09/08/99

TIP PROJECT: U-3309A

CONTRACT: C202064

See Sheet 1-A For Index of Sheets

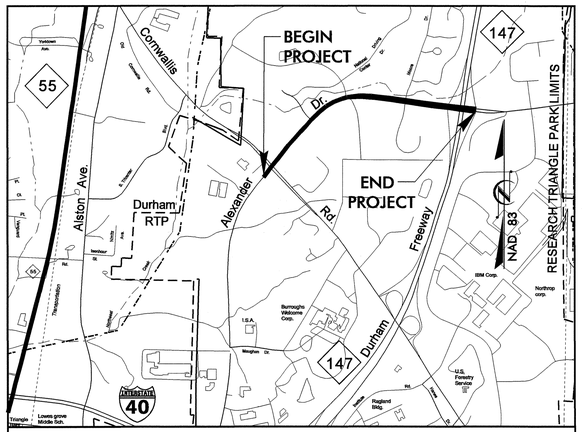


VICINITY MAP

STATE OF NORTH CAROLINA
DIVISION OF HIGHWAYS

# DURHAM COUNTY

| STATE | STATE PROJECT REFERENCE NO. | SHEET NO. | TOTAL SHEETS |
|---|---|---|---|
| N.C. | U-3309A | 1 | |

| STATE PROJ. NO. | F. A. PROJ. NO. | DESCRIPTION |
|---|---|---|
| 34916.1.1 | STP-2028(1) | P.E. |
| 34916.2.1 | STP-2028(1) | R/W – UTIL |
| 34916.3.3 | STP-2028(4) | CONST. |

***LOCATION: SR 2028 (T.W. ALEXANDER DRIVE) FROM SR 1121 (CORNWALLIS ROAD) TO EAST OF NC 147 IN DURHAM***

***TYPE OF WORK: GRADING, DRAINAGE, PAVING, WIDENING, AND SIGNALS***

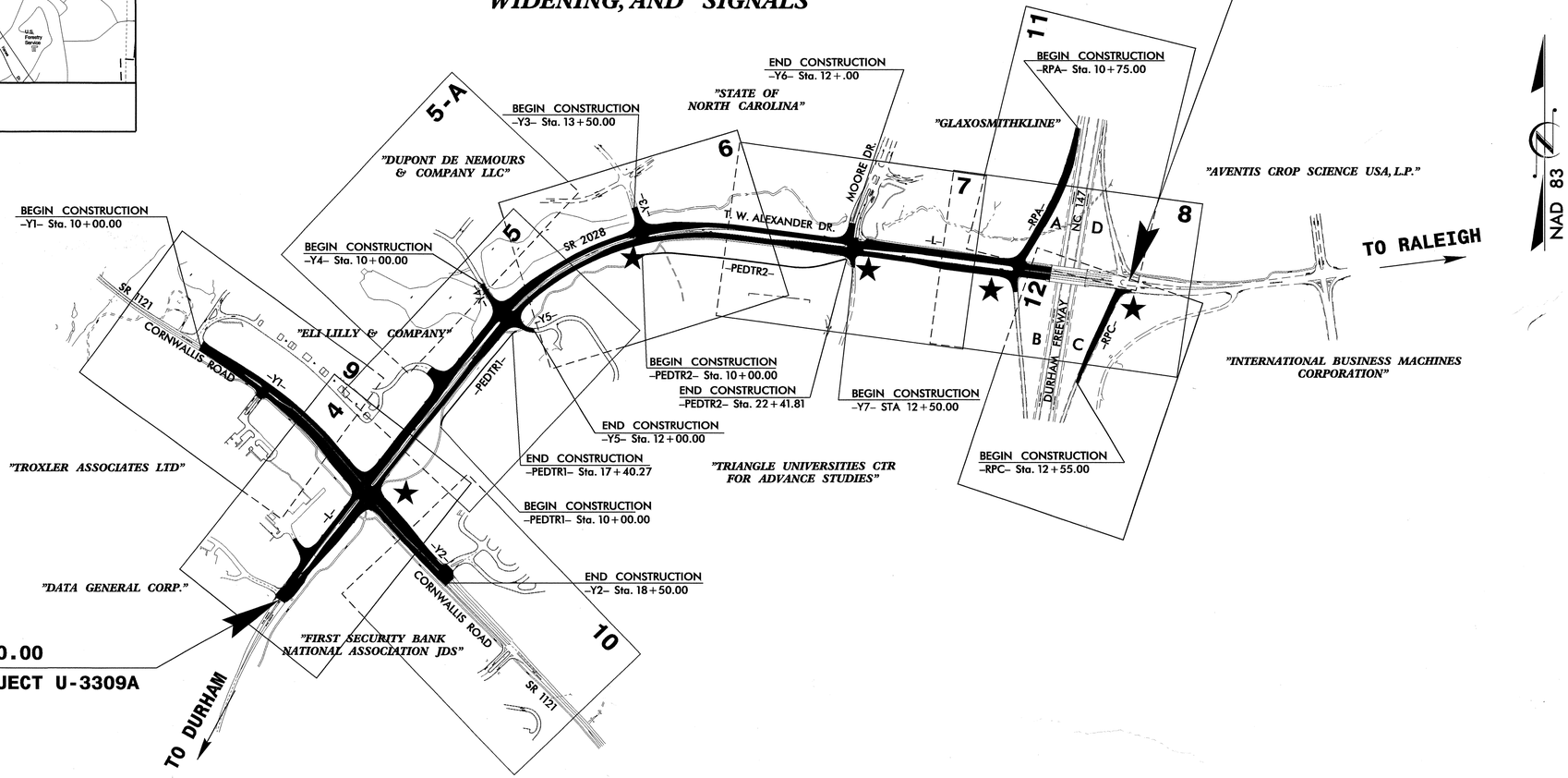


★ UPGRADE EXIST SIGNALS

THIS IS A PARTIAL CONTROLLED-ACCESS PROJECT WITH ACCESS BEING LIMITED TO POINTS AS SHOWN ON THE PLANS.

***GRAPHIC SCALES***

PLANS: 50 25 0 50 100

PROFILE (HORIZONTAL): 50 25 0 50 100

PROFILE (VERTICAL): 10 5 0 10 20

***DESIGN DATA***

ADT 2009 = 19,400
ADT 2030 = 33,100
DHV = 11 %
D = 75 %
T = 3 % *
V = 60 MPH
* TTST 1 DUAL 2

***PROJECT LENGTH***

LENGTH ROADWAY TIP PROJECT U-3309A = 1.165 MI
TOTAL LENGTH STATE ROADWAY TIP PROJECT U-3309A = 1.165 MI

Prepared In the Office of:
***DIVISION OF HIGHWAYS***
*1000 Birch Ridge Dr., Raleigh NC, 27610*

*2006 STANDARD SPECIFICATIONS*

***RIGHT OF WAY DATE:*** OCTOBER 19, 2007

***LETTING DATE:*** DECEMBER 15, 2009

JASON MOORE, P.E.
*PROJECT ENGINEER*

BRYAN KEY, P.E.
*PROJECT DESIGN ENGINEER*

***HYDRAULICS ENGINEER***
7/31/09
SIGNATURE:
NORTH CAROLINA PROFESSIONAL SEAL 15533 ENGINEER P.E.

***ROADWAY DESIGN ENGINEER***
7-31-09
SIGNATURE:
NORTH CAROLINA PROFESSIONAL SEAL 26964 ENGINEER BRYAN C. KEY

***DIVISION OF HIGHWAYS STATE OF NORTH CAROLIN***
STATE OF NORTH CAROLINA · DEPARTMENT OF TRANSPORTATION ·
*STATE HIGHWAY DESIGN ENGINEER*

16-JUL-2009 11:55
r:\roadway\proj\u3309a_rdy_tsh.dgn
$$$$USERNAME$$$$

8/17/99

| PROJECT REFERENCE NO. | SHEET NO. |
|---|---|
| U-3309A | 1-A |

ROADWAY DESIGN ENGINEER

8-1-09

INDEX OF SHEETS

| SHEET NUMBER | SHEET |
|---|---|
| 1 | TITLE SHEET |
| 1-A | INDEX OF SHEETS. GENERAL NOTES. AND LIST OF STANDARD DRAWINGS |
| 1-B | CONVENTIONAL SYMBOLS |
| 1-C | SURVEY CONTROL SHEET |
| 2 THRU 2-E | PAVEMENT SCHEDULE. TYPICAL SECTIONS. AND WEDGING DETAILS |
| 2-F | HYDRAULIC DITCH DETAILS |
| 2-G THRU 2-J | INTERSECTION DETAILS |
| 2-K | DETAIL OF BUS PULL OUT & BUS SHELTER PAD W/ SIDEWALK |
| 2-L | DETAIL FOR BRIDGE MOUNTED CHAIN LINK FENCE |
| 2-M | DETAIL FOR ANCHORAGE FOR FRAMES - BRICK OR CONCRETE |
| 2-N | DETAIL FOR 2'-9" CONCRETE CURB & GUTTER |
| 2-O | DETAIL OF 2'-9" TO 2'-6" CURB & GUTTER TRANSITION SECTION |
| 2-P | DETAIL TO CONVERT EXISTING CATCH BASIN OR JUNCTION BOX TO DROP INLET |
| 2-Q | DETAIL TO CONVERT EXISTING OPEN THROAT CATCH BASIN TO GRATED DROP INLET |
| 2-R | DETAIL TO CONVERT EXISTING DROP INLET OR CATCH BASIN TO Junction Box |
| 2-S THRU 2-T | DETAIL FOR METHOD OF PIPE INSTALLATION |
| 3 (2 SHEETS) | SUMMARY OF QUANTITIES |
| 3-A THRU 3-D | SUMMARY OF PIPES. ENDWALLS. ETC. FOR PIPES 48" & UNDER |
| 3-E | SUMMARY OF PIPES. ENDWALLS. ETC. FOR PIPES 54" & OVER |
| 3-F | SUMMARY OF GUARDRAIL. EARTHWORK. PAVEMENT REMOVAL. BREAKING EXISTING ASPHALT PAVEMENT. FENCE. AND UNDERDRAIN |
| 3-G | PARCEL INDEX SHEET |
| 4 THRU 12 | PLAN SHEETS |
| 13 THRU 21 | PROFILE SHEETS |
| TCP-1 THRU TCP-8F | TRAFFIC CONTROL PLANS |
| PMP-1 THRU PMP-10 | PAVEMENT MARKING PLANS |
| E-1 THRU E-3 | PLANS & DETAILS FOR PROPOSED LIGHTING / ELECTRICAL CONSTRUCTION |
| EC-1 THRU EC-23 | EROSION CONTROL PLANS |
| SIGN-1 THRU SIGN-11 | SIGNING PLANS |
| SIG-1 THRU SIG-58 | SIGNAL PLANS |
| UC-1 THRU UC-6 | UTILITIES CONSTRUCTION PLANS |
| UO-1 THRU UO-8 | UTILITIES BY OTHERS |
| X-1 THRU X-47 | CROSS-SECTIONS |

GENERAL NOTES:

2006 SPECIFICATIONS
EFFECTIVE: 07-18-06
REVISED: 07-30-08

GRADING AND SURFACING OR RESURFACING AND WIDENING:

THE GRADE LINES SHOWN DENOTE THE FINISHED ELEVATION OF THE PROPOSED SURFACING AT GRADE POINTS SHOWN ON THE TYPICAL SECTIONS. WHERE NO GRADE LINES ARE SHOWN. THE PROFILES SHOWN DENOTE THE TOP ELEVATION OF THE EXISTING PAVEMENT ALONG THE CENTER LINE OF SURVEY ON WHICH THE PROPOSED RESURFACING WILL BE PLACED. GRADE LINES MAY BE ADJUSTED BY THE ENGINEER IN ORDER TO SECURE A PROPER TIE-IN.

CLEARING:

CLEARING ON THIS PROJECT SHALL BE PERFORMED TO THE LIMITS ESTABLISHED BY METHOD III.

SUPERELEVATION:

ALL CURVES ON THIS PROJECT SHALL BE SUPERELEVATED IN ACCORDANCE WITH STD. NO. 225.04 USING THE RATE OF SUPERELEVATION AND RUNOFF SHOWN ON THE PLANS. SUPERELEVATION IS TO BE REVOLVED ABOUT THE GRADE POINTS SHOWN ON THE TYPICAL SECTIONS.

SHOULDER CONSTRUCTION:

ASPHALT. EARTH. AND CONCRETE SHOULDER CONSTRUCTION ON THE HIGH SIDE OF SUPERELEVATED CURVES SHALL BE IN ACCORDANCE WITH STD. NO. 560.01.

SIDE ROADS:

THE CONTRACTOR WILL BE REQUIRED TO DO ALL NECESSARY WORK TO PROVIDE SUITABLE CONNECTIONS WITH ALL ROADS. STREETS. AND DRIVES ENTERING THIS PROJECT. THIS WORK WILL BE PAID FOR AT THE CONTRACT UNIT PRICE FOR THE PARTICULAR ITEMS INVOLVED.

UNDERDRAINS:

UNDERDRAINS SHALL BE CONSTRUCTED IN ACCORDANCE WITH STD. NO. 815.03 AT LOCATIONS DIRECTED BY THE ENGINEER.

DRIVEWAYS:

STREET TURNOUT:

STREET RETURNS SHALL BE CONSTRUCTED IN ACCORDANCE WITH STD. NO. 848.04 USING THE RADII NOTED ON PLANS.

GUARDRAIL:

THE GUARDRAIL LOCATIONS SHOWN ON THE PLANS MAY BE ADJUSTED DURING CONSTRUCTION AS DIRECTED BY THE ENGINEER. THE CONTRACTOR SHOULD CONSULT WITH THE ENGINEER PRIOR TO ORDERING GUARDRAIL MATERIAL.

TEMPORARY SHORING:

SHORING REQUIRED FOR THE MAINTENANCE OF TRAFFIC WILL BE PAID FOR AS "EXTRA WORK" IN ACCORDANCE WITH SECTION 104-7.

UTILITIES:

UTILITY OWNERS ON THIS PROJECT ARE PSNC. Duke Energy. Time Warner

Cablevision. Verizon Communications. AT&T Local. Verizon Business (Internet Long

Distance). DukeNet. Level 3 Communications. BTI/Deltacom. AT&T Metro. Glaxo Smith

Kline. MCNC/UNC-TV

ANY RELOCATION OF EXISTING UTILITIES WILL BE ACCOMPLISHED BY OTHERS. EXCEPT AS SHOWN ON THE PLANS.

RIGHT-OF-WAY MARKERS:

ALL RIGHT-OF-WAY MARKERS ON THIS PROJECT SHALL BE PLACED BY CONTRACT.

WHEELCHAIR RAMPS:

WHEELCHAIR RAMPS ARE SHOWN ON THE PLANS AT APPROXIMATE LOCATIONS. THE CONSTRUCTION OF ALL WHEELCHAIR RAMPS SHALL BE IN ACCORDANCE WITH STD. NO. 848.05

EFF. 07-18-06
REV. 01-02-07

2006 ROADWAY ENGLISH STANDARD DRAWINGS

The following Roadway Standards as appear in "Roadway Standard Drawings" Highway Design Branch - N. C. Department of Transportation - Raleigh. N. C.. Dated July 18. 2006 are applicable to this project and by reference hereby are considered a part of these plans:

| STD.NO. | TITLE |
|---|---|
| DIVISION 2 - EARTHWORK | |
| 200.03 | Method of Clearing - Method III |
| 225.02 | Guide for Grading Subgrade - Secondary and Local |
| 225.04 | Method of Obtaining Superelevation - Two Lane Pavement |
| DIVISION 3 - PIPE CULVERTS | |
| 300.01 | Method of Pipe Installation - Method 'A' |
| DIVISION 5 - SUBGRADE. BASES AND SHOULDERS | |
| 560.01 | Method of Shoulder Construction - High Side of Superelevated Curve - Method I |
| DIVISION 6 - ASPHALT BASES AND PAVEMENTS | |
| 654.01 | Pavement Repairs |
| DIVISION 8 - INCIDENTALS | |
| 806.01 | Concrete Right-of-Way Marker |
| 806.02 | Granite Right-of-Way Marker |
| 815.03 | Pipe Underdrain and Blind Drain |
| 816.04 | Markers for Drainage Structure and Concrete Pad |
| 838.01 | Concrete Endwall for Single and Double Pipe Culverts - 15" thru 48" Pipe 90 Skew |
| 838.11 | Brick Endwall for Single and Double Pipe Culverts - 15" thru 48" Pipe 90 Skew |
| 838.21 | Reinforced Concrete Endwall - for Single 54" Pipe 90 Skew |
| 838.45 | Notes for Reinforced Concrete Endwall - Std. Dwg 838.21 thru 838.40 |
| 838.51 | Reinforced Brick Endwall - for Single 54" Pipe 90 Skew |
| 838.75 | Notes for Reinforced Brick Endwall - Std. Dwg 838.51 thru 838.70 |
| 838.80 | Precast Endwalls - 12" thru 72" Pipe 90 Skew |
| 840.00 | Concrete Base Pad for Drainage Structures |
| 840.01 | Brick Catch Basin - 12" thru 54" Pipe |
| 840.02 | Concrete Catch Basin - 12" thru 54" Pipe |
| 840.03 | Frame. Grates and Hood - for Use on Standard Catch Basin |
| 840.14 | Concrete Drop Inlet - 12" thru 30" Pipe |
| 840.15 | Brick Drop Inlet - 12" thru 30" Pipe |
| 840.16 | Drop Inlet Frame and Grates - for use with Std. Dwg 840.14 and 840.15 |
| 840.17 | Concrete Grated Drop Inlet Type 'A' - 12" thru 72" Pipe |
| 840.18 | Concrete Grated Drop Inlet Type 'B' - 12" thru 36" Pipe |
| 840.19 | Concrete Grated Drop Inlet Type 'D' - 12" thru 36" Pipe |
| 840.22 | Frames and Wide Slot Sag Grates |
| 840.24 | Frames and Narrow Slot Sag Grates |
| 840.26 | Brick Grated Drop Inlet Type 'A' - 12" thru 72" Pipe |
| 840.27 | Brick Grated Drop Inlet Type 'B' - 12" thru 36" Pipe |
| 840.28 | Brick Grated Drop Inlet Type 'D' - 12" thru 36" Pipe |
| 840.29 | Frames and Narrow Slot Flat Grates |
| 840.31 | Concrete Junction Box - 12" thru 66" Pipe |
| 840.32 | Brick Junction Box - 12" thru 66" Pipe |
| 840.34 | Traffic Bearing Junction Box - for Use with Pipes 42" and Under |
| 840.45 | Precast Drainage Structure |
| 840.46 | Traffic Bearing Precast Drainage Structure |
| 840.51 | Brick Manhole - 12" thru 36" Pipe |
| 840.53 | Precast Manhole with Masonry Base - 12" thru 42" Pipe |
| 840.54 | Manhole Frame and Cover |
| 840.66 | Drainage Structure Steps |
| 840.72 | Pipe Collar |
| 846.01 | Concrete Curb. Gutter and Curb & Gutter |
| 848.04 | Street Turnout |
| 848.05 | Wheelchair Ramp - Curb Cut |
| 852.01 | Concrete Islands |
| 852.06 | Method for Placement of Drop Inlets in Concrete Islands |
| 852.10 | Median Construction - with Curb and Gutter |
| 862.01 | Guardrail Placement |
| 862.02 | Guardrail Installation |
| 876.01 | Rip Rap in Channels |
| 876.02 | Guide for Rip Rap at Pipe Outlets |
| 876.04 | Drainage Ditches with Class 'B' Rip Rap |

04-AUG-2009 14:41
r:\roadway\proj\u-3309a_rdy_psh_1a.dgn
$$$$USERNAME$$$$

3/15/06

| PROJECT REFERENCE NO. | SHEET NO. |
|---|---|
| U-3309A | 1-B |

***Note: Not to Scale***

****S.U.E. = Subsurface Utility Engineering***

STATE OF NORTH CAROLINA
DIVISION OF HIGHWAYS

# CONVENTIONAL PLAN SHEET SYMBOLS

## *BOUNDARIES AND PROPERTY:*

- State Line
- County Line
- Township Line
- City Line
- Reservation Line
- Property Line
- Existing Iron Pin — EIP
- Property Corner
- Property Monument — ECM
- Parcel/Sequence Number — 123
- Existing Fence Line
- Proposed Woven Wire Fence
- Proposed Chain Link Fence
- Proposed Barbed Wire Fence
- Existing Wetland Boundary — WLB
- Proposed Wetland Boundary — WLB
- Existing Endangered Animal Boundary — EAB
- Existing Endangered Plant Boundary — EPB

## *BUILDINGS AND OTHER CULTURE:*

- Gas Pump Vent or U/G Tank Cap
- Sign — S
- Well — W
- Small Mine
- Foundation
- Area Outline
- Cemetery
- Building
- School
- Church
- Dam

## *HYDROLOGY:*

- Stream or Body of Water
- Hydro, Pool or Reservoir
- Jurisdictional Stream — JS
- Buffer Zone 1 — BZ 1
- Buffer Zone 2 — BZ 2
- Flow Arrow
- Disappearing Stream
- Spring
- Wetland
- Proposed Lateral, Tail, Head Ditch — FLOW
- False Sump

## *RAILROADS:*

- Standard Gauge — CSX TRANSPORTATION
- RR Signal Milepost — MILEPOST 35
- Switch — SWITCH
- RR Abandoned
- RR Dismantled

## *RIGHT OF WAY:*

- Baseline Control Point
- Existing Right of Way Marker
- Existing Right of Way Line
- Proposed Right of Way Line — RW
- Proposed Right of Way Line with Iron Pin and Cap Marker — RW
- Proposed Right of Way Line with Concrete or Granite Marker — RW
- Existing Control of Access — CA
- Proposed Control of Access — CA
- Existing Easement Line — E
- Proposed Temporary Construction Easement — E
- Proposed Temporary Drainage Easement — TDE
- Proposed Permanent Drainage Easement — PDE
- Proposed Permanent Utility Easement — PUE

## *ROADS AND RELATED FEATURES:*

- Existing Edge of Pavement
- Existing Curb
- Proposed Slope Stakes Cut — C
- Proposed Slope Stakes Fill — F
- Proposed Wheel Chair Ramp — WCR
- Existing Metal Guardrail
- Proposed Guardrail
- Existing Cable Guiderail
- Proposed Cable Guiderail
- Equality Symbol
- Pavement Removal

## *VEGETATION:*

- Single Tree
- Single Shrub
- Hedge
- Woods Line
- Orchard
- Vineyard — Vineyard

## *EXISTING STRUCTURES:*

MAJOR:

- Bridge, Tunnel or Box Culvert — CONC
- Bridge Wing Wall, Head Wall and End Wall — CONC WW

MINOR:

- Head and End Wall — CONC HW
- Pipe Culvert
- Footbridge
- Drainage Box: Catch Basin, DI or JB — CB
- Paved Ditch Gutter
- Storm Sewer Manhole — S
- Storm Sewer — S

## *UTILITIES:*

POWER:

- Existing Power Pole
- Proposed Power Pole
- Existing Joint Use Pole
- Proposed Joint Use Pole
- Power Manhole — P
- Power Line Tower
- Power Transformer
- U/G Power Cable Hand Hole — HH
- H-Frame Pole
- Recorded U/G Power Line — P
- Designated U/G Power Line (S.U.E.*) — P

TELEPHONE:

- Existing Telephone Pole
- Proposed Telephone Pole
- Telephone Manhole — T
- Telephone Booth
- Telephone Pedestal — T
- Telephone Cell Tower
- U/G Telephone Cable Hand Hole — HH
- Recorded U/G Telephone Cable — T
- Designated U/G Telephone Cable (S.U.E.*) — T
- Recorded U/G Telephone Conduit — TC
- Designated U/G Telephone Conduit (S.U.E.*) — TC
- Recorded U/G Fiber Optics Cable — T FO
- Designated U/G Fiber Optics Cable (S.U.E.*) — T FO

WATER:

- Water Manhole — W
- Water Meter
- Water Valve
- Water Hydrant
- Recorded U/G Water Line — W
- Designated U/G Water Line (S.U.E.*) — W
- Above Ground Water Line — A/G Water

TV:

- TV Satellite Dish
- TV Pedestal — C
- TV Tower
- U/G TV Cable Hand Hole — HH
- Recorded U/G TV Cable — TV
- Designated U/G TV Cable (S.U.E.*) — TV
- Recorded U/G Fiber Optic Cable — TV FO
- Designated U/G Fiber Optic Cable (S.U.E.*) — TV FO

GAS:

- Gas Valve
- Gas Meter
- Recorded U/G Gas Line — G
- Designated U/G Gas Line (S.U.E.*) — G
- Above Ground Gas Line — A/G Gas

SANITARY SEWER:

- Sanitary Sewer Manhole
- Sanitary Sewer Cleanout
- U/G Sanitary Sewer Line — SS
- Above Ground Sanitary Sewer — A/G Sanitary Sewer
- Recorded SS Forced Main Line — FSS
- Designated SS Forced Main Line (S.U.E.*) — FSS

MISCELLANEOUS:

- Utility Pole
- Utility Pole with Base
- Utility Located Object
- Utility Traffic Signal Box — S
- Utility Unknown U/G Line — ?UTL
- U/G Tank; Water, Gas, Oil
- A/G Tank; Water, Gas, Oil
- U/G Test Hole (S.U.E.*)
- Abandoned According to Utility Records — AATUR
- End of Information — E.O.I.

10/09/07

| PROJECT REFERENCE NO. | SHEET NO. |
|---|---|
| U-3309A | 1-C |
| Location and Surveys | |

# SURVEY CONTROL SHEET U3309A

# DURHAM COUNTY

## SR 2028 (T.W. ALEXANDER DRIVE) FROM SR 1121 (CORNWALLIS ROAD) TO NC 147

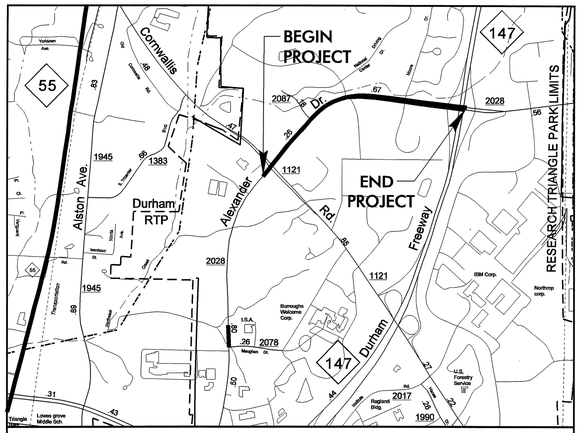


VICINITY MAP

## DATUM DESCRIPTION

THE LOCALIZED COORDINATE SYSTEM DEVELOPED FOR THIS PROJECT IS BASED ON THE STATE PLANE COORDINATES ESTABLISHED BY NCGS FOR MONUMENT "ALEX" WITH NAD 83 STATE PLANE GRID COORDINATES OF NORTHING: 789344.44(ft) EASTING: 2040965.81(ft) THE AVERAGE COMBINED GRID FACTOR USED ON THIS PROJECT (GROUND TO GRID) IS: 0.99994162 THE N.C. LAMBERT GRID BEARING AND LOCALIZED HORIZONTAL GROUND DISTANCE FROM "ALEX" TO -L- STATION 18+50.00 IS N 88°56'49.3" W 4395.95' ALL LINEAR DIMENSIONS ARE LOCALIZED HORIZONTAL DISTANCES VERTICAL DATUM USED IS NGVD 29

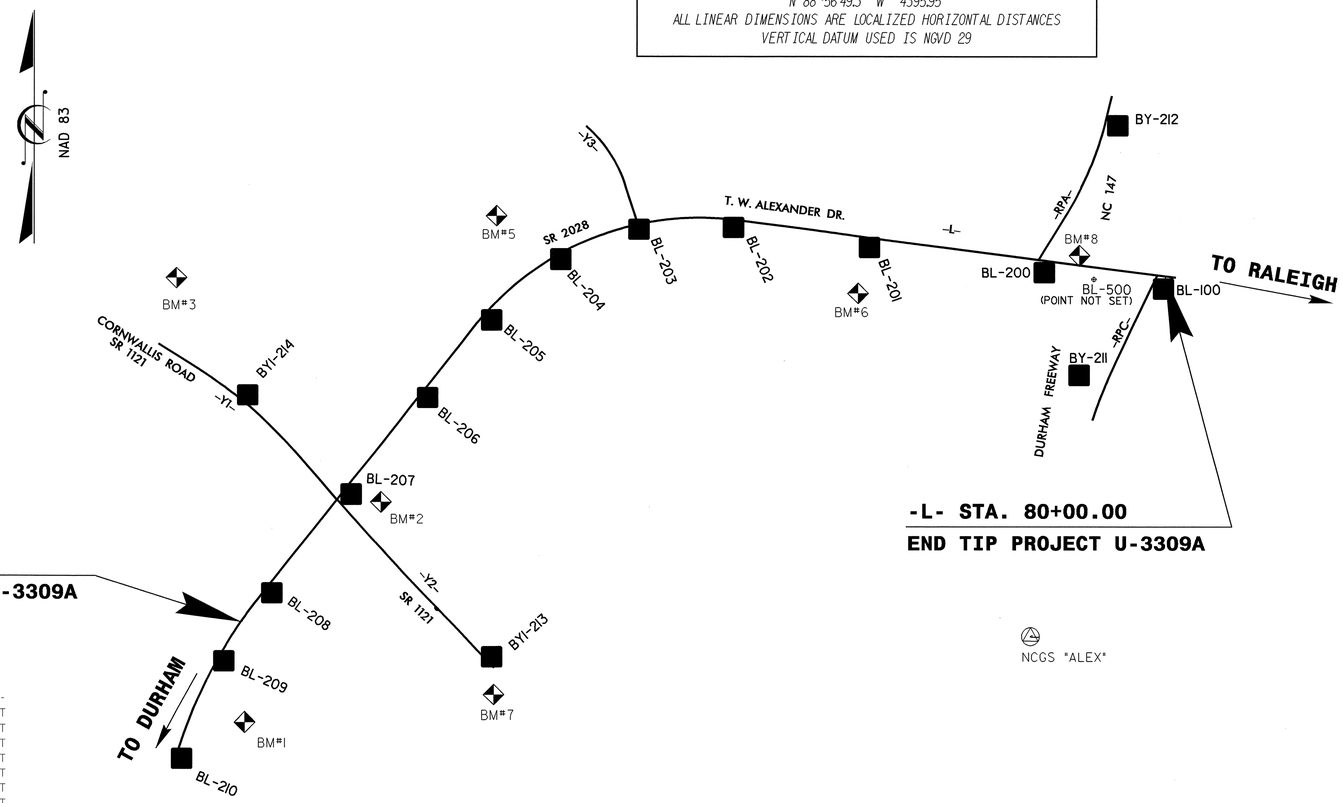


## BENCHMARK DATA

```
1       ELEVATION = 291.02
N 788867       E 2036599
L STATION 13+48    298' RT

RR SPIKE SET IN 16" PINE
TBM-1
```

```
2       ELEVATION = 330.10
N 790098       E 2037351
L STATION 28+62 199' RIGHT
RR SPIKE SET IN 15" GUM
TBM-2
```

```
3       ELEVATION = 296.97
N 791343       E 2036211
Y1 STATION 10+00
N 15° 14' 16.9" E  DIST    378'
RR SPIKE SET IN 12" PINE
TBM-3
```

```
5       ELEVATION = 290.52
N 791691       E 2037994
L STATION 44+11 368'  LT
RR SPIKE SET IN 15" PINE
TBM-5
```

```
6       ELEVATION = 324.42
N 791259       E 2040002
L STATION 63+18 314'  RT
RR SPIKE SET IN 18" OAK
TBM-6
```

```
7       ELEVATION = 312.90
N 789022       E 2037975
Y1 STATION 23+30
S 38° 41' 21" E  DIST   1392'
RR SPIKE SET IN 12" PINE
TBM-7
```

```
8       ELEVATION = 338.01
N 791466       E 2041237
L STATION 754+13 51' LT
CUT IN CONC NW CORNER OF BRIDGE OVER NC 147
TBM-8
```

## CONTROL DATA

BL

| POINT | DESC. | NORTH | EAST | ELEVATION | L STATION | OFFSET |
|---|---|---|---|---|---|---|
| 210 | BL-210 | 788668.3160 | 2036241.2920 | 291.44 | 10+16.86 | 31.61 RT |
| 209 | BL-209 | 789209.7540 | 2036476.9200 | 297.50 | 16+16.07 | 35.21 RT |
| 208 | BL-208 | 789588.3550 | 2036743.8360 | 311.05 | 20+85.58 | 40.23 RT |
| 207 | BL-207 | 790140.2250 | 2037184.3070 | 323.14 | 27+91.67 | 42.52 RT |
| 206 | BL-206 | 790679.3800 | 2037609.9190 | 304.25 | 34+78.57 | 41.06 RT |
| 205 | BL-205 | 791109.1100 | 2037966.1320 | 293.27 | 40+39.55 | 50.69 RT |
| 204 | BL-204 | 791446.4560 | 2038350.6910 | 288.89 | 45+66.15 | 29.36 RT |
| 203 | BL-203 | 791613.3460 | 2038785.4390 | 292.11 | 50+42.23 | 28.92 RT |
| 202 | BL-202 | 791624.0260 | 2039311.5050 | 298.23 | 55+82.97 | 43.62 RT |
| 201 | BL-201 | 791512.1240 | 2040068.0890 | 306.26 | 63+48.58 | 53.14 RT |
| 200 | BL-200 | 791374.4860 | 2041041.3690 | 335.07 | 73+30.81 | 64.50 RT |
| 500 | | 791336.8764 | 2041316.8366 | UNKNOWN | 76+08.82 | 66.92 RT |
| 100 | | 791283.9086 | 2041704.7932 | 344.74 | 80+00.36 | 70.31 RT |

BY

| POINT | DESC. | NORTH | EAST | ELEVATION | RPA STATION | OFFSET |
|---|---|---|---|---|---|---|
| 212 | BY-212 | 792195.6270 | 2041449.0550 | 325.88 | 11+50.79 | 72.00 LT |
| 211 | BY-211 | 790806.1900 | 2041235.1290 | 329.42 | OUTSIDE PROJECT LIMITS | |

BY

| POINT | DESC. | NORTH | EAST | ELEVATION | RPC STATION | OFFSET |
|---|---|---|---|---|---|---|
| 211 | BY-211 | 790806.1900 | 2041235.1290 | 329.42 | 12+41.38 | 157.09 LT |
| 212 | BY-212 | 792195.6270 | 2041449.0550 | 325.88 | OUTSIDE PROJECT LIMITS | |

BY1

| POINT | DESC. | NORTH | EAST | ELEVATION | Y1 STATION | OFFSET |
|---|---|---|---|---|---|---|
| 214 | BY1-214 | 790693.4150 | 2036608.6140 | 319.09 | 15+67.86 | 42.86 LT |
| 213 | BY1-213 | 789233.2770 | 2037967.0790 | 313.94 | OUTSIDE PROJECT LIMITS | |

BY1

| POINT | DESC. | NORTH | EAST | ELEVATION | Y2 STATION | OFFSET |
|---|---|---|---|---|---|---|
| 214 | BY1-214 | 790693.4150 | 2036608.6140 | 319.09 | OUTSIDE PROJECT LIMITS | |
| 213 | BY1-213 | 789233.2770 | 2037967.0790 | 313.94 | 22+29.02 | 33.41 LT |

*NOTES:*

*THE CONTROL DATA FOR THIS PROJECT CAN BE FOUND ELECTRONICALLY BY SELECTING PROJECT CONTROL DATA AT:*

*HTTP:\WWW.DOH.DOT.STATE.NC.US/PRECONSTRUCT/HIGHWAY/LOCATION/PROJECT*

*u3309a_ls_control_090501.txt*

*SITE CALIBRATION INFORMATION HAS NOT BEEN PROVIDED FOR THIS PROJECT. IF FURTHER INFORMATION IS NEEDED, PLEASE CONTACT THE LOCATION AND SURVEYS UNIT.*

△ *INDICATES GEODETIC CONTROL MONUMENTS USED OR SET FOR HORIZONTAL PROJECT CONTROL BY THE NCDOT LOCATION AND SURVEYS UNIT.*

*PROJECT CONTROL ESTABLISHED USING GLOBAL POSITIONING SYSTEM.*

*NOTE: DRAWING NOT TO SCALE*

6/2/99

# PAVEMENT SCHEDULE

| | | | |
|---|---|---|---|
| C1 | PROP. APPROX. 1.5" ASPHALT CONCRETE SURFACE COURSE, TYPE S9.5B, AT AN AVERAGE RATE OF 168 LBS. PER SQ. YD. | E3 | PROP. VAR. DEPTH ASPHALT CONCRETE BASE COURSE, TYPE B25.0B, AT AN AVERAGE RATE OF 114 LBS. PER SQ. YD. PER 1" DEPTH. TO BE PLACED IN LAYERS NOT LESS THAN 3" IN DEPTH OR GREATER THAN 5½" IN DEPTH. |
| C2 | PROP. APPROX. 3" ASPHALT CONCRETE SURFACE COURSE TYPE S9.5B, AT AN AVERAGE RATE OF 168 LBS. PER SQ. YD. IN EACH OF TWO LAYERS. | J1 | PROP. 6" AGGREGATE BASE COURSE. |
| C3 | PROP. VAR. DEPTH ASPHALT CONCRETE SURFACE COURSE, TYPE S9.5B, AT AN AVERAGE RATE OF 112 LBS. PER SQ. YD. PER 1" DEPTH, TO BE PLACED IN LAYERS NOT LESS THAN 1½" IN DEPTH OR GREATER THAN 2" IN DEPTH. | J2 | PROP. 8" AGGREGATE BASE COURSE. |
| C4 | PROP. APPROX. 1.5" ASPHALT CONCRETE SURFACE COURSE, TYPE SF9.5A, AT AN AVERAGE RATE OF 165 LBS. PER SQ. YD. | P | PRIME COAT AT THE RATE OF .35 GAL. PER SQ. YD. |
| C5 | PROP. APPROX. 3" ASPHALT CONCRETE SURFACE COURSE, TYPE SF9.5A, AT AN AVERAGE RATE OF 165 LBS. PER SQ. YD. IN EACH OF TWO LAYERS. | R1 | 2'-9" CONCRETE CURB AND GUTTER. |
| C6 | PROP. VAR. DEPTH ASPHALT CONCRETE SURFACE COURSE, TYPA SF9.5A, AT AN AVERAGE RATE OF 110 LBS. PER SQ. YD. PER 1" DEPTH, TO BE PLACED IN LAYERS NOT LESS THAN 1" IN DEPTH OR GREATER THAN 1½" IN DEPTH. | R2 | 2'-6" CONCRETE CURB AND GUTTER. |
| D1 | PROP. APPROX. 4" ASPHALT CONCRETE INTERMEDIATE COURSE, TYPE I19.0B, AT AN AVERAGE RATE OF 456 LBS. PER SQ. YD. | R3 | 5" MONOLITHIC CONCRETE ISLAND. |
| D2 | PROP. APPROX. 3" ASPHALT CONCRETE INTERMEDIATE COURSE, TYPE I19.0B, AT AN AVERAGE RATE OF 342 LBS. PER SQ. YD. | T | EARTH MATERIAL. |
| D3 | PROP. APPROX. 2½" ASPHALT CONCRETE INTERMEDIATE COURSE, TYPE I19.0B, AT AN AVERAGE RATE OF 285 LBS. PER SQ. YD. | U | EXISTING PAVEMENT. |
| D4 | PROP. VAR. DEPTH ASPHALT CONCRETE INTERMEDIATE COURSE, TYPE I19.0B, AT AN AVERAGE RATE OF 114 LBS. PER SQ. YD. PER 1" DEPTH, TO BE PLACED IN LAYERS NOT LESS THAN 2½" IN DEPTH OR GREATER THAN 4" IN DEPTH. | V1 | 2½" DEPTH MILLING |
| E1 | PROP. APPROX. 4" ASPHALT CONCRETE BASE COURSE, TYPE B25.0B, AT AN AVERAGE RATE OF 456 LBS. PER SQ. YD. | V2 | VARIABLE DEPTH MILLING |
| E2 | PROP. APPROX. 4½" ASPHALT CONCRETE BASE COURSE, TYPE B25.0B, AT AN AVERAGE RATE OF 513 LBS. PER SQ. YD. | W | VARIABLE DEPTH ASPHALT PAVEMENT (SEE STANDARD WEDGING DETAIL) |

NOTE: PAVEMENT EDGE SLOPES ARE 1:1 UNLESS SHOWN OTHERWISE.

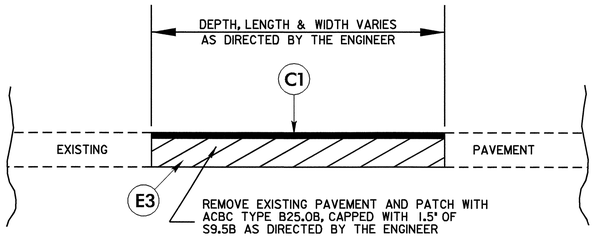


FULL DEPTH ASPHALT PAVEMENT REPAIR

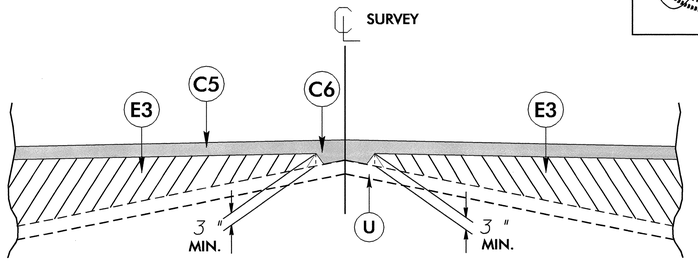


DETAIL SHOWING METHOD OF WEDGING
(USE WITH –Y4–, –Y5– & –Y7– ONLY)

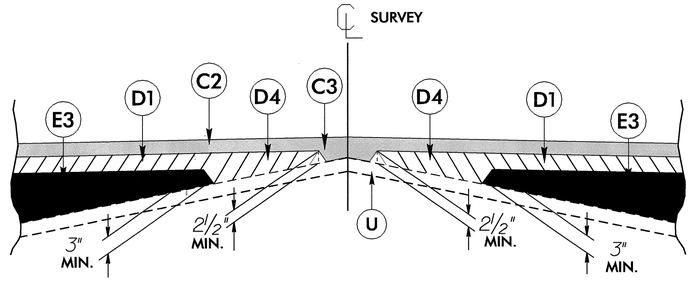


DETAIL SHOWING METHOD OF WEDGING

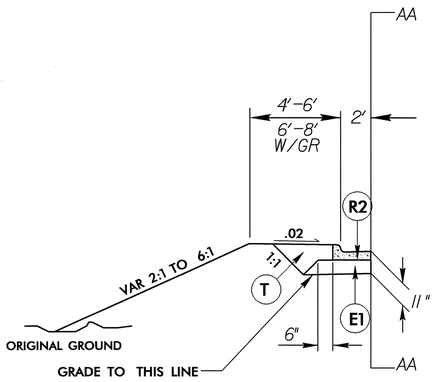


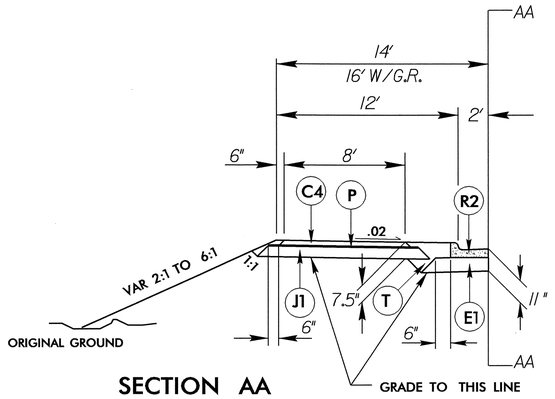


SECTION AA

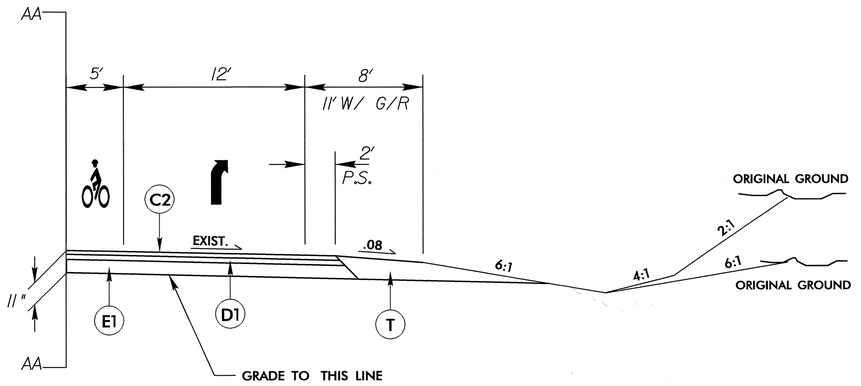


TO BE USED IN CONJUCTION WITH
TYPICALS SECTIONS 1,2, AND 3
AND ALL -Y- LINES TURNOUTS

-L- LT. STA. 64+00.00 TO 72+50.00
-Y1- RT. STA. 13+00.00 TO 22+84.89

-L- RT. STA. 20+99.57 TO 25+22.49
-L- LT. STA. 28+90.95 TO 31+92.48
-L- RT. STA. 36+70.75 TO 39+24.67
-L- LT. STA. 42+18.35 TO 44+90.00

-L- LT. STA. 51+76.79 TO 54+56.13
-L- RT. STA. 59+13.00 TO 61+79.40
-L- RT. STA. 66+75.70 TO 72+80.00
-Y2- LT. STA. 11+49.42 TO 15+09.00

| PROJECT REFERENCE NO. | SHEET NO. |
|---|---|
| U-3309A | 2 |

ROADWAY DESIGN ENGINEER
NORTH CAROLINA PROFESSIONAL SEAL 26954 ENGINEER BRIAN C. KEY
8-3-09

PAVEMENT DESIGN ENGINEER
NORTH CAROLINA PROFESSIONAL SEAL 13368 ENGINEER JOHN CHI CHEN
8/4/09

03-AUG-2009 14:32
$$$$USERNAME$$$$
$$$$DGNFILE$$$$

| PROJECT REFERENCE NO. | SHEET NO. |
|---|---|
| U-3309A | 2-A |

ROADWAY DESIGN ENGINEER — NORTH CAROLINA PROFESSIONAL SEAL 26964 ENGINEER BRYAN C. KEY — 8-25-09

PAVEMENT DESIGN ENGINEER — NORTH CAROLINA PROFESSIONAL SEAL 13268 ENGINEER DON CHI CHEN — 8/25/09

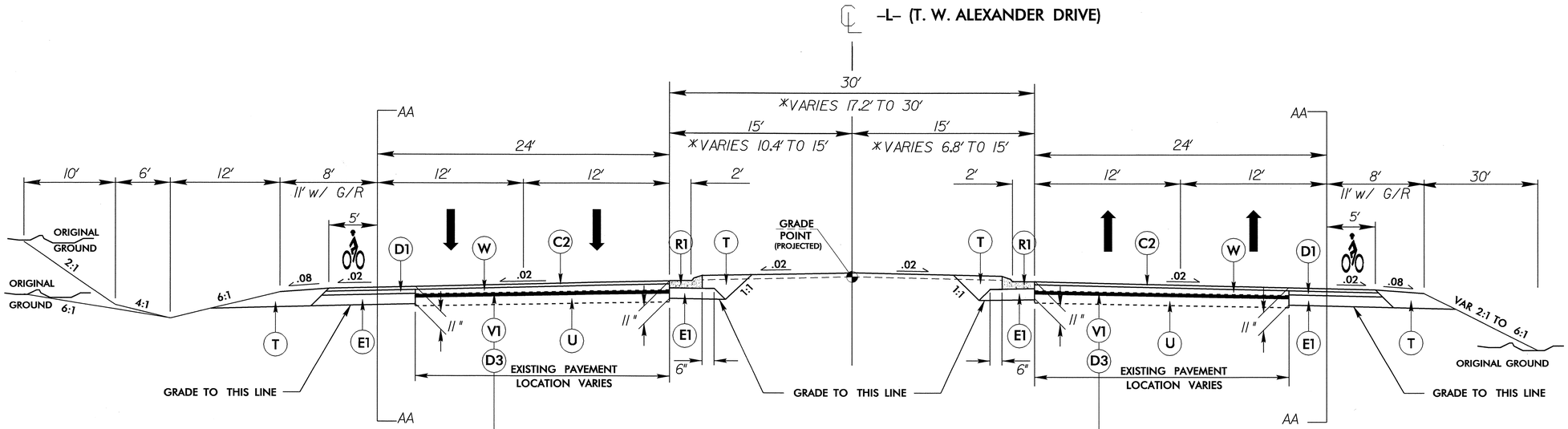


## TYPICAL SECTION NO. 1

NOTE: SEE PLANS FOR TURN LANES AND TAPERS
NOTE: SEE SHEET 2 FOR SECTION AA

**MILLING NOTE:**
MILL ONLY AREAS WHERE THE WEDGING LAYERS BETWEEN THE EXISTING PAVEMENT AND THE BOTTOM OF THE SURFACE COURSE ARE 4 OR LESS INCHES THICK.

**USE TYPICAL SECTION NO. 1 FROM:**

* -L- STA. 19+00.00 TO 24+10.00
-L- STA. 24+10.00 TO 34+50.00
-L- STA. 40+00.00 TO 42+00.00
-L- STA. 47+50.00 TO 53+00.00
-L- STA. 57+50.00 TO 73+00.00

## PAVEMENT SCHEDULE

| | |
|---|---|
| C1 | 1.5" TYPE S9.5B |
| C2 | 3" TYPE S9.5B |
| C3 | VAR. DEPTH TYPE S9.5B |
| C4 | 1.5" TYPE SF9.5A |
| C5 | 3" TYPE SF9.5A |
| C6 | VAR. DEPTH TYPE SF9.5A |
| D1 | 4" TYPE I19.0B |
| D2 | 3" TYPE I19.0B |
| D3 | 2½" TYPE I19.0B |
| D4 | VAR. DEPTH TYPE I19.0B |
| E1 | 4" TYPE B25.0B |
| E2 | 4½" TYPE B25.0B |
| E3 | VAR. DEPTH TYPE B25.0B |
| J1 | 6" ABC |
| J2 | 8" ABC |
| P | PRIME COAT |
| R1 | 2'-9" CONC CURB AND GUTTER. |
| R2 | 2'-6" CONC CURB AND GUTTER. |
| R3 | 5" MONO. CONC. ISLAND |
| T | EARTH MATERIAL. |
| U | EXISTING PAVEMENT. |
| V1 | 2½" DEPTH MILLING |
| V2 | VARIABLE DEPTH MILLING |
| W | VARIABLE DEPTH ASPHALT PAVEMENT |

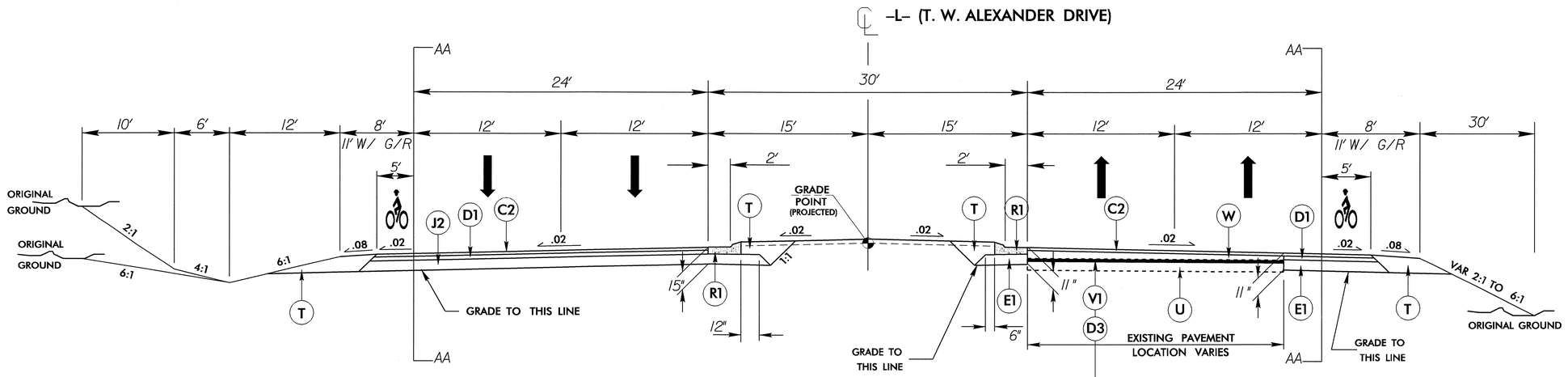


## TYPICAL SECTION NO. 2

NOTE: SEE PLANS FOR TURN LANES AND TAPERS
NOTE: SEE SHEET 2 FOR SECTION AA

**MILLING NOTE:**
MILL ONLY AREAS WHERE THE WEDGING LAYERS BETWEEN THE EXISTING PAVEMENT AND THE BOTTOM OF THE SURFACE COURSE ARE 4 OR LESS INCHES THICK.

**USE TYPICAL SECTION NO. 2 FROM:**

-L- STA. 34+50.00 TO 40+00.00
-L- STA. 42+00.00 TO 47+50.00
-L- STA. 53+00.00 TO 57+50.00

6/2/99

25-AUG-2009 11:33
r:\roadway\proj\u3309a_rdy_typ.dgn
$$$$USERNAME$$$$

6/2/99

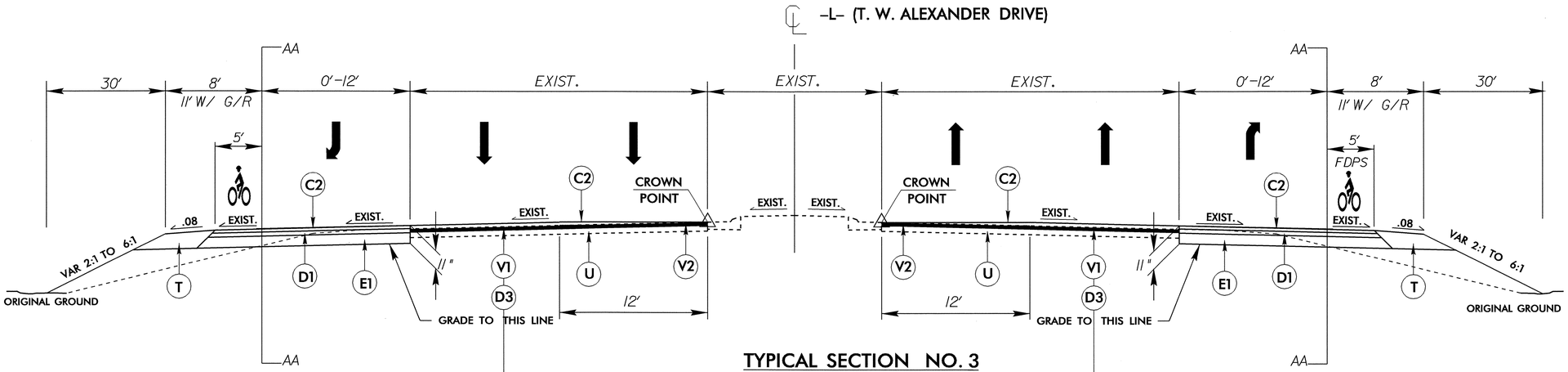


## TYPICAL SECTION NO. 3

NOTE: SEE PLANS FOR TURN LANES AND TAPERS
NOTE: SEE SHEET 2 FOR SECTION AA

**MILLING NOTE:**
MILL ONLY AREAS WHERE THE WEDGING LAYERS BETWEEN THE EXISTING PAVEMENT AND THE BOTTOM OF THE SURFACE COURSE ARE 4 OR LESS INCHES THICK.

**USE TYPICAL SECTION NO. 3 FROM:**

-L- STA. 18+50.00 TO 19+00.00
-L- STA. 73+00.00 TO 75+10.92

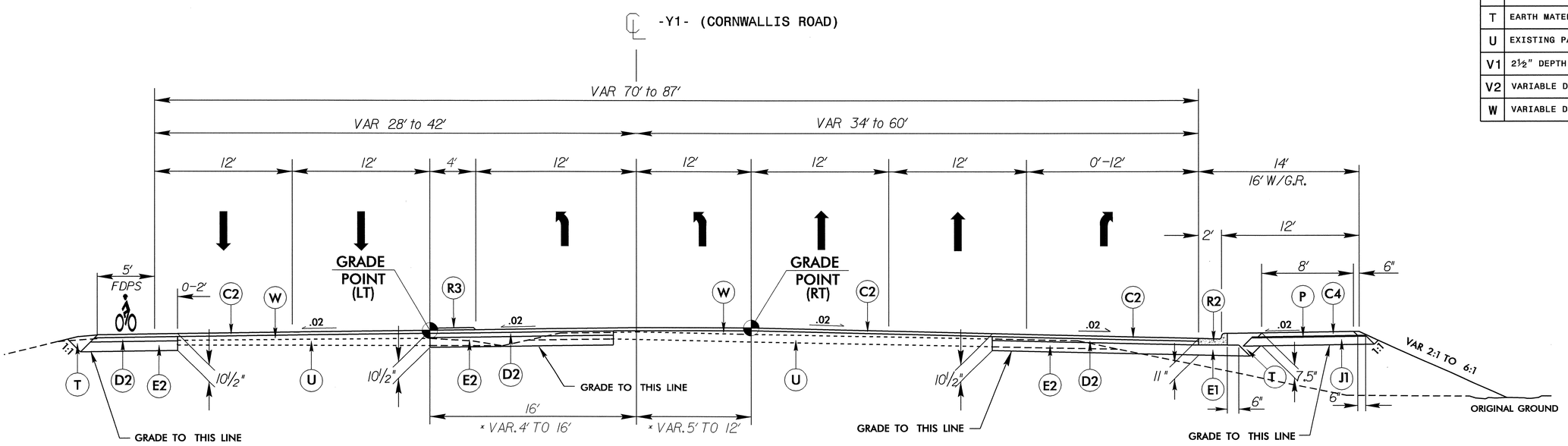


## TYPICAL SECTION NO. 4

NOTE: SEE PLANS FOR TURN LANES AND TAPERS

**USE TYPICAL SECTION NO. 4 FROM:**

-Y1- LT STA 13+12.00 TO 22+85.53
-Y1- RT STA 13+12.00 TO 22+84.53

RESURFACE AND TRANSITION TO EXISTING FROM
* -Y1- STA. 10+00.00 TO 13+12.00

| PROJECT REFERENCE NO. | SHEET NO. |
|---|---|
| U-3309A | 2-B |

ROADWAY DESIGN ENGINEER

NORTH CAROLINA PROFESSIONAL SEAL 26964 ENGINEER BRYAN C. KEY 8-25-09

PAVEMENT DESIGN ENGINEER

NORTH CAROLINA PROFESSIONAL SEAL 23152 ENGINEER CHI CHEN 8/25/09

## PAVEMENT SCHEDULE

| | |
|---|---|
| C1 | 1.5" TYPE S9.5B |
| C2 | 3" TYPE S9.5B |
| C3 | VAR. DEPTH TYPE S9.5B |
| C4 | 1.5" TYPE SF9.5A |
| C5 | 3" TYPE SF9.5A |
| C6 | VAR. DEPTH TYPE SF9.5A |
| D1 | 4" TYPE I19.0B |
| D2 | 3" TYPE I19.0B |
| D3 | 2½" TYPE I19.0B |
| D4 | VAR. DEPTH TYPE I19.0B |
| E1 | 4" TYPE B25.0B |
| E2 | 4½" TYPE B25.0B |
| E3 | VAR. DEPTH TYPE B25.0B |
| J1 | 6" ABC |
| J2 | 8" ABC |
| P | PRIME COAT |
| R1 | 2'-9" CONC CURB AND GUTTER. |
| R2 | 2'-6" CONC CURB AND GUTTER. |
| R3 | 5" MONO. CONC. ISLAND |
| T | EARTH MATERIAL. |
| U | EXISTING PAVEMENT. |
| V1 | 2½" DEPTH MILLING |
| V2 | VARIABLE DEPTH MILLING |
| W | VARIABLE DEPTH ASPHALT PAVEMENT |

25-AUG-2009 11:33
\\ftpsrv\projects\u3309a_rdy_typ.dgn
$$$$USERNAME$$$$

| PROJECT REFERENCE NO. | SHEET NO. |
|---|---|
| U-3309A | 2-C |
| ROADWAY DESIGN ENGINEER | PAVEMENT DESIGN ENGINEER |

NORTH CAROLINA PROFESSIONAL SEAL 26984 ENGINEER BRIAN C. KEY 7-31-09

NORTH CAROLINA PROFESSIONAL SEAL 33664 ENGINEER DON-CHI CHEN 8/3/09

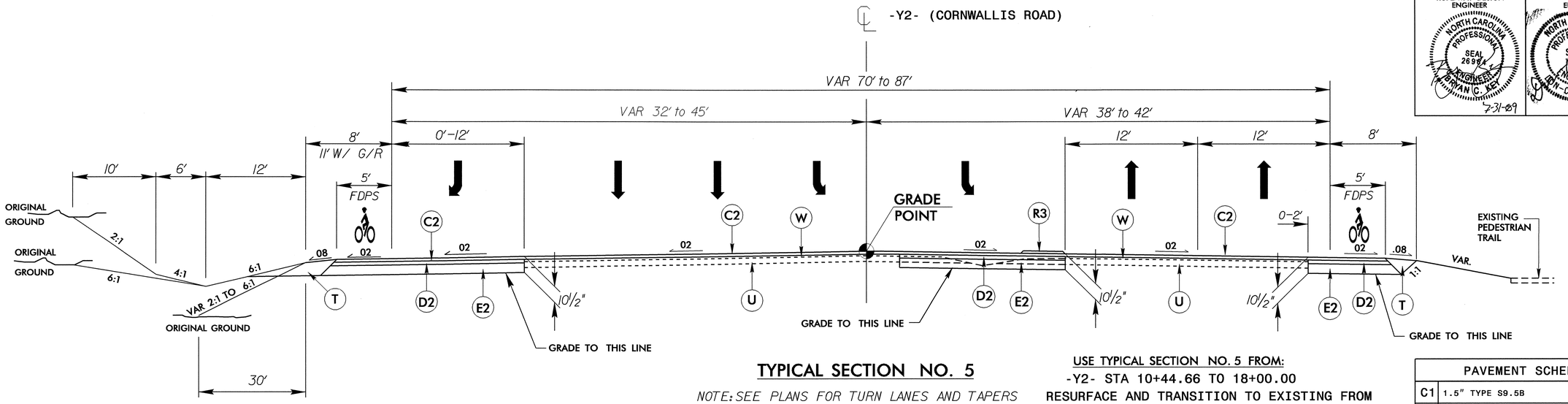


## TYPICAL SECTION NO. 5

NOTE: SEE PLANS FOR TURN LANES AND TAPERS

USE TYPICAL SECTION NO. 5 FROM:
-Y2- STA 10+44.66 TO 18+00.00
RESURFACE AND TRANSITION TO EXISTING FROM
-Y2- STA. 18+00.00 TO 18+50.00

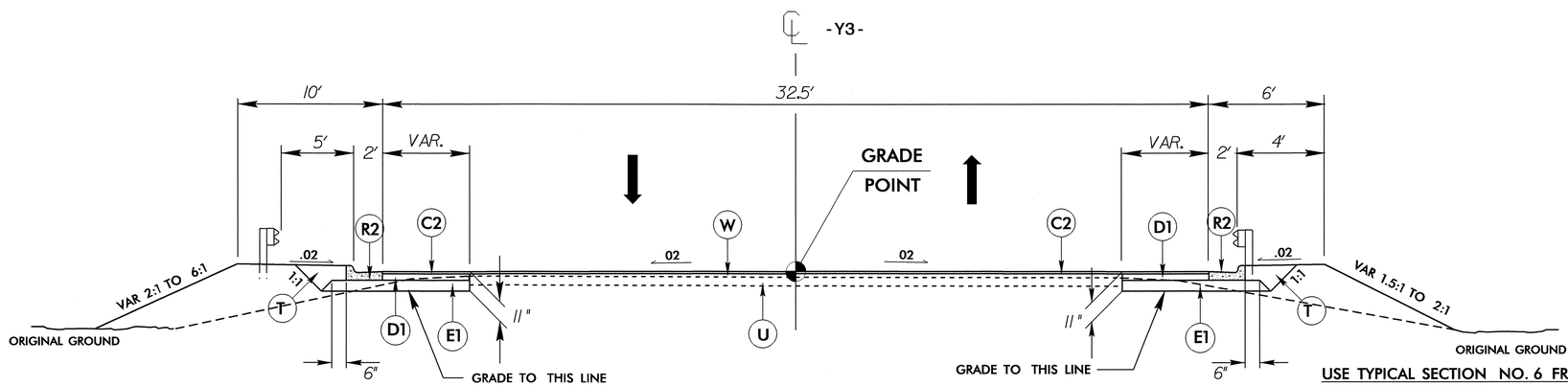


USE TYPICAL SECTION NO. 6 FROM:
-Y3- STA 14+50.00 TO 15+93.91
RESURFACE AND TRANSITION TO EXISTING FROM
-Y3- STA 14+00.00 TO 14+50.00

## TYPICAL SECTION NO. 6

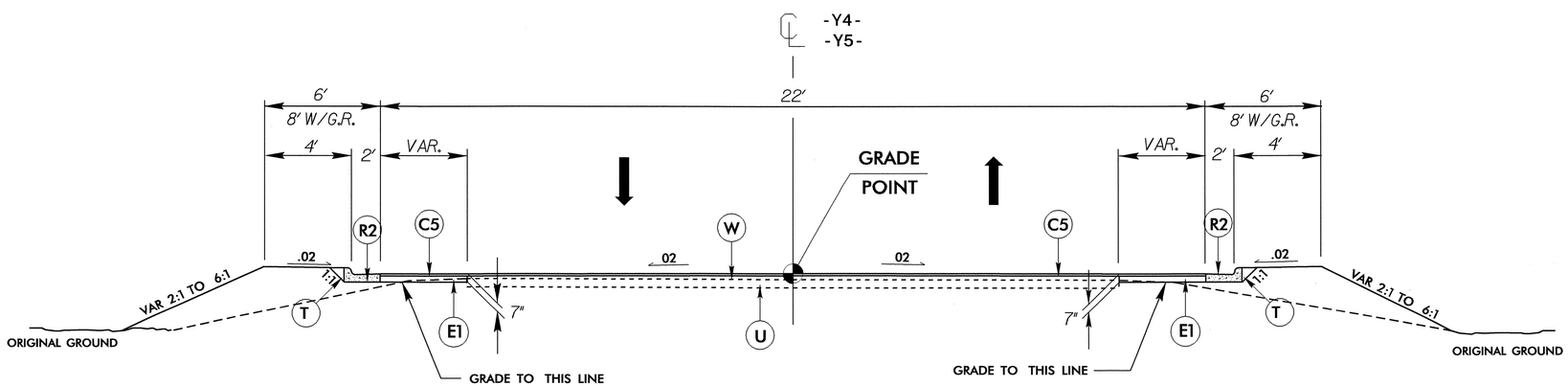


USE TYPICAL SECTION NO. 7 FROM:
-Y4- STA 11+00.00 TO 12+00.00
-Y5- STA 10+39.00 TO 11+50.00
RESURFACE AND TRANSITION TO EXISTING FROM
-Y4- STA 10+50.00 TO 11+00.00

## TYPICAL SECTION NO. 7

| PAVEMENT SCHEDULE | |
|---|---|
| C1 | 1.5" TYPE S9.5B |
| C2 | 3" TYPE S9.5B |
| C3 | VAR. DEPTH TYPE S9.5B |
| C4 | 1.5" TYPE SF9.5A |
| C5 | 3" TYPE SF9.5A |
| C6 | VAR. DEPTH TYPE SF9.5A |
| D1 | 4" TYPE I19.0B |
| D2 | 3" TYPE I19.0B |
| D3 | 2½" TYPE I19.0B |
| D4 | VAR. DEPTH TYPE I19.0B |
| E1 | 4" TYPE B25.0B |
| E2 | 4½" TYPE B25.0B |
| E3 | VAR. DEPTH TYPE B25.0B |
| J1 | 6" ABC |
| J2 | 8" ABC |
| P | PRIME COAT |
| R1 | 2'-9" CONC CURB AND GUTTER. |
| R2 | 2'-6" CONC CURB AND GUTTER. |
| R3 | 5" MONO. CONC. ISLAND |
| T | EARTH MATERIAL. |
| U | EXISTING PAVEMENT. |
| V1 | 2½" DEPTH MILLING |
| V2 | VARIABLE DEPTH MILLING |
| W | VARIABLE DEPTH ASPHALT PAVEMENT |

6/2/99

29-JUL-2009 16:38
r:\roadway\proj\u3309a_rdy_typ.dgn
$$$$USERNAME$$$$

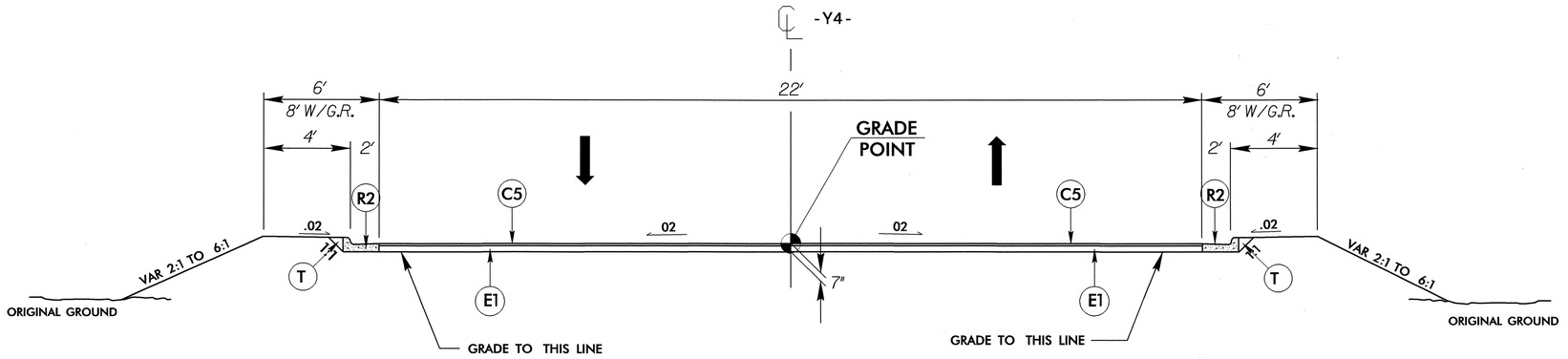


## TYPICAL SECTION NO. 8

USE TYPICAL SECTION NO. 8 FROM:

-Y4- STA 12+00.00 TO 12+80.72

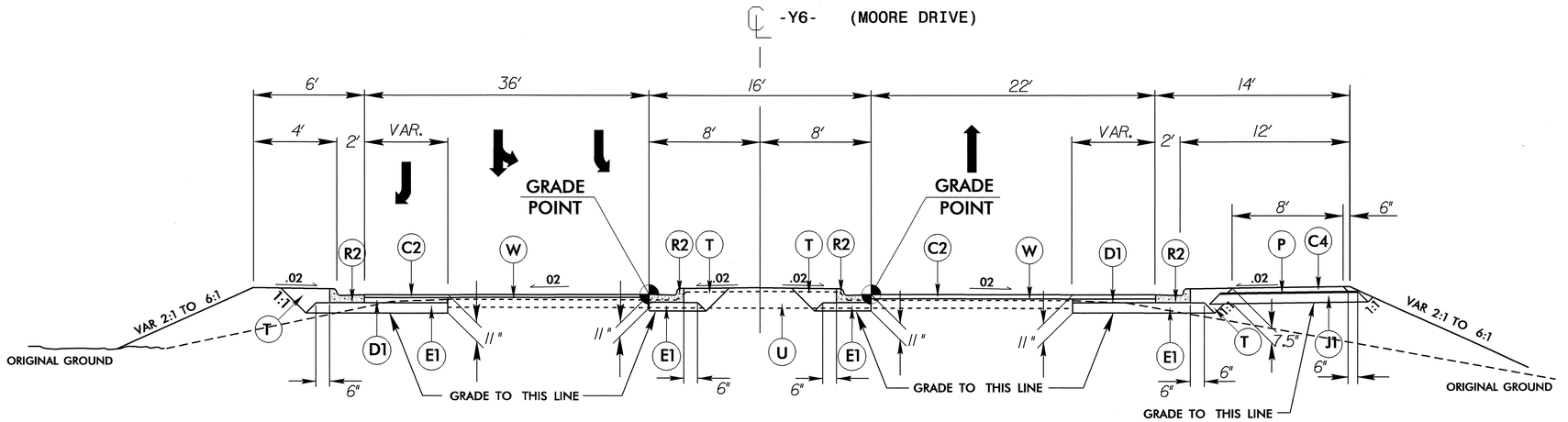


## TYPICAL SECTION NO. 9

USE TYPICAL SECTION NO. 9 FROM:

-Y6- STA 10+39.00 TO 11+00.00

RESURFACE AND TRANSITION TO EXISTING FROM
-Y6- STA 11+00.00 TO 11+50.00

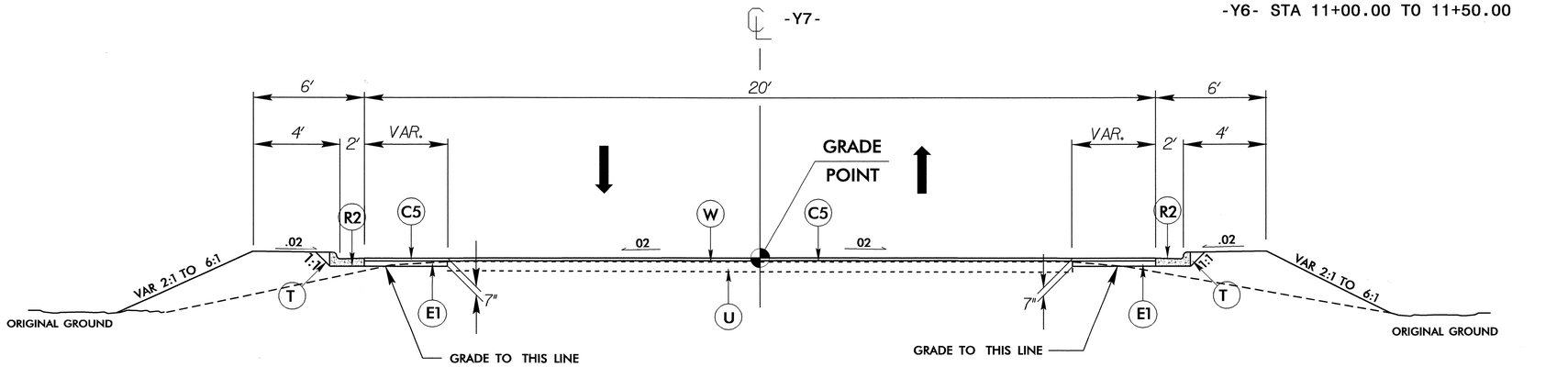


## TYPICAL SECTION NO. 10

USE TYPICAL SECTION NO. 10 FROM:

-Y7- STA 13+50.00 TO 14+65.92

RESURFACE AND TRANSITION TO EXISTING FROM
-Y7- STA 13+00.00 TO 13+50.00

| PROJECT REFERENCE NO. | SHEET NO. |
|---|---|
| U-3309A | 2-D |

ROADWAY DESIGN ENGINEER

NORTH CAROLINA PROFESSIONAL SEAL 26964 ENGINEER BRYAN C. KEY 7-31-09

PAVEMENT DESIGN ENGINEER

NORTH CAROLINA PROFESSIONAL SEAL 13367 ENGINEER DA-CHI CHEN 8/3/09

## PAVEMENT SCHEDULE

| | |
|---|---|
| C1 | 1.5" TYPE S9.5B |
| C2 | 3" TYPE S9.5B |
| C3 | VAR. DEPTH TYPE S9.5B |
| C4 | 1.5" TYPE SF9.5A |
| C5 | 3" TYPE SF9.5A |
| C6 | VAR. DEPTH TYPE SF9.5A |
| D1 | 4" TYPE I19.0B |
| D2 | 3" TYPE I19.0B |
| D3 | 2½" TYPE I19.0B |
| D4 | VAR. DEPTH TYPE I19.0B |
| E1 | 4" TYPE B25.0B |
| E2 | 4½" TYPE B25.0B |
| E3 | VAR. DEPTH TYPE B25.0B |
| J1 | 6" ABC |
| J2 | 8" ABC |
| P | PRIME COAT |
| R1 | 2'-9" CONC CURB AND GUTTER. |
| R2 | 2'-6" CONC CURB AND GUTTER. |
| R3 | 5" MONO. CONC. ISLAND |
| T | EARTH MATERIAL. |
| U | EXISTING PAVEMENT. |
| V1 | 2½" DEPTH MILLING |
| V2 | VARIABLE DEPTH MILLING |
| W | VARIABLE DEPTH ASPHALT PAVEMENT |

29-JUL-2009 16:38
r:\roadway\prj\u3309a_rdy_typ.dgn
$$$$USERNAME$$$$

6/2/99

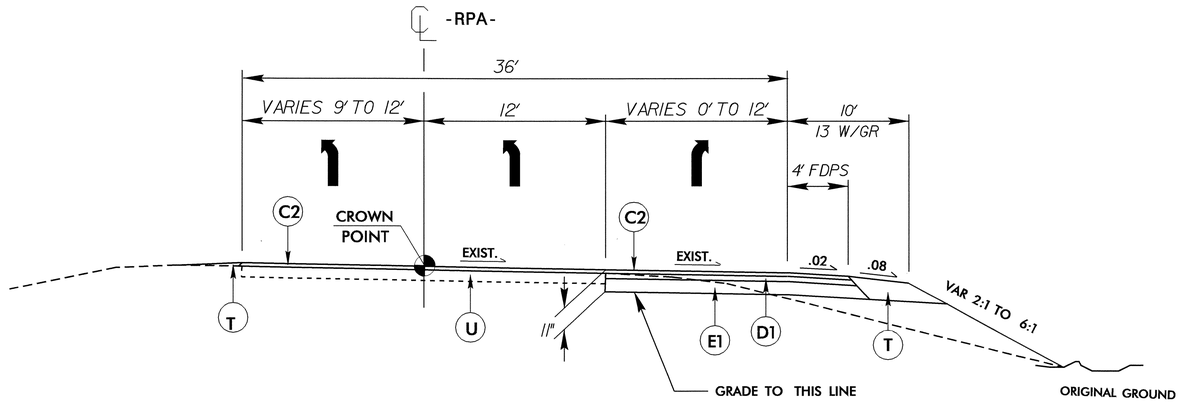


## TYPICAL SECTION NO. 11

**USE TYPICAL SECTION NO. 11 FROM:**

-RPA- STA 10+75.00 TO 19+66.58

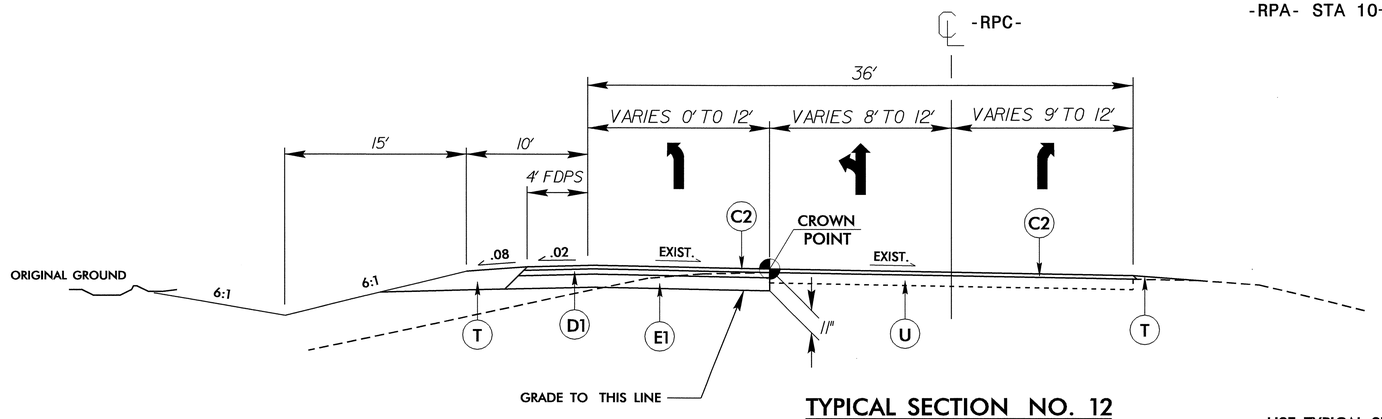


## TYPICAL SECTION NO. 12

**USE TYPICAL SECTION NO. 12 FROM:**

-RPC- STA 12+55.00 TO 18+79.00

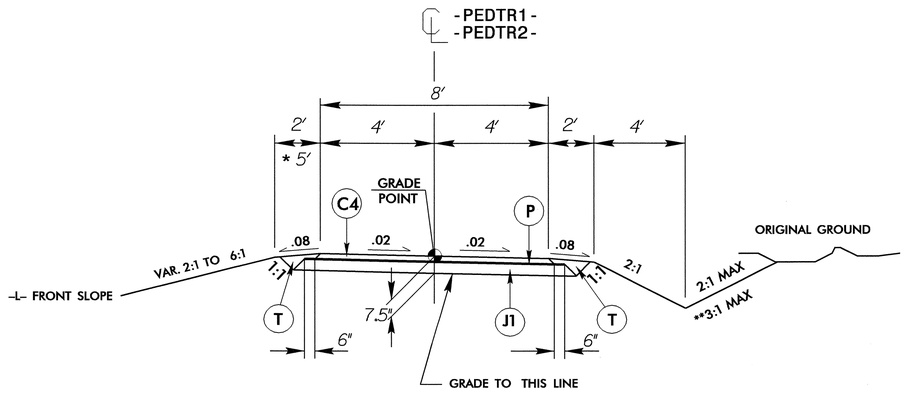


## TYPICAL SECTION NO. 13

**USE TYPICAL SECTION NO. 13 FROM:**

-PEDTR1- STA 10+00 TO 17+37.63
-PEDTR2- STA 10+00 TO 22+41.81

USE * -PEDTR1- STA 13+00.00 TO 14+50.00
USE * -PEDTR2- STA 11+50.00 TO 13+50.00
USE * -PEDTR2- STA 16+00.00 TO 17+50.00 LT.

**-PEDTR2- STA 13+50 TO 22+10 RT.

| PROJECT REFERENCE NO. | SHEET NO. |
|---|---|
| U-3309A | 2-E |

ROADWAY DESIGN ENGINEER

NORTH CAROLINA PROFESSIONAL SEAL 26964 ENGINEER HERMAN C. KELLY

7-31-09

PAVEMENT DESIGN ENGINEER

NORTH CAROLINA PROFESSIONAL SEAL 13268 ENGINEER CHI CHEN

8/3/09

## PAVEMENT SCHEDULE

| | |
|---|---|
| C1 | 1.5" TYPE S9.5B |
| C2 | 3" TYPE S9.5B |
| C3 | VAR. DEPTH TYPE S9.5B |
| C4 | 1.5" TYPE SF9.5A |
| C5 | 3" TYPE SF9.5A |
| C6 | VAR. DEPTH TYPE SF9.5A |
| D1 | 4" TYPE I19.0B |
| D2 | 3" TYPE I19.0B |
| D3 | 2½" TYPE I19.0B |
| D4 | VAR. DEPTH TYPE I19.0B |
| E1 | 4" TYPE B25.0B |
| E2 | 4½" TYPE B25.0B |
| E3 | VAR. DEPTH TYPE B25.0B |
| J1 | 6" ABC |
| J2 | 8" ABC |
| P | PRIME COAT |
| R1 | 2'-9" CONC CURB AND GUTTER. |
| R2 | 2'-6" CONC CURB AND GUTTER. |
| R3 | 5" MONO. CONC. ISLAND |
| T | EARTH MATERIAL. |
| U | EXISTING PAVEMENT. |
| V1 | 2½" DEPTH MILLING |
| V2 | VARIABLE DEPTH MILLING |
| W | VARIABLE DEPTH ASPHALT PAVEMENT |

29-JUL-2009 16:38
r:\roadway\prj\u3309a_rdy_typ.dgn
$$$$USERNAME$$$$

| PROJECT REFERENCE NO. | SHEET NO. |
|---|---|
| U-3309A | 2-F |
| R/W SHEET NO. | |

ROADWAY DESIGN ENGINEER — NORTH CAROLINA PROFESSIONAL SEAL 26964 ENGINEER BRIAN C. KEY — 8.17.09

HYDRAULICS ENGINEER — NORTH CAROLINA PROFESSIONAL SEAL 28853 ENGINEER — 8/17/09

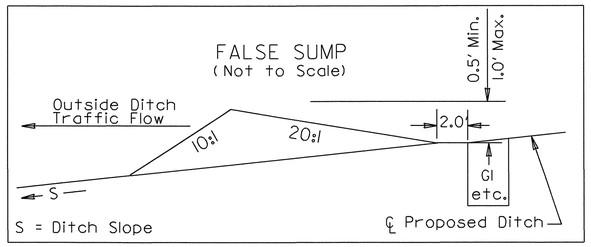


–L– STA. 37+25 RT.

## DETAIL A
*SPECIAL LATERAL BASE DITCH*
*( Not to Scale)*

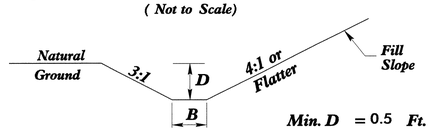


–L– STA. 22+75 TO STA. 25+00 LT.
–L– STA. 46+50 TO STA. 50+40 RT.
–L– STA. 52+00 TO STA. 53+50 RT.

## DETAIL B
*TOE PROTECTION*
*( Not to Scale)*

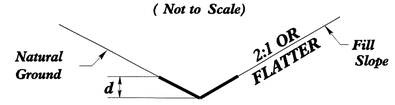


*Type of Liner =* ***PSRM***

–L– STA. 23+00 TO STA. 23+50 RT.
–L– STA. 25+00 TO STA. 25+67 LT.

## DETAIL C
*SPECIAL CUT DITCH*
*( Not to Scale)*

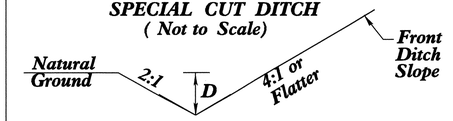


–L– STA. 19+70 TO STA. 21+00 LT.
–L– STA. 37+22 TO STA. 38+00 LT.
–L– STA. 42+21 TO STA. 43+00 RT.
–L– STA. 67+50 TO STA. 70+50 RT.
–Y2– STA. 11+50 TO STA. 13+00 LT.
–Y7– STA. 13+00 TO STA. 14+00 LT.

## DETAIL D
*LATERAL BASE DITCH*
*( Not to Scale)*

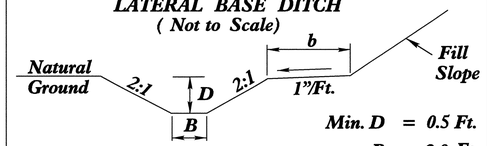


–L– STA. 41+30 TO STA. 42+20 LT.
–PEDTR1– STA. 14+02 TO STA. 15+23 RT.

## DETAIL E
*TOE PROTECTION*
*( Not to Scale)*

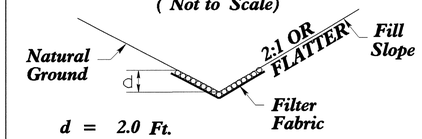


*Type of Liner = Class B Riprap*

–L– STA. 36+00 TO STA. 37+00 RT.
–L– STA. 38+00 TO STA. 38+60 LT.

## DETAIL F
STANDARD BASE DITCH
( Not to Scale)

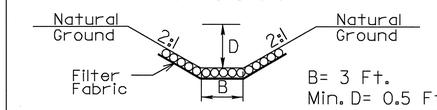


*Type of Liner = Class B Rip Rap*

–PEDTR2– STA. 11+55 LT.
–PEDTR2– STA. 11+75 RT.

## DETAIL G
SPECIAL LATERAL BASE DITCH
( Not to Scale)

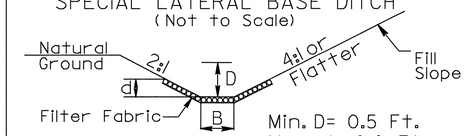


Type of Liner= Class B Rip-Rap

–L– STA. 50+40 TO STA. 52+00 RT.

## DETAIL H
*BASE DITCH*
*( Not to Scale)*

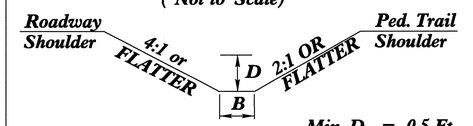


–L– STA. 28+71 TO STA. 40+20 RT.

## DETAIL I
*PIPE OUTLET CHANNEL*
*( Not to Scale)*

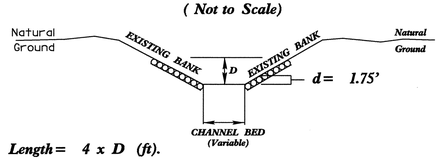


*Length = 4 x D (ft).*
*D = 42"*
*Est. = 1.6 Tons of Class I Rip-Rap*

–L– STA. 38+61 LT.

## DETAIL J
STANDARD 'V' DITCH
DITCH CLEANOUT
( Not to Scale)

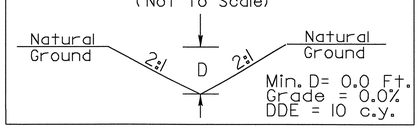


FROM –Y2– STA. 11+66 TO STA. 13+16 RT.

## DETAIL K
SPECIAL CUT DITCH
( Not to Scale)

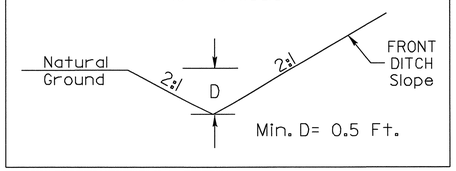


–PEDTR1– STA. 15+23 TO STA. 16+95 RT.
–PEDTR2– STA. 11+34 TO STA. 11+75 RT.

## DETAIL L
SPECIAL CUT DITCH
( Not to Scale)

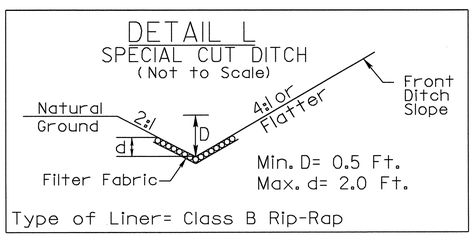


Type of Liner= Class B Rip-Rap

–L– STA. 70+50 TO STA. 71+54 RT.

| PROJECT REFERENCE NO. | SHEET NO. |
|---|---|
| U-3309A | 2-G |
| R/W SHEET NO. | |

ROADWAY DESIGN ENGINEER

NORTH CAROLINA PROFESSIONAL SEAL 26964 ENGINEER BRYAN C. KEY

7-31-09

# INTERSECTION DETAIL
## -L-, -Y1-, -Y2-

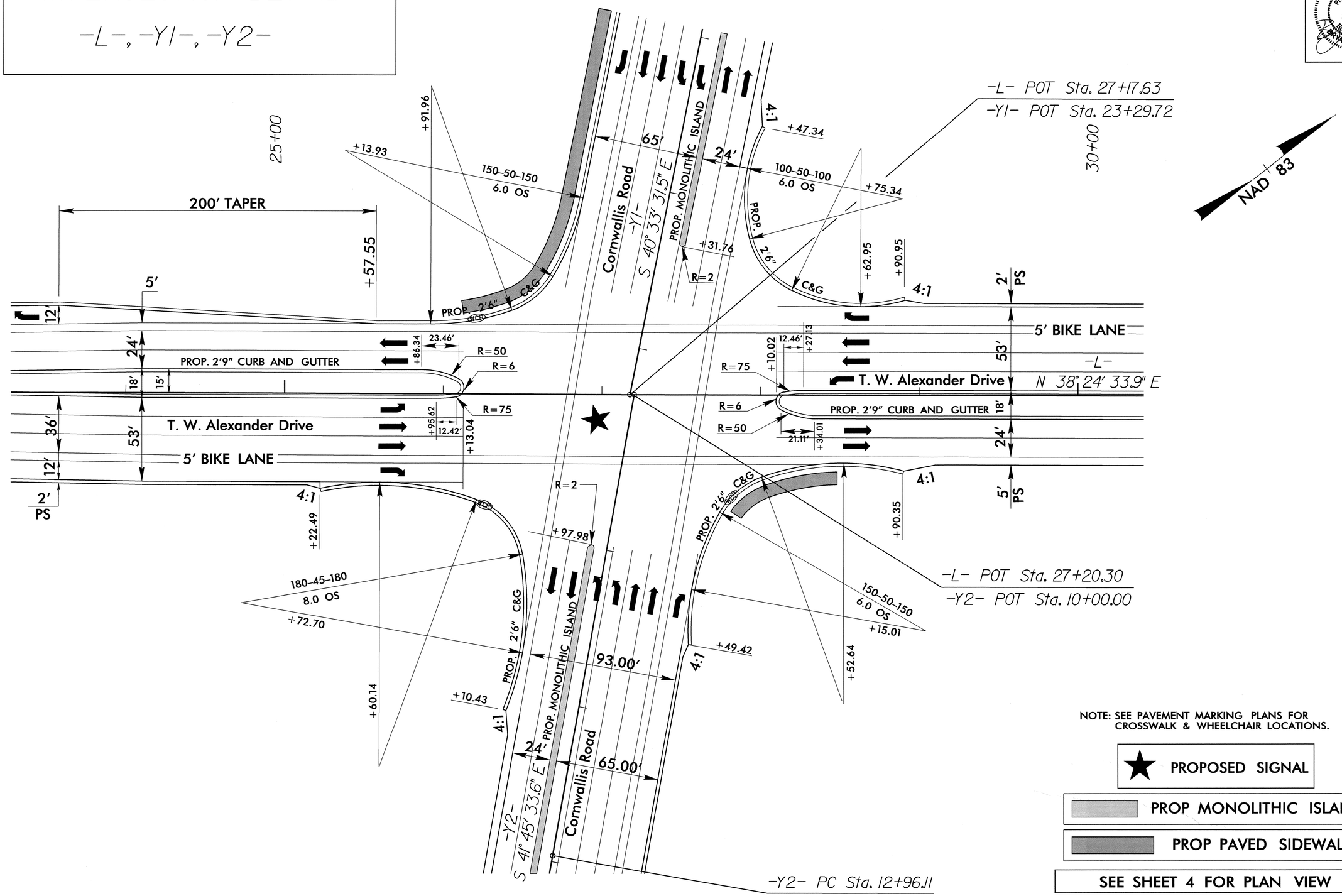


NOTE: SEE PAVEMENT MARKING PLANS FOR CROSSWALK & WHEELCHAIR LOCATIONS.

★ PROPOSED SIGNAL

PROP MONOLITHIC ISLAND

PROP PAVED SIDEWALK

SEE SHEET 4 FOR PLAN VIEW

REVISIONS

8/17/99

01-JUL-2009 10:44
r:\roadway\proj\u3309a_rdy_intsecdtl_2g.dgn
$$$$USERNAME$$$$

| PROJECT REFERENCE NO. | SHEET NO. |
|---|---|
| U-3309A | 2-H |
| R/W SHEET NO. | |

ROADWAY DESIGN ENGINEER

NORTH CAROLINA PROFESSIONAL SEAL 26964 ENGINEER BRYAN C. KEY

7-31-09

# INTERSECTION DETAIL
## -L-, -Y4-, -Y5-

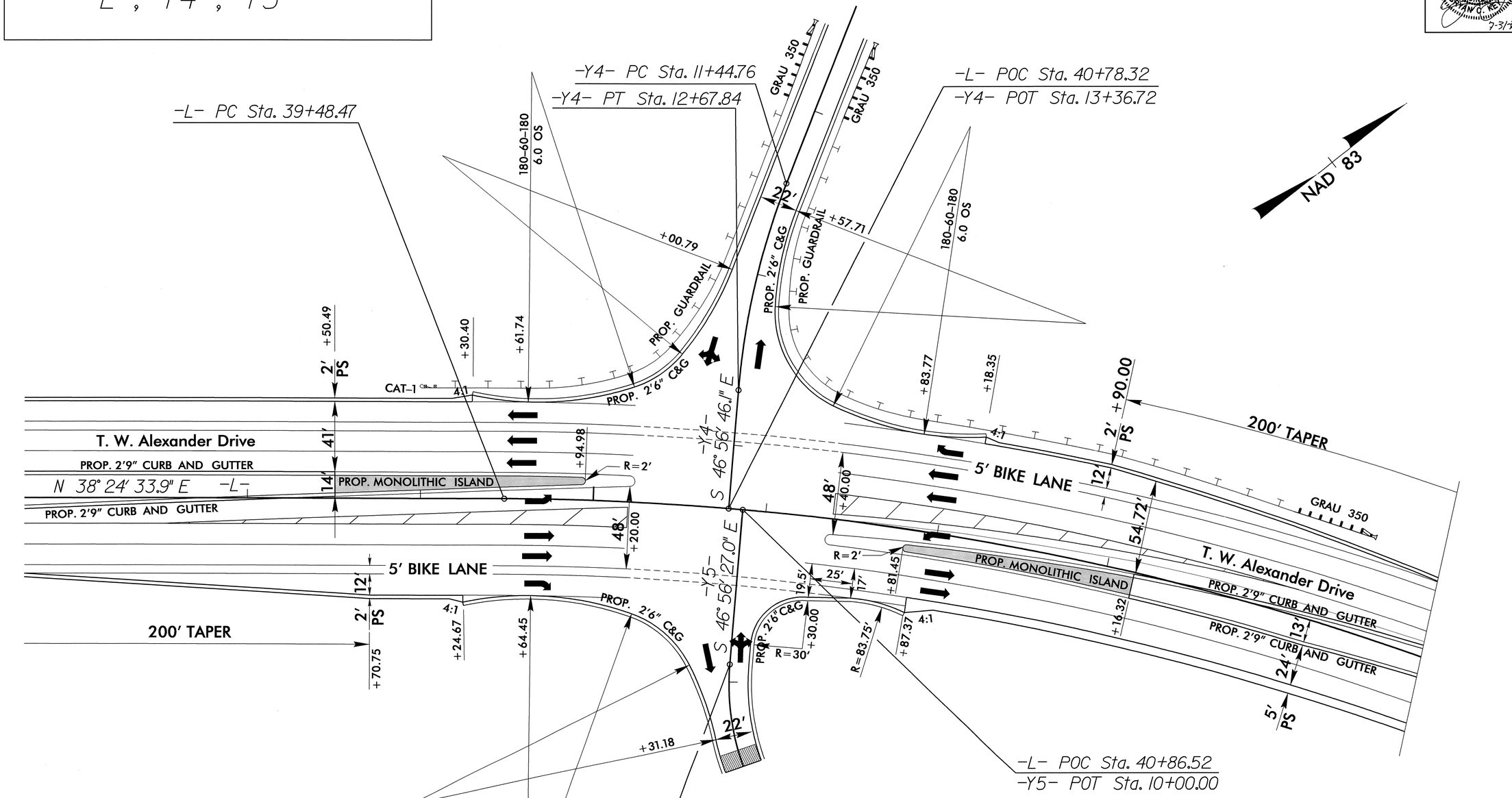


NOTE: SEE PAVEMENT MARKING PLANS FOR CROSSWALK & WHEELCHAIR LOCATIONS.

PROP MONOLITHIC ISLAND

PROP PAVED SIDEWALK

SEE SHEET 5 FOR PLAN VIEW

REVISIONS

8/17/99

16-JUL-2009 11:55
r:\roadway\proj\u3309a_rdy_intsecdtl_2h.dgn
$$$$USERNAME$$$$

| PROJECT REFERENCE NO. | SHEET NO. |
|---|---|
| U-3309A | 2-1 |
| R/W SHEET NO. | |

ROADWAY DESIGN ENGINEER

NORTH CAROLINA PROFESSIONAL SEAL 26964 ENGINEER BRYAN C. KEY

7-31-09

# INTERSECTION DETAIL
## -L-, -Y3-

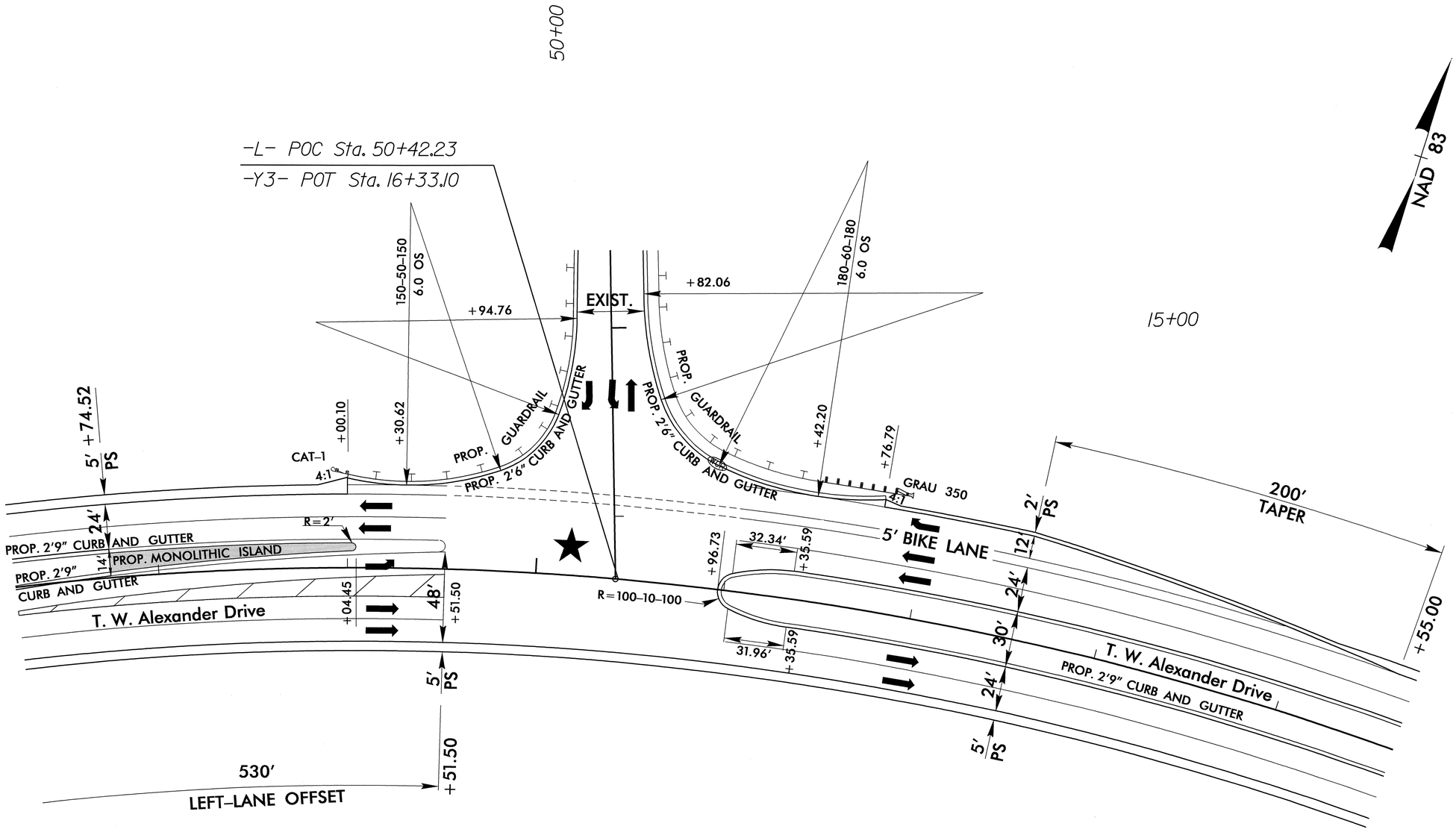


★ UPGRADE EXISTING SIGNAL

PROP MONOLITHIC ISLAND

NOTE: SEE PAVEMENT MARKING PLANS FOR CROSSWALK & WHEELCHAIR LOCATIONS.

SEE SHEET 6 FOR PLAN VIEW

REVISIONS

8/17/99

30-JUN-2009 13:44
r:\roadway\proj\u3309a_rdy_intsecdtl_2.dgn
$$$$USERNAME$$$$

8/17/99

REVISIONS

| PROJECT REFERENCE NO. | SHEET NO. |
|---|---|
| U-3309A | 2-J |
| R/W SHEET NO. | |

ROADWAY DESIGN ENGINEER

NORTH CAROLINA PROFESSIONAL SEAL 26964 ENGINEER BRYAN C. KEY 7-31-09

# INTERSECTION DETAIL
## -L-, -Y6-, -Y7-

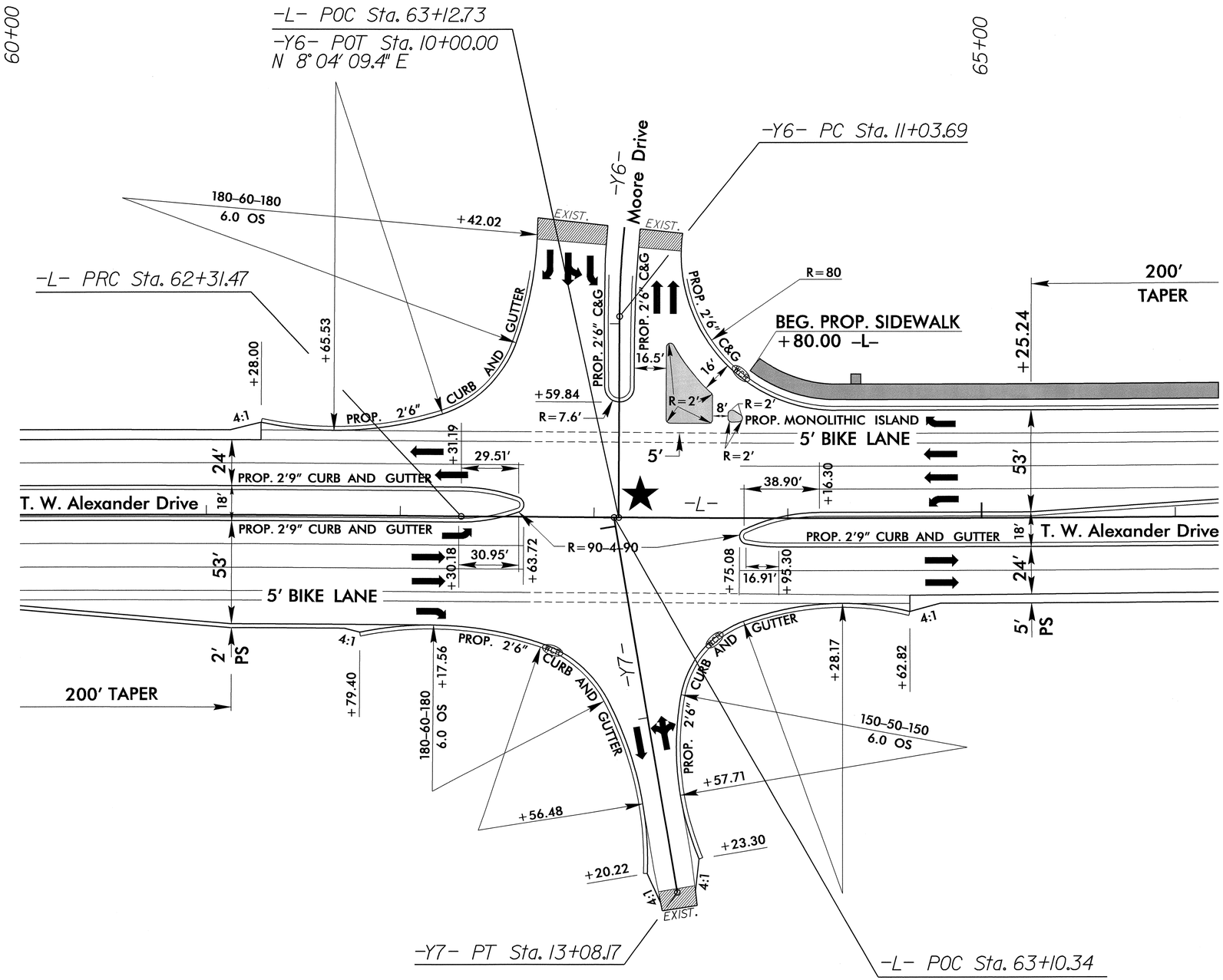


NOTE: SEE PAVEMENT MARKING PLANS FOR CROSSWALK & WHEELCHAIR LOCATIONS.

★ UPGRADE EXISTING SIGNAL

PROP MONOLITHIC ISLAND

PROP PAVED SIDEWALK

SEE SHEET 7 FOR PLAN VIEW

16-JUL-2009 11:55
r:\roadway\proj\u3309a_rdy_intsecdtl_2.dgn
$$$$USERNAME$$$$

| PROJECT REFERENCE NO. | SHEET NO. |
|---|---|
| U-3309A | 2-K |
| R/W SHEET NO. | |

ROADWAY DESIGN ENGINEER
NORTH CAROLINA PROFESSIONAL SEAL 26964 ENGINEER BRYAN C. KEY
2-31-09

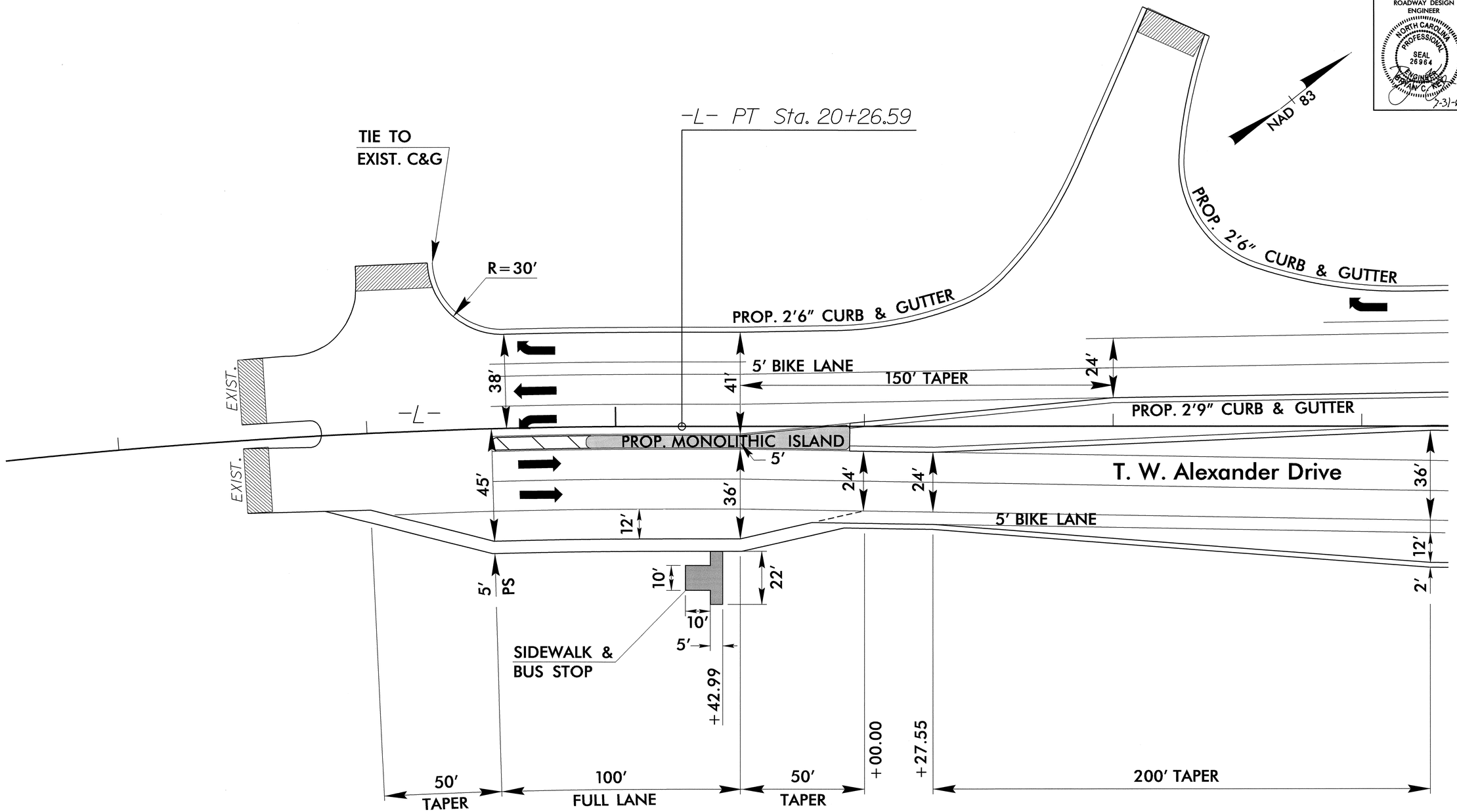


NOTE: SEE PAVEMENT MARKING PLANS FOR CROSSWALK & WHEELCHAIR LOCATIONS.

PROP MONOLITHIC ISLAND

PROP PAVED SIDEWALK

SEE SHEET 4 FOR PLAN VIEW

5/14/99

01-JUL-2009 10:44
r:\roadway\proj\u3309a_rdy_dtl_2k.dgn
$$$$USERNAME$$$$

| PROJECT REFERENCE NO. | SHEET NO. |
|---|---|
| U-3309A | 2-L |
| STRUCTURE PROJECT DESIGN ENGINEER | |

NORTH CAROLINA PROFESSIONAL ENGINEER SEAL 11259 DAVID R. ANDERSON
8/28/09

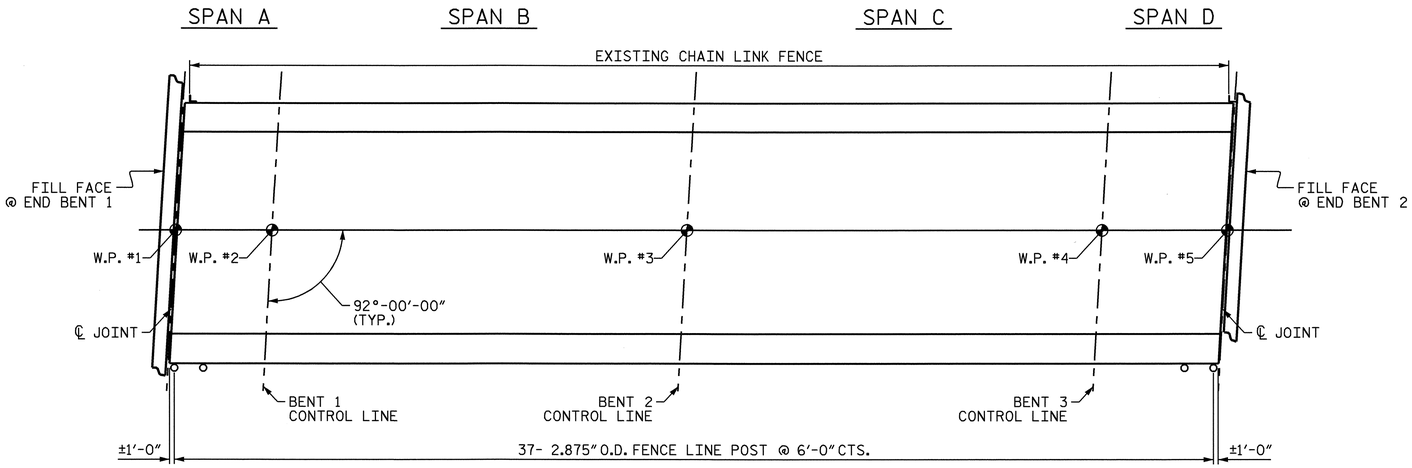


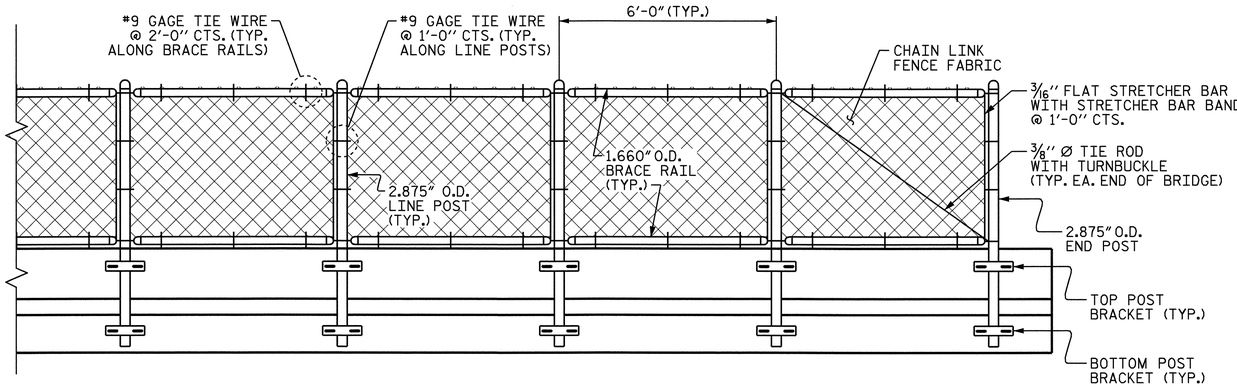


PARTIAL ELEVATION

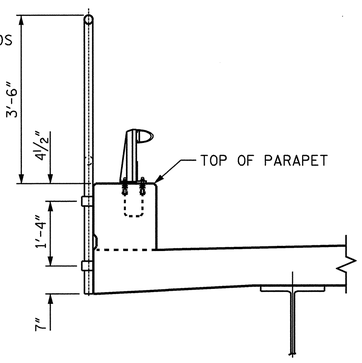


SECTION THRU FENCE

## NOTES

FOR BRIDGE MOUNTED CHAIN LINK FENCE, SEE SPECIAL PROVISIONS.

MATERIAL FOR ANCHOR BOLTS SHALL BE TYPE 304 STAINLESS STEEL WITH A MINIMUM 9000 PSI ULTIMATE STRENGTH. NUTS AND WASHERS SHALL BE TYPE 304 STAINLESS STEEL. ANCHOR BOLTS SHALL BE EMBEDDED AS PER ADHESIVE BONDING SYSTEM MANUFACTURER SPECIFICATIONS. NUTS SHALL BE AMERICAN STANDARD FINISHED HEXAGON THICK NUTS, CLASS 2B THREADS.

FOR SETTING ANCHOR BOLTS, THE CONTRACTOR SHALL USE AN ADHESIVE BONDING SYSTEM. SEE SPECIAL PROVISIONS FOR ADHESIVELY ANCHORED ANCHOR BOLTS OR DOWELS. LEVEL ONE FIELD TESTING OF BONDING SYSTEM IS REQUIRED.

ALL FENCE MATERIAL SHALL MEET THE REQUIREMENTS OF SECTION 1050 OF THE STANDARD SPECIFICATIONS, GALVANIZE ALL STEEL PARTS AND HARDWARE IN ACCORDANCE WITH ARTICLE 1076 OF THE STANDARD SPECIFICATIONS.

FENCE POST LOCATIONS SHALL BE SHIFTED, AS NECESSARY, TO MAINTAIN 1'-0" MINIMUM DISTANCE FROM ANCHOR BOLT TO JOINTS IN BARRIER RAIL.

WELDING SHALL BE DONE IN ACCORDANCE WITH ARTICLE 1072-20 OF THE STANDARD SPECIFICATIONS.

ADHESIVE ANCHOR SYSTEM SHALL HAVE MINIMUM PULLOUT STRENGTH OF 10 KIPS. THE ADHESIVE ANCHOR SYSTEM SHALL BE CHOSEN FROM THOSE ON THE NCDOT APPROVED PRODUCTS LIST.

TOTAL PAY LENGTH 216 LIN. FT.

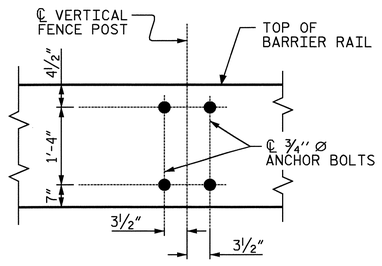


BOLT SETTING DETAIL

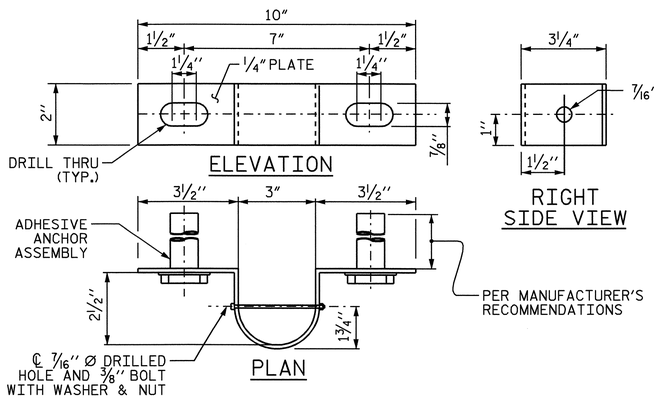


TOP POST BRACKET

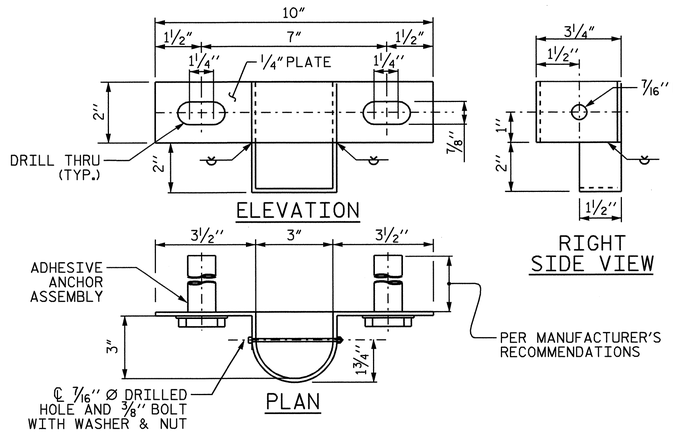


BOTTOM POST BRACKET

REVISIONS

8/17/99

27-AUG-2009 08:40
\$\$\$\$\$\$\$\$\$\$\$\$\$\$\$\$DGN\$\$\$\$\$\$\$\$\$\$\$\$\$\$\$\$

| PROJECT REFERENCE NO. | SHEET NO. |
|---|---|
| U-3309A | 2-M |

STATE OF
NORTH CAROLINA
DEPT. OF TRANSPORTATION
DIVISION OF HIGHWAYS
RALEIGH, N.C.

ENGLISH DETAIL DRAWING FOR
**ANCHORAGE FOR FRAMES**
BRICK/CONCRETE/PRECAST CONCRETE

SHEET 1 OF 1
**840D25**

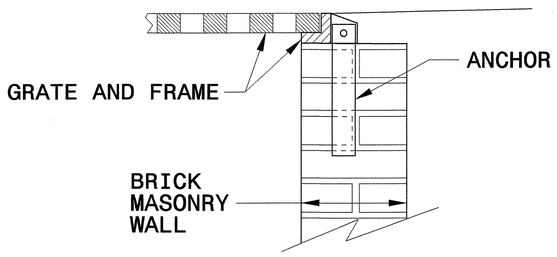


**BRICK MASONRY CONSTRUCTION**

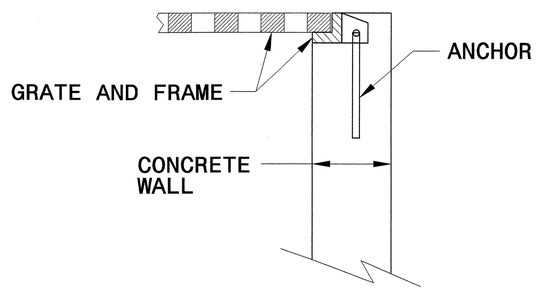


**CONCRETE CONSTRUCTION**

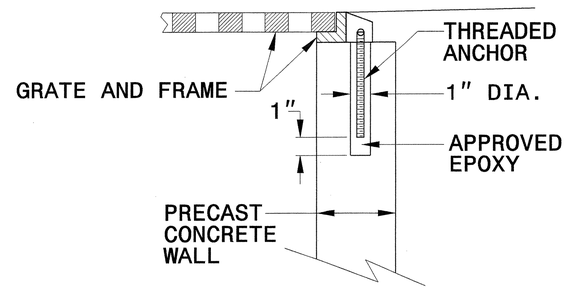


**PRECAST CONCRETE CONSTRUCTION**

## DETAIL SHOWING ANCHORAGE OF FRAME FOR GRATED DROP INLET

NOTE:
CONSTRUCT GRATED DROP INLET TO COINCIDE WITH NORMAL OR SUPERELEVATED SHOULDER OR PAVEMENT SLOPE.

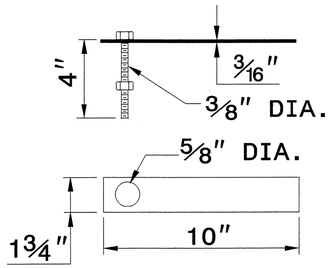


**MASONRY ANCHOR**
3/8" DIA. BOLT WITH PLATE

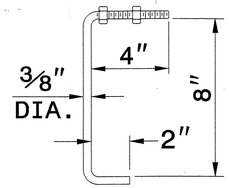


**CONCRETE ANCHOR**
3/8" DIA. BENT BAR

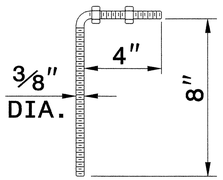


**PRECAST CONCRETE ANCHOR**
3/8" DIA. BENT BAR

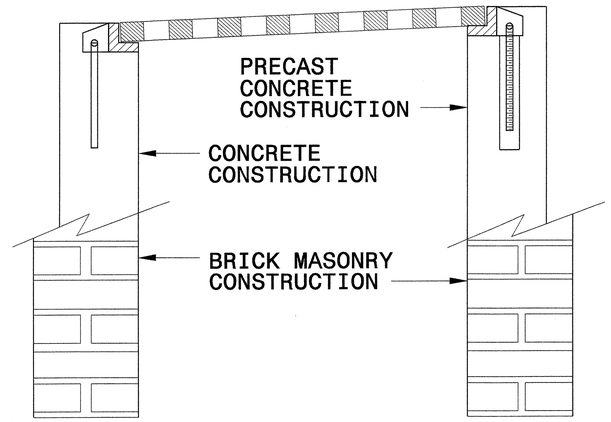


**FRAME AND GRATE INSTALLATION FOR NORMAL CROWN AND SUPERELEVATED SECTIONS**

STATE OF
NORTH CAROLINA
DEPT. OF TRANSPORTATION
DIVISION OF HIGHWAYS
RALEIGH, N.C.

ENGLISH DETAIL DRAWING FOR
**ANCHORAGE FOR FRAMES**
BRICK/CONCRETE/PRECAST CONCRETE

SHEET 1 OF 1
**840D25**

NORTH CAROLINA PROFESSIONAL SEAL 022966 ENGINEER JOHN S. HOWERTON

**PROJECT SERVICES UNIT**
**STANDARDS AND SPECIAL DESIGN**
Office 919-250-4128 FAX 919-250-4119

**SEE PLATE FOR TITLE**

ORIGINAL BY: 2006 STD 840.25 DATE: 07/18/06
MODIFIED BY: E.E. WARD DATE: 9/25/06
CHECKED BY: DATE: 11/1/06
FILE SPEC.:

$$$$USERNAME$$$$
$$$$SYSTIME$$$$
$$$$DGN$$$$

| PROJECT REFERENCE NO. | SHEET NO. |
|---|---|
| U-3309A | 2-N |

STATE OF
NORTH CAROLINA
DEPT. OF TRANSPORTATION
DIVISION OF HIGHWAYS
RALEIGH, N.C.

ENGLISH DETAIL DRAWING FOR

# 2'-9" CONCRETE CURB & GUTTER

SHEET 1 OF 1

**846D01**

GENERAL NOTES:
- PLACE CONTRACTION JOINTS AT 10' INTERVALS, EXCEPT THAT A 15' SPACING MAY BE USED WHEN A MACHINE IS USED OR WHEN SATISFACTORY SUPPORT FOR THE FACE FORM CAN BE OBTAINED WITHOUT THE USE OF TEMPLATES AT 10' INTERVALS.
- JOINT SPACING MAY BE ALTERED IF REQUIRED BY THE ENGINEER.
- CONTRACTION JOINTS MAY BE INSTALLED WITH THE USE OF TEMPLATES OR FORMED BY OTHER APPROVED METHODS. MAKE NON-TEMPLATE FORMED JOINTS A MIN. OF 1½" DEEP.
- FILL ALL CONSTRUCTION JOINTS WITH JOINT FILLER AND SEALER.
- SPACE EXPANSION JOINTS AT 90' INTERVALS AND ADJACENT TO ALL RIGID OBJECTS.

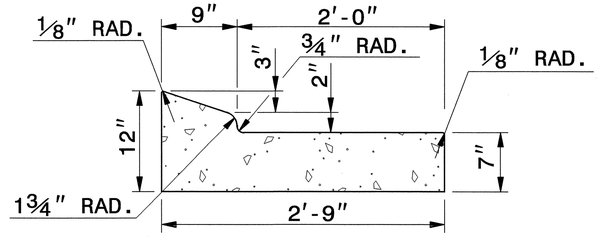


**2'-9" CURB AND GUTTER**

**SECTION VIEW OF CURB AND GUTTER**

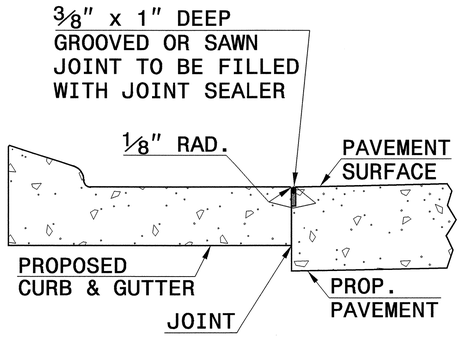


**LONGITUDINAL JOINT**

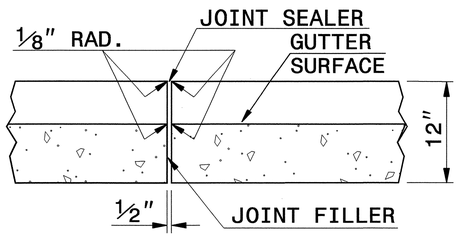


**TRANSVERSE EXPANSION JOINT IN CURB AND GUTTER**

**SECTION VIEW OF JOINTS**

STATE OF
NORTH CAROLINA
DEPT. OF TRANSPORTATION
DIVISION OF HIGHWAYS
RALEIGH, N.C.

ENGLISH DETAIL DRAWING FOR

# 2'-9" CONCRETE CURB & GUTTER

SHEET 1 OF 1

**846D01**

NORTH CAROLINA PROFESSIONAL SEAL 022966 ENGINEER JOEL S. HOWERTON
8/9/09

**PROJECT SERVICES UNIT**
**STANDARDS AND SPECIAL DESIGN**
Office 919-250-4128 FAX 919-250-4119

**SEE PLATE FOR TITLE**

ORIGINAL BY: STD. 846.01 DATE:
MODIFIED BY: E.E. WARD DATE: 8-15-00
CHECKED BY: [signature] DATE: 7/13/09
FILE SPEC.: /usr/details/stand/c&g2'-9".dgn

13-JUL-2009 08:31
s:\contracts\contracts\special details\ericward\usr\details\stand\c&g2'-9.dgn
jhowerton AT PS237501

| PROJECT REFERENCE NO. | SHEET NO. |
|---|---|
| V-3309A | 2-0 |

*NOTE: SEE STD.DWG. 846.01 FOR 2'-6" CURB AND GUTTER INFORMATION.

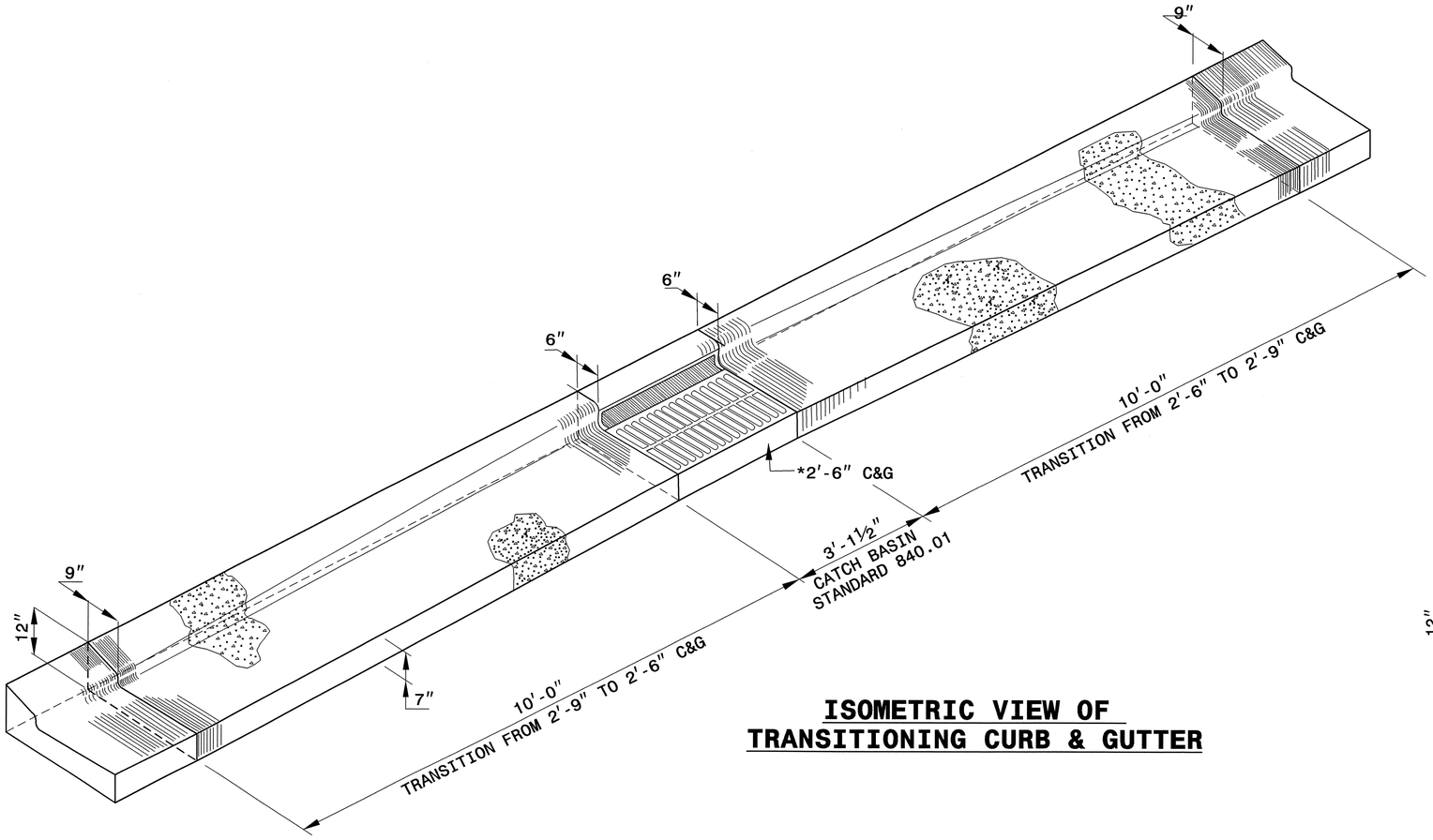


## ISOMETRIC VIEW OF TRANSITIONING CURB & GUTTER

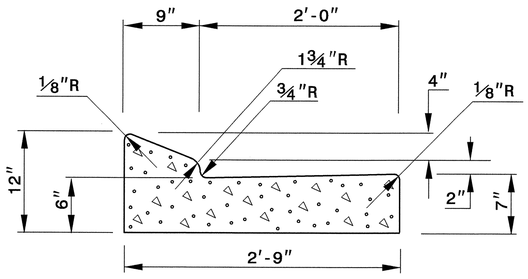


## PROPOSED 2'-9" CURB & GUTTER

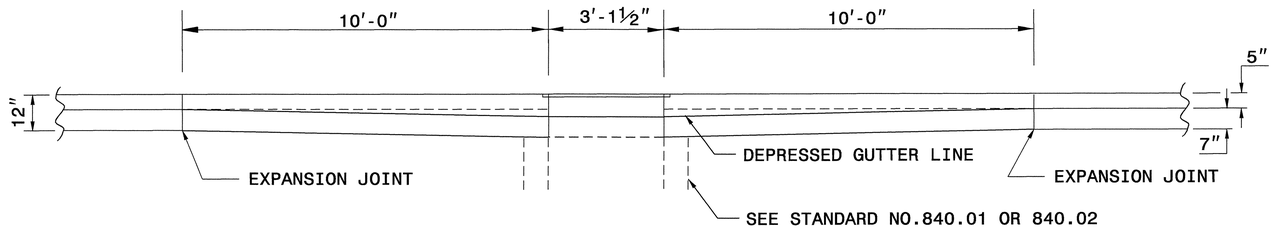


## ELEVATION

NORTH CAROLINA PROFESSIONAL SEAL 022966 ENGINEER JOHN S. MORRISON
8/4/09

**PROJECT SERVICES UNIT**
**STANDARDS AND SPECIAL DESIGN**
Office 919-250-4128 FAX 919-250-4119

# DETAIL OF 2'-9" TO 2'-6" CURB & GUTTER TRANSITION SECTION

ORIGINAL BY: _____ DATE: _____
MODIFIED BY: tspell DATE: july 14,2009
CHECKED BY: _____ DATE: 7/15/09
FILE SPEC.: s:eric/usr/details/stand/cgtransit.dgn

15-JUL-2009 12:09
s:\contracts\contracts\special details\ericward\usr\details\stand\cgtransit.dgn
tspell AT PS244552

| PROJECT REFERENCE NO. | SHEET NO. |
|---|---|
| U-3309A | 2-P |

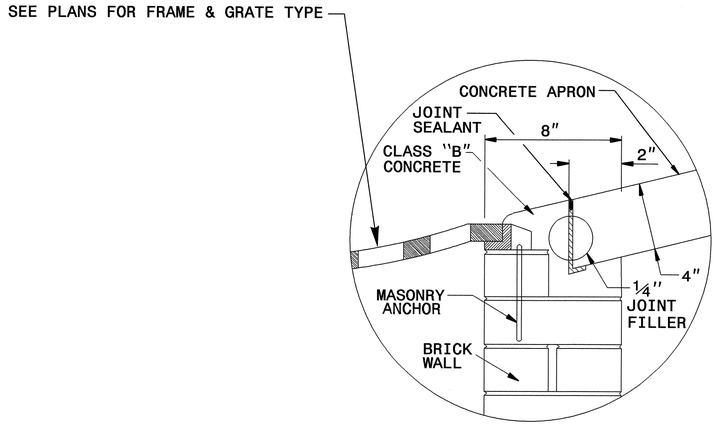


## GRATE PLACEMENT DETAIL

FOR MEDIAN DROP INLETS

GENERAL NOTES:

- -CONSTRUCT IN ACCORDANCE WITH SECTION 859 OF THE STANDARD SPECIFICATIONS.
- -USE CLASS B CONCRETE.
- -THE DIMENSIONS FOR THE EXISTING BOXES ARE APPROXIMATE AND MAY VARY SLIGHTLY.
- -JUMBO BRICK WILL BE PERMITTED. CONCRETE BRICK OR 4" SOLID CONCRETE BLOCK MAY BE USED IN LIEU OF CLAY BRICK.
- -INCLUDE 18" CONCRETE APRON IN UNIT PRICE BID PER EACH, CONVERT EXISTING CATCH BASIN TO DROP INLET.
- -SPECIAL DESIGN IS REQUIRED FOR USE UNDER PAVEMENT.
- -CONFIRM DIMENSIONS ON EACH INDIVIDUAL FRAME & GRATE PROPOSAL.
- -SEE STD. DRAWING 840.25 FOR MASONRY ANCHORAGE.

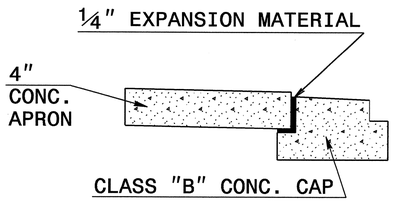


## EXPANSION JOINT DETAIL

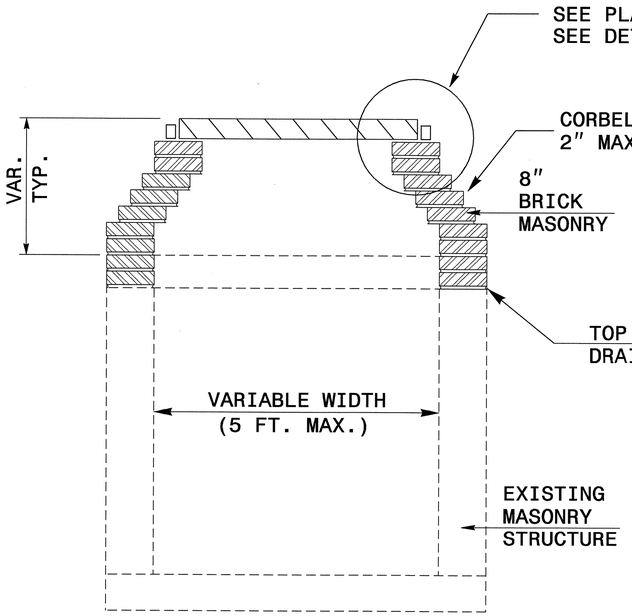


## TYPICAL SECTION

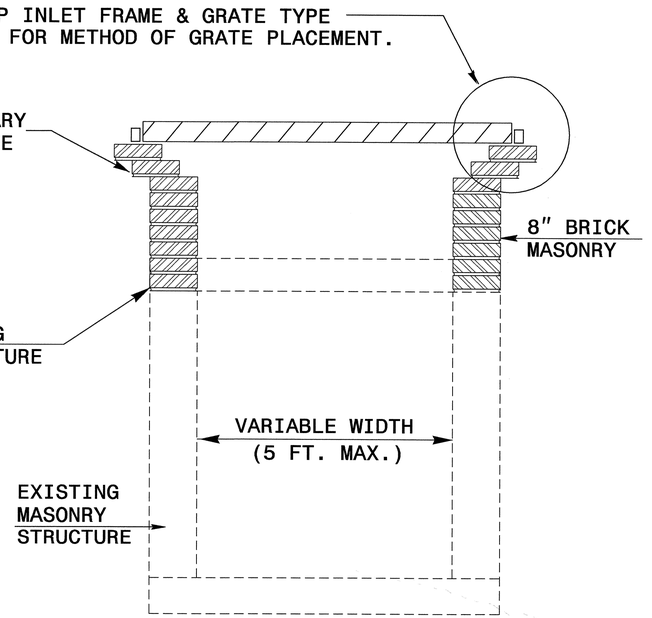


## TYPICAL SECTION

**PROJECT SERVICES UNIT**
**STANDARDS AND SPECIAL DESIGN**
Office 919-250-4128 FAX 919-250-4119

**DETAIL TO CONVERT EXISTING CATCH BASIN OR JUNCTION BOX TO DROP INLET**

| | | |
|---|---|---|
| ORIGINAL BY: | T.S.S. | DATE: NOV. 1997 |
| MODIFIED BY: | T.S.S. | DATE: FEB. 2000 |
| CHECKED BY: | | DATE: 7/13/09 |
| FILE SPEC.: | DS174:usr/details/stand/cbtodi02.dgn | |

13-JUL-2009 09:59
s:\contracts\contracts\special details\tspell\tspell\details\stand\cbtodi02.dgn
jhowerton AT PS237501

5/14/99

| PROJECT REFERENCE NO. | SHEET NO. |
|---|---|
| U-3309A | 2-Q |

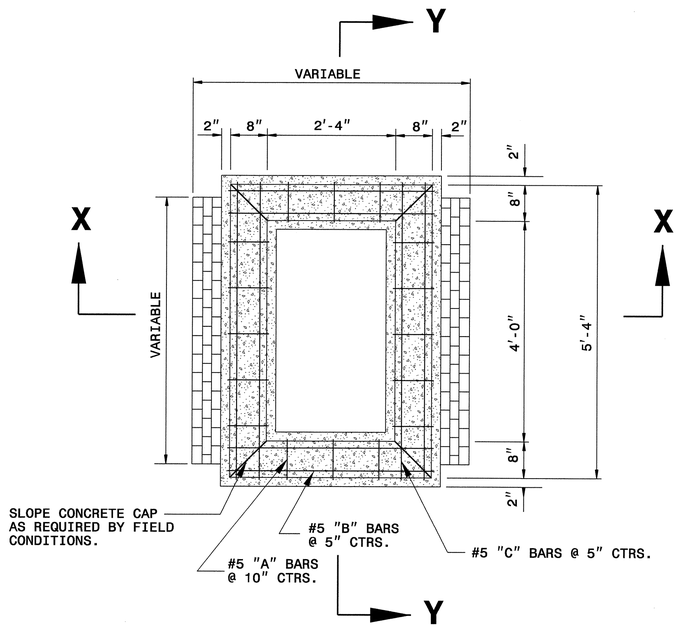


## PLAN VIEW
## APRON NOT SHOWN

NOTES:
- USE CLASS 'B' CONCRETE.
- DIMENSIONS MAY BE ADJUSTED TO SUIT FIELD CONDITIONS AS DIRECTED BY THE ENGINEER.
- CONSTRUCT IN ACCORDANCE WITH SECTION 859 OF THE STANDARD SPECIFICATIONS.

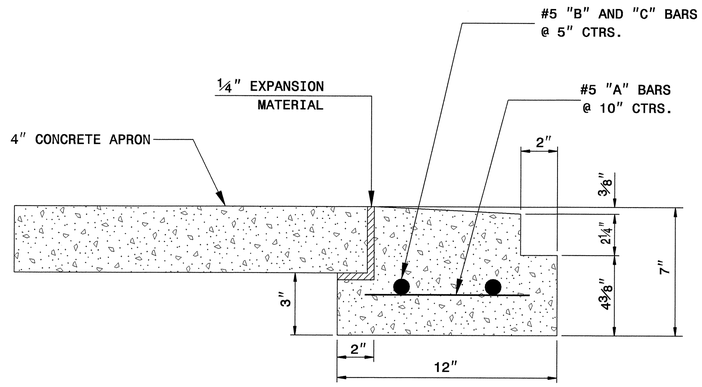


## DETAIL "A"
## CONCRETE CAP WITH APRON

**BILL OF MATERIAL**

| BAR | NO. | SIZE | LENGTH | WEIGHT |
|---|---|---|---|---|
| A | 16 | 5 | 9" | 13 |
| B | 4 | 5 | 3'-5" | 14 |
| C | 4 | 5 | 5'-1" | 21 |
| | | | | |
| | | | | |
| TOTAL REINF. STEEL (lbs.) | | | | 48 |
| BRICK MASONRY (per ft. ht.) (cu. yds.) | | | | 0.38 |
| CLASS "B" CONC. (cu. yds.) | | | | 0.23 |

| FRAME AND GRATES | STD. NO. |
|---|---|
| PREFERRED: | 840.22 |
| | 840.24 |
| ACCEPTABLE: | 840.20 |
| | 840.29 |
| | 840.33 |

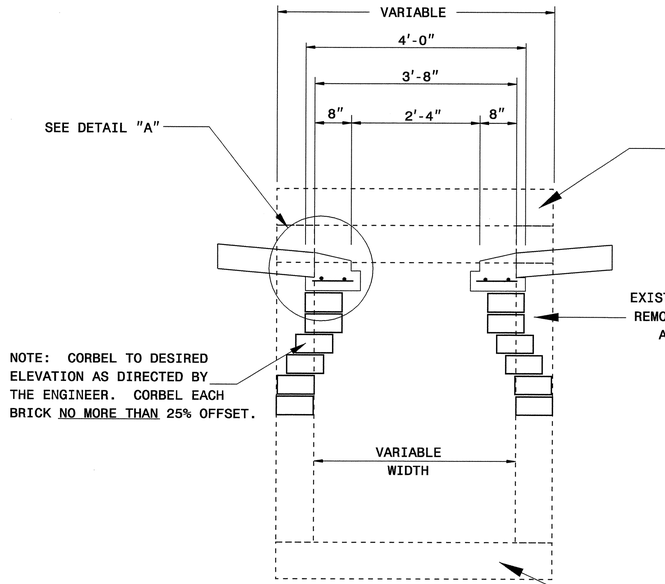


## SECTION X-X

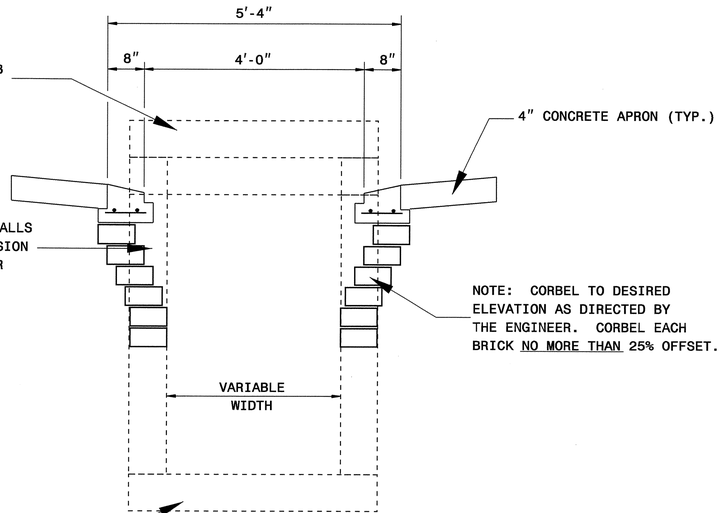


## SECTION Y-Y

NORTH CAROLINA PROFESSIONAL SEAL 022986 ENGINEER JOHN S. HAMPTON
8/9/09

**PROJECT SERVICES UNIT**
**STANDARDS AND SPECIAL DESIGN**
Office 919-250-4128 FAX 919-250-4119

# CONVERT EXISTING OPEN THROAT CATCH BASIN TO GRATED DROP INLET

ORIGINAL BY: L.M.LEWIS DATE: 3/97
MODIFIED BY: E.E.WARD DATE: 1/00
CHECKED BY: DATE: 7/19/09
FILE SPEC.: s:usr\details\stand\cbto2gi.dgn

13-JUL-2009 09:21
s:\contracts\contracts\special details\erickward\usr\details\stand\cbto2gi.dgn
jhowerton AT PS237501

| PROJECT REFERENCE NO. | SHEET NO. |
|---|---|
| U-3309A | 2-B |

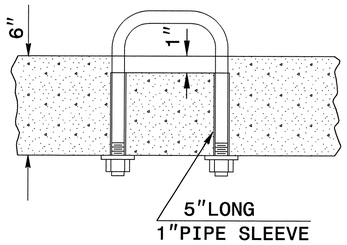


**PARTIAL SECTION**

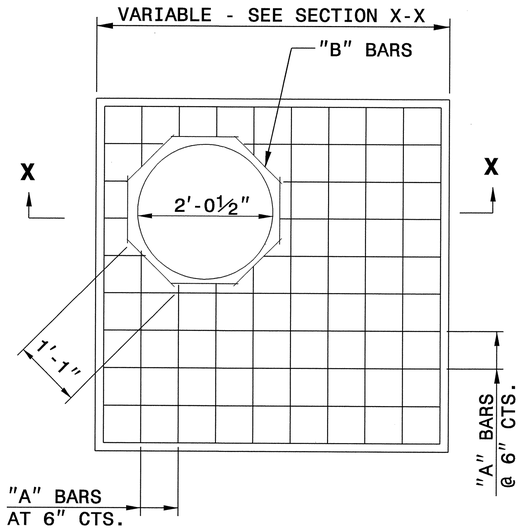


**PLAN**

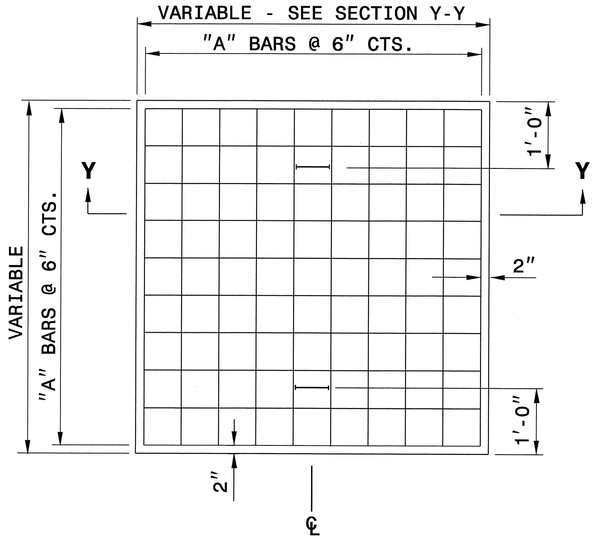


**PLAN**

GENERAL NOTES:

CONSTRUCT IN ACCORDANCE WITH SECTION 859 OF THE STANDARD SPECIFICATIONS.

FIELD VERIFY THE DIMENSIONS FOR THE EXISTING BOXES

DETAIL INTENDED FOR NON-TRAFFIC BEARING DRAINAGE STRUCTURES.

**BILL OF MATERIALS**

REINFORCING STEEL

| CODE | SIZE | QTY. | LENGTH | REINF. STEEL LBS. |
|---|---|---|---|---|
| A | #4 | 20 | 4'-6" | 60.12 |
| B | #4 | 8 | 1'-1" | 5.79 |
| TOTAL | | | | 65.91 * |

| MASONRY | CU YDS |
|---|---|
| TOP SLAB CONCRETE CLASS "B" | .433 * |
| BRICK MASONRY PER FT HT (MIN) | .4111 |

* NOTE:
QUANTITIES BASED ON 3'-6" X 3'-6" DRAINAGE STRUCTURE. ADJUST QUANTITIES FOR LARGER STRUCTURES AND MANHOLE CONSTRUCTION.

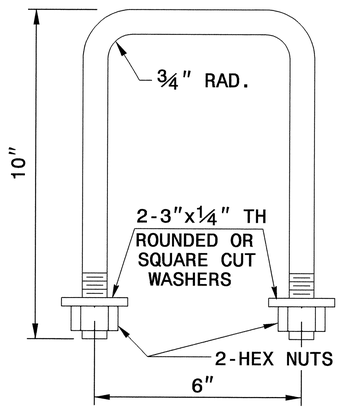


**DETAIL OF HANDLE**

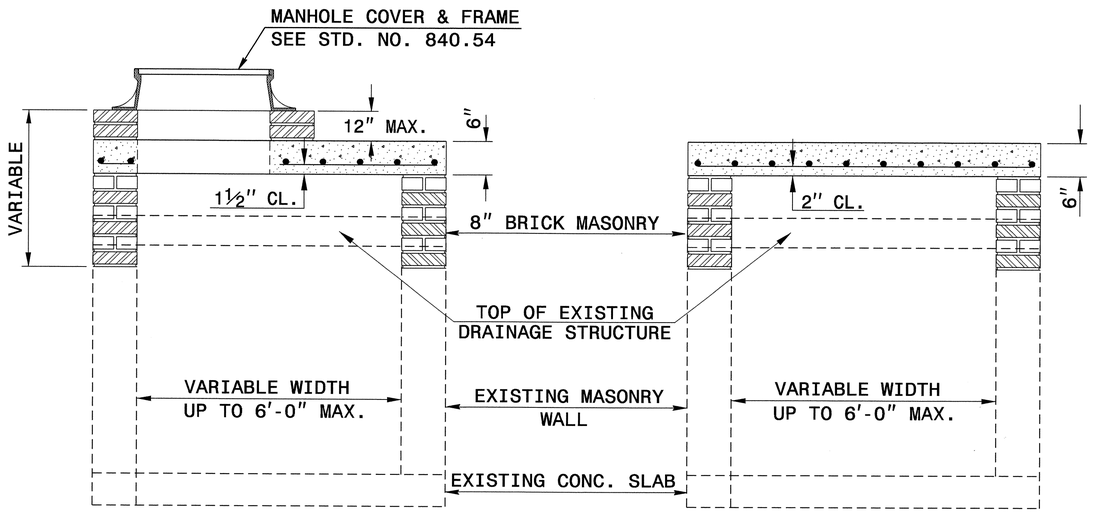


**SECTION X-X**

**SECTION Y-Y**

NORTH CAROLINA PROFESSIONAL SEAL 022966 ENGINEER JOEL S. BOWERTON
9/4/09

**PROJECT SERVICES UNIT**
**STANDARDS AND SPECIAL DESIGN**
Office 919-250-4128 FAX 919-250-4119

**DETAIL TO CONVERT EXISTING DROP INLET OR CATCH BASIN TO JUNCTION BOX (MANHOLE OPTIONAL)**

ORIGINAL BY: T.S.S. DATE: NOV.1997
MODIFIED BY: E.G.W. DATE: 8-28-02
CHECKED BY: [signature] DATE: 7/13/01
FILE SPEC.: usr/details/stand/boxtojbe.dgn

13-JUL-2009 09:19
s:\contracts\contracts\special details\erickward\usr\details\stand\cbtojbe.dgn
jhowerton AI PS237501

30-JUL-2009 08:48
s:\contracts\contracts\special details\ericward\stds\06' stds to special details\30001\0300d01.dgn
jhowerton AT PS237501

5/14/99

STATE OF NORTH CAROLINA
DEPT. OF TRANSPORTATION
DIVISION OF HIGHWAYS
RALEIGH, N.C.

7-06

ENGLISH DETAIL DRAWING FOR

# METHOD OF PIPE INSTALLATION

FLEXIBLE PIPE

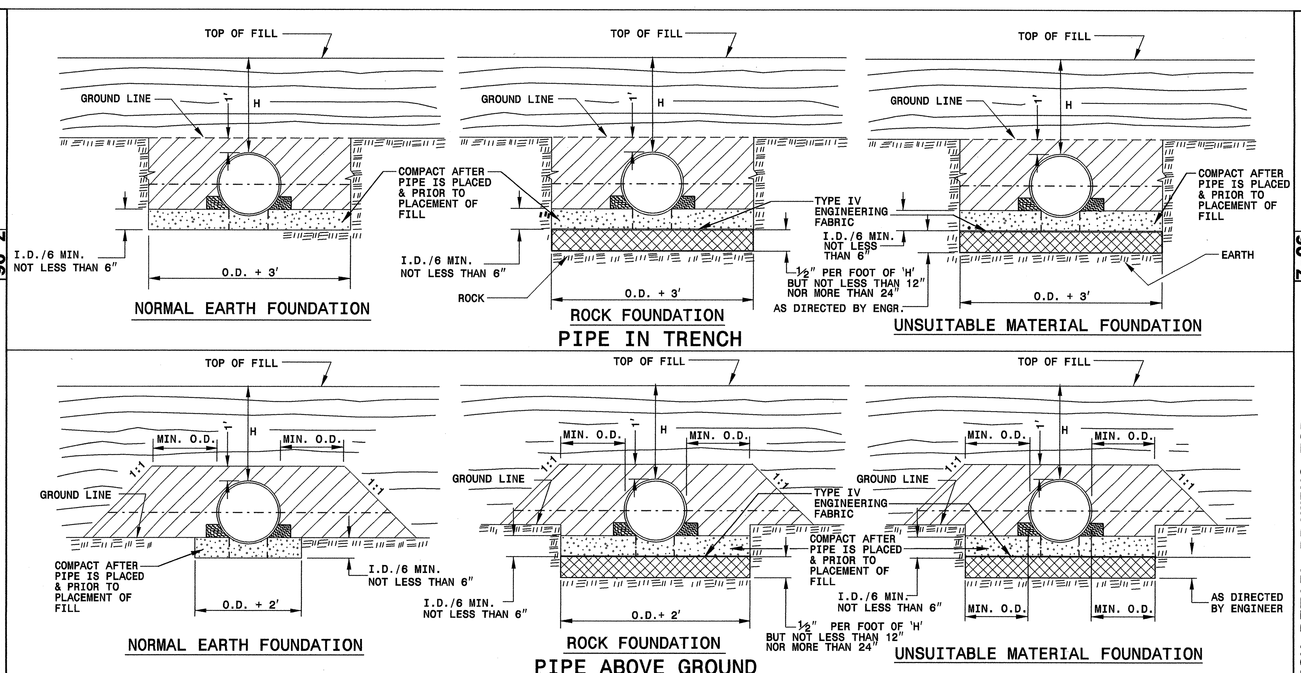


GENERAL NOTES:

I.D. = THE MAXIMUM HORIZONTAL INSIDE DIAMETER DIMENSION.

O.D. = THE MAXIMUM HORIZONTAL OUTSIDE DIAMETER DIMENSION.

H = THE FILL HEIGHT MEASURED VERTICALLY AT ANY POINT ALONG THE PIPE FROM THE TOP OF THE PIPE TO THE TOP OF THE EMBANKMENT AT THAT POINT.

TAKE CARE TO FULLY COMPACT HAUNCH ZONE OF PIPE BACKFILL.

LOOSELY PLACED SELECT MATERIAL CLASS III OR CLASS II, TYPE 1 FOR PIPE BEDDING. LEAVE SECTION DIRECTLY BENEATH PIPE UNCOMPACTED AS PIPE SEATING AND BACKFILL WILL ACCOMPLISH COMPACTION.

DO NOT OPERATE HEAVY EQUIPMENT OVER ANY PIPE CULVERT UNTIL THE PIPE CULVERT HAS BEEN PROPERLY BACKFILLED AND COVERED WITH AT LEAST 3 FEET OF APPROVED MATERIAL.

SPRINGLINE OF PIPE

SELECT BACKFILL MATERIAL CLASS III OR CLASS II, TYPE 1 ABOVE AND BELOW SPRINGLINE.

APPROVED SUITABLE LOCAL MATERIAL.

UNDISTURBED EARTH MATERIAL

SELECT MATERIAL CLASS V OR VI FOR FOUNDATION CONDITIONING. ENCAPSULATE WITH ENGINEERING FABRIC AS DIRECTED BY THE ENGINEER.

SHEET 1 OF 3

300D01

STATE OF NORTH CAROLINA
DEPT. OF TRANSPORTATION
DIVISION OF HIGHWAYS
RALEIGH, N.C.

7-06

ENGLISH DETAIL DRAWING FOR

# METHOD OF PIPE INSTALLATION

RIGID PIPE

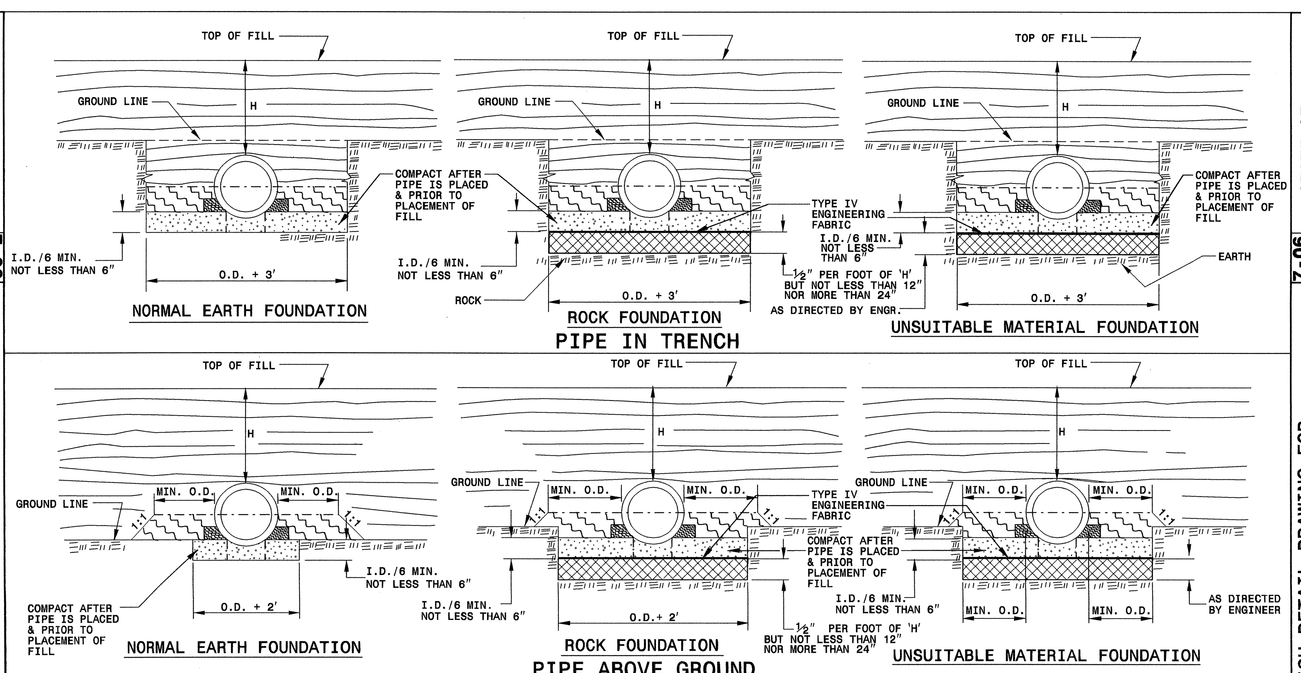


GENERAL NOTES:

I.D. = THE MAXIMUM HORIZONTAL INSIDE DIAMETER DIMENSION.

O.D. = THE MAXIMUM HORIZONTAL OUTSIDE DIAMETER DIMENSION.

H = THE FILL HEIGHT MEASURED VERTICALLY AT ANY POINT ALONG THE PIPE FROM THE TOP OF THE PIPE TO THE TOP OF THE EMBANKMENT AT THAT POINT.

TAKE CARE TO FULLY COMPACT HAUNCH ZONE OF PIPE BACKFILL.

LOOSELY PLACED SELECT MATERIAL CLASS III OR CLASS II, TYPE 1 FOR PIPE BEDDING. LEAVE SECTION DIRECTLY BENEATH PIPE UNCOMPACTED AS PIPE SEATING AND BACKFILL WILL ACCOMPLISH COMPACTION.

DO NOT OPERATE HEAVY EQUIPMENT OVER ANY PIPE CULVERT UNTIL THE PIPE CULVERT HAS BEEN PROPERLY BACKFILLED AND COVERED WITH AT LEAST 3 FEET OF APPROVED MATERIAL.

SPRINGLINE OF PIPE

SELECT BACKFILL MATERIAL CLASS III OR CLASS II, BELOW SPRINGLINE.

APPROVED SUITABLE LOCAL MATERIAL ABOVE SPRINGLINE.

UNDISTURBED EARTH MATERIAL

SELECT MATERIAL CLASS V OR VI FOR FOUNDATION CONDITIONING. ENCAPSULATE WITH ENGINEERING FABRIC AS DIRECTED BY THE ENGINEER.

SHEET 2 OF 3

300D01

PROJECT SERVICES UNIT
STANDARDS AND SPECIAL DESIGN
Office 919-250-4128 FAX 919-250-4119

SEE PLATE FOR TITLE

ORIGINAL BY: KKemprf DATE: 5-15-09
MODIFIED BY: DATE:
CHECKED BY: DATE: 7/9/09
FILE SPEC: s:\ericward\stds\standards\300d01\0300d01.dgn

PROJECT REFERENCE NO. U-3309A
SHEET NO. 2-S

30-JUL-2009 08:49
s:\contracts\contracts\special details\ericward\stds\06' stds to special details\30001\0300d01.dgn
.jhowerton AT PS237581

5/14/99

STATE OF NORTH CAROLINA
DEPT. OF TRANSPORTATION
DIVISION OF HIGHWAYS
RALEIGH, N.C.

7-06

ENGLISH DETAIL DRAWING FOR

**METHOD OF PIPE INSTALLATION**

FILL HEIGHT TABLES

SHEET 3 OF 3

**300D01**

# FLEXIBLE PIPE

**Round Corrugated Steel Pipe**
**2 2/3 x ½ corrugation ****

| Diameter (inches) | Minimum cover (inches) | Maximum Height of Cover (feet) (Ga) 16 | 14 | 12 | 10 | 8 |
|---|---|---|---|---|---|---|
| 12 | 12 | 204 | 256 | | | |
| 15 | 12 | 162 | 204 | | | |
| 18 | 12 | 135 | 169 | 239 | | |
| 21 | 12 | 115 | 145 | 204 | | |
| 24 | 12 | 100 | 126 | 178 | | |
| 30 | 12 | 79 | 100 | 142 | | |
| 36 | 12 | 65 | 83 | 117 | 152 | |
| 42 | 12 | 55 | 70 | 100 | 130 | 160 |
| 48 | 12 | 48 | 61 | 87 | 113 | 139 |
| 54 | 12 | | 54 | 77 | 100 | 123 |
| 60 | 12 | | | 69 | 90 | 111 |
| 66 | 12 | | | | 81 | 100 |
| 72 | 12 | | | | 74 | 91 |
| 78 | 12 | | | | | 81 |
| 84 | 12 | | | | | 69 |

**Round Corrugated Aluminum Pipe**
**2 2/3 x ½ corrugation ****

| Diameter (inches) | Minimum cover (inches) | Maximum Height of Cover (feet) (Ga) 16 | 14 | 12 | 10 | 8 |
|---|---|---|---|---|---|---|
| 12 | 12 | 123 | 155 | 218 | 281 | 344 |
| 15 | 12 | 98 | 123 | 174 | 224 | 275 |
| 18 | 12 | 81 | 102 | 144 | 187 | 228 |
| 21 | 12 | 69 | 87 | 123 | 160 | 195 |
| 24 | 12 | 60 | 76 | 108 | 139 | 171 |
| 27 | 12 | | 67 | 95 | 123 | 151 |
| 30 | 12 | | 60 | 85 | 111 | 136 |
| 36 | 12 | | 50 | 71 | 92 | 113 |
| 42 | 12 | | | 60 | 78 | 96 |
| 48 | 12 | | | 52 | 68 | 84 |
| 54 | 12 | | | 46 | 50 | 74 |
| 60 | 12 | | | | 50 | 62 |
| 66 | 12 | | | | | 51 |
| 72 | 12 | | | | | 41 |

** FOR DIFFERENT CORRUGATIONS AND ARCH PIPES REFER TO ROADWAY DESIGN MANUAL OR MANUFACTURERS SPECIFICATION.

HDPE - * (Minimum fill) 2′ for pipe diameters ≥ 12″ and ≤ 60″
* (Maximum fill) 20′ for pipe diameters ≤ 24″
17′ for pipe diameters ≥ 30″ and ≤ 60″

PVC - * (Minimum fill) 2′ for pipe diameters ≥ 12″ and ≤ 36″
* (Maximum fill) 30′ for pipe diameters ≥ 12″ and ≤ 36″

* FILL HEIGHT IS MEASURED FROM THE TOP OF THE PIPE TO THE BOTTOM OF THE PAVEMENT STRUCTURE

REFER TO THE FOLLOWING FOR PIPE SPECIFICATIONS

CSP - AASHTO M36
CAAP - AASHTO M196
HDPE - AASHTO M294
PVC - ASTM F949 or AASHTO M304

NOTES: FILL HEIGHTS SHOWN WERE CALCULATED USING AASHTO LRFD BRIDGE DESIGN SPECIFICATIONS

1′ MINIMUM COVER FOR ALL SIDE DRAIN PIPE IN ACCORDANCE WITH THE STANDARD SPECIFICATIONS

# RIGID PIPE

RCP - * (Minimum fill) 1′ for Class IV & CLASS V
2′ for Class III & Class II

* (Maximum fill) 10′ - Class II pipe
20′ - Class III pipe
30′ - Class IV pipe
40′ - Class V pipe

(For fills > 40′ & < 80′ use LRFD Direct Design Method)

* FILL HEIGHT IS MEASURED FROM THE TOP OF THE PIPE TO THE BOTTOM OF THE PAVEMENT STRUCTURE

REFER TO THE FOLLOWING FOR PIPE SPECIFICATIONS

RCP - AASHTO M170

NOTES: FILL HEIGHTS SHOWN WERE CALCULATED USING AASHTO LRFD BRIDGE DESIGN SPECIFICATIONS

1′ MINIMUM COVER FOR ALL SIDE DRAIN PIPE IN ACCORDANCE WITH THE STANDARD SPECIFICATIONS

STATE OF NORTH CAROLINA
DEPT. OF TRANSPORTATION
DIVISION OF HIGHWAYS
RALEIGH, N.C.

7-06

ENGLISH DETAIL DRAWING FOR

**METHOD OF PIPE INSTALLATION**

FILL HEIGHT TABLES

SHEET 3 OF 3

**300D01**

**PROJECT SERVICES UNIT**
**STANDARDS AND SPECIAL DESIGN**
Office 919-250-4128 FAX 919-250-4119

**SEE PLATE FOR TITLE**

ORIGINAL BY: Kkemprf DATE: 5-15-09
MODIFIED BY: _____ DATE: _____
CHECKED BY: _____ DATE: 7/9/09
FILE SPEC: /projects/std/stds/stdstoderkits/30001/0300d01.dgn

NORTH CAROLINA PROFESSIONAL ENGINEER SEAL 022986 JOEL E. KEMPRF 8/4/09

| PROJECT REFERENCE NO. | SHEET NO. |
|---|---|
| U-3309A | 2-T |

5/28/99

| PROJECT REFERENCE NO. | SHEET NO. |
|---|---|
| U-3309A | 3(1of 2) |

STATE OF NORTH CAROLINA
DIVISION OF HIGHWAYS

# SUMMARY OF QUANTITIES

**STATE OF NORTH CAROLINA**
**DIVISION OF HIGHWAYS**
**ROADWAY SUMMARY OF QUANTITIES FOR CONTRACT - C202064**

| ItemNumber | Sec # | Quantity | Unit | Description |
|---|---|---|---|---|
| 0000100000-N | 800 | Lump Sum | | MOBILIZATION |
| 0000400000-N | 801 | Lump Sum | | CONSTRUCTION SURVEYING |
| 0000900000-N | SP | Lump Sum | | GENERIC MISCELLANEOUS ITEM REMOVE AND RESET SIGN, STATION 35+25 -L- |
| 0000910000-N | SP | 225 | HR | GENERIC MISCELLANEOUS ITEM EXPLORATORY EXCAVATION - STANDARD |
| 0000910000-N | SP | 50 | HR | GENERIC MISCELLANEOUS ITEM EXPLORATORY EXCAVATION - VACUUM |
| 0001000000-E | 200 | Lump Sum | | CLEARING & GRUBBING .. ACRE(S) |
| 0008000000-E | 200 | 1 | ACR | SUPPLEMENTARY CLEARING & GRUB-BING |
| 0022000000-E | 225 | 17,600 | CY | UNCLASSIFIED EXCAVATION |
| 0036000000-E | 225 | 9,660 | CY | UNDERCUT EXCAVATION |
| 0080000000-E | SP | 850 | TON | CLASS IV SUBGRADE STABILIZA-TION |
| 0106000000-E | 230 | 52,760 | CY | BORROW EXCAVATION |
| 0134000000-E | 240 | 170 | CY | DRAINAGE DITCH EXCAVATION |
| 0156000000-E | 250 | 10,500 | SY | REMOVAL OF EXISTING ASPHALT PAVEMENT |
| 0177000000-E | 250 | 510 | SY | BREAKING OF EXISTING ASPHALT PAVEMENT |
| 0195000000-E | 265 | 2,000 | CY | SELECT GRANULAR MATERIAL |
| 0196000000-E | 270 | 2,000 | SY | FABRIC FOR SOIL STABILIZATION |
| 0318000000-E | 300 | 598.9 | TON | FOUNDATION CONDITIONING MATE-RIAL, MINOR STRS |
| 0320000000-E | SP | 1,855 | SY | FOUNDATION CONDITIONING FABRIC |
| 0384000000-E | 310 | 32 | LF | 30" RC PIPE CULVERTS, CLASS III |
| 0396000000-E | 310 | 136 | LF | 42" RC PIPE CULVERTS, CLASS III |
| 0402000000-E | 310 | 56 | LF | 48" RC PIPE CULVERTS, CLASS III |
| 0408000000-E | 310 | 28 | LF | 54" RC PIPE CULVERTS, CLASS III |
| 0708000000-E | 310 | 24 | LF | 15" BIT COAT CS PIPE CULVERTS, TYPE B 0.064" THICK |
| 0714000000-E | 310 | 100 | LF | 18" BIT COAT CS PIPE CULVERTS, TYPE B 0.064" THICK |
| 0807000000-E | 310 | 2 | EA | 18" BIT COAT CS PIPE ELBOWS, T YPE B 0.064" THICK |
| 0973100000-E | SP | 52 | LF | **" WELDED STEEL PIPE, ****" THICK, GRADE ** IN SOIL (36", 0.5", B) |
| 0973300000-E | SP | 52 | LF | **" WELDED STEEL PIPE, ****" THICK, GRADE ** NOT IN SOIL (36", 0.5", B) |
| 0995000000-E | 340 | 931 | LF | PIPE REMOVAL |
| 1011000000-N | 500 | Lump Sum | | FINE GRADING |
| 1110000000-E | 510 | 500 | TON | STABILIZER AGGREGATE |
| 1121000000-E | 520 | 5,040 | TON | AGGREGATE BASE COURSE |
| 1220000000-E | 545 | 2,000 | TON | INCIDENTAL STONE BASE |
| 1275000000-E | 600 | 1,196 | GAL | PRIME COAT |
| 1297000000-E | 607 | 5,600 | SY | MILLING ASPHALT PAVEMENT, ***" DEPTH (2-1/2") |
| 1330000000-E | 607 | 210 | SY | INCIDENTAL MILLING |
| 1489000000-E | 610 | 11,810 | TON | ASPHALT CONC BASE COURSE, TYPE B25.0B |
| 1498000000-E | 610 | 10,100 | TON | ASPHALT CONC INTERMEDIATE COURSE, TYPE I19.0B |
| 1519000000-E | 610 | 13,700 | TON | ASPHALT CONC SURFACE COURSE, TYPE S9.5B |
| 1525000000-E | 610 | 650 | TON | ASPHALT CONC SURFACE COURSE, TYPE SF9.5A |
| 1560000000-E | 620 | 1,850 | TON | ASPHALT BINDER FOR PLANT MIX, GRADE PG 64-22 |
| 1693000000-E | 654 | 555 | TON | ASPHALT PLANT MIX, PAVEMENT REPAIR |
| 2000000000-N | 806 | 45 | EA | RIGHT OF WAY MARKERS |
| 2022000000-E | 815 | 358 | CY | SUBDRAIN EXCAVATION |
| 2033000000-E | 815 | 269 | CY | SUBDRAIN FINE AGGREGATE |
| 2044000000-E | 815 | 1,600 | LF | 6" PERFORATED SUBDRAIN PIPE |
| 2055000000-E | 815 | 48 | EA | 6" SUBDRAIN PIPE WYES, TEES, & ELBOWS |
| 2066000000-N | 815 | 4 | EA | CONCRETE PAD FOR SUBDRAIN PIPE OUTLET |
| 2077000000-E | 815 | 24 | LF | 6" OUTLET PIPE (SUBDRAINS) |
| 2209000000-E | 838 | 16.2 | CY | ENDWALLS |
| 2220000000-E | 838 | 5 | CY | REINFORCED ENDWALLS |
| 2253000000-E | 840 | 7.56 | CY | PIPE COLLARS |
| 2275000000-E | SP | 0.7 | CY | FLOWABLE FILL |
| 2286000000-N | 840 | 72 | EA | MASONRY DRAINAGE STRUCTURES |
| 2297000000-E | 840 | 4.33 | CY | MASONRY DRAINAGE STRUCTURES |
| 2308000000-E | 840 | 23.9 | LF | MASONRY DRAINAGE STRUCTURES |
| 2354000000-N | 840 | 1 | EA | FRAME WITH GRATE, STD 840.22 |
| 2364000000-N | 840 | 16 | EA | FRAME WITH TWO GRATES, STD 840.16 |
| 2365000000-N | 840 | 11 | EA | FRAME WITH TWO GRATES, STD 840.22 |
| 2366000000-N | 840 | 5 | EA | FRAME WITH TWO GRATES, STD 840.24 |
| 2374000000-N | 840 | 9 | EA | FRAME WITH GRATE & HOOD, STD 840.03, TYPE ** (E) |
| 2374000000-N | 840 | 14 | EA | FRAME WITH GRATE & HOOD, STD 840.03, TYPE ** (F) |
| 2374000000-N | 840 | 16 | EA | FRAME WITH GRATE & HOOD, STD 840.03, TYPE ** (G) |
| 2396000000-N | 840 | 3 | EA | FRAME WITH COVER, STD 840.54 |
| 2451000000-N | 852 | 15 | EA | CONCRETE TRANSITIONAL SECTION FOR DROP INLETS |
| 2538000000-E | 846 | 8,210 | LF | **'-**" CONCRETE CURB & GUTTER (2' X 9") |
| 2549000000-E | 846 | 6,270 | LF | 2'-6" CONCRETE CURB & GUTTER |
| 2605000000-N | 848 | 12 | EA | CONCRETE WHEELCHAIR RAMPS |
| 2647000000-E | 852 | 1,260 | SY | 5" MONOLITHIC CONCRETE ISLANDS (SURFACE MOUNTED) |
| 2875000000-N | 859 | 1 | EA | CONVERT EXISTING CATCH BASIN TO DROP INLET |
| 2920000000-N | SP | 2 | EA | CONVERT EXISTING DROP INLET TO CATCH BASIN |
| 2938000000-N | SP | 1 | EA | CONVERT EXISTING DROP INLET TO JUNCTION BOX WITH MANHOLE COVER |
| 3030000000-E | 862 | 1,950 | LF | STEEL BM GUARDRAIL |
| 3045000000-E | 862 | 250 | LF | STEEL BM GUARDRAIL, SHOP CURVED |
| 3150000000-N | 862 | 5 | EA | ADDITIONAL GUARDRAIL POSTS |
| 3210000000-N | 862 | 4 | EA | GUARDRAIL ANCHOR UNITS, TYPE CAT-1 |
| 3270000000-N | SP | 7 | EA | GUARDRAIL ANCHOR UNITS, TYPE 350 |
| 3285000000-N | SP | 1 | EA | GUARDRAIL ANCHOR UNITS, TYPE M-350 |
| 3360000000-E | 863 | 1,550 | LF | REMOVE EXISTING GUARDRAIL |
| 3566000000-E | 867 | 425 | LF | WOVEN WIRE FENCE RESET |
| 3575000000-E | SP | 216 | LF | GENERIC FENCING ITEM 42" CHAIN LINK FENCE |
| 3628000000-E | 876 | 40 | TON | RIP RAP, CLASS I |
| 3649000000-E | 876 | 375 | TON | RIP RAP, CLASS B |
| 3656000000-E | 876 | 3,635 | SY | FILTER FABRIC FOR DRAINAGE |
| 4048000000-E | 902 | 1 | CY | REINFORCED CONCRETE SIGN FOUN-DATIONS |
| 4060000000-E | 903 | 218 | LB | SUPPORTS, BREAKAWAY STEEL BEAM |
| 4072000000-E | 903 | 2,423 | LF | SUPPORTS, 3-LB STEEL U-CHANNEL |
| 4096000000-N | 904 | 2 | EA | SIGN ERECTION, TYPE D |
| 4102000000-N | 904 | 156 | EA | SIGN ERECTION, TYPE E |
| 4108000000-N | 904 | 8 | EA | SIGN ERECTION, TYPE F |
| 4110000000-N | 904 | 1 | EA | SIGN ERECTION, TYPE *** (GROUND MOUNTED) (A) |
| 4116100000-N | 904 | 1 | EA | SIGN ERECTION, RELOCATE, TYPE **** (GROUND MOUNTED) (E) |
| 4152000000-N | 907 | 1 | EA | DISPOSAL OF SIGN SYSTEM, STEEL BEAM |
| 4155000000-N | 907 | 42 | EA | DISPOSAL OF SIGN SYSTEM, U-CHANNEL |
| 4192000000-N | 907 | 1 | EA | DISPOSAL OF SUPPORT, U-CHANNEL |
| 4400000000-E | 1110 | 320 | SF | WORK ZONE SIGNS (STATIONARY) |
| 4405000000-E | 1110 | 606 | SF | WORK ZONE SIGNS (PORTABLE) |
| 4410000000-E | 1110 | 156 | SF | WORK ZONE SIGNS (BARRICADE MOUNTED) |
| 4415000000-N | 1115 | 4 | EA | FLASHING ARROW PANELS, TYPE C |
| 4420000000-N | 1120 | 6 | EA | CHANGEABLE MESSAGE SIGN |
| 4430000000-N | 1130 | 700 | EA | DRUMS |
| 4435000000-N | 1135 | 212 | EA | CONES |
| 4445000000-E | 1145 | 776 | LF | BARRICADES (TYPE III) |
| 4450000000-N | 1150 | 2,408 | HR | FLAGGER |
| 4480000000-N | 1165 | 2 | EA | TMIA |
| 4507000000-E | SP | 1,000 | LF | WATER FILLED BARRIER |
| 4516000000-N | 1180 | 15 | EA | SKINNY DRUM |
| 4605000000-N | SP | 96 | HR | GENERIC TRAFFIC CONTROL ITEM LAW ENFORCEMENT |
| 4650000000-N | 1251 | 493 | EA | TEMPORARY RAISED PAVEMENT MARKERS |
| 4685000000-E | 1205 | 15,791 | LF | THERMOPLASTIC PAVEMENT MARKING LINES (4", 90 MILS) |
| 4686000000-E | 1205 | 17,810 | LF | THERMOPLASTIC PAVEMENT MARKING LINES (4", 120 MILS) |
| 4695000000-E | 1205 | 2,941 | LF | THERMOPLASTIC PAVEMENT MARKING LINES (8", 90 MILS) |
| 4710000000-E | 1205 | 2,850 | LF | THERMOPLASTIC PAVEMENT MARKING LINES (24", 120 MILS) |
| 4721000000-E | 1205 | 16 | EA | THERMOPLASTIC PAVEMENT MARKING CHARACTER (120 MILS) |
| 4725000000-E | 1205 | 221 | EA | THERMOPLASTIC PAVEMENT MARKING SYMBOL (90 MILS) |
| 4810000000-E | 1205 | 137,596 | LF | PAINT PAVEMENT MARKING LINES (4") |
| 4820000000-E | 1205 | 2,632 | LF | PAINT PAVEMENT MARKING LINES (8") |
| 4835000000-E | 1205 | 9,728 | LF | PAINT PAVEMENT MARKING LINES (24") |
| 4840000000-N | 1205 | 84 | EA | PAINT PAVEMENT MARKING CHARAC-TER |
| 4845000000-N | 1205 | 372 | EA | PAINT PAVEMENT MARKING SYMBOL |
| 4850000000-E | 1205 | 1,050 | LF | REMOVAL OF PAVEMENT MARKING LINES (4") |
| 4860000000-E | 1205 | 305 | LF | REMOVAL OF PAVEMENT MARKING LINES (8") |
| 4875000000-N | 1205 | 2 | EA | REMOVAL OF PAVEMENT MARKING SYMBOLS & CHARACTERS |
| 4900000000-N | 1251 | 693 | EA | PERMANENT RAISED PAVEMENT MARKERS |
| 5020000000-N | 1401 | 1 | EA | PORTABLE DRIVE UNIT |
| 5025000000-E | 1402 | 28 | CY | HIGH MOUNT FOUNDATIONS |
| 5030000000-N | 1403 | 16 | EA | HIGH MOUNT LUMINAIRES ******** (400W HPS) |
| 5030000000-N | 1403 | 16 | EA | HIGH MOUNT LUMINAIRES ******** (750W HPS) |
| 5155000000-E | 1409 | 185 | LF | ELECTRICAL DUCT, TYPE BD, SIZE ***** (3") |
| 5160000000-E | 1409 | 60 | LF | ELECTRICAL DUCT, TYPE JA, SIZE ***** (3") |
| 5160000000-E | 1409 | 80 | LF | ELECTRICAL DUCT, TYPE JA, SIZE ***** (6") |
| 5175000000-E | 1410 | 220 | LF | ** #6 W/G FEEDER CIRCUIT (2) |
| 5180000000-E | 1410 | 290 | LF | ** #4 W/G FEEDER CIRCUIT (2) |
| 5185000000-E | 1410 | 290 | LF | ** #2 W/G FEEDER CIRCUIT (2) |
| 5205000000-E | 1410 | 1,050 | LF | ** #8 W/G FEEDER CIRCUIT IN *****" CONDUIT (2, 1.5") |
| 5210000000-E | 1410 | 895 | LF | ** #6 W/G FEEDER CIRCUIT IN *****" CONDUIT (2, 1.5") |
| 5215000000-E | 1410 | 1,370 | LF | ** #4 W/G FEEDER CIRCUIT IN *****" CONDUIT (2, 1.5") |
| 5220000000-E | 1410 | 1,270 | LF | ** #2 W/G FEEDER CIRCUIT IN *****" CONDUIT (2, 1.5") |
| 5240000000-N | 1411 | 10 | EA | ELECTRICAL JUNCTION BOXES ************ (PC18) |
| 5240000000-N | 1411 | 5 | EA | ELECTRICAL JUNCTION BOXES ************ (PC36) |
| 5270000000-N | SP | 2 | EA | GENERIC LIGHTING ITEM 120' HIGH MOUNT STANDARD |
| 5270000000-N | SP | 2 | EA | GENERIC LIGHTING ITEM 80' HIGH MOUNT STANDARD |
| 5270000000-N | SP | 1 | EA | GENERIC LIGHTING ITEM LIGHT CONTROL EQUIPMENT, RW, 480V, 150A |
| 5325800000-E | 1510 | 59 | LF | 8" WATER LINE |
| 5326200000-E | 1510 | 66 | LF | 12" WATER LINE |
| 5672000000-N | 1515 | 2 | EA | RELOCATE FIRE HYDRANT |
| 5709300000-E | 1520 | 44 | LF | 6" FORCE MAIN SEWER |
| 5815000000-N | 1530 | 1 | EA | REMOVE WATER METER |
| 5882000000-N | SP | 1 | EA | GENERIC UTILITY ITEM BREAKDOWN AND REBUILD WATER VALVE VAULT |
| 5882000000-N | SP | 2 | EA | GENERIC UTILITY ITEM RAISE MANHOLE RING AND COVER FOR WATER VALVE VAULT |
| 5882000000-N | SP | 1 | EA | GENERIC UTILITY ITEM ROTATE TOP FOR EXISTING MANHOLE |
| 6000000000-E | 1605 | 20,250 | LF | TEMPORARY SILT FENCE |
| 6006000000-E | 1610 | 2,400 | TON | STONE FOR EROSION CONTROL, CLASS A |
| 6009000000-E | 1610 | 3,150 | TON | STONE FOR EROSION CONTROL, CLASS B |
| 6012000000-E | 1610 | 2,600 | TON | SEDIMENT CONTROL STONE |
| 6015000000-E | 1615 | 76 | ACR | TEMPORARY MULCHING |
| 6018000000-E | 1620 | 1,850 | LB | SEED FOR TEMPORARY SEEDING |
| 6021000000-E | 1620 | 8.5 | TON | FERTILIZER FOR TEMPORARY SEED-ING |
| 6024000000-E | 1622 | 1,200 | LF | TEMPORARY SLOPE DRAINS |
| 6027000000-N | 1622 | 7 | EA | INLET PROTECTION AT TEMPORARY SLOPE DRAINS |
| 6029000000-E | SP | 2,900 | LF | SAFETY FENCE |
| 6030000000-E | 1630 | 11,900 | CY | SILT EXCAVATION |
| 6036000000-E | 1631 | 30,500 | SY | MATTING FOR EROSION CONTROL |
| 6037000000-E | SP | 350 | SY | COIR FIBER MAT |
| 6038000000-E | SP | 730 | SY | PERMANENT SOIL REINFORCEMENT MAT |
| 6042000000-E | 1632 | 6,050 | LF | 1/4" HARDWARE CLOTH |
| 6048000000-E | SP | 150 | SY | FLOATING TURBIDITY CURTAIN |
| 6071010000-E | SP | 80 | LF | WATTLE |
| 6071020000-E | SP | 18 | LB | POLYACRYLAMIDE (PAM) |
| 6071030000-E | SP | 9,050 | LF | COIR FIBER BAFFLES |
| 6071050000-E | SP | 28 | EA | **" SKIMMER (1-1/2") |
| 6071050000-E | SP | 1 | EA | **" SKIMMER (2") |
| 6084000000-E | 1660 | 55 | ACR | SEEDING & MULCHING |
| 6087000000-E | 1660 | 48.5 | ACR | MOWING |
| 6090000000-E | 1661 | 600 | LB | SEED FOR REPAIR SEEDING |
| 6093000000-E | 1661 | 1.75 | TON | FERTILIZER FOR REPAIR SEEDING |
| 6096000000-E | 1662 | 975 | LB | SEED FOR SUPPLEMENTAL SEEDING |
| 6108000000-E | 1665 | 29 | TON | FERTILIZER TOPDRESSING |
| 6114500000-N | SP | 30 | MHR | SPECIALIZED HAND MOWING |
| 6117000000-N | SP | 36 | EA | RESPONSE FOR EROSION CONTROL |
| 7000000000-E | 1705 | 14 | EA | PEDESTRIAN SIGNAL HEAD (**", ** SECTION) (16", 1 SECT WITH COUNTDOWN) |
| 7060000000-E | 1705 | 10,955 | LF | SIGNAL CABLE |
| 7120000000-E | 1705 | 49 | EA | VEHICLE SIGNAL HEAD (12", 3 SECTION) |
| 7132000000-E | 1705 | 3 | EA | VEHICLE SIGNAL HEAD (12", 4 SECTION) |

29-JUN-2009 10:56
r:\roadway\proj\u-3309a_rdy_sum_sh3.dgn
$$$$USERNAME$$$$

# STATE OF NORTH CAROLINA
# SUMMARY OF QUANTITIES

| PROJECT REFERENCE No. | SHEET No. |
|---|---|
| U-3309A | 3 (2 of 2) |

| ItemNumber | Sec # | Quantity | Unit | Description |
|---|---|---|---|---|
| 7144000000-E | 1705 | 19 | EA | VEHICLE SIGNAL HEAD (12", 5 SECTION) |
| 7264000000-E | 1710 | 1,940 | LF | MESSENGER CABLE (3/8") |
| 7279000000-E | 1715 | 6,190 | LF | TRACER WIRE |
| 7288000000-E | 1715 | 5,710 | LF | PAVED TRENCHING (**********) (1, 2") |
| 7300000000-E | 1715 | 4,520 | LF | UNPAVED TRENCHING (**********) (1, 2") |
| 7301000000-E | 1715 | 3,500 | LF | DIRECTIONAL DRILL (**********) (1, 2") |
| 7324000000-N | 1716 | 33 | EA | JUNCTION BOX (STANDARD SIZE) |
| 7348000000-N | 1716 | 11 | EA | JUNCTION BOX (OVER-SIZED, HEAVY DUTY) |
| 7360000000-N | 1720 | 14 | EA | WOOD POLE |
| 7372000000-N | 1721 | 26 | EA | GUY ASSEMBLY |
| 7408000000-E | 1722 | 4 | EA | 1" RISER WITH WEATHERHEAD |
| 7420000000-E | 1722 | 14 | EA | 2" RISER WITH WEATHERHEAD |
| 7444000000-E | 1725 | 10,725 | LF | INDUCTIVE LOOP SAWCUT |
| 7456000000-E | 1726 | 25,985 | LF | LEAD-IN CABLE (**********) (14-2) |
| 7516000000-E | 1730 | 6,470 | LF | COMMUNICATIONS CABLE (**FIBER) (12) |
| 7528000000-E | 1730 | 151 | LF | DROP CABLE |
| 7540000000-N | 1731 | 3 | EA | SPLICE ENCLOSURE |
| 7552000000-N | 1731 | 3 | EA | INTERCONNECT CENTER |
| 7564000000-N | 1732 | 3 | EA | FIBER-OPTIC TRANSCEIVER, DROP & REPEAT |
| 7568000000-N | SP | 1 | EA | FURNISH FIBER-OPTIC RESTORATION KIT |
| 7570000000-N | SP | 1 | EA | FURNISH FIBER-OPTIC POWER METER |
| 7572000000-N | SP | 1 | EA | FURNISH OPTICAL LIGHT GENERATOR |
| 7574000000-N | SP | 1 | EA | FURNISH FIBER-OPTIC TRANSCEIVER |
| 7575160000-E | 1734 | 2,420 | LF | REMOVE EXISTING COMMUNICATIONS CABLE |

| ItemNumber | Sec # | Quantity | Unit | Description |
|---|---|---|---|---|
| 7588000000-N | SP | 10 | EA | METAL POLE WITH SINGLE MAST ARM |
| 7590000000-N | SP | 1 | EA | METAL POLE WITH DUAL MAST ARM |
| 7613000000-N | SP | 11 | EA | SOIL TEST |
| 7614100000-E | SP | 88 | CY | DRILLED PIER FOUNDATION |
| 7624000000-N | 1743 | 7 | EA | SIGNAL PEDESTAL WITH FOUNDATION |
| 7631000000-N | SP | 11 | EA | MAST ARM WITH METAL POLE DESIGN |
| 7636000000-N | 1745 | 34 | EA | SIGN FOR SIGNALS |
| 7686000000-N | SP | 3 | EA | CONDUIT ENTRANCE INTO EXISTING FOUNDATION |
| 7688000000-N | 1753 | 5 | EA | CABINET BASE ADAPTER |
| 7720000000-N | 1751 | 5 | EA | CONTROLLER WITH CABINET (TYPE 170E, BASE MOUNTED) |
| 7744000000-N | 1751 | 26 | EA | DETECTOR CARD (TYPE 170) |
| 7960000000-N | SP | 9 | EA | METAL POLE FOUNDATION REMOVAL |
| 7972000000-N | SP | 9 | EA | METAL POLE REMOVAL |
| ******* BEGIN SCHEDULE AA ******* ******* ( 3 ALTERNATES ) ******* | | | | |
| 0366000000-E AA1 | 310 | 4,132 | LF | 15" RC PIPE CULVERTS, CLASS III |
| 0372000000-E AA1 | 310 | 612 | LF | 18" RC PIPE CULVERTS, CLASS III |
| 0378000000-E AA1 | 310 | 260 | LF | 24" RC PIPE CULVERTS, CLASS III |
| 0390000000-E AA1 | 310 | 174 | LF | 36" RC PIPE CULVERTS, CLASS III |
| *** OR *** | | | | |
| 0366000000-E AA2 | 310 | 3,764 | LF | 15" RC PIPE CULVERTS, CLASS III |
| 0372000000-E AA2 | 310 | 456 | LF | 18" RC PIPE CULVERTS, CLASS III |
| 0378000000-E AA2 | 310 | 216 | LF | 24" RC PIPE CULVERTS, CLASS III |
| 0390000000-E AA2 | 310 | 146 | LF | 36" RC PIPE CULVERTS, CLASS III |

| ItemNumber | Sec # | Quantity | Unit | Description |
|---|---|---|---|---|
| 0536000000-E AA2 | SP | 368 | LF | ***" HDPE PIPE CULVERTS (15") |
| 0536000000-E AA2 | SP | 156 | LF | ***" HDPE PIPE CULVERTS (18") |
| 0536000000-E AA2 | SP | 44 | LF | ***" HDPE PIPE CULVERTS (24") |
| 0536000000-E AA2 | SP | 28 | LF | ***" HDPE PIPE CULVERTS (36") |
| *** OR *** | | | | |
| 0366000000-E AA3 | 310 | 3,764 | LF | 15" RC PIPE CULVERTS, CLASS III |
| 0372000000-E AA3 | 310 | 456 | LF | 18" RC PIPE CULVERTS, CLASS III |
| 0378000000-E AA3 | 310 | 216 | LF | 24" RC PIPE CULVERTS, CLASS III |
| 0390000000-E AA3 | 310 | 146 | LF | 36" RC PIPE CULVERTS, CLASS III |
| 0540000000-E AA3 | SP | 368 | LF | ***" ALUMINIZED CORRUGATED STEEL PIPE CULVERTS, ****" THICK (15", 0.064") |
| 0540000000-E AA3 | SP | 156 | LF | ***" ALUMINIZED CORRUGATED STEEL PIPE CULVERTS, ****" THICK (18", 0.064") |
| 0540000000-E AA3 | SP | 44 | LF | ***" ALUMINIZED CORRUGATED STEEL PIPE CULVERTS, ****" THICK (24", 0.064") |
| 0540000000-E AA3 | SP | 28 | LF | ***" ALUMINIZED CORRUGATED STEEL PIPE CULVERTS, ****" THICK (36", 0.079") |
| ******* END SCHEDULE AA ******* | | | | |

RD248615

COMPUTED BY: TMW DATE: 10/14/2008

CHECKED BY: REO DATE: 2/20/2009

| PROJECT NO. | SHEET NO. |
|---|---|
| U-3309A | 3 - A |

# STATE OF NORTH CAROLINA
# DIVISION OF HIGHWAYS

## *LIST OF PIPES, ENDWALLS, ETC. (FOR PIPES 48" & UNDER)*

| STATION | LOCATION (LT, RT, OR CL) | STRUCTURE NO. FROM | STRUCTURE NO. TO | TOP ELEVATION | INVERT ELEVATION | INVERT ELEVATION | SLOPE CRITICAL | CLASS III R.C. PIPE (UNLESS NOTED OTHERWISE) 12" | 15" | 18" | 24" | 30" | 36" | 42" | 48" |
|---|---|---|---|---|---|---|---|---|---|---|---|---|---|---|---|
| -L- 20+70.80 | LT | 1 | | 311.87 | | | | | | | | | | | |
| -L- 20+70.80 | LT | 1 | 2 | | 308.7 | 308.5 | | | | | | | | | |
| -L- 22+71.75 | LT | in | 3 | | 314.5 | 313.34 | | | | | | | | | |
| -L- 22+68.38 | LT | 3 | | 317.01 | | | | | | | | | | | |
| -L- 22+68.38 | LT | 4 | | | 313.34 | 313.01 | | | | 12 | | | | | |
| -L- 22+45.31 | CL | 5 | | | | | | | | | | | | | |
| -L- 22+23.20 | RT | 6 | 7 | | 307.63 | 307.5 | | | | 20 | | | | | |
| -L- 25+29.05 | RT | 8 | | 323.17 | | | | | | | | | | | |
| -L- 25+29.05 | RT | 8 | 9 | | 320 | 319.9 | | | | | | | | | |
| | | | | | | | | | | | | | | | |
| -L- 25+67.06 | LT | 10 | | 324.67 | | | | | | | | | | | |
| -L- 25+67.06 | LT | 10 | 11 | | 321.5 | 321 | | | 56 | | | | | | |
| -Y1- 22+00.00 | RT | 12 | | | | | | | | | | | | | |
| -Y1- 22+00.00 | RT | 12 | 13 | | | 320.2 | | | 92 | | | | | | |
| -L- 26+49.21 | LT | 13 | | 325.8 | | | | | | | | | | | |
| -L- 26+49.21 | LT | 13 | 13A | | 320.2 | | | | 32 | | | | | | |
| -L- 26+26.58 | LT | 13A | | | | | | | | | | | | | |
| -L- 26+27.85 | RT | 14 | 15 | | | 318.5 | | | | | 36 | | | | |
| -Y2- 11+21.80 | RT | 15 | | 321.7 | | | | | | | | | | | |
| -Y2- 11+53.06 | RT | 15 | 17 | | 318.5 | 318.37 | | | | | | | | | |
| -Y1- 22+20.67 | CL | 18 | | 325.97 | | | | | | | | | | | |
| -Y1- 22+20.67 | LT | 18 | 19 | | 322.8 | 319.5 | | | 140 | | | | | | |
| -L- 28+84.56 | LT | 19 | | 322.5 | | | | | | | | | | | |
| -L- 28+84.56 | LT | 19 | 20 | | 319.5 | 317.3 | | | 88 | | | | | | |
| -L- 28+78.46 | CL | 21 | | 322.7 | | | | | | | | | | | |
| -L- 28+78.46 | CL | 21 | 22 | | 319.5 | 318 | | | 72 | | | | | | |
| -L- 29+50.22 | CL | 22 | | 321 | | | | | | | | | | | |
| -L- 29+50.22 | CL | 22 | 23 | | 318 | 316 | | | 72 | | | | | | |
| -Y2- 11+30.00 | LT | 24 | | 322.23 | | | | | | | | | | | |
| -Y2- 11+30.00 | LT | 24 | 25 | | 319.23 | 318.84 | | | 16 | | | | | | |
| -Y2- 11+45.00 | LT | 25 | | 321.84 | | | | | | | | | | | |
| -Y2- 11+45.00 | LT | 25 | 26 | | 318.84 | 318.38 | | | | | | | | | |
| -Y2- 11+66.14 | CL | 27 | | 323.14 | | | | | | | | | | | |
| -Y2- 11+66.14 | CL | 27 | 28 | | 319.97 | 317.08 | | | 252 | | | | | | |
| -Y2- 14+20.20 | CL | 28 | | 320.25 | | | | | | | | | | | |
| -Y2- 14+20.20 | CL | 28 | 29 | | 317.08 | 316.01 | | | 92 | | | | | | |
| -Y2- 15+13.28 | CL | 29 | | 319.18 | | | | | | | | | | | |
| -Y2- 15+13.28 | CL | 29 | 30 | | 316.01 | 315.08 | | | 96 | | | | | | |
| -Y2- 16+09.70 | CL | 30 | | 318.25 | | | | | | | | | | | |
| | | | | | | | | | | | | | | | |
| -Y2- 16+09.70 | CL | 30 | 32 | | 312.5 | 312.22 | | | | 4 | | | | | |
| -Y2- 16+09.70 | CL | 30 | 31 | | 314.2 | 314.81 | | | 32 | | | | | | |
| -Y2- 16+44.40 | CL | 31 | | 317.98 | | | | | | | | | | | |
| -Y1- 19+48.23 | CL | 33 | | 325.74 | | | | | | | | | | | |
| | | | | | | | | | | | | | | | |
| -Y1- 19+48.23 | CL | 33 | 34 | | 322.57 | 321.94 | | | 64 | | | | | | |
| -Y1- 18+81.84 | CL | 34 | | 325.11 | | | | | | | | | | | |
| -Y1- 18+81.84 | CL | 34 | 35 | | 321.94 | 319.48 | | | 184 | | | | | | |
| -Y1- 16+97.88 | CL | 35 | | 322.65 | | | | | | | | | | | |
| | | | | | | | | | | | | | | | |
| SHEET TOTALS | | | | | | | | | 1288 | 36 | 36 | | | | |

| STATION | BITUMINOUS COATED C.S. PIPE TYPE B (UNLESS NOTED OTHERWISE) 12" .064 | 15" .064 | 18" .064 | 24" .064 | 30" .079 | 36" .079 | 42" .109 | 48" .109 | CLASS III R.C. PIPE OR ALUMINIZED C.S. PIPE, TYPE IR OR HDPE PIPE, TYPE S OR D 12" | 15" | 18" | 24" | 30" | 36" | 42" | 48" | 15" SIDE DRAIN PIPE | 18" SIDE DRAIN PIPE | 24" SIDE DRAIN PIPE | ENDWALLS STD. 838.01 OR STD. 838.11 (UNLESS NOTED OTHERWISE) CU. YARDS R.C.P. | C.S.P. |
|---|---|---|---|---|---|---|---|---|---|---|---|---|---|---|---|---|---|---|---|---|---|
| -L- 20+70.80 | | | | | | | | | | | | | | | | | | | | | |
| -L- 20+70.80 | | | | | | | | | | 44 | | | | | | | | | | | |
| -L- 22+71.75 | | | | | | | | | | | 20 | | | | | | | | | | |
| -L- 22+68.38 | | | | | | | | | | | | | | | | | | | | | |
| -L- 22+68.38 | | | | | | | | | | | | | | | | | | | | | |
| -L- 22+45.31 | | | | | | | | | | | | | | | | | | | | | |
| -L- 22+23.20 | | | | | | | | | | | | | | | | | | | | | |
| -L- 25+29.05 | | | | | | | | | | | | | | | | | | | | | |
| -L- 25+29.05 | | | | | | | | | | 16 | | | | | | | | | | | |
| -L- 25+67.06 | | | | | | | | | | | | | | | | | | | | | |
| -L- 25+67.06 | | | | | | | | | | | | | | | | | | | | | |
| -Y1- 22+00.00 | | | | | | | | | | | | | | | | | | | | | |
| -Y1- 22+00.00 | | | | | | | | | | | | | | | | | | | | | |
| -L- 26+49.21 | | | | | | | | | | | | | | | | | | | | | |
| -L- 26+49.21 | | | | | | | | | | | | | | | | | | | | | |
| -L- 26+26.58 | | | | | | | | | | | | | | | | | | | | | |
| -L- 26+27.85 | | | | | | | | | | | | | | | | | | | | | |
| -Y2- 11+21.80 | | | | | | | | | | | | | | | | | | | | | |
| -Y2- 11+53.06 | | | | | | | | | | | | 44 | | | | | | | | | |
| -Y1- 22+20.67 | | | | | | | | | | | | | | | | | | | | | |
| -Y1- 22+20.67 | | | | | | | | | | | | | | | | | | | | | |
| -L- 28+84.56 | | | | | | | | | | | | | | | | | | | | | |
| -L- 28+84.56 | | | | | | | | | | | | | | | | | | | | | |
| -L- 28+78.46 | | | | | | | | | | | | | | | | | | | | | |
| -L- 28+78.46 | | | | | | | | | | | | | | | | | | | | | |
| -L- 29+50.22 | | | | | | | | | | | | | | | | | | | | | |
| -L- 29+50.22 | | | | | | | | | | | | | | | | | | | | | |
| -Y2- 11+30.00 | | | | | | | | | | | | | | | | | | | | | |
| -Y2- 11+30.00 | | | | | | | | | | | | | | | | | | | | | |
| -Y2- 11+45.00 | | | | | | | | | | | | | | | | | | | | | |
| -Y2- 11+45.00 | | | | | | | | | | 16 | | | | | | | | | | | |
| -Y2- 11+66.14 | | | | | | | | | | | | | | | | | | | | | |
| -Y2- 11+66.14 | | | | | | | | | | | | | | | | | | | | | |
| -Y2- 14+20.20 | | | | | | | | | | | | | | | | | | | | | |
| -Y2- 14+20.20 | | | | | | | | | | | | | | | | | | | | | |
| -Y2- 15+13.28 | | | | | | | | | | | | | | | | | | | | | |
| -Y2- 15+13.28 | | | | | | | | | | | | | | | | | | | | | |
| -Y2- 16+09.70 | | | | | | | | | | | | | | | | | | | | | |
| -Y2- 16+09.70 | | | | | | | | | | | | | | | | | | | | | |
| -Y2- 16+09.70 | | | | | | | | | | | | | | | | | | | | | |
| -Y2- 16+44.40 | | | | | | | | | | | | | | | | | | | | | |
| -Y1- 19+48.23 | | | | | | | | | | | | | | | | | | | | | |
| -Y1- 19+48.23 | | | | | | | | | | | | | | | | | | | | | |
| -Y1- 18+81.84 | | | | | | | | | | | | | | | | | | | | | |
| -Y1- 18+81.84 | | | | | | | | | | | | | | | | | | | | | |
| -Y1- 16+97.88 | | | | | | | | | | | | | | | | | | | | | |
| SHEET TOTALS | | | | | | | | | | 76 | 20 | 44 | | | | | | | | | |

| STATION | QUANITIES FOR DRAINAGE STRUCTURES PER EACH (0' THRU 5.0') | *TOTAL L.F. FOR PAY QUANTITY SHALL BE COL. 'A' + (1.3 X COL.'B') LIN. FT. A 5.0' THRU 10.0' | B 10.0' AND ABOVE | C.B. STD. 840.01 OR STD. 840.02 | FRAME, GRATES, AND HOOD STANDARD 840.03 TYPE OF GRATE E | F | G | CONCRETE TRANSITIONAL SECTION DROP INLET | CATCH BASIN | D.I. STD. 840.14 OR STD. 840.15 | D.I. FRAME AND GRATE STD. 840.16 | G.D.I. TYPE "A" STD. 840.17 OR 840.26 | G.D.I. TYPE "B" STD. 840.18 OR 840.27 | G.D.I. TYPE "D" STD. 840.19 OR 840.28 | G.D.I. FRAME WITH GRATE STD. 840.22 | G.D.I. FRAME WITH TWO GRATES STD. 840.22 | G.D.I. (N.S.) FRAME WITH GRATE STD. 840.24 | G.D.I. (N.S.) FRAME WITH TWO GRATES STD. 840.24 | J.B. STD. 840.31 OR 840.32 | T.B.J.B. STD. 840.34 | MANHOLE STD. 840.51 | M.H. STD. 840.51 OR 840.53 | M.H. FRAME AND COVER STD. 840.54 | CONVERT DI TO JB | CONVERT OTCB TO 2GI | CONVERT CB TO 2GI |
|---|---|---|---|---|---|---|---|---|---|---|---|---|---|---|---|---|---|---|---|---|---|---|---|---|---|---|
| -L- 20+70.80 | 1 | | | 1 | 1 | | | | | | | | | | | | | | | | | | | | | |
| -L- 20+70.80 | | | | | | | | | | | | | | | | | | | | | | | | | | |
| -L- 22+71.75 | | | | | | | | | | | | | | | | | | | | | | | | | | |
| -L- 22+68.38 | 1 | | | 1 | | 1 | | | | | | | | | | | | | | | | | | | | |
| -L- 22+68.38 | | | | | | | | | | | | | | | | | | | | | | | | | | |
| -L- 22+45.31 | 1 | | | | | | | | | | | | | | | | | | | | | | 1 | 1 | | |
| -L- 22+23.20 | | | | | | | | | | | | | | | | | | | | | | | | | | |
| -L- 25+29.05 | 1 | | | 1 | | | 1 | | | | | | | | | | | | | | | | | | | |
| -L- 25+29.05 | | | | | | | | | | | | | | | | | | | | | | | | | | |
| -L- 25+67.06 | 1 | | | 1 | | | 1 | | | | | | | | | | | | | | | | | | | |
| -L- 25+67.06 | | | | | | | | | | | | | | | | | | | | | | | | | | |
| -Y1- 22+00.00 | 1 | | | 1 | | 1 | | | | | | | | | | | | | | | | | | | | |
| -Y1- 22+00.00 | | | | | | | | | | | | | | | | | | | | | | | | | | |
| -L- 26+49.21 | 1 | 0.6 | | | | | | | | | | | | | | | | | | 1 | | 1 | | | | |
| -L- 26+49.21 | | | | | | | | | | | | | | | | | | | | | | | | | | |
| -L- 26+26.58 | 1 | | | | | | | | | | | | | 1 | | | | 1 | | | | | | | | |
| -L- 26+27.85 | | | | | | | | | | | | | | | | | | | | | | | | | | |
| -Y2- 11+21.80 | 1 | | | | | | | | | 1 | 1 | | | | | | | | | | | | | | | |
| -Y2- 11+53.06 | | | | | | | | | | | | | | | | | | | | | | | | | | |
| -Y1- 22+20.67 | 1 | | | | | | | 1 | | 1 | 1 | | | | | | | | | | | | | | | |
| -Y1- 22+20.67 | | | | | | | | | | | | | | | | | | | | | | | | | | |
| -L- 28+84.56 | 1 | | | 1 | | 1 | | | | | | | | | | | | | | | | | | | | |
| -L- 28+84.56 | | | | | | | | | | | | | | | | | | | | | | | | | | |
| -L- 28+78.46 | 1 | | | 1 | | 1 | | | | | | | | | | | | | | | | | | | | |
| -L- 28+78.46 | | | | | | | | | | | | | | | | | | | | | | | | | | |
| -L- 29+50.22 | 1 | | | 1 | | 1 | | | | | | | | | | | | | | | | | | | | |
| -L- 29+50.22 | | | | | | | | | | | | | | | | | | | | | | | | | | |
| -Y2- 11+30.00 | 1 | | | 1 | | | 1 | | | | | | | | | | | | | | | | | | | |
| -Y2- 11+30.00 | | | | | | | | | | | | | | | | | | | | | | | | | | |
| -Y2- 11+45.00 | 1 | | | 1 | | | 1 | | | | | | | | | | | | | | | | | | | |
| -Y2- 11+45.00 | | | | | | | | | | | | | | | | | | | | | | | | | | |
| -Y2- 11+66.14 | 1 | | | | | | | 1 | | 1 | 1 | | | | | | | | | | | | | | | |
| -Y2- 11+66.14 | | | | | | | | | | | | | | | | | | | | | | | | | | |
| -Y2- 14+20.20 | 1 | | | | | | | 1 | | 1 | 1 | | | | | | | | | | | | | | | |
| -Y2- 14+20.20 | | | | | | | | | | | | | | | | | | | | | | | | | | |
| -Y2- 15+13.28 | 1 | | | | | | | 1 | | 1 | 1 | | | | | | | | | | | | | | | |
| -Y2- 15+13.28 | | | | | | | | | | | | | | | | | | | | | | | | | | |
| -Y2- 16+09.70 | 1 | 0.8 | | | | | | 1 | | 1 | 1 | | | | | | | | | | | | | | | |
| -Y2- 16+09.70 | | | | | | | | | | | | | | | | | | | | | | | | | | |
| -Y2- 16+09.70 | | | | | | | | | | | | | | | | | | | | | | | | | | |
| -Y2- 16+44.40 | 1 | | | | | | | 1 | | 1 | 1 | | | | | | | | | | | | | | | |
| -Y1- 19+48.23 | 1 | | | | | | | 1 | | 1 | 1 | | | | | | | | | | | | | | | |
| -Y1- 19+48.23 | | | | | | | | | | | | | | | | | | | | | | | | | | |
| -Y1- 18+81.84 | 1 | | | | | | | 1 | | 1 | 1 | | | | | | | | | | | | | | | |
| -Y1- 18+81.84 | | | | | | | | | | | | | | | | | | | | | | | | | | |
| -Y1- 16+97.88 | 1 | | | | | | | 1 | | 1 | 1 | | | | | | | | | | | | | | | |
| SHEET TOTALS | 23 | 1.4 | | 10 | 1 | 5 | 4 | 9 | | 10 | 10 | | | 1 | | | | 1 | | 1 | | 1 | 1 | 1 | | |

| STATION | CORR. STEEL ELBOWS NO. & SIZE | CONC. COLLARS CL. "B" C.Y. STD. 840.72 | CONC. & BRICK PIPE PLUG, C.Y. STD. 840.71 | PIPE REMOVAL LIN. FT. | REMARKS |
|---|---|---|---|---|---|
| -L- 20+70.80 | | | | | |
| -L- 20+70.80 | | | | | |
| -L- 22+71.75 | | | | | |
| -L- 22+68.38 | | | | | |
| -L- 22+68.38 | | 0.4465 | | | |
| -L- 22+45.31 | | | | | CONVERT DI TO JB W/ MH |
| -L- 22+23.20 | | 0.4465 | | | |
| -L- 25+29.05 | | | | | |
| -L- 25+29.05 | | | | | |
| -L- 25+67.06 | | | | | |
| -L- 25+67.06 | | | | | |
| -Y1- 22+00.00 | | | | | |
| -Y1- 22+00.00 | | | | | |
| -L- 26+49.21 | | | | | |
| -L- 26+49.21 | | | | | |
| -L- 26+26.58 | | | | | |
| -L- 26+27.85 | | 0.5526 | | 20 | REMOVE DI & PIPE |
| -Y2- 11+21.80 | | | | | |
| -Y2- 11+53.06 | | | | | REMOVE AND REPLACE W/ 24" |
| -Y1- 22+20.67 | | | | | |
| -Y1- 22+20.67 | | | | | |
| -L- 28+84.56 | | | | | |
| -L- 28+84.56 | | | | | |
| -L- 28+78.46 | | | | | |
| -L- 28+78.46 | | | | | |
| -L- 29+50.22 | | | | | |
| -L- 29+50.22 | | | | | |
| -Y2- 11+30.00 | | | | | |
| -Y2- 11+30.00 | | | | | |
| -Y2- 11+45.00 | | | | | |
| -Y2- 11+45.00 | | | | | |
| -Y2- 11+66.14 | | | | | |
| -Y2- 11+66.14 | | | | | |
| -Y2- 14+20.20 | | | | | |
| -Y2- 14+20.20 | | | | | |
| -Y2- 15+13.28 | | | | | |
| -Y2- 15+13.28 | | | | | |
| -Y2- 16+09.70 | | | | | |
| -Y2- 16+09.70 | | 0.4465 | | | REMOVE DI |
| -Y2- 16+09.70 | | | | | |
| -Y2- 16+44.40 | | | | | |
| -Y1- 19+48.23 | | | | | |
| -Y1- 19+48.23 | | | | | |
| -Y1- 18+81.84 | | | | | |
| -Y1- 18+81.84 | | | | | |
| -Y1- 16+97.88 | | | | | |
| SHEET TOTALS | | 1.8921 | | 20 | |

ABBREVIATIONS

| | |
|---|---|
| C.B. | CATCH BASIN |
| N.D.I. | NARROW DROP INLET |
| D.I. | DROP INLET |
| G.D.I. | GRATED DROP INLET |
| G.D.I.(N.S.) | GRATED DROP INLET (NARROW SLOT) |
| J.B. | JUNCTION BOX |
| M.H. | MANHOLE |
| T.B.D.I. | TRAFFIC BEARING DROP INLET |
| T.B.J.B. | TRAFFIC BEARING JUNCTION BOX |

RD248615

COMPUTED BY: TMW DATE: 10/14/2008

CHECKED BY: REO DATE: 2/20/2009

| PROJECT NO. | SHEET NO. |
|---|---|
| U-3309A | 3 - B |

# STATE OF NORTH CAROLINA
# DIVISION OF HIGHWAYS

## *LIST OF PIPES, ENDWALLS, ETC. (FOR PIPES 48" & UNDER)*

| STATION | LOCATION (LT, RT, OR CL) | STRUCTURE NO. FROM | STRUCTURE NO. TO | TOP ELEVATION | INVERT ELEVATION | INVERT ELEVATION | SLOPE CRITICAL | CLASS III R.C.P. (UNLESS NOTED OTHERWISE) 12" | 15" | 18" | 24" | 30" | 36" | 42" | 48" |
|---|---|---|---|---|---|---|---|---|---|---|---|---|---|---|---|
| -Y1- 16+97.88 | CL | 35 | 36 | | 319.48 | 316.63 | | | 112 | | | | | | |
| -Y1- 15+84.42 | CL | 36 | | 319.8 | | | | | | | | | | | |
| -Y1- 15+84.42 | CL | 36 | 37 | | 316.63 | 314.49 | | | 76 | | | | | | |
| -Y1- 15+10.04 | CL | 37 | | 317.66 | | | | | | | | | | | |
| -Y1- 15+10.04 | CL | 37 | 38 | | 314.49 | | | | 36 | | | | | | |
| -Y1- 15+10.04 | RT | 38 | | | | | | | | | | | | | |
| -Y1- 15+10.04 | RT | 38A | 38 | | | | | | 20 | | | | | | |
| -Y1- 15+10.17 | RT | 38A | | | | | | | | | | | | | |
| -Y1- 17+50.00 | RT | 38B | 38 | | | | | | 236 | | | | | | |
| -Y1- 17+50.00 | RT | 38B | | | | | | | | | | | | | |
| -Y1- 15+10.04 | RT | 38 | 40 | | | | | | | 180 | | | | | |
| -Y1- 13+25.03 | CL | 42 | | 311.5 | | | | | | | | | | | |
| -Y1- 13+25.03 | CL | 42 | 40 | | 308.9 | 305.6 | | | 40 | | | | | | |
| -Y1- 13+25.00 | RT | 40 | | 309.3 | | | | | | | | | | | |
| -Y1- 13+25.00 | RT | 40 | out | | 305.6 | 305.35 | | | | | 68 | | | | |
| -L- 33+48.00 | LT | 44 | | 305.7 | | | | | | | | | | | |
| -L- 33+48.00 | LT | 44 | 45 | | 303.78 | 303.11 | | | 72 | | | | | | |
| -L- 34+22.84 | LT | 45 | | 306.28 | | | | | | | | | | | |
| -L- 34+22.84 | LT | 45 | 46 | | 303.11 | 298.5 | | | 192 | | | | | | |
| -L- 36+16.37 | LT | 46 | | 301.5 | | | | | | | | | | | |
| -L- 36+16.37 | LT | 46 | 47 | | 298.4 | 297.5 | | | 72 | | | | | | |
| -L- 36+84.50 | LT | 47 | | 300.7 | | | | | | | | | | | |
| -L- 36+84.50 | LT | 47 | 48 | | 297.5 | 295.73 | | | 44 | | | | | | |
| -L- 37+16.67 | RT | 49 | 50 | | 288.85 | 287.47 | | | | | | | | 48 | |
| -L- 37+14.52 | RT | 50 | | 293.27 | | | | | | | | | | 12 | |
| -L- 38+10.91 | LT | 52 | 53 | | | 283.5 | | | | | | | | 76 | |
| -L- 39+80.00 | CL | 54 | | 296.44 | | | | | | | | | | | |
| -L- 39+80.00 | CL | 54 | 55 | | 293.27 | 288.6 | | | 84 | | | | | | |
| -L- 40+18.33 | RT | 55 | | 292.3 | | | | | | | | | | | |
| -Y5- 10+65.86 | RT | 55 | 56 | | 288.6 | 287.08 | | | | | | | | | |
| -Y5- 10+85.58 | RT | 56 | | 289 | | | | | | | | | | | |
| -Y5- 10+85.58 | RT | 56 | 60 | | 287.08 | 287 | | | | | | | | | |
| -Y5- 10+84.94 | RT | 60 | | 293 | | | | | | | | | | | |
| -Y5- 10+84.94 | RT | 60 | 59 | | 287 | 291.54 | | | 56 | | | | | | |
| -Y5- 11+32.02 | RT | 59 | | 294.54 | | | | | | | | | | | |
| -Y5- 11+28.98 | RT | 57 | 59 | | 292.03 | 291.54 | | | | | | | | | |
| -Y5- 11+28.98 | RT | 57 | | 293.95 | | | | | | | | | | | |
| -Y5- 11+36.04 | LT | 58 | 59 | | 291.68 | 291.54 | | | 24 | | | | | | |
| -Y5- 11+36.04 | LT | 58 | | 294.68 | | | | | | | | | | | |
| SHEET TOTALS | | | | | | | | | 1064 | 180 | 68 | | | 136 | |

SIZE / THICKNESS OR GAUGE

| STATION | BITUMINOUS COATED C.S. PIPE TYPE B (UNLESS NOTED OTHERWISE) 12" .064 | 15" .064 | 18" .064 | 24" .064 | 30" .079 | 36" .079 | 42" .109 | 48" .109 | CLASS III R.C. PIPE OR ALUMINIZED C.S. PIPE, TYPE IR OR HDPE PIPE, TYPE S OR D 12" | 15" | 18" | 24" | 30" | 36" | 42" | 48" | 15" SIDE DRAIN PIPE | 18" SIDE DRAIN PIPE | 24" SIDE DRAIN PIPE | ENDWALLS STD. 838.01 OR STD. 838.11 (UNLESS NOTED OTHERWISE) CU. YARDS R.C.P. | C.S.P. |
|---|---|---|---|---|---|---|---|---|---|---|---|---|---|---|---|---|---|---|---|---|---|
| -L- 37+16.67 | | | | | | | | | | | | | | | | | | | | 4.5 | |
| -Y5- 10+65.86 | | | | | | | | | | 20 | | | | | | | | | | | |
| -Y5- 10+85.58 | | | | | | | | | | 32 | | | | | | | | | | | |
| -Y5- 11+28.98 | | | | | | | | | | 20 | | | | | | | | | | | |
| SHEET TOTALS | | | | | | | | | | 72 | | | | | | | | | | 4.5 | |

| STATION | QUANITIES FOR DRAINAGE STRUCTURES PER EACH (0' THRU 5.0') | *TOTAL L.F. FOR PAY QUANTITY SHALL BE COL. 'A' + (1.3 X COL.'B') LIN. FT. A 5.0' THRU 10.0' | B 10.0' AND ABOVE | C.B. STD. 840.01 OR STD. 840.02 | FRAME, GRATES, AND HOOD STANDARD 840.03 TYPE OF GRATE E | F | G | CONCRETE TRANSITIONAL SECTION DROP INLET | CATCH BASIN | D.I. STD. 840.14 OR STD. 840.15 | D.I. FRAME AND GRATE STD. 840.16 | G.D.I. TYPE "A" STD. 840.17 OR 840.26 | G.D.I. TYPE "B" STD. 840.18 OR 840.27 | G.D.I. TYPE "D" STD. 840.19 OR 840.28 | G.D.I. FRAME WITH GRATE STD. 840.22 | G.D.I. FRAME WITH TWO GRATES STD. 840.22 | G.D.I. (N.S.) FRAME WITH GRATE STD. 840.24 | G.D.I. (N.S.) FRAME WITH TWO GRATES STD. 840.24 | J.B. STD. 840.31 OR 840.32 | T.B.J.B. STD. 840.34 | MANHOLE STD. 840.51 | M.H. STD. 840.51 OR 840.53 | M.H. FRAME AND COVER STD. 840.54 | M.H. FRAME AND COVER STD. 840.54 | CONVERT DI TO JB | CONVERT DI TO CB | CONVERT CB TO 2GI |
|---|---|---|---|---|---|---|---|---|---|---|---|---|---|---|---|---|---|---|---|---|---|---|---|---|---|---|---|
| -Y1- 15+84.42 | 1 | | | | | | | 1 | | 1 | 1 | | | | | | | | | | | | | | | | |
| -Y1- 15+10.04 | 1 | | | | | | | 1 | | 1 | 1 | | | | | | | | | | | | | | | | |
| -Y1- 15+10.04 | 1 | | | 1 | | | 1 | | | | | | | | | | | | | | | | | | | | |
| -Y1- 15+10.17 | 1 | | | | | | | | | | | | | 1 | | | | 1 | | | | | | | | | |
| -Y1- 17+50.00 | 1 | | | 1 | | | 1 | | | | | | | | | | | | | | | | | | | | |
| -Y1- 13+25.03 | 1 | | | | | | | 1 | | 1 | 1 | | | | | | | | | | | | | | | | |
| -Y1- 13+25.00 | 1 | | | 1 | | | 1 | | | | | | | | | | | | | | | | | | | | |
| -L- 33+48.00 | 1 | | | | | | | | | | | | 1 | | | 1 | | | | | | | | | | | |
| -L- 34+22.84 | 1 | | | 1 | 1 | | | | | | | | | | | | | | | | | | | | | | |
| -L- 36+16.37 | 1 | | | 1 | 1 | | | | | | | | | | | | | | | | | | | | | | |
| -L- 36+84.50 | 1 | | | 1 | | | 1 | | | | | | | | | | | | | | | | | | | | |
| -L- 37+14.52 | 1 | 0.8 | | | | | | | | | | 1 | | | 1 | 1 | | | | | | | | | | | |
| -L- 39+80.00 | 1 | | | | | | | 1 | | 1 | 1 | | | | | | | | | | | | | | | | |
| -L- 40+18.33 | 1 | | | 1 | 1 | | | | | | | | | | | | | | | | | | | | | | |
| -Y5- 10+85.58 | 1 | | | | | | | | | | | | | 1 | | 1 | | | | | | | | | | | |
| -Y5- 10+84.94 | 1 | 1 | | 1 | | | 1 | | | | | | | | | | | | | | | | | | | | |
| -Y5- 11+32.02 | 1 | | | 1 | | | 1 | | | | | | | | | | | | | | | | | | | | |
| -Y5- 11+28.98 | 1 | | | | | | | | | | | | | 1 | | 1 | | | | | | | | | | | |
| -Y5- 11+36.04 | 1 | | | 1 | | 1 | | | | | | | | | | | | | | | | | | | | | |
| SHEET TOTALS | 19 | 1.8 | | 10 | 3 | 1 | 6 | 4 | | 4 | 4 | 1 | 1 | 3 | 1 | 4 | | 1 | | | | | | | | | |

| STATION | CORR. STEEL ELBOWS NO. & SIZE | CONC. COLLARS CL. "B" C.Y. STD. 840.72 | CONC. & BRICK PIPE PLUG, C.Y. STD. 840.71 | PIPE REMOVAL LIN. FT. | REMARKS |
|---|---|---|---|---|---|
| -Y1- 15+84.42 | | | | 57 | REMOVE DI |
| -Y1- 15+10.04 | | | | 89 | |
| -Y1- 13+25.03 | | | | | REMOVE DI |
| -Y1- 13+25.03 | | | | 56 | |
| -L- 33+48.00 | | | | 41 | pipe removal at '-L- 33+76.42 RT |
| -L- 34+22.84 | | | | 87 | REMOVE 2 - DI |
| -L- 37+14.52 | | 0.8856 | | | 3GI AND FALSE SUMP, REMOVE HEADWALL |
| -L- 38+10.91 | | 0.8856 | | | |
| -Y5- 10+84.94 | | | | 56 | |
| SHEET TOTALS | | 1.7712 | | 386 | |

ABBREVIATIONS

| | |
|---|---|
| C.B. | CATCH BASIN |
| N.D.I. | NARROW DROP INLET |
| D.I. | DROP INLET |
| G.D.I. | GRATED DROP INLET |
| G.D.I.(N.S.) | GRATED DROP INLET (NARROW SLOT) |
| J.B. | JUNCTION BOX |
| M.H. | MANHOLE |
| T.B.D.I. | TRAFFIC BEARING DROP INLET |
| T.B.J.B. | TRAFFIC BEARING JUNCTION BOX |

RD248615

COMPUTED BY: TMW DATE: 10/14/2008

CHECKED BY: REO DATE: 2/20/2009

| PROJECT NO. | SHEET NO. |
|---|---|
| U-3309A | 3 - C |

# STATE OF NORTH CAROLINA
# DIVISION OF HIGHWAYS

## *LIST OF PIPES, ENDWALLS, ETC. (FOR PIPES 48" & UNDER)*

| STATION | LOCATION (LT, RT, OR CL) | STRUCTURE NO. FROM | STRUCTURE NO. TO | TOP ELEVATION | INVERT ELEVATION | INVERT ELEVATION | SLOPE CRITICAL | CLASS III R.C. PIPE (UNLESS NOTED OTHERWISE) 12" | 15" | 18" | 24" | 30" | 36" | 42" | 48" | BITUMINOUS COATED C.S. PIPE TYPE B (UNLESS NOTED OTHERWISE) 12" .064 | 15" .064 | 18" .064 | 24" .064 | 30" .079 | 36" .079 | 42" .109 | 48" .109 | CLASS III R.C. PIPE OR ALUMINIZED C.S. PIPE, TYPE IR OR HDPE PIPE, TYPE S OR D 12" | 15" | 18" | 24" | 30" | 36" | 42" | 48" | 15" SIDE DRAIN PIPE | 18" SIDE DRAIN PIPE | 24" SIDE DRAIN PIPE |
|---|---|---|---|---|---|---|---|---|---|---|---|---|---|---|---|---|---|---|---|---|---|---|---|---|---|---|---|---|---|---|---|---|---|---|
| -Y5- 10+84.97 | CL | 60 | 60A |  | 287 | 289.9 |  |  | 40 |  |  |  |  |  |  |  |  |  |  |  |  |  |  |  |  |  |  |  |  |  |  |  |  |  |
| -Y5- 10+74.23 | LT | 60A |  | 292.9 |  |  |  |  |  |  |  |  |  |  |  |  |  |  |  |  |  |  |  |  |  |  |  |  |  |  |  |  |  |  |
| -Y5- 10+74.23 | LT | 60A | 61 |  | 289.6 | 289 |  |  |  | 40 |  |  |  |  |  |  |  |  |  |  |  |  |  |  |  |  |  |  |  |  |  |  |  |  |
| -L- 41+29.25 | RT | 61 |  | 292.8 |  |  |  |  |  |  |  |  |  |  |  |  |  |  |  |  |  |  |  |  |  |  |  |  |  |  |  |  |  |  |
| -L- 41+29.25 | RT | 61 | 63 |  | 289 | 288.5 |  |  |  | 48 |  |  |  |  |  |  |  |  |  |  |  |  |  |  |  |  |  |  |  |  |  |  |  |  |
| -L- 41+78.19 | RT | 63 |  | 291.5 |  |  |  |  |  |  |  |  |  |  |  |  |  |  |  |  |  |  |  |  |  |  |  |  |  |  |  |  |  |  |
| -L- 42+21.46 | RT | 62 | 63 |  | 285.93 | 285.5 |  |  | 44 |  |  |  |  |  |  |  |  |  |  |  |  |  |  |  |  |  |  |  |  |  |  |  |  |  |
| -L- 42+21.46 | RT | 62 |  | 287.85 |  |  |  |  |  |  |  |  |  |  |  |  |  |  |  |  |  |  |  |  |  |  |  |  |  |  |  |  |  |  |
| -L- 41+78.19 | RT | 63 | 64 |  | 285.5 | 285 |  |  |  | 56 |  |  |  |  |  |  |  |  |  |  |  |  |  |  |  |  |  |  |  |  |  |  |  |  |
| -L- 42+20.09 | CL | 64 |  | 293.86 |  |  |  |  |  |  |  |  |  |  |  |  |  |  |  |  |  |  |  |  |  |  |  |  |  |  |  |  |  |  |
| -L- 42+20.09 | CL | 64 | 67 |  | 285 | 284 |  |  |  |  | 112 |  |  |  |  |  |  |  |  |  |  |  |  |  |  |  |  |  |  |  |  |  |  |  |
| -Y4- 11+18.72 | RT | 65 |  |  |  |  |  |  |  |  |  |  |  |  |  |  |  |  |  |  |  |  |  |  |  |  |  |  |  |  |  |  |  |  |
| -Y4- 11+18.72 | LT | 66 |  |  |  |  |  |  |  |  |  |  |  |  |  |  |  |  |  |  |  |  |  |  |  |  |  |  |  |  |  |  |  |  |
| -L- 44+55.00 | LT | 68 |  | 293.02 |  |  |  |  |  |  |  |  |  |  |  |  |  |  |  |  |  |  |  |  |  |  |  |  |  |  |  |  |  |  |
|  |  |  |  |  |  |  |  |  |  |  |  |  |  |  |  |  |  |  |  |  |  |  |  |  |  |  |  |  |  |  |  |  |  |  |
| -L- 44+55.00 | LT | 68 | 69 |  | 290.02 | 289.21 |  |  | 180 |  |  |  |  |  |  |  |  |  |  |  |  |  |  |  |  |  |  |  |  |  |  |  |  |  |
| -L- 46+36.96 | LT | 69 |  | 292.71 |  |  |  |  |  |  |  |  |  |  |  |  |  |  |  |  |  |  |  |  |  |  |  |  |  |  |  |  |  |  |
| -L- 46+36.96 | LT | 69 | 70 |  | 289.21 | 289.21 |  |  | 4 |  |  |  |  |  |  |  |  |  |  |  |  |  |  |  |  |  |  |  |  |  |  |  |  |  |
| -L- 46+43.09 | LT | 70 |  | 292.71 |  |  |  |  |  |  |  |  |  |  |  |  |  |  |  |  |  |  |  |  |  |  |  |  |  |  |  |  |  |  |
|  |  |  |  |  |  |  |  |  |  |  |  |  |  |  |  |  |  |  |  |  |  |  |  |  |  |  |  |  |  |  |  |  |  |  |
| -L- 46+43.09 | LT | 70 | 71 |  | 289.21 | 288.7 |  |  | 112 |  |  |  |  |  |  |  |  |  |  |  |  |  |  |  |  |  |  |  |  |  |  |  |  |  |
| -L- 47+58.00 | LT | 71 |  | 293.2 |  |  |  |  |  |  |  |  |  |  |  |  |  |  |  |  |  |  |  |  |  |  |  |  |  |  |  |  |  |  |
| -L- 47+58.00 | LT | 71 | 72 |  | 288.7 | 288.1 |  |  | 132 |  |  |  |  |  |  |  |  |  |  |  |  |  |  |  |  |  |  |  |  |  |  |  |  |  |
| -L- 48+91.99 | LT | 72 |  | 294.53 |  |  |  |  |  |  |  |  |  |  |  |  |  |  |  |  |  |  |  |  |  |  |  |  |  |  |  |  |  |  |
|  |  |  |  |  |  |  |  |  |  |  |  |  |  |  |  |  |  |  |  |  |  |  |  |  |  |  |  |  |  |  |  |  |  |  |
| -L- 48+91.99 | LT | 72 | 77A |  | 288.1 | 287.08 |  |  | 76 |  |  |  |  |  |  |  |  |  |  |  |  |  |  |  |  |  |  |  |  |  |  |  |  |  |
| -L- 49+57.35 | LT | 77A | 77 |  | 282.6 | 282.4 |  |  |  |  |  |  | 12 |  |  |  |  |  |  |  |  |  |  |  |  |  |  |  |  |  |  |  |  |  |
| -L- 49+69.14 | LT | 76 | 77 |  | 282.93 | 282.52 |  |  |  |  |  |  |  |  | 16 |  |  |  |  |  |  |  |  |  |  |  |  |  |  |  |  |  |  |  |
| -L- 50+03.24 | LT | 75 | 77A |  | 294.67 | 291 |  |  | 56 |  |  |  |  |  |  |  |  |  |  |  |  |  |  |  |  |  |  |  |  |  |  |  |  |  |
| -L- 50+34.34 | RT | 77C | 77B |  | 285.8 | 282.5 |  |  |  |  |  |  | 42 |  |  |  |  |  |  |  |  |  |  |  |  |  |  |  |  |  |  |  |  |  |
| -L- 50+11.00 | CL | 77B | 77A |  |  |  |  |  |  |  |  |  |  |  |  |  |  |  |  |  |  |  |  |  |  |  |  |  |  |  |  |  |  |  |
| -L- 50+03.24 | LT | 75 |  | 297.67 |  |  |  |  |  |  |  |  |  |  |  |  |  |  |  |  |  |  |  |  |  |  |  |  |  |  |  |  |  |  |
| -L- 50+31.69 | RT | 73 | 74 |  | 285.8 | 285.75 |  |  |  |  |  |  |  |  | 40 |  |  |  |  |  |  |  |  |  |  |  |  |  |  |  |  |  |  |  |
| -L- 51+84.25 | RT | 79 |  |  | 288.5 | 287.5 |  |  |  |  |  |  | 44 |  |  |  |  |  |  |  |  |  |  |  |  |  |  |  |  |  |  |  |  |  |
| -L- 51+84.25 | RT | 80 |  |  | 288.5 | 287.5 |  |  |  |  |  |  | 48 |  |  |  |  |  |  |  |  |  |  |  |  |  |  |  |  |  |  |  |  |  |
| -L- 51+75.00 | CL | 81 |  | 297.96 |  |  |  |  |  |  |  |  |  |  |  |  |  |  |  |  |  |  |  |  |  |  |  |  |  |  |  |  |  |  |
| -L- 51+75.00 | CL | 81 | 82 |  | 290.22 | 296.35 |  |  | 224 |  |  |  |  |  |  |  |  |  |  |  |  |  |  |  |  |  |  |  |  |  |  |  |  |  |
| -L- 54+00.07 | CL | 82 |  | 299.35 |  |  |  |  |  |  |  |  |  |  |  |  |  |  |  |  |  |  |  |  |  |  |  |  |  |  |  |  |  |  |
| -L- 54+00.07 | CL | 82 | 83 |  | 296.35 | 298.1 |  |  | 124 |  |  |  |  |  |  |  |  |  |  |  |  |  |  |  |  |  |  |  |  |  |  |  |  |  |
|  |  |  |  |  |  |  |  |  |  |  |  |  |  |  |  |  |  |  |  |  |  |  |  |  |  |  |  |  |  |  |  |  |  |  |
| -L- 55+24.90 | CL | 83 |  | 301.3 |  |  |  |  |  |  |  |  |  |  |  |  |  |  |  |  |  |  |  |  |  |  |  |  |  |  |  |  |  |  |
| -L- 58+40.86 | RT | 86 |  |  |  |  |  |  |  |  |  |  |  |  |  |  |  |  |  |  |  |  |  |  |  |  |  |  |  |  |  |  |  |  |
| -L- 58+40.86 | RT | 86 | 89 |  | 294.58 | 296.25 |  |  |  |  |  |  |  |  |  |  |  |  |  |  |  |  |  |  |  | 124 |  |  |  |  |  |  |  |  |
| -L- 59+68.39 | RT | 89 |  | 299.25 |  |  |  |  |  |  |  |  |  |  |  |  |  |  |  |  |  |  |  |  |  |  |  |  |  |  |  |  |  |  |
|  |  |  |  |  |  |  |  |  |  |  |  |  |  |  |  |  |  |  |  |  |  |  |  |  |  |  |  |  |  |  |  |  |  |  |
| -L- 59+68.39 | RT | 89 | 88 |  | 296.25 | 310.45 |  |  |  |  |  |  |  |  |  |  |  | 80 |  |  |  |  |  |  |  |  |  |  |  |  |  |  |  |  |
| -L- 59+68.39 | RT | 88 |  | 313.67 |  |  |  |  |  |  |  |  |  |  |  |  |  |  |  |  |  |  |  |  |  |  |  |  |  |  |  |  |  |  |
| -L- 59+68.39 | RT | 88 | 87 |  | 310.45 | 310.5 |  |  |  |  |  |  |  |  |  |  |  | 20 |  |  |  |  |  |  |  |  |  |  |  |  |  |  |  |  |
| -L- 59+68.39 | RT | 87 |  | 313.5 |  |  |  |  |  |  |  |  |  |  |  |  |  |  |  |  |  |  |  |  |  |  |  |  |  |  |  |  |  |  |
|  |  |  |  |  |  |  |  |  |  |  |  |  |  |  |  |  |  |  |  |  |  |  |  |  |  |  |  |  |  |  |  |  |  |  |
| SHEET TOTALS |  |  |  |  |  |  |  |  | 992 | 144 | 112 |  | 146 |  | 56 |  |  | 100 |  |  |  |  |  |  |  | 124 |  |  |  |  |  |  |  |  |

| STATION | FROM | TO | ENDWALLS STD. 838.01 OR STD. 838.11 (UNLESS NOTED OTHERWISE) CU. YARDS R.C.P. | C.S.P. | QUANITIES FOR DRAINAGE STRUCTURES PER EACH (0' THRU 5.0') | *TOTAL L.F. FOR PAY QUANTITY SHALL BE COL. 'A' + (1.3 X COL.'B') LIN. FT. A 5.0' THRU 10.0' | B 10.0' AND ABOVE | C.B. STD. 840.01 OR STD. 840.02 | FRAME, GRATES, AND HOOD STANDARD 840.03 TYPE OF GRATE E | F | G | CONCRETE TRANSITIONAL SECTION DROP INLET | CATCH BASIN | D.I. STD. 840.14 OR STD. 840.15 | D.I. FRAME AND GRATE STD. 840.16 | G.D.I. TYPE "A" STD. 840.17 OR 840.26 | G.D.I. TYPE "B" STD. 840.18 OR 840.27 | G.D.I. TYPE "D" STD. 840.19 OR 840.28 | G.D.I. FRAME WITH GRATE STD. 840.22 | G.D.I. FRAME WITH TWO GRATES STD. 840.22 | G.D.I. (N.S.) FRAME WITH GRATE STD. 840.24 | G.D.I. (N.S.) FRAME WITH TWO GRATES STD. 840.24 | J.B. STD. 840.31 OR 840.32 | T.B.J.B. STD. 840.34 | MANHOLE STD. 840.51 | M.H. STD. 840.51 OR 840.53 | M.H. FRAME AND COVER STD. 840.54 | CONVERT DI TO JB | CONVERT DI TO CB | CONVERT CB TO 2GI | 36" WELDED STEEL PIPE, 0.5" THICK, GRADE B IN SOIL ( TRENCHLESS INSTALLATION ) | CORR. STEEL ELBOWS NO. & SIZE | CONC. COLLARS CL. "B" C.Y. STD. 840.72 | CONC. & BRICK PIPE PLUG, C.Y. STD. 840.71 | PIPE REMOVAL LIN. FT. | REMARKS |
|---|---|---|---|---|---|---|---|---|---|---|---|---|---|---|---|---|---|---|---|---|---|---|---|---|---|---|---|---|---|---|---|---|---|---|---|---|
| -Y5- 10+84.97 | 60 | 60A |  |  |  |  |  |  |  |  |  |  |  |  |  |  |  |  |  |  |  |  |  |  |  |  |  |  |  |  |  |  |  |  | 32 | REMOVE 3 DI |
| -Y5- 10+74.23 | 60A |  |  |  | 1 |  |  | 1 | 1 |  |  |  |  |  |  |  |  |  |  |  |  |  |  |  |  |  |  |  |  |  |  |  |  |  |  |  |
| -Y5- 10+74.23 | 60A | 61 |  |  |  |  |  |  |  |  |  |  |  |  |  |  |  |  |  |  |  |  |  |  |  |  |  |  |  |  |  |  |  |  | 27 |  |
| -L- 41+29.25 | 61 |  |  |  | 1 |  |  | 1 |  | 1 |  |  |  |  |  |  |  |  |  |  |  |  |  |  |  |  |  |  |  |  |  |  |  |  |  |  |
| -L- 41+29.25 | 61 | 63 |  |  |  |  |  |  |  |  |  |  |  |  |  |  |  |  |  |  |  |  |  |  |  |  |  |  |  |  |  |  |  |  |  |  |
| -L- 41+78.19 | 63 |  |  |  | 1 | 1 |  | 1 |  | 1 |  |  |  |  |  |  |  |  |  |  |  |  |  |  |  |  |  |  |  |  |  |  |  |  |  |  |
| -L- 42+21.46 | 62 | 63 |  |  |  |  |  |  |  |  |  |  |  |  |  |  |  |  |  |  |  |  |  |  |  |  |  |  |  |  |  |  |  |  |  |  |
| -L- 42+21.46 | 62 |  |  |  | 1 |  |  |  |  |  |  |  |  |  |  |  |  | 1 |  | 1 |  |  |  |  |  |  |  |  |  |  |  |  |  |  |  | REMOVE DI |
| -L- 41+78.19 | 63 | 64 |  |  |  |  |  |  |  |  |  |  |  |  |  |  |  |  |  |  |  |  |  |  |  |  |  |  |  |  |  |  |  |  | 92 |  |
| -L- 42+20.09 | 64 |  |  |  | 1 | 3.9 |  |  |  |  |  | 1 |  | 1 | 1 |  |  |  |  |  |  |  |  |  |  |  |  |  |  |  |  |  |  |  |  |  |
| -L- 42+20.09 | 64 | 67 |  |  |  |  |  |  |  |  |  |  |  |  |  |  |  |  |  |  |  |  |  |  |  |  |  |  |  |  |  |  |  |  |  |  |
| -Y4- 11+18.72 | 65 |  |  |  |  |  |  |  | 1 |  |  |  |  |  |  |  |  |  |  |  |  |  |  |  |  |  |  |  |  | 1 |  |  |  |  |  |  | RETAIN / ADJUST |
| -Y4- 11+18.72 | 66 |  |  |  |  |  |  |  | 1 |  |  |  |  |  |  |  |  |  |  |  |  |  |  |  |  |  |  |  |  | 1 |  |  |  |  |  |  | RETAIN / ADJUST |
| -L- 44+55.00 | 68 |  |  |  | 1 |  |  | 1 |  | 1 |  |  |  |  |  |  |  |  |  |  |  |  |  |  |  |  |  |  |  |  |  |  |  |  |  |  |
|  |  |  |  |  |  |  |  |  |  |  |  |  |  |  |  |  |  |  |  |  |  |  |  |  |  |  |  |  |  |  |  |  |  |  |  |  |
| -L- 44+55.00 | 68 | 69 |  |  |  |  |  |  |  |  |  |  |  |  |  |  |  |  |  |  |  |  |  |  |  |  |  |  |  |  |  |  |  |  |  |  |
| -L- 46+36.96 | 69 |  |  |  | 1 |  |  | 1 | 1 |  |  |  |  |  |  |  |  |  |  |  |  |  |  |  |  |  |  |  |  |  |  |  |  |  |  |  |
| -L- 46+36.96 | 69 | 70 |  |  |  |  |  |  |  |  |  |  |  |  |  |  |  |  |  |  |  |  |  |  |  |  |  |  |  |  |  |  |  |  |  |  |
| -L- 46+43.09 | 70 |  |  |  | 1 |  |  | 1 | 1 |  |  |  |  |  |  |  |  |  |  |  |  |  |  |  |  |  |  |  |  |  |  |  |  |  |  |  |
|  |  |  |  |  |  |  |  |  |  |  |  |  |  |  |  |  |  |  |  |  |  |  |  |  |  |  |  |  |  |  |  |  |  |  |  |  |
| -L- 46+43.09 | 70 | 71 |  |  |  |  |  |  |  |  |  |  |  |  |  |  |  |  |  |  |  |  |  |  |  |  |  |  |  |  |  |  |  |  |  |  |
| -L- 47+58.00 | 71 |  |  |  | 1 |  |  | 1 |  |  | 1 |  |  |  |  |  |  |  |  |  |  |  |  |  |  |  |  |  |  |  |  |  |  |  |  |  |
| -L- 47+58.00 | 71 | 72 |  |  |  |  |  |  |  |  |  |  |  |  |  |  |  |  |  |  |  |  |  |  |  |  |  |  |  |  |  |  |  |  |  |  |
| -L- 48+91.99 | 72 |  |  |  | 1 | 1.4 |  |  |  |  |  | 1 |  | 1 | 1 |  |  |  |  |  |  |  |  |  |  |  |  |  |  |  |  |  |  |  |  |  |
|  |  |  |  |  |  |  |  |  |  |  |  |  |  |  |  |  |  |  |  |  |  |  |  |  |  |  |  |  |  |  |  |  |  |  |  |  |
| -L- 48+91.99 | 72 | 77A |  |  |  |  |  |  |  |  |  |  |  |  |  |  |  |  |  |  |  |  |  |  |  |  |  |  |  |  |  |  |  |  |  |  |
| -L- 49+57.35 | 77A | 77 |  |  |  |  |  |  |  |  |  |  |  |  |  |  |  |  |  |  |  |  |  |  |  |  |  |  |  |  |  |  |  |  |  |  |
| -L- 49+69.14 | 76 | 77 |  |  |  |  |  |  |  |  |  |  |  |  |  |  |  |  |  |  |  |  |  |  |  |  |  |  |  |  |  |  | 1.0126 |  |  | COLLAR AND EXTEND |
| -L- 50+03.24 | 75 | 77A |  |  |  |  |  |  |  |  |  |  |  |  |  |  |  |  |  |  |  |  |  |  |  |  |  |  |  |  |  |  |  |  |  |  |
| -L- 50+34.34 | 77C | 77B | 3.4 |  |  |  |  |  |  |  |  |  |  |  |  |  |  |  |  |  |  |  |  |  |  |  |  |  |  |  |  |  | 0.764 |  |  |  |
| -L- 50+11.00 | 77B | 77A |  |  |  |  |  |  |  |  |  |  |  |  |  |  |  |  |  |  |  |  |  |  |  |  |  |  |  |  | 104 |  |  |  |  |  |
| -L- 50+03.24 | 75 |  |  |  | 1 |  |  | 1 |  | 1 |  |  |  |  |  |  |  |  |  |  |  |  |  |  |  |  |  |  |  |  |  |  |  |  |  |  |
| -L- 50+31.69 | 73 | 74 | 6 |  |  |  |  |  |  |  |  |  |  |  |  |  |  |  |  |  |  |  |  |  |  |  |  |  |  |  |  |  | 1.0126 |  |  | REMOVE HEADWALL |
| -L- 51+84.25 | 79 |  |  |  |  |  |  |  |  |  |  |  |  |  |  |  |  |  |  |  |  |  |  |  |  |  |  |  |  |  |  |  |  |  | 62 | REMOVE 36" PLASTIC PIPE |
| -L- 51+84.25 | 80 |  |  |  |  |  |  |  |  |  |  |  |  |  |  |  |  |  |  |  |  |  |  |  |  |  |  |  |  |  |  |  |  |  |  |  |
| -L- 51+75.00 | 81 |  |  |  | 1 | 2.7 |  | 1 |  |  | 1 |  |  |  |  |  |  |  |  |  |  |  |  |  |  |  |  |  |  |  |  |  |  |  | 22 | REMOVE DI |
| -L- 51+75.00 | 81 | 82 |  |  |  |  |  |  |  |  |  |  |  |  |  |  |  |  |  |  |  |  |  |  |  |  |  |  |  |  |  |  |  |  | 148 | REMOVE DI |
| -L- 54+00.07 | 82 |  |  |  | 1 |  |  | 1 |  |  | 1 |  |  |  |  |  |  |  |  |  |  |  |  |  |  |  |  |  |  |  |  |  |  |  |  |  |
| -L- 54+00.07 | 82 | 83 |  |  |  |  |  |  |  |  |  |  |  |  |  |  |  |  |  |  |  |  |  |  |  |  |  |  |  |  |  |  |  |  |  |  |
|  |  |  |  |  |  |  |  |  |  |  |  |  |  |  |  |  |  |  |  |  |  |  |  |  |  |  |  |  |  |  |  |  |  |  |  |  |
| -L- 55+24.90 | 83 |  |  |  | 1 |  |  | 1 |  |  | 1 |  |  |  |  |  |  |  |  |  |  |  |  |  |  |  |  |  |  |  |  |  |  |  |  |  |
| -L- 58+40.86 | 86 |  |  |  |  |  |  |  |  |  |  |  |  |  |  |  |  |  |  | 1 |  |  |  |  |  |  |  |  |  |  | 1 |  |  |  |  | CONVERT OTCB TO 2GI |
| -L- 58+40.86 | 86 | 89 |  |  |  |  |  |  |  |  |  |  |  |  |  |  |  |  |  |  |  |  |  |  |  |  |  |  |  |  |  |  |  |  |  |  |
| -L- 59+68.39 | 89 |  |  |  | 1 |  |  |  |  |  |  |  |  |  |  | 1 |  |  | 1 |  |  |  |  |  |  |  |  |  |  |  |  |  |  |  |  |  |
|  |  |  |  |  |  |  |  |  |  |  |  |  |  |  |  |  |  |  |  |  |  |  |  |  |  |  |  |  |  |  |  |  |  |  |  |  |
| -L- 59+68.39 | 89 | 88 |  |  |  |  |  |  |  |  |  |  |  |  |  |  |  |  |  |  |  |  |  |  |  |  |  |  |  |  |  | 2@18 |  |  |  |  |
| -L- 59+68.39 | 88 |  |  |  | 1 |  |  |  |  |  |  |  |  |  |  | 1 |  |  |  |  | 1 |  |  |  |  |  |  |  |  |  |  |  |  |  |  |  |
| -L- 59+68.39 | 88 | 87 |  |  |  |  |  |  |  |  |  |  |  |  |  |  |  |  |  |  |  |  |  |  |  |  |  |  |  |  |  |  |  |  |  |  |
| -L- 59+68.39 | 87 |  |  |  | 1 |  |  |  |  |  |  |  |  |  |  | 1 |  |  |  |  | 1 |  |  |  |  |  |  |  |  |  |  |  |  |  |  |  |
|  |  |  |  |  |  |  |  |  |  |  |  |  |  |  |  |  |  |  |  |  |  |  |  |  |  |  |  |  |  |  |  |  |  |  |  |  |
| SHEET TOTALS |  |  | 9.4 |  | 17 | 9 |  | 11 | 5 | 4 | 4 | 2 |  | 2 | 2 |  | 3 | 1 |  | 3 |  | 2 |  |  |  |  |  |  |  | 2 | 1 | 104 | 2@18 | 2.7892 |  | 383 |  |

ABBREVIATIONS

- C.B. — CATCH BASIN
- N.D.I. — NARROW DROP INLET
- D.I. — DROP INLET
- G.D.I. — GRATED DROP INLET
- G.D.I.(N.S.) — GRATED DROP INLET (NARROW SLOT)
- J.B. — JUNCTION BOX
- M.H. — MANHOLE
- T.B.D.I. — TRAFFIC BEARING DROP INLET
- T.B.J.B. — TRAFFIC BEARING JUNCTION BOX

RD248615

COMPUTED BY: TMW DATE: 10/14/2008

CHECKED BY: REO DATE: 2/20/2009

| PROJECT NO. | SHEET NO. |
|---|---|
| U-3309A | 3 - D |

# STATE OF NORTH CAROLINA
# DIVISION OF HIGHWAYS

## *LIST OF PIPES, ENDWALLS, ETC. (FOR PIPES 48" & UNDER)*

| STATION | LOCATION (LT, RT, OR CL) | STRUCTURE NO. FROM | STRUCTURE NO. TO | TOP ELEVATION | INVERT ELEVATION | INVERT ELEVATION | SLOPE CRITICAL | CLASS III R.C. PIPE (UNLESS NOTED OTHERWISE) 12" | 15" | 18" | 24" | 30" | 36" | 42" | 48" | BITUMINOUS COATED C.S. PIPE TYPE B (UNLESS NOTED OTHERWISE) 12" .064 | 15" .064 | 18" .064 | 24" .064 | 24" | 30" .079 | 30" | 36" .079 | 36" | 42" .109 | 42" | 48" .109 | 48" |
|---|---|---|---|---|---|---|---|---|---|---|---|---|---|---|---|---|---|---|---|---|---|---|---|---|---|---|---|---|
| -L- 59+68.39 | RT | 89 | 93 | | 296.25 | 298.05 | | | | | | | | | | | | | | | | | | | | | | |
| -L- 61+90.00 | RT | 93 | | 300.8 | | | | | | | | | | | | | | | | | | | | | | | | |
| -L- 61+90.00 | RT | 93 | 90 | | 298.05 | 301.43 | | | | | | | | | | | 24 | | | | | | | | | | | |
| -L- 61+90.00 | RT | 90 | | 304.43 | | | | | | | | | | | | | | | | | | | | | | | | |
| -L- 61+90.00 | RT | 93 | 95 | | 298.05 | 301.05 | | | 60 | | | | | | | | | | | | | | | | | | | |
| -L- 62+50.00 | RT | 95 | | 303.8 | | | | | | | | | | | | | | | | | | | | | | | | |
| -L- 61+33.81 | LT | 91 | | 304.04 | | | | | | | | | | | | | | | | | | | | | | | | |
| -L- 61+33.81 | LT | 91 | 92 | | 301.04 | 300.5 | | | 24 | | | | | | | | | | | | | | | | | | | |
| -Y7- 14+00.00 | LT | 99 | | 306.5 | | | | | | | | | | | | | | | | | | | | | | | | |
| -Y7- 14+00.00 | LT | 99 | 96 | | 303.75 | 302.8 | | | 16 | | | | | | | | | | | | | | | | | | | |
| -Y7- 14+16.00 | LT | 96 | | 306.05 | | | | | | | | | | | | | | | | | | | | | | | | |
| -Y7- 14+16.00 | CL | 96 | 97 | | 302.8 | 301.6 | | | | 48 | | | | | | | | | | | | | | | | | | |
| -Y7- 14+35.80 | RT | 97 | | 307.7 | | | | | | | | | | | | | | | | | | | | | | | | |
| -Y7- 14+21.11 | RT | 98 | 97 | | 302.8 | 301.6 | | | | 48 | | | | | | | | | | | | | | | | | | |
| -Y7- 14+21.11 | RT | 98 | | 305.8 | | | | | | | | | | | | | | | | | | | | | | | | |
| -Y7- 13+61.60 | RT | 100 | | | | | | | | | | | | | | | | | | | | | | | | | | |
| -Y7- 13+61.60 | RT | IN | 100 | | 303.2 | 302.3 | | | | | | | | | | | | | | | | | | | | | | |
| -L- 64+34.91 | LT | 101 | | 309.8 | | | | | | | | | | | | | | | | | | | | | | | | |
| -L- 64+34.91 | LT | 101 | OUT | | 306.8 | 306.5 | | | 36 | | | | | | | | | | | | | | | | | | | |
| -L- 66+94.30 | LT | 103 | | 318.8 | | | | | | | | | | | | | | | | | | | | | | | | |
| -L- 66+94.30 | LT | 103 | 104 | | 311.2 | 325.6 | | | 284 | | | | | | | | | | | | | | | | | | | |
| -L- 69+79.96 | LT | 104 | | 328.6 | | | | | | | | | | | | | | | | | | | | | | | | |
| -L- 67+33.11 | RT | 102 | | 317.1 | | | | | | | | | | | | | | | | | | | | | | | | |
| -L- 67+33.11 | RT | 102 | OUT | | 314.3 | | | | | | | | | | | | | | | | | | | | | | | |
| -L- 71+54.10 | RT | 105 | OUT | | 315.5 | 315.2 | | | | | | 32 | | | | | | | | | | | | | | | | |
| TOTAL | | | | | | | | | 420 | 96 | | 32 | | | | | 24 | | | | | | | | | | | |
| SHEET 1 TOTALS | | | | | | | | | 1288 | 36 | 36 | | | | | | | | | | | | | | | | | |
| SHEET 2 TOTALS | | | | | | | | | 1064 | 180 | 68 | | | 136 | | | | | | | | | | | | | | |
| SHEET 3 TOTALS | | | | | | | | | 992 | 144 | 112 | | 146 | | 56 | | | 100 | | | | | | | | | | |
| SHEET 4 TOTALS | | | | | | | | | 420 | 96 | | 32 | | | | | 24 | | | | | | | | | | | |
| GRAND TOTALS | | | | | | | | | 3764 | 456 | 216 | 32 | 146 | 136 | 56 | | 24 | 100 | | | | | | | | | | |
| FROM UTILITIES | | | | | | | | | | | | | | | | | | | | | | | | | | | | |
| PROJECT TOTAL | | | | | | | | | | | | | | | | | | | | | | | | | | | | |

| STATION | CLASS III R.C. PIPE OR ALUMINIZED C.S. PIPE, TYPE IR OR HDPE PIPE, TYPE S OR D 12" | 15" | 18" | 24" | 30" | 36" | 42" | 48" | 15" SIDE DRAIN PIPE | 18" SIDE DRAIN PIPE | 24" SIDE DRAIN PIPE | ENDWALLS STD. 838.01 OR STD. 838.11 (UNLESS NOTED OTHERWISE) CU. YARDS R.C.P. | C.S.P. | QUANITIES FOR DRAINAGE STRUCTURES PER EACH (0' THRU 5.0') | *TOTAL L.F. FOR PAY QUANTITY SHALL BE COL. 'A' + (1.3 X COL.'B') LIN. FT. A 5.0' THRU 10.0' | B 10.0' AND ABOVE | C.B. STD. 840.01 OR STD. 840.02 | FRAME, GRATES, AND HOOD STANDARD 840.03 TYPE OF GRATE E | F | G | CONCRETE TRANSITIONAL SECTION DROP INLET | CATCH BASIN |
|---|---|---|---|---|---|---|---|---|---|---|---|---|---|---|---|---|---|---|---|---|---|---|
| -L- 59+68.39 | | 220 | | | | | | | | | | | | | | | | | | | | |
| -L- 61+90.00 | | | | | | | | | | | | | | 1 | | | | | | | | |
| -L- 61+90.00 | | | | | | | | | | | | | | | | | | | | | | |
| -L- 61+90.00 | | | | | | | | | | | | | | 1 | | | 1 | | | 1 | | |
| -L- 61+90.00 | | | | | | | | | | | | | | | | | | | | | | |
| -L- 62+50.00 | | | | | | | | | | | | | | 1 | | | | | | | | |
| -L- 61+33.81 | | | | | | | | | | | | | | 1 | | | 1 | | 1 | | | |
| -L- 61+33.81 | | | | | | | | | | | | | | | | | | | | | | |
| -Y7- 14+00.00 | | | | | | | | | | | | | | 1 | | | | | | | | |
| -Y7- 14+00.00 | | | | | | | | | | | | | | | | | | | | | | |
| -Y7- 14+16.00 | | | | | | | | | | | | | | 1 | | | 1 | | | 1 | | |
| -Y7- 14+16.00 | | | | | | | | | | | | | | | | | | | | | | |
| -Y7- 14+35.80 | | | | | | | | | | | | | | 1 | 1.1 | | | | | | | |
| -Y7- 14+21.11 | | | | | | | | | | | | | | | | | | | | | | |
| -Y7- 14+21.11 | | | | | | | | | | | | | | 1 | | | | | | | | |
| -Y7- 13+61.60 | | | | | | | | | | | | | | 1 | | | | | | | | |
| -Y7- 13+61.60 | | | | | 28 | | | | | | | | | | | | | | | | | |
| -L- 64+34.91 | | | | | | | | | | | | | | 1 | | | 1 | | 1 | | | |
| -L- 64+34.91 | | | | | | | | | | | | | | | | | | | | | | |
| -L- 66+94.30 | | | | | | | | | | | | | | 1 | 2.6 | | 1 | | 1 | | | |
| -L- 66+94.30 | | | | | | | | | | | | | | | | | | | | | | |
| -L- 69+79.96 | | | | | | | | | | | | | | 1 | | | 1 | | 1 | | | |
| -L- 67+33.11 | | | | | | | | | | | | | | 1 | | | | | | | | |
| -L- 67+33.11 | | | 12 | | | | | | | | | | | | | | | | | | | |
| -L- 71+54.10 | | | | | | | | | | | | 2.3 | | | | | | | | | | |
| TOTAL | | 220 | 12 | | 28 | | | | | | | 2.3 | | 13 | 3.7 | | 6 | | 4 | 2 | | |
| SHEET 1 TOTALS | | 76 | 20 | 44 | | | | | | | | | | 23 | 1.4 | | 10 | 1 | 5 | 4 | 9 | |
| SHEET 2 TOTALS | | 72 | | | | | | | | | | 4.5 | | 19 | 1.8 | | 10 | 3 | 1 | 6 | 4 | |
| SHEET 3 TOTALS | | | 124 | | | | | | | | | 9.4 | | 17 | 9 | | 11 | 5 | 4 | 4 | 2 | |
| SHEET 4 TOTALS | | 220 | 12 | | 28 | | | | | | | 2.3 | | 13 | 3.7 | | 6 | | 4 | 2 | | |
| GRAND TOTALS | | 368 | 156 | 44 | 28 | | | | | | | 16.2 | | 72 | 15.9 | | 37 | 9 | 14 | 16 | 15 | |
| FROM UTILITIES | | | | | | | | | | | | | | | 8 | | | | | | | |
| PROJECT TOTAL | | | | | | | | | | | | | | | 23.9 | | | | | | | |

| STATION | D.I. STD. 840.14 OR STD. 840.15 | D.I. FRAME AND GRATE STD. 840.16 | G.D.I. TYPE "A" STD. 840.17 OR 840.26 | G.D.I. TYPE "B" STD. 840.18 OR 840.27 | G.D.I. TYPE "D" STD. 840.19 OR 840.28 | G.D.I. FRAME WITH GRATE STD. 840.22 | G.D.I. FRAME WITH TWO GRATES STD. 840.22 | G.D.I. (N.S.) FRAME WITH GRATE STD. 840.24 | G.D.I. (N.S.) FRAME WITH TWO GRATES STD. 840.24 | J.B. STD. 840.31 OR 840.32 | T.B.J.B. STD. 840.34 | MANHOLE STD. 840.51 | M.H. STD. 840.51 OR 840.53 | M.H. FRAME AND COVER STD. 840.54 | CONVERT DI TO JB | CONVERT DI TO CB | CONVERT CB TO 2GI | 36" WELDED STEEL PIPE, 0.5" THICK, GRADE B ( TRENCHLESS INSTALLATION ) | CORR. STEEL ELBOWS NO. & SIZE | CONC. COLLARS CL. "B" C.Y. STD. 840.72 | CONC. & BRICK PIPE PLUG, C.Y. STD. 840.71 | PIPE REMOVAL LIN. FT. | REMARKS |
|---|---|---|---|---|---|---|---|---|---|---|---|---|---|---|---|---|---|---|---|---|---|---|---|
| -L- 59+68.39 | | | | | | | | | | | | | | | | | | | | | | | |
| -L- 61+90.00 | | | | 1 | | | 1 | | | | | | | | | | | | | | | | |
| -L- 61+90.00 | | | | | | | | | | | | | | | | | | | | | | | |
| -L- 61+90.00 | | | | | | | | | | | | | | | | | | | | | | | |
| -L- 61+90.00 | | | | | | | | | | | | | | | | | | | | | | | |
| -L- 62+50.00 | | | | 1 | | | | | 1 | | | | | | | | | | | | | | |
| -L- 61+33.81 | | | | | | | | | | | | | | | | | | | | | | | |
| -L- 61+33.81 | | | | | | | | | | | | | | | | | | | | | | | |
| -Y7- 14+00.00 | | | | 1 | | | 1 | | | | | | | | | | | | | | | | |
| -Y7- 14+00.00 | | | | | | | | | | | | | | | | | | | | | | | |
| -Y7- 14+16.00 | | | | | | | | | | | | | | | | | | | | | | 40 | |
| -Y7- 14+16.00 | | | | | | | | | | | | | | | | | | | | | | 44 | |
| -Y7- 14+35.80 | | | | | | | | | | | 1 | | | 1 | | | | | | | | | REMOVE DI |
| -Y7- 14+21.11 | | | | | | | | | | | | | | | | | | | | | | | |
| -Y7- 14+21.11 | | | | 1 | | | 1 | | | | | | | | | | | | | | | | |
| -Y7- 13+61.60 | | | | | | | | | | 1 | | | | 1 | | | | | | | | | |
| -Y7- 13+61.60 | | | | | | | | | | | | | | | | | | | | | | 58 | |
| -L- 64+34.91 | | | | | | | | | | | | | | | | | | | | | | | |
| -L- 64+34.91 | | | | | | | | | | | | | | | | | | | | | | | |
| -L- 66+94.30 | | | | | | | | | | | | | | | | | | | | | | | |
| -L- 66+94.30 | | | | | | | | | | | | | | | | | | | | | | | |
| -L- 69+79.96 | | | | | | | | | | | | | | | | | | | | | | | |
| -L- 67+33.11 | | | | 1 | | | 1 | | | | | | | | | | | | | | | | |
| -L- 67+33.11 | | | | | | | | | | | | | | | | | | | | 0.4465 | | | REMOVE CB |
| -L- 71+54.10 | | | | | | | | | | | | | | | | | | | | 0.656 | | | COLLAR & EXTEND AND REMOVE HDWL |
| TOTAL | | | | 5 | | | 4 | | 1 | 1 | 1 | | | 2 | | | | | | 1.1025 | | 142 | |
| SHEET 1 TOTALS | 10 | 10 | | | 1 | | | | 1 | | 1 | | 1 | 1 | 1 | | | | | 1.8921 | | 20 | |
| SHEET 2 TOTALS | 4 | 4 | 1 | 1 | 3 | 1 | 4 | | 1 | | | | | | | | | | | 1.7712 | | 386 | |
| SHEET 3 TOTALS | 2 | 2 | | 3 | 1 | | 3 | | 2 | | | | | | | 2 | 1 | 104 | 2@18 | 2.7892 | | 383 | |
| SHEET 4 TOTALS | | | | 5 | | | 4 | | 1 | 1 | 1 | | | 2 | | | | | | 1.1025 | | 142 | |
| GRAND TOTALS | 16 | 16 | 1 | 9 | 5 | 1 | 11 | | 5 | 1 | 2 | | 1 | 3 | 1 | 2 | 1 | 104 | 2@18" | 7.56 | | 931 | |
| FROM UTILITIES | | | | | | | | | | | | | | | | | | | | | | | |
| PROJECT TOTAL | | | | | | | | | | | | | | | | | | | | | | | |

ABBREVIATIONS

| | |
|---|---|
| C.B. | CATCH BASIN |
| N.D.I. | NARROW DROP INLET |
| D.I. | DROP INLET |
| G.D.I. | GRATED DROP INLET |
| G.D.I.(N.S.) | GRATED DROP INLET (NARROW SLOT) |
| J.B. | JUNCTION BOX |
| M.H. | MANHOLE |
| T.B.D.I. | TRAFFIC BEARING DROP INLET |
| T.B.J.B. | TRAFFIC BEARING JUNCTION BOX |

COMPUTED BY: TMW DATE: 11/18/2008

CHECKED BY: REO DATE: 2/20/2009

| PROJECT NO. | SHEET NO. |
|---|---|
| U-3309A | 3 - E |

RD248615

# STATE OF NORTH CAROLINA
# DIVISION OF HIGHWAYS

## *LIST OF PIPES, ENDWALLS, ETC. (FOR PIPES 54" & OVER)*

| STATION | LOCATION (LT, RT, OR CL) | STRUCTURE NO. FROM | STRUCTURE NO. TO | TOP ELEVATION | INVERT ELEVATION | INVERT ELEVATION | SLOPE CRITICAL | CLASS III R.C. PIPE (UNLESS NOTED OTHERWISE) SIZE | | | | | | BITUMINOUS COATED C.S. PIPE TYPE B (UNLESS NOTED OTHERWISE) SIZE | | | | | | | | | | STRUCTURAL PLATE PIPE SIZE | | | | | | REINFORCED ENDWALLS | | MASONRY DRAINAGE STRUCTURES CUBIC YARDS | C.B. STD. 840.01 OR 840.02 | FRAMES, GRATES & HOOD STANDARD 840.03 | | | | REINF. CONC. FLARED END SECTIONS NO. & SIZE | CORR. STEEL FLARED END SECTIONS NO. & Size | CORR. STEEL ELBOWS NO. & SIZE | CONC. COLLARS CL. "B" C.Y. STD. 840.72 | | PIPE REMOVAL LIN. FT. | REMARKS |
|---|---|---|---|---|---|---|---|---|---|---|---|---|---|---|---|---|---|---|---|---|---|---|---|---|---|---|---|---|---|---|---|---|---|---|---|---|---|---|---|---|
| | | | | | | | | 54" | 60" | 66" | 72" | 78" | 84" | 54" | | | 60" | 66" | 72" | | | | | 60" | 66" | 72" | | | | WITH R.C. - C.Y. | WITH C.S. - C.Y. | | | E | F | G | | | | | | | | |
| THICKNESS OR GAUGE | | | | | | | | | | | | | | .109 | .138 | .168 | SHOP ELON-GATED .138 | SHOP ELON-GATED .168 | .138 | .168 | .138 | .168 | .139 | .168 | 12 | 10 | 12 | 10 | 12 | 10 | | | | | TYPE OF GRATE | | | | | | | | | | | | |
| -L- 49+69.14 | LT | 77 | OUT | | 282.4 | 282 | | 28 | | | | | | | | | | | | | | | | | | | | | .5 | | | | | | | | | | | | | | HEADWALL |
| -L- 49+69.14 | LT | 77 | | 288.8 | 282.4 | | | | | | | | | | | | | | | | | | | | | | | | | | 4.33 | | | | | | | | | | | | |
| SHEET TOTALS | | | | | | | | 28 | | | | | | | | | | | | | | | | | | | | | 5 | | 4.33 | | | | | | | | | | | | |

| ABBREVIATIONS | |
|---|---|
| C.B. | CATCH BASIN |
| N.D.I. | NARROW DROP INLET |
| D.I. | DROP INLET |
| G.D.I. | GRATED DROP INLET |
| G.D.I.(N.S.) | GRATED DROP INLET (NARROW SLOT) |
| J.B. | JUNCTION BOX |
| M.H. | MANHOLE |
| T.B.D.I. | TRAFFIC BEARING DROP INLET |
| T.B.J.B. | TRAFFIC BEARING JUNCTION BOX |

12/06/07

COMPUTED BY: REO DATE: 5/6/09
CHECKED BY: TMW DATE: 7/13/09

STATE OF NORTH CAROLINA
DIVISION OF HIGHWAYS

| PROJECT REFERENCE NO. | SHEET NO. |
|---|---|
| U-3309A | 3-F |

"N" = DISTANCE FROM EDGE OF LANE TO FACE OF GUARDRAIL.
TOTAL SHOULDER WIDTH = DISTANCE FROM EDGE OF TRAVEL LANE TO SHOULDER BREAK POINT.
FLARE LENGTH = DISTANCE FROM LAST SECTION OF PARALLEL GUARDRAIL TO END OF GUARDRAIL.
W = TOTAL WIDTH OF FLARE FROM BEGINNING OF TAPER TO END OF GUARDRAIL.
G = GATING IMPACT ATTENUATOR TYPE 350
NG = NON-GATING IMPACT ATTENUATOR TYPE 350

## GUARDRAIL SUMMARY

| SURVEY LINE | BEG. STA. | END STA. | LOCATION | LENGTH | | | WARRANT POINT | | "N" DIST. FROM E.O.L. | TOTAL SHOUL. WIDTH *(Berm) | FLARE LENGTH | | W | | ANCHORS | | | | | | | | | IMPACT ATTENUATOR TYPE 350 | | | SINGLE FACED GUARDRAIL | REMOVE EXISTING GUARDRAIL | REMOVE AND STOCKPILE EXISTING GUARDRAIL | REMARKS |
|---|---|---|---|---|---|---|---|---|---|---|---|---|---|---|---|---|---|---|---|---|---|---|---|---|---|---|---|---|---|
| | | | | STRAIGHT | SHOP CURVED | DOUBLE FACED | APPROACH END | TRAILING END | | | APPROACH END | TRAILING END | APPROACH END | TRAILING END | XI MOD | XI | GRAU 350 | M-350 | XIII | CAT-1 | VI MOD | BIC | AT-1 | EA | G | NG | | | | |
| -Y3- /-L- | 14+00.00 | 51+90.00 | LT. /LT. | 250' | 50' | | 14+75.00 | 50+65.00 | 7' | *8' | 50' | 50' | 1' | 1' | | | 2 | | | | | | | | | | | 178.38' | | |
| -Y3- /-L- | 14+00.00 | 48+90.00 | RT. /LT. | 237.5' | 50' | | 14+75.00 | 48+90.00 | 2' | *4' | 50' | | 1' | | | | 1 | | | 1 | | | | | | | | 170.16' | | |
| -Y4- | 10+50.00 | 12+64.45 | LT. | 162.5' | 50' | | 11+25.00 | | **6' | *6' | 50' | | 1' | | | | 1 | | | | | | | | | | | 127.17' | | ** TRANSITION GUARDRAIL FROM -Y4- TO -L- |
| -L- | 41+34.00 | 44+45.00 | LT. | 325' | | | | 43+20.00 | 8' | 11' | | 50' | | 1' | | | 1 | | | | | | | | | | | | | |
| -Y4- | 10+50.00 | 12+67.41 | RT. | 200' | 50' | | 11+25.00 | | 6' | *6' | 50' | | 1' | | | | 1 | | | | | | | | | | | 127.45' | | TRANSITION GUARDRAIL FROM -Y4- TO -L- |
| -L- | 39+00.00 | 40+08.92 | LT. | 112.5' | | | | 39+00.00 | 8' | 11' | | | | | | | | | | 1 | | | | | | | | | |
| -RPA- | 13+35.00 | 19+00.00 | RT. | 565' | | | 14+50.00 | | 10' | 13' | 50' | | 1' | | | | 1 | | | | | | | | | | | 577.89' | | TRANSITION GUARDRAIL FROM -RPA- TO -L- |
| -L- | 69+00.00 | 73+00.00 | LT. | 344' | 50' | | | 20+00.00 | 14' | *14' | | | | | | | | | | 1 | | | | | | | | 360.32' | | |
| NC 147 | SEE SHEET E2 | | MED. | 150' | | | | | 14' | | | | | | | | | 1 | | 1 | | | | | | | | | | |
| TOTAL: | | | | 2346.5' | 250' | | | | | | | | | | | | 7 | 1 | | 4 | | | | | | | | 1541.37' | | |
| DEDUCTIONS: | | 7 GRAU 350 @ 50' | | 350' | | | | | | | | | | | | | | | | | | | | | | | | | | |
| | | 1 M-350 @ 37.5' | | 37.5' | | | | | | | | | | | | | | | | | | | | | | | | | | |
| | | 4 CAT-1 @ 6.25' | | 25' | | | | | | | | | | | | | | | | | | | | | | | | | | |
| GRAND TOTAL: | | | | 1934' | 250' | | | | | | | | | | | | | | | | | | | | | | | 1541.37' | | |
| SAY: | | | | 1950' | 250' | | | | | | | | | | | | 7 | 1 | | 4 | | | | | | | | 1550' | | |

## SUMMARY OF EARTHWORK

| LINE | STATION | STATION | UNCL. EXCAV. | UNDERCUT EXCAV. | EMBANK. +% | BORROW | WASTE |
|---|---|---|---|---|---|---|---|
| -L- RT | 18+50.00 | 27+00.00 | 84 | 215 | 1,573 | 1,489 | 215 |
| -L- RT | 27+00.00 | 40+50.00 | 1,849 | 211 | 2,711 | 1,975 | 1,324 |
| -L- RT | 40+50.00 | 63+00.00 | 13,743 | 0 | 4,232 | 0 | 9,511 |
| -L- RT | 63+00.00 | 73+00.00 | 294 | 0 | 2,204 | 1,910 | 0 |
| | SUBTOTAL: | | 15,970 | 426 | 10,720 | 5,374 | 11,050 |
| | | | | | | | |
| -L- LT | 18+50.00 | 27+00.00 | 376 | 123 | 1,800 | 1,514 | 213 |
| -L- LT | 27+00.00 | 40+50.00 | 2,347 | 2 | 8,404 | 6,057 | 2 |
| -L- LT | 40+50.00 | 63+00.00 | 60 | 0 | 17,609 | 17,549 | 0 |
| -L- LT | 63+00.00 | 73+00.00 | 62 | 0 | 3,728 | 3,666 | 0 |
| | SUBTOTAL: | | 2,845 | 125 | 31,541 | 28,786 | 215 |
| | | | | | | | |
| -L- MED. | 18+50.00 | 27+00.00 | 8 | 0 | 588 | 580 | 0 |
| -L- MED. | 27+00.00 | 40+50.00 | 18 | 0 | 958 | 940 | 0 |
| -L- MED. | 40+50.00 | 63+00.00 | 52 | 0 | 2,159 | 2,107 | 0 |
| -L- MED. | 63+00.00 | 73+00.00 | 92 | 0 | 776 | 684 | 0 |
| | SUBTOTAL: | | 170 | 0 | 4,481 | 4,311 | 0 |
| | | | | | | | |
| -Y1- LT | 12+00.00 | 22+84.99 | 142 | 0 | 1024 | 882 | 0 |
| -Y1- RT | 12+00.00 | 22+84.99 | 41 | 0 | 1666 | 1625 | 0 |
| | SUBTOTAL: | | 183 | 0 | 2690 | 2507 | 0 |
| | | | | | | | |
| -Y2- LT | 10+44.66 | 18+50.00 | 1,331 | 0 | 72 | 0 | 1,259 |
| -Y2- RT | 10+44.66 | 18+50.00 | 85 | 0 | 185 | 100 | 0 |
| | SUBTOTAL: | | 1,416 | 0 | 257 | 100 | 1,259 |
| | | | | | | | |
| -Y3- | 14+00.00 | 15+93.91 | 21 | 0 | 407 | 386 | 0 |
| -Y4- | 10+50.00 | 12+80.72 | 33 | 0 | 2,456 | 2,423 | 0 |
| -Y5- | 10+39.00 | 11+50.00 | 69 | 0 | 4 | 0 | 65 |
| -Y6- | 10+39.00 | 11+50.00 | 61 | 0 | 24 | 0 | 37 |
| -Y7- | 12+50.00 | 14+65.92 | 221 | 0 | 188 | 0 | 33 |
| -RPA- | 11+00.00 | 19+50.00 | 677 | 0 | 1,080 | 403 | 0 |
| -RPC- | 13+00.00 | 18+50.00 | 411 | 0 | 5 | 0 | 406 |
| | PROJECT SUBTOTAL: | | 22077 | 551 | 53853 | 44290 | 13065 |
| | ADDITIONAL UNDERCUT | | | 9,100 | 10,920 | 10,920 | 9,100 |
| | WASTE IN LIEU OF BORROW | | | | | -11,247 | -11,247 |
| | LOSS DUE TO CLEARING & GRUBBING | | -4,500 | | | 4,500 | |
| | LESS SELECT GRANULAR MATERIAL | | | | -2000 | -2,000 | |
| | EST. SHOULDER MATERIAL | | | | 3780 | 3780 | |
| | PROJECT TOTALS | | 17577 | 9,651 | 66553 | 50243 | 10,918 |
| EST. 5% TO REPLACE TOP SOIL ON BORROW PIT | | | | | | 2512 | |
| | GRAND TOTALS | | 17577 | 9,651 | | 52755 | |
| | SAY | | 17600 | 9,660 | | 52760 | |

## PAVEMENT REMOVAL SUMMARY

| SURVEY LINE | STATION | STATION | LOCATION LT/RT/CL | YD² |
|---|---|---|---|---|
| L | 26+12.78 | 26+12.78 | MED | 558.20 |
| L | 24+34.35 | 26+13.93 | RT MED | 120.85 |
| L | 28+08.70 | 30+61.44 | LT MED | 173.01 |
| L | 28+10.40 | 38+36.08 | MED | 1377.26 |
| L | 43+15.22 | 47+75.52 | MED | 793.47 |
| L | 50+95.62 | 58+41.95 | MED | 1086.03 |
| L | 53+00.00 | 57+50.00 | LT | 824.85 |
| L | 58+16.92 | 62+64.39 | MED | 114.50 |
| L | 63+75.70 | 72+70.42 | MED | 340.13 |
| PEDTR1 | 10+07.00 | 17+37.00 | LT | 630.31 |
| PEDTR2 | 10+29.00 | 22+41.81 | LT | 1101.82 |
| Y1 | 13+00.00 | 14+30.00 | RT | 113.90 |
| Y1 | 14+90.00 | 22+96.00 | RT | 717.53 |
| Y1 | 16+84.15 | 20+51.05 | RT | 156.26 |
| Y2 | 10+95.00 | 14+26.00 | RT | 162.98 |
| from pavement design | | | | 2200 |
| | | | | |
| | | | TOTAL: | 10471.09 |
| | | | SAY: | 10500 |

## SUMMARY OF BREAKING EXISTING ASPHALT PAVEMENT

| SURVEY LINE | STATION | STATION | LOCATION LT/RT/CL | YD² |
|---|---|---|---|---|
| Y4 | 12+00.00 | 13+22.00 | CL | 505.10 |
| | | | | |
| | | | TOTAL: | 505.10 |
| | | | SAY: | 510 |

## SUMMARY OF 48" WW FENCE REMOVE AND RESET

| SURVEY LINE | STATION | STATION | LOCATION LT/RT/CL | LF |
|---|---|---|---|---|
| L | 66+41.21 | 70+64.52 | RT | 423.34 |
| | | | | |
| | | | TOTAL: | 423.34 |
| | | | SAY: | 425 |

## SUMMARY OF CHAIN LINK FENCE

| SURVEY LINE | STATION | STATION | LOCATION LT/RT/CL | L.F. |
|---|---|---|---|---|
| L | 75+12.00 | 77+26.00 | LT /RT | 216 |
| | | | | |
| | | | TOTAL: | 216 |
| | | | SAY: | 216 |

(SEE DETAIL 2-L)

## UNDERDRAIN SUMMARY

| SURVEY LINE | STATION | STATION | LOCATION LT/RT/CL | L.F. |
|---|---|---|---|---|
| L | 38+00.00 | 49+00.00 | RT | 1100 |
| GEOTECH | CONTINGENCY | | | 500 |
| | | | TOTAL: | 1600 |
| | | | SAY: | 1600 |

10-AUG-2009 09:54
I:\projects\3309a_rdy_sum\final\u3309a_rdy_sumdgn
$$$$USERNAME$$$$

| PROJ. REFERENCE NO. | SHEET NO. |
|---|---|
| U-3309A | 3-G |

# STATE OF NORTH CAROLINA
# DIVISION OF HIGHWAYS

## *PARCEL INDEX SHEET*

| PARCEL No. | SHEET No. | PROPERTY OWNER NAME |
|---|---|---|
| 1-A | 4 | DATA GENERAL CORP |
| 1 | 4,9 | TROXLER ASSOCIATES LTD |
| 2 | 4,10 | UNITED THERAPEUTICS CORPORATION PARCEL 2 |
| 3 | 4,5,5-A,9 | ELI LILLY & COMPANY |
| 4 | 4,5,6,7,8 | TRIANGLE UNIVERSITIES CTR FOR ADVANCE STUDIES |
| 5 | 5,5-A,6 | DUPONT DE NEMOURS & COMPANY LLC |
| 6 | 6,7 | STATE OF NORTH CAROLINA |
| 7 | 8,11 | GLAXOSMITHKLINE |

| PARCEL No. | SHEET No. | PROPERTY OWNER NAME |
|---|---|---|

| PROJECT REFERENCE NO. | SHEET NO. |
|---|---|
| U-3309A | 4 |
| R/W SHEET NO. | |
| ROADWAY DESIGN ENGINEER | HYDRAULICS ENGINEER |

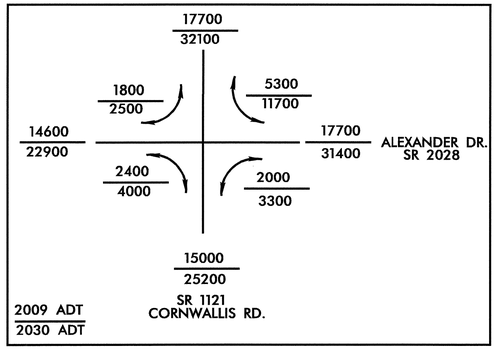


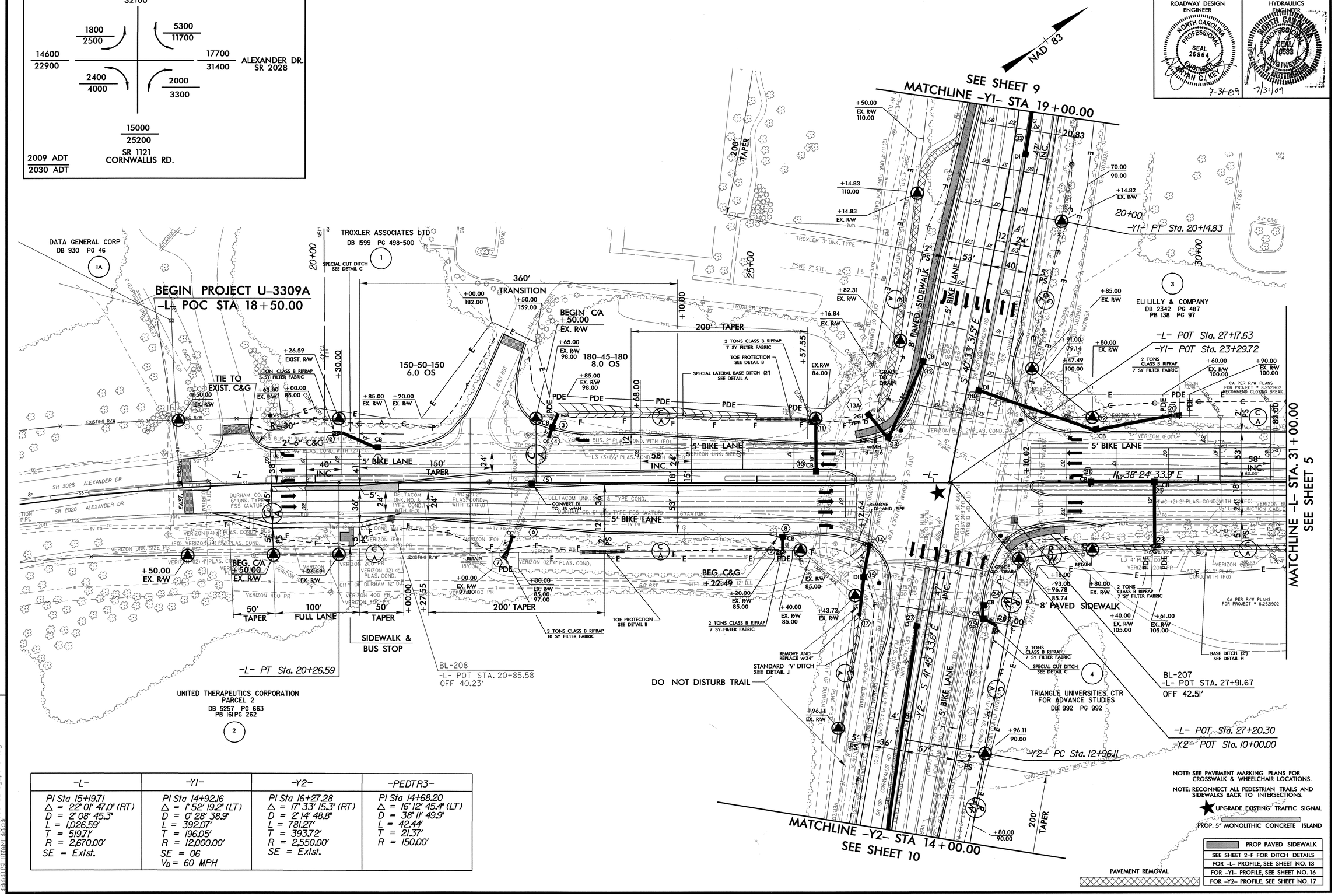


| -L- | -Y1- | -Y2- | -PEDTR3- |
|---|---|---|---|
| PI Sta 15+19.71<br>Δ = 22° 01' 47.0" (RT)<br>D = 2° 08' 45.3"<br>L = 1,026.59'<br>T = 519.71'<br>R = 2,670.00'<br>SE = Exist. | PI Sta 14+92.16<br>Δ = 1° 52' 19.2" (LT)<br>D = 0° 28' 38.9"<br>L = 392.07'<br>T = 196.05'<br>R = 12,000.00'<br>SE = 06<br>$V_D$ = 60 MPH | PI Sta 16+27.28<br>Δ = 17° 33' 15.3" (RT)<br>D = 2° 14' 48.8"<br>L = 781.27'<br>T = 393.72'<br>R = 2,550.00'<br>SE = Exist. | PI Sta 14+68.20<br>Δ = 16° 12' 45.4" (LT)<br>D = 38° 11' 49.9"<br>L = 42.44'<br>T = 21.37'<br>R = 150.00' |

NOTE: SEE PAVEMENT MARKING PLANS FOR CROSSWALK & WHEELCHAIR LOCATIONS.

NOTE: RECONNECT ALL PEDESTRIAN TRAILS AND SIDEWALKS BACK TO INTERSECTIONS.

UPGRADE EXISTING TRAFFIC SIGNAL

PROP. 5" MONOLITHIC CONCRETE ISLAND

PROP PAVED SIDEWALK

SEE SHEET 2-F FOR DITCH DETAILS

FOR -L- PROFILE, SEE SHEET NO. 13

FOR -Y1- PROFILE, SEE SHEET NO. 16

FOR -Y2- PROFILE, SEE SHEET NO. 17

PAVEMENT REMOVAL

REVISIONS

23-JUL-2009 09:03
R:\Roadway\Proj\u3309a_rdy_psh04.dgn

| PROJECT REFERENCE NO. | SHEET NO. |
|---|---|
| U-3309A | 5 |
| R/W SHEET NO. | |

ROADWAY DESIGN ENGINEER — NORTH CAROLINA PROFESSIONAL SEAL 26964 ENGINEER BRIAN C. KEY — 7-31-09

HYDRAULICS ENGINEER — NORTH CAROLINA PROFESSIONAL SEAL 16338 ENGINEER TIMOTHY A. HOTTINGER — 7/31/09

8/17/99

REVISIONS

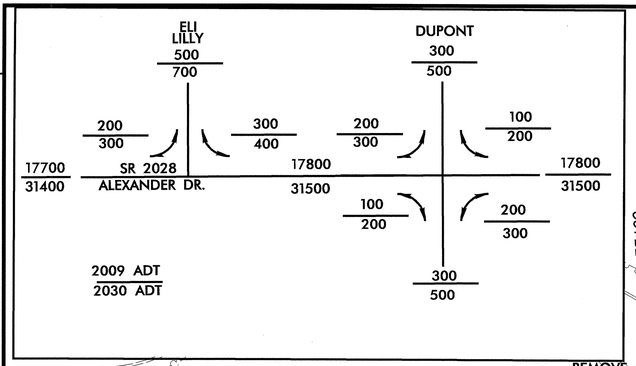


MATCHLINE SEE SHEET 5-A

MATCHLINE SEE SHEET 5-A

-Y4- POT Sta. 10+00.00

BEG. CONST.
-Y4- STA 10+50.00

TIE TO EXIST. C&G
+50.00

-L- POC Sta. 40+78.32
-Y4- POT Sta. 13+36.72

-L- PC Sta. 39+48.47

-Y4- PC Sta. 11+44.76

-Y4- PT Sta. 12+67.84

END C/A
+09.00
EXIST. R/W

BEGIN C/A
+40.00
EXIST. R/W

END C/A
+30.00
EXIST. R/W

BEG. C&G
+56.74

180-60-180
6.0 OS

END 2'6" C&G
+95.26

TIE TO EXIST C&G
BEG. C/A
+04.00
EXIST. R/W

REMOVE & RESET SIGN

ELILILLY & COMPANY
DB 2342 PG 487
PB 138 PG 97

DUPONT DE NEMOURS & COMPANY LLC
DB 3272 PG 166
PB 138 PG 97

530' LEFT-TURN OFFSET

200' TAPER

5' BIKE LANE

PROP. GUARDRAIL

N 38° 24' 33.9" E -L-

-PEDTRI- N 39° 28' 52.8" E

-PEDTRI- PT Sta. 10+68.85

-PEDTRI- PC Sta. 10+09.06

BEG.CONST.
-PEDTRI- POT Sta. 10+00.00
N 5° 13' 21.0" E

-PEDTRI- PT Sta. 17+37.63
N 77° 46' 52.6" E
END CONST.
-PEDTRI- POT Sta. 17+40.27

-PEDTRI- PC Sta. 17+04.21

-Y5- POT Sta. 10+00.00

-Y5- PC Sta. 10+89.76

-Y5- PT Sta. 12+38.66

-Y5- POT Sta. 12+75.02

N 72° 07' 13.7" E

-Y5- POC STA 11+50.00

END CONST.

Note: Do Not Disturb Sign

BL-206 PINC 29+46.72
-L- POT 34+78.57
OFF 41.05'

BL-205 PINC 35+04.89
-L- POC STA 40+39.55
OFF 50.69'

TRIANGLE UNIVERSITIES CTR FOR ADVANCE STUDIES DB 992 PG 992

SEE SHEET 4 MATCHLINE -L- STA. 31+00.00

MATCHLINE -L- STA. 44+00.00 SEE SHEET 6

NAD 83

| -L- | -PEDTRI- | | -Y4- | -Y5- |
|---|---|---|---|---|
| PI Sta 48+52.84 | PI Sta 10+39.88 | PI Sta 17+21.57 | PI Sta 12+06.73 | PI Sta 11+72.12 |
| Δ = 58° 57' 11.0" (RT) | Δ = 34° 15' 31.9" (RT) | Δ = 38° 17' 59.8" (RT) | Δ = 16° 35' 34.3" (LT) | Δ = 60° 56' 19.3" (LT) |
| D = 3° 34' 51.6" | D = 57° 17' 44.8" | D = 114° 35' 29.6" | D = 13° 28' 52.9" | D = 40° 55' 32.0" |
| L = 1,646.28' | L = 59.79' | L = 33.42' | L = 123.08' | L = 148.90' |
| T = 904.37' | T = 30.82' | T = 17.36' | T = 61.97' | T = 82.37' |
| R = 1,600.00' | R = 100.00' | R = 50.00' | R = 425.00' | R = 140.00' |
| SE = 06 | | | SE = EXIST. | SE = EXIST. |
| Vb = 60 MPH | | | | |

NOTE: SEE PAVEMENT MARKING PLANS FOR CROSSWALK & WHEELCHAIR LOCATIONS.

NOTE: RECONNECT ALL PEDESTRIAN TRAILS AND SIDEWALKS BACK TO INTERSECTIONS.

PROP. 5" MONOLITHIC CONCRETE ISLAND

FOR -PEDTRI- PROFILE, SEE SHEET NO. 21
SEE SHEET 2-F FOR DITCH DETAILS
FOR -L- PROFILE, SEE SHEET NO. 13 & 14
FOR -Y4- PROFILE, SEE SHEET NO. 18
FOR -Y5- PROFILE, SEE SHEET NO. 18

6-JUL-2009 JJ54
N:\Roadway\Proj\u3309a_rdy_psh05.dgn
ksmith1 ENGINEER

| PROJECT REFERENCE NO. | SHEET NO. |
|---|---|
| U-3309A | 5-A |
| R/W SHEET NO. | |
| ROADWAY DESIGN ENGINEER | HYDRAULICS ENGINEER |

NORTH CAROLINA PROFESSIONAL SEAL 26964 ENGINEER BRYAN C. KEY 7-31-09

NORTH CAROLINA PROFESSIONAL SEAL 18533 ENGINEER A.T. NOTTINGHAM 7/31/09

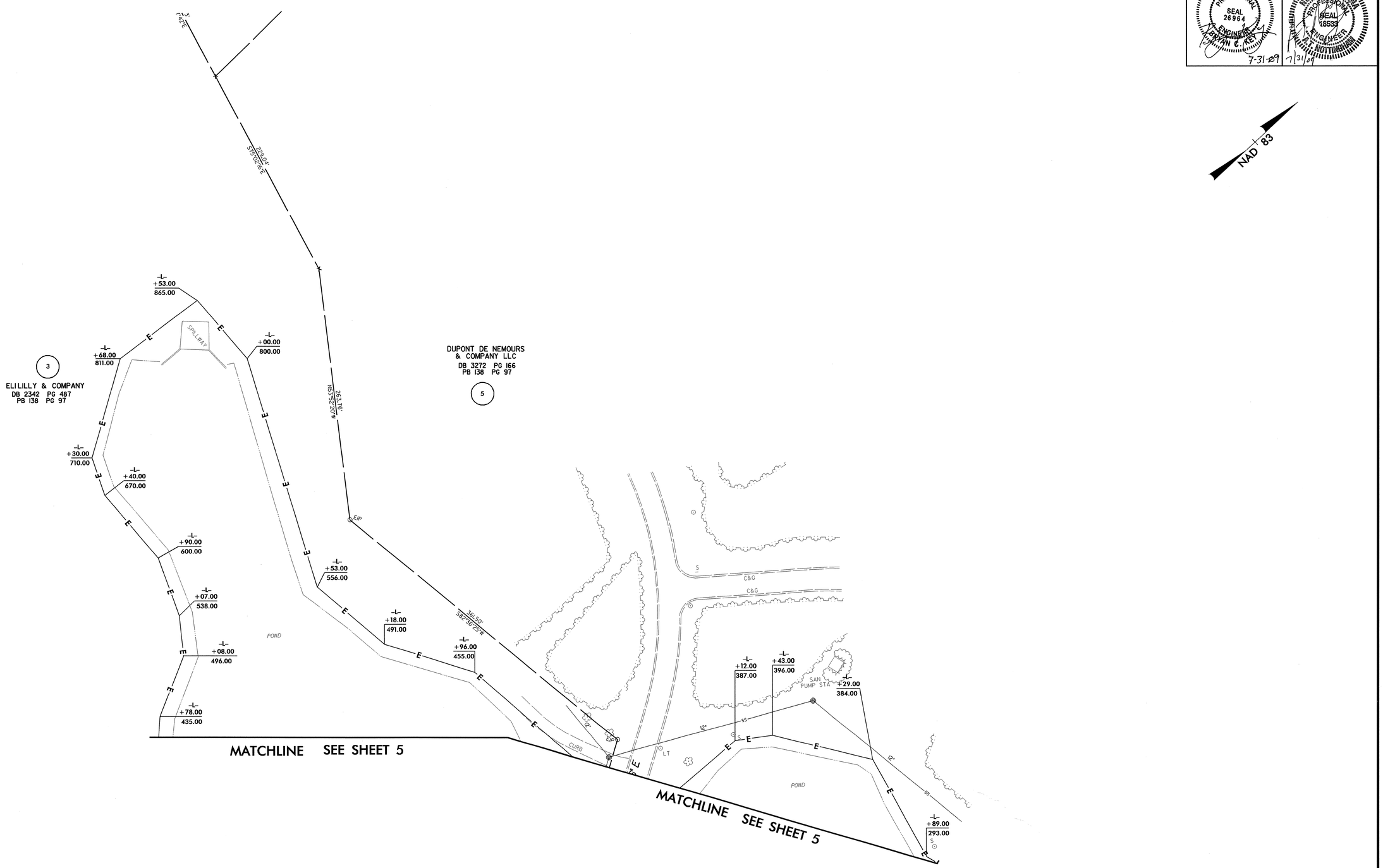


REVISIONS

8/17/99

29-JUN-2009 10:56
R:\Roadway\Proj\u3309a_rdy_psh05a.dgn
$$$$USERNAME$$$$

| PROJECT REFERENCE NO. | SHEET NO. |
|---|---|
| U-3309A | 6 |
| R/W SHEET NO. | |
| ROADWAY DESIGN ENGINEER | HYDRAULICS ENGINEER |

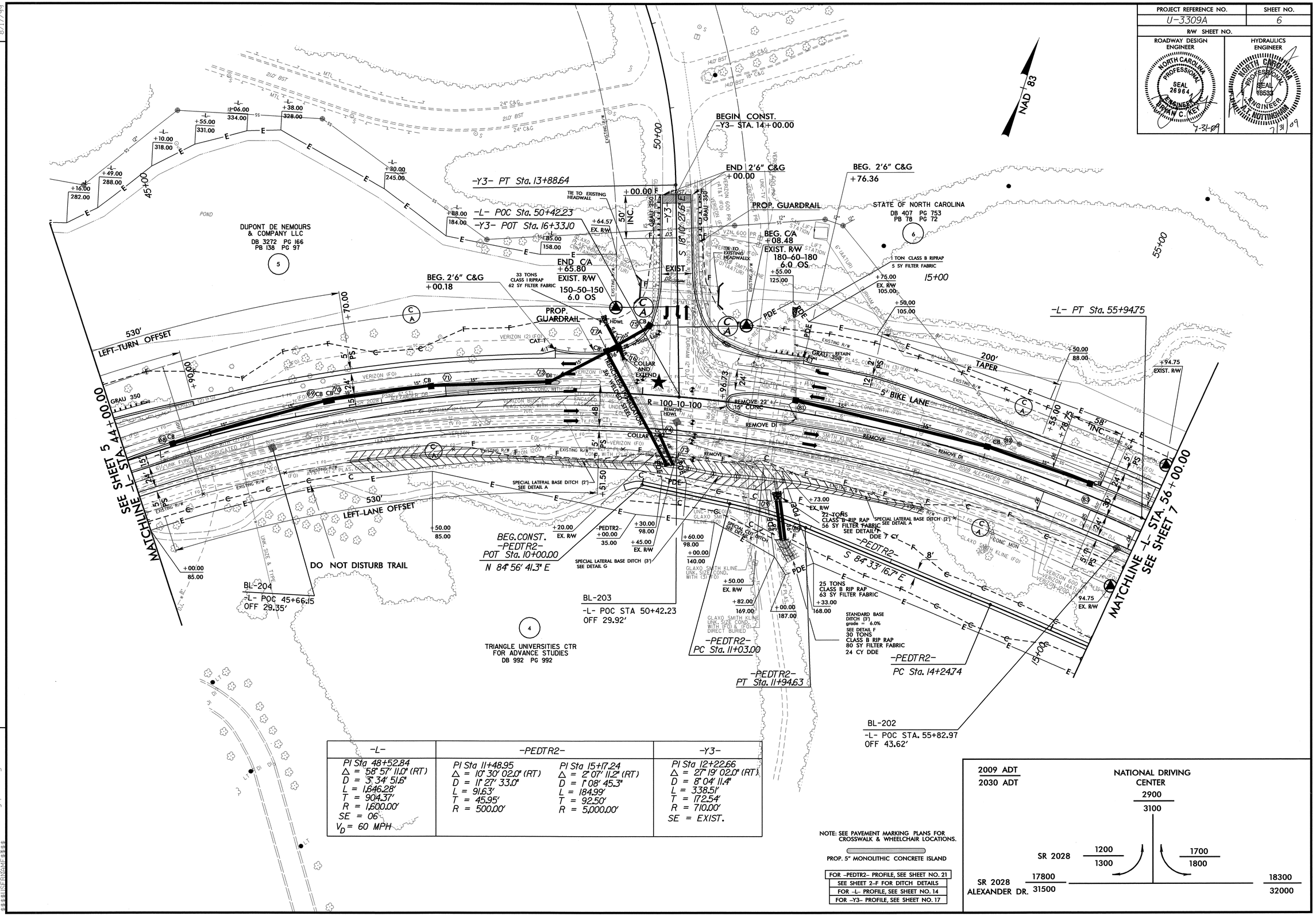


| -L- | -PEDTR2- | | -Y3- |
|---|---|---|---|
| PI Sta 48+52.84<br>Δ = 58° 57' 11.0" (RT)<br>D = 3° 34' 51.6"<br>L = 1,646.28'<br>T = 904.37'<br>R = 1,600.00'<br>SE = 06<br>$V_D$ = 60 MPH | PI Sta 11+48.95<br>Δ = 10° 30' 02.0" (RT)<br>D = 11° 27' 33.0"<br>L = 91.63'<br>T = 45.95'<br>R = 500.00' | PI Sta 15+17.24<br>Δ = 2° 07' 11.2" (RT)<br>D = 1° 08' 45.3"<br>L = 184.99'<br>T = 92.50'<br>R = 5,000.00' | PI Sta 12+22.66<br>Δ = 27° 19' 02.0" (RT)<br>D = 8° 04' 11.4"<br>L = 338.51'<br>T = 172.54'<br>R = 710.00'<br>SE = EXIST. |

NOTE: SEE PAVEMENT MARKING PLANS FOR CROSSWALK & WHEELCHAIR LOCATIONS.

PROP. 5" MONOLITHIC CONCRETE ISLAND

| |
|---|
| FOR -PEDTR2- PROFILE, SEE SHEET NO. 21 |
| SEE SHEET 2-F FOR DITCH DETAILS |
| FOR -L- PROFILE, SEE SHEET NO. 14 |
| FOR -Y3- PROFILE, SEE SHEET NO. 17 |

2009 ADT
2030 ADT

NATIONAL DRIVING CENTER
2900
3100

SR 2028
1200
1300
1700
1800

SR 2028 ALEXANDER DR.
17800
31500
18300
32000

REVISIONS

8/17/99

20-JUL-2009 15:45
R:\Roadway\Proj\u3309a_rdy_psh06.dgn
$$$$USERNAME$$$$

| PROJECT REFERENCE NO. | SHEET NO. |
|---|---|
| U-3309A | 7 |
| R/W SHEET NO. | |

ROADWAY DESIGN ENGINEER: NORTH CAROLINA PROFESSIONAL SEAL 26964 ENGINEER KEVAN C. KEY — 7-31-09

HYDRAULICS ENGINEER: NORTH CAROLINA PROFESSIONAL SEAL 16532 ENGINEER JEFFREY T. NOTTINGHAM — 7/31/09

REVISIONS 8/17/99

MOORE DRIVE
8600 / 9300

SR 2028 ALEXANDER DR. 18300 / 32000

3900 / 4200 | 4700 / 5000 | 19400 / 33100 | 200 / 300 | 500 / 600 | 800 / 1000

2009 ADT
2030 ADT

STATE OF NORTH CAROLINA
DB 407 PG 753
PB 78 PG 72

GLAXOSMITHKLINE
DB 2986 PG 852
PB 101 PG 74

TRIANGLE UNIVERSITIES CTR FOR ADVANCE STUDIES
DB 992 PG 992

NAD 83

SEE SHEET 6
MATCHLINE -L- STA. 56+00.00

MATCHLINE -L- STA. 69+00.00
SEE SHEET 8

-Y6- POT Sta. 13+31.95
-Y6- PT Sta. 12+22.45
-L- PC Sta. 58+47.47
-L- POC Sta. 63+12.73
-Y6- POT Sta. 10+00.00
-L- PRC Sta. 62+31.47
-L- PT Sta. 66+51.84
-Y6- PC Sta. 11+03.69
END CONST. -Y6- STA. 11+50.00
TIE TO EX. C&G +25.00
Note: Do Not Disturb Sign
TIE TO EXIST. C&G +25.00
END C/A +20.00 EXIST. R/W
BEG. C/A +05.00 EXIST. R/W
BEG. C/A +62.00 EX. R/W
-L- POT 63+48.58 OFF 53.14
-L- POC Sta. 63+10.34 RESET EXIST. FENCE
-Y7- POT Sta. 15+04.58
BL-201
REMOVE AND PROP. PAVED 8' SIDEWALK
200' TAPER
100' TRANSITION
5' BIKE LANE
2 TONS CLASS B RIPRAP 7 SY FILTER FABRIC
3 TONS CLASS B RIPRAP 11 SY FILTER FABRIC
1 TON CLASS B RIPRAP 5 SY FILTER FABRIC
GRADE TO DRAIN AND TIE TO EXISTING DI
REMOVE CONC. DITCH
SPECIAL CUT DITCH SEE DETAIL C
REMOVE PIPES & DI
Conv. OTCB To 2GI
-PEDTR2- PT Sta. 16+09.72
-PEDTR2- PC Sta. 19+06.67
-PEDTR2- PT Sta. 21+01.20
END CONST. -PEDTR2- POT Sta. 22+41.81
BEG. CONST. -Y7- STA. 13+00.00
-Y7- PT Sta. 13+08.17
-Y7- PC Sta. 10+74.78
-Y7- POT Sta. 10+00.00
S 82° 38' 15.1" E
S 82° 26' 05.5" E
N 75° 16' 26.2" E
N 27° 51' 49.3" E
N 8° 04' 08.2" E
N 16° 52' 52.7" E
S 82° 43' 20.3" E
RADIUS=1826.19
DELTA=12°00'30"
RADIUS=1398.49
DELTA=12°45'30"
DELTA=12°00'00"
CHORD=375.85
R=1826.19
T=192.00
L=384.00
SE=NC
VD=60 MPH
TOP=340.24
INV=332.14
Inaccessible

| -Y7- | -Y6- | -PEDTR2- | |
|---|---|---|---|
| PI Sta 11+92.44<br>Δ = 18° 01' 18.1" (LT)<br>D = 7° 43' 18.5"<br>L = 233.39'<br>T = 117.67'<br>R = 742.00'<br>SE = EXIST. | PI Sta 11+63.40<br>Δ = 14° 47' 35.4" (RT)<br>D = 12° 27' 20.2"<br>L = 118.77'<br>T = 59.72'<br>R = 460.00'<br>SE = EXIST. | PI Sta 15+17.24<br>Δ = 2° 07' 11.2" (RT)<br>D = 1° 08' 45.3"<br>L = 184.99'<br>T = 92.50'<br>R = 5,000.00' | PI Sta 20+05.18<br>Δ = 22° 17' 28.3" (LT)<br>D = 11° 27' 33.0"<br>L = 194.53'<br>T = 98.51'<br>R = 500.00' |

| -L- | | |
|---|---|---|
| PI Sta 48+52.84<br>Δ = 58° 57' 11.0" (RT)<br>D = 3° 34' 51.6"<br>L = 1,646.28'<br>T = 904.37'<br>R = 1,600.00'<br>SE = 06<br>VD = 60 MPH | PI Sta 60+39.48<br>Δ = 0° 53' 43.0" (RT)<br>D = 0° 13' 59.3"<br>L = 384.00'<br>T = 192.00'<br>R = 24,575.16'<br>SE = NC | PI Sta 64+41.66<br>Δ = 0° 58' 48.2" (LT)<br>D = 0° 13' 59.3"<br>L = 420.36'<br>T = 210.19'<br>R = 24,575.16'<br>SE = NC |

PROP. 5" MONOLITHIC CONCRETE ISLAND
UPGRADE EXISTING TRAFFIC SIGNAL
PROP PAVED SIDEWALK

FOR -PEDTR2- PROFILE, SEE SHEET NO. 21
SEE SHEET 2-F FOR DITCH DETAILS
FOR -L- PROFILE, SEE SHEET NO. 14
FOR-Y6- PROFILE, SEE SHEET NO. 19
FOR -Y7- PROFILE, SEE SHEET NO. 19

NOTE: SEE PAVEMENT MARKING PLANS FOR CROSSWALK & WHEELCHAIR LOCATIONS.

NOTE: RECONNECT ALL PEDESTRIAN TRAILS AND SIDEWALKS BACK TO INTERSECTIONS.

23-JUL-2009 09:02
R:\Roadway\Proj\u3309a_rdy_psh07.dgn
$$$$USERNAME$$$$

| PROJECT REFERENCE NO. | SHEET NO. |
|---|---|
| U-3309A | 8 |
| R/W SHEET NO. | |
| ROADWAY DESIGN ENGINEER | HYDRAULICS ENGINEER |

NORTH CAROLINA PROFESSIONAL SEAL 26964 ENGINEER BRYAN C. KEY 7-31-09

NORTH CAROLINA PROFESSIONAL SEAL 18533 ENGINEER A.T. NOTTINGHAM 7/31/09

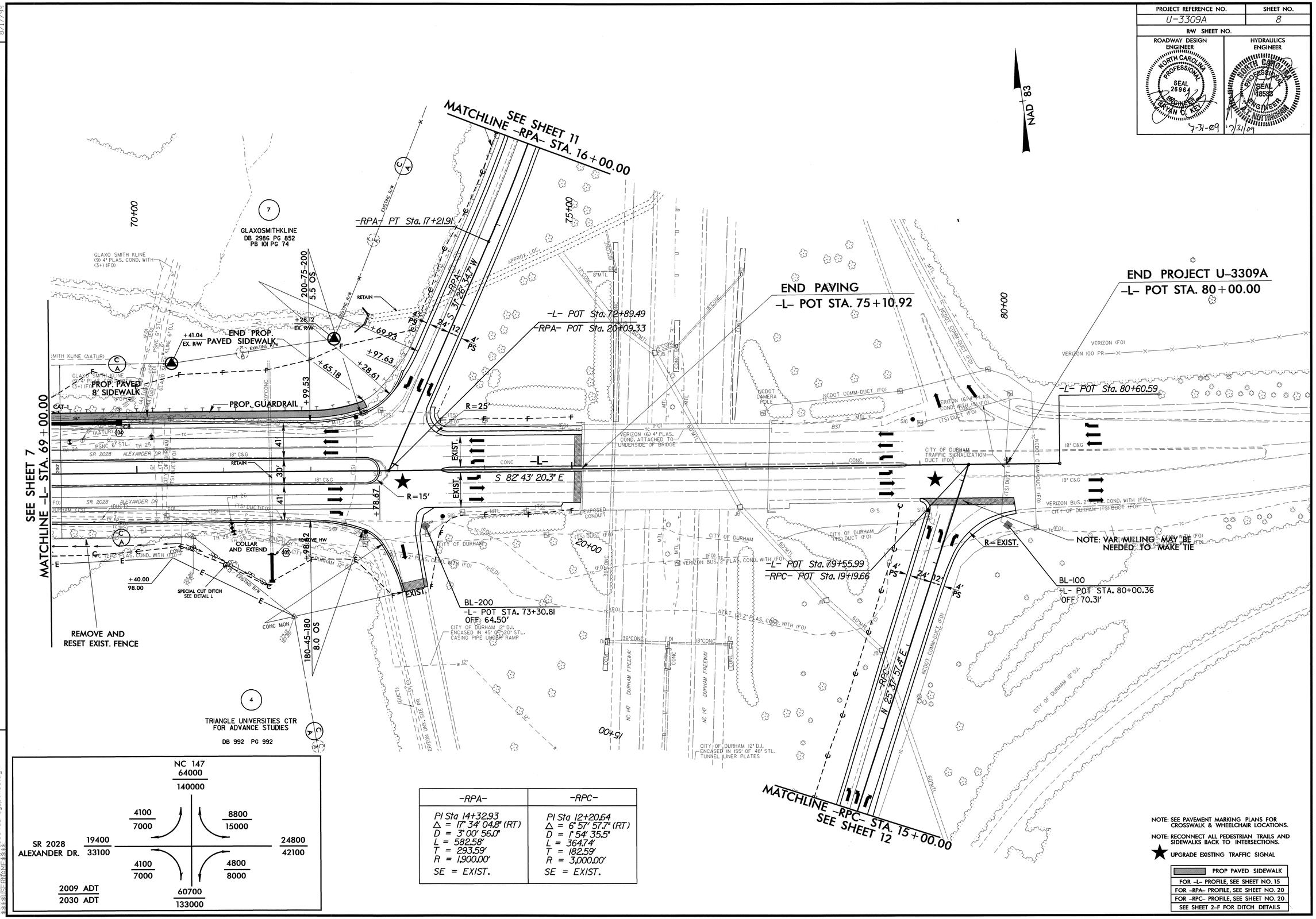





| -RPA- | -RPC- |
|---|---|
| PI Sta 14+32.93 | PI Sta 12+20.64 |
| Δ = 17° 34' 04.8" (RT) | Δ = 6° 57' 57.7" (RT) |
| D = 3° 00' 56.0" | D = 1° 54' 35.5" |
| L = 582.58' | L = 364.74' |
| T = 293.59' | T = 182.59' |
| R = 1,900.00' | R = 3,000.00' |
| SE = EXIST. | SE = EXIST. |

NOTE: SEE PAVEMENT MARKING PLANS FOR CROSSWALK & WHEELCHAIR LOCATIONS.

NOTE: RECONNECT ALL PEDESTRIAN TRAILS AND SIDEWALKS BACK TO INTERSECTIONS.

★ UPGRADE EXISTING TRAFFIC SIGNAL

| |
|---|
| PROP PAVED SIDEWALK |
| FOR -L- PROFILE, SEE SHEET NO. 15 |
| FOR -RPA- PROFILE, SEE SHEET NO. 20 |
| FOR -RPC- PROFILE, SEE SHEET NO. 20 |
| SEE SHEET 2-F FOR DITCH DETAILS |

REVISIONS

8/17/99

22-JUL-2009 15:09
R:\Roadway\Proj\u3309a_rdy_psh08.dgn
$$$$USERNAME$$$$

| PROJECT REFERENCE NO. | SHEET NO. |
|---|---|
| U-3309A | 9 |
| R/W SHEET NO. | |

ROADWAY DESIGN ENGINEER — NORTH CAROLINA PROFESSIONAL SEAL 26964 ENGINEER BRYAN C. KEY — 7-31-09

HYDRAULICS ENGINEER — NORTH CAROLINA PROFESSIONAL SEAL 18933 ENGINEER MATTHEW C. NOTTINGHAM — 7/31/09

REVISIONS

8/17/99

NAD 83

TBM#3
BY STA 2+29
27' RT
N 791343.38
E 2036211.06
ELEV=296.97
RR SPIKE 12" PINE

POND

SR 1121 CORNWALLIS RD

JB APPROX. LOC.

BEG. CONST.
-Y1- POC STA. 10+00.00

-Y1- S 58°06'46.9" E

-Y1- POT Sta. 10+00.00

-Y1- PC Sta. 12+33.56

EXIST.

8 TONS CLASS B RIPRAP
21 SY FILTER FABRIC

RETAIN

TIE TO EX. CURB

ELI LILLY & COMPANY
DB 2342 PG 487
PB 138 PG 97

BEG. C/A
+00.00
EX. R/W

+65.24
EX. R/W

50' TAPER
EXISTING R/W

75' TAPER

-Y1- POC STA. 15+67.86
OFF -42.86' RT

BY1=214

15+00

+72.00

+75.00
85.00

R=4'

+44.00

+48.81

-Y1-

R=4'-32'

R=4'

R=30'

F

-Y1- PT Sta. 15+00.39

-Y1- PC Sta. 15+33.52

-Y1- PT Sta. 16+84.10

MATACHLINE -Y1- STA 19+00.00
SEE SHEET 4

8' PAVED SIDEWALK

ABANDONED T-PEDS
REMOVED FROM FIELD

BEG. C/A
+00.00
EX. R/W

TRANSITION BACK TO EXIST.

360' TRANSITION

+72.00

200' TAPER

+80.00

TROXLER ASSOCIATES LTD
DB 1599 PG 498-500
1

| -Y1LT- | |
|---|---|
| PI Sta 14+91.81<br>Δ = 8° 43' 48.2" (RT)<br>D = 2° 25' 56.4"<br>L = 358.92'<br>T = 179.81'<br>R = 2,355.59' | PI Sta 18+46.36<br>Δ = 7° 42' 10.9" (RT)<br>D = 2° 13' 58.4"<br>L = 344.98'<br>T = 172.75'<br>R = 2,566.00' |

| -Y1RT- | |
|---|---|
| PI Sta 14+93.11<br>Δ = 8° 05' 51.8" (RT)<br>D = 2° 14' 21.6"<br>L = 361.61'<br>T = 181.11'<br>R = 2,558.60' | PI Sta 18+41.78<br>Δ = 7° 42' 10.9" (RT)<br>D = 2° 15' 27.1"<br>L = 341.22'<br>T = 170.87'<br>R = 2,538.00' |

| -Y1- |
|---|
| PI Sta 16+27.28<br>Δ = 11° 33' 15.3" (RT)<br>D = 2° 14' 48.8"<br>L = 781.27'<br>T = 393.72'<br>R = 2,550.00'<br>SE = EXIST. |

| -PEDTR3- | | | |
|---|---|---|---|
| PI Sta 10+30.76<br>Δ = 34° 10' 15.7" (RT)<br>D = 114° 35' 29.6"<br>L = 29.82'<br>T = 15.37'<br>R = 50.00' | PI Sta 12+07.58<br>Δ = 9° 10' 06.3" (RT)<br>D = 7° 09' 43.1"<br>L = 128.02'<br>T = 64.14'<br>R = 800.00' | PI Sta 15+79.18<br>Δ = 18° 41' 34.6" (RT)<br>D = 38° 11' 49.9"<br>L = 48.94'<br>T = 24.69'<br>R = 150.00' | PI Sta 16+84.10<br>Δ = 16° 12' 45.4" (LT)<br>D = 38° 11' 49.9"<br>L = 42.44'<br>T = 21.37'<br>R = 150.00' |

NOTE: SEE PAVEMENT MARKING PLANS FOR CROSSWALK & WHEELCHAIR LOCATIONS.

PROP. 5" MONOLITHIC CONCRETE ISLAND

PROP PAVED SIDEWALK

FOR -Y1- LT PROFILE, SEE SHEET NO. 16

FOR -Y1- RT PROFILE, SEE SHEET NO. 16

SEE SHEET 2-F FOR DITCH DETAILS

20-JUL-2009 15:42
c:\projects\3309a_rdy_psh09.dgn
$$$$USERNAME$$$$

| PROJECT REFERENCE NO. | SHEET NO. |
|---|---|
| U-3309A | 10 |
| R/W SHEET NO. | |
| ROADWAY DESIGN ENGINEER | HYDRAULICS ENGINEER |
| NORTH CAROLINA PROFESSIONAL SEAL 26964 ENGINEER BRIAN C. KEY 7-31-09 | NORTH CAROLINA PROFESSIONAL SEAL 18533 ENGINEER W. R. NOTTINGHAM 7/31/09 |

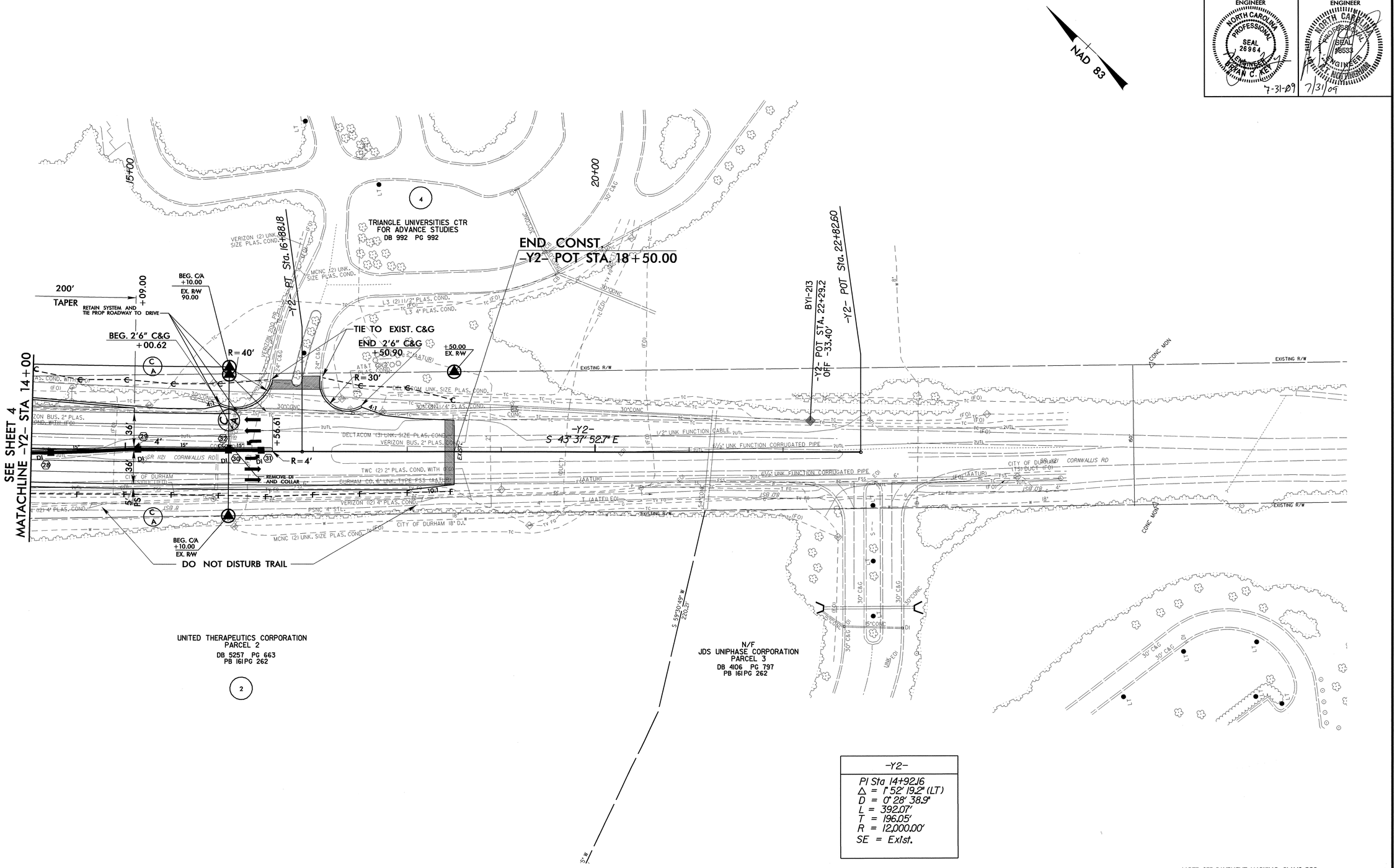


| -Y2- |
|---|
| PI Sta 14+92.16 |
| Δ = 1° 52' 19.2" (LT) |
| D = 0° 28' 38.9" |
| L = 392.07' |
| T = 196.05' |
| R = 12,000.00' |
| SE = Exist. |

NOTE: SEE PAVEMENT MARKING PLANS FOR CROSSWALK & WHEELCHAIR LOCATIONS.

PROP. 5" MONOLITHIC CONCRETE ISLAND

FOR -Y2- PROFILE, SEE SHEET NO. 17

REVISIONS

8/17/99

29-JUN-2009 10:55
R:\Roadway\Proj\u3309a_rdy_psh10.dgn
$$$$USERNAME$$$$

| PROJECT REFERENCE NO. | SHEET NO. |
|---|---|
| U-3309A | 11 |
| R/W SHEET NO. | |
| ROADWAY DESIGN ENGINEER | HYDRAULICS ENGINEER |

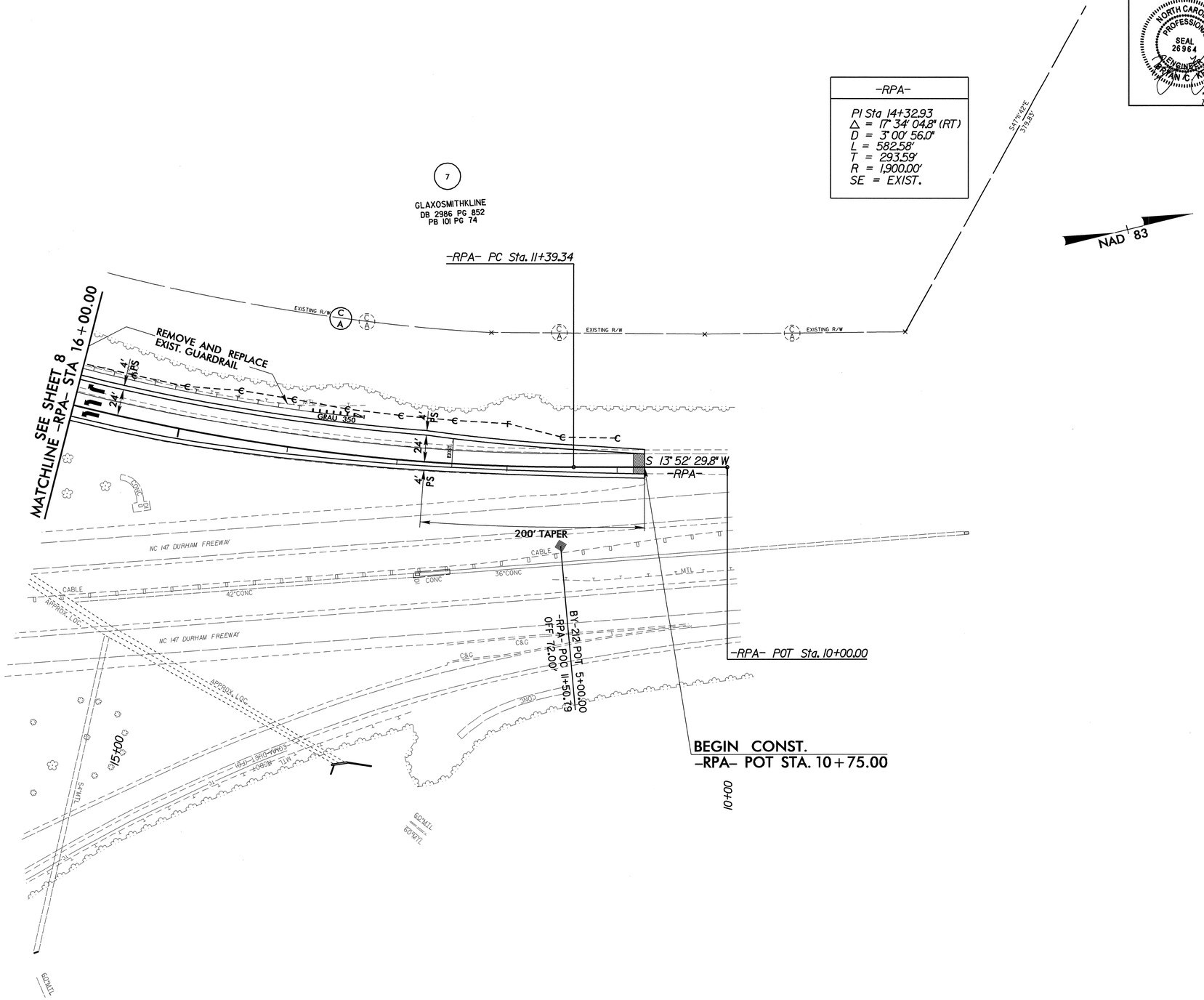


FOR -RPA- PROFILE, SEE SHEET NO. 20

8/17/99

29-JUN-2009 10:55
R:\Roadway\Proj\u3309a_rdy_psh11.dgn
$$$$USERNAME$$$$

| PROJECT REFERENCE NO. | SHEET NO. |
|---|---|
| U-3309A | 12 |
| R/W SHEET NO. | |

ROADWAY DESIGN ENGINEER

NORTH CAROLINA PROFESSIONAL SEAL 26964 ENGINEER BRIAN C. KEY

7-31-09

HYDRAULICS ENGINEER

NORTH CAROLINA PROFESSIONAL SEAL 16868 ENGINEER

7/31/09

REVISIONS

8/17/99

TRIANGLE UNIVERSITIES CTR
FOR ADVANCE STUDIES
DB 992 PG 992

NAD 83

10+00

24"CONC

CONC

-RPC- BY-211
-RPC- POC
OFF 157.09'
12+41.38

2'-2" PLATE CONC WITH (2.0) LT VOID

30"CONC

CABLE

NC 147 DURHAM FREEWAY

-RPC- POT Sta. 10+00.00

18"CONC

NC 147 DURHAM FREEWAY

-RPC- POC STA. 12+55.00
BEGIN CONST.
-RPC-
N 18° 39' 59.7" E

200' TAPER

4" PS

EXIST

N 25° 37' 57.4" E

12' 24'

NCDOT COMM-DUCT

4" PS

MATCHLINE -RPC- STA 15+00.00
SEE SHEET 8

-RPC- PC Sta. 10+38.05

36"CONC

-RPC- PT Sta. 14+02.79

| -RPC- |
|---|
| PI Sta 12+20.64<br>Δ = 6° 57' 57.7" (RT)<br>D = 1° 54' 35.5"<br>L = 364.74'<br>T = 182.59'<br>R = 3,000.00'<br>SE = EXIST. |

FOR -RPC- PROFILE, SEE SHEET NO. 20

16-JUL-2009 11:54
N:\Roadway\Proj\u3309a_rdy_psht2.dgn
$$$$USERNAME$$$$

5/28/99

| PROJECT REFERENCE NO. | SHEET NO. |
|---|---|
| U-3309A | 13 |

ROADWAY DESIGN ENGINEER — NORTH CAROLINA PROFESSIONAL SEAL 26964 ENGINEER BRIAN K. KEY — 7/31/09

HYDRAULICS ENGINEER — NORTH CAROLINA PROFESSIONAL SEAL 18533 ENGINEER R. NOTTINGHAM — 7/31/09

-L-

BM-2 ELEV. 330.10' R/R SPIKE
SET IN 15" SWEET GUM
-L- STA 28+62, 199' RT.

BEGIN CONSTRUCTION
BEGIN MIN. RESURFACING
-L- STA. 18+50.00
EL = 306.61'

BEGIN GRADE
-L- STA. 19+50.00
EL = 309.30'

PI = 26+70.00
EL = 329.70'
K = 114
VC = 670'
V = 55 MPH

(+) 2.8339%
(-) 3.0263%
(+) 1.8866%
(+) 1.3400%
(+) 2.8171%
(+) 1.4667%
(+) 3.1800%
(+) 3.5000%

PI = 24+50.000
EL = 319.43

PI = 29+00.000
EL = 317.50

-L- POT Sta. 27+17.63
-Y1- POT Sta. 23+29.72

-L- POT Sta. 27+20.30
-Y2- POT Sta. 10+00.00

BEG. LT. DITCH GRADE
PI = 19+70.000
EL = 306.82

PI = 20+00.000
EL = 307.26

PI = 20+50.000
EL = 308.85

BEG. LT. DITCH GRADE
PI = 22+75.000
EL = 314.50

END LT. DITCH GRADE
PI = 21+00.000
EL = 310.50

END LT. DITCH GRADE
PI = 25+00.000
EL = 320.10

BEG. RT. DITCH GRADE
PI = 28+71.000
EL = 318.05

PIPE HYDRAULIC DATA
DRAINAGE STRUCTURE NOs 4,5,&6

| | | |
|---|---|---|
| DRAINAGE AREA | = 2.84 | AC |
| DESIGN FREQUENCY | = 50 | YRS |
| DESIGN DISCHARGE | = 8.6 | CFS |
| DESIGN HW ELEVATION | = 316.26 | FT |
| 100 YEAR DISCHARGE | = 9 | CFS |
| 100 YEAR HW ELEVATION | = 316.33 | FT |
| OVERTOPPING FREQUENCY | = 100+ | YRS |
| OVERTOPPING DISCHARGE | = 12.2 | CFS |
| OVERTOPPING ELEVATION | = 317 | FT |

LEFT DITCH — · — ·
RIGHT DITCH - - - - - -
FOR PLAN VIEW, SEE SHEET NO. 4

360 350 340 330 320 310 300 290 280 270

15+00 16+00 17+00 18+00 19+00 20+00 21+00 22+00 23+00 24+00 25+00 26+00 27+00 28+00 29+00

-L-

PIPE HYDRAULIC DATA
DRAINAGE STRUCTURE NOs 50&52

| | | |
|---|---|---|
| DRAINAGE AREA | = 24 | AC |
| DESIGN FREQUENCY | = 50 | YRS |
| DESIGN DISCHARGE | = 57 | CFS |
| DESIGN HW ELEVATION | = 292.95 | FT |
| 100 YEAR DISCHARGE | = 67 | CFS |
| 100 YEAR HW ELEVATION | = 293.41 | FT |
| OVERTOPPING FREQUENCY | = 100+ | YRS |
| OVERTOPPING DISCHARGE | = 70 | CFS |
| OVERTOPPING ELEVATION | = 293.50 | FT |

PI = 33+00.00
EL = 310.63'
K = 332
VC = 180'
V = 60 MPH

(-) 2.7867%
(-) 3.0763%
(-) 12.4840%
(-) 2.7867%
(-) 2.6600%
(-) 3.0600%
(-) 5.8600%
(-) 1.5400%
(-) 2.6071%
(-) 2.0000%
(-) 3.3600%
(-) 3.1400%
(-) 2.4840%
(-) 0.6263%
(-) 1.6400%
(-) 0.7400%
(-) 0.4600%
(-) 0.7200%
(-) 0.9500%
(+) 1.6400%
(-) 1.0200%
(+) 1.0500%
(+) 0.6203%

PI = 29+00.000
EL = 317.50

PI = 35+00.000
EL = 300.78

PI = 35+50.000
EL = 299.45

PI = 36+00.000
EL = 297.92

PI = 36+50.000
EL = 294.99

PI = 37+00.000
EL = 294.22

PI = 37+50.000
EL = 292.65

PI = 37+50.000
EL = 295.00

PI = 38+00.000
EL = 290.97

PI = 38+50.000
EL = 290.15

PI = 39+00.000
EL = 289.78

PI = 39+50.000
EL = 289.55

PI = 40+00.000
EL = 289.19

PI = 41+50.000
EL = 283.68

PI = 42+00.000
EL = 283.79

END LT. DITCH GRADE
PI = 38+00.000
EL = 294.00

PI = 38+65.00
EL = 296.60'
K = 145
VC = 269'
V = 60 MPH

BEG. LT. DITCH GRADE
PI = 37+22.000
EL = 295.73

-L- POC Sta. 40+78.32
-Y4- POT Sta. 13+36.72

END RT. DITCH GRADE
PI = 43+00.000
EL = 288.34

-L- POC Sta. 40+86.52
-Y5- POT Sta. 10+00.00

BEG. RT. DITCH GRADE
PI = 42+21.000
EL = 287.85

BEG. LT DITCH GRADE
PI = 41+25.000
EL = 282.87

END LT. DITCH GRADE
PI = 42+20.000
EL = 284.00

END RT. DITCH GRADE
PI = 40+20.000
EL = 289.00

LEFT DITCH — · — ·
RIGHT DITCH - - - - - -
FOR PLAN VIEW, SEE SHEET NO. 4 & 5

360 350 340 330 320 310 300 290 280 270 260

29+00 30+00 31+00 32+00 33+00 34+00 35+00 36+00 37+00 38+00 39+00 40+00 41+00 42+00 43+00

17-JUL-2009 15:11
c:\projects\u3309a_rdy_pf113.dgn
$$$$USERNAME$$$$

5/28/99

| PROJECT REFERENCE NO. | SHEET NO. |
|---|---|
| U-3309A | 14 |

ROADWAY DESIGN ENGINEER

NORTH CAROLINA PROFESSIONAL SEAL 26964 ENGINEER RYAN C. KEY

7-31-09

HYDRAULICS ENGINEER

NORTH CAROLINA PROFESSIONAL SEAL 16533 ENGINEER

7/31/09

BM-5 ELEV. 290.52' RR SPIKE
SET IN 15" PINE
-L- STA 44+11, 368' LT.

### PIPE HYDRAULIC DATA

DRAINAGE STRUCTURE NOs 73,77,77A & 77C

| | | | |
|---|---|---|---|
| DRAINAGE AREA | = | 45 | AC |
| DESIGN FREQUENCY | = | 50 | YRS |
| DESIGN DISCHARGE | = | 100 | CFS |
| DESIGN HW ELEVATION | = | 289.00 | FT |
| 100 YEAR DISCHARGE | = | 120 | CFS |
| 100 YEAR HW ELEVATION | = | 289.50 | FT |
| OVERTOPPING FREQUENCY | = | 100+ | YRS |
| OVERTOPPING DISCHARGE | = | 170 | CFS |
| OVERTOPPING ELEVATION | = | 290.70 | FT |

-L- POC Sta. 50+42.23
-Y3- POT Sta. 16+33.10

PI = 46+65.00
EL = 291.59'
K = 137
VC = 220'
V = 60 MPH

PI = 50+65.00
EL = 295.51'
K = 1228
VC = 180'
V = 60 MPH

PI = 56+00.00
EL = 301.54'
K = 386
VC = 180'
V = 60 MPH

(-)0.6263%
(+)0.9803%
(-) 0.4300%
(-) 0.1733%
(+)0.9803%
(+)1.1269%
(-) 0.1500%
(+) 1.9500%
(+) 0.8300%
(+) 2.7400%
(+)11.1269%
(+)0.6600%

PI = 48+50.000
El = 286.12

PI = 50+00.000
El = 285.86

PI = 50+40.000
El = 285.80

PI = 52+00.000
El = 288.92

PI = 53+00.000
El = 289.75

BEG. RT. DITCH GRADE
PI = 46+50.000
El = 286.98

BEG. RT. DITCH GRADE
PI = 53+50.000
El = 291.12

LEFT DITCH
RIGHT DITCH
FOR PLAN VIEW, SEE SHEET NO. 5, 6, & 7

340 330 320 310 300 290 280 270 260 250

43+00 44+00 45+00 46+00 47+00 48+00 49+00 50+00 51+00 52+00 53+00 54+00 55+00 56+00 57+00

BM-6 ELEV. 324.42' RR SPIKE
SET IN 18" OAK
-L- STA 63+18, 314' RT.

PI = 70+00.00
EL = 330.79'
K = 139
VC = 200'
V = 55 MPH

PI = 63+00.00
EL = 306.16'
K = 140
VC = 400'
V = 60 MPH

(+)3.5186%
(+) 3.2100%
(-) 2.0640%
(-) 8.4400%
(+)0.6600%
(+)3.5186%

PI = 70+50.000
El = 327.22

PI = 71+00.000
El = 323.00

-L- POC Sta. 63+12.73
-Y6- POT Sta. 10+00.00

-L- POC Sta. 63+10.34
-Y7- POT Sta. 15+04.58

BEG. RT. DITCH GRADE
PI = 67+50.000
El = 317.59

LEFT DITCH
RIGHT DITCH
FOR PLAN VIEW, SEE SHEET NO. 7 & 8

340 330 320 310 300 290 280 270 260 250

57+00 58+00 59+00 60+00 61+00 62+00 63+00 64+00 65+00 66+00 67+00 68+00 69+00 70+00 71+00

c:\pp\projects\3309a-rdy-pf114.dgn
21-JUL-2003 11:19
$$$$USERNAME$$$$

| PROJECT REFERENCE NO. | SHEET NO. |
|---|---|
| U-3309A | 15 |

ROADWAY DESIGN ENGINEER — NORTH CAROLINA PROFESSIONAL SEAL 26964 ENGINEER BRYAN C. KEY — 7-31-09

HYDRAULICS ENGINEER — NORTH CAROLINA PROFESSIONAL SEAL 18533 ENGINEER ALT. MOTTINGHAM — 7/31/09

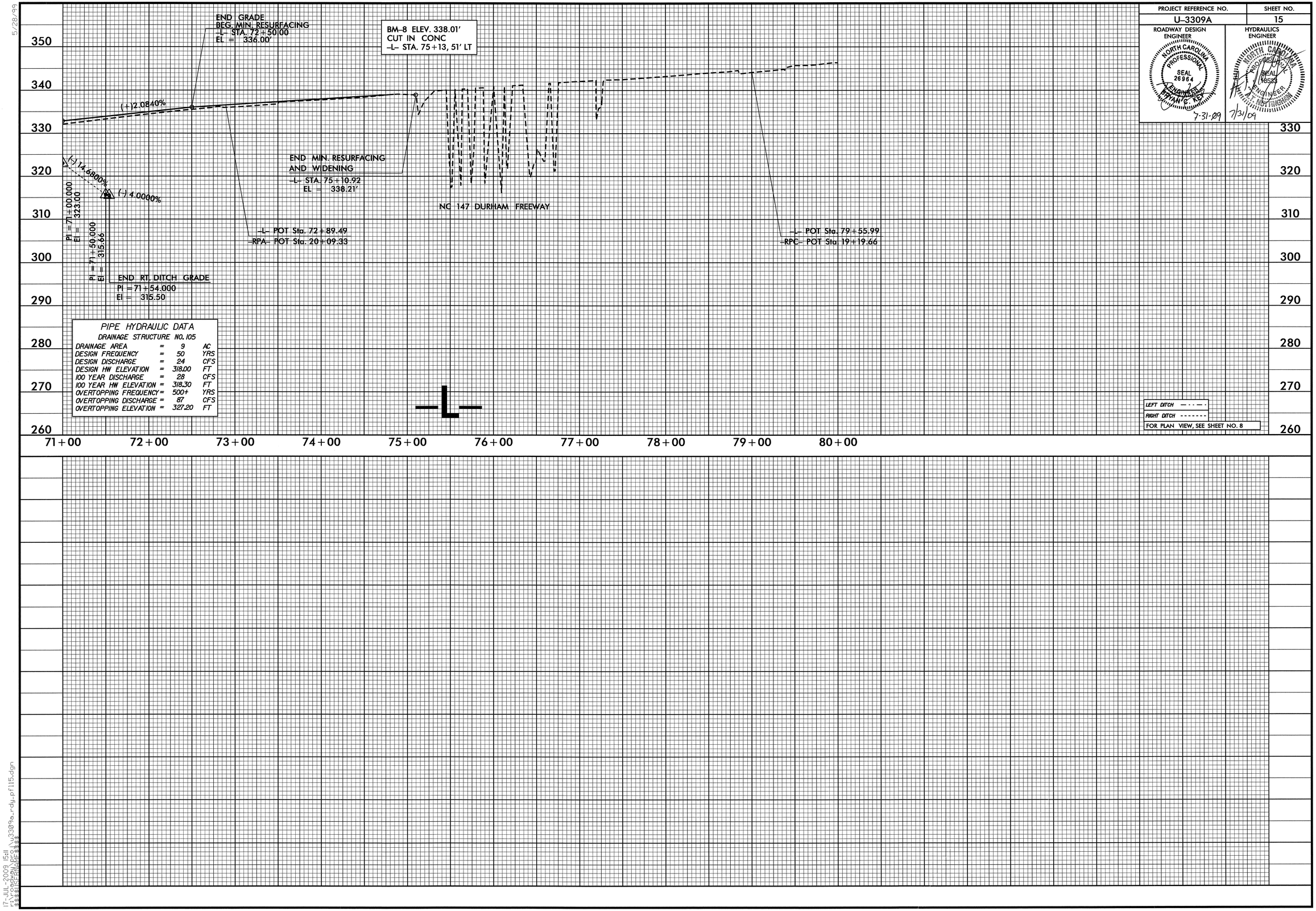


PIPE HYDRAULIC DATA

DRAINAGE STRUCTURE NO. 105

| | | | |
|---|---|---|---|
| DRAINAGE AREA | = | 9 | AC |
| DESIGN FREQUENCY | = | 50 | YRS |
| DESIGN DISCHARGE | = | 24 | CFS |
| DESIGN HW ELEVATION | = | 318.00 | FT |
| 100 YEAR DISCHARGE | = | 28 | CFS |
| 100 YEAR HW ELEVATION | = | 318.30 | FT |
| OVERTOPPING FREQUENCY | = | 500+ | YRS |
| OVERTOPPING DISCHARGE | = | 87 | CFS |
| OVERTOPPING ELEVATION | = | 327.20 | FT |

LEFT DITCH — · · —

RIGHT DITCH - - - - - -

FOR PLAN VIEW, SEE SHEET NO. 8

5/28/99

17-JUL-2009 15:11
r:\roadway\proj\u3309a_rdy_pf115.dgn
$$$$USERNAME$$$$

5/28/99

| PROJECT REFERENCE NO. | SHEET NO. |
|---|---|
| U-3309A | 16 |

ROADWAY DESIGN ENGINEER

NORTH CAROLINA PROFESSIONAL SEAL 26964 ENGINEER BRIAN C. KEY

7/31/09

HYDRAULICS ENGINEER

NORTH CAROLINA PROFESSIONAL SEAL 18533 ENGINEER

7/31/09

# -Y1LT-

BEGIN GRADE
-Y1LT- STA. 13+12.00
EL = 311.20'

PI = 16+50.00
EL = 322.89'
K = 160
VC = 400'
V = 60 MPH

(+)3.4588%

(+)0.9427%

PI = 21+00.00
EL = 327.23'
K = 153
VC = 300'
V = 60 MPH

(+)0.9427%

(-)1.0000%

END GRADE
-Y1LT- STA. 22+85.53
EL = 325.28'

FOR PLAN VIEW, SEE SHEET NO. 4 & 9

360 350 340 330 320 310 300 290 280 270

14+00 15+00 16+00 17+00 18+00 19+00 20+00 21+00 22+00

# -Y1RT-

BEGIN GRADE
-Y1RT- STA. 13+12.00
EL = 311.03'

PI = 16+15.00
EL = 321.24'
K = 179
VC = 340'
V = 60 MPH

(+)3.3696%

(+)1.4515%

PI = 20+60.00
EL = 327.79'
K = 121
VC = 300'
V = 55 MPH

(+)1.4515%

(-)1.0000%

(-) 0.6000%

(-) 1.0000%

END GRADE
-Y1RT- STA. 22+84.53
EL = 325.45'

BEG. RT. DITCH GRADE
PI = 19+97.000
EL = 323.50

PI = 21+97.000
EL = 322.30

END RT. DITCH GRADE
PI = 22+47.000
EL = 321.80

RIGHT DITCH - - - - - - -

FOR PLAN VIEW, SEE SHEET NO. 4 & 9

360 350 340 330 320 310 300 290 280 270 260

14+00 15+00 16+00 17+00 18+00 19+00 20+00 21+00 22+00

22-JUL-2009 12:48
f:\roadway\prof\u3309a_rdy_prf116.dgn
$$$$USERNAME$$$$

| PROJECT REFERENCE NO. | SHEET NO. |
|---|---|
| U-3309A | 17 |

ROADWAY DESIGN ENGINEER

NORTH CAROLINA PROFESSIONAL SEAL 26964 ENGINEER BRYAN C. KEY 7-31-09

HYDRAULICS ENGINEER

NORTH CAROLINA PROFESSIONAL SEAL 18532 ENGINEER 7/31/09

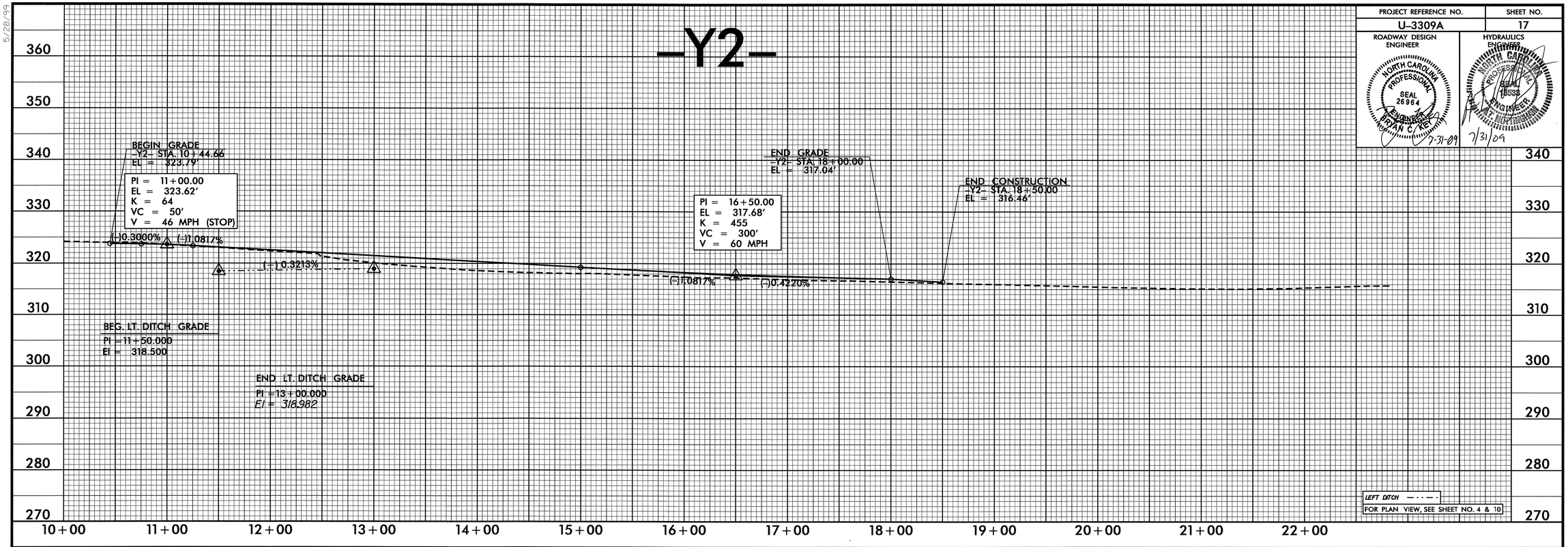


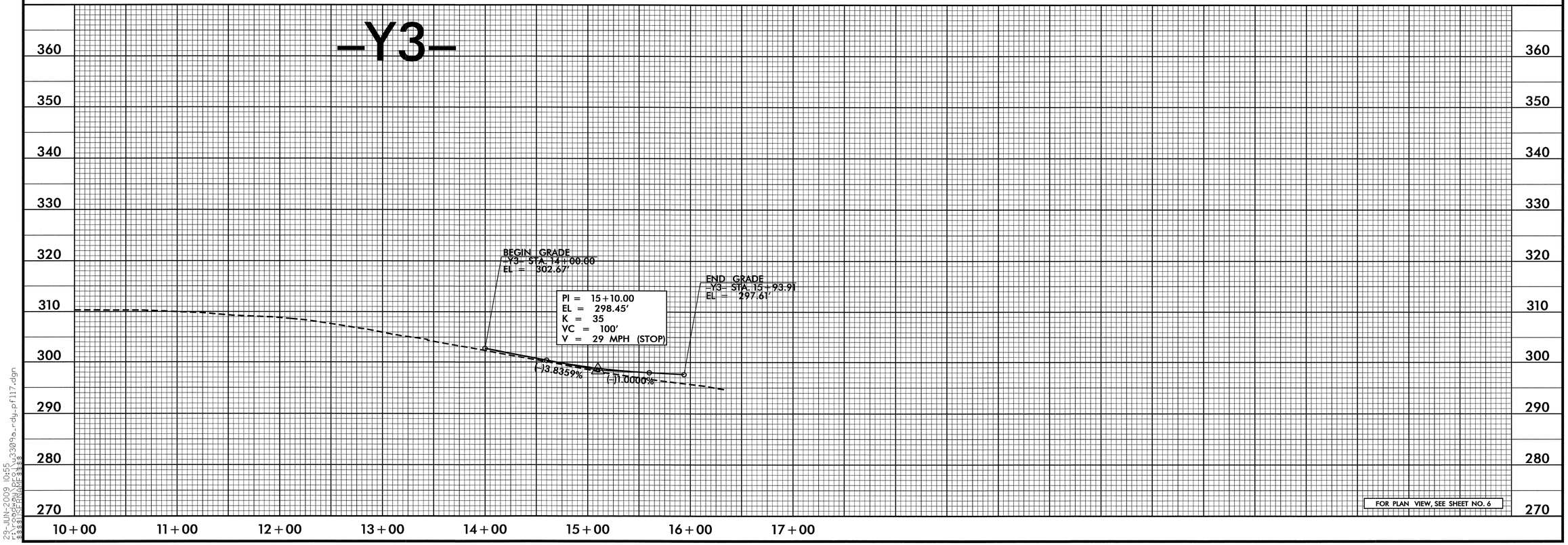


5/28/99

29-JUN-2009 10:55
r:\roadway\proj\u3309a_rdy_pf117.dgn
$$$$USERNAME$$$$

| PROJECT REFERENCE NO. | SHEET NO. |
|---|---|
| U-3309A | 18 |

ROADWAY DESIGN ENGINEER

NORTH CAROLINA PROFESSIONAL SEAL 26964 ENGINEER BRYAN C. KEY

7-31-09

HYDRAULICS ENGINEER

NORTH CAROLINA PROFESSIONAL SEAL 16193 ENGINEER BRYAN C. KEY

7/31/09

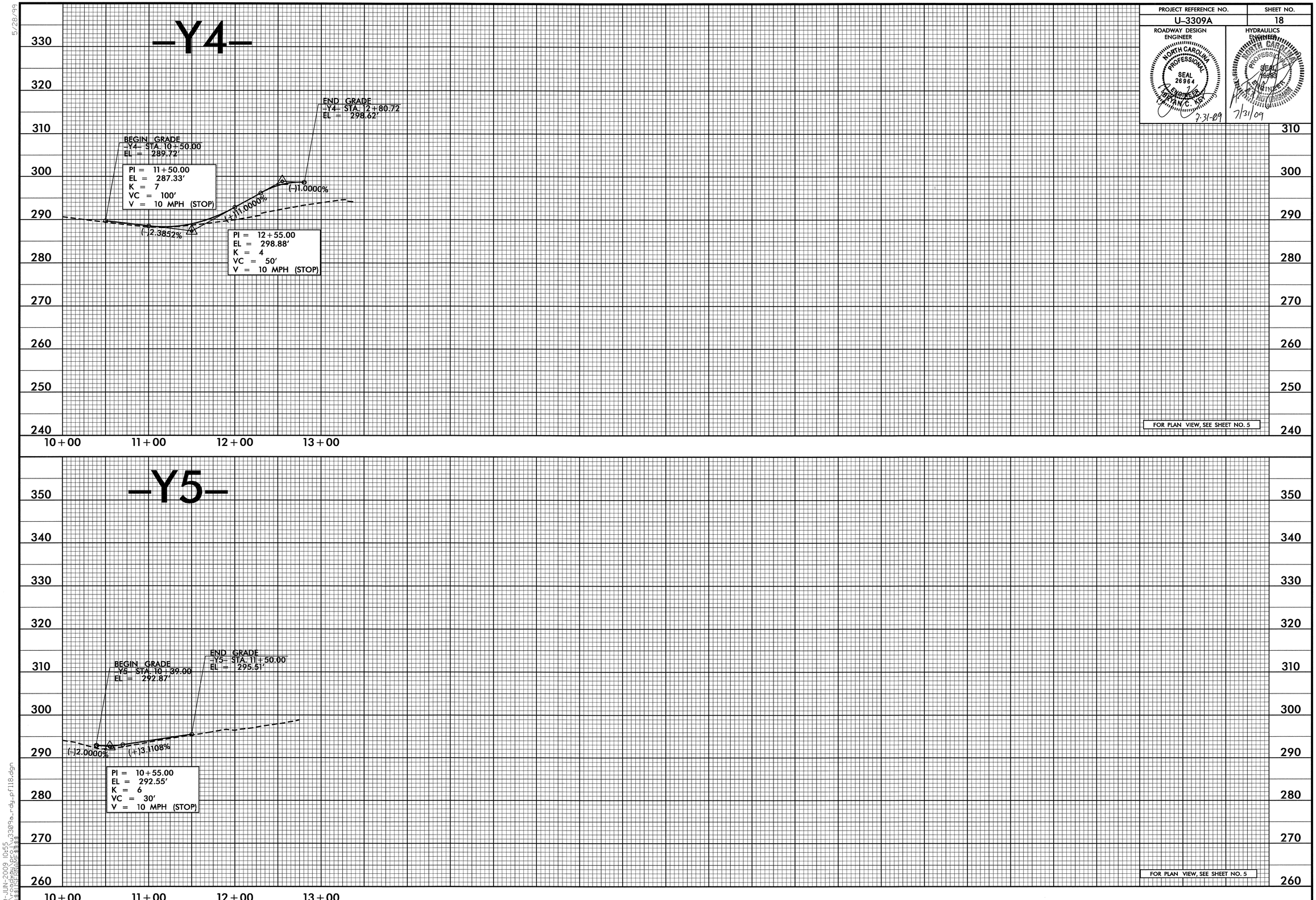


5/28/99

29-JUN-2009 10:55
r:\roadway\proj\u3309a_rdy_pf118.dgn
$$$$USERNAME$$$$

| PROJECT REFERENCE NO. | SHEET NO. |
|---|---|
| U-3309A | 19 |

ROADWAY DESIGN ENGINEER

NORTH CAROLINA PROFESSIONAL SEAL 26964 ENGINEER BRYAN C. KEY

7-31-09

HYDRAULICS ENGINEER

NORTH CAROLINA PROFESSIONAL SEAL 18533 ENGINEER

7/31/09

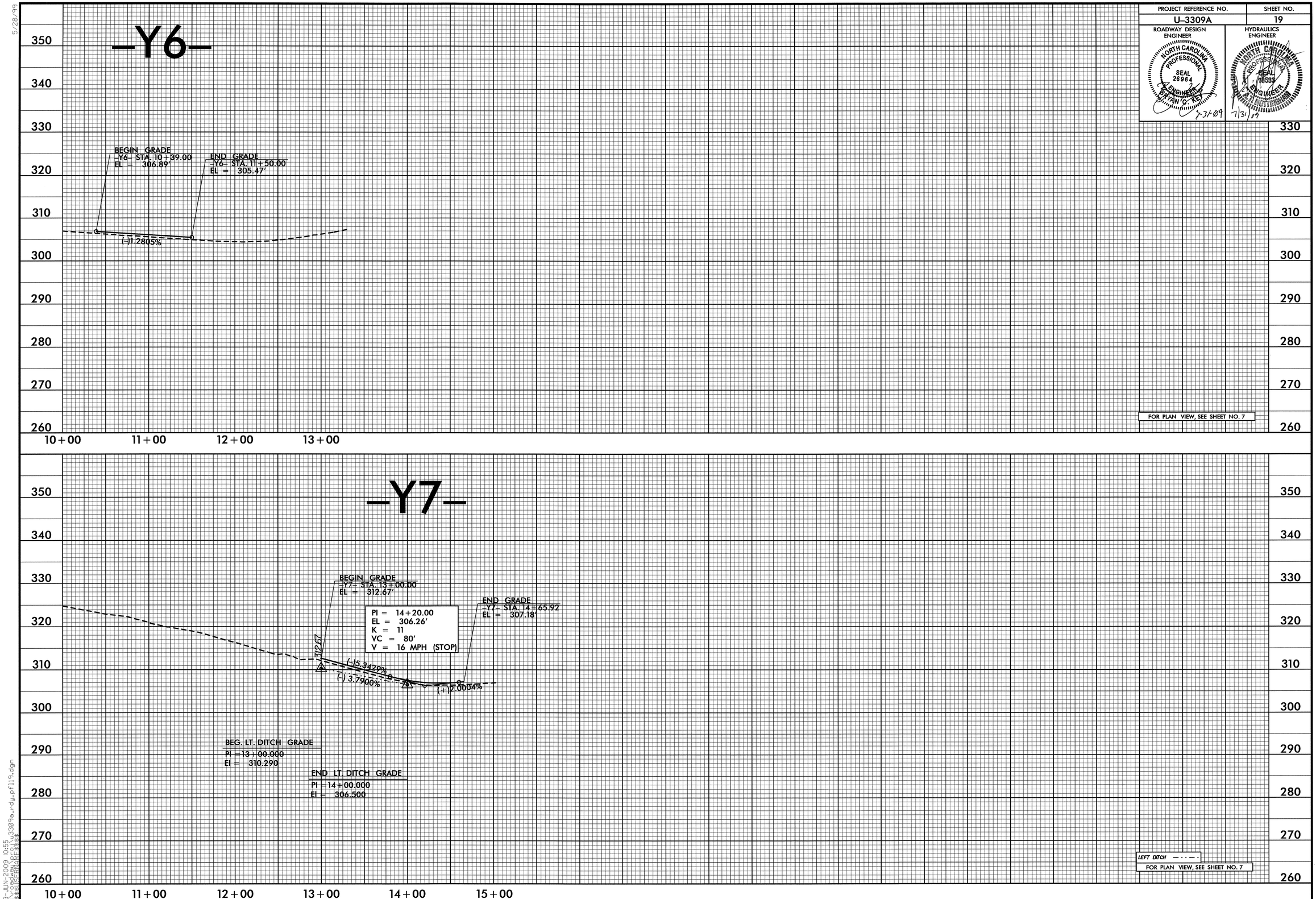


5/28/99

29-JUN-2009 10:55
r:\roadway\proj\u3309a_rdy_pfl19.dgn
$$$$USERNAME$$$$

| PROJECT REFERENCE NO. | SHEET NO. |
|---|---|
| U-3309A | 20 |

ROADWAY DESIGN ENGINEER

NORTH CAROLINA PROFESSIONAL SEAL 26964 ENGINEER BRYAN C. KEY

7-31-09

HYDRAULICS ENGINEER

NORTH CAROLINA PROFESSIONAL SEAL 19533 ENGINEER MATT NOTTINGHAM

7/31/09

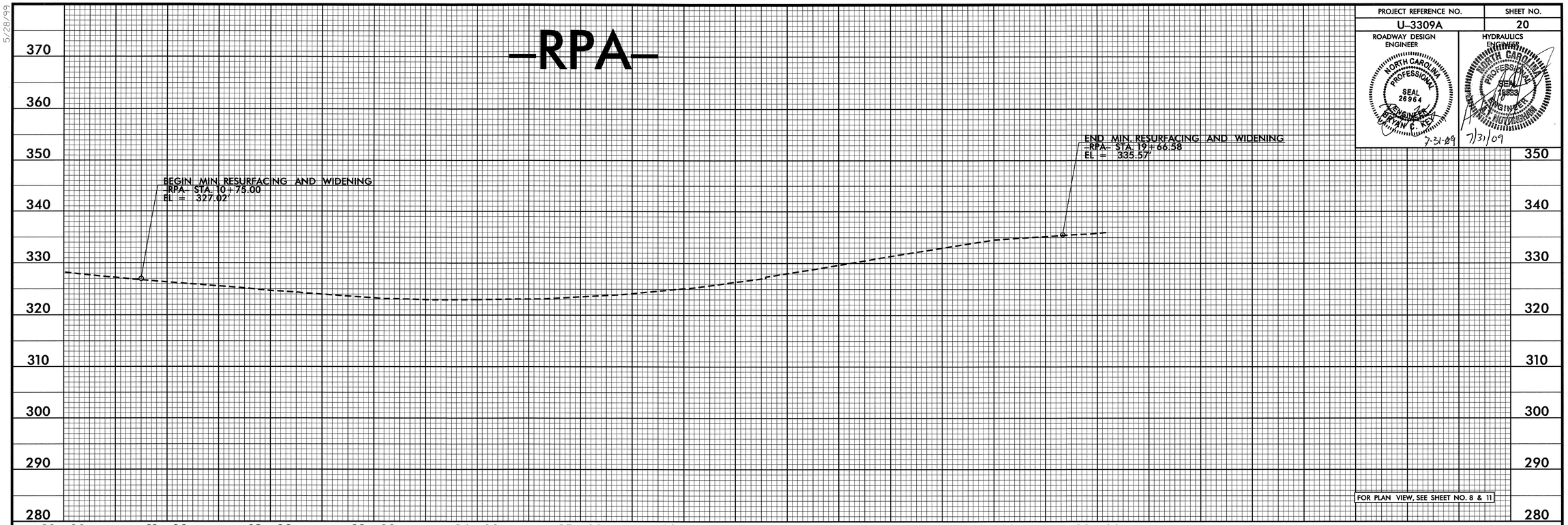


FOR PLAN VIEW, SEE SHEET NO. 8 & 11

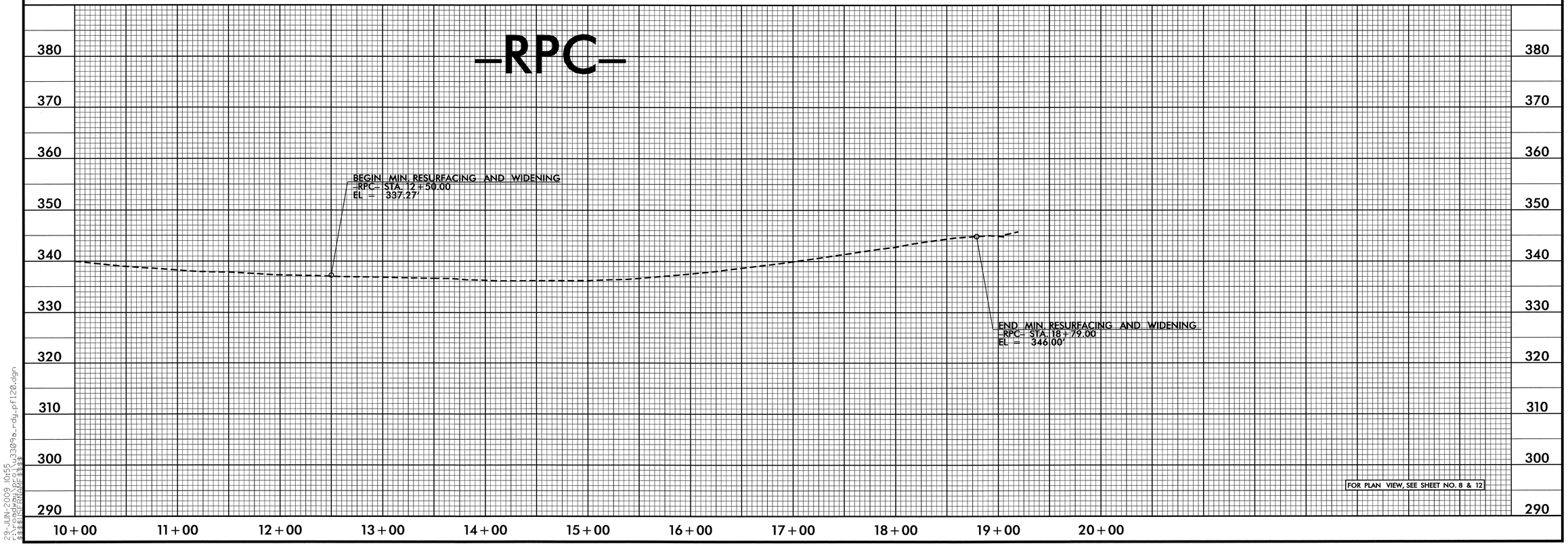


FOR PLAN VIEW, SEE SHEET NO. 8 & 12

5/28/99
29-JUN-2009 10:55
r:\roadway\proj\u3309a_rdy_pf120.dgn
$$$$USERNAME$$$$

| PROJECT REFERENCE NO. | SHEET NO. |
|---|---|
| U-3309A | 21 |
| ROADWAY DESIGN ENGINEER | HYDRAULICS ENGINEER |

NORTH CAROLINA PROFESSIONAL SEAL 26964 ENGINEER BRYAN C. KEY 7-31-09

NORTH CAROLINA PROFESSIONAL SEAL 18533 ENGINEER A.T. NOTTINGHAM 7/31/09

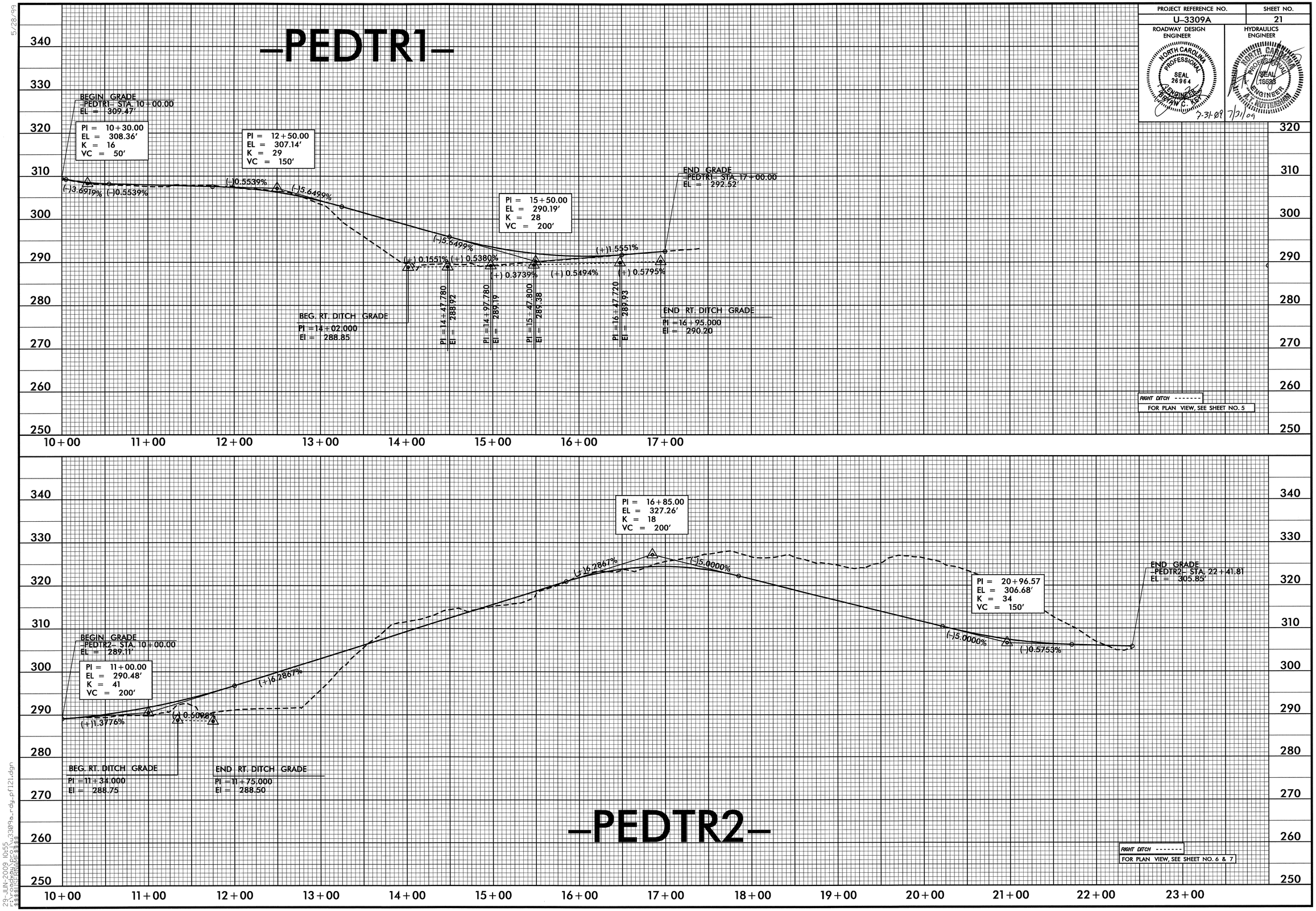


5/28/99

29-JUN-2009 10:55
r:\roadway\proj\u3309a_rdy_pf121.dgn
$$$$USERNAME$$$$