09/08/99

STATE	STATE PROJECT REFERENCE NO.	SHEET NO.	TOTAL SHEETS
N.C.	B-4507		

STATE PROJ. NO.	F.A. PROJ. NO.	DESCRIPTION
38396.1.1	BRNHS-421(33)	P.E.
38396.2.1	BRNHS-421(33)	RW/UTL.
38396.3.1	BRNHS-421(33)	CONST.

STATE OF NORTH CAROLINA
DIVISION OF HIGHWAYS

FORSYTH COUNTY

LOCATION: BRIDGES No. 221 AND No. 222 OVER MUDDY CREEK AND APPROACHES ON US 421

TYPE OF WORK: GRADING, PAVING, DRAINAGE, AND STRUCTURES

TIP PROJECT: B-4507

CONTRACT: C202258

STRUCTURES

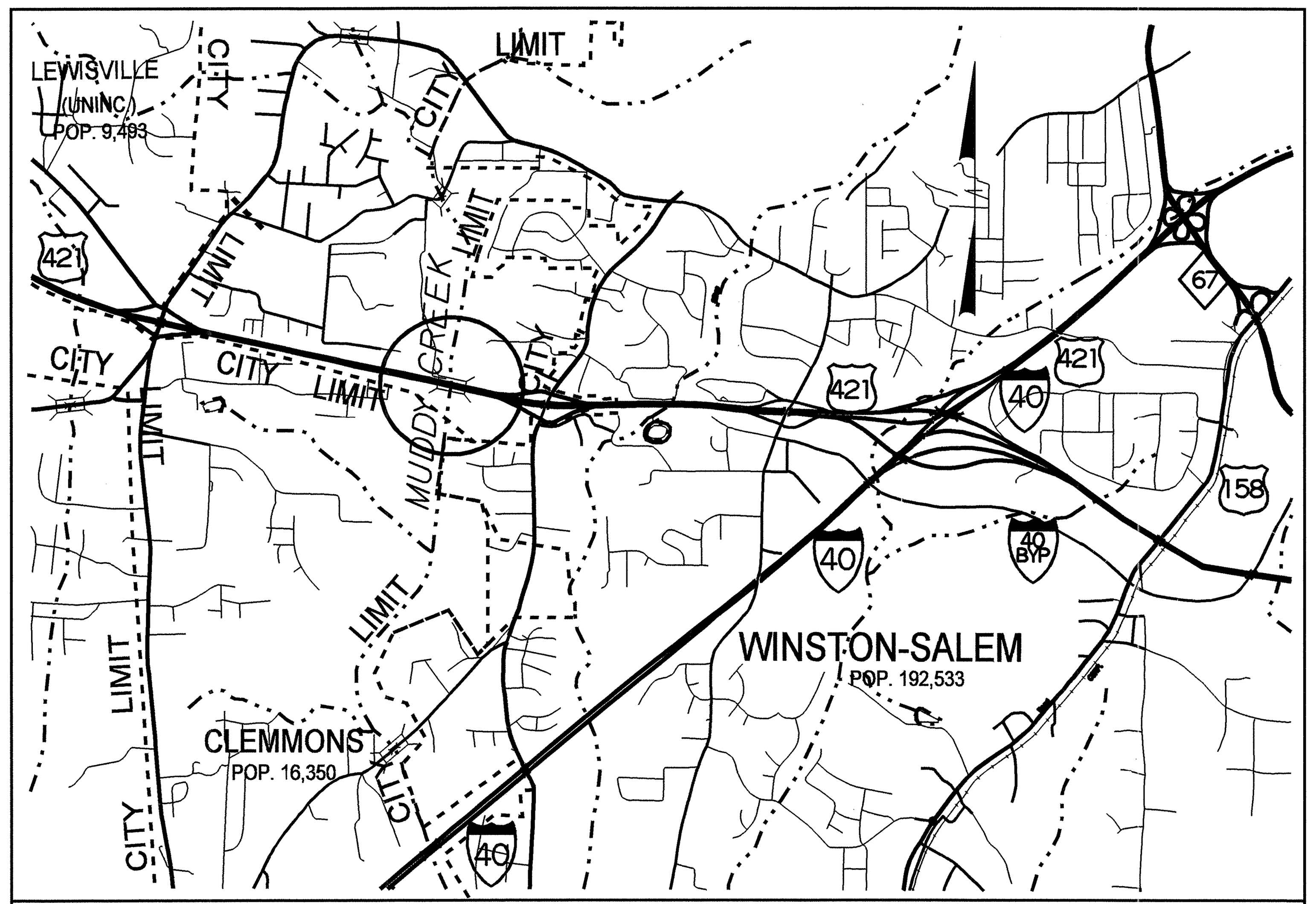

VICINITY MAP

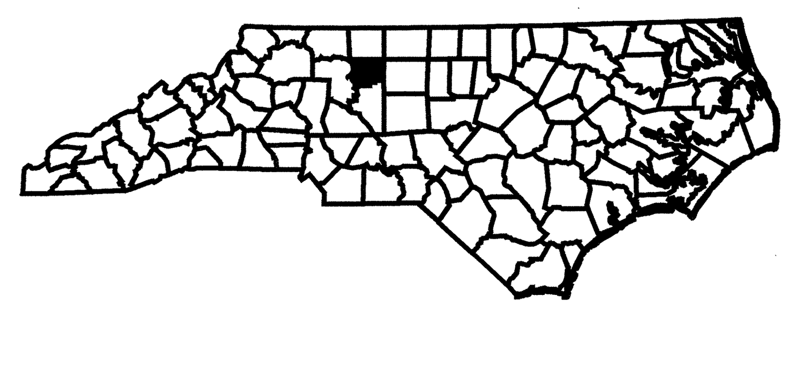

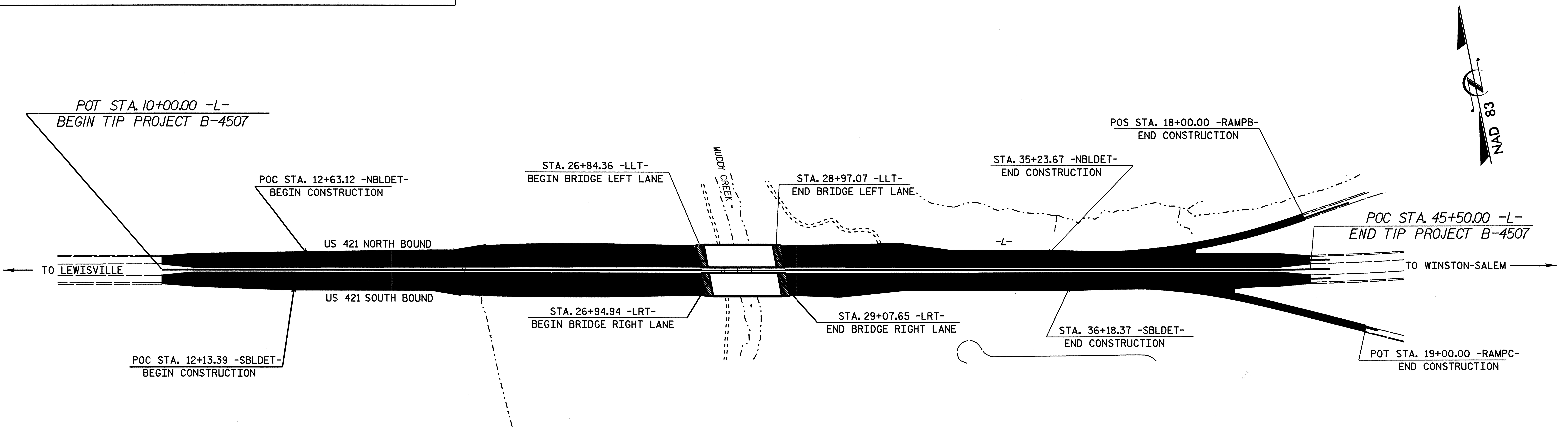

***** DESIGN EXCEPTION FOR DESIGN SPEED REQUIRED***

STATE OF NORTH CAROLINA DEPARTMENT OF TRANSPORTATION

DESIGN DATA

ADT 2009 = 46,056
ADT 2025 = 58,600
DHV = 10 %
D ≐ 60 %
T = 10 % *
**V = 70 MPH
FUNC CLASS = FREEWAY
* TTST 7% DUAL 6%

PROJECT LENGTH

LENGTH ROADWAY TIP PROJECT B-4507 = 0.632 MILES

LENGTH STRUCTURE TIP PROJECT B-4507 = 0.040 MILES

TOTAL LENGTH TIP PROJECT B-4507 = 0.672 MILES

PLANS PREPARED IN THE OFFICE OF:
DIVISION OF HIGHWAYS

2006 STANDARD SPECIFICATIONS

LETTING DATE:
NOVEMBER 17, 2009

Q. H. NGUYEN, P.E.
PROJECT ENGINEER

MARC G. CHEEK, P.E.
PROJECT DESIGN ENGINEER

STRUCTURE DESIGN UNIT
1000 BIRCH RIDGE DRIVE
RALEIGH, N.C. 27610

DIVISION OF HIGHWAYS
STATE OF NORTH CAROLINA

P.E.
STATE DESIGN ENGINEER

DEPARTMENT OF TRANSPORTATION
FEDERAL HIGHWAY ADMINISTRATION

APPROVED
DIVISION ADMINISTRATOR ***DATE***

28-SEP-2009 09:39
$$$$$$$$$$$$$$$$DGN$$$$$$$$$$$$$$$$$$$$
afigueroa

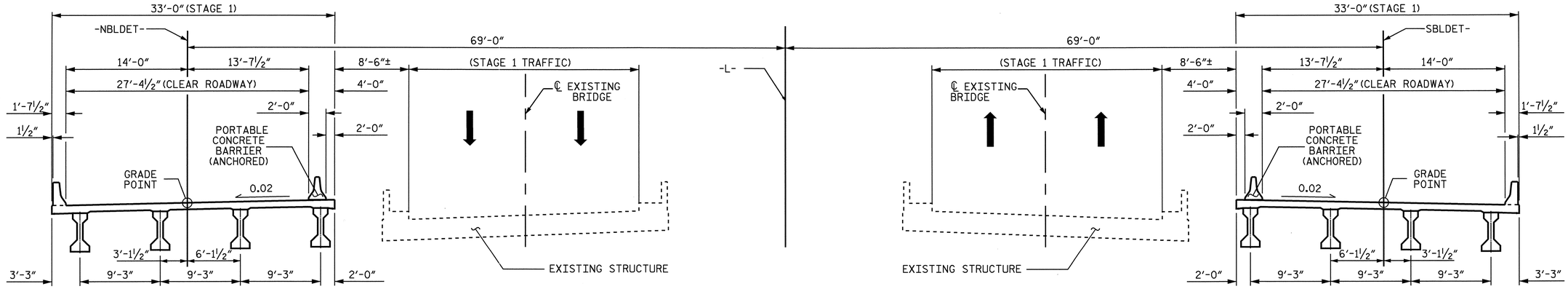

STAGE 1

NOTES

FOR TRAFFIC PHASING, SEE TRAFFIC CONTROL PLANS.

THE PORTABLE CONCRETE BARRIER (ANCHORED) IS A TRAFFIC CONTROL PAY ITEM.

SEE TRAFFIC CONTROL PLANS FOR LOCATION AND PAY LIMITS OF THE PORTABLE CONCRETE BARRIER (ANCHORED).

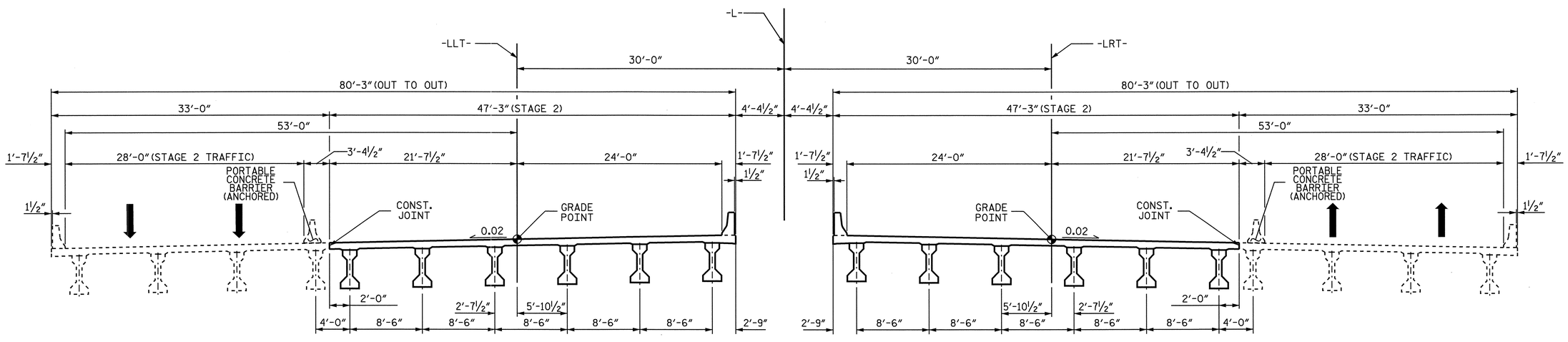

STAGE 2

PROJECT NO. B-4507

FORSYTH COUNTY

STATION: 27+96.00 -L-

STATE OF NORTH CAROLINA
DEPARTMENT OF TRANSPORTATION
RALEIGH

CONSTRUCTION STAGING SEQUENCE

NORTH CAROLINA PROFESSIONAL SEAL 20125 ENGINEER
MARSHALL G. CHEEK, JR.
9-29-09

REVISIONS						SHEET NO.
NO.	BY:	DATE:	NO.	BY:	DATE:	S-1
1			3			TOTAL SHEETS
2			4			99

DRAWN BY : A.L. FIGUEROA DATE : 03-13-08
CHECKED BY : M.G. CHEEK DATE : 02-25-09

28-SEP-2009 08:24
R:\Structures\Final Plans\Left Lane\B-4507_sd_str*1_02B_GD.dgn
afigueroa

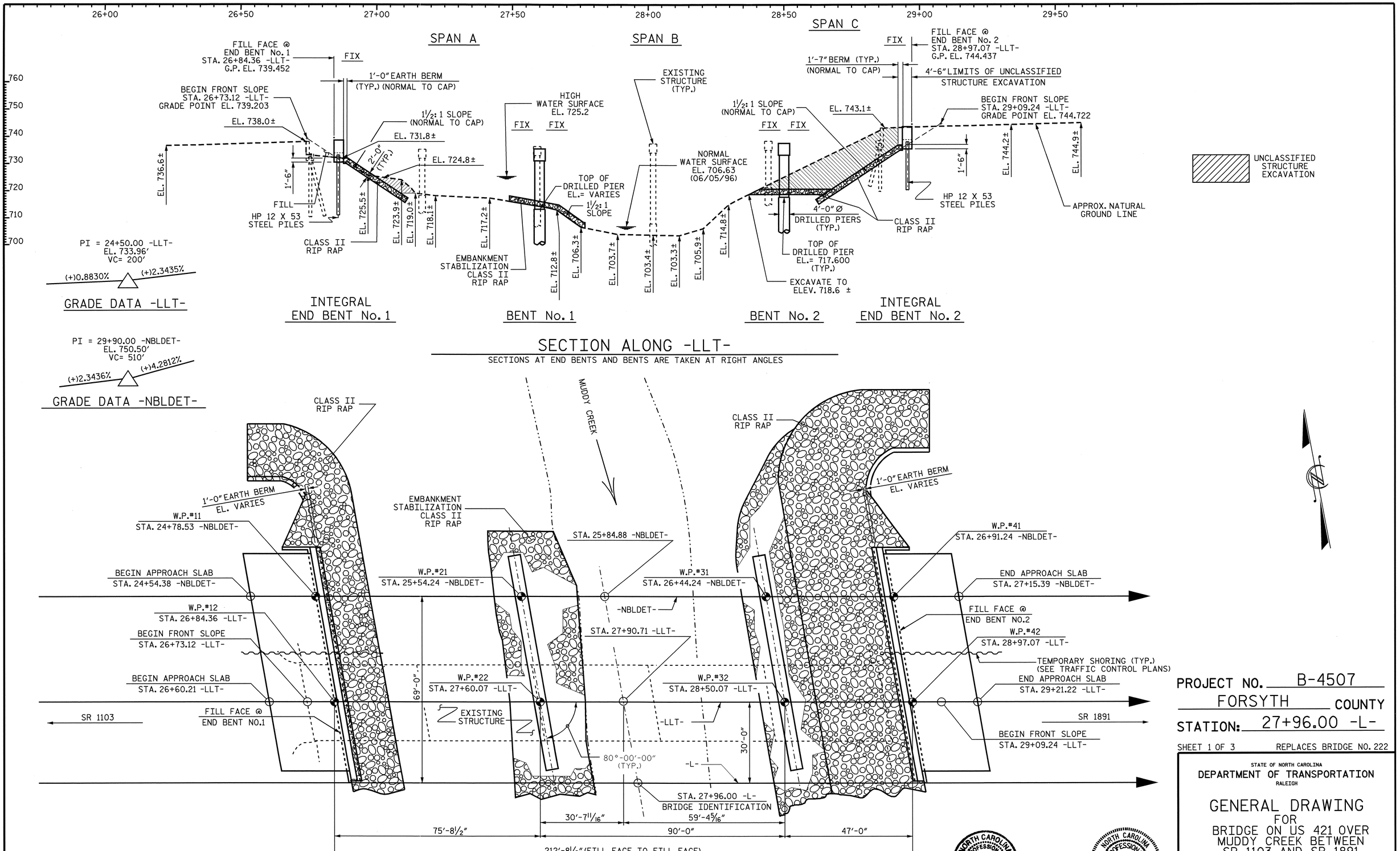

PROJECT NO. B-4507

FORSYTH COUNTY

STATION: 27+96.00 -L-

SHEET 1 OF 3 REPLACES BRIDGE NO. 222

STATE OF NORTH CAROLINA
DEPARTMENT OF TRANSPORTATION
RALEIGH

GENERAL DRAWING FOR BRIDGE ON US 421 OVER MUDDY CREEK BETWEEN SR 1103 AND SR 1891 LEFT LANE

REVISIONS							SHEET NO.
NO.	BY:	DATE:	NO.	BY:	DATE:		S-2
1			3				TOTAL SHEETS
2			4				99

STR. #1

DRAWN BY :	A.L. FIGUEROA	DATE :	03-19-09
CHECKED BY :	M.G. CHEEK	DATE :	05-29-09

28-SEP-2009 08:24
R:\Structures\Final Plans\Left Lane\B-4507_sd_str#1_02B_GD.dgn
afigueroa

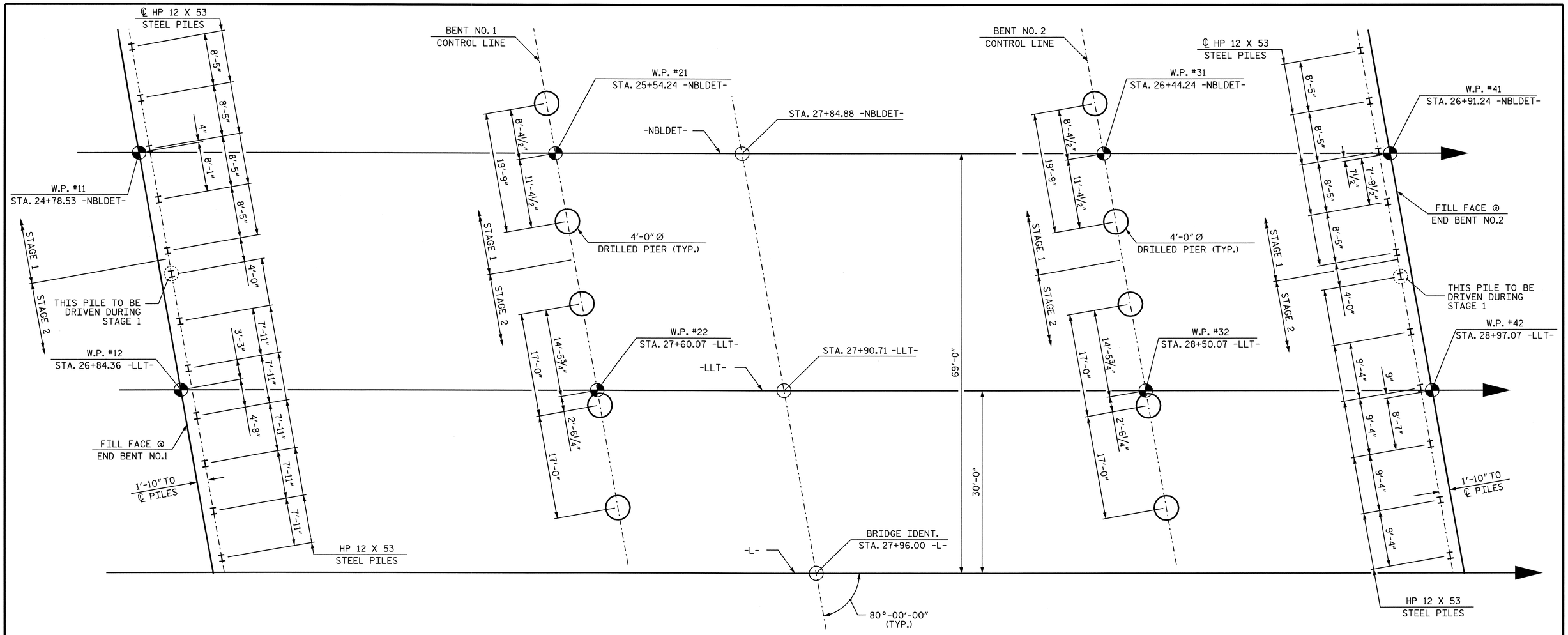

FOUNDATION LAYOUT

ALL END BENT PILES ARE HP 12 X 53.
DIMENSIONS LOCATING PILES ARE SHOWN TO THE PILE CENTERLINE AT THE BOTTOM OF THE CAP.

NOTES

FOR PILES, SEE SPECIAL PROVISIONS.

PILES AT END BENT NO.1 ARE DESIGNED FOR A FACTORED RESISTANCE OF 120 TONS PER PILE. DRIVE PILES TO A REQUIRED DRIVING RESISTANCE OF 200 TONS PER PILE.

PILES AT END BENT NO.2 ARE DESIGNED FOR A FACTORED RESISTANCE OF 105 TONS PER PILE. DRIVE PILES TO A REQUIRED DRIVING RESISTANCE OF 175 TONS PER PILE.

FOR DRILLED PIERS, SEE SPECIAL PROVISIONS.

DRILLED PIERS AT BENT NO.1 ARE DESIGNED FOR A FACTORED RESISTANCE OF 510 TONS PER DRILLED PIER. CHECK FIELD CONDITIONS FOR THE REQUIRED TIP RESISTANCE OF 65 TONS PER SQ. FOOT.

INSTALL DRILLED PIERS AT BENT NO.1 THAT EXTEND TO AN ELEVATION NO HIGHER THAN 670.0 FEET AND SATISFY THE REQUIRED TIP RESISTANCE.

PERMANENT STEEL CASING IS REQUIRED FOR DRILLED PIERS AT BENT NO.1. DO NOT EXTEND CASING BELOW ELEVATION 689.0 WITHOUT PRIOR APPROVAL FROM THE ENGINEER.

THE SCOUR CRITICAL ELEVATIONS FOR BENT NO.1 IS ELEVATION 677.0. SCOUR CRITICAL ELEVATIONS ARE USED TO MONITOR POSSIBLE SCOUR PROBLEMS DURING THE LIFE OF THE STRUCTURE.

DRILLED PIERS AT BENT NO.2 ARE DESIGNED FOR A FACTORED RESISTANCE OF 440 TONS PER DRILLED PIER. CHECK FIELD CONDITIONS FOR THE REQUIRED TIP RESISTANCE OF 65 TONS PER SQ. FOOT.

INSTALL DRILLED PIERS AT BENT NO.2 THAT EXTEND TO AN ELEVATION NO HIGHER THAN 682.0 FEET AND SATISFY THE REQUIRED TIP RESISTANCE.

PERMANENT STEEL CASING IS REQUIRED FOR DRILLED PIERS AT BENT NO.2. DO NOT EXTEND CASING BELOW ELEVATION 699.0 WITHOUT PRIOR APPROVAL FROM THE ENGINEER.

THE SCOUR CRITICAL ELEVATIONS FOR BENT NO.2 IS ELEVATION 686.0. SCOUR CRITICAL ELEVATIONS ARE USED TO MONITOR POSSIBLE SCOUR PROBLEMS DURING THE LIFE OF THE STRUCTURE.

SPT TESTING MAY BE REQUIRED FOR DRILLED PIERS. THE ENGINEER WILL DETERMINED THE NEED FOR SPT TESTING.

CSL TUBES ARE REQUIRED AND CSL TESTING MAY BE REQUIRED FOR THE DRILLED PIERS. THE ENGINEER WILL DETERMINE THE NEED FOR CSL TESTING. SEE CROSSHOLE SONIC LOGGING SPECIAL PROVISION.

SID INSPECTIONS MAY BE REQUIRED FOR DRILLED PIERS. THE ENGINEER WILL DETERMINE THE NEED FOR SID INSPECTIONS.

PROJECT NO. B-4507
FORSYTH COUNTY
STATION: 27+96.00 -L-

SHEET 2 OF 3

STATE OF NORTH CAROLINA
DEPARTMENT OF TRANSPORTATION
RALEIGH

GENERAL DRAWING
FOR
BRIDGE ON US 421 OVER
MUDDY CREEK BETWEEN
SR 1103 AND SR 1891
LEFT LANE

NORTH CAROLINA PROFESSIONAL SEAL 20125 ENGINEER MARSHALL G. CHEEK, JR.
9-29-09

REVISIONS								SHEET NO.
NO.	BY:	DATE:	NO.	BY:	DATE:			S-3
1			3					TOTAL SHEETS
2			4					99

STR. #1

DRAWN BY : A.L. FIGUEROA DATE : 6-25-09
CHECKED BY : M.G. CHEEK DATE : 8-04-09

28-SEP-2009 08:24
R:\Structures\FinalPlans\Left Lane\B-4507_sd_str*1_02C_FL.dgn
afigueroa

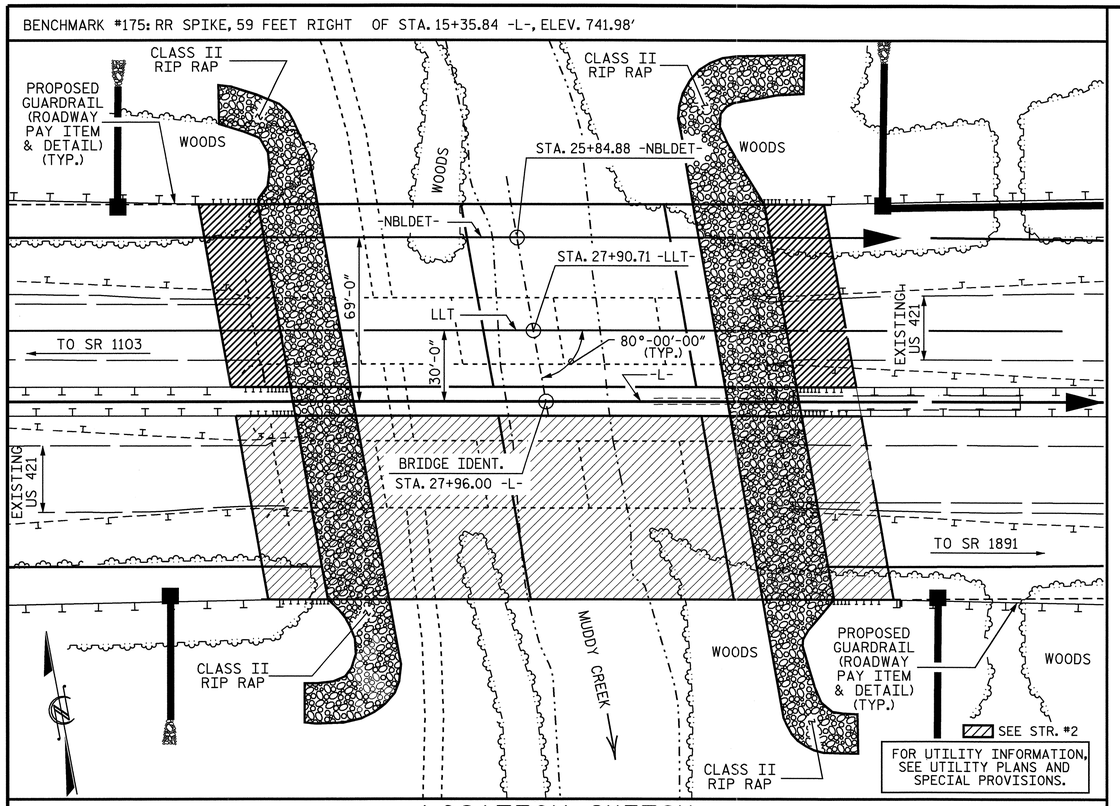

LOCATION SKETCH

NOTES

ASSUMED LIVE LOAD = HL 93 OR ALTERNATE LOADING.

FOR OTHER DESIGN DATA AND GENERAL NOTES, SEE SHEET SN.

FOR EROSION CONTROL MEASURES, SEE EROSION CONTROL PLANS.

THIS BRIDGE HAS BEEN DESIGNED IN ACCORDANCE WITH THE AASHTO LRFD BRIDGE DESIGN SPECIFICATIONS.

PRESTRESSED CONCRETE DECK PANELS MAY BE USED IN LIEU OF METAL STAY-IN-PLACE FORMS IN ACCORDANCE WITH ARTICLE 420-3 OF THE STANDARD SPECIFICATIONS.

REMOVABLE FORMS MAY BE USED IN LIEU OF METAL STAY-IN-PLACE FORMS IN ACCORDANCE WITH ARTICLE 420-3 OF THE STANDARD SPECIFICATIONS.

THE LOCATION OF THE CONSTRUCTION JOINT IN THE DRILLED PIERS IS BASED ON AN APPROXIMATE GROUND LINE ELEVATION. IF THE CONSTRUCTION JOINT IS ABOVE THE ACTUAL GROUND ELEVATION, THE CONTRACTOR SHALL PLACE THE CONSTRUCTION JOINT 1 FT. BELOW THE GROUND LINE.

AFTER SERVING AS A TEMPORARY STRUCTURE, THE EXISTING 5-SPAN STRUCTURE (5 @ 42'-6") CONSISTING OF A REINFORCED CONCRETE DECK ON 4 LINE OF STEEL I-BEAMS ON A SUBSTRUCTURE CONSISTING OF REINFORCED CONCRETE CAP ON PRESTRESSED CONCRETE PILES AT THE END BENTS AND BENTS #1 AND #4, AND REINFORCED CONCRETE POST AND BEAM BENTS AT BENTS #2 AND #3 AND LOCATED AT THE SITE OF THE PROPOSED STRUCTURE SHALL BE REMOVED.
THE EXISTING BRIDGE IS PRESENTLY NOT POSTED FOR LOAD LIMIT. SHOULD THE STRUCTURAL INTEGRITY OF THE BRIDGE DETERIORATE A LOAD LIMIT MAY BE POSTED AND MAY BE REDUCED AS FOUND NECESSARY DURING THE LIFE OF THE PROJECT.

REMOVAL OF THE EXISTING BRIDGE SHALL BE PERFORMED SO AS NOT ALLOW DEBRIS TO FALL INTO THE WATER. THE CONTRACTOR SHALL REMOVE THE BRIDGE AND SUBMIT PLANS FOR DEMOLITION IN ACCORDANCE WITH ARTICLE 402-2 OF THE STANDARD SPECIFICATIONS.

THE MATERIAL SHOWN IN THE CROSS-HATCHED AREA (SEE SHEET 1 OF 3) SHALL BE EXCAVATED FOR A DISTANCE OF APPROXIMATELY 50' EACH SIDE OF CENTERLINE ROADWAY AS DIRECTED BY THE ENGINEER. THIS WORK WILL BE MEASURED AND PAID FOR AT THE CONTRACT UNIT PRICE PER CUBIC YARD FOR UNCLASSIFIED STRUCTURE EXCAVATION.

FOR PLACING LOAD ON STRUCTURE MEMBERS, SEE SPECIAL PROVISIONS.

FOR FORMS FOR CONCRETE BRIDGE DECKS, SEE SPECIAL PROVISIONS.

FOR CURING CONCRETE, SEE SPECIAL PROVISIONS.

FOR GROUT FOR STRUCTURES, SEE SPECIAL PROVISIONS.

FOR PILES, SEE SPECIAL PROVISIONS.

THE SUBSTRUCTURE OF THE EXISTING BRIDGE INDICATED ON THE PLANS IS FROM THE BEST INFORMATION AVAILABLE. SINCE THIS INFORMATION IS SHOWN FOR THE CONVENIENCE OF THE CONTRACTOR, THE CONTRACTOR SHALL HAVE NO CLAIM WHATSOEVER AGAINST THE DEPARTMENT OF TRANSPORTATION FOR ANY DELAYS OR ADDITIONAL COST INCURRED BASED ON DIFFERENCES BETWEEN THE EXISTING BRIDGE SUBSTRUCTURE SHOWN ON THE PLANS AND THE ACTUAL CONDITIONS AT THE PROJECT SITE.

INASMUCH AS THE PAINT SYSTEM ON THE EXISTING STRUCTURAL STEEL CONTAINS LEAD, THE CONTRACTOR'S ATTENTION IS DIRECTED TO ARTICLE 107-1 OF THE STANDARD SPECIFICATIONS. ANY COST RESULTING FROM COMPLIANCE WITH APPLICABLE STATE OR FEDERAL REGULATIONS PERTAINING TO HANDLING OF MATERIALS CONTAINING LEAD BASED PAINT SHALL BE INCLUDED IN THE BID PRICE FOR "REMOVAL OF EXISTING STRUCTURE".

THE CLASS AA CONCRETE IN THE BRIDGE DECK SHALL CONTAIN FLY ASH OR GROUND GRANULATED BLAST FURNACE SLAG AT THE SUBSTITUTION RATE SPECIFIED IN ARTICLE 1024-1 AND IN ACCORDANCE WITH ARTICLE 1024-5 AND 1024-6 OF THE STANDARD SPECIFICATIONS. NO PAYMENT WILL BE MADE FOR THIS SUBSTITUTION AS IT IS CONSIDERED INCIDENTAL TO THE COST OF THE REINFORCED CONCRETE DECK SLAB.

THIS STRUCTURE HAS BEEN DESIGNED IN ACCORDANCE WITH HEC 18, "EVALUATING SCOUR AT BRIDGES", MAY, 2001.

THIS BRIDGE HAS BEEN DESIGNED IN ACCORDANCE WITH THE REQUIREMENTS OF THE AASHTO LRFD BRIDGE DESIGN SPECIFICATIONS FOR SEISMIC DESIGN FOR SEISMIC PERFORMANCE ZONE 1.

TEMPORARY SHORING WILL BE REQUIRED IN THE AREAS INDICATED IN THE PLAN VIEW, SHEET 1 OF 3.

FOR LIMITS OF TEMPORARY SHORING FOR MAINTENANCE OF TRAFFIC, SEE TRAFFIC CONTROL PLANS. FOR PAY ITEM FOR TEMPORARY SHORING FOR MAINTENANCE OF TRAFFIC, SEE ROADWAY PLANS.

STEEL SHEET PILING REQUIRED FOR SHORING SHALL BE HOT ROLLED.

AT THE CONTRACTOR'S OPTION, AND UPON REMOVAL OF THE CAUSEWAY, THE CLASS II RIP RAP USED IN THE CAUSEWAY MAY BE PLACED AS RIP RAP SLOPE PROTECTION. SEE SPECIAL PROVISIONS FOR CONSTRUCTION, MAINTENANCE AND REMOVAL OF TEMPORARY ACCESS.

NEEDLE BEAMS WILL NOT BE ALLOWED UNLESS OTHERWISE CALLED FOR ON THE PLANS OR APPROVED BY THE ENGINEER.

FOR SUBMITTAL OF WORKING DRAWINGS, SEE SPECIAL PROVISIONS.

FOR FALSEWORK AND FORMWORK, SEE SPECIAL PROVISIONS.

FOR CRANE SAFETY, SEE SPECIAL PROVISIONS.

FOR PRESTRESSED CONCRETE MEMBERS, SEE SPECIAL PROVISIONS.

TOTAL BILL OF MATERIAL

	CONSTRUCTION, MAINTENANCE & REMOVAL OF TEMPORARY ACCESS	REMOVAL OF EXISTING STRUCTURE	4'-0" Ø DRILLED PIERS IN SOIL	4'-0" Ø DRILLED PIERS NOT IN SOIL	PERMANENT STEEL CASING FOR 4'-0" Ø DRILLED PIERS	SID INSPECTION	SPT TESTING	CROSSHOLE SONIC LOGGING	UNCLASSIFIED STRUCTURE EXCAVATION	REINFORCED CONCRETE DECK SLAB
	LUMP SUM	LUMP SUM	LIN. FT.	LIN. FT.	LIN. FT.	EACH	EACH	EACH	CU. YDS.	SQ. FT.
SUPERSTRUCTURE		LUMP SUM								17069
END BENT NO. 1									40	
BENT NO. 1			145.00	73.00	123.00					
BENT NO. 2			136.33	42.00	93.00					
END BENT NO. 2									1680	
TOTAL	LUMP SUM	LUMP SUM	281.33	115.00	216.00	10	5	5	1720	17069

TOTAL BILL OF MATERIAL

	GROOVING BRIDGE FLOORS	CLASS A CONCRETE	BRIDGE APPROACH SLABS	REINFORCING STEEL	SPIRAL COLUMN REINFORCING STEEL	54" PRESTRESSED CONCRETE GIRDERS		HP 12 X 53 STEEL PILES		CONCRETE BARRIER RAIL	RIP RAP CLASS II (2'-0" THICK)	FILTER FABRIC FOR DRAINAGE	ELASTOMERIC BEARINGS	EVAZOTE JOINT SEALS
	SQ. FT.	CU. YDS.	LUMP SUM	LBS.	LBS.	NO.	LIN. FT.	NO.	LIN. FT.	LIN. FT.	TONS	SQ. YDS.	LUMP SUM	LUMP SUM
SUPERSTRUCTURE	18893		LUMP SUM			30	2087.92			425.42			LUMP SUM	LUMP SUM
END BENT NO. 1		42.4		6699				12	420		757	842		
BENT NO. 1		85.3		32768	7689									
BENT NO. 2		82.0		29389	6470									
END BENT NO. 2		41.8		6361				11	440		869	966		
TOTAL	18893	251.5	LUMP SUM	75217	14159	30	2087.92	23	860	425.42	1626	1808	LUMP SUM	LUMP SUM

HYDRAULIC DATA

DESIGN DISCHARGE	=	10,000 cf/s
FREQUENCY OF DESIGN FLOOD	=	50 YRS.
DESIGN HIGH WATER ELEVATION	=	721.62 ft.
DRAINAGE AREA	=	86.0 SQ. MI.
BASIC DISCHARGE (Q100)	=	12,000 cf/s
BASIC HIGH WATER ELEVATION	=	722.54 ft.

OVERTOPPING FLOOD DATA

OVERTOPPING DISCHARGE	=	N/A
FREQUENCY OF OVERTOPPING FLOOD	=	500+ YRS.
OVERTOPPING FLOOD ELEVATION	=	732.94 ft.

PROJECT NO. B-4507
FORSYTH COUNTY
STATION: 27+96.00 -L-

SHEET 3 OF 3

STATE OF NORTH CAROLINA
DEPARTMENT OF TRANSPORTATION
RALEIGH

GENERAL DRAWING
FOR
BRIDGE ON US 421 OVER
MUDDY CREEK BETWEEN
SR 1103 AND SR 1891
LEFT LANE

NORTH CAROLINA PROFESSIONAL SEAL 20125 ENGINEER MARSHALL G. CHEEK, JR.
9-29-09

REVISIONS						SHEET NO.
NO.	BY:	DATE:	NO.	BY:	DATE:	S-4
1			3			TOTAL SHEETS
2			4			99

STR. #1

DRAWN BY : A.L. FIGUEROA DATE : 03-19-09
CHECKED BY : M.G. CHEEK DATE : 05-29-09

29-SEP-2009 14:50
R:\Structures\Final Plans\Left Lane\B-4507_sd_str#1_02B_GD.dgn
afigueroa

LOAD AND RESISTANCE FACTOR RATING (LRFR) SUMMARY FOR PRESTRESSED CONCRETE GIRDERS

LEVEL		VEHICLE	WEIGHT (TONS)	CONTROLLING LOAD RATING (#)	MINIMUM RATING FACTORS (RF)	TONS = W × RF	STRENGTH I LIMIT STATE											SERVICE III LIMIT STATE						COMMENT NUMBER
							LIVE-LOAD FACTORS (γ_{LL})	MOMENT					SHEAR					LIVE-LOAD FACTORS (γ_{LL})	MOMENT					
								DISTRIBUTION FACTORS (DF)	RATING FACTOR	SPAN	GIRDER LOCATION	DISTANCE FROM LEFT END OF SPAN (ft)	DISTRIBUTION FACTORS (DF)	RATING FACTOR	SPAN	GIRDER LOCATION	DISTANCE FROM LEFT END OF SPAN (ft)		DISTRIBUTION FACTORS (DF)	RATING FACTOR	SPAN	GIRDER LOCATION	DISTANCE FROM LEFT END OF SPAN (ft)	
DESIGN LOAD RATING		HL-93 (INVENTORY)	N/A	1	1.00	--	1.75	0.739	1.54	A	I	36.38	0.735	1.00	A	ER	3.64	0.80	0.739	1.39	A	I	36.38	
		HL-93 (OPERATING)	N/A		1.30	--	1.35	0.739	2.00	A	I	36.38	0.735	1.30	A	ER	3.64	N/A	--	--	--	--	--	
		HS-20 (INVENTORY)	36.000	2	1.15	41.40	1.80	0.901	1.85	C	I	22.02	0.922	1.15	C	I	4.40	1.00	0.901	2.58	C	I	22.02	
		HS-20 (OPERATING)	36.000		1.53	55.08	1.35	0.901	2.47	C	I	22.02	0.922	1.53	C	I	4.40	N/A	--	--	--	--	--	
LEGAL LOAD RATING	SINGLE VEHICLE (SV)	SNSH	13.500		3.22	43.47	1.40	0.901	4.65	C	I	22.02	0.922	3.22	C	I	4.40	0.80	0.901	5.05	C	I	22.02	
		SNGARBS2	20.000		2.38	47.60	1.40	0.901	3.75	C	I	17.62	0.922	2.38	C	I	4.40	0.80	0.901	4.06	C	I	22.02	
		SNAGRIS2	22.000		2.24	49.28	1.40	0.901	3.62	C	I	17.62	0.922	2.24	C	I	4.40	0.80	0.901	3.95	C	I	17.62	
		SNCOTTS3	27.250		1.61	43.87	1.40	0.901	2.32	C	I	22.02	0.922	1.61	C	I	4.40	0.80	0.901	2.53	C	I	22.02	
		SNAGGRS4	34.925		1.40	48.90	1.40	0.901	2.05	C	I	22.02	0.922	1.40	C	I	4.40	0.80	0.901	2.23	C	I	22.02	
		SNS5A	35.550		1.46	51.90	1.40	0.901	2.00	C	I	22.02	0.922	1.46	C	I	4.40	0.80	0.901	2.16	C	I	22.02	
		SNS6A	39.950		1.36	54.33	1.40	0.901	1.88	C	I	22.02	0.922	1.36	C	I	4.40	0.80	0.901	2.04	C	I	22.02	
		SNS7B	42.000		1.37	57.54	1.40	0.901	1.79	C	I	22.02	0.810	1.37	C	EL	2.20	0.80	0.901	1.95	C	I	22.02	
	TRUCK TRACTOR SEMI-TRAILER (TTST)	TNAGRIT3	33.000		1.59	52.47	1.40	0.901	2.31	C	I	22.02	0.922	1.59	C	I	4.40	0.80	0.901	2.51	C	I	22.02	
		TNT4A	33.075		1.52	50.27	1.40	0.901	2.33	C	I	22.02	0.922	1.52	C	I	4.40	0.80	0.901	2.54	C	I	22.02	
		TNT6A	41.600		1.48	61.57	1.40	0.901	1.96	C	I	22.02	0.922	1.48	C	I	4.40	0.80	0.901	2.13	C	I	22.02	
		TNT7A	42.000		1.37	57.54	1.40	0.901	1.99	C	I	22.02	0.922	1.37	C	I	4.40	0.80	0.901	2.16	C	I	22.02	
		TNT7B	42.000		1.31	55.02	1.40	0.901	2.08	C	I	22.02	0.922	1.31	C	I	4.40	0.80	0.901	2.25	C	I	22.02	
		TNAGRIT4	43.000		1.26	54.18	1.40	0.901	1.98	C	I	22.02	0.922	1.26	C	I	4.40	0.80	0.901	2.15	C	I	22.02	
		TNAGT5A	45.000		1.30	58.50	1.40	0.901	1.84	C	I	22.02	0.810	1.30	C	EL	2.20	0.80	0.901	2.00	C	I	22.02	
		TNAGT5B	45.000	3	1.19	53.55	1.40	0.901	1.80	C	I	22.02	0.922	1.19	C	I	4.40	0.80	0.901	1.95	C	I	22.02	

LOAD FACTORS:

DESIGN LOAD RATING FACTORS	LIMIT STATE	γ_{DC}	γ_{DW}
	STRENGTH I	1.25	1.50
	SERVICE III	1.00	1.00

LEGAL LOAD RATING FACTORS	YEAR	ADTT
	2009	1930
	2025	2461

NOTES:

MINIMUM RATING FACTORS FOR DESIGN LOAD RATING ARE BASED ON THE STRENGTH I AND SERVICE III LIMIT STATES.

MINIMUM RATING FACTORS FOR LEGAL LOAD RATING ARE BASED ON THE STRENGTH I LIMIT STATE.

ALLOWABLE STRESSES FOR SERVICE III LIMIT STATE ARE AS REQUIRED FOR DESIGN.

COMMENTS:

1.
2.
3.
4.

(#) CONTROLLING LOAD RATING

(1) DESIGN LOAD RATING (HL-93)
(2) DESIGN LOAD RATING (HS-20)
(3) LEGAL LOAD RATING **
** SEE CHART FOR VEHICLE TYPE

GIRDER LOCATION

I - INTERIOR GIRDER
EL - EXTERIOR LEFT GIRDER
ER - EXTERIOR RIGHT GIRDER

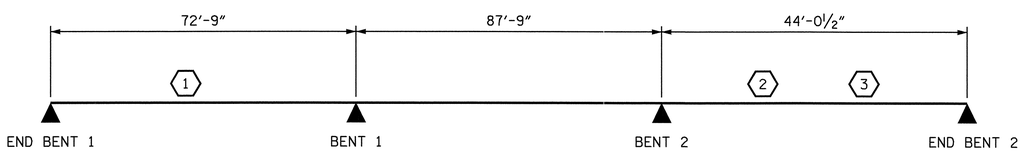

LRFR SUMMARY

PROJECT NO. B-4507
FORSYTH COUNTY
STATION: 27+96.00 -L-

STATE OF NORTH CAROLINA
DEPARTMENT OF TRANSPORTATION
RALEIGH

STANDARD
LRFR SUMMARY FOR PRESTRESSED CONCRETE GIRDERS
(NON-INTERSTATE TRAFFIC)
(LEFT LANE)

NORTH CAROLINA PROFESSIONAL SEAL 20125 ENGINEER MARSHALL A. G. CHEEK, JR.
9.29.09

REVISIONS						SHEET NO.
NO.	BY:	DATE:	NO.	BY:	DATE:	S-5
1			3			TOTAL SHEETS
2			4			99

STR. #1 STD. NO. LRFR1

ASSEMBLED BY : A.L. FIGUEROA DATE : 09-28-09
CHECKED BY : M.G. CHEEK DATE : 09-29-09
DRAWN BY : MAA 1/08
CHECKED BY : GM/DI 2/08
REV. 11/12/08RR MAA/GM

29-SEP-2009 11:36
R:\Structures\Final Plans\Left Lane\B-4507_sd_str#1_02D_lrfr1_08.dgn
afigueroa

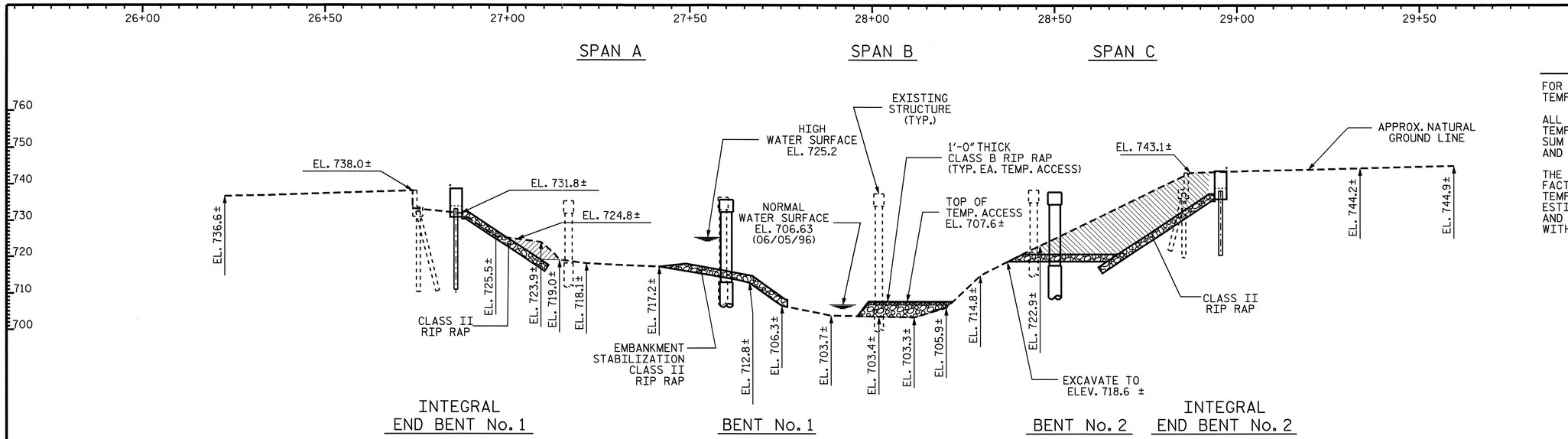

SECTION ALONG -LLT-

SECTIONS AT END BENTS AND BENTS ARE TAKEN AT RIGHT ANGLES

NOTES

FOR CONSTRUCTION, MAINTENANCE AND REMOVAL OF TEMPORARY ACCESS, SEE SPECIAL PROVISIONS.

ALL GRADING REQUIRED FOR ACCESS TO THE TEMPORARY ACCESS SHALL BE INCLUDED IN THE LUMP SUM BID PRICE FOR "CONSTRUCTION, MAINTENANCE AND REMOVAL OF TEMPORARY ACCESS".

THE CONTRACTOR'S ATTENTION IS CALLED TO THE FACT THAT THE LOCATION AND PROFILE OF THE TEMPORARY ACCESS SHOWN ON THE PLANS IS FOR ESTIMATING PURPOSES ONLY. THE ACTUAL LOCATION AND PROFILE SHALL BE DETERMINED IN THE FIELD WITH THE APPROVAL OF THE ENGINEER.

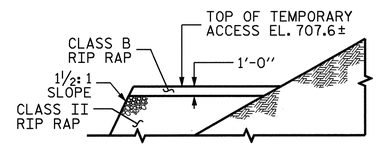

SECTION A-A

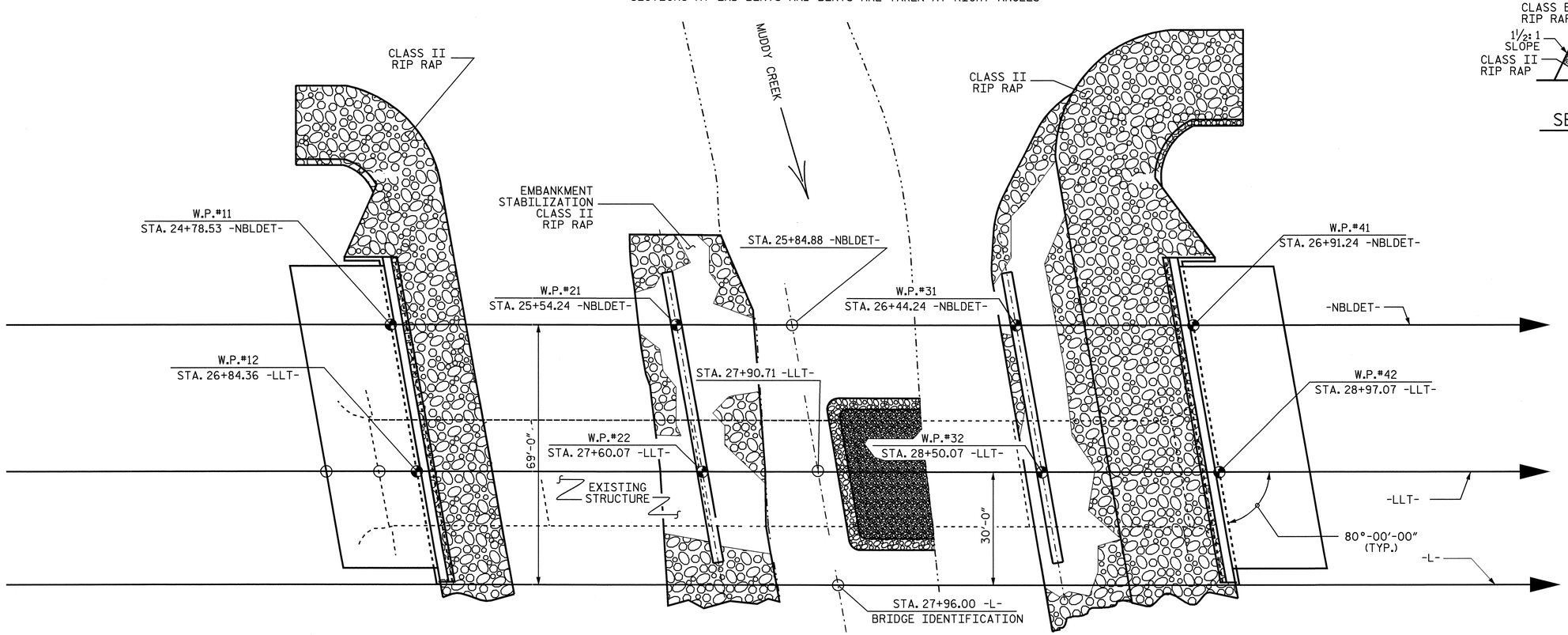

PLAN

PILES AND COLUMNS NOT SHOWN IN PLAN VIEW

PROJECT NO. B-4507

FORSYTH COUNTY

STATION: 27+96.00 -L-

STATE OF NORTH CAROLINA
DEPARTMENT OF TRANSPORTATION
RALEIGH

TEMPORARY ACCESS
LEFT LANE

NORTH CAROLINA PROFESSIONAL SEAL 20125 ENGINEER MARSHALL G. CHEEK, JR.
9-29-09

REVISIONS								SHEET NO.
NO.	BY:	DATE:	NO.	BY:	DATE:			S-6
1			3					TOTAL SHEETS
2			4					99

STR. #1

DRAWN BY : A.L. FIGUEROA DATE : 03-19-09
CHECKED BY : M.G. CHEEK DATE : 06-26-09

29-SEP-2009 11:35
R:\Structures\FInal Plans\Left Lane\B-4507_sd_str#1_03 _TA.dgn
afigueroa

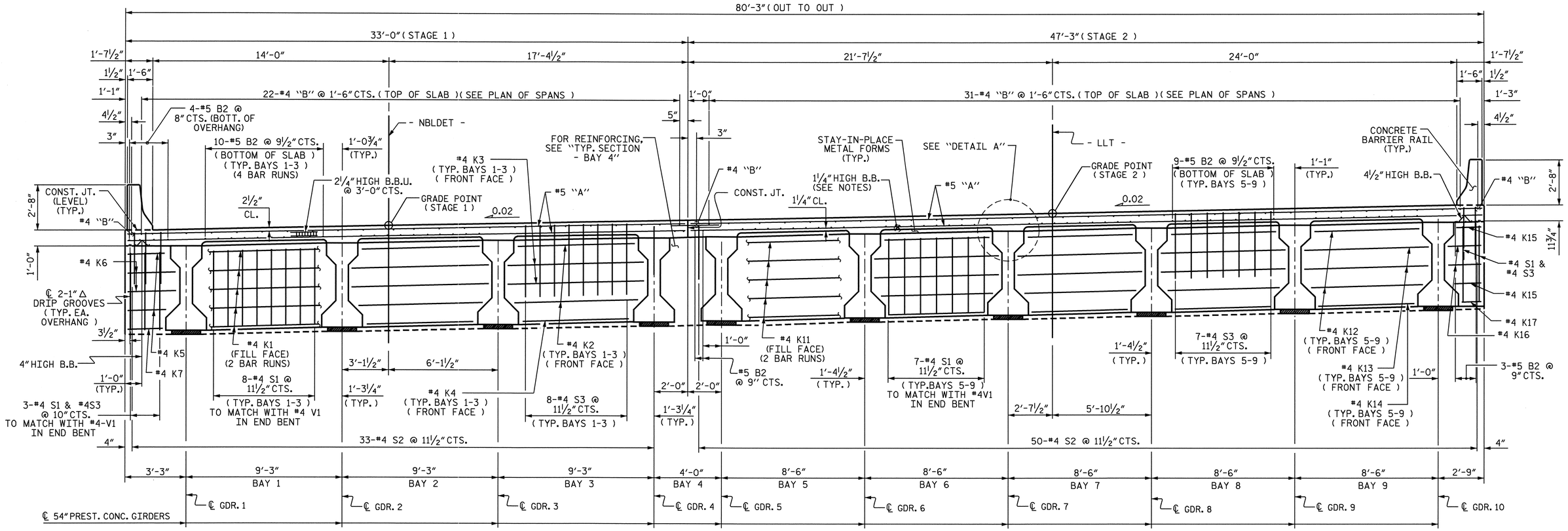

END ELEVATION

(END BENT No. 1 SHOWN - END BENT No. 2 SIMILAR)
(FOR SECTION THRU END BENT, SEE SHEET 3 OF 3)

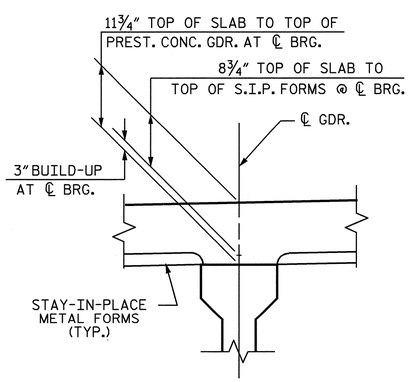

DETAIL A

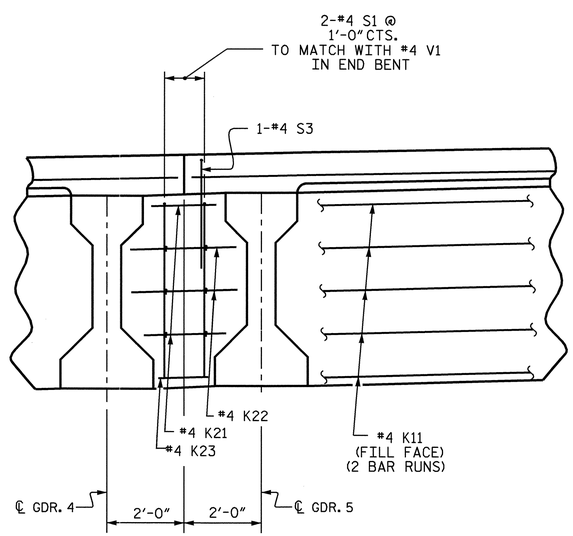

TYPICAL SECTION - BAY 4

(SHOWING END BENT DIAPHRAGM AT BAY 4 - STAGE 2)

NOTES

PROVIDE 1¼" HIGH BEAM BOLSTERS UPPER AT 4'-0" CTS. ATOP THE METAL STAY-IN-PLACE FORMS TO SUPPORT THE BOTTOM MAT OF 'A' BARS. WHEN USING REMOVABLE FORMS, PROVIDE CONTINUOUS HIGH CHAIRS FOR METAL DECK (C.H.C.M.) @ 4'-0" CTS. WITH A HEIGHT TO SUPPORT THE BOTTOM MAT OF 'A' BARS A CLEAR DISTANCE OF 2½" ABOVE THE TOP OF THE REMOVABLE FORM.

LONGITUDINAL STEEL MAY BE SHIFTED SLIGHTLY, AS NECESSARY, TO AVOID INTERFERENCE WITH STIRRUPS IN PRESTRESSED CONCRETE GIRDERS.

PREVIOUSLY CAST CONCRETE IN A CONTINUOUS UNIT SHALL HAVE ATTAINED A MINIMUM COMPRESSIVE STRENGTH OF 3000 PSI BEFORE ADDITIONAL CONCRETE IS CAST IN THE UNIT.

BARRIER RAIL IN A CONTINUOUS UNIT SHALL NOT BE CAST UNTIL ALL SLAB CONCRETE IN THE UNIT HAS BEEN CAST AND HAS REACHED A MINIMUM COMPRESSIVE STRENGTH OF 3000 PSI.

PROJECT NO. B-4507
FORSYTH COUNTY
STATION: 27+96.00 -L-

SHEET 1 OF 3

STATE OF NORTH CAROLINA
DEPARTMENT OF TRANSPORTATION
RALEIGH

SUPERSTRUCTURE
TYPICAL SECTIONS
LEFT LANE

NORTH CAROLINA PROFESSIONAL SEAL 20125 ENGINEER MARSHALL R. CHEEK, JR.
9-29-09

REVISIONS								SHEET NO.
NO.	BY:	DATE:	NO.	BY:	DATE:			S-7
1			3					TOTAL SHEETS
2			4					99

STR. 1

DRAWN BY : V.X. NGUYEN DATE : 8-08
CHECKED BY : M.G. CHEEK DATE : 3-09

04-AUG-2009 16:25
R:\Structures\STR*1\vnguyen\B4507_sd_TS.dgn
aflgueroa

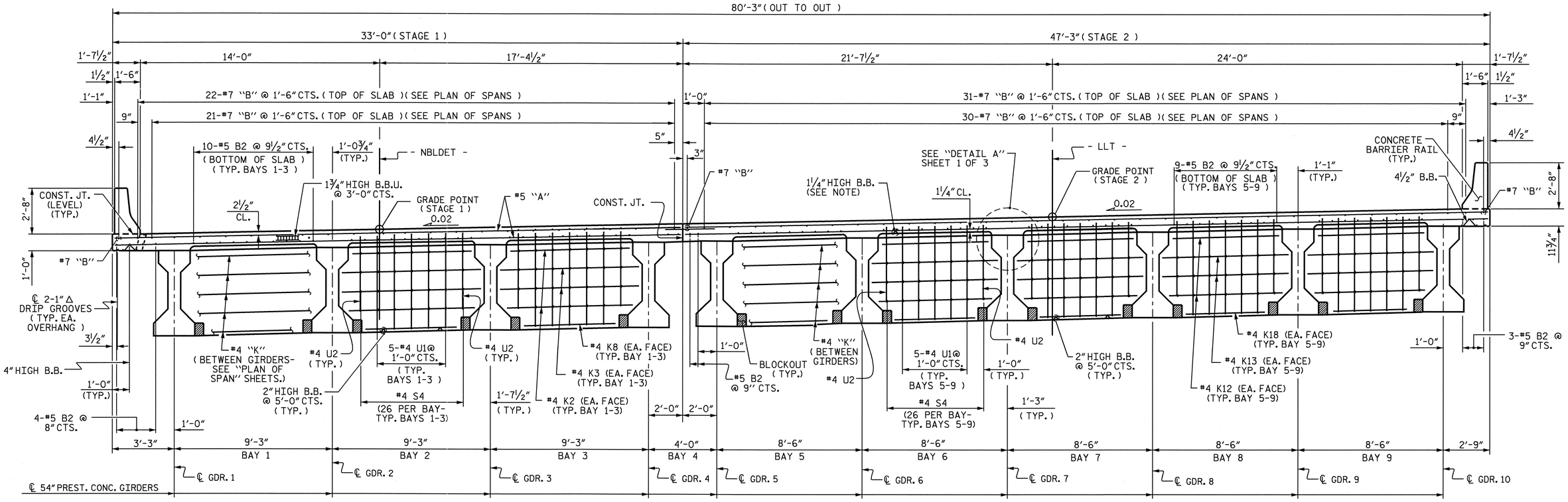

TYPICAL SECTION

(SHOWING BENT DIAPHRAGMS)

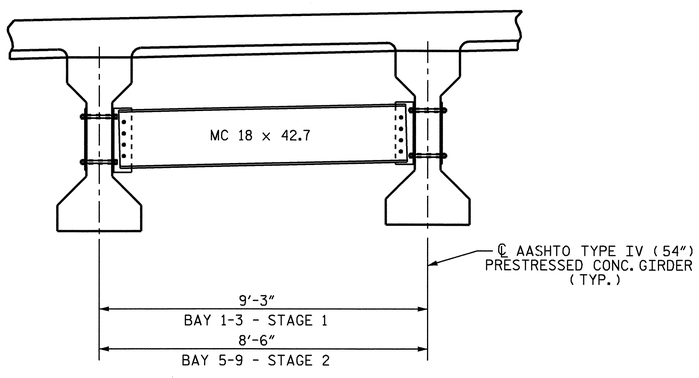

TYPICAL SECTION

(SHOWING INTERMEDIATE DIAPHRAGMS)
(FOR INTERMEDIATE STEEL DIAPHRAGMS DETAILS, SEE "INTERMEDIATE STEEL DIAPHRAGMS " SHEET.)

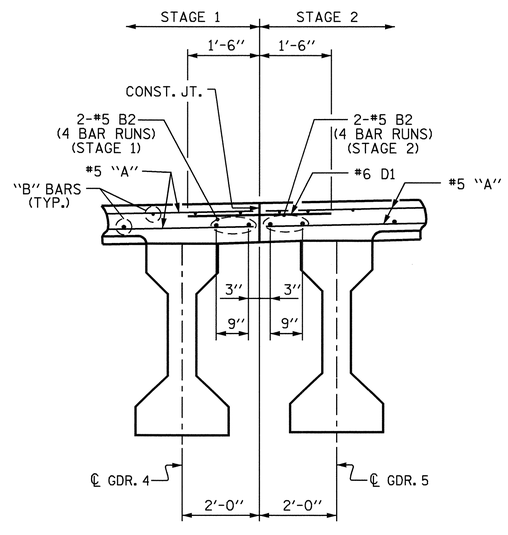

TYPICAL SECTION

(SHOWING REINFORCING STEEL AT CONSTRUCTION JOINT)

PROJECT NO. B-4507
FORSYTH COUNTY
STATION: 27+96.00 -L-

SHEET 2 OF 3

STATE OF NORTH CAROLINA
DEPARTMENT OF TRANSPORTATION
RALEIGH

SUPERSTRUCTURE
TYPICAL SECTIONS
LEFT LANE

NORTH CAROLINA PROFESSIONAL SEAL 20125 ENGINEER MARSHALL G. CHEEK, JR.
9-29-09

REVISIONS						SHEET NO.
NO.	BY:	DATE:	NO.	BY:	DATE:	S-8
1			3			TOTAL SHEETS
2			4			99

STR. 1

DRAWN BY : V.X. NGUYEN DATE : 8-08
CHECKED BY : M.G. CHEEK DATE : 3-09

06-AUG-2009 10:46
r:\structures\STR#1\vnguyen\B4507_sd_TS.dgn
ddhodge

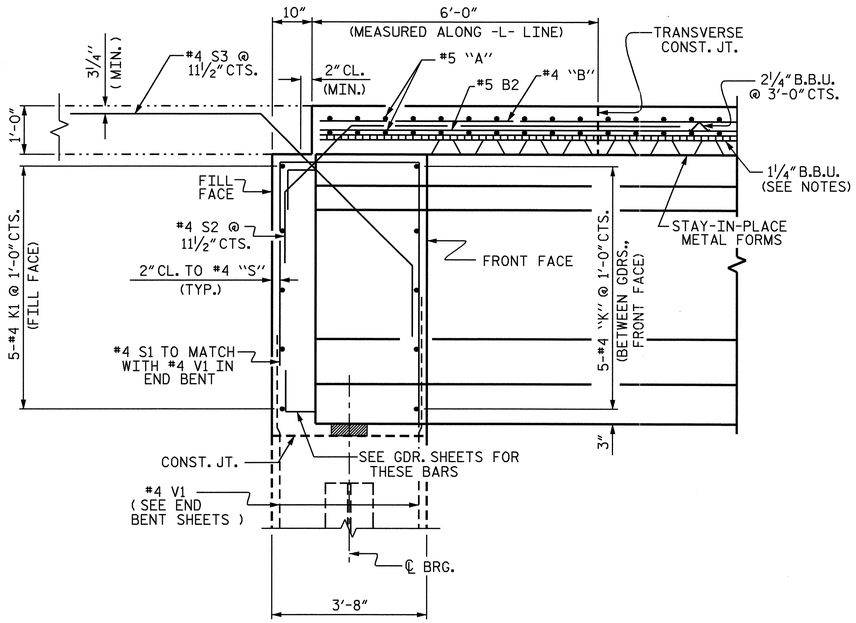

SECTION THRU END BENT

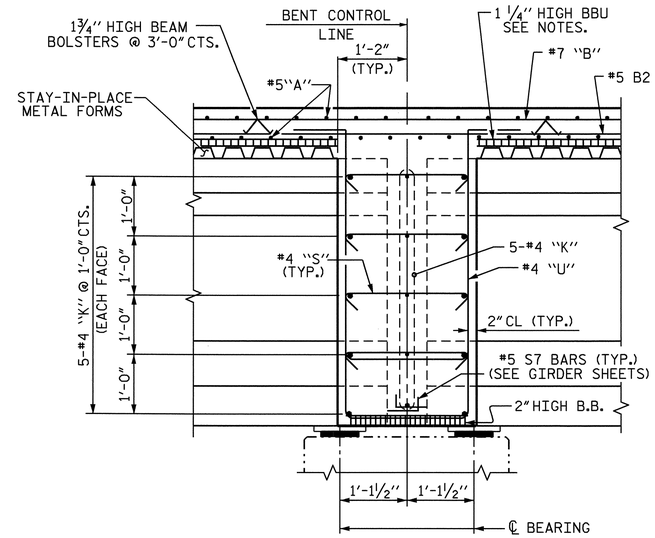

SECTION THRU CONTINUOUS BENT DIAPHRAGM

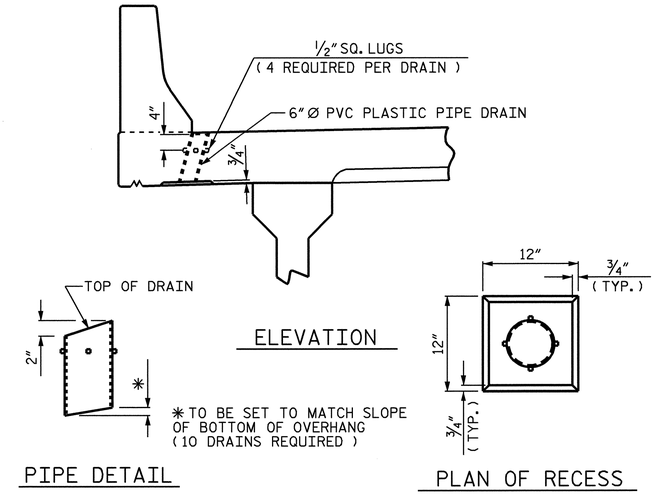

DRAIN DETAILS

TOP OF FLOOR DRAIN TO BE SET 3/8" BELOW SURFACE OF SLAB.

4-1/2" SQUARE LUGS TO BE GLUED TO THE PVC PLASTIC PIPE AT EQUAL SPACES AROUND THE PIPE DRAIN APPROXIMATELY 4" FROM THE TOP OF THE PIPE.

THE 6" Ø PVC PLASTIC PIPE AND FITTINGS SHALL BE SCHEDULE 40 AND CONFORM TO ASTM D1785.

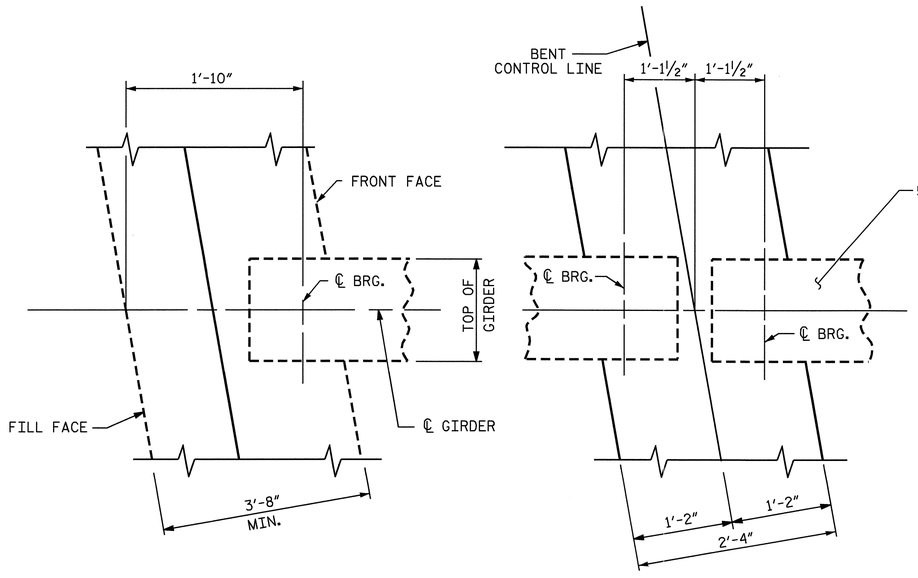

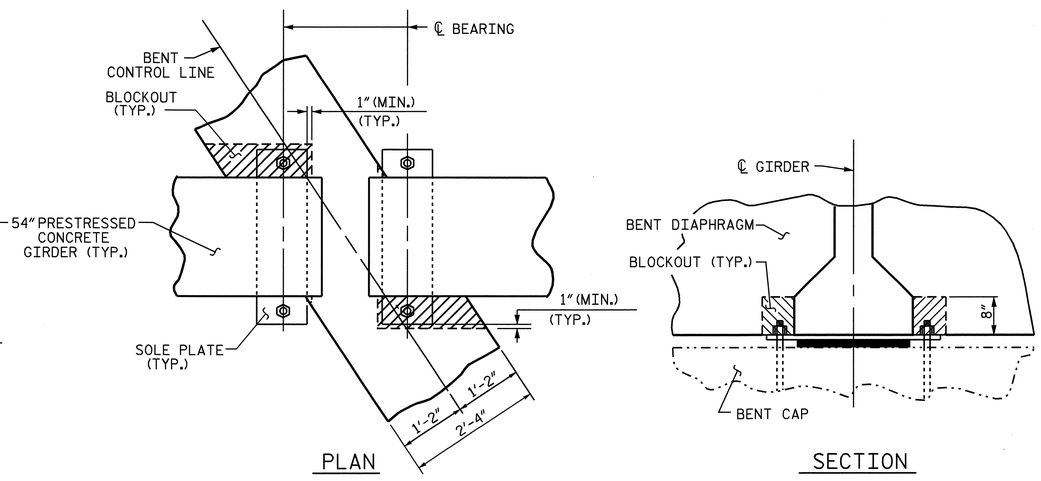

BENT DIAPHRAGM BLOCK-OUT DETAIL

PROJECT NO. B-4507

FORSYTH COUNTY

STATION: 27+96.00 -L-

SHEET 3 OF 3

STATE OF NORTH CAROLINA
DEPARTMENT OF TRANSPORTATION
RALEIGH

SUPERSTRUCTURE
TYPICAL SECTIONS
LEFT LANE

NORTH CAROLINA PROFESSIONAL SEAL 20125 ENGINEER MARSHALL G. CHEEK, JR.
9-29-09

REVISIONS						SHEET NO.
NO.	BY:	DATE:	NO.	BY:	DATE:	S-9
1			3			TOTAL SHEETS
2			4			99

STR. 1

DRAWN BY : V.X. NGUYEN DATE : 8-08
CHECKED BY : M.G. CHEEK DATE : 3-09

04-AUG-2009 16:24
R:\Structures\STR#1\vnguyen\B4507_sd_TS.dgn
afigueroa

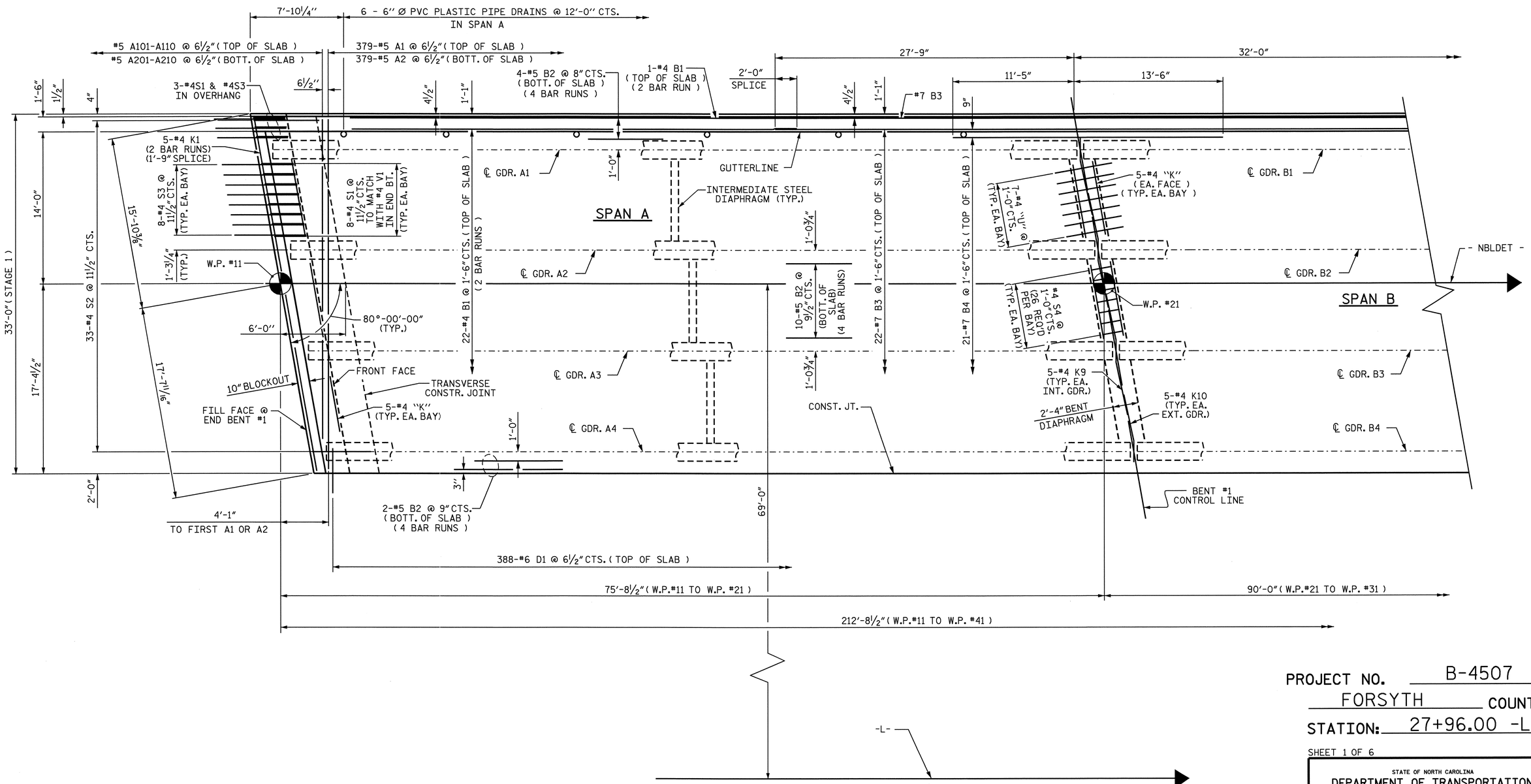

PROJECT NO. B-4507

FORSYTH COUNTY

STATION: 27+96.00 -L-

SHEET 1 OF 6

STATE OF NORTH CAROLINA
DEPARTMENT OF TRANSPORTATION
RALEIGH

SUPERSTRUCTURE

PLAN OF SPAN A - STAGE 1

LEFT LANE

PLAN OF SPAN A - STAGE 1

FOR INTERMEDIATE DIAPHRAGMS, SEE "INTERMEDIATE STEEL DIAPHRAGMS" SHEET.

DOWELS SHALL BE PLACED IN THE SAME HORIZONTAL PLANE AS THE TOP SLAB REINFORCING STEEL.

NORTH CAROLINA PROFESSIONAL SEAL 20125 ENGINEER MARSHALL G. CHEEK, JR.
9-29-09

REVISIONS								SHEET NO.
NO.	BY:	DATE:	NO.	BY:	DATE:			S-10
1			3					TOTAL SHEETS
2			4					99

STR. #1

DRAWN BY : V.X. NGUYEN DATE : 9-23-08
CHECKED BY : M.G. CHEEK DATE : 3-09

28-SEP-2009 08:23
R:\Structures\Final Plans\Left Lane\B-4507_sd_str#1_05_s#.dgn
afigueroa

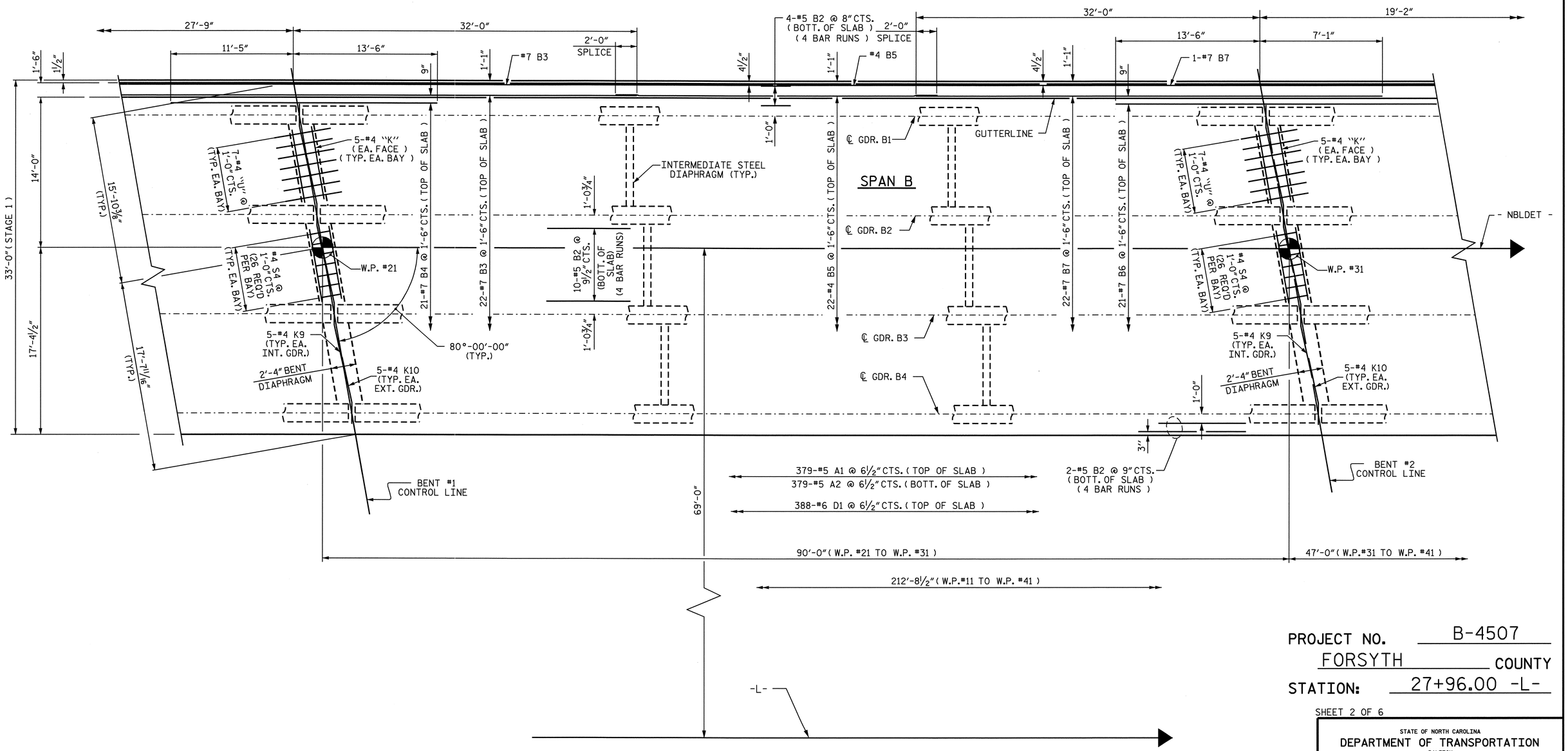

PROJECT NO. B-4507

FORSYTH COUNTY

STATION: 27+96.00 -L-

SHEET 2 OF 6

PLAN OF SPAN B - STAGE 1

FOR INTERMEDIATE DIAPHRAGMS, SEE "INTERMEDIATE STEEL DIAPHRAGMS" SHEET.

DOWELS SHALL BE PLACED IN THE SAME HORIZONTAL PLANE AS THE TOP SLAB REINFORCING STEEL.

NORTH CAROLINA PROFESSIONAL SEAL 20125 ENGINEER MARSHALL G. CHEEK, JR.
9-29-09

STATE OF NORTH CAROLINA
DEPARTMENT OF TRANSPORTATION
RALEIGH

SUPERSTRUCTURE

PLAN OF SPAN B
STAGE 1
LEFT LANE

REVISIONS						SHEET NO.
NO.	BY:	DATE:	NO.	BY:	DATE:	S-11
1			3			TOTAL SHEETS
2			4			99

STR. #1

DRAWN BY : V.X. NGUYEN DATE : 9-23-08
CHECKED BY : M.G. CHEEK DATE : 3-09

06-AUG-2009 10:45
r:\structures\STR#1\vnguyen\b4507_sd_s*.dgn
dahodge

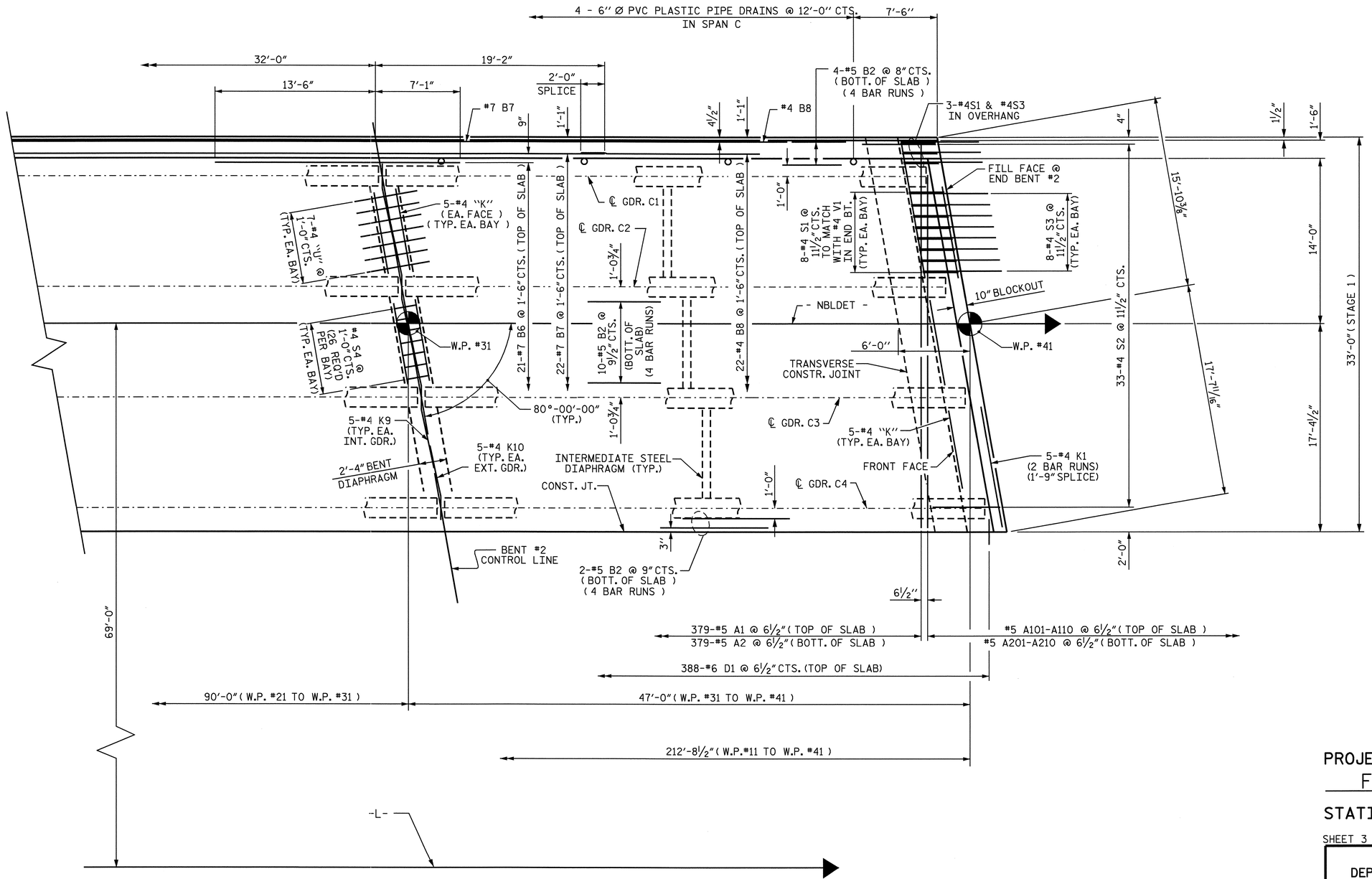

PLAN OF SPAN C - STAGE 1

FOR INTERMEDIATE DIAPHRAGMS, SEE "INTERMEDIATE STEEL DIAPHRAGMS" SHEET.

DOWELS SHALL BE PLACED IN THE SAME HORIZONTAL PLANE AS THE TOP SLAB REINFORCING STEEL.

PROJECT NO. B-4507
FORSYTH COUNTY
STATION: 27+96.00 -L-

SHEET 3 OF 6

STATE OF NORTH CAROLINA
DEPARTMENT OF TRANSPORTATION
RALEIGH

SUPERSTRUCTURE
PLAN OF SPAN C
STAGE 1
LEFT LANE

NORTH CAROLINA PROFESSIONAL SEAL 20125 ENGINEER MARSHALL G. CHEEK, JR.
9-29-09

REVISIONS						SHEET NO.
NO.	BY:	DATE:	NO.	BY:	DATE:	S-12
1			3			TOTAL SHEETS
2			4			99

STR. #1

DRAWN BY : V.X. NGUYEN DATE : 9-23-08
CHECKED BY : M.G. CHEEK DATE : 3-09

28-SEP-2009 08:23
R:\Structures\Final Plans\Left Lane\B-4507_sd_str#1_05_s*.dgn
afiguero0

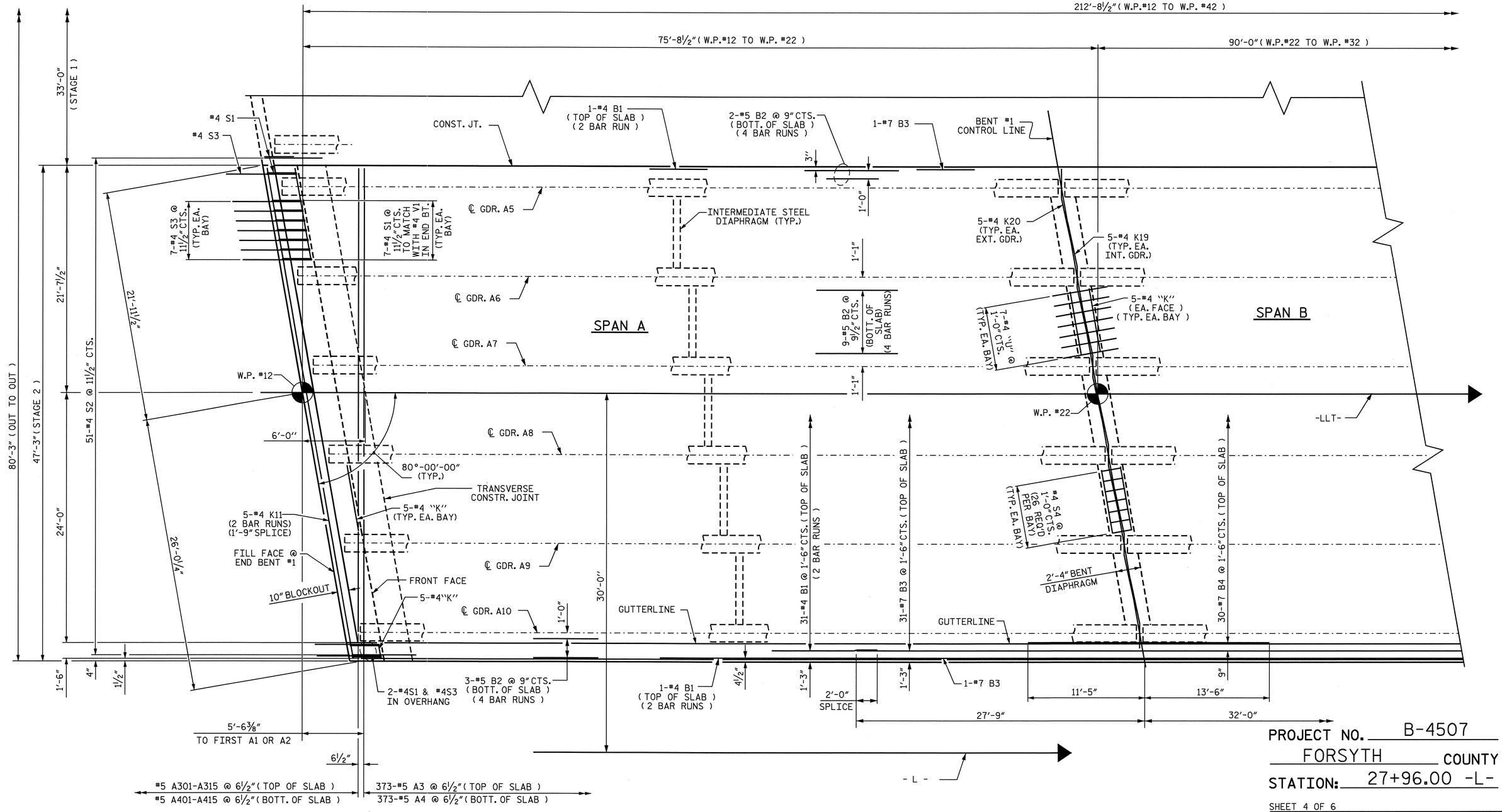

PROJECT NO. B-4507

FORSYTH COUNTY

STATION: 27+96.00 -L-

SHEET 4 OF 6

STATE OF NORTH CAROLINA
DEPARTMENT OF TRANSPORTATION
RALEIGH

SUPERSTRUCTURE

PLAN OF SPAN A - STAGE 2

FOR INTERMEDIATE DIAPHRAGMS, SEE "INTERMEDIATE STEEL DIAPHRAGMS" SHEET.

NORTH CAROLINA PROFESSIONAL SEAL 20125 ENGINEER MARSHALL G. CHEEK, JR.
9-29-09

REVISIONS						SHEET NO.
NO.	BY:	DATE:	NO.	BY:	DATE:	S-13
1			3			TOTAL SHEETS
2			4			99

STR. #1

DRAWN BY : V.X. NGUYEN DATE : 9-23-08
CHECKED BY : M.G. CHEEK DATE : 3-09

06-AUG-2009 10:45
r:\structures\STR#1\vnguyen\b4507_sd_s*.dgn
dahodge

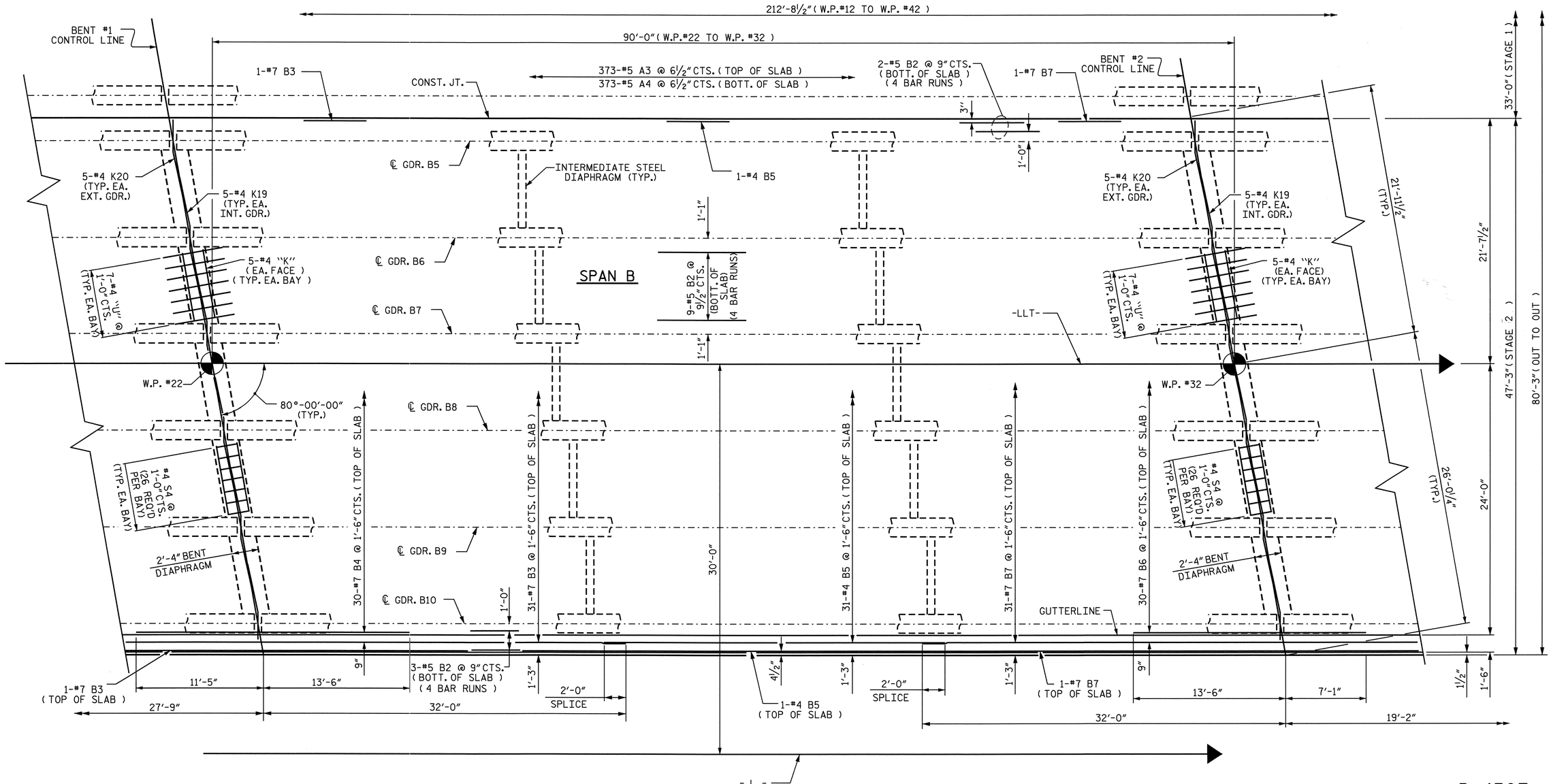

PROJECT NO. B-4507

FORSYTH COUNTY

STATION: 27+96.00 -L-

SHEET 5 OF 6

PLAN OF SPAN B - STAGE 2

FOR INTERMEDIATE DIAPHRAGMS, SEE "INTERMEDIATE STEEL DIAPHRAGMS" SHEET.

NORTH CAROLINA PROFESSIONAL SEAL 20125 ENGINEER MARSHALL G. CHEEK, JR.
9-29-09

STATE OF NORTH CAROLINA
DEPARTMENT OF TRANSPORTATION
RALEIGH

SUPERSTRUCTURE

PLAN OF SPAN B
STAGE 2
LEFT LANE

REVISIONS						SHEET NO.
NO.	BY:	DATE:	NO.	BY:	DATE:	S-14
1			3			TOTAL SHEETS
2			4			99

STR. #1

DRAWN BY : V.X. NGUYEN DATE : 9-23-08
CHECKED BY : M.G. CHEEK DATE : 3-09

06-AUG-2009 10:45
r:\structures\STR#1\vnguyen\b4507_sd_s*.dgn
ddhodge

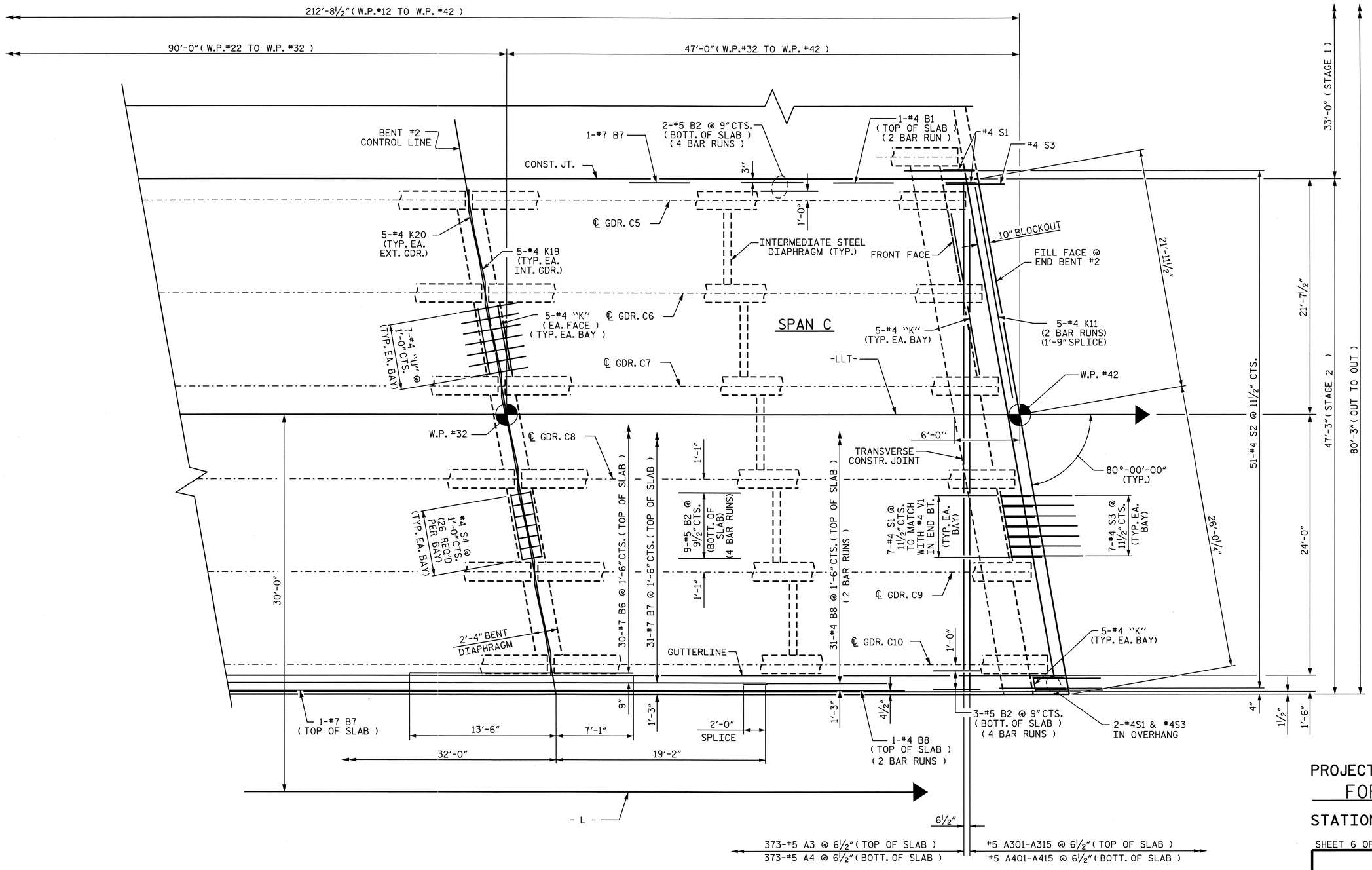

PROJECT NO. B-4507

FORSYTH COUNTY

STATION: 27+96.00 -L-

SHEET 6 OF 6

PLAN OF SPAN C - STAGE 2

FOR INTERMEDIATE DIAPHRAGMS, SEE "INTERMEDIATE STEEL DIAPHRAGMS" SHEET.

STATE OF NORTH CAROLINA
DEPARTMENT OF TRANSPORTATION
RALEIGH

SUPERSTRUCTURE

PLAN OF SPANS C
STAGE 2
LEFT LANE

NORTH CAROLINA PROFESSIONAL SEAL 20125 ENGINEER MARSHALL G. CHEEK, JR.
9-29-09

REVISIONS								SHEET NO.
NO.	BY:	DATE:	NO.	BY:	DATE:			S-15
1			3					TOTAL SHEETS
2			4					99

DRAWN BY : V.X. NGUYEN DATE : 9-23-08
CHECKED BY : M.G. CHEEK DATE : 3-09

06-AUG-2009 10:44
r:\structures\STR#1\vnguyen\b4507_sd_s#.dgn
dahodge

STR. #1

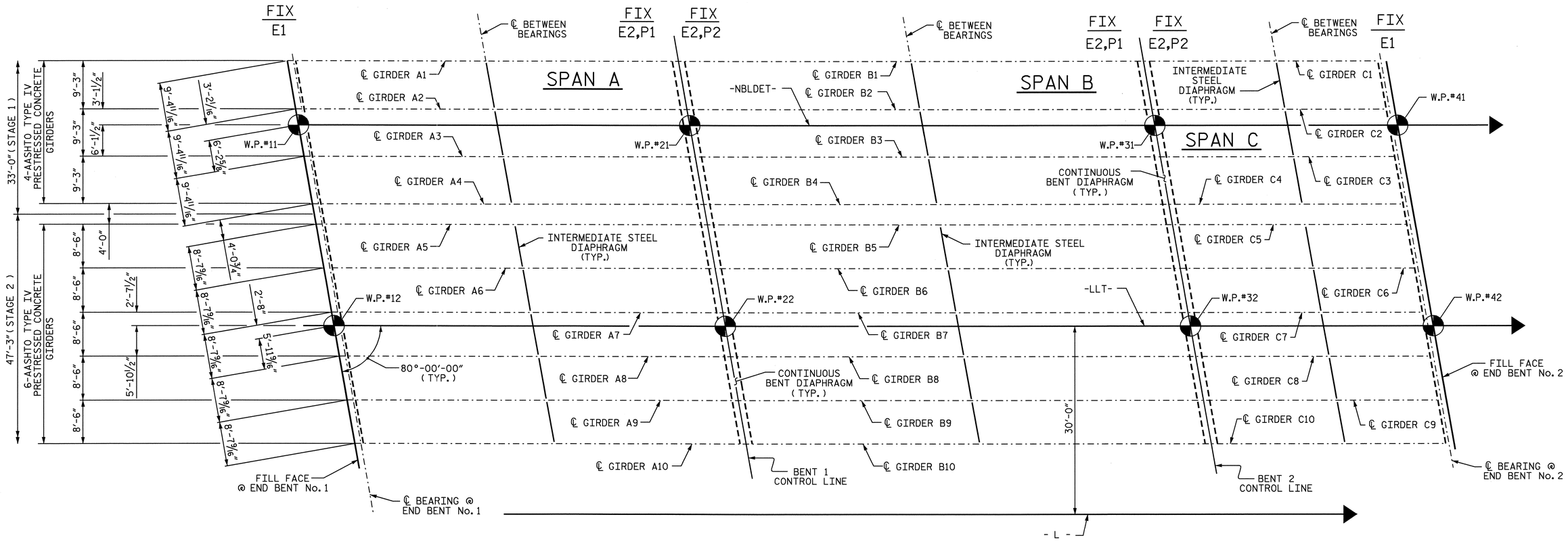

PLAN OF GIRDER LAYOUT

PROJECT NO. B-4507

FORSYTH COUNTY

STATION: 27+96.00 -L-

STATE OF NORTH CAROLINA
DEPARTMENT OF TRANSPORTATION
RALEIGH

SUPERSTRUCTURE

GIRDER LAYOUT
SPANS A, B, & C
STAGE 1 & 2
LEFT LANE

NORTH CAROLINA PROFESSIONAL SEAL 20125 ENGINEER MARSHALL G. CHEEK, JR.
4-24-09

REVISIONS						SHEET NO.
NO.	BY:	DATE:	NO.	BY:	DATE:	S-16
1			3			TOTAL SHEETS
2			4			99

STR. #1

DRAWN BY : V.X. NGUYEN DATE : 10-6-08
CHECKED BY : M.G. CHEEK DATE : 3-09

04-AUG-2009 16:25
R:\Structures\STR*1\vnguyen\B4507_sd_FP.dgn
aflgueroa

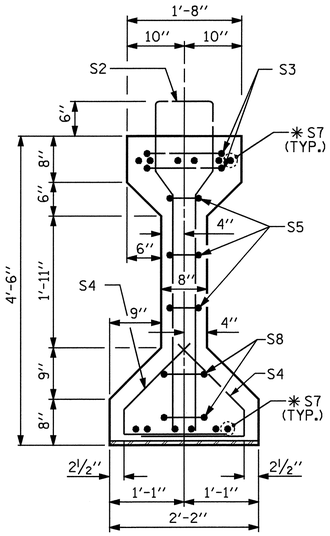

SECTION A-A

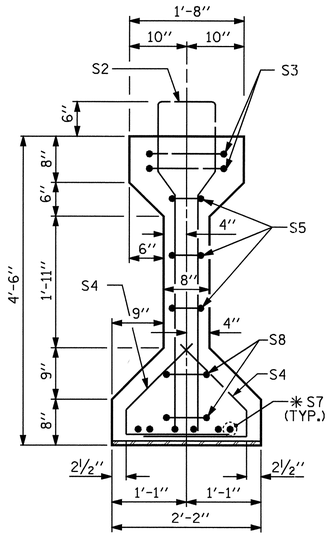

SECTION B-B

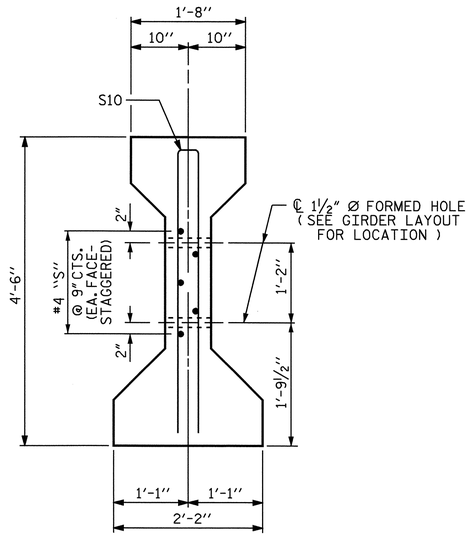

SECTION C-C

(S1 BARS NOT SHOWN)

✱FOR S7 BARS, SEE DETAIL "A" OF "PRESTRESSED CONCRETE GIRDER CONTINUOUS FOR LIVE LOAD DETAILS" SHEET 4 OF 7

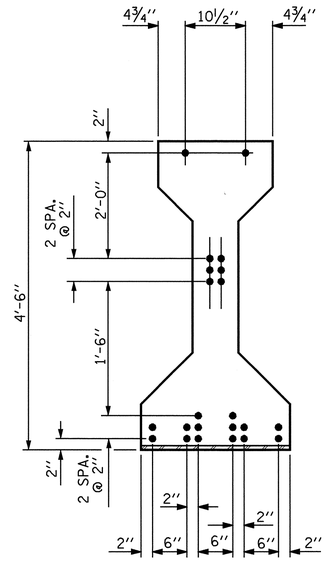

AT END OF GIRDER

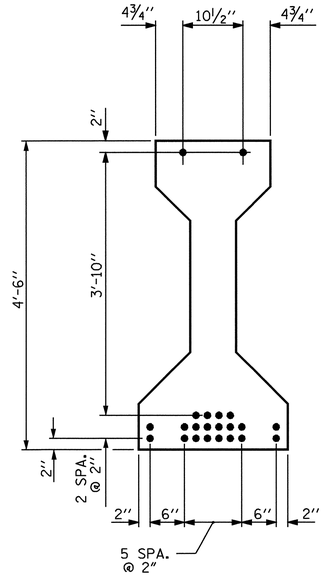

AT ℄ OF GIRDER

0.6" Ø LOW RELAXATION STRAND LAYOUT

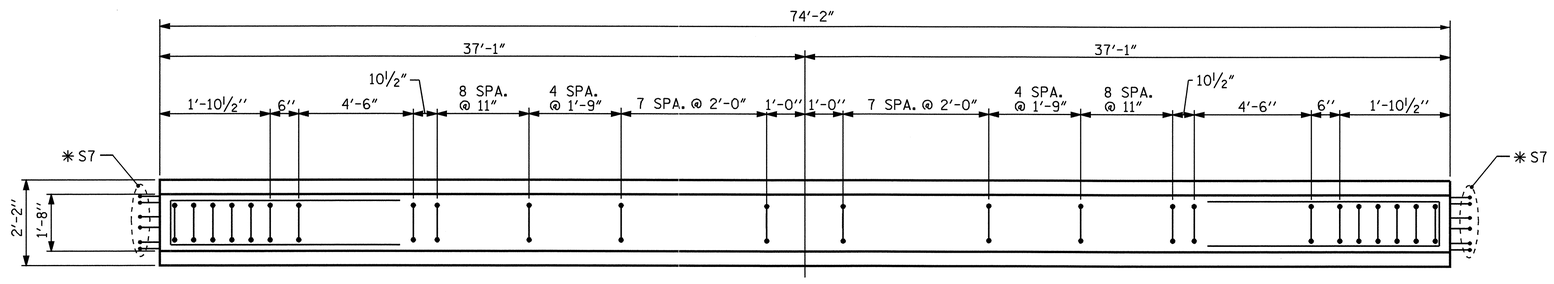

PLAN OF GIRDER

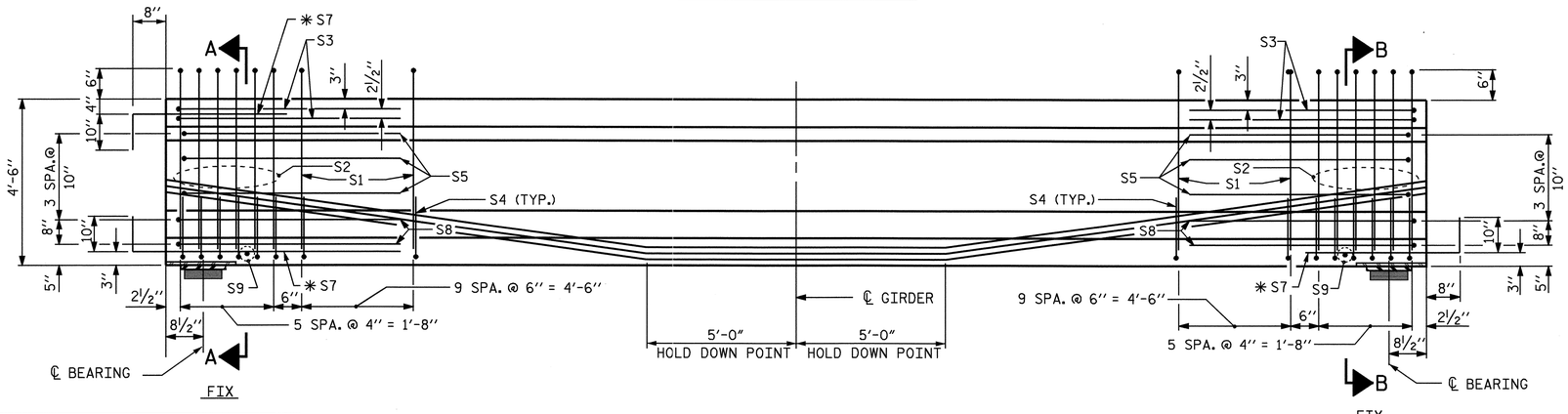

ELEVATION OF GIRDER

(SEE PARTIAL ELEVATION FOR ADDITIONAL "S" BARS)

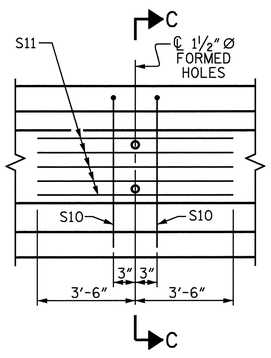

PARTIAL ELEVATION

SHOWING INTERMEDIATE DIAPHRAGM REINFORCING STEEL FOR GIRDERS Nos. 1-10

0.6" Ø L. R. GRADE 270 STRANDS

AREA (SQUARE INCHES)	ULTIMATE STRENGTH (LBS. PER STRAND)	APPLIED PRESTRESS (LBS. PER STRAND)
0.217	58,600	43,950

REINFORCING STEEL FOR ONE GIRDER

BAR	NUMBER	SIZE	TYPE	LENGTH	WEIGHT
S1	60	#4	1	10'-8"	428
S2	12	#6	1	10'-8"	192
S3	4	#4	2	9'-1"	24
S4	64	#4	3	3'-5"	146
S5	6	#4	2	8'-5"	34
✱S7	18	#5	STR	3'-8"	69
S8	4	#4	2	8'-7"	23
S9	2	#3	STR	1'-10"	1
S10	2	#5	2	8'-8"	18
S11	5	#4	STR	7'-0"	23

✱NOTE: S7 BARS SHALL BE BENT BEFORE SHIPMENT. HEAT BENDING SHALL NOT BE ALLOWED.

BAR TYPES

ALL BAR DIMENSIONS ARE OUT-TO-OUT

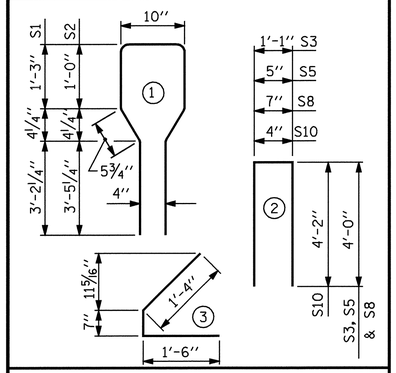

QUANTITIES FOR ONE GIRDER

	REINFORCING STEEL LB.	5000 PSI CONCRETE C.Y.	0.6" Ø L.R. STRANDS No.
	958	15.1	22

GIRDERS REQUIRED

NUMBER	LENGTH	TOTAL LENGTH
10	74'-2"	741'-8" LIN. FT.

PROJECT NO. B-4507

FORSYTH COUNTY

STATION: 27+96.00 -L-

SHEET 1 OF 7

STATE OF NORTH CAROLINA
DEPARTMENT OF TRANSPORTATION
RALEIGH

STANDARD
AASHTO TYPE IV
PRESTRESSED CONCRETE GIRDER
CONTINUOUS FOR LIVE LOAD
SPAN A
LEFT LANE

ASSEMBLED BY : V.X. NGUYEN	DATE : 10-21-08
CHECKED BY : M.G. CHEEK	DATE : 6-09
DRAWN BY : ELR 8/91	REV. 7/17/98 RWW/LES
CHECKED BY : GRP 8/91	REV. 10/17/00R RWW/LES
	REV. 5/1/06 TLA/GM

NORTH CAROLINA PROFESSIONAL SEAL 20125 ENGINEER MARSHALL G. CHEEK, JR.
9-29-09

REVISIONS						
NO.	BY:	DATE:	NO.	BY:	DATE:	
1			3			
2			4			

SHEET NO. S-17

TOTAL SHEETS 99

STR. #1

STD. NO. PCG6

29-SEP-2009 14:51
r:\structures\final plans\left lane\b-4507_sd_str#1_07_g*.dgn
vnguyen

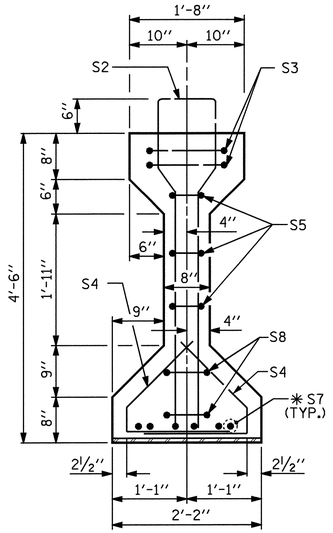

SECTION B-B

✱ FOR S7 BARS, SEE DETAIL "A" OF "PRESTRESSED CONCRETE GIRDER CONTINUOUS FOR LIVE LOAD DETAILS", SHEET 4 OF 7

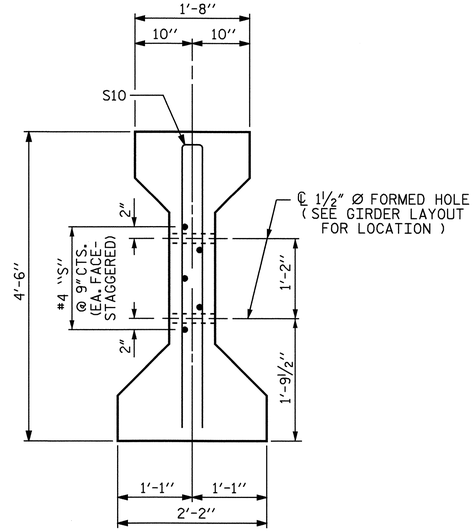

SECTION C-C

(S1 BARS NOT SHOWN)

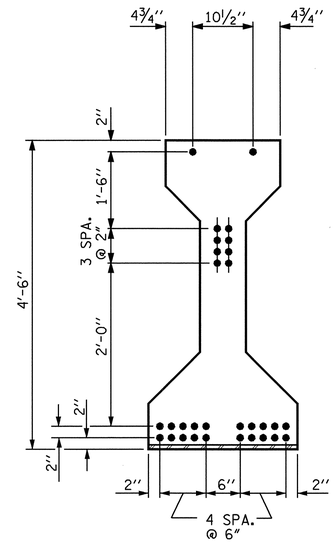

AT END OF GIRDER

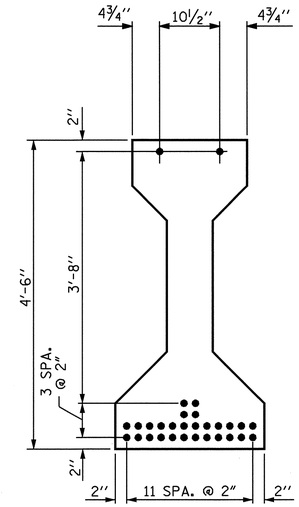

AT ℄ OF GIRDER

0.6" Ø LOW RELAXATION STRAND LAYOUT

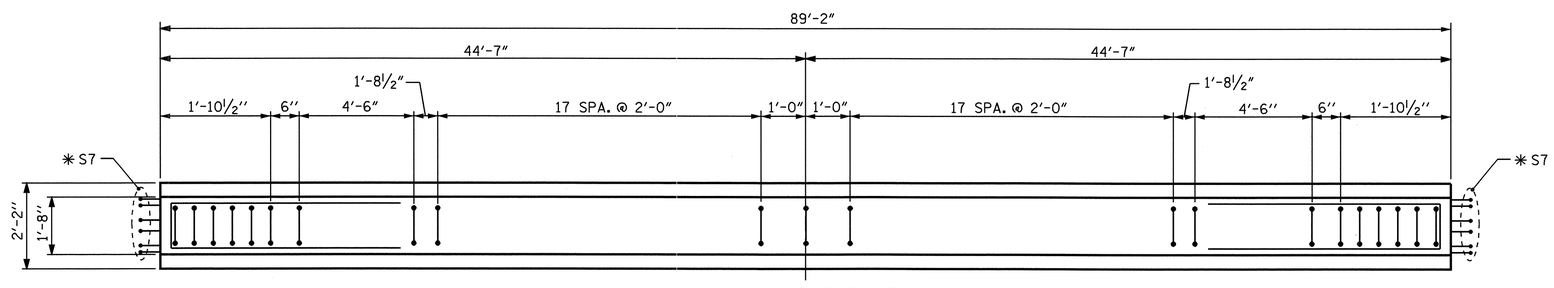

PLAN OF GIRDER

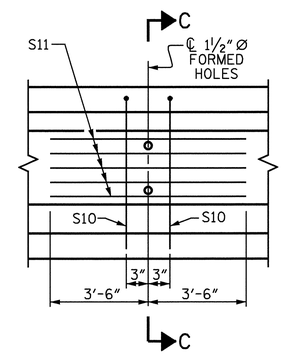

PARTIAL ELEVATION

SHOWING INTERMEDIATE DIAPHRAGM REINFORCING STEEL FOR GIRDER Nos. 1-10

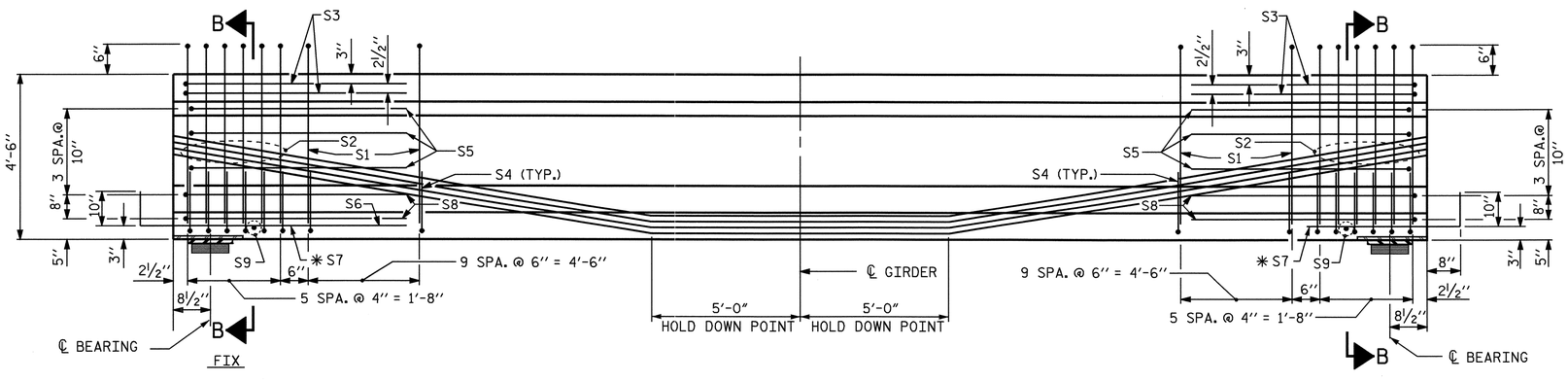

ELEVATION OF GIRDER

(SEE PARTIAL ELEVATION FOR ADDITIONAL "S" BARS)

0.6" Ø L. R. GRADE 270 STRANDS

AREA (SQUARE INCHES)	ULTIMATE STRENGTH (LBS. PER STRAND)	APPLIED PRESTRESS (LBS. PER STRAND)
0.217	58,600	43,950

REINFORCING STEEL FOR ONE GIRDER

BAR	NUMBER	SIZE	TYPE	LENGTH	WEIGHT
S1	57	#4	1	10'-8"	406
S2	12	#6	1	10'-8"	192
S3	4	#4	2	9'-1"	24
S4	64	#4	3	3'-5"	146
S5	6	#4	2	8'-5"	34
✱ S7	12	#5	STR	3'-8"	46
S8	4	#4	2	8'-7"	23
S9	2	#3	STR	1'-10"	1
S10	2	#5	2	8'-8"	18
S11	5	#4	STR	7'-0"	23

✱ NOTE: S7 BARS SHALL BE BENT BEFORE SHIPMENT. HEAT BENDING SHALL NOT BE ALLOWED.

BAR TYPES

ALL BAR DIMENSIONS ARE OUT-TO-OUT

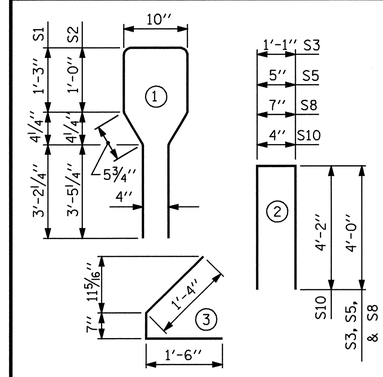

QUANTITIES FOR ONE GIRDER

	REINFORCING STEEL	6500 PSI CONCRETE	0.6" Ø L.R. STRANDS
	LB.	C.Y.	No.
	913	18.1	30

GIRDERS REQUIRED

NUMBER	LENGTH	TOTAL LENGTH
10	89'-2"	891'-8" LIN. FT.

PROJECT NO. B-4507

FORSYTH COUNTY

STATION: 27+96.00 -L-

SHEET 2 OF 7

STATE OF NORTH CAROLINA
DEPARTMENT OF TRANSPORTATION
RALEIGH

STANDARD
AASHTO TYPE IV
PRESTRESSED CONCRETE GIRDER
CONTINUOUS FOR LIVE LOAD
SPAN B
LEFT LANE

ASSEMBLED BY : V.X. NGUYEN	DATE : 10-21-08
CHECKED BY : M.G. CHEEK	DATE : 6-09
DRAWN BY : ELR 8/91	REV. 7/17/98 RWW/LES
CHECKED BY : GRP 8/91	REV. 10/17/00R RWW/LES
	REV. 5/1/06 TLA/GM

NORTH CAROLINA PROFESSIONAL SEAL 20125 ENGINEER MARSHALL G. CHEEK, JR.

9-24-09

REVISIONS

NO.	BY:	DATE:	NO.	BY:	DATE:
1			3		
2			4		

SHEET NO. S-18

TOTAL SHEETS 99

STR. #1

STD. NO. PCG6

29-SEP-2009 11:09
r:\structures\finalplans\left lane\b-4507_sd_str#1_07_g#.dgn
vnguyen

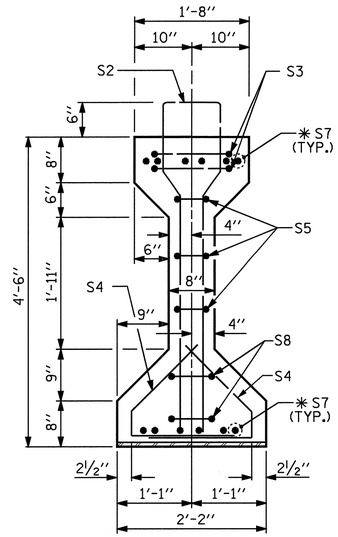

SECTION A-A

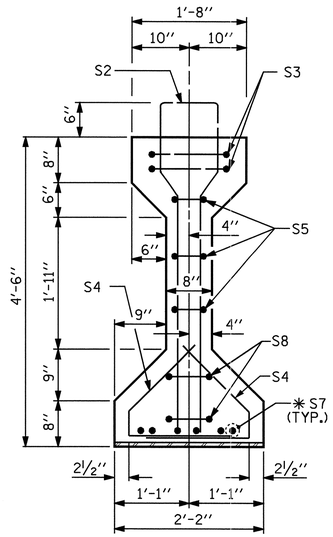

SECTION B-B

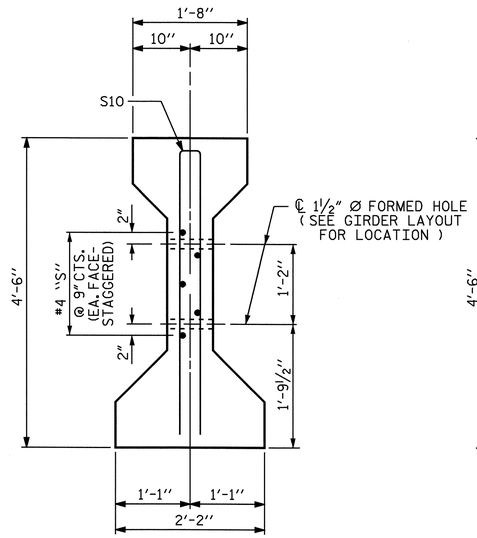

SECTION C-C

(S1 BARS NOT SHOWN)

✱ FOR S7 BARS, SEE DETAIL "A" OF "PRESTRESSED CONCRETE GIRDER CONTINUOUS FOR LIVE LOAD DETAILS", SHEET 4 OF 7

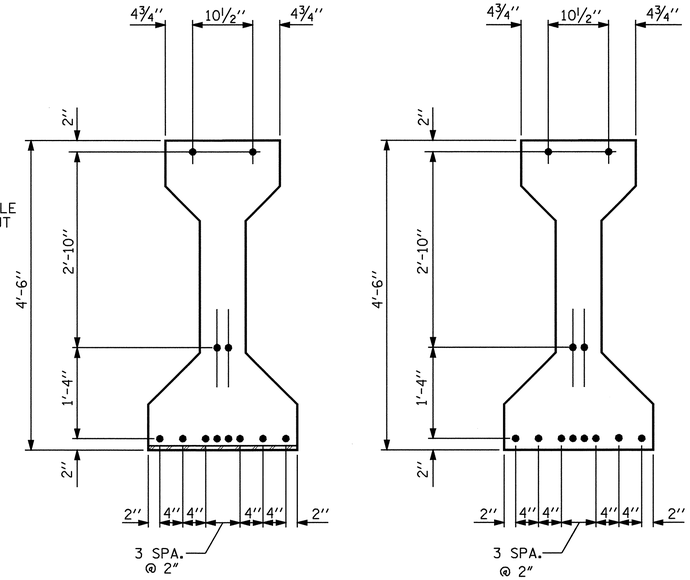

AT END OF GIRDER

AT ℄ OF GIRDER

0.6" Ø LOW RELAXATION STRAND LAYOUT

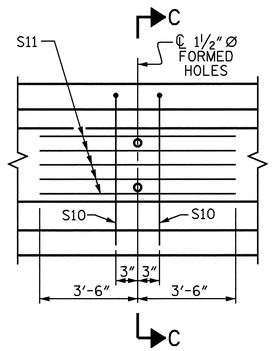

PARTIAL ELEVATION

SHOWING INTERMEDIATE DIAPHRAGM REINFORCING STEEL FOR GIRDERS Nos. 1-10

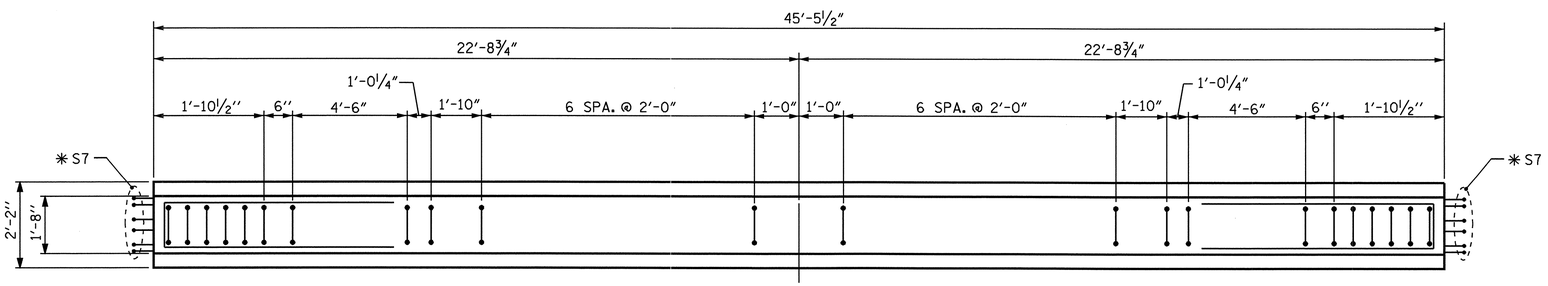

PLAN OF GIRDER

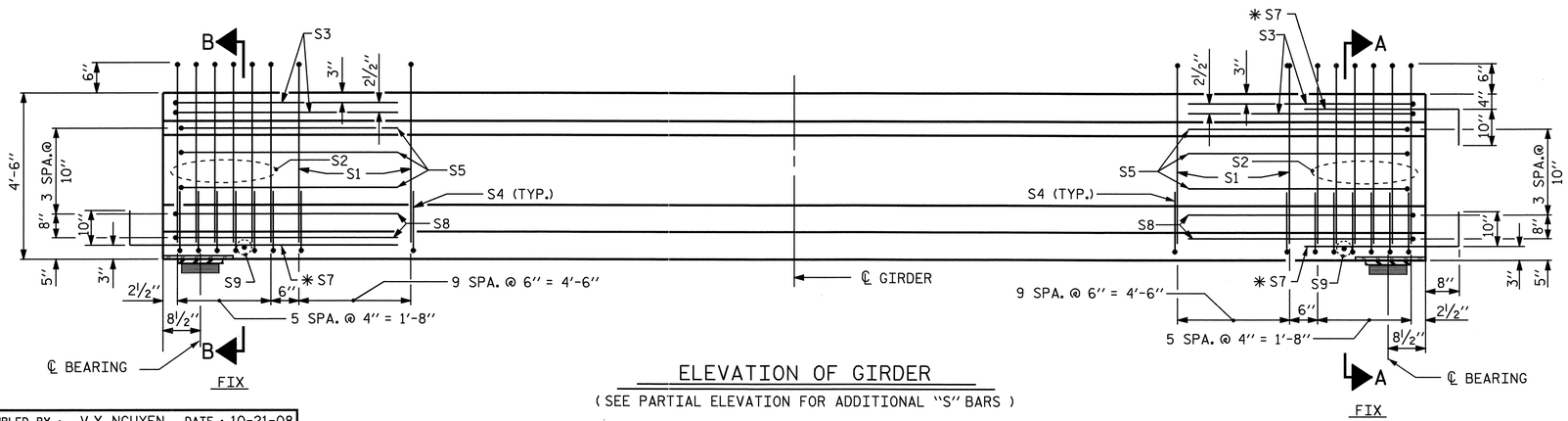

ELEVATION OF GIRDER

(SEE PARTIAL ELEVATION FOR ADDITIONAL "S" BARS)

0.6" Ø L. R. GRADE 270 STRANDS

AREA (SQUARE INCHES)	ULTIMATE STRENGTH (LBS. PER STRAND)	APPLIED PRESTRESS (LBS. PER STRAND)
0.217	58,600	43,950

REINFORCING STEEL FOR ONE GIRDER

BAR	NUMBER	SIZE	TYPE	LENGTH	WEIGHT
S1	36	#4	1	10'-8"	257
S2	12	#6	1	10'-8"	192
S3	4	#4	2	9'-1"	24
S4	64	#4	3	3'-5"	146
S5	6	#4	2	8'-5"	34
✱ S7	18	#5	STR	3'-8"	69
S8	4	#4	2	8'-7"	23
S9	2	#3	STR	1'-10"	1
S10	2	#5	2	8'-8"	18
S11	5	#4	STR	7'-0"	23

✱ NOTE: S7 BARS SHALL BE BENT BEFORE SHIPMENT. HEAT BENDING SHALL NOT BE ALLOWED.

BAR TYPES

ALL BAR DIMENSIONS ARE OUT-TO-OUT

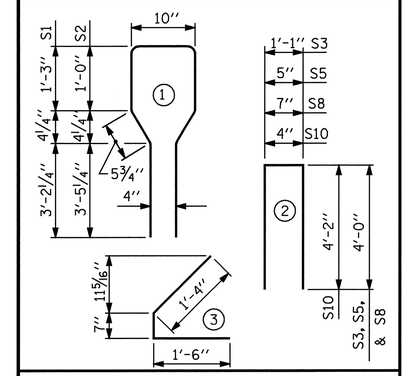

QUANTITIES FOR ONE GIRDER

	REINFORCING STEEL LB.	5000 PSI CONCRETE C.Y.	0.6" Ø L.R. STRANDS No.
	787	9.2	12

GIRDERS REQUIRED

NUMBER	LENGTH	TOTAL LENGTH
10	45'-5½"	454'-7" LIN. FT.

PROJECT NO. B-4507

FORSYTH COUNTY

STATION: 27+96.00 -L-

SHEET 3 OF 7

STATE OF NORTH CAROLINA
DEPARTMENT OF TRANSPORTATION
RALEIGH

STANDARD
AASHTO TYPE IV
PRESTRESSED CONCRETE GIRDER
CONTINUOUS FOR LIVE LOAD
SPAN C
LEFT LANE

NORTH CAROLINA PROFESSIONAL SEAL 20125 ENGINEER MARSHALL B. CHEEK, JR.
9-20-09

REVISIONS								SHEET NO.
NO.	BY:	DATE:	NO.	BY:	DATE:			S-19
1			3					TOTAL SHEETS
2			4					99

ASSEMBLED BY : V.X. NGUYEN	DATE : 10-21-08		
CHECKED BY : M.G. CHEEK	DATE : 6-09		
DRAWN BY : ELR 8/91	REV. 7/17/98	RWW/LES	
CHECKED BY : GRP 8/91	REV. 10/17/00R	RWW/LES	
	REV. 5/1/06	TLA/GM	

29-SEP-2009 09:59
r:\structures\finalplans\Left Lane\B-4507_sd_str#1_07_g*.dgn
vnguyen

STR. #1

STD. NO. PCG6

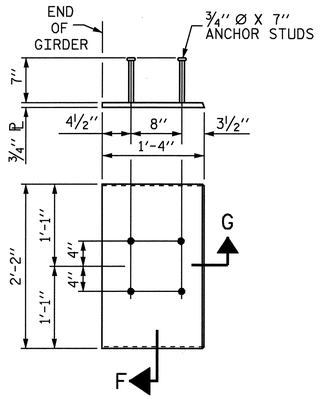

EMBEDDED PLATE "B-1" DETAILS FOR AASHTO TYPE IV GIRDER

(2 REQ'D PER GIRDER)

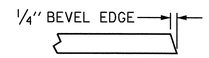

SECTION "G"

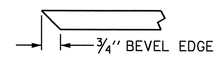

SECTION "F"

(SEE NOTES)

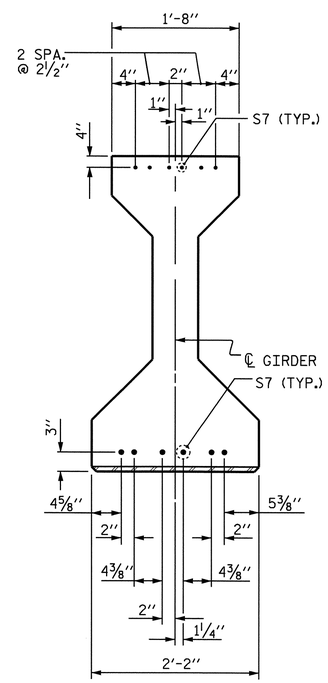

DETAIL "A"

NOTES

ALL PRESTRESSING STRANDS SHALL BE 7-WIRE LOW-RELAXATION GRADE 270 STRANDS AND SHALL CONFORM TO AASHTO M203 EXCEPT FOR SAMPLING REQUIREMENTS WHICH SHALL BE IN ACCORDANCE WITH THE STANDARD SPECIFICATIONS.

ALL REINFORCING STEEL SHALL BE GRADE 60.

EMBEDDED PLATE "B-1" SHALL BE GALVANIZED IN ACCORDANCE WITH THE STANDARD SPECIFICATIONS. BEVEL EDGES OF PLATE "B-1" TO GIVE CLOSE FIT BUT NOT TIGHT FIT TO STEEL CASTING FORM.

ANCHOR STUDS SHALL CONFORM TO AASHTO M169 GRADES 1010 THROUGH 1020 OR APPROVED EQUAL, AND SHALL MEET THE TYPE "B" REQUIREMENTS OF SUBSECTION 7.3 OF THE ANSI/AASHTO/AWS D1.5 BRIDGE WELDING CODE.

AT ENDS OF GIRDERS TO BE EMBEDDED IN CONCRETE DIAPHRAGMS OR END WALLS, PRESTRESSING STRANDS MAY EXTEND A MAXIMUM OF 2" BEYOND THE GIRDER ENDS. OTHERWISE, PRESTRESSING STRANDS SHALL BE CUT FLUSH WITH THE GIRDER ENDS.

THE TRANSFER OF LOAD FROM THE ANCHORAGES TO THE GIRDER SHALL BE DONE WHEN CONCRETE HAS REACHED A COMPRESSIVE STRENGTH OF NOT LESS THAN 4000 PSI FOR SPANS A & C, AND 4900 PSI FOR SPAN B.

DEPENDING ON THE TYPE OF SYSTEM USED TO SUPPORT THE DECK SLAB FORMS, PRESET ANCHORS MAY BE NECESSARY IN THE PRESTRESSED CONCRETE GIRDER.

THE TOP SURFACE OF THE GIRDER, EXCLUDING THE OUTSIDE 4", SHALL BE RAKED TO A DEPTH OF 1/4".

WHEN DRAPED STRANDS ARE DETAILED, THE LONGITUDINAL LOCATION OF THE HOLD DOWN DEVICES SHALL BE WITHIN 6" OF THE LOCATION SHOWN AND THE CENTER OF GRAVITY OF THE GROUP OF DRAPED STRANDS SHALL BE LOCATED WITHIN 1/2" OF THE THEORETICAL LOCATION SHOWN.

PROJECT NO. B-4507
FORSYTH COUNTY
STATION: 27+96.00 -L-

SHEET 4 OF 7

STATE OF NORTH CAROLINA
DEPARTMENT OF TRANSPORTATION
RALEIGH

STANDARD

PRESTRESSED CONCRETE GIRDER CONTINUOUS FOR LIVE LOAD DETAILS
LEFT LANE

NORTH CAROLINA PROFESSIONAL SEAL 20125 ENGINEER MARSHALL G. CHEEK, JR.
9-29-09

REVISIONS						SHEET NO.
NO.	BY:	DATE:	NO.	BY:	DATE:	S-20
1			3			TOTAL SHEETS
2			4			99

STR. #1

STD. NO. PCG11

ASSEMBLED BY : V.X. NGUYEN		DATE : 12-18-08	
CHECKED BY : M.G. CHEEK		DATE : 6-09	
DRAWN BY : ELR 11/91	REV. 10/17/00 RWW/LES		
CHECKED BY : GRP 11/91	REV. 7/10/01RR LES/RDR		
	REV. 5/1/06 TLA/GM		

29-SEP-2009 10:54
R:\Structures\Final Plans\Left Lane\B-4507_sd_str*1_07_g*.dgn
aflgueroa

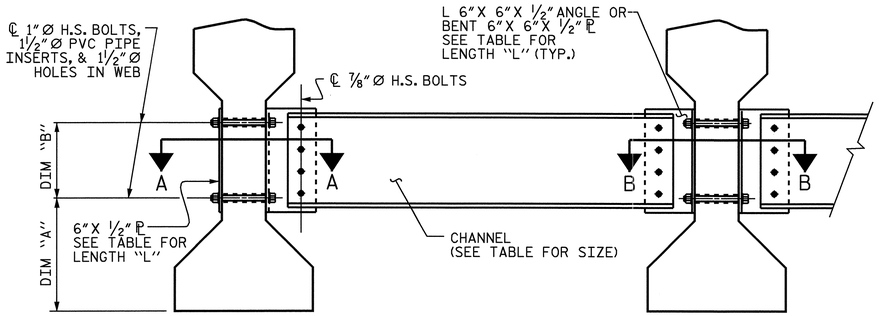

EXTERIOR GIRDER

INTERIOR GIRDER

PART SECTION AT INTERMEDIATE DIAPHRAGM

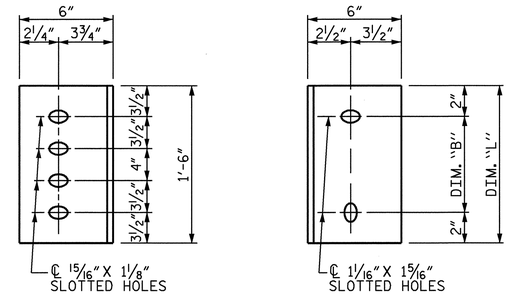

DIAPHRAGM FACE

WEB FACE

CONNECTOR PLATE DETAILS

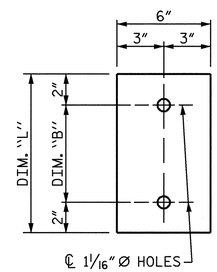

PLATE DETAILS

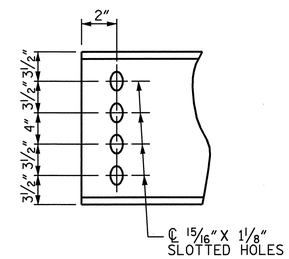

CHANNEL END

STRUCTURAL STEEL NOTES

ALL INTERMEDIATE DIAPHRAGM STEEL, CONNECTOR PLATES AND PLATE WASHERS SHALL BE AASHTO M270 GRADE 50 OR APPROVED EQUAL.

TENSION ON THE AASHTO M164 BOLTS THROUGH THE CHANNEL MEMBER SHALL BE CALIBRATED USING DIRECT TENSION INDICATOR WASHERS IN ACCORDANCE WITH ARTICLE 440-8 OF THE STANDARD SPECIFICATIONS.

TENSION ON THE AASHTO M164 BOLTS THROUGH THE GIRDER WEB SHALL BE SNUG TIGHTENED FOLLOWED BY AN ADDITIONAL ¼ TURN.

THE CHANNELS, ANGLES, WASHERS, PLATE WASHERS, AND DIRECT TENSION INDICATORS SHALL BE GALVANIZED OR METALLIZED IN ACCORDANCE WITH THE STANDARD SPECIFICATIONS. FOR THERMAL SPRAYED COATINGS (METALLIZATION), SEE SPECIAL PROVISIONS.

FOR METALLIZATION, APPLY AN 8 MIL THICK 99.99 PERCENT ZINC (W-Zn-1) THERMAL SPRAYED COATING WITH A 0.5 MIL THICK SEAL COAT TO ALL STEEL DIAPHRAGM SURFACES IN ACCORDANCE WITH THE THERMAL SPRAYED COATINGS SPECIAL PROVISIONS AND SECTION 442 OF THE STANDARD SPECIFICATIONS.

GALVANIZE THE HIGH STRENGTH BOLTS, NUTS, AND WASHERS IN ACCORDANCE WITH THE STANDARD SPECIFICATIONS. FOR HIGH STRENGTH BOLTS, SEE SPECIAL PROVISIONS.

USE A MINIMUM 7/16" THICK PLATE WASHER WITH STANDARD HOLES UNDER EACH BOLT HEAD AND NUT. THE PLATE WASHERS SHALL HAVE SUFFICIENT SIZE TO COVER THE HOLES AFTER INSTALLATION. DIRECT TENSION INDICATORS ARE TO BE USED IN CONJUNCTION WITH THE PLATE WASHERS.

PROVIDE SUFFICIENT LENGTH OF ALL BOLTS TO ACCOMMODATE WASHERS, DIRECT TENSION INDICATORS, THE THICKNESS OF CONNECTING MEMBER PLUS AT LEAST ¼" PROJECTION BEYOND THE NUT.

INTERMEDIATE DIAPHRAGM ASSEMBLY SHALL COMPLY WITH SECTION 1072 OF THE STANDARD SPECIFICATIONS.

CONTRACTOR SHALL SUBMIT TWO SETS OF WORKING DRAWINGS FOR THE INTERMEDIATE DIAPHRAGM ASSEMBLY FOR REVIEW, COMMENTS AND ACCEPTANCE. AFTER REVIEW, COMMENTS, AND ACCEPTANCE, SUBMIT SEVEN SETS FOR DISTRIBUTION.

IN THE EXTERIOR BAYS, TEMPORARY STRUTS SHALL BE PLACED BETWEEN PRESTRESSED GIRDERS ADJACENT TO THE STEEL DIAPHRAGMS. STRUTS SHALL REMAIN IN PLACE 3 DAYS AFTER CONCRETE IS PLACED. ALL AASHTO M164 H.S. BOLTS SHALL BE FULLY TIGHTENED AFTER THE STRUTS HAVE BEEN REMOVED.

THE COST OF THE STEEL DIAPHRAGMS AND ASSEMBLIES SHALL BE INCLUDED IN THE UNIT PRICE BID FOR PRESTRESSED CONCRETE GIRDERS.

FOR DIRECT TENSION INDICATORS, SEE SPECIAL PROVISIONS.

TABLE

GIRDER TYPE	CHANNEL SIZE	DIM "A"	DIM "B"	DIM "L"
IV	MC 18 x 42.7	1'-9½"	1'-2"	1'-6"

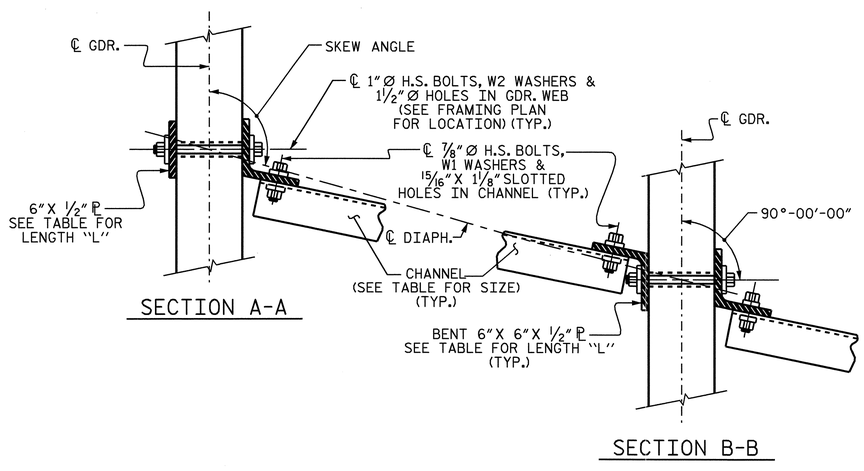

SECTION A-A

SECTION B-B

CONNECTION DETAILS

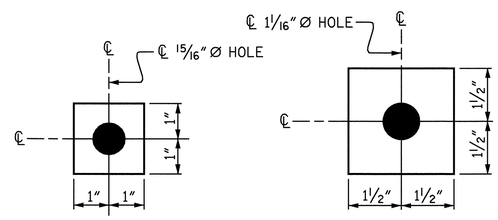

W1

ℙ 7/16" X 2" X 2"

USE WITH ⅞" Ø HVY. HEX NUTS & DIRECT TENSION INDICATOR WASHERS AT DIAPHRAGM CHANNEL TO CONNECTOR PLATE CONNECTIONS

W2

ℙ 7/16" X 3" X 3"

USE WITH 1" Ø HVY. HEX NUTS AT CONNECTOR PLATE TO GIRDER CONNECTIONS

WASHER DETAILS

PROJECT NO. B-4507

FORSYTH COUNTY

STATION: 27+96.00 -L-

SHEET 5 OF 7

STATE OF NORTH CAROLINA
DEPARTMENT OF TRANSPORTATION
RALEIGH

STANDARD
INTERMEDIATE
STEEL DIAPHRAGMS
FOR TYPE IV
PRESTRESSED CONCRETE
GIRDERS
LEFT LANE

NORTH CAROLINA PROFESSIONAL SEAL 20125 ENGINEER MARSHALL G. CHEEK, JR.
9.29.09

REVISIONS						SHEET NO.
NO.	BY:	DATE:	NO.	BY:	DATE:	S-21
1			3			TOTAL SHEETS
2			4			99

STR. #1

STD. NO. PCG12

ASSEMBLED BY : V.X. NGUYEN	DATE : 11-5-08
CHECKED BY : M.G. CHEEK	DATE : 6-09
DRAWN BY : TLA 6/05	ADDED 10/21/05
CHECKED BY : VC 6/05	REV. 5/1/06R KMM/GM

28-SEP-2009 08:22
R:\Structures\Final Plans\Left Lane\B-4507_sd_str*1_07_g*.dgn
afigueroa

DEAD LOAD DEFLECTION TABLE FOR SPAN A - STAGE 1

0.6"Ø LOW RELAXATION	GIRDER No. 1											GIRDERS No. 2 & 3											GIRDER No. 4										
TENTH POINTS	℄ BRG.	.1	.2	.3	.4	.5	.6	.7	.8	.9	℄ BRG.	℄ BRG.	.1	.2	.3	.4	.5	.6	.7	.8	.9	℄ BRG.	℄ BRG.	.1	.2	.3	.4	.5	.6	.7	.8	.9	℄ BRG.
CAMBER (GIRDER ALONE IN PLACE) ↑	0.0	0.043	0.082	0.112	0.131	0.137	0.131	0.112	0.082	0.043	0.0	0.0	0.043	0.082	0.112	0.131	0.137	0.131	0.112	0.082	0.043	0.0	0.0	0.043	0.082	0.112	0.131	0.137	0.131	0.112	0.082	0.043	0.0
✳ DEFLECTION DUE TO SUPERIMPOSED D.L. ↓	0.0	0.019	0.035	0.048	0.056	0.059	0.056	0.048	0.035	0.019	0.0	0.0	0.020	0.039	0.053	0.062	0.065	0.062	0.053	0.039	0.020	0.0	0.0	0.016	0.030	0.042	0.049	0.051	0.049	0.042	0.030	0.016	0.0
FINAL CAMBER ↑	0	5/16"	9/16"	3/4"	13/16"	7/8"	13/16"	3/4"	9/16"	5/16"	0	0	1/4"	1/2"	11/16"	13/16"	7/8"	13/16"	11/16"	1/2"	1/4"	0	0	5/16"	5/8"	7/8"	1"	1 1/16"	1"	7/8"	5/8"	5/16"	0

DEAD LOAD DEFLECTION TABLE FOR SPAN B - STAGE 1

0.6"Ø LOW RELAXATION	GIRDER No. 1											GIRDERS No. 2 & 3											GIRDER No. 4										
TENTH POINTS	℄ BRG.	.1	.2	.3	.4	.5	.6	.7	.8	.9	℄ BRG.	℄ BRG.	.1	.2	.3	.4	.5	.6	.7	.8	.9	℄ BRG.	℄ BRG.	.1	.2	.3	.4	.5	.6	.7	.8	.9	℄ BRG.
CAMBER (GIRDER ALONE IN PLACE) ↑	0.0	0.077	0.145	0.198	0.232	0.244	0.232	0.198	0.145	0.077	0.0	0.0	0.077	0.145	0.198	0.232	0.244	0.232	0.198	0.145	0.077	0.0	0.0	0.077	0.145	0.198	0.232	0.244	0.232	0.198	0.145	0.077	0.0
✳ DEFLECTION DUE TO SUPERIMPOSED D.L. ↓	0.0	0.035	0.066	0.090	0.105	0.110	0.105	0.090	0.066	0.035	0.0	0.0	0.038	0.072	0.099	0.116	0.122	0.116	0.099	0.072	0.038	0.0	0.0	0.030	0.057	0.078	0.091	0.096	0.091	0.078	0.057	0.030	0.0
FINAL CAMBER ↑	0	1/2"	15/16"	1 5/16"	1 1/2"	1 5/8"	1 1/2"	1 5/16"	15/16"	1/2"	0	0	7/16"	7/8"	1 3/16"	1 3/8"	1 1/2"	1 3/8"	1 3/16"	7/8"	7/16"	0	0	9/16"	1 1/16"	1 7/16"	1 11/16"	1 3/4"	1 11/16"	1 7/16"	1 1/16"	9/16"	0

DEAD LOAD DEFLECTION TABLE FOR SPAN C - STAGE 1

0.6"Ø LOW RELAXATION	GIRDER No. 1											GIRDERS No. 2 & 3											GIRDER No. 4										
TENTH POINTS	℄ BRG.	.1	.2	.3	.4	.5	.6	.7	.8	.9	℄ BRG.	℄ BRG.	.1	.2	.3	.4	.5	.6	.7	.8	.9	℄ BRG.	℄ BRG.	.1	.2	.3	.4	.5	.6	.7	.8	.9	℄ BRG.
CAMBER (GIRDER ALONE IN PLACE) ↑	0.0	0.008	0.014	0.020	0.023	0.024	0.023	0.020	0.014	0.008	0.0	0.0	0.008	0.014	0.020	0.023	0.024	0.023	0.020	0.014	0.008	0.0	0.0	0.008	0.014	0.020	0.023	0.024	0.023	0.020	0.014	0.008	0.0
✳ DEFLECTION DUE TO SUPERIMPOSED D.L. ↓	0.0	0.003	0.005	0.007	0.008	0.008	0.008	0.007	0.005	0.003	0.0	0.0	0.003	0.005	0.007	0.008	0.009	0.008	0.007	0.005	0.003	0.0	0.0	0.002	0.004	0.006	0.007	0.007	0.007	0.006	0.004	0.002	0.0
FINAL CAMBER ↑	0	1/16"	1/8"	1/8"	3/16"	3/16"	3/16"	1/8"	1/8"	1/16"	0	0	1/16"	1/8"	1/8"	3/16"	3/16"	3/16"	1/8"	1/8"	1/16"	0	0	1/16"	1/8"	3/16"	3/16"	3/16"	3/16"	3/16"	1/8"	1/16"	0

✳ INCLUDES FUTURE WEARING SURFACE
ALL VALUES ARE SHOWN IN FEET (DECIMAL FORM), EXCEPT "FINAL CAMBER", WHICH IS GIVEN IN INCHES (FRACTION FORM).

PROJECT NO. B-4507
FORSYTH COUNTY
STATION: 27+96.00 -L-

SHEET 6 OF 7

STATE OF NORTH CAROLINA
DEPARTMENT OF TRANSPORTATION
RALEIGH

SUPERSTRUCTURE
DEAD LOAD DEFLECTIONS
SPANS A, B, & C
STAGE 1
LEFT LANE

NORTH CAROLINA PROFESSIONAL SEAL 20125 ENGINEER MARSHALL G. CHEEK, JR.
9-29-09

REVISIONS						SHEET NO.
NO.	BY:	DATE:	NO.	BY:	DATE:	S-22
1			3			TOTAL SHEETS
2			4			99

STR. #1

DRAWN BY : V.X. NGUYEN DATE : 1-5-09
CHECKED BY : M.G. CHEEK DATE : 6-09

29-SEP-2009 10:00
r:\structures\finalplans\Left Lane\B-4507_sd_str#1_07_g#.dgn
vnguyen

DEAD LOAD DEFLECTION TABLE FOR SPAN A - STAGE 2

0.6"Ø LOW RELAXATION	GIRDER No. 5											GIRDERS No. 6,7,8, & 9											GIRDER No. 10										
TENTH POINTS	℄ BRG.	.1	.2	.3	.4	.5	.6	.7	.8	.9	℄ BRG.	℄ BRG.	.1	.2	.3	.4	.5	.6	.7	.8	.9	℄ BRG.	℄ BRG.	.1	.2	.3	.4	.5	.6	.7	.8	.9	℄ BRG.
CAMBER (GIRDER ALONE IN PLACE) ↑	0.0	0.043	0.082	0.112	0.131	0.137	0.131	0.112	0.082	0.043	0.0	0.0	0.043	0.082	0.112	0.131	0.137	0.131	0.112	0.082	0.043	0.0	0.0	0.043	0.082	0.112	0.131	0.137	0.131	0.112	0.082	0.043	0.0
✳ DEFLECTION DUE TO SUPERIMPOSED D.L. ↓	0.0	0.014	0.027	0.037	0.043	0.045	0.043	0.037	0.027	0.014	0.0	0.0	0.019	0.035	0.049	0.057	0.060	0.057	0.049	0.035	0.019	0.0	0.0	0.017	0.032	0.043	0.051	0.053	0.051	0.043	0.032	0.017	0.0
FINAL CAMBER ↑	0	3/8"	11/16"	7/8"	1 1/16"	1 1/8"	1 1/16"	7/8"	11/16"	3/8"	0	0	5/16"	9/16"	3/4"	7/8"	15/16"	7/8"	3/4"	9/16"	5/16"	0	0	5/16"	5/8"	13/16"	15/16"	1"	15/16"	13/16"	5/8"	5/16"	0

DEAD LOAD DEFLECTION TABLE FOR SPAN B - STAGE 2

0.6"Ø LOW RELAXATION	GIRDER No. 5											GIRDERS No. 6,7,8, & 9											GIRDER No. 10										
TENTH POINTS	℄ BRG.	.1	.2	.3	.4	.5	.6	.7	.8	.9	℄ BRG.	℄ BRG.	.1	.2	.3	.4	.5	.6	.7	.8	.9	℄ BRG.	℄ BRG.	.1	.2	.3	.4	.5	.6	.7	.8	.9	℄ BRG.
CAMBER (GIRDER ALONE IN PLACE) ↑	0.0	0.077	0.145	0.198	0.232	0.244	0.232	0.198	0.145	0.077	0.0	0.0	0.077	0.145	0.198	0.232	0.244	0.232	0.198	0.145	0.077	0.0	0.0	0.077	0.145	0.198	0.232	0.244	0.232	0.198	0.145	0.077	0.0
✳ DEFLECTION DUE TO SUPERIMPOSED D.L. ↓	0.0	0.026	0.050	0.068	0.080	0.084	0.080	0.068	0.050	0.026	0.0	0.0	0.035	0.066	0.091	0.106	0.111	0.106	0.091	0.066	0.035	0.0	0.0	0.031	0.059	0.081	0.095	0.100	0.095	0.081	0.059	0.031	0.0
FINAL CAMBER ↑	0	5/8"	1 1/8"	1 9/16"	1 13/16"	1 15/16"	1 13/16"	1 9/16"	1 1/8"	5/8"	0	0	1/2"	15/16"	1 5/16"	1 1/2"	1 9/16"	1 1/2"	1 5/16"	15/16"	1/2"	0	0	9/16"	1"	1 7/16"	1 5/8"	1 3/4"	1 5/8"	1 7/16"	1"	9/16"	0

DEAD LOAD DEFLECTION TABLE FOR SPAN C - STAGE 2

0.6"Ø LOW RELAXATION	GIRDER No. 5											GIRDERS No. 6,7,8, & 9											GIRDER No. 10										
TENTH POINTS	℄ BRG.	.1	.2	.3	.4	.5	.6	.7	.8	.9	℄ BRG.	℄ BRG.	.1	.2	.3	.4	.5	.6	.7	.8	.9	℄ BRG.	℄ BRG.	.1	.2	.3	.4	.5	.6	.7	.8	.9	℄ BRG.
CAMBER (GIRDER ALONE IN PLACE) ↑	0.0	0.008	0.014	0.020	0.023	0.024	0.023	0.020	0.014	0.008	0.0	0.0	0.008	0.014	0.020	0.023	0.024	0.023	0.020	0.014	0.008	0.0	0.0	0.008	0.014	0.020	0.023	0.024	0.023	0.020	0.014	0.008	0.0
✳ DEFLECTION DUE TO SUPERIMPOSED D.L. ↓	0.0	0.002	0.004	0.005	0.006	0.006	0.006	0.005	0.004	0.002	0.0	0.0	0.003	0.005	0.007	0.008	0.008	0.008	0.007	0.005	0.003	0.0	0.0	0.002	0.004	0.006	0.007	0.007	0.007	0.006	0.004	0.002	0.0
FINAL CAMBER ↑	0	1/16"	1/8"	3/16"	3/16"	1/4"	3/16"	3/16"	1/8"	1/16"	0	0	1/16"	1/8"	3/16"	3/16"	3/16"	3/16"	3/16"	1/8"	1/16"	0	0	1/16"	1/8"	3/16"	3/16"	3/16"	3/16"	3/16"	1/8"	1/16"	0

✳ INCLUDES FUTURE WEARING SURFACE
ALL VALUES ARE SHOWN IN FEET (DECIMAL FORM), EXCEPT "FINAL CAMBER", WHICH IS GIVEN IN INCHES (FRACTION FORM).

PROJECT NO. B-4507
FORSYTH COUNTY
STATION: 27+96.00 -L-

SHEET 7 OF 7

STATE OF NORTH CAROLINA
DEPARTMENT OF TRANSPORTATION
RALEIGH

SUPERSTRUCTURE
DEAD LOAD DEFLECTIONS
SPANS A, B, & C
STAGE 2
LEFT LANE

NORTH CAROLINA PROFESSIONAL SEAL 20125 ENGINEER
MARSHALL G. CHEEK, JR.
9-29-09

REVISIONS						SHEET NO.
NO.	BY:	DATE:	NO.	BY:	DATE:	S-23
1			3			TOTAL SHEETS
2			4			99

DRAWN BY : V.X. NGUYEN DATE : 1-5-09
CHECKED BY : M.G. CHEEK DATE : 6-09

29-SEP-2009 10:01
r:\structures\final plans\Left Lane\B-4507_sd_str#1_07_g#.dgn
vnguyen

STR. #1

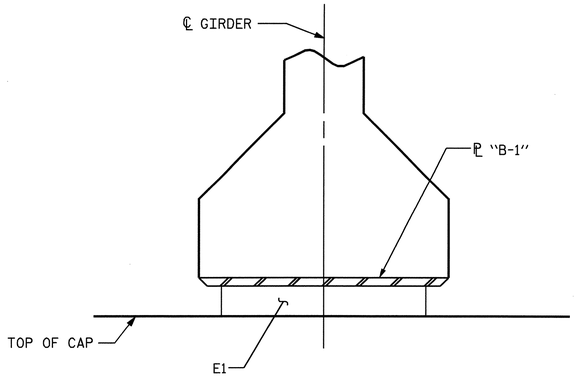

SECTION D-D

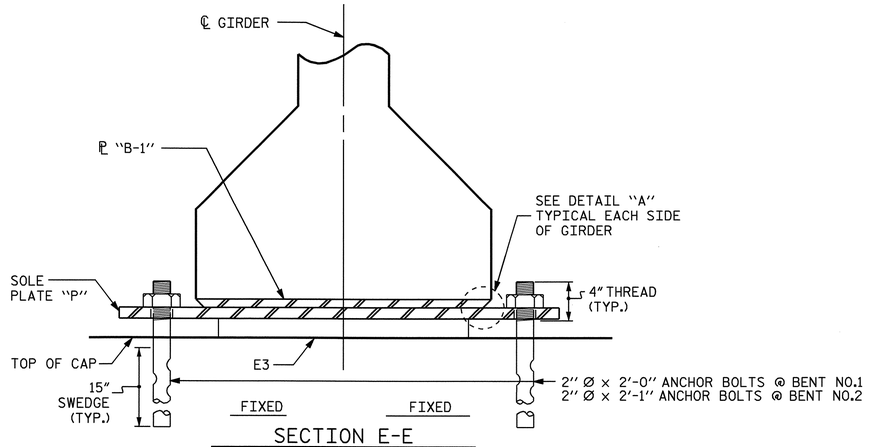

SECTION E-E

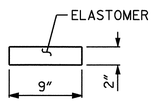

TYPICAL SECTION OF ELASTOMERIC BEARINGS

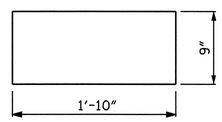

E1
(FIXED)
E1 (20 REQ'D)

PLAN VIEW OF ELASTOMERIC BEARING

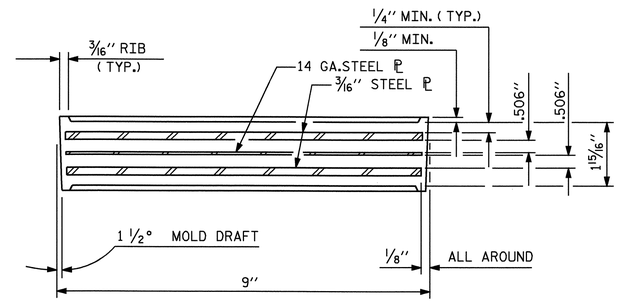

TYPICAL SECTION OF ELASTOMERIC BEARINGS

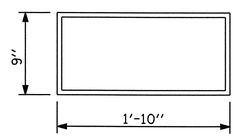

E2 (40 REQ'D)

PLAN VIEW OF ELASTOMERIC BEARING

TYPE IV

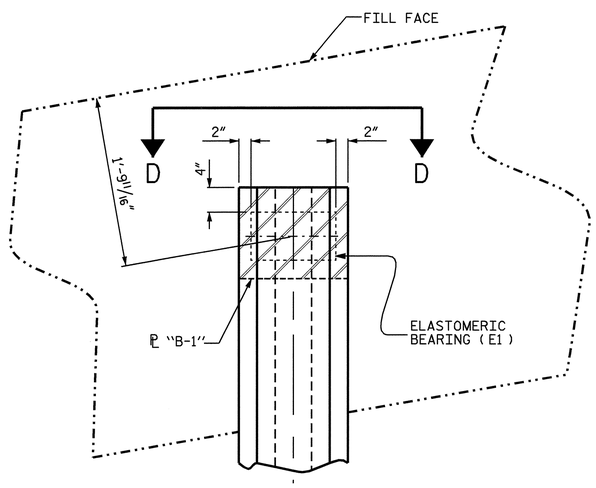

PLAN VIEW AT END BENTS

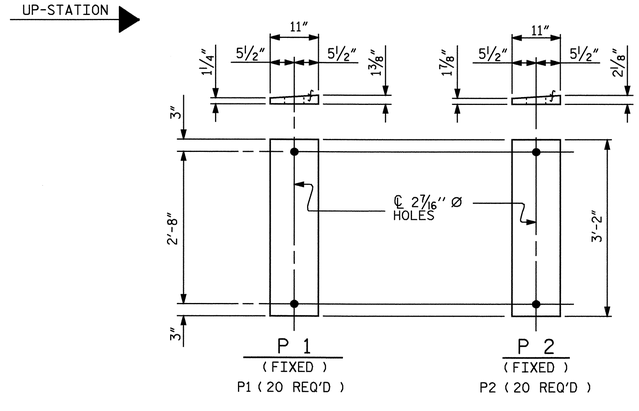

SOLE PLATE DETAILS ("P")

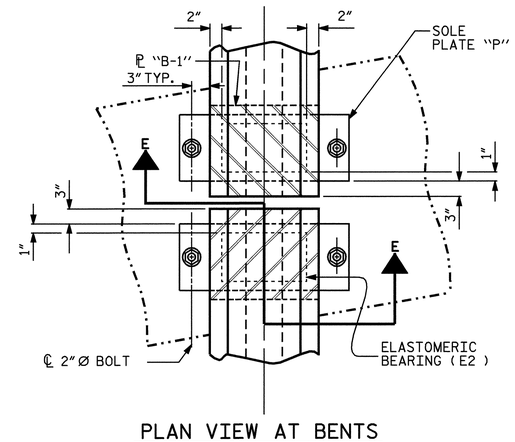

PLAN VIEW AT BENTS
(SHOWING CONTINUOUS BENT)

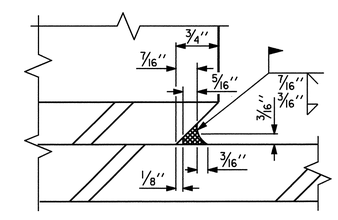

DETAIL "A"

NOTES

AT ALL FIXED POINTS OF SUPPORT, NUTS FOR ANCHOR BOLTS ARE TO BE TIGHTENED FINGER TIGHT AND THEN BACKED OFF 1/2 TURN. THE THREAD OF THE NUT AND BOLT SHALL THEN BE BURRED WITH A SHARP POINTED TOOL.

THE 2" Ø PIPE SLEEVE SHALL BE CUT FROM SCHEDULE 40 PVC PLASTIC PIPE. THE PVC PLASTIC PIPE SHALL MEET THE REQUIREMENTS OF ASTM D1785.

STEEL SOLE PLATES, ANCHOR BOLTS, NUTS, AND WASHERS SHALL BE GALVANIZED IN ACCORDANCE WITH THE STANDARD SPECIFICATIONS.

PRIOR TO WELDING, GRIND THE GALVANIZED SURFACE OF THE PORTION OF THE EMBEDDED PLATE AND SOLE PLATE THAT ARE TO BE WELDED. AFTER WELDING, DAMAGED GALVANIZED SURFACES SHALL BE REPAIRED IN ACCORDANCE WITH THE STANDARD SPECIFICATIONS.

WHEN WELDING THE SOLE PLATE TO THE EMBEDDED PLATE IN THE GIRDER, USE TEMPERATURE INDICATING WAX PENS, OR OTHER SUITABLE MEANS, TO ENSURE THAT THE TEMPERATURE OF THE SOLE PLATE DOES NOT EXCEED 300°F. TEMPERATURES ABOVE THIS MAY DAMAGE THE ELASTOMER.

SOLE PLATE "P", BOLTS, NUTS, WASHERS, AND PIPE SLEEVE SHALL BE INCLUDED IN THE PAY ITEM FOR PRESTRESSED CONCRETE GIRDERS.

ANCHOR BOLTS SHALL MEET THE REQUIREMENTS OF ASTM A449. NUTS SHALL MEET THE REQUIREMENTS OF AASHTO M291-DH OR AASHTO M292-2H. WASHERS SHALL MEET THE REQUIREMENTS OF AASHTO M293. SHOP DRAWINGS ARE NOT REQUIRED FOR ANCHOR BOLT, NUTS AND WASHERS. SHOP INSPECTION IS REQUIRED.

ALL SURFACES OF BEARING PLATES SHALL BE SMOOTH AND STRAIGHT.

LOAD RATINGS	
	MAX.D.L.+ L.L.
TYPE IV	137 K

PROJECT NO. B-4507
FORSYTH COUNTY
STATION: 27+96.00 -L-

STATE OF NORTH CAROLINA
DEPARTMENT OF TRANSPORTATION
RALEIGH

STANDARD

ELASTOMERIC BEARING DETAILS

LEFT LANE

NORTH CAROLINA PROFESSIONAL SEAL 20125 ENGINEER MARSHALL G. CHEEK, JR.
9.24.09

ASSEMBLED BY : V.X. NGUYEN	DATE : 10-22-08
CHECKED BY : M.G. CHEEK	DATE : 3-09

DRAWN BY : WJH 8/89	REV. 10/17/00 RWW/LES
CHECKED BY : CRK 8/89	REV. 7/10/01 RWW/LES
	REV. 5/1/06 TLA/GM

REVISIONS						SHEET NO.
NO.	BY:	DATE:	NO.	BY:	DATE:	S-24
1			3			TOTAL SHEETS
2			4			99

STR. #1

28-SEP-2009 08:21
R:\Structures\Final Plans\Left Lane\B-4507_sd_str#1_08_BG.dgn
afigueroa

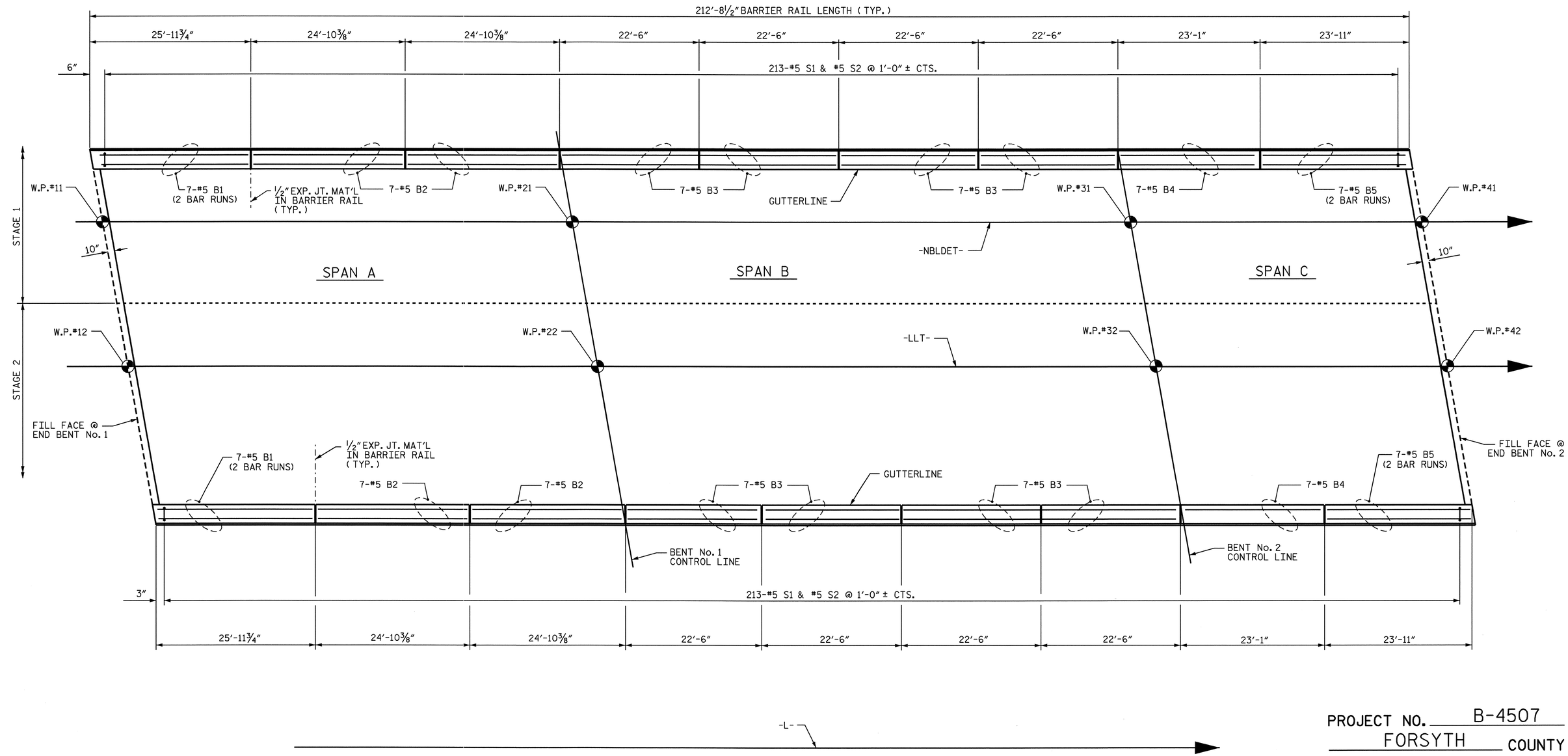

PLAN OF BARRIER RAIL

PROJECT NO. B-4507

FORSYTH COUNTY

STATION: 27+96.00 -L-

SHEET 1 OF 2

STATE OF NORTH CAROLINA
DEPARTMENT OF TRANSPORTATION
RALEIGH

SUPERSTRUCTURE

CONCRETE BARRIER RAIL

LEFT LANE

NORTH CAROLINA PROFESSIONAL SEAL 20125 ENGINEER MARSHALL G. CHEEK, JR.

REVISIONS						SHEET NO.
NO.	BY:	DATE:	NO.	BY:	DATE:	S-25
1			3			TOTAL SHEETS
2			4			99

STR. #1

DRAWN BY : V.X. NGUYEN DATE : 10-27-08
CHECKED BY : M.G. CHEEK DATE : 3-09

28-SEP-2009 08:21
R:\Structures\Final Plans\Left Lane\B-4507_sd_str#1_09A_BR.dgn
afigueroa

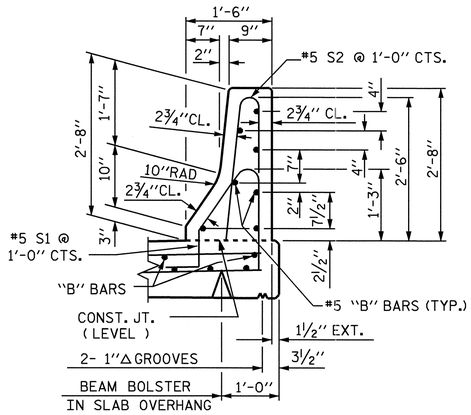

SECTION THRU RAIL

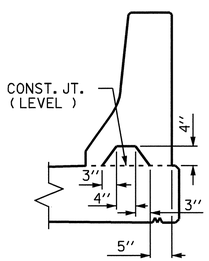

SECTION S-S

AT DAM IN OPEN JOINT
(THIS IS TO BE USED ONLY
WHEN SLIP FORM IS USED)

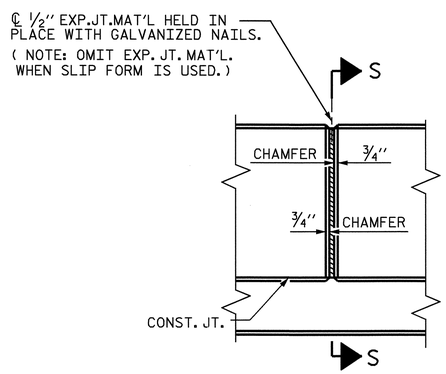

ELEVATION AT EXPANSION JOINTS

BARRIER RAIL DETAILS

NOTES

THE BARRIER RAIL IN A CONTINUOUS UNIT SHALL NOT BE CAST UNTIL ALL SLAB CONCRETE IN THE UNIT HAS BEEN CAST AND HAS REACHED A MINIMUM COMPRESSIVE STRENGTH OF 3,000 PSI.

ALL REINFORCING STEEL IN BARRIER RAILS SHALL BE EPOXY COATED.

VERTICAL GROOVED CONTRACTION JOINTS, ½" IN DEPTH, SHALL BE TOOLED IN ALL EXPOSED FACES OF THE BARRIER RAIL AND IN ACCORDANCE WITH ARTICLE 825-10(B) OF THE STANDARD SPECIFICATIONS. THE CONTRACTION JOINT SHALL BE LOCATED AT EACH THIRD POINT BETWEEN BARRIER RAIL EXPANSION JOINTS. ONLY ONE CONTRACTION JOINT IS REQUIRED AT MIDPOINT OF BARRIER RAIL SEGMENTS LESS THAN 20 FEET IN LENGTH AND NO CONTRACTION JOINTS ARE REQUIRED FOR THOSE SEGMENTS LESS THAN 10 FEET IN LENGTH.

THE #5 "S" BARS MAY BE SHIFTED AS NECESSARY IN ORDER TO MAINTAIN A 2" MINIMUM CLEARANCE TO THE ½" EXPANSION JOINT MATERIAL IN BARRIER RAIL.

BAR TYPES

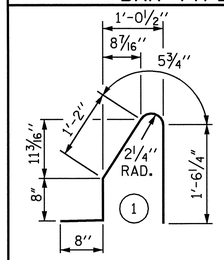

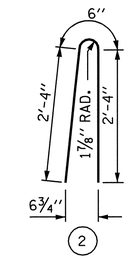

ALL BAR DIMENSIONS ARE OUT TO OUT

BILL OF MATERIAL

FOR CONCRETE BARRIER RAIL ONLY

BAR	NO.	SIZE	TYPE	LENGTH	WEIGHT
* B1	28	#5	STR.	14'-8"	428
* B2	28	#5	STR.	24'-5"	713
* B3	56	#5	STR.	22'-1"	1290
* B4	14	#5	STR.	22'-8"	331
* B5	28	#5	STR.	13'-8"	399
* S1	426	#5	1	4'-6"	1999
* S2	426	#5	2	5'-2"	2296

* EPOXY COATED REINFORCING STEEL	7456 LBS.
CLASS AA CONCRETE	42.6 CU. YDS.
CONCRETE BARRIER RAIL	425.42 LIN. FT.

* THESE BARS SHALL BE EPOXY COATED

PROJECT NO. B-4507

FORSYTH COUNTY

STATION: 27+96.00 -L-

SHEET 2 OF 2

STATE OF NORTH CAROLINA
DEPARTMENT OF TRANSPORTATION
RALEIGH

STANDARD

CONCRETE
BARRIER RAIL

LEFT LANE

NORTH CAROLINA PROFESSIONAL SEAL 20125 ENGINEER MARSHALL G. CHEEK, JR.
9-29-09

REVISIONS						SHEET NO.
NO.	BY:	DATE:	NO.	BY:	DATE:	S-26
1			3			TOTAL SHEETS
2			4			99

STR. #1

STD. NO. CBR1

ASSEMBLED BY : V.X. NGUYEN	DATE : 10-29-08		
CHECKED BY : M.G. CHEEK	DATE : 3-09		
DRAWN BY : ARB 5/87	REV. 10/17/00	RWW/LES	
CHECKED BY : SJD 9/87	REV. 5/7/03R	RWW/JTE	
	REV. 5/1/06	TLA/GM	

04-AUG-2009 16:24
R:\Structures\STR#1\vnguyen\B4507_sd_BR.dgn
afigueroa

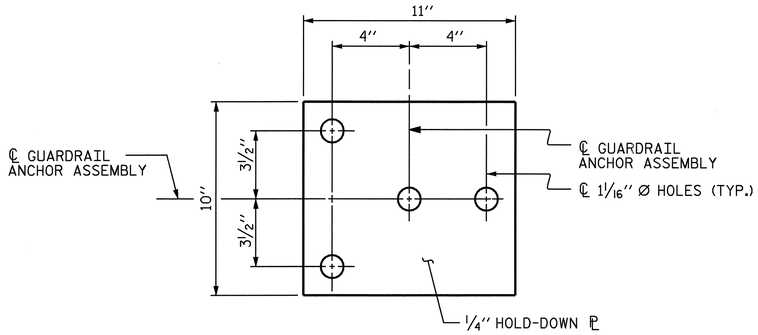

PLAN

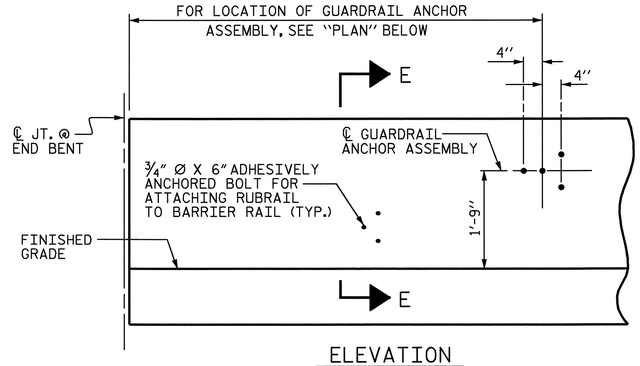

ELEVATION

FOR LOCATION OF RUBRAIL, SEE ROADWAY STD. 862.03

NOTES

THE GUARDRAIL ANCHOR ASSEMBLY SHALL CONSIST OF A 1/4" HOLD DOWN PLATE AND 4 - 7/8" Ø BOLTS WITH NUTS AND WASHERS, RUBRAIL, AND ADHESIVELY ANCHORED BOLTS.

THE HOLD-DOWN PLATE SHALL CONFORM TO AASHTO M270 GRADE 36. AFTER FABRICATION, THE HOLD-DOWN PLATE SHALL BE HOT-DIP GALVANIZED IN ACCORDANCE WITH AASHTO M111.

BOLTS SHALL CONFORM TO THE REQUIREMENTS OF ASTM A307 AND NUTS SHALL CONFORM TO THE REQUIREMENTS OF AASHTO M291. BOLTS, NUTS AND WASHERS SHALL BE GALVANIZED. (AT THE CONTRACTOR'S OPTION, STAINLESS STEEL BOLTS, NUTS AND WASHERS MAY BE USED AS AN ALTERNATE FOR THE 7/8" Ø GALVANIZED BOLTS, NUTS AND WASHERS. THEY SHALL CONFORM TO OR EXCEED THE MECHANICAL REQUIREMENTS OF ASTM A307. THE USE OF THIS ALTERNATE SHALL BE APPROVED BY THE ENGINEER.)

THE GUARDRAIL ANCHOR ASSEMBLY IS REQUIRED AT ALL POINTS WHERE APPROACH GUARDRAIL IS TO BE ATTACHED TO THE END OF BARRIER RAIL. FOR POINTS OF ATTACHMENT, SEE SKETCH.

AFTER INSTALLATION, THE EXPOSED THREAD OF THE BOLT SHALL BE BURRED WITH A SHARP POINTED TOOL.

THE COST OF THE GUARDRAIL ANCHOR ASSEMBLY SHALL BE INCLUDED IN THE UNIT CONTRACT PRICE BID FOR CONCRETE BARRIER RAIL.

THE 1 1/4" Ø HOLES SHALL BE FORMED OR DRILLED WITH A CORE BIT. IMPACT TOOLS WILL NOT BE PERMITTED. ANY CONCRETE DAMAGED BY THIS WORK SHALL BE REPAIRED TO THE SATISFACTION OF THE ENGINEER.

THE C6 X 8.2 RUBRAIL IS TO BE ADHESIVELY ANCHORED TO THE RAIL USING THREE 3/4" Ø X 6" BOLTS WITH WASHERS. LEVEL ONE FIELD TESTING IS REQUIRED, AND THE YIELD LOAD OF THE 3/4" Ø BOLT IS 12 KIPS. FOR ADHESIVELY ANCHORED ANCHOR BOLTS OR DOWELS, SEE SPECIAL PROVISIONS. SEE ROADWAY STANDARD 862.03 FOR DETAILS AND LOCATION OF THE RUBRAIL.

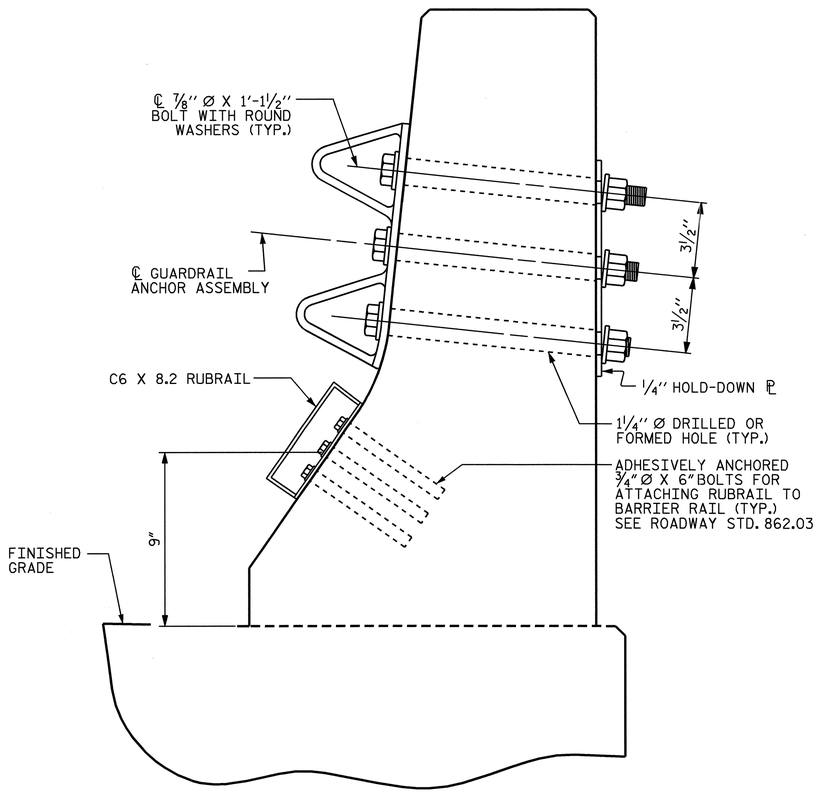

SECTION E-E

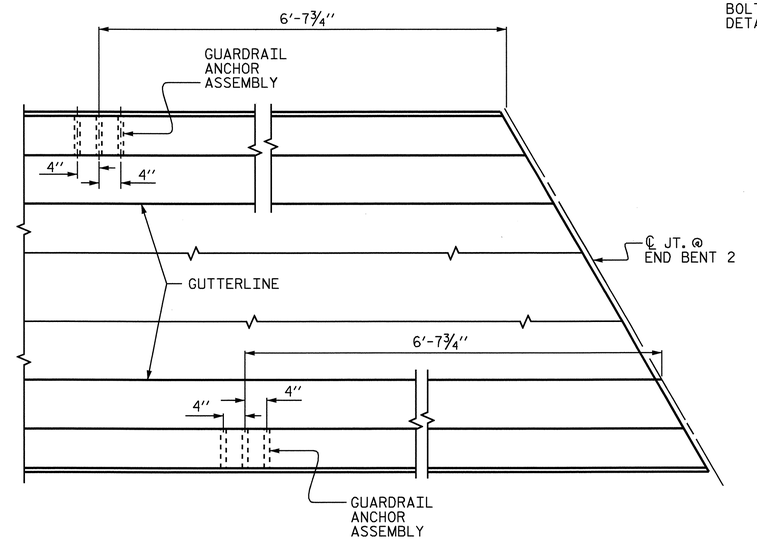

PLAN

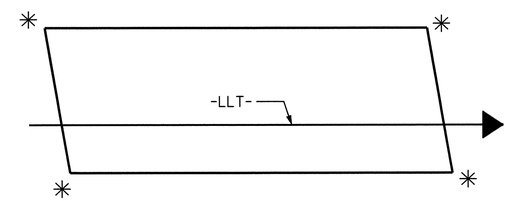

SKETCH SHOWING POINTS OF ATTACHMENTS

✳ DENOTES GUARDRAIL ANCHOR ASSEMBLY

GUARDRAIL ANCHOR ASSEMBLY DETAILS

LOCATION OF ANCHORS FOR GUARDRAIL

END BENT 2 SHOWN, END BENT 1 SIMILAR.

PROJECT NO. B-4507

FORSYTH COUNTY

STATION: 27+96.00 -L-

STATE OF NORTH CAROLINA
DEPARTMENT OF TRANSPORTATION
RALEIGH

STANDARD

GUARDRAIL ANCHORAGE FOR BARRIER RAIL LEFT LANE

NORTH CAROLINA PROFESSIONAL SEAL 20125 ENGINEER MARSHALL G. CHEEK, JR.
9.29.09

ASSEMBLED BY : V.X. NGUYEN	DATE : 12-18-08		
CHECKED BY : M.G. CHEEK	DATE : 3-09		
DRAWN BY : TLA 5/06	ADDED 5/1/06R KMM/GM		
CHECKED BY : GM 5/06			

REVISIONS						SHEET NO.
NO.	BY:	DATE:	NO.	BY:	DATE:	S-27
1			3			TOTAL SHEETS
2			4			99

STR. #1

STD. NO. GRA2

04-AUG-2009 16:24
R:\Structures\STR*1\vnguyen\B4507_sd_GR.dgn
afigueroa

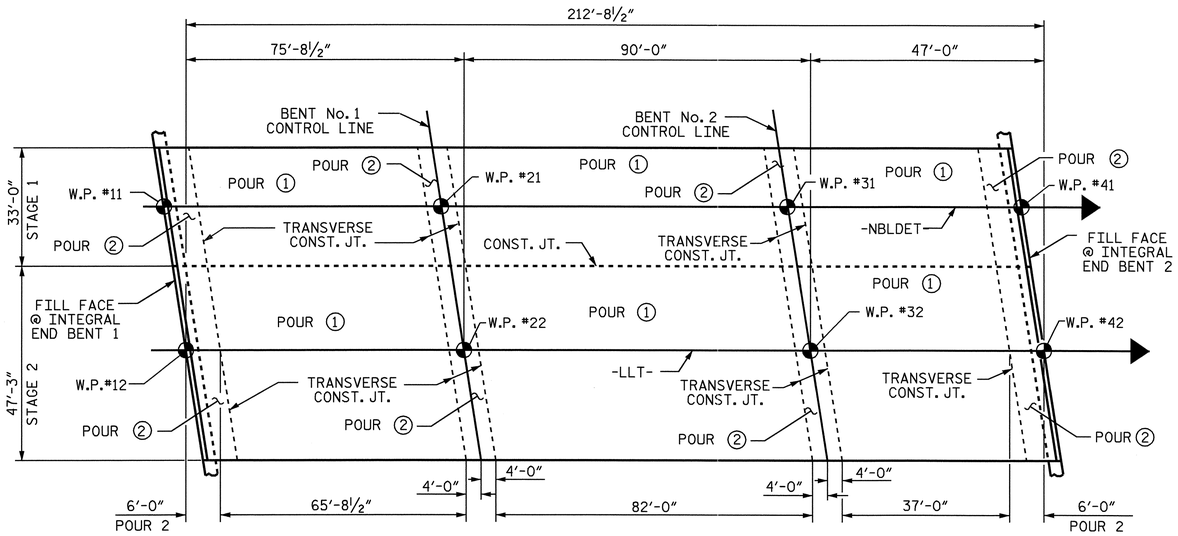

OPTIONAL POURING SEQUENCE

POUR ② CANNOT BE STARTED UNTIL BOTH ADJACENT ① POURS REACH A MINIMUM OF 3000 PSI.

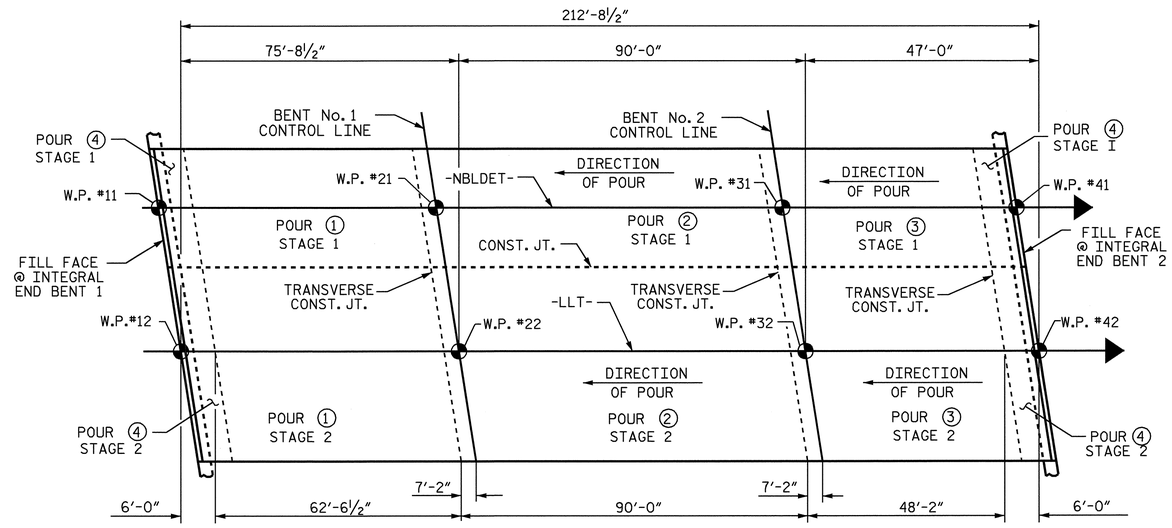

POURING SEQUENCE

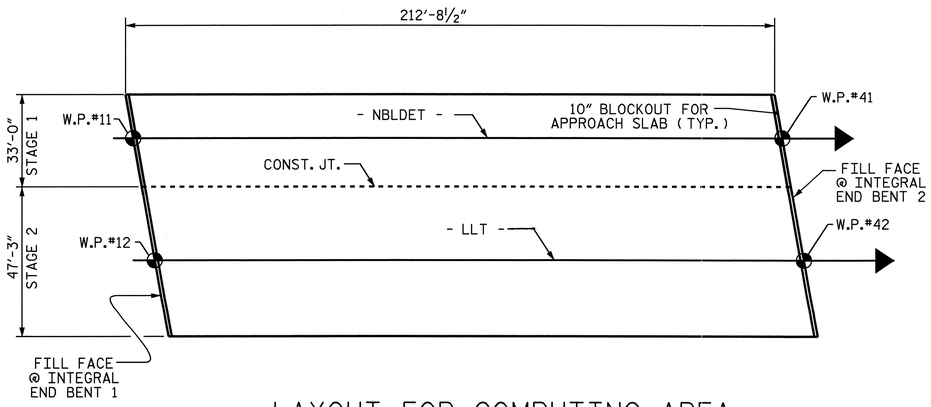

LAYOUT FOR COMPUTING AREA REINFORCED CONCRETE DECK SLAB

STAGE 1	=	7019	SQ. FEET
STAGE 2	=	10,050	SQ. FEET
TOTAL	=	17,069	SQ. FEET

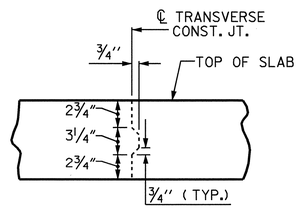

TRANSVERSE CONSTRUCTION JOINT DETAIL

NOTE: REINFORCING STEEL IN SLAB NOT SHOWN.
LONGITUDINAL REINFORCING STEEL SHALL BE CONTINUOUS THRU JOINT

PROJECT NO. B-4507
FORSYTH COUNTY
STATION: 27+96.00 -L-

SHEET 1 OF 2

STATE OF NORTH CAROLINA
DEPARTMENT OF TRANSPORTATION
RALEIGH

SUPERSTRUCTURE BILL OF MATERIAL

LEFT LANE

NORTH CAROLINA PROFESSIONAL SEAL 20125 ENGINEER MARSHALL G. CHEEK, JR.
9-24-09

REVISIONS						SHEET NO.
NO.	BY:	DATE:	NO.	BY:	DATE:	S-28
1			3			TOTAL SHEETS
2			4			99

STR. #1

DRAWN BY : V.X. NGUYEN DATE : 12/08
CHECKED BY : M.G. CHEEK DATE : 3-09

28-SEP-2009 08:20
R:\Structures\Final Plans\Left Lane\B-4507_sd_str#1_11A_bm.dgn
afigueroa

BILL OF MATERIAL
SPANS A, B, & C - STAGE 1

BAR	NO.	SIZE	TYPE	LENGTH	WEIGHT
✳ A1	379	#5	STR	32'-7"	12880
A2	379	#5	STR	32'-7"	12880
✳ A101	2	#5	STR	29'-9"	62
✳ A102	2	#5	STR	26'-8"	56
✳ A103	2	#5	STR	23'-7"	49
✳ A104	2	#5	STR	20'-6"	43
✳ A105	2	#5	STR	17'-6"	37
✳ A106	2	#5	STR	14'-5"	30
✳ A107	2	#5	STR	11'-4"	24
✳ A108	2	#5	STR	8'-3"	17
✳ A109	2	#5	STR	5'-2"	11
✳ A110	2	#5	STR	2'-1"	4
A201	2	#5	STR	29'-9"	62
A202	2	#5	STR	26'-8"	56
A203	2	#5	STR	23'-7"	49
A204	2	#5	STR	20'-6"	43
A205	2	#5	STR	17'-6"	37
A206	2	#5	STR	14'-5"	30
A207	2	#5	STR	11'-4"	24
A208	2	#5	STR	8'-3"	17
A209	2	#5	STR	5'-2"	11
A210	2	#5	STR	2'-1"	4
✳ B1	46	#4	STR	25'-6"	784
B2	144	#5	STR	54'-4"	8160
✳ B3	23	#7	STR	59'-9"	2809
✳ B4	21	#7	STR	24'-11"	1070
✳ B5	23	#4	STR	30'-0"	461
✳ B6	21	#7	STR	20'-7"	884
✳ B7	23	#7	STR	51'-2"	2405
✳ B8	23	#4	STR	28'-10"	443
✳ D1	388	#6	STR	3'-0"	1748
K1	20	#4	STR	16'-7"	222
K2	36	#4	STR	7'-4"	176
K3	36	#4	STR	8'-4"	200
K4	6	#4	STR	6'-10"	27
K5	4	#4	STR	2'-1"	6
K6	4	#4	STR	2'-7"	7
K7	2	#4	STR	1'-10"	2
K8	12	#4	STR	5'-8"	45
K9	20	#4	5	11'-4"	151
K10	20	#4	6	5'-8"	76
S1	54	#4	2	12'-0"	433
✳ S2	66	#4	3	11'-8"	514
✳ S3	54	#4	3	10'-7"	382
S4	156	#4	1	2'-9"	287
U1	30	#4	4	14'-10"	297
U2	12	#4	4	12'-10"	103

REINFORCING STEEL = 23,405 LBS.
✳ EPOXY COATED REIN. STEEL = 24,713 LBS.

BILL OF MATERIAL
SPANS A, B, & C - STAGE 2

BAR	NO.	SIZE	TYPE	LENGTH	WEIGHT
✳ A3	373	#5	STR	46'-10"	18220
A4	373	#5	STR	46'-10"	18220
✳ A301	2	#5	STR	45'-11"	96
✳ A302	2	#5	STR	42'-10"	89
✳ A303	2	#5	STR	39'-9"	83
✳ A304	2	#5	STR	36'-8"	76
✳ A305	2	#5	STR	33'-7"	70
✳ A306	2	#5	STR	30'-6"	64
✳ A307	2	#5	STR	27'-6"	57
✳ A308	2	#5	STR	24'-5"	51
✳ A309	2	#5	STR	21'-4"	45
✳ A310	2	#5	STR	18'-3"	38
✳ A311	2	#5	STR	15'-2"	32
✳ A312	2	#5	STR	12'-1"	25
✳ A313	2	#5	STR	9'-0"	19
✳ A314	2	#5	STR	6'-0"	13
✳ A315	2	#5	STR	2'-11"	6
A401	2	#5	STR	45'-11"	96
A402	2	#5	STR	42'-10"	89
A403	2	#5	STR	39'-9"	83
A404	2	#5	STR	36'-8"	76
A405	2	#5	STR	33'-7"	70
A406	2	#5	STR	30'-6"	64
A407	2	#5	STR	27'-6"	57
A408	2	#5	STR	24'-5"	51
A409	2	#5	STR	21'-4"	45
A410	2	#5	STR	18'-3"	38
A411	2	#5	STR	15'-2"	32
A412	2	#5	STR	12'-1"	25
A413	2	#5	STR	9'-0"	19
A414	2	#5	STR	6'-0"	13
A415	2	#5	STR	2'-11"	6
✳ B1	66	#4	STR	25'-6"	1124
B2	200	#5	STR	54'-4"	11334
✳ B3	33	#7	STR	59'-9"	4030
✳ B4	30	#7	STR	24'-11"	1528
✳ B5	33	#4	STR	30'-0"	661
✳ B6	30	#7	STR	20'-7"	1262
✳ B7	33	#7	STR	51'-2"	3451
✳ B8	33	#4	STR	28'-10"	636
K11	20	#4	STR	25'-10"	345
K12	60	#4	STR	6'-6"	261
K13	60	#4	STR	7'-8"	307
K14	10	#4	STR	6'-1"	41
K15	4	#4	STR	1'-8"	4
K16	4	#4	STR	2'-1"	6
K17	2	#4	STR	1'-9"	2
K18	20	#4	STR	4'-11"	66
K19	40	#4	5	10'-6"	281
K20	20	#4	6	5'-8"	76
K21	4	#4	STR	2'-0"	5
K22	4	#4	STR	3'-0"	8
K23	2	#4	STR	1'-6"	2
S1	78	#4	2	12'-0"	625
✳ S2	100	#4	3	11'-8"	795
✳ S3	76	#4	3	10'-7"	537
S4	260	#4	1	2'-9"	478
U1	50	#4	4	14'-10"	495
U2	20	#4	4	12'-10"	171

REINFORCING STEEL = 33,491 LBS.
✳ EPOXY COATED REINF. STEEL = 32,992 LBS.

✳ THESE BARS ARE EPOXY COATED

SUPERSTRUCTURE BILL OF MATERIAL

STAGE 1	CLASS AA CONCRETE	REINFORCING STEEL	EPOXY COATED REINFORCING STEEL
	(CU. YDS.)	(LBS.)	(LBS.)
SPANS A, B & C		23,405	24,713
POUR #1	69.6		
POUR #2	111.0		
POUR #3	62.9		
POUR #4	53.4		
TOTALS✳✳	296.9	23,405	24,713

STAGE 2	CLASS AA CONCRETE	REINFORCING STEEL	EPOXY COATED REINFORCING STEEL
	(CU. YDS.)	(LBS.)	(LBS.)
SPANS A, B & C		33,491	32,992
POUR #1	99.3		
POUR #2	159.4		
POUR #3	90.7		
POUR #4	76.0		
TOTALS✳✳	425.4	33,491	32,992

✳✳ QUANTITIES FOR BARRIER RAIL ARE NOT INCLUDED

SUPERSTRUCTURE REINFORCING STEEL LENGTHS ARE BASED ON THE FOLLOWING MINIMUM SPLICE LENGTHS

BAR SIZE	SUPERSTRUCTURE EXCEPT APPROACH SLABS, PARAPET, AND BARRIER RAIL		APPROACH SLABS		PARAPET AND BARRIER RAIL
	EPOXY COATED	UNCOATED	EPOXY COATED	UNCOATED	
#4	2'-0"	1'-9"	2'-0"	1'-9"	2'-9"
#5	2'-6"	2'-2"	2'-6"	2'-2"	3'-5"
#6	3'-0"	2'-7"	3'-10"	2'-7"	4'-4"
#7	5'-3"	3'-6"			
#8	6'-10"	4'-7"			

BAR TYPES

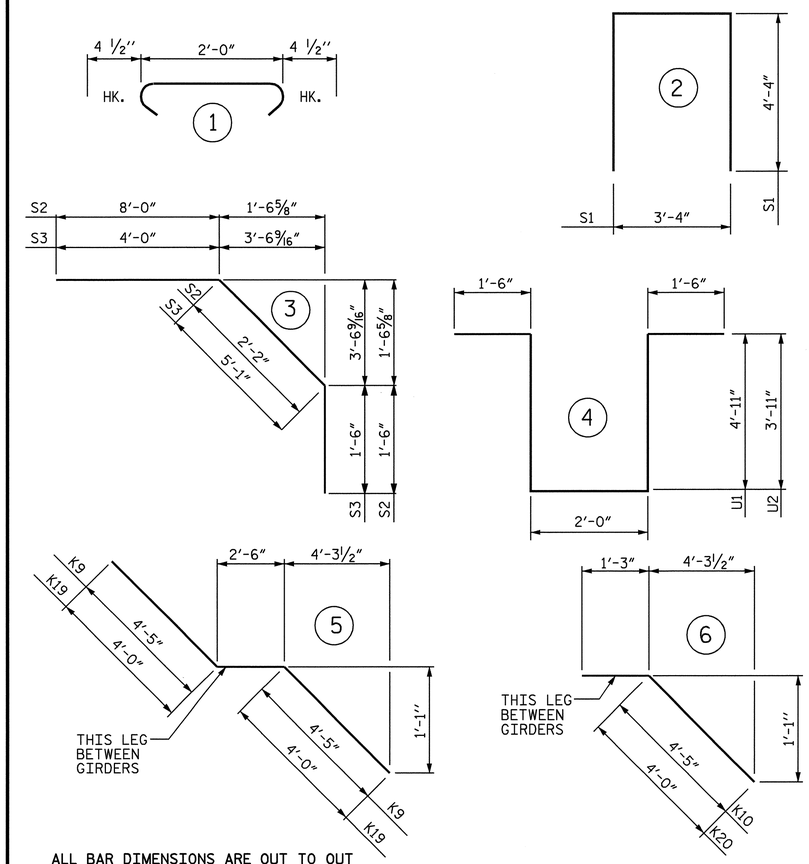

ALL BAR DIMENSIONS ARE OUT TO OUT

GROOVING BRIDGE FLOORS

APPROACH SLABS - STAGE 1	1,334	SQ.FT.
APPROACH SLABS - STAGE 2	1,971	SQ.FT.
APPROACH SLAB TOTAL	3,305	SQ.FT.
BRIDGE DECK - STAGE 1	6,293	SQ.FT.
BRIDGE DECK - STAGE 2	9,295	SQ.FT.
BRIDGE DECK TOTAL	15,588	SQ.FT.
TOTAL	18,893	SQ.FT.

PROJECT NO. B-4507
FORSYTH COUNTY
STATION: 27+96.00 -L-

SHEET 2 OF 2

STATE OF NORTH CAROLINA
DEPARTMENT OF TRANSPORTATION
RALEIGH

STANDARD
SUPERSTRUCTURE
BILL OF MATERIAL
LEFT LANE

NORTH CAROLINA PROFESSIONAL SEAL 20125 ENGINEER MARSHALL G. CHEEK, JR.
9-29-09

REVISIONS						SHEET NO.
NO.	BY:	DATE:	NO.	BY:	DATE:	S-29
1			3			TOTAL SHEETS
2			4			99

STR. #1 STD. NO. BOM2

ASSEMBLED BY : V.X. NGUYEN	DATE : 12/08		
CHECKED BY : M.G. CHEEK	DATE : 6-09		
DRAWN BY : JMB 5/87	REV. 6/1/94	EEM/GRP	
CHECKED BY : SJD 9/87	REV. 8/16/99	RWW/LES	
	REV. 5/1/06	TLA/GM	

07-AUG-2009 09:22
r:\structures\str#1\vnguyen\b4507_sd_bm.dgn
dahodge

NOTES

THE CONTRACTOR SHALL PROVIDE FOR INSTALLATION OF THE 4" DIAMETER DRAIN PIPE THROUGH THE WING WALL AS REQUIRED FOR REINFORCED BRIDGE APPROACH FILLS, SEE THE ROADWAY PLANS. REINFORCING STEEL IN THE WING WALL MAY BE SHIFTED AS NECESSARY TO CLEAR THE DRAIN PIPE.

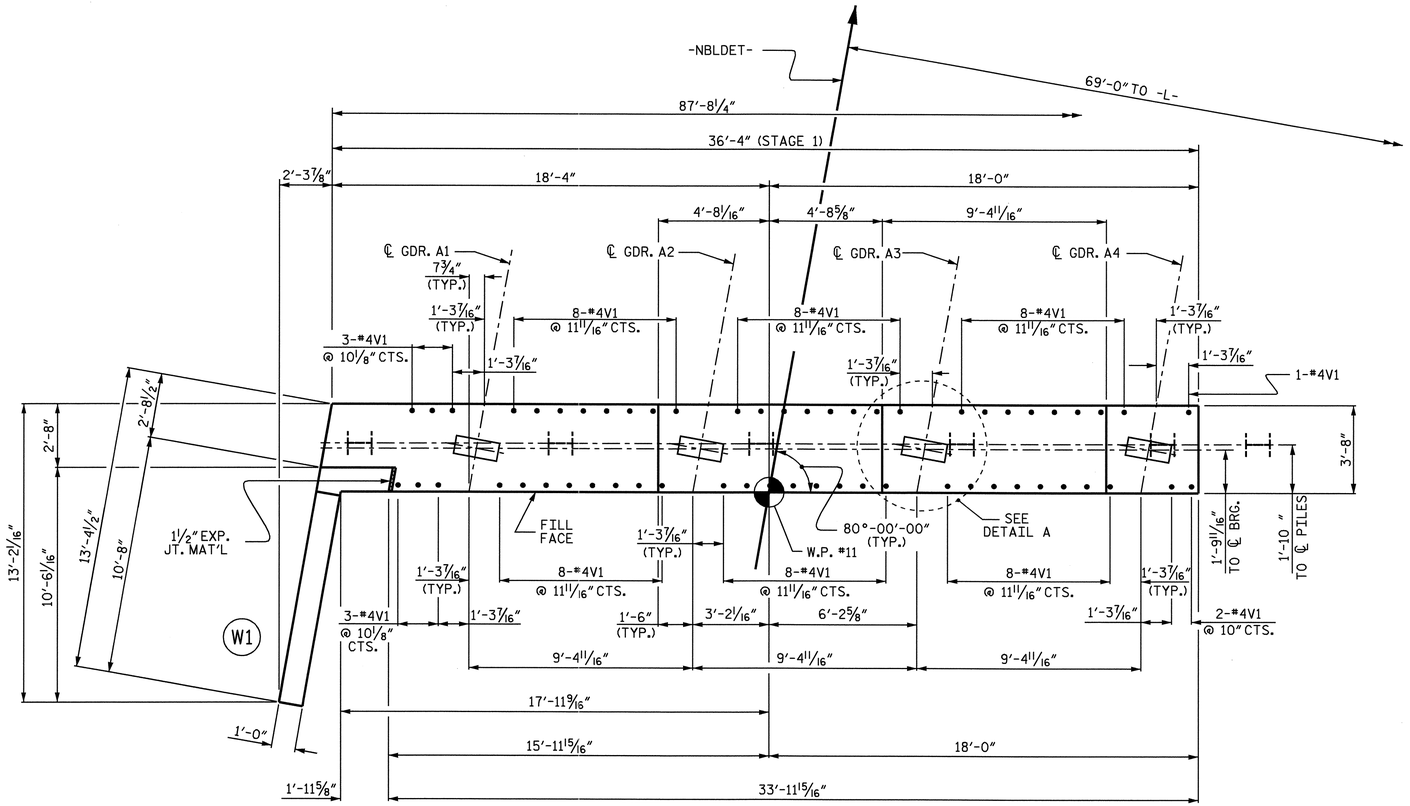

PLAN - STAGE 1

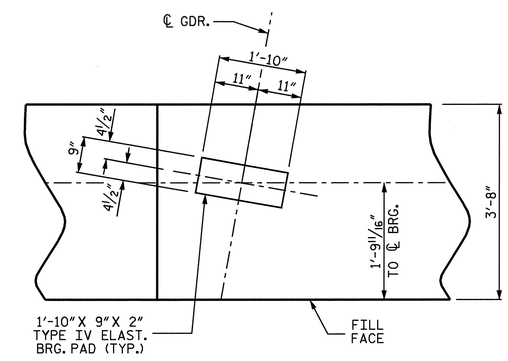

DETAIL A

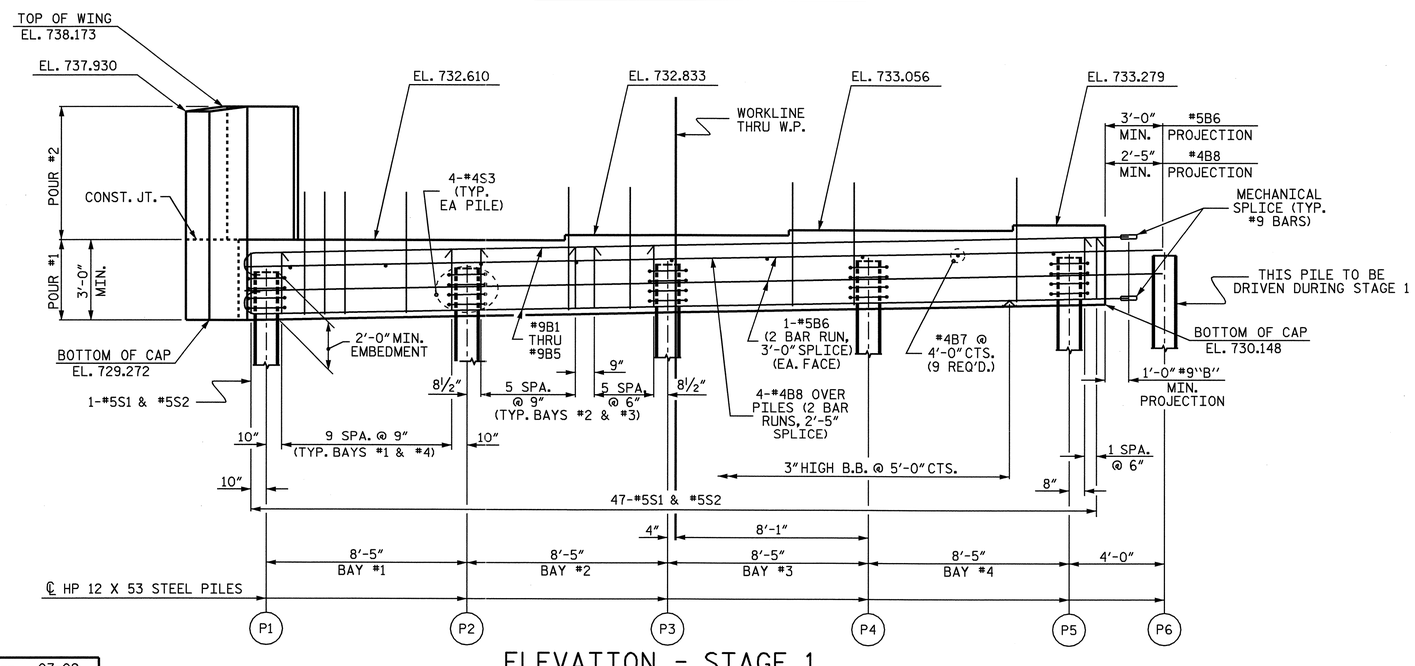

ELEVATION - STAGE 1

TOP OF PILE ELEVATIONS STAGE 1	
P1	731.314
P2	731.514
P3	731.713
P4	731.913
P5	732.112
P6	732.207

PROJECT NO. B-4507

FORSYTH COUNTY

STATION: 27+96.00-L-

SHEET 1 OF 4

STATE OF NORTH CAROLINA
DEPARTMENT OF TRANSPORTATION
RALEIGH

SUBSTRUCTURE

END BENT NO. 1
LEFT LANE
STAGE 1

NORTH CAROLINA PROFESSIONAL SEAL 20125 ENGINEER MARSHALL G. CHEEK, JR. 9-29-09

REVISIONS						SHEET NO.
NO.	BY:	DATE:	NO.	BY:	DATE:	S-30
1			3			TOTAL SHEETS
2			4			99

DRAWN BY : L.L. MURPHY DATE : 07-09
CHECKED BY : M.G. CHEEK DATE : 08-04-09

28-SEP-2009 08:20
R:\Structures\Final Plans\Left Lane\B-4507_sd_str*1_12_E*.dgn
atfigueroa

STR #1

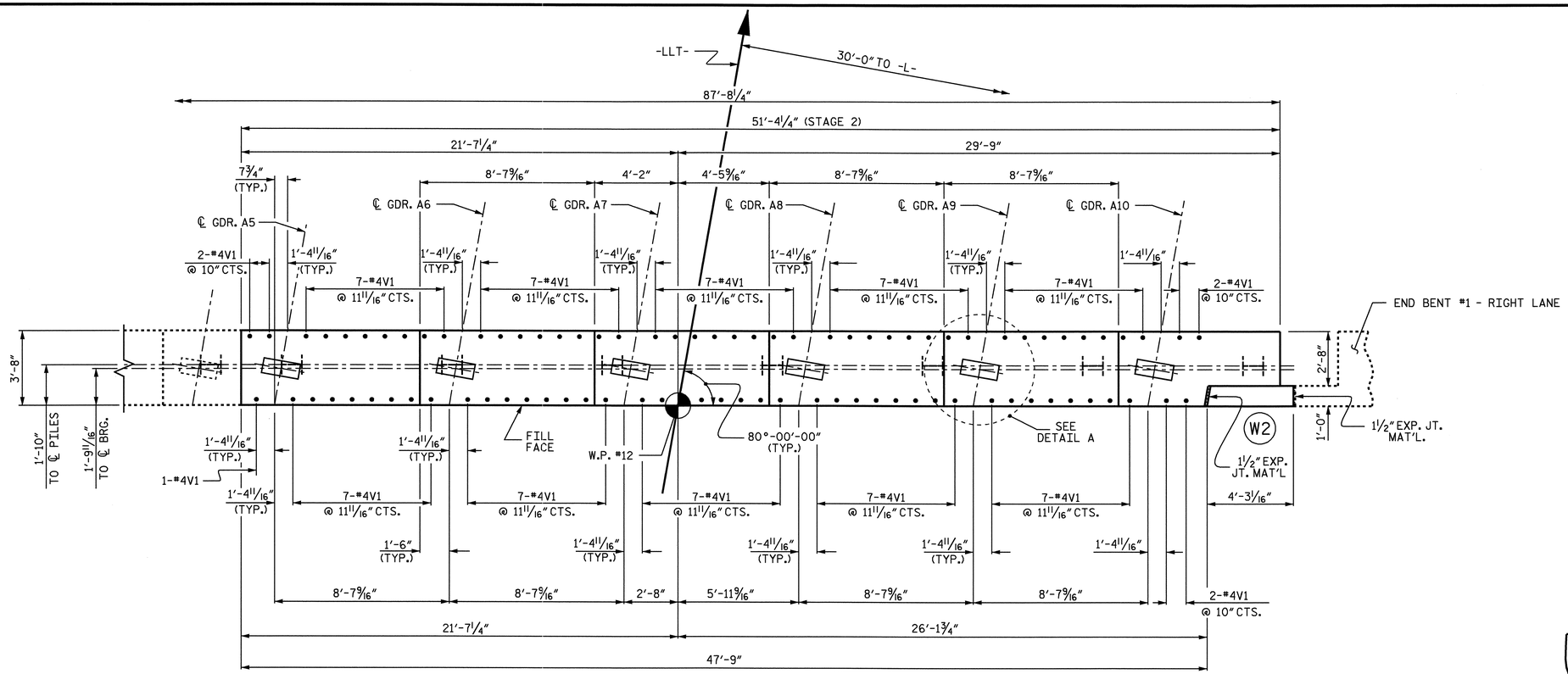

PLAN - STAGE 2

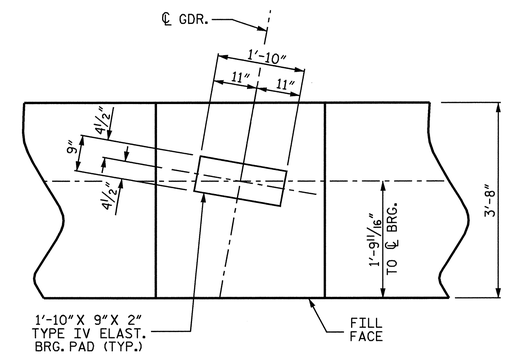

DETAIL A

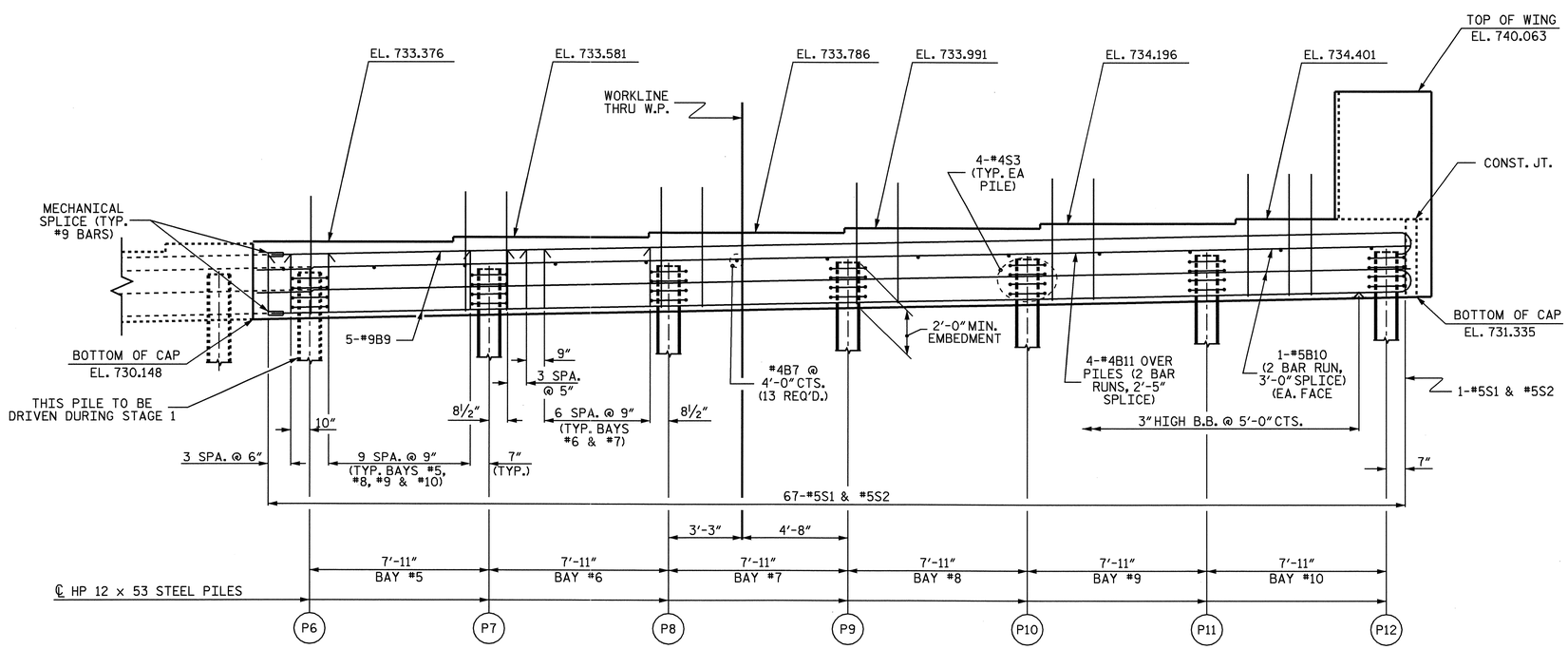

ELEVATION - STAGE 2

TOP OF PILE ELEVATIONS STAGE 2	
P7	732.390
P8	732.573
P9	732.756
P10	732.939
P11	733.121
P12	733.304

PROJECT NO. B-4507

FORSYTH COUNTY

STATION: 27+96.00-L-

SHEET 2 OF 4

STATE OF NORTH CAROLINA
DEPARTMENT OF TRANSPORTATION
RALEIGH

SUBSTRUCTURE

END BENT NO. 1
LEFT LANE
STAGE 2

NORTH CAROLINA PROFESSIONAL SEAL 20125 ENGINEER MARSHALL G. CHEEK, JR.
9.29.09

REVISIONS						SHEET NO.
NO.	BY:	DATE:	NO.	BY:	DATE:	S-31
1			3			TOTAL SHEETS
2			4			99

DRAWN BY : L.L. MURPHY DATE : 07-09
CHECKED BY : M.G. CHEEK DATE : 08-04-09

29-SEP-2009 11:48
R:\Structures\Final Plans\Left Lane\B-4507_sd_str#1_12_E*.dgn
afigueroa

STR #1

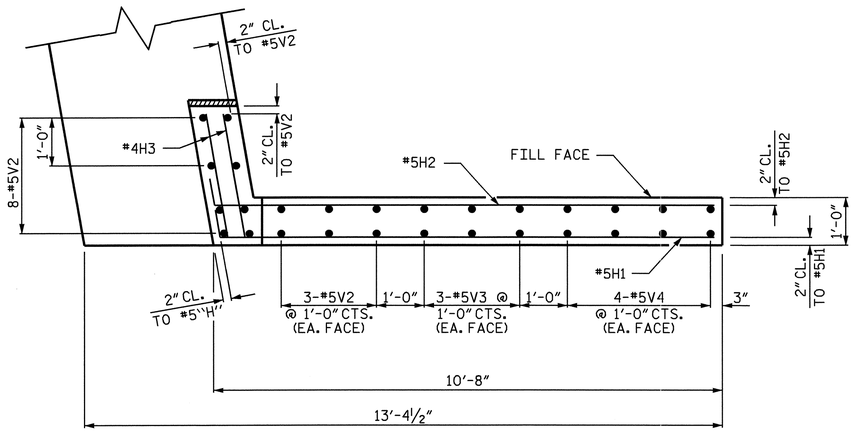

PLAN OF WING W1 - STAGE 1

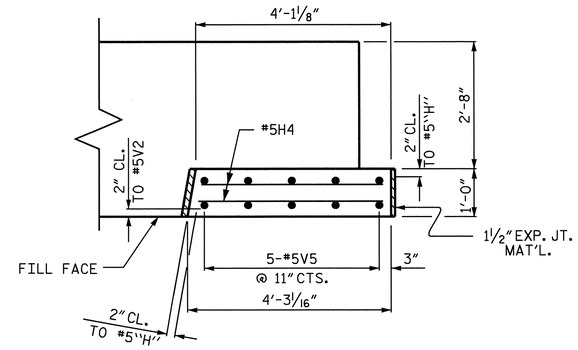

PLAN OF WING W2 - STAGE 2

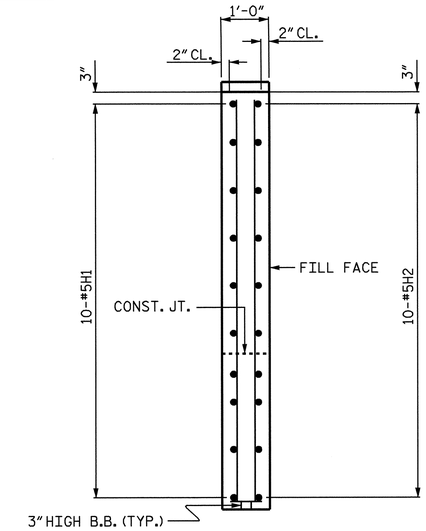

SECTION X-X

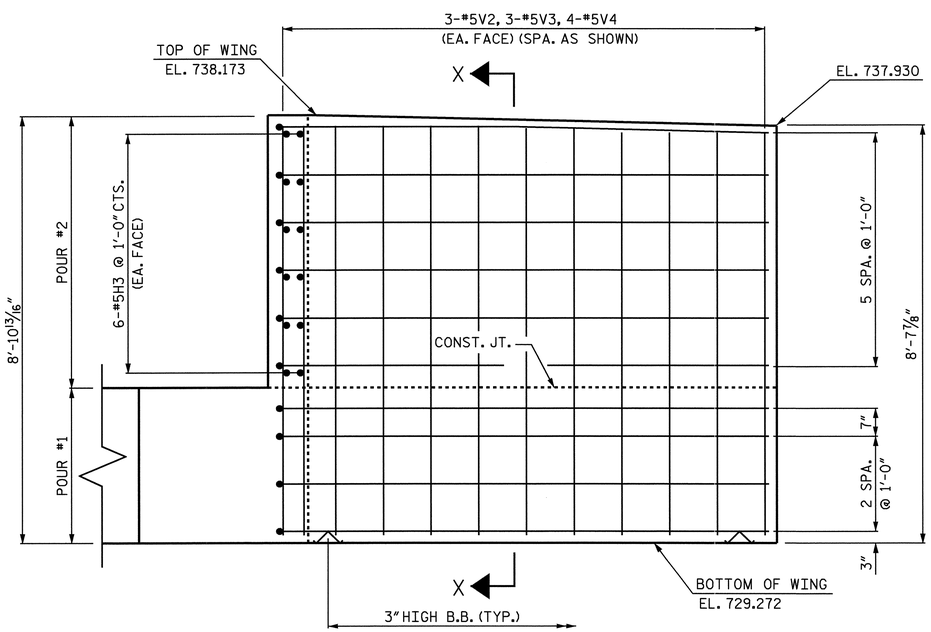

ELEVATION OF WING W1 - STAGE 1

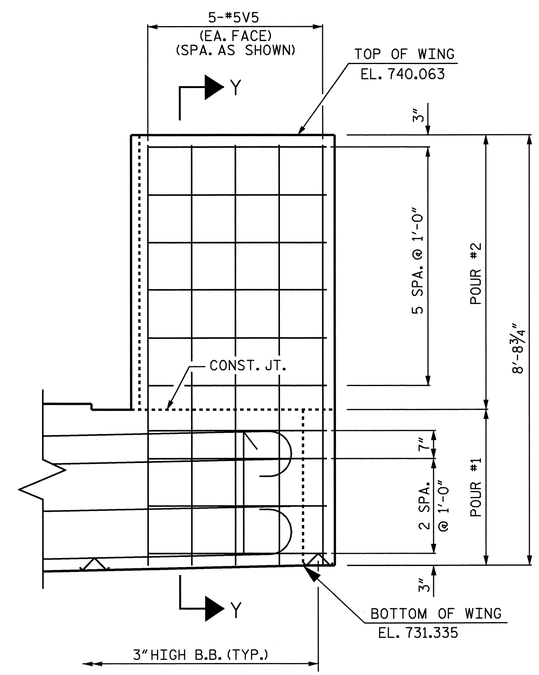

ELEVATION OF WING W2 - STAGE 2

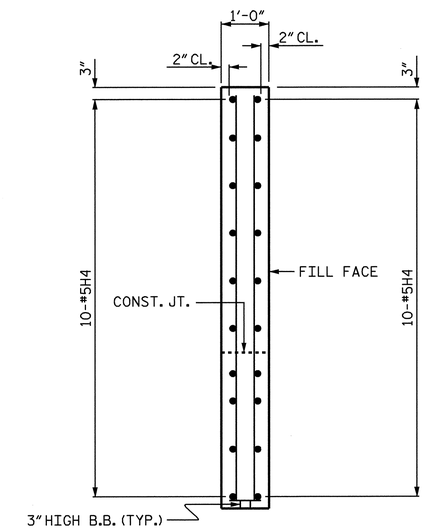

SECTION Y-Y

PROJECT NO. B-4507

FORSYTH COUNTY

STATION: 27+96.00-L-

SHEET 3 OF 4

STATE OF NORTH CAROLINA
DEPARTMENT OF TRANSPORTATION
RALEIGH

SUBSTRUCTURE

END BENT NO. 1

LEFT LANE

NORTH CAROLINA PROFESSIONAL SEAL 20125 ENGINEER MARSHALL G. CHEEK, JR.
9-29-09

REVISIONS								SHEET NO.
NO.	BY:	DATE:	NO.	BY:	DATE:			S-32
1			3					TOTAL SHEETS
2			4					99

DRAWN BY : L.L. MURPHY DATE : 07-09
CHECKED BY : M.G. CHEEK DATE : 08-04-09

19-AUG-2009 14:17
r:\structures\str#1\lmurphy\b4507_sd_e*_str#1.dgn
lmurphy

STR #1

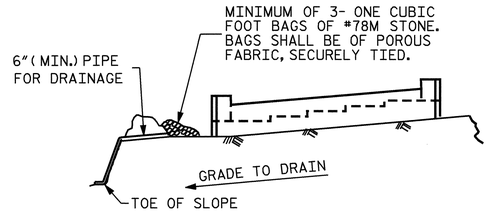

BAGGED STONE AND PIPE SHALL BE PLACED IMMEDIATELY AFTER COMPLETION OF END BENT EXCAVATION. PIPE MAY BE EITHER CONCRETE, CORRUGATED STEEL, CORRUGATED ALUMINUM ALLOY, OR CORRUGATED PLASTIC. PERFORATED PIPE WILL NOT BE ALLOWED.

BAGGED STONE SHALL REMAIN IN PLACE UNTIL THE ENGINEER DIRECTS THAT IT BE REMOVED. THE CONTRACTOR SHALL REMOVE AND DISPOSE OF SILT ACCUMULATIONS AT BAGGED STONE WHEN SO DIRECTED BY THE ENGINEER. BAGS SHALL BE REMOVED AND REPLACED WHENEVER THE ENGINEER DETERMINES THAT THEY HAVE DETERIORATED AND LOST THEIR EFFECTIVENESS.

NO SEPARATE PAYMENT WILL BE MADE FOR THIS WORK AND THE ENTIRE COST OF THIS WORK SHALL BE INCLUDED IN THE UNIT CONTRACT PRICE BID FOR THE SEVERAL PAY ITEMS.

TEMPORARY DRAINAGE AT END BENT

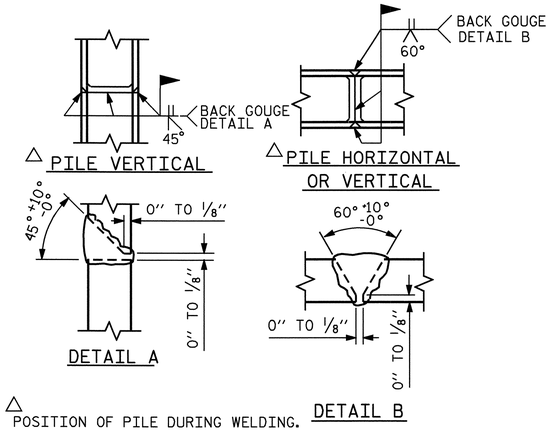

PILE SPLICE DETAILS

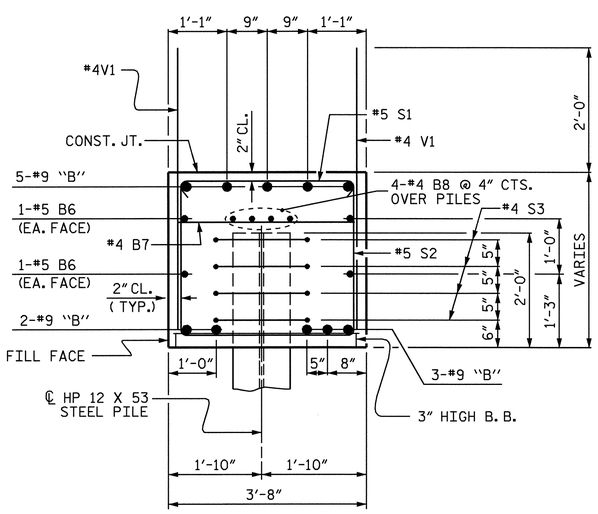

SECTION THRU CAP

STAGE 1

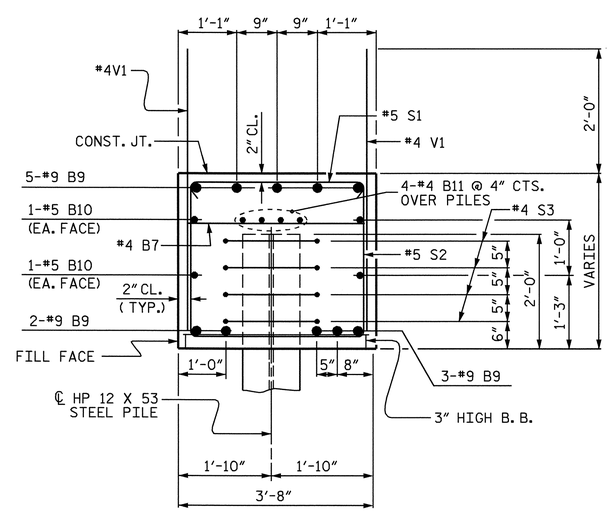

SECTION THRU CAP

STAGE 2

BAR TYPES

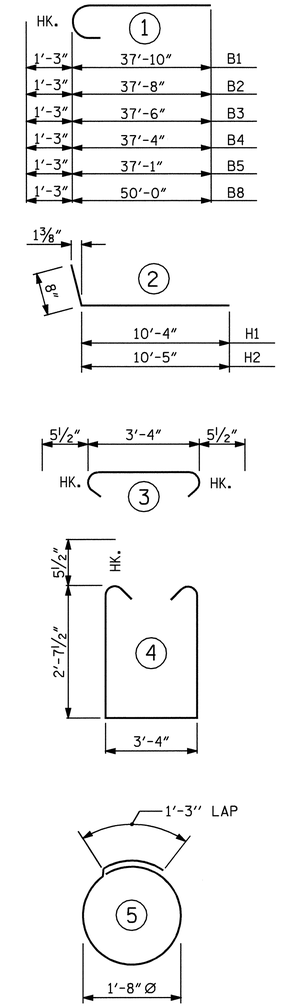

ALL BAR DIMENSIONS ARE OUT TO OUT.

BILL OF MATERIAL

END BENT NO. 1 STAGE 1

BAR	NO.	SIZE	TYPE	LENGTH	WEIGHT
B1	2	#9	1	39'-1"	266
B2	2	#9	1	38'-11"	265
B3	2	#9	1	38'-9"	264
B4	2	#9	1	38'-7"	262
B5	2	#9	1	38'-4"	261
B6	8	#5	STR	21'-5"	179
B7	9	#4	STR	3'-4"	20
B8	8	#4	STR	20'-9"	111
H1	10	#5	2	11'-0"	115
H2	10	#5	2	11'-1"	116
H3	12	#4	STR	2'-7"	21
S1	47	#5	3	4'-3"	208
S2	47	#5	4	9'-6"	466
S3	20	#4	5	6'-6"	87
V1	57	#4	STR	4'-9"	181
V2	14	#5	STR	8'-5"	123
V3	6	#5	STR	8'-4"	52
V4	8	#5	STR	8'-3"	69

REINFORCING STEEL = 3066 LBS.

CLASS A CONCRETE

POUR #1 : CAP & BOT. OF WING = 17.0 CU. YDS.

POUR #2 : TOP OF WING = 2.5 CU. YDS.

TOTAL CLASS A CONCRETE = 19.5 CU. YDS.

HP 12 X 53 STEEL PILES
NO. 6 LIN. FT. 210

END BENT NO. 1 STAGE 2

BAR	NO.	SIZE	TYPE	LENGTH	WEIGHT
B7	13	#4	STR	3'-4"	29
B9	10	#9	1	51'-3"	1743
B10	8	#5	STR	27'-1"	226
B11	8	#4	STR	26'-9"	143
H4	20	#5	STR	3'-9"	78
S1	67	#5	3	4'-3"	297
S2	67	#5	4	9'-6"	664
S3	28	#4	5	6'-6"	122
V1	77	#4	STR	4'-9"	244
V5	10	#5	STR	8'-4"	87

REINFORCING STEEL = 3633 LBS.

CLASS A CONCRETE

POUR #1 : CAP & BOT. OF WING = 22.0 CU. YDS.

POUR #2 : TOP OF WING = 0.9 CU. YDS.

TOTAL CLASS A CONCRETE = 22.9 CU. YDS.

HP 12 X 53 STEEL PILES
NO. 6 LIN. FT. 210

TOTAL QUANTITIES

REINFORCING STEEL	=	6699 LBS.
CLASS A CONCRETE	=	42.4 CU. YDS.
HP 12 X 53 STEEL PILES	=	420 LIN. FT.

PROJECT NO. B-4507

FORSYTH COUNTY

STATION: 27+96.00-L-

SHEET 4 OF 4

STATE OF NORTH CAROLINA
DEPARTMENT OF TRANSPORTATION
RALEIGH

SUBSTRUCTURE

END BENT NO. 1
LEFT LANE

NORTH CAROLINA PROFESSIONAL SEAL 20125 ENGINEER MARSHALL G. CHEEK, JR.
9-28-09

REVISIONS						SHEET NO.
NO.	BY:	DATE:	NO.	BY:	DATE:	S-33
1			3			TOTAL SHEETS
2			4			99

DRAWN BY : L.L. MURPHY DATE : 07-09
CHECKED BY : M.G. CHEEK DATE : 08-04-09

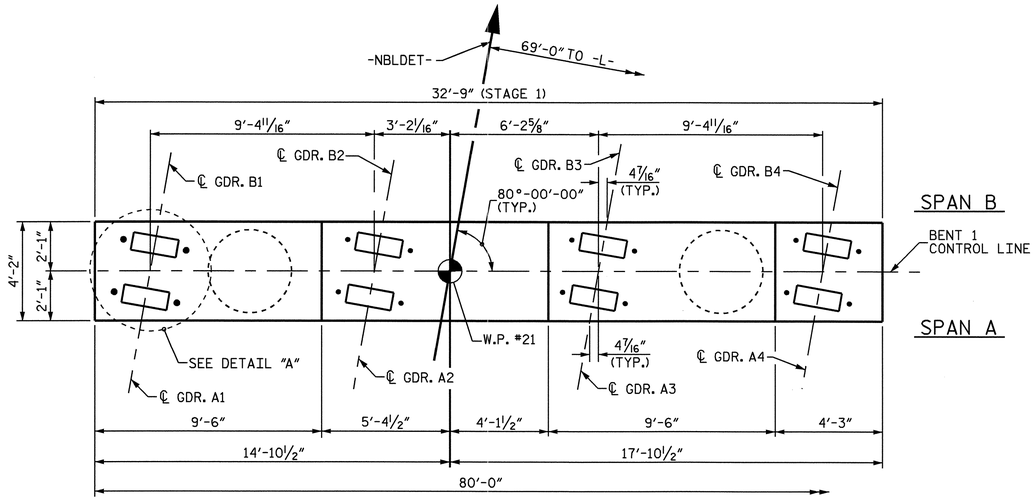

PLAN

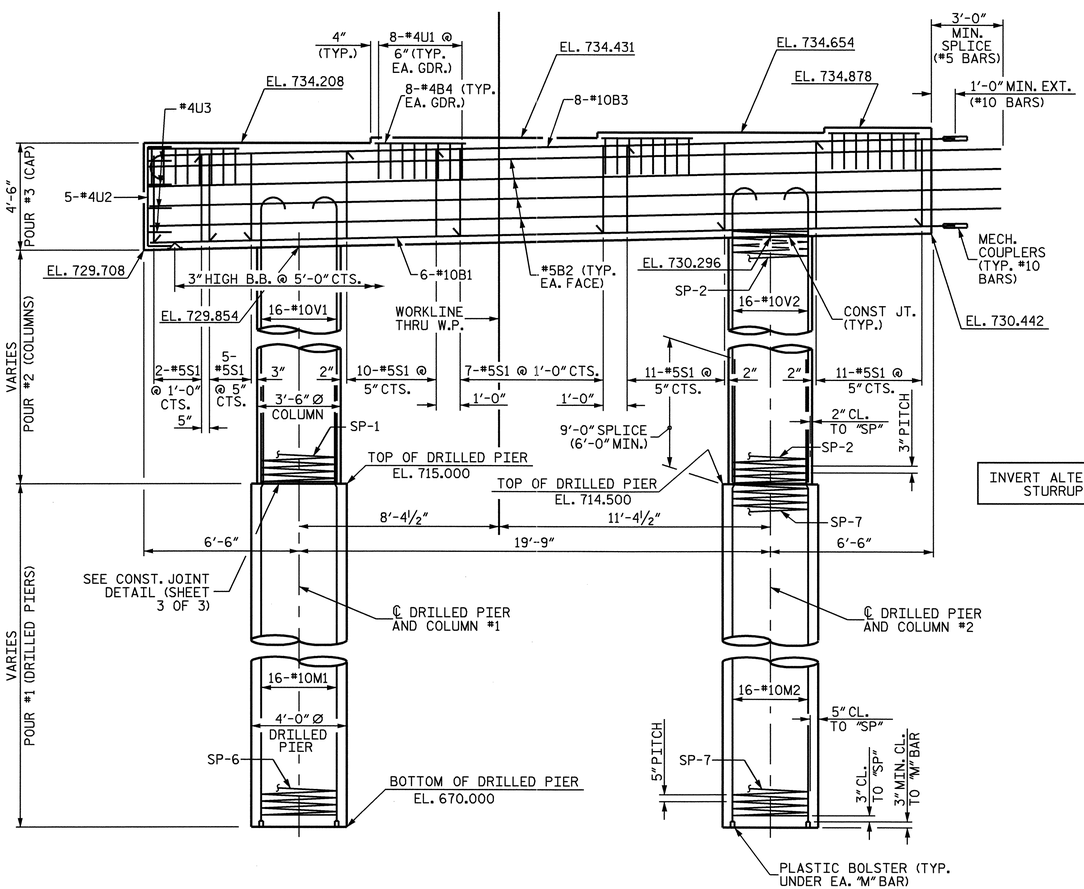

INVERT ALTERNATE STURRUPS

ELEVATION

DIMENSIONS AND REINFORCING STEEL ARE TYPICAL FOR EACH COLUMN AND DRILLED PIER UNLESS OTHERWISE NOTED

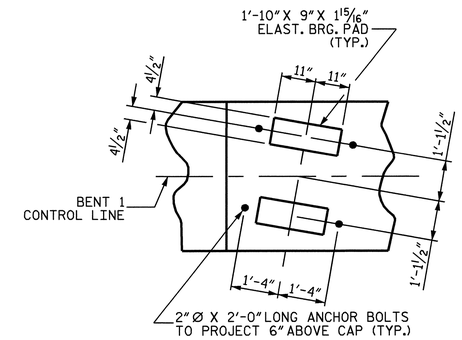

DETAIL "A"

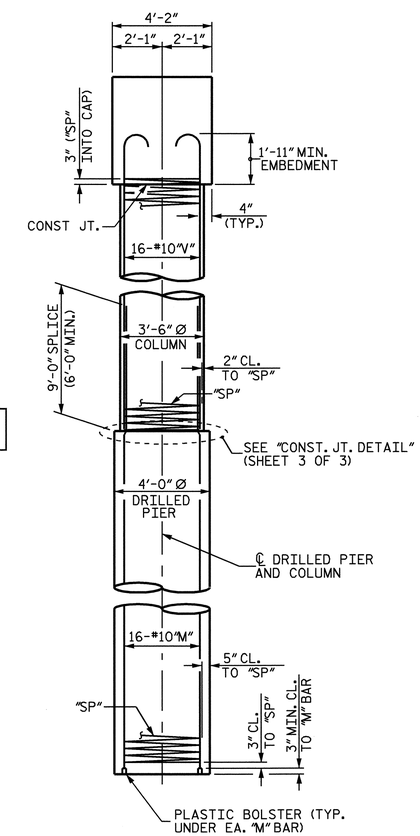

END ELEVATION

NOTES

STIRRUPS IN CAP MAY BE SHIFTED AS NECESSARY TO CLEAR ANCHOR BOLTS.

HOOKS ON "V" BARS MAY BE TURNED AS NECESSARY FOR PLACING REINFORCING STEEL.

ALL STEEL IN THE DRILLED PIERS IS INCLUDED IN THE PAY ITEMS FOR "REINFORCING STEEL" AND "SPIRAL COLUMN REINFORCING STEEL".

THE CONTRACTOR'S ATTENTION IS CALLED TO THE FACT THAT THE LONGITUDINAL REINFORCEMENT FOR THE DRILLED PIERS IS DETAILED WITH 3 FEET OF EXTRA LENGTH.

THE LOCATION OF THE CONSTRUCTION JOINT IN THE DRILLED PIERS IS BASED ON AN APPROXIMATE GROUND LINE ELEVATION. IF THE CONSTRUCTION JOINT IS ABOVE THE ACTUAL GROUND LINE ELEVATION, THE CONTRACTOR SHALL PLACE THE CONSTRUCTION JOINT 1 FT. BELOW THE GROUND LINE.

FOR DRILLED PIERS, SEE SPECIAL PROVISIONS.

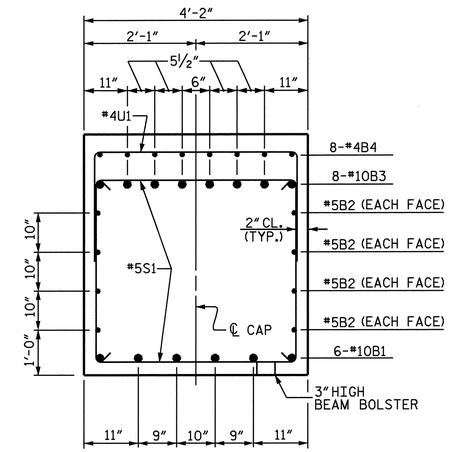

SECTION THRU CAP

PROJECT NO. B-4507

FORSYTH COUNTY

STATION: 27+96.00 -L-

SHEET 1 OF 3

STATE OF NORTH CAROLINA
DEPARTMENT OF TRANSPORTATION
RALEIGH

SUBSTRUCTURE

BENT 1
STAGE 1

LEFT LANE

NORTH CAROLINA PROFESSIONAL SEAL 20125 ENGINEER MARSHALL G. CHEEK, JR.
9-29-09

REVISIONS								SHEET NO.
NO.	BY:	DATE:	NO.	BY:	DATE:			S-34
1			3					TOTAL SHEETS
2			4					99

DRAWN BY : W.D. CRUTCHER DATE : 6-15-09
CHECKED BY : M.G. CHEEK DATE : 7-13-09

29-SEP-2009 11:35
R:\Structures\Final Plans\Left Lane\B-4507_sd_str*1_13A_bents.dgn
afiguero a

STR. #1

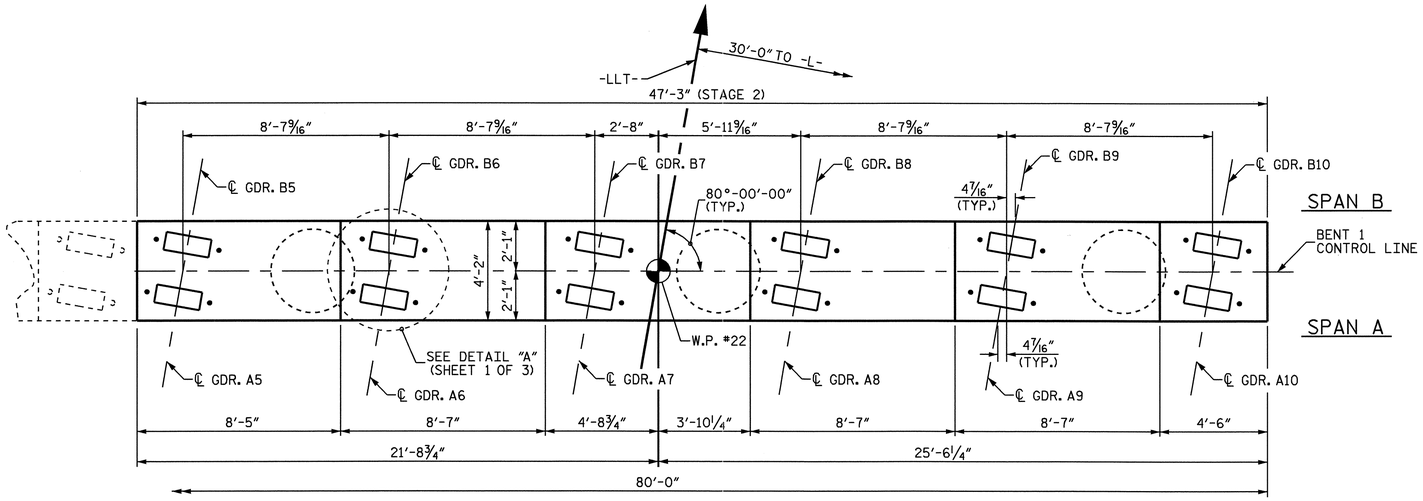

PLAN

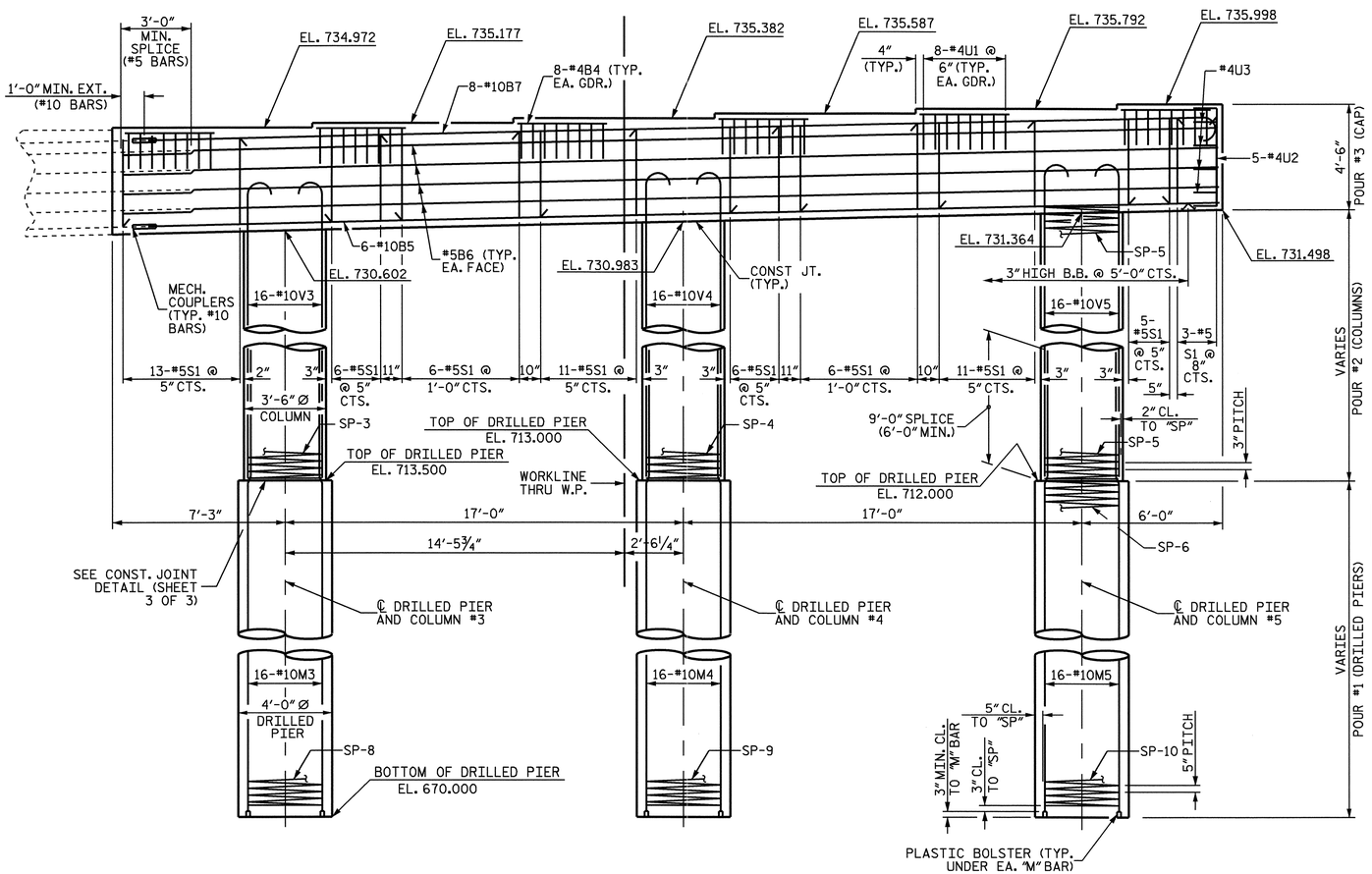

ELEVATION

DIMENSIONS AND REINFORCING STEEL ARE TYPICAL FOR EACH COLUMN AND DRILLED PIER UNLESS OTHERWISE NOTED

INVERT ALTERNATE STURRUPS

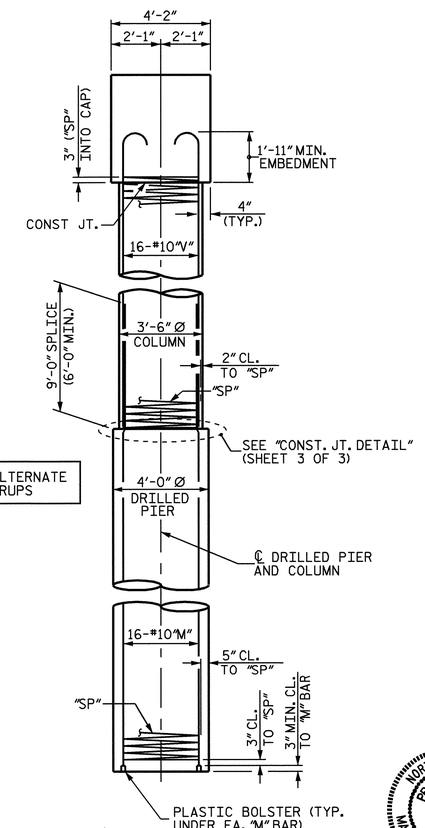

END ELEVATION

NOTES

STIRRUPS IN CAP MAY BE SHIFTED AS NECESSARY TO CLEAR ANCHOR BOLTS.

HOOKS ON "V" BARS MAY BE TURNED AS NECESSARY FOR PLACING REINFORCING STEEL.

ALL STEEL IN THE DRILLED PIERS IS INCLUDED IN THE PAY ITEMS FOR "REINFORCING STEEL" AND "SPIRAL COLUMN REINFORCING STEEL".

THE CONTRACTOR'S ATTENTION IS CALLED TO THE FACT THAT THE LONGITUDINAL REINFORCEMENT FOR THE DRILLED PIERS IS DETAILED WITH 3 FEET OF EXTRA LENGTH.

THE LOCATION OF THE CONSTRUCTION JOINT IN THE DRILLED PIERS IS BASED ON AN APPROXIMATE GROUND LINE ELEVATION. IF THE CONSTRUCTION JOINT IS ABOVE THE ACTUAL GROUND LINE ELEVATION, THE CONTRACTOR SHALL PLACE THE CONSTRUCTION JOINT 1 FT. BELOW THE GROUND LINE.

FOR DRILLED PIERS, SEE SPECIAL PROVISIONS.

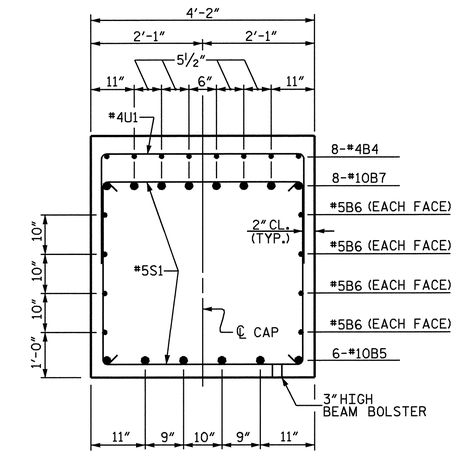

SECTION THRU CAP

PROJECT NO. B-4507

FORSYTH COUNTY

STATION: 27+96.00 -L-

SHEET 2 OF 3

STATE OF NORTH CAROLINA
DEPARTMENT OF TRANSPORTATION
RALEIGH

SUBSTRUCTURE

BENT 1
STAGE 2

LEFT LANE

NORTH CAROLINA PROFESSIONAL SEAL 20125 ENGINEER MARSHALL G. CHEEK, JR.
9-29-09

REVISIONS								SHEET NO.
NO.	BY:	DATE:	NO.	BY:	DATE:			S-35
1			3					TOTAL SHEETS
2			4					99

DRAWN BY : W.D. CRUTCHER DATE : 6-15-09
CHECKED BY : M.G. CHEEK DATE : 7-13-09

04-AUG-2009 16:24
R:\Structures\STR*1\dcrutcher\bents.dgn
afiguaroa

STR. #1

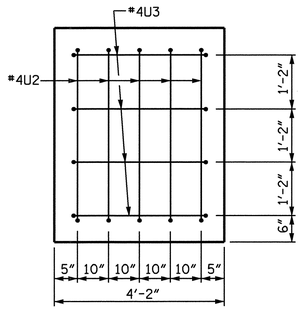

END OF CAP VIEW

(LEFT END OF STAGE 1 CAP,
& RIGHT END OF STAGE 2 CAP)

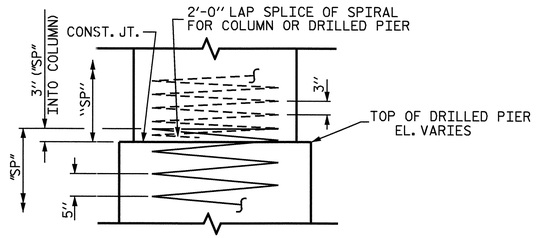

CONST. JOINT DETAIL

BAR TYPES

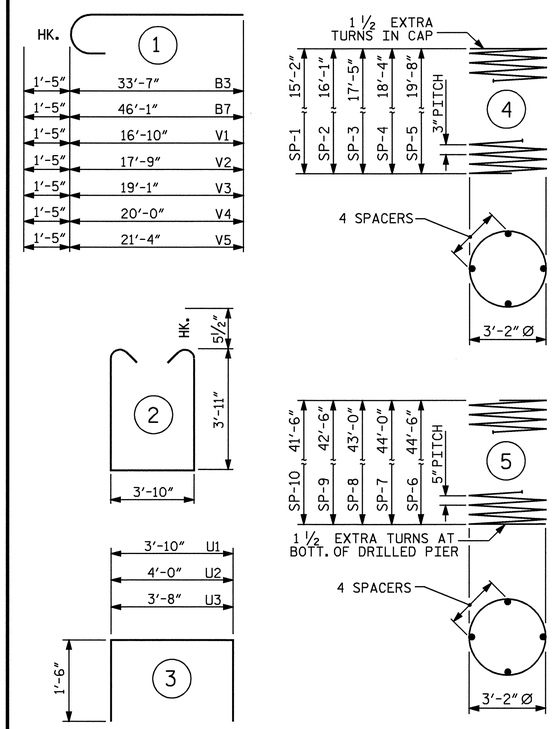

ALL BAR DIMENSIONS ARE OUT TO OUT.

BILL OF MATERIAL

STAGE 1

BAR	NO.	SIZE	TYPE	LENGTH	WEIGHT
B1	6	10	STR	33-7	867
B2	8	5	STR	35-7	297
B3	8	10	1	35-0	1205
B4	32	4	STR	3-10	82
M1	16	10	STR	53-9	3701
M2	16	10	STR	53-3	3666
S1	46	5	2	12-7	604
U1	32	4	3	6-10	146
U2	5	4	3	7-0	23
U3	4	4	3	6-8	18
V1	16	10	1	18-3	1256
V2	16	10	1	19-2	1320
REINFORCING STEEL (LBS.)					13185
SP-1	1	✳	4	611-5	408
SP-2	1	✳	4	648-2	433
SP-6	1	✳✳	5	1062-8	1108
SP-7	1	✳✳	5	1050-5	1096
SPIRAL COLUMN REINFORCING STEEL (LBS.)					3045
CLASS A CONCRETE					
POUR #2- COLUMNS (CU. YDS.)					10.9
POUR #3- CAP (CU. YDS.)					22.2
TOTAL (CU. YDS.)					33.1
DRILLED PIER CONCRETE					
POUR #1- DRILLED PIERS (CU. YDS.)					41.7
4'-0" Ø DRILLED PIERS IN SOIL (LIN. FT.)					60.30
4'-0" Ø DRILLED PIERS NOT IN SOIL (LIN. FT.)					29.20
PERMANENT STEEL CASING FOR 4'-0" Ø DRILLED PIERS (LIN. FT.)					51.50
▲ CSL TUBES (LIN. FT.)					378.00

STAGE 2

BAR	NO.	SIZE	TYPE	LENGTH	WEIGHT
B4	48	4	STR	3-10	123
B5	6	10	STR	46-1	1190
B6	8	5	STR	46-10	391
B7	8	10	1	47-6	1635
M3	16	10	STR	52-3	3597
M4	16	10	STR	51-9	3563
M5	16	10	STR	50-9	3494
S1	67	5	2	12-7	879
U1	48	4	3	6-10	219
U2	5	4	3	7-0	23
U3	4	4	3	6-8	18
V3	16	10	1	20-6	1411
V4	16	10	1	21-5	1474
V5	16	10	1	22-9	1566
REINFORCING STEEL (LBS.)					19583
SP-3	1	✳	4	699-9	467
SP-4	1	✳	4	734-2	490
SP-5	1	✳	4	788-2	526
SP-8	1	✳✳	5	1025-11	1070
SP-9	1	✳✳	5	1013-8	1057
SP-10	1	✳✳	5	991-8	1034
SPIRAL COLUMN REINFORCING STEEL (LBS.)					4644
CLASS A CONCRETE					
POUR #2- COLUMNS (CU. YDS.)					19.4
POUR #3- CAP (CU. YDS.)					32.8
TOTAL (CU. YDS.)					52.2
DRILLED PIER CONCRETE					
POUR #1- DRILLED PIERS (CU. YDS.)					59.8
4'-0" Ø DRILLED PIERS IN SOIL (LIN. FT.)					84.70
4'-0" Ø DRILLED PIERS NOT IN SOIL (LIN. FT.)					43.80
PERMANENT STEEL CASING FOR 4'-0" Ø DRILLED PIERS (LIN. FT.)					71.50
▲ CSL TUBES (LIN. FT.)					544.00

✳ THE SPIRAL REINFORCING STEEL SHALL BE W20 OR D-20 COLD DRAWN WIRE OR #4 PLAIN OR DEFORMED BAR.

✳✳ THE SPIRAL REINFORCING STEEL SHALL BE W31 OR D-31 COLD DRAWN WIRE OR #5 PLAIN OR DEFORMED BAR.

▲-NO SEPARATE PAYMENT WILL BE MADE FOR CSL TUBES. CSL TUBES WILL BE INCLUDED IN THE UNIT PRICE BID FOR DRILLED PIERS.

TOTAL BILL OF MATERIAL

REINFORCING STEEL (LBS.)	32768
SPIRAL COLUMN REINFORCING STEEL (LBS.)	7689
CLASS A CONCRETE (CU. YDS.)	85.3
DRILLED PIER CONCRETE (CU. YDS.)	101.5
4'-0" Ø DRILLED PIERS IN SOIL (LIN. FT.)	145.00
4'-0" Ø DRILLED PIERS NOT IN SOIL (LIN. FT.)	73.00
PERMANENT STEEL CASING FOR 4'-0" Ø DRILLED PIERS (LIN. FT.)	123.00
▲ CSL TUBES (LIN. FT.)	922.00

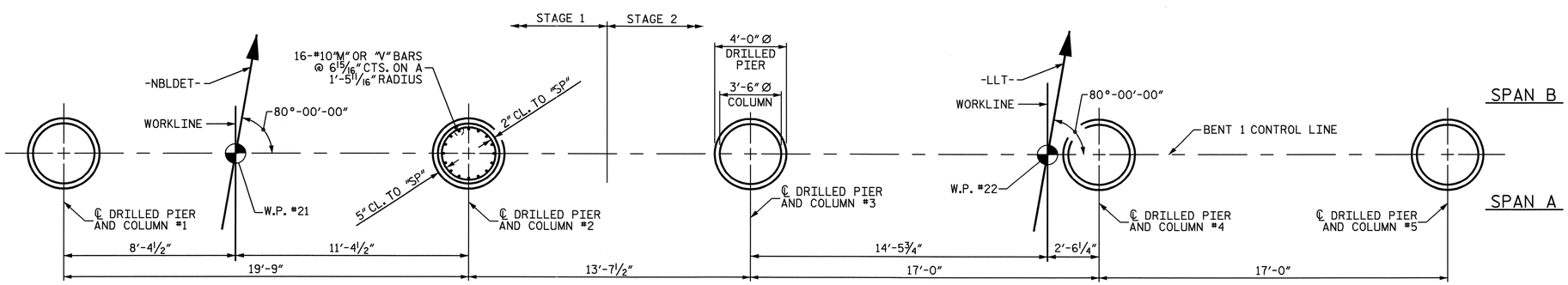

PLAN OF COLUMNS AND DRILLED PIERS

DIMENSIONS AND REINFORCING STEEL ARE TYPICAL
FOR EACH COLUMN AND DRILLED PIER

PROJECT NO. B-4507
FORSYTH COUNTY
STATION: 27+96.00 -L-

SHEET 3 OF 3

STATE OF NORTH CAROLINA
DEPARTMENT OF TRANSPORTATION
RALEIGH

SUBSTRUCTURE

BENT 1

LEFT LANE

NORTH CAROLINA PROFESSIONAL SEAL 20125 ENGINEER MARSHALL G. CHEEK, JR.
9-29-09

REVISIONS								SHEET NO.
NO.	BY:	DATE:	NO.	BY:	DATE:			S-36
1			3					TOTAL SHEETS
2			4					99

DRAWN BY : W.D. CRUTCHER DATE : 6-15-09
CHECKED BY : M.G. CHEEK DATE : 7-13-09

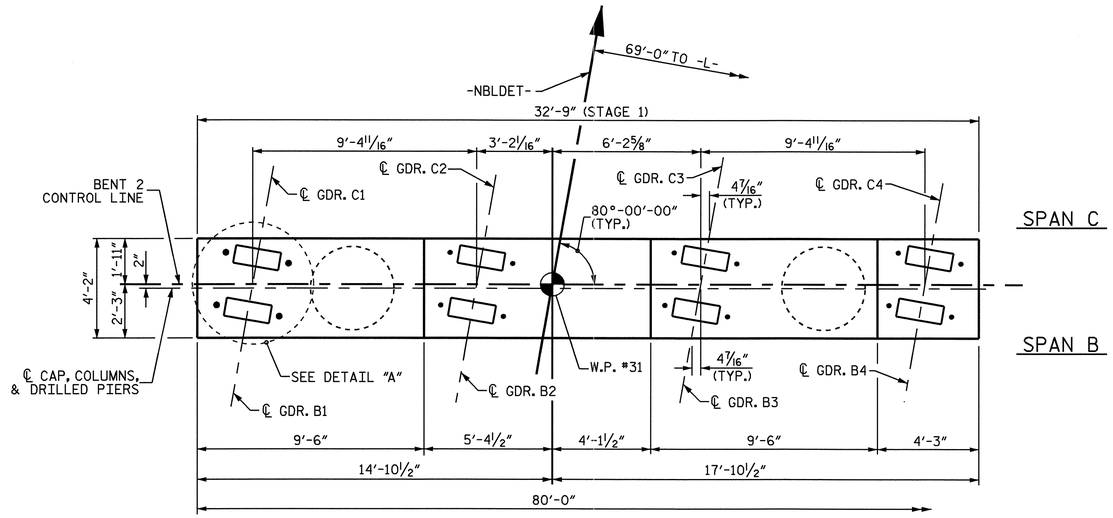

PLAN

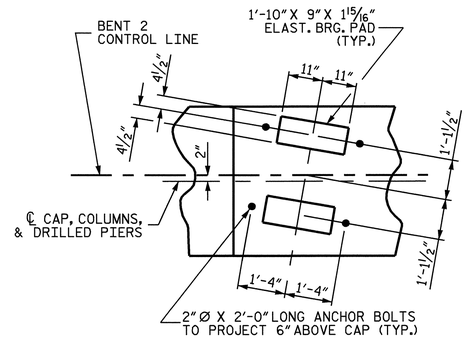

DETAIL "A"

NOTES

STIRRUPS IN CAP MAY BE SHIFTED AS NECESSARY TO CLEAR ANCHOR BOLTS.

HOOKS ON "V" BARS MAY BE TURNED AS NECESSARY FOR PLACING REINFORCING STEEL.

ALL STEEL IN THE DRILLED PIERS IS INCLUDED IN THE PAY ITEMS FOR "REINFORCING STEEL" AND "SPIRAL COLUMN REINFORCING STEEL".

THE CONTRACTOR'S ATTENTION IS CALLED TO THE FACT THAT THE LONGITUDINAL REINFORCEMENT FOR THE DRILLED PIERS IS DETAILED WITH 3 FEET OF EXTRA LENGTH.

THE LOCATION OF THE CONSTRUCTION JOINT IN THE DRILLED PIERS IS BASED ON AN APPROXIMATE GROUND LINE ELEVATION. IF THE CONSTRUCTION JOINT IS ABOVE THE ACTUAL GROUND LINE ELEVATION, THE CONTRACTOR SHALL PLACE THE CONSTRUCTION JOINT 1 FT. BELOW THE GROUND LINE.

FOR DRILLED PIERS, SEE SPECIAL PROVISIONS.

THE CONTRACTOR'S ATTENTION IS CALLED TO THE FACT THAT THE BENT CONTROL LINE IS OFFSET FROM THE CENTERLINE BENT.

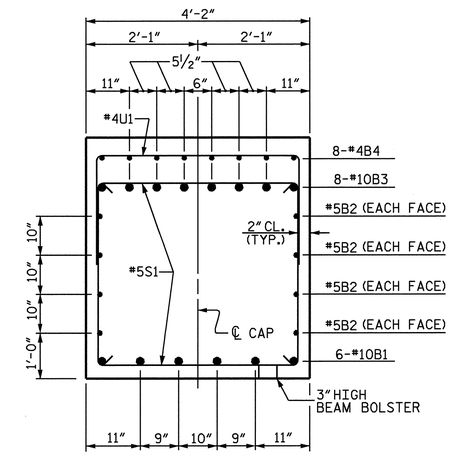

SECTION THRU CAP

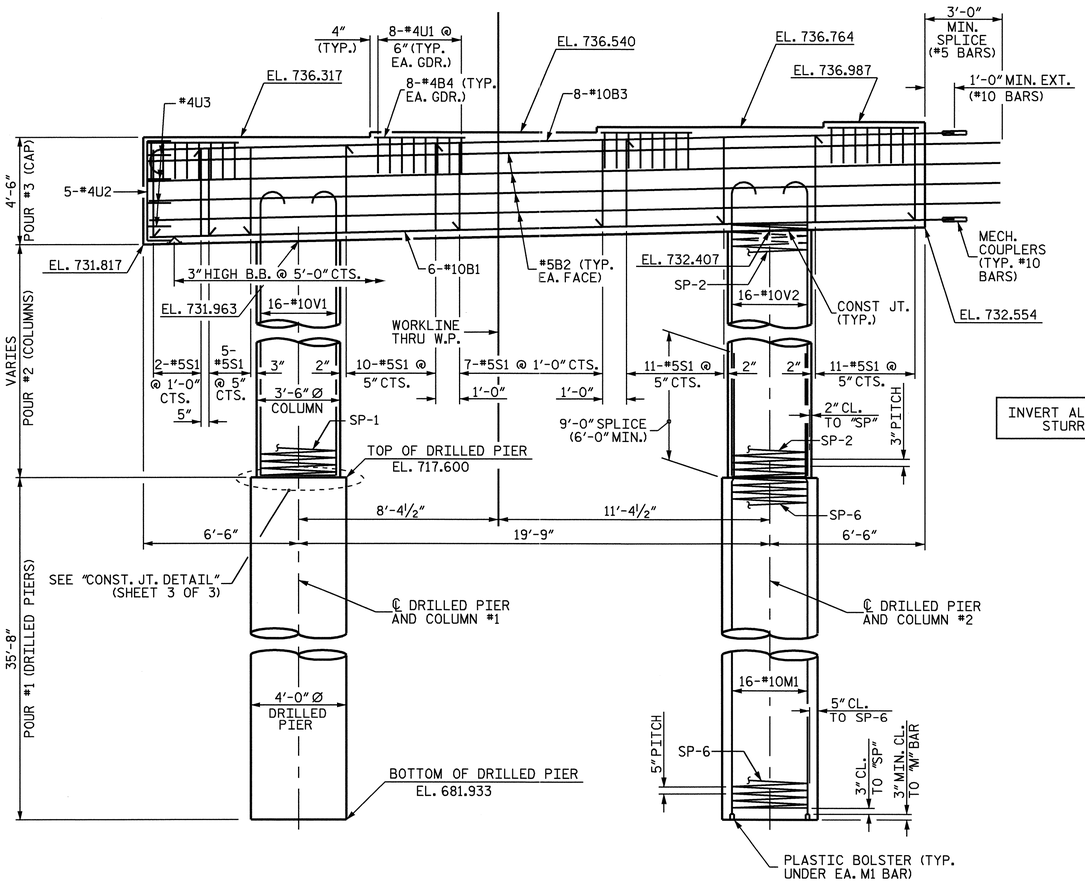

INVERT ALTERNATE STURRUPS

ELEVATION

DIMENSIONS AND REINFORCING STEEL ARE TYPICAL FOR EACH COLUMN AND DRILLED PIER UNLESS OTHERWISE NOTED

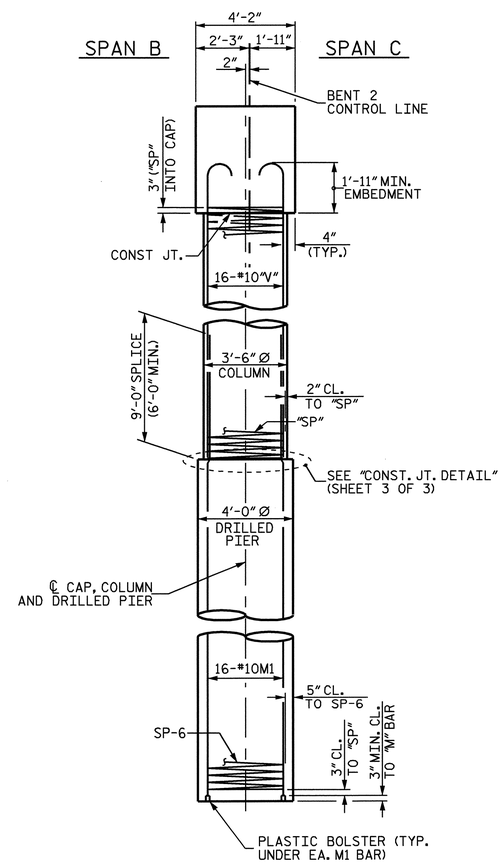

END ELEVATION

PROJECT NO. B-4507

FORSYTH COUNTY

STATION: 27+96.00 -L-

SHEET 1 OF 3

STATE OF NORTH CAROLINA
DEPARTMENT OF TRANSPORTATION
RALEIGH

SUBSTRUCTURE

BENT 2
STAGE 1

LEFT LANE

NORTH CAROLINA PROFESSIONAL SEAL 20125 ENGINEER MARSHALL G. CHEEK, JR.
9-29-09

REVISIONS						SHEET NO.
NO.	BY:	DATE:	NO.	BY:	DATE:	S-37
1			3			TOTAL SHEETS
2			4			99

DRAWN BY : W.D. CRUTCHER DATE : 6-15-09
CHECKED BY : M.G. CHEEK DATE : 7-13-09

04-AUG-2009 16:24
R:\Structures\STR*1\dcrutcher\bents.dgn
afigueroa

STR. #1

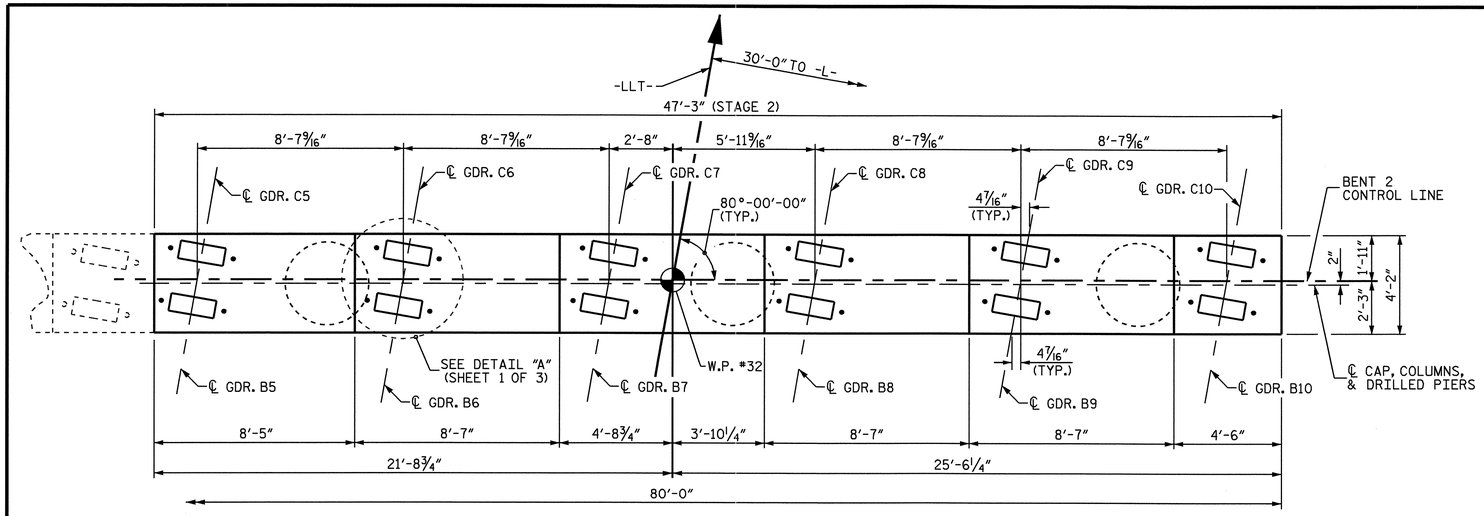

PLAN

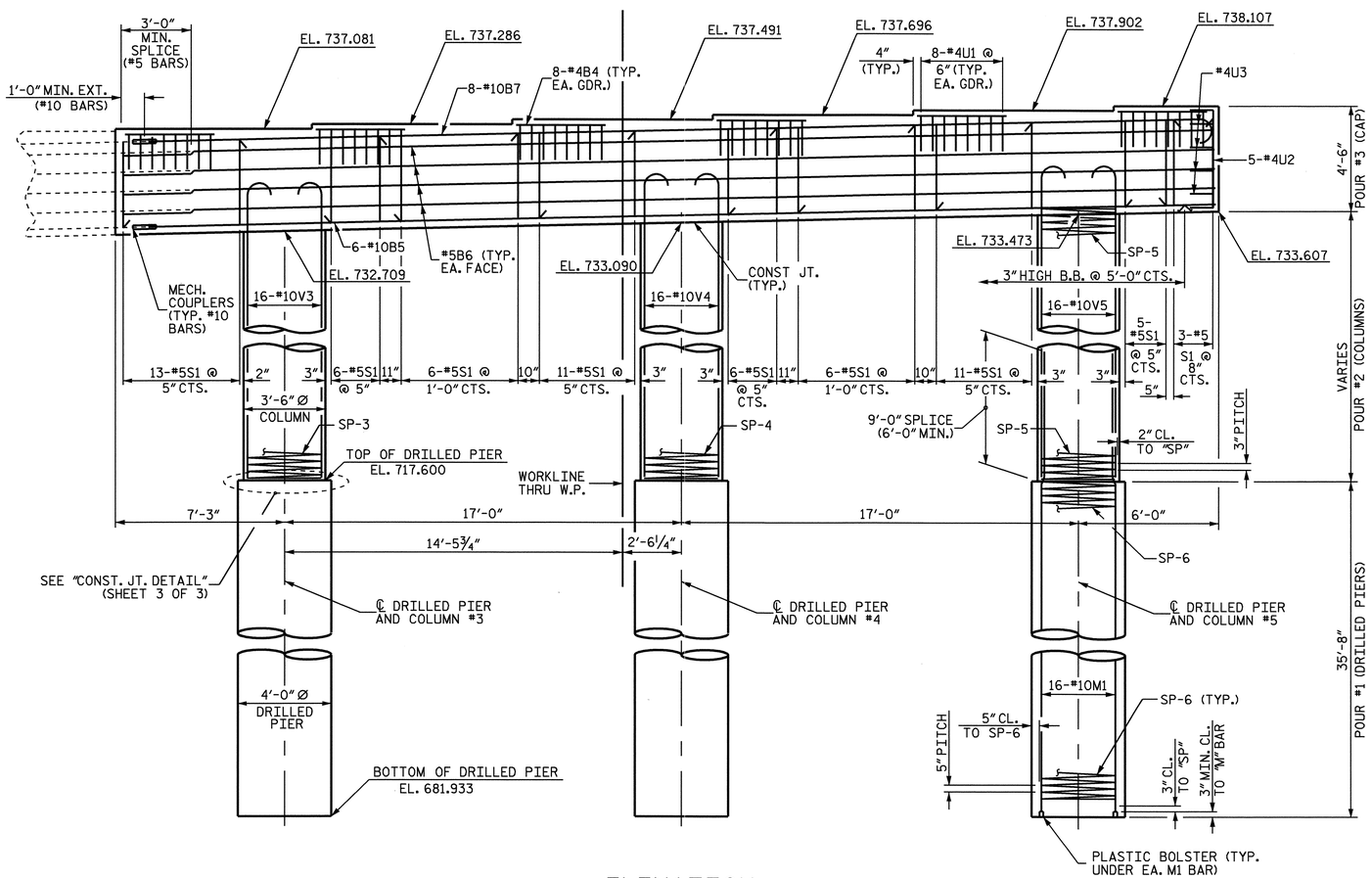

ELEVATION

DIMENSIONS AND REINFORCING STEEL ARE TYPICAL FOR EACH COLUMN AND DRILLED PIER UNLESS OTHERWISE NOTED

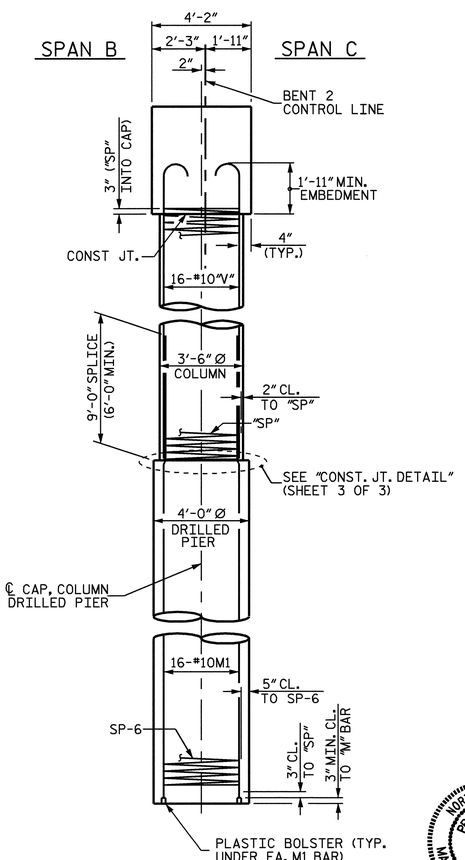

END ELEVATION

NOTES

STIRRUPS IN CAP MAY BE SHIFTED AS NECESSARY TO CLEAR ANCHOR BOLTS.

HOOKS ON "V" BARS MAY BE TURNED AS NECESSARY FOR PLACING REINFORCING STEEL.

ALL STEEL IN THE DRILLED PIERS IS INCLUDED IN THE PAY ITEMS FOR "REINFORCING STEEL" AND "SPIRAL COLUMN REINFORCING STEEL".

THE CONTRACTOR'S ATTENTION IS CALLED TO THE FACT THAT THE LONGITUDINAL REINFORCEMENT FOR THE DRILLED PIERS IS DETAILED WITH 3 FEET OF EXTRA LENGTH.

THE LOCATION OF THE CONSTRUCTION JOINT IN THE DRILLED PIERS IS BASED ON AN APPROXIMATE GROUND LINE ELEVATION. IF THE CONSTRUCTION JOINT IS ABOVE THE ACTUAL GROUND LINE ELEVATION, THE CONTRACTOR SHALL PLACE THE CONSTRUCTION JOINT 1 FT. BELOW THE GROUND LINE.

FOR DRILLED PIERS, SEE SPECIAL PROVISIONS.

THE CONTRACTOR'S ATTENTION IS CALLED TO THE FACT THAT THE BENT CONTROL LINE IS OFFSET FROM THE CENTERLINE BENT.

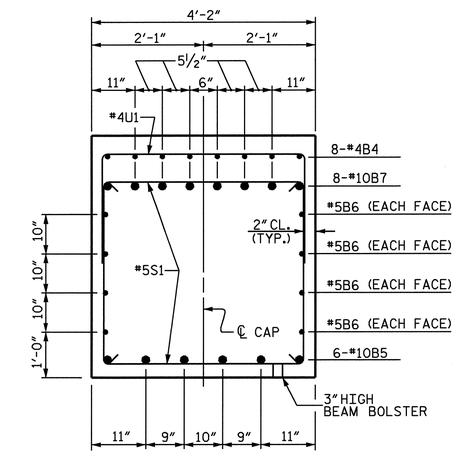

SECTION THRU CAP

PROJECT NO. B-4507

FORSYTH COUNTY

STATION: 27+96.00 -L-

SHEET 2 OF 3

STATE OF NORTH CAROLINA
DEPARTMENT OF TRANSPORTATION
RALEIGH

SUBSTRUCTURE

BENT 2
STAGE 2

LEFT LANE

NORTH CAROLINA PROFESSIONAL SEAL 20125 ENGINEER MARSHALL G. CHEEK, JR.
9-24-09

REVISIONS								SHEET NO.
NO.	BY:	DATE:	NO.	BY:	DATE:			S-38
1			3					TOTAL SHEETS
2			4					99

DRAWN BY : W.D. CRUTCHER DATE : 6-15-09
CHECKED BY : M.G. CHEEK DATE : 7-13-09

04-AUG-2009 16:24
R:\Structures\STR*1\dcrutcher\bents.dgn
afigueroa

STR. #1

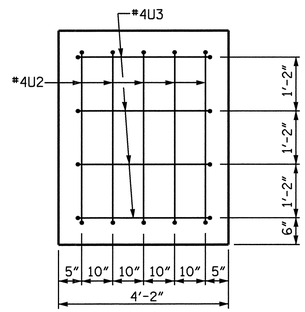

END OF CAP VIEW

(LEFT END OF STAGE 1 CAP, & RIGHT END OF STAGE 2 CAP)

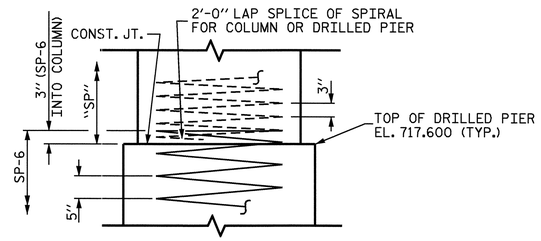

CONST. JOINT DETAIL

BAR TYPES

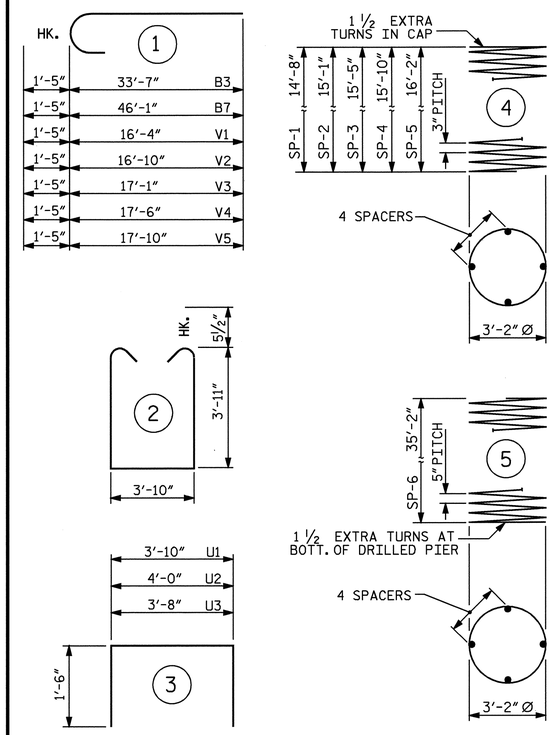

ALL BAR DIMENSIONS ARE OUT TO OUT.

BILL OF MATERIAL

STAGE 1

BAR	NO.	SIZE	TYPE	LENGTH	WEIGHT
B1	6	10	STR	33-7	867
B2	8	5	STR	35-7	297
B3	8	10	1	35-0	1205
B4	32	4	STR	3-10	82
M1	32	10	STR	44-5	6116
S1	46	5	2	12-7	604
U1	32	4	3	6-10	146
U2	5	4	3	7-0	23
U3	4	4	3	6-8	18
V1	16	10	1	17-9	1222
V2	16	10	1	18-3	1256
REINFORCING STEEL (LBS.)					11836
SP-1	1	✳	4	591-9	395
SP-2	1	✳	4	608-11	407
SP-6	2	✳✳	5	842-4	1757
SPIRAL COLUMN REINFORCING STEEL (LBS.)					2559
CLASS A CONCRETE					
POUR #2- COLUMNS (CU. YDS.)					10.4
POUR #3- CAP (CU. YDS.)					22.2
TOTAL (CU. YDS.)					32.6
DRILLED PIER CONCRETE					
POUR #1- DRILLED PIERS (CU. YDS.)					33.2
4'-0" Ø DRILLED PIERS IN SOIL (LIN. FT.)					54.53
4'-0" Ø DRILLED PIERS NOT IN SOIL (LIN. FT.)					16.80
PERMANENT STEEL CASING FOR 4'-0" Ø DRILLED PIERS (LIN. FT.)					37.20
▲ CSL TUBES (LIN. FT.)					305.33

STAGE 2

BAR	NO.	SIZE	TYPE	LENGTH	WEIGHT
B4	48	4	STR	3-10	123
B5	6	10	STR	46-1	1190
B6	8	5	STR	46-10	391
B7	8	10	1	47-6	1635
M1	48	10	STR	44-5	9174
S1	67	5	2	12-7	879
U1	48	4	3	6-10	219
U2	5	4	3	7-0	23
U3	4	4	3	6-8	18
V3	16	10	1	18-6	1274
V4	16	10	1	18-11	1302
V5	16	10	1	19-3	1325
REINFORCING STEEL (LBS.)					17553
SP-3	1	✳	4	621-2	415
SP-4	1	✳	4	635-11	425
SP-5	1	✳	4	650-8	435
SP-6	3	✳✳	5	842-4	2636
SPIRAL COLUMN REINFORCING STEEL (LBS.)					3911
CLASS A CONCRETE					
POUR #2- COLUMNS (CU. YDS.)					16.6
POUR #3- CAP (CU. YDS.)					32.8
TOTAL (CU. YDS.)					49.4
DRILLED PIER CONCRETE					
POUR #1- DRILLED PIERS (CU. YDS.)					49.8
4'-0" Ø DRILLED PIERS IN SOIL (LIN. FT.)					81.80
4'-0" Ø DRILLED PIERS NOT IN SOIL (LIN. FT.)					25.20
PERMANENT STEEL CASING FOR 4'-0" Ø DRILLED PIERS (LIN. FT.)					55.80
▲ CSL TUBES (LIN. FT.)					458.00

✳ THE SPIRAL REINFORCING STEEL SHALL BE W20 OR D-20 COLD DRAWN WIRE OR #4 PLAIN OR DEFORMED BAR.

✳✳ THE SPIRAL REINFORCING STEEL SHALL BE W31 OR D-31 COLD DRAWN WIRE OR #5 PLAIN OR DEFORMED BAR.

TOTAL BILL OF MATERIAL

REINFORCING STEEL (LBS.)	29389
SPIRAL COLUMN REINFORCING STEEL (LBS.)	6470
CLASS A CONCRETE (CU. YDS.)	82.0
DRILLED PIER CONCRETE (CU. YDS.)	83.0
4'-0" Ø DRILLED PIERS IN SOIL (LIN. FT.)	136.33
4'-0" Ø DRILLED PIERS NOT IN SOIL (LIN. FT.)	42.00
PERMANENT STEEL CASING FOR 4'-0" Ø DRILLED PIERS (LIN. FT.)	93.00
▲ CSL TUBES (LIN. FT.)	763.33

▲-NO SEPARATE PAYMENT WILL BE MADE FOR CSL TUBES. CSL TUBES WILL BE INCLUDED IN THE UNIT PRICE BID FOR DRILLED PIERS.

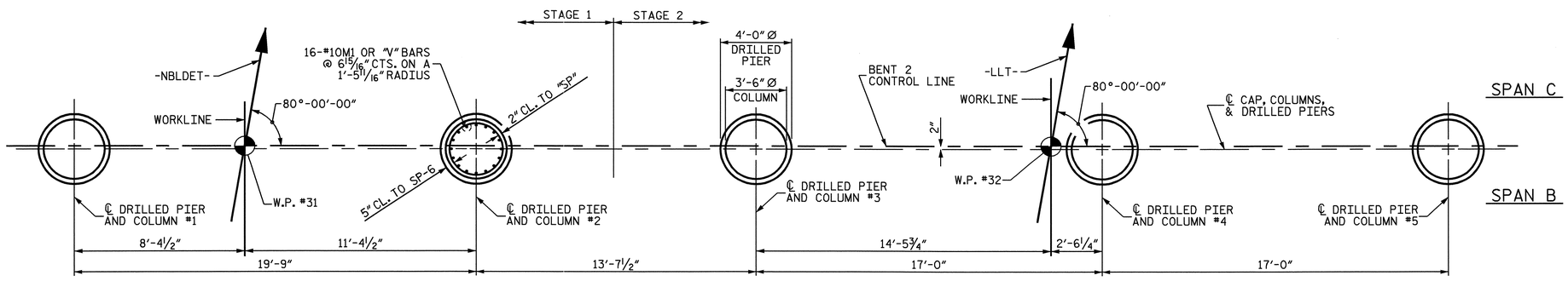

PLAN OF COLUMNS AND DRILLED PIERS

DIMENSIONS AND REINFORCING STEEL ARE TYPICAL FOR EACH COLUMN AND DRILLED PIER

PROJECT NO. B-4507
FORSYTH COUNTY
STATION: 27+96.00 -L-

SHEET 3 OF 3

STATE OF NORTH CAROLINA
DEPARTMENT OF TRANSPORTATION
RALEIGH

SUBSTRUCTURE

BENT 2

LEFT LANE

NORTH CAROLINA PROFESSIONAL SEAL 20125 ENGINEER MARSHALL G. CHEEK, JR.
9-24-09

REVISIONS						SHEET NO.
NO.	BY:	DATE:	NO.	BY:	DATE:	S-39
1			3			TOTAL SHEETS
2			4			99

DRAWN BY : W.D. CRUTCHER DATE : 6-15-09
CHECKED BY : M.G. CHEEK DATE : 7-13-09

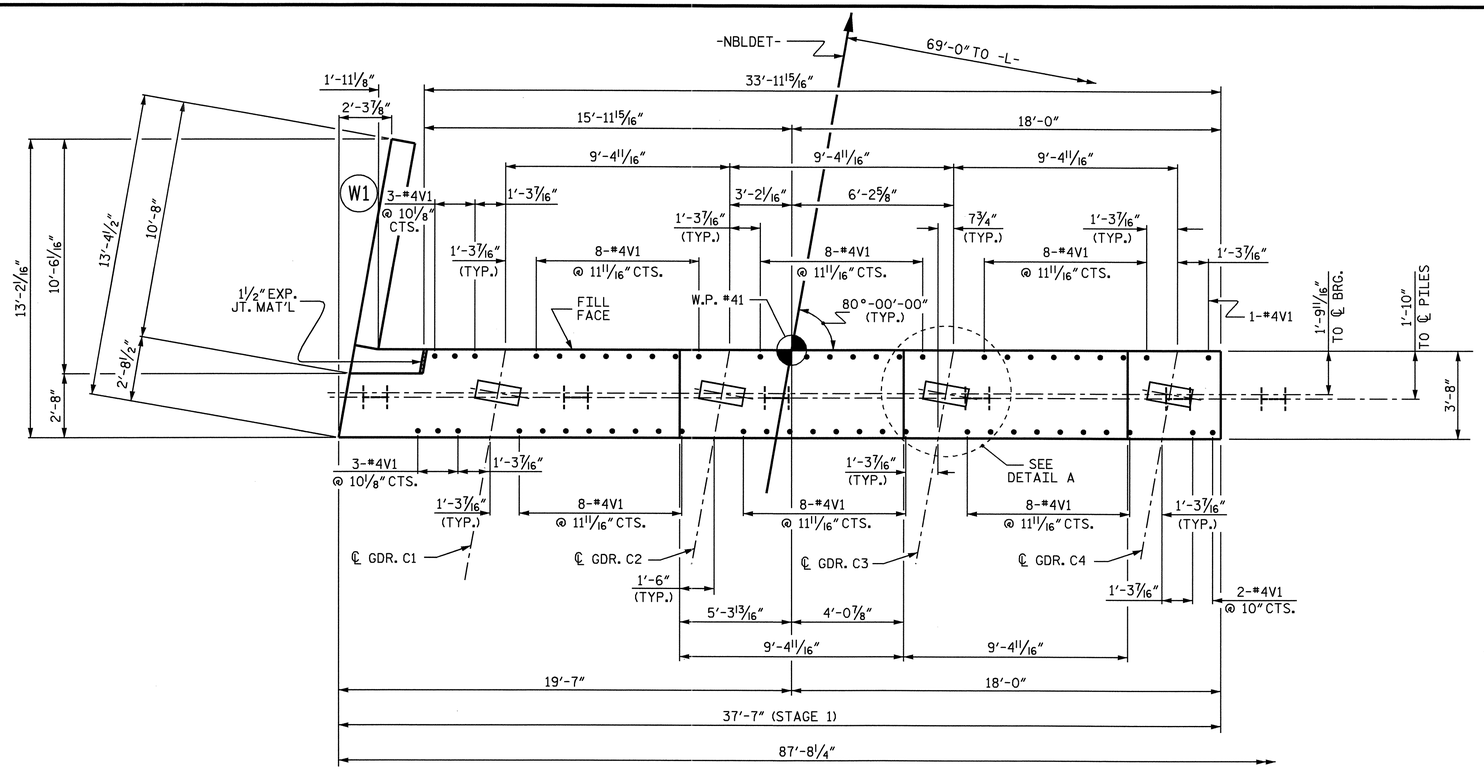

PLAN - STAGE 1

NOTES

THE CONTRACTOR SHALL PROVIDE FOR INSTALLATION OF THE 4" DIAMETER DRAIN PIPE THROUGH THE WING WALL AS REQUIRED FOR REINFORCED BRIDGE APPROACH FILLS, SEE THE ROADWAY PLANS. REINFORCING STEEL IN THE WING WALL MAY BE SHIFTED AS NECESSARY TO CLEAR THE DRAIN PIPE.

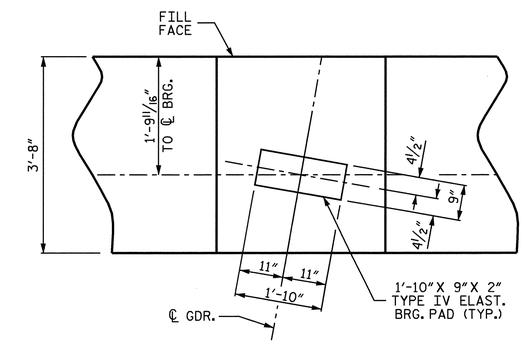

DETAIL A

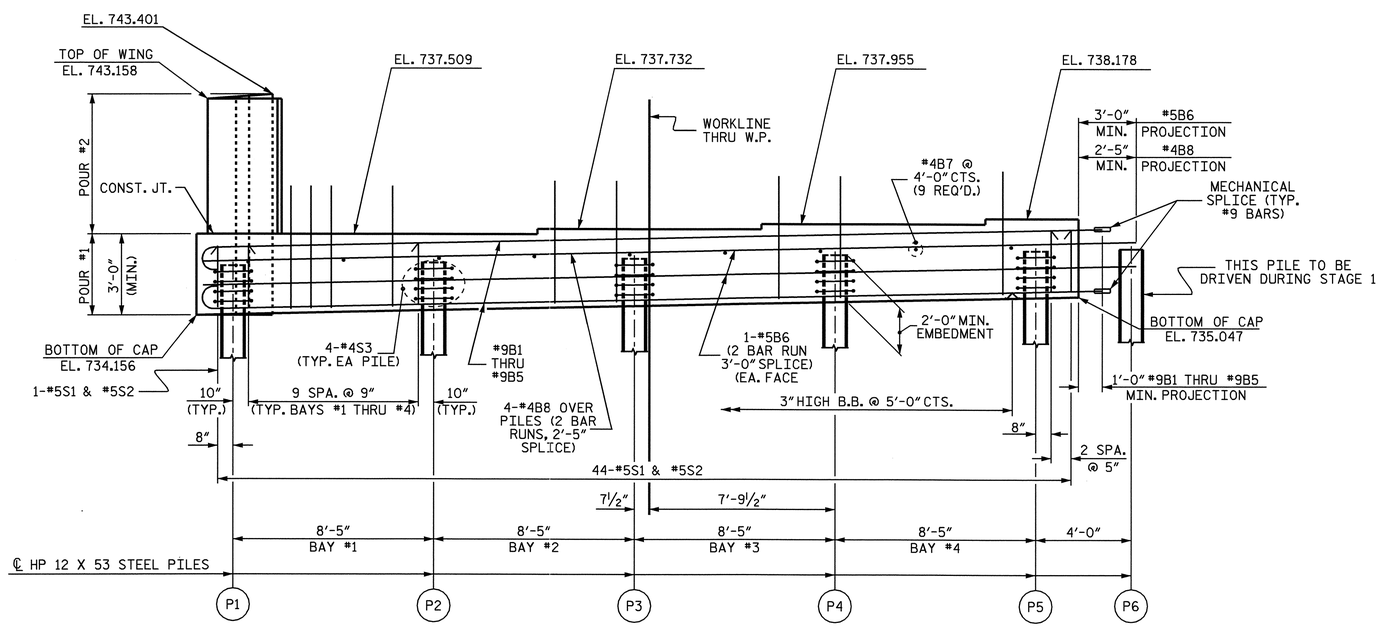

ELEVATION - STAGE 1

TOP OF PILE ELEVATIONS STAGE 1	
P1	736.206
P2	736.406
P3	736.605
P4	736.805
P5	737.004
P6	737.099

PROJECT NO. B-4507

FORSYTH COUNTY

STATION: 27+96.00-L-

SHEET 1 OF 4

STATE OF NORTH CAROLINA
DEPARTMENT OF TRANSPORTATION
RALEIGH

SUBSTRUCTURE
END BENT NO. 2
LEFT LANE
STAGE 1

NORTH CAROLINA PROFESSIONAL SEAL 20125 ENGINEER MARSHALL G. CHEEK, JR.
9.29.09

REVISIONS						SHEET NO.
NO.	BY:	DATE:	NO.	BY:	DATE:	S-40
1			3			TOTAL SHEETS
2			4			99

DRAWN BY : L.L. MURPHY DATE : 07-09
CHECKED BY : M.G. CHEEK DATE : 08-09

28-SEP-2009 08:19
R:\Structures\Final Plans\Left Lane\B-4507_sd_str#1_12_E*.dgn
afigueroa

STR #1

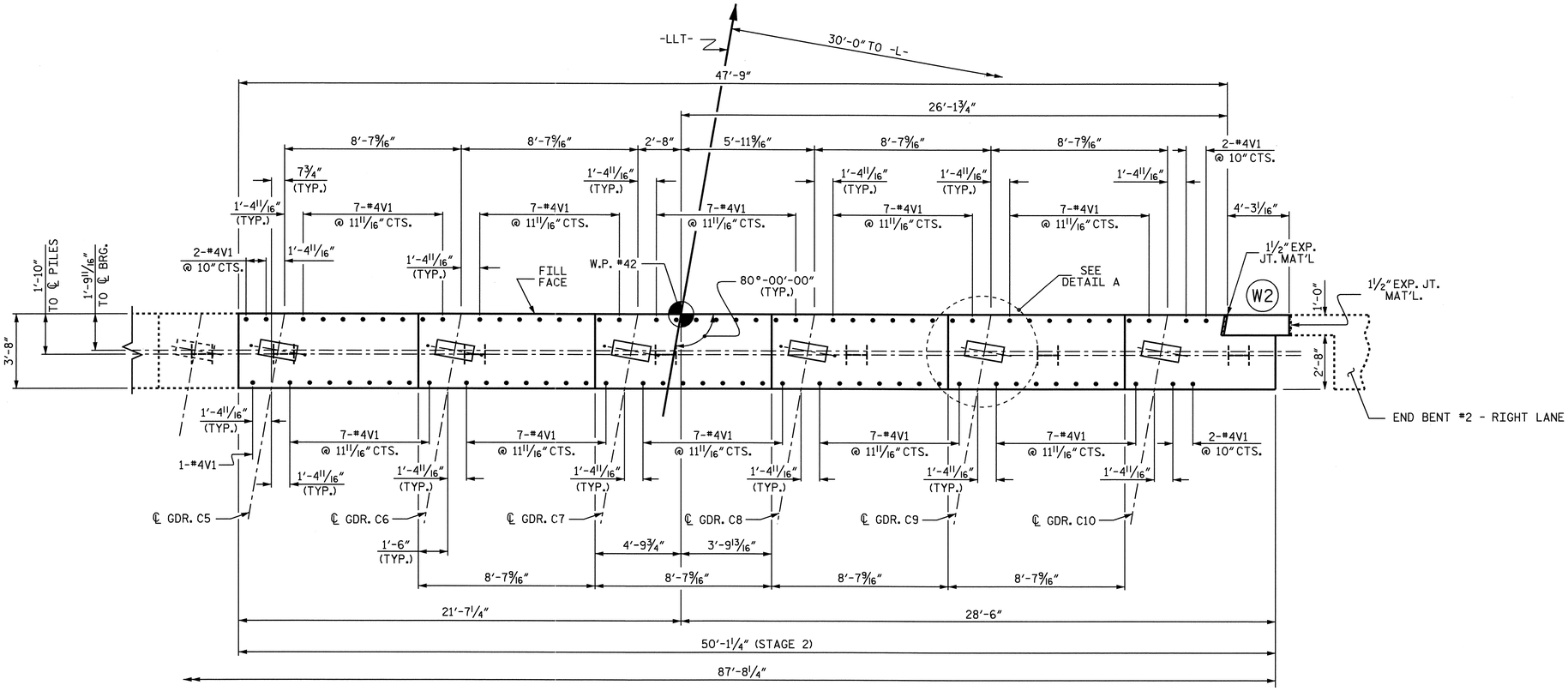

PLAN - STAGE 2

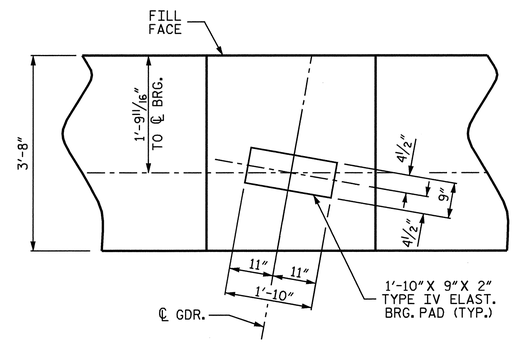

DETAIL A

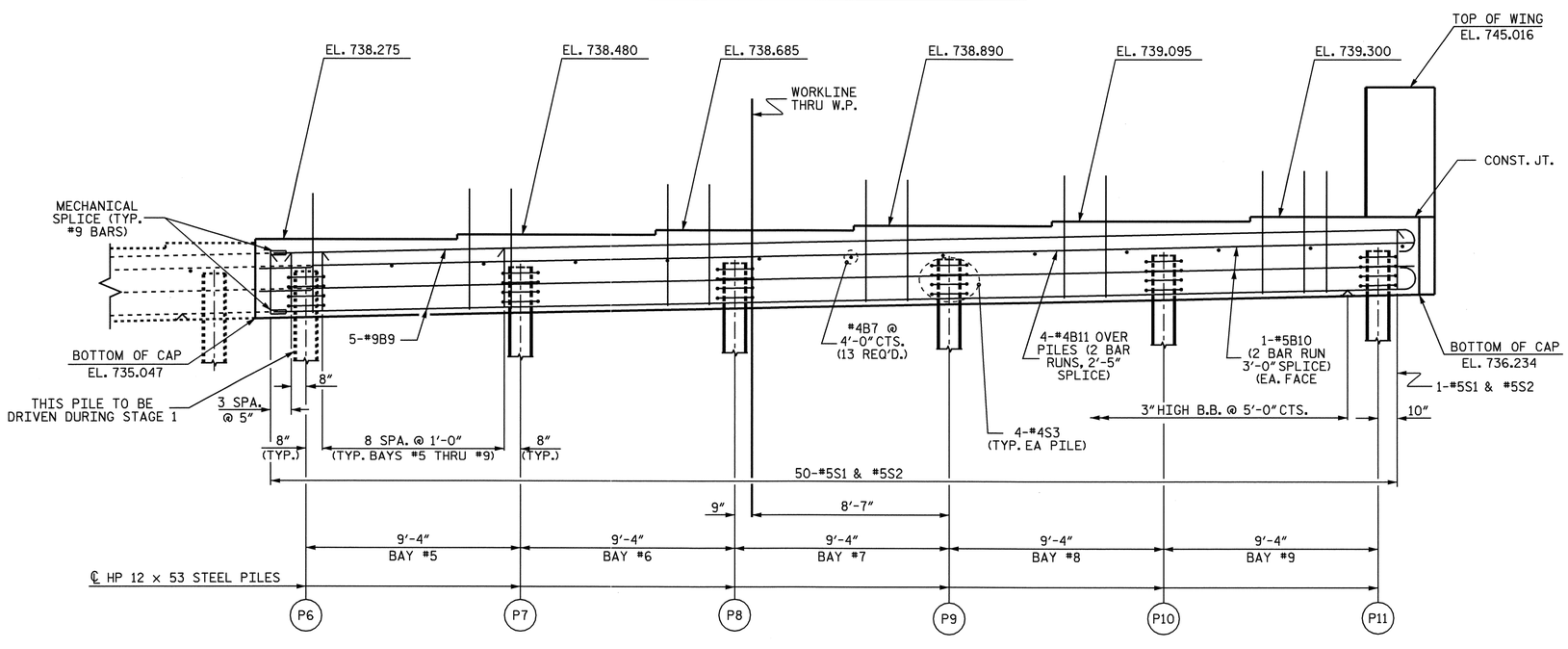

ELEVATION - STAGE 2

TOP OF PILE ELEVATIONS STAGE 2	
P7	737.320
P8	737.541
P9	737.762
P10	737.983
P11	738.204

PROJECT NO. B-4507

FORSYTH COUNTY

STATION: 27+96.00-L-

SHEET 2 OF 4

STATE OF NORTH CAROLINA
DEPARTMENT OF TRANSPORTATION
RALEIGH

SUBSTRUCTURE
END BENT NO. 2
LEFT LANE
STAGE 2

NORTH CAROLINA PROFESSIONAL SEAL 20125 ENGINEER MARSHALL G. CHEEK, JR.
9-29-09

REVISIONS						SHEET NO.
NO.	BY:	DATE:	NO.	BY:	DATE:	S-41
1			3			TOTAL SHEETS
2			4			99

DRAWN BY : L.L. MURPHY DATE : 07-09
CHECKED BY : M.G. CHEEK DATE : 08-09

29-SEP-2009 11:48
R:\Structures\Final Plans\Left Lane\B-4507_sd_str#1_12_E*.dgn
afiguero a

STR #1

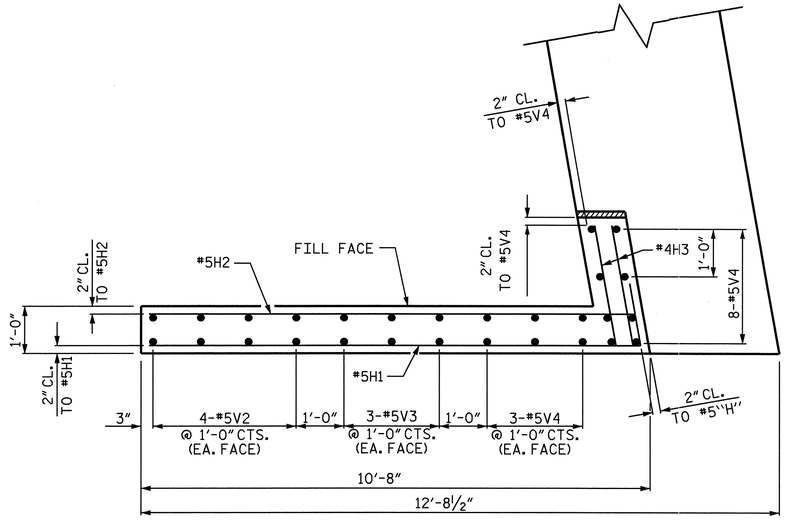

PLAN OF WING W1 - STAGE 1

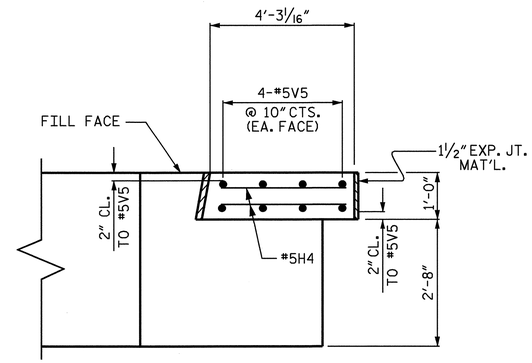

PLAN OF WING W2 - STAGE 2

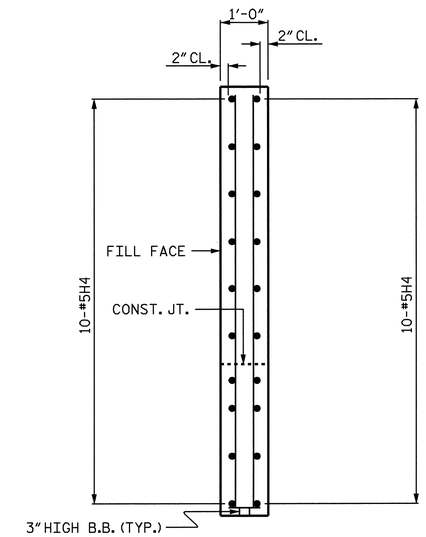

SECTION Y-Y

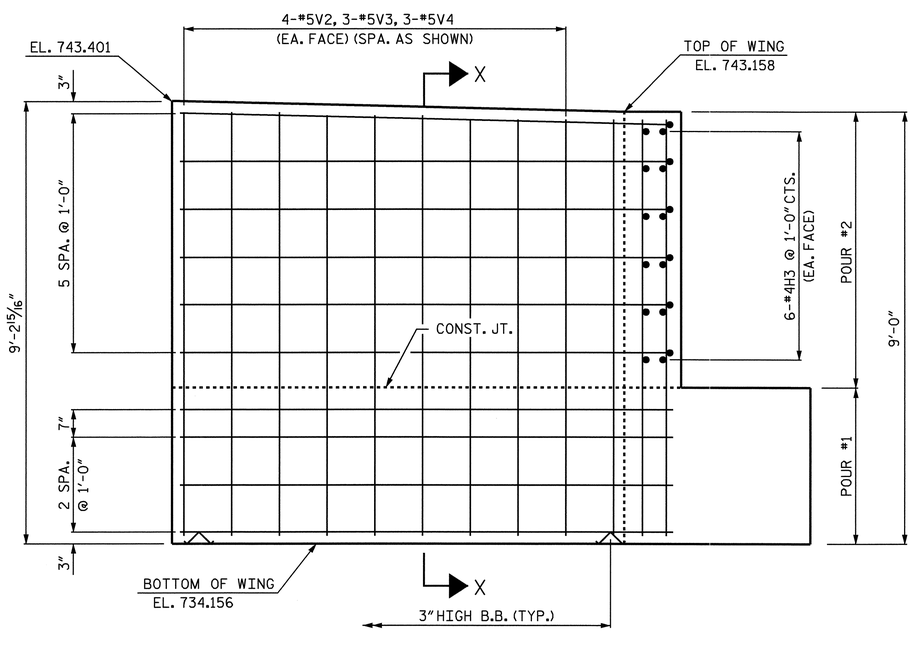

ELEVATION OF WING W1 - STAGE 1

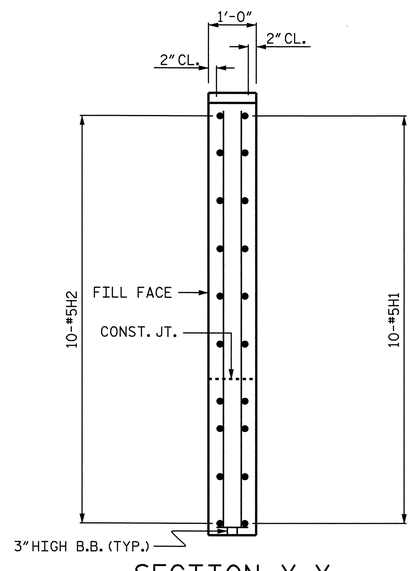

SECTION X-X

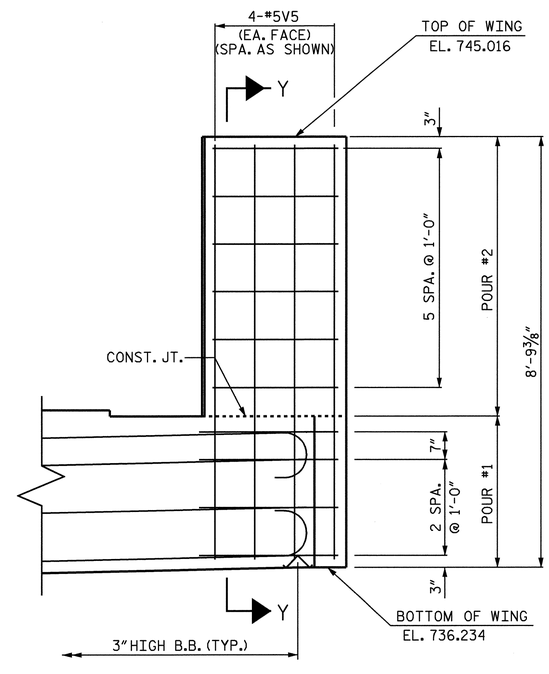

ELEVATION OF WING W2 - STAGE 2

PROJECT NO. B-4507
FORSYTH COUNTY
STATION: 27+96.00-L-

SHEET 3 OF 4

STATE OF NORTH CAROLINA
DEPARTMENT OF TRANSPORTATION
RALEIGH

SUBSTRUCTURE

END BENT NO. 2
LEFT LANE

NORTH CAROLINA PROFESSIONAL SEAL 20125 ENGINEER MARSHALL G. CHEEK, JR.
9-28-09

REVISIONS						SHEET NO.
NO.	BY:	DATE:	NO.	BY:	DATE:	S-42
1			3			TOTAL SHEETS
2			4			99

DRAWN BY : L.L. MURPHY DATE : 07-09
CHECKED BY : M.G. CHEEK DATE : 08-09

29-SEP-2009 11:35
R:\Structures\Final Plans\Left Lane\B-4507_sd_str#1_12_E*.dgn
afigueroa

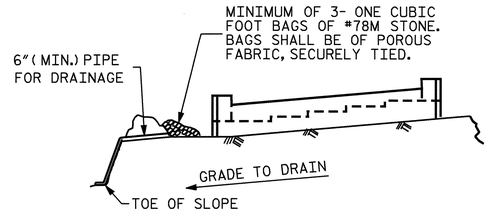

BAGGED STONE AND PIPE SHALL BE PLACED IMMEDIATELY AFTER COMPLETION OF END BENT EXCAVATION. PIPE MAY BE EITHER CONCRETE, CORRUGATED STEEL, CORRUGATED ALUMINUM ALLOY, OR CORRUGATED PLASTIC. PERFORATED PIPE WILL NOT BE ALLOWED.

BAGGED STONE SHALL REMAIN IN PLACE UNTIL THE ENGINEER DIRECTS THAT IT BE REMOVED. THE CONTRACTOR SHALL REMOVE AND DISPOSE OF SILT ACCUMULATIONS AT BAGGED STONE WHEN SO DIRECTED BY THE ENGINEER. BAGS SHALL BE REMOVED AND REPLACED WHENEVER THE ENGINEER DETERMINES THAT THEY HAVE DETERIORATED AND LOST THEIR EFFECTIVENESS.

NO SEPARATE PAYMENT WILL BE MADE FOR THIS WORK AND THE ENTIRE COST OF THIS WORK SHALL BE INCLUDED IN THE UNIT CONTRACT PRICE BID FOR THE SEVERAL PAY ITEMS.

TEMPORARY DRAINAGE AT END BENT

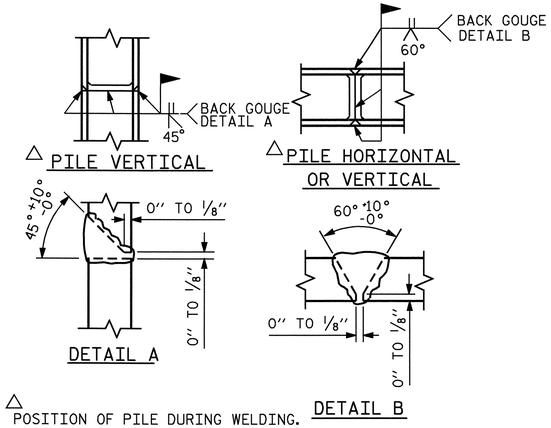

△ POSITION OF PILE DURING WELDING.

PILE SPLICE DETAILS

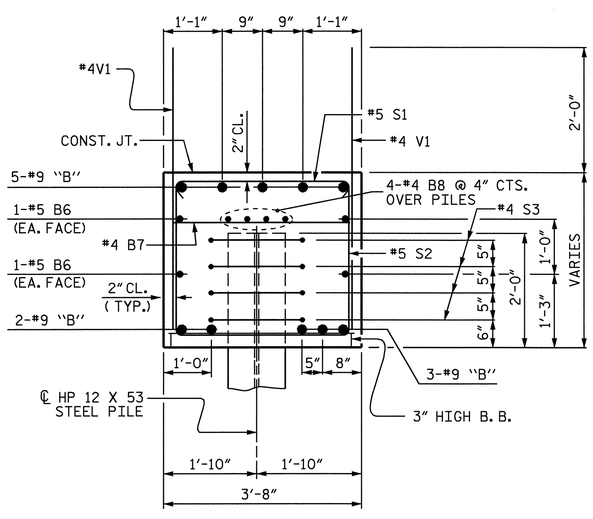

SECTION THRU CAP

STAGE 1

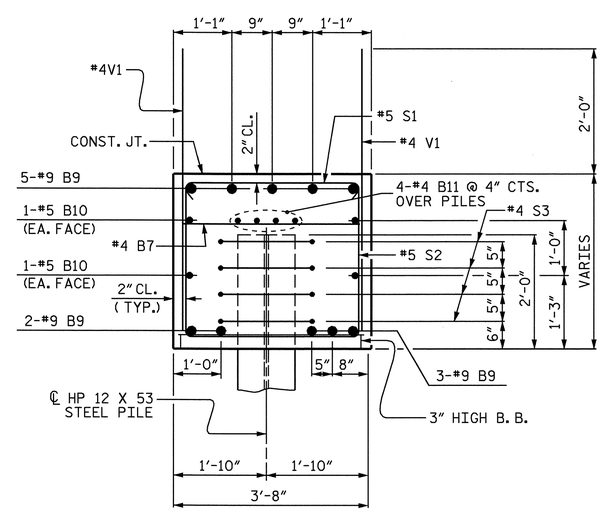

SECTION THRU CAP

STAGE 2

BAR TYPES

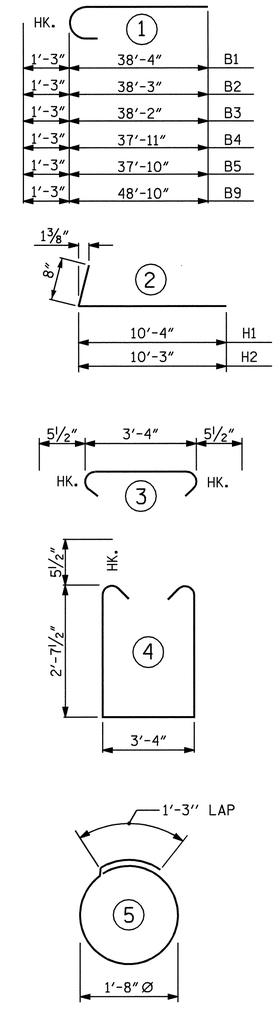

ALL BAR DIMENSIONS ARE OUT TO OUT.

BILL OF MATERIAL

END BENT NO. 2 STAGE 1

BAR	NO.	SIZE	TYPE	LENGTH	WEIGHT
B1	2	#9	1	39'-7"	269
B2	2	#9	1	39'-6"	269
B3	2	#9	1	39'-5"	268
B4	2	#9	1	39'-2"	266
B5	2	#9	1	39'-1"	266
B6	8	#5	STR	21'-9"	181
B7	9	#4	STR	3'-4"	20
B8	8	#4	STR	21'-1"	113
H1	10	#5	2	11'-0"	115
H2	10	#5	2	10'-11"	114
H3	12	#4	STR	2'-7"	21
S1	44	#5	3	4'-3"	195
S2	44	#5	4	9'-6"	436
S3	20	#4	5	6'-6"	87
V1	57	#4	STR	4'-9"	181
V2	8	#5	STR	8'-10"	74
V3	6	#5	STR	8'-9"	55
V4	14	#5	STR	8'-8"	127

REINFORCING STEEL = 3057 LBS.

CLASS A CONCRETE

POUR #1 : CAP & BOT. OF WING = 17.2 CU. YDS.

POUR #2 : TOP OF WINGS = 2.2 CU. YDS.

TOTAL CLASS A CONCRETE = 19.4 CU. YDS.

HP 12 X 53 STEEL PILES
NO. 6 LIN. FT. 240

END BENT NO. 2 STAGE 2

BAR	NO.	SIZE	TYPE	LENGTH	WEIGHT
B7	13	#4	STR	3'-4"	29
B9	10	#9	1	50'-1"	1703
B10	8	#5	STR	26'-4"	220
B11	8	#4	STR	26'-1"	139
H4	20	#5	STR	3'-9"	78
S1	50	#5	3	4'-3"	222
S2	50	#5	4	9'-6"	495
S3	24	#4	5	6'-6"	104
V1	77	#4	STR	4'-9"	244
V5	8	#5	STR	8'-5"	70

REINFORCING STEEL = 3304 LBS.

CLASS A CONCRETE

POUR #1 : CAP & BOT. OF WING = 21.5 CU. YDS.

POUR #2 : TOP OF WINGS = 0.9 CU. YDS.

TOTAL CLASS A CONCRETE = 22.4 CU. YDS.

HP 12 X 53 STEEL PILES
NO. 5 LIN. FT. 200

TOTAL QUANTITIES

REINFORCING STEEL	=	6361 LBS.
CLASS A CONCRETE	=	41.8 CU. YDS.
HP 12 X 53 STEEL PILES	=	440 LIN. FT.

PROJECT NO. B-4507
FORSYTH COUNTY
STATION: 27+96.00-L-

SHEET 4 OF 4

STATE OF NORTH CAROLINA
DEPARTMENT OF TRANSPORTATION
RALEIGH

SUBSTRUCTURE
END BENT NO. 2
LEFT LANE

NORTH CAROLINA PROFESSIONAL SEAL 20125 ENGINEER MARSHALL G. CHEEK, JR.
9-24-09

REVISIONS						SHEET NO.
NO.	BY:	DATE:	NO.	BY:	DATE:	S-43
1			3			TOTAL SHEETS
2			4			99

DRAWN BY : L.L. MURPHY DATE : 07-09
CHECKED BY : M.G. CHEEK DATE : 08-09

NOTES :
FOR BERM WIDTH DIMENSIONS, SEE GENERAL DRAWING.

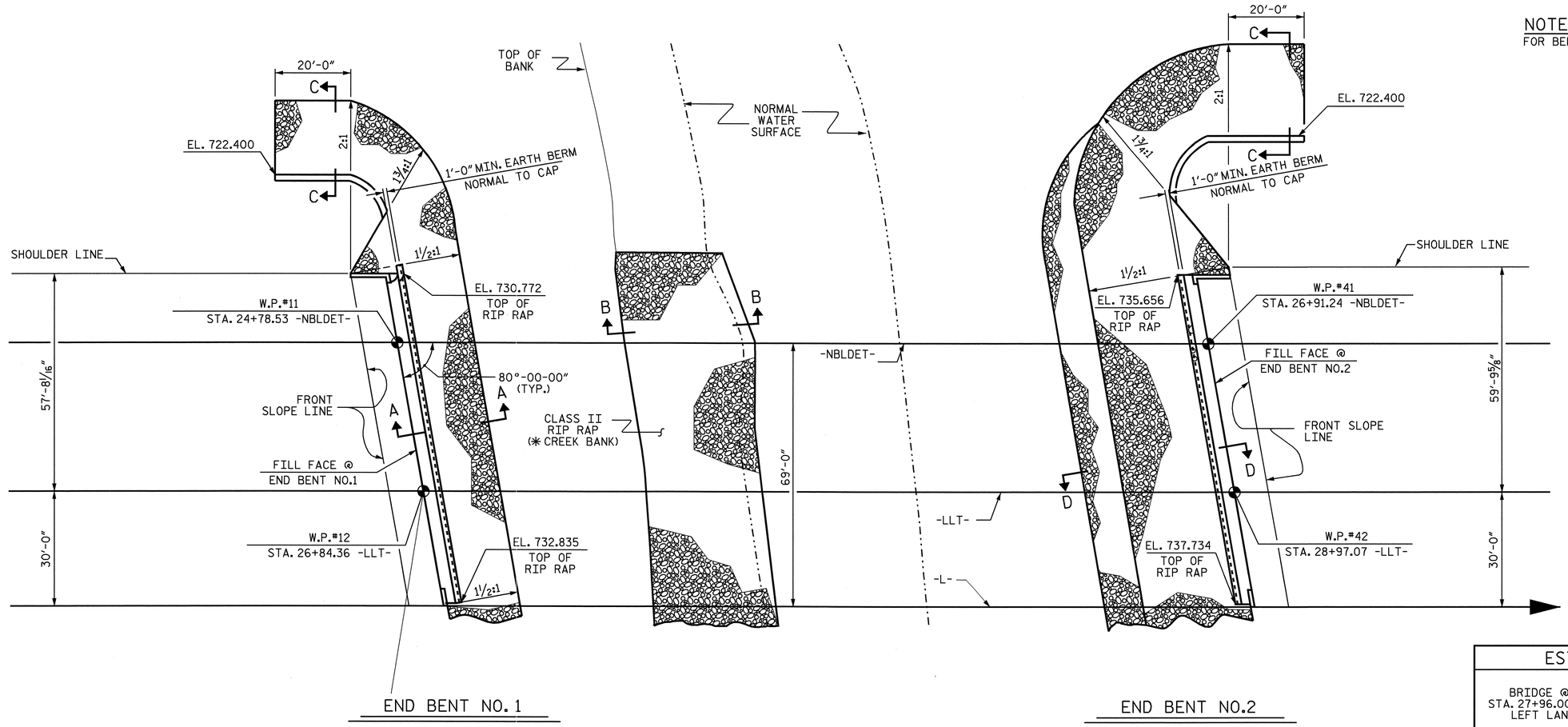

PLAN

ESTIMATED QUANTITIES		
BRIDGE @ STA. 27+96.00 -L- LEFT LANE	RIP RAP CLASS II	FILTER FABRIC FOR DRAINAGE
	TONS	SQUARE YARDS
END BENT 1	545	606
END BENT 2	869	966
✱ CREEK BANK	212	236

✱ CREEK BANK QUANTITY IS INCLUDED WITH END BENT NO. 1 QUANTITIES IN TOTAL BILL OF MATERIAL.

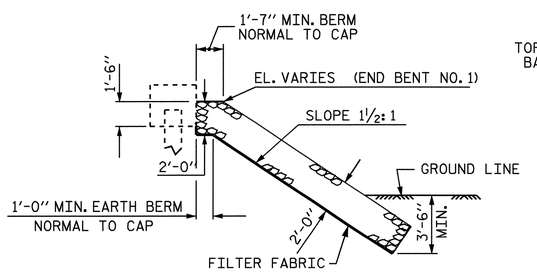

SECTION A-A

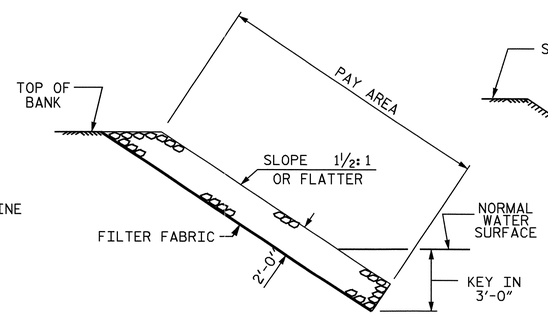

SECTION B-B

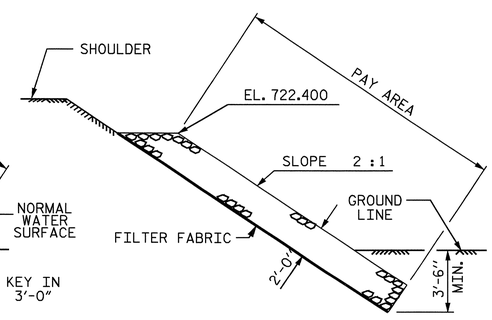

SECTION C-C

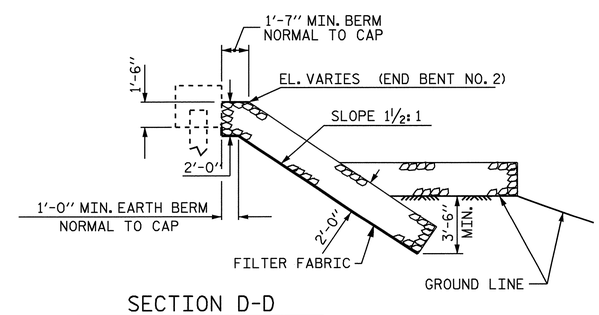

SECTION D-D

PROJECT NO. B-4507
FORSYTH COUNTY
STATION: 27+96.00 -L-

STATE OF NORTH CAROLINA
DEPARTMENT OF TRANSPORTATION
RALEIGH

STANDARD
RIP RAP DETAILS
LEFT LANE

NORTH CAROLINA PROFESSIONAL SEAL 20125 ENGINEER MARSHALL G. PEEL, JR.
9-28-09

REVISIONS								SHEET NO.
NO.	BY:	DATE:	NO.	BY:	DATE:			S-44
1			3					TOTAL SHEETS
2			4					99

ASSEMBLED BY : A.L. FIGUEROA		DATE : 6-24-09	
CHECKED BY : D. HODGE		DATE : 7-16-09	
DRAWN BY : REK 1/84	REV. 8/16/99	RWW/LES	
CHECKED BY : RDU 1/84	REV. 10/17/00	RWW/LES	
	REV. 5/1/06	TLA/GM	

28-SEP-2009 08:18
R:\Structures\Final Plans\Left Lane\B-4507_sd_str#1_14_SP.dgn
atfigueroa

STR. #1

STD. NO. RR1

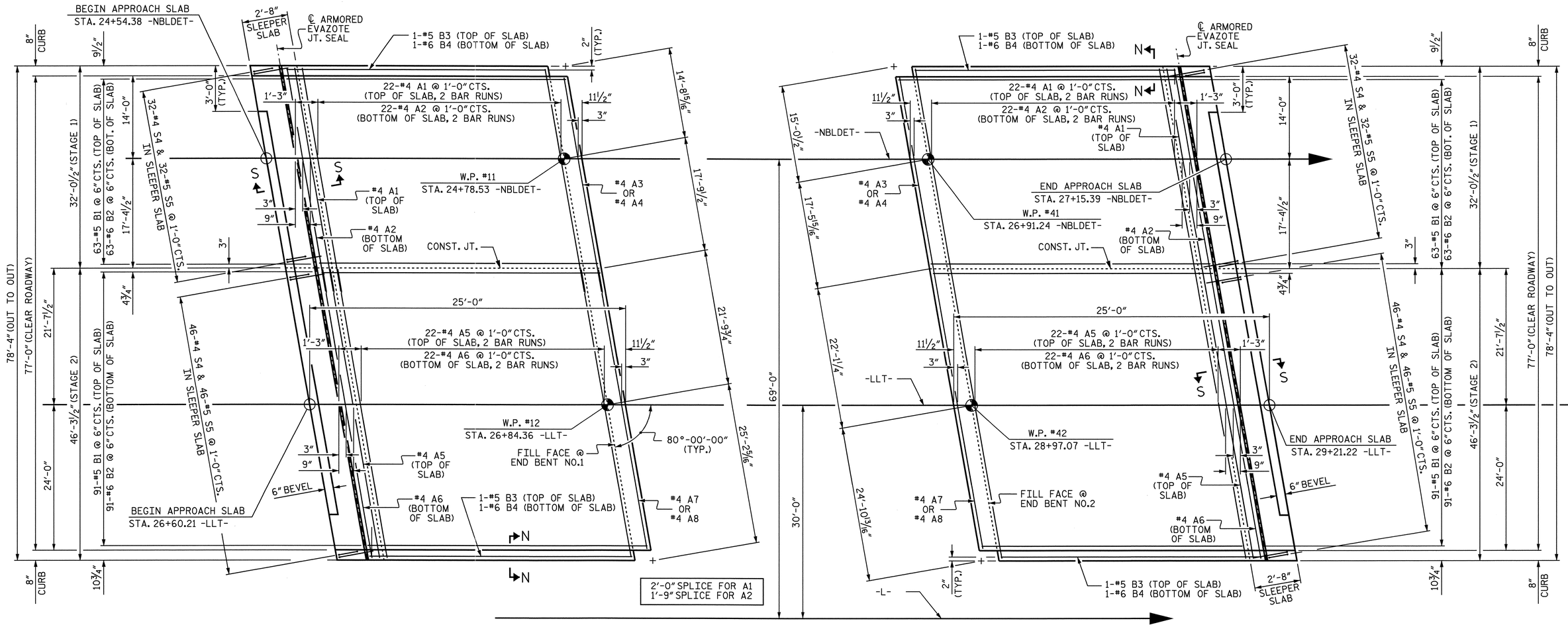

APPROACH SLAB @ END BENT NO. 1

PLAN

#4 A1 AND A5 BARS IN SLEEPER SLAB NOT SHOWN FOR CLARITY

APPROACH SLAB @ END BENT NO. 2

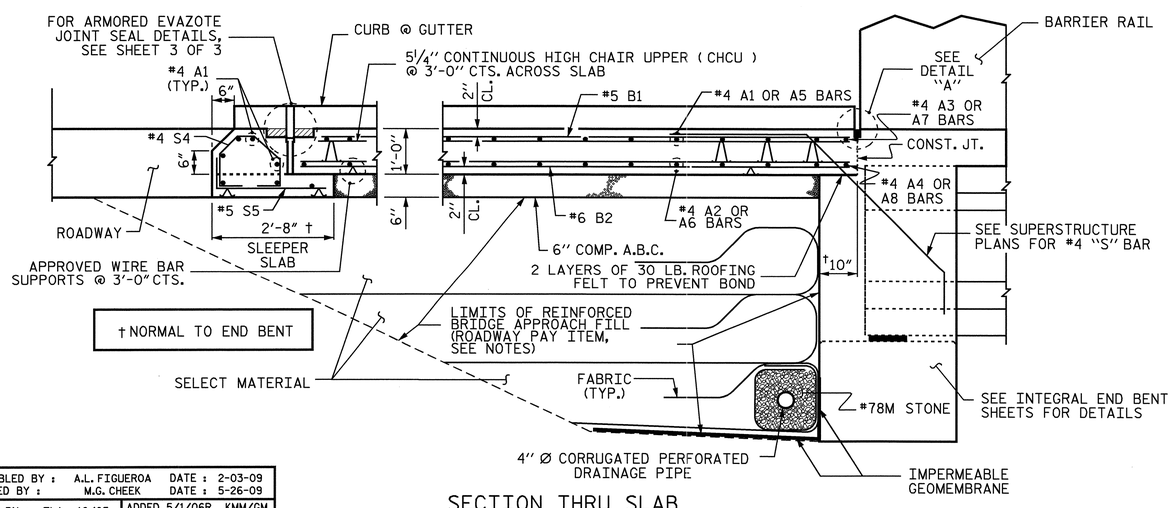

SECTION THRU SLAB

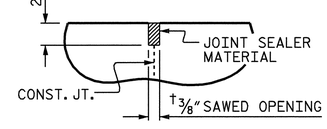

DETAIL "A"

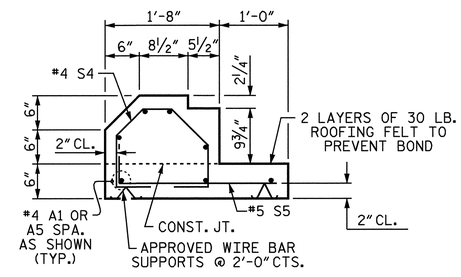

SECTION S-S

SHOWING SLEEPER SLAB

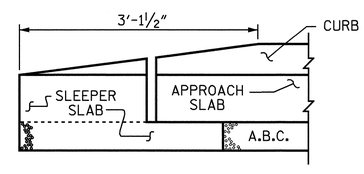

END OF CURB WITHOUT SHOULDER BERM GUTTER

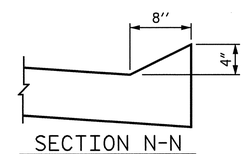

SECTION N-N

NORTH CAROLINA PROFESSIONAL SEAL 20125 ENGINEER MARSHALL G. CHEEK, JR.
9-28-09

PROJECT NO. B-4507

FORSYTH COUNTY

STATION: 27+96.00 -L-

SHEET 1 OF 3

STATE OF NORTH CAROLINA
DEPARTMENT OF TRANSPORTATION
RALEIGH

STANDARD

BRIDGE APPROACH SLAB FOR INTEGRAL ABUTMENT

LEFT LANE

REVISIONS						SHEET NO.
NO.	BY:	DATE:	NO.	BY:	DATE:	S-45
1			3			TOTAL SHEETS
2			4			99

ASSEMBLED BY :	A.L. FIGUEROA	DATE :	2-03-09
CHECKED BY :	M.G. CHEEK	DATE :	5-26-09
DRAWN BY : TLA 10/05		ADDED 5/1/06R KMM/GM	
CHECKED BY : GM 5/06			

28-SEP-2009 08:18
R:\Structures\Final Plans\Left Lane\B-4507_sd_str*1_15_AS.dgn
aflgueroa

STR. #1 STD. NO. BAS11

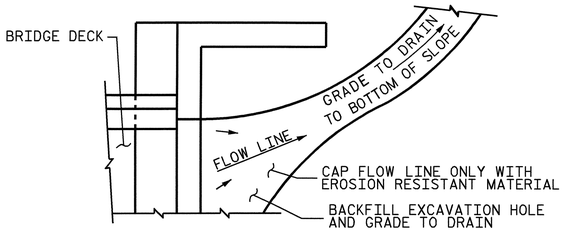

NOTE: IF THE APPROACH SLAB IS NOT CONSTRUCTED IMMEDIATELY AFTER THE BACKFILLING OF THE END BENT EXCAVATION, GRADE TO DRAIN TO THE BOTTOM OF THE SLOPE AND PROVIDE EROSION RESISTANT MATERIAL, SUCH AS FIBERGLASS ROVING OR AS DIRECTED BY THE ENGINEER TO PREVENT SOIL EROSION AND TO PROTECT THE AREA ADJACENT TO THE STRUCTURE. THE CONTRACTOR WILL BE REQUIRED TO REMOVE THESE MATERIALS PRIOR TO CONSTRUCTION OF THE APPROACH SLAB.

TEMPORARY DRAINAGE DETAIL

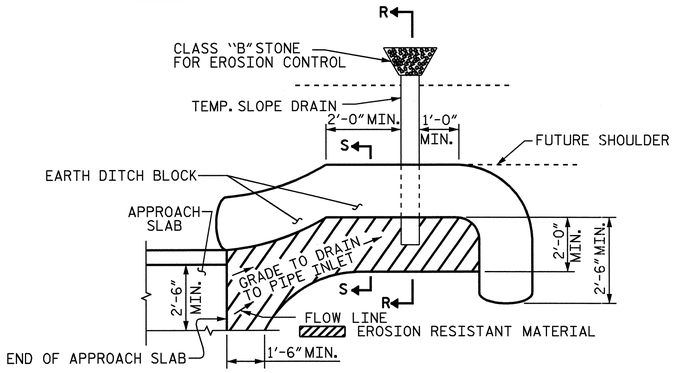

NOTE: IMMEDIATELY AFTER THE CONSTRUCTION OF THE APPROACH SLAB, THE CONTRACTOR SHALL PROVIDE TEMPORARY BERM AND SLOPE DRAIN. CONTRACTOR SHALL GRADE TO PIPE INLET AND PROVIDE EROSION RESISTANT MATERIAL AS SHOWN. THE EROSION RESISTANT MATERIAL SHALL BE EITHER 1) ASPHALT PLANT MIX, TYPE 1 OR TYPE 2, MIN. 2" DEPTH, 2) EROSION CONTROL MAT, OR 3) CONCRETE, AS DIRECTED BY THE ENGINEER. THE SLOPE DRAIN SHALL CONSIST OF A NON-PERFORATED TEMPORARY DRAINAGE PIPE, 12 INCHES DIAMETER.

PLAN VIEW

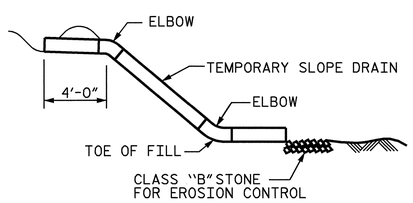

SECTION R-R

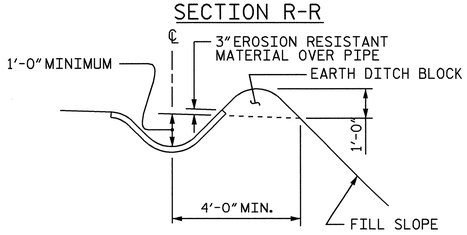

SECTION S-S

TEMPORARY BERM AND SLOPE DRAIN DETAILS

BILL OF MATERIAL

APPROACH SLAB AT EB NO.1

STAGE 1

BAR	NO.	SIZE	TYPE	LENGTH	WEIGHT
✳ A1	61	#4	STR	18'-3"	744
A2	47	#4	STR	18'-1"	568
✳ A3	1	#4	STR	17'-11"	12
A4	1	#4	STR	17'-8"	12
✳ B1	63	#5	STR	22'-5"	1473
B2	63	#6	STR	22'-11"	2169
✳ B3	1	#5	STR	21'-7"	23
B4	1	#6	STR	22'-1"	33
✳ S4	32	#4	1	4'-1"	87
S5	32	#5	2	3'-0"	100

REINFORCING STEEL	LBS.	2882
✳ EPOXY COATED REINFORCING STEEL	LBS.	2339
CLASS AA CONCRETE		
POUR #1 SLEEPER SLAB		3.5 C.Y.
POUR #2 SLAB & CURB		27.5 C.Y.
TOTAL		31.0 C.Y.

STAGE 2

BAR	NO.	SIZE	TYPE	LENGTH	WEIGHT
✳ A5	61	#4	STR	24'-6"	998
A6	47	#4	STR	24'-4"	764
✳ A7	1	#4	STR	24'-1"	16
A8	1	#4	STR	24'-0"	16
✳ B1	91	#5	STR	22'-5"	2128
B2	91	#6	STR	22'-11"	3132
✳ B3	1	#5	STR	21'-7"	23
B4	1	#6	STR	22'-1"	33
✳ S4	46	#4	1	4'-1"	125
S5	46	#5	2	3'-0"	144

REINFORCING STEEL	LBS.	4089
✳ EPOXY COATED REINFORCING STEEL	LBS.	3290
CLASS AA CONCRETE		
POUR #1 SLEEPER SLAB		5.1 C.Y.
POUR #2 SLAB & CURB		39.8 C.Y.
TOTAL		44.9 C.Y.

APPROACH SLAB AT EB NO.2

STAGE 1

BAR	NO.	SIZE	TYPE	LENGTH	WEIGHT
✳ A1	61	#4	STR	18'-3"	744
A2	47	#4	STR	18'-1"	568
✳ A3	1	#4	STR	17'-11"	12
A4	1	#4	STR	17'-8"	12
✳ B1	63	#5	STR	22'-5"	1473
B2	63	#6	STR	22'-11"	2169
✳ B1	1	#5	STR	21'-7"	23
B2	1	#6	STR	22'-1"	33
✳ S4	32	#4	1	4'-1"	87
S5	32	#5	2	3'-0"	100

REINFORCING STEEL	LBS.	2882
✳ EPOXY COATED REINFORCING STEEL	LBS.	2339
CLASS AA CONCRETE		
POUR #1 SLEEPER SLAB		3.5 C.Y.
POUR #2 SLAB & CURB		27.5 C.Y.
TOTAL		31.0 C.Y.

STAGE 2

BAR	NO.	SIZE	TYPE	LENGTH	WEIGHT
✳ A5	61	#4	STR	24'-6"	998
A6	47	#4	STR	24'-4"	764
✳ A7	1	#4	STR	24'-1"	16
A8	1	#4	STR	24'-0"	16
✳ B1	91	#5	STR	22'-5"	2128
B2	91	#6	STR	22'-11"	3132
✳ B1	1	#5	STR	21'-7"	23
B2	1	#6	STR	22'-1"	33
✳ S4	46	#4	1	4'-1"	125
S5	46	#5	2	3'-0"	144

REINFORCING STEEL	LBS.	4089
✳ EPOXY COATED REINFORCING STEEL	LBS.	3290
CLASS AA CONCRETE		
POUR #1 SLEEPER SLAB		5.1 C.Y.
POUR #2 SLAB & CURB		39.8 C.Y.
TOTAL		44.9 C.Y.

BAR TYPES

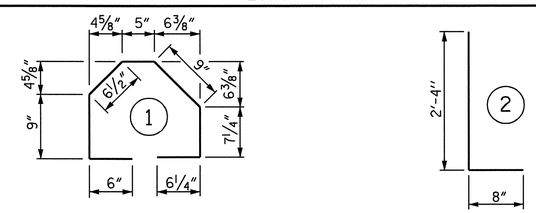

ALL BAR DIMENSIONS ARE OUT TO OUT

NOTES

APPROACH SLAB SHALL NOT BE CONSTRUCTED PRIOR TO COMPLETION OF THE BRIDGE DECK.

FOR REINFORCED BRIDGE APPROACH FILL INCLUDING FABRIC, IMPERMEABLE GEOMEMBRANE, 4" Ø DRAINAGE PIPE, #78M STONE, AND SELECT MATERIAL, SEE ROADWAY PLANS.

TEMPORARY DRAINAGE AND TEMPORARY BERM AND SLOPE DRAINS WILL BE PAID FOR UNDER THE LUMP SUM PRICE FOR BRIDGE APPROACH SLAB.

AREA BETWEEN THE WINGWALL AND APPROACH SLAB SHALL BE GRADED TO DRAIN THE WATER AWAY FROM THE FILL FACE OF THE BRIDGE AND SHALL BE PAVED. SEE ROADWAY PLANS.

THE 6" COMP. A.B.C. SHALL BE FLUSH WITH THE SLEEPER SLAB AND SHALL EXTEND 1'-0" OUTSIDE OF EACH EDGE OF THE APPROACH SLAB.

THE CONTRACTOR MAY USE 4" TYPE B-25.0B ASPHALT CONCRETE BASE COURSE IN LIEU OF 6" COMP. A.B.C. IF THIS OPTION IS USED, THE BASE COURSE SHALL BE FLUSH WITH THE SLEEPER SLAB, AND THE WIDTH SHALL BE THE SAME AS THAT OF THE APPROACH SLAB.

THE CONTRACTOR MAY USE 5" CLASS "A" CONCRETE BASE IN LIEU OF 6" COMP. A.B.C. IF THIS OPTION IS USED, THE CONCRETE BASE SHALL BE FLUSH WITH THE SLEEPER SLAB, AND THE WIDTH SHALL BE THE SAME AS THAT OF THE APPROACH SLAB. THE CONCRETE SHALL BE FINISHED TO A SMOOTH SURFACE AND A LAYER OF 30 LB ROOFING FELT SHALL BE PLACED BETWEEN THE CONCRETE BASE AND THE APPROACH SLAB TO PREVENT BOND. THE APPROACH SLAB SHALL NOT BE CAST UNTIL THE CONCRETE BASE HAS REACHED AN AGE OF THREE CURING DAYS.

THE VERTICAL JOINT ON THE RIGHT AND LEFT SIDE OF THE APPROACH SLAB AT THE ENDS OF THE EVAZOTE JOINT SHALL BE FILLED WITH SILICONE OR OTHER APPROVED MATERIAL IN ORDER TO PREVENT BACKFILL FROM ENTERING THE JOINT OPENING.

THE JOINT OPENING AT THE APPROACH SLAB/DECK INTERFACE SHALL BE SAWED NO MORE THAN 12 HOURS AFTER THE APPROACH SLAB IS CAST. THE JOINT SHALL BE CLEANED OF ALL DEBRIS BEFORE THE SEALANT IS APPLIED. THE JOINT SEALER MATERIAL SHALL CONFORM TO THE REQUIREMENTS OF TYPE SL LOW MODULUS SILICONE SEALANT.

GROOVING BRIDGE FLOORS IS NOT REQUIRED ON THE TOP SURFACE OF THE SLEEPER SLAB. INSTEAD, APPLY A BROOMED TEXTURE IN ACCORDANCE WITH ARTICLE 442-3 OF THE STANDARD SPECIFICATIONS.

PROJECT NO. B-4507
FORSYTH COUNTY
STATION: 27+96.00 -L-

SHEET 2 OF 3

STATE OF NORTH CAROLINA
DEPARTMENT OF TRANSPORTATION
RALEIGH

STANDARD
BRIDGE APPROACH SLAB DETAILS
LEFT LANE

NORTH CAROLINA PROFESSIONAL SEAL 20125 ENGINEER MARSHALL G. CHEEK, JR.
4-10-09

REVISIONS								SHEET NO.
NO.	BY:	DATE:	NO.	BY:	DATE:			S-46
1			3					TOTAL SHEETS
2			4					99

STR. #1

ASSEMBLED BY :	A.L. FIGUEROA		DATE :	8-19-08	
CHECKED BY :	M.G. CHEEK		DATE :	5-26-09	
DRAWN BY : FCJ	11/88	REV. 10/17/00	RWW/LES		
CHECKED BY : ARB	11/88	REV. 5/7/03	RWW/JTE		
		REV. 5/1/06	TLA/GM		

04-AUG-2009 16:24
R:\Structures\STR*1\aflgueroa\Microstation\B-4507_sd_STR*1_15_AS.dgn
aflgueroa

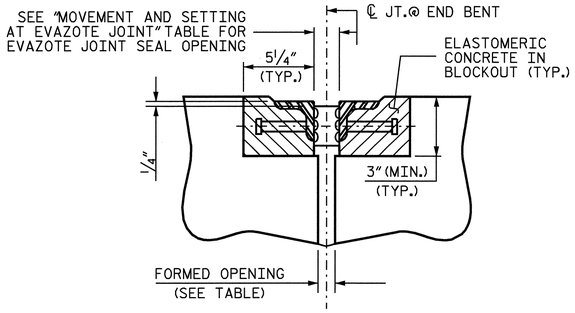

SECTION C-C
ARMORED EVAZOTE JOINT SEAL

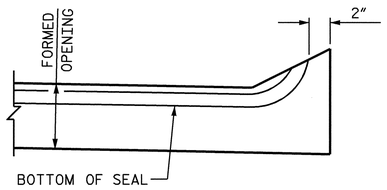

SECTION A-A

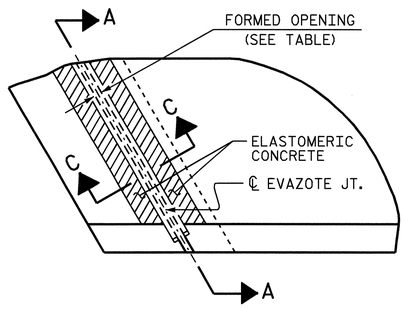

PLAN

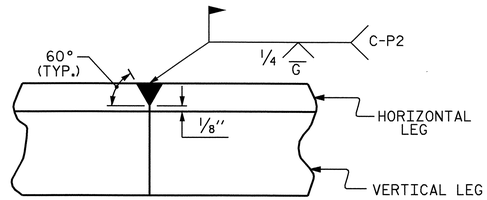

DETAIL- FIELD WELD SPLICE OF ANGLE

NOTES

ANGLES SHALL CONFORM TO AASHTO M270 GRADE 36 STEEL OR APPROVED EQUAL. ALL STUD ANCHORS SHALL CONFORM TO AASHTO M169 GRADES 1010 THRU 1020 OR APPROVED EQUAL.

STUD ANCHORS SHALL BE SHOP WELDED AND ALL HOLES SHALL BE SHOP DRILLED AS SHOWN ON THE PLANS. STUD ANCHORS SHALL BE ELECTRIC ARC END WELDED WITH COMPLETE FUSION.

UPON COMPLETION OF SHOP FABRICATION, THE ENTIRE ANCHOR ASSEMBLY SHALL BE METALLIZED. THE ½" Ø STUD ANCHORS AND ANCHOR TABS NEED NOT BE METALLIZED. SEE SPECIAL PROVISION FOR THERMAL SPRAYED COATINGS (METALLIZATION).

ANCHOR ASSEMBLY SHALL BE MADE CONTINUOUS THE LENGTH OF THE JOINT FROM GUTTER TO GUTTER. FOR FIELD SPLICES AT ALL CROWN BREAK POINTS, THE ENDS OF THE STEEL ANGLES SHALL BE CUT PARALLEL TO THE BRIDGE CENTERLINE. FINISHED FIELD WELDS SHALL BE GROUND SMOOTH AND COATED WITH A MINIMUM THICKNESS OF 4 DRY MILS OF ZINC-RICH PAINT IN ACCORDANCE WITH THE STANDARD SPECIFICATIONS.

ANCHOR ASSEMBLY SEGMENTS SHALL NOT BE LESS THAN 12 FEET NOR MORE THAN 20 FEET IN LENGTH. SHORTER SEGMENTS MAY BE USED AT THE EDGE OF ROADWAY OR AT POINTS OF STAGED CONSTRUCTION.

THE ANCHOR ASSEMBLY SHALL BE SECURED AND LEVELED AS SHOWN IN THE "ARMORED JOINT ANCHOR ASSEMBLY DETAILS". NO SUBMITTALS ARE REQUIRED FOR ⅜" Ø EXPANSION ANCHORS, NUTS OR WASHERS. THE CONTRACTOR MAY SUBMIT FOR APPROVAL AN ALTERNATE METHOD OF ALIGNING AND LEVELING THE ANGLES. THE ALTERNATE METHOD SHALL NOT INCLUDE ANY WELDING TO THE OUTSIDE FACE OF THE ANGLES.

AFTER THE ELASTOMERIC CONCRETE HAS BEEN CAST ON BOTH SIDES OF THE JOINT, REMOVE ANY EXCESS CONCRETE THAT COMES THROUGH THE WEEP HOLES AND THOROUGHLY CLEAN THE ANGLES. ANY DAMAGED STEEL SHALL BE COATED WITH A MINIMUM OF 4 MILS OF ZINC-RICH PAINT IN ACCORDANCE WITH THE STANDARD SPECIFICATIONS.

SEE SPECIAL PROVISIONS FOR EVAZOTE JOINT SEALS.

THE NOMINAL UNCOMPRESSED SEAL WIDTH OF THE EVAZOTE JOINT SEAL SHALL BE 2 13/16" AT END BENT NO.1 AND 2½" AT END BENT NO.2.

SEE SPECIAL PROVISIONS FOR ELASTOMERIC CONCRETE.

MOVEMENT AND SETTING AT EVAZOTE JOINT

END BENT NO.	SKEW ANGLE	NOMINAL UNCOMPRESSED SEAL WIDTH	TOTAL MOVEMENT (ALONG ℄ RDWY)	PERPENDICULAR JOINT OPENING AT 45° F	PERPENDICULAR JOINT OPENING AT 60° F	PERPENDICULAR JOINT OPENING AT 90° F	FORMED OPENING
1	80°	2 13/16"	1⅜"	2½"	2¼"	1 13/16"	1⅜"
2	80°	2⅛"	1"	2⅛"	2"	1 11/16"	1"

TOTAL MOVEMENT IS CALCULATED ALONG THE CENTERLINE OF ROADWAY.
JOINT OPENINGS ARE MEASURED PERPENDICULAR TO THE JOINT.

ELASTOMERIC CONCRETE

	ELASTOMERIC CONCRETE ✳ (CU. FT.)		TOTAL LENGTH OF ANGLE (FT)	
STAGE	END BENT NO. 1	END BENT NO. 2	END BENT NO. 1	END BENT NO. 2
1	7.4	7.4	65.073	65.073
2	10.6	10.6	94.012	94.012
TOTAL	18.0	18.0	159.085	159.085

✳ BASED ON THE MINIMUM BLOCKOUT SHOWN.

JOINT SEAL DETAILS

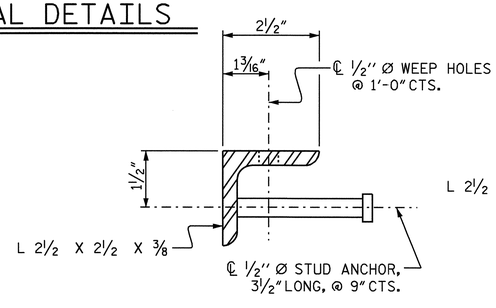

SECTION VIEW OF STUD

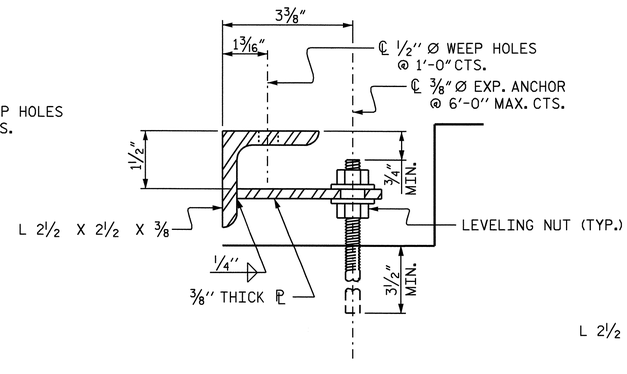

SECTION VIEW OF TAB

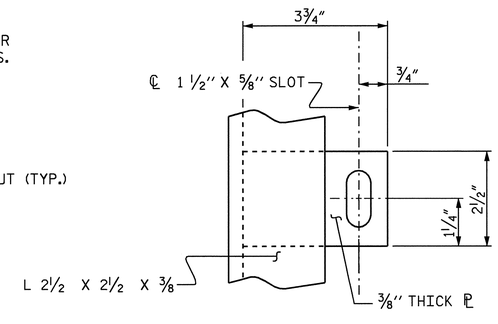

PLAN VIEW OF TAB

ARMORED JOINT ANCHOR ASSEMBLY DETAILS

PROJECT NO. B-4507
FORSYTH COUNTY
STATION: 27+96.00 -L-

SHEET 3 OF 3

STATE OF NORTH CAROLINA
DEPARTMENT OF TRANSPORTATION
RALEIGH

BRIDGE APPROACH SLAB DETAILS
LEFT LANE

NORTH CAROLINA PROFESSIONAL SEAL 20125 ENGINEER MARSHALL G. CHEEK, JR.
9.29.09

REVISIONS						SHEET NO.
NO.	BY:	DATE:	NO.	BY:	DATE:	S-47
1			3			TOTAL SHEETS
2			4			99

STR. #1

ASSEMBLED BY : A.L. FIGUEROA DATE : 8-19-08
CHECKED BY : M.G. CHEEK DATE : 5-26-09

29-SEP-2009 11:34
R:\Structures\Final Plans\Left Lane\B-4507_sd_str#1_15_AS.dgn
afigueroa

OVERHANG BRACKET CALCULATION INSTRUCTIONS

AASHTO SHAPES - TYPES III, IV, V, AND VI

1. RECORD KNOWN INFORMATION ON "BRIDGE OVERHANG BRACKET SUMMARY" ON SHEET 2
2. CALCULATE THE MAXIMUM SCREED LOAD PER BRACKET (SLPB) WITH AN ESTIMATED R = 1.5. SLPB = R X W. ROUND VALUE UP TO NEAREST SLPB VALUE INDICATED ON APPROPRIATE TABLE 1-1, 1-2, 1-3, OR 1-4.
3. WITH THE ESTIMATED SLPB, OVERHANG SLAB THICKNESS, "K" VALUE, AND 45° HANGER SAFE WORKING LOAD (SWL), ENTER THE APPROPRIATE TABLE 1-1, 1-2, 1-3, OR 1-4 (BASED ON OVERHANG DIMENSION) AND DETERMINE THE BRACKET SPACING, S.
4. CALCULATE S/D1 AND S/D2, ROUNDING UP TO NEAREST VALUE IN TABLE 2. ENTER TABLE 2 AND DETERMINE R VALUE.
5. CALCULATE REVISED SLPB. ROUND VALUE UP TO NEAREST SLPB VALUE INDICATED ON APPROPRIATE TABLE 1-1, 1-2, 1-3, OR 1-4.
6. WITH THE REVISED SLPB, OVERHANG SLAB THICKNESS, "K" VALUE AND 45 HANGER SAFE WORKING LOAD (SWL), ENTER THE APPROPRIATE TABLE 1-1, 1-2, 1-3 OR 1-4 (BASED ON OVERHANG DIMENSION) AND DETERMINE REVISED BRACKET SPACING, S.
7. CONTINUE ITERATIONS OF STEPS 4-6 UNTIL THE REVISED BRACKET SPACING, S, IS THE SAME AS THE PREVIOUS S VALUE.
8. CHECK LUMBER JOIST SPACING: WITH BRACKET SPACING VALUE, S, ROUND THIS VALUE UP TO THE NEAREST VALUE OF ALLOWABLE SPAN LENGTH OF JOIST OF TABLE 3. USING THIS VALUE, ALONG WITH THE AVERAGE OVERHANG SLAB THICKNESS AND THE LUMBER JOIST SIZE, DETERMINE JOIST SPACING FROM TABLE 3. IF NECESSARY, ADJUST LUMBER JOIST SIZE AND/OR JOIST SPACING TO MEET ALLOWABLE SPAN LENGTH OF JOIST.
9. CONVERSELY, IF THE DESIRED JOIST SPACING IS KNOWN, USE THIS ALONG WITH THE AVERAGE OVERHANG SLAB THICKNESS AND THE LUMBER JOIST SIZE TO DETERMINE IF ALLOWABLE SPAN LENGTH OF JOIST IS GREATER THAN THE BRACKET SPACING, S. IF NECESSARY, ADJUST LUMBER JOIST SIZE TO MEET REQUIREMENTS OF ALLOWABLE SPAN LENGTH OF JOIST AND JOIST SPACING.
10. RECORD REMAINING INFORMATION ON "BRIDGE OVERHANG BRACKET SUMMARY" FORM.
11. SUBMIT FORM AND CALCULATIONS FOR REVIEW AND APPROVAL.

TABLE 1-1

(FOR USE ON **UP TO 2'-0" OVERHANG (L)** & 54" HORIZONTAL LEG LENGTH OF THE OVERHANG BRACKET)

AVG. SLAB THICKNESS (T) (in)	BRACKET (K) DIMENSION (in)	SCREED LOAD PER BRACKET									45° HANGER SWL (lbs)
		2500 lbs.	2250 lbs.	2000 lbs.	1750 lbs.	1500 lbs.	1250 lbs.	1000 lbs.	750 lbs.	0 lbs.	
		BRACKET SPACING									
10	30				2'-1"	2'-7"	3'-2"	3'-8"	4'-2"	5'-9"	4000
		3'-6"	4'-0"	4'-5"	4'-9"	5'-1"	5'-3"	5'-5"	5'-7"	6'-7"	6000
	40				2'-1"	2'-7"	3'-2"	3'-8"	4'-2"	5'-9"	4000
		3'-6"	4'-0"	4'-5"	4'-9"	5'-1"	5'-3"	5'-5"	5'-7"	6'-7"	6000
	50				2'-1"	2'-7"	3'-2"	3'-8"	4'-2"	5'-9"	4000
		3'-6"	4'-0"	4'-5"	4'-9"	5'-1"	5'-3"	5'-5"	5'-7"	6'-7"	6000
12	30					2'-4"	2'-10"	3'-4"	3'-9"	5'-2"	4000
		3'-2"	3'-7"	4'-1"	4'-7"	5'-0"	5'-2"	5'-4"	5'-7"	6'-5"	6000
	40					2'-4"	2'-10"	3'-4"	3'-9"	5'-2"	4000
		3'-2"	3'-7"	4'-1"	4'-7"	5'-0"	5'-2"	5'-4"	5'-7"	6'-5"	6000
	50					2'-4"	2'-10"	3'-4"	3'-9"	5'-2"	4000
		3'-2"	3'-7"	4'-1"	4'-7"	5'-0"	5'-2"	5'-4"	5'-7"	6'-5"	6000
14	30					2'-2"	2'-7"	3'-0"	3'-5"	4'-9"	4000
		2'-10"	3'-4"	3'-9"	4'-2"	4'-7"	5'-0"	5'-4"	5'-7"	6'-4"	6000
	40					2'-2"	2'-7"	3'-0"	3'-5"	4'-9"	4000
		2'-10"	3'-4"	3'-9"	4'-2"	4'-7"	5'-0"	5'-4"	5'-7"	6'-4"	6000
	50					2'-2"	2'-7"	3'-0"	3'-5"	4'-9"	4000
		2'-10"	3'-4"	3'-9"	4'-2"	4'-7"	5'-0"	5'-4"	5'-7"	6'-4"	6000
16	30					2'-0"	2'-4"	2'-9"	3'-2"	4'-4"	4000
		2'-8"	3'-0"	3'-5"	3'-10"	4'-3"	4'-7"	5'-0"	5'-5"	6'-3"	6000
	40					2'-0"	2'-4"	2'-9"	3'-2"	4'-4"	4000
		2'-8"	3'-0"	3'-5"	3'-10"	4'-3"	4'-7"	5'-0"	5'-5"	6'-3"	6000
	50					2'-0"	2'-4"	2'-9"	3'-2"	4'-4"	4000
		2'-8"	3'-0"	3'-5"	3'-10"	4'-3"	4'-7"	5'-0"	5'-5"	6'-3"	6000

TABLE 1-2

(FOR USE ON **OVER 2'-0" TO 2'-6" OVERHANG (L)** & 54" HORIZONTAL LEG LENGTH OF THE OVERHANG BRACKET)

AVG. SLAB THICKNESS (T) (in)	BRACKET (K) DIMENSION (in)	SCREED LOAD PER BRACKET									45° HANGER SWL (lbs)
		2500 lbs.	2250 lbs.	2000 lbs.	1750 lbs.	1500 lbs.	1250 lbs.	1000 lbs.	750 lbs.	0 lbs.	
		BRACKET SPACING									
10	30					2'-4"	2'-9"	3'-3"	3'-8"	5'-1"	4000
		3'-1"	3'-6"	4'-0"	4'-5"	4'-11"	5'-3"	5'-5"	5'-7"	6'-7"	6000
	40					2'-4"	2'-9"	3'-3"	3'-8"	5'-1"	4000
		3'-1"	3'-6"	4'-0"	4'-5"	4'-11"	5'-3"	5'-5"	5'-7"	6'-7"	6000
	50					2'-4"	2'-9"	3'-3"	3'-8"	5'-1"	4000
		3'-1"	3'-6"	4'-0"	4'-5"	4'-11"	5'-3"	5'-5"	5'-7"	6'-7"	6000
12	30					2'-1"	2'-6"	2'-11"	3'-4"	4'-6"	4000
		2'-9"	3'-2"	3'-7"	4'-0"	4'-5"	4'-10"	5'-3"	5'-7"	6'-5"	6000
	40					2'-1"	2'-6"	2'-11"	3'-4"	4'-6"	4000
		2'-9"	3'-2"	3'-7"	4'-0"	4'-5"	4'-10"	5'-3"	5'-7"	6'-5"	6000
	50					2'-1"	2'-6"	2'-11"	3'-4"	4'-6"	4000
		2'-9"	3'-2"	3'-7"	4'-0"	4'-5"	4'-10"	5'-3"	5'-7"	6'-5"	6000
14	30						2'-3"	2'-7"	3'-0"	4'-1"	4000
		2'-6"	2'-10"	3'-3"	3'-7"	4'-0"	4'-4"	4'-9"	5'-1"	6'-3"	6000
	40						2'-3"	2'-7"	3'-0"	4'-1"	4000
		2'-6"	2'-10"	3'-3"	3'-7"	4'-0"	4'-4"	4'-9"	5'-1"	6'-3"	6000
	50						2'-3"	2'-7"	3'-0"	4'-1"	4000
		2'-6"	2'-10"	3'-3"	3'-7"	4'-0"	4'-4"	4'-9"	5'-1"	6'-3"	6000
16	30						2'-1"	2'-5"	2'-9"	3'-9"	4000
		2'-3"	2'-7"	2'-11"	3'-4"	3'-8"	4'-0"	4'-4"	4'-8"	5'-8"	6000
	40						2'-1"	2'-5"	2'-9"	3'-9"	4000
		2'-3"	2'-7"	2'-11"	3'-4"	3'-8"	4'-0"	4'-4"	4'-8"	5'-8"	6000
	50						2'-1"	2'-5"	2'-9"	3'-9"	4000
		2'-3"	2'-7"	2'-11"	3'-4"	3'-8"	4'-0"	4'-4"	4'-8"	5'-8"	6000

TABLE 1-3

(FOR USE ON **OVER 2'-6" TO 3'-0" OVERHANG (L)** & 54" HORIZONTAL LEG LENGTH OF THE OVERHANG BRACKET)

AVG. SLAB THICKNESS (T) (in)	BRACKET (K) DIMENSION (in)	SCREED LOAD PER BRACKET									45° HANGER SWL (lbs)
		2500 lbs.	2250 lbs.	2000 lbs.	1750 lbs.	1500 lbs.	1250 lbs.	1000 lbs.	750 lbs.	0 lbs.	
		BRACKET SPACING									
10	30					2'-1"	2'-6"	2'-11"	3'-4"	4'-6"	4000
						4'-5"	4'-10"	5'-3"	5'-7"	6'-7"	6000
	40					2'-1"	2'-6"	2'-11"	3'-4"	4'-6"	4000
		2'-9"	3'-2"	3'-7"	4'-0"	4'-5"	4'-10"	5'-3"	5'-7"	6'-7"	6000
	50					2'-1"	2'-6"	2'-11"	3'-4"	4'-6"	4000
		2'-9"	3'-2"	3'-7"	4'-0"	4'-5"	4'-10"	5'-3"	5'-7"	6'-7"	6000
12	30						2'-2"	2'-7"	2'-11"	4'-0"	4000
						3'-11"	4'-3"	4'-8"	5'-0"	6'-1"	6000
	40						2'-2"	2'-7"	2'-11"	4'-0"	4000
		2'-5"	2'-10"	3'-2"	3'-6"	3'-11"	4'-3"	4'-8"	5'-0"	6'-1"	6000
	50						2'-2"	2'-7"	2'-11"	4'-0"	4000
		2'-5"	2'-10"	3'-2"	3'-6"	3'-11"	4'-3"	4'-8"	5'-0"	6'-1"	6000
14	30						2'-0"	2'-4"	2'-8"	3'-8"	4000
					3'-2"	3'-6"	3'-10"	4'-2"	4'-6"	5'-6"	6000
	40						2'-0"	2'-4"	2'-8"	3'-8"	4000
		2'-2"	2'-6"	2'-10"	3'-2"	3'-6"	3'-10"	4'-2"	4'-6"	5'-6"	6000
	50						2'-0"	2'-4"	2'-8"	3'-8"	4000
		2'-2"	2'-6"	2'-10"	3'-2"	3'-6"	3'-10"	4'-2"	4'-6"	5'-6"	6000
16	30							2'-1"	2'-5"	3'-4"	4000
					2'-11"	3'-2"	3'-6"	3'-10"	4'-1"	5'-0"	6000
	40							2'-1"	2'-5"	3'-4"	4000
		2'-0"	2'-4"	2'-7"	2'-11"	3'-2"	3'-6"	3'-10"	4'-1"	5'-0"	6000
	50							2'-1"	2'-5"	3'-4"	4000
		2'-0"	2'-4"	2'-7"	2'-11"	3'-2"	3'-6"	3'-10"	4'-1"	5'-0"	6000

TABLE 1-4

(FOR USE ON **OVER 3'-0" TO 3'-6" OVERHANG (L)** & 54" HORIZONTAL LEG LENGTH OF THE OVERHANG BRACKET)

AVG. SLAB THICKNESS (T) (in)	BRACKET (K) DIMENSION (in)	SCREED LOAD PER BRACKET									45° HANGER SWL (lbs)
		2500 lbs.	2250 lbs.	2000 lbs.	1750 lbs.	1500 lbs.	1250 lbs.	1000 lbs.	750 lbs.	0 lbs.	
		BRACKET SPACING									
10	30						2'-1"	2'-5"	2'-9"	3'-10"	4000
						2'-3"	2'-11"	3'-7"	4'-3"	5'-9"	6000
	40						2'-1"	2'-5"	2'-9"	3'-10"	4000
				2'-4"	3'-0"	3'-7"	4'-1"	4'-5"	4'-9"	5'-9"	6000
	50						2'-1"	2'-5"	2'-9"	3'-10"	4000
		2'-4"	2'-8"	3'-0"	3'-4"	3'-8"	4'-1"	4'-5"	4'-9"	5'-9"	6000
12	30							2'-2"	2'-6"	3'-5"	4000
						2'-1"	2'-8"	3'-4"	3'-11"	5'-2"	6000
	40							2'-2"	2'-6"	3'-5"	4000
				2'-2"	2'-9"	3'-4"	3'-7"	3'-11"	4'-3"	5'-2"	6000
	50							2'-2"	2'-6"	3'-5"	4000
		2'-1"	2'-4"	2'-8"	3'-0"	3'-4"	3'-7"	3'-11"	4'-3"	5'-2"	6000
14	30								2'-3"	3'-1"	4000
						2'-0"	2'-6"	3'-1"	3'-8"	4'-8"	6000
	40								2'-3"	3'-1"	4000
				2'-0"	2'-7"	3'-0"	3'-3"	3'-6"	3'-10"	4'-8"	6000
	50								2'-3"	3'-1"	4000
			2'-2"	2'-5"	2'-8"	3'-0"	3'-3"	3'-6"	3'-10"	4'-8"	6000
16	30								2'-0"	2'-9"	4000
							2'-4"	2'-10"	3'-5"	4'-3"	6000
	40								2'-0"	2'-9"	4000
					2'-5"	2'-8"	2'-11"	3'-3"	3'-6"	4'-3"	6000
	50								2'-0"	2'-9"	4000
				2'-2"	2'-5"	2'-8"	2'-11"	3'-3"	3'-6"	4'-3"	6000

DEFINITIONS

SLPB = SCREED LOAD PER BRACKET (R x W)
R = SCREED LOAD FACTOR, OBTAINED FROM TABLE 2
W = WHEEL LOAD
S = BRACKET SPACING
T = AVERAGE SLAB THICKNESS
SWL = SAFE WORKING LOAD
K = DIMENSION DEFINED ON "BRIDGE OVERHANG BRACKET SUMMARY" ON SHEET 2
L = OVERHANG MEASURED FROM EDGE OF TOP FLANGE TO EDGE OF SUPERSTRUCTURE

PROJECT NO. B-4507
FORSYTH COUNTY
STATION: 27+96.00 -L-

SHEET 1 OF 3

STATE OF NORTH CAROLINA
DEPARTMENT OF TRANSPORTATION
RALEIGH

STANDARD OVERHANG FALSEWORK

AASHTO TYPES
III, IV, V, AND VI

LEFT LANE

NORTH CAROLINA PROFESSIONAL SEAL 18788 ENGINEER CHANG-CHUAN VICTOR CHAO

Chang-Chuan Victor Chao
8/7/2009

REVISIONS						SHEET NO.
NO.	BY:	DATE:	NO.	BY:	DATE:	S-48
1			3			TOTAL SHEETS
2			4			99

ASSEMBLED BY:	DATE:
CHECKED BY:	DATE:
DRAWN BY: R. WRIGHT 06/04	REV.
CHECKED BY: C. V. CHAO 06/04	

07-AUG-2009 14:15
d:\wdir\victor\overhangfalsework\tiebar&strut\b-4507_type_iv\b4507overhangsheetsleft.dgn
vchao

BRIDGE OVERHANG BRACKET SUMMARY

TOTAL SCREED WEIGHT = _____ LBS.
NUMBER OF SCREED WHEELS = _____
SCREED WHEEL LOAD (W) = _____ LBS.
SCREED LOAD PER BRACKET = _____ LBS.

PROJECT No. : _____
COUNTY : _____
STATION : _____
DESCRIPTION : _____

DATE : _____
DESIGN BY : _____
CHECK BY : _____

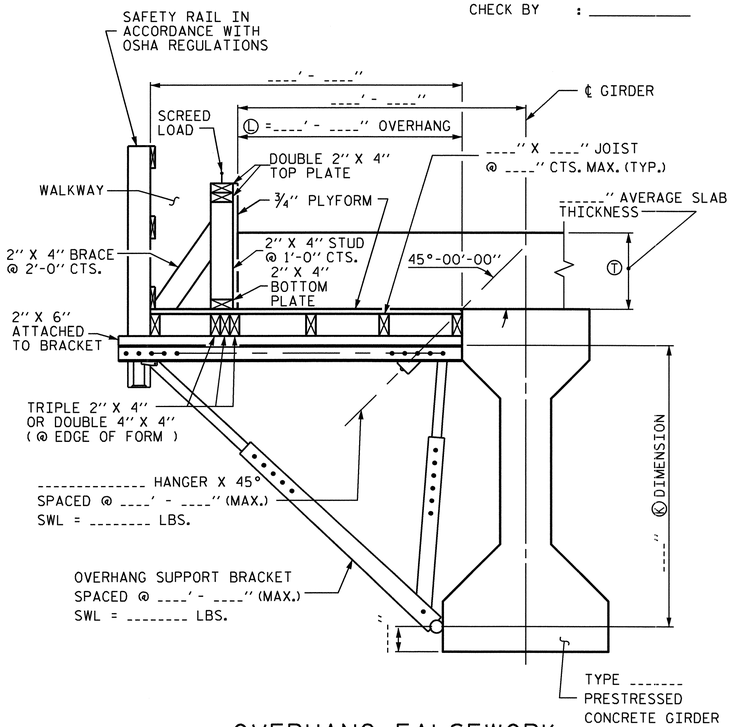

OVERHANG FALSEWORK

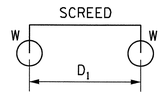

4-WHEEL MACHINE

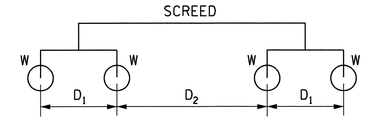

8-WHEEL MACHINE

4 WHEEL MACHINE	
S/D1	R
<= 1.0	1.00
1.1	1.09
1.2	1.17
1.3	1.23
1.4	1.29
1.5	1.33
1.6	1.38
1.7	1.41
1.8	1.44
1.9	1.47
2.0	1.50
2.2	1.55
2.4	1.58
2.6	1.62
2.8	1.64
3.0	1.67
3.5	1.71
4.0	1.75

TABLE 2: SCREED LOAD FACTOR "R"

		THE SCREED LOAD FACTOR R (FOR 8 WHEEL MACHINE)																	
		S/D_2																	
		<= 1.0	1.1	1.2	1.3	1.4	1.5	1.6	1.7	1.8	1.9	2.0	2.2	2.4	2.6	2.8	3.0	3.5	4.0
S/D_1	<= 1.0	1.00	1.09	1.17	1.23	1.29	1.33	1.38	1.41	1.44	1.47	1.50	1.55	1.58	1.62	1.64	1.67	1.71	1.75
	1.1	1.09	1.18	1.26	1.32	1.38	1.42	1.47	1.50	1.54	1.56	1.59	1.64	1.67	1.71	1.73	1.76	1.81	1.84
	1.2	1.17	1.26	1.33	1.40	1.45	1.50	1.54	1.58	1.61	1.64	1.67	1.71	1.75	1.78	1.81	1.83	1.88	1.92
	1.3	1.23	1.32	1.40	1.46	1.52	1.56	1.61	1.64	1.68	1.70	1.73	1.78	1.81	1.85	1.87	1.90	1.95	1.98
	1.4	1.29	1.38	1.45	1.52	1.57	1.62	1.66	1.70	1.73	1.76	1.79	1.83	1.87	1.90	1.93	1.95	2.00	2.07
	1.5	1.33	1.42	1.50	1.56	1.62	1.67	1.71	1.75	1.78	1.81	1.83	1.88	1.92	1.95	1.98	2.00	2.10	2.17
	1.6	1.38	1.47	1.54	1.61	1.66	1.71	1.75	1.79	1.82	1.85	1.88	1.92	1.96	1.99	2.04	2.08	2.18	2.25
	1.7	1.41	1.50	1.58	1.64	1.70	1.75	1.79	1.82	1.86	1.89	1.91	1.96	2.00	2.05	2.11	2.16	2.25	2.32
	1.8	1.44	1.54	1.61	1.68	1.73	1.78	1.82	1.86	1.89	1.92	1.94	1.99	2.06	2.12	2.17	2.22	2.32	2.39
	1.9	1.47	1.56	1.64	1.70	1.76	1.81	1.85	1.89	1.92	1.95	1.97	2.04	2.11	2.18	2.23	2.28	2.38	2.45
	2.0	1.50	1.59	1.67	1.73	1.79	1.83	1.88	1.91	1.94	1.97	2.00	2.09	2.17	2.23	2.29	2.33	2.43	2.50
	2.2	1.55	1.64	1.71	1.78	1.83	1.88	1.92	1.96	1.99	2.04	2.09	2.18	2.26	2.32	2.38	2.42	2.52	2.59
	2.4	1.58	1.67	1.75	1.81	1.87	1.92	1.96	2.00	2.06	2.11	2.17	2.26	2.33	2.40	2.45	2.50	2.60	2.67
	2.6	1.62	1.71	1.78	1.85	1.90	1.95	1.99	2.05	2.12	2.18	2.23	2.32	2.40	2.46	2.52	2.56	2.66	2.73
	2.8	1.64	1.73	1.81	1.87	1.93	1.98	2.04	2.11	2.17	2.23	2.29	2.38	2.45	2.52	2.57	2.62	2.71	2.79
	3.0	1.67	1.76	1.83	1.90	1.95	2.00	2.08	2.16	2.22	2.28	2.33	2.42	2.50	2.56	2.62	2.67	2.76	2.83
	3.5	1.71	1.81	1.88	1.95	2.00	2.10	2.18	2.25	2.32	2.38	2.43	2.52	2.60	2.66	2.71	2.76	2.86	2.93
	4.0	1.75	1.84	1.92	1.98	2.07	2.17	2.25	2.32	2.39	2.45	2.50	2.59	2.67	2.73	2.79	2.83	2.93	3.00

TABLE 3: ALLOWABLE SPAN LENGTH OF JOISTS AND JOIST SPACINGS

AVG. SLAB THICKNESS Ⓣ (IN)	LUMBER JOIST SIZE (IN X IN)	JOIST SPACINGS			
		15 IN	12 IN	10 IN	8 IN
		THE ALLOWABLE SPAN LENGTH OF JOISTS			
10	2 X 4	———	4' - 6"	4' - 9"	5' - 0"
	4 X 4	5' - 9"	6' - 3"	6' - 6"	6' - 7"
12	2 X 4	———	4' - 3"	4' - 9"	5' - 0"
	4 X 4	5' - 3"	6' - 0"	6' - 3"	6' - 5"
14	2 X 4	———	4' - 0"	4' - 6"	5' - 0"
	4 X 4	———	5' - 6"	6' - 0"	6' - 4"
16	2 X 4	———	4' - 0"	4' - 3"	4' - 9"
	4 X 4	———	5' - 3"	5' - 9"	6' - 3"

NOTES

DESIGN INCLUDES CONSTRUCTION LIVE LOAD 20 PSF ON THE AREA SUPPORTED AND 75 PLF AT THE OUTSIDE DECK OF OVERHANGS.

REQUIRED MINIMUM DIAGONAL LEG CAPACITY: 3600 LB WORKING LOAD

THE CONTRACTOR HAS THE OPTION OF SUBMITTING HIS OWN DESIGN FOR OVERHANG FALSEWORK IN ACCORDANCE WITH THE SPECIAL PROVISIONS.

SUBMITTALS UTILIZING THE INSTRUCTIONS AND PROCEDURES DESCRIBED ON SHEET 1 OF 3 SHALL BE IN ACCORDANCE WITH THE APPLICABLE SECTIONS OF THE SPECIFICATIONS AND SPECIAL PROVISIONS, EXCEPT THAT CALCULATIONS FOR OVERHANG FALSEWORK NEED NOT BE SEALED BY A REGISTERED ENGINEER.

FOR OVERHANG FALSEWORK BRACING DESIGN, SEE SHEET 3 OF 3.

PROJECT NO. B-4507
FORSYTH COUNTY
STATION: 27+96.00 -L-

SHEET 2 OF 3

STATE OF NORTH CAROLINA
DEPARTMENT OF TRANSPORTATION
RALEIGH

STANDARD OVERHANG FALSEWORK

AASHTO TYPES
III, IV, V, AND VI

LEFT LANE

NORTH CAROLINA PROFESSIONAL SEAL 18788 ENGINEER CHANG-CHUAN VICTOR CHAO

Chang-Chuan Victor Chao
8/7/2009

REVISIONS							
NO.	BY:	DATE:	NO.	BY:	DATE:		
1			3				
2			4				

SHEET NO. S-49
TOTAL SHEETS 99

ASSEMBLED BY:	DATE:
CHECKED BY:	DATE:
DRAWN BY: R. WRIGHT 06/04	REV.
CHECKED BY: C. V. CHAO 06/04	

07-AUG-2009 14:16
d:\wdlr\victor\overhangfalsework\tlebar&strut\b-4507_type_iv\b4507overhangsheetsleft.dgn
vchao

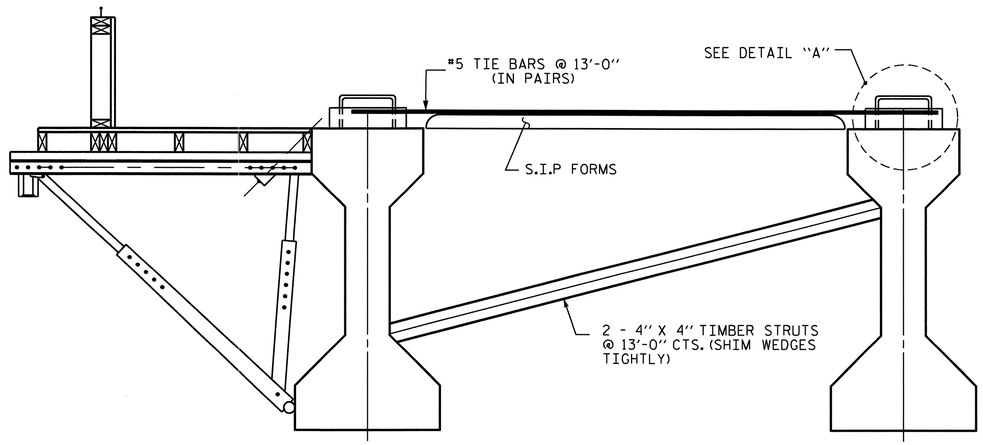

EXTERIOR GIRDER INTERIOR GIRDER

DETAIL OF REQUIRED OVERHANG FALSEWORK BRACING SYSTEM

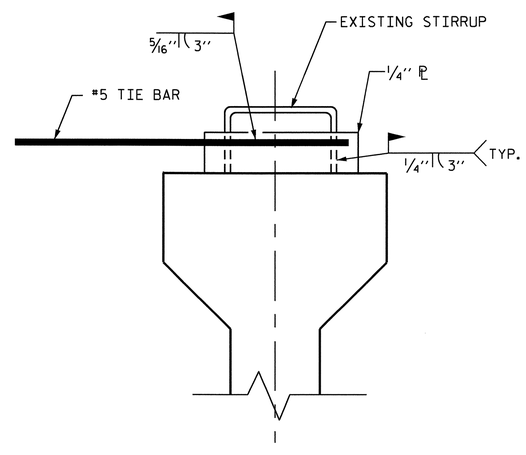

DETAIL "A"

NOTES:

EACH #5 TIE BAR SHALL BE WELDED TO ONE STIRRUP LOOP AS SHOWN IN DETAIL "A". #5 TIE BARS SHALL BE WELDED TO TWO ADJACENT STIRRUPS OF THE EXTERIOR GIRDER AND THE ADJACENT INTERIOR GIRDER BETWEEN PERMANENT DIAPHRAGMS. WELD STEEL PLATES IN BETWEEN THE TIE BARS AND THE STIRRUP LOOP. WELDING TWO TIE BARS TO THE SAME STIRRUP LOOP SHALL NOT BE PERMITTED.

MAXIMUM SPACING BETWEEN THE BRACING (TIE BARS-TIMBER STRUT) IS 13'-0" CTS. #5 TIE BARS SHALL BE LOCATED OVER A TIMBER STRUT.

INSTALL TIE BARS AND TIMBER STRUTS PRIOR TO PLACEMENT OF CONCRETE OR SCREED WEIGHT ONTO THE OVERHANG FALSEWORK.

PROJECT NO. B-4507
FORSYTH COUNTY
STATION: 27+96.00 -L-

SHEET 3 OF 3

STATE OF NORTH CAROLINA
DEPARTMENT OF TRANSPORTATION
RALEIGH

STANDARD OVERHANG FALSEWORK

AASHTO TYPES
III, IV, V, AND VI

LEFT LANE

NORTH CAROLINA PROFESSIONAL SEAL 18788 ENGINEER CHANG-CHUAN VICTOR CHAO

Chang-Chuan Victor Chao
8/7/2009

REVISIONS						SHEET NO.
NO.	BY:	DATE:	NO.	BY:	DATE:	S-50
1			3			TOTAL SHEETS
2			4			99

DRAWN BY: R. WRIGHT 06/04 DATE :
CHECKED BY: C. V. CHAO 06/04 DATE :

07-AUG-2009 14:16
d:\wdir\victor\overhangfalsework\tiebar&strut\b-4507_type_iv\b4507verhangsheetsleft.dgn
vchao

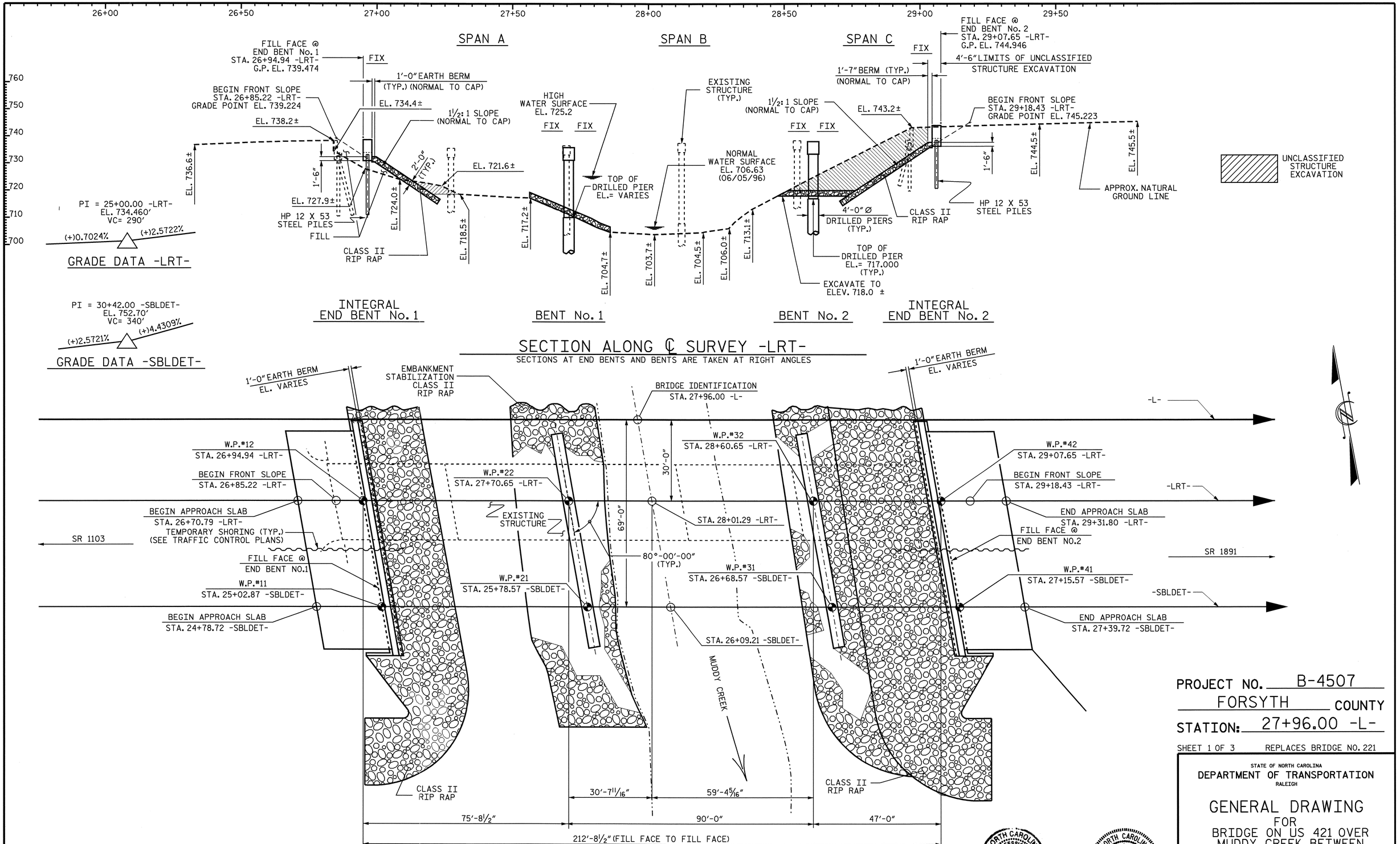

PROJECT NO. B-4507

FORSYTH COUNTY

STATION: 27+96.00 -L-

SHEET 1 OF 3 REPLACES BRIDGE NO. 221

STATE OF NORTH CAROLINA
DEPARTMENT OF TRANSPORTATION
RALEIGH

GENERAL DRAWING
FOR
BRIDGE ON US 421 OVER MUDDY CREEK BETWEEN SR 1103 AND SR 1891 RIGHT LANE

NORTH CAROLINA PROFESSIONAL SEAL 13014 ENGINEER QUANG H. NGUYEN
Quang H. Nguyen 9/29/09

NORTH CAROLINA PROFESSIONAL SEAL 20125 ENGINEER MARSHALL G. CHEEK, JR.
9-29-09

REVISIONS						SHEET NO.
NO.	BY:	DATE:	NO.	BY:	DATE:	S-51
1			3			TOTAL SHEETS
2			4			99

STR. #2

DRAWN BY : A.L. FIGUEROA DATE : 03-19-09
CHECKED BY : M.G. CHEEK DATE : 05-29-09

28-SEP-2009 08:17
R:\Structures\FinalPlans\Right Lane\B-4507_sd_STR#2_02B_GD.dgn
afigueroa

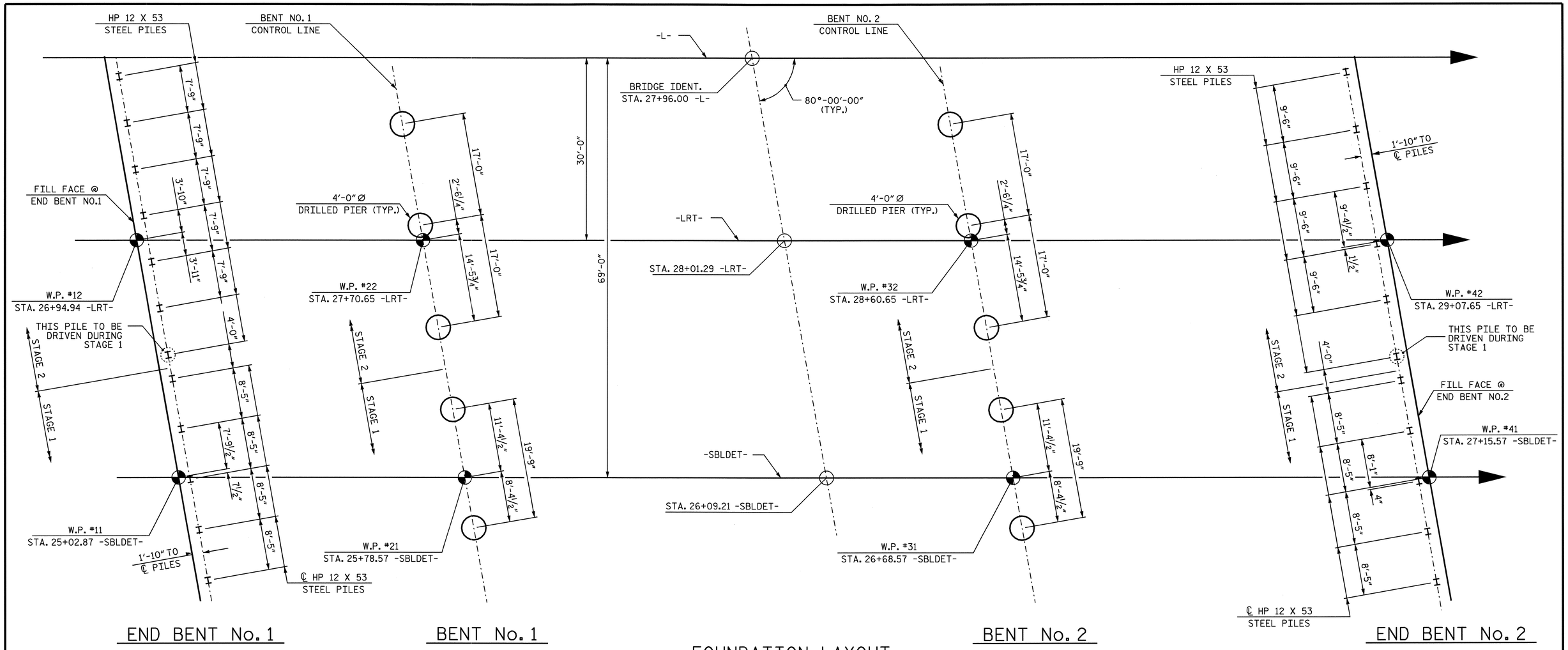

FOUNDATION LAYOUT

ALL END BENT PILES ARE HP 12 X 53
DIMENSIONS LOCATING PILES ARE SHOWN TO THE
PILE CENTERLINE AT THE BOTTOM OF THE CAP.

NOTES

FOR PILES, SEE SPECIAL PROVISIONS.

PILES AT END BENT NO.1 ARE DESIGNED FOR A FACTORED RESISTANCE OF 120 TONS PER PILE. DRIVE PILES TO A REQUIRED DRIVING RESISTANCE OF 200 TONS PER PILE.

PILES AT END BENT NO.2 ARE DESIGNED FOR A FACTORED RESISTANCE OF 105 TONS PER PILE. DRIVE PILES TO A REQUIRED DRIVING RESISTANCE OF 175 TONS PER PILE.

FOR DRILLED PIERS, SEE SPECIAL PROVISIONS.

DRILLED PIERS AT BENT NO.1 ARE DESIGNED FOR A FACTORED RESISTANCE OF 510 TONS PER DRILLED PIER. CHECK FIELD CONDITIONS FOR THE REQUIRED TIP RESISTANCE OF 65 TONS PER SQ. FOOT.

INSTALL DRILLED PIERS AT BENT NO.1 THAT EXTEND TO AN ELEVATION NO HIGHER THAN 670.0 FEET AND SATISFY THE REQUIRED TIP RESISTANCE.

PERMANENT STEEL CASING IS REQUIRED FOR DRILLED PIERS AT BENT NO.1. DO NOT EXTEND CASING BELOW ELEVATION 689.0 WITHOUT PRIOR APPROVAL FROM THE ENGINEER.

THE SCOUR CRITICAL ELEVATIONS FOR BENT NO.1 IS ELEVATION 677.0. SCOUR CRITICAL ELEVATIONS ARE USED TO MONITOR POSSIBLE SCOUR PROBLEMS DURING THE LIFE OF THE STRUCTURE.

DRILLED PIERS AT BENT NO.2 ARE DESIGNED FOR A FACTORED RESISTANCE OF 440 TONS PER DRILLED PIER. CHECK FIELD CONDITIONS FOR THE REQUIRED TIP RESISTANCE OF 65 TONS PER SQ. FOOT.

INSTALL DRILLED PIERS AT BENT NO.2 THAT EXTEND TO AN ELEVATION NO HIGHER THAN 683.0 FEET AND SATISFY THE REQUIRED TIP RESISTANCE.

PERMANENT STEEL CASING IS REQUIRED FOR DRILLED PIERS AT BENT NO.21 DO NOT EXTEND CASING BELOW ELEVATION 699.0 WITHOUT PRIOR APPROVAL FROM THE ENGINEER.

THE SCOUR CRITICAL ELEVATIONS FOR BENT NO.2 IS ELEVATION 686.0. SCOUR CRITICAL ELEVATIONS ARE USED TO MONITOR POSSIBLE SCOUR PROBLEMS DURING THE LIFE OF THE STRUCTURE.

SPT TESTING MAY BE REQUIRED FOR DRILLED PIERS. THE ENGINEER WILL DETERMINED THE NEED FOR SPT TESTING.

CSL TUBES ARE REQUIRED AND CSL TESTING MAY BE REQUIRED FOR THE DRILLED PIERS. THE ENGINEER WILL DETERMINE THE NEED FOR CSL TESTING. SEE CROSSHOLE SONIC LOGGING SPECIAL PROVISION.

SID INSPECTIONS MAY BE REQUIRED FOR DRILLED PIERS. THE ENGINEER WILL DETERMINE THE NEED FOR SID INSPECTIONS.

PROJECT NO. B-4507
FORSYTH COUNTY
STATION: 27+96.00 -L-

SHEET 2 OF 3

STATE OF NORTH CAROLINA
DEPARTMENT OF TRANSPORTATION
RALEIGH

GENERAL DRAWING
FOR
BRIDGE ON US 421 OVER
MUDDY CREEK BETWEEN
SR 1103 AND SR 1891
RIGHT LANE

NORTH CAROLINA PROFESSIONAL SEAL 20125 ENGINEER MARSHALL G. CHEEK, JR.
9-29-09

REVISIONS						SHEET NO.
NO.	BY:	DATE:	NO.	BY:	DATE:	S-52
1			3			TOTAL SHEETS
2			4			99

STR. #2

DRAWN BY : A.L. FIGUEROA DATE : 6-25-09
CHECKED BY : M.G. CHEEK DATE : 8-05-09

28-SEP-2009 08:17
R:\Structures\Final Plans\Right Lane\B-4507_sd_STR#2_02C_FL.dgn
aflgueroa

BENCHMARK #175: RR SPIKE, 59 FEET RIGHT OF STA. 15+35.84 -L-, ELEV. 741.98'

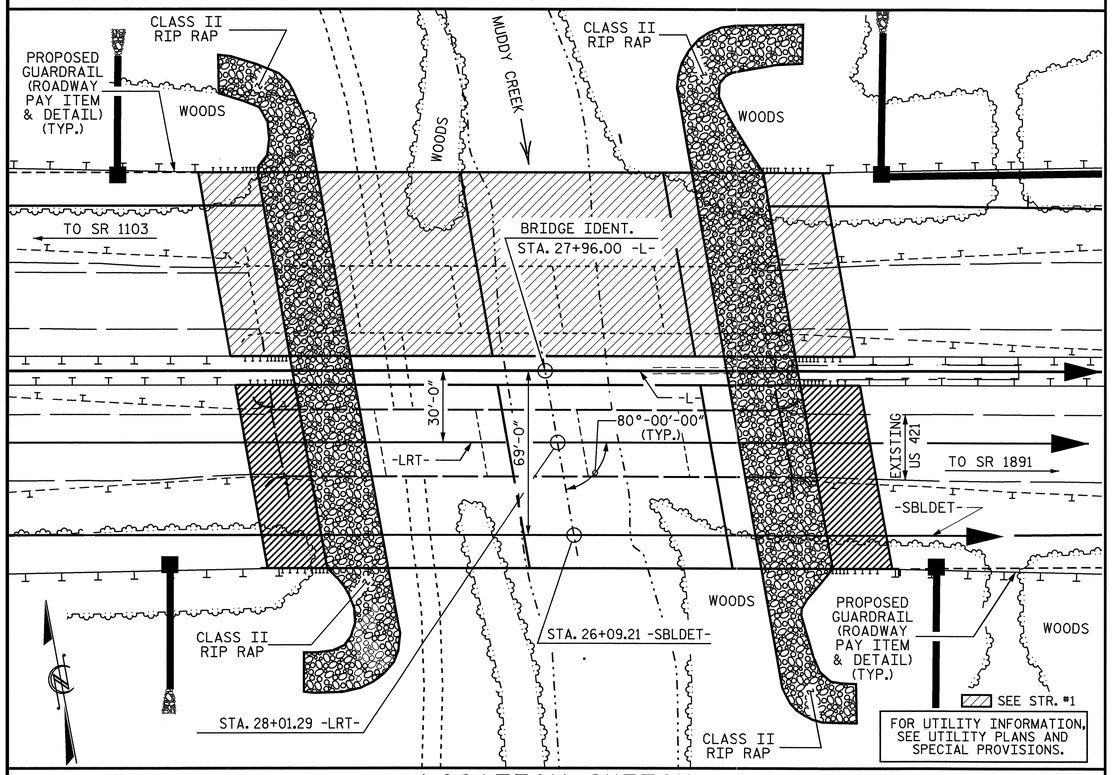

LOCATION SKETCH

NOTES

ASSUMED LIVE LOAD = HL 93 OR ALTERNATE LOADING.

FOR OTHER DESIGN DATA AND GENERAL NOTES, SEE SHEET SN.

FOR EROSION CONTROL MEASURES, SEE EROSION CONTROL PLANS.

THIS BRIDGE HAS BEEN DESIGNED IN ACCORDANCE WITH THE AASHTO LRFD BRIDGE DESIGN SPECIFICATIONS.

PRESTRESSED CONCRETE DECK PANELS MAY BE USED IN LIEU OF METAL STAY-IN-PLACE FORMS IN ACCORDANCE WITH ARTICLE 420-3 OF THE STANDARD SPECIFICATIONS.

REMOVABLE FORMS MAY BE USED IN LIEU OF METAL STAY-IN-PLACE FORMS IN ACCORDANCE WITH ARTICLE 420-3 OF THE STANDARD SPECIFICATIONS.

THE LOCATION OF THE CONSTRUCTION JOINT IN THE DRILLED PIERS IS BASED ON AN APPROXIMATE GROUND LINE ELEVATION. IF THE CONSTRUCTION JOINT IS ABOVE THE ACTUAL GROUND ELEVATION, THE CONTRACTOR SHALL PLACE THE CONSTRUCTION JOINT 1 FT. BELOW THE GROUND LINE.

AFTER SERVING AS A TEMPORARY STRUCTURE, THE EXISTING 5-SPAN STRUCTURE (5 @ 42'-6") CONSISTING OF A REINFORCED CONCRETE DECK ON 4 LINE OF STEEL I-BEAMS ON A SUBSTRUCTURE CONSISTING OF REINFORCED CONCRETE CAP ON PRESTRESSED CONCRETE PILES AT THE END BENTS AND BENTS #1 AND #4, AND REINFORCED CONCRETE POST AND BEAM BENTS AT BENTS #2 AND #3 AND LOCATED AT THE SITE OF THE PROPOSED STRUCTURE SHALL BE REMOVED. THE EXISTING BRIDGE IS PRESENTLY NOT POSTED FOR LOAD LIMIT. SHOULD THE STRUCTURAL INTEGRITY OF THE BRIDGE DETERIORATE A LOAD LIMIT MAY BE POSTED AND MAY BE REDUCED AS FOUND NECESSARY DURING THE LIFE OF THE PROJECT.

REMOVAL OF THE EXISTING BRIDGE SHALL BE PERFORMED SO AS NOT ALLOW DEBRIS TO FALL INTO THE WATER. THE CONTRACTOR SHALL REMOVE THE BRIDGE AND SUBMIT PLANS FOR DEMOLITION IN ACCORDANCE WITH ARTICLE 402-2 OF THE STANDARD SPECIFICATIONS.

THE MATERIAL SHOWN IN THE CROSS-HATCHED AREA (SEE SHEET 1 OF 3) SHALL BE EXCAVATED FOR A DISTANCE OF APPROXIMATELY 50' EACH SIDE OF CENTERLINE ROADWAY AS DIRECTED BY THE ENGINEER. THIS WORK WILL BE MEASURED AND PAID FOR AT THE CONTRACT UNIT PRICE PER CUBIC YARD FOR UNCLASSIFIED STRUCTURE EXCAVATION.

FOR PLACING LOAD ON STRUCTURE MEMBERS, SEE SPECIAL PROVISIONS.

FOR FORMS FOR CONCRETE BRIDGE DECKS, SEE SPECIAL PROVISIONS.

FOR CURING CONCRETE, SEE SPECIAL PROVISIONS.

FOR GROUT FOR STRUCTURES, SEE SPECIAL PROVISIONS.

FOR PILES, SEE SPECIAL PROVISIONS.

THE SUBSTRUCTURE OF THE EXISTING BRIDGE INDICATED ON THE PLANS IS FROM THE BEST INFORMATION AVAILABLE. SINCE THIS INFORMATION IS SHOWN FOR THE CONVENIENCE OF THE CONTRACTOR, THE CONTRACTOR SHALL HAVE NO CLAIM WHATSOEVER AGAINST THE DEPARTMENT OF TRANSPORTATION FOR ANY DELAYS OR ADDITIONAL COST INCURRED BASED ON DIFFERENCES BETWEEN THE EXISTING BRIDGE SUBSTRUCTURE SHOWN ON THE PLANS AND THE ACTUAL CONDITIONS AT THE PROJECT SITE.

INASMUCH AS THE PAINT SYSTEM ON THE EXISTING STRUCTURAL STEEL CONTAINS LEAD, THE CONTRACTOR'S ATTENTION IS DIRECTED TO ARTICLE 107-1 OF THE STANDARD SPECIFICATIONS. ANY COST RESULTING FROM COMPLIANCE WITH APPLICABLE STATE OR FEDERAL REGULATIONS PERTAINING TO HANDLING OF MATERIALS CONTAINING LEAD BASED PAINT SHALL BE INCLUDED IN THE BID PRICE FOR "REMOVAL OF EXISTING STRUCTURE".

THE CLASS AA CONCRETE IN THE BRIDGE DECK SHALL CONTAIN FLY ASH OR GROUND GRANULATED BLAST FURNACE SLAG AT THE SUBSTITUTION RATE SPECIFIED IN ARTICLE 1024-1 AND IN ACCORDANCE WITH ARTICLE 1024-5 AND 1024-6 OF THE STANDARD SPECIFICATIONS. NO PAYMENT WILL BE MADE FOR THIS SUBSTITUTION AS IT IS CONSIDERED INCIDENTAL TO THE COST OF THE REINFORCED CONCRETE DECK SLAB.

THIS STRUCTURE HAS BEEN DESIGNED IN ACCORDANCE WITH HEC 18, "EVALUATING SCOUR AT BRIDGES", MAY, 2001.

THIS BRIDGE HAS BEEN DESIGNED IN ACCORDANCE WITH THE REQUIREMENTS OF THE AASHTO LRFD BRIDGE DESIGN SPECIFICATIONS FOR SEISMIC DESIGN FOR SEISMIC PERFORMANCE ZONE 1.

TEMPORARY SHORING WILL BE REQUIRED IN THE AREAS INDICATED IN THE PLAN VIEW, SHEET 1 OF 3.

FOR LIMITS OF TEMPORARY SHORING FOR MAINTENANCE OF TRAFFIC, SEE TRAFFIC CONTROL PLANS. FOR PAY ITEM FOR TEMPORARY SHORING FOR MAINTENANCE OF TRAFFIC, SEE ROADWAY PLANS.

STEEL SHEET PILING REQUIRED FOR SHORING SHALL BE HOT ROLLED.

AT THE CONTRACTOR'S OPTION, AND UPON REMOVAL OF THE CAUSEWAY, THE CLASS II RIP RAP USED IN THE CAUSEWAY MAY BE PLACED AS RIP RAP SLOPE PROTECTION. SEE SPECIAL PROVISIONS FOR CONSTRUCTION, MAINTENANCE AND REMOVAL OF TEMPORARY ACCESS.

NEEDLE BEAMS WILL NOT BE ALLOWED UNLESS OTHERWISE CALLED FOR ON THE PLANS OR APPROVED BY THE ENGINEER.

FOR SUBMITTAL OF WORKING DRAWINGS, SEE SPECIAL PROVISIONS.

FOR FALSEWORK AND FORMWORK, SEE SPECIAL PROVISIONS.

FOR CRANE SAFETY, SEE SPECIAL PROVISIONS.

FOR PRESTRESSED CONCRETE MEMBERS, SEE SPECIAL PROVISIONS.

HYDRAULIC DATA

DESIGN DISCHARGE	=	10,000 cf/s
FREQUENCY OF DESIGN FLOOD	=	50 YRS.
DESIGN HIGH WATER ELEVATION	=	721.62 ft.
DRAINAGE AREA	=	86.0 SQ. MI.
BASIC DISCHARGE (Q100)	=	12,000 cf/s
BASIC HIGH WATER ELEVATION	=	722.54 ft.

OVERTOPPING FLOOD DATA

OVERTOPPING DISCHARGE	=	N/A
FREQUENCY OF OVERTOPPING FLOOD	=	500+ YRS.
OVERTOPPING FLOOD ELEVATION	=	732.94 ft.

TOTAL BILL OF MATERIAL

	CONSTRUCTION, MAINTENANCE & REMOVAL OF TEMPORARY ACCESS	REMOVAL OF EXISTING STRUCTURE	4'-0" Ø DRILLED PIERS IN SOIL	4'-0" Ø DRILLED PIERS NOT IN SOIL	PERMANENT STEEL CASING FOR 4'-0" Ø DRILLED PIERS	SID INSPECTION	SPT TESTING	CROSSHOLE SONIC LOGGING	UNCLASSIFIED STRUCTURE EXCAVATION	REINFORCED CONCRETE DECK SLAB
	LUMP SUM	LUMP SUM	LIN. FT.	LIN. FT.	LIN. FT.	EACH	EACH	EACH	CU. YDS.	SQ. FT.
SUPERSTRUCTURE		LUMP SUM								17069
END BENT NO. 1									185	
BENT NO. 1			151.00	54.00	110.00					
BENT NO. 2			124.33	49.00	93.00					
END BENT NO. 2									1465	
TOTAL	LUMP SUM	LUMP SUM	275.33	103.00	203.00	10	5	5	1650	17069

TOTAL BILL OF MATERIAL

	GROOVING BRIDGE FLOORS	CLASS A CONCRETE	BRIDGE APPROACH SLABS	REINFORCING STEEL	SPIRAL COLUMN REINFORCING STEEL	54" PRESTRESSED CONCRETE GIRDERS		HP 12 X 53 STEEL PILES		CONCRETE BARRIER RAIL	RIP RAP CLASS II (2'-0" THICK)	FILTER FABRIC FOR DRAINAGE	ELASTOMERIC BEARINGS	EVAZOTE JOINT SEALS
	SQ. FT.	CU. YDS.	LUMP SUM	LBS.	LBS.	NO.	LIN. FT.	NO.	LIN. FT.	LIN. FT.	TONS	SQ. YDS.	LUMP SUM	LUMP SUM
SUPERSTRUCTURE	18893		LUMP SUM			30	2087.92			425.42			LUMP SUM	LUMP SUM
END BENT NO. 1		41.8		6659				12	420		689	766		
BENT NO. 1		90.1		32820	7723									
BENT NO. 2		82.9		29222	6420									
END BENT NO. 2		42.4		6360				11	440		1034	1149		
TOTAL	18893	257.2	LUMP SUM	75061	14143	30	2087.92	23	860	425.42	1723	1915	LUMP SUM	LUMP SUM

PROJECT NO. B-4507
FORSYTH COUNTY
STATION: 27+96.00 -L-

SHEET 3 OF 3

STATE OF NORTH CAROLINA
DEPARTMENT OF TRANSPORTATION
RALEIGH

GENERAL DRAWING
FOR
BRIDGE ON US 421 OVER
MUDDY CREEK BETWEEN
SR 1103 AND SR 1891
RIGHT LANE

NORTH CAROLINA PROFESSIONAL SEAL 20125 ENGINEER MARSHALL G. CHEEK, JR.
9-28-09

REVISIONS						SHEET NO.
NO.	BY:	DATE:	NO.	BY:	DATE:	S-53
1			3			TOTAL SHEETS
2			4			99

STR. #2

DRAWN BY : A.L. FIGUEROA DATE : 03-19-09
CHECKED BY : M.G. CHEEK DATE : 05-29-09

28-SEP-2009 08:17
R:\Structures\Final Plans\Right Lane\B-4507_sd_STR#2_02B_GD.dgn
afigueroa

LOAD AND RESISTANCE FACTOR RATING (LRFR) SUMMARY FOR PRESTRESSED CONCRETE GIRDERS

LEVEL		VEHICLE	WEIGHT (W) (TONS)	CONTROLLING LOAD RATING (#)	MINIMUM RATING FACTORS (RF)	TONS = W × RF	STRENGTH I LIMIT STATE											SERVICE III LIMIT STATE						COMMENT NUMBER
							LIVE-LOAD FACTORS (γ_{LL})	MOMENT					SHEAR					LIVE-LOAD FACTORS (γ_{LL})	MOMENT					
								DISTRIBUTION FACTORS (DF)	RATING FACTOR	SPAN	GIRDER LOCATION	DISTANCE FROM LEFT END OF SPAN (ft)	DISTRIBUTION FACTORS (DF)	RATING FACTOR	SPAN	GIRDER LOCATION	DISTANCE FROM LEFT END OF SPAN (ft)		DISTRIBUTION FACTORS (DF)	RATING FACTOR	SPAN	GIRDER LOCATION	DISTANCE FROM LEFT END OF SPAN (ft)	
DESIGN LOAD RATING		HL-93 (INVENTORY)	N/A	1	1.00	--	1.75	0.739	1.54	A	I	36.38	0.735	1.00	A	EL	3.64	0.80	0.739	1.39	A	I	36.38	
		HL-93 (OPERATING)	N/A		1.30	--	1.35	0.739	2.00	A	I	36.38	0.735	1.30	A	EL	3.64	N/A	--	--	--	--	--	
		HS-20 (INVENTORY)	36.000	2	1.15	41.40	1.80	0.901	1.85	C	I	22.02	0.922	1.15	C	I	4.40	1.00	0.901	2.58	C	I	22.02	
		HS-20 (OPERATING)	36.000		1.53	55.08	1.35	0.901	2.47	C	I	22.02	0.922	1.53	C	I	4.40	N/A	--	--	--	--	--	
LEGAL LOAD RATING	SINGLE VEHICLE (SV)	SNSH	13.500		3.22	43.47	1.40	0.901	4.65	C	I	22.02	0.922	3.22	C	I	4.40	0.80	0.901	5.05	C	I	22.02	
		SNGARBS2	20.000		2.38	47.60	1.40	0.901	3.75	C	I	17.62	0.922	2.38	C	I	4.40	0.80	0.901	4.06	C	I	22.02	
		SNAGRIS2	22.000		2.24	49.28	1.40	0.901	3.62	C	I	17.62	0.922	2.24	C	I	4.40	0.80	0.901	3.95	C	I	17.62	
		SNCOTTS3	27.250		1.61	43.87	1.40	0.901	2.32	C	I	22.02	0.922	1.61	C	I	4.40	0.80	0.901	2.53	C	I	22.02	
		SNAGGRS4	34.925		1.40	48.90	1.40	0.901	2.05	C	I	22.02	0.922	1.40	C	I	4.40	0.80	0.901	2.23	C	I	22.02	
		SNS5A	35.550		1.46	51.90	1.40	0.901	2.00	C	I	22.02	0.922	1.46	C	I	4.40	0.80	0.901	2.16	C	I	22.02	
		SNS6A	39.950		1.36	54.33	1.40	0.901	1.88	C	I	22.02	0.922	1.36	C	I	4.40	0.80	0.901	2.04	C	I	22.02	
		SNS7B	42.000		1.37	57.54	1.40	0.901	1.79	C	I	22.02	0.810	1.37	C	ER	2.20	0.80	0.901	1.95	C	I	22.02	
	TRUCK TRACTOR SEMI-TRAILER (TTST)	TNAGRIT3	33.000		1.59	52.47	1.40	0.901	2.31	C	I	22.02	0.922	1.59	C	I	4.40	0.80	0.901	2.51	C	I	22.02	
		TNT4A	33.075		1.52	50.27	1.40	0.901	2.33	C	I	22.02	0.922	1.52	C	I	4.40	0.80	0.901	2.54	C	I	22.02	
		TNT6A	41.600		1.48	61.57	1.40	0.901	1.96	C	I	22.02	0.922	1.48	C	I	4.40	0.80	0.901	2.13	C	I	22.02	
		TNT7A	42.000		1.37	57.54	1.40	0.901	1.99	C	I	22.02	0.922	1.37	C	I	4.40	0.80	0.901	2.16	C	I	22.02	
		TNT7B	42.000		1.31	55.02	1.40	0.901	2.08	C	I	22.02	0.922	1.31	C	I	4.40	0.80	0.901	2.25	C	I	22.02	
		TNAGRIT4	43.000		1.26	54.18	1.40	0.901	1.98	C	I	22.02	0.922	1.26	C	I	4.40	0.80	0.901	2.15	C	I	22.02	
		TNAGT5A	45.000		1.30	58.50	1.40	0.901	1.84	C	I	22.02	0.810	1.30	C	ER	2.20	0.80	0.901	2.00	C	I	22.02	
		TNAGT5B	45.000	3	1.19	53.55	1.40	0.901	1.80	C	I	22.02	0.922	1.19	C	I	4.40	0.80	0.901	1.95	C	I	22.02	

LOAD FACTORS:

DESIGN LOAD RATING FACTORS	LIMIT STATE	γ_{DC}	γ_{DW}
	STRENGTH I	1.25	1.50
	SERVICE III	1.00	1.00

LEGAL LOAD RATING FACTORS	YEAR	ADTT
	2009	1930
	2025	2461

NOTES:

MINIMUM RATING FACTORS FOR DESIGN LOAD RATING ARE BASED ON THE STRENGTH I AND SERVICE III LIMIT STATES.

MINIMUM RATING FACTORS FOR LEGAL LOAD RATING ARE BASED ON THE STRENGTH I LIMIT STATE.

ALLOWABLE STRESSES FOR SERVICE III LIMIT STATE ARE AS REQUIRED FOR DESIGN.

COMMENTS:

1.
2.
3.
4.

(#) CONTROLLING LOAD RATING

(1) DESIGN LOAD RATING (HL-93)

(2) DESIGN LOAD RATING (HS-20)

(3) LEGAL LOAD RATING **

** SEE CHART FOR VEHICLE TYPE

GIRDER LOCATION

I - INTERIOR GIRDER
EL - EXTERIOR LEFT GIRDER
ER - EXTERIOR RIGHT GIRDER

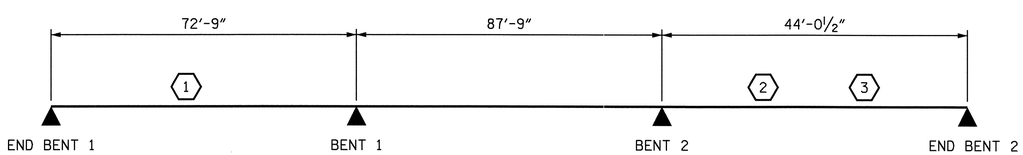

LRFR SUMMARY

PROJECT NO. B-4507
FORSYTH COUNTY
STATION: 27+96.00 -L-

STATE OF NORTH CAROLINA
DEPARTMENT OF TRANSPORTATION
RALEIGH

STANDARD
LRFR SUMMARY FOR PRESTRESSED CONCRETE GIRDERS
(NON-INTERSTATE TRAFFIC)
(RIGHT LANE)

NORTH CAROLINA PROFESSIONAL SEAL 20125 ENGINEER MARSHALL G. CHEEK, JR.

REVISIONS						SHEET NO.
NO.	BY:	DATE:	NO.	BY:	DATE:	S-54
1			3			TOTAL SHEETS
2			4			99

STR. #2 STD. NO. LRFR1

ASSEMBLED BY : A.L. FIGUEROA DATE : 09-28-09
CHECKED BY : M.G. CHEEK DATE : 09-29-09
DRAWN BY : MAA 1/08
CHECKED BY : GM/DI 2/08
REV. 11/12/08RR MAA/GM

29-SEP-2009 11:34
R:\Structures\Final Plans\Right Lane\B-4507_sd_str*2_02D_lrfr1_08.dgn
afigueroa

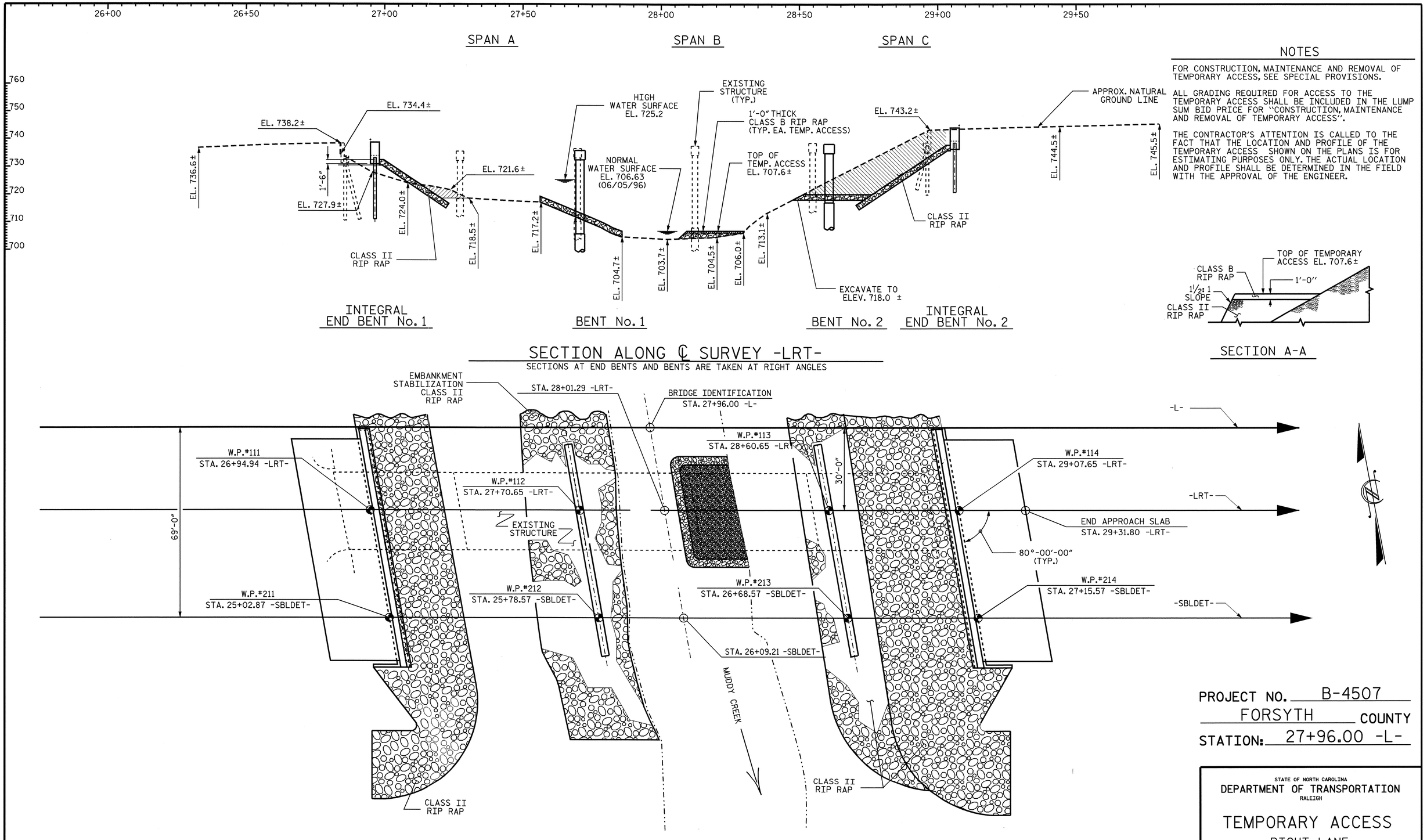

NOTES

FOR CONSTRUCTION, MAINTENANCE AND REMOVAL OF TEMPORARY ACCESS, SEE SPECIAL PROVISIONS.

ALL GRADING REQUIRED FOR ACCESS TO THE TEMPORARY ACCESS SHALL BE INCLUDED IN THE LUMP SUM BID PRICE FOR "CONSTRUCTION, MAINTENANCE AND REMOVAL OF TEMPORARY ACCESS".

THE CONTRACTOR'S ATTENTION IS CALLED TO THE FACT THAT THE LOCATION AND PROFILE OF THE TEMPORARY ACCESS SHOWN ON THE PLANS IS FOR ESTIMATING PURPOSES ONLY. THE ACTUAL LOCATION AND PROFILE SHALL BE DETERMINED IN THE FIELD WITH THE APPROVAL OF THE ENGINEER.

PROJECT NO. B-4507
FORSYTH COUNTY
STATION: 27+96.00 -L-

STATE OF NORTH CAROLINA
DEPARTMENT OF TRANSPORTATION
RALEIGH

TEMPORARY ACCESS
RIGHT LANE

NORTH CAROLINA PROFESSIONAL SEAL 20125 ENGINEER MARSHALL G. CHEEK, JR.
9-29-09

REVISIONS							SHEET NO.
NO.	BY:	DATE:	NO.	BY:	DATE:		S-55
1			3				TOTAL SHEETS
2			4				99

STR. #2

DRAWN BY : A.L. FIGUEROA DATE : 03-19-09
CHECKED BY : M.G. CHEEK DATE : 06-26-09

28-SEP-2009 08:17
R:\Structures\FinalPlans\Right Lane\B-4507_sd_str#2_03_TA.dgn
afigueroa

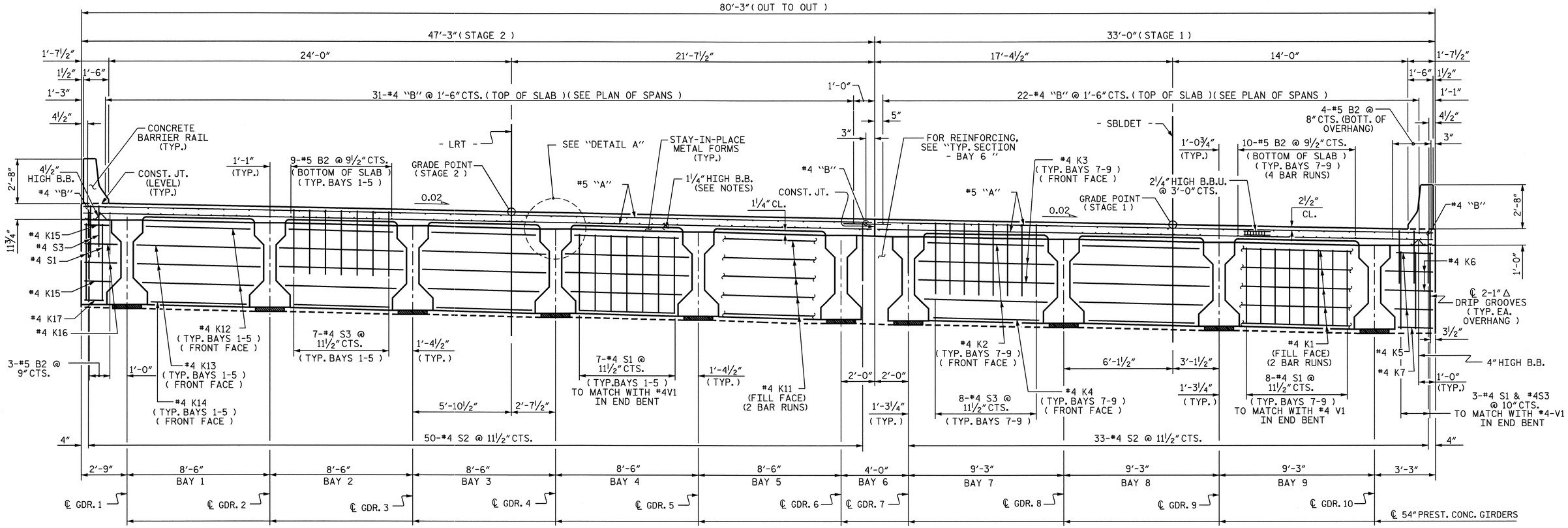

END ELEVATION

(END BENT No. 1 SHOWN - END BENT No. 2 SIMILAR)
(FOR SECTION THRU END BENT, SEE SHEET 3 OF 3)

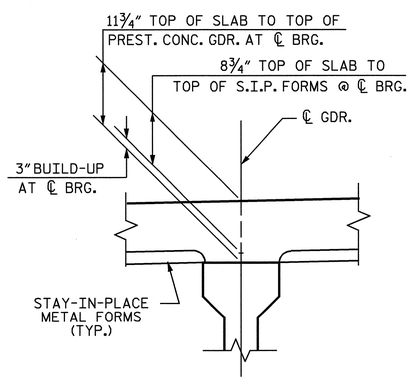

DETAIL A

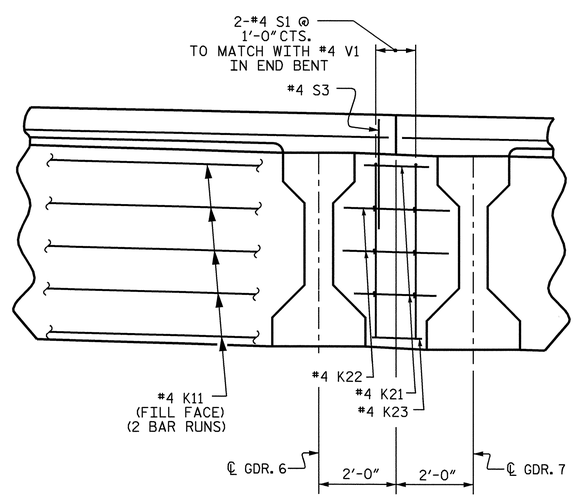

TYPICAL SECTION - BAY 6

(SHOWING END BENT DIAPHRAGM AT BAY 6 - STAGE 2)

NOTES

PROVIDE 1¼" HIGH BEAM BOLSTERS UPPER AT 4'-0" CTS. ATOP THE METAL STAY-IN-PLACE FORMS TO SUPPORT THE BOTTOM MAT OF 'A' BARS. WHEN USING REMOVABLE FORMS, PROVIDE CONTINUOUS HIGH CHAIRS FOR METAL DECK (C.H.C.M.) @ 4'-0" CTS. WITH A HEIGHT TO SUPPORT THE BOTTOM MAT OF 'A' BARS A CLEAR DISTANCE OF 2½" ABOVE THE TOP OF THE REMOVABLE FORM.

LONGITUDINAL STEEL MAY BE SHIFTED SLIGHTLY, AS NECESSARY, TO AVOID INTERFERENCE WITH STIRRUPS IN PRESTRESSED CONCRETE GIRDERS.

PREVIOUSLY CAST CONCRETE IN A CONTINUOUS UNIT SHALL HAVE ATTAINED A MINIMUM COMPRESSIVE STRENGTH OF 3000 PSI BEFORE ADDITIONAL CONCRETE IS CAST IN THE UNIT.

BARRIER RAIL IN A CONTINUOUS UNIT SHALL NOT BE CAST UNTIL ALL SLAB CONCRETE IN THE UNIT HAS BEEN CAST AND HAS REACHED A MINIMUM COMPRESSIVE STRENGTH OF 3000 PSI.

PROJECT NO. B-4507
FORSYTH COUNTY
STATION: 27+96.00 -L-

SHEET 1 OF 3

STATE OF NORTH CAROLINA
DEPARTMENT OF TRANSPORTATION
RALEIGH

SUPERSTRUCTURE
TYPICAL SECTIONS
RIGHT LANE

NORTH CAROLINA PROFESSIONAL SEAL 20125 ENGINEER MARSHALL G. CHEEK, JR.
9-21-09

REVISIONS						SHEET NO.
NO.	BY:	DATE:	NO.	BY:	DATE:	S-56
1			3			TOTAL SHEETS
2			4			99

DRAWN BY : V.X. NGUYEN DATE : 6-09
CHECKED BY : M.G. CHEEK DATE : 6-09

05-AUG-2009 08:59
R:\Structures\STR*2\vnguyen\B-4507_SD_TS.dgn
afigueroa

STR. #2

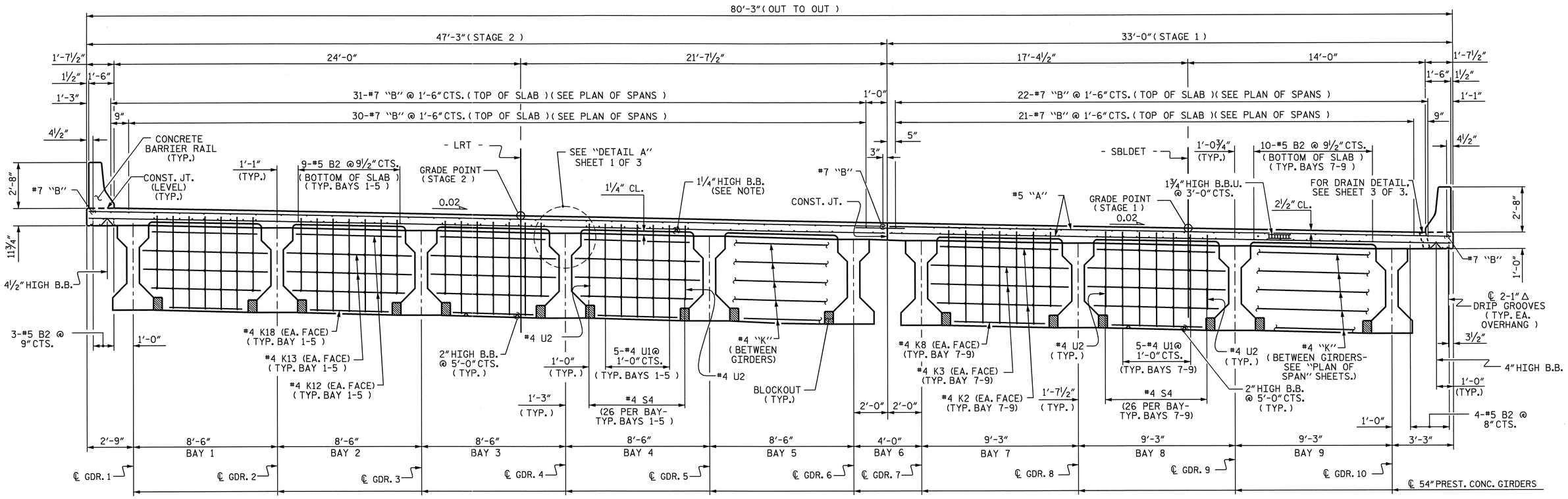

TYPICAL SECTION

(SHOWING BENT DIAPHRAGMS)

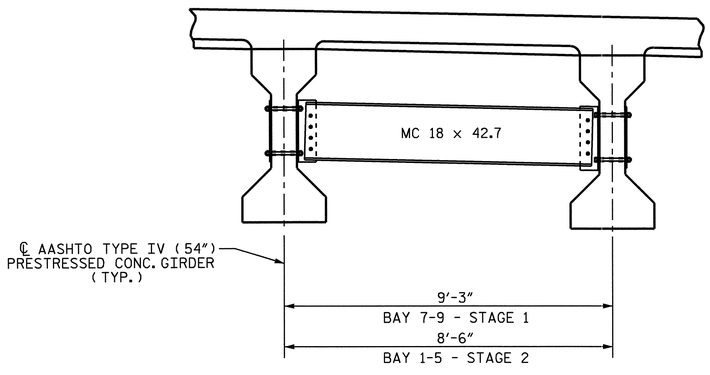

TYPICAL SECTION

(SHOWING INTERMEDIATE DIAPHRAGMS)
(FOR INTERMEDIATE STEEL DIAPHRAGMS DETAILS, SEE "INTERMEDIATE STEEL DIAPHRAGMS " SHEET.)

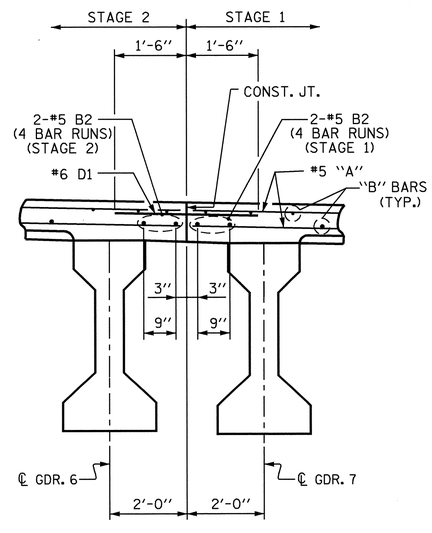

TYPICAL SECTION

(SHOWING REINFORCING STEEL AT CONSTRUCTION JOINT)

PROJECT NO. B-4507
FORSYTH COUNTY
STATION: 27+96.00 -L-

SHEET 2 OF 3

STATE OF NORTH CAROLINA
DEPARTMENT OF TRANSPORTATION
RALEIGH

SUPERSTRUCTURE
TYPICAL SECTIONS
RIGHT LANE

NORTH CAROLINA PROFESSIONAL SEAL 20125 ENGINEER MARSHALL G. CHEEK, JR.
9-29-09

REVISIONS						SHEET NO.
NO.	BY:	DATE:	NO.	BY:	DATE:	S-57
1			3			TOTAL SHEETS
2			4			99

STR. #2

DRAWN BY : V.X. NGUYEN DATE : 6-09
CHECKED BY : M.G. CHEEK DATE : 6-09

06-AUG-2009 10:43
r:\structures\STR#2\vnguyen\B-4507_SD_TS.dgn
ddhodge

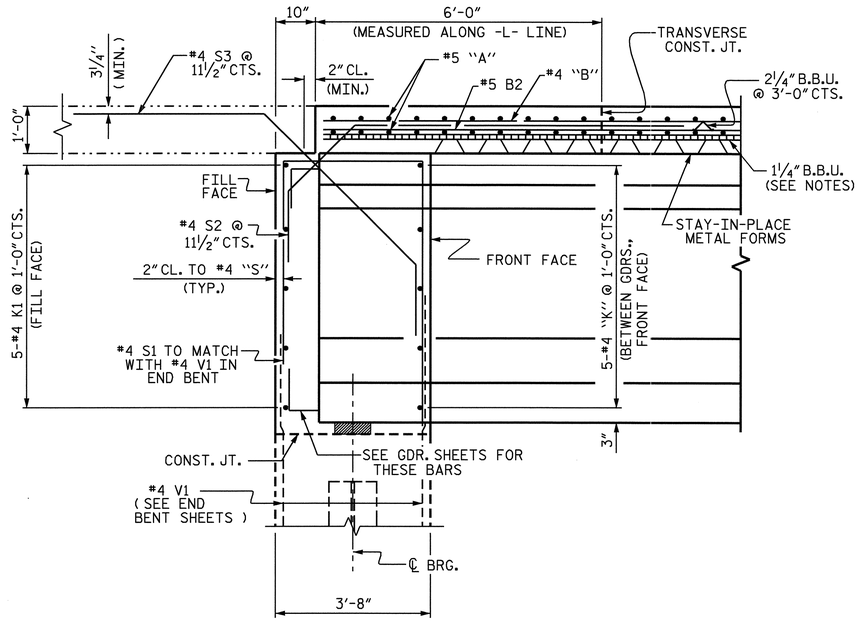

SECTION THRU END BENT

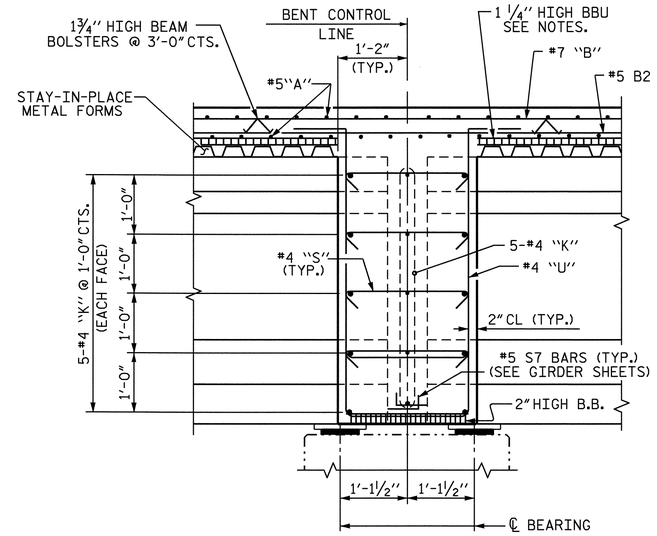

SECTION THRU CONTINUOUS BENT DIAPHRAGM

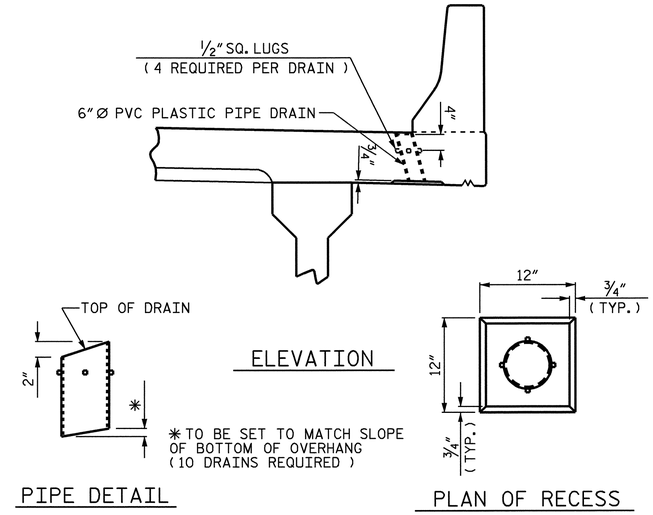

DRAIN DETAILS

TOP OF FLOOR DRAIN TO BE SET ⅜" BELOW SURFACE OF SLAB.

4-½" SQUARE LUGS TO BE GLUED TO THE PVC PLASTIC PIPE AT EQUAL SPACES AROUND THE PIPE DRAIN APPROXIMATELY 4" FROM THE TOP OF THE PIPE.

THE 6" Ø PVC PLASTIC PIPE AND FITTINGS SHALL BE SCHEDULE 40 AND CONFORM TO ASTM D1785.

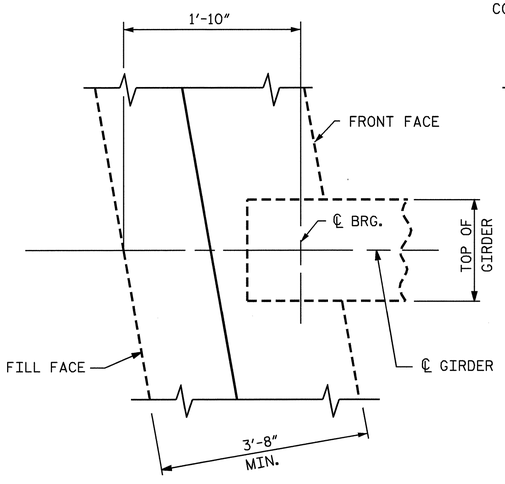

END BENT

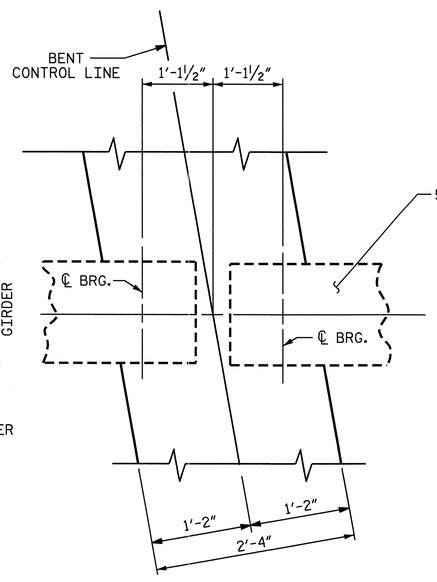

BENT DIAPHRAGM

PLAN

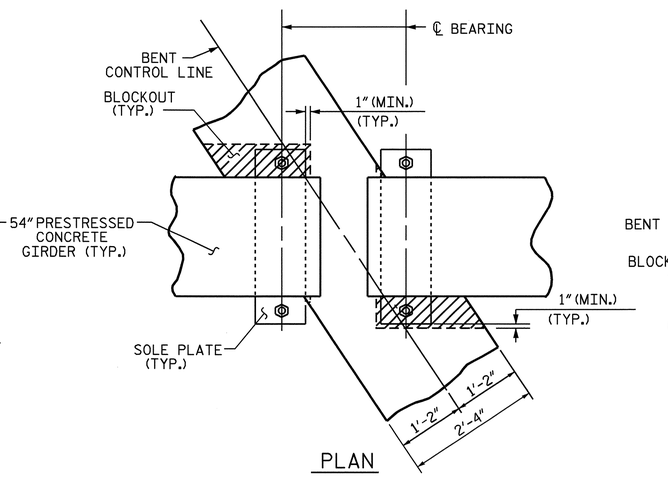

PLAN

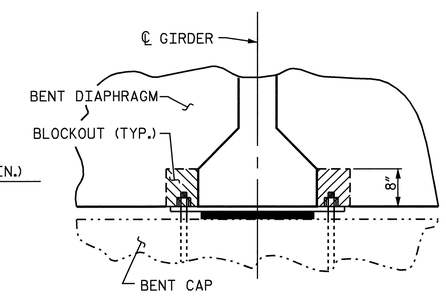

SECTION

BENT DIAPHRAGM BLOCK-OUT DETAIL

PROJECT NO. B-4507
FORSYTH COUNTY
STATION: 27+96.00 -L-

SHEET 3 OF 3

STATE OF NORTH CAROLINA
DEPARTMENT OF TRANSPORTATION
RALEIGH

SUPERSTRUCTURE
TYPICAL SECTIONS
RIGHT LANE

NORTH CAROLINA PROFESSIONAL SEAL 20125 ENGINEER MARSHALL G. CHEEK, JR.
9-28-09

REVISIONS						SHEET NO.
NO.	BY:	DATE:	NO.	BY:	DATE:	S-58
1			3			TOTAL SHEETS
2			4			99

STR. #2

DRAWN BY : V.X. NGUYEN DATE : 8-08
CHECKED BY : M.G. CHEEK DATE : 6-09

05-AUG-2009 08:59
R:\Structures\STR#2\vnguyen\B-4507_SD_TS.dgn
atlgueroa

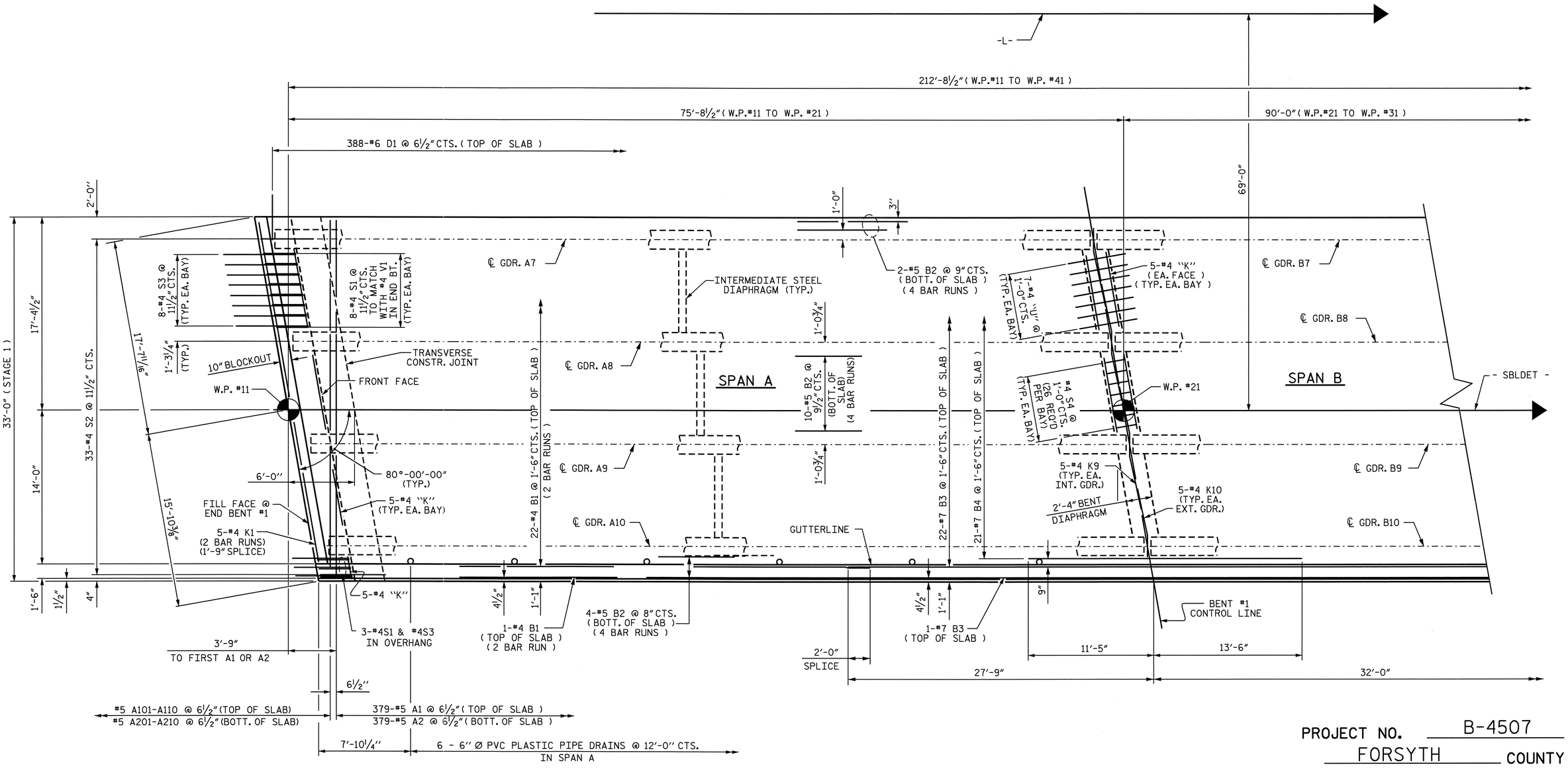

PROJECT NO. B-4507

FORSYTH COUNTY

STATION: 27+96.00 -L-

SHEET 1 OF 6

PLAN OF SPAN A - STAGE 1

FOR INTERMEDIATE DIAPHRAGMS, SEE "INTERMEDIATE STEEL DIAPHRAGMS" SHEET.

DOWELS SHALL BE PLACED IN THE SAME HORIZONTAL PLANE AS THE TOP SLAB REINFORCING STEEL.

NORTH CAROLINA PROFESSIONAL SEAL 20125 ENGINEER MARSHALL G. CHEEK, JR.

9-29-09

STATE OF NORTH CAROLINA
DEPARTMENT OF TRANSPORTATION
RALEIGH

SUPERSTRUCTURE

PLAN OF SPAN A
STAGE 1
RIGHT LANE

REVISIONS						SHEET NO.
NO.	BY:	DATE:	NO.	BY:	DATE:	S-59
1			3			TOTAL SHEETS
2			4			99

STR. #2

DRAWN BY : V.X. NGUYEN DATE : 9-23-08
CHECKED BY : M.G. CHEEK DATE : 6-09

28-SEP-2009 08:16
R:\Structures\Final Plans\Right Lane\B-4507_sd_str#2_05_s*.dgn
atfigueroa

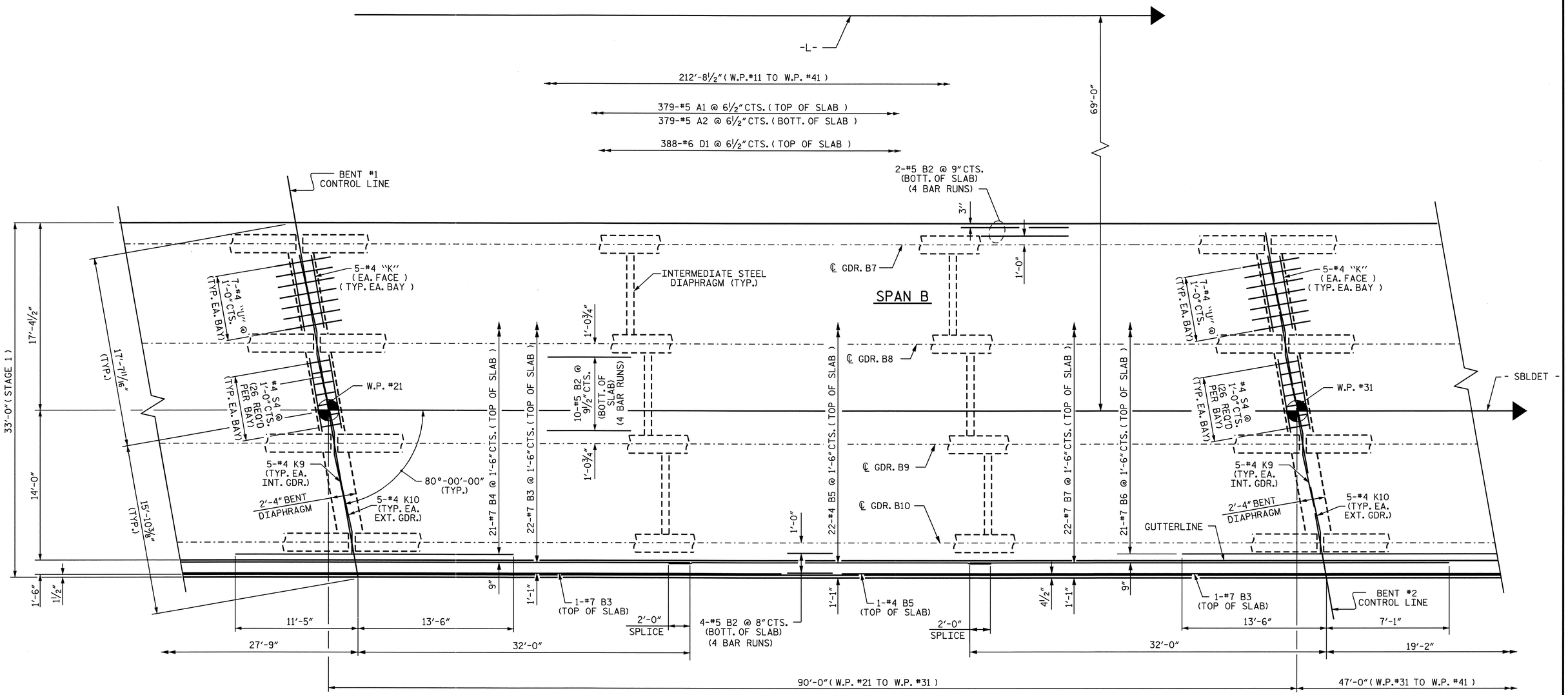

PLAN OF SPAN B - STAGE 1

FOR INTERMEDIATE DIAPHRAGMS, SEE "INTERMEDIATE STEEL DIAPHRAGMS" SHEET.

DOWELS SHALL BE PLACED IN THE SAME HORIZONTAL PLANE AS THE TOP SLAB REINFORCING STEEL.

PROJECT NO. B-4507

FORSYTH COUNTY

STATION: 27+96.00 -L-

SHEET 2 OF 6

STATE OF NORTH CAROLINA
DEPARTMENT OF TRANSPORTATION
RALEIGH

SUPERSTRUCTURE

PLAN OF SPAN B
STAGE 1
RIGHT LANE

NORTH CAROLINA PROFESSIONAL SEAL 20125 ENGINEER MARSHALL G. CHEEK, JR.
9-24-09

REVISIONS						SHEET NO.
NO.	BY:	DATE:	NO.	BY:	DATE:	S-60
1			3			TOTAL SHEETS
2			4			99

DRAWN BY : V.X. NGUYEN DATE : 9-23-08
CHECKED BY : M.G. CHEEK DATE : 6-09

06-AUG-2009 10:43
r:\structures\STR#2\vnguyen\B-4507_sd_s*.dgn
dahodge

STR. #2

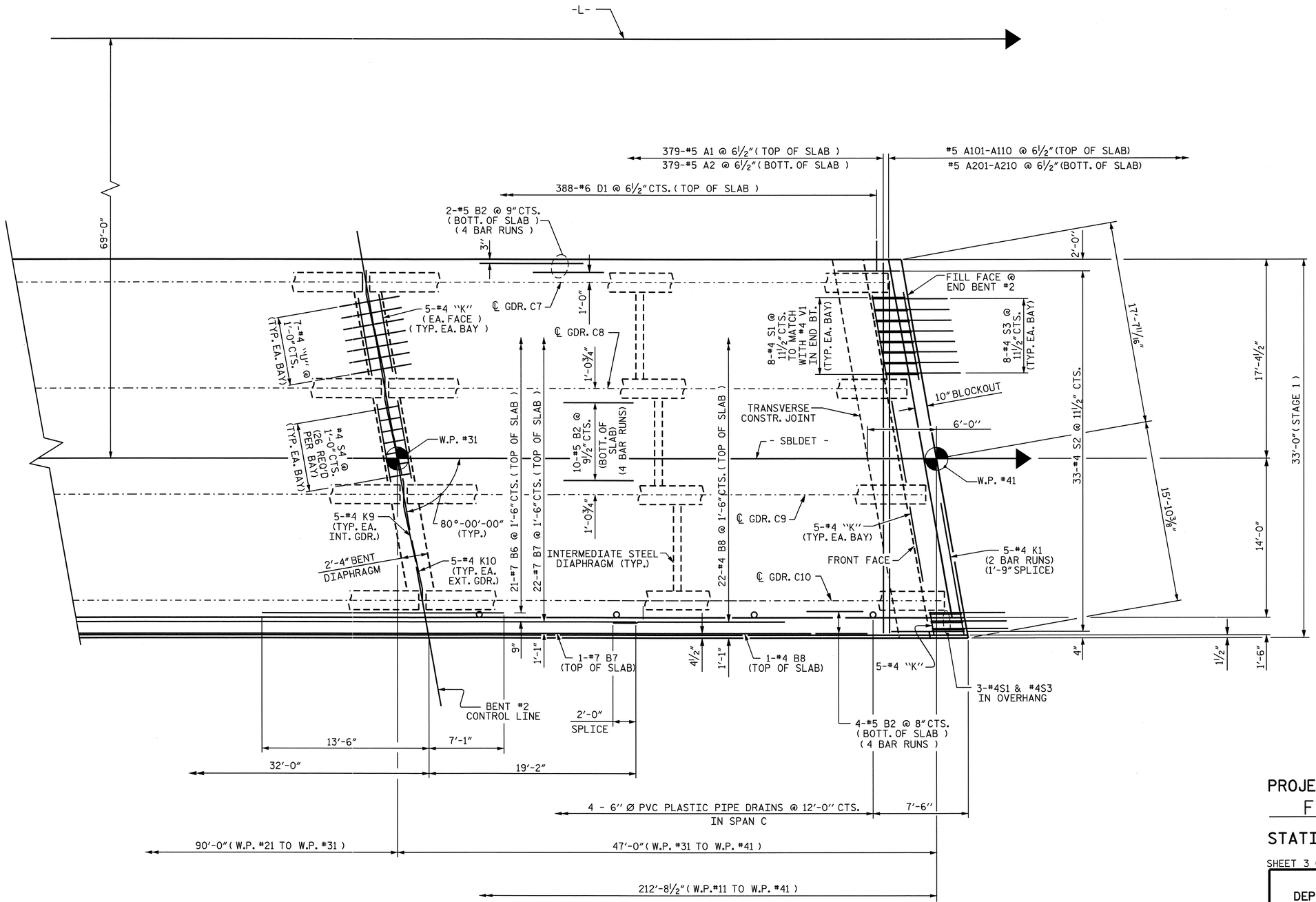

PLAN OF SPAN C - STAGE 1

FOR INTERMEDIATE DIAPHRAGMS, SEE "INTERMEDIATE STEEL DIAPHRAGMS" SHEET.

DOWELS SHALL BE PLACED IN THE SAME HORIZONTAL PLANE AS THE TOP SLAB REINFORCING STEEL.

PROJECT NO. B-4507
FORSYTH COUNTY
STATION: 27+96.00 -L-

SHEET 3 OF 6

STATE OF NORTH CAROLINA
DEPARTMENT OF TRANSPORTATION
RALEIGH

SUPERSTRUCTURE
PLAN OF SPAN C
STAGE 1
RIGHT LANE

NORTH CAROLINA PROFESSIONAL SEAL 20125 ENGINEER MARSHALL G. CHEEK, JR.
9-29-09

REVISIONS						SHEET NO.
NO.	BY:	DATE:	NO.	BY:	DATE:	S-61
1			3			TOTAL SHEETS
2			4			99

STR. #2

DRAWN BY : V.X. NGUYEN DATE : 9-23-08
CHECKED BY : M.G. CHEEK DATE : 6-09

28-SEP-2009 08:15
R:\Structures\Final Plans\Right Lane\B-4507_sd_str#2_05_s#.dgn
afigueroa

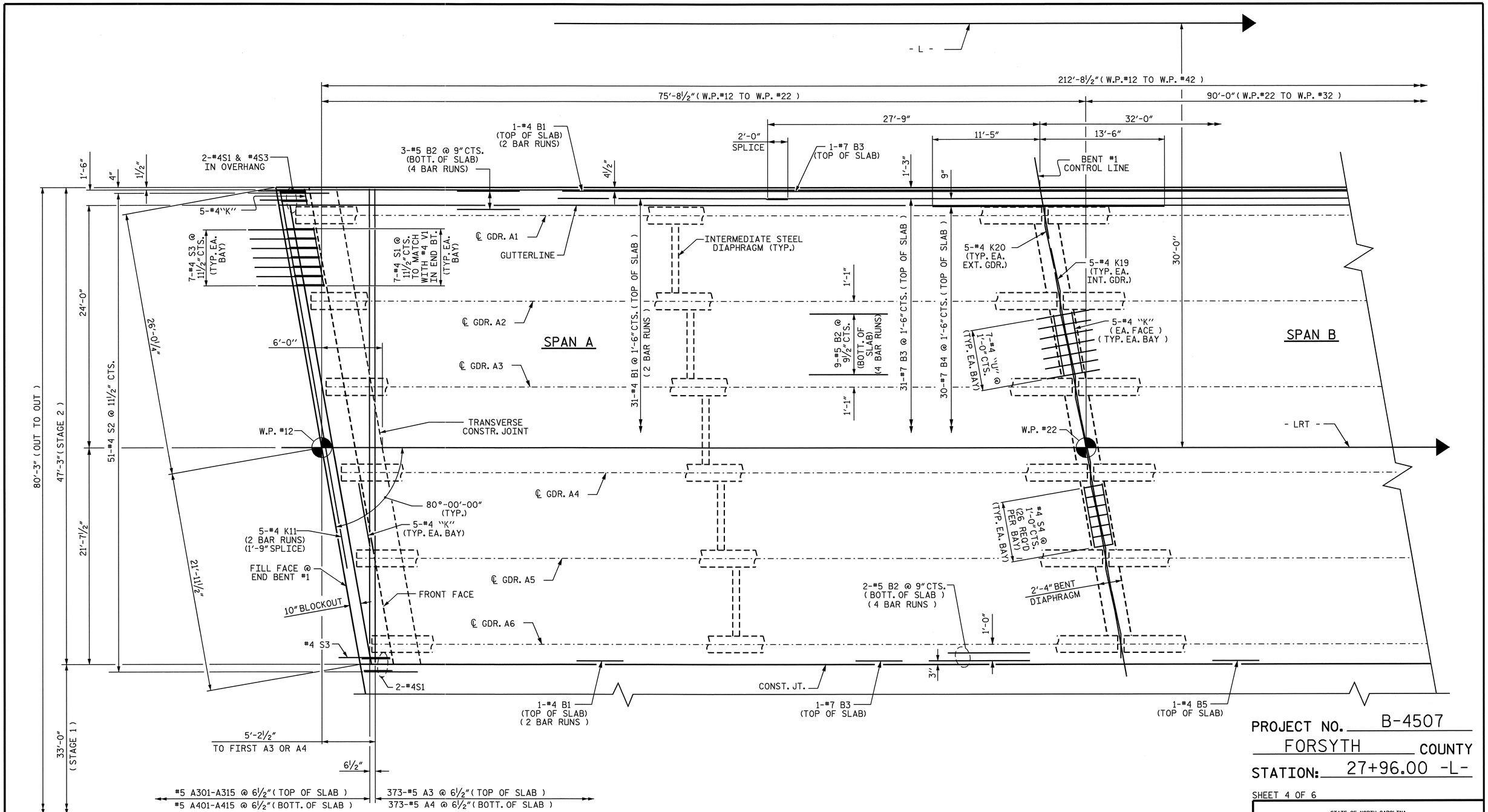

PROJECT NO. B-4507

FORSYTH COUNTY

STATION: 27+96.00 -L-

SHEET 4 OF 6

STATE OF NORTH CAROLINA
DEPARTMENT OF TRANSPORTATION
RALEIGH

SUPERSTRUCTURE

PLAN OF SPAN A - STAGE 2

RIGHT LANE

PLAN OF SPAN A - STAGE 2

FOR INTERMEDIATE DIAPHRAGMS, SEE "INTERMEDIATE STEEL DIAPHRAGMS" SHEET.

NORTH CAROLINA PROFESSIONAL SEAL 20125 ENGINEER MARSHALL G. CHEEK, JR.
9-29-09

REVISIONS						SHEET NO.
NO.	BY:	DATE:	NO.	BY:	DATE:	S-62
1			3			TOTAL SHEETS
2			4			99

STR. #2

DRAWN BY : V.X. NGUYEN DATE : 9-23-08
CHECKED BY : M.G. CHEEK DATE : 6-09

06-AUG-2009 10:42
r:\structures\STR#2\vnguyen\B-4507_sd_s*.dgn
dahodge

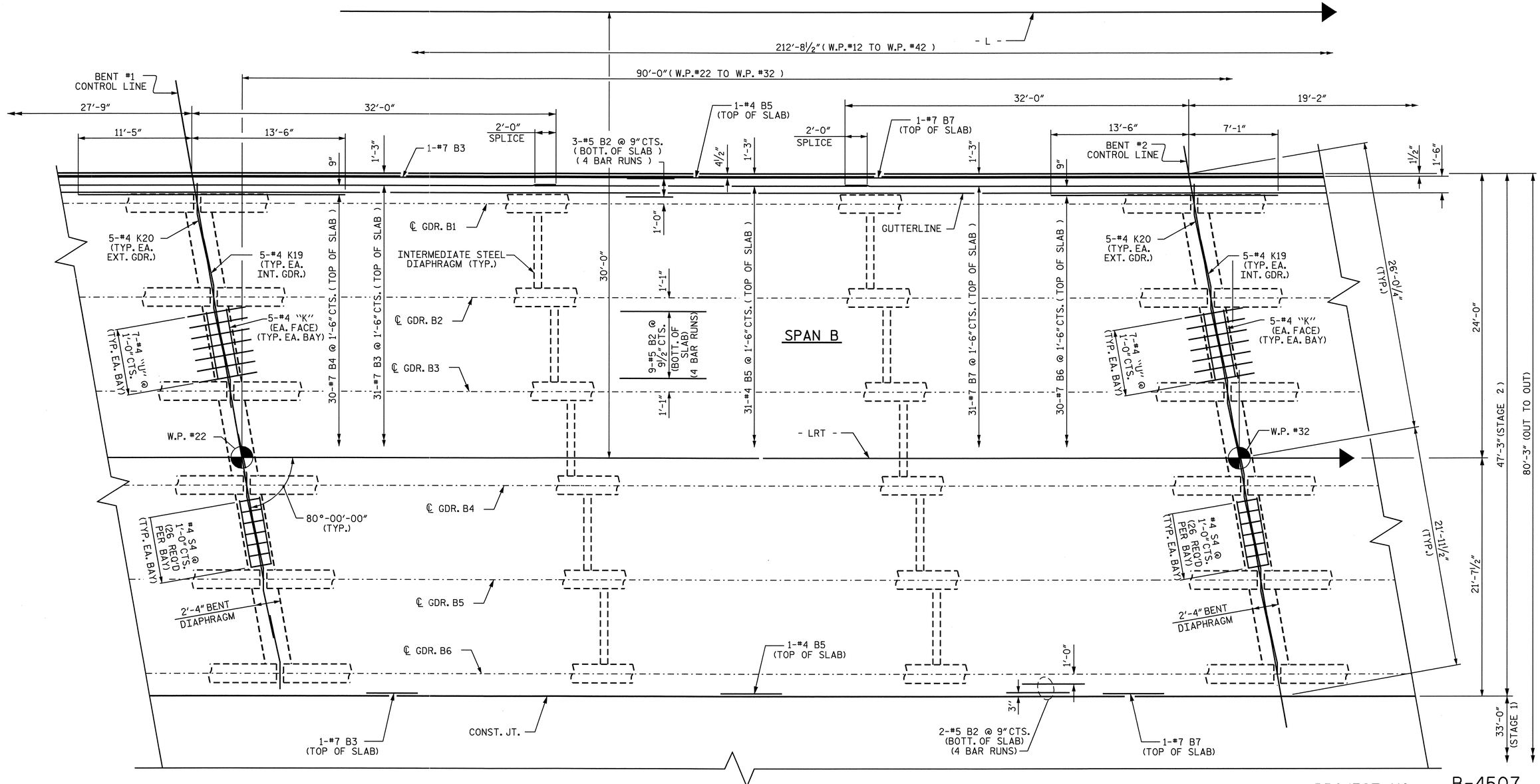

PROJECT NO. B-4507

FORSYTH COUNTY

STATION: 27+96.00 -L-

SHEET 5 OF 6

STATE OF NORTH CAROLINA
DEPARTMENT OF TRANSPORTATION
RALEIGH

SUPERSTRUCTURE

PLAN OF SPAN B
STAGE 2
RIGHT LANE

PLAN OF SPAN B - STAGE 2

FOR INTERMEDIATE DIAPHRAGMS, SEE "INTERMEDIATE STEEL DIAPHRAGMS" SHEET.

NORTH CAROLINA PROFESSIONAL SEAL 20125 ENGINEER MARSHALL B. CHEEK, JR.
9-29-09

REVISIONS						
NO.	BY:	DATE:	NO.	BY:	DATE:	
1			3			
2			4			

SHEET NO. S-63

TOTAL SHEETS 99

STR. #2

DRAWN BY : V.X. NGUYEN DATE : 9-23-08
CHECKED BY : M.G. CHEEK DATE : 6-09

28-SEP-2009 08:15
R:\Structures\Final Plans\Right Lane\B-4507_sd_str#2_05_s#.dgn
atfigueroa

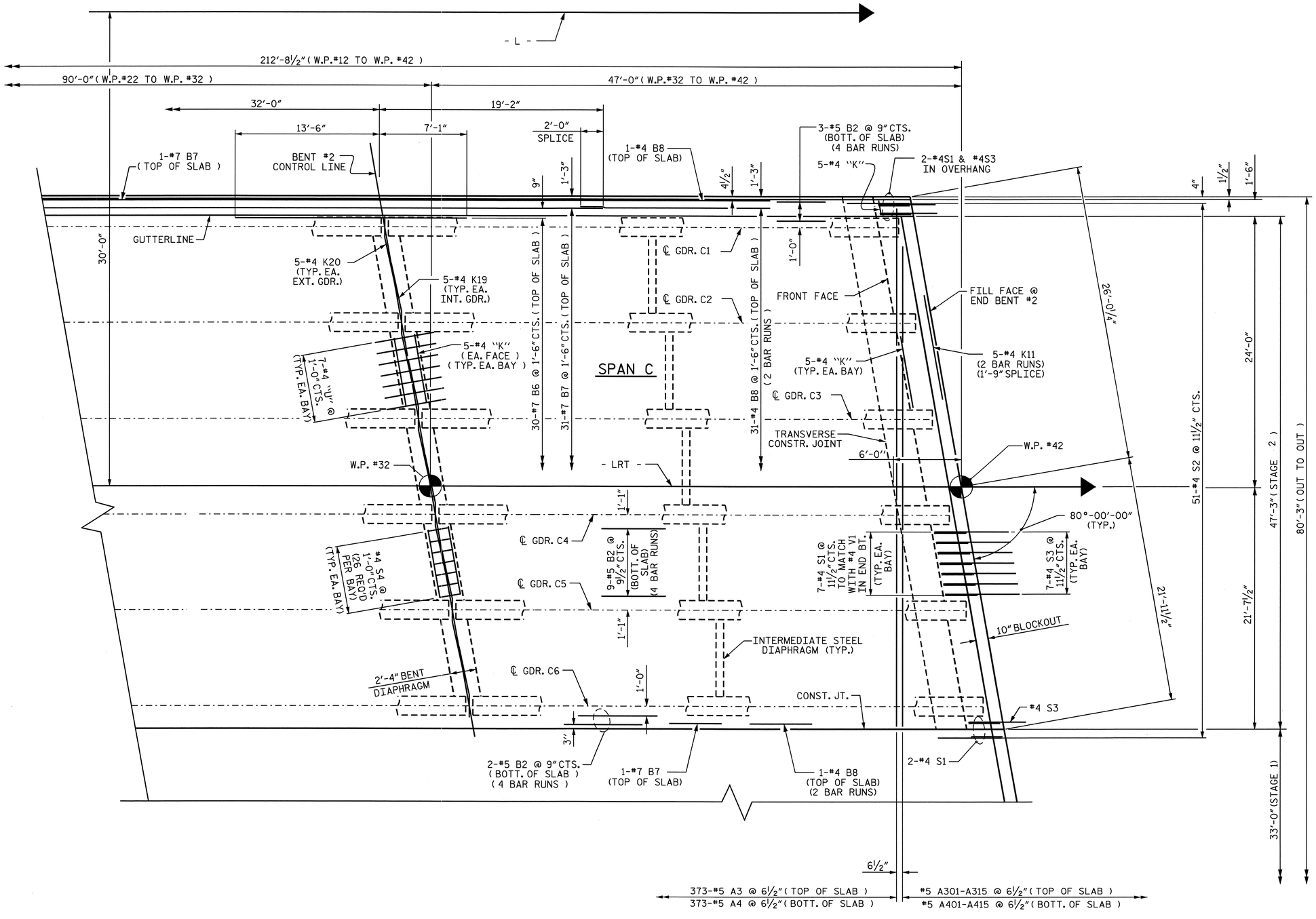

PLAN OF SPAN C - STAGE 2

FOR INTERMEDIATE DIAPHRAGMS, SEE "INTERMEDIATE STEEL DIAPHRAGMS" SHEET.

PROJECT NO. B-4507

FORSYTH COUNTY

STATION: 27+96.00 -L-

SHEET 6 OF 6

STATE OF NORTH CAROLINA
DEPARTMENT OF TRANSPORTATION
RALEIGH

SUPERSTRUCTURE

PLAN OF SPANS C
STAGE 2
RIGHT LANE

NORTH CAROLINA PROFESSIONAL SEAL 20125 ENGINEER MARSHALL G. CHEEK, JR.
9-29-09

REVISIONS						SHEET NO.
NO.	BY:	DATE:	NO.	BY:	DATE:	S-64
1			3			TOTAL SHEETS
2			4			99

DRAWN BY : V.X. NGUYEN DATE : 9-23-08
CHECKED BY : M.G. CHEEK DATE : 6-09

28-SEP-2009 08:15
R:\Structures\Final Plans\Right Lane\B-4507_sd_str#2_05_s*.dgn
afigueroa

STR. #2

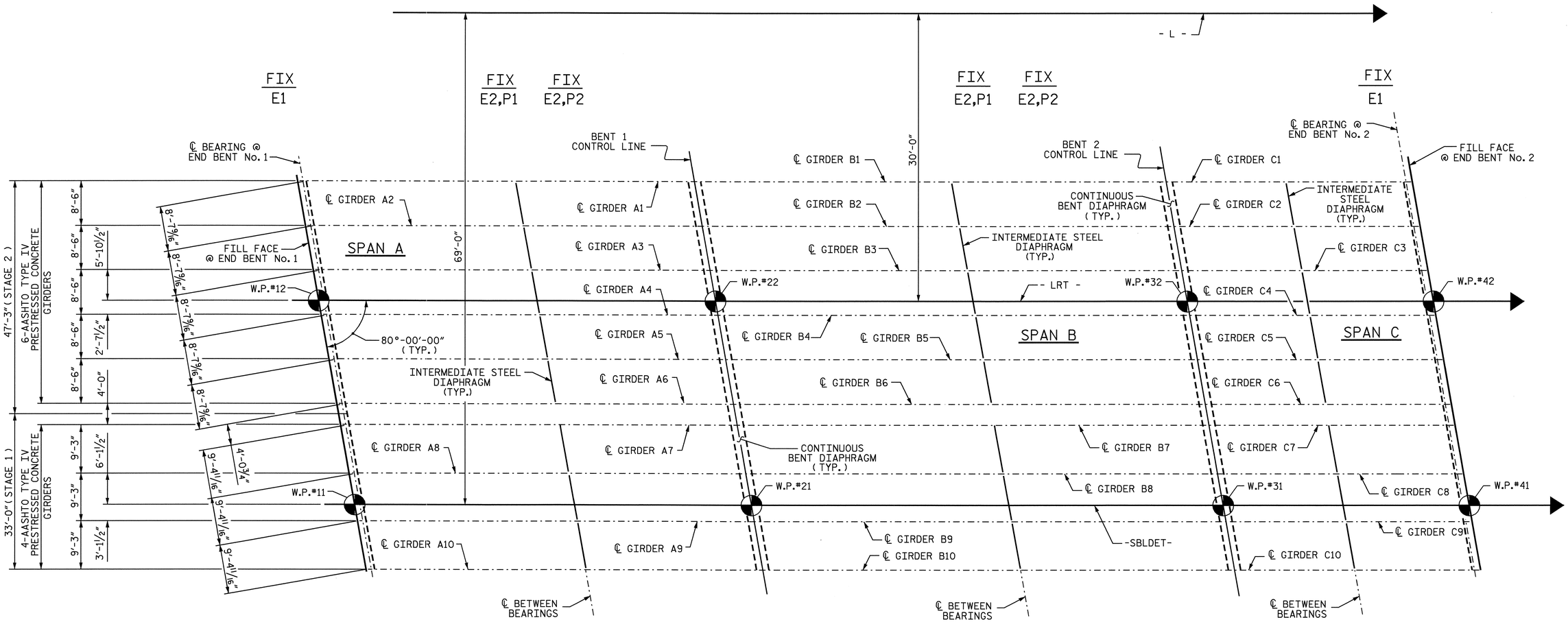

PLAN OF GIRDER LAYOUT

PROJECT NO. B-4507

FORSYTH COUNTY

STATION: 27+96.00 -L-

STATE OF NORTH CAROLINA
DEPARTMENT OF TRANSPORTATION
RALEIGH

SUPERSTRUCTURE

GIRDER LAYOUT
SPANS A, B, & C
STAGE 1 & 2
RIGHT LANE

NORTH CAROLINA PROFESSIONAL SEAL 20125 ENGINEER MARSHALL G. CHEEK, JR.
9-29-09

REVISIONS						SHEET NO.
NO.	BY:	DATE:	NO.	BY:	DATE:	S-65
1			3			TOTAL SHEETS
2			4			99

STR. #2

DRAWN BY : V.X. NGUYEN DATE : 10-6-08
CHECKED BY : M.G. CHEEK DATE : 6-09

05-AUG-2009 08:59
R:\Structures\STR*2\vnguyen\B-4507_SD_FP.dgn
aflgueroa

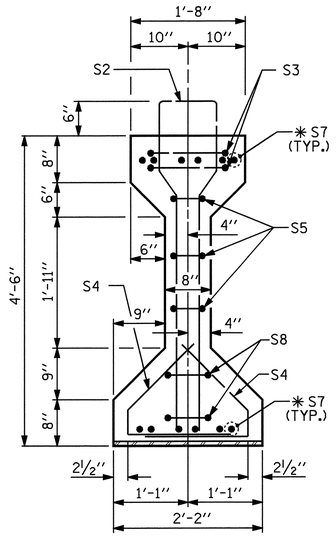

SECTION A-A

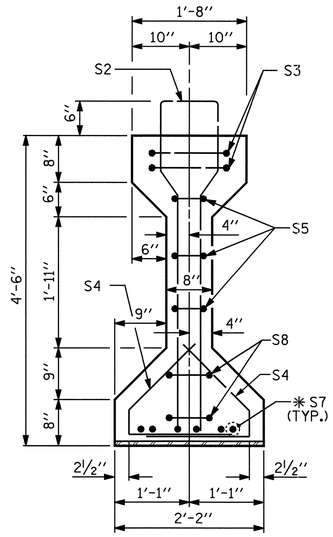

SECTION B-B

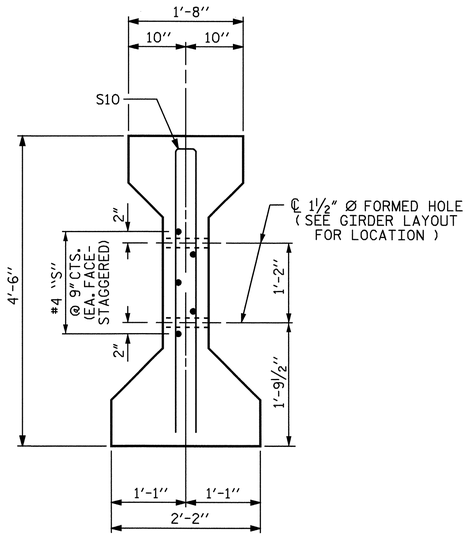

SECTION C-C

(S1 BARS NOT SHOWN)

✱FOR S7 BARS, SEE DETAIL "A" OF "PRESTRESSED CONCRETE GIRDER CONTINUOUS FOR LIVE LOAD DETAILS" SHEET 4 OF 7.

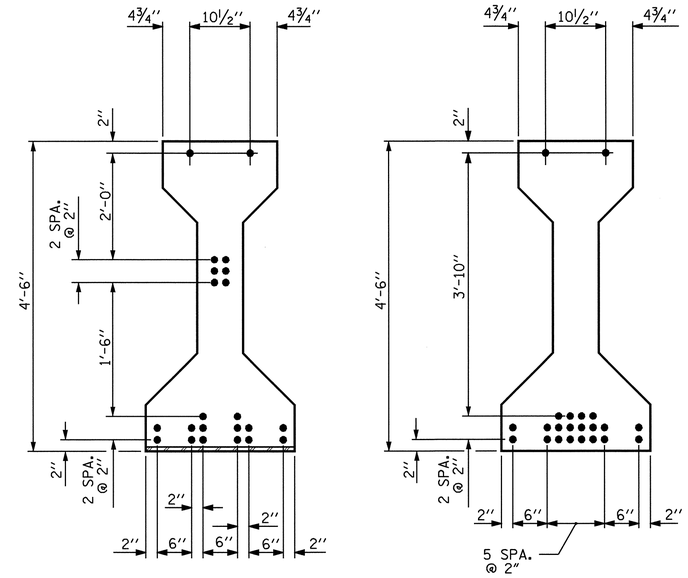

AT END OF GIRDER

AT ℄ OF GIRDER

0.6" Ø LOW RELAXATION STRAND LAYOUT

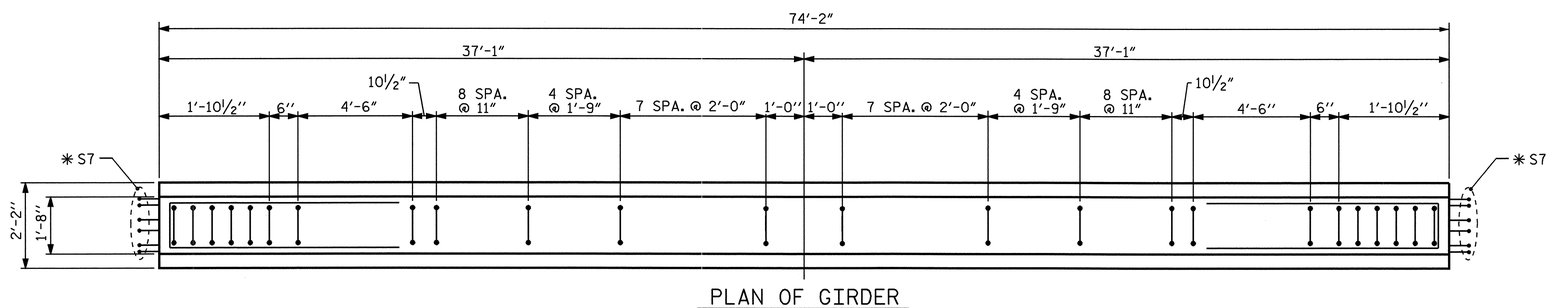

PLAN OF GIRDER

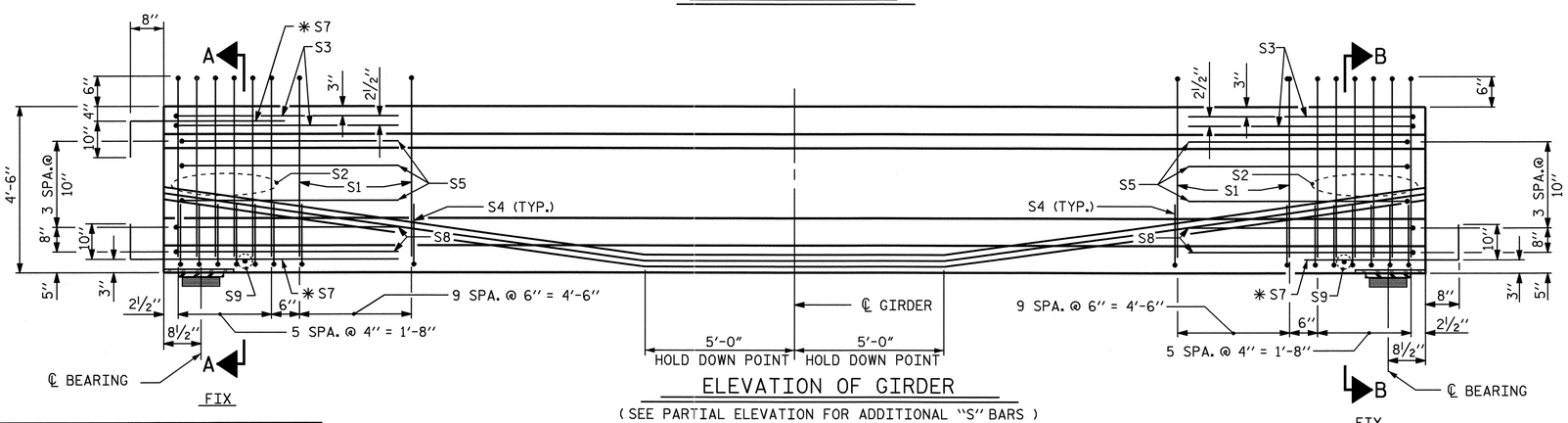

ELEVATION OF GIRDER

(SEE PARTIAL ELEVATION FOR ADDITIONAL "S" BARS)

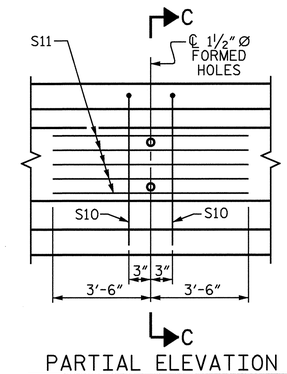

PARTIAL ELEVATION

SHOWING INTERMEDIATE DIAPHRAGM REINFORCING STEEL FOR GIRDERS Nos. 1-10

0.6" Ø L. R. GRADE 270 STRANDS

AREA (SQUARE INCHES)	ULTIMATE STRENGTH (LBS. PER STRAND)	APPLIED PRESTRESS (LBS. PER STRAND)
0.217	58,600	43,950

REINFORCING STEEL FOR ONE GIRDER

BAR	NUMBER	SIZE	TYPE	LENGTH	WEIGHT
S1	60	#4	1	10'-8"	428
S2	12	#6	1	10'-8"	192
S3	4	#4	2	9'-1"	24
S4	64	#4	3	3'-5"	146
S5	6	#4	2	8'-5"	34
✱S7	18	#5	STR	3'-8"	69
S8	4	#4	2	8'-7"	23
S9	2	#3	STR	1'-10"	1
S10	2	#5	2	8'-8"	18
S11	5	#4	STR	7'-0"	23

✱NOTE: S7 BARS SHALL BE BENT BEFORE SHIPMENT. HEAT BENDING SHALL NOT BE ALLOWED.

BAR TYPES

ALL BAR DIMENSIONS ARE OUT-TO-OUT

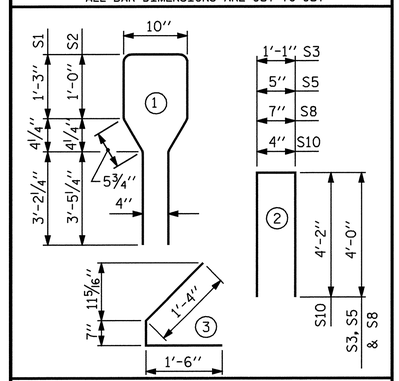

QUANTITIES FOR ONE GIRDER

	REINFORCING STEEL LB.	5000 PSI CONCRETE C.Y.	0.6" Ø L.R. STRANDS No.
	958	15.1	22

GIRDERS REQUIRED

NUMBER	LENGTH	TOTAL LENGTH
10	74'-2"	741'-8" LIN. FT.

PROJECT NO. B-4507

FORSYTH COUNTY

STATION: 27+96.00 -L-

SHEET 1 OF 7

STATE OF NORTH CAROLINA
DEPARTMENT OF TRANSPORTATION
RALEIGH

STANDARD
AASHTO TYPE IV
PRESTRESSED CONCRETE GIRDER
CONTINUOUS FOR LIVE LOAD
SPAN A
RIGHT LANE

NORTH CAROLINA PROFESSIONAL SEAL 20125 ENGINEER MARSHALL G. CHEEK, JR.
9-29-09

REVISIONS							SHEET NO.
NO.	BY:	DATE:	NO.	BY:	DATE:		S-66
1			3				TOTAL SHEETS
2			4				99

ASSEMBLED BY : V.X. NGUYEN	DATE : 6-3-09		
CHECKED BY : M.G. CHEEK	DATE : 6-09		
DRAWN BY : ELR 8/91	REV. 7/17/98	RWW/LES	
CHECKED BY : GRP 8/91	REV. 10/17/00R	RWW/LES	
	REV. 5/1/06	TLA/GM	

29-SEP-2009 14:51
r:\structures\finalplans\Right Lane\B-4507_SD_str*2_07_G*.dgn
vnguyen

STR. #2

STD. NO. PCG6

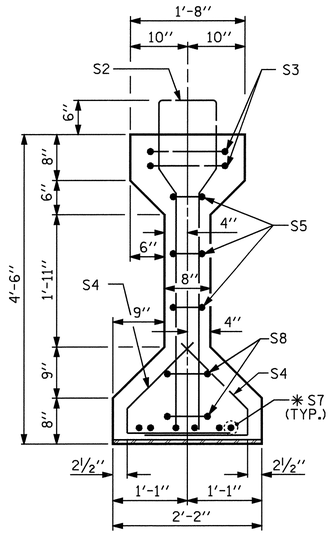

SECTION B-B

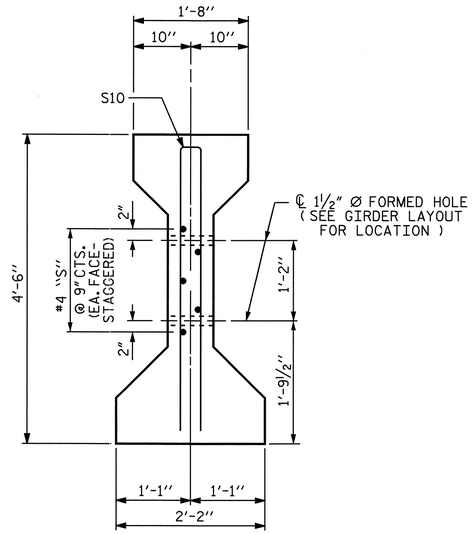

SECTION C-C

(S1 BARS NOT SHOWN)

✱ FOR S7 BARS, SEE DETAIL "A" OF "PRESTRESSED CONCRETE GIRDER CONTINUOUS FOR LIVE LOAD DETAILS", SHEET 4 OF 7

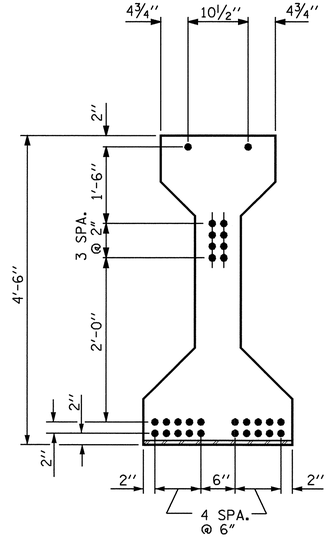

AT END OF GIRDER

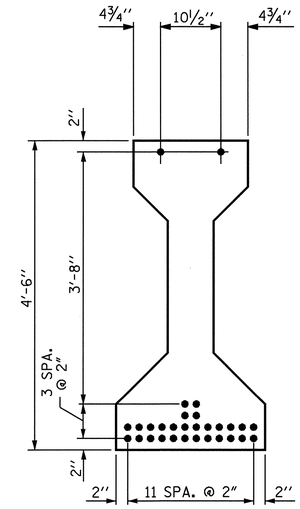

AT ℄ OF GIRDER

0.6" Ø LOW RELAXATION STRAND LAYOUT

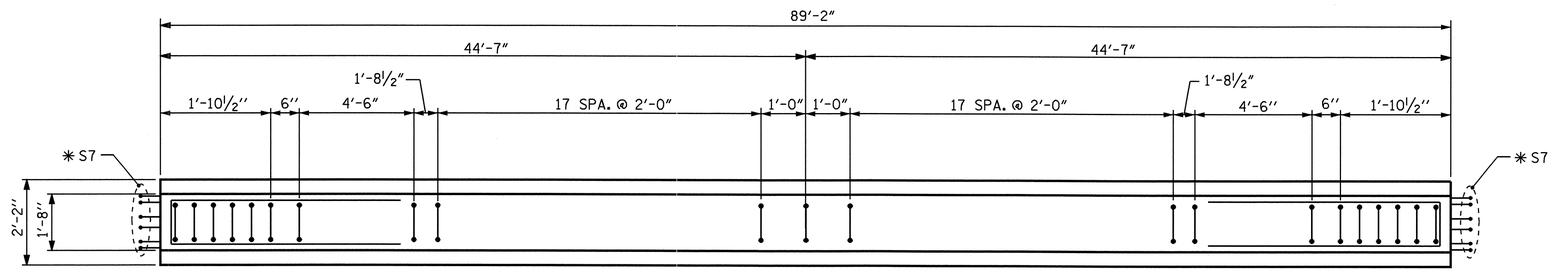

PLAN OF GIRDER

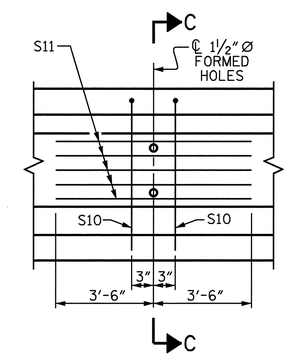

PARTIAL ELEVATION

SHOWING INTERMEDIATE DIAPHRAGM REINFORCING STEEL FOR GIRDERS Nos. 1-10

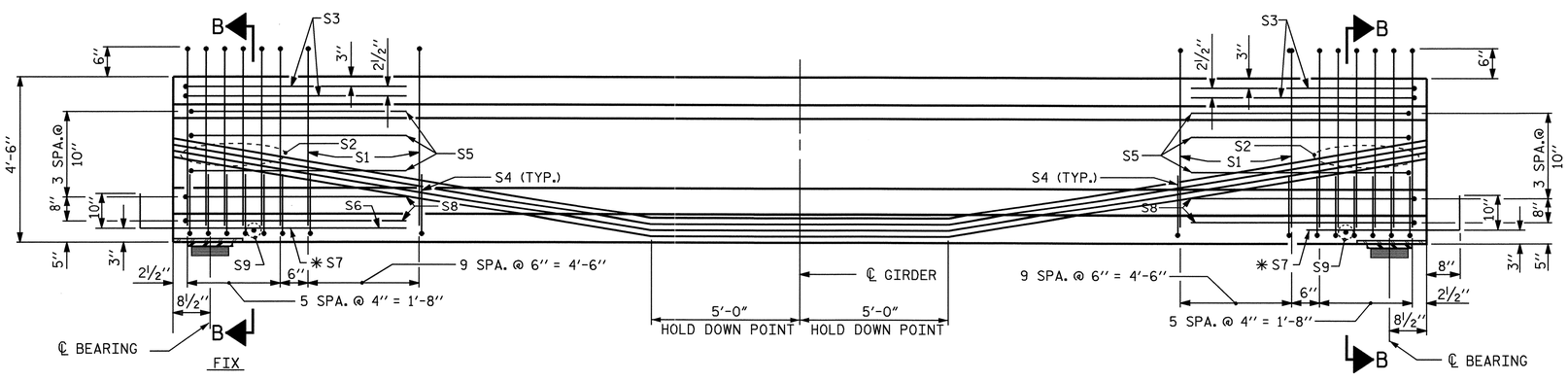

ELEVATION OF GIRDER

(SEE PARTIAL ELEVATION FOR ADDITIONAL "S" BARS)

0.6" Ø L. R. GRADE 270 STRANDS

AREA (SQUARE INCHES)	ULTIMATE STRENGTH (LBS. PER STRAND)	APPLIED PRESTRESS (LBS. PER STRAND)
0.217	58,600	43,950

REINFORCING STEEL FOR ONE GIRDER

BAR	NUMBER	SIZE	TYPE	LENGTH	WEIGHT
S1	57	#4	1	10'-8"	406
S2	12	#6	1	10'-8"	192
S3	4	#4	2	9'-1"	24
S4	64	#4	3	3'-5"	146
S5	6	#4	2	8'-5"	34
✱ S7	12	#5	STR	3'-8"	46
S8	4	#4	2	8'-7"	23
S9	2	#3	STR	1'-10"	1
S10	2	#5	2	8'-8"	18
S11	5	#4	STR	7'-0"	23

✱ NOTE: S7 BARS SHALL BE BENT BEFORE SHIPMENT. HEAT BENDING SHALL NOT BE ALLOWED.

BAR TYPES

ALL BAR DIMENSIONS ARE OUT-TO-OUT

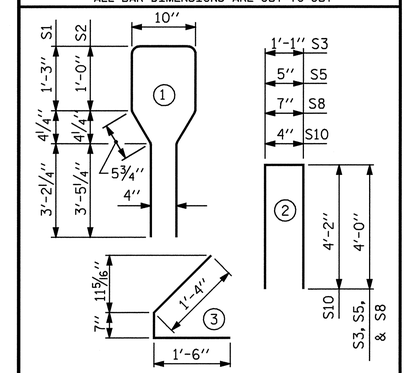

QUANTITIES FOR ONE GIRDER

	REINFORCING STEEL	6500 PSI CONCRETE	0.6" Ø L.R. STRANDS
	LB.	C.Y.	No.
	913	18.1	30

GIRDERS REQUIRED

NUMBER	LENGTH	TOTAL LENGTH
10	89'-2"	891'-8" LIN. FT.

PROJECT NO. B-4507

FORSYTH COUNTY

STATION: 27+96.00 -L-

SHEET 2 OF 7

STATE OF NORTH CAROLINA
DEPARTMENT OF TRANSPORTATION
RALEIGH

STANDARD
AASHTO TYPE IV
PRESTRESSED CONCRETE GIRDER
CONTINUOUS FOR LIVE LOAD
SPAN B
RIGHT LANE

NORTH CAROLINA PROFESSIONAL SEAL 20125 ENGINEER MARSHALL L. CHEEK, JR.
9-29-09

REVISIONS							SHEET NO.
NO.	BY:	DATE:	NO.	BY:	DATE:		S-67
1			3				TOTAL SHEETS
2			4				99

STR. #2

STD. NO. PCG6

ASSEMBLED BY : V.X. NGUYEN	DATE : 6-3-09		
CHECKED BY : M.G. CHEEK	DATE : 6-09		
DRAWN BY : ELR 8/91	REV. 7/17/98	RWW/LES	
CHECKED BY : GRP 8/91	REV. 10/17/00R	RWW/LES	
	REV. 5/1/06	TLA/GM	

29-SEP-2009 11:09
r:\structures\finalplans\Right Lane\B-4507_SD_str#2_07_G*.dgn
vnguyen

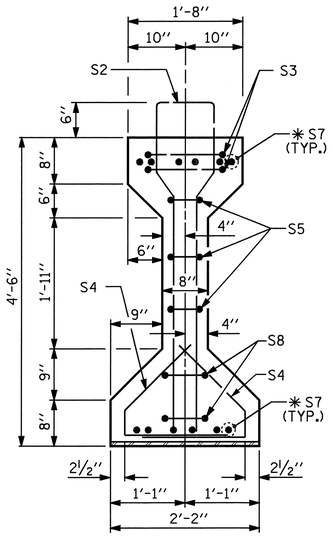

SECTION A-A

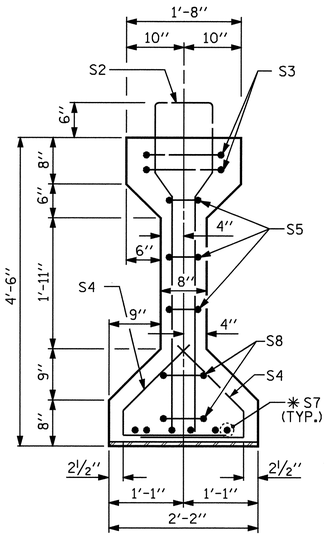

SECTION B-B

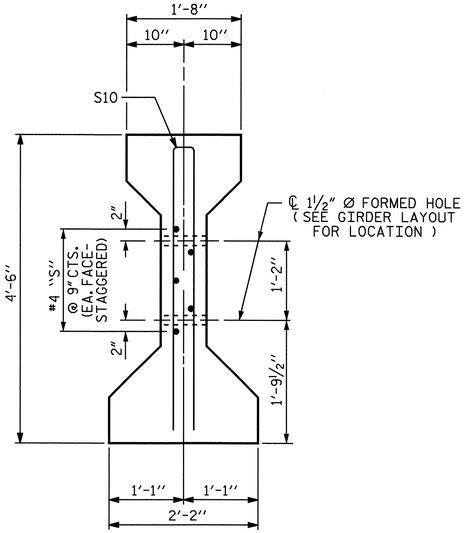

SECTION C-C

(S1 BARS NOT SHOWN)

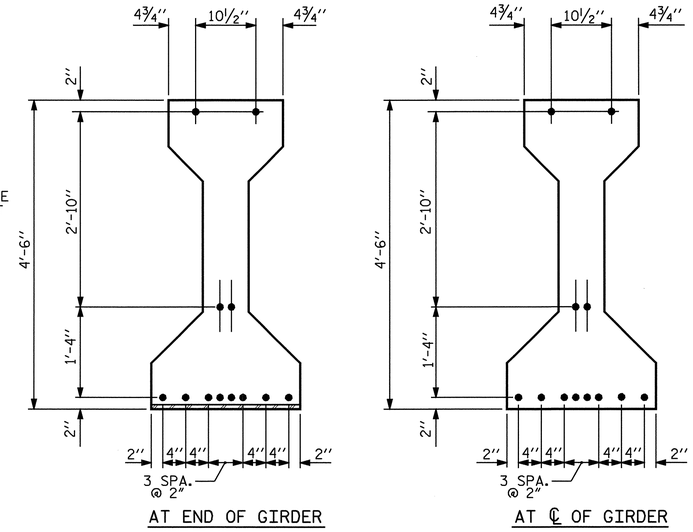

0.6" Ø LOW RELAXATION STRAND LAYOUT

✱ FOR S7 BARS, SEE DETAIL "A" OF "PRESTRESSED CONCRETE GIRDER CONTINUOUS FOR LIVE LOAD DETAILS", SHEET 4 OF 7

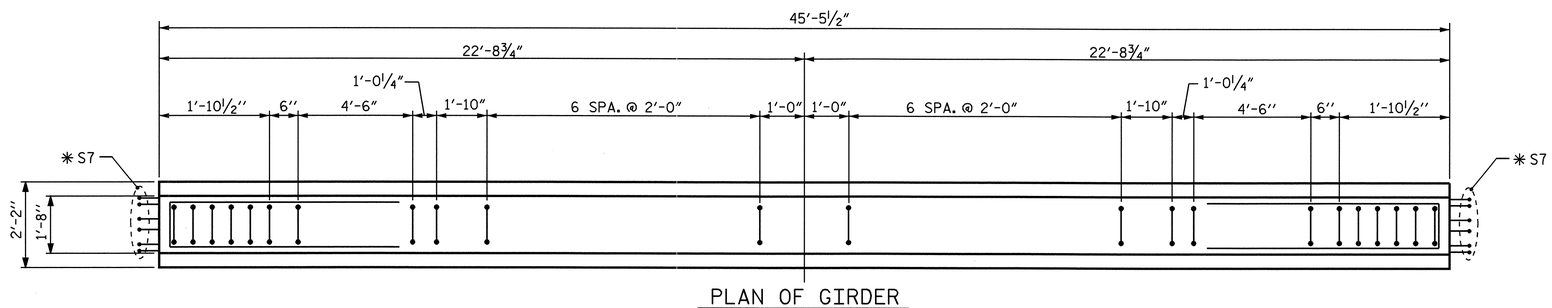

PLAN OF GIRDER

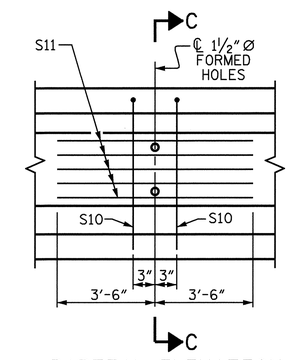

PARTIAL ELEVATION

SHOWING INTERMEDIATE DIAPHRAGM REINFORCING STEEL FOR GIRDERS Nos. 1-10

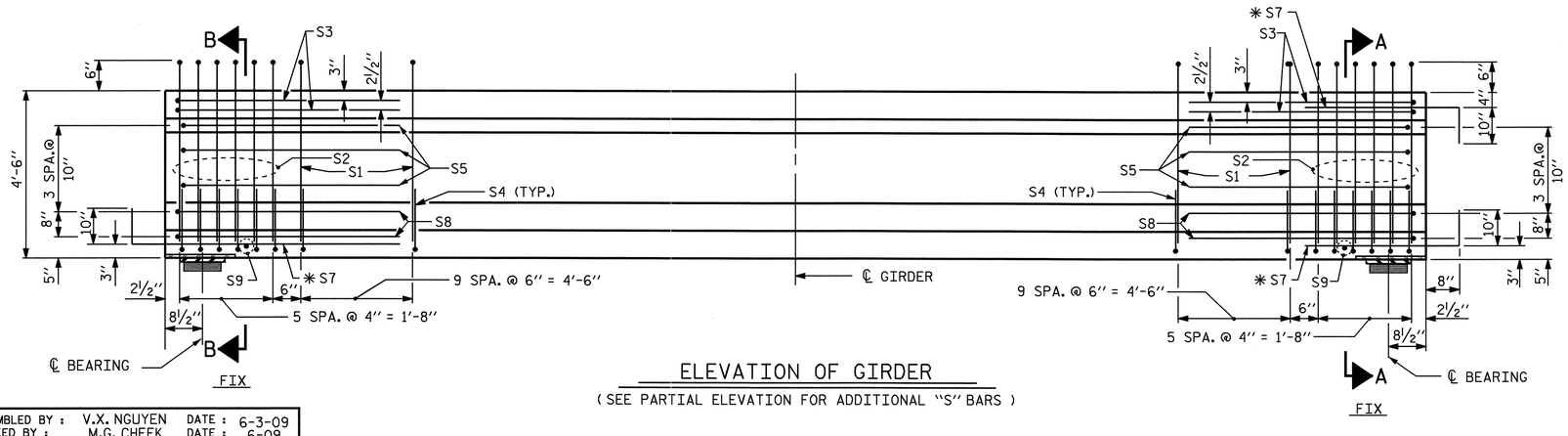

ELEVATION OF GIRDER

(SEE PARTIAL ELEVATION FOR ADDITIONAL "S" BARS)

0.6" Ø L. R. GRADE 270 STRANDS

AREA (SQUARE INCHES)	ULTIMATE STRENGTH (LBS. PER STRAND)	APPLIED PRESTRESS (LBS. PER STRAND)
0.217	58,600	43,950

REINFORCING STEEL FOR ONE GIRDER

BAR	NUMBER	SIZE	TYPE	LENGTH	WEIGHT
S1	36	#4	1	10'-8"	257
S2	12	#6	1	10'-8"	192
S3	4	#4	2	9'-1"	24
S4	64	#4	3	3'-5"	146
S5	6	#4	2	8'-5"	34
✱S7	18	#5	STR	3'-8"	69
S8	4	#4	2	8'-7"	23
S9	2	#3	STR	1'-10"	1
S10	2	#5	2	8'-8"	18
S11	5	#4	STR	7'-0"	23

✱NOTE: S7 BARS SHALL BE BENT BEFORE SHIPMENT. HEAT BENDING SHALL NOT BE ALLOWED.

BAR TYPES

ALL BAR DIMENSIONS ARE OUT-TO-OUT

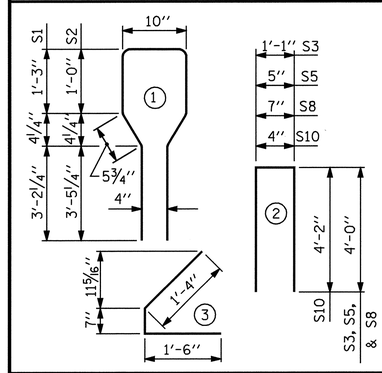

QUANTITIES FOR ONE GIRDER

	REINFORCING STEEL LB.	5000 PSI CONCRETE C.Y.	0.6" Ø L.R. STRANDS No.
	787	9.2	12

GIRDERS REQUIRED

NUMBER	LENGTH	TOTAL LENGTH
10	45'-5½"	454'-7" LIN. FT.

PROJECT NO. B-4507

FORSYTH COUNTY

STATION: 27+96.00 -L-

SHEET 3 OF 7

STATE OF NORTH CAROLINA
DEPARTMENT OF TRANSPORTATION
RALEIGH

STANDARD
AASHTO TYPE IV
PRESTRESSED CONCRETE GIRDER
CONTINUOUS FOR LIVE LOAD

SPAN C
RIGHT LANE

NORTH CAROLINA PROFESSIONAL SEAL 20125 ENGINEER MARSHALL G. CHEEK, JR.
9-29-09

REVISIONS						SHEET NO.
NO.	BY:	DATE:	NO.	BY:	DATE:	S-68
1			3			TOTAL SHEETS
2			4			99

ASSEMBLED BY :	V.X. NGUYEN	DATE :	6-3-09
CHECKED BY :	M.G. CHEEK	DATE :	6-09
DRAWN BY : ELR 8/91	REV. 7/17/98	RWW/LES	
CHECKED BY : GRP 8/91	REV. 10/17/00R	RWW/LES	
	REV. 5/1/06	TLA/GM	

29-SEP-2009 09:58
r:\structures\finalplans\Right Lane\B-4507_SD_str#2_07_G*.dgn
vnguyen

STR. #2

STD. NO. PCG6

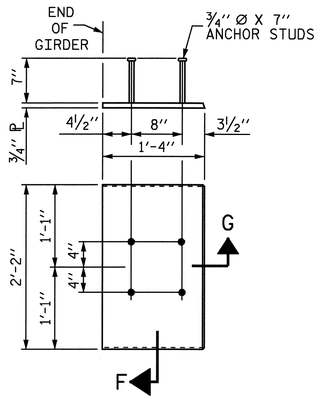

EMBEDDED PLATE "B-1" DETAILS FOR AASHTO TYPE IV GIRDER

(2 REQ'D PER GIRDER)

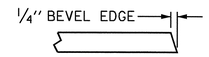

SECTION "G"

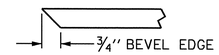

SECTION "F"

(SEE NOTES)

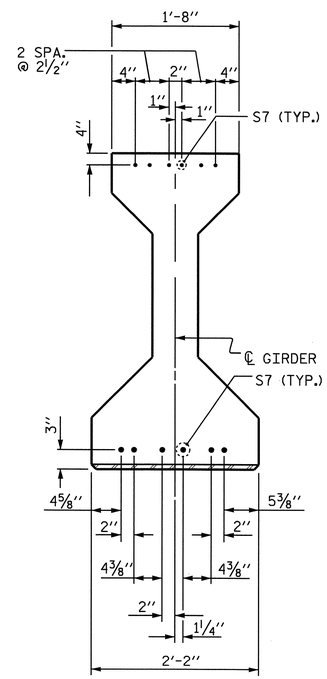

DETAIL "A"

NOTES

ALL PRESTRESSING STRANDS SHALL BE 7-WIRE LOW-RELAXATION GRADE 270 STRANDS AND SHALL CONFORM TO AASHTO M203 EXCEPT FOR SAMPLING REQUIREMENTS WHICH SHALL BE IN ACCORDANCE WITH THE STANDARD SPECIFICATIONS.

ALL REINFORCING STEEL SHALL BE GRADE 60.

EMBEDDED PLATE "B-1" SHALL BE GALVANIZED IN ACCORDANCE WITH THE STANDARD SPECIFICATIONS. BEVEL EDGES OF PLATE "B-1" TO GIVE CLOSE FIT BUT NOT TIGHT FIT TO STEEL CASTING FORM.

ANCHOR STUDS SHALL CONFORM TO AASHTO M169 GRADES 1010 THROUGH 1020 OR APPROVED EQUAL, AND SHALL MEET THE TYPE "B" REQUIREMENTS OF SUBSECTION 7.3 OF THE ANSI/AASHTO/AWS D1.5 BRIDGE WELDING CODE.

AT ENDS OF GIRDERS TO BE EMBEDDED IN CONCRETE DIAPHRAGMS OR END WALLS, PRESTRESSING STRANDS MAY EXTEND A MAXIMUM OF 2" BEYOND THE GIRDER ENDS. OTHERWISE, PRESTRESSING STRANDS SHALL BE CUT FLUSH WITH THE GIRDER ENDS.

THE TRANSFER OF LOAD FROM THE ANCHORAGES TO THE GIRDER SHALL BE DONE WHEN CONCRETE HAS REACHED A COMPRESSIVE STRENGTH OF NOT LESS THAN 4000 PSI FOR SPANS A & C, AND 4900 PSI FOR SPAN B.

DEPENDING ON THE TYPE OF SYSTEM USED TO SUPPORT THE DECK SLAB FORMS, PRESET ANCHORS MAY BE NECESSARY IN THE PRESTRESSED CONCRETE GIRDER.

THE TOP SURFACE OF THE GIRDER, EXCLUDING THE OUTSIDE 4", SHALL BE RAKED TO A DEPTH OF 1/4".

WHEN DRAPED STRANDS ARE DETAILED, THE LONGITUDINAL LOCATION OF THE HOLD DOWN DEVICES SHALL BE WITHIN 6" OF THE LOCATION SHOWN AND THE CENTER OF GRAVITY OF THE GROUP OF DRAPED STRANDS SHALL BE LOCATED WITHIN 1/2" OF THE THEORETICAL LOCATION SHOWN.

PROJECT NO. B-4507
FORSYTH COUNTY
STATION: 27+96.00 -L-

SHEET 4 OF 7

STATE OF NORTH CAROLINA
DEPARTMENT OF TRANSPORTATION
RALEIGH

STANDARD

PRESTRESSED CONCRETE GIRDER CONTINUOUS FOR LIVE LOAD DETAILS

RIGHT LANE

NORTH CAROLINA PROFESSIONAL SEAL 20125 ENGINEER MARSHALL G. CHEEK, JR.
9-29-09

REVISIONS						SHEET NO.
NO.	BY:	DATE:	NO.	BY:	DATE:	S-69
1			3			TOTAL SHEETS
2			4			99

STR. #2

STD. NO. PCG11

ASSEMBLED BY : V.X. NGUYEN		DATE : 6-3-09	
CHECKED BY : M.G. CHEEK		DATE : 6-09	
DRAWN BY : ELR 11/91	REV. 10/17/00 RWW/LES		
CHECKED BY : GRP 11/91	REV. 7/10/01RR LES/RDR		
	REV. 5/1/06 TLA/GM		

29-SEP-2009 10:54
R:\Structures\Final Plans\Right Lane\B-4507_SD_str#2_07_G*.dgn
afigueroa

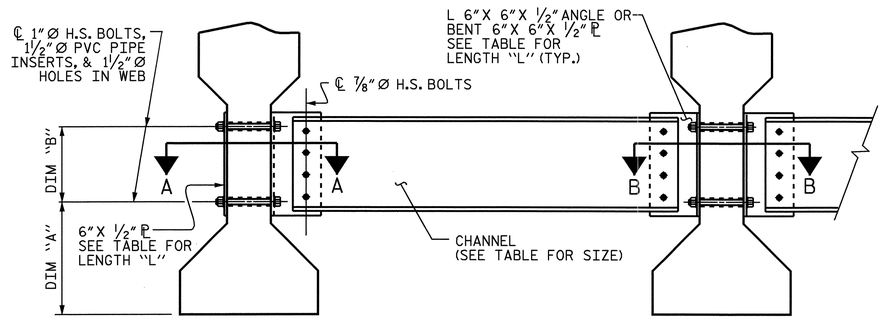

EXTERIOR GIRDER

INTERIOR GIRDER

PART SECTION AT INTERMEDIATE DIAPHRAGM

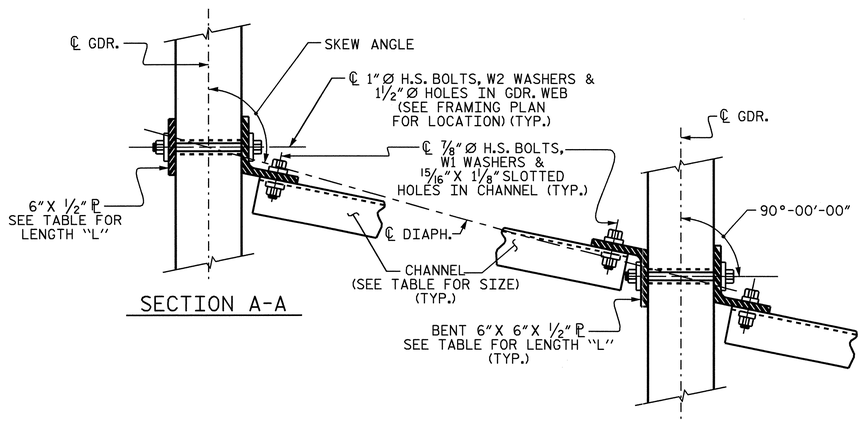

SECTION A-A

SECTION B-B

CONNECTION DETAILS

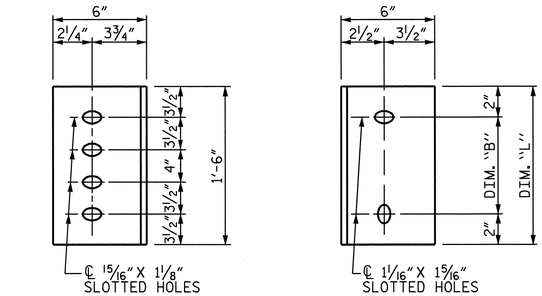

DIAPHRAGM FACE

WEB FACE

CONNECTOR PLATE DETAILS

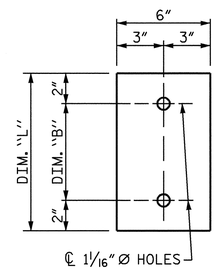

PLATE DETAILS

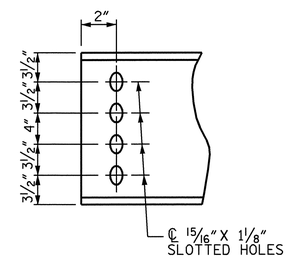

CHANNEL END

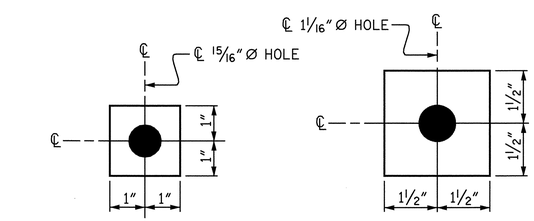

W1

ℙ 7/16"X 2"X 2"

USE WITH ⅞"Ø HVY. HEX NUTS & DIRECT TENSION INDICATOR WASHERS AT DIAPHRAGM CHANNEL TO CONNECTOR PLATE CONNECTIONS

W2

ℙ 7/16"X 3"X 3"

USE WITH 1"Ø HVY. HEX NUTS AT CONNECTOR PLATE TO GIRDER CONNECTIONS

WASHER DETAILS

STRUCTURAL STEEL NOTES

ALL INTERMEDIATE DIAPHRAGM STEEL, CONNECTOR PLATES AND PLATE WASHERS SHALL BE AASHTO M270 GRADE 50 OR APPROVED EQUAL.

TENSION ON THE AASHTO M164 BOLTS THROUGH THE CHANNEL MEMBER SHALL BE CALIBRATED USING DIRECT TENSION INDICATOR WASHERS IN ACCORDANCE WITH ARTICLE 440-8 OF THE STANDARD SPECIFICATIONS.

TENSION ON THE AASHTO M164 BOLTS THROUGH THE GIRDER WEB SHALL BE SNUG TIGHTENED FOLLOWED BY AN ADDITIONAL ¼ TURN.

THE CHANNELS, ANGLES, WASHERS, PLATE WASHERS, AND DIRECT TENSION INDICATORS SHALL BE GALVANIZED OR METALLIZED IN ACCORDANCE WITH THE STANDARD SPECIFICATIONS. FOR THERMAL SPRAYED COATINGS (METALLIZATION), SEE SPECIAL PROVISIONS.

FOR METALLIZATION, APPLY AN 8 MIL THICK 99.99 PERCENT ZINC (W-Zn-1) THERMAL SPRAYED COATING WITH A 0.5 MIL THICK SEAL COAT TO ALL STEEL DIAPHRAGM SURFACES IN ACCORDANCE WITH THE THERMAL SPRAYED COATINGS SPECIAL PROVISIONS AND SECTION 442 OF THE STANDARD SPECIFICATIONS.

GALVANIZE THE HIGH STRENGTH BOLTS, NUTS, AND WASHERS IN ACCORDANCE WITH THE STANDARD SPECIFICATIONS. FOR HIGH STRENGTH BOLTS, SEE SPECIAL PROVISIONS.

USE A MINIMUM 7/16" THICK PLATE WASHER WITH STANDARD HOLES UNDER EACH BOLT HEAD AND NUT. THE PLATE WASHERS SHALL HAVE SUFFICIENT SIZE TO COVER THE HOLES AFTER INSTALLATION. DIRECT TENSION INDICATORS ARE TO BE USED IN CONJUNCTION WITH THE PLATE WASHERS.

PROVIDE SUFFICIENT LENGTH OF ALL BOLTS TO ACCOMMODATE WASHERS, DIRECT TENSION INDICATORS, THE THICKNESS OF CONNECTING MEMBER PLUS AT LEAST ¼" PROJECTION BEYOND THE NUT.

INTERMEDIATE DIAPHRAGM ASSEMBLY SHALL COMPLY WITH SECTION 1072 OF THE STANDARD SPECIFICATIONS.

CONTRACTOR SHALL SUBMIT TWO SETS OF WORKING DRAWINGS FOR THE INTERMEDIATE DIAPHRAGM ASSEMBLY FOR REVIEW, COMMENTS AND ACCEPTANCE. AFTER REVIEW, COMMENTS, AND ACCEPTANCE, SUBMIT SEVEN SETS FOR DISTRIBUTION.

IN THE EXTERIOR BAYS, TEMPORARY STRUTS SHALL BE PLACED BETWEEN PRESTRESSED GIRDERS ADJACENT TO THE STEEL DIAPHRAGMS. STRUTS SHALL REMAIN IN PLACE 3 DAYS AFTER CONCRETE IS PLACED. ALL AASHTO M164 H.S. BOLTS SHALL BE FULLY TIGHTENED AFTER THE STRUTS HAVE BEEN REMOVED.

THE COST OF THE STEEL DIAPHRAGMS AND ASSEMBLIES SHALL BE INCLUDED IN THE UNIT PRICE BID FOR PRESTRESSED CONCRETE GIRDERS.

FOR DIRECT TENSION INDICATORS, SEE SPECIAL PROVISIONS.

TABLE

GIRDER TYPE	CHANNEL SIZE	DIM "A"	DIM "B"	DIM "L"
IV	MC 18 x 42.7	1'-9½"	1'-2"	1'-6"

PROJECT NO. B-4507

FORSYTH COUNTY

STATION: 27+96.00 -L-

SHEET 5 OF 9

STATE OF NORTH CAROLINA
DEPARTMENT OF TRANSPORTATION
RALEIGH

STANDARD
INTERMEDIATE
STEEL DIAPHRAGMS
FOR TYPE IV
PRESTRESSED CONCRETE
GIRDERS
RIGHT LANE

NORTH CAROLINA PROFESSIONAL SEAL 20125 ENGINEER MARSHALL G. CHEEK, JR.
9-29-09

REVISIONS								SHEET NO.
NO.	BY:	DATE:	NO.	BY:	DATE:			S-70
1			3					TOTAL SHEETS
2			4					99

ASSEMBLED BY : V.X. NGUYEN		DATE : 6-3-09	
CHECKED BY : M.G. CHEEK		DATE : 6-09	
DRAWN BY : TLA 6/05	ADDED 10/21/05		
CHECKED BY : VC 6/05	REV. 5/1/06R	KMM/GM	

28-SEP-2009 08:14
R:\Structures\Final Plans\Right Lane\B-4507_SD_str#2_07_G#.dgn
atfigueroa

STR. #2

STD. NO. PCG12

DEAD LOAD DEFLECTION TABLE FOR SPAN A - STAGE 1

0.6" Ø LOW RELAXATION	GIRDER No. 7											GIRDERS No. 8 & 9											GIRDER No. 10										
TENTH POINTS	℄ BRG.	.1	.2	.3	.4	.5	.6	.7	.8	.9	℄ BRG.	℄ BRG.	.1	.2	.3	.4	.5	.6	.7	.8	.9	℄ BRG.	℄ BRG.	.1	.2	.3	.4	.5	.6	.7	.8	.9	℄ BRG.
CAMBER (GIRDER ALONE IN PLACE) ↑	0.0	0.043	0.082	0.112	0.131	0.137	0.131	0.112	0.082	0.043	0.0	0.0	0.043	0.082	0.112	0.131	0.137	0.131	0.112	0.082	0.043	0.0	0.0	0.043	0.082	0.112	0.131	0.137	0.131	0.112	0.082	0.043	0.0
✳ DEFLECTION DUE TO SUPERIMPOSED D.L. ↓	0.0	0.016	0.030	0.042	0.049	0.051	0.049	0.042	0.030	0.016	0.0	0.0	0.020	0.039	0.053	0.062	0.065	0.062	0.053	0.039	0.020	0.0	0.0	0.019	0.035	0.048	0.056	0.059	0.056	0.048	0.035	0.019	0.0
FINAL CAMBER ↑	0	5/16"	5/8"	7/8"	1"	1 1/16"	1"	7/8"	5/8"	5/16"	0	0	1/4"	1/2"	11/16"	13/16"	7/8"	13/16"	11/16"	1/2"	1/4"	0	0	5/16"	9/16"	3/4"	13/16"	7/8"	13/16"	3/4"	9/16"	5/16"	0

DEAD LOAD DEFLECTION TABLE FOR SPAN B - STAGE 1

0.6" Ø LOW RELAXATION	GIRDER No. 7											GIRDERS No. 8 & 9											GIRDER No. 10										
TENTH POINTS	℄ BRG.	.1	.2	.3	.4	.5	.6	.7	.8	.9	℄ BRG.	℄ BRG.	.1	.2	.3	.4	.5	.6	.7	.8	.9	℄ BRG.	℄ BRG.	.1	.2	.3	.4	.5	.6	.7	.8	.9	℄ BRG.
CAMBER (GIRDER ALONE IN PLACE) ↑	0.0	0.077	0.145	0.198	0.232	0.244	0.232	0.198	0.145	0.077	0.0	0.0	0.077	0.145	0.198	0.232	0.244	0.232	0.198	0.145	0.077	0.0	0.0	0.077	0.145	0.198	0.232	0.244	0.232	0.198	0.145	0.077	0.0
✳ DEFLECTION DUE TO SUPERIMPOSED D.L. ↓	0.0	0.030	0.057	0.078	0.091	0.096	0.091	0.078	0.057	0.030	0.0	0.0	0.038	0.072	0.099	0.116	0.122	0.116	0.099	0.072	0.038	0.0	0.0	0.035	0.066	0.090	0.105	0.110	0.105	0.090	0.066	0.035	0.0
FINAL CAMBER ↑	0	9/16"	1 1/16"	1 7/16"	1 11/16"	1 3/4"	1 11/16"	1 7/16"	1 1/16"	9/16"	0	0	7/16"	7/8"	1 3/16"	1 3/8"	1 1/2"	1 3/8"	1 3/16"	7/8"	7/16"	0	0	1/2"	1 5/16"	1 5/16"	1 1/2"	1 5/8"	1 1/2"	1 5/16"	1 5/16"	1/2"	0

DEAD LOAD DEFLECTION TABLE FOR SPAN C - STAGE 1

0.6" Ø LOW RELAXATION	GIRDER No. 7											GIRDERS No. 8 & 9											GIRDER No. 10										
TENTH POINTS	℄ BRG.	.1	.2	.3	.4	.5	.6	.7	.8	.9	℄ BRG.	℄ BRG.	.1	.2	.3	.4	.5	.6	.7	.8	.9	℄ BRG.	℄ BRG.	.1	.2	.3	.4	.5	.6	.7	.8	.9	℄ BRG.
CAMBER (GIRDER ALONE IN PLACE) ↑	0.0	0.008	0.014	0.020	0.023	0.024	0.023	0.020	0.014	0.008	0.0	0.0	0.008	0.014	0.020	0.023	0.024	0.023	0.020	0.014	0.008	0.0	0.0	0.008	0.014	0.020	0.023	0.024	0.023	0.020	0.014	0.008	0.0
✳ DEFLECTION DUE TO SUPERIMPOSED D.L. ↓	0.0	0.002	0.004	0.006	0.007	0.007	0.007	0.006	0.004	0.002	0.0	0.0	0.003	0.005	0.007	0.008	0.009	0.008	0.007	0.005	0.003	0.0	0.0	0.003	0.005	0.007	0.008	0.008	0.008	0.007	0.005	0.003	0.0
FINAL CAMBER ↑	0	1/16"	1/8"	3/16"	3/16"	3/16"	3/16"	3/16"	1/8"	1/16"	0	0	1/16"	1/8"	1/8"	3/16"	3/16"	3/16"	1/8"	1/8"	1/16"	0	0	1/16"	1/8"	1/8"	3/16"	3/16"	3/16"	1/8"	1/8"	1/16"	0

✳ INCLUDES FUTURE WEARING SURFACE
ALL VALUES ARE SHOWN IN FEET (DECIMAL FORM), EXCEPT "FINAL CAMBER", WHICH IS GIVEN IN INCHES (FRACTION FORM).

PROJECT NO. B-4507
FORSYTH COUNTY
STATION: 27+96.00 -L-

SHEET 6 OF 7

STATE OF NORTH CAROLINA
DEPARTMENT OF TRANSPORTATION
RALEIGH

SUPERSTRUCTURE
DEAD LOAD
DEFLECTIONS
SPANS A, B, & C
STAGE 1
RIGHT LANE

NORTH CAROLINA PROFESSIONAL SEAL 20125 ENGINEER MARSHALL G. CHEEK, JR.
9-29-09

REVISIONS						SHEET NO.
NO.	BY:	DATE:	NO.	BY:	DATE:	S-71
1			3			TOTAL SHEETS
2			4			99

STR. #2

DRAWN BY : V.X. NGUYEN DATE : 6-3-09
CHECKED BY : M.G. CHEEK DATE : 6-09

29-SEP-2009 10:02
r:\structures\final plans\Right Lane\B-4507_SD_str#2_07_G*.dgn
vnguyen

DEAD LOAD DEFLECTION TABLE FOR SPAN A - STAGE 2

0.6"Ø LOW RELAXATION	GIRDER No. 1											GIRDERS No. 2,3,4, & 5											GIRDER No. 6										
TENTH POINTS	℄ BRG.	.1	.2	.3	.4	.5	.6	.7	.8	.9	℄ BRG.	℄ BRG.	.1	.2	.3	.4	.5	.6	.7	.8	.9	℄ BRG.	℄ BRG.	.1	.2	.3	.4	.5	.6	.7	.8	.9	℄ BRG.
CAMBER (GIRDER ALONE IN PLACE) ↑	0.0	0.043	0.082	0.112	0.131	0.137	0.131	0.112	0.082	0.043	0.0	0.0	0.043	0.082	0.112	0.131	0.137	0.131	0.112	0.082	0.043	0.0	0.0	0.043	0.082	0.112	0.131	0.137	0.131	0.112	0.082	0.043	0.0
✳ DEFLECTION DUE TO SUPERIMPOSED D.L. ↓	0.0	0.017	0.032	0.043	0.051	0.053	0.051	0.043	0.032	0.017	0.0	0.0	0.019	0.035	0.049	0.057	0.060	0.057	0.049	0.035	0.019	0.0	0.0	0.014	0.027	0.037	0.043	0.045	0.043	0.037	0.027	0.014	0.0
FINAL CAMBER ↑	0	5/16"	5/8"	13/16"	15/16"	1"	15/16"	13/16"	5/8"	5/16"	0	0	5/16"	9/16"	3/4"	7/8"	15/16"	7/8"	3/4"	9/16"	5/16"	0	0	3/8"	11/16"	7/8"	1 1/16"	1 1/8"	1 1/16"	7/8"	11/16"	3/8"	0

DEAD LOAD DEFLECTION TABLE FOR SPAN B - STAGE 2

0.6"Ø LOW RELAXATION	GIRDER No. 1											GIRDERS No. 2,3,4, & 5											GIRDER No. 6										
TENTH POINTS	℄ BRG.	.1	.2	.3	.4	.5	.6	.7	.8	.9	℄ BRG.	℄ BRG.	.1	.2	.3	.4	.5	.6	.7	.8	.9	℄ BRG.	℄ BRG.	.1	.2	.3	.4	.5	.6	.7	.8	.9	℄ BRG.
CAMBER (GIRDER ALONE IN PLACE) ↑	0.0	0.077	0.145	0.198	0.232	0.244	0.232	0.198	0.145	0.077	0.0	0.0	0.077	0.145	0.198	0.232	0.244	0.232	0.198	0.145	0.077	0.0	0.0	0.077	0.145	0.198	0.232	0.244	0.232	0.198	0.145	0.077	0.0
✳ DEFLECTION DUE TO SUPERIMPOSED D.L. ↓	0.0	0.031	0.059	0.081	0.095	0.100	0.095	0.081	0.059	0.031	0.0	0.0	0.035	0.066	0.091	0.106	0.111	0.106	0.091	0.066	0.035	0.0	0.0	0.026	0.050	0.068	0.080	0.084	0.080	0.068	0.050	0.026	0.0
FINAL CAMBER ↑	0	9/16"	1"	1 7/16"	1 5/8"	1 3/4"	1 5/8"	1 7/16"	1"	9/16"	0	0	1/2"	15/16"	1 5/16"	1 1/2"	1 9/16"	1 1/2"	1 5/16"	15/16"	1/2"	0	0	5/8"	1 1/8"	1 9/16"	1 13/16"	1 15/16"	1 13/16"	1 9/16"	1 1/8"	5/8"	0

DEAD LOAD DEFLECTION TABLE FOR SPAN C - STAGE 2

0.6"Ø LOW RELAXATION	GIRDER No. 1											GIRDERS No. 2,3,4, & 5											GIRDER No. 6										
TENTH POINTS	℄ BRG.	.1	.2	.3	.4	.5	.6	.7	.8	.9	℄ BRG.	℄ BRG.	.1	.2	.3	.4	.5	.6	.7	.8	.9	℄ BRG.	℄ BRG.	.1	.2	.3	.4	.5	.6	.7	.8	.9	℄ BRG.
CAMBER (GIRDER ALONE IN PLACE) ↑	0.0	0.008	0.014	0.020	0.023	0.024	0.023	0.020	0.014	0.008	0.0	0.0	0.008	0.014	0.020	0.023	0.024	0.023	0.020	0.014	0.008	0.0	0.0	0.008	0.014	0.020	0.023	0.024	0.023	0.020	0.014	0.008	0.0
✳ DEFLECTION DUE TO SUPERIMPOSED D.L. ↓	0.0	0.002	0.004	0.006	0.007	0.007	0.007	0.006	0.004	0.002	0.0	0.0	0.003	0.005	0.007	0.008	0.008	0.008	0.007	0.005	0.003	0.0	0.0	0.002	0.004	0.005	0.006	0.006	0.006	0.005	0.004	0.002	0.0
FINAL CAMBER ↑	0	1/16"	1/8"	3/16"	3/16"	3/16"	3/16"	3/16"	1/8"	1/16"	0	0	1/16"	1/8"	3/16"	3/16"	3/16"	3/16"	3/16"	1/8"	1/16"	0	0	1/16"	1/8"	3/16"	3/16"	1/4"	3/16"	3/16"	1/8"	1/16"	0

✳ INCLUDES FUTURE WEARING SURFACE
ALL VALUES ARE SHOWN IN FEET (DECIMAL FORM), EXCEPT "FINAL CAMBER", WHICH IS GIVEN IN INCHES (FRACTION FORM).

PROJECT NO. B-4507
FORSYTH COUNTY
STATION: 27+96.00 -L-

SHEET 7 OF 7

STATE OF NORTH CAROLINA
DEPARTMENT OF TRANSPORTATION
RALEIGH

SUPERSTRUCTURE
DEAD LOAD DEFLECTIONS
SPANS A, B, & C
STAGE 2
RIGHT LANE

NORTH CAROLINA PROFESSIONAL SEAL 20125 ENGINEER MARSHALL G. CHEEK, JR.
9-29-09

REVISIONS						SHEET NO.
NO.	BY:	DATE:	NO.	BY:	DATE:	S-72
1			3			TOTAL SHEETS
2			4			99

STR. #2

DRAWN BY : V.X. NGUYEN DATE : 6-3-09
CHECKED BY : M.G. CHEEK DATE : 6-09

29-SEP-2009 10:02
r:\structures\finalplans\Right Lane\B-4507_SD_str#2_07_G*.dgn
vnguyen

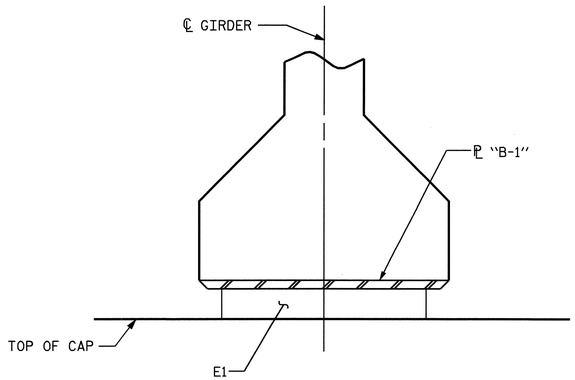

SECTION D-D

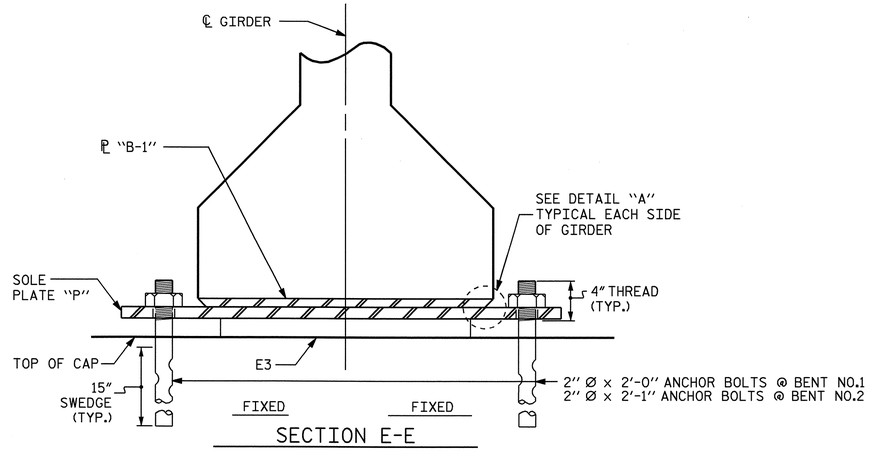

SECTION E-E

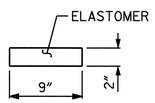

TYPICAL SECTION OF ELASTOMERIC BEARINGS

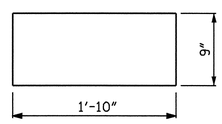

E1
(FIXED)
E1 (20 REQ'D)

PLAN VIEW OF ELASTOMERIC BEARING

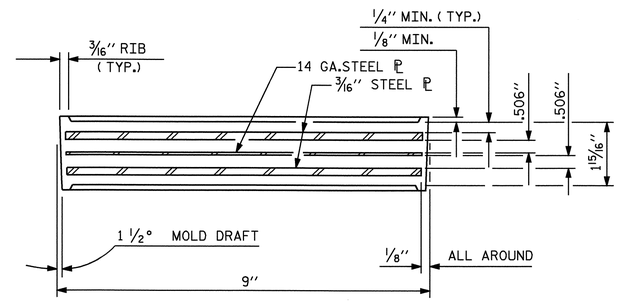

TYPICAL SECTION OF ELASTOMERIC BEARINGS

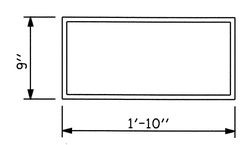

E2 (40 REQ'D)

PLAN VIEW OF ELASTOMERIC BEARING

TYPE IV

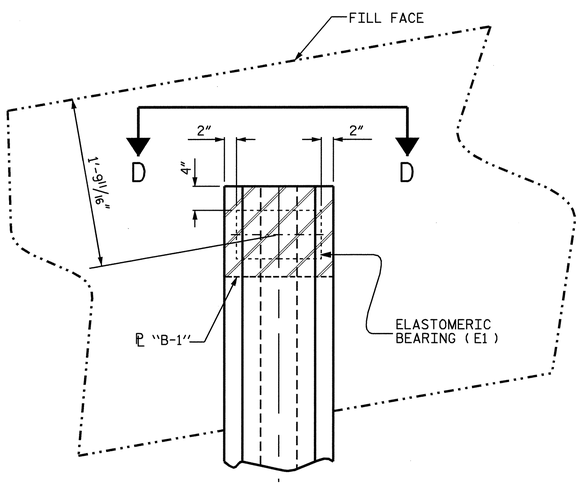

PLAN VIEW AT END BENTS

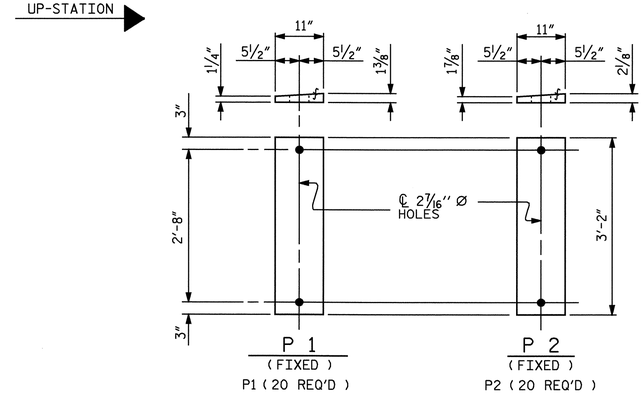

SOLE PLATE DETAILS ("P")

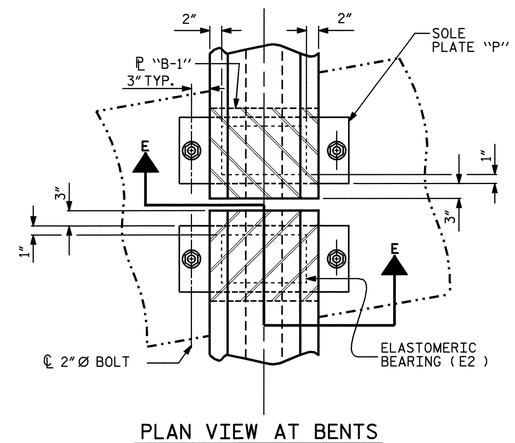

PLAN VIEW AT BENTS
(SHOWING CONTINUOUS BENT)

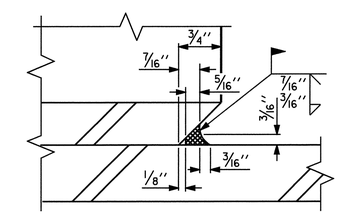

DETAIL "A"

NOTES

AT ALL FIXED POINTS OF SUPPORT, NUTS FOR ANCHOR BOLTS ARE TO BE TIGHTENED FINGER TIGHT AND THEN BACKED OFF 1/2 TURN. THE THREAD OF THE NUT AND BOLT SHALL THEN BE BURRED WITH A SHARP POINTED TOOL.

THE 2" Ø PIPE SLEEVE SHALL BE CUT FROM SCHEDULE 40 PVC PLASTIC PIPE. THE PVC PLASTIC PIPE SHALL MEET THE REQUIREMENTS OF ASTM D1785.

STEEL SOLE PLATES, ANCHOR BOLTS, NUTS, AND WASHERS SHALL BE GALVANIZED IN ACCORDANCE WITH THE STANDARD SPECIFICATIONS.

PRIOR TO WELDING, GRIND THE GALVANIZED SURFACE OF THE PORTION OF THE EMBEDDED PLATE AND SOLE PLATE THAT ARE TO BE WELDED. AFTER WELDING, DAMAGED GALVANIZED SURFACES SHALL BE REPAIRED IN ACCORDANCE WITH THE STANDARD SPECIFICATIONS.

WHEN WELDING THE SOLE PLATE TO THE EMBEDDED PLATE IN THE GIRDER, USE TEMPERATURE INDICATING WAX PENS, OR OTHER SUITABLE MEANS, TO ENSURE THAT THE TEMPERATURE OF THE SOLE PLATE DOES NOT EXCEED 300°F. TEMPERATURES ABOVE THIS MAY DAMAGE THE ELASTOMER.

SOLE PLATE "P", BOLTS, NUTS, WASHERS, AND PIPE SLEEVE SHALL BE INCLUDED IN THE PAY ITEM FOR PRESTRESSED CONCRETE GIRDERS.

ANCHOR BOLTS SHALL MEET THE REQUIREMENTS OF ASTM A449. NUTS SHALL MEET THE REQUIREMENTS OF AASHTO M291-DH OR AASHTO M292-2H. WASHERS SHALL MEET THE REQUIREMENTS OF AASHTO M293. SHOP DRAWINGS ARE NOT REQUIRED FOR ANCHOR BOLT, NUTS AND WASHERS. SHOP INSPECTION IS REQUIRED.

ALL SURFACES OF BEARING PLATES SHALL BE SMOOTH AND STRAIGHT.

LOAD RATINGS	
	MAX.D.L.+ L.L.
TYPE IV	137 K

PROJECT NO. B-4507
FORSYTH COUNTY
STATION: 27+96.00 -L-

STATE OF NORTH CAROLINA
DEPARTMENT OF TRANSPORTATION
RALEIGH

STANDARD

ELASTOMERIC BEARING DETAILS

RIGHT LANE

NORTH CAROLINA PROFESSIONAL SEAL 20125 ENGINEER MARSHALL G. CHEEK, JR.
9-19-09

ASSEMBLED BY : V.X. NGUYEN	DATE : 6-8-09
CHECKED BY : M.G. CHEEK	DATE : 6-09

DRAWN BY : WJH 8/89	REV. 10/17/00	RWW/LES
CHECKED BY : CRK 8/89	REV. 7/10/01	RWW/LES
	REV. 5/1/06	TLA/GM

REVISIONS						SHEET NO.
NO.	BY:	DATE:	NO.	BY:	DATE:	S-73
1			3			TOTAL SHEETS
2			4			99

STR. #2

28-SEP-2009 08:14
R:\Structures\Final Plans\Right Lane\B-4507_sd_str#2_08_BG.dgn
afigueroa

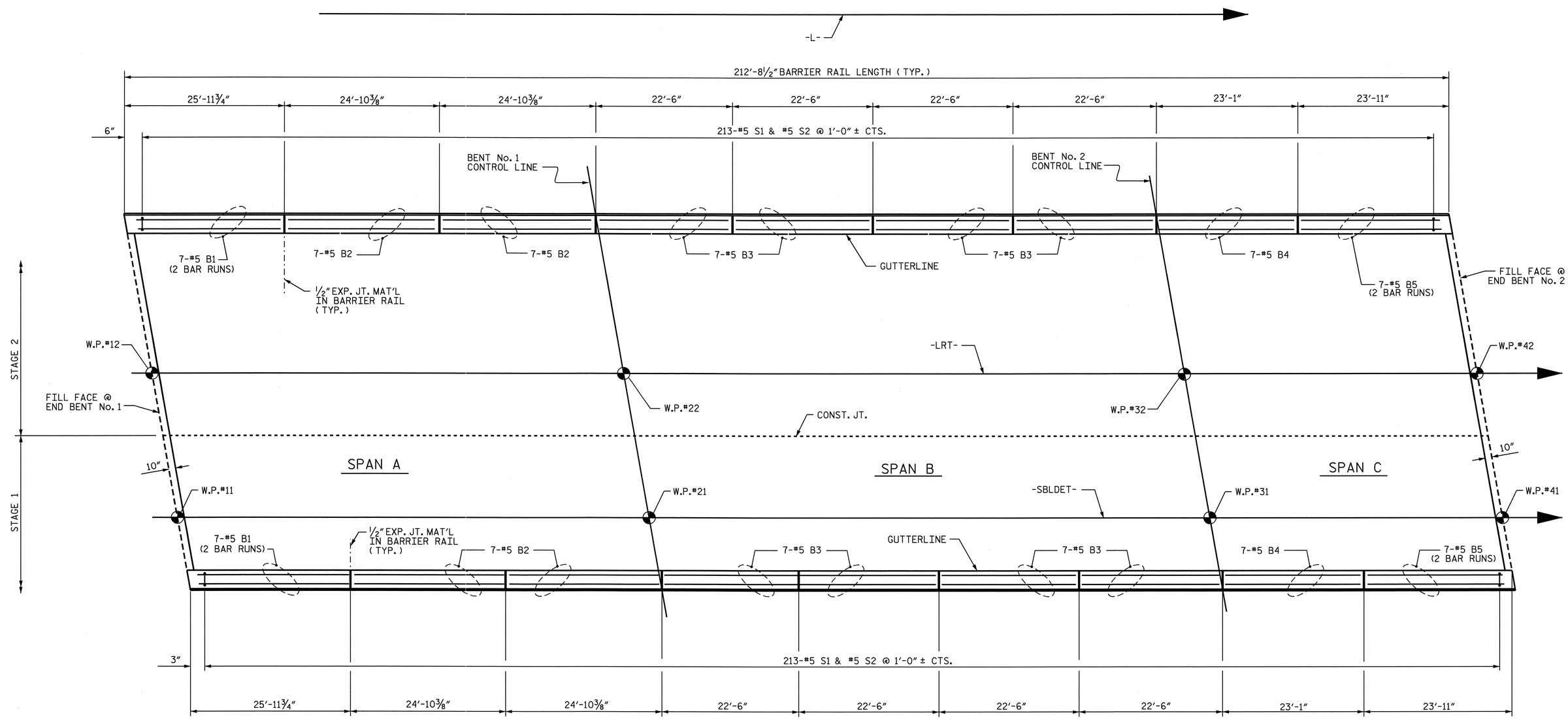

PLAN OF BARRIER RAIL

PROJECT NO. B-4507

FORSYTH COUNTY

STATION: 27+96.00 -L-

SHEET 1 OF 2

STATE OF NORTH CAROLINA
DEPARTMENT OF TRANSPORTATION
RALEIGH

SUPERSTRUCTURE

CONCRETE BARRIER RAIL

RIGHT LANE

NORTH CAROLINA PROFESSIONAL SEAL 20125 ENGINEER MARSHALL G. CHEEK, JR.
9-28-09

REVISIONS						SHEET NO.
NO.	BY:	DATE:	NO.	BY:	DATE:	S-74
1			3			TOTAL SHEETS
2			4			99

STR. #2

DRAWN BY : V.X. NGUYEN DATE : 6-6-09
CHECKED BY : M.G. CHEEK DATE : 6-09

28-SEP-2009 08:13
R:\Structures\Final Plans\Right Lane\B-4507_sd_str#2_09A_BR.dgn
afigueroa

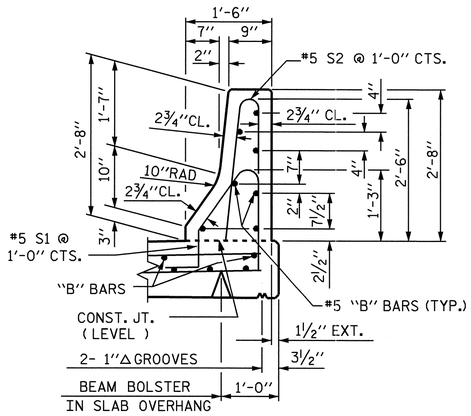

SECTION THRU RAIL

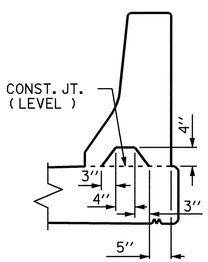

SECTION S-S

AT DAM IN OPEN JOINT
(THIS IS TO BE USED ONLY
WHEN SLIP FORM IS USED)

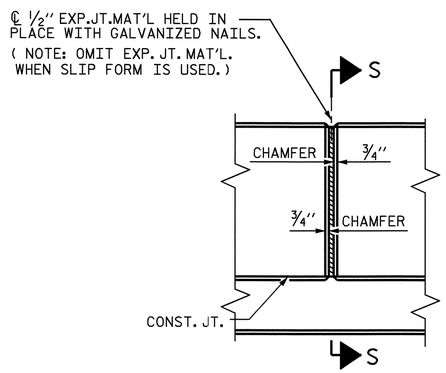

ELEVATION AT EXPANSION JOINTS

BARRIER RAIL DETAILS

NOTES

THE BARRIER RAIL IN A CONTINUOUS UNIT SHALL NOT BE CAST UNTIL ALL SLAB CONCRETE IN THE UNIT HAS BEEN CAST AND HAS REACHED A MINIMUM COMPRESSIVE STRENGTH OF 3,000 PSI.

ALL REINFORCING STEEL IN BARRIER RAILS SHALL BE EPOXY COATED.

VERTICAL GROOVED CONTRACTION JOINTS, ½" IN DEPTH, SHALL BE TOOLED IN ALL EXPOSED FACES OF THE BARRIER RAIL AND IN ACCORDANCE WITH ARTICLE 825-10(B) OF THE STANDARD SPECIFICATIONS. THE CONTRACTION JOINT SHALL BE LOCATED AT EACH THIRD POINT BETWEEN BARRIER RAIL EXPANSION JOINTS. ONLY ONE CONTRACTION JOINT IS REQUIRED AT MIDPOINT OF BARRIER RAIL SEGMENTS LESS THAN 20 FEET IN LENGTH AND NO CONTRACTION JOINTS ARE REQUIRED FOR THOSE SEGMENTS LESS THAN 10 FEET IN LENGTH.

THE #5 "S" BARS MAY BE SHIFTED AS NECESSARY IN ORDER TO MAINTAIN A 2" MINIMUM CLEARANCE TO THE ½" EXPANSION JOINT MATERIAL IN BARRIER RAIL.

BAR TYPES

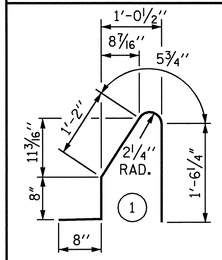

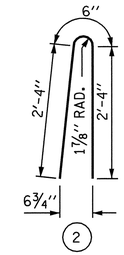

ALL BAR DIMENSIONS ARE OUT TO OUT

BILL OF MATERIAL

FOR CONCRETE BARRIER RAIL ONLY

BAR	NO.	SIZE	TYPE	LENGTH	WEIGHT
* B1	28	#5	STR.	14'-8"	428
* B2	28	#5	STR.	24'-5"	713
* B3	56	#5	STR.	22'-1"	1290
* B4	14	#5	STR.	22'-8"	331
* B5	28	#5	STR.	13'-8"	399
* S1	426	#5	1	4'-6"	1999
* S2	426	#5	2	5'-2"	2296

* EPOXY COATED REINFORCING STEEL	7456 LBS.
CLASS AA CONCRETE	42.6 CU. YDS.
CONCRETE BARRIER RAIL	425.42 LIN. FT.

* THESE BARS SHALL BE EPOXY COATED

PROJECT NO. B-4507

FORSYTH COUNTY

STATION: 27+96.00 -L-

SHEET 2 OF 2

STATE OF NORTH CAROLINA
DEPARTMENT OF TRANSPORTATION
RALEIGH

STANDARD

CONCRETE
BARRIER RAIL

RIGHT LANE

NORTH CAROLINA PROFESSIONAL SEAL 20125 ENGINEER MARSHALL G. CHEEK, JR.
9.18.09

REVISIONS						SHEET NO.
NO.	BY:	DATE:	NO.	BY:	DATE:	S-75
1			3			TOTAL SHEETS
2			4			99

STR. #2

STD. NO. CBR1

ASSEMBLED BY : V.X. NGUYEN	DATE : 6-6-08		
CHECKED BY : M.G. CHEEK	DATE : 6-09		
DRAWN BY : ARB 5/87	REV. 10/17/00	RWW/LES	
CHECKED BY : SJD 9/87	REV. 5/7/03R	RWW/JTE	
	REV. 5/1/06	TLA/GM	

05-AUG-2009 08:59
R:\Structures\STR#2\vnguyen\B-4507_SD_BR.dgn
afigueroa

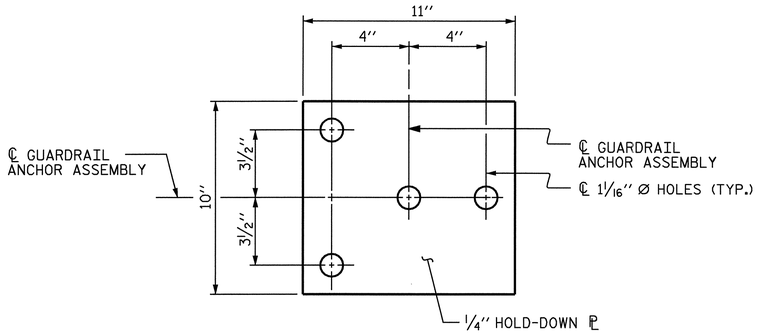

PLAN

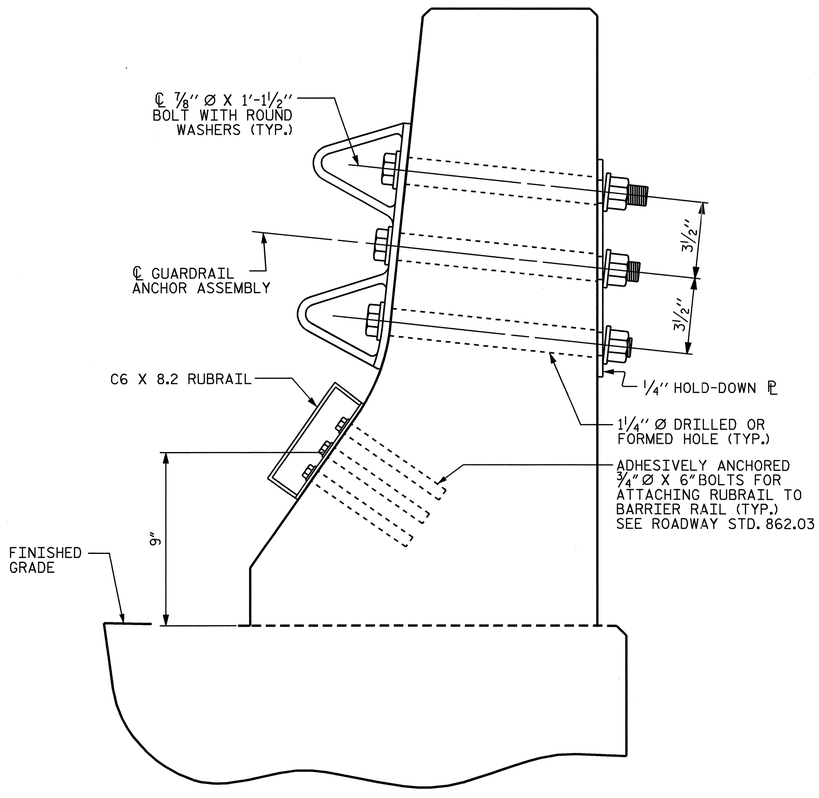

SECTION E-E

GUARDRAIL ANCHOR ASSEMBLY DETAILS

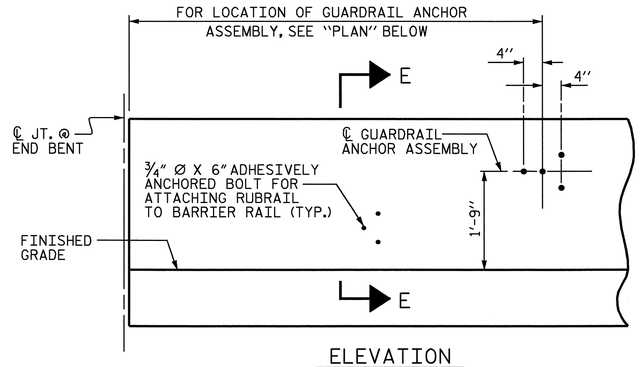

ELEVATION

FOR LOCATION OF RUBRAIL, SEE ROADWAY STD. 862.03

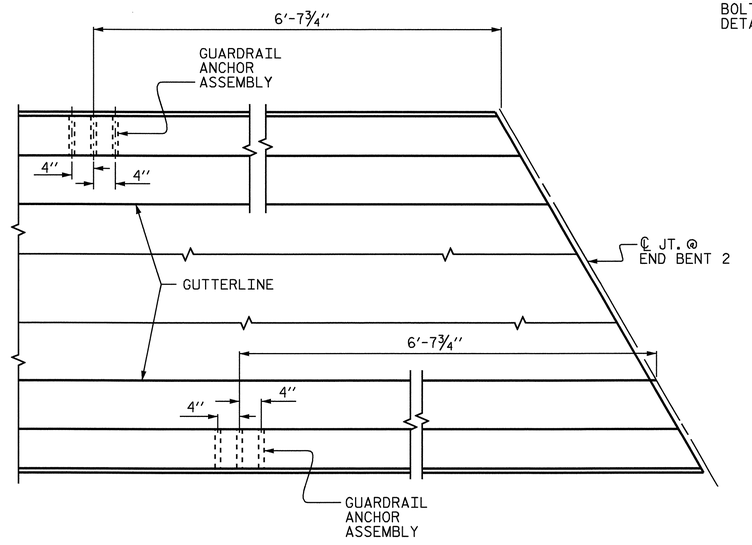

PLAN

LOCATION OF ANCHORS FOR GUARDRAIL

END BENT 2 SHOWN, END BENT 1 SIMILAR.

NOTES

THE GUARDRAIL ANCHOR ASSEMBLY SHALL CONSIST OF A 1/4'' HOLD DOWN PLATE AND 4 - 7/8'' Ø BOLTS WITH NUTS AND WASHERS, RUBRAIL, AND ADHESIVELY ANCHORED BOLTS.

THE HOLD-DOWN PLATE SHALL CONFORM TO AASHTO M270 GRADE 36. AFTER FABRICATION, THE HOLD-DOWN PLATE SHALL BE HOT-DIP GALVANIZED IN ACCORDANCE WITH AASHTO M111.

BOLTS SHALL CONFORM TO THE REQUIREMENTS OF ASTM A307 AND NUTS SHALL CONFORM TO THE REQUIREMENTS OF AASHTO M291. BOLTS, NUTS AND WASHERS SHALL BE GALVANIZED. (AT THE CONTRACTOR'S OPTION, STAINLESS STEEL BOLTS, NUTS AND WASHERS MAY BE USED AS AN ALTERNATE FOR THE 7/8'' Ø GALVANIZED BOLTS, NUTS AND WASHERS. THEY SHALL CONFORM TO OR EXCEED THE MECHANICAL REQUIREMENTS OF ASTM A307. THE USE OF THIS ALTERNATE SHALL BE APPROVED BY THE ENGINEER.)

THE GUARDRAIL ANCHOR ASSEMBLY IS REQUIRED AT ALL POINTS WHERE APPROACH GUARDRAIL IS TO BE ATTACHED TO THE END OF BARRIER RAIL. FOR POINTS OF ATTACHMENT, SEE SKETCH.

AFTER INSTALLATION, THE EXPOSED THREAD OF THE BOLT SHALL BE BURRED WITH A SHARP POINTED TOOL.

THE COST OF THE GUARDRAIL ANCHOR ASSEMBLY SHALL BE INCLUDED IN THE UNIT CONTRACT PRICE BID FOR CONCRETE BARRIER RAIL.

THE 1 1/4'' Ø HOLES SHALL BE FORMED OR DRILLED WITH A CORE BIT. IMPACT TOOLS WILL NOT BE PERMITTED. ANY CONCRETE DAMAGED BY THIS WORK SHALL BE REPAIRED TO THE SATISFACTION OF THE ENGINEER.

THE C6 X 8.2 RUBRAIL IS TO BE ADHESIVELY ANCHORED TO THE RAIL USING THREE 3/4''Ø X 6'' BOLTS WITH WASHERS. LEVEL ONE FIELD TESTING IS REQUIRED, AND THE YIELD LOAD OF THE 3/4''Ø BOLT IS 12 KIPS. FOR ADHESIVELY ANCHORED ANCHOR BOLTS OR DOWELS, SEE SPECIAL PROVISIONS. SEE ROADWAY STANDARD 862.03 FOR DETAILS AND LOCATION OF THE RUBRAIL.

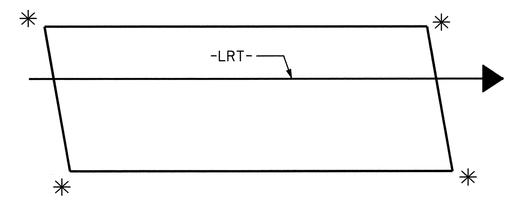

SKETCH SHOWING POINTS OF ATTACHMENTS

✳ DENOTES GUARDRAIL ANCHOR ASSEMBLY

PROJECT NO. B-4507
FORSYTH COUNTY
STATION: 27+96.00 -L-

STATE OF NORTH CAROLINA
DEPARTMENT OF TRANSPORTATION
RALEIGH

STANDARD
GUARDRAIL ANCHORAGE FOR BARRIER RAIL RIGHT LANE

NORTH CAROLINA PROFESSIONAL SEAL 20125 ENGINEER MARSHALL G. CHEEK, JR.
9-29-09

REVISIONS						SHEET NO.
NO.	BY:	DATE:	NO.	BY:	DATE:	S-76
1			3			TOTAL SHEETS
2			4			99

STR. #2

STD. NO. GRA2

ASSEMBLED BY : V.X. NGUYEN DATE : 12-18-08 CHECKED BY : M.G. CHEEK DATE : 6-09	
DRAWN BY : TLA 5/06 CHECKED BY : GM 5/06	ADDED 5/1/06R KMM/GM

05-AUG-2009 08:59
R:\Structures\STR#2\vnguyen\B-4507_SD_GR.dgn
afigueroa

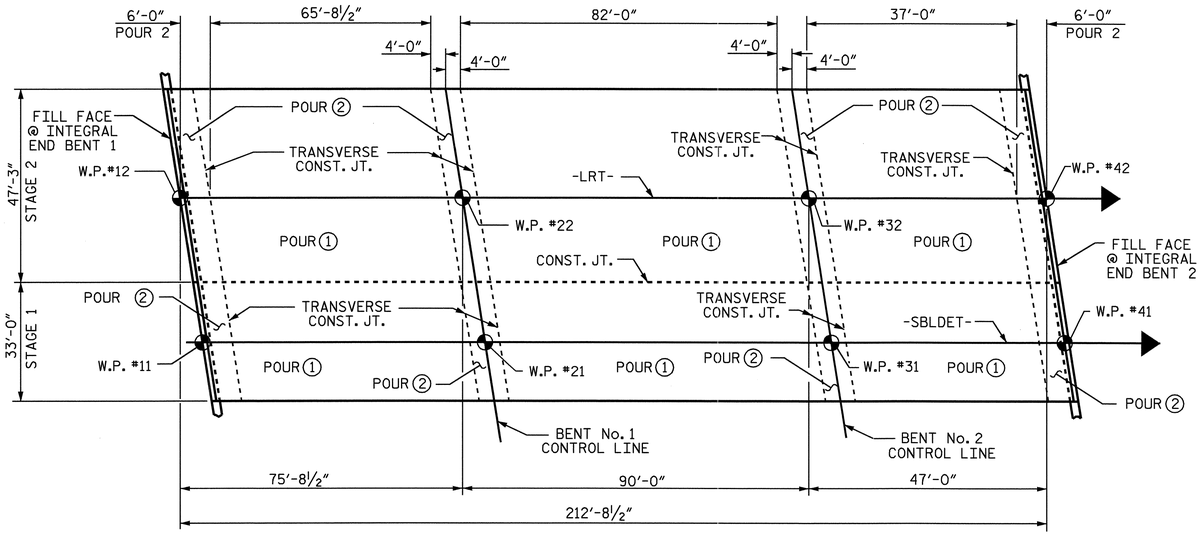

OPTIONAL POURING SEQUENCE

POUR (2) CANNOT BE STARTED UNTIL BOTH ADJACENT (1) POURS REACH A MINIMUM OF 3000 PSI.

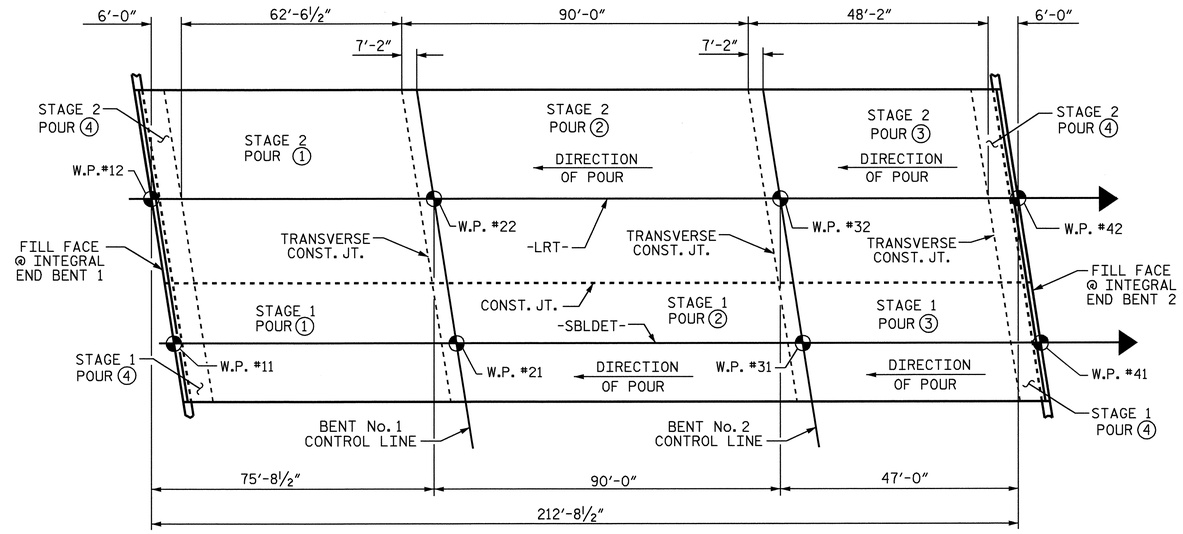

POURING SEQUENCE

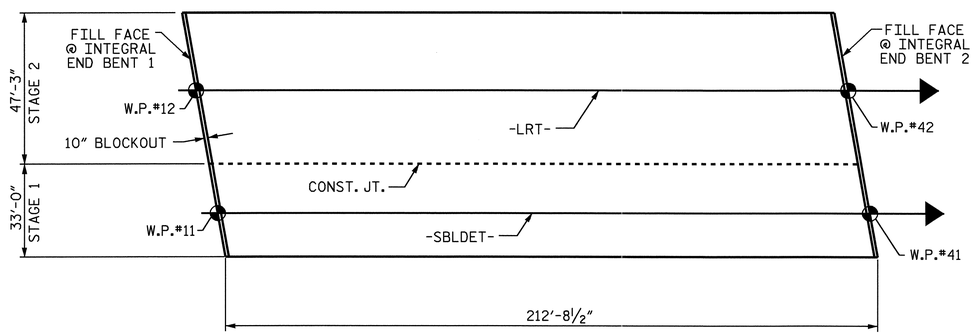

LAYOUT FOR COMPUTING AREA REINFORCED CONCRETE DECK SLAB

STAGE 1	=	7019	SQ. FEET
STAGE 2	=	10,050	SQ. FEET
TOTAL	=	17,069	SQ. FEET

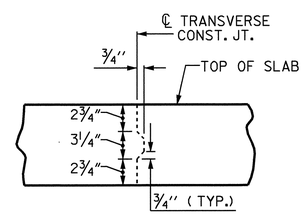

TRANSVERSE CONSTRUCTION JOINT DETAIL

NOTE: REINFORCING STEEL IN SLAB NOT SHOWN.
LONGITUDINAL REINFORCING STEEL SHALL BE CONTINUOUS THRU JOINT

PROJECT NO. B-4507
FORSYTH COUNTY
STATION: 27+96.00 -L-

SHEET 1 OF 2

STATE OF NORTH CAROLINA
DEPARTMENT OF TRANSPORTATION
RALEIGH

SUPERSTRUCTURE BILL OF MATERIAL
RIGHT LANE

NORTH CAROLINA PROFESSIONAL SEAL 20125 ENGINEER MARSHALL G. CHEEK, JR.
9-29-09

REVISIONS								SHEET NO.
NO.	BY:	DATE:	NO.	BY:	DATE:			S-77
1			3					TOTAL SHEETS
2			4					99

DRAWN BY : V.X. NGUYEN DATE : 06/8/09
CHECKED BY : M.G. CHEEK DATE : 06-09

28-SEP-2009 08:13
R:\Structures\Final Plans\Right Lane\B-4507_sd_str#2_11A_BM.dgn
afigueroa

STR. #2

BILL OF MATERIAL
SPANS A, B, & C - STAGE 1

BAR	NO.	SIZE	TYPE	LENGTH	WEIGHT
✳ A1	379	#5	STR	32'-7"	12880
A2	379	#5	STR	32'-7"	12880
✳ A101	2	#5	STR	30'-0"	63
✳ A102	2	#5	STR	27'-0"	56
✳ A103	2	#5	STR	23'-11"	50
✳ A104	2	#5	STR	20'-10"	43
✳ A105	2	#5	STR	17'-9"	37
✳ A106	2	#5	STR	14'-8"	31
✳ A107	2	#5	STR	11'-7"	24
✳ A108	2	#5	STR	8'-6"	18
✳ A109	2	#5	STR	5'-6"	11
✳ A110	2	#5	STR	2'-5"	5
A201	2	#5	STR	30'-0"	63
A202	2	#5	STR	27'-0"	56
A203	2	#5	STR	23'-11"	50
A204	2	#5	STR	20'-10"	43
A205	2	#5	STR	17'-9"	37
A206	2	#5	STR	14'-8"	31
A207	2	#5	STR	11'-7"	24
A208	2	#5	STR	8'-6"	18
A209	2	#5	STR	5'-6"	11
A210	2	#5	STR	2'-5"	5
✳ B1	46	#4	STR	25'-6"	784
B2	144	#5	STR	54'-4"	8160
✳ B3	23	#7	STR	59'-9"	2809
✳ B4	21	#7	STR	24'-11"	1070
✳ B5	23	#4	STR	30'-0"	461
✳ B6	21	#7	STR	20'-7"	884
✳ B7	23	#7	STR	51'-2"	2405
✳ B8	23	#4	STR	28'-10"	443
✳ D1	388	#6	STR	3'-0"	1748
K1	20	#4	STR	16'-7"	222
K2	36	#4	STR	7'-4"	176
K3	36	#4	STR	8'-4"	200
K4	6	#4	STR	6'-10"	27
K5	4	#4	STR	2'-1"	6
K6	4	#4	STR	2'-7"	7
K7	2	#4	STR	1'-10"	2
K8	12	#4	STR	5'-8"	45
K9	20	#4	5	11'-4"	151
K10	20	#4	6	5'-8"	76
S1	54	#4	2	12'-0"	433
✳S2	66	#4	3	11'-8"	514
✳S3	54	#4	3	10'-7"	382
S4	156	#4	1	2'-9"	287
U1	30	#4	4	14'-10"	297
U2	12	#4	4	12'-10"	103

REINFORCING STEEL = 23,410 LBS.
✳EPOXY COATED REIN. STEEL = 24,718 LBS.

BILL OF MATERIAL
SPANS A, B, & C - STAGE 2

BAR	NO.	SIZE	TYPE	LENGTH	WEIGHT
✳ A3	373	#5	STR	46'-10"	18220
A4	373	#5	STR	46'-10"	18220
✳ A301	2	#5	STR	46'-7"	97
✳ A302	2	#5	STR	43'-6"	91
✳ A303	2	#5	STR	40'-5"	84
✳ A304	2	#5	STR	37'-4"	78
✳ A305	2	#5	STR	34'-3"	71
✳ A306	2	#5	STR	31'-3"	65
✳ A307	2	#5	STR	28'-2"	59
✳ A308	2	#5	STR	25'-1"	52
✳ A309	2	#5	STR	22'-0"	46
✳ A310	2	#5	STR	18'-11"	39
✳ A311	2	#5	STR	15'-10"	33
✳ A312	2	#5	STR	12'-9"	27
✳ A313	2	#5	STR	9'-8"	20
✳ A314	2	#5	STR	6'-8"	14
✳ A315	2	#5	STR	3'-7"	7
A401	2	#5	STR	45'-6"	96
A402	2	#5	STR	42'-5"	88
A403	2	#5	STR	39'-4"	82
A404	2	#5	STR	36'-3"	76
A405	2	#5	STR	33'-2"	69
A406	2	#5	STR	30'-2"	63
A407	2	#5	STR	27'-1"	56
A408	2	#5	STR	23'-7"	49
A409	2	#5	STR	20'-11"	44
A410	2	#5	STR	17'-10"	37
A411	2	#5	STR	14'-9"	31
A412	2	#5	STR	11'-8"	24
A413	2	#5	STR	8'-7"	18
A414	2	#5	STR	5'-6"	11
A415	2	#5	STR	2'-6"	5
✳ B1	66	#4	STR	25'-6"	1124
B2	200	#5	STR	54'-4"	11334
✳ B3	33	#7	STR	59'-9"	4030
✳ B4	30	#7	STR	24'-11"	1528
✳ B5	33	#4	STR	30'-0"	661
✳ B6	30	#7	STR	20'-7"	1262
✳ B7	33	#7	STR	51'-2"	3451
✳ B8	33	#4	STR	28'-10"	636
K11	20	#4	STR	25'-10"	345
K12	60	#4	STR	6'-6"	261
K13	60	#4	STR	7'-8"	307
K14	10	#4	STR	6'-1"	41
K15	4	#4	STR	1'-8"	4
K16	4	#4	STR	2'-1"	6
K17	2	#4	STR	1'-9"	2
K18	20	#4	STR	4'-11"	66
K19	40	#4	5	10'-6"	281
K20	20	#4	6	5'-8"	76
K21	4	#4	STR	2'-0"	5
K22	4	#4	STR	3'-0"	8
K23	2	#4	STR	1'-6"	2
S1	78	#4	2	12'-0"	625
✳S2	100	#4	3	11'-8"	779
✳S3	76	#4	3	10'-7"	537
S4	260	#4	1	2'-9"	478
U1	50	#4	4	14'-10"	495
U2	20	#4	4	12'-10"	171

REINFORCING STEEL = 33,476 LBS.
✳EPOXY COATED REINF. STEEL = 33,011 LBS.

✳ THESE BARS ARE EPOXY COATED

SUPERSTRUCTURE BILL OF MATERIAL

STAGE 1	CLASS AA CONCRETE	REINFORCING STEEL	EPOXY COATED REINFORCING STEEL
	(CU. YDS.)	(LBS.)	(LBS.)
SPANS A, B & C		23,410	24,718
POUR #1	69.6		
POUR #2	111.0		
POUR #3	62.9		
POUR #4	53.4		
TOTALS✳✳	296.9	23,410	24,718

STAGE 2	CLASS AA CONCRETE	REINFORCING STEEL	EPOXY COATED REINFORCING STEEL
	(CU. YDS.)	(LBS.)	(LBS.)
SPANS A, B & C		33,476	33,011
POUR #1	99.3		
POUR #2	159.4		
POUR #3	90.7		
POUR #4	76.0		
TOTALS✳✳	425.4	33,476	33,011

✳✳ QUANTITIES FOR BARRIER RAIL ARE NOT INCLUDED

SUPERSTRUCTURE REINFORCING STEEL LENGTHS ARE BASED ON THE FOLLOWING MINIMUM SPLICE LENGTHS

BAR SIZE	SUPERSTRUCTURE EXCEPT APPROACH SLABS, PARAPET, AND BARRIER RAIL		APPROACH SLABS		PARAPET AND BARRIER RAIL
	EPOXY COATED	UNCOATED	EPOXY COATED	UNCOATED	
#4	2'-0"	1'-9"	2'-0"	1'-9"	2'-9"
#5	2'-6"	2'-2"	2'-6"	2'-2"	3'-5"
#6	3'-0"	2'-7"	3'-10"	2'-7"	4'-4"
#7	5'-3"	3'-6"			
#8	6'-10"	4'-7"			

GROOVING BRIDGE FLOORS

APPROACH SLABS - STAGE 1	1,334	SQ.FT.
APPROACH SLABS - STAGE 2	1,971	SQ.FT.
APPROACH SLAB TOTAL	3,305	SQ.FT.
BRIDGE DECK - STAGE 1	6,293	SQ.FT.
BRIDGE DECK - STAGE 2	9,295	SQ.FT.
BRIDGE DECK TOTAL	15,588	SQ.FT.
TOTAL	18,893	SQ.FT.

BAR TYPES

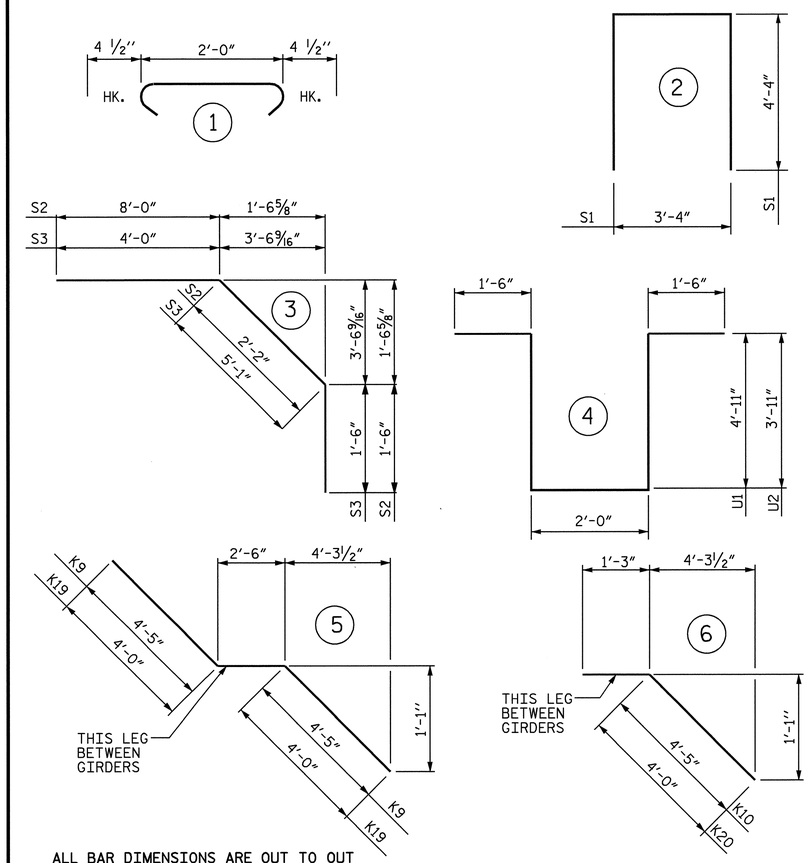

ALL BAR DIMENSIONS ARE OUT TO OUT

PROJECT NO. B-4507
FORSYTH COUNTY
STATION: 27+96.00 -L-

SHEET 2 OF 2

STATE OF NORTH CAROLINA
DEPARTMENT OF TRANSPORTATION
RALEIGH

STANDARD
SUPERSTRUCTURE
BILL OF MATERIAL
RIGHT LANE

NORTH CAROLINA PROFESSIONAL SEAL 20125 ENGINEER MARSHALL G. CHEEK, JR.
9.29.09

REVISIONS						SHEET NO.
NO.	BY:	DATE:	NO.	BY:	DATE:	S-78
1			3			TOTAL SHEETS
2			4			99

STR. #2 STD. NO. BOM2

ASSEMBLED BY : V.X. NGUYEN	DATE : 6/8/09		
CHECKED BY : M.G.CHEEK	DATE : 06/09		
DRAWN BY : JMB 5/87	REV. 6/1/94	EEM/GRP	
CHECKED BY : SJD 9/87	REV. 8/16/99	RWW/LES	
	REV. 5/1/06	TLA/GM	

07-AUG-2009 09:23
r:\structures\STR#2\vnguyen\B-4507_SD_BM.dgn
dahodge

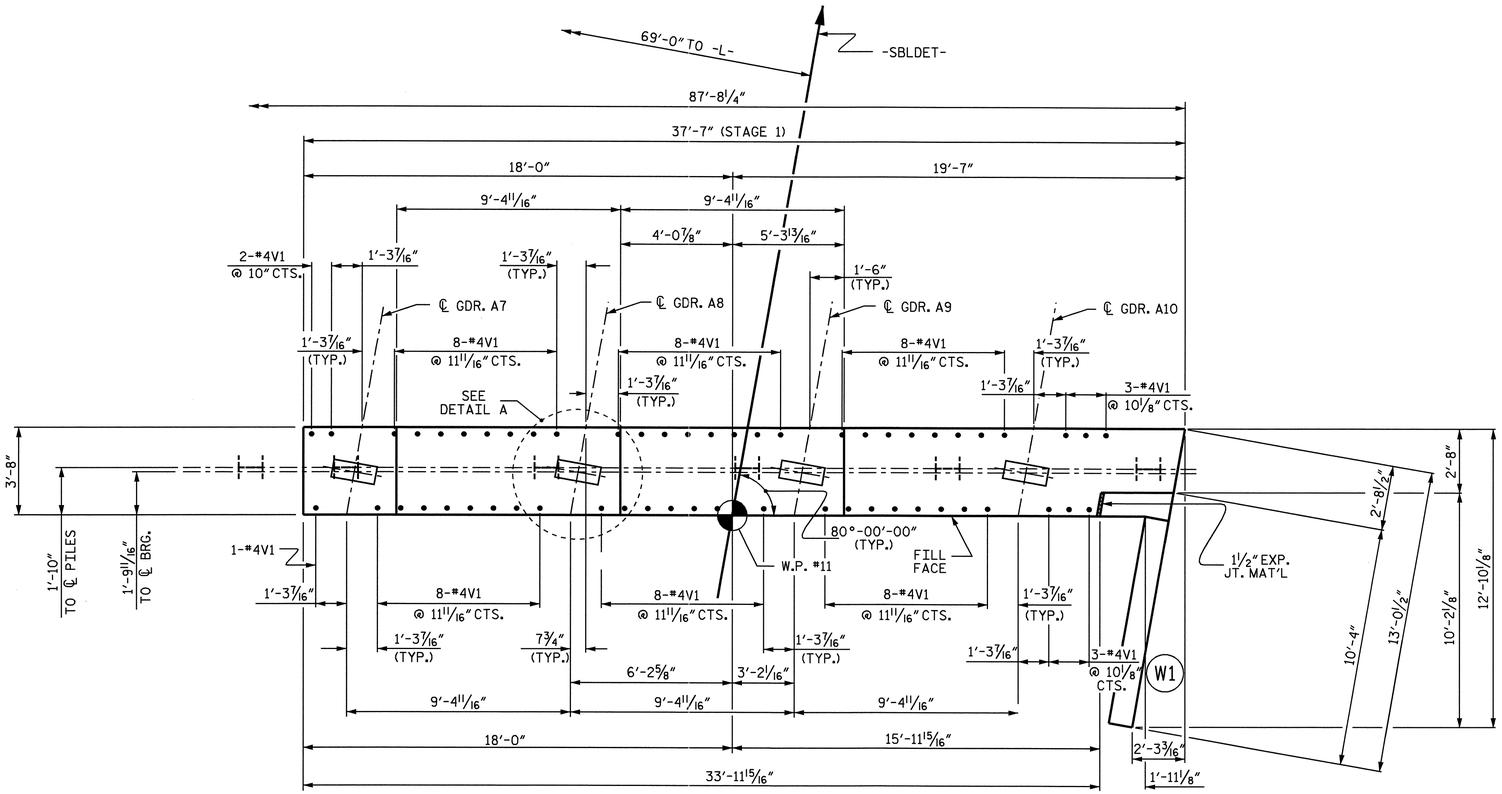

PLAN - STAGE 1

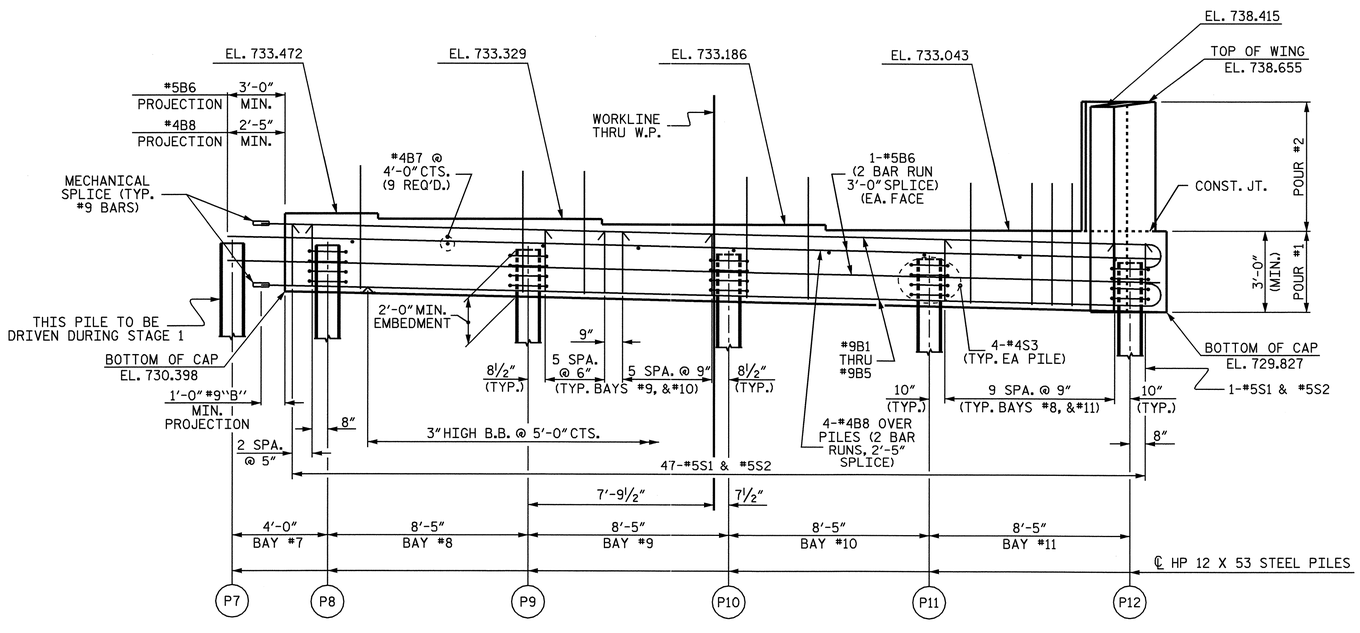

ELEVATION - STAGE 1

NOTES

THE CONTRACTOR SHALL PROVIDE FOR INSTALLATION OF THE 4" DIAMETER DRAIN PIPE THROUGH THE WING WALL AS REQUIRED FOR REINFORCED BRIDGE APPROACH FILLS, SEE THE ROADWAY PLANS. REINFORCING STEEL IN THE WING WALL MAY BE SHIFTED AS NECESSARY TO CLEAR THE DRAIN PIPE.

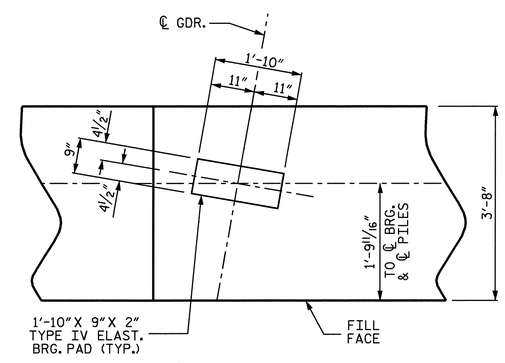

DETAIL A

TOP OF PILE ELEVATIONS STAGE 1	
P7	732.432
P8	732.371
P9	732.243
P10	732.115
P11	731.987
P12	731.859

PROJECT NO. B-4507

FORSYTH COUNTY

STATION: 27+96.00-L-

SHEET 1 OF 4

STATE OF NORTH CAROLINA
DEPARTMENT OF TRANSPORTATION
RALEIGH

SUBSTRUCTURE
END BENT NO. 1
RIGHT LANE
STAGE 1

NORTH CAROLINA PROFESSIONAL SEAL 20125 ENGINEER MARSHALL G. CHEEK, JR. 9-28-09

REVISIONS						SHEET NO.
NO.	BY:	DATE:	NO.	BY:	DATE:	S-79
1			3			TOTAL SHEETS
2			4			99

DRAWN BY : L.L. MURPHY DATE : 07-09
CHECKED BY : M.G. CHEEK DATE : 08-09

28-SEP-2009 08:13
R:\Structures\Final Plans\Right Lane\B-4507_sd_str#2_12_eb*.dgn
afigueroa

STR #2

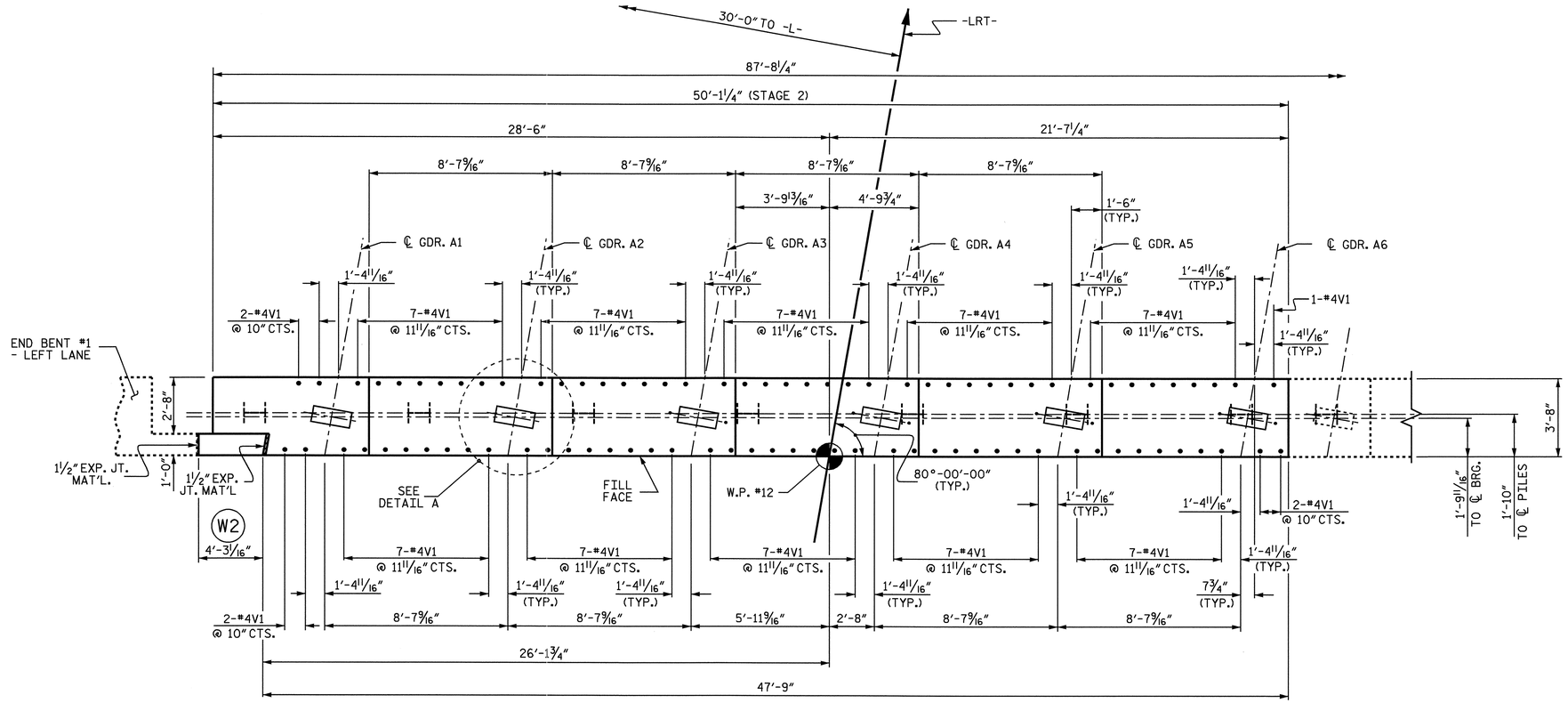

PLAN - STAGE 2

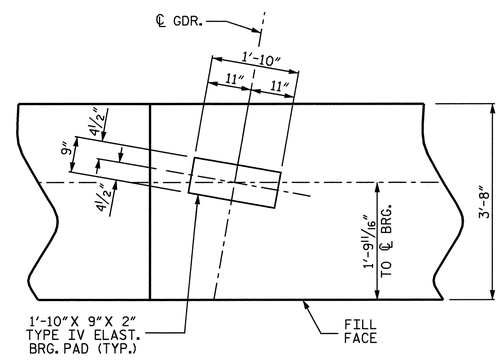

DETAIL A

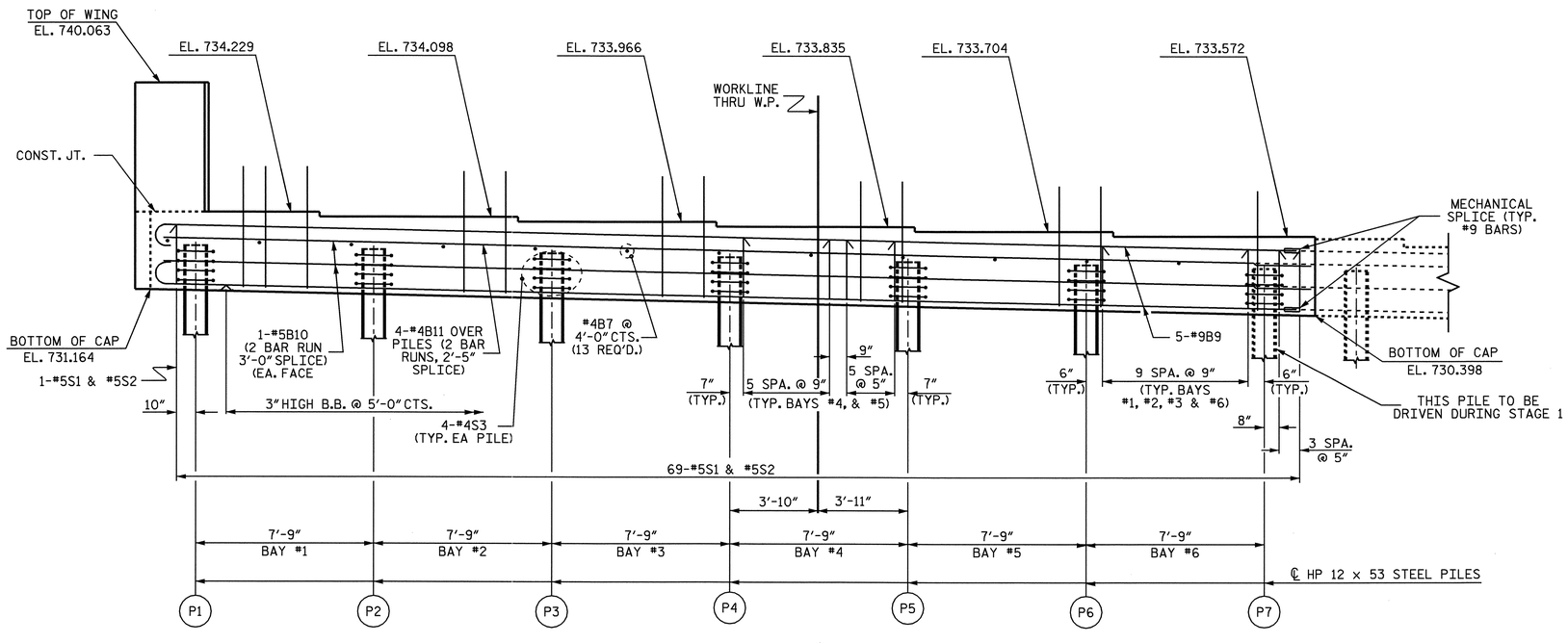

ELEVATION - STAGE 2

TOP OF PILE ELEVATIONS STAGE 2	
P1	733.143
P2	733.028
P3	732.906
P4	732.788
P5	732.669
P6	732.551

PROJECT NO. B-4507

FORSYTH COUNTY

STATION: 27+96.00-L-

SHEET 2 OF 4

STATE OF NORTH CAROLINA
DEPARTMENT OF TRANSPORTATION
RALEIGH

SUBSTRUCTURE
END BENT NO. 1
RIGHT LANE
STAGE 2

NORTH CAROLINA PROFESSIONAL SEAL 20125 ENGINEER MARSHALL G. CHEEK, JR.
4-29-09

REVISIONS						SHEET NO.
NO.	BY:	DATE:	NO.	BY:	DATE:	S-80
1			3			TOTAL SHEETS
2			4			99

DRAWN BY : L.L. MURPHY DATE : 07-09
CHECKED BY : M.G. CHEEK DATE : 08-09

29-SEP-2009 11:47
R:\Structures\Final Plans\Right Lane\B-4507_sd_str*2_12_eb*.dgn
afigueroa

STR #2

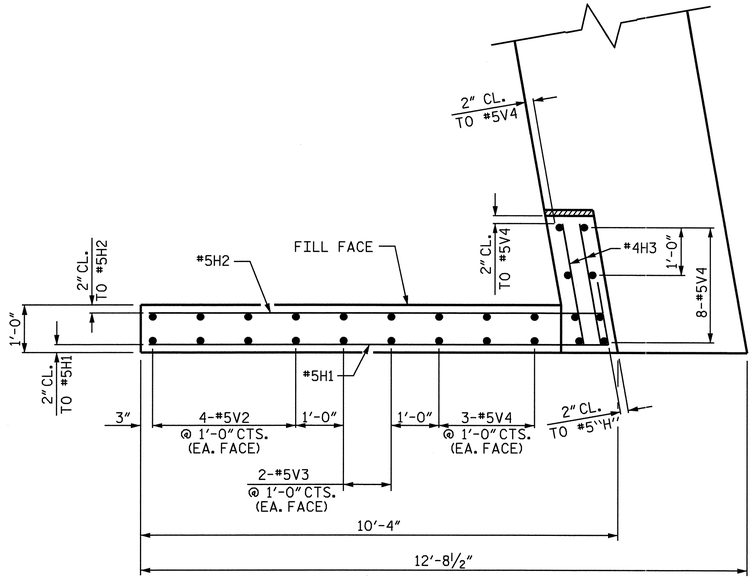

PLAN OF WING W1 - STAGE 1

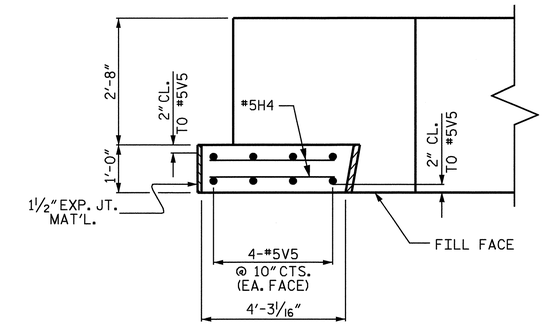

PLAN OF WING W2 - STAGE 2

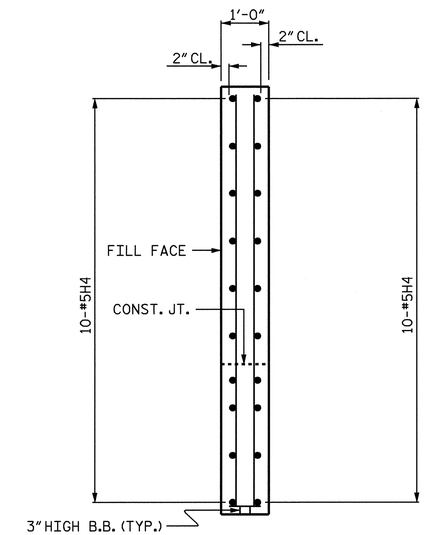

SECTION Y-Y

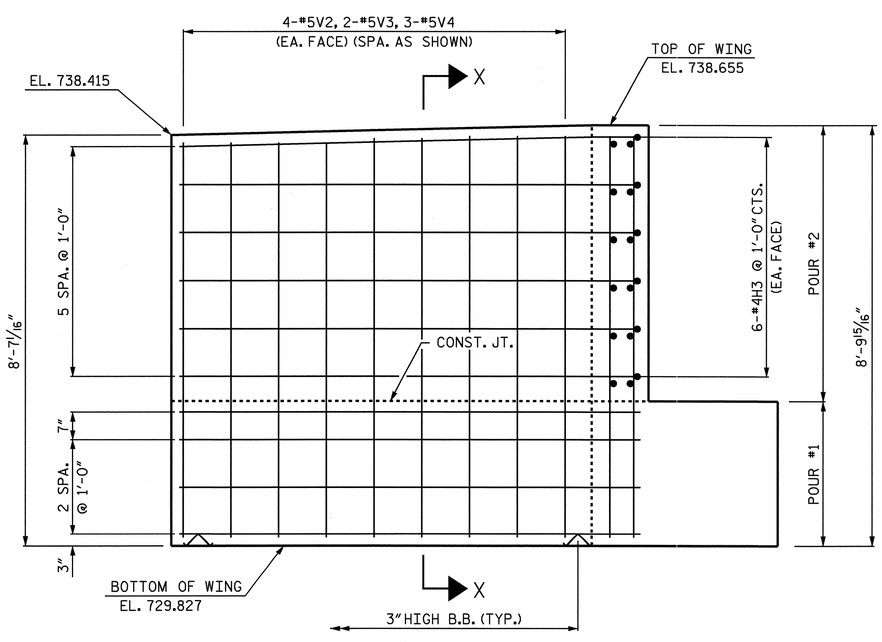

ELEVATION OF WING W1 - STAGE 1

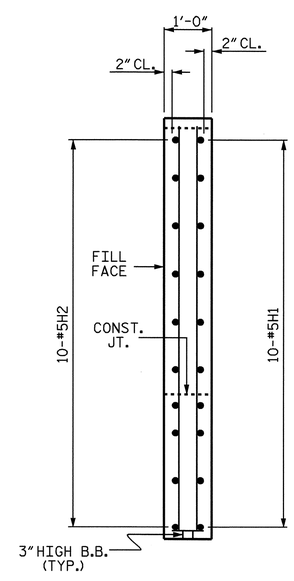

SECTION X-X

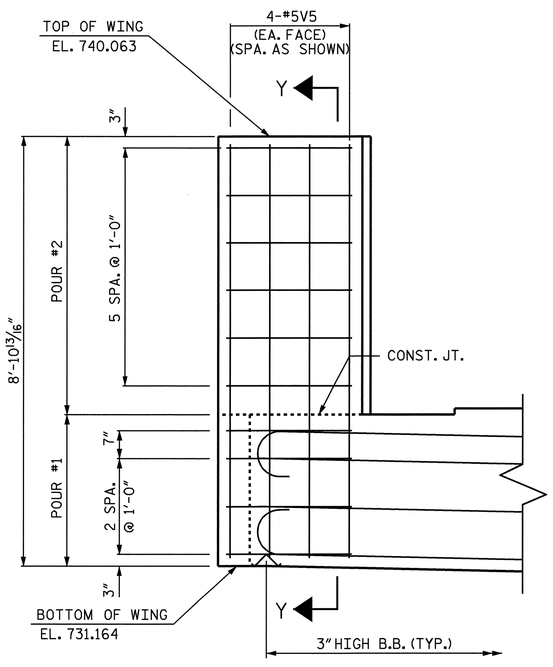

ELEVATION OF WING W2 - STAGE 2

PROJECT NO. B-4507
FORSYTH COUNTY
STATION: 27+96.00-L-

SHEET 3 OF 4

STATE OF NORTH CAROLINA
DEPARTMENT OF TRANSPORTATION
RALEIGH

SUBSTRUCTURE

END BENT NO. 1
RIGHT LANE

NORTH CAROLINA PROFESSIONAL SEAL 20125 ENGINEER MARSHALL G. CHEEK, JR.
9-29-09

REVISIONS						SHEET NO.
NO.	BY:	DATE:	NO.	BY:	DATE:	S-81
1			3			TOTAL SHEETS
2			4			99

DRAWN BY : L.L. MURPHY DATE : 07-09
CHECKED BY : M.G. CHEEK DATE : 08-09

19-AUG-2009 15:49
r:\structures\STR*2\lmurphy\b4507_sd_e*_str*2.dgn
lmurphy

STR #2

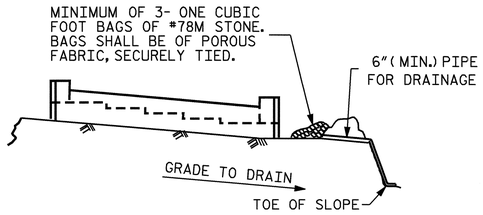

BAGGED STONE AND PIPE SHALL BE PLACED IMMEDIATELY AFTER COMPLETION OF END BENT EXCAVATION. PIPE MAY BE EITHER CONCRETE, CORRUGATED STEEL, CORRUGATED ALUMINUM ALLOY, OR CORRUGATED PLASTIC. PERFORATED PIPE WILL NOT BE ALLOWED.

BAGGED STONE SHALL REMAIN IN PLACE UNTIL THE ENGINEER DIRECTS THAT IT BE REMOVED. THE CONTRACTOR SHALL REMOVE AND DISPOSE OF SILT ACCUMULATIONS AT BAGGED STONE WHEN SO DIRECTED BY THE ENGINEER. BAGS SHALL BE REMOVED AND REPLACED WHENEVER THE ENGINEER DETERMINES THAT THEY HAVE DETERIORATED AND LOST THEIR EFFECTIVENESS.

NO SEPARATE PAYMENT WILL BE MADE FOR THIS WORK AND THE ENTIRE COST OF THIS WORK SHALL BE INCLUDED IN THE UNIT CONTRACT PRICE BID FOR THE SEVERAL PAY ITEMS.

TEMPORARY DRAINAGE AT END BENT

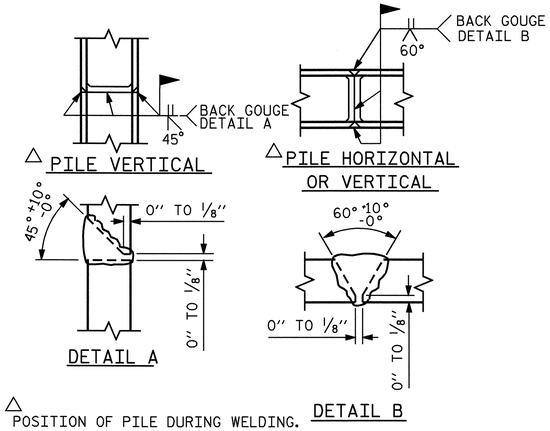

PILE SPLICE DETAILS

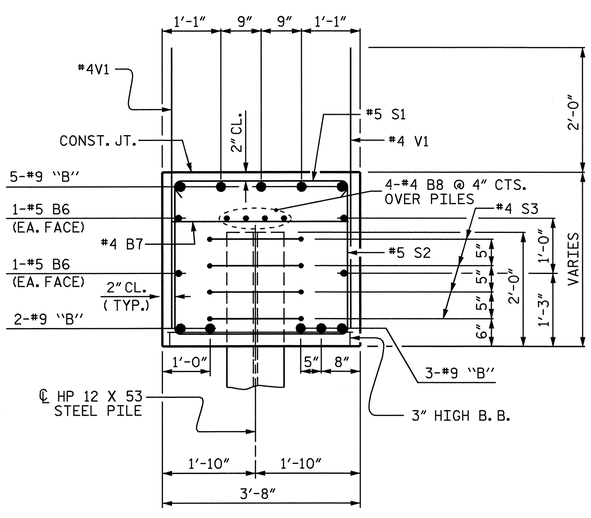

SECTION THRU CAP

STAGE 1

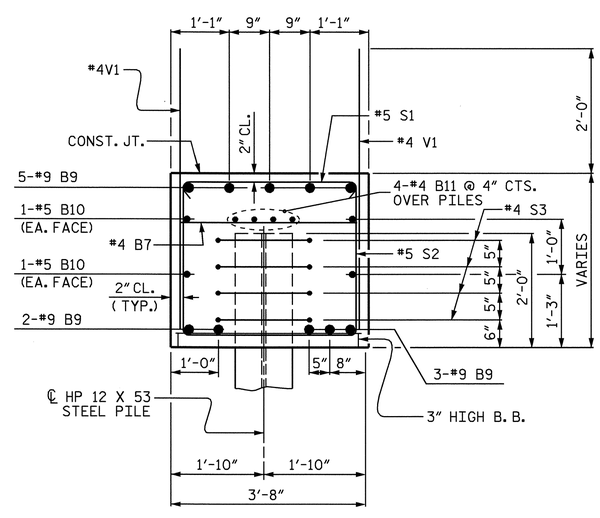

SECTION THRU CAP

STAGE 2

BAR TYPES

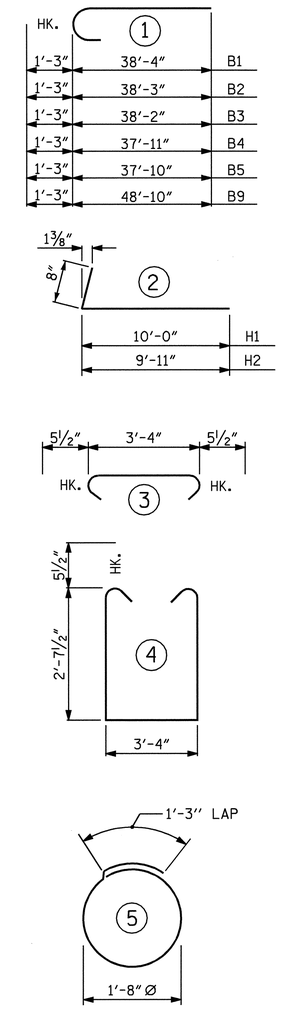

ALL BAR DIMENSIONS ARE OUT TO OUT.

BILL OF MATERIAL

END BENT NO. 1 STAGE 1

BAR	NO.	SIZE	TYPE	LENGTH	WEIGHT
B1	2	#9	1	39'-7"	269
B2	2	#9	1	39'-6"	269
B3	2	#9	1	39'-5"	268
B4	2	#9	1	39'-2"	266
B5	2	#9	1	39'-1"	266
B6	8	#5	STR	21'-9"	181
B7	9	#4	STR	3'-4"	20
B8	8	#4	STR	21'-1"	113
H1	10	#5	2	10'-8"	111
H2	10	#5	2	10'-7"	110
H3	12	#4	STR	2'-7"	21
S1	47	#5	3	4'-3"	208
S2	47	#5	4	9'-6"	466
S3	20	#4	5	6'-6"	87
V1	57	#4	STR	4'-9"	181
V2	8	#5	STR	8'-3"	69
V3	4	#5	STR	8'-4"	35
V4	14	#5	STR	8'-5"	123

REINFORCING STEEL = 3063 LBS.

CLASS A CONCRETE

POUR #1 : CAP & BOT. OF WING = 17.2 CU. YDS.

POUR #2 : TOP OF WINGS = 2.2 CU. YDS.

TOTAL CLASS A CONCRETE = 19.4 CU. YDS.

HP 12 X 53 STEEL PILES

NO. 6 LIN. FT. 210

END BENT NO. 1 STAGE 2

BAR	NO.	SIZE	TYPE	LENGTH	WEIGHT
B7	13	#4	STR	3'-4"	29
B9	10	#9	1	50'-1"	1703
B10	8	#5	STR	26'-4"	220
B11	8	#4	STR	26'-1"	139
H4	20	#5	STR	3'-9"	78
S1	69	#5	3	4'-3"	306
S2	69	#5	4	9'-6"	684
S3	28	#4	5	6'-6"	122
V1	77	#4	STR	4'-9"	244
V5	8	#5	STR	8'-6"	71

REINFORCING STEEL = 3596 LBS.

CLASS A CONCRETE

POUR #1 : CAP & BOT. OF WING = 21.5 CU. YDS.

POUR #2 : TOP OF WINGS = 0.9 CU. YDS.

TOTAL CLASS A CONCRETE = 22.4 CU. YDS.

HP 12 X 53 STEEL PILES

NO. 6 LIN. FT. 210

TOTAL QUANTITIES

REINFORCING STEEL	=	6659 LBS.
CLASS A CONCRETE	=	41.8 CU. YDS.
HP 12 X 53 STEEL PILES	=	420 LIN. FT.

PROJECT NO. B-4507

FORSYTH COUNTY

STATION: 27+96.00-L-

SHEET 4 OF 4

STATE OF NORTH CAROLINA
DEPARTMENT OF TRANSPORTATION
RALEIGH

SUBSTRUCTURE

END BENT NO. 1

RIGHT LANE

NORTH CAROLINA PROFESSIONAL SEAL 20125 ENGINEER MARSHALL G. CHEEK, JR.
9-28-09

REVISIONS						SHEET NO.
NO.	BY:	DATE:	NO.	BY:	DATE:	S-82
1			3			TOTAL SHEETS
2			4			99

DRAWN BY : L.L. MURPHY DATE : 07-09

CHECKED BY : M.G. CHEEK DATE : 08-09

STR #2

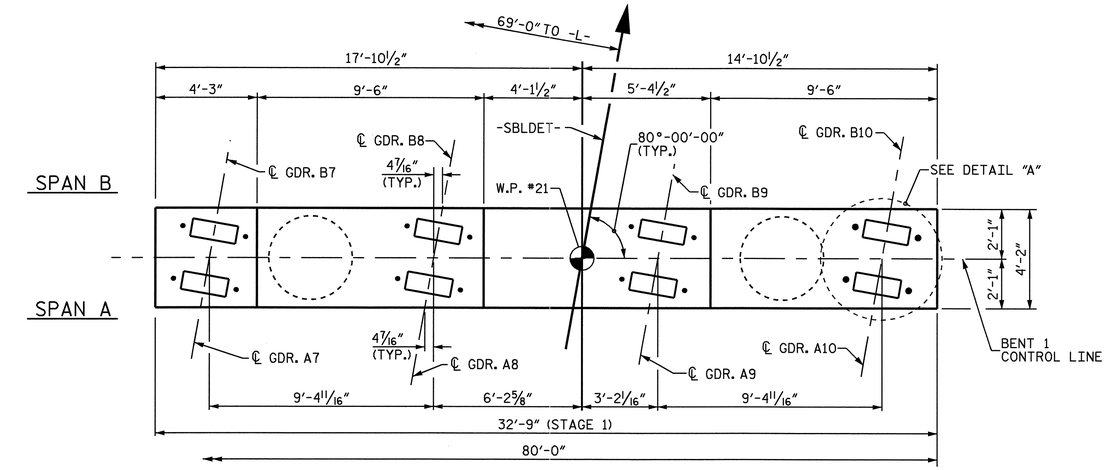

PLAN

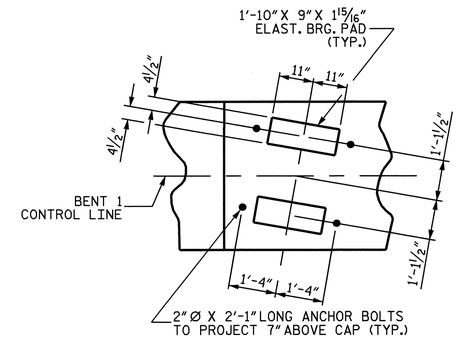

DETAIL "A"

NOTES

STIRRUPS IN CAP MAY BE SHIFTED AS NECESSARY TO CLEAR ANCHOR BOLTS.

HOOKS ON "V" BARS MAY BE TURNED AS NECESSARY FOR PLACING REINFORCING STEEL.

ALL STEEL IN THE DRILLED PIERS IS INCLUDED IN THE PAY ITEMS FOR "REINFORCING STEEL" AND "SPIRAL COLUMN REINFORCING STEEL".

THE CONTRACTOR'S ATTENTION IS CALLED TO THE FACT THAT THE LONGITUDINAL REINFORCEMENT FOR THE DRILLED PIERS IS DETAILED WITH 3 FEET OF EXTRA LENGTH.

THE LOCATION OF THE CONSTRUCTION JOINT IN THE DRILLED PIERS IS BASED ON AN APPROXIMATE GROUND LINE ELEVATION. IF THE CONSTRUCTION JOINT IS ABOVE THE ACTUAL GROUND LINE ELEVATION, THE CONTRACTOR SHALL PLACE THE CONSTRUCTION JOINT 1 FT. BELOW THE GROUND LINE.

FOR DRILLED PIERS, SEE SPECIAL PROVISIONS.

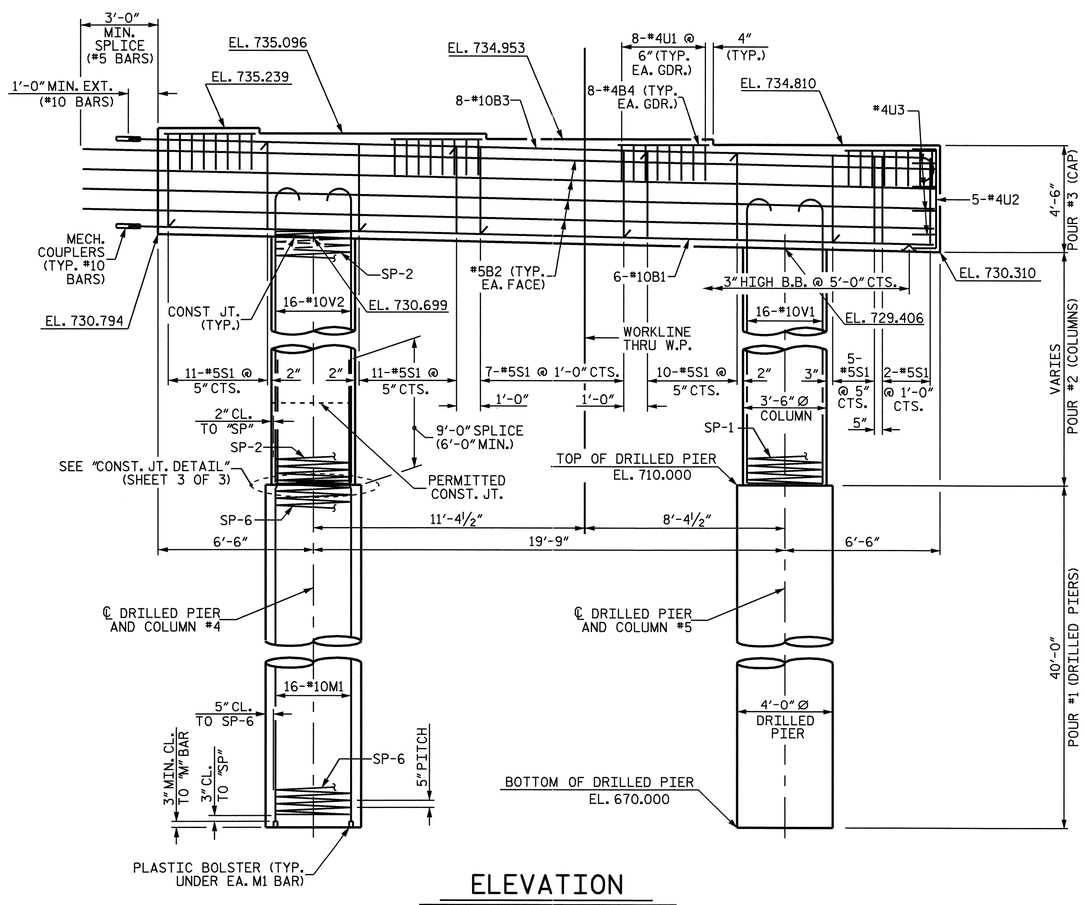

INVERT ALTERNATE STURRUPS

ELEVATION

DIMENSIONS AND REINFORCING STEEL ARE TYPICAL FOR EACH COLUMN AND DRILLED PIER UNLESS OTHERWISE NOTED

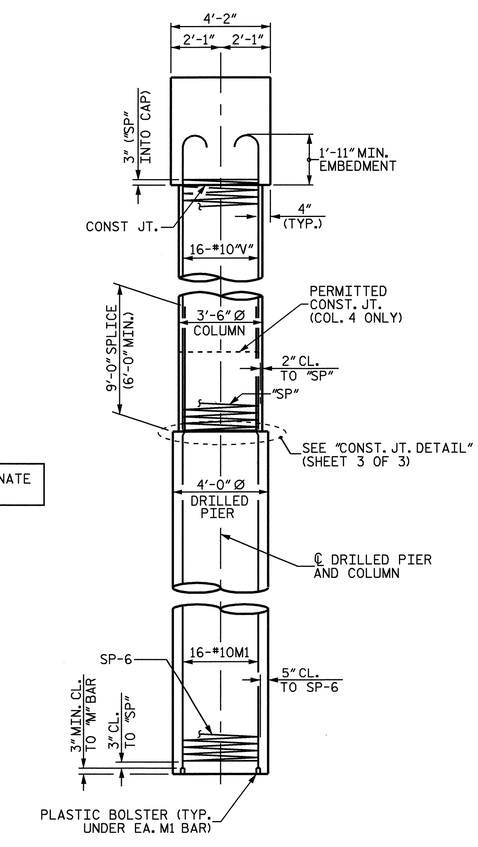

END ELEVATION

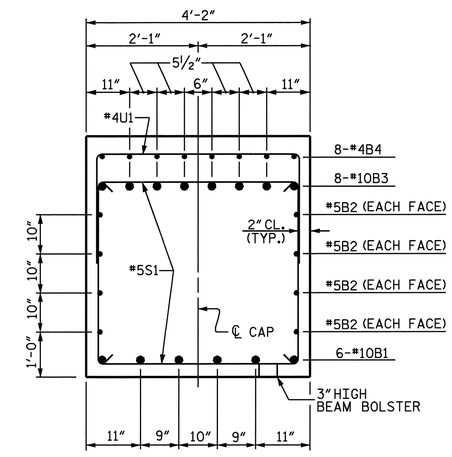

SECTION THRU CAP

PROJECT NO. B-4507

FORSYTH COUNTY

STATION: 27+96.00 -L-

SHEET 1 OF 3

STATE OF NORTH CAROLINA
DEPARTMENT OF TRANSPORTATION
RALEIGH

SUBSTRUCTURE

BENT 1
STAGE 1

RIGHT LANE

NORTH CAROLINA PROFESSIONAL SEAL 20125 ENGINEER MARSHALL G. CHEEK, JR.
9-29-09

REVISIONS						SHEET NO.
NO.	BY:	DATE:	NO.	BY:	DATE:	S-83
1			3			TOTAL SHEETS
2			4			99

DRAWN BY : W.D. CRUTCHER DATE : 6-15-09
CHECKED BY : M.G. CHEEK DATE : 7-09

05-AUG-2009 08:59
R:\Structures\STR#2\dcrutcher\bents.dgn
dfigueroa

STR. #2

NOTES

STIRRUPS IN CAP MAY BE SHIFTED AS NECESSARY TO CLEAR ANCHOR BOLTS.

HOOKS ON "V" BARS MAY BE TURNED AS NECESSARY FOR PLACING REINFORCING STEEL.

ALL STEEL IN THE DRILLED PIERS IS INCLUDED IN THE PAY ITEMS FOR "REINFORCING STEEL" AND "SPIRAL COLUMN REINFORCING STEEL".

THE CONTRACTOR'S ATTENTION IS CALLED TO THE FACT THAT THE LONGITUDINAL REINFORCEMENT FOR THE DRILLED PIERS IS DETAILED WITH 3 FEET OF EXTRA LENGTH.

THE LOCATION OF THE CONSTRUCTION JOINT IN THE DRILLED PIERS IS BASED ON AN APPROXIMATE GROUND LINE ELEVATION. IF THE CONSTRUCTION JOINT IS ABOVE THE ACTUAL GROUND LINE ELEVATION, THE CONTRACTOR SHALL PLACE THE CONSTRUCTION JOINT 1 FT. BELOW THE GROUND LINE.

FOR DRILLED PIERS, SEE SPECIAL PROVISIONS.

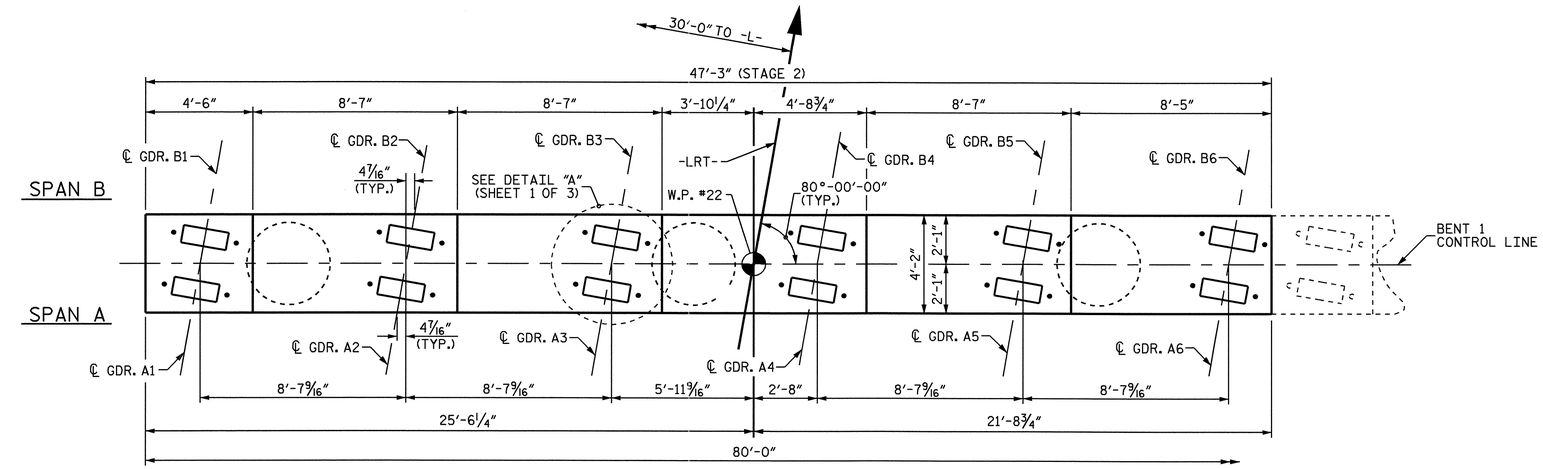

PLAN

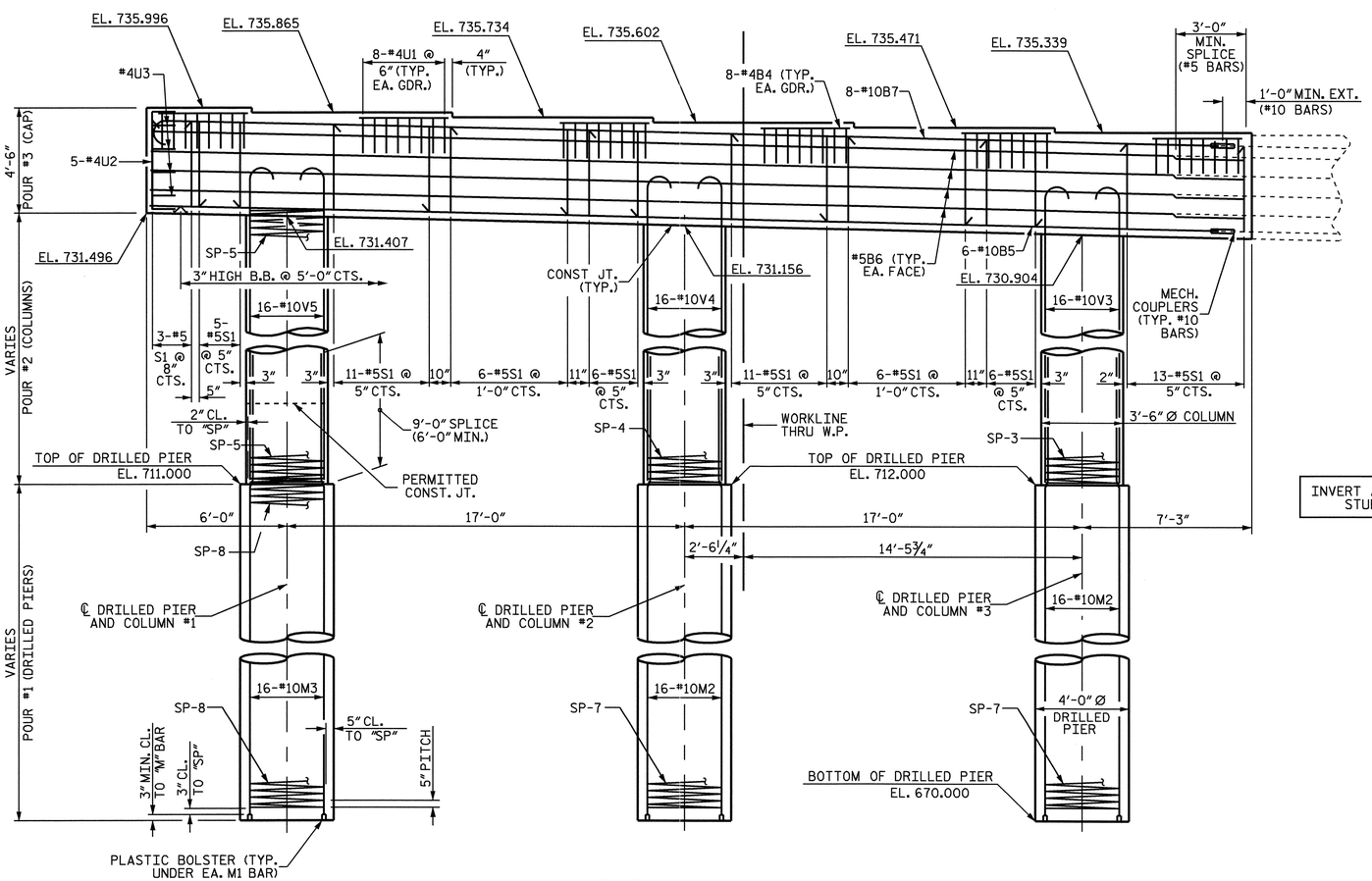

ELEVATION

DIMENSIONS AND REINFORCING STEEL ARE TYPICAL FOR EACH COLUMN AND DRILLED PIER UNLESS OTHERWISE NOTED

INVERT ALTERNATE STURRUPS

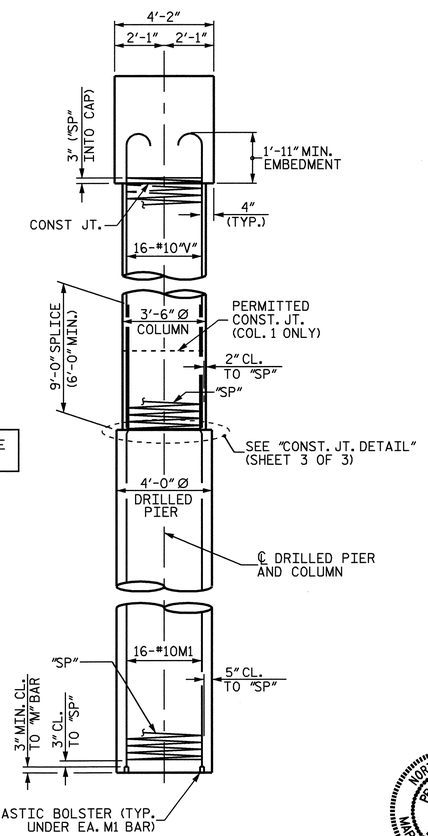

END ELEVATION

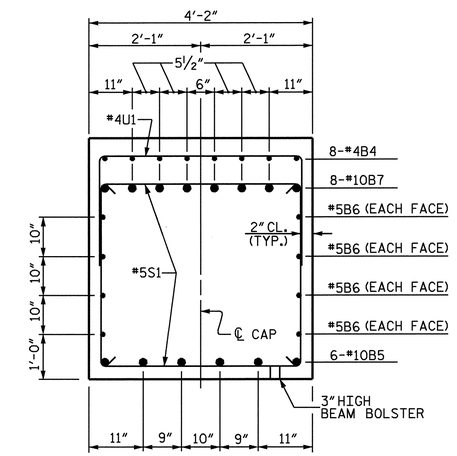

SECTION THRU CAP

PROJECT NO. B-4507

FORSYTH COUNTY

STATION: 27+96.00 -L-

SHEET 2 OF 3

STATE OF NORTH CAROLINA
DEPARTMENT OF TRANSPORTATION
RALEIGH

SUBSTRUCTURE

BENT 1
STAGE 2

RIGHT LANE

NORTH CAROLINA PROFESSIONAL SEAL 20125 ENGINEER MARSHALL G. CHEEK, JR. 9-28-09

REVISIONS						SHEET NO.
NO.	BY:	DATE:	NO.	BY:	DATE:	S-84
1			3			TOTAL SHEETS
2			4			99

DRAWN BY : W.D. CRUTCHER DATE : 6-15-09
CHECKED BY : M.G. CHEEK DATE : 7-09

28-SEP-2009 08:12
R:\Structures\Final Plans\Right Lane\B-4507_sd_str#2_13A_bents.dgn
aflgueroa

STR. #2

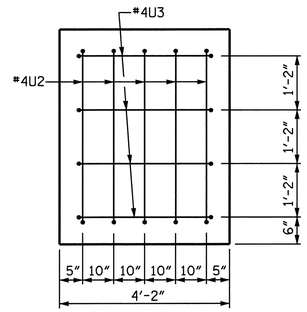

END OF CAP VIEW

(RIGHT END OF STAGE 1 CAP, & LEFT END OF STAGE 2 CAP)

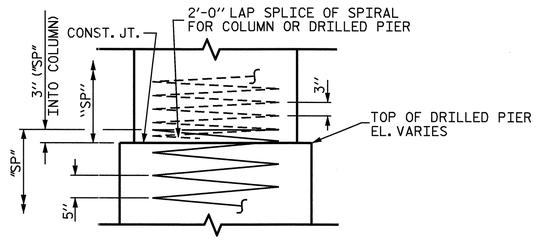

CONST. JOINT DETAIL

BAR TYPES

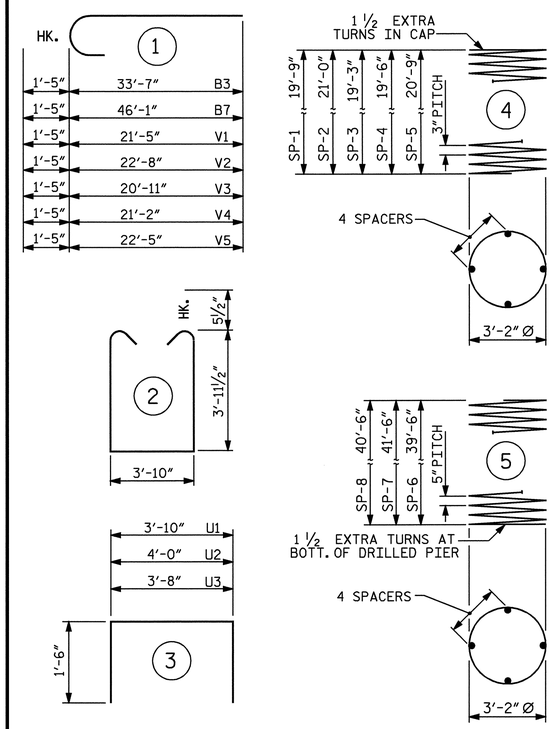

ALL BAR DIMENSIONS ARE OUT TO OUT.

BILL OF MATERIAL

STAGE 1

BAR	NO.	SIZE	TYPE	LENGTH	WEIGHT
B1	6	10	STR	33-7	867
B2	8	5	STR	35-7	297
B3	8	10	1	35-0	1205
B4	32	4	STR	3-10	82
M1	32	10	STR	48-9	6713
S1	46	5	2	12-8	608
U1	32	4	3	6-10	146
U2	5	4	3	7-0	23
U3	4	4	3	6-8	18
V1	16	10	1	22-10	1572
V2	16	10	1	24-1	1658
REINFORCING STEEL (LBS.)					13189
SP-1	1	*	4	788-2	526
SP-2	1	*	4	839-8	561
SP-6	2	**	5	945-2	1972
SPIRAL COLUMN REINFORCING STEEL (LBS.)					3059
CLASS A CONCRETE					
POUR #2- COLUMNS (CU. YDS.)					14.3
POUR #3- CAP (CU. YDS.)					22.2
TOTAL (CU. YDS.)					36.5
DRILLED PIER CONCRETE					
POUR #1- DRILLED PIERS (CU. YDS.)					37.2
4'-0" Ø DRILLED PIERS IN SOIL (LIN. FT.)					58.40
4'-0" Ø DRILLED PIERS NOT IN SOIL (LIN. FT.)					21.60
PERMANENT STEEL CASING FOR 4'-0" Ø DRILLED PIERS (LIN. FT.)					42.00
▲ CSL TUBES (LIN. FT.)					340.00

STAGE 2

BAR	NO.	SIZE	TYPE	LENGTH	WEIGHT
B4	48	4	STR	3-10	123
B5	6	10	STR	46-1	1190
B6	8	5	STR	46-10	391
B7	8	10	1	47-6	1635
M2	32	10	STR	50-9	6988
M3	16	10	STR	49-9	3425
S1	67	5	2	12-8	885
U1	48	4	3	6-10	219
U2	5	4	3	7-0	23
U3	4	4	3	6-8	18
V3	16	10	1	22-4	1538
V4	16	10	1	22-7	1555
V5	16	10	1	23-10	1641
REINFORCING STEEL (LBS.)					19631
SP-3	1	*	4	768-6	513
SP-4	1	*	4	778-4	520
SP-5	1	*	4	827-5	553
SP-7	2	**	5	991-8	2069
SP-8	1	**	5	967-2	1009
SPIRAL COLUMN REINFORCING STEEL (LBS.)					4664
CLASS A CONCRETE					
POUR #2- COLUMNS (CU. YDS.)					20.8
POUR #3- CAP (CU. YDS.)					32.8
TOTAL (CU. YDS.)					53.6
DRILLED PIER CONCRETE					
POUR #1- DRILLED PIERS (CU. YDS.)					58.2
4'-0" Ø DRILLED PIERS IN SOIL (LIN. FT.)					92.60
4'-0" Ø DRILLED PIERS NOT IN SOIL (LIN. FT.)					32.40
PERMANENT STEEL CASING FOR 4'-0" Ø DRILLED PIERS (LIN. FT.)					68.00
▲ CSL TUBES (LIN. FT.)					530.00

* THE SPIRAL REINFORCING STEEL SHALL BE W20 OR D-20 COLD DRAWN WIRE OR #4 PLAIN OR DEFORMED BAR.

** THE SPIRAL REINFORCING STEEL SHALL BE W31 OR D-31 COLD DRAWN WIRE OR #5 PLAIN OR DEFORMED BAR.

▲ - NO SEPARATE PAYMENT WILL BE MADE FOR CSL TUBES. CSL TUBES WILL BE INCLUDED IN THE UNIT PRICE BID FOR DRILLED PIERS.

TOTAL BILL OF MATERIAL

REINFORCING STEEL (LBS.)	32820
SPIRAL COLUMN REINFORCING STEEL (LBS.)	7723
CLASS A CONCRETE (CU. YDS.)	90.1
DRILLED PIER CONCRETE (CU. YDS.)	95.4
4'-0" Ø DRILLED PIERS IN SOIL (LIN. FT.)	151.00
4'-0" Ø DRILLED PIERS NOT IN SOIL (LIN. FT.)	54.00
PERMANENT STEEL CASING FOR 4'-0" Ø DRILLED PIERS (LIN. FT.)	110.00
▲ CSL TUBES (LIN. FT.)	870.00

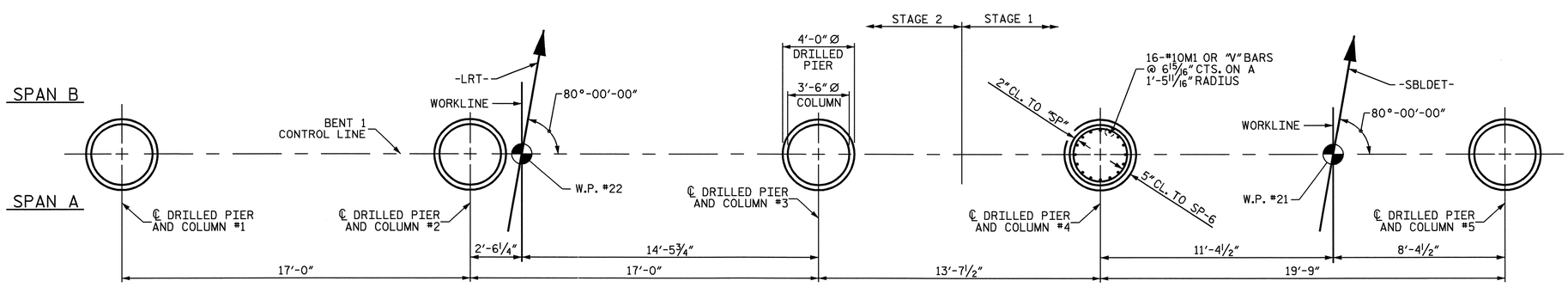

PLAN OF COLUMNS AND DRILLED PIERS

DIMENSIONS AND REINFORCING STEEL ARE TYPICAL FOR EACH COLUMN AND DRILLED PIER

PROJECT NO. B-4507
FORSYTH COUNTY
STATION: 27+96.00 -L-

SHEET 3 OF 3

STATE OF NORTH CAROLINA
DEPARTMENT OF TRANSPORTATION
RALEIGH

SUBSTRUCTURE

BENT 1

RIGHT LANE

NORTH CAROLINA PROFESSIONAL SEAL 20125 ENGINEER MARSHALL G. CHEEK, JR.
4-29-09

REVISIONS						SHEET NO.
NO.	BY:	DATE:	NO.	BY:	DATE:	S-85
1			3			TOTAL SHEETS
2			4			99

DRAWN BY : W.D. CRUTCHER DATE : 6-15-09
CHECKED BY : M.G. CHEEK DATE : 7-09

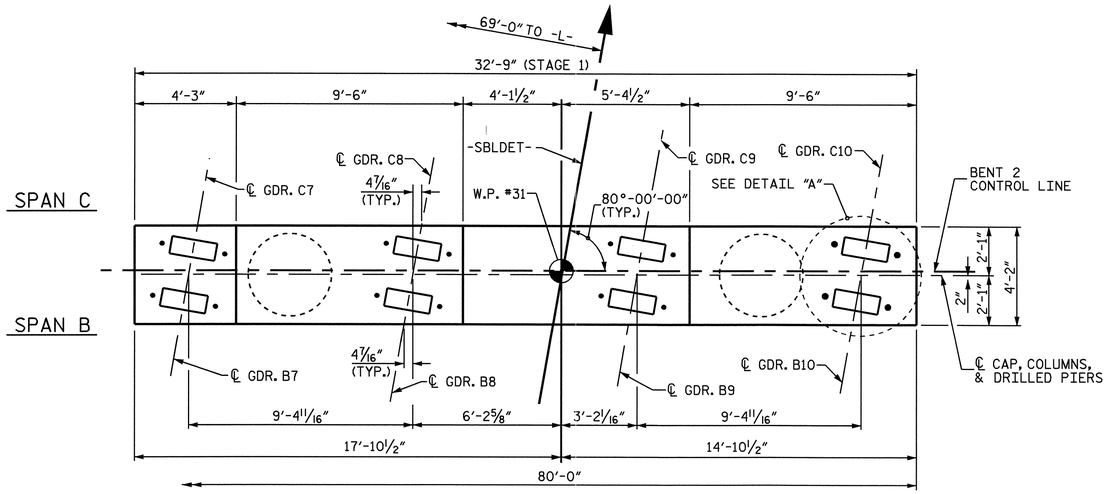

PLAN

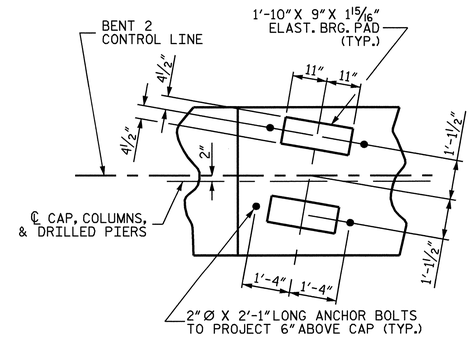

DETAIL "A"

NOTES

STIRRUPS IN CAP MAY BE SHIFTED AS NECESSARY TO CLEAR ANCHOR BOLTS.

HOOKS ON "V" BARS MAY BE TURNED AS NECESSARY FOR PLACING REINFORCING STEEL.

ALL STEEL IN THE DRILLED PIERS IS INCLUDED IN THE PAY ITEMS FOR "REINFORCING STEEL" AND "SPIRAL COLUMN REINFORCING STEEL".

THE CONTRACTOR'S ATTENTION IS CALLED TO THE FACT THAT THE LONGITUDINAL REINFORCEMENT FOR THE DRILLED PIERS IS DETAILED WITH 3 FEET OF EXTRA LENGTH.

THE LOCATION OF THE CONSTRUCTION JOINT IN THE DRILLED PIERS IS BASED ON AN APPROXIMATE GROUND LINE ELEVATION. IF THE CONSTRUCTION JOINT IS ABOVE THE ACTUAL GROUND LINE ELEVATION, THE CONTRACTOR SHALL PLACE THE CONSTRUCTION JOINT 1 FT. BELOW THE GROUND LINE.

FOR DRILLED PIERS, SEE SPECIAL PROVISIONS.

THE CONTRACTOR'S ATTENTION IS CALLED TO THE FACT THAT THE BENT CONTROL LINE IS OFFSET FROM THE CENTERLINE BENT.

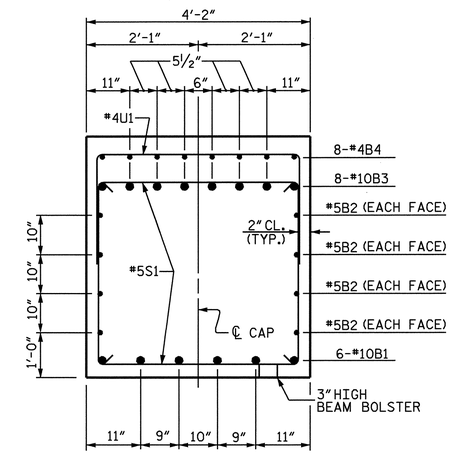

SECTION THRU CAP

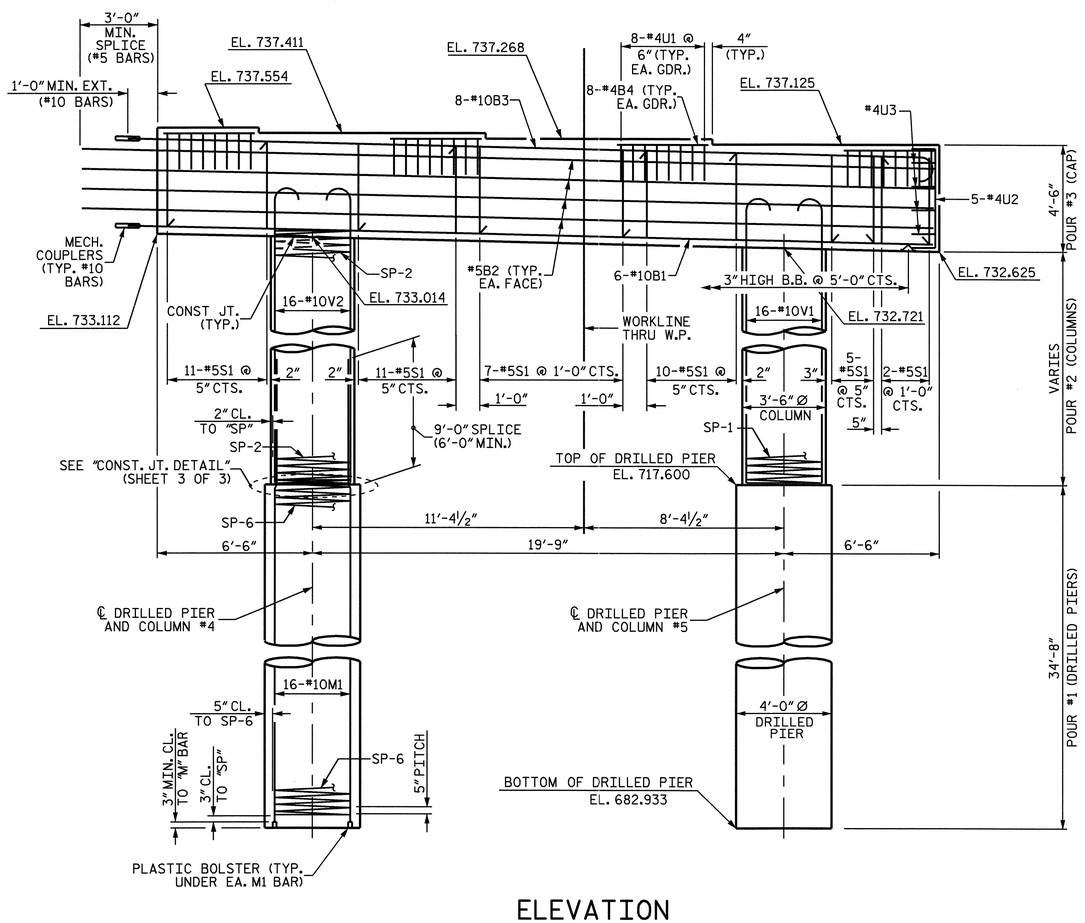

ELEVATION

DIMENSIONS AND REINFORCING STEEL ARE TYPICAL FOR EACH COLUMN AND DRILLED PIER UNLESS OTHERWISE NOTED

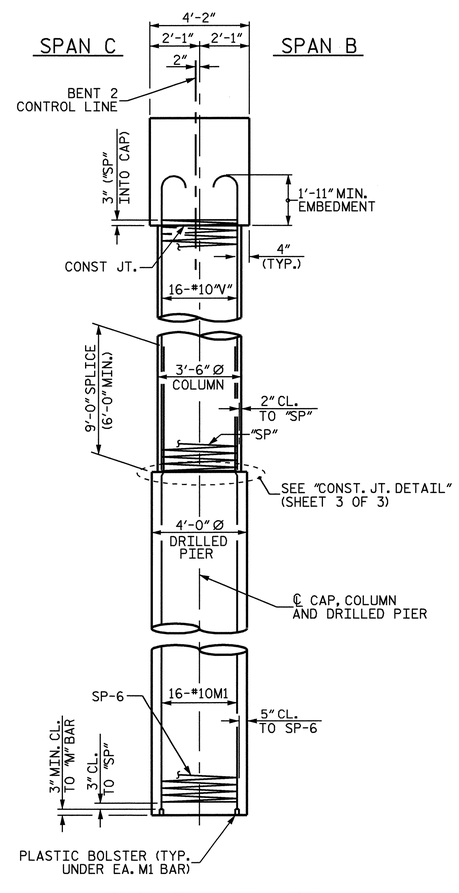

END ELEVATION

PROJECT NO. B-4507

FORSYTH COUNTY

STATION: 27+96.00 -L-

SHEET 1 OF 3

STATE OF NORTH CAROLINA
DEPARTMENT OF TRANSPORTATION
RALEIGH

SUBSTRUCTURE

BENT 2
STAGE 1

RIGHT LANE

NORTH CAROLINA PROFESSIONAL SEAL 20125 ENGINEER MARSHALL G. CHEEK, JR.
9-29-09

REVISIONS						SHEET NO.
NO.	BY:	DATE:	NO.	BY:	DATE:	S-86
1			3			TOTAL SHEETS
2			4			99

DRAWN BY : W.D. CRUTCHER DATE : 6-15-09
CHECKED BY : M.G. CHEEK DATE : 7-09

05-AUG-2009 08:59
R:\Structures\STR#2\dcrutcher\bents.dgn
afigueroa

STR. #2

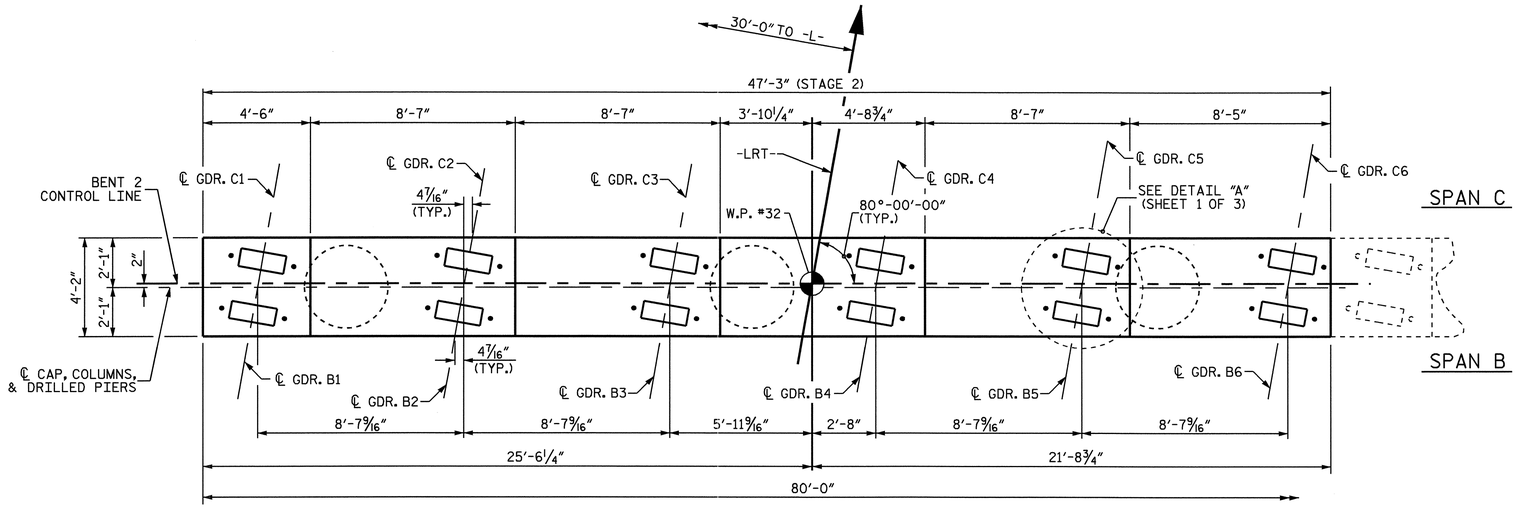

PLAN

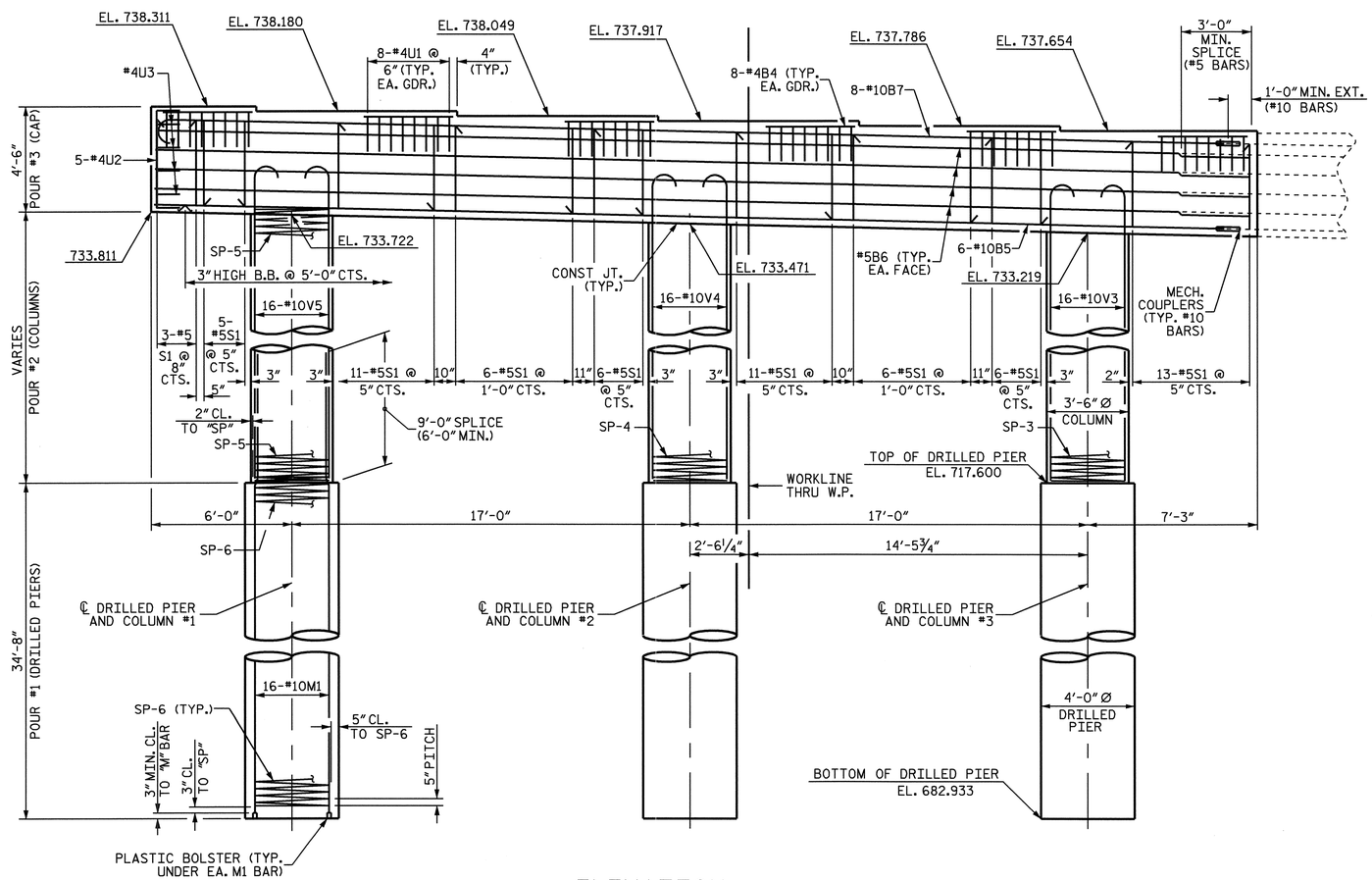

ELEVATION

DIMENSIONS AND REINFORCING STEEL ARE TYPICAL FOR EACH COLUMN AND DRILLED PIER UNLESS OTHERWISE NOTED

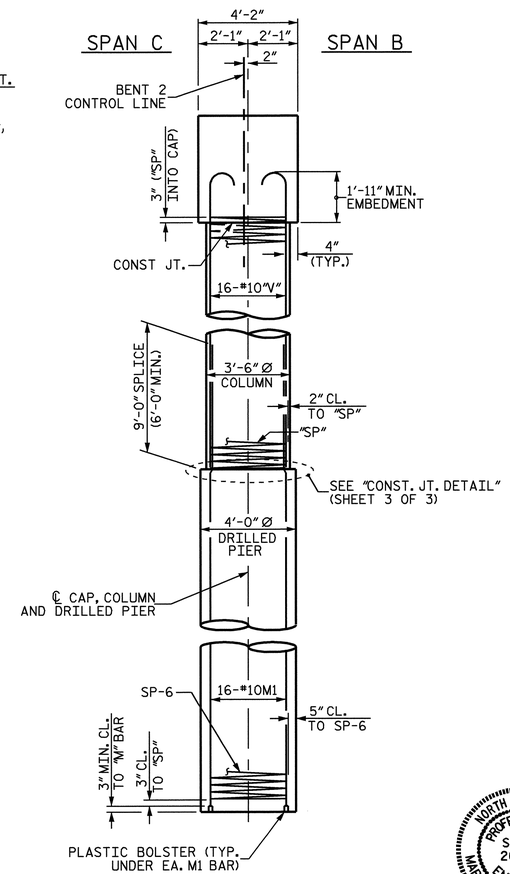

END ELEVATION

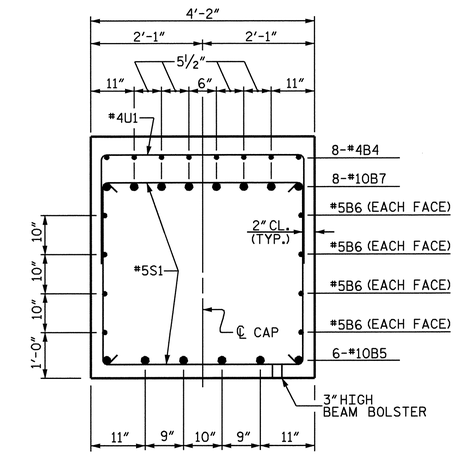

SECTION THRU CAP

NOTES

STIRRUPS IN CAP MAY BE SHIFTED AS NECESSARY TO CLEAR ANCHOR BOLTS.

HOOKS ON "V" BARS MAY BE TURNED AS NECESSARY FOR PLACING REINFORCING STEEL.

ALL STEEL IN THE DRILLED PIERS IS INCLUDED IN THE PAY ITEMS FOR "REINFORCING STEEL" AND "SPIRAL COLUMN REINFORCING STEEL".

THE CONTRACTOR'S ATTENTION IS CALLED TO THE FACT THAT THE LONGITUDINAL REINFORCEMENT FOR THE DRILLED PIERS IS DETAILED WITH 3 FEET OF EXTRA LENGTH.

THE LOCATION OF THE CONSTRUCTION JOINT IN THE DRILLED PIERS IS BASED ON AN APPROXIMATE GROUND LINE ELEVATION. IF THE CONSTRUCTION JOINT IS ABOVE THE ACTUAL GROUND LINE ELEVATION, THE CONTRACTOR SHALL PLACE THE CONSTRUCTION JOINT 1 FT. BELOW THE GROUND LINE.

FOR DRILLED PIERS, SEE SPECIAL PROVISIONS.

THE CONTRACTOR'S ATTENTION IS CALLED TO THE FACT THAT THE BENT CONTROL LINE IS OFFSET FROM THE CENTERLINE BENT.

PROJECT NO. B-4507
FORSYTH COUNTY
STATION: 27+96.00 -L-

SHEET 2 OF 3

STATE OF NORTH CAROLINA
DEPARTMENT OF TRANSPORTATION
RALEIGH

SUBSTRUCTURE

BENT 2
STAGE 2

RIGHT LANE

NORTH CAROLINA PROFESSIONAL SEAL 20125 ENGINEER MARSHALL G. CHEEK, JR.
9-24-09

REVISIONS								SHEET NO.
NO.	BY:	DATE:	NO.	BY:	DATE:			S-87
1			3					TOTAL SHEETS
2			4					99

DRAWN BY : W.D. CRUTCHER DATE : 6-15-09
CHECKED BY : M.G. CHEEK DATE : 7-09

05-AUG-2009 08:59
R:\Structures\STR*2\dcrutcher\bents.dgn
dfigueroa

STR. #2

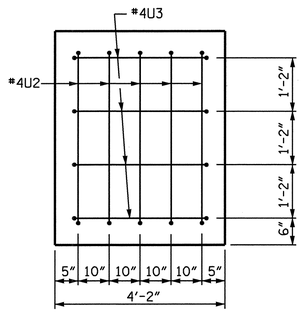

END OF CAP VIEW

(RIGHT END OF STAGE 1 CAP, & LEFT END OF STAGE 2 CAP)

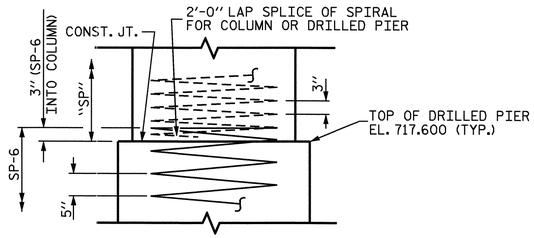

CONST. JOINT DETAIL

BAR TYPES

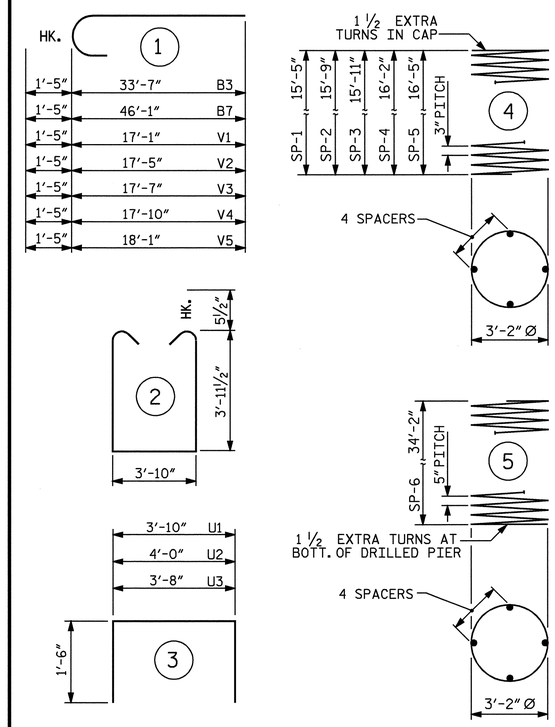

ALL BAR DIMENSIONS ARE OUT TO OUT.

BILL OF MATERIAL

STAGE 1

BAR	NO.	SIZE	TYPE	LENGTH	WEIGHT
B1	6	10	STR	33-7	867
B2	8	5	STR	35-7	297
B3	8	10	1	35-0	1205
B4	32	4	STR	3-10	82
M1	32	10	STR	43-5	5978
S1	46	5	2	12-8	608
U1	32	4	3	6-10	146
U2	5	4	3	7-0	23
U3	4	4	3	6-8	18
V1	16	10	1	18-6	1274
V2	16	10	1	18-10	1297
REINFORCING STEEL (LBS)					11795
SP-1	1	*	4	621-2	415
SP-2	1	*	4	633-6	423
SP-6	2	**	5	820-3	1711
SPIRAL COLUMN REINFORCING STEEL (LBS.)					2549
CLASS A CONCRETE					
POUR #2- COLUMNS (CU. YDS.)					10.9
POUR #3- CAP (CU. YDS.)					22.2
TOTAL (CU. YDS.)					33.1
DRILLED PIER CONCRETE					
POUR #1- DRILLED PIERS (CU. YDS.)					32.3
4'-0" Ø DRILLED PIERS IN SOIL (LIN. FT.)					49.73
4'-0" Ø DRILLED PIERS NOT IN SOIL (LIN. FT.)					19.60
PERMANENT STEEL CASING FOR 4'-0" Ø DRILLED PIERS (LIN. FT.)					37.20
▲ CSL TUBES (LIN. FT.)					297.34

STAGE 2

BAR	NO.	SIZE	TYPE	LENGTH	WEIGHT
B4	48	4	STR	3-10	123
B5	6	10	STR	46-1	1190
B6	8	5	STR	46-10	391
B7	8	10	1	47-6	1635
M1	48	10	STR	43-5	8967
S1	67	5	2	12-8	885
U1	48	4	3	6-10	219
U2	5	4	3	7-0	23
U3	4	4	3	6-8	18
V3	16	10	1	19-0	1308
V4	16	10	1	19-3	1325
V5	16	10	1	19-6	1343
REINFORCING STEEL (LBS)					17427
SP-3	1	*	4	640-10	428
SP-4	1	*	4	650-8	435
SP-5	1	*	4	660-6	441
SP-6	3	**	5	820-3	2567
SPIRAL COLUMN REINFORCING STEEL (LBS.)					3871
CLASS A CONCRETE					
POUR #2- COLUMNS (CU. YDS.)					17.0
POUR #3- CAP (CU. YDS.)					32.8
TOTAL (CU. YDS.)					49.8
DRILLED PIER CONCRETE					
POUR #1- DRILLED PIERS (CU. YDS.)					48.4
4'-0" Ø DRILLED PIERS IN SOIL (LIN. FT.)					74.60
4'-0" Ø DRILLED PIERS NOT IN SOIL (LIN. FT.)					29.40
PERMANENT STEEL CASING FOR 4'-0" Ø DRILLED PIERS (LIN. FT.)					55.80
▲ CSL TUBES (LIN. FT.)					446.00

* THE SPIRAL REINFORCING STEEL SHALL BE W20 OR D-20 COLD DRAWN WIRE OR #4 PLAIN OR DEFORMED BAR.

** THE SPIRAL REINFORCING STEEL SHALL BE W31 OR D-31 COLD DRAWN WIRE OR #5 PLAIN OR DEFORMED BAR.

TOTAL BILL OF MATERIAL

REINFORCING STEEL (LBS.)	29222
SPIRAL COLUMN REINFORCING STEEL (LBS.)	6420
CLASS A CONCRETE (CU. YDS.)	82.9
DRILLED PIER CONCRETE (CU. YDS.)	80.7
4'-0" Ø DRILLED PIERS IN SOIL (LIN. FT.)	124.33
4'-0" Ø DRILLED PIERS NOT IN SOIL (LIN. FT.)	49.00
PERMANENT STEEL CASING FOR 4'-0" Ø DRILLED PIERS (LIN. FT.)	93.00
▲ CSL TUBES (LIN. FT.)	743.34

▲-NO SEPARATE PAYMENT WILL BE MADE FOR CSL TUBES. CSL TUBES WILL BE INCLUDED IN THE UNIT PRICE BID FOR DRILLED PIERS.

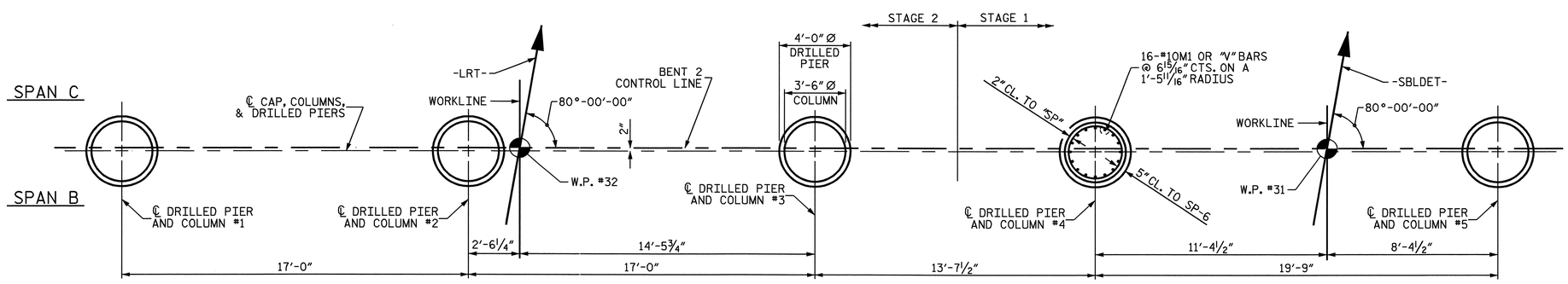

PLAN OF COLUMNS AND DRILLED PIERS

DIMENSIONS AND REINFORCING STEEL ARE TYPICAL FOR EACH COLUMN AND DRILLED PIER

PROJECT NO. B-4507
FORSYTH COUNTY
STATION: 27+96.00 -L-

SHEET 3 OF 3

STATE OF NORTH CAROLINA
DEPARTMENT OF TRANSPORTATION
RALEIGH

SUBSTRUCTURE

BENT 2

RIGHT LANE

NORTH CAROLINA PROFESSIONAL SEAL 20125 ENGINEER MARSHALL G. CHEEK, JR.
9-24-09

REVISIONS						SHEET NO.
NO.	BY:	DATE:	NO.	BY:	DATE:	S-88
1			3			TOTAL SHEETS
2			4			99

DRAWN BY : W.D. CRUTCHER DATE : 6-15-09
CHECKED BY : M.G. CHEEK DATE : 7-09

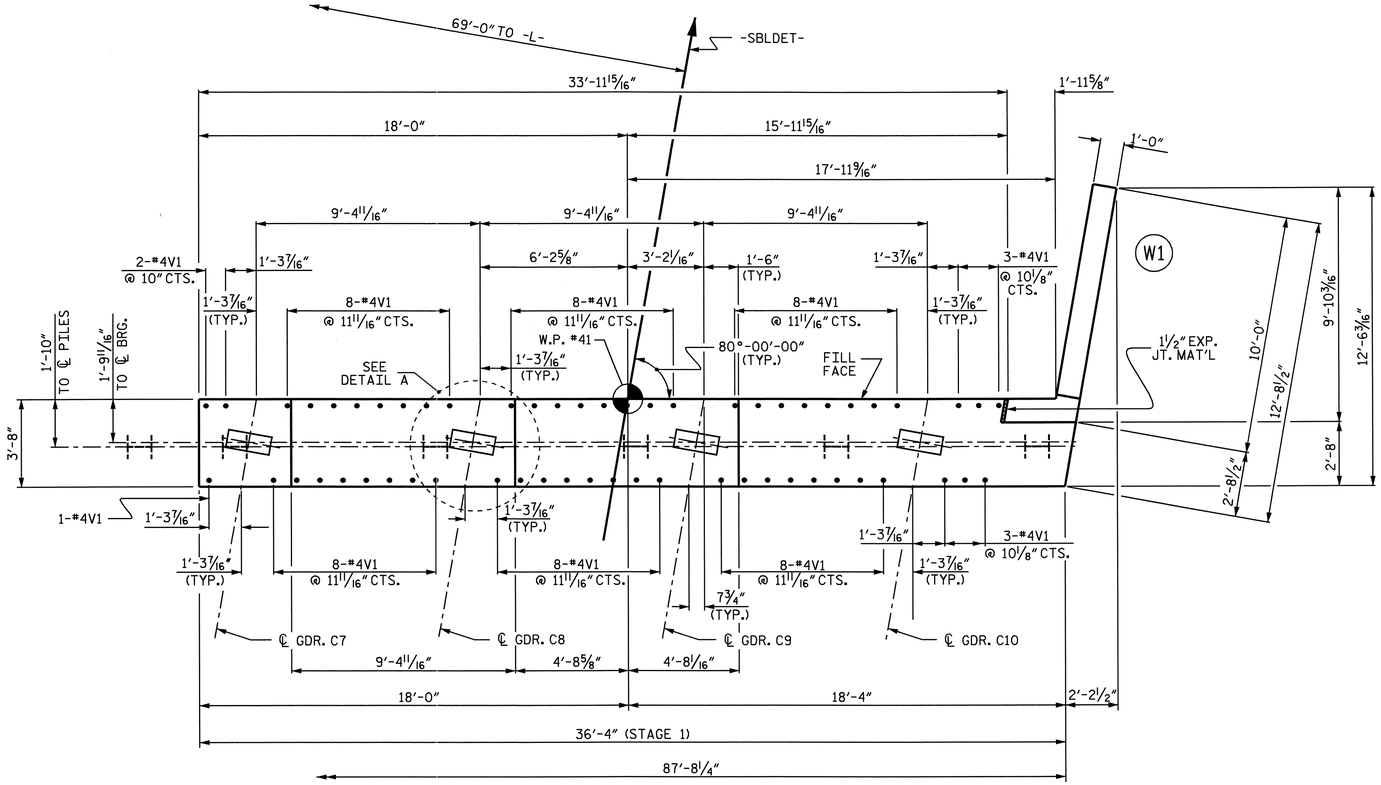

PLAN - STAGE 1

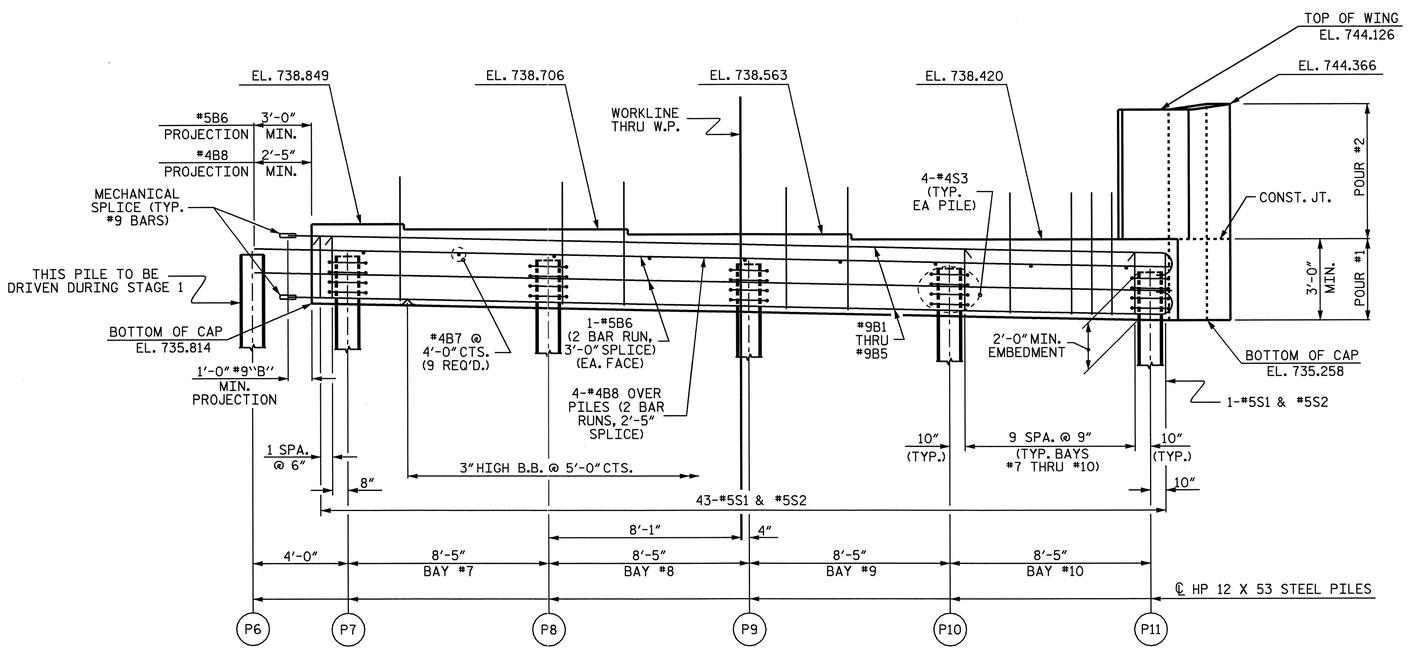

ELEVATION - STAGE 1

NOTES

THE CONTRACTOR SHALL PROVIDE FOR INSTALLATION OF THE 4" DIAMETER DRAIN PIPE THROUGH THE WING WALL AS REQUIRED FOR REINFORCED BRIDGE APPROACH FILLS. SEE THE ROADWAY PLANS. REINFORCING STEEL IN THE WING WALL MAY BE SHIFTED AS NECESSARY TO CLEAR THE DRAIN PIPE.

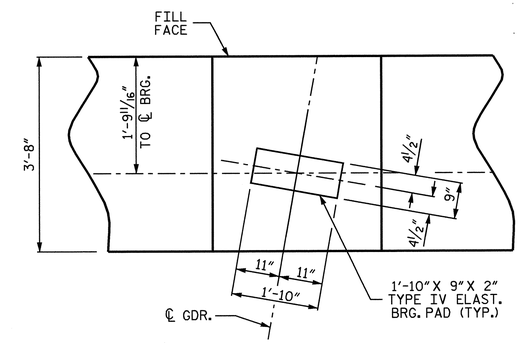

DETAIL A

TOP OF PILE ELEVATIONS STAGE 1	
P6	737.852
P7	737.791
P8	737.662
P9	737.533
P10	737.405
P11	737.276

PROJECT NO. B-4507

FORSYTH COUNTY

STATION: 27+96.00-L-

SHEET 1 OF 4

STATE OF NORTH CAROLINA
DEPARTMENT OF TRANSPORTATION
RALEIGH

SUBSTRUCTURE

END BENT NO. 2
RIGHT LANE
STAGE 1

NORTH CAROLINA PROFESSIONAL SEAL 20125 ENGINEER MARSHALL G. CHEEK, JR.
9-29-09

REVISIONS						SHEET NO.
NO.	BY:	DATE:	NO.	BY:	DATE:	S-89
1			3			TOTAL SHEETS
2			4			99

STR #2

DRAWN BY : L.L. MURPHY DATE : 07-09
CHECKED BY : M.G. CHEEK DATE : 08-04-09

28-SEP-2009 08:12
R:\Structures\Final Plans\Right Lane\B-4507_sd_str#2_12_eb#.dgn
afigueroa

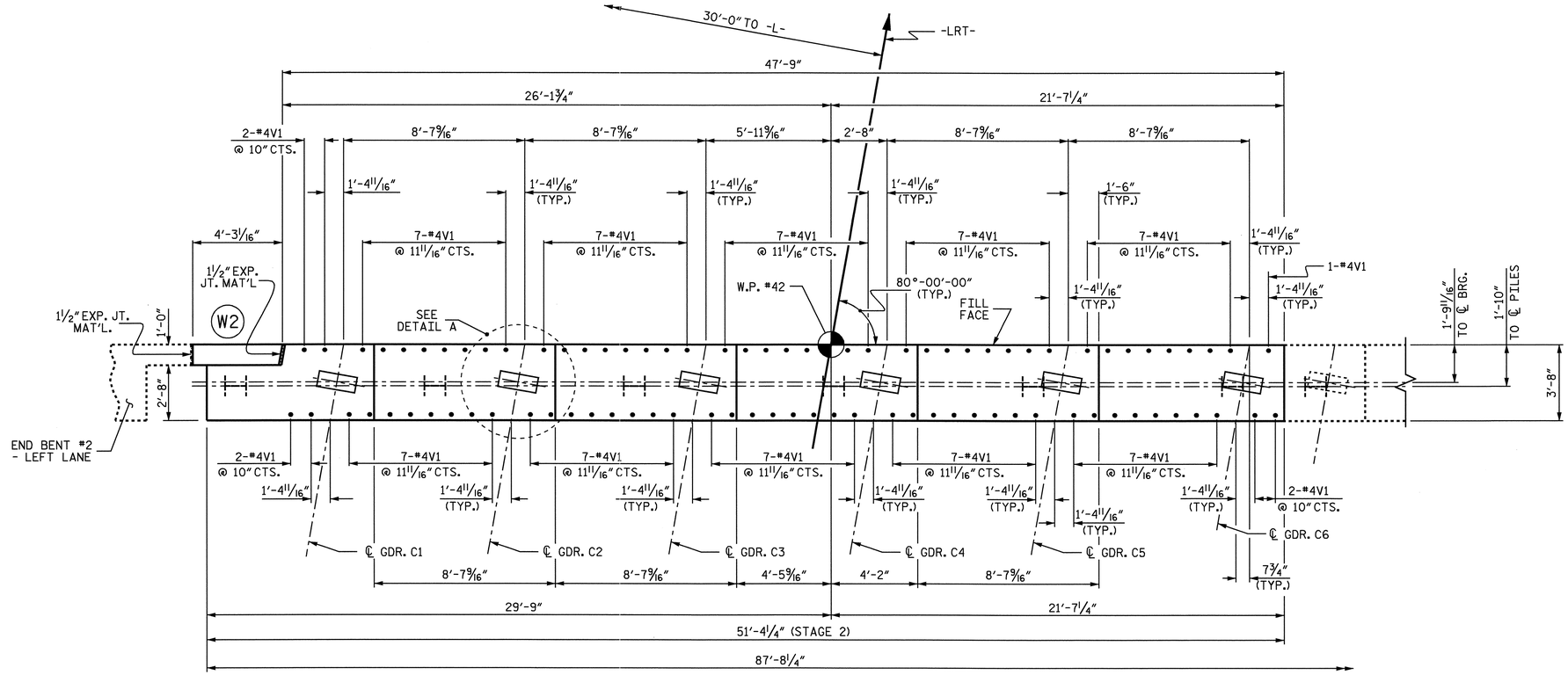

PLAN - STAGE 2

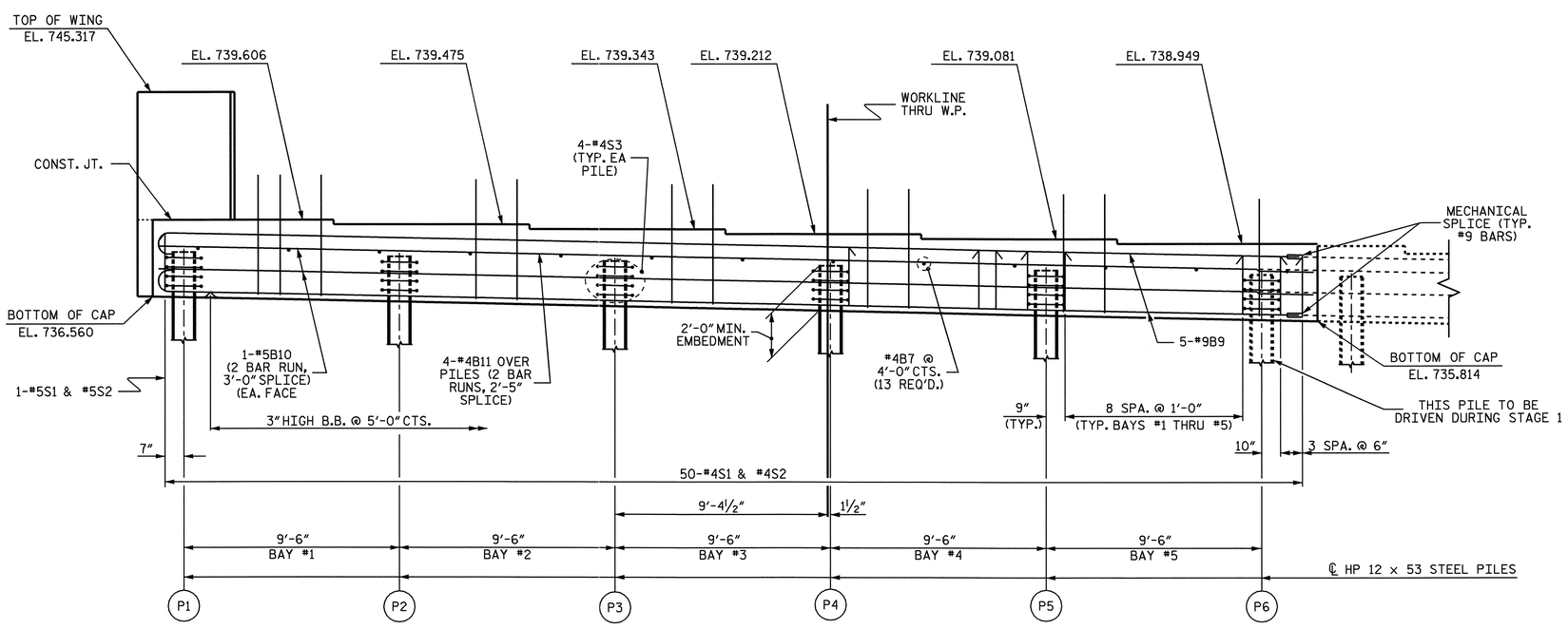

ELEVATION - STAGE 2

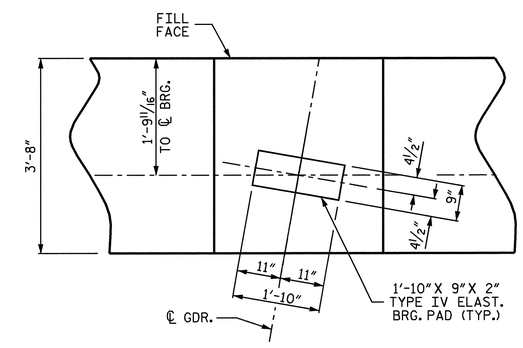

DETAIL A

TOP OF PILE ELEVATIONS STAGE 2	
P1	738.541
P2	738.395
P3	738.250
P4	738.105
P5	737.960

PROJECT NO. B-4507

FORSYTH COUNTY

STATION: 27+96.00-L-

SHEET 2 OF 4

STATE OF NORTH CAROLINA
DEPARTMENT OF TRANSPORTATION
RALEIGH

SUBSTRUCTURE

END BENT NO. 2
RIGHT LANE
STAGE 2

NORTH CAROLINA PROFESSIONAL SEAL 20125 ENGINEER MARSHALL G. CHEEK, JR. 9-29-09

REVISIONS						SHEET NO.
NO.	BY:	DATE:	NO.	BY:	DATE:	S-90
1			3			TOTAL SHEETS
2			4			99

STR #2

DRAWN BY : L.L. MURPHY DATE : 07-09
CHECKED BY : M.G. CHEEK DATE : 08-04-09

29-SEP-2009 11:47
R:\Structures\Final Plans\Right Lane\B-4507_sd_str#2_12_eb*.dgn
afigueroa

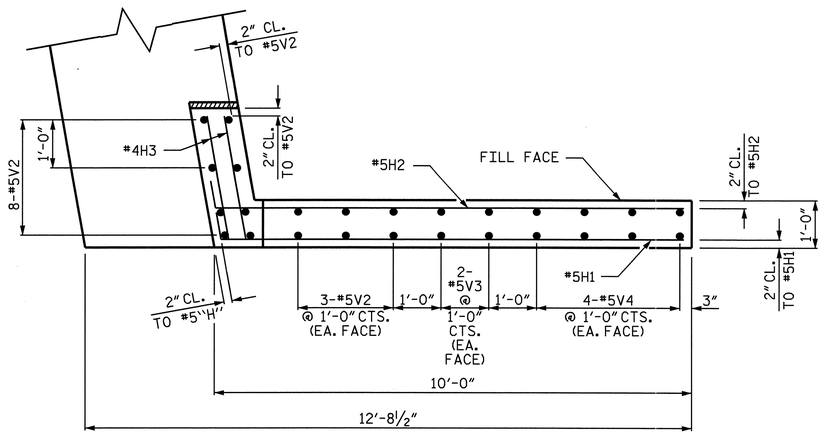

PLAN OF WING W1 - STAGE 1

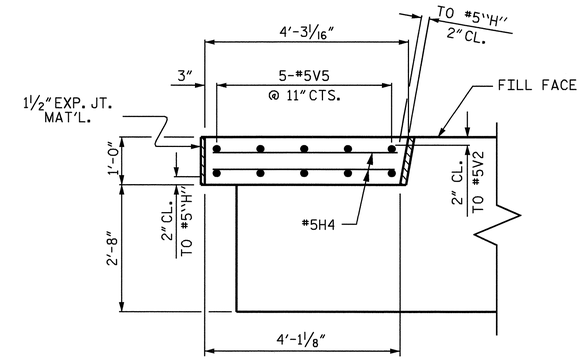

PLAN OF WING W2 - STAGE 2

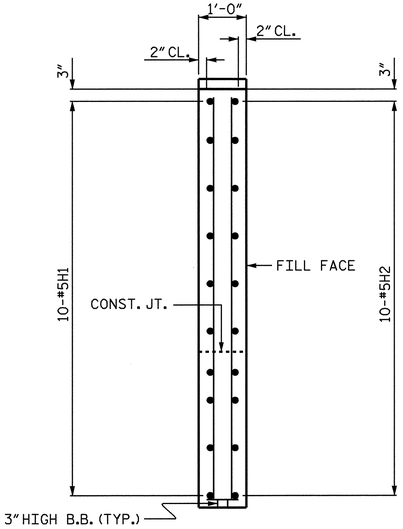

SECTION X-X

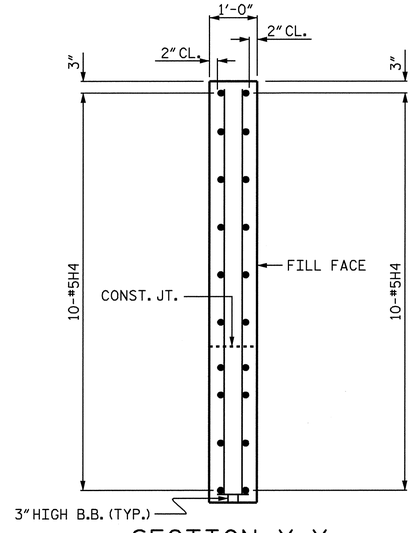

SECTION Y-Y

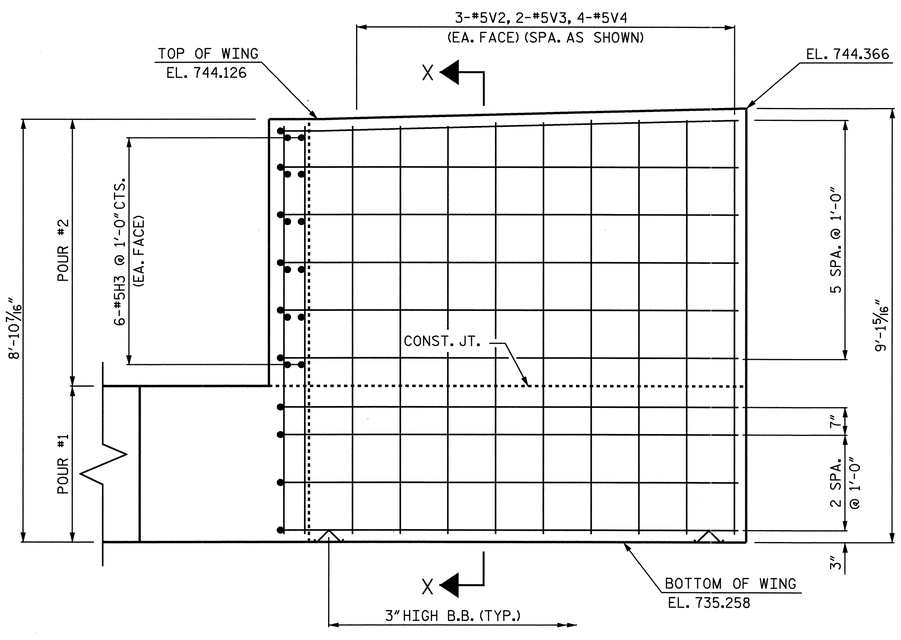

ELEVATION OF WING W1 - STAGE 1

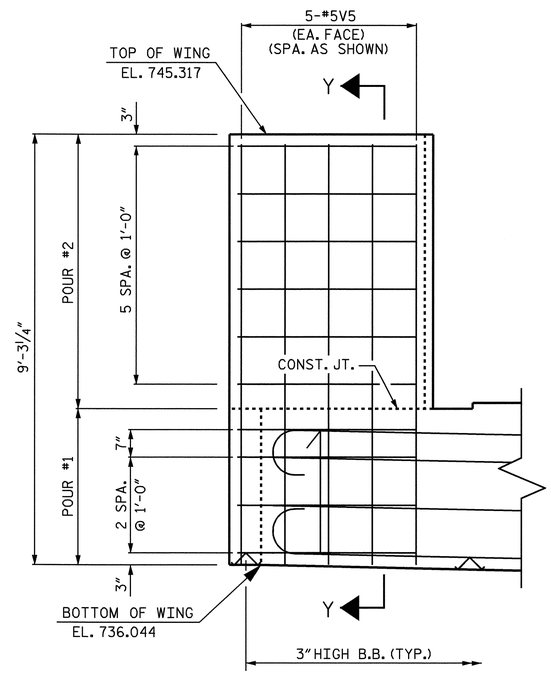

ELEVATION OF WING W2 - STAGE 2

PROJECT NO. B-4507

FORSYTH COUNTY

STATION: 27+96.00-L-

SHEET 3 OF 4

STATE OF NORTH CAROLINA
DEPARTMENT OF TRANSPORTATION
RALEIGH

SUBSTRUCTURE

END BENT NO. 2

RIGHT LANE

NORTH CAROLINA PROFESSIONAL SEAL 20125 ENGINEER MARSHALL G. CHEEK, JR.
9-29-09

REVISIONS						SHEET NO.
NO.	BY:	DATE:	NO.	BY:	DATE:	S-91
1			3			TOTAL SHEETS
2			4			99

STR #2

DRAWN BY : L.L. MURPHY DATE : 07-09
CHECKED BY : M.G. CHEEK DATE : 08-04-09

19-AUG-2009 15:50
r:\structures\STR#2\lmurphy\b4507_sd_e*_str#2.dgn
lmurphy

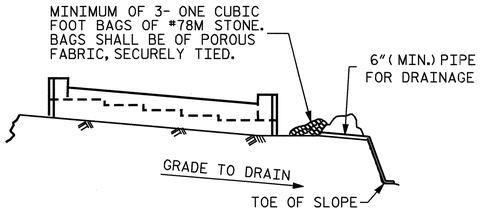

BAGGED STONE AND PIPE SHALL BE PLACED IMMEDIATELY AFTER COMPLETION OF END BENT EXCAVATION. PIPE MAY BE EITHER CONCRETE, CORRUGATED STEEL, CORRUGATED ALUMINUM ALLOY, OR CORRUGATED PLASTIC. PERFORATED PIPE WILL NOT BE ALLOWED.

BAGGED STONE SHALL REMAIN IN PLACE UNTIL THE ENGINEER DIRECTS THAT IT BE REMOVED. THE CONTRACTOR SHALL REMOVE AND DISPOSE OF SILT ACCUMULATIONS AT BAGGED STONE WHEN SO DIRECTED BY THE ENGINEER. BAGS SHALL BE REMOVED AND REPLACED WHENEVER THE ENGINEER DETERMINES THAT THEY HAVE DETERIORATED AND LOST THEIR EFFECTIVENESS.

NO SEPARATE PAYMENT WILL BE MADE FOR THIS WORK AND THE ENTIRE COST OF THIS WORK SHALL BE INCLUDED IN THE UNIT CONTRACT PRICE BID FOR THE SEVERAL PAY ITEMS.

TEMPORARY DRAINAGE AT END BENT

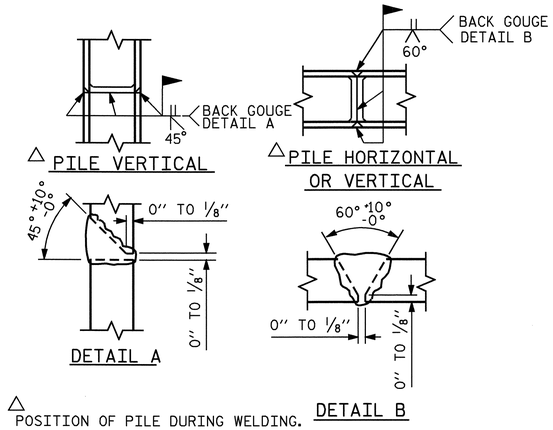

△ POSITION OF PILE DURING WELDING.

PILE SPLICE DETAILS

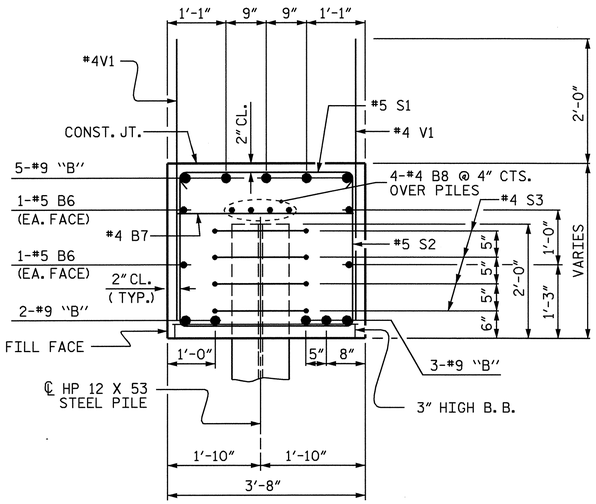

SECTION THRU CAP

STAGE 1

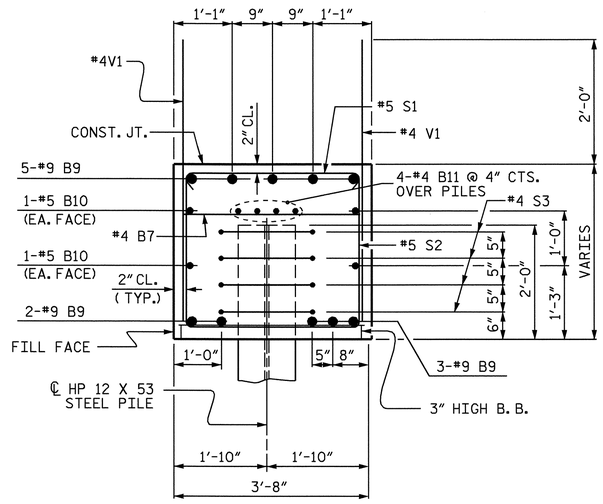

SECTION THRU CAP

STAGE 2

BAR TYPES

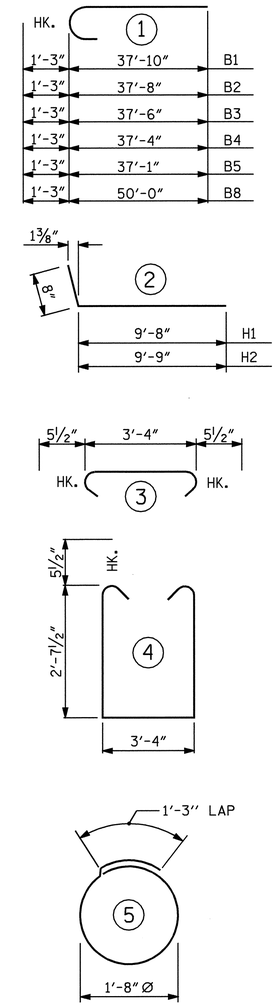

ALL BAR DIMENSIONS ARE OUT TO OUT.

BILL OF MATERIAL

END BENT NO. 2 STAGE 1

BAR	NO.	SIZE	TYPE	LENGTH	WEIGHT
B1	2	#9	1	39'-1"	266
B2	2	#9	1	38'-11"	265
B3	2	#9	1	38'-9"	264
B4	2	#9	1	38'-7"	262
B5	2	#9	1	38'-4"	261
B6	8	#5	STR	21'-5"	179
B7	9	#4	STR	3'-4"	20
B8	8	#4	STR	20'-9"	111
H1	10	#5	2	10'-4"	108
H2	10	#5	2	10'-5"	109
H3	12	#4	STR	2'-7"	21
S1	43	#5	3	4'-3"	191
S2	43	#5	4	9'-6"	426
S3	20	#4	5	6'-6"	87
V1	57	#4	STR	4'-9"	181
V2	14	#5	STR	8'-6"	124
V3	4	#5	STR	8'-7"	36
V4	8	#5	STR	8'-8"	72

REINFORCING STEEL = 2983 LBS.

CLASS A CONCRETE

POUR #1 : CAP & BOT. OF WING = 17.0 CU. YDS.

POUR #2 : TOP OF WING = 2.5 CU. YDS.

TOTAL CLASS A CONCRETE = 19.5 CU. YDS.

HP 12 X 53 STEEL PILES NO. 6 LIN. FT. 240

END BENT NO. 2 STAGE 2

BAR	NO.	SIZE	TYPE	LENGTH	WEIGHT
B7	13	#4	STR	3'-4"	29
B9	10	#9	1	51'-3"	1743
B10	8	#5	STR	27'-1"	226
B11	8	#4	STR	26'-9"	143
H4	20	#5	STR	3'-9"	78
S1	50	#5	3	4'-3"	222
S2	50	#5	4	9'-6"	495
S3	24	#4	5	6'-6"	104
V1	77	#4	STR	4'-9"	244
V5	10	#5	STR	8'-11"	93

REINFORCING STEEL = 3377 LBS.

CLASS A CONCRETE

POUR #1 : CAP & BOT. OF WING = 22.0 CU. YDS.

POUR #2 : TOP OF WING = 0.9 CU. YDS.

TOTAL CLASS A CONCRETE = 22.9 CU. YDS.

HP 12 X 53 STEEL PILES NO. 5 LIN. FT. 200

TOTAL QUANTITIES

REINFORCING STEEL	=	6360 LBS.
CLASS A CONCRETE	=	42.4 CU. YDS.
HP 12 X 53 STEEL PILES	=	440 LIN. FT.

PROJECT NO. B-4507

FORSYTH COUNTY

STATION: 27+96.00-L-

SHEET 4 OF 4

STATE OF NORTH CAROLINA
DEPARTMENT OF TRANSPORTATION
RALEIGH

SUBSTRUCTURE

END BENT NO. 2
RIGHT LANE

NORTH CAROLINA PROFESSIONAL SEAL 20125 ENGINEER MARSHALL G. CHEEK, JR.
9-19-09

REVISIONS						
NO.	BY:	DATE:	NO.	BY:	DATE:	
1			3			
2			4			

SHEET NO. S-92

TOTAL SHEETS 99

DRAWN BY : L.L. MURPHY DATE : 07-09
CHECKED BY : M.G. CHEEK DATE : 08-04-09

STR #2

NOTES :
FOR BERM WIDTH DIMENSIONS, SEE GENERAL DRAWING.

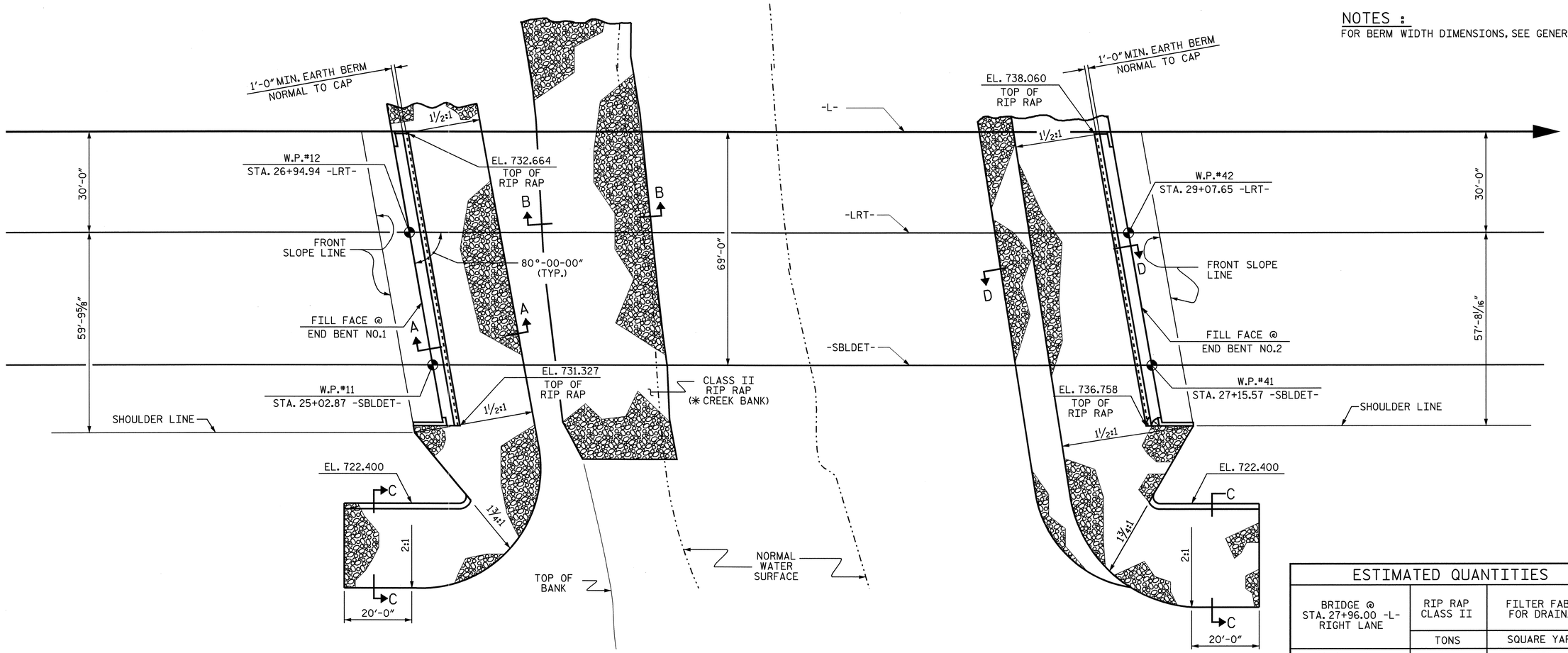

END BENT NO.1 — PLAN — END BENT NO.2

ESTIMATED QUANTITIES

BRIDGE @ STA. 27+96.00 -L- RIGHT LANE	RIP RAP CLASS II	FILTER FABRIC FOR DRAINAGE
	TONS	SQUARE YARDS
END BENT 1	477	530
END BENT 2	1,034	1,149
✱ CREEK BANK	212	236

✱ CREEK BANK QUANTITY IS INCLUDED WITH END BENT NO. 1 QUANTITIES IN TOTAL BILL OF MATERIAL.

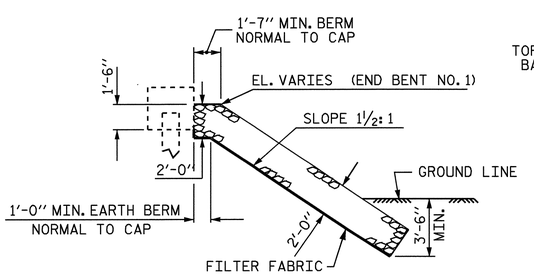

SECTION A-A

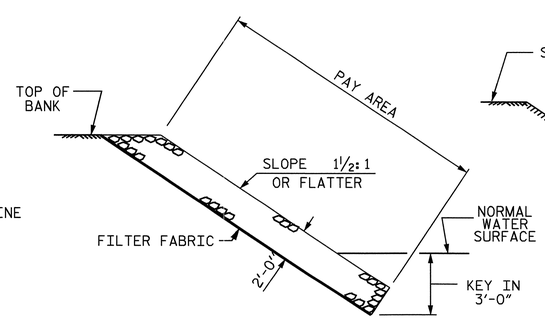

SECTION B-B

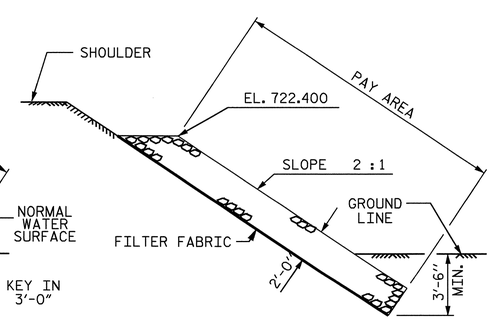

SECTION C-C

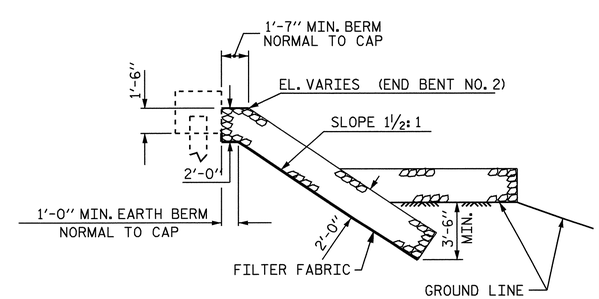

SECTION D-D

PROJECT NO. B-4507
FORSYTH COUNTY
STATION: 27+96.00 -L-

STATE OF NORTH CAROLINA
DEPARTMENT OF TRANSPORTATION
RALEIGH

STANDARD
RIP RAP DETAILS
RIGHT LANE

NORTH CAROLINA PROFESSIONAL SEAL 20125 ENGINEER MARSHALL L. GREEK, JR.
9-29-09

REVISIONS						
NO.	BY:	DATE:	NO.	BY:	DATE:	
1			3			
2			4			

SHEET NO. S-93
TOTAL SHEETS 99

ASSEMBLED BY : A.L. FIGUEROA		DATE : 6-24-09	
CHECKED BY : D. HODGE		DATE : 7-16-09	
DRAWN BY : REK 1/84	REV. 8/16/99	RWW/LES	
CHECKED BY : RDU 1/84	REV. 10/17/00	RWW/LES	
	REV. 5/1/06	TLA/GM	

28-SEP-2009 08:11
R:\Structures\Final Plans\Right Lane\B-4507_sd_str#2_14_SP.dgn
afigueroa

STR #2 STD. NO. RR1

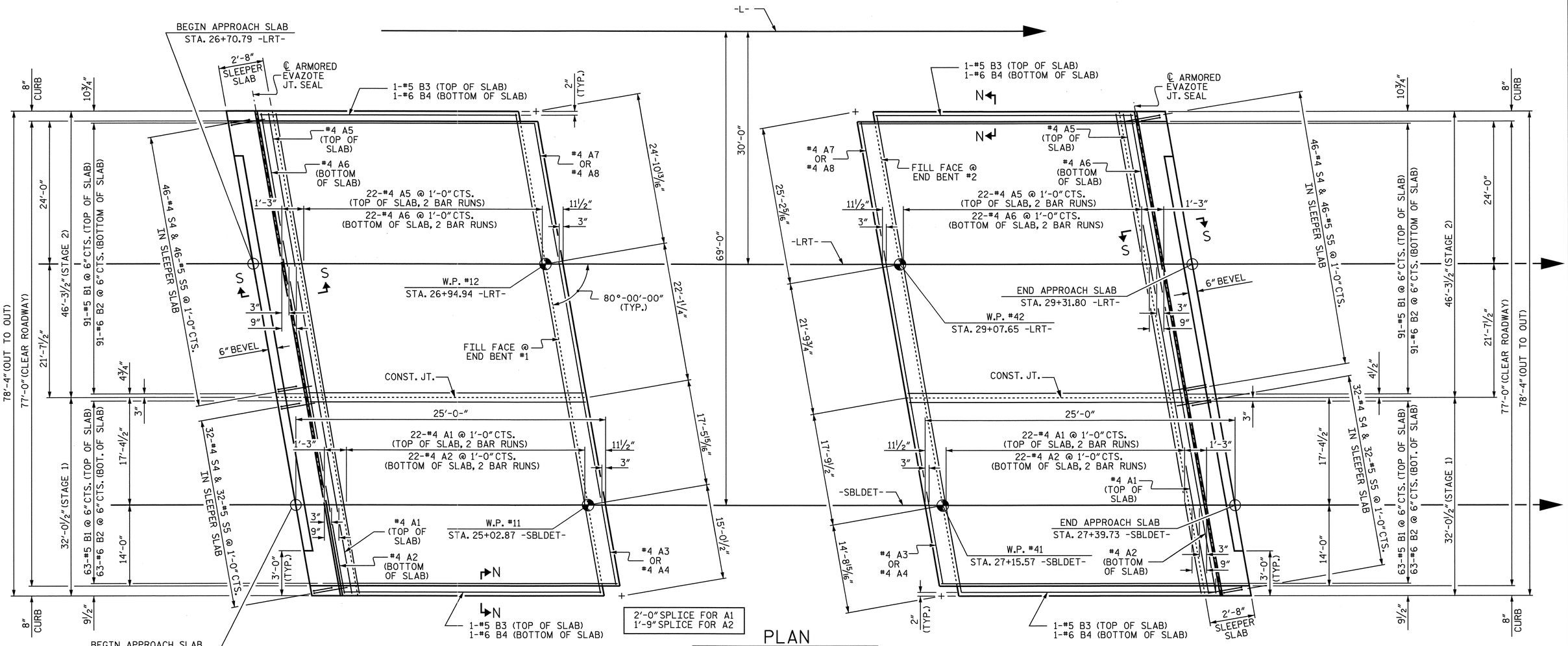

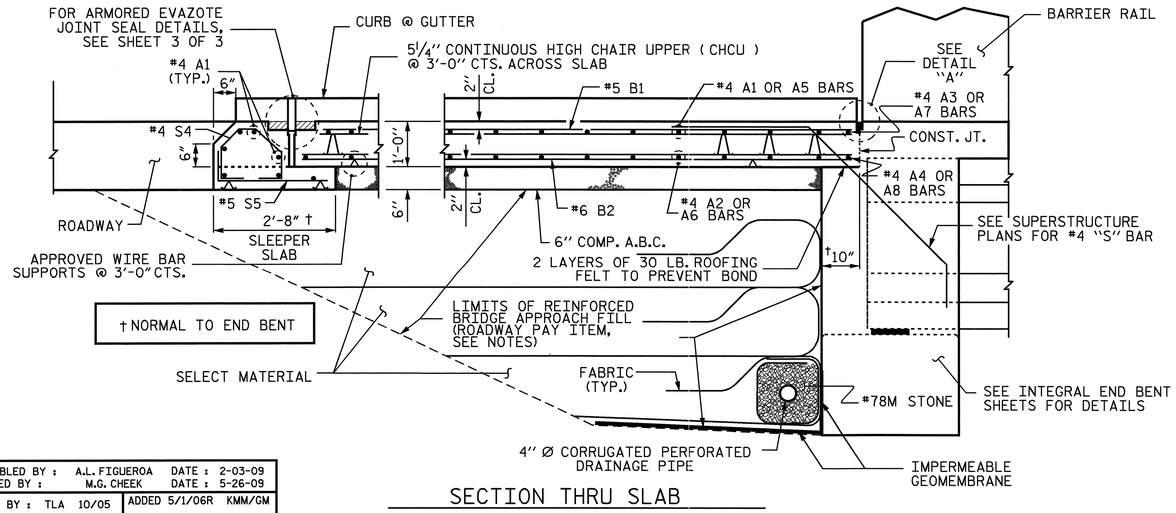

SECTION THRU SLAB

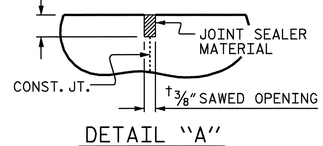

DETAIL "A"

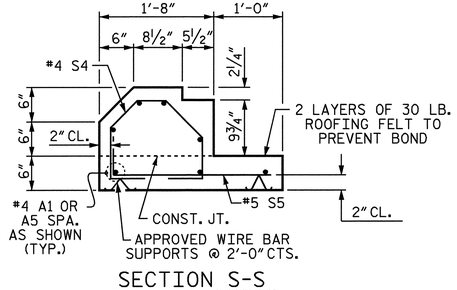

SECTION S-S
SHOWING SLEEPER SLAB

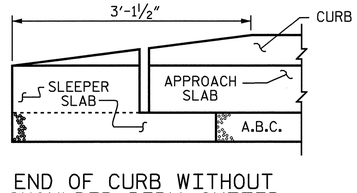

END OF CURB WITHOUT SHOULDER BERM GUTTER

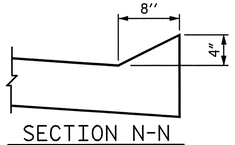

SECTION N-N

PROJECT NO. B-4507
FORSYTH COUNTY
STATION: 27+96.00 -L-

SHEET 1 OF 3

STATE OF NORTH CAROLINA
DEPARTMENT OF TRANSPORTATION
RALEIGH

STANDARD

BRIDGE APPROACH SLAB FOR INTEGRAL ABUTMENT

RIGHT LANE

NORTH CAROLINA PROFESSIONAL SEAL 20125 ENGINEER MARSHALL B. CHEEK, JR.
9-28-09

REVISIONS								SHEET NO.
NO.	BY:	DATE:	NO.	BY:	DATE:			S-94
1			3					TOTAL SHEETS
2			4					99

ASSEMBLED BY :	A.L. FIGUEROA	DATE :	2-03-09
CHECKED BY :	M.G. CHEEK	DATE :	5-26-09
DRAWN BY : TLA 10/05		ADDED 5/1/06R KMM/GM	
CHECKED BY : GM 5/06			

05-AUG-2009 08:59
R:\Structures\STR#2\afigueroa\Microstation\B-4507_sd_STR#2_15_AS.dgn
afigueroa

STR. #2 STD. NO. BAS11

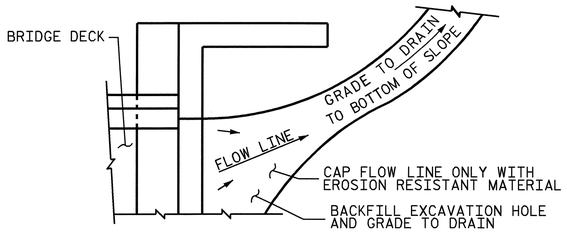

NOTE: IF THE APPROACH SLAB IS NOT CONSTRUCTED IMMEDIATELY AFTER THE BACKFILLING OF THE END BENT EXCAVATION, GRADE TO DRAIN TO THE BOTTOM OF THE SLOPE AND PROVIDE EROSION RESISTANT MATERIAL, SUCH AS FIBERGLASS ROVING OR AS DIRECTED BY THE ENGINEER TO PREVENT SOIL EROSION AND TO PROTECT THE AREA ADJACENT TO THE STRUCTURE. THE CONTRACTOR WILL BE REQUIRED TO REMOVE THESE MATERIALS PRIOR TO CONSTRUCTION OF THE APPROACH SLAB.

TEMPORARY DRAINAGE DETAIL

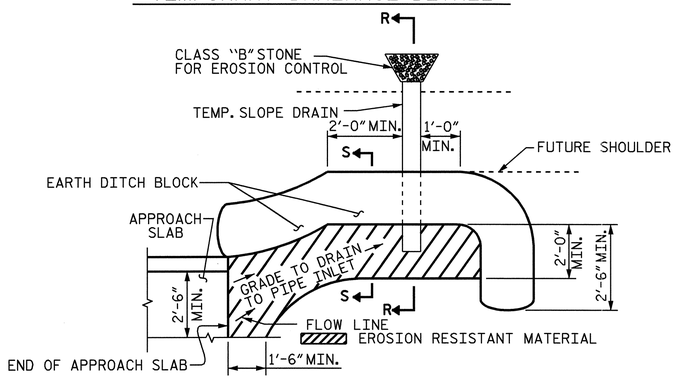

NOTE: IMMEDIATELY AFTER THE CONSTRUCTION OF THE APPROACH SLAB, THE CONTRACTOR SHALL PROVIDE TEMPORARY BERM AND SLOPE DRAIN. CONTRACTOR SHALL GRADE TO PIPE INLET AND PROVIDE EROSION RESISTANT MATERIAL AS SHOWN. THE EROSION RESISTANT MATERIAL SHALL BE EITHER 1) ASPHALT PLANT MIX, TYPE 1 OR TYPE 2, MIN. 2" DEPTH, 2) EROSION CONTROL MAT, OR 3) CONCRETE, AS DIRECTED BY THE ENGINEER. THE SLOPE DRAIN SHALL CONSIST OF A NON-PERFORATED TEMPORARY DRAINAGE PIPE, 12 INCHES DIAMETER.

PLAN VIEW

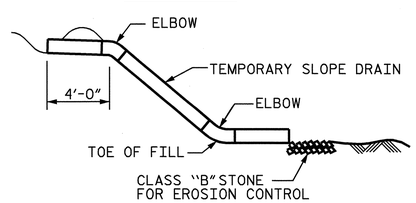

SECTION R-R

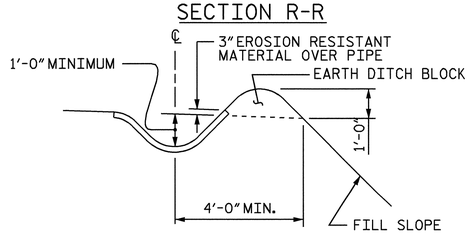

SECTION S-S

TEMPORARY BERM AND SLOPE DRAIN DETAILS

BILL OF MATERIAL

APPROACH SLAB AT EB NO.1

STAGE 1

BAR	NO.	SIZE	TYPE	LENGTH	WEIGHT
✳ A1	61	#4	STR	18'-3"	744
A2	47	#4	STR	18'-1"	568
✳ A3	1	#4	STR	17'-11"	12
A4	1	#4	STR	17'-8"	12
✳ B1	63	#5	STR	22'-5"	1473
B2	63	#6	STR	22'-11"	2169
✳ B3	1	#5	STR	21'-7"	23
B4	1	#6	STR	22'-1"	33
✳ S4	32	#4	1	4'-1"	87
S5	32	#5	2	3'-0"	100

REINFORCING STEEL LBS. 2882

✳ EPOXY COATED REINFORCING STEEL LBS. 2339

CLASS AA CONCRETE

POUR #1 SLEEPER SLAB 3.5 C.Y.

POUR #2 SLAB & CURB 27.5 C.Y.

TOTAL 31.0 C.Y.

STAGE 2

BAR	NO.	SIZE	TYPE	LENGTH	WEIGHT
✳ A5	61	#4	STR	24'-6"	998
A6	47	#4	STR	24'-4"	764
✳ A7	1	#4	STR	24'-1"	16
A8	1	#4	STR	24'-0"	16
✳ B1	91	#5	STR	22'-5"	2128
B2	91	#6	STR	22'-11"	3132
✳ B3	1	#5	STR	21'-7"	23
B4	1	#6	STR	22'-1"	33
✳ S4	46	#4	1	4'-1"	125
S5	46	#5	2	3'-0"	144

REINFORCING STEEL LBS. 4089

✳ EPOXY COATED REINFORCING STEEL LBS. 3290

CLASS AA CONCRETE

POUR #1 SLEEPER SLAB 5.1 C.Y.

POUR #2 SLAB & CURB 39.8 C.Y.

TOTAL 44.9 C.Y.

APPROACH SLAB AT EB NO.2

STAGE 1

BAR	NO.	SIZE	TYPE	LENGTH	WEIGHT
✳ A1	61	#4	STR	18'-3"	744
A2	47	#4	STR	18'-1"	568
✳ A3	1	#4	STR	17'-11"	12
A4	1	#4	STR	17'-8"	12
✳ B1	63	#5	STR	22'-5"	1473
B2	63	#6	STR	22'-11"	2169
✳ B1	1	#5	STR	21'-7"	23
B2	1	#6	STR	22'-1"	33
✳ S4	32	#4	1	4'-1"	87
S5	32	#5	2	3'-0"	100

REINFORCING STEEL LBS. 2882

✳ EPOXY COATED REINFORCING STEEL LBS. 2339

CLASS AA CONCRETE

POUR #1 SLEEPER SLAB 3.5 C.Y.

POUR #2 SLAB & CURB 27.5 C.Y.

TOTAL 31.0 C.Y.

STAGE 2

BAR	NO.	SIZE	TYPE	LENGTH	WEIGHT
✳ A5	61	#4	STR	24'-6"	998
A6	47	#4	STR	24'-4"	764
✳ A7	1	#4	STR	24'-1"	16
A8	1	#4	STR	24'-0"	16
✳ B1	91	#5	STR	22'-5"	2128
B2	91	#6	STR	22'-11"	3132
✳ B1	1	#5	STR	21'-7"	23
B2	1	#6	STR	22'-1"	33
✳ S4	46	#4	1	4'-1"	125
S5	46	#5	2	3'-0"	144

REINFORCING STEEL LBS. 4089

✳ EPOXY COATED REINFORCING STEEL LBS. 3290

CLASS AA CONCRETE

POUR #1 SLEEPER SLAB 5.1 C.Y.

POUR #2 SLAB & CURB 39.8 C.Y.

TOTAL 44.9 C.Y.

BAR TYPES

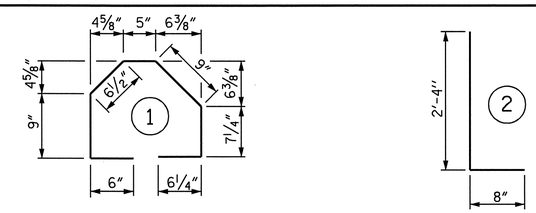

ALL BAR DIMENSIONS ARE OUT TO OUT

NOTES

APPROACH SLAB SHALL NOT BE CONSTRUCTED PRIOR TO COMPLETION OF THE BRIDGE DECK.

FOR REINFORCED BRIDGE APPROACH FILL INCLUDING FABRIC, IMPERMEABLE GEOMEMBRANE, 4" Ø DRAINAGE PIPE, #78M STONE, AND SELECT MATERIAL, SEE ROADWAY PLANS.

TEMPORARY DRAINAGE AND TEMPORARY BERM AND SLOPE DRAINS WILL BE PAID FOR UNDER THE LUMP SUM PRICE FOR BRIDGE APPROACH SLAB.

AREA BETWEEN THE WINGWALL AND APPROACH SLAB SHALL BE GRADED TO DRAIN THE WATER AWAY FROM THE FILL FACE OF THE BRIDGE AND SHALL BE PAVED. SEE ROADWAY PLANS.

THE 6" COMP. A.B.C. SHALL BE FLUSH WITH THE SLEEPER SLAB AND SHALL EXTEND 1'-0" OUTSIDE OF EACH EDGE OF THE APPROACH SLAB.

THE CONTRACTOR MAY USE 4" TYPE B-25.0B ASPHALT CONCRETE BASE COURSE IN LIEU OF 6" COMP. A.B.C. IF THIS OPTION IS USED, THE BASE COURSE SHALL BE FLUSH WITH THE SLEEPER SLAB, AND THE WIDTH SHALL BE THE SAME AS THAT OF THE APPROACH SLAB.

THE CONTRACTOR MAY USE 5" CLASS "A" CONCRETE BASE IN LIEU OF 6" COMP. A.B.C. IF THIS OPTION IS USED, THE CONCRETE BASE SHALL BE FLUSH WITH THE SLEEPER SLAB, AND THE WIDTH SHALL BE THE SAME AS THAT OF THE APPROACH SLAB. THE CONCRETE SHALL BE FINISHED TO A SMOOTH SURFACE AND A LAYER OF 30 LB ROOFING FELT SHALL BE PLACED BETWEEN THE CONCRETE BASE AND THE APPROACH SLAB TO PREVENT BOND. THE APPROACH SLAB SHALL NOT BE CAST UNTIL THE CONCRETE BASE HAS REACHED AN AGE OF THREE CURING DAYS.

THE VERTICAL JOINT ON THE RIGHT AND LEFT SIDE OF THE APPROACH SLAB AT THE ENDS OF THE EVAZOTE JOINT SHALL BE FILLED WITH SILICONE OR OTHER APPROVED MATERIAL IN ORDER TO PREVENT BACKFILL FROM ENTERING THE JOINT OPENING.

THE JOINT OPENING AT THE APPROACH SLAB/DECK INTERFACE SHALL BE SAWED NO MORE THAN 12 HOURS AFTER THE APPROACH SLAB IS CAST. THE JOINT SHALL BE CLEANED OF ALL DEBRIS BEFORE THE SEALANT IS APPLIED. THE JOINT SEALER MATERIAL SHALL CONFORM TO THE REQUIREMENTS OF TYPE SL LOW MODULUS SILICONE SEALANT.

GROOVING BRIDGE FLOORS IS NOT REQUIRED ON THE TOP SURFACE OF THE SLEEPER SLAB. INSTEAD, APPLY A BROOMED TEXTURE IN ACCORDANCE WITH ARTICLE 442-3 OF THE STANDARD SPECIFICATIONS.

PROJECT NO. B-4507

FORSYTH COUNTY

STATION: 27+96.00 -L-

SHEET 2 OF 3

STATE OF NORTH CAROLINA
DEPARTMENT OF TRANSPORTATION
RALEIGH

STANDARD
BRIDGE APPROACH SLAB DETAILS
RIGHT LANE

NORTH CAROLINA PROFESSIONAL SEAL 20125 ENGINEER MARSHALL L. GREEK, JR.

REVISIONS								SHEET NO.
NO.	BY:	DATE:	NO.	BY:	DATE:			S-95
1			3					TOTAL SHEETS
2			4					99

STR. #2

ASSEMBLED BY : A.L. FIGUEROA		DATE : 8-19-08	
CHECKED BY : M.G. CHEEK		DATE : 5-26-09	
DRAWN BY : FCJ 11/88	REV. 10/17/00	RWW/LES	
CHECKED BY : ARB 11/88	REV. 5/7/03	RWW/JTE	
	REV. 5/1/06	TLA/GM	

05-AUG-2009 08:59
R:\Structures\STR#2\afigueroa\Microstation\B-4507_sd_STR#2_15_AS.dgn
afigueroa

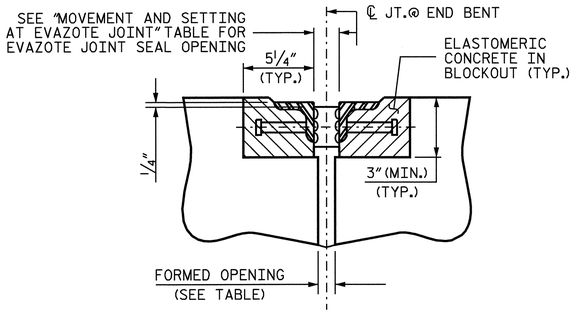

SECTION C-C
ARMORED EVAZOTE JOINT SEAL

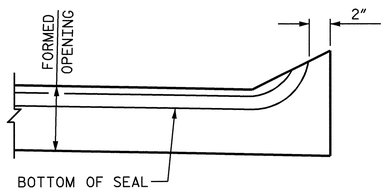

SECTION A-A

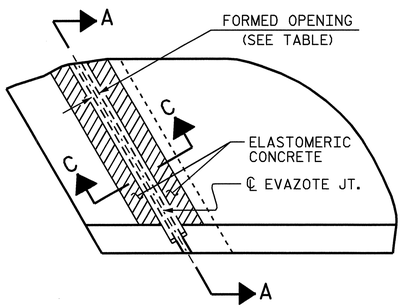

PLAN

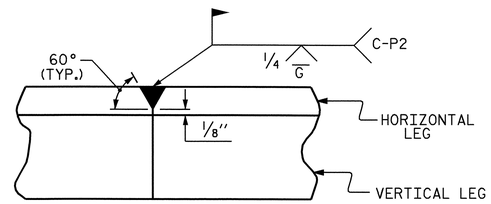

DETAIL- FIELD WELD SPLICE OF ANGLE

NOTES

ANGLES SHALL CONFORM TO AASHTO M270 GRADE 36 STEEL OR APPROVED EQUAL. ALL STUD ANCHORS SHALL CONFORM TO AASHTO M169 GRADES 1010 THRU 1020 OR APPROVED EQUAL.

STUD ANCHORS SHALL BE SHOP WELDED AND ALL HOLES SHALL BE SHOP DRILLED AS SHOWN ON THE PLANS. STUD ANCHORS SHALL BE ELECTRIC ARC END WELDED WITH COMPLETE FUSION.

UPON COMPLETION OF SHOP FABRICATION, THE ENTIRE ANCHOR ASSEMBLY SHALL BE METALLIZED. THE ½" Ø STUD ANCHORS AND ANCHOR TABS NEED NOT BE METALLIZED. SEE SPECIAL PROVISION FOR THERMAL SPRAYED COATINGS (METALLIZATION).

ANCHOR ASSEMBLY SHALL BE MADE CONTINUOUS THE LENGTH OF THE JOINT FROM GUTTER TO GUTTER. FOR FIELD SPLICES AT ALL CROWN BREAK POINTS, THE ENDS OF THE STEEL ANGLES SHALL BE CUT PARALLEL TO THE BRIDGE CENTERLINE. FINISHED FIELD WELDS SHALL BE GROUND SMOOTH AND COATED WITH A MINIMUM THICKNESS OF 4 DRY MILS OF ZINC-RICH PAINT IN ACCORDANCE WITH THE STANDARD SPECIFICATIONS.

ANCHOR ASSEMBLY SEGMENTS SHALL NOT BE LESS THAN 12 FEET NOR MORE THAN 20 FEET IN LENGTH. SHORTER SEGMENTS MAY BE USED AT THE EDGE OF ROADWAY OR AT POINTS OF STAGED CONSTRUCTION.

THE ANCHOR ASSEMBLY SHALL BE SECURED AND LEVELED AS SHOWN IN THE "ARMORED JOINT ANCHOR ASSEMBLY DETAILS". NO SUBMITTALS ARE REQUIRED FOR ⅜" Ø EXPANSION ANCHORS, NUTS OR WASHERS. THE CONTRACTOR MAY SUBMIT FOR APPROVAL AN ALTERNATE METHOD OF ALIGNING AND LEVELING THE ANGLES. THE ALTERNATE METHOD SHALL NOT INCLUDE ANY WELDING TO THE OUTSIDE FACE OF THE ANGLES.

AFTER THE ELASTOMERIC CONCRETE HAS BEEN CAST ON BOTH SIDES OF THE JOINT, REMOVE ANY EXCESS CONCRETE THAT COMES THROUGH THE WEEP HOLES AND THOROUGHLY CLEAN THE ANGLES. ANY DAMAGED STEEL SHALL BE COATED WITH A MINIMUM OF 4 MILS OF ZINC-RICH PAINT IN ACCORDANCE WITH THE STANDARD SPECIFICATIONS.

SEE SPECIAL PROVISIONS FOR EVAZOTE JOINT SEALS.

THE NOMINAL UNCOMPRESSED SEAL WIDTH OF THE EVAZOTE JOINT SEAL SHALL BE 2 13/16" AT END BENT NO.1 AND 2½" AT END BENT NO.2.

SEE SPECIAL PROVISIONS FOR ELASTOMERIC CONCRETE.

MOVEMENT AND SETTING AT EVAZOTE JOINT

END BENT NO.	SKEW ANGLE	NOMINAL UNCOMPRESSED SEAL WIDTH	TOTAL MOVEMENT (ALONG ℄ RDWY)	PERPENDICULAR JOINT OPENING AT 45° F	PERPENDICULAR JOINT OPENING AT 60° F	PERPENDICULAR JOINT OPENING AT 90° F	FORMED OPENING
1	80°	2 13/16"	1⅜"	2½"	2¼"	1 13/16"	1⅜"
2	80°	2⅛"	1"	2⅛"	2"	1 11/16"	1"

TOTAL MOVEMENT IS CALCULATED ALONG THE CENTERLINE OF ROADWAY.
JOINT OPENINGS ARE MEASURED PERPENDICULAR TO THE JOINT.

ELASTOMERIC CONCRETE

	ELASTOMERIC CONCRETE ✳ (CU. FT.)		TOTAL LENGTH OF ANGLE (FT)	
STAGE	END BENT NO. 1	END BENT NO. 2	END BENT NO. 1	END BENT NO. 2
1	7.4	7.4	65.073	65.073
2	10.6	10.6	94.012	94.012
TOTAL	18.0	18.0	159.085	159.085

✳ BASED ON THE MINIMUM BLOCKOUT SHOWN.

JOINT SEAL DETAILS

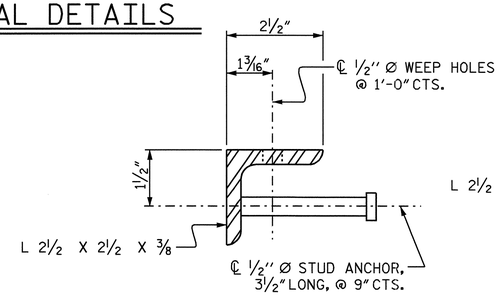

SECTION VIEW OF STUD

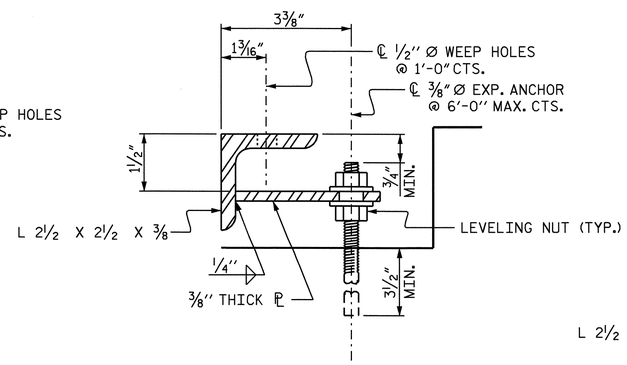

SECTION VIEW OF TAB

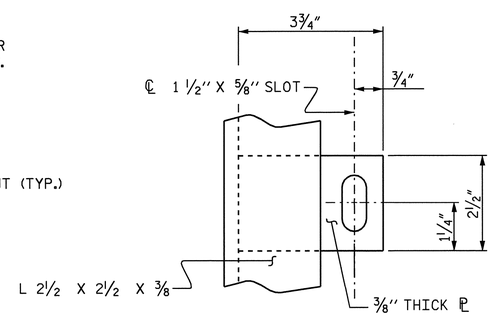

PLAN VIEW OF TAB

ARMORED JOINT ANCHOR ASSEMBLY DETAILS

PROJECT NO. B-4507
FORSYTH COUNTY
STATION: 27+96.00 -L-

SHEET 3 OF 3

STATE OF NORTH CAROLINA
DEPARTMENT OF TRANSPORTATION
RALEIGH

BRIDGE APPROACH SLAB DETAILS
RIGHT LANE

NORTH CAROLINA PROFESSIONAL SEAL 20125 ENGINEER MARSHALL G. CHEEK, JR.
9-29-09

REVISIONS						SHEET NO.
NO.	BY:	DATE:	NO.	BY:	DATE:	S-96
1			3			TOTAL SHEETS
2			4			99

STR. #2

ASSEMBLED BY : A.L. FIGUEROA DATE : 8-19-08
CHECKED BY : M.G. CHEEK DATE : 5-26-09

05-AUG-2009 08:59
R:\Structures\STR#2\aflgueroa\Microstation\B-4507_sd_STR#2_15_AS.dgn
aflgueroa

OVERHANG BRACKET CALCULATION INSTRUCTIONS

AASHTO SHAPES - TYPES III, IV, V, AND VI

1. RECORD KNOWN INFORMATION ON "BRIDGE OVERHANG BRACKET SUMMARY" ON SHEET 2
2. CALCULATE THE MAXIMUM SCREED LOAD PER BRACKET (SLPB) WITH AN ESTIMATED R = 1.5. SLPB = R X W. ROUND VALUE UP TO NEAREST SLPB VALUE INDICATED ON APPROPRIATE TABLE 1-1, 1-2, 1-3, OR 1-4.
3. WITH THE ESTIMATED SLPB, OVERHANG SLAB THICKNESS, "K" VALUE, AND 45° HANGER SAFE WORKING LOAD (SWL), ENTER THE APPROPRIATE TABLE 1-1, 1-2, 1-3, OR 1-4 (BASED ON OVERHANG DIMENSION) AND DETERMINE THE BRACKET SPACING, S.
4. CALCULATE S/D1 AND S/D2, ROUNDING UP TO NEAREST VALUE IN TABLE 2. ENTER TABLE 2 AND DETERMINE R VALUE.
5. CALCULATE REVISED SLPB. ROUND VALUE UP TO NEAREST SLPB VALUE INDICATED ON APPROPRIATE TABLE 1-1, 1-2, 1-3, OR 1-4.
6. WITH THE REVISED SLPB, OVERHANG SLAB THICKNESS, "K" VALUE AND 45 HANGER SAFE WORKING LOAD (SWL), ENTER THE APPROPRIATE TABLE 1-1, 1-2, 1-3 OR 1-4 (BASED ON OVERHANG DIMENSION) AND DETERMINE REVISED BRACKET SPACING, S.
7. CONTINUE ITERATIONS OF STEPS 4-6 UNTIL THE REVISED BRACKET SPACING, S, IS THE SAME AS THE PREVIOUS S VALUE.
8. CHECK LUMBER JOIST SPACING: WITH BRACKET SPACING VALUE, S, ROUND THIS VALUE UP TO THE NEAREST VALUE OF ALLOWABLE SPAN LENGTH OF JOIST OF TABLE 3. USING THIS VALUE, ALONG WITH THE AVERAGE OVERHANG SLAB THICKNESS AND THE LUMBER JOIST SIZE, DETERMINE JOIST SPACING FROM TABLE 3. IF NECESSARY, ADJUST LUMBER JOIST SIZE AND/OR JOIST SPACING TO MEET ALLOWABLE SPAN LENGTH OF JOIST.
9. CONVERSELY, IF THE DESIRED JOIST SPACING IS KNOWN, USE THIS ALONG WITH THE AVERAGE OVERHANG SLAB THICKNESS AND THE LUMBER JOIST SIZE TO DETERMINE IF ALLOWABLE SPAN LENGTH OF JOIST IS GREATER THAN THE BRACKET SPACING, S. IF NECESSARY, ADJUST LUMBER JOIST SIZE TO MEET REQUIREMENTS OF ALLOWABLE SPAN LENGTH OF JOIST AND JOIST SPACING.
10. RECORD REMAINING INFORMATION ON "BRIDGE OVERHANG BRACKET SUMMARY" FORM.
11. SUBMIT FORM AND CALCULATIONS FOR REVIEW AND APPROVAL.

TABLE 1-1

(FOR USE ON **UP TO 2'-0" OVERHANG** Ⓛ & 54" HORIZONTAL LEG LENGTH OF THE OVERHANG BRACKET)

AVG. SLAB THICKNESS Ⓣ (in)	BRACKET Ⓚ DIMENSION (in)	SCREED LOAD PER BRACKET									45° HANGER SWL (lbs)
		2500 lbs.	2250 lbs.	2000 lbs.	1750 lbs.	1500 lbs.	1250 lbs.	1000 lbs.	750 lbs.	0 lbs.	
		BRACKET SPACING									
10	30				2'-1"	2'-7"	3'-2"	3'-8"	4'-2"	5'-9"	4000
		3'-6"	4'-0"	4'-5"	4'-9"	5'-1"	5'-3"	5'-5"	5'-7"	6'-7"	6000
	40				2'-1"	2'-7"	3'-2"	3'-8"	4'-2"	5'-9"	4000
		3'-6"	4'-0"	4'-5"	4'-9"	5'-1"	5'-3"	5'-5"	5'-7"	6'-7"	6000
	50				2'-1"	2'-7"	3'-2"	3'-8"	4'-2"	5'-9"	4000
		3'-6"	4'-0"	4'-5"	4'-9"	5'-1"	5'-3"	5'-5"	5'-7"	6'-7"	6000
12	30					2'-4"	2'-10"	3'-4"	3'-9"	5'-2"	4000
		3'-2"	3'-7"	4'-1"	4'-7"	5'-0"	5'-2"	5'-4"	5'-7"	6'-5"	6000
	40					2'-4"	2'-10"	3'-4"	3'-9"	5'-2"	4000
		3'-2"	3'-7"	4'-1"	4'-7"	5'-0"	5'-2"	5'-4"	5'-7"	6'-5"	6000
	50					2'-4"	2'-10"	3'-4"	3'-9"	5'-2"	4000
		3'-2"	3'-7"	4'-1"	4'-7"	5'-0"	5'-2"	5'-4"	5'-7"	6'-5"	6000
14	30					2'-2"	2'-7"	3'-0"	3'-5"	4'-9"	4000
		2'-10"	3'-4"	3'-9"	4'-2"	4'-7"	5'-0"	5'-4"	5'-7"	6'-4"	6000
	40					2'-2"	2'-7"	3'-0"	3'-5"	4'-9"	4000
		2'-10"	3'-4"	3'-9"	4'-2"	4'-7"	5'-0"	5'-4"	5'-7"	6'-4"	6000
	50					2'-2"	2'-7"	3'-0"	3'-5"	4'-9"	4000
		2'-10"	3'-4"	3'-9"	4'-2"	4'-7"	5'-0"	5'-4"	5'-7"	6'-4"	6000
16	30					2'-0"	2'-4"	2'-9"	3'-2"	4'-4"	4000
		2'-8"	3'-0"	3'-5"	3'-10"	4'-3"	4'-7"	5'-0"	5'-5"	6'-3"	6000
	40					2'-0"	2'-4"	2'-9"	3'-2"	4'-4"	4000
		2'-8"	3'-0"	3'-5"	3'-10"	4'-3"	4'-7"	5'-0"	5'-5"	6'-3"	6000
	50					2'-0"	2'-4"	2'-9"	3'-2"	4'-4"	4000
		2'-8"	3'-0"	3'-5"	3'-10"	4'-3"	4'-7"	5'-0"	5'-5"	6'-3"	6000

TABLE 1-2

(FOR USE ON **OVER 2'-0" TO 2'-6" OVERHANG** Ⓛ & 54" HORIZONTAL LEG LENGTH OF THE OVERHANG BRACKET)

AVG. SLAB THICKNESS Ⓣ (in)	BRACKET Ⓚ DIMENSION (in)	SCREED LOAD PER BRACKET									45° HANGER SWL (lbs)
		2500 lbs.	2250 lbs.	2000 lbs.	1750 lbs.	1500 lbs.	1250 lbs.	1000 lbs.	750 lbs.	0 lbs.	
		BRACKET SPACING									
10	30					2'-4"	2'-9"	3'-3"	3'-8"	5'-1"	4000
		3'-1"	3'-6"	4'-0"	4'-5"	4'-11"	5'-3"	5'-5"	5'-7"	6'-7"	6000
	40					2'-4"	2'-9"	3'-3"	3'-8"	5'-1"	4000
		3'-1"	3'-6"	4'-0"	4'-5"	4'-11"	5'-3"	5'-5"	5'-7"	6'-7"	6000
	50					2'-4"	2'-9"	3'-3"	3'-8"	5'-1"	4000
		3'-1"	3'-6"	4'-0"	4'-5"	4'-11"	5'-3"	5'-5"	5'-7"	6'-7"	6000
12	30					2'-1"	2'-6"	2'-11"	3'-4"	4'-6"	4000
		2'-9"	3'-2"	3'-7"	4'-0"	4'-5"	4'-10"	5'-3"	5'-7"	6'-5"	6000
	40					2'-1"	2'-6"	2'-11"	3'-4"	4'-6"	4000
		2'-9"	3'-2"	3'-7"	4'-0"	4'-5"	4'-10"	5'-3"	5'-7"	6'-5"	6000
	50					2'-1"	2'-6"	2'-11"	3'-4"	4'-6"	4000
		2'-9"	3'-2"	3'-7"	4'-0"	4'-5"	4'-10"	5'-3"	5'-7"	6'-5"	6000
14	30						2'-3"	2'-7"	3'-0"	4'-1"	4000
		2'-6"	2'-10"	3'-3"	3'-7"	4'-0"	4'-4"	4'-9"	5'-1"	6'-3"	6000
	40						2'-3"	2'-7"	3'-0"	4'-1"	4000
		2'-6"	2'-10"	3'-3"	3'-7"	4'-0"	4'-4"	4'-9"	5'-1"	6'-3"	6000
	50						2'-3"	2'-7"	3'-0"	4'-1"	4000
		2'-6"	2'-10"	3'-3"	3'-7"	4'-0"	4'-4"	4'-9"	5'-1"	6'-3"	6000
16	30						2'-1"	2'-5"	2'-9"	3'-9"	4000
		2'-3"	2'-7"	2'-11"	3'-4"	3'-8"	4'-0"	4'-4"	4'-8"	5'-8"	6000
	40						2'-1"	2'-5"	2'-9"	3'-9"	4000
		2'-3"	2'-7"	2'-11"	3'-4"	3'-8"	4'-0"	4'-4"	4'-8"	5'-8"	6000
	50						2'-1"	2'-5"	2'-9"	3'-9"	4000
		2'-3"	2'-7"	2'-11"	3'-4"	3'-8"	4'-0"	4'-4"	4'-8"	5'-8"	6000

TABLE 1-3

(FOR USE ON **OVER 2'-6" TO 3'-0" OVERHANG** Ⓛ & 54" HORIZONTAL LEG LENGTH OF THE OVERHANG BRACKET)

AVG. SLAB THICKNESS Ⓣ (in)	BRACKET Ⓚ DIMENSION (in)	SCREED LOAD PER BRACKET									45° HANGER SWL (lbs)
		2500 lbs.	2250 lbs.	2000 lbs.	1750 lbs.	1500 lbs.	1250 lbs.	1000 lbs.	750 lbs.	0 lbs.	
		BRACKET SPACING									
10	30					2'-1"	2'-6"	2'-11"	3'-4"	4'-6"	4000
						4'-5"	4'-10"	5'-3"	5'-7"	6'-7"	6000
	40					2'-1"	2'-6"	2'-11"	3'-4"	4'-6"	4000
		2'-9"	3'-2"	3'-7"	4'-0"	4'-5"	4'-10"	5'-3"	5'-7"	6'-7"	6000
	50					2'-1"	2'-6"	2'-11"	3'-4"	4'-6"	4000
		2'-9"	3'-2"	3'-7"	4'-0"	4'-5"	4'-10"	5'-3"	5'-7"	6'-7"	6000
12	30						2'-2"	2'-7"	2'-11"	4'-0"	4000
						3'-11"	4'-3"	4'-8"	5'-0"	6'-1"	6000
	40						2'-2"	2'-7"	2'-11"	4'-0"	4000
		2'-5"	2'-10"	3'-2"	3'-6"	3'-11"	4'-3"	4'-8"	5'-0"	6'-1"	6000
	50						2'-2"	2'-7"	2'-11"	4'-0"	4000
		2'-5"	2'-10"	3'-2"	3'-6"	3'-11"	4'-3"	4'-8"	5'-0"	6'-1"	6000
14	30						2'-0"	2'-4"	2'-8"	3'-8"	4000
					3'-2"	3'-6"	3'-10"	4'-2"	4'-6"	5'-6"	6000
	40						2'-0"	2'-4"	2'-8"	3'-8"	4000
		2'-2"	2'-6"	2'-10"	3'-2"	3'-6"	3'-10"	4'-2"	4'-6"	5'-6"	6000
	50						2'-0"	2'-4"	2'-8"	3'-8"	4000
		2'-2"	2'-6"	2'-10"	3'-2"	3'-6"	3'-10"	4'-2"	4'-6"	5'-6"	6000
16	30							2'-1"	2'-5"	3'-4"	4000
					2'-11"	3'-2"	3'-6"	3'-10"	4'-1"	5'-0"	6000
	40							2'-1"	2'-5"	3'-4"	4000
		2'-0"	2'-4"	2'-7"	2'-11"	3'-2"	3'-6"	3'-10"	4'-1"	5'-0"	6000
	50							2'-1"	2'-5"	3'-4"	4000
		2'-0"	2'-4"	2'-7"	2'-11"	3'-2"	3'-6"	3'-10"	4'-1"	5'-0"	6000

TABLE 1-4

(FOR USE ON **OVER 3'-0" TO 3'-6" OVERHANG** Ⓛ & 54" HORIZONTAL LEG LENGTH OF THE OVERHANG BRACKET)

AVG. SLAB THICKNESS Ⓣ (in)	BRACKET Ⓚ DIMENSION (in)	SCREED LOAD PER BRACKET									45° HANGER SWL (lbs)
		2500 lbs.	2250 lbs.	2000 lbs.	1750 lbs.	1500 lbs.	1250 lbs.	1000 lbs.	750 lbs.	0 lbs.	
		BRACKET SPACING									
10	30						2'-1"	2'-5"	2'-9"	3'-10"	4000
						2'-3"	2'-11"	3'-7"	4'-3"	5'-9"	6000
	40						2'-1"	2'-5"	2'-9"	3'-10"	4000
				2'-4"	3'-0"	3'-7"	4'-1"	4'-5"	4'-9"	5'-9"	6000
	50						2'-1"	2'-5"	2'-9"	3'-10"	4000
		2'-4"	2'-8"	3'-0"	3'-4"	3'-8"	4'-1"	4'-5"	4'-9"	5'-9"	6000
12	30							2'-2"	2'-6"	3'-5"	4000
						2'-1"	2'-8"	3'-4"	3'-11"	5'-2"	6000
	40							2'-2"	2'-6"	3'-5"	4000
				2'-2"	2'-9"	3'-4"	3'-7"	3'-11"	4'-3"	5'-2"	6000
	50							2'-2"	2'-6"	3'-5"	4000
		2'-1"	2'-4"	2'-8"	3'-0"	3'-4"	3'-7"	3'-11"	4'-3"	5'-2"	6000
14	30								2'-3"	3'-1"	4000
						2'-0"	2'-6"	3'-1"	3'-8"	4'-8"	6000
	40								2'-3"	3'-1"	4000
				2'-0"	2'-7"	3'-0"	3'-3"	3'-6"	3'-10"	4'-8"	6000
	50								2'-3"	3'-1"	4000
			2'-2"	2'-5"	2'-8"	3'-0"	3'-3"	3'-6"	3'-10"	4'-8"	6000
16	30								2'-0"	2'-9"	4000
							2'-4"	2'-10"	3'-5"	4'-3"	6000
	40								2'-0"	2'-9"	4000
					2'-5"	2'-8"	2'-11"	3'-3"	3'-6"	4'-3"	6000
	50								2'-0"	2'-9"	4000
				2'-2"	2'-5"	2'-8"	2'-11"	3'-3"	3'-6"	4'-3"	6000

DEFINITIONS

SLPB = SCREED LOAD PER BRACKET (R × W)
R = SCREED LOAD FACTOR, OBTAINED FROM TABLE 2
W = WHEEL LOAD
S = BRACKET SPACING
T = AVERAGE SLAB THICKNESS
SWL = SAFE WORKING LOAD
K = DIMENSION DEFINED ON "BRIDGE OVERHANG BRACKET SUMMARY" ON SHEET 2
L = OVERHANG MEASURED FROM EDGE OF TOP FLANGE TO EDGE OF SUPERSTRUCTURE

PROJECT NO. B-4507
FORSYTH COUNTY
STATION: 27+96.00 -L-

SHEET 1 OF 3

STATE OF NORTH CAROLINA
DEPARTMENT OF TRANSPORTATION
RALEIGH

STANDARD OVERHANG FALSEWORK

AASHTO TYPES
III, IV, V, AND VI

RIGHT LANE

NORTH CAROLINA PROFESSIONAL SEAL 18788 ENGINEER CHANG-CHUAN VICTOR CHAO

Chang-Chuan Victor Chao
8/7/2009

REVISIONS						SHEET NO.
NO.	BY:	DATE:	NO.	BY:	DATE:	S-97
1			3			TOTAL SHEETS
2			4			99

ASSEMBLED BY:	DATE:
CHECKED BY:	DATE:
DRAWN BY: R. WRIGHT 06/04	REV.
CHECKED BY: C. V. CHAO 06/04	

07-AUG-2009 14:25
d:\wdlr\victor\overhangfalsework\tiebar&strut\b-4507_type_iv\b4507verhangsheetsiright.dgn
vchao

BRIDGE OVERHANG BRACKET SUMMARY

TOTAL SCREED WEIGHT = _____ LBS.
NUMBER OF SCREED WHEELS = _____
SCREED WHEEL LOAD (W) = _____ LBS.
SCREED LOAD PER BRACKET = _____ LBS.

PROJECT No. : _____
COUNTY : _____
STATION : _____
DESCRIPTION : _____

DATE : _____
DESIGN BY : _____
CHECK BY : _____

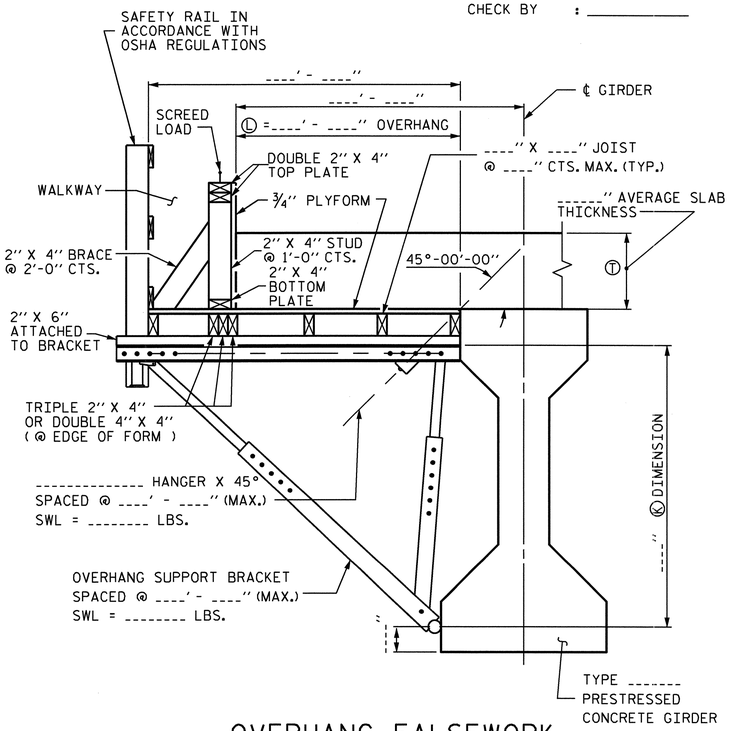

OVERHANG FALSEWORK

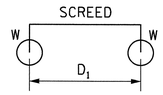

4-WHEEL MACHINE

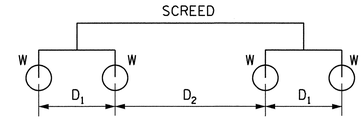

8-WHEEL MACHINE

4 WHEEL MACHINE	
S/D1	R
<= 1.0	1.00
1.1	1.09
1.2	1.17
1.3	1.23
1.4	1.29
1.5	1.33
1.6	1.38
1.7	1.41
1.8	1.44
1.9	1.47
2.0	1.50
2.2	1.55
2.4	1.58
2.6	1.62
2.8	1.64
3.0	1.67
3.5	1.71
4.0	1.75

TABLE 2: SCREED LOAD FACTOR "R"

		THE SCREED LOAD FACTOR R (FOR 8 WHEEL MACHINE)																	
		S/D_2																	
		<= 1.0	1.1	1.2	1.3	1.4	1.5	1.6	1.7	1.8	1.9	2.0	2.2	2.4	2.6	2.8	3.0	3.5	4.0
S/D_1	<= 1.0	1.00	1.09	1.17	1.23	1.29	1.33	1.38	1.41	1.44	1.47	1.50	1.55	1.58	1.62	1.64	1.67	1.71	1.75
	1.1	1.09	1.18	1.26	1.32	1.38	1.42	1.47	1.50	1.54	1.56	1.59	1.64	1.67	1.71	1.73	1.76	1.81	1.84
	1.2	1.17	1.26	1.33	1.40	1.45	1.50	1.54	1.58	1.61	1.64	1.67	1.71	1.75	1.78	1.81	1.83	1.88	1.92
	1.3	1.23	1.32	1.40	1.46	1.52	1.56	1.61	1.64	1.68	1.70	1.73	1.78	1.81	1.85	1.87	1.90	1.95	1.98
	1.4	1.29	1.38	1.45	1.52	1.57	1.62	1.66	1.70	1.73	1.76	1.79	1.83	1.87	1.90	1.93	1.95	2.00	2.07
	1.5	1.33	1.42	1.50	1.56	1.62	1.67	1.71	1.75	1.78	1.81	1.83	1.88	1.92	1.95	1.98	2.00	2.10	2.17
	1.6	1.38	1.47	1.54	1.61	1.66	1.71	1.75	1.79	1.82	1.85	1.88	1.92	1.96	1.99	2.04	2.08	2.18	2.25
	1.7	1.41	1.50	1.58	1.64	1.70	1.75	1.79	1.82	1.86	1.89	1.91	1.96	2.00	2.05	2.11	2.16	2.25	2.32
	1.8	1.44	1.54	1.61	1.68	1.73	1.78	1.82	1.86	1.89	1.92	1.94	1.99	2.06	2.12	2.17	2.22	2.32	2.39
	1.9	1.47	1.56	1.64	1.70	1.76	1.81	1.85	1.89	1.92	1.95	1.97	2.04	2.11	2.18	2.23	2.28	2.38	2.45
	2.0	1.50	1.59	1.67	1.73	1.79	1.83	1.88	1.91	1.94	1.97	2.00	2.09	2.17	2.23	2.29	2.33	2.43	2.50
	2.2	1.55	1.64	1.71	1.78	1.83	1.88	1.92	1.96	1.99	2.04	2.09	2.18	2.26	2.32	2.38	2.42	2.52	2.59
	2.4	1.58	1.67	1.75	1.81	1.87	1.92	1.96	2.00	2.06	2.11	2.17	2.26	2.33	2.40	2.45	2.50	2.60	2.67
	2.6	1.62	1.71	1.78	1.85	1.90	1.95	1.99	2.05	2.12	2.18	2.23	2.32	2.40	2.46	2.52	2.56	2.66	2.73
	2.8	1.64	1.73	1.81	1.87	1.93	1.98	2.04	2.11	2.17	2.23	2.29	2.38	2.45	2.52	2.57	2.62	2.71	2.79
	3.0	1.67	1.76	1.83	1.90	1.95	2.00	2.08	2.16	2.22	2.28	2.33	2.42	2.50	2.56	2.62	2.67	2.76	2.83
	3.5	1.71	1.81	1.88	1.95	2.00	2.10	2.18	2.25	2.32	2.38	2.43	2.52	2.60	2.66	2.71	2.76	2.86	2.93
	4.0	1.75	1.84	1.92	1.98	2.07	2.17	2.25	2.32	2.39	2.45	2.50	2.59	2.67	2.73	2.79	2.83	2.93	3.00

TABLE 3: ALLOWABLE SPAN LENGTH OF JOISTS AND JOIST SPACINGS

AVG. SLAB THICKNESS Ⓣ (IN)	LUMBER JOIST SIZE (IN X IN)	JOIST SPACINGS			
		15 IN	12 IN	10 IN	8 IN
		THE ALLOWABLE SPAN LENGTH OF JOISTS			
10	2 X 4	———	4' - 6"	4' - 9"	5' - 0"
	4 X 4	5' - 9"	6' - 3"	6' - 6"	6' - 7"
12	2 X 4	———	4' - 3"	4' - 9"	5' - 0"
	4 X 4	5' - 3"	6' - 0"	6' - 3"	6' - 5"
14	2 X 4	———	4' - 0"	4' - 6"	5' - 0"
	4 X 4	———	5' - 6"	6' - 0"	6' - 4"
16	2 X 4	———	4' - 0"	4' - 3"	4' - 9"
	4 X 4	———	5' - 3"	5' - 9"	6' - 3"

NOTES

DESIGN INCLUDES CONSTRUCTION LIVE LOAD 20 PSF ON THE AREA SUPPORTED AND 75 PLF AT THE OUTSIDE DECK OF OVERHANGS.

REQUIRED MINIMUM DIAGONAL LEG CAPACITY: 3600 LB WORKING LOAD

THE CONTRACTOR HAS THE OPTION OF SUBMITTING HIS OWN DESIGN FOR OVERHANG FALSEWORK IN ACCORDANCE WITH THE SPECIAL PROVISIONS.

SUBMITTALS UTILIZING THE INSTRUCTIONS AND PROCEDURES DESCRIBED ON SHEET 1 OF 3 SHALL BE IN ACCORDANCE WITH THE APPLICABLE SECTIONS OF THE SPECIFICATIONS AND SPECIAL PROVISIONS, EXCEPT THAT CALCULATIONS FOR OVERHANG FALSEWORK NEED NOT BE SEALED BY A REGISTERED ENGINEER.

FOR OVERHANG FALSEWORK BRACING DESIGN, SEE SHEET 3 OF 3.

PROJECT NO. B-4507
FORSYTH COUNTY
STATION: 27+96.00 -L-

SHEET 2 OF 3

STATE OF NORTH CAROLINA
DEPARTMENT OF TRANSPORTATION
RALEIGH

STANDARD OVERHANG FALSEWORK

AASHTO TYPES
III, IV, V, AND VI

RIGHT LANE

NORTH CAROLINA PROFESSIONAL SEAL 18788 ENGINEER CHARNG-CHUAN VICTOR CHAO

Charng-Chuan Victor Chao
8/7/2009

ASSEMBLED BY:	DATE:
CHECKED BY:	DATE:
DRAWN BY: R. WRIGHT 06/04	REV.
CHECKED BY: C. V. CHAO 06/04	

REVISIONS						SHEET NO.
NO.	BY:	DATE:	NO.	BY:	DATE:	S-98
1			3			TOTAL SHEETS
2			4			99

07-AUG-2009 14:26
d:\wdir\victor\overhangfalsework\tiebar&strut\b-4507_type_iv\b4507verhangsheetsiright.dgn
vchao

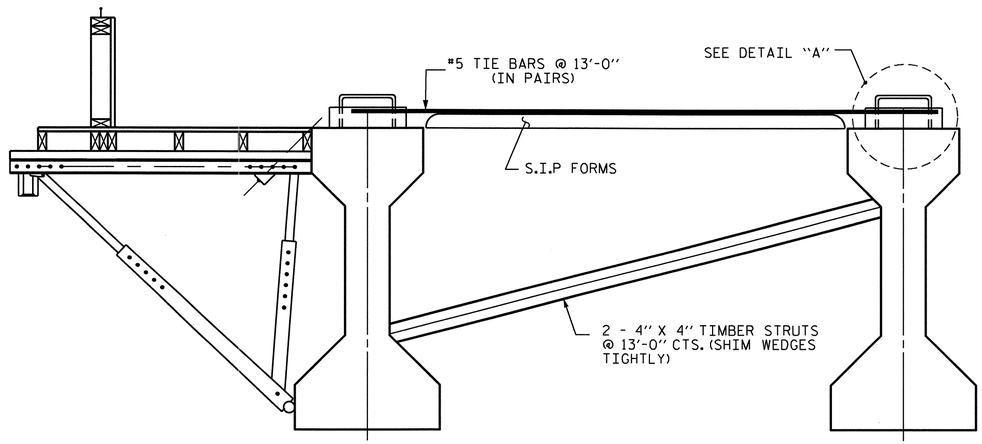

EXTERIOR GIRDER

INTERIOR GIRDER

DETAIL OF REQUIRED OVERHANG FALSEWORK BRACING SYSTEM

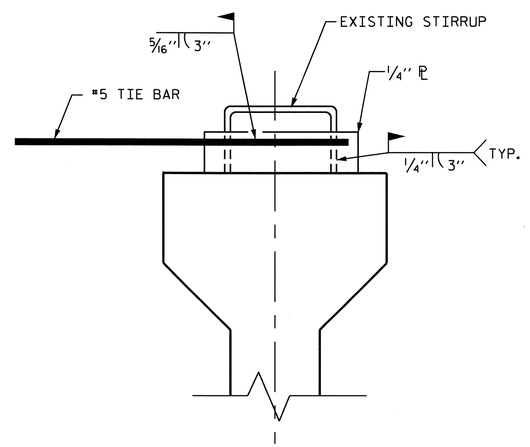

DETAIL "A"

NOTES:

EACH #5 TIE BAR SHALL BE WELDED TO ONE STIRRUP LOOP AS SHOWN IN DETAIL "A". #5 TIE BARS SHALL BE WELDED TO TWO ADJACENT STIRRUPS OF THE EXTERIOR GIRDER AND THE ADJACENT INTERIOR GIRDER BETWEEN PERMANENT DIAPHRAGMS. WELD STEEL PLATES IN BETWEEN THE TIE BARS AND THE STIRRUP LOOP. WELDING TWO TIE BARS TO THE SAME STIRRUP LOOP SHALL NOT BE PERMITTED.

MAXIMUM SPACING BETWEEN THE BRACING (TIE BARS-TIMBER STRUT) IS 13'-0" CTS. #5 TIE BARS SHALL BE LOCATED OVER A TIMBER STRUT.

INSTALL TIE BARS AND TIMBER STRUTS PRIOR TO PLACEMENT OF CONCRETE OR SCREED WEIGHT ONTO THE OVERHANG FALSEWORK.

PROJECT NO. B-4507

FORSYTH COUNTY

STATION: 27+96.00 -L-

SHEET 3 OF 3

STATE OF NORTH CAROLINA
DEPARTMENT OF TRANSPORTATION
RALEIGH

STANDARD OVERHANG FALSEWORK

AASHTO TYPES
III, IV, V, AND VI

RIGHT LANE

NORTH CAROLINA PROFESSIONAL SEAL 18788 ENGINEER CHANG-CHUAN VICTOR CHAO

Chang-Chuan Victor Chao
8/7/2009

REVISIONS						SHEET NO.
NO.	BY:	DATE:	NO.	BY:	DATE:	S-99
1			3			TOTAL SHEETS
2			4			99

DRAWN BY: R. WRIGHT 06/04 DATE : _____
CHECKED BY: C. V. CHAO 06/04 DATE : _____

07-AUG-2009 14:27
d:\wdir\victor\overhangfalsework\tiebar&strut\b-4507_type_iv\b4507verhangsheetsiright.dgn
vchao

STANDARD NOTES

DESIGN DATA:

SPECIFICATIONS	A.A.S.H.T.O. (CURRENT)
LIVE LOAD	SEE PLANS
IMPACT ALLOWANCE	SEE A.A.S.H.T.O.
STRESS IN EXTREME FIBER OF	
STRUCTURAL STEEL - AASHTO M270 GRADE 36	20,000 LBS. PER SQ. IN.
- AASHTO M270 GRADE 50W	27,000 LBS. PER SQ. IN.
- AASHTO M270 GRADE 50	27,000 LBS. PER SQ. IN.
REINFORCING STEEL IN TENSION GRADE 60	24,000 LBS. PER SQ. IN.
CONCRETE IN COMPRESSION	1,200 LBS. PER SQ. IN.
CONCRETE IN SHEAR	SEE A.A.S.H.T.O.
STRUCTURAL TIMBER - TREATED OR UNTREATED - EXTREME FIBER STRESS	1,800 LBS. PER SQ. IN.
COMPRESSION PERPENDICULAR TO GRAIN OF TIMBER	375 LBS. PER SQ. IN.
EQUIVALENT FLUID PRESSURE OF EARTH	30 LBS. PER CU. FT. (MINIMUM)

MATERIAL AND WORKMANSHIP:

EXCEPT AS MAY OTHERWISE BE SPECIFIED ON PLANS OR IN THE SPECIAL PROVISIONS, ALL MATERIAL AND WORKMANSHIP SHALL BE IN ACCORDANCE WITH THE 2006 "STANDARD SPECIFICATIONS FOR ROADS AND STRUCTURES" OF THE N. C. DEPARTMENT OF TRANSPORTATION.

STEEL SHEET PILING FOR PERMANENT OR TEMPORARY APPLICATIONS SHALL BE HOT ROLLED.

CONCRETE:

UNLESS OTHERWISE REQUIRED ON PLANS, CLASS A CONCRETE SHALL BE USED FOR ALL PORTIONS OF ALL STRUCTURES WITH THE EXCEPTION THAT: CLASS AA CONCRETE SHALL BE USED IN BRIDGE SUPERSTRUCTURES, ABUTMENT BACKWALLS, AND APPROACH SLABS; AND CLASS B CONCRETE SHALL BE USED FOR SLOPE PROTECTION AND RIP RAP.

CONCRETE CHAMFERS:

UNLESS OTHERWISE NOTED ON THE PLANS, ALL EXPOSED CORNERS ON STRUCTURES SHALL BE CHAMFERED 3/4" WITH THE FOLLOWING EXCEPTIONS: TOP CORNERS OF CURBS MAY BE ROUNDED TO 1-1/2" RADIUS WHICH IS BUILT INTO CURB FORMS; CORNERS OF TRANSVERSE FLOOR EXPANSION JOINTS SHALL BE ROUNDED WITH A 1/4" FINISHING TOOL UNLESS OTHERWISE REQUIRED ON PLANS; AND CORNERS OF EXPANSION JOINTS IN THE ROADWAY FACES AND TOPS OF CURBS AND SIDEWALKS SHALL BE ROUNDED TO A 1/4" RADIUS WITH A FINISHING STONE OR TOOL UNLESS OTHERWISE REQUIRED ON PLANS.

DOWELS:

DOWELS WHEN INDICATED ON PLANS AS FOR CULVERT EXTENSIONS, SHALL BE EMBEDDED AT LEAST 12" INTO THE OLD CONCRETE AND GROUTED INTO PLACE WITH 1:2 CEMENT MORTAR.

ALLOWANCE FOR DEAD LOAD DEFLECTION, SETTLEMENT, ETC. IN CASTING SUPERSTRUCTURES:

BRIDGES SHALL BE BUILT ON THE GRADE OR VERTICAL CURVE SHOWN ON PLANS. SLABS, CURBS AND PARAPETS SHALL CONFORM TO THE GRADE OR CURVE.

ALL DIMENSIONS WHICH ARE GIVEN IN SECTION AND ARE AFFECTED BY DEAD LOAD DEFLECTIONS ARE DIMENSIONS AT CENTER LINE OF BEARING UNLESS OTHERWISE NOTED ON PLANS. IN SETTING FORMS FOR STEEL BEAM BRIDGES AND PRESTRESSED CONCRETE GIRDER BRIDGES, ADJUSTMENTS SHALL BE MADE DUE TO THE DEAD LOAD DEFLECTIONS FOR THE ELEVATIONS SHOWN. WHERE BLOCKS ARE SHOWN OVER BEAMS FOR BUILDING UP TO THE SLAB, THE VERTICAL DIMENSIONS OF THE BLOCKS SHALL BE ADJUSTED BETWEEN BEARINGS TO COMPENSATE FOR DEAD LOAD DEFLECTIONS, VERTICAL CURVE ORDINATE, AND ACTUAL BEAM CAMBER. WHERE BOTTOM OF SLAB IS IN LINE WITH BOTTOM OF TOP FLANGES, DEPTH OF SLAB BETWEEN BEARINGS SHALL BE ADJUSTED TO COMPENSATE FOR DEAD LOAD DEFLECTION, VERTICAL CURVE ORDINATE, AND ACTUAL BEAM CAMBER.

IN SETTING FALSEWORK AND FORMS FOR REINFORCED CONCRETE SPANS, AN ALLOWANCE SHALL BE MADE FOR DEAD LOAD DEFLECTIONS, SETTLEMENT OF FALSEWORK, AND PERMANENT CAMBER WHICH SHALL BE PROVIDED FOR IN ADDITION TO THE ELEVATIONS SHOWN. AFTER REMOVAL OF THE FALSEWORK, THE FINISHED STRUCTURES SHALL CONFORM TO THE PROFILE AND ELEVATIONS SHOWN ON THE PLANS AND CONSTRUCTION ELEVATIONS FURNISHED BY THE ENGINEER.

DETAILED DRAWINGS FOR FALSEWORK OR FORMS FOR BRIDGE SUPERSTRUCTURE AND ANY STRUCTURE OR PARTS OF A STRUCTURE AS NOTED ON THE PLANS SHALL BE SUBMITTED TO THE ENGINEER FOR APPROVAL BEFORE CONSTRUCTION OF THE FALSEWORK OR FORMS IS STARTED.

REINFORCING STEEL:

ALL REINFORCING STEEL SHALL BE DEFORMED. DIMENSIONS RELATIVE TO PLACEMENT OF REINFORCING ARE TO CENTERS OF BARS UNLESS OTHERWISE INDICATED IN THE PLANS. DIMENSIONS ON BAR DETAILS ARE TO CENTERS OF BARS OR ARE OUT TO OUT AS INDICATED ON PLANS.

WIRE BAR SUPPORTS SHALL BE PROVIDED FOR REINFORCING STEEL WHERE INDICATED ON THE PLANS. WHEN BAR SUPPORT PIECES ARE PLACED IN CONTINUOUS LINES, THEY SHALL BE SO PLACED THAT THE ENDS OF THE SUPPORTING WIRES SHALL BE LAPPED TO LOCK LEGS ON ADJOINING PIECES.

STRUCTURAL STEEL:

AT THE CONTRACTOR'S OPTION, HE MAY SUBSTITUTE 7/8" Ø SHEAR STUDS FOR THE 3/4" Ø STUDS SPECIFIED ON THE PLANS. THIS SUBSTITUTION SHALL BE MADE AT THE RATE OF 3 - 7/8" Ø STUDS FOR 4 - 3/4" Ø STUDS, AND STUD SPACING CHANGES SHALL BE MADE AS NECESSARY TO PROVIDE THE SAME EQUIVALENT NUMBER OF 7/8" Ø STUDS ALONG THE BEAM AS SHOWN FOR 3/4" Ø STUDS BASED ON THE RATIO OF 3 - 7/8" Ø STUDS FOR 4 - 3/4" Ø STUDS. STUDS OF THE LENGTH SPECIFIED ON THE PLANS MUST BE PROVIDED. THE MAXIMUM SPACING SHALL BE 2'-0".

EXCEPT AT THE INTERIOR SUPPORTS OF CONTINUOUS BEAMS WHERE THE COVER PLATE IS IN CONTACT WITH BEARING PLATE, THE CONTRACTOR MAY, AT HIS OPTION, SUBSTITUTE FOR THE COVER PLATES DESIGNATED ON THE PLANS COVER PLATES OF THE EQUIVALENT AREA PROVIDED THESE PLATES ARE AT LEAST 5/16" IN THICKNESS AND DO NOT EXCEED A WIDTH EQUAL TO THE FLANGE WIDTH LESS 2" OR A THICKNESS EQUAL TO 2 TIMES THE FLANGE THICKNESS. THE SIZE OF FILLET WELDS SHALL CONFORM TO THE REQUIREMENTS OF THE CURRENT ANSI/AASHTO/AWS "BRIDGE WELDING CODE". ELECTROSLAG WELDING WILL NOT BE PERMITTED.

WITH THE SOLE EXCEPTION OF EDGES AT SURFACES WHICH BEAR ON OTHER SURFACES, ALL SHARP EDGES AND ENDS OF SHAPES AND PLATES SHALL BE SLIGHTLY ROUNDED BY SUITABLE MEANS TO A RADIUS OF APPROXIMATELY 1/16 INCH OR EQUIVALENT FLAT SURFACE AT A SUITABLE ANGLE PRIOR TO PAINTING, GALVANIZING, OR METALLIZING.

HANDRAILS AND POSTS:

METAL STANDARDS AND FACES OF THE CONCRETE END POSTS FOR THE METAL RAIL SHALL BE SET NORMAL TO THE GRADE OF THE CURB, UNLESS OTHERWISE SHOWN ON PLANS. THE METAL RAIL AND TOPS OF CONCRETE POSTS USED WITH THE ALUMINUM RAIL SHALL BE BUILT PARALLEL TO THE GRADE OF THE CURB.

METAL HANDRAILS SHALL BE IN ACCORDANCE WITH THE PLANS. RAILS SHALL BE AS MANUFACTURED FOR BRIDGE RAILING. CASTINGS SHALL BE OF A UNIFORM APPEARANCE. FINS AND OTHER DEFORMATIONS RESULTING FROM CASTING OR OTHERWISE SHALL BE REMOVED IN A MANNER SO THAT A UNIFORM COLORING OF THE COMPLETED CASTING SHALL BE OBTAINED. CASTINGS WITH DISCOLORATIONS OR OF NON-UNIFORM COLORING WILL NOT BE ACCEPTED. CERTIFIED MILL REPORTS ARE REQUIRED FOR METAL RAILS AND POSTS.

SPECIAL NOTES:

GENERALLY, IN CASE OF DISCREPANCY, THIS STANDARD SHEET OF NOTES SHALL GOVERN OVER THE SPECIFICATIONS, BUT THE REMAINDER OF THE PLANS SHALL GOVERN OVER NOTES HEREON, AND SPECIAL PROVISIONS SHALL GOVERN OVER ALL. SEE SPECIFICATIONS ARTICLE 105-4.

ENGLISH

JANUARY, 1990

STD. NO. SN