09/08/99

TIP PROJECT: R-3833B

CONTRACT: C202068

STATE OF NORTH CAROLINA
DIVISION OF HIGHWAYS

IREDELL COUNTY

STATE	STATE PROJECT REFERENCE NO.	SHEET NO.	TOTAL SHEETS
N.C.	R-3833B		

STATE PROJ. NO.	F.A. PROJ. NO.	DESCRIPTION
34554.1.1	STP-150(11)	P.E.
34554.2.3	STP-1100(20)	R/W, UTL
34554.3.2	STP-1100(20)	CONST.

LOCATION: ***SR 1100 (BRAWLEY SCHOOL ROAD) FROM EAST OF SR 1109 (WILLIAMSON ROAD) TO EAST OF WINGHAVEN COURT***

TYPE OF WORK: ***GRADING, DRAINAGE, PAVING, SIGNING, SIGNALS AND STRUCTURES***

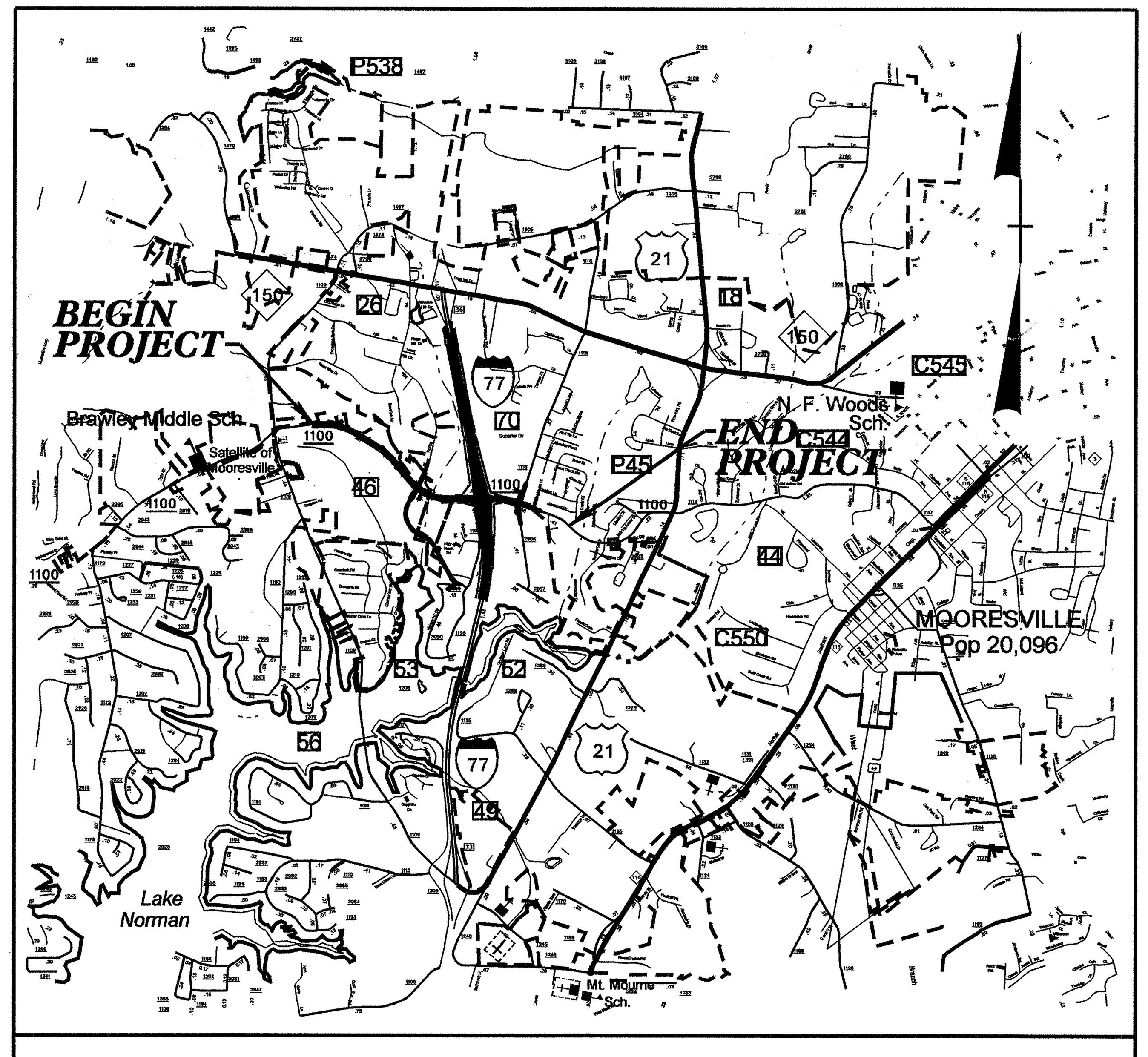

VICINITY MAP

STRUCTURES

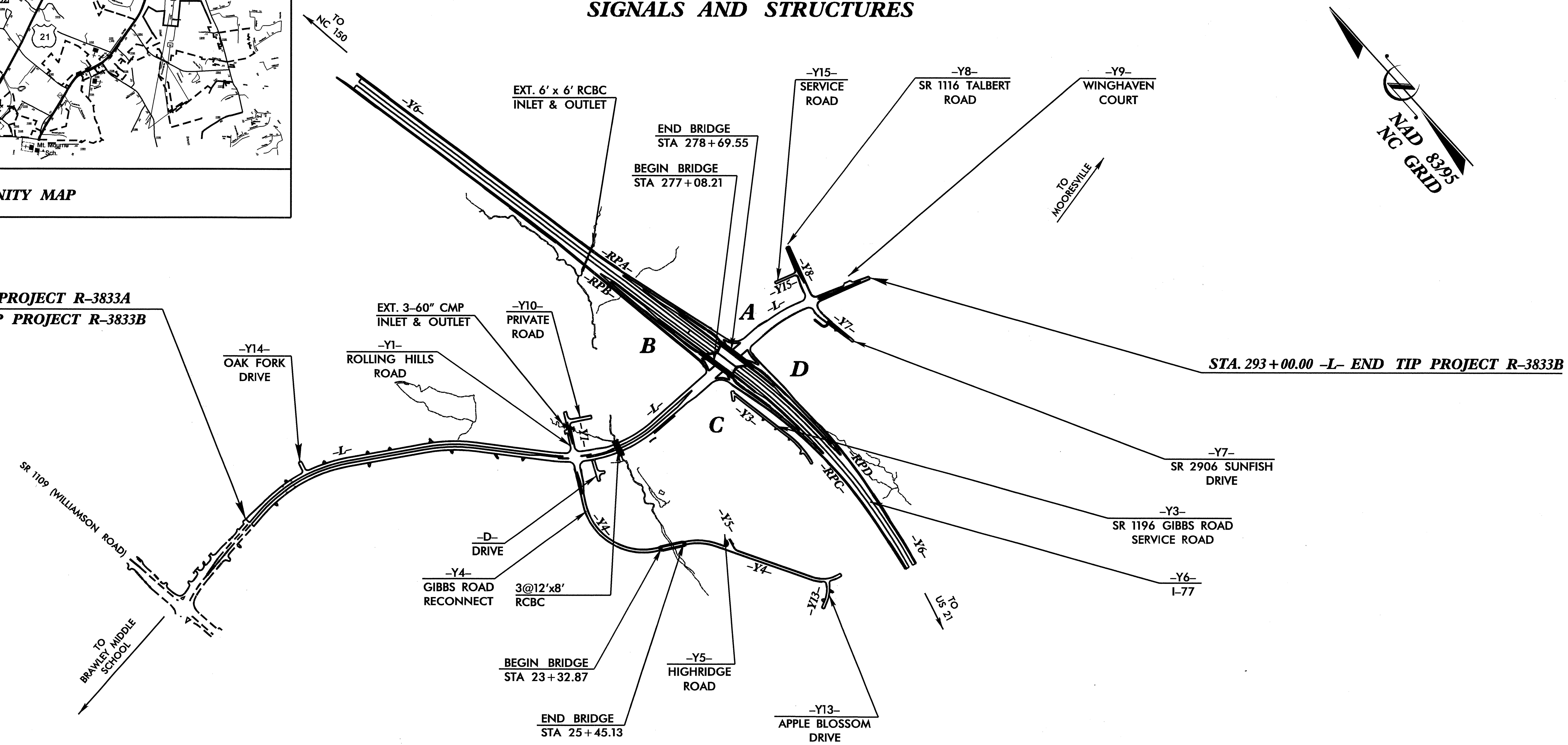

DESIGN DATA

ADT 2009	=	24,880
ADT 2029	=	33,790
DHV	=	9 %
D	≐	60 %
T	=	9 % *
V	=	50 MPH

* (TTST 3% + DUAL 6%)

PROJECT LENGTH

LENGTH ROADWAY TIP PROJECT R-3833B	=	1.17 MI
LENGTH STRUCTURES TIP PROJECT R-3833B	=	0.03 MI
TOTAL LENGTH OF TIP PROJECT R-3833B	=	1.20 MI

Prepared In the Office of:

DIVISION OF HIGHWAYS

1000 Birch Ridge Dr., Raleigh, N.C. 27610

2006 STANDARD SPECIFICATIONS

LETTING DATE:
October 20, 2009

ROY GIROLAMI, P.E.
PROJECT ENGINEER

DAVID ANDERSON, P.E.
PROJECT DESIGN ENGINEER

STRUCTURE DESIGN UNIT

DIVISION OF HIGHWAYS
STATE OF NORTH CAROLINA

P.E.
STATE HIGHWAY DESIGN ENGINEER

07-JAN-2009 12:05
$$$$$$$$$$$$$$DGN$$$$$$$$$$$$$$$$$
Danderson

INDEX			
	STATION	DESCRIPTION	SHEET NUMBER(S)
A	277+88.88 -L-	BRIDGE ON SR 1100 OVER I-77	S-1 THRU S-85
B	24+39.00 -Y4-	BRIDGE ON -Y4- OVER UNNAMED TRIBUTARY	S-86 THRU S-107
C	265+08.83 -L-	TRIPLE 12' X 8' RCBC	C-1 THRU C-5
D	40+22.00 -Y6-	SINGLE 6' X 8' RCBC	C-6 THRU C-10
E	277+08.21 -L-	MSE WALL ALONG END BENT 1 OF STRUCTURE A	W-1 THRU W-3
F	278+69.55 -L-	MSE WALL ALONG END BENT 2 OF STRUCTURE A	W-1 THRU W-3
G	31+85.00 -Y6-	MSE WALL @ 31+85.00 -Y6-	W-4 THRU W-5
H	268+50.00 -L-	MSE WALL @ 268+50.00 -L-	W-6 THRU W-7

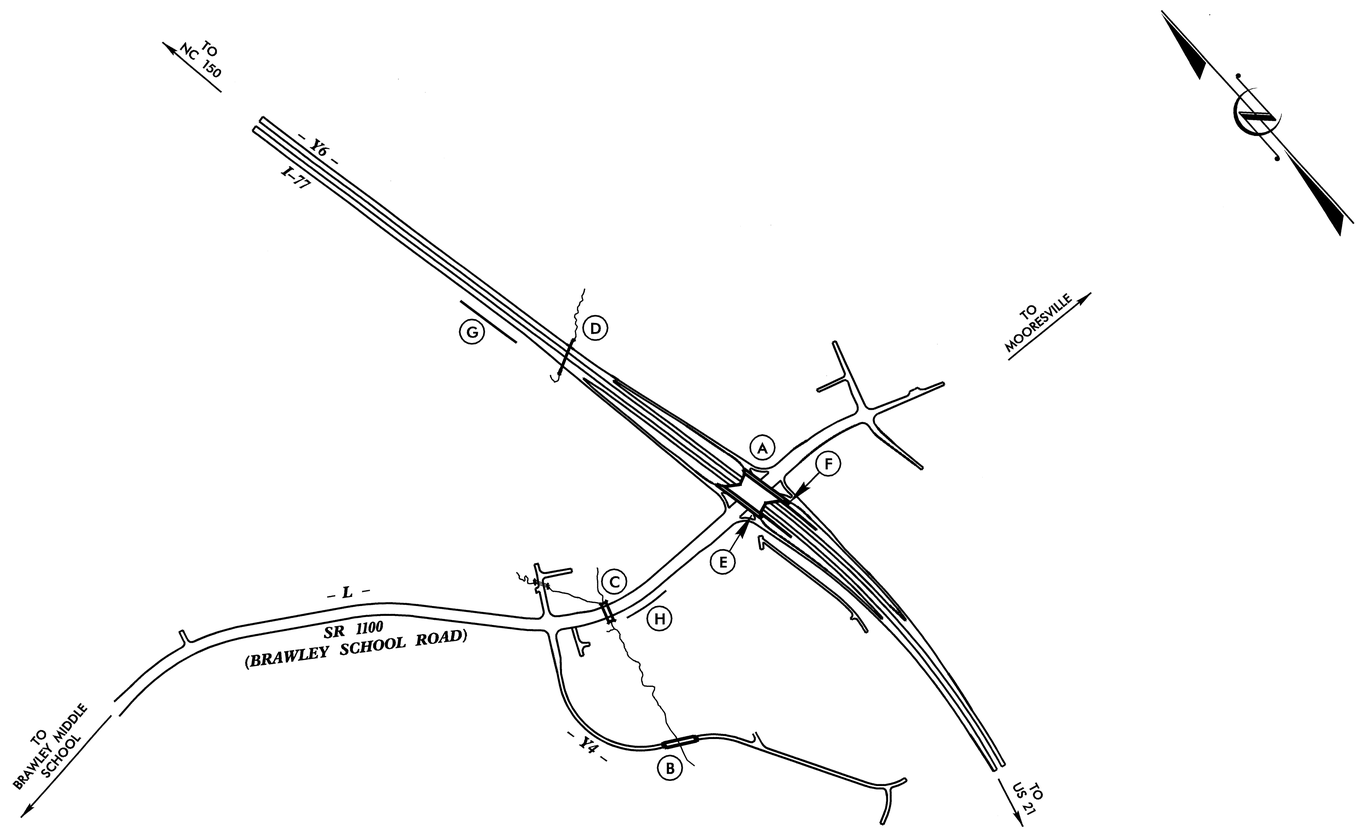

PLAN

PROJECT NO. R-3833B

IREDELL COUNTY

STATION:

STATE OF NORTH CAROLINA
DEPARTMENT OF TRANSPORTATION
RALEIGH

INDEX OF BRIDGES, CULVERTS & WALLS

NORTH CAROLINA PROFESSIONAL SEAL 11259 ENGINEER DAVID R. ANDERSON

11/25/08

REVISIONS						SHEET NO.
NO.	BY:	DATE:	NO.	BY:	DATE:	TOTAL SHEETS
1			3			
2			4			

DRAWN BY : R. WITHROW DATE : 12 NOV 08
CHECKED BY : D. ANDERSON DATE : 18 NOV 09

25-NOV-2008 10:35
R:\Structures\rwithrow\Microstation\R3833B_sd_ls_01.dgn
drwithrow

F.A. PROJ. NO.: STP-1100(20)

GRADE DATA:

+6.1912% △ +0.4233%

PI = 276+33.00 -L-
EL. = 843.88
VC = 485'

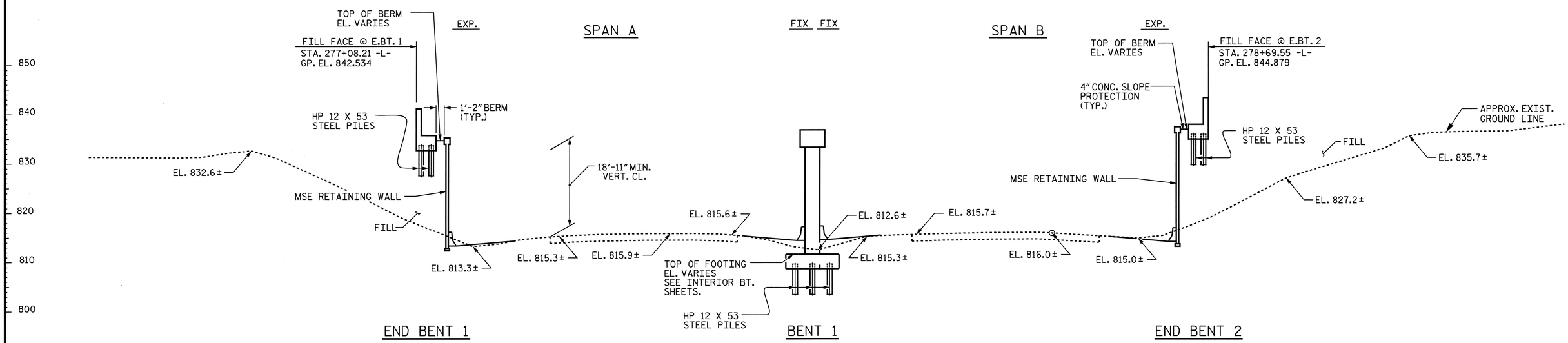

SECTION ALONG -L-

(SECTION @ BENT AND END BENTS ARE TAKEN AT RIGHT ANGLES)

(SEE SHEET 2 OF 5 FOR PLAN)

NORTH CAROLINA PROFESSIONAL SEAL 9804 ENGINEER ROY M. RASHIDIAN
11-24-08

NORTH CAROLINA PROFESSIONAL SEAL 11259 ENGINEER DAVID R. ANDERSON
11/24/08

PROJECT NO. R-3833B
IREDELL COUNTY
STATION: 277+88.88 -L-

SHEET 1 OF 5 REPLACES BR. NO. 70

STATE OF NORTH CAROLINA
DEPARTMENT OF TRANSPORTATION
RALEIGH

GENERAL DRAWING
BRIDGE ON SR 1100
OVER I-77 BETWEEN
SR 1109 AND SR 2906

REVISIONS						SHEET NO.
NO.	BY:	DATE:	NO.	BY:	DATE:	S-1
1			3			TOTAL SHEETS
2			4			113

DRAWN BY : S. M. RASHIDI DATE : 9-4-08
CHECKED BY : D. R. ANDERSON DATE : 10/7/08

05-NOV-2008 12:31
r:\structures\srashidi\microstation\wkg\str.*1\r3833b_sd_pgd_01.dgn
danderson

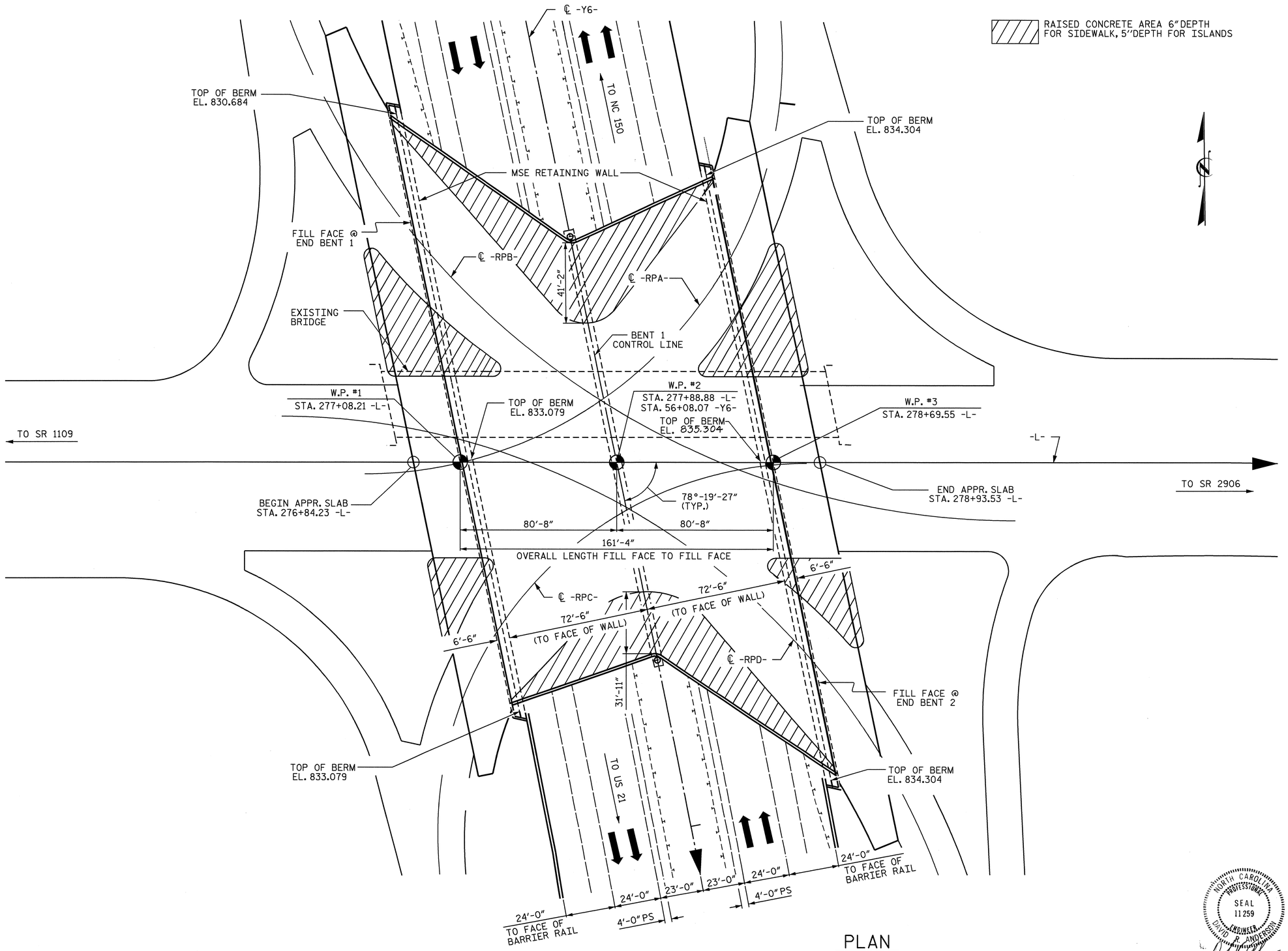

PLAN

(PILES NOT SHOWN FOR CLARITY)

PROJECT NO. R-3833B

IREDELL COUNTY

STATION: 277+88.88 -L-

SHEET 2 OF 5 REPLACES BR. NO. 70

STATE OF NORTH CAROLINA
DEPARTMENT OF TRANSPORTATION
RALEIGH

GENERAL DRAWING
BRIDGE ON SR 1100 OVER I-77 BETWEEN SR 1109 AND SR 2906

NORTH CAROLINA PROFESSIONAL SEAL 11259 ENGINEER DAVID R. ANDERSON

11/24/08

REVISIONS						SHEET NO.
NO.	BY:	DATE:	NO.	BY:	DATE:	S-2
1			3			TOTAL SHEETS
2			4			113

DRAWN BY : S. M. RASHIDI DATE : 9-4-08
CHECKED BY : D. R. ANDERSON DATE : 10/7/08

14-OCT-2008 11:48
i:\structures\srashidl\microstation\wkg\str. #1\r3833b_sd_pgd_01.dgn
srashidl

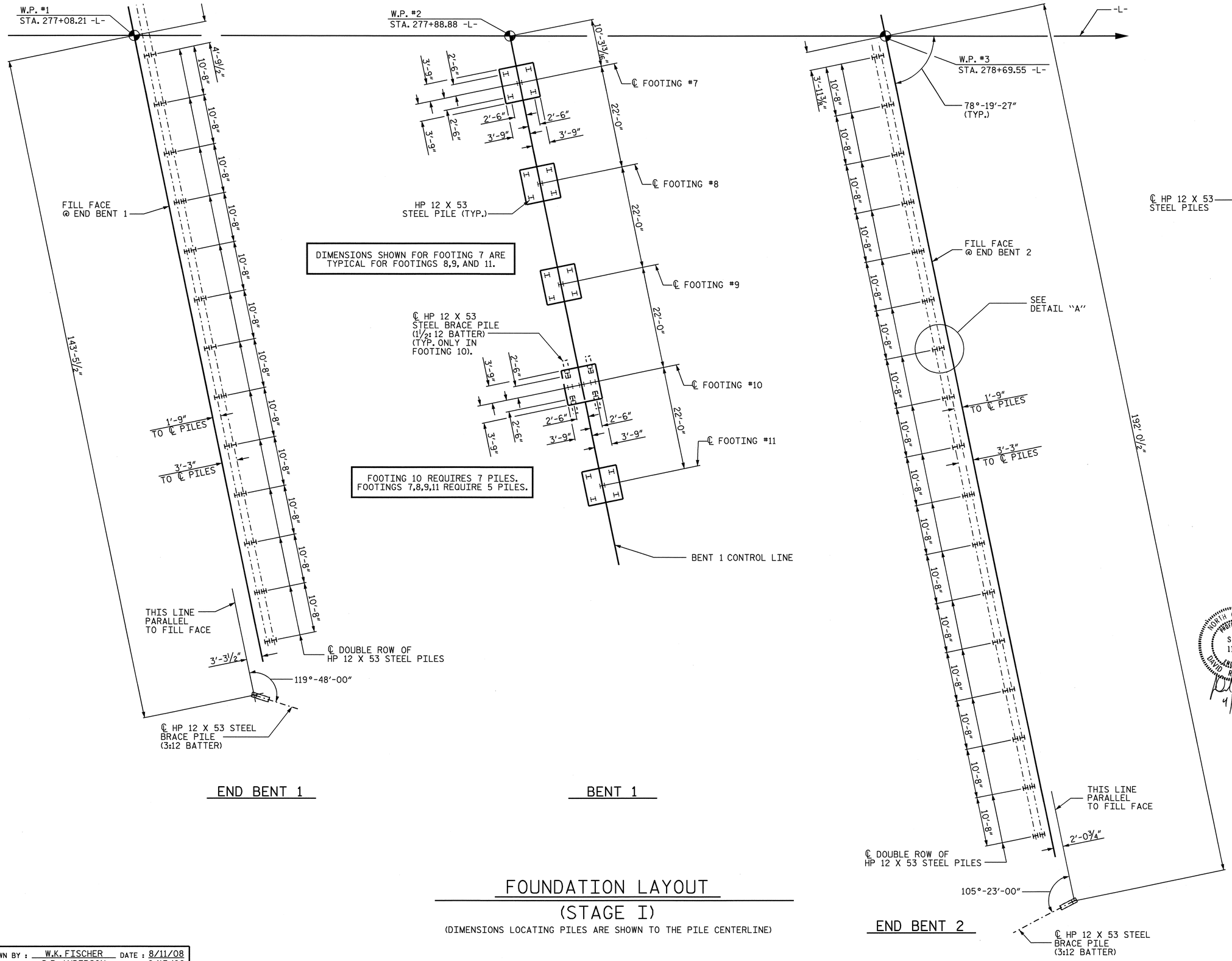

FOUNDATION LAYOUT

(STAGE I)

(DIMENSIONS LOCATING PILES ARE SHOWN TO THE PILE CENTERLINE)

NORTH CAROLINA PROFESSIONAL SEAL 11259 ENGINEER DAVID R. ANDERSON

4/17/09

PROJECT NO. R-3833B

IREDELL COUNTY

STATION: 277+88.88 -L-

SHEET 3 OF 5

STATE OF NORTH CAROLINA
DEPARTMENT OF TRANSPORTATION
RALEIGH

GENERAL DRAWING
BRIDGE ON SR 1100
OVER I-77 BETWEEN
SR 1109 AND SR 2906
(STAGE I)

REVISIONS						SHEET NO.
NO.	BY:	DATE:	NO.	BY:	DATE:	S-3
1			3			TOTAL SHEETS
2			4			113

DRAWN BY : W.K. FISCHER DATE : 8/11/08
CHECKED BY : D.R. ANDERSON DATE : 8/13/08

15-APR-2009 14:17
r:\structures\danderson\str #1\r-3833b_sd_fl.dgn
danderson

FOUNDATION LAYOUT

(STAGE II)

(DIMENSIONS LOCATING PILES ARE SHOWN TO THE PILE CENTERLINE)

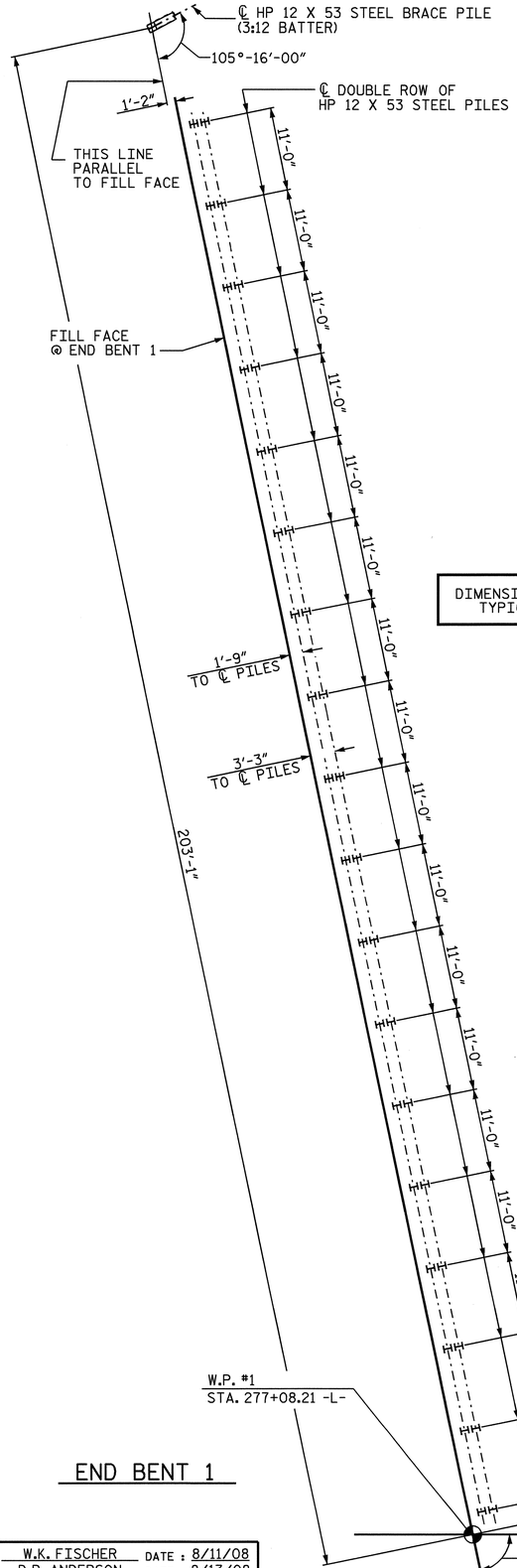

END BENT 1

DIMENSIONS SHOWN FOR FOOTING 1 ARE TYPICAL FOR FOOTINGS 3 AND 6.

FOOTING 2 REQUIRES 7 PILES. FOOTINGS 1,3,AND 6 REQUIRE 5 PILES. FOOTINGS 4 AND 5 REQUIRE 8 PILES.

ALL DIMENSIONS SHOWN FOR FOOTINGS 4 AND 5 ARE TYPICAL FOR BOTH.

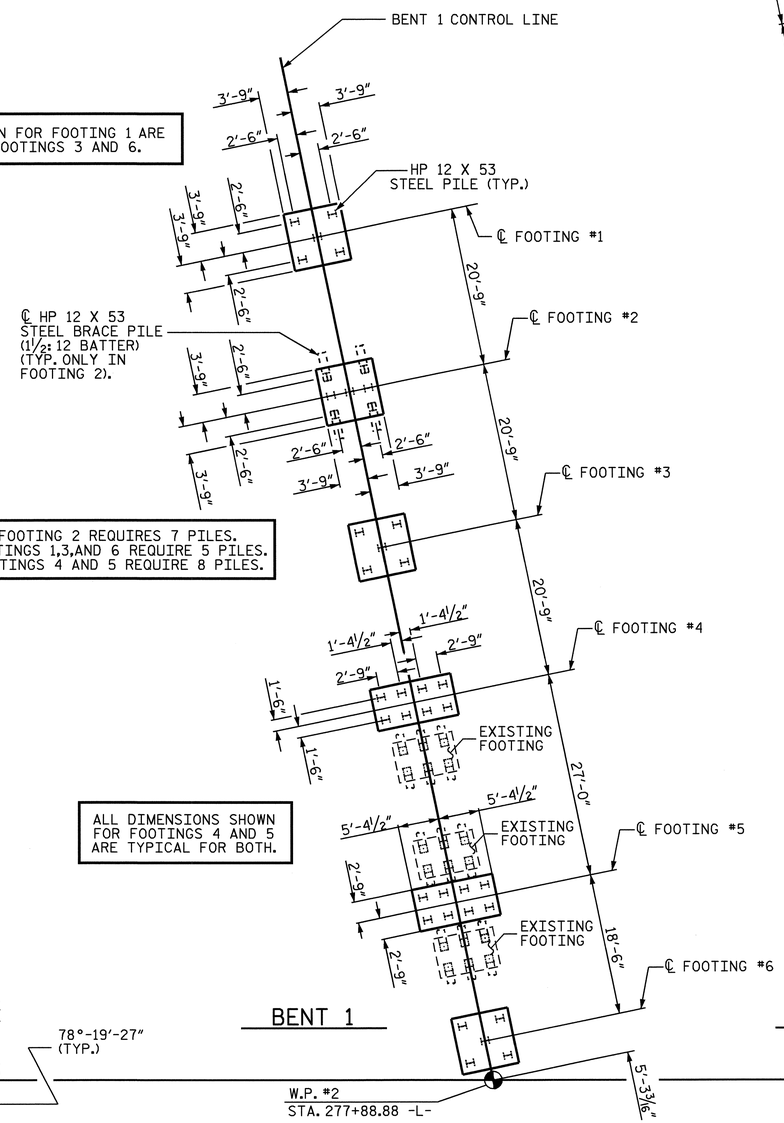

BENT 1

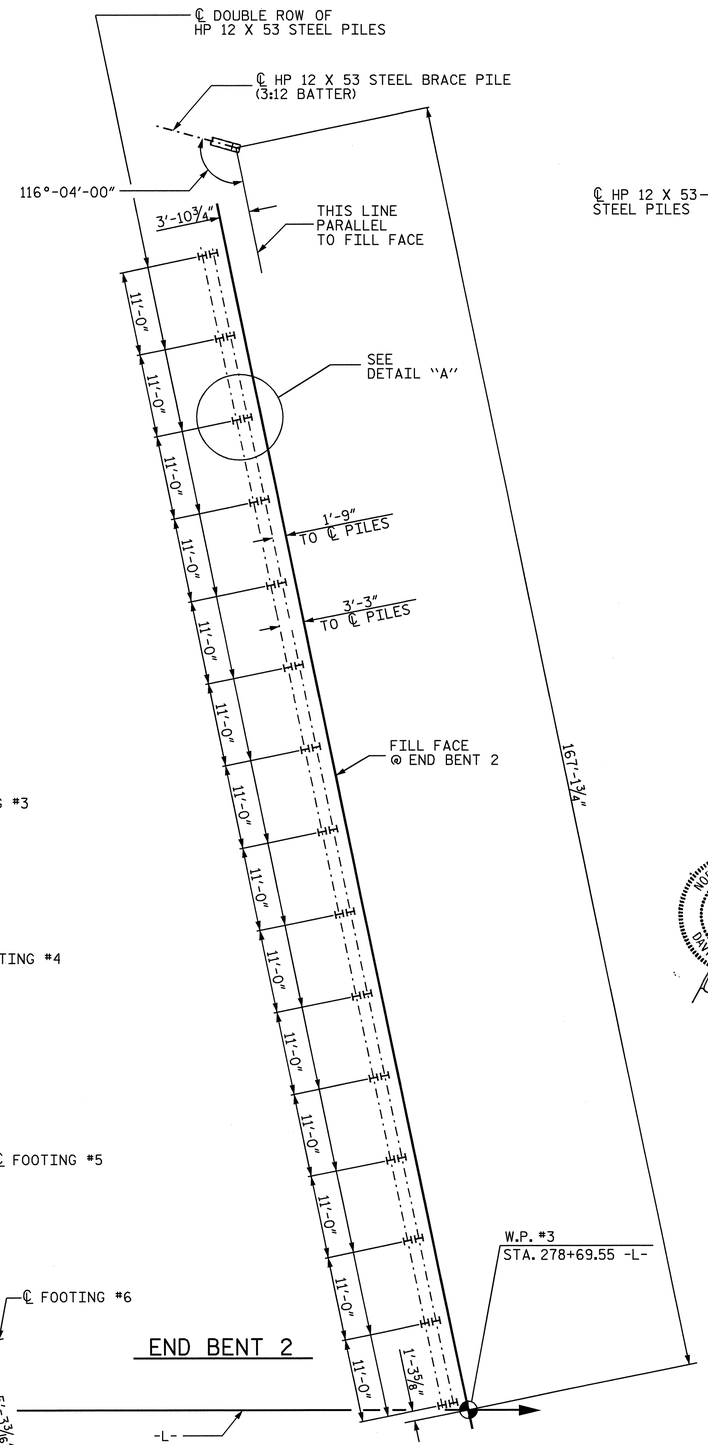

END BENT 2

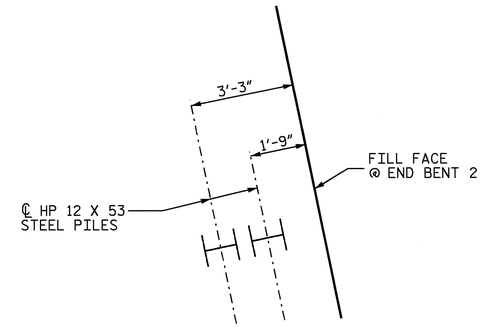

DETAIL "A"

(END BENT 2 SHOWN- END BENT 1 SIMILAR BY ROTAION)

NORTH CAROLINA PROFESSIONAL SEAL 11259 ENGINEER DAVID R. ANDERSON

4/17/09

PROJECT NO. R-3833B

IREDELL COUNTY

STATION: 277+88.88 -L-

SHEET 4 OF 5

STATE OF NORTH CAROLINA
DEPARTMENT OF TRANSPORTATION
RALEIGH

GENERAL DRAWING
BRIDGE ON SR 1100
OVER I-77 BETWEEN
SR 1109 AND SR 2906
(STAGE II)

REVISIONS						SHEET NO.
NO.	BY:	DATE:	NO.	BY:	DATE:	S-4
1			3			TOTAL SHEETS
2			4			113

DRAWN BY : W.K. FISCHER DATE : 8/11/08
CHECKED BY : D.R. ANDERSON DATE : 8/13/08

15-APR-2009 14:17
r:\structures\danderson\str #1\r-3833b_sd_f1.dgn
danderson

TOTAL BILL OF MATERIAL

	REMOVAL OF EXISTING STRUCTURE	FOUNDATION EXCAVATION	REINFORCED CONCRETE DECK SLAB	GROOVING BRIDGE FLOORS	CLASS A CONCRETE	BRIDGE APPROACH SLABS	REINFORCING STEEL	SPIRAL COLUMN REINFORCING STEEL	54" P/S CONCRETE GIRDERS		HP 12 X 53 STEEL PILES		THREE BAR METAL RAIL	ELASTOMERIC BEARINGS	EVAZOTE JOINT SEALS
	LUMP SUM	LUMP SUM	SQ. FT.	SQ. FT.	CU.YDS.	LUMP SUM	LBS.	LBS.	NO.	LIN. FT.	NO.	LIN. FT.	LIN. FT.	LUMP SUM	LUMP SUM
SUPERSTRUCTURE			41,301	48,145		LUMP SUM			56	4,638.33			354.3	LUMP SUM	LUMP SUM
END BENT 1					293.8		38,359				64	5,120			
BENT 1					340.2		46,583	5,380			65	3,250			
END BENT 2					285.9		39,430				66	4,950			
TOTAL	LUMP SUM	LUMP SUM	41,301	48,145	919.9	LUMP SUM	124,372	5,380	56	4,638.33	195	13,320	354.3	LUMP SUM	LUMP SUM

BM #13- RR SPIKE SET IN THE EDGE OF PAVEMENT AND GUTTER AT ENTRANCE OF CUL -DE-SAC, 36' SE OF MANHOLE, -BL- STA. 289+81 OFFSET 569.89' LT ELEV. 830.71'.

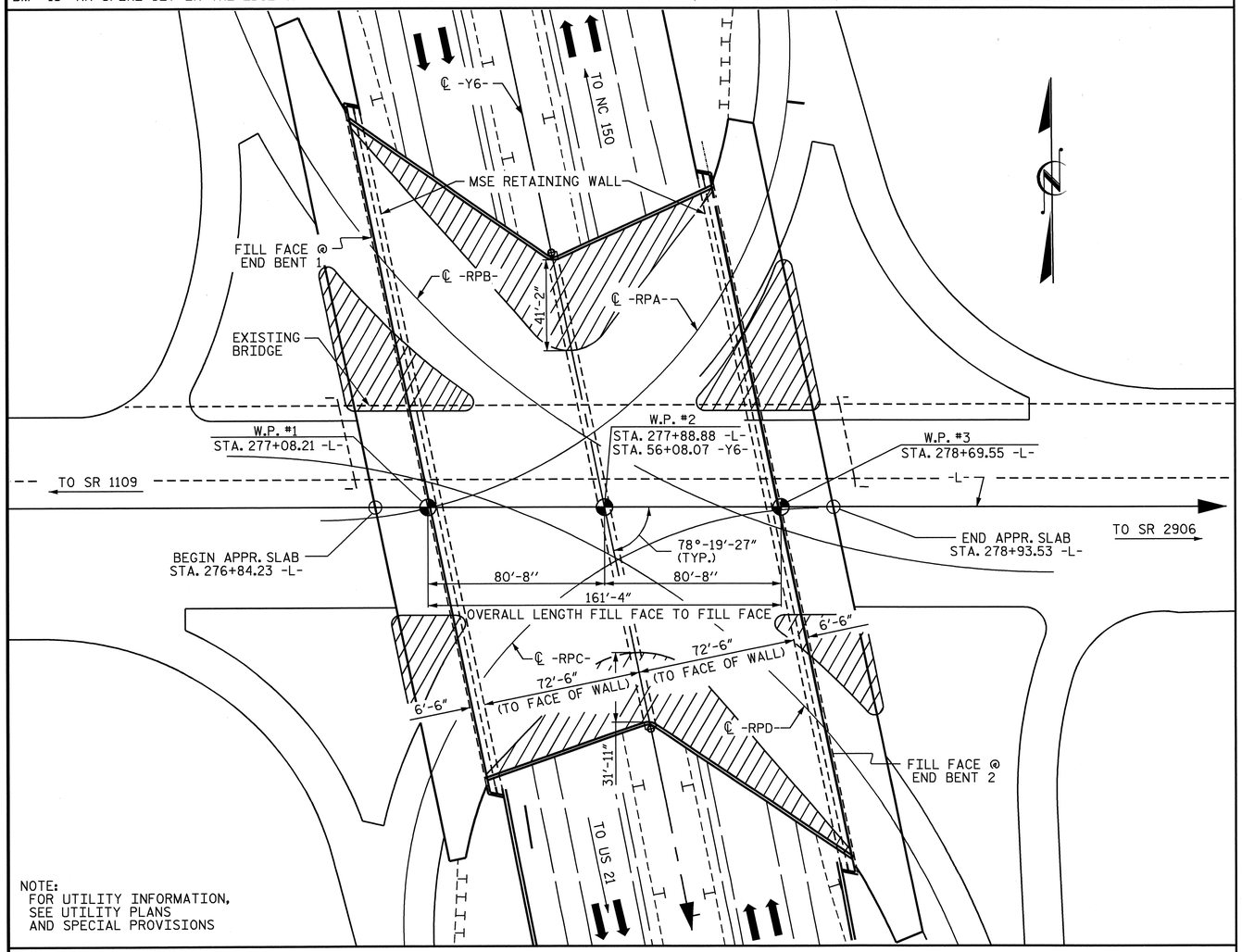

NOTE:
FOR UTILITY INFORMATION, SEE UTILITY PLANS AND SPECIAL PROVISIONS

LOCATION SKETCH

NOTES

THIS BRIDGE HAS BEEN DESIGNED BY THE STRENGTH DESIGN METHOD AS SPECIFIED IN AASHTO STANDARD SPECIFICATIONS.

ASSUMED LIVE LOAD = HS 20 OR ALTERNATE LOADING, EXCEPT THAT THE PRESTRESSED GIRDERS HAVE BEEN DESIGNED FOR HS25.

FOR LIMITS OF TEMPORARY SHORING FOR MAINTENANCE OF TRAFFIC, SEE TRAFFIC CONTROL PLANS. FOR TEMPORARY SHORING PAY ITEM, SEE ROADWAY PLANS.

FOR CRANE SAFETY, SEE SPECIAL PROVISIONS.

FOR GROUT, SEE SPECIAL PROVISION "GROUT FOR STRUCTURES".

FOR SUBMITTAL OF WORKING DRAWINGS, SEE SPECIAL PROVISONS.

FOR FALSEWORK AND FORMWORK, SEE SPECIAL PROVISIONS.

FOR OTHER DESIGN DATA AND GENERAL NOTES, SEE SHEET SN.

FOR EROSION CONTROL MEASURES SEE EROSION CONTROL PLANS.

FOR PRESTRESSED CONCRETE MEMBERS, SEE SPECIAL PROVISIONS.

DRIVE PILES AT END BENT NO. 1, BENT NO. 1 AND END BENT NO. 2 TO A REQUIRED BEARING CAPACITY OF 140 TONS PER PILE. THE REQUIRED BEARING CAPACITY IS EQUAL TO THE ALLOWABLE BEARING CAPACITY WITH A MINIMUM FACTOR OF SAFETY.

THE ALLOWABLE BEARING CAPACITY FOR PILES AT END BENT NO. 1, BENT NO. 1 AND END BENT NO. 2 IS 70 TONS PER PILE.

FOR MAINTENANCE AND PROTECTION OF TRAFFIC BENEATH PROPOSED STRUCTURE, SEE SPECIAL PROVISIONS.

THIS BRIDGE HAS BEEN DESIGNED IN ACCORDANCE WITH THE REQUIREMENTS OF THE STANDARD SPECIFICATIONS FOR SEISMIC DESIGN OF HIGHWAY BRIDGES FOR SEISMIC PERFORMANCE CATEGORY A.

THE SUBSTRUCTURE OF THE EXISTING BRIDGE INDICATED ON THE PLANS IS FROM THE BEST INFORMATION AVAILABLE. SINCE THIS INFORMATION IS SHOWN FOR THE CONVENIENCE OF THE CONTRACTOR, THE CONTRACTOR SHALL HAVE NO CLAIM WHATSOEVER AGAINST THE DEPARTMENT OF TRANSPORTATION FOR ANY DELAYS OR ADDITIONAL COST INCURRED BASED ON DIFFERENCES BETWEEN THE EXISTING BRIDGE SUBSTRUCTURE SHOWN ON THE PLANS AND THE ACTUAL CONDITIONS AT THE PROJECT SITE.

FOR PILES, SEE SPECIAL PROVISIONS.

FOR CURING CONCRETE, SEE SPECIAL PROVISIONS.

FOR FORMS FOR CONCRETE BRIDGE DECKS, SEE SPECIAL PROVISIONS.

FOR PLACING LOAD ON STRUCTURE MEMBERS, SEE SPECIAL PROVISIONS.

THE CLASS AA CONCRETE IN THE BRIDGE DECK SHALL CONTAIN FLY ASH OR GROUND GRANULATED BLAST FURNACE SLAG AT THE SUBSTITUTION RATE SPECIFIED IN ARTICLE 1024-1 AND IN ACCORDANCE WITH ARTICLES 1024-5 AND 1024-6 OF THE STANDARD SPECIFICATIONS. NO PAYMENT WILL BE MADE FOR THIS SUBSTITUTION AS IT IS CONSIDERED INCIDENTAL TO THE COST OF THE REINFORCED CONCRETE DECK SLAB.

THE CONTRACTOR SHALL PROVIDE INDEPENDENT ASSURANCE SAMPLES OF REINFORCING STEEL AS FOLLOWS: FOR PROJECTS REQUIRING UP TO 400 TONS OF REINFORCING STEEL, ONE 30 INCH SAMPLE OF EACH SIZE BAR USED, AND FOR PROJECTS REQUIRING OVER 400 TONS OF REINFORCING STEEL, TWO 30 INCH SAMPLES OF EACH SIZE BAR USED. THE BARS FROM WHICH THE SAMPLES ARE TAKEN MUST THEN BE SPLICED WITH REPLACEMENT BARS OF THE SIZE AND LENGTH OF THE SAMPLE, PLUS A MINIMUM LAP SPLICE OF THIRTY BAR DIAMETERS.

THE EXISTING STRUCTURE CONSISTS OF RC DECK ON PRECAST PRESTRESSED CONCRETE GIRDERS, END BENT : RC CAP ON PPC PILES, INT. BENTS: RCP & B ON PILE FTGS. ONE SPAN @ 47'-0", TWO SPAN @ 65'-0", ONE SPAN 52'-0" AND CLEAR ROADWAY WIDTH OF 34'-0". THE EXISTING BRIDGE IS PRESENTLY NOT POSTED FOR LOAD LIMIT. SHOULD THE STRUCTURAL INTEGRITY OF THE BRIDGE DETERIORATE A LOAD LIMIT MAY BE POSTED AND MAY BE REDUCED AS FOUND NECESSARY DURING THE LIFE OF THE PROJECT. SEE SPECIAL PROVISIONS.

INASMUCH AS THE PAINT SYSTEM ON THE EXISTING STRUCTURAL STEEL CONTAINS LEAD, THE CONTRACTOR'S ATTENTION IS DIRECTED TO ARTICLE 107-1 OF THE STANDARD SPECIFICATIONS. ANY COSTS RESULTING FROM COMPLIANCE WITH APPLICABLE STATE OR FEDERAL REGULATIONS PERTAINING TO HANDLING OF MATERIALS CONTAINING LEAD BASED PAINT SHALL BE INCLUDED IN THE BID PRICE FOR "REMOVAL OF EXISTING STRUCTURE AT STATION 277+88.88 -L-."

PROJECT NO. R-3833B
IREDELL COUNTY
STATION: 277+88.88 -L-

SHEET 5 OF 5

STATE OF NORTH CAROLINA
DEPARTMENT OF TRANSPORTATION
RALEIGH

GENERAL DRAWING
BRIDGE ON SR 1100
OVER I-77 BETWEEN
SR 1109 AND SR 2906

NORTH CAROLINA PROFESSIONAL SEAL 11259 ENGINEER DAVID R. ANDERSON
5/11/09

REVISIONS						SHEET NO.
NO.	BY:	DATE:	NO.	BY:	DATE:	S-5
1			3			TOTAL SHEETS
2			4			113

STR. 1

DRAWN BY : S. M. RASHIDI DATE : 10-21-08
CHECKED BY : D. R. ANDERSON DATE : 11-4-08

11-MAY-2009 11:23
r:\structures\srashidi\microstation\wkg\str. #1\r3833b_sd_location _01.dgn
danderson

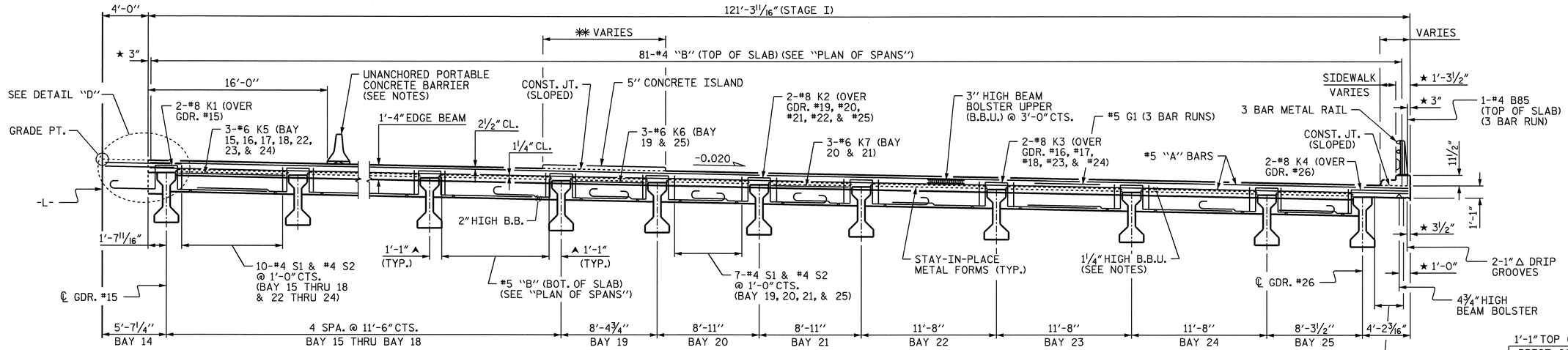

END ELEVATION AT END BENT 1 - STAGE I

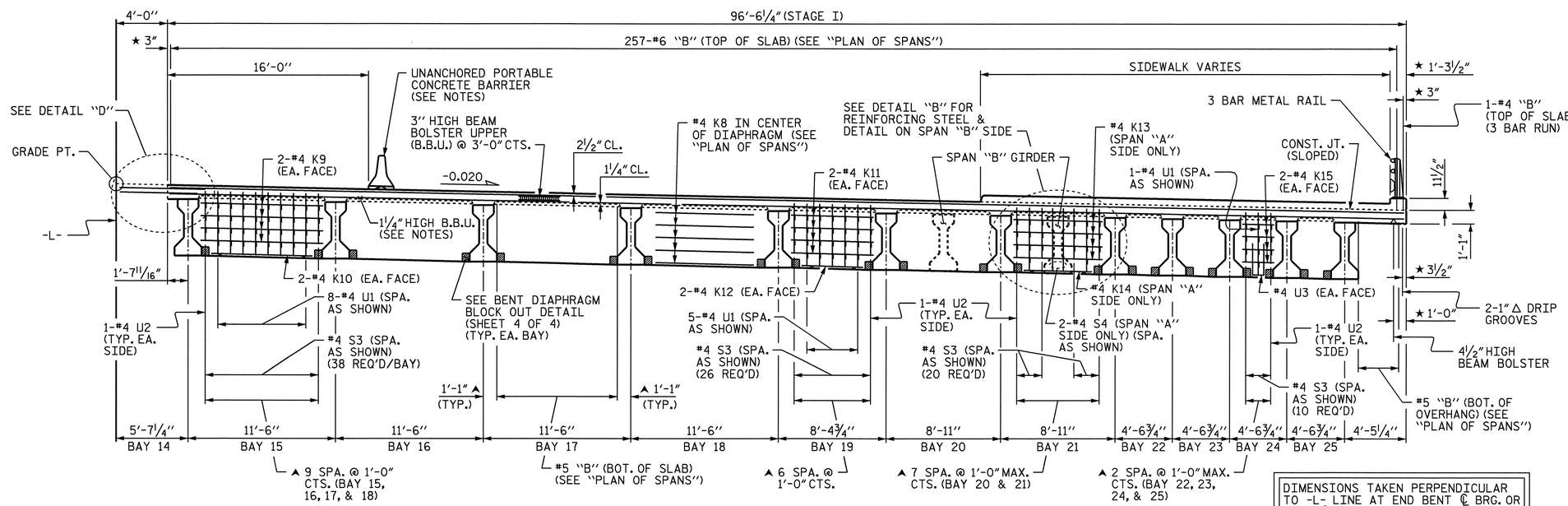

END ELEVATION AT BENT 1 - STAGE I

DIMENSIONS TAKEN PERPENDICULAR TO -L- LINE AT END BENT ℄ BRG. OR BENT ℄ BRG. SPAN "A" SIDE UNLESS OTHERWISE NOTED.

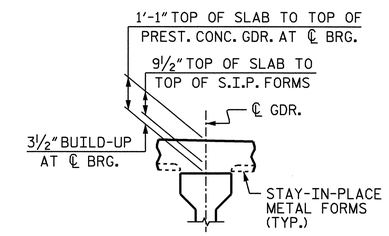

DETAIL "A"

(TYP. EA. GIRDER)

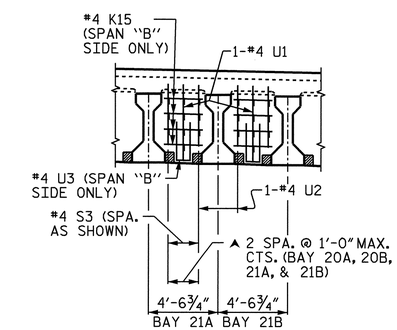

DETAIL "B"

(BAY 21A & 21B SHOWN, BAY 20A & 20B SIMILAR)

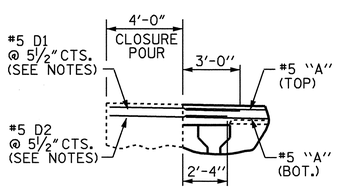

DETAIL "D"

NOTES:

▲ THESE DIMENSIONS ARE TAKEN NORMAL TO ℄ OF GIRDER.

★ THESE DIMENSIONS ARE TAKEN NORMAL TO THE EDGE OF SLAB.

PROVIDE 1 1/4" HIGH BEAM BOLSTERS UPPER AT 4'-0" CTS. ATOP THE METAL STAY-IN-PLACE FORMS TO SUPPORT THE BOTTOM MAT OF 'A' BARS. WHEN USING REMOVABLE FORMS, PROVIDE CONTINUOUS HIGH CHAIRS FOR METAL DECK (C.H.C.M.) @ 4'-0" CTS. WITH A HEIGHT TO SUPPORT THE BOTTOM MAT OF 'A' BARS A CLEAR DISTANCE OF 2 1/2" ABOVE THE TOP OF THE REMOVABLE FORM.

LONGITUDINAL STEEL MAY BE SHIFTED SLIGHTLY, AS NECESSARY, TO AVOID INTERFERENCE WITH STIRRUPS IN PRESTRESSED CONCRETE GIRDERS.

THE JOINT IN THE DECK SHALL BE FORMED PRIOR TO THE CASTING OF THE SIDEWALK.

#5 "G" BAR MAY BE SHIFTED SLIGHTLY AS NECESSARY TO CLEAR REINFORCING STEEL AND STIRRUPS.

THE #5 D1 DOWELS SHALL BE SPLICED WITH THE TOP #5 "A" BARS.

THE #5 D2 DOWELS SHALL BE SPLICED WITH THE BOT. #5 "A" BARS.

PREVIOUSLY CAST CONCRETE IN A CONTINUOUS UNIT SHALL HAVE ATTAINED A MINIMUM COMPRESSIVE STRENGTH OF 3,000 PSI BEFORE ADDITIONAL CONCRETE IS CAST IN THE UNIT.

CONCRETE IN END BENT DIAPHRAGMS MAY BE CLASS A IN LIEU OF CLASS AA. PAYMENT SHALL BE MADE UNDER THE UNIT CONTRACT PRICE FOR REINFORCED CONCRETE DECK SLAB.

SEE TRAFFIC CONTROL PLANS FOR LOCATION AND PAY LIMITS OF THE ANCHORED PORTABLE CONCRETE BARRIER.

FOR SIDEWALK REINFORCING STEEL AND DETAILS, SEE "SIDEWALK DETAILS" SHEETS.

** FOR CONCRETE ISLAND REINFORCING STEEL AND DETAILS, SEE "5" CONCRETE ISLAND" SHEETS.

SEE TRAFFIC CONTROL PLANS FOR LOCATION AND PAY LIMITS OF THE UNANCHORED PORTABLE CONCRETE BARRIER.

NORTH CAROLINA PROFESSIONAL SEAL 11259 ENGINEER DAVID R. ANDERSON
1/2/09

PROJECT NO. R-3833B
IREDELL COUNTY
STATION: 277+88.88 -L-

SHEET 1 OF 4

STATE OF NORTH CAROLINA
DEPARTMENT OF TRANSPORTATION
RALEIGH

SUPERSTRUCTURE
TYPICAL SECTIONS

REVISIONS						SHEET NO.
NO.	BY:	DATE:	NO.	BY:	DATE:	S-6
1			3			TOTAL SHEETS
2			4			113

DRAWN BY : P.C. BREWER DATE : 10/17/08
CHECKED BY : W.F. PARKER DATE : 11/12/08

30-DEC-2008 10:14
h:\structures\callaway\microstation\brewer plans\r3833b_sd_ts_01.dgn
srashidi

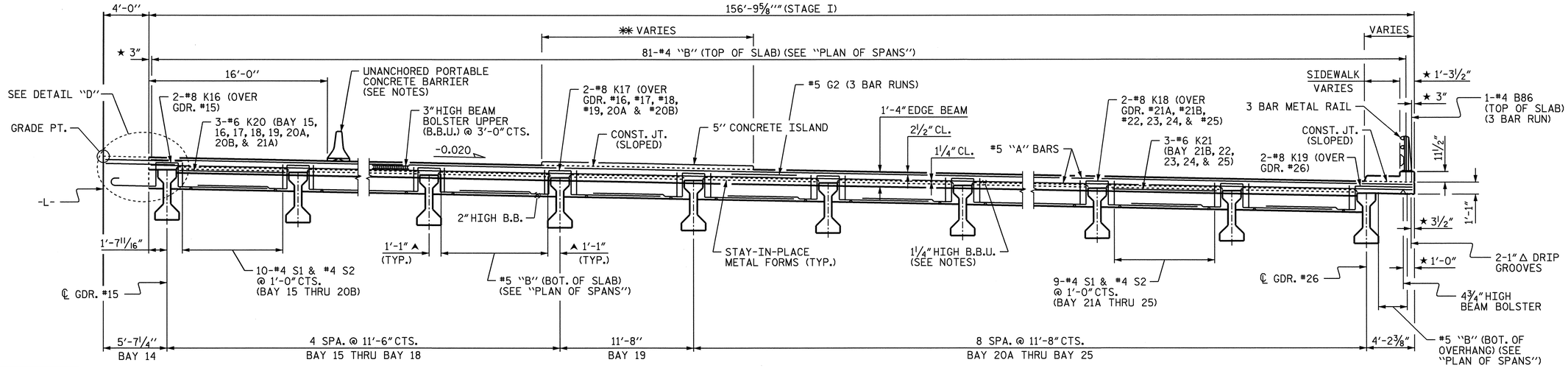

DIMENSIONS TAKEN PERPENDICULAR TO -L- LINE AT END BENT ℄ BRG. OR BENT ℄ BRG. SPAN "A" SIDE UNLESS OTHERWISE NOTED.

END ELEVATION AT END BENT 2 - STAGE I

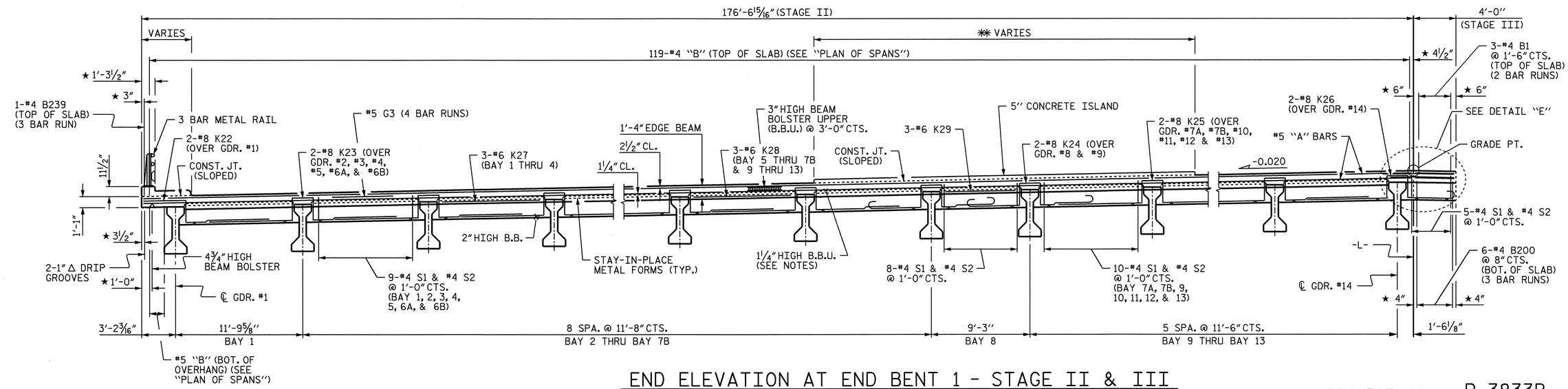

END ELEVATION AT END BENT 1 - STAGE II & III

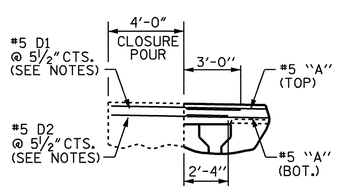

DETAIL "D"

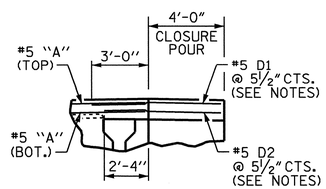

DETAIL "E"

NOTES:

▲ THESE DIMENSIONS ARE TAKEN NORMAL TO ℄ OF GIRDER.

★ THESE DIMENSIONS ARE TAKEN NORMAL TO THE EDGE OF SLAB.

✱✱ FOR CONCRETE ISLAND REINFORCING STEEL AND DETAILS, SEE "5" CONCRETE ISLAND" SHEETS.

SEE TRAFFIC CONTROL PLANS FOR LOCATION AND PAY LIMITS OF THE UNANCHORD PORTABLE CONCRETE BARRIER.

NORTH CAROLINA PROFESSIONAL ENGINEER SEAL 11259 DAVID R. ANDERSON

11/24/08

PROJECT NO. R-3833B
IREDELL COUNTY
STATION: 277+88.88 -L-

SHEET 2 OF 4

STATE OF NORTH CAROLINA
DEPARTMENT OF TRANSPORTATION
RALEIGH

SUPERSTRUCTURE
TYPICAL SECTIONS

REVISIONS						SHEET NO.
NO.	BY:	DATE:	NO.	BY:	DATE:	S-7
1			3			TOTAL SHEETS
2			4			113

DRAWN BY : P.C. BREWER DATE : 10/17/08
CHECKED BY : W.F. PARKER DATE : 11/12/08

14-NOV-2008 11:46
f:\structures\callaway\microstation\brewer plans\r3833b_sd_ts_01.dgn
scallaway

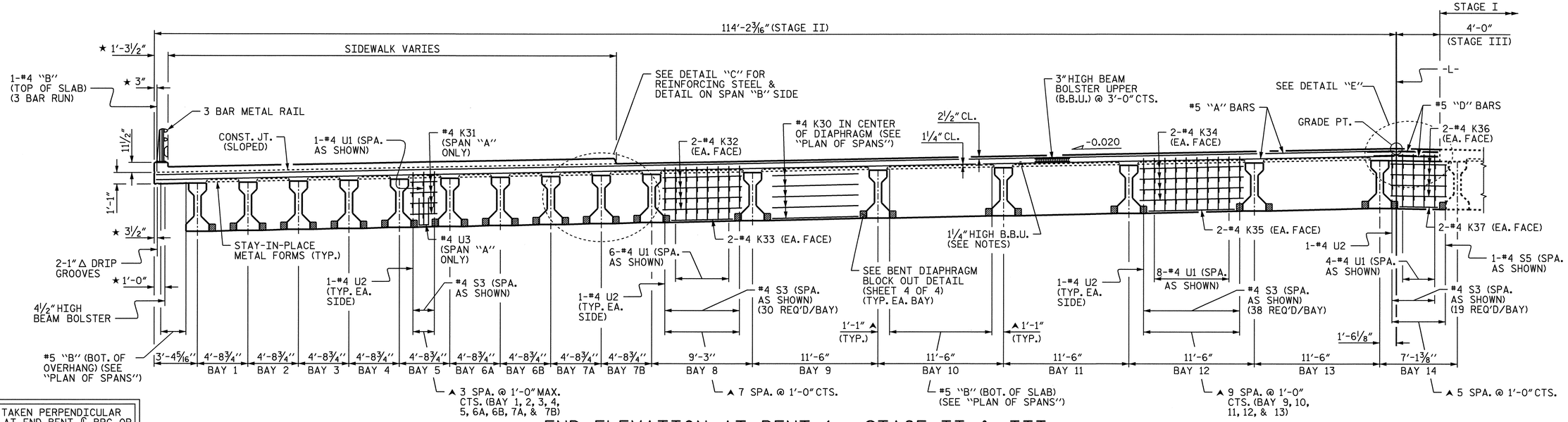

DIMENSIONS TAKEN PERPENDICULAR TO -L- LINE AT END BENT ℄ BRG. OR BENT ℄ BRG. SPAN "A" SIDE UNLESS OTHERWISE NOTED.

END ELEVATION AT BENT 1 - STAGE II & III

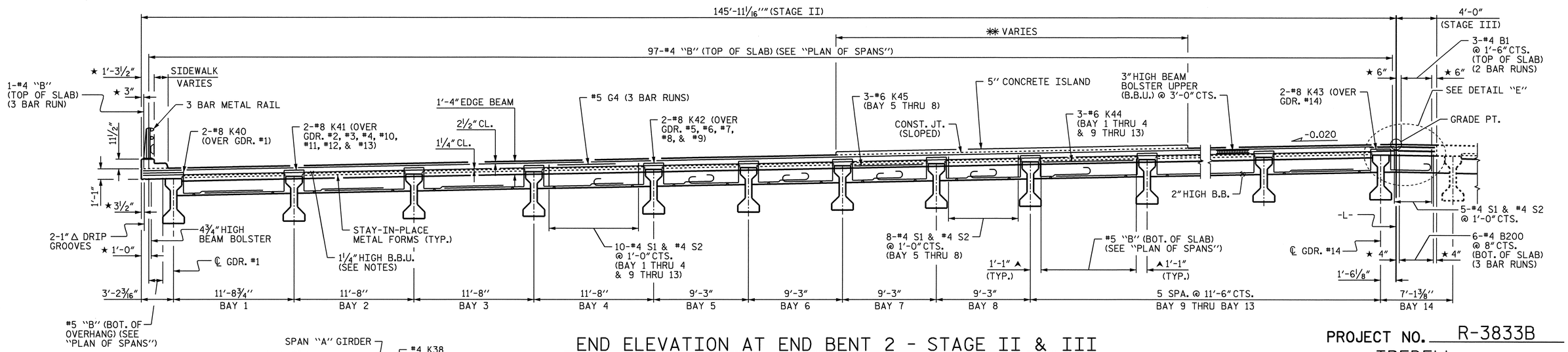

END ELEVATION AT END BENT 2 - STAGE II & III

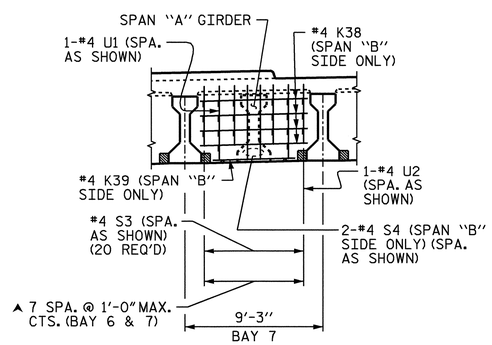

DETAIL "C"

(BAY 7 SHOWN, BAY 6 SIMILAR)

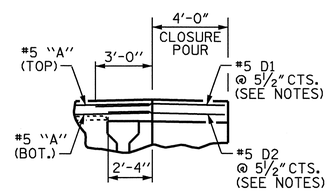

DETAIL "E"

NOTES:

THE BENT DIAPHRAGM IN BAY 14 SHALL BE POURED WITH THE STAGE II BENT DIAPHRAGMS.

▲ THESE DIMENSIONS ARE TAKEN NORMAL TO ℄ OF GIRDER.

★ THESE DIMENSIONS ARE TAKEN NORMAL TO THE EDGE OF SLAB.

✱✱ FOR CONCRETE ISLAND REINFORCING STEEL AND DETAILS, SEE "5" CONCRETE ISLAND" SHEETS.

PROJECT NO. R-3833B

IREDELL COUNTY

STATION: 277+88.88 -L-

SHEET 3 OF 4

STATE OF NORTH CAROLINA
DEPARTMENT OF TRANSPORTATION
RALEIGH

SUPERSTRUCTURE

TYPICAL SECTIONS

NORTH CAROLINA PROFESSIONAL SEAL 11259 ENGINEER DAVID R. ANDERSON
11/24/08

REVISIONS						SHEET NO.
NO.	BY:	DATE:	NO.	BY:	DATE:	5-8
1			3			TOTAL SHEETS
2			4			113

DRAWN BY : P.C. BREWER DATE : 10/17/08
CHECKED BY : W.F. PARKER DATE : 11/12/08

14-NOV-2008 11:47
f:\structures\callaway\microstation\brewer plans\r3833b_sd_ts_01.dgn
scallaway

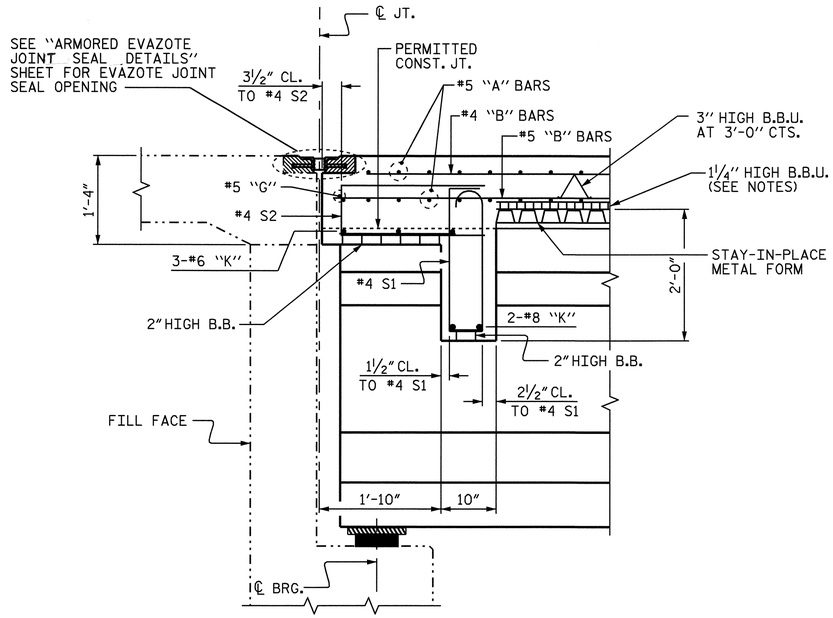

SECTION THRU END BENT DIAPHRAGM

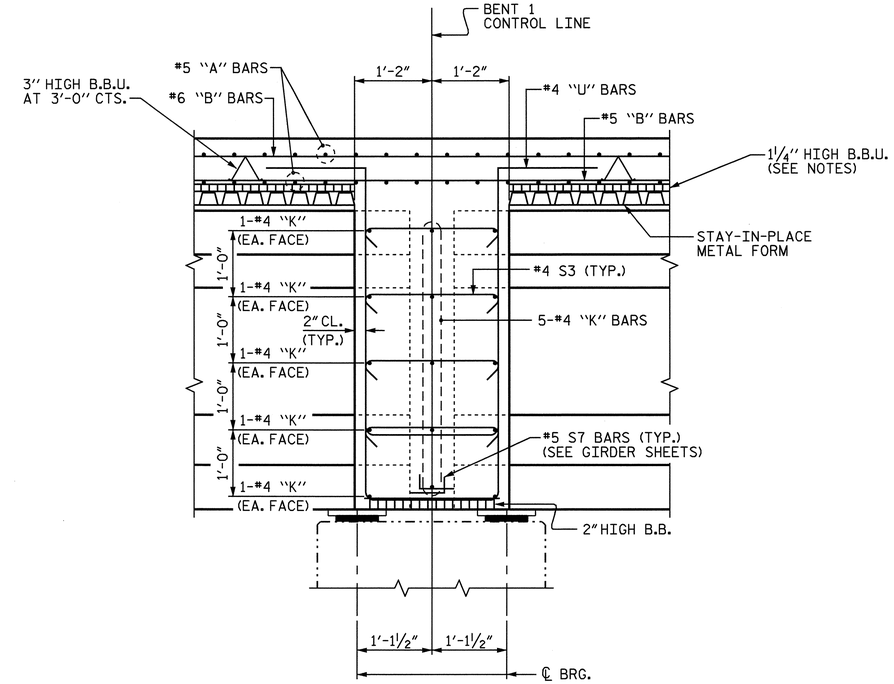

SECTION THRU CONTINUOUS BENT DIAPHRAGM

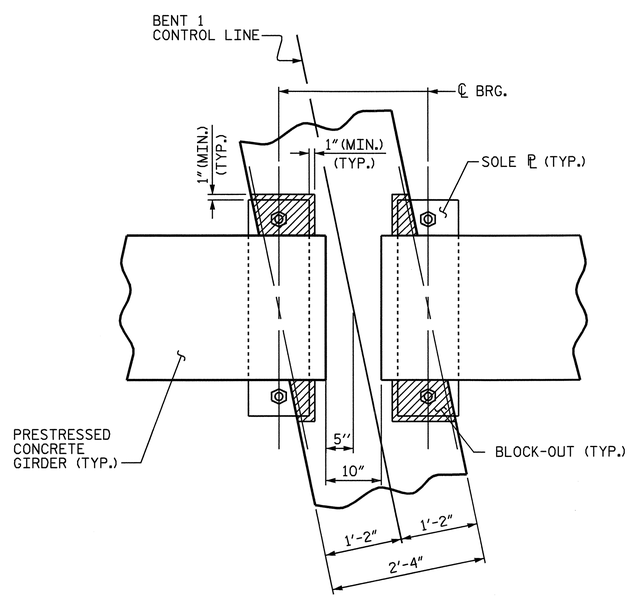

PLAN

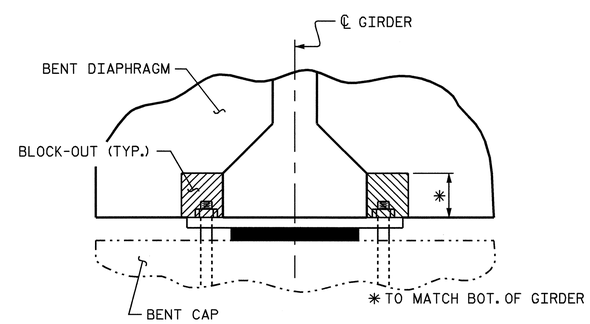

SECTION

BENT DIAPHRAGM BLOCK-OUT DETAIL

PROJECT NO. R-3833B
IREDELL COUNTY
STATION: 277+88.88 -L-

SHEET 4 OF 4

STATE OF NORTH CAROLINA
DEPARTMENT OF TRANSPORTATION
RALEIGH

SUPERSTRUCTURE
TYPICAL SECTIONS

NORTH CAROLINA PROFESSIONAL SEAL 11259 ENGINEER DAVID R. ANDERSON
11/24/08

REVISIONS						SHEET NO.
NO.	BY:	DATE:	NO.	BY:	DATE:	6-9
1			3			TOTAL SHEETS
2			4			113

DRAWN BY : P.C. BREWER DATE : 10/17/08
CHECKED BY : W.F. PARKER DATE : 11/12/08

06-NOV-2008 09:00
f:\structures\calloway\microstation\brewer plans\plot\r3833b_sd_plot_01.dgn
scalloway

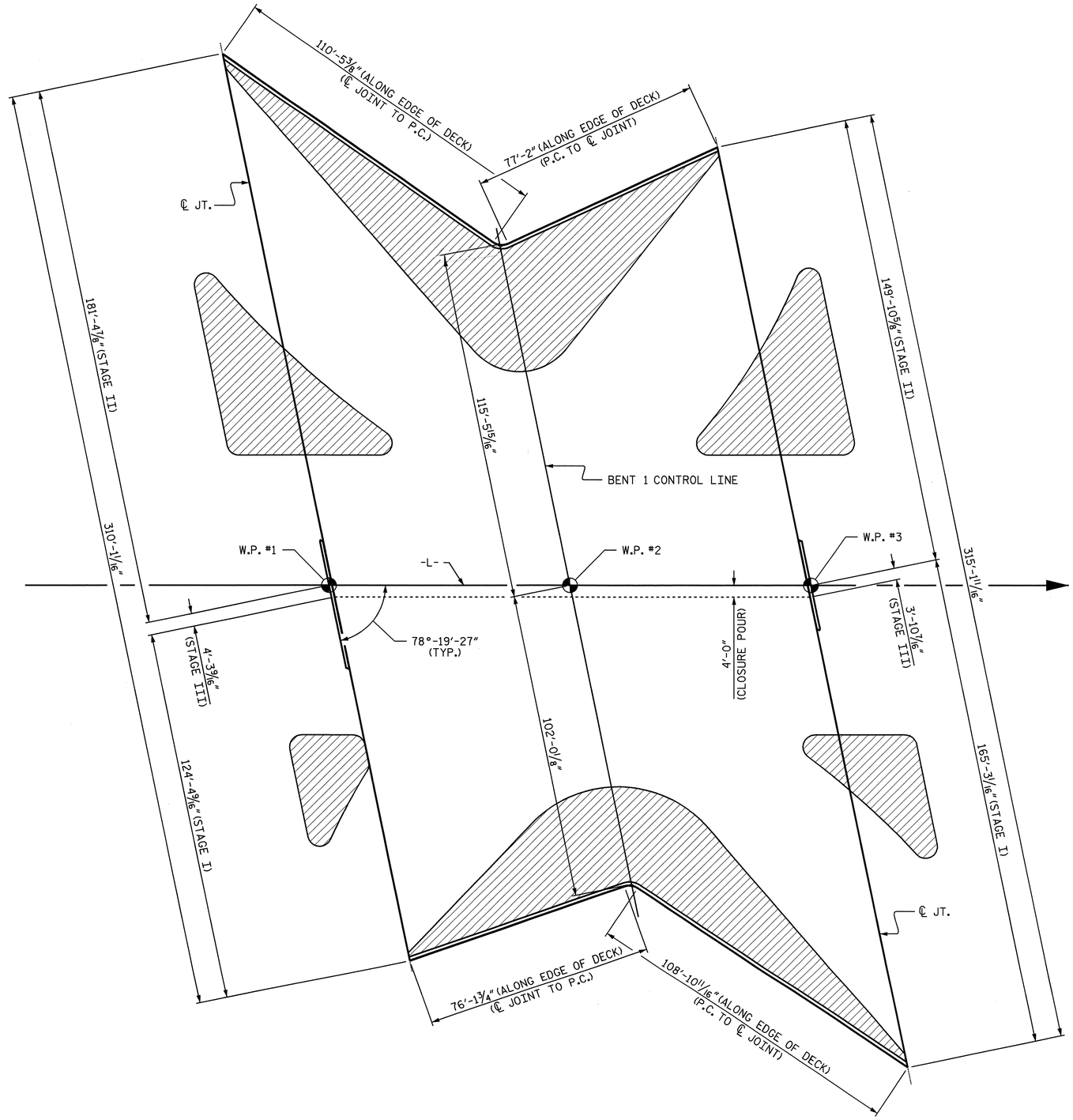

NOTE

FOR ADDITIONAL DETAILS LOCATING DIMENSIONS, SEE "PLAN OF SPANS" SHEETS 1 THRU 4 OF 15.

PROJECT NO. R-3833B
IREDELL COUNTY
STATION: 277+88.88 -L-

STATE OF NORTH CAROLINA
DEPARTMENT OF TRANSPORTATION
RALEIGH

SUPERSTRUCTURE

BRIDGE LAYOUT

NORTH CAROLINA PROFESSIONAL SEAL 11259 ENGINEER DAVID R. ANDERSON
11/24/08

REVISIONS						SHEET NO.
NO.	BY:	DATE:	NO.	BY:	DATE:	S-10
1			3			TOTAL SHEETS
2			4			113

DRAWN BY : P.C. BREWER DATE : 10/17/08
CHECKED BY : W.F. PARKER DATE : 11/12/08

14-NOV-2008 11:59
f:\structures\callaway\mlarostation\brewer plans\r3833b_sd_ps_01.dgn
scallaway

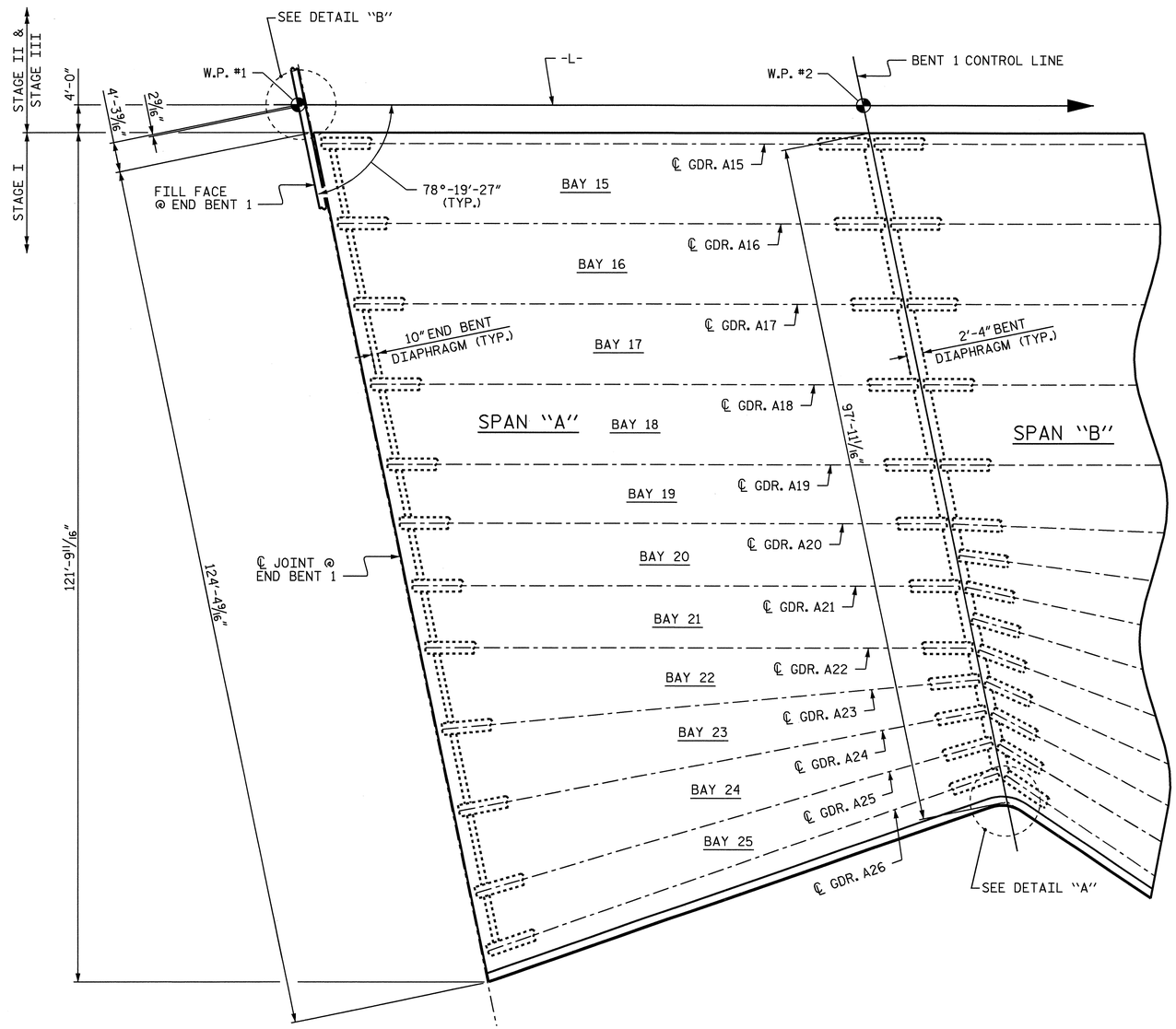

PLAN OF SPAN "A" - STAGE I

(FOR CLARITY, REINFORCING STEEL NOT SHOWN)

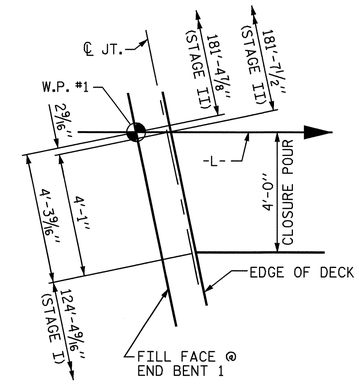

DETAIL "B"

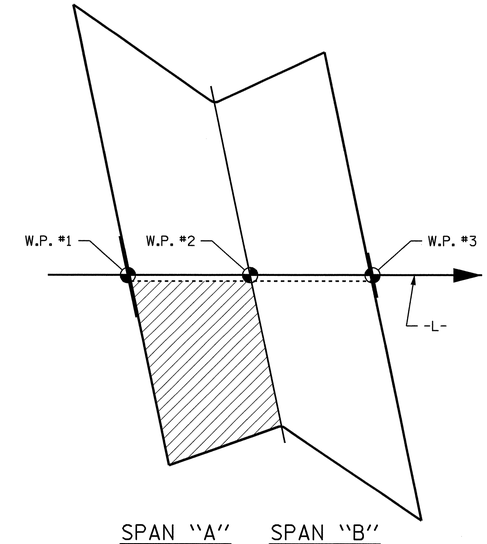

SPAN "A" SPAN "B"

PLAN ORIENTATION

NOTES:

FOR SECTIONS THROUGH DIAPHRAGMS, SEE "TYPICAL SECTIONS" SHEET 4 OF 4.

FOR REINFORCING STEEL IN SLAB, SEE "PLAN OF SPANS" SHEET 5 OF 15 AND SHEET 7 OF 15.

FOR DIAPHRAGM REINFORCING STEEL AND DETAILS, SEE "PLAN OF SPANS" SHEET 14 OF 15 AND SHEET 15 OF 15.

FOR CONCRETE ISLAND REINFORCING STEEL AND DETAILS, SEE "5" CONCRETE ISLAND" SHEETS.

FOR SIDEWALK REINFORCING STEEL AND DETAILS, SEE "SIDEWALK DETAILS" SHEETS.

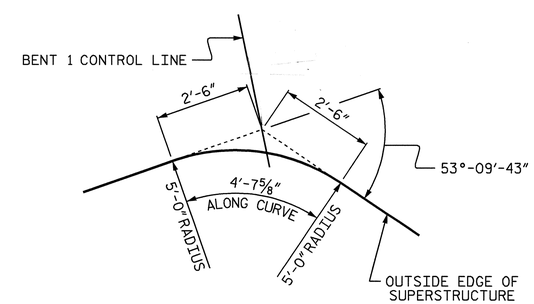

DETAIL "A"

PROJECT NO. R-3833B

IREDELL COUNTY

STATION: 277+88.88 -L-

SHEET 1 OF 15

STATE OF NORTH CAROLINA
DEPARTMENT OF TRANSPORTATION
RALEIGH

SUPERSTRUCTURE

PLAN OF SPANS

NORTH CAROLINA PROFESSIONAL SEAL 11259 ENGINEER DAVID R. ANDERSON

11/24/08

REVISIONS						SHEET NO.
NO.	BY:	DATE:	NO.	BY:	DATE:	S-11
1			3			TOTAL SHEETS
2			4			113

DRAWN BY : P.C. BREWER DATE : 10/17/08
CHECKED BY : W.F. PARKER DATE : 11/12/08

13-NOV-2008 08:51
f:\structures\callaway\microstation\brewer plans\r3833b_sd_ps_01.dgn
scallaway

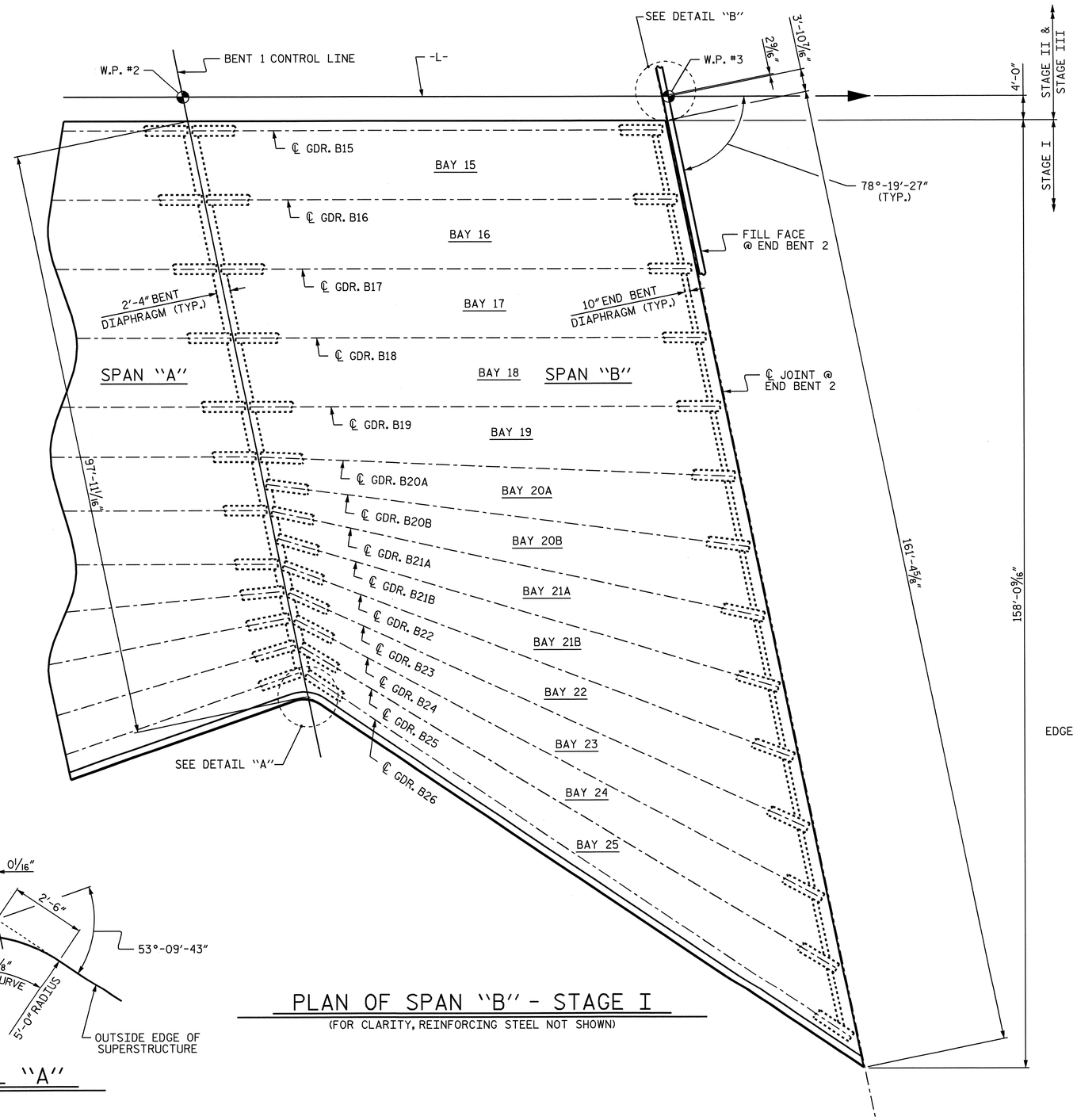

PLAN OF SPAN "B" - STAGE I

(FOR CLARITY, REINFORCING STEEL NOT SHOWN)

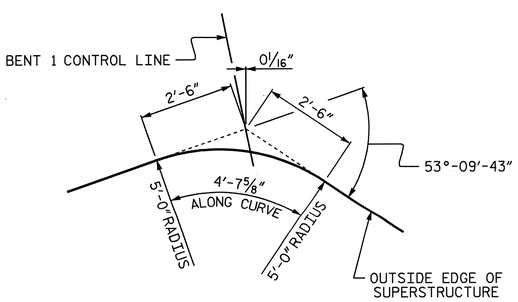

DETAIL "A"

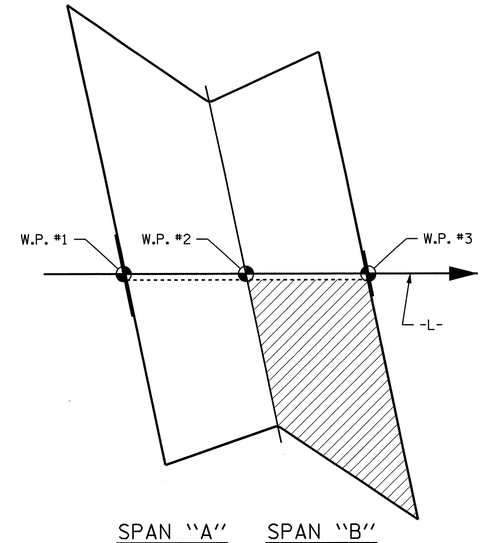

SPAN "A" SPAN "B"

PLAN ORIENTATION

NOTES:

FOR SECTIONS THROUGH DIAPHRAGMS, SEE "TYPICAL SECTIONS" SHEET 4 OF 4.

FOR REINFORCING STEEL IN SLAB, SEE "PLAN OF SPANS" SHEET 6 OF 15 AND SHEET 8 OF 15.

FOR DIAPHRAGM REINFORCING STEEL AND DETAILS, SEE "PLAN OF SPANS" SHEET 14 OF 15 AND SHEET 15 OF 15.

FOR CONCRETE ISLAND REINFORCING STEEL AND DETAILS, SEE "5" CONCRETE ISLAND" SHEETS.

FOR SIDEWALK REINFORCING STEEL AND DETAILS, SEE "SIDEWALK DETAILS" SHEETS.

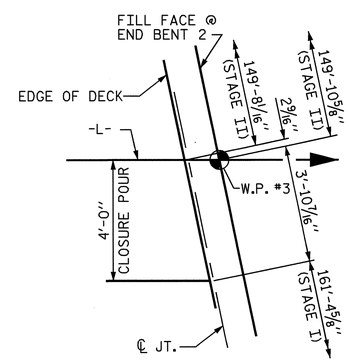

DETAIL "B"

PROJECT NO. R-3833B

IREDELL COUNTY

STATION: 277+88.88 -L-

SHEET 2 OF 15

STATE OF NORTH CAROLINA
DEPARTMENT OF TRANSPORTATION
RALEIGH

SUPERSTRUCTURE

PLAN OF SPANS

NORTH CAROLINA PROFESSIONAL SEAL 11259 ENGINEER DAVID R. ANDERSON

11/24/08

REVISIONS						SHEET NO.
NO.	BY:	DATE:	NO.	BY:	DATE:	5-12
1			3			TOTAL SHEETS
2			4			113

DRAWN BY : P.C. BREWER DATE : 10/17/08
CHECKED BY : W.F. PARKER DATE : 11/12/08

13-NOV-2008 08:51
f:\structures\callaway\microstation\brewer plans\r3833b_sd_ps_01.dgn
scallaway

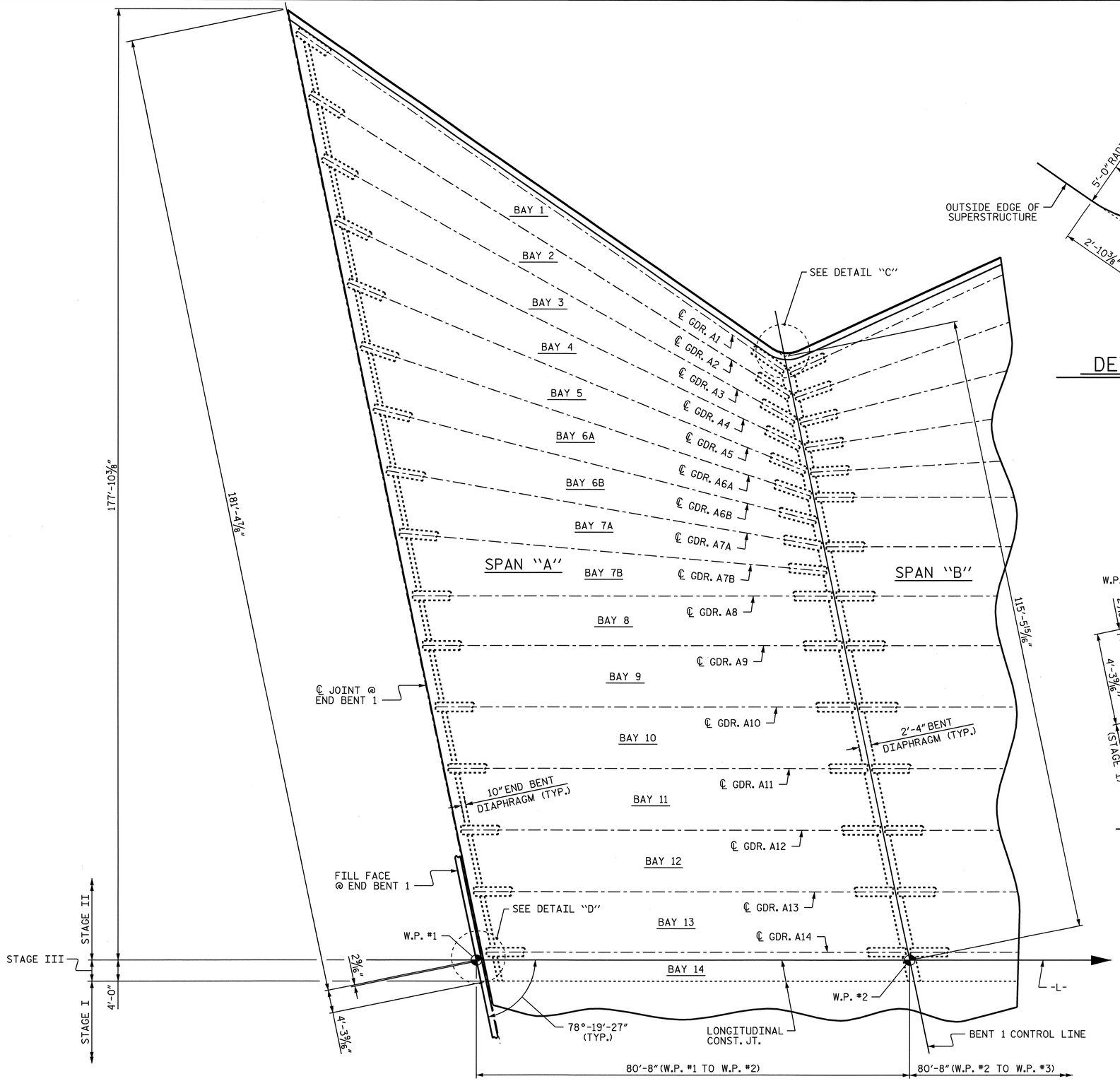

PLAN OF SPAN "A" - STAGE II

(FOR CLARITY, REINFORCING STEEL NOT SHOWN)

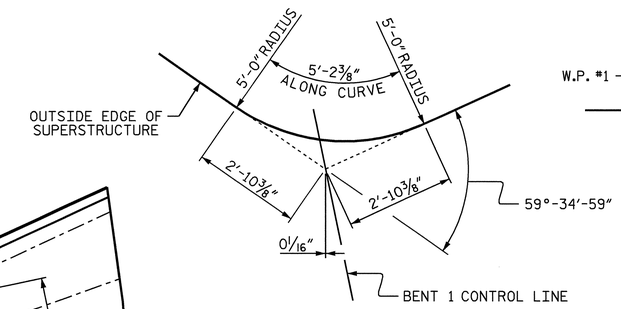

DETAIL "C"

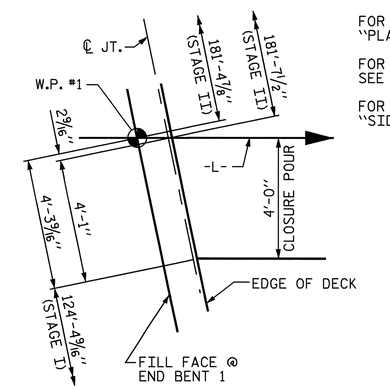

DETAIL "D"

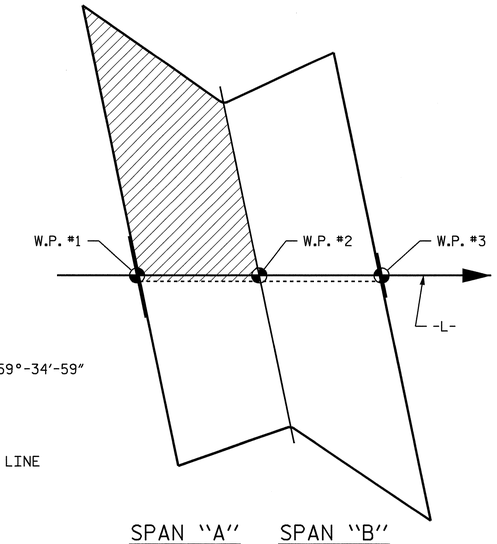

SPAN "A" SPAN "B"

PLAN ORIENTATION

NOTES:

FOR SECTIONS THROUGH DIAPHRAGMS, SEE "TYPICAL SECTIONS" SHEET 4 OF 4.

FOR REINFORCING STEEL IN SLAB, SEE "PLAN OF SPANS" SHEET 9 OF 15 AND SHEET 11 OF 15.

FOR DIAPHRAGM REINFORCING STEEL AND DETAILS, SEE "PLAN OF SPANS" SHEET 14 OF 15 AND SHEET 15 OF 15.

FOR CONCRETE ISLAND REINFORCING STEEL AND DETAILS, SEE "5" CONCRETE ISLAND" SHEETS.

FOR SIDEWALK REINFORCING STEEL AND DETAILS, SEE "SIDEWALK DETAILS" SHEETS.

PROJECT NO. R-3833B
IREDELL COUNTY
STATION: 277+88.88 -L-

SHEET 3 OF 15

STATE OF NORTH CAROLINA
DEPARTMENT OF TRANSPORTATION
RALEIGH

SUPERSTRUCTURE

PLAN OF SPANS

NORTH CAROLINA PROFESSIONAL SEAL 11259 ENGINEER DAVID R. ANDERSON
11/24/08

REVISIONS						SHEET NO.
NO.	BY:	DATE:	NO.	BY:	DATE:	S-13
1			3			TOTAL SHEETS
2			4			113

DRAWN BY : P.C. BREWER DATE : 10/17/08
CHECKED BY : W.F. PARKER DATE : 11/12/08

13-NOV-2008 08:51
f:\structures\callaway\microstation\brewer plans\r3833b_sd_ps_01.dgn
scallaway

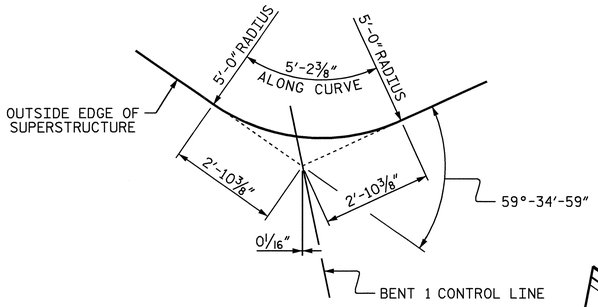

DETAIL "C"

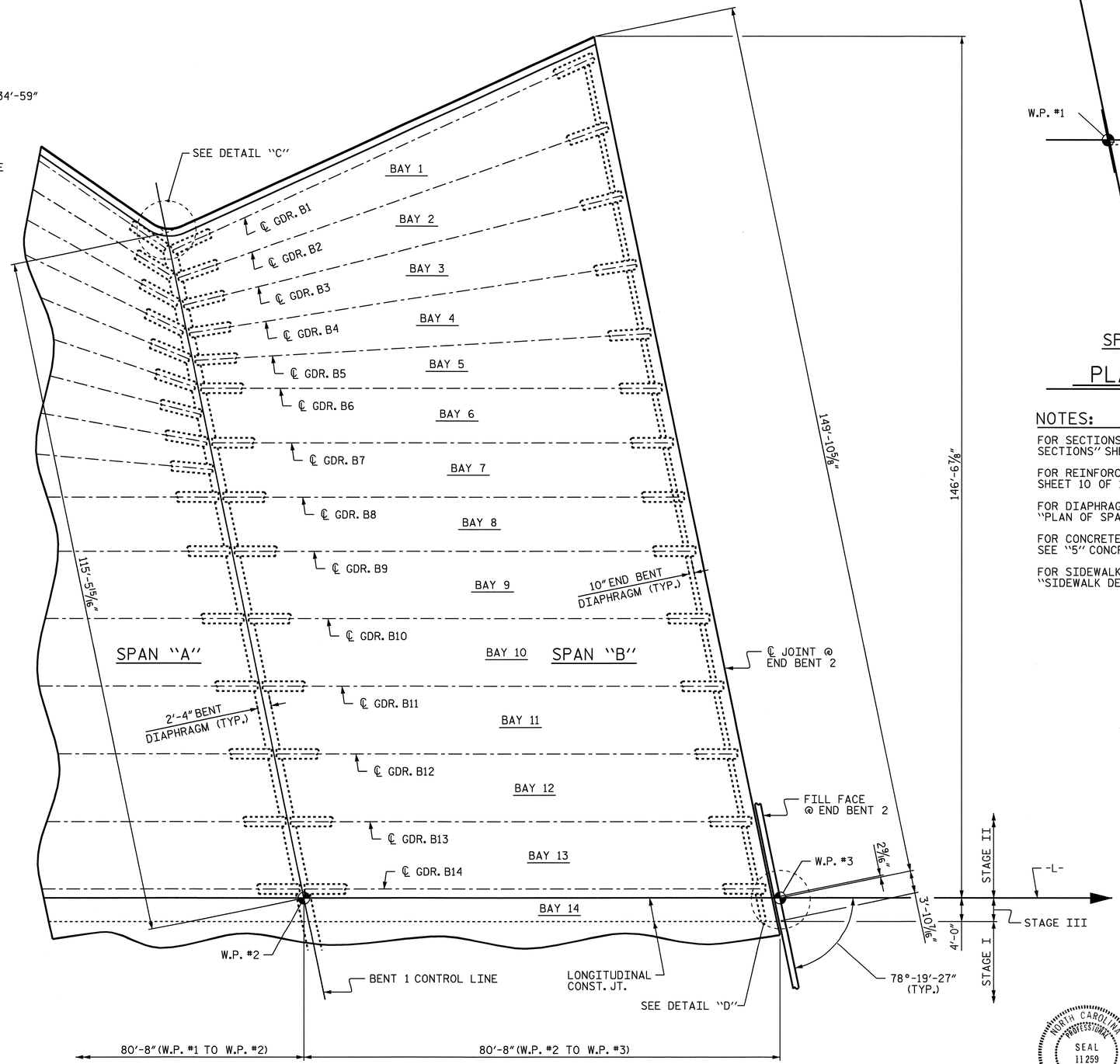

PLAN OF SPAN "B" - STAGE II

(FOR CLARITY, REINFORCING STEEL NOT SHOWN)

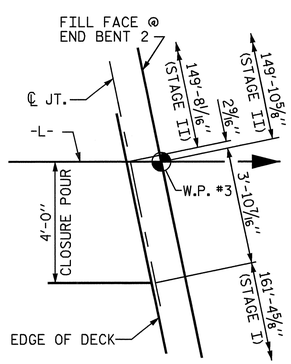

DETAIL "D"

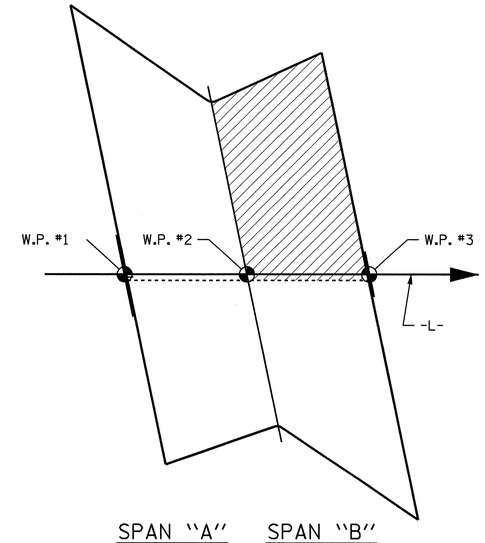

SPAN "A" SPAN "B"

PLAN ORIENTATION

NOTES:

FOR SECTIONS THROUGH DIAPHRAGMS, SEE "TYPICAL SECTIONS" SHEET 4 OF 4.

FOR REINFORCING STEEL IN SLAB, SEE "PLAN OF SPANS" SHEET 10 OF 15 AND SHEET 12 OF 15.

FOR DIAPHRAGM REINFORCING STEEL AND DETAILS, SEE "PLAN OF SPANS" SHEET 14 OF 15 AND SHEET 15 OF 15.

FOR CONCRETE ISLAND REINFORCING STEEL AND DETAILS, SEE "5" CONCRETE ISLAND" SHEETS.

FOR SIDEWALK REINFORCING STEEL AND DETAILS, SEE "SIDEWALK DETAILS" SHEETS.

PROJECT NO. R-3833B

IREDELL COUNTY

STATION: 277+88.88 -L-

SHEET 4 OF 15

STATE OF NORTH CAROLINA
DEPARTMENT OF TRANSPORTATION
RALEIGH

SUPERSTRUCTURE

PLAN OF SPANS

NORTH CAROLINA PROFESSIONAL SEAL 11259 ENGINEER DAVID R. ANDERSON
11/24/08

REVISIONS						SHEET NO.
NO.	BY:	DATE:	NO.	BY:	DATE:	S-14
1			3			TOTAL SHEETS
2			4			113

DRAWN BY : P.C. BREWER DATE : 10/17/08
CHECKED BY : W.F. PARKER DATE : 11/12/08

14-NOV-2008 12:30
f:\structures\callaway\microstation\brewer plans\r3833b_sd_ps_01.dgn
scallaway

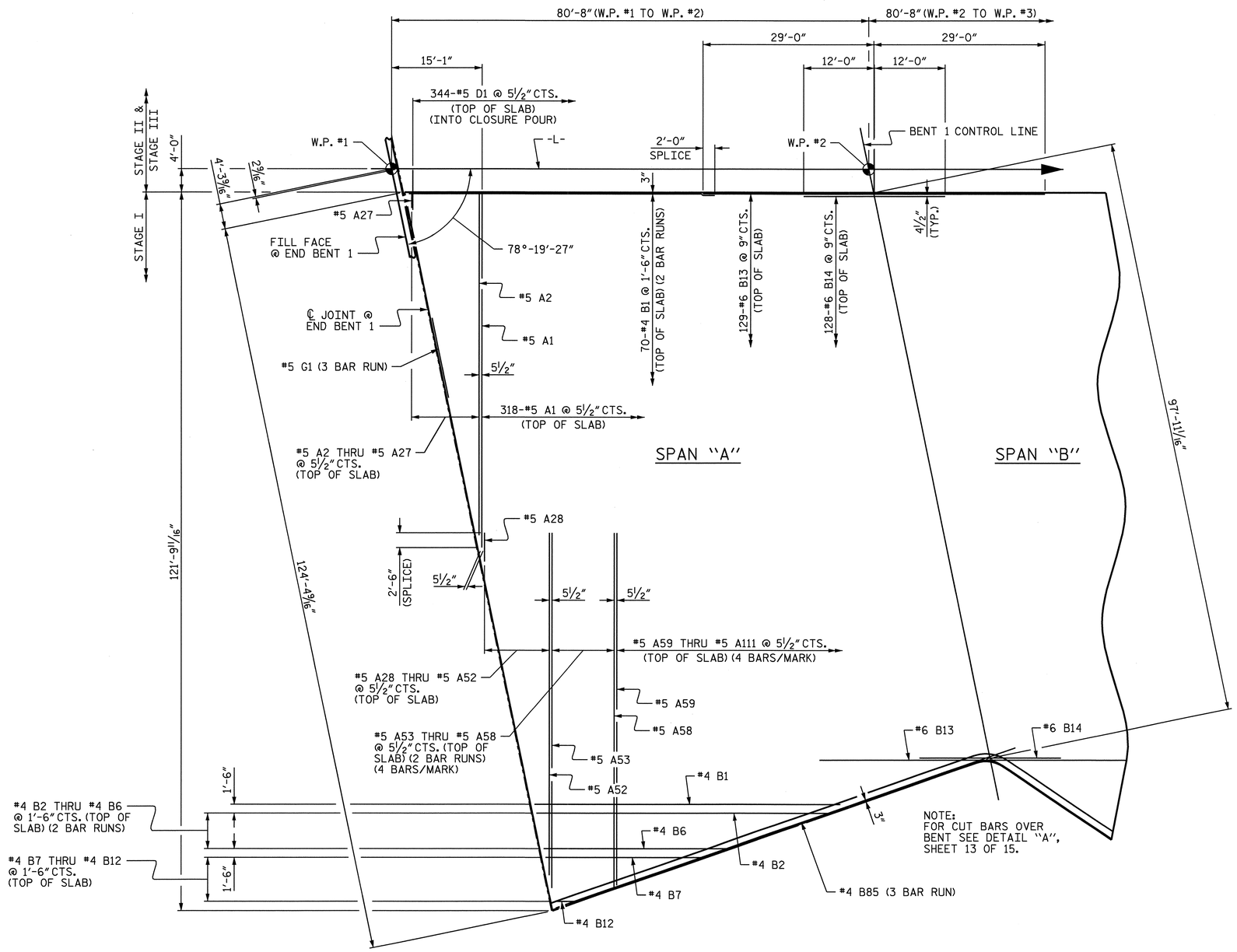

PLAN OF SPAN "A" - STAGE I

(SHOWING TOP MAT REINFORCING STEEL)

PROJECT NO. R-3833B

IREDELL COUNTY

STATION: 277+88.88 -L-

SHEET 5 OF 15

STATE OF NORTH CAROLINA
DEPARTMENT OF TRANSPORTATION
RALEIGH

SUPERSTRUCTURE

PLAN OF SPANS

NORTH CAROLINA PROFESSIONAL SEAL 11259 ENGINEER DAVID R. ANDERSON

11/24/08

REVISIONS						SHEET NO.
NO.	BY:	DATE:	NO.	BY:	DATE:	5-15
1			3			TOTAL SHEETS
2			4			113

DRAWN BY : P.C. BREWER DATE : 10/17/08

CHECKED BY : W.F. PARKER DATE : 11/12/08

13-NOV-2008 09:12
f:\structures\callaway\microstation\brewer plans\r3833b_sd_ps_01.dgn
scallaway

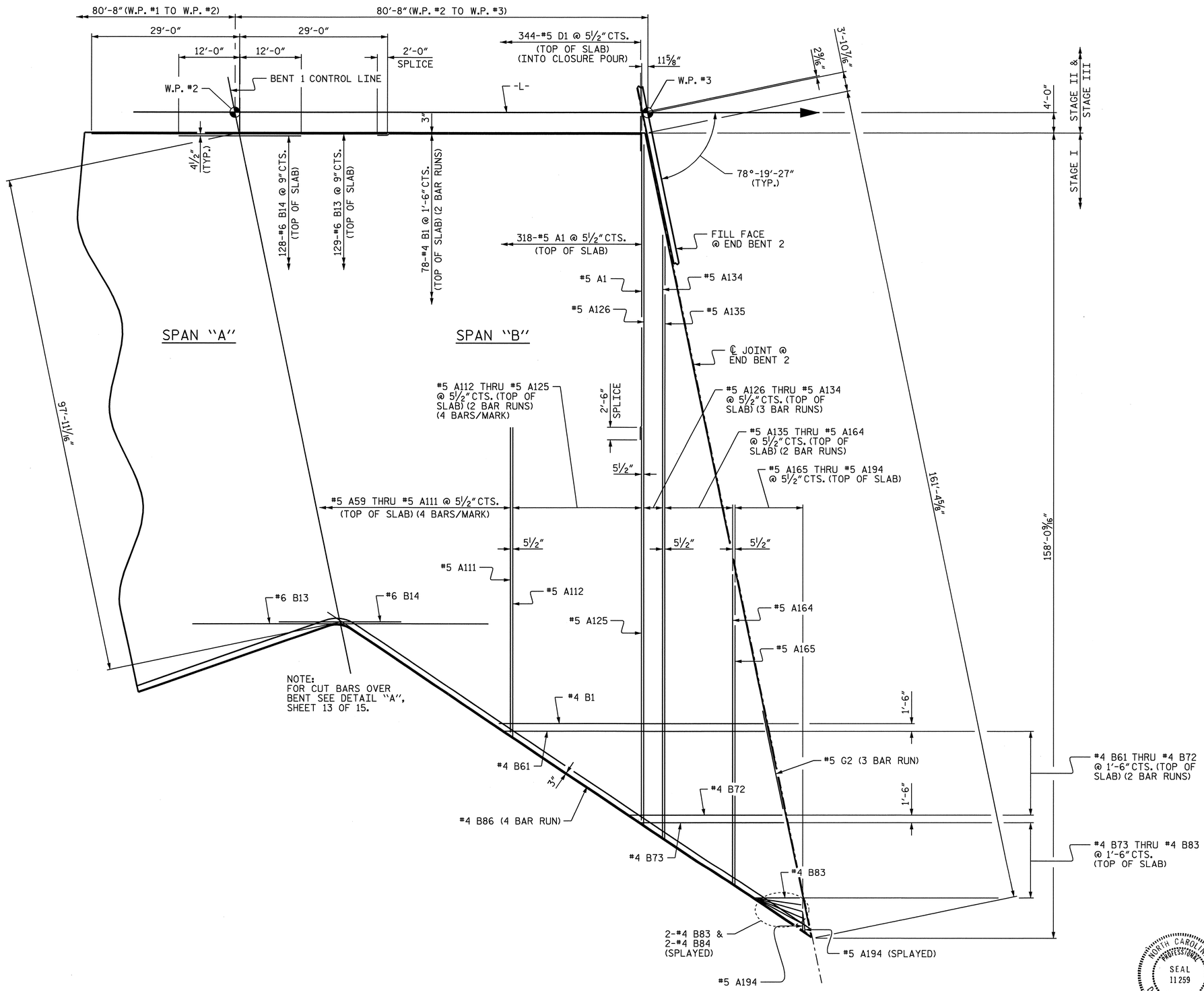

PLAN OF SPAN "B" - STAGE I

(SHOWING TOP MAT REINFORCING STEEL)

PROJECT NO. R-3833B

IREDELL COUNTY

STATION: 277+88.88 -L-

SHEET 6 OF 15

STATE OF NORTH CAROLINA
DEPARTMENT OF TRANSPORTATION
RALEIGH

SUPERSTRUCTURE

PLAN OF SPANS

NORTH CAROLINA PROFESSIONAL SEAL 11259 ENGINEER DAVID R. ANDERSON

11/24/08

REVISIONS								SHEET NO.
NO.	BY:	DATE:	NO.	BY:	DATE:			S-16
1			3					TOTAL SHEETS
2			4					113

DRAWN BY : P.C. BREWER DATE : 10/17/08
CHECKED BY : W.F. PARKER DATE : 11/12/08

13-NOV-2008 09:12
f:\structures\callaway\microstation\brewer plans\r3833b_sd_ps_01.dgn
scallaway

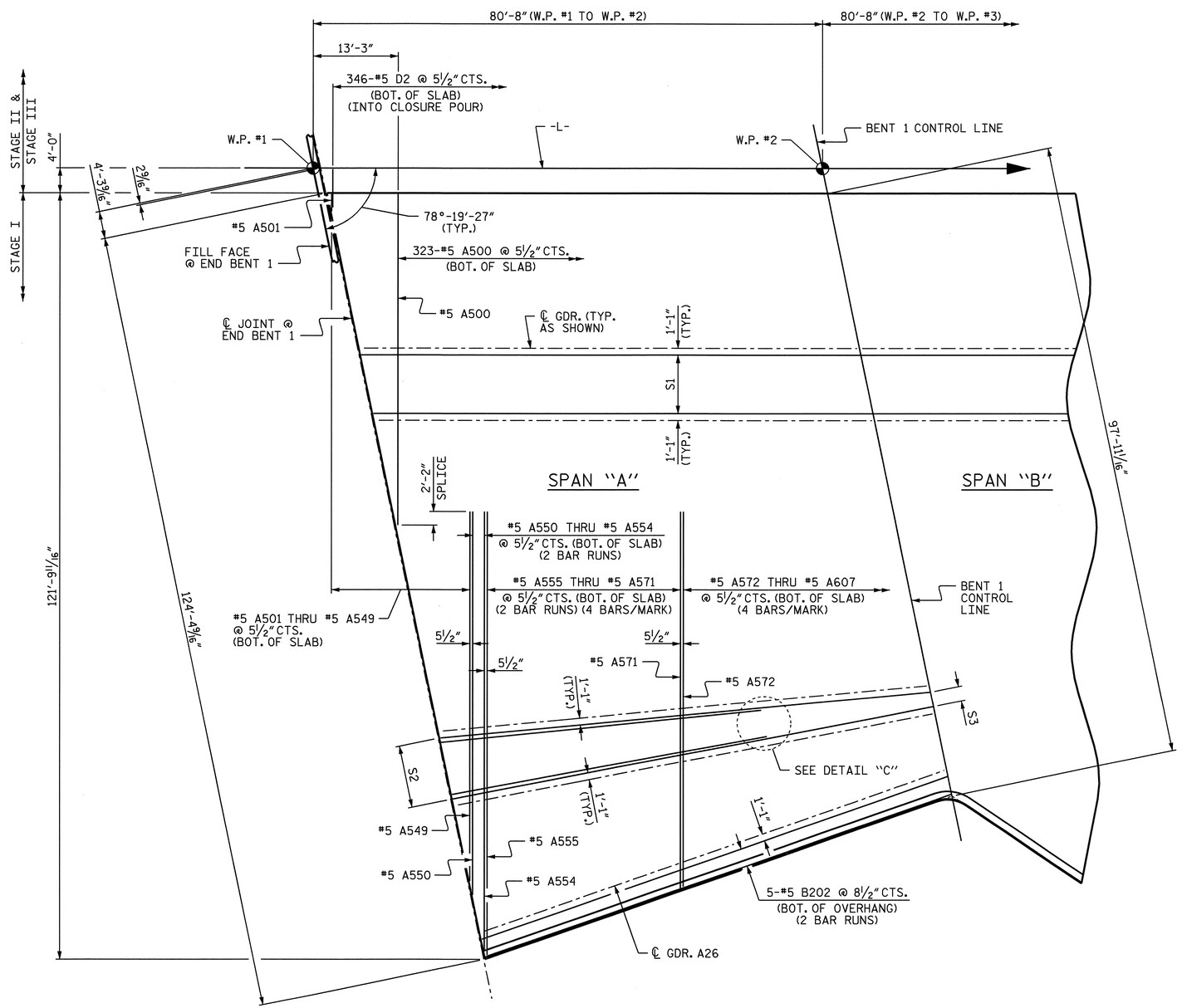

PLAN OF SPAN "A" - STAGE I

(SHOWING BOT. MAT REINFORCING STEEL)

BOTTOM "B" BAR SPACING				
BAY	BAR	S1	S2	S3
BAY 15	15-#5 B200 (3 BAR RUNS)	14 SPA. @ 8" CTS.	—	—
BAY 16	15-#5 B200 (3 BAR RUNS)	14 SPA. @ 8" CTS.	—	—
BAY 17	15-#5 B200 (3 BAR RUNS)	14 SPA. @ 8" CTS.	—	—
BAY 18	15-#5 B200 (3 BAR RUNS)	14 SPA. @ 8" CTS.	—	—
BAY 19	15-#5 B200 (3 BAR RUNS)	14 SPA. @ 5¼" CTS.	—	—
BAY 20	11-#5 B201 (2 BAR RUNS)	10 SPA. @ 8⅛" CTS.	—	—
BAY 21	11-#5 B201 (2 BAR RUNS)	10 SPA. @ 8⅛" CTS.	—	—
BAY 22	8-#5 B202 (2 BAR RUNS) 7-#5 B203	—	14 SPA. @ 8¼" CTS.	7 SPA. @ 4" CTS.
BAY 23	8-#5 B202 (2 BAR RUNS) 7-#5 B203	—	14 SPA. @ 8⅜" CTS.	7 SPA. @ 4" CTS.
BAY 24	8-#5 B202 (2 BAR RUNS) 7-#5 B203	—	14 SPA. @ 8⅜" CTS.	7 SPA. @ 4" CTS.
BAY 25	8-#5 B202 (2 BAR RUNS) 7-#5 B204	—	14 SPA. @ 7½" CTS.	7 SPA. @ 4" CTS.

THE "B" BARS IN BAY 15 THRU BAY 19 ARE CONTINUOUS FROM END BENT 1 TO END BENT 2.

"S2" AND "S3" IS THE SPACE BETWEEN ALTERNATING LONG AND SHORT "B" BARS.

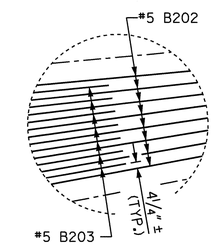

DETAIL "C"

BAY 23 SHOWN, BAY 22, 24, & 25 SIMILAR

PROJECT NO. R-3833B

IREDELL COUNTY

STATION: 277+88.88 -L-

SHEET 7 OF 15

STATE OF NORTH CAROLINA
DEPARTMENT OF TRANSPORTATION
RALEIGH

SUPERSTRUCTURE

PLAN OF SPANS

NORTH CAROLINA PROFESSIONAL SEAL 11259 ENGINEER DAVID R. ANDERSON
11/24/08

REVISIONS						SHEET NO.
NO.	BY:	DATE:	NO.	BY:	DATE:	S-17
1			3			TOTAL SHEETS
2			4			113

DRAWN BY : P.C. BREWER DATE : 10/17/08
CHECKED BY : W.F. PARKER DATE : 11/12/08

13-NOV-2008 09:12
f:\structures\callaway\microstation\brewer plans\r3833b_sd_ps_01.dgn
scallaway

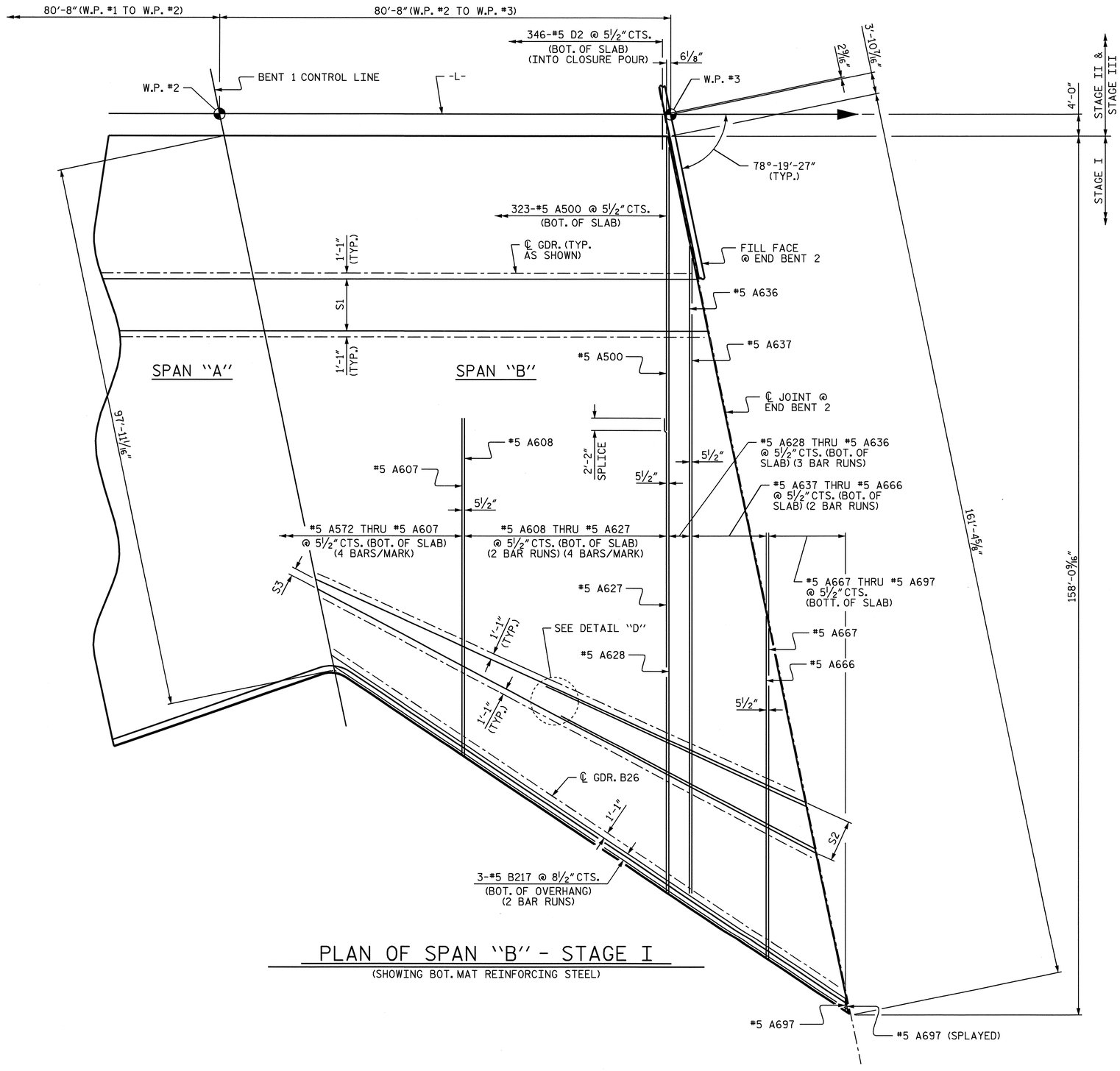

PLAN OF SPAN "B" - STAGE I

(SHOWING BOT. MAT REINFORCING STEEL)

BOTTOM "B" BAR SPACING				
BAY	BAR	S1	S2	S3
BAY 15 THRU BAY 18	SEE SHEET 7 OF 15.			
BAY 19	15-#5 B200 (3 BAR RUNS)	—	14 SPA. @ 8⅛" CTS.	14 SPA. @ 5¼" CTS.
BAY 20A	8-#5 B205 (2 BAR RUNS) 7-#5 B206	—	14 SPA. @ 8⅛" CTS.	7 SPA. @ 3¾" CTS.
BAY 20B	8-#5 B205 (2 BAR RUNS) 7-#5 B206	—	14 SPA. @ 7⅝" CTS.	7 SPA. @ 3½" CTS.
BAY 21A	8-#5 B207 (2 BAR RUNS) 7-#5 B208	—	14 SPA. @ 7¼" CTS.	7 SPA. @ 3¼" CTS.
BAY 21B	7-#5 B209 (2 BAR RUNS) 6-#5 B210	—	12 SPA. @ 8⅜" CTS.	6 SPA. @ 3½" CTS.
BAY 22	7-#5 B211 (2 BAR RUNS) 6-#5 B212	—	12 SPA. @ 7⅝" CTS.	6 SPA. @ 3⅛" CTS.
BAY 23	7-#5 B213 (2 BAR RUNS) 6-#5 B214	—	12 SPA. @ 7½" CTS.	6 SPA. @ 2¾" CTS.
BAY 24	6-#5 B215 (2 BAR RUNS) 5-#5 B216 (2 BAR RUNS)	—	10 SPA. @ 8½" CTS.	5 SPA. @ 3" CTS.
BAY 25	6-#5 B217 (2 BAR RUNS) 5-#5 B218 (2 BAR RUNS)	—	10 SPA. @ 7½" CTS.	5 SPA. @ 2⅝" CTS.

THE "B" BARS IN BAY 15 THRU BAY 19 ARE CONTINUOUS FROM END BENT 1 TO END BENT 2.

"S2" AND "S3" IS THE SPACE BETWEEN ALTERNATING LONG AND SHORT "B" BARS.

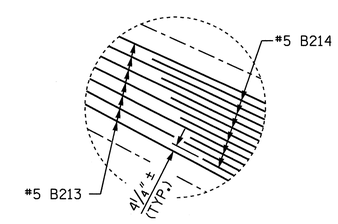

DETAIL "D"

BAY 23 SHOWN, BAY 20A, 20B, 21A, 21B, 22, 24, & 25 SIMILAR

PROJECT NO. R-3833B

IREDELL COUNTY

STATION: 277+88.88 -L-

SHEET 8 OF 15

STATE OF NORTH CAROLINA
DEPARTMENT OF TRANSPORTATION
RALEIGH

SUPERSTRUCTURE

PLAN OF SPANS

NORTH CAROLINA PROFESSIONAL SEAL 11259 ENGINEER DAVID R. ANDERSON

REVISIONS						SHEET NO.
NO.	BY:	DATE:	NO.	BY:	DATE:	S-18
1			3			TOTAL SHEETS
2			4			113

DRAWN BY : P.C. BREWER DATE : 10/17/08
CHECKED BY : W.F. PARKER DATE : 11/12/08

13-NOV-2008 09:12
f:\structures\callaway\microstation\brewer plans\r3833b_sd_ps_01.dgn
scallaway

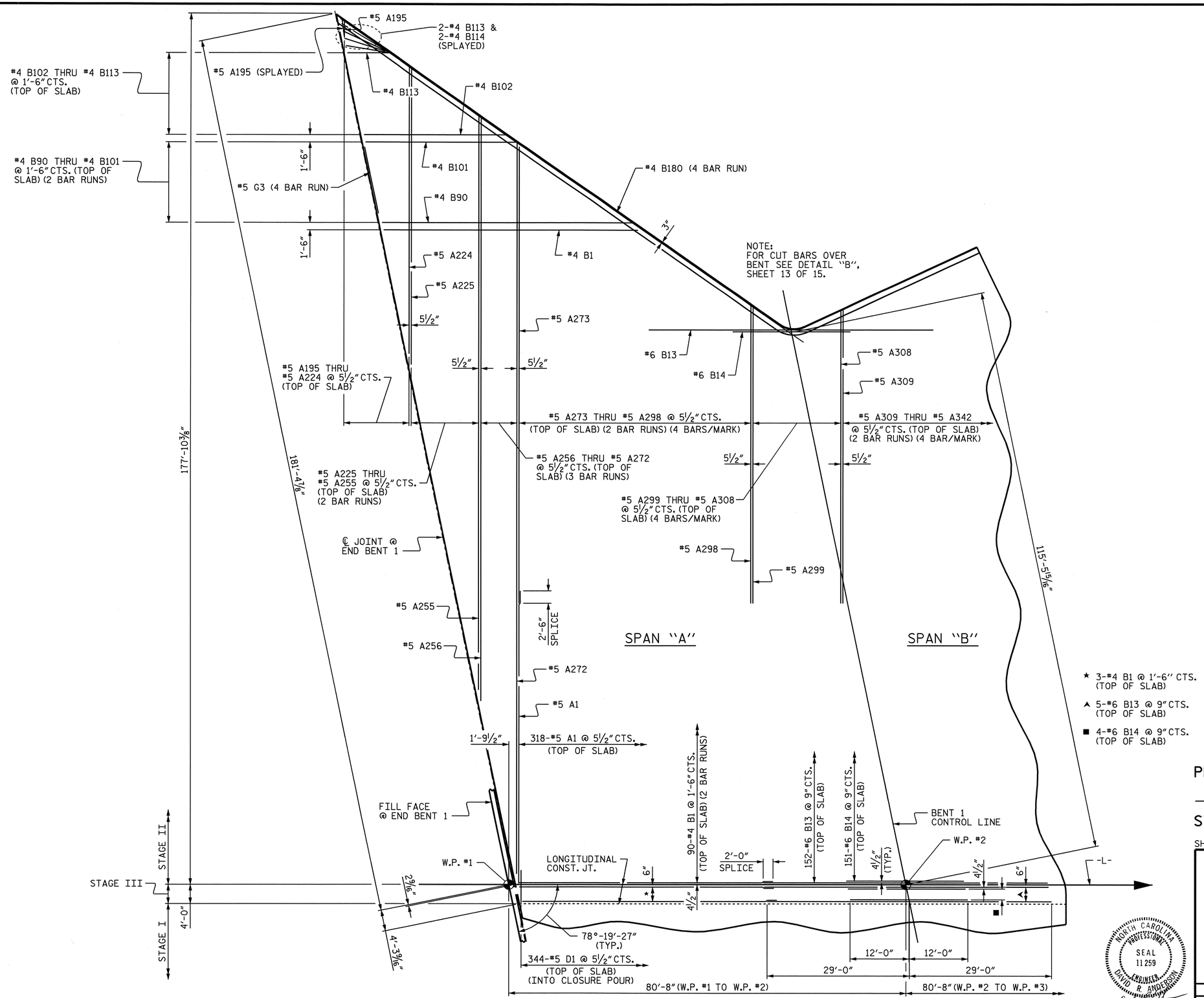

PLAN OF SPAN "A" - STAGE II

(SHOWING TOP MAT REINFORCING STEEL)

PROJECT NO. R-3833B

IREDELL COUNTY

STATION: 277+88.88 -L-

SHEET 9 OF 15

STATE OF NORTH CAROLINA
DEPARTMENT OF TRANSPORTATION
RALEIGH

SUPERSTRUCTURE

PLAN OF SPANS

NORTH CAROLINA PROFESSIONAL SEAL 11259 ENGINEER DAVID R. ANDERSON

11/24/08

REVISIONS							SHEET NO.
NO.	BY:	DATE:	NO.	BY:	DATE:		S-19
1			3				TOTAL SHEETS
2			4				113

DRAWN BY : P.C. BREWER DATE : 10/17/08
CHECKED BY : W.F. PARKER DATE : 11/12/08

13-NOV-2008 09:13
f:\structures\callaway\microstation\brewer plans\r3833b_sd_ps_01.dgn
scallaway

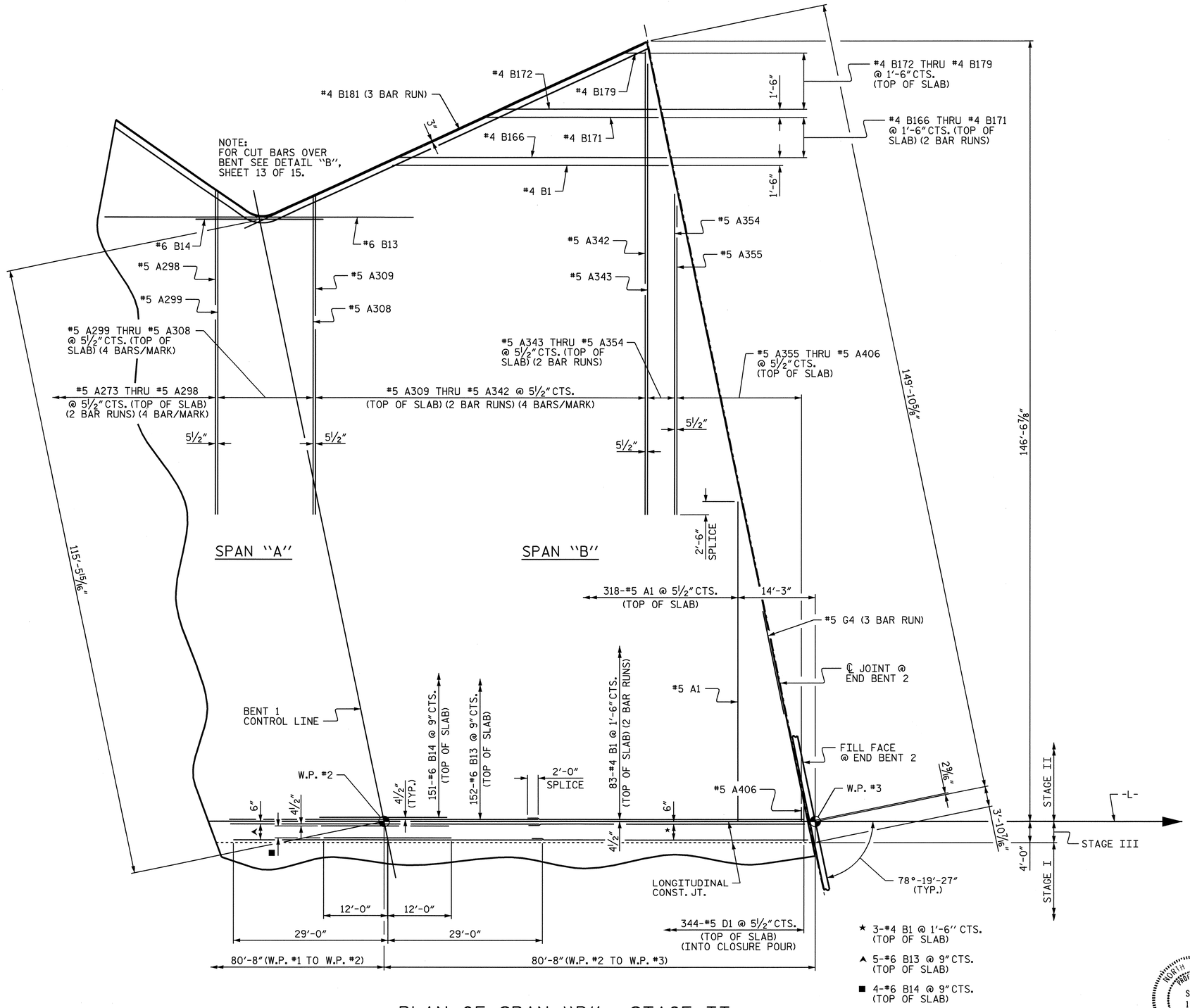

PLAN OF SPAN "B" - STAGE II

(SHOWING TOP MAT REINFORCING STEEL)

PROJECT NO. R-3833B

IREDELL COUNTY

STATION: 277+88.88 -L-

SHEET 10 OF 15

STATE OF NORTH CAROLINA
DEPARTMENT OF TRANSPORTATION
RALEIGH

SUPERSTRUCTURE

PLAN OF SPANS

NORTH CAROLINA PROFESSIONAL SEAL 11259 ENGINEER DAVID R. ANDERSON

11/24/08

REVISIONS						SHEET NO.
NO.	BY:	DATE:	NO.	BY:	DATE:	S-20
1			3			TOTAL SHEETS
2			4			113

DRAWN BY : P.C. BREWER DATE : 10/17/08
CHECKED BY : W.F. PARKER DATE : 11/12/08

13-NOV-2008 09:13
f:\structures\callaway\microstation\brewer plans\r3833b_sd_ps_01.dgn
scallaway

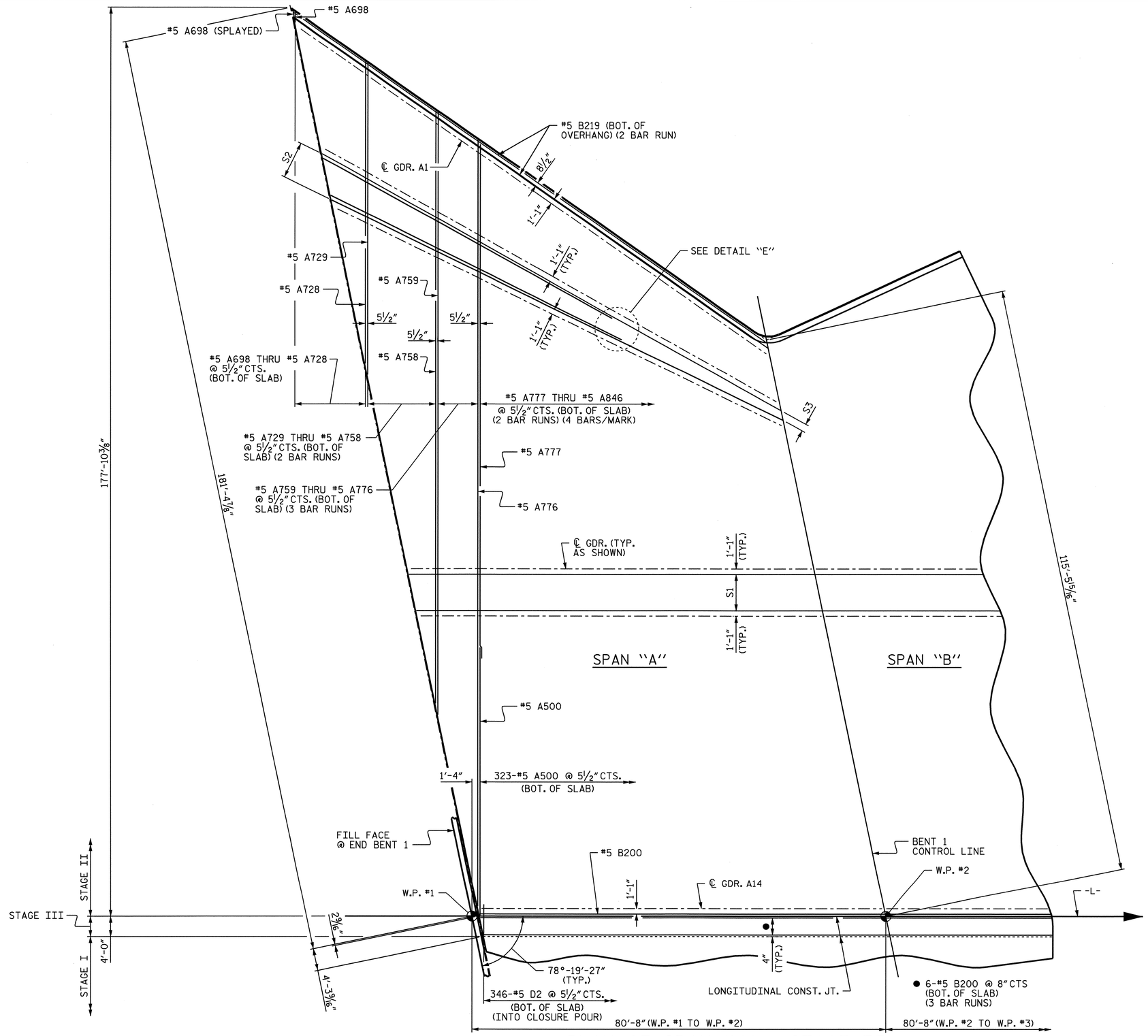

PLAN OF SPAN "A" - STAGE II

(SHOWING BOT. MAT REINFORCING STEEL)

BOTTOM "B" BAR SPACING				
BAY	BAR	S1	S2	S3
BAY 1	6-#5 B219 (2 BAR RUNS) 5-#5 B220 (2 BAR RUNS)	—	10 SPA. @ 7½" CTS.	5 SPA. @ 2¾" CTS.
BAY 2	6-#5 B221 (2 BAR RUNS) 5-#5 B222 (2 BAR RUNS)	—	10 SPA. @ 7⅛" CTS.	5 SPA. @ 3¼" CTS.
BAY 3	6-#5 B223 (2 BAR RUNS) 5-#5 B224 (2 BAR RUNS)	—	10 SPA. @ 8⅜" CTS.	5 SPA. @ 3⅝" CTS.
BAY 4	7-#5 B225 (2 BAR RUNS) 6-#5 B226	—	12 SPA. @ 7⅜" CTS.	6 SPA. @ 3⅜" CTS.
BAY 5	7-#5 B227 (2 BAR RUNS) 6-#5 B228	—	12 SPA. @ 7⅞" CTS.	6 SPA. @ 3⅝" CTS.
BAY 6A	7-#5 B229 (2 BAR RUNS) 6-#5 B230	—	12 SPA. @ 8¼" CTS.	6 SPA. @ 4" CTS.
BAY 6B	8-#5 B231 (2 BAR RUNS) 7-#5 B232	—	14 SPA. @ 7⅜" CTS.	7 SPA. @ 3⅝" CTS.
BAY 7A	8-#5 B233 (2 BAR RUNS) 7-#5 B234	—	14 SPA. @ 7¾" CTS.	7 SPA. @ 3⅞" CTS.
BAY 7B	8-#5 B235 (2 BAR RUNS) 7-#5 B236	—	14 SPA. @ 8" CTS.	7 SPA. @ 4⅛" CTS.
BAY 8	11-#5 B200 (3 BAR RUNS)	10 SPA. @ 8½" CTS.	—	—
BAY 9 THRU BAY 13	15-#5 B200 (3 BAR RUNS)	14 SPA. @ 8" CTS.	—	—
BAY 14	SEE PLAN VIEW			

THE "B" BARS IN BAY 9 THRU BAY 13 ARE CONTINUOUS FROM END BENT 1 TO END BENT 2.

"S2" AND "S3" IS THE SPACE BETWEEN ALTERNATING LONG AND SHORT "B" BARS.

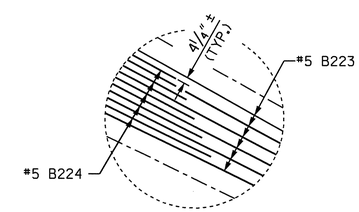

DETAIL "E"

BAY 3 SHOWN, BAY 1, 2, 4, 5, 6A, 6B, 7A, & 7B SIMILAR

PROJECT NO. R-3833B

IREDELL COUNTY

STATION: 277+88.88 -L-

SHEET 11 OF 15

STATE OF NORTH CAROLINA
DEPARTMENT OF TRANSPORTATION
RALEIGH

SUPERSTRUCTURE

PLAN OF SPANS

NORTH CAROLINA PROFESSIONAL SEAL 11259 ENGINEER DAVID R. ANDERSON
11/24/08

REVISIONS							SHEET NO.
NO.	BY:	DATE:	NO.	BY:	DATE:		S-21
1			3				TOTAL SHEETS
2			4				113

DRAWN BY : P.C. BREWER DATE : 10/17/08
CHECKED BY : W.F. PARKER DATE : 11/12/08

14-NOV-2008 12:54
f:\structures\callaway\microstation\brewer plans\r3833b_sd_ps_01.dgn
scallaway

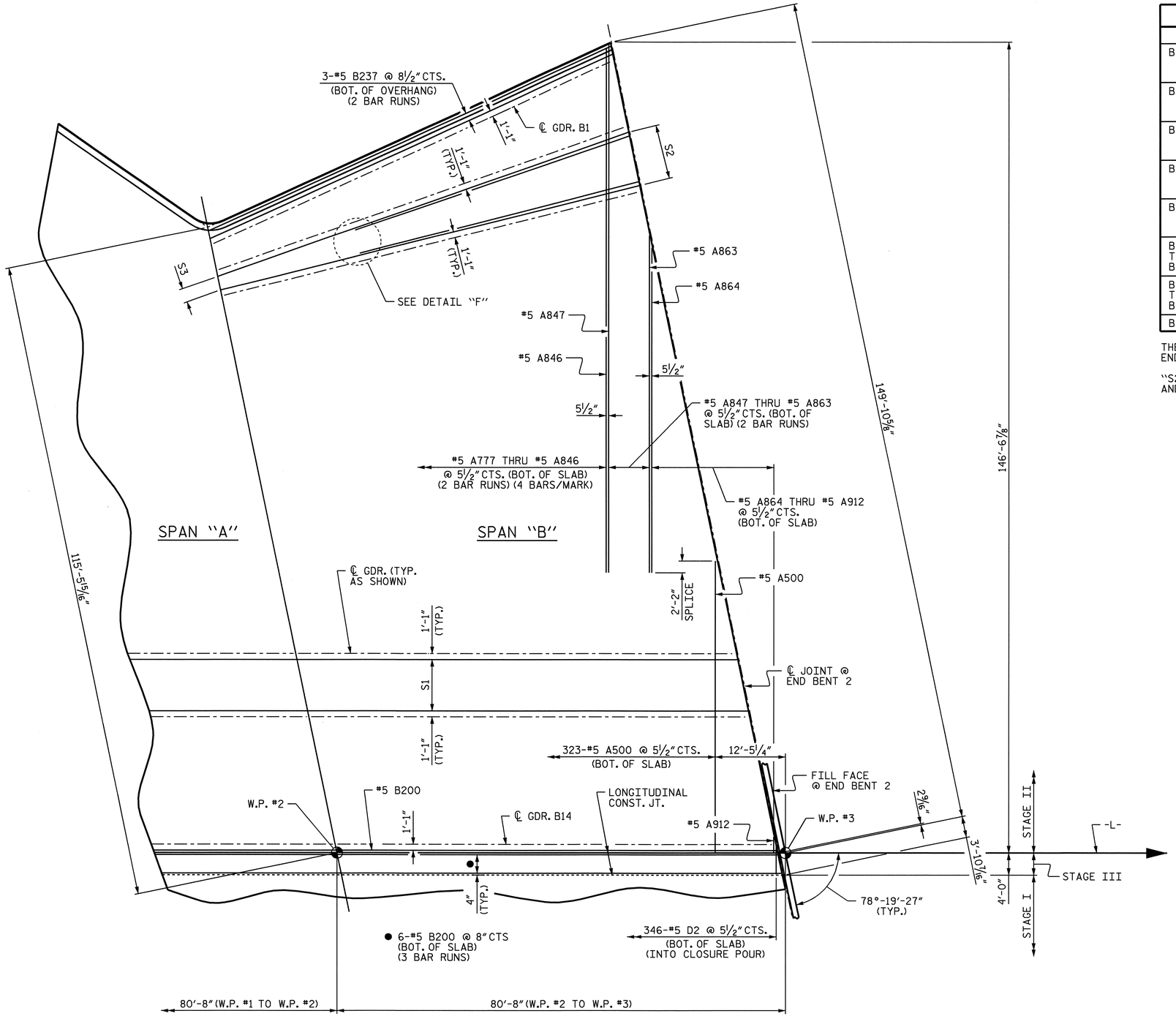

PLAN OF SPAN "B" - STAGE II

(SHOWING BOT. MAT REINFORCING STEEL)

BOTTOM "B" BAR SPACING				
BAY	BAR	S1	S2	S3
BAY 1	8-#5 B237 (2 BAR RUNS) 7-#5 B238	—	14 SPA. @ 8¼" CTS.	7 SPA. @ 4¼" CTS.
BAY 2	8-#5 B237 (2 BAR RUNS) 7-#5 B238	—	14 SPA. @ 8⅜" CTS.	7 SPA. @ 4⅜" CTS.
BAY 3	8-#5 B239 (2 BAR RUNS) 7-#5 B240	—	14 SPA. @ 8⅜" CTS.	7 SPA. @ 4⅜" CTS.
BAY 4	8-#5 B239 (2 BAR RUNS) 7-#5 B240	—	14 SPA. @ 8⅜" CTS.	7 SPA. @ 4⅜" CTS.
BAY 5	7-#5 B241 (2 BAR RUNS) 6-#5 B242	—	12 SPA. @ 7¼" CTS.	6 SPA. @ 5" CTS.
BAY 6 THRU BAY 8	11-#5 B243 (2 BAR RUNS)	10 SPA. @ 8½" CTS.	—	—
BAY 9 THRU BAY 13	SEE SHEET 11 OF 15.			
BAY 14	SEE PLAN VIEW			

THE "B" BARS IN BAY 9 THRU BAY 13 ARE CONTINUOUS FROM END BENT 1 TO END BENT 2.

"S2" AND "S3" IS THE SPACE BETWEEN ALTERNATING LONG AND SHORT "B" BARS.

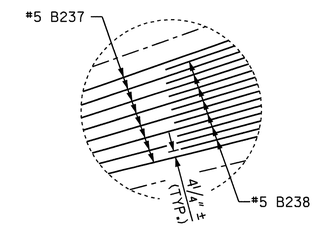

DETAIL "F"

BAY 2 SHOWN, BAY 1, 3, 4, & 5 SIMILAR

PROJECT NO. R-3833B

IREDELL COUNTY

STATION: 277+88.88 -L-

SHEET 12 OF 15

STATE OF NORTH CAROLINA
DEPARTMENT OF TRANSPORTATION
RALEIGH

SUPERSTRUCTURE

PLAN OF SPANS

NORTH CAROLINA PROFESSIONAL SEAL 11259 ENGINEER DAVID R. ANDERSON

11/24/08

REVISIONS						SHEET NO.
NO.	BY:	DATE:	NO.	BY:	DATE:	S-22
1			3			TOTAL SHEETS
2			4			113

DRAWN BY : P.C. BREWER DATE : 10/17/08
CHECKED BY : W.F. PARKER DATE : 11/12/08

14-NOV-2008 12:54
f:\structures\callaway\microstation\brewer plans\r3833b_sd_ps_01.dgn
scallaway

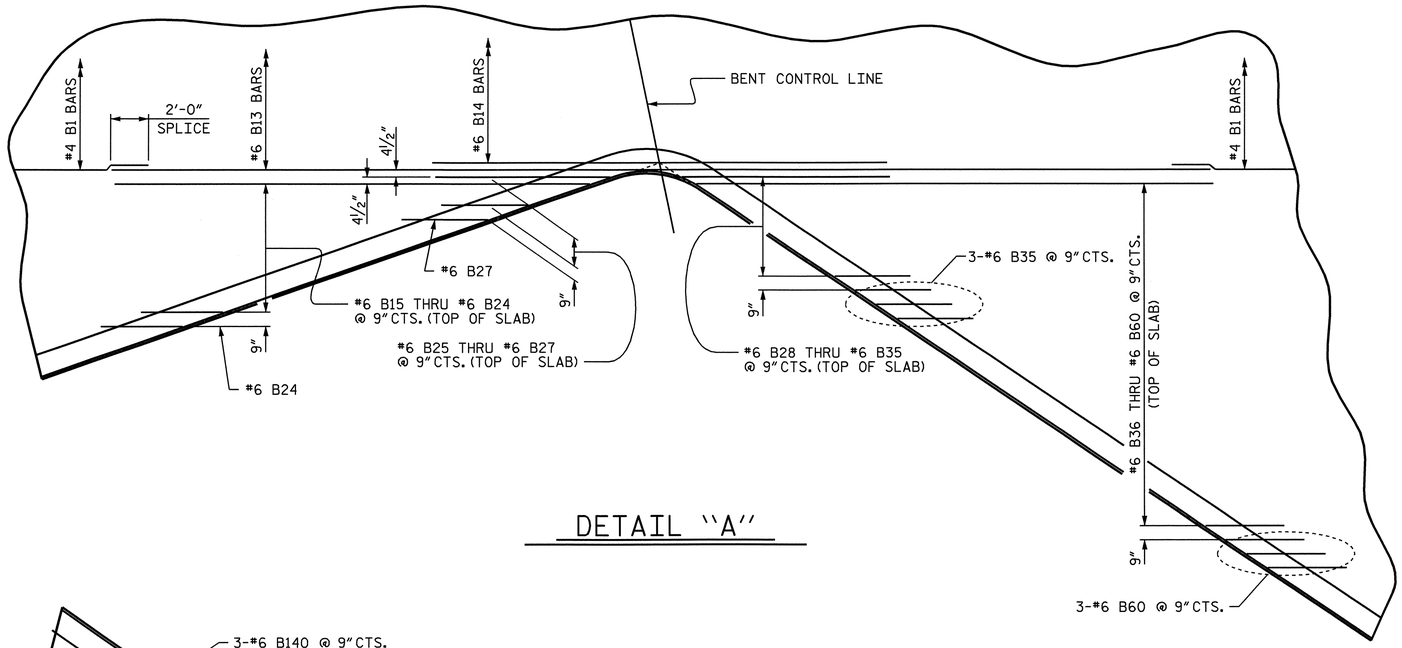

DETAIL "A"

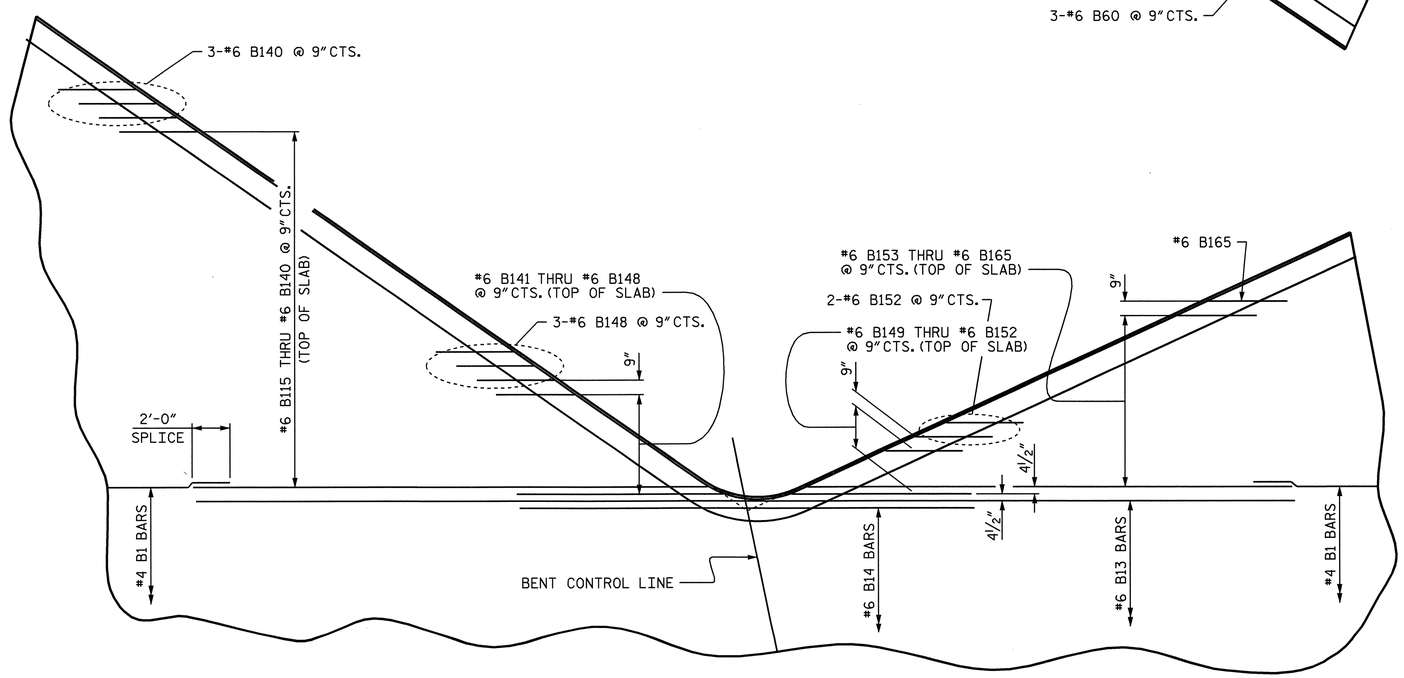

DETAIL "B"

PROJECT NO. R-3833B
IREDELL COUNTY
STATION: 277+88.88 -L-

SHEET 13 OF 15

STATE OF NORTH CAROLINA
DEPARTMENT OF TRANSPORTATION
RALEIGH

SUPERSTRUCTURE
PLAN OF SPANS

NORTH CAROLINA PROFESSIONAL SEAL 11259 ENGINEER DAVID R. ANDERSON
11/24/08

REVISIONS						SHEET NO.
NO.	BY:	DATE:	NO.	BY:	DATE:	S-23
1			3			TOTAL SHEETS
2			4			113

DRAWN BY : P.C. BREWER DATE : 10/17/08
CHECKED BY : W.F. PARKER DATE : 11/12/08

06-NOV-2008 09:03
f:\structures\callaway\microstation\brewer plans\plot\r3833b_sd_plot_01.dgn
scallaway

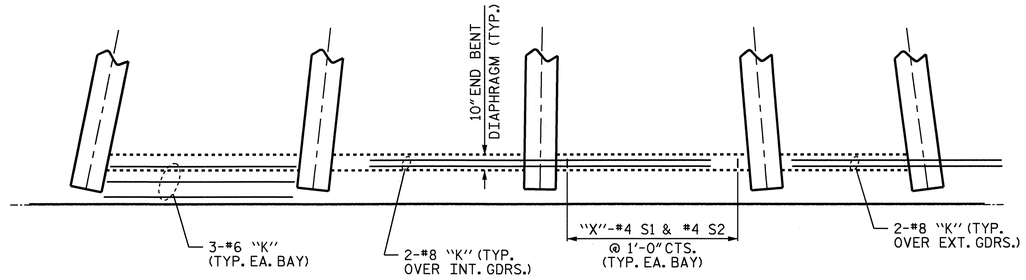

PARTIAL PLAN OF END BENT DIAPHRAGMS

(SEE TABLES)

DIAPHRAGM REINFORCING STEEL (STAGE I)

FOR BAY REINFORCING STEEL

SPAN "A"			SPAN "B"		
BAY	"X"	"K" BAR	BAY	"X"	"K" BAR
BAY 15	10	K5	BAY 15	10	K20
BAY 16	10	K5	BAY 16	10	K20
BAY 17	10	K5	BAY 17	10	K20
BAY 18	10	K5	BAY 18	10	K20
BAY 19	7	K6	BAY 19	10	K20
BAY 20	7	K7	BAY 20A	10	K20
			BAY 20B	10	K20
BAY 21	7	K7	BAY 21A	9	K20
			BAY 21B	9	K21
BAY 22	10	K5	BAY 22	9	K21
BAY 23	10	K5	BAY 23	9	K21
BAY 24	10	K5	BAY 24	9	K21
BAY 25	7	K6	BAY 25	9	K21

DIAPHRAGM REINFORCING STEEL (STAGE I)

FOR REINFORCING STEEL OVER GIRDERS

SPAN "A"		SPAN "B"	
GDR.	"K" BAR	GDR.	"K" BAR
GDR. A15	K1	GDR. B15	K16
GDR. A16	K3	GDR. B16	K17
GDR. A17	K3	GDR. B17	K17
GDR. A18	K3	GDR. B18	K17
GDR. A19	K2	GDR. B19	K17
GDR. A20	K2	GDR. B20A	K17
		GDR. B20B	K17
GDR. A21	K2	GDR. B21A	K18
		GDR. B21B	K18
GDR. A22	K2	GDR. B22	K18
GDR. A23	K3	GDR. B23	K18
GDR. A24	K3	GDR. B24	K18
GDR. A25	K2	GDR. B25	K18
GDR. A26	K4	GDR. B26	K19

DIAPHRAGM REINFORCING STEEL (STAGE II & STAGE III)

FOR BAY REINFORCING STEEL

SPAN "A"			SPAN "B"		
BAY	"X"	"K" BAR	BAY	"X"	"K" BAR
BAY 1	9	K27	BAY 1	10	K44
BAY 2	9	K27	BAY 2	10	K44
BAY 3	9	K27	BAY 3	10	K44
BAY 4	9	K27	BAY 4	10	K44
BAY 5	9	K28	BAY 5	8	K45
BAY 6A	9	K28	BAY 6	8	K45
BAY 6B	9	K28			
BAY 7A	10	K28	BAY 7	8	K45
BAY 7B	10	K28			
BAY 8	8	K29	BAY 8	8	K45
BAY 9	10	K28	BAY 9	10	K44
BAY 10	10	K28	BAY 10	10	K44
BAY 11	10	K28	BAY 11	10	K44
BAY 12	10	K28	BAY 12	10	K44
BAY 13	10	K28	BAY 13	10	K44
BAY 14	5	—	BAY 14	5	—

DIAPHRAGM REINFORCING STEEL (STAGE II & STAGE III)

FOR REINFORCING STEEL OVER GIRDERS

SPAN "A"		SPAN "B"	
GDR.	"K" BAR	GDR.	"K" BAR
GDR. A1	K22	GDR. B1	K40
GDR. A2	K23	GDR. B2	K41
GDR. A3	K23	GDR. B3	K41
GDR. A4	K23	GDR. B4	K41
GDR. A5	K23	GDR. B5	K42
GDR. A6A	K23	GDR. B6	K42
GDR. A6B	K23		
GDR. A7A	K25	GDR. B7	K42
GDR. A7B	K25		
GDR. A8	K24	GDR. B8	K42
GDR. A9	K24	GDR. B9	K42
GDR. A10	K25	GDR. B10	K41
GDR. A11	K25	GDR. B11	K41
GDR. A12	K25	GDR. B12	K41
GDR. A13	K25	GDR. B13	K41
GDR. A14	K26	GDR. B14	K43

PROJECT NO. R-3833B

IREDELL COUNTY

STATION: 277+88.88 -L-

SHEET 14 OF 15

STATE OF NORTH CAROLINA
DEPARTMENT OF TRANSPORTATION
RALEIGH

SUPERSTRUCTURE

PLAN OF SPANS

NORTH CAROLINA PROFESSIONAL SEAL 11259 ENGINEER DAVID R. ANDERSON

11/24/08

REVISIONS						SHEET NO.
NO.	BY:	DATE:	NO.	BY:	DATE:	5-24
1			3			TOTAL SHEETS
2			4			113

DRAWN BY : P.C. BREWER DATE : 10/17/08
CHECKED BY : W.F. PARKER DATE : 11/12/08

06-NOV-2008 09:03
f:\structures\callaway\microstation\brewer plans\plot\r3833b_sd_plot_01.dgn
scallaway

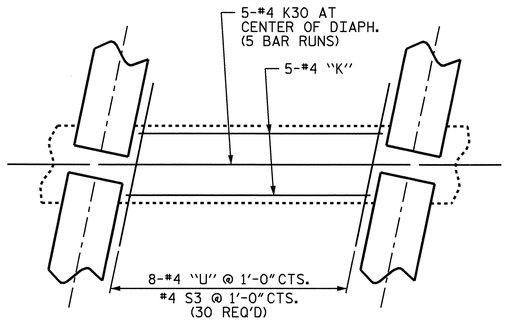

BAY 8

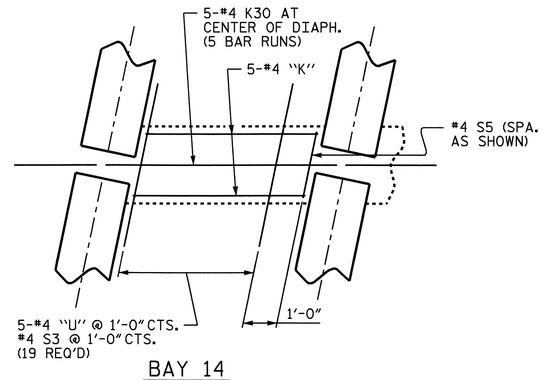

BAY 14

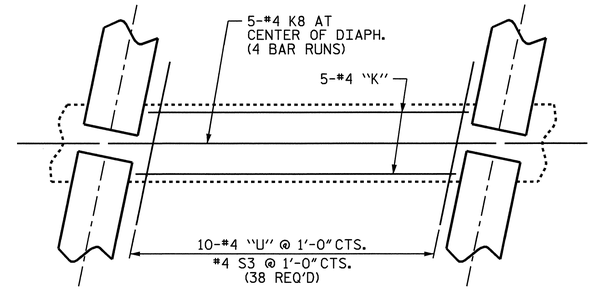

BAY 18
(BAY 9 THRU 13 &
15 THRU 17 SIMILAR)

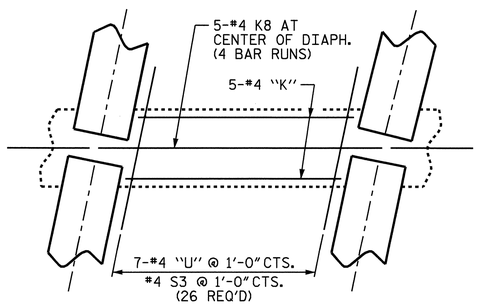

BAY 19

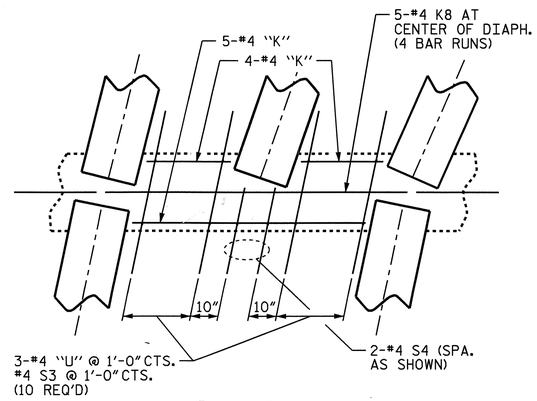

BAY 20
(BAY 6, 7, & 21 SIMILAR)

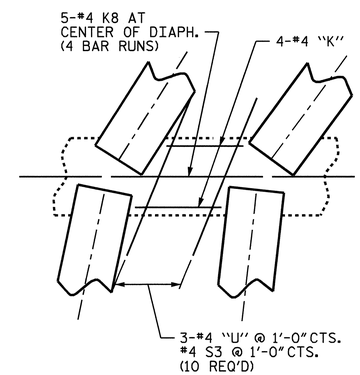

BAY 22
(BAY 1 THRU 5 &
23 THRU 25 SIMILAR)

PARTIAL PLAN OF BENT DIAPHRAGMS

NOTE:

FOR FURTHER DIAPHRAGM REINFORCING STEEL AND DETAILS, SEE "TYPICAL SECTIONS" SHEETS.

PROJECT NO. R-3833B
IREDELL COUNTY
STATION: 277+88.88 -L-

SHEET 15 OF 15

STATE OF NORTH CAROLINA
DEPARTMENT OF TRANSPORTATION
RALEIGH

SUPERSTRUCTURE

PLAN OF SPANS

NORTH CAROLINA PROFESSIONAL SEAL 11259 ENGINEER DAVID R. ANDERSON
11/24/08

REVISIONS						SHEET NO.
NO.	BY:	DATE:	NO.	BY:	DATE:	S-25
1			3			TOTAL SHEETS
2			4			113

DRAWN BY : P.C. BREWER DATE : 10/17/08
CHECKED BY : W.F. PARKER DATE : 11/12/08

06-NOV-2008 09:03
f:\structures\callaway\microstation\brewer plans\plot\r3833b_sd_plot_01.dgn
scallaway

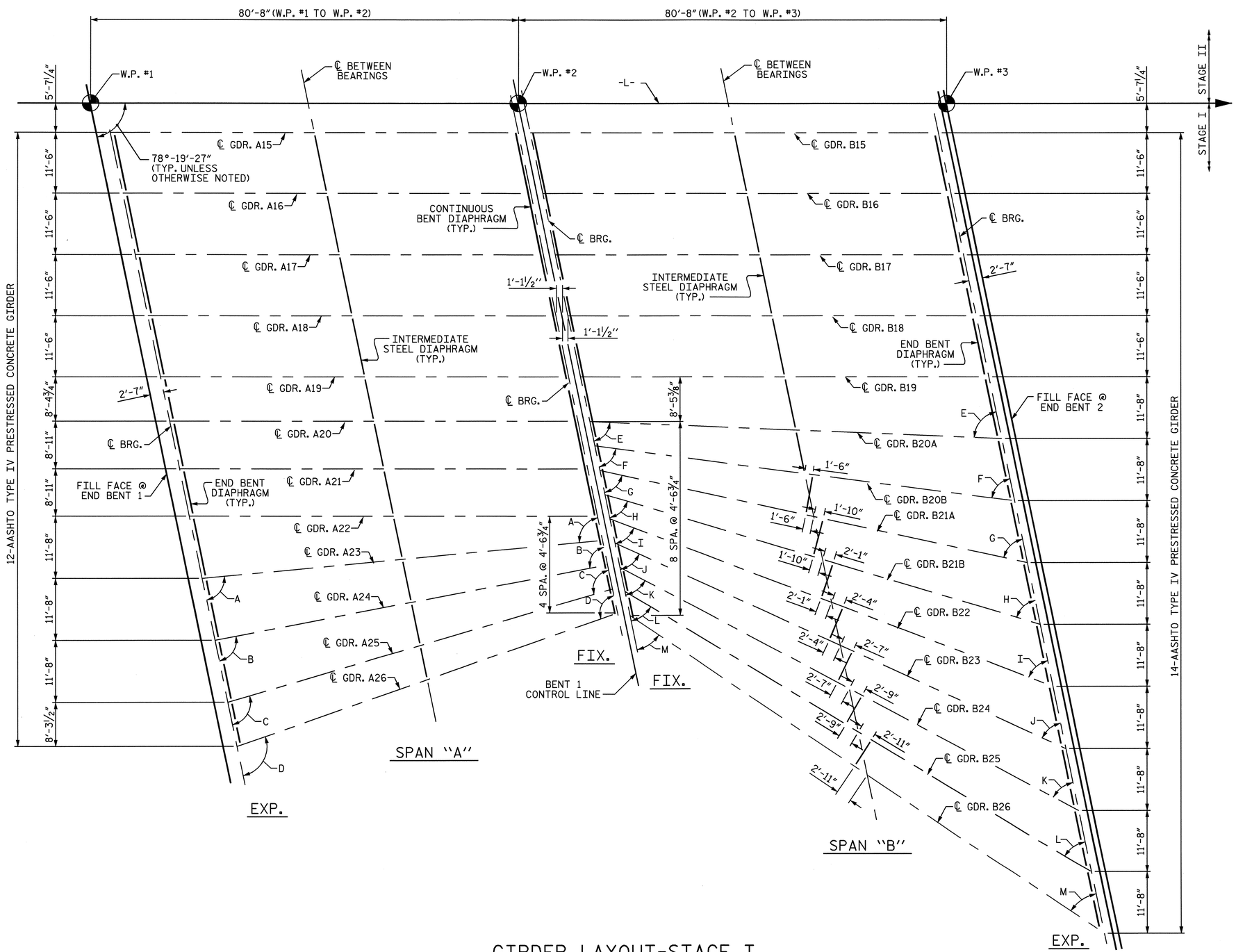

GIRDER LAYOUT-STAGE I

SOLE PLATES					
SPAN "A"			SPAN "B"		
GIRDER	EXP.	FIX.	GIRDER	FIX.	EXP.
A15	P2, E4	P3, E4	B15	P6, E4	P9, E4
A16	P2, E4	P3, E4	B16	P6, E4	P9, E4
A17	P2, E4	P3, E4	B17	P7, E4	P9, E4
A18	P2, E4	P3, E4	B18	P7, E4	P9, E4
A19	P2, E4	P4, E4	B19	P7, E4	P9, E4
A20	P2, E4	P4, E4	B20A	P7, E4	P9, E4
A21	P2, E4	P4, E4	B20B	P7, E4	P9, E4
A22	P2, E4	P4, E4	B21A	P8, E4	P9, E4
A23	P2, E4	P3, E4	B21B	P8, E4	P9, E4
A24	P2, E4	P3, E4	B22	P8, E4	P10, E4
A25	P2, E4	P3, E4	B23	P8, E4	P10, E4
A26	P2, E4	P3, E4	B24	P8, E4	P10, E4
			B25	P8, E4	P10, E4
			B26	P8, E4	P10, E4

ANGLES	
A	83°-42'-16"
B	89°-11'-53"
C	94°-42'-23"
D	97°-34'-11"
E	75°-56'-52"
F	70°-52'-58"
G	66°-06'-34"
H	61°-39'-48"
I	57°-33'-37"
J	53°-47'-56"
K	50°-22'-01"
L	47°-14'-40"
M	44°-24'-28"

PROJECT NO. R-3833B
IREDELL COUNTY
STATION: 277+88.88 -L-

SHEET 1 OF 2

STATE OF NORTH CAROLINA
DEPARTMENT OF TRANSPORTATION
RALEIGH

SUPERSTRUCTURE

GIRDER LAYOUT
STAGE I

NORTH CAROLINA PROFESSIONAL SEAL 11259 ENGINEER DAVID R. ANDERSON
11/24/08

REVISIONS						SHEET NO.
NO.	BY:	DATE:	NO.	BY:	DATE:	S-26
1			3			TOTAL SHEETS
2			4			113

STR. #1

DRAWN BY : A.S. CALLAWAY DATE : 10/1/08
CHECKED BY : D. ANDERSON DATE : 10/7/08

05-NOV-2008 14:01
r:\structures\callaway\microstation\r3833b_sd_fp_01.dgn
danderson

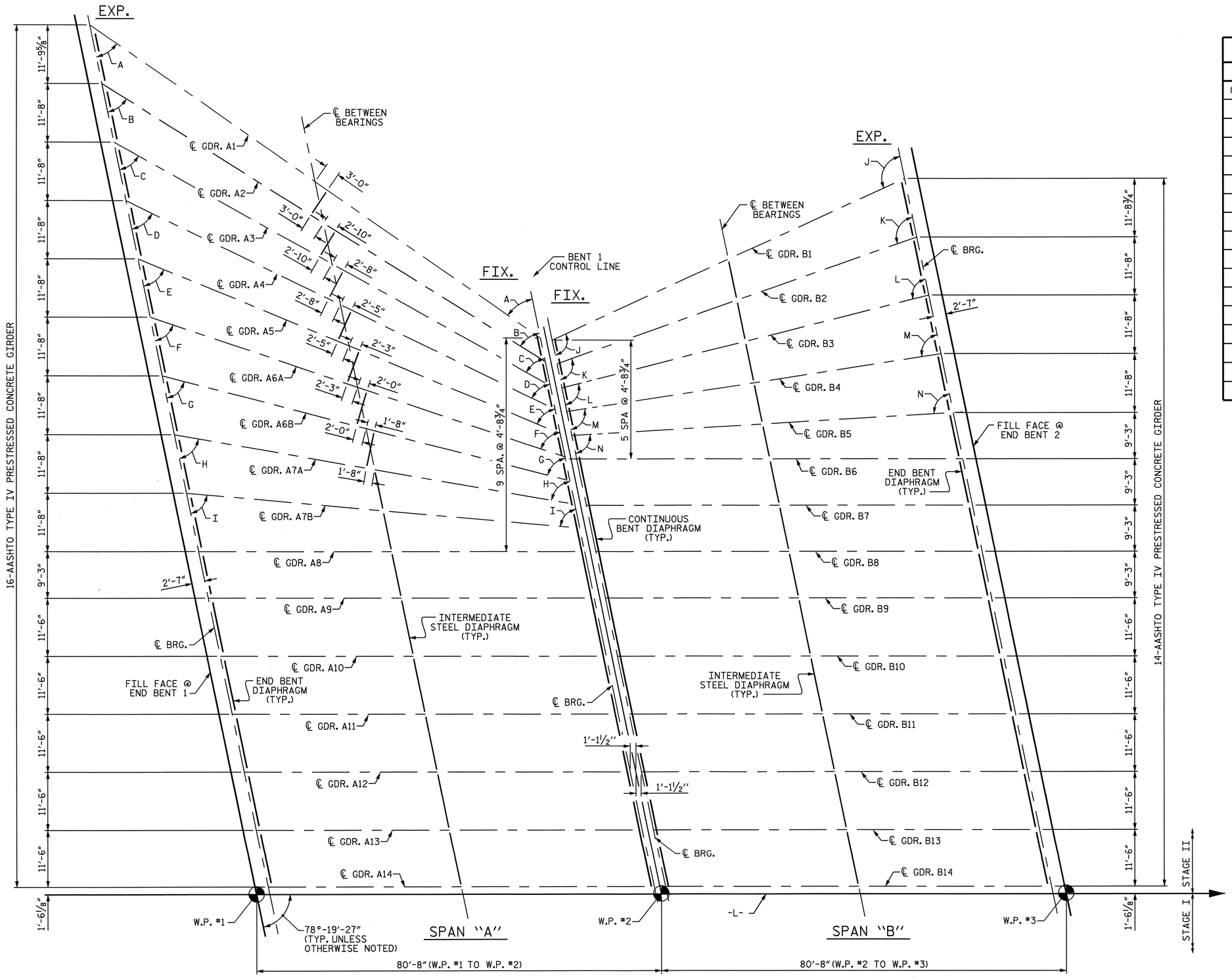

GIRDER LAYOUT-STAGE II

SOLE PLATES					
SPAN "A"			SPAN "B"		
GIRDER	EXP.	FIX.	GIRDER	FIX.	EXP.
A1	P1, E4	P3, E4	B1	P5, E4	P9, E4
A2	P1, E4	P3, E4	B2	P5, E4	P9, E4
A3	P1, E4	P3, E4	B3	P5, E4	P9, E4
A4	P1, E4	P3, E4	B4	P5, E4	P9, E4
A5	P1, E4	P3, E4	B5	P5, E4	P9, E4
A6A	P2, E4	P3, E4	B6	P5, E4	P9, E4
A6B	P2, E4	P3, E4	B7	P5, E4	P9, E4
A7A	P2, E4	P3, E4	B8	P6, E4	P9, E4
A7B	P2, E4	P3, E4	B9	P6, E4	P9, E4
A8	P2, E4	P3, E4	B10	P6, E4	P9, E4
A9	P2, E4	P3, E4	B11	P6, E4	P9, E4
A10	P2, E4	P3, E4	B12	P6, E4	P9, E4
A11	P2, E4	P3, E4	B13	P6, E4	P9, E4
A12	P2, E4	P3, E4	B14	P6, E4	P9, E4
A13	P2, E4	P3, E4			
A14	P2, E4	P3, E4			

ANGLES	
A	43°-27'-54"
B	46°-11'-38"
C	49°-08'-12"
D	52°-21'-58"
E	55°-54'-10"
F	59°-45'-42"
G	63°-56'-54"
H	68°-27'-25"
I	73°-15'-47"
J	103°-02'-54"
K	97°-47'-31"
L	92°-26'-58"
M	87°-03'-50"
N	81°-43'-47"

PROJECT NO. R-3833B
IREDELL COUNTY
STATION: 277+88.88 -L-

SHEET 2 OF 2

STATE OF NORTH CAROLINA
DEPARTMENT OF TRANSPORTATION
RALEIGH

SUPERSTRUCTURE
GIRDER LAYOUT
STAGE II

NORTH CAROLINA PROFESSIONAL SEAL 11259 ENGINEER DAVID R. ANDERSON
11/24/08

REVISIONS						SHEET NO.
NO.	BY:	DATE:	NO.	BY:	DATE:	S-27
1			3			TOTAL SHEETS
2			4			113

STR. #1

DRAWN BY : A.S. CALLAWAY DATE : 10/1/08
CHECKED BY : D. ANDERSON DATE : 10/7/08

05-NOV-2008 14:01
r:\structures\callaway\microstation\r3833b_sd_fp_01.dgn
danderson

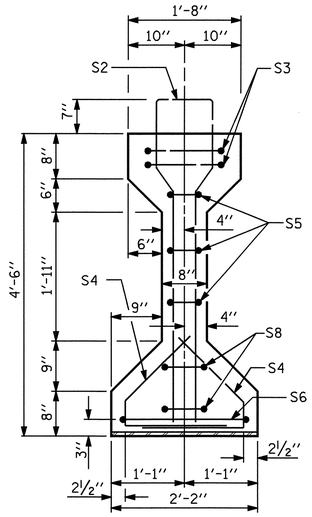

SECTION A-A

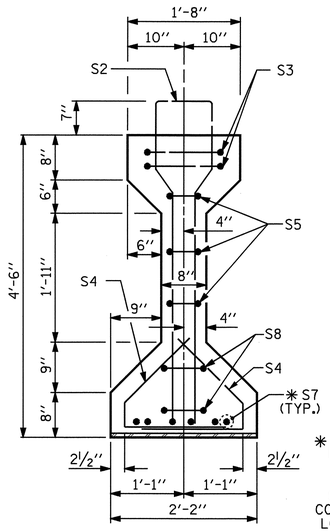

SECTION B-B

✱ FOR S7 BARS, SEE DETAIL "A" OF PRESTRESSED CONCRETE GIRDER CONTINUOUS FOR LIVE LOAD DETAILS SHEET

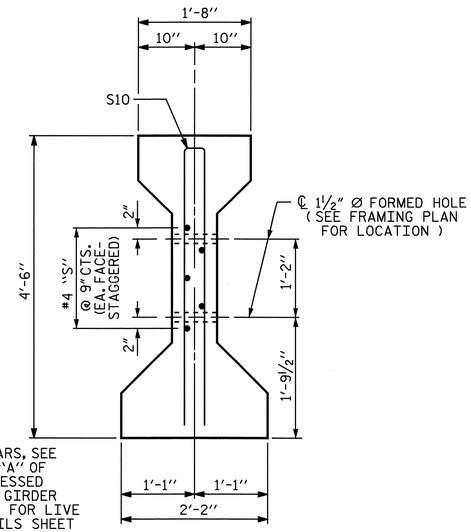

SECTION C-C

(S1 BARS NOT SHOWN)

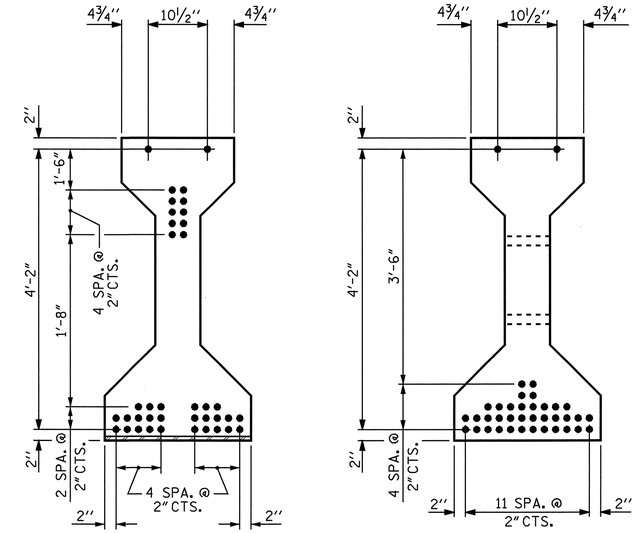

AT END OF GIRDER

AT ℄ OF GIRDER

0.6" Ø LOW RELAXATION STRAND LAYOUT

GIRDER DIMENSIONS

GDR. No.	DIM. "A"	DIM. "B"	DIM. "C"	DIM. "E"	DIM. "L"	DIM. "R"	"N"
A1	110'-10"	55'-5"	6½"	8⅛"	-	3'-0"	48
A2	105'-9"	53'-10½"	2'-0"	8⅜"	3'-0"	2'-10"	44
A3	101'-0"	50'-6"	1'-7½"	8½"	2'-10"	2'-8"	42
A4	96'-6"	48'-3"	1'-4½"	8 7/16"	2'-8"	2'-5"	40
A5	92'-4"	46'-2"	3½"	8 5/16"	2'-5"	2'-3"	39

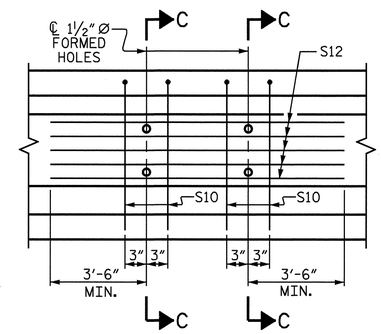

PARTIAL ELEVATION

SHOWING INTERMEDIATE DIAPHRAGM REINFORCING STEEL FOR GIRDER Nos. A2-A5

SEE SHEET 9 OF 13 FOR BILL OF MATERIAL

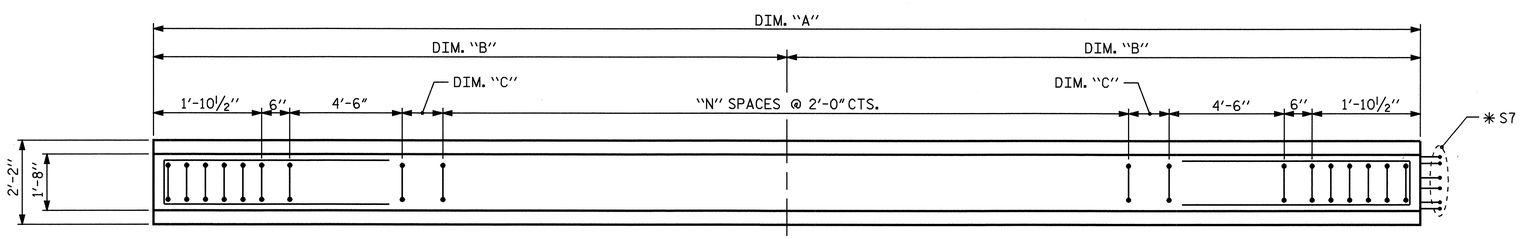

PLAN OF GIRDER

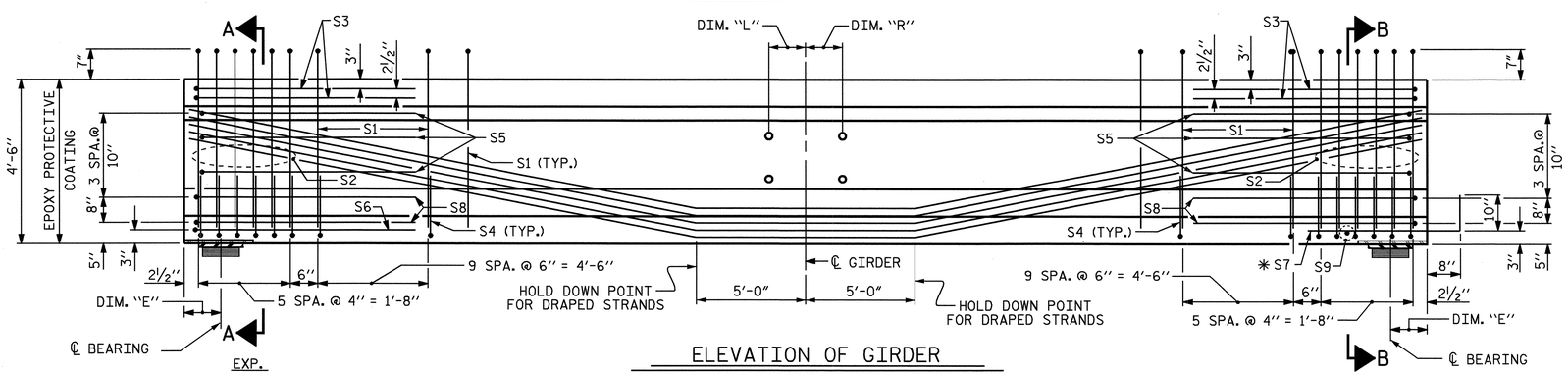

ELEVATION OF GIRDER

(SEE PARTIAL ELEVATION FOR ADDITIONAL "S" BARS)

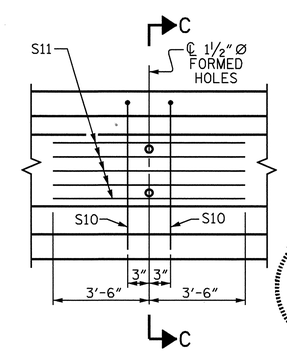

PARTIAL ELEVATION

SHOWING INTERMEDIATE DIAPHRAGM REINFORCING STEEL FOR GIRDER No. A1

PROJECT NO. R-3833B

IREDELL COUNTY

STATION: 277+88.88 -L-

SHEET 1 OF 13

STATE OF NORTH CAROLINA
DEPARTMENT OF TRANSPORTATION
RALEIGH

STANDARD
AASHTO TYPE IV
PRESTRESSED CONCRETE GIRDER
CONTINUOUS FOR LIVE LOAD
GIRDERS A1 - A5

NORTH CAROLINA PROFESSIONAL SEAL 11259 ENGINEER DAVID R. ANDERSON 11/24/08

ASSEMBLED BY : M.K. BEARD	DATE : 9/30/08
CHECKED BY : A.S. CALLAWAY	DATE : 10/7/08

DRAWN BY : ELR 8/91	REV. 7/17/98 RWW/LES
CHECKED BY : GRP 8/91	REV. 10/17/00R RWW/LES
	REV. 5/1/06 TLA/GM

REVISIONS						SHEET NO.
NO.	BY:	DATE:	NO.	BY:	DATE:	S-28
1			3			TOTAL SHEETS
2			4			113

STR. #1

STD. NO. PCG6

10-OCT-2008 09:54
r:\structures\kbeard\R3833B_sd_G*.dgn
kbeard

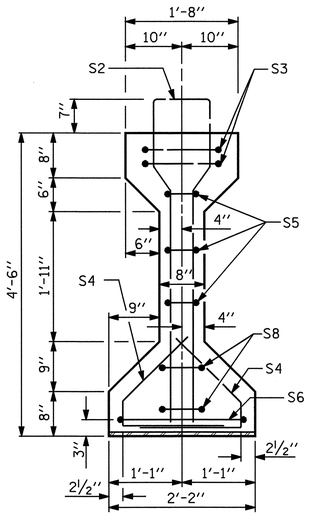

SECTION A-A

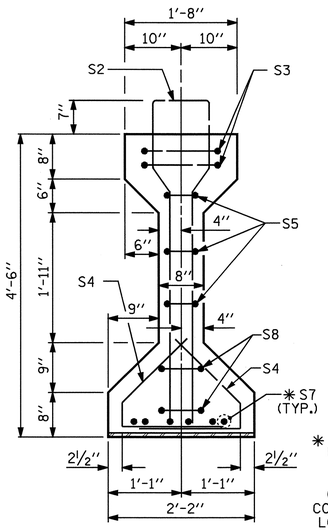

SECTION B-B

✱ FOR S7 BARS, SEE DETAIL "A" OF PRESTRESSED CONCRETE GIRDER CONTINUOUS FOR LIVE LOAD DETAILS SHEET

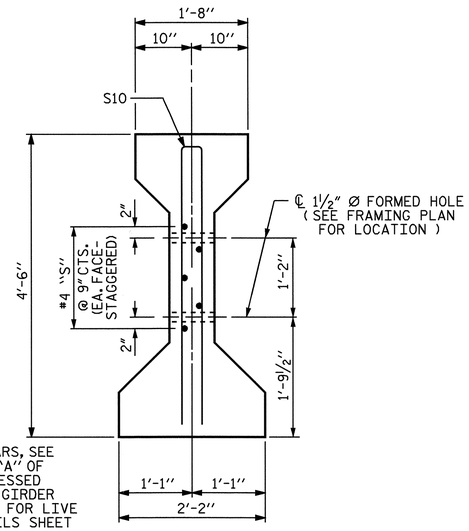

SECTION C-C

(S1 BARS NOT SHOWN)

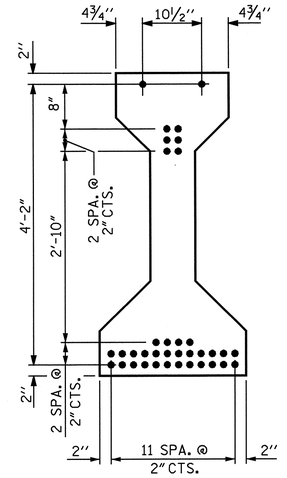

AT ℄ & END OF GIRDER

0.6" Ø LOW RELAXATION STRAND LAYOUT

GIRDER DIMENSIONS							
GDR. No.	DIM. "A"	DIM. "B"	DIM. "C"	DIM. "E"	DIM. "L"	DIM. "R"	"M"
A6A	88'-7"	44'-3½"	5"	8½"	2'-3"	2'-0"	37
A6B	85'-3"	42'-7½"	9"	8 9/16"	2'-0"	1'-8"	35
A7A	82'-4"	41'-2"	1'-3½"	8 3/16"	1'-8"	0	33
A7B	80'-1"	40'-0½"	1'-2"	8⅝"	-	-	32

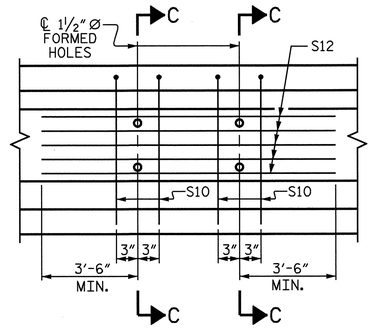

PARTIAL ELEVATION

SHOWING INTERMEDIATE DIAPHRAGM REINFORCING STEEL FOR GIRDER Nos. A6A, A6B & A7A

SEE SHEET 10 OF 13 FOR BILL OF MATERIAL

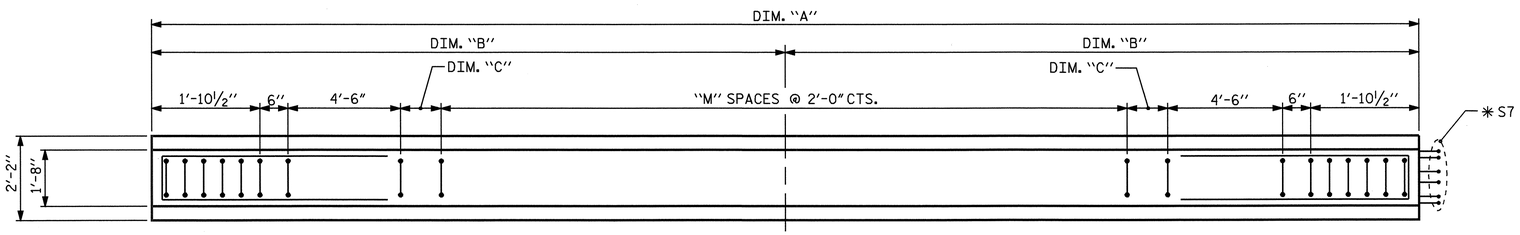

PLAN OF GIRDER

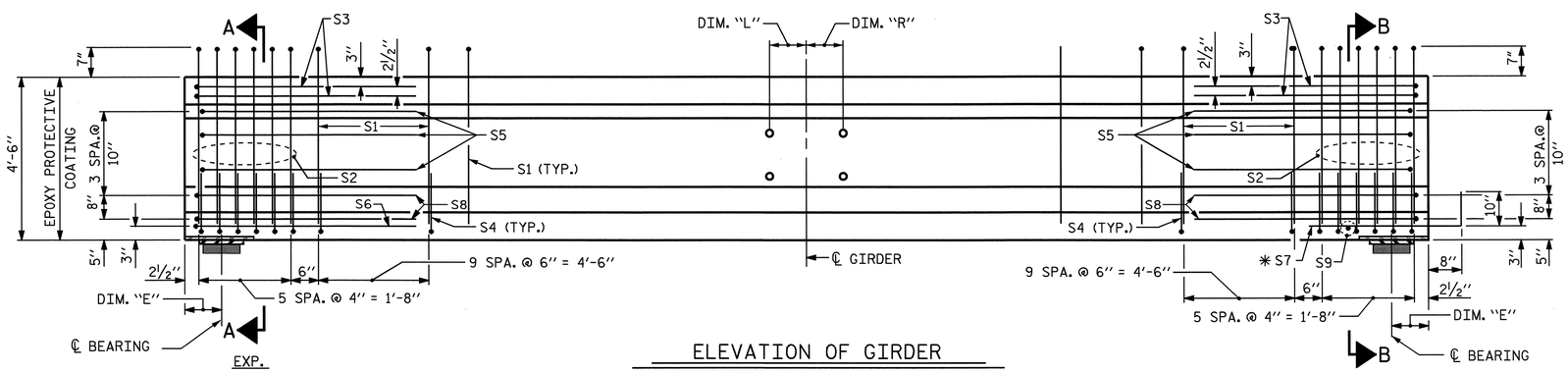

ELEVATION OF GIRDER

(SEE PARTIAL ELEVATION FOR ADDITIONAL "S" BARS)

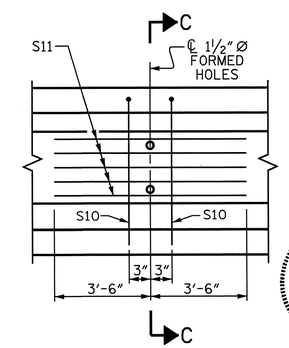

PARTIAL ELEVATION

SHOWING INTERMEDIATE DIAPHRAGM REINFORCING STEEL FOR GIRDER No. A7B

NORTH CAROLINA PROFESSIONAL SEAL 11259 ENGINEER DAVID R. ANDERSON

11/24/08

PROJECT NO. R-3833B

IREDELL COUNTY

STATION: 277+88.88 -L-

SHEET 2 OF 13

STATE OF NORTH CAROLINA
DEPARTMENT OF TRANSPORTATION
RALEIGH

STANDARD
AASHTO TYPE IV
PRESTRESSED CONCRETE GIRDER
CONTINUOUS FOR LIVE LOAD
GIRDERS A6A, A6B,
A7A & A7B

REVISIONS								SHEET NO.
NO.	BY:	DATE:	NO.	BY:	DATE:			S-29
1			3					TOTAL SHEETS
2			4					113

ASSEMBLED BY : M.K. BEARD	DATE : 9/30/08
CHECKED BY : A.S. CALLAWAY	DATE : 10/7/08
DRAWN BY : ELR 8/91	REV. 7/17/98 RWW/LES
CHECKED BY : GRP 8/91	REV. 10/17/00R RWW/LES
	REV. 5/1/06 TLA/GM

10-OCT-2008 09:55
r:\structures\kbeard\R3833B_sd_G*.dgn
kbeard

STR. #1

STD. NO. PCG6

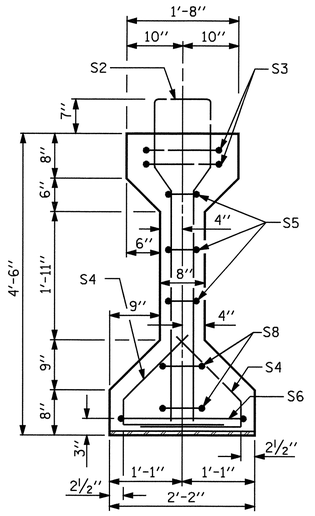

SECTION A-A

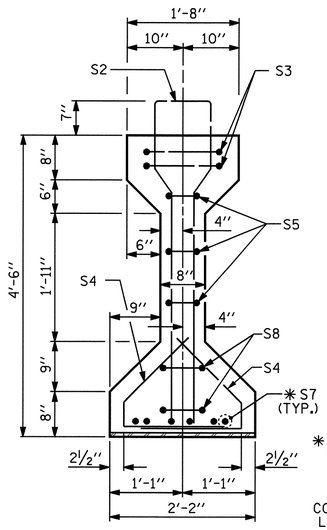

SECTION B-B

✱ FOR S7 BARS, SEE DETAIL "A" OF PRESTRESSED CONCRETE GIRDER CONTINUOUS FOR LIVE LOAD DETAILS SHEET

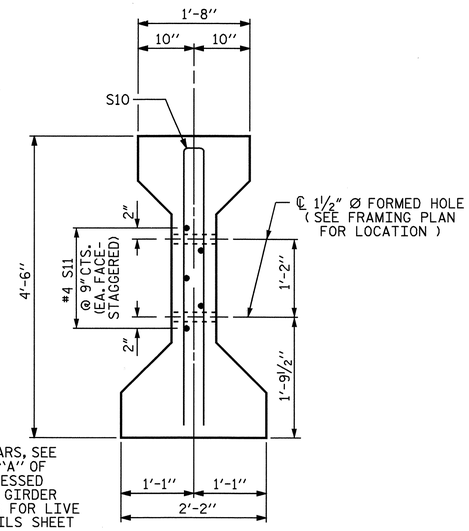

SECTION C-C

(S1 BARS NOT SHOWN)

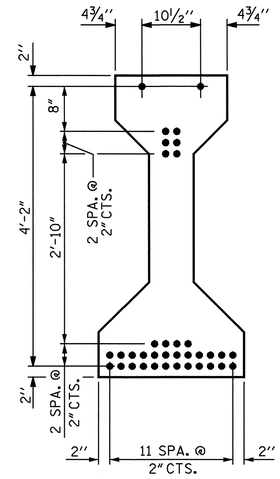

AT ℄ & END OF GIRDER

0.6" Ø LOW RELAXATION STRAND LAYOUT

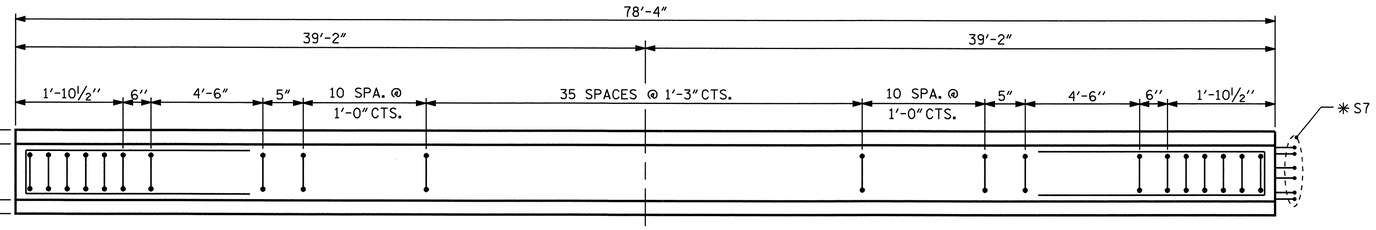

PLAN OF GIRDER

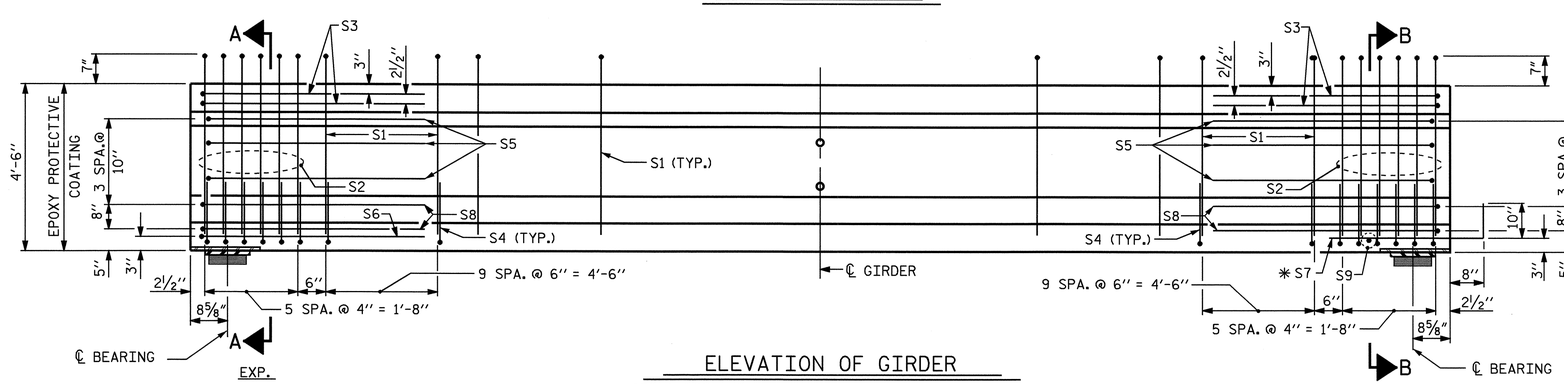

ELEVATION OF GIRDER

(SEE PARTIAL ELEVATION FOR ADDITIONAL "S" BARS)

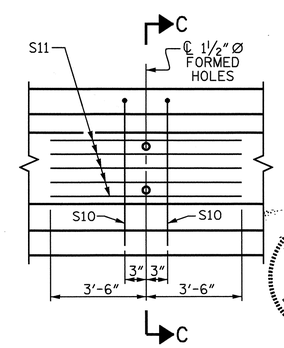

PARTIAL ELEVATION

SHOWING INTERMEDIATE DIAPHRAGM
REINFORCING STEEL FOR GIRDER No. A8 - A22

0.6" Ø L. R. GRADE 270 STRANDS

AREA (SQUARE INCHES)	ULTIMATE STRENGTH (LBS. PER STRAND)	APPLIED PRESTRESS (LBS. PER STRAND)
0.217	58,600	43,950

REINFORCING STEEL FOR ONE GIRDER

BAR	NUMBER	SIZE	TYPE	LENGTH	WEIGHT
S1	76	#4	1	10'-10"	550
S2	12	#6	1	10'-10"	195
S3	4	#4	2	9'-1"	24
S4	64	#4	3	3'-5"	146
S5	6	#4	2	8'-5"	34
S6	1	#4	2	9'-11"	7
✱S7	6	#5	STR	3'-8"	23
S8	4	#4	2	8'-7"	23
S9	1	#3	STR	1'-10"	1
S10	2	#5	2	8'-8"	18
S11	5	#4	STR	7'-0"	23

✱NOTE: S7 BARS SHALL BE BENT BEFORE SHIPMENT. HEAT BENDING SHALL NOT BE ALLOWED.

BAR TYPES

ALL BAR DIMENSIONS ARE OUT-TO-OUT

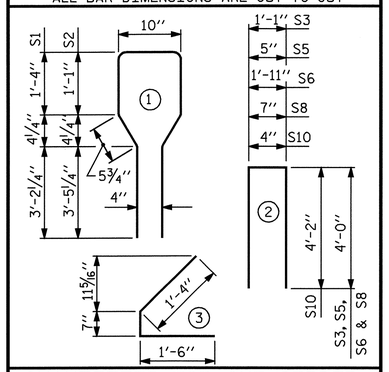

QUANTITIES FOR ONE GIRDER

	REINFORCING STEEL	8000 PSI CONCRETE	0.6" Ø L.R. STRANDS
	LB.	C.Y.	No.
	1044	15.9	36

GIRDERS REQUIRED

NUMBER	LENGTH	TOTAL LENGTH
15	78'-4"	1175'-0"

PROJECT NO. R-3833B

IREDELL COUNTY

STATION: 277+88.88 -L-

SHEET 3 OF 13

STATE OF NORTH CAROLINA
DEPARTMENT OF TRANSPORTATION
RALEIGH

STANDARD
AASHTO TYPE IV
PRESTRESSED CONCRETE GIRDER
CONTINUOUS FOR LIVE LOAD
GIRDERS A8 - A22

NORTH CAROLINA PROFESSIONAL SEAL 11259 ENGINEER DAVID R. ANDERSON
11/24/08

ASSEMBLED BY : M.K. BEARD	DATE : 9/30/08
CHECKED BY : A.S. CALLAWAY	DATE : 10/7/08
DRAWN BY : ELR 8/91	REV. 7/17/98 RWW/LES
CHECKED BY : GRP 8/91	REV. 10/17/00R RWW/LES
	REV. 5/1/06 TLA/GM

REVISIONS							SHEET NO.
NO.	BY:	DATE:	NO.	BY:	DATE:		S-30
1			3				TOTAL SHEETS
2			4				113

STR. #1

STD. NO. PCG6

10-OCT-2008 09:55
r:\structures\kbeard\R3833B_sd_G*.dgn
kbeard

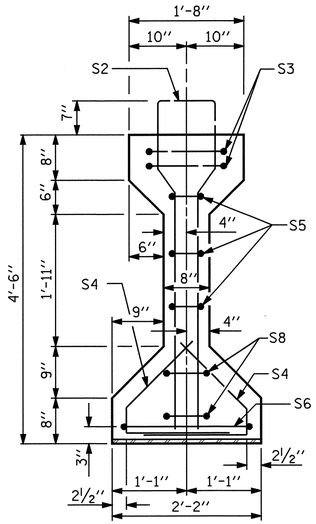

SECTION A-A

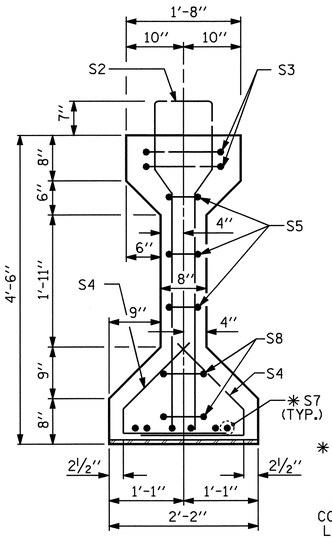

SECTION B-B

* FOR S7 BARS, SEE DETAIL "A" OF PRESTRESSED CONCRETE GIRDER CONTINUOUS FOR LIVE LOAD DETAILS SHEET

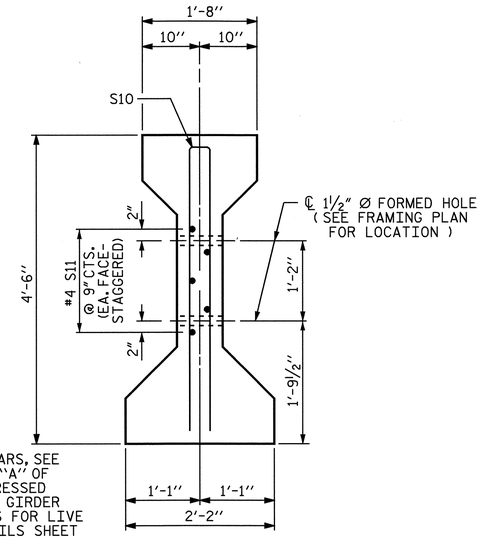

SECTION C-C

(S1 BARS NOT SHOWN)

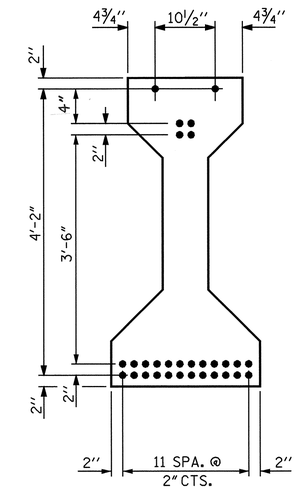

AT ℄ & END OF GIRDER

0.6" Ø LOW RELAXATION STRAND LAYOUT

GIRDER DIMENSIONS

GDR. No.	DIM. "A"	DIM. "B"	DIM. "C"	DIM. "E"
A23	77'-2"	38'-7"	9½"	8⅜"
A24	76'-9"	38'-4½"	7"	8⅝"
A25	77'-0"	38'-6"	8½"	8⅝"
A26	77'-5"	38'-8½"	11"	8⅝"

SEE SHEET 10 OF 13 FOR BILL OF MATERIAL

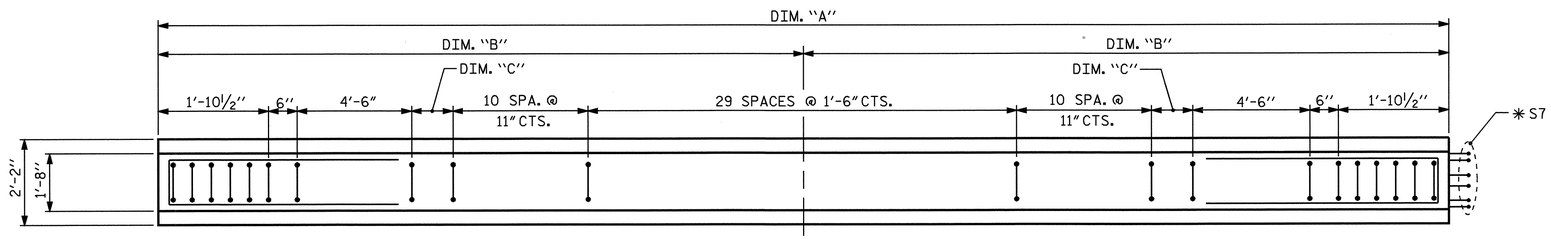

PLAN OF GIRDER

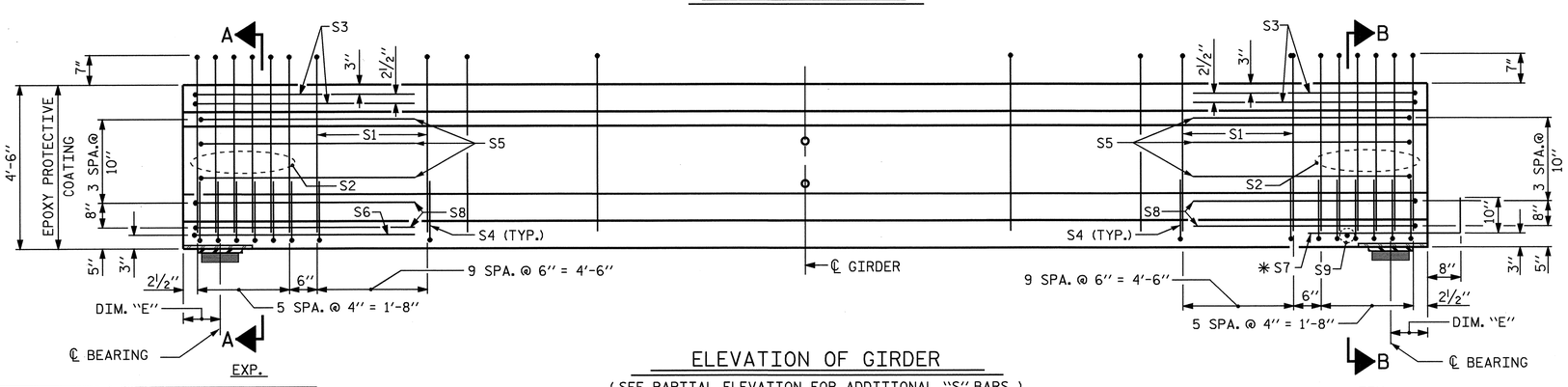

ELEVATION OF GIRDER

(SEE PARTIAL ELEVATION FOR ADDITIONAL "S" BARS)

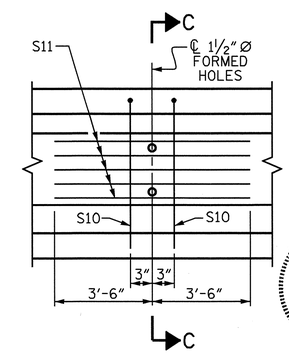

PARTIAL ELEVATION

SHOWING INTERMEDIATE DIAPHRAGM REINFORCING STEEL FOR GIRDER No. A23 - A26

NORTH CAROLINA PROFESSIONAL SEAL 11259 ENGINEER DAVID R. ANDERSON 11/24/08

PROJECT NO. R-3833B

IREDELL COUNTY

STATION: 277+88.88 -L-

SHEET 4 OF 13

STATE OF NORTH CAROLINA
DEPARTMENT OF TRANSPORTATION
RALEIGH

STANDARD
AASHTO TYPE IV
PRESTRESSED CONCRETE GIRDER
CONTINUOUS FOR LIVE LOAD
GIRDERS A23 - A26

ASSEMBLED BY : M.K. BEARD	DATE : 9/30/08
CHECKED BY : A.S. CALLAWAY	DATE : 10/7/08

DRAWN BY : ELR 8/91	REV. 7/17/98	RWW/LES
CHECKED BY : GRP 8/91	REV. 10/17/00R	RWW/LES
	REV. 5/1/06	TLA/GM

REVISIONS						SHEET NO.
NO.	BY:	DATE:	NO.	BY:	DATE:	S-31
1			3			TOTAL SHEETS
2			4			113

07-NOV-2008 11:05
y:\structures\kbeard\r3833b_sd_g*.dgn
wkfischer

STR. #1

STD. NO. PCG6

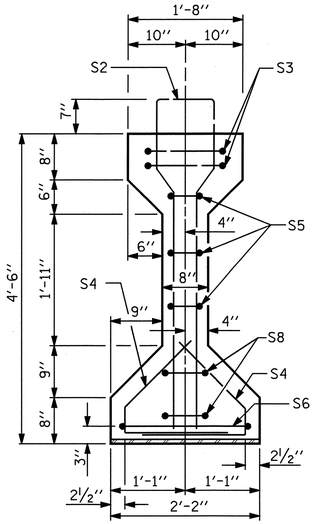

SECTION A-A

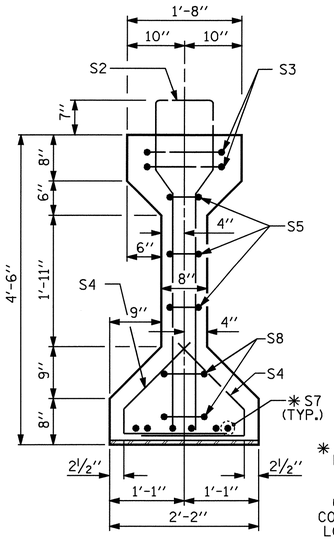

✱ FOR S7 BARS, SEE DETAIL "A" OF PRESTRESSED CONCRETE GIRDER CONTINUOUS FOR LIVE LOAD DETAILS SHEET

SECTION B-B

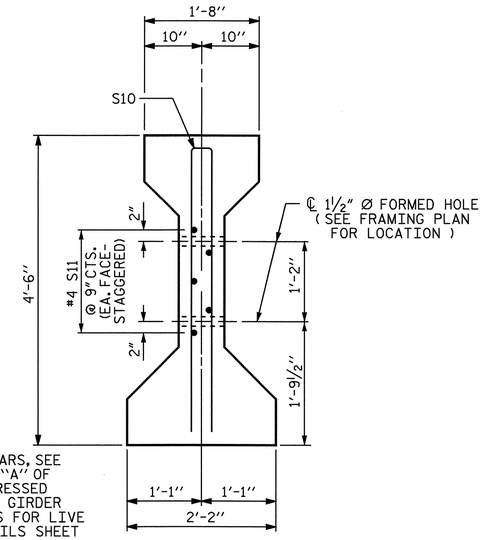

SECTION C-C

(S1 BARS NOT SHOWN)

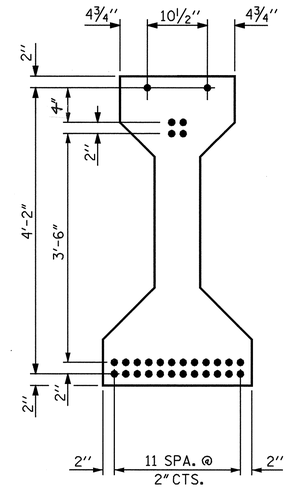

AT ℄ & END OF GIRDER

0.6" Ø LOW RELAXATION STRAND LAYOUT

GIRDER DIMENSIONS				
GDR. No.	DIM. "A"	DIM. "B"	DIM. "C"	DIM. "E"
B1	78'-9"	39'-4½"	1'-7"	8 11/16"
B2	77'-5"	38'-8½"	11"	8 7/16"
B3	76'-9"	38'-4½"	7"	8¼"
B4	76'-10"	38'-5"	7½"	8 9/16"
B5	77'-6"	38'-9"	11½"	8⅜"

SEE SHEET 11 OF 13 FOR BILL OF MATERIAL

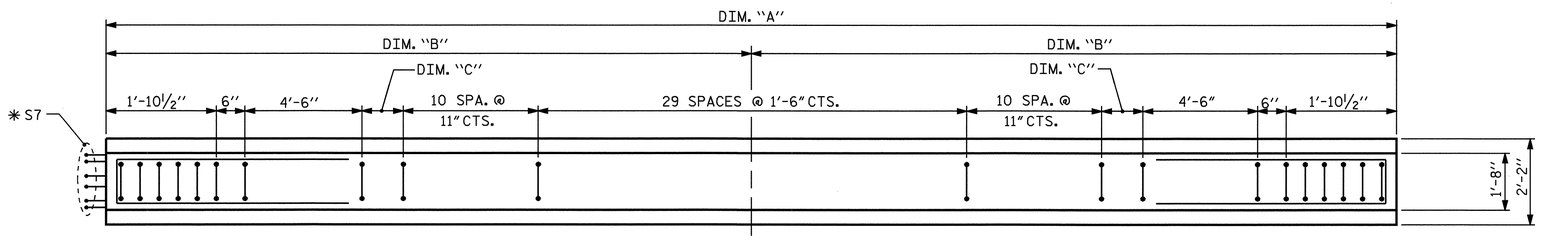

PLAN OF GIRDER

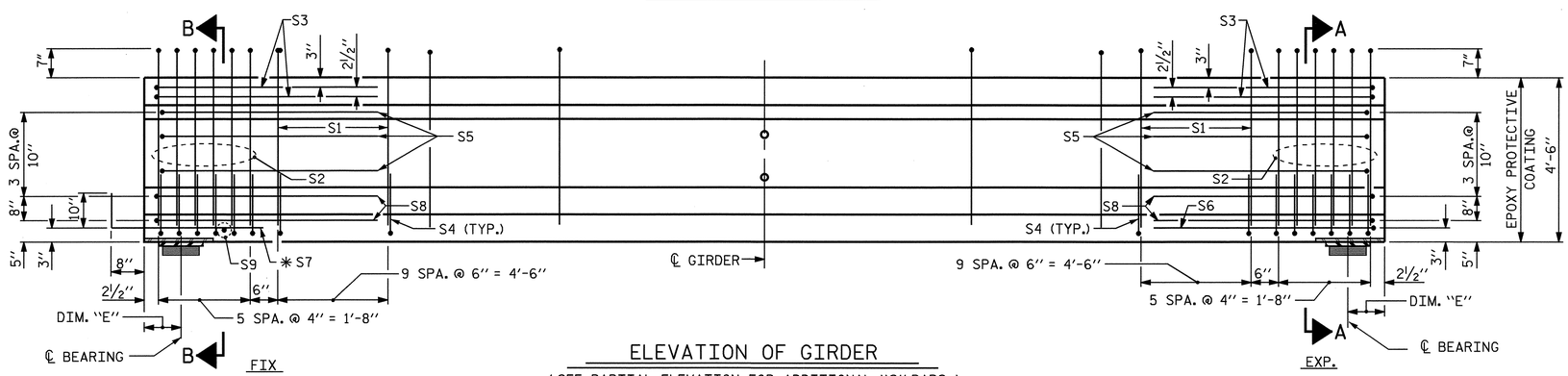

ELEVATION OF GIRDER

(SEE PARTIAL ELEVATION FOR ADDITIONAL "S" BARS)

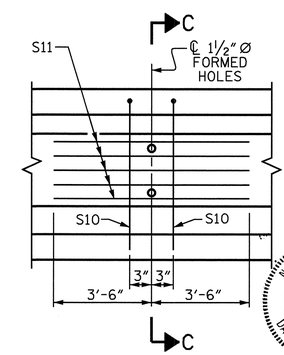

PARTIAL ELEVATION

SHOWING INTERMEDIATE DIAPHRAGM REINFORCING STEEL FOR GIRDER No. B1 - B5

NORTH CAROLINA PROFESSIONAL ENGINEER SEAL 11259 DAVID R. ANDERSON
11/24/08

PROJECT NO. R-3833B

IREDELL COUNTY

STATION: 277+88.88 -L-

SHEET 5 OF 13

STATE OF NORTH CAROLINA
DEPARTMENT OF TRANSPORTATION
RALEIGH

STANDARD
AASHTO TYPE IV
PRESTRESSED CONCRETE GIRDER
CONTINUOUS FOR LIVE LOAD
GIRDERS B1 - B5

REVISIONS								SHEET NO.
NO.	BY:	DATE:	NO.	BY:	DATE:			5-32
1			3					TOTAL SHEETS
2			4					113

ASSEMBLED BY : M.K. BEARD	DATE : 9/30/08		
CHECKED BY : A.S. CALLAWAY	DATE : 10/7/08		
DRAWN BY : ELR 8/91	REV. 7/17/98	RWW/LES	
CHECKED BY : GRP 8/91	REV. 10/17/00R	RWW/LES	
	REV. 5/1/06	TLA/GM	

07-NOV-2008 11:05
y:\structures\kbeard\r3833b_sd_g*.dgn
wkfischer

STR. #1

STD. NO. PCG6

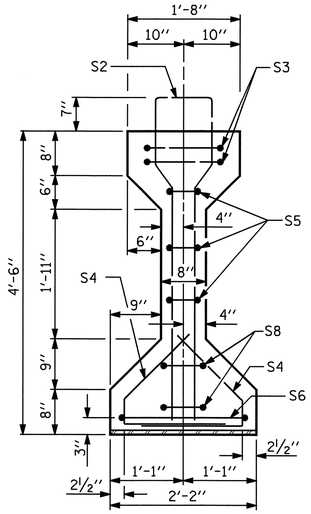

SECTION A-A

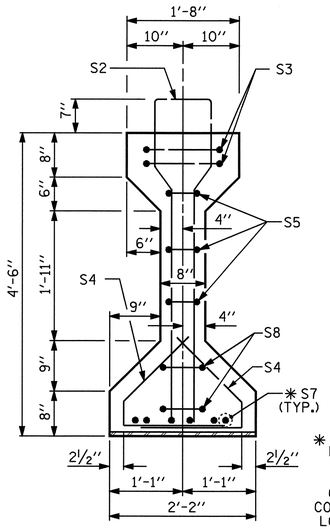

SECTION B-B

✱ FOR S7 BARS, SEE DETAIL "A" OF PRESTRESSED CONCRETE GIRDER CONTINUOUS FOR LIVE LOAD DETAILS SHEET

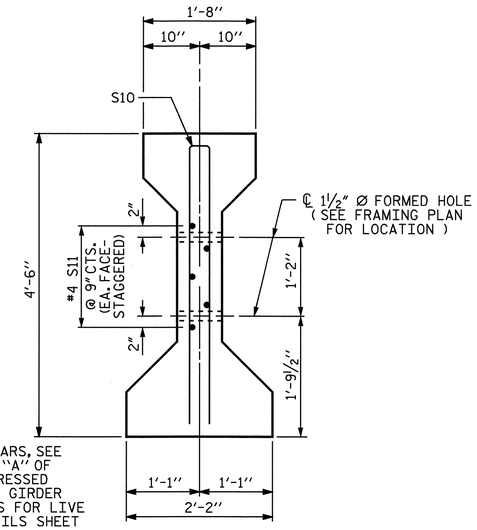

SECTION C-C

(S1 BARS NOT SHOWN)

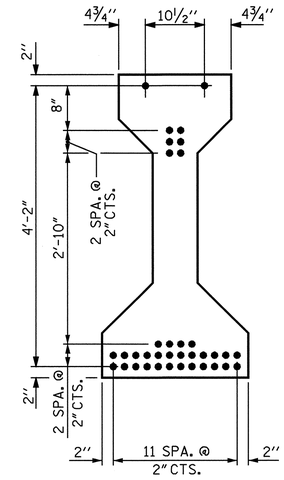

AT ℄ & END OF GIRDER

0.6" Ø LOW RELAXATION STRAND LAYOUT

0.6" Ø L. R. GRADE 270 STRANDS

AREA (SQUARE INCHES)	ULTIMATE STRENGTH (LBS. PER STRAND)	APPLIED PRESTRESS (LBS. PER STRAND)
0.217	58,600	43,950

REINFORCING STEEL FOR ONE GIRDER

BAR	NUMBER	SIZE	TYPE	LENGTH	WEIGHT
S1	76	#4	1	10'-10"	550
S2	12	#6	1	10'-10"	195
S3	4	#4	2	9'-1"	24
S4	64	#4	3	3'-5"	146
S5	6	#4	2	8'-5"	34
S6	1	#4	2	9'-11"	7
✱ S7	6	#5	STR	3'-8"	23
S8	4	#4	2	8'-7"	23
S9	1	#3	STR	1'-10"	1
S10	2	#5	2	8'-8"	18
S11	5	#4	STR	7'-0"	23

✱ NOTE: S7 BARS SHALL BE BENT BEFORE SHIPMENT. HEAT BENDING SHALL NOT BE ALLOWED.

BAR TYPES

ALL BAR DIMENSIONS ARE OUT-TO-OUT

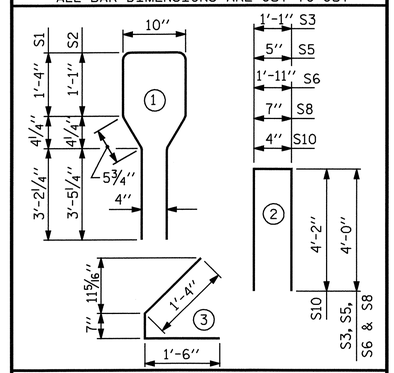

QUANTITIES FOR ONE GIRDER

	REINFORCING STEEL	8000 PSI CONCRETE	0.6" Ø L.R. STRANDS
	LB.	C.Y.	No.
	1044	15.9	36

GIRDERS REQUIRED

NUMBER	LENGTH	TOTAL LENGTH
14	78'-4"	1096'-8"

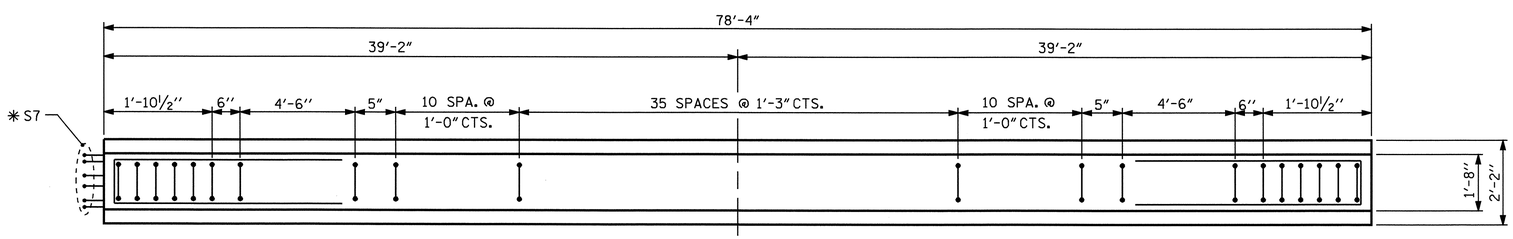

PLAN OF GIRDER

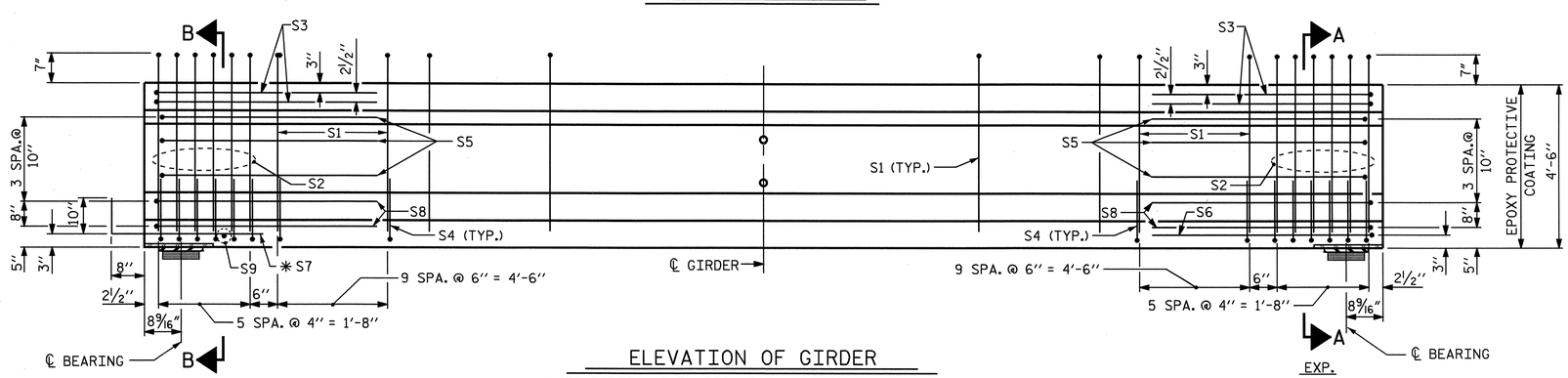

ELEVATION OF GIRDER

(SEE PARTIAL ELEVATION FOR ADDITIONAL "S" BARS)

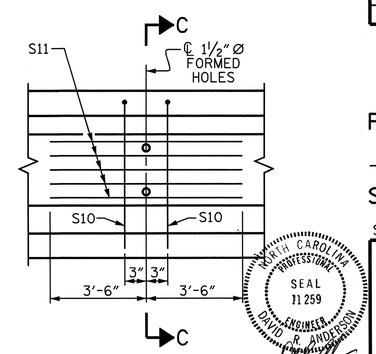

PARTIAL ELEVATION

SHOWING INTERMEDIATE DIAPHRAGM REINFORCING STEEL FOR GIRDER No. B6 - B19

NORTH CAROLINA PROFESSIONAL SEAL 11259 ENGINEER DAVID R. ANDERSON 11/24/08

PROJECT NO. R-3833B

IREDELL COUNTY

STATION: 277+88.88 -L-

SHEET 6 OF 13

STATE OF NORTH CAROLINA
DEPARTMENT OF TRANSPORTATION
RALEIGH

STANDARD
AASHTO TYPE IV
PRESTRESSED CONCRETE GIRDER
CONTINUOUS FOR LIVE LOAD
GIRDERS B6 - B19

REVISIONS								SHEET NO.
NO.	BY:	DATE:		NO.	BY:	DATE:		S-33
1				3				TOTAL SHEETS
2				4				113

ASSEMBLED BY : M.K. BEARD	DATE : 9/30/08		
CHECKED BY : A.S. CALLAWAY	DATE : 10/7/08		
DRAWN BY : ELR 8/91	REV. 7/17/98	RWW/LES	
CHECKED BY : GRP 8/91	REV. 10/17/00R	RWW/LES	
	REV. 5/1/06	TLA/GM	

10-OCT-2008 09:56
r:\structures\kbeard\R3833B_sd_G*.dgn
kbeard

STR. #1

STD. NO. PCG6

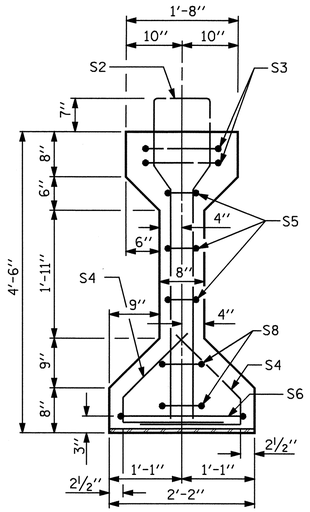

SECTION A-A

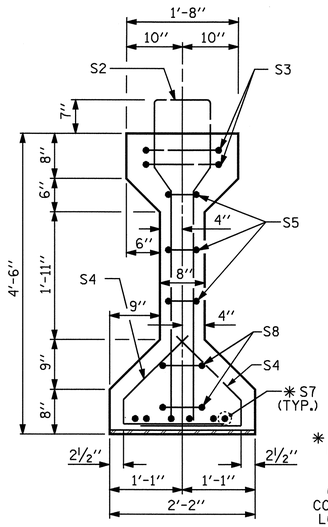

SECTION B-B

* FOR S7 BARS, SEE DETAIL "A" OF PRESTRESSED CONCRETE GIRDER CONTINUOUS FOR LIVE LOAD DETAILS SHEET

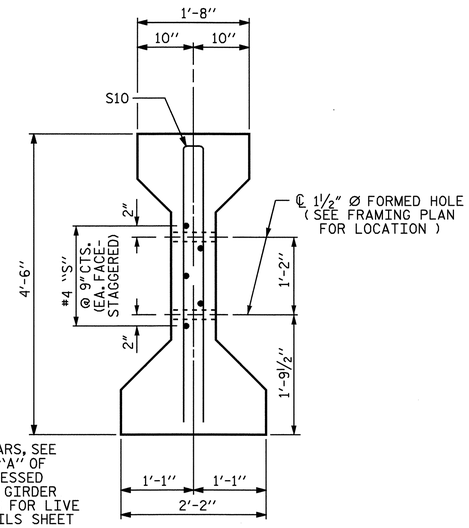

SECTION C-C

(S1 BARS NOT SHOWN)

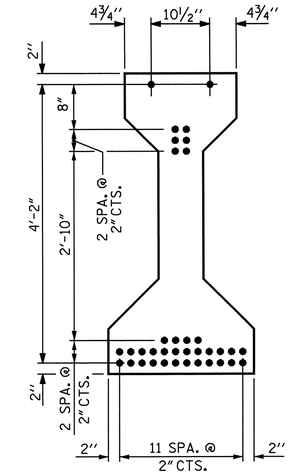

AT ℄ & END OF GIRDER

0.6" Ø LOW RELAXATION STRAND LAYOUT

GIRDER DIMENSIONS							
GDR. No.	DIM. "A"	DIM. "B"	DIM. "C"	DIM. "E"	DIM. "L"	DIM. "R"	"N"
B20A	79'-0"	39'-6"	1'-7½"	8 3/16"	-	-	31
B20B	81'-1"	40'-6½"	8"	8¼"	0	1'-6"	33
B21A	83'-9"	41'-10½"	2'-0"	8 5/16"	1'-6"	1'-10"	33
B21B	86'-11"	43'-5½"	1'-7"	8⅛"	1'-10"	2'-1"	35

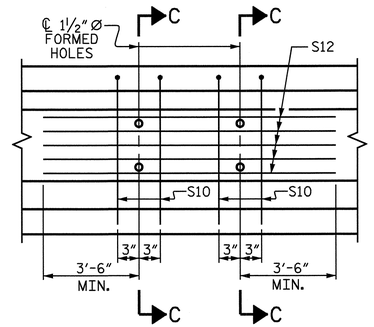

PARTIAL ELEVATION

SHOWING INTERMEDIATE DIAPHRAGM REINFORCING STEEL FOR GIRDER Nos. B20B, B21A & B21B

SEE SHEET 11 OF 13 FOR BILL OF MATERIAL

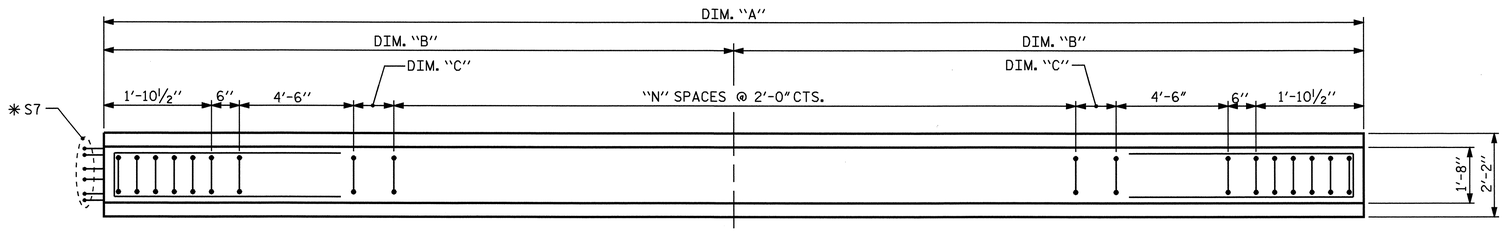

PLAN OF GIRDER

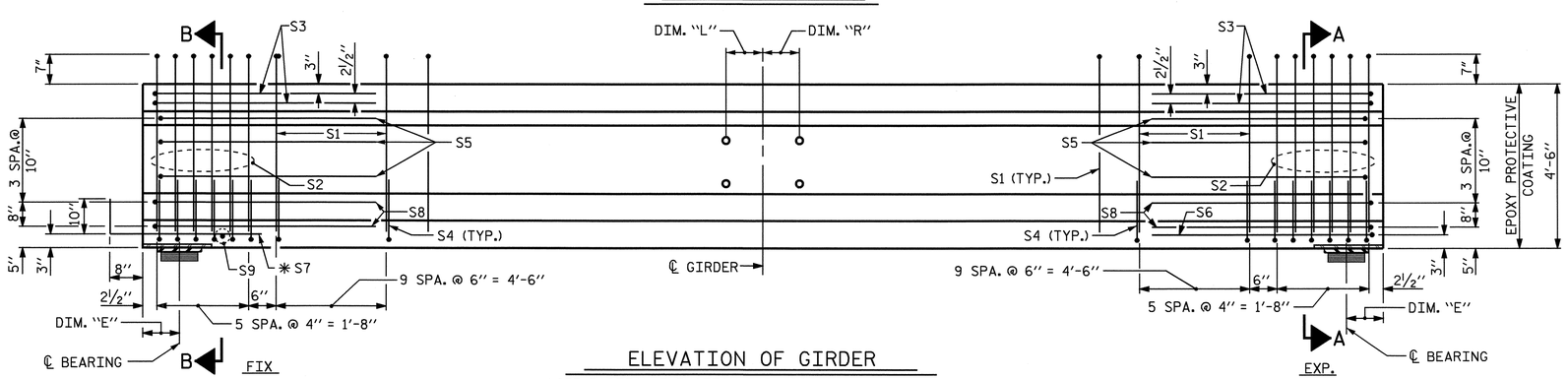

ELEVATION OF GIRDER

(SEE PARTIAL ELEVATION FOR ADDITIONAL "S" BARS)

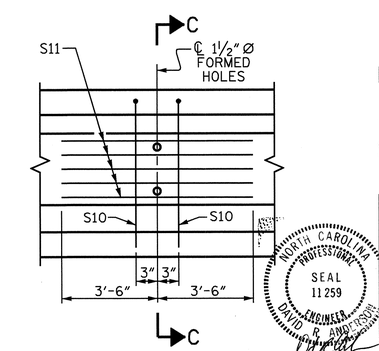

PARTIAL ELEVATION

SHOWING INTERMEDIATE DIAPHRAGM REINFORCING STEEL FOR GIRDER No. B20A

NORTH CAROLINA PROFESSIONAL SEAL 11259 ENGINEER DAVID R. ANDERSON

11/24/08

PROJECT NO. R-3833B

IREDELL COUNTY

STATION: 277+88.88 -L-

SHEET 7 OF 13

STATE OF NORTH CAROLINA
DEPARTMENT OF TRANSPORTATION
RALEIGH

STANDARD
AASHTO TYPE IV
PRESTRESSED CONCRETE GIRDER
CONTINUOUS FOR LIVE LOAD
GIRDERS B20A, B20B,
B21A & B21B

REVISIONS								SHEET NO.
NO.	BY:	DATE:	NO.	BY:	DATE:			S-34
1			3					TOTAL SHEETS
2			4					113

STR. #1

STD. NO. PCG6

ASSEMBLED BY : M.K. BEARD	DATE : 9/30/08		
CHECKED BY : A.S. CALLAWAY	DATE : 10/7/08		
DRAWN BY : ELR 8/91	REV. 7/17/98	RWW/LES	
CHECKED BY : GRP 8/91	REV. 10/17/00R	RWW/LES	
	REV. 5/1/06	TLA/GM	

10-OCT-2008 09:56
r:\structures\kbeard\R3833B_sd_G*.dgn
kbeard

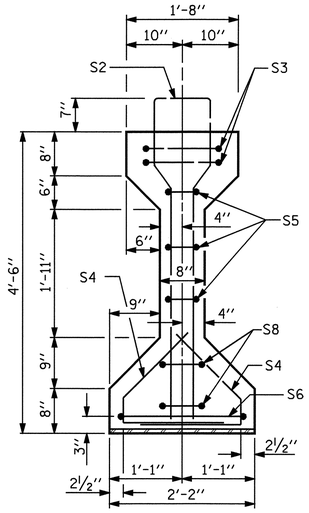

SECTION A-A

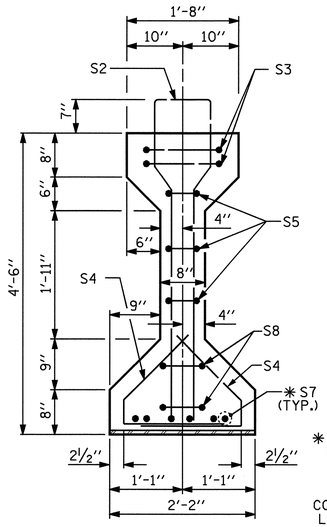

SECTION B-B

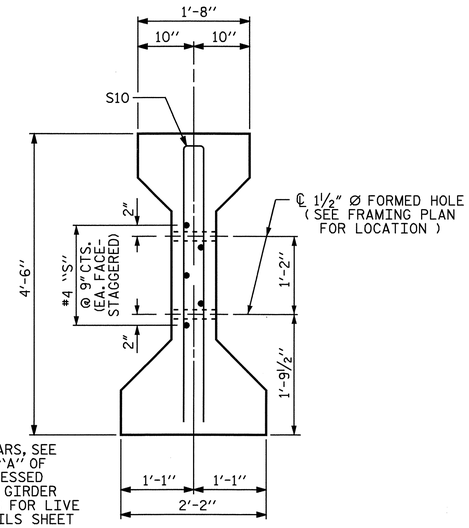

SECTION C-C
(S1 BARS NOT SHOWN)

* FOR S7 BARS, SEE DETAIL "A" OF PRESTRESSED CONCRETE GIRDER CONTINUOUS FOR LIVE LOAD DETAILS SHEET

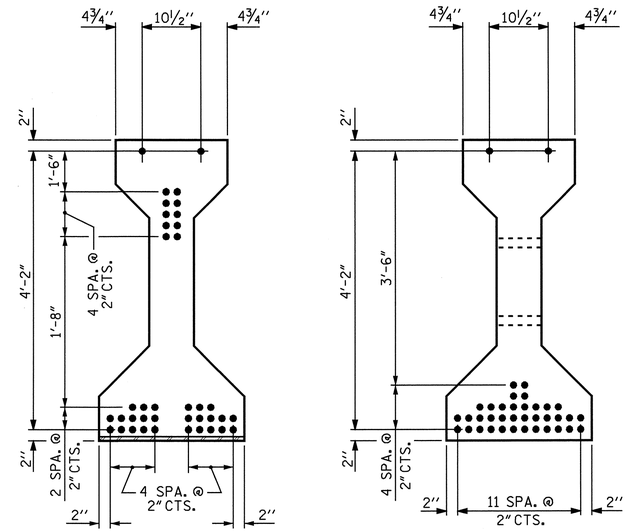

AT END OF GIRDER

AT ℄ OF GIRDER

0.6" Ø LOW RELAXATION STRAND LAYOUT

GIRDER DIMENSIONS

GDR. No.	DIM. "A"	DIM. "B"	DIM. "C"	DIM. "E"	DIM. "L"	DIM. "R"	"N"
B22	90'-8"	45'-4"	1'-5½"	8 9/16"	2'-1"	2'-4"	37
B23	94'-9"	47'-4½"	1'-6"	8 9/16"	2'-4"	2'-7"	39
B24	99'-3"	49'-7½"	1'-9"	8¾"	2'-7"	2'-9"	41
B25	103'-11"	51'-11½"	1'-1"	8⅛"	2'-9"	2'-11"	44
B26	109'-1"	54'-6½"	1'-8"	8¾"	2'-11"	-	46

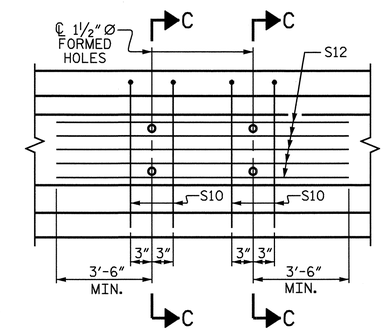

PARTIAL ELEVATION
SHOWING INTERMEDIATE DIAPHRAGM REINFORCING STEEL FOR GIRDER Nos. B22-B25

SEE SHEET 12 OF 13 FOR BILL OF MATERIAL

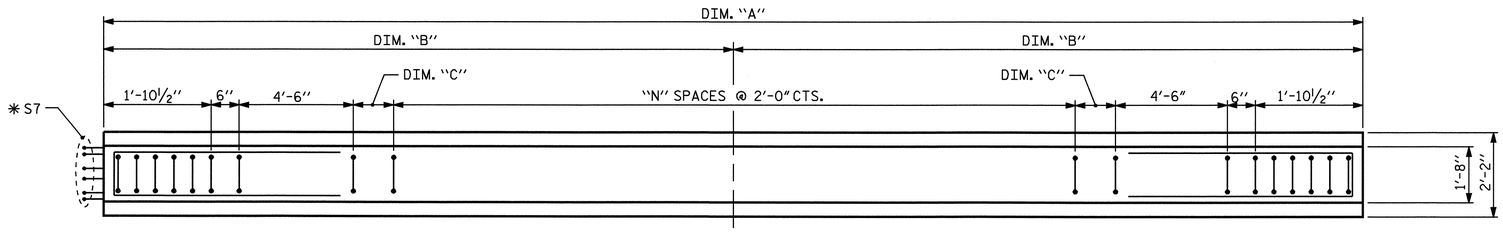

PLAN OF GIRDER

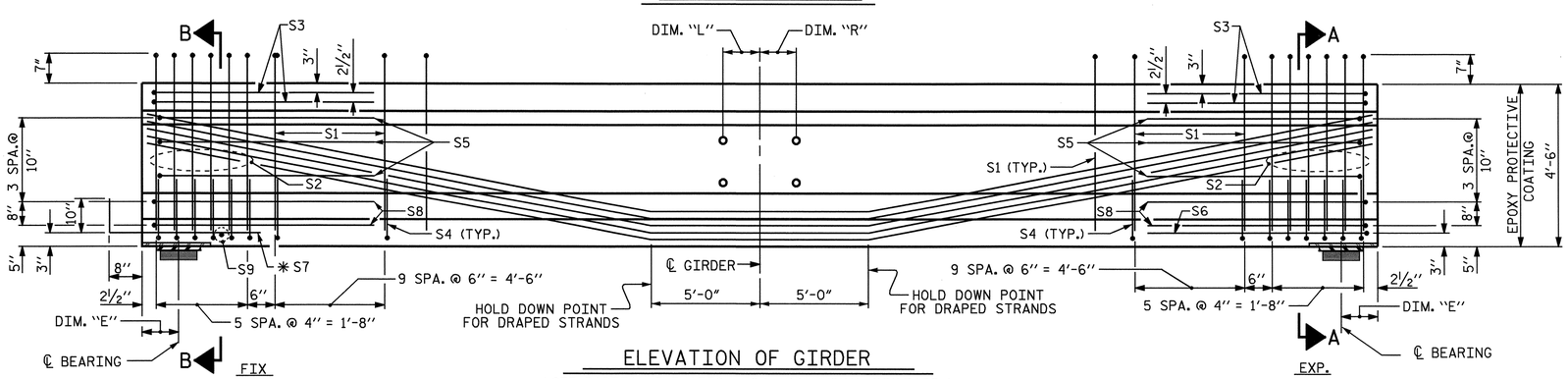

ELEVATION OF GIRDER
(SEE PARTIAL ELEVATION FOR ADDITIONAL "S" BARS)

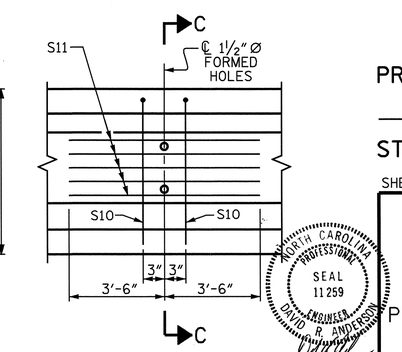

PARTIAL ELEVATION
SHOWING INTERMEDIATE DIAPHRAGM REINFORCING STEEL FOR GIRDER No. B26

PROJECT NO. R-3833B
IREDELL COUNTY
STATION: 277+88.88 -L-

SHEET 8 OF 13

STATE OF NORTH CAROLINA
DEPARTMENT OF TRANSPORTATION
RALEIGH

STANDARD
AASHTO TYPE IV
PRESTRESSED CONCRETE GIRDER
CONTINUOUS FOR LIVE LOAD
GIRDERS B22 - B26

NORTH CAROLINA PROFESSIONAL SEAL 11259 ENGINEER DAVID R. ANDERSON 11/24/08

ASSEMBLED BY : M.K. BEARD	DATE : 9/30/08
CHECKED BY : A.S. CALLAWAY	DATE : 10/7/08
DRAWN BY : ELR 8/91	REV. 7/17/98 RWW/LES
CHECKED BY : GRP 8/91	REV. 10/17/00R RWW/LES
	REV. 5/1/06 TLA/GM

REVISIONS						SHEET NO.
NO.	BY:	DATE:	NO.	BY:	DATE:	S-35
1			3			TOTAL SHEETS
2			4			113

STR. #1

STD. NO. PCG6

10-OCT-2008 09:55
r:\structures\kbeard\R3833B_sd_G*.dgn
kbeard

0.6″ Ø L. R. GRADE 270 STRANDS

AREA (SQUARE INCHES)	ULTIMATE STRENGTH (LBS. PER STRAND)	APPLIED PRESTRESS (LBS. PER STRAND)
0.217	58,600	43,950

REINFORCING STEEL FOR GIRDER A1

BAR	NUMBER	SIZE	TYPE	LENGTH	WEIGHT
S1	69	#4	1	10′-10″	499
S2	12	#6	1	10′-10″	195
S3	4	#4	2	9′-1″	24
S4	64	#4	3	3′-5″	146
S5	6	#4	2	8′-5″	34
S6	1	#4	2	9′-11″	7
✳ S7	6	#5	STR	3′-8″	23
S8	4	#4	2	8′-7″	23
S9	1	#3	STR	1′-10″	1
S10	2	#5	2	8′-8″	18
S11	5	#4	STR	7′-0″	23

✳ NOTE: S7 BARS SHALL BE BENT BEFORE SHIPMENT. HEAT BENDING SHALL NOT BE ALLOWED.

BAR TYPES

ALL BAR DIMENSIONS ARE OUT-TO-OUT

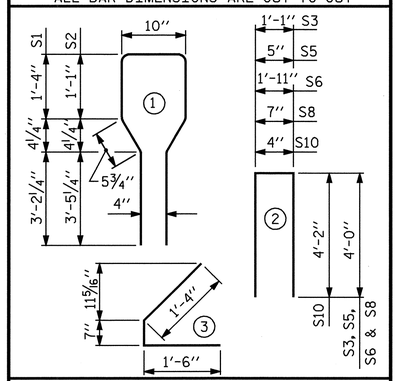

QUANTITIES FOR ONE GIRDER

	REINFORCING STEEL LB.	8000 PSI CONCRETE C.Y.	0.6″ Ø L.R. STRANDS No.
GDR. A1	993	22.5	38

GIRDERS REQUIRED

NUMBER	LENGTH	TOTAL LENGTH
1	110′-10″	110′-10″

0.6″ Ø L. R. GRADE 270 STRANDS

AREA (SQUARE INCHES)	ULTIMATE STRENGTH (LBS. PER STRAND)	APPLIED PRESTRESS (LBS. PER STRAND)
0.217	58,600	43,950

REINFORCING STEEL FOR GIRDER A2

BAR	NUMBER	SIZE	TYPE	LENGTH	WEIGHT
S1	65	#4	1	10′-10″	470
S2	12	#6	1	10′-10″	195
S3	4	#4	2	9′-1″	24
S4	64	#4	3	3′-5″	146
S5	6	#4	2	8′-5″	34
S6	1	#4	2	9′-11″	7
✳ S7	6	#5	STR	3′-8″	23
S8	4	#4	2	8′-7″	23
S9	1	#3	STR	1′-10″	1
S10	4	#5	2	8′-8″	36
S12	5	#4	STR	12′-10″	43

✳ NOTE: S7 BARS SHALL BE BENT BEFORE SHIPMENT. HEAT BENDING SHALL NOT BE ALLOWED.

BAR TYPES

ALL BAR DIMENSIONS ARE OUT-TO-OUT

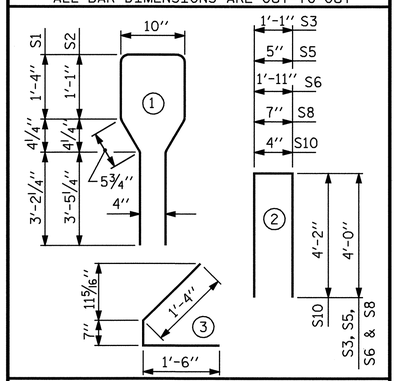

QUANTITIES FOR ONE GIRDER

	REINFORCING STEEL LB.	8000 PSI CONCRETE C.Y.	0.6″ Ø L.R. STRANDS No.
GDR. A2	1002	21.5	38

GIRDERS REQUIRED

NUMBER	LENGTH	TOTAL LENGTH
1	105′-9″	105′-9″

0.6″ Ø L. R. GRADE 270 STRANDS

AREA (SQUARE INCHES)	ULTIMATE STRENGTH (LBS. PER STRAND)	APPLIED PRESTRESS (LBS. PER STRAND)
0.217	58,600	43,950

REINFORCING STEEL FOR GIRDER A3

BAR	NUMBER	SIZE	TYPE	LENGTH	WEIGHT
S1	63	#4	1	10′-10″	456
S2	12	#6	1	10′-10″	195
S3	4	#4	2	9′-1″	24
S4	64	#4	3	3′-5″	146
S5	6	#4	2	8′-5″	34
S6	1	#4	2	9′-11″	7
✳ S7	6	#5	STR	3′-8″	23
S8	4	#4	2	8′-7″	23
S9	1	#3	STR	1′-10″	1
S10	4	#5	2	8′-8″	36
S12	5	#4	STR	12′-6″	42

✳ NOTE: S7 BARS SHALL BE BENT BEFORE SHIPMENT. HEAT BENDING SHALL NOT BE ALLOWED.

BAR TYPES

ALL BAR DIMENSIONS ARE OUT-TO-OUT

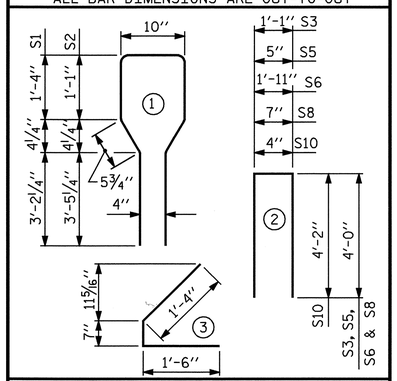

QUANTITIES FOR ONE GIRDER

	REINFORCING STEEL LB.	8000 PSI CONCRETE C.Y.	0.6″ Ø L.R. STRANDS No.
GDR. A3	987	20.5	38

GIRDERS REQUIRED

NUMBER	LENGTH	TOTAL LENGTH
1	101′-0″	101′-0″

0.6″ Ø L. R. GRADE 270 STRANDS

AREA (SQUARE INCHES)	ULTIMATE STRENGTH (LBS. PER STRAND)	APPLIED PRESTRESS (LBS. PER STRAND)
0.217	58,600	43,950

REINFORCING STEEL FOR GIRDER A4

BAR	NUMBER	SIZE	TYPE	LENGTH	WEIGHT
S1	61	#4	1	10′-10″	441
S2	12	#6	1	10′-10″	195
S3	4	#4	2	9′-1″	24
S4	64	#4	3	3′-5″	146
S5	6	#4	2	8′-5″	34
S6	1	#4	2	9′-11″	7
✳ S7	6	#5	STR	3′-8″	23
S8	4	#4	2	8′-7″	23
S9	1	#3	STR	1′-10″	1
S10	4	#5	2	8′-8″	36
S12	5	#4	STR	12′-1″	40

✳ NOTE: S7 BARS SHALL BE BENT BEFORE SHIPMENT. HEAT BENDING SHALL NOT BE ALLOWED.

BAR TYPES

ALL BAR DIMENSIONS ARE OUT-TO-OUT

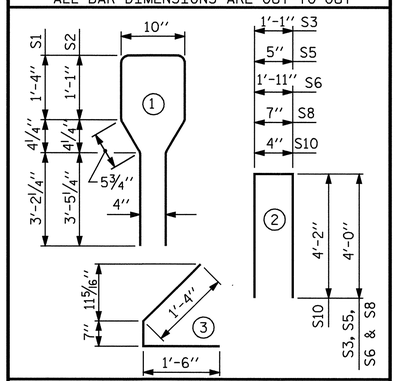

QUANTITIES FOR ONE GIRDER

	REINFORCING STEEL LB.	8000 PSI CONCRETE C.Y.	0.6″ Ø L.R. STRANDS No.
GDR. A4	970	19.6	38

GIRDERS REQUIRED

NUMBER	LENGTH	TOTAL LENGTH
1	96′-6″	96′-6″

0.6″ Ø L. R. GRADE 270 STRANDS

AREA (SQUARE INCHES)	ULTIMATE STRENGTH (LBS. PER STRAND)	APPLIED PRESTRESS (LBS. PER STRAND)
0.217	58,600	43,950

REINFORCING STEEL FOR GIRDER A5

BAR	NUMBER	SIZE	TYPE	LENGTH	WEIGHT
S1	60	#4	1	10′-10″	434
S2	12	#6	1	10′-10″	195
S3	4	#4	2	9′-1″	24
S4	64	#4	3	3′-5″	146
S5	6	#4	2	8′-5″	34
S6	1	#4	2	9′-11″	7
✳ S7	6	#5	STR	3′-8″	23
S8	4	#4	2	8′-7″	23
S9	1	#3	STR	1′-10″	1
S10	4	#5	2	8′-8″	36
S12	5	#4	STR	11′-8″	39

✳ NOTE: S7 BARS SHALL BE BENT BEFORE SHIPMENT. HEAT BENDING SHALL NOT BE ALLOWED.

BAR TYPES

ALL BAR DIMENSIONS ARE OUT-TO-OUT

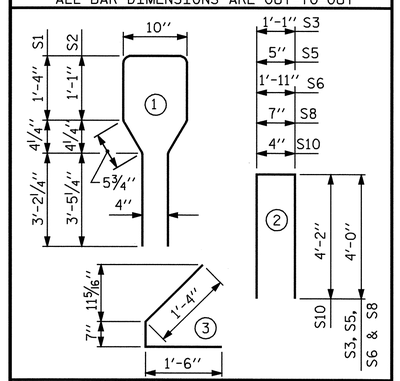

QUANTITIES FOR ONE GIRDER

	REINFORCING STEEL LB.	8000 PSI CONCRETE C.Y.	0.6″ Ø L.R. STRANDS No.
GDR. A5	962	18.7	38

GIRDERS REQUIRED

NUMBER	LENGTH	TOTAL LENGTH
1	92′-4″	92′-4″

PROJECT NO. R-3833B

IREDELL COUNTY

STATION: 277+88.88 -L-

SHEET 9 OF 13

STATE OF NORTH CAROLINA
DEPARTMENT OF TRANSPORTATION
RALEIGH

BILL OF MATERIAL GIRDERS A1 - A5

NORTH CAROLINA PROFESSIONAL SEAL 11259 ENGINEER DAVID R. ANDERSON

11/24/08

REVISIONS							SHEET NO.
NO.	BY:	DATE:	NO.	BY:	DATE:		S-36
1			3				TOTAL SHEETS
2			4				113

DRAWN BY : M.K. BEARD DATE : 10/2/08
CHECKED BY : A.S. CALLOWAY DATE : 10/7/08

07-NOV-2008 11:04
y:\structures\kbeard\r3833b_sd_g*.dgn
wkflscher

STR. #1

0.6″ Ø L. R. GRADE 270 STRANDS

AREA (SQUARE INCHES)	ULTIMATE STRENGTH (LBS. PER STRAND)	APPLIED PRESTRESS (LBS. PER STRAND)
0.217	58,600	43,950

REINFORCING STEEL FOR GIRDER A23, A24, A25 OR A26

BAR	NUMBER	SIZE	TYPE	LENGTH	WEIGHT
S1	70	#4	1	10′-10″	507
S2	12	#6	1	10′-10″	195
S3	4	#4	2	9′-1″	24
S4	64	#4	3	3′-5″	146
S5	6	#4	2	8′-5″	34
S6	1	#4	2	9′-11″	7
✳ S7	6	#5	STR	3′-8″	23
S8	4	#4	2	8′-7″	23
S9	1	#3	STR	1′-10″	1
S10	2	#5	2	8′-8″	18
S11	5	#4	STR	7′-0″	23

✳ NOTE: S7 BARS SHALL BE BENT BEFORE SHIPMENT. HEAT BENDING SHALL NOT BE ALLOWED.

BAR TYPES

ALL BAR DIMENSIONS ARE OUT-TO-OUT

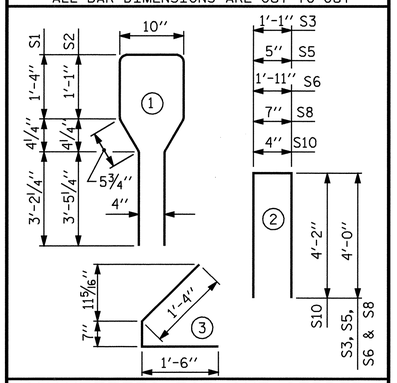

QUANTITIES FOR ONE GIRDER

	REINFORCING STEEL LB.	7000 PSI CONCRETE C.Y.	0.6″ Ø L.R. STRANDS No.
GDR. A23	1001	15.7	30
GDR. A24	1001	15.6	30
GDR. A25	1001	15.6	30
GDR. A26	1001	15.7	30

GIRDERS REQUIRED

	LENGTH	TOTAL LENGTH
GDR. A23	77′-2″	77′-2″
GDR. A24	76′-9″	76′-9″
GDR. A25	77′-0″	77′-0″
GDR. A26	77′-5″	77′-5″
	TOTAL	308′-4″

0.6″ Ø L. R. GRADE 270 STRANDS

AREA (SQUARE INCHES)	ULTIMATE STRENGTH (LBS. PER STRAND)	APPLIED PRESTRESS (LBS. PER STRAND)
0.217	58,600	43,950

REINFORCING STEEL FOR GIRDER A6A

BAR	NUMBER	SIZE	TYPE	LENGTH	WEIGHT
S1	58	#4	1	10′-10″	420
S2	12	#6	1	10′-10″	195
S3	4	#4	2	9′-1″	24
S4	64	#4	3	3′-5″	146
S5	6	#4	2	8′-5″	34
S6	1	#4	2	9′-11″	7
✳ S7	6	#5	STR	3′-8″	23
S8	4	#4	2	8′-7″	23
S9	1	#3	STR	1′-10″	1
S10	4	#5	2	8′-8″	36
S12	5	#4	STR	11′-3″	38

✳ NOTE: S7 BARS SHALL BE BENT BEFORE SHIPMENT. HEAT BENDING SHALL NOT BE ALLOWED.

BAR TYPES

ALL BAR DIMENSIONS ARE OUT-TO-OUT

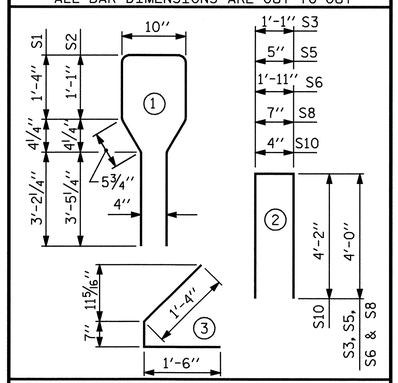

QUANTITIES FOR ONE GIRDER

	REINFORCING STEEL LB.	8000 PSI CONCRETE C.Y.	0.6″ Ø L.R. STRANDS No.
GDR. A6A	947	18.0	36

GIRDERS REQUIRED

NUMBER	LENGTH	TOTAL LENGTH
1	88′-7″	88′-7″

0.6″ Ø L. R. GRADE 270 STRANDS

AREA (SQUARE INCHES)	ULTIMATE STRENGTH (LBS. PER STRAND)	APPLIED PRESTRESS (LBS. PER STRAND)
0.217	58,600	43,950

REINFORCING STEEL FOR GIRDER A6B

BAR	NUMBER	SIZE	TYPE	LENGTH	WEIGHT
S1	56	#4	1	10′-10″	405
S2	12	#6	1	10′-10″	195
S3	4	#4	2	9′-1″	24
S4	64	#4	3	3′-5″	146
S5	6	#4	2	8′-5″	34
S6	1	#4	2	9′-11″	7
✳ S7	6	#5	STR	3′-8″	23
S8	4	#4	2	8′-7″	23
S9	1	#3	STR	1′-10″	1
S10	4	#5	2	8′-8″	36
S12	5	#4	STR	10′-8″	36

✳ NOTE: S7 BARS SHALL BE BENT BEFORE SHIPMENT. HEAT BENDING SHALL NOT BE ALLOWED.

BAR TYPES

ALL BAR DIMENSIONS ARE OUT-TO-OUT

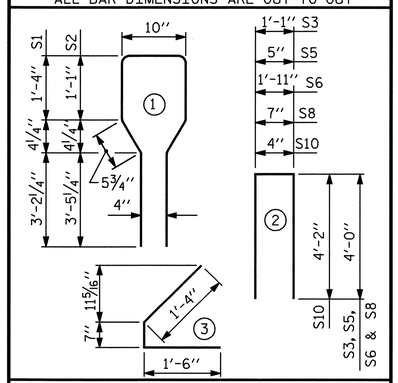

QUANTITIES FOR ONE GIRDER

	REINFORCING STEEL LB.	8000 PSI CONCRETE C.Y.	0.6″ Ø L.R. STRANDS No.
GDR. A6B	930	17.3	36

GIRDERS REQUIRED

NUMBER	LENGTH	TOTAL LENGTH
1	85′-3″	85′-3″

0.6″ Ø L. R. GRADE 270 STRANDS

AREA (SQUARE INCHES)	ULTIMATE STRENGTH (LBS. PER STRAND)	APPLIED PRESTRESS (LBS. PER STRAND)
0.217	58,600	43,950

REINFORCING STEEL FOR GIRDER A7A

BAR	NUMBER	SIZE	TYPE	LENGTH	WEIGHT
S1	54	#4	1	10′-10″	391
S2	12	#6	1	10′-10″	195
S3	4	#4	2	9′-1″	24
S4	64	#4	3	3′-5″	146
S5	6	#4	2	8′-5″	34
S6	1	#4	2	9′-11″	7
✳ S7	6	#5	STR	3′-8″	23
S8	4	#4	2	8′-7″	23
S9	1	#3	STR	1′-10″	1
S10	4	#5	2	8′-8″	36
S12	5	#4	STR	8′-8″	29

✳ NOTE: S7 BARS SHALL BE BENT BEFORE SHIPMENT. HEAT BENDING SHALL NOT BE ALLOWED.

BAR TYPES

ALL BAR DIMENSIONS ARE OUT-TO-OUT

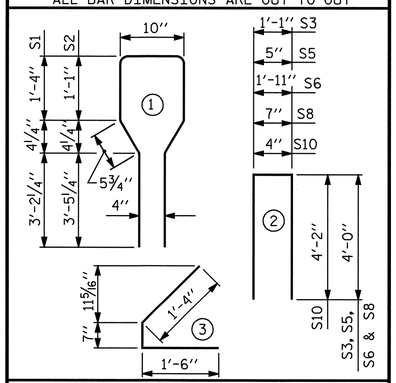

QUANTITIES FOR ONE GIRDER

	REINFORCING STEEL LB.	8000 PSI CONCRETE C.Y.	0.6″ Ø L.R. STRANDS No.
GDR. A7A	909	16.7	36

GIRDERS REQUIRED

NUMBER	LENGTH	TOTAL LENGTH
1	82′-4″	82′-4″

0.6″ Ø L. R. GRADE 270 STRANDS

AREA (SQUARE INCHES)	ULTIMATE STRENGTH (LBS. PER STRAND)	APPLIED PRESTRESS (LBS. PER STRAND)
0.217	58,600	43,950

REINFORCING STEEL FOR GIRDER A7B

BAR	NUMBER	SIZE	TYPE	LENGTH	WEIGHT
S1	53	#4	1	10′-10″	384
S2	12	#6	1	10′-10″	195
S3	4	#4	2	9′-1″	24
S4	64	#4	3	3′-5″	146
S5	6	#4	2	8′-5″	34
S6	1	#4	2	9′-11″	7
✳ S7	6	#5	STR	3′-8″	23
S8	4	#4	2	8′-7″	23
S9	1	#3	STR	1′-10″	1
S10	2	#5	2	8′-8″	18
S11	5	#4	STR	7′-0″	23

✳ NOTE: S7 BARS SHALL BE BENT BEFORE SHIPMENT. HEAT BENDING SHALL NOT BE ALLOWED.

BAR TYPES

ALL BAR DIMENSIONS ARE OUT-TO-OUT

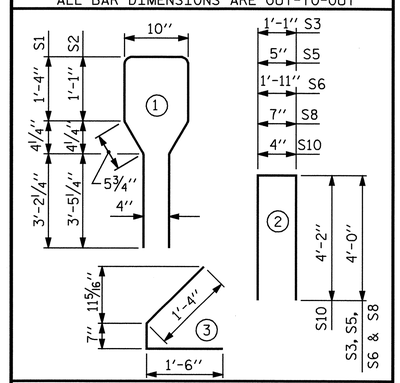

QUANTITIES FOR ONE GIRDER

	REINFORCING STEEL LB.	8000 PSI CONCRETE C.Y.	0.6″ Ø L.R. STRANDS No.
GDR. A7B	878	16.3	36

GIRDERS REQUIRED

NUMBER	LENGTH	TOTAL LENGTH
1	80′-1″	80′-1″

PROJECT NO. R-3833B

IREDELL COUNTY

STATION: 277+88.88 -L-

SHEET 10 OF 13

STATE OF NORTH CAROLINA
DEPARTMENT OF TRANSPORTATION
RALEIGH

BILL OF MATERIAL

GIRDERS A23 - A26, A6A, A6B, A7A & A7B

NORTH CAROLINA PROFESSIONAL SEAL 11259 ENGINEER DAVID R. ANDERSON

11/24/08

REVISIONS						SHEET NO.
NO.	BY:	DATE:	NO.	BY:	DATE:	S-37
1			3			TOTAL SHEETS
2			4			113

DRAWN BY : M.K. BEARD DATE : 10/2/08
CHECKED BY : A.S. CALLAWAY DATE : 10/7/08

07-NOV-2008 11:04
y:\structures\kbeard\r3833b_sd_g*.dgn
wkflscher

STR. #1

0.6″ Ø L. R. GRADE 270 STRANDS

AREA (SQUARE INCHES)	ULTIMATE STRENGTH (LBS. PER STRAND)	APPLIED PRESTRESS (LBS. PER STRAND)
0.217	58,600	43,950

REINFORCING STEEL FOR GIRDER B1, B2, B3, B4 OR B5

BAR	NUMBER	SIZE	TYPE	LENGTH	WEIGHT
S1	70	#4	1	10′-10″	507
S2	12	#6	1	10′-10″	195
S3	4	#4	2	9′-1″	24
S4	64	#4	3	3′-5″	146
S5	6	#4	2	8′-5″	34
S6	1	#4	2	9′-11″	7
✳S7	6	#5	STR	3′-8″	23
S8	4	#4	2	8′-7″	23
S9	1	#3	STR	1′-10″	1
S10	2	#5	2	8′-8″	18
S11	5	#4	STR	7′-0″	23

✳NOTE: S7 BARS SHALL BE BENT BEFORE SHIPMENT. HEAT BENDING SHALL NOT BE ALLOWED.

BAR TYPES

ALL BAR DIMENSIONS ARE OUT-TO-OUT

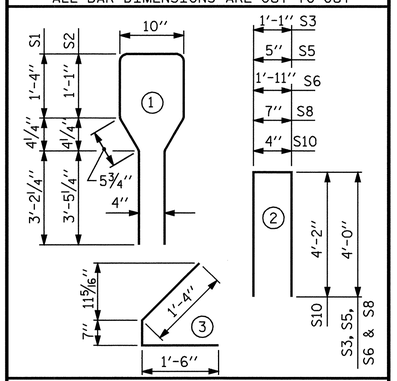

QUANTITIES FOR ONE GIRDER

	REINFORCING STEEL LB.	7000 PSI CONCRETE C.Y.	0.6″ Ø L.R. STRANDS No.
GDR. B1	1001	16.0	30
GDR. B2	1001	15.7	30
GDR. B3	1001	15.6	30
GDR. B4	1001	15.6	30
GDR. B5	1001	15.7	30

GIRDERS REQUIRED

	LENGTH	TOTAL LENGTH
GDR. B1	78′-9″	78′-9″
GDR. B2	77′-5″	77′-5″
GDR. B3	76′-9″	76′-9″
GDR. B4	76′-10″	76′-10″
GDR. B5	77′-6″	77′-6″
	TOTAL	387′-3″

0.6″ Ø L. R. GRADE 270 STRANDS

AREA (SQUARE INCHES)	ULTIMATE STRENGTH (LBS. PER STRAND)	APPLIED PRESTRESS (LBS. PER STRAND)
0.217	58,600	43,950

REINFORCING STEEL FOR GIRDER B20A

BAR	NUMBER	SIZE	TYPE	LENGTH	WEIGHT
S1	52	#4	1	10′-10″	376
S2	12	#6	1	10′-10″	195
S3	4	#4	2	9′-1″	24
S4	64	#4	3	3′-5″	146
S5	6	#4	2	8′-5″	34
S6	1	#4	2	9′-11″	7
✳S7	6	#5	STR	3′-8″	23
S8	4	#4	2	8′-7″	23
S9	1	#3	STR	1′-10″	1
S10	2	#5	2	8′-8″	18
S11	5	#4	STR	7′-0″	23

✳NOTE: S7 BARS SHALL BE BENT BEFORE SHIPMENT. HEAT BENDING SHALL NOT BE ALLOWED.

BAR TYPES

ALL BAR DIMENSIONS ARE OUT-TO-OUT

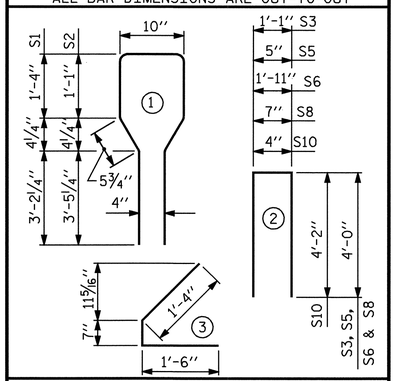

QUANTITIES FOR ONE GIRDER

	REINFORCING STEEL LB.	8000 PSI CONCRETE C.Y.	0.6″ Ø L.R. STRANDS No.
GDR. B20A	870	16.0	36

GIRDERS REQUIRED

NUMBER	LENGTH	TOTAL LENGTH
1	79′-0″	79′-0″

0.6″ Ø L. R. GRADE 270 STRANDS

AREA (SQUARE INCHES)	ULTIMATE STRENGTH (LBS. PER STRAND)	APPLIED PRESTRESS (LBS. PER STRAND)
0.217	58,600	43,950

REINFORCING STEEL FOR GIRDER B20B

BAR	NUMBER	SIZE	TYPE	LENGTH	WEIGHT
S1	54	#4	1	10′-10″	391
S2	12	#6	1	10′-10″	195
S3	4	#4	2	9′-1″	24
S4	64	#4	3	3′-5″	146
S5	6	#4	2	8′-5″	34
S6	1	#4	2	9′-11″	7
✳S7	6	#5	STR	3′-8″	23
S8	4	#4	2	8′-7″	23
S9	1	#3	STR	1′-10″	1
S10	4	#5	2	8′-8″	36
S12	5	#4	STR	8′-6″	28

✳NOTE: S7 BARS SHALL BE BENT BEFORE SHIPMENT. HEAT BENDING SHALL NOT BE ALLOWED.

BAR TYPES

ALL BAR DIMENSIONS ARE OUT-TO-OUT

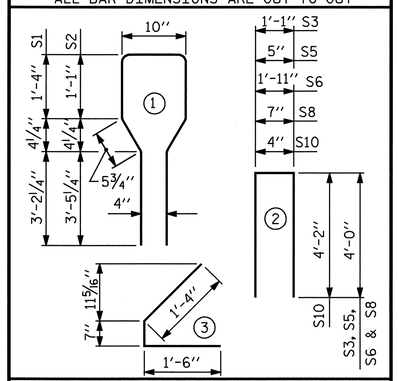

QUANTITIES FOR ONE GIRDER

	REINFORCING STEEL LB.	8000 PSI CONCRETE C.Y.	0.6″ Ø L.R. STRANDS No.
GDR. B20B	908	16.5	36

GIRDERS REQUIRED

NUMBER	LENGTH	TOTAL LENGTH
1	81′-1″	81′-1″

0.6″ Ø L. R. GRADE 270 STRANDS

AREA (SQUARE INCHES)	ULTIMATE STRENGTH (LBS. PER STRAND)	APPLIED PRESTRESS (LBS. PER STRAND)
0.217	58,600	43,950

REINFORCING STEEL FOR GIRDER B21A

BAR	NUMBER	SIZE	TYPE	LENGTH	WEIGHT
S1	54	#4	1	10′-10″	391
S2	12	#6	1	10′-10″	195
S3	4	#4	2	9′-1″	24
S4	64	#4	3	3′-5″	146
S5	6	#4	2	8′-5″	34
S6	1	#4	2	9′-11″	7
✳S7	6	#5	STR	3′-8″	23
S8	4	#4	2	8′-7″	23
S9	1	#3	STR	1′-10″	1
S10	4	#5	2	8′-8″	36
S12	5	#4	STR	10′-4″	35

✳NOTE: S7 BARS SHALL BE BENT BEFORE SHIPMENT. HEAT BENDING SHALL NOT BE ALLOWED.

BAR TYPES

ALL BAR DIMENSIONS ARE OUT-TO-OUT

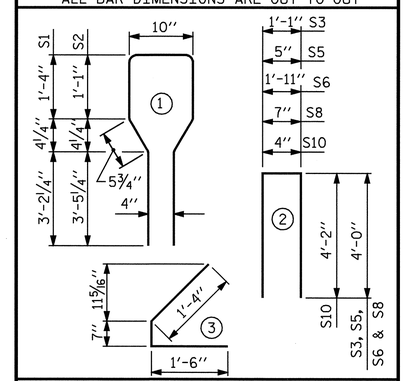

QUANTITIES FOR ONE GIRDER

	REINFORCING STEEL LB.	8000 PSI CONCRETE C.Y.	0.6″ Ø L.R. STRANDS No.
GDR. B21A	914	17.0	36

GIRDERS REQUIRED

NUMBER	LENGTH	TOTAL LENGTH
1	83′-9″	83′-9″

0.6″ Ø L. R. GRADE 270 STRANDS

AREA (SQUARE INCHES)	ULTIMATE STRENGTH (LBS. PER STRAND)	APPLIED PRESTRESS (LBS. PER STRAND)
0.217	58,600	43,950

REINFORCING STEEL FOR GIRDER B21B

BAR	NUMBER	SIZE	TYPE	LENGTH	WEIGHT
S1	56	#4	1	10′-10″	405
S2	12	#6	1	10′-10″	195
S3	4	#4	2	9′-1″	24
S4	64	#4	3	3′-5″	146
S5	6	#4	2	8′-5″	34
S6	1	#4	2	9′-11″	7
✳S7	6	#5	STR	3′-8″	23
S8	4	#4	2	8′-7″	23
S9	1	#3	STR	1′-10″	1
S10	4	#5	2	8′-8″	36
S12	5	#4	STR	10′-11″	36

✳NOTE: S7 BARS SHALL BE BENT BEFORE SHIPMENT. HEAT BENDING SHALL NOT BE ALLOWED.

BAR TYPES

ALL BAR DIMENSIONS ARE OUT-TO-OUT

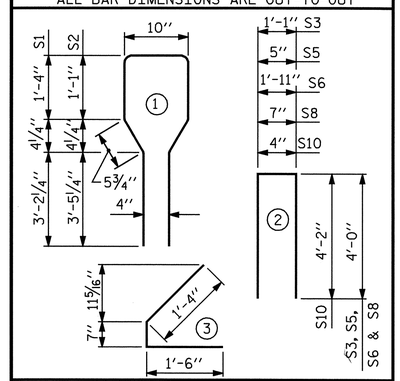

QUANTITIES FOR ONE GIRDER

	REINFORCING STEEL LB.	8000 PSI CONCRETE C.Y.	0.6″ Ø L.R. STRANDS No.
GDR. B21B	930	17.6	36

GIRDERS REQUIRED

NUMBER	LENGTH	TOTAL LENGTH
1	86′-11″	86′-11″

PROJECT NO. R-3833B

IREDELL COUNTY

STATION: 277+88.88 -L-

SHEET 11 OF 13

STATE OF NORTH CAROLINA
DEPARTMENT OF TRANSPORTATION
RALEIGH

BILL OF MATERIAL

GIRDERS B1 - B5, B20A, B20B, B21A & B21B

NORTH CAROLINA PROFESSIONAL SEAL 11259 ENGINEER DAVID R. ANDERSON

11/24/08

REVISIONS						SHEET NO.
NO.	BY:	DATE:	NO.	BY:	DATE:	S-38
1			3			TOTAL SHEETS
2			4			113

DRAWN BY : M.K. BEARD DATE : 10/2/08
CHECKED BY : A.S. CALLAWAY DATE : 10/7/08

07-NOV-2008 11:03
y:\structures\kbeard\r3833b_sd_g*.dgn
wkfischer

STR. #1

0.6″ Ø L. R. GRADE 270 STRANDS

AREA (SQUARE INCHES)	ULTIMATE STRENGTH (LBS. PER STRAND)	APPLIED PRESTRESS (LBS. PER STRAND)
0.217	58,600	43,950

REINFORCING STEEL FOR GIRDER B22

BAR	NUMBER	SIZE	TYPE	LENGTH	WEIGHT
S1	58	#4	1	10′-10″	420
S2	12	#6	1	10′-10″	195
S3	4	#4	2	9′-1″	24
S4	64	#4	3	3′-5″	146
S5	6	#4	2	8′-5″	34
S6	1	#4	2	9′-11″	7
✳S7	6	#5	STR	3′-8″	23
S8	4	#4	2	8′-7″	23
S9	1	#3	STR	1′-10″	1
S10	4	#5	2	8′-8″	36
S12	5	#4	STR	11′-5″	38

✳NOTE: S7 BARS SHALL BE BENT BEFORE SHIPMENT. HEAT BENDING SHALL NOT BE ALLOWED.

BAR TYPES

ALL BAR DIMENSIONS ARE OUT-TO-OUT

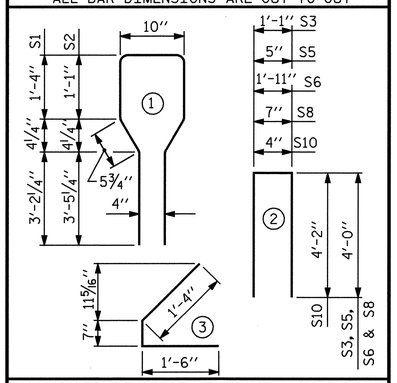

QUANTITIES FOR ONE GIRDER

	REINFORCING STEEL LB.	8000 PSI CONCRETE C.Y.	0.6″ Ø L.R. STRANDS No.
GDR. B22	947	18.4	38

GIRDERS REQUIRED

NUMBER	LENGTH	TOTAL LENGTH
1	90′-8″	90′-8″

0.6″ Ø L. R. GRADE 270 STRANDS

AREA (SQUARE INCHES)	ULTIMATE STRENGTH (LBS. PER STRAND)	APPLIED PRESTRESS (LBS. PER STRAND)
0.217	58,600	43,950

REINFORCING STEEL FOR GIRDER B23

BAR	NUMBER	SIZE	TYPE	LENGTH	WEIGHT
S1	60	#4	1	10′-10″	434
S2	12	#6	1	10′-10″	195
S3	4	#4	2	9′-1″	24
S4	64	#4	3	3′-5″	146
S5	6	#4	2	8′-5″	34
S6	1	#4	2	9′-11″	7
✳S7	6	#5	STR	3′-8″	23
S8	4	#4	2	8′-7″	23
S9	1	#3	STR	1′-10″	1
S10	4	#5	2	8′-8″	36
S12	5	#4	STR	11′-11″	40

✳NOTE: S7 BARS SHALL BE BENT BEFORE SHIPMENT. HEAT BENDING SHALL NOT BE ALLOWED.

BAR TYPES

ALL BAR DIMENSIONS ARE OUT-TO-OUT

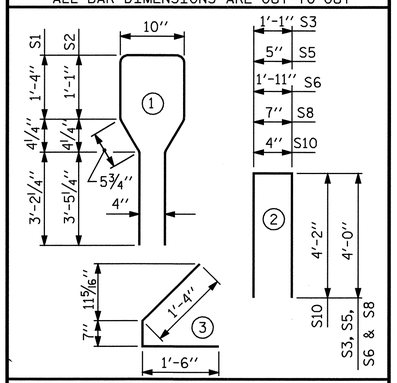

QUANTITIES FOR ONE GIRDER

	REINFORCING STEEL LB.	8000 PSI CONCRETE C.Y.	0.6″ Ø L.R. STRANDS No.
GDR. B23	963	19.2	38

GIRDERS REQUIRED

NUMBER	LENGTH	TOTAL LENGTH
1	94′-9″	94′-9″

0.6″ Ø L. R. GRADE 270 STRANDS

AREA (SQUARE INCHES)	ULTIMATE STRENGTH (LBS. PER STRAND)	APPLIED PRESTRESS (LBS. PER STRAND)
0.217	58,600	43,950

REINFORCING STEEL FOR GIRDER B24

BAR	NUMBER	SIZE	TYPE	LENGTH	WEIGHT
S1	62	#4	1	10′-10″	449
S2	12	#6	1	10′-10″	195
S3	4	#4	2	9′-1″	24
S4	64	#4	3	3′-5″	146
S5	6	#4	2	8′-5″	34
S6	1	#4	2	9′-11″	7
✳S7	6	#5	STR	3′-8″	23
S8	4	#4	2	8′-7″	23
S9	1	#3	STR	1′-10″	1
S10	4	#5	2	8′-8″	36
S12	5	#4	STR	12′-4″	41

✳NOTE: S7 BARS SHALL BE BENT BEFORE SHIPMENT. HEAT BENDING SHALL NOT BE ALLOWED.

BAR TYPES

ALL BAR DIMENSIONS ARE OUT-TO-OUT

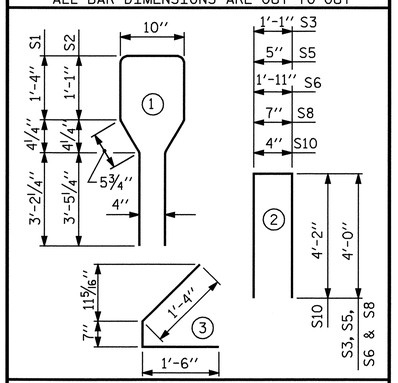

QUANTITIES FOR ONE GIRDER

	REINFORCING STEEL LB.	8000 PSI CONCRETE C.Y.	0.6″ Ø L.R. STRANDS No.
GDR. B24	979	20.1	38

GIRDERS REQUIRED

NUMBER	LENGTH	TOTAL LENGTH
1	99′-3″	99′-3″

0.6″ Ø L. R. GRADE 270 STRANDS

AREA (SQUARE INCHES)	ULTIMATE STRENGTH (LBS. PER STRAND)	APPLIED PRESTRESS (LBS. PER STRAND)
0.217	58,600	43,950

REINFORCING STEEL FOR GIRDER B25

BAR	NUMBER	SIZE	TYPE	LENGTH	WEIGHT
S1	65	#4	1	10′-10″	470
S2	12	#6	1	10′-10″	195
S3	4	#4	2	9′-1″	24
S4	64	#4	3	3′-5″	146
S5	6	#4	2	8′-5″	34
S6	1	#4	2	9′-11″	7
✳S7	6	#5	STR	3′-8″	23
S8	4	#4	2	8′-7″	23
S9	1	#3	STR	1′-10″	1
S10	4	#5	2	8′-8″	36
S12	5	#4	STR	12′-8″	42

✳NOTE: S7 BARS SHALL BE BENT BEFORE SHIPMENT. HEAT BENDING SHALL NOT BE ALLOWED.

BAR TYPES

ALL BAR DIMENSIONS ARE OUT-TO-OUT

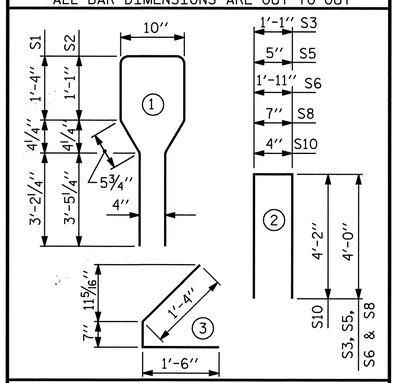

QUANTITIES FOR ONE GIRDER

	REINFORCING STEEL LB.	8000 PSI CONCRETE C.Y.	0.6″ Ø L.R. STRANDS No.
GDR. B25	1001	21.1	38

GIRDERS REQUIRED

NUMBER	LENGTH	TOTAL LENGTH
1	103′-11″	103′-11″

0.6″ Ø L. R. GRADE 270 STRANDS

AREA (SQUARE INCHES)	ULTIMATE STRENGTH (LBS. PER STRAND)	APPLIED PRESTRESS (LBS. PER STRAND)
0.217	58,600	43,950

REINFORCING STEEL FOR GIRDER B26

BAR	NUMBER	SIZE	TYPE	LENGTH	WEIGHT
S1	67	#4	1	10′-10″	485
S2	12	#6	1	10′-10″	195
S3	4	#4	2	9′-1″	24
S4	64	#4	3	3′-5″	146
S5	6	#4	2	8′-5″	34
S6	1	#4	2	9′-11″	7
✳S7	6	#5	STR	3′-8″	23
S8	4	#4	2	8′-7″	23
S9	1	#3	STR	1′-10″	1
S10	2	#5	2	8′-8″	18
S11	5	#4	STR	7′-0″	23

✳NOTE: S7 BARS SHALL BE BENT BEFORE SHIPMENT. HEAT BENDING SHALL NOT BE ALLOWED.

BAR TYPES

ALL BAR DIMENSIONS ARE OUT-TO-OUT

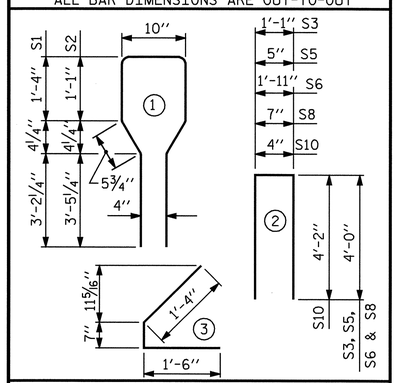

QUANTITIES FOR ONE GIRDER

	REINFORCING STEEL LB.	8000 PSI CONCRETE C.Y.	0.6″ Ø L.R. STRANDS No.
GDR. B26	979	22.1	38

GIRDERS REQUIRED

NUMBER	LENGTH	TOTAL LENGTH
1	109′-1″	109′-1″

PROJECT NO. R-3833B

IREDELL COUNTY

STATION: 277+88.88 -L-

SHEET 12 OF 13

STATE OF NORTH CAROLINA
DEPARTMENT OF TRANSPORTATION
RALEIGH

BILL OF MATERIAL GIRDERS B22 - B26

NORTH CAROLINA PROFESSIONAL SEAL 11259 ENGINEER DAVID R. ANDERSON
11/24/08

REVISIONS						SHEET NO.
NO.	BY:	DATE:	NO.	BY:	DATE:	5-39
1			3			TOTAL SHEETS
2			4			113

DRAWN BY : M.K. BEARD DATE : 10/2/08
CHECKED BY : A.S. CALLAWAY DATE : 10/7/08

07-NOV-2008 11:03
y:\structures\kbeard\r3833b_sd_g*.dgn
wkfischer

STR. #1

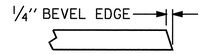

SECTION "G"

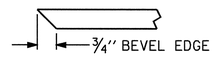

SECTION "F"

(SEE NOTES)

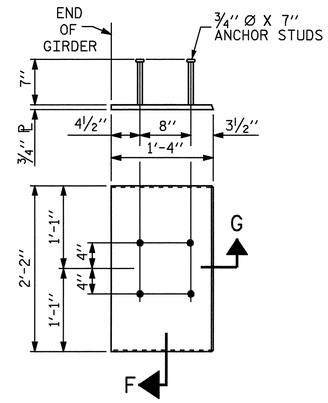

EMBEDDED PLATE "B-1" DETAILS FOR AASHTO TYPE IV GIRDER

(2 REQ'D PER GIRDER)

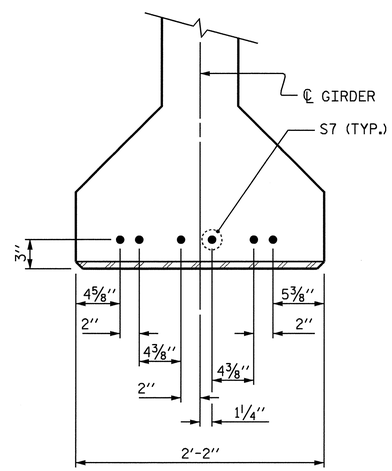

DETAIL "A"

NOTES

ALL PRESTRESSING STRANDS SHALL BE 7-WIRE LOW-RELAXATION GRADE 270 STRANDS AND SHALL CONFORM TO AASHTO M203 EXCEPT FOR SAMPLING REQUIREMENTS WHICH SHALL BE IN ACCORDANCE WITH THE STANDARD SPECIFICATIONS.

ALL REINFORCING STEEL SHALL BE GRADE 60.

APPLY EPOXY PROTECTIVE COATING TO END OF GIRDER SURFACES INDICATED IN ELEVATION VIEW.

EMBEDDED PLATE "B-1" SHALL BE GALVANIZED IN ACCORDANCE WITH THE STANDARD SPECIFICATIONS. BEVEL EDGES OF PLATE "B-1" TO GIVE CLOSE FIT BUT NOT TIGHT FIT TO STEEL CASTING FORM.

ANCHOR STUDS SHALL CONFORM TO AASHTO M169 GRADES 1010 THROUGH 1020 OR APPROVED EQUAL, AND SHALL MEET THE TYPE "B" REQUIREMENTS OF SUBSECTION 7.3 OF THE ANSI/AASHTO/AWS D1.5 BRIDGE WELDING CODE.

AT ENDS OF GIRDERS TO BE EMBEDDED IN CONCRETE DIAPHRAGMS, PRESTRESSING STRANDS MAY EXTEND A MAXIMUM OF 2" BEYOND THE GIRDER ENDS. OTHERWISE, PRESTRESSING STRANDS SHALL BE CUT FLUSH WITH THE GIRDER ENDS.

THE TRANSFER OF LOAD FROM THE ANCHORAGES TO THE GIRDER SHALL BE DONE WHEN CONCRETE HAS REACHED A COMPRESSIVE STRENGTH OF NOT LESS THAN 5900 PSI FOR GIRDERS A1-A22 & B6-B26.

THE TRANSFER OF LOAD FROM THE ANCHORAGES TO THE GIRDER SHALL BE DONE WHEN CONCRETE HAS REACHED A COMPRESSIVE STRENGTH OF NOT LESS THAN 5100 PSI FOR GIRDERS A23-A26 & B1-B5.

DEPENDING ON THE TYPE OF SYSTEM USED TO SUPPORT THE DECK SLAB FORMS, PRESET ANCHORS MAY BE NECESSARY IN THE PRESTRESSED CONCRETE GIRDER.

THE TOP SURFACE OF THE GIRDER, EXCLUDING THE OUTSIDE 4", SHALL BE RAKED TO A DEPTH OF 1/4".

WHEN DRAPED STRANDS ARE DETAILED, THE LONGITUDINAL LOCATION OF THE HOLD DOWN DEVICES SHALL BE WITHIN 6" OF THE LOCATION SHOWN AND THE CENTER OF GRAVITY OF THE GROUP OF DRAPED STRANDS SHALL BE LOCATED WITHIN 1/2" OF THE THEORETICAL LOCATION SHOWN.

PROJECT NO. R-3833B
IREDELL COUNTY
STATION: 277+88.88 -L-

SHEET 13 OF 13

STATE OF NORTH CAROLINA
DEPARTMENT OF TRANSPORTATION
RALEIGH

STANDARD

PRESTRESSED CONCRETE GIRDER CONTINUOUS FOR LIVE LOAD DETAILS

NORTH CAROLINA PROFESSIONAL SEAL 11259 ENGINEER DAVID R. ANDERSON
12/29/08

REVISIONS						SHEET NO.
NO.	BY:	DATE:	NO.	BY:	DATE:	S-40
1			3			TOTAL SHEETS
2			4			113

ASSEMBLED BY : M.K. BEARD DATE : 10/9/08	
CHECKED BY : A.S. CALLAWAY DATE : 10/10/08	
DRAWN BY : ELR 11/91	REV. 10/17/00 RWW/LES
CHECKED BY : GRP 11/91	REV. 7/10/01RR LES/RDR
	REV. 5/1/06 TLA/GM

22-DEC-2008 12:27
r:\structures\kbeard\r3833b_sd_g*.dgn
danderson

STR. #1

STD. NO. PCG11 (Sht. 3)

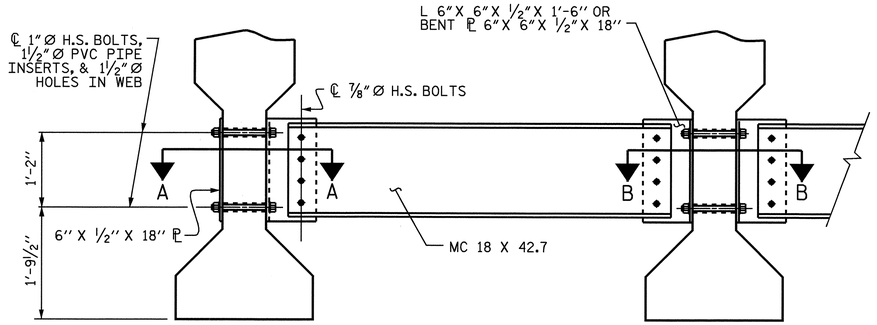

EXTERIOR GIRDER

INTERIOR GIRDER

PART SECTION AT INTERMEDIATE DIAPHRAGM

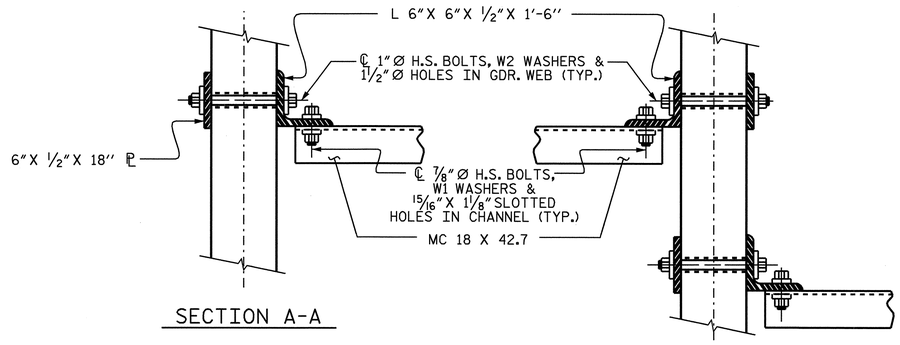

SECTION A-A

SECTION B-B

CONNECTION DETAILS

(FOR SKEW < 70° OR SKEW > 110°)

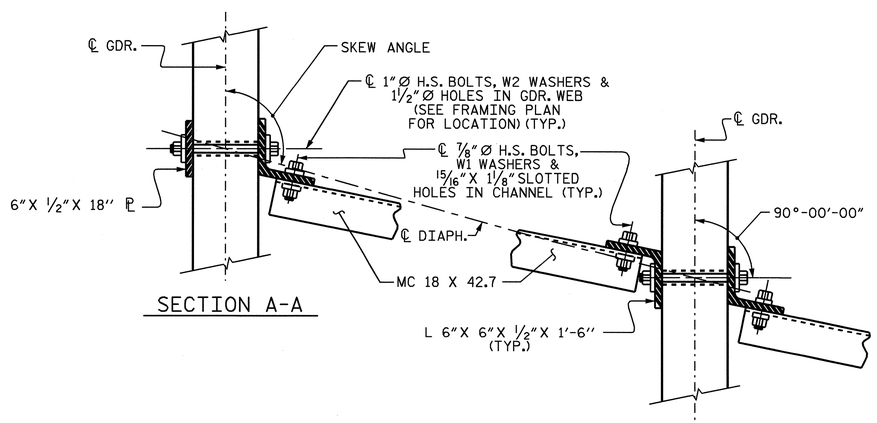

SECTION A-A

SECTION B-B

CONNECTION DETAILS

(FOR 70° ≤ SKEW < 90° OR 90° < SKEW ≤ 110°)

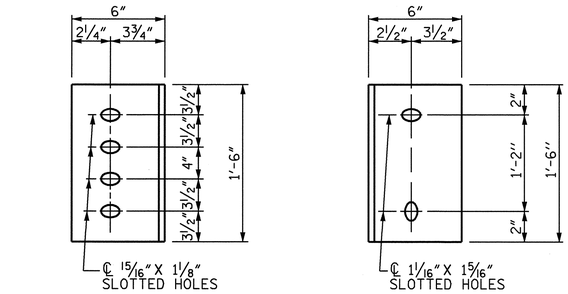

DIAPHRAGM FACE

WEB FACE

CONNECTOR PLATE DETAILS

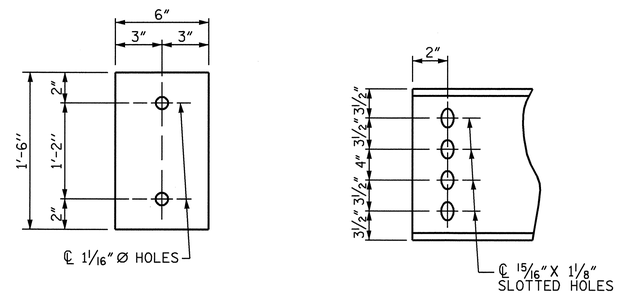

PLATE DETAILS

CHANNEL END

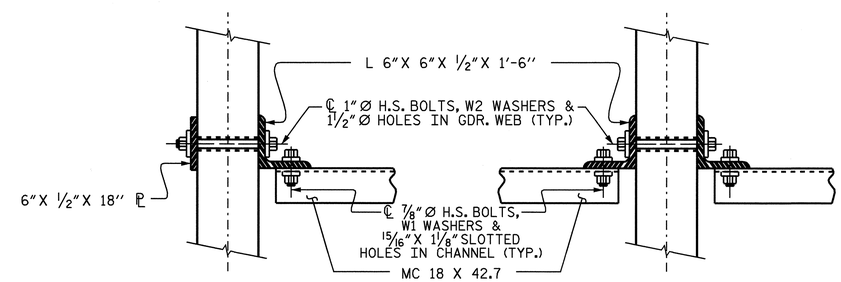

SECTION A-A

SECTION B-B

CONNECTION DETAILS

(FOR SKEW = 90°)

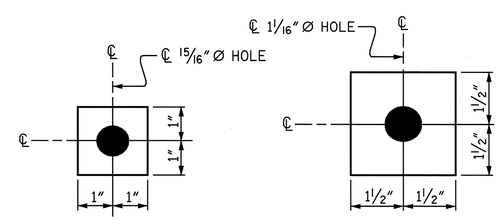

W1

ℙ 7/16"X 2"X 2"

USE WITH ⅞"Ø HVY. HEX NUTS & DIRECT TENSION INDICATOR WASHERS AT DIAPHRAGM CHANNEL TO CONNECTOR PLATE CONNECTIONS

W2

ℙ 7/16"X 3"X 3"

USE WITH 1"Ø HVY. HEX NUTS AT CONNECTOR PLATE TO GIRDER CONNECTIONS

WASHER DETAILS

STRUCTURAL STEEL NOTES

ALL INTERMEDIATE DIAPHRAGM STEEL, CONNECTOR PLATES AND PLATE WASHERS SHALL BE AASHTO M270 GRADE 50 OR APPROVED EQUAL.

TENSION ON THE AASHTO M164 BOLTS THROUGH THE CHANNEL MEMBER SHALL BE CALIBRATED USING DIRECT TENSION INDICATOR WASHERS IN ACCORDANCE WITH ARTICLE 440-8 OF THE STANDARD SPECIFICATIONS.

TENSION ON THE AASHTO M164 BOLTS THROUGH THE GIRDER WEB SHALL BE SNUG TIGHTENED FOLLOWED BY AN ADDITIONAL ¼ TURN.

THE CHANNELS, ANGLES, WASHERS, PLATE WASHERS, AND DIRECT TENSION INDICATORS SHALL BE GALVANIZED OR METALLIZED IN ACCORDANCE WITH THE STANDARD SPECIFICATIONS. FOR THERMAL SPRAYED COATINGS (METALLIZATION), SEE SPECIAL PROVISIONS.

FOR METALLIZATION, APPLY AN 8 MIL THICK 99.99 PERCENT ZINC (W-Zn-1) THERMAL SPRAYED COATING WITH A 0.5 MIL THICK SEAL COAT TO ALL STEEL DIAPHRAGM SURFACES IN ACCORDANCE WITH THE THERMAL SPRAYED COATINGS SPECIAL PROVISIONS AND SECTION 442 OF THE STANDARD SPECIFICATIONS.

GALVANIZE THE HIGH STRENGTH BOLTS, NUTS, AND WASHERS IN ACCORDANCE WITH THE STANDARD SPECIFICATIONS. FOR HIGH STRENGTH BOLTS, SEE SPECIAL PROVISIONS.

USE A MINIMUM 7/16" THICK PLATE WASHER WITH STANDARD HOLES UNDER EACH BOLT HEAD AND NUT. THE PLATE WASHERS SHALL HAVE SUFFICIENT SIZE TO COVER THE HOLES AFTER INSTALLATION. DIRECT TENSION INDICATORS ARE TO BE USED IN CONJUNCTION WITH THE PLATE WASHERS.

PROVIDE SUFFICIENT LENGTH OF ALL BOLTS TO ACCOMMODATE WASHERS, DIRECT TENSION INDICATORS, THE THICKNESS OF CONNECTING MEMBER PLUS AT LEAST ¼" PROJECTION BEYOND THE NUT.

INTERMEDIATE DIAPHRAGM ASSEMBLY SHALL COMPLY WITH SECTION 1072 OF THE STANDARD SPECIFICATIONS.

CONTRACTOR SHALL SUBMIT TWO SETS OF WORKING DRAWINGS FOR THE INTERMEDIATE DIAPHRAGM ASSEMBLY FOR REVIEW, COMMENTS AND ACCEPTANCE. AFTER REVIEW, COMMENTS, AND ACCEPTANCE, SUBMIT SEVEN SETS FOR DISTRIBUTION.

IN THE EXTERIOR BAYS, TEMPORARY STRUTS SHALL BE PLACED BETWEEN PRESTRESSED GIRDERS ADJACENT TO THE STEEL DIAPHRAGMS. STRUTS SHALL REMAIN IN PLACE 3 DAYS AFTER CONCRETE IS PLACED. ALL AASHTO M164 H.S. BOLTS SHALL BE FULLY TIGHTENED AFTER THE STRUTS HAVE BEEN REMOVED.

THE COST OF THE STEEL DIAPHRAGMS AND ASSEMBLIES SHALL BE INCLUDED IN THE UNIT PRICE BID FOR PRESTRESSED CONCRETE GIRDERS.

PROJECT NO. R-3833B
IREDELL COUNTY
STATION: 277+88.88 -L-

STATE OF NORTH CAROLINA
DEPARTMENT OF TRANSPORTATION
RALEIGH

STANDARD

INTERMEDIATE STEEL DIAPHRAGMS FOR TYPE IV PRESTRESSED CONCRETE GIRDERS

NORTH CAROLINA PROFESSIONAL SEAL 11259 ENGINEER DAVID R. ANDERSON
11/24/08

REVISIONS							SHEET NO.
NO.	BY:	DATE:	NO.	BY:	DATE:		S-41
1			3				TOTAL SHEETS
2			4				113

ASSEMBLED BY : A.S. CALLAWAY	DATE : 10/8/08
CHECKED BY : M.K. BEARD	DATE : 10/9/08
DRAWN BY : TLA 6/05	ADDED 10/21/05
CHECKED BY : VC 6/05	REV. 5/1/06R KMM/GM

10-OCT-2008 09:40
f:\structures\callaway\r3833b_sd_fp_01.dgn
scallaway

STR. #1

STD. NO. PCG12

DEAD LOAD DEFLECTION TABLE FOR GIRDERS

SPAN A

GDR. A1

0.6" LOW RELAXATION											
TENTH POINTS	BRG.	0.1	0.2	0.3	0.4	0.5	0.6	0.7	0.8	0.9	BRG.
CAMBER (GIRDER ALONE IN PLACE) ↑	0	0.134	0.253	0.346	0.405	0.425	0.405	0.346	0.253	0.134	0
✳ DEFLECTION DUE TO SUPERIMPOSED D.L. ↓	0	0.066	0.125	0.171	0.200	0.210	0.200	0.171	0.125	0.066	0
FINAL CAMBER ↑	0	13/16"	1 9/16"	2 1/8"	2 7/16"	2 9/16"	2 7/16"	2 1/8"	1 9/16"	13/16"	0

GDR. A2

0.6" LOW RELAXATION											
TENTH POINTS	BRG.	0.1	0.2	0.3	0.4	0.5	0.6	0.7	0.8	0.9	BRG.
CAMBER (GIRDER ALONE IN PLACE) ↑	0	0.133	0.251	0.344	0.403	0.423	0.403	0.344	0.251	0.133	0
✳ DEFLECTION DUE TO SUPERIMPOSED D.L. ↓	0	0.058	0.109	0.150	0.176	0.184	0.176	0.150	0.109	0.058	0
FINAL CAMBER ↑	0	7/8"	1 11/16"	2 5/16"	2 3/4"	2 7/8"	2 3/4"	2 5/16"	1 11/16"	7/8"	0

GDR. A3

0.6" LOW RELAXATION											
TENTH POINTS	BRG.	0.1	0.2	0.3	0.4	0.5	0.6	0.7	0.8	0.9	BRG.
CAMBER (GIRDER ALONE IN PLACE) ↑	0	0.130	0.247	0.338	0.395	0.415	0.395	0.338	0.247	0.130	0
✳ DEFLECTION DUE TO SUPERIMPOSED D.L. ↓	0	0.050	0.094	0.129	0.151	0.158	0.151	0.129	0.094	0.050	0
FINAL CAMBER ↑	0	15/16"	1 13/16"	2 1/2"	2 15/16"	3 1/16"	2 15/16"	2 1/2"	1 13/16"	15/16"	0

GDR. A4

0.6" LOW RELAXATION											
TENTH POINTS	BRG.	0.1	0.2	0.3	0.4	0.5	0.6	0.7	0.8	0.9	BRG.
CAMBER (GIRDER ALONE IN PLACE) ↑	0	0.127	0.239	0.328	0.384	0.403	0.384	0.328	0.239	0.127	0
✳ DEFLECTION DUE TO SUPERIMPOSED D.L. ↓	0	0.042	0.079	0.108	0.127	0.133	0.127	0.108	0.079	0.042	0
FINAL CAMBER ↑	0	1"	1 15/16"	2 5/8"	3 1/16"	3 1/4"	3 1/16"	2 5/8"	1 15/16"	1"	0

GDR. A5

0.6" LOW RELAXATION											
TENTH POINTS	BRG.	0.1	0.2	0.3	0.4	0.5	0.6	0.7	0.8	0.9	BRG.
CAMBER (GIRDER ALONE IN PLACE) ↑	0	0.122	0.231	0.316	0.370	0.389	0.370	0.316	0.231	0.122	0
✳ DEFLECTION DUE TO SUPERIMPOSED D.L. ↓	0	0.036	0.069	0.094	0.110	0.115	0.110	0.094	0.069	0.036	0
FINAL CAMBER ↑	0	1 1/16"	1 15/16"	2 11/16"	3 1/8"	3 5/16"	3 1/8"	2 11/16"	1 15/16"	1 1/16"	0

GDR. A6A

0.6" LOW RELAXATION											
TENTH POINTS	BRG.	0.1	0.2	0.3	0.4	0.5	0.6	0.7	0.8	0.9	BRG.
CAMBER (GIRDER ALONE IN PLACE) ↑	0	0.071	0.134	0.184	0.216	0.226	0.216	0.184	0.134	0.071	0
✳ DEFLECTION DUE TO SUPERIMPOSED D.L. ↓	0	0.032	0.060	0.082	0.096	0.101	0.096	0.082	0.060	0.032	0
FINAL CAMBER ↑	0	7/16"	7/8"	1 1/4"	1 7/16"	1 1/2"	1 7/16"	1 1/4"	7/8"	7/16"	0

GDR. A6B

0.6" LOW RELAXATION											
TENTH POINTS	BRG.	0.1	0.2	0.3	0.4	0.5	0.6	0.7	0.8	0.9	BRG.
CAMBER (GIRDER ALONE IN PLACE) ↑	0	0.070	0.132	0.180	0.211	0.222	0.211	0.180	0.132	0.070	0
✳ DEFLECTION DUE TO SUPERIMPOSED D.L. ↓	0	0.025	0.048	0.065	0.077	0.080	0.077	0.065	0.048	0.025	0
0.6" LOW RELAXATION ↑	0	9/16"	1"	1 3/8"	1 5/8"	1 11/16"	1 5/8"	1 3/8"	1"	9/16"	0

GDR. A7A

TENTH POINTS	BRG.	0.1	0.2	0.3	0.4	0.5	0.6	0.7	0.8	0.9	BRG.
CAMBER (GIRDER ALONE IN PLACE) ↑	0	0.068	0.129	0.176	0.206	0.217	0.206	0.176	0.129	0.068	0
✳ DEFLECTION DUE TO SUPERIMPOSED D.L. ↓	0	0.023	0.043	0.059	0.069	0.072	0.069	0.059	0.043	0.023	0
FINAL CAMBER ↑	0	7/16"	1 1/16"	1 3/8"	1 5/8"	1 3/4"	1 5/8"	1 3/8"	1 1/16"	7/16"	0

GDR. A7B

0.6" LOW RELAXATION											
TENTH POINTS	BRG.	0.1	0.2	0.3	0.4	0.5	0.6	0.7	0.8	0.9	BRG.
CAMBER (GIRDER ALONE IN PLACE) ↑	0	0.065	0.123	0.168	0.197	0.207	0.197	0.168	0.123	0.065	0
✳ DEFLECTION DUE TO SUPERIMPOSED D.L. ↓	0	0.019	0.036	0.049	0.058	0.061	0.058	0.049	0.036	0.019	0
FINAL CAMBER ↑	0	9/16"	1 1/16"	1 3/8"	1 11/16"	1 3/4"	1 11/16"	1 3/8"	1 1/16"	9/16"	0

GDR. A8

0.6" LOW RELAXATION											
TENTH POINTS	BRG.	0.1	0.2	0.3	0.4	0.5	0.6	0.7	0.8	0.9	BRG.
CAMBER (GIRDER ALONE IN PLACE) ↑	0	0.065	0.123	0.168	0.197	0.207	0.197	0.168	0.123	0.065	0
✳ DEFLECTION DUE TO SUPERIMPOSED D.L. ↓	0	0.021	0.039	0.053	0.062	0.065	0.062	0.053	0.039	0.021	0
FINAL CAMBER ↑	0	1/2"	1"	1 3/8"	1 5/8"	1 11/16"	1 5/8"	1 3/8"	1"	1/2"	0

GDR. A9

TENTH POINTS	BRG.	0.1	0.2	0.3	0.4	0.5	0.6	0.7	0.8	0.9	BRG.
CAMBER (GIRDER ALONE IN PLACE) ↑	0	0.065	0.123	0.168	0.197	0.207	0.197	0.168	0.123	0.065	0
✳ DEFLECTION DUE TO SUPERIMPOSED D.L. ↓	0	0.025	0.046	0.064	0.074	0.078	0.074	0.064	0.046	0.025	0
FINAL CAMBER ↑	0	1/2"	15/16"	1 1/4"	1 1/2"	1 9/16"	1 1/2"	1 1/4"	15/16"	1/2"	0

GDR. A10-A13, A16-A18

TENTH POINTS	BRG.	0.1	0.2	0.3	0.4	0.5	0.6	0.7	0.8	0.9	BRG.
CAMBER (GIRDER ALONE IN PLACE) ↑	0	0.065	0.123	0.168	0.197	0.207	0.197	0.168	0.123	0.065	0
✳ DEFLECTION DUE TO SUPERIMPOSED D.L. ↓	0	0.027	0.051	0.070	0.082	0.086	0.082	0.070	0.051	0.027	0
FINAL CAMBER ↑	0	7/16"	7/8"	1 3/16"	1 3/8"	1 7/16"	1 3/8"	1 3/16"	7/8"	7/16"	0

GDR. A14 & A15

TENTH POINTS	BRG.	0.1	0.2	0.3	0.4	0.5	0.6	0.7	0.8	0.9	BRG.
CAMBER (GIRDER ALONE IN PLACE) ↑	0	0.065	0.123	0.168	0.197	0.207	0.197	0.168	0.123	0.065	0
✳ DEFLECTION DUE TO SUPERIMPOSED D.L. ↓	0	0.025	0.047	0.065	0.076	0.079	0.076	0.065	0.047	0.025	0
FINAL CAMBER ↑	0	1/2"	15/16"	1 1/4"	1 1/2"	1 9/16"	1 1/2"	1 1/4"	15/16"	1/2"	0

GDR. A19

TENTH POINTS	BRG.	0.1	0.2	0.3	0.4	0.5	0.6	0.7	0.8	0.9	BRG.
CAMBER (GIRDER ALONE IN PLACE) ↑	0	0.065	0.123	0.168	0.197	0.207	0.197	0.168	0.123	0.065	0
✳ DEFLECTION DUE TO SUPERIMPOSED D.L. ↓	0	0.023	0.044	0.061	0.071	0.075	0.071	0.061	0.044	0.023	0
FINAL CAMBER ↑	0	1/2"	15/16"	1 5/16"	1 1/2"	1 9/16"	1 1/2"	1 5/16"	15/16"	1/2"	0

GDR. A20

TENTH POINTS	BRG.	0.1	0.2	0.3	0.4	0.5	0.6	0.7	0.8	0.9	BRG.
CAMBER (GIRDER ALONE IN PLACE) ↑	0	0.065	0.123	0.168	0.197	0.207	0.197	0.168	0.123	0.065	0
✳ DEFLECTION DUE TO SUPERIMPOSED D.L. ↓	0	0.021	0.039	0.053	0.062	0.065	0.062	0.053	0.039	0.021	0
FINAL CAMBER ↑	0	1/2"	1"	1 3/8"	1 5/8"	1 11/16"	1 5/8"	1 3/8"	1"	1/2"	0

GDR. A21

TENTH POINTS	BRG.	0.1	0.2	0.3	0.4	0.5	0.6	0.7	0.8	0.9	BRG.
CAMBER (GIRDER ALONE IN PLACE) ↑	0	0.065	0.123	0.168	0.197	0.207	0.197	0.168	0.123	0.065	0
✳ DEFLECTION DUE TO SUPERIMPOSED D.L. ↓	0	0.023	0.044	0.060	0.070	0.073	0.070	0.060	0.044	0.023	0
FINAL CAMBER ↑	0	1/2"	15/16"	1 5/16"	1 1/2"	1 5/8"	1 1/2"	1 5/16"	15/16"	1/2"	0

GDR. A22

TENTH POINTS	BRG.	0.1	0.2	0.3	0.4	0.5	0.6	0.7	0.8	0.9	BRG.
CAMBER (GIRDER ALONE IN PLACE) ↑	0	0.065	0.123	0.168	0.197	0.207	0.197	0.168	0.123	0.065	0
✳ DEFLECTION DUE TO SUPERIMPOSED D.L. ↓	0	0.022	0.042	0.058	0.068	0.071	0.068	0.058	0.042	0.022	0
FINAL CAMBER ↑	0	1/2"	1"	1 5/16"	1 9/16"	1 5/8"	1 9/16"	1 5/16"	1"	1/2"	0

GDR. A23

TENTH POINTS	BRG.	0.1	0.2	0.3	0.4	0.5	0.6	0.7	0.8	0.9	BRG.
CAMBER (GIRDER ALONE IN PLACE) ↑	0	0.055	0.105	0.143	0.168	0.176	0.168	0.143	0.105	0.055	0
✳ DEFLECTION DUE TO SUPERIMPOSED D.L. ↓	0	0.022	0.042	0.058	0.068	0.071	0.068	0.058	0.042	0.022	0
FINAL CAMBER ↑	0	3/8"	3/4"	1"	1 3/16"	1 1/4"	1 3/16"	1"	3/4"	3/8"	0

GDR. A24

TENTH POINTS	BRG.	0.1	0.2	0.3	0.4	0.5	0.6	0.7	0.8	0.9	BRG.
CAMBER (GIRDER ALONE IN PLACE) ↑	0	0.055	0.104	0.142	0.167	0.175	0.167	0.142	0.104	0.055	0
✳ DEFLECTION DUE TO SUPERIMPOSED D.L. ↓	0	0.022	0.042	0.058	0.067	0.071	0.067	0.058	0.042	0.022	0
FINAL CAMBER ↑	0	3/8"	3/4"	1"	1 1/8"	1 1/4"	1 1/8"	1"	3/4"	3/8"	0

GDR. A25

TENTH POINTS	BRG.	0.1	0.2	0.3	0.4	0.5	0.6	0.7	0.8	0.9	BRG.
CAMBER (GIRDER ALONE IN PLACE) ↑	0	0.055	0.104	0.143	0.167	0.176	0.167	0.143	0.104	0.055	0
✳ DEFLECTION DUE TO SUPERIMPOSED D.L. ↓	0	0.021	0.039	0.053	0.062	0.066	0.062	0.053	0.039	0.021	0
FINAL CAMBER ↑	0	7/16"	13/16"	1 1/16"	1 1/4"	1 5/16"	1 1/4"	1 1/16"	13/16"	7/16"	0

GDR. A26

0.6" LOW RELAXATION											
TENTH POINTS	BRG.	0.1	0.2	0.3	0.4	0.5	0.6	0.7	0.8	0.9	BRG.
CAMBER (GIRDER ALONE IN PLACE) ↑	0	0.055	0.105	0.143	0.168	0.176	0.168	0.143	0.105	0.055	0
✳ DEFLECTION DUE TO SUPERIMPOSED D.L. ↓	0	0.022	0.042	0.058	0.068	0.071	0.068	0.058	0.042	0.022	0
FINAL CAMBER ↑	0	3/8"	3/4"	1"	1 3/16"	1 5/16"	1 3/16"	1"	3/4"	3/8"	0

✳ INCUDES FUTURE WEARING SURFACE
ALL VALUES ARE SHOWN IN FEET (DECIMAL FORM) EXCEPT "FINAL CAMBER", WHICH IS GIVEN IN INCHES (FRACTION FORM).

DRAWN BY : S. M. RASHIDI DATE : 9/18/08
CHECKED BY : W. F. PARKER DATE : 10/1/08

10-NOV-2008 12:36
h:\structures\srashidi\microstation\wkg\str. #1\r-3833b_sd_dl.dgn
srashidi

PROJECT NO. R-3833B
IREDELL COUNTY
STATION: 277+88.88 -L-

SHEET 1 OF 2

STATE OF NORTH CAROLINA
DEPARTMENT OF TRANSPORTATION
RALEIGH

SUPERSTRUCTURE

DEAD LOAD DEFLECTION TABLES

NORTH CAROLINA PROFESSIONAL SEAL 11259 ENGINEER DAVID R. ANDERSON
11/24/08

REVISIONS						SHEET NO.
NO.	BY:	DATE:	NO.	BY:	DATE:	S-42
1			3			TOTAL SHEETS
2			4			113

STR. 1

DEAD LOAD DEFLECTION TABLE FOR GIRDERS

SPAN B

GDR. B1

0.6" LOW RELAXATION	BRG.	0.1	0.2	0.3	0.4	0.5	0.6	0.7	0.8	0.9	BRG.
TENTH POINTS	BRG.	0.1	0.2	0.3	0.4	0.5	0.6	0.7	0.8	0.9	BRG.
CAMBER (GIRDER ALONE IN PLACE) ↑	0	0.056	0.106	0.145	0.170	0.179	0.170	0.145	0.106	0.056	0
✳ DEFLECTION DUE TO SUPERIMPOSED D.L. ↓	0	0.023	0.043	0.060	0.070	0.073	0.070	0.060	0.043	0.023	0
FINAL CAMBER ↑	0	3/8"	3/4"	1 1/16"	1 3/16"	1 1/4"	1 3/16"	1 1/16"	3/4"	3/8"	0

GDR. B2

0.6" LOW RELAXATION	BRG.	0.1	0.2	0.3	0.4	0.5	0.6	0.7	0.8	0.9	BRG.
TENTH POINTS	BRG.	0.1	0.2	0.3	0.4	0.5	0.6	0.7	0.8	0.9	BRG.
CAMBER (GIRDER ALONE IN PLACE) ↑	0	0.055	0.105	0.143	0.168	0.176	0.168	0.143	0.105	0.055	0
✳ DEFLECTION DUE TO SUPERIMPOSED D.L. ↓	0	0.023	0.044	0.060	0.070	0.074	0.070	0.060	0.044	0.023	0
FINAL CAMBER ↑	0	3/8"	3/4"	1"	1 3/16"	1 1/4"	1 3/16"	1"	3/4"	3/8"	0

GDR. B3

0.6" LOW RELAXATION	BRG.	0.1	0.2	0.3	0.4	0.5	0.6	0.7	0.8	0.9	BRG.
TENTH POINTS	BRG.	0.1	0.2	0.3	0.4	0.5	0.6	0.7	0.8	0.9	BRG.
CAMBER (GIRDER ALONE IN PLACE) ↑	0	0.055	0.104	0.143	0.167	0.175	0.167	0.143	0.104	0.055	0
✳ DEFLECTION DUE TO SUPERIMPOSED D.L. ↓	0	0.022	0.043	0.058	0.068	0.072	0.068	0.058	0.043	0.022	0
FINAL CAMBER ↑	0	3/8"	3/4"	1"	1 3/16"	1 1/4"	1 3/16"	1"	3/4"	3/8"	0

GDR. B4

0.6" LOW RELAXATION	BRG.	0.1	0.2	0.3	0.4	0.5	0.6	0.7	0.8	0.9	BRG.
TENTH POINTS	BRG.	0.1	0.2	0.3	0.4	0.5	0.6	0.7	0.8	0.9	BRG.
CAMBER (GIRDER ALONE IN PLACE) ↑	0	0.055	0.104	0.143	0.167	0.175	0.167	0.143	0.104	0.055	0
✳ DEFLECTION DUE TO SUPERIMPOSED D.L. ↓	0	0.022	0.042	0.057	0.067	0.070	0.067	0.057	0.042	0.022	0
FINAL CAMBER ↑	0	3/8"	3/4"	1"	1 3/16"	1 1/4"	1 3/16"	1"	3/4"	3/8"	0

GDR. B5

0.6" LOW RELAXATION	BRG.	0.1	0.2	0.3	0.4	0.5	0.6	0.7	0.8	0.9	BRG.
TENTH POINTS	BRG.	0.1	0.2	0.3	0.4	0.5	0.6	0.7	0.8	0.9	BRG.
CAMBER (GIRDER ALONE IN PLACE) ↑	0	0.055	0.105	0.144	0.168	0.177	0.168	0.144	0.105	0.055	0
✳ DEFLECTION DUE TO SUPERIMPOSED D.L. ↓	0	0.021	0.040	0.055	0.065	0.068	0.065	0.055	0.040	0.021	0
FINAL CAMBER ↑	0	7/16"	3/4"	1 1/16"	1 1/4"	1 5/16"	1 1/4"	1 1/16"	3/4"	7/16"	0

GDR. B6

0.6" LOW RELAXATION	BRG.	0.1	0.2	0.3	0.4	0.5	0.6	0.7	0.8	0.9	BRG.
TENTH POINTS	BRG.	0.1	0.2	0.3	0.4	0.5	0.6	0.7	0.8	0.9	BRG.
CAMBER (GIRDER ALONE IN PLACE) ↑	0	0.065	0.123	0.168	0.197	0.207	0.197	0.168	0.123	0.065	0
✳ DEFLECTION DUE TO SUPERIMPOSED D.L. ↓	0	0.021	0.040	0.055	0.065	0.068	0.065	0.055	0.040	0.021	0
FINAL CAMBER ↑	0	1/2"	1"	1 3/8"	1 9/16"	1 11/16"	1 9/16"	1 3/8"	1"	1/2"	0

GDR. B7 & B8

0.6" LOW RELAXATION	BRG.	0.1	0.2	0.3	0.4	0.5	0.6	0.7	0.8	0.9	BRG.
TENTH POINTS	BRG.	0.1	0.2	0.3	0.4	0.5	0.6	0.7	0.8	0.9	BRG.
CAMBER (GIRDER ALONE IN PLACE) ↑	0	0.065	0.123	0.168	0.197	0.207	0.197	0.168	0.123	0.065	0
✳ DEFLECTION DUE TO SUPERIMPOSED D.L. ↓	0	0.022	0.041	0.057	0.066	0.070	0.066	0.057	0.041	0.022	0
0.6" LOW RELAXATION ↑	0	1/2"	1"	1 5/16"	1 9/16"	1 5/8"	1 9/16"	1 5/16"	1"	1/2"	0

GDR. B9

TENTH POINTS	BRG.	0.1	0.2	0.3	0.4	0.5	0.6	0.7	0.8	0.9	BRG.
CAMBER (GIRDER ALONE IN PLACE) ↑	0	0.065	0.123	0.168	0.197	0.207	0.197	0.168	0.123	0.065	0
✳ DEFLECTION DUE TO SUPERIMPOSED D.L. ↓	0	0.025	0.046	0.064	0.074	0.078	0.074	0.064	0.046	0.025	0
FINAL CAMBER ↑	0	1/2"	15/16"	1 1/4"	1 1/2"	1 9/16"	1 1/2"	1 1/4"	15/16"	1/2"	0

GDR. B10-B13, B16-B18

0.6" LOW RELAXATION	BRG.	0.1	0.2	0.3	0.4	0.5	0.6	0.7	0.8	0.9	BRG.
TENTH POINTS	BRG.	0.1	0.2	0.3	0.4	0.5	0.6	0.7	0.8	0.9	BRG.
CAMBER (GIRDER ALONE IN PLACE) ↑	0	0.065	0.123	0.168	0.197	0.207	0.197	0.168	0.123	0.065	0
✳ DEFLECTION DUE TO SUPERIMPOSED D.L. ↓	0	0.027	0.051	0.070	0.082	0.086	0.082	0.070	0.051	0.027	0
FINAL CAMBER ↑	0	7/16"	7/8"	1 3/16"	1 3/8"	1 7/16"	1 3/8"	1 3/16"	7/8"	7/16"	0

GDR. B14 & B15

0.6" LOW RELAXATION	BRG.	0.1	0.2	0.3	0.4	0.5	0.6	0.7	0.8	0.9	BRG.
TENTH POINTS	BRG.	0.1	0.2	0.3	0.4	0.5	0.6	0.7	0.8	0.9	BRG.
CAMBER (GIRDER ALONE IN PLACE) ↑	0	0.065	0.123	0.168	0.197	0.207	0.197	0.168	0.123	0.065	0
✳ DEFLECTION DUE TO SUPERIMPOSED D.L. ↓	0	0.025	0.047	0.065	0.076	0.079	0.076	0.065	0.047	0.025	0
FINAL CAMBER ↑	0	1/2"	15/16"	1 1/4"	1 7/16"	1 9/16"	1 7/16"	1 1/4"	15/16"	1/2"	0

GDR. B19

TENTH POINTS	BRG.	0.1	0.2	0.3	0.4	0.5	0.6	0.7	0.8	0.9	BRG.
CAMBER (GIRDER ALONE IN PLACE) ↑	0	0.065	0.123	0.168	0.197	0.207	0.197	0.168	0.123	0.065	0
✳ DEFLECTION DUE TO SUPERIMPOSED D.L. ↓	0	0.025	0.048	0.066	0.077	0.081	0.077	0.066	0.048	0.025	0
FINAL CAMBER ↑	0	1/2"	15/16"	1 1/4"	1 7/16"	1 1/2"	1 7/16"	1 1/4"	15/16"	1/2"	0

GDR. B20A

TENTH POINTS	BRG.	0.1	0.2	0.3	0.4	0.5	0.6	0.7	0.8	0.9	BRG.
CAMBER (GIRDER ALONE IN PLACE) ↑	0	0.066	0.124	0.170	0.199	0.209	0.199	0.170	0.124	0.066	0
✳ DEFLECTION DUE TO SUPERIMPOSED D.L. ↓	0	0.022	0.042	0.057	0.067	0.070	0.067	0.057	0.042	0.022	0
FINAL CAMBER ↑	0	1/2"	1"	1 3/8"	1 9/16"	1 11/16"	1 9/16"	1 3/8"	1"	1/2"	0

GDR. B20B

TENTH POINTS	BRG.	0.1	0.2	0.3	0.4	0.5	0.6	0.7	0.8	0.9	BRG.
CAMBER (GIRDER ALONE IN PLACE) ↑	0	0.067	0.127	0.174	0.204	0.214	0.204	0.174	0.127	0.067	0
✳ DEFLECTION DUE TO SUPERIMPOSED D.L. ↓	0	0.021	0.041	0.056	0.065	0.068	0.065	0.056	0.041	0.021	0
FINAL CAMBER ↑	0	9/16"	1 1/16"	1 7/16"	1 11/16"	1 3/4"	1 11/16"	1 7/16"	1 1/16"	9/16"	0

GDR. B21A

TENTH POINTS	BRG.	0.1	0.2	0.3	0.4	0.5	0.6	0.7	0.8	0.9	BRG.
CAMBER (GIRDER ALONE IN PLACE) ↑	0	0.069	0.130	0.178	0.209	0.219	0.209	0.178	0.130	0.069	0
✳ DEFLECTION DUE TO SUPERIMPOSED D.L. ↓	0	0.024	0.045	0.061	0.072	0.076	0.072	0.061	0.045	0.024	0
FINAL CAMBER ↑	0	9/16"	1"	1 3/8"	1 5/8"	1 11/16"	1 5/8"	1 3/8"	1"	9/16"	0

GDR. B21B

TENTH POINTS	BRG.	0.1	0.2	0.3	0.4	0.5	0.6	0.7	0.8	0.9	BRG.
CAMBER (GIRDER ALONE IN PLACE) ↑	0	0.070	0.133	0.183	0.214	0.224	0.214	0.183	0.133	0.070	0
✳ DEFLECTION DUE TO SUPERIMPOSED D.L. ↓	0	0.030	0.056	0.077	0.090	0.095	0.090	0.077	0.056	0.030	0
FINAL CAMBER ↑	0	1/2"	15/16"	1 1/4"	1 1/2"	1 9/16"	1 1/2"	1 1/4"	15/16"	1/2"	0

GDR. B22

TENTH POINTS	BRG.	0.1	0.2	0.3	0.4	0.5	0.6	0.7	0.8	0.9	BRG.
CAMBER (GIRDER ALONE IN PLACE) ↑	0	0.120	0.227	0.311	0.364	0.382	0.364	0.311	0.227	0.120	0
✳ DEFLECTION DUE TO SUPERIMPOSED D.L. ↓	0	0.034	0.064	0.088	0.103	0.108	0.103	0.088	0.064	0.034	0
FINAL CAMBER ↑	0	1 1/16"	1 15/16"	2 11/16"	3 1/8"	3 5/16"	3 1/8"	2 11/16"	1 15/16"	1 1/16"	0

GDR. B23

TENTH POINTS	BRG.	0.1	0.2	0.3	0.4	0.5	0.6	0.7	0.8	0.9	BRG.
CAMBER (GIRDER ALONE IN PLACE) ↑	0	0.125	0.236	0.323	0.378	0.397	0.378	0.323	0.236	0.125	0
✳ DEFLECTION DUE TO SUPERIMPOSED D.L. ↓	0	0.039	0.074	0.101	0.118	0.124	0.118	0.101	0.074	0.039	0
FINAL CAMBER ↑	0	1 1/16"	1 15/16"	2 11/16"	3 1/8"	3 1/4"	3 1/8"	2 11/16"	1 15/16"	1 1/16"	0

GDR. B24

TENTH POINTS	BRG.	0.1	0.2	0.3	0.4	0.5	0.6	0.7	0.8	0.9	BRG.
CAMBER (GIRDER ALONE IN PLACE) ↑	0	0.129	0.247	0.334	0.391	0.411	0.391	0.334	0.247	0.129	0
✳ DEFLECTION DUE TO SUPERIMPOSED D.L. ↓	0	0.046	0.087	0.119	0.139	0.146	0.139	0.119	0.087	0.046	0
FINAL CAMBER ↑	0	1"	1 15/16"	2 9/16"	3"	3 3/16"	3"	2 9/16"	1 15/16"	1"	0

GDR. B25

TENTH POINTS	BRG.	0.1	0.2	0.3	0.4	0.5	0.6	0.7	0.8	0.9	BRG.
CAMBER (GIRDER ALONE IN PLACE) ↑	0	0.132	0.250	0.342	0.401	0.421	0.401	0.342	0.250	0.132	0
✳ DEFLECTION DUE TO SUPERIMPOSED D.L. ↓	0	0.053	0.101	0.138	0.162	0.170	0.162	0.138	0.101	0.053	0
FINAL CAMBER ↑	0	15/16"	1 13/16"	2 7/16"	2 7/8"	3"	2 7/8"	2 7/16"	1 13/16"	15/16"	0

GDR. B26

TENTH POINTS	BRG.	0.1	0.2	0.3	0.4	0.5	0.6	0.7	0.8	0.9	BRG.
CAMBER (GIRDER ALONE IN PLACE) ↑	0	0.134	0.253	0.346	0.405	0.425	0.405	0.346	0.253	0.134	0
✳ DEFLECTION DUE TO SUPERIMPOSED D.L. ↓	0	0.068	0.129	0.176	0.206	0.216	0.206	0.176	0.129	0.068	0
FINAL CAMBER ↑	0	13/16"	1 1/2"	2 1/16"	2 3/8"	2 1/2"	2 3/8"	2 1/16"	1 1/2"	13/16"	0

✳ INCUDES FUTURE WEARING SURFACE
ALL VALUES ARE SHOWN IN FEET (DECIMAL FORM) EXCEPT "FINAL CAMBER", WHICH IS GIVEN IN INCHES (FRACTION FORM).

DRAWN BY : S. M. RASHIDI DATE : 9/18/08
CHECKED BY : W. F. PARKER DATE : 10/1/08

NORTH CAROLINA PROFESSIONAL SEAL 11259 ENGINEER DAVID R. ANDERSON
11/24/08

PROJECT NO. R-3833B
IREDELL COUNTY
STATION: 277+88.88 -L-

SHEET 2 OF 2

STATE OF NORTH CAROLINA
DEPARTMENT OF TRANSPORTATION
RALEIGH

SUPERSTRUCTURE

DEAD LOAD DEFLECTION TABLES

REVISIONS						SHEET NO.
NO.	BY:	DATE:	NO.	BY:	DATE:	S-43
1			3			TOTAL SHEETS
2			4			113

STR. 1

10-NOV-2008 12:39
h:\structures\srashidi\microstation\wkg\str. #1\r-3833b_sd_dl.dgn
srashidi

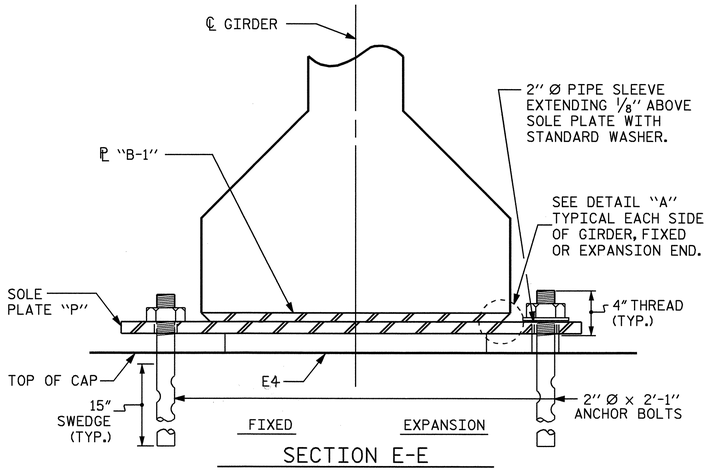

SECTION E-E

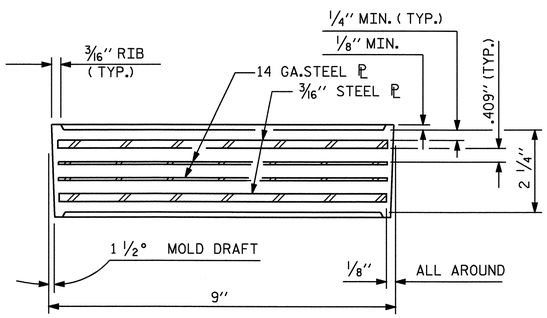

TYPICAL SECTION OF ELASTOMERIC BEARINGS

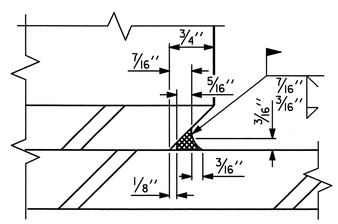

DETAIL "A"

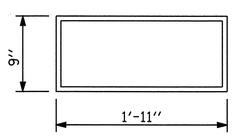

E4 (112 REQ'D)

PLAN VIEW OF ELASTOMERIC BEARING

TYPE V

— LOAD RATINGS —	
	MAX.D.L.+L.L.
54" PCG -TYPE V	180 K

NOTES

AT ALL FIXED POINTS OF SUPPORT, NUTS FOR ANCHOR BOLTS ARE TO BE TIGHTENED FINGER TIGHT AND THEN BACKED OFF 1/2 TURN. THE THREAD OF THE NUT AND BOLT SHALL THEN BE BURRED WITH A SHARP POINTED TOOL.

THE 2" Ø PIPE SLEEVE SHALL BE CUT FROM SCHEDULE 40 PVC PLASTIC PIPE. THE PVC PLASTIC PIPE SHALL MEET THE REQUIREMENTS OF ASTM D1785.

STEEL SOLE PLATES, ANCHOR BOLTS, NUTS, AND WASHERS SHALL BE GALVANIZED IN ACCORDANCE WITH THE STANDARD SPECIFICATIONS.

PRIOR TO WELDING, GRIND THE GALVANIZED SURFACE OF THE PORTION OF THE EMBEDDED PLATE AND SOLE PLATE THAT ARE TO BE WELDED. AFTER WELDING, DAMAGED GALVANIZED SURFACES SHALL BE REPAIRED IN ACCORDANCE WITH THE STANDARD SPECIFICATIONS.

WHEN WELDING THE SOLE PLATE TO THE EMBEDDED PLATE IN THE GIRDER, USE TEMPERATURE INDICATING WAX PENS, OR OTHER SUITABLE MEANS, TO ENSURE THAT THE TEMPERATURE OF THE SOLE PLATE DOES NOT EXCEED 300°F. TEMPERATURES ABOVE THIS MAY DAMAGE THE ELASTOMER.

SOLE PLATE "P", BOLTS, NUTS, WASHERS, AND PIPE SLEEVE SHALL BE INCLUDED IN THE PAY ITEM FOR PRESTRESSED CONCRETE GIRDERS.

ANCHOR BOLTS SHALL MEET THE REQUIREMENTS OF ASTM A449. NUTS SHALL MEET THE REQUIREMENTS OF AASHTO M291-DH OR AASHTO M292-2H. WASHERS SHALL MEET THE REQUIREMENTS OF AASHTO M293. SHOP DRAWINGS ARE NOT REQUIRED FOR ANCHOR BOLT, NUTS AND WASHERS. SHOP INSPECTION IS REQUIRED.

ALL SURFACES OF BEARING PLATES SHALL BE SMOOTH AND STRAIGHT.

ELASTOMER IN ALL BEARINGS SHALL BE 60 DUROMETER HARDNESS.

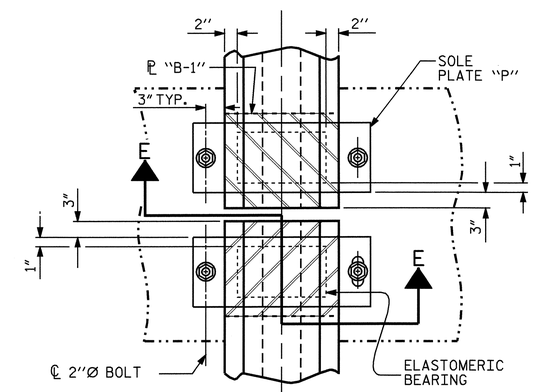

TYPICAL HALF-PLAN (SHOWING CONTINUOUS BENT)

TYPICAL HALF-PLAN (SHOWING SIMPLE SPAN BENT)

PROJECT NO. R-3833B

IREDELL COUNTY

STATION: 277+88.88 -L-

SHEET 1 OF 2

STATE OF NORTH CAROLINA
DEPARTMENT OF TRANSPORTATION
RALEIGH

STANDARD
ELASTOMERIC BEARING DETAILS

PRESTRESSED CONCRETE GIRDER SUPERSTRUCTURE

NORTH CAROLINA PROFESSIONAL SEAL 11259 ENGINEER DAVID R. ANDERSON
11/24/08

REVISIONS						SHEET NO.
NO.	BY:	DATE:	NO.	BY:	DATE:	S-44
1			3			TOTAL SHEETS
2			4			113

DRAWN BY : S. M. RASHIDI DATE : 9/25/09
CHECKED BY : N. Q. TRAN DATE : 10/06/09

16-OCT-2008 15:06
r:\structures\srashidi\microstation\wkg\str.*1\r-3833b_sd_bg.dgn
danderson

STD. NO. EB4

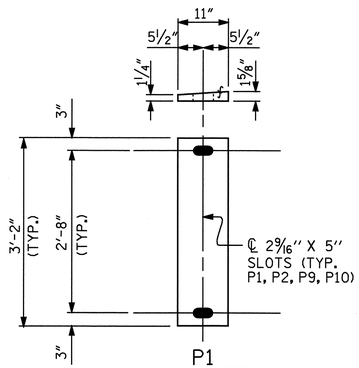

P1
(EXPANSION)
(5 REQ'D)

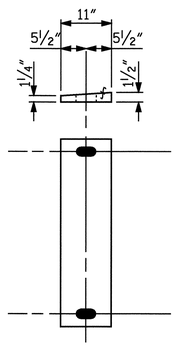

P2
(EXPANSION)
(23 REQ'D)

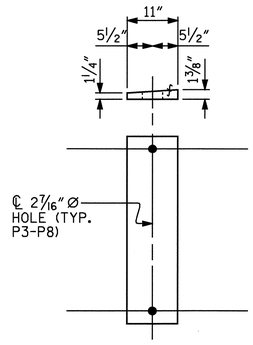

P3
(FIXED)
(24 REQ'D)

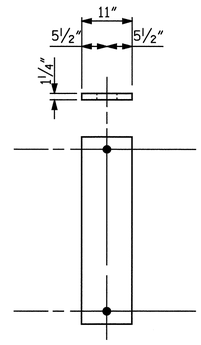

P4
(FIXED)
(4 REQ'D)

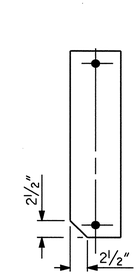

P1 CLIP
AT END BENT 1
(TYP. GRDS. A1, A2, A3)

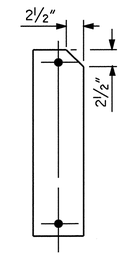

P10 CLIP
AT END BENT 2
(TYP. GRDS. B24, B25, B26)

SOLE PLATE CLIP DETAILS

UP-STATION

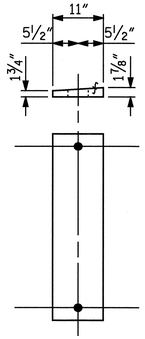

P5
(FIXED)
(7 REQ'D)

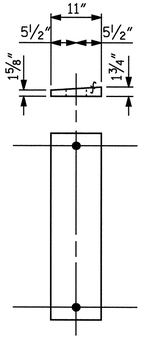

P6
(FIXED)
(9 REQ'D)

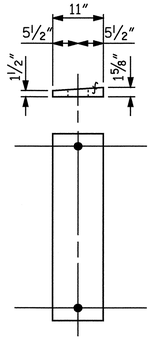

P7
(FIXED)
(5 REQ'D)

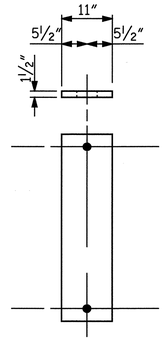

P8
(FIXED)
(7 REQ'D)

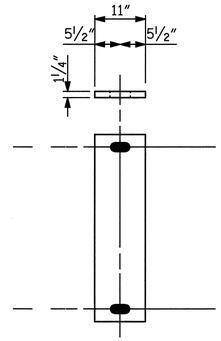

P9
(EXPANSION)
(23 REQ'D)

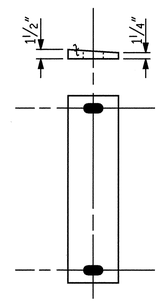

P10
(EXPANSION)
(5 REQ'D)

SOLE PLATE DETAILS ("P")

PROJECT NO. R-3833B
IREDELL COUNTY
STATION: 277+88.88 -L-

SHEET 2 OF 2

STATE OF NORTH CAROLINA
DEPARTMENT OF TRANSPORTATION
RALEIGH

SUPERSTRUCTURE
SOLE PLATE
DETAILS

NORTH CAROLINA PROFESSIONAL SEAL 11259 ENGINEER DAVID R. ANDERSON
11/24/08

REVISIONS						SHEET NO.
NO.	BY:	DATE:	NO.	BY:	DATE:	S-45
1			3			TOTAL SHEETS
2			4			113

DRAWN BY : S. M. RASHIDI DATE : 9/25/09
CHECKED BY : N. Q. TRAN DATE : 10/06/09

17-OCT-2008 12:03
r:\structures\srashidi\microstation\wkg\str. *1\r-3833b_sd_bg.dgn
danderson

NOTES

ALL REINFORCING STEEL IN SIDEWALK SHALL BE EPOXY COATED.

PAYMENT FOR SIDEWALK SHALL BE INCLUDED IN PAY ITEM FOR "REINFORCED CONCRETE DECK SLAB".

FOR WHEELCHAIR RAMP DETAILS, SEE ROADWAY STANDARD 848.06.

EPOXY COATED REINFORCING STEEL THAT IS FIELD CUT SHALL BE PATCHED PER STANDARD SPECIFICATIONS, SECTION 1070-8.

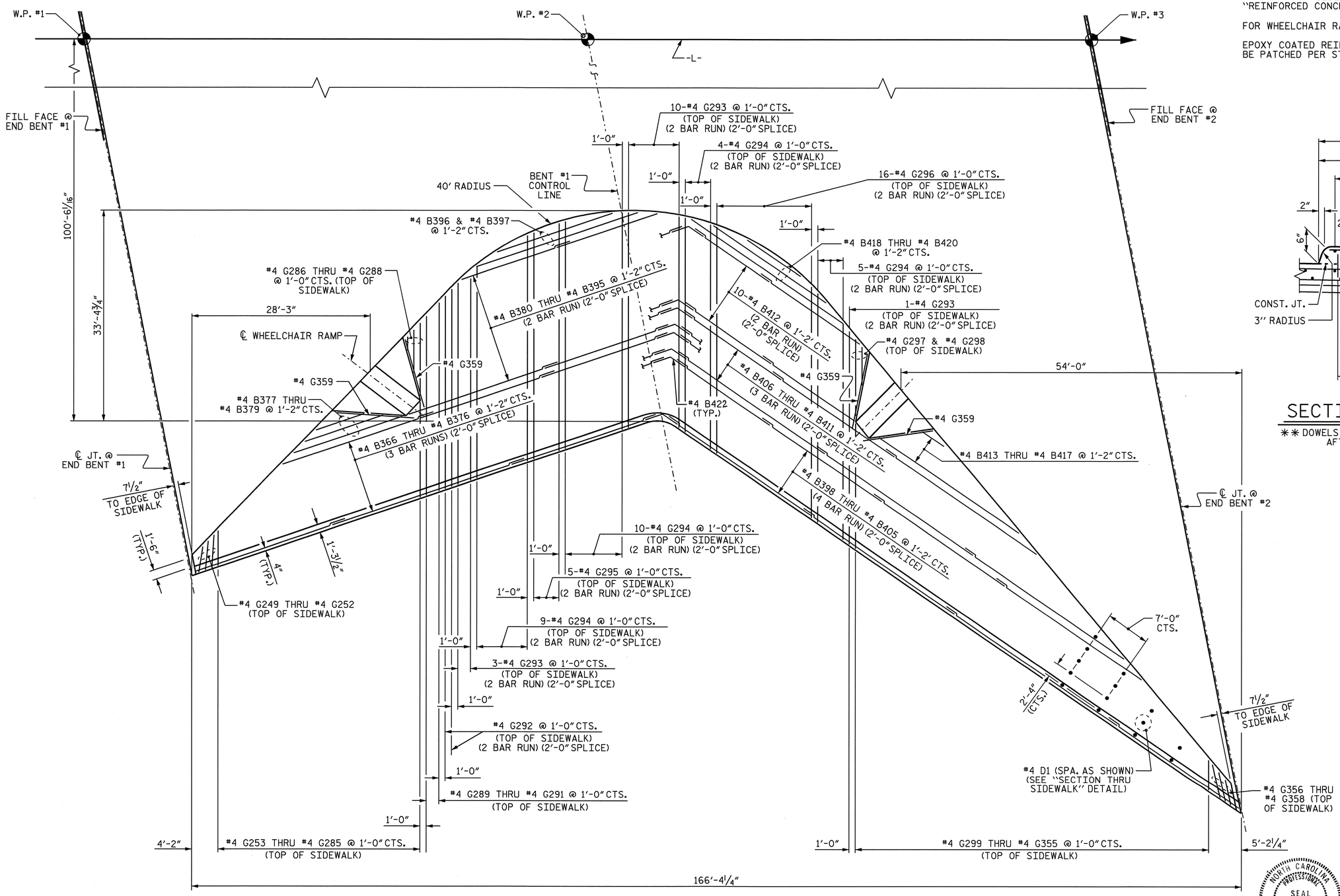

PLAN OF SIDEWALK

(STAGE I SHOWN)

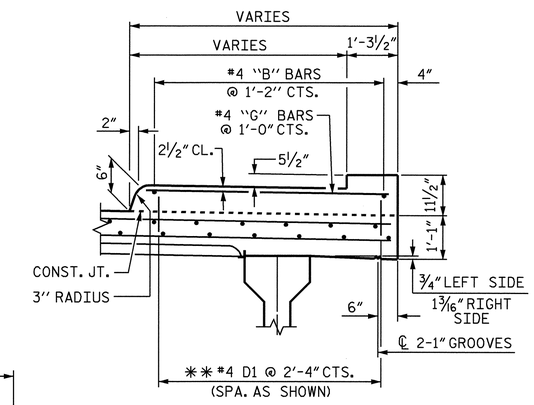

SECTION THRU SIDEWALK

** DOWELS MAY BE PUSHED INTO GREEN CONCRETE AFTER SPAN HAS BEEN SCREEDED OFF.

PROJECT NO. R-3833B

IREDELL COUNTY

STATION: 277+88.88 -L-

SHEET 1 OF 3

STATE OF NORTH CAROLINA
DEPARTMENT OF TRANSPORTATION
RALEIGH

SUPERSTRUCTURE

SIDEWALK DETAILS
STAGE I

NORTH CAROLINA PROFESSIONAL SEAL 11259 ENGINEER DAVID R. ANDERSON

11/24/08

REVISIONS							SHEET NO.
NO.	BY:	DATE:	NO.	BY:	DATE:		S-46
1			3				TOTAL SHEETS
2			4				113

DRAWN BY : M.K. BEARD DATE : 10/14/08
CHECKED BY : J.A. TILLMAN DATE : 10/31/08

17-NOV-2008 09:36
r:\structures\kbeard\r3833b_sd_sw.dgn
danderson

STR. #1

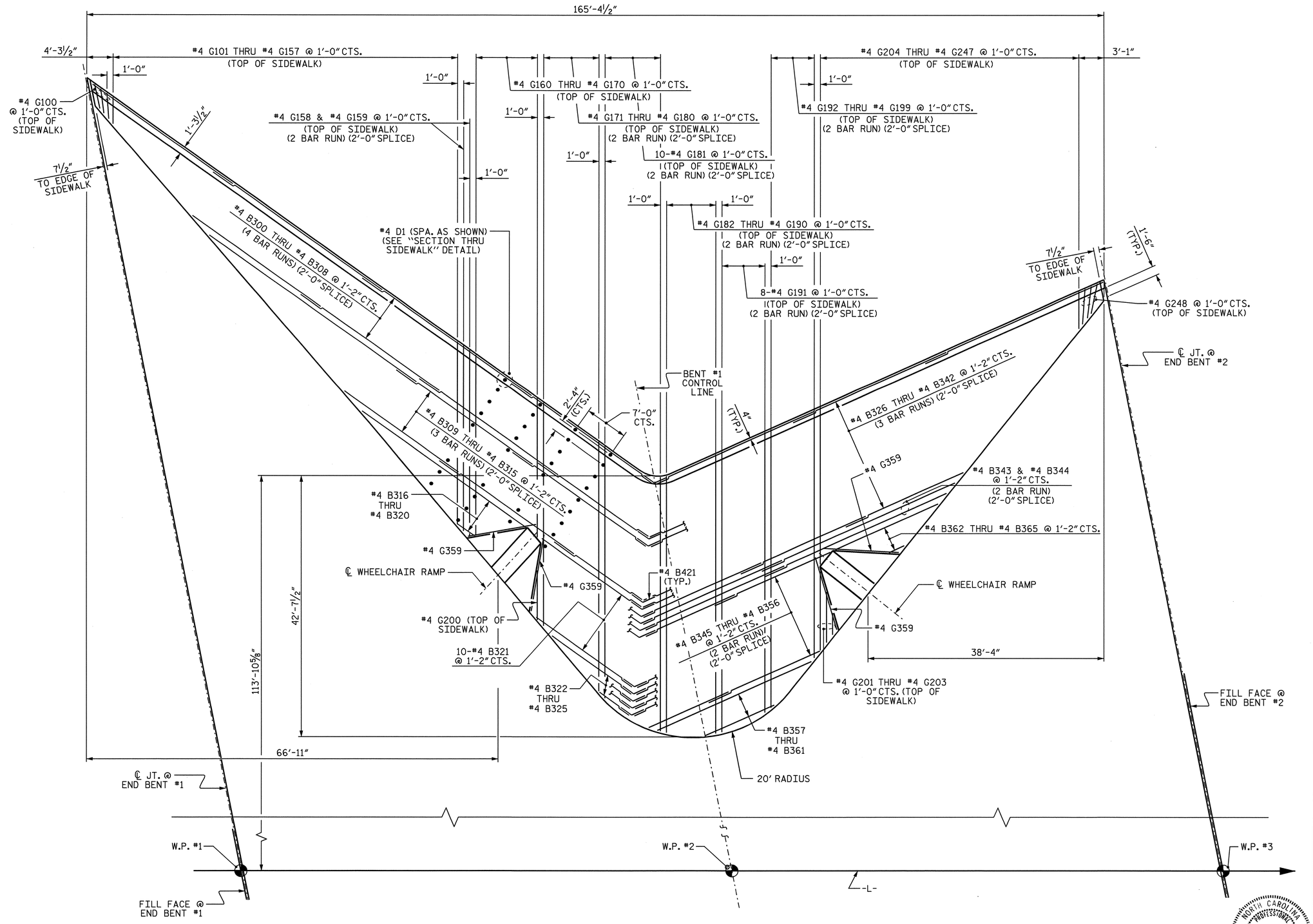

PLAN OF SIDEWALK

(STAGE II SHOWN)

PROJECT NO. R-3833B

IREDELL COUNTY

STATION: 277+88.88 -L-

SHEET 2 OF 3

STATE OF NORTH CAROLINA
DEPARTMENT OF TRANSPORTATION
RALEIGH

SUPERSTRUCTURE

SIDEWALK DETAILS
STAGE II

NORTH CAROLINA PROFESSIONAL SEAL 11259 ENGINEER DAVID R. ANDERSON
11/24/08

REVISIONS							SHEET NO.
NO.	BY:	DATE:	NO.	BY:	DATE:		S-47
1			3				TOTAL SHEETS
2			4				113

STR. #1

DRAWN BY : M.K. BEARD DATE : 10/14/08
CHECKED BY : J.A. TILLMAN DATE : 10/31/08

17-NOV-2008 09:36
r:\structures\kbeard\r3833b_sd_sw.dgn
danderson

REINFORCING BAR SCHEDULE FOR SIDEWALKS

BAR	NO.	SIZE	TYPE	LENGTH	WEIGHT
STAGE I					
B366	3	#4	STR	27'-6"	55
B367	3	#4	STR	27'-4"	55
B368	3	#4	STR	26'-10"	54
B369	3	#4	STR	26'-4"	53
B370	3	#4	STR	25'-9"	52
B371	3	#4	STR	25'-3"	51
B372	3	#4	STR	24'-9"	50
B373	3	#4	STR	24'-2"	48
B374	3	#4	STR	23'-8"	47
B375	3	#4	STR	23'-2"	46
B376	3	#4	STR	22'-8"	45
B377	1	#4	STR	16'-9"	12
B378	1	#4	STR	11'-10"	8
B379	1	#4	STR	6'-10"	5
B380	2	#4	STR	23'-3"	31
B381	2	#4	STR	22'-5"	30
B382	2	#4	STR	22'-6"	30
B383	2	#4	STR	22'-9"	30
B384	2	#4	STR	23'-0"	31
B385	2	#4	STR	23'-3"	31
B386	2	#4	STR	23'-6"	31
B387	2	#4	STR	23'-9"	32
B388	2	#4	STR	24'-0"	32
B389	2	#4	STR	24'-4"	33
B390	2	#4	STR	24'-3"	32
B391	2	#4	STR	23'-6"	31
B392	2	#4	STR	22'-8"	30
B393	2	#4	STR	21'-10"	29
B394	2	#4	STR	19'-9"	26
B395	2	#4	STR	17'-4"	23
B396	1	#4	STR	26'-11"	18
B397	1	#4	STR	19'-3"	13
B398	4	#4	STR	29'-2"	78
B399	4	#4	STR	28'-8"	77
B400	4	#4	STR	27'-10"	74
B401	4	#4	STR	27'-0"	72
B402	4	#4	STR	26'-1"	70
B403	4	#4	STR	25'-3"	67
B404	4	#4	STR	24'-5"	65
B405	4	#4	STR	23'-6"	63
B406	3	#4	STR	29'-7"	59
B407	3	#4	STR	28'-5"	57
B408	3	#4	STR	27'-3"	54
B409	3	#4	STR	26'-1"	52
B410	3	#4	STR	24'-11"	50
B411	3	#4	STR	23'-9"	48
B412	20	#4	STR	18'-3"	244
B413	1	#4	STR	25'-5"	17
B414	1	#4	STR	20'-1"	13
B415	1	#4	STR	14'-10"	10
B416	1	#4	STR	9'-6"	6
B417	1	#4	STR	4'-2"	3
B418	1	#4	STR	29'-2"	19
B419	1	#4	STR	21'-7"	14
B420	1	#4	STR	10'-3"	7
B422	24	#4	1	5'-8"	91
D1	205	#4	STR	10"	114
G249	1	#4	STR	2'-6"	2
G250	1	#4	STR	2'-10"	2
G251	1	#4	STR	3'-3"	2

BAR	NO.	SIZE	TYPE	LENGTH	WEIGHT
G252	1	#4	STR	3'-8"	2
G253	1	#4	STR	4'-2"	3
G254	1	#4	STR	4'-10"	3
G255	1	#4	STR	5'-7"	4
G256	1	#4	STR	6'-4"	4
G257	1	#4	STR	7'-1"	5
G258	1	#4	STR	7'-10"	5
G259	1	#4	STR	8'-6"	6
G260	1	#4	STR	9'-3"	6
G261	1	#4	STR	10'-0"	7
G262	1	#4	STR	10'-9"	7
G263	1	#4	STR	11'-6"	8
G264	1	#4	STR	12'-3"	8
G265	1	#4	STR	12'-11"	9
G266	1	#4	STR	13'-8"	9
G267	1	#4	STR	14'-5"	10
G268	1	#4	STR	15'-2"	10
G269	1	#4	STR	15'-11"	11
G270	1	#4	STR	16'-8"	11
G271	1	#4	STR	17'-4"	12
G272	1	#4	STR	18'-0"	12
G273	1	#4	STR	17'-7"	12
G274	1	#4	STR	17'-2"	11
G275	1	#4	STR	16'-9"	11
G276	1	#4	STR	16'-4"	11
G277	1	#4	STR	15'-11"	11
G278	1	#4	STR	15'-7"	10
G279	1	#4	STR	15'-2"	10
G280	1	#4	STR	14'-9"	10
G281	1	#4	STR	14'-4"	10
G282	1	#4	STR	13'-11"	9
G283	1	#4	STR	13'-9"	9
G284	1	#4	STR	14'-5"	10
G285	1	#4	STR	15'-2"	10
G286	1	#4	STR	2'-2"	1
G287	1	#4	STR	6'-9"	5
G288	1	#4	STR	11'-5"	8
G289	1	#4	STR	28'-5"	19
G290	1	#4	STR	29'-2"	19
G291	1	#4	STR	29'-10"	20
G292	4	#4	STR	16'-8"	45
G293	26	#4	STR	17'-9"	311
G294	56	#4	STR	18'-11"	708
G295	10	#4	STR	19'-0"	127
G296	32	#4	STR	19'-10"	424
G297	1	#4	STR	12'-2"	8
G298	1	#4	STR	6'-0"	4
G299	1	#4	STR	19'-10"	13
G300	1	#4	STR	19'-4"	13
G301	1	#4	STR	18'-9"	13
G302	1	#4	STR	19'-7"	13
G303	1	#4	STR	20'-5"	14
G304	1	#4	STR	21'-3"	14
G305	1	#4	STR	22'-1"	15
G306	1	#4	STR	22'-11"	15
G307	1	#4	STR	23'-9"	16
G308	1	#4	STR	24'-7"	16
G309	1	#4	STR	25'-5"	17
G310	1	#4	STR	26'-3"	18
G311	1	#4	STR	26'-11"	18
G312	1	#4	STR	26'-4"	18
G313	1	#4	STR	25'-10"	17
G314	1	#4	STR	25'-4"	17

BAR	NO.	SIZE	TYPE	LENGTH	WEIGHT
G315	1	#4	STR	24'-9"	17
G316	1	#4	STR	24'-3"	16
G317	1	#4	STR	23'-9"	16
G318	1	#4	STR	23'-2"	15
G319	1	#4	STR	22'-8"	15
G320	1	#4	STR	22'-2"	15
G321	1	#4	STR	21'-7"	14
G322	1	#4	STR	21'-1"	14
G323	1	#4	STR	20'-6"	14
G324	1	#4	STR	20'-0"	13
G325	1	#4	STR	19'-6"	13
G326	1	#4	STR	18'-11"	13
G327	1	#4	STR	18'-5"	12
G328	1	#4	STR	17'-11"	12
G329	1	#4	STR	17'-4"	12
G330	1	#4	STR	16'-10"	11
G331	1	#4	STR	16'-4"	11
G332	1	#4	STR	15'-9"	11
G333	1	#4	STR	15'-3"	10
G334	1	#4	STR	14'-9"	10
G335	1	#4	STR	14'-2"	9
G336	1	#4	STR	13'-8"	9
G337	1	#4	STR	13'-2"	9
G338	1	#4	STR	12'-7"	8
G339	1	#4	STR	12'-1"	8
G340	1	#4	STR	11'-6'	8
G341	1	#4	STR	11'-0"	7
G342	1	#4	STR	10'-6"	7
G343	1	#4	STR	9'-11"	7
G344	1	#4	STR	9'-5"	6
G345	1	#4	STR	8'-11"	6
G346	1	#4	STR	8'-4"	6
G347	1	#4	STR	7'-10"	5
G348	1	#4	STR	7'-4"	5
G349	1	#4	STR	6'-9"	5
G350	1	#4	STR	6'-3"	4
G351	1	#4	STR	5'-9"	4
G352	1	#4	STR	5'-2"	3
G353	1	#4	STR	4'-8"	3
G354	1	#4	STR	4'-1"	3
G355	1	#4	STR	3'-7"	2
G356	1	#4	STR	3'-9"	3
G357	1	#4	STR	3'-1"	2
G358	1	#4	STR	2'-5"	2
G359	4	#4	STR	11'-0"	29

EPOXY COATED REINFORCING STEEL 5180 LBS.

CLASS AA CONCRETE 81.1 CU. YDS.

BAR	NO.	SIZE	TYPE	LENGTH	WEIGHT
STAGE II					
B300	4	#4	STR	29'-9"	79
B301	4	#4	STR	29'-3"	78
B302	4	#4	STR	28'-4"	76
B303	4	#4	STR	27'-4"	73
B304	4	#4	STR	26'-5"	71
B305	4	#4	STR	25'-5"	68
B306	4	#4	STR	24'-6"	65
B307	4	#4	STR	23'-6"	63
B308	4	#4	STR	22'-7"	60
B309	3	#4	STR	28'-2"	56
B310	3	#4	STR	26'-10"	54
B311	3	#4	STR	25'-7"	51
B312	3	#4	STR	24'-3"	49
B313	3	#4	STR	23'-8"	47
B314	3	#4	STR	21'-9"	44
B315	3	#4	STR	20'-5"	41
B316	1	#4	STR	29'-4"	20
B317	1	#4	STR	23'-8"	16
B318	1	#4	STR	18'-4"	12
B319	1	#4	STR	12'-4"	8
B320	1	#4	STR	6'-8"	4
B321	10	#4	STR	20'-0"	134
B322	1	#4	STR	19'-0"	13
B323	1	#4	STR	15'-2"	10
B324	1	#4	STR	11'-4"	8
B325	1	#4	STR	7'-6"	5
B326	3	#4	STR	27'-9"	56
B327	3	#4	STR	27'-11"	56
B328	3	#4	STR	27'-5"	55
B329	3	#4	STR	26'-10"	54
B330	3	#4	STR	26'-4"	53
B331	3	#4	STR	25'-10"	52
B332	3	#4	STR	25'-4"	51
B333	3	#4	STR	24'-10"	50
B334	3	#4	STR	24'-3"	49
B335	3	#4	STR	23'-9"	48
B336	3	#4	STR	23'-3"	47
B337	3	#4	STR	22'-9"	46
B338	3	#4	STR	22'-3"	45
B339	3	#4	STR	21'-9"	44
B340	3	#4	STR	21'-2"	42
B341	3	#4	STR	20'-8"	41
B342	3	#4	STR	20'-2"	40
B343	2	#4	STR	28'-6"	38
B344	2	#4	STR	27'-9"	37
B345	2	#4	STR	17'-10"	24
B346	2	#4	STR	17'-1"	23
B347	2	#4	STR	17'-3"	23
B348	2	#4	STR	17'-6"	23
B349	2	#4	STR	17'-10"	24
B350	2	#4	STR	18'-1"	24
B351	2	#4	STR	18'-4"	25
B352	2	#4	STR	18'-7"	25
B353	2	#4	STR	18'-10"	25
B354	2	#4	STR	19'-1"	25
B355	2	#4	STR	19'-1"	25
B356	2	#4	STR	17'-6"	23
B357	1	#4	STR	29'-9"	20
B358	1	#4	STR	26'-3"	18
B359	1	#4	STR	22'-6"	15
B360	1	#4	STR	18'-4"	12
B361	1	#4	STR	12'-11"	9

BAR	NO.	SIZE	TYPE	LENGTH	WEIGHT
B362	1	#4	STR	16'-7"	11
B363	1	#4	STR	12'-1"	5
B364	1	#4	STR	7'-8"	5
B365	1	#4	STR	3'-2"	2
B421	29	#4	1	5'-8"	110
D1	215	#4	STR	10"	120
G100	3	#4	STR	4'-0"	8
G101	1	#4	STR	2'-11"	2
G102	1	#4	STR	3'-5"	2
G103	1	#4	STR	3'-11"	3
G104	1	#4	STR	4'-4"	3
G105	1	#4	STR	4'-10"	2
G106	1	#4	STR	5'-4"	4
G107	1	#4	STR	5'-10"	4
G108	1	#4	STR	6'-3"	4
G109	1	#4	STR	6'-9"	5
G110	1	#4	STR	7'-3"	5
G111	1	#4	STR	7'-8"	5
G112	1	#4	STR	8'-2"	5
G113	1	#4	STR	8'-8"	6
G114	1	#4	STR	9'-2"	6
G115	1	#4	STR	9'-7"	6
G116	1	#4	STR	10'-1"	7
G117	1	#4	STR	10'-7"	7
G118	1	#4	STR	11'-0"	7
G119	1	#4	STR	11'-6"	8
G120	1	#4	STR	12'-0"	7
G121	1	#4	STR	12'-6"	8
G122	1	#4	STR	12'-11"	9
G123	1	#4	STR	13'-5"	9
G124	1	#4	STR	13'-11"	9
G125	1	#4	STR	14'-4"	10
G126	1	#4	STR	14'-10"	10
G127	1	#4	STR	15'-4"	10
G128	1	#4	STR	15'-10"	11
G129	1	#4	STR	16'-3"	11
G130	1	#4	STR	16'-9"	11
G131	1	#4	STR	17'-3"	12
G132	1	#4	STR	17'-9"	12
G133	1	#4	STR	18'-2"	12
G134	1	#4	STR	18'-8'	12
G135	1	#4	STR	19'-2"	13
G136	1	#4	STR	19'-7"	13
G137	1	#4	STR	20'-1"	13
G138	1	#4	STR	20'-7"	14
G139	1	#4	STR	21'-1"	14
G140	1	#4	STR	21'-6"	14
G141	1	#4	STR	22'-0"	15
G142	1	#4	STR	22'-6"	15
G143	1	#4	STR	22'-11"	15
G144	1	#4	STR	23'-5"	16
G145	1	#4	STR	23'-11"	16
G146	1	#4	STR	24'-5"	16
G147	1	#4	STR	24'-10"	17
G148	1	#4	STR	25'-4"	17
G149	1	#4	STR	25'-10"	17
G150	1	#4	STR	26'-3"	18
G151	1	#4	STR	26'-9"	18
G152	1	#4	STR	27'-3"	18
G153	1	#4	STR	27'-9"	19
G154	1	#4	STR	28'-2"	19

BAR	NO.	SIZE	TYPE	LENGTH	WEIGHT
G155	1	#4	STR	28'-8"	19
G156	1	#4	STR	29'-2"	19
G157	1	#4	STR	29'-7"	20
G158	2	#4	STR	16'-0"	21
G159	2	#4	STR	16'-2"	22
G160	1	#4	STR	29'-5"	20
G161	1	#4	STR	28'-7"	19
G162	1	#4	STR	27'-8"	18
G163	1	#4	STR	26'-9"	18
G164	1	#4	STR	25'-11"	17
G165	1	#4	STR	25'-0"	17
G166	1	#4	STR	24'-1"	16
G167	1	#4	STR	23'-3"	16
G168	1	#4	STR	22'-4"	15
G169	1	#4	STR	22'-2"	15
G170	1	#4	STR	22'-8"	15
G171	2	#4	STR	19'-2"	26
G172	2	#4	STR	19'-4"	26
G173	2	#4	STR	19'-7"	26
G174	2	#4	STR	19'-10"	26
G175	2	#4	STR	20'-1"	27
G176	2	#4	STR	20'-4"	27
G177	2	#4	STR	20'-7"	27
G178	2	#4	STR	20'-10"	28
G179	2	#4	STR	21'-0"	28
G180	2	#4	STR	21'-3"	28
G181	20	#4	STR	21'-8"	289
G182	2	#4	STR	21'-11"	29
G183	2	#4	STR	22'-2"	30
G184	2	#4	STR	22'-6"	30
G185	2	#4	STR	22'-9"	30
G186	2	#4	STR	23'-0"	31
G187	2	#4	STR	23'-3"	31
G188	2	#4	STR	23'-5"	31
G189	2	#4	STR	23'-7"	32
G190	2	#4	STR	23'-9"	32
G191	16	#4	STR	24'-0"	257
G192	2	#4	STR	23'-8"	32
G193	2	#4	STR	23'-5"	31
G194	2	#4	STR	23'-1"	32
G195	2	#4	STR	22'-9"	30
G196	2	#4	STR	22'-4"	30
G197	2	#4	STR	21'-11"	29
G198	2	#4	STR	21'-6"	29
G199	2	#4	STR	21'-1"	28
G200	1	#4	STR	7'-9"	5
G201	1	#4	STR	12'-8"	8
G202	1	#4	STR	8'-0"	5
G203	1	#4	STR	3'-4"	2
G204	1	#4	STR	25'-7"	17
G205	1	#4	STR	24'-9"	17
G206	1	#4	STR	24'-0"	16
G207	1	#4	STR	24'-6"	16
G208	1	#4	STR	25'-0"	17
G209	1	#4	STR	25'-6"	17
G210	1	#4	STR	26'-1"	17
G211	1	#4	STR	26'-7"	18
G212	1	#4	STR	27'-1"	18
G213	1	#4	STR	27'-7"	18
G214	1	#4	STR	28'-1"	19
G215	1	#4	STR	28'-7"	19
G216	1	#4	STR	29'-1"	19
G217	1	#4	STR	28'-7"	19

BAR	NO.	SIZE	TYPE	LENGTH	WEIGHT
G218	1	#4	STR	27'-9"	19
G219	1	#4	STR	26'-11"	18
G220	1	#4	STR	26'-1"	17
G221	1	#4	STR	25'-3"	17
G222	1	#4	STR	24'-5"	16
G223	1	#4	STR	23'-7"	16
G224	1	#4	STR	22'-9"	15
G225	1	#4	STR	21'-11"	15
G226	1	#4	STR	21'-1"	14
G227	1	#4	STR	20'-3"	14
G228	1	#4	STR	19'-5"	13
G229	1	#4	STR	18'-7"	12
G230	1	#4	STR	17'-9"	12
G231	1	#4	STR	16'-11"	11
G232	1	#4	STR	16'-2"	11
G233	1	#4	STR	15'-4"	10
G234	1	#4	STR	14'-6"	10
G235	1	#4	STR	13'-8"	9
G236	1	#4	STR	12'-10"	9
G237	1	#4	STR	12'-0"	8
G238	1	#4	STR	11'-2"	7
G239	1	#4	STR	10'-4"	7
G240	1	#4	STR	9'-6"	6
G241	1	#4	STR	8'-8"	6
G242	1	#4	STR	7'-10"	5
G243	1	#4	STR	7'-0"	5
G244	1	#4	STR	6'-2"	4
G245	1	#4	STR	5'-4"	4
G246	1	#4	STR	4'-6"	3
G247	1	#4	STR	3'-8"	2
G248	3	#4	STR	3'-0"	6
G359	4	#4	STR	11'-0"	29

EPOXY COATED REINFORCING STEEL 5530 LBS.

CLASS AA CONCRETE 85.9 CU. YDS.

BAR TYPE

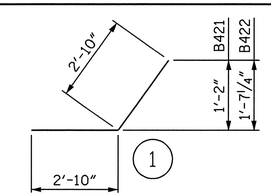

BAR DIMENSIONS ARE OUT TO OUT.

PROJECT NO. R-3833B

IREDELL COUNTY

STATION: 277+88.88 -L-

SHEET 3 OF 3

STATE OF NORTH CAROLINA
DEPARTMENT OF TRANSPORTATION
RALEIGH

SUPERSTRUCTURE

SIDEWALK
BILL OF MATERIAL

NORTH CAROLINA PROFESSIONAL SEAL 11259 ENGINEER DAVID R. ANDERSON
11/24/08

REVISIONS						SHEET NO.
NO.	BY:	DATE:	NO.	BY:	DATE:	S-48
1			3			TOTAL SHEETS
2			4			113

DRAWN BY : M.K. BEARD DATE : 10/17/08
CHECKED BY : J.A. TILLMAN DATE : 10/31/08

17-NOV-2008 09:37
r:\structures\kbeard\r3833b_sd_sw.dgn
danderson

STR. #1

NOTE: FOR FORMED OPENING AND AND COVER PLATE DETAILS, SEE SHEET 2 OF2.

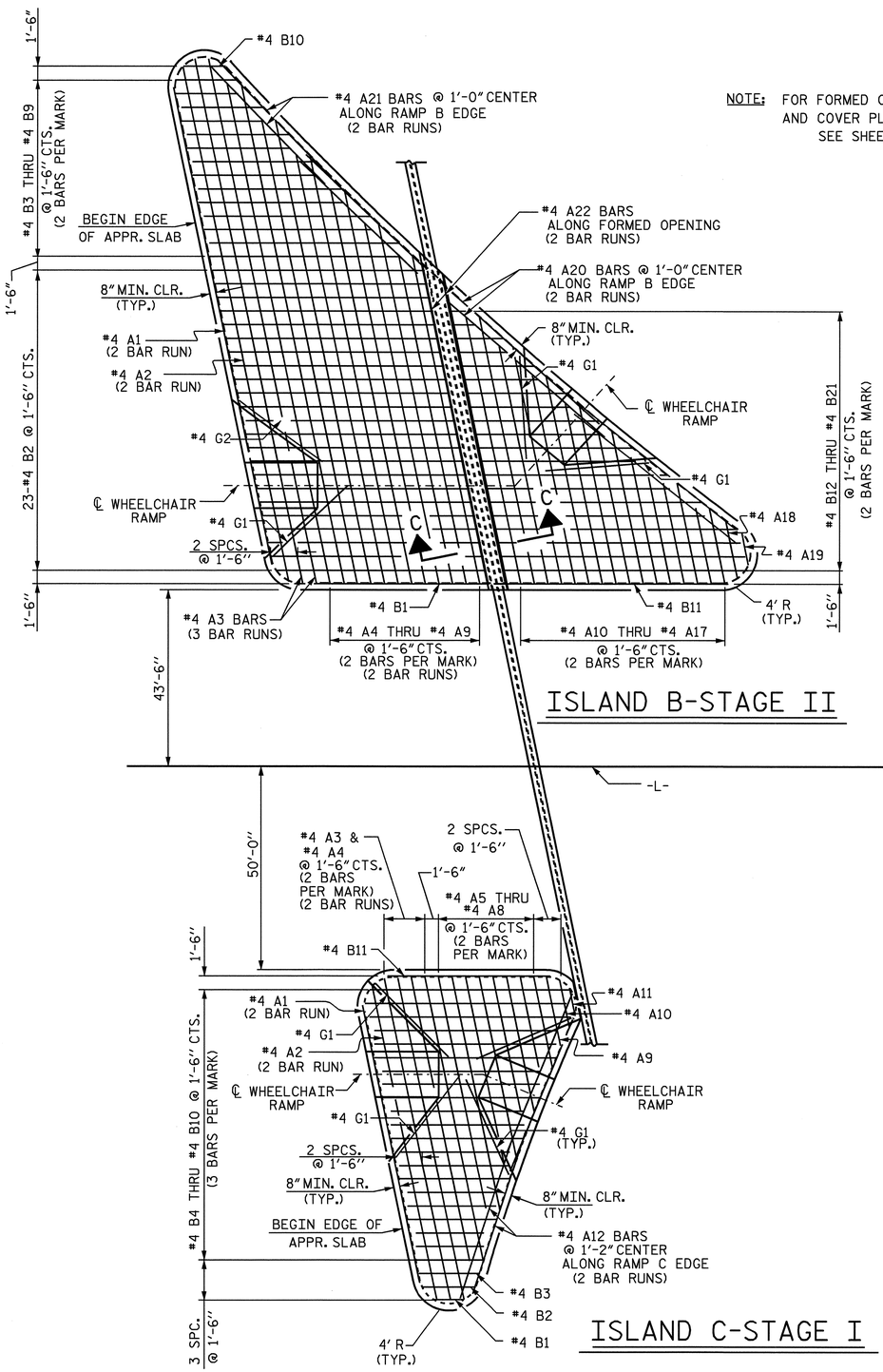

ISLAND B-STAGE II

ISLAND C-STAGE I

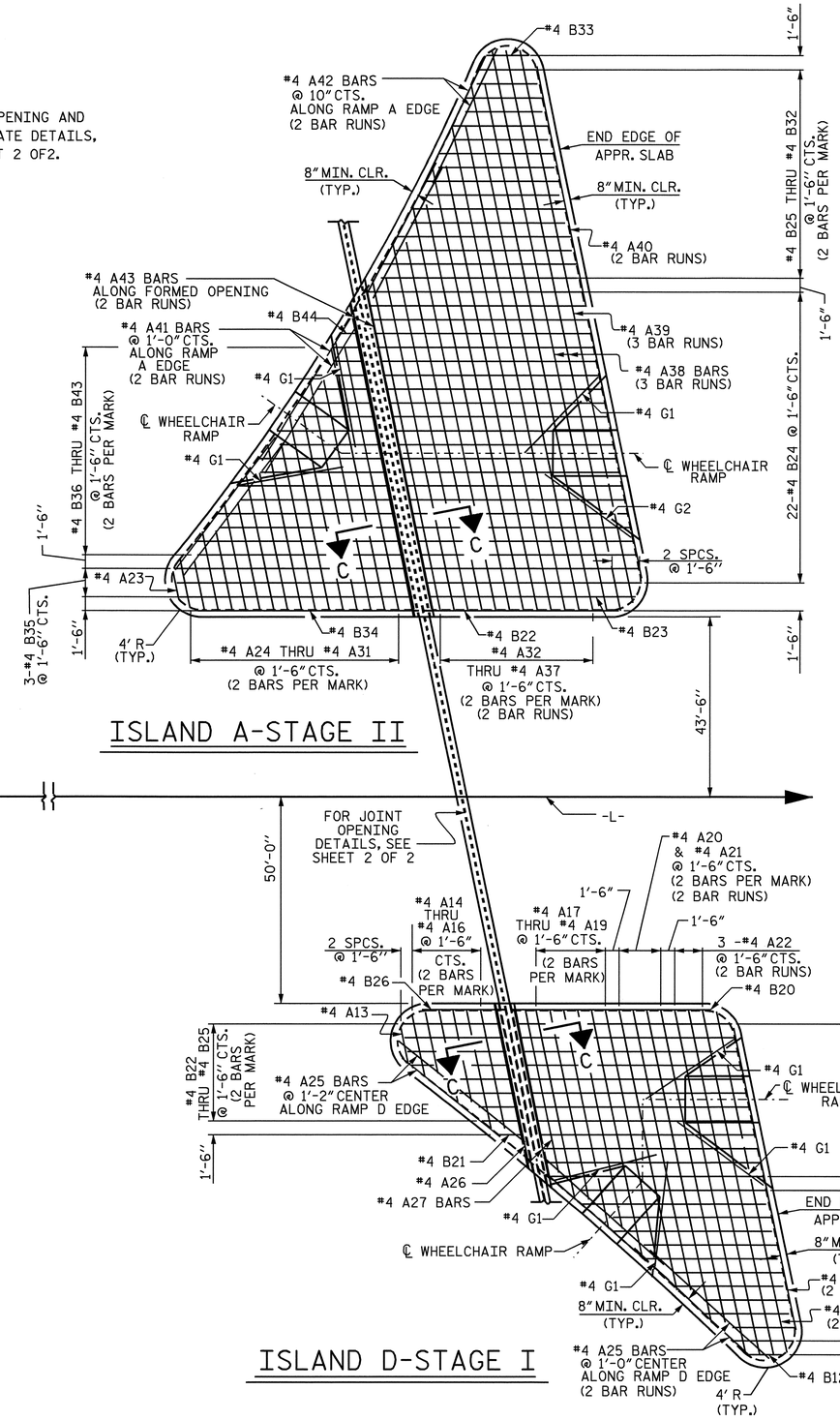

ISLAND A-STAGE II

ISLAND D-STAGE I

NOTES:

LOCATE CONCRETE MEDIAN ISLANDS AND PROVIDE WHEELCHAIR RAMPS AS SHOWN ON ROADWAY PLANS OR AS DIRECTED BY THE ENGINEER.

FOR WHEELCHAIR RAMP DETAILS SEE ROADWAY STANDARD 848.06.

CUT MEDIAN ISLAND REINFORCING STEEL AS NEEDED TO PROVIDE WHEELCHAIR RAMPS.

ALL REINFORCING STEEL IN CONCRETE MEDIANS SHALL BE EPOXY COATED.

EPOXY COATED REINFORCING STEEL THAT IS FIELD CUT SHALL BE PATCHED AS PER STANDARD SPECIFICATIONS SECTION 1070-8.

GROOVED CONTRACTION JOINTS, ½" IN DEPTH, SHALL BE TOOLED IN ALL EXPOSED FACES OF THE MEDIAN STRIP IN ACCORDANCE WITH ARTICLE 825-10(B) OF THE STANDARD SPECIFICATIONS. THE CONTRACTION JOINTS SHALL BE LOCATED AT A SPACING OF 8 FT. CTS. NO CONTRACTION JOINTS WILL BE REQUIRED FOR SEGMENTS LESS THAN 10 FT. IN LENGTH.

THE STEEL PLATES SHALL CONFORM TO AASHTO M270 GRADE 36 OR APPROVED EQUAL. AFTER FABRICATION, THE PLATES SHALL BE COMMERCIALLY BLAST CLEANED AND COATED WITH A MINIMUM THICKNESS OF 4 MILS (DRY) OF ZINC-RICH PAINT, GALVANIZED OR METALLIZED TO A MINIMUM THICKNESS OF 6 MILS IN ACCORDANCE WITH THE STANDARD SPECIFICATIONS. FOR THERMAL SPRAYED COATINGS (METALLIZATION), SEE SPECIAL PROVISIONS.

THE ¾" Ø HEX HEAD BOLTS SHALL CONFORM TO ASTM F593 ALLOY 304 STAINLESS STEEL.

THE ¾" CONCRETE INSERTS SHALL BE CLOSED-END FERRULES WITH LOOPED WIRE STRUTS ATTACHED TO THEM. THE INSERTS SHALL CONFORM TO AASHTO M169, GRADE 12L14, AND SHALL HAVE A TENSILE WORKING LOAD CAPACITY OF 3000 LBS.

NO SEPARATE PAYMENT WILL BE MADE FOR FURNISHING AND INSTALLING THE COVER PLATE. THE ENTIRE COST OF THIS WORK SHALL BE INCLUDED IN THE PRICE FOR REINFORCED CONCRETE DECK SLAB.

THE COST OF THE EPOXY COATED REINFORCING STEEL AND CLASS AA CONCRETE ARE INCLUDED IN THE PRICE FOR REINFORCED CONCRETE DECK SLAB.

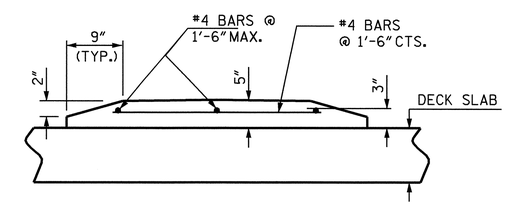

REINFORCING STEEL DETAILS

NORTH CAROLINA PROFESSIONAL SEAL 11259 ENGINEER DAVID R. ANDERSON
12/29/08

PROJECT NO. R-3833B
IREDELL COUNTY
STATION: 277+88.88 -L-

SHEET 1 OF 2

STATE OF NORTH CAROLINA
DEPARTMENT OF TRANSPORTATION
RALEIGH

SUPERSTRUCTURE

BRIDGE MEDIAN ISLANDS

REVISIONS						SHEET NO.
NO.	BY:	DATE:	NO.	BY:	DATE:	S-49
1			3			TOTAL SHEETS
2			4			113

STR. #1

DRAWN BY : S. L. WANCE DATE : 10/30/08
CHECKED BY : J. TILLMAN DATE : 11/18/08

22-DEC-2008 14:10
r:\structures\swance\structure1\microstation\r3833b_sd_medianislands_01.dgn
danderson

BRIDGE MEDIAN ISLANDS

STAGE I

BAR	NO.	SIZE	TYPE	LENGTH	WEIGHT
A1	2	#4	STR	17'-0"	23
A2	2	#4	STR	19'-0"	25
A3	4	#4	STR	19'-4"	52
A4	4	#4	STR	17'-0"	45
A5	2	#4	STR	26'-0"	35
A6	2	#4	STR	20'-4"	27
A7	2	#4	STR	15'-0"	20
A8	2	#4	STR	10'-0"	13
A9	1	#4	STR	7'-6"	5
A10	1	#4	STR	5'-2"	3
A11	1	#4	STR	2'-10"	2
A12	4	#4	STR	19'-0"	51
A13	1	#4	STR	4'-0"	3
A14	2	#4	STR	6'-8"	9
A15	2	#4	STR	10'-0"	13
A16	2	#4	STR	12'-8"	17
A17	2	#4	STR	20'-10"	28
A18	2	#4	STR	24'-0"	32
A19	2	#4	STR	27'-4"	37
A20	4	#4	STR	16'-6"	44
A21	4	#4	STR	18'-4"	50
A22	6	#4	STR	20'-2"	81
A23	2	#4	STR	20'-0"	27
A24	2	#4	STR	17'-0"	23
A25	6	#4	STR	17'-6"	70
A26	1	#4	STR	16'-0"	11
A27	2	#4	STR	17'-10"	24
B1	1	#4	STR	3'-4"	2
B2	1	#4	STR	5'-10"	4
B3	1	#4	STR	6'-8"	5
B4	3	#4	STR	7'-4"	15
B5	3	#4	STR	9'-8"	20
B6	3	#4	STR	12'-2"	24
B7	3	#4	STR	14'-8"	29
B8	3	#4	STR	17'-4"	35
B9	3	#4	STR	20'-0"	40
B10	3	#4	STR	22'-2'	44
B11	1	#4	STR	18'-0"	12
B12	1	#4	STR	3'-6"	2
B13	2	#4	STR	6'-6"	9
B14	2	#4	STR	9'-2"	12
B15	2	#4	STR	11'-10	16
B16	2	#4	STR	14'-6"	19
B17	2	#4	STR	17'-2"	23
B18	2	#4	STR	20'-0"	27
B19	12	#4	STR	23'-2"	186
B20	1	#4	STR	21'-2"	14
B21	1	#4	STR	2'-8'	2
B22	2	#4	STR	4'-2"	6
B23	2	#4	STR	7'-4"	10
B24	2	#4	STR	10'-8"	14
B25	2	#4	STR	10'-8"	14
B26	1	#4	STR	8-2"	5
G1	8	#4	STR	11'-6"	61
EPOXY COATED REINF. STEEL					1420 LBS
CLASS AA CONCRETE					23.1 CY

STAGE II

BAR	NO.	SIZE	TYPE	LENGTH	WEIGHT
A1	2	#4	STR	28'-0"	37
A2	2	#4	STR	30'-0"	40
A3	6	#4	STR	21'-0"	84
A4	4	#4	STR	29'-3"	78
A5	4	#4	STR	27'-3"	73
A6	4	#4	STR	25'-3"	67
A7	4	#4	STR	23'-4"	62
A8	4	#4	STR	21'-6"	57
A9	4	#4	STR	19'-8"	53
A10	2	#4	STR	29'-10"	40
A11	2	#4	STR	26'-6"	35
A12	2	#4	STR	23'-2"	31
A13	2	#4	STR	20'-0"	27
A14	2	#4	STR	17'-0"	23
A15	2	#4	STR	14'-0"	19
A16	2	#4	STR	11'-2"	15
A17	2	#4	STR	8'-4"	11
A18	1	#4	STR	6'-4"	4
A19	1	#4	STR	3'-6"	2
A20	4	#4	STR	23'-0"	61
A21	4	#4	STR	18'-0"	48
A22	4	#4	STR	19'-0"	51
A23	1	#4	STR	3'-0"	2
A24	2	#4	STR	5'-2"	7
A25	2	#4	STR	8'-6"	12
A26	2	#4	STR	11'-8"	16
A27	2	#4	STR	14'-10"	20
A28	2	#4	STR	18'-2"	24
A29	2	#4	STR	21'-8"	29
A30	2	#4	STR	25'-2"	34
A31	2	#4	STR	28'-10"	39
A32	4	#4	STR	19'-6"	52
A33	4	#4	STR	21'-6"	57
A34	4	#4	STR	23'-6"	63
A35	4	#4	STR	26'-0'	69
A36	4	#4	STR	28'-0"	75
A37	4	#4	STR	30'-0"	80
A38	6	#4	STR	22'-0"	88
A39	3	#4	STR	21'-8"	43
A40	2	#4	STR	29'-6"	39
A41	4	#4	STR	18'-0"	48
A42	4	#4	STR	16'-0"	43
A43	4	#4	STR	18'-8"	50
B1	1	#4	STR	21'-4"	14
B2	23	#4	STR	23'-4"	358
B3	2	#4	STR	21'-2"	28
B4	2	#4	STR	18'-8"	25

BAR	NO.	SIZE	TYPE	LENGTH	WEIGHT
B5	2	#4	STR	16'-2"	21
B6	2	#4	STR	13'-10"	18
B7	2	#4	STR	11'-6"	15
B8	2	#4	STR	9'-2"	12
B9	2	#4	STR	6'-10"	9
B10	1	#4	STR	4'-6"	3
B11	1	#4	STR	24'-6"	16
B12	2	#4	STR	27'-0"	36
B13	2	#4	STR	26'-10"	36
B14	2	#4	STR	23'-6"	31
B15	2	#4	STR	20'-4"	27
B16	2	#4	STR	17'-2"	23
B17	2	#4	STR	14'-2"	19
B18	2	#4	STR	11'-2"	15
B19	2	#4	STR	8'-2"	11
B20	2	#4	STR	5'-4"	7
B21	2	#4	STR	2'-8"	4
B22	1	#4	STR	20'-2"	13
B23	1	#4	STR	22'-4"	15
B24	22	#4	STR	23'-2"	340
B25	2	#4	STR	21'-0"	28
B26	2	#4	STR	18'-8'	25
B27	2	#4	STR	16'-6"	22
B28	2	#4	STR	14'-4"	19
B29	2	#4	STR	12'-2"	16
B30	2	#4	STR	10'-2"	14
B31	2	#4	STR	8'-2"	11
B32	2	#4	STR	6'-2"	8
B33	2	#4	STR	4'-10"	6
B34	1	#4	STR	23'-0"	15
B35	3	#4	STR	25'-2"	50
B36	2	#4	STR	22'-2"	30
B37	2	#4	STR	19'-4"	26
B38	2	#4	STR	16'-6"	22
B39	2	#4	STR	13'-8"	18
B40	2	#4	STR	11'-0"	15
B41	2	#4	STR	8'-3"	11
B42	2	#4	STR	5'-8"	8
B43	2	#4	STR	3'-2"	4
B44	1	#4	STR	2'-0"	1
G1	8	#4	STR	11'-6"	61
EPOXY COATED REINF. STEEL					3314 LBS
CLASS AA CONCRETE					55.9 CY

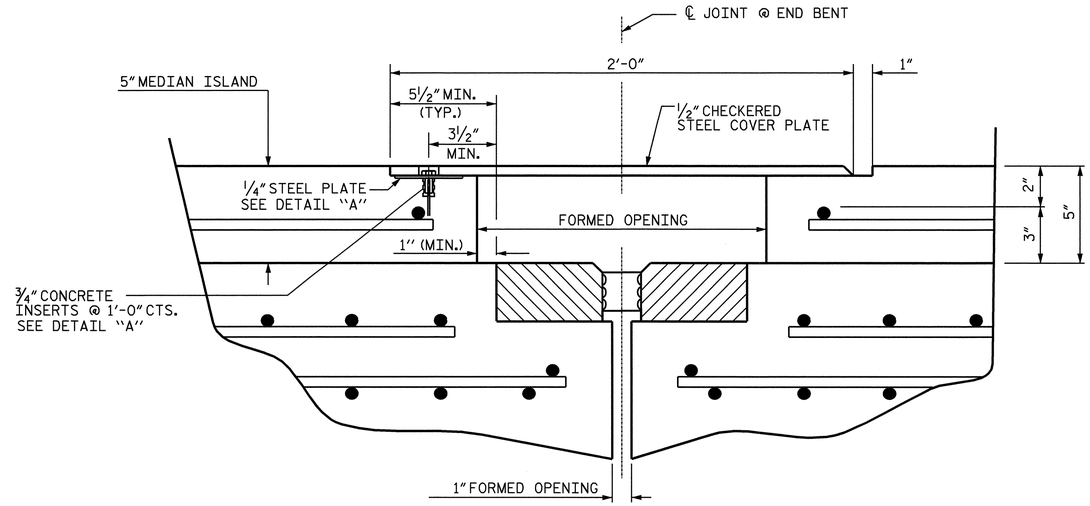

SECTION C-C
FORMED OPENING AND ISLAND COVER PLATE DETAILS

SECTION NORMAL TO JOINT AT END BENT

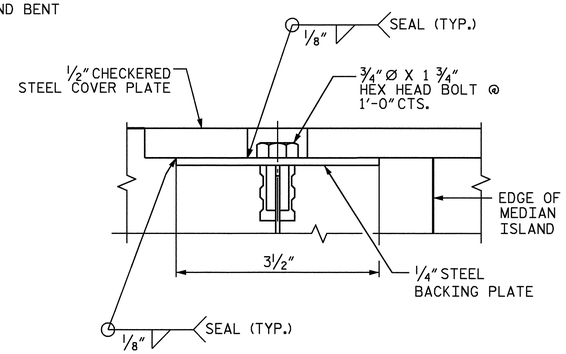

DETAIL "A"

NOTE: JOINT IS NOT REQUIRED TO BE ARMORED UNDER THE MEDIAN.

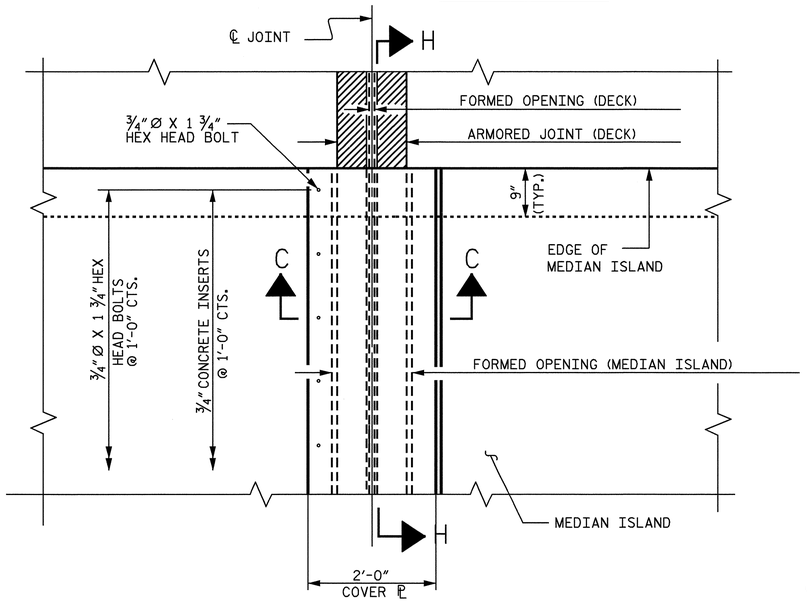

PLAN OF FORMED OPENING AND COVER PLATE AT EDGE OF MEDIAN ISLAND

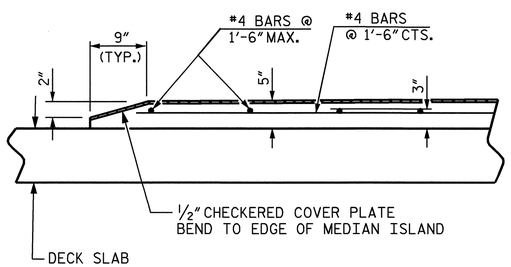

SECTION H-H

PROJECT NO. R-3833B
IREDELL COUNTY
STATION: 277+88.88 -L-

SHEET 2 OF 2

STATE OF NORTH CAROLINA
DEPARTMENT OF TRANSPORTATION
RALEIGH

SUPERSTRUCTURE

BRIDGE MEDIAN ISLANDS

NORTH CAROLINA PROFESSIONAL SEAL 11259 ENGINEER DAVID R. ANDERSON
12/29/08

REVISIONS						SHEET NO.
NO.	BY:	DATE:	NO.	BY:	DATE:	S-50
1			3			TOTAL SHEETS
2			4			113

STR. #1

DRAWN BY : S. L. WANCE DATE : 10/30/08
CHECKED BY : J. TILLMAN DATE : 11/18/08

22-DEC-2008 14:10
r:\structures\swance\structure1\microstation\r3833b_sd_medianislands_01.dgn
danderson

NOTES

FOR PARAPET REINFORCING STEEL AND DETAILS, SEE APPROACH SLAB SHEETS.

FOR END POST REINFORCING STEEL AND DETAILS, SEE END POST SHEETS.

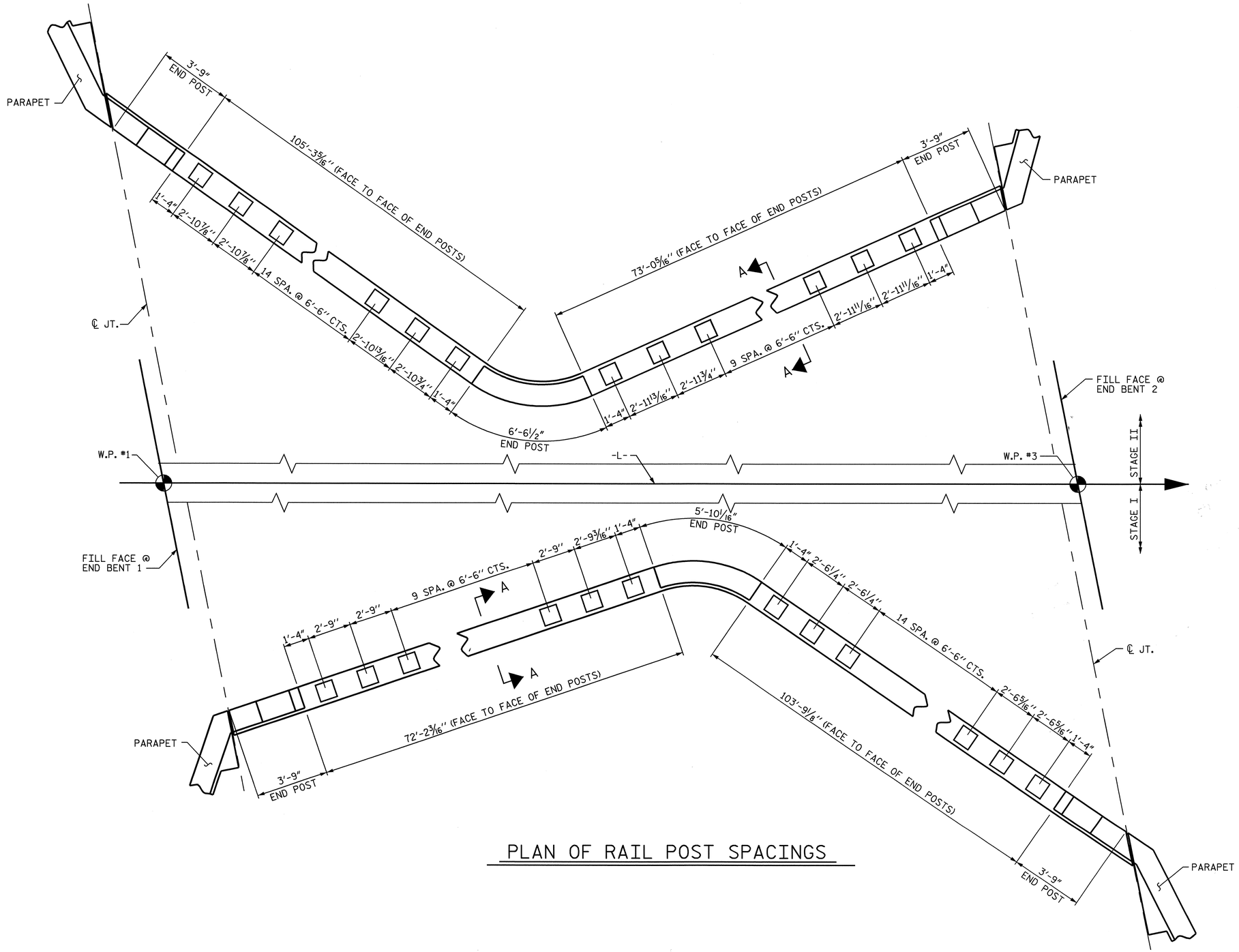

PLAN OF RAIL POST SPACINGS

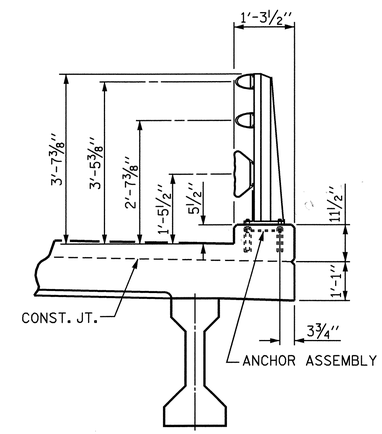

SECTION A-A

PROJECT NO. R-3833B

IREDELL COUNTY

STATION: 277+88.88 -L-

STATE OF NORTH CAROLINA
DEPARTMENT OF TRANSPORTATION
RALEIGH

SUPERSTRUCTURE

RAIL POST SPACING

NORTH CAROLINA PROFESSIONAL SEAL 11259 ENGINEER DAVID R. ANDERSON

11/24/08

REVISIONS						SHEET NO.
NO.	BY:	DATE:	NO.	BY:	DATE:	S-51
1			3			TOTAL SHEETS
2			4			113

DRAWN BY : A.S. CALLAWAY DATE : 10/2/08
CHECKED BY : W.F. PARKER DATE : 10/13/08

15-OCT-2008 10:39
r:\structures\callaway\r3833b_sd_3mr_01.dgn
scallaway

STR. #1

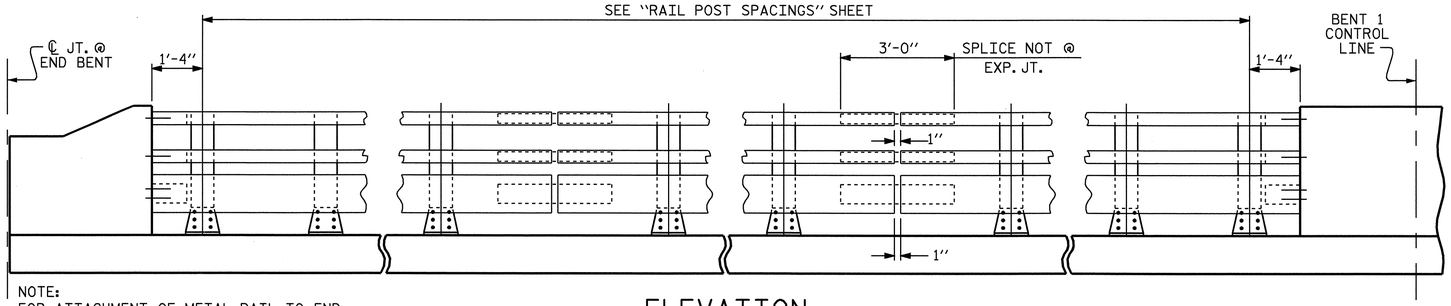

NOTE:
FOR ATTACHMENT OF METAL RAIL TO END POST, SEE STANDARD NO. BMR7.

ELEVATION

SPAN A SHOWN, SPAN B SIMILAR.

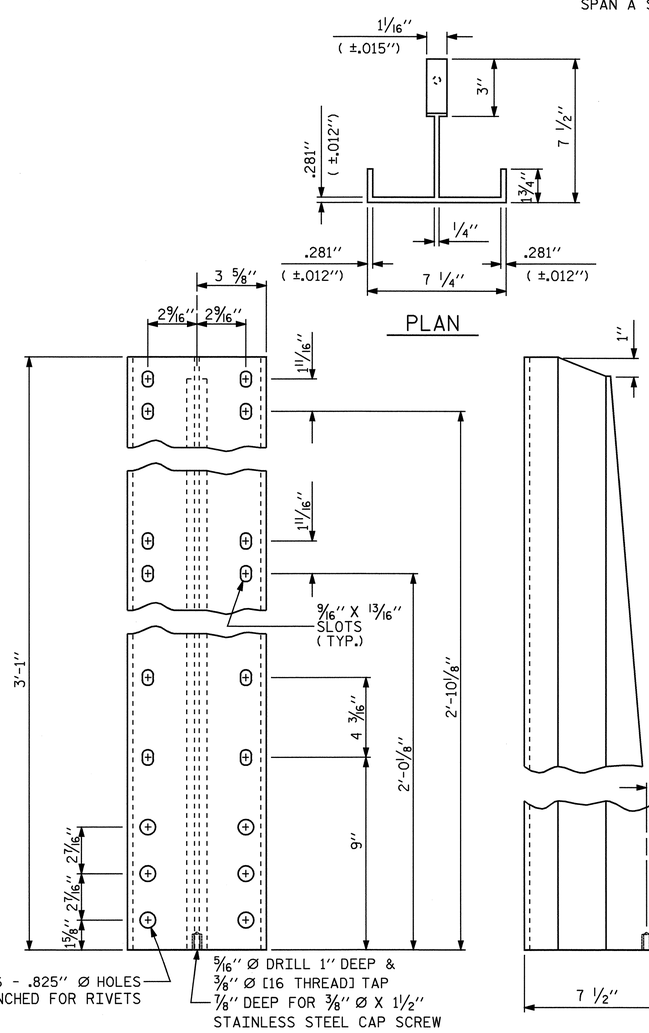

DETAILS OF POST

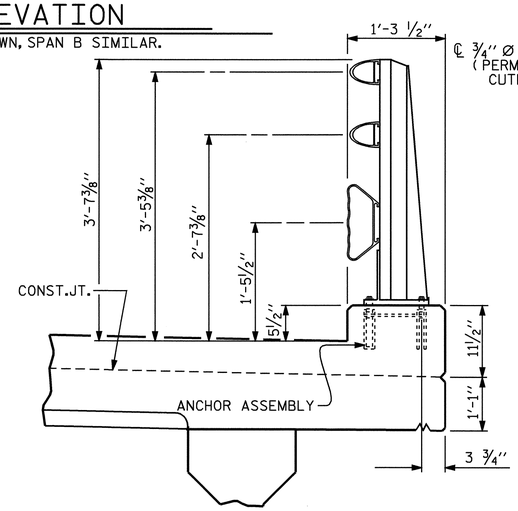

SECTION THRU RAIL

FOR ANCHOR ASSEMBLY, SEE "3 BAR METAL RAIL" STD.No.BMR6

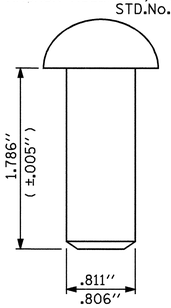

RIVET DETAIL

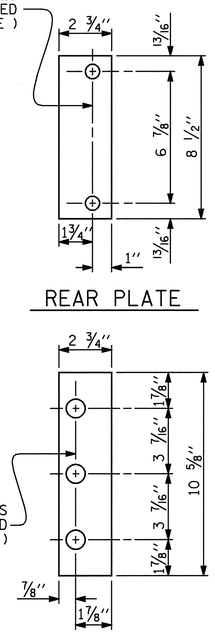

SHIM DETAILS

NOTE :
SHIMS MAY BE CUT ALONG PERMITTED CUTLINE OR SLOTTED TO EDGE OF PLATE TO FACILITATE PLACEMENT.

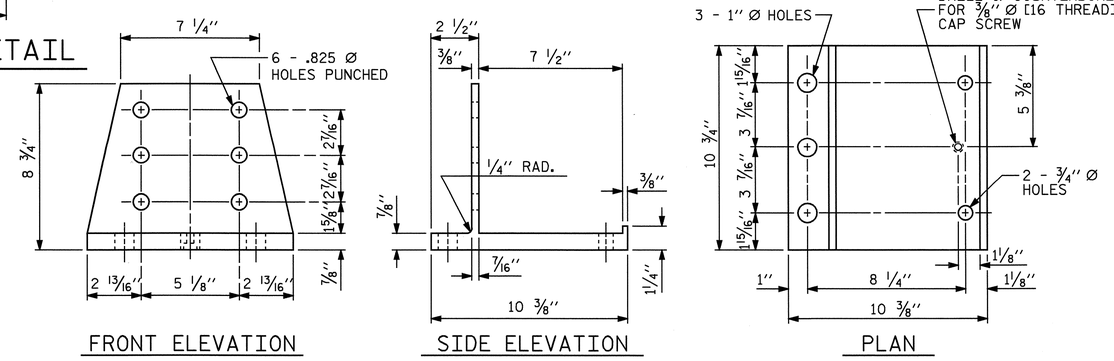

POST BASE DETAILS

NOTES

AT THE CONTRACTOR'S OPTION, METAL RAIL MAY BE EITHER ALUMINUM OR GALVANIZED STEEL IN ACCORDANCE WITH THE REQUIREMENTS OF THE GENERAL NOTES AND THE FOLLOWING SPECIFICATIONS FOR THE ALTERNATE MATERIALS; HOWEVER, THE CONTRACTOR WILL BE REQUIRED TO USE THE SAME RAIL MATERIAL ON ALL STRUCTURES ON THE PROJECT FOR WHICH METAL RAIL IS DESIGNATED.

ALUMINUM RAILS

MATERIAL FOR POSTS, BASES AND RAILS, EXPANSION BARS AND CLAMP BARS SHALL BE ASTM B221 ALLOY 6061-T6.

MATERIAL FOR RIVETS SHALL BE ASTM B316 ALLOY 6061-T6. RIVETS SHALL BE STANDARD BUTTON HEAD AND CONE POINT COLD DRIVEN AS PER DRAWING.

THE BASE OF RAIL POSTS, OR ANY OTHER ALUMINUM SURFACE IN CONTACT WITH CONCRETE SHALL BE THOROUGHLY COATED WITH AN ALUMINUM IMPREGNATED CAULKING COMPOUND OF APPROVED QUALITY.

MATERIAL FOR SHIMS TO BE ASTM B209 ALLOY 6061-T6.

GALVANIZED STEEL RAILS

MATERIAL AND GALVANIZING ARE TO CONFORM TO THE FOLLOWING SPECIFICATIONS:

POST, POST BASES, RAILS, EXPANSION BARS AND CLAMP BARS : AASHTO M270 GRADE 36 STRUCTURAL STEEL - GALVANIZED TO AASHTO M111.

RIVETS: RIVETS SHALL MEET THE REQUIREMENTS OF ASTM A502 FOR GRADE 1 RIVETS.

THE CUT ENDS OF GALVANIZED STEEL RAILING, AFTER GRINDING SMOOTH SHALL BE GIVEN TWO COATS OF ZINC RICH PAINT MEETING THE REQUIREMENTS OF FEDERAL SPECIFICATION MIL-P-26915 USAF TYPE 1, OR OF FEDERAL SPECIFICATIONS TT-P-641.

SHIMS: SHIMS SHALL MEET THE REQUIREMENTS OF ASTM A570 FOR GRADE 33 OR A611 FOR GRADE C AND SHALL BE GALVANIZED IN ACCORDANCE WITH AASHTO M111.

RAIL CAPS: RAIL CAPS SHALL MEET THE REQUIREMENTS OF ASTM A570 FOR GRADE 33 OR A611 FOR GRADE C AND SHALL BE GALVANIZED IN ACCORDANCE WITH AASHTO M111.

GENERAL NOTES

RAILING SHALL BE CONTINUOUS FROM END POST TO END POST OF BRIDGE. EACH JOINT IN RAIL LENGTH SHALL BE SPLICED AS DETAILED. PANEL LENGTHS OF RAIL SHALL BE ATTACHED TO A MINIMUM OF THREE POSTS. PLACE ONE JOINT SPLICE JUST BEYOND THE 3RD RAIL POST FROM EACH END, TYPICALLY 14' FROM THE END. PLACE OTHER JOINTS AS NEEDED.

FOR END OF RAIL TO CLEAR FACE OF CONCRETE END POST DIMENSION, SEE STANDARD NO. BMR7.

CAP SCREWS SHALL BE ASTM F593 ALLOY 305 STAINLESS STEEL. WASHERS FOR RAIL ATTACHMENT SHALL MEET THE REQUIREMENTS OF ASTM F844 EXCEPT THEY SHALL BE MADE FROM ALLOY 304 STAINLESS STEEL.

CERTIFIED MILL REPORTS ARE REQUIRED FOR RAILS AND POSTS. SHOP INSPECTION IS NOT REQUIRED.

METAL RAIL POSTS SHALL BE SET NORMAL TO CURB GRADE.

METHOD OF MEASUREMENT FOR METAL RAILS: FOR LENGTH OF METAL RAILS TO BE PAID FOR, SEE THE STANDARD SPECIFICATIONS.

CURVED RAIL USAGE: WHERE RAILS ARE TO BE USED ON BRIDGES ON HORIZONTAL AND/OR VERTICAL CURVATURE THE CONTRACTOR MAY, AT HIS OPTION, HAVE THE REQUIRED CURVATURE IN THE RAIL FORMED IN THE SHOP OR IN THE FIELD. IN EITHER EVENT, THE RAIL SHALL CONFORM WITHOUT BUCKLING OR KINKING TO THE REQUIRED CURVATURE IN A UNIFORM MANNER ACCEPTABLE TO THE ENGINEER.

TO INSURE FUTURE IDENTIFICATION OF THE FABRICATOR, A PERMANENT IDENTIFYING MARK SHALL BE PLACED ON EACH POST. THE METHOD OF MARKING AND LOCATION SHALL BE SUCH THAT IT DOES NOT DETRACT FROM THE APPEARANCE OF THE POST, BUT REMAIN VISIBLE AFTER RAIL PLACEMENT.

SHIMS SHALL BE USED AS NECESSARY FOR POST ALIGNMENT.

ALLOY 6351-T5 MAY BE SUBSTITUTED FOR ALLOY 6061-T6 WHERE APPLICABLE.

MINOR VARIATIONS IN DETAILS OF METAL RAIL WILL BE CONSIDERED. DETAILS OF SUCH VARIATIONS, IF DESIRED, SHALL BE SUBMITTED FOR APPROVAL.

PAY LENGTH = 175.9 LIN.FT. - STAGE I
178.4 LIN.FT. - STAGE II
354.3 LIN.FT. - TOTAL

NORTH CAROLINA PROFESSIONAL SEAL 11259 ENGINEER DAVID R. ANDERSON
11/24/08

PROJECT NO. R-3833B
IREDELL COUNTY
STATION: 277+88.88 -L-

SHEET 1 OF 3

STATE OF NORTH CAROLINA
DEPARTMENT OF TRANSPORTATION
RALEIGH

STANDARD

3 BAR METAL RAIL

ASSEMBLED BY : A.S. CALLAWAY	DATE : 10/2/08				
CHECKED BY : W.F. PARKER	DATE : 10/13/08				
DRAWN BY : JMB 1/88	REV. 10/17/00	RWW/LES			
CHECKED BY : GGH 1/88	REV. 5/7/03	RWW/JTE			
	REV. 5/1/06	TLA/GM			

REVISIONS						SHEET NO.
NO.	BY:	DATE:	NO.	BY:	DATE:	S-52
1			3			TOTAL SHEETS
2			4			113

15-OCT-2008 10:38
r:\structures\callaway\r3833b_sd_3mr_01.dgn
scallaway

STR. #1

STD. NO. BMR5

NOTES

STRUCTURAL CONCRETE ANCHOR ASSEMBLY

THE STRUCTURAL CONCRETE ANCHOR ASSEMBLY SHALL CONSIST OF THE FOLLOWING COMPONENTS:

A. FERRULES SHALL BE MADE FROM STEEL MEETING THE REQUIREMENTS OF AASHTO M169, GRADE 12L14 AND SHALL HAVE A MINIMUM LENGTH OF THREADS OF 2" FOR 3/4" FERRULES AND 1 3/4" FOR 5/8" FERRULES.

B. 3 - 3/4" Ø X 2 1/2" BOLTS WITH WASHERS. BOLTS SHALL CONFORM TO THE REQUIREMENTS OF ASTM A307. BOLTS AND WASHERS SHALL BE GALVANIZED. AT THE CONTRACTOR'S OPTION, STAINLESS STEEL BOLTS AND WASHERS MAY BE USED AS AN ALTERNATE FOR THE 3/4" Ø X 2 1/2" GALVANIZED BOLTS AND WASHERS. THEY SHALL CONFORM TO OR EXCEED THE MECHANICAL REQUIREMENTS OF ASTM A307. THE USE OF THIS ALTERNATE SHALL BE APPROVED BY THE ENGINEER.

C. 2 - 5/8" Ø X 2 1/4" BOLTS WITH WASHERS. BOLTS SHALL CONFORM TO THE REQUIREMENTS OF ASTM A307. BOLTS AND WASHERS SHALL BE GALVANIZED. AT THE CONTRACTOR'S OPTION, STAINLESS STEEL BOLTS AND WASHERS MAY BE USED AS AN ALTERNATE FOR THE 5/8" Ø X 2 1/4" GALVANIZED BOLTS AND WASHERS. THEY SHALL CONFORM TO OR EXCEED THE MECHANICAL REQUIREMENTS OF ASTM A307. THE USE OF THIS ALTERNATE SHALL BE APPROVED BY THE ENGINEER.

D. WIRE STRUT SHOWN IN THE CONCRETE ANCHOR ASSEMBLY DETAIL IS THE MINIMUM ALLOWABLE SIZE AND SHALL HAVE A MINIMUM TENSILE STRENGTH OF 100,000 PSI. AS AN OPTION, A 7/16" Ø WIRE STRUT WITH A MINIMUM TENSILE STRENGTH OF 90,000 PSI IS ACCEPTABLE.

E. THE METAL RAIL ANCHOR ASSEMBLIES TO BE HOT DIPPED GALVANIZED TO CONFORM TO REQUIREMENTS OF AASHTO M111.

F. THE COST OF THE METAL RAIL ANCHOR ASSEMBLY WITH BOLTS AND WASHERS COMPLETE IN PLACE SHALL BE INCLUDED IN THE PRICE BID FOR LINEAR FEET OF METAL RAIL.

G. BOLTS TO BE TIGHTENED ONE-HALF TURN WITH A WRENCH FROM A FINGER-TIGHT POSITION.

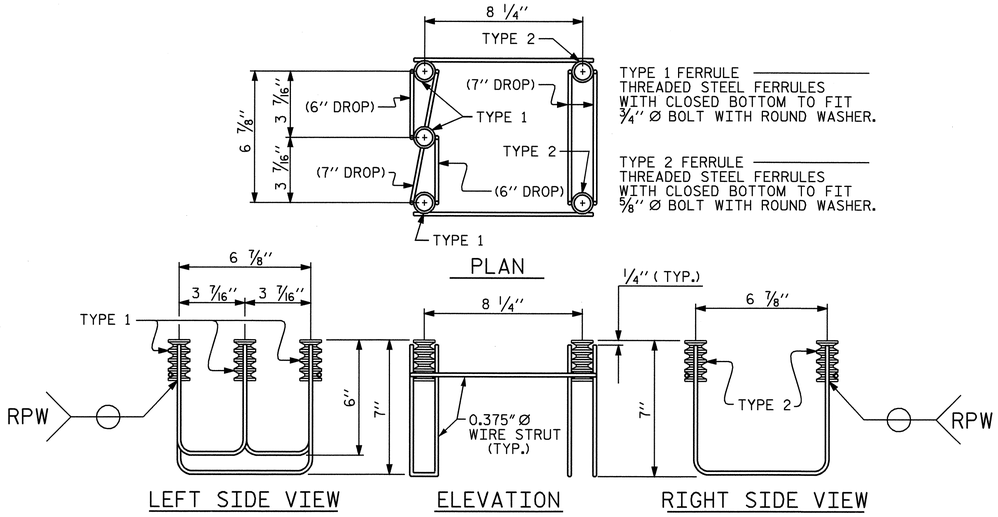

5-BOLT METAL RAIL ANCHOR ASSEMBLY

(66 ASSEMBLIES REQUIRED)

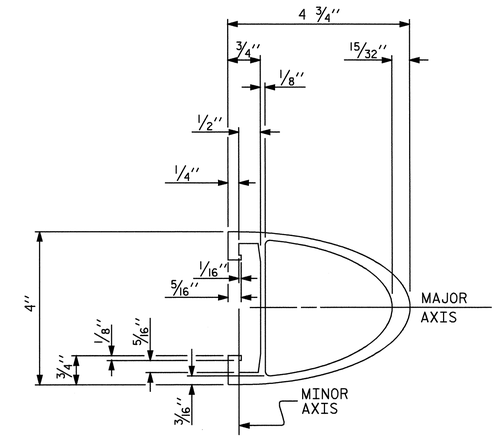

TOP & MIDDLE RAIL SECTION

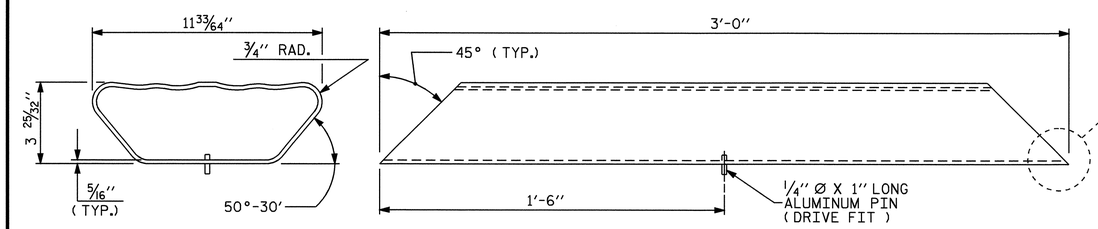

END VIEW

PLAN VIEW

BOTTOM RAIL EXPANSION BAR

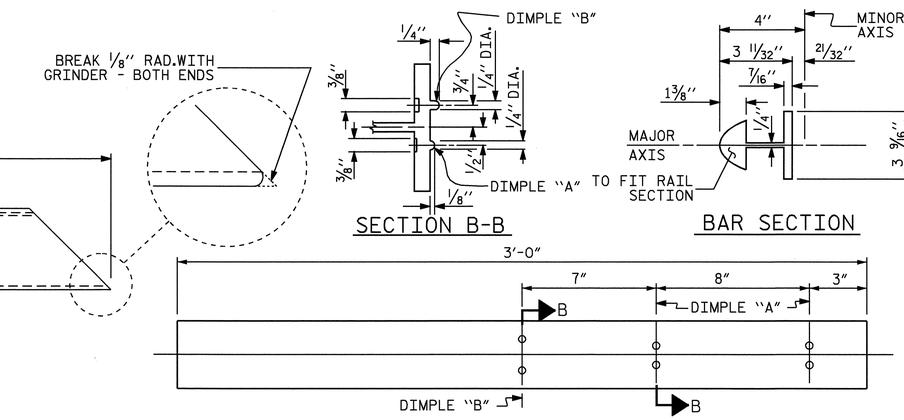

SECTION B-B

BAR SECTION

BACK ELEVATION

TOP & MIDDLE RAIL EXPANSION BAR

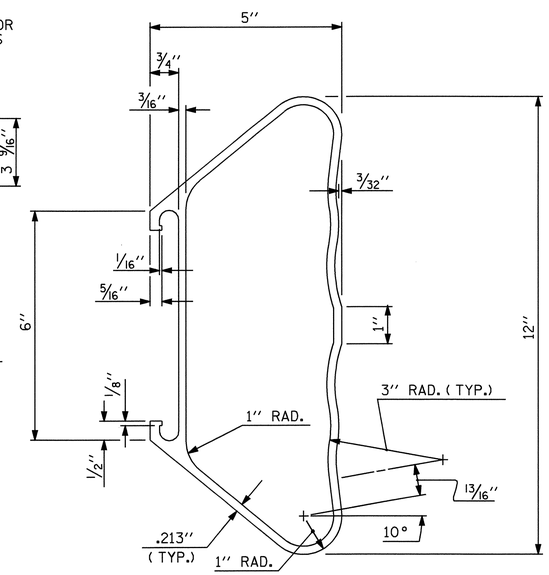

BOTTOM RAIL SECTION

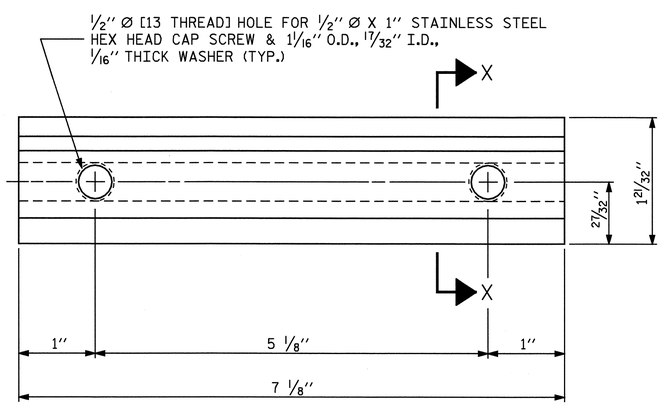

ELEVATION

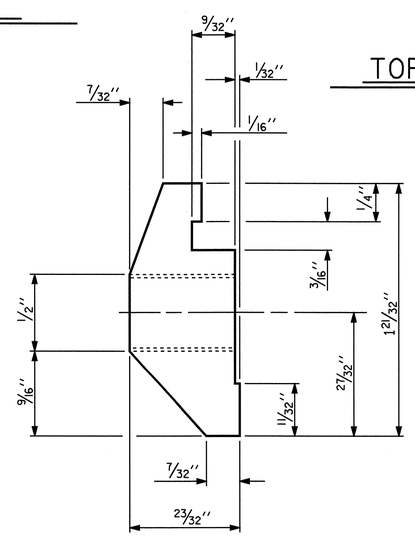

SECTION X-X

CLAMP BAR DETAIL

(6 REQUIRED PER POST)

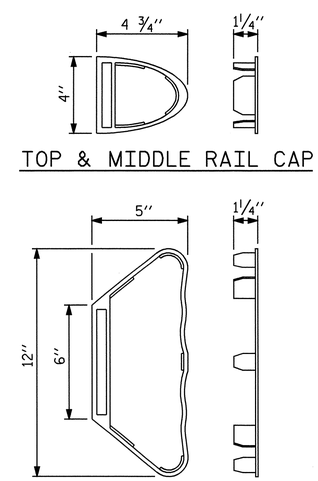

TOP & MIDDLE RAIL CAP

BOTTOM RAIL CAP

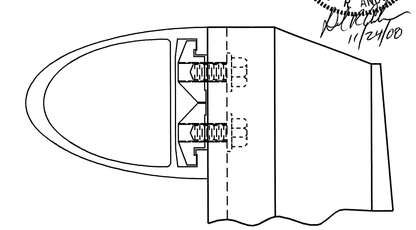

CLAMP ASSEMBLY

TOP RAIL SHOWN
(MIDDLE & BOTTOM RAIL ARE SIMILAR)

NORTH CAROLINA PROFESSIONAL SEAL 11259 ENGINEER DAVID R. ANDERSON
11/24/08

PROJECT NO. R-3833B
IREDELL COUNTY
STATION: 277+88.88 -L-

SHEET 2 OF 3

STATE OF NORTH CAROLINA
DEPARTMENT OF TRANSPORTATION
RALEIGH

STANDARD

3 BAR METAL RAIL

ASSEMBLED BY : A.S. CALLAWAY	DATE : 10/2/08		
CHECKED BY : W.F. PARKER	DATE : 10/13/08		
DRAWN BY : JMB 1/88	REV. 7/10/01	RWW/LES	
CHECKED BY : GGH 1/88	REV. 5/7/03	RWW/JTE	
	REV. 5/1/06	TLA/GM	

REVISIONS								SHEET NO.
NO.	BY:	DATE:	NO.	BY:	DATE:			S-53
1			3					TOTAL SHEETS
2			4					113

STR. #1

STD. NO. BMR6

15-OCT-2008 10:38
r:\structures\callaway\r3833b_sd_3mr_01.dgn
scallaway

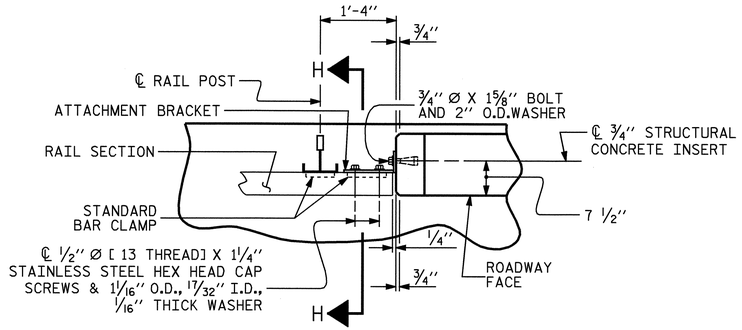

PLAN OF RAIL AND END POST

(STIFFENER ON 1/2" ℙ NOT SHOWN FOR CLARITY)

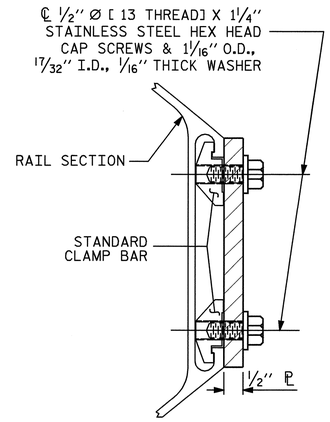

SECTION H-H

(FOR BOTTOM RAIL)

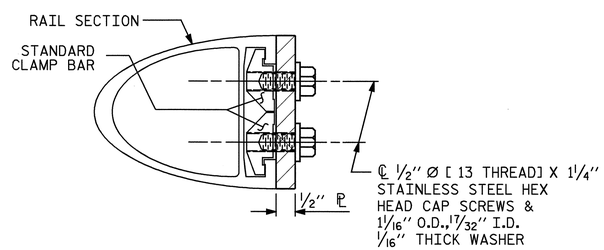

SECTION H-H

(FOR TOP & MIDDLE RAIL)

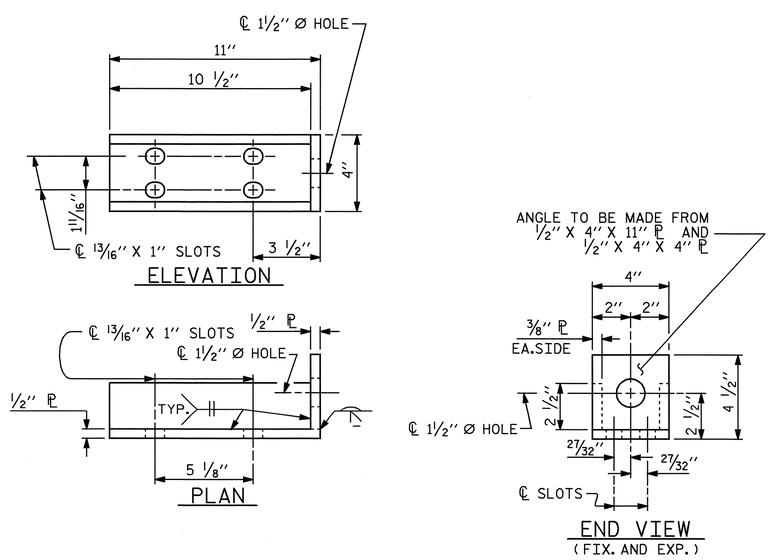

DETAILS FOR ATTACHMENT BRACKET

(TOP & MIDDLE RAIL ONLY)

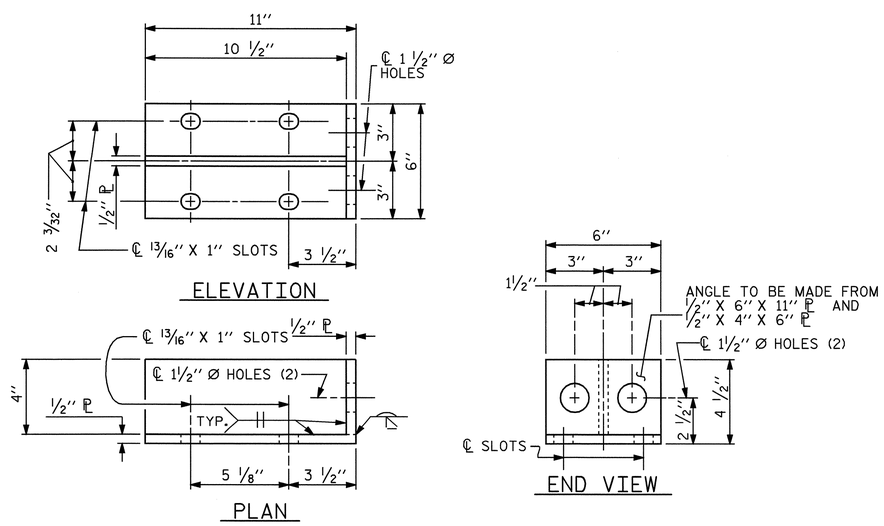

DETAILS FOR ATTACHMENT BRACKET

(BOTTOM RAIL ONLY)

NOTES

METAL RAIL TO END POST CONNECTION

THE METAL RAIL TO END POST CONNECTION SHALL CONSIST OF THE FOLLOWING COMPONENTS:

A. 1/2" PLATES SHALL CONFORM TO AASHTO M270 GRADE 36 AND SHALL BE GALVANIZED AFTER FABRICATION.

B. 3/4" STRUCTURAL CONCRETE INSERT SHALL HAVE A WORKING LOAD SHEAR CAPACITY OF 4800 LBS. THE FERRULES SHALL ENGAGE A 3/4" Ø X 1 5/8" BOLT WITH 2" O.D. WASHER IN PLACE. THE 3/4" Ø X 1 5/8" BOLT SHALL HAVE N. C. THREADS.

C. CAP SCREWS FOR RAIL ATTACHMENT TO ANGLE SHALL CONFORM TO THE REQUIREMENTS OF ASTM F593 ALLOY 305 STAINLESS STEEL. CAP SCREWS TO BE CENTERED IN SLOTS AT 60°F. WASHERS FOR RAIL ATTACHMENT SHALL MEET THE REQUIREMENTS OF ASTM F844 EXCEPT THEY SHALL BE MADE FROM ALLOY 304 STAINLESS STEEL.

D. STANDARD CLAMP BARS (STD. No. BMR6).

THE COST OF THE STANDARD CLAMP BARS AND CAP SCREWS USED IN THE METAL RAIL TO END POST CONNECTION SHALL BE INCLUDED IN THE UNIT CONTRACT PRICE BID FOR LINEAR FEET OF 3 BAR METAL RAIL.

THE 3/4" STRUCTURAL CONCRETE INSERT WITH BOLT SHALL BE ASSEMBLED IN THE SHOP.

THE COST OF THE 3/4" STRUCTURAL CONCRETE INSERT ASSEMBLY, AND THE 1/2" PLATES COMPLETE IN PLACE SHALL BE INCLUDED IN THE VARIOUS PAY ITEMS.

THE CONTRACTOR, AT HIS OPTION, MAY USE AN ADHESIVE BONDING SYSTEM IN LIEU OF THE STRUCTURAL CONCRETE INSERT EMBEDDED IN THE END POST. IF THE ADHESIVE BONDING SYSTEM IS USED, THE 3/4" Ø X 1 5/8" BOLT WITH WASHER SHALL BE REPLACED WITH A 3/4" Ø X 6 1/2" BOLT AND 2" O.D.WASHER. ALL SPECIFICATIONS THAT APPLY TO THE 3/4" Ø X 1 5/8" BOLT SHALL APPLY TO THE 3/4" Ø X 6 1/2" BOLT. FIELD TESTING OF THE ADHESIVE BONDING SYSTEM IS NOT REQUIRED.

NOTES

STRUCTURAL CONCRETE INSERT

THE STRUCTURAL CONCRETE INSERT ASSEMBLY SHALL CONSIST OF THE FOLLOWING COMPONENTS:

A. FERRULES SHALL BE MADE FROM STEEL MEETING THE REQUIREMENTS OF AASHTO M169, GRADE 12L14 AND SHALL HAVE A MINIMUM LENGTH OF THREADS OF 1 1/2".

B. 1 - 3/4" Ø X 1 5/8" BOLT WITH WASHER. BOLT SHALL CONFORM TO THE REQUIREMENTS OF ASTM A307. BOLT AND WASHER SHALL BE GALVANIZED. AT THE CONTRACTORS OPTION, STAINLESS STEEL BOLT AND WASHER MAY BE USED AS AN ALTERNATE FOR THE 3/4" Ø X 1 5/8" GALVANIZED BOLT AND WASHER. THEY SHALL CONFORM TO OR EXCEED THE MECHANICAL REQUIREMENTS OF ASTM A307. THE USE OF THIS ALTERNATE SHALL BE APPROVED BY THE ENGINEER.

C. WIRE STRUT SHOWN IN THE CONCRETE INSERT ASSEMBLY DETAIL IS THE MINIMUM ALLOWABLE SIZE AND SHALL HAVE A MINIMUM TENSILE STRENGTH OF 100,000 PSI. AS AN OPTION, A 7/16" Ø WIRE STRUT WITH A MINIMUM TENSILE STRENGTH OF 90,000 PSI IS ACCEPTABLE.

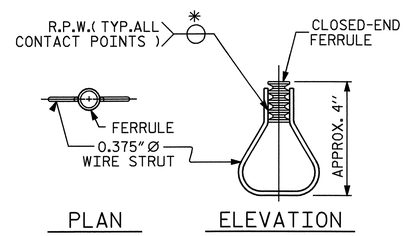

STRUCTURAL CONCRETE INSERT

* EACH WELDED ATTACHMENT OF WIRE TO FERRULE SHALL DEVELOP THE TENSILE STRENGTH OF THE WIRE.

PROJECT NO. R-3833B

IREDELL COUNTY

STATION: 277+88.88 -L-

SHEET 3 OF 3

STATE OF NORTH CAROLINA
DEPARTMENT OF TRANSPORTATION
RALEIGH

STANDARD

3 BAR METAL RAIL

NORTH CAROLINA PROFESSIONAL SEAL 11259 ENGINEER DAVID R. ANDERSON
11/24/08

REVISIONS						SHEET NO.
NO.	BY:	DATE:	NO.	BY:	DATE:	S-54
1			3			TOTAL SHEETS
2			4			113

STR. #1

STD. NO. BMR7

ASSEMBLED BY : A.S. CALLAWAY		DATE : 10/2/08	
CHECKED BY : W.F. PARKER		DATE : 10/13/08	
DRAWN BY : JMB 1/88	REV. 7/10/01	RWW/LES	
CHECKED BY : GGH 1/88	REV. 5/7/03	RWW/JTE	
	REV. 5/1/06	TLA/GM	

15-OCT-2008 10:39
r:\structures\callaway\r3833b_sd_3mr_01.dgn
scallaway

BAR TYPES

ALL DIMEMSIONS ARE OUT TO OUT.

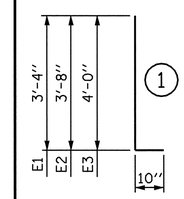

BILL OF MATERIAL

END POSTS - STAGE I

BAR	NO.	SIZE	TYPE	LENGTH	WEIGHT
✳E1	9	#7	1	4'-2"	77
✳E2	4	#7	1	4'-6"	37
✳E3	16	#7	1	4'-10"	158
✳F1	4	#6	STR	3'-5"	21
✳F2	4	#6	STR	3'-6"	21
✳F3	4	#6	STR	2'-1"	13
✳F4	5	#6	STR	5'-4"	40
✳F5	5	#6	STR	4'-7"	34
✳F6	4	#6	STR	3'-6"	21
✳F7	4	#6	STR	4'-3"	26
✳EPOXY COATED REINF. STEEL					448 LBS
CLASS AA CONCRETE					1.7 CY

NOTES

ALL REINFORCING STEEL IN END POST SHALL BE EPOXY COATED.

A VERTICAL GROOVED CONTRACTION JOINT, ½" IN DEPTH, SHALL BE TOOLED IN EXPOSED FACE OF END POST AND IN ACCORDANCE WITH ARTICLE 825-10(B) OF THE STANDARD SPECIFICATIONS. THE CONTRACTION JOINT SHALL BE LOCATED AT MIDPOINT OF THE END POST AT BENT 1 CONTROL LINE.

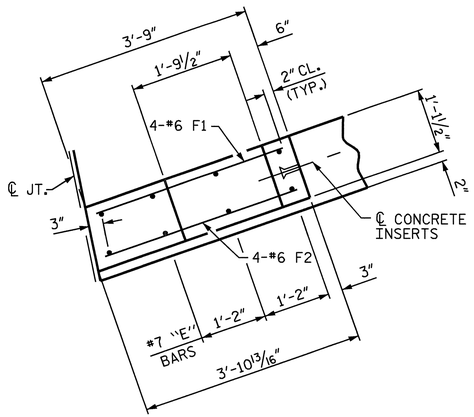

PLAN OF END POST

(AT END BENT 1)

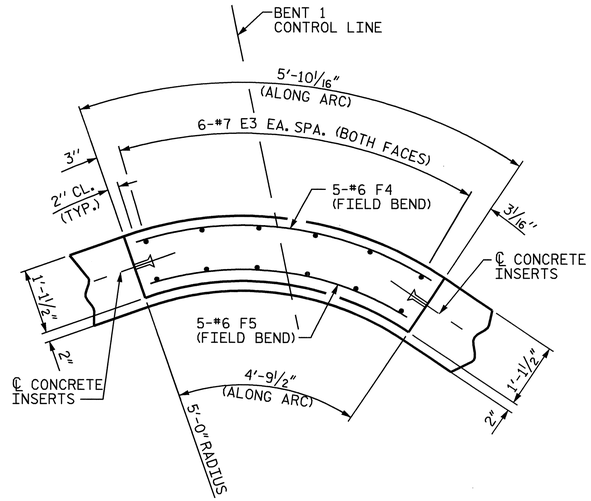

PLAN OF END POST

(AT BENT 1)

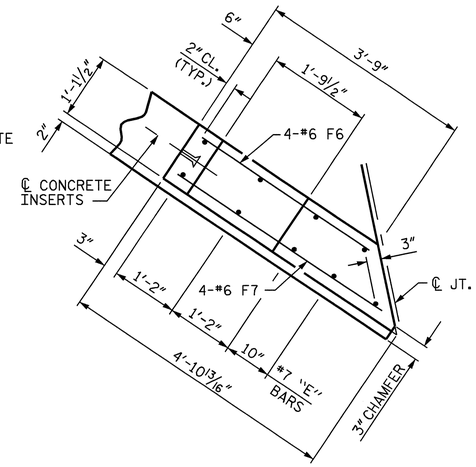

PLAN OF END POST

(AT END BENT 2)

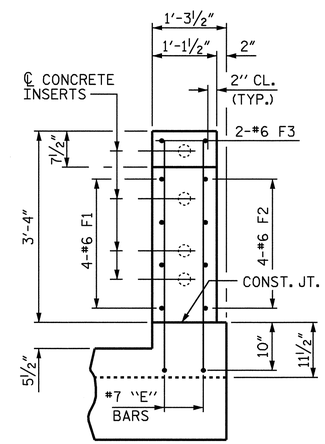

VIEW A-A

END BENT 1 SHOWN, END BENT 2 SIMILAR.

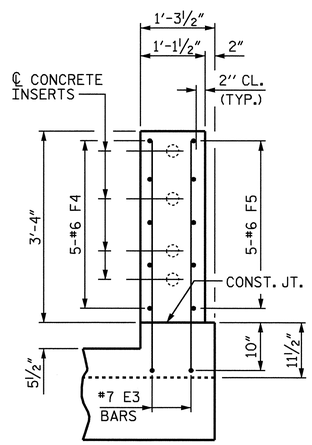

VIEW B-B

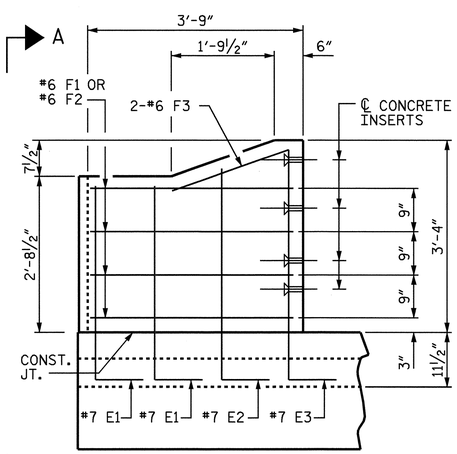

ELEVATION

(AT END BENT 1)

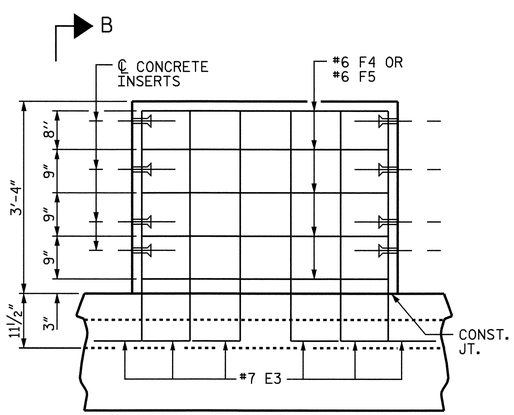

ELEVATION

(AT BENT 1)

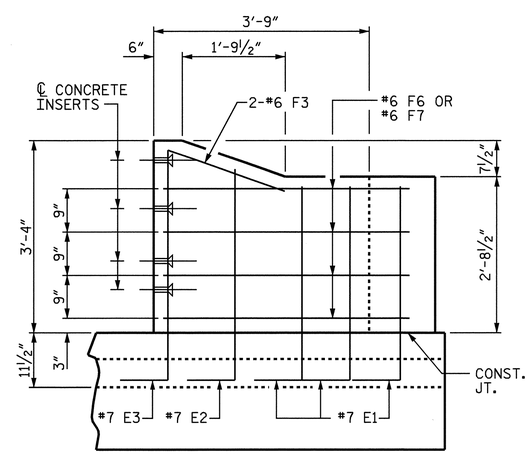

ELEVATION

(AT END BENT 2)

PROJECT NO. R-3833B

IREDELL COUNTY

STATION: 277+88.88 -L-

SHEET 1 OF 2

STATE OF NORTH CAROLINA
DEPARTMENT OF TRANSPORTATION
RALEIGH

SUPERSTRUCTURE

END POST FOR 3 BAR METAL RAIL

STAGE I

NORTH CAROLINA PROFESSIONAL SEAL 11259 ENGINEER DAVID R. ANDERSON 12/29/08

REVISIONS						SHEET NO.
NO.	BY:	DATE:	NO.	BY:	DATE:	S-55
1			3			TOTAL SHEETS
2			4			113

STR. #1

DRAWN BY : A.S. CALLAWAY DATE : 10/6/08
CHECKED BY : W.F. PARKER DATE : 10/13/08

22-DEC-2008 14:38
r:\structures\callaway\mlarostation\r3833b_sd_3mr_01.dgn
danderson

BAR TYPES

ALL DIMEMSIONS ARE OUT TO OUT.

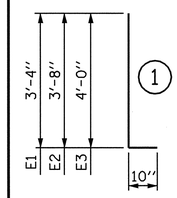

BILL OF MATERIAL

END POSTS - STAGE II

BAR	NO.	SIZE	TYPE	LENGTH	WEIGHT
✳E1	9	#7	1	4'-2"	77
✳E2	4	#7	1	4'-6"	37
✳E3	18	#7	1	4'-10"	178
✳F1	4	#6	STR	3'-6"	21
✳F2	4	#6	STR	4'-3"	26
✳F3	4	#6	STR	2'-1"	13
✳F4	5	#6	STR	6'-0"	45
✳F5	5	#6	STR	5'-3"	39
✳F6	4	#6	STR	3'-5"	21
✳F7	4	#6	STR	3'-7"	22
✳EPOXY COATED REINF. STEEL					479 LBS
CLASS AA CONCRETE					1.8 CY

NOTES

ALL REINFORCING STEEL IN END POST SHALL BE EPOXY COATED.

A VERTICAL GROOVED CONTRACTION JOINT, ½" IN DEPTH, SHALL BE TOOLED IN EXPOSED FACE OF END POST AND IN ACCORDANCE WITH ARTICLE 825-10(B) OF THE STANDARD SPECIFICATIONS. THE CONTRACTION JOINT SHALL BE LOCATED AT MIDPOINT OF THE END POST AT BENT 1 CONTROL LINE.

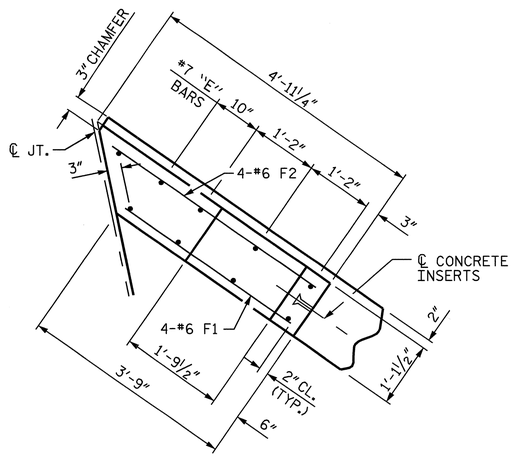

PLAN OF END POST

(AT END BENT 1)

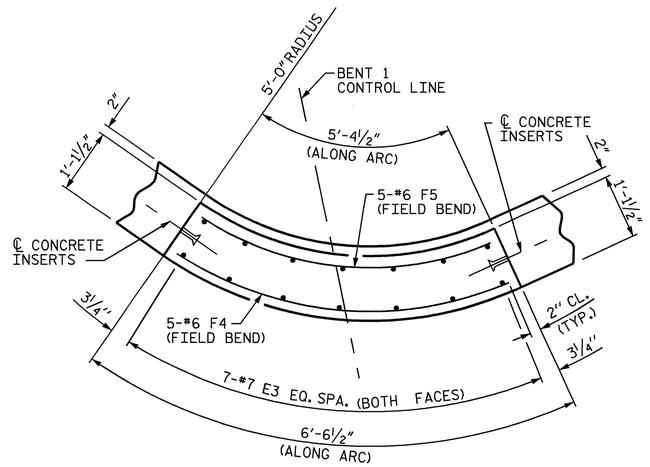

PLAN OF END POST

(AT BENT 1)

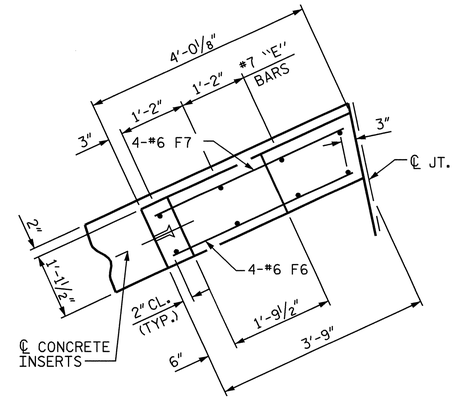

PLAN OF END POST

(AT END BENT 2)

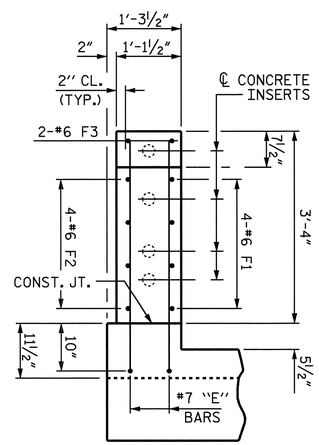

VIEW A-A

END BENT 1 SHOWN, END BENT 2 SIMILAR.

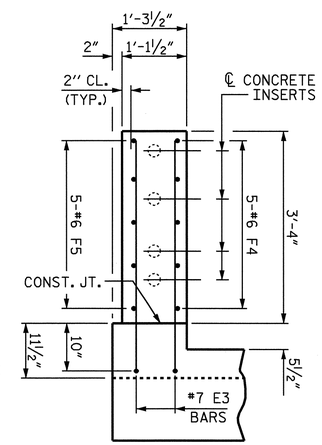

VIEW B-B

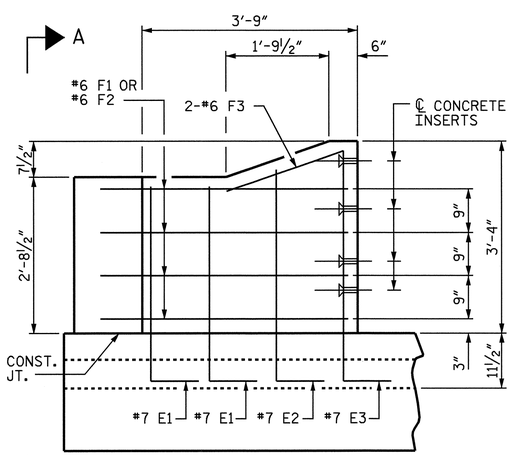

ELEVATION

(AT END BENT 1)

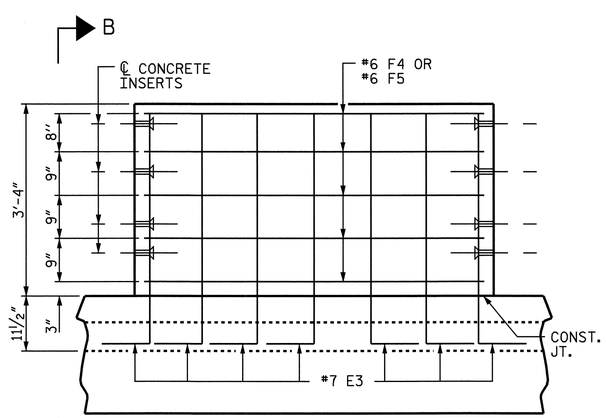

ELEVATION

(AT BENT 1)

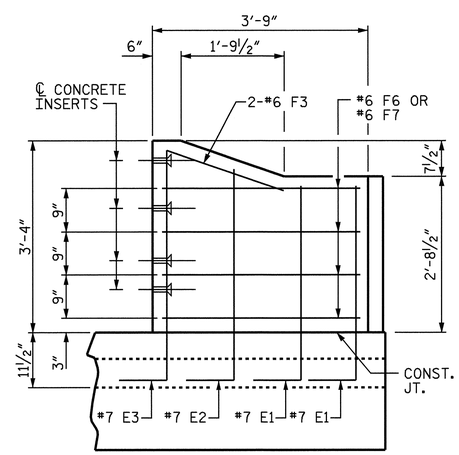

ELEVATION

(AT END BENT 2)

PROJECT NO. R-3833B

IREDELL COUNTY

STATION: 277+88.88 -L-

SHEET 2 OF 2

STATE OF NORTH CAROLINA
DEPARTMENT OF TRANSPORTATION
RALEIGH

SUPERSTRUCTURE

END POST FOR 3 BAR METAL RAIL

STAGE II

NORTH CAROLINA PROFESSIONAL SEAL 11259 ENGINEER DAVID R. ANDERSON

12/29/08

REVISIONS						SHEET NO.
NO.	BY:	DATE:	NO.	BY:	DATE:	S-56
1			3			TOTAL SHEETS
2			4			113

STR. #1

DRAWN BY : A.S. CALLAWAY DATE : 10/6/08
CHECKED BY : W.F. PARKER DATE : 10/13/08

22-DEC-2008 14:38
r:\structures\callaway\microstation\r3833b_sd_3mr_01.dgn
danderson

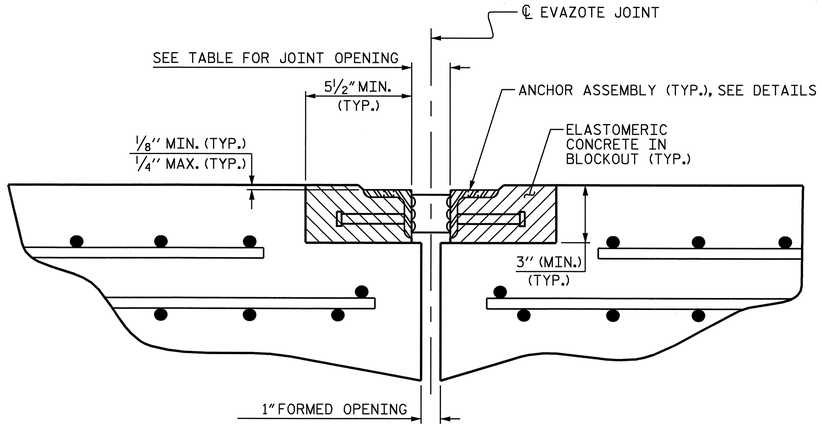

ARMORED JOINT DETAILS

SECTION NORMAL TO JOINT AT BENT

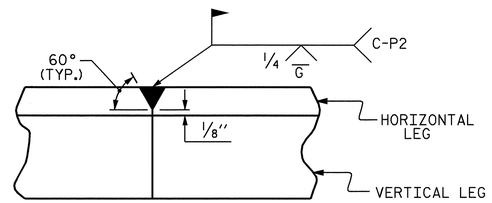

DETAIL- FIELD WELD SPLICE OF ANGLE

NOTES

ANGLES SHALL CONFORM TO AASHTO M270 GRADE 36 STEEL OR APPROVED EQUAL. ALL STUD ANCHORS SHALL CONFORM TO AASHTO M169 GRADES 1010 THRU 1020 OR APPROVED EQUAL.

STUD ANCHORS SHALL BE SHOP WELDED AND ALL HOLES SHALL BE SHOP DRILLED AS SHOWN ON THE PLANS. STUD ANCHORS SHALL BE ELECTRIC ARC END WELDED WITH COMPLETE FUSION.

UPON COMPLETION OF SHOP FABRICATION, THE ENTIRE ANCHOR ASSEMBLY SHALL BE METALLIZED. THE ½" Ø STUD ANCHORS AND ANCHOR TABS NEED NOT BE METALLIZED. SEE SPECIAL PROVISION FOR THERMAL SPRAYED COATINGS (METALLIZATION).

ANCHOR ASSEMBLY SHALL BE MADE CONTINUOUS THE LENGTH OF THE JOINT FROM GUTTER TO GUTTER. FOR FIELD SPLICES AT ALL CROWN BREAK POINTS, THE ENDS OF THE STEEL ANGLES SHALL BE CUT PARALLEL TO THE BRIDGE CENTERLINE. FINISHED FIELD WELDS SHALL BE GROUND SMOOTH AND COATED WITH A MINIMUM THICKNESS OF 4 DRY MILS OF ZINC-RICH PAINT IN ACCORDANCE WITH THE STANDARD SPECIFICATIONS.

ANCHOR ASSEMBLY SEGMENTS SHALL NOT BE LESS THAN 12 FEET NOR MORE THAN 20 FEET IN LENGTH. SHORTER SEGMENTS MAY BE USED AT THE EDGE OF ROADWAY OR AT POINTS OF STAGED CONSTRUCTION.

THE ANCHOR ASSEMBLY SHALL BE SECURED AND LEVELED AS SHOWN IN THE "ARMORED JOINT ANCHOR ASSEMBLY DETAILS". NO SUBMITTALS ARE REQUIRED FOR ⅜" Ø EXPANSION ANCHORS, NUTS OR WASHERS. THE CONTRACTOR MAY SUBMIT FOR APPROVAL AN ALTERNATE METHOD OF ALIGNING AND LEVELING THE ANGLES. THE ALTERNATE METHOD SHALL NOT INCLUDE ANY WELDING TO THE OUTSIDE FACE OF THE ANGLES.

AFTER THE ELASTOMERIC CONCRETE HAS BEEN CAST ON BOTH SIDES OF THE JOINT, REMOVE ANY EXCESS CONCRETE THAT COMES THROUGH THE WEEP HOLES AND THOROUGHLY CLEAN THE ANGLES. ANY DAMAGED STEEL SHALL BE COATED WITH A MINIMUM OF 4 MILS OF ZINC-RICH PAINT IN ACCORDANCE WITH THE STANDARD SPECIFICATIONS.

SEE SPECIAL PROVISIONS FOR EVAZOTE JOINT SEALS.

SEE SPECIAL PROVISIONS FOR ELASTOMERIC CONCRETE.

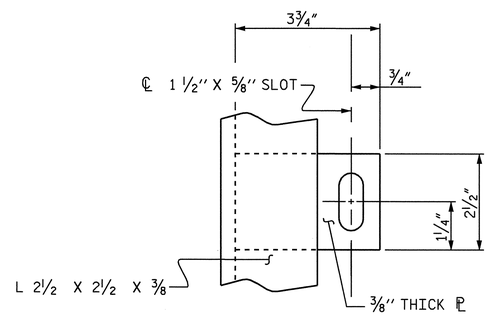

PLAN VIEW OF TAB

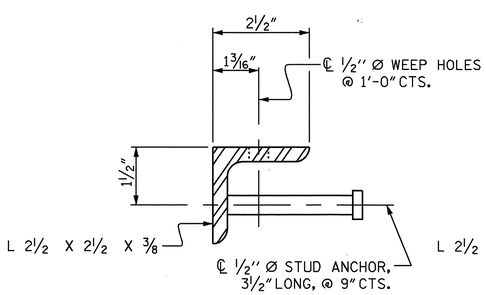

SECTION VIEW OF STUD

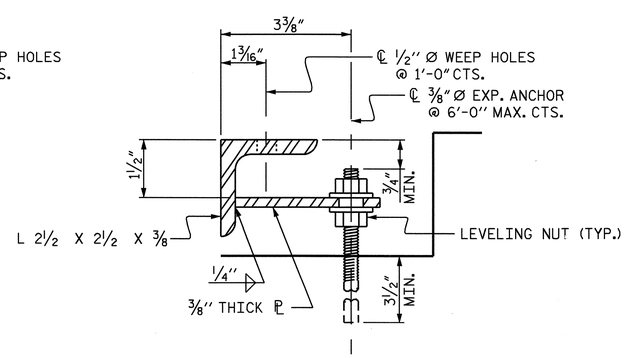

SECTION VIEW OF TAB

ARMORED JOINT ANCHOR ASSEMBLY DETAILS

MOVEMENT AND SETTING AT EVAZOTE JOINT

END BENT NO.	SKEW ANGLE	NOMINAL UNCOMPRESSED SEAL WIDTH	TOTAL MOVEMENT (ALONG ℄ RDWY)	PERPENDICULAR JOINT OPENING AT 45° F	PERPENDICULAR JOINT OPENING AT 60° F	PERPENDICULAR JOINT OPENING AT 90° F
1	78°-19'-27"	2½"	0.65"	2 1/8"	2"	1¾"
2	78°-19'-27"	2½"	0.65"	2 1/8"	2"	1¾"

TOTAL MOVEMENT IS CALCULATED ALONG THE CENTERLINE OF ROADWAY.
JOINT OPENINGS ARE MEASURED PERPENDICULAR TO THE JOINT.

BILL OF MATERIAL

END BENT NO.	ELASTOMERIC CONCRETE ✳ (CU. FT.)	TOTAL LENGTH OF ANGLE (FT)
1	61.6	621.77
2	62.4	630.28

✳ BASED ON THE MINIMUM BLOCKOUT SHOWN.

PROJECT NO. R-3833B
IREDELL COUNTY
STATION: 277+88.88-L-

STATE OF NORTH CAROLINA
DEPARTMENT OF TRANSPORTATION
RALEIGH

STANDARD
ARMORED EVAZOTE JOINT DETAILS

NORTH CAROLINA PROFESSIONAL SEAL 11259 ENGINEER DAVID R. ANDERSON
11/24/08

REVISIONS						
NO.	BY:	DATE:	NO.	BY:	DATE:	
1			3			
2			4			

SHEET NO. 5-57
TOTAL SHEETS 113

STD. NO. AEJ1

ASSEMBLED BY : S. L. WANCE PE	DATE : 10/08
CHECKED BY : D. R. ANDERSON	DATE : 10/08
DRAWN BY : EEM 1/96	REV. 7/10/01 LES/RDR
CHECKED BY : RGW 1/96	REV. 5/7/03RR RWW/JTE
	REV. 5/1/06 TLA/GM

21-OCT-2008 12:14
r:\structures\swance\structure1\microstation\R3833B_sd_aej1_06.dgn
danderson

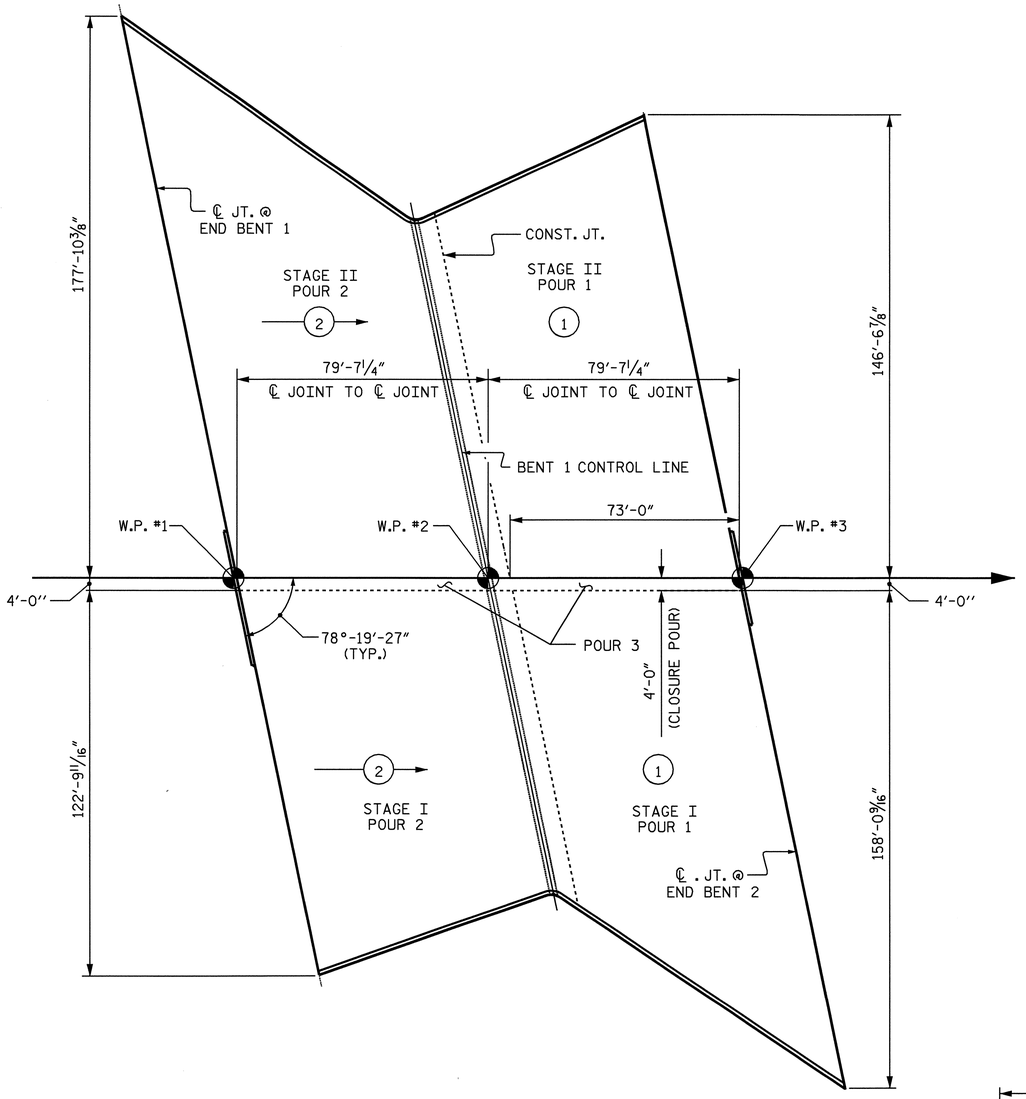

POURING SEQUENCE

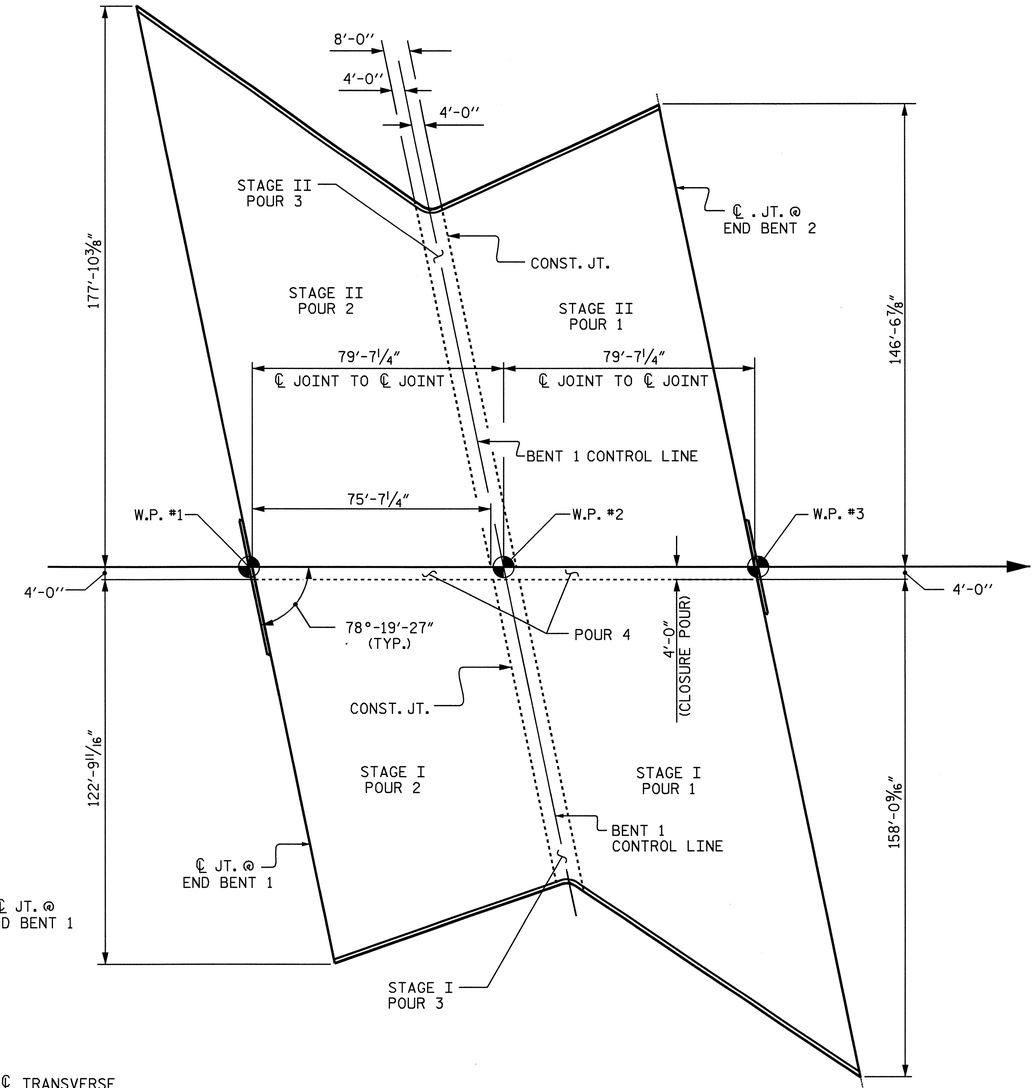

OPTIONAL POURING SEQUENCE

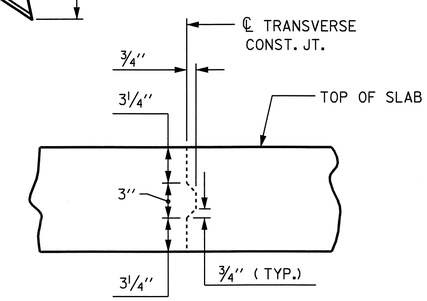

TRANSVERSE CONSTRUCTION JOINT DETAIL

NOTE: REINFORCING STEEL IN SLAB NOT SHOWED. LONGITUDINAL REINFORCING STEEL SHALL BE CONTINUOUS THRU JOINT

PROJECT NO. R-3833B
IREDELL COUNTY
STATION: 277+88.88 -L-

STATE OF NORTH CAROLINA
DEPARTMENT OF TRANSPORTATION
RALEIGH

SUPERSTRUCTURE

POURING SEQUENCE

NORTH CAROLINA PROFESSIONAL SEAL 11259 ENGINEER DAVID R. ANDERSON
11/24/08

REVISIONS						SHEET NO.
NO.	BY:	DATE:	NO.	BY:	DATE:	S-58
1			3			TOTAL SHEETS
2			4			113

DRAWN BY : S. M. RASHIDI DATE : 9/26/08
CHECKED BY : D. R. ANDERSON DATE : 10/14/08

05-NOV-2008 11:44
r:\structures\srashidi\microstation\wkg\str. *1\r-3833b_sd_ps.dgn
danderson

NCBDS

BILL OF MATERIAL

STAGE I

BAR	NO.	SIZE	TYPE	LENGTH	WEIGHT
✱ A1	318	5	STR	60'-0"	19900
✱ A2	1	5	STR	57'-11"	60
✱ A3	1	5	STR	55'-8"	58
✱ A4	1	5	STR	53'-6"	56
✱ A5	1	5	STR	51'-3"	53
✱ A6	1	5	STR	49'-1"	51
✱ A7	1	5	STR	46'-10"	49
✱ A8	1	5	STR	44'-7"	47
✱ A9	1	5	STR	42'-5"	44
✱ A10	1	5	STR	40'-2"	42
✱ A11	1	5	STR	38'-0"	40
✱ A12	1	5	STR	35'-9"	37
✱ A13	1	5	STR	33'-6"	35
✱ A14	1	5	STR	31'-4"	33
✱ A15	1	5	STR	29'-1"	30
✱ A16	1	5	STR	26'-11"	28
✱ A17	1	5	STR	24'-8"	26
✱ A18	1	5	STR	22'-5"	23
✱ A19	1	5	STR	20'-3"	21
✱ A20	1	5	STR	18'-0"	19
✱ A21	1	5	STR	15'-9"	16
✱ A22	1	5	STR	13'-7"	14
✱ A23	1	5	STR	11'-4"	12
✱ A24	1	5	STR	9'-2"	10
✱ A25	1	5	STR	6'-11"	7
✱ A26	1	5	STR	4'-8"	5
✱ A27	1	5	STR	2'-6"	3
✱ A28	1	5	STR	4'-10"	5
✱ A29	1	5	STR	7'-1"	7
✱ A30	1	5	STR	9'-3"	10
✱ A31	1	5	STR	11'-6"	12
✱ A32	1	5	STR	13'-9"	14
✱ A33	1	5	STR	15'-11"	17
✱ A34	1	5	STR	18'-2"	19
✱ A35	1	5	STR	20'-5"	21
✱ A36	1	5	STR	22'-7"	24
✱ A37	1	5	STR	24'-10"	26
✱ A38	1	5	STR	27'-0"	28
✱ A39	1	5	STR	29'-3"	31
✱ A40	1	5	STR	31'-6"	33
✱ A41	1	5	STR	33'-8"	35
✱ A42	1	5	STR	35'-11"	37
✱ A43	1	5	STR	38'-2"	40
✱ A44	1	5	STR	40'-4"	42
✱ A45	1	5	STR	42'-7"	44
✱ A46	1	5	STR	44'-9"	47
✱ A47	1	5	STR	47'-0"	49
✱ A48	1	5	STR	49'-3"	51
✱ A49	1	5	STR	51'-5"	54
✱ A50	1	5	STR	53'-8"	56
✱ A51	1	5	STR	55'-10"	58
✱ A52	1	5	STR	58'-1"	61
✱ A53	8	5	STR	33'-1"	276
✱ A54	8	5	STR	32'-10"	274
✱ A55	8	5	STR	32'-6"	271
✱ A56	8	5	STR	32'-2"	268
✱ A57	8	5	STR	31'-10"	266
✱ A58	8	5	STR	31'-6"	263
✱ A59	4	5	STR	59'-10"	250
✱ A60	4	5	STR	59'-3"	247
✱ A61	4	5	STR	58'-7"	244
✱ A62	4	5	STR	57'-11"	242
✱ A63	4	5	STR	57'-4"	239
✱ A64	4	5	STR	56'-8"	236
✱ A65	4	5	STR	56'-0"	234
✱ A66	4	5	STR	55'-5"	231
✱ A67	4	5	STR	54'-9"	228
✱ A68	4	5	STR	54'-1"	226
✱ A69	4	5	STR	53'-6"	223
✱ A70	4	5	STR	52'-10"	220
✱ A71	4	5	STR	52'-2"	218
✱ A72	4	5	STR	51'-7"	215
✱ A73	4	5	STR	50'-11"	212
✱ A74	4	5	STR	50'-3"	210
✱ A75	4	5	STR	49'-8"	207
✱ A76	4	5	STR	49'-0"	204
✱ A77	4	5	STR	48'-4"	202
✱ A78	4	5	STR	47'-9"	199
✱ A79	4	5	STR	47'-1"	196
✱ A80	4	5	STR	46'-5"	194
✱ A81	4	5	STR	45'-9"	191
✱ A82	4	5	STR	45'-2"	188
✱ A83	4	5	STR	44'-6"	186
✱ A84	4	5	STR	43'-10"	183
✱ A85	4	5	STR	43'-3"	180
✱ A86	4	5	STR	42'-7"	178
✱ A87	4	5	STR	41'-11"	175
✱ A88	4	5	STR	41'-4"	172
✱ A89	4	5	STR	40'-8"	170
✱ A90	4	5	STR	40'-0"	167
✱ A91	4	5	STR	39'-5"	164
✱ A92	4	5	STR	38'-11"	162
✱ A93	4	5	STR	38'-9"	162
✱ A94	4	5	STR	39'-1"	163
✱ A95	4	5	STR	40'-2"	168
✱ A96	4	5	STR	41'-5"	173
✱ A97	4	5	STR	42'-8"	178
✱ A98	4	5	STR	43'-10"	183
✱ A99	4	5	STR	45'-1"	188
✱ A100	4	5	STR	46'-4"	193
✱ A101	4	5	STR	47'-7"	199
✱ A102	4	5	STR	48'-10"	204
✱ A103	4	5	STR	50'-0"	209
✱ A104	4	5	STR	51'-3"	214
✱ A105	4	5	STR	52'-6"	219
✱ A106	4	5	STR	53'-9"	224
✱ A107	4	5	STR	55'-0"	229
✱ A108	4	5	STR	56'-2"	234
✱ A109	4	5	STR	57'-5"	240
✱ A110	4	5	STR	58'-8"	245
✱ A111	4	5	STR	59'-11"	250
✱ A112	8	5	STR	31'-10"	266
✱ A113	8	5	STR	32'-5"	270
✱ A114	8	5	STR	33'-1"	276
✱ A115	8	5	STR	33'-8"	281
✱ A116	8	5	STR	34'-4"	286
✱ A117	8	5	STR	34'-11"	291
✱ A118	8	5	STR	35'-6"	296
✱ A119	8	5	STR	36'-2"	302
✱ A120	8	5	STR	36'-9"	307
✱ A121	8	5	STR	37'-5"	312
✱ A122	8	5	STR	38'-0"	317
✱ A123	8	5	STR	38'-7"	322
✱ A124	8	5	STR	39'-3"	328
✱ A125	8	5	STR	39'-10"	332
✱ A126	3	5	STR	46'-3"	145
✱ A127	3	5	STR	45'-7"	143
✱ A128	3	5	STR	44'-11"	141
✱ A129	3	5	STR	44'-4"	139
✱ A130	3	5	STR	43'-8"	137
✱ A131	3	5	STR	43'-0"	135
✱ A132	3	5	STR	42'-5"	133
✱ A133	3	5	STR	41'-9"	131
✱ A134	3	5	STR	41'-1"	129
✱ A135	2	5	STR	59'-6"	124
✱ A136	2	5	STR	58'-6"	122
✱ A137	2	5	STR	57'-7"	120
✱ A138	2	5	STR	56'-7"	118
✱ A139	2	5	STR	55'-8"	116
✱ A140	2	5	STR	54'-8"	114
✱ A141	2	5	STR	53'-9"	112
✱ A142	2	5	STR	52'-9"	110
✱ A143	2	5	STR	51'-10"	108
✱ A144	2	5	STR	50'-10"	106
✱ A145	2	5	STR	49'-11"	104
✱ A146	2	5	STR	48'-11"	102
✱ A147	2	5	STR	48'-0"	100
✱ A148	2	5	STR	47'-1"	98
✱ A149	2	5	STR	46'-1"	96
✱ A150	2	5	STR	45'-2"	94
✱ A151	2	5	STR	44'-2"	92
✱ A152	2	5	STR	43'-3"	90
✱ A153	2	5	STR	42'-3"	88
✱ A154	2	5	STR	41'-4"	86
✱ A155	2	5	STR	40'-4"	84
✱ A156	2	5	STR	39'-5"	82
✱ A157	2	5	STR	38'-5"	80
✱ A158	2	5	STR	37'-6"	78
✱ A159	2	5	STR	36'-7"	76
✱ A160	2	5	STR	35'-7"	74
✱ A161	2	5	STR	34'-8"	72
✱ A162	2	5	STR	33'-8"	70
✱ A163	2	5	STR	32'-9"	68
✱ A164	2	5	STR	31'-9"	66
✱ A165	1	5	STR	59'-0"	62
✱ A166	1	5	STR	57'-1"	60
✱ A167	1	5	STR	55'-2"	58
✱ A168	1	5	STR	53'-3"	56
✱ A169	1	5	STR	51'-5"	54
✱ A170	1	5	STR	49'-6"	52
✱ A171	1	5	STR	47'-7"	50
✱ A172	1	5	STR	45'-8"	48
✱ A173	1	5	STR	43'-9"	46
✱ A174	1	5	STR	41'-10"	44
✱ A175	1	5	STR	39'-11"	42
✱ A176	1	5	STR	38'-0"	40
✱ A177	1	5	STR	36'-1"	38
✱ A178	1	5	STR	34'-2"	36
✱ A179	1	5	STR	32'-3"	34
✱ A180	1	5	STR	30'-4"	32
✱ A181	1	5	STR	28'-6"	30
✱ A182	1	5	STR	26'-7"	28
✱ A183	1	5	STR	24'-8"	26
✱ A184	1	5	STR	22'-9"	24
✱ A185	1	5	STR	20'-10"	22
✱ A186	1	5	STR	18'-11"	20
✱ A187	1	5	STR	17'-0"	18
✱ A188	1	5	STR	15'-1"	16
✱ A189	1	5	STR	13'-2"	14
✱ A190	1	5	STR	11'-3"	12
✱ A191	1	5	STR	9'-4"	10
✱ A192	1	5	STR	7'-6"	8
✱ A193	1	5	STR	5'-7"	6
✱ A194	2	5	STR	3'-8"	8
A500	323	5	STR	52'-8"	17743
A501	1	5	STR	2'-9"	3
A502	1	5	STR	4'-11"	5
A503	1	5	STR	7'-2"	7
A504	1	5	STR	9'-5"	10
A505	1	5	STR	11'-7"	12
A506	1	5	STR	13'-10"	14
A507	1	5	STR	16'-0"	17
A508	1	5	STR	18'-3"	19
A509	1	5	STR	20'-6"	21
A510	1	5	STR	22'-8"	24
A511	1	5	STR	24'-11"	26
A512	1	5	STR	27'-2"	28
A513	1	5	STR	29'-4"	31
A514	1	5	STR	31'-7"	33
A515	1	5	STR	33'-9"	35
A516	1	5	STR	36'-0"	38
A517	1	5	STR	38'-3"	40
A518	1	5	STR	40'-5"	42
A519	1	5	STR	42'-8"	45
A520	1	5	STR	44'-10"	47
A521	1	5	STR	47'-1"	49
A522	1	5	STR	49'-4"	51
A523	1	5	STR	51'-6"	54
A524	1	5	STR	3'-3"	3
A525	1	5	STR	5'-6"	6
A526	1	5	STR	7'-8"	8
A527	1	5	STR	9'-11"	10
A528	1	5	STR	12'-1"	13
A529	1	5	STR	14'-4"	15
A530	1	5	STR	16'-7"	17
A531	1	5	STR	18'-9"	20
A532	1	5	STR	21'-0"	22
A533	1	5	STR	23'-2"	24
A534	1	5	STR	25'-5"	27
A535	1	5	STR	27'-8"	29
A536	1	5	STR	29'-10"	31
A537	1	5	STR	32'-1"	33
A538	1	5	STR	34'-3"	36
A539	1	5	STR	36'-6"	38
A540	1	5	STR	38'-9"	40
A541	1	5	STR	40'-11"	43
A542	1	5	STR	43'-2"	45
A543	1	5	STR	45'-5"	47
A544	1	5	STR	47'-7"	50
A545	1	5	STR	49'-10"	52
A546	1	5	STR	52'-0"	54
A547	1	5	STR	54'-3"	57
A548	1	5	STR	56'-6"	59
A549	1	5	STR	58'-8"	61
A550	2	5	STR	31'-7"	66
A551	2	5	STR	32'-8"	68
A552	2	5	STR	33'-10"	71
A553	2	5	STR	34'-11"	73
A554	2	5	STR	36'-0"	75
A555	8	5	STR	36'-5"	304
A556	8	5	STR	36'-1"	301
A557	8	5	STR	35'-9"	298
A558	8	5	STR	35'-5"	296
A559	8	5	STR	35'-1"	293
A560	8	5	STR	34'-9"	290
A561	8	5	STR	34'-5"	287
A562	8	5	STR	34'-2"	285
A563	8	5	STR	33'-10"	282
A564	8	5	STR	33'-6"	280
A565	8	5	STR	33'-2"	277
A566	8	5	STR	32'-10"	274
A567	8	5	STR	32'-6"	271
A568	8	5	STR	32'-3"	269
A569	8	5	STR	31'-11"	266
A570	8	5	STR	31'-7"	264
A571	8	5	STR	31'-3"	261
A572	4	5	STR	59'-8"	249
A573	4	5	STR	59'-0"	246
A574	4	5	STR	58'-5"	244
A575	4	5	STR	57'-9"	241
A576	4	5	STR	57'-1"	238
A577	4	5	STR	56'-6"	236
A578	4	5	STR	55'-10"	233
A579	4	5	STR	55'-2"	230
A580	4	5	STR	54'-7"	228
A581	4	5	STR	53'-11"	225
A582	4	5	STR	53'-3"	222
A583	4	5	STR	52'-8"	220
A584	4	5	STR	52'-0"	217
A585	4	5	STR	51'-4"	214
A586	4	5	STR	50'-9"	212
A587	4	5	STR	50'-1"	209
A588	4	5	STR	49'-5"	206
A589	4	5	STR	48'-10"	204
A590	4	5	STR	48'-2"	201
A591	4	5	STR	47'-6"	198
A592	4	5	STR	46'-10"	195
A593	4	5	STR	46'-3"	193
A594	4	5	STR	45'-9"	191
A595	4	5	STR	45'-8"	191
A596	4	5	STR	46'-3"	193
A597	4	5	STR	47'-6"	198
A598	4	5	STR	48'-9"	203
A599	4	5	STR	49'-11"	208
A600	4	5	STR	51'-2"	213
A601	4	5	STR	52'-5"	219
A602	4	5	STR	53'-8"	224
A603	4	5	STR	54'-11"	229
A604	4	5	STR	56'-1"	234
A605	4	5	STR	57'-4"	239
A606	4	5	STR	58'-7"	244
A607	4	5	STR	59'-10"	250
A608	8	5	STR	31'-7"	264
A609	8	5	STR	32'-3"	269
A610	8	5	STR	32'-10"	274
A611	8	5	STR	33'-6"	280
A612	8	5	STR	34'-1"	284
A613	8	5	STR	34'-8"	289
A614	8	5	STR	35'-4"	295
A615	8	5	STR	35'-11"	300
A616	8	5	STR	36'-7"	305
A617	8	5	STR	37'-2"	310
A618	8	5	STR	37'-9"	315
A619	8	5	STR	38'-5"	321
A620	8	5	STR	39'-0"	325
A621	8	5	STR	39'-8"	331
A622	8	5	STR	40'-3"	336
A623	8	5	STR	40'-10"	341
A624	8	5	STR	41'-6"	346
A625	8	5	STR	42'-1"	351
A626	8	5	STR	42'-9"	357
A627	8	5	STR	43'-4"	362
A628	3	5	STR	46'-2"	144
A629	3	5	STR	45'-7"	143
A630	3	5	STR	44'-11"	141
A631	3	5	STR	44'-3"	138
A632	3	5	STR	43'-8"	137
A633	3	5	STR	43'-0"	135
A634	3	5	STR	42'-4"	132
A635	3	5	STR	41'-9"	131
A636	3	5	STR	41'-1"	129
A637	2	5	STR	59'-7"	124
A638	2	5	STR	58'-7"	122
A639	2	5	STR	57'-8"	120
A640	2	5	STR	56'-9"	118
A641	2	5	STR	55'-9"	116
A642	2	5	STR	54'-10"	114
A643	2	5	STR	53'-10"	112
A644	2	5	STR	52'-11"	110
A645	2	5	STR	51'-11"	108
A646	2	5	STR	51'-0"	106
A647	2	5	STR	50'-0"	104
A648	2	5	STR	49'-1"	102
A649	2	5	STR	48'-1"	100
A650	2	5	STR	47'-2"	98
A651	2	5	STR	46'-2"	96
A652	2	5	STR	45'-3"	94
A653	2	5	STR	44'-4"	92
A654	2	5	STR	43'-4"	90
A655	2	5	STR	42'-5"	88
A656	2	5	STR	41'-5"	86
A657	2	5	STR	40'-6"	84
A658	2	5	STR	39'-6"	82
A659	2	5	STR	38'-7"	80
A660	2	5	STR	37'-7"	78
A661	2	5	STR	36'-8"	76
A662	2	5	STR	35'-8"	74
A663	2	5	STR	34'-9"	72
A664	2	5	STR	33'-10"	71
A665	2	5	STR	32'-10"	68
A666	2	5	STR	31'-11"	67
A667	1	5	STR	59'-7"	62
A668	1	5	STR	57'-8"	60
A669	1	5	STR	55'-9"	58
A670	1	5	STR	53'-10"	56
A671	1	5	STR	51'-11"	54
A672	1	5	STR	50'-0"	52
A673	1	5	STR	48'-1"	50
A674	1	5	STR	46'-3"	48
A675	1	5	STR	44'-4"	46
A676	1	5	STR	42'-5"	44
A677	1	5	STR	40'-6"	42
A678	1	5	STR	38'-7"	40
A679	1	5	STR	36'-8"	38
A680	1	5	STR	34'-9"	36
A681	1	5	STR	32'-10"	34
A682	1	5	STR	30'-11"	32
A683	1	5	STR	29'-0"	30
A684	1	5	STR	27'-1"	28
A685	1	5	STR	25'-2"	26
A686	1	5	STR	23'-4"	24
A687	1	5	STR	21'-5"	22
A688	1	5	STR	19'-6"	20
A689	1	5	STR	17'-7"	18
A690	1	5	STR	15'-8"	16
A691	1	5	STR	13'-9"	14
A692	1	5	STR	11'-10"	12
A693	1	5	STR	9'-11"	10
A694	1	5	STR	8'-0"	8
A695	1	5	STR	6'-1"	6
A696	1	5	STR	4'-2"	4
A697	2	5	STR	2'-3"	7

REINFORCING STEEL	43616 LBS.
EPOXY COATED REINFORCING STEEL	43289 LBS.

✱ DENOTES EPOXY COATED REINFORCING STEEL.

STAGE I CONTINUED ON SHEET 2 OF 5.

PROJECT NO. R-3833B
IREDELL COUNTY
STATION: 277+88.88 -L-

SHEET 1 OF 5

STATE OF NORTH CAROLINA
DEPARTMENT OF TRANSPORTATION
RALEIGH

SUPERSTRUCTURE

BILL OF MATERIAL

NORTH CAROLINA PROFESSIONAL SEAL 11259 ENGINEER DAVID R. ANDERSON
11/24/08

REVISIONS						SHEET NO.
NO.	BY:	DATE:	NO.	BY:	DATE:	S-59
1			3			TOTAL SHEETS
2			4			113

DRAWN BY : P.C. BREWER DATE : 10/17/08
CHECKED BY : W.F. PARKER DATE : 11/12/08

14-NOV-2008 13:43
f:\structures\callaway\microstation\brewer plans\r3833b_sd_bm_01.dgn
scallaway

BILL OF MATERIAL

STAGE I

BAR	NO.	SIZE	TYPE	LENGTH	WEIGHT
✳B1	296	4	STR	27'-0"	5339
✳B2	2	4	STR	25'-10"	35
✳B3	2	4	STR	23'-7"	32
✳B4	2	4	STR	21'-3"	28
✳B5	2	4	STR	18'-11"	25
✳B6	2	4	STR	16'-8"	22
✳B7	1	4	STR	26'-7"	18
✳B8	1	4	STR	21'-11"	15
✳B9	1	4	STR	17'-4"	12
✳B10	1	4	STR	12'-9"	9
✳B11	1	4	STR	8'-1"	5
✳B12	1	4	STR	3'-6"	2
✳B13	129	6	STR	58'-0"	11238
✳B14	128	6	STR	24'-0"	4614
✳B15	1	6	STR	25'-2"	38
✳B16	1	6	STR	22'-10"	34
✳B17	1	6	STR	20'-6"	31
✳B18	1	6	STR	18'-3"	27
✳B19	1	6	STR	15'-11"	24
✳B20	1	6	STR	13'-7"	20
✳B21	1	6	STR	11'-4"	17
✳B22	1	6	STR	9'-0"	14
✳B23	1	6	STR	6'-8"	10
✳B24	2	6	STR	4'-4"	13
✳B25	1	6	STR	9'-3"	14
✳B26	1	6	STR	7'-0"	11
✳B27	2	6	STR	4'-7"	14
✳B28	1	6	STR	11'-0"	17
✳B29	1	6	STR	9'-10"	15
✳B30	1	6	STR	8'-10"	13
✳B31	1	6	STR	7'-11"	12
✳B32	1	6	STR	6'-11"	10
✳B33	1	6	STR	6'-0"	9
✳B34	1	6	STR	5'-0"	8
✳B35	4	6	STR	4'-0"	24
✳B36	1	6	STR	27'-4"	41
✳B37	1	6	STR	26'-4"	40
✳B38	1	6	STR	25'-5"	38
✳B39	1	6	STR	24'-5"	37
✳B40	1	6	STR	23'-6"	35
✳B41	1	6	STR	22'-6"	34
✳B42	1	6	STR	21'-7"	32
✳B43	1	6	STR	20'-7"	31
✳B44	1	6	STR	19'-8"	30
✳B45	1	6	STR	18'-8"	28
✳B46	1	6	STR	17'-9"	27
✳B47	1	6	STR	16'-9"	25
✳B48	1	6	STR	15'-9"	24
✳B49	1	6	STR	14'-10"	22
✳B50	1	6	STR	13'-10"	21
✳B51	1	6	STR	12'-11"	19
✳B52	1	6	STR	11'-11"	18
✳B53	1	6	STR	11'-0"	17
✳B54	1	6	STR	10'-0"	15
✳B55	1	6	STR	9'-1"	14
✳B56	1	6	STR	8'-1"	12
✳B57	1	6	STR	7'-2"	11
✳B58	1	6	STR	6'-2"	9
✳B59	1	6	STR	5'-3"	8
✳B60	4	6	STR	4'-2"	25
✳B61	2	4	STR	26'-8"	36
✳B62	2	4	STR	25'-8"	34
✳B63	2	4	STR	24'-9"	33
✳B64	2	4	STR	23'-9"	32
✳B65	2	4	STR	22'-10"	31
✳B66	2	4	STR	21'-10"	29
✳B67	2	4	STR	20'-11"	28
✳B68	2	4	STR	19'-11"	27
✳B69	2	4	STR	19'-0"	25
✳B70	2	4	STR	18'-0"	24
✳B71	2	4	STR	17'-1"	23
✳B72	2	4	STR	16'-1"	21
✳B73	1	4	STR	28'-2"	19
✳B74	1	4	STR	26'-3"	18
✳B75	1	4	STR	24'-4"	16
✳B76	1	4	STR	22'-5"	15
✳B77	1	4	STR	20'-5"	14
✳B78	1	4	STR	18'-6"	12
✳B79	1	4	STR	16'-7"	11
✳B80	1	4	STR	14'-8"	10
✳B81	1	4	STR	12'-9"	9
✳B82	1	4	STR	10'-10"	7
✳B83	3	4	STR	8'-9"	18
✳B84	2	4	STR	10'-0"	13
✳B85	3	4	STR	29'-0"	58
✳B86	4	4	STR	30'-0"	80
B200	270	5	STR	54'-5"	15324
B201	44	5	STR	40'-9"	1870
B202	74	5	STR	40'-9"	3145
B203	21	5	STR	51'-3"	1123
B204	7	5	STR	55'-7"	406
B205	32	5	STR	43'-7"	14546
B206	14	5	STR	50'-1"	731
B207	16	5	STR	45'-3"	755
B208	7	5	STR	47'-7"	347
B209	14	5	STR	47'-2"	689
B210	6	5	STR	55'-8"	348
B211	14	5	STR	49'-3"	719
B212	6	5	STR	54'-0"	338
B213	14	5	STR	51'-7"	753
B214	6	5	STR	51'-6"	322
B215	12	5	STR	54'-1"	677
B216	10	5	STR	32'-0"	334
B217	18	5	STR	56'-8"	1064
B218	10	5	STR	31'-10"	332
✳D1	344	5	STR	6'-10"	2452
✳D2	346	5	STR	6'-2"	2225
✳G1	3	5	STR	43'-0"	135
✳G2	3	5	STR	55'-5"	173
✳K1	2	8	2	19'-2"	102
✳K2	10	8	9	18'-5"	492
✳K3	10	8	3	21'-10'	583
✳K4	2	8	1	13'-3"	71
K5	21	6	STR	9'-8"	305
K6	6	6	STR	6'-5"	58
K7	6	6	STR	7'-0"	63
K8	20	4	STR	24'-7"	328
K9	32	4	STR	9'-8"	207
K10	8	4	STR	8'-0"	43
K11	8	4	STR	6'-6"	35
K12	2	4	STR	4'-10"	6
K13	8	4	STR	7'-0"	37
K14	2	4	STR	5'-4"	7
K15	48	4	STR	2'-7"	83
✳K16	2	8	2	19'-2"	102
✳K17	12	8	3	22'-0"	705
✳K18	12	8	3	22'-6"	721
✳K19	2	8	1	15'-3"	81
K20	24	6	STR	9'-8"	348
K21	15	6	STR	9'-1"	205
✳S1	222	4	4	5'-11"	877
✳S2	222	4	6	5'-1"	754
S3	258	4	8	2'-9"	474
✳S4	4	4	7	8'-3"	22
✳U1	45	4	3	14'-10"	446
✳U2	26	4	3	12'-10"	223
U3	12	4	6	5'-11"	47

REINFORCING STEEL	46069 LBS.
EPOXY COATED REINFORCING STEEL	33189 LBS.

✳ DENOTES EPOXY COATED REINFORCING STEEL.

STAGE I REINFORCING STEEL

	REINFORCING STEEL	EPOXY COATED REINF. STEEL
	(LBS.)	(LBS.)
QUANTITY FROM SHEET 1 OF 5	43616	43289
QUANTITY FROM SHEET 2 OF 5	46069	33189
TOTAL STAGE I	89685	76478

PROJECT NO. R-3833B
IREDELL COUNTY
STATION: 277+88.88 -L-

SHEET 2 OF 5

NORTH CAROLINA PROFESSIONAL SEAL 11259 ENGINEER DAVID R. ANDERSON
11/24/08

STATE OF NORTH CAROLINA
DEPARTMENT OF TRANSPORTATION
RALEIGH

SUPERSTRUCTURE

BILL OF MATERIAL

REVISIONS						SHEET NO.
NO.	BY:	DATE:	NO.	BY:	DATE:	S-60
1			3			TOTAL SHEETS
2			4			113

DRAWN BY : P.C. BREWER DATE : 10/17/08
CHECKED BY : W.F. PARKER DATE : 11/12/08

14-NOV-2008 13:43
f:\structures\callaway\microstation\brewer plans\r3833b_sd_bm_01.dgn
scallaway

BILL OF MATERIAL

STAGE II

BAR	NO.	SIZE	TYPE	LENGTH	WEIGHT
✱A1	318	5	STR	60'-0"	19900
✱A195	2	5	STR	3'-5"	7
✱A196	1	5	STR	5'-4"	6
✱A197	1	5	STR	7'-3"	8
✱A198	1	5	STR	9'-2"	10
✱A199	1	5	STR	11'-0"	11
✱A200	1	5	STR	12'-11"	13
✱A201	1	5	STR	14'-10"	15
✱A202	1	5	STR	16'-9"	17
✱A203	1	5	STR	18'-8"	19
✱A204	1	5	STR	20'-6"	21
✱A205	1	5	STR	22'-5"	23
✱A206	1	5	STR	24'-4"	25
✱A207	1	5	STR	26'-3"	27
✱A208	1	5	STR	28'-1"	29
✱A209	1	5	STR	30'-0"	31
✱A210	1	5	STR	31'-11"	33
✱A211	1	5	STR	33'-10"	35
✱A212	1	5	STR	35'-9"	37
✱A213	1	5	STR	37'-7"	39
✱A214	1	5	STR	39'-6"	41
✱A215	1	5	STR	41'-5"	43
✱A216	1	5	STR	43'-4"	45
✱A217	1	5	STR	45'-2"	47
✱A218	1	5	STR	47'-1"	49
✱A219	1	5	STR	49'-0"	51
✱A220	1	5	STR	50'-11"	53
✱A221	1	5	STR	52'-10"	55
✱A222	1	5	STR	54'-8"	57
✱A223	1	5	STR	56'-7"	59
✱A224	1	5	STR	58'-6"	61
✱A225	2	5	STR	31'-6"	66
✱A226	2	5	STR	32'-5"	68
✱A227	2	5	STR	33'-4"	70
✱A228	2	5	STR	34'-4"	72
✱A229	2	5	STR	35'-3"	74
✱A230	2	5	STR	36'-3"	76
✱A231	2	5	STR	37'-2"	78
✱A232	2	5	STR	38'-1"	79
✱A233	2	5	STR	39'-1"	82
✱A234	2	5	STR	40'-0"	83
✱A235	2	5	STR	41'-0"	86
✱A236	2	5	STR	41'-11"	87
✱A237	2	5	STR	42'-10"	89
✱A238	2	5	STR	43'-10"	91
✱A239	2	5	STR	44'-9"	93
✱A240	2	5	STR	45'-8"	95
✱A241	2	5	STR	46'-8"	97
✱A242	2	5	STR	47'-7"	99
✱A243	2	5	STR	48'-7"	101
✱A244	2	5	STR	49'-6"	103
✱A245	2	5	STR	50'-5"	105
✱A246	2	5	STR	51'-5"	107
✱A247	2	5	STR	52'-4"	109
✱A248	2	5	STR	53'-4"	111
✱A249	2	5	STR	54'-3"	113
✱A250	2	5	STR	55'-2"	115
✱A251	2	5	STR	56'-2"	117
✱A252	2	5	STR	57'-1"	119
✱A253	2	5	STR	58'-1"	121
✱A254	2	5	STR	59'-0"	123
✱A255	2	5	STR	59'-11"	125
✱A256	3	5	STR	41'-5"	130
✱A257	3	5	STR	42'-1"	132
✱A258	3	5	STR	42'-8"	134
✱A259	3	5	STR	43'-4"	136
✱A260	3	5	STR	44'-0"	138
✱A261	3	5	STR	44'-7"	140
✱A262	3	5	STR	45'-3"	142
✱A263	3	5	STR	45'-10"	143
✱A264	3	5	STR	46'-6"	145
✱A265	3	5	STR	47'-2"	148
✱A266	3	5	STR	47'-9"	149
✱A267	3	5	STR	48'-5"	151
✱A268	3	5	STR	49'-0"	153
✱A269	3	5	STR	49'-8"	155
✱A270	3	5	STR	50'-3"	157
✱A271	3	5	STR	50'-11"	159
✱A272	3	5	STR	51'-7"	161
✱A273	8	5	STR	47'-11"	400
✱A274	8	5	STR	47'-3"	394
✱A275	8	5	STR	46'-7"	389
✱A276	8	5	STR	45'-11"	383
✱A277	8	5	STR	45'-4"	378
✱A278	8	5	STR	44'-8"	373
✱A279	8	5	STR	44'-1"	368
✱A280	8	5	STR	43'-5"	362
✱A281	8	5	STR	42'-9"	357
✱A282	8	5	STR	42'-2"	352
✱A283	8	5	STR	41'-6"	346
✱A284	8	5	STR	40'-10"	341
✱A285	8	5	STR	40'-3"	336
✱A286	8	5	STR	39'-7"	330
✱A287	8	5	STR	38'-11"	325
✱A288	8	5	STR	38'-4"	320
✱A289	8	5	STR	37'-8"	314
✱A290	8	5	STR	37'-0"	309
✱A291	8	5	STR	36'-5"	304
✱A292	8	5	STR	35'-9"	298
✱A293	8	5	STR	35'-1"	293
✱A294	8	5	STR	34'-6"	288
✱A295	8	5	STR	33'-10"	282
✱A296	8	5	STR	33'-2"	277
✱A297	8	5	STR	32'-7"	272
✱A298	8	5	STR	31'-11"	266
✱A299	4	5	STR	60'-0"	250
✱A300	4	5	STR	58'-9"	245
✱A301	4	5	STR	57'-6"	240
✱A302	4	5	STR	56'-4"	235
✱A303	4	5	STR	56'-0"	234
✱A304	4	5	STR	56'-2"	234
✱A305	4	5	STR	56'-11"	237
✱A306	4	5	STR	57'-9"	241
✱A307	4	5	STR	58'-7"	244
✱A308	4	5	STR	59'-5"	248
✱A309	8	5	STR	31'-5"	262
✱A310	8	5	STR	31'-10"	266
✱A311	8	5	STR	32'-3"	269
✱A312	8	5	STR	32'-8"	273
✱A313	8	5	STR	33'-1"	276
✱A314	8	5	STR	33'-6"	280
✱A315	8	5	STR	33'-11"	283
✱A316	8	5	STR	34'-4"	286
✱A317	8	5	STR	34'-9"	290
✱A318	8	5	STR	35'-2"	293
✱A319	8	5	STR	35'-7"	297
✱A320	8	5	STR	36'-1"	301
✱A321	8	5	STR	36'-6"	305
✱A322	8	5	STR	36'-11"	308
✱A323	8	5	STR	37'-4"	312
✱A324	8	5	STR	37'-9"	315
✱A325	8	5	STR	38'-2"	318
✱A326	8	5	STR	38'-7"	322
✱A327	8	5	STR	39'-0"	325
✱A328	8	5	STR	39'-5"	329
✱A329	8	5	STR	39'-10"	332
✱A330	8	5	STR	40'-3"	336
✱A331	8	5	STR	40'-8"	339
✱A332	8	5	STR	41'-1"	343
✱A333	8	5	STR	41'-6"	346
✱A334	8	5	STR	41'-11"	350
✱A335	8	5	STR	42'-4"	353
✱A336	8	5	STR	42'-9"	357
✱A337	8	5	STR	43'-3"	361
✱A338	8	5	STR	43'-8"	364
✱A339	8	5	STR	44'-1"	368
✱A340	8	5	STR	44'-6"	371
✱A341	8	5	STR	44'-11"	375
✱A342	8	5	STR	45'-5"	379
✱A343	2	5	STR	43'-8"	91
✱A344	2	5	STR	42'-6"	89
✱A345	2	5	STR	41'-5"	86
✱A346	2	5	STR	40'-4"	84
✱A347	2	5	STR	39'-2"	82
✱A348	2	5	STR	38'-1"	79
✱A349	2	5	STR	37'-0"	77
✱A350	2	5	STR	35'-10"	75
✱A351	2	5	STR	34'-9"	72
✱A352	2	5	STR	33'-8"	70
✱A353	2	5	STR	32'-7"	68
✱A354	2	5	STR	31'-5"	66
✱A355	1	5	STR	58'-2"	61
✱A356	1	5	STR	55'-11"	58
✱A357	1	5	STR	53'-8"	56
✱A358	1	5	STR	51'-6"	54
✱A359	1	5	STR	49'-3"	51
✱A360	1	5	STR	47'-1"	49
✱A361	1	5	STR	44'-10"	47
✱A362	1	5	STR	42'-7"	44
✱A363	1	5	STR	40'-5"	42
✱A364	1	5	STR	38'-2"	40
✱A365	1	5	STR	36'-0"	38
✱A366	1	5	STR	33'-9"	35
✱A367	1	5	STR	31'-6"	33
✱A368	1	5	STR	29'-4"	31
✱A369	1	5	STR	27'-1"	28
✱A370	1	5	STR	24'-10"	26
✱A371	1	5	STR	22'-8"	24
✱A372	1	5	STR	20'-5"	21
✱A373	1	5	STR	18'-3"	19
✱A374	1	5	STR	16'-0"	17
✱A375	1	5	STR	13'-9"	14
✱A376	1	5	STR	11'-7"	12
✱A377	1	5	STR	9'-4"	10
✱A378	1	5	STR	7'-2"	7
✱A379	1	5	STR	4'-11"	5
✱A380	1	5	STR	2'-8"	3
✱A381	1	5	STR	58'-0"	60
✱A382	1	5	STR	55'-9"	58
✱A383	1	5	STR	53'-6"	56
✱A384	1	5	STR	51'-4"	54
✱A385	1	5	STR	49'-1"	51
✱A386	1	5	STR	46'-11"	49
✱A387	1	5	STR	44'-8"	47
✱A388	1	5	STR	42'-5"	44
✱A389	1	5	STR	40'-3"	42
✱A390	1	5	STR	38'-0"	40
✱A391	1	5	STR	35'-10"	37
✱A392	1	5	STR	33'-7"	35
✱A393	1	5	STR	31'-4"	33
✱A394	1	5	STR	29'-2"	30
✱A395	1	5	STR	26'-11"	28
✱A396	1	5	STR	24'-8"	26
✱A397	1	5	STR	22'-6"	23
✱A398	1	5	STR	20'-3"	21
✱A399	1	5	STR	18'-1"	19
✱A400	1	5	STR	15'-10"	17
✱A401	1	5	STR	13'-7"	14
✱A402	1	5	STR	11'-5"	12
✱A403	1	5	STR	9'-2"	10
✱A404	1	5	STR	7'-0"	7
✱A405	1	5	STR	4'-9"	5
✱A406	1	5	STR	2'-6"	3
A500	323	5	STR	52'-8"	17743
A698	2	5	STR	2'-1"	4
A699	1	5	STR	4'-0"	4
A700	1	5	STR	5'-11"	6
A701	1	5	STR	7'-10"	8
A702	1	5	STR	9'-9"	10
A703	1	5	STR	11'-8"	12
A704	1	5	STR	13'-6"	14
A705	1	5	STR	15'-5"	16
A706	1	5	STR	17'-4"	18
A707	1	5	STR	19'-3"	20
A708	1	5	STR	21'-2"	22
A709	1	5	STR	23'-0"	24
A710	1	5	STR	24'-11"	26
A711	1	5	STR	26'-10"	28
A712	1	5	STR	28'-9"	30
A713	1	5	STR	30'-7"	32
A714	1	5	STR	32'-6"	34
A715	1	5	STR	34'-5"	36
A716	1	5	STR	36'-4"	38
A717	1	5	STR	38'-2"	40
A718	1	5	STR	40'-1"	42
A719	1	5	STR	42'-0"	44
A720	1	5	STR	43'-11"	46
A721	1	5	STR	45'-10"	48
A722	1	5	STR	47'-8"	50
A723	1	5	STR	49'-7"	52
A724	1	5	STR	51'-6"	54
A725	1	5	STR	53'-5"	56
A726	1	5	STR	55'-4"	58
A727	1	5	STR	57'-2"	60
A728	1	5	STR	59'-1"	62
A729	2	5	STR	31'-7"	66
A730	2	5	STR	32'-6"	68
A731	2	5	STR	33'-6"	70
A732	2	5	STR	34'-5"	72
A733	2	5	STR	35'-5"	74
A734	2	5	STR	36'-4"	76
A735	2	5	STR	37'-3"	78
A736	2	5	STR	38'-3"	80
A737	2	5	STR	39'-2"	82
A738	2	5	STR	40'-2"	84
A739	2	5	STR	41'-1"	86
A740	2	5	STR	42'-0"	88
A741	2	5	STR	43'-0"	90
A742	2	5	STR	43'-11"	92
A743	2	5	STR	44'-10"	94
A744	2	5	STR	45'-10"	96
A745	2	5	STR	46'-9"	98
A746	2	5	STR	47'-9"	100
A747	2	5	STR	48'-8"	102
A748	2	5	STR	49'-7"	103
A749	2	5	STR	50'-7"	106
A750	2	5	STR	51'-6"	107
A751	2	5	STR	52'-6"	110
A752	2	5	STR	53'-4"	111
A753	2	5	STR	54'-4"	113
A754	2	5	STR	55'-4"	115
A755	2	5	STR	56'-3"	117
A756	2	5	STR	57'-3"	119
A757	2	5	STR	58'-2"	121
A758	2	5	STR	59'-1"	123
A759	3	5	STR	40'-9"	128
A760	3	5	STR	41'-5"	130
A761	3	5	STR	42'-0"	131
A762	3	5	STR	42'-8"	134
A763	3	5	STR	43'-4"	136
A764	3	5	STR	43'-11"	137
A765	3	5	STR	44'-7"	140
A766	3	5	STR	45'-2"	141
A767	3	5	STR	45'-10"	143
A768	3	5	STR	46'-6"	145
A769	3	5	STR	47'-1"	147
A770	3	5	STR	47'-9"	149
A771	3	5	STR	48'-4"	151
A772	3	5	STR	49'-0"	153
A773	3	5	STR	49'-8"	155
A774	3	5	STR	50'-3"	157
A775	3	5	STR	50'-11"	159
A776	3	5	STR	51'-6"	161
A777	8	5	STR	51'-4"	428
A778	8	5	STR	50'-9"	423
A779	8	5	STR	50'-1"	418
A780	8	5	STR	49'-5"	412
A781	8	5	STR	48'-10"	407
A782	8	5	STR	48'-2"	402
A783	8	5	STR	47'-6"	396
A784	8	5	STR	46'-11"	391
A785	8	5	STR	46'-3"	386
A786	8	5	STR	45'-7"	380
A787	8	5	STR	45'-0"	375
A788	8	5	STR	44'-4"	370
A789	8	5	STR	43'-8"	364
A790	8	5	STR	43'-1"	359
A791	8	5	STR	42'-5"	354
A792	8	5	STR	41'-9"	348
A793	8	5	STR	41'-2"	343
A794	8	5	STR	40'-6"	338
A795	8	5	STR	39'-10"	332
A796	8	5	STR	39'-3"	328
A797	8	5	STR	38'-7"	322
A798	8	5	STR	37'-11"	316
A799	8	5	STR	37'-4"	312
A800	8	5	STR	36'-8"	306
A801	8	5	STR	36'-0"	300
A802	8	5	STR	35'-5"	296
A803	8	5	STR	34'-9"	290
A804	8	5	STR	34'-1"	284
A805	8	5	STR	33'-6"	280
A806	8	5	STR	32'-11"	275
A807	8	5	STR	32'-7"	272
A808	8	5	STR	32'-7"	272
A809	8	5	STR	32'-11"	275
A810	8	5	STR	33'-4"	278
A811	8	5	STR	33'-9"	282
A812	8	5	STR	34'-2"	285
A813	8	5	STR	34'-8"	289
A814	8	5	STR	35'-1"	293
A815	8	5	STR	35'-6"	296
A816	8	5	STR	35'-10"	291
A817	8	5	STR	36'-4"	303
A818	8	5	STR	36'-9"	307
A819	8	5	STR	37'-2"	310
A820	8	5	STR	37'-7"	314
A821	8	5	STR	38'-0"	317
A822	8	5	STR	38'-5"	321
A823	8	5	STR	38'-10"	324
A824	8	5	STR	39'-3"	328
A825	8	5	STR	39'-8"	331
A826	8	5	STR	40'-1"	334
A827	8	5	STR	40'-6"	338
A828	8	5	STR	40'-11"	341
A829	8	5	STR	41'-5"	346
A830	8	5	STR	41'-10"	349
A831	8	5	STR	42'-3"	353
A832	8	5	STR	42'-8"	356
A833	8	5	STR	43'-1"	359
A834	8	5	STR	43'-6"	363
A835	8	5	STR	43'-11"	366
A836	8	5	STR	44'-4"	370
A837	8	5	STR	44'-9"	373
A838	8	5	STR	45'-2"	377
A839	8	5	STR	45'-7"	380
A840	8	5	STR	46'-0"	384
A841	8	5	STR	46'-5"	387
A842	8	5	STR	46'-10"	391
A843	8	5	STR	47'-3"	394
A844	8	5	STR	47'-9"	398
A845	8	5	STR	48'-2"	402
A846	8	5	STR	48'-7"	405
A847	2	5	STR	48'-10"	102
A848	2	5	STR	48'-2"	100
A849	2	5	STR	47'-1"	98
A850	2	5	STR	46'-0"	96
A851	2	5	STR	44'-11"	94
A852	2	5	STR	43'-9"	91
A853	2	5	STR	42'-8"	89
A854	2	5	STR	41'-7"	87
A855	2	5	STR	40'-5"	84
A856	2	5	STR	39'-4"	82
A857	2	5	STR	38'-3"	80
A858	2	5	STR	37'-1"	77
A859	2	5	STR	36'-0"	75
A860	2	5	STR	34'-11"	73
A861	2	5	STR	33'-9"	70
A862	2	5	STR	32'-8"	68
A863	2	5	STR	31'-7"	66
A864	1	5	STR	58'-9"	61
A865	1	5	STR	56'-6"	59
A866	1	5	STR	54'-4"	57
A867	1	5	STR	52'-1"	54
A868	1	5	STR	49'-11"	52
A869	1	5	STR	47'-8"	50
A870	1	5	STR	45'-5"	47
A871	1	5	STR	43'-3"	45
A872	1	5	STR	41'-0"	43
A873	1	5	STR	38'-9"	40
A874	1	5	STR	36'-7"	38
A875	1	5	STR	34'-4"	36
A876	1	5	STR	32'-2"	34
A877	1	5	STR	29'-11"	31
A878	1	5	STR	27'-8"	29
A879	1	5	STR	25'-6"	27
A880	1	5	STR	23'-3"	24
A881	1	5	STR	21'-0"	22
A882	1	5	STR	18'-10"	20
A883	1	5	STR	16'-7"	17
A884	1	5	STR	14'-5"	15
A885	1	5	STR	12'-2"	13
A886	1	5	STR	9'-11"	10
A887	1	5	STR	7'-9"	8
A888	1	5	STR	5'-6"	6
A889	1	5	STR	3'4"	3
A890	1	5	STR	51'-7"	54
A891	1	5	STR	49'-4"	51
A892	1	5	STR	47'-2"	49
A893	1	5	STR	44'-11"	47
A894	1	5	STR	42'-8"	45
A895	1	5	STR	40'-6"	42
A896	1	5	STR	38'-3"	40
A897	1	5	STR	36'-1"	38
A898	1	5	STR	33'-10"	35
A899	1	5	STR	31'-7"	33
A900	1	5	STR	29'-5"	31
A901	1	5	STR	27'-2"	28
A902	1	5	STR	25'-0"	26
A903	1	5	STR	22'-9"	24
A904	1	5	STR	20'-6"	21
A905	1	5	STR	18'-4"	19
A906	1	5	STR	16'-1"	17
A907	1	5	STR	13'-10"	14
A908	1	5	STR	11'-8"	12
A909	1	5	STR	9'-5"	10
A910	1	5	STR	7'-3"	8
A911	1	5	STR	5'-0"	5
A912	1	5	STR	2'-9"	3

REINFORCING STEEL	51089 LBS.
EPOXY COATED REINFORCING STEEL	50828 LBS.

✱ DENOTES EPOXY COATED REINFORCING STEEL.

STAGE II CONTINUED ON SHEET 4 OF 5.

NORTH CAROLINA PROFESSIONAL SEAL 11259 ENGINEER DAVID R. ANDERSON
11/24/08

PROJECT NO. R-3833B
IREDELL COUNTY
STATION: 277+88.88 -L-

SHEET 3 OF 5

STATE OF NORTH CAROLINA
DEPARTMENT OF TRANSPORTATION
RALEIGH

SUPERSTRUCTURE
BILL OF MATERIAL

REVISIONS						SHEET NO.
NO.	BY:	DATE:	NO.	BY:	DATE:	S-61
1			3			TOTAL SHEETS
2			4			113

DRAWN BY : P.C. BREWER DATE : 10/17/08
CHECKED BY : W.F. PARKER DATE : 11/12/08

14-NOV-2008 13:43
f:\structures\callaway\microstation\brewer plans\r3833b_sd_bm_01.dgn
scallaway

BILL OF MATERIAL

STAGE II

BAR	NO.	SIZE	TYPE	LENGTH	WEIGHT
✳B1	346	4	STR	27'-0"	6240
✳B13	152	6	STR	58'-0"	13242
✳B14	151	6	STR	24'-0"	5443
✳B90	2	4	STR	26'-7"	36
✳B91	2	4	STR	25'-8"	34
✳B92	2	4	STR	24'-9"	33
✳B93	2	4	STR	23'-10"	32
✳B94	2	4	STR	22'-11"	31
✳B95	2	4	STR	22'-0"	29
✳B96	2	4	STR	21'-1"	28
✳B97	2	4	STR	20'-2"	27
✳B98	2	4	STR	19'-3"	26
✳B99	2	4	STR	18'-4"	24
✳B100	2	4	STR	17'-5"	23
✳B101	2	4	STR	16'-6"	22
✳B102	1	4	STR	29'-1"	19
✳B103	1	4	STR	27'-3"	18
✳B104	1	4	STR	25'-5"	17
✳B105	1	4	STR	23'-7"	16
✳B106	1	4	STR	21'-8"	14
✳B107	1	4	STR	19'-10"	13
✳B108	1	4	STR	18'-0"	12
✳B109	1	4	STR	16'-2"	11
✳B110	1	4	STR	14'-4"	10
✳B111	1	4	STR	12'-3"	8
✳B112	1	4	STR	10'-8"	7
✳B113	3	4	STR	8'-9"	18
✳B114	2	4	STR	10'-0"	13
✳B115	1	6	STR	27'-2"	41
✳B116	1	6	STR	26'-2"	39
✳B117	1	6	STR	25'-3"	38
✳B118	1	6	STR	24'-4"	37
✳B119	1	6	STR	23'-5"	35
✳B120	1	6	STR	22'-6"	34
✳B121	1	6	STR	21'-7"	32
✳B122	1	6	STR	20'-8"	31
✳B123	1	6	STR	19'-9"	30
✳B124	1	6	STR	18'-10"	28
✳B125	1	6	STR	17'-11"	27
✳B126	1	6	STR	17'-0"	26
✳B127	1	6	STR	16'-1"	24
✳B128	1	6	STR	15'-2"	23
✳B129	1	6	STR	14'-3"	21
✳B130	1	6	STR	13'-4"	20
✳B131	1	6	STR	12'-4"	19
✳B132	1	6	STR	11'-5"	17
✳B133	1	6	STR	10'-6"	16
✳B134	1	6	STR	9'-7"	14
✳B135	1	6	STR	8'-8"	13
✳B136	1	6	STR	7'-9"	12
✳B137	1	6	STR	6'-10"	10
✳B138	1	6	STR	5'-11"	9
✳B139	1	6	STR	5'-0"	8
✳B140	4	6	STR	4'-1"	25
✳B141	1	6	STR	10'-10"	16
✳B142	1	6	STR	9'-8"	15
✳B143	1	6	STR	8'-9"	13
✳B144	1	6	STR	7'-10"	12
✳B145	1	6	STR	6'-11"	10
✳B146	1	6	STR	6'-0"	9
✳B147	1	6	STR	5'-1"	8
✳B148	4	6	STR	4'-2"	25
✳B149	1	6	STR	9'-6"	14
✳B150	1	6	STR	7'-8"	12
✳B151	1	6	STR	5'-11"	9
✳B152	3	6	STR	4'-1"	18
✳B153	1	6	STR	25'-7"	38
✳B154	1	6	STR	23'-9"	36
✳B155	1	6	STR	22'-0"	33
✳B156	1	6	STR	20'-3"	30
✳B157	1	6	STR	18'-5"	28
✳B158	1	6	STR	16'-8"	25
✳B159	1	6	STR	14'-10"	22
✳B160	1	6	STR	13'-1"	20
✳B161	1	6	STR	11'-4"	17
✳B162	1	6	STR	9'-6"	14
✳B163	1	6	STR	7'-9"	12
✳B164	1	6	STR	5'-11"	9
✳B165	2	6	STR	4'-2"	13
✳B166	2	4	STR	26'-3"	35
✳B167	2	4	STR	24'-6	33
✳B168	2	4	STR	22'-8"	30
✳B169	2	4	STR	20'-11"	28
✳B170	2	4	STR	19'-1"	25
✳B171	2	4	STR	17'-4"	23
✳B172	1	4	STR	29'-1"	19
✳B173	1	4	STR	25'-6"	17
✳B174	1	4	STR	21'-11"	15
✳B175	1	4	STR	18'-4"	12
✳B176	1	4	STR	14'-10"	10
✳B177	1	4	STR	11'-3"	8
✳B178	1	4	STR	7'-8"	5
✳B179	1	4	STR	4'-1"	3
✳B180	4	4	STR	30'-0"	80
✳B181	3	4	STR	28'-10"	58
B200	258	5	STR	54'-5"	14643
B219	16	5	STR	57'-7"	961
B220	10	5	STR	31'-4"	327
B221	12	5	STR	54'-11"	687
B222	10	5	STR	32'-4"	337
B223	12	5	STR	52'-6"	657
B224	10	5	STR	33'-4"	348
B225	14	5	STR	50'-2"	733
B226	6	5	STR	54'-2"	339
B227	14	5	STR	48'-0"	701
B228	6	5	STR	56'-5"	353
B229	14	5	STR	46'-1"	673
B230	6	5	STR	57'-11"	362
B231	16	5	STR	44'-4"	740
B232	7	5	STR	49'-8"	363
B233	16	5	STR	42'-11"	716
B234	7	5	STR	50'-11"	372
B235	16	5	STR	41'-8"	695
B236	7	5	STR	51'-10"	378
B237	32	5	STR	41'-0"	1368
B238	14	5	STR	52'-4"	764
B239	32	5	STR	40'-5"	1349
B240	14	5	STR	52'-4"	764
B241	14	5	STR	40'-9"	595
B242	6	5	STR	49'-11"	312
B243	66	5	STR	40'-7"	2794
✳D1	344	5	STR	6'-10"	2452
✳D2	346	5	STR	6'-2"	2225
✳G3	4	5	STR	47'-1"	196
✳G4	3	5	STR	51'-5"	161
✳K22	2	8	1	14'-3"	76
✳K23	12	8	3	22'-6"	721
✳K24	4	8	9	18'-5"	197
✳K25	12	8	3	21'-11"	702
✳K26	2	8	2	19'-2"	102
K27	12	6	STR	9'-2"	165
K28	30	6	STR	9'-6"	428
K29	3	6	STR	7'-0"	32
K30	25	4	STR	25'-6"	426
K31	56	4	STR	2'-6"	94
K32	8	4	STR	7'-4"	39
K33	2	4	STR	5'-8"	8
K34	40	4	STR	9'-8"	258
K35	10	4	STR	8'-0"	53
K38	8	4	STR	7'-4"	39
K39	2	4	STR	5'-8"	8
✳K40	2	8	1	13'-11"	74
✳K41	14	8	3	21'-11"	819
✳K42	10	8	9	18'-5"	492
✳K43	2	8	2	19'-2"	102
K44	27	6	STR	9'-8"	392
K45	12	6	STR	7'-4"	132
✳S1	263	4	4	5'-11"	1039
✳S2	263	4	6	5'-1"	893
S3	310	4	8	2'-9"	569
✳S4	4	4	7	8'-3"	22
✳U1	55	4	3	14'-10"	545
✳U2	30	4	3	12'-10"	257
U3	14	4	6	5'-11"	55

REINFORCING STEEL	35029 LBS.
EPOXY COATED REINFORCING STEEL	38009 LBS.

✳ DENOTES EPOXY COATED REINFORCING STEEL.

STAGE III

BAR	NO.	SIZE	TYPE	LENGTH	WEIGHT
✳B1	12	4	STR	27'-0"	216
✳B13	5	6	STR	58'-0"	436
✳B14	4	6	STR	24'-0"	144
B200	18	5	STR	54'-5"	1022
K36	8	4	STR	5'-2"	28
K37	2	4	STR	3'-6"	5
✳S1	10	4	4	5'-11"	40
✳S2	10	4	6	5'-1"	34
S3	19	4	8	2'-9"	35
✳S5	1	4	5	13'-8"	9
✳U1	4	4	3	14'-10"	40
✳U2	1	4	3	12'-10"	9

REINFORCING STEEL	1090 LBS.
EPOXY COATED REINFORCING STEEL	928 LBS.

STAGE II REINFORCING STEEL

	REINFORCING STEEL (LBS.)	EPOXY COATED REINF. STEEL (LBS.)
QUANTITY FROM SHEET 3 IF 5	51089	50828
QUANTITY FROM SHEET 4 OF 5	35029	38009
TOTAL STAGE II	86118	88837

DRAWN BY : P.C. BREWER DATE : 10/17/08
CHECKED BY : W.F. PARKER DATE : 11/12/08

14-NOV-2008 13:43
f:\structures\galloway\microstation\brewer plans\r3833b_sd_bm_01.dgn
galloway

PROJECT NO. R-3833B
IREDELL COUNTY
STATION: 277+88.88 -L-

SHEET 4 OF 5

STATE OF NORTH CAROLINA
DEPARTMENT OF TRANSPORTATION
RALEIGH

SUPERSTRUCTURE
BILL OF MATERIAL

NORTH CAROLINA PROFESSIONAL SEAL 11259 ENGINEER DAVID R. ANDERSON
11/24/08

REVISIONS						SHEET NO.
NO.	BY:	DATE:	NO.	BY:	DATE:	S-62
1			3			TOTAL SHEETS
2			4			113

SUPERSTRUCTURE REINFORCING STEEL LENGTHS ARE BASED ON THE FOLLOWING MINIMUM SPLICE LENGTHS

BAR SIZE	SUPERSTRUCTURE EXCEPT APPROACH SLABS, PARAPET, AND BARRIER RAIL		APPROACH SLABS		PARAPET AND BARRIER RAIL
	EPOXY COATED	UNCOATED	EPOXY COATED	UNCOATED	
#4	2'-0"	1'-9"	2'-0"	1'-9"	2'-9"
#5	2'-6"	2'-2"	2'-6"	2'-2"	3'-5"
#6	3'-0"	2'-7"	3'-10"	2'-7"	4'-4"
#7	5'-3"	3'-6"	—	—	—
#8	6'-10"	4'-7"	—	—	—

GROOVING BRIDGE FLOORS

APPROACH SLABS	16,519	SQ.FT.
BRIDGE DECK	31,626	SQ.FT.
TOTAL	48,145	SQ.FT.

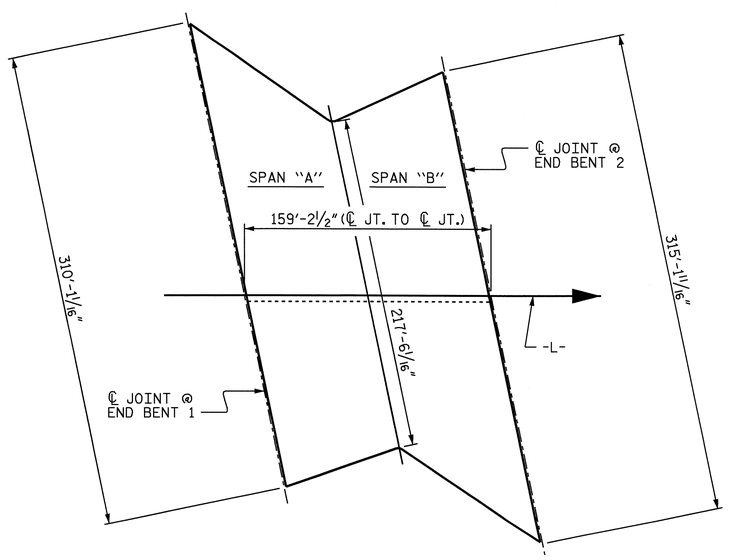

LAYOUT FOR COMPUTING AREA OF REINFORCED CONCRETE DECK SLAB (SQ. FT. = 41,301)

BAR TYPES

ALL BAR DIMENSIONS ARE OUT TO OUT.

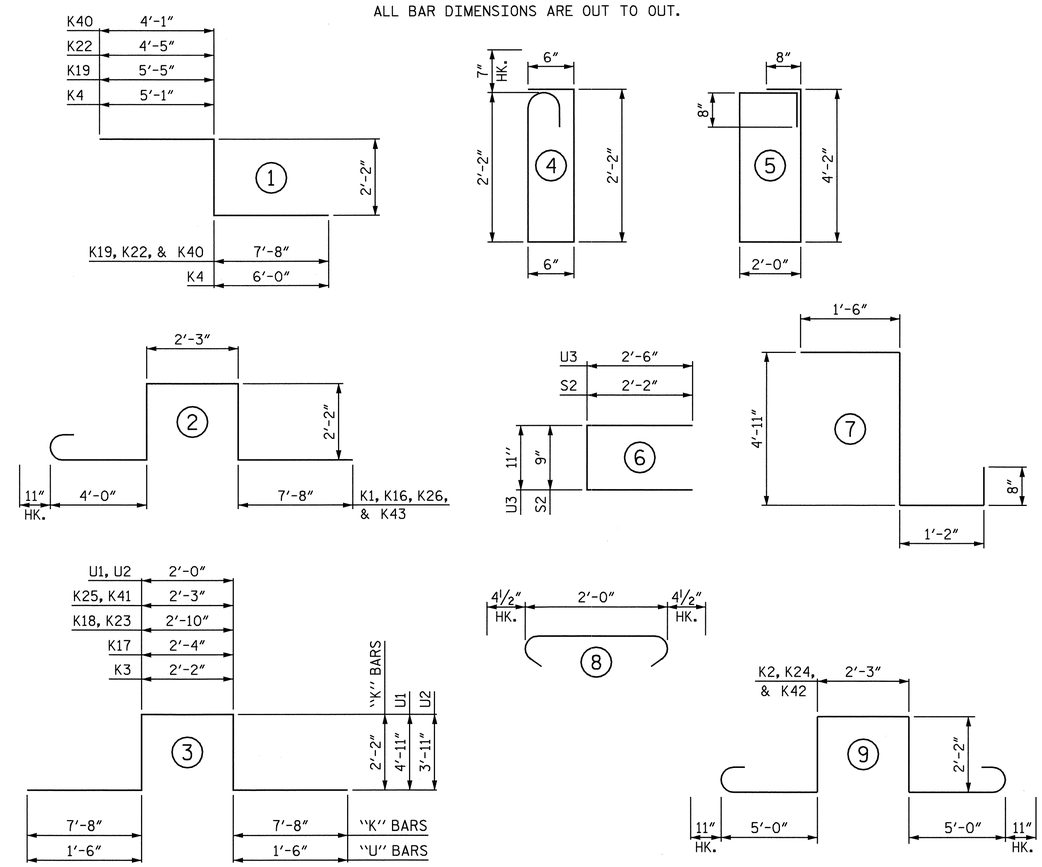

SUPERSTRUCTURE BILL OF MATERIAL

	CLASS AA CONCRETE (CU. YDS.)					REINFORCING STEEL (LBS.)	EPOXY COATED REINFORCING STEEL (LBS.)			
	POUR #1	POUR #2	SIDEWALK	ISLANDS	TOTAL		DECK	SIDEWALK	ISLANDS	TOTAL
STAGE I	328.7	367.0	81.1	23.1	799.9	89685	76478	5180	1420	83078
STAGE II	325.7	481.6	85.9	55.9	949.1	86118	88837	5530	3314	97681
STAGE III	26.0	—	—	—	26.0	1090	928	—	—	928
TOTALS	—	—	—	—	1775.0	176893	—	—	—	181687

PROJECT NO. R-3833B
IREDELL COUNTY
STATION: 277+88.88 -L-

SHEET 5 OF 5

STATE OF NORTH CAROLINA
DEPARTMENT OF TRANSPORTATION
RALEIGH

SUPERSTRUCTURE
BILL OF MATERIAL

NORTH CAROLINA PROFESSIONAL SEAL 11259 ENGINEER DAVID R. ANDERSON
9/30/09

REVISIONS						SHEET NO.
NO.	BY:	DATE:	NO.	BY:	DATE:	S-63
1			3			TOTAL SHEETS
2			4			113

DRAWN BY : P.C. BREWER DATE : 10/17/08
CHECKED BY : W.F. PARKER DATE : 11/12/08

30-SEP-2009 11:44
r:\structures\callaway\microstation\brewer plans\r3833b_sd_bm_01.dgn
danderson

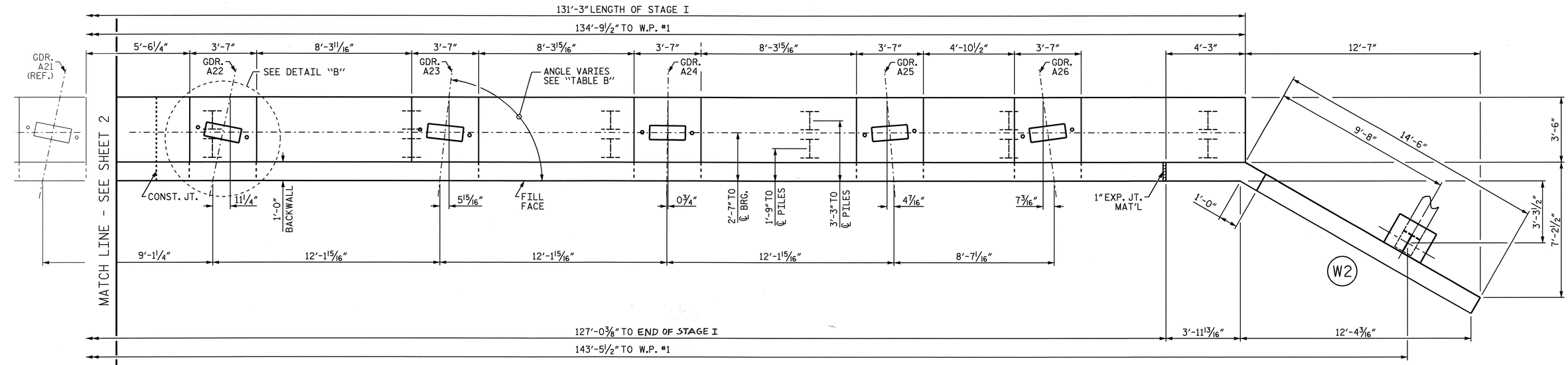

PLAN

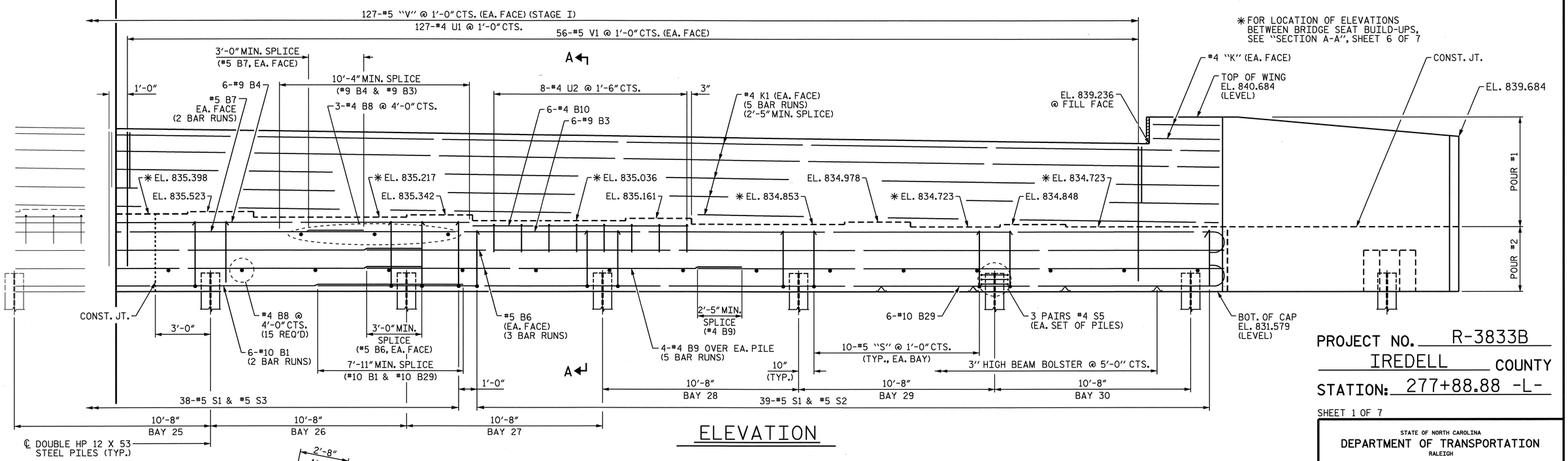

✱ FOR LOCATION OF ELEVATIONS BETWEEN BRIDGE SEAT BUILD-UPS, SEE "SECTION A-A", SHEET 6 OF 7

ELEVATION

TABLE B	
GIRDER	SKEW
A15 TO A22	78°-19'-27"
A23	83°-42'-16"
A24	89°-11'-53"
A25	94°-42'-23"
A26	97°-34'-11"

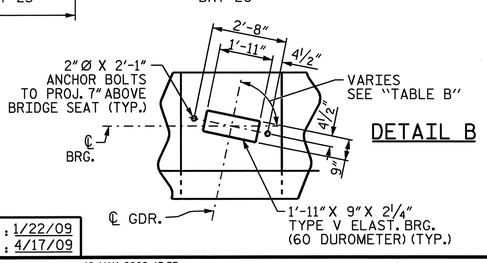

DETAIL B

NOTES

STIRRUPS IN CAP MAY BE SHIFTED AS NECESSARY TO CLEAR ANCHOR BOLTS.

BACKWALL SHALL BE PLACED BEFORE APPLYING THE EPOXY PROTECTIVE COATING.

THE TOP SURFACE AREAS OF THE END BENT CAPS SHALL BE CURED IN ACCORDANCE WITH THE STANDARD SPECIFICATIONS EXCEPT THE MEMBRANE CURING COMPOUND METHOD SHALL NOT BE USED.

THE TOP SURFACE OF THE CAP EXCEPT THE BRIDGE SEAT BUILDUPS SHALL BE SLOPED TRANSVERSELY FROM THE FILL FACE TO THE BACK FACE AT THE RATE OF 2%.

FOR GALVANIZED REINFORCING STRAP LOAD DETAIL, SEE SHEET 7 OF 7.

NORTH CAROLINA PROFESSIONAL SEAL 11259 ENGINEER DAVID R. ANDERSON

5/13/09

PROJECT NO. R-3833B
IREDELL COUNTY
STATION: 277+88.88 -L-

SHEET 1 OF 7

STATE OF NORTH CAROLINA
DEPARTMENT OF TRANSPORTATION
RALEIGH

SUBSTRUCTURE
END BENT 1
STAGE I

REVISIONS								SHEET NO.
NO.	BY:	DATE:	NO.	BY:	DATE:			S-64
1			3					TOTAL SHEETS
2			4					113

DRAWN BY : R. WITHROW DATE : 1/22/09
CHECKED BY : D. ANDERSON DATE : 4/17/09

12-MAY-2009 15:35
R:\Structures\rwithrow\Microstation\r3833b_sd_e*_01.dgn
drwithrow

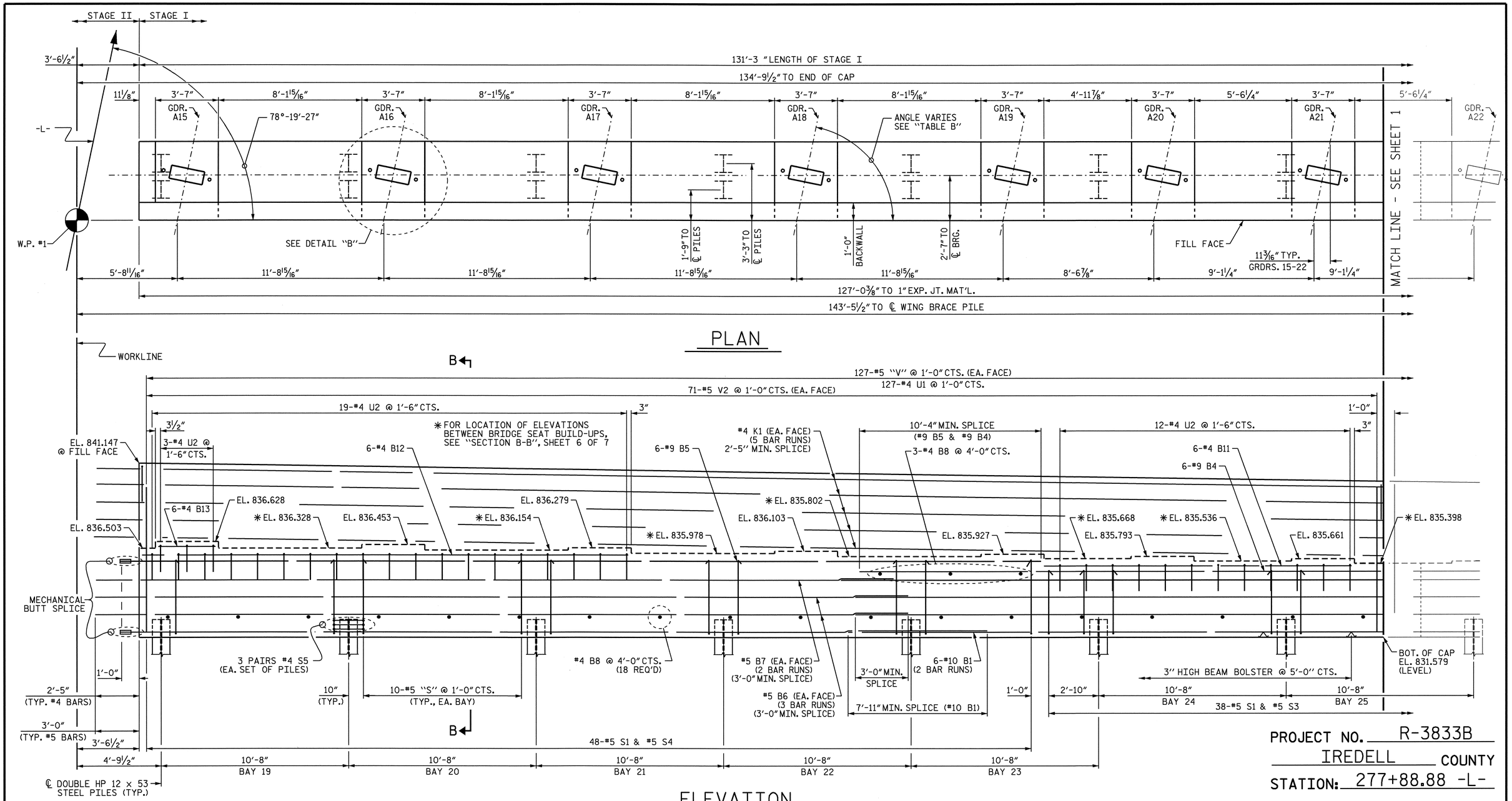

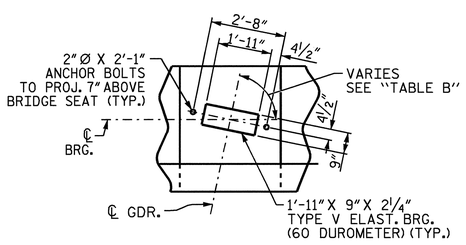

DETAIL B

TABLE B	
GIRDER	SKEW
A15 TO A22	78°-19'-27"
A23	83°-42'-16"
A24	89°-11'-53"
A25	94°-42'-23"
A26	97°-34'-11"

NOTES

STIRRUPS IN CAP MAY BE SHIFTED AS NECESSARY TO CLEAR ANCHOR BOLTS.

BACKWALL SHALL BE PLACED BEFORE APPLYING THE EPOXY PROTECTIVE COATING.

THE TOP SURFACE AREAS OF THE END BENT CAPS SHALL BE CURED IN ACCORDANCE WITH THE STANDARD SPECIFICATIONS EXCEPT THE MEMBRANE CURING COMPOUND METHOD SHALL NOT BE USED.

THE TOP SURFACE OF THE CAP EXCEPT THE BRIDGE SEAT BUILDUPS SHALL BE SLOPED TRANSVERSELY FROM THE FILL FACE TO THE BACK FACE AT THE RATE OF 2%.

FOR GALVANIZED REINFORCING STRAP LOAD DETAIL, SEE SHEET 7 OF 7.

NORTH CAROLINA PROFESSIONAL SEAL 11259 ENGINEER DAVID R. ANDERSON
5/13/09

PROJECT NO. R-3833B
IREDELL COUNTY
STATION: 277+88.88 -L-

SHEET 2 OF 7

STATE OF NORTH CAROLINA
DEPARTMENT OF TRANSPORTATION
RALEIGH

SUBSTRUCTURE
END BENT 1
STAGE I

REVISIONS								SHEET NO.
NO.	BY:	DATE:	NO.	BY:	DATE:			S-65
1			3					TOTAL SHEETS
2			4					113

DRAWN BY : R. WITHROW DATE : 1/22/09
CHECKED BY : D. ANDERSON DATE : 4/17/09

13-MAY-2009 08:02
R:\Structures\rwithrow\Microstation\r3833b_sd_e*_01.dgn
drwithrow

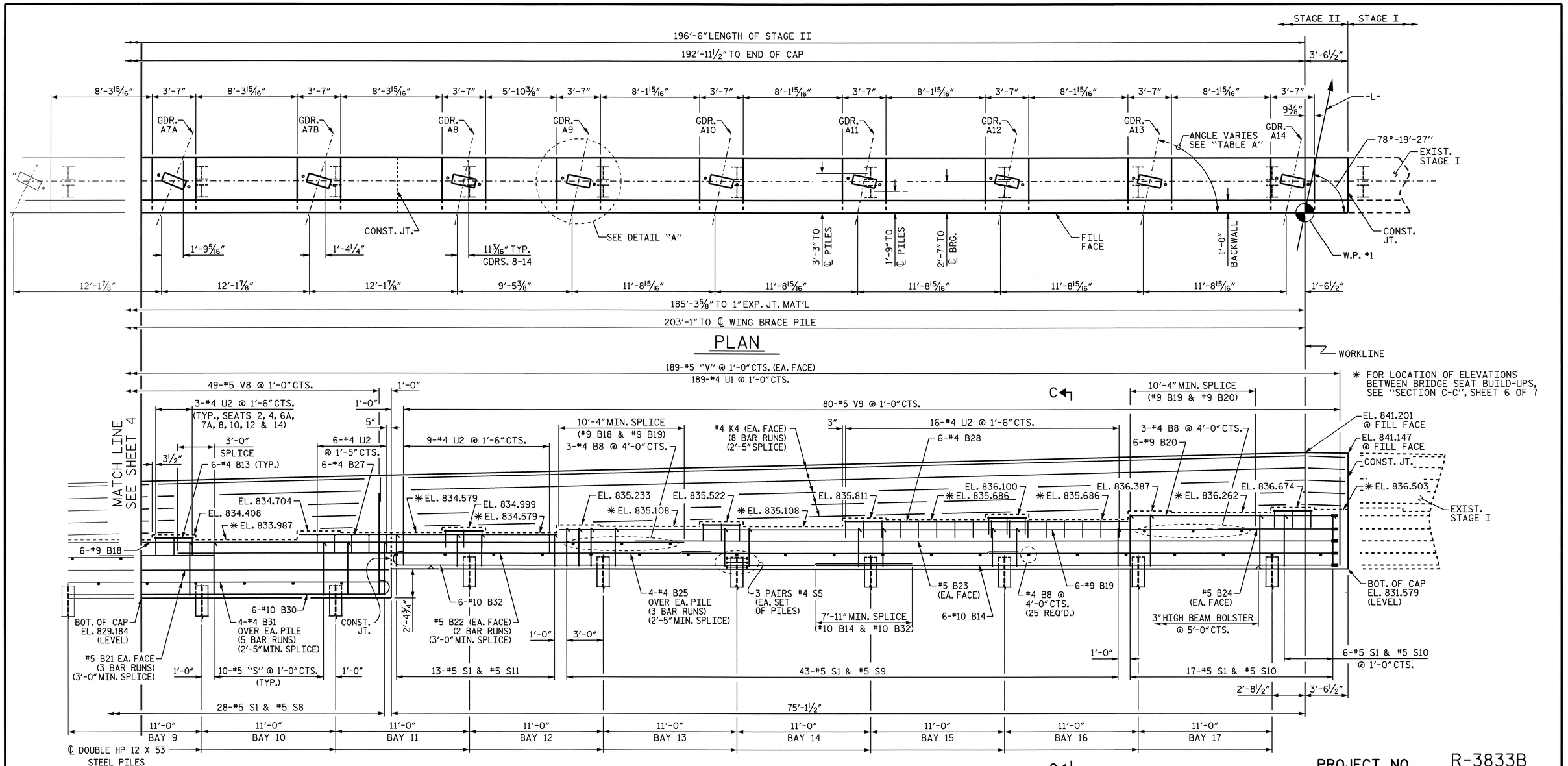

TABLE A	
GIRDER	SKEW
A1	43°-27'-54"
A2	46°-11'-38"
A3	49°- 8'-12"
A4	52°-21'-58"
A5	55°-54'-10"
A6A	59°-45'-42"
A6B	63°-56'-54"
A7A	68°-27'-25"
A7B	73°-15'-47"
A8 TO A14	78°-19'-27"

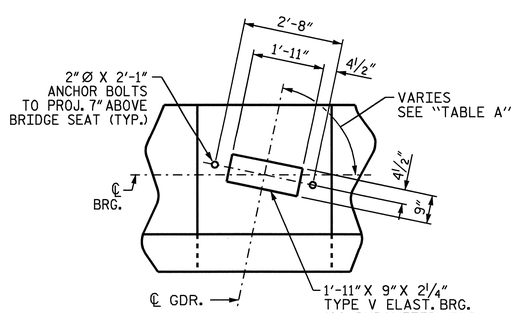

DETAIL A

NOTES

STIRRUPS IN CAP MAY BE SHIFTED AS NECESSARY TO CLEAR ANCHOR BOLTS.

BACKWALL SHALL BE PLACED BEFORE APPLYING THE EPOXY PROTECTIVE COATING.

THE TOP SURFACE AREAS OF THE END BENT CAPS SHALL BE CURED IN ACCORDANCE WITH THE STANDARD SPECIFICATIONS EXCEPT THE MEMBRANE CURING COMPOUND METHOD SHALL NOT BE USED.

THE TOP SURFACE OF THE CAP EXCEPT THE BRIDGE SEAT BUILDUPS SHALL BE SLOPED TRANSVERSELY FROM THE FILL FACE TO THE BACK FACE AT THE RATE OF 2%.

FOR GALVANIZED REINFORCING STRAP LOAD DETAIL, SEE SHEET 7 OF 7.

NORTH CAROLINA PROFESSIONAL SEAL 11259 ENGINEER DAVID R. ANDERSON
5/13/09

PROJECT NO. R-3833B
IREDELL COUNTY
STATION: 277+88.88 -L-

SHEET 3 OF 7

STATE OF NORTH CAROLINA
DEPARTMENT OF TRANSPORTATION
RALEIGH

SUBSTRUCTURE
END BENT 1
STAGE II

REVISIONS						SHEET NO.
NO.	BY:	DATE:	NO.	BY:	DATE:	S-66
1			3			TOTAL SHEETS
2			4			113

DRAWN BY : TRAN/WITHROW DATE : 8/29/08
CHECKED BY : D. ANDERSON DATE : 4/17/09

13-MAY-2009 08:13
R:\Structures\rwithrow\Microstation\r3833b_sd_e*_01.dgn
drwithrow

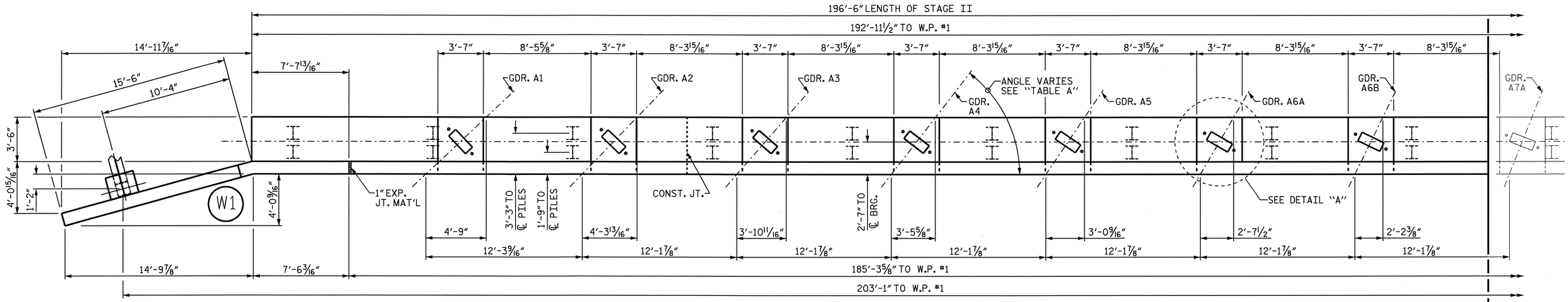

PLAN

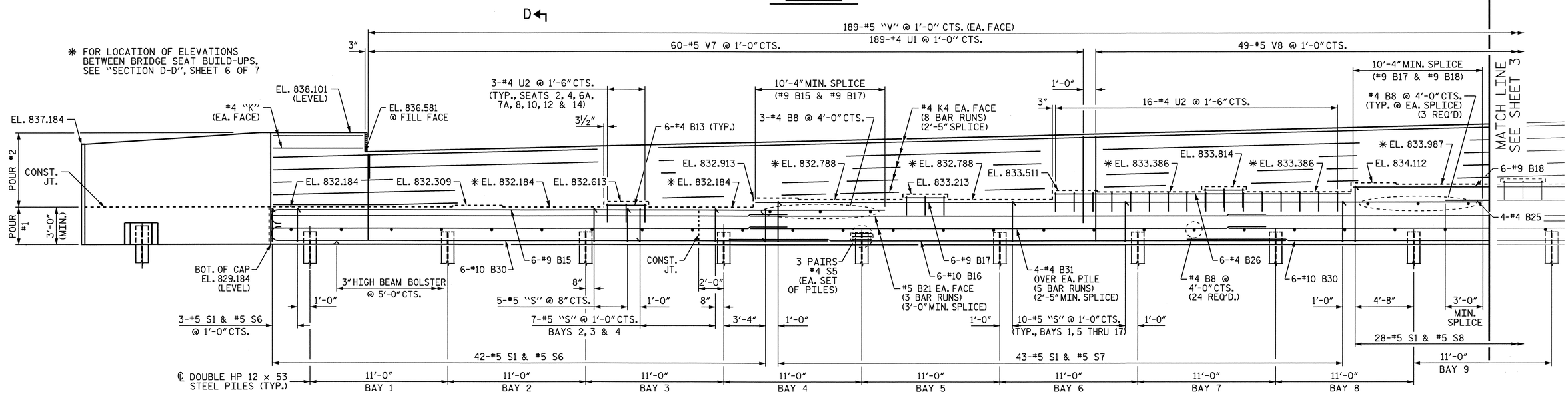

ELEVATION

TABLE A	
GIRDER	SKEW
A1	43°-27'-54"
A2	46°-11'-38"
A3	49°- 8'-12"
A4	52°-21'-58"
A5	55°-54'-10"
A6A	59°-45'-42"
A6B	63°-56'-54"
A7A	68°-27'-25"
A7B	73°-15'-47"
A8 TO A14	78°-19'-27"

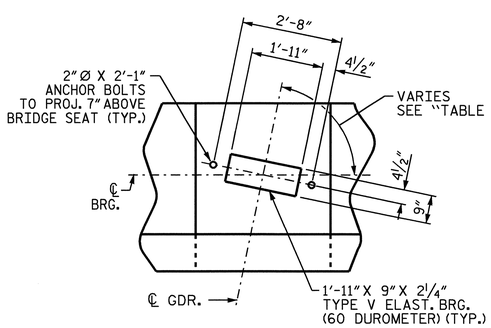

DETAIL A

NOTES

STIRRUPS IN CAP MAY BE SHIFTED AS NECESSARY TO CLEAR ANCHOR BOLTS.

BACKWALL SHALL BE PLACED BEFORE APPLYING THE EPOXY PROTECTIVE COATING.

THE TOP SURFACE AREAS OF THE END BENT CAPS SHALL BE CURED IN ACCORDANCE WITH THE STANDARD SPECIFICATIONS EXCEPT THE MEMBRANE CURING COMPOUND METHOD SHALL NOT BE USED.

THE TOP SURFACE OF THE CAP EXCEPT THE BRIDGE SEAT BUILDUPS SHALL BE SLOPED TRANSVERSELY FROM THE FILL FACE TO THE BACK FACE AT THE RATE OF 2%.

FOR GALVANIZED REINFORCING STRAP LOAD DETAILS, SEE SHEET 7 OF 7.

NORTH CAROLINA PROFESSIONAL SEAL 11259 ENGINEER DAVID R. ANDERSON
5/13/09

PROJECT NO. R-3833B
IREDELL COUNTY
STATION: 277+88.88 -L-

SHEET 4 OF 7

STATE OF NORTH CAROLINA
DEPARTMENT OF TRANSPORTATION
RALEIGH

SUBSTRUCTURE
END BENT 1
STAGE II

REVISIONS						SHEET NO.
NO.	BY:	DATE:	NO.	BY:	DATE:	5-67
1			3			TOTAL SHEETS
2			4			113

DRAWN BY : R. WITHROW DATE : 8/29/08
CHECKED BY : D. ANDERSON DATE : 4/17/09

13-MAY-2009 08:22
R:\Structures\rwithrow\Microstation\r3833b_sd_e*_01.dgn
drwithrow

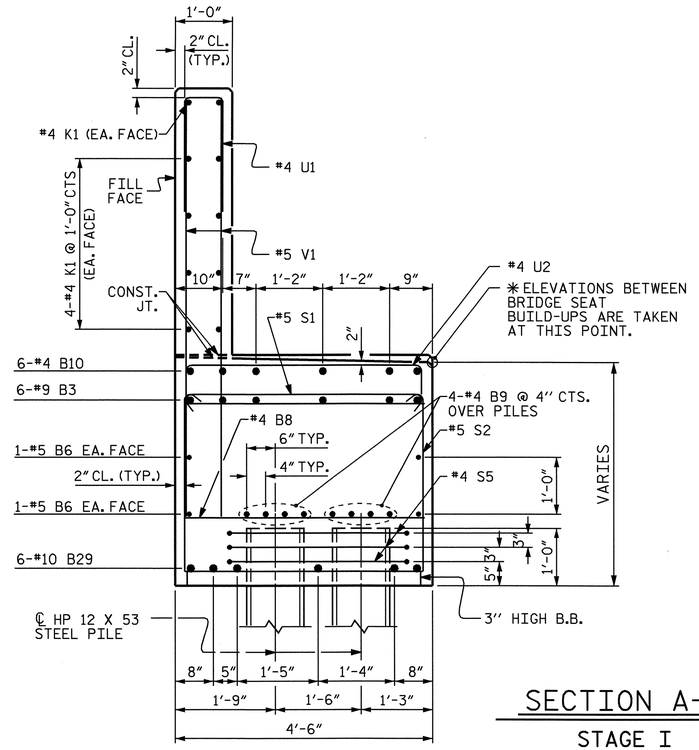

SECTION A-A

STAGE I

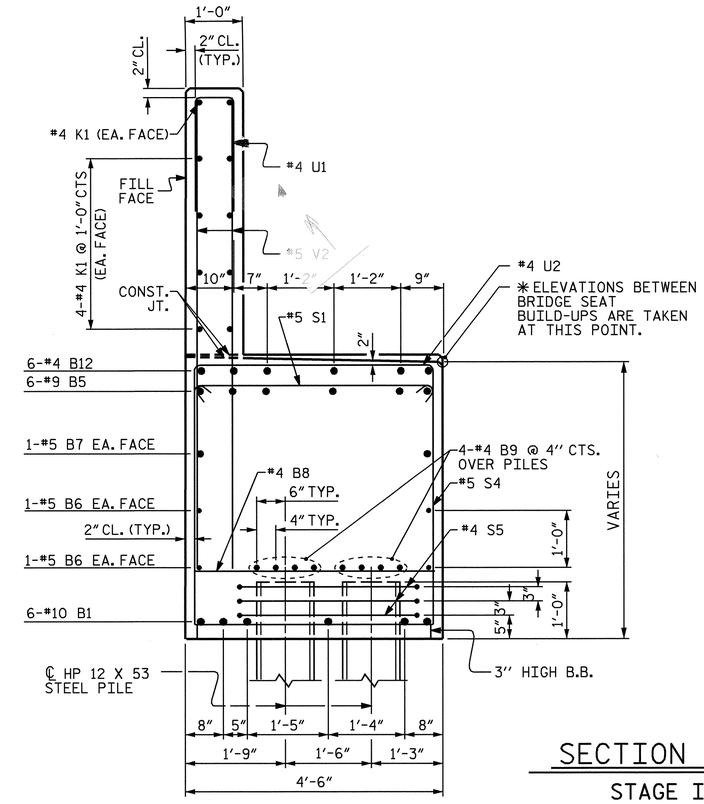

SECTION B-B

STAGE I

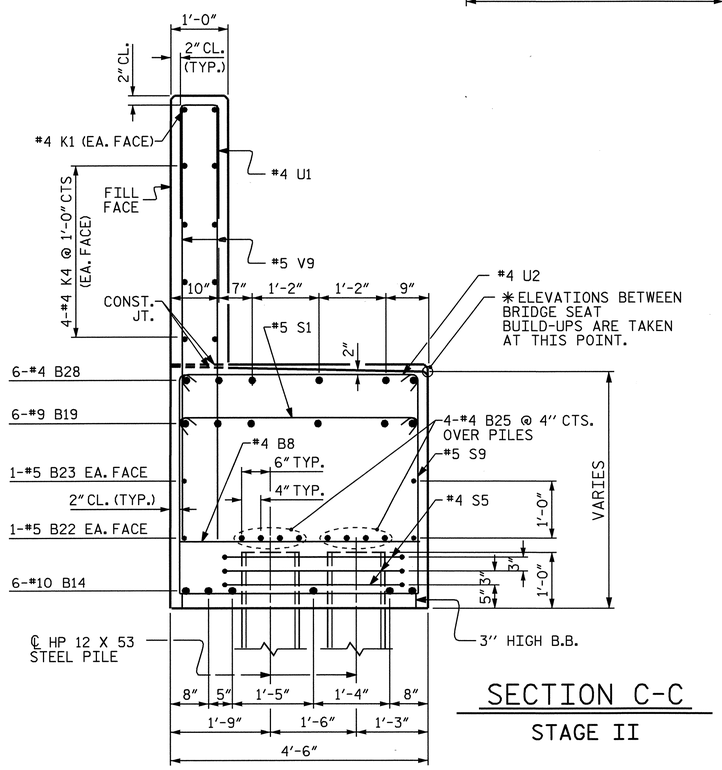

SECTION C-C

STAGE II

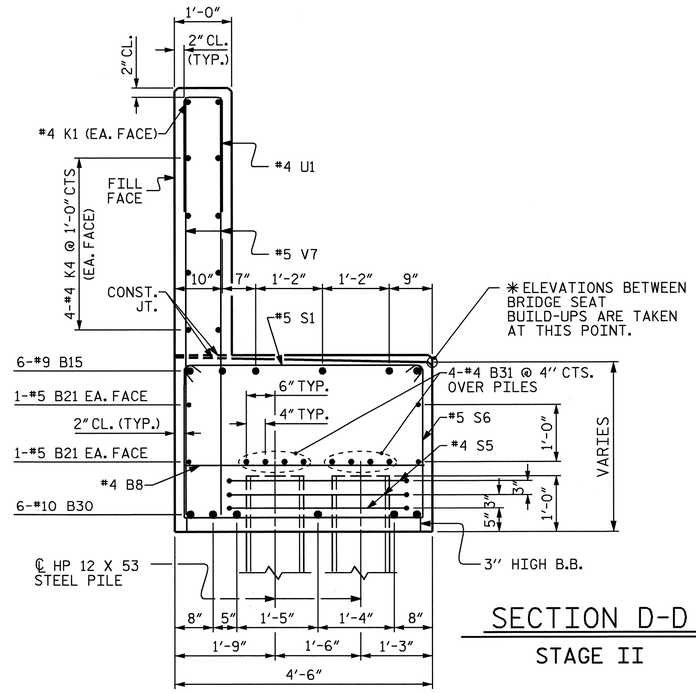

SECTION D-D

STAGE II

NORTH CAROLINA PROFESSIONAL SEAL 11259 ENGINEER DAVID R. ANDERSON

5/11/09

PROJECT NO. R-3833B

IREDELL COUNTY

STATION: 277+88.88 -L-

SHEET 5 OF 7

STATE OF NORTH CAROLINA
DEPARTMENT OF TRANSPORTATION
RALEIGH

SUBSTRUCTURE
END BENT 1

REVISIONS						SHEET NO.
NO.	BY:	DATE:	NO.	BY:	DATE:	5-68
1			3			TOTAL SHEETS
2			4			113

DRAWN BY : R. WITHROW DATE : 1/22/09
CHECKED BY : D. ANDERSON DATE : 4/17/09

11-MAY-2009 10:20
r:\structures\rwithrow\microstation\r3833b_sd_e*_01.dgn
danderson

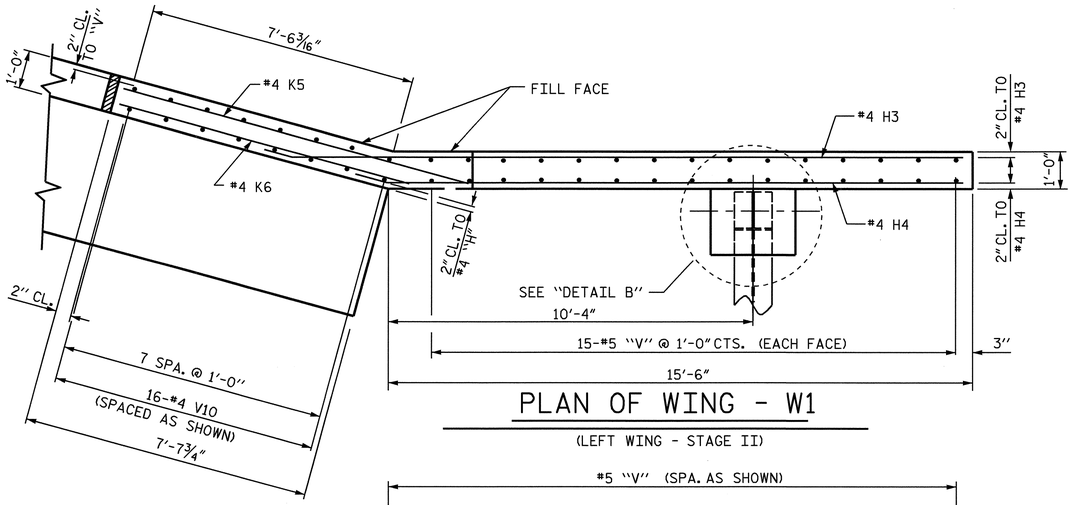

PLAN OF WING - W1

(LEFT WING - STAGE II)

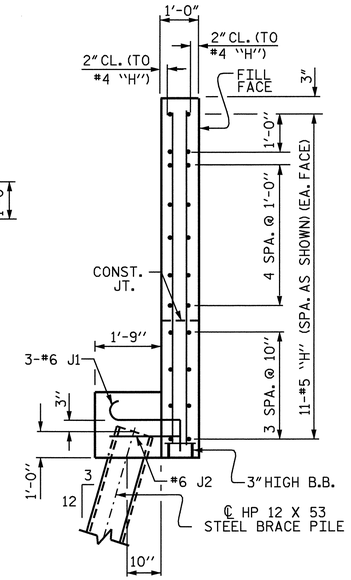

SECTION X-X

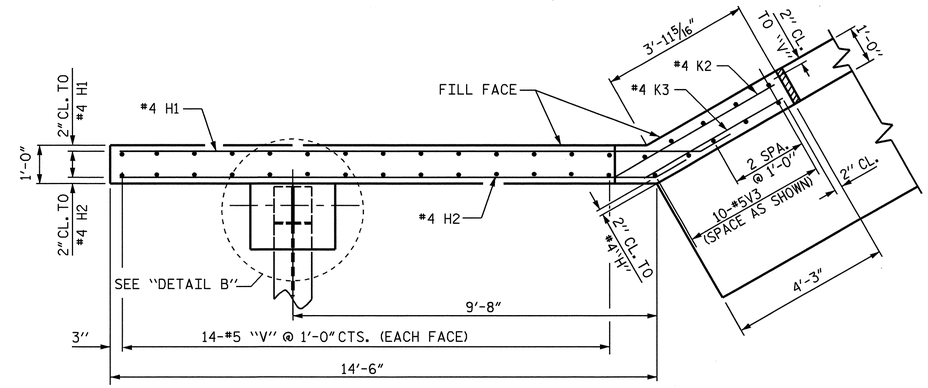

PLAN OF WING - W2

(RIGHT WING - STAGE I)

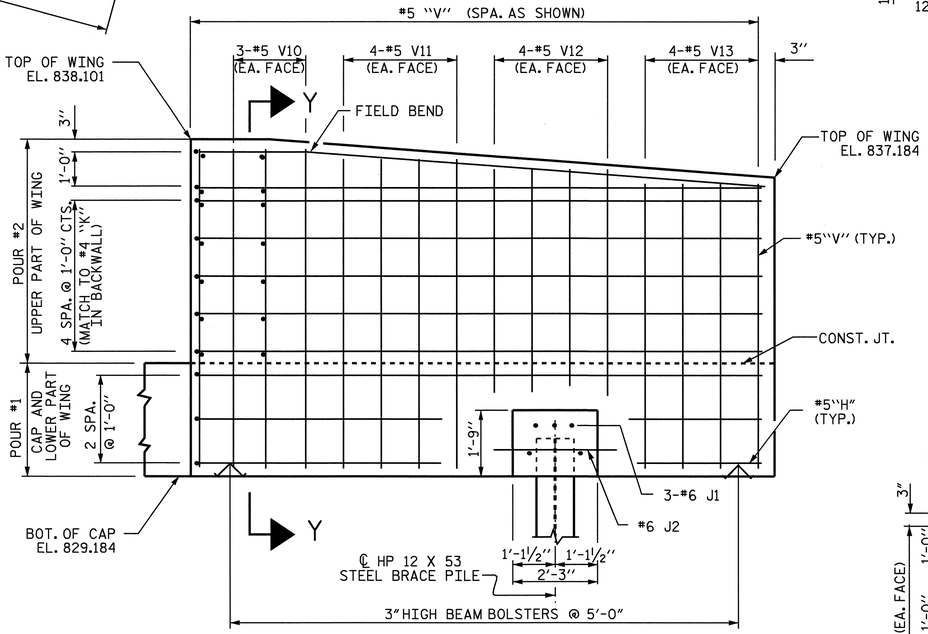

ELEVATION OF WING - W1

(LEFT WING - STAGE II)

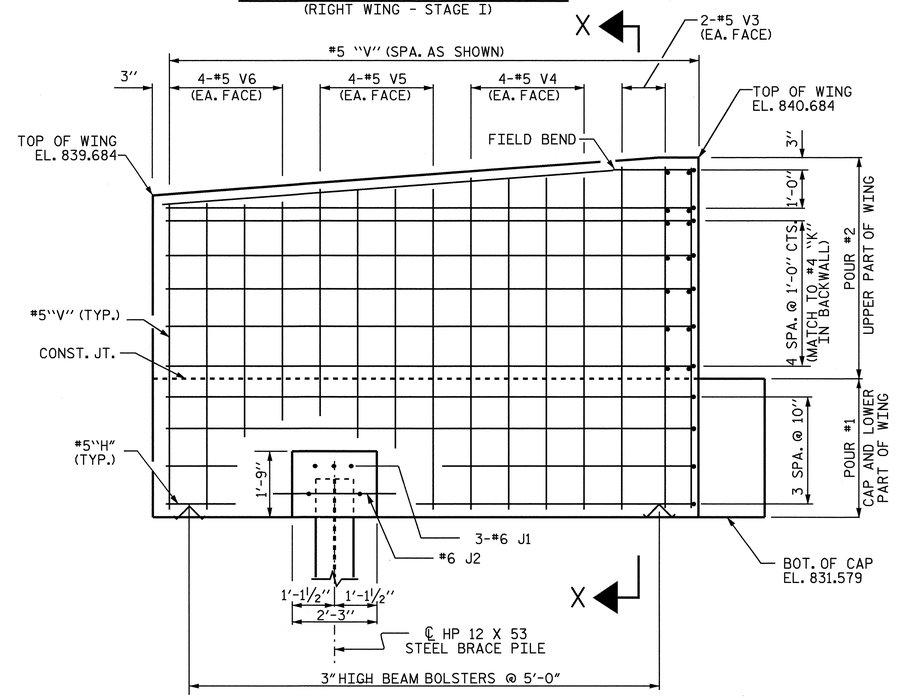

ELEVATION OF WING - W2

(RIGHT WING - STAGE I)

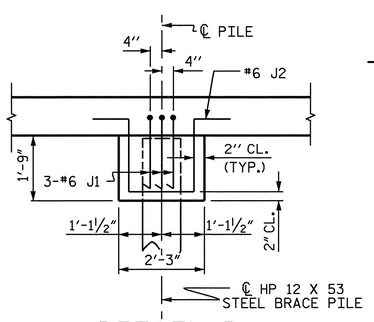

DETAIL B

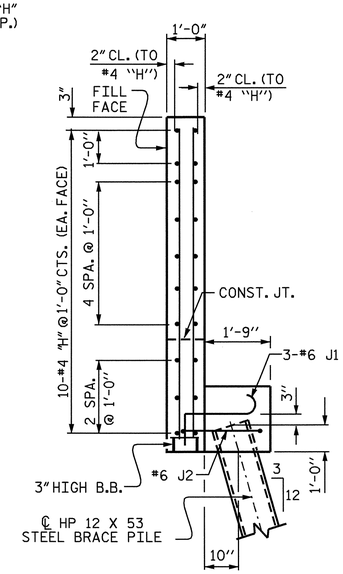

SECTION Y-Y

PROJECT NO. R-3833B

IREDELL COUNTY

STATION: 277+88.88 -L-

SHEET 6 OF 7

STATE OF NORTH CAROLINA
DEPARTMENT OF TRANSPORTATION
RALEIGH

SUBSTRUCTURE

END BENT 1

NORTH CAROLINA PROFESSIONAL SEAL 11259 ENGINEER DAVID R. ANDERSON
4/22/09

REVISIONS						SHEET NO.
NO.	BY:	DATE:	NO.	BY:	DATE:	5-69
1			3			TOTAL SHEETS
2			4			113

DRAWN BY : N. Q. TRAN DATE : 8/29/08
CHECKED BY : D. ANDERSON DATE : 4/17/09

21-APR-2009 13:22
p:\tlpprojects-r\r3833b\structures\rwithrow\Microstation\r3833b_sd_e*_01.dgn
drwithrow

BAR TYPES

STAGE I

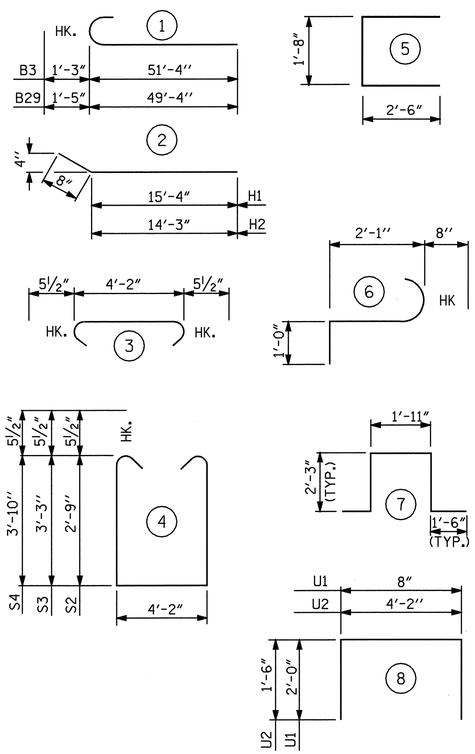

ALL BAR DIMENSIONS ARE OUT TO OUT.

STAGE II

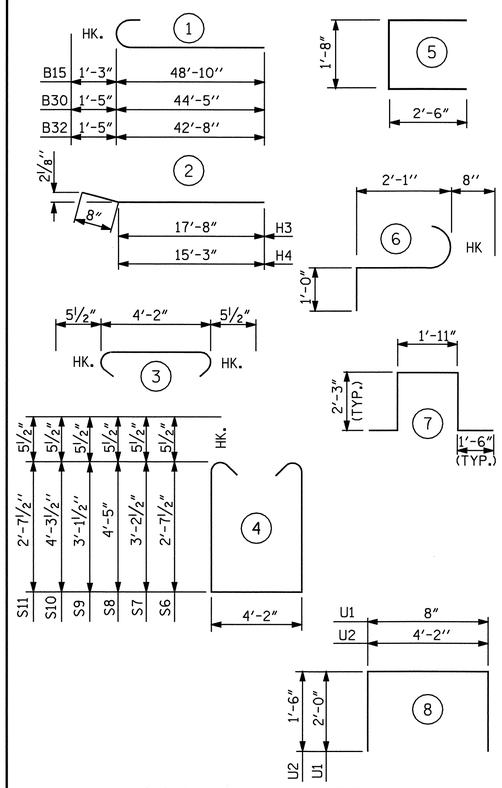

ALL BAR DIMENSIONS ARE OUT TO OUT.

BILL OF MATERIAL FOR END BENT 1

STAGE I

BAR	NO.	SIZE	TYPE	LENGTH	WEIGHT
B1	12	#10	STR	49'-4"	2547
B3	6	#9	1	52'-7"	1073
B4	6	#9	STR	40'-8"	830
B5	6	#9	STR	52'-4"	1068
B6	12	#5	STR	46'-8"	584
B7	4	#5	STR	44'-4"	185
B8	39	#4	STR	4'-2"	109
B9	40	#4	STR	28'-8"	766
B10	6	#4	STR	11'-9"	47
B11	6	#4	STR	17'-6"	70
B12	6	#4	STR	24'-1"	97
B13	6	#4	STR	3'-3"	13
B29	6	#10	1	50'-9"	1310
H1	11	#4	2	16'-0"	118
H2	11	#4	2	14'-11"	110
J1	3	#6	6	3'-9"	17
J2	1	#6	7	9'-5"	14
K1	50	#4	STR	28'-8"	957
K2	2	#4	STR	5'-1"	7
K3	2	#4	STR	4'-0"	5
S1	125	#5	3	5'-1"	663
S2	39	#5	4	10'-7"	430
S3	38	#5	4	11'-7"	459
S4	48	#5	4	12'-9"	638
S5	78	#4	5	6'-8"	347
U1	127	#4	8	4'-8"	396
U2	42	#4	8	7'-2"	201
V1	112	#5	STR	7'-4"	857
V2	142	#5	STR	8'-3"	1222
V3	14	#5	STR	8'-8"	127
V4	8	#5	STR	8'-4"	70
V5	8	#5	STR	8'-1"	67
V6	8	#5	STR	7'-9"	65

REINFORCING STEEL = 15469 LBS

CLASS A CONCRETE BREAKDOWN

POUR 1 - CAP AND LOWER PORTION OF WINGS 93.5 C.Y.

POUR 2 - BACKWALL & UPPER PORTION OF WINGS 30.5 C.Y.

CLASS A CONCRETE TOTAL 124.0 C.Y.

HP 12 x 53 STEEL PILES

NO. 27 2160.0 LIN. FEET

STAGE II

BAR	NO.	SIZE	TYPE	LENGTH	WEIGHT
B8	62	#4	STR	4'-2"	173
B13	48	#4	STR	3'-3"	104
B14	6	#10	STR	42'-8"	1102
B15	6	#9	1	50'-1"	1022
B16	6	#10	STR	44'-5"	1147
B17	6	#9	STR	58'-0"	1183
B18	6	#9	STR	55'-6"	1132
B19	6	#9	STR	57'-4"	1170
B20	6	#9	STR	16'-11"	345
B21	12	#5	STR	41'-2"	515
B22	4	#5	STR	52'-10"	220
B23	2	#5	STR	57'-6"	120
B24	2	#5	STR	10'-7"	22
B25	24	#4	STR	27'-8"	444
B26	6	#4	STR	23'-8"	95
B27	6	#4	STR	21'-3"	85
B28	6	#4	STR	23'-4"	94
B30	12	#10	1	45'-10"	2367
B31	40	#4	STR	25'-5"	679
B32	6	#10	1	44'-1"	1138
H3	10	#4	2	18'-4"	122
H4	10	#4	2	15'-11"	106
J1	3	#6	6	3'-9"	17
J2	1	#6	7	9'-5"	14
K4	80	#4	STR	26'-8"	1425
K5	2	#4	STR	9'-7"	13
K6	2	#4	STR	7'-8"	10
S1	186	#5	3	5'-1"	986
S5	108	#4	5	6'-8"	481
S6	42	#5	4	10'-4"	453
S7	43	#5	4	11'-6"	516
S8	28	#5	4	13'-5"	392
S9	43	#5	4	11'-4"	508
S10	17	#5	4	13'-8"	242
S11	13	#5	4	10'-4"	140
U1	189	#4	8	4'-8"	589
U2	71	#4	8	7'-2"	340
V7	120	#5	STR	7'-1"	887
V8	98	#5	STR	8'-7"	877
V9	160	#5	STR	7'-4"	1224
V10	22	#5	STR	8'-5"	193
V11	8	#5	STR	8'-2"	68
V12	8	#5	STR	7'-11"	66
V13	8	#5	STR	7'-8"	64

REINFORCING STEEL = 22890 LBS

CLASS A CONCRETE BREAKDOWN

POUR 1 - CAP AND LOWER PORTION OF WINGS 131.7 C.Y.

POUR 2 - BACKWALL & UPPER PORTION OF WINGS 38.1 C.Y.

CLASS A CONCRETE TOTAL 169.8 C.Y.

HP 12 x 53 STEEL PILES

NO. 37 2960.0 LIN. FEET

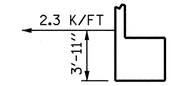

GALVANIZED REINFORCING STRAP LOAD DETAIL

GALVANIZED REINFORCING STRAPS SHALL BE ATTACHED TO THE END BENT BACKWALL. FOR DESIGN CRITERIA AND DETAILS, SEE "MECHANICALLY STABILIZED EARTH RETAINING WALL" SPECIAL PROVISIONS.

PLANS, WORKING DRAWINGS AND DESIGN CALCULATIONS SHALL BE SUBMITTED BY THE CONTRACTOR TO THE ENGINEER FOR REVIEW AND APPROVAL; SEE SPECIAL PROVISIONS. PLANS SUBMITTED FOR REVIEW SHALL INCLUDE THE FOLLOWING: PLAN VIEW, ELEVATION VIEW, TYPICAL SECTIONS AND STRAP DETAILS.

THE GALVANIZED REINFORCING STRAPS SHALL BE DESIGNED WITH THE FOLLOWING SOIL PARAMETERS:

FRICTION ANGLE = 38 DEGREES
COHESION c =0.0
UNIT WEIGHT OF SOIL = 110 PCF

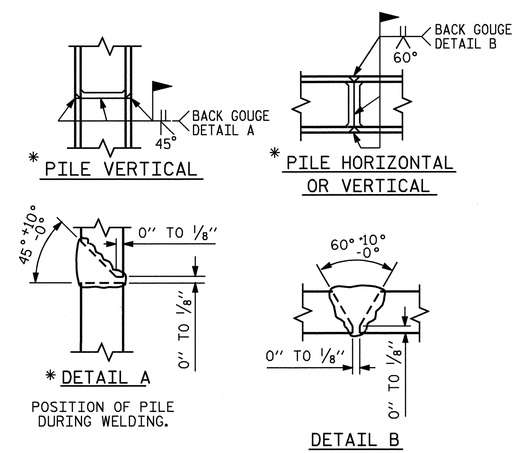

PILE SPLICE DETAILS

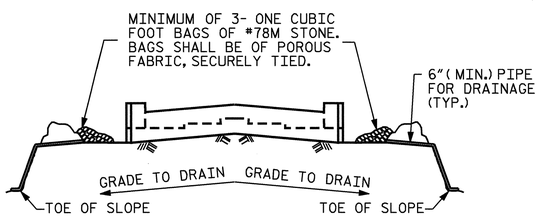

BAGGED STONE AND PIPE SHALL BE PLACED IMMEDIATELY AFTER COMPLETION OF END BENT EXCAVATION. PIPE MAY BE EITHER CONCRETE, CORRUGATED STEEL, CORRUGATED ALUMINUM ALLOY, OR CORRUGATED PLASTIC. PERFORATED PIPE WILL NOT BE ALLOWED.

BAGGED STONE SHALL REMAIN IN PLACE UNTIL THE ENGINEER DIRECTS THAT IT BE REMOVED. THE CONTRACTOR SHALL REMOVE AND DISPOSE OF SILT ACCUMULATIONS AT BAGGED STONE WHEN SO DIRECTED BY THE ENGINEER. BAGS SHALL BE REMOVED AND REPLACED WHENEVER THE ENGINEER DETERMINES THAT THEY HAVE DETERIORATED AND LOST THEIR EFFECTIVENESS.

NO SEPARATE PAYMENT WILL BE MADE FOR THIS WORK AND THE ENTIRE COST OF THIS WORK SHALL BE INCLUDED IN THE UNIT CONTRACT PRICE BID FOR THE SEVERAL PAY ITEMS.

TEMPORARY DRAINAGE AT END BENT

PROJECT NO. R-3833B
IREDELL COUNTY
STATION: 277+88.88 -L-

SHEET 7 OF 7

STATE OF NORTH CAROLINA
DEPARTMENT OF TRANSPORTATION
RALEIGH

SUBSTRUCTURE
END BENT 1

NORTH CAROLINA PROFESSIONAL SEAL 11259 ENGINEER DAVID R. ANDERSON
5/11/09

REVISIONS						SHEET NO.
NO.	BY:	DATE:	NO.	BY:	DATE:	S-10
1			3			TOTAL SHEETS
2			4			113

DRAWN BY : R. WITHROW DATE : 1/22/09
CHECKED BY : D. ANDERSON DATE : 4/17/09

11-MAY-2009 08:54
R:\Structures\rwithrow\Microstation\r3833b_sd_e*_01.dgn
drwithrow

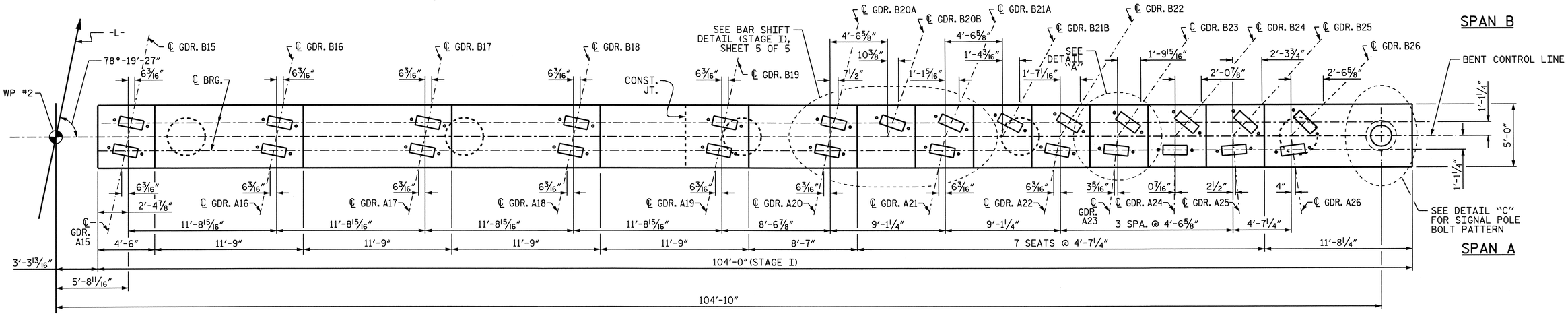

PLAN

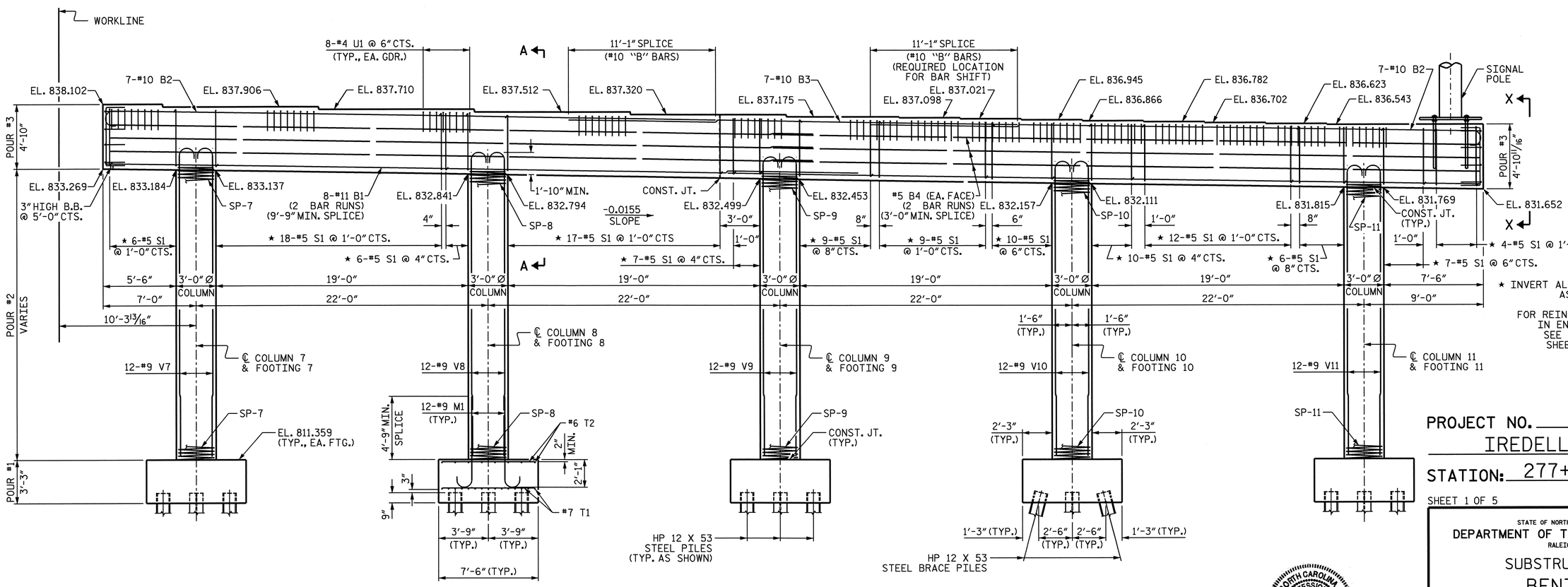

ELEVATION

DIMENSIONS AND REINFORCING STEEL ARE TYPICAL FOR EACH COLUMN AND FOOTING

NOTE: FOOTING 10 REQUIRES 7 PILES. FOOTINGS 7, 8, 9 & 11 REQUIRE 5 PILES.

NORTH CAROLINA PROFESSIONAL SEAL 21546 ENGINEER STEVEN L. WANCE 5/13/09

PROJECT NO. R-3833B
IREDELL COUNTY
STATION: 277+88.88 -L-

SHEET 1 OF 5

STATE OF NORTH CAROLINA
DEPARTMENT OF TRANSPORTATION
RALEIGH

SUBSTRUCTURE
BENT 1
STAGE I

REVISIONS						SHEET NO.
NO.	BY:	DATE:	NO.	BY:	DATE:	5-71
1			3			TOTAL SHEETS
2			4			113

DRAWN BY : R. WITHROW DATE : 06/23/08
CHECKED BY : S. WANCE DATE : 09/08

13-MAY-2009 08:42
R:\Structures\rwithrow\Microstation\r3833b_sd_bt_01.dgn
drwithrow

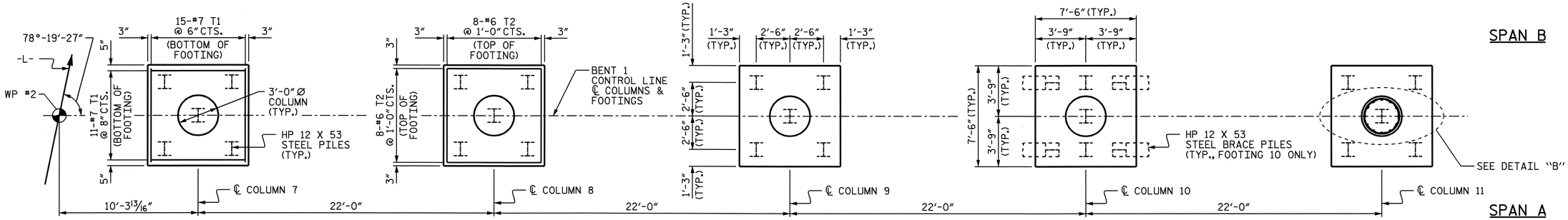

PLAN OF FOOTINGS

DIMENSIONS AND REINFORCING STEEL ARE TYPICAL FOR EACH COLUMN AND FOOTING

NOTE: FOOTING 10 REQUIRES 7 PILES.
FOOTINGS 7, 8, 9 & 11 REQUIRE 5 PILES.

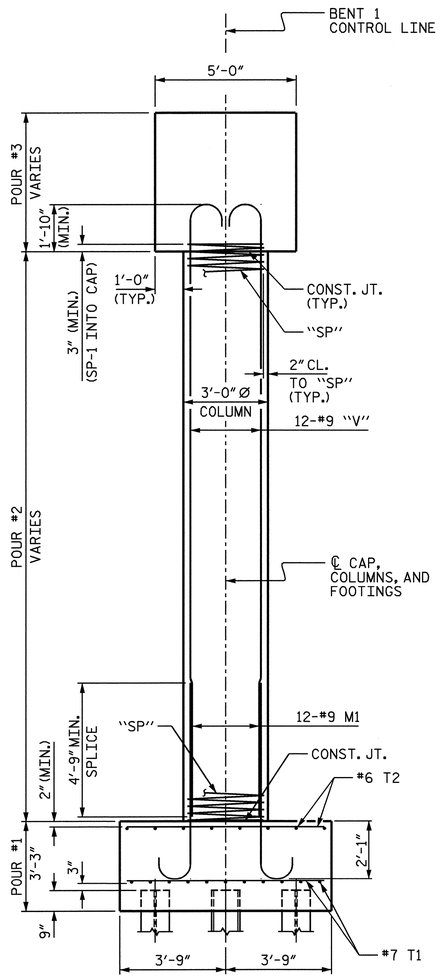

END ELEVATION

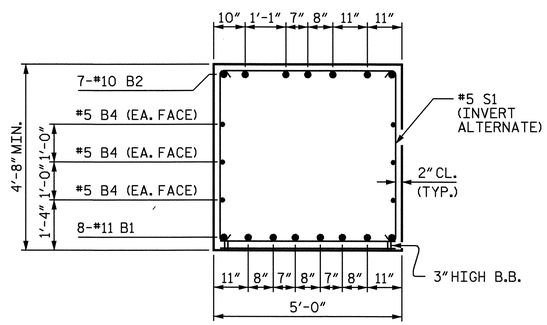

SECTION A-A

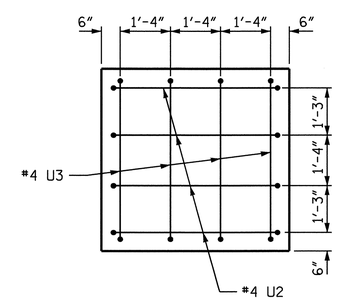

VIEW X-X

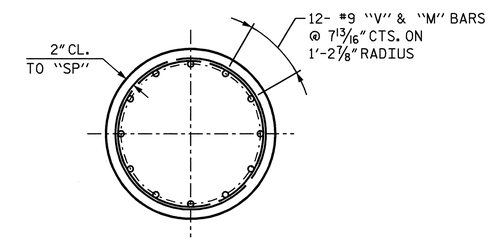

DETAIL B

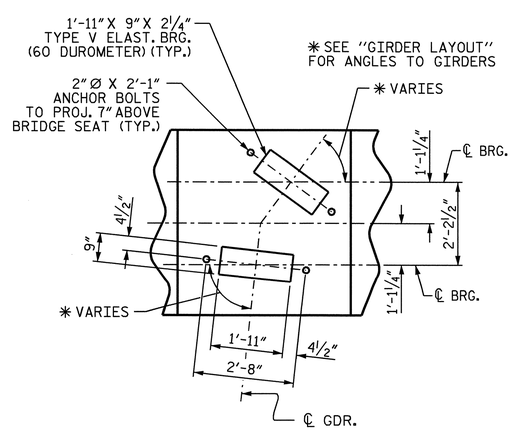

DETAIL A

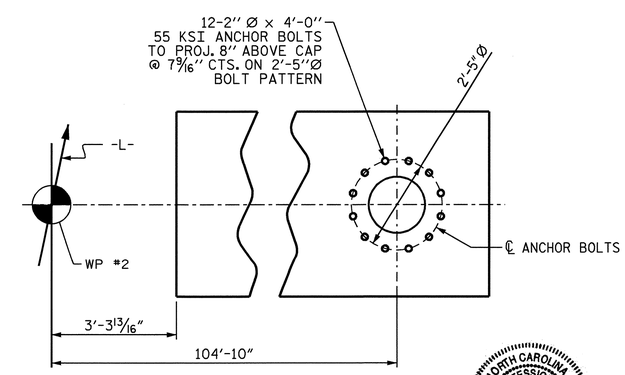

DETAIL C

NORTH CAROLINA PROFESSIONAL SEAL 21545 ENGINEER STEVEN L. WANCE
06/19/09

PROJECT NO. R-3833B
IREDELL COUNTY
STATION: 277+88.88 -L-

SHEET 2 OF 5

STATE OF NORTH CAROLINA
DEPARTMENT OF TRANSPORTATION
RALEIGH

SUBSTRUCTURE
BENT 1
STAGE I

REVISIONS						SHEET NO.
NO.	BY:	DATE:	NO.	BY:	DATE:	S-72
1			3			TOTAL SHEETS
2			4			113

DRAWN BY : R. WITHROW DATE : 06/23/08
CHECKED BY : S. WANCE DATE : 09/08

13-MAY-2009 08:47
R:\Structures\rwithrow\Microstation\r3833b_sd_bt_01.dgn
drwithrow

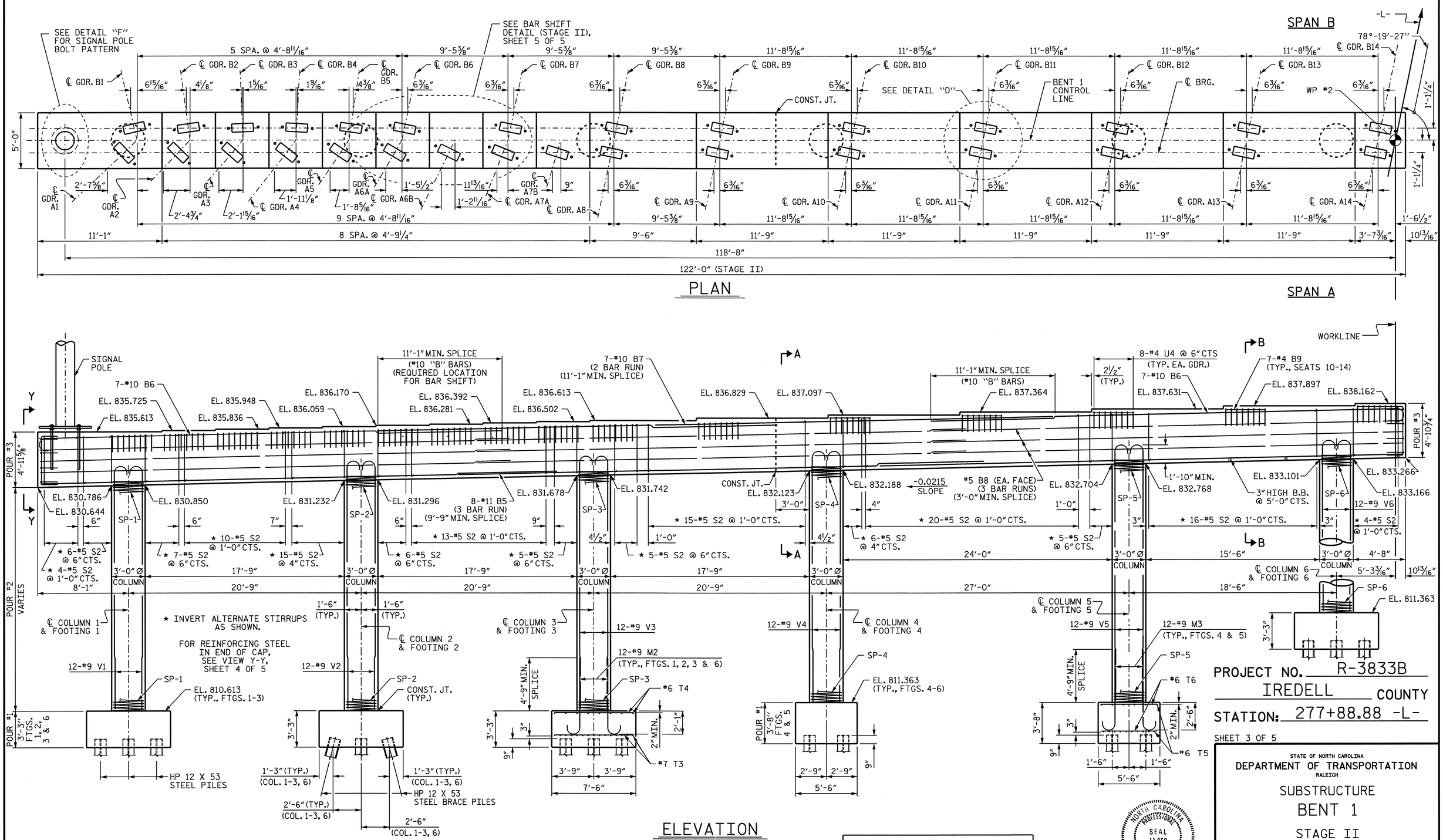

NOTE: FOOTING 2 REQUIRES 7 PILES. FOOTINGS 1, 3 & 6 REQUIRE 5 PILES. FOOTINGS 4 & 5 REQUIRE 8 PILES.

PROJECT NO. R-3833B

IREDELL COUNTY

STATION: 277+88.88 -L-

SHEET 3 OF 5

STATE OF NORTH CAROLINA
DEPARTMENT OF TRANSPORTATION
RALEIGH

SUBSTRUCTURE
BENT 1
STAGE II

NORTH CAROLINA PROFESSIONAL SEAL 11259 ENGINEER DAVID R. ANDERSON
5/11/09

REVISIONS						
NO.	BY:	DATE:	NO.	BY:	DATE:	SHEET NO. S-73
1			3			TOTAL SHEETS 113
2			4			

DRAWN BY : R. WITHROW DATE : 06/23/08
CHECKED BY : S. WANCE DATE : 09/08

11-MAY-2009 10:37
r:\structures\rwithrow\microstation\r3833b_sd_bt_01.dgn
danderson

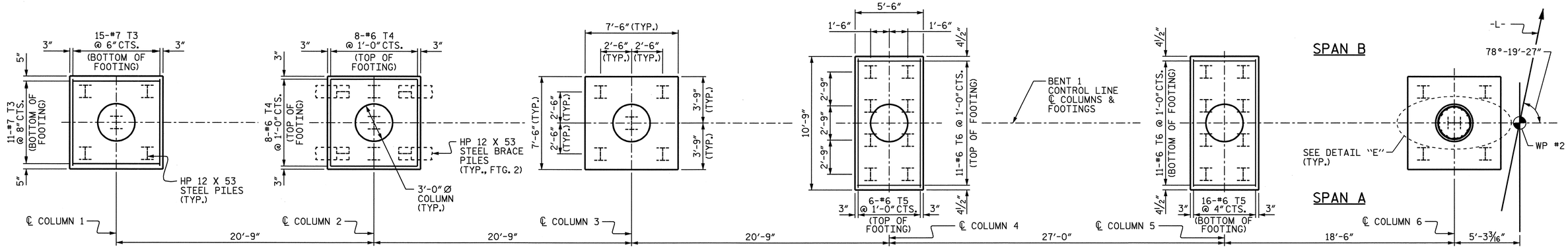

PLAN OF FOOTINGS

DIMENSIONS AND REINFORCING STEEL ARE TYPICAL FOR FOOTINGS 1, 2, 3 & 6 AND FOR FOOTINGS 4 & 5

NOTE: FOOTING 2 REQUIRES 7 PILES. FOOTINGS 1, 3 & 6 REQUIRE 5 PILES. FOOTINGS 4 & 5 REQUIRE 8 PILES.

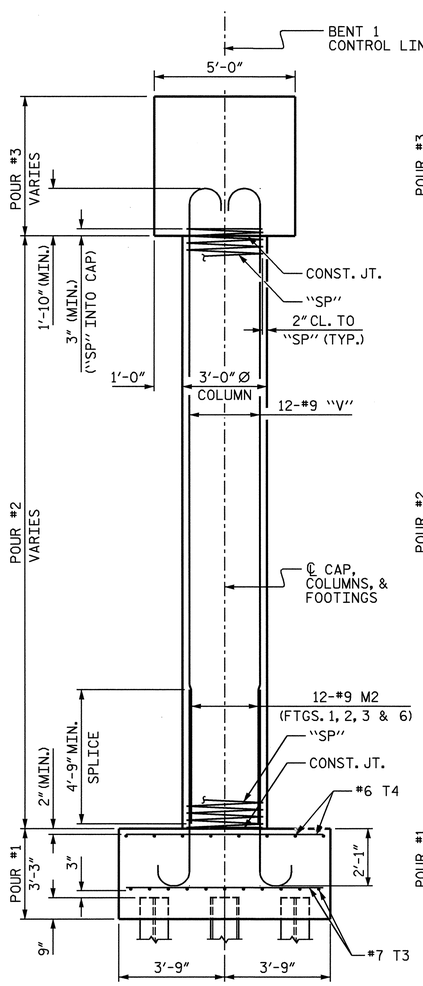

END ELEVATION

DIMENSIONS AND REINFORCING STEEL ARE TYPICAL FOR COLUMNS 1, 2 & 3 AND FOOTINGS 1, 2, 3 & 6

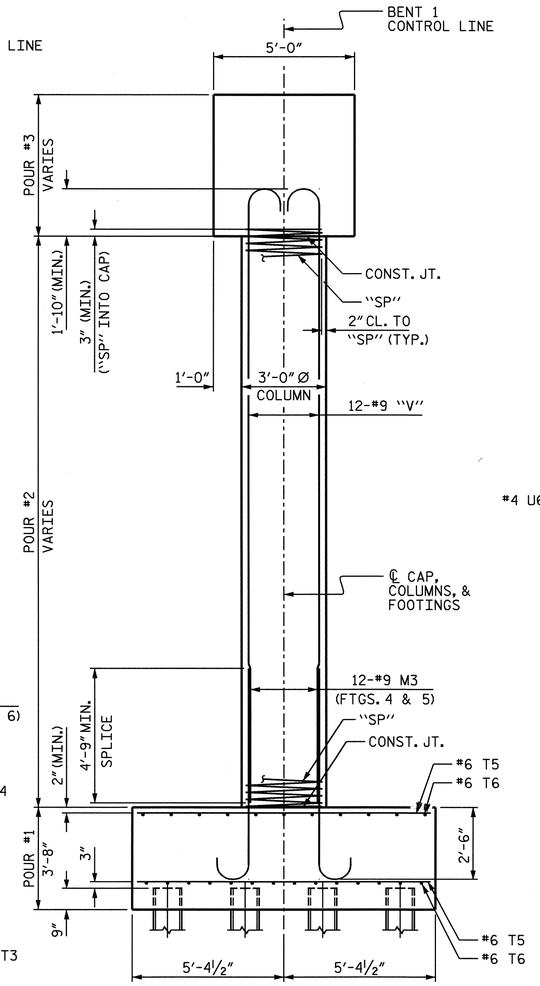

END ELEVATION

DIMENSIONS AND REINFORCING STEEL ARE TYPICAL FOR COLUMNS 4, 5 & 6 AND FOOTINGS 4 & 5

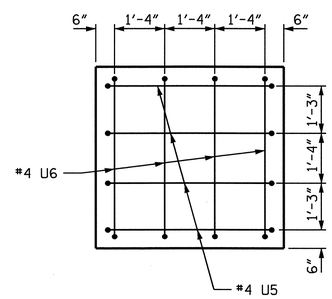

VIEW Y-Y

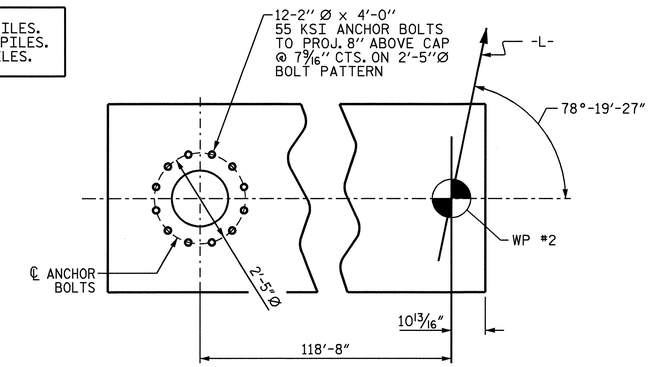

DETAIL F

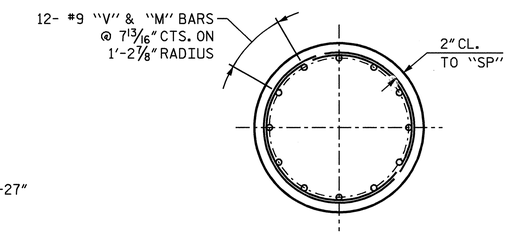

DETAIL E

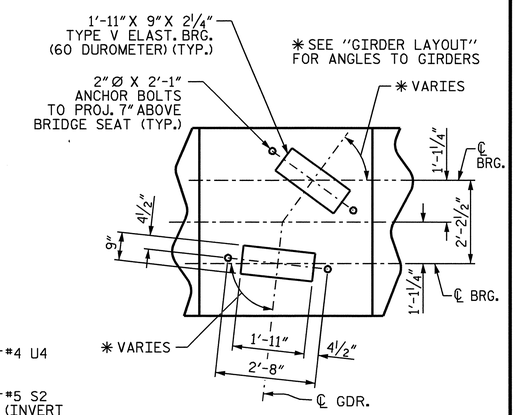

DETAIL D

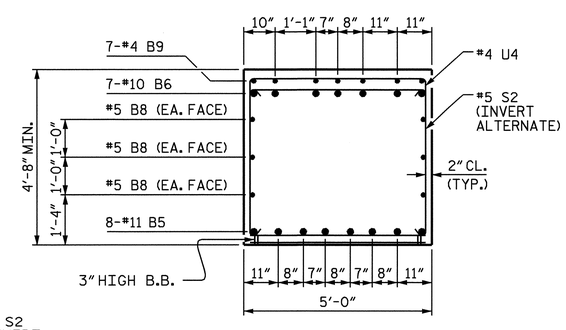

SECTION B-B

TYP., SEATS 10-14 STAGE II ONLY

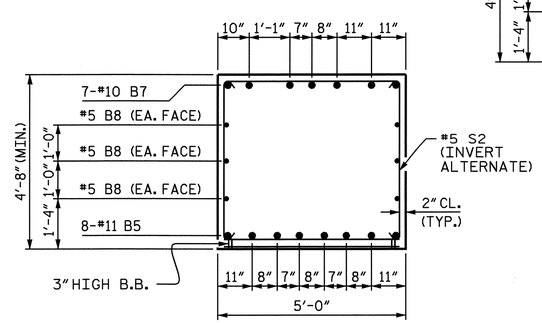

SECTION A-A

PROJECT NO. R-3833B

IREDELL COUNTY

STATION: 277+88.88 -L-

SHEET 4 OF 5

STATE OF NORTH CAROLINA
DEPARTMENT OF TRANSPORTATION
RALEIGH

SUBSTRUCTURE
BENT 1
STAGE II

REVISIONS						SHEET NO.
NO.	BY:	DATE:	NO.	BY:	DATE:	S-74
1			3			TOTAL SHEETS
2			4			113

DRAWN BY : R. WITHROW DATE : 06/23/08
CHECKED BY : S. WANCE DATE : 09/08

16-APR-2009 15:03
p:\tlpprojects-r\r3833b\structures\rwithrow\microstation\r3833b_sd_bt_01.dgn
drwithrow

BAR TYPES

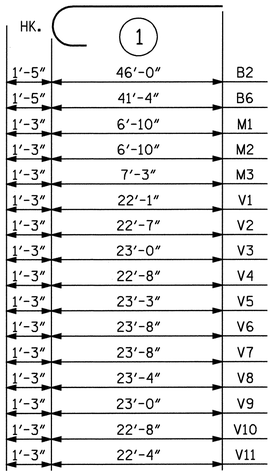

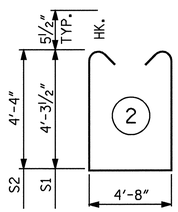

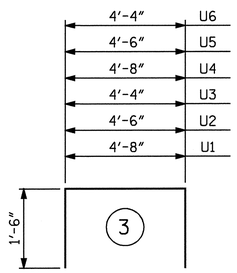

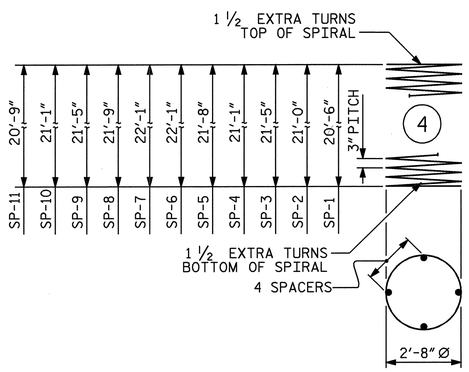

ALL BAR DIMENSIONS ARE OUT TO OUT.

BILL OF MATERIAL STAGE 1

BAR	NO.	SIZE	TYPE	LENGTH	WEIGHT
B1	16	#11	STR	56'-9"	4824
B2	14	#10	1	47'-5"	2856
B3	7	#10	STR	33'-10"	1019
B4	12	#5	STR	53'-4"	668
M1	60	#9	1	8'-1"	1649
S1	121	#5	2	14'-2"	1788
T1	130	#7	STR	7'-0"	1860
T2	80	#6	STR	7'-0"	841
U1	112	#4	3	7'-8"	574
U2	8	#4	3	7'-6"	40
U3	8	#4	3	7'-4"	39
V7	12	#9	1	24'-11"	1017
V8	12	#9	1	24'-7"	1003
V9	12	#9	1	24'-3"	989
V10	12	#9	1	23'-11"	976
V11	12	#9	1	23'-7"	962
REINFORCING STEEL TOTAL = 21105 LBS					
SP-7	1	*	4	759'-1"	507
SP-8	1	*	4	742'-7"	496
SP-9	1	*	4	734'-4"	491
SP-10	1	*	4	726'-1"	485
SP-11	1	*	4	709'-7"	474
SPIRAL COLUMN REINFORCING STEEL TOTAL = 2453 LBS					

CLASS A CONCRETE (C.Y.)
POUR #1 (FOOTINGS) = C.Y. 33.9
POUR #2 (COLUMNS) = C.Y. 27.7
POUR #3 (CAP) = C.Y. 92.1
TOTAL = C.Y. 153.7

HP 12 X 53 STEEL PILES (LIN.FT.)
NO.= 27 LIN.FT. 1350

BILL OF MATERIAL STAGE 2

BAR	NO.	SIZE	TYPE	LENGTH	WEIGHT
B5	24	#11	STR	47'-2"	6014
B6	14	#10	1	42'-9"	2575
B7	14	#10	STR	35'-10"	2158
B8	18	#5	STR	42'-7"	799
B9	35	#4	STR	3'-8"	86
M2	48	#9	1	8'-1"	1319
M3	24	#9	1	8'-6"	694
S2	137	#5	2	14'-2"	2024
T3	104	#7	STR	7'-0"	1488
T4	64	#6	STR	7'-0"	673
T5	44	#6	STR	10'-3"	677
T6	44	#6	STR	5'-0"	330
U4	128	#4	3	7'-8"	656
U5	8	#4	3	7'-6"	40
U6	8	#4	3	7'-4"	39
V1	12	#9	1	23'-4"	952
V2	12	#9	1	23'-10"	972
V3	12	#9	1	24'-3"	989
V4	12	#9	1	23'-11"	976
V5	12	#9	1	24'-6"	1000
V6	12	#9	1	24'-11"	1017
REINFORCING STEEL TOTAL = 25478 LBS					
SP-1	1	*	4	701'-4"	468
SP-2	1	*	4	717'-10"	480
SP-3	1	*	4	734'-4"	491
SP-4	1	*	4	726'-1"	485
SP-5	1	*	4	742'-7"	496
SP-6	1	*	4	759'-1"	507
SPIRAL COLUMN REINFORCING STEEL TOTAL = 2927 LBS					

CLASS A CONCRETE (C.Y.)
POUR #1 (FOOTINGS) = C.Y. 44.4
POUR #2 (COLUMNS) = C.Y. 33.1
POUR #3 (CAP) = C.Y. 109.0
TOTAL = C.Y. 186.5

HP 12 X 53 STEEL PILES (LIN.FT.)
NO.= 38 LIN.FT. 1900

* THE SP-1 THRU SP-11 SPIRAL REINFORCING STEEL SHALL BE W20 OR D-20 COLD DRAWN WIRE OR #4 PLAIN OR DEFORMED BAR.

NOTES

STIRRUPS AND "U" BARS IN CAP MAY BE SHIFTED AS NECESSARY TO CLEAR ANCHOR BOLTS.

THE CONTRACTOR SHALL ALIGN THE "V" & "M" BARS AS SHOWN IN COLUMN DETAILS "B" & "E".

HOOKS ON "V" BARS MAY BE TURNED AS NECESSARY FOR PLACING REINFORCING STEEL.

SEE "GIRDER LAYOUT" FOR SKEW ANGLES OF ALL GIRDERS.

FOR SIGNAL POLES, ANCHOR BOLTS, MOUNTING HARDWARE, ETC., SEE TRAFFIC SIGNAL PLANS AND SPECIAL PROVISIONS.

THE TRAFFIC ENGINEERING UNIT HAS PROVIDED THE FOLLOWING INFORMATION RELATED TO THE METAL STRAIN POLES ATTACHED TO THE TOP OF THE BENT CAPS: BOLT PATTERN, ANCHOR BOLT DIAMETER, ANCHOR BOLT LENGTH AND EMBEDMENT. IN ADDITION, THE TRAFFIC ENGINEERING UNIT HAS PROVIDED THE FOLLOWING DESIGN LOAD REACTIONS FOR BOTH OF THE METAL STRAIN POLES ATTACHED TO THE BENT CAP AS FOLLOWS:
MOMENT - 373 K FT (UN-FACTORED)
SHEAR - 9.5 K (UN-FACTORED)

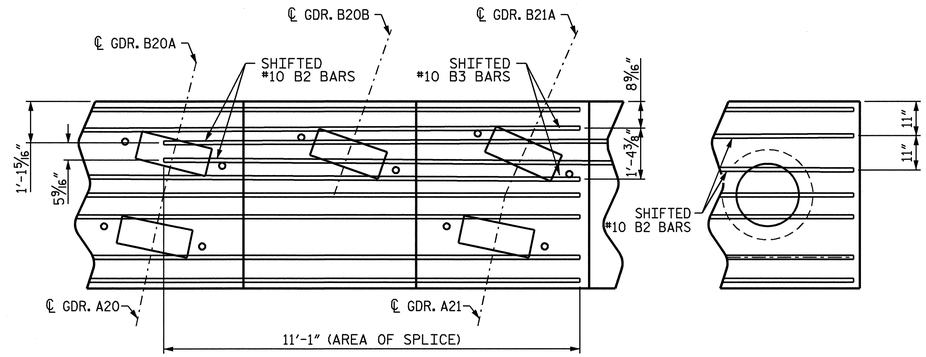

BAR SHIFT DETAIL (STAGE I)

ADJUST #10 "B" BARS IN 11'-1" SPLICE AREA AS SHOWN TO CLEAR ANCHOR BOLTS

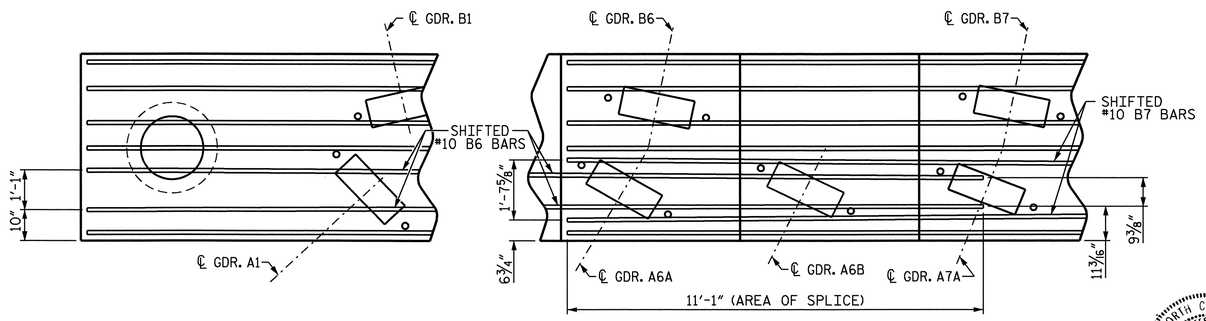

BAR SHIFT DETAIL (STAGE II)

ADJUST #10 "B" BARS IN 11'-1" SPLICE AREA AS SHOWN TO CLEAR ANCHOR BOLTS

NORTH CAROLINA PROFESSIONAL SEAL 11259 ENGINEER DAVID R. ANDERSON
5/11/09

PROJECT NO. R-3833B
IREDELL COUNTY
STATION: 277+88.88 -L-

SHEET 5 OF 5

STATE OF NORTH CAROLINA
DEPARTMENT OF TRANSPORTATION
RALEIGH

SUBSTRUCTURE
BENT 1

REVISIONS						SHEET NO.
NO.	BY:	DATE:	NO.	BY:	DATE:	S-75
1			3			TOTAL SHEETS
2			4			113

DRAWN BY : R. WITHROW DATE : 06/23/08
CHECKED BY : S. WANCE DATE : 09/08

11-MAY-2009 09:29
R:\Structures\rwithrow\Microstation\r3833b_sd_bt_01.dgn
drwithrow

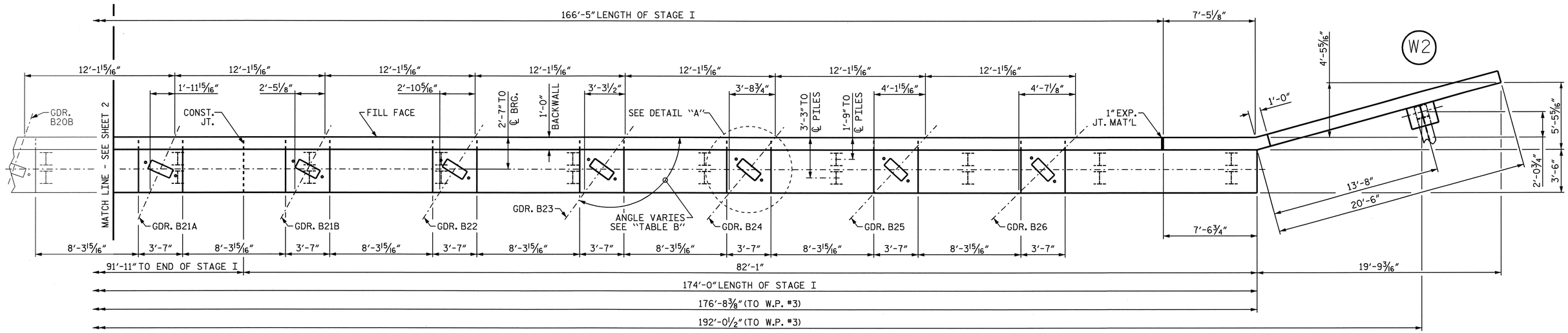

PLAN

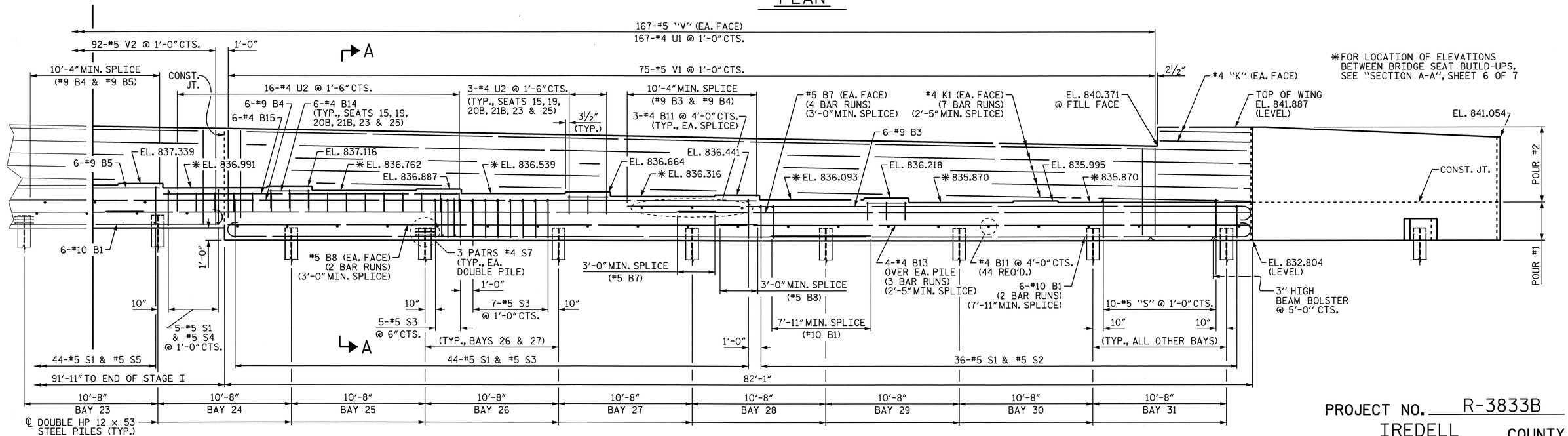

ELEVATION

TABLE B	
GIRDER	SKEW
B15 TO B19	101°-40'-33"
B20A	104°- 3'- 8"
B20B	109°- 7'- 2"
B21A	113°-53'-26"
B21B	118°-20'-12"
B22	122°-26'-23"
B23	126°-12'- 4"
B24	129°-37'-59"
B25	132°-45'-20"
B26	135°-35'-33"

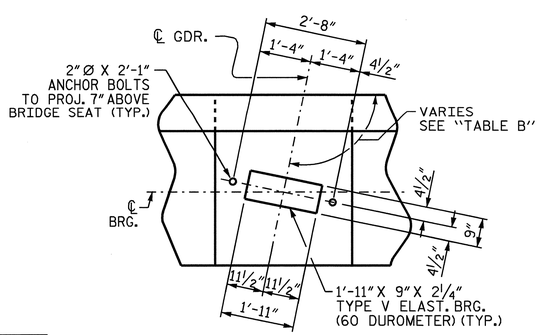

DETAIL A

NOTES

STIRRUPS IN CAP MAY BE SHIFTED AS NECESSARY TO CLEAR ANCHOR BOLTS.

BACKWALL SHALL BE PLACED BEFORE APPLYING THE EPOXY PROTECTIVE COATING.

THE TOP SURFACE AREAS OF THE END BENT CAPS SHALL BE CURED IN ACCORDANCE WITH THE STANDARD SPECIFICATIONS EXCEPT THE MEMBRANE CURING COMPOUND METHOD SHALL NOT BE USED.

THE TOP SURFACE OF THE CAP EXCEPT THE BRIDGE SEAT BUILDUPS SHALL BE SLOPED TRANSVERSELY FROM THE FILL FACE TO THE BACK FACE AT THE RATE OF 2%.

FOR GALVANIZED REINFORCING STRAP LOAD DETAILS, SEE SHEET 7 OF 7.

PROJECT NO. R-3833B
IREDELL COUNTY
STATION: 277+88.88 -L-

SHEET 1 OF 7

STATE OF NORTH CAROLINA
DEPARTMENT OF TRANSPORTATION
RALEIGH

SUBSTRUCTURE
END BENT 2
STAGE I

NORTH CAROLINA PROFESSIONAL SEAL 11259 ENGINEER DAVID R. ANDERSON
5/13/09

REVISIONS						SHEET NO.
NO.	BY:	DATE:	NO.	BY:	DATE:	S-76
1			3			TOTAL SHEETS
2			4			113

DRAWN BY : N.O. TRAN/WITHROW DATE : 8/29/08
CHECKED BY : J.A. TILLMAN DATE : 5/5/09

13-MAY-2009 10:24
r:\structures\rwithrow\microstation\r3833b_sd_e*_02.dgn
danderson

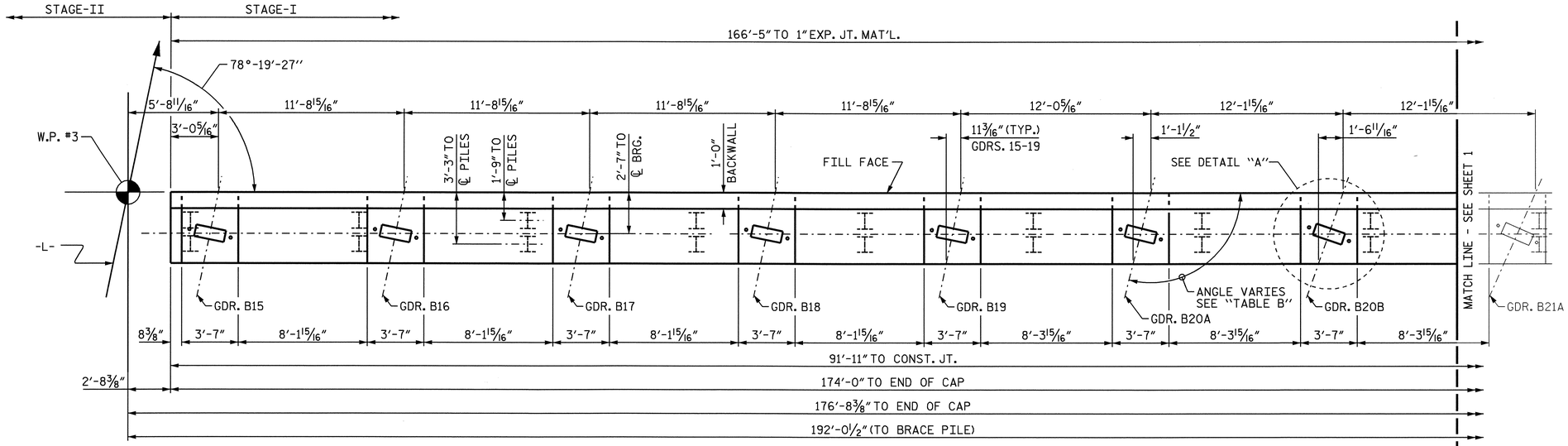

PLAN

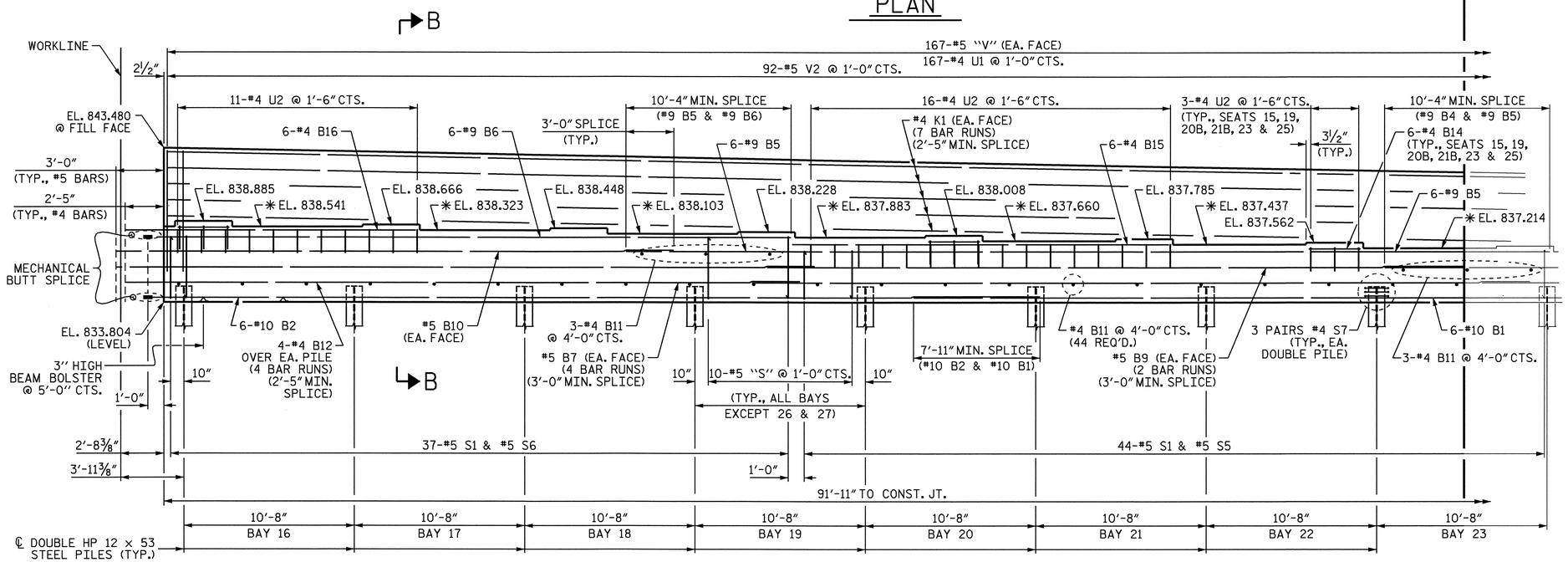

*FOR LOCATION OF ELEVATIONS BETWEEN BRIDGE SEAT BUILD-UPS, SEE "SECTION B-B", SHEET 6 OF 7

ELEVATION

TABLE B	
GIRDER	SKEW
B15 TO B19	101°-40'-33"
B20A	104°- 3'- 8"
B20B	109°- 7'- 2"
B21A	113°-53'-26"
B21B	118°-20'-12"
B22	122°-26'-23"
B23	126°-12'- 4"
B24	129°-37'-59"
B25	132°-45'-20"
B26	135°-35'-33"

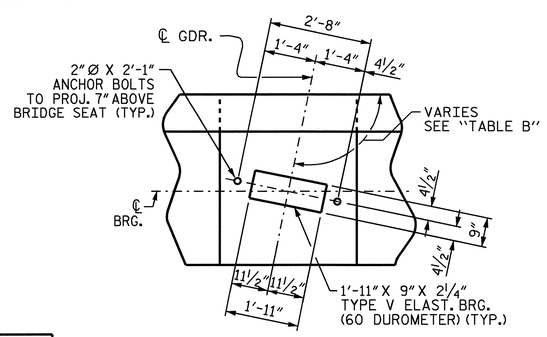

DETAIL A

NOTES

STIRRUPS IN CAP MAY BE SHIFTED AS NECESSARY TO CLEAR ANCHOR BOLTS.

BACKWALL SHALL BE PLACED BEFORE APPLYING THE EPOXY PROTECTIVE COATING.

THE TOP SURFACE AREAS OF THE END BENT CAPS SHALL BE CURED IN ACCORDANCE WITH THE STANDARD SPECIFICATIONS EXCEPT THE MEMBRANE CURING COMPOUND METHOD SHALL NOT BE USED.

THE TOP SURFACE OF THE CAP EXCEPT THE BRIDGE SEAT BUILDUPS SHALL BE SLOPED TRANSVERSELY FROM THE FILL FACE TO THE BACK FACE AT THE RATE OF 2%.

FOR GALVANIZED REINFORCING STRAP LOAD DETAILS, SEE SHEET 7 OF 7.

NORTH CAROLINA PROFESSIONAL SEAL 11259 ENGINEER DAVID R. ANDERSON
5/13/09

PROJECT NO. R-3833B
IREDELL COUNTY
STATION: 277+88.88 -L-

SHEET 2 OF 7

STATE OF NORTH CAROLINA
DEPARTMENT OF TRANSPORTATION
RALEIGH

SUBSTRUCTURE
END BENT 2
STAGE I

REVISIONS						SHEET NO.
NO.	BY:	DATE:	NO.	BY:	DATE:	S-77
1			3			TOTAL SHEETS
2			4			113

DRAWN BY : N.O. TRAN/WITHROW DATE : 8/29/08
CHECKED BY : J.A. TILLMAN DATE : 5/5/09

13-MAY-2009 10:23
r:\structures\rwithrow\microstation\r3833b_sd_e*_02.dgn
danderson

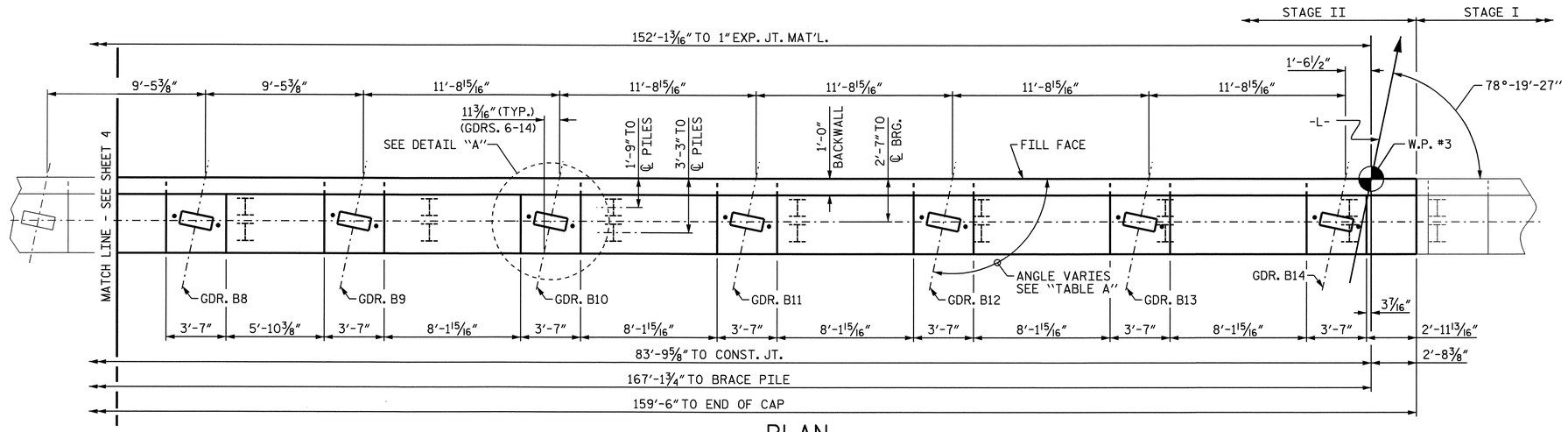

PLAN

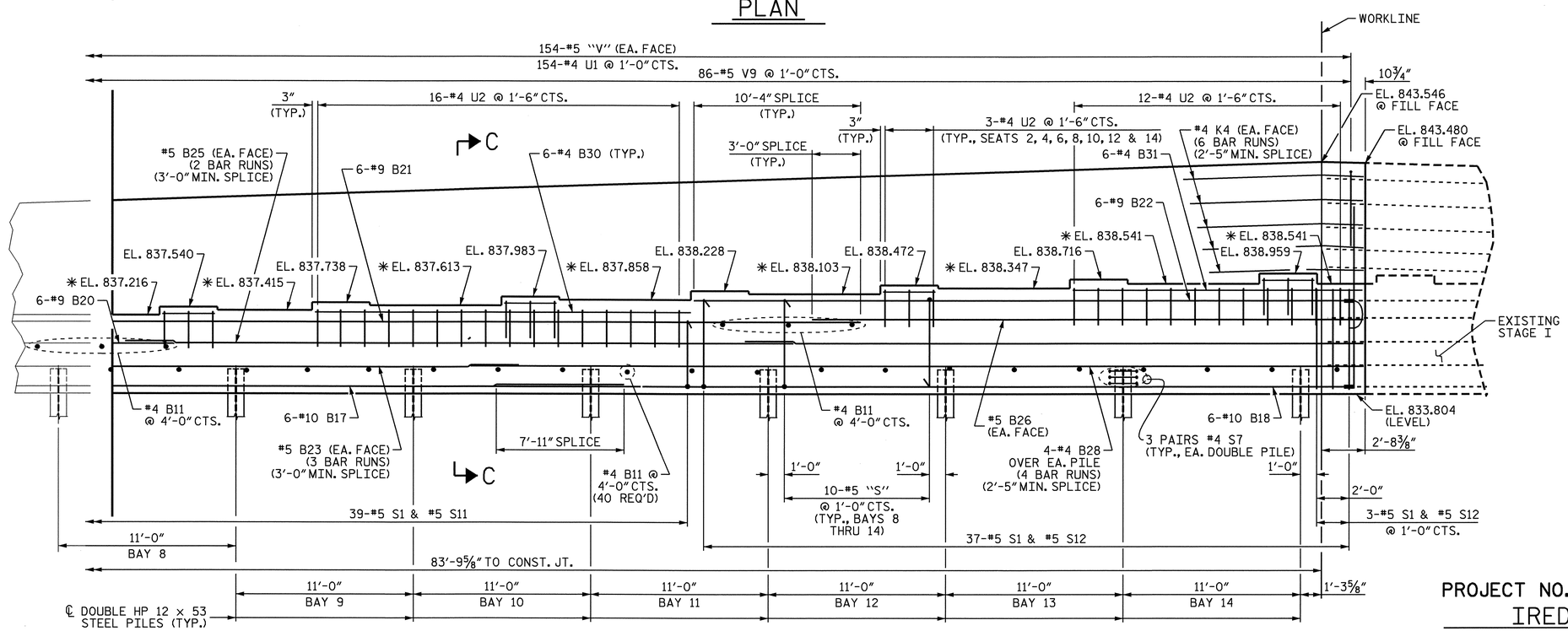

ELEVATION

TABLE A	
GIRDER	SKEW
B1	76°-57'-7"
B2	82°-12'-29"
B3	87°- 33'-2"
B4	92°-56'-10"
B5	98°-16'-13"
B6 TO B14	101°-40'-33"

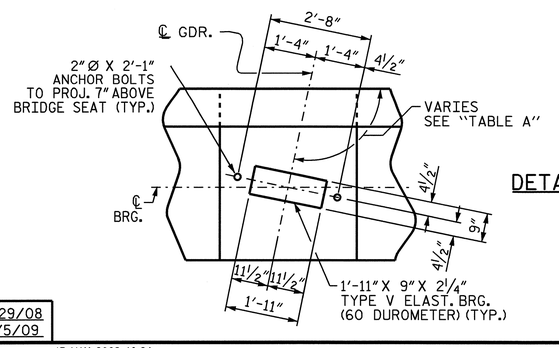

DETAIL A

NOTES

STIRRUPS IN CAP MAY BE SHIFTED AS NECESSARY TO CLEAR ANCHOR BOLTS.

BACKWALL SHALL BE PLACED BEFORE APPLYING THE EPOXY PROTECTIVE COATING.

THE TOP SURFACE AREAS OF THE END BENT CAPS SHALL BE CURED IN ACCORDANCE WITH THE STANDARD SPECIFICATIONS EXCEPT THE MEMBRANE CURING COMPOUND METHOD SHALL NOT BE USED.

THE TOP SURFACE OF THE CAP EXCEPT THE BRIDGE SEAT BUILDUPS SHALL BE SLOPED TRANSVERSELY FROM THE FILL FACE TO THE BACK FACE AT THE RATE OF 2%.

FOR GALVANIZED REINFORCING STRAP LOAD DETAILS, SEE SHEET 7 OF 7.

PROJECT NO. R-3833B
IREDELL COUNTY
STATION: 277+88.88 -L-

SHEET 3 OF 7

STATE OF NORTH CAROLINA
DEPARTMENT OF TRANSPORTATION
RALEIGH

SUBSTRUCTURE
END BENT 2
STAGE II

NORTH CAROLINA PROFESSIONAL SEAL 11259 ENGINEER DAVID R. ANDERSON
5/13/09

REVISIONS							SHEET NO.
NO.	BY:	DATE:	NO.	BY:	DATE:		S-78
1			3				TOTAL SHEETS
2			4				113

DRAWN BY : N.O. TRAN/WITHROW DATE : 8/29/08
CHECKED BY : J.A. TILLMAN DATE : 5/5/09

13-MAY-2009 10:24
r:\structures\rwithrow\microstation\r3833b_sd_e*_02.dgn
danderson

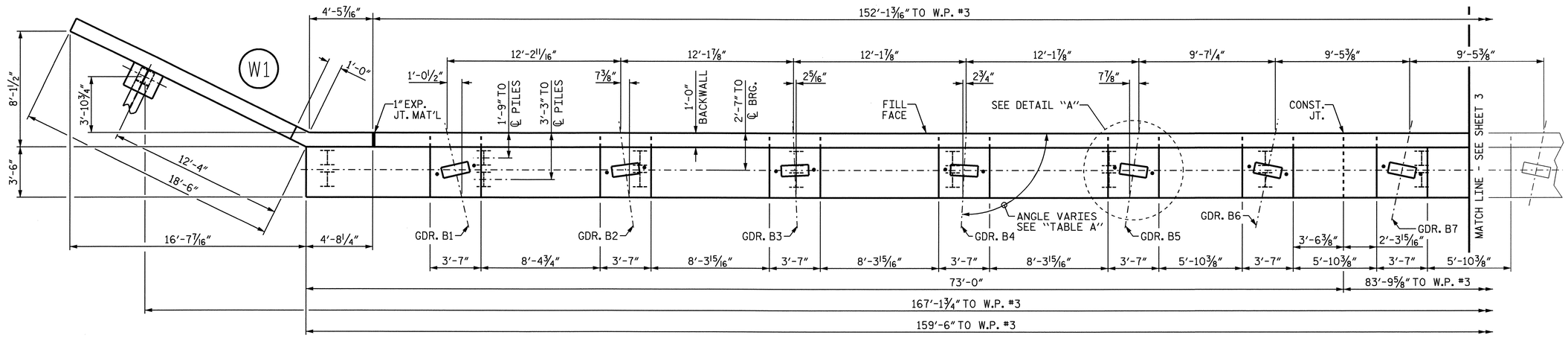

PLAN

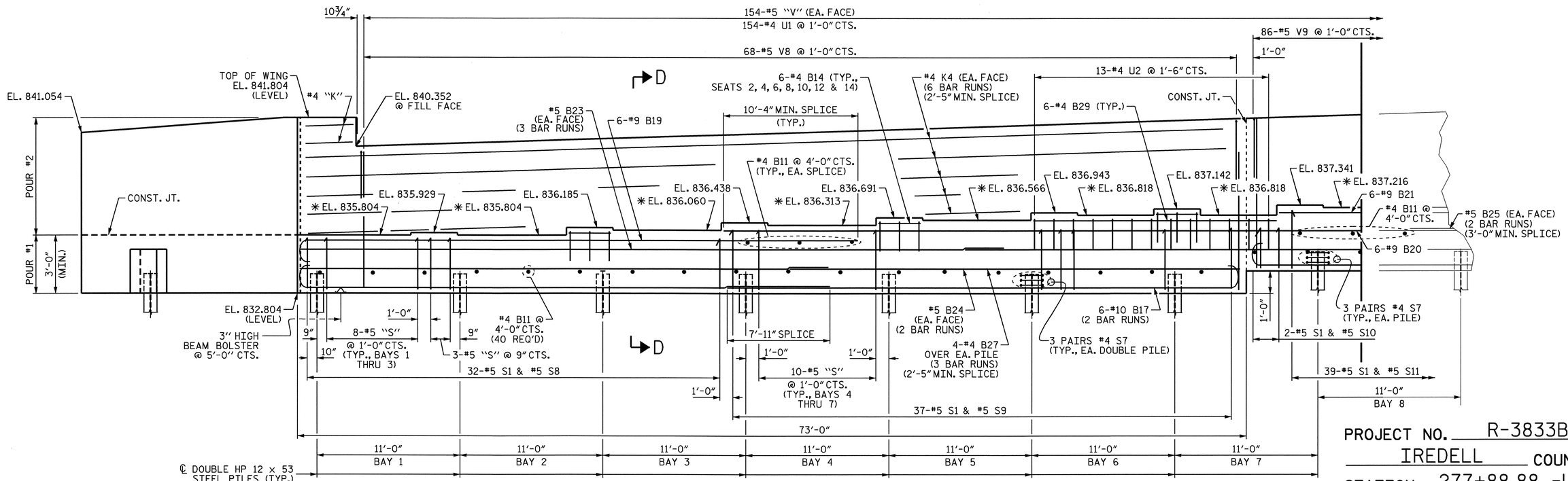

ELEVATION

TABLE A	
GIRDER	SKEW
B1	76°-57'-7"
B2	82°-12'-29"
B3	87°- 33'-2"
B4	92°-56'-10"
B5	98°-16'-13"
B6 TO B14	101°-40'-33"

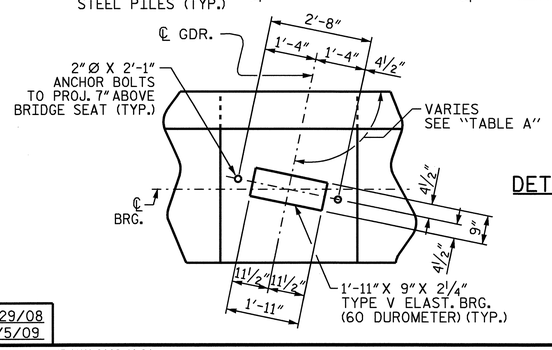

DETAIL A

NOTES

STIRRUPS IN CAP MAY BE SHIFTED AS NECESSARY TO CLEAR ANCHOR BOLTS.

BACKWALL SHALL BE PLACED BEFORE APPLYING THE EPOXY PROTECTIVE COATING.

THE TOP SURFACE AREAS OF THE END BENT CAPS SHALL BE CURED IN ACCORDANCE WITH THE STANDARD SPECIFICATIONS EXCEPT THE MEMBRANE CURING COMPOUND METHOD SHALL NOT BE USED.

THE TOP SURFACE OF THE CAP EXCEPT THE BRIDGE SEAT BUILDUPS SHALL BE SLOPED TRANSVERSELY FROM THE FILL FACE TO THE BACK FACE AT THE RATE OF 2%.

FOR GALVANIZED REINFORCING STRAP LOAD DETAILS, SEE SHEET 7 OF 7.

NORTH CAROLINA PROFESSIONAL SEAL 11259 ENGINEER DAVID R. ANDERSON
5/13/09

PROJECT NO. R-3833B
IREDELL COUNTY
STATION: 277+88.88 -L-

SHEET 4 OF 7

STATE OF NORTH CAROLINA
DEPARTMENT OF TRANSPORTATION
RALEIGH

SUBSTRUCTURE
END BENT 2
STAGE II

REVISIONS						SHEET NO.
NO.	BY:	DATE:	NO.	BY:	DATE:	S-79
1			3			TOTAL SHEETS
2			4			113

DRAWN BY : N.O. TRAN/WITHROW DATE : 8/29/08
CHECKED BY : J.A. TILLMAN DATE : 5/5/09

13-MAY-2009 10:24
r:\structures\rwithrow\microstation\r3833b_sd_e*_02.dgn
danderson

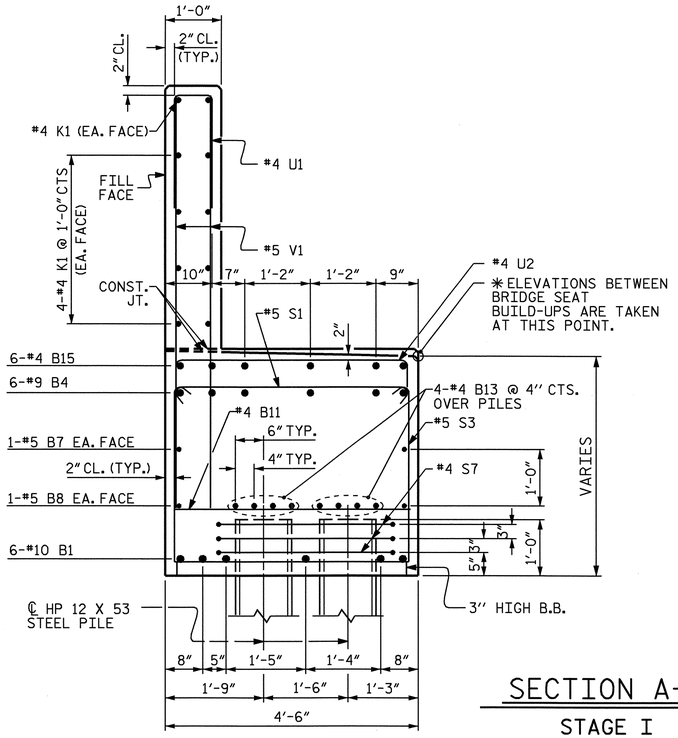

SECTION A-A

STAGE I

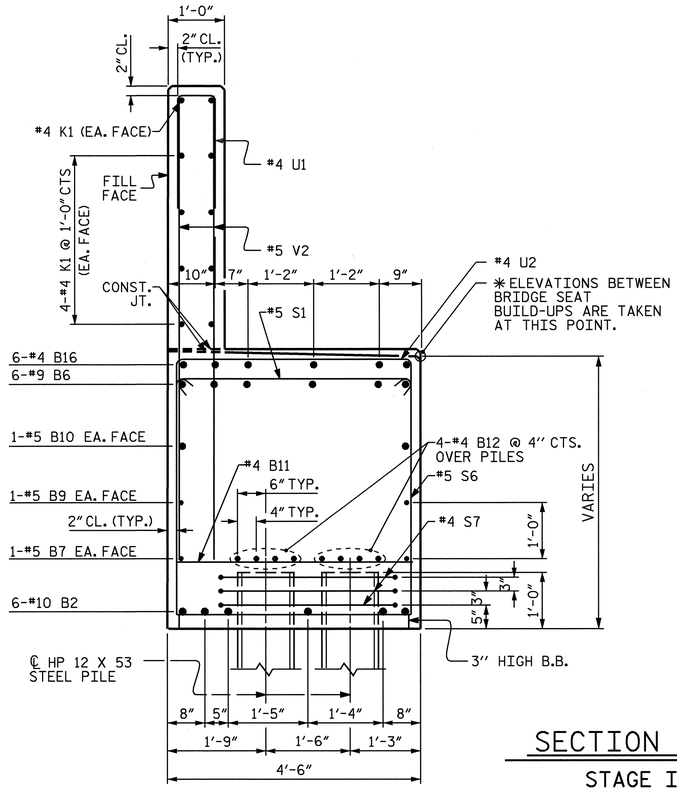

SECTION B-B

STAGE I

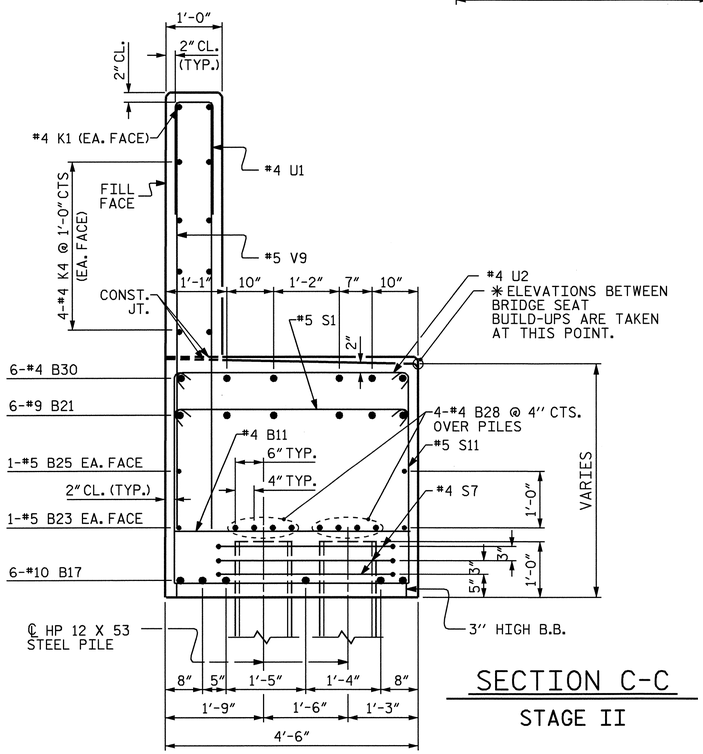

SECTION C-C

STAGE II

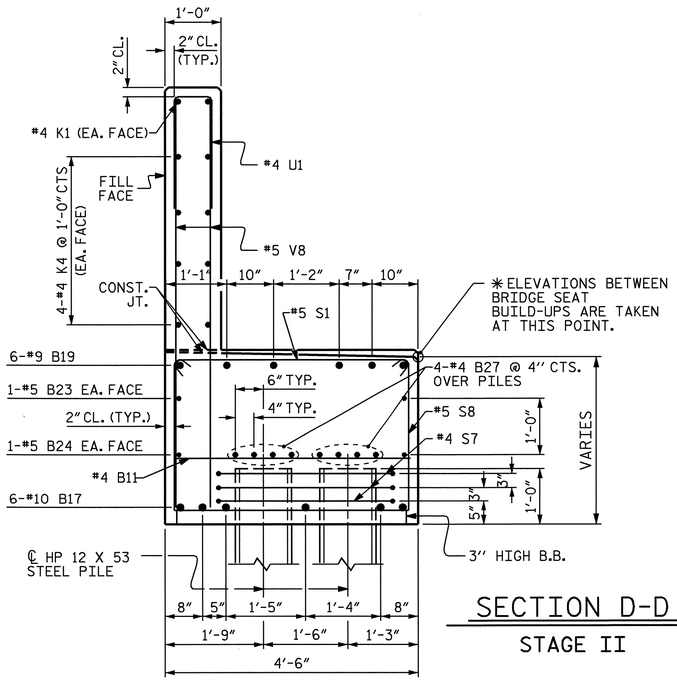

SECTION D-D

STAGE II

PROJECT NO. R-3833B

IREDELL COUNTY

STATION: 277+88.88 -L-

SHEET 5 OF 7

STATE OF NORTH CAROLINA
DEPARTMENT OF TRANSPORTATION
RALEIGH

SUBSTRUCTURE
END BENT 2

NORTH CAROLINA PROFESSIONAL SEAL 11259 ENGINEER DAVID R. ANDERSON

5/11/09

REVISIONS						SHEET NO.
NO.	BY:	DATE:	NO.	BY:	DATE:	5-80
1			3			TOTAL SHEETS
2			4			113

DRAWN BY : R. WITHROW DATE : 1/22/09
CHECKED BY : J.A. TILLMAN DATE : 5/5/09

11-MAY-2009 09:46
R:\Structures\rwithrow\Microstation\r3833b_sd_e*_02.dgn
drwithrow

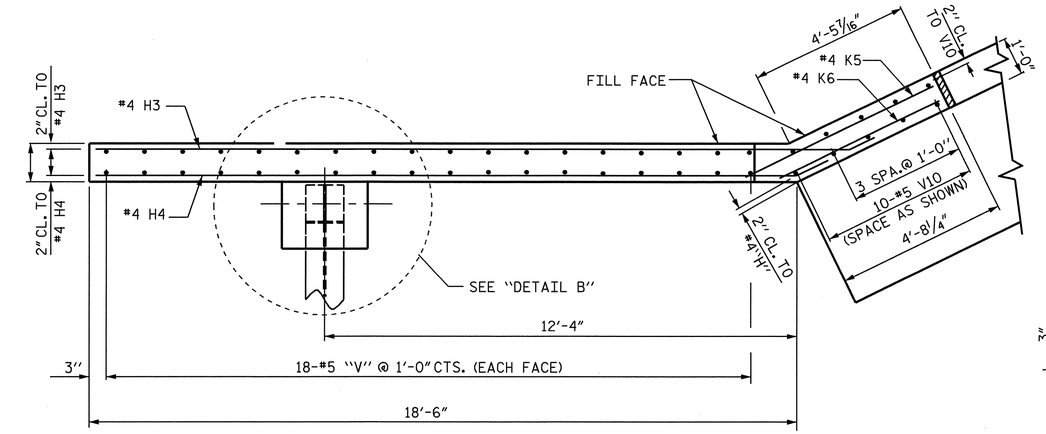

PLAN OF WING - W1

(LEFT WING - STAGE II)

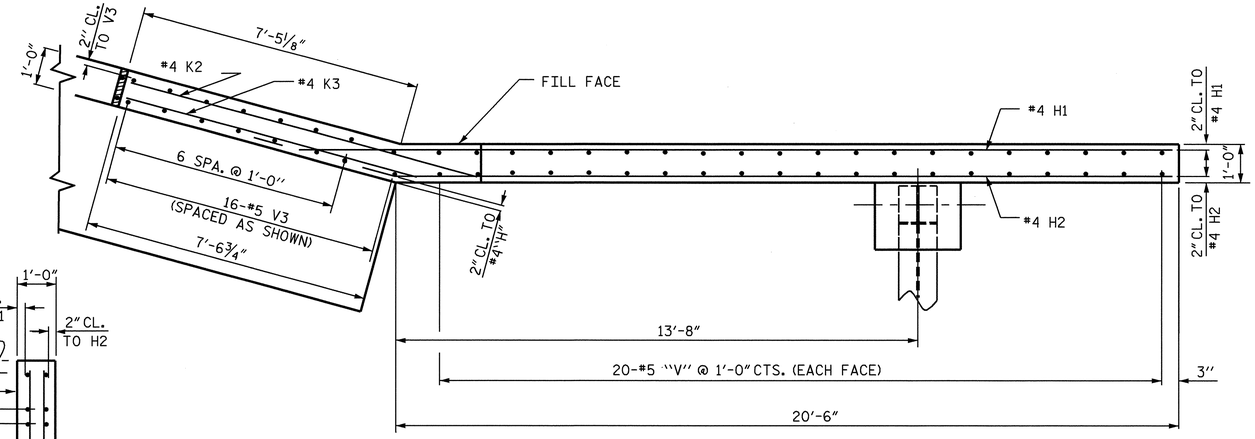

PLAN OF WING - W2

(RIGHT WING - STAGE I)

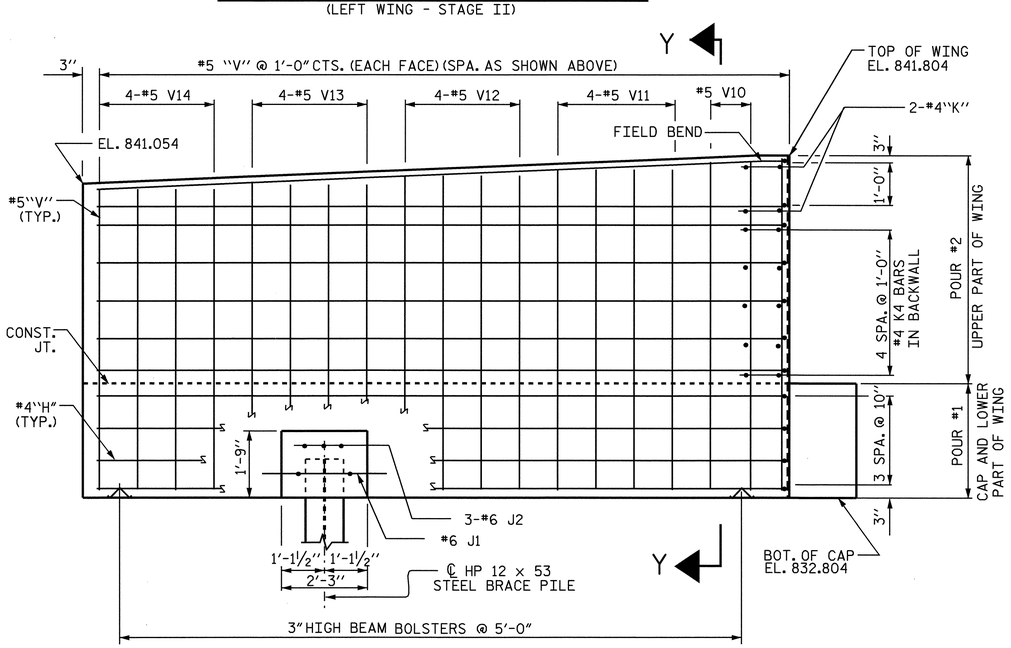

ELEVATION OF WING - W1

(LEFT WING - STAGE II)

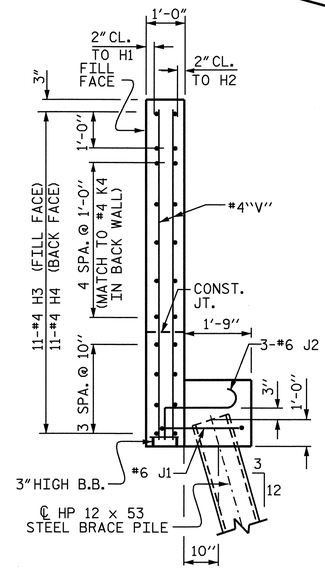

SECTION X-X

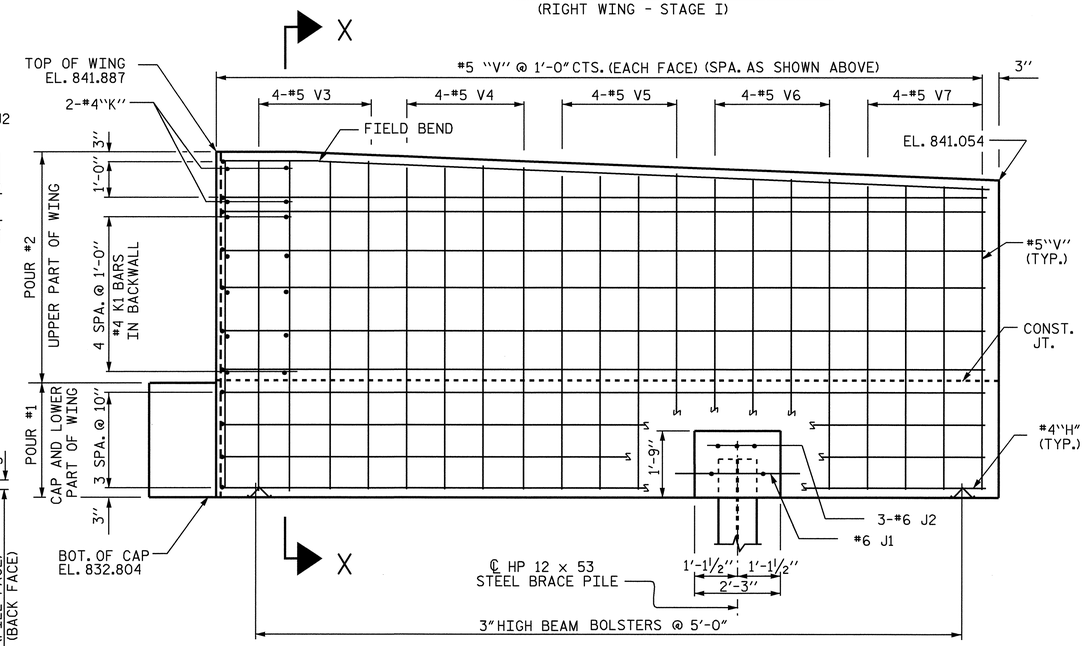

ELEVATION OF WING - W2

(RIGHT WING - STAGE I)

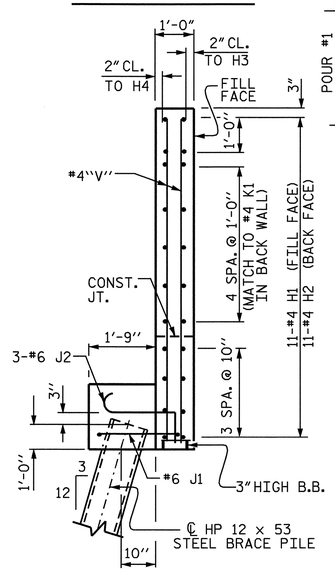

SECTION Y-Y

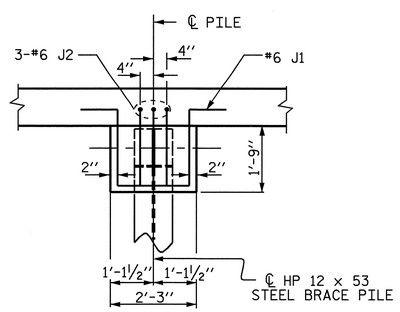

DETAIL B

PROJECT NO. R-3833B

IREDELL COUNTY

STATION: 277+88.88 -L-

SHEET 6 OF 7

STATE OF NORTH CAROLINA
DEPARTMENT OF TRANSPORTATION
RALEIGH

SUBSTRUCTURE

END BENT 2

NORTH CAROLINA PROFESSIONAL SEAL 11259 ENGINEER DAVID R. ANDERSON

11/24/08

REVISIONS						SHEET NO.
NO.	BY:	DATE:	NO.	BY:	DATE:	S-81
1			3			TOTAL SHEETS
2			4			113

DRAWN BY : N. Q. TRAN DATE : 8-29-08
CHECKED BY : J. A. TILLMAN DATE : 10-29-08

07-NOV-2008 14:01
r:\structures\ntran\microe\wkg\r3833b#1-ebs.dgn
danderson

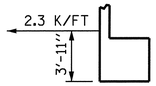

GALVANIZED REINFORCING STRAP LOAD DETAIL

GALVANIZED REINFORCING STRAPS SHALL BE ATTACHED TO THE END BENT BACKWALL. FOR DESIGN CRITERIA AND DETAILS, SEE "MECHANICALLY STABILIZED EARTH RETAINING WALL" SPECIAL PROVISIONS.

PLANS, WORKING DRAWINGS AND DESIGN CALCULATIONS SHALL BE SUBMITTED BY THE CONTRACTOR TO THE ENGINEER FOR REVIEW AND APPROVAL; SEE SPECIAL PROVISIONS. PLANS SUBMITTED FOR REVIEW SHALL INCLUDE THE FOLLOWING: PLAN VIEW, ELEVATION VIEW, TYPICAL SECTIONS AND STRAP DETAILS.

THE GALVANIZED REINFORCING STRAPS SHALL BE DESIGNED WITH THE FOLLOWING SOIL PARAMETERS:
FRICTION ANGLE = 38 DEGREES
COHESION c =0.0
UNIT WEIGHT OF SOIL = 110 PCF

BAR TYPES

STAGE I

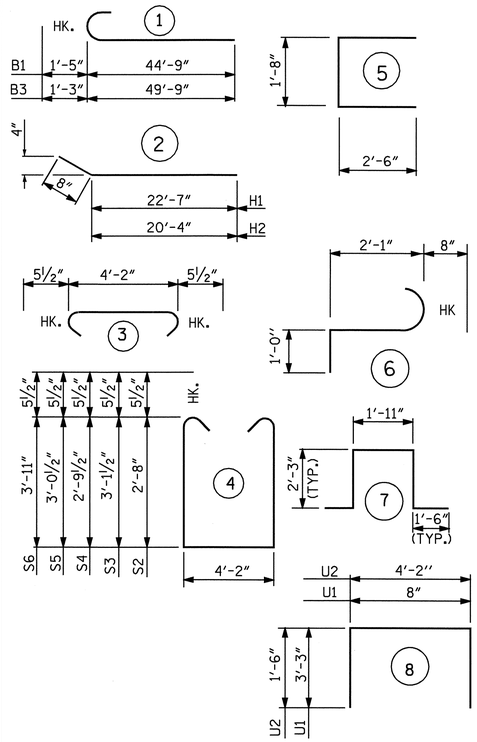

ALL BAR DIMENSIONS ARE OUT TO OUT.

STAGE II

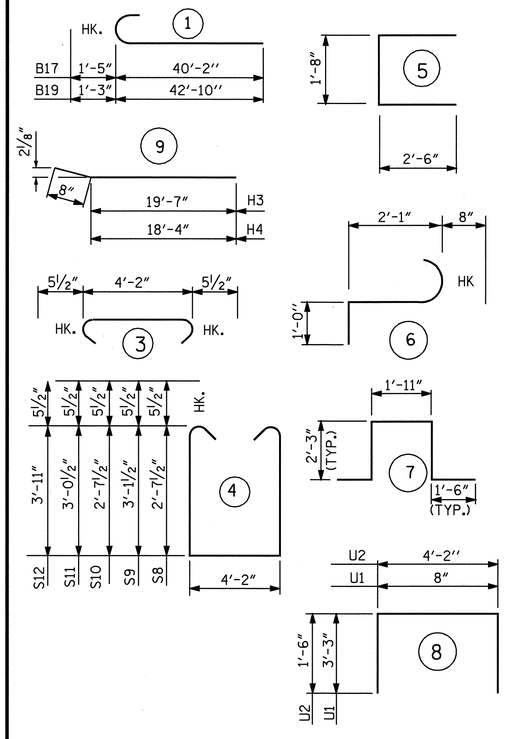

ALL BAR DIMENSIONS ARE OUT TO OUT.

BILL OF MATERIAL FOR END BENT 2

STAGE I

BAR	NO.	SIZE	TYPE	LENGTH	WEIGHT
B1	18	10	1	46'-2"	3576
B2	6	10	STR	55'-10"	1441
B3	6	9	1	51'-0"	1040
B4	6	9	STR	58'-0"	1183
B5	6	9	STR	57'-9"	1178
B6	6	9	STR	40'-4"	823
B7	8	5	STR	46'-6"	388
B8	4	5	STR	42'-4"	177
B9	4	5	STR	43'-9"	178
B10	2	5	STR	32'-1"	67
B11	53	4	STR	4'-2"	148
B12	32	4	STR	25'-4"	542
B13	24	4	STR	28'-10"	462
B14	36	4	STR	3'-3"	79
B15	12	4	STR	23'-8"	190
B16	6	4	STR	18'-3"	73
H1	11	4	2	23'-3"	171
H2	11	4	2	21'-0"	154
J1	1	6	7	9'-5"	14
J2	3	6	6	3'-9"	17
K1	70	4	STR	27'-2"	1270
K2	2	4	STR	9'-8"	13
K3	2	4	STR	7'-5"	10
S1	166	5	3	5'-1"	880
S2	36	5	4	10'-5"	402
S3	44	5	4	11'-4"	520
S4	5	5	4	10'-8"	56
S5	44	5	4	11'-2"	512
S6	37	5	4	12'-11"	498
S7	102	4	5	6'-8"	454
U1	167	4	8	7'-2"	799
U2	61	4	8	7'-2"	292
V1	150	5	STR	7'-2"	1121
V2	184	5	STR	7'-7"	1455
V3	24	5	STR	8'-9"	219
V4	8	5	STR	8'-5"	70
V5	8	5	STR	8'-3"	69
V6	8	5	STR	8'-1"	67
V7	8	5	STR	7'-11"	66

REINFORCING STEEL 20,674 LBS.

CLASS A CONCRETE BREAKDOWN

POUR 1 - CAP AND LOWER PORTION OF WINGS 113.4 C.Y.

POUR 2 - BACKWALL & UPPER PORTION OF WINGS 35.0 C.Y.

CLASS A CONCRETE TOTAL 148.4 C.Y.

HP 12 x 53 STEEL PILES

NO. 35 2625.0 LIN. FEET

STAGE II

BAR	NO.	SIZE	TYPE	LENGTH	WEIGHT
B11	49	4	STR	4'-2"	136
B14	42	4	STR	3'-3"	91
B17	18	10	1	41'-7"	3221
B18	6	10	STR	50'-4"	1300
B19	6	9	1	44'-1"	899
B20	6	9	STR	53'-0"	1081
B21	6	9	STR	52'-8"	1074
B22	6	9	STR	40'-7"	828
B23	6	5	STR	55'-0"	344
B24	4	5	STR	37'-10"	156
B25	4	5	STR	39'-9"	166
B26	2	5	STR	34'-2"	71
B27	24	4	STR	25'-10"	414
B28	32	4	STR	23'-4"	499
B29	6	4	STR	18'-9"	75
B30	6	4	STR	23'-4"	94
B31	6	4	STR	18'-0"	72
H3	11	4	9	20'-3"	149
H4	11	4	9	19'-0"	140
J1	1	6	7	9'-5"	14
J2	3	6	6	3'-9"	17
K4	60	4	STR	28'-6"	1142
K5	2	4	STR	5'-10"	8
K6	2	4	STR	4'-7"	6
S1	147	5	3	5'-1"	779
S7	90	4	5	6'-8"	401
S8	32	5	4	10'-4"	345
S9	37	5	4	11'-4"	437
S10	2	5	4	10'-4"	22
S11	39	5	4	11'-2"	454
S12	37	5	4	12'-11"	498
U1	154	4	8	7'-2"	737
U2	62	4	8	7'-2"	297
V8	136	5	STR	7'-2"	1017
V9	172	5	STR	7'-8"	1375
V10	14	5	STR	8'-7"	125
V11	8	5	STR	8'-5"	70
V12	8	5	STR	8'-3"	69
V13	8	5	STR	8'-1"	67
V14	8	5	STR	7'-11"	66

REINFORCING STEEL 18,756 LBS.

CLASS A CONCRETE BREAKDOWN

POUR 1 - CAP AND LOWER PORTION OF WINGS 105.6 C.Y.

POUR 2 - BACKWALL & UPPER PORTION OF WINGS 31.9 C.Y.

CLASS A CONCRETE TOTAL 137.5 C.Y.

HP 12 x 53 STEEL PILES

NO. 31 2325.0 LIN. FEET

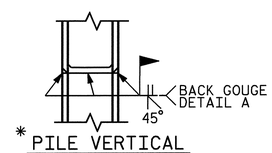

* PILE VERTICAL

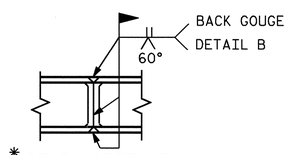

* PILE HORIZONTAL OR VERTICAL

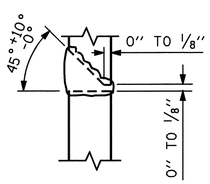

* DETAIL A

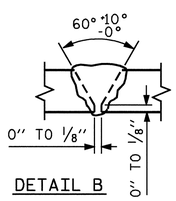

DETAIL B

POSITION OF PILE DURING WELDING.

PILE SPLICE DETAILS

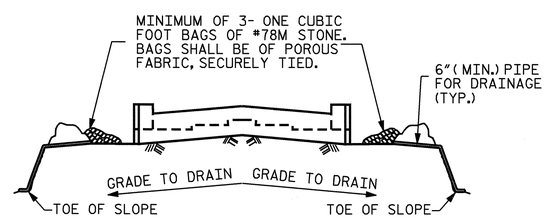

BAGGED STONE AND PIPE SHALL BE PLACED IMMEDIATELY AFTER COMPLETION OF END BENT EXCAVATION. PIPE MAY BE EITHER CONCRETE, CORRUGATED STEEL, CORRUGATED ALUMINUM ALLOY, OR CORRUGATED PLASTIC. PERFORATED PIPE WILL NOT BE ALLOWED.

BAGGED STONE SHALL REMAIN IN PLACE UNTIL THE ENGINEER DIRECTS THAT IT BE REMOVED. THE CONTRACTOR SHALL REMOVE AND DISPOSE OF SILT ACCUMULATIONS AT BAGGED STONE WHEN SO DIRECTED BY THE ENGINEER. BAGS SHALL BE REMOVED AND REPLACED WHENEVER THE ENGINEER DETERMINES THAT THEY HAVE DETERIORATED AND LOST THEIR EFFECTIVENESS.

NO SEPARATE PAYMENT WILL BE MADE FOR THIS WORK AND THE ENTIRE COST OF THIS WORK SHALL BE INCLUDED IN THE UNIT CONTRACT PRICE BID FOR THE SEVERAL PAY ITEMS.

TEMPORARY DRAINAGE AT END BENT

PROJECT NO. R-3833B
IREDELL COUNTY
STATION: 277+88.88 -L-

SHEET 7 OF 7

STATE OF NORTH CAROLINA
DEPARTMENT OF TRANSPORTATION
RALEIGH

SUBSTRUCTURE

END BENT 2

NORTH CAROLINA PROFESSIONAL SEAL 11259 ENGINEER DAVID R. ANDERSON
5/6/09

REVISIONS						SHEET NO.
NO.	BY:	DATE:	NO.	BY:	DATE:	S-82
1			3			TOTAL SHEETS
2			4			113

DRAWN BY : N. Q. TRAN DATE : 8-29-08
CHECKED BY : J. A. TILLMAN DATE : 10-29-08

06-MAY-2009 09:57
p:\tlprojects-r\r3833b\structures\rwithrow\Microstation\r3833b_sd_e*_02.dgn
drwithrow

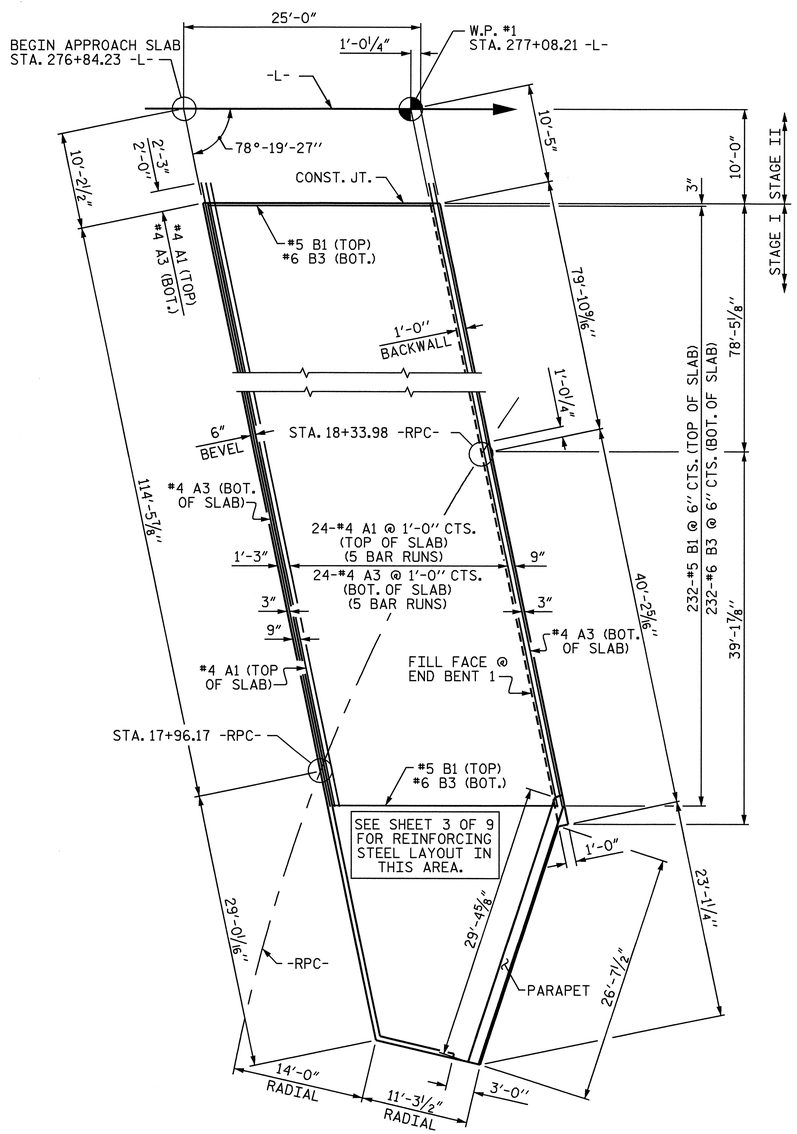

AT END BENT 1

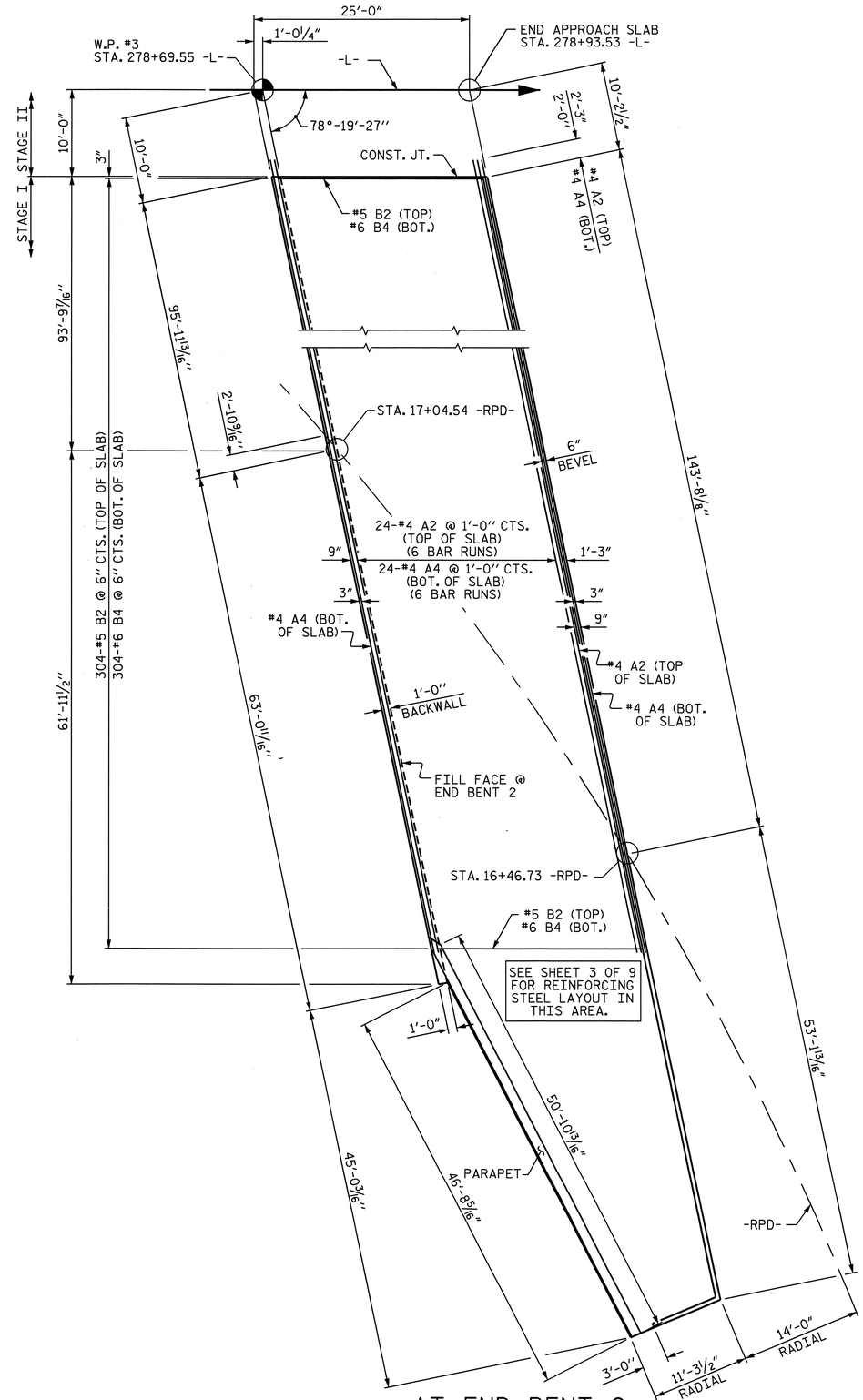

AT END BENT 2

NOTES

ALL "B" BARS ARE PLACED PARALLEL TO CONSTRUCTION JOINT.

ALL "A" BARS ARE PLACED PARALLEL TO END BENT FILL FACE.

SEE PARAPET SHEETS FOR REINFORCING STEEL AND DETAILS.

SEE 5" CONCRETE ISLAND SHEETS FOR REINFORCING STEEL AND DETAILS.

PROJECT NO. R-3833B

IREDELL COUNTY

STATION: 277+88.88 -L-

SHEET 1 OF 9

STATE OF NORTH CAROLINA
DEPARTMENT OF TRANSPORTATION
RALEIGH

APPROACH SLAB STAGE I

NORTH CAROLINA PROFESSIONAL SEAL 11259 ENGINEER DAVID R. ANDERSON

11/24/08

REVISIONS						SHEET NO.
NO.	BY:	DATE:	NO.	BY:	DATE:	S-83
1			3			TOTAL SHEETS
2			4			113

DRAWN BY : A.S. CALLAWAY DATE : 9/15/08
CHECKED BY : W.F. PARKER DATE : 10/15/08

30-OCT-2008 09:43
f:\structures\callaway\microstation\r3833b_sd_as_01.dgn
scallaway

STR. #1

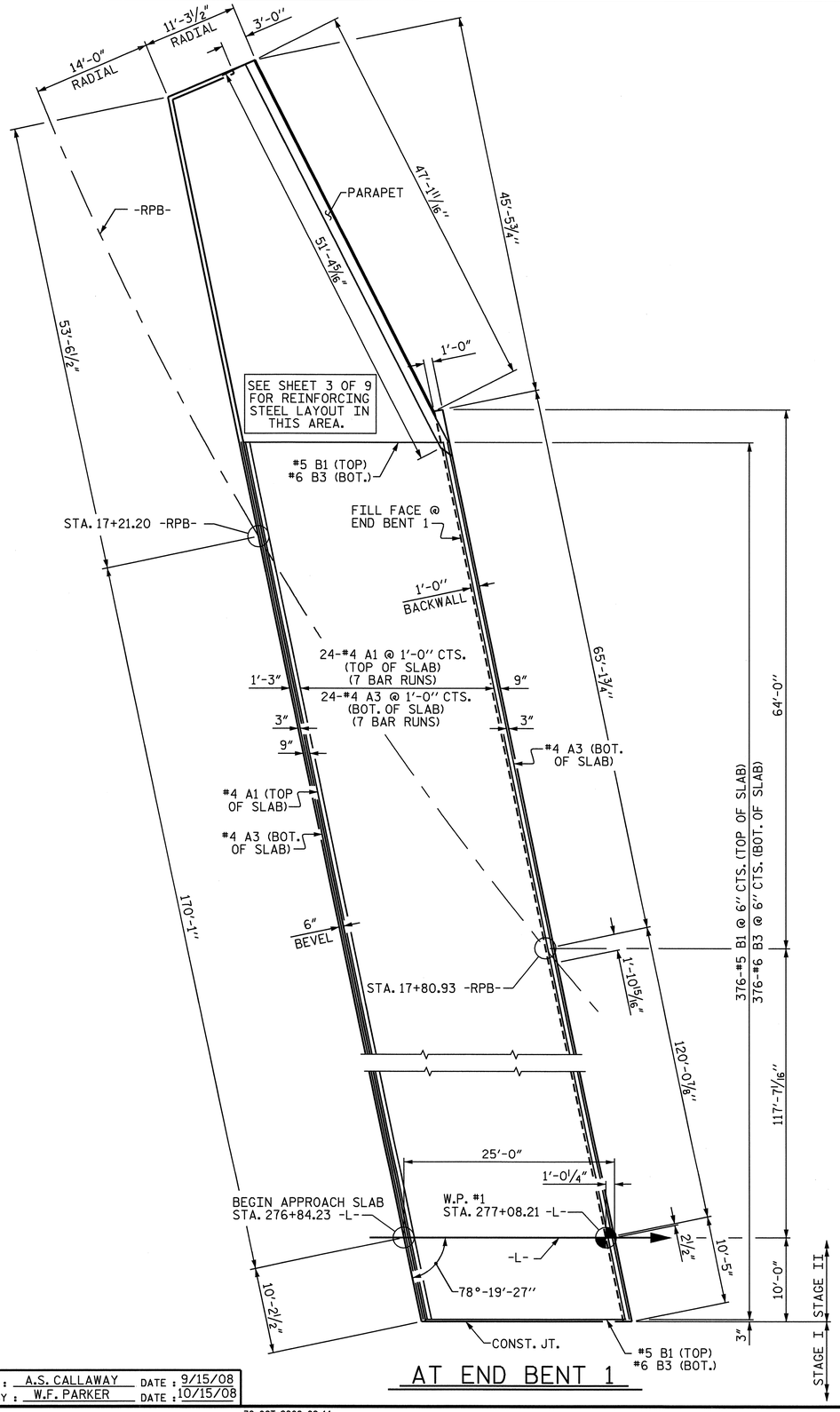

AT END BENT 1

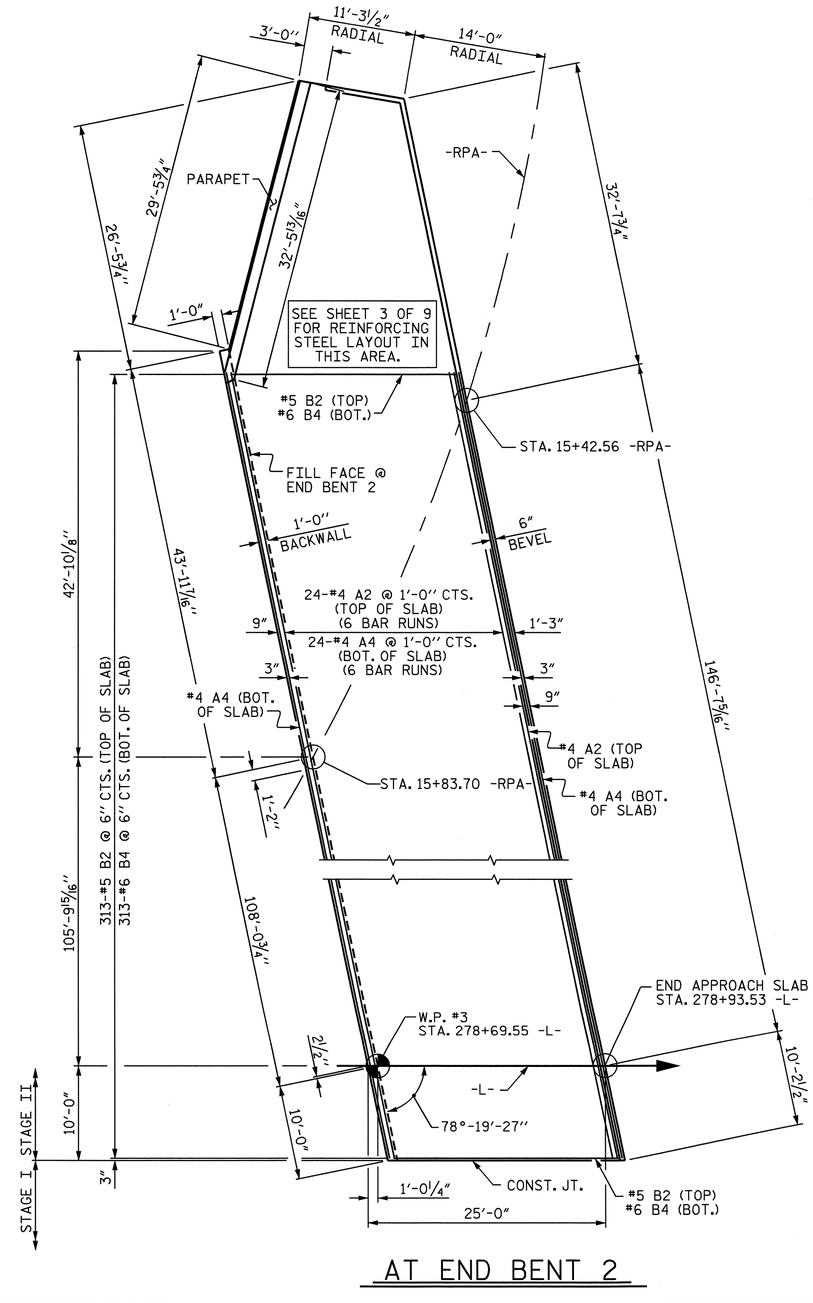

AT END BENT 2

NOTES

ALL "B" BARS ARE PLACED PARALLEL TO CONSTRUCTION JOINT.

ALL "A" BARS ARE PLACED PARALLEL TO END BENT FILL FACE.

SEE PARAPET SHEETS FOR REINFORCING STEEL AND DETAILS.

SEE 5" CONCRETE ISLAND SHEETS FOR REINFORCING STEEL AND DETAILS.

NORTH CAROLINA PROFESSIONAL SEAL 11259 ENGINEER DAVID R. ANDERSON
11/24/08

PROJECT NO. R-3833B
IREDELL COUNTY
STATION: 277+88.88 -L-

SHEET 2 OF 9

STATE OF NORTH CAROLINA
DEPARTMENT OF TRANSPORTATION
RALEIGH

APPROACH SLAB STAGE II

REVISIONS								SHEET NO.
NO.	BY:	DATE:	NO.	BY:	DATE:			S-84
1			3					TOTAL SHEETS
2			4					113

DRAWN BY : A.S. CALLAWAY DATE : 9/15/08
CHECKED BY : W.F. PARKER DATE : 10/15/08

30-OCT-2008 09:44
f:\structures\callaway\microstation\r3833b_sd_as_01.dgn
scallaway

STR. #1

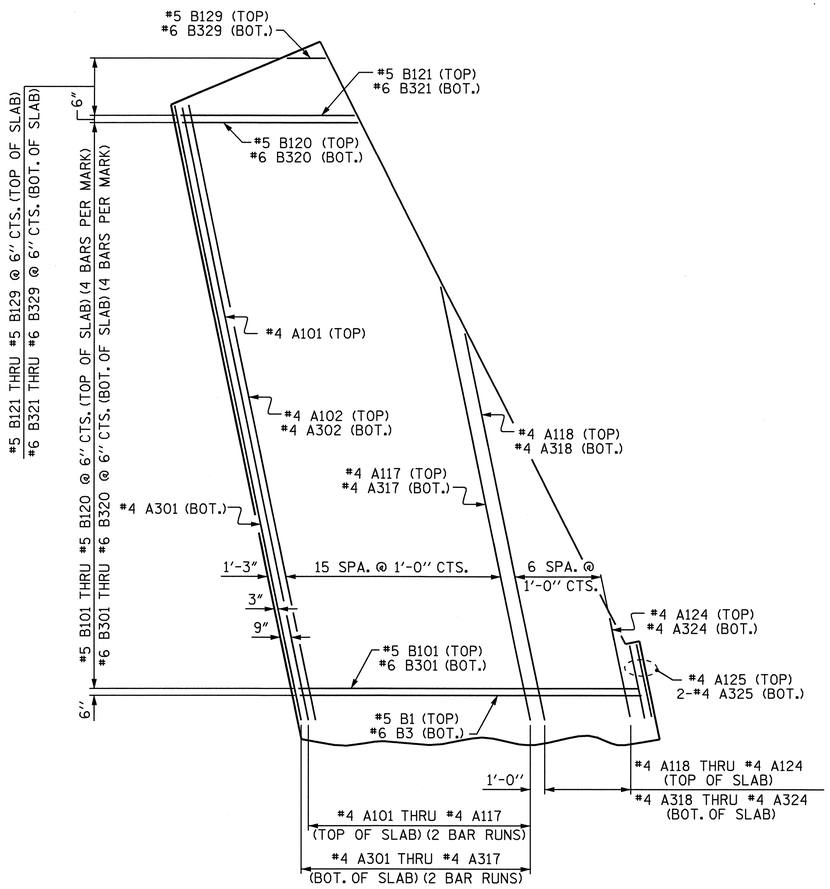

APPROACH SLAB - LEFT SIDE
END BENT 1 - STAGE II

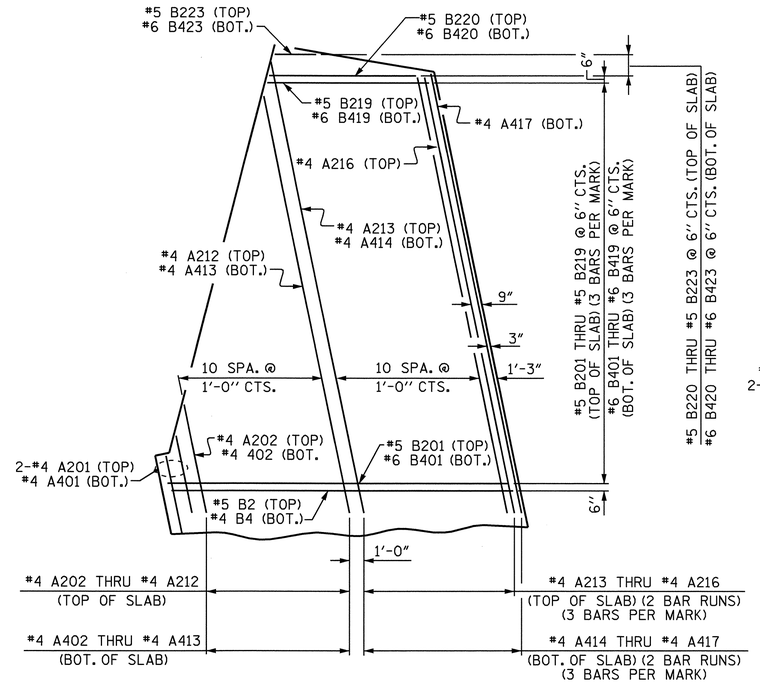

APPROACH SLAB - LEFT SIDE
END BENT 2 - STAGE II

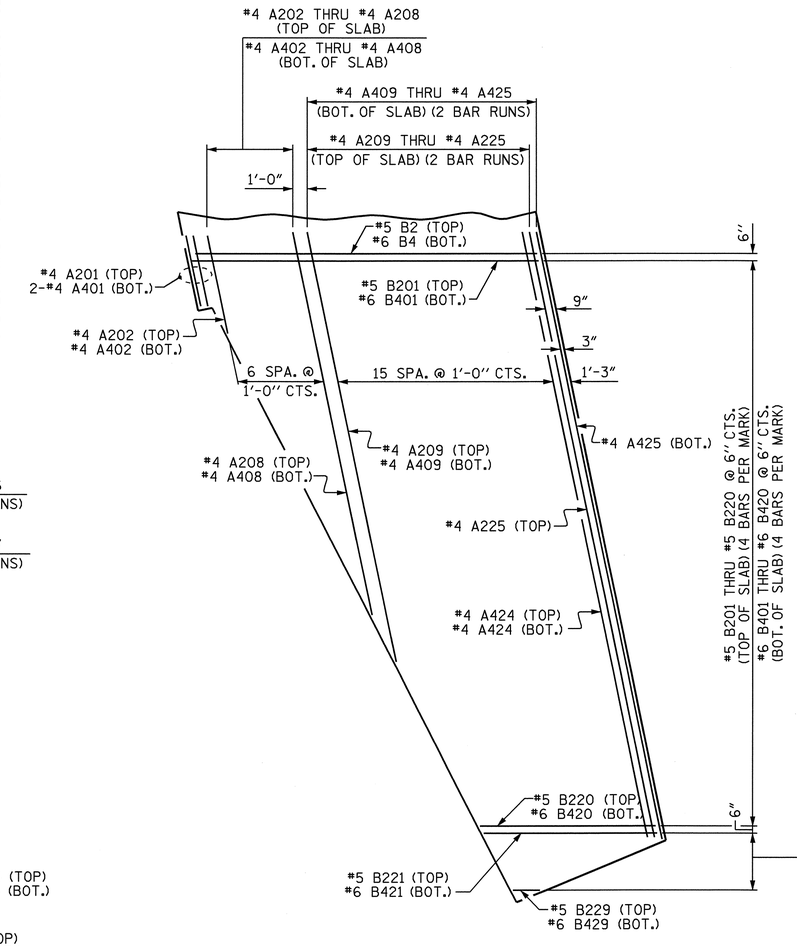

APPROACH SLAB - RIGHT SIDE
END BENT 2 - STAGE I

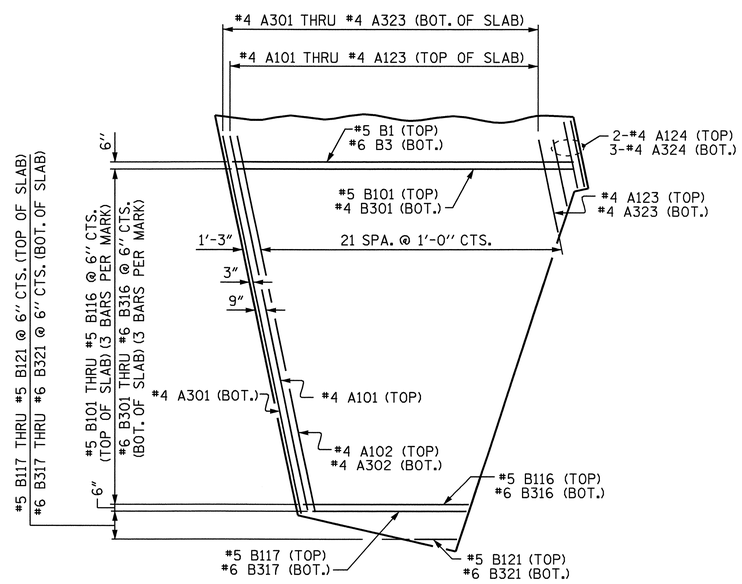

APPROACH SLAB - RIGHT SIDE
END BENT 1 - STAGE I

PROJECT NO. R-3833B
IREDELL COUNTY
STATION: 277+88.88 -L-

SHEET 3 OF 9

STATE OF NORTH CAROLINA
DEPARTMENT OF TRANSPORTATION
RALEIGH

APPROACH SLAB
STAGE I & II

NORTH CAROLINA PROFESSIONAL SEAL 11259 ENGINEER DAVID R. ANDERSON
11/24/08

REVISIONS						SHEET NO.
NO.	BY:	DATE:	NO.	BY:	DATE:	S-85
1			3			TOTAL SHEETS
2			4			113

DRAWN BY : A.S. CALLAWAY DATE : 9/15/08
CHECKED BY : W.F. PARKER DATE : 10/15/08

21-OCT-2008 11:40
r:\structures\callaway\microstation\r3833b_sd_as_01.dgn
danderson

STR. #1

NOTES

THE PARAPETS SHALL NOT BE CAST UNTIL THE APPROACH SLAB CONCRETE IN THAT STAGE HAS BEEN CAST AND HAS REACHED A MINIMUM COMPRESSIVE STRENGTH OF 3,000 PSI.

ARMORED EVAZOTE JOINT SEAL IS REQUIRED, THE JOINT IN THE DECK SHALL BE FORMED PRIOR TO THE CASTING OF PARAPETS.

ALL REINFORCING STEEL IN PARAPETS SHALL BE EPOXY COATED.

VERTICAL GROOVED CONTRACTION JOINTS, 1/2" IN DEPTH, SHALL BE TOOLED IN ALL EXPOSED FACES OF THE PARAPETS AND IN ACCORDANCE WITH ARTICLE 825-10(B) OF THE STANDARD SPECIFICATIONS. THE CONTRACTION JOINT SHALL BE LOCATED AT THIRD POINTS ALONG LENGTH OF PARAPET.

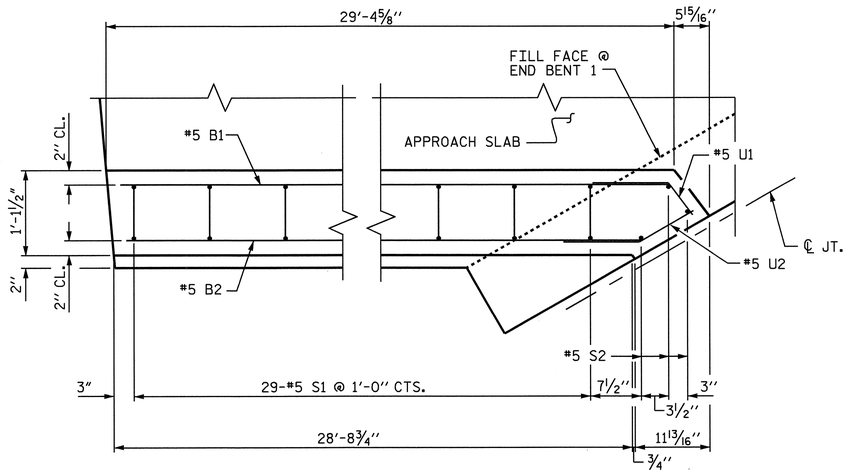

PLAN END BENT 1 RIGHT (RAMP -RPC-)

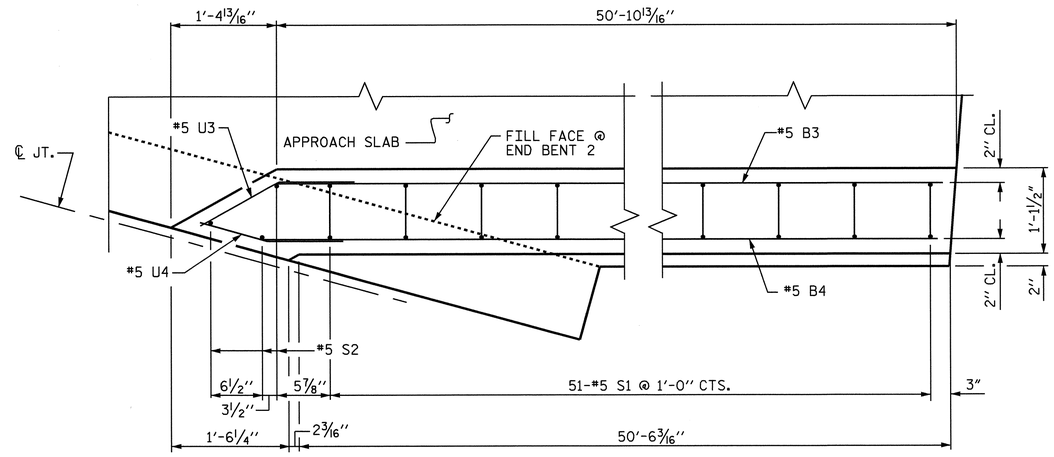

PLAN END BENT 2 RIGHT (RAMP -RPD-)

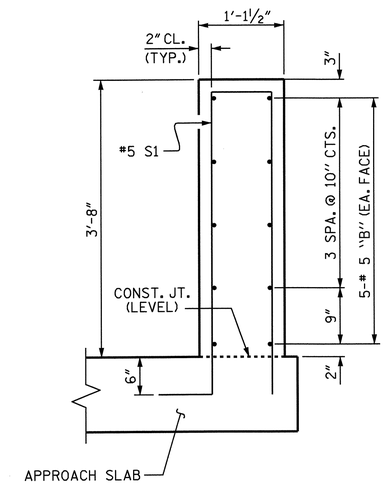

SECTION A-A

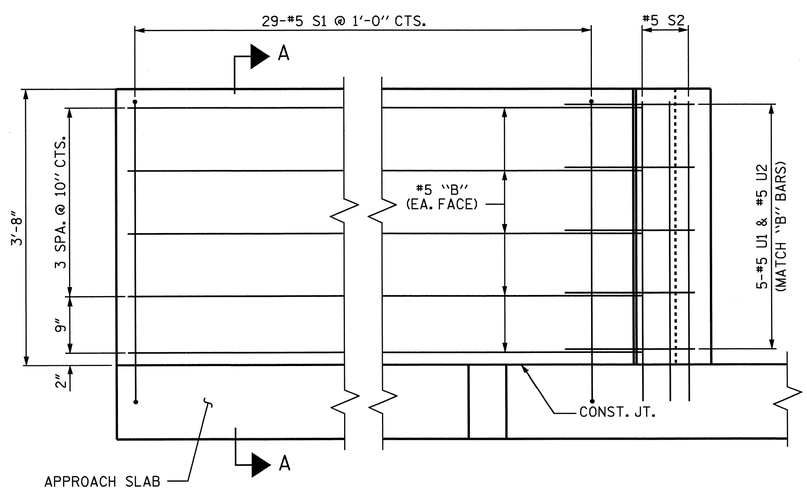

ELEVATION END BENT 1 RIGHT (RAMP -RPC-)

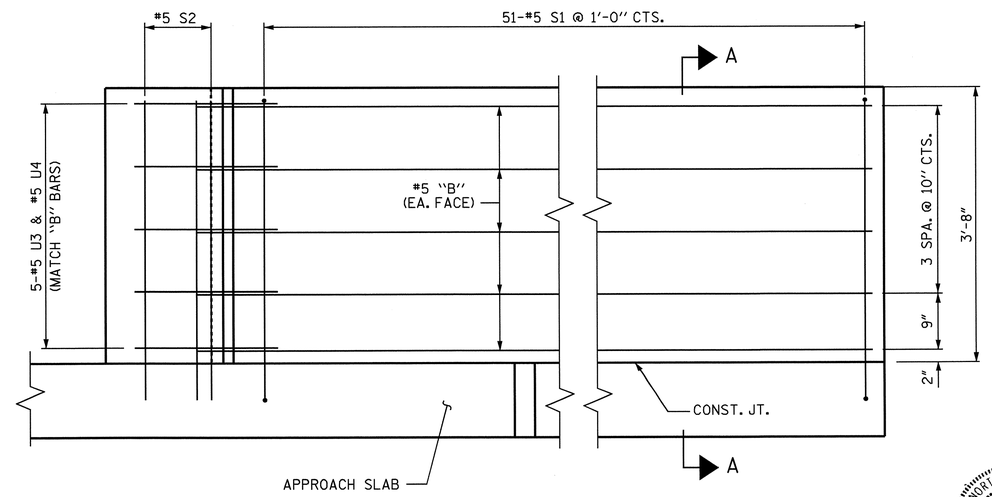

ELEVATION END BENT 2 RIGHT (RAMP -RPD-)

PROJECT NO. R-3833B

IREDELL COUNTY

STATION: 277+88.88 -L-

SHEET 4 OF 9

STATE OF NORTH CAROLINA
DEPARTMENT OF TRANSPORTATION
RALEIGH

APPROACH SLAB
PARAPET DETAILS
STAGE I

NORTH CAROLINA PROFESSIONAL SEAL 11259 ENGINEER DAVID R. ANDERSON
11/24/08

REVISIONS						SHEET NO.
NO.	BY:	DATE:	NO.	BY:	DATE:	5-86
1			3			TOTAL SHEETS
2			4			113

STR. #1

DRAWN BY : A.S. CALLAWAY DATE : 9/15/08
CHECKED BY : W.F. PARKER DATE : 10/15/08

30-OCT-2008 09:44
f:\structures\callaway\microstation\r3833b_sd_as_01.dgn
scallaway

NOTES

THE PARAPETS SHALL NOT BE CAST UNTIL THE APPROACH SLAB CONCRETE IN THAT STAGE HAS BEEN CAST AND HAS REACHED A MINIMUM COMPRESSIVE STRENGTH OF 3,000 PSI.

ARMORED EVAZOTE JOINT SEAL IS REQUIRED, THE JOINT IN THE DECK SHALL BE FORMED PRIOR TO THE CASTING OF PARAPETS.

ALL REINFORCING STEEL IN PARAPETS SHALL BE EPOXY COATED.

VERTICAL GROOVED CONTRACTION JOINTS, 1/2" IN DEPTH, SHALL BE TOOLED IN ALL EXPOSED FACES OF THE PARAPETS AND IN ACCORDANCE WITH ARTICLE 825-10(B) OF THE STANDARD SPECIFICATIONS. THE CONTRACTION JOINT SHALL BE LOCATED AT THIRD POINTS ALONG LENGTH OF PARAPET.

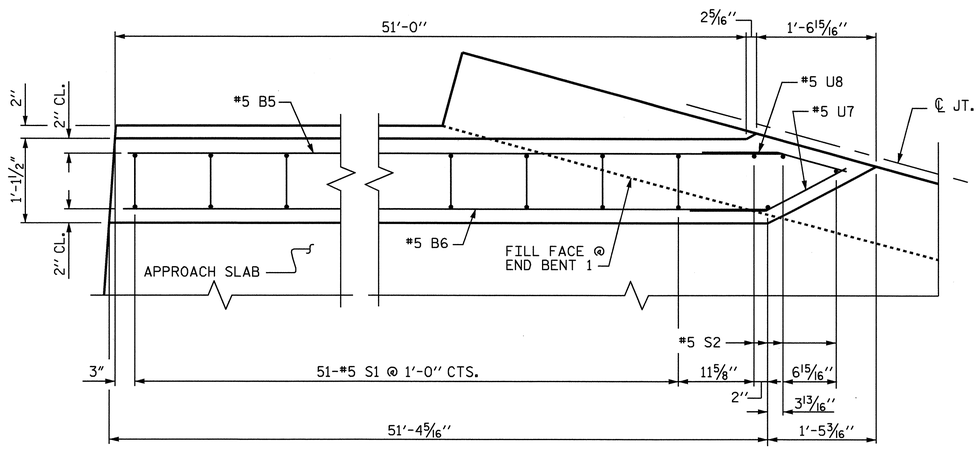

PLAN END BENT 1 LEFT (RAMP -RPB-)

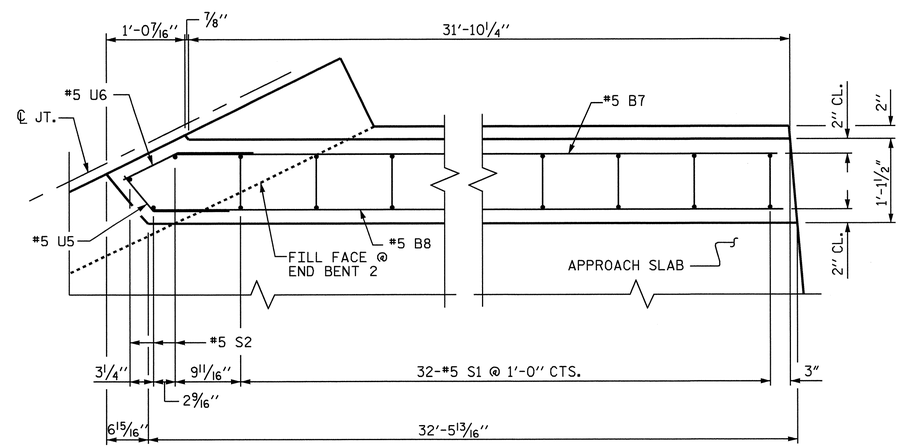

PLAN END BENT 2 LEFT (RAMP -RPA-)

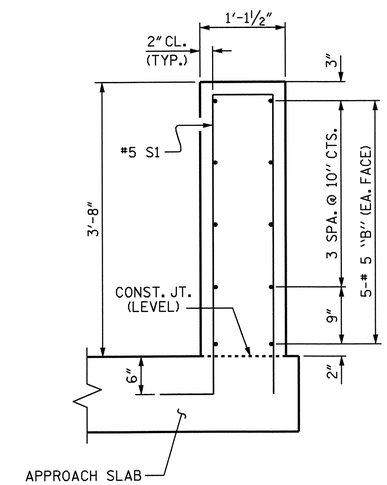

SECTION A-A

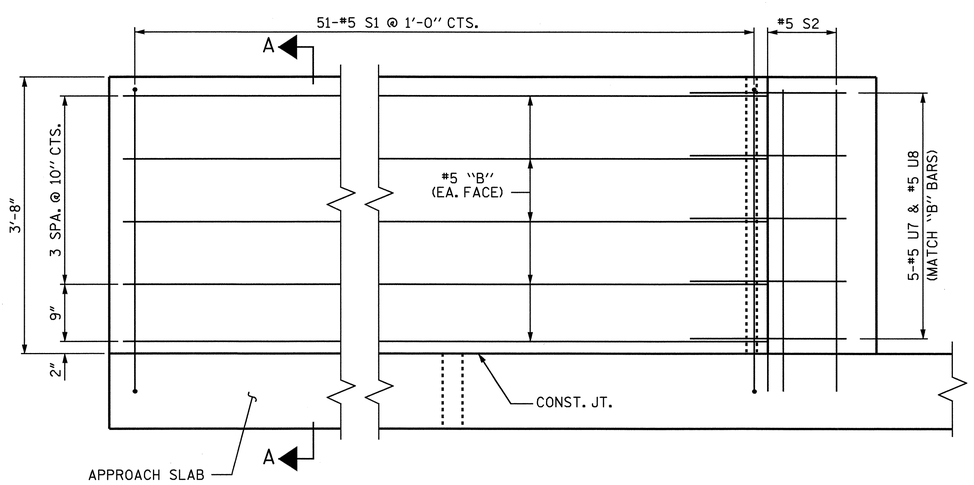

ELEVATION END BENT 1 LEFT (RAMP -RPB-)

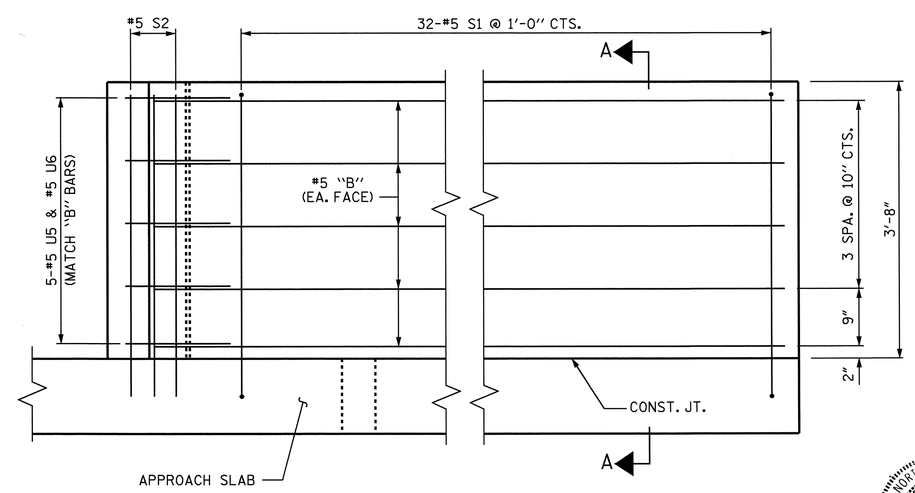

ELEVATION END BENT 1 LEFT (RAMP -RPB-)

PROJECT NO. R-3833B
IREDELL COUNTY
STATION: 277+88.88 -L-

SHEET 5 OF 9

STATE OF NORTH CAROLINA
DEPARTMENT OF TRANSPORTATION
RALEIGH

APPROACH SLAB PARAPET DETAILS STAGE II

NORTH CAROLINA PROFESSIONAL SEAL 11259 ENGINEER DAVID R. ANDERSON
11/24/08

REVISIONS						SHEET NO.
NO.	BY:	DATE:	NO.	BY:	DATE:	5-87
1			3			TOTAL SHEETS
2			4			113

STR. #1

DRAWN BY : A.S. CALLAWAY DATE : 9/15/08
CHECKED BY : W.F. PARKER DATE : 10/15/08

30-OCT-2008 09:44
f:\structures\callaway\microstation\r3833b_sd_as_01.dgn
scallaway

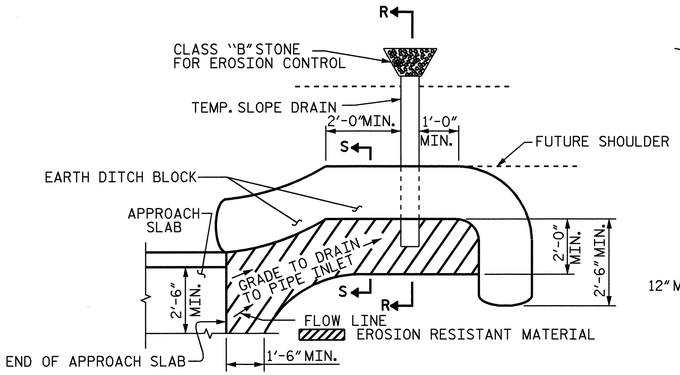

NOTE: IMMEDIATELY AFTER THE CONSTRUCTION OF THE APPROACH SLAB, THE CONTRACTOR SHALL PROVIDE TEMPORARY BERM AND SLOPE DRAIN. CONTRACTOR SHALL GRADE TO PIPE INLET AND PROVIDE EROSION RESISTANT MATERIAL AS SHOWN. THE EROSION RESISTANT MATERIAL SHALL BE EITHER 1) ASPHALT PLANT MIX, TYPE 1 OR TYPE 2, MIN. 2" DEPTH, 2) EROSION CONTROL MAT, OR 3) CONCRETE, AS DIRECTED BY THE ENGINEER. THE SLOPE DRAIN SHALL CONSIST OF A NON-PERFORATED TEMPORARY DRAINAGE PIPE, 12 INCHES IN DIAMETER.

PLAN VIEW

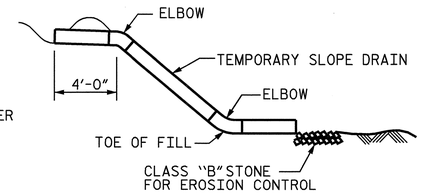

SECTION R-R

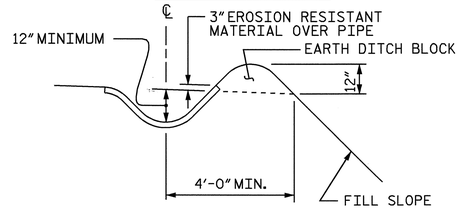

SECTION S-S

TEMPORARY BERM AND SLOPE DRAIN DETAILS

(TO BE USED WHEN SHOULDER BERM GUTTER IS REQUIRED)

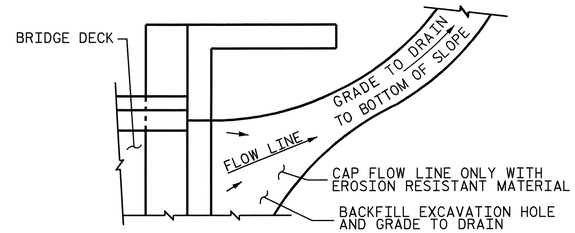

NOTE: IF THE APPROACH SLAB IS NOT CONSTRUCTED IMMEDIATELY AFTER THE BACKFILLING OF THE END BENT EXCAVATION, GRADE TO DRAIN TO THE BOTTOM OF THE SLOPE AND PROVIDE EROSION RESISTANT MATERIAL, SUCH AS FIBERGLASS ROVING OR AS DIRECTED BY THE ENGINEER TO PREVENT SOIL EROSION AND TO PROTECT THE AREA ADJACENT TO THE STRUCTURE. THE CONTRACTOR WILL BE REQUIRED TO REMOVE THESE MATERIALS PRIOR TO CONSTRUCTION OF THE APPROACH SLAB.

TEMPORARY DRAINAGE DETAIL

NOTES

APPROACH SLAB SHALL NOT BE CONSTRUCTED PRIOR TO COMPLETION OF THE BRIDGE DECK.

AREA BETWEEN THE WINGWALL AND APPROACH SLAB SHALL BE GRADED TO DRAIN THE WATER AWAY FROM THE FILL FACE OF THE BRIDGE AND SHALL BE PAVED. SEE ROADWAY PLANS.

THE 6" COMP. A.B.C. SHALL BE FLUSH WITH THE ROADWAY END OF THE APPROACH SLAB AND SHALL EXTEND 1'-0" OUTSIDE EACH EDGE OF THE APPROACH SLAB.

THE CONTRACTOR MAY USE 4" TYPE B-25.0B ASPHALT CONCRETE BASE COURSE IN LIEU OF 6" COMP. A.B.C. IF THIS OPTION IS USED, THE BASE COURSE SHALL BE FLUSH WITH THE ROADWAY END OF THE APPROACH SLAB, AND THE WIDTH SHALL BE THE SAME AS THAT OF THE APPROACH SLAB.

THE CONTRACTOR MAY USE 5" CLASS "A" CONCRETE BASE IN LIEU OF 6" COMP. A.B.C. IF THIS OPTION IS USED, THE CONCRETE BASE SHALL BE FLUSH WITH THE ROADWAY END OF THE APPROACH SLAB, AND THE WIDTH SHALL BE THE SAME AS THAT OF THE APPROACH SLAB. THE CONCRETE SHALL BE FINISHED TO A SMOOTH SURFACE AND A LAYER OF 30 LB ROOFING FELT SHALL BE PLACED BETWEEN THE CONCRETE BASE AND THE APPROACH SLAB TO PREVENT BOND. THE APPROACH SLAB SHALL NOT BE CAST UNTIL THE CONCRETE BASE HAS REACHED AN AGE OF THREE CURING DAYS.

THE JOINT SHALL BE FORMED PRIOR TO THE CASTING OF THE PARAPET.

FOR EVAZOTE JOINT SEALS, SEE SPECIAL PROVISIONS.

THE NOMINAL UNCOMPRESSED SEAL WIDTH OF THE EVAZOTE JOINT SEAL SHALL BE 3".

FOR ELASTOMERIC CONCRETE, SEE SPECIAL PROVISIONS.

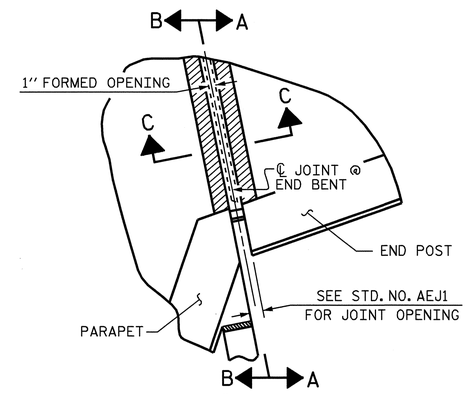

PLAN

(END BENT 1 SHOWN, END BENT 2 SIMILAR)

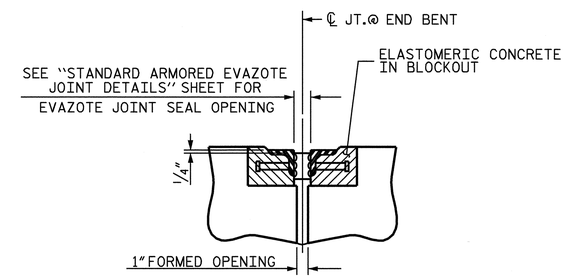

SECTION C-C

ARMORED EVAZOTE JOINT SEAL

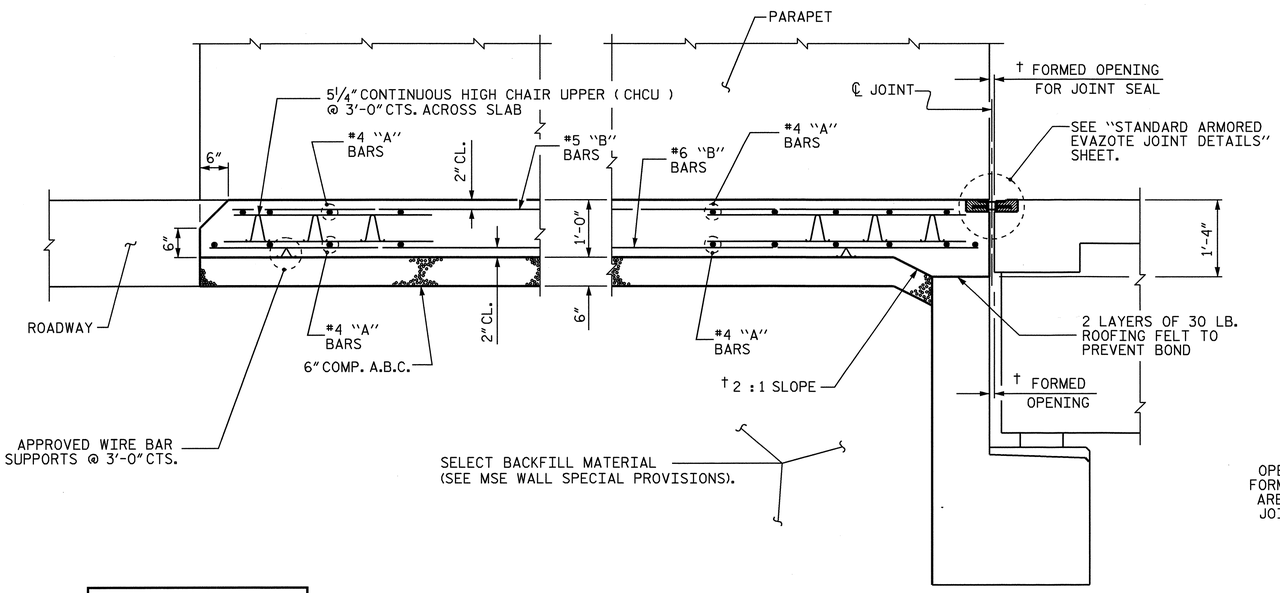

† NORMAL TO END BENT

SECTION THRU SLAB

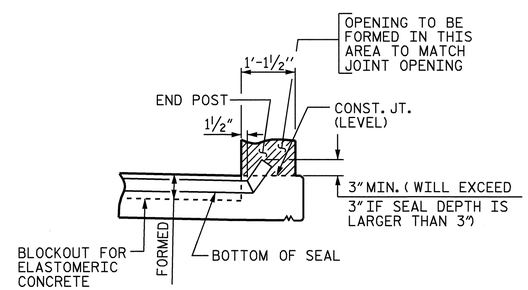

SECTION A-A

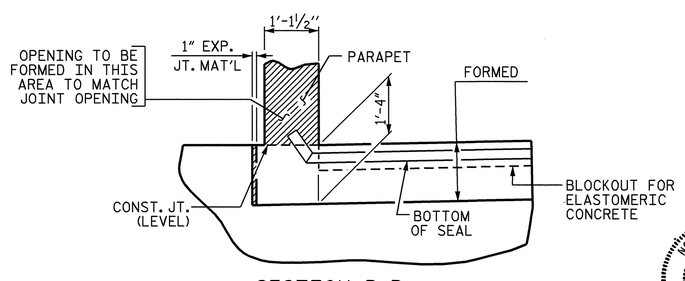

SECTION B-B

JOINT SEAL DETAILS @ END BENT

PROJECT NO. R-3833B

IREDELL COUNTY

STATION: 277+88.88 -L-

SHEET 6 OF 9

STATE OF NORTH CAROLINA
DEPARTMENT OF TRANSPORTATION
RALEIGH

BRIDGE APPROACH SLAB DETAILS

NORTH CAROLINA PROFESSIONAL SEAL 11259 ENGINEER DAVID R. ANDERSON
1/7/09

REVISIONS						SHEET NO.
NO.	BY:	DATE:	NO.	BY:	DATE:	S-88
1			3			TOTAL SHEETS
2			4			113

STR. #1

DRAWN BY : A.S. CALLAWAY DATE : 9/15/08
CHECKED BY : W.F.PARKER DATE : 10/15/08

07-JAN-2009 11:33
r:\structures\callaway\microstation\r3833b_sd_as_01.dgn
Danderson

BILL OF MATERIAL - STAGE I

APPROACH SLAB AT END BENT 1

BAR	NO.	SIZE	TYPE	LENGTH	WEIGHT
✱ A1	125	#4	STR	25'-9"	2150
A3	130	#4	STR	25'-6"	2214
✱ A101	1	#4	STR	26'-9"	18
✱ A102	1	#4	STR	26'-11"	18
✱ A103	1	#4	STR	27'-2"	18
✱ A104	1	#4	STR	27'-5"	18
✱ A105	1	#4	STR	27'-8"	18
✱ A106	1	#4	STR	27'-11"	19
✱ A107	1	#4	STR	28'-2"	19
✱ A108	1	#4	STR	28'-5"	19
✱ A109	1	#4	STR	28'-8"	19
✱ A110	1	#4	STR	28'-11"	19
✱ A111	1	#4	STR	29'-2"	19
✱ A112	1	#4	STR	27'-11"	19
✱ A113	1	#4	STR	26'-0"	17
✱ A114	1	#4	STR	24'-1"	16
✱ A115	1	#4	STR	22'-2"	15
✱ A116	1	#4	STR	20'-3"	14
✱ A117	1	#4	STR	18'-4"	12
✱ A118	1	#4	STR	16'-6"	11
✱ A119	1	#4	STR	14'-7"	10
✱ A120	1	#4	STR	12'-8"	8
✱ A121	1	#4	STR	10'-9"	7
✱ A122	1	#4	STR	8'-10"	6
✱ A123	1	#4	STR	6'-11"	5
✱ A124	2	#4	STR	5'-0"	7
A301	1	#4	STR	26'-9"	18
A302	1	#4	STR	27'-0"	18
A303	1	#4	STR	27'-3"	18
A304	1	#4	STR	27'-6"	18
A305	1	#4	STR	27'-9"	19
A306	1	#4	STR	28'-0"	19
A307	1	#4	STR	28'-3"	19
A308	1	#4	STR	28'-6"	19
A309	1	#4	STR	28'-9"	19
A310	1	#4	STR	29'-0"	19
A311	1	#4	STR	29'-3"	20
A312	1	#4	STR	27'-8"	18
A313	1	#4	STR	25'-9"	17
A314	1	#4	STR	23'-10"	16
A315	1	#4	STR	21'-11"	15
A316	1	#4	STR	20'-0"	13
A317	1	#4	STR	18'-2"	12
A318	1	#4	STR	16'-3"	11
A319	1	#4	STR	14'-4"	10
A320	1	#4	STR	12'-5"	8
A321	1	#4	STR	10'-6"	7
A322	1	#4	STR	8'-7"	6
A323	1	#4	STR	6'-8"	4
A324	3	#4	STR	4'-9"	10
✱ B1	232	#5	STR	23'-10"	5767
B3	232	#6	STR	24'-8"	8595
✱ B101	3	#5	STR	24'-3"	76
✱ B102	3	#5	STR	22'-9"	71
✱ B103	3	#5	STR	21'-11"	69
✱ B104	3	#5	STR	21'-2"	66
✱ B105	3	#5	STR	20'-4"	64

BAR	NO.	SIZE	TYPE	LENGTH	WEIGHT
✱ B106	3	#5	STR	19'-7"	61
✱ B107	3	#5	STR	18'-9"	59
✱ B108	3	#5	STR	17'-11"	56
✱ B109	3	#5	STR	17'-2"	54
✱ B110	3	#5	STR	16'-4"	51
✱ B111	3	#5	STR	15'-7"	49
✱ B112	3	#5	STR	14'-9"	46
✱ B113	3	#5	STR	13'-11"	44
✱ B114	3	#5	STR	13'-2"	41
✱ B115	3	#5	STR	12'-4"	39
✱ B116	3	#5	STR	11'-6"	36
✱ B117	1	#5	STR	10'-8"	11
✱ B118	1	#5	STR	8'-5"	9
✱ B119	1	#5	STR	6'-1"	6
✱ B120	1	#5	STR	3'-9"	4
✱ B121	1	#5	STR	2'-11"	3
B301	3	#6	STR	24'-8"	111
B302	3	#6	STR	23'-1"	104
B303	3	#6	STR	22'-3"	100
B304	3	#6	STR	21'-6"	97
B305	3	#6	STR	20'-8"	93
B306	3	#6	STR	19'-11"	90
B307	3	#6	STR	19'-1"	86
B308	3	#6	STR	18'-3"	82
B309	3	#6	STR	17'-6"	79
B310	3	#6	STR	16'-8"	75
B311	3	#6	STR	15'-11"	72
B312	3	#6	STR	15'-1"	68
B313	3	#6	STR	14'-3"	64
B314	3	#6	STR	13'-6"	61
B315	3	#6	STR	12'-8"	57
B316	3	#6	STR	11'-10"	53
B317	1	#6	STR	11'-7"	17
B318	1	#6	STR	9'-10"	15
B319	1	#6	STR	7'-7"	11
B320	1	#6	STR	5'-3"	8
B321	1	#6	STR	2'-11"	4
REINFORCING STEEL					12509 LBS
✱ EPOXY COATED REINF. STEEL					9183 LBS
CLASS AA CONCRETE					126.0 CY

APPROACH SLAB AT END BENT 2

BAR	NO.	SIZE	TYPE	LENGTH	WEIGHT
✱ A2	150	#4	STR	28'-0"	2806
A4	156	#4	STR	27'-9"	2892
✱ A201	1	#4	STR	5'-4"	4
✱ A202	1	#4	STR	7'-3"	5
✱ A203	1	#4	STR	10'-7"	7
✱ A204	1	#4	STR	13'-11"	9
✱ A205	1	#4	STR	17'-3"	12
✱ A206	1	#4	STR	20'-8"	14
✱ A207	1	#4	STR	24'-0"	16
✱ A208	1	#4	STR	27'-4"	18
✱ A209	2	#4	STR	16'-4"	22
✱ A210	2	#4	STR	18'-0"	24
✱ A211	2	#4	STR	19'-9"	26
✱ A212	2	#4	STR	21'-5"	29
✱ A213	2	#4	STR	23'-1"	31
✱ A214	2	#4	STR	24'-8"	33
✱ A215	2	#4	STR	24'-6"	33
✱ A216	2	#4	STR	24'-3"	32
✱ A217	2	#4	STR	24'-1"	32
✱ A218	2	#4	STR	23'-11"	32
✱ A219	2	#4	STR	23'-8"	32
✱ A220	2	#4	STR	23'-6"	31
✱ A221	2	#4	STR	23'-4"	31
✱ A222	2	#4	STR	23'-1"	31
✱ A223	2	#4	STR	22'-11"	31
✱ A224	2	#4	STR	22'-8"	30
✱ A225	2	#4	STR	22'-7"	30
A401	2	#4	STR	5'-1"	7
A402	1	#4	STR	7'-0"	5
A403	1	#4	STR	10'-4"	7
A404	1	#4	STR	13'-8"	9
A405	1	#4	STR	17'-0"	11
A406	1	#4	STR	20'-4"	14
A407	1	#4	STR	23'-9"	16
A408	1	#4	STR	27'-1"	18
A409	2	#4	STR	16'-2"	22
A410	2	#4	STR	17'-9"	24
A411	2	#4	STR	19'-6"	26
A412	2	#4	STR	21'-2"	28
A413	2	#4	STR	22'-10"	31
A414	2	#4	STR	24'-6"	33
A415	2	#4	STR	24'-5"	33
A416	2	#4	STR	24'-2"	32
A417	2	#4	STR	24'-0"	32
A418	2	#4	STR	23'-10"	32
A419	2	#4	STR	23'-7"	32
A420	2	#4	STR	23'-5"	31
A421	2	#4	STR	23'-3"	31
A422	2	#4	STR	23'-0"	31
A423	2	#4	STR	22'-10"	31
A424	2	#4	STR	22'-8"	30
A425	2	#4	STR	22'-5"	30
✱ B2	304	#5	STR	23'-10"	7557
B4	304	#6	STR	24'-8"	11263
✱ B201	4	#5	STR	24'-3"	101
✱ B202	4	#5	STR	23'-2"	97
✱ B203	4	#5	STR	22'-7"	94

BAR	NO.	SIZE	TYPE	LENGTH	WEIGHT
✱ B204	4	#5	STR	22'-0"	92
✱ B205	4	#5	STR	21'-4"	89
✱ B206	4	#5	STR	20'-9"	87
✱ B207	4	#5	STR	20'-2"	84
✱ B208	4	#5	STR	19'-6"	81
✱ B209	4	#5	STR	18'-11"	79
✱ B210	4	#5	STR	18'-4"	76
✱ B211	4	#5	STR	17'-9"	74
✱ B212	4	#5	STR	17'-1"	71
✱ B213	4	#5	STR	16'-6"	69
✱ B214	4	#5	STR	15'-10"	66
✱ B215	4	#5	STR	15'-3"	64
✱ B216	4	#5	STR	14'-8"	61
✱ B217	4	#5	STR	14'-1"	59
✱ B218	4	#5	STR	13'-5"	56
✱ B219	4	#5	STR	12'-10"	54
✱ B220	4	#5	STR	12'-3"	51
✱ B221	1	#5	STR	12'-1"	13
✱ B222	1	#5	STR	11'-2"	12
✱ B223	1	#5	STR	9'-8"	10
✱ B224	1	#5	STR	8'-3"	9
✱ B225	1	#5	STR	6'-10"	7
✱ B226	1	#5	STR	5'-4"	6
✱ B227	1	#5	STR	3'-11"	4
✱ B228	1	#5	STR	3'-2"	3
✱ B229	1	#5	STR	1'-10"	2
B401	4	#6	STR	24'-8"	148
B402	4	#6	STR	23'-6"	141
B403	4	#6	STR	22'-11"	138
B404	4	#6	STR	22'-4"	134
B405	4	#6	STR	21'-8"	130
B406	4	#6	STR	21'-1"	127
B407	4	#6	STR	20'-6"	123
B408	4	#6	STR	19'-10"	120
B409	4	#6	STR	19'-23"	116
B410	4	#6	STR	18'-8"	112
B411	4	#6	STR	18'-1"	109
B412	4	#6	STR	17'-5"	105
B413	4	#6	STR	16'-10"	101
B414	4	#6	STR	16'-3"	98
B415	4	#6	STR	15'-7"	94
B416	4	#6	STR	15'-0"	90
B417	4	#6	STR	14'-5"	87
B418	4	#6	STR	13'-9"	83
B419	4	#6	STR	13'-2"	79
B420	4	#6	STR	12'-7"	76
B421	1	#6	STR	12'-5"	19
B422	1	#6	STR	12'-0"	18
B423	1	#6	STR	10'-7"	16
B424	1	#6	STR	9'-1"	14
B425	1	#6	STR	7'-8"	12
B426	1	#6	STR	6'-2"	9
B427	1	#6	STR	4'-9"	7
B428	1	#6	STR	3'-4"	5
B429	1	#6	STR	1'-10"	3
REINFORCING STEEL					17064 LBS
✱ EPOXY COATED REINF. STEEL					12529 LBS
CLASS AA CONCRETE					171.9 CY

PARAPET

BAR	NO.	SIZE	TYPE	LENGTH	WEIGHT
✱ B1	5	#5	STR	29'-1"	152
✱ B2	5	#5	STR	28'-8"	149
✱ B3	5	#5	STR	50'-7"	264
✱ B4	5	#5	STR	50'-10"	265
✱ S1	80	#5	1	9'-6"	793
✱ S2	6	#5	STR	4'-0"	25
✱ U1	5	#5	2	1'-6"	8
✱ U2	5	#5	3	1'-8"	9
✱ U3	5	#5	4	2'-2"	11
✱ U4	5	#5	5	1'-9"	9
✱ EPOXY COATED REINF. STEEL					1685 LBS
CLASS AA CONCRETE					12.4 CY

BAR TYPES

ALL BAR DIMENSIONS ARE OUT TO OUT.

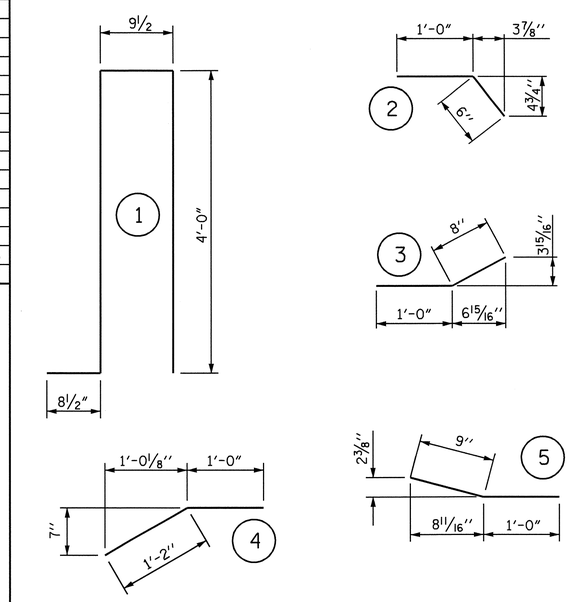

TOTAL QUANTITIES - STAGE I

	REINFORCING STEEL	EPOXY COATED REINF. STEEL	CLASS AA CONCRETE
APPROACH SLAB	29573 LBS	21712 LBS	297.9 CY
PARAPET	———	1685 LBS	12.4 CY
TOTAL	29573 LBS	23397 LBS	310.3 CY

✱ DENOTES EPOXY COATED REINFORCING STEEL.

PROJECT NO. R-3833B
IREDELL COUNTY
STATION: 277+88.88 -L-

SHEET 7 OF 9

STATE OF NORTH CAROLINA
DEPARTMENT OF TRANSPORTATION
RALEIGH

BILL OF MATERIAL

APPROACH SLAB & PARAPET
STAGE I

NORTH CAROLINA PROFESSIONAL SEAL 11259 ENGINEER DAVID R. ANDERSON
11/24/08

REVISIONS						SHEET NO.
NO.	BY:	DATE:	NO.	BY:	DATE:	S-89
1			3			TOTAL SHEETS
2			4			113

DRAWN BY : A.S. CALLAWAY DATE : 9/15/08
CHECKED BY : W.F.PARKER DATE : 10/15/08

20-OCT-2008 13:34
r:\structures\callaway\microstation\r3833b_sd_as_01.dgn
scallaway

STR. #1

BILL OF MATERIAL - STAGE II

APPROACH SLAB AT END BENT 1

BAR	NO.	SIZE	TYPE	LENGTH	WEIGHT
✳ A1	175	#4	STR	29′-2″	3410
A3	182	#4	STR	29′-2″	3546
✳ A101	2	#4	STR	22′-10″	31
✳ A102	2	#4	STR	22′-11″	31
✳ A103	2	#4	STR	23′-2″	31
✳ A104	2	#4	STR	23′-4″	31
✳ A105	2	#4	STR	23′-6″	31
✳ A106	2	#4	STR	23′-9″	32
✳ A107	2	#4	STR	23′-11″	32
✳ A108	2	#4	STR	24′-2″	32
✳ A109	2	#4	STR	24′-4″	33
✳ A110	2	#4	STR	24′-6″	33
✳ A111	2	#4	STR	24′-9″	33
✳ A112	2	#4	STR	24′-11″	33
✳ A113	2	#4	STR	23′-3″	31
✳ A114	2	#4	STR	21′-7″	29
✳ A115	2	#4	STR	19′-11″	27
✳ A116	2	#4	STR	18′-2″	24
✳ A117	2	#4	STR	16′-6″	22
✳ A118	1	#4	STR	27′-7″	18
✳ A119	1	#4	STR	24′-2″	16
✳ A120	1	#4	STR	20′-10″	14
✳ A121	1	#4	STR	17′-5″	12
✳ A122	1	#4	STR	14′-0″	9
✳ A123	1	#4	STR	10′-8″	7
✳ A124	1	#4	STR	7′-3″	5
✳ A125	1	#4	STR	5′-4″	4
A301	2	#4	STR	22′-8″	30
A302	2	#4	STR	22′-10″	31
A303	2	#4	STR	23′-1″	31
A304	2	#4	STR	23′-3″	31
A305	2	#4	STR	23′-5″	31
A306	2	#4	STR	23′-8″	32
A307	2	#4	STR	23′-10″	32
A308	2	#4	STR	24′-1″	32
A309	2	#4	STR	24′-3″	32
A310	2	#4	STR	24′-5″	33
A311	2	#4	STR	24′-8″	33
A312	2	#4	STR	24′-9″	33
A313	2	#4	STR	23′-0″	31
A314	2	#4	STR	21′-4″	29
A315	2	#4	STR	19′-8″	26
A316	2	#4	STR	17′-11″	24
A317	2	#4	STR	16′-3″	22
A318	1	#4	STR	27′-4″	18
A319	1	#4	STR	23′-11″	16
A320	1	#4	STR	20′-7″	14
A321	1	#4	STR	17′-2″	11
A322	1	#4	STR	13′-9″	9
A323	1	#4	STR	10′-5″	7
A324	1	#4	STR	7′-0″	5
A325	2	#4	STR	5′-2″	7
✳ B1	376	#5	STR	23′-10″	9347
B3	376	#6	STR	24′-8″	13931
✳ B101	4	#5	STR	24′-3″	101
✳ B102	4	#5	STR	23′-2″	97
✳ B103	4	#5	STR	22′-6″	94

BAR	NO.	SIZE	TYPE	LENGTH	WEIGHT
✳ B104	4	#5	STR	21′-11″	91
✳ B105	4	#5	STR	21′-4″	89
✳ B106	4	#5	STR	20′-9″	87
✳ B107	4	#5	STR	20′-1″	84
✳ B108	4	#5	STR	19′-6″	81
✳ B109	4	#5	STR	18′-11″	79
✳ B110	4	#5	STR	18′-4″	76
✳ B111	4	#5	STR	17′-9″	74
✳ B112	4	#5	STR	17′-1″	71
✳ B113	4	#5	STR	16′-6″	69
✳ B114	4	#5	STR	15′-11″	66
✳ B115	4	#5	STR	15′-4″	64
✳ B116	4	#5	STR	14′-8″	61
✳ B117	4	#5	STR	14′-1″	59
✳ B118	4	#5	STR	13′-6″	56
✳ B119	4	#5	STR	12′-11″	54
✳ B120	4	#5	STR	12′-3″	51
✳ B121	1	#5	STR	12′-2″	13
✳ B122	1	#5	STR	11′-10″	12
✳ B123	1	#5	STR	10′-5″	11
✳ B124	1	#5	STR	9′-0″	9
✳ B125	1	#5	STR	7′-7″	8
✳ B126	1	#5	STR	6′-1″	6
✳ B127	1	#5	STR	4′-8″	5
✳ B128	1	#5	STR	3′-3″	3
✳ B129	1	#5	STR	2′-8″	3
B301	4	#6	STR	24′-8′′	148
B302	4	#6	STR	23′-6″	141
B303	4	#6	STR	22′-10″	137
B304	4	#6	STR	22′-3″	134
B305	4	#6	STR	21′-8″	130
B306	4	#6	STR	21′-1″	127
B307	4	#6	STR	20′-6″	123
B308	4	#6	STR	19′-10″	119
B309	4	#6	STR	19′-3″	116
B310	4	#6	STR	18′-8″	112
B311	4	#6	STR	18′-1″	109
B312	4	#6	STR	17′-5″	105
B313	4	#6	STR	16′-10″	101
B314	4	#6	STR	16′-3″	98
B315	4	#6	STR	15′-8″	94
B316	4	#6	STR	15′-0″	90
B317	4	#6	STR	14′-5″	87
B318	4	#6	STR	13′-10″	83
B319	4	#6	STR	13′-3″	80
B320	4	#6	STR	12′-87″	76
B321	1	#6	STR	12′-6″	19
B322	1	#6	STR	12′-4″	19
B323	1	#6	STR	11′-3″	17
B324	1	#6	STR	9′-10″	15
B325	1	#6	STR	8′-5″	13
B326	1	#6	STR	7′-0″	11
B327	1	#6	STR	5′-7″	8
B328	1	#6	STR	4′-1″	6
B329	1	#6	STR	2′-8″	4
REINFORCING STEEL					20399 LBS
✳ EPOXY COATED REINF. STEEL					14932 LBS
CLASS AA CONCRETE					205.9 CY

APPROACH SLAB AT END BENT 2

BAR	NO.	SIZE	TYPE	LENGTH	WEIGHT
✳ A2	150	#4	STR	28′-3″	2831
A4	156	#4	STR	28′-1″	2927
✳ A201	2	#4	STR	5′-5″	7
✳ A202	1	#4	STR	7′-8″	5
✳ A203	1	#4	STR	9′-10″	7
✳ A204	1	#4	STR	12′-1″	8
✳ A205	1	#4	STR	14′-3″	10
✳ A206	1	#4	STR	16′-6″	11
✳ A207	1	#4	STR	18′-8″	12
✳ A208	1	#4	STR	20′-10″	14
✳ A209	1	#4	STR	23′-1″	15
✳ A210	1	#4	STR	25′-3″	17
✳ A211	1	#4	STR	27′-6″	18
✳ A212	1	#4	STR	29′-8″	20
✳ A213	6	#4	STR	17′-4″	69
✳ A214	6	#4	STR	17′-0″	68
✳ A215	6	#4	STR	16′-9″	67
✳ A216	6	#4	STR	16′-7″	66
A401	1	#4	STR	3′-9′′	3
A402	1	#4	STR	5′-2″	3
A403	1	#4	STR	7′-5″	5
A404	1	#4	STR	9′-7″	6
A405	1	#4	STR	11′-10″	8
A406	1	#4	STR	14′-0″	9
A407	1	#4	STR	16′-3″	11
A408	1	#4	STR	18′-5″	12
A409	1	#4	STR	20′-7″	14
A410	1	#4	STR	22′-10″	15
A411	1	#4	STR	25′-0″	17
A412	1	#4	STR	27′-3″	18
A413	1	#4	STR	29′-5″	20
A414	6	#4	STR	16′-9″	67
A415	6	#4	STR	17′-0′′	68
A416	6	#4	STR	16′-8″	67
A417	6	#4	STR	16′-5″	66
✳ B2	313	#5	STR	23′-10″	7781
B4	313	#6	STR	24′-8″	11596
✳ B201	3	#5	STR	24′-3′′	76
✳ B202	3	#5	STR	23′-1″	72
✳ B203	3	#5	STR	22′-5″	70
✳ B204	3	#5	STR	21′-8″	68
✳ B205	3	#5	STR	21′-0″	66
✳ B206	3	#5	STR	20′-4″	64
✳ B207	3	#5	STR	19′-7″	61
✳ B208	3	#5	STR	18′-11″	59
✳ B209	3	#5	STR	18′-3″	57
✳ B210	3	#5	STR	17′-6″	55
✳ B211	3	#5	STR	16′-10″	53
✳ B212	3	#5	STR	16′-2″	51
✳ B213	3	#5	STR	15′-5″	48
✳ B214	3	#5	STR	14′-9″	46
✳ B215	3	#5	STR	14′-1″	44
✳ B216	3	#5	STR	13′-4″	42
✳ B217	3	#5	STR	12′-8″	40
✳ B218	3	#5	STR	12′-0″	38
✳ B219	3	#5	STR	11′34″	35
✳ B220	1	#5	STR	10′-3″	11

PARAPET

BAR	NO.	SIZE	TYPE	LENGTH	WEIGHT
✳ B221	1	#5	STR	7′-2″	7
✳ B222	1	#5	STR	4′-1″	4
✳ B223	1	#5	STR	2′-10″	3
B401	3	#6	STR	24′-8′′	111
B402	3	#6	STR	23′-5″	106
B403	3	#6	STR	22′-9″	103
B404	3	#6	STR	22′-0″	99
B405	3	#6	STR	21′-4″	96
B406	3	#6	STR	20′-8″	93
B407	3	#6	STR	19′-11′′	90
B408	3	#6	STR	19′-3″	87
B409	3	#6	STR	18′-7″	84
B410	3	#6	STR	17′-10″	80
B411	3	#6	STR	17′-2″	77
B412	3	#6	STR	16′-6″	74
B413	3	#6	STR	15′-9″	71
B414	3	#6	STR	15′-1″	68
B415	3	#6	STR	14′-5″	65
B416	3	#6	STR	13′-8″	62
B417	3	#6	STR	13′-0″	59
B418	3	#6	STR	12′-4″	56
B419	3	#6	STR	11′-7″	52
B420	1	#6	STR	11′-5″	17
B421	1	#6	STR	9′-2″	14
B422	1	#6	STR	6′-1″	9
B423	1	#6	STR	3′-0″	5
REINFORCING STEEL					16510 LBS
✳ EPOXY COATED REINF. STEEL					12096 LBS
CLASS AA CONCRETE					166.8 CY

BAR	NO.	SIZE	TYPE	LENGTH	WEIGHT
✳ B5	5	#5	STR	51′-4′′	268
✳ B6	5	#5	STR	51′-1′′	266
✳ B7	5	#5	STR	31′-011′	166
✳ B8	5	#5	STR	32′-2′′	168
✳ S1	83	#5	1	9′-6″	822
✳ S2	7	#5	STR	4′-0″	29
✳ U5	5	#5	2	1′-7′′	8
✳ U6	5	#5	3	1′-8′′	9
✳ U7	5	#5	4	2′-2′′	11
✳ U8	5	#5	5	1′-9′′	9
✳ EPOXY COATED REINF. STEEL					1756 LBS
CLASS AA CONCRETE					13.0 CY

BAR TYPES

ALL BAR DIMENSIONS ARE OUT TO OUT.

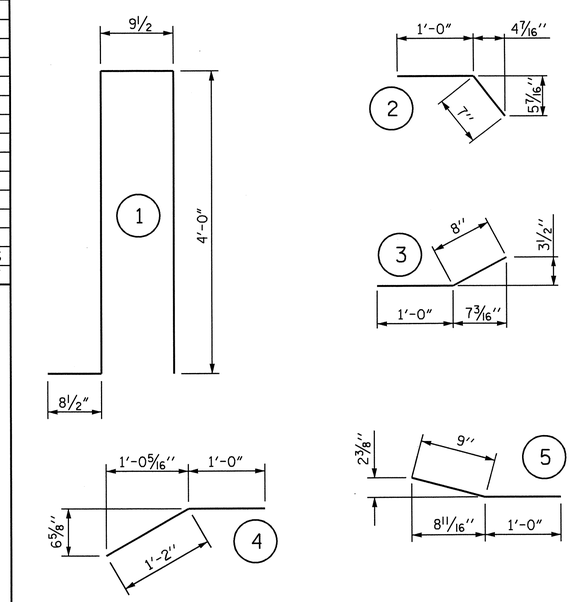

TOTAL QUANTITIES - STAGE II			
	REINFORCING STEEL	EPOXY COATED REINF. STEEL	CLASS AA CONCRETE
APPROACH SLAB	36909 LBS	27028 LBS	372.7 CY
PARAPET		1756 LBS	13.0 CY
TOTAL	36909 LBS	28784 LBS	385.7 CY

✳ DENOTES EPOXY COATED REINFORCING STEEL.

PROJECT NO. R-3833B
IREDELL COUNTY
STATION: 277+88.88 -L-

SHEET 8 OF 9

STATE OF NORTH CAROLINA
DEPARTMENT OF TRANSPORTATION
RALEIGH

BILL OF MATERIAL

APPROACH SLAB & PARAPET
STAGE II

NORTH CAROLINA PROFESSIONAL SEAL 11259 ENGINEER DAVID R. ANDERSON
11/24/08

REVISIONS						SHEET NO.
NO.	BY:	DATE:	NO.	BY:	DATE:	S-90
1			3			TOTAL SHEETS
2			4			113

STR. #1

DRAWN BY : A.S. CALLAWAY DATE : 9/15/08
CHECKED BY : W.F.PARKER DATE : 10/15/08

20-OCT-2008 13:34
r:\structures\callaway\microstation\r3833b_sd_as_01.dgn
scallaway

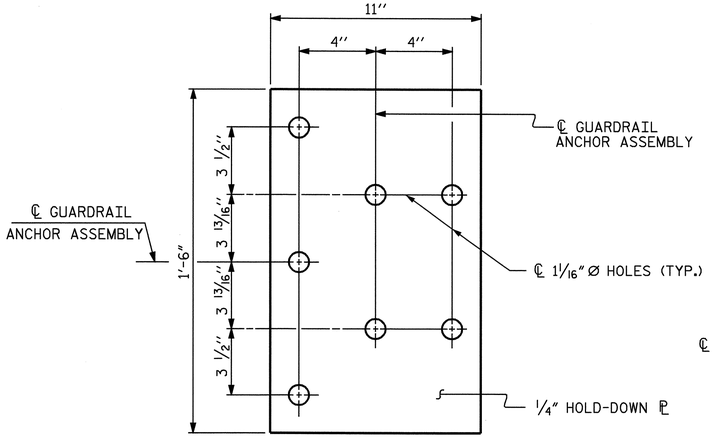

PLAN

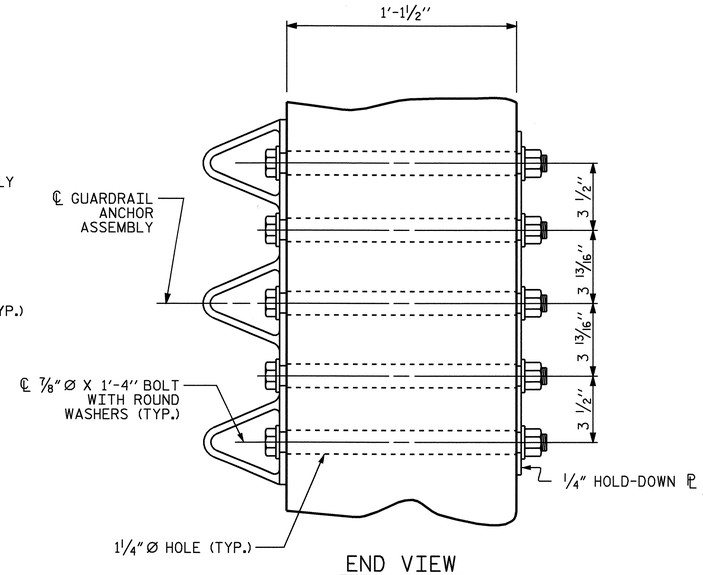

END VIEW

GUARDRAIL ANCHOR ASSEMBLY DETAILS

NOTES

THE GUARDRAIL ANCHOR ASSEMBLY SHALL CONSIST OF A 1/4" HOLD DOWN PLATE AND 7 - 7/8" Ø BOLTS WITH NUTS AND WASHERS.

THE HOLD-DOWN PLATE SHALL CONFORM TO AASHTO M270 GRADE 36. AFTER FABRICATION, THE HOLD-DOWN PLATE SHALL BE HOT-DIP GALVANIZED IN ACCORDANCE WITH AASHTO M111.

BOLTS SHALL CONFORM TO THE REQUIREMENTS OF ASTM A307 AND NUTS SHALL CONFORM TO THE REQUIREMENTS OF AASHTO M291. BOLTS, NUTS AND WASHERS SHALL BE GALVANIZED. AT THE CONTRACTOR'S OPTION, STAINLESS STEEL BOLTS, NUTS AND WASHERS MAY BE USED AS AN ALTERNATE FOR THE 7/8" Ø GALVANIZED BOLTS, NUTS AND WASHERS. THEY SHALL CONFORM TO OR EXCEED THE MECHANICAL REQUIREMENTS OF ASTM A307. THE USE OF THIS ALTERNATE SHALL BE APPROVED BY THE ENGINEER.

AFTER INSTALLATION, THE EXPOSED THREAD OF THE BOLT SHALL BE BURRED WITH A SHARP POINTED TOOL.

THE COST OF THE GUARDRAIL ANCHOR ASSEMBLIES WITH BOLTS, NUTS AND WASHERS COMPLETE IN PLACE, SHALL BE INCLUDED IN THE VARIOUS PAY ITEMS.

THE VERTICAL REINFORCING BARS MAY BE SHIFTED SLIGHTLY IN THE PARAPET TO CLEAR ASSEMBLY BOLTS.

THE 1 1/4" Ø HOLES SHALL BE FORMED OR DRILLED WITH A CORE BIT. IMPACT TOOLS WILL NOT BE PERMITTED. ANY CONCRETE DAMAGED BY THIS WORK SHALL BE REPAIRED TO THE SATISFACTION OF THE ENGINEER.

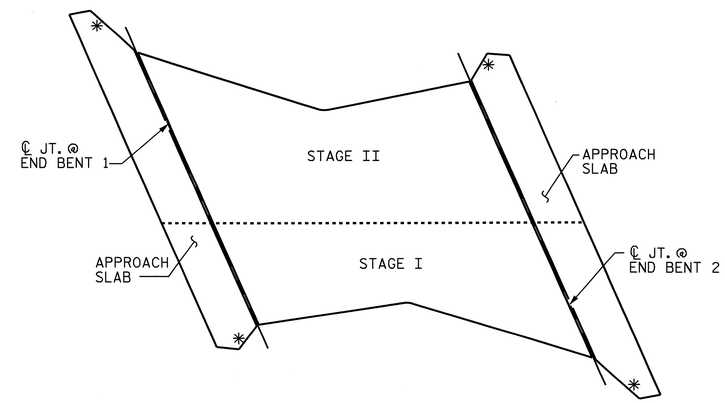

SKETCH SHOWING POINTS OF ATTACHMENT

✳ LOCATION OF GUARDRAIL ATTACHMENT

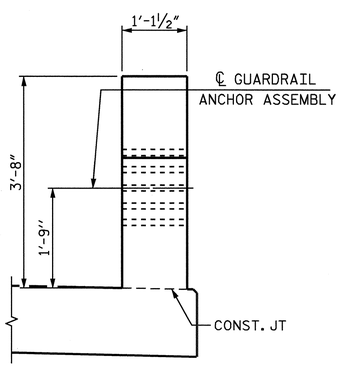

END VIEW

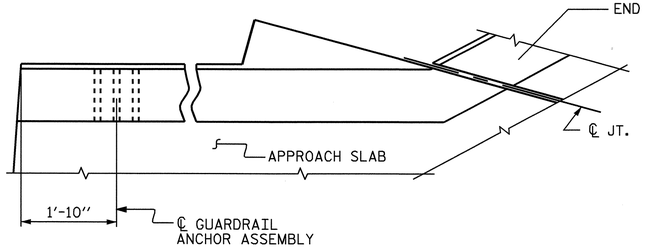

END BENT 1 LEFT (RAMP -RPB-)

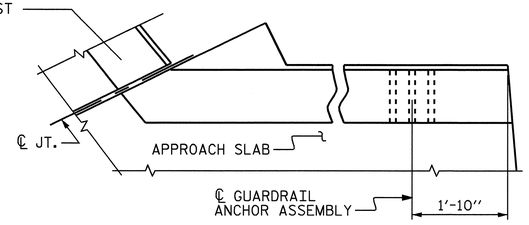

END BENT 2 LEFT (RAMP -RPA-)

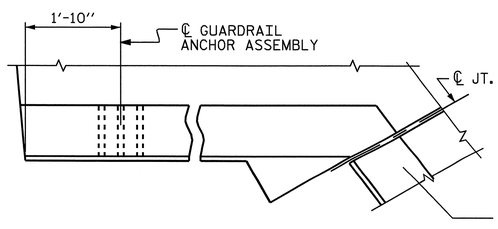

END BENT 1 RIGHT (RAMP -RPC-)

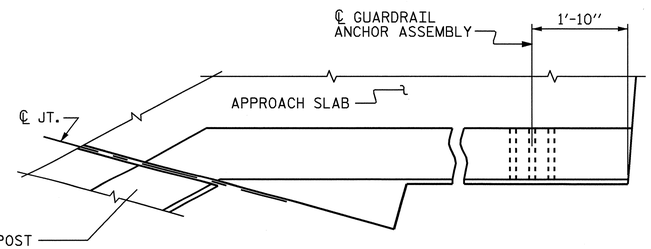

END BENT 2 RIGHT (RAMP -RPD-)

LOCATION OF GUARDRAIL ANCHOR AT PARAPET

PROJECT NO. R-3833B
IREDELL COUNTY
STATION: 277+88.88 -L-

SHEET 9 OF 9

STATE OF NORTH CAROLINA
DEPARTMENT OF TRANSPORTATION
RALEIGH

GUARDRAIL ANCHORAGE DETAILS

NORTH CAROLINA PROFESSIONAL SEAL 11259 ENGINEER DAVID R. ANDERSON
11/24/08

REVISIONS						SHEET NO.
NO.	BY:	DATE:	NO.	BY:	DATE:	S-91
1			3			TOTAL SHEETS
2			4			113

DRAWN BY : A.S. CALLAWAY DATE : 8/28/08
CHECKED BY : W.F.PARKER DATE : 10/15/08

20-OCT-2008 13:35
r:\structures\callaway\microstation\r3833b_sd_as_01.dgn
scallaway

STR. #1

F.A. PROJ. NO.: STP-1100(20)

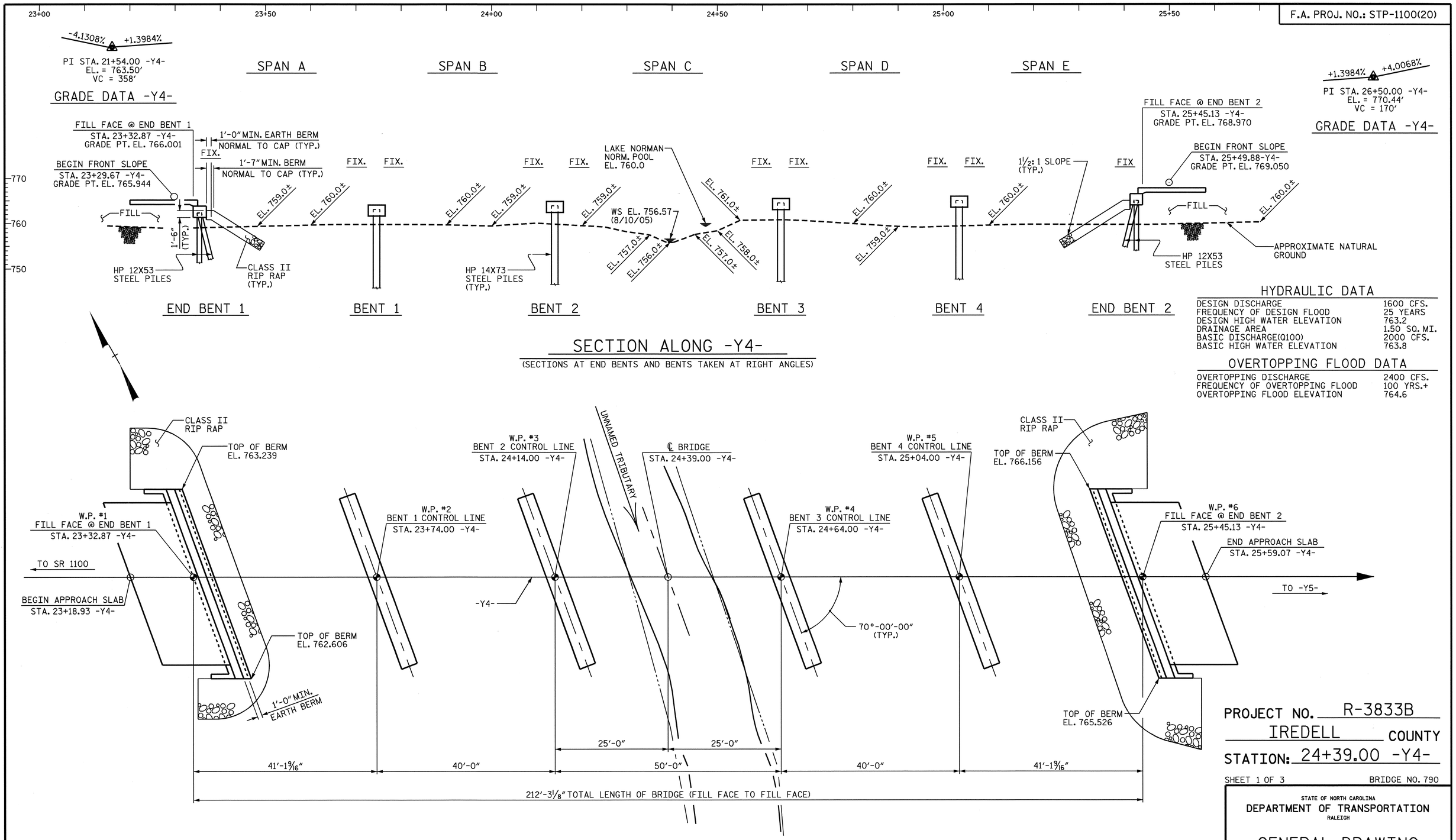

SECTION ALONG -Y4-

(SECTIONS AT END BENTS AND BENTS TAKEN AT RIGHT ANGLES)

PLAN

PILES NOT SHOWN FOR CLARITY

HYDRAULIC DATA

DESIGN DISCHARGE	1600 CFS.
FREQUENCY OF DESIGN FLOOD	25 YEARS
DESIGN HIGH WATER ELEVATION	763.2
DRAINAGE AREA	1.50 SQ. MI.
BASIC DISCHARGE(Q100)	2000 CFS.
BASIC HIGH WATER ELEVATION	763.8

OVERTOPPING FLOOD DATA

OVERTOPPING DISCHARGE	2400 CFS.
FREQUENCY OF OVERTOPPING FLOOD	100 YRS.+
OVERTOPPING FLOOD ELEVATION	764.6

PROJECT NO. R-3833B

IREDELL COUNTY

STATION: 24+39.00 -Y4-

SHEET 1 OF 3 BRIDGE NO. 790

STATE OF NORTH CAROLINA
DEPARTMENT OF TRANSPORTATION
RALEIGH

GENERAL DRAWING
BRIDGE OVER UNNAMED
TRIBUTARY ON -Y4- BETWEEN
SR 1100 AND -Y5-

NORTH CAROLINA PROFESSIONAL SEAL 9804 ENGINEER ROY W. GIRDLAM 12-30-08

NORTH CAROLINA PROFESSIONAL SEAL 11259 ENGINEER DAVID R. ANDERSON 12/30/08

REVISIONS						SHEET NO.
NO.	BY:	DATE:	NO.	BY:	DATE:	S-92
1			3			TOTAL SHEETS
2			4			113

DRAWN BY : E.C. LOCKLEAR DATE : 11-13-06
CHECKED BY : S.M. RASHIDI DATE : 2-1-07

29-DEC-2008 11:45
h:\structures\srashidi\microstation\wkg\str. #2\r3833b_sd_pgd_02.dgn
srashidi

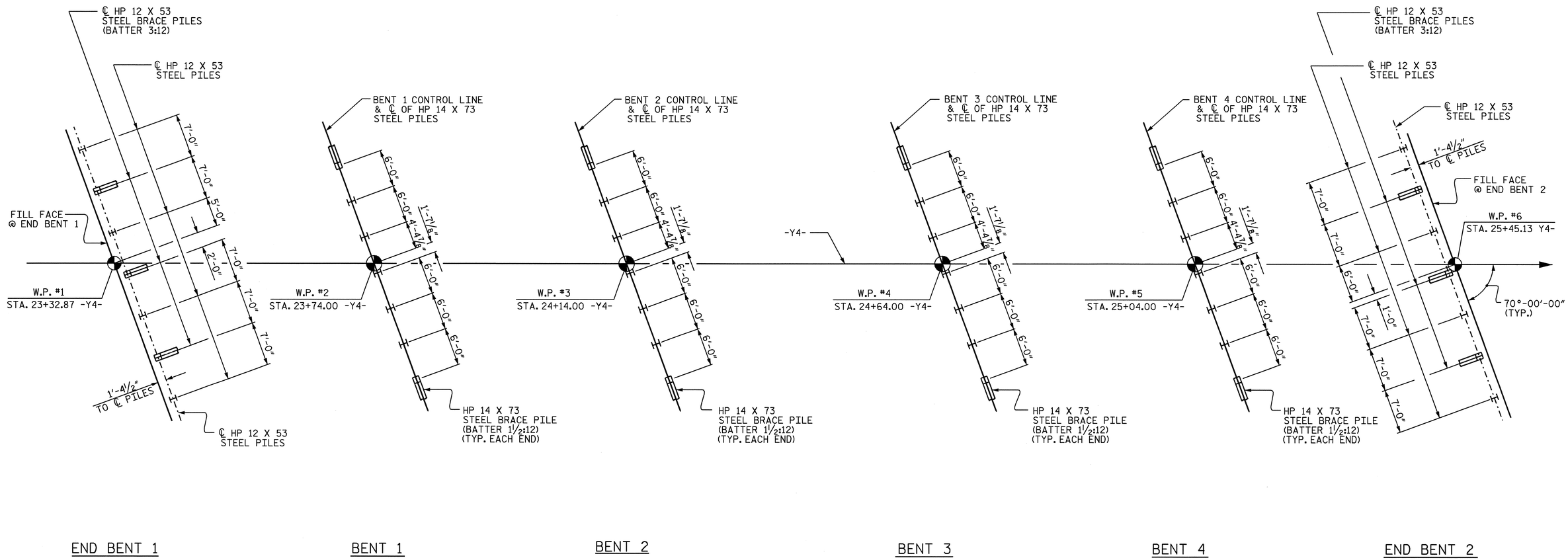

FOUNDATION LAYOUT

(DIMENSIONS LOCATING PILES ARE SHOWN TO THE PILE CENTERLINE)

PROJECT NO. R-3833B

IREDELL COUNTY

STATION: 24+39.00 -Y4-

SHEET 2 OF 3

STATE OF NORTH CAROLINA
DEPARTMENT OF TRANSPORTATION
RALEIGH

GENERAL DRAWING
BRIDGE OVER UNNAMED
TRIBUTARY ON -Y4- BETWEEN
SR 1100 AND -Y5-

NORTH CAROLINA PROFESSIONAL SEAL 11259 ENGINEER DAVID R. ANDERSON
1/2/09

REVISIONS						SHEET NO.
NO.	BY:	DATE:	NO.	BY:	DATE:	S-93
1			3			TOTAL SHEETS
2			4			113

DRAWN BY : S. M. RASHIDI DATE : 9-17-08
CHECKED BY : D. R. ANDERSON DATE : 9-25-08

29-DEC-2008 11:49
h:\structures\srashidl\microstation\wkg\str.*2\r-3833b_sd_fisketch.dgn
srashidl

STR. 2

TOTAL BILL OF MATERIAL

	PDA TESTING	PDA ASSISTANCE	CLASS A CONCRETE	BRIDGE APPROACH SLABS	REINFORCING STEEL	HP 12 X 53 STEEL PILES		HP 14 X 73 GALVANIZED STEEL PILES		CONCRETE BARRIER RAIL	RIP RAP CLASS II (2'-0" THICK)	FILTER FABRIC FOR DRAINAGE	ELASTOMERIC BEARINGS	3'-0" x 1'-9" PRESTRESSED CONCRETE CORED SLABS	
	EACH	EACH	CU.YDS.	LUMP SUM	LBS.	NO.	LIN. FT.	NO.	LIN. FT.	LIN. FT.	TONS	SQ. YARDS	LUMP SUM	NO.	LIN. FT.
SUPERSTRUCTURE										418.75			LUMP SUM	60	2512.5
END BENT 1			14.3		2,213	7	231				130	140			
BENT 1	1	1	12.8		2,061			7	210						
BENT 2	1	1	12.8		2,061			7	235						
BENT 3	1	1	12.8		2,061			7	270						
BENT 4	1	1	12.8		2,061			7	310						
END BENT 2			14.3		2,213	7	315				160	175			
TOTAL	4	4	79.8	LUMP SUM	12,670	14	546	28	1,025	418.75	290	315	LUMP SUM	60	2512.5

BM #17- 40d NAIL IN BASE OF A 24" OAK TREE, -BY30- STA. 22+08 81.39' LT ELEV. 771.39'.

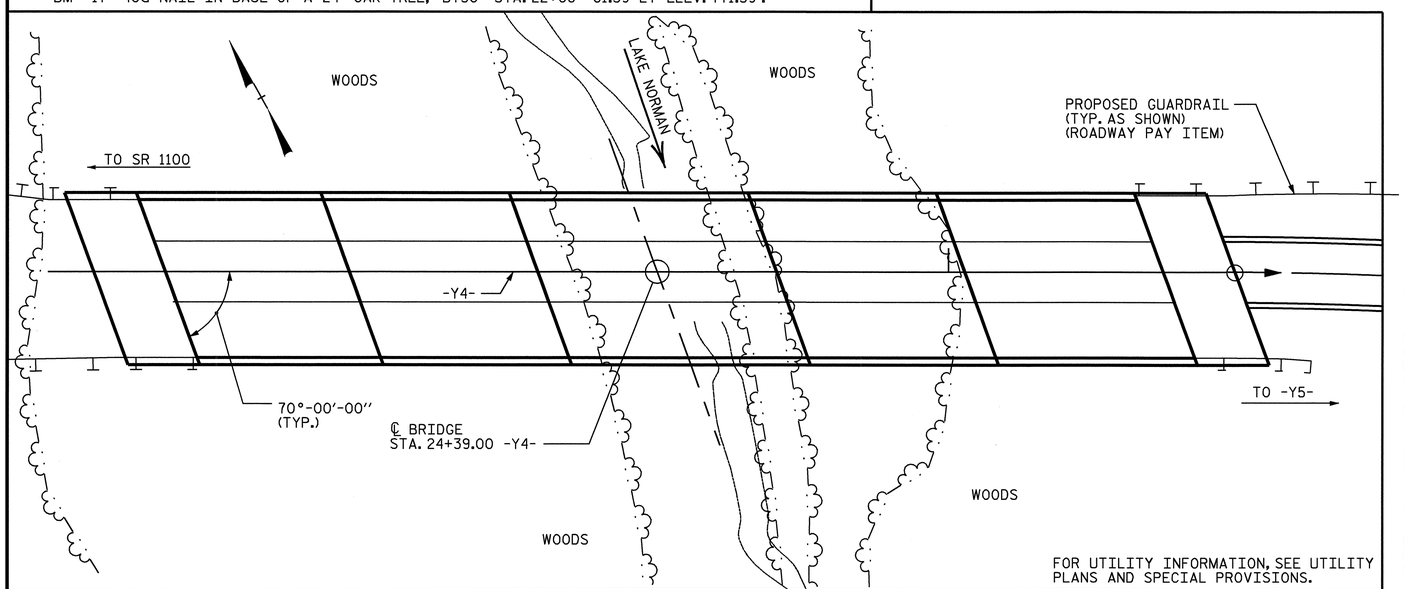

LOCATION SKETCH

NOTES

THIS BRIDGE HAS BEEN DESIGNED BY THE STRENGTH DESIGN METHOD AS SPECIFIED IN AASHTO STANDARD SPECIFICATIONS.

ASSUMED LIVE LOAD = HS 20 OR ALTERNATE LOADING, EXCEPT THAT THE CORED SLAB UNITS HAVE BEEN DESIGNED FOR HS25.

FOR OTHER DESIGN DATA AND GENERAL NOTES, SEE SHEET SN.

FOR EROSION CONTROL MEASURES SEE EROSION CONTROL PLANS.

THIS STRUCTURE HAS BEEN DESIGNED IN ACCORDANCE WITH HEC 18,"EVALUATING SCOUR AT BRIDGES", MAY, 2001.

THIS BRIDGE HAS BEEN DESIGNED IN ACCORDANCE WITH THE REQUIREMENTS OF THE STANDARD SPECIFICATIONS FOR SEISMIC DESIGN OF HIGHWAY BRIDGES FOR SEISMIC PERFORMANCE CATEGORY A.

TESTING PILES WITH THE PILE DRIVING ANALYZER (PDA) DURING DRIVING, RESTRIKING OR REDRIVING MAY BE REQUIRED. THE ENGINEER WILL DETERMINE THE NEED FOR PDA TESTING. FOR PILE DRIVING ANALYZER, SEE SPECIAL PROVISIONS.

LOCATE EACH STEEL PILE LOCATION AT BENT NO. 1, 2, 3 AND 4 BY SURVEY

DRIVE PILES AT END BENT NO. 1 AND END BENT NO. 2 TO A REQUIRED BEARING CAPACITY OF 120 TONS PER PILE. THE REQUIRED BEARING CAPACITY IS EQUAL TO THE ALLOWABLE BEARING CAPACITY WITH A MINIMUM FACTOR OF SAFETY OF TWO.

DRIVE PILES AT BENTS NO. 1, 2, 3 AND 4 TO A REQUIRED BEARING CAPACITY OF 140 TONS PER PILE. THE REQUIRED BEARING CAPACITY IS EQUAL TO THE ALLOWABLE BEARING CAPACITY WITH A MINIMUM FACTOR OF SAFETY OF TWO.

THE SCOUR CRITICAL ELEVATIONS FOR BENT NO. 1, BENT NO. 2 AND BENT NO.4 ARE ELEVATION 745.5 ft (LT) AND 746.0 ft (RT). SCOUR CRITICAL ELEVATIONS ARE USED TO MONITOR POSSIBLE SCOUR PROBLEMS DURING THE LIFE OF THE STRUCTURE.

THE SCOUR CRITICAL ELEVATIONS FOR BENT NO. 3 ARE ELEVATION 746.5 ft (LT) AND 746.5 ft (RT). SCOUR CRITICAL ELEVATIONS ARE USED TO MONITOR POSSIBLE SCOUR PROBLEMS DURING THE LIFE OF THE STRUCTURE.

THE ALLOWABLE BEARING CAPACITY FOR THE PILES AT END BENT NO. 1 AND END BENT 2. IS 60 TONS PER PILE.

THE ALLOWABLE BEARING CAPACITY FOR THE PILES AT BENTS NO. 1, 2, 3 AND 4 IS 70 TONS PER PILE.

FOR SUBMITTAL OF WORKING DRAWINGS, SEE SPECIAL PROVISONS.

FOR FALSEWORK AND FORMWORK, SEE SPECIAL PROVISIONS.

FOR CRANE SAFETY, SEE SPECIAL PROVISIONS.

THE CONTRACTOR SHALL PROVIDE INDEPENDENT ASSURANCE SAMPLES OF REINFORCING STEEL AS FOLLOWS: FOR PROJECTS REQUIRING UP TO 400 TONS OF REINFORCING STEEL, ONE 30 INCH SAMPLE OF EACH SIZE BAR USED, AND FOR PROJECTS REQUIRING OVER 400 TONS OF REINFORCING STEEL, TWO 30 INCH SAMPLES OF EACH SIZE BAR USED.THE BARS FROM WHICH THE SAMPLES ARE TAKEN MUST THEN BE SPLICED WITH REPLACEMENT BARS OF THE SIZE AND LENGTH OF THE SAMPLE, PLUS A MINIMUM LAP SPLICE OF THIRTY BAR DIAMETERS.

FOR GROUT, SEE SPECIAL PROVISION "GROUT FOR STRUCTURES".

FOR PRESTRESSED CONCRETE MEMBERS, SEE SPECIAL PROVISIONS.

NO WAITING PERIOD IS REQUIRED FOR END BENT CONSTRUCTION AFTER COMPLETION OF EMBANKMENT.

FOR PILES, SEE SPECIAL PROVISIONS.

FOR CURING CONCRETE, SEE SPECIAL PROVISIONS.

FOR PLACING LOAD ON STRUCTURE MEMBERS, SEE SPECIAL PROVISIONS.

GALVANIZE THE FULL LENGTH OF EACH HP 14X73 STEEL PILE IN ACCORDANCE WITH SECTION 1076 OF THE STANDARD SPECIFICATIONS.

PROJECT NO. R-3833B
IREDELL COUNTY
STATION: 24+39.00 -Y4-

SHEET 3 OF 3

NORTH CAROLINA PROFESSIONAL SEAL 11259 ENGINEER DAVID R. ANDERSON
1/2/09

STATE OF NORTH CAROLINA
DEPARTMENT OF TRANSPORTATION
RALEIGH

GENERAL DRAWING
BRIDGE OVER UNNAMED TRIBUTARY ON -Y4- BETWEEN SR 1100 & -Y5-

REVISIONS						SHEET NO.
NO.	BY:	DATE:	NO.	BY:	DATE:	S-94
1			3			TOTAL SHEETS
2			4			113

DRAWN BY : S. M. RASHIDI DATE : 9-8-08
CHECKED BY : D. R. ANDERSON DATE : 10-15-08

29-DEC-2008 12:02
h:\structures\srashidi\microstation\wkg\str. #2\r-3833b_sd_location sketch.dgn
srashidi

STR. 2

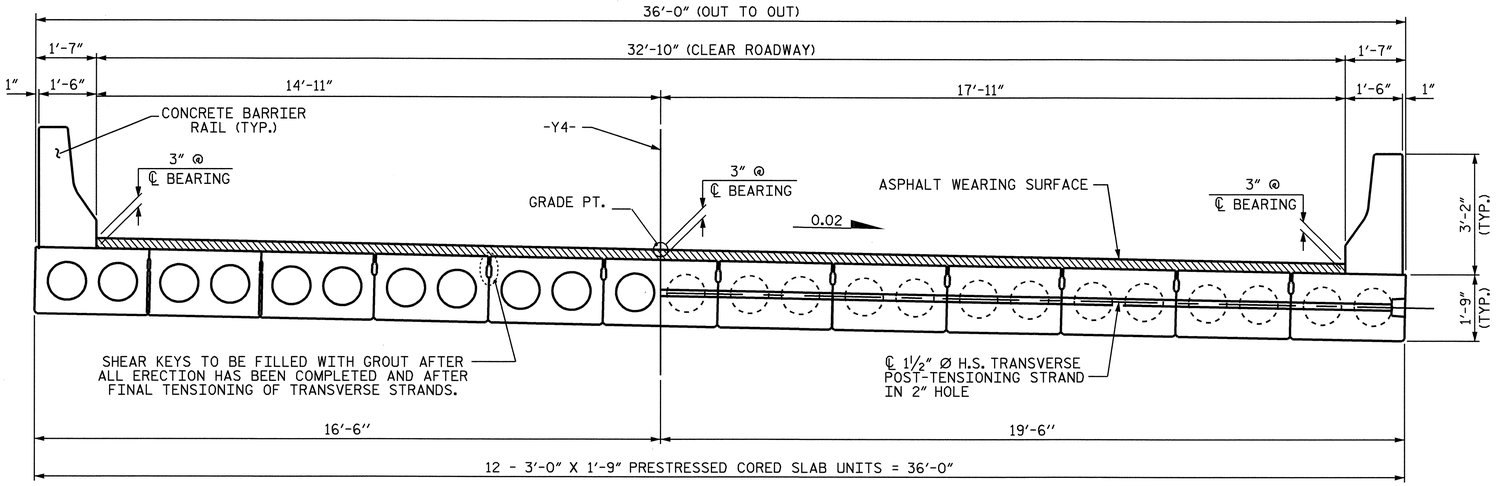

HALF SECTION AT INTERMEDIATE DIAPHRAGM

HALF SECTION AT VOIDS

TYPICAL SECTION

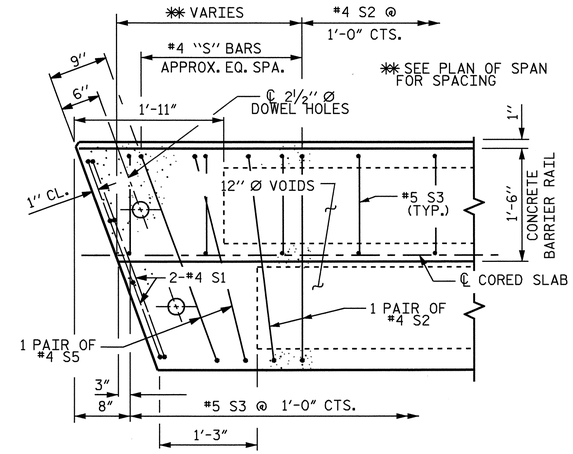

70° SKEW

PART PLAN-EXTERIOR SECTION

NOTE: EXTERIOR SECTION SHOWN-INTERIOR SECTION SIMILAR EXCEPT OMIT S3 BARS.

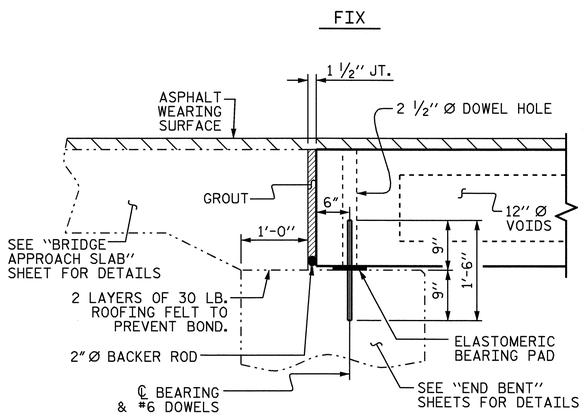

SECTION AT END BENT

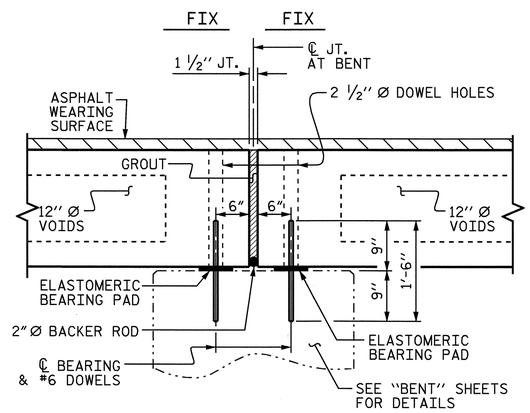

SECTION AT BENT

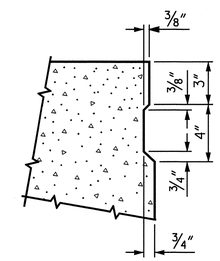

SHEAR KEY DETAIL

NOTE: OMIT SHEAR KEY ON OUTSIDE FACE OF EXTERIOR CORED SLABS.

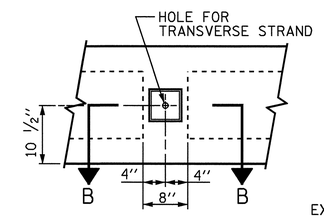

ELEVATION VIEW

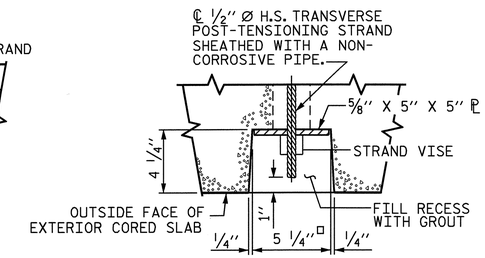

SECTION B-B

GROUTED RECESS AT END END OF POST-TENSIONED STRAND CORED SLABS

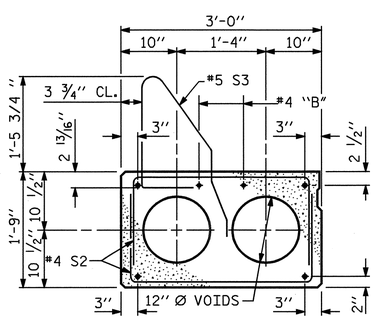

EXTERIOR SLAB SECTION

(FOR PRESTRESSED STRAND LAYOUT, SEE INTERIOR SLAB SECTION.)

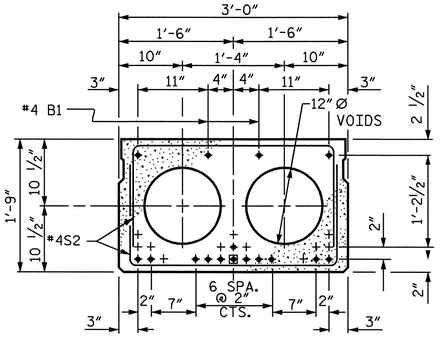

SPANS A, B, D & E

14 STRANDS, 1 SHEATHED

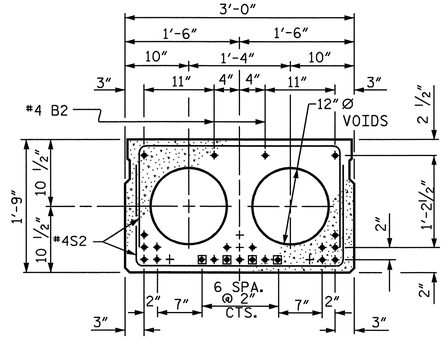

SPAN C

21 STRANDS, 4 SHEATHED

INTERIOR SLAB SECTION ½" Ø LOW RELAXATION STRAND LAYOUT

▣ BOND SHALL BE BROKEN AT THESE STRANDS AT A DISTANCE OF FOUR FEET FROM THE END OF CORED SLAB UNIT. SEE STANDARD SPECIFICATIONS ARTICLE 1078-7.

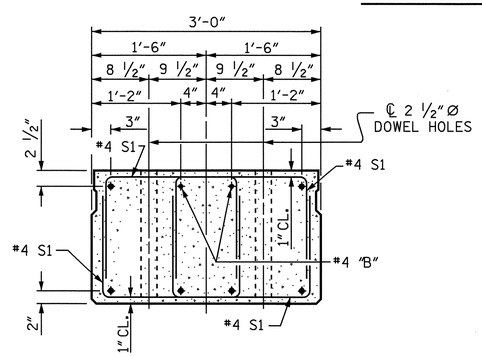

END ELEVATION

SHOWING PLACEMENT OF DOUBLE STIRRUPS AND LOCATION OF DOWEL HOLES. (STRAND LAYOUT NOT SHOWN.) INTERIOR SLAB SECTION SHOWN-EXTERIOR SLAB SECTION SIMILAR EXCEPT SHEAR KEY LOCATION.

PROJECT NO. R-3833B

IREDELL COUNTY

STATION: 24+39.00 -Y4-

SHEET 1 OF 8

STATE OF NORTH CAROLINA
DEPARTMENT OF TRANSPORTATION
RALEIGH

STANDARD 3'-0" X 1'-9" PRESTRESSED CONCRETE CORED SLAB UNIT

NORTH CAROLINA PROFESSIONAL SEAL 11259 ENGINEER DAVID R. ANDERSON
11/18/08

REVISIONS							SHEET NO.
NO.	BY:	DATE:	NO.	BY:	DATE:		S-95
1			3				TOTAL SHEETS
2			4				113

STD. No. PCS2

STR #2

ASSEMBLED BY : N. Q. TRAN		DATE : 9-4-06	
CHECKED BY : J. A. TILLMAN		DATE : 7-24-08	
DRAWN BY : WJH	4/89	REV. 10/17/00	RWW/LES
CHECKED BY : FCJ	5/89	REV. 7/10/01RR	RWW/LES
		REV. 5/1/06	TLA/GM

22-OCT-2008 10:28
r:\structures\ntran\mlcroe\wkg\r-3833b*2-cs.dgn
DANDERSON

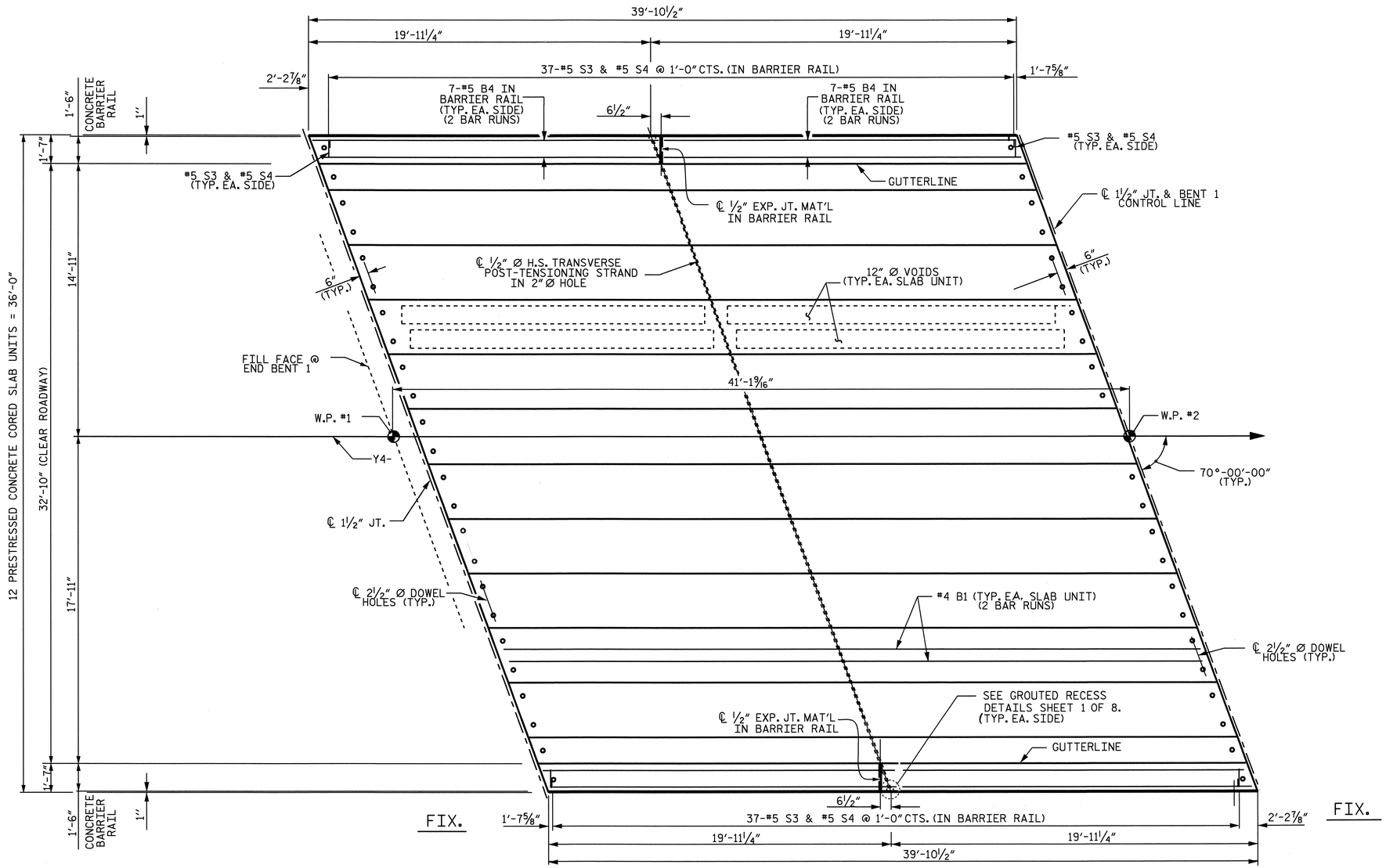

PLAN OF SPAN A

NOTE: FOR REINFORCING STEEL IN END OF CORED SLAB UNIT, SEE "PART PLAN - EXTERIOR SECTION" SHEET 1 OF 8.

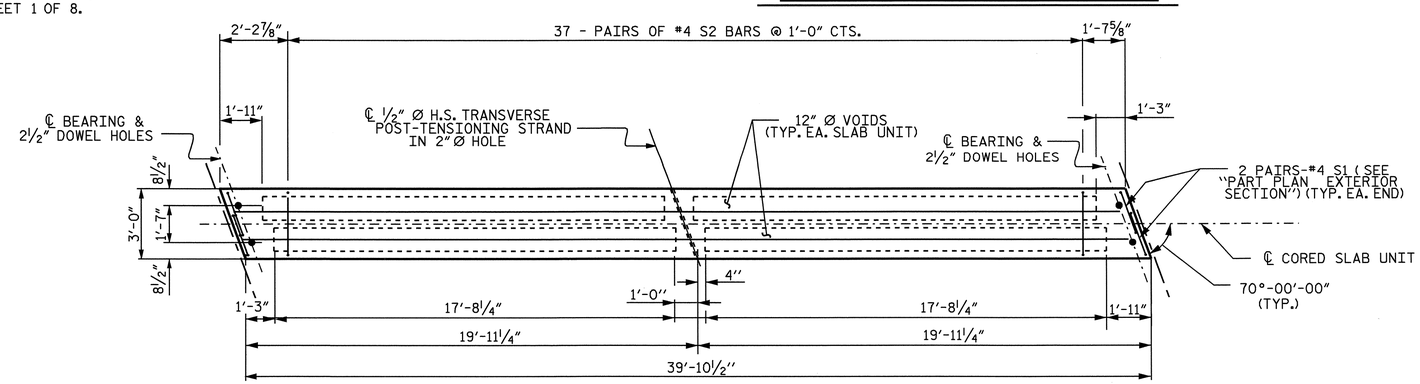

PLAN OF INTERIOR CORED SLAB UNIT

PROJECT NO. R-3833B
IREDELL COUNTY
STATION: 24+39.00 -Y4-

SHEET 2 OF 8

STATE OF NORTH CAROLINA
DEPARTMENT OF TRANSPORTATION
RALEIGH

SUPERSTRUCTURE PLAN OF SPAN A

NORTH CAROLINA PROFESSIONAL SEAL 11259 ENGINEER DAVID R. ANDERSON
11/18/08

REVISIONS						SHEET NO.
NO.	BY:	DATE:	NO.	BY:	DATE:	S-96
1			3			TOTAL SHEETS
2			4			113

DRAWN BY : N. Q. TRAN DATE : 9-25-07
CHECKED BY : J. A. TILMAN DATE : 7-24-08

22-OCT-2008 12:57
r:\structures\ntran\mlaroe\wkg\r-3833b#2-cs.dgn
DANDERSON

STR #2

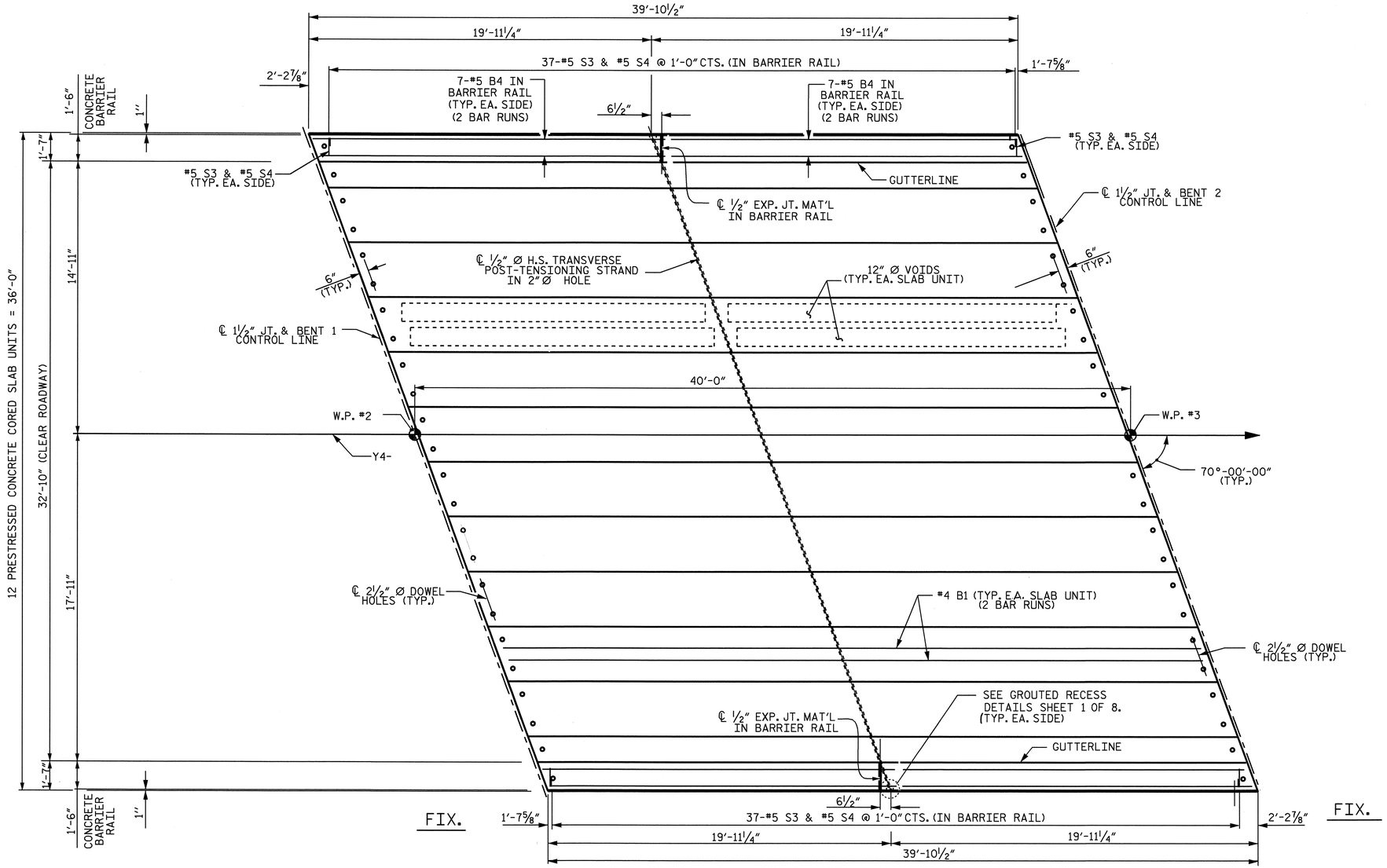

PLAN OF SPAN B

NOTE: FOR REINFORCING STEEL IN END OF CORED SLAB UNIT, SEE "PART PLAN - EXTERIOR SECTION" SHEET 1 OF 8.

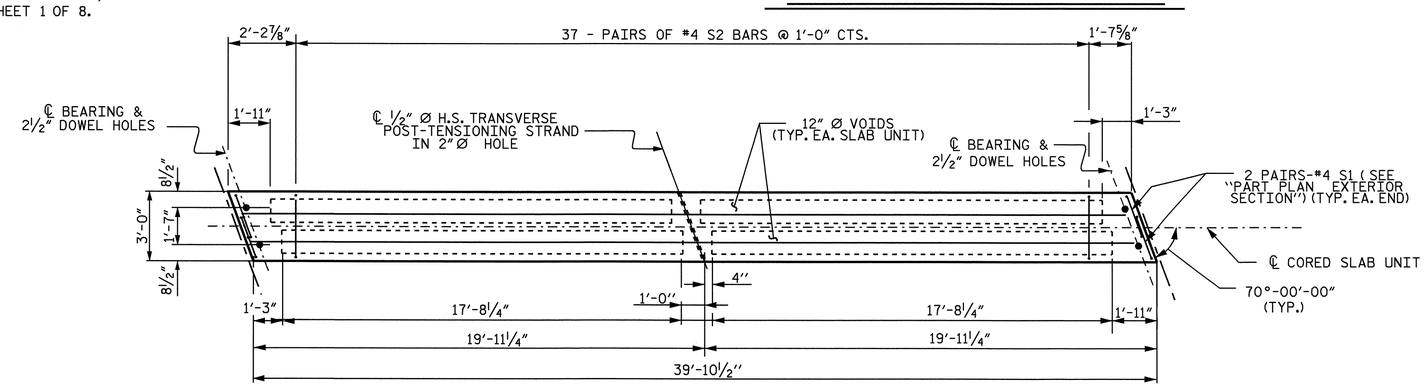

PLAN OF INTERIOR CORED SLAB UNIT

PROJECT NO. R-3833B
IREDELL COUNTY
STATION: 24+39.00 -Y4-

SHEET 3 OF 8

STATE OF NORTH CAROLINA
DEPARTMENT OF TRANSPORTATION
RALEIGH

SUPERSTRUCTURE PLAN OF SPAN B

NORTH CAROLINA PROFESSIONAL SEAL 11259 ENGINEER DAVID R. ANDERSON
11/18/08

REVISIONS								SHEET NO.
NO.	BY:	DATE:		NO.	BY:	DATE:		S-97
1				3				TOTAL SHEETS
2				4				113

DRAWN BY : N. Q. TRAN DATE : 9-25-07
CHECKED BY : J. A. TILMAN DATE : 7-24-08

22-OCT-2008 12:57
r:\structures\ntran\mlaroe\wkg\r-3833b*2-cs.dgn
DANDERSON

STR #2

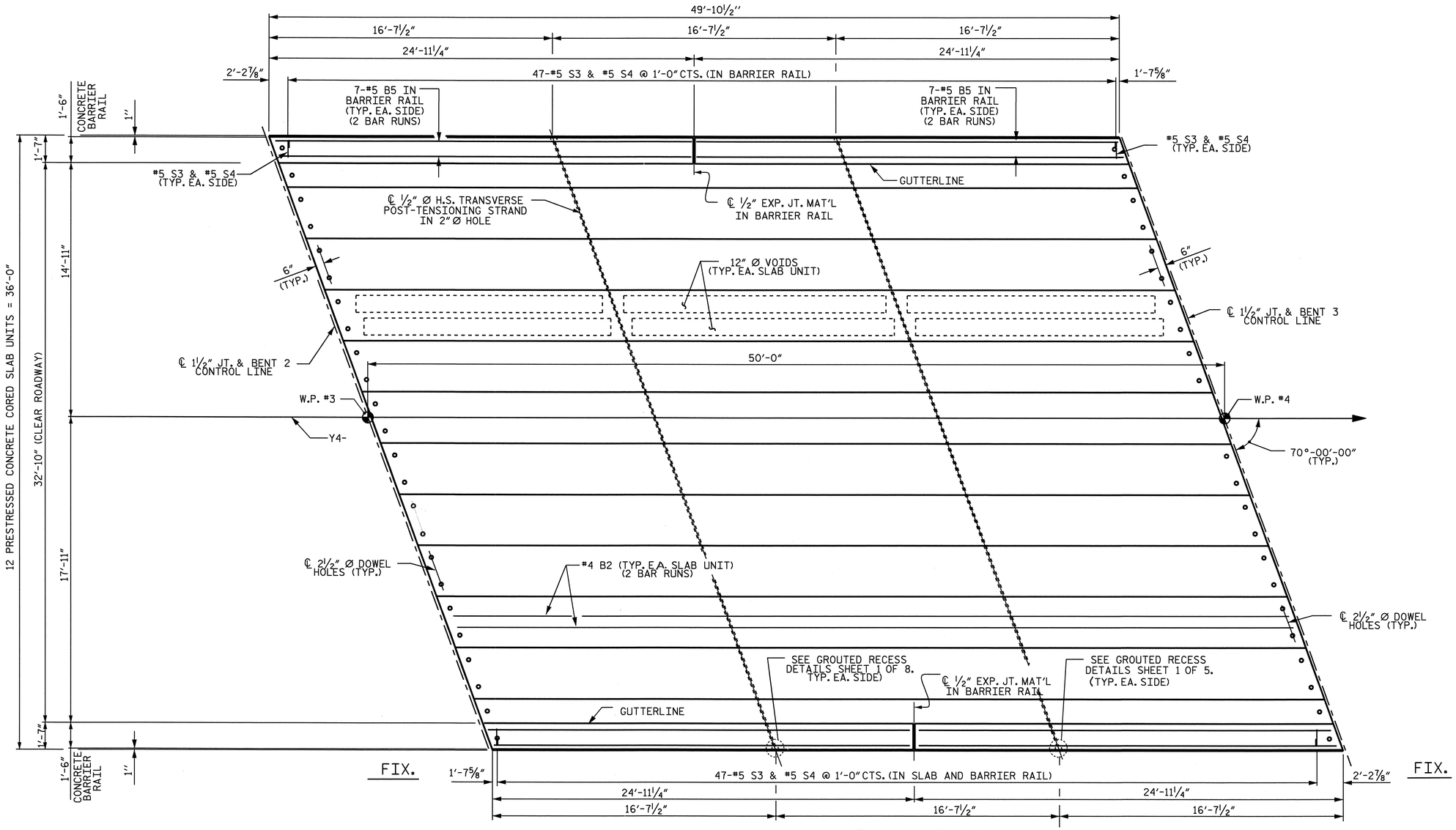

PLAN OF SPAN C

NOTE: FOR REINFORCING STEEL IN END OF CORED SLAB UNIT, SEE "PART PLAN - EXTERIOR SECTION" SHEET 1 OF 8.

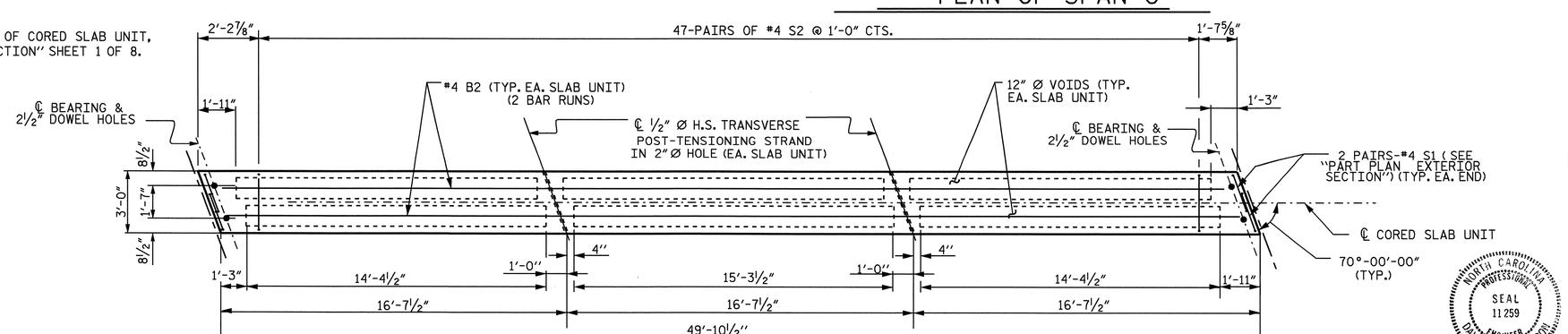

PLAN OF INTERIOR CORED SLAB UNIT

PROJECT NO. R-3833B
IREDELL COUNTY
STATION: 24+39.00 -L-

SHEET 4 OF 8

STATE OF NORTH CAROLINA
DEPARTMENT OF TRANSPORTATION
RALEIGH

SUPERSTRUCTURE PLAN OF SPAN C

NORTH CAROLINA PROFESSIONAL SEAL 11259 ENGINEER DAVID R. ANDERSON
11/18/08

REVISIONS						SHEET NO.
NO.	BY:	DATE:	NO.	BY:	DATE:	5-98
1			3			TOTAL SHEETS
2			4			113

DRAWN BY : N. Q. TRAN DATE : 9-25-07
CHECKED BY : J. A. TILMAN DATE : 7-24-08

22-OCT-2008 10:27
r:\structures\ntran\mlaroe\wkg\r-3833b*2-cs.dgn
DANDERSON

STR #2

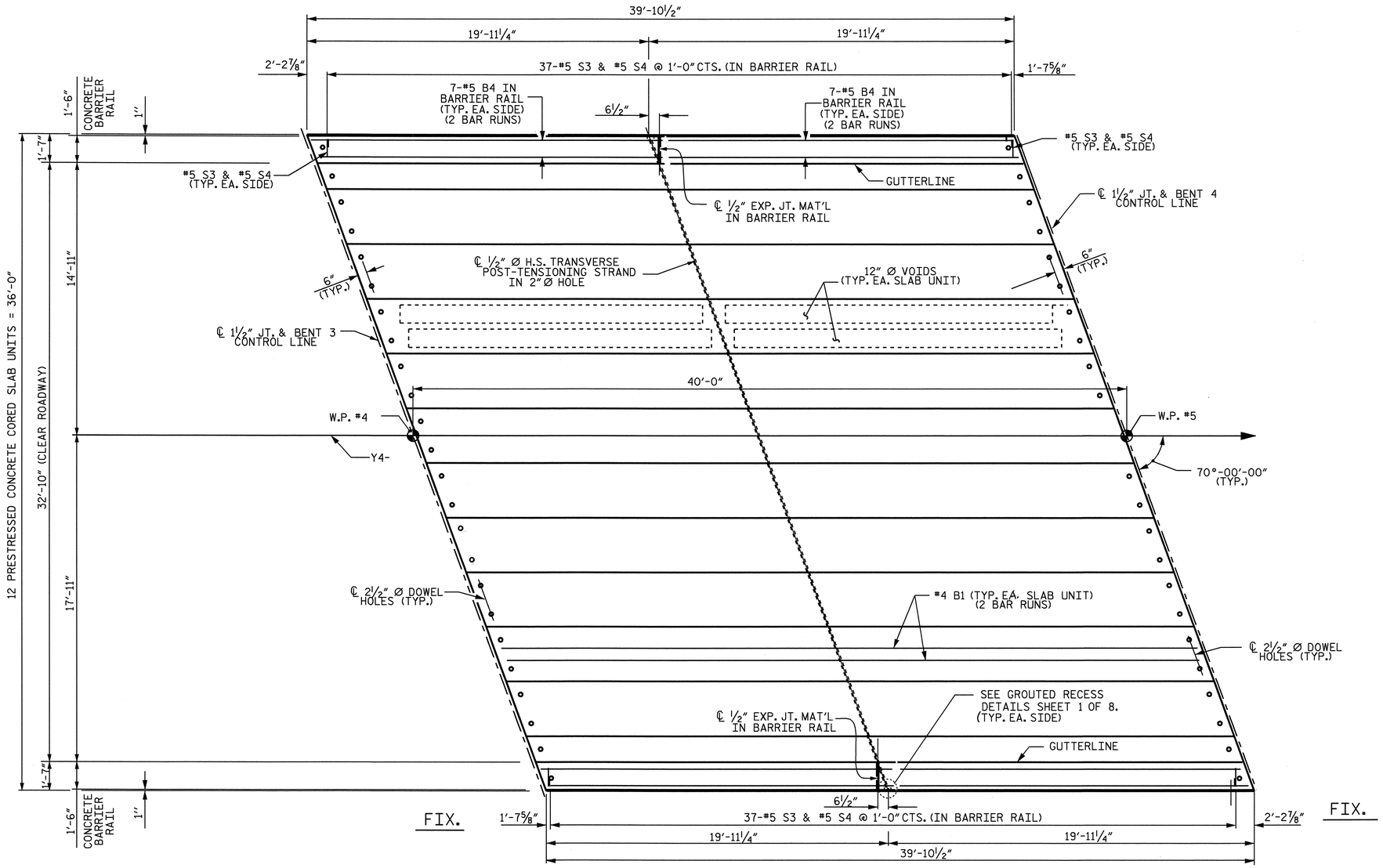

PLAN OF SPAN D

NOTE: FOR REINFORCING STEEL IN END OF CORED SLAB UNIT, SEE "PART PLAN - EXTERIOR SECTION" SHEET 1 OF 8.

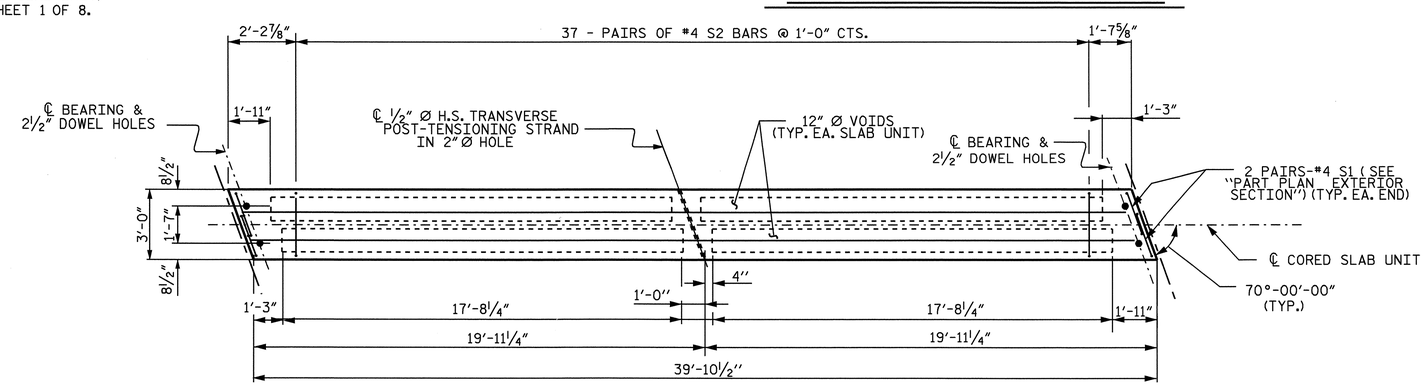

PLAN OF INTERIOR CORED SLAB UNIT

PROJECT NO. R-3833B
IREDELL COUNTY
STATION: 24+39.00 -Y4-

SHEET 5 OF 8

STATE OF NORTH CAROLINA
DEPARTMENT OF TRANSPORTATION
RALEIGH

SUPERSTRUCTURE PLAN OF SPAN D

NORTH CAROLINA PROFESSIONAL SEAL 11259 ENGINEER DAVID R. ANDERSON
11/18/08

REVISIONS						SHEET NO.
NO.	BY:	DATE:	NO.	BY:	DATE:	S-99
1			3			TOTAL SHEETS
2			4			113

DRAWN BY : N. Q. TRAN DATE : 9-25-07
CHECKED BY : J. A. TILMAN DATE : 7-24-08

22-OCT-2008 12:56
r:\structures\ntran\mlcroe\wkg\r-3833b*2-cs.dgn
DANDERSON

STR #2

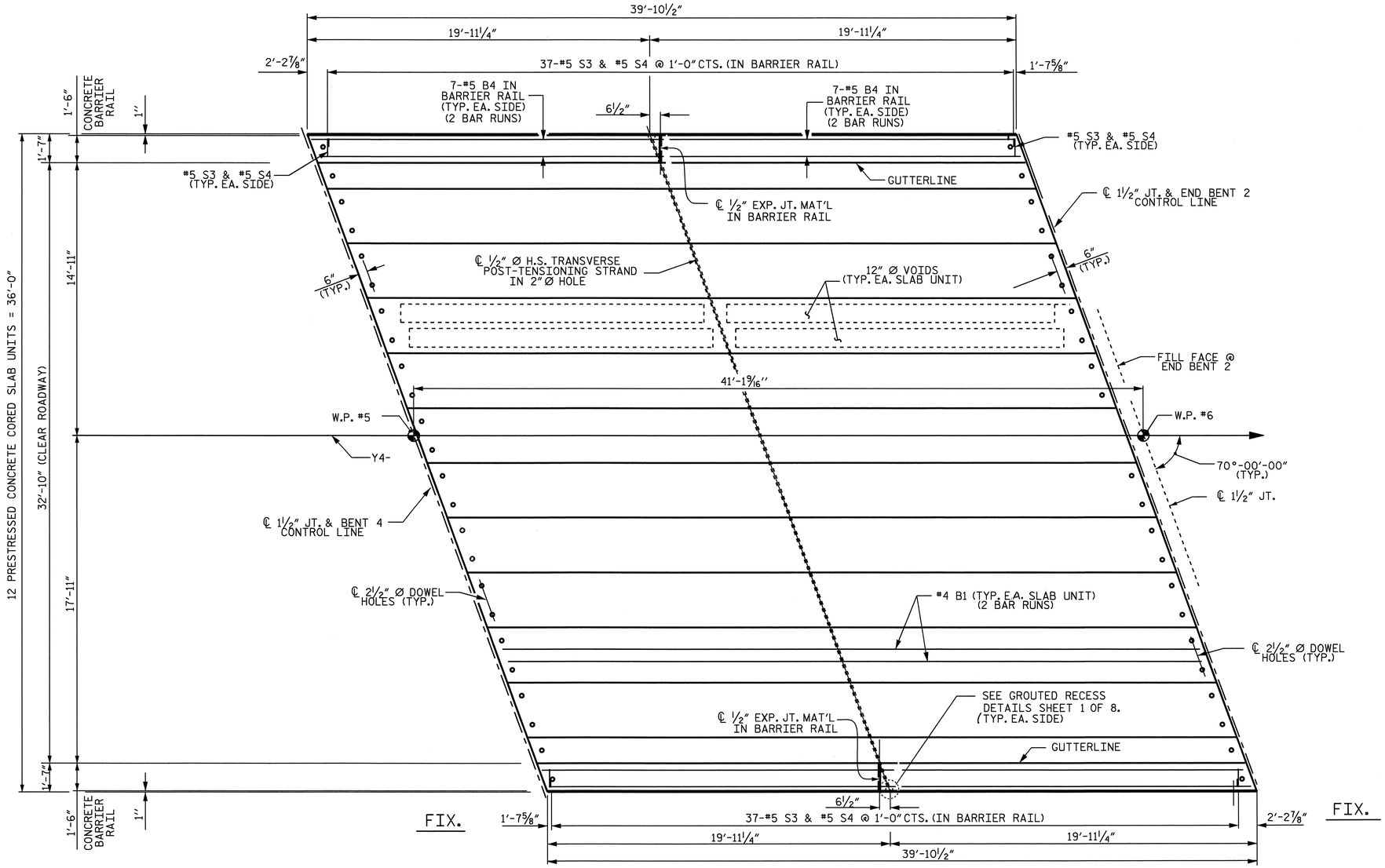

PLAN OF SPAN E

NOTE: FOR REINFORCING STEEL IN END OF CORED SLAB UNIT, SEE "PART PLAN - EXTERIOR SECTION" SHEET 1 OF 8.

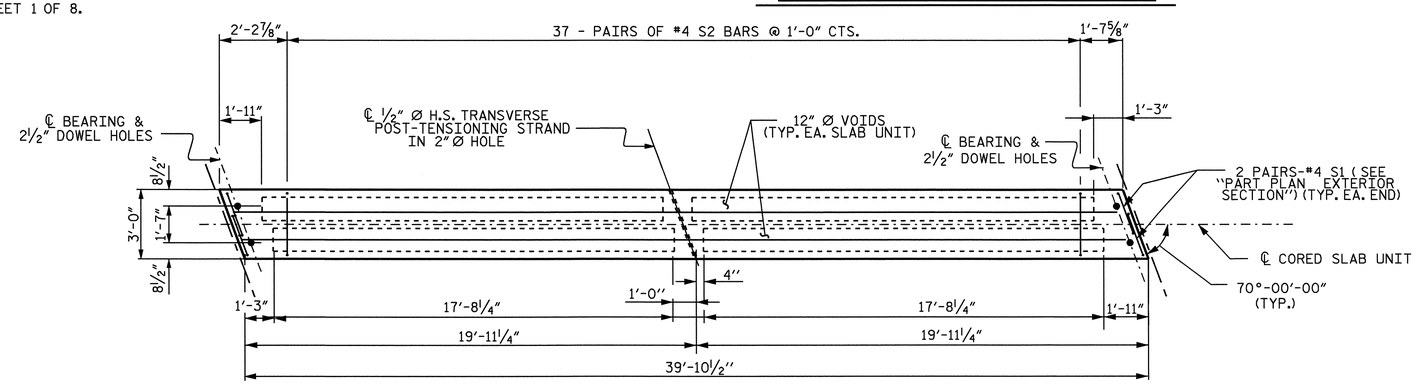

PLAN OF INTERIOR CORED SLAB UNIT

PROJECT NO. R-3833B
IREDELL COUNTY
STATION: 24+39.00 -Y4-

SHEET 6 OF 8

STATE OF NORTH CAROLINA
DEPARTMENT OF TRANSPORTATION
RALEIGH

SUPERSTRUCTURE PLAN OF SPAN E

NORTH CAROLINA PROFESSIONAL SEAL 11259 ENGINEER DAVID R. ANDERSON
11/10/08

REVISIONS						SHEET NO.
NO.	BY:	DATE:	NO.	BY:	DATE:	S-100
1			3			TOTAL SHEETS
2			4			113

DRAWN BY : N. Q. TRAN DATE : 9-25-07
CHECKED BY : J. A. TILMAN DATE : 7-24-08

22-OCT-2008 12:56
r:\structures\ntran\microe\wkg\r-3833b*2-cs.dgn
DANDERSON

STR #2

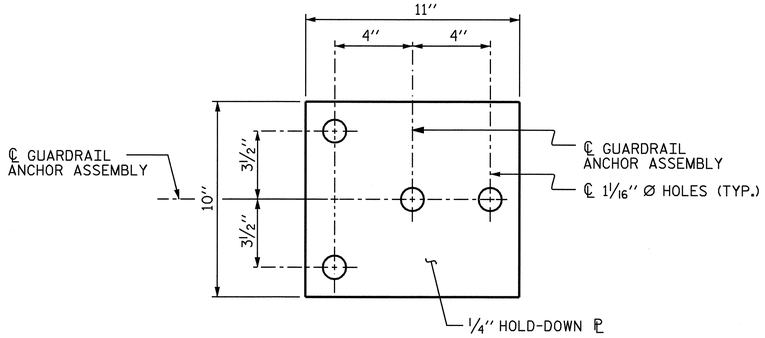

PLAN

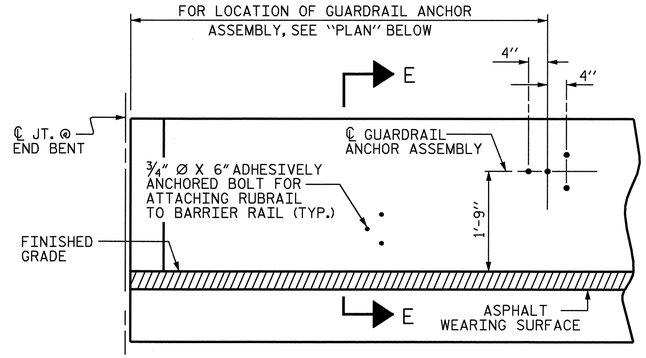

ELEVATION

FOR LOCATION OF RUBRAIL, SEE ROADWAY STD. 862.03

NOTES

THE GUARDRAIL ANCHOR ASSEMBLY SHALL CONSIST OF A 1/4'' HOLD DOWN PLATE AND 4 - 7/8'' Ø BOLTS WITH NUTS AND WASHERS, RUBRAIL, AND ADHESIVELY ANCHORED BOLTS.

THE HOLD-DOWN PLATE SHALL CONFORM TO AASHTO M270 GRADE 36. AFTER FABRICATION, THE HOLD-DOWN PLATE SHALL BE HOT-DIP GALVANIZED IN ACCORDANCE WITH AASHTO M111.

BOLTS SHALL CONFORM TO THE REQUIREMENTS OF ASTM A307 AND NUTS SHALL CONFORM TO THE REQUIREMENTS OF AASHTO M291. BOLTS, NUTS AND WASHERS SHALL BE GALVANIZED. (AT THE CONTRACTOR'S OPTION, STAINLESS STEEL BOLTS, NUTS AND WASHERS MAY BE USED AS AN ALTERNATE FOR THE 7/8'' Ø GALVANIZED BOLTS, NUTS AND WASHERS. THEY SHALL CONFORM TO OR EXCEED THE MECHANICAL REQUIREMENTS OF ASTM A307. THE USE OF THIS ALTERNATE SHALL BE APPROVED BY THE ENGINEER.)

THE GUARDRAIL ANCHOR ASSEMBLY IS REQUIRED AT ALL POINTS WHERE APPROACH GUARDRAIL IS TO BE ATTACHED TO THE END OF BARRIER RAIL. FOR POINTS OF ATTACHMENT, SEE SKETCH.

AFTER INSTALLATION, THE EXPOSED THREAD OF THE BOLT SHALL BE BURRED WITH A SHARP POINTED TOOL.

THE COST OF THE GUARDRAIL ANCHOR ASSEMBLY SHALL BE INCLUDED IN THE UNIT CONTRACT PRICE BID FOR CONCRETE BARRIER RAIL.

THE 1 1/4'' Ø HOLES SHALL BE FORMED OR DRILLED WITH A CORE BIT. IMPACT TOOLS WILL NOT BE PERMITTED. ANY CONCRETE DAMAGED BY THIS WORK SHALL BE REPAIRED TO THE SATISFACTION OF THE ENGINEER.

THE C6 X 8.2 RUBRAIL IS TO BE ADHESIVELY ANCHORED TO THE RAIL USING THREE 3/4" Ø X 6" BOLTS WITH WASHERS. LEVEL ONE FIELD TESTING IS REQUIRED, AND THE YIELD LOAD OF THE 3/4" Ø BOLT IS 12 KIPS. FOR ADHESIVELY ANCHORED ANCHOR BOLTS OR DOWELS, SEE SPECIAL PROVISIONS. SEE ROADWAY STANDARD 862.03 FOR DETAILS AND LOCATION OF THE RUBRAIL.

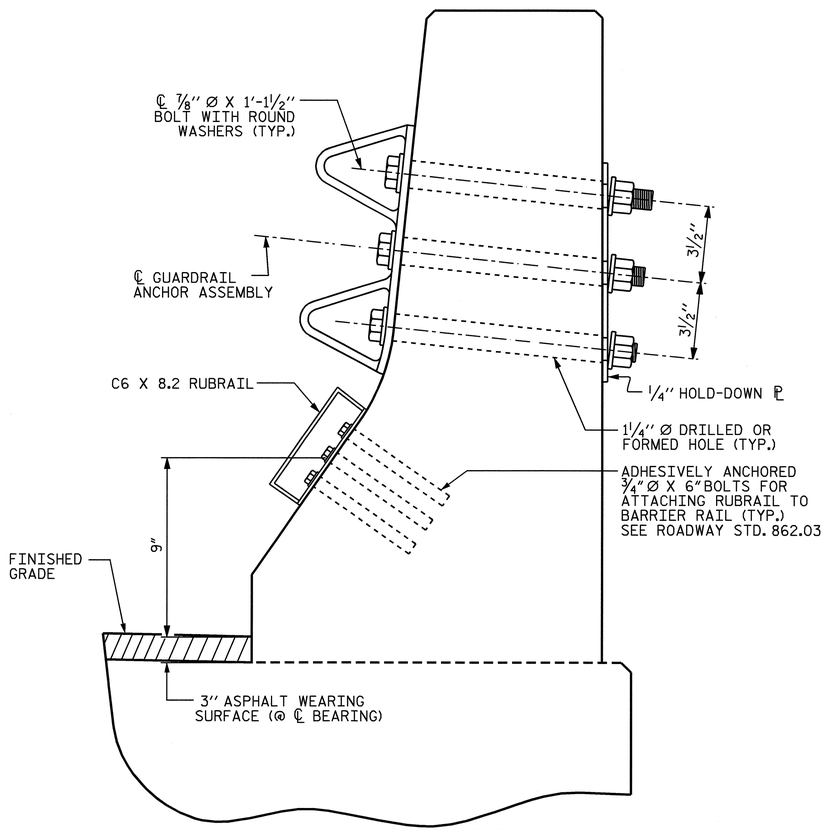

SECTION E-E

GUARDRAIL ANCHOR ASSEMBLY DETAILS

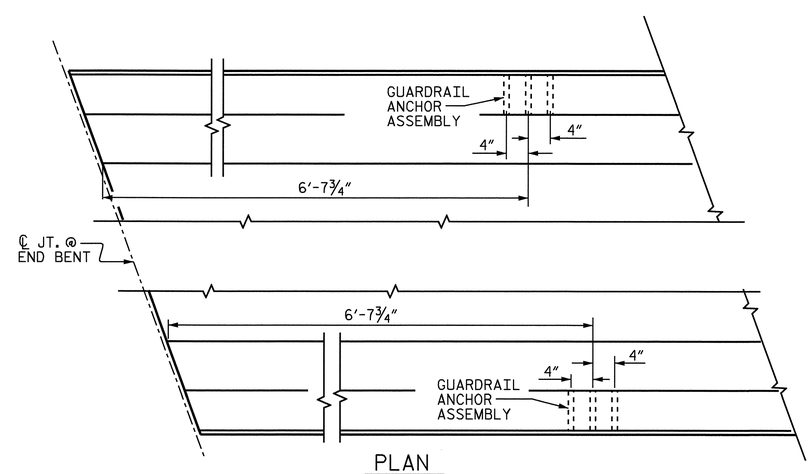

PLAN

LOCATION OF ANCHORS FOR GUARDRAIL

END BENT #1 SHOWN, END BENT #2 SIMILAR.

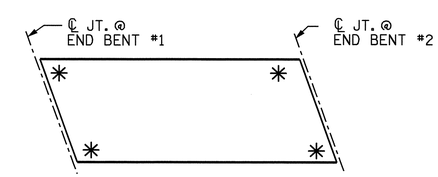

SKETCH SHOWING POINTS OF ATTACHMENTS

✳ DENOTES GUARDRAIL ANCHOR ASSEMBLY

PROJECT NO. R-3833B
IREDELL COUNTY
STATION: 24+39.00 -Y4-

SHEET 7 OF 8

STATE OF NORTH CAROLINA
DEPARTMENT OF TRANSPORTATION
RALEIGH

STANDARD
GUARDRAIL ANCHORAGE FOR BARRIER RAIL

NORTH CAROLINA PROFESSIONAL SEAL 11259 ENGINEER DAVID R. ANDERSON
1/2/09

REVISIONS						SHEET NO.
NO.	BY:	DATE:	NO.	BY:	DATE:	S-101
1			3			TOTAL SHEETS
2			4			113

ASSEMBLED BY : N. Q. TRAN	DATE : 9-25-07
CHECKED BY : J. A. TILLMAN	DATE : 8-15-08
DRAWN BY : TLA 5/06	ADDED 5/1/06R KMM/GM
CHECKED BY : GM 5/06	

29-DEC-2008 14:24
h:\structures\ntran\mlcroe\wkg\r-3833b*2-cs.dgn
srashldl

STD. NO. GRA2 STR #2

SPANS A, B, D & E

BILL OF MATERIAL FOR ONE CORED SLAB SECTION

				EXTERIOR UNIT		INTERIOR UNIT	
BAR	NUMBER	SIZE	TYPE	LENGTH	WEIGHT	LENGTH	WEIGHT
B1	4	#4	STR	20'-8"	55	20'-8"	55
S1	8	#4	3	4'-3"	23	4'-3"	23
S2	74	#4	3	5'-4"	264	5'-4"	264
✳ S3	37	#5	1	5'-5"	209		
S5	8	#4	3	5'-5"	28	5'-5"	28
REINFORCING STEEL					370 LBS.		370 LBS.
✳ EPOXY COATED REINFORCING STEEL					209 LBS.		
5000 P.S.I. CONCRETE					5.7 CU. YDS.		5.7 CU. YDS.
½" Ø L.R. STRANDS					No. 14		No. 14

DEAD LOAD DEFLECTION AND CAMBER

	3'-0" x 1'-9"
	½" Ø L.R. STRAND
CAMBER (SLAB ALONE IN PLACE) ↑	13/16"
DEFLECTION DUE TO SUPERIMPOSED DEAD LOAD ✳✳ ↓	1/8"
FINAL CAMBER ↑	11/16"

✳✳ INCLUDES FUTURE WEARING SURFACE

SPAN C

BILL OF MATERIAL FOR ONE CORED SLAB SECTION

				EXTERIOR UNIT		INTERIOR UNIT	
BAR	NUMBER	SIZE	TYPE	LENGTH	WEIGHT	LENGTH	WEIGHT
B2	4	#4	STR	25'-8"	69	25'-8"	69
S1	8	#4	3	4'-3"	23	4'-3"	23
S2	94	#4	3	5'-4"	335	5'-4"	335
✳ S3	47	#5	1	5'-5"	266		
S5	8	#4	3	5'-5"	28	5'-5"	28
REINFORCING STEEL					455 LBS.		455 LBS.
✳ EPOXY COATED REINFORCING STEEL					266 LBS.		
5000 P.S.I. CONCRETE					6.7 CU. YDS.		6.7 CU. YDS.
½" Ø L.R. STRANDS					No. 21		No. 21

DEAD LOAD DEFLECTION AND CAMBER

	3'-0" x 1'-9"
	½" Ø L.R. STRAND
CAMBER (SLAB ALONE IN PLACE) ↑	1 13/16"
DEFLECTION DUE TO SUPERIMPOSED DEAD LOAD ✳✳ ↓	1/4"
FINAL CAMBER ↑	1 9/16"

✳✳ INCLUDES FUTURE WEARING SURFACE

CORED SLABS REQUIRED

SPAN A,B,D&E	NUMBER	LENGTH	TOTAL LENGTH
EXTERIOR C.S.	8	39'-10½"	319'-0"
INTERIOR C.S.	40	39'-10½"	1595'-0"
TOTAL	48		1914'-0"

CORED SLABS REQUIRED

SPAN C	NUMBER	LENGTH	TOTAL LENGTH
EXTERIOR C.S.	2	49'-10½"	99'-9"
INTERIOR C.S.	10	49'-10½"	498'-9"
TOTAL	12		598'-6"

GRADE 270 STRANDS

	½" Ø L.R.
AREA (SQUARE INCHES)	0.153
ULTIMATE STRENGTH (LBS. PER STRAND)	41,300
APPLIED PRESTRESS (LBS. PER STRAND)	30,980

BILL OF MATERIAL FOR CONCRETE BARRIER RAIL

BAR	BARS PER SPAN			TOTAL NO.	SIZE	TYPE	LENGTH	WEIGHT
	SPANS A&E	SPANS B&D	SPAN C					
✳ B4	112	112		224	#5	STR	11'-7"	2706
✳ B5			56	56	#5	STR	14'-3"	832
✳ S4	148	148	94	390	#5	2	5'-8"	2305
✳ EPOXY COATED REINFORCING STEEL								5843
CLASS AA CONCRETE								49.1 CU.YDS.
TOTAL LIN. FT. OF CONCRETE BARRIER RAIL								418.75 LIN. FT.

BAR TYPES

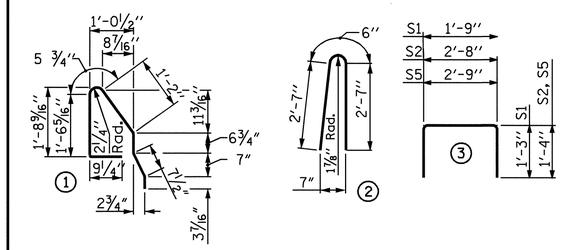

ALL BAR DIMENSIONS ARE OUT TO OUT

NOTES

ALL PRESTRESSING STRANDS SHALL BE 7-WIRE LOW RELAXATION GRADE 270 STRANDS AND SHALL CONFORM TO AASHTO M203 EXCEPT FOR SAMPLING REQUIREMENTS WHICH SHALL BE IN ACCORDANCE WITH THE STANDARD SPECIFICATIONS.

ALL REINFORCING STEEL CAST WITH THE CORED SLAB SECTIONS SHALL BE GRADE 60 AND SHALL BE INCLUDED IN THE UNIT PRICE BID FOR PRESTRESSED CONCRETE CORED SLABS.

RECESSES FOR TRANSVERSE STRANDS SHALL BE GROUTED AFTER THE TENSIONING OF THE STRANDS.

THE 2½" Ø DOWEL HOLES AT FIXED ENDS OF SLAB SECTIONS SHALL BE FILLED WITH NON-SHRINK GROUT.

THE 2" Ø BACKER ROD SHALL CONFORM TO THE REQUIREMENTS OF TYPE M BOND BREAKER. SEE SECTION 1028 OF THE STANDARD SPECIFICATIONS.

WHEN CORED SLABS ARE CAST, A POSITIVE HOLD-DOWN SYSTEM SHALL BE EMPLOYED TO PREVENT VOIDS FROM RISING OR MOVING SIDEWAYS. THIS SYSTEM SHALL BE DESIGNED TO BE LEFT IN PLACE UNTIL THE CONCRETE HAS REACHED RELEASE STRENGTH. AT LEAST THREE WEEKS PRIOR TO CASTING CORED SLABS, THE CONTRACTOR SHALL SUBMIT TO THE ENGINEER FOR REVIEW AND COMMENT, DETAILED DRAWINGS OF THE PROPOSED HOLD-DOWN SYSTEM. IN ADDITION TO STRUCTURAL DETAILS, LOCATION AND SPACING OF THE HOLD-DOWNS SHALL BE INDICATED.

THE TRANSFER OF LOAD FROM THE ANCHORAGES TO THE CORED SLAB UNIT SHALL BE DONE WHEN THE CONCRETE HAS REACHED A COMPRESSIVE STRENGTH OF NOT LESS THAN 4000 PSI.

ALL REINFORCING STEEL IN BARRIER RAILS SHALL BE EPOXY COATED.

PRESTRESSING STRANDS SHALL BE CUT FLUSH WITH THE CORED SLAB UNIT ENDS.

APPLY EPOXY PROTECTIVE COATING TO CORED SLAB UNIT ENDS.

VERTICAL GROOVED CONTRACTION JOINTS, ½" IN DEPTH, SHALL BE TOOLED IN ALL EXPOSED FACES OF THE BARRIER RAIL AND IN ACCORDANCE WITH ARTICLE 825-10(B) OF THE STANDARD SPECIFICATIONS. A VERTICAL CONTRACTION JOINT SHALL BE LOCATED AT EACH THIRD POINT BETWEEN BARRIER RAIL EXPANSION JOINTS. ONLY ONE CONTRACTION JOINT IS REQUIRED AT MIDPOINT OF BARRIER RAIL SEGMENTS LESS THAN 20 FEET IN LENGTH AND NO CONTRACTION JOINTS ARE REQUIRED FOR THOSE SEGMENTS LESS THAN 10 FEET IN LENGTH.

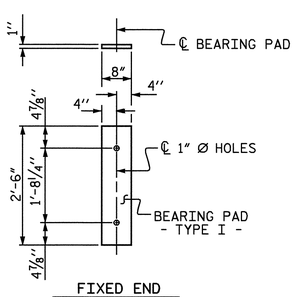

FIXED END
(TYPE I - 120 REQ'D)

ELASTOMERIC BEARING DETAILS

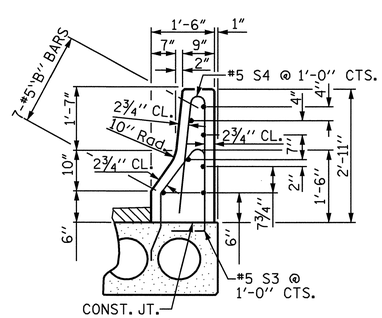

SECTION THRU RAIL

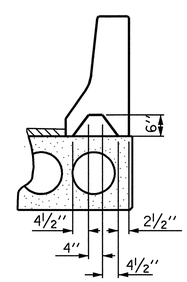

SECTION S-S
AT DAM IN OPEN JOINT
(THIS IS TO BE USED ONLY WHEN SLIP FORM IS USED)

ELASTOMER IN ALL BEARING PADS SHALL BE 50 DUROMETER HARDNESS.

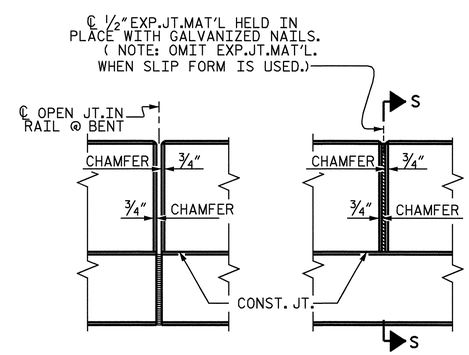

ELEVATION AT EXPANSION JOINTS

BARRIER RAIL DETAILS

NORTH CAROLINA PROFESSIONAL SEAL 11259 ENGINEER DAVID R. ANDERSON
1/2/09

PROJECT NO. R-3833B
IREDELL COUNTY
STATION: 24+39.00 -Y4-

SHEET 8 OF 8

STATE OF NORTH CAROLINA
DEPARTMENT OF TRANSPORTATION
RALEIGH

STANDARD

3'-0" X 1'-9"
PRESTRESSED CONCRETE
CORED SLAB UNIT

REVISIONS						SHEET NO.
NO.	BY:	DATE:	NO.	BY:	DATE:	S-102
1			3			TOTAL SHEETS
2			4			113

ASSEMBLED BY : N. Q. TRAN	DATE : 8-13-08		
CHECKED BY : J. A. TILLMAN	DATE : 8-15-08		
DRAWN BY : WJH 4/89	REV. 7/10/01	RWW/LES	
CHECKED BY : FCJ 5/89	REV. 5/7/03	RRR RWW/JTE	
	REV. 5/1/06	TLA/GM	

29-DEC-2008 12:14
h:\structures\ntran\mlcroe\wkg\r-3833b*2-cs.dgn
srashidi

STD. NO. PCS3

STR #2

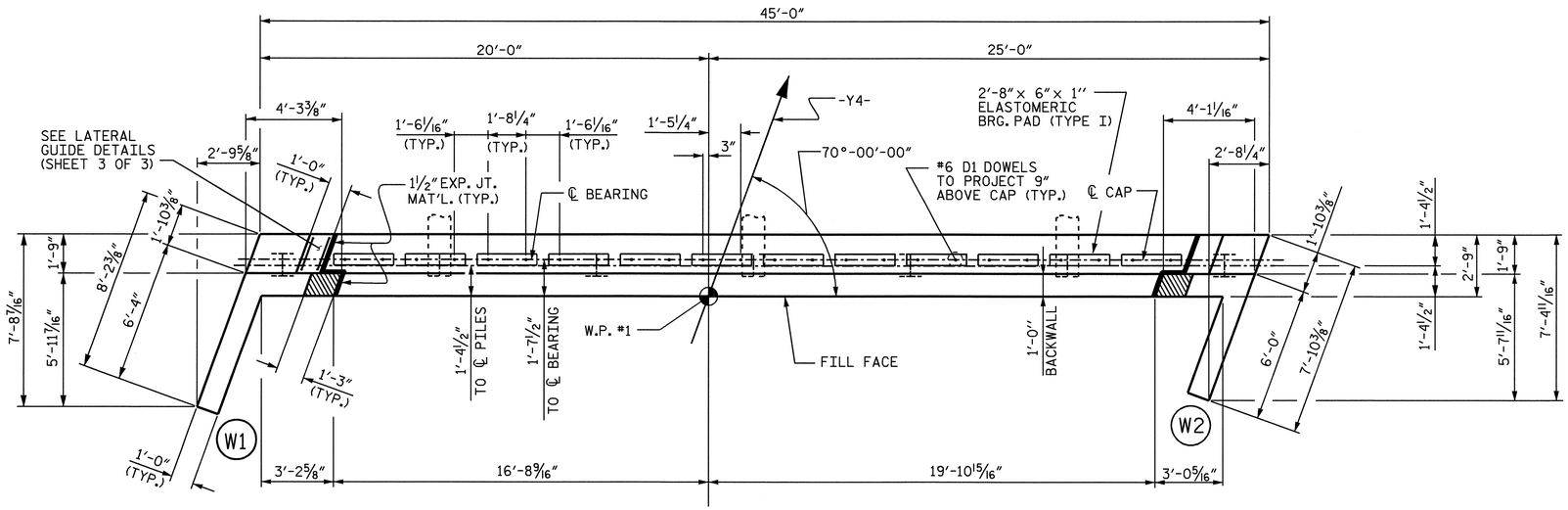

PLAN

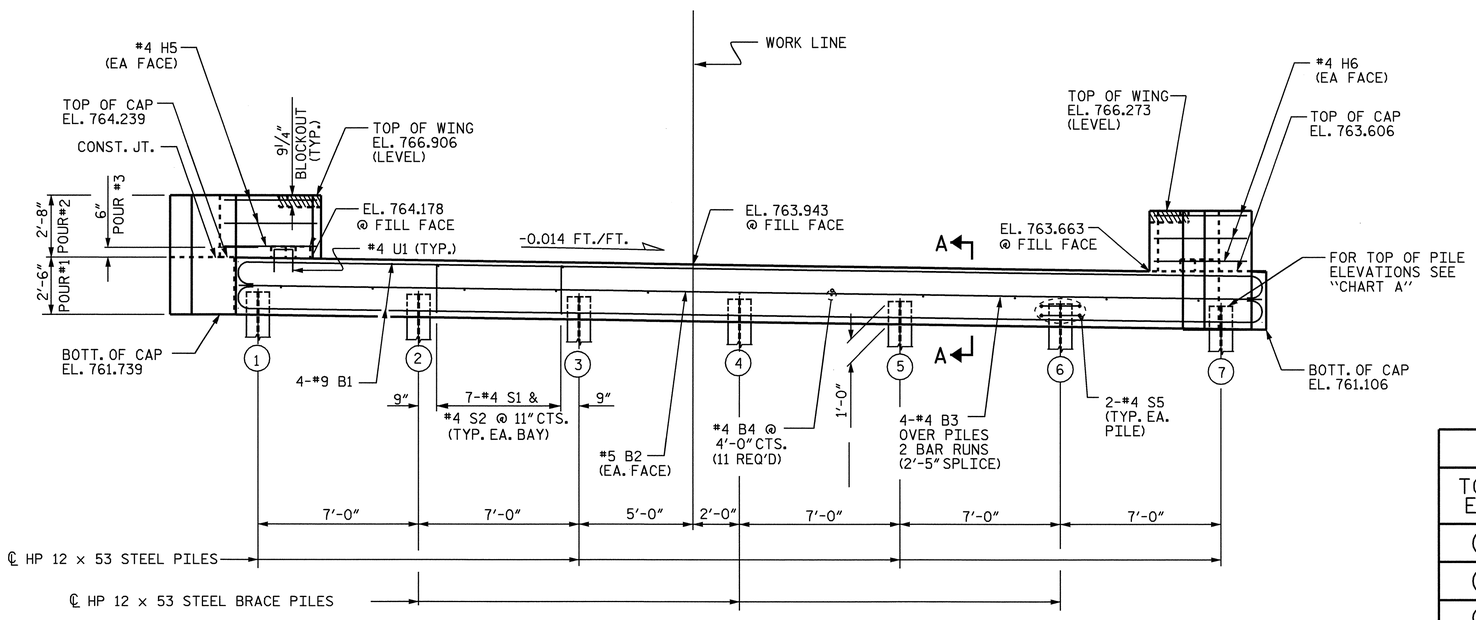

ELEVATION

CHART A	
TOP OF PILE ELEVATIONS	
1	762.719
2	762.620
3	762.522
4	762.424
5	762.325
6	762.227
7	762.128

NOTES:

THE LATERAL GUIDE AT THE ENDS OF CAP ARE NOT TO BE POURED UNTIL AFTER CORED SLAB UNITS ARE IN PLACE.

STIRRUPS IN CAP MAY BE SHIFTED AS NECESSARY TO CLEAR DOWELS.

THE CONTRACTOR SHALL PROVIDE FOR INSTALLATION OF THE 4"Ø DRAIN PIPE THROUGH THE WING WALL AS REQUIRED FOR REINFORCED BRIDGE APPROACH FILLS, SEE THE ROADWAY PLANS. REINFORCING STEEL IN THE WING WALL MAY BE SHIFTED AS NECESSARY TO CLEAR THE DRAIN PIPE.

THE CONCRETE IN THE SHADED AREA OF THE WING SHALL BE POURED AFTER THE BARRIER RAIL IS CAST IF SLIP FORMING IS USED.

PROJECT NO. R-3833B
IREDELL COUNTY
STATION: 24+39.00 -Y4-

SHEET 1 OF 3

STATE OF NORTH CAROLINA
DEPARTMENT OF TRANSPORTATION
RALEIGH

SUBSTRUCTURE
END BENT 1

NORTH CAROLINA PROFESSIONAL SEAL 11259 ENGINEER DAVID R. ANDERSON
1/2/09

REVISIONS						SHEET NO.
NO.	BY:	DATE:	NO.	BY:	DATE:	S-103
1			3			TOTAL SHEETS
2			4			113

DRAWN BY : N. Q. TRAN DATE : 2-19-08
CHECKED BY : J. A. TILLMAN DATE : 8-4-08

29-DEC-2008 14:30
h:\structures\rwithrow\microstation\r-3833b-y4-ebs.dgn
srashidi

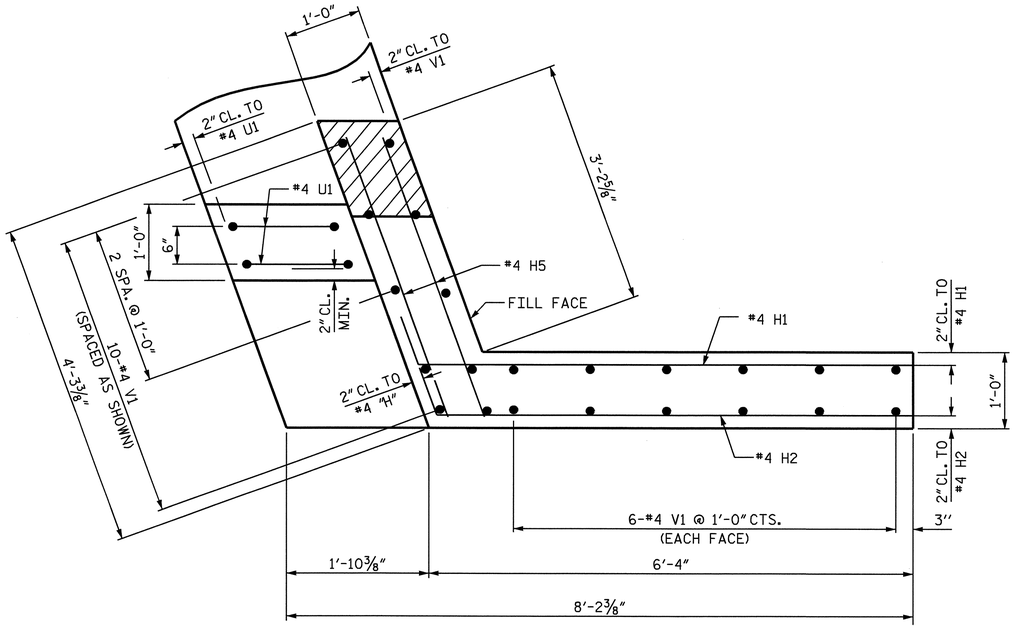

PLAN OF WING - W1

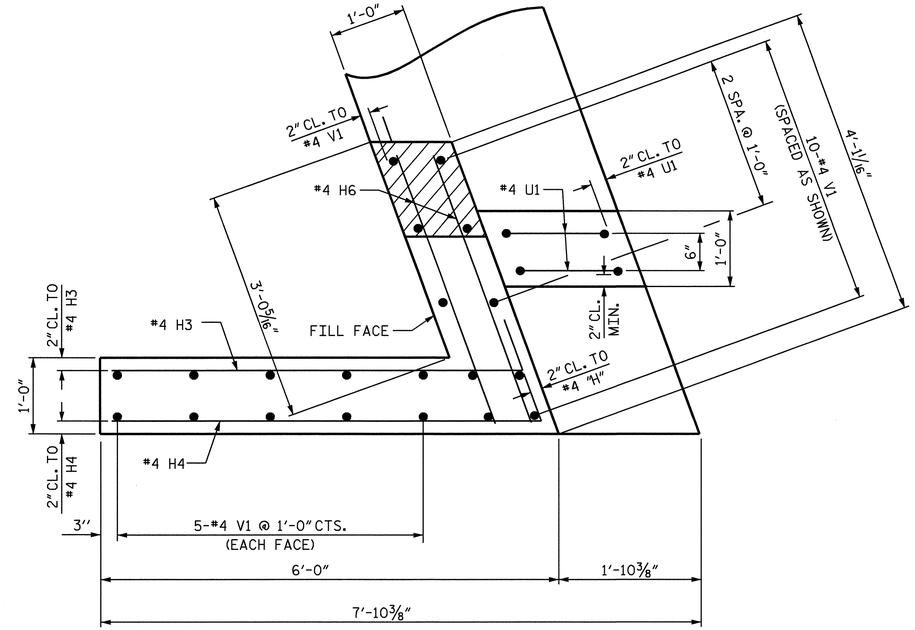

PLAN OF WING - W2

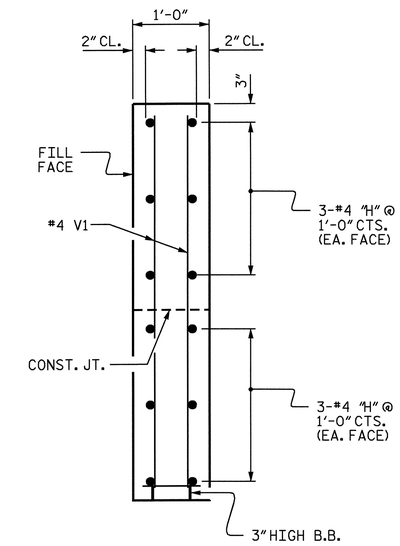

SECTION X-X

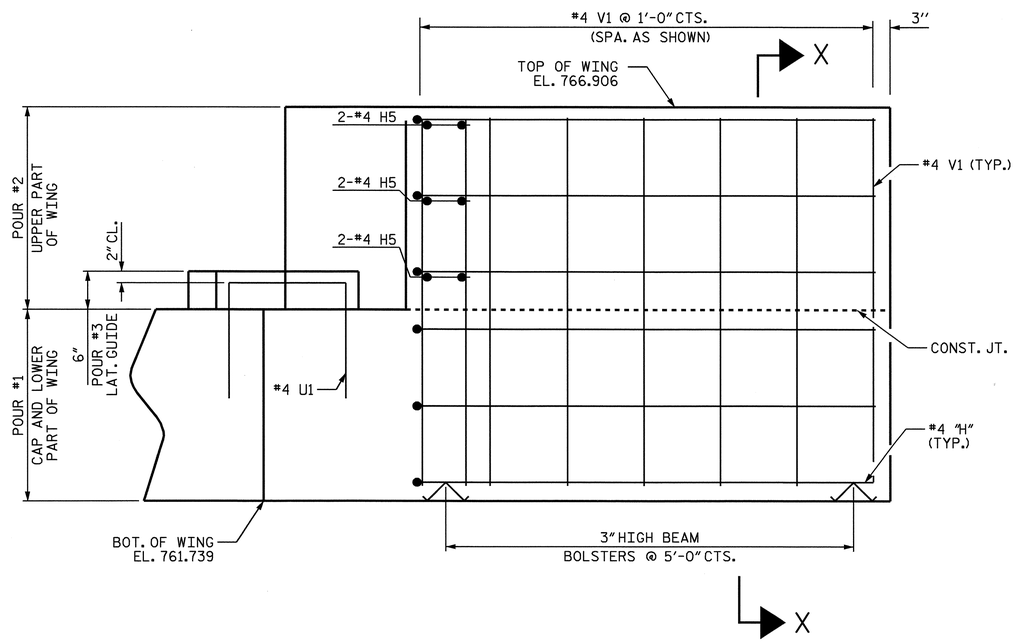

ELEVATION OF WING - W1

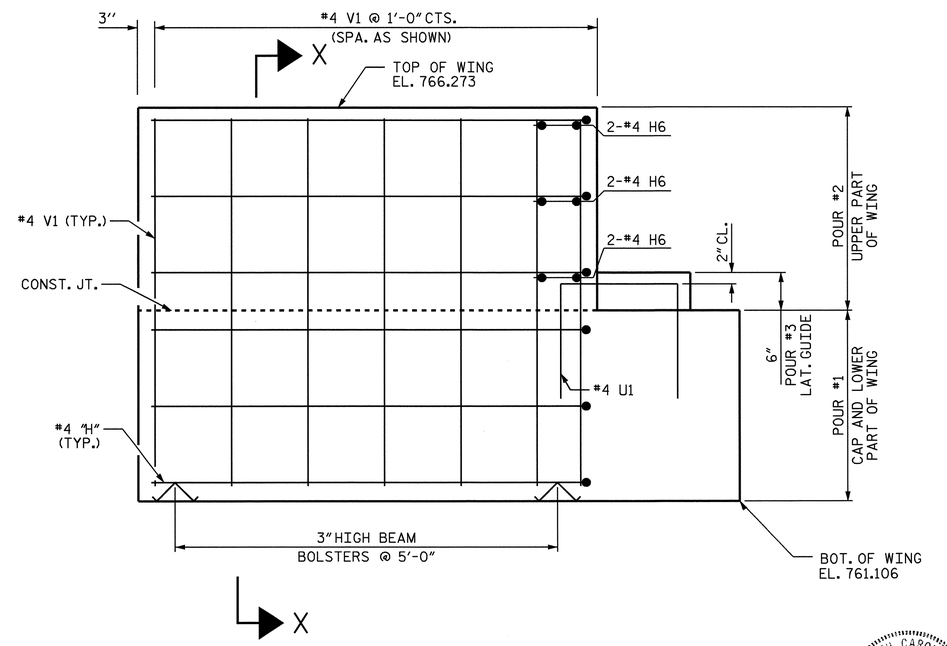

ELEVATION OF WING - W2

NORTH CAROLINA PROFESSIONAL SEAL 11259 ENGINEER DAVID R. ANDERSON

11/18/08

PROJECT NO. R-3833B

IREDELL COUNTY

STATION: 24+39.00 -Y4-

SHEET 2 OF 3

STATE OF NORTH CAROLINA
DEPARTMENT OF TRANSPORTATION
RALEIGH

SUBSTRUCTURE

END BENT 1

REVISIONS						SHEET NO.
NO.	BY:	DATE:	NO.	BY:	DATE:	S-104
1			3			TOTAL SHEETS
2			4			113

DRAWN BY : N. Q. TRAN DATE : 2/19/08
CHECKED BY : T. A. TILLMAN DATE : 8/4/08

22-OCT-2008 12:19
r:\structures\ntran\mlcroe\wkg\r-3833b*2-y4-ebs.dgn
DANDERSON

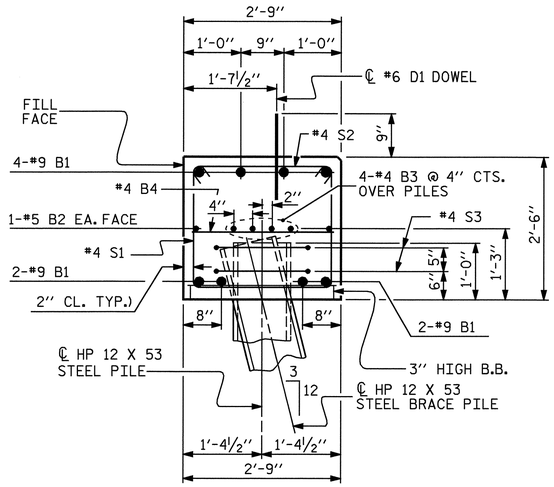

SECTION A-A

BAR TYPES

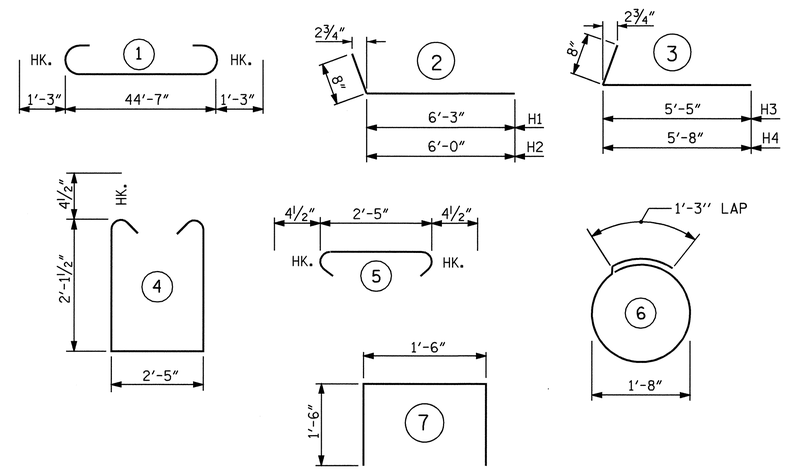

ALL BAR DIMENSIONS ARE OUT TO OUT.

BILL OF MATERIAL

END BENT 1

BAR	NO.	SIZE	TYPE	LENGTH	WEIGHT
B1	8	9	1	47'-1"	1281
B2	2	5	STR	44'-7"	93
B3	8	4	STR	23'-6"	126
B4	11	4	STR	2'-5"	18
D1	24	6	STR	1'-6"	54
H1	6	4	2	6'-11"	28
H2	6	4	2	6'-8"	27
H3	6	4	3	6'-1"	24
H4	6	4	3	6'-4"	25
H5	6	4	STR	3'-11"	16
H6	6	4	STR	3'-9"	15
S1	42	4	4	7'-5"	208
S2	42	4	5	3'-2"	89
S3	14	4	6	6'-6"	61
U1	4	4	7	4'-6"	12
V1	42	4	STR	4'-10"	136
REINFORCING STEEL					2213 LBS.

CLASS A CONCRETE BREAKDOWN

POUR 1 - CAP AND LOWER PORTION OF WINGS	12.4 C.Y.
POUR 2 - UPPER PORTION OF WINGS	1.8 C.Y.
POUR 3 - LATERAL GUIDES	0.1 C.Y.
CLASS A CONCRETE TOTAL	14.3 C.Y.

HP 12 x 53 STEEL PILES

NO. 7	231	LIN. FEET

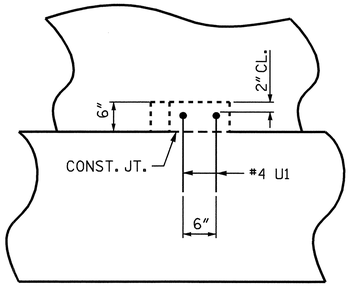

ELEVATION

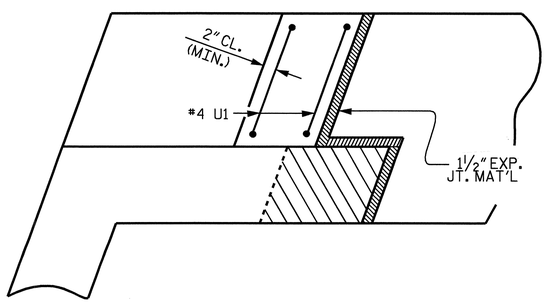

LATERAL GUIDE DETAILS

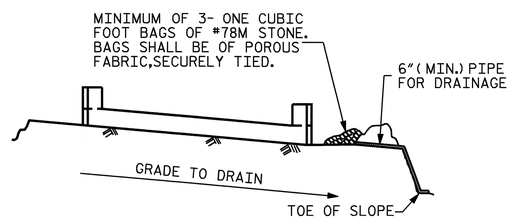

BAGGED STONE AND PIPE SHALL BE PLACED IMMEDIATELY AFTER COMPLETION OF END BENT EXCAVATION. PIPE MAY BE EITHER CONCRETE, CORRUGATED STEEL, CORRUGATED ALUMINUM ALLOY, OR CORRUGATED PLASTIC. PERFORATED PIPE WILL NOT BE ALLOWED.

BAGGED STONE SHALL REMAIN IN PLACE UNTIL THE ENGINEER DIRECTS THAT IT BE REMOVED. THE CONTRACTOR SHALL REMOVE AND DISPOSE OF SILT ACCUMULATIONS AT BAGGED STONE WHEN SO DIRECTED BY THE ENGINEER. BAGS SHALL BE REMOVED AND REPLACED WHENEVER THE ENGINEER DETERMINES THAT THEY HAVE DETERIORATED AND LOST THEIR EFFECTIVENESS.

NO SEPARATE PAYMENT WILL BE MADE FOR THIS WORK AND THE ENTIRE COST OF THIS WORK SHALL BE INCLUDED IN THE UNIT CONTRACT PRICE BID FOR THE SEVERAL PAY ITEMS.

TEMPORARY DRAINAGE AT END BENT

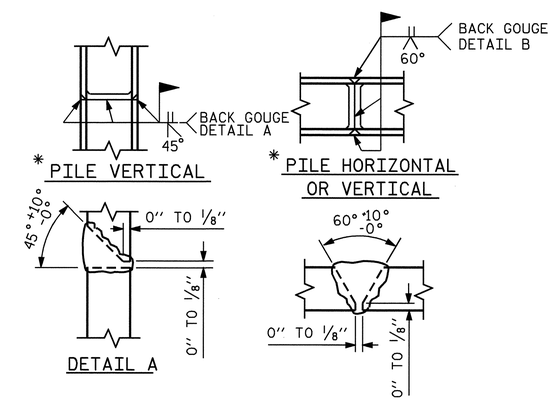

* POSITION OF PILE DURING WELDING.

PILE SPLICE DETAILS

PROJECT NO. R-3833B

IREDELL COUNTY

STATION: 24+39.00 -Y4-

SHEET 3 OF 3

STATE OF NORTH CAROLINA
DEPARTMENT OF TRANSPORTATION
RALEIGH

SUBSTRUCTURE
END BENT 1

NORTH CAROLINA PROFESSIONAL SEAL 11259 ENGINEER DAVID R. ANDERSON
11/18/08

REVISIONS							SHEET NO.
NO.	BY:	DATE:	NO.	BY:	DATE:		S-105
1			3				TOTAL SHEETS
2			4				113

DRAWN BY : N. Q. TRAN DATE : 2/19/08
CHECKED BY : J. A. TILLMAN DATE : 8/4/08

18-NOV-2008 09:44
r:\structures\ntran\mlcroe\wkg\r-3833b*2-y4-ebs.dgn
danderson

NOTES

STIRRUPS IN CAP MAY BE SHIFTED AS NECESSARY TO CLEAR ANCHOR BOLTS.

FOR PILE SPLICE DETAILS, SEE SHEET 2 OF 2.

THE LATERAL GUIDE AT EACH END OF THE CAP IS NOT TO BE POURED UNTIL AFTER THE CORED SLAB UNITS ARE IN PLACE.

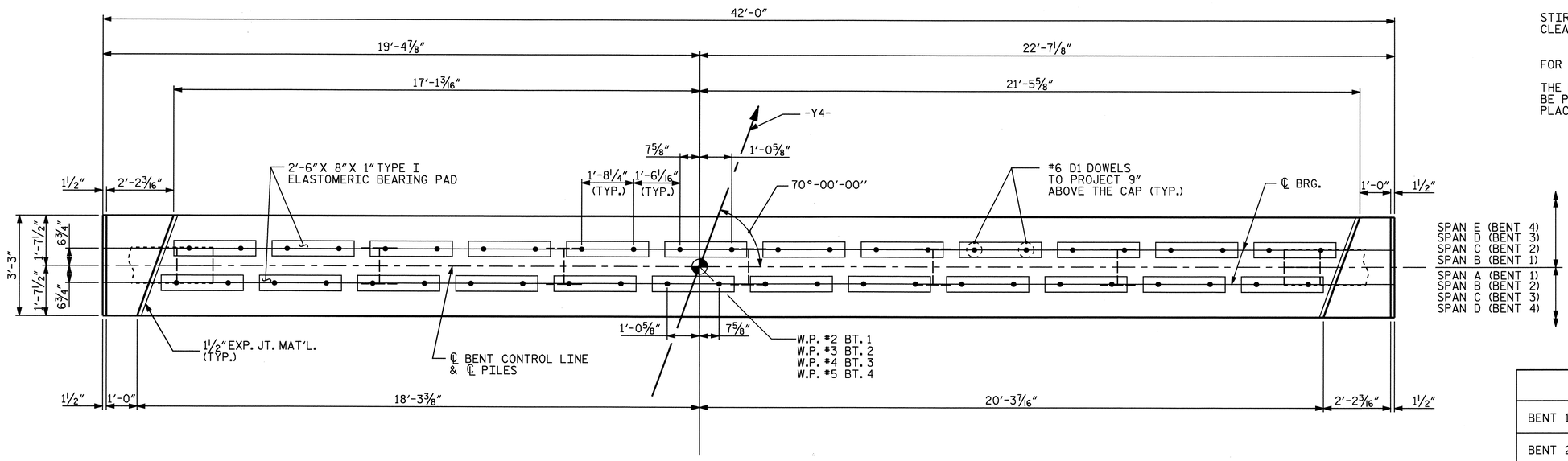

PLAN

CAP ELEVATIONS					
	EL. A	EL. B	EL. C	EL. D	EL. E
BENT 1	764.525	764.797	764.208	762.297	761.708
BENT 2	765.084	765.356	764.768	762.857	762.268
BENT 3	765.783	766.055	765.467	763.555	762.967
BENT 4	766.343	766.615	766.026	764.115	763.526

TOP OF PILE ELEVATIONS				
	BT. 1	BT. 2	BT. 3	BT. 4
PILE 1	763.255	763.815	764.513	765.073
PILE 2	763.171	763.731	764.429	764.989
PILE 3	763.087	763.647	764.345	764.905
PILE 4	763.003	763.563	764.261	764.821
PILE 5	762.919	763.479	764.177	764.737
PILE 6	762.835	763.395	764.093	764.653
PILE 7	762.751	763.311	764.009	764.569

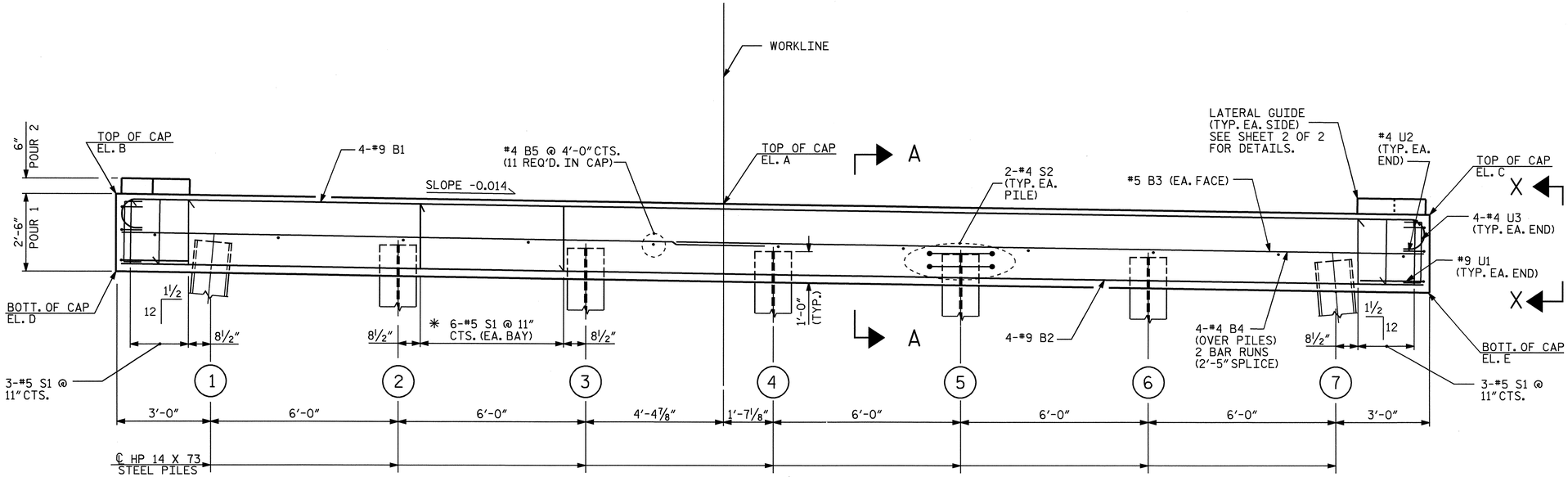

* INVERT ALTERNATE STIRRUPS

ELEVATION

PROJECT NO. R-3833B

IREDELL COUNTY

STATION: 24+39.00 -Y4-

SHEET 1 OF 2

STATE OF NORTH CAROLINA
DEPARTMENT OF TRANSPORTATION
RALEIGH

SUBSTRUCTURE

BENTS 1-4

NORTH CAROLINA PROFESSIONAL SEAL 21545 ENGINEER STEVEN V. WANCE

REVISIONS						SHEET NO.
NO.	BY:	DATE:	NO.	BY:	DATE:	S-106
1			3			TOTAL SHEETS
2			4			113

DRAWN BY : T.L.CLELLAND DATE : 8/27/08
CHECKED BY : S. WANCE PE DATE : 09/15/08

22-OCT-2008 15:26
\\dot\dfsroot01\proj\tlab01a\r3833b\structa\tclella\r-3833a.dgn
tclelland

STR. 2

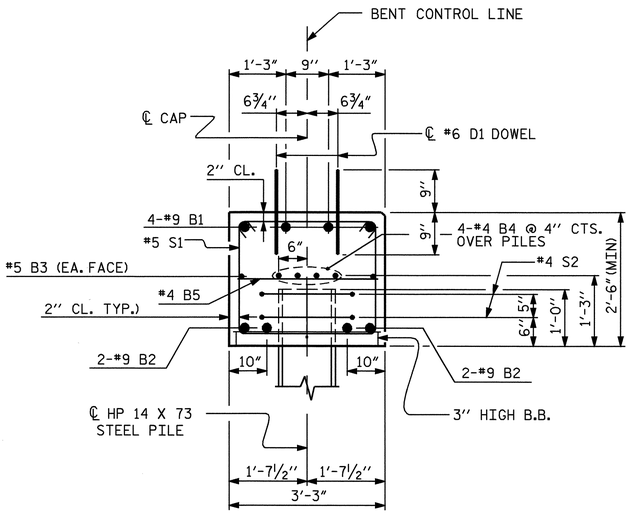

SECTION A-A

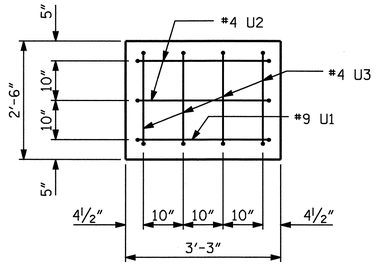

VIEW X-X

(TYP. EA. END)

BAR TYPES

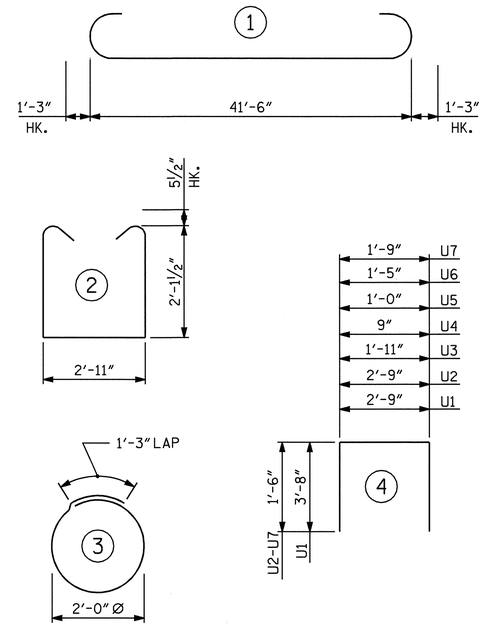

BILL OF MATERIAL
FOR ONE BENT (4 REQ'D.)

BAR	NO.	SIZE	TYPE	LENGTH	WEIGHT
B1	4	#9	1	44'-0"	598
B2	4	#9	STR	41'-8"	567
B3	2	#5	STR	41'-8"	87
B4	8	#4	STR	21'-6"	115
B5	13	#4	STR	2'-11"	25
B6	2	#4	STR	3'-1"	4
D1	48	#6	STR	1'-6"	108
S1	42	#5	2	8'-1"	354
S2	14	#4	3	7'-7"	71
U1	2	#9	4	10'-1"	69
U2	4	#4	4	5'-9"	15
U3	8	#4	4	4'-11"	26
U4	2	#4	4	3'-9"	5
U5	2	#4	4	4'-0"	5
U6	2	#4	4	4'-5"	6
U7	2	#4	4	4'-9"	6

REINFORCING STEEL = 2061 LBS

POUR #1 CAP 12.6 C.Y.
POUR #2 LATERAL GUIDE 0.2 C.Y.

TOTAL 12.8 C.Y.

HP 14 X 73 GALVANIZED STEEL PILES

BENT 1	NO. 7	LIN. FT. 210
BENT 2	NO. 7	LIN. FT. 235
BENT 3	NO. 7	LIN. FT. 270
BENT 4	NO. 7	LIN. FT. 310

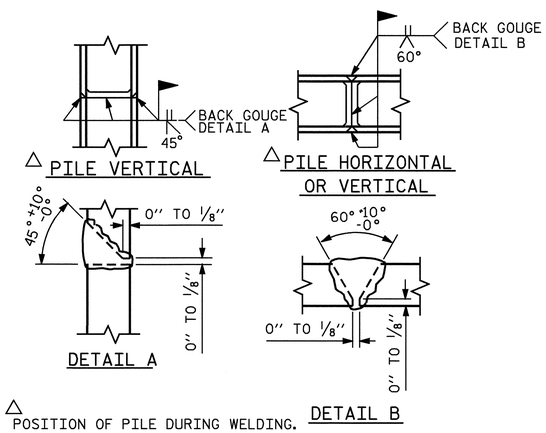

△ POSITION OF PILE DURING WELDING.

PILE SPLICE DETAILS

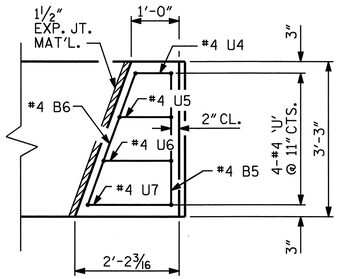

PLAN

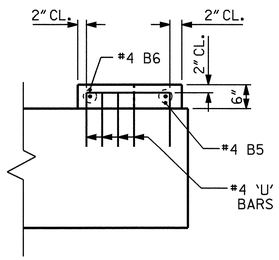

ELEVATION

LATERAL GUIDE DETAILS

(RIGHT SIDE SHOWN, LEFT SIDE SIMILAR BY ROTATION)

PROJECT NO. R-3833B
IREDELL COUNTY
STATION: 24+39.00 -Y4-

SHEET 2 OF 2

STATE OF NORTH CAROLINA
DEPARTMENT OF TRANSPORTATION
RALEIGH

SUBSTRUCTURE

BENTS 1-4

NORTH CAROLINA PROFESSIONAL SEAL 21545 ENGINEER STEVEN L. WANCE

REVISIONS						SHEET NO.
NO.	BY:	DATE:	NO.	BY:	DATE:	5-107
1			3			TOTAL SHEETS
2			4			113

DRAWN BY : T.L. CLELLAND DATE : 8/27/08
CHECKED BY : S. WANCE PE DATE : 9/15/08

22-OCT-2008 15:20
\\dot\dfsroot01\proj\tlab01a\r3833b\struct01\tclell01\r-3833a.dgn
tclelland

STR. 2

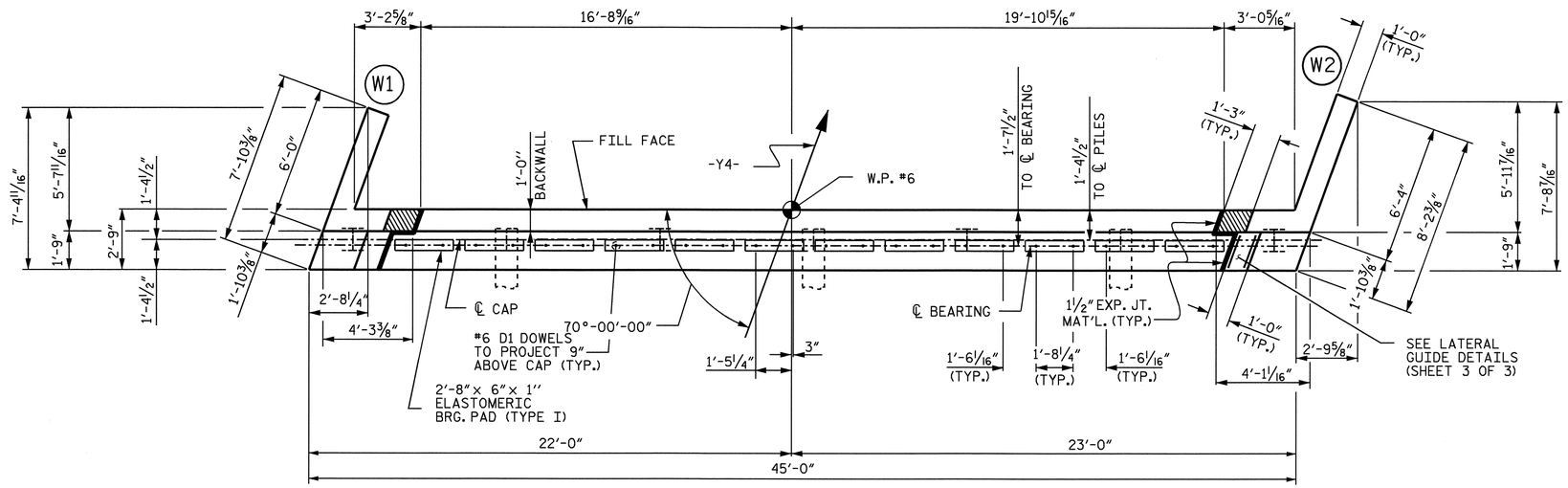

PLAN

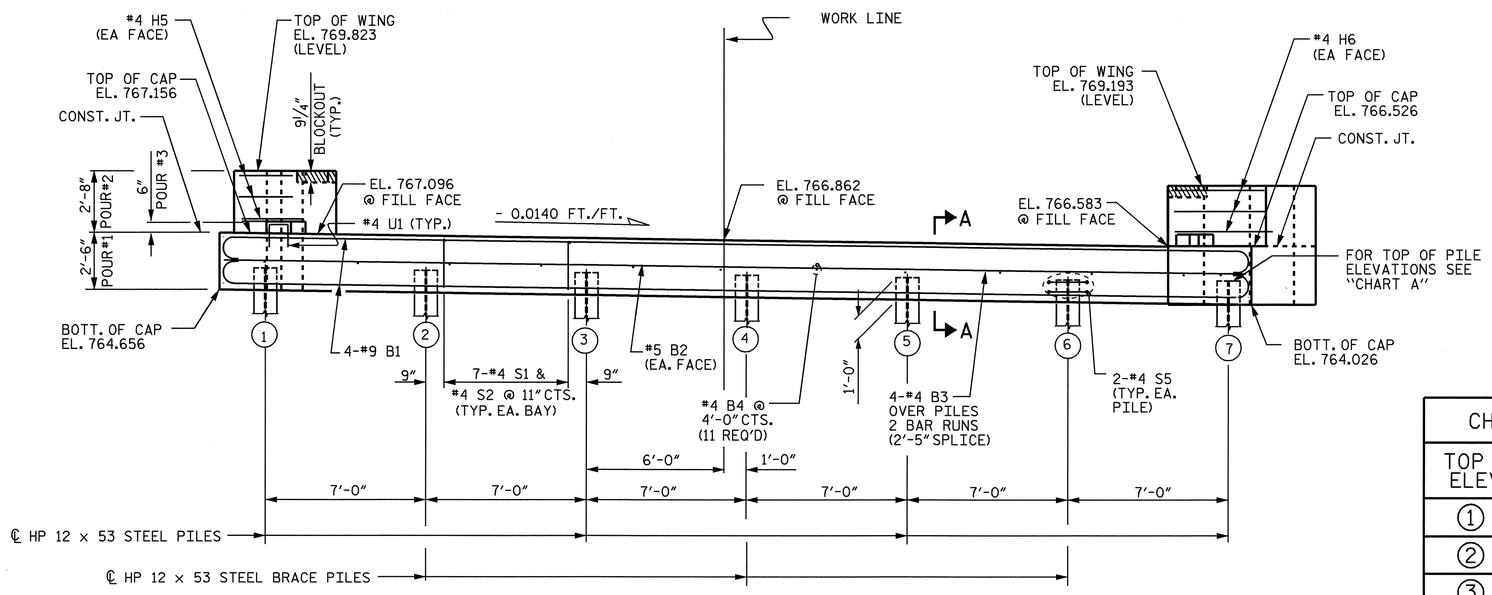

ELEVATION

CHART A	
TOP OF PILE ELEVATIONS	
1	765.636
2	765.538
3	765.440
4	765.342
5	765.244
6	765.146
7	765.048

NOTES:

THE LATERAL GUIDE AT THE ENDS OF CAP ARE NOT TO BE POURED UNTIL AFTER CORED SLAB UNITS ARE IN PLACE.

STIRRUPS IN CAP MAY BE SHIFTED AS NECESSARY TO CLEAR DOWELS.

THE CONTRACTOR SHALL PROVIDE FOR INSTALLATION OF THE 4"Ø DRAIN PIPE THROUGH THE WING WALL AS REQUIRED FOR REINFORCED BRIDGE APPROACH FILLS, SEE THE ROADWAY PLANS. REINFORCING STEEL IN THE WING WALL MAY BE SHIFTED AS NECESSARY TO CLEAR THE DRAIN PIPE.

THE CONCRETE IN THE SHADED AREA OF THE WING SHALL BE POURED AFTER THE BARRIER RAIL IS CAST IF SLIP FORMING IS USED.

PROJECT NO. R-3833B
IREDELL COUNTY
STATION: 24+39.00 -Y4-

SHEET 1 OF 3

STATE OF NORTH CAROLINA
DEPARTMENT OF TRANSPORTATION
RALEIGH

SUBSTRUCTURE
END BENT 2

NORTH CAROLINA PROFESSIONAL SEAL 11259 ENGINEER DAVID R. ANDERSON
1/2/09

REVISIONS						SHEET NO.
NO.	BY:	DATE:	NO.	BY:	DATE:	S-108
1			3			TOTAL SHEETS
2			4			113

DRAWN BY : N. Q. TRAN DATE : 2-19-08
CHECKED BY : J. A. TILLMAN DATE : 8-4-08

29-DEC-2008 12:47
h:\structures\rwlthrow\microstation\r-3833b-y4-ebs.dgn
srashidi

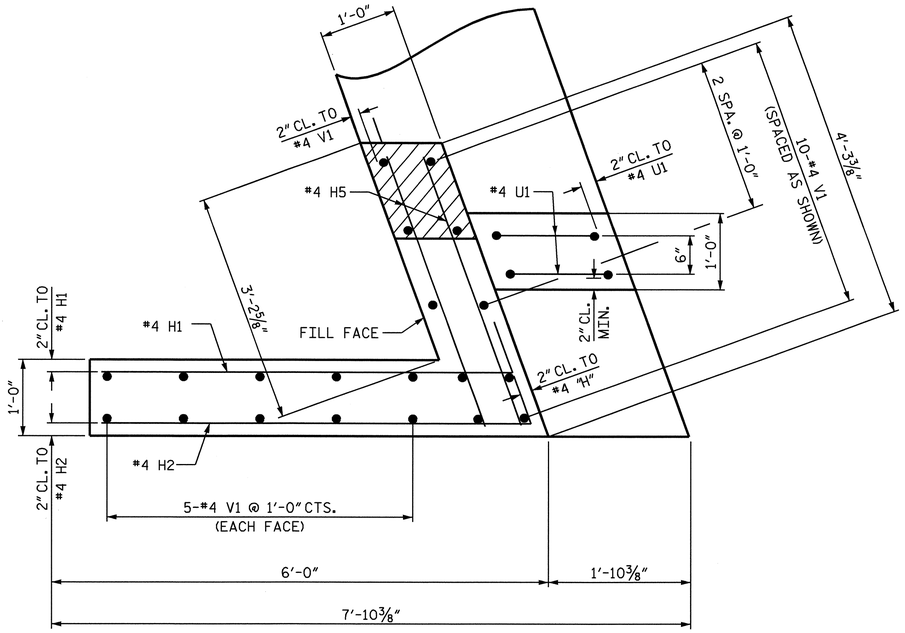

PLAN OF WING - W1

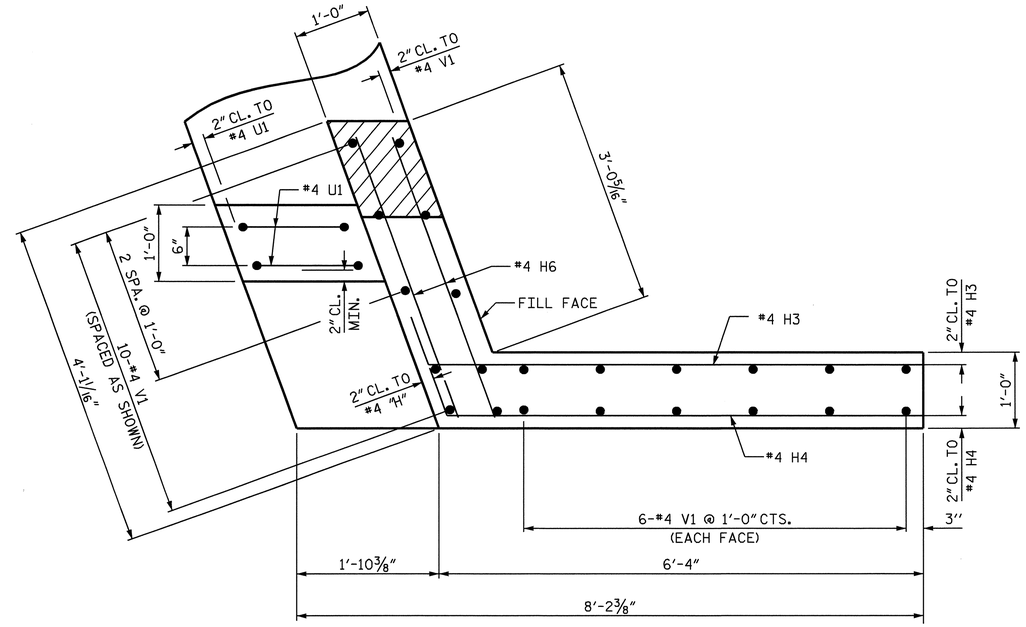

PLAN OF WING - W2

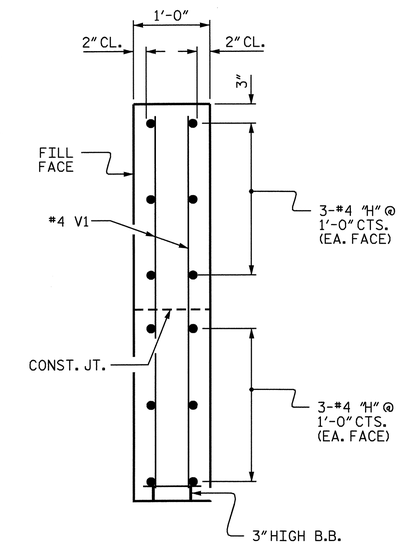

SECTION X-X

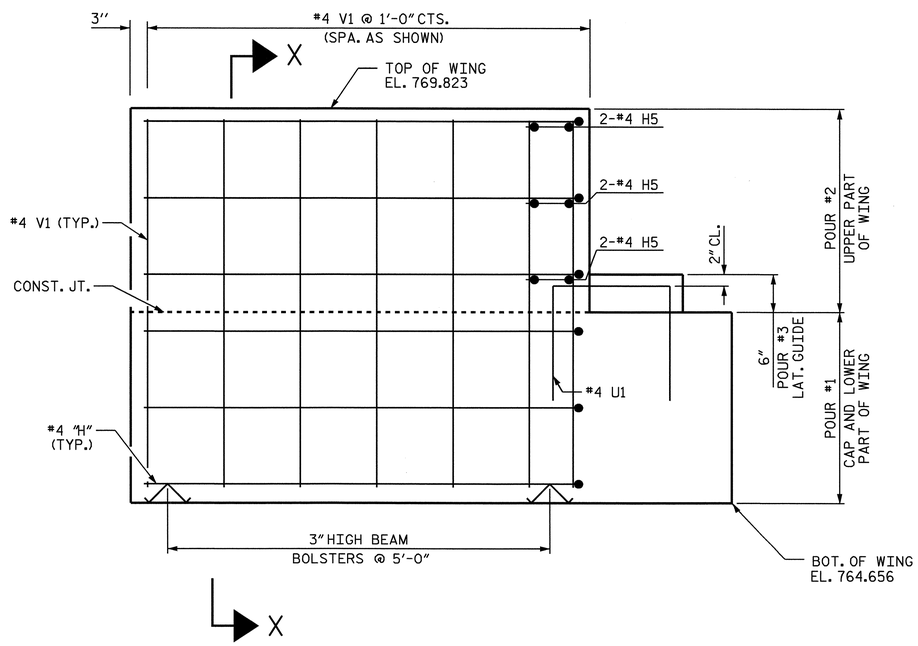

ELEVATION OF WING - W1

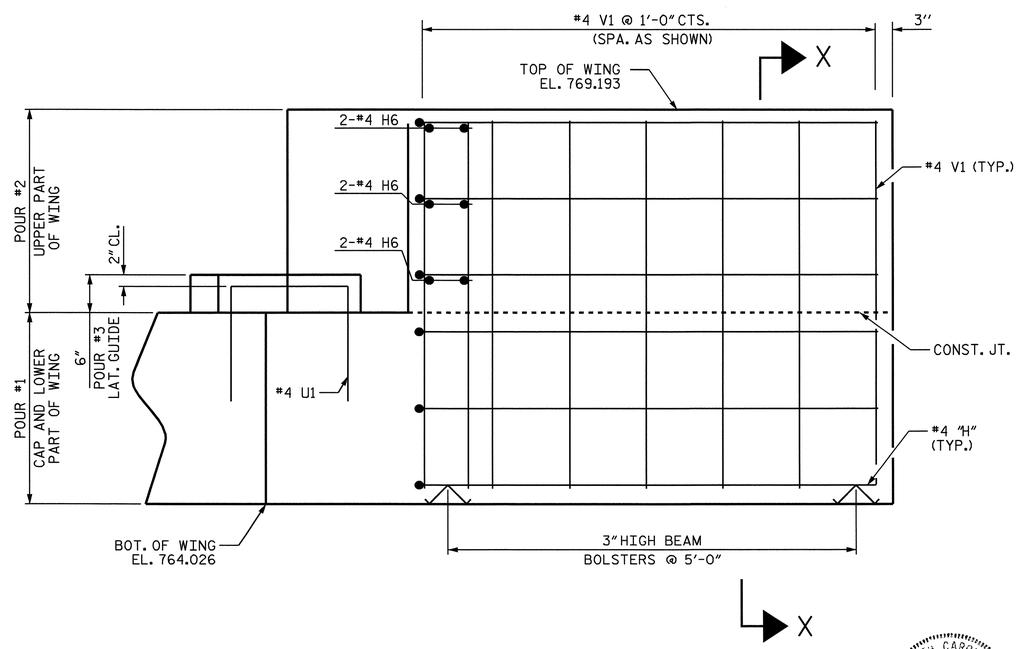

ELEVATION OF WING - W2

NORTH CAROLINA PROFESSIONAL SEAL 11259 ENGINEER DAVID R. ANDERSON
11/18/08

PROJECT NO. R-3833B
IREDELL COUNTY
STATION: 24+39.00 -Y4-

SHEET 2 OF 3

STATE OF NORTH CAROLINA
DEPARTMENT OF TRANSPORTATION
RALEIGH

SUBSTRUCTURE
END BENT 2

REVISIONS						SHEET NO.
NO.	BY:	DATE:	NO.	BY:	DATE:	S-109
1			3			TOTAL SHEETS
2			4			113

DRAWN BY : N. Q. TRAN DATE : 2/19/08
CHECKED BY : J. A. TILLMAN DATE : 8-4-08

22-OCT-2008 12:19
r:\structures\ntran\microe\wkg\r-3833b#2-y4-ebs.dgn
DANDERSON

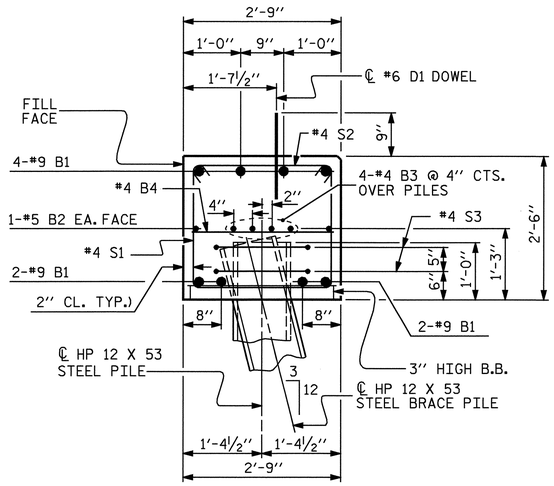

SECTION A-A

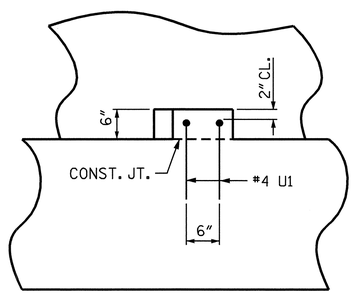

ELEVATION

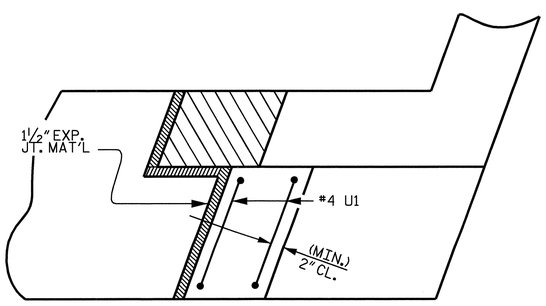

LATERAL GUIDE DETAILS

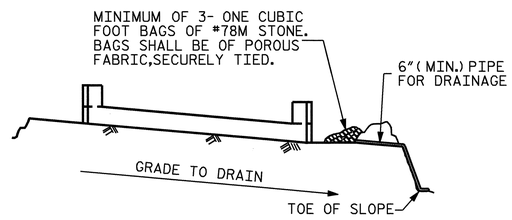

BAGGED STONE AND PIPE SHALL BE PLACED IMMEDIATELY AFTER COMPLETION OF END BENT EXCAVATION. PIPE MAY BE EITHER CONCRETE, CORRUGATED STEEL, CORRUGATED ALUMINUM ALLOY, OR CORRUGATED PLASTIC. PERFORATED PIPE WILL NOT BE ALLOWED.

BAGGED STONE SHALL REMAIN IN PLACE UNTIL THE ENGINEER DIRECTS THAT IT BE REMOVED. THE CONTRACTOR SHALL REMOVE AND DISPOSE OF SILT ACCUMULATIONS AT BAGGED STONE WHEN SO DIRECTED BY THE ENGINEER. BAGS SHALL BE REMOVED AND REPLACED WHENEVER THE ENGINEER DETERMINES THAT THEY HAVE DETERIORATED AND LOST THEIR EFFECTIVENESS.

NO SEPARATE PAYMENT WILL BE MADE FOR THIS WORK AND THE ENTIRE COST OF THIS WORK SHALL BE INCLUDED IN THE UNIT CONTRACT PRICE BID FOR THE SEVERAL PAY ITEMS.

TEMPORARY DRAINAGE AT END BENT

BAR TYPES

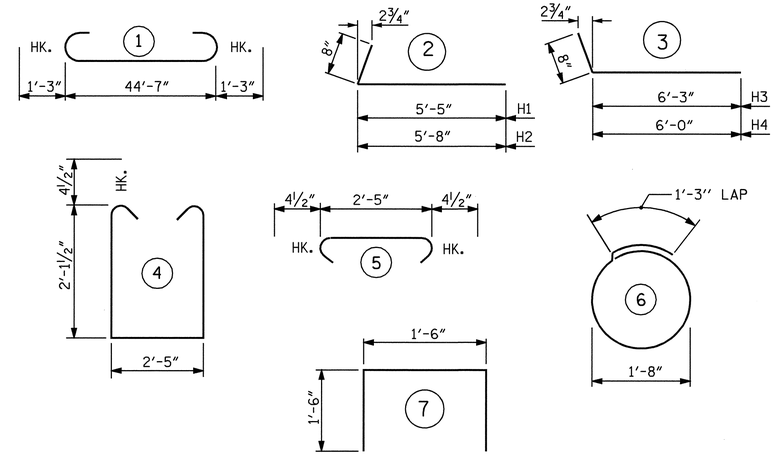

ALL BAR DIMENSIONS ARE OUT TO OUT.

BILL OF MATERIAL
END BENT 2

BAR	NO.	SIZE	TYPE	LENGTH	WEIGHT
B1	8	9	1	47'-1"	1281
B2	2	5	STR	44'-7"	93
B3	8	4	STR	23'-6"	126
B4	11	4	STR	2'-5"	18
D1	24	6	STR	1'-6"	54
H1	6	4	2	6'-1"	24
H2	6	4	2	6'-4"	25
H3	6	4	3	6'-11"	28
H4	6	4	3	6'-8"	27
H5	6	4	STR	3'-11"	16
H6	6	4	STR	3'-0"	15
S1	42	4	4	7'-5"	208
S2	42	4	5	3'-2"	89
S3	14	4	6	6'-6"	61
U1	4	4	7	4'-6"	12
V1	42	4	STR	4'-10"	136
REINFORCING STEEL					2213 LBS.

CLASS A CONCRETE BREAKDOWN

POUR 1 - CAP AND LOWER PORTION OF WINGS	12.4 C.Y.
POUR 2 - UPPER PORTION OF WINGS	1.8 C.Y.
POUR 3 - LATERAL GUIDES	0.1 C.Y.
CLASS A CONCRETE TOTAL	14.3 C.Y.

HP 12 x 53 STEEL PILES

NO. 7	315	LIN. FEET

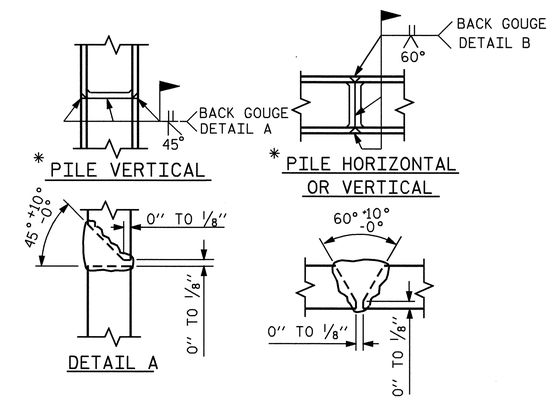

* POSITION OF PILE DURING WELDING.

PILE SPLICE DETAILS

PROJECT NO. R-3833B
IREDELL COUNTY
STATION: 24+39.00 -Y4-

SHEET 3 OF 3

STATE OF NORTH CAROLINA
DEPARTMENT OF TRANSPORTATION
RALEIGH

SUBSTRUCTURE
END BENT 2

NORTH CAROLINA PROFESSIONAL SEAL 11259 ENGINEER DAVID R. ANDERSON
11/18/08

REVISIONS							SHEET NO.
NO.	BY:	DATE:	NO.	BY:	DATE:		S-110
1			3				TOTAL SHEETS
2			4				113

DRAWN BY : N. Q. TRAN DATE : 2/19/08
CHECKED BY : J. A. TILLMAN DATE : 8-4-08

18-NOV-2008 10:30
r:\structures\ntran\mlcroe\wkg\r-3833b*2-y4-ebs.dgn
danderson

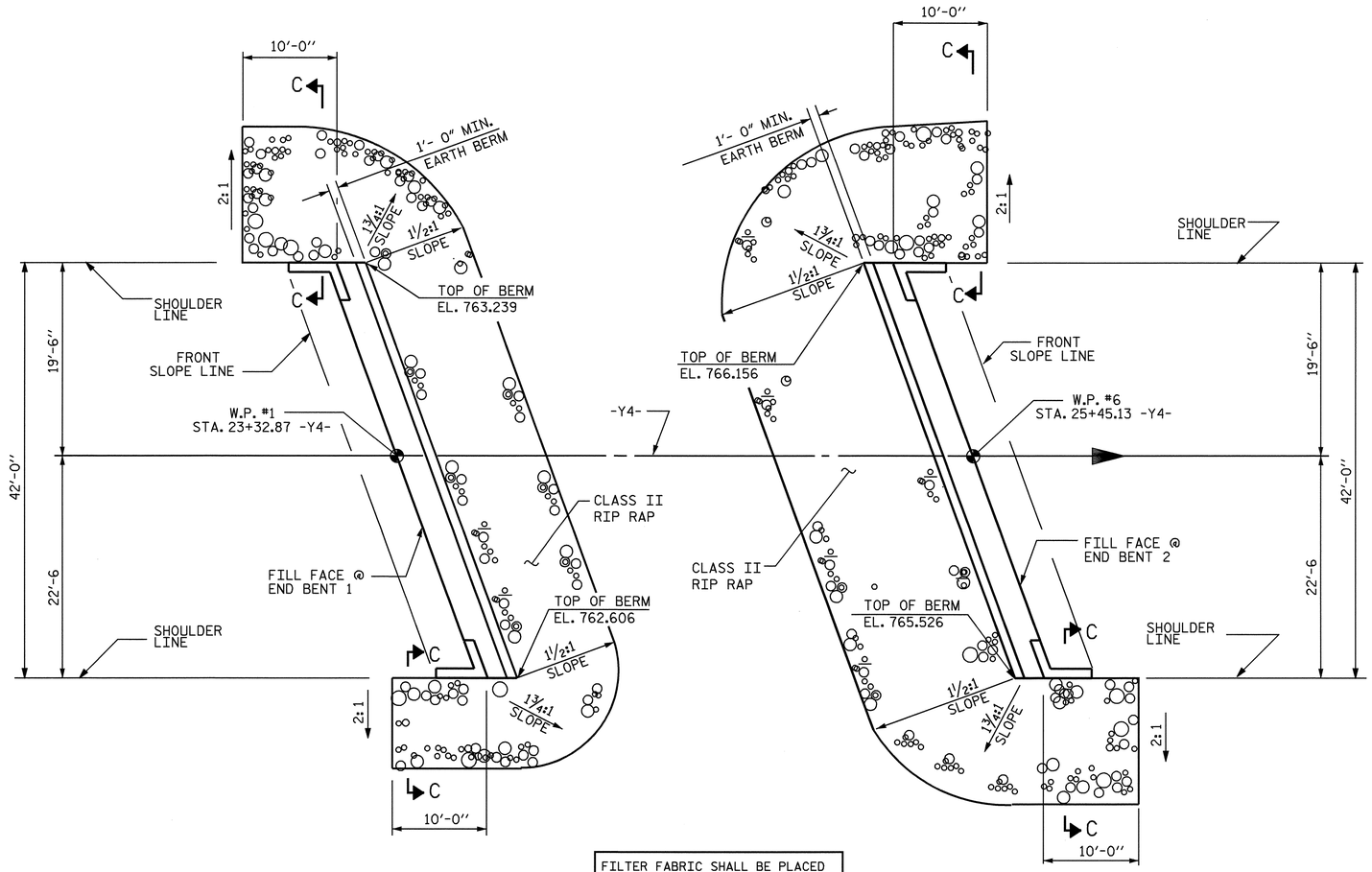

FILTER FABRIC SHALL BE PLACED UNDER ENTIRE AREA OF RIP RAP.

@ END BENT 1

@ END BENT 2

RIP RAP DETAILS

ESTIMATED QUANTITIES		
BRIDGE @ STA. 24+39.00 -Y4-	RIP RAP CLASS II	FILTER FABRIC FOR DRAINAGE
	TONS	SQUARE YARDS
END BENT 1	130	140
END BENT 2	160	175

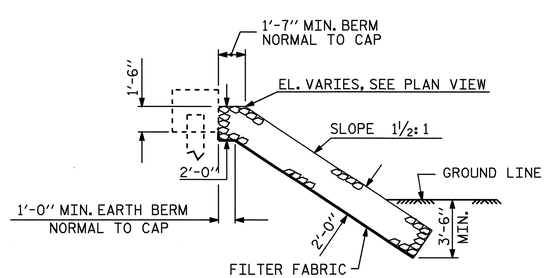

℄ SECTION

BERM RIP RAPPED

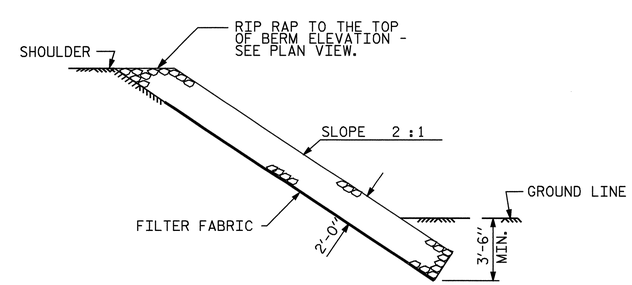

SECTION C-C

PROJECT NO. R-3833B

IREDELL COUNTY

STATION: 24+39.00 -Y4-

STATE OF NORTH CAROLINA
DEPARTMENT OF TRANSPORTATION
RALEIGH

STANDARD

RIP RAP DETAILS

NORTH CAROLINA PROFESSIONAL SEAL 11259 ENGINEER DAVID R. ANDERSON

1/2/09

ASSEMBLED BY : N. Q. TRAN	DATE : 10-4-07		
CHECKED BY : E.C. LOCKLEAR	DATE : 10-4-07		
DRAWN BY : REK 1/84	REV. 8/16/99	RWW/LES	
CHECKED BY : RDU 1/84	REV. 10/17/00	RWW/LES	
	REV. 5/1/06	TLA/GM	

REVISIONS						SHEET NO.
NO.	BY:	DATE:	NO.	BY:	DATE:	S-111
1			3			TOTAL SHEETS
2			4			113

29-DEC-2008 12:57
h:\structures\ntran\microe\wkg\r-3833b*1-rr.dgn
srashidi

BILL OF MATERIAL FOR ONE APPROACH SLAB (2 REQ'D)					
BAR	NO.	SIZE	TYPE	LENGTH	WEIGHT
✳ A1	30	#4	STR	19'-2"	384
A2	30	#4	STR	19'-0"	381
✳ B1	68	#5	STR	14'- 3"	1011
B2	68	#6	STR	14'- 7"	1489
REINFORCING STEEL				LBS.	1870
✳ EPOXY COATED REINFORCING STEEL				LBS.	1395
CLASS AA CONCRETE				C. Y.	20.8

SPLICE CHART	
BAR	SPLICE LENGTH
#4 A1	2-0
#4 A2	1-9

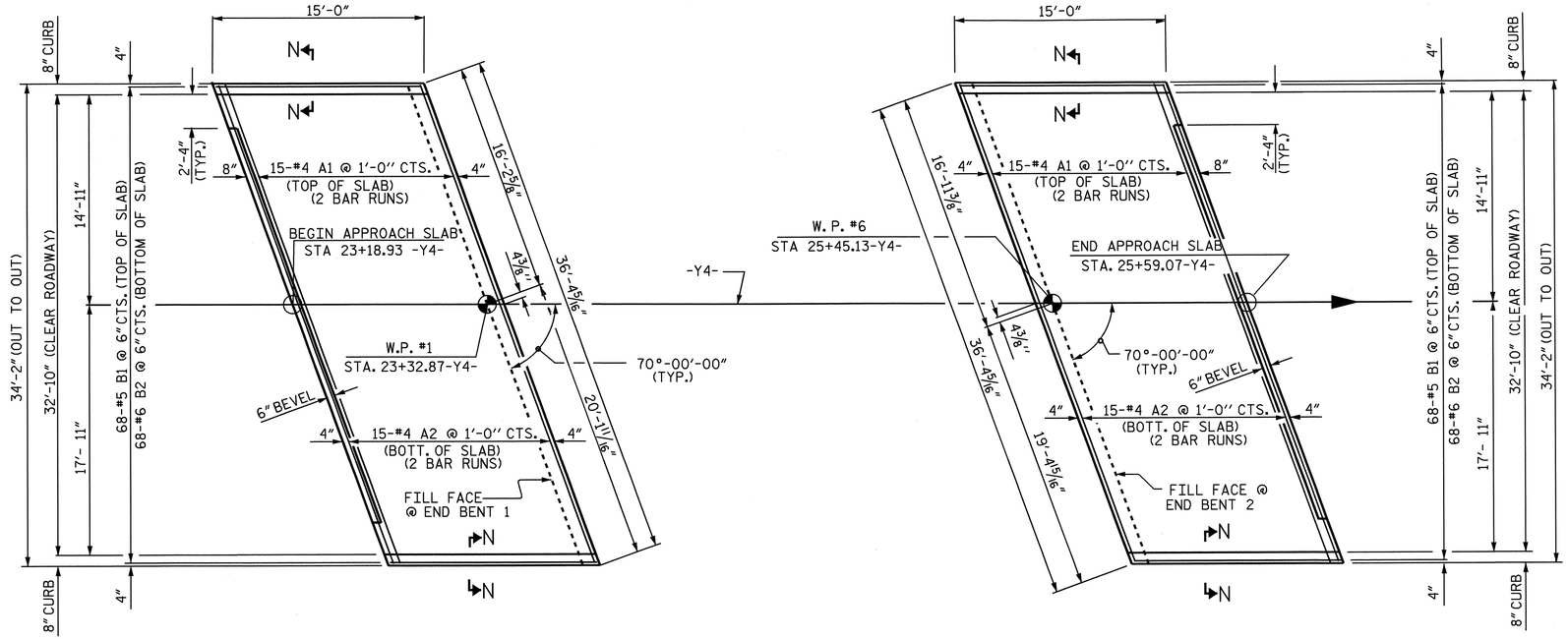

AT END BENT 1

AT END BENT 2

PLAN

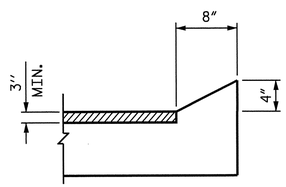

SECTION N-N

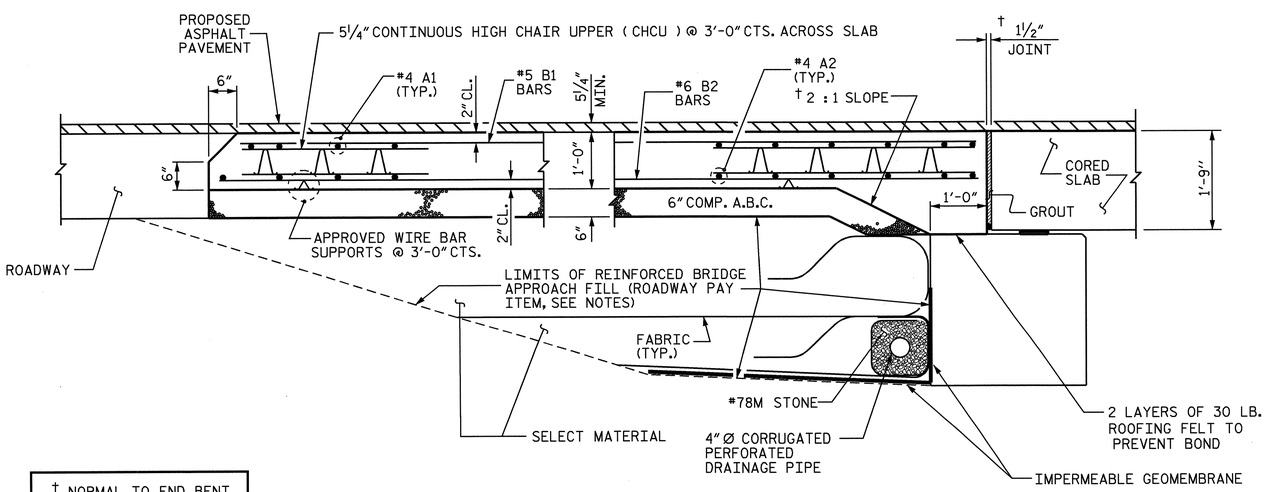

† NORMAL TO END BENT

SECTION THRU SLAB

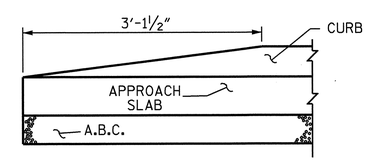

END OF CURB WITHOUT SHOULDER BERM GUTTER

CURB DETAILS

PROJECT NO. R-3833B

IREDELL COUNTY

STATION: 24+39.00 -Y4-

SHEET 1 OF 2

STATE OF NORTH CAROLINA
DEPARTMENT OF TRANSPORTATION
RALEIGH

STANDARD

BRIDGE APPROACH SLAB FOR PRESTRESSED CONCRETE CORED SLAB

NORTH CAROLINA PROFESSIONAL SEAL 11259 ENGINEER DAVID R. ANDERSON
11/18/08

REVISIONS						SHEET NO.
NO.	BY:	DATE:	NO.	BY:	DATE:	S-112
1			3			TOTAL SHEETS
2			4			113

ASSEMBLED BY : N. Q. TRAN	DATE : 10-1-07	
CHECKED BY : E. C. LOCKLEAR	DATE : 10-4-07	
DRAWN BY : FCJ 6/87	REV. 7/10/01	LES/RDR
CHECKED BY : EGA 6/87	REV. 5/7/03R	RWW/JTE
	REV. 5/1/06R	KMM/GM

18-NOV-2008 09:58
r:\structures\ntran\mlarce\wkg\r-3833b*1-as.dgn
dandersen

STR. #2 STD. NO. BAS7

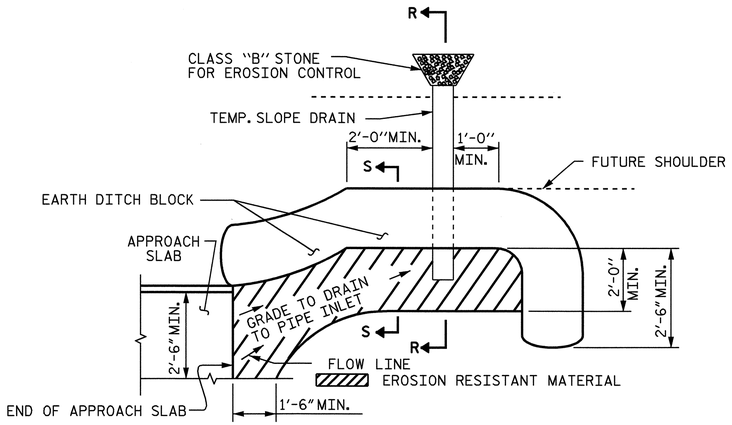

NOTE: IMMEDIATELY AFTER THE CONSTRUCTION OF THE APPROACH SLAB, THE CONTRACTOR SHALL PROVIDE TEMPORARY BERM AND SLOPE DRAIN. CONTRACTOR SHALL GRADE TO PIPE INLET AND PROVIDE EROSION RESISTANT MATERIAL AS SHOWN. THE EROSION RESISTANT MATERIAL SHALL BE EITHER 1) ASPHALT PLANT MIX, TYPE 1 OR TYPE 2, MIN. 2" DEPTH, 2) EROSION CONTROL MAT, OR 3) CONCRETE, AS DIRECTED BY THE ENGINEER. THE SLOPE DRAIN SHALL CONSIST OF A NON-PERFORATED TEMPORARY DRAINAGE PIPE, 12 INCHES IN DIAMETER.

PLAN VIEW

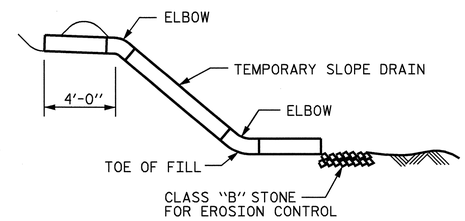

SECTION R-R

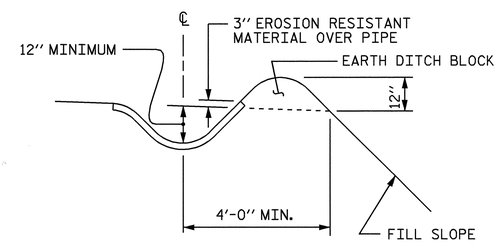

SECTION S-S

TEMPORARY BERM AND SLOPE DRAIN DETAILS

(TO BE USED WHEN SHOULDER BERM GUTTER IS REQUIRED)

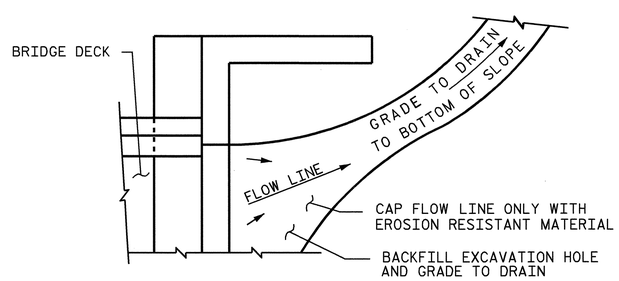

NOTE: IF THE APPROACH SLAB IS NOT CONSTRUCTED IMMEDIATELY AFTER THE BACKFILLING OF THE END BENT EXCAVATION, GRADE TO DRAIN TO THE BOTTOM OF THE SLOPE AND PROVIDE EROSION RESISTANT MATERIAL, SUCH AS FIBERGLASS ROVING OR AS DIRECTED BY THE ENGINEER TO PREVENT SOIL EROSION AND TO PROTECT THE AREA ADJACENT TO THE STRUCTURE. THE CONTRACTOR WILL BE REQUIRED TO REMOVE THESE MATERIALS PRIOR TO CONSTRUCTION OF THE APPROACH SLAB.

TEMPORARY DRAINAGE DETAIL

NOTES

FOR REINFORCED BRIDGE APPROACH FILL INCLUDING FABRIC, IMPERMEABLE GEOMEMBRANE, 4" Ø DRAINAGE PIPE, #78M STONE, AND SELECT MATERIAL, SEE ROADWAY PLANS.

AREA BETWEEN THE WINGWALL AND APPROACH SLAB SHALL BE GRADED TO DRAIN THE WATER AWAY FROM THE FILL FACE OF THE BRIDGE AND SHALL BE PAVED. SEE ROADWAY PLANS.

THE 6" COMP. A.B.C. SHALL BE FLUSH WITH THE ROADWAY END OF THE APPROACH SLAB AND SHALL EXTEND 1'-0" OUTSIDE OF EACH EDGE OF THE APPROACH SLAB.

THE CONTRACTOR MAY USE 4" TYPE B-25.0B ASPHALT CONCRETE BASE COURSE IN LIEU OF 6" COMP. A.B.C. IF THIS OPTION IS USED, THE BASE COURSE SHALL BE FLUSH WITH THE ROADWAY END OF THE APPROACH SLAB, AND THE WIDTH SHALL BE THE SAME AS THAT OF THE APPROACH SLAB.

THE CONTRACTOR MAY USE 5" CLASS "A" CONCRETE BASE IN LIEU OF 6" COMP. A.B.C. IF THIS OPTION IS USED, THE CONCRETE BASE SHALL BE FLUSH WITH THE ROADWAY END OF THE APPROACH SLAB, AND THE WIDTH SHALL BE THE SAME AS THAT OF THE APPROACH SLAB. THE CONCRETE SHALL BE FINISHED TO A SMOOTH SURFACE AND A LAYER OF 30 LB ROOFING FELT SHALL BE PLACED BETWEEN THE CONCRETE BASE AND THE APPROACH SLAB TO PREVENT BOND. THE APPROACH SLAB SHALL NOT BE CAST UNTIL THE CONCRETE BASE HAS REACHED AN AGE OF THREE CURING DAYS.

FOR JOINT DETAILS, SEE "PRESTRESSED CONCRETE CORED SLAB UNIT" SHEETS.

THE JOINT AT THE END BENT SHALL BE GROUTED AS SOON AS PRACTICAL AFTER THE CONSTRUCTION OF THE APPROACH SLABS.

APPROACH SLAB GROOVING IS NOT REQUIRED.

PROJECT NO. R-3833B
IREDELL COUNTY
STATION: 24+39+00 -Y4-

SHEET 2 OF 2

STATE OF NORTH CAROLINA
DEPARTMENT OF TRANSPORTATION
RALEIGH

STANDARD

BRIDGE APPROACH SLAB DETAILS

NORTH CAROLINA PROFESSIONAL SEAL 11259 ENGINEER DAVID R. ANDERSON
11/18/08

REVISIONS						SHEET NO.
NO.	BY:	DATE:	NO.	BY:	DATE:	5-113
1			3			TOTAL SHEETS
2			4			113

ASSEMBLED BY : N. Q. TRAN	DATE : 10-1-07		
CHECKED BY : E. C. LOCKLEAR	DATE : 10-4-07		
DRAWN BY : FCJ 11/88	REV. 10/17/00	RWW/LES	
CHECKED BY : ARB 11/88	REV. 5/7/03	RWW/JTE	
	REV. 5/1/06	TLA/GM	

02-OCT-2008 12:51
L:\Structures\ntran\MicroE\wkg\r-3833b*1-as.dgn

STR. #2 STD. NO. BAS10

BM #12 RR SPIKE SET IN BASE OF 48" TWIN BEECH TREE 363.27' LT. STA. 268+87 -BL- EL. 785.67

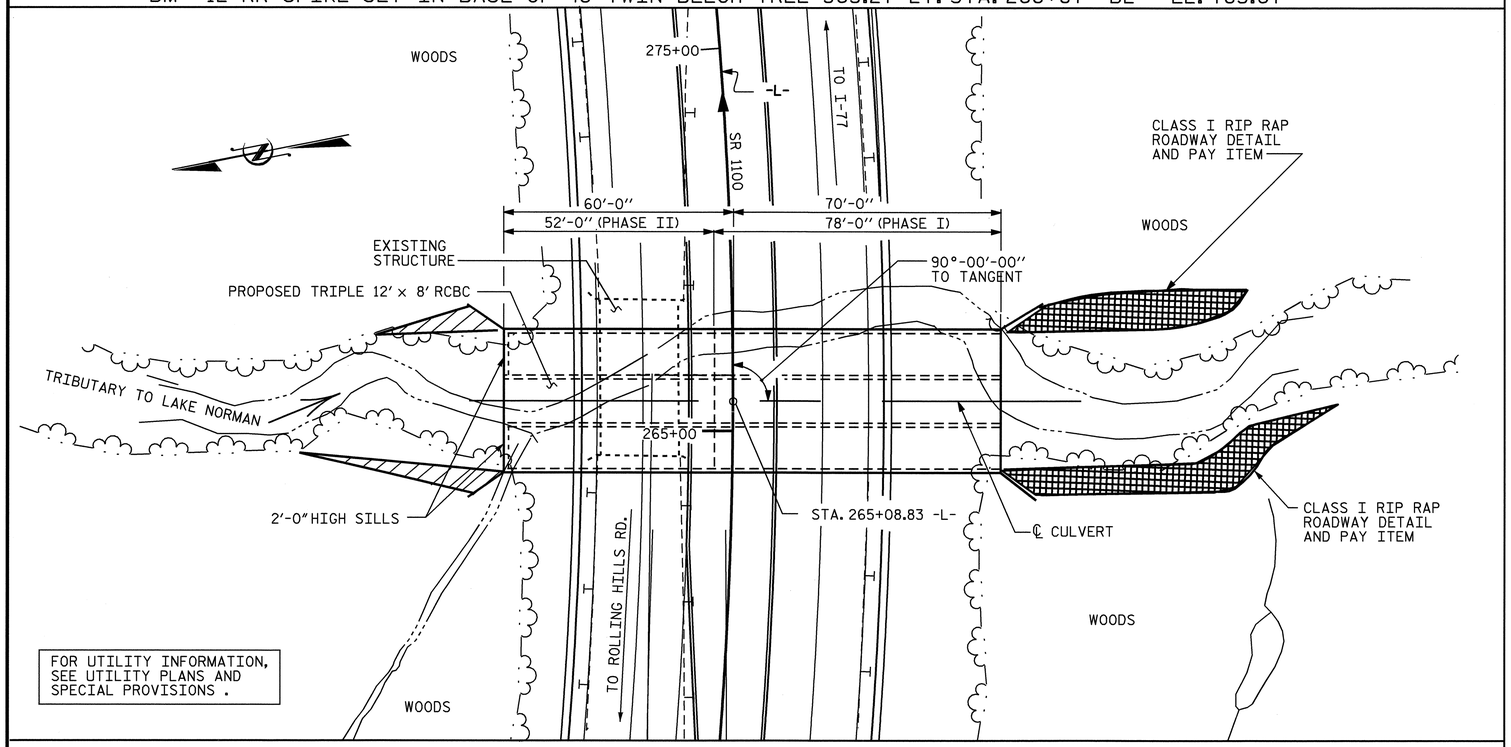

LOCATION SKETCH

F.A. PROJECT NO. STP-1100(20)

NOTES

ASSUMED LIVE LOAD = HS20-44 OR ALTERNATE LOADING.

DESIGN FILL = 9.2'
FOR OTHER DESIGN DATA AND NOTES SEE STANDARD NOTE SHEET SN.

3"Ø WEEP HOLES INDICATED TO BE IN ACCORDANCE WITH THE SPECIFICATIONS.

CONCRETE IN CULVERTS TO BE POURED IN THE FOLLOWING ORDER IN EACH CONSTRUCTION STAGE:
1. WING FOOTINGS AND FLOOR SLAB INCLUDING 4" OF ALL VERTICAL WALLS.
2. THE REMAINING PORTIONS OF THE WALLS AND WINGS FULL HEIGHT FOLLOWED BY ROOF SLAB AND HEADWALL.

THE RESIDENT ENGINEER SHALL CHECK THE LENGTH OF CULVERT BEFORE STAKING IT OUT TO MAKE CERTAIN THAT IT WILL PROPERLY TAKE CARE OF THE FILL.

DIMENSIONS FOR WING LAYOUT AS WELL AS ADDITIONAL REINFORCING STEEL EMBEDDED IN BARREL ARE SHOWN ON WING SHEET.

TRANSVERSE CONSTRUCTION JOINTS SHALL BE USED IN THE BARREL, SPACED TO LIMIT THE POURS TO A MAXIMUM OF 70 FT. LOCATION OF JOINTS SHALL BE SUBJECT TO APPROVAL OF THE ENGINEER.

AT THE CONTRACTOR'S OPTION, HE MAY SPLICE THE VERTICAL REINFORCING STEEL IN THE INTERIOR FACE OF EXTERIOR WALL AND BOTH FACES OF INTERIOR WALLS ABOVE LOWER WALL CONSTRUCTION JOINT. THE SPLICE LENGTH SHALL BE AS PROVIDED IN THE SPLICE LENGTH CHART SHOWN ON THE PLANS. EXTRA WEIGHT OF STEEL DUE TO THE SPLICES SHALL BE PAID FOR BY THE CONTRACTOR.

THE EXISTING STRUCTURE CONSISTING OF A SINGLE SPAN (40'-6") OF TIMBER DECK ON 9 LINES OF W24x68 STEEL BEAMS WITH A CLEAR ROADWAY WIDTH OF 19.8' SUPPORTED BY TIMBER CAPS WITH TIMBER BULKHEADS AND LOCATED AT THE PROPOSED SITE SHALL BE REMOVED. THE EXISTING BRIDGE IS PRESENTLY POSTED BELOW THE LEGAL LOAD LIMIT. SHOULD THE STRUCTURAL INTEGRITY OF THE BRIDGE FURTHER DETERIORATE, THIS LOAD LIMITATION MAY BE REDUCED AS FOUND NECESSARY DURING THE LIFE OF THE PROJECT. SEE SPECIAL PROVISIONS.

THE CONTRACTOR SHALL PROVIDE INDEPENDENT ASSURANCE SAMPLES OF REINFORCING STEEL AS FOLLOWS: FOR PROJECTS REQUIRING UP TO 400 TONS OF REINFORCING STEEL, ONE 30 INCH SAMPLE OF EACH SIZE BAR USED, AND FOR PROJECTS REQUIRING OVER 400 TONS OF REINFORCING STEEL, TWO 30 INCH SAMPLES OF EACH SIZE BAR USED. THE BARS FROM WHICH THE SAMPLES ARE TAKEN MUST THEN BE SPLICED WITH REPLACEMENT BARS OF THE SIZE AND LENGTH OF THE SAMPLE, PLUS A MINIMUM LAP SPLICE OF THIRTY BAR DIAMETERS.

FOR CULVERT DIVERSION DETAILS AND PAY ITEM, SEE EROSION CONTROL PLANS.

A 3 FOOT STRIP OF FILTER FABRIC SHALL BE ATTACHED TO THE FILL FACE OF THE WING COVERING THE ENTIRE LENGTH OF THE EXPANSION JOINT.

FOR FALSEWORK AND FORMWORK, SEE SPECIAL PROVISIONS.

FOR CRANE SAFETY, SEE SPECIAL PROVISIONS.

AT THE CONTRACTOR'S OPTION HE MAY SUBMIT, TO THE ENGINEER FOR APPROVAL, DESIGN AND DETAIL DRAWINGS FOR A PRECAST REINFORCED CONCRETE BOX CULVERT IN LIEU OF THE CAST-IN-PLACE CULVERT SHOWN ON THE PLANS. THE DESIGN SHALL PROVIDE THE SAME SIZE AND NUMBER OF BARRELS AS USED ON THE CAST-IN-PLACE DESIGN. FOR OPTIONAL PRECAST REINFORCED CONCRETE BOX CULVERT, SEE SPECIAL PROVISIONS.

FOR SUBMITTAL OF WORKING DRAWINGS, SEE SPECIAL PROVISIONS.

FOR EROSION CONTROL, SEE ROADWAY PLANS.

INASMUCH AS THE PAINT SYSTEM ON THE EXISTING STRUCTURAL STEEL CONTAINS LEAD, THE CONTRACTOR'S ATTENTION IS DIRECTED TO ARTICLE 107-1 OF THE STANDARD SPECIFICATIONS. ANY COSTS RESULTING FROM COMPLIANCE WITH APPLICABLE STATE OR FEDERAL REGULATIONS PERTAINING TO HANDLING OF MATERIALS CONTAINING LEAD BASED PAINT SHALL BE INCLUDED IN THE BID PRICE FOR "REMOVAL OF EXISTING STRUCTURE AT STATION 265+08.83 -L-."

ROADWAY DATA

GRADE POINT ELEV. @ STA. 265+08.83 -L- __ 774.600
BED ELEVATON @ STA. 265+08.83 -L- _____ 758.400
ROADWAY SLOPES _____ 2:1

HYDRAULIC DATA

DESIGN DISCHARGE = 1700 c.f.s
FREQUENCY OF DESIGN FLOOD ____= 50 YEARS
DESIGN HIGH WATER ELEVATION __= 769.3
DRAINAGE AREA_____= 1.4 Sq. mi.
BASIC DISCHARGE (Q100) _____= 1900 c.f.s
BASIC HIGH WATER ELEVATION___= 770.1

OVERTOPPING FLOOD DATA

OVERTOPPING DISCHARGE = 1900+ c.f.s
FREQUENCY OF OVERTOPPING FLOOD = 100 YEARS
OVERTOPPING FLOOD ELEVATION = 770.3

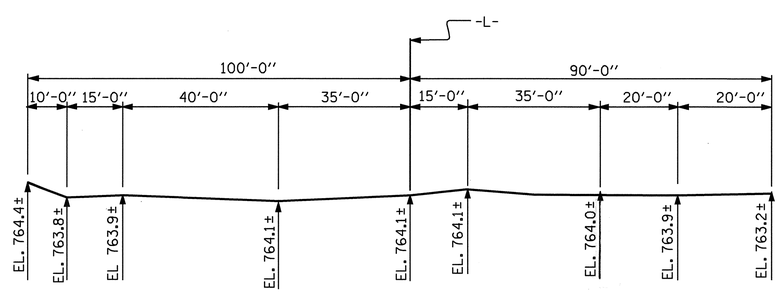

PROFILE ALONG ℄ CULVERT

TOTAL STRUCTURE QUANTITIES

	PHASE I		PHASE II		
CLASS A CONCRETE (C.Y.)	STAGE 1	STAGE II	STAGE I	STAGE II	TOTAL
BARREL =	203.0	83.0	76.1	114.6	476.7
WINGS, HEADWALLS, ETC. =					31.2
TOTAL =					507.9
REINFORCING STEEL (Lbs)					
BARREL =	36,091	15,326	14,386	19,790	85,593
4 WINGS ETC. =					1,453
TOTAL =					87,046
FOUNDATION COND. MAT'L					355 TONS
CULVERT EXCAVATION =					LUMP SUM
REMOVAL OF EXISTING STRUCTURE =					LUMP SUM

PROJECT NO. R-3833B
IREDELL COUNTY
STATION: 265+08.83 -L-

SHEET 1 OF 5 REPLACES BRIDGE #46

STATE OF NORTH CAROLINA
DEPARTMENT OF TRANSPORTATION
RALEIGH

BARREL STANDARD
TRIPLE 12 FT. X 8 FT.
CONCRETE BOX CULVERT
90° SKEW

NORTH CAROLINA PROFESSIONAL SEAL 9804 ENGINEER ROY M. GIRDIANI
1-5-09

NORTH CAROLINA PROFESSIONAL SEAL 11259 ENGINEER DAVID R. ANDERSON
1/2/09

REVISIONS						SHEET NO.
NO.	BY:	DATE:	NO.	BY:	DATE:	C-1
1			3			TOTAL SHEETS
2			4			10

STD. NO. CB13A

ASSEMBLED BY : NOT/KDL	DATE : 10-08	SPECIAL	
CHECKED BY : D. MULLER	DATE : 10-08		
DRAWN BY : J. E. MANGUM	DATE : 10/25/89	STANDARD	
CHECKED BY : A.R. BISSETTE	DATE : AUG. 1989		

ADDED 8-22-89

02-JAN-2009 14:18
h:\structures\kloyne\r3833b_sd_cu_03.dgn
srashid

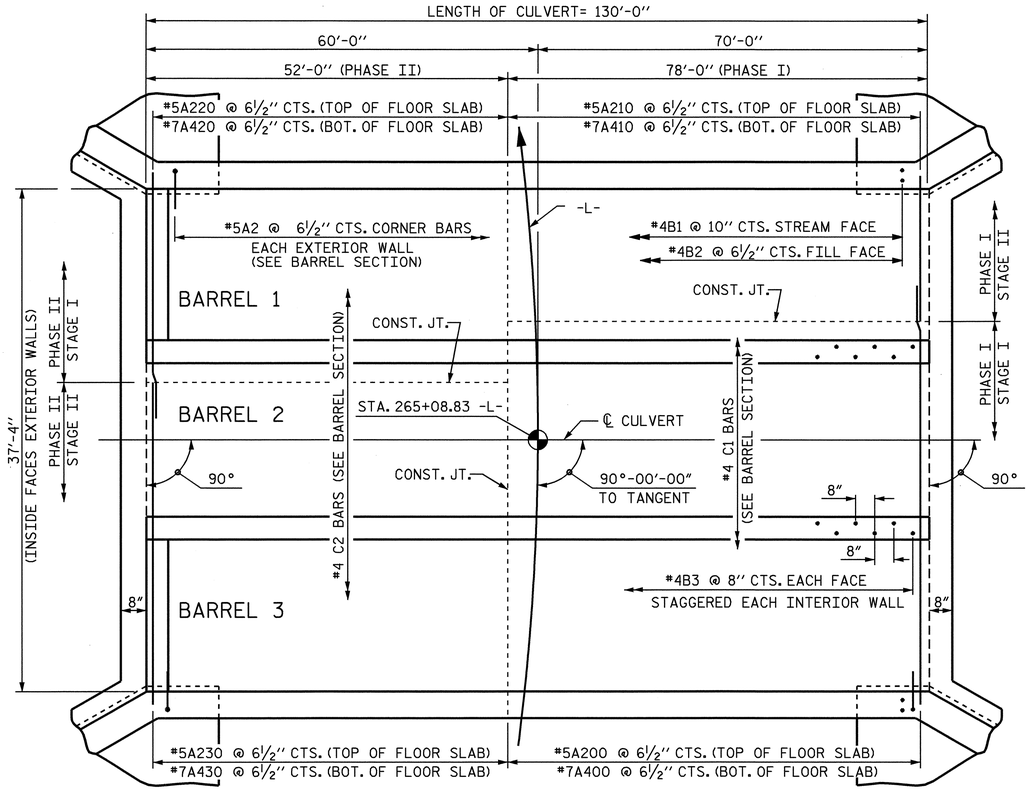

PLAN FLOOR SLAB

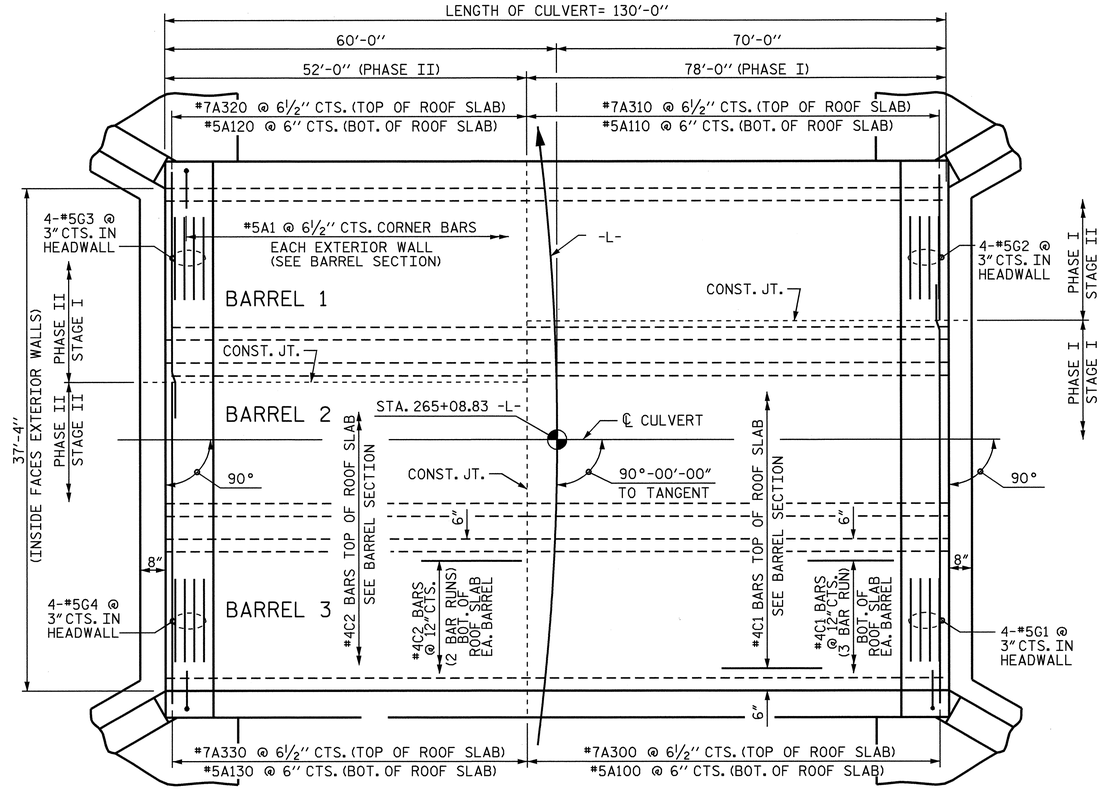

PLAN ROOF SLAB

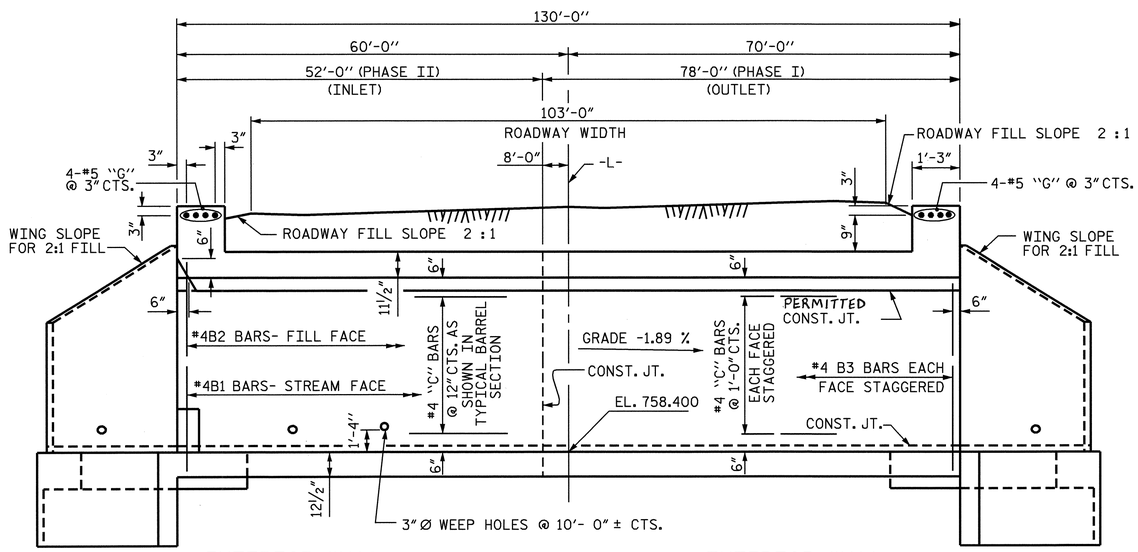

CULVERT SECTION NORMAL TO ROADWAY

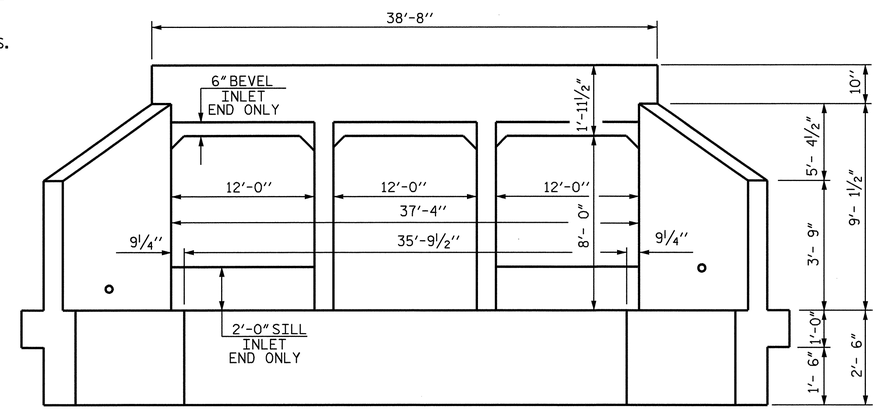

END ELEVATION

PROJECT NO. R-3833B
IREDELL COUNTY
STATION: 265+08.83 -L-

SHEET 2 OF 5

STATE OF NORTH CAROLINA
DEPARTMENT OF TRANSPORTATION
RALEIGH

BARREL STANDARD
TRIPLE 12 FT. X 8 FT.
CONCRETE BOX CULVERT
90° SKEW

NORTH CAROLINA PROFESSIONAL SEAL 11259 ENGINEER DAVID R. ANDERSON
11/24/08

REVISIONS						SHEET NO.
NO.	BY:	DATE:	NO.	BY:	DATE:	C-2
1			3			TOTAL SHEETS
2			4			10

ASSEMBLED BY : NOT/KDL	DATE : 10-08	SPECIAL	
CHECKED BY : D. MULLER	DATE : 10-08		
DRAWN BY : JOEL JOHNSON	DATE : MAR. 1971	STANDARD	
CHECKED BY : GARY BROOME	DATE : MAR. 1971		

REVISED 8-28-92 BY E.L.R. CHECKED BY G.R.P.
REDRAWN NOV. 1990 BY TSS. CHECKED BY ARB

10-NOV-2008 09:28
L:\Structures\Wayne\R3833B_sd_cu_03.dgn
ntran

STD. NO. CB13

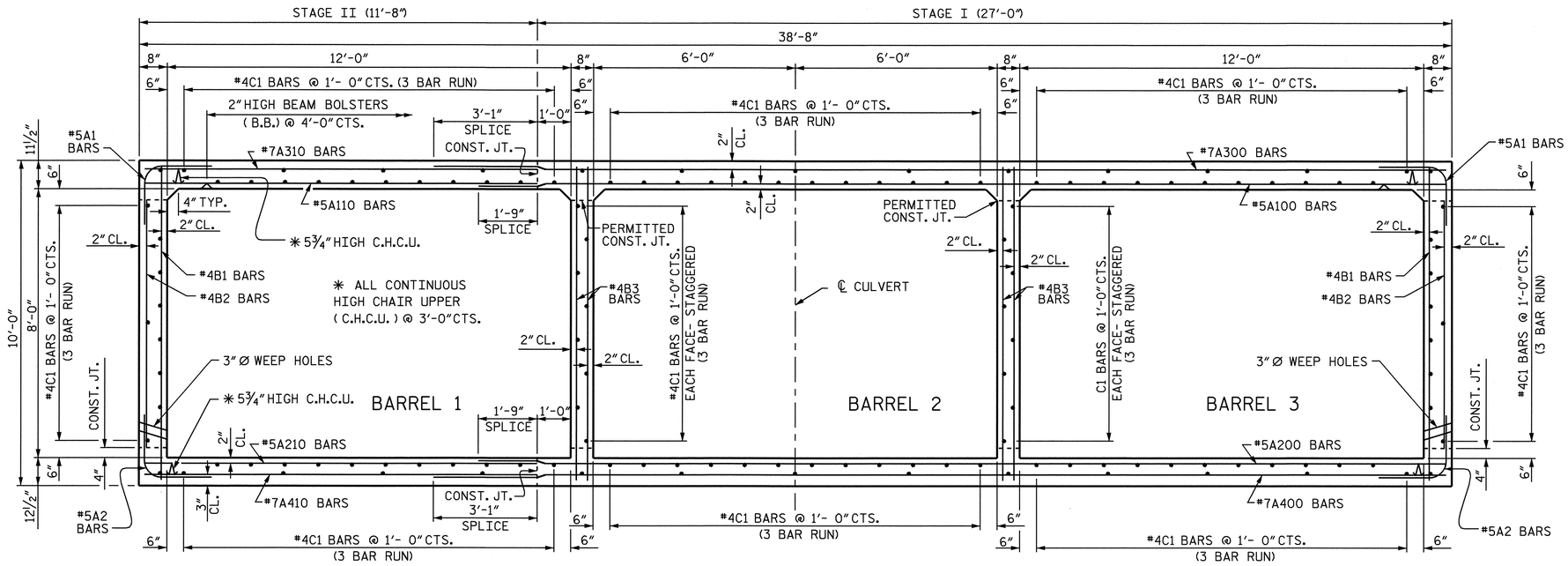

RIGHT ANGLE SECTION OF BARREL - PHASE I

THERE ARE 132 C1 BARS IN SECTION OF BARREL.

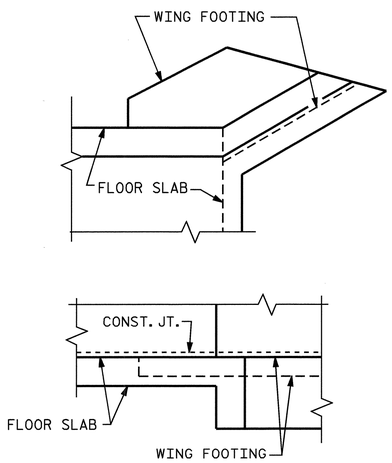

DETAIL

CONNECTION OF WING FOOTING AND FLOOR SLAB WHEN SLAB IS THICKER THAN FOOTING

BAR TYPES

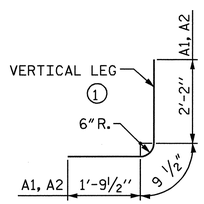

ALL BAR DIMENSIONS ARE OUT TO OUT.

SPLICE LENGTHS CHART		
BAR	SIZE	SPLICE LENGTH
A100 & A110	#5	1'-9"
A200 & A210	#5	1'-9"
A300 & A310	#7	3'-1"
A400 & A410	#7	3'-1"
B1	#4	1'-9"
B3	#4	1'-9"
C1	#4	1'-11"

BILL OF MATERIAL (PHASE-I: OUTLET)

-- STAGE I--

BAR	NO.	SIZE	TYPE	LENGTH	WEIGHT
A1	144	#5	1	4'-9"	713
A2	144	#5	1	4'-9"	713
A100	156	#5	STR	28'-7"	4651
A200	144	#5	STR	28'-7"	4293
A300	144	#7	STR	29'-11"	8806
A400	144	#7	STR	29'-11"	8806
B1	94	#4	STR	9'-6"	597
B2	144	#4	STR	7'-4"	705
B3	234	#4	STR	9'-6"	1485
C1	279	#4	STR	27'-11"	5203
G1	4	#5	STR	28'-7"	119
REINFORCING STEEL					36,091 LBS.
CLASS A CONCRETE					
BARREL @ 2.603 CY/FT. =					203.0 yds.3

-- STAGE II--

BAR	NO.	SIZE	TYPE	LENGTH	WEIGHT
A1	144	#5	1	4'-9"	713
A2	144	#5	1	4'-9"	713
A110	156	#5	STR	11'-6"	1871
A210	144	#5	STR	11'-6"	1727
A310	144	#7	STR	11'-6"	3385
A410	144	#7	STR	11'-6"	3385
B1	94	#4	STR	9'-6"	597
B2	144	#4	STR	7'-4"	705
C1	117	#4	STR	27'-11"	2182
G2	4	#5	STR	11'-6"	48
REINFORCING STEEL					15,326 LBS.
CLASS A CONCRETE					
BARREL @ 1.064 CY/FT. =					83.0 yds.3

PROJECT NO. R-3833B
IREDELL COUNTY
STATION: 265+08.83 -L-

SHEET 3 OF 5

STATE OF NORTH CAROLINA
DEPARTMENT OF TRANSPORTATION
RALEIGH

PHASE I
TRIPLE 12 FT. X 8 FT.
CONCRETE BOX CULVERT
90° SKEW

NORTH CAROLINA PROFESSIONAL SEAL 11259 ENGINEER DAVID R. ANDERSON
11/24/08

REVISIONS						SHEET NO.
NO.	BY:	DATE:	NO.	BY:	DATE:	C-3
1			3			TOTAL SHEETS
2			4			10

DRAWN BY : NQT/KDL DATE : 10/08
CHECKED BY : D. MULLER DATE : 10/08

18-NOV-2008 10:53
r:\structures\klayne\r3833b_sd_cu_03.dgn
danderson

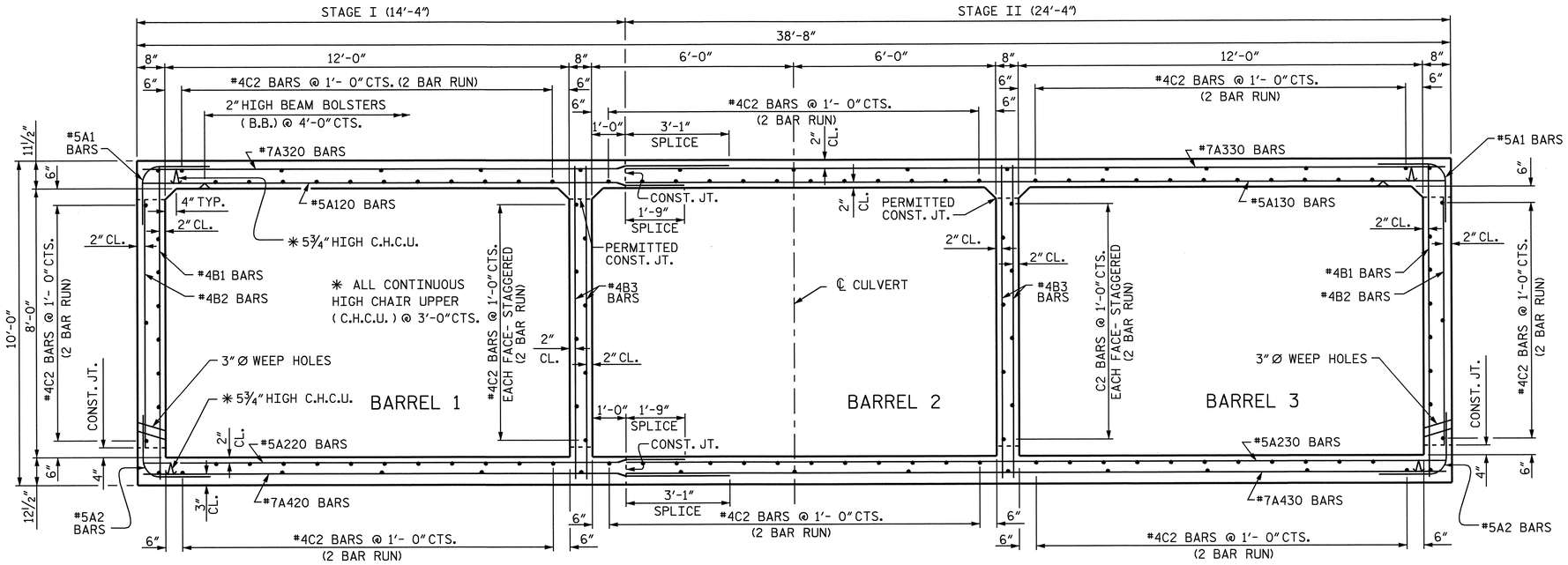

RIGHT ANGLE SECTION OF BARREL - PHASE II

THERE ARE 132 C2 BARS IN SECTION OF BARREL.

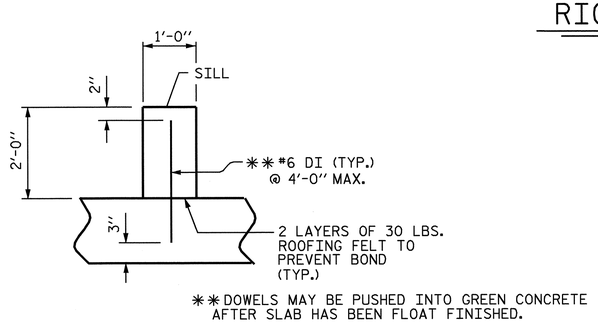

SECTION THRU SILL

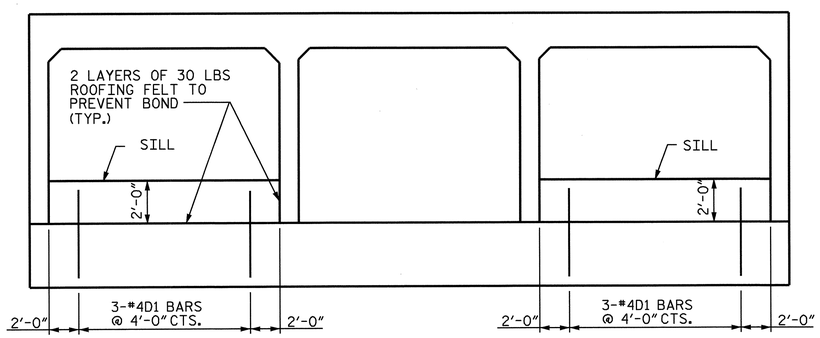

ELEVATION
CULVERT SILL DETAILS

BAR TYPES

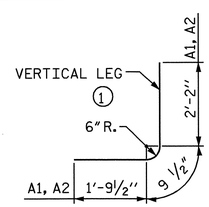

ALL BAR DIMENSIONS ARE OUT TO OUT.

SPLICE LENGTHS CHART		
BAR	SIZE	SPLICE LENGTH
A120 & A130	#5	1'-9"
A220 & A230	#5	1'-9"
A320 & A330	#7	3'-1"
A420 & A430	#7	3'-1"
B1	#4	1'-9"
B3	#4	1'-9"
C1	#4	1'-11"

BILL OF MATERIAL (PHASE-II : INLET)

-- STAGE I--						-- STAGE II--					
BAR	NO.	SIZE	TYPE	LENGTH	WEIGHT	BAR	NO.	SIZE	TYPE	LENGTH	WEIGHT
A1	96	#5	1	4'-9"	476	A1	96	#5	1	4'-9"	476
A2	96	#5	1	4'-9"	476	A2	96	#5	1	4'-9"	476
A120	104	#5	STR	15'-11"	1727	A130	104	#5	STR	24'-2"	2621
A220	96	#5	STR	15'-11	1594	A230	96	#5	STR	24'-2"	2420
A320	96	#7	STR	17'-3"	3385	A330	96	#7	STR	24'-2"	4742
A420	96	#7	STR	17'-3"	3385	A430	96	#7	STR	24'-2"	4742
B1	63	#4	STR	9'-6"	400	B1	63	#4	STR	9'-6"	400
B2	96	#4	STR	7'-4"	470	B2	96	#4	STR	7'-4"	470
B3	78	#4	STR	9'-6"	495	B3	78	#4	STR	9'-6"	495
C2	106	#4	STR	26'-11"	1906	C2	158	#4	STR	26'-11"	2841
D1	3	#4	STR	2'-9"	6	D1	3	#4	STR	2'-9"	6
G3	4	#5	STR	15'-11"	66	G4	4	#5	STR	24'-2"	101
REINFORCING STEEL					14,386 LBS.	REINFORCING STEEL					19,790 LBS.
CLASS A CONCRETE						CLASS A CONCRETE					
BARREL @ 1.463 yds.3/lin. ft.= 76.1 yds.3						BARREL @ 1.463 yds.3/lin. ft.= 114.6 yds.3					

PROJECT NO. R-3833B
IREDELL COUNTY
STATION: 265+08.83 -L-

SHEET 4 OF 5

STATE OF NORTH CAROLINA
DEPARTMENT OF TRANSPORTATION
RALEIGH

PHASE II
TRIPLE 12 FT. X 8 FT.
CONCRETE BOX CULVERT
90° SKEW

NORTH CAROLINA PROFESSIONAL SEAL 11259 ENGINEER DAVID R. ANDERSON
11/24/08

REVISIONS						SHEET NO. C-4
NO.	BY:	DATE:	NO.	BY:	DATE:	TOTAL SHEETS 10
1			3			
2			4			

DRAWN BY : NQT/KDL DATE : 10/08
CHECKED BY : D. MULLER DATE : 10/08

18-NOV-2008 10:56
r:\structures\klayne\r3833b_sd_cu_03.dgn
danderson

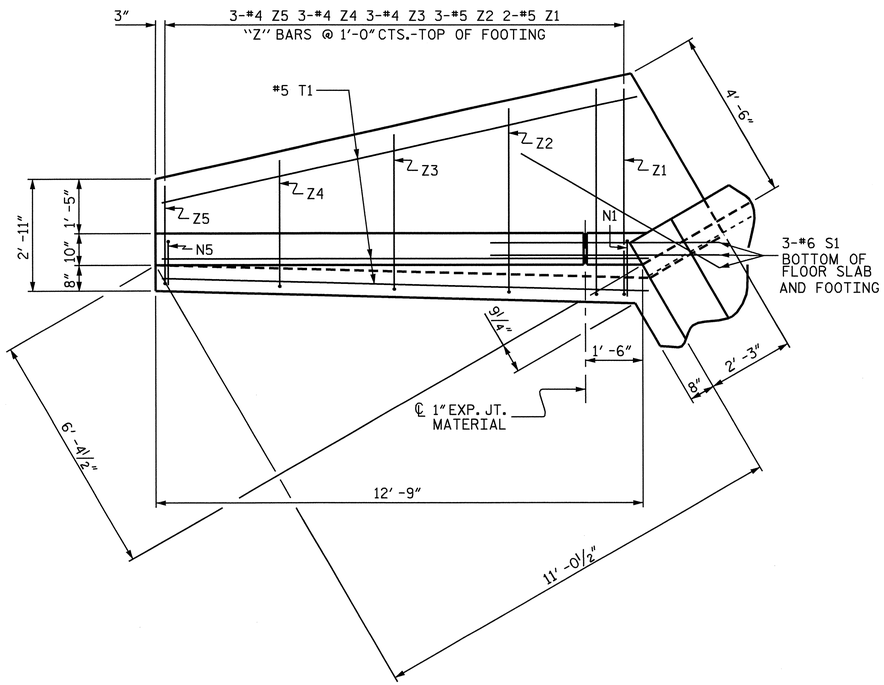

PLAN

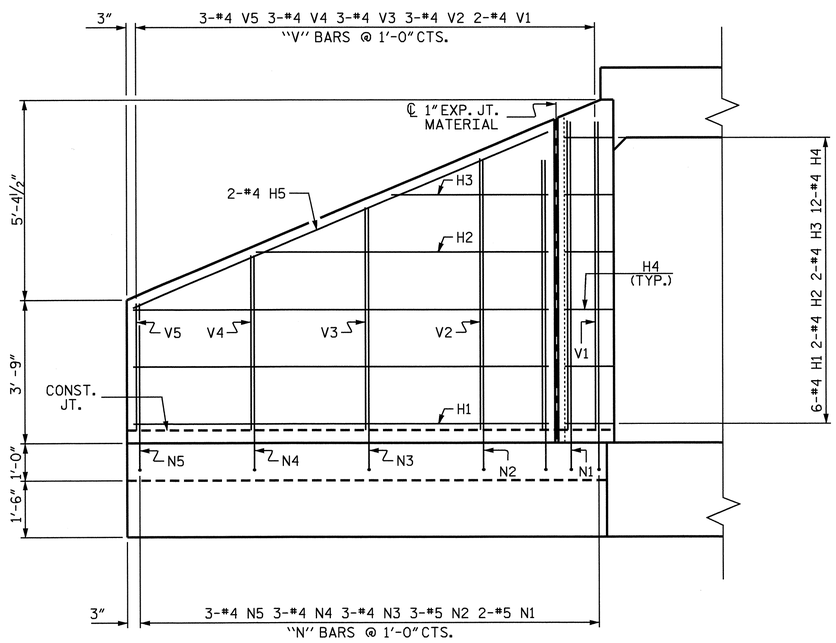

ELEVATION

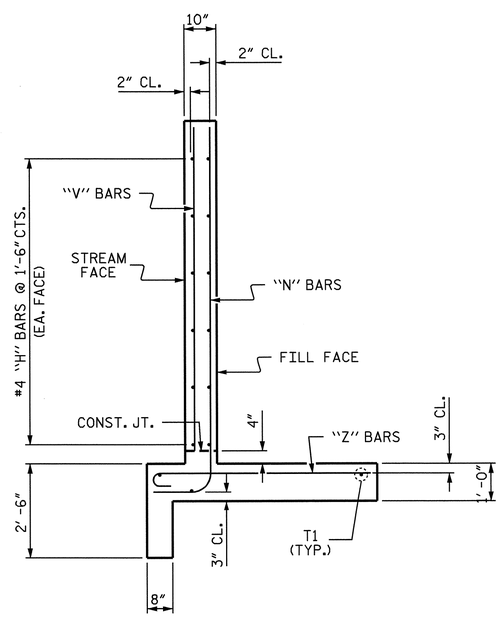

TYPICAL WING SECTION

BAR TYPES

ALL BAR DIMENSIONS ARE OUT TO OUT.

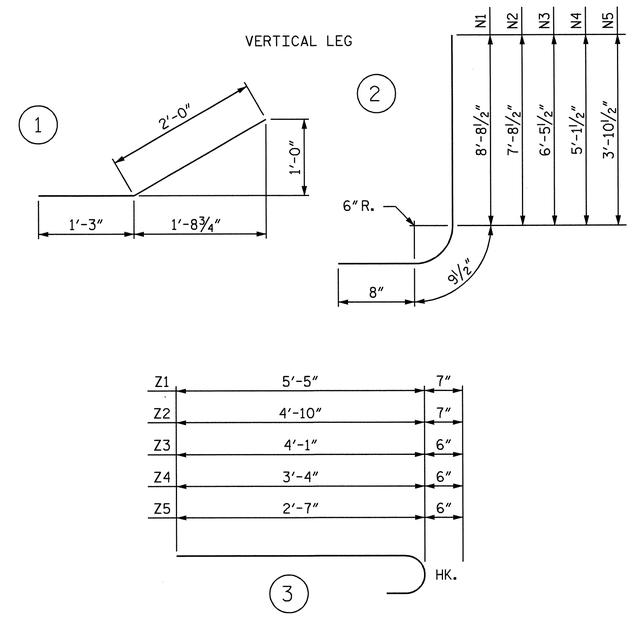

BILL OF MATERIAL

BAR	NO.	SIZE	TYPE	LENGTH	WEIGHT
H1	24	#4	STR	10'-10"	174
H2	8	#4	STR	7'-8"	41
H3	8	#4	STR	4'-1"	22
H4	48	#4	1	3'-3"	104
H5	8	#4	STR	11'-9"	63
N1	8	#5	2	10'-2"	85
N2	12	#5	2	9'-2"	115
N3	12	#4	2	7'-11"	63
N4	12	#4	2	6'-7"	53
N5	12	#4	2	5'-4"	43
S1	12	#6	STR	6'-0"	108
T1	12	#5	STR	12'-9"	160
V1	8	#4	STR	8'-1"	43
V2	12	#4	STR	7'-1"	57
V3	12	#4	STR	5'-10"	47
V4	12	#4	STR	4'-7"	37
V5	12	#4	STR	3'-4"	27
Z1	8	#5	3	6'-0"	50
Z2	12	#5	3	5'-5"	68
Z3	12	#4	3	4'-7"	37
Z4	12	#4	3	3'-10"	31
Z5	12	#4	3	3'-1"	25

REINFORCING STEEL
FOR 2 WINGS 1453 LBS.

CLASS A CONCRETE
4 WINGS 21.4 C.Y.
2 HEADWALLS 3.6 C.Y.
2 END CURTAIN WALLS 4.4
2 - 1'-0" x 2'-0" SILLS 1.8 C.Y.
TOTAL 31.2 C.Y.

PROJECT NO. R-3833B
IREDELL COUNTY
STATION: 265+08.83 -L-
SHEET 5 OF 5

STATE OF NORTH CAROLINA
DEPARTMENT OF TRANSPORTATION
RALEIGH

STANDARD WINGS FOR CONCRETE BOX CULVERT

H = 8'-0" SLOPE = 2:1
90° SKEW

NORTH CAROLINA PROFESSIONAL SEAL 11259 ENGINEER DAVID R. ANDERSON
11/24/08

REVISIONS							SHEET NO.
NO.	BY:	DATE:	NO.	BY:	DATE:		C-5
1			3				TOTAL SHEETS
2			4				10

STD. NO. CW9008

ASSEMBLED BY : NQT/KDL		DATE : 10-08	
CHECKED BY : D. MULLER		DATE : 10-08	
DRAWN BY : CCJ	10/99		
CHECKED BY : RWW	03/00		

15-OCT-2008 15:00
R:\STRUCT-H\hfran\MlloreE\wkg\R-3833-3.DGN

BENCH MARK IS: BY 23-79: AT PROJECT STA. 25+34.1 -Y6-, EL. 795.54 NAVD 88

F.A. PROJECT NO. STP-1100(20)

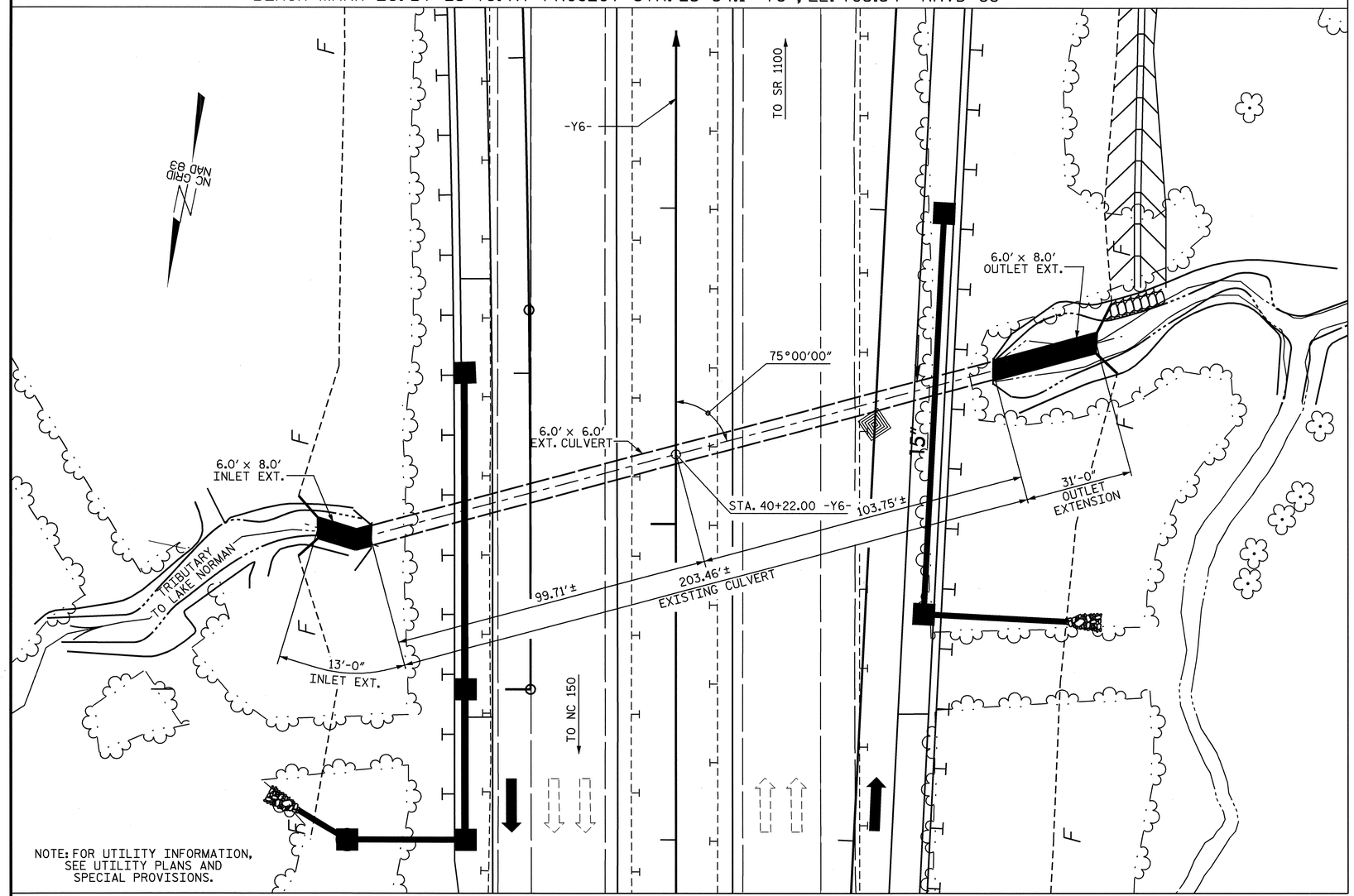

NOTE: FOR UTILITY INFORMATION, SEE UTILITY PLANS AND SPECIAL PROVISIONS.

LOCATION SKETCH

NOTES

ASSUMED LIVE LOAD ---------- HS20-44 OR ALTERNATE LOADING.

DESIGN FILL = 20.53 FEET.

FOR OTHER DESIGN DATA AND NOTES SEE STANDARD NOTE SHEET SN.

3" Ø WEEP HOLES INDICATED TO BE IN ACCORDANCE WITH THE SPECIFICATIONS.

CONCRETE IN CULVERTS TO BE POURED IN THE FOLLOWING ORDER:

1. INLET EXTENSION FLOOR SLAB INCLUDING 4" OF ALL VERTICAL WALLS.
2. INLET EXTENSION REMAINING PORTIONS OF THE WALLS AND WINGS FULL HEIGHT. FOLLOWED BY EXTENSION ROOF AND HEADWALL.
3. OUTLET EXTENSION FLOOR SLAB INCLUDING 4" OF ALL VERTICAL WALLS.
4. OUT EXTENSION REMAINING PORTIONS OF THE WALLS AND WINGS FULL HEIGHT. FOLLOWED BY EXTENSION ROOF AND HEADWALL.

THE RESIDENT ENGINEER SHALL CHECK THE LENGTH OF CULVERT BEFORE STAKING IT OUT TO MAKE CERTAIN THAT IT WILL PROPERLY TAKE CARE OF THE FILL.

DIMENSIONS FOR WING LAYOUT AS WELL AS ADDITIONAL REINFORCING STEEL EMBEDDED IN BARREL ARE SHOWN ON WING SHEET.

AT THE CONTRACTOR'S OPTION, HE MAY SPLICE THE VERTICAL REINFORCING STEEL IN THE INTERIOR FACE OF EXTERIOR WALL ABOVE LOWER WALL CONSTRUCTION JOINT. THE SPLICE LENGTH SHALL BE AS PROVIDED IN THE SPLICE LENGTH CHART SHOWN ON THE PLANS. EXTRA WEIGHT OF STEEL DUE TO THE SPLICES SHALL BE PAID FOR BY THE CONTRACTOR.

IF APPROVED BY THE ENGINEER, THE CONTRACTOR MAY USE THE EXISTING WINGS AS TEMPORARY SHORING FOR THE CONSTRUCTION OF THE CULVERT EXTENSION. IN THIS CASE, THE BOTTOM SLAB OF THE EXTENSION SHALL BE POURED AT LEAST 72 HOURS PRIOR TO CUTTING THE WINGS. THE WINGS MAY BE CUT EARLIER PROVIDED THE SLAB CONCRETE STRENGTH HAS REACHED A MINIMUM COMPRESSIVE STRENGTH OF 1500 PSI.

DOWELS SHALL BE USED TO CONNECT THE CULVERT EXTENSION TO THE EXISTING CULVERT AS SHOWN. FOR NOTE REGARDING SETTING OF DOWELS, SEE SHEET SN.

FOR CULVERT DIVERSION DETAILS AND PAY ITEM, SEE EROSION CONTROL PLANS.

A 3 FOOT STRIP OF FILTER FABRIC SHALL BE ATTACHED TO THE FILL FACE OF THE WING COVERING THE ENTIRE LENGTH OF THE EXPANSION JOINT.

FOR FALSEWORK AND FORMWORK, SEE SPECIAL PROVISIONS.

FOR SUBMITTAL OF WORKING DRAWINGS, SEE SPECIAL PROVISIONS.

NO PRECAST REINFORCED BOX CULVERT OPTION WILL BE ALLOWED.

FOR CRANE SAFETY, SEE SPECIAL PROVISIONS.

FOR EROSION CONTROL, SEE ROADWAY PLANS.

ROADWAY DATA

GRADE POINT EL. @ STA. 40+22.00-Y6- = 797.890
BED ELEVATION @ STA. 40+22.00-Y6- = 771.490
ROADWAY SLOPES = 2 :1

HYDRAULIC DATA

DESIGN DISCHARGE = 750 ft3/s
FREQUENCY OF DESIGN FLOOD = 50 YRS
DESIGN HIGH WATER ELEVATION = 788.1
DRAINAGE AREA = 0.5 Sq. mi.
BASIC DISCHARGE (Q100) = 850 ft3/s
BASIC HIGH WATER ELEVATION = 791.1

OVERTOPPING FLOOD DATA

OVERTOPPING DISCHARGE = 1035 ft3/s
FREQUENCY OF OVERTOPPING FLOOD = 100++ YRS
OVERTOPPING FLOOD ELEVATION = 797.8

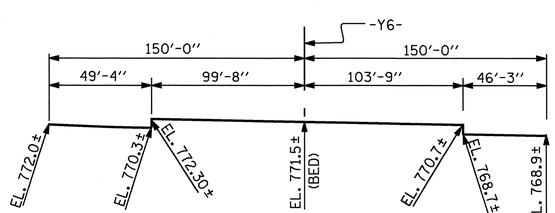

PROFILE ALONG ℄ CULVERT

NORTH CAROLINA PROFESSIONAL SEAL 9804 ENGINEER ROY A. SHOLAMI 11-24-08

NORTH CAROLINA PROFESSIONAL SEAL 11259 ENGINEER DAVID R. ANDERSON 11/24/08

TOTAL STRUCTURE QUANTITIES

	INLET EXTENSION	OUTLET EXTENSION	TOTAL
CLASS A CONCRETE (CUBIC YARDS)			
BARREL @ 0.807 CY / FT	10.5	25.0	35.5
WINGS, ETC.			26.1
TOTAL (CUBIC YARDS)			61.6
REINFORCING STEEL (LBS)			
BARREL	1,993	4,012	6,005
WINGS, ETC.			1,547
TOTAL (LBS)			7,552
FOUNDATION COND. MAT'L (TONS)	7	16	23
CULVERT EXCAVATION			LUMP SUM

PROJECT NO. R-3833B
IREDELL COUNTY
STATION: 40+22.00 -Y6-

SHEET 1 OF 5

STATE OF NORTH CAROLINA
DEPARTMENT OF TRANSPORTATION
RALEIGH

SINGLE BARREL
6 FT. X 8 FT.
CONCRETE BOX CULVERT
75° SKEW
INLET AND OUTLET EXTENSIONS

REVISIONS						SHEET NO.
NO.	BY:	DATE:	NO.	BY:	DATE:	C-6
1			3			TOTAL SHEETS
2			4			10

ASSEMBLED BY : NQT/KDL DATE : 10-16-08
CHECKED BY : D. MULLER DATE : 10-21-08

23-OCT-2008 11:34
R:\STRUCT01\klayne\R3833B01.DGN
klayne

STR #4

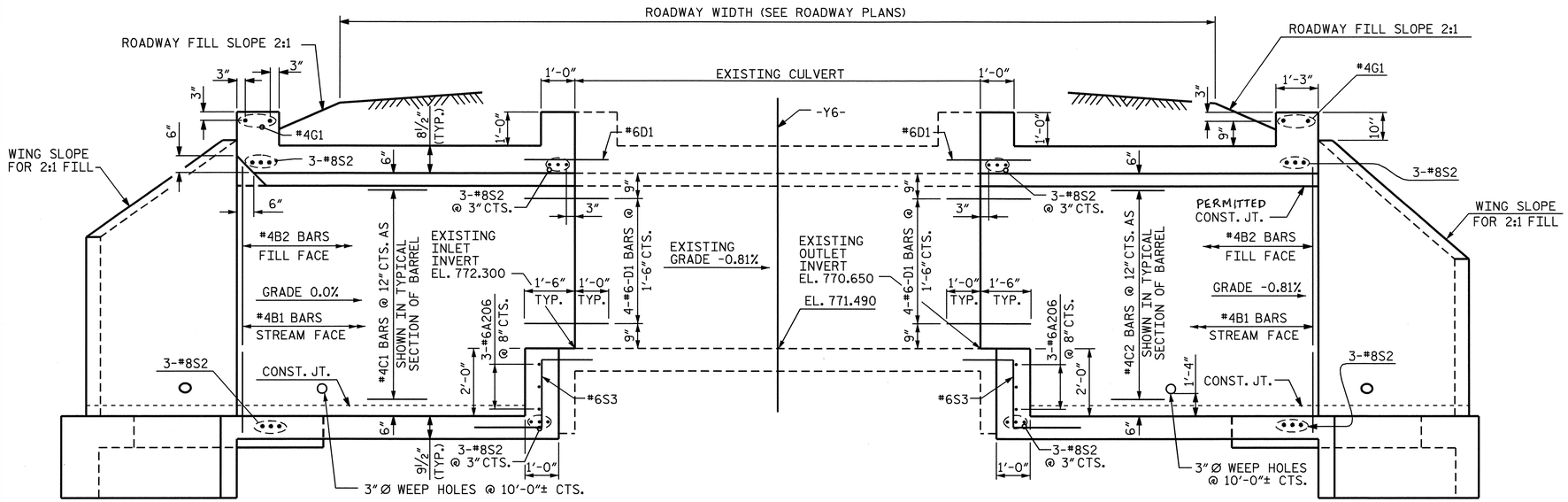

CULVERT SECTION NORMAL TO ROADWAY

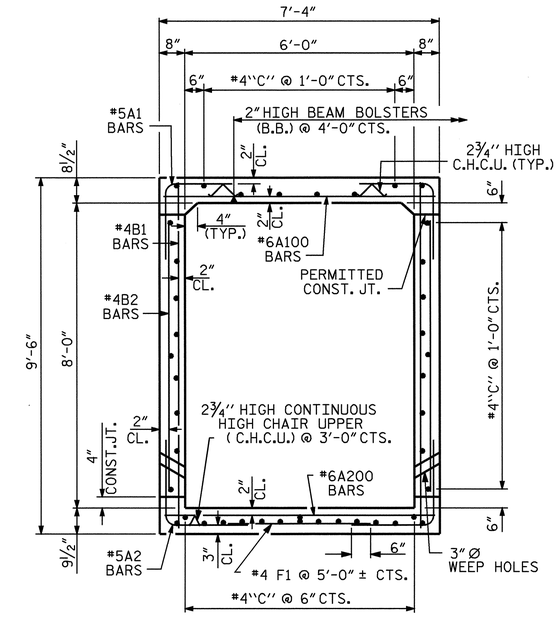

RIGHT ANGLE SECTION OF BARREL

THERE ARE 42 "C" BARS IN SECTION OF BARREL

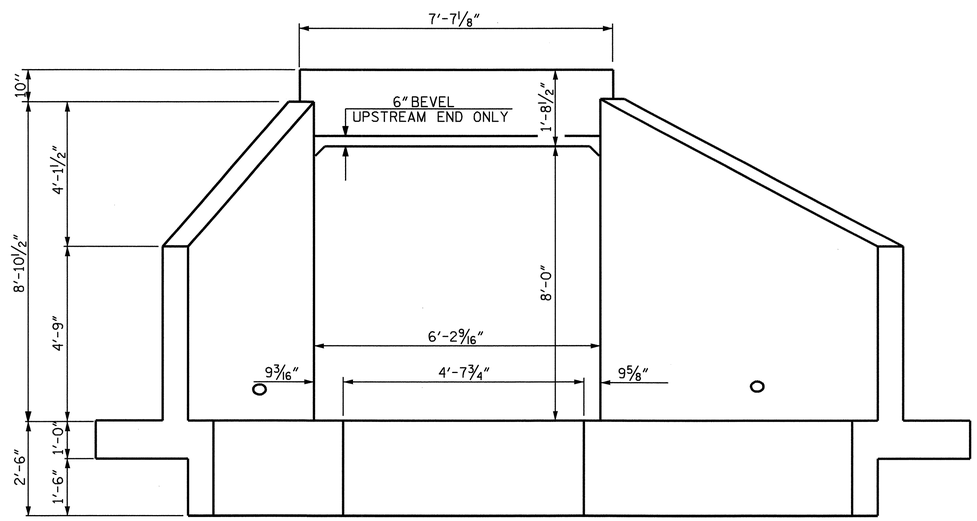

END ELEVATION NORMAL TO SKEW

PROJECT NO. R-3833B

IREDELL COUNTY

STATION: 40+22.00 -Y6-

SHEET 2 OF 5

STATE OF NORTH CAROLINA
DEPARTMENT OF TRANSPORTATION
RALEIGH

SINGLE BARREL 6 FT. X 8 FT. CONCRETE BOX CULVERT 75° SKEW INLET AND OUTLET EXTENSIONS

NORTH CAROLINA PROFESSIONAL SEAL 11259 ENGINEER DAVID R. ANDERSON

11/24/08

REVISIONS						SHEET NO.
NO.	BY:	DATE:	NO.	BY:	DATE:	C-7
1			3			TOTAL SHEETS
2			4			10

ASSEMBLED BY : NOT/KDL	DATE : 10/16/08	SPECIAL	
CHECKED BY : D. MULLER	DATE : 10-21-08		
DRAWN BY : S. A. TEDDER	DATE : AUG. 1989	STANDARD	
CHECKED BY : A.R. BISSETTE	DATE : AUG. 1989		

REVISED 8-28-98 BY E.L.R. CHECKED BY C.R.P.
REVISED 8-2-99 BY A.R.B. CHECKED BY C.R.K.
REDRAWN 8-22-89

REVISED 11-19-99 BY M.M. CHECKED BY R.W.W.

10-NOV-2008 09:26
L:\Structures\klayne\R3833B_sd_cu_04.dgn
ntran

STR #4

CB21

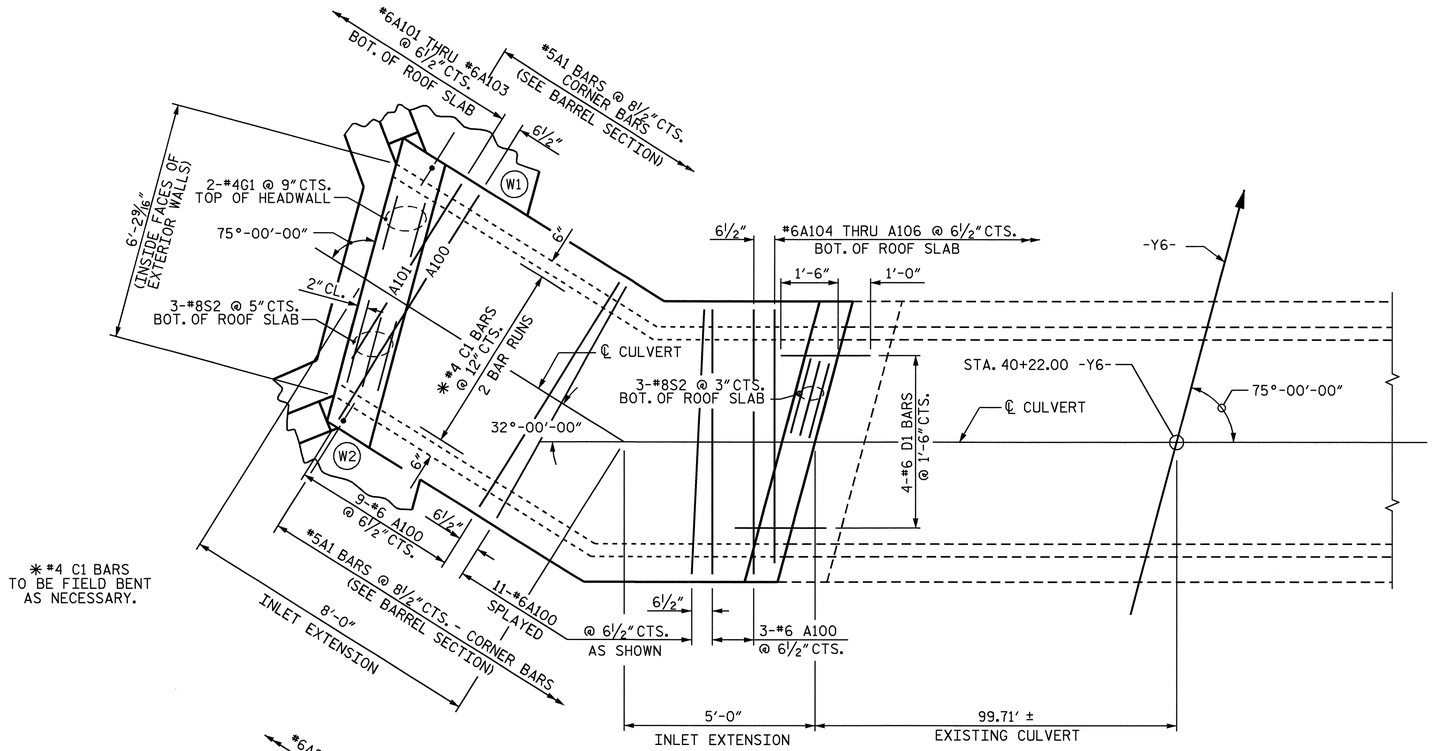

INLET EXTENSION - PLAN OF ROOF SLAB

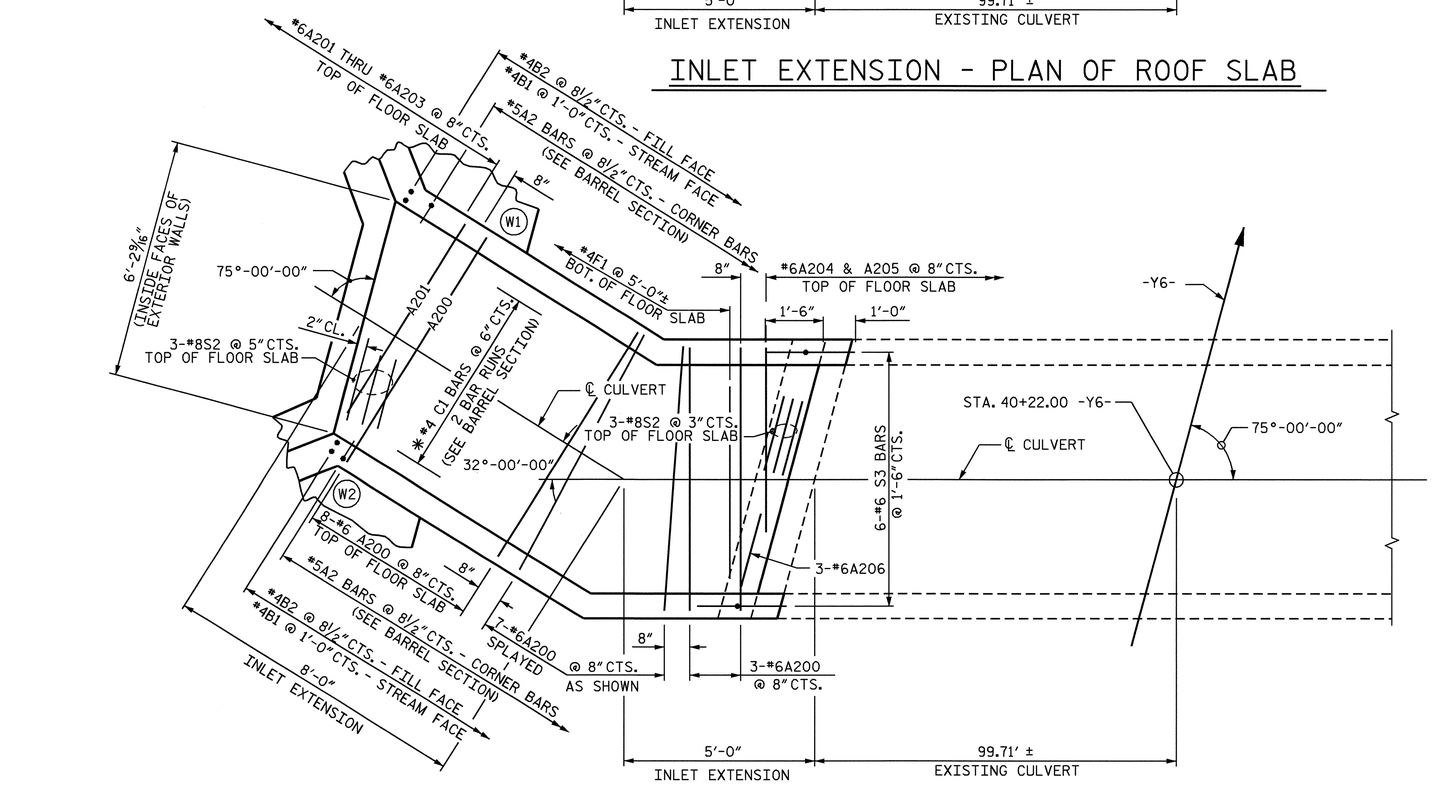

INLET EXTENSION - PLAN OF FLOOR SLAB

BAR TYPE

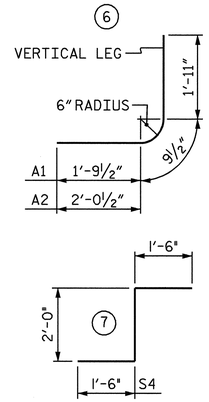

ALL BAR DIMENSIONS ARE OUT TO OUT

SPLICE LENGTHS CHART

BAR	SIZE	SPLICE LENGTH
B1	#4	1' - 9"
C1	#4	1' - 11"

REINFORCING STEEL INLET EXTENSION

BAR	NO.	SIZE	TYPE	LENGTH	WEIGHT
A100	23	6	STR	6'-11"	239
A101	1	6	STR	5'-4"	8
A102	1	6	STR	3'-7"	5
A103	1	6	STR	1'-10"	3
A104	1	6	STR	6'-7"	10
A105	1	6	STR	4'-7"	7
A106	1	6	STR	2'-7"	4
A200	18	6	STR	6'-11"	187
A201	1	6	STR	5'-9"	9
A202	1	6	STR	3'-7"	5
A203	1	6	STR	1'-5"	2
A204	1	6	STR	4'-10"	7
A205	1	6	STR	2'-4"	4
A206	3	6	STR	7'-2"	11
A1	40	5	6	4'-6"	188
A2	40	5	6	4'-9"	198
B1	28	4	STR	9'-0"	168
B2	38	4	STR	7'-4"	186
C1	84	4	STR	7'-4"	411
D1	12	6	STR	2'-6"	45
F1	4	4	STR	3'-11"	10
G1	2	4	STR	7'-3"	10
S2	12	8	STR	7'-3"	232
S3	6	6	7	5'-0"	45
				TOTAL (LBS.) =	1,993

PROJECT NO. R-3833B
IREDELL COUNTY
STATION: 40+22.00 -Y6-

SHEET 3 OF 5

STATE OF NORTH CAROLINA
DEPARTMENT OF TRANSPORTATION
RALEIGH

SINGLE BARREL 6 FT. X 8 FT. CONCRETE BOX CULVERT 75° SKEW INLET EXTENSION

NORTH CAROLINA PROFESSIONAL SEAL 11259 ENGINEER DAVID R. ANDERSON
1/2/09

REVISIONS						SHEET NO.
NO.	BY:	DATE:	NO.	BY:	DATE:	C-8
1			3			TOTAL SHEETS
2			4			10

DRAWN BY : NQT/KDL DATE : 10/16/08
CHECKED BY : D. MULLER DATE : 10-21-08

29-DEC-2008 15:01
h:\structures\klayne\r3833b_sd_cu_04.dgn
srashidi

STR #4

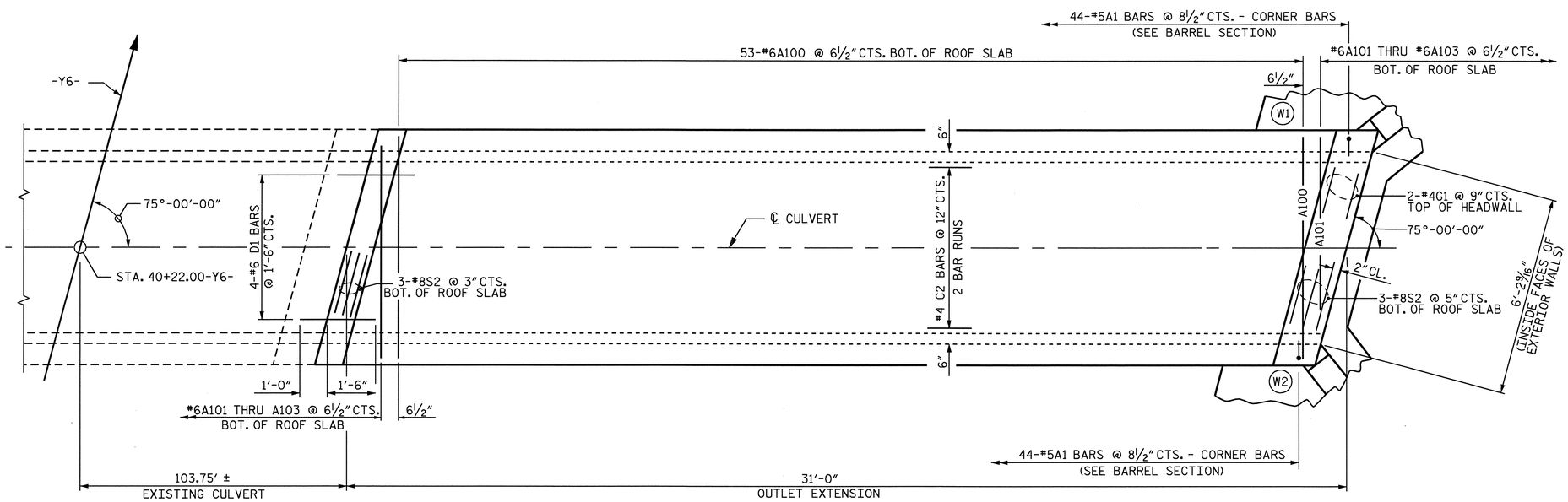

OUTLET EXTENSION - PLAN OF ROOF SLAB

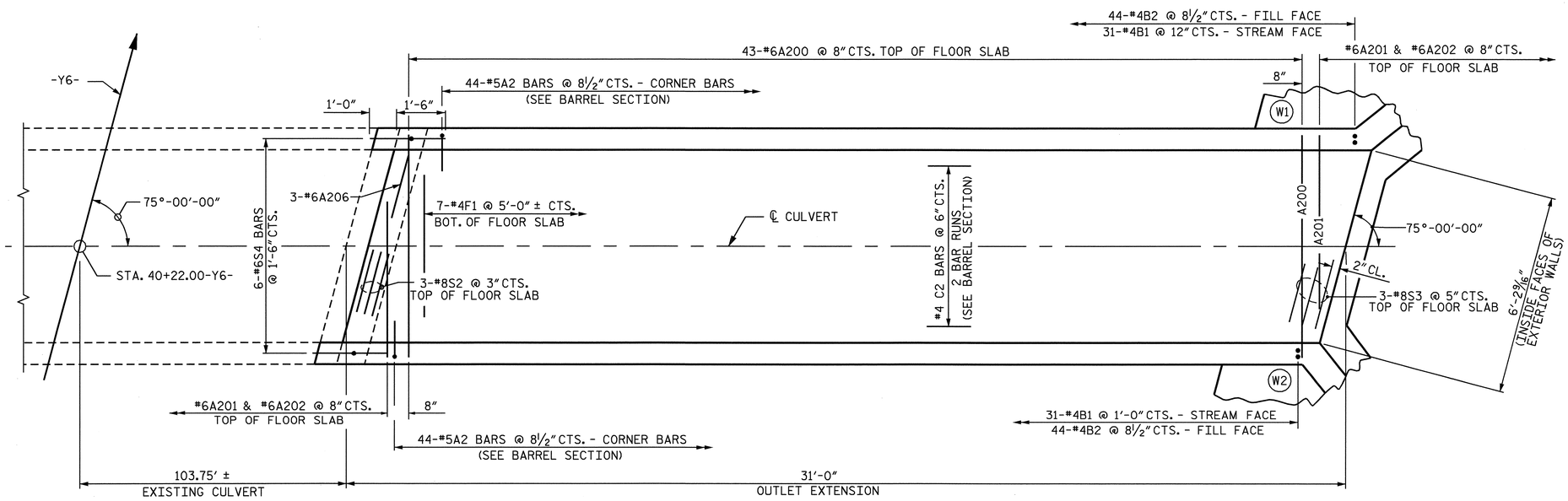

OUTLET EXTENSION - PLAN OF FLOOR SLAB

BAR TYPE

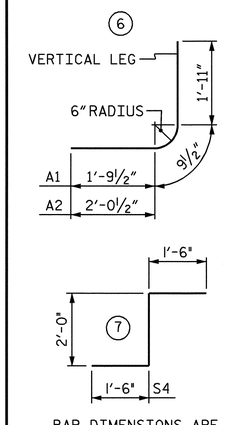

BAR DIMENSIONS ARE OUT TO OUT

REINFORCING STEEL OUTLET EXTENSION

BAR	NO.	SIZE	TYPE	LENGTH	WEIGHT
A100	53	6	STR	6'-11"	551
A101	2	6	STR	5'-4"	16
A102	2	6	STR	3'-7"	11
A103	2	6	STR	1'-10"	6
A200	43	6	STR	6'-11"	447
A201	2	6	STR	5'-4"	16
A202	2	6	STR	3'-7"	11
A206	3	6	STR	7'-2"	32
A1	88	5	6	4'-6"	413
A2	88	5	6	4'-9"	436
B1	62	4	STR	9'-0"	373
B2	88	4	STR	7'-4"	431
C2	84	4	STR	16'-5"	921
D1	12	6	STR	2'-6"	45
F1	7	4	STR	3'-11"	18
G1	2	4	STR	7'-3"	10
S2	12	8	STR	7'-3"	232
S3	6	6	7	5'-0"	45

TOTAL (LBS.) = 4,014

SPLICE LENGTHS CHART

BAR	SIZE	SPLICE LENGTH
B1	#4	1' - 9"
C2	#4	1' - 11"

PROJECT NO. R-3833B
IREDELL COUNTY
STATION: 40+22.00 -Y6-

SHEET 4 OF 5

STATE OF NORTH CAROLINA
DEPARTMENT OF TRANSPORTATION
RALEIGH

SINGLE BARREL
6 FT. X 8 FT.
CONCRETE BOX CULVERT
75° SKEW
OUTLET EXTENSION

NORTH CAROLINA PROFESSIONAL SEAL 11259 ENGINEER DAVID R. ANDERSON
11/24/08

REVISIONS						SHEET NO.
NO.	BY:	DATE:	NO.	BY:	DATE:	C-9
1			3			TOTAL SHEETS
2			4			10

DRAWN BY : NQT/KDL DATE : 10/16/08
CHECKED BY : D. MULLER DATE : 10-21-08

10-NOV-2008 09:27
L:\Structures\klayne\R3833B_sd_cu_04.dgn
ntran

STR #4

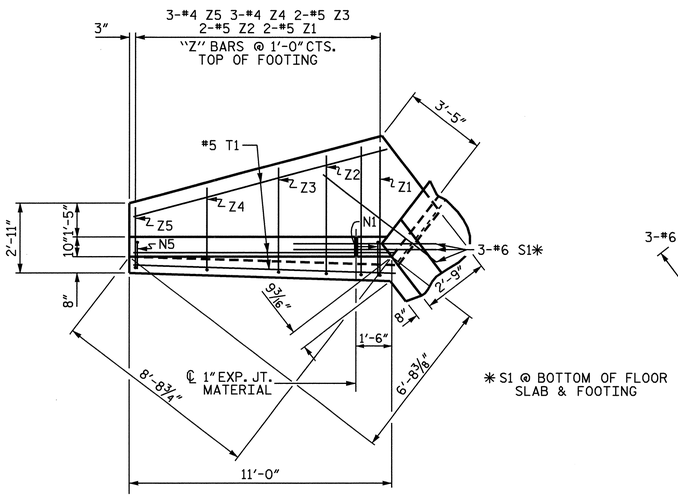

PLAN W2

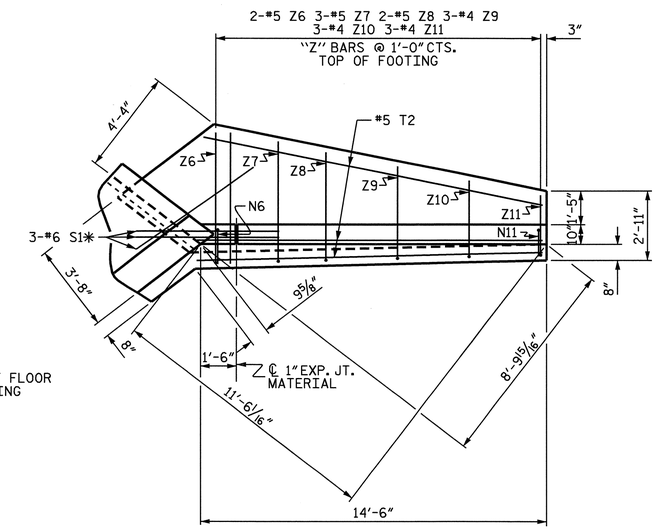

PLAN W1

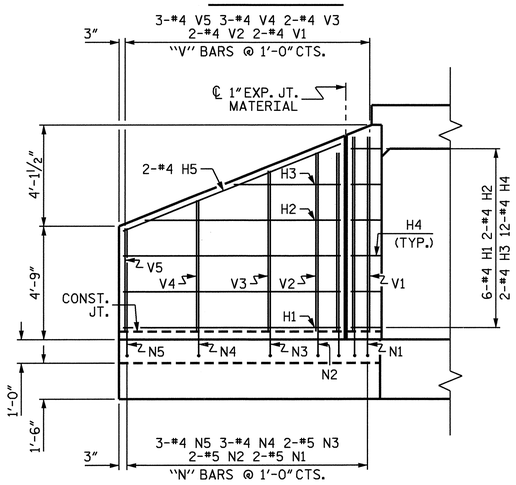

ELEVATION W2

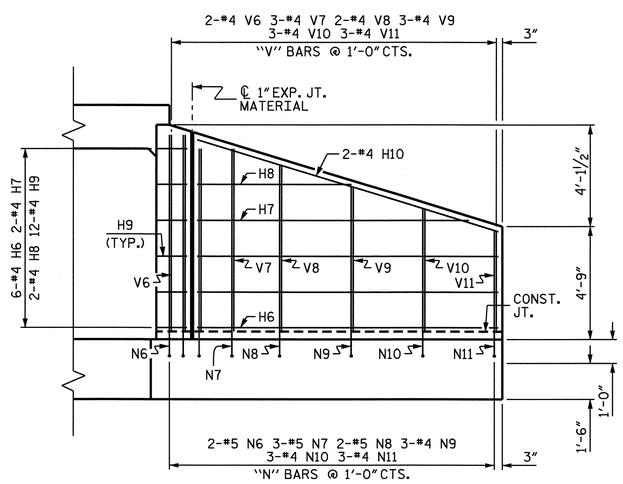

ELEVATION W1

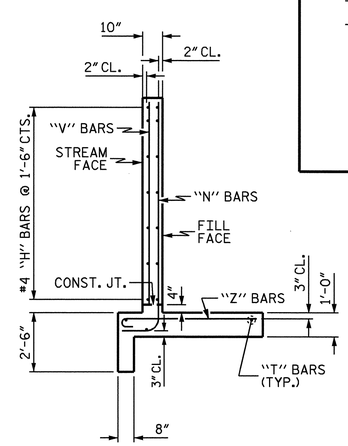

TYPICAL WING SECTION

BAR TYPES

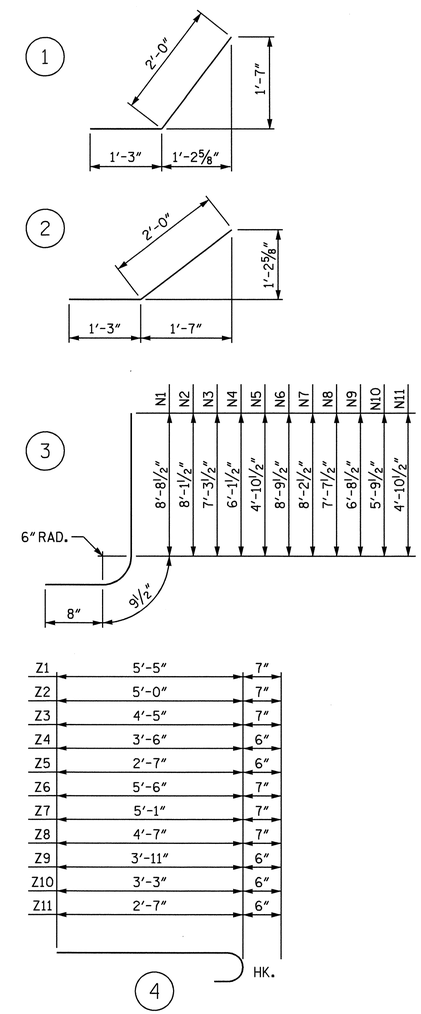

ALL BAR DIMENSIONS ARE OUT TO OUT.

BILL OF MATERIAL

BAR	NO.	SIZE	TYPE	LENGTH	WEIGHT
H1	12	#4	STR	9'-1"	73
H2	4	#4	STR	8'-2"	22
H3	4	#4	STR	4'-5"	12
H4	24	#4	1	3'-3"	52
H5	4	#4	STR	9'-10"	26
H6	12	#4	STR	12'-7"	101
H7	4	#4	STR	11'-4"	30
H8	4	#4	STR	6'-5"	17
H9	24	#4	2	3'-3"	52
H10	4	#4	STR	13'-2"	35
N1	4	#5	3	10'-2"	42
N2	4	#5	3	9'-7"	40
N3	4	#5	3	8'-9"	37
N4	6	#4	3	7'-7"	30
N5	6	#4	3	6'-4"	25
N6	4	#5	3	10'-3"	43
N7	6	#5	3	9'-8"	60
N8	4	#5	3	9'-1"	38
N9	6	#4	3	8'-2"	33
N10	6	#4	3	7'-3"	29
N11	6	#4	3	6'-4"	25
S1	12	#6	STR	6'-0"	108
T1	6	#5	STR	11'-0"	69
T2	6	#5	STR	14'-6"	91
V1	4	#4	STR	8'-2"	22
V2	4	#4	STR	7'-6"	20
V3	4	#4	STR	6'-9"	18
V4	6	#4	STR	5'-6"	22
V5	6	#4	STR	4'-4"	17
V6	4	#4	STR	8'-3"	22
V7	6	#4	STR	7'-8"	31
V8	4	#4	STR	7'-0"	19
V9	6	#4	STR	6'-1"	24
V10	6	#4	STR	5'-2"	21
V11	6	#4	STR	4'-3"	17
Z1	4	#5	4	6'-0"	25
Z2	4	#5	4	5'-7"	23
Z3	4	#5	4	5'-0"	21
Z4	6	#4	4	4'-0"	16
Z5	6	#4	4	3'-1"	12
Z6	4	#5	4	6'-1"	25
Z7	6	#5	4	5'-8"	35
Z8	4	#5	4	5'-2"	22
Z9	6	#4	4	4'-5"	18
Z10	6	#4	4	3'-9"	15
Z11	6	#4	4	3'-1"	12

REINFORCING STEEL FOR 4 WINGS	1,547 LBS
CLASS A CONCRETE	
4 WINGS	22.6 C.Y.
2 HEADWALLS	0.8 C.Y.
2 END CURTAIN WALLS	1.0 C.Y.
4 EDGE BEAMS	1.7 C.Y.
TOTAL	26.1 C.Y.

PROJECT NO. R-3833B

IREDELL COUNTY

STATION: 40+22.00 -Y6-

SHEET 5 OF 5

STATE OF NORTH CAROLINA
DEPARTMENT OF TRANSPORTATION
RALEIGH

STANDARD WINGS FOR CONCRETE BOX CULVERT

H = 8'-0" SLOPE = 2:1
75° OR 105° SKEW

NORTH CAROLINA PROFESSIONAL SEAL 11259 ENGINEER DAVID R. ANDERSON

11/24/08

REVISIONS						SHEET NO.
NO.	BY:	DATE:	NO.	BY:	DATE:	C-10
1			3			TOTAL SHEETS
2			4			10

ASSEMBLED BY : N. Q. TRAN DATE : 10-1-08
CHECKED BY : D. MULLER DATE : 10-21-08

DRAWN BY : CCJ 01/00
CHECKED BY : RWW 03/00

18-NOV-2008 11:39
r:\structures\klayne\r3833b_sd_cu_04.dgn
danderson

STD. NO. CW7508

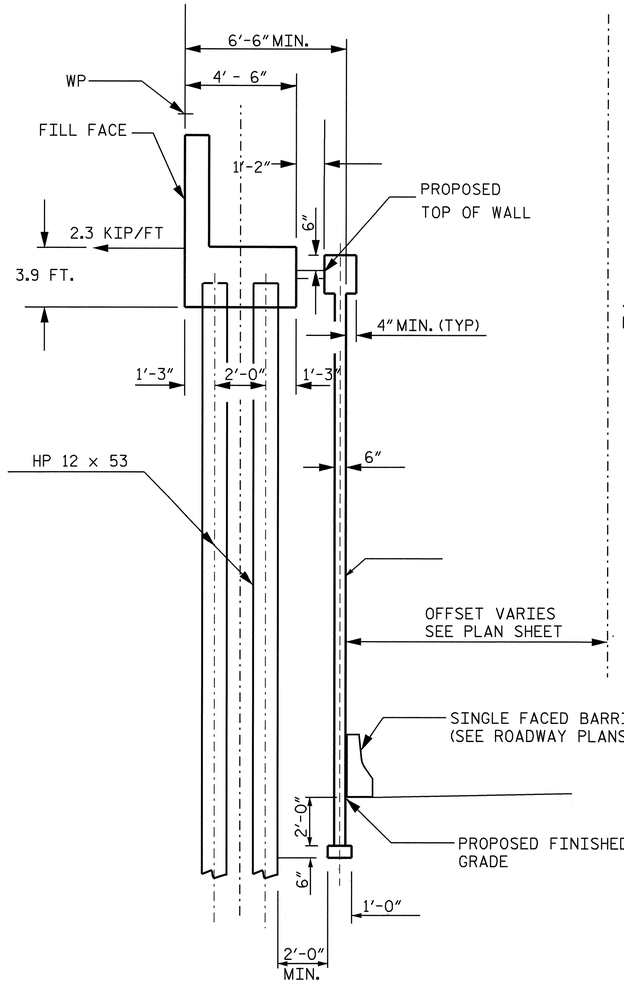

TYPICAL SECTION B-B

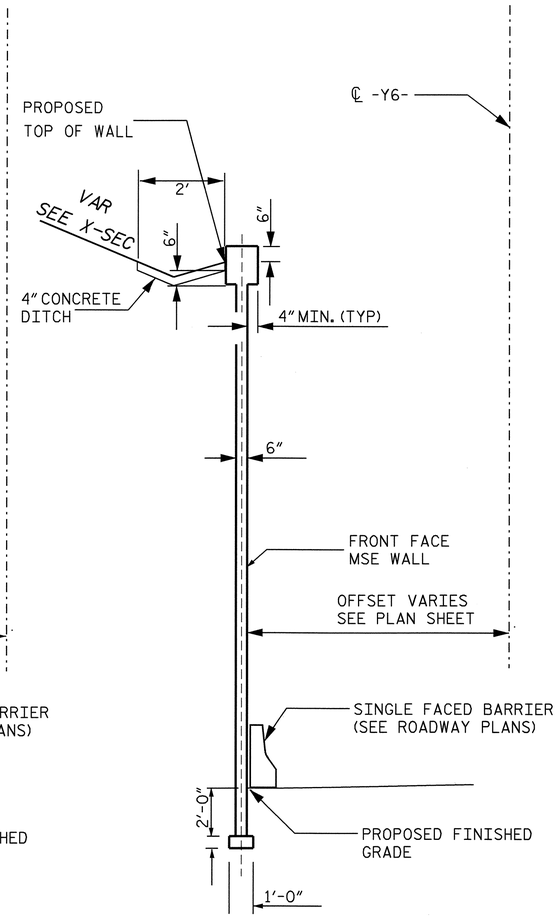

TYPICAL SECTION A-A

NOTES

1. FOR MECHANICALLY STABILIZED EARTH (MSE) RETAINING WALLS, SEE MECHANICALLY STABILIZED EARTH RETAINING WALLS SPECIAL PROVISION.

2. FOR SINGLE FACED PRECAST CONCRETE BARRIER, SEE ROADWAY PLANS AND SECTION 857 OF THE STANDARD SPECIFICATIONS.

3. DO NOT USE AN MSE WALL SYSTEM WITH SEGMENTAL RETAINING WALL UNITS FOR WALL NO. 1 OR WALL NO. 2.

4. DO NOT USE STANDARD SIZE 2S OR 2MS FOR WALL BACKFILL FOR RETAINING WALL NO. 1 OR NO. 2.

5. BEFORE BEGINNING MSE WALL DESIGN FOR RETAINING WALL NO. 1 OR WALL NO.2 , SURVEY ALL EXISTING GROUND ELEVATIONS SHOWN ON THE PLANS AND SUBMIT A REVISED WALL ENVELOPE FOR REVIEW. DO NOT START WALL DESIGN OR CONSTRUCTION UNTIL THE ENVELOPE IS ACCEPTED.

6. CAST IN PLACE CONCRETE COPING IS REQUIRED FOR RETAINING WALL NO. 1 AND NO. 2.

7. DESIGN RETAINING WALL NO. 1 AND NO. 2 FOR A WALL HEIGHT (DIFFERENCE BETWEEN GRADE ELEVATION AND BOTTOM OF WALL ELEVATION) PLUS EMBEDMENT (DIFFERENCE BETWEEN BOTTOM OF WALL ELEVATION AND TOP OF LEVELING PAD ELEVATION).

8. DESIGN RETAINING WALL NO. 1 AND NO.2 FOR THE FOLLOWING:
   1) MINIMUM SERVICE LIFE = 100 YEARS
   2) ALLOWABLE BEARING CAPACITY = 2000 PSF
   3) WALL BACKFILL PARAMETERS:

MATERIAL STANDARD SIZE NO. (IN ACCORDANCE WITH SECTIONS 1005 AND 1014 OF THE STANDARD SPECIFICATIONS)	UNIT WEIGHT PCF	FRICTION ANGLE DEGREES	COHESION PSF
57, 67 AND 78M	110	38	0

   4) IN-SITU ASSUMED SOIL MATERIAL PARAMETERES:

MATERIAL TYPE	UNIT WEIGHT PCF	FRICTION ANGLE DEGREES	COHESION (c) PSF
RETAINED AND RANDOM BACKFILL	120	30	0
FOUNDATION	120	30	0

9. DESIGN RETAINING WALL NO. 1 AND NO.2 FOR A LIVE LOAD (TRAFFIC) SURCHARGE.

10. DESIGN REINFORCEMENT CONNECTED TO THE END BENT CAPS FOR THE LOADING SHOWN AND CAST THE REINFORCEMENT CONNECTION HARDWARE INTO THE CAP BACKWALL FOR END BENT NO. 1 AND END BENT NO.2 LOCATED AT STATION 277+08.21 -L- AND STATION 278+69.55 -L-, RESPECTIVELY. MAINTAIN A MINIMUM CLEARANCE OF 3" BETWEEN THE HARDWARE AND THE REINFORCING STEEL IN THE CAP. A MINIMUM OF 2 LAYERS OF REINFORCING IS REQUIRED.

11. FOUNDATIONS FOR END BENT NO.1 AND END BENT NO.2 LOCATED AT STATION 277+08.21 -L- AND STATION 278+69.55 -L- WILL INTERFERE WITH REINFORCEMENT FOR RETAINING WALL NO. 1 AND NO. 2. SEE "FOUNDATION LAYOUT" SHEET FOR FOUNDATION LOCATIONS.

12. DO NOT PLACE LEVELING PAD CONCRETE, WALL BACKFILL, OR FIRST REINFORCEMENT LAYER FOR RETAINING WALL NO. 1 OR NO. 2 UNTIL OBTAINING APPROVAL OF THE EXCAVATION DEPTH AND FOUNDATION MATERIAL.

13. THE MINIMUM REINFORCEMENT RATIO SHALL BE 0.9:1 (L:H) TO SATISFY EXTERNAL STABILITY.

14. TEMPORARY WALLS WILL BE REQUIRED FOR STAGE CONSTRUCTION. SEE TRAFFIC CONTROL PLANS FOR STAGING POINTS.

GEOTECHNICAL ENGINEER	ENGINEER
NORTH CAROLINA PROFESSIONAL SEAL 027869 ENGINEER DAVID L. TEAGUE	
SIGNATURE DATE 11/5/08	SIGNATURE DATE

PROJECT NO.: R-3833B (34554.1.1)

IREDELL **COUNTY**

STATION:

SHEET 1 OF 3

GEOTECHNICAL ENGINEERING UNIT

☐ EASTERN REGIONAL OFFICE
☐ WESTERN REGIONAL OFFICE
■ CONTRACT OFFICE

STATE OF NORTH CAROLINA
DEPARTMENT OF TRANSPORTATION
RALEIGH

MSE WALL #1 and #2

REVISIONS						SHEET NO.
NO.	BY	DATE	NO.	BY	DATE	W-1
1			3			TOTAL SHEETS
2			4			7

PREPARED BY:	D. TEAGUE	DATE: 6-08
REVIEWED BY:	E. WILLIAMS	DATE: 6-08

GEOTECHNICAL ENGINEER	ENGINEER
NORTH CAROLINA PROFESSIONAL SEAL 027869 ENGINEER DAVID L. TEAGUE	
SIGNATURE DATE 11/5/08	SIGNATURE DATE

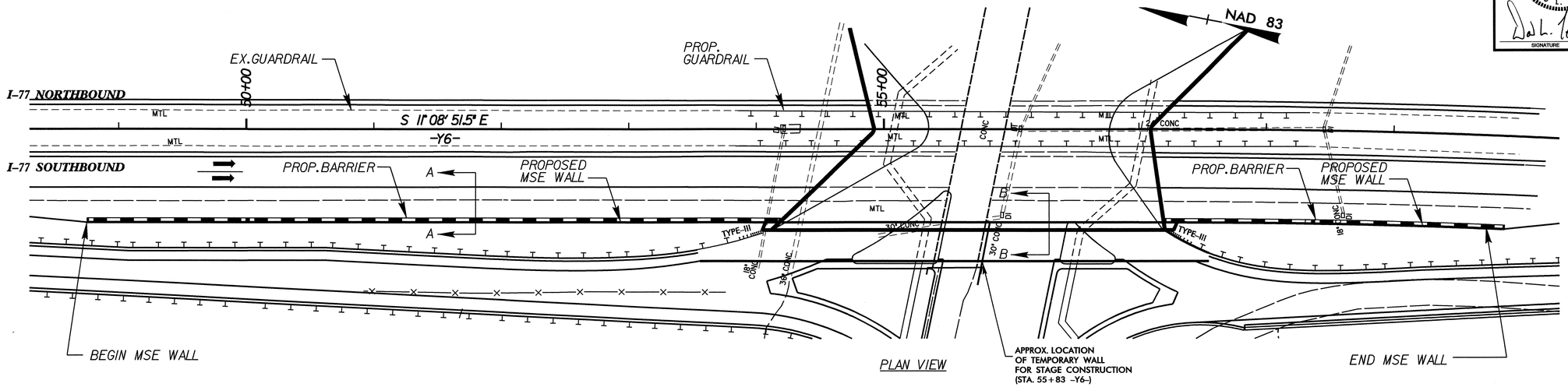

PLAN VIEW

TOTAL BILL OF MATERIAL	
MSE RETAINING WALL AT STA. 48+75.00 -Y6- (RT.) TO STA. 59+90.00 -Y6- (RT.)	14,324 SQ. FT.

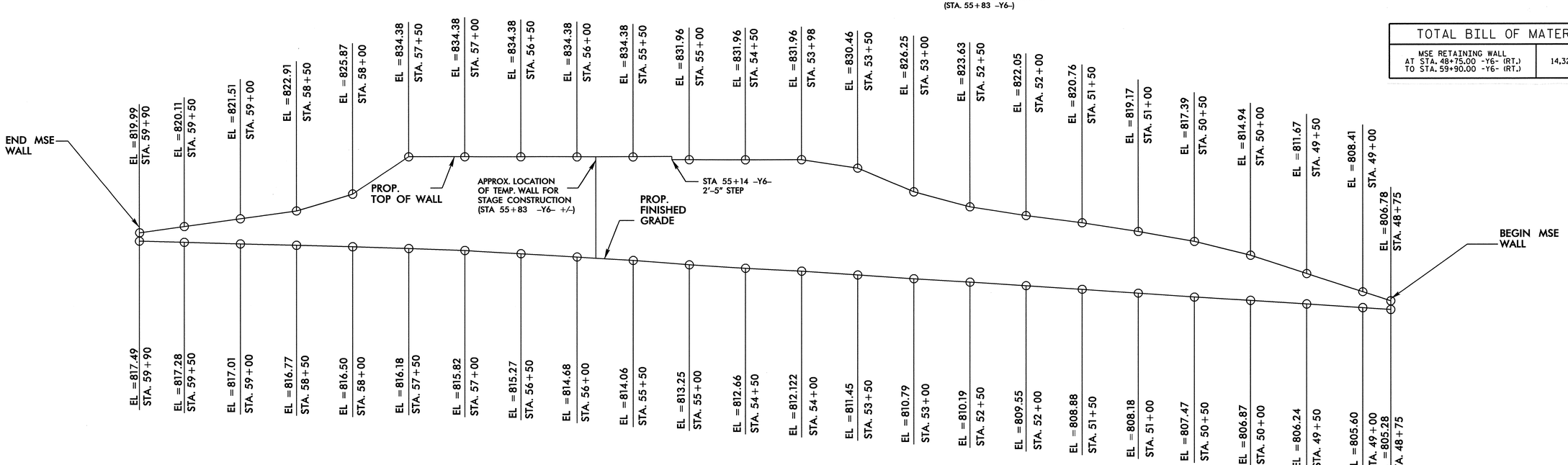

ELEVATION VIEW ALONG -Y6-

FRONT FACE

PROJECT NO.: R-3833B (34554.1.1)

IREDELL **COUNTY**

STATION: 277+08.21 -L-

SHEET 2 OF 3

GEOTECHNICAL ENGINEERING UNIT

☐ EASTERN REGIONAL OFFICE
☐ WESTERN REGIONAL OFFICE
■ CONTRACT OFFICE

STATE OF NORTH CAROLINA
DEPARTMENT OF TRANSPORTATION
RALEIGH

MSE WALL #1

REVISIONS							SHEET NO.
NO.	BY	DATE	NO.	BY	DATE		W-2
1			3				TOTAL SHEETS
2			4				7

PREPARED BY:	D. TEAGUE	DATE: 6-08
REVIEWED BY:	E. WILLIAMS	DATE: 6-08

GEOTECHNICAL ENGINEER	ENGINEER
NORTH CAROLINA PROFESSIONAL SEAL 027869 ENGINEER DAVID L. TEAGUE — SIGNATURE: David L. Teague — DATE: 11/5/08	SIGNATURE — DATE

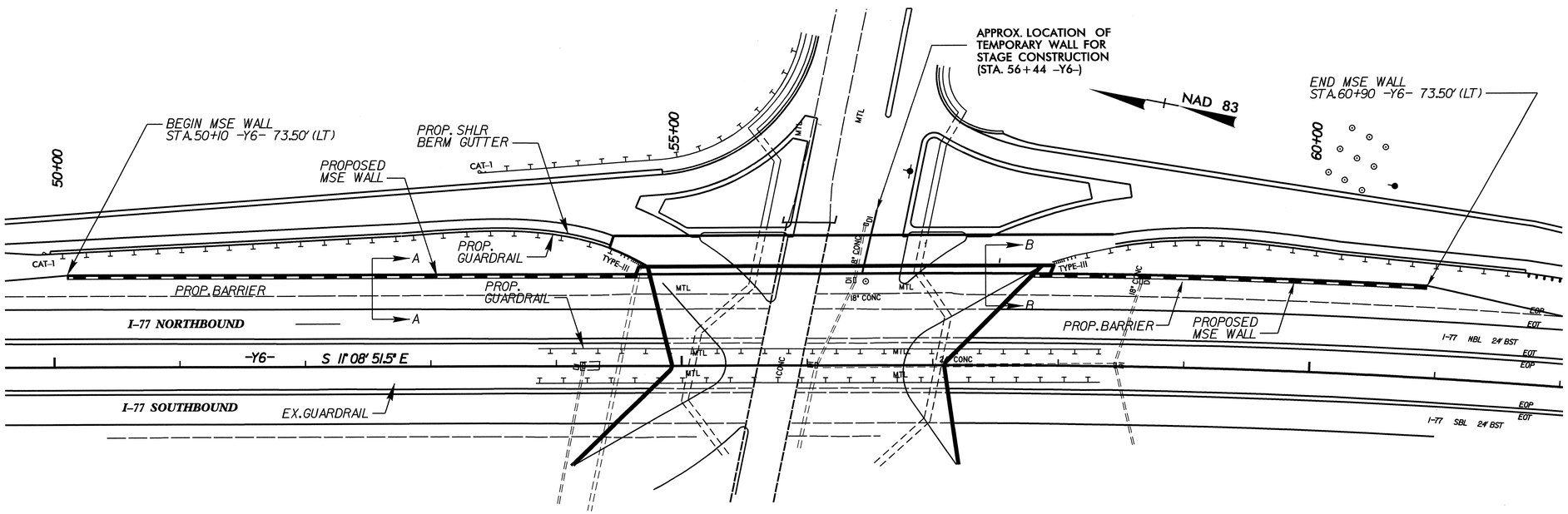

PLAN VIEW

TOTAL BILL OF MATERIAL	
MSE RETAINING WALL AT STA. 50+10.00 -Y6- (LT.) TO STA. 60+90.00 -Y6- (LT.)	13,288 SQ. FT.

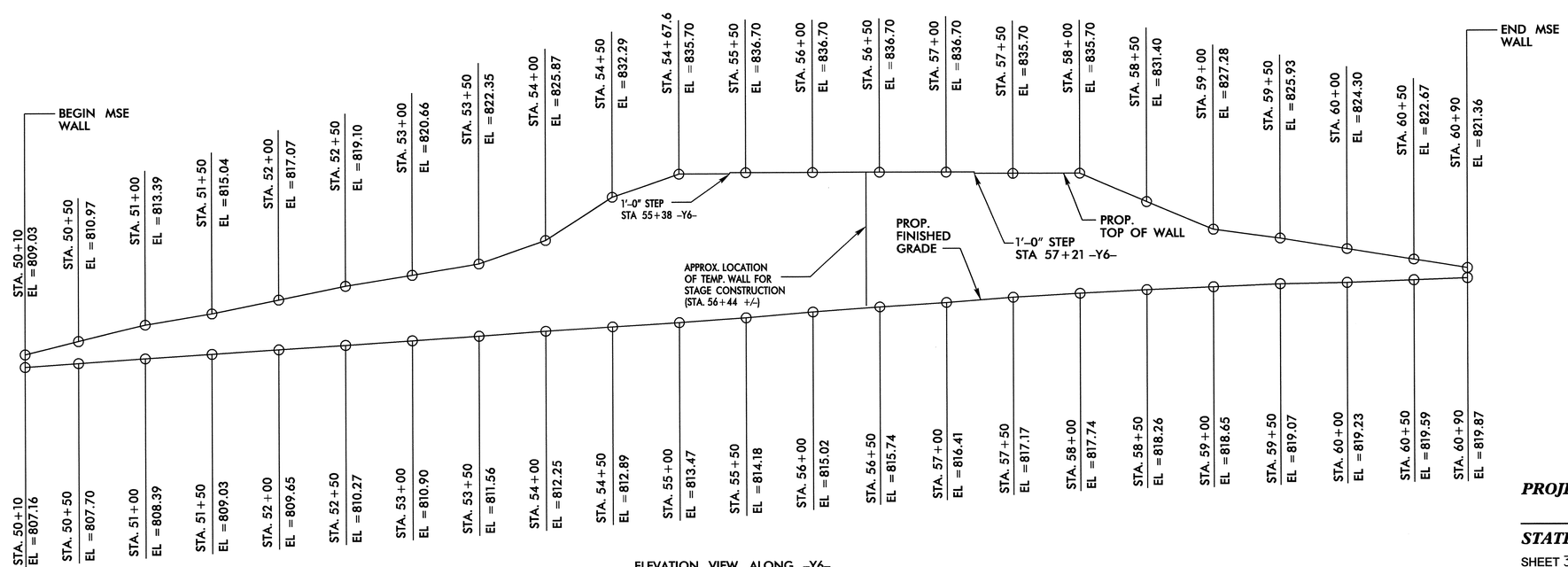

ELEVATION VIEW ALONG -Y6-
FRONT FACE

PROJECT NO.: R-3833B (34554.1.1)
IREDELL **COUNTY**
STATION: 278+69.55 -L-
SHEET 3 OF 3

GEOTECHNICAL ENGINEERING UNIT

- ☐ EASTERN REGIONAL OFFICE
- ☐ WESTERN REGIONAL OFFICE
- ■ CONTRACT OFFICE

STATE OF NORTH CAROLINA
DEPARTMENT OF TRANSPORTATION
RALEIGH

MSE WALL #2

REVISIONS						SHEET NO.
NO.	BY	DATE	NO.	BY	DATE	W-3
1			3			TOTAL SHEETS
2			4			7

PREPARED BY: D. TEAGUE	DATE: 6-08
REVIEWED BY: E. WILLIAMS	DATE: 6-08

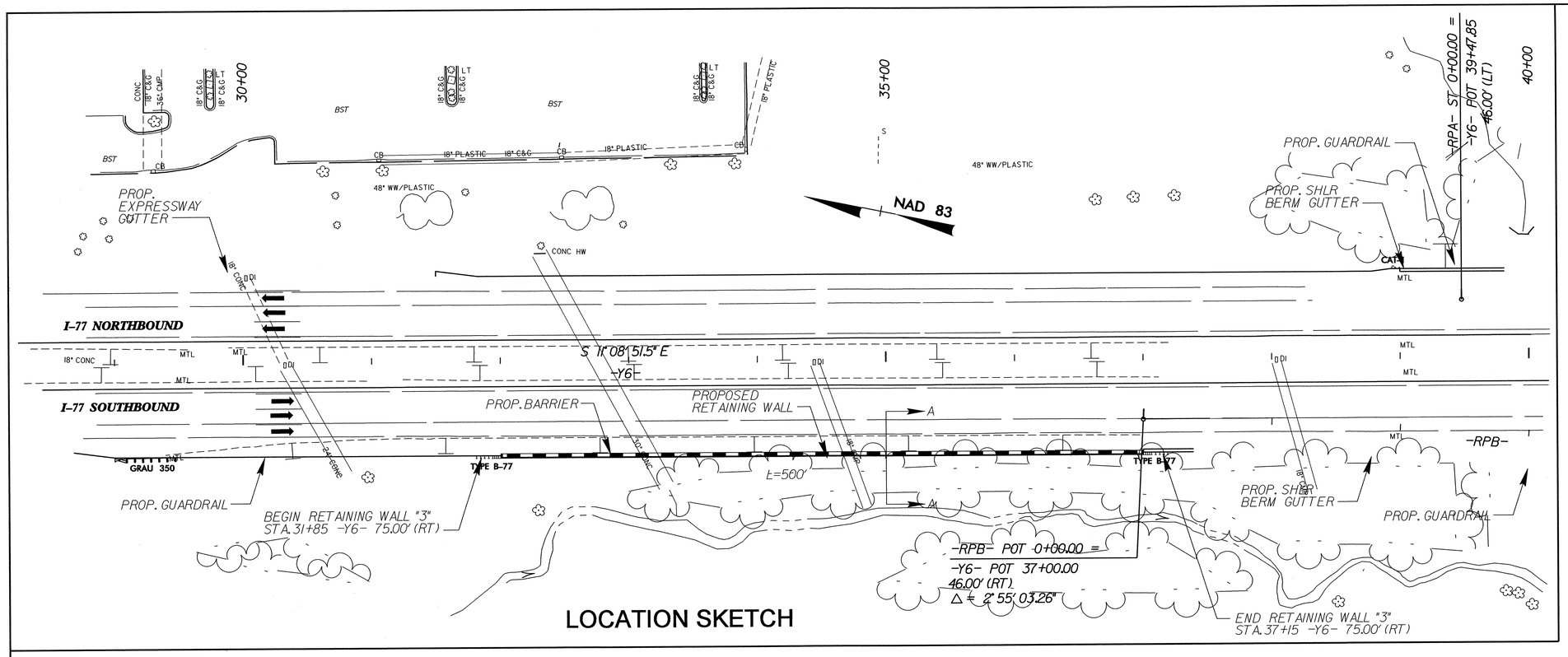

LOCATION SKETCH

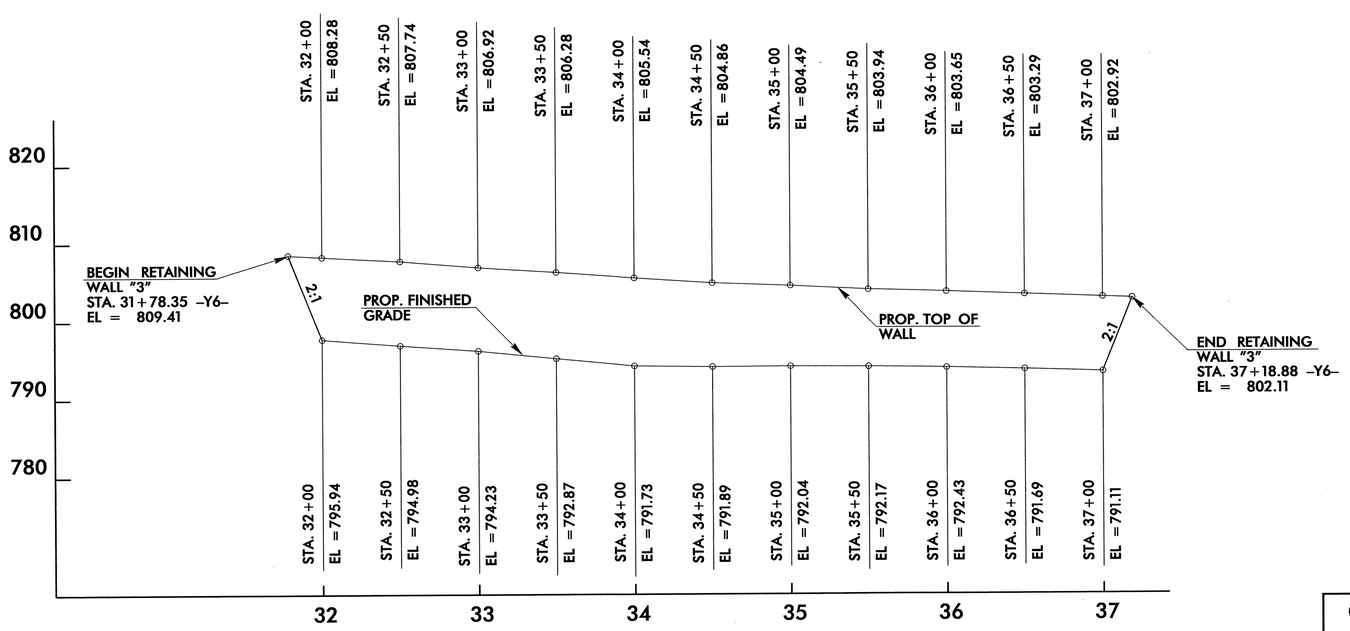

WALL ELEVATION

GEOTECHNICAL ENGINEER	ENGINEER
NORTH CAROLINA PROFESSIONAL SEAL 29869 ENGINEER SHANE C. CLARK — SIGNATURE: S. Clark — DATE: 12/16/08	SIGNATURE — DATE

TOTAL BILL OF MATERIAL	
MSE RETAINING WALL AT STA. 31+85.00 -Y6- (RT.) TO STA. 37+15.00 -Y6- (RT.)	5420 SQ. FT.

PROJECT NO.: R-3833B
IREDELL COUNTY
STATION: 31+85 -Y6- TO 37+15 -Y6- (RT.)
SHEET 1 OF 2

GEOTECHNICAL ENGINEERING UNIT
☐ EASTERN REGIONAL OFFICE
☒ WESTERN REGIONAL OFFICE

STATE OF NORTH CAROLINA
DEPARTMENT OF TRANSPORTATION
RALEIGH

MSE RETAINING WALL #3 DETAILS

REVISIONS						SHEET NO.
NO.	BY	DATE	NO.	BY	DATE	W-4
1			3			TOTAL SHEETS
2			4			9

PREPARED BY: EJS	DATE: 06/08
REVIEWED BY: SCC	DATE: 10/14/08

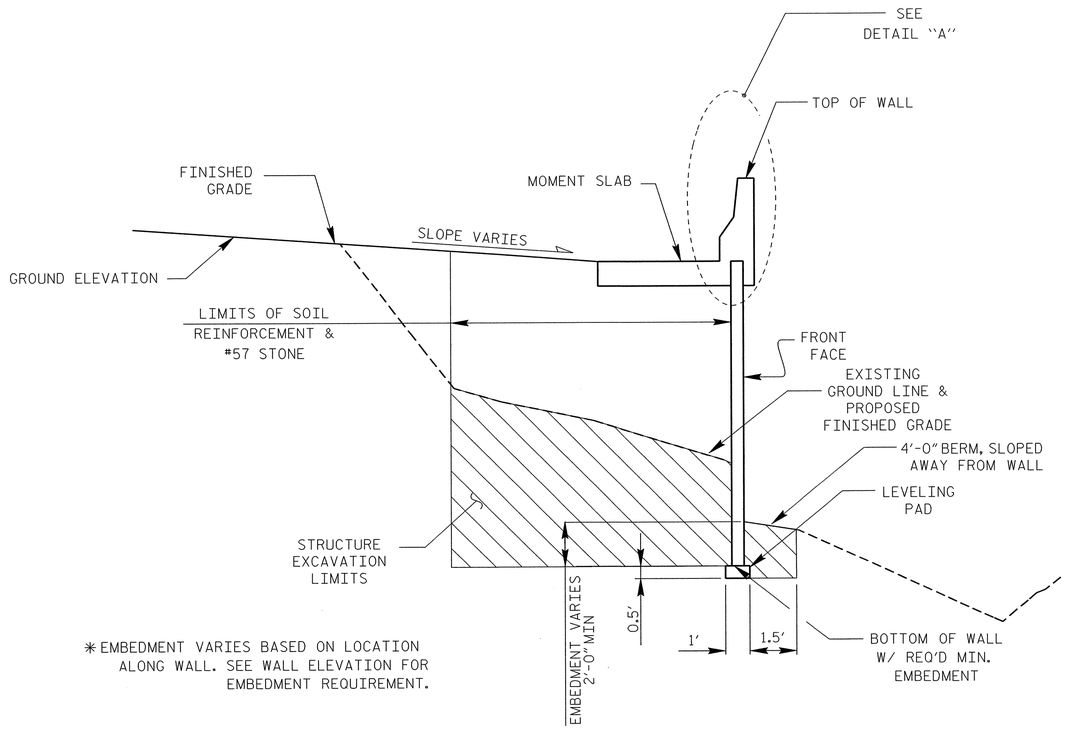

SECTION THROUGH WALL

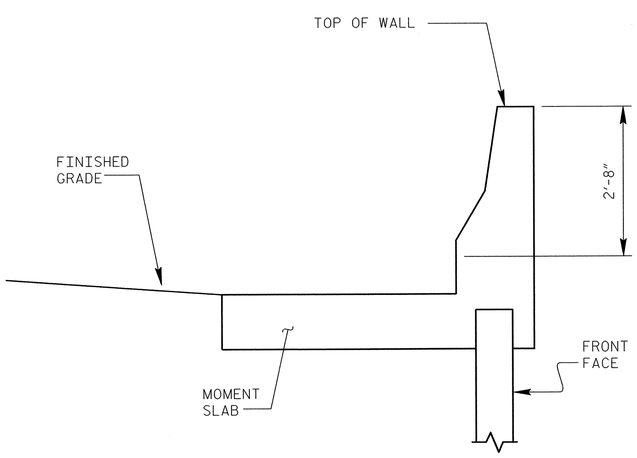

DETAIL "A"

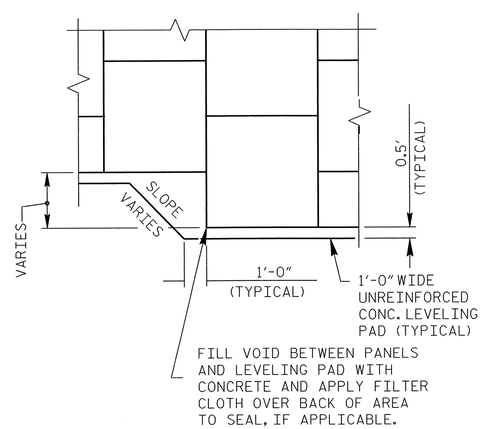

TYPICAL LEVELING PAD STEP DETAIL

NOTES

FOR MECHANICALLY STABILIZED EARTH (MSE) RETAINING WALLS, SEE MECHANICALLY STABILIZED EARTH RETAINING WALLS SPECIAL PROVISION.

CONCRETE BARRIER RAIL COPING WITH A MOMENT SLAB IS REQUIRED FOR RETAINING AS SHOWN. NO SEPARATE PAYMENT WILL BE MADE FOR CONCRETE BARRIER RAIL COPING WITH A MOMENT SLAB. PAYMENT WILL BE CONSIDERED INCIDENTAL TO THE COST OF THE MSE RETAINING WALL.

CONTRACTOR IS RESPONSIBLE FOR SUBMITTING THE DESIGN FOR CONCRETE BARRIER RAIL COPING WITH A MOMENT SLAB ALONG WITH THE MSE WALL DESIGN FOR APPROVAL.

DO NOT USE AN MSE WALL SYSTEM WITH SEGMENTAL RETAINING WALL UNITS FOR RETAINING WALL

A PLAIN GRAY CONCRETE FINISH IS REQUIRED ON THE FRONT FACE OF RETAINING WALL UNITS FOR RETAINING WALL NO. 3.

BEFORE BEGINNING MSE WALL DESIGN FOR RETAINING WALL NO. 3, SURVEY ALL EXISTING GROUND ELEVATIONS SHOWN ON THE PLANS AND SUBMIT A REVISED WALL ENVELOPE FOR REVIEW. DO NOT START WALL DESIGN OR CONSTRUCTION UNTIL THIS ENVELOPE IS ACCEPTED.

DESIGN RETAINING WALL FOR A WALL HEIGHT EQUAL TO THE DESIGN HEIGHT (DIFFERENCE BETWEEN GRADE ELEVATION AND BOTTOM OF WALL ELEVATION) PLUS EMBEDMENT (DIFFERENCE BETWEEN BOTTOM OF WALL ELEVATION AND TOP OF LEVELING PAD ELEVATION).

DESIGN RETAINING WALL FOR THE FOLLOWING:
1) MINIMUM SERVICE LIFE = 75 YEARS
2) ALLOWABLE BEARING CAPACITY = 3000 PSF
3) WALL BACKFILL MATERIAL PARAMETERS:

MATERIAL STANDARD SIZE NO. (IN ACCORDANCE WITH SECTIONS 1005 AND 1014 OF THE STANDARD SPECIFICATIONS)	UNIT WEIGHT (γ) PCF	FRICTION ANGLE (ϕ) DEGREES	COHESION (c) PSF
2S AND 2MS*	125	34	0
57, 67 AND 78M	110	38	0

4) IN-SITU ASSUMED MATERIAL PARAMETERS:

MATERIAL TYPE	UNIT WEIGHT (γ) PCF (kN/m^3)	FRICTION ANGLE (ϕ) DEGREES	COHESION (c) PSF (kPa)
RETAINED AND RANDOM BACKFILL	120	30	0
FOUNDATION	120	30	0

DESIGN RETAINING WALL FOR A LIVE LOAD (TRAFFIC) SURCHARGE.

DO NOT PLACE LEVELING PAD CONCRETE, WALL BACKFILL OR FIRST REINFORCEMENT LAYER FOR RETAINING WALL UNTIL OBTAINING APPROVAL OF THE EXCAVATION DEPTH AND FOUNDATION MATERIAL.

RECONSTRUCT FILL SLOPE AROUND ENDS OF WALL ON A 2:1 (H:V) SLOPE

CONTRACTOR HAS THE OPTION TO CONSTRUCT THE WALL FULL HEIGHT AND THEN CONSTRUCT SLOPE IN FRONT OR TO STEP THE WALL FOOTINGS TO MAINTAIN THE MINIMUM EMBEDDMENT REQUIRED.

GEOTECHNICAL ENGINEER
NORTH CAROLINA PROFESSIONAL SEAL 29869 ENGINEER SHANE C CLARK
SIGNATURE DATE 12/15/08

ENGINEER
SIGNATURE DATE

PROJECT NO.: R-3833B
IREDELL COUNTY
STATION: 31+85 -Y6- TO 37+15 -Y6- (RT.)
SHEET 2 OF 2

GEOTECHNICAL ENGINEERING UNIT
☐ EASTERN REGIONAL OFFICE
☒ WESTERN REGIONAL OFFICE

STATE OF NORTH CAROLINA
DEPARTMENT OF TRANSPORTATION
RALEIGH

MSE RETAINING WALL #3 DETAILS

REVISIONS							SHEET NO.
NO.	BY	DATE	NO.	BY	DATE		W-5
1	-	-	3	-	-		TOTAL SHEETS
2	-	-	4	-	-		7

PREPARED BY:	EJS	DATE:	06/08
REVIEWED BY:	SCC	DATE:	10/15/08

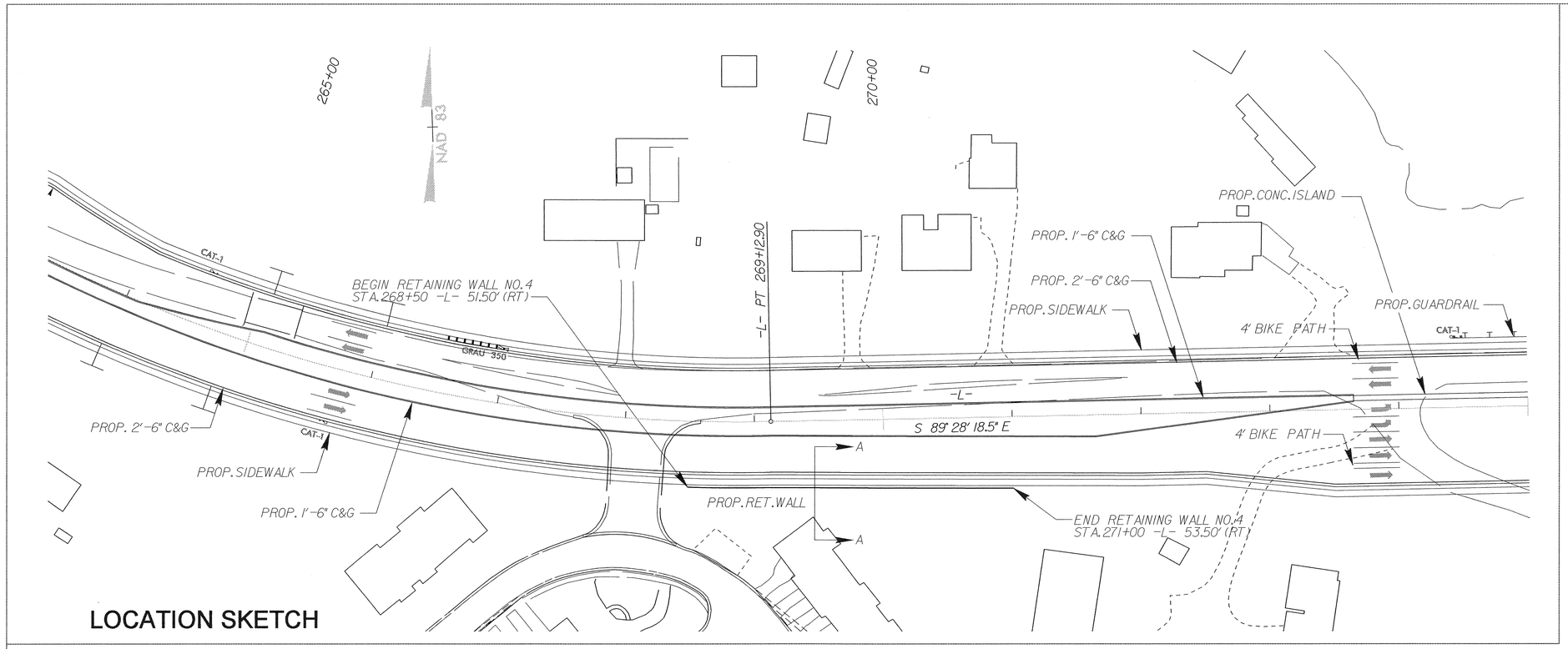

LOCATION SKETCH

GEOTECHNICAL ENGINEER	ENGINEER
NORTH CAROLINA PROFESSIONAL SEAL 29869 ENGINEER SHANE C CLARK — SIGNATURE 10/9/9 DATE	SIGNATURE DATE

TOTAL BILL OF MATERIAL	
RETAINING WALL NO. 4 AT STA. 268+50.00 -L- TO STA. 271+00.00 -L-	2330 SQ. FT.
5'-0" HIGH CHAIN LINK FENCE	300.0 LIN. FT.

1

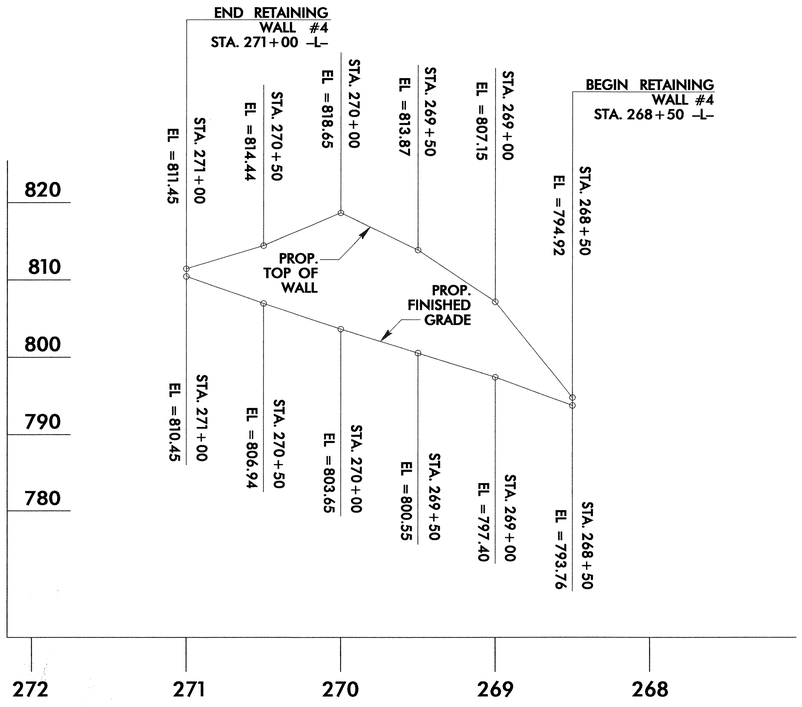

WALL ELEVATION

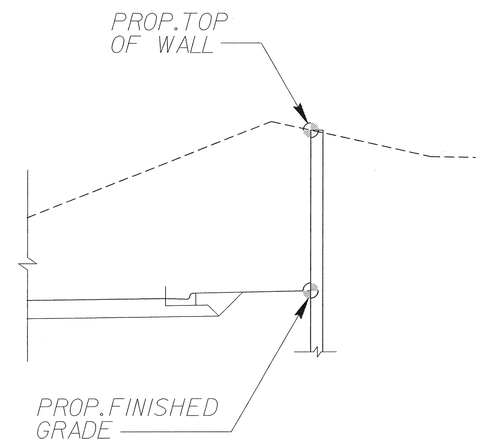

1 SECTION A-A

PROJECT NO.: R-3833B
IREDELL **COUNTY**
STATION: 268+50 -L- TO 271+00 -L-
SHEET 1 OF 2

PREPARED BY: EJS	DATE: 06/08
REVIEWED BY: SCC	DATE: 09/08

GEOTECHNICAL ENGINEERING UNIT
☐ *EASTERN REGIONAL OFFICE*
☒ *WESTERN REGIONAL OFFICE*

STATE OF NORTH CAROLINA
DEPARTMENT OF TRANSPORTATION
RALEIGH

RETAINING WALL NO. 4 SOLDIER PILE RETAINING WALL DETAILS

REVISIONS

NO.	BY	DATE	NO.	BY	DATE
1	SHANE CLARK	10-9-09	3	-	-
2	-	-	4	-	-

SHEET NO. W-6
TOTAL SHEETS 7

GEOTECHNICAL ENGINEER	ENGINEER
NORTH CAROLINA PROFESSIONAL SEAL 29869 ENGINEER SHANE C CLARK — SIGNATURE 10/9/09 DATE	SIGNATURE DATE

NOTES

FOR SOLDIER PILE RETAINING WALLS, SEE SOLDIER PILE RETAINING WALLS PROVISION.

FOR GUARDRAIL, SEE ROADWAY PLANS AND SECTION 862 OF THE STANDARD SPECIFICATIONS.

FOR SINGLE FACED PRECAST CONCRETE BARRIER, SEE ROADWAY PLANS AND SECTION 857 OF THE STANDARD SPECIFICATIONS.

PILE EXCAVATION IS REQUIRED TO INSTALL H PILES FOR RETAINING WALL NO. 4.

1 A 5' 0" CHAINLINK FENCE IS REQUIRED ON TOP OF RETAINING WALL NO. 4 SEE DETAILS FOR FENCE ATTACHMENT INFORMATION.

USE A SOLDIER PILE RETAINING WALL WITH PRECAST CONCRETE PANELS FOR RETAINING WALL NO. 4.

BEFORE BEGINNING SOLDIER PILE WALL DESIGN FOR RETAINING WALL NO. 4, SURVEY EXISTING GROUND ELEVATIONS SHOWN ON THE WALL PROFILE VIEW (WALL ENVELOPE) AND SUBMIT A REVISED WALL ENVELOPE FOR REVIEW. DO NOT START WALL DESIGN OR CONSTRUCTION UNTIL THIS ENVELOPE IS ACCEPTED.

DESIGN RETAINING WALL NO. 4 FOR WALL HEIGHTS EQUAL TO THE DESIGN HEIGHT (DIFFERENCE BETWEEN GRADE ELEVATION AND BOTTOM OF WALL ELEVATION) PLUS EMBEDMENT (DIFFERENCE BETWEEN BOTTOM OF WALL ELEVATION AND TOP OF LEVELING PAD ELEVATION).

DESIGN RETAINING WALL NO. 4 FOR THE FOLLOWING:
1) MINIMUM SERVICE LIFE = 75 YEARS
2) IN-SITU ASSUMED MATERIAL PARAMETERS:
UNIT WEIGHT, gamma = 120 PCF
FRICTION ANGLE, phi = 30 DEGREES
COHESION, c = 0 PSF

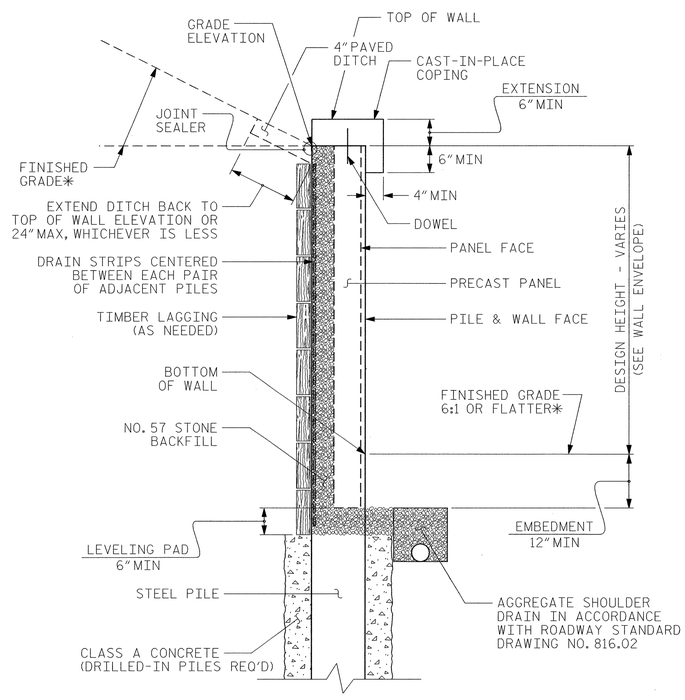

PRECAST PANEL TYPICAL SECTION

*SEE ROADWAY TYPICAL SECTIONS FOR FINISHED GRADE DETAILS.

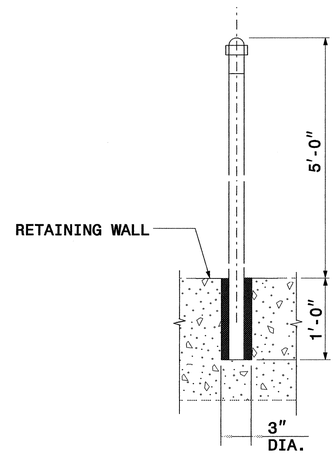

1 **DETAIL 'A'**

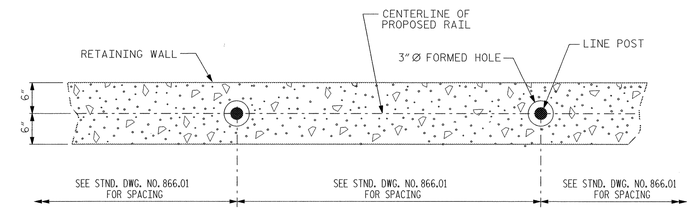

1 SECTION B-B

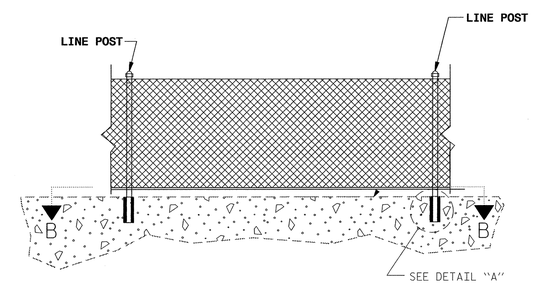

1 ELEVATION OF PROPOSED CHAIN LINK FENCING
(TYP. EACH BAY)

NOTE

SEE NCDOT STANDARD 866.01 FOR POST SPACING, ADDITIONAL CONSTRUCTION DETAILS, AND SPECIFICATIONS.

PROJECT NO.: R-3833B
IREDELL ***COUNTY***
STATION: 268+50 -L- TO 271+00 -L-
SHEET 2 OF 2

GEOTECHNICAL ENGINEERING UNIT
☐ ***EASTERN REGIONAL OFFICE***
☒ ***WESTERN REGIONAL OFFICE***

STATE OF NORTH CAROLINA
DEPARTMENT OF TRANSPORTATION
RALEIGH

RETAINING WALL NO. 4 SOLDIER PILE RETAINING WALL DETAILS

REVISIONS						SHEET NO.
NO.	BY	DATE	NO.	BY	DATE	W-7
1	SHANE CLARK	10-9-09	3	-	-	TOTAL SHEETS
2	-	-	4	-	-	7

PREPARED BY:	EJS	DATE:	06/08
REVIEWED BY:	SCC	DATE:	09/08

STANDARD NOTES

DESIGN DATA:

SPECIFICATIONS	A.A.S.H.T.O. (CURRENT)
LIVE LOAD	SEE PLANS
IMPACT ALLOWANCE	SEE A.A.S.H.T.O.
STRESS IN EXTREME FIBER OF	
STRUCTURAL STEEL - AASHTO M270 GRADE 36	20,000 LBS. PER SQ. IN.
- AASHTO M270 GRADE 50W	27,000 LBS. PER SQ. IN.
- AASHTO M270 GRADE 50	27,000 LBS. PER SQ. IN.
REINFORCING STEEL IN TENSION GRADE 60	24,000 LBS. PER SQ. IN.
CONCRETE IN COMPRESSION	1,200 LBS. PER SQ. IN.
CONCRETE IN SHEAR	SEE A.A.S.H.T.O.
STRUCTURAL TIMBER - TREATED OR UNTREATED - EXTREME FIBER STRESS	1,800 LBS. PER SQ. IN.
COMPRESSION PERPENDICULAR TO GRAIN OF TIMBER	375 LBS. PER SQ. IN.
EQUIVALENT FLUID PRESSURE OF EARTH	30 LBS. PER CU. FT. (MINIMUM)

MATERIAL AND WORKMANSHIP:

EXCEPT AS MAY OTHERWISE BE SPECIFIED ON PLANS OR IN THE SPECIAL PROVISIONS, ALL MATERIAL AND WORKMANSHIP SHALL BE IN ACCORDANCE WITH THE 2006 "STANDARD SPECIFICATIONS FOR ROADS AND STRUCTURES" OF THE N. C. DEPARTMENT OF TRANSPORTATION.

STEEL SHEET PILING FOR PERMANENT OR TEMPORARY APPLICATIONS SHALL BE HOT ROLLED.

CONCRETE:

UNLESS OTHERWISE REQUIRED ON PLANS, CLASS A CONCRETE SHALL BE USED FOR ALL PORTIONS OF ALL STRUCTURES WITH THE EXCEPTION THAT: CLASS AA CONCRETE SHALL BE USED IN BRIDGE SUPERSTRUCTURES, ABUTMENT BACKWALLS, AND APPROACH SLABS; AND CLASS B CONCRETE SHALL BE USED FOR SLOPE PROTECTION AND RIP RAP.

CONCRETE CHAMFERS:

UNLESS OTHERWISE NOTED ON THE PLANS, ALL EXPOSED CORNERS ON STRUCTURES SHALL BE CHAMFERED 3/4" WITH THE FOLLOWING EXCEPTIONS: TOP CORNERS OF CURBS MAY BE ROUNDED TO 1-1/2" RADIUS WHICH IS BUILT INTO CURB FORMS; CORNERS OF TRANSVERSE FLOOR EXPANSION JOINTS SHALL BE ROUNDED WITH A 1/4" FINISHING TOOL UNLESS OTHERWISE REQUIRED ON PLANS; AND CORNERS OF EXPANSION JOINTS IN THE ROADWAY FACES AND TOPS OF CURBS AND SIDEWALKS SHALL BE ROUNDED TO A 1/4" RADIUS WITH A FINISHING STONE OR TOOL UNLESS OTHERWISE REQUIRED ON PLANS.

DOWELS:

DOWELS WHEN INDICATED ON PLANS AS FOR CULVERT EXTENSIONS, SHALL BE EMBEDDED AT LEAST 12" INTO THE OLD CONCRETE AND GROUTED INTO PLACE WITH 1:2 CEMENT MORTAR.

ALLOWANCE FOR DEAD LOAD DEFLECTION, SETTLEMENT, ETC. IN CASTING SUPERSTRUCTURES:

BRIDGES SHALL BE BUILT ON THE GRADE OR VERTICAL CURVE SHOWN ON PLANS. SLABS, CURBS AND PARAPETS SHALL CONFORM TO THE GRADE OR CURVE.

ALL DIMENSIONS WHICH ARE GIVEN IN SECTION AND ARE AFFECTED BY DEAD LOAD DEFLECTIONS ARE DIMENSIONS AT CENTER LINE OF BEARING UNLESS OTHERWISE NOTED ON PLANS. IN SETTING FORMS FOR STEEL BEAM BRIDGES AND PRESTRESSED CONCRETE GIRDER BRIDGES, ADJUSTMENTS SHALL BE MADE DUE TO THE DEAD LOAD DEFLECTIONS FOR THE ELEVATIONS SHOWN. WHERE BLOCKS ARE SHOWN OVER BEAMS FOR BUILDING UP TO THE SLAB, THE VERTICAL DIMENSIONS OF THE BLOCKS SHALL BE ADJUSTED BETWEEN BEARINGS TO COMPENSATE FOR DEAD LOAD DEFLECTIONS, VERTICAL CURVE ORDINATE, AND ACTUAL BEAM CAMBER. WHERE BOTTOM OF SLAB IS IN LINE WITH BOTTOM OF TOP FLANGES, DEPTH OF SLAB BETWEEN BEARINGS SHALL BE ADJUSTED TO COMPENSATE FOR DEAD LOAD DEFLECTION, VERTICAL CURVE ORDINATE, AND ACTUAL BEAM CAMBER.

IN SETTING FALSEWORK AND FORMS FOR REINFORCED CONCRETE SPANS, AN ALLOWANCE SHALL BE MADE FOR DEAD LOAD DEFLECTIONS, SETTLEMENT OF FALSEWORK, AND PERMANENT CAMBER WHICH SHALL BE PROVIDED FOR IN ADDITION TO THE ELEVATIONS SHOWN. AFTER REMOVAL OF THE FALSEWORK, THE FINISHED STRUCTURES SHALL CONFORM TO THE PROFILE AND ELEVATIONS SHOWN ON THE PLANS AND CONSTRUCTION ELEVATIONS FURNISHED BY THE ENGINEER.

DETAILED DRAWINGS FOR FALSEWORK OR FORMS FOR BRIDGE SUPERSTRUCTURE AND ANY STRUCTURE OR PARTS OF A STRUCTURE AS NOTED ON THE PLANS SHALL BE SUBMITTED TO THE ENGINEER FOR APPROVAL BEFORE CONSTRUCTION OF THE FALSEWORK OR FORMS IS STARTED.

REINFORCING STEEL:

ALL REINFORCING STEEL SHALL BE DEFORMED. DIMENSIONS RELATIVE TO PLACEMENT OF REINFORCING ARE TO CENTERS OF BARS UNLESS OTHERWISE INDICATED IN THE PLANS. DIMENSIONS ON BAR DETAILS ARE TO CENTERS OF BARS OR ARE OUT TO OUT AS INDICATED ON PLANS.

WIRE BAR SUPPORTS SHALL BE PROVIDED FOR REINFORCING STEEL WHERE INDICATED ON THE PLANS. WHEN BAR SUPPORT PIECES ARE PLACED IN CONTINUOUS LINES, THEY SHALL BE SO PLACED THAT THE ENDS OF THE SUPPORTING WIRES SHALL BE LAPPED TO LOCK LEGS ON ADJOINING PIECES.

STRUCTURAL STEEL:

AT THE CONTRACTOR'S OPTION, HE MAY SUBSTITUTE 7/8" Ø SHEAR STUDS FOR THE 3/4" Ø STUDS SPECIFIED ON THE PLANS. THIS SUBSTITUTION SHALL BE MADE AT THE RATE OF 3 - 7/8" Ø STUDS FOR 4 - 3/4" Ø STUDS, AND STUD SPACING CHANGES SHALL BE MADE AS NECESSARY TO PROVIDE THE SAME EQUIVALENT NUMBER OF 7/8" Ø STUDS ALONG THE BEAM AS SHOWN FOR 3/4" Ø STUDS BASED ON THE RATIO OF 3 - 7/8" Ø STUDS FOR 4 - 3/4" Ø STUDS. STUDS OF THE LENGTH SPECIFIED ON THE PLANS MUST BE PROVIDED. THE MAXIMUM SPACING SHALL BE 2'-0".

EXCEPT AT THE INTERIOR SUPPORTS OF CONTINUOUS BEAMS WHERE THE COVER PLATE IS IN CONTACT WITH BEARING PLATE, THE CONTRACTOR MAY, AT HIS OPTION, SUBSTITUTE FOR THE COVER PLATES DESIGNATED ON THE PLANS COVER PLATES OF THE EQUIVALENT AREA PROVIDED THESE PLATES ARE AT LEAST 5/16" IN THICKNESS AND DO NOT EXCEED A WIDTH EQUAL TO THE FLANGE WIDTH LESS 2" OR A THICKNESS EQUAL TO 2 TIMES THE FLANGE THICKNESS. THE SIZE OF FILLET WELDS SHALL CONFORM TO THE REQUIREMENTS OF THE CURRENT ANSI/AASHTO/AWS "BRIDGE WELDING CODE". ELECTROSLAG WELDING WILL NOT BE PERMITTED.

WITH THE SOLE EXCEPTION OF EDGES AT SURFACES WHICH BEAR ON OTHER SURFACES, ALL SHARP EDGES AND ENDS OF SHAPES AND PLATES SHALL BE SLIGHTLY ROUNDED BY SUITABLE MEANS TO A RADIUS OF APPROXIMATELY 1/16 INCH OR EQUIVALENT FLAT SURFACE AT A SUITABLE ANGLE PRIOR TO PAINTING, GALVANIZING, OR METALLIZING.

HANDRAILS AND POSTS:

METAL STANDARDS AND FACES OF THE CONCRETE END POSTS FOR THE METAL RAIL SHALL BE SET NORMAL TO THE GRADE OF THE CURB, UNLESS OTHERWISE SHOWN ON PLANS. THE METAL RAIL AND TOPS OF CONCRETE POSTS USED WITH THE ALUMINUM RAIL SHALL BE BUILT PARALLEL TO THE GRADE OF THE CURB.

METAL HANDRAILS SHALL BE IN ACCORDANCE WITH THE PLANS. RAILS SHALL BE AS MANUFACTURED FOR BRIDGE RAILING. CASTINGS SHALL BE OF A UNIFORM APPEARANCE. FINS AND OTHER DEFORMATIONS RESULTING FROM CASTING OR OTHERWISE SHALL BE REMOVED IN A MANNER SO THAT A UNIFORM COLORING OF THE COMPLETED CASTING SHALL BE OBTAINED. CASTINGS WITH DISCOLORATIONS OR OF NON-UNIFORM COLORING WILL NOT BE ACCEPTED. CERTIFIED MILL REPORTS ARE REQUIRED FOR METAL RAILS AND POSTS.

SPECIAL NOTES:

GENERALLY, IN CASE OF DISCREPANCY, THIS STANDARD SHEET OF NOTES SHALL GOVERN OVER THE SPECIFICATIONS, BUT THE REMAINDER OF THE PLANS SHALL GOVERN OVER NOTES HEREON, AND SPECIAL PROVISIONS SHALL GOVERN OVER ALL. SEE SPECIFICATIONS ARTICLE 105-4.

ENGLISH

JANUARY, 1990