| Project No. | Sheet No. |
|---|---|
| U-4020 | Sig. 1 |

**Project: U-4020**

*Vicinity*

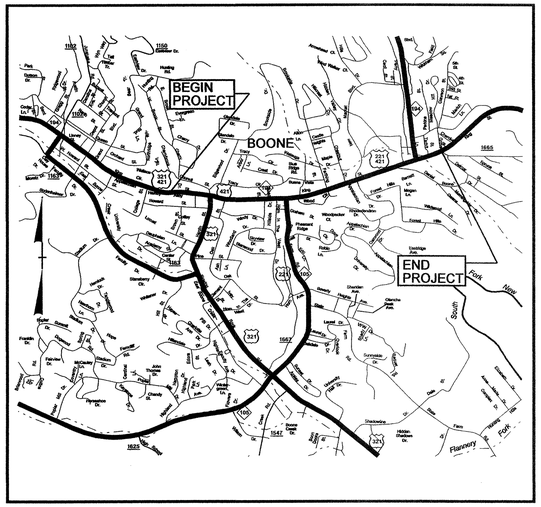


STATE OF NORTH CAROLINA
DIVISION OF HIGHWAYS

# WATAUGA COUNTY

***LOCATION: US 421 (KING STREET) FROM US 321 (HARDIN STREET) TO EAST OF NC 194 (JEFFERSON ROAD) IN BOONE***

***TYPE OF WORK: TRAFFIC SIGNALS***

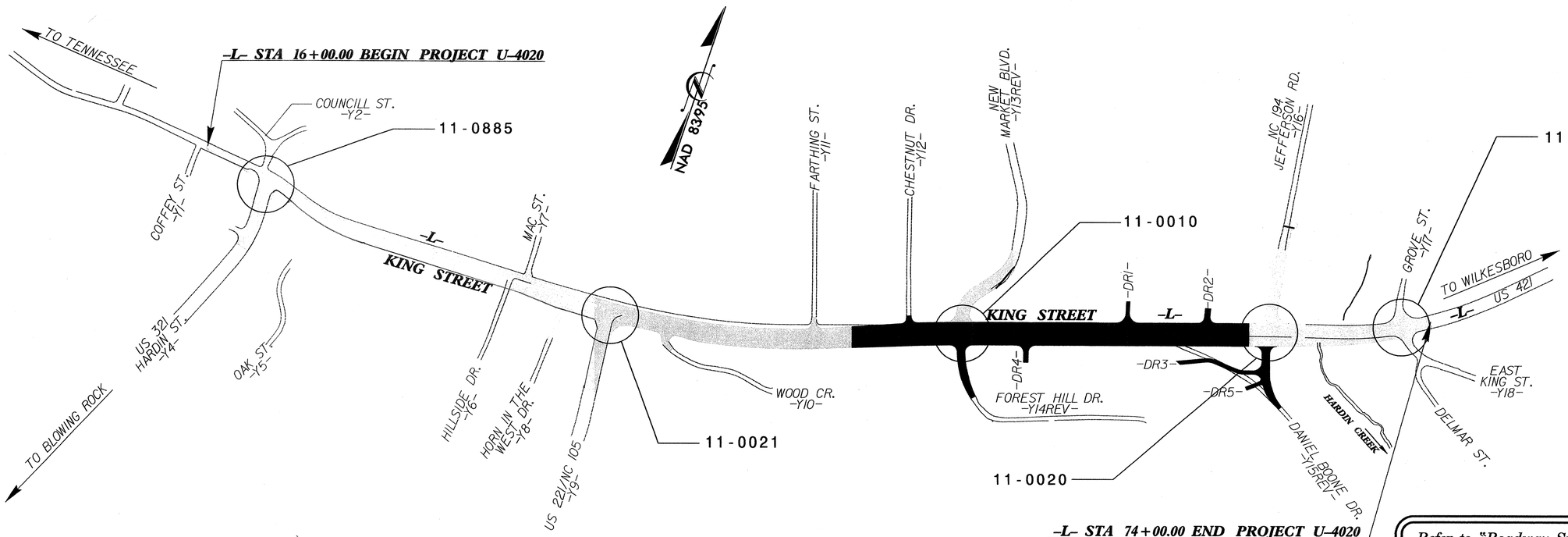


*Refer to "Roadway Standard Drawings NCDOT" dated July 2006 and "Standard Specifications for Roads and Structures" dated July 2006.*

## *Index of Plans*

| Sheet # | Reference # | Location/Description |
|---|---|---|
| Sig. 1 | | Title Sheet |
| Sig. 2-9 | 11-0885 | US 421 - US 321 (King Street) at US 321 (Hardin Street) /Council Street |
| Sig. 10-19 | 11-0021 | US 421 (King Street) at US 221/NC 105 |
| Sig. 20-35 | 11-1010 | US 421 (King Street) at New Market Blvd./Forest Hill Drive |
| Sig. 36-45 | 11-0020 | US 421 (King Street) at NC 194 (Jefferson Rd.)/Daniel Boone Drive |
| Sig. 46-53 | 11-1117 | US 421 (King Street) at East King St./Grove Street |
| Sig. 54-58 | | Standard Metal Pole Details Sheets |
| Sig. 59-61 | | Loop Detail Sheets |
| Sig. 62-64 | | Wireless Communication Plans |


***INTELLIGENT TRANSPORTATION AND SIGNALS UNIT***

*Contacts:*

*Z. M. Little, PE - Signals Project Engineer*
*G. C. Brown, PE - Signal Equipment Design Engineer*
*G. A. Fuller, PE - State ITS & Signals Engineer*

*Prepared in the Office of:*
*DIVISION OF HIGHWAYS*
*TRAFFIC ENGINEERING AND SAFETY SYSTEMS BRANCH*

*750 N. Greenfield Parkway, Garner, NC 27529*



06-JAN-2009 09:10
s:\its signals\workgroups\tip projects\0_titlesheet_library\u4020_tsh.dgn

| PROJECT REFERENCE NO. | SHEET NO. |
|---|---|
| U-4020 | Sig.2 |

## PHASING DIAGRAM

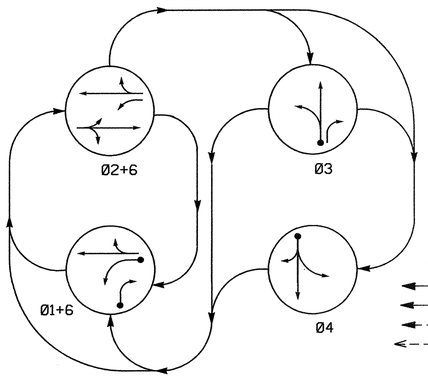


## TABLE OF OPERATION

| SIGNAL FACE | PHASE Ø1+6 | Ø2+6 | Ø3 | Ø4 | FLASH |
|---|---|---|---|---|---|
| 21,22 | R | G | R | R | Y |
| 31 | R | R | G | R | R |
| 32 | R | R | G | R | R |
| 41 | R | R | R | G | R |
| 42,43 | R | R | R | G | R |
| 61 | G | G | R | R | Y |
| 62 | G | G | R | R | Y |

## SIGNAL FACE I.D.

ALL HEADS L.E.D

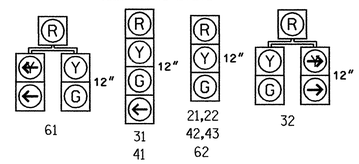


## 2070L LOOP & DETECTOR INSTALLATION

| INDUCTIVE LOOPS | | | | | DETECTOR PROGRAMMING | | | | | | |
|---|---|---|---|---|---|---|---|---|---|---|---|
| LOOP | SIZE (FT) | DISTANCE FROM STOPBAR (FT) | TURNS | NEW LOOP | PHASE | CALLING | EXTENSION | FULL TIME DELAY | STRETCH TIME | DELAY TIME | SYSTEM LOOP | NEW CARD |
| 1A | 6X40 | 0 | 2-4-2 | Y | 1 | Y | Y | - | - | 15 | - | Y |
| 1B | 6X40 | 0 | 2-4-2 | Y | 1 | Y | Y | - | - | 15 | - | Y |
| 3A | 6X40 | 0 | 2-4-2 | Y | 3 | Y | Y | - | - | - | - | Y |
| 4A | 6X40 | 0 | 2-4-2 | Y | 4 | Y | Y | - | - | 5 | - | Y |

4 Phase
Semi-Actuated
(Isolated)

## NOTES

1. Refer to "Roadway Standard Drawings NCDOT" dated July 2006 and "Standard Specifications for Roads and Structures" dated July 2006.
2. Do not program signal for late night flashing operation unless otherwise directed by the Engineer.
3. Enable Backup Protect for phase 6 to allow the controller to clear from phase 2+6 to phase 1+6 by progressing through an all red display.
4. Set all detector units to presence mode.
5. Locate new cabinet so as not to obstruct sight distance of vehicles turning right on red.

PHASING DIAGRAM DETECTION LEGEND

- DETECTED MOVEMENT
- UNDETECTED MOVEMENT (OVERLAP)
- UNSIGNALIZED MOVEMENT
- PEDESTRIAN MOVEMENT

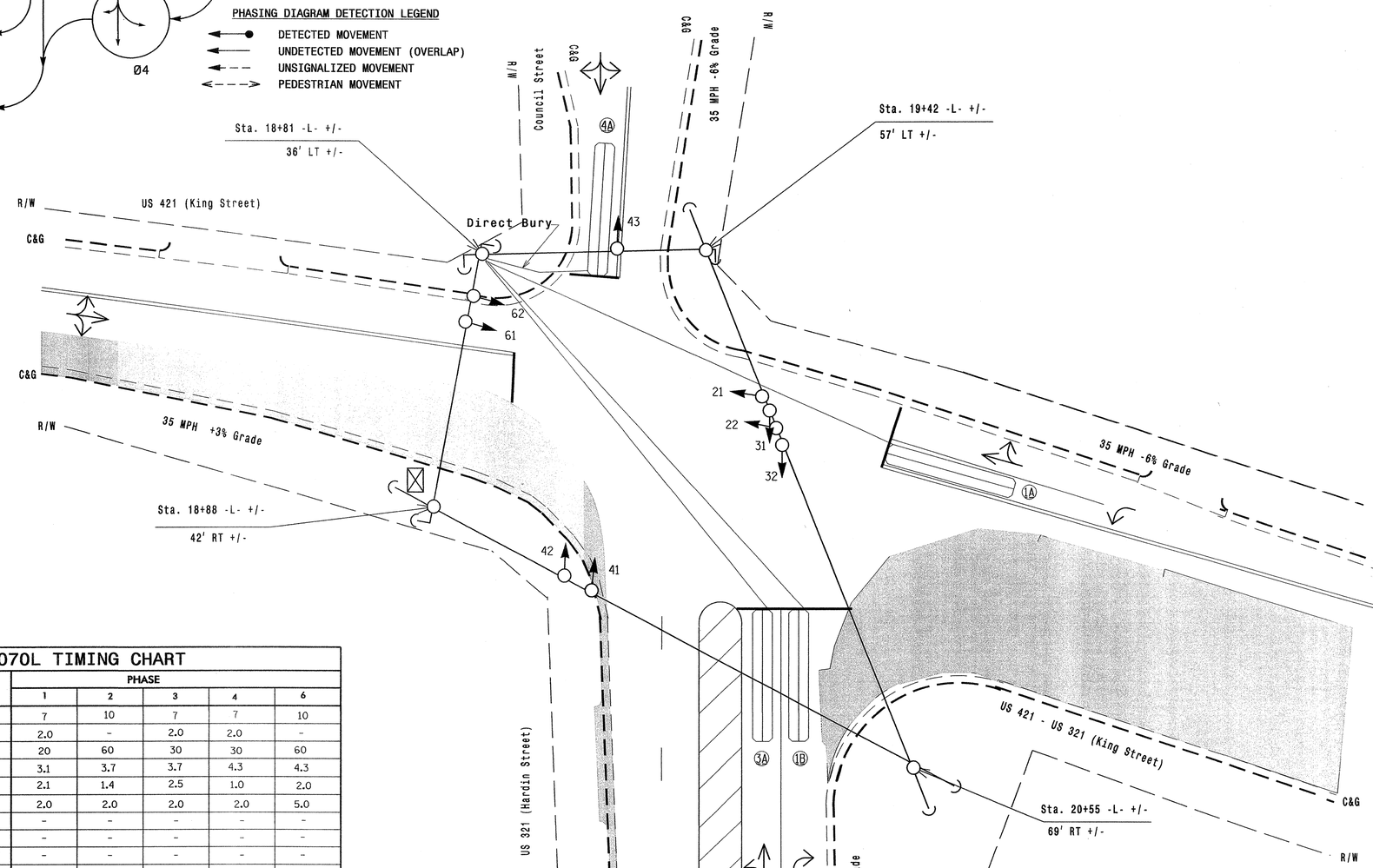


## LEGEND

| PROPOSED | | EXISTING |
|---|---|---|
| | Traffic Signal Head | |
| | Modified Signal Head | N/A |
| | Sign | |
| | Pedestrian Signal Head With Push Button & Sign | |
| | Signal Pole with Guy | |
| | Signal Pole with Sidewalk Guy | |
| | Inductive Loop Detector | |
| | Controller & Cabinet | |
| | Junction Box | |
| | 2-in Underground Conduit | |
| N/A | Right of Way | |
| | Directional Arrow | |
| | Pavement Marking Arrow | |
| | Construction Zone | |

## 2070L TIMING CHART

| FEATURE | PHASE 1 | 2 | 3 | 4 | 6 |
|---|---|---|---|---|---|
| Min Green 1 * | 7 | 10 | 7 | 7 | 10 |
| Extension 1 * | 2.0 | - | 2.0 | 2.0 | - |
| Max Green 1 * | 20 | 60 | 30 | 30 | 60 |
| Yellow Clearance | 3.1 | 3.7 | 3.7 | 4.3 | 4.3 |
| Red Clearance | 2.1 | 1.4 | 2.5 | 1.0 | 2.0 |
| Red Revert | 2.0 | 2.0 | 2.0 | 2.0 | 5.0 |
| Walk 1 * | - | - | - | - | - |
| Don't Walk 1 | - | - | - | - | - |
| Seconds Per Actuation * | - | - | - | - | - |
| Max Variable Initial * | - | - | - | - | - |
| Time Before Reduction * | - | - | - | - | - |
| Time To Reduce * | - | - | - | - | - |
| Minimum Gap | - | - | - | - | - |
| Recall Mode | - | MAX RECALL | - | - | MAX RECALL |
| Vehicle Call Memory | - | N/A | - | - | N/A |
| Dual Entry | - | - | - | - | - |
| Simultaneous Gap | ON | ON | ON | ON | ON |

* These values may be field adjusted. Do not adjust Min Green and Extension times for phases 2 and 6 lower than what is shown. Min Green for all other phases should not be lower than 4 seconds.

Signal Upgrade - Temporary (Phase I - Step 2)

Prepared in the Offices of:
Traffic Engineering and Safety Systems Branch
Signal and Geometrics Section
DEPARTMENT OF TRANSPORTATION
STATE OF NORTH CAROLINA
750 N. Greenfield Pkwy, Garner, NC 27529

SCALE 0 20 1"=20'

US 421 - US 321 (King Street) at US 321 (Hardin Street)/ Council Street

Division 11 Watauga County Boone

PLAN DATE: September 2008 REVIEWED BY:
PREPARED BY: Jerry Yaravitz REVIEWED BY:

| REVISIONS | INIT. | DATE |
|---|---|---|
| | | |

SEAL
NORTH CAROLINA PROFESSIONAL SEAL 30530 ENGINEER ZAHAD MUHAMMAD LITTLE
SIGNATURE 12/11/08 DATE
SIG. INVENTORY NO. 11-0885 T1

16-DEC-2008 14:27
s:\its signals\workgroups\tip projects\u-4020\signals\designs\signals\11-0885\11085t1_sig_dsn_2008mmdd.dgn
jyaravitz

| PROJECT REFERENCE NO. | SHEET NO. |
|---|---|
| U-4020 | Sig.3 |

# EDI MODEL 2010ECL-NC CONFLICT MONITOR PROGRAMMING DETAIL

*(remove jumpers and set switches as shown)*

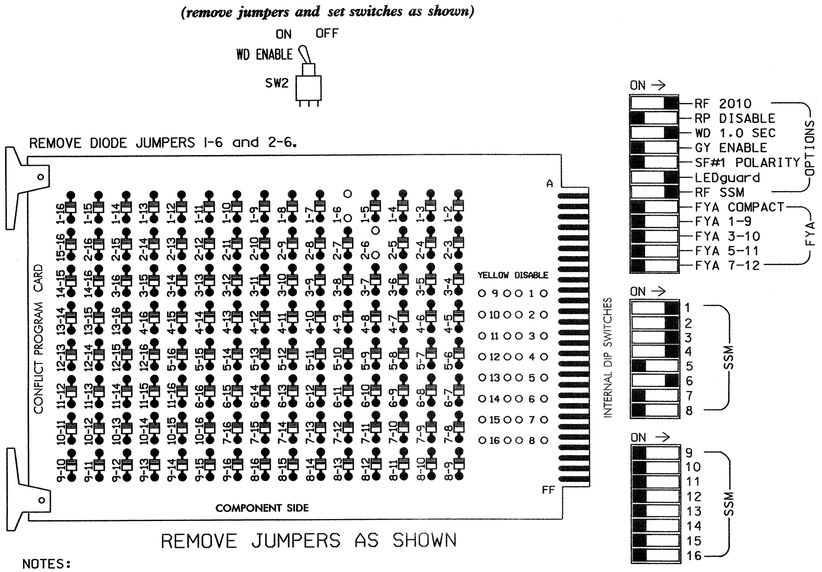


REMOVE JUMPERS AS SHOWN

NOTES:

1. Card is provided with all diode jumpers in place. Removal of any jumper allows its channels to run concurrently.
2. Make sure jumpers SEL2-SEL5 are present on the monitor board.

## NOTES

1. To prevent "flash-conflict" problems, insert red flash program blocks for all unused vehicle load switches in the output file. The installer shall verify that signal heads flash in accordance with the Signal Plans.
2. Ensure that Red Enable is active at all times during normal operation. To prevent Red Failures on unused monitor channels, tie unused red monitor inputs 5,7,8,9, 10,11,12,13,14,15 & 16 to load switch AC+ per the cabinet manufacturer's instructions.
3. Program phases 2 and 6, on the controller unit, for Start Up In Green.
4. Enable Simultaneous Gap-Out, on the controller unit, for all phases.

## SIGNAL HEAD HOOK-UP CHART

| LOAD SWITCH NO. | S1 | S2 | S2P | S3 | | S4 | | S4P | S5 | S6 | S6P | S7 | S8 | S8P |
|---|---|---|---|---|---|---|---|---|---|---|---|---|---|---|
| PHASE | 1 | 2 | 2 PED | 3 | | 4 | | 4 PED | 5 | 6 | 6 PED | 7 | 8 | 8 PED |
| SIGNAL HEAD NO. | 32,61 | 21,22 | NU | 31 | 32 | 41 | 42,43 | NU | NU | 61,62 | NU | NU | NU | NU |
| RED | * | 128 | | 116 | 116 | 101 | 101 | | | 134 | | | | |
| YELLOW | | 129 | | 117 | 117 | 102 | 102 | | | 135 | | | | |
| GREEN | | 130 | | 118 | 118 | 103 | 103 | | | 136 | | | | |
| RED ARROW | | | | | | | | | | | | | | |
| YELLOW ARROW | 126 | | | | | | | | | | | | | |
| GREEN ARROW | 127 | | | 118 | | 103 | | | | | | | | |
| ✋ | | | | | | | | | | | | | | |
| 🚶 | | | | | | | | | | | | | | |

NU = Not Used

* Denotes install load resistor. See load resistor installation detail this sheet.

## EQUIPMENT INFORMATION

CONTROLLER.....CONTRACTOR SUPPLIED 2070L
CABINET.....CONTRACTOR SUPPLIED 332
SOFTWARE.....ECONOLITE OASIS
CABINET MOUNT.....BASE
OUTPUT FILE POSITIONS...12
LOAD SWITCHES USED.....S1,S2,S3,S4,S6
PHASES USED.....1,2,3,4,6
OVERLAPS.....NONE

## INPUT FILE POSITION LAYOUT

*(front view)*

| | | 1 | 2 | 3 | 4 | 5 | 6 | 7 | 8 | 9 | 10 | 11 | 12 | 13 | 14 |
|---|---|---|---|---|---|---|---|---|---|---|---|---|---|---|---|
| FILE "I" | U | ø1 1A | ø1 1B | SLOT EMPTY | SLOT EMPTY | ø3 3A | ø4 4A | SLOT EMPTY | SLOT EMPTY | SLOT EMPTY | SLOT EMPTY | SLOT EMPTY | SLOT EMPTY | SLOT EMPTY | FS DC ISOLATOR |
| | L | NOT USED | NOT USED | | | NOT USED | NOT USED | | | | | | | | ST DC ISOLATOR |
| FILE "J" | U | SLOT EMPTY | SLOT EMPTY | SLOT EMPTY | SLOT EMPTY | SLOT EMPTY | SLOT EMPTY | SLOT EMPTY | SLOT EMPTY | SLOT EMPTY | SLOT EMPTY | SLOT EMPTY | SLOT EMPTY | SLOT EMPTY | SLOT EMPTY |
| | L | | | | | | | | | | | | | | |

EX.: 1A, 2A, ETC. = LOOP NO.'S

FS = FLASH SENSE
ST = STOP TIME

## INPUT FILE CONNECTION & PROGRAMMING CHART

| LOOP NO. | LOOP TERMINAL | INPUT FILE POS. | PIN NO. | INPUT ASSIGNMENT NO. | DETECTOR NO. | NEMA PHASE | CALL | EXTEND | FULL TIME DELAY | STRETCH TIME | DELAY TIME |
|---|---|---|---|---|---|---|---|---|---|---|---|
| 1A | TB2-1,2 | I1U | 56 | 18 | 1 | 1 | Y | Y | | | 15 |
| 1B | TB2-5,6 | I2U | 39 | 1 | 2 | 1 | Y | Y | | | 15 |
| 3A | TB4-5,6 | I5U | 58 | 20 | 3 | 3 | Y | Y | | | |
| 4A | TB4-9,10 | I6U | 41 | 3 | 4 | 4 | Y | Y | | | 5 |

INPUT FILE POSITION LEGEND: J2L
FILE J
SLOT 2
LOWER

## BACKUP PROTECTION NOTE

*(program controller as shown below)*

From Main Menu press '2' (Phase Control), then '1' (Phase Control Functions). Program phase 6 for 'Backup Protect'. Make sure the Red Revert times shown on the Signal Design Plans are programmed in the 'Phase Timing' menu.

## LOAD RESISTOR INSTALLATION DETAIL

ACCEPTABLE VALUES

| VALUE (ohms) | WATTAGE |
|---|---|
| 1.5K - 1.9K | 25W (min) |
| 2.0K - 3.0K | 10W (min) |

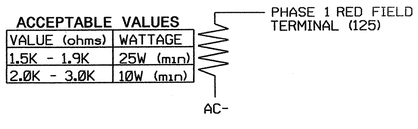


NOTE: The purpose of this resistor is to load the channel red monitor inputs in order for the Signal Sequence Monitor to use the full signal sequence monitoring capability on channels that do not use the red display in the field.

THIS ELECTRICAL DETAIL IS FOR
THE SIGNAL DESIGN: 11-0885T1
DESIGNED: September 2008
SEALED: 12-16-08
REVISED: N/A

Signal Upgrade - Temporary (Phase I - Step 2)

ELECTRICAL AND PROGRAMMING DETAILS FOR:

US 421 - US 321 (King Street) at US 321 (Hardin Street)/ Council Street

Division 11 Watauga County Boone

PLAN DATE: 12-04-08 REVIEWED BY: D.T. Joyce

PREPARED BY: D.H. Spaulding REVIEWED BY:

REVISIONS | INIT. | DATE

Prepared in the Offices of:
Traffic Engineering and Safety Systems Branch
Signals Management Section
750 N. Greenfield Pkwy, Garner, NC 27529

SEAL
NORTH CAROLINA PROFESSIONAL SEAL 022013 ENGINEER GEORGE C. BROWN

George C. Brown 12/19/08
SIGNATURE DATE

SIG. INVENTORY NO. 11-0885T1

17-DEC-2008 10:39
s:\traffic\signal\design manual\building\in-progress\1088511_sheets.2008xx.dgn
dspaulding

| PROJECT REFERENCE NO. | SHEET NO. |
|---|---|
| U-4020 | Sig.4 |

## PHASING DIAGRAM

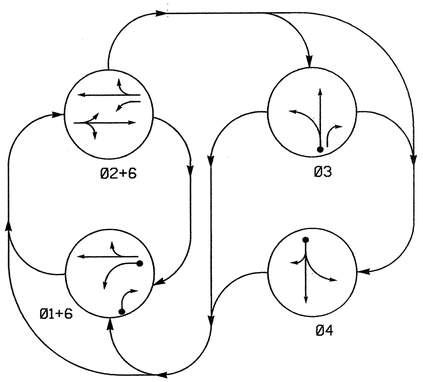


PHASING DIAGRAM DETECTION LEGEND

- DETECTED MOVEMENT
- UNDETECTED MOVEMENT (OVERLAP)
- UNSIGNALIZED MOVEMENT
- PEDESTRIAN MOVEMENT

## TABLE OF OPERATION

| SIGNAL FACE | PHASE 01+6 | PHASE 02+6 | PHASE 03 | PHASE 04 | FLASH |
|---|---|---|---|---|---|
| 21,22 | R | G | R | R | Y |
| 31 | R | R | G | R | R |
| 32 | R | R | G | R | R |
| 41 | R | R | R | G | R |
| 42,43 | R | R | R | G | R |
| 61 | G | G | R | R | Y |
| 62 | G | G | R | R | Y |

## SIGNAL FACE I.D.

All Heads L.E.D.

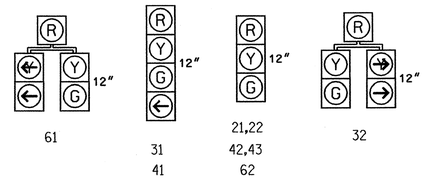


## 2070L LOOP & DETECTOR INSTALLATION

| INDUCTIVE LOOPS | | | | | DETECTOR PROGRAMMING | | | | | | |
|---|---|---|---|---|---|---|---|---|---|---|---|
| LOOP | SIZE (FT) | DISTANCE FROM STOPBAR (FT) | TURNS | NEW LOOP | PHASE | CALLING | EXTENSION | FULL TIME DELAY | STRETCH TIME | DELAY TIME | SYSTEM LOOP | NEW CARD |
| 1A | 6X40 | 0 | 2-4-2 | Y | 1 | Y | Y | - | - | 15 | - | - |
| 1B | 6X40 | 0 | 2-4-2 | Y | 1 | Y | Y | - | - | 15 | - | - |
| 3A | 6X40 | 0 | 2-4-2 | Y | 3 | Y | Y | - | - | - | - | - |
| 4A | 6X40 | 0 | 2-4-2 | Y | 4 | Y | Y | - | - | 5 | - | - |

4 Phase
Semi - Actuated
(Isolated)

## NOTES

1. Refer to "Roadway Standard Drawings NCDOT" dated July 2006 and "Standard Specifications for Roads and Structures" dated July 2006.
2. Do not program signal for late night flashing operation unless otherwise directed by the Engineer.
3. Enable Backup Protect for phase 6 to allow the controller to clear from phase 2+6 to phase 1+6 by progressing through an all red display.
3. Reposition existing signal heads as needed.
4. Set all detector units to presence mode.

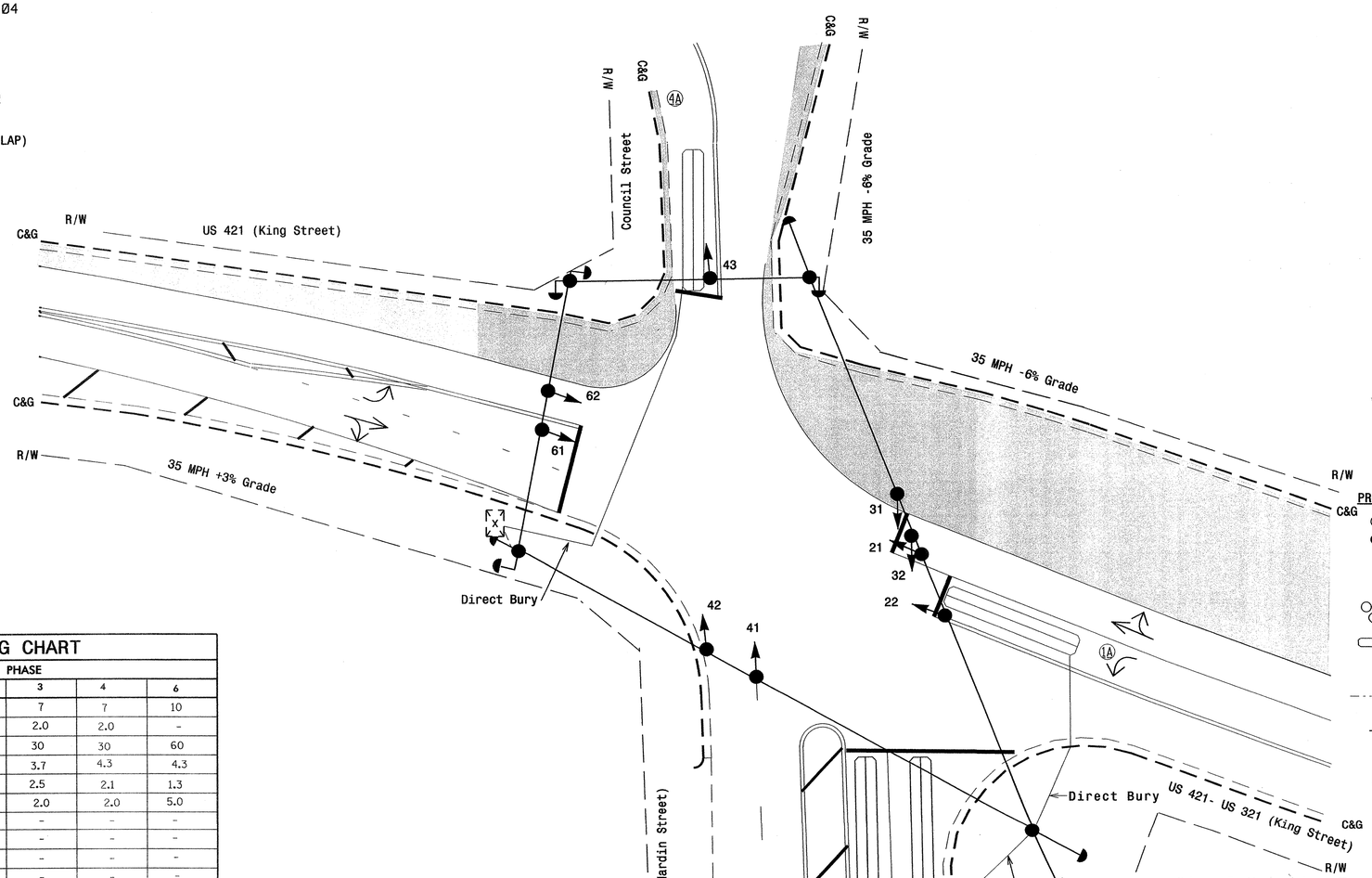


## LEGEND

| PROPOSED | | EXISTING |
|---|---|---|
| | Traffic Signal Head | |
| | Modified Signal Head | N/A |
| | Sign | |
| | Pedestrian Signal Head With Push Button & Sign | |
| | Signal Pole with Guy | |
| | Signal Pole with Sidewalk Guy | |
| | Inductive Loop Detector | |
| | Controller & Cabinet | |
| | Junction Box | |
| | 2-in Underground Conduit | |
| N/A | Right of Way | |
| | Directional Arrow | |
| | Pavement Marking Arrow | |
| | Construction Zone | |

## 2070L TIMING CHART

| FEATURE | PHASE 1 | PHASE 2 | PHASE 3 | PHASE 4 | PHASE 6 |
|---|---|---|---|---|---|
| Min Green 1 * | 7 | 10 | 7 | 7 | 10 |
| Extension 1 * | 2.0 | - | 2.0 | 2.0 | - |
| Max Green 1 * | 20 | 60 | 30 | 30 | 60 |
| Yellow Clearance | 3.1 | 3.7 | 3.7 | 4.3 | 4.3 |
| Red Clearance | 1.6 | 2.0 | 2.5 | 2.1 | 1.3 |
| Red Revert | 2.0 | 2.0 | 2.0 | 2.0 | 5.0 |
| Walk 1 * | - | - | - | - | - |
| Don't Walk 1 | - | - | - | - | - |
| Seconds Per Actuation * | - | - | - | - | - |
| Max Variable Initial * | - | - | - | - | - |
| Time Before Reduction * | - | - | - | - | - |
| Time To Reduce * | - | - | - | - | - |
| Minimum Gap | - | - | - | - | - |
| Recall Mode | - | MAX RECALL | - | - | MAX RECALL |
| Vehicle Call Memory | - | N/A | - | - | N/A |
| Dual Entry | - | - | - | - | - |
| Simultaneous Gap | ON | ON | ON | ON | ON |

* These values may be field adjusted. Do not adjust Min Green and Extension times for phases 2 and 6 lower than what is shown. Min Green for all other phases should not be lower than 4 seconds.

Signal Upgrade -Temporary (Phase II - Steps 1&2)

Prepared in the Offices of:
Traffic Engineering and Safety Systems Branch
Signals and Geometrics Section
Department of Transportation
750 N. Greenfield Pkwy, Garner, NC 27529

SCALE 0 20 1"=20'

# US 421 - US 321 (King Street) at US 321 (Hardin Street) / Council Street

Division 11 Watauga County Boone

PLAN DATE: September 2008 REVIEWED BY:

PREPARED BY: Jerry Yaravitz REVIEWED BY:

| REVISIONS | INIT. | DATE |
|---|---|---|
| | | |

SEAL
NORTH CAROLINA PROFESSIONAL SEAL 30530 ENGINEER ZACHARY M. LITTLE
SIGNATURE 12/16/08 DATE
SIG. INVENTORY NO. 11-0885T2

| PROJECT REFERENCE NO. | SHEET NO. |
|---|---|
| U-4020 | Sig.5 |

# EDI MODEL 2010ECL-NC CONFLICT MONITOR PROGRAMMING DETAIL

*(remove jumpers and set switches as shown)*

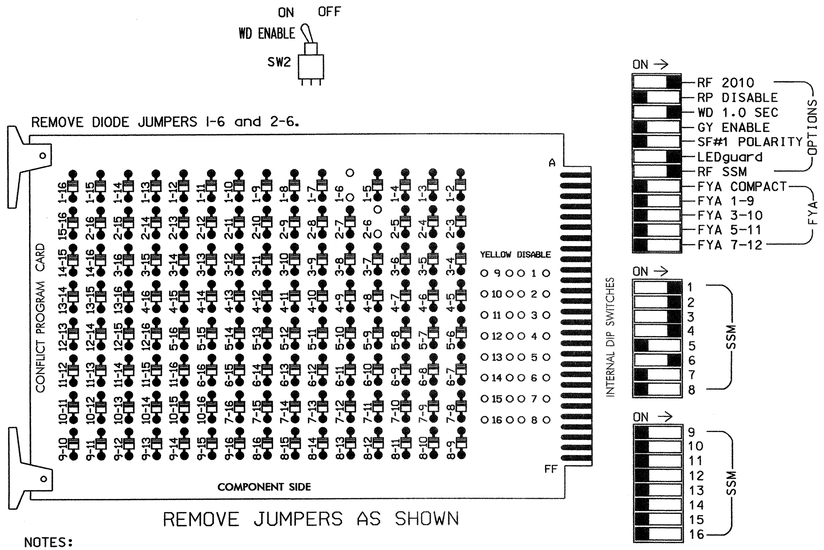


REMOVE JUMPERS AS SHOWN

NOTES:

1. Card is provided with all diode jumpers in place. Removal of any jumper allows its channels to run concurrently.
2. Make sure jumpers SEL2-SEL5 are present on the monitor board.

■ = DENOTES POSITION OF SWITCH

## NOTES

1. To prevent "flash-conflict" problems, insert red flash program blocks for all unused vehicle load switches in the output file. The installer shall verify that signal heads flash in accordance with the Signal Plans.
2. Ensure that Red Enable is active at all times during normal operation. To prevent Red Failures on unused monitor channels, tie unused red monitor inputs 5,7,8,9, 10,11,12,13,14,15 & 16 to load switch AC+ per the cabinet manufacturer's instructions.
3. Program phases 2 and 6, on the controller unit, for Start Up In Green.
4. Enable Simultaneous Gap-Out, on the controller unit, for all phases.

## SIGNAL HEAD HOOK-UP CHART

| LOAD SWITCH NO. | S1 | S2 | S2P | S3 | | S4 | | S4P | S5 | S6 | S6P | S7 | S8 | S8P |
|---|---|---|---|---|---|---|---|---|---|---|---|---|---|---|
| PHASE | 1 | 2 | 2 PED | 3 | | 4 | | 4 PED | 5 | 6 | 6 PED | 7 | 8 | 8 PED |
| SIGNAL HEAD NO. | 32,61 | 21,22 | NU | 31 | 32 | 41 | 42,43 | NU | NU | 61,62 | NU | NU | NU | NU |
| RED | * | 128 | | 116 | 116 | 101 | 101 | | | 134 | | | | |
| YELLOW | | 129 | | 117 | 117 | 102 | 102 | | | 135 | | | | |
| GREEN | | 130 | | 118 | 118 | 103 | 103 | | | 136 | | | | |
| RED ARROW | | | | | | | | | | | | | | |
| YELLOW ARROW | 126 | | | | | | | | | | | | | |
| GREEN ARROW | 127 | | | 118 | | 103 | | | | | | | | |
| ✋ | | | | | | | | | | | | | | |
| 🚶 | | | | | | | | | | | | | | |

NU = Not Used

* Denotes install load resistor. See load resistor installation detail this sheet.

## EQUIPMENT INFORMATION

CONTROLLER.....CONTRACTOR SUPPLIED 2070L
CABINET.....CONTRACTOR SUPPLIED 332
SOFTWARE.....ECONOLITE OASIS
CABINET MOUNT.....BASE
OUTPUT FILE POSITIONS...12
LOAD SWITCHES USED.....S1,S2,S3,S4,S6
PHASES USED.....1,2,3,4,6
OVERLAPS.....NONE

## INPUT FILE POSITION LAYOUT

*(front view)*

| | | 1 | 2 | 3 | 4 | 5 | 6 | 7 | 8 | 9 | 10 | 11 | 12 | 13 | 14 |
|---|---|---|---|---|---|---|---|---|---|---|---|---|---|---|---|
| FILE "I" | U | ø1 1A | ø1 1B | SLOT EMPTY | SLOT EMPTY | ø3 3A | ø4 4A | SLOT EMPTY | SLOT EMPTY | SLOT EMPTY | SLOT EMPTY | SLOT EMPTY | SLOT EMPTY | SLOT EMPTY | FS DC ISOLATOR |
| | L | NOT USED | NOT USED | | | NOT USED | NOT USED | | | | | | | | ST DC ISOLATOR |
| FILE "J" | U | SLOT EMPTY | SLOT EMPTY | SLOT EMPTY | SLOT EMPTY | SLOT EMPTY | SLOT EMPTY | SLOT EMPTY | SLOT EMPTY | SLOT EMPTY | SLOT EMPTY | SLOT EMPTY | SLOT EMPTY | SLOT EMPTY | SLOT EMPTY |
| | L | | | | | | | | | | | | | | |

EX.: 1A, 2A, ETC. = LOOP NO.'S

FS = FLASH SENSE
ST = STOP TIME

## INPUT FILE CONNECTION & PROGRAMMING CHART

| LOOP NO. | LOOP TERMINAL | INPUT FILE POS. | PIN NO. | INPUT ASSIGNMENT NO. | DETECTOR NO. | NEMA PHASE | CALL | EXTEND | FULL TIME DELAY | STRETCH TIME | DELAY TIME |
|---|---|---|---|---|---|---|---|---|---|---|---|
| 1A | TB2-1,2 | I1U | 56 | 18 | 1 | 1 | Y | Y | | | 15 |
| 1B | TB2-5,6 | I2U | 39 | 1 | 2 | 1 | Y | Y | | | 15 |
| 3A | TB4-5,6 | I5U | 58 | 20 | 3 | 3 | Y | Y | | | |
| 4A | TB4-9,10 | I6U | 41 | 3 | 4 | 4 | Y | Y | | | 5 |

INPUT FILE POSITION LEGEND: J2L
FILE J
SLOT 2
LOWER

## BACKUP PROTECTION NOTE

*(program controller as shown below)*

From Main Menu press '2' (Phase Control), then '1' (Phase Control Functions). Program phase 6 for 'Backup Protect'. Make sure the Red Revert times shown on the Signal Design Plans are programmed in the 'Phase Timing' menu.

## LOAD RESISTOR INSTALLATION DETAIL

ACCEPTABLE VALUES

| VALUE (ohms) | WATTAGE |
|---|---|
| 1.5K - 1.9K | 25W (min) |
| 2.0K - 3.0K | 10W (min) |

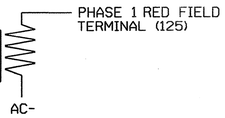


NOTE: The purpose of this resistor is to load the channel red monitor inputs in order for the Signal Sequence Monitor to use the full signal sequence monitoring capability on channels that do not use the red display in the field.

THIS ELECTRICAL DETAIL IS FOR
THE SIGNAL DESIGN: 11-0885T2
DESIGNED: September 2008
SEALED: 12-16-08
REVISED: N/A

Signal Upgrade - Temporary (Phase II - Step 1&2)

ELECTRICAL AND PROGRAMMING DETAILS FOR:

Prepared in the Offices of:

Pacific Southwestern and Safety Systems, Inc.
STATE OF NORTH CAROLINA DEPARTMENT OF TRANSPORTATION
Signals Management Section

750 N. Greenfield Pkwy, Garner, NC 27529

# US 421 - US 321 (King Street) at US 321 (Hardin Street)/ Council Street

Division 11 Watauga County Boone

| | | | |
|---|---|---|---|
| PLAN DATE: | 12-08-08 | REVIEWED BY: | D.T. Joyce |
| PREPARED BY: | D.H. Spaulding | REVIEWED BY: | |

| REVISIONS | INIT. | DATE |
|---|---|---|
| | | |

SEAL

NORTH CAROLINA PROFESSIONAL SEAL 022013 ENGINEER GEORGE C. BROWN

George C. Brown 12/16/08
SIGNATURE DATE

SIG. INVENTORY NO. 11-0885T2

11-DEC-2008 10:43
s:\traffic\signal\workgroups\sig mandspaulding\in-progress\1088572_smu_ela_2008xx.dgn
dspaulding

| PROJECT REFERENCE NO. | SHEET NO. |
|---|---|
| U-4020 | Sig.6 |

## PHASING DIAGRAM

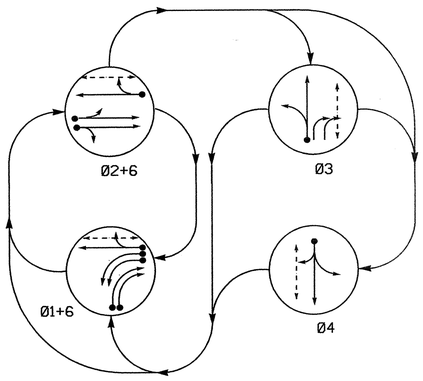


### PHASING DIAGRAM DETECTION LEGEND

- DETECTED MOVEMENT
- UNDETECTED MOVEMENT (OVERLAP)
- UNSIGNALIZED MOVEMENT
- PEDESTRIAN MOVEMENT

## TABLE OF OPERATION

| SIGNAL FACE | PHASE Ø1+6 | Ø2+6 | Ø3 | Ø4 | FLASH |
|---|---|---|---|---|---|
| 11,12 | ← | ~~R~~ | ~~R~~ | ~~R~~ | ~~R~~ |
| 21,22 | R | G | R | R | Y |
| 31 | R | R | G ← | R | R |
| 32,33 | R ↗ | R | G | R | R |
| 41 | R | R | R | G ← | R |
| 42,43 | R | R | R | G | R |
| 61,62 | G | G | R | R | Y |
| P31,P32 | DW | DW | W | DW | DRK |
| P41,P42 | DW | DW | DW | W | DRK |
| P61,P62 | W | W | DW | DW | DRK |

W - Walk
DW - Don't Walk
DRK - Dark

## SIGNAL FACE I.D.

ALL HEADS L.E.D.

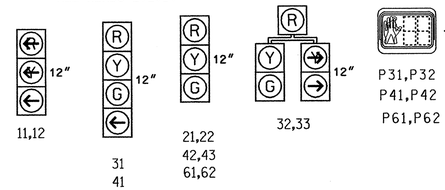


## 2070L LOOP & DETECTOR INSTALLATION

| INDUCTIVE LOOPS | | | | | DETECTOR PROGRAMMING | | | | | | | |
|---|---|---|---|---|---|---|---|---|---|---|---|---|
| LOOP | SIZE (FT) | DISTANCE FROM STOPBAR (FT) | TURNS | NEW LOOP | PHASE | CALLING | EXTENSION | FULL TIME DELAY | STRETCH TIME | DELAY TIME | SYSTEM LOOP | NEW C&D |
| 1A | 6X40 | 0 | 2-4-2 | Y | 1 | Y | Y | - | - | - | - | - |
| 1B | 6X40 | 0 | 2-4-2 | Y | 1 | Y | Y | - | - | - | - | - |
| 1C | 6X40 | 0 | 2-4-2 | Y | 1 | Y | Y | - | - | 15 | - | Y |
| 1D | 6X40 | 0 | 2-4-2 | Y | 1 | Y | Y | - | - | 15 | - | Y |
| 2A,2B | 6X6 | 70 | 6 | Y | 2 | Y | Y | - | - | - | - | Y |
| 3A | 6X40 | 0 | 2-4-2 | - | 3 | Y | Y | - | - | - | - | - |
| 4A | 6X40 | 0 | 2-4-2 | - | 4 | Y | Y | - | - | 5 | - | - |
| 6A | 6X6 | 70 | 6 | Y | 6 | Y | Y | - | - | - | - | Y |
| S01 | 6X6 | +170 | 6 | Y | - | - | - | - | - | - | Y | Y |
| S02 | 6X6 | +170 | 6 | Y | - | - | - | - | - | - | Y | Y |

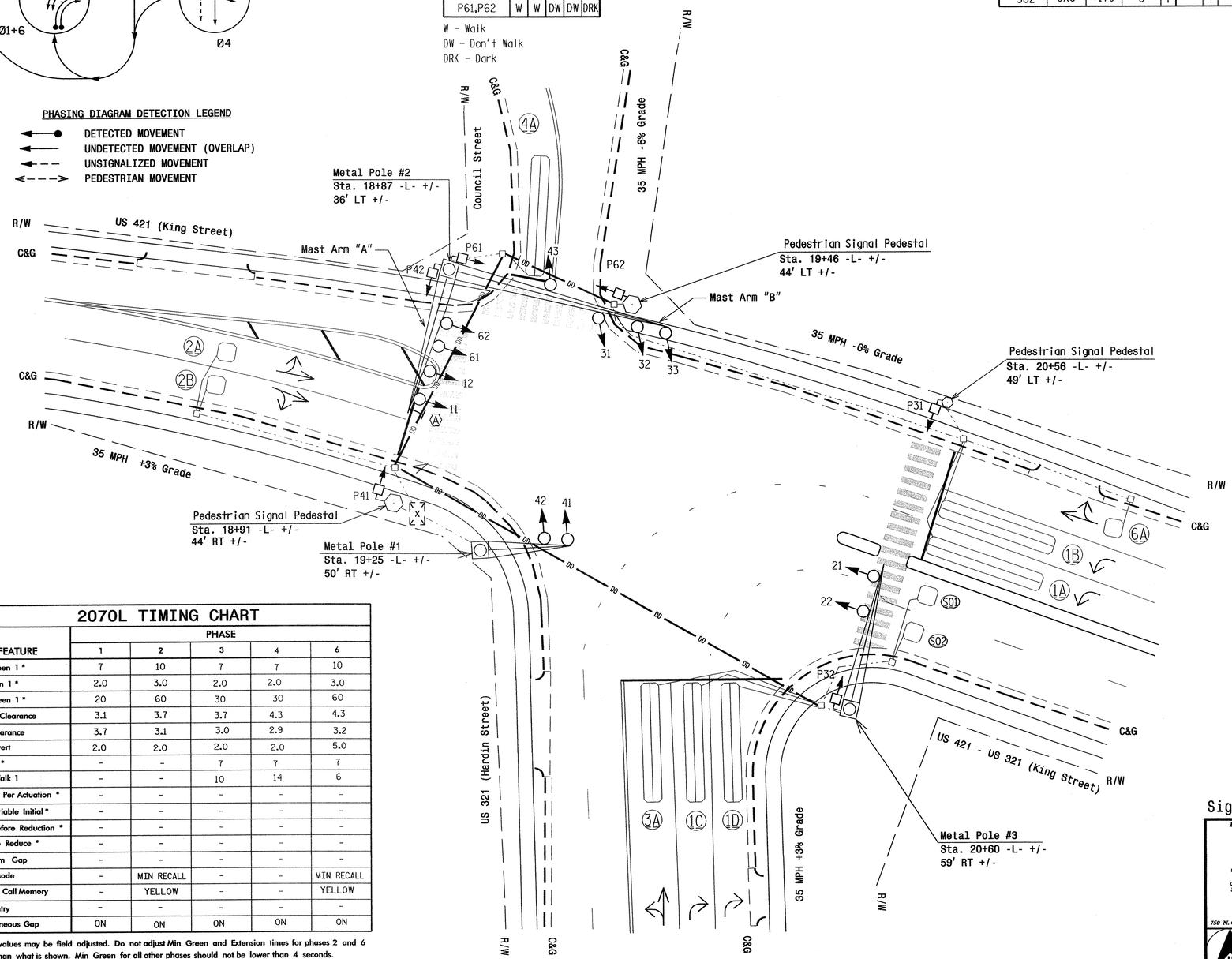


## 2070L TIMING CHART

| FEATURE | PHASE 1 | 2 | 3 | 4 | 6 |
|---|---|---|---|---|---|
| Min Green 1 * | 7 | 10 | 7 | 7 | 10 |
| Extension 1 * | 2.0 | 3.0 | 2.0 | 2.0 | 3.0 |
| Max Green 1 * | 20 | 60 | 30 | 30 | 60 |
| Yellow Clearance | 3.1 | 3.7 | 3.7 | 4.3 | 4.3 |
| Red Clearance | 3.7 | 3.1 | 3.0 | 2.9 | 3.2 |
| Red Revert | 2.0 | 2.0 | 2.0 | 2.0 | 5.0 |
| Walk 1 * | - | - | 7 | 7 | 7 |
| Don't Walk 1 | - | - | 10 | 14 | 6 |
| Seconds Per Actuation * | - | - | - | - | - |
| Max Variable Initial * | - | - | - | - | - |
| Time Before Reduction * | - | - | - | - | - |
| Time To Reduce * | - | - | - | - | - |
| Minimum Gap | - | - | - | - | - |
| Recall Mode | - | MIN RECALL | - | - | MIN RECALL |
| Vehicle Call Memory | - | YELLOW | - | - | YELLOW |
| Dual Entry | - | - | - | - | - |
| Simultaneous Gap | ON | ON | ON | ON | ON |

* These values may be field adjusted. Do not adjust Min Green and Extension times for phases 2 and 6 lower than what is shown. Min Green for all other phases should not be lower than 4 seconds.

## 4 Phase
## Fully Actuated
## US 421 (King Street) Closed Loop System

## NOTES

1. Refer to "Roadway Standard Drawings NCDOT" dated July 2006 and "Standard Specifications for Roads and Structures" dated July 2006.
2. Do not program signal for late night flashing operation unless otherwise directed by the Engineer.
3. Enable Backup Protect for phase 6 to allow the controller to clear from phase 2+6 to phase 1+6 by progressing through an all red display.
4. The order of phase 3 and phase 4 may be reversed.
5. Set all detector units to presence mode.
6. Omit "WALK" and flashing "DON'T WALK" with no pedestrian calls.
7. Program pedestrian heads to countdown the flashing "Don't Walk" time only.
8. Maximum times shown in timing chart are for free-run operation only. Coordinated signal system timing values supersede these values.
9. Closed loop system data: Controller Asset #0885.

## LEGEND

| PROPOSED | | EXISTING |
|---|---|---|
| | Traffic Signal Head | |
| | Modified Signal Head | N/A |
| | Sign | |
| | Pedestrian Signal Head With Push Button & Sign | |
| | Signal Pole with Guy | |
| | Signal Pole with Sidewalk Guy | |
| | Inductive Loop Detector | |
| | Controller & Cabinet | |
| | Junction Box | |
| | 2-in Underground Conduit | |
| N/A | Right of Way | |
| | Directional Arrow | |
| | Pavement Marking Arrow | |
| DD | Directional Drill | N/A |
| | Pedestrian Signal Pedestal | |
| | Metal Pole with Mastarm | |
| A | "U-TURN YIELD TO RIGHT TURN" Sign (R10-16) | A |

Signal Upgrade - Final

Prepared in the Offices of:
Traffic Engineering and Safety Systems Branch
STATE OF NORTH CAROLINA
DEPARTMENT OF TRANSPORTATION
Signals and Geometrics Section
750 N. Greenfield Pkwy, Garner, NC 27529

SCALE 0 20 1"=20'

US 421 - US 321 (King Street) at US 321 (Hardin Street)/ Council Street

Division 11 Watauga County Boone

PLAN DATE: September 2008 REVIEWED BY:
PREPARED BY: Jerry Yaravitz REVIEWED BY:

| REVISIONS | INIT. | DATE |
|---|---|---|
| | | |

SEAL
NORTH CAROLINA PROFESSIONAL SEAL 30530 ENGINEER ACHARY M. LITTLE
SIGNATURE 12/16/08 DATE
SIG. INVENTORY NO. 11-0885

02-JAN-2009 10:26
s:\traffic signals\workgroups\tip projects\u-4020\signals\design signals\11-0885\11-0885_sig_dsn_2008rmdd.dgn
jyaravitz

| PROJECT REFERENCE NO. | SHEET NO. |
|---|---|
| U-4020 | Sig.7 |

# EDI MODEL 2010ECL-NC CONFLICT MONITOR PROGRAMMING DETAIL

*(remove jumpers and set switches as shown)*

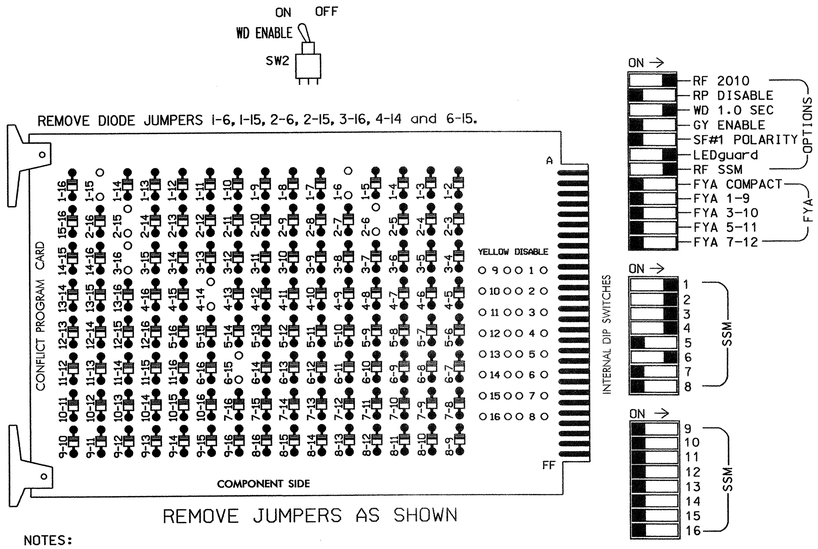


REMOVE JUMPERS AS SHOWN

■ = DENOTES POSITION OF SWITCH

NOTES:

1. Card is provided with all diode jumpers in place. Removal of any jumper allows its channels to run concurrently.
2. Make sure jumpers SEL2-SEL5 are present on the monitor board.

## NOTES

1. To prevent "flash-conflict" problems, insert red flash program blocks for all unused vehicle load switches in the output file. The installer shall verify that signal heads flash in accordance with the Signal Plans.
2. Ensure that Red Enable is active at all times during normal operation. To prevent Red Failures on unused monitor channels, tie unused red monitor inputs 5,7,8,9, 10,11,12,13,14,15 & 16 to load switch AC+ per the cabinet manufacturer's instructions.
3. Program phases 2 and 6, on the controller unit, for Start Up In Green.
4. Enable Simultaneous Gap-Out, on the controller unit, for all phases.
5. Program phases 3, 4 and 6 for 'STARTUP PED CALL'.
6. The cabinet and controller are part of the US 421 (King Street) Closed Loop System.

## SIGNAL HEAD HOOK-UP CHART

| LOAD SWITCH NO. | S1 | | S2 | S2P | S3 | | S4 | | S4P | S5 | S6 | S6P | S7 | S8 | S8P |
|---|---|---|---|---|---|---|---|---|---|---|---|---|---|---|---|
| PHASE | 1 | | 2 | 2 PED | 3 | | 4 | | 4 PED | 5 | 6 | 6 PED | 7 | 8 | 3 PED |
| SIGNAL HEAD NO. | 11,12 | 32,33 | 21,22 | NU | 31 | 32,33 | 41 | 42,43 | P41, P42 | NU | 61,62 | P61, P62 | NU | NU | P31, P32 |
| RED | | | 128 | | 116 | 116 | 101 | 101 | | | 134 | | | | |
| YELLOW | | | 129 | | 117 | 117 | 102 | 102 | | | 135 | | | | |
| GREEN | | | 130 | | 118 | 118 | 103 | 103 | | | 136 | | | | |
| RED ARROW | 125 | | | | | | | | | | | | | | |
| YELLOW ARROW | 126 | 126 | | | | | | | | | | | | | |
| GREEN ARROW | 127 | 127 | | | 118 | | 103 | | | | | | | | |
| ✋ | | | | | | | | | 104 | | | 119 | | | 110 |
| 🚶 | | | | | | | | | 106 | | | 121 | | | 112 |

NU = Not Used

## EQUIPMENT INFORMATION

CONTROLLER.....CONTRACTOR SUPPLIED 2070L
CABINET.....CONTRACTOR SUPPLIED 332
SOFTWARE.....ECONOLITE OASIS
CABINET MOUNT.....BASE
OUTPUT FILE POSITIONS...12
LOAD SWITCHES USED.....S1,S2,S3,S4,S4P,S6,S6P,S8P
PHASES USED.....1,2,3,3PED,4,4PED,6,6PED
OVERLAPS.....NONE

## BACKUP PROTECTION NOTE

*(program controller as shown below)*

From Main Menu press '2' (Phase Control), then '1' (Phase Control Functions). Program phase 6 for 'Backup Protect'. Make sure the Red Revert times shown on the Signal Design Plans are programmed in the 'Phase Timing' menu.

## INPUT FILE POSITION LAYOUT

*(front view)*

| | | 1 | 2 | 3 | 4 | 5 | 6 | 7 | 8 | 9 | 10 | 11 | 12 | 13 | 14 |
|---|---|---|---|---|---|---|---|---|---|---|---|---|---|---|---|
| FILE "I" | U | Ø1 1A | Ø1 1B | Ø1 1D | SLOT EMPTY | Ø3 3A | Ø4 4A | SLOT EMPTY | SLOT EMPTY | SYS. DET. SØ1 | SLOT EMPTY | SLOT EMPTY | NOT USED | Ø6 PED DC ISOLATOR | FS DC ISOLATOR |
| | L | NOT USED | Ø1 1C | Ø2 2A,2B | | NOT USED | NOT USED | | | SYS. DET. SØ2 | | | Ø4 PED DC ISOLATOR | Ø3 PED DC ISOLATOR | ST DC ISOLATOR |
| FILE "J" | U | SLOT EMPTY | Ø6 6A | SLOT EMPTY | SLOT EMPTY | SLOT EMPTY | SLOT EMPTY | SLOT EMPTY | SLOT EMPTY | SLOT EMPTY | SLOT EMPTY | SLOT EMPTY | SLOT EMPTY | SLOT EMPTY | SLOT EMPTY |
| | L | | NOT USED | | | | | | | | | | | | |

EX.: 1A, 2A, ETC. = LOOP NO.'S

FS = FLASH SENSE
ST = STOP TIME

## INPUT FILE CONNECTION & PROGRAMMING CHART

| LOOP NO. | LOOP TERMINAL | INPUT FILE POS. | PIN NO. | INPUT ASSIGNMENT NO. | DETECTOR NO. | NEMA PHASE | CALL | EXTEND | FULL TIME DELAY | STRETCH TIME | DELAY TIME |
|---|---|---|---|---|---|---|---|---|---|---|---|
| 1A | TB2-1,2 | I1U | 56 | 18 | 1 | 1 | Y | Y | | | |
| 1B | TB2-5,6 | I2U | 39 | 1 | 2 | 1 | Y | Y | | | |
| 1C | TB2-7,8 | I2L | 43 | 5 | 12 | 1 | Y | Y | | | 15 |
| 1D | TB2-9,10 | I3U | 63 | 25 | 32 | 1 | Y | Y | | | 15 |
| 2A,2B | TB2-11,12 | I3L | 76 | 38 | 42 | 2 | Y | Y | | | |
| 3A | TB4-5,6 | I5U | 58 | 20 | 3 | 3 | Y | Y | | | |
| 4A | TB4-9,10 | I6U | 41 | 3 | 4 | 4 | Y | Y | | | 5 |
| * SØ1 | TB6-9,10 | I9U | 60 | 22 | 11 | SYS | | | | | |
| * SØ2 | TB6-11,12 | I9L | 62 | 24 | 13 | SYS | | | | | |
| 6A | TB3-5,6 | J2U | 40 | 2 | 6 | 6 | Y | Y | | | |
| PED PUSH BUTTONS | | | | | | | | | | | |
| P41,P42 | TB8-5,6 | I12L | 69 | 31 | PED 4 | 4 PED | | | | | |
| P61,P62 | TB8-7,9 | I13U | 68 | 30 | PED 6 | 6 PED | | | | | |
| P31,P32 | TB8-8,9 | I13L | 70 | 32 | PED 8 | 3 PED | | | | | |

NOTE:
INSTALL DC ISOLATORS IN INPUT FILE SLOTS I12 AND I13.

* SYSTEM DETECTOR ONLY. REMOVE THE VEHICLE PHASE ASSIGNED TO THIS DETECTOR IN THE DEFAULT PROGRAMMING.

INPUT FILE POSITION LEGEND: J2L
FILE J
SLOT 2
LOWER

## PED 3 PROGRAMMING DETAIL

*(program controller as shown below)*

**CHANGING OUTPUT ASSIGNMENTS**

1. FROM MAIN MENU SELECT '6' (OUTPUTS), THEN '1' (OUTPUT ASSIGNMENTS)
2. ENTER 17 (PHASE 8 DW) FOR OUTPUT ASSIGNMENT #.
3. SCROLL DOWN TO 'PEDESTRIAN PHASE' AND ENTER 'Y' REGARDLESS OF DEFAULT PROGRAMMING!
4. ENTER '3' FOR 'SELECT PEDESTRIAN PHASE'. NO CHANGE NEEDED FOR 'SELECT COLOR'
5. BACKUP TO 'OUTPUT ASSIGNMENTS AND SETTINGS MENU:' BY PRESSING THE 'ESC' BUTTON ON KEYBOARD.
6. SELECT '1' (OUTPUT ASSIGNMENTS)
7. ENTER 18 (PHASE 8 W) FOR OUTPUT ASSIGNMENT #.
8. REPEAT STEPS # 3 AND # 4.

**CHANGING INPUT ASSIGNMENTS**

1. FROM MAIN MENU SELECT '7' (DETECTORS), THEN '2' (PEDESTRIAN DETECTOR ASSIGNMENTS)
2. CYCLE TO PED DETECTOR #8 BY REPEATEDLY DEPRESSING '+' KEY
3. MODIFY PHASE ASSIGNED TO PED DETECTOR # 8 FROM PHASE 8 TO PHASE 3

PROGRAMMING COMPLETE

## COUNTDOWN PEDESTRIAN SIGNAL OPERATION

Countdown Ped Signals are required to display timing only during Ped Clearance Interval. Consult Ped Signal Module user's manual for instructions on selecting this feature.

THIS ELECTRICAL DETAIL IS FOR
THE SIGNAL DESIGN: 11-0885
DESIGNED: September 2008
SEALED: 12-16-08
REVISED: N/A

Signal Upgrade - Final

ELECTRICAL AND PROGRAMMING DETAILS FOR:

US 421 - US 321/ (King Street) at US 321 (Hardin Street)/ Council Street

Division 11 Watauga County Boone

| PLAN DATE: 12-04-08 | REVIEWED BY: D.T. Joyce |
|---|---|
| PREPARED BY: D.H. Spaulding | REVIEWED BY: |

| REVISIONS | INIT. | DATE |
|---|---|---|
| | | |

Prepared in the Offices of:
Public Transportation and Safety Division
STATE OF NORTH CAROLINA DEPARTMENT OF TRANSPORTATION
Signals Management Section
750 N. Greenfield Pkwy, Garner, NC 27529

SEAL
NORTH CAROLINA PROFESSIONAL SEAL 022013 ENGINEER GEORGE C. BROWN

George C. Brown 12/29/08
SIGNATURE DATE
SIG. INVENTORY NO. 11-0885

17-DEC-2008 10:51
s:\its signals\workgroups\sig management\building\in-progress\110885_sml_ele_2008xx.dgn
dspaulding

| PROJECT REFERENCE NO. | SHEET NO. |
|---|---|
| U-4020 | Sig.8 |

# METAL POLE No. 1 and 3

## Design Loading for METAL POLE NO. 1

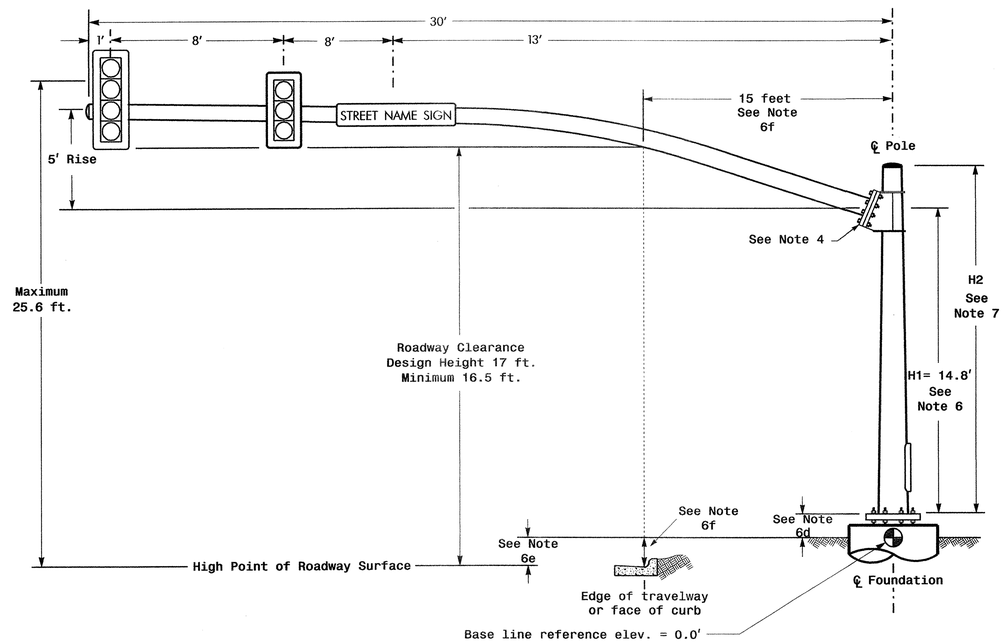


ELEVATION VIEW

## Design Loading for METAL POLE NO. 3

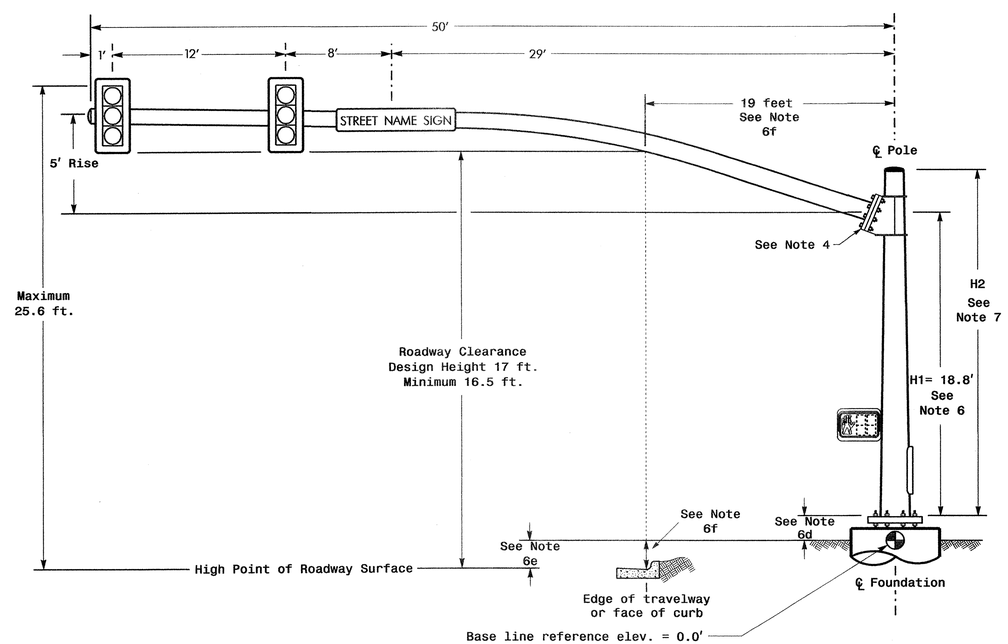


Elevation View

## SPECIAL NOTE

The contractor is responsible for verifying that the mast arm attachment height (H1) will provide the "Design Height" clearance from the roadway before submitting final shop drawings for approval. Verify elevation data below which was obtained by field measurement or from available project survey data.

## Elevation Data for Mast Arm Attachment (H1)

| Elevation Differences for: | Pole 1 | Pole 3 |
|---|---|---|
| Baseline reference point at ℄ Foundation @ ground level | 0.0 ft. | 0.0 ft. |
| Elevation difference at High point of roadway surface | +0.8 ft. | +4.8 ft. |
| Elevation difference at Edge of travelway or face of curb | -0.2 ft. | +4.7 ft. |

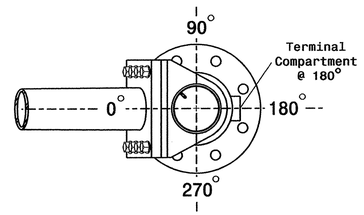


POLE RADIAL ORIENTATION

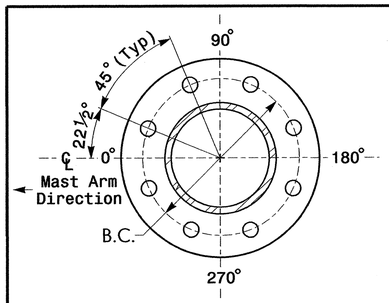


8 BOLT BASE PLATE DETAIL

See Note 5

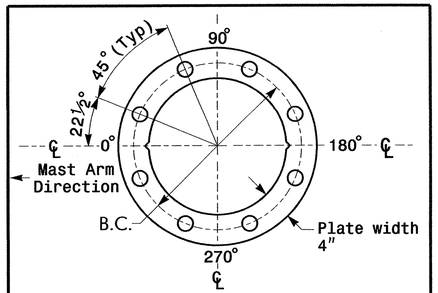


BASE PLATE TEMPLATE & ANCHOR BOLT LOCK PLATE DETAIL

For 8 Bolt Base Plate

## MAST ARM LOADING SCHEDULE

| LOADING SYMBOL | DESCRIPTION | AREA | SIZE | WEIGHT |
|---|---|---|---|---|
| | SIGNAL HEAD 12"–4 SECTION–WITH BACKPLATE AND ASTRO–BRAC | 11.5 S.F. | 25.5" W X 66.0" L | 74 LBS |
| | SIGNAL HEAD 12"–3 SECTION–WITH BACKPLATE AND ASTRO–BRAC | 9.3 S.F. | 25.5" W X 52.5" L | 60 LBS |
| STREET NAME SIGN | STREET NAME SIGN RIGID MOUNTED WITH ASTRO–SIGN–BRAC | 12.0 S.F. | 18.0" W X 96.0" L | 27 LBS |
| | PEDESTRIAN SIGNAL HEAD WITH MOUNTING HARDWARE | 2.2 S.F. | 18.5" W X 17.0" L | 21 LBS |

## NOTES

**Design Reference Material**

1. Design the traffic signal structure and foundation in accordance with:
   - The 4th Edition 2001 AASHTO "Standard Specifications for Structural Supports for Highway Signs, Luminaires, and Traffic Signals, including all of the latest interim revisions.
   - The 2006 NCDOT "Standard Specifications for Roads and Structures". The latest addenda to these specifications can be found in the traffic signal project special provisions.
   - The 2006 NCDOT Roadway Standard Drawings.

**Design Requirements**

2. Design the traffic signal structure using the loading conditions shown in the elevation views. These are anticipated worst case "Design loads" and may not represent the actual loads that will be applied at the time of the installation. The contractor should refer to the traffic signal plans for the actual loads that will be applied at the time of the installation.
3. Design all signal supports using stress ratios that do not exceed 0.9.
4. A clamp-type bolted mast arm-to-pole connection may be used instead of the welded ring stiffened box connection shown as long as the connection meets all of the design requirements.
5. Design base plate with 8 anchor bolt holes. Provide 2 inch x 60 inch anchor bolts.
6. The mast arm attachment height (H1) shown is based on the following design assumptions:
   a. Nominal vertical rise in mast arm is 5 feet as measured from the centerline of the arm base to the centerline of the free end of the arm.
   b. Signal heads attached to the mast arm are rigid mounted and vertically centered on the arm.
   c. The roadway clearance height for design is as shown in the elevation views.
   d. The top of the pole base plate is .75 feet above the ground elevation.
   e. Refer to the Elevation Data chart for elevation differences between the proposed foundation ground level and the high point on the roadway.
   f. Provide horizontal distance from proposed centerline of foundation to edge of travelway. Refer to the Elevation Data chart above for elevation difference between the proposed foundation ground level and the edge of travelway. This information is necessary when arched arms are specified to ensure that the roadway clearance is maintained at the edge of the travelway and to assist in the camber design of the mast arm.
7. The pole manufacturer will determine the total height (H2) of each pole using the greater of the following:
   - Mast arm attachment height (H1) plus 2 feet, or
   - H1 plus ½ of the total height of the mast arm attachment assembly plus 1 foot.
8. If pole location adjustments are required, the contractor must gain approval from the engineer as this may affect the mast arm lengths and arm attachment heights. The contractor may contact the Signals & Geometrics Structural Engineer for assistance at (919) 773-2800.
9. The contractor is responsible for verifying that the mast arm length shown will allow proper positioning of the signal heads over the roadway.
10. The contractor is responsible for providing soil penetration testing data (SPT) to the pole manufacturer so site specific foundations can be designed.

NCDOT Wind Zone 5 (120 mph)

Prepared in the Offices of:
Traffic Engineering and Safety Systems Branch
STATE OF NORTH CAROLINA DEPARTMENT OF TRANSPORTATION
Signals and Geometrics Section
750 N. Greenfield Pkwy, Garner, NC 27529

SCALE 0 N/A N/A

US421 - US 321 (King Street)
AT
US 321 (Hardin Street) /
Council Street

Division 11 Watauga County Boone

PLAN DATE: December 2008 REVIEWED BY:
PREPARED BY: Jerry Yaravitz REVIEWED BY:

| REVISIONS | INIT. | DATE |
|---|---|---|
| | | |

SEAL
NORTH CAROLINA PROFESSIONAL SEAL 30530 ENGINEER ZACHARY M. LITTLE
SIGNATURE 1/5/09 DATE
SIG. INVENTORY NO. 11-0885

05-JAN-2009 11:15
S:\Its Signals\workgroups\tip projects\u-4020\signals\design\signals\11-0885\archsingle0907.dgn
jyaravitz

| PROJECT REFERENCE NO. | SHEET NO. |
|---|---|
| U-4020 | Sig. 9 |

# METAL POLE No. 2

## Design Loading for METAL POLE NO. 2, MAST ARM A

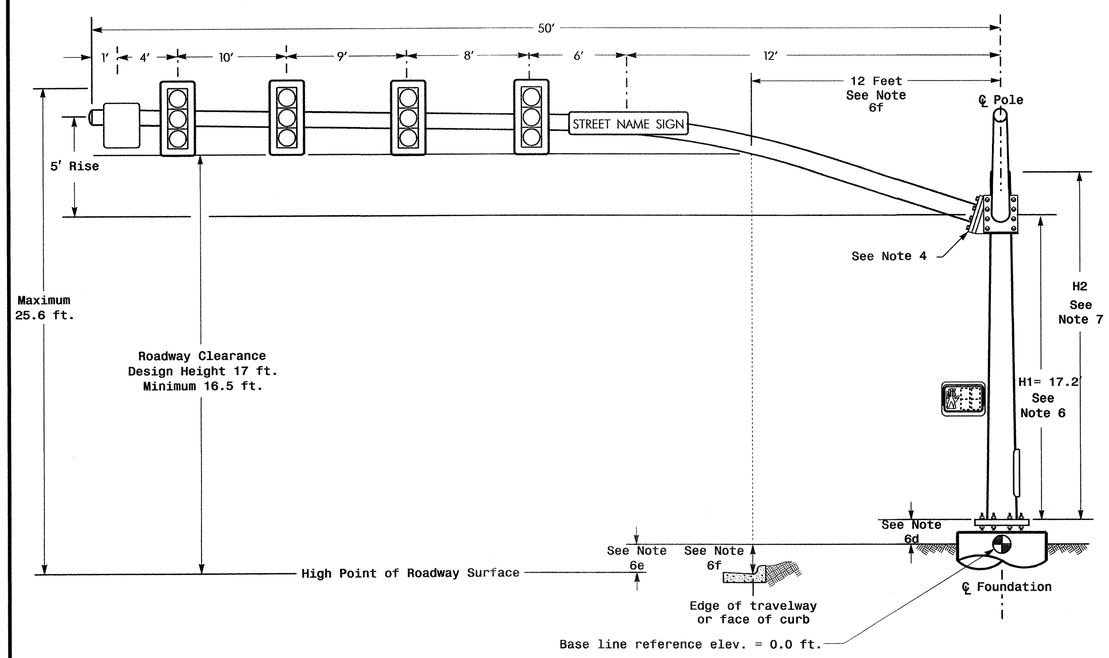


Elevation View @ 270°

## Design Loading for METAL POLE NO. 2, MAST ARM B

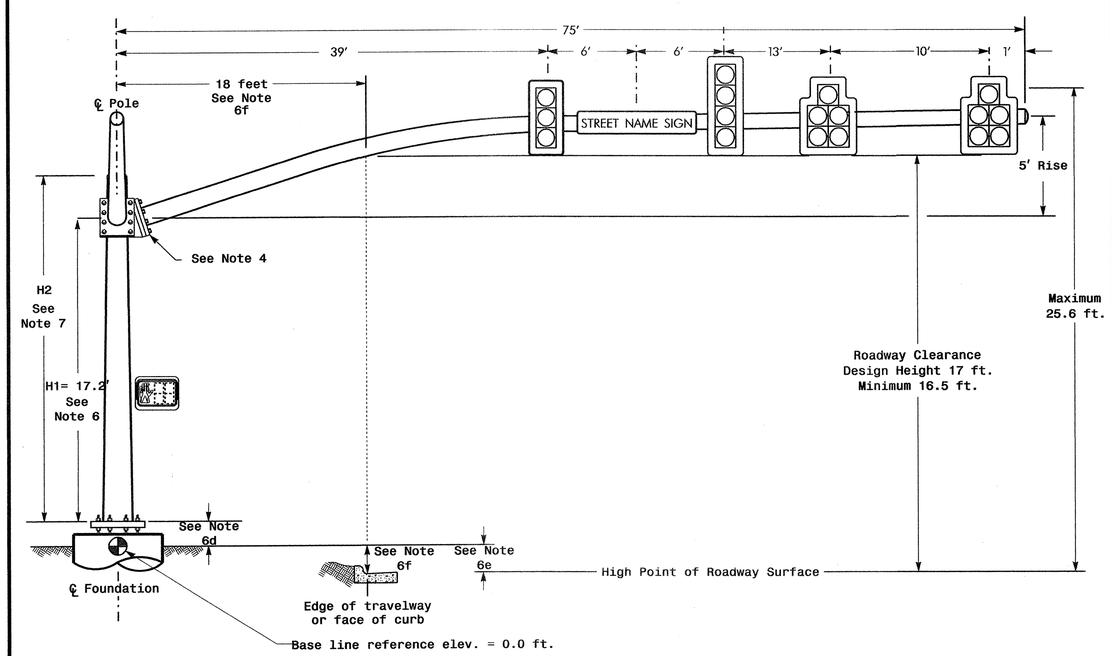


Elevation View @ 0°

## SPECIAL NOTE

The contractor is responsible for verifying that the mast arm attachment height (H1) will provide the "Design Height" clearance from the roadway before submitting final shop drawings for approval. Verify elevation data below which was obtained by field measurement or from available project survey data.

## Elevation Data for Mast Arm Attachment (H1)

| Elevation Differences for: | Arm "A" | Arm "B" |
|---|---|---|
| Baseline reference point at ℄ Foundation @ ground level | 0.0 ft. | 0.0 ft. |
| Elevation difference at High point of roadway surface | +0.2 ft. | +3.2 ft. |
| Elevation difference at Edge of travelway or face of curb | +0.1 ft. | +3.2 ft. |

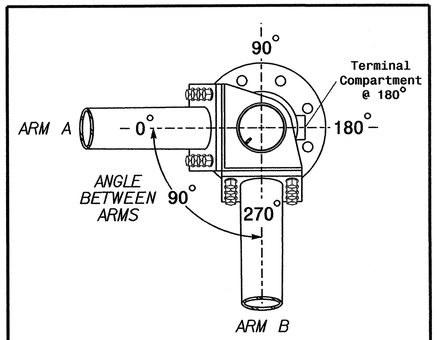


POLE RADIAL ORIENTATION

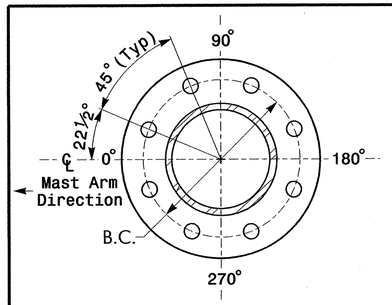


8 BOLT BASE PLATE DETAIL

See Note 5

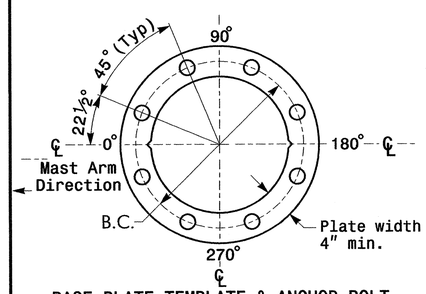


BASE PLATE TEMPLATE & ANCHOR BOLT LOCK PLATE DETAIL

For 8 Bolt Base Plate

## MAST ARM LOADING SCHEDULE

| LOADING SYMBOL | DESCRIPTION | AREA | SIZE | WEIGHT |
|---|---|---|---|---|
| | SIGNAL HEAD 12"-5 SECTION-WITH BACKPLATE AND ASTRO-BRAC | 16.3 S.F. | 42.0" W X 56.0" L | 103 LBS |
| | SIGNAL HEAD 12"-4 SECTION-WITH BACKPLATE AND ASTRO-BRAC | 11.5 S.F. | 25.5" W X 66.0" L | 74 LBS |
| | SIGNAL HEAD 12"-3 SECTION-WITH BACKPLATE AND ASTRO-BRAC | 9.3 S.F. | 25.5" W X 52.5" L | 60 LBS |
| | SIGN RIGID MOUNTED WITH ASTRO-SIGN-BRAC | 5.0 S.F. | 24.0" W X 30.0" L | 11 LBS |
| STREET NAME SIGN | STREET NAME SIGN RIGID MOUNTED WITH ASTRO-SIGN-BRAC | 12.0 S.F. | 18.0" W X 96.0" L | 27 LBS |
| | PEDESTRIAN SIGNAL HEAD WITH MOUNTING HARDWARE | 2.2 S.F. | 18.5" W X 17.0" L | 21 LBS |

## NOTES

**Design Reference Material**

1. Design the traffic signal structure and foundation in accordance with:
   - The 4th Edition 2001 AASHTO "Standard Specifications for Structural Supports for Highway Signs, Luminaires, and Traffic Signals, including all of the latest interim revisions.
   - The 2006 NCDOT "Standard Specifications for Roads and Structures". The latest addenda to these specifications can be found in the traffic signal project special provisions.
   - The 2006 NCDOT Roadway Standard Drawings.

**Design Requirements**

2. Design the traffic signal structure using the loading conditions shown in the elevation views. These are anticipated worst case "Design loads" and may not represent the actual loads that will be applied at the time of the installation. The contractor should refer to the traffic signal plans for the actual loads that will be applied at the time of the installation.
3. Design all signal supports using stress ratios that do not exceed 0.9.
4. A clamp-type bolted mast arm-to-pole connection may be used instead of the welded ring stiffened box connection shown as long as the connection meets all of the design requirements. This requires staggering the connections. Use elevation data for each arm to determine appropriate connection points.
5. Design base plate with 8 anchor bolt holes. Provide 2 inch x 60 inch anchor bolts.
6. The mast arm attachment height (H1) shown is based on the following design assumptions:
   a. Nominal vertical rise in mast arm is 5 feet as measured from the centerline of the arm base to the centerline of the free end of the arm.
   b. Signal heads attached to the mast arm are rigid mounted and vertically centered on the arm.
   c. The roadway clearance height for design is as shown in the elevation views.
   d. The top of the pole base plate is .75 feet above the ground elevation.
   e. Refer to the Elevation Data chart for elevation differences between the proposed foundation ground level and the high point on the roadway.
   f. Provide horizontal distance from proposed centerline of foundation to edge of travelway. Refer to the Elevation Data chart above for elevation difference between the proposed foundation ground level and the edge of travelway. This information is necessary when arched arms are specified to ensure that the roadway clearance is maintained at the edge of the travelway and to assist in the camber design of the mast arm.
7. The pole manufacturer will determine the total height (H2) of the pole using the greater of the following:
   - Mast arm attachment height (H1) plus 2 feet, or
   - H1 plus ½ of the total height of the mast arm attachment assembly plus 1 foot.
8. If pole location adjustments are required, the contractor must gain approval from the engineer as this may affect the mast arm lengths and arm attachment heights. The contractor may contact the Signals & Geometrics Structural Engineer for assistance at (919) 773-2800.
9. The contractor is responsible for verifying that the mast arm length shown will allow proper positioning of the signal heads over the roadway.
10. The contractor is responsible for providing soil penetration testing data (SPT) to the pole manufacturer so site specific foundations can be designed.

NCDOT Wind Zone 5 (120 mph)

Prepared in the Offices of:
Traffic Engineering and Safety Systems Branch
Signals and Geometrics Section
STATE OF NORTH CAROLINA
DEPARTMENT OF TRANSPORTATION
750 N. Greenfield Pkwy, Garner, NC 27529

US 421 - US 321 (King Street)
at
US 321 (Hardin Street) / Council Street

Division 11 Watauga County Boone

| PLAN DATE: December 2008 | REVIEWED BY: |
|---|---|
| PREPARED BY: Jerry Yaravitz | REVIEWED BY: |

SCALE: 0 N/A — N/A

| REVISIONS | INIT. | DATE |
|---|---|---|
| | | |

SEAL
NORTH CAROLINA PROFESSIONAL SEAL 30530 ENGINEER ZACHARY M. TILLE
SIGNATURE DATE 1/5/09
SIG. INVENTORY NO. 11-0885

05-JAN-2009 12:39
s:\its signals\workgroups\tip projects\u-4020\signals\designs\signals\11-0885\archdoubleb0907.dgn
jyaravitz

| PROJECT REFERENCE NO. | SHEET NO. |
|---|---|
| U-4020 | Sig.10 |

## PHASING DIAGRAM

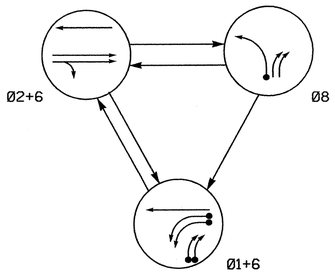


PHASING DIAGRAM DETECTION LEGEND

- DETECTED MOVEMENT
- UNDETECTED MOVEMENT (OVERLAP)
- UNSIGNALIZED MOVEMENT
- PEDESTRIAN MOVEMENT

## TABLE OF OPERATION

| SIGNAL FACE | PHASE Ø1+6 | PHASE Ø2+6 | PHASE Ø8 | FLASH |
|---|---|---|---|---|
| 11,12 | ← | R | R | R |
| 21,22 | R | G | R | Y |
| 61,62 | G | G | R | Y |
| 81 | R | R | ← | R |
| 82,83 | → | R | → | R |

## SIGNAL FACE I.D.

All Signal Heads L.E.D.

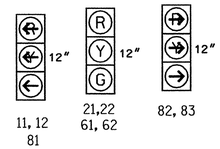


## 2070L LOOP & DETECTOR INSTALLATION

| INDUCTIVE LOOPS | | | | | DETECTOR PROGRAMMING | | | | | | | |
|---|---|---|---|---|---|---|---|---|---|---|---|---|
| LOOP | SIZE (FT) | DISTANCE FROM STOPBAR (FT) | TURNS | NEW LOOP | PHASE | CALLING | EXTENSION | FULL TIME DELAY | STRETCH TIME | DELAY TIME | SYSTEM LOOP | NEW CARD |
| 1A | 6x40 | 0 | 2-4-2 | Y | 1 | Y | Y | - | - | - | - | Y |
| 1B | 6x40 | 0 | 2-4-2 | Y | 1 | Y | Y | - | - | - | - | Y |
| 1C | 6x40 | 0 | 2-4-2 | Y | 1 | Y | Y | - | - | 15 | - | Y |
| 1D | 6x40 | 0 | 2-4-2 | Y | 1 | Y | Y | - | - | 15 | - | Y |
| 8A | 6X40 | 0 | 2-4-2 | Y | 8 | Y | Y | - | - | 3 | - | Y |

3 Phase
Semi- Actuated
(Isolated)

## NOTES

1. Refer to "Roadway Standard Drawings NCDOT" dated July 2006 and "Standard Specifications for Roads and Structures" dated July 2006.
2. Do not program signal for late night flashing operation unless otherwise directed by the Engineer.
3. Set all detector units to presence mode.
4. Locate new cabinet so as not to obstruct sight distance of vehicles turning right on red.

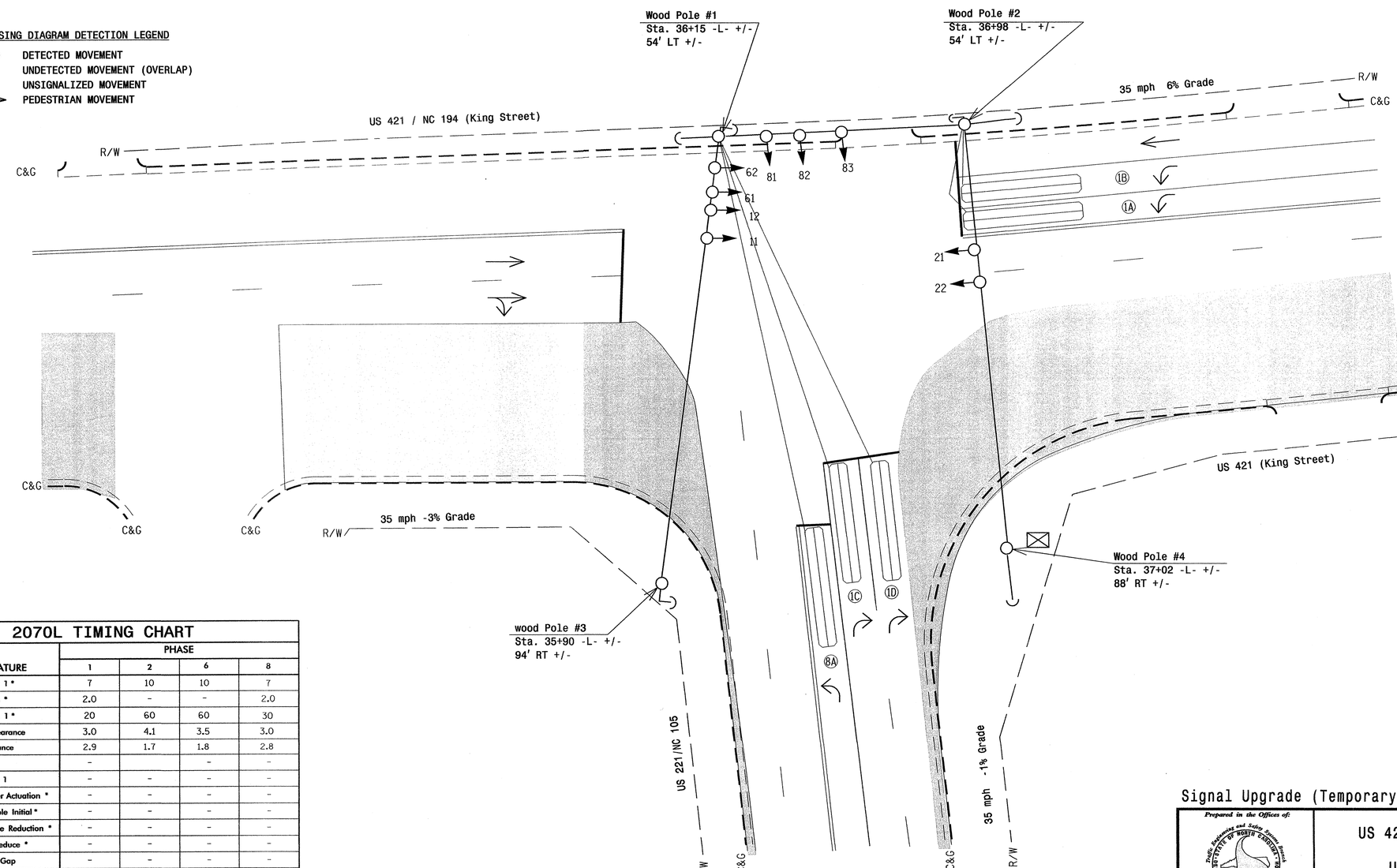


## LEGEND

| PROPOSED | | EXISTING |
|---|---|---|
| | Traffic Signal Head | |
| | Modified Signal Head | N/A |
| | Sign | |
| | Pedestrian Signal Head With Push Button & Sign | |
| | Signal Pole with Guy | |
| | Signal Pole with Sidewalk Guy | |
| | Inductive Loop Detector | |
| | Controller & Cabinet | |
| | Junction Box | |
| | 2-in Underground Conduit | |
| N/A | Right of Way | |
| | Directional Arrow | |
| | Pavement Marking Arrow | |

## 2070L TIMING CHART

| FEATURE | PHASE 1 | PHASE 2 | PHASE 6 | PHASE 8 |
|---|---|---|---|---|
| Min Green 1 * | 7 | 10 | 10 | 7 |
| Extension 1 * | 2.0 | - | - | 2.0 |
| Max Green 1 * | 20 | 60 | 60 | 30 |
| Yellow Clearance | 3.0 | 4.1 | 3.5 | 3.0 |
| Red Clearance | 2.9 | 1.7 | 1.8 | 2.8 |
| Walk 1 * | - | | - | - |
| Don't Walk 1 | - | - | - | - |
| Seconds Per Actuation * | - | - | - | - |
| Max Variable Initial * | - | - | - | - |
| Time Before Reduction * | - | - | - | - |
| Time To Reduce * | - | - | - | - |
| Minimum Gap | - | - | - | - |
| Recall Mode | - | MAX RECALL | MAX RECALL | - |
| Vehicle Call Memory | - | N/A | N/A | - |
| Dual Entry | - | - | - | - |
| Simultaneous Gap | ON | ON | ON | ON |

* These values may be field adjusted. Do not adjust Min Green and Extension times for phases 2 and 6 lower than what is shown. Min Green for all other phases should not be lower than 4 seconds.

Signal Upgrade (Temporary-TCP Phase I, Steps 2-5)

Prepared in the Offices of:
Traffic Engineering and Safety Systems Branch
STATE OF NORTH CAROLINA DEPARTMENT OF TRANSPORTATION
Signals and Geometrics Section
750 N. Greenfield Pkwy, Garner, NC 27529

SCALE 0 20 1"=20'

US 421 (King Street)
at
US 221 /NC 105

Division 11 Watauga County Boone

| | | | |
|---|---|---|---|
| PLAN DATE: | December 2008 | REVIEWED BY: | Z.W.Little |
| PREPARED BY: | Jerry Yaravitz | REVIEWED BY: | |

| REVISIONS | INIT. | DATE |
|---|---|---|
| | | |

SEAL
NORTH CAROLINA PROFESSIONAL SEAL 30530 ENGINEER ZACHARY W. LITTLE
SIGNATURE 12/19/08 DATE
SIG. INVENTORY NO. 11-0021T1

19-DEC-2008 11:02
s:\its signals\workgroups\tip projects\u-4020\signals\designs\signals\11-0021\11002111_sig_dsn_2008mmdd.dgn
jyaravitz

| PROJECT REFERENCE NO. | SHEET NO. |
|---|---|
| U-4020 | Sig.11 |

# EDI MODEL 2010ECL-NC CONFLICT MONITOR PROGRAMMING DETAIL

*(remove jumpers and set switches as shown)*

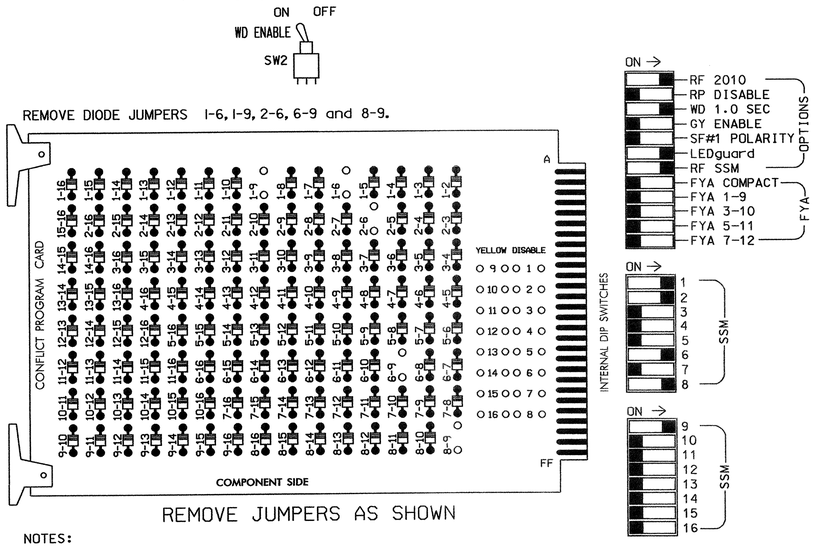


REMOVE JUMPERS AS SHOWN

NOTES:

1. Card is provided with all diode jumpers in place. Removal of any jumper allows its channels to run concurrently.
2. Make sure jumpers SEL2-SEL5 are present on the monitor board.

■ = DENOTES POSITION OF SWITCH

## NOTES

1. To prevent "flash-conflict" problems, insert red flash program blocks for all unused vehicle load switches in the output file. The installer shall verify that signal heads flash in accordance with the Signal Plans.
2. Ensure that Red Enable is active at all times during normal operation. To prevent Red Failures on unused monitor channels, tie unused red monitor inputs 3,4,5,7, 10,11,12,13,14,15 & 16 to load switch AC+ per the cabinet manufacturer's instructions.
3. Program phases 2 and 6 on the controller unit, for Start Up In Green.
4. Enable Simultaneous Gap-Out, on the controller unit, for all phases.

CONTROLLER.....CONTRACTOR SUPPLIED 2070L
CABINET.....CONTRACTOR SUPPLIED 332
SOFTWARE.....ECONOLITE OASIS
CABINET MOUNT.....BASE
OUTPUT FILE POSITIONS...18 (12-STD, 6-AUX)
LOAD SWITCHES USED.....S1,S2,S6,S8,S9
PHASES USED.....1,2,6,8
OVERLAPS.....OLA 1+8

## SIGNAL HEAD HOOK-UP CHART

| LOAD SWITCH NO. | S1 | S2 | S2P | S3 | S4 | S4P | S5 | S6 | S6P | S7 | S8 | S8P | S9 | S10 | S11 | S12 | S13 | S14 |
|---|---|---|---|---|---|---|---|---|---|---|---|---|---|---|---|---|---|---|
| PHASE | 1 | 2 | 2 PED | 3 | 4 | 4 PED | 5 | 6 | 6 PED | 7 | 8 | 8 PED | ✳ OLA | OLB | SPARE | OLC | OLD | SPARE |
| SIGNAL HEAD NO. | 11,12 | 21,22 | NU | NU | NU | NU | NU | 61,62 | NU | NU | 81 | NU | 82,83 | NU | NU | NU | NU | NU |
| RED | | 128 | | | | | | 134 | | | | | | | | | | |
| YELLOW | | 129 | | | | | | 135 | | | | | | | | | | |
| GREEN | | 130 | | | | | | 136 | | | | | | | | | | |
| RED ARROW | 125 | | | | | | | | | | 107 | | A121 | | | | | |
| YELLOW ARROW | 126 | | | | | | | | | | 108 | | A122 | | | | | |
| GREEN ARROW | 127 | | | | | | | | | | 109 | | A123 | | | | | |
| ✋ | | | | | | | | | | | | | | | | | | |
| 🚶 | | | | | | | | | | | | | | | | | | |

NU = Not Used
✳ Flash note: Wire overlap "A" to flash on flasher unit 2, ciruit 1.

## INPUT FILE POSITION LAYOUT

*(front view)*

| | | 1 | 2 | 3 | 4 | 5 | 6 | 7 | 8 | 9 | 10 | 11 | 12 | 13 | 14 |
|---|---|---|---|---|---|---|---|---|---|---|---|---|---|---|---|
| FILE "I" | U | Ø1 1A | Ø1 1B | Ø1 1D | SLOT EMPTY | SLOT EMPTY | SLOT EMPTY | SLOT EMPTY | SLOT EMPTY | SLOT EMPTY | SLOT EMPTY | SLOT EMPTY | SLOT EMPTY | SLOT EMPTY | FS DC ISOLATOR |
| | L | NOT USED | Ø1 1C | NOT USED | | | | | | | | | | | ST DC ISOLATOR |
| FILE "J" | U | SLOT EMPTY | SLOT EMPTY | SLOT EMPTY | SLOT EMPTY | SLOT EMPTY | Ø8 8A | SLOT EMPTY | SLOT EMPTY | SLOT EMPTY | SLOT EMPTY | SLOT EMPTY | SLOT EMPTY | SLOT EMPTY | SLOT EMPTY |
| | L | | | | | | NOT USED | | | | | | | | |

EX.: 1A, 2A, ETC. = LOOP NO.'S

FS = FLASH SENSE
ST = STOP TIME

## INPUT FILE CONNECTION & PROGRAMMING CHART

| LOOP NO. | LOOP TERMINAL | INPUT FILE POS. | PIN NO. | INPUT ASSIGNMENT NO. | DETECTOR NO. | NEMA PHASE | CALL | EXTEND | FULL TIME DELAY | STRETCH TIME | DELAY TIME |
|---|---|---|---|---|---|---|---|---|---|---|---|
| 1A | TB2-1,2 | I1U | 56 | 18 | 1 | 1 | Y | Y | | | |
| 1B | TB2-5,6 | I2U | 39 | 2 | 1 | 1 | Y | Y | | | |
| 1C | TB2-7,8 | I2L | 43 | 5 | 12 | 1 | Y | Y | | | 15 |
| 1D | TB2-9,10 | I3U | 63 | 25 | 32 | 1 | Y | Y | | | 15 |
| 8A | TB5-9,10 | J6U | 42 | 4 | 8 | 8 | Y | Y | | | 3 |

INPUT FILE POSITION LEGEND: J2L
FILE J
SLOT 2
LOWER

## OVERLAP PROGRAMMING DETAIL

*(program controller as shown below)*

FROM MAIN MENU PRESS '8' (OVERLAPS), THEN '1' (VEHICLE OVERLAP SETTINGS).

```
PAGE 1: VEHICLE OVERLAP 'A' SETTINGS
PHASE:            !123456789101112131415 16
VEH OVL PARENTS:!X       X
VEH OVL NOT VEH:!
VEH OVL NOT PED:!
VEH OVL GRN EXT:!
STARTUP COLOR: _ RED  _ YELLOW  _ GREEN
FLASH COLORS:  _ RED  _ YELLOW  _ GREEN
SELECT VEHICLE OVERLAP OPTIONS:   (Y/N)
FLASH YELLOW IN CONTROLLER FLASH?...N
GREEN EXTENSION (0-255 SEC).........0
YELLOW CLEAR (0=PARENT,3-25.5 SEC)..0.0
RED CLEAR (0=PARENT,0.1-25.5 SEC)...0.0
OUTPUT AS PHASE # (0=NONE, 1-16)....0
```

OVERLAP PROGRAMMING COMPLETE

THIS ELECTRICAL DETAIL IS FOR
THE SIGNAL DESIGN: 11-0021T1
DESIGNED: December 2008
SEALED: 12-19-08
REVISED: N/A

Signal Upgrade (Temporary - TCP Phase I, Steps 2-5)

ELECTRICAL AND PROGRAMMING DETAILS FOR:

Prepared in the Offices of:
Traffic Engineering and Safety Systems Branch
STATE OF NORTH CAROLINA DEPARTMENT OF TRANSPORTATION
Signals Management Section
750 N. Greenfield Pkwy, Garner, NC 27529

US 421 (King Street)
at
US 221 /NC 105

Division 11 Watauga County Boone

| PLAN DATE: | 12-18-08 | REVIEWED BY: | D.T. Joyce |
|---|---|---|---|
| PREPARED BY: | D.H. Spaulding | REVIEWED BY: | |

| REVISIONS | INIT. | DATE |
|---|---|---|
| | | |

SEAL
NORTH CAROLINA PROFESSIONAL SEAL 022013 ENGINEER GEORGE C. BROWN

Nancy C Brown 1/6/09
SIGNATURE DATE

SIG. INVENTORY NO. 11-0021T1

05-JAN-2009 13:39
$:\ITS Signals\Workgroups\Sig Mone\Spaulding\In-progress\11002171_sm_2008xx.dgn
11-0028

| PROJECT REFERENCE NO. | SHEET NO. |
|---|---|
| U-4020 | Sig.12 |

## PHASING DIAGRAM

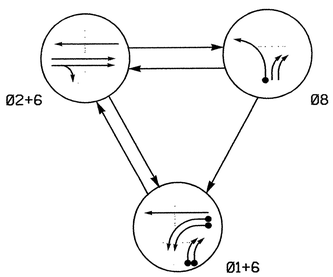


PHASING DIAGRAM DETECTION LEGEND

- DETECTED MOVEMENT
- UNDETECTED MOVEMENT (OVERLAP)
- UNSIGNALIZED MOVEMENT
- PEDESTRIAN MOVEMENT

## TABLE OF OPERATION

| SIGNAL FACE | PHASE Ø1+6 | PHASE Ø2+6 | PHASE Ø8 | FLASH |
|---|---|---|---|---|
| 11,12 | ← | ~~R~~ | ~~R~~ | ~~R~~ |
| 21,22 | R | G | R | Y |
| 61,62 | G | G | R | Y |
| 81 | ~~R~~ | ~~R~~ | ← | ~~R~~ |
| 82,83 | → | ~~R~~ | → | ~~R~~ |

## SIGNAL FACE I.D.

All Signal Heads L.E.D.

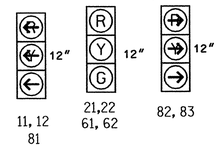


## 2070L LOOP & DETECTOR INSTALLATION

| INDUCTIVE LOOPS | | | | | DETECTOR PROGRAMMING | | | | | | | |
|---|---|---|---|---|---|---|---|---|---|---|---|---|
| LOOP | SIZE (FT) | DISTANCE FROM STOPBAR (FT) | TURNS | NEW LOOP | PHASE | CALLING | EXTENSION | FULL TIME DELAY | STRETCH TIME | DELAY TIME | SYSTEM LOOP | NEW CARD |
| 1A | 6x40 | 0 | 2-4-2 | Y | 1 | Y | Y | - | - | - | - | - |
| 1B | 6x40 | 0 | 2-4-2 | Y | 1 | Y | Y | - | - | - | - | - |
| 1C | 6x40 | 0 | 2-4-2 | Y | 1 | Y | Y | - | - | 15 | - | - |
| 1D | 6x40 | 0 | 2-4-2 | Y | 1 | Y | Y | - | - | 15 | - | - |
| 8A | 6X40 | 0 | 2-4-2 | Y | 8 | Y | Y | - | - | 3 | - | - |

3 Phase
Semi- Actuated
(Isolated)

## NOTES

1. Refer to "Roadway Standard Drawings NCDOT" dated July 2006 and "Standard Specifications for Roads and Structures" dated July 2006.
2. Do not program signal for late night flashing operation unless otherwise directed by the Engineer.
3. Reposition existing signal heads as needed.
4. Set all detector units to presence mode.

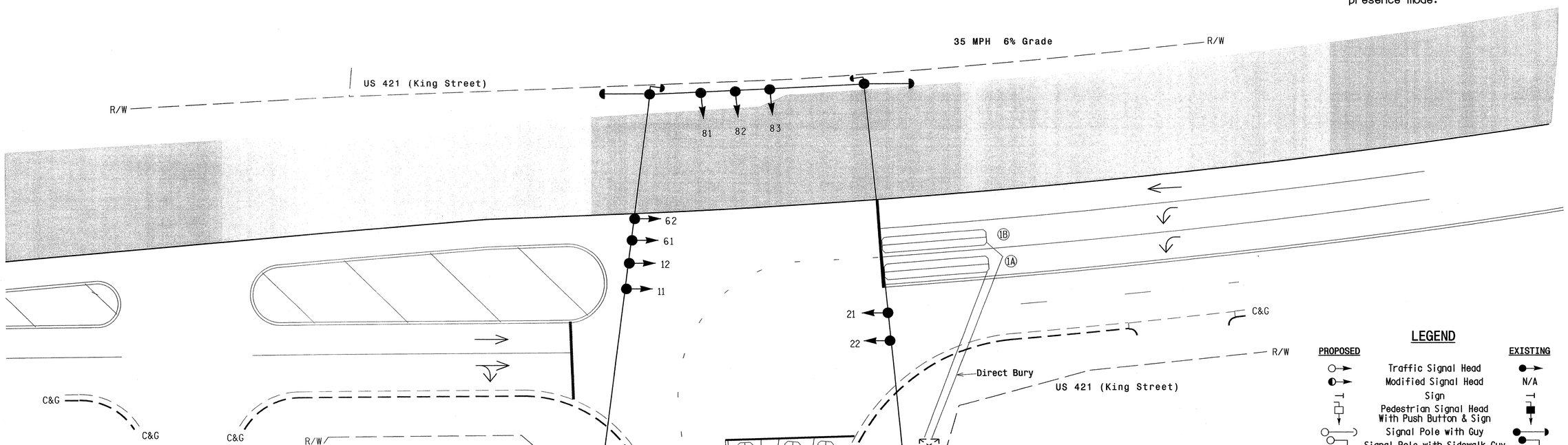


## LEGEND

| PROPOSED | | EXISTING |
|---|---|---|
| | Traffic Signal Head | |
| | Modified Signal Head | N/A |
| | Sign | |
| | Pedestrian Signal Head With Push Button & Sign | |
| | Signal Pole with Guy | |
| | Signal Pole with Sidewalk Guy | |
| | Inductive Loop Detector | |
| | Controller & Cabinet | |
| | Junction Box | |
| | 2-in Underground Conduit | |
| N/A | Right of Way | |
| | Directional Arrow | |
| | Pavement Marking Arrow | |

## 2070L TIMING CHART

| FEATURE | PHASE 1 | PHASE 2 | PHASE 6 | PHASE 8 |
|---|---|---|---|---|
| Min Green 1 * | 7 | 10 | 10 | 7 |
| Extension 1 * | 2.0 | - | - | 2.0 |
| Max Green 1 * | 20 | 60 | 60 | 30 |
| Yellow Clearance | 3.0 | 4.1 | 3.5 | 3.0 |
| Red Clearance | 3.2 | 1.9 | 1.8 | 3.1 |
| Walk 1 * | - | | - | - |
| Don't Walk 1 | - | - | - | - |
| Seconds Per Actuation * | - | - | - | - |
| Max Variable Initial * | - | - | - | - |
| Time Before Reduction * | - | - | - | - |
| Time To Reduce * | - | - | - | - |
| Minimum Gap | - | - | - | - |
| Recall Mode | - | MAX RECALL | MAX RECALL | - |
| Vehicle Call Memory | - | N/A | N/A | - |
| Dual Entry | - | - | - | - |
| Simultaneous Gap | ON | ON | ON | ON |

* These values may be field adjusted. Do not adjust Min Green and Extension times for phases 2 and 6 lower than what is shown. Min Green for all other phases should not be lower than 4 seconds.

Signal Upgrade (Temporary-TCP Phase II, Steps 1-4)

Prepared in the Offices of:
Traffic Engineering and Safety Systems Branch
Signals and Geometrics Section
750 N. Greenfield Pkwy, Garner, NC 27529

SCALE 1"=20' (0 – 20)

US 421 (King Street)
at
US 221 /NC 105

Division 11 Watauga County Boone

| | | | |
|---|---|---|---|
| PLAN DATE: | December 2008 | REVIEWED BY: | Z.M.Little |
| PREPARED BY: | JERRY YARAVITZ | REVIEWED BY: | |

| REVISIONS | INIT. | DATE |
|---|---|---|
| | | |

SEAL: NORTH CAROLINA PROFESSIONAL SEAL 30530 ENGINEER ZACHARY M. LITTLE

SIGNATURE 12/19/08 DATE

SIG. INVENTORY NO. 11-0021T2

19-DEC-2008 11:07
s:\its signal\workgroups\tip projects\u-4020\signals\designs\signals\11-0021\11002112_sig_dsn_xxxx2008.dgn
jyaravitz

| PROJECT REFERENCE NO. | SHEET NO. |
|---|---|
| U-4020 | Sig.13 |

# EDI MODEL 2010ECL-NC CONFLICT MONITOR PROGRAMMING DETAIL

*(remove jumpers and set switches as shown)*

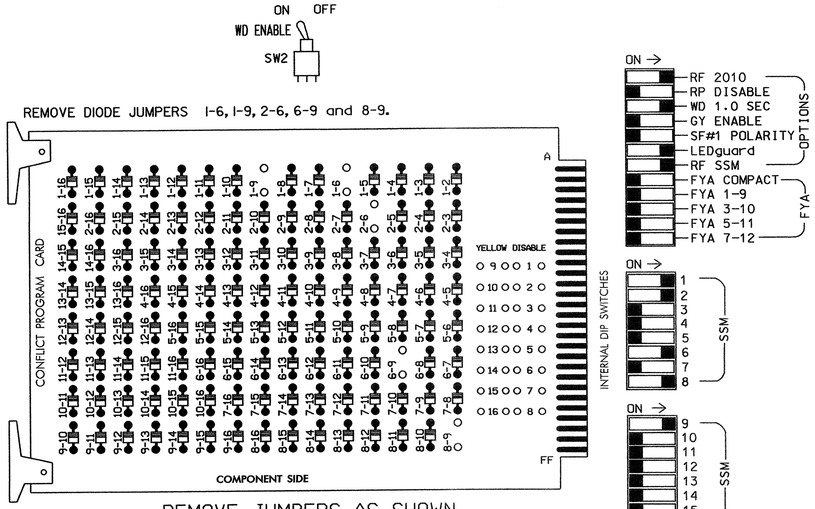


REMOVE JUMPERS AS SHOWN

NOTES:

1. Card is provided with all diode jumpers in place. Removal of any jumper allows its channels to run concurrently.
2. Make sure jumpers SEL2-SEL5 are present on the monitor board.

■ = DENOTES POSITION OF SWITCH

## NOTES

1. To prevent "flash-conflict" problems, insert red flash program blocks for all unused vehicle load switches in the output file. The installer shall verify that signal heads flash in accordance with the Signal Plans.
2. Ensure that Red Enable is active at all times during normal operation. To prevent Red Failures on unused monitor channels, tie unused red monitor inputs 3,4,5,7, 10,11,12,13,14,15 & 16 to load switch AC+ per the cabinet manufacturer's instructions.
3. Program phases 2 and 6 on the controller unit, for Start Up In Green.
4. Enable Simultaneous Gap-Out, on the controller unit, for all phases.

CONTROLLER.....CONTRACTOR SUPPLIED 2070L
CABINET.....CONTRACTOR SUPPLIED 332
SOFTWARE.....ECONOLITE OASIS
CABINET MOUNT.....BASE
OUTPUT FILE POSITIONS...18 (12-STD, 6-AUX)
LOAD SWITCHES USED.....S1,S2,S6,S8,S9
PHASES USED.....1,2,6,8
OVERLAPS.....OLA 1+8

## SIGNAL HEAD HOOK-UP CHART

| LOAD SWITCH NO. | S1 | S2 | S2P | S3 | S4 | S4P | S5 | S6 | S6P | S7 | S8 | S8P | S9 | S10 | S11 | S12 | S13 | S14 |
|---|---|---|---|---|---|---|---|---|---|---|---|---|---|---|---|---|---|---|
| PHASE | 1 | 2 | 2 PED | 3 | 4 | 4 PED | 5 | 6 | 6 PED | 7 | 8 | 8 PED | ✱ OLA | OLB | SPARE | OLC | OLD | SPARE |
| SIGNAL HEAD NO. | 11,12 | 21,22 | NU | NU | NU | NU | NU | 61,62 | NU | NU | 81 | NU | 82,83 | NU | NU | NU | NU | NU |
| RED | | 128 | | | | | | 134 | | | | | | | | | | |
| YELLOW | | 129 | | | | | | 135 | | | | | | | | | | |
| GREEN | | 130 | | | | | | 136 | | | | | | | | | | |
| RED ARROW | 125 | | | | | | | | | | 107 | | A121 | | | | | |
| YELLOW ARROW | 126 | | | | | | | | | | 108 | | A122 | | | | | |
| GREEN ARROW | 127 | | | | | | | | | | 109 | | A123 | | | | | |
| ✋ | | | | | | | | | | | | | | | | | | |
| 🚶 | | | | | | | | | | | | | | | | | | |

NU = Not Used

✱ Flash note: Wire overlap "A" to flash on flasher unit 2, ciruit 1.

## INPUT FILE POSITION LAYOUT

*(front view)*

| | | 1 | 2 | 3 | 4 | 5 | 6 | 7 | 8 | 9 | 10 | 11 | 12 | 13 | 14 |
|---|---|---|---|---|---|---|---|---|---|---|---|---|---|---|---|
| FILE "I" | U | ø 1 1A | ø 1 1B | ø 1 1D | SLOT EMPTY | SLOT EMPTY | SLOT EMPTY | SLOT EMPTY | SLOT EMPTY | SLOT EMPTY | SLOT EMPTY | SLOT EMPTY | SLOT EMPTY | SLOT EMPTY | FS DC ISOLATOR |
| | L | NOT USED | ø 1 1C | NOT USED | | | | | | | | | | | ST DC ISOLATOR |
| FILE "J" | U | SLOT EMPTY | SLOT EMPTY | SLOT EMPTY | SLOT EMPTY | SLOT EMPTY | ø 8 8A | SLOT EMPTY | SLOT EMPTY | SLOT EMPTY | SLOT EMPTY | SLOT EMPTY | SLOT EMPTY | SLOT EMPTY | SLOT EMPTY |
| | L | | | | | | NOT USED | | | | | | | | |

EX.: 1A, 2A, ETC. = LOOP NO.'S

FS = FLASH SENSE
ST = STOP TIME

## INPUT FILE CONNECTION & PROGRAMMING CHART

| LOOP NO. | LOOP TERMINAL | INPUT FILE POS. | PIN NO. | INPUT ASSIGNMENT NO. | DETECTOR NO. | NEMA PHASE | CALL | EXTEND | FULL TIME DELAY | STRETCH TIME | DELAY TIME |
|---|---|---|---|---|---|---|---|---|---|---|---|
| 1A | TB2-1,2 | I1U | 56 | 18 | 1 | 1 | Y | Y | | | |
| 1B | TB2-5,6 | I2U | 39 | 1 | 2 | 1 | Y | Y | | | |
| 1C | TB2-7,8 | I2L | 43 | 5 | 12 | 1 | Y | Y | | | 15 |
| 1D | TB2-9,10 | I3U | 63 | 25 | 32 | 1 | Y | Y | | | 15 |
| 8A | TB5-9,10 | J6U | 42 | 4 | 8 | 8 | Y | Y | | | 3 |

INPUT FILE POSITION LEGEND: J2L
FILE J
SLOT 2
LOWER

## OVERLAP PROGRAMMING DETAIL

*(program controller as shown below)*

FROM MAIN MENU PRESS '8' (OVERLAPS), THEN '1' (VEHICLE OVERLAP SETTINGS).

```
PAGE 1: VEHICLE OVERLAP 'A' SETTINGS
PHASE:            ¦123456789101112131415 16
VEH OVL PARENTS:¦X       X
VEH OVL NOT VEH:¦
VEH OVL NOT PED:¦
VEH OVL GRN EXT:¦
STARTUP COLOR: _ RED  _ YELLOW  _ GREEN
FLASH COLORS:  _ RED  _ YELLOW  _ GREEN
SELECT VEHICLE OVERLAP OPTIONS:   (Y/N)
FLASH YELLOW IN CONTROLLER FLASH?...N
GREEN EXTENSION (0-255 SEC).........0
YELLOW CLEAR (0=PARENT,3-25.5 SEC)..0.0
RED CLEAR (0=PARENT,0.1-25.5 SEC)...0.0
OUTPUT AS PHASE # (0=NONE, 1-16)....0
```

OVERLAP PROGRAMMING COMPLETE

THIS ELECTRICAL DETAIL IS FOR
THE SIGNAL DESIGN: 11-0021T2
DESIGNED: December 2008
SEALED: 12-19-08
REVISED: N/A

Signal Upgrade (Temporary - TCP Phase II, Steps 1-4)

ELECTRICAL AND PROGRAMMING DETAILS FOR:

US 421 (King Street)
at
US 221 /NC 105

Division 11 Watauga County Boone

PLAN DATE: 12-18-08 REVIEWED BY: D.T. Joyce
PREPARED BY: D.H. Spaulding REVIEWED BY:

| REVISIONS | INIT. | DATE |
|---|---|---|
| | | |

Prepared in the Offices of:
State Traffic Engineering and Safety Systems Branch
STATE OF NORTH CAROLINA DEPARTMENT OF TRANSPORTATION
Signals Management Section
750 N. Greenfield Pkwy, Garner, NC 27529

SEAL
NORTH CAROLINA PROFESSIONAL SEAL 022013 ENGINEER GEORGE C. BROWN
George C. Brown 12/19/08
SIGNATURE DATE
SIG. INVENTORY NO. 11-0021T2

06-JAN-2009 06:53
s:\ts_signal\working\groups\sig man\spaulding\in-progress\11-0021T2_sm.ele.2008xx.dgn
t:joyce

| PROJECT REFERENCE NO. | SHEET NO. |
|---|---|
| U-4020 | Sig.14 |

## PHASING DIAGRAM

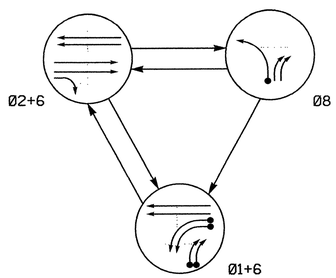


### PHASING DIAGRAM DETECTION LEGEND

- DETECTED MOVEMENT
- UNDETECTED MOVEMENT (OVERLAP)
- UNSIGNALIZED MOVEMENT
- PEDESTRIAN MOVEMENT

## TABLE OF OPERATION

| SIGNAL FACE | PHASE Ø1+6 | PHASE Ø2+6 | PHASE Ø8 | FLASH |
|---|---|---|---|---|
| 11,12 | → | ~~R~~ | ~~R~~ | ~~R~~ |
| 21,22 | R | G | R | Y |
| 61,62 | G | G | R | Y |
| 81 | ~~R~~ | ~~R~~ | → | ~~R~~ |
| 82,83 | → | ~~R~~ | → | ~~R~~ |

## SIGNAL FACE I.D.

All Signal Heads L.E.D.

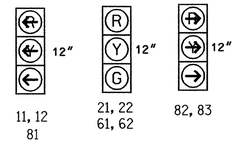


## 2070L LOOP & DETECTOR INSTALLATION

| INDUCTIVE LOOPS | | | | | DETECTOR PROGRAMMING | | | | | | |
|---|---|---|---|---|---|---|---|---|---|---|---|
| LOOP | SIZE (FT) | DISTANCE FROM STOPBAR (FT) | TURNS | NEW LOOP | PHASE | CALLING | EXTENSION | FULL TIME DELAY | STRETCH TIME | DELAY TIME | SYSTEM LOOP | NEW CARD |
| 1A | 6x40 | 0 | 2-4-2 | Y | 1 | Y | Y | - | - | - | - | - |
| 1B | 6x40 | 0 | 2-4-2 | Y | 1 | Y | Y | - | - | - | - | - |
| 1C | 6x40 | 0 | 2-4-2 | - | 1 | Y | Y | - | - | 15 | - | - |
| 1D | 6x40 | 0 | 2-4-2 | - | 1 | Y | Y | - | - | 15 | - | - |
| 8A | 6X40 | 0 | 2-4-2 | - | 8 | Y | Y | - | - | 3 | - | - |

3 Phase
Semi-Actuated
(Isolated)

## NOTES

1. Refer to "Roadway Standard Drawings NCDOT" dated July 2006 and "Standard Specifications for Roads and Structures" dated July 2006.
2. Do not program signal for late night flashing operation unless otherwise directed by the Engineer.
3. Reposition existing signal heads as needed.
4. Set all detector units to presence mode.

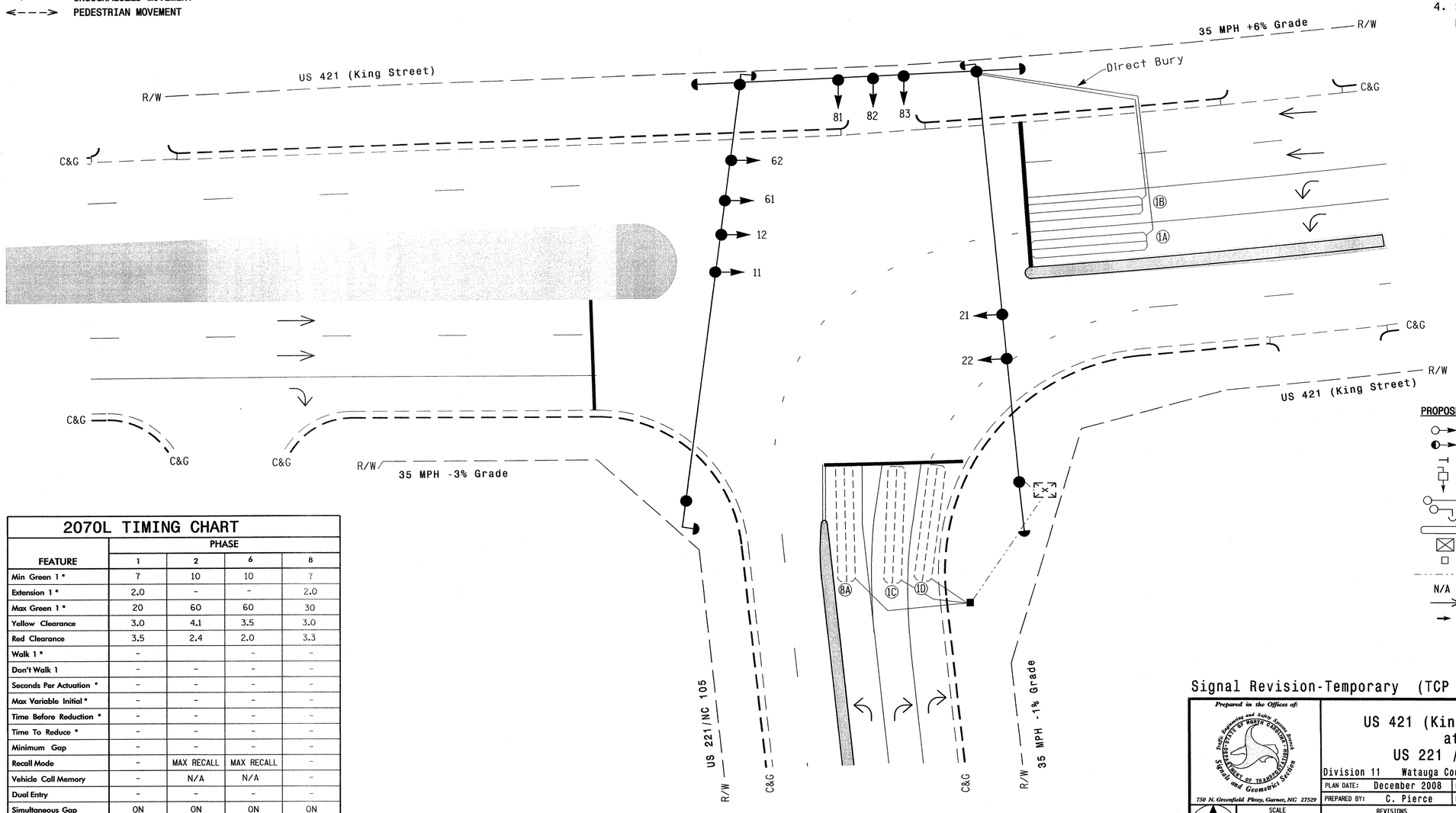


## LEGEND

| PROPOSED | | EXISTING |
|---|---|---|
| | Traffic Signal Head | |
| | Modified Signal Head | N/A |
| | Sign | |
| | Pedestrian Signal Head With Push Button & Sign | |
| | Signal Pole with Guy | |
| | Signal Pole with Sidewalk Guy | |
| | Inductive Loop Detector | |
| | Controller & Cabinet | |
| | Junction Box | |
| | 2-in Underground Conduit | |
| N/A | Right of Way | |
| | Directional Arrow | |
| | Pavement Marking Arrow | |

## 2070L TIMING CHART

| FEATURE | PHASE 1 | PHASE 2 | PHASE 6 | PHASE 8 |
|---|---|---|---|---|
| Min Green 1 * | 7 | 10 | 10 | 7 |
| Extension 1 * | 2.0 | - | - | 2.0 |
| Max Green 1 * | 20 | 60 | 60 | 30 |
| Yellow Clearance | 3.0 | 4.1 | 3.5 | 3.0 |
| Red Clearance | 3.5 | 2.4 | 2.0 | 3.3 |
| Walk 1 * | - | | - | - |
| Don't Walk 1 | - | - | - | - |
| Seconds Per Actuation * | - | - | - | - |
| Max Variable Initial * | - | - | - | - |
| Time Before Reduction * | - | - | - | - |
| Time To Reduce * | - | - | - | - |
| Minimum Gap | - | - | - | - |
| Recall Mode | - | MAX RECALL | MAX RECALL | - |
| Vehicle Call Memory | - | N/A | N/A | - |
| Dual Entry | - | - | - | - |
| Simultaneous Gap | ON | ON | ON | ON |

* These values may be field adjusted. Do not adjust Min Green and Extension times for phases 2 and 6 lower than what is shown. Min Green for all other phases should not be lower than 4 seconds.

Signal Revision-Temporary (TCP Phase III, Steps 1&2)

Prepared in the Offices of:
Traffic Engineering and Safety Systems Branch
STATE OF NORTH CAROLINA DEPARTMENT OF TRANSPORTATION
Signals and Geometrics Section
750 N. Greenfield Pkwy, Garner, NC 27529

SCALE 0 20 1"=20'

US 421 (King Street)
at
US 221 /NC 105

Division 11 Watauga County Boone

PLAN DATE: December 2008 REVIEWED BY:
PREPARED BY: C. Pierce REVIEWED BY:

| REVISIONS | INIT. | DATE |
|---|---|---|
| | | |

SEAL
NORTH CAROLINA PROFESSIONAL SEAL 30530 ENGINEER ZACHARY M. LITTLE
SIGNATURE 12/9/08 DATE
SIG. INVENTORY NO. 11-0021T3

19-DEC-2008 11:19
s:\#ts signals\workgroups\#tip projects\u-4020\designs\signals\11-0021\#11002113.sig_dsn_xxxx2008.dgn
jyarovitz

| PROJECT REFERENCE NO. | SHEET NO. |
|---|---|
| U-4020 | Sig.15 |

# EDI MODEL 2010ECL-NC CONFLICT MONITOR PROGRAMMING DETAIL

*(remove jumpers and set switches as shown)*

REMOVE DIODE JUMPERS 1-6, 1-9, 2-6, 6-9 and 8-9.

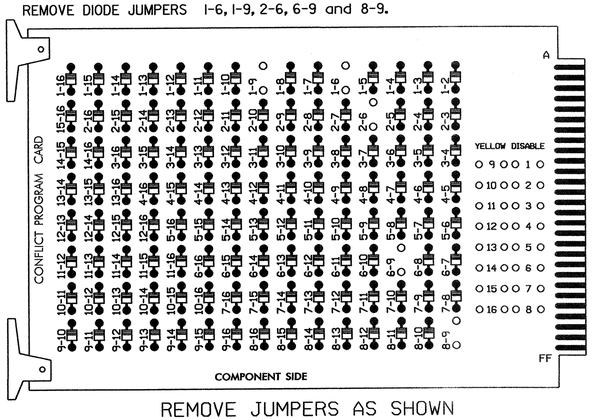


REMOVE JUMPERS AS SHOWN

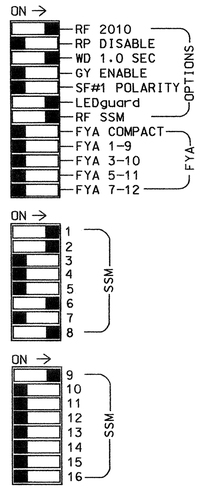


■ = DENOTES POSITION OF SWITCH

NOTES:

1. Card is provided with all diode jumpers in place. Removal of any jumper allows its channels to run concurrently.
2. Make sure jumpers SEL2-SEL5 are present on the monitor board.

## NOTES

1. To prevent "flash-conflict" problems, insert red flash program blocks for all unused vehicle load switches in the output file. The installer shall verify that signal heads flash in accordance with the Signal Plans.
2. Ensure that Red Enable is active at all times during normal operation. To prevent Red Failures on unused monitor channels, tie unused red monitor inputs 3,4,5,7, 10,11,12,13,14,15 & 16 to load switch AC+ per the cabinet manufacturer's instructions.
3. Program phases 2 and 6 on the controller unit, for Start Up In Green.
4. Enable Simultaneous Gap-Out, on the controller unit, for all phases.

CONTROLLER.....CONTRACTOR SUPPLIED 2070L
CABINET.....CONTRACTOR SUPPLIED 332
SOFTWARE.....ECONOLITE OASIS
CABINET MOUNT.....BASE
OUTPUT FILE POSITIONS...18 (12-STD, 6-AUX)
LOAD SWITCHES USED.....S1,S2,S6,S8,S9
PHASES USED.....1,2,6,8
OVERLAPS.....OLA 1+8

## SIGNAL HEAD HOOK-UP CHART

| LOAD SWITCH NO. | S1 | S2 | S2P | S3 | S4 | S4P | S5 | S6 | S6P | S7 | S8 | S8P | S9 | S10 | S11 | S12 | S13 | S14 |
|---|---|---|---|---|---|---|---|---|---|---|---|---|---|---|---|---|---|---|
| PHASE | 1 | 2 | 2 PED | 3 | 4 | 4 PED | 5 | 6 | 6 PED | 7 | 8 | 8 PED | ✱ OLA | OLB | SPARE | OLC | OLD | SPARE |
| SIGNAL HEAD NO. | 11,12 | 21,22 | NU | NU | NU | NU | NU | 61,62 | NU | NU | 81 | NU | 82,83 | NU | NU | NU | NU | NU |
| RED | | 128 | | | | | | 134 | | | | | | | | | | |
| YELLOW | | 129 | | | | | | 135 | | | | | | | | | | |
| GREEN | | 130 | | | | | | 136 | | | | | | | | | | |
| RED ARROW | 125 | | | | | | | | | | 107 | | A121 | | | | | |
| YELLOW ARROW | 126 | | | | | | | | | | 108 | | A122 | | | | | |
| GREEN ARROW | 127 | | | | | | | | | | 109 | | A123 | | | | | |
| ✋ | | | | | | | | | | | | | | | | | | |
| 🚶 | | | | | | | | | | | | | | | | | | |

NU = Not Used

✱ Flash note: Wire overlap "A" to flash on flasher unit 2, ciruit 1.

## INPUT FILE POSITION LAYOUT

*(front view)*

| | | 1 | 2 | 3 | 4 | 5 | 6 | 7 | 8 | 9 | 10 | 11 | 12 | 13 | 14 |
|---|---|---|---|---|---|---|---|---|---|---|---|---|---|---|---|
| FILE "I" | U | ø 1 1A | ø 1 1B | ø 1 1D | SLOT EMPTY | SLOT EMPTY | SLOT EMPTY | SLOT EMPTY | SLOT EMPTY | SLOT EMPTY | SLOT EMPTY | SLOT EMPTY | SLOT EMPTY | SLOT EMPTY | FS DC ISOLATOR |
| | L | NOT USED | ø 1 1C | NOT USED | | | | | | | | | | | ST DC ISOLATOR |
| FILE "J" | U | SLOT EMPTY | SLOT EMPTY | SLOT EMPTY | SLOT EMPTY | SLOT EMPTY | ø 8 8A | SLOT EMPTY | SLOT EMPTY | SLOT EMPTY | SLOT EMPTY | SLOT EMPTY | SLOT EMPTY | SLOT EMPTY | SLOT EMPTY |
| | L | | | | | | NOT USED | | | | | | | | |

EX.: 1A, 2A, ETC. = LOOP NO.'S

FS = FLASH SENSE
ST = STOP TIME

## INPUT FILE CONNECTION & PROGRAMMING CHART

| LOOP NO. | LOOP TERMINAL | INPUT FILE POS. | PIN NO. | INPUT ASSIGNMENT NO. | DETECTOR NO. | NEMA PHASE | CALL | EXTEND | FULL TIME DELAY | STRETCH TIME | DELAY TIME |
|---|---|---|---|---|---|---|---|---|---|---|---|
| 1A | TB2-1,2 | I1U | 56 | 18 | 1 | 1 | Y | Y | | | |
| 1B | TB2-5,6 | I2U | 39 | 1 | 2 | 1 | Y | Y | | | |
| 1C | TB2-7,8 | I2L | 43 | 5 | 12 | 1 | Y | Y | | | 15 |
| 1D | TB2-9,10 | I3U | 63 | 25 | 32 | 1 | Y | Y | | | 15 |
| 8A | TB5-9,10 | J6U | 42 | 4 | 8 | 8 | Y | Y | | | 3 |

INPUT FILE POSITION LEGEND: J2L
FILE J
SLOT 2
LOWER

## OVERLAP PROGRAMMING DETAIL

*(program controller as shown below)*

FROM MAIN MENU PRESS '8' (OVERLAPS), THEN '1' (VEHICLE OVERLAP SETTINGS).

```
PAGE 1: VEHICLE OVERLAP 'A' SETTINGS
PHASE:          ¦123456789101112131415 16
VEH OVL PARENTS:¦X       X
VEH OVL NOT VEH:¦
VEH OVL NOT PED:¦
VEH OVL GRN EXT:¦
STARTUP COLOR: _ RED  _ YELLOW  _ GREEN
FLASH COLORS:  _ RED  _ YELLOW  _ GREEN
SELECT VEHICLE OVERLAP OPTIONS:   (Y/N)
FLASH YELLOW IN CONTROLLER FLASH?...N
GREEN EXTENSION (0-255 SEC).........0
YELLOW CLEAR (0=PARENT,3-25.5 SEC)..0.0
RED CLEAR (0=PARENT,0.1-25.5 SEC)...0.0
OUTPUT AS PHASE # (0=NONE, 1-16)....0
```

OVERLAP PROGRAMMING COMPLETE

THIS ELECTRICAL DETAIL IS FOR
THE SIGNAL DESIGN: 11-0021T3
DESIGNED: December 2008
SEALED: 12-19-08
REVISED: N/A

Signal Revision - Temporary (TCP Phase III Steps 1 & 2)

ELECTRICAL AND PROGRAMMING DETAILS FOR:

Prepared in the Offices of:

Traffic Engineering and Safety Systems Branch
Signals Management Section
750 N. Greenfield Pkwy, Garner, NC 27529

US 421 (King Street)
at
US 221 /NC 105

Division 11 Watauga County Boone

PLAN DATE: 12-17-08 REVIEWED BY: D.T. Joyce
PREPARED BY: D.H. Spaulding REVIEWED BY:

| REVISIONS | INIT. | DATE |
|---|---|---|
| | | |

SEAL

NORTH CAROLINA PROFESSIONAL SEAL 022013 ENGINEER GEORGE C. BROWN

SIGNATURE DATE 11/6/09

SIG. INVENTORY NO. 11-0021T3

06-JAN-2009 06:41
s:\its signals\workgroups\sig mgmt\spaulding\in-progress\11002173_am_ele_2008xx.dgn
tjjoyce

| PROJECT REFERENCE NO. | SHEET NO. |
|---|---|
| U-4020 | Sig.16 |

## PHASING DIAGRAM

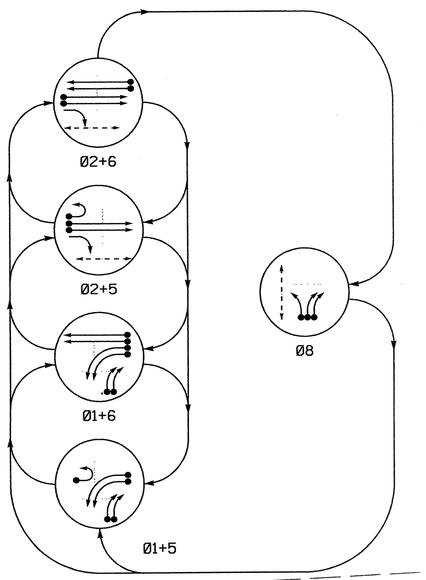


## TABLE OF OPERATION

| SIGNAL FACE | PHASE Ø1+5 | Ø1+6 | Ø2+5 | Ø2+6 | Ø8 | FLASH |
|---|---|---|---|---|---|---|
| 11, 12 | ← | ← | ~~R~~ | ~~R~~ | ~~R~~ | ~~R~~ |
| 21, 22 | R | R | G | G | R | Y |
| 51 | ← | ~~R~~ | ← | ~~R~~ | ~~R~~ | ~~R~~ |
| 61, 62 | R | G | R | G | R | Y |
| 81 | R | R | R | R | G | R |
| 82, 83 | → | → | ~~R~~ | ~~R~~ | → | ~~R~~ |
| P21, P22 | DW | DW | W | W | DW | DRK |
| P81, P82 | DW | DW | DW | DW | W | DRK |

W - Walk
DW - Don't Walk
DRK - Dark

## SIGNAL FACE I.D.

All Signal Heads L.E.D.

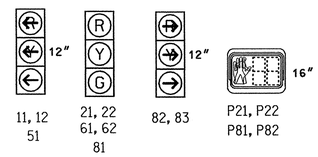


## 2070L LOOP & DETECTOR INSTALLATION

| INDUCTIVE LOOPS | | | | | DETECTOR PROGRAMMING | | | | | | | |
|---|---|---|---|---|---|---|---|---|---|---|---|---|
| LOOP | SIZE (FT) | DISTANCE FROM STOPBAR (FT) | TURNS | NEW LOOP | PHASE | CALLING | EXTENSION | FULL TIME DELAY | STRETCH TIME | DELAY TIME | SYSTEM LOOP | NEW CARD |
| 1A | 6x40 | 0 | 2-4-2 | Y | 1 | Y | Y | - | - | - | - | - |
| 1B | 6x40 | 0 | 2-4-2 | Y | 1 | Y | Y | - | - | - | - | - |
| 1C | 6x40 | 0 | 2-4-2 | - | 1 | Y | Y | - | - | 15 | - | - |
| 1D | 6x40 | 0 | 2-4-2 | - | 1 | Y | Y | - | - | 15 | - | - |
| 2A, 2B | 6x6 | 70 | 4 | Y | 2 | Y | Y | - | - | - | - | Y |
| 5A | 6x40 | 0 | 2-4-2 | Y | 5 | Y | Y | - | - | - | - | Y |
| 6A, 6B | 6x6 | 70 | 4 | Y | 6 | Y | Y | - | - | - | - | Y |
| 8A | 6x40 | 0 | 2-4-2 | - | 8 | Y | Y | - | - | - | - | - |
| S03 | 6x6 | +155 | 4 | Y | - | - | - | - | - | - | Y | Y |
| S04 | 6x6 | +155 | 4 | Y | - | - | - | - | - | - | Y | Y |
| S05 | 6x6 | +200 | 4 | Y | - | - | - | - | - | - | Y | Y |
| S06 | 6x6 | +200 | 4 | Y | - | - | - | - | - | - | Y | Y |

## 5 Phase
## Fully Actuated
## US 421(King Street) Closed Loop System

## NOTES

1. Refer to "Roadway Standard Drawings NCDOT" dated July 2006 and "Standard Specifications for Roads and Structures" dated July 2006.
2. Do not program signal for late night flashing operation unless otherwise directed by the Engineer.
3. Phase 1 or phase 5 may be lagged.
4. Set all detector units to presence mode.
5. Omit "WALK" and flashing "DON'T WALK" with no pedestrian calls.
6. Program pedestrian heads to countdown the flashing "Don't Walk" time only.
7. Maximum times shown in timing chart are for free-run operation only. Coordinated signal system timing values supersede these values.
8. Closed loop system data: Master Asset #11103. Controller Asset #0021.

PHASING DIAGRAM DETECTION LEGEND

- DETECTED MOVEMENT
- UNDETECTED MOVEMENT (OVERLAP)
- UNSIGNALIZED MOVEMENT
- PEDESTRIAN MOVEMENT

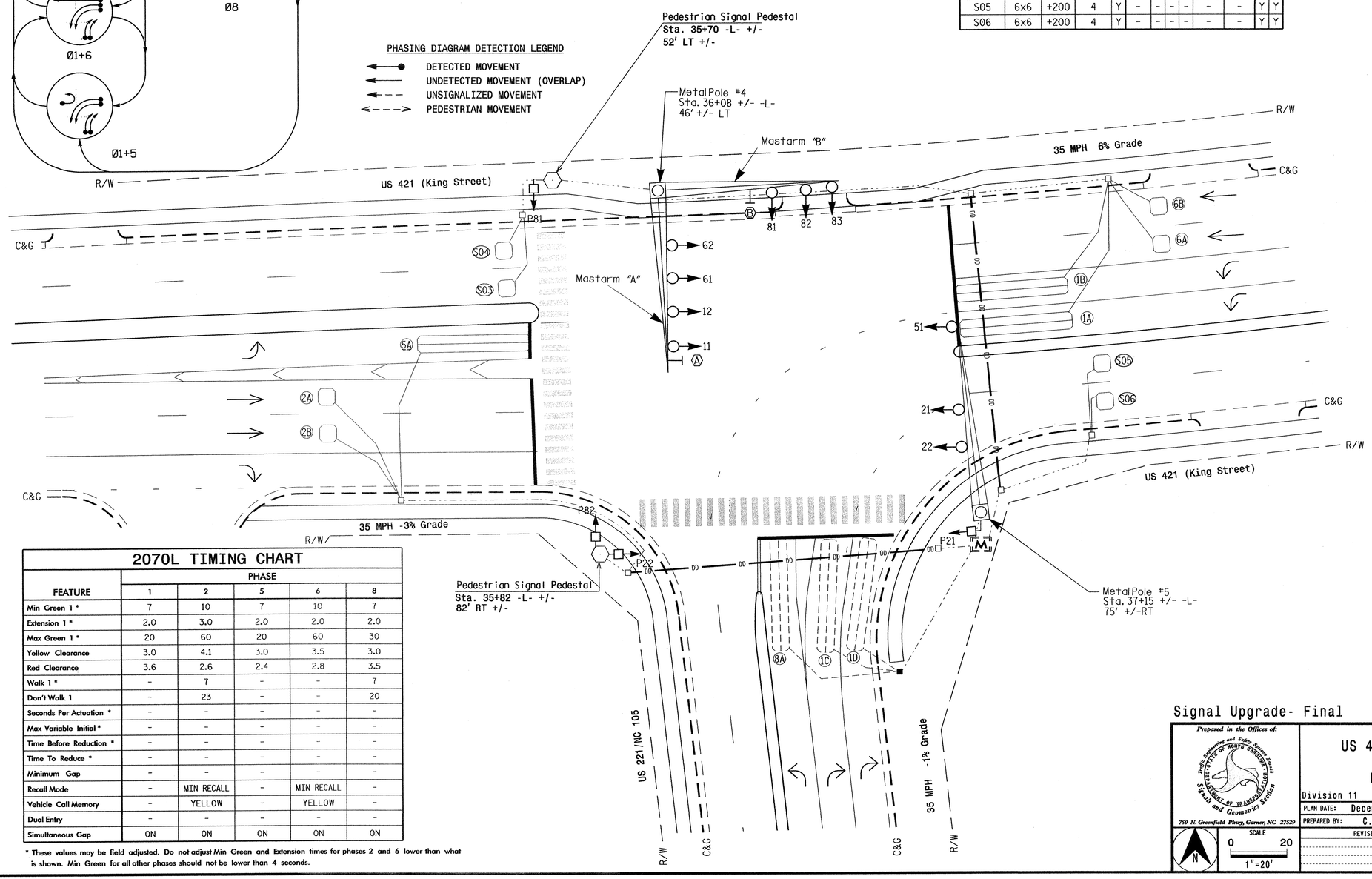


## LEGEND

| PROPOSED | | EXISTING |
|---|---|---|
| | Traffic Signal Head | |
| | Modified Signal Head | N/A |
| | Sign | |
| | Pedestrian Signal Head With Push Button & Sign | |
| | Signal Pole with Guy | |
| | Signal Pole with Sidewalk Guy | |
| | Inductive Loop Detector | |
| | Controller & Cabinet | |
| | Junction Box | |
| | 2-in Underground Conduit | |
| N/A | Right of Way | |
| | Directional Arrow | |
| | Pavement Marking Arrow | |
| DD | Directional Drill Polyethylene Conduit | N/A |
| | Metal Pole with Mastarm | |
| | Pedestrian Signal Pedestal | |
| M | Master Controller & Cabinet | M |
| A | "U-TURN YIELD TO RIGHT TURN" Sign (R10-16) | A |
| B | Left Arrow "ONLY" Sign (R3-5L) | B |

## 2070L TIMING CHART

| FEATURE | PHASE 1 | 2 | 5 | 6 | 8 |
|---|---|---|---|---|---|
| Min Green 1 * | 7 | 10 | 7 | 10 | 7 |
| Extension 1 * | 2.0 | 3.0 | 2.0 | 2.0 | 2.0 |
| Max Green 1 * | 20 | 60 | 20 | 60 | 30 |
| Yellow Clearance | 3.0 | 4.1 | 3.0 | 3.5 | 3.0 |
| Red Clearance | 3.6 | 2.6 | 2.4 | 2.8 | 3.5 |
| Walk 1 * | - | 7 | - | - | 7 |
| Don't Walk 1 | - | 23 | - | - | 20 |
| Seconds Per Actuation * | - | - | - | - | - |
| Max Variable Initial * | - | - | - | - | - |
| Time Before Reduction * | - | - | - | - | - |
| Time To Reduce * | - | - | - | - | - |
| Minimum Gap | - | - | - | - | - |
| Recall Mode | - | MIN RECALL | - | MIN RECALL | - |
| Vehicle Call Memory | - | YELLOW | - | YELLOW | - |
| Dual Entry | - | - | - | - | - |
| Simultaneous Gap | ON | ON | ON | ON | ON |

* These values may be field adjusted. Do not adjust Min Green and Extension times for phases 2 and 6 lower than what is shown. Min Green for all other phases should not be lower than 4 seconds.

Signal Upgrade- Final

Prepared in the Offices of:
Traffic Engineering and Safety Systems Branch
Signals and Geometrics Section
STATE OF NORTH CAROLINA DEPARTMENT OF TRANSPORTATION
750 N. Greenfield Pkwy, Garner, NC 27529

# US 421 (King Street) at US 221 /NC 105

Division 11 Watauga County Boone

PLAN DATE: December 2008 REVIEWED BY:
PREPARED BY: C. Pierce REVIEWED BY:

SCALE 0 20 1"=20'

| REVISIONS | INIT. | DATE |
|---|---|---|
| | | |

SEAL
NORTH CAROLINA PROFESSIONAL SEAL 30530 ENGINEER ZACHARY M. LITTLE
SIGNATURE DATE 12/19/08
SIG. INVENTORY NO. 11-0021

05-JAN-2009 12:16
s:\traffic\Signals\workgroups\ip projects\u-4020\signals\designsignals\11-0021\11-0021_sig_dgn_xxxx2008.dgn
esparce

| PROJECT REFERENCE NO. | SHEET NO. |
|---|---|
| U-4020 | Sig.17 |

# EDI MODEL 2010ECL-NC CONFLICT MONITOR PROGRAMMING DETAIL

*(remove jumpers and set switches as shown)*

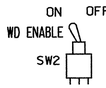


REMOVE DIODE JUMPERS I-5, I-6, I-9, 2-5, 2-6, 2-13, 5-9, 5-13, 6-9, 6-13, 8-9, 8-16 and 9-16.

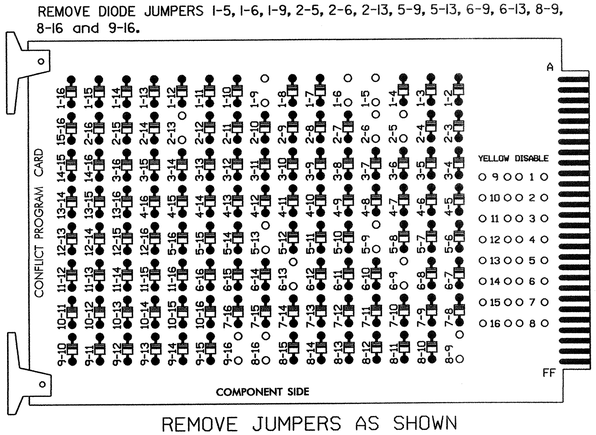


REMOVE JUMPERS AS SHOWN

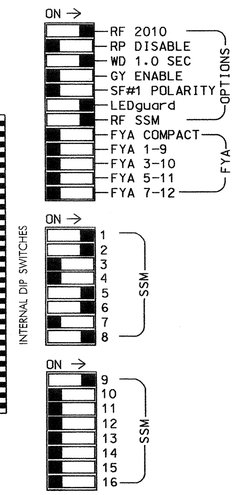


■ = DENOTES POSITION OF SWITCH

NOTES:

1. Card is provided with all diode jumpers in place. Removal of any jumper allows its channels to run concurrently.
2. Make sure jumpers SEL2-SEL5 are present on the monitor board.

## NOTES

1. To prevent "flash-conflict" problems, insert red flash program blocks for all unused vehicle load switches in the output file. The installer shall verify that signal heads flash in accordance with the Signal Plans.
2. Ensure that Red Enable is active at all times during normal operation. To prevent Red Failures on unused monitor channels, tie unused red monitor inputs 3,4,7, 10,11,12,13,14,15 & 16 to load switch AC+ per the cabinet manufacturer's instructions.
3. Program phases 2 and 6, on the controller unit, for Start Up In Green.
4. Enable Simultaneous Gap-Out, on the controller unit, for all phases.
5. Program phases 2 and 8 for 'STARTUP PED CALL'.

CONTROLLER.....CONTRACTOR SUPPLIED 2070L
CABINET.....CONTRACTOR SUPPLIED 332
SOFTWARE.....ECONOLITE OASIS
CABINET MOUNT.....BASE
OUTPUT FILE POSITIONS...18 (12-STD, 6-AUX)
LOAD SWITCHES USED.....S1,S2,S2P,S5,S6,S8,S8P
PHASES USED.....1,2,2PED,5,6,8,8PED
OVERLAPS.....OLA 1+8

## SIGNAL HEAD HOOK-UP CHART

| LOAD SWITCH NO. | S1 | S2 | S2P | S3 | S4 | S4P | S5 | S6 | S6P | S7 | S8 | S8P | S9 | S10 | S11 | S12 | S13 | S14 |
|---|---|---|---|---|---|---|---|---|---|---|---|---|---|---|---|---|---|---|
| PHASE | 1 | 2 | 2 PED | 3 | 4 | 4 PED | 5 | 6 | 6 PED | 7 | 8 | 8 PED | ✱ OLA | OLB | SPARE | OLC | OLD | SPARE |
| SIGNAL HEAD NO. | 11,12 | 21,22 | P21, P22 | NU | NU | NU | 51 | 61,62 | NU | NU | 81 | P81, P82 | 82,83 | NU | NU | NU | NU | NU |
| RED | | 128 | | | | | | 134 | | | 107 | | | | | | | |
| YELLOW | | 129 | | | | | | 135 | | | 108 | | | | | | | |
| GREEN | | 130 | | | | | | 136 | | | 109 | | | | | | | |
| RED ARROW | 125 | | | | | | 131 | | | | | | A121 | | | | | |
| YELLOW ARROW | 126 | | | | | | 132 | | | | | | A122 | | | | | |
| GREEN ARROW | 127 | | | | | | 133 | | | | | | A123 | | | | | |
| ✋ | | | 113 | | | | | | | | | 110 | | | | | | |
| 🚶 | | | 115 | | | | | | | | | 112 | | | | | | |

NU = Not Used

✱ Flash note: Wire overlap "A" to flash on flasher unit 2, ciruit 1.

## INPUT FILE POSITION LAYOUT

*(front view)*

| | | 1 | 2 | 3 | 4 | 5 | 6 | 7 | 8 | 9 | 10 | 11 | 12 | 13 | 14 |
|---|---|---|---|---|---|---|---|---|---|---|---|---|---|---|---|
| FILE "I" | U | Ø1 1A | Ø1 1B | Ø1 1D | SLOT EMPTY | SLOT EMPTY | SLOT EMPTY | SLOT EMPTY | SLOT EMPTY | SYS SO3 | SLOT EMPTY | SLOT EMPTY | Ø2 PED DC ISOLATOR | NOT USED | FS DC ISOLATOR |
| | L | NOT USED | Ø1 1C | Ø2 2A,2B | | | | | | SYS SO4 | | | NOT USED | Ø8 PED DC ISOLATOR | ST DC ISOLATOR |
| FILE "J" | U | Ø5 5A | Ø6 6A,6B | SLOT EMPTY | SLOT EMPTY | SLOT EMPTY | Ø8 8A | SLOT EMPTY | SLOT EMPTY | SYS SO5 | SLOT EMPTY | SLOT EMPTY | SLOT EMPTY | SLOT EMPTY | SLOT EMPTY |
| | L | NOT USED | NOT USED | | | | NOT USED | | | SYS SO6 | | | | | |

EX.: 1A, 2A, ETC. = LOOP NO.'S

FS = FLASH SENSE
ST = STOP TIME

## INPUT FILE CONNECTION & PROGRAMMING CHART

| LOOP NO. | LOOP TERMINAL | INPUT FILE POS. | PIN NO. | INPUT ASSIGNMENT NO. | DETECTOR NO. | NEMA PHASE | CALL | EXTEND | FULL TIME DELAY | STRETCH TIME | DELAY TIME |
|---|---|---|---|---|---|---|---|---|---|---|---|
| 1A | TB2-1,2 | I1U | 56 | 18 | 1 | 1 | Y | Y | | | |
| 1B | TB2-5,6 | I2U | 39 | 1 | 2 | 1 | Y | Y | | | |
| 1C | TB2-7,8 | I2L | 43 | 5 | 12 | 1 | Y | Y | | | 15 |
| 1D | TB2-9,10 | I3U | 63 | 25 | 32 | 1 | Y | Y | | | 15 |
| 2A,2B | TB2-11,12 | I3L | 76 | 38 | 42 | 2 | Y | Y | | | |
| 5A | TB3-1,2 | J1U | 55 | 17 | 5 | 5 | Y | Y | | | |
| 6A,6B | TB3-5,6 | J2U | 40 | 2 | 6 | 6 | Y | Y | | | |
| 8A | TB5-9,10 | J6U | 42 | 4 | 8 | 8 | Y | Y | | | |
| ✱SO3 | TB6-9,10 | I9U | 60 | 22 | 11 | SYS | | | | | |
| ✱SO4 | TB6-11,12 | I9L | 62 | 24 | 13 | SYS | | | | | |
| ✱SO5 | TB7-9,10 | J9U | 59 | 21 | 15 | SYS | | | | | |
| ✱SO6 | TB7-11,12 | J9L | 61 | 23 | 17 | SYS | | | | | |
| PED PUSH BUTTONS | | | | | | | | | | | |
| P21,P22 | TB8-4,6 | I12U | 67 | 29 | PED 2 | 2 PED | | | | | |
| P81,P82 | TB8-8,9 | I13L | 70 | 32 | PED 8 | 8 PED | | | | | |

NOTE:
INSTALL DC ISOLATORS IN INPUT FILE SLOTS I12 AND I13.

✱ System detector only. Remove the vehicle phase assigned to this detector in the default programming.

INPUT FILE POSITION LEGEND: J2L
FILE J
SLOT 2
LOWER

## OVERLAP PROGRAMMING DETAIL

*(program controller as shown below)*

FROM MAIN MENU PRESS '8' (OVERLAPS), THEN '1' (VEHICLE OVERLAP SETTINGS).

```
PAGE 1: VEHICLE OVERLAP 'A' SETTINGS
PHASE:            ¦123456789101112131415 16
VEH OVL PARENTS:¦X       X
VEH OVL NOT VEH:¦
VEH OVL NOT PED:¦
VEH OVL GRN EXT:¦
STARTUP COLOR: _ RED  _ YELLOW  _ GREEN
FLASH COLORS:  _ RED  _ YELLOW  _ GREEN
SELECT VEHICLE OVERLAP OPTIONS:    (Y/N)
FLASH YELLOW IN CONTROLLER FLASH?...N
GREEN EXTENSION (0-255 SEC).........0
YELLOW CLEAR (0=PARENT,3-25.5 SEC)..0.0
RED CLEAR (0=PARENT,0.1-25.5 SEC)...0.0
OUTPUT AS PHASE # (0=NONE, 1-16)....0
```

OVERLAP PROGRAMMING COMPLETE

## COUNTDOWN PEDESTRIAN SIGNAL OPERATION

Countdown Ped Signals are required to display timing only during Ped Clearance Interval. Consult Ped Signal Module user's manual for instructions on selecting this feature.

THIS ELECTRICAL DETAIL IS FOR
THE SIGNAL DESIGN: 11-0021
DESIGNED: December 2008
SEALED: 12-19-08
REVISED: N/A

Signal Upgrade - Final

ELECTRICAL AND PROGRAMMING DETAILS FOR:

US 421 (King Street)
at
US 221 /NC 105

Division 11 Watauga County Boone

PLAN DATE: 12-17-08 REVIEWED BY: D.T. Joyce
PREPARED BY: D.H. Spaulding REVIEWED BY:

| REVISIONS | INIT. | DATE |
|---|---|---|
| | | |

Prepared in the Offices of:
Traffic Engineering and Safety Systems Branch
STATE OF NORTH CAROLINA DEPARTMENT OF TRANSPORTATION
Signals Management Section
750 N. Greenfield Pkwy, Garner, NC 27529

SEAL
NORTH CAROLINA PROFESSIONAL SEAL 022013 ENGINEER GEORGE C. BROWN
George C. Brown 1/6/09
SIGNATURE DATE
SIG. INVENTORY NO. 11-0021

06-JAN-2009 06:42
s:\its signals\working\groups\sig mgmt\spaulding\in-progress\110021_sm_ele_2008xx.dgn
tjoyce

# METAL POLE No. 4

| PROJECT REFERENCE NO. | SHEET NO. |
|---|---|
| U-4020 | Sig.1$ |

## Design Loading for METAL POLE NO. 4, MAST ARM A

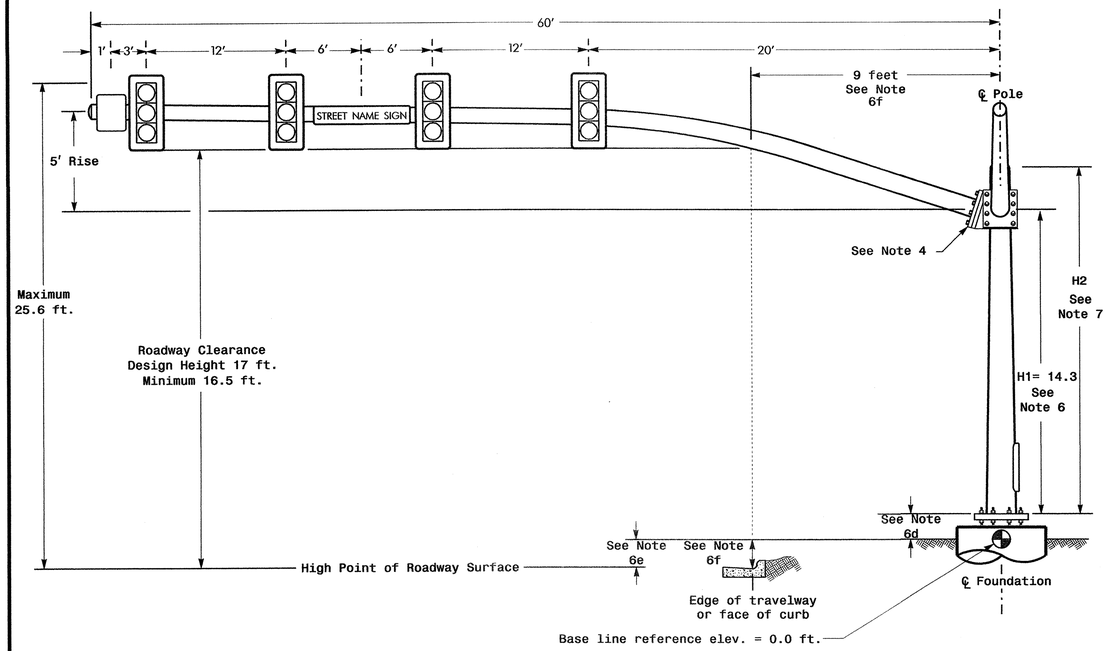


Elevation View @ 270°

## Design Loading for METAL POLE NO. 4, MAST ARM B

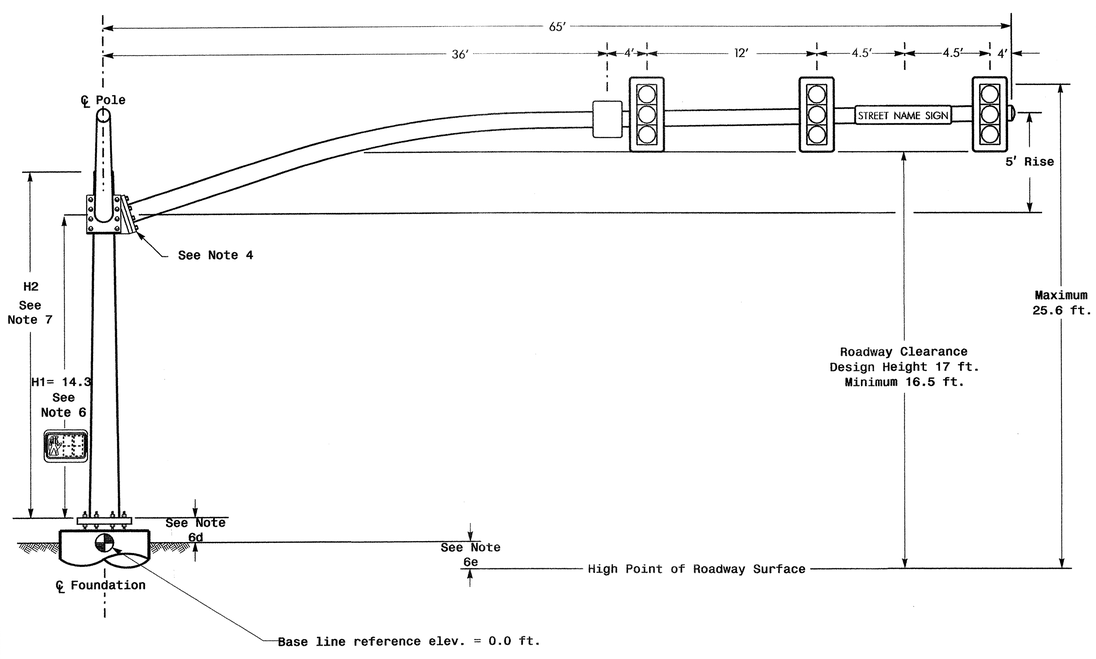


Elevation View @ 0°

## SPECIAL NOTE

The contractor is responsible for verifying that the mast arm attachment height (H1) will provide the "Design Height" clearance from the roadway before submitting final shop drawings for approval. Verify elevation data below which was obtained by field measurement or from available project survey data.

## Elevation Data for Mast Arm Attachment (H1)

| Elevation Differences for: | Arm "A" | Arm "B" |
|---|---|---|
| Baseline reference point at ℄ Foundation @ ground level | 0.0 ft. | 0.0 ft. |
| Elevation difference at High point of roadway surface | +0.3 ft. | 0.0 ft. |
| Elevation difference at Edge of travelway or face of curb | -0.7 ft. | 0.0 ft. |

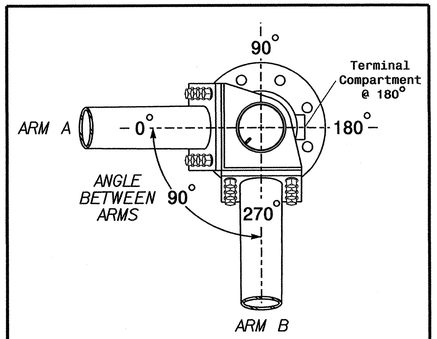


POLE RADIAL ORIENTATION

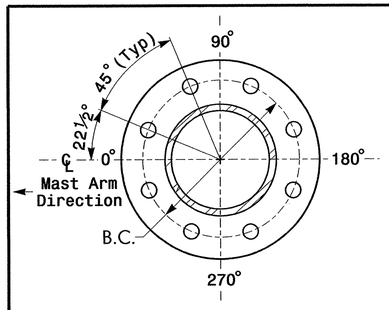


8 BOLT BASE PLATE DETAIL

See Note 5

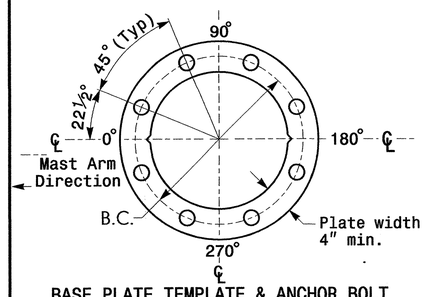


BASE PLATE TEMPLATE & ANCHOR BOLT LOCK PLATE DETAIL

For 8 Bolt Base Plate

## MAST ARM LOADING SCHEDULE

| LOADING SYMBOL | DESCRIPTION | AREA | SIZE | WEIGHT |
|---|---|---|---|---|
| | SIGNAL HEAD 12"-3 SECTION-WITH BACKPLATE AND ASTRO-BRAC | 9.3 S.F. | 25.5" W X 52.5" L | 60 LBS |
| | SIGN RIGID MOUNTED WITH ASTRO-SIGN-BRAC | 5.0 S.F. | 24.0" W X 30.0" L | 11 LBS |
| STREET NAME SIGN | STREET NAME SIGN RIGID MOUNTED WITH ASTRO-SIGN-BRAC | 12.0 S.F. | 18.0" W X 96.0" L | 27 LBS |

## NOTES

Design Reference Material

1. Design the traffic signal structure and foundation in accordance with:
   - The 4th Edition 2001 AASHTO "Standard Specifications for Structural Supports for Highway Signs, Luminaires, and Traffic Signals, including all of the latest interim revisions.
   - The 2006 NCDOT "Standard Specifications for Roads and Structures". The latest addenda to these specifications can be found in the traffic signal project special provisions.
   - The 2006 NCDOT Roadway Standard Drawings.
   - The traffic signal project plans and special provisions.
   - The NCDOT "Metal Pole Standards" located at the following NCDOT website: http://www.ncdot.org/doh/preconstruct/traffic/ITSS/ws/mpoles/poles.html

Design Requirements

2. Design the traffic signal structure using the loading conditions shown in the elevation views. These are anticipated worst case "Design loads" and may not represent the actual loads that will be applied at the time of the installation. The contractor should refer to the traffic signal plans for the actual loads that will be applied at the time of the installation.
3. Design all signal supports using stress ratios that do not exceed 0.9.
4. A clamp-type bolted mast arm-to-pole connection may be used instead of the welded ring stiffened box connection shown as long as the connection meets all of the design requirements. This requires staggering the connections. Use elevation data for each arm to determine appropriate connection points.
5. Design base plate with 8 anchor bolt holes. Provide 2 inch x 60 inch anchor bolts.
6. The mast arm attachment height (H1) shown is based on the following design assumptions:
   a. Nominal vertical rise in mast arm is 5 feet as measured from the centerline of the arm base to the centerline of the free end of the arm.
   b. Signal heads attached to the mast arm are rigid mounted and vertically centered on the arm.
   c. The roadway clearance height for design is as shown in the elevation views.
   d. The top of the pole base plate is .75 feet above the ground elevation.
   e. Refer to the Elevation Data chart for elevation differences between the proposed foundation ground level and the high point on the roadway.
   f. Provide horizontal distance from proposed centerline of foundation to edge of travelway. Refer to the Elevation Data chart above for elevation difference between the proposed foundation ground level and the edge of travelway. This information is necessary when arched arms are specified to ensure that the roadway clearance is maintained at the edge of the travelway and to assist in the camber design of the mast arm.
7. The pole manufacturer will determine the total height (H2) of the pole using the greater of the following:
   - Mast arm attachment height (H1) plus 2 feet, or
   - H1 plus ½ of the total height of the mast arm attachment assembly plus 1 foot.
8. If pole location adjustments are required, the contractor must gain approval from the engineer as this may affect the mast arm lengths and arm attachment heights. The contractor may contact the Signals & Geometrics Structural Engineer for assistance at (919) 773-2800.
9. The contractor is responsible for verifying that the mast arm length shown will allow proper positioning of the signal heads over the roadway.
10. The contractor is responsible for providing soil penetration testing data (SPT) to the pole manufacturer so site specific foundations can be designed.

NCDOT Wind Zone 5 (120 mph)

Prepared in the Offices of:
Traffic Engineering and Safety Systems Branch
Signals and Geometrics Section
STATE OF NORTH CAROLINA DEPARTMENT OF TRANSPORTATION
750 N. Greenfield Pkwy, Garner, NC 27529

SCALE: 0 N/A

US 421 (King Street)
at
US 221 /NC 105

Division 11 Watauga County Boone

PLAN DATE: December 2008 REVIEWED BY:
PREPARED BY: C. Pierce REVIEWED BY:

| REVISIONS | INIT. | DATE |
|---|---|---|
| | | |

SEAL
NORTH CAROLINA PROFESSIONAL SEAL 30530 ENGINEER ZACHARY M. LITTLE

SIGNATURE DATE 1/5/09

SIG. INVENTORY NO. 11-0021

05-JAN-2009 13:57
s:#ts signals#workgroups#tp projects#u-4020#signals#designs#signals#11-0021#110021_sig_dsn_xxxx2008.dgn
cepierce

## Design Loading for METAL POLE NO. 5

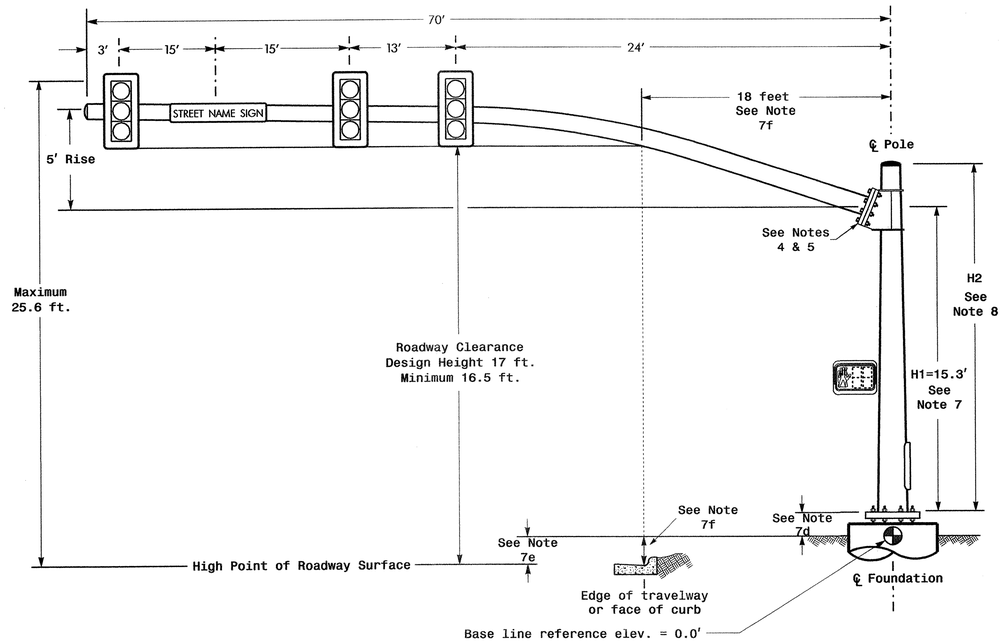


ELEVATION VIEW

## SPECIAL NOTE

The contractor is responsible for verifying that the mast arm attachment height (H1) will provide the "Design Height" clearance from the roadway before submitting final shop drawings for approval. Verify elevation data below which was obtained by field measurement or from available project survey data.

## Elevation Data for Mast Arm Attachment (H1)

| Elevation Differences for: | Pole 5 | |
|---|---|---|
| Baseline reference point at ℄ Foundation @ ground level | 0.0 ft. | |
| Elevation difference at High point of roadway surface | +1.3 ft. | |
| Elevation difference at Edge of travelway or face of curb | +1.3 ft. | |

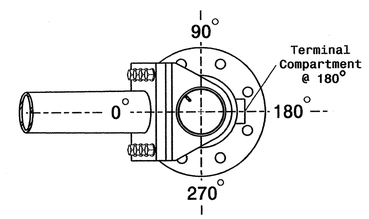


POLE RADIAL ORIENTATION

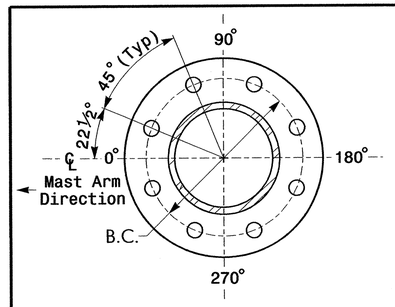


8 BOLT BASE PLATE DETAIL

See Note 6

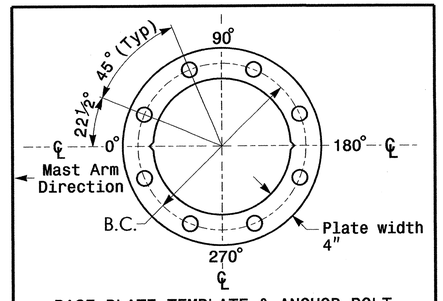


BASE PLATE TEMPLATE & ANCHOR BOLT LOCK PLATE DETAIL

For 8 Bolt Base Plate

## MAST ARM LOADING SCHEDULE

| LOADING SYMBOL | DESCRIPTION | AREA | SIZE | WEIGHT |
|---|---|---|---|---|
| | SIGNAL HEAD 12"–3 SECTION–WITH BACKPLATE AND ASTRO–BRAC | 9.3 S.F. | 25.5" W X 52.5" L | 60 LBS |
| STREET NAME SIGN | STREET NAME SIGN RIGID MOUNTED WITH ASTRO–SIGN–BRAC | 12.0 S.F. | 18.0" W X 96.0" L | 27 LBS |

## NOTES

Design Reference Material

1. Design the traffic signal structure and foundation in accordance with:
   - The 4th Edition 2001 AASHTO "Standard Specifications for Structural Supports for Highway Signs, Luminaires, and Traffic Signals, including all of the latest interim revisions.
   - The 2006 NCDOT "Standard Specifications for Roads and Structures". The latest addenda to these specifications can be found in the traffic signal project special provisions.
   - The 2006 NCDOT Roadway Standard Drawings.
   - The traffic signal project plans and special provisions.
   - The NCDOT "Metal Pole Standards" located at the following NCDOT website: http://www.ncdot.org/doh/preconstruct/traffic/ITSS/ws/mpoles/poles.html

Design Requirements

2. Design the traffic signal structure using the loading conditions shown in the elevation views. These are anticipated worst case "Design loads" and may not represent the actual loads that will be applied at the time of the installation. The contractor should refer to the traffic signal plans for the actual loads that will be applied at the time of the installation.
3. Design all signal supports using stress ratios that do not exceed 0.9.
4. A clamp-type bolted mast arm-to-pole connection may be used instead of the welded ring stiffened box connection shown as long as the connection meets all of the design requirements. This requires staggering the connections. Use elevation data for each arm to determine appropriate connection points.
5. Design base plate with 8 anchor bolt holes. Provide 2 inch x 60 inch anchor bolts.
6. The mast arm attachment height (H1) shown is based on the following design assumptions:
   a. Nominal vertical rise in mast arm is 5 feet as measured from the centerline of the arm base to the centerline of the free end of the arm.
   b. Signal heads attached to the mast arm are rigid mounted and vertically centered on the arm.
   c. The roadway clearance height for design is as shown in the elevation views.
   d. The top of the pole base plate is .75 feet above the ground elevation.
   e. Refer to the Elevation Data chart for elevation differences between the proposed foundation ground level and the high point on the roadway.
   f. Provide horizontal distance from proposed centerline of foundation to edge of travelway. Refer to the Elevation Data chart above for elevation difference between the proposed foundation ground level and the edge of travelway. This information is necessary when arched arms are specified to ensure that the roadway clearance is maintained at the edge of the travelway and to assist in the camber design of the mast arm.
7. The pole manufacturer will determine the total height (H2) of the pole using the greater of the following:
   - Mast arm attachment height (H1) plus 2 feet, or
   - H1 plus ½ of the total height of the mast arm attachment assembly plus 1 foot.
8. If pole location adjustments are required, the contractor must gain approval from the engineer as this may affect the mast arm lengths and arm attachment heights. The contractor may contact the Signals & Geometrics Structural Engineer for assistance at (919) 773-2800.
9. The contractor is responsible for verifying that the mast arm length shown will allow proper positioning of the signal heads over the roadway.
10. The contractor is responsible for providing soil penetration testing data (SPT) to the pole manufacturer so site specific foundations can be designed.

NCDOT Wind Zone 5 (120 mph)

Prepared in the Offices of:
Traffic Engineering and Safety Systems Branch
STATE OF NORTH CAROLINA
DEPARTMENT OF TRANSPORTATION
Signals and Geometrics Section
759 N. Greenfield Pkwy, Garner, NC 27529

SCALE 0 N/A — N/A

US 421 (King Street)
at
US 221 /NC 105

Division 11 Watauga County Boone

PLAN DATE: December 2008 REVIEWED BY:
PREPARED BY: C. Pierce REVIEWED BY:

| REVISIONS | INIT. | DATE |
|---|---|---|
| | | |

SEAL
NORTH CAROLINA PROFESSIONAL SEAL 30530 ENGINEER ZACHARY M. PIERCE
SIGNATURE DATE 1/5/09
SIG. INVENTORY NO. 11-0021

05-JAN-2009 14:00
s:\traffic\Signals\Working\Groups\tip projects\u-4020\signals\design\signals\11-0021\110021_sig_dsn_xxxx2008.dgn
Pierce

| PROJECT REFERENCE NO. | SHEET NO. |
|---|---|
| U-4020 | Sig.2C |

## PHASING DIAGRAM

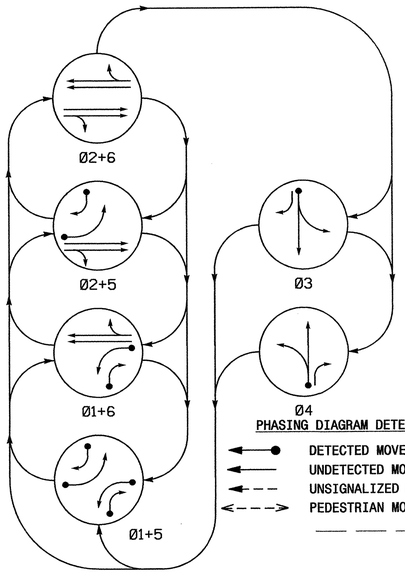


PHASING DIAGRAM DETECTION LEGEND

- DETECTED MOVEMENT
- UNDETECTED MOVEMENT (OVERLAP)
- UNSIGNALIZED MOVEMENT
- PEDESTRIAN MOVEMENT

## TABLE OF OPERATION

| SIGNAL FACE | PHASE 01+5 | 01+6 | 02+5 | 02+6 | 03 | 04 | FLASH |
|---|---|---|---|---|---|---|---|
| 11 | ← | ← | ~~R~~ | ~~R~~ | ~~R~~ | ~~R~~ | ~~R~~ |
| 21,22 | R | R | G | G | R | R | Y |
| 31 | R | R | R | R | G ← | R | R |
| 32 | R/→ | R | R/→ | R | G | R | R |
| 41 | R | R | R | R | R | G ← | R |
| 42 | R/→ | R/→ | R | R | R | G | R |
| 51 | ← | ~~R~~ | ← | ~~R~~ | ~~R~~ | ~~R~~ | ~~R~~ |
| 61,62 | R | G | R | G | R | R | Y |

## SIGNAL FACE I.D.

ALL HEADS L.E.D.




## 2070L LOOP & DETECTOR INSTALLATION

| INDUCTIVE LOOPS | | | | | DETECTOR PROGRAMMING | | | | | | |
|---|---|---|---|---|---|---|---|---|---|---|---|
| LOOP | SIZE (FT) | DISTANCE FROM STOPBAR (FT) | TURNS | NEW LOOP | PHASE | CALLING | EXTENSION | FULL TIME DELAY | STRETCH TIME | DELAY TIME | SYSTEM LOOP | NEW CARD |
| 1A | 6X40 | 0 | 2-4-2 | Y | 1 | Y | Y | - | - | 3 | - | Y |
| 1B | 6X40 | 0 | 2-4-2 | Y | 1 | Y | Y | - | - | 15 | - | Y |
| 3A | 6X40 | 0 | 2-4-2 | Y | 3 | Y | Y | - | - | 3 | - | Y |
| 4A | 6X40 | 0 | 2-4-2 | Y | 4 | Y | Y | - | - | 3 | - | Y |
| 5A | 6X40 | 0 | 2-4-2 | Y | 5 | Y | Y | - | - | 3 | - | Y |
| 5B | 6X40 | 0 | 2-4-2 | Y | 5 | Y | Y | - | - | 15 | - | Y |

6 Phase
Semi-Actuated
Isolated

## NOTES

1. Refer to "Roadway Standard Drawings NCDOT" dated July 2006 and "Standard Specifications for Roads and Structures" dated July 2006.
2. Do not program signal for late night flashing operation unless otherwise directed by the Engineer.
3. Phase 1 or phase 5 may be lagged.
4. The order of phase 3 and phase 4 may be reversed.
5. Set all detector units to presence mode.

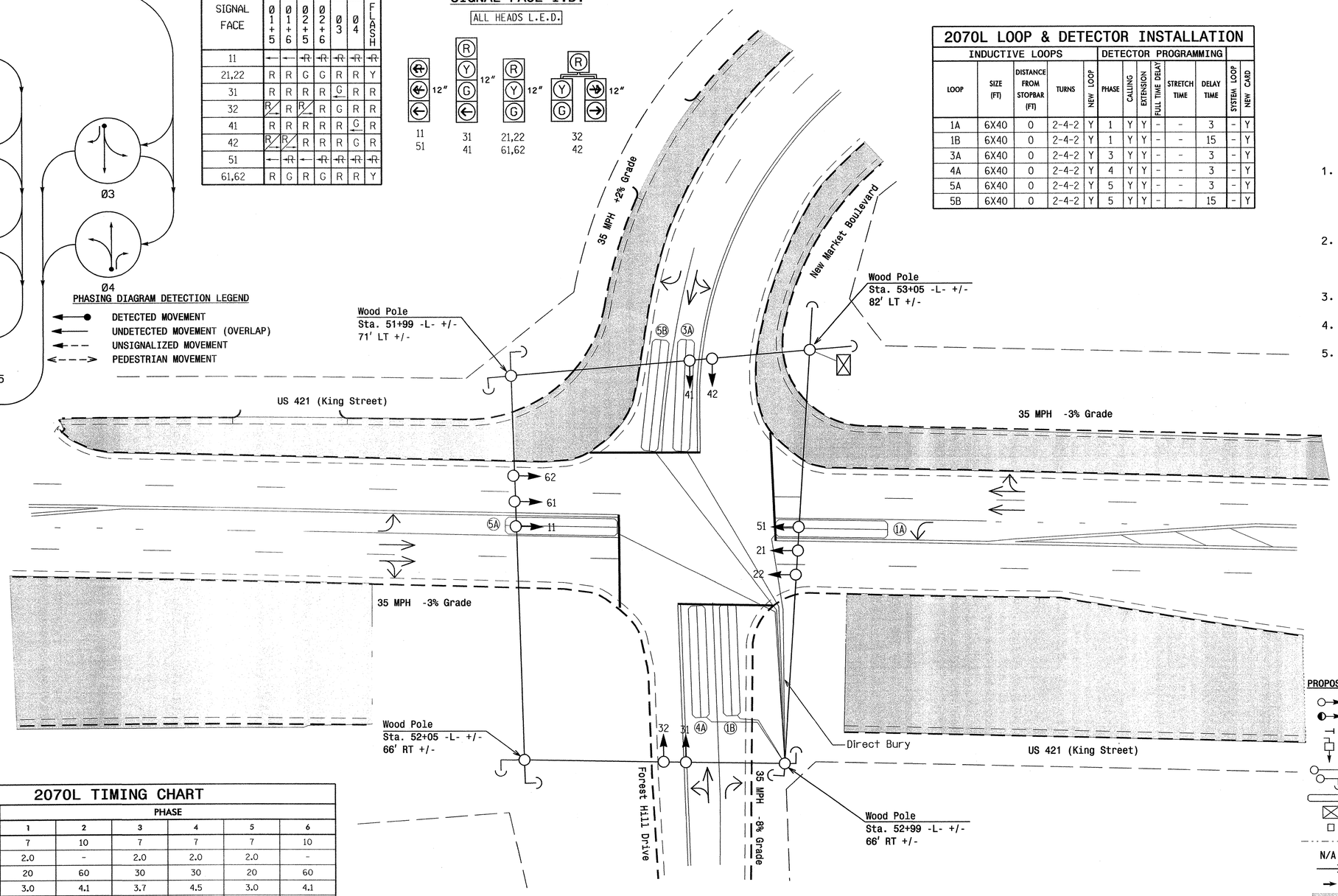


## LEGEND

| PROPOSED | | EXISTING |
|---|---|---|
| | Traffic Signal Head | |
| | Modified Signal Head | N/A |
| | Sign | |
| | Pedestrian Signal Head With Push Button & Sign | |
| | Signal Pole with Guy | |
| | Signal Pole with Sidewalk Guy | |
| | Inductive Loop Detector | |
| | Controller & Cabinet | |
| | Junction Box | |
| | 2-in Underground Conduit | |
| N/A | Right of Way | |
| | Directional Arrow | |
| | Pavement Marking Arrow | |
| | Construction Zone | |

## 2070L TIMING CHART

| FEATURE | PHASE 1 | 2 | 3 | 4 | 5 | 6 |
|---|---|---|---|---|---|---|
| Min Green 1 * | 7 | 10 | 7 | 7 | 7 | 10 |
| Extension 1 * | 2.0 | - | 2.0 | 2.0 | 2.0 | - |
| Max Green 1 * | 20 | 60 | 30 | 30 | 20 | 60 |
| Yellow Clearance | 3.0 | 4.1 | 3.7 | 4.5 | 3.0 | 4.1 |
| Red Clearance | 1.6 | 1.0 | 1.1 | 1.0 | 1.4 | 1.0 |
| Walk 1 * | - | - | - | - | - | - |
| Don't Walk 1 | - | - | - | - | - | - |
| Seconds Per Actuation * | - | - | - | - | - | - |
| Max Variable Initial * | - | - | - | - | - | - |
| Time Before Reduction * | - | - | - | - | - | - |
| Time To Reduce * | - | - | - | - | - | - |
| Minimum Gap | - | - | - | - | - | - |
| Recall Mode | - | MAX RECALL | - | - | - | MAX RECALL |
| Vehicle Call Memory | - | N/A | - | - | - | N/A |
| Dual Entry | - | - | - | - | - | - |
| Simultaneous Gap | ON | ON | ON | ON | ON | ON |

* These values may be field adjusted. Do not adjust Min Green and Extension times for phases 2 and 6 lower than what is shown. Min Green for all other phases should not be lower than 4 seconds.

Signal Upgrade-Temporary (Phase I - Step 2)

Prepared in the Offices of:
Traffic Engineering and Safety Systems Branch
Signal and Geometrics Section
STATE OF NORTH CAROLINA DEPARTMENT OF TRANSPORTATION
750 N. Greenfield Pkwy, Garner, NC 27529

SCALE 0 20 1"=20'

# US 421 (King Street) at New Market Boulevard / Forest Hill Drive

Division 11 Watauga County Boone

| PLAN DATE: November 2008 | REVIEWED BY: J.P. Galloway |
|---|---|
| PREPARED BY: Z.M. Little | REVIEWED BY: |

| REVISIONS | INIT. | DATE |
|---|---|---|
| | | |

SEAL
NORTH CAROLINA PROFESSIONAL SEAL 30530 ENGINEER ZACHARY M. LITTLE
SIGNATURE 12/16/08 DATE
SIG. INVENTORY NO. 11-1010 T1

16-DEC-2008 14:33
s:\ts signal\working\projects\u-4020\signals\design\signals\11-1010\11101011.dgn
bwynn

| PROJECT REFERENCE NO. | SHEET NO. |
|---|---|
| U-4020 | Sig.21 |

# EDI MODEL 2010ECL-NC CONFLICT MONITOR PROGRAMMING DETAIL

*(remove jumpers and set switches as shown)*

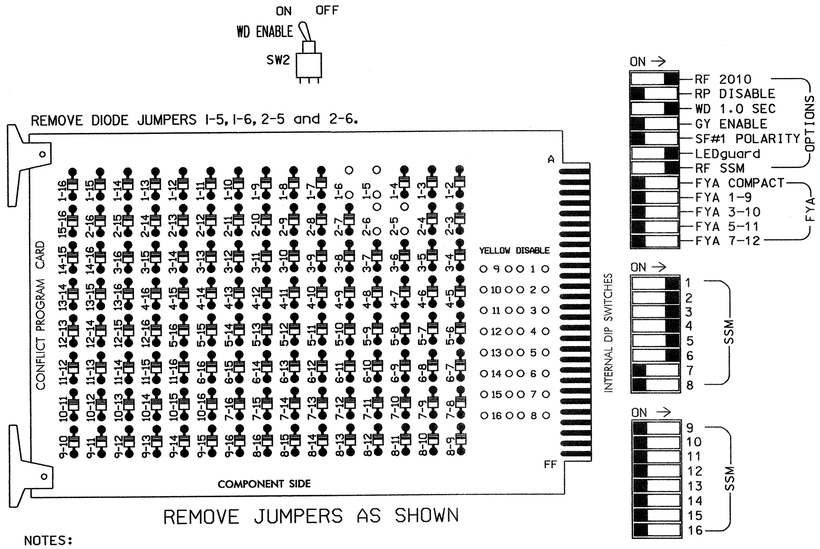


REMOVE JUMPERS AS SHOWN

NOTES:

1. Card is provided with all diode jumpers in place. Removal of any jumper allows its channels to run concurrently.
2. Make sure jumpers SEL2-SEL5 are present on the monitor board.

■ = DENOTES POSITION OF SWITCH

## NOTES

1. To prevent "flash-conflict" problems, insert red flash program blocks for all unused vehicle load switches in the output file. The installer shall verify that signal heads flash in accordance with the Signal Plans.
2. Ensure that Red Enable is active at all times during normal operation. To prevent Red Failures on unused monitor channels, tie unused red monitor inputs 7,8,9,10, 11,12,13,14,15 & 16 to load switch AC+ per the cabinet manufacturer's instructions.
3. Program phases 2 and 6, on the controller unit, for Start Up In Green.
4. Enable Simultaneous Gap-Out, on the controller unit, for all phases.

## SIGNAL HEAD HOOK-UP CHART

| LOAD SWITCH NO. | S1 | | S2 | S2P | S3 | | S4 | | S4P | S5 | | S6 | S6P | S7 | S8 | S8P | S9 | S10 | S11 | S12 | S13 | S14 |
|---|---|---|---|---|---|---|---|---|---|---|---|---|---|---|---|---|---|---|---|---|---|---|
| PHASE | 1 | | 2 | 2 PED | 3 | | 4 | | 4 PED | 5 | | 6 | 6 PED | 7 | 8 | 8 PED | OLA | OLB | SPARE | OLC | OLD | SPARE |
| SIGNAL HEAD NO. | 11 | 42 | 21,22 | NU | 31 | 32 | 41 | 42 | NU | 51 | 32 | 61,62 | NU | NU | NU | NU | NU | NU | NU | NU | NU | NU |
| RED | | | 128 | | 116 | 116 | 101 | 101 | | | | 134 | | | | | | | | | | |
| YELLOW | | | 129 | | 117 | 117 | 102 | 102 | | | | 135 | | | | | | | | | | |
| GREEN | | | 130 | | 118 | 118 | 103 | 103 | | | | 136 | | | | | | | | | | |
| RED ARROW | 125 | | | | | | | | | 131 | | | | | | | | | | | | |
| YELLOW ARROW | 126 | 126 | | | | | | | | 132 | 132 | | | | | | | | | | | |
| GREEN ARROW | 127 | 127 | | | 118 | | 103 | | | 133 | 133 | | | | | | | | | | | |
| ✋ | | | | | | | | | | | | | | | | | | | | | | |
| 🚶 | | | | | | | | | | | | | | | | | | | | | | |

NU = Not Used

CONTROLLER.....CONTRACTOR SUPPLIED 2070L
CABINET.....CONTRACTOR SUPPLIED 332
SOFTWARE.....ECONOLITE OASIS
CABINET MOUNT.....BASE
OUTPUT FILE POSITIONS...18 (12-STD, 6-AUX)
LOAD SWITCHES USED.....S1,S2,S3,S4,S5,S6
PHASES USED.....1,2,3,4,5,6
OVERLAPS.....NONE

## INPUT FILE POSITION LAYOUT

*(front view)*

| | | 1 | 2 | 3 | 4 | 5 | 6 | 7 | 8 | 9 | 10 | 11 | 12 | 13 | 14 |
|---|---|---|---|---|---|---|---|---|---|---|---|---|---|---|---|
| FILE "I" | U | SLOT EMPTY | ø1 1A | SLOT EMPTY | SLOT EMPTY | ø3 3A | ø4 4A | SLOT EMPTY | SLOT EMPTY | SLOT EMPTY | SLOT EMPTY | SLOT EMPTY | SLOT EMPTY | SLOT EMPTY | FS DC ISOLATOR |
| | L | | ø1 1B | | | NOT USED | NOT USED | | | | | | | | ST DC ISOLATOR |
| FILE "J" | U | ø5 5A | ø5 5B | SLOT EMPTY | SLOT EMPTY | SLOT EMPTY | SLOT EMPTY | SLOT EMPTY | SLOT EMPTY | SLOT EMPTY | SLOT EMPTY | SLOT EMPTY | SLOT EMPTY | SLOT EMPTY | SLOT EMPTY |
| | L | NOT USED | NOT USED | | | | | | | | | | | | |

EX.: 1A, 2A, ETC. = LOOP NO.'S

FS = FLASH SENSE
ST = STOP TIME

## INPUT FILE CONNECTION & PROGRAMMING CHART

| LOOP NO. | LOOP TERMINAL | INPUT FILE POS. | PIN NO. | INPUT ASSIGNMENT NO. | DETECTOR NO. | NEMA PHASE | CALL | EXTEND | FULL TIME DELAY | STRETCH TIME | DELAY TIME |
|---|---|---|---|---|---|---|---|---|---|---|---|
| 1A | TB2-5,6 | I2U | 39 | 1 | 2 | 1 | Y | Y | | | 3 |
| 1B | TB2-7,8 | I2L | 43 | 5 | 12 | 1 | Y | Y | | | 15 |
| 3A | TB4-5,6 | I5U | 58 | 20 | 3 | 3 | Y | Y | | | 3 |
| 4A | TB4-9,10 | I6U | 41 | 3 | 4 | 4 | Y | Y | | | 3 |
| 5A | TB3-1,2 | J1U | 55 | 17 | 5 | 5 | Y | Y | | | 3 |
| 5B | TB3-5,6 | J2U | 40 | 2 | 6 | 5 | Y | Y | | | 15 |

INPUT FILE POSITION LEGEND: J2L
FILE J
SLOT 2
LOWER

THIS ELECTRICAL DETAIL IS FOR
THE SIGNAL DESIGN: 11-1010 T1
DESIGNED: November 2008
SEALED: 12-16-08
REVISED: N/A

Signal Upgrade-Temporary (phase I -Step 2)

ELECTRICAL AND PROGRAMMING DETAILS FOR:

US 421 (King Street)
at
New Market Boulevard /
Forest Hill Drive

Division 11 Watauga County Boone

PLAN DATE: 12-02-08 REVIEWED BY: D.T. Joyce
PREPARED BY: D.H. Spaulding REVIEWED BY:

| REVISIONS | INIT. | DATE |
|---|---|---|
| | | |

Prepared in the Offices of:
Traffic Engineering and Safety Systems Branch
STATE OF NORTH CAROLINA DEPARTMENT OF TRANSPORTATION
Signals Management Section
750 N. Greenfield Pkwy, Garner, NC 27529

SEAL
NORTH CAROLINA PROFESSIONAL SEAL 022013 ENGINEER GEORGE C. BROWN
George C. Brown 12/30/08
SIGNATURE DATE
SIG. INVENTORY NO. 11-1010 T1

17-DEC-2008 06:43
s:\its\signals\workgroups\sig mon\spaulding\in-progress\11101011_sm.ele.2008xx.dgn
dspaulding

| PROJECT REFERENCE NO. | SHEET NO. |
|---|---|
| U-4020 | Sig. 2Z |

## PHASING DIAGRAM

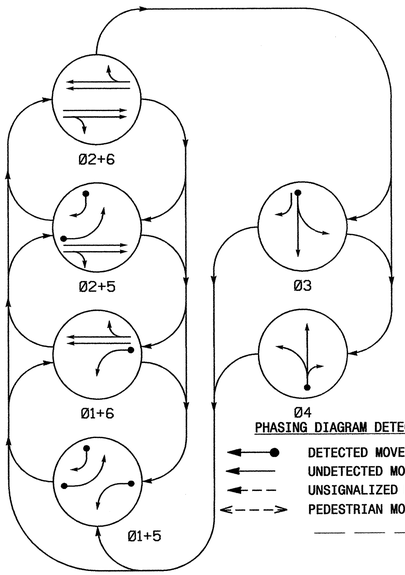


PHASING DIAGRAM DETECTION LEGEND

- DETECTED MOVEMENT
- UNDETECTED MOVEMENT (OVERLAP)
- UNSIGNALIZED MOVEMENT
- PEDESTRIAN MOVEMENT

## TABLE OF OPERATION

| SIGNAL FACE | PHASE 01+5 | 01+6 | 02+5 | 02+6 | 03 | 04 | FLASH |
|---|---|---|---|---|---|---|---|
| 11 | ← | ← | ~~R~~ | ~~R~~ | ~~R~~ | ~~R~~ | ~~R~~ |
| 21,22 | R | R | G | G | R | R | Y |
| 31 | R | R | R | R | G ← | R | R |
| 32 | R/→ | R | R/→ | R | G | R | R |
| 41 | R | R | R | R | R | G ← | R |
| 42 | R | R | R | R | R | G | R |
| 51 | ← | ~~R~~ | ← | ~~R~~ | ~~R~~ | ~~R~~ | ~~R~~ |
| 61,62 | R | G | R | G | R | R | Y |

## SIGNAL FACE I.D.

ALL HEADS L.E.D.




## 2070L LOOP & DETECTOR INSTALLATION

| INDUCTIVE LOOPS | | | | | DETECTOR PROGRAMMING | | | | | | |
|---|---|---|---|---|---|---|---|---|---|---|---|
| LOOP | SIZE (FT) | DISTANCE FROM STOPBAR (FT) | TURNS | NEW LOOP | PHASE | CALLING | EXTENSION | FULL TIME DELAY | STRETCH TIME | DELAY TIME | SYSTEM LOOP | NEW CARD |
| 1A | 6X40 | 0 | 2-4-2 | - | 1 | Y | Y | - | - | 3 | - | - |
| 3A | 6X40 | 0 | 2-4-2 | - | 3 | Y | Y | - | - | 3 | - | - |
| 4A | 6X40 | 0 | 2-4-2 | Y | 4 | Y | Y | - | - | 5 | - | - |
| 5A | 6X40 | 0 | 2-4-2 | - | 5 | Y | Y | - | - | 3 | - | - |
| 5B | 6X40 | 0 | 2-4-2 | - | 5 | Y | Y | - | - | 15 | - | - |

6 Phase
Semi-Actuated
Isolated

## NOTES

1. Refer to "Roadway Standard Drawings NCDOT" dated July 2006 and "Standard Specifications for Roads and Structures" dated July 2006.
2. Do not program signal for late night flashing operation unless otherwise directed by the Engineer.
3. Phase 1 or phase 5 may be lagged.
4. The order of phase 3 and phase 4 may be reversed.
5. Set all detector units to presence mode.

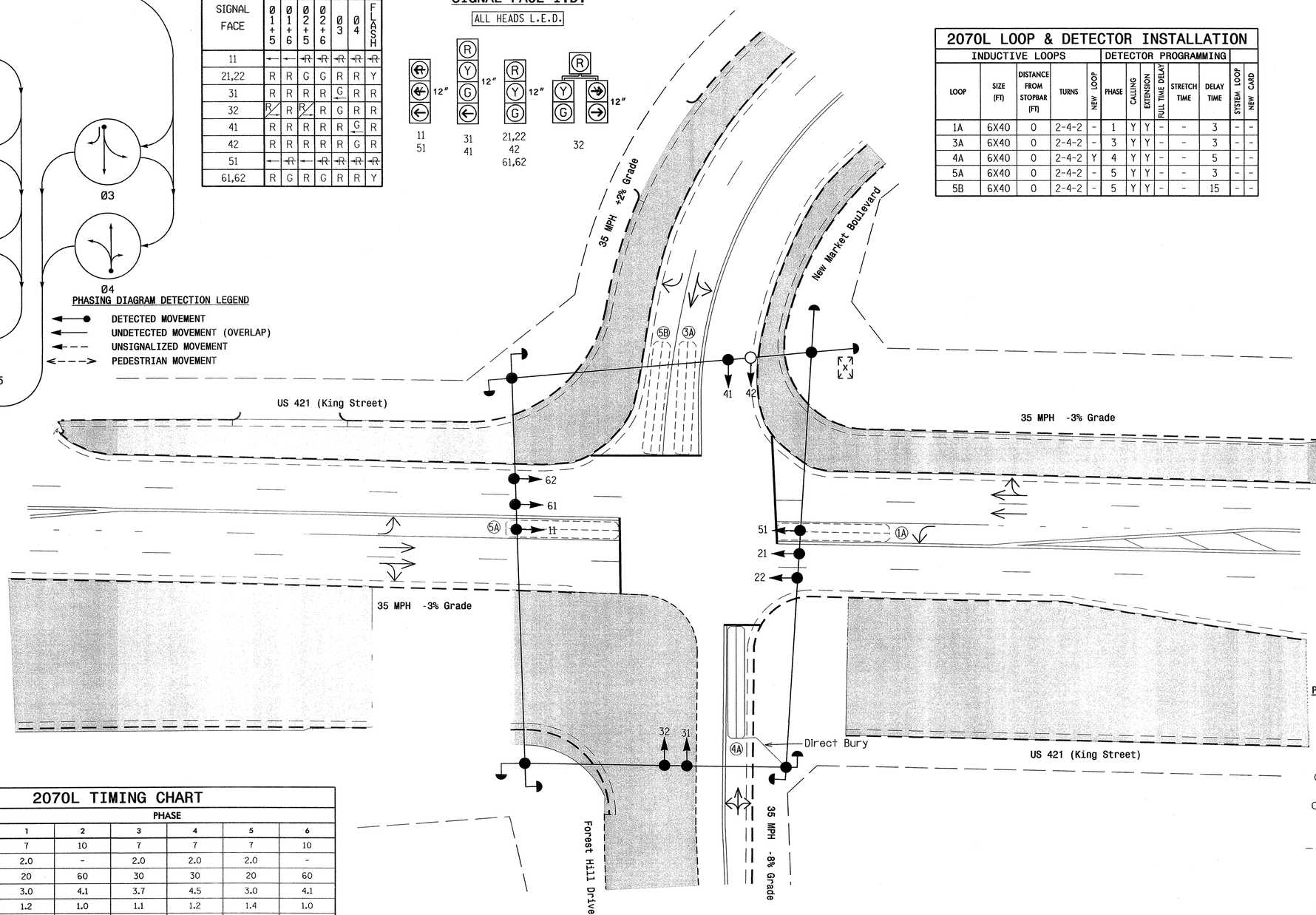


## LEGEND

| PROPOSED | | EXISTING |
|---|---|---|
| | Traffic Signal Head | |
| | Modified Signal Head | N/A |
| | Sign | |
| | Pedestrian Signal Head With Push Button & Sign | |
| | Signal Pole with Guy | |
| | Signal Pole with Sidewalk Guy | |
| | Inductive Loop Detector | |
| | Controller & Cabinet | |
| | Junction Box | |
| | 2-in Underground Conduit | |
| N/A | Right of Way | |
| | Directional Arrow | |
| | Pavement Marking Arrow | |
| | Construction Zone | |

## 2070L TIMING CHART

| FEATURE | PHASE 1 | 2 | 3 | 4 | 5 | 6 |
|---|---|---|---|---|---|---|
| Min Green 1 * | 7 | 10 | 7 | 7 | 7 | 10 |
| Extension 1 * | 2.0 | - | 2.0 | 2.0 | 2.0 | - |
| Max Green 1 * | 20 | 60 | 30 | 30 | 20 | 60 |
| Yellow Clearance | 3.0 | 4.1 | 3.7 | 4.5 | 3.0 | 4.1 |
| Red Clearance | 1.2 | 1.0 | 1.1 | 1.2 | 1.4 | 1.0 |
| Walk 1 * | - | - | - | - | - | - |
| Don't Walk 1 | - | - | - | - | - | - |
| Seconds Per Actuation * | - | - | - | - | - | - |
| Max Variable Initial * | - | - | - | - | - | - |
| Time Before Reduction * | - | - | - | - | - | - |
| Time To Reduce * | - | - | - | - | - | - |
| Minimum Gap | - | - | - | - | - | - |
| Recall Mode | - | MAX RECALL | - | - | - | MAX RECALL |
| Vehicle Call Memory | - | N/A | - | - | - | N/A |
| Dual Entry | - | - | - | - | - | - |
| Simultaneous Gap | ON | ON | ON | ON | ON | ON |

* These values may be field adjusted. Do not adjust Min Green and Extension times for phases 2 and 6 lower than what is shown. Min Green for all other phases should not be lower than 4 seconds.

Signal Upgrade-Temporary (Phase I - Step 3)

Prepared in the Offices of:
Traffic Engineering and Safety Systems Branch
STATE OF NORTH CAROLINA DEPARTMENT OF TRANSPORTATION
Signals and Geometrics Section
750 N. Greenfield Pkwy, Garner, NC 27529

SCALE 0 20 1"=20'

# US 421 (King Street) at New Market Boulevard / Forest Hill Drive

Division 11 Watauga County Boone

| | | | |
|---|---|---|---|
| PLAN DATE: | November 2008 | REVIEWED BY: | J.P. Galloway |
| PREPARED BY: | Z.W. Little | REVIEWED BY: | |

| REVISIONS | INIT. | DATE |
|---|---|---|
| | | |

SEAL
NORTH CAROLINA PROFESSIONAL SEAL 30530 ENGINEER ZACHARY W. LITTLE
SIGNATURE 12/4/08 DATE
SIG. INVENTORY NO. 11-1010 T2

16-DEC-2008 14:38
s:\its signals\workgroups\tip projects\u-4020\signals\designs\signals\11-1010\1101012.dgn
bwynn

| PROJECT REFERENCE NO. | SHEET NO. |
|---|---|
| U-4020 | Sig.23 |

# EDI MODEL 2010ECL-NC CONFLICT MONITOR PROGRAMMING DETAIL

*(remove jumpers and set switches as shown)*

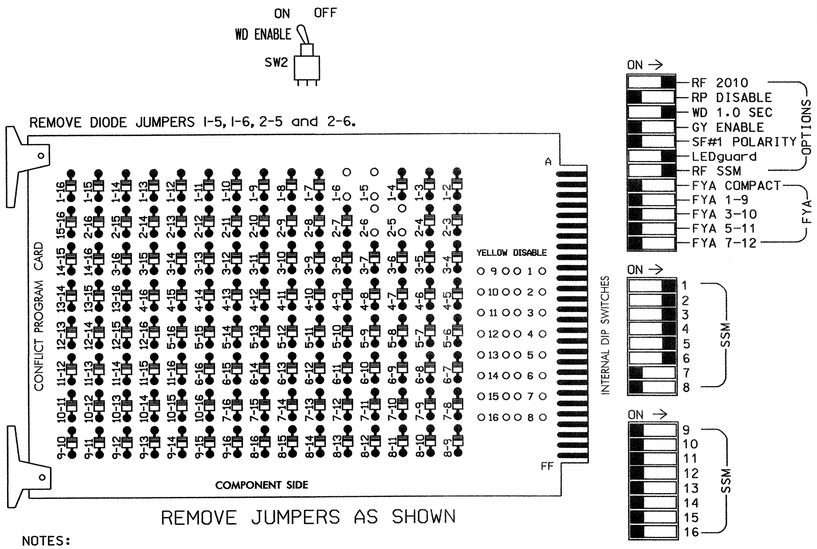


NOTES:

1. Card is provided with all diode jumpers in place. Removal of any jumper allows its channels to run concurrently.
2. Make sure jumpers SEL2-SEL5 are present on the monitor board.

■ = DENOTES POSITION OF SWITCH

## NOTES

1. To prevent "flash-conflict" problems, insert red flash program blocks for all unused vehicle load switches in the output file. The installer shall verify that signal heads flash in accordance with the Signal Plans.
2. Ensure that Red Enable is active at all times during normal operation. To prevent Red Failures on unused monitor channels, tie unused red monitor inputs 7,8,9,10, 11,12,13,14,15 & 16 to load switch AC+ per the cabinet manufacturer's instructions.
3. Program phases 2 and 6, on the controller unit, for Start Up In Green.
4. Enable Simultaneous Gap-Out, on the controller unit, for all phases.

CONTROLLER.....CONTRACTOR SUPPLIED 2070L
CABINET.....CONTRACTOR SUPPLIED 332
SOFTWARE.....ECONOLITE OASIS
CABINET MOUNT.....BASE
OUTPUT FILE POSITIONS...18 (12-STD, 6-AUX)
LOAD SWITCHES USED.....S1,S2,S3,S4,S5,S6
PHASES USED.....1,2,3,4,5,6
OVERLAPS.....NONE

## SIGNAL HEAD HOOK-UP CHART

| LOAD SWITCH NO. | S1 | S2 | S2P | S3 | | S4 | | S4P | S5 | | S6 | S6P | S7 | S8 | S8P | S9 | S10 | S11 | S12 | S13 | S14 |
|---|---|---|---|---|---|---|---|---|---|---|---|---|---|---|---|---|---|---|---|---|---|
| PHASE | 1 | 2 | 2 PED | 3 | | 4 | | 4 PED | 5 | | 6 | 6 PED | 7 | 8 | 8 PED | OLA | OLB | SPARE | OLC | OLD | SPARE |
| SIGNAL HEAD NO. | 11 | 21,22 | NU | 31 | 32 | 41 | 42 | NU | 51 | 32 | 61,62 | NU | NU | NU | NU | NU | NU | NU | NU | NU | NU |
| RED | | 128 | | 116 | 116 | 101 | 101 | | | | 134 | | | | | | | | | | |
| YELLOW | | 129 | | 117 | 117 | 102 | 102 | | | | 135 | | | | | | | | | | |
| GREEN | | 130 | | 118 | 118 | 103 | 103 | | | | 136 | | | | | | | | | | |
| RED ARROW | 125 | | | | | | | | 131 | | | | | | | | | | | | |
| YELLOW ARROW | 126 | | | | | | | | 132 | 132 | | | | | | | | | | | |
| GREEN ARROW | 127 | | | 118 | | 103 | | | 133 | 133 | | | | | | | | | | | |
| ✋ | | | | | | | | | | | | | | | | | | | | | |
| 🚶 | | | | | | | | | | | | | | | | | | | | | |

NU = Not Used

## INPUT FILE POSITION LAYOUT

*(front view)*

| | | 1 | 2 | 3 | 4 | 5 | 6 | 7 | 8 | 9 | 10 | 11 | 12 | 13 | 14 |
|---|---|---|---|---|---|---|---|---|---|---|---|---|---|---|---|
| FILE "I" | U | SLOT EMPTY | Ø1 1A | SLOT EMPTY | SLOT EMPTY | Ø3 3A | Ø4 4A | SLOT EMPTY | SLOT EMPTY | SLOT EMPTY | SLOT EMPTY | SLOT EMPTY | SLOT EMPTY | SLOT EMPTY | FS DC ISOLATOR |
| | L | | NOT USED | | | NOT USED | NOT USED | | | | | | | | ST DC ISOLATOR |
| FILE "J" | U | Ø5 5A | Ø5 5B | SLOT EMPTY | SLOT EMPTY | SLOT EMPTY | SLOT EMPTY | SLOT EMPTY | SLOT EMPTY | SLOT EMPTY | SLOT EMPTY | SLOT EMPTY | SLOT EMPTY | SLOT EMPTY | SLOT EMPTY |
| | L | NOT USED | NOT USED | | | | | | | | | | | | |

EX.: 1A, 2A, ETC. = LOOP NO.'S

FS = FLASH SENSE
ST = STOP TIME

## INPUT FILE CONNECTION & PROGRAMMING CHART

| LOOP NO. | LOOP TERMINAL | INPUT FILE POS. | PIN NO. | INPUT ASSIGNMENT NO. | DETECTOR NO. | NEMA PHASE | CALL | EXTEND | FULL TIME DELAY | STRETCH TIME | DELAY TIME |
|---|---|---|---|---|---|---|---|---|---|---|---|
| 1A | TB2-5,6 | I2U | 39 | 1 | 2 | 1 | Y | Y | | | 3 |
| 3A | TB4-5,6 | I5U | 58 | 20 | 3 | 3 | Y | Y | | | 3 |
| 4A | TB4-9,10 | I6U | 41 | 3 | 4 | 4 | Y | Y | | | 5 |
| 5A | TB3-1,2 | J1U | 55 | 17 | 5 | 5 | Y | Y | | | 3 |
| 5B | TB3-5,6 | J2U | 40 | 2 | 6 | 5 | Y | Y | | | 15 |

INPUT FILE POSITION LEGEND: J2L
FILE J
SLOT 2
LOWER

THIS ELECTRICAL DETAIL IS FOR
THE SIGNAL DESIGN: 11-1010 T2
DESIGNED: November 2008
SEALED: 12-16-08
REVISED: N/A

Signal Upgrade-Temporary (phase I -Step 3)

ELECTRICAL AND PROGRAMMING DETAILS FOR:

US 421 (King Street)
at
New Market Boulevard /
Forest Hill Drive

Division 11 Watauga County Boone

PLAN DATE: 12-02-08 REVIEWED BY: D.T. Joyce
PREPARED BY: D.H. Spaulding REVIEWED BY:

| REVISIONS | INIT. | DATE |
|---|---|---|
| | | |


Prepared in the Offices of:
Traffic Engineering and Safety Systems Branch
STATE OF NORTH CAROLINA DEPARTMENT OF TRANSPORTATION
Signals Management Section
750 N. Greenfield Pkwy, Garner, NC 27529


SEAL
NORTH CAROLINA PROFESSIONAL SEAL 022013 ENGINEER GEORGE C. BROWN
George C. Brown 12/30/08
SIGNATURE DATE
SIG. INVENTORY NO. 11-1010 T2


17-DEC-2008 09:47
s:\#ts signals\workgroups\sig management\in-progress\11010T2_sm.ele_2008xx.dgn
dspaulding

| PROJECT REFERENCE NO. | SHEET NO. |
|---|---|
| U-4020 | Sig.24 |

## PHASING DIAGRAM

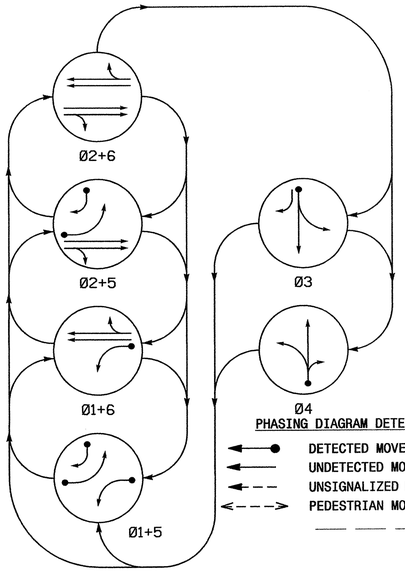


PHASING DIAGRAM DETECTION LEGEND

- DETECTED MOVEMENT
- UNDETECTED MOVEMENT (OVERLAP)
- UNSIGNALIZED MOVEMENT
- PEDESTRIAN MOVEMENT

## TABLE OF OPERATION

| SIGNAL FACE | PHASE 01+5 | 01+6 | 02+5 | 02+6 | 03 | 04 | FLASH |
|---|---|---|---|---|---|---|---|
| 11 | ← | ← | ~~R~~ | ~~R~~ | ~~R~~ | ~~R~~ | ~~R~~ |
| 21,22 | R | R | G | G | R | R | Y |
| 31 | R | R | R | R | G | R | R |
| 32 | R | R | R | R | G | R | R |
| 41 | R | R | R | R | R | G | R |
| 42 | R | R | R | R | R | G | R |
| 51 | ← | ~~R~~ | ← | ~~R~~ | ~~R~~ | ~~R~~ | ~~R~~ |
| 61,62 | R | G | R | G | R | R | Y |

## SIGNAL FACE I.D.

ALL HEADS L.E.D.




## 2070L LOOP & DETECTOR INSTALLATION

| INDUCTIVE LOOPS | | | | | DETECTOR PROGRAMMING | | | | | | |
|---|---|---|---|---|---|---|---|---|---|---|---|
| LOOP | SIZE (FT) | DISTANCE FROM STOPBAR (FT) | TURNS | NEW LOOP | PHASE | CALLING | EXTENSION | FULL TIME DELAY | STRETCH TIME | DELAY TIME | SYSTEM LOOP | NEW CARD |
| 1A | 6X40 | 0 | 2-4-2 | Y | 1 | Y | Y | - | - | 3 | - | - |
| 3A | 6X40 | 0 | 2-4-2 | Y | 3 | Y | Y | - | - | 3 | - | - |
| 4A | 6X40 | 0 | 2-4-2 | Y | 4 | Y | Y | - | - | 5 | - | - |
| 5A | 6X40 | 0 | 2-4-2 | Y | 5 | Y | Y | - | - | 3 | - | - |
| 5B | 6X40 | 0 | 2-4-2 | Y | 5 | Y | Y | - | - | 15 | - | - |

6 Phase
Semi-Actuated
Isolated

## NOTES

1. Refer to "Roadway Standard Drawings NCDOT" dated July 2006 and "Standard Specifications for Roads and Structures" dated July 2006.
2. Do not program signal for late night flashing operation unless otherwise directed by the Engineer.
3. Phase 1 or phase 5 may be lagged.
4. The order of phase 3 and phase 4 may be reversed.
5. Set all detector units to presence mode.
6. Reposition existing signal heads number 41 and 42.

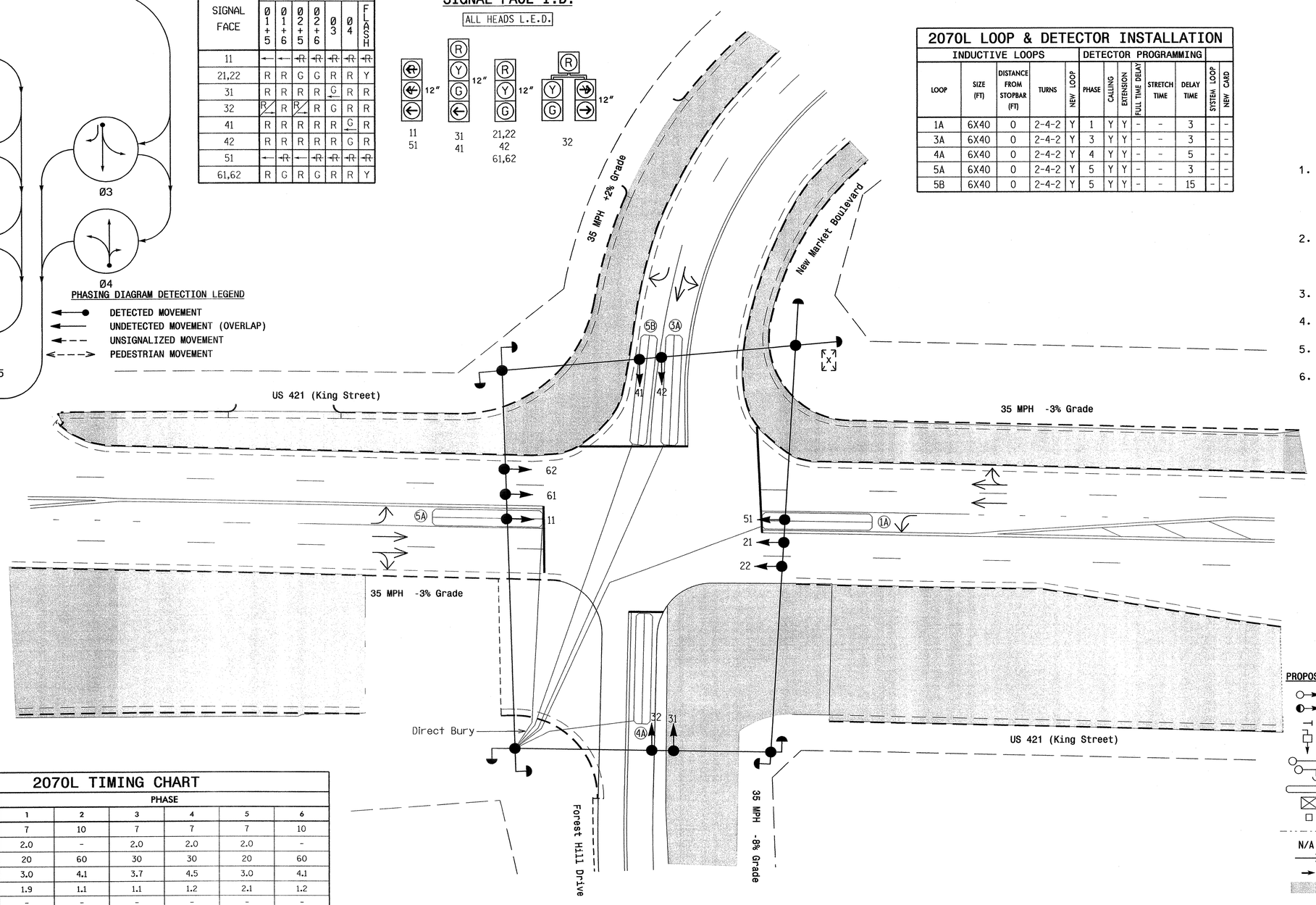


## LEGEND

| PROPOSED | | EXISTING |
|---|---|---|
| | Traffic Signal Head | |
| | Modified Signal Head | N/A |
| | Sign | |
| | Pedestrian Signal Head With Push Button & Sign | |
| | Signal Pole with Guy | |
| | Signal Pole with Sidewalk Guy | |
| | Inductive Loop Detector | |
| | Controller & Cabinet | |
| | Junction Box | |
| | 2-in Underground Conduit | |
| N/A | Right of Way | |
| | Directional Arrow | |
| | Pavement Marking Arrow | |
| | Construction Zone | |

## 2070L TIMING CHART

| FEATURE | PHASE 1 | 2 | 3 | 4 | 5 | 6 |
|---|---|---|---|---|---|---|
| Min Green 1 * | 7 | 10 | 7 | 7 | 7 | 10 |
| Extension 1 * | 2.0 | - | 2.0 | 2.0 | 2.0 | - |
| Max Green 1 * | 20 | 60 | 30 | 30 | 20 | 60 |
| Yellow Clearance | 3.0 | 4.1 | 3.7 | 4.5 | 3.0 | 4.1 |
| Red Clearance | 1.9 | 1.1 | 1.1 | 1.2 | 2.1 | 1.2 |
| Walk 1 * | - | - | - | - | - | - |
| Don't Walk 1 | - | - | - | - | - | - |
| Seconds Per Actuation * | - | - | - | - | - | - |
| Max Variable Initial * | - | - | - | - | - | - |
| Time Before Reduction * | - | - | - | - | - | - |
| Time To Reduce * | - | - | - | - | - | - |
| Minimum Gap | - | - | - | - | - | - |
| Recall Mode | - | MAX RECALL | - | - | - | MAX RECALL |
| Vehicle Call Memory | - | N/A | - | - | - | N/A |
| Dual Entry | - | - | - | - | - | - |
| Simultaneous Gap | ON | ON | ON | ON | ON | ON |

* These values may be field adjusted. Do not adjust Min Green and Extension times for phases 2 and 6 lower than what is shown. Min Green for all other phases should not be lower than 4 seconds.

Signal Upgrade-Temporary (Phase I - Step 4)

Prepared in the Offices of:
Traffic Engineering and Safety Systems Branch
STATE OF NORTH CAROLINA DEPARTMENT OF TRANSPORTATION
Signal and Geometric Section
750 N. Greenfield Pkwy, Garner, NC 27529

SCALE 0 20 1"=20'

US 421 (King Street)
at
New Market Boulevard /
Forest Hill Drive

Division 11 Watauga County Boone

PLAN DATE: November 2008 REVIEWED BY: J.P. Galloway
PREPARED BY: Z.W. Little REVIEWED BY:

| REVISIONS | INIT. | DATE |
|---|---|---|
| | | |

SEAL
NORTH CAROLINA PROFESSIONAL SEAL 30530 ENGINEER ZACHARY W. LITTLE
SIGNATURE DATE 12/16/08
SIG. INVENTORY NO. 11-1010 T3

16-DEC-2008 14:43
s:\its\signal\workgroups\ttp projects\u-4020\signals\designs\signals\11-1010\11101013.dgn
Dwynn

| PROJECT REFERENCE NO. | SHEET NO. |
|---|---|
| U-4020 | Sig.25 |

# EDI MODEL 2010ECL-NC CONFLICT MONITOR PROGRAMMING DETAIL

*(remove jumpers and set switches as shown)*

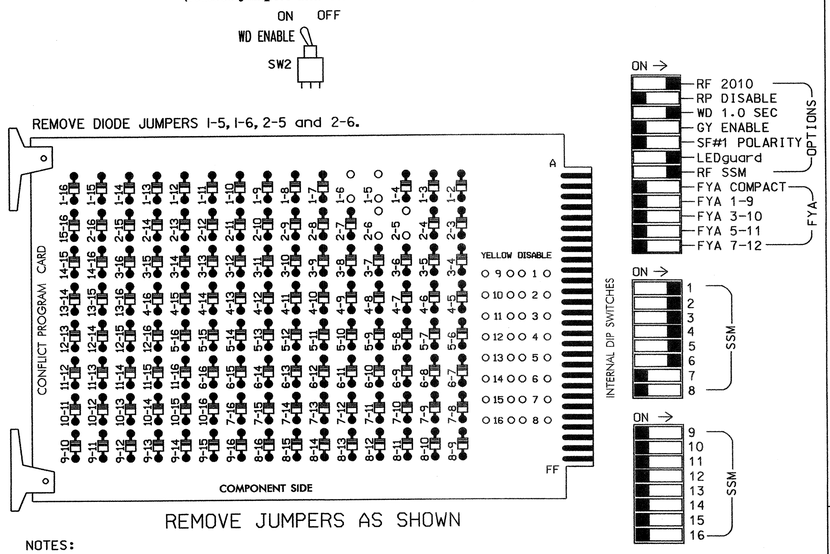


NOTES:

1. Card is provided with all diode jumpers in place. Removal of any jumper allows its channels to run concurrently.
2. Make sure jumpers SEL2-SEL5 are present on the monitor board.

■ = DENOTES POSITION OF SWITCH

## NOTES

1. To prevent "flash-conflict" problems, insert red flash program blocks for all unused vehicle load switches in the output file. The installer shall verify that signal heads flash in accordance with the Signal Plans.
2. Ensure that Red Enable is active at all times during normal operation. To prevent Red Failures on unused monitor channels, tie unused red monitor inputs 7,8,9,10, 11,12,13,14,15 & 16 to load switch AC+ per the cabinet manufacturer's instructions.
3. Program phases 2 and 6, on the controller unit, for Start Up In Green.
4. Enable Simultaneous Gap-Out, on the controller unit, for all phases.

## SIGNAL HEAD HOOK-UP CHART

| LOAD SWITCH NO. | S1 | S2 | S2P | S3 | | S4 | | S4P | S5 | | S6 | S6P | S7 | S8 | S8P | S9 | S10 | S11 | S12 | S13 | S14 |
|---|---|---|---|---|---|---|---|---|---|---|---|---|---|---|---|---|---|---|---|---|---|
| PHASE | 1 | 2 | 2 PED | 3 | | 4 | | 4 PED | 5 | | 6 | 6 PED | 7 | 8 | 8 PED | OLA | OLB | SPARE | OLC | OLD | SPARE |
| SIGNAL HEAD NO. | 11 | 21,22 | NU | 31 | 32 | 41 | 42 | NU | 51 | 32 | 61,62 | NU | NU | NU | NU | NU | NU | NU | NU | NU | NU |
| RED | | 128 | | 116 | 116 | 101 | 101 | | | | 134 | | | | | | | | | | |
| YELLOW | | 129 | | 117 | 117 | 102 | 102 | | | | 135 | | | | | | | | | | |
| GREEN | | 130 | | 118 | 118 | 103 | 103 | | | | 136 | | | | | | | | | | |
| RED ARROW | 125 | | | | | | | | 131 | | | | | | | | | | | | |
| YELLOW ARROW | 126 | | | | | | | | 132 | 132 | | | | | | | | | | | |
| GREEN ARROW | 127 | | | 118 | | 103 | | | 133 | 133 | | | | | | | | | | | |
| ✋ | | | | | | | | | | | | | | | | | | | | | |
| 🚶 | | | | | | | | | | | | | | | | | | | | | |

NU = Not Used

CONTROLLER.....CONTRACTOR SUPPLIED 2070L
CABINET.....CONTRACTOR SUPPLIED 332
SOFTWARE.....ECONOLITE OASIS
CABINET MOUNT.....BASE
OUTPUT FILE POSITIONS...18 (12-STD, 6-AUX)
LOAD SWITCHES USED.....S1,S2,S3,S4,S5,S6
PHASES USED.....1,2,3,4,5,6
OVERLAPS.....NONE

## INPUT FILE POSITION LAYOUT

*(front view)*

| | | 1 | 2 | 3 | 4 | 5 | 6 | 7 | 8 | 9 | 10 | 11 | 12 | 13 | 14 |
|---|---|---|---|---|---|---|---|---|---|---|---|---|---|---|---|
| FILE "I" | U | SLOT EMPTY | Ø1 1A | SLOT EMPTY | SLOT EMPTY | Ø3 3A | Ø4 4A | SLOT EMPTY | SLOT EMPTY | SLOT EMPTY | SLOT EMPTY | SLOT EMPTY | SLOT EMPTY | SLOT EMPTY | FS DC ISOLATOR |
| | L | | NOT USED | | | NOT USED | NOT USED | | | | | | | | ST DC ISOLATOR |
| FILE "J" | U | Ø5 5A | Ø5 5B | SLOT EMPTY | SLOT EMPTY | SLOT EMPTY | SLOT EMPTY | SLOT EMPTY | SLOT EMPTY | SLOT EMPTY | SLOT EMPTY | SLOT EMPTY | SLOT EMPTY | SLOT EMPTY | SLOT EMPTY |
| | L | NOT USED | NOT USED | | | | | | | | | | | | |

EX.: 1A, 2A, ETC. = LOOP NO.'S

FS = FLASH SENSE
ST = STOP TIME

## INPUT FILE CONNECTION & PROGRAMMING CHART

| LOOP NO. | LOOP TERMINAL | INPUT FILE POS. | PIN NO. | INPUT ASSIGNMENT NO. | DETECTOR NO. | NEMA PHASE | CALL | EXTEND | FULL TIME DELAY | STRETCH TIME | DELAY TIME |
|---|---|---|---|---|---|---|---|---|---|---|---|
| 1A | TB2-5,6 | I2U | 39 | 1 | 2 | 1 | Y | Y | | | 3 |
| 3A | TB4-5,6 | I5U | 58 | 20 | 3 | 3 | Y | Y | | | 3 |
| 4A | TB4-9,10 | I6U | 41 | 3 | 4 | 4 | Y | Y | | | 5 |
| 5A | TB3-1,2 | J1U | 55 | 17 | 5 | 5 | Y | Y | | | 3 |
| 5B | TB3-5,6 | J2U | 40 | 2 | 6 | 5 | Y | Y | | | 15 |

INPUT FILE POSITION LEGEND: J2L
FILE J
SLOT 2
LOWER

THIS ELECTRICAL DETAIL IS FOR
THE SIGNAL DESIGN: 11-1010 T3
DESIGNED: November 2008
SEALED: 12-16-08
REVISED: N/A

Signal Upgrade-Temporary (phase I -Step 4)

ELECTRICAL AND PROGRAMMING DETAILS FOR:

*Prepared in the Offices of:*

Traffic Engineering and Safety Systems Branch
STATE OF NORTH CAROLINA DEPARTMENT OF TRANSPORTATION
Signals Management Section

750 N. Greenfield Pkwy, Garner, NC 27529

# US 421 (King Street) at New Market Boulevard / Forest Hill Drive

Division 11 Watauga County Boone

| | | | |
|---|---|---|---|
| PLAN DATE: | 12-02-08 | REVIEWED BY: | D.T. Joyce |
| PREPARED BY: | D.H. Spaulding | REVIEWED BY: | |

| REVISIONS | INIT. | DATE |
|---|---|---|
| | | |
| | | |
| | | |

SEAL

NORTH CAROLINA PROFESSIONAL SEAL 022013 ENGINEER GEORGE C. BROWN

George C. Brown 12/30/08
SIGNATURE DATE

SIG. INVENTORY NO. 11-1010 T3

17-DEC-2008 07:02
s:\traffic\Signals\workgroups\sig mgmt\spaulding\in-progress\11101073_sm_ele_2008xx.dgn
spaulding

| PROJECT REFERENCE NO. | SHEET NO. |
|---|---|
| U-4020 | Sig.26 |

## PHASING DIAGRAM

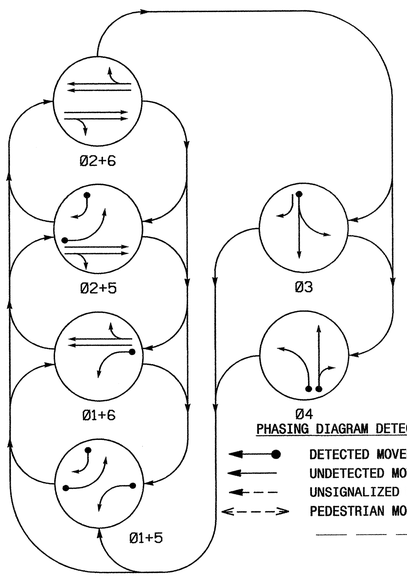


PHASING DIAGRAM DETECTION LEGEND

- DETECTED MOVEMENT
- UNDETECTED MOVEMENT (OVERLAP)
- UNSIGNALIZED MOVEMENT
- PEDESTRIAN MOVEMENT

## TABLE OF OPERATION

| SIGNAL FACE | PHASE 01+5 | 01+6 | 02+5 | 02+6 | 03 | 04 | FLASH |
|---|---|---|---|---|---|---|---|
| 11 | ← | ← | ~~R~~ | ~~R~~ | ~~R~~ | ~~R~~ | ~~R~~ |
| 21,22 | R | R | G | G | R | R | Y |
| 31 | R | R | R | R | G | R | R |
| 32 | R | R | R | R | G | R | R |
| 41 | R | R | R | R | G | R | R |
| 42 | R | R | R | R | G | R | R |
| 51 | ← | ~~R~~ | ← | ~~R~~ | ~~R~~ | ~~R~~ | ~~R~~ |
| 61,62 | R | G | R | G | R | R | Y |

## SIGNAL FACE I.D.

ALL HEADS L.E.D.




## 2070L LOOP & DETECTOR INSTALLATION

| INDUCTIVE LOOPS | | | | | DETECTOR PROGRAMMING | | | | | | |
|---|---|---|---|---|---|---|---|---|---|---|---|
| LOOP | SIZE (FT) | DISTANCE FROM STOPBAR (FT) | TURNS | NEW LOOP | PHASE | CALLING | EXTENSION | FULL TIME DELAY | STRETCH TIME | DELAY TIME | SYSTEM LOOP | NEW CARD |
| 1A | 6X40 | 0 | 2-4-2 | - | 1 | Y | Y | - | - | 3 | - | - |
| 3A | 6X40 | 0 | 2-4-2 | - | 3 | Y | Y | - | - | 3 | - | - |
| 4A | 6X40 | 0 | 2-4-2 | Y | 4 | Y | Y | - | - | 3 | - | - |
| 4B | 6X40 | 0 | 2-4-2 | Y | 4 | Y | Y | - | - | 10 | - | - |
| 5A | 6X40 | 0 | 2-4-2 | - | 5 | Y | Y | - | - | 3 | - | - |
| 5B | 6X40 | 0 | 2-4-2 | - | 5 | Y | Y | - | - | 15 | - | - |

6 Phase
Semi-Actuated
Isolated

## NOTES

1. Refer to "Roadway Standard Drawings NCDOT" dated July 2006 and "Standard Specifications for Roads and Structures" dated July 2006.
2. Do not program signal for late night flashing operation unless otherwise directed by the Engineer.
3. Phase 1 or phase 5 may be lagged.
4. The order of phase 3 and phase 4 may be reversed.
5. Set all detector units to presence mode.
6. Reposition existing signal heads number 41 and 42.

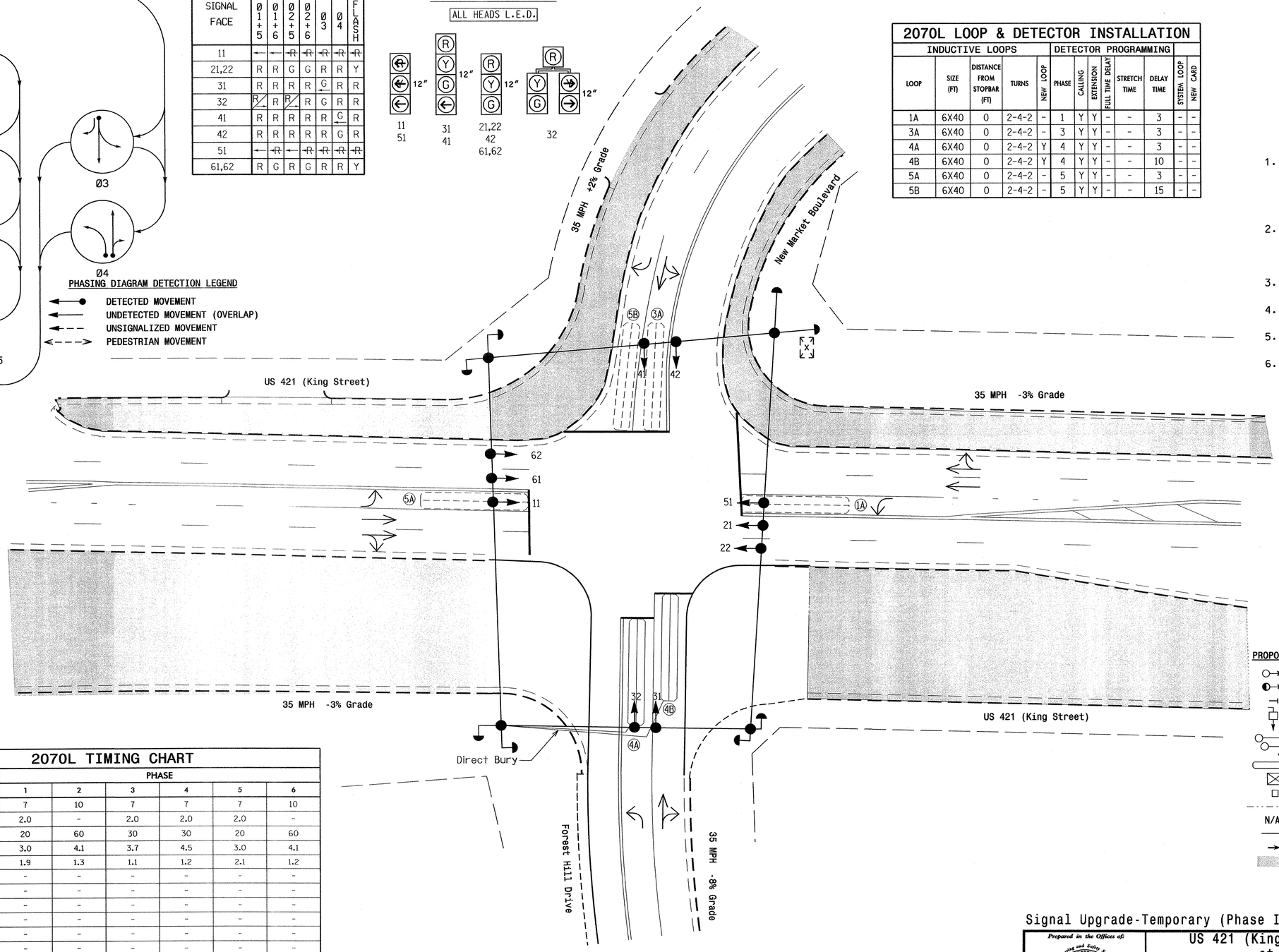


## LEGEND

| PROPOSED | | EXISTING |
|---|---|---|
| | Traffic Signal Head | |
| | Modified Signal Head | N/A |
| | Sign | |
| | Pedestrian Signal Head With Push Button & Sign | |
| | Signal Pole with Guy | |
| | Signal Pole with Sidewalk Guy | |
| | Inductive Loop Detector | |
| | Controller & Cabinet | |
| | Junction Box | |
| | 2-in Underground Conduit | |
| N/A | Right of Way | |
| | Directional Arrow | |
| | Pavement Marking Arrow | |
| | Construction Zone | |

## 2070L TIMING CHART

| FEATURE | PHASE 1 | 2 | 3 | 4 | 5 | 6 |
|---|---|---|---|---|---|---|
| Min Green 1 * | 7 | 10 | 7 | 7 | 7 | 10 |
| Extension 1 * | 2.0 | - | 2.0 | 2.0 | 2.0 | - |
| Max Green 1 * | 20 | 60 | 30 | 30 | 20 | 60 |
| Yellow Clearance | 3.0 | 4.1 | 3.7 | 4.5 | 3.0 | 4.1 |
| Red Clearance | 1.9 | 1.3 | 1.1 | 1.2 | 2.1 | 1.2 |
| Walk 1 * | - | - | - | - | - | - |
| Don't Walk 1 | - | - | - | - | - | - |
| Seconds Per Actuation * | - | - | - | - | - | - |
| Max Variable Initial * | - | - | - | - | - | - |
| Time Before Reduction * | - | - | - | - | - | - |
| Time To Reduce * | - | - | - | - | - | - |
| Minimum Gap | - | - | - | - | - | - |
| Recall Mode | - | MAX RECALL | - | - | - | MAX RECALL |
| Vehicle Call Memory | - | N/A | - | - | - | N/A |
| Dual Entry | - | - | - | - | - | - |
| Simultaneous Gap | ON | ON | ON | ON | ON | ON |

* These values may be field adjusted. Do not adjust Min Green and Extension times for phases 2 and 6 lower than what is shown. Min Green for all other phases should not be lower than 4 seconds.

Signal Upgrade-Temporary (Phase I - Step 5)

Prepared in the Offices of:
Traffic Engineering and Safety Systems Branch
Signals and Geometrics Section
STATE OF NORTH CAROLINA DEPARTMENT OF TRANSPORTATION
750 N. Greenfield Pkwy, Garner, NC 27529

SCALE 0 20 1"=20'

US 421 (King Street)
at
New Market Boulevard / Forest Hill Drive

Division 11 Watauga County Boone

PLAN DATE: November 2008 REVIEWED BY: J.P. Galloway
PREPARED BY: Z.M. Little REVIEWED BY:

| REVISIONS | INIT. | DATE |
|---|---|---|
| | | |

SEAL
NORTH CAROLINA PROFESSIONAL SEAL 30530 ENGINEER ZACHARY M. LITTLE
SIGNATURE DATE 12/16/08
SIG. INVENTORY NO. 11-1010 T4

16-DEC-2008 14:50
s:\its signals\workgroups\tip projects\u-4020\signals\designs\signals\1-1010\1101014.dgn
Dwyhn

| PROJECT REFERENCE NO. | SHEET NO. |
|---|---|
| U-4020 | Sig.27 |

# EDI MODEL 2010ECL-NC CONFLICT MONITOR PROGRAMMING DETAIL

*(remove jumpers and set switches as shown)*

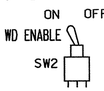


REMOVE DIODE JUMPERS 1-5, 1-6, 2-5 and 2-6.

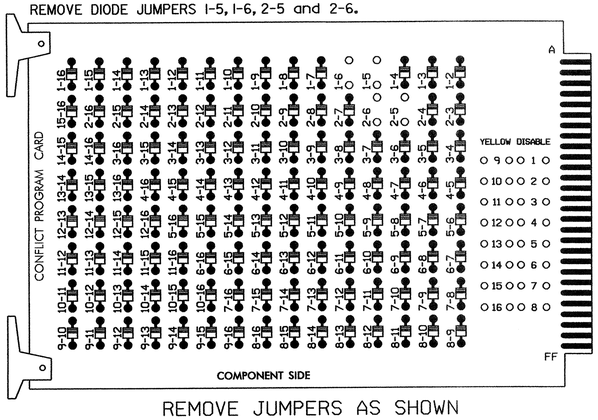


REMOVE JUMPERS AS SHOWN

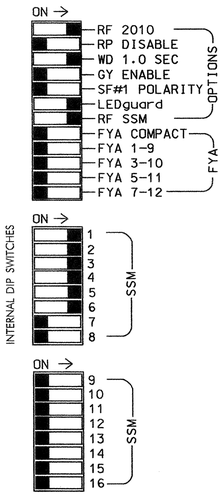


NOTES:

1. Card is provided with all diode jumpers in place. Removal of any jumper allows its channels to run concurrently.
2. Make sure jumpers SEL2-SEL5 are present on the monitor board.

■ = DENOTES POSITION OF SWITCH

## NOTES

1. To prevent "flash-conflict" problems, insert red flash program blocks for all unused vehicle load switches in the output file. The installer shall verify that signal heads flash in accordance with the Signal Plans.
2. Ensure that Red Enable is active at all times during normal operation. To prevent Red Failures on unused monitor channels, tie unused red monitor inputs 7,8,9,10, 11,12,13,14,15 & 16 to load switch AC+ per the cabinet manufacturer's instructions.
3. Program phases 2 and 6, on the controller unit, for Start Up In Green.
4. Enable Simultaneous Gap-Out, on the controller unit, for all phases.

CONTROLLER.....CONTRACTOR SUPPLIED 2070L
CABINET.....CONTRACTOR SUPPLIED 332
SOFTWARE.....ECONOLITE OASIS
CABINET MOUNT.....BASE
OUTPUT FILE POSITIONS...18 (12-STD, 6-AUX)
LOAD SWITCHES USED.....S1,S2,S3,S4,S5,S6
PHASES USED.....1,2,3,4,5,6
OVERLAPS.....NONE

## SIGNAL HEAD HOOK-UP CHART

| LOAD SWITCH NO. | S1 | S2 | S2P | S3 | | S4 | | S4P | S5 | | S6 | S6P | S7 | S8 | S8P | S9 | S10 | S11 | S12 | S13 | S14 |
|---|---|---|---|---|---|---|---|---|---|---|---|---|---|---|---|---|---|---|---|---|---|
| PHASE | 1 | 2 | 2 PED | 3 | | 4 | | 4 PED | 5 | | 6 | 6 PED | 7 | 8 | 8 PED | OLA | OLB | SPARE | OLC | OLD | SPARE |
| SIGNAL HEAD NO. | 11 | 21,22 | NU | 31 | 32 | 41 | 42 | NU | 51 | 32 | 61,62 | NU | NU | NU | NU | NU | NU | NU | NU | NU | NU |
| RED | | 128 | | 116 | 116 | 101 | 101 | | | | 134 | | | | | | | | | | |
| YELLOW | | 129 | | 117 | 117 | 102 | 102 | | | | 135 | | | | | | | | | | |
| GREEN | | 130 | | 118 | 118 | 103 | 103 | | | | 136 | | | | | | | | | | |
| RED ARROW | 125 | | | | | | | | 131 | | | | | | | | | | | | |
| YELLOW ARROW | 126 | | | | | | | | 132 | 132 | | | | | | | | | | | |
| GREEN ARROW | 127 | | | 118 | | 103 | | | 133 | 133 | | | | | | | | | | | |
| ✋ | | | | | | | | | | | | | | | | | | | | | |
| 🚶 | | | | | | | | | | | | | | | | | | | | | |

NU = Not Used

## INPUT FILE POSITION LAYOUT

*(front view)*

| | | 1 | 2 | 3 | 4 | 5 | 6 | 7 | 8 | 9 | 10 | 11 | 12 | 13 | 14 |
|---|---|---|---|---|---|---|---|---|---|---|---|---|---|---|---|
| FILE "I" | U | SLOT | Ø1 | SLOT | SLOT | Ø3 | Ø4 | SLOT | SLOT | SLOT | SLOT | SLOT | SLOT | SLOT | FS |
| | | | 1A | | | 3A | 4A | | | | | | | | DC ISOLATOR |
| | L | EMPTY | NOT USED | EMPTY | EMPTY | NOT USED | Ø4 | EMPTY | EMPTY | EMPTY | EMPTY | EMPTY | EMPTY | EMPTY | ST |
| | | | | | | | 4B | | | | | | | | DC ISOLATOR |
| FILE "J" | U | Ø5 | Ø5 | SLOT | SLOT | SLOT | SLOT | SLOT | SLOT | SLOT | SLOT | SLOT | SLOT | SLOT | SLOT |
| | | 5A | 5B | | | | | | | | | | | | |
| | L | NOT USED | NOT USED | EMPTY | EMPTY | EMPTY | EMPTY | EMPTY | EMPTY | EMPTY | EMPTY | EMPTY | EMPTY | EMPTY | EMPTY |

EX.: 1A, 2A, ETC. = LOOP NO.'S

FS = FLASH SENSE
ST = STOP TIME

## INPUT FILE CONNECTION & PROGRAMMING CHART

| LOOP NO. | LOOP TERMINAL | INPUT FILE POS. | PIN NO. | INPUT ASSIGNMENT NO. | DETECTOR NO. | NEMA PHASE | CALL | EXTEND | FULL TIME DELAY | STRETCH TIME | DELAY TIME |
|---|---|---|---|---|---|---|---|---|---|---|---|
| 1A | TB2-5,6 | I2U | 39 | 1 | 2 | 1 | Y | Y | | | 3 |
| 3A | TB4-5,6 | I5U | 58 | 20 | 3 | 3 | Y | Y | | | 3 |
| 4A | TB4-9,10 | I6U | 41 | 3 | 4 | 4 | Y | Y | | | 3 |
| 4B | TB4-11,12 | I6L | 45 | 7 | 14 | 4 | Y | Y | | | 10 |
| 5A | TB3-1,2 | J1U | 55 | 17 | 5 | 5 | Y | Y | | | 3 |
| 5B | TB3-5,6 | J2U | 40 | 2 | 6 | 5 | Y | Y | | | 15 |

INPUT FILE POSITION LEGEND: J2L
FILE J
SLOT 2
LOWER

THIS ELECTRICAL DETAIL IS FOR
THE SIGNAL DESIGN: 11-1010 T4
DESIGNED: November 2008
SEALED: 12-16-08
REVISED: N/A

Signal Upgrade-Temporary (phase I -Step 5)

ELECTRICAL AND PROGRAMMING DETAILS FOR:

US 421 (King Street)
at
New Market Boulevard /
Forest Hill Drive

Division 11 Watauga County Boone

PLAN DATE: 12-02-08 REVIEWED BY: D.T. Joyce
PREPARED BY: D.H. Spaulding REVIEWED BY:

| REVISIONS | INIT. | DATE |
|---|---|---|
| | | |

Prepared in the Offices of:
Traffic Engineering and Safety Systems Branch
STATE OF NORTH CAROLINA DEPARTMENT OF TRANSPORTATION
Signals Management Section
750 N. Greenfield Pkwy, Garner, NC 27529

SEAL
NORTH CAROLINA PROFESSIONAL SEAL 022013 ENGINEER GEORGE C. BROWN
George C. Brown 12/30/08
SIGNATURE DATE
SIG. INVENTORY NO. 11-1010 T4

17-DEC-2008 09:43
s:*its signals*workgroups*sig mgmt*spaulding*in-progress*11101074sm.ele.2008xx.dgn
dspaulding

| PROJECT REFERENCE NO. | SHEET NO. |
|---|---|
| U-4020 | Sig.28 |

## PHASING DIAGRAM

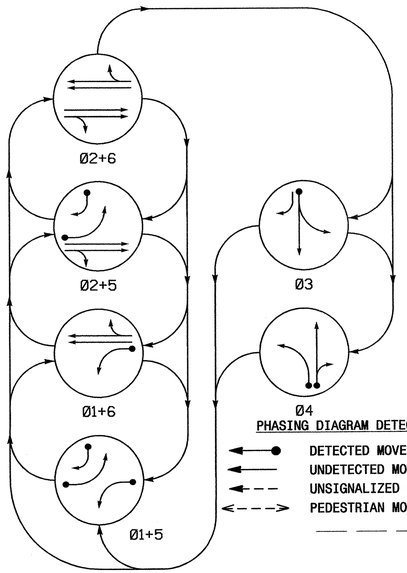


PHASING DIAGRAM DETECTION LEGEND

- DETECTED MOVEMENT
- UNDETECTED MOVEMENT (OVERLAP)
- UNSIGNALIZED MOVEMENT
- PEDESTRIAN MOVEMENT

## TABLE OF OPERATION

| SIGNAL FACE | PHASE 01+5 | 01+6 | 02+5 | 02+6 | 03 | 04 | FLASH |
|---|---|---|---|---|---|---|---|
| 11 | ← | ← | ~~R~~ | ~~R~~ | ~~R~~ | ~~R~~ | ~~R~~ |
| 21,22 | R | R | G | G | R | R | Y |
| 31 | R | R | R | R | G | R | R |
| 32 | R | R | R | R | G | R | R |
| 41 | R | R | R | R | G | R | R |
| 42 | R | R | R | R | G | R | R |
| 51 | ← | ~~R~~ | ← | ~~R~~ | ~~R~~ | ~~R~~ | ~~R~~ |
| 61,62 | R | G | R | G | R | R | Y |

## SIGNAL FACE I.D.

ALL HEADS L.E.D.




## 2070L LOOP & DETECTOR INSTALLATION

| INDUCTIVE LOOPS | | | | | DETECTOR PROGRAMMING | | | | | | |
|---|---|---|---|---|---|---|---|---|---|---|---|
| LOOP | SIZE (FT) | DISTANCE FROM STOPBAR (FT) | TURNS | NEW LOOP | PHASE | CALLING | EXTENSION | FULL TIME DELAY | STRETCH TIME | DELAY TIME | SYSTEM LOOP | NEW CARD |
| 1A | 6X40 | 0 | 2-4-2 | Y | 1 | Y | Y | - | - | 3 | - | - |
| 3A | 6X40 | 0 | 2-4-2 | Y | 3 | Y | Y | - | - | 3 | - | - |
| 4A | 6X40 | 0 | 2-4-2 | Y | 4 | Y | Y | - | - | 3 | - | - |
| 4B | 6X40 | 0 | 2-4-2 | Y | 4 | Y | Y | - | - | 10 | - | - |
| 5A | 6X40 | 0 | 2-4-2 | Y | 5 | Y | Y | - | - | 3 | - | - |
| 5B | 6X40 | 0 | 2-4-2 | Y | 5 | Y | Y | - | - | 15 | - | - |

6 Phase
Semi-Actuated
Isolated

## NOTES

1. Refer to "Roadway Standard Drawings NCDOT" dated July 2006 and "Standard Specifications for Roads and Structures" dated July 2006.
2. Do not program signal for late night flashing operation unless otherwise directed by the Engineer.
3. Phase 1 or phase 5 may be lagged.
4. The order of phase 3 and phase 4 may be reversed.
5. Set all detector units to presence mode.
6. Reposition all existing signal heads.

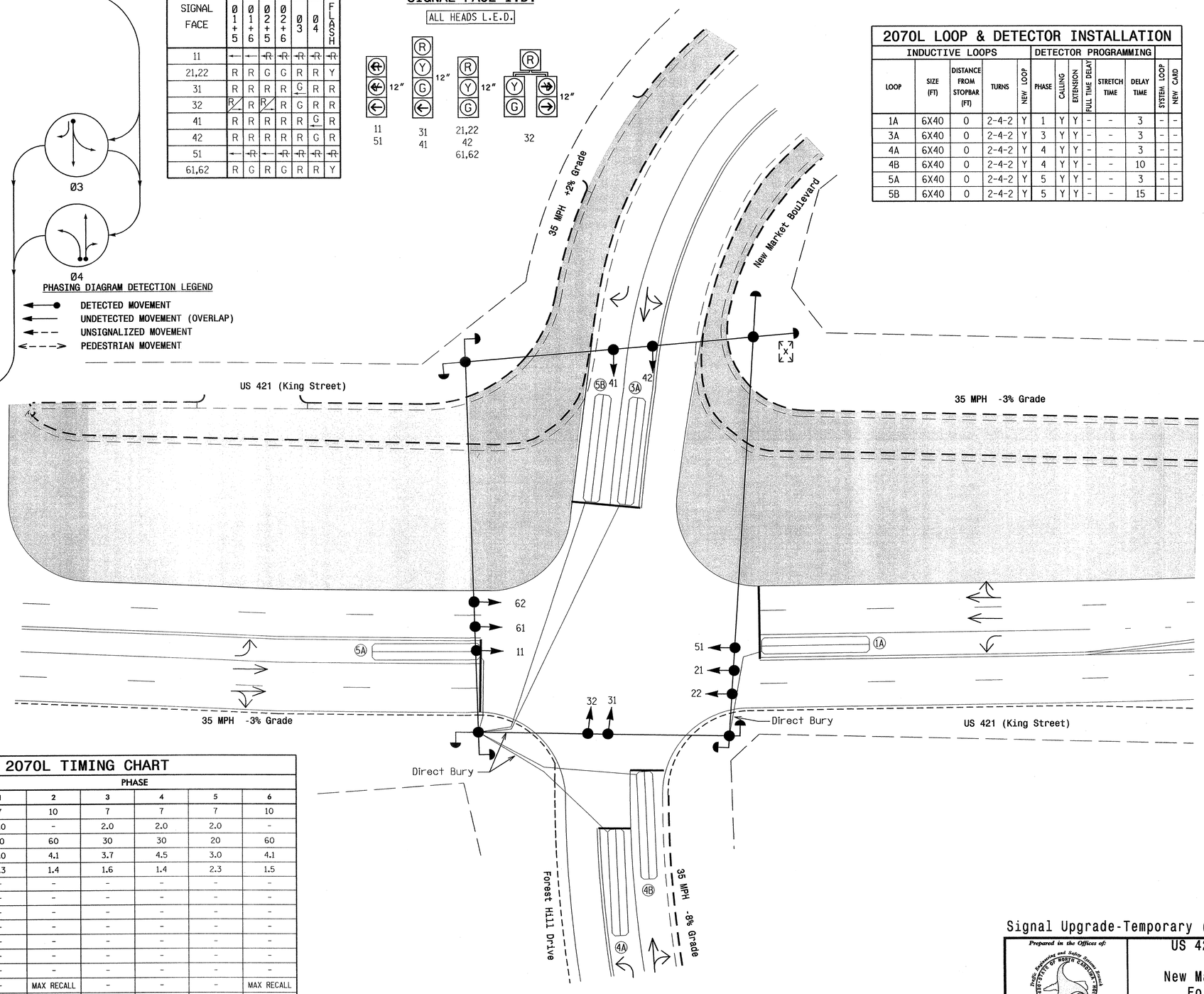


## 2070L TIMING CHART

| FEATURE | PHASE 1 | 2 | 3 | 4 | 5 | 6 |
|---|---|---|---|---|---|---|
| Min Green 1 * | 7 | 10 | 7 | 7 | 7 | 10 |
| Extension 1 * | 2.0 | - | 2.0 | 2.0 | 2.0 | - |
| Max Green 1 * | 20 | 60 | 30 | 30 | 20 | 60 |
| Yellow Clearance | 3.0 | 4.1 | 3.7 | 4.5 | 3.0 | 4.1 |
| Red Clearance | 2.3 | 1.4 | 1.6 | 1.4 | 2.3 | 1.5 |
| Walk 1 * | - | - | - | - | - | - |
| Don't Walk 1 | - | - | - | - | - | - |
| Seconds Per Actuation * | - | - | - | - | - | - |
| Max Variable Initial * | - | - | - | - | - | - |
| Time Before Reduction * | - | - | - | - | - | - |
| Time To Reduce * | - | - | - | - | - | - |
| Minimum Gap | - | - | - | - | - | - |
| Recall Mode | - | MAX RECALL | - | - | - | MAX RECALL |
| Vehicle Call Memory | - | N/A | - | - | - | N/A |
| Dual Entry | - | - | - | - | - | - |
| Simultaneous Gap | ON | ON | ON | ON | ON | ON |

* These values may be field adjusted. Do not adjust Min Green and Extension times for phases 2 and 6 lower than what is shown. Min Green for all other phases should not be lower than 4 seconds.

## LEGEND

| PROPOSED | | EXISTING |
|---|---|---|
| | Traffic Signal Head | |
| | Modified Signal Head | N/A |
| | Sign | |
| | Pedestrian Signal Head With Push Button & Sign | |
| | Signal Pole with Guy | |
| | Signal Pole with Sidewalk Guy | |
| | Inductive Loop Detector | |
| | Controller & Cabinet | |
| | Junction Box | |
| | 2-in Underground Conduit | |
| N/A | Right of Way | |
| | Directional Arrow | |
| | Pavement Marking Arrow | |
| | Construction Zone | |

Signal Upgrade-Temporary (Phase II - Steps 1&2)

Prepared in the Offices of:
Traffic Engineering and Safety Systems Branch
STATE OF NORTH CAROLINA
DEPARTMENT OF TRANSPORTATION
Signals and Geometrics Section
750 N. Greenfield Pkwy, Garner, NC 27529

SCALE 0 20 1"=20'

# US 421 (King Street) at New Market Boulevard / Forest Hill Drive

Division 11 Watauga County Boone

PLAN DATE: November 2008 REVIEWED BY: J.P. Galloway
PREPARED BY: Z.M. Little REVIEWED BY:

| REVISIONS | INIT. | DATE |
|---|---|---|
| | | |

SEAL
NORTH CAROLINA PROFESSIONAL SEAL 30530 ENGINEER ZACHARY M. LITTLE
SIGNATURE DATE 12/4/08
SIG. INVENTORY NO. 11-1010 T5

16-DEC-2008 16:17
s:\traffic\signals\workgroups\tip projects\u-4020\signals\design\signals\11-1010\11010t5.dgn
zmlittle

| PROJECT REFERENCE NO. | SHEET NO. |
|---|---|
| U-4020 | Sig.29 |

# EDI MODEL 2010ECL-NC CONFLICT MONITOR PROGRAMMING DETAIL

*(remove jumpers and set switches as shown)*

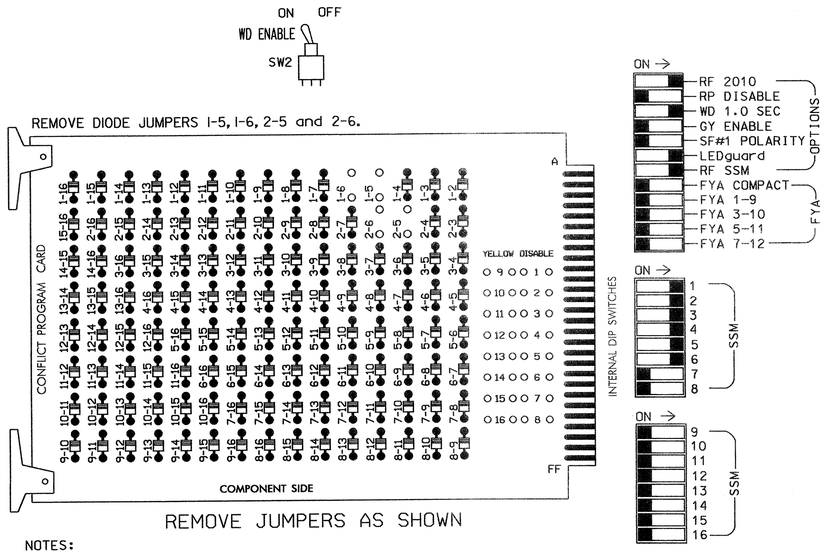


REMOVE JUMPERS AS SHOWN

NOTES:

1. Card is provided with all diode jumpers in place. Removal of any jumper allows its channels to run concurrently.
2. Make sure jumpers SEL2-SEL5 are present on the monitor board.

■ = DENOTES POSITION OF SWITCH

## NOTES

1. To prevent "flash-conflict" problems, insert red flash program blocks for all unused vehicle load switches in the output file. The installer shall verify that signal heads flash in accordance with the Signal Plans.
2. Ensure that Red Enable is active at all times during normal operation. To prevent Red Failures on unused monitor channels, tie unused red monitor inputs 7,8,9,10, 11,12,13,14,15 & 16 to load switch AC+ per the cabinet manufacturer's instructions.
3. Program phases 2 and 6, on the controller unit, for Start Up In Green.
4. Enable Simultaneous Gap-Out, on the controller unit, for all phases.

CONTROLLER.....CONTRACTOR SUPPLIED 2070L
CABINET.....CONTRACTOR SUPPLIED 332
SOFTWARE.....ECONOLITE OASIS
CABINET MOUNT.....BASE
OUTPUT FILE POSITIONS...18 (12-STD, 6-AUX)
LOAD SWITCHES USED.....S1,S2,S3,S4,S5,S6
PHASES USED.....1,2,3,4,5,6
OVERLAPS.....NONE

## SIGNAL HEAD HOOK-UP CHART

| LOAD SWITCH NO. | S1 | S2 | S2P | S3 | | S4 | | S4P | S5 | | S6 | S6P | S7 | S8 | S8P | S9 | S10 | S11 | S12 | S13 | S14 |
|---|---|---|---|---|---|---|---|---|---|---|---|---|---|---|---|---|---|---|---|---|---|
| PHASE | 1 | 2 | 2 PED | 3 | | 4 | | 4 PED | 5 | | 6 | 6 PED | 7 | 8 | 8 PED | OLA | OLB | SPARE | OLC | OLD | SPARE |
| SIGNAL HEAD NO. | 11 | 21,22 | NU | 31 | 32 | 41 | 42 | NU | 51 | 32 | 61,62 | NU | NU | NU | NU | NU | NU | NU | NU | NU | NU |
| RED | | 128 | | 116 | 116 | 101 | 101 | | | | 134 | | | | | | | | | | |
| YELLOW | | 129 | | 117 | 117 | 102 | 102 | | | | 135 | | | | | | | | | | |
| GREEN | | 130 | | 118 | 118 | 103 | 103 | | | | 136 | | | | | | | | | | |
| RED ARROW | 125 | | | | | | | | 131 | | | | | | | | | | | | |
| YELLOW ARROW | 126 | | | | | | | | 132 | 132 | | | | | | | | | | | |
| GREEN ARROW | 127 | | | 118 | | 103 | | | 133 | 133 | | | | | | | | | | | |
| ✋ | | | | | | | | | | | | | | | | | | | | | |
| 🚶 | | | | | | | | | | | | | | | | | | | | | |

NU = Not Used

## INPUT FILE POSITION LAYOUT

*(front view)*

| | | 1 | 2 | 3 | 4 | 5 | 6 | 7 | 8 | 9 | 10 | 11 | 12 | 13 | 14 |
|---|---|---|---|---|---|---|---|---|---|---|---|---|---|---|---|
| FILE "I" | U | SLOT EMPTY | ø1 1A | SLOT EMPTY | SLOT EMPTY | ø3 3A | ø4 4A | SLOT EMPTY | SLOT EMPTY | SLOT EMPTY | SLOT EMPTY | SLOT EMPTY | SLOT EMPTY | SLOT EMPTY | FS DC ISOLATOR |
| | L | | NOT USED | | | NOT USED | ø4 4B | | | | | | | | ST DC ISOLATOR |
| FILE "J" | U | ø5 5A | ø5 5B | SLOT EMPTY | SLOT EMPTY | SLOT EMPTY | SLOT EMPTY | SLOT EMPTY | SLOT EMPTY | SLOT EMPTY | SLOT EMPTY | SLOT EMPTY | SLOT EMPTY | SLOT EMPTY | SLOT EMPTY |
| | L | NOT USED | NOT USED | | | | | | | | | | | | |

EX.: 1A, 2A, ETC. = LOOP NO.'S

FS = FLASH SENSE
ST = STOP TIME

## INPUT FILE CONNECTION & PROGRAMMING CHART

| LOOP NO. | LOOP TERMINAL | INPUT FILE POS. | PIN NO. | INPUT ASSIGNMENT NO. | DETECTOR NO. | NEMA PHASE | CALL | EXTEND | FULL TIME DELAY | STRETCH TIME | DELAY TIME |
|---|---|---|---|---|---|---|---|---|---|---|---|
| 1A | TB2-5,6 | I2U | 39 | 1 | 2 | 1 | Y | Y | | | 3 |
| 3A | TB4-5,6 | I5U | 58 | 20 | 3 | 3 | Y | Y | | | 3 |
| 4A | TB4-9,10 | I6U | 41 | 3 | 4 | 4 | Y | Y | | | 3 |
| 4B | TB4-11,12 | I6L | 45 | 7 | 14 | 4 | Y | Y | | | 10 |
| 5A | TB3-1,2 | J1U | 55 | 17 | 5 | 5 | Y | Y | | | 3 |
| 5B | TB3-5,6 | J2U | 40 | 2 | 6 | 5 | Y | Y | | | 15 |

INPUT FILE POSITION LEGEND: J2L
FILE J
SLOT 2
LOWER

THIS ELECTRICAL DETAIL IS FOR
THE SIGNAL DESIGN: 11-1010 T5
DESIGNED: November 2008
SEALED: 12-16-08
REVISED: N/A

Signal Upgrade-Temporary (phase II -Steps 1&2)

ELECTRICAL AND PROGRAMMING DETAILS FOR:

Prepared in the Offices of:
Traffic Engineering and Safety Systems Branch
STATE OF NORTH CAROLINA DEPARTMENT OF TRANSPORTATION
Signal Management Section
750 N. Greenfield Pkwy, Garner, NC 27529

US 421 (King Street)
at
New Market Boulevard /
Forest Hill Drive

Division 11 Watauga County Boone

| | | | |
|---|---|---|---|
| PLAN DATE: | 12-02-08 | REVIEWED BY: | D.T. Joyce |
| PREPARED BY: | D.H. Spaulding | REVIEWED BY: | |

| REVISIONS | INIT. | DATE |
|---|---|---|
| | | |

SEAL
NORTH CAROLINA PROFESSIONAL SEAL 022013 ENGINEER GEORGE C. BROWN

George C. Brown 12/30/08
SIGNATURE DATE

SIG. INVENTORY NO. 11-1010 T5

17-DEC-2008 10:21
styles: c:\pwworking\d0185\wf\kgroupsesig mon\spaulding\in-progress\11101075_sm_ele_2008xx.dgn
spaulding

| PROJECT REFERENCE NO. | SHEET NO. |
|---|---|
| U-4020 | Sig.3O |

## PHASING DIAGRAM

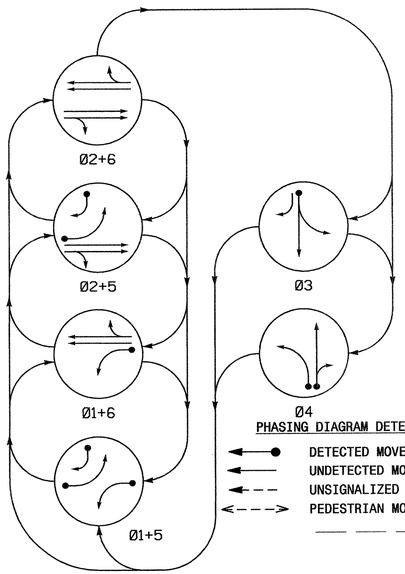


PHASING DIAGRAM DETECTION LEGEND

- DETECTED MOVEMENT
- UNDETECTED MOVEMENT (OVERLAP)
- UNSIGNALIZED MOVEMENT
- PEDESTRIAN MOVEMENT

## TABLE OF OPERATION

| SIGNAL FACE | PHASE 01+5 | 01+6 | 02+5 | 02+6 | 03 | 04 | FLASH |
|---|---|---|---|---|---|---|---|
| 11 | ← | ← | ~~R~~ | ~~R~~ | ~~R~~ | ~~R~~ | ~~R~~ |
| 21,22 | R | R | G | G | R | R | Y |
| 31 | R | R | R | R | G | R | R |
| 32 | R | R | R | R | G | R | R |
| 41 | R | R | R | R | G | R | R |
| 42 | R | R | R | R | G | G | R |
| 51 | ← | ~~R~~ | ← | ~~R~~ | ~~R~~ | ~~R~~ | ~~R~~ |
| 61,62 | R | G | R | G | R | R | Y |

## SIGNAL FACE I.D.

ALL HEADS L.E.D.




## 2070L LOOP & DETECTOR INSTALLATION

| INDUCTIVE LOOPS | | | | | DETECTOR PROGRAMMING | | | | | | | |
|---|---|---|---|---|---|---|---|---|---|---|---|---|
| LOOP | SIZE (FT) | DISTANCE FROM STOPBAR (FT) | TURNS | NEW LOOP | PHASE | CALLING | EXTENSION | FULL TIME DELAY | STRETCH TIME | DELAY TIME | SYSTEM LOOP | NEW CARD |
| 1A | 6X40 | 0 | 2-4-2 | Y | 1 | Y | Y | - | - | 3 | - | - |
| 3A | 6X40 | 0 | 2-4-2 | Y | 3 | Y | Y | - | - | 3 | - | - |
| 4A | 6X40 | 0 | 2-4-2 | - | 4 | Y | Y | - | - | 3 | - | - |
| 4B | 6X40 | 0 | 2-4-2 | - | 4 | Y | Y | - | - | 10 | - | - |
| 5A | 6X40 | 0 | 2-4-2 | Y | 5 | Y | Y | - | - | 3 | - | - |
| 5B | 6X40 | 0 | 2-4-2 | Y | 5 | Y | Y | - | - | 15 | - | - |

6 Phase
Semi-Actuated
Isolated

## NOTES

1. Refer to "Roadway Standard Drawings NCDOT" dated July 2006 and "Standard Specifications for Roads and Structures" dated July 2006.
2. Do not program signal for late night flashing operation unless otherwise directed by the Engineer.
3. Phase 1 or phase 5 may be lagged.
4. The order of phase 3 and phase 4 may be reversed.
5. Set all detector units to presence mode.
6. Reposition existing signal heads number 11, 21, 22, 51, 61, 62.

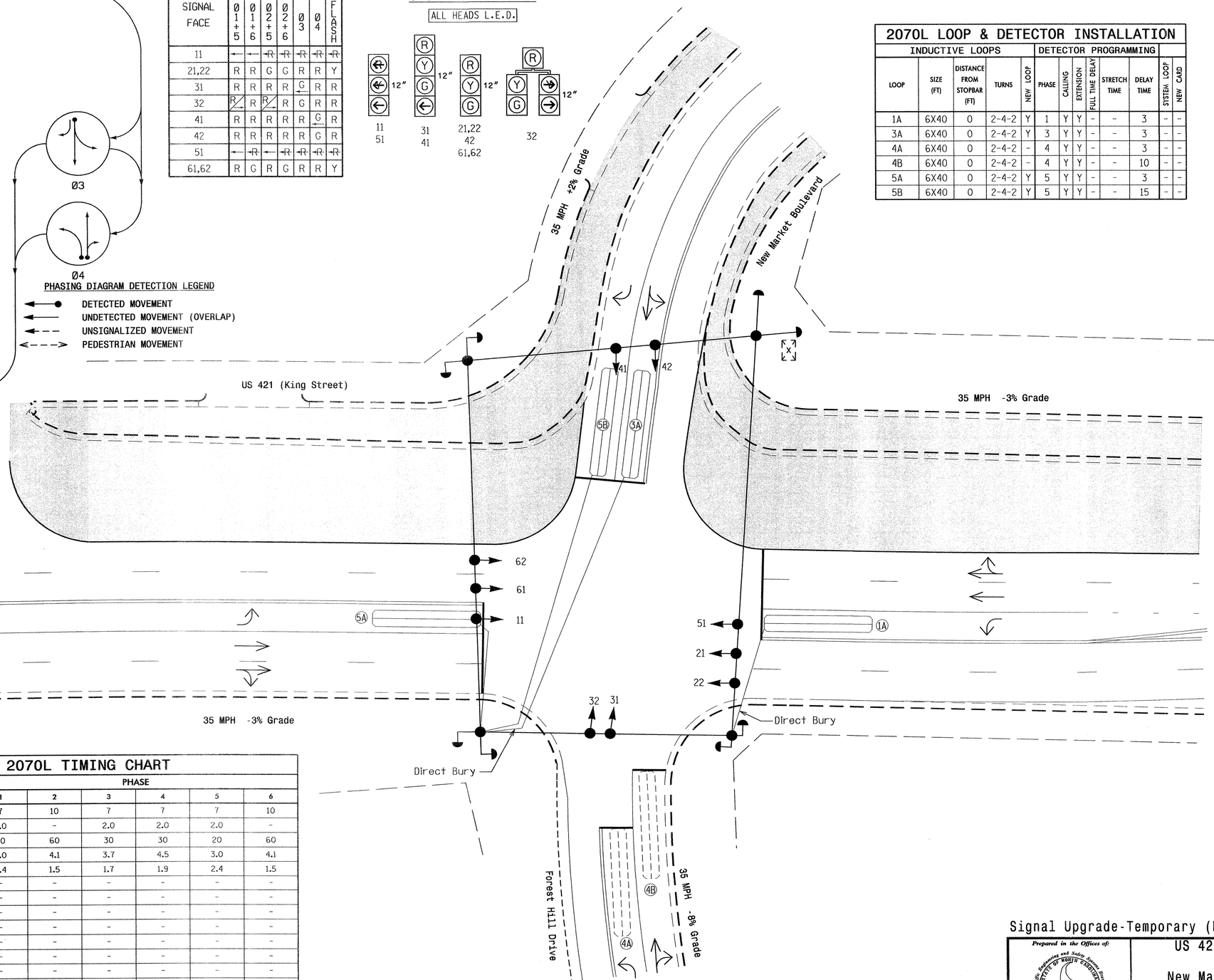


## LEGEND

| PROPOSED | | EXISTING |
|---|---|---|
| | Traffic Signal Head | |
| | Modified Signal Head | N/A |
| | Sign | |
| | Pedestrian Signal Head With Push Button & Sign | |
| | Signal Pole with Guy | |
| | Signal Pole with Sidewalk Guy | |
| | Inductive Loop Detector | |
| | Controller & Cabinet | |
| | Junction Box | |
| | 2-in Underground Conduit | |
| N/A | Right of Way | |
| | Directional Arrow | |
| | Pavement Marking Arrow | |
| | Construction Zone | |

## 2070L TIMING CHART

| FEATURE | PHASE 1 | 2 | 3 | 4 | 5 | 6 |
|---|---|---|---|---|---|---|
| Min Green 1 * | 7 | 10 | 7 | 7 | 7 | 10 |
| Extension 1 * | 2.0 | - | 2.0 | 2.0 | 2.0 | - |
| Max Green 1 * | 20 | 60 | 30 | 30 | 20 | 60 |
| Yellow Clearance | 3.0 | 4.1 | 3.7 | 4.5 | 3.0 | 4.1 |
| Red Clearance | 2.4 | 1.5 | 1.7 | 1.9 | 2.4 | 1.5 |
| Walk 1 * | - | - | - | - | - | - |
| Don't Walk 1 | - | - | - | - | - | - |
| Seconds Per Actuation * | - | - | - | - | - | - |
| Max Variable Initial * | - | - | - | - | - | - |
| Time Before Reduction * | - | - | - | - | - | - |
| Time To Reduce * | - | - | - | - | - | - |
| Minimum Gap | - | - | - | - | - | - |
| Recall Mode | - | MAX RECALL | - | - | - | MAX RECALL |
| Vehicle Call Memory | - | N/A | - | - | - | N/A |
| Dual Entry | - | - | - | - | - | - |
| Simultaneous Gap | ON | ON | ON | ON | ON | ON |

* These values may be field adjusted. Do not adjust Min Green and Extension times for phases 2 and 6 lower than what is shown. Min Green for all other phases should not be lower than 4 seconds.

Signal Upgrade-Temporary (Phase II - Steps 3&4)

Prepared in the Offices of:
Traffic Engineering and Safety Systems Branch
Signals and Geometric Section
STATE OF NORTH CAROLINA DEPARTMENT OF TRANSPORTATION
750 N. Greenfield Pkwy, Garner, NC 27529

SCALE 0 20
1"=20'

US 421 (King Street)
at
New Market Boulevard /
Forest Hill Drive

Division 11 Watauga County Boone

PLAN DATE: November 2008 REVIEWED BY: J.P. Galloway
PREPARED BY: Z.W. Little REVIEWED BY:

| REVISIONS | INIT. | DATE |
|---|---|---|
| | | |

SEAL
NORTH CAROLINA PROFESSIONAL SEAL 30530 ENGINEER ZACHARY W. LITTLE
SIGNATURE 12/16/08 DATE
SIG. INVENTORY NO. 11-1010 T6

16-DEC-2008 15:24
s:\its\signals\workgroups\tip projects\u-4020\signals\design\signals\11-1010\11101016.dgn
bwynn

| PROJECT REFERENCE NO. | SHEET NO. |
|---|---|
| U-4020 | Sig. 31 |

# EDI MODEL 2010ECL-NC CONFLICT MONITOR PROGRAMMING DETAIL

*(remove jumpers and set switches as shown)*

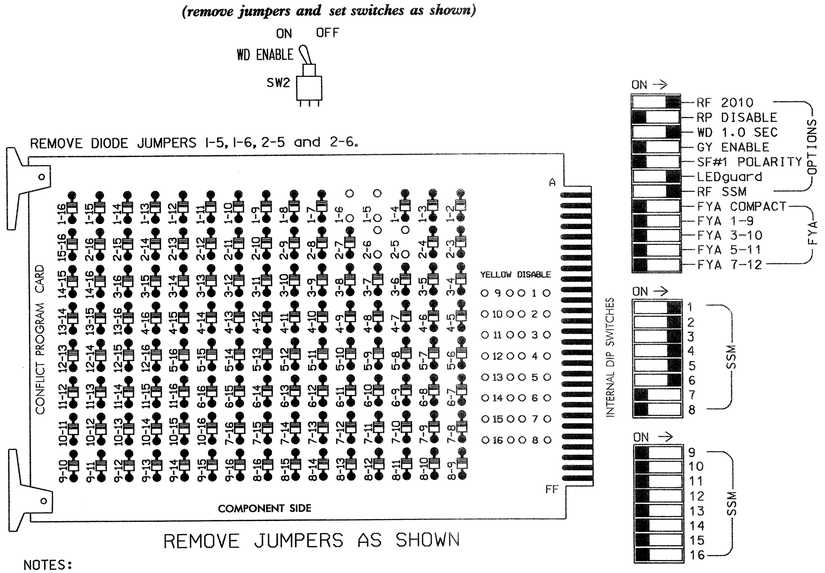


REMOVE JUMPERS AS SHOWN

NOTES:

1. Card is provided with all diode jumpers in place. Removal of any jumper allows its channels to run concurrently.
2. Make sure jumpers SEL2-SEL5 are present on the monitor board.

■ = DENOTES POSITION OF SWITCH

## NOTES

1. To prevent "flash-conflict" problems, insert red flash program blocks for all unused vehicle load switches in the output file. The installer shall verify that signal heads flash in accordance with the Signal Plans.
2. Ensure that Red Enable is active at all times during normal operation. To prevent Red Failures on unused monitor channels, tie unused red monitor inputs 7,8,9,10, 11,12,13,14,15 & 16 to load switch AC+ per the cabinet manufacturer's instructions.
3. Program phases 2 and 6, on the controller unit, for Start Up In Green.
4. Enable Simultaneous Gap-Out, on the controller unit, for all phases.

CONTROLLER.....CONTRACTOR SUPPLIED 2070L
CABINET.....CONTRACTOR SUPPLIED 332
SOFTWARE.....ECONOLITE OASIS
CABINET MOUNT.....BASE
OUTPUT FILE POSITIONS...18 (12-STD, 6-AUX)
LOAD SWITCHES USED.....S1,S2,S3,S4,S5,S6
PHASES USED.....1,2,3,4,5,6
OVERLAPS.....NONE

## SIGNAL HEAD HOOK-UP CHART

| LOAD SWITCH NO. | S1 | S2 | S2P | S3 | | S4 | | S4P | S5 | | S6 | S6P | S7 | S8 | S8P | S9 | S10 | S11 | S12 | S13 | S14 |
|---|---|---|---|---|---|---|---|---|---|---|---|---|---|---|---|---|---|---|---|---|---|
| PHASE | 1 | 2 | 2 PED | 3 | | 4 | | 4 PED | 5 | | 6 | 6 PED | 7 | 8 | 8 PED | OLA | OLB | SPARE | OLC | OLD | SPARE |
| SIGNAL HEAD NO. | 11 | 21,22 | NU | 31 | 32 | 41 | 42 | NU | 51 | 32 | 61,62 | NU | NU | NU | NU | NU | NU | NU | NU | NU | NU |
| RED | | 128 | | 116 | 116 | 101 | 101 | | | | 134 | | | | | | | | | | |
| YELLOW | | 129 | | 117 | 117 | 102 | 102 | | | | 135 | | | | | | | | | | |
| GREEN | | 130 | | 118 | 118 | 103 | 103 | | | | 136 | | | | | | | | | | |
| RED ARROW | 125 | | | | | | | | 131 | | | | | | | | | | | | |
| YELLOW ARROW | 126 | | | | | | | | 132 | 132 | | | | | | | | | | | |
| GREEN ARROW | 127 | | | 118 | | 103 | | | 133 | 133 | | | | | | | | | | | |
| ✋ | | | | | | | | | | | | | | | | | | | | | |
| 🚶 | | | | | | | | | | | | | | | | | | | | | |

NU = Not Used

## INPUT FILE POSITION LAYOUT

*(front view)*

| | | 1 | 2 | 3 | 4 | 5 | 6 | 7 | 8 | 9 | 10 | 11 | 12 | 13 | 14 |
|---|---|---|---|---|---|---|---|---|---|---|---|---|---|---|---|
| FILE "I" | U | SLOT | Ø1 / 1A | SLOT | SLOT | Ø3 / 3A | Ø4 / 4A | SLOT | SLOT | SLOT | SLOT | SLOT | SLOT | SLOT | FS / DC ISOLATOR |
| | L | EMPTY | NOT USED | EMPTY | EMPTY | NOT USED | Ø4 / 4B | EMPTY | EMPTY | EMPTY | EMPTY | EMPTY | EMPTY | EMPTY | ST / DC ISOLATOR |
| FILE "J" | U | Ø5 / 5A | Ø5 / 5B | SLOT | SLOT | SLOT | SLOT | SLOT | SLOT | SLOT | SLOT | SLOT | SLOT | SLOT | SLOT |
| | L | NOT USED | NOT USED | EMPTY | EMPTY | EMPTY | EMPTY | EMPTY | EMPTY | EMPTY | EMPTY | EMPTY | EMPTY | EMPTY | EMPTY |

EX.: 1A, 2A, ETC. = LOOP NO.'S

FS = FLASH SENSE
ST = STOP TIME

## INPUT FILE CONNECTION & PROGRAMMING CHART

| LOOP NO. | LOOP TERMINAL | INPUT FILE POS. | PIN NO. | INPUT ASSIGNMENT NO. | DETECTOR NO. | NEMA PHASE | CALL | EXTEND | FULL TIME DELAY | STRETCH TIME | DELAY TIME |
|---|---|---|---|---|---|---|---|---|---|---|---|
| 1A | TB2-5,6 | I2U | 39 | 1 | 2 | 1 | Y | Y | | | 3 |
| 3A | TB4-5,6 | I5U | 58 | 20 | 3 | 3 | Y | Y | | | 3 |
| 4A | TB4-9,10 | I6U | 41 | 3 | 4 | 4 | Y | Y | | | 3 |
| 4B | TB4-11,12 | I6L | 45 | 7 | 14 | 4 | Y | Y | | | 10 |
| 5A | TB3-1,2 | J1U | 55 | 17 | 5 | 5 | Y | Y | | | 3 |
| 5B | TB3-5,6 | J2U | 40 | 2 | 6 | 5 | Y | Y | | | 15 |

INPUT FILE POSITION LEGEND: J2L
FILE J
SLOT 2
LOWER

THIS ELECTRICAL DETAIL IS FOR
THE SIGNAL DESIGN: 11-1010 T6
DESIGNED: November 2008
SEALED: 12-16-08
REVISED: N/A

Signal Upgrade-Temporary (phase II -Steps 3&4)

ELECTRICAL AND PROGRAMMING DETAILS FOR:

Prepared in the Offices of:
Traffic Engineering and Safety Systems Branch
STATE OF NORTH CAROLINA DEPARTMENT OF TRANSPORTATION
Signals Management Section
750 N. Greenfield Pkwy, Garner, NC 27529

US 421 (King Street)
at
New Market Boulevard /
Forest Hill Drive

Division 11 Watauga County Boone

| | | | |
|---|---|---|---|
| PLAN DATE: | 12-02-08 | REVIEWED BY: | D.T. Joyce |
| PREPARED BY: | D.H. Spaulding | REVIEWED BY: | |

| REVISIONS | INIT. | DATE |
|---|---|---|
| | | |

SEAL
NORTH CAROLINA PROFESSIONAL SEAL 022013 ENGINEER GEORGE C. BROWN
SIGNATURE DATE 12/30/08
SIG. INVENTORY NO. 11-1010 T6

17-DEC-2008 09:38
s:\its signals\workgroups\sig mon\spaulding\in-progress\1101016_sm_ele_2008xx.dgn
dspaulding

| PROJECT REFERENCE NO. | SHEET NO. |
|---|---|
| U-4020 | Sig.32 |

## PHASING DIAGRAM

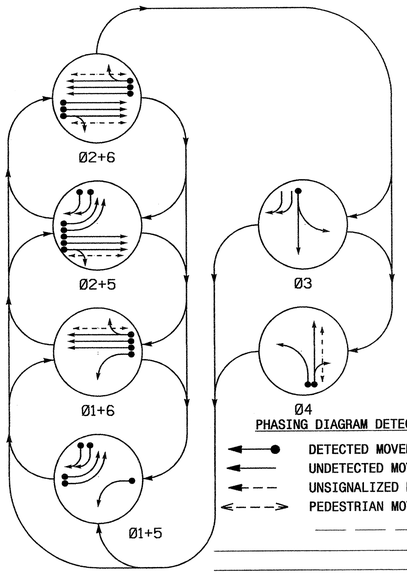


PHASING DIAGRAM DETECTION LEGEND

- DETECTED MOVEMENT
- UNDETECTED MOVEMENT (OVERLAP)
- UNSIGNALIZED MOVEMENT
- PEDESTRIAN MOVEMENT

## TABLE OF OPERATION

| SIGNAL FACE | PHASE 01+5 | 01+6 | 02+5 | 02+6 | 03 | 04 | FLASH |
|---|---|---|---|---|---|---|---|
| 11 | ← | ← | ~~R~~ | ~~R~~ | ~~R~~ | ~~R~~ | ~~R~~ |
| 21,22 | R | R | G | G | R | R | Y |
| 31 | R | R | R | R | G ← | R | R |
| 32 | R | R | R | R | G | R | R |
| 33,34 | → | ~~R~~ | → | ~~R~~ | → | ~~R~~ | ~~R~~ |
| 41 | R | R | R | R | G ← | R | R |
| 42 | R | R | R | R | R | G | R |
| 51,52 | ← | ~~R~~ | ← | ~~R~~ | ~~R~~ | ~~R~~ | ~~R~~ |
| 61,62 | R | G | R | G | R | R | Y |
| P21,P22 | DW | DW | W | W | DW | DW | DRK |
| P41,P42 | DW | DW | DW | DW | DW | W | DRK |
| P61,P62 | DW | W | DW | W | DW | DW | DRK |

W - Walk
DW - Don't Walk
DRK - Dark

## SIGNAL FACE I.D.

ALL HEADS L.E.D.




## 2070L LOOP & DETECTOR INSTALLATION

| INDUCTIVE LOOPS | | | | | DETECTOR PROGRAMMING | | | | | | | |
|---|---|---|---|---|---|---|---|---|---|---|---|---|
| LOOP | SIZE (FT) | DISTANCE FROM STOPBAR (FT) | TURNS | NEW LOOP | PHASE | CALLING | EXTENSION | FULL TIME DELAY | STRETCH TIME | DELAY TIME | SYSTEM LOOP | NEW CARD |
| 1A | 6X40 | 0 | 2-4-2 | Y | 1 | Y | Y | - | - | - | - | - |
| 2A,2B,2C | 6X6 | 70 | 4 | Y | 2 | Y | Y | - | - | - | - | Y |
| 3A | 6X40 | 0 | 2-4-2 | Y | 3 | Y | Y | - | - | 3 | - | - |
| 4A | 6X40 | 0 | 2-4-2 | Y | 4 | Y | Y | - | - | 3 | - | - |
| 4B | 6X40 | 0 | 2-4-2 | Y | 4 | Y | Y | - | - | 10 | - | - |
| 5A | 6X40 | 0 | 2-4-2 | Y | 5 | Y | Y | - | - | - | - | - |
| 5B | 6X40 | 0 | 2-4-2 | Y | 5 | Y | Y | - | - | - | - | - |
| 5C | 6X40 | 0 | 2-4-2 | Y | 5 | Y | Y | - | - | 15 | - | Y |
| 5D | 6X40 | 0 | 2-4-2 | Y | 5 | Y | Y | - | - | 15 | - | Y |
| 6A,6B,6C | 6X6 | 70 | 4 | Y | 6 | Y | Y | - | - | - | - | Y |
| S07 | 6X6 | +140 | 4 | Y | - | - | - | - | - | - | Y | Y |
| S08 | 6X6 | +140 | 4 | Y | - | - | - | - | - | - | Y | Y |
| S09 | 6X6 | +140 | 4 | Y | - | - | - | - | - | - | Y | Y |

## 6 Phase
## Fully Actuated
## US 421 (King Street) Closed Loop System

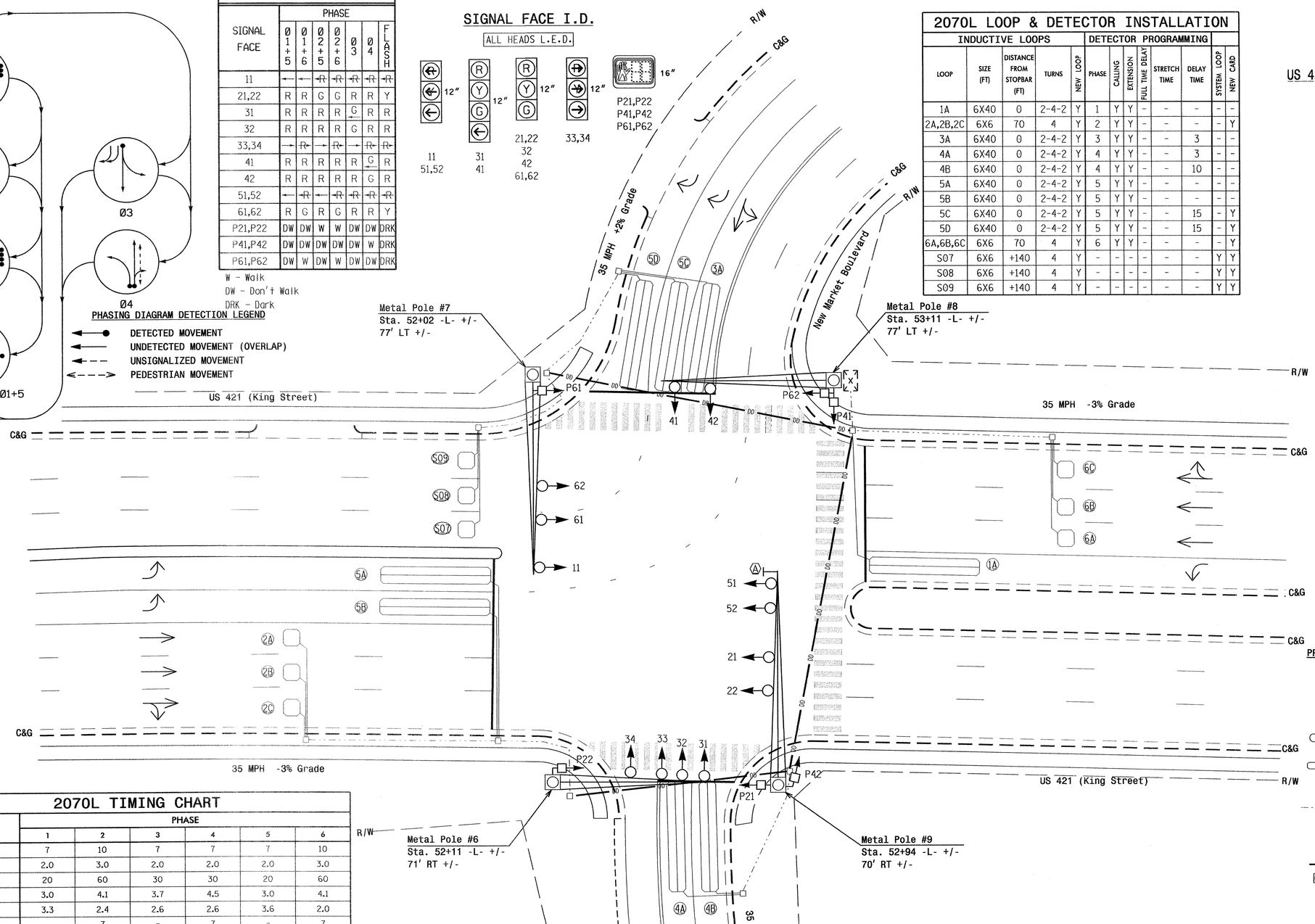


## NOTES

1. Refer to "Roadway Standard Drawings NCDOT" dated July 2006 and "Standard Specifications for Roads and Structures" dated July 2006.
2. Do not program signal for late night flashing operation unless otherwise directed by the Engineer.
3. Phase 1 or phase 5 may be lagged.
4. The order of phase 3 and phase 4 may be reversed.
5. Set all detector units to presence mode.
6. Omit "WALK" and flashing "DON'T WALK" with no pedestrian calls.
7. Program pedestrian heads to countdown the flashing "Don't Walk" time only.
8. Maximum times shown in timing chart are for free-run operation only. Coordinated signal system timing values supersede these values.
9. Closed loop system data: Controller Asset #1010.

## LEGEND

| PROPOSED | | EXISTING |
|---|---|---|
| | Traffic Signal Head | |
| | Modified Signal Head | N/A |
| | Sign | |
| | Pedestrian Signal Head With Push Button & Sign | |
| | Signal Pole with Guy | |
| | Signal Pole with Sidewalk Guy | |
| | Inductive Loop Detector | |
| | Controller & Cabinet | |
| | Junction Box | |
| | 2-in Underground Conduit | |
| N/A | Right of Way | |
| | Directional Arrow | |
| | Pavement Marking Arrow | |
| | Directional Drill | N/A |
| | Metal Pole with Mastarm | |
| | "U-TURN YIELD TO RIGHT TURN" Sign (R10-16) | |

## 2070L TIMING CHART

| FEATURE | PHASE 1 | 2 | 3 | 4 | 5 | 6 |
|---|---|---|---|---|---|---|
| Min Green 1 * | 7 | 10 | 7 | 7 | 7 | 10 |
| Extension 1 * | 2.0 | 3.0 | 2.0 | 2.0 | 2.0 | 3.0 |
| Max Green 1 * | 20 | 60 | 30 | 30 | 20 | 60 |
| Yellow Clearance | 3.0 | 4.1 | 3.7 | 4.5 | 3.0 | 4.1 |
| Red Clearance | 3.3 | 2.4 | 2.6 | 2.6 | 3.6 | 2.0 |
| Walk 1 * | - | 7 | - | 7 | - | 7 |
| Don't Walk 1 | - | 13 | - | 23 | - | 20 |
| Seconds Per Actuation * | - | - | - | - | - | - |
| Max Variable Initial * | - | - | - | - | - | - |
| Time Before Reduction * | - | - | - | - | - | - |
| Time To Reduce * | - | - | - | - | - | - |
| Minimum Gap | - | - | - | - | - | - |
| Recall Mode | - | MIN RECALL | - | - | - | MIN RECALL |
| Vehicle Call Memory | - | YELLOW | - | - | - | YELLOW |
| Dual Entry | - | - | - | - | - | - |
| Simultaneous Gap | ON | ON | ON | ON | ON | ON |

* These values may be field adjusted. Do not adjust Min Green and Extension times for phases 2 and 6 lower than what is shown. Min Green for all other phases should not be lower than 4 seconds.

Signal Upgrade - Final

Prepared in the Offices of:
Traffic Engineering and Safety Systems Branch
Signal and Geometrics Section
750 N. Greenfield Pkwy, Garner, NC 27529

SCALE 0 20 1"=20'

US 421 (King Street)
at
New Market Boulevard / Forest Hill Drive

Division 11 Watauga County Boone

PLAN DATE: November 2008 REVIEWED BY: J.P. Galloway
PREPARED BY: Z.W. Little REVIEWED BY:

| REVISIONS | INIT. | DATE |
|---|---|---|
| | | |

SEAL
NORTH CAROLINA PROFESSIONAL SEAL 30530 ENGINEER ZACHARY W. LITTLE
SIGNATURE 12/16/08 DATE
SIG. INVENTORY NO. 11-1010

16-DEC-2008 16:44
st#:ts signals#workgroups#tp projects#u-4020#signals#designs#signals#11-1010#111010.dgn
zm:title

| PROJECT REFERENCE NO. | SHEET NO. |
|---|---|
| U-4020 | Sig.33 |

# EDI MODEL 2010ECL-NC CONFLICT MONITOR PROGRAMMING DETAIL

*(remove jumpers and set switches as shown)*

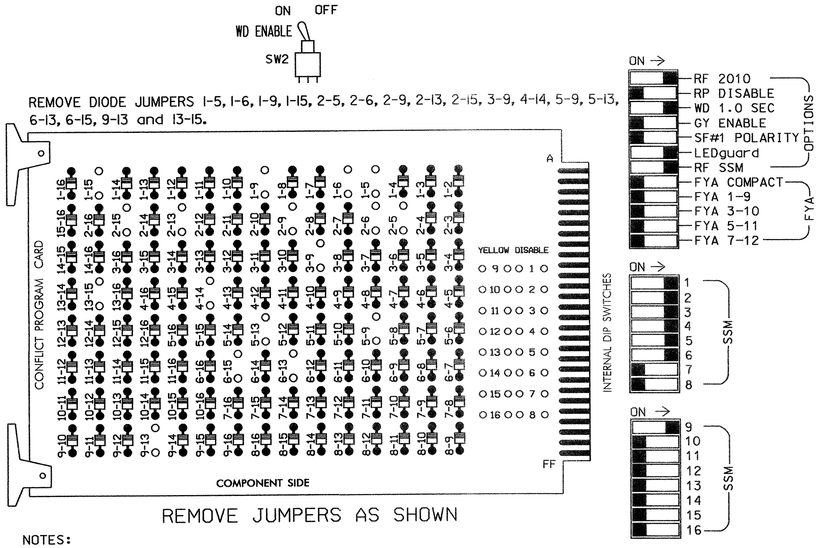


REMOVE DIODE JUMPERS 1-5, 1-6, 1-9, 1-15, 2-5, 2-6, 2-9, 2-13, 2-15, 3-9, 4-14, 5-9, 5-13, 6-13, 6-15, 9-13 and 13-15.

REMOVE JUMPERS AS SHOWN

■ = DENOTES POSITION OF SWITCH

NOTES:

1. Card is provided with all diode jumpers in place. Removal of any jumper allows its channels to run concurrently.
2. Make sure jumpers SEL2-SEL5 are present on the monitor board.

## NOTES

1. To prevent "flash-conflict" problems, insert red flash program blocks for all unused vehicle load switches in the output file. The installer shall verify that signal heads flash in accordance with the Signal Plans.
2. Ensure that Red Enable is active at all times during normal operation. To prevent Red Failures on unused monitor channels, tie unused red monitor inputs 7,8,10, 11,12,13,14,15 & 16 to load switch AC+ per the cabinet manufacturer's instructions.
3. Program phases 2 and 6, on the controller unit, for Start Up In Green.
4. Enable Simultaneous Gap-Out, on the controller unit, for all phases.
5. Program phases 2, 4, 6 for 'STARTUP PED CALL'.
6. The cabinet and controller are part of the US 421 (King Street) Closed Loop System.

CONTROLLER.....CONTRACTOR SUPPLIED 2070L
CABINET.....CONTRACTOR SUPPLIED 332
SOFTWARE.....ECONOLITE OASIS
CABINET MOUNT.....BASE
OUTPUT FILE POSITIONS...18 (12-STD, 6-AUX)
LOAD SWITCHES USED.....S1,S2,S2P,S3,S4,S4P,S5,S6,S6P,S9
PHASES USED.....1,2,2PED,3,4,4PED,5,6,6PED
OVERLAPS.....OLA= 3+5

## SIGNAL HEAD HOOK-UP CHART

| LOAD SWITCH NO. | S1 | S2 | S2P | S3 | | S4 | | S4P | S5 | S6 | S6P | S7 | S8 | S8P | S9 | S10 | S11 | S12 | S13 | S14 |
|---|---|---|---|---|---|---|---|---|---|---|---|---|---|---|---|---|---|---|---|---|
| PHASE | 1 | 2 | 2 PED | 3 | | 4 | | 4 PED | 5 | 6 | 6 PED | 7 | 8 | 8 PED | ✱ OLA | OLB | SPARE | OLC | OLD | SPARE |
| SIGNAL HEAD NO. | 11 | 21,22 | P21, P22 | 31 | 32 | 41 | 42 | P41, P42 | 51,52 | 61,62 | P61, P62 | NU | NU | NU | 33,34 | NU | NU | NU | NU | NU |
| RED | | 128 | | 116 | 116 | 101 | 101 | | | 134 | | | | | | | | | | |
| YELLOW | | 129 | | 117 | 117 | 102 | 102 | | | 135 | | | | | | | | | | |
| GREEN | | 130 | | 118 | 118 | 103 | 103 | | | 136 | | | | | | | | | | |
| RED ARROW | 125 | | | | | | | | 131 | | | | | | A121 | | | | | |
| YELLOW ARROW | 126 | | | | | | | | 132 | | | | | | A122 | | | | | |
| GREEN ARROW | 127 | | | 118 | | 103 | | | 133 | | | | | | A123 | | | | | |
| ✋ | | | 113 | | | | | 104 | | | 119 | | | | | | | | | |
| 🚶 | | | 115 | | | | | 106 | | | 121 | | | | | | | | | |

NU = Not Used

✱ Flash note: Wire overlap "A" to flash on flasher unit 2, ciruit 1.

## INPUT FILE POSITION LAYOUT

*(front view)*

| | | 1 | 2 | 3 | 4 | 5 | 6 | 7 | 8 | 9 | 10 | 11 | 12 | 13 | 14 |
|---|---|---|---|---|---|---|---|---|---|---|---|---|---|---|---|
| FILE "I" | U | SLOT EMPTY | Ø1 1A | Ø2 2A,2B, 2C | SLOT EMPTY | Ø3 3A | Ø4 4A | SLOT EMPTY | SLOT EMPTY | SYS. DET. SØ7 | SLOT EMPTY | SLOT EMPTY | Ø2 PED DC ISOLATOR | Ø6 PED DC ISOLATOR | FS DC ISOLATOR |
| | L | | NOT USED | NOT USED | | NOT USED | Ø4 4B | | | SYS. DET. SØ8 | | | Ø4 PED DC ISOLATOR | NOT USED | ST DC ISOLATOR |
| FILE "J" | U | Ø5 5A | Ø5 5B | Ø5 5D | SLOT EMPTY | SLOT EMPTY | SLOT EMPTY | SLOT EMPTY | SLOT EMPTY | SYS. DET. SØ9 | SLOT EMPTY | SLOT EMPTY | SLOT EMPTY | SLOT EMPTY | SLOT EMPTY |
| | L | NOT USED | Ø5 5C | Ø6 6A,6B, 6C | | | | | | NOT USED | | | | | |

EX.: 1A, 2A, ETC. = LOOP NO.'S

FS = FLASH SENSE
ST = STOP TIME

## INPUT FILE CONNECTION & PROGRAMMING CHART

| LOOP NO. | LOOP TERMINAL | INPUT FILE POS. | PIN NO. | INPUT ASSIGNMENT NO. | DETECTOR NO. | NEMA PHASE | CALL | EXTEND | FULL TIME DELAY | STRETCH TIME | DELAY TIME |
|---|---|---|---|---|---|---|---|---|---|---|---|
| 1A | TB2-5,6 | I2U | 39 | 1 | 2 | 1 | Y | Y | | | |
| 2A,2B,2C | TB2-9,10 | I3U | 63 | 25 | 32 | 2 | Y | Y | | | |
| 3A | TB4-5,6 | I5U | 58 | 20 | 3 | 3 | Y | Y | | | 3 |
| 4A | TB4-9,10 | I6U | 41 | 3 | 4 | 4 | Y | Y | | | 3 |
| 4B | TB4-11,12 | I6L | 45 | 7 | 14 | 4 | Y | Y | | | 10 |
| ✱SØ7 | TB6-9,10 | I9U | 60 | 22 | 11 | SYS | | | | | |
| ✱SØ8 | TB6-11,12 | I9L | 62 | 24 | 13 | SYS | | | | | |
| 5A | TB3-1,2 | J1U | 55 | 17 | 5 | 5 | Y | Y | | | |
| 5B | TB3-5,6 | J2U | 40 | 2 | 6 | 5 | Y | Y | | | |
| 5C | TB3-7,8 | J2L | 44 | 6 | 16 | 5 | Y | Y | | | 15 |
| 5D | TB3-9,10 | J3U | 64 | 26 | 36 | 5 | Y | Y | | | 15 |
| 6A,6B,6C | TB3-11,12 | J3L | 77 | 39 | 46 | 6 | Y | Y | | | |
| ✱SØ9 | TB7-9,10 | J9U | 59 | 21 | 15 | SYS | | | | | |
| PED PUSH BUTTONS | | | | | | | | | | | |
| P21,P22 | TB8-4,6 | I12U | 67 | 29 | PED 2 | 2 PED | | | | | |
| P41,P42 | TB8-5,6 | I12L | 69 | 31 | PED 4 | 4 PED | | | | | |
| P61,P62 | TB8-7,9 | I13U | 68 | 30 | PED 6 | 6 PED | | | | | |

NOTE:
INSTALL DC ISOLATORS IN INPUT FILE SLOTS I12 AND I13.

✱ System detector only. Remove the vehicle phase assigned to this detector in the default programming.

INPUT FILE POSITION LEGEND: J2L
FILE J
SLOT 2
LOWER

## OVERLAP PROGRAMMING DETAIL

*(program controller as shown below)*

FROM MAIN MENU PRESS '8' (OVERLAPS), THEN '1' (VEHICLE OVERLAP SETTINGS).

```
PAGE 1: VEHICLE OVERLAP 'A' SETTINGS
PHASE:          ¦123456789101112131415 16
VEH OVL PARENTS:¦  X X
VEH OVL NOT VEH:¦
VEH OVL NOT PED:¦
VEH OVL GRN EXT:¦
STARTUP COLOR: _ RED  _ YELLOW  _ GREEN
FLASH COLORS:  _ RED  _ YELLOW  _ GREEN
SELECT VEHICLE OVERLAP OPTIONS:   (Y/N)
FLASH YELLOW IN CONTROLLER FLASH?...N
GREEN EXTENSION (0-255 SEC).........0
YELLOW CLEAR (0=PARENT,3-25.5 SEC)..0.0
RED CLEAR (0=PARENT,0.1-25.5 SEC)...0.0
OUTPUT AS PHASE # (0=NONE, 1-16)....0
```

OVERLAP PROGRAMMING COMPLETE

## COUNTDOWN PEDESTRIAN SIGNAL OPERATION

Countdown Ped Signals are required to display timing only during Ped Clearance Interval. Consult Ped Signal Module user's manual for instructions on selecting this feature.

THIS ELECTRICAL DETAIL IS FOR
THE SIGNAL DESIGN: 11-1010
DESIGNED: November 2008
SEALED: 12-16-08
REVISED: N/A

Signal Upgrade - Final

ELECTRICAL AND PROGRAMMING DETAILS FOR:

Prepared in the Offices of:
Traffic Engineering and Safety Systems Branch
Signals Management Section
750 N. Greenfield Pkwy, Garner, NC 27529

US 421 (King Street)
at
New Market Boulevard / Forest Hill Drive

Division 11 Watauga County Boone

| PLAN DATE: 12-02-08 | REVIEWED BY: D.T. Joyce |
|---|---|
| PREPARED BY: D.H. Spaulding | REVIEWED BY: |

| REVISIONS | INIT. | DATE |
|---|---|---|
| | | |

SEAL
NORTH CAROLINA PROFESSIONAL SEAL 022013 ENGINEER GEORGE C. BROWN
George C. Brown 12/30/08
SIGNATURE DATE
SIG. INVENTORY NO. 11-1010

30-DEC-2008 11:29
s:\its_signals\workgroups\sig mon\spaulding\in-progress\11010_smu_ele_2008xx.dgn
dspaulding

## Design Loading for METAL POLE NO. 6

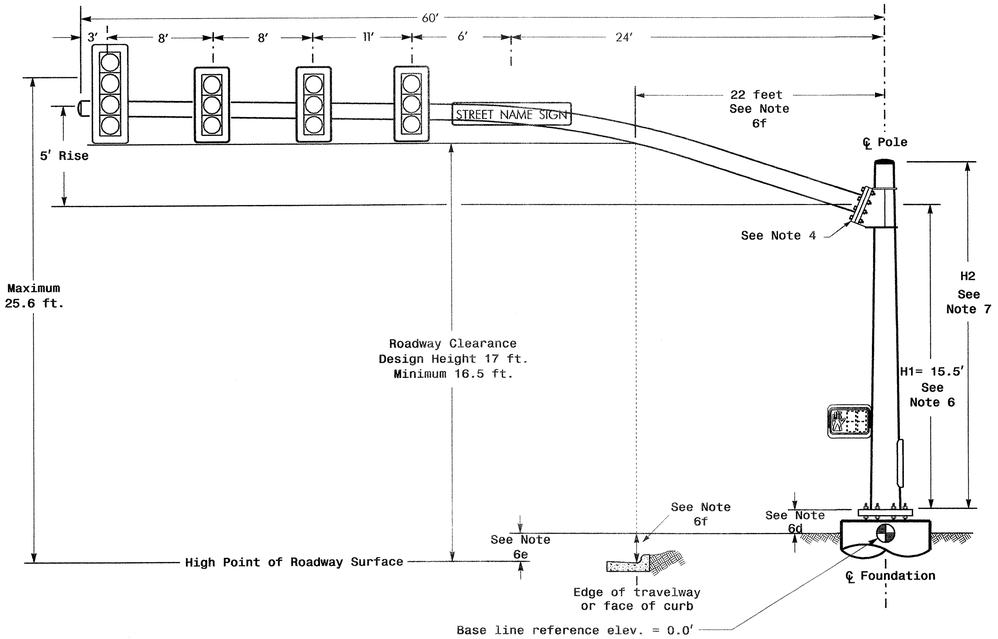


ELEVATION VIEW

## Design Loading for METAL POLE NO. 7

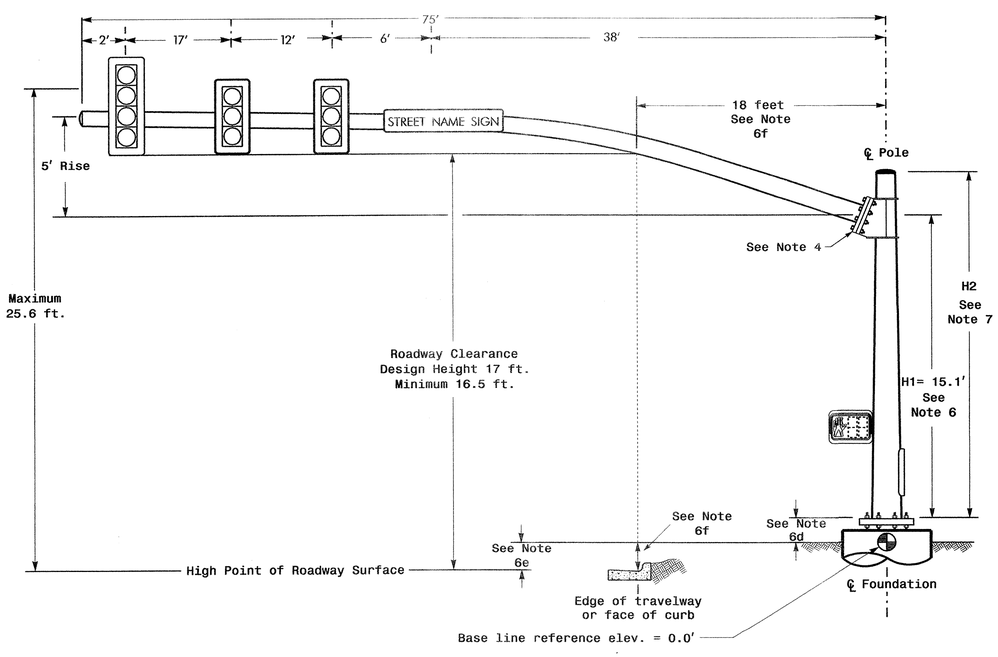


Elevation View

## SPECIAL NOTE

The contractor is responsible for verifying that the mast arm attachment height (H1) will provide the "Design Height" clearance from the roadway before submitting final shop drawings for approval. Verify elevation data below which was obtained by field measurement or from available project survey data.

## Elevation Data for Mast Arm Attachment (H1)

| Elevation Differences for: | Pole 6 | Pole 7 |
|---|---|---|
| Baseline reference point at ℄ Foundation @ ground level | 0.0 ft. | 0.0 ft. |
| Elevation difference at High point of roadway surface | +1.5 ft. | +1.1 ft. |
| Elevation difference at Edge of travelway or face of curb | +0.9 ft. | +0.2 ft. |

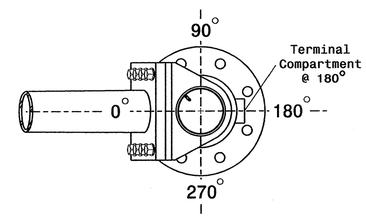


POLE RADIAL ORIENTATION

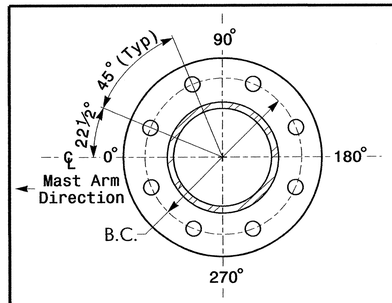


8 BOLT BASE PLATE DETAIL

See Note 5

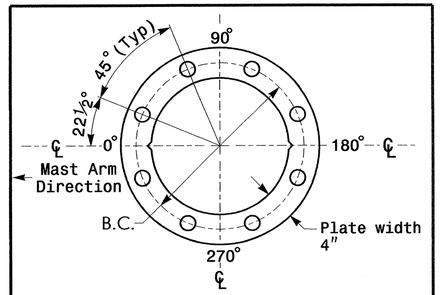


BASE PLATE TEMPLATE & ANCHOR BOLT LOCK PLATE DETAIL

For 8 Bolt Base Plate

## MAST ARM LOADING SCHEDULE

| LOADING SYMBOL | DESCRIPTION | AREA | SIZE | WEIGHT |
|---|---|---|---|---|
| | SIGNAL HEAD 12"-4 SECTION-WITH BACKPLATE AND ASTRO-BRAC | 11.5 S.F. | 25.5" W X 66.0" L | 74 LBS |
| | SIGNAL HEAD 12"-3 SECTION-WITH BACKPLATE AND ASTRO-BRAC | 9.3 S.F. | 25.5" W X 52.5" L | 60 LBS |
| STREET NAME SIGN | STREET NAME SIGN RIGID MOUNTED WITH ASTRO-SIGN-BRAC | 12.0 S.F. | 18.0" W X 96.0" L | 27 LBS |
| | PEDESTRIAN SIGNAL HEAD WITH MOUNTING HARDWARE | 2.2 S.F. | 18.5" W X 17.0" L | 21 LBS |

## NOTES

Design Reference Material

1. Design the traffic signal structure and foundation in accordance with:
   - The 4th Edition 2001 AASHTO "Standard Specifications for Structural Supports for Highway Signs, Luminaires, and Traffic Signals, including all of the latest interim revisions.
   - The 2006 NCDOT "Standard Specifications for Roads and Structures". The latest addenda to these specifications can be found in the traffic signal project special provisions.
   - The 2006 NCDOT Roadway Standard Drawings.

Design Requirements

2. Design the traffic signal structure using the loading conditions shown in the elevation views. These are anticipated worst case "Design loads" and may not represent the actual loads that will be applied at the time of the installation. The contractor should refer to the traffic signal plans for the actual loads that will be applied at the time of the installation.
3. Design all signal supports using stress ratios that do not exceed 0.9.
4. A clamp-type bolted mast arm-to-pole connection may be used instead of the welded ring stiffened box connection shown as long as the connection meets all of the design requirements.
5. Design base plate with 8 anchor bolt holes. Provide 2 inch x 60 inch anchor bolts.
6. The mast arm attachment height (H1) shown is based on the following design assumptions:
   a. Nominal vertical rise in mast arm is 5 feet as measured from the centerline of the arm base to the centerline of the free end of the arm.
   b. Signal heads attached to the mast arm are rigid mounted and vertically centered on the arm.
   c. The roadway clearance height for design is as shown in the elevation views.
   d. The top of the pole base plate is .75 feet above the ground elevation.
   e. Refer to the Elevation Data chart for elevation differences between the proposed foundation ground level and the high point on the roadway.
   f. Provide horizontal distance from proposed centerline of foundation to edge of travelway. Refer to the Elevation Data chart above for elevation difference between the proposed foundation ground level and the edge of travelway. This information is necessary when arched arms are specified to ensure that the roadway clearance is maintained at the edge of the travelway and to assist in the camber design of the mast arm.
7. The pole manufacturer will determine the total height (H2) of each pole using the greater of the following:
   - Mast arm attachment height (H1) plus 2 feet, or
   - H1 plus ½ of the total height of the mast arm attachment assembly plus 1 foot.
8. If pole location adjustments are required, the contractor must gain approval from the engineer as this may affect the mast arm lengths and arm attachment heights. The contractor may contact the Signals & Geometrics Structural Engineer for assistance at (919) 773-2800.
9. The contractor is responsible for verifying that the mast arm length shown will allow proper positioning of the signal heads over the roadway.
10. The contractor is responsible for providing soil penetration testing data (SPT) to the pole manufacturer so site specific foundations can be designed.

NCDOT Wind Zone 5 (120 mph)

Prepared in the Offices of:
Traffic Engineering and Safety Systems Branch
Signals and Geometrics Section
750 N. Greenfield Pkwy, Garner, NC 27529

US 421 - US 321/ (King Street)
at
New Market Boulvard/
Forest Hill Drive

Division 11 Watauga County Boone

PLAN DATE: December 2008 REVIEWED BY:
PREPARED BY: Jerry Yaravitz REVIEWED BY:

SCALE 0 N/A N/A

| REVISIONS | INIT. | DATE |
|---|---|---|
| | | |

SEAL
NORTH CAROLINA PROFESSIONAL SEAL 30530 ENGINEER
SIGNATURE 1/5/09 DATE
SIG. INVENTORY NO. 11-1010

05-JAN-2009 11:16
s:\ts\signals\workgroups\tip projects\u-4020\signals\design\signals\11-1010\archsingle0907.dgn
jyaravitz

## Design Loading for METAL POLE NO. 8

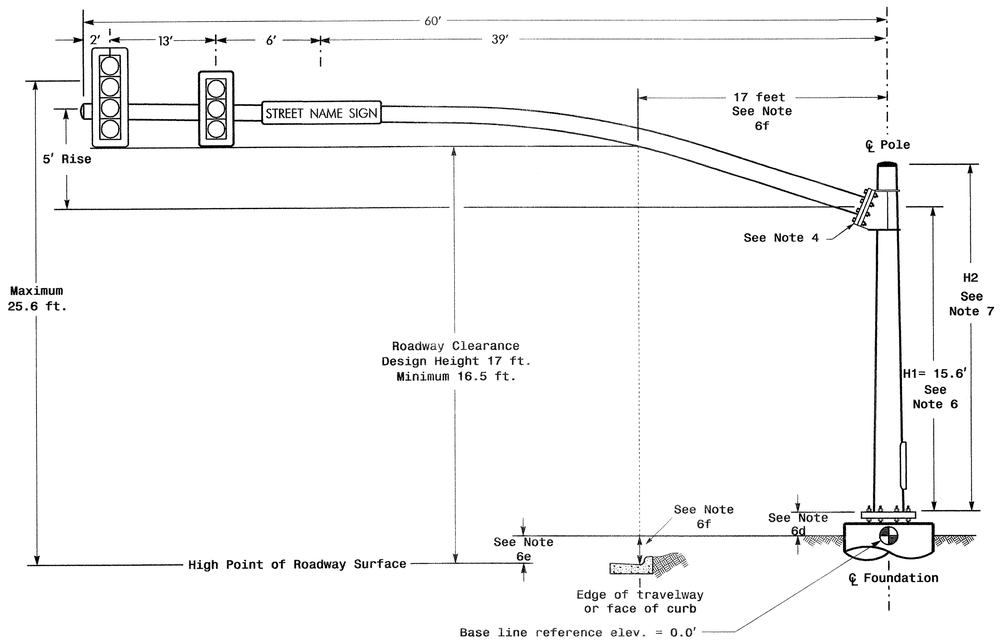


ELEVATION VIEW

## Design Loading for METAL POLE NO. 9

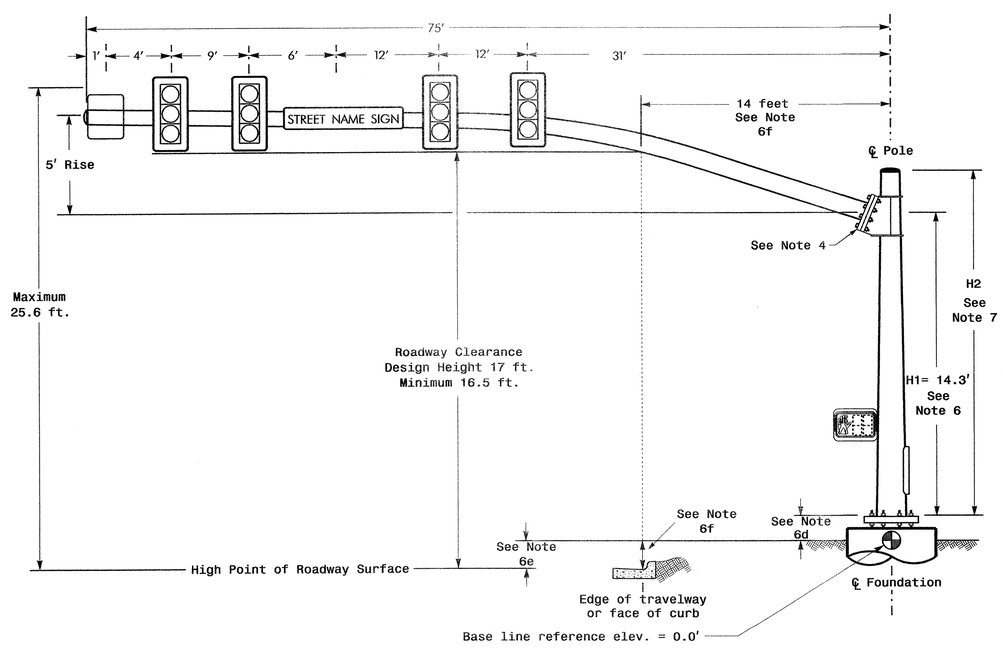


Elevation View

## SPECIAL NOTE

The contractor is responsible for verifying that the mast arm attachment height (H1) will provide the "Design Height" clearance from the roadway before submitting final shop drawings for approval. Verify elevation data below which was obtained by field measurement or from available project survey data.

## Elevation Data for Mast Arm Attachment (H1)

| Elevation Differences for: | Pole 8 | Pole 9 |
|---|---|---|
| Baseline reference point at ℄ Foundation @ ground level | 0.0 ft. | 0.0 ft. |
| Elevation difference at High point of roadway surface | +1.6 ft. | +0.3 ft. |
| Elevation difference at Edge of travelway or face of curb | +0.8 ft. | -0.7 ft. |

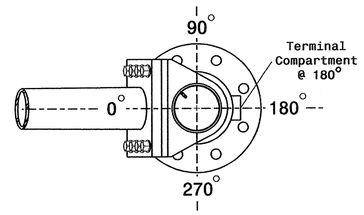


POLE RADIAL ORIENTATION

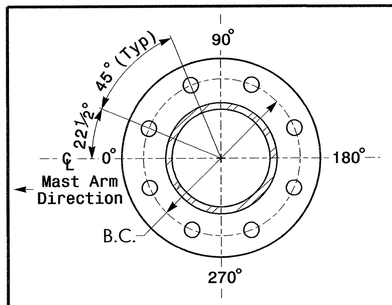


8 BOLT BASE PLATE DETAIL

See Note 5

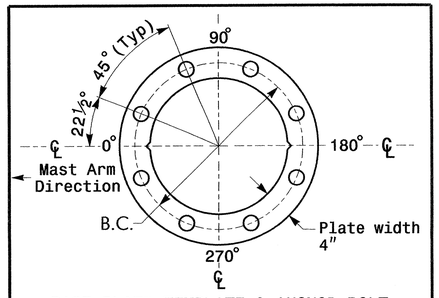


BASE PLATE TEMPLATE & ANCHOR BOLT LOCK PLATE DETAIL

For 8 Bolt Base Plate

## MAST ARM LOADING SCHEDULE

| LOADING SYMBOL | DESCRIPTION | AREA | SIZE | WEIGHT |
|---|---|---|---|---|
| | SIGNAL HEAD 12"-4 SECTION-WITH BACKPLATE AND ASTRO-BRAC | 11.5 S.F. | 25.5" W X 66.0" L | 74 LBS |
| | SIGNAL HEAD 12"-3 SECTION-WITH BACKPLATE AND ASTRO-BRAC | 9.3 S.F. | 25.5" W X 52.5" L | 60 LBS |
| | SIGN RIGID MOUNTED WITH ASTRO-SIGN-BRAC | 5.0 S.F. | 24.0" W X 30.0" L | 11 LBS |
| STREET NAME SIGN | STREET NAME SIGN RIGID MOUNTED WITH ASTRO-SIGN-BRAC | 12.0 S.F. | 18.0" W X 96.0" L | 27 LBS |
| | PEDESTRIAN SIGNAL HEAD WITH MOUNTING HARDWARE | 2.2 S.F. | 18.5" W X 17.0" L | 21 LBS |

## NOTES

Design Reference Material

1. Design the traffic signal structure and foundation in accordance with:
   - The 4th Edition 2001 AASHTO "Standard Specifications for Structural Supports for Highway Signs, Luminaires, and Traffic Signals, including all of the latest interim revisions.
   - The 2006 NCDOT "Standard Specifications for Roads and Structures". The latest addenda to these specifications can be found in the traffic signal project special provisions.
   - The 2006 NCDOT Roadway Standard Drawings.

Design Requirements

2. Design the traffic signal structure using the loading conditions shown in the elevation views. These are anticipated worst case "Design loads" and may not represent the actual loads that will be applied at the time of the installation. The contractor should refer to the traffic signal plans for the actual loads that will be applied at the time of the installation.
3. Design all signal supports using stress ratios that do not exceed 0.9.
4. A clamp-type bolted mast arm-to-pole connection may be used instead of the welded ring stiffened box connection shown as long as the connection meets all of the design requirements.
5. Design base plate with 8 anchor bolt holes. Provide 2 inch x 60 inch anchor bolts.
6. The mast arm attachment height (H1) shown is based on the following design assumptions:
   a. Nominal vertical rise in mast arm is 5 feet as measured from the centerline of the arm base to the centerline of the free end of the arm.
   b. Signal heads attached to the mast arm are rigid mounted and vertically centered on the arm.
   c. The roadway clearance height for design is as shown in the elevation views.
   d. The top of the pole base plate is .75 feet above the ground elevation.
   e. Refer to the Elevation Data chart for elevation differences between the proposed foundation ground level and the high point on the roadway.
   f. Provide horizontal distance from proposed centerline of foundation to edge of travelway. Refer to the Elevation Data chart above for elevation difference between the proposed foundation ground level and the edge of travelway. This information is necessary when arched arms are specified to ensure that the roadway clearance is maintained at the edge of the travelway and to assist in the camber design of the mast arm.
7. The pole manufacturer will determine the total height (H2) of each pole using the greater of the following:
   - Mast arm attachment height (H1) plus 2 feet, or
   - H1 plus ½ of the total height of the mast arm attachment assembly plus 1 foot.
8. If pole location adjustments are required, the contractor must gain approval from the engineer as this may affect the mast arm lengths and arm attachment heights. The contractor may contact the Signals & Geometrics Structural Engineer for assistance at (919) 773-2800.
9. The contractor is responsible for verifying that the mast arm length shown will allow proper positioning of the signal heads over the roadway.
10. The contractor is responsible for providing soil penetration testing data (SPT) to the pole manufacturer so site specific foundations can be designed.

NCDOT Wind Zone 5 (120 mph)

Prepared in the Offices of:
Traffic Engineering and Safety Systems Branch
Signals and Geometrics Section
DIVISION OF HIGHWAYS
DEPARTMENT OF TRANSPORTATION
750 N. Greenfield Pkwy, Garner, NC 27529

US 421 - US 321 / (King Street)
at
New Market Boulvard/
Forest Hill Drive

Division 11 Watauga County Boone

PLAN DATE: December 2008 REVIEWED BY:
PREPARED BY: Jerry Yaravitz REVIEWED BY:

SCALE 0 N/A N/A

| REVISIONS | INIT. | DATE |
|---|---|---|
| | | |

SEAL
NORTH CAROLINA PROFESSIONAL SEAL 30530 ENGINEER ZACHARY M. LITTLE

SIGNATURE 1/5/09 DATE

SIG. INVENTORY NO. 11-1010

05-JAN-2009 11:17
s:\ts signals\workgroups\tip projects\u-4020\signals\design\signals\11-1010\copy of archsignle0907.dgn
jyaravitz

| PROJECT REFERENCE NO. | SHEET NO. |
|---|---|
| U-4020 | Sig.36 |

## PHASING DIAGRAM

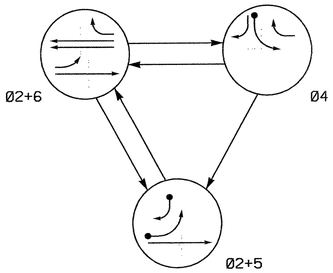


PHASING DIAGRAM DETECTION LEGEND

- DETECTED MOVEMENT
- UNDETECTED MOVEMENT (OVERLAP)
- UNSIGNALIZED MOVEMENT
- PEDESTRIAN MOVEMENT

## TABLE OF OPERATION

| SIGNAL FACE | PHASE Ø2+5 | PHASE Ø2+6 | PHASE Ø4 | PHASE FLASH |
|---|---|---|---|---|
| 21 | G | G | R | Y |
| 22 | G | G | R | Y |
| 41 | R | R | G | R |
| 42 | R | R | G | R |
| 61 | R | G | R | Y |
| 62 | R | G | R | Y |

## SIGNAL FACE I.D.

All Heads L.E.D.




## 2070L LOOP & DETECTOR INSTALLATION

| INDUCTIVE LOOPS | | | | | DETECTOR PROGRAMMING | | | | | | | |
|---|---|---|---|---|---|---|---|---|---|---|---|---|
| LOOP | SIZE (FT) | DISTANCE FROM STOPBAR (FT) | TURNS | NEW LOOP | PHASE | CALLING | EXTENSION | FULL TIME DELAY | STRETCH TIME | DELAY TIME | SYSTEM LOOP | NEW CARD |
| 4A | 6X40 | 0 | 2-4-2 | Y | 4 | Y | Y | — | — | 3 | — | Y |
| 5A | 6X40 | 0 | 2-4-2 | Y | 5 | Y | Y | — | — | 15 | — | Y |
| 5B | 6X40 | 0 | 2-4-2 | Y | 5 | Y | Y | — | — | 15 | — | Y |
| 5C | 6X6 | 0 | 2-4-2 | Y | 5 | Y | Y | — | — | 15 | — | Y |

3 Phase
Semi-Actuated
(Isolated)

## NOTES

1. Refer to "Roadway Standard Drawings NCDOT" dated July 2006 and "Standard Specifications for Roads and Structures" dated July 2006.
2. Do not program signal for late night flashing operation unless otherwise directed by the Engineer.
3. Set all detector units to presence mode.
4. Locate new cabinet so as not to obstruct sight distance of vehicles turning right on red.

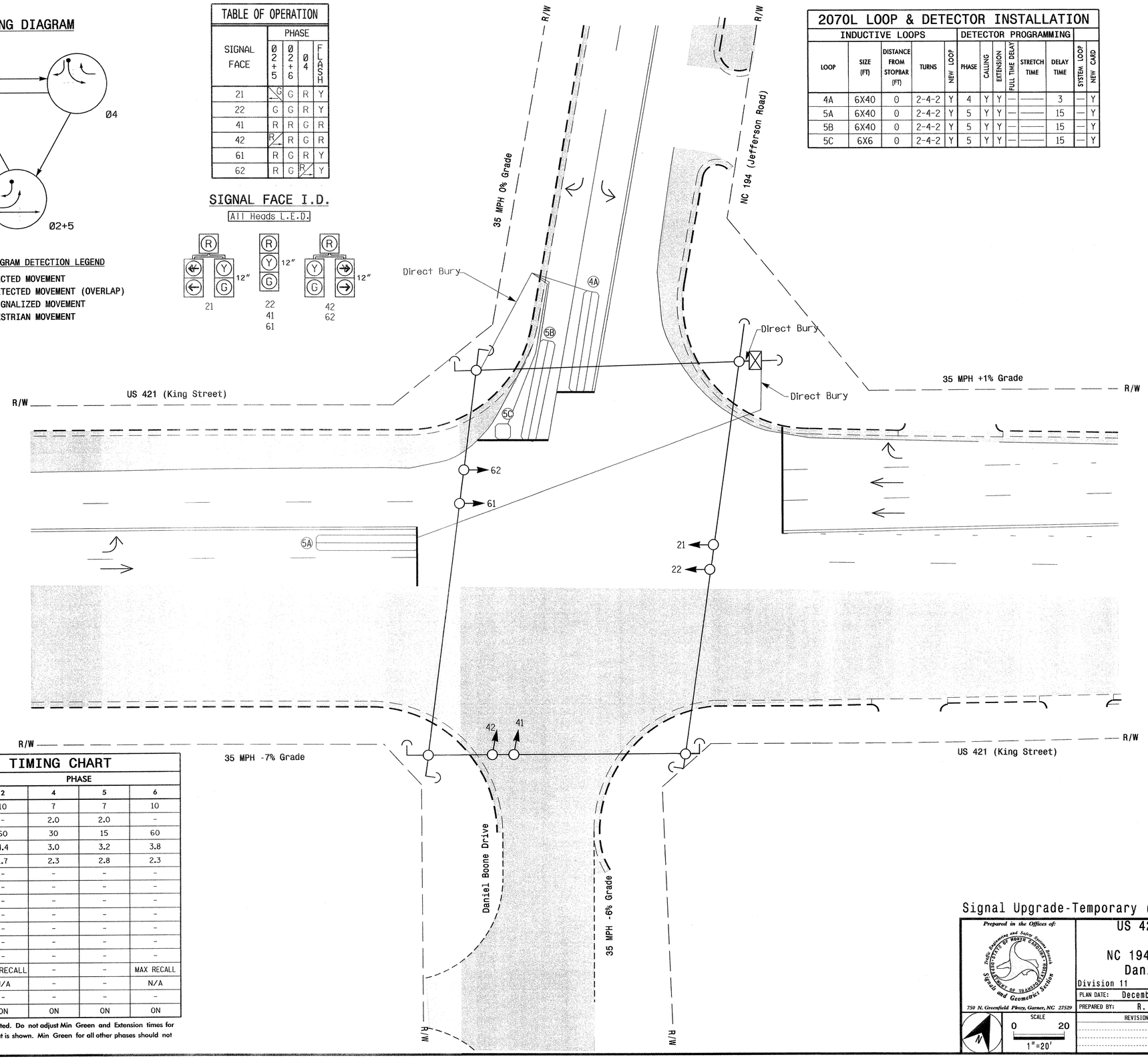


## LEGEND

| PROPOSED | | EXISTING |
|---|---|---|
| | Traffic Signal Head | |
| | Modified Signal Head | N/A |
| | Sign | |
| | Pedestrian Signal Head With Push Button & Sign | |
| | Signal Pole with Guy | |
| | Signal Pole with Sidewalk Guy | |
| | Inductive Loop Detector | |
| | Controller & Cabinet | |
| | Junction Box | |
| | 2-in Underground Conduit | |
| N/A | Right of Way | |
| | Directional Arrow | |

## 2070L TIMING CHART

| FEATURE | PHASE 2 | PHASE 4 | PHASE 5 | PHASE 6 |
|---|---|---|---|---|
| Min Green 1 * | 10 | 7 | 7 | 10 |
| Extension 1 * | - | 2.0 | 2.0 | - |
| Max Green 1 * | 60 | 30 | 15 | 60 |
| Yellow Clearance | 4.4 | 3.0 | 3.2 | 3.8 |
| Red Clearance | 1.7 | 2.3 | 2.8 | 2.3 |
| Walk 1 * | - | - | - | - |
| Don't Walk 1 | - | - | - | - |
| Seconds Per Actuation * | - | - | - | - |
| Max Variable Initial * | - | - | - | - |
| Time Before Reduction * | - | - | - | - |
| Time To Reduce * | - | - | - | - |
| Minimum Gap | - | - | - | - |
| Recall Mode | MAX RECALL | - | - | MAX RECALL |
| Vehicle Call Memory | N/A | - | - | N/A |
| Dual Entry | - | - | - | - |
| Simultaneous Gap | ON | ON | ON | ON |

* These values may be field adjusted. Do not adjust Min Green and Extension times for phases 2 and 6 lower than what is shown. Min Green for all other phases should not be lower than 4 seconds.

Signal Upgrade-Temporary (Phase I Steps 2-5)

Prepared in the Offices of:
Traffic Engineering and Safety Systems Branch
STATE OF NORTH CAROLINA
DEPARTMENT OF TRANSPORTATION
Signals and Geometrics Section
750 N. Greenfield Pkwy, Garner, NC 27529

US 421 (King Street)
at
NC 194 (Jefferson Rd.)/
Daniel Boone Drive

Division 11 Watauga County Boone

| PLAN DATE: December 2008 | REVIEWED BY: |
|---|---|
| PREPARED BY: R. Hough | REVIEWED BY: |

SCALE 0 20 1"=20'

| REVISIONS | INIT. | DATE |
|---|---|---|
| | | |

SEAL
NORTH CAROLINA PROFESSIONAL SEAL 30530 ENGINEER ZACHARY M. LITTLE
SIGNATURE DATE 12/18/08
SIG. INVENTORY NO. 11-0020 T1

17-DEC-2008 15:00
s:\wis signals\workgroups\tip projects\u-4020\signals\design\signals\11-0020\110020t1_sig_dsn_2008xxxx.dgn
jyarovitz

| PROJECT REFERENCE NO. | SHEET NO. |
|---|---|
| U-4020 | Sig.37 |

# EDI MODEL 2010ECL-NC CONFLICT MONITOR PROGRAMMING DETAIL

*(remove jumpers and set switches as shown)*

REMOVE DIODE JUMPERS 2-5 and 2-6.

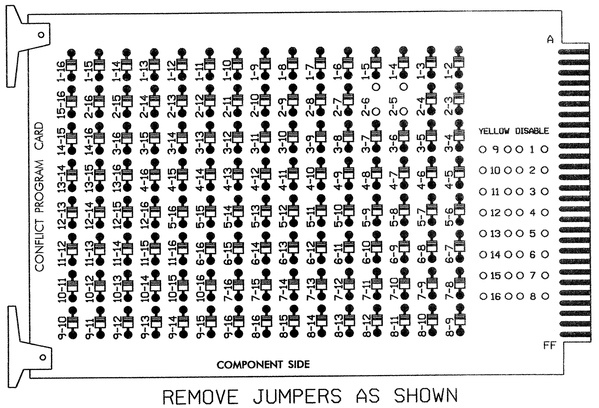


REMOVE JUMPERS AS SHOWN

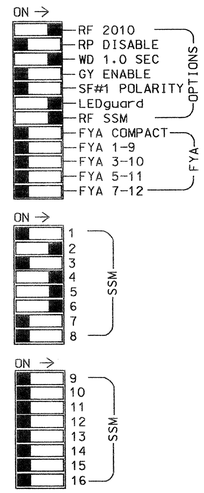


NOTES:

1. Card is provided with all diode jumpers in place. Removal of any jumper allows its channels to run concurrently.
2. Make sure jumpers SEL2-SEL5 are present on the monitor board.

■ = DENOTES POSITION OF SWITCH

## NOTES

1. To prevent "flash-conflict" problems, insert red flash program blocks for all unused vehicle load switches in the output file. The installer shall verify that signal heads flash in accordance with the Signal Plans.
2. Ensure that Red Enable is active at all times during normal operation. To prevent Red Failures on unused monitor channels, tie unused red monitor inputs 1,3,7,8,9, 10,11,12,13,14,15 & 16 to load switch AC+ per the cabinet manufacturer's instructions.
3. Program phases 2 and 6, on the controller unit, for Start Up In Green.
4. Enable Simultaneous Gap-Out, on the controller unit, for all phases.

CONTROLLER.....CONTRACTOR SUPPLIED 2070L
CABINET.....CONTRACTOR SUPPLIED 332
SOFTWARE.....ECONOLITE OASIS
CABINET MOUNT.....BASE
OUTPUT FILE POSITIONS...12
LOAD SWITCHES USED.....S2,S4,S5,S6
PHASES USED.....2,4,5,6
OVERLAPS.....NONE

## SIGNAL HEAD HOOK-UP CHART

| LOAD SWITCH NO. | S1 | S2 | S2P | S3 | S4 | | S4P | S5 | S6 | S6P | S7 | S8 | S8P |
|---|---|---|---|---|---|---|---|---|---|---|---|---|---|
| PHASE | 1 | 2 | 2 PED | 3 | 4 | | 4 PED | 5 | 6 | 6 PED | 7 | 8 | 8 PED |
| SIGNAL HEAD NO. | NU | 21,22 | NU | NU | 41,42 | 62 | NU | 21,42 | 61,62 | NU | NU | NU | NU |
| RED | | 128 | | | 101 | | | * | 134 | | | | |
| YELLOW | | 129 | | | 102 | | | | 135 | | | | |
| GREEN | | 130 | | | 103 | | | | 136 | | | | |
| RED ARROW | | | | | | | | | | | | | |
| YELLOW ARROW | | | | | | 102 | | 132 | | | | | |
| GREEN ARROW | | | | | | 103 | | 133 | | | | | |
| ✋ | | | | | | | | | | | | | |
| 🚶 | | | | | | | | | | | | | |

NU = Not Used

* Denotes install load resistor. See load resistor installation detail this sheet.

## INPUT FILE POSITION LAYOUT

*(front view)*

| | | 1 | 2 | 3 | 4 | 5 | 6 | 7 | 8 | 9 | 10 | 11 | 12 | 13 | 14 |
|---|---|---|---|---|---|---|---|---|---|---|---|---|---|---|---|
| FILE "I" | U | SLOT EMPTY | SLOT EMPTY | SLOT EMPTY | SLOT EMPTY | SLOT EMPTY | Ø4 4A | SLOT EMPTY | SLOT EMPTY | SLOT EMPTY | SLOT EMPTY | SLOT EMPTY | SLOT EMPTY | SLOT EMPTY | FS DC ISOLATOR |
| | L | | | | | | NOT USED | | | | | | | | ST DC ISOLATOR |
| FILE "J" | U | Ø5 5A | Ø5 5B | SLOT EMPTY | SLOT EMPTY | SLOT EMPTY | SLOT EMPTY | SLOT EMPTY | SLOT EMPTY | SLOT EMPTY | SLOT EMPTY | SLOT EMPTY | SLOT EMPTY | SLOT EMPTY | SLOT EMPTY |
| | L | NOT USED | Ø5 5C | | | | | | | | | | | | |

EX.: 1A, 2A, ETC. = LOOP NO.'S

FS = FLASH SENSE
ST = STOP TIME

## INPUT FILE CONNECTION & PROGRAMMING CHART

| LOOP NO. | LOOP TERMINAL | INPUT FILE POS. | PIN NO. | INPUT ASSIGNMENT NO. | DETECTOR NO. | NEMA PHASE | CALL | EXTEND | FULL TIME DELAY | STRETCH TIME | DELAY TIME |
|---|---|---|---|---|---|---|---|---|---|---|---|
| 4A | TB4-9,10 | I6U | 41 | 3 | 4 | 4 | Y | Y | | | 3 |
| 5A | TB3-1,2 | J1U | 55 | 17 | 5 | 5 | Y | Y | | | 15 |
| 5B | TB3-5,6 | J2U | 40 | 2 | 6 | 5 | Y | Y | | | 15 |
| 5C | TB3-7,8 | J2L | 44 | 6 | 16 | 5 | Y | Y | | | 15 |

INPUT FILE POSITION LEGEND: J2L
FILE J
SLOT 2
LOWER

## LOAD RESISTOR INSTALLATION DETAIL

ACCEPTABLE VALUES

| VALUE (ohms) | WATTAGE |
|---|---|
| 1.5K - 1.9K | 25W (min) |
| 2.0K - 3.0K | 10W (min) |

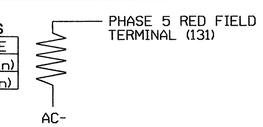


NOTE: The purpose of this resistor is to load the channel red monitor input in order for the Signal Sequence Monitor to use the full signal sequence monitoring capability on channels that do not use the red display in the field.

THIS ELECTRICAL DETAIL IS FOR
THE SIGNAL DESIGN: 11-0020T1
DESIGNED: December 2008
SEALED: 12-18-08
REVISED: N/A

Signal Upgrade - Temporary (Phase I Steps 2-5)

ELECTRICAL AND PROGRAMMING DETAILS FOR:

US 421 (King Street) at NC 194 (Jefferson Road)/ Daniel Boone Drive

Division 11 | Watauga County | Boone

| | | | |
|---|---|---|---|
| PLAN DATE: | 12-16-08 | REVIEWED BY: | D.T. Joyce |
| PREPARED BY: | D.H. Spaulding | REVIEWED BY: | |

| REVISIONS | INIT. | DATE |
|---|---|---|
| | | |

Prepared in the Offices of:
Traffic Engineering and Safety Systems Branch
STATE OF NORTH CAROLINA
DEPARTMENT OF TRANSPORTATION
Signals Management Section
750 N. Greenfield Pkwy, Garner, NC 27529

SEAL
NORTH CAROLINA PROFESSIONAL SEAL 022013 ENGINEER GEORGE C. BROWN
George C. Brown 12/30/08
SIGNATURE DATE
SIG. INVENTORY NO. 11-0020T1

29-DEC-2008 09:35
s:\ITS Signals\Workgroups\Sig Mgmt\Spaulding\In-progress\11002OT1_sm_ele_2008xx.dgn
jloyce

| PROJECT REFERENCE NO. | SHEET NO. |
|---|---|
| U-4020 | Sig.3g |

## PHASING DIAGRAM

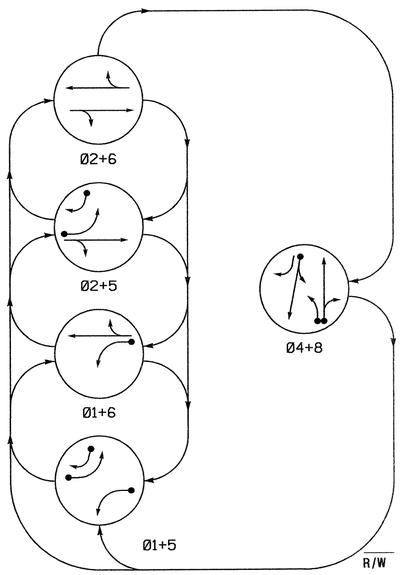


PHASING DIAGRAM DETECTION LEGEND

- DETECTED MOVEMENT
- UNDETECTED MOVEMENT (OVERLAP)
- UNSIGNALIZED MOVEMENT
- PEDESTRIAN MOVEMENT

## TABLE OF OPERATION

| SIGNAL FACE | PHASE 01+5 | 01+6 | 02+5 | 02+6 | 04+8 | FLASH |
|---|---|---|---|---|---|---|
| 11 | ← | ← | ~~R~~ | ~~R~~ | ~~R~~ | ~~R~~ |
| 21, 22 | R | R | G | G | R | Y |
| 41 | R | R | R | R | G | R |
| 42 | R/→ | R | R/→ | R | G | R |
| 51 | ← | ~~R~~ | ← | ~~R~~ | ~~R~~ | ~~R~~ |
| 61, 62 | R | G | R | G | R | Y |
| 81, 82 | R | R | R | R | G | R |

## SIGNAL FACE I.D.

All Heads L.E.D.




## 2070L LOOP & DETECTOR INSTALLATION

| INDUCTIVE LOOPS | | | | | DETECTOR PROGRAMMING | | | | | | |
|---|---|---|---|---|---|---|---|---|---|---|---|
| LOOP | SIZE (FT) | DISTANCE FROM STOPBAR (FT) | TURNS | NEW LOOP | PHASE | CALLING | EXTENSION | FULL TIME DELAY | STRETCH TIME | DELAY TIME | SYSTEM LOOP | NEW CARD |
| 1A | 6X40 | 0 | 2-4-2 | Y | 1 | Y | Y | — | — | — | — | Y |
| 4A | 6X40 | 0 | 2-4-2 | Y | 4 | Y | Y | — | — | 3 | — | — |
| 5A | 6X40 | 0 | 2-4-2 | Y | 5 | Y | Y | — | — | — | — | — |
| 5B | 6X40 | 0 | 2-4-2 | Y | 5 | Y | Y | — | — | 15 | — | — |
| 8A | 6X40 | 0 | 2-4-2 | Y | 8 | Y | Y | — | — | 3 | — | Y |
| 8B | 6X40 | 0 | 2-4-2 | Y | 8 | Y | Y | — | — | 10 | — | Y |

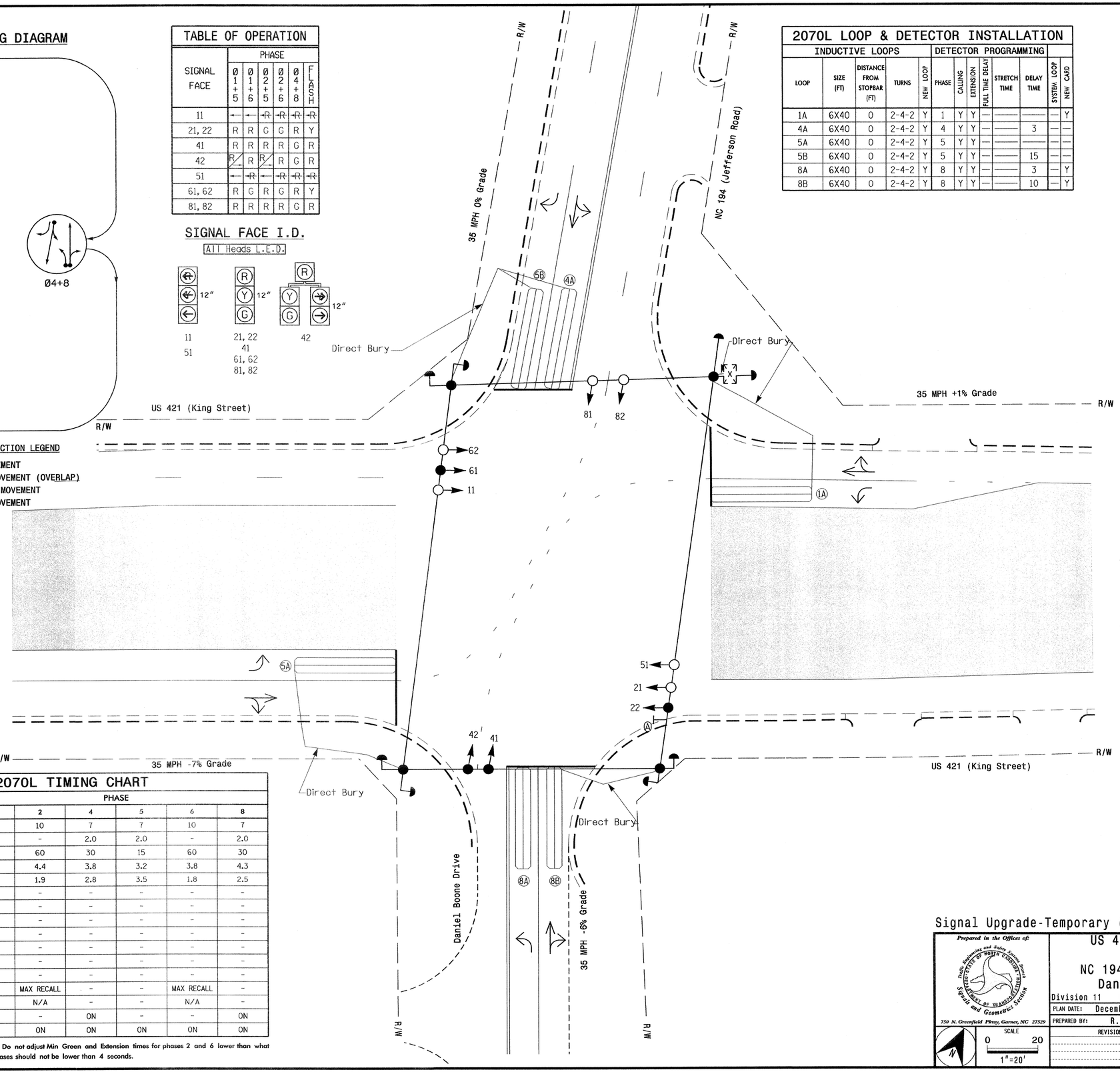


## 2070L TIMING CHART

| FEATURE | PHASE 1 | 2 | 4 | 5 | 6 | 8 |
|---|---|---|---|---|---|---|
| Min Green 1 * | 7 | 10 | 7 | 7 | 10 | 7 |
| Extension 1 * | 2.0 | - | 2.0 | 2.0 | - | 2.0 |
| Max Green 1 * | 15 | 60 | 30 | 15 | 60 | 30 |
| Yellow Clearance | 3.0 | 4.4 | 3.8 | 3.2 | 3.8 | 4.3 |
| Red Clearance | 3.9 | 1.9 | 2.8 | 3.5 | 1.8 | 2.5 |
| Walk 1 * | - | - | - | - | - | - |
| Don't Walk 1 | - | - | - | - | - | - |
| Seconds Per Actuation * | - | - | - | - | - | - |
| Max Variable Initial * | - | - | - | - | - | - |
| Time Before Reduction * | - | - | - | - | - | - |
| Time To Reduce * | - | - | - | - | - | - |
| Minimum Gap | - | - | - | - | - | - |
| Recall Mode | - | MAX RECALL | - | - | MAX RECALL | - |
| Vehicle Call Memory | - | N/A | - | - | N/A | - |
| Dual Entry | - | - | ON | - | - | ON |
| Simultaneous Gap | ON | ON | ON | ON | ON | ON |

* These values may be field adjusted. Do not adjust Min Green and Extension times for phases 2 and 6 lower than what is shown. Min Green for all other phases should not be lower than 4 seconds.

5 Phase
Semi-Actuated
(Isolated)

## NOTES

1. Refer to "Roadway Standard Drawings NCDOT" dated July 2006 and "Standard Specifications for Roads and Structures" dated July 2006.
2. Do not program signal for late night flashing operation unless otherwise directed by the Engineer.
3. Phase 1 or phase 5 may be lagged.
4. Reposition existing signal heads numbered 22 and 61.
5. Set all detector units to presence mode.

## LEGEND

| PROPOSED | | EXISTING |
|---|---|---|
| | Traffic Signal Head | |
| | Modified Signal Head | N/A |
| | Sign | |
| | Pedestrian Signal Head With Push Button & Sign | |
| | Signal Pole with Guy | |
| | Signal Pole with Sidewalk Guy | |
| | Inductive Loop Detector | |
| | Controller & Cabinet | |
| | Junction Box | |
| | 2-in Underground Conduit | |
| N/A | Right of Way | |
| | Directional Arrow | |

Signal Upgrade-Temporary (Phase II Steps 1&2)

Prepared in the Offices of:
Traffic Engineering and Safety Systems Branch
STATE OF NORTH CAROLINA DEPARTMENT OF TRANSPORTATION
Signals and Geometrics Section
750 N. Greenfield Pkwy, Garner, NC 27529

SCALE 0 20 1"=20'

US 421 (King Street)
at
NC 194 (Jefferson Rd.)/
Daniel Boone Drive

Division 11 Watauga County Boone

PLAN DATE: December 2008 REVIEWED BY:
PREPARED BY: R. Hough REVIEWED BY:

| REVISIONS | INIT. | DATE |
|---|---|---|
| | | |

SEAL
NORTH CAROLINA PROFESSIONAL SEAL 30530 ENGINEER ZACHARY M. DITTLE
SIGNATURE 12/19/08 DATE
SIG. INVENTORY NO. 11-0020 T2

18-DEC-2008 14:12
s:\traffic signals\workgroups\tip projects\u-4020\signals\design\signals\11-0020\11-0020T2_sig_dsn_2008mdd.dgn
zmlittle

| PROJECT REFERENCE NO. | SHEET NO. |
|---|---|
| U-4020 | Sig.39 |

# EDI MODEL 2010ECL-NC CONFLICT MONITOR PROGRAMMING DETAIL

*(remove jumpers and set switches as shown)*

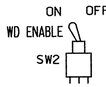


REMOVE DIODE JUMPERS I-5, I-6, 2-5, 2-6 and 4-8.

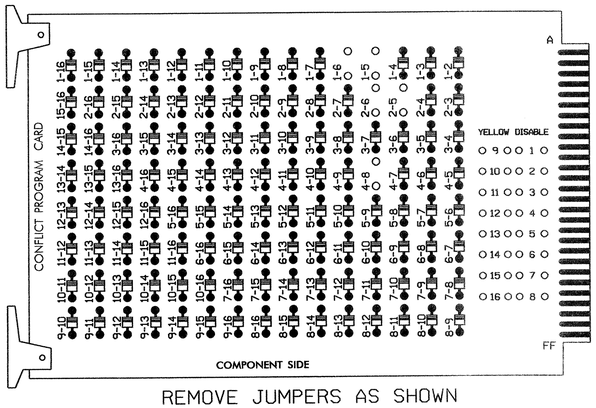


REMOVE JUMPERS AS SHOWN

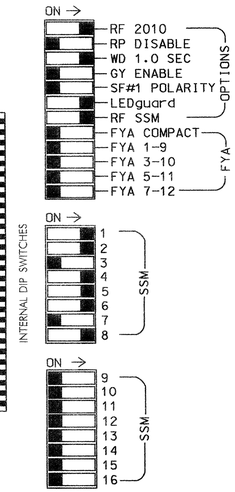


■ = DENOTES POSITION OF SWITCH

NOTES:

1. Card is provided with all diode jumpers in place. Removal of any jumper allows its channels to run concurrently.
2. Make sure jumpers SEL2-SEL5 are present on the monitor board.

## NOTES

1. To prevent "flash-conflict" problems, insert red flash program blocks for all unused vehicle load switches in the output file. The installer shall verify that signal heads flash in accordance with the Signal Plans.
2. Ensure that Red Enable is active at all times during normal operation. To prevent Red Failures on unused monitor channels, tie unused red monitor inputs 3,7,9,10, 11,12,13,14,15 & 16 to load switch AC+ per the cabinet manufacturer's instructions.
3. Program phases 2 and 6, on the controller unit, for Start Up In Green.
4. Enable Simultaneous Gap-Out, on the controller unit, for all phases.
5. Program phases 4 and 8, on the controller unit, for Dual Entry.

CONTROLLER.....CONTRACTOR SUPPLIED 2070L
CABINET.....CONTRACTOR SUPPLIED 332
SOFTWARE.....ECONOLITE OASIS
CABINET MOUNT.....BASE
OUTPUT FILE POSITIONS...12
LOAD SWITCHES USED.....S1,S2,S4,S5,S6,S8
PHASES USED.....1,2,4,5,6,8
OVERLAPS.....NONE

## SIGNAL HEAD HOOK-UP CHART

| LOAD SWITCH NO. | S1 | S2 | S2P | S3 | S4 | S4P | S5 | | S6 | S6P | S7 | S8 | S8P |
|---|---|---|---|---|---|---|---|---|---|---|---|---|---|
| PHASE | 1 | 2 | 2 PED | 3 | 4 | 4 PED | 5 | | 6 | 6 PED | 7 | 8 | 8 PED |
| SIGNAL HEAD NO. | 11 | 21,22 | NU | NU | 41,42 | NU | 51 | 42 | 61,62 | NU | NU | 81,82 | NU |
| RED | | 128 | | | 101 | | | | 134 | | | 107 | |
| YELLOW | | 129 | | | 102 | | | | 135 | | | 108 | |
| GREEN | | 130 | | | 103 | | | | 136 | | | 109 | |
| RED ARROW | 125 | | | | | | 131 | | | | | | |
| YELLOW ARROW | 126 | | | | | | 132 | 132 | | | | | |
| GREEN ARROW | 127 | | | | | | 133 | 133 | | | | | |
| ✋ | | | | | | | | | | | | | |
| 🚶 | | | | | | | | | | | | | |

NU = Not Used

## INPUT FILE POSITION LAYOUT

*(front view)*

| | | 1 | 2 | 3 | 4 | 5 | 6 | 7 | 8 | 9 | 10 | 11 | 12 | 13 | 14 |
|---|---|---|---|---|---|---|---|---|---|---|---|---|---|---|---|
| FILE "I" | U | Ø1 1A | SLOT | SLOT | SLOT | SLOT | Ø4 4A | SLOT | SLOT | SLOT | SLOT | SLOT | SLOT | SLOT | FS DC ISOLATOR |
| | L | NOT USED | EMPTY | EMPTY | EMPTY | EMPTY | NOT USED | EMPTY | EMPTY | EMPTY | EMPTY | EMPTY | EMPTY | EMPTY | ST DC ISOLATOR |
| FILE "J" | U | Ø5 5A | Ø5 5B | SLOT | SLOT | SLOT | Ø8 8A | SLOT | SLOT | SLOT | SLOT | SLOT | SLOT | SLOT | SLOT |
| | L | NOT USED | NOT USED | EMPTY | EMPTY | EMPTY | Ø8 8B | EMPTY | EMPTY | EMPTY | EMPTY | EMPTY | EMPTY | EMPTY | EMPTY |

EX.: 1A, 2A, ETC. = LOOP NO.'S

FS = FLASH SENSE
ST = STOP TIME

## INPUT FILE CONNECTION & PROGRAMMING CHART

| LOOP NO. | LOOP TERMINAL | INPUT FILE POS. | PIN NO. | INPUT ASSIGNMENT NO. | DETECTOR NO. | NEMA PHASE | CALL | EXTEND | FULL TIME DELAY | STRETCH TIME | DELAY TIME |
|---|---|---|---|---|---|---|---|---|---|---|---|
| 1A | TB2-1,2 | I1U | 56 | 18 | 1 | 1 | Y | Y | | | |
| 4A | TB4-9,10 | I6U | 41 | 3 | 4 | 4 | Y | Y | | | 3 |
| 5A | TB3-1,2 | J1U | 55 | 17 | 5 | 5 | Y | Y | | | |
| 5B | TB3-5,6 | J2U | 40 | 2 | 6 | 5 | Y | Y | | | 15 |
| 8A | TB5-9,10 | J6U | 42 | 4 | 8 | 8 | Y | Y | | | 3 |
| 8B | TB5-11,12 | J6L | 46 | 8 | 18 | 8 | Y | Y | | | 10 |

INPUT FILE POSITION LEGEND: J2L
FILE J
SLOT 2
LOWER

THIS ELECTRICAL DETAIL IS FOR
THE SIGNAL DESIGN: 11-0020T2
DESIGNED: December 2008
SEALED: 12-18-08
REVISED: N/A

Signal Upgrade - Temporary (Phase II Steps 1&2)

ELECTRICAL AND PROGRAMMING DETAILS FOR:

Prepared in the Offices of:

Traffic Engineering and Safety Systems Branch
STATE OF NORTH CAROLINA DEPARTMENT OF TRANSPORTATION
Signals Management Section

750 N. Greenfield Pkwy, Garner, NC 27529

US 421 (King Street)
at
NC 194 (Jefferson Road)/
Daniel Boone Drive

Division 11 Watauga County Boone

| PLAN DATE: 12-16-08 | REVIEWED BY: D.T. Joyce |
|---|---|
| PREPARED BY: D.H. Spaulding | REVIEWED BY: |

| REVISIONS | INIT. | DATE |
|---|---|---|
| | | |

SEAL

NORTH CAROLINA PROFESSIONAL SEAL 022013 ENGINEER GEORGE C. BROWN

George C. Brown 12/30/08
SIGNATURE DATE

SIG. INVENTORY NO. 11-0020T2

29-DEC-2008 09:35
s:\ITS Signals\Workgroups\Sig Mark\Spaulding\In-progress\11002012_sml_ele.2008xx.dgn
tjoyce

| PROJECT REFERENCE NO. | SHEET NO. |
|---|---|
| U-4020 | Sig.4a |

## PHASING DIAGRAM

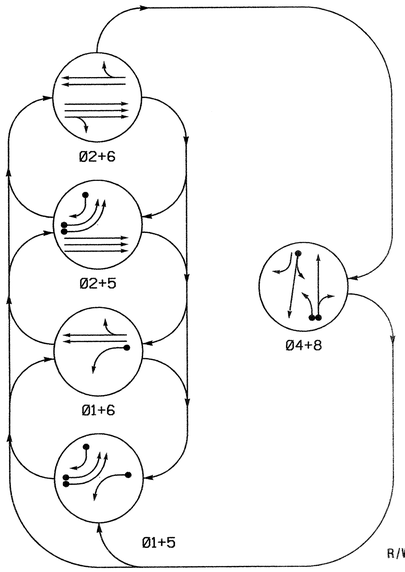


## TABLE OF OPERATION

| SIGNAL FACE | PHASE Ø1+5 | Ø1+6 | Ø2+5 | Ø2+6 | Ø4+8 | FLASH |
|---|---|---|---|---|---|---|
| 11 | ← | ← | ~~R~~ | ~~R~~ | ~~R~~ | ~~R~~ |
| 21, 22 | R | R | G | G | R | Y |
| 41 | R | R | R | R | G | R |
| 42 | R/← | R | R/← | R | G | R |
| 51, 52 | ← | ~~R~~ | ← | ~~R~~ | ~~R~~ | ~~R~~ |
| 61, 62 | R | G | R | G | R | Y |
| 81, 82 | R | R | R | R | G | R |

## SIGNAL FACE I.D.

All Heads L.E.D.

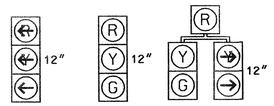


11
51, 52

21, 22
41
61, 62
81, 82

42

## 2070L LOOP & DETECTOR INSTALLATION

| INDUCTIVE LOOPS | | | | | DETECTOR PROGRAMMING | | | | | | |
|---|---|---|---|---|---|---|---|---|---|---|---|
| LOOP | SIZE (FT) | DISTANCE FROM STOPBAR (FT) | TURNS | NEW LOOP | PHASE | CALLING | EXTENSION | FULL TIME DELAY | STRETCH TIME | DELAY TIME | SYSTEM LOOP | NEW CARD |
| 1A | 6X40 | 0 | 2-4-2 | Y | 1 | Y | Y | - | - | - | - | - |
| 4A | 6X40 | 0 | 2-4-2 | - | 4 | Y | Y | - | - | 3 | - | - |
| 5A | 6X40 | 0 | 2-4-2 | Y | 5 | Y | Y | - | - | - | - | - |
| 5B | 6X40 | 0 | 2-4-2 | Y | 5 | Y | Y | - | - | - | - | - |
| 5C | 6X40 | 0 | 2-4-2 | - | 5 | Y | Y | - | - | 15 | - | - |
| 8A | 6X40 | 0 | 2-4-2 | - | 8 | Y | Y | - | - | 3 | - | - |
| 8B | 6X40 | 0 | 2-4-2 | - | 8 | Y | Y | - | - | 10 | - | - |

5 Phase
Semi-Actuated
(Isolated)

## NOTES

1. Refer to "Roadway Standard Drawings NCDOT" dated July 2006 and "Standard Specifications for Roads and Structures" dated July 2006.
2. Do not program signal for late night flashing operation unless otherwise directed by the Engineer.
3. Phase 1 or phase 5 may be lagged.
4. Reposition existing signal heads numbered 11, 21, 22, 51, 61, and 62.
5. Set all detector units to presence mode.

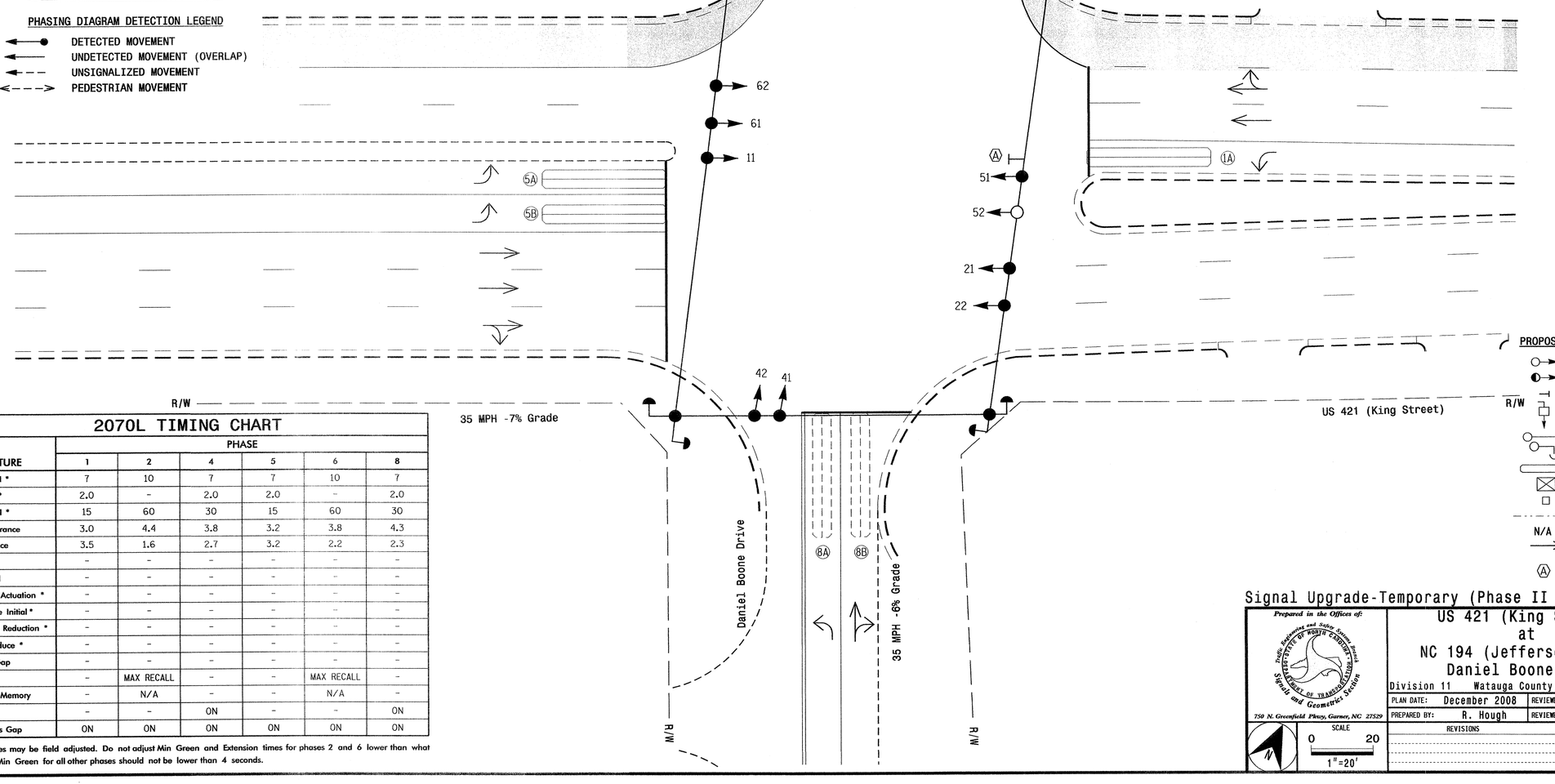


## PHASING DIAGRAM DETECTION LEGEND

- DETECTED MOVEMENT
- UNDETECTED MOVEMENT (OVERLAP)
- UNSIGNALIZED MOVEMENT
- PEDESTRIAN MOVEMENT

## 2070L TIMING CHART

| FEATURE | PHASE 1 | 2 | 4 | 5 | 6 | 8 |
|---|---|---|---|---|---|---|
| Min Green 1 * | 7 | 10 | 7 | 7 | 10 | 7 |
| Extension 1 * | 2.0 | - | 2.0 | 2.0 | - | 2.0 |
| Max Green 1 * | 15 | 60 | 30 | 15 | 60 | 30 |
| Yellow Clearance | 3.0 | 4.4 | 3.8 | 3.2 | 3.8 | 4.3 |
| Red Clearance | 3.5 | 1.6 | 2.7 | 3.2 | 2.2 | 2.3 |
| Walk 1 * | - | - | - | - | - | - |
| Don't Walk 1 | - | - | - | - | - | - |
| Seconds Per Actuation * | - | - | - | - | - | - |
| Max Variable Initial * | - | - | - | - | - | - |
| Time Before Reduction * | - | - | - | - | - | - |
| Time To Reduce * | - | - | - | - | - | - |
| Minimum Gap | - | - | - | - | - | - |
| Recall Mode | - | MAX RECALL | - | - | MAX RECALL | - |
| Vehicle Call Memory | - | N/A | - | - | N/A | - |
| Dual Entry | - | - | ON | - | - | ON |
| Simultaneous Gap | ON | ON | ON | ON | ON | ON |

* These values may be field adjusted. Do not adjust Min Green and Extension times for phases 2 and 6 lower than what is shown. Min Green for all other phases should not be lower than 4 seconds.

## LEGEND

| PROPOSED | | EXISTING |
|---|---|---|
| | Traffic Signal Head | |
| | Modified Signal Head | N/A |
| | Sign | |
| | Pedestrian Signal Head With Push Button & Sign | |
| | Signal Pole with Guy | |
| | Signal Pole with Sidewalk Guy | |
| | Inductive Loop Detector | |
| | Controller & Cabinet | |
| | Junction Box | |
| | 2-in Underground Conduit | |
| N/A | Right of Way | |
| | Directional Arrow | |
| | "U-TURN YIELD TO RIGHT TURN" Sign (R10-16) | |

Signal Upgrade-Temporary (Phase II Steps 3&4)

Prepared in the Offices of:
Traffic Engineering and Safety Systems Branch
Signals and Geometrics Section
750 N. Greenfield Pkwy, Garner, NC 27529

SCALE 0 20 1"=20'

US 421 (King Street)
at
NC 194 (Jefferson Road)/
Daniel Boone Drive

Division 11 Watauga County Boone

| PLAN DATE: December 2008 | REVIEWED BY: |
|---|---|
| PREPARED BY: R. Hough | REVIEWED BY: |

| REVISIONS | INIT. | DATE |
|---|---|---|
| | | |

SEAL
NORTH CAROLINA PROFESSIONAL SEAL 30530 ENGINEER ZACHARY M. LITTLE
SIGNATURE DATE 12/18/08
SIG. INVENTORY NO. 11-0020T3

06-JAN-2009 11:13
s:\ts signals\workgroups\tip projects\u-4020\signals\design\signals\11-0020\11-0020T3_sig_dsn_2008mmdd.dgn
rwhough

| PROJECT REFERENCE NO. | SHEET NO. |
|---|---|
| U-4020 | Sig.41 |

# EDI MODEL 2010ECL-NC CONFLICT MONITOR PROGRAMMING DETAIL

*(remove jumpers and set switches as shown)*

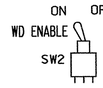


REMOVE DIODE JUMPERS I-5, I-6, 2-5, 2-6 and 4-8.

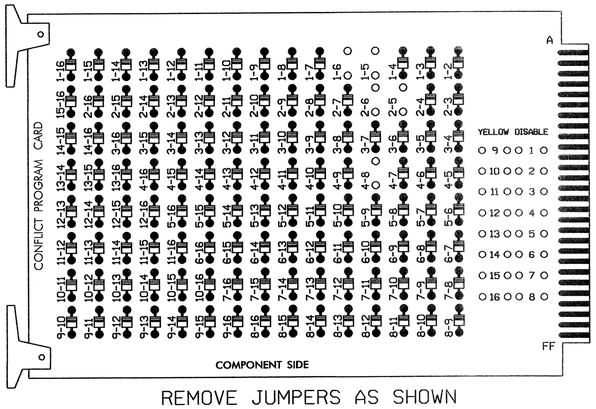


REMOVE JUMPERS AS SHOWN

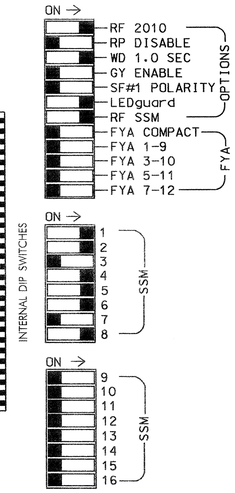


■ = DENOTES POSITION OF SWITCH

NOTES:

1. Card is provided with all diode jumpers in place. Removal of any jumper allows its channels to run concurrently.
2. Make sure jumpers SEL2-SEL5 are present on the monitor board.

## NOTES

1. To prevent "flash-conflict" problems, insert red flash program blocks for all unused vehicle load switches in the output file. The installer shall verify that signal heads flash in accordance with the Signal Plans.
2. Ensure that Red Enable is active at all times during normal operation. To prevent Red Failures on unused monitor channels, tie unused red monitor inputs 3,7,9,10, 11,12,13,14,15 & 16 to load switch AC+ per the cabinet manufacturer's instructions.
3. Program phases 2 and 6, on the controller unit, for Start Up In Green.
4. Enable Simultaneous Gap-Out, on the controller unit, for all phases.
5. Program phases 4 and 8, on the controller unit, for Dual Entry.

CONTROLLER.....CONTRACTOR SUPPLIED 2070L
CABINET.....CONTRACTOR SUPPLIED 332
SOFTWARE.....ECONOLITE OASIS
CABINET MOUNT.....BASE
OUTPUT FILE POSITIONS...12
LOAD SWITCHES USED.....S1,S2,S4,S5,S6,S8
PHASES USED.....1,2,4,5,6,8
OVERLAPS.....NONE

## SIGNAL HEAD HOOK-UP CHART

| LOAD SWITCH NO. | S1 | S2 | S2P | S3 | S4 | S4P | S5 | | S6 | S6P | S7 | S8 | S8P |
|---|---|---|---|---|---|---|---|---|---|---|---|---|---|
| PHASE | 1 | 2 | 2 PED | 3 | 4 | 4 PED | 5 | | 6 | 6 PED | 7 | 8 | 8 PED |
| SIGNAL HEAD NO. | 11 | 21,22 | NU | NU | 41,42 | NU | 51,52 | 42 | 61,62 | NU | NU | 81,82 | NU |
| RED | | 128 | | | 101 | | | | 134 | | | 107 | |
| YELLOW | | 129 | | | 102 | | | | 135 | | | 108 | |
| GREEN | | 130 | | | 103 | | | | 136 | | | 109 | |
| RED ARROW | 125 | | | | | | 131 | | | | | | |
| YELLOW ARROW | 126 | | | | | | 132 | 132 | | | | | |
| GREEN ARROW | 127 | | | | | | 133 | 133 | | | | | |
| | | | | | | | | | | | | | |
| | | | | | | | | | | | | | |

NU = Not Used

## INPUT FILE POSITION LAYOUT

*(front view)*

| | | 1 | 2 | 3 | 4 | 5 | 6 | 7 | 8 | 9 | 10 | 11 | 12 | 13 | 14 |
|---|---|---|---|---|---|---|---|---|---|---|---|---|---|---|---|
| FILE "I" | U | Ø1 1A | SLOT | SLOT | SLOT | SLOT | Ø4 4A | SLOT | SLOT | SLOT | SLOT | SLOT | SLOT | SLOT | FS DC ISOLATOR |
| | L | NOT USED | EMPTY | EMPTY | EMPTY | EMPTY | NOT USED | EMPTY | EMPTY | EMPTY | EMPTY | EMPTY | EMPTY | EMPTY | ST DC ISOLATOR |
| FILE "J" | U | Ø5 5A | Ø5 5B | SLOT | SLOT | SLOT | Ø8 8A | SLOT | SLOT | SLOT | SLOT | SLOT | SLOT | SLOT | SLOT |
| | L | NOT USED | Ø5 5C | EMPTY | EMPTY | EMPTY | Ø8 8B | EMPTY | EMPTY | EMPTY | EMPTY | EMPTY | EMPTY | EMPTY | EMPTY |

EX.: 1A, 2A, ETC. = LOOP NO.'S

FS = FLASH SENSE
ST = STOP TIME

## INPUT FILE CONNECTION & PROGRAMMING CHART

| LOOP NO. | LOOP TERMINAL | INPUT FILE POS. | PIN NO. | INPUT ASSIGNMENT NO. | DETECTOR NO. | NEMA PHASE | CALL | EXTEND | FULL TIME DELAY | STRETCH TIME | DELAY TIME |
|---|---|---|---|---|---|---|---|---|---|---|---|
| 1A | TB2-1,2 | I1U | 56 | 18 | 1 | 1 | Y | Y | | | |
| 4A | TB4-9,10 | I6U | 41 | 3 | 4 | 4 | Y | Y | | | 3 |
| 5A | TB3-1,2 | J1U | 55 | 17 | 5 | 5 | Y | Y | | | |
| 5B | TB3-5,6 | J2U | 40 | 2 | 6 | 5 | Y | Y | | | |
| 5C | TB3-7,8 | J2L | 44 | 6 | 16 | 5 | Y | Y | | | 15 |
| 8A | TB5-9,10 | J6U | 42 | 4 | 8 | 8 | Y | Y | | | 3 |
| 8B | TB5-11,12 | J6L | 46 | 8 | 18 | 8 | Y | Y | | | 10 |

INPUT FILE POSITION LEGEND: J2L
FILE J
SLOT 2
LOWER

THIS ELECTRICAL DETAIL IS FOR
THE SIGNAL DESIGN: 11-0020T3
DESIGNED: December 2008
SEALED: 12-18-08
REVISED: N/A

Signal Upgrade - Temporary (Phase II Steps 3&4)

ELECTRICAL AND PROGRAMMING DETAILS FOR:

US 421 (King Street)
at
NC 194 (Jefferson Road)/
Daniel Boone Drive

Division 11 Watauga County Boone

PLAN DATE: 12-15-08 REVIEWED BY: D.T. Joyce
PREPARED BY: D.H. Spaulding REVIEWED BY:

| REVISIONS | INIT. | DATE |
|---|---|---|
| | | |

Prepared in the Offices of:
Traffic Engineering and Safety Systems Branch
STATE OF NORTH CAROLINA DEPARTMENT OF TRANSPORTATION
Signals Management Section
750 N. Greenfield Pkwy, Garner, NC 27529

SEAL
NORTH CAROLINA PROFESSIONAL SEAL 022013 ENGINEER GEORGE C. BROWN
George C. Brown 12/30/08
SIGNATURE DATE
SIG. INVENTORY NO. 11-0020T3

29-DEC-2008 09:36
s:\ITS Signals\Workgroups\Sig Man\Spaulding\in-progress\11002013_sm_2008xx.dgn
floyce

| PROJECT REFERENCE NO. | SHEET NO. |
|---|---|
| U-4020 | Sig.42 |

## PHASING DIAGRAM

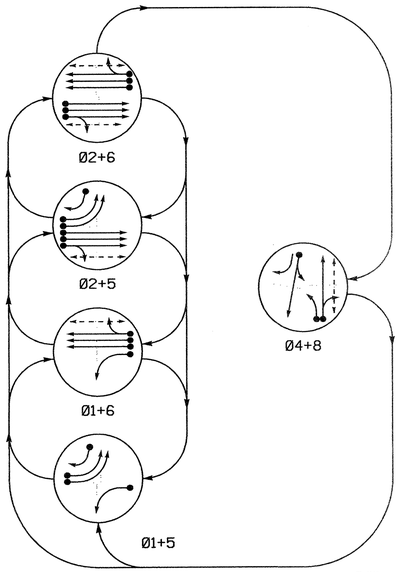


## TABLE OF OPERATION

| SIGNAL FACE | PHASE Ø1+5 | Ø1+6 | Ø2+5 | Ø2+6 | Ø4+8 | FLASH |
|---|---|---|---|---|---|---|
| 11 | ← | ← | ~~R~~ | ~~R~~ | ~~R~~ | ~~R~~ |
| 21, 22 | R | R | G | G | R | Y |
| 41 | R | R | R | R | G | R |
| 42 | R/→ | R | R/→ | R | G | R |
| 51, 52 | ← | ~~R~~ | ← | ~~R~~ | ~~R~~ | ~~R~~ |
| 61, 62 | R | G | R | G | R | Y |
| 81, 82, 83 | R | R | R | R | G | R |
| P21, P22 | DW | DW | W | W | DW | DRK |
| P61, P62 | DW | W | DW | W | DW | DRK |
| P81, P82 | DW | DW | DW | DW | W | DRK |

W - Walk
DW - Don't Walk
DRK - Dark

## SIGNAL FACE I.D.

All Heads L.E.D.

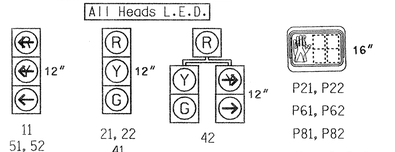


## 2070L LOOP & DETECTOR INSTALLATION

| INDUCTIVE LOOPS | | | | | DETECTOR PROGRAMMING | | | | | | |
|---|---|---|---|---|---|---|---|---|---|---|---|
| LOOP | SIZE (FT) | DISTANCE FROM STOPBAR (FT) | TURNS | NEW LOOP | PHASE | CALLING | EXTENSION | FULL TIME DELAY | STRETCH TIME | DELAY TIME | SYSTEM LOOP | NEW CARD |
| 1A | 6X40 | 0 | 2-4-2 | Y | 1 | Y | Y | — | —— | —— | — | — |
| 2A | 6X6 | 70 | 4 | Y | 2 | Y | Y | — | —— | —— | — | Y |
| 2B | 6X6 | 70 | 4 | Y | 2 | Y | Y | — | —— | —— | — | Y |
| 2C | 6X6 | 70 | 4 | Y | 2 | Y | Y | — | —— | —— | — | Y |
| 4A | 6X40 | 0 | 2-4-2 | Y | 4 | Y | Y | — | —— | —— | — | — |
| 5A | 6X40 | 0 | 2-4-2 | Y | 5 | Y | Y | — | —— | —— | — | — |
| 5B | 6X40 | 0 | 2-4-2 | Y | 5 | Y | Y | — | —— | —— | — | — |
| 5C | 6X40 | 0 | 2-4-2 | Y | 5 | Y | Y | — | —— | 15 | — | — |
| 6A | 6X6 | 70 | 3 | Y | 6 | Y | Y | — | —— | —— | — | Y |
| 6B | 6X6 | 70 | 3 | Y | 6 | Y | Y | — | —— | —— | — | Y |
| 6C | 6X6 | 70 | 3 | Y | 6 | Y | Y | — | —— | —— | — | Y |
| 8A | 6X40 | 0 | 2-4-2 | Y | 8 | Y | Y | — | —— | 3 | — | — |
| 8B | 6X40 | 0 | 2-4-2 | Y | 8 | Y | Y | — | —— | 15 | — | — |
| S10 | 6X6 | +150 | 4 | Y | — | — | — | — | —— | —— | Y | Y |
| S11 | 6X6 | +150 | 4 | Y | — | — | — | — | —— | —— | Y | Y |
| S12 | 6X6 | +150 | 4 | Y | — | — | — | — | —— | —— | Y | Y |
| S13 | 6X6 | +150 | 4 | Y | — | — | — | — | —— | —— | Y | Y |
| S14 | 6X6 | +150 | 4 | Y | — | — | — | — | —— | —— | Y | Y |
| S15 | 6X6 | +150 | 4 | Y | — | — | — | — | —— | —— | Y | Y |

# 5 Phase
# Fully Actuated
# US 421 (King Street) Closed Loop System

## NOTES

1. Refer to "Roadway Standard Drawings NCDOT" dated July 2006 and "Standard Specifications for Roads and Structures" dated July 2006.
2. Do not program signal for late night flashing operation unless otherwise directed by the Engineer.
3. Phase 1 or phase 5 may be lagged.
4. Set all detector units to presence mode.
5. Omit "WALK" and flashing "DON'T WALK" with no pedestrian calls.
6. Program pedestrian heads to countdown the flashing "Don't Walk" time only.
7. Maximum times shown in timing chart are for free-run operation only. Coordinated signal system timing values supersede these values.
8. Closed loop system data: Controller Asset # 0020.

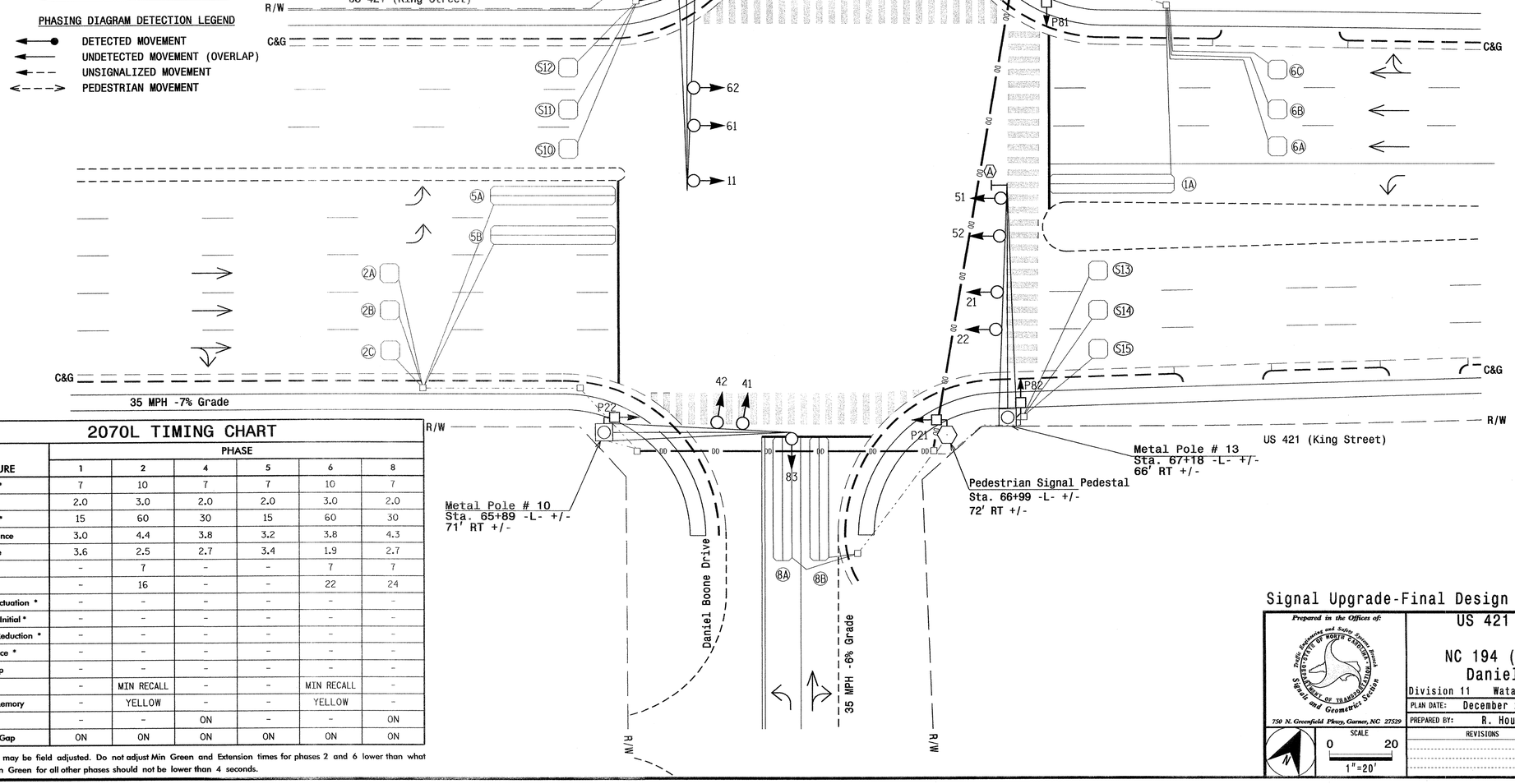


## PHASING DIAGRAM DETECTION LEGEND

- DETECTED MOVEMENT
- UNDETECTED MOVEMENT (OVERLAP)
- UNSIGNALIZED MOVEMENT
- PEDESTRIAN MOVEMENT

## 2070L TIMING CHART

| FEATURE | PHASE 1 | 2 | 4 | 5 | 6 | 8 |
|---|---|---|---|---|---|---|
| Min Green 1 * | 7 | 10 | 7 | 7 | 10 | 7 |
| Extension 1 * | 2.0 | 3.0 | 2.0 | 2.0 | 3.0 | 2.0 |
| Max Green 1 * | 15 | 60 | 30 | 15 | 60 | 30 |
| Yellow Clearance | 3.0 | 4.4 | 3.8 | 3.2 | 3.8 | 4.3 |
| Red Clearance | 3.6 | 2.5 | 2.7 | 3.4 | 1.9 | 2.7 |
| Walk 1 * | - | 7 | - | - | 7 | 7 |
| Don't Walk 1 | - | 16 | - | - | 22 | 24 |
| Seconds Per Actuation * | - | - | - | - | - | - |
| Max Variable Initial * | - | - | - | - | - | - |
| Time Before Reduction * | - | - | - | - | - | - |
| Time To Reduce * | - | - | - | - | - | - |
| Minimum Gap | - | - | - | - | - | - |
| Recall Mode | - | MIN RECALL | - | - | MIN RECALL | - |
| Vehicle Call Memory | - | YELLOW | - | - | YELLOW | - |
| Dual Entry | - | - | ON | - | - | ON |
| Simultaneous Gap | ON | ON | ON | ON | ON | ON |

* These values may be field adjusted. Do not adjust Min Green and Extension times for phases 2 and 6 lower than what is shown. Min Green for all other phases should not be lower than 4 seconds.

## LEGEND

| PROPOSED | | EXISTING |
|---|---|---|
| | Traffic Signal Head | |
| | Modified Signal Head | N/A |
| | Sign | |
| | Pedestrian Signal Head With Push Button & Sign | |
| | Signal Pole with Guy | |
| | Signal Pole with Sidewalk Guy | |
| | Inductive Loop Detector | |
| | Controller & Cabinet | |
| | Junction Box | |
| | 2-in Underground Conduit | |
| N/A | Right of Way | |
| | Directional Arrow | |
| | Metal Pole with Mastarm | |
| | Pedestrian Signal Pedestal | |
| | Directional Drill | N/A |
| | "U-TURN YIELD TO RIGHT TURN" Sign (R10-16) | |

Signal Upgrade-Final Design

Prepared in the Offices of:
Traffic Engineering and Safety Systems Branch
STATE OF NORTH CAROLINA DEPARTMENT OF TRANSPORTATION
Signals and Geometrics Section
750 N. Greenfield Pkwy, Garner, NC 27529

SCALE 0 20 1"=20'

US 421 (King Street)
at
NC 194 (Jefferson Road)
Daniel Boone Drive

Division 11 Watauga County Boone

PLAN DATE: December 2008 REVIEWED BY:
PREPARED BY: R. Hough REVIEWED BY:

| REVISIONS | INIT. | DATE |
|---|---|---|
| | | |

SEAL
NORTH CAROLINA PROFESSIONAL SEAL 30530 ENGINEER ZACHARY M. LITTLE
SIGNATURE 12/18/09 DATE
SIG. INVENTORY NO. 11-0020

05-JAN-2009 11:03
s:\traffic\Signals\workgroups\tip projects\u-4020\signals\designs\signals\11-0020\110020_sig_dsn_2008xxxx.dgn
rwhough

| PROJECT REFERENCE NO. | SHEET NO. |
|---|---|
| U-4020 | Sig.43 |

# EDI MODEL 2010ECL-NC CONFLICT MONITOR PROGRAMMING DETAIL

*(remove jumpers and set switches as shown)*

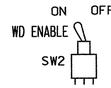


REMOVE DIODE JUMPERS I-5, I-6, I-15, 2-5, 2-6, 2-13, 2-15, 4-8, 4-16, 5-13, 6-13, 6-15, 8-16 and 13-15.

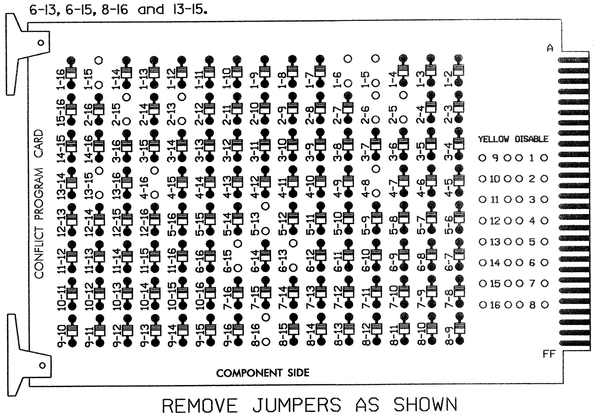


REMOVE JUMPERS AS SHOWN

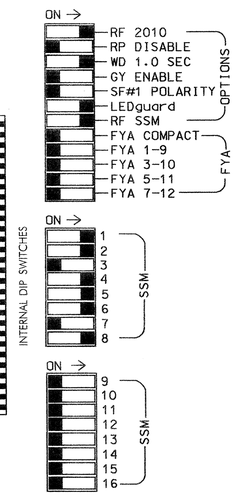


■ = DENOTES POSITION OF SWITCH

NOTES:

1. Card is provided with all diode jumpers in place. Removal of any jumper allows its channels to run concurrently.
2. Make sure jumpers SEL2-SEL5 are present on the monitor board.

## NOTES

1. To prevent "flash-conflict" problems, insert red flash program blocks for all unused vehicle load switches in the output file. The installer shall verify that signal heads flash in accordance with the Signal Plans.
2. Ensure that Red Enable is active at all times during normal operation. To prevent Red Failures on unused monitor channels, tie unused red monitor inputs 3,7,9,10, 11,12,13,14,15 & 16 to load switch AC+ per the cabinet manufacturer's instructions.
3. Program phases 2 and 6, on the controller unit, for Start Up In Green.
4. Enable Simultaneous Gap-Out, on the controller unit, for all phases.
5. Program phases 4 and 8, on the controller unit, for Dual Entry.
6. Program phases 2, 6 and 8 for 'STARTUP PED CALL'.
7. The cabinet and controller are part of the US 421 (King Street) Closed Loop System.

CONTROLLER.....CONTRACTOR SUPPLIED 2070L
CABINET.....CONTRACTOR SUPPLIED 332
SOFTWARE.....ECONOLITE OASIS
CABINET MOUNT.....BASE
OUTPUT FILE POSITIONS...12
LOAD SWITCHES USED.....S1,S2,S2P,S4,S5,S6,S6P,S8,S8P
PHASES USED.....1,2,2PED,4,5,6,6PED,8,8PED
OVERLAPS.....NONE

## SIGNAL HEAD HOOK-UP CHART

| LOAD SWITCH NO. | S1 | S2 | S2P | S3 | S4 | S4P | S5 | | S6 | S6P | S7 | S8 | S8P |
|---|---|---|---|---|---|---|---|---|---|---|---|---|---|
| PHASE | 1 | 2 | 2 PED | 3 | 4 | 4 PED | 5 | | 6 | 6 PED | 7 | 8 | 8 PED |
| SIGNAL HEAD NO. | 11 | 21,22 | P21, P22 | NU | 41,42 | NU | 51,52 | 42 | 61,62 | P61, P62 | NU | 81,82 83 | P81, P82 |
| RED | | 128 | | | 101 | | | | 134 | | | 107 | |
| YELLOW | | 129 | | | 102 | | | | 135 | | | 108 | |
| GREEN | | 130 | | | 103 | | | | 136 | | | 109 | |
| RED ARROW | 125 | | | | | | 131 | | | | | | |
| YELLOW ARROW | 126 | | | | | | 132 | 132 | | | | | |
| GREEN ARROW | 127 | | | | | | 133 | 133 | | | | | |
| ✋ | | | 113 | | | | | | | 119 | | | 110 |
| 🚶 | | | 115 | | | | | | | 121 | | | 112 |

NU = Not Used

## INPUT FILE POSITION LAYOUT

*(front view)*

| | | 1 | 2 | 3 | 4 | 5 | 6 | 7 | 8 | 9 | 10 | 11 | 12 | 13 | 14 |
|---|---|---|---|---|---|---|---|---|---|---|---|---|---|---|---|
| FILE "I" | U | Ø1 1A | Ø2 2A | Ø2 2C | SLOT EMPTY | SLOT EMPTY | Ø4 4A | SYS. DET. S10 | SLOT EMPTY | SYS. DET. S12 | SLOT EMPTY | SLOT EMPTY | Ø2 PED DC ISOLATOR | Ø6 PED DC ISOLATOR | FS DC ISOLATOR |
| | L | NOT USED | Ø2 2B | NOT USED | | | NOT USED | SYS. DET. S11 | | SYS. DET. S13 | | | NOT USED | Ø8 PED DC ISOLATOR | ST DC ISOLATOR |
| FILE "J" | U | Ø5 5A | Ø5 5B | Ø6 6A | Ø6 6C | SLOT EMPTY | Ø8 8A | SLOT EMPTY | SLOT EMPTY | SYS. DET. S14 | SLOT EMPTY | SLOT EMPTY | SLOT EMPTY | SLOT EMPTY | SLOT EMPTY |
| | L | NOT USED | Ø5 5C | Ø6 6B | NOT USED | | Ø8 8B | | | SYS. DET. S15 | | | | | |

EX.: 1A, 2A, ETC. = LOOP NO.'S

FS = FLASH SENSE
ST = STOP TIME

## INPUT FILE CONNECTION & PROGRAMMING CHART

| LOOP NO. | LOOP TERMINAL | INPUT FILE POS. | PIN NO. | INPUT ASSIGNMENT NO. | DETECTOR NO. | NEMA PHASE | CALL | EXTEND | FULL TIME DELAY | STRETCH TIME | DELAY TIME |
|---|---|---|---|---|---|---|---|---|---|---|---|
| 1A | TB2-1,2 | I1U | 56 | 18 | 1 | 1 | Y | Y | | | |
| 2A | TB2-5,6 | I2U | 39 | 1 | 2 | 2 | Y | Y | | | |
| 2B | TB2-7,8 | I2L | 43 | 5 | 12 | 2 | Y | Y | | | |
| 2C | TB2-9,10 | I3U | 63 | 25 | 32 | 2 | Y | Y | | | |
| 4A | TB4-9,10 | I6U | 41 | 3 | 4 | 4 | Y | Y | | | |
| ✱ S10 | TB6-1,2 | I7U | 65 | 27 | 34 | SYS | | | | | |
| ✱ S11 | TB6-3,4 | I7L | 78 | 40 | 44 | SYS | | | | | |
| ✱ S12 | TB6-9,10 | I9U | 60 | 22 | 11 | SYS | | | | | |
| ✱ S13 | TB6-11,12 | I9L | 62 | 24 | 13 | SYS | | | | | |
| 5A | TB3-1,2 | J1U | 55 | 17 | 5 | 5 | Y | Y | | | |
| 5B | TB3-5,6 | J2U | 40 | 2 | 6 | 5 | Y | Y | | | |
| 5C | TB3-7,8 | J2L | 44 | 6 | 16 | 5 | Y | Y | | | 15 |
| 6A | TB3-9,10 | J3U | 64 | 26 | 36 | 6 | Y | Y | | | |
| 6B | TB3-11,12 | J3L | 77 | 39 | 46 | 6 | Y | Y | | | |
| 6C | TB5-1,2 | J4U | 48 | 10 | 26 | 6 | Y | Y | | | |
| 8A | TB5-9,10 | J6U | 42 | 4 | 8 | 8 | Y | Y | | | 3 |
| 8B | TB5-11,12 | J6L | 46 | 8 | 18 | 8 | Y | Y | | | 15 |
| ✱ S14 | TB7-9,10 | J9U | 59 | 21 | 15 | SYS | | | | | |
| ✱ S15 | TB7-11,12 | J9L | 61 | 23 | 17 | SYS | | | | | |
| PED PUSH BUTTONS | | | | | | | | | | | |
| P21,P22 | TB8-4,6 | I12U | 67 | 29 | PED 2 | 2 PED | | | | | |
| P61,P62 | TB8-7,9 | I13U | 68 | 30 | PED 6 | 6 PED | | | | | |
| P81,P82 | TB8-8,9 | I13L | 70 | 32 | PED 8 | 8 PED | | | | | |

NOTE:
INSTALL DC ISOLATORS IN INPUT FILE SLOTS I12 AND I13.

✱ SYSTEM DETECTOR ONLY. REMOVE THE VEHICLE PHASE ASSIGNED TO THIS DETECTOR IN THE DEFAULT PROGRAMMING.

INPUT FILE POSITION LEGEND: J2L
FILE J
SLOT 2
LOWER

## COUNTDOWN PEDESTRIAN SIGNAL OPERATION

Countdown Ped Signals are required to display timing only during Ped Clearance Interval. Consult Ped Signal Module user's manual for instructions on selecting this feature.

THIS ELECTRICAL DETAIL IS FOR
THE SIGNAL DESIGN: 11-0020
DESIGNED: December 2008
SEALED: 12-18-08
REVISED: N/A

Signal Upgrade - Final Design

ELECTRICAL AND PROGRAMMING DETAILS FOR:

*Prepared in the Offices of:*

Traffic Engineering and Safety Systems Branch
STATE OF NORTH CAROLINA DEPARTMENT OF TRANSPORTATION
Signals Management Section

*750 N. Greenfield Pkwy, Garner, NC 27529*

US 421 (King Street)
at
NC 194 (Jefferson Road)/
Daniel Boone Drive

Division 11 Watauga County Boone

| | | | |
|---|---|---|---|
| PLAN DATE: | 12-15-08 | REVIEWED BY: | D.T. Joyce |
| PREPARED BY: | D.H. Spaulding | REVIEWED BY: | |

| REVISIONS | INIT. | DATE |
|---|---|---|
| | | |

SEAL

NORTH CAROLINA PROFESSIONAL SEAL 022013 ENGINEER GEORGE C. BROWN

SIGNATURE DATE 12/30/08

SIG. INVENTORY NO. 11-0020

30-DEC-2008 14:44
s:\its signal\workgroups\sig management\spaulding\in-progress\110020_sml_el_2008xx.dgn
dspaulding

## Design Loading for METAL POLE NO. 10

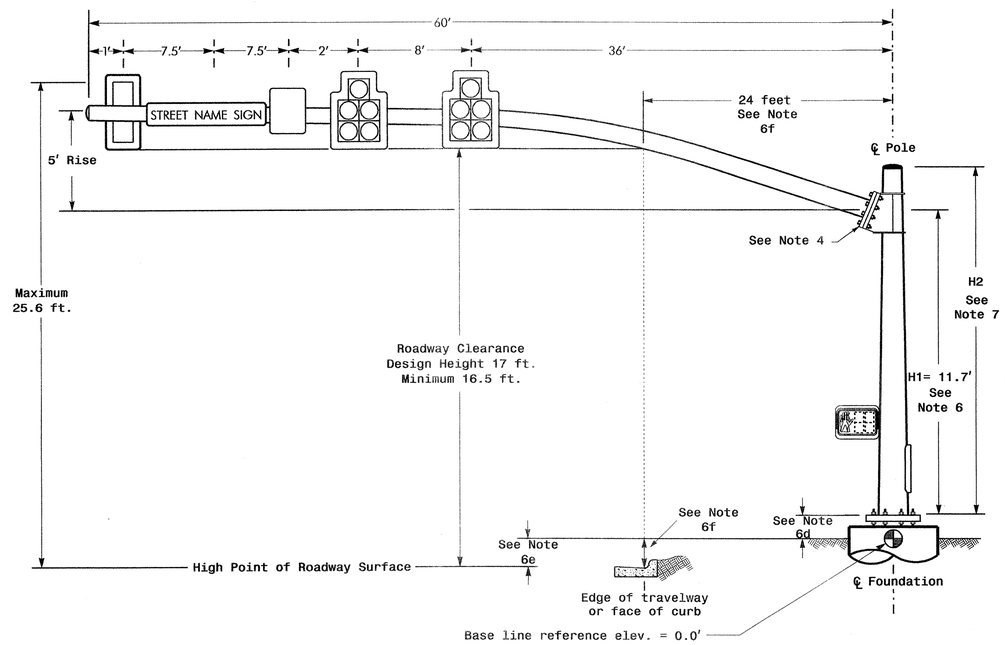


ELEVATION VIEW

## Design Loading for METAL POLE NO. 11

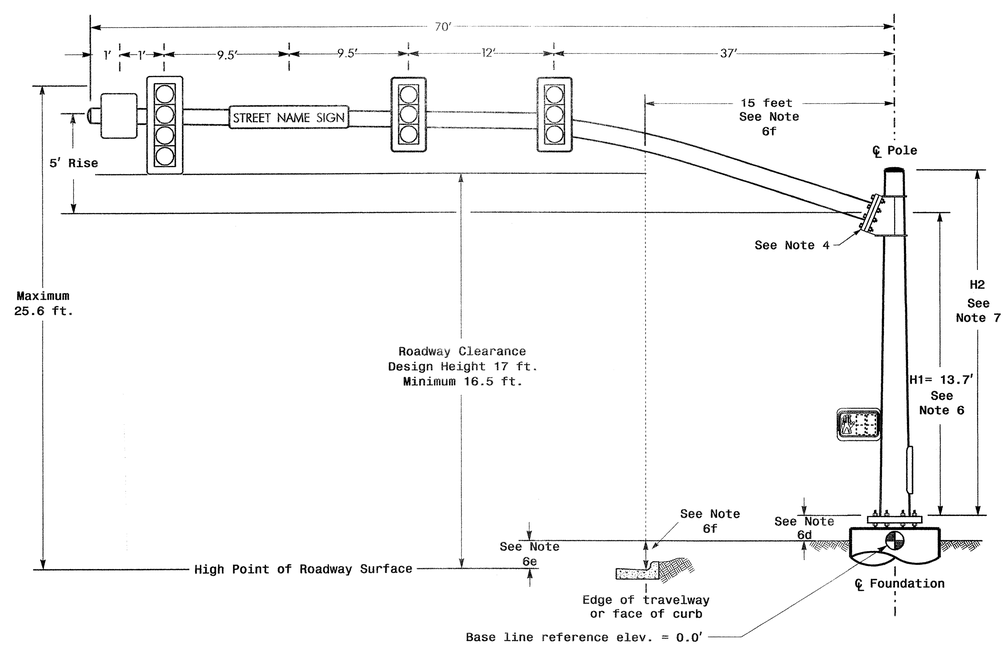


Elevation View

## SPECIAL NOTE

The contractor is responsible for verifying that the mast arm attachment height (H1) will provide the "Design Height" clearance from the roadway before submitting final shop drawings for approval. Verify elevation data below which was obtained by field measurement or from available project survey data.

## Elevation Data for Mast Arm Attachment (H1)

| Elevation Differences for: | Pole 10 | Pole 11 |
|---|---|---|
| Baseline reference point at ℄ Foundation @ ground level | 0.0 ft. | 0.0 ft. |
| Elevation difference at High point of roadway surface | -1.7 ft. | -0.3 ft. |
| Elevation difference at Edge of travelway or face of curb | -1.7 ft. | -0.9 ft. |

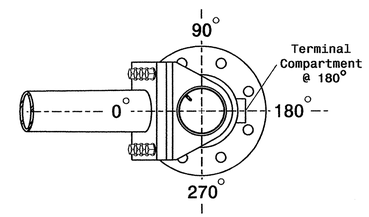


POLE RADIAL ORIENTATION

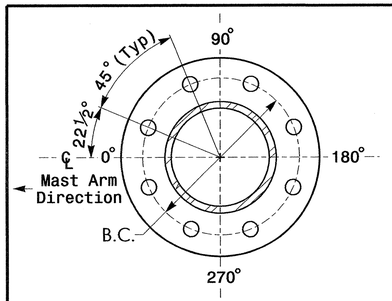


8 BOLT BASE PLATE DETAIL

See Note 5

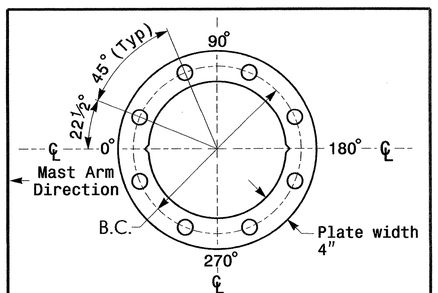


BASE PLATE TEMPLATE & ANCHOR BOLT LOCK PLATE DETAIL

For 8 Bolt Base Plate

## MAST ARM LOADING SCHEDULE

| LOADING SYMBOL | DESCRIPTION | AREA | SIZE | WEIGHT |
|---|---|---|---|---|
| | SIGNAL HEAD 12"-5 SECTION-WITH BACKPLATE AND ASTRO-BRAC | 16.3 S.F. | 42.0" W X 56.0" L | 103 LBS |
| | SIGNAL HEAD 12"-4 SECTION-WITH BACKPLATE AND ASTRO-BRAC | 11.5 S.F. | 25.5" W X 66.0" L | 74 LBS |
| | SIGNAL HEAD 12"-3 SECTION-WITH BACKPLATE AND ASTRO-BRAC | 9.3 S.F. | 25.5" W X 52.5" L | 60 LBS |
| | SIGN RIGID MOUNTED WITH ASTRO-SIGN-BRAC | 5.0 S.F. | 24.0" W X 30.0" L | 11 LBS |
| STREET NAME SIGN | STREET NAME SIGN RIGID MOUNTED WITH ASTRO-SIGN-BRAC | 12.0 S.F. | 18.0" W X 96.0" L | 27 LBS |
| | PEDESTRIAN SIGNAL HEAD WITH MOUNTING HARDWARE | 2.2 S.F. | 18.5" W X 17.0" L | 21 LBS |

## NOTES

Design Reference Material

1. Design the traffic signal structure and foundation in accordance with:
   - The 4th Edition 2001 AASHTO "Standard Specifications for Structural Supports for Highway Signs, Luminaires, and Traffic Signals, including all of the latest interim revisions.
   - The 2006 NCDOT "Standard Specifications for Roads and Structures". The latest addenda to these specifications can be found in the traffic signal project special provisions.
   - The 2006 NCDOT Roadway Standard Drawings.
   - The traffic signal project plans and special provisions.
   - The NCDOT "Metal Pole Standards" located at the following NCDOT website: http://www.ncdot.org/doh/preconstruct/traffic/ITSS/ws/mpoles/poles.html

Design Requirements

2. Design the traffic signal structure using the loading conditions shown in the elevation views. These are anticipated worst case "Design loads" and may not represent the actual loads that will be applied at the time of the installation. The contractor should refer to the traffic signal plans for the actual loads that will be applied at the time of the installation.
3. Design all signal supports using stress ratios that do not exceed 0.9.
4. A clamp-type bolted mast arm-to-pole connection may be used instead of the welded ring stiffened box connection shown as long as the connection meets all of the design requirements.
5. Design base plate with 8 anchor bolt holes. Provide 2 inch x 60 inch anchor bolts.
6. The mast arm attachment height (H1) shown is based on the following design assumptions:
   a. Nominal vertical rise in mast arm is 5 feet as measured from the centerline of the arm base to the centerline of the free end of the arm.
   b. Signal heads attached to the mast arm are rigid mounted and vertically centered on the arm.
   c. The roadway clearance height for design is as shown in the elevation views.
   d. The top of the pole base plate is .75 feet above the ground elevation.
   e. Refer to the Elevation Data chart for elevation differences between the proposed foundation ground level and the high point on the roadway.
   f. Provide horizontal distance from proposed centerline of foundation to edge of travelway. Refer to the Elevation Data chart above for elevation difference between the proposed foundation ground level and the edge of travelway. This information is necessary when arched arms are specified to ensure that the roadway clearance is maintained at the edge of the travelway and to assist in the camber design of the mast arm.
7. The pole manufacturer will determine the total height (H2) of each pole using the greater of the following:
   - Mast arm attachment height (H1) plus 2 feet, or
   - H1 plus ½ of the total height of the mast arm attachment assembly plus 1 foot.
8. If pole location adjustments are required, the contractor must gain approval from the engineer as this may affect the mast arm lengths and arm attachment heights. The contractor may contact the Signals & Geometrics Structural Engineer for assistance at (919) 773-2800.
9. The contractor is responsible for verifying that the mast arm length shown will allow proper positioning of the signal heads over the roadway.
10. The contractor is responsible for providing soil penetration testing data (SPT) to the pole manufacturer so site specific foundations can be designed.

NCDOT Wind Zone 5 (120 mph)

Prepared in the Offices of:
Traffic Engineering and Safety Systems Branch
STATE OF NORTH CAROLINA DEPARTMENT OF TRANSPORTATION
Signals and Geometrics Section
750 N. Greenfield Pkwy, Garner, NC 27529

SCALE: 0 N/A — N/A

US 421 (King Street)
at
NC 194 (Jefferson Road)
Daniel Boone Drive

Division 11 Watauga County Boone

| PLAN DATE: December 2008 | REVIEWED BY: |
|---|---|
| PREPARED BY: R. Hough | REVIEWED BY: |

| REVISIONS | INIT. | DATE |
|---|---|---|
| | | |

SEAL

NORTH CAROLINA PROFESSIONAL SEAL 30530 ENGINEER ZACHARY M. LITTLE

SIGNATURE — DATE 1/6/09

SIG. INVENTORY NO. 11-0020

06-JAN-2009 10:06
s:\traffic\signals\workgroups\tip projects\u-4020\signals\design\signals\11-0020\roansingle[1].dgn
r.hough

# METAL POLE No. 12 and 13

## Design Loading for METAL POLE NO. 12

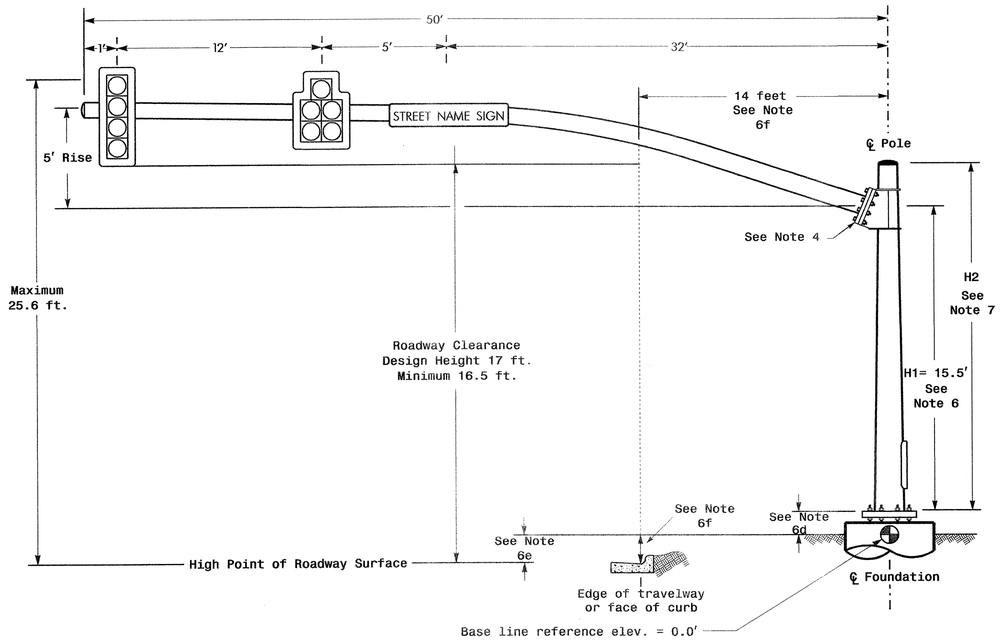


ELEVATION VIEW

## Design Loading for METAL POLE NO. 13

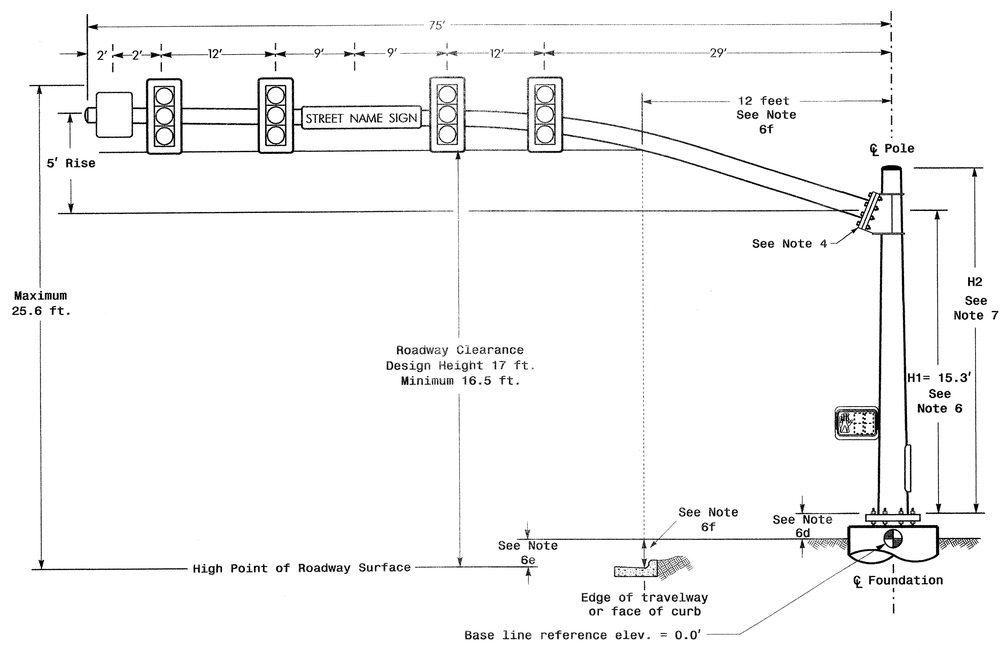


Elevation View

## SPECIAL NOTE

The contractor is responsible for verifying that the mast arm attachment height (H1) will provide the "Design Height" clearance from the roadway before submitting final shop drawings for approval. Verify elevation data below which was obtained by field measurement or from available project survey data.

## Elevation Data for Mast Arm Attachment (H1)

| Elevation Differences for: | Pole 12 | Pole 13 |
|---|---|---|
| Baseline reference point at ℄ Foundation @ ground level | 0.0 ft. | 0.0 ft. |
| Elevation difference at High point of roadway surface | +1.5 ft. | +1.3 ft. |
| Elevation difference at Edge of travelway or face of curb | +0.7 ft. | +1.1 ft. |

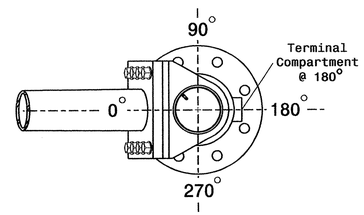


POLE RADIAL ORIENTATION

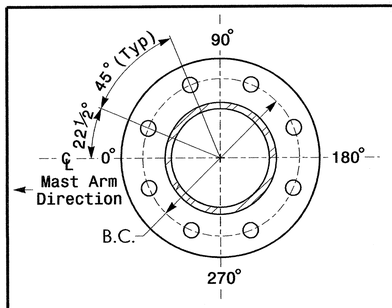


8 BOLT BASE PLATE DETAIL

See Note 5

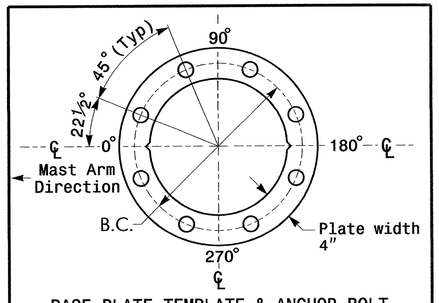


BASE PLATE TEMPLATE & ANCHOR BOLT LOCK PLATE DETAIL

For 8 Bolt Base Plate

## MAST ARM LOADING SCHEDULE

| LOADING SYMBOL | DESCRIPTION | AREA | SIZE | WEIGHT |
|---|---|---|---|---|
| | SIGNAL HEAD 12"-5 SECTION-WITH BACKPLATE AND ASTRO-BRAC | 16.3 S.F. | 42.0" W X 56.0" L | 103 LBS |
| | SIGNAL HEAD 12"-4 SECTION-WITH BACKPLATE AND ASTRO-BRAC | 11.5 S.F. | 25.5" W X 66.0" L | 74 LBS |
| | SIGNAL HEAD 12"-3 SECTION-WITH BACKPLATE AND ASTRO-BRAC | 9.3 S.F. | 25.5" W X 52.5" L | 60 LBS |
| STREET NAME SIGN | STREET NAME SIGN RIGID MOUNTED WITH ASTRO-SIGN-BRAC | 12.0 S.F. | 18.0" W X 96.0" L | 27 LBS |
| | PEDESTRIAN SIGNAL HEAD WITH MOUNTING HARDWARE | 2.2 S.F. | 18.5" W X 17.0" L | 21 LBS |

## NOTES

Design Reference Material

1. Design the traffic signal structure and foundation in accordance with:
   - The 4th Edition 2001 AASHTO "Standard Specifications for Structural Supports for Highway Signs, Luminaires, and Traffic Signals, including all of the latest interim revisions.
   - The 2006 NCDOT "Standard Specifications for Roads and Structures". The latest addenda to these specifications can be found in the traffic signal project special provisions.
   - The 2006 NCDOT Roadway Standard Drawings.
   - The traffic signal project plans and special provisions.
   - The NCDOT "Metal Pole Standards" located at the following NCDOT website: http://www.ncdot.org/doh/preconstruct/traffic/ITSS/ws/mpoles/poles.html

Design Requirements

2. Design the traffic signal structure using the loading conditions shown in the elevation views. These are anticipated worst case "Design loads" and may not represent the actual loads that will be applied at the time of the installation. The contractor should refer to the traffic signal plans for the actual loads that will be applied at the time of the installation.
3. Design all signal supports using stress ratios that do not exceed 0.9.
4. A clamp-type bolted mast arm-to-pole connection may be used instead of the welded ring stiffened box connection shown as long as the connection meets all of the design requirements.
5. Design base plate with 8 anchor bolt holes. Provide 2 inch x 60 inch anchor bolts.
6. The mast arm attachment height (H1) shown is based on the following design assumptions:
   a. Nominal vertical rise in mast arm is 5 feet as measured from the centerline of the arm base to the centerline of the free end of the arm.
   b. Signal heads attached to the mast arm are rigid mounted and vertically centered on the arm.
   c. The roadway clearance height for design is as shown in the elevation views.
   d. The top of the pole base plate is .75 feet above the ground elevation.
   e. Refer to the Elevation Data chart for elevation differences between the proposed foundation ground level and the high point on the roadway.
   f. Provide horizontal distance from proposed centerline of foundation to edge of travelway. Refer to the Elevation Data chart above for elevation difference between the proposed foundation ground level and the edge of travelway. This information is necessary when arched arms are specified to ensure that the roadway clearance is maintained at the edge of the travelway and to assist in the camber design of the mast arm.
7. The pole manufacturer will determine the total height (H2) of each pole using the greater of the following:
   - Mast arm attachment height (H1) plus 2 feet, or
   - H1 plus ½ of the total height of the mast arm attachment assembly plus 1 foot.
8. If pole location adjustments are required, the contractor must gain approval from the engineer as this may affect the mast arm lengths and arm attachment heights. The contractor may contact the Signals & Geometrics Structural Engineer for assistance at (919) 773-2800.
9. The contractor is responsible for verifying that the mast arm length shown will allow proper positioning of the signal heads over the roadway.
10. The contractor is responsible for providing soil penetration testing data (SPT) to the pole manufacturer so site specific foundations can be designed.

NCDOT Wind Zone 5 (120 mph)

Prepared in the Offices of:
Traffic Engineering and Safety Systems Branch
Signals and Geometrics Section
STATE OF NORTH CAROLINA DEPARTMENT OF TRANSPORTATION
750 N. Greenfield Pkwy, Garner, NC 27529

US 421 (King Street)
at
NC 194 (Jefferson Road)
Daniel Boone Drive

Division 11 Watauga County Boone

PLAN DATE: December 2008 REVIEWED BY:
PREPARED BY: R. Hough REVIEWED BY:

SCALE 0 N/A N/A

| REVISIONS | INIT. | DATE |
|---|---|---|
| | | |

SEAL
NORTH CAROLINA PROFESSIONAL SEAL 30530 ENGINEER ZACHARY W. LITTLE
SIGNATURE DATE 1/6/09
SIG. INVENTORY NO. 11-0020

06-JAN-2009 10:06
s:\its signals\workgroups\tip projects\u-4020\signals\designsignals\11-0020\archsingle[1].dgn
rhough

| PROJECT REFERENCE NO. | SHEET NO. |
|---|---|
| U-4020 | Sig.46 |

## PHASING DIAGRAM

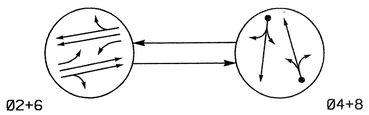


PHASING DIAGRAM DETECTION LEGEND

- DETECTED MOVEMENT
- UNDETECTED MOVEMENT (OVERLAP)
- UNSIGNALIZED MOVEMENT
- PEDESTRIAN MOVEMENT

## TABLE OF OPERATION

| SIGNAL FACE | PHASE Ø2+6 | PHASE Ø4+8 | PHASE FLASH |
|---|---|---|---|
| 21, 22 | G | R | Y |
| 41, 42 | R | G | R |
| 61, 62 | G | R | Y |
| 81, 82 | R | G | R |

## SIGNAL FACE I.D.

Denotes L.E.D.




## 2070L LOOP & DETECTOR INSTALLATION

| INDUCTIVE LOOPS | | | | | DETECTOR PROGRAMMING | | | | | | | |
|---|---|---|---|---|---|---|---|---|---|---|---|---|
| LOOP | SIZE (FT) | DISTANCE FROM STOPBAR (FT) | TURNS | NEW LOOP | PHASE | CALLING | EXTENSION | FULL TIME DELAY | STRETCH TIME | DELAY TIME | SYSTEM LOOP | NEW CARD |
| 4A | 6X40 | 0 | 2-4-2 | Y | 4 | Y | Y | — | —— | 5 | — | Y |
| 8A | 6X40 | 0 | 2-4-2 | Y | 8 | Y | Y | — | —— | 5 | — | Y |

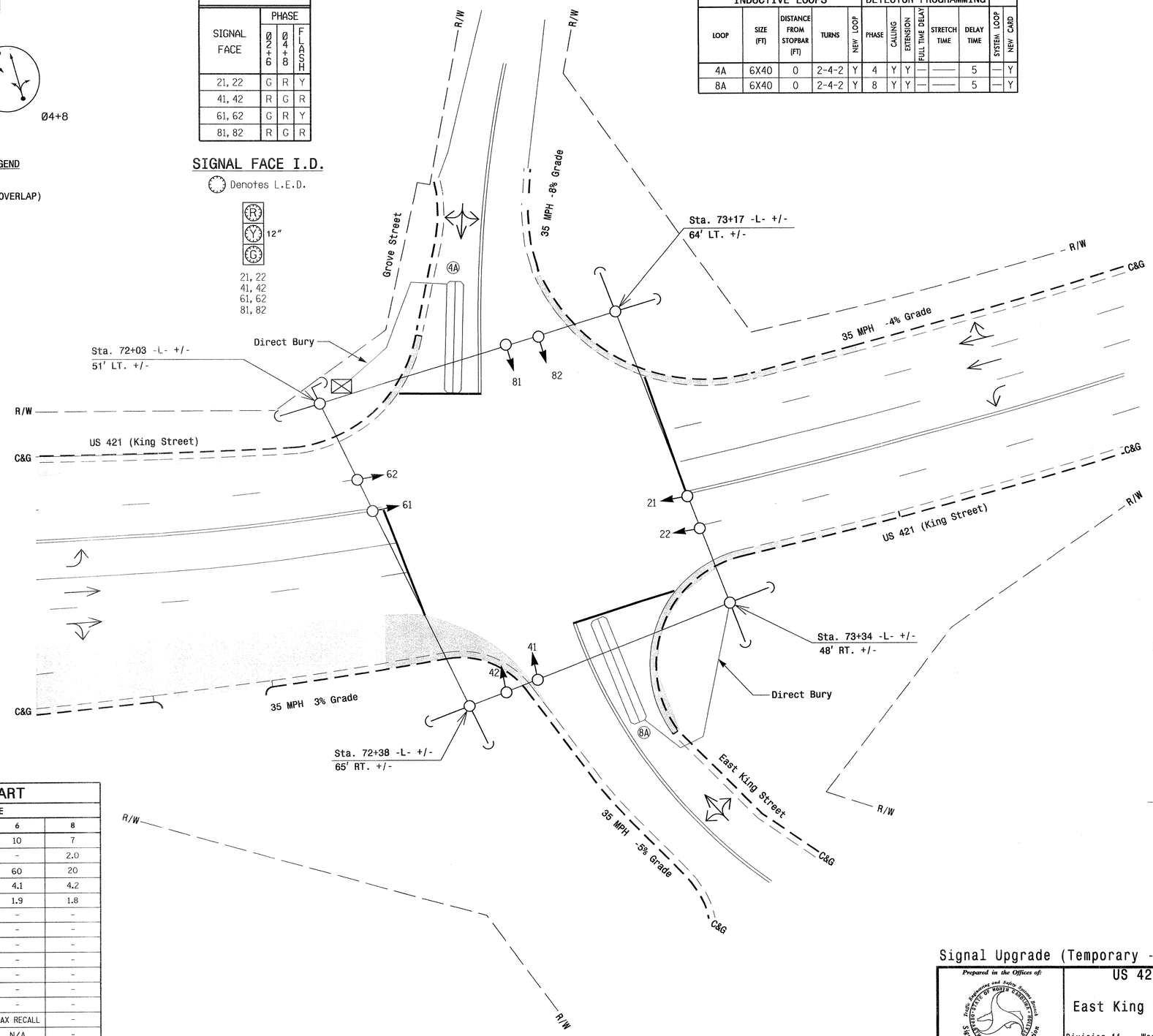


2 Phase
Semi-Actuated
(Isolated)

## NOTES

1. Refer to "Roadway Standard Drawings NCDOT" dated July 2006 and "Standard Specifications for Roads and Structures" dated July 2006.
2. Do not program signal for late night flashing operation unless otherwise directed by the Engineer.
3. Set all detector units to presence mode.
4. Locate new cabinet so as not to obstruct sight distance of vehicles turning right on red.

## LEGEND

| PROPOSED | | EXISTING |
|---|---|---|
| | Traffic Signal Head | |
| | Modified Signal Head | N/A |
| | Sign | |
| | Pedestrian Signal Head With Push Button & Sign | |
| | Signal Pole with Guy | |
| | Signal Pole with Sidewalk Guy | |
| | Inductive Loop Detector | |
| | Controller & Cabinet | |
| | Junction Box | |
| | 2-in Underground Conduit | |
| N/A | Right of Way | |
| | Directional Arrow | |
| | Pavement Marking Arrow | |
| | Construction Zone | |

## 2070L TIMING CHART

| FEATURE | PHASE 2 | PHASE 4 | PHASE 6 | PHASE 8 |
|---|---|---|---|---|
| Min Green 1 * | 10 | 7 | 10 | 7 |
| Extension 1 * | - | 2.0 | - | 2.0 |
| Max Green 1 * | 60 | 20 | 60 | 20 |
| Yellow Clearance | 3.7 | 4.5 | 4.1 | 4.2 |
| Red Clearance | 1.5 | 1.6 | 1.9 | 1.8 |
| Walk 1 * | - | - | - | - |
| Don't Walk 1 | - | - | - | - |
| Seconds Per Actuation * | - | - | - | - |
| Max Variable Initial * | - | - | - | - |
| Time Before Reduction * | - | - | - | - |
| Time To Reduce * | - | - | - | - |
| Minimum Gap | - | - | - | - |
| Recall Mode | MAX RECALL | - | MAX RECALL | - |
| Vehicle Call Memory | N/A | - | N/A | - |
| Dual Entry | - | ON | - | ON |
| Simultaneous Gap | ON | ON | ON | ON |

* These values may be field adjusted. Do not adjust Min Green and Extension times for phases 2 and 6 lower than what is shown. Min Green for all other phases should not be lower than 4 seconds.

Signal Upgrade (Temporary - Phase I, Step 2)

Prepared in the Offices of:
Traffic Engineering and Safety Systems Branch
STATE OF NORTH CAROLINA
DEPARTMENT OF TRANSPORTATION
Signals and Geometrics Section
750 N. Greenfield Pkwy, Garner, NC 27529

US 421 (King Street)
at
East King Street/Grove Street

Division 11 Watauga County Boone

| PLAN DATE: October 2008 | REVIEWED BY: Z. M. Little |
|---|---|
| PREPARED BY: B.E. Wynn | REVIEWED BY: |

SCALE 0 20 1"=20'

| REVISIONS | INIT. | DATE |
|---|---|---|
| | | |

SEAL
NORTH CAROLINA PROFESSIONAL SEAL 30530 ENGINEER ZACHARY M. LITTLE
SIGNATURE DATE 12/16/08
SIG. INVENTORY NO. 11-1117T1

16-DEC-2008 14:30
s:\its signals\workgroups\tip projects\u-4020\signals\design\signals\11-1117\111117t1_sig_dsn_2008xxxx.dgn
zmlittle

| PROJECT REFERENCE NO. | SHEET NO. |
|---|---|
| U-4020 | Sig.47 |

# EDI MODEL 2010ECL-NC CONFLICT MONITOR PROGRAMMING DETAIL

*(remove jumpers and set switches as shown)*

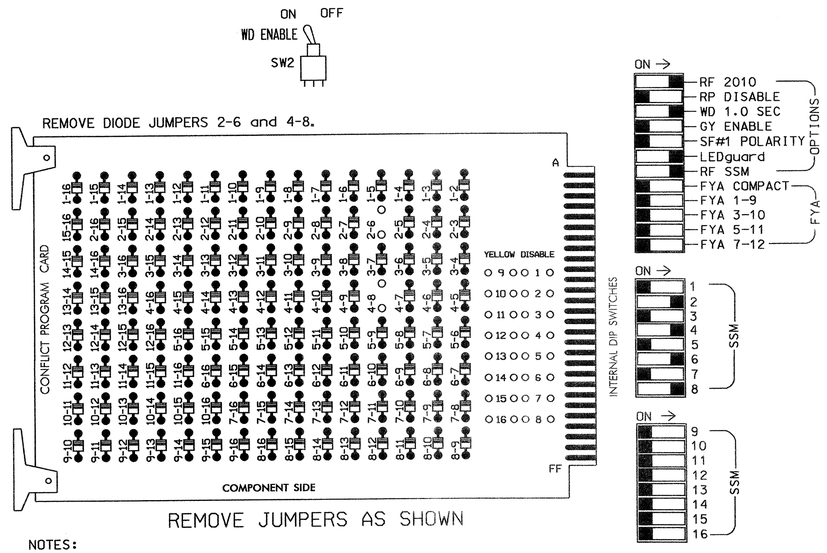


REMOVE JUMPERS AS SHOWN

NOTES:

1. Card is provided with all diode jumpers in place. Removal of any jumper allows its channels to run concurrently.
2. Make sure jumpers SEL2-SEL5 are present on the monitor board.

■ = DENOTES POSITION OF SWITCH

## NOTES

1. To prevent "flash-conflict" problems, insert red flash program blocks for all unused vehicle load switches in the output file. The installer shall verify that signal heads flash in accordance with the Signal Plans.
2. Ensure that Red Enable is active at all times during normal operation. To prevent Red Failures on unused monitor channels, tie unused red monitor inputs 1,3,5,7,9, 10,11,12,13,14,15 & 16 to load switch AC+ per the cabinet manufacturer's instructions.
3. Program phases 2 and 6, on the controller unit, for Start Up In Green.
4. Enable Simultaneous Gap-Out, on the controller unit, for all phases.
5. Program phases 4 and 8, on the controller unit, for Dual Entry.

## SIGNAL HEAD HOOK-UP CHART

| LOAD SWITCH NO. | S1 | S2 | S2P | S3 | S4 | S4P | S5 | S6 | S6P | S7 | S8 | S8P |
|---|---|---|---|---|---|---|---|---|---|---|---|---|
| PHASE | 1 | 2 | 2 PED | 3 | 4 | 4 PED | 5 | 6 | 6 PED | 7 | 8 | 8 PED |
| SIGNAL HEAD NO. | NU | 21,22 | NU | NU | 41,42 | NU | NU | 61,62 | NU | NU | 81,82 | NU |
| RED | | 128 | | | 101 | | | 134 | | | 107 | |
| YELLOW | | 129 | | | 102 | | | 135 | | | 108 | |
| GREEN | | 130 | | | 103 | | | 136 | | | 109 | |
| RED ARROW | | | | | | | | | | | | |
| YELLOW ARROW | | | | | | | | | | | | |
| GREEN ARROW | | | | | | | | | | | | |
| ✋ | | | | | | | | | | | | |
| 🚶 | | | | | | | | | | | | |

NU = Not Used

## EQUIPMENT INFORMATION

CONTROLLER.....CONTRACTOR SUPPLIED 2070L
CABINET.....CONTRACTOR SUPPLIED 332
SOFTWARE.....ECONOLITE OASIS
CABINET MOUNT.....BASE
OUTPUT FILE POSITIONS...12
LOAD SWITCHES USED.....S2,S4,S6,S8
PHASES USED.....2,4,6,8
OVERLAPS.....NONE

## INPUT FILE POSITION LAYOUT

*(front view)*

| | | 1 | 2 | 3 | 4 | 5 | 6 | 7 | 8 | 9 | 10 | 11 | 12 | 13 | 14 |
|---|---|---|---|---|---|---|---|---|---|---|---|---|---|---|---|
| FILE "I" | U | SLOT EMPTY | SLOT EMPTY | SLOT EMPTY | SLOT EMPTY | SLOT EMPTY | ø 4 4A | SLOT EMPTY | SLOT EMPTY | SLOT EMPTY | SLOT EMPTY | SLOT EMPTY | SLOT EMPTY | SLOT EMPTY | FS DC ISOLATOR |
| | L | | | | | | NOT USED | | | | | | | | ST DC ISOLATOR |
| FILE "J" | U | SLOT EMPTY | SLOT EMPTY | SLOT EMPTY | SLOT EMPTY | SLOT EMPTY | ø 8 8A | SLOT EMPTY | SLOT EMPTY | SLOT EMPTY | SLOT EMPTY | SLOT EMPTY | SLOT EMPTY | SLOT EMPTY | SLOT EMPTY |
| | L | | | | | | NOT USED | | | | | | | | |

EX.: 1A, 2A, ETC. = LOOP NO.'S

FS = FLASH SENSE
ST = STOP TIME

## INPUT FILE CONNECTION & PROGRAMMING CHART

| LOOP NO. | LOOP TERMINAL | INPUT FILE POS. | PIN NO. | INPUT ASSIGNMENT NO. | DETECTOR NO. | NEMA PHASE | CALL | EXTEND | FULL TIME DELAY | STRETCH TIME | DELAY TIME |
|---|---|---|---|---|---|---|---|---|---|---|---|
| 4A | TB4-9,10 | I6U | 41 | 3 | 4 | 4 | Y | Y | | | 5 |
| 8A | TB5-9,10 | J6U | 42 | 4 | 8 | 8 | Y | Y | | | 5 |

INPUT FILE POSITION LEGEND: J2L
FILE J
SLOT 2
LOWER

THIS ELECTRICAL DETAIL IS FOR
THE SIGNAL DESIGN: 11-1117T1
DESIGNED: October 2008
SEALED: 12-16-08
REVISED: N/A

Signal Upgrade (Temporary - Phase I, Step 2)

ELECTRICAL AND PROGRAMMING DETAILS FOR:

Prepared in the Offices of:

Traffic Engineering and Safety Systems Branch
STATE OF NORTH CAROLINA DEPARTMENT OF TRANSPORTATION
Signal Management Section

750 N. Greenfield Pkwy, Garner, NC 27529

US 421 (King Street)
at
East King Street/Grove Street

Division 11 Watauga County Boone

| | | | |
|---|---|---|---|
| PLAN DATE: | 12-10-08 | REVIEWED BY: | D.T. Joyce |
| PREPARED BY: | D.H. Spaulding | REVIEWED BY: | |

| REVISIONS | INIT. | DATE |
|---|---|---|
| | | |

SEAL

NORTH CAROLINA PROFESSIONAL SEAL 022013 ENGINEER GEORGE C. BROWN

George C. Brown 12/17/08
SIGNATURE DATE

SIG. INVENTORY NO. 11-1117T1

16-DEC-2008 15:39
s:\its\signals\workgroups\sig man\spaulding\in-progress\1111771_sm.ele.2008xx.dgn
dspaulding

| PROJECT REFERENCE NO. | SHEET NO. |
|---|---|
| U-4020 | Sig.4 8 |

## PHASING DIAGRAM

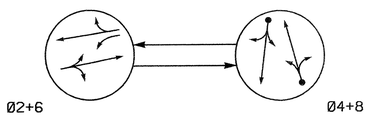


PHASING DIAGRAM DETECTION LEGEND

- DETECTED MOVEMENT
- UNDETECTED MOVEMENT (OVERLAP)
- UNSIGNALIZED MOVEMENT
- PEDESTRIAN MOVEMENT

## TABLE OF OPERATION

| SIGNAL FACE | PHASE 02+6 | PHASE 04+8 | FLASH |
|---|---|---|---|
| 21, 22 | G | R | Y |
| 41, 42 | R | G | R |
| 61, 62 | G | R | Y |
| 81, 82 | R | G | R |

## SIGNAL FACE I.D.

Denotes L.E.D.




21, 22
41, 42
61, 62
81, 82

## 2070L LOOP & DETECTOR INSTALLATION

| INDUCTIVE LOOPS | | | | | DETECTOR PROGRAMMING | | | | | | |
|---|---|---|---|---|---|---|---|---|---|---|---|
| LOOP | SIZE (FT) | DISTANCE FROM STOPBAR (FT) | TURNS | NEW LOOP | PHASE | CALLING | EXTENSION | FULL TIME DELAY | STRETCH TIME | DELAY TIME | SYSTEM LOOP | NEW CARD |
| 4A | 6X40 | 0 | 2-4-2 | — | 4 | Y | Y | — | —— | 5 | — | — |
| 8A | 6X40 | 0 | 2-4-2 | — | 8 | Y | Y | — | —— | 5 | — | — |

2 Phase
Semi-Actuated
(Isolated)

## NOTES

1. Refer to "Roadway Standard Drawings NCDOT" dated July 2006 and "Standard Specifications for Roads and Structures" dated July 2006.
2. Do not program signal for late night flashing operation unless otherwise directed by the Engineer.
3. Set all detector units to presence mode.
4. Reposition existing heads as needed.

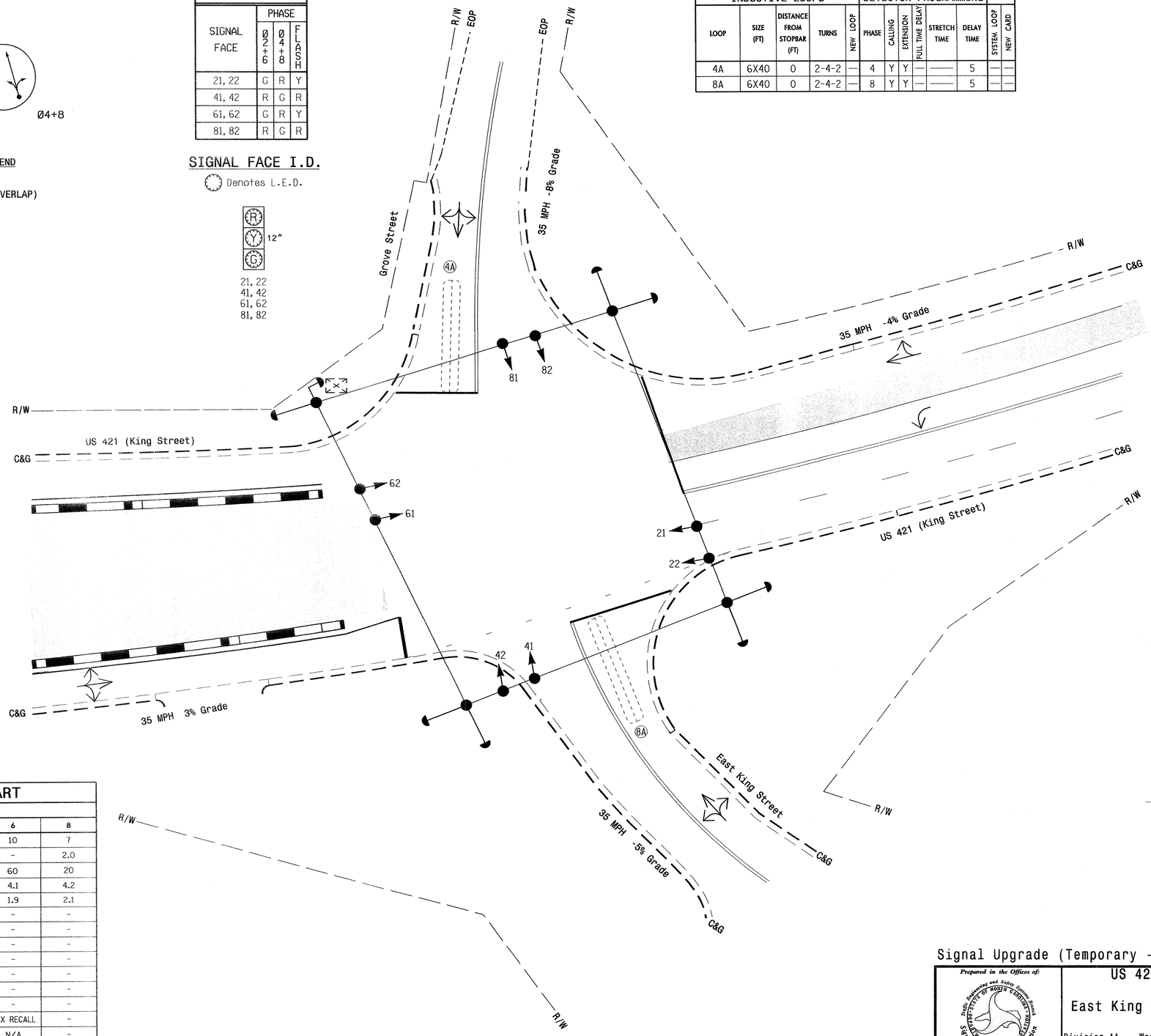


## LEGEND

| PROPOSED | | EXISTING |
|---|---|---|
| | Traffic Signal Head | |
| | Modified Signal Head | N/A |
| | Sign | |
| | Pedestrian Signal Head With Push Button & Sign | |
| | Signal Pole with Guy | |
| | Signal Pole with Sidewalk Guy | |
| | Inductive Loop Detector | |
| | Controller & Cabinet | |
| | Junction Box | |
| | 2-in Underground Conduit | |
| N/A | Right of Way | |
| | Directional Arrow | |
| | Pavement Marking Arrow | |
| | Construction Zone | |

## 2070L TIMING CHART

| FEATURE | PHASE 2 | PHASE 4 | PHASE 6 | PHASE 8 |
|---|---|---|---|---|
| Min Green 1 * | 10 | 7 | 10 | 7 |
| Extension 1 * | - | 2.0 | - | 2.0 |
| Max Green 1 * | 60 | 20 | 60 | 20 |
| Yellow Clearance | 3.7 | 4.5 | 4.1 | 4.2 |
| Red Clearance | 2.1 | 1.8 | 1.9 | 2.1 |
| Walk 1 * | - | - | - | - |
| Don't Walk 1 | - | - | - | - |
| Seconds Per Actuation * | - | - | - | - |
| Max Variable Initial * | - | - | - | - |
| Time Before Reduction * | - | - | - | - |
| Time To Reduce * | - | - | - | - |
| Minimum Gap | - | - | - | - |
| Recall Mode | MAX RECALL | - | MAX RECALL | - |
| Vehicle Call Memory | N/A | - | N/A | - |
| Dual Entry | - | ON | - | ON |
| Simultaneous Gap | ON | ON | ON | ON |

* These values may be field adjusted. Do not adjust Min Green and Extension times for phases 2 and 6 lower than what is shown. Min Green for all other phases should not be lower than 4 seconds.

Signal Upgrade (Temporary - Phase II, Step 1&2)

Prepared in the Offices of:
Traffic Engineering and Safety Systems Branch
STATE OF NORTH CAROLINA
DEPARTMENT OF TRANSPORTATION
Signals and Geometrics Section
750 N. Greenfield Pkwy, Garner, NC 27529

US 421 (King Street)
at
East King Street/Grove Street

Division 11 Watauga County Boone

PLAN DATE: October 2008 REVIEWED BY:
PREPARED BY: B.E. Wynn REVIEWED BY:

SCALE 0 20 1"=20'

| REVISIONS | INIT. | DATE |
|---|---|---|
| | | |

SEAL
NORTH CAROLINA PROFESSIONAL SEAL 30530 ENGINEER ZACHARY W. LITTLE
SIGNATURE DATE 12/16/08
SIG. INVENTORY NO. 11-1117T2

16-DEC-2008 12:20
s:\traffic\signals\workgroups\tip projects\u-4020\signals\design\signals\11-1117\11111T2_sig_dsn_2008xxxx.dgn
bwynn

| PROJECT REFERENCE NO. | SHEET NO. |
|---|---|
| U-4020 | Sig.49 |

## EDI MODEL 2010ECL-NC CONFLICT MONITOR PROGRAMMING DETAIL

*(remove jumpers and set switches as shown)*

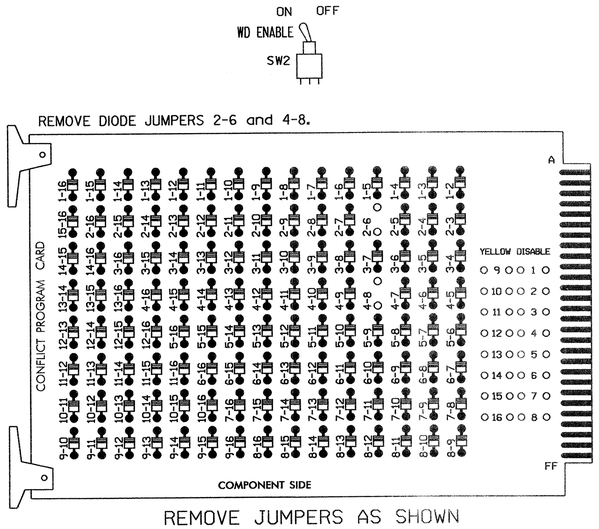


REMOVE JUMPERS AS SHOWN

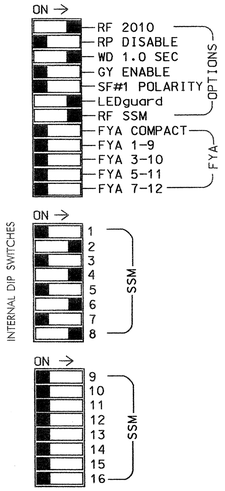


NOTES:

1. Card is provided with all diode jumpers in place. Removal of any jumper allows its channels to run concurrently.
2. Make sure jumpers SEL2-SEL5 are present on the monitor board.

■ = DENOTES POSITION OF SWITCH

## NOTES

1. To prevent "flash-conflict" problems, insert red flash program blocks for all unused vehicle load switches in the output file. The installer shall verify that signal heads flash in accordance with the Signal Plans.
2. Ensure that Red Enable is active at all times during normal operation. To prevent Red Failures on unused monitor channels, tie unused red monitor inputs 1,3,5,7,9, 10,11,12,13,14,15 & 16 to load switch AC+ per the cabinet manufacturer's instructions.
3. Program phases 2 and 6, on the controller unit, for Start Up In Green.
4. Enable Simultaneous Gap-Out, on the controller unit, for all phases.
5. Program phases 4 and 8, on the controller unit, for Dual Entry.

## SIGNAL HEAD HOOK-UP CHART

| LOAD SWITCH NO. | S1 | S2 | S2P | S3 | S4 | S4P | S5 | S6 | S6P | S7 | S8 | S8P |
|---|---|---|---|---|---|---|---|---|---|---|---|---|
| PHASE | 1 | 2 | 2 PED | 3 | 4 | 4 PED | 5 | 6 | 6 PED | 7 | 8 | 8 PED |
| SIGNAL HEAD NO. | NU | 21,22 | NU | NU | 41,42 | NU | NU | 61,62 | NU | NU | 81,82 | NU |
| RED | | 128 | | | 101 | | | 134 | | | 107 | |
| YELLOW | | 129 | | | 102 | | | 135 | | | 108 | |
| GREEN | | 130 | | | 103 | | | 136 | | | 109 | |
| RED ARROW | | | | | | | | | | | | |
| YELLOW ARROW | | | | | | | | | | | | |
| GREEN ARROW | | | | | | | | | | | | |
| ✋ | | | | | | | | | | | | |
| 🚶 | | | | | | | | | | | | |

NU = Not Used

## EQUIPMENT INFORMATION

CONTROLLER.....CONTRACTOR SUPPLIED 2070L
CABINET.....CONTRACTOR SUPPLIED 332
SOFTWARE.....ECONOLITE OASIS
CABINET MOUNT.....BASE
OUTPUT FILE POSITIONS...12
LOAD SWITCHES USED.....S2,S4,S6,S8
PHASES USED.....2,4,6,8
OVERLAPS.....NONE

## INPUT FILE POSITION LAYOUT

*(front view)*

| | | 1 | 2 | 3 | 4 | 5 | 6 | 7 | 8 | 9 | 10 | 11 | 12 | 13 | 14 |
|---|---|---|---|---|---|---|---|---|---|---|---|---|---|---|---|
| FILE "I" | U | SLOT | SLOT | SLOT | SLOT | SLOT | ø 4 4A | SLOT | SLOT | SLOT | SLOT | SLOT | SLOT | SLOT | FS DC ISOLATOR |
| | L | EMPTY | EMPTY | EMPTY | EMPTY | EMPTY | NOT USED | EMPTY | EMPTY | EMPTY | EMPTY | EMPTY | EMPTY | EMPTY | ST DC ISOLATOR |
| FILE "J" | U | SLOT | SLOT | SLOT | SLOT | SLOT | ø 8 8A | SLOT | SLOT | SLOT | SLOT | SLOT | SLOT | SLOT | SLOT |
| | L | EMPTY | EMPTY | EMPTY | EMPTY | EMPTY | NOT USED | EMPTY | EMPTY | EMPTY | EMPTY | EMPTY | EMPTY | EMPTY | EMPTY |

EX.: 1A, 2A, ETC. = LOOP NO.'S

FS = FLASH SENSE
ST = STOP TIME

## INPUT FILE CONNECTION & PROGRAMMING CHART

| LOOP NO. | LOOP TERMINAL | INPUT FILE POS. | PIN NO. | INPUT ASSIGNMENT NO. | DETECTOR NO. | NEMA PHASE | CALL | EXTEND | FULL TIME DELAY | STRETCH TIME | DELAY TIME |
|---|---|---|---|---|---|---|---|---|---|---|---|
| 4A | TB4-9,10 | I6U | 41 | 3 | 4 | 4 | Y | Y | | | 5 |
| 8A | TB5-9,10 | J6U | 42 | 4 | 8 | 8 | Y | Y | | | 5 |

INPUT FILE POSITION LEGEND: J2L
FILE J
SLOT 2
LOWER

THIS ELECTRICAL DETAIL IS FOR
THE SIGNAL DESIGN: 11-1117T2
DESIGNED: October 2008
SEALED: 12-16-08
REVISED: N/A

Signal Upgrade (Temporary - Phase II, Step 1&2)

ELECTRICAL AND PROGRAMMING DETAILS FOR:

Prepared in the Offices of:

Traffic Engineering and Safety Systems Branch
DIVISION OF HIGHWAYS
DEPARTMENT OF TRANSPORTATION
State Management Section

750 N. Greenfield Pkwy, Garner, NC 27529

US 421 (King Street)
at
East King Street/Grove Street

Division 11 Watauga County Boone

| PLAN DATE: 12-10-08 | REVIEWED BY: D.T. Joyce |
|---|---|
| PREPARED BY: D.H. Spaulding | REVIEWED BY: |

| REVISIONS | INIT. | DATE |
|---|---|---|
| | | |

SEAL

NORTH CAROLINA PROFESSIONAL SEAL 022013 ENGINEER GEORGE C. BROWN

George C. Brown 12/17/08
SIGNATURE DATE

SIG. INVENTORY NO. 11-1117T2

16-DEC-2008 15:36
11-1117T2_signal_workgroupsskig mcmsspaulding#inprogress#1111772_sm.ele.2008xx.dgn
dspaulding

| PROJECT REFERENCE NO. | SHEET NO. |
|---|---|
| U-4020 | Sig.50 |

## PHASING DIAGRAM

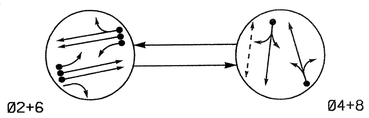


**PHASING DIAGRAM DETECTION LEGEND**

- DETECTED MOVEMENT
- UNDETECTED MOVEMENT (OVERLAP)
- UNSIGNALIZED MOVEMENT
- PEDESTRIAN MOVEMENT

## TABLE OF OPERATION

| SIGNAL FACE | PHASE Ø2+6 | PHASE Ø4+8 | FLASH |
|---|---|---|---|
| 21, 22, 23 | G | R | Y |
| 41, 42 | R | G | R |
| 61, 62 | G | R | Y |
| 81, 82 | R | G | R |
| P41, P42 | DW | W | DRK |

W - Walk
DW - Don't Walk
DRK - Dark

## SIGNAL FACE I.D.

Denotes L.E.D.




## 2070L LOOP & DETECTOR INSTALLATION

| INDUCTIVE LOOPS | | | | | DETECTOR PROGRAMMING | | | | | | | |
|---|---|---|---|---|---|---|---|---|---|---|---|---|
| LOOP | SIZE (FT) | DISTANCE FROM STOPBAR (FT) | TURNS | NEW LOOP | PHASE | CALLING | EXTENSION | FULL TIME DELAY | STRETCH TIME | DELAY TIME | SYSTEM LOOP | NEW CARD |
| 2A, 2B | 6X6 | 70 | 4 | Y | 2 | Y | Y | — | — | — | — | Y |
| 2C | 6X40 | 0 | 2-4-2 | Y | 2 | Y | Y | — | — | — | — | Y |
| 4A | 6X40 | 0 | 2-4-2 | Y | 4 | Y | Y | — | — | 5 | — | Y |
| 6A, 6B | 6X6 | 70 | 3 | Y | 6 | Y | Y | — | — | — | — | Y |
| 6C | 6X40 | 0 | 2-4-2 | Y | 6 | Y | Y | — | — | — | — | Y |
| 8A | 6X40 | 0 | 2-4-2 | Y | 8 | Y | Y | — | — | 5 | — | Y |
| S16 | 6X6 | +150 | 3 | Y | — | — | — | — | — | — | Y | Y |
| S17 | 6X6 | +150 | 3 | Y | — | — | — | — | — | — | Y | Y |

## 2 Phase
## Fully Actuated
## US 421 (King Street) Closed Loop System

## NOTES

1. Refer to "Roadway Standard Drawings NCDOT" dated July 2006 and "Standard Specifications for Roads and Structures" dated July 2006.
2. Do not program signal for late night flashing operation unless otherwise directed by the Engineer.
3. Set all detector units to presence mode.
4. Omit "WALK" and flashing "DON'T WALK" with no pedestrian calls.
5. Program pedestrian heads to countdown the flashing "Don't Walk" time only.
6. Maximum times shown in timing chart are for free-run operation only. Coordinated signal system timing values supersede these values.
7. Closed loop system data: Controller Asset #: 1117.

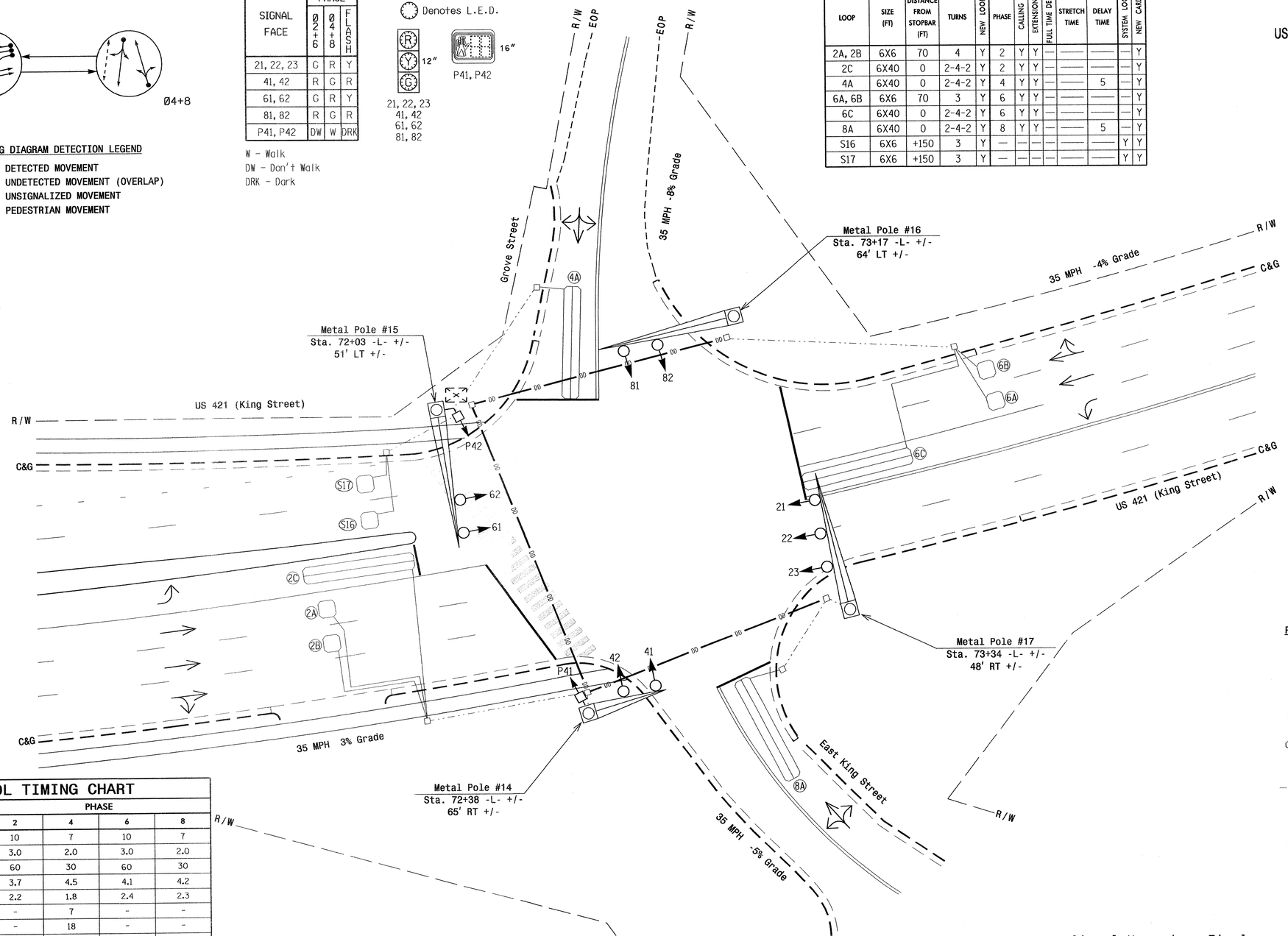


## LEGEND

| PROPOSED | | EXISTING |
|---|---|---|
| | Traffic Signal Head | |
| | Modified Signal Head | N/A |
| | Sign | |
| | Pedestrian Signal Head With Push Button & Sign | |
| | Signal Pole with Guy | |
| | Signal Pole with Sidewalk Guy | |
| | Inductive Loop Detector | |
| | Controller & Cabinet | |
| | Junction Box | |
| | 2-in Underground Conduit | |
| N/A | Right of Way | |
| | Directional Arrow | |
| | Pavement Marking Arrow | |
| | Metal Pole with Mastarm | |

## 2070L TIMING CHART

| FEATURE | PHASE 2 | PHASE 4 | PHASE 6 | PHASE 8 |
|---|---|---|---|---|
| Min Green 1 * | 10 | 7 | 10 | 7 |
| Extension 1 * | 3.0 | 2.0 | 3.0 | 2.0 |
| Max Green 1 * | 60 | 30 | 60 | 30 |
| Yellow Clearance | 3.7 | 4.5 | 4.1 | 4.2 |
| Red Clearance | 2.2 | 1.8 | 2.4 | 2.3 |
| Walk 1 * | - | 7 | - | - |
| Don't Walk 1 | - | 18 | - | - |
| Seconds Per Actuation * | - | - | - | - |
| Max Variable Initial * | - | - | - | - |
| Time Before Reduction * | - | - | - | - |
| Time To Reduce * | - | - | - | - |
| Minimum Gap | - | - | - | - |
| Recall Mode | MIN RECALL | - | MIN RECALL | - |
| Vehicle Call Memory | YELLOW | - | YELLOW | - |
| Dual Entry | - | ON | - | ON |
| Simultaneous Gap | ON | ON | ON | ON |

* These values may be field adjusted. Do not adjust Min Green and Extension times for phases 2 and 6 lower than what is shown. Min Green for all other phases should not be lower than 4 seconds.

Signal Upgrade - Final

Prepared in the Offices of:
Traffic Engineering and Safety Systems Branch
STATE OF NORTH CAROLINA DEPARTMENT OF TRANSPORTATION
Signals and Geometrics Section
750 N. Greenfield Pkwy, Garner, NC 27529

SCALE 0 20 1"=20'

US 421 (King Street) at East King Street/Grove Street

Division 11 Watauga County Boone

| | | | |
|---|---|---|---|
| PLAN DATE: | October 2008 | REVIEWED BY: | |
| PREPARED BY: | B.E. Wynn | REVIEWED BY: | |

| REVISIONS | INIT. | DATE |
|---|---|---|
| | | |

SEAL
NORTH CAROLINA PROFESSIONAL SEAL 30530 ENGINEER ZACHARY M. TUCKER
SIGNATURE TITLE DATE 12/19/08
SIG. INVENTORY NO. 11-1117

15-DEC-2008 14:19
z:\ITS signals\workgroups\ip projects\u-4020\signals\designs\signals\11-1117\111117_sig_dsn_2008xxxx.dgn
bwynn

| PROJECT REFERENCE NO. | SHEET NO. |
|---|---|
| U-4020 | Sig.S1 |

## EDI MODEL 2010ECL-NC CONFLICT MONITOR PROGRAMMING DETAIL

*(remove jumpers and set switches as shown)*

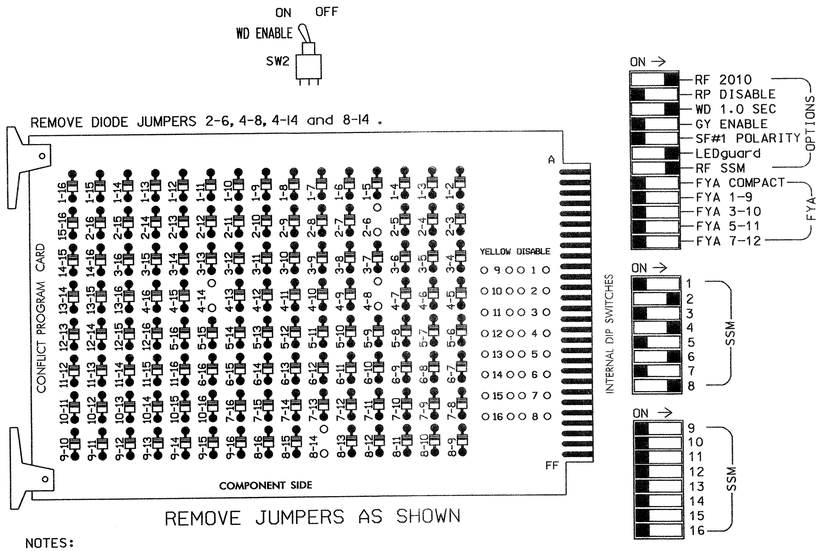


NOTES:

1. Card is provided with all diode jumpers in place. Removal of any jumper allows its channels to run concurrently.
2. Make sure jumpers SEL2-SEL5 are present on the monitor board.

■ = DENOTES POSITION OF SWITCH

## NOTES

1. To prevent "flash-conflict" problems, insert red flash program blocks for all unused vehicle load switches in the output file. The installer shall verify that signal heads flash in accordance with the Signal Plans.
2. Ensure that Red Enable is active at all times during normal operation. To prevent Red Failures on unused monitor channels, tie unused red monitor inputs 1,3,5,7,9, 10,11,12,13,14,15 & 16 to load switch AC+ per the cabinet manufacturer's instructions.
3. Program phases 2 and 6, on the controller unit, for Start Up In Green.
4. Enable Simultaneous Gap-Out, on the controller unit, for all phases.
5. Program phases 4 and 8, on the controller unit, for Dual Entry.
6. Program phase 4 for 'STARTUP PED CALL'.
7. The cabinet and controller are part of the US 421 (King Street) Closed Loop System.

## SIGNAL HEAD HOOK-UP CHART

| LOAD SWITCH NO. | S1 | S2 | S2P | S3 | S4 | S4P | S5 | S6 | S6P | S7 | S8 | S8P |
|---|---|---|---|---|---|---|---|---|---|---|---|---|
| PHASE | 1 | 2 | 2 PED | 3 | 4 | 4 PED | 5 | 6 | 6 PED | 7 | 8 | 8 PED |
| SIGNAL HEAD NO. | NU | 21,22 23 | NU | NU | 41,42 | P41, P42 | NU | 61,62 | NU | NU | 81,82 | NU |
| RED | | 128 | | | 101 | | | 134 | | | 107 | |
| YELLOW | | 129 | | | 102 | | | 135 | | | 108 | |
| GREEN | | 130 | | | 103 | | | 136 | | | 109 | |
| RED ARROW | | | | | | | | | | | | |
| YELLOW ARROW | | | | | | | | | | | | |
| GREEN ARROW | | | | | | | | | | | | |
| ✋ | | | | | | 104 | | | | | | |
| 🚶 | | | | | | 106 | | | | | | |

NU = Not Used

## EQUIPMENT INFORMATION

CONTROLLER.....CONTRACTOR SUPPLIED 2070L
CABINET.....CONTRACTOR SUPPLIED 332
SOFTWARE.....ECONOLITE OASIS
CABINET MOUNT.....BASE
OUTPUT FILE POSITIONS...12
LOAD SWITCHES USED.....S2,S4,S4P,S6,S8
PHASES USED.....2,4,4PED,6,8
OVERLAPS.....NONE

## INPUT FILE POSITION LAYOUT

*(front view)*

| | | 1 | 2 | 3 | 4 | 5 | 6 | 7 | 8 | 9 | 10 | 11 | 12 | 13 | 14 |
|---|---|---|---|---|---|---|---|---|---|---|---|---|---|---|---|
| FILE "I" | U | SLOT | Ø 2 | SLOT | SLOT | SLOT | Ø 4 | SLOT | SLOT | SYS. DET. | SLOT | SLOT | NOT USED | SLOT | FS |
| | | | 2A,2B | | | | 4A | | | S16 | | | | | DC ISOLATOR |
| | L | EMPTY | Ø 2 | EMPTY | EMPTY | EMPTY | NOT USED | EMPTY | EMPTY | SYS. DET. | EMPTY | EMPTY | Ø4 PED | EMPTY | ST |
| | | | 2C | | | | | | | S17 | | | DC ISOLATOR | | DC ISOLATOR |
| FILE "J" | U | SLOT | Ø 6 | SLOT | SLOT | SLOT | Ø 8 | SLOT | SLOT | SLOT | SLOT | SLOT | SLOT | SLOT | SLOT |
| | | | 6A,6B | | | | 8A | | | | | | | | |
| | L | EMPTY | Ø 6 | EMPTY | EMPTY | EMPTY | NOT USED | EMPTY | EMPTY | EMPTY | EMPTY | EMPTY | EMPTY | EMPTY | EMPTY |
| | | | 6C | | | | | | | | | | | | |

EX.: 1A, 2A, ETC. = LOOP NO.'S

FS = FLASH SENSE
ST = STOP TIME

## INPUT FILE CONNECTION & PROGRAMMING CHART

| LOOP NO. | LOOP TERMINAL | INPUT FILE POS. | PIN NO. | INPUT ASSIGNMENT NO. | DETECTOR NO. | NEMA PHASE | CALL | EXTEND | FULL TIME DELAY | STRETCH TIME | DELAY TIME |
|---|---|---|---|---|---|---|---|---|---|---|---|
| 2A,2B | TB2-5,6 | I2U | 39 | 1 | 2 | 2 | Y | Y | | | |
| 2C | TB2-7,8 | I2L | 43 | 5 | 12 | 2 | Y | Y | | | |
| 4A | TB4-9,10 | I6U | 41 | 3 | 4 | 4 | Y | Y | | | 15 |
| * S16 | TB6-9,10 | I9U | 60 | 22 | 11 | SYS | | | | | |
| * S17 | TB6-11,12 | I9L | 62 | 24 | 13 | SYS | | | | | |
| 6A,6B | TB3-5,6 | J2U | 40 | 2 | 6 | 6 | Y | Y | | | |
| 6C | TB3-7,8 | J2L | 44 | 6 | 16 | 6 | Y | Y | | | |
| 8A | TB5-9,10 | J6U | 42 | 4 | 8 | 8 | Y | Y | | | 5 |
| PED PUSH BUTTONS | | | | | | | | | | | |
| P41,P42 | TB8-5,6 | I12L | 69 | 31 | PED 4 | 4 PED | | | | | |

NOTE:
INSTALL DC ISOLATOR IN INPUT FILE SLOT I12.

* SYSTEM DETECTOR ONLY. REMOVE THE VEHICLE PHASE ASSIGNED TO THIS DETECTOR IN THE DEFAULT PROGRAMMING.

INPUT FILE POSITION LEGEND: J2L
FILE J
SLOT 2
LOWER

## COUNTDOWN PEDESTRIAN SIGNAL OPERATION

Countdown Ped Signals are required to display timing only during Ped Clearance Interval. Consult Ped Signal Module user's manual for instructions on selecting this feature.

THIS ELECTRICAL DETAIL IS FOR
THE SIGNAL DESIGN: 11-1117
DESIGNED: October 2008
SEALED: 12/16/08
REVISED: N/A

Signal Upgrade - Final

ELECTRICAL AND PROGRAMMING DETAILS FOR:

US 421 (King Street) at East King Street/Grove Street

Division 11 Watauga County Boone

PLAN DATE: 12-10-08 REVIEWED BY: D.T. Joyce

PREPARED BY: D.H. Spaulding REVIEWED BY:

| REVISIONS | INIT. | DATE |
|---|---|---|
| | | |

Prepared in the Offices of:
Traffic Engineering and Safety Systems Branch
STATE OF NORTH CAROLINA DEPARTMENT OF TRANSPORTATION
Signals Management Section
750 N. Greenfield Pkwy, Garner, NC 27529

SEAL
NORTH CAROLINA PROFESSIONAL SEAL 022013 ENGINEER GEORGE C. BROWN

George C. Brown 12/17/08
SIGNATURE DATE
SIG. INVENTORY NO. 11-1117

17-DEC-2008 11:07
s:\its\signals\workgroups\sig mgmt\spaulding\in-progress\111117_smu_ete_2008xx.dgn
dsspaulding

# METAL POLE No. 14 and 15

## Design Loading for METAL POLE NO. 14

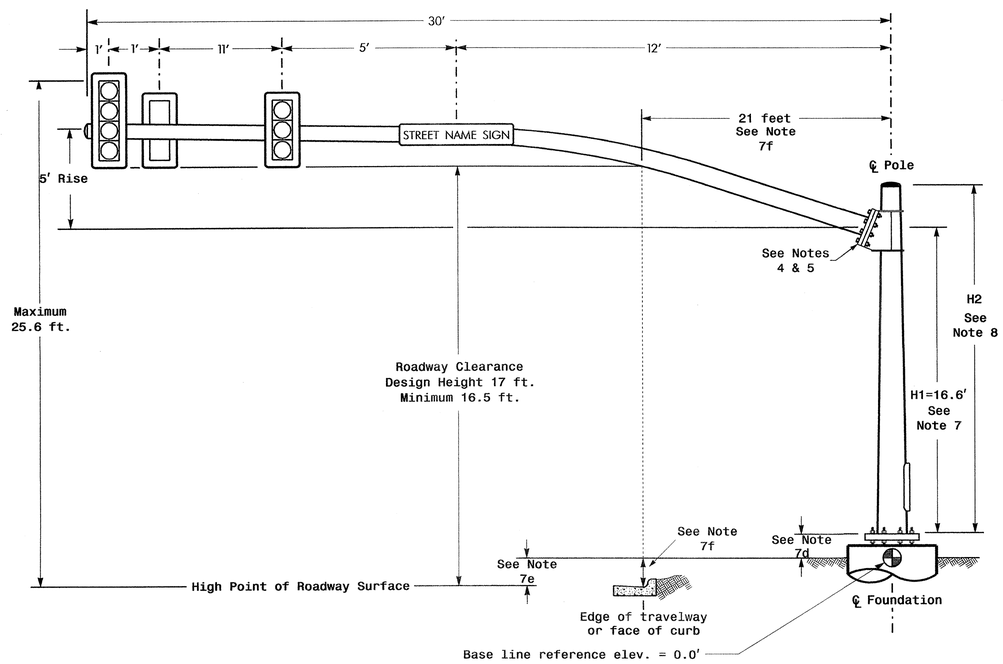


ELEVATION VIEW

## Design Loading for METAL POLE NO. 15

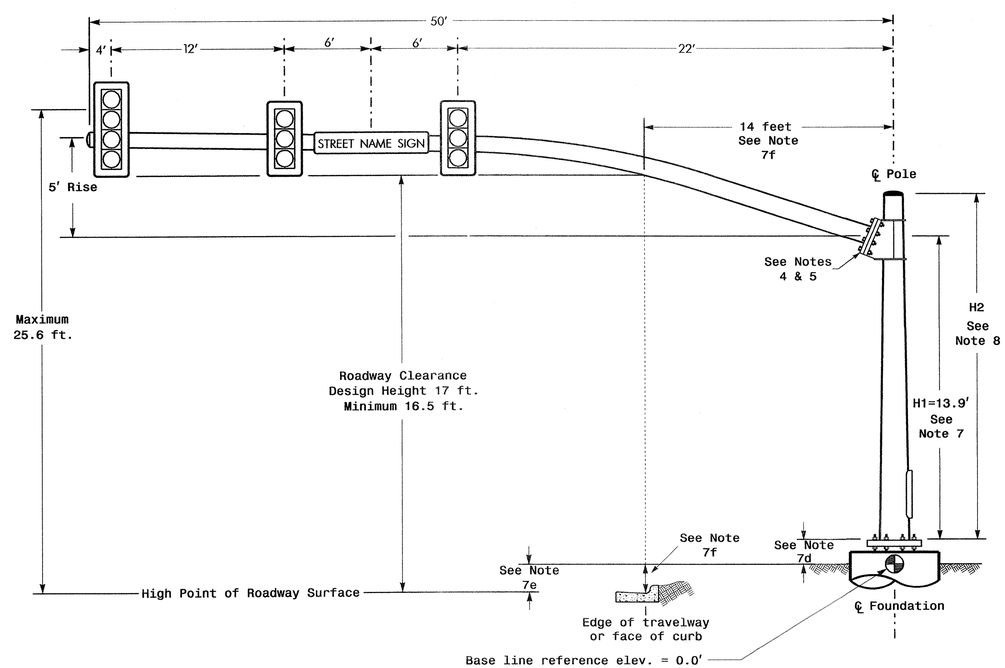


ELEVATION VIEW

## SPECIAL NOTE

The contractor is responsible for verifying that the mast arm attachment height (H1) will provide the "Design Height" clearance from the roadway before submitting final shop drawings for approval. Verify elevation data below which was obtained by field measurement or from available project survey data.

## Elevation Data for Mast Arm Attachment (H1)

| Elevation Differences for: | Pole 14 | Pole 15 |
|---|---|---|
| Baseline reference point at ℄ Foundation @ ground level | 0.0 ft. | 0.0 ft. |
| Elevation difference at High point of roadway surface | +2.6 ft. | +0.7 ft. |
| Elevation difference at Edge of travelway or face of curb | +1.6 ft. | -1.4 ft. |

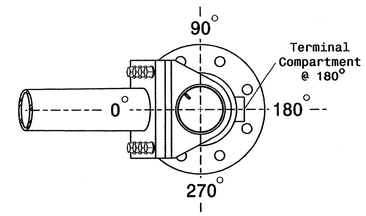


POLE RADIAL ORIENTATION

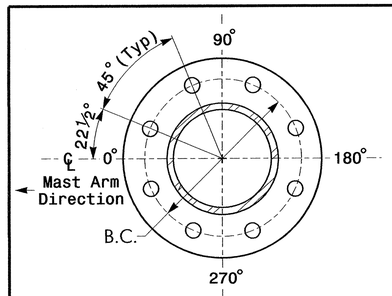


8 BOLT BASE PLATE DETAIL

See Note 6

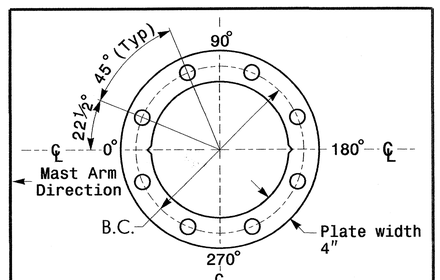


BASE PLATE TEMPLATE & ANCHOR BOLT LOCK PLATE DETAIL

For 8 Bolt Base Plate

## MAST ARM LOADING SCHEDULE

| LOADING SYMBOL | DESCRIPTION | AREA | SIZE | WEIGHT |
|---|---|---|---|---|
| | SIGNAL HEAD 12"–4 SECTION–WITH BACKPLATE AND ASTRO–BRAC | 11.5 S.F. | 25.5" W X 66.0" L | 74 LBS |
| | SIGNAL HEAD 12"–3 SECTION–WITH BACKPLATE AND ASTRO–BRAC | 9.3 S.F. | 25.5" W X 52.5" L | 60 LBS |
| STREET NAME SIGN | STREET NAME SIGN RIGID MOUNTED WITH ASTRO–SIGN–BRAC | 12.0 S.F. | 18.0" W X 96.0" L | 27 LBS |

## NOTES

Design Reference Material

1. Design the traffic signal structure and foundation in accordance with:
   - The 4th Edition 2001 AASHTO "Standard Specifications for Structural Supports for Highway Signs, Luminaires, and Traffic Signals, including all of the latest interim revisions.
   - The 2006 NCDOT "Standard Specifications for Roads and Structures". The latest addenda to these specifications can be found in the traffic signal project special provisions.
   - The 2006 NCDOT Roadway Standard Drawings.
   - The traffic signal project plans and special provisions.
   - The NCDOT "Metal Pole Standards" located at the following NCDOT website: http://www.ncdot.org/doh/preconstruct/traffic/ITSS/ws/mpoles/poles.html

Design Requirements

2. Design the traffic signal structure using the loading conditions shown in the elevation views. These are anticipated worst case "Design loads" and may not represent the actual loads that will be applied at the time of the installation. The contractor should refer to the traffic signal plans for the actual loads that will be applied at the time of the installation.
3. Design all signal supports using stress ratios that do not exceed 0.9.
4. A clamp-type bolted mast arm-to-pole connection may be used instead of the welded ring stiffened box connection shown as long as the connection meets all of the design requirements.
5. Design base plate with 8 anchor bolt holes. Provide 2 inch x 60 inch anchor bolts.
6. The mast arm attachment height (H1) shown is based on the following design assumptions:
   a. Nominal vertical rise in mast arm is 5 feet as measured from the centerline of the arm base to the centerline of the free end of the arm.
   b. Signal heads attached to the mast arm are rigid mounted and vertically centered on the arm.
   c. The roadway clearance height for design is as shown in the elevation views.
   d. The top of the pole base plate is .75 feet above the ground elevation.
   e. Refer to the Elevation Data chart for elevation differences between the proposed foundation ground level and the high point on the roadway.
   f. Provide horizontal distance from proposed centerline of foundation to edge of travelway. Refer to the Elevation Data chart above for elevation difference between the proposed foundation ground level and the edge of travelway. This information is necessary when arched arms are specified to ensure that the roadway clearance is maintained at the edge of the travelway and to assist in the camber design of the mast arm.
7. The pole manufacturer will determine the total height (H2) of each pole using the greater of the following:
   - Mast arm attachment height (H1) plus 2 feet, or
   - H1 plus ½ of the total height of the mast arm attachment assembly plus 1 foot.
8. If pole location adjustments are required, the contractor must gain approval from the engineer as this may affect the mast arm lengths and arm attachment heights. The contractor may contact the Signals & Geometrics Structural Engineer for assistance at (919) 773-2800.
9. The contractor is responsible for verifying that the mast arm length shown will allow proper positioning of the signal heads over the roadway.
10. The contractor is responsible for providing soil penetration testing data (SPT) to the pole manufacturer so site specific foundations can be designed.

NCDOT Wind Zone 5 (120 mph)

Prepared in the Offices of:
Traffic Engineering and Safety Systems Branch
Signals and Geometrics Section
STATE OF NORTH CAROLINA DEPARTMENT OF TRANSPORTATION
750 N. Greenfield Pkwy, Garner, NC 27529

US 421 (King Street)
at
East King Street/Grove Street

Division 11 Watauga County Boone

PLAN DATE: December 2008 REVIEWED BY:
PREPARED BY: B.E. Wynn REVIEWED BY:

SCALE 0 N/A N/A

| REVISIONS | INIT. | DATE |
|---|---|---|
| | | |

SEAL
NORTH CAROLINA PROFESSIONAL SEAL 30530 ENGINEER ZACHARY M. LEWIS
SIGNATURE 1/8/09 DATE
SIG. INVENTORY NO. 11-1117

08-JAN-2009 14:57
s:\its signals\workgroups\tip projects\u-4020\signals\design\signals\11-1117\new metal poles.dgn
Dwynn

# METAL POLE No. 16 and 17

| PROJECT REFERENCE NO. | SHEET NO. |
|---|---|
| U-4020 | Sig. 53 |

## Design Loading for METAL POLE NO. 16

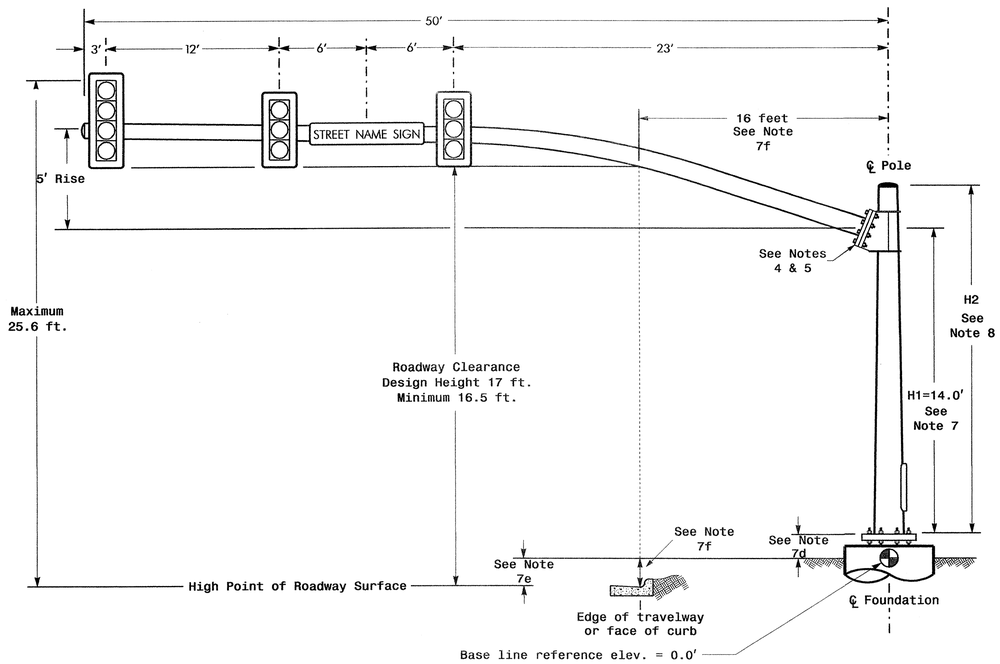


ELEVATION VIEW

## Design Loading for METAL POLE NO. 17

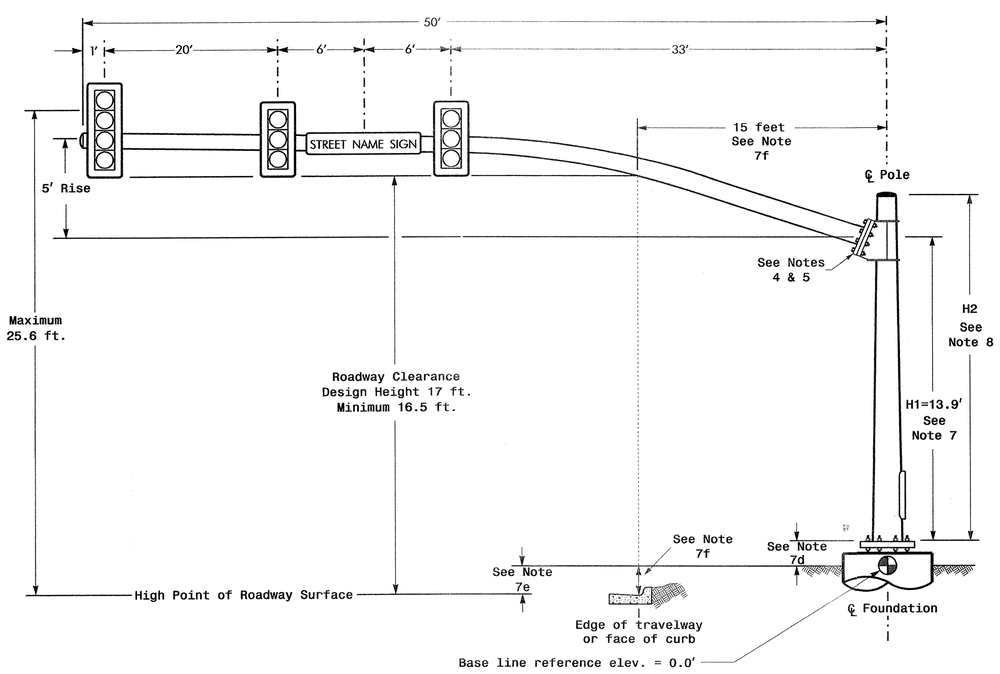


ELEVATION VIEW

## SPECIAL NOTE

The contractor is responsible for verifying that the mast arm attachment height (H1) will provide the "Design Height" clearance from the roadway before submitting final shop drawings for approval. Verify elevation data below which was obtained by field measurement or from available project survey data.

## Elevation Data for Mast Arm Attachment (H1)

| Elevation Differences for: | Pole 16 | Pole 17 |
|---|---|---|
| Baseline reference point at ℄ Foundation @ ground level | 0.0 ft. | 0.0 ft. |
| Elevation difference at High point of roadway surface | 0.0 ft. | +1.7 ft. |
| Elevation difference at Edge of travelway or face of curb | +0.1 ft. | +2.0 ft. |

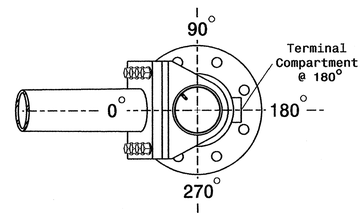


POLE RADIAL ORIENTATION

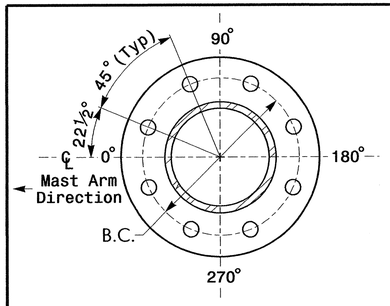


8 BOLT BASE PLATE DETAIL

See Note 6

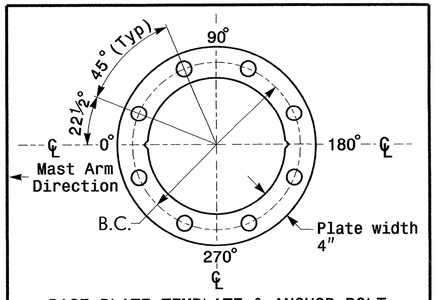


BASE PLATE TEMPLATE & ANCHOR BOLT LOCK PLATE DETAIL

For 8 Bolt Base Plate

## MAST ARM LOADING SCHEDULE

| LOADING SYMBOL | DESCRIPTION | AREA | SIZE | WEIGHT |
|---|---|---|---|---|
| | SIGNAL HEAD 12"-4 SECTION-WITH BACKPLATE AND ASTRO-BRAC | 11.5 S.F. | 25.5" W X 66.0" L | 74 LBS |
| | SIGNAL HEAD 12"-3 SECTION-WITH BACKPLATE AND ASTRO-BRAC | 9.3 S.F. | 25.5" W X 52.5" L | 60 LBS |
| STREET NAME SIGN | STREET NAME SIGN RIGID MOUNTED WITH ASTRO-SIGN-BRAC | 12.0 S.F. | 18.0" W X 96.0" L | 27 LBS |

## NOTES

Design Reference Material

1. Design the traffic signal structure and foundation in accordance with:
   - The 4th Edition 2001 AASHTO "Standard Specifications for Structural Supports for Highway Signs, Luminaires, and Traffic Signals, including all of the latest interim revisions.
   - The 2006 NCDOT "Standard Specifications for Roads and Structures". The latest addenda to these specifications can be found in the traffic signal project special provisions.
   - The 2006 NCDOT Roadway Standard Drawings.
   - The traffic signal project plans and special provisions.
   - The NCDOT "Metal Pole Standards" located at the following NCDOT website: http://www.ncdot.org/doh/preconstruct/traffic/ITSS/ws/mpoles/poles.html

Design Requirements

2. Design the traffic signal structure using the loading conditions shown in the elevation views. These are anticipated worst case "Design loads" and may not represent the actual loads that will be applied at the time of the installation. The contractor should refer to the traffic signal plans for the actual loads that will be applied at the time of the installation.
3. Design all signal supports using stress ratios that do not exceed 0.9.
4. A clamp-type bolted mast arm-to-pole connection may be used instead of the welded ring stiffened box connection shown as long as the connection meets all of the design requirements.
5. Design base plate with 8 anchor bolt holes. Provide 2 inch x 60 inch anchor bolts.
6. The mast arm attachment height (H1) shown is based on the following design assumptions:
   a. Nominal vertical rise in mast arm is 5 feet as measured from the centerline of the arm base to the centerline of the free end of the arm.
   b. Signal heads attached to the mast arm are rigid mounted and vertically centered on the arm.
   c. The roadway clearance height for design is as shown in the elevation views.
   d. The top of the pole base plate is .75 feet above the ground elevation.
   e. Refer to the Elevation Data chart for elevation differences between the proposed foundation ground level and the high point on the roadway.
   f. Provide horizontal distance from proposed centerline of foundation to edge of travelway. Refer to the Elevation Data chart above for elevation difference between the proposed foundation ground level and the edge of travelway. This information is necessary when arched arms are specified to ensure that the roadway clearance is maintained at the edge of the travelway and to assist in the camber design of the mast arm.
7. The pole manufacturer will determine the total height (H2) of each pole using the greater of the following:
   - Mast arm attachment height (H1) plus 2 feet, or
   - H1 plus ½ of the total height of the mast arm attachment assembly plus 1 foot.
8. If pole location adjustments are required, the contractor must gain approval from the engineer as this may affect the mast arm lengths and arm attachment heights. The contractor may contact the Signals & Geometrics Structural Engineer for assistance at (919) 773-2800.
9. The contractor is responsible for verifying that the mast arm length shown will allow proper positioning of the signal heads over the roadway.
10. The contractor is responsible for providing soil penetration testing data (SPT) to the pole manufacturer so site specific foundations can be designed.

NCDOT Wind Zone 5 (120 mph)

Prepared in the Offices of:
Traffic Engineering and Safety Systems Branch
Signals and Geometrics Section
750 N. Greenfield Pkwy, Garner, NC 27529

SCALE: 0 N/A — N/A

US 421 (King Street)
at
East King Street/Grove Street

Division 11 Watauga County Boone

PLAN DATE: December 2008 REVIEWED BY:
PREPARED BY: B.E. Wynn REVIEWED BY:

| REVISIONS | INIT. | DATE |
|---|---|---|
| | | |

SEAL
NORTH CAROLINA PROFESSIONAL SEAL 30530 ENGINEER ZACHARY M. PETTLE
SIGNATURE 1/8/09 DATE
SIG. INVENTORY NO. 11-1117

08-JAN-2009 15:01
s:\ts signals\workgroups\ip projects\u-4020\designs\signals\11-1117\new metal poles.dgn
Dayton

| STATE | PROJECT NO. | SHEET NO. |
|---|---|---|
| N.C. | U-4020 | Sig.54 |
| F. A. PROJ. NO. | | M 1 |
| PROJECT ID. NO. | | |

# STATE OF NORTH CAROLINA
# DIVISION OF HIGHWAYS

## STANDARD DRAWINGS FOR METAL POLES

NCDOT METAL POLE STANDARDS

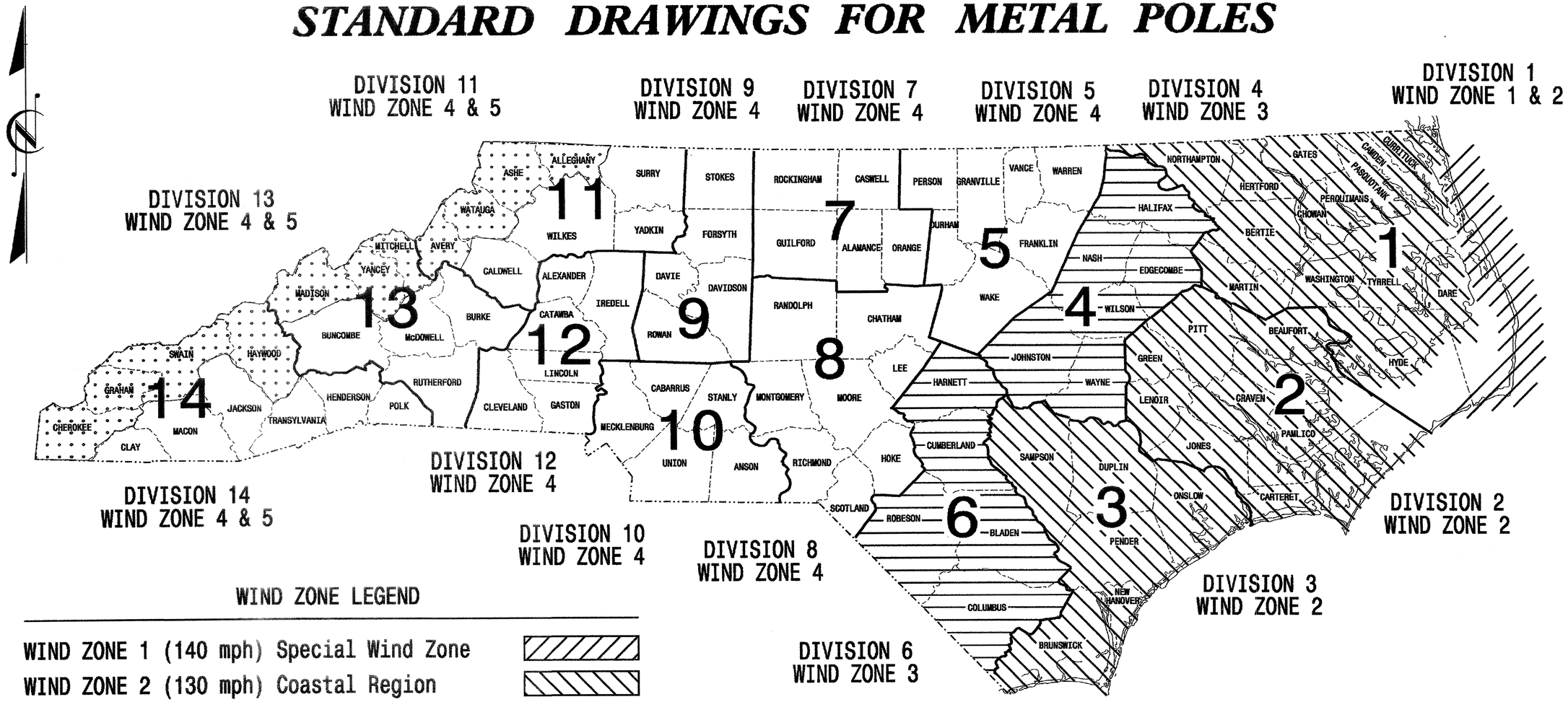


### WIND ZONE LEGEND

| | |
|---|---|
| WIND ZONE 1 (140 mph) | Special Wind Zone |
| WIND ZONE 2 (130 mph) | Coastal Region |
| WIND ZONE 3 (110 mph) | Eastern Region |
| WIND ZONE 4 (90 mph) | Central & Mtn. Region |
| WIND ZONE 5 (120 mph) | Special Wind Zone |

http://www.ncdot.org/doh/preconstruct/traffic/tmssu/ws/default.htm

*Prepared in the Offices of:*

Traffic Engineering and Safety Systems Branch · STATE OF NORTH CAROLINA · DEPARTMENT OF TRANSPORTATION · Signals and Geometrics Section

*122 N. McDowell St., Raleigh, NC 27603*

*Designed in conformance with the 2002 Interim to the 4th Edition 2001*

**AASHTO**

*Standard Specifications for Structural Supports for Highway Signs, Luminares, and Traffic Signals*

### INDEX OF PLANS

| DRAWING NUMBER | DESCRIPTION |
|---|---|
| M 1 | Title Sheet |
| M 2 | Fabrication Details – All Poles |
| M 3 | Fabrication Details – Strain Poles |
| M 4,5 | Fabrication Details – Mast Arm Poles |
| M 6 | Construction Details – Strain Poles |
| M 7 | Construction Details – Foundations |
| M 8 | Standard Strain Poles |

### NCDOT CONTACTS:

**TRAFFIC ENGINEERING AND SAFETY SYSTEMS BRANCH**

*G. A. Fuller, P.E. – State ITS and Signals Engineer*
*R. E. Mullinax, P.E. – Signals and Geometrics Engineer*
*P. L. Alexander, P.E. – Signals and Geometrics Special Projects Engineer*
*D. C. Sarkar, P.E. – Signals and Geometrics Structural Engineer*
*A. M. Esposito, P.E. – Signals and Geometrics Project Engineer*
*C. F. Andrews, Jr. – Signals and Geometrics Project Engineer*

SEAL

NORTH CAROLINA PROFESSIONAL SEAL 028094 ENGINEER DEBESH C. SARKAR

D. Sarkar 9.2.2005
SIGNATURE DATE

| PROJECT REFERENCE NO. | SHEET NO. |
|---|---|
| U-4020 | Sig.55 M 2 |

# Fabrication Details – All Poles

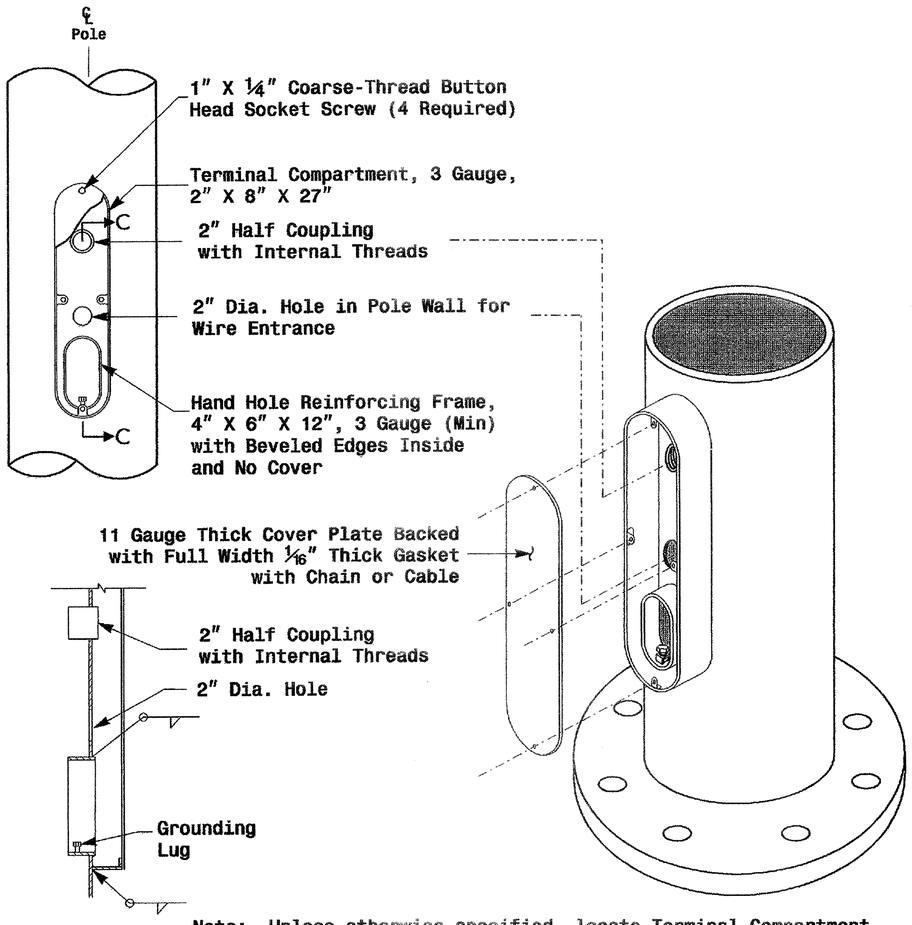


Section C-C

Note: Unless otherwise specified, locate Terminal Compartment 1 foot above the pole base plate at 180 degrees on the pole's radial index.

## Terminal Compartment Detail

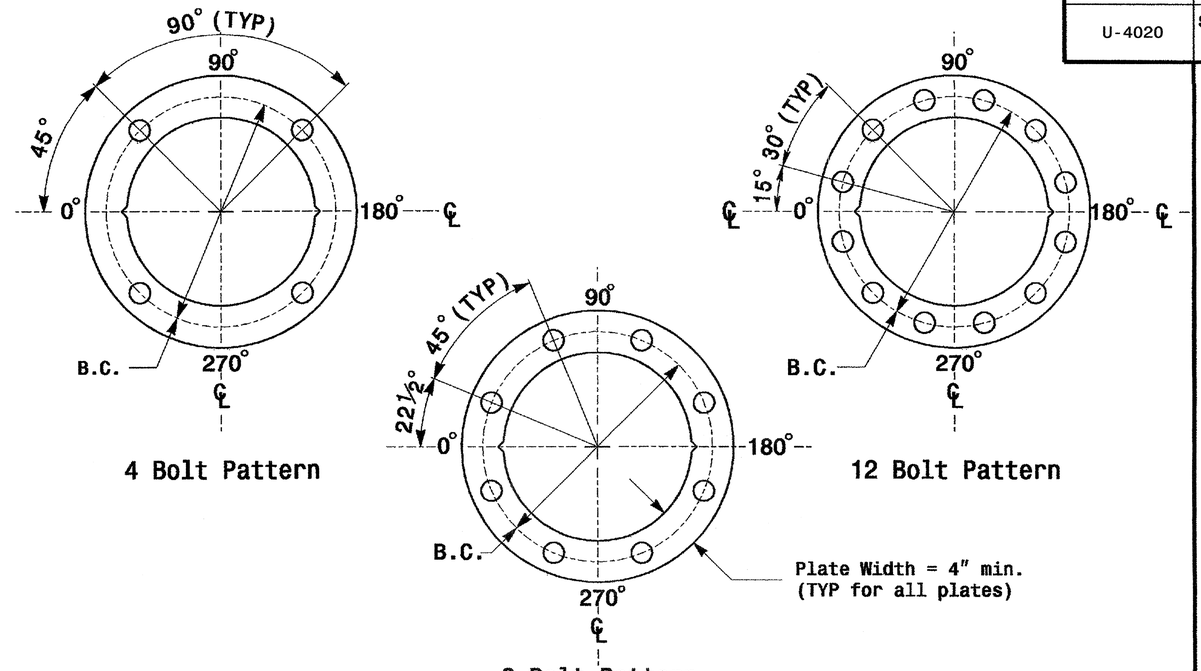


Construct Templates and Plates from ¼" min. thick Steel. Galvanizing is not required.

## Base Plate Template and Anchor Bolt Lock Plate Details

MFG _____ MFG. DATE: MM/YY
SHAFT D/T/L/Y ----/----/----/----
ARM-A D/T/L/Y ----/----/----/----
----/----/----/----
ARM-B D/T/L/Y ----/----/----/----
----/----/----/----
A.B. DIA./B.C./L/Y ----/----/----/----
NCDOT STANDARD ----------

Shaft I.D. Tag
(Provide on Strain Poles and Mast Arm Poles)

MFG _____ MFG. DATE: MM/YY
SECTION D/T/L/Y ----/----/----/----
NCDOT STANDARD ----------

Arm I.D. Tag
(Provide on each section of a multi-section mast arm)

Notes:
1) D= Diameter, T= Thickness, L= Length, Y= Yield Strength
2) A.B. = Anchor Bolt
3) B.C. = Bolt Circle of Anchor Bolts
4) If Custom Design, use "NCDOT STANDARD" line for plan pole I.D.
5) See drawing M4 for mounting positions of I.D. tags.

## Identification Tag Details

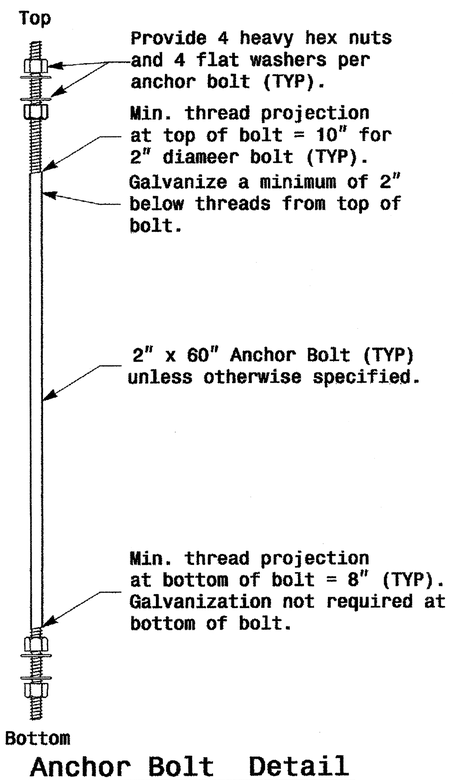


## Anchor Bolt Detail

Note: See Strain Pole drawing M3 and Mast arm drawing M4 for base plate weld details.

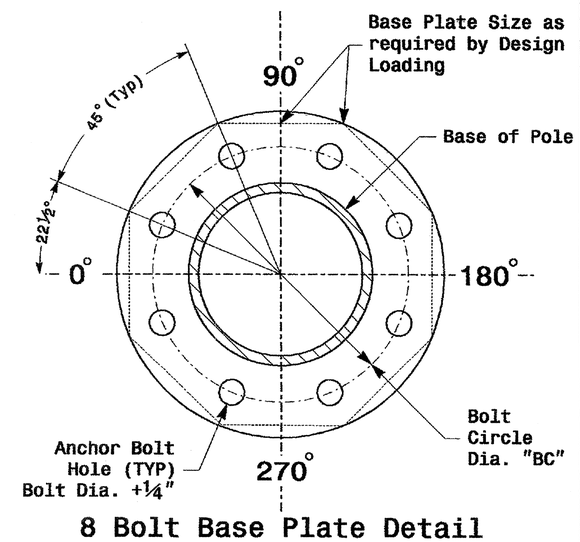


## 8 Bolt Base Plate Detail

Prepared in the Offices of: Traffic Engineering and Safety Systems Branch, Signals and Geometrics Section, Division of Highways, Department of Transportation, State of North Carolina
122 N. McDowell St., Raleigh, NC 27603

SCALE 0 NA NONE

**Typical Fabrication Details Common To All Metal Poles**

| | | | |
|---|---|---|---|
| PLAN DATE: | May 2005 | REVIEWED BY: | C.F. Andrews |
| PREPARED BY: | P.L. Alexander | REVIEWED BY: | A.W. Esposito |

| REVISIONS | INIT. | DATE |
|---|---|---|
| | | |

SEAL
NORTH CAROLINA PROFESSIONAL SEAL 028094 ENGINEER DEBESH C. SARKAR
D. Sarkar 9.2.2005
SIGNATURE DATE
SIG. INVENTORY NO.

01-SEP-2005 18:22
D:\M2004 Metal Pole Standards\M2004 m2 thru m5.dgn
cfandrews

| PROJECT REFERENCE NO. | SHEET NO. |
|---|---|
| U-4020 | Sig.56 M 4 |

# Fabrication Details – Mast Arm Poles

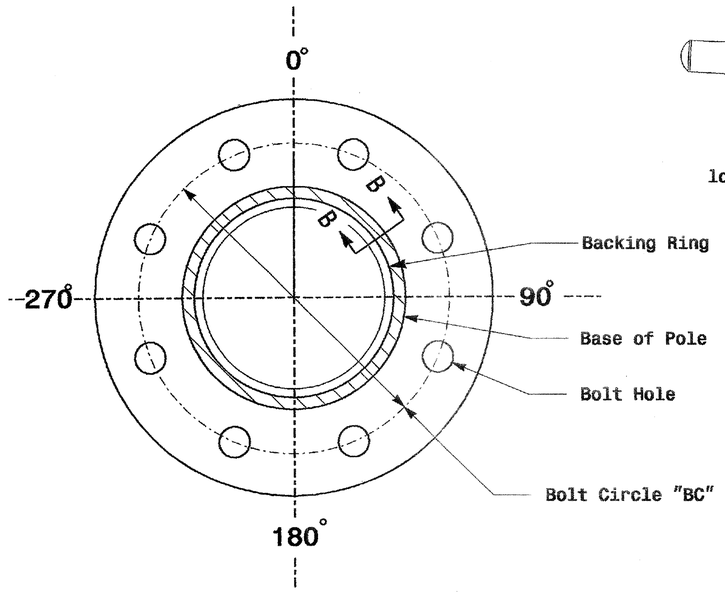


Section A-A
(See drawing M 2)

## Pole Base Plate

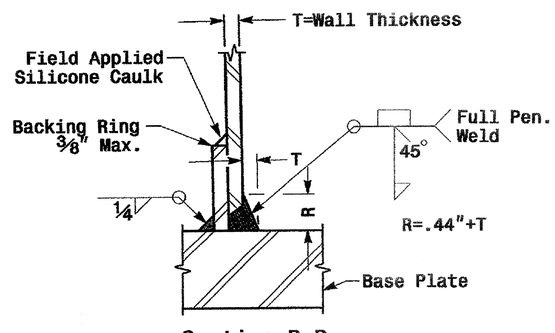


Section B-B
(Pole Attachment to Base Plate)

## Full-Penetration Groove Weld Detail

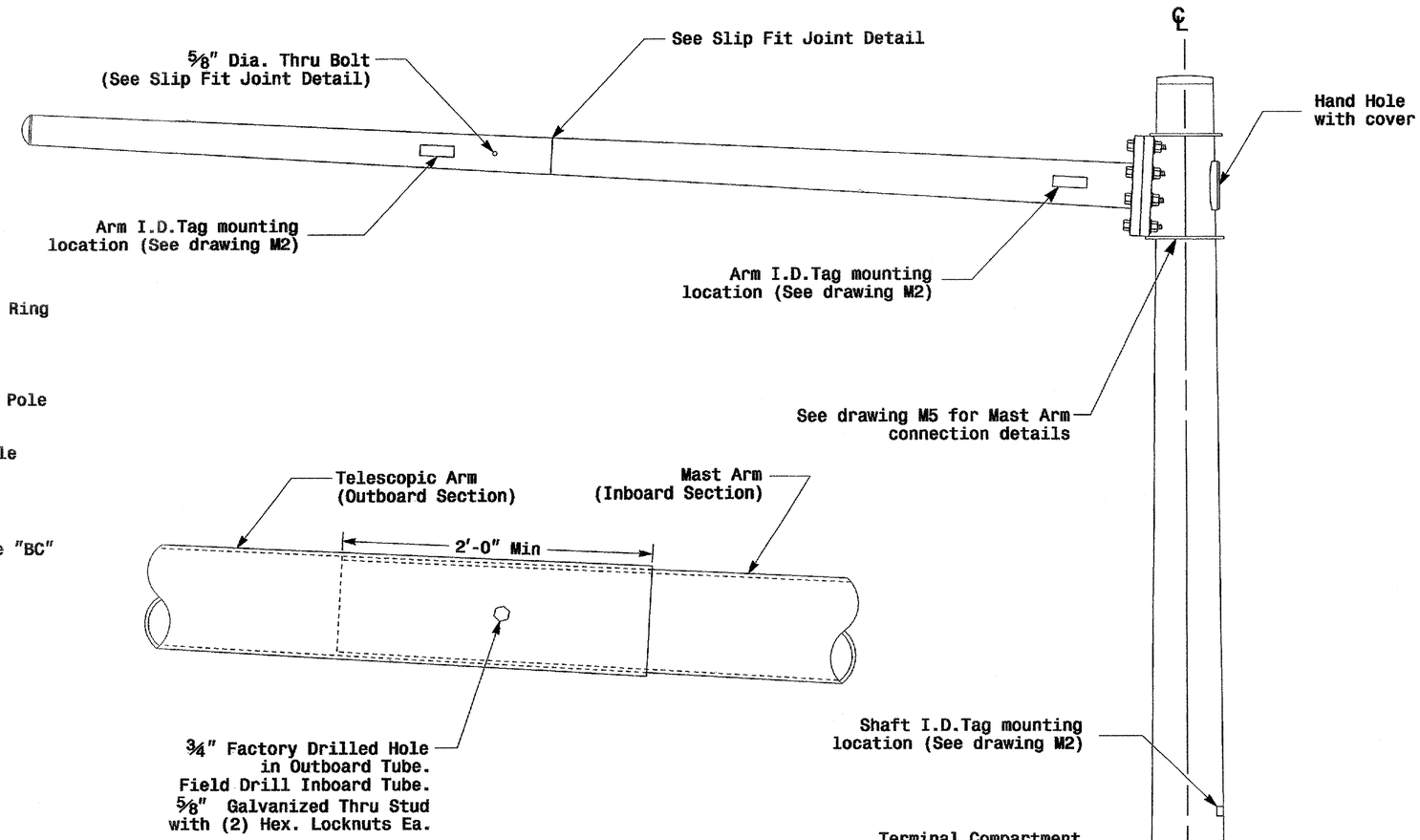


## Slip Fit Joint Detail for Mast Arm

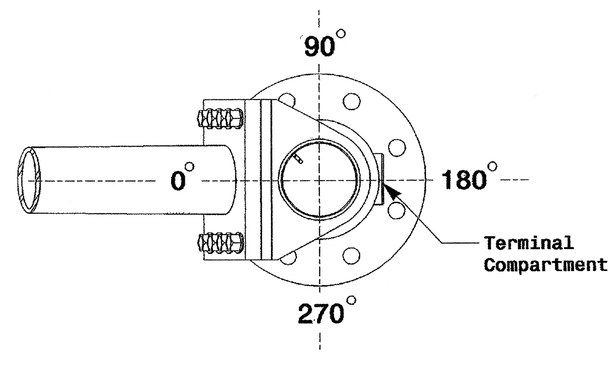


## Mast Arm Radial Orientation

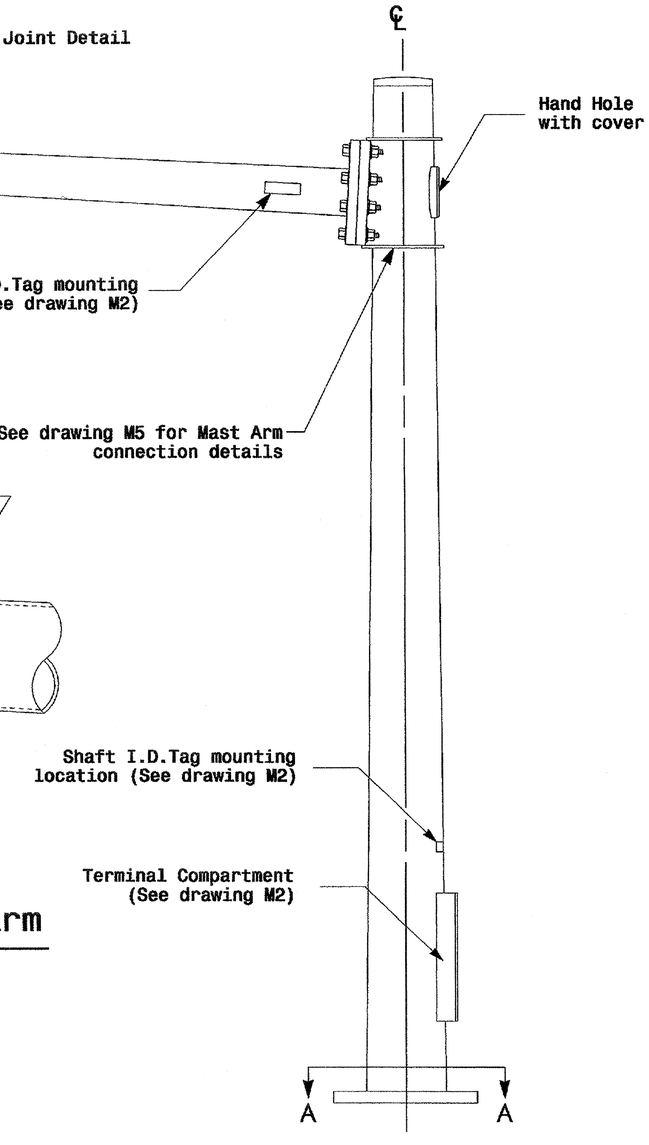


Monotube Mast Arm Pole
(.14in./ft. taper)

Prepared in the Offices of:
Traffic Engineering and Safety Systems Branch
STATE OF NORTH CAROLINA
DEPARTMENT OF TRANSPORTATION
Signals and Geometrics Section
122 N. McDowell St., Raleigh, NC 27603

SCALE
0 NA
NONE

Typical Fabrication Details for Mast Arm Poles

| PLAN DATE: May 2005 | REVIEWED BY: C.F. Andrews |
|---|---|
| PREPARED BY: P.L. Alexander | REVIEWED BY: A.M. Esposito |

| REVISIONS | INIT. | DATE |
|---|---|---|
| | | |

SEAL
NORTH CAROLINA PROFESSIONAL SEAL 028094 ENGINEER DEBESH C. SARKAR

D. Sarkar 9.2.2005
SIGNATURE DATE

SIG. INVENTORY NO.

01-SEP-2005 14:08
w:\peoples-unit\workgroups\2004 metal pole standards\2004 m4.dgn
palexander

| PROJECT REFERENCE NO. | SHEET NO. |
|---|---|
| U-4020 | Sig.57 M 5 |

# Fabrication Details – Mast Arm Poles

## Adjustable Clamp Type Bolted Mast Arm Connection

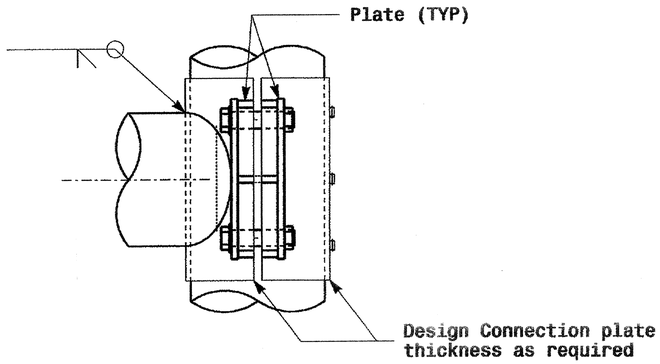


Side Elevation View

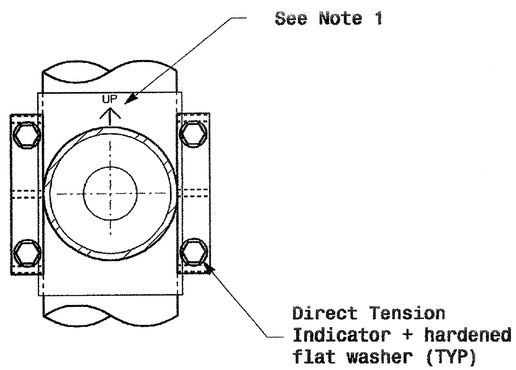


Front Elevation View

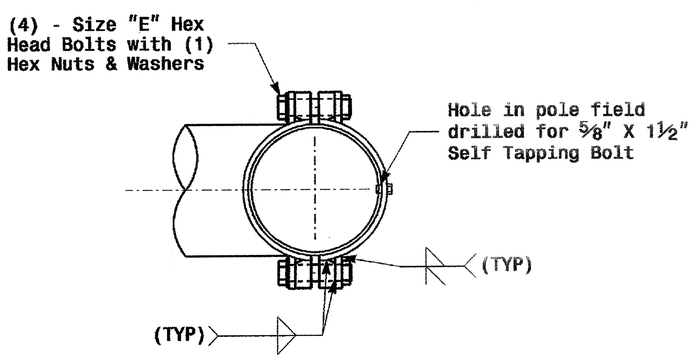


Plan View

## Welded Ring Stiffened Mast Arm Connection

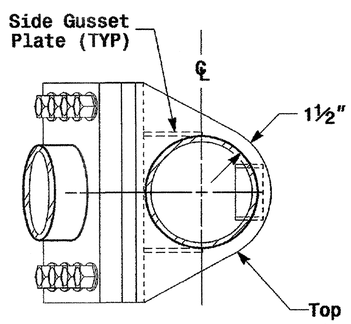


Plan View

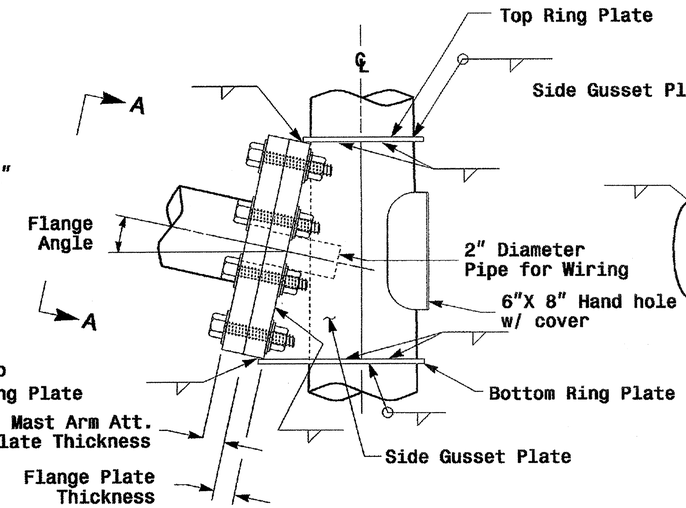


Side Elevation View

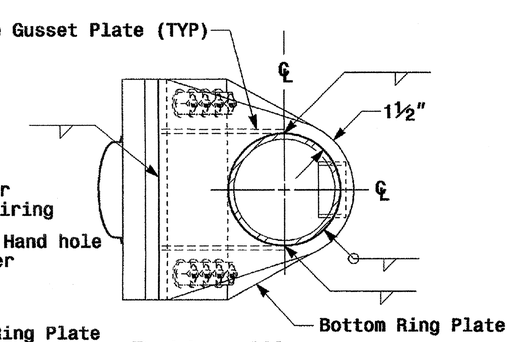


Bottom View

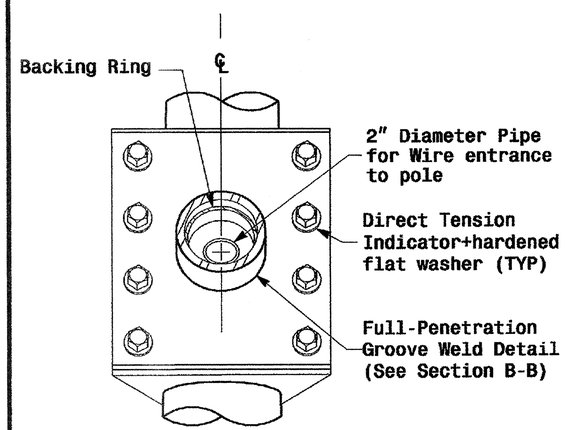


Front Elevation View

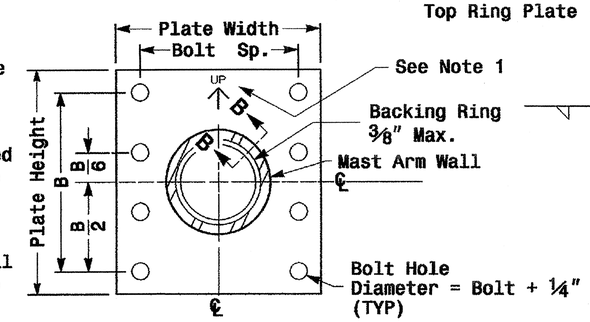


Section View A-A

Mast Arm Attachment Plate

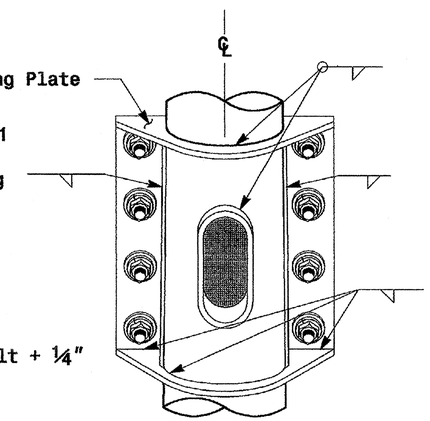


Back Elevation View

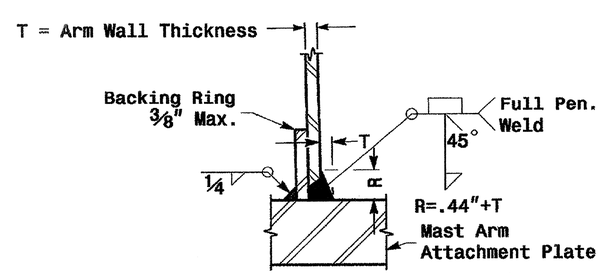


Section B-B

Full-Penetration Groove Weld Detail

Notes:

1. Provide a permanent means of identification above the mast arm to indicate proper attachment orientation of the mast arm.
2. Designer will determine the size of all structural components, plates, fasteners, and welds shown unless they are already specified.
3. Designer is responsible for providing appropriate drainage points.

Prepared in the Offices of: Traffic Engineering and Safety Systems Branch, Transportation Mobility and Safety Division, Department of Transportation, State of North Carolina
1122 N. McDowell St., Raleigh, NC 27603

SCALE: 0 NA — NONE

Fabrication Details For Mast Arm Connection To Pole

| | | | |
|---|---|---|---|
| PLAN DATE: | May 2005 | REVIEWED BY: | C.F. Andrews |
| PREPARED BY: | P.L. Alexander | REVIEWED BY: | A.M. Esposito |

| REVISIONS | INIT. | DATE |
|---|---|---|
| | | |

SEAL: NORTH CAROLINA PROFESSIONAL SEAL 028094 ENGINEER DEBESH C. SARKAR

D. Sarkar 9.2.2005
SIGNATURE DATE

SIG. INVENTORY NO.

01-SEP-2005 14:11
v:\tpsdgn\ts-uni1\workgroups\2004 metal pole standards\2004 m5.dgn
ts_bondar

| PROJECT REFERENCE NO. | SHEET NO. |
|---|---|
| U-4020 | Sig.58 M 7 |

# Construction Details – Foundations

## Reinforcing Steel Bars

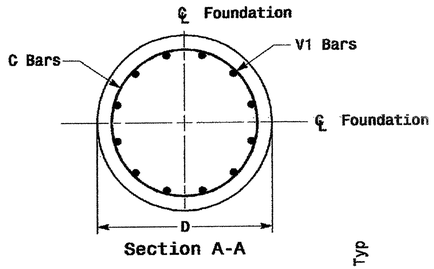


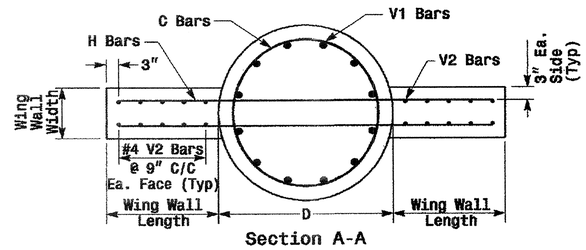


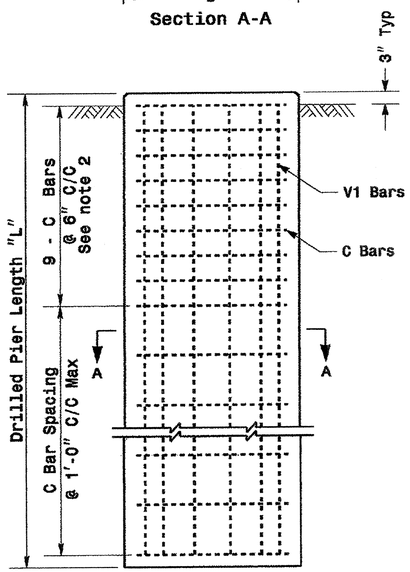


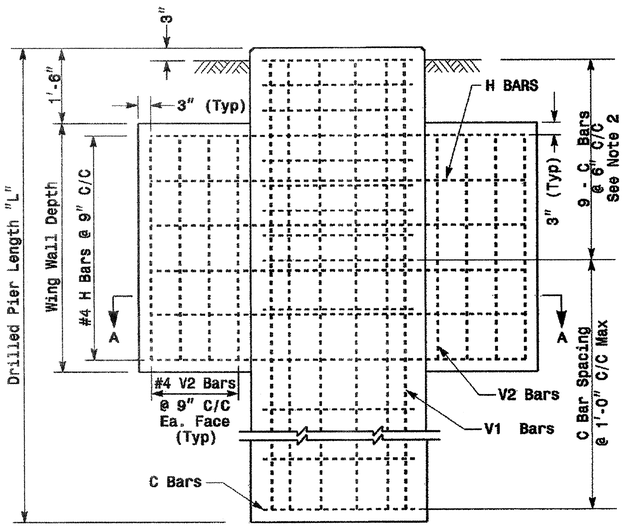


| REINFORCING STEEL TABLE FOR STANDARD DRILL PIER SHAFT (42" & 48" DIAMETER) | | | | | | |
|---|---|---|---|---|---|---|
| Shaft Dia (in.) | Conc. Volume (cu. yds.) | Bar Name | No. | Size | Type | Length |
| 42" | .356 x L | V1 | 9 | #8 | STR. | ** |
| | | C | * | #4 | CIR. | 10'-9" |
| 48" | .465 x L | V1 | 12 | #8 | STR. | ** |
| | | C | * | #4 | CIR. | 12'-6" |

* See Note No. 1
** See Note No. 3

| REINFORCING STEEL TABLE FOR STANDARD 42" and 48" DRILL PIER SHAFT WITH TYPE 1 AND TYPE 2 WING WALLS | | | | | | |
|---|---|---|---|---|---|---|
| Wing Wall Type | Drill Pier Shaft Dia. (in.) | Reinforcing Steel | | | | |
| | | Bar Name | No. | Size | Type | Length |
| TYPE 1 | 42" | V1 | 9 | #8 | STR. | ** |
| | | V2 | 12 | #4 | STR. | 2'-6" |
| | | H | 8 | #4 | STR. | 6'-0" |
| | | C | * | #4 | CIR. | 10'-9" |
| TYPE 2 | 42" | V1 | 9 | #8 | STR. | ** |
| | | V2 | 16 | #4 | STR. | 4'-6" |
| | | H | 12 | #4 | STR. | 9'-0" |
| | | C | * | #4 | CIR. | 10'-9" |
| TYPE 2 | 48" | V1 | 12 | #8 | STR. | ** |
| | | V2 | 16 | #4 | STR. | 4'-6" |
| | | H | 12 | #4 | STR. | 9'-6" |
| | | C | * | #4 | CIR. | 12'-6" |

* See Note No. 1
** See Note No. 3

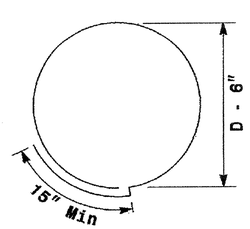


Typical "C" Bars

| WING WALL DETAILS | | | | |
|---|---|---|---|---|
| Wing Wall Type | Wing Wall Length (Ft.) | Wing Wall Width (Ft.) | Wing Wall Depth (Ft.) | Concrete Volume (Cu. Yds.) |
| TYPE 1 | 1'-6" | 1'-0" | 3'-0" | .4 |
| TYPE 2 | 3'-0" | 1'-0" | 5'-0" | 1.2 |

See Note No. 4

## Typical Foundation Anchor Bolt Details

(Reinforcing Cage Not Shown for Clarity)

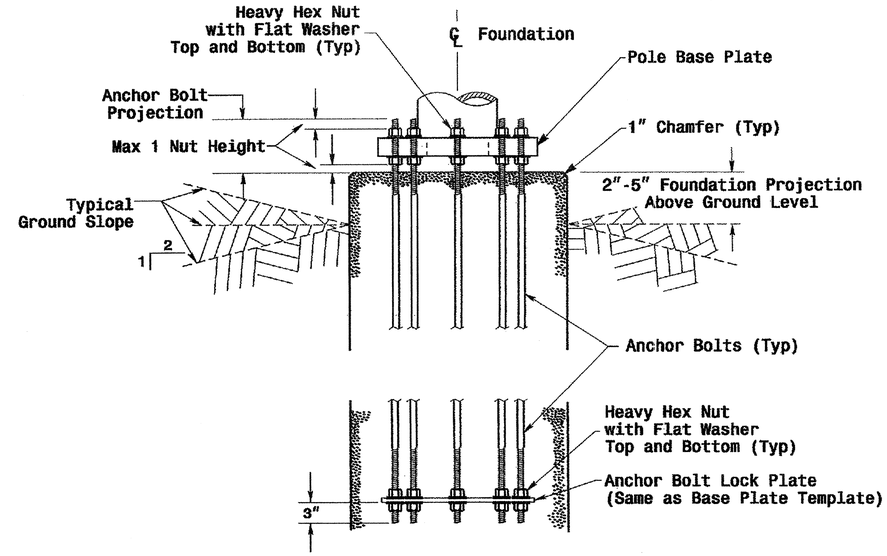


## Typical Foundation Conduit Details

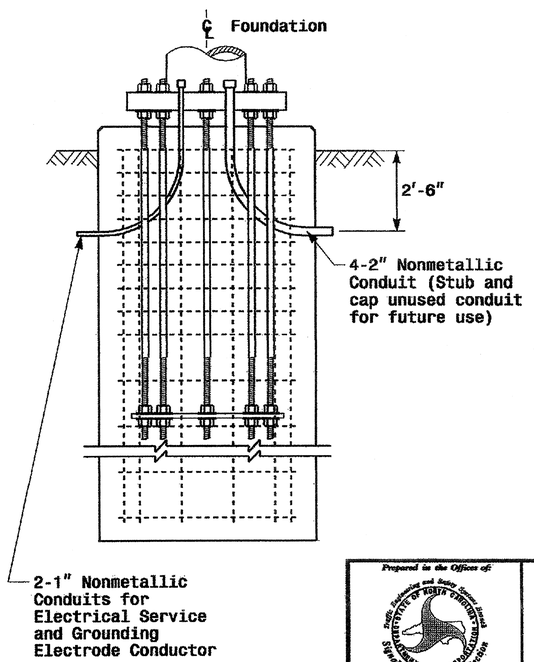


## Notes

1. The number of C-bars is based on foundation depth. For standard foundations, see sheet M 8.
2. Circular tie reinforcing rings may be vertically adjusted by +/- 3" at a depth between 2'-0" and 3'-0" to facilitate the installation of electrical conduit entering in the cage.
3. The length of V1-bars is based on foundation depth. For standard foundations, see sheet M 8.
4. The quantities for steel and concrete shown in the Wing Wall Details Chart reflect the amount of material for 1 pair of wing walls (2 wing walls per drilled pier shaft.)

Prepared in the Offices of: Traffic Engineering and Safety Systems Branch, Structures Management Unit, Standards and Geometrics Section, Division of Highways, Department of Transportation, 122 N. McDowell St., Raleigh, NC 27603

SCALE: 0 NA — NONE

Construction Details
Foundations

| | | | |
|---|---|---|---|
| PLAN DATE: | May 2005 | REVIEWED BY: | P.L. ALEXANDER |
| PREPARED BY: | C.F. ANDREWS | REVIEWED BY: | A.M. ESPOSITO |

| REVISIONS | INIT. | DATE |
|---|---|---|
| | | |

SEAL: NORTH CAROLINA PROFESSIONAL SEAL 028094 ENGINEER DEBESH C. SARKAR

D. Sarkar 9.2.2005
SIGNATURE DATE

SIG. INVENTORY NO.

01-SEP-2005 17:48
w:\tpeab\as-unit\workgroups\2004 metal pole standards\004 mf.dgn
c:\bkarmar

| PROJECT REFERENCE NO. | SHEET NO. |
|---|---|
| U-4020 | Sig.59 |

STATE OF NORTH CAROLINA
DEPT. OF TRANSPORTATION
DIVISION OF HIGHWAYS
RALEIGH, N.C.

11-08

ENGLISH DETAIL DRAWING FOR
**INDUCTIVE DETECTION LOOPS**

## CONVENTIONAL 4-SIDED LOOP

### SAW SLOT DEPTH CHART

| DEPTH (IN) | NO. OF WIRE TURNS | | | | |
|---|---|---|---|---|---|
| | 2 | 3 | 4 | 5 | 6 |
| CONCRETE | 2.0 | 2.0 | 2.5 | 2.5 | 3.0 |
| ASPHALT | 2.0 | 2.5 | 3.0 | 3.0 | 3.0 |

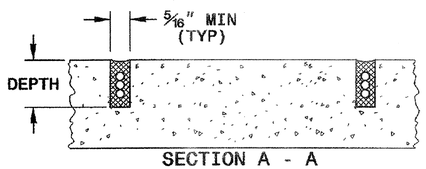


SECTION A - A

### SAW CUT OPTIONS

OPTION 1

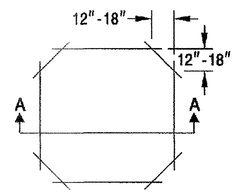


OPTION 2
(POOR PAVEMENT)

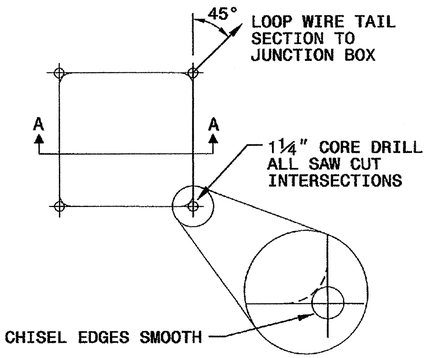


### LOOP WINDING METHOD

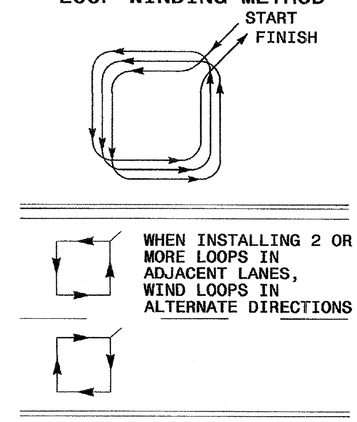


## LOOP WIRE TWISTING METHOD

INCORRECT WAY TO TWIST WIRE

CORRECT WAY TO TWIST WIRE

## NOTES

1. OVERLAP SAW CUTS AT CORNERS AND INTERSECTION POINTS TO ENSURE UNIFORM SAW SLOT DEPTH.
2. MAINTAIN 12" SPACING BETWEEN LOOP WIRE TAIL SECTIONS.
3. WIRE LOOPS CONNECTED TO THE SAME DETECTOR CHANNEL IN SERIES.
4. LOCATE LOOPS IN CENTER OF LANES UNLESS OTHERWISE SHOWN ON PLANS OR APPROVED BY ENGINEER.

## QUADRUPOLE LOOP

### SAW CUT OPTIONS

OPTION 1

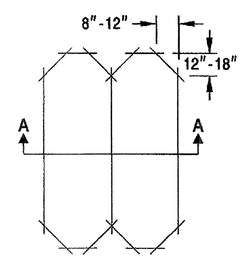


OPTION 2
(POOR PAVEMENT)

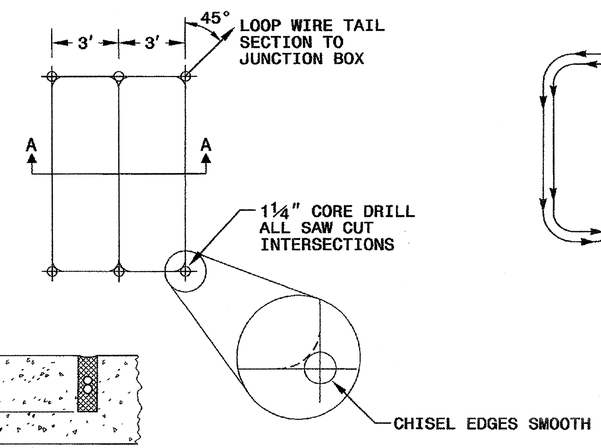


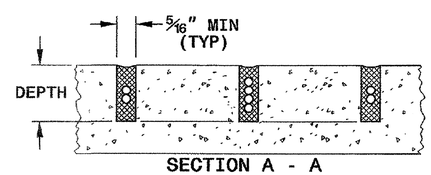


SECTION A - A

DEPTH IS 2.5" FOR CONCRETE AND 3.0" FOR ASPHALT

### LOOP WINDING METHOD

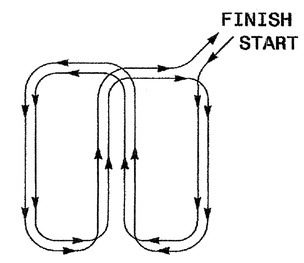


STATE OF NORTH CAROLINA
DEPT. OF TRANSPORTATION
DIVISION OF HIGHWAYS
RALEIGH, N.C.

11-08

ENGLISH DETAIL DRAWING FOR
**INDUCTIVE DETECTION LOOPS**

SHEET 1 OF 3
**1725D01**

SHEET 1 OF 3
**1725D01**

See Plate for Title

Prepared in the Offices of:
Intelligent Transportation Systems & Signals Unit
750 N. Greenfield Parkway
Garner, NC 27529

SEAL
NORTH CAROLINA PROFESSIONAL SEAL 16286 ENGINEER MILTON I. DEAN

Milton I. Dean 11/24/08
SIGNATURE DATE

24-NOV-2008 09:28
d:\work files\0-standard plate sheets\1725D01_nov2307.dgn
zmiittle

| PROJECT REFERENCE NO. | SHEET NO. |
|---|---|
| U-4020 | Sig.60 |

STATE OF NORTH CAROLINA
DEPT. OF TRANSPORTATION
DIVISION OF HIGHWAYS
RALEIGH, N.C.

11-08

ENGLISH DETAIL DRAWING FOR
**INDUCTIVE DETECTION LOOPS**
LOOP WIRE DETAILS

SHEET 2 OF 3
**1725D01**

## LOOP WIRE SPLICE POINT DETAILS

### LOOP WIRE AT JUNCTION BOX

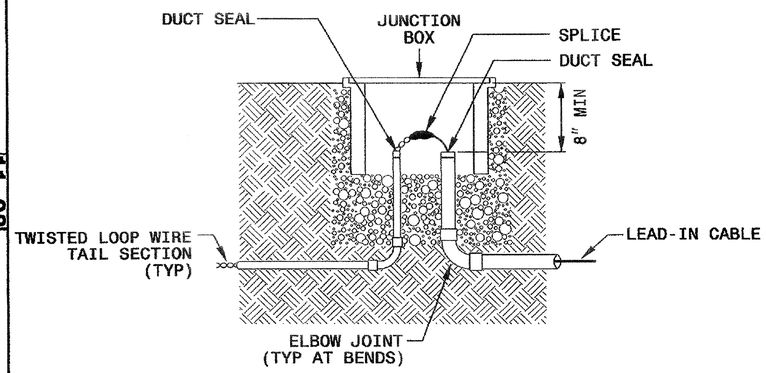


### LOOP WIRE AT POLE

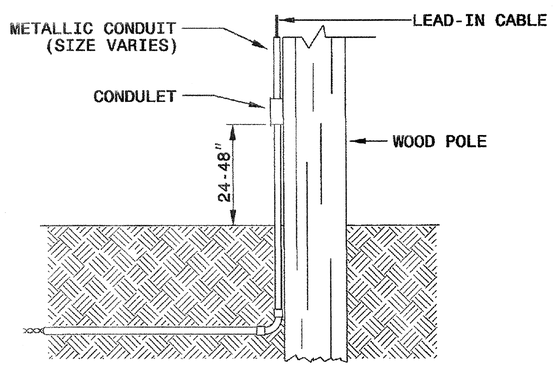


### NOTE

SPLICE ALL LOOP WIRE TAIL SECTIONS/LEAD-IN CABLE IN JUNCTION BOXES OR APPROVED CONDULETS.

## LOOP WIRE PAVEMENT EDGE DETAILS

### LOOP WIRE AT CURB & GUTTER SECTION

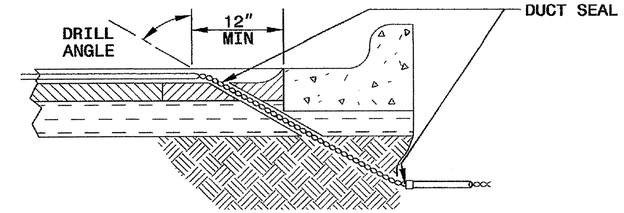


### LOOP WIRE AT PAVEMENT SECTION

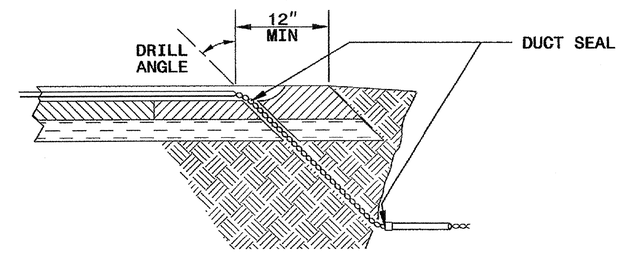


### NOTES

1. DO NOT EXCAVATE UNDER CURB AND GUTTER SECTIONS FOR CONDUIT INSTALLATION.
2. TWIST LOOP WIRE TAIL SECTIONS FROM WHERE LOOP WIRE TAIL LEAVES SAW CUT TO JUNCTION BOX, INCLUDING THROUGH CONDUIT.
3. BEFORE SEALING LOOPS, INSTALL DUCT SEAL WHERE LOOP WIRE TAIL SECTION LEAVES SAW CUT IN PAVEMENT AND AT ENTRANCE OF CONDUIT TO JUNCTION BOX.


STATE OF NORTH CAROLINA
DEPT. OF TRANSPORTATION
DIVISION OF HIGHWAYS
RALEIGH, N.C.

11-08

ENGLISH DETAIL DRAWING FOR
**INDUCTIVE DETECTION LOOPS**
LOOP WIRE DETAILS

SHEET 2 OF 3
**1725D01**


See Plate for Title

Prepared in the Offices of:
Intelligent Transportation Systems & Signals Unit
750 N. Greenfield Parkway
Garner, NC 27529

SEAL
NORTH CAROLINA PROFESSIONAL SEAL 16286 ENGINEER MILTON I. DEAN

Milton I. Dean 11/24/08
SIGNATURE DATE

24-NOV-2008 09:29
d:\work files\0-standard plate sheets\1725D102_may2307.dgn
zmlittle

| PROJECT REFERENCE NO. | SHEET NO. |
|---|---|
| U-4020 | Sig.G1 |

STATE OF NORTH CAROLINA
DEPT. OF TRANSPORTATION
DIVISION OF HIGHWAYS
RALEIGH, N.C.

11-08

ENGLISH DETAIL DRAWING FOR
**INDUCTIVE DETECTION LOOPS**
SPLICING FOR LEAD-IN CABLE AND LOOP WIRE

SHEET 3 OF 3

**1725D01**

## STEP 1. STRIP LOOP WIRE AND LEAD-IN CABLE

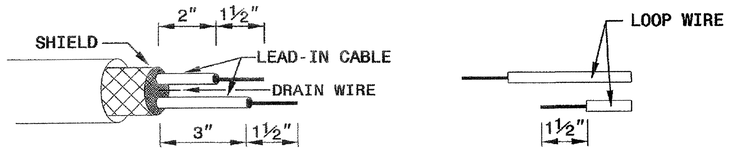


## STEP 2. CONNECT AND SOLDER

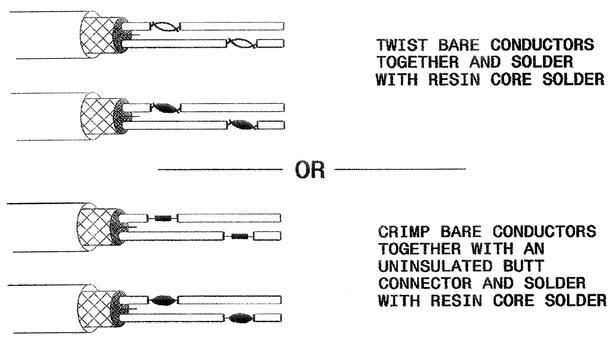


BOND SHIELD DRAIN WIRE AT SPLICE SECTIONS (DO NOT GROUND)

## LOOP WIRE AND LEAD-IN CABLE CONNECTION DETAILS

SINGLE CONNECTION SERIES CONNECTION

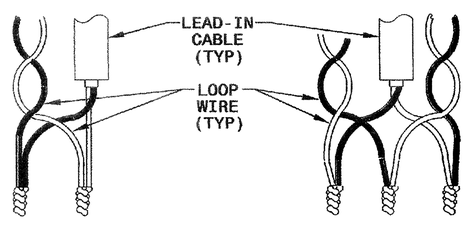


## STEP 3. INSULATE EACH SOLDER JOINT SEPARATELY

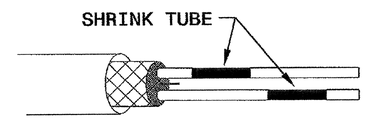


## STEP 4. ENVIRONMENTALLY PROTECT SPLICE

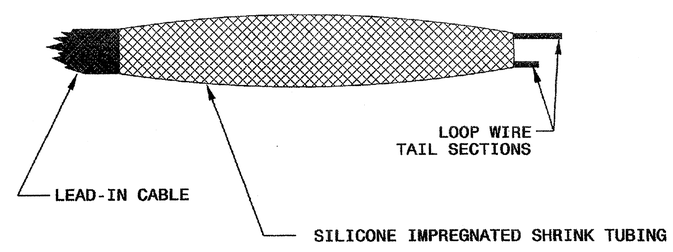


STATE OF NORTH CAROLINA
DEPT. OF TRANSPORTATION
DIVISION OF HIGHWAYS
RALEIGH, N.C.

11-08

ENGLISH DETAIL DRAWING FOR
**INDUCTIVE DETECTION LOOPS**
SPLICING FOR LEAD-IN CABLE AND LOOP WIRE

SHEET 3 OF 3

**1725D01**

See Plate for Title

*Prepared in the Offices of:*

Intelligent Transportation Systems & Signals Unit
STATE OF NORTH CAROLINA DEPARTMENT OF TRANSPORTATION

*750 N. Greenfield Parkway*
*Garner, NC 27529*

SEAL

NORTH CAROLINA PROFESSIONAL SEAL 16286 ENGINEER MILTON I. DEAN

Milton I. Dean 11/24/08
SIGNATURE DATE

24-NOV-2008 09:36
d:\work files\MO-standard plate sheets\1725D03_moy2307.dgn
zmi1918

| PROJECT REFERENCE NO. | SHEET NO. |
|---|---|
| U-4020 | S16.62 |

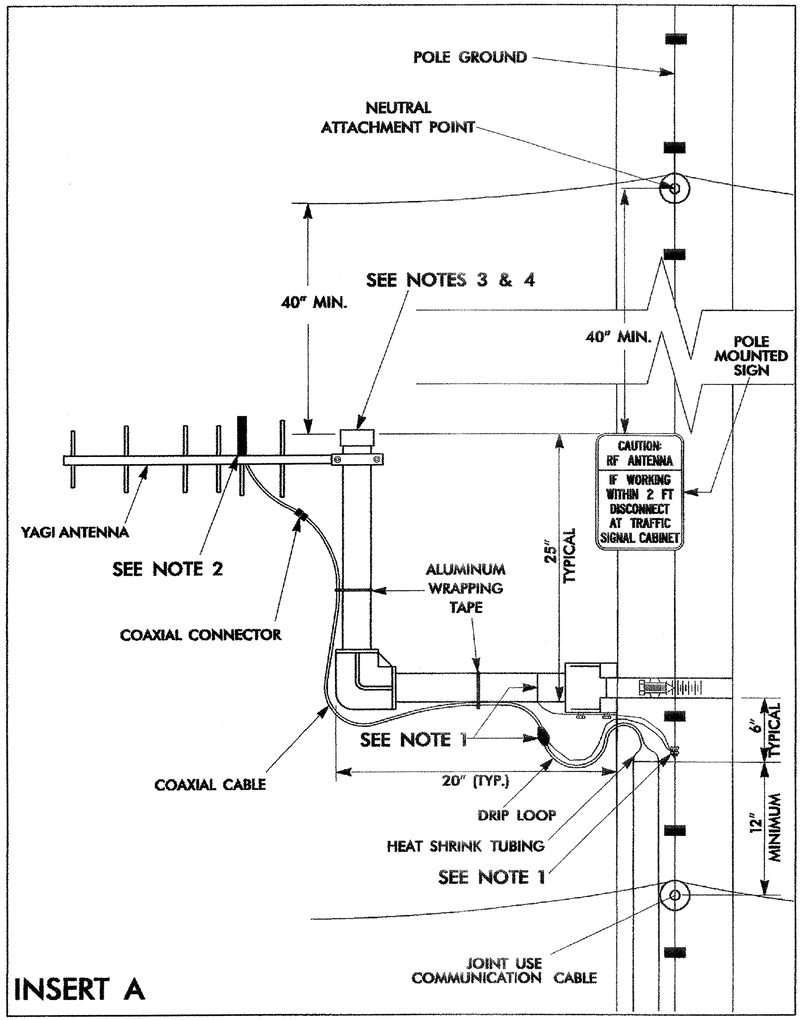


INSERT A

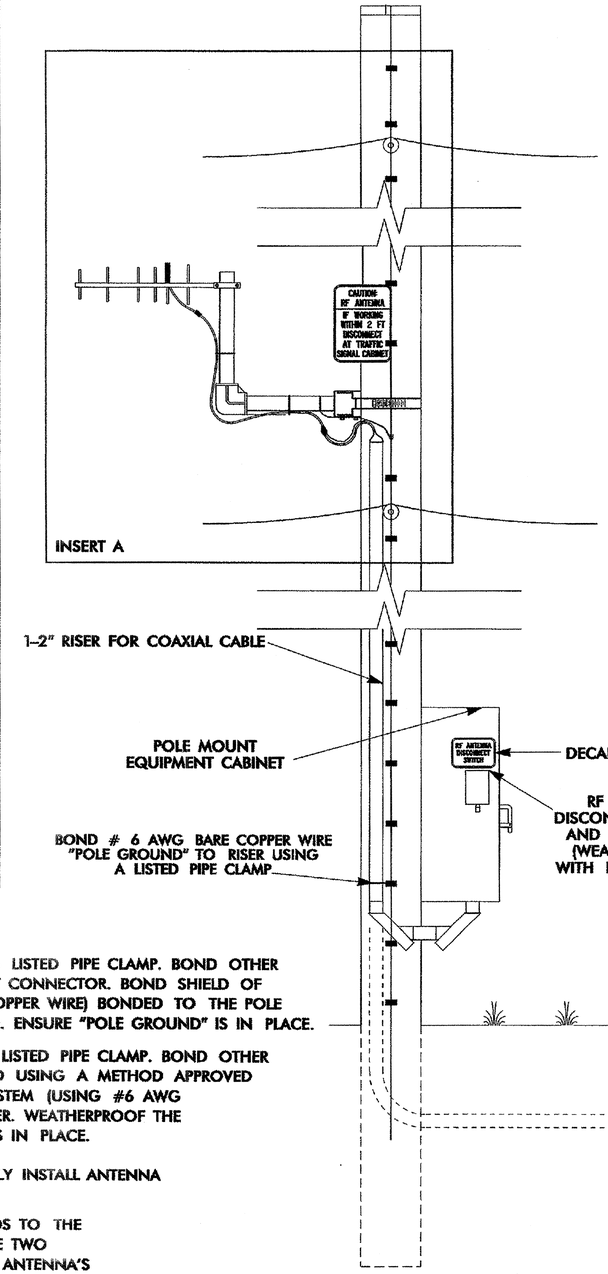


## ANTENNA AND COAXIAL CABLE CONNECTION SCHEMATIC

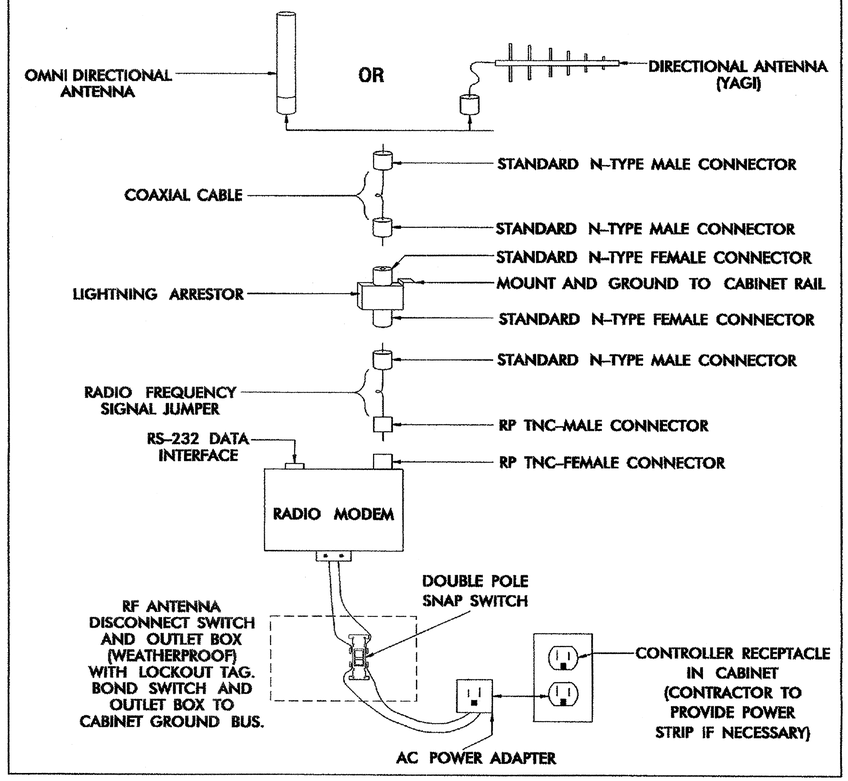


## NOTES

1. WOOD POLE — BOND # 6 AWG SOLID BARE COPPER WIRE TO ANTENNA SUPPORT USING LISTED PIPE CLAMP. BOND OTHER END OF # 6 AWG SOLID BARE COPPER WIRE TO THE POLE GROUND USING A SPLIT BOLT CONNECTOR. BOND SHIELD OF COAXIAL CABLE WITH AN APPROVED GROUNDING SYSTEM (USING #6 AWG STRANDED COPPER WIRE) BONDED TO THE POLE GROUND. WEATHERPROOF THE CONNECTION ONCE THE GROUNDING SYSTEM IS INSTALLED. ENSURE "POLE GROUND" IS IN PLACE.

   METAL POLE — BOND # 6 AWG SOLID BARE COPPER WIRE TO ANTENNA SUPPORT USING LISTED PIPE CLAMP. BOND OTHER END OF # 6 AWG SOLID BARE COPPER WIRE TO THE POLE OR EXISTING SYSTEM GROUND USING A METHOD APPROVED BY THE ENGINEER. BOND SHIELD OF COAXIAL CABLE WITH AN APPROVED GROUNDING SYSTEM (USING #6 AWG STRANDED COPPER WIRE) BONDED TO THE POLE BY A METHOD APPROVED BY THE ENGINEER. WEATHERPROOF THE CONNECTION ONCE THE GROUNDING SYSTEM IS INSTALLED. ENSURE "SYSTEM GROUND" IS IN PLACE.

2. YAGI ANTENNA SHOWN IN VERTICAL POLARIZATION POSITION FOR CLARIFICATION. TYPICALLY INSTALL ANTENNA IN HORIZONTAL POLARIZATION POSITION.

3. TO CONSERVE VERTICAL SPACING ON THE POLE (JOINT-USE OR SIGNAL POLE) WITH REGARDS TO THE SURROUNDING UTILITIES, INSTALL THE ANTENNA MOUNTING HARDWARE USING ONE OF THE TWO METHODS LISTED BELOW: (ENSURE THAT THE MOUNTING METHOD DOES NOT DEGRADE THE ANTENNA'S SIGNAL INTEGRITY)
   - A) ROTATE THE VERTICAL SUPPORT ARM 90 DEGREES SUCH THAT THE ANTENNA IS AT THE SAME HEIGHT AS THE HORIZONTAL SUPPORT ARM.
   - B) ELIMINATE THE VERTICAL SUPPORT ARM AND MOUNT THE ANTENNA TO THE HORIZONTAL SUPPORT ARM.
   - C) ANTENNA, ANTENNA SUPPORT ARM, AND SIGN TO MAINTAIN A 40" SEPARATION FROM NEUTRAL /POWER AND 12" FROM OTHER UTILITIES.

4. INSTALL AN END CAP TO SEAL THE EXPOSED END OF THE MOUNTING PIPE.

Prepared in the Offices of:
Traffic Management Systems
122 N. McDowell St., Raleigh, NC 27603

# WIRELESS RADIO ANTENNA TYPICAL DETAILS

| | | | |
|---|---|---|---|
| PLAN DATE: | JULY 2005 | REVIEWED BY: | I. N. AVERY |
| PREPARED BY: | A. CREECH | REVIEWED BY: | A. T. FAULKNER |

SCALE: 0

| REVISIONS | INIT. | DATE |
|---|---|---|
| UPDATE GROUNDING - COAXIAL CABLE SHIELD | | 4/13/06 |

SEAL: NORTH CAROLINA PROFESSIONAL SEAL 023919 ENGINEER GREGORY A. FULLER

SIGNATURE / DATE: 9/12/05

CADD Filename:

| PROJECT REFERENCE NO. | SHEET NO. |
|---|---|
| U-4020 | SIG.63 |

# DECAL

SIGN NUMBER: SP05224
TYPE: DECAL
QUANTITY:

SIGN WIDTH: 0'-9"
HEIGHT: 0'-6"
TOTAL AREA: 0.4 Sq.Ft.

BORDER TYPE: FLUSH
RECESS: 0"
WIDTH: 0.25"
RADII: 1"

NO. Z BARS:
LENGTH:

BACKG COLOR: Yellow
COPY COLOR: Black

| SYMBOL | X | Y | WID | HT |
|---|---|---|---|---|
| | | | | |

MAT'L: 0.063" (1.6 mm) ALUMINUM

DESIGN BY: S PIOTROWSKI DATE: Jul 18,2005 CHECKED BY: SUSAN B. KUNZ
PROJECT ID: ID DIV:INTELLIGENT TRANSPORTATION SYSTEM

USE NOTES: 2, 4
1. Legend and border shall be direct applied Type III reflective sheeting.
2. Legend and border shall be direct applied non-reflective sheeting.
3. Shields shall be Type III reflective sheeting on 0.032" (0.8mm) aluminum and demountable.
4. Background shall be Type III reflective sheeting.
5. Background shall be Type I reflective sheeting.
6. Center arrow(s) vertically on sign.
7. Bottom panel shall be yellow Type III sheeting. Legend shall be direct applied black non-reflective sheeting. Yellow panel is:

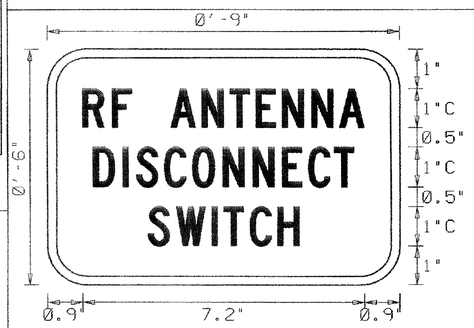


NOTE: THIS SIGN SHALL BE PRODUCED AS A DECAL

LETTER POSITIONS

Letter spacings are to start of next letter

| | | | | | | | | | | | | | | | | | | | | | | | | | | | | Series/Size Text Length |
|---|---|---|---|---|---|---|---|---|---|---|---|---|---|---|---|---|---|---|---|---|---|---|---|---|---|---|---|---|
| | R | F | | A | N | T | E | N | N | A | | | | | | | | | | | | | | | | | | C1 |
| 0.9 | 0.8 | 0.5 | 1 | 0.8 | 0.7 | 0.7 | 0.7 | 0.8 | 0.7 | 0.6 | 0.9 | | | | | | | | | | | | | | | | | 7.2 |
| | D | I | S | C | O | N | N | E | C | T | | | | | | | | | | | | | | | | | | C1 |
| 1.2 | 0.8 | 0.3 | 0.7 | 0.7 | 0.8 | 0.8 | 0.8 | 0.7 | 0.7 | 0.5 | 1.2 | | | | | | | | | | | | | | | | | 6.7 |
| | S | W | I | T | C | H | | | | | | | | | | | | | | | | | | | | | | C1 |
| 2.6 | 0.7 | 0.9 | 0.3 | 0.7 | 0.7 | 0.5 | 2.6 | | | | | | | | | | | | | | | | | | | | | 3.9 |

Spacing Factor is 1 unless specified otherwise

# POLE MOUNTED SIGN

SIGN NUMBER: SP05223
TYPE: D
QUANTITY:

SIGN WIDTH: 0'-9"
HEIGHT: 1'-0"
TOTAL AREA: 0.8 Sq.Ft.

BORDER TYPE: FLUSH
RECESS: 0"
WIDTH: 0.2"
RADII: 1"

NO. Z BARS:
LENGTH:

BACKG COLOR: Yellow
COPY COLOR: Black

| SYMBOL | X | Y | WID | HT |
|---|---|---|---|---|
| BAR | 0.2 | 8.2 | 8.6 | 1.0 |

MAT'L: 0.063" (1.6 mm) ALUMINUM

DESIGN BY: M. TRACEY DATE: Oct 25, 2007 CHECKED BY: SUSAN KUNZ
PROJECT ID: DIV: INTELLIGENT TRANSPORTATION SYSTEMS

USE NOTES: 2,4
1. Legend and border shall be direct applied Type III reflective sheeting.
2. Legend and border shall be direct applied non-reflective sheeting.
3. Shields shall be Type III reflective sheeting on 0.032" (0.8mm) aluminum and demountable.
4. Background shall be Type III reflective sheeting.
5. Background shall be Type I reflective sheeting.
6. Center arrow(s) vertically on sign.
7. Bottom panel shall be yellow Type III sheeting. Legend shall be direct applied black non-reflective sheeting. Yellow panel is:

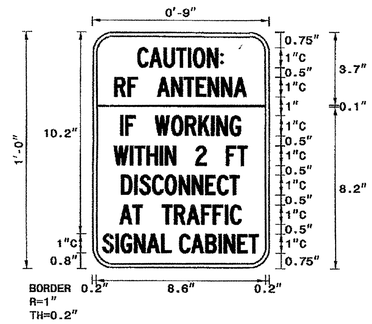


0.60 SPACING FACTOR

LETTER POSITIONS

Letter spacings are to start of next letter

| | | | | | | | | | | | | | | | | | | | | | | | | | | | | Series/Size Text Length |
|---|---|---|---|---|---|---|---|---|---|---|---|---|---|---|---|---|---|---|---|---|---|---|---|---|---|---|---|---|
| | C | A | U | T | I | O | N | : | | | | | | | | | | | | | | | | | | | | C |
| 2.3 | 0.6 | 0.7 | 0.6 | 0.6 | 0.3 | 0.7 | 0.7 | 0.1 | 2.3 | | | | | | | | | | | | | | | | | | | 4.4 |
| | R | F | | A | N | T | E | N | N | A | | | | | | | | | | | | | | | | | | C |
| 1.2 | 0.7 | 0.5 | 1 | 0.7 | 0.6 | 0.6 | 0.6 | 0.7 | 0.6 | 0.6 | 1.2 | | | | | | | | | | | | | | | | | 6.7 |
| | I | F | | W | O | R | K | I | N | G | | | | | | | | | | | | | | | | | | C |
| 1.4 | 0.3 | 0.5 | 1 | 0.8 | 0.7 | 0.7 | 0.6 | 0.3 | 0.7 | 0.5 | 1.4 | | | | | | | | | | | | | | | | | 6.1 |
| | W | I | T | H | I | N | | 2 | | F | T | | | | | | | | | | | | | | | | | C |
| 1.1 | 0.8 | 0.2 | 0.6 | 0.7 | 0.3 | 0.5 | 1 | 0.5 | 1 | 0.6 | 0.5 | 1.1 | | | | | | | | | | | | | | | | 6.8 |
| | D | I | S | C | O | N | N | E | C | T | | | | | | | | | | | | | | | | | | C |
| 1.5 | 0.7 | 0.3 | 0.6 | 0.6 | 0.7 | 0.7 | 0.7 | 0.6 | 0.6 | 0.5 | 1.5 | | | | | | | | | | | | | | | | | 6 |
| | A | T | | T | R | A | F | F | I | C | | | | | | | | | | | | | | | | | | C |
| 1.4 | 0.7 | 0.5 | 1 | 0.6 | 0.6 | 0.7 | 0.6 | 0.6 | 0.3 | 0.5 | 1.4 | | | | | | | | | | | | | | | | | 6.2 |
| | S | I | G | N | A | L | | C | A | B | I | N | E | T | | | | | | | | | | | | | | C |
| 0.5 | 0.7 | 0.3 | 0.7 | 0.6 | 0.7 | 0.5 | 0.4 | 0.6 | 0.7 | 0.7 | 0.3 | 0.7 | 0.6 | 0.5 | 0.5 | | | | | | | | | | | | | 7.9 |

Spacing Factor is 1 unless specified otherwise

NORTH CAROLINA D.O.T. SIGN DETAIL

Prepared in the Offices of:
Traffic Engineering and Safety Systems Branch
STATE OF NORTH CAROLINA DEPARTMENT OF TRANSPORTATION
Intelligent Transportation Systems
750 N. Greenfield Pkwy., Garner, NC 27529

SCALE
0

WIRELESS
RADIO ANTENNA
TYPICAL DETAILS

| PLAN DATE: JULY 2005 | REVIEWED BY: I. N. AVERY |
|---|---|
| PREPARED BY: A. CREECH | REVIEWED BY: A. T. FAULKNER |

| REVISIONS | INIT. | DATE |
|---|---|---|
| | | |

SEAL
NORTH CAROLINA PROFESSIONAL SEAL 023919 ENGINEER GREGORY A. FULLER

Gregory A. Fuller 9/12/05
SIGNATURE DATE

CADD Filename:

| PROJECT REFERENCE NO. | SHEET NO. |
|---|---|
| U-4020 | SIG.64 |

**LEGEND**

- YAGI ANTENNA (DOUBLE) FOR REPEATOR OPERATION
- YAGI ANTENNA (SINGLE)
- OMNI ANTENNA
- EXISTING CONTROLLER AND CABINET
- EXISTING MASTER CONTROLLER AND CABINET
- XX-XXXX SIGNAL INVENTORY NUMBER
- NEW METAL POLE W/MAST ARM
- EXISTING WOOD POLE
- NEW METAL POLE
- SP SIGNAL POLE
- EXISTING METAL POLE

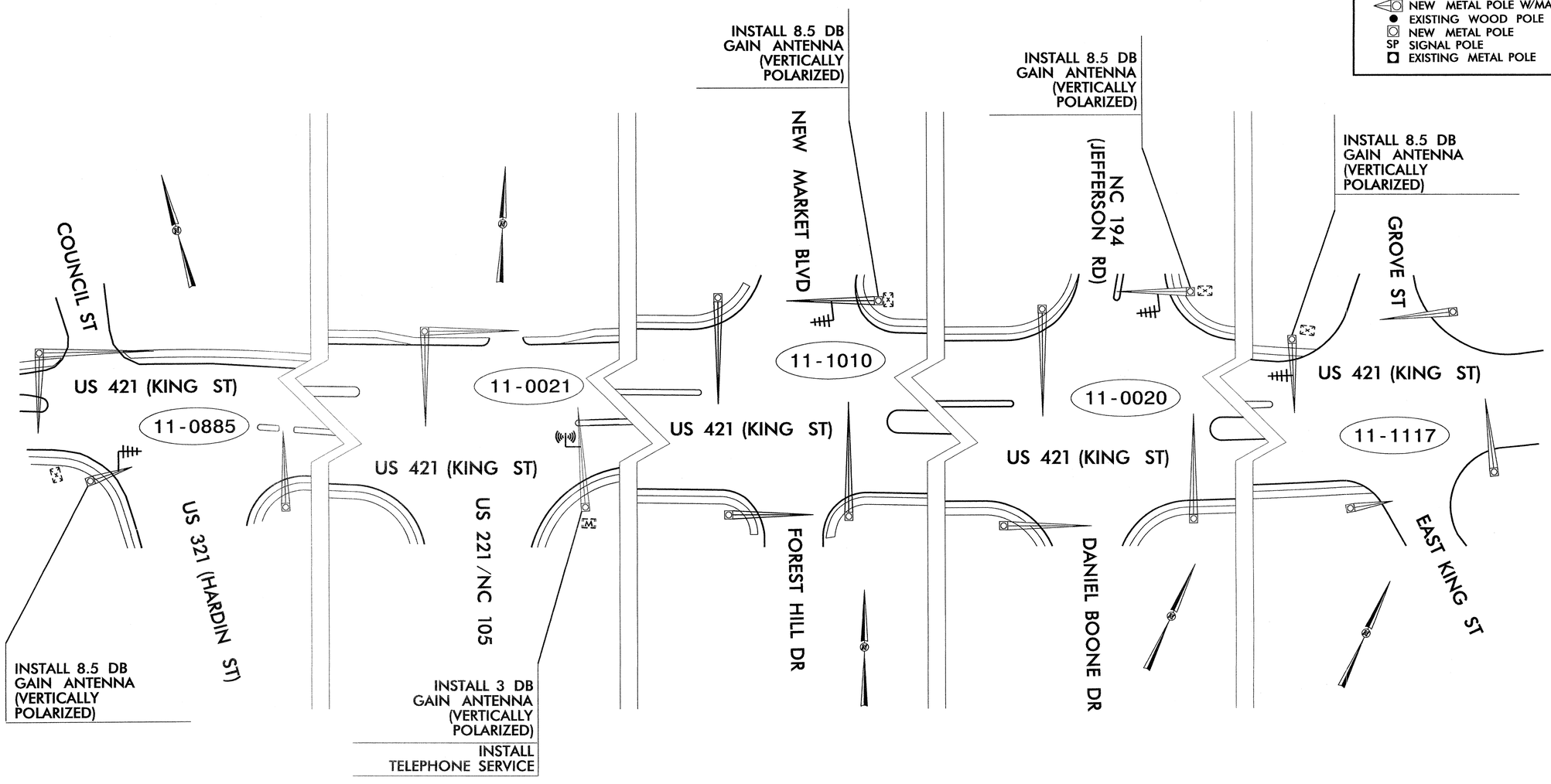


NOTES:

1. INSTALL COAXIAL CABLE
   A. ON WOOD POLES, INSTALL A 2" RISER WITH HEAT SHRINK TUBING TO ROUTE THE COAXIAL CABLE TO THE ANTENNA.
   B. ON METAL POLES, RUN COAXIAL CABLE UP THROUGH THE POLE AND OUT THE MAST ARM; FIELD DRILL 1/2" HOLE WITH GROMMET THROUGH BOTTOM OF MAST ARM FOR INSTALLATION OF THE COAXIAL CABLE TO THE ANTENNA.
   C. ON METAL STRAIN POLES, RUN COAXIAL CABLE UP THROUGH THE POLE AND REPLACE THE WEATHERHEAD WITH HEAT SHRINK TUBING AND ROUTE THE COAXIAL CABLE TO THE ANTENNA.
   D. BETWEEN THE POINT OF EXITING THE METAL POLE OR MAST ARM AND THE ANTENNA, SECURE THE COAXIAL CABLE TO THE STRUCTURE USING 3/4" STAINLESS STEEL STRAPS EVERY 12".
2. IF EXISTING SPARE RISER IS AVAILABLE, REMOVE WEATHERHEAD AND INSTALL COAXIAL CABLES. RESEAL WITH HEAT SHRINK TUBING.
3. INSTALL WIRELESS ANTENNA ON POLE WITH RF WARNING SIGN AND AIM TOWARDS MASTER.
4. MAINTAIN PROPER CLEARANCE FROM ALL UTILITIES PER THE NATIONAL ELECTRICAL SAFETY CODE.
5. INSTALL WIRELESS SERIAL RADIO MODEM WITH EXTERIOR DISCONNECT SWITCH LOCATED ON CABINET. (NOTE: RF ANTENNA DISCONNECT SWITCH NOT REQUIRED ON NCDOT-OWNED POLE.)
6. REFERENCE "WIRELESS RADIO ANTENNA TYPICAL DETAILS."

Prepared in the Offices of:
Traffic Engineering and Safety Systems Branch
STATE OF NORTH CAROLINA DEPARTMENT OF TRANSPORTATION
Intelligent Transportation Systems
750 N. Greenfield Pkwy., Garner, NC 27529

SCALE 0

# WIRELESS COMMUNICATION PLANS ALONG US 421 (KING STREET)

DIVISION 11 WATAUGA CO. BOONE

| | | | |
|---|---|---|---|
| PLAN DATE: | DECEMBER 2008 | REVIEWED BY: | I.N. AVERY |
| PREPARED BY: | S.C. WARDLE | REVIEWED BY: | G.A. FULLER |

| REVISIONS | INIT. | DATE |
|---|---|---|
| | | |

SEAL
NORTH CAROLINA PROFESSIONAL SEAL 023919 ENGINEER GREGORY A. FULLER

Gregory A. Fuller 12/22/08
SIGNATURE DATE

CADD Filename: