09/08/99

TIP PROJECT: R-2719A

CONTRACT: C201965

See Sheet 1-A For Index of Sheets
See Sheet 1-B For Standard Symbology Sheet

STATE OF NORTH CAROLINA
DIVISION OF HIGHWAYS

LENOIR COUNTY

STATE	STATE PROJECT REFERENCE NO.	SHEET NO.	TOTAL SHEETS
N.C.	R-2719A	1	

STATE PROJ. NO.	F. A. PROJ. NO.	DESCRIPTION
34501.1.1	STP-0224(3)	PE
34501.2.4	STP-0224(8)	ROW, Util.
34501.3.ST1	STM-0224(13)	Const.

LOCATION: CRESCENT RD IN KINSTON FROM US 70 TO US 258

TYPE OF WORK: GRADING, DRAINAGE, PAVING, SIGNALS, STRUCTURES

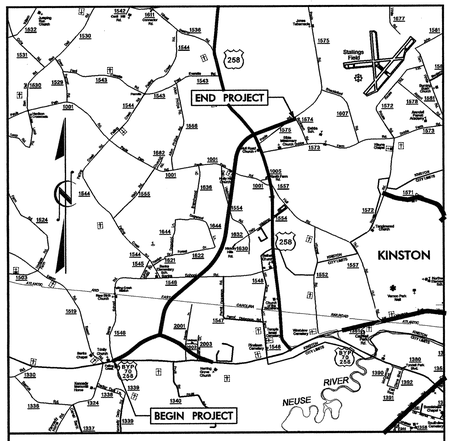

VICINITY MAP

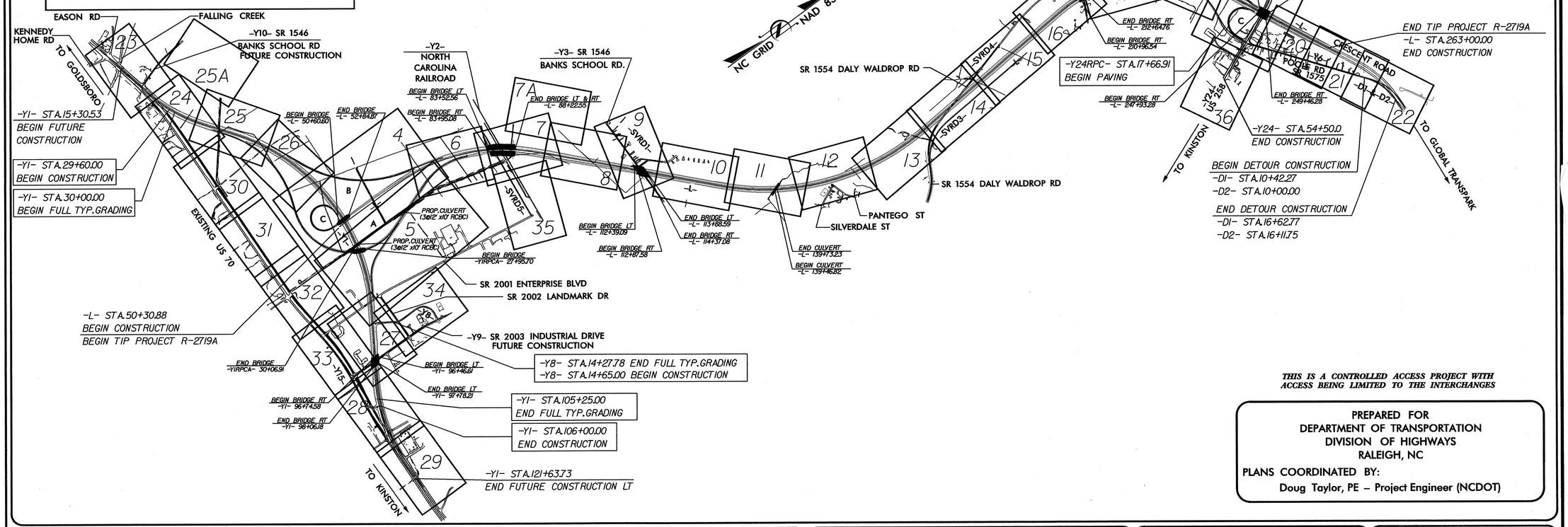

THIS IS A CONTROLLED ACCESS PROJECT WITH ACCESS BEING LIMITED TO THE INTERCHANGES

PREPARED FOR
DEPARTMENT OF TRANSPORTATION
DIVISION OF HIGHWAYS
RALEIGH, NC

PLANS COORDINATED BY:
Doug Taylor, PE – Project Engineer (NCDOT)

GRAPHIC SCALES

50 25 0 50 100
PLANS

50 25 0 50 100
PROFILE (HORIZONTAL)

5 2.5 0 5 10
PROFILE (VERTICAL)

DESIGN DATA

ADT 2008	=	27,490
ADT 2030	=	49,000
DHV	=	10 %
D	=	55 %
T	=	14 % *
V	=	70 MPH

* TTST 10% DUAL 4%

FUNCTIONAL CLASSIFICATION FREEWAY

PROJECT LENGTH

LENGTH ROADWAY TIP PROJECT R-2719A = 3.803 MI

LENGTH STRUCTURE TIP PROJECT R-2719A = 0.225 MI

TOTAL LENGTH OF TIP PROJECT R-2719A = 4.028 MI

NOTE: SOUTHBOUND LANES (-L- LT) WERE USED FOR PROJECT LENGTH CALCULATIONS

Prepared for the Division of Highways in the Office of:
URS CORPORATION – NORTH CAROLINA
1600 Perimeter Park Dr., Morrisville, North Carolina 27560
Telephone (919) 461-1100 Fax (919) 461-1415

2006 STANDARD SPECIFICATIONS

RIGHT OF WAY DATE: AUGUST 31, 2005

LETTING DATE: June 16, 2009

MICHAEL LINDGREN, P.E.
PROJECT ENGINEER

JEFFREY A. KOONTZ, P.E.
PROJECT DESIGN ENGINEER

HYDRAULICS ENGINEER
NORTH CAROLINA PROFESSIONAL SEAL 021162 ENGINEER W. HERBERT TURNER, JR.
SIGNATURE: W. Herbert Turner Jr. P.E. 5-16-09

ROADWAY DESIGN ENGINEER
NORTH CAROLINA PROFESSIONAL SEAL 025513 ENGINEER MICHAEL D. LINDGREN
SIGNATURE: M D L P.E. 5-16-09

DIVISION OF HIGHWAYS
STATE OF NORTH CAROLINA
STATE OF NORTH CAROLINA DEPARTMENT OF TRANSPORTATION
P.E.
STATE HIGHWAY DESIGN ENGINEER

100% PLANS
MARCH 16, 2009

TIP PROJECT: R-2719A

CONTRACT: C201965

See Sheet 1-A For Index of Sheets
See Sheet 1-B For Standard Symbology Sheet

STATE OF NORTH CAROLINA
DIVISION OF HIGHWAYS

LENOIR COUNTY

STATE	STATE PROJECT REFERENCE NO.	SHEET NO.	TOTAL SHEETS
N.C.	R-2719A	1	

STATE PROJ. NO.	F.A. PROJ. NO.	DESCRIPTION
34501.1.1	STP-0224(3)	PE
34501.2.4	STP-0224(8)	ROW, Util.
34501.3.ST1	STM-0224(13)	Const.

LOCATION: CRESCENT RD
IN KINSTON FROM US 70 TO US 258

TYPE OF WORK: GRADING, DRAINAGE, PAVING, SIGNALS, STRUCTURES

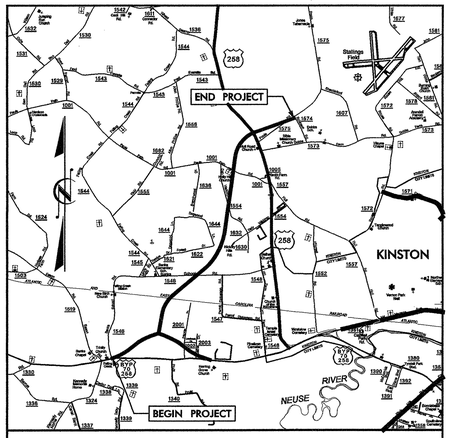

VICINITY MAP

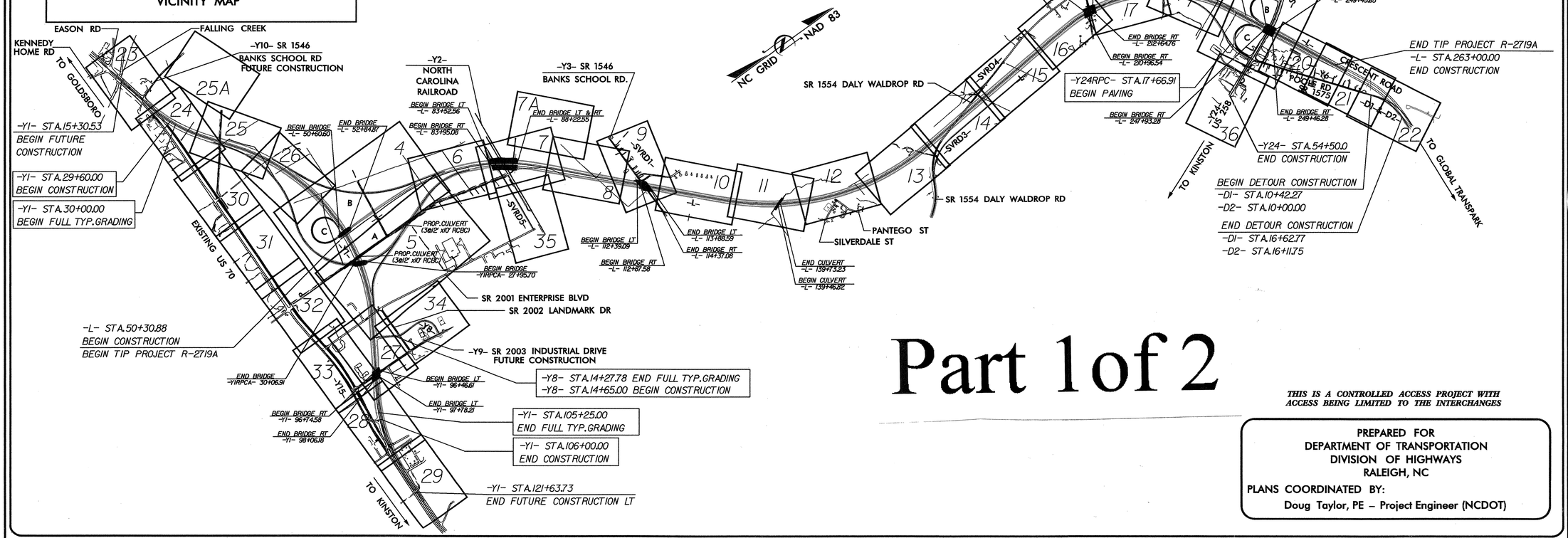

Part 1 of 2

THIS IS A CONTROLLED ACCESS PROJECT WITH ACCESS BEING LIMITED TO THE INTERCHANGES

PREPARED FOR
DEPARTMENT OF TRANSPORTATION
DIVISION OF HIGHWAYS
RALEIGH, NC

PLANS COORDINATED BY:
Doug Taylor, PE – Project Engineer (NCDOT)

GRAPHIC SCALES

50 25 0 50 100
PLANS

50 25 0 50 100
PROFILE (HORIZONTAL)

5 2.5 0 5 10
PROFILE (VERTICAL)

DESIGN DATA

ADT 2008	=	27,490
ADT 2030	=	49,000
DHV	=	10 %
D	=	55 %
T	=	14 % *
V	=	70 MPH
* TTST 10%		DUAL 4%
FUNCTIONAL CLASSIFICATION		FREEWAY

PROJECT LENGTH

LENGTH ROADWAY TIP PROJECT R-2719A = 3.803 MI

LENGTH STRUCTURE TIP PROJECT R-2719A = 0.225 MI

TOTAL LENGTH OF TIP PROJECT R-2719A = 4.028 MI

NOTE: SOUTHBOUND LANES (-L- LT) WERE USED FOR PROJECT LENGTH CALCULATIONS

Prepared for the Division of Highways in the Office of:
URS CORPORATION – NORTH CAROLINA
1600 Perimeter Park Dr., Morrisville, North Carolina 27560
Telephone (919) 461-1100 Fax (919) 461-1415

2006 STANDARD SPECIFICATIONS

RIGHT OF WAY DATE:
AUGUST 31, 2005

LETTING DATE:
June 16, 2009

MICHAEL LINDGREN, P.E.
PROJECT ENGINEER

JEFFREY A. KOONTZ, P.E.
PROJECT DESIGN ENGINEER

HYDRAULICS ENGINEER
NORTH CAROLINA PROFESSIONAL SEAL 021162 ENGINEER W. HERBERT TURNER, JR.
SIGNATURE: W. Herbert Turner Jr. P.E. 3-16-09

ROADWAY DESIGN ENGINEER
NORTH CAROLINA PROFESSIONAL SEAL 025513 ENGINEER MICHAEL D. LINDGREN
SIGNATURE: M D L P.E. 3-16-09

DIVISION OF HIGHWAYS
STATE OF NORTH CAROLINA
STATE OF NORTH CAROLINA DEPARTMENT OF TRANSPORTATION
P.E.
STATE HIGHWAY DESIGN ENGINEER

100% PLANS
MARCH 16, 2009

PROJECT REFERENCE NO.	SHEET NO.
R-2719A	1-A

ROADWAY DESIGN ENGINEER

NORTH CAROLINA PROFESSIONAL SEAL 025513 ENGINEER MICHAEL D. LINDGREN

4-1-09

SHEET NUMBER	SHEET
1	TITLESHEET
1-A	INDEX OF SHEETS, GENERAL NOTES, AND LIST OF STANDARD DRAWINGS
1-B	CONVENTIONAL SYMBOLS
1-C THRU 1-E	SURVEY CONTROL SHEETS
1-F	CENTERLINE COORDINATE LIST
2 THRU 2-G	PAVEMENT SCHEDULE, TYPICAL SECTIONS & WEDGING DETAILS
2-H THRU 2-I	INTERCHANGE SHEAR POINT DIAGRAM
2-J THRU 2-K	INTERSECTION DETAILS
2-L	DITCH DETAILS
2-M	CULVERT CHANNEL DETAILS
2-N	TEMPORARY PAVEMENT WIDENNG DETAILS
2-O THRU 2-R	NOISE WALL DETAIL SHEET
2-S THRU 2T	INTERCHANGE GRADING DETAILS
2-U	MODIFIED CONCRETE FLUME DETAIL
2-V	DETAIL TO CONVERT EXISTING DROP INLET OR CATCH BASIN TO JUNCTION BOX
2-W	DETAIL OF SPECIAL CATCH BASIN
2-X	DETAIL-CONCRETE ENDWALL FOR 7I SKEW: 3@36" TRIPLE PIPE CULVERT
2-Y	DETAIL OF REINFORCED CONCRETE ENDWALL FOR 54" DIAMETER PIPE: 147° SKEW: STA. -Y1RPB- 22+35
2-Z	DETAIL OF REINFORCED CONCRETE ENDWALL FOR 60" DIAMETER PIPE: 77° SKEW: STA. -L- 69+50
2-AA	DETAIL-CONCRETE ENDWALL FOR 49°SKEW: 2@48" PIPE CULVERT
2-AB	DETAIL OF REINFORCED CONCRETE ENDWALL FOR 54" DIAMETER PIPE: 60° SKEW: STA. -Y1- 85+20
2-AC	DETAIL OF REINFORCED CONCRETE ENDWALL FOR 60" DIAMETER PIPE: 106° SKEW: STA. -Y1RPCA- 9+20
2-AD	DETAIL-CONCRETE ENDWALL FOR 70° SKEW: 48" PIPE CULVERT
2-AE	DETAIL-CONCRETE ENDWALL FOR 127° SKEW: 36" PIPE CULVERT
2-AF	DETAIL-CONCRETE ENDWALL FOR 71° SKEW: 36" PIPE CULVERT
2-AG	DETAIL-CONCRETE ENDWALL FOR 78° SKEW: 42" PIPE CULVERT
2-AH	DETAIL-CONCRETE ENDWALL FOR 62° SKEW: 42" PIPE CULVERT
2-AI	DETAIL-CONCRETE ENDWALL FOR 65° SKEW: 36" PIPE CULVERT
2-AJ	DETAIL OF REINFORCED CONCRETE ENDWALL FOR 60" DIAMETER PIPE: 101° SKEW: STA. -Y1- 31+60
2-AK	DETAIL-CONCRETE ENDWALL FOR 111° SKEW: 36" PIPE CULVERT
2-AL	GEOGRID REINFORCED SLOPE AT 252+50 TO 259+50 -L-
2-AM	DETAIL OF ANCHORAGE OF FRAMES
2-AN	SETTLEMENT GUAGE DETAIL
3	SUMMARY OF QUANTITIES (2 SHEETS)
3A1 & 3A2	SUMMARY OF GUARDRAIL QUANTITIES
3B THRU 3P	SUMMARY OF DRAINAGE QUANTITIES
3Q	SUMMARY OF EARTHWORK QUANTITIES
3R	FUTURE AND PROPOSED SUMMARY OF WOVEN WIRE FENCE SUMMARY OF ASPHALT PAVEMENT REMOVAL SUMMARY OF CABLE GUIDERAIL SUMMARY OF SHOULDER BERM GUTTER SUMMARY OF PRECAST SINGLE FACED BARRIER SUMMARY OF EXPRESSWAY GUTTER SUMMARY OF TEMPORARY GUARDRAIL
3S	PARCEL INDEX SHEET
4 THRU 36	PLAN SHEETS
37 THRU 72	PROFILE SHEETS
TCP-1 THRU TCP-18	TRAFFIC CONTROL PLANS
PM-1 THRU PM-4	PAVEMENT MARKING PLANS
EC-1 THRU EC-76	EROSION CONTROL PLANS
OSM-1 THRU OSM-16	ON SITE MITIGATION PLANS
SIGN-1 THRU SIGN-11	SIGNING PLANS
SIG-1 THRU SIG-21	SIGNAL PLANS
UC-1 THRU UC-21	UTILITY CONSTRUCTION PLANS
UO-1 THRU UO-20	UTILITIES BY OTHERS PLANS
X-1A THRU X-1H	CROSS-SECTION SUMMARY SHEETS
X-2 THRU X- 256	CROSS-SECTIONS
S-1 THRU S-340	STRUCTURE PLANS
C-1 THRU C-23	CULVERT PLANS

GENERAL NOTES:

2006 SPECIFICATIONS
EFFECTIVE: 07-18-06
REVISED: 07-30-08

GRADING AND SURFACING OR RESURFACING AND WIDENING:

THE GRADE LINES SHOWN DENOTE THE FINISHED ELEVATION OF THE PROPOSED SURFACING AT GRADE POINTS SHOWN ON THE TYPICAL SECTIONS. WHERE NO GRADE LINES ARE SHOWN, THE PROFILES SHOWN DENOTE THE TOP ELEVATION OF THE EXISTING PAVEMENT ALONG THE CENTER LINE OF SURVEY ON WHICH THE PROPOSED RESURFACING WILL BE PLACED. GRADE LINES MAY BE ADJUSTED BY THE ENGINEER IN ORDER TO SECURE A PROPER TIE-IN.

CLEARING:

CLEARING ON THIS PROJECT SHALL BE PERFORMED TO THE LIMITS ESTABLISHED BY METHOD III.

SUPERELEVATION:

ALL CURVES ON THIS PROJECT SHALL BE SUPERELEVATED IN ACCORDANCE WITH STD. NO. 225.04 AND NO. 225.05 USING THE RATE OF SUPERELEVATION AND RUNOFF SHOWN ON THE PLANS. SUPERELEVATION IS TO BE REVOLVED ABOUT THE GRADE POINTS SHOWN ON THE TYPICAL SECTIONS.

SHOULDER CONSTRUCTION:

ASPHALT, EARTH, AND CONCRETE SHOULDER CONSTRUCTION ON THE HIGH SIDE OF SUPERELEVATED CURVES SHALL BE IN ACCORDANCE WITH STD. NO. 560.01 AND STD. NO. 560.02.

SIDE ROADS:

THE CONTRACTOR WILL BE REQUIRED TO DO ALL NECESSARY WORK TO PROVIDE SUITABLE CONNECTIONS WITH ALL ROADS, STREETS, AND DRIVES ENTERING THIS PROJECT. THIS WORK WILL BE PAID FOR AT THE CONTRACT UNIT PRICE FOR THE PARTICULAR ITEMS INVOLVED.

BERM DITCHES:

BERM DITCHES SHALL BE CONSTRUCTED IN ACCORDANCE WITH STD. NO. 240.01 AT LOCATIONS SHOWN ON THE PLANS OR AS DIRECTED BY THE ENGINEER.

TEMPORARY SHORING:

SHORING REQUIRED FOR THE MAINTENANCE OF TRAFFIC WILL BE PAID FOR AS "EXTRA WORK" IN ACCORDANCE WITH SECTION 104-7

END BENTS:

THE ENGINEER SHALL CHECK THE STRUCTURE END BENT PLANS, DETAILS, AND CROSS-SECTION PRIOR TO SETTING OF THE SLOPE STAKES FOR THE EMBANKMENT OR EXCAVATION APPROACHING A BRIDGE.

UTILITIES:

UTILITY OWNERS ON THIS PROJECT ARE NORTH LENOIR WATER CORPORATION, NEUSE REGIONAL WATER AND SEWER AUTHORITY, CITY OF KINSTON, EMBARQ, LENOIR COUNTY, PROGRESS ENERGY, SUDDEN LINK CABLE TV AND PIEDMONT NATURAL GAS

ANY RELOCATION OF EXISTING UTILITIES WILL BE ACCOMPLISHED BY OTHERS, EXCEPT AS SHOWN ON THE PLANS.

RIGHT-OF-WAY MARKERS:

ALL RIGHT-OF-WAY MARKERS ON THIS PROJECT SHALL BE PLACED BY OTHERS.

EFF. 07-18-06
REV. 01-02-07

2006 ROADWAY ENGLISH STANDARD DRAWINGS

The following Roadway Standards as appear in "Roadway Standard Drawings" Highway Design Branch - N. C. Department of Transportation - Raleigh, N. C., Dated July 18, 2006 are applicable to this project and by reference hereby are considered a part of these plans:

STD.NO.	TITLE
DIVISION 2 - EARTHWORK	
200.03	Method of Clearing - Method III
225.01	Guide for Grading Subgrade - Interstate and Freeway
225.02	Guide for Grading Subgrade - Secondary and Local
225.03	Deceleration and Acceleration Lanes
225.04	Method of Obtaining Superelevation - Two Lane Pavement
225.05	Method of Obtaining Superelevation - Divided Highways
225.06	Method of Grading Sight Distance at Intersections
225.09	Guide for Shoulder and Ditch Transition at Grade Separations
240.01	Guide for Berm Ditch Construction
DIVISION 3 - PIPE CULVERTS	
300.01	Method of Pipe Installation - Method 'A'
300.02	Method of Pipe Installation - Method 'B'
DIVISION 4 - MAJOR STRUCTURES	
422.10	Reinforced Bridge Approach Fills
DIVISION 5 - SUBGRADE, BASES AND SHOULDERS	
560.01	Method of Shoulder Construction - High Side of Superelevated Curve - Method I
560.02	Method of Shoulder Construction - High Side of Superelevated Curve - Method II
DIVISION 6 - ASPHALT BASES AND PAVEMENTS	
610.01	Guide for Paving Shoulders Under Bridges - Method I
610.02	Guide for Paving Shoulders Under Bridges - Method II
610.03	Guide for Paving Shoulders Under Bridges - Method III
654.01	Pavement Repairs
DIVISION 8 - INCIDENTALS	
816.04	Markers for Drainage Structure and Concrete Pad
838.01	Concrete Endwall for Single and Double Pipe Culverts - 15" thru 48" Pipe 90 Skew
838.11	Brick Endwall for Single and Double Pipe Culverts - 15" thru 48" Pipe 90 Skew
838.21	Reinforced Concrete Endwall - for Single 54" Pipe 90 Skew
838.27	Reinforced Concrete Endwall - for Single 60" Pipe 90 Skew
838.28	Reinforced Concrete Endwall - for Double and Triple 60" Pipes 90 Skew
838.33	Reinforced Concrete Endwall - for Single 66" Pipe 90 Skew
838.45	Notes for Reinforced Concrete Endwall - Std. Dwg 838.21 thru 838.40
838.51	Reinforced Brick Endwall - for Single 54" Pipe 90 Skew
838.57	Reinforced Brick Endwall - for Single 60" Pipe 90 Skew
838.58	Reinforced Brick Endwall - for Double and Triple 60" Pipes 90 Skew
838.63	Reinforced Brick Endwall - for Single 66" Pipe 90 Skew
838.75	Notes for Reinforced Brick Endwall - Std. Dwg 838.51 thru 838.70
838.80	Precast Endwalls - 12" thru 72" Pipe 90 Skew
840.00	Concrete Base Pad for Drainage Structures
840.01	Brick Catch Basin - 12" thru 54" Pipe
840.02	Concrete Catch Basin - 12" thru 54" Pipe
840.03	Frame, Grates and Hood - for Use on Standard Catch Basin
840.14	Concrete Drop Inlet - 12" thru 30" Pipe
840.15	Brick Drop Inlet - 12" thru 30" Pipe
840.16	Drop Inlet Frame and Grates - for use with Std. Dwg 840.14 and 840.15
840.17	Concrete Grated Drop Inlet Type 'A' - 12" thru 72" Pipe
840.18	Concrete Grated Drop Inlet Type 'B' - 12" thru 36" Pipe
840.19	Concrete Grated Drop Inlet Type 'D' - 12" thru 36" Pipe
840.20	Frames and Wide Slot Flat Grates
840.22	Frames and Wide Slot Sag Grates
840.26	Brick Grated Drop Inlet Type 'A' - 12" thru 72" Pipe
840.27	Brick Grated Drop Inlet Type 'B' - 12" thru 36" Pipe
840.28	Brick Grated Drop Inlet Type 'D' - 12" thru 36" Pipe
840.34	Traffic Bearing Junction Box - for Use with Pipes 42" and Under
840.41	Spring Box - Concrete or Brick
840.45	Precast Drainage Structure
840.46	Traffic Bearing Precast Drainage Structure
840.72	Pipe Collar
846.02	Drop Inlet Installation in Expressway Gutter
846.04	Drop Inlet Installation in Shoulder Berm Gutter
850.01	Concrete Paved Ditches
850.10	Guide for Berm Drainage Outlet - 15" and 18" Pipe
850.11	Guide for Berm Drainage Outlet - 24" and 30" Pipe
852.06	Method for Placement of Drop Inlets in Concrete Islands
857.01	Precast Reinforced Concrete Barrier - 41" Single Faced
862.03	Structure Anchor Units
862.04	Anchoring End of Guardrail - B-77 and B-83 Anchor Units
866.02	Woven Wire Fence - with Wood Post
876.01	Rip Rap in Channels
876.02	Guide for Rip Rap at Pipe Outlets
876.04	Drainage Ditches with Class 'B' Rip Rap

3/15/06

PROJECT REFERENCE NO.	SHEET NO.
R-2719A	1B

Note: Not to Scale

S.U.E. = Subsurface Utility Engineering

STATE OF NORTH CAROLINA
DIVISION OF HIGHWAYS

CONVENTIONAL PLAN SHEET SYMBOLS

BOUNDARIES AND PROPERTY:

- State Line
- County Line
- Township Line
- City Line
- Reservation Line
- Property Line
- Existing Iron Pin — EIP
- Property Corner
- Property Monument — ECM
- Parcel/Sequence Number — 123
- Existing Fence Line
- Proposed Woven Wire Fence
- Proposed Chain Link Fence
- Proposed Barbed Wire Fence
- Existing Wetland Boundary — WLB
- Proposed Wetland Boundary — WLB
- Existing Endangered Animal Boundary — EAB
- Existing Endangered Plant Boundary — EPB

BUILDINGS AND OTHER CULTURE:

- Gas Pump Vent or U/G Tank Cap
- Sign — S
- Well — W
- Small Mine
- Foundation
- Area Outline
- Cemetery
- Building
- School
- Church
- Dam

HYDROLOGY:

- Stream or Body of Water
- Hydro, Pool or Reservoir
- Jurisdictional Stream — JS
- Buffer Zone 1 — BZ 1
- Buffer Zone 2 — BZ 2
- Flow Arrow
- Disappearing Stream
- Spring
- Wetland
- Proposed Lateral, Tail, Head Ditch — FLOW
- False Sump

RAILROADS:

- Standard Gauge — CSX TRANSPORTATION
- RR Signal Milepost — MILEPOST 35
- Switch — SWITCH
- RR Abandoned
- RR Dismantled

RIGHT OF WAY:

- Baseline Control Point
- Existing Right of Way Marker
- Existing Right of Way Line
- Proposed Right of Way Line — RW
- Proposed Right of Way Line with Iron Pin and Cap Marker — RW
- Proposed Right of Way Line with Concrete or Granite Marker — RW
- Existing Control of Access — CA
- Proposed Control of Access — CA
- Existing Easement Line — E
- Proposed Temporary Construction Easement — E
- Proposed Temporary Drainage Easement — TDE
- Proposed Permanent Drainage Easement — PDE
- Proposed Permanent Utility Easement — PUE
- Proposed Mitigation Area Boundary — MA

ROADS AND RELATED FEATURES:

- Existing Edge of Pavement
- Existing Curb
- Proposed Slope Stakes Cut — C
- Proposed Slope Stakes Fill — F
- Proposed Wheel Chair Ramp — WCR
- Proposed Wheel Chair Ramp Curb Cut — WCC
- Curb Cut for Future Wheel Chair Ramp — CCFR
- Existing Metal Guardrail
- Proposed Guardrail
- Existing Cable Guiderail
- Proposed Cable Guiderail
- Equality Symbol
- Pavement Removal

VEGETATION:

- Single Tree
- Single Shrub
- Hedge
- Woods Line
- Orchard
- Vineyard — Vineyard

EXISTING STRUCTURES:

MAJOR:

- Bridge, Tunnel or Box Culvert — CONC
- Bridge Wing Wall, Head Wall and End Wall — CONC WW

MINOR:

- Head and End Wall — CONC HW
- Pipe Culvert
- Footbridge
- Drainage Box: Catch Basin, DI or JB — CB
- Paved Ditch Gutter
- Storm Sewer Manhole — S
- Storm Sewer — S

UTILITIES:

POWER:

- Existing Power Pole
- Proposed Power Pole
- Existing Joint Use Pole
- Proposed Joint Use Pole
- Power Manhole — P
- Power Line Tower
- Power Transformer
- U/G Power Cable Hand Hole — HH
- H-Frame Pole
- Recorded U/G Power Line — P
- Designated U/G Power Line (S.U.E.*) — P

TELEPHONE:

- Existing Telephone Pole
- Proposed Telephone Pole
- Telephone Manhole — T
- Telephone Booth
- Telephone Pedestal — T
- Telephone Cell Tower
- U/G Telephone Cable Hand Hole — HH
- Recorded U/G Telephone Cable — T
- Designated U/G Telephone Cable (S.U.E.*) — T
- Recorded U/G Telephone Conduit — TC
- Designated U/G Telephone Conduit (S.U.E.*) — TC
- Recorded U/G Fiber Optics Cable — T FO
- Designated U/G Fiber Optics Cable (S.U.E.*) — T FO

WATER:

- Water Manhole — W
- Water Meter
- Water Valve
- Water Hydrant
- Recorded U/G Water Line — W
- Designated U/G Water Line (S.U.E.*) — W
- Above Ground Water Line — A/G Water

TV:

- TV Satellite Dish
- TV Pedestal — C
- TV Tower
- U/G TV Cable Hand Hole — HH
- Recorded U/G TV Cable — TV
- Designated U/G TV Cable (S.U.E.*) — TV
- Recorded U/G Fiber Optic Cable — TV FO
- Designated U/G Fiber Optic Cable (S.U.E.*) — TV FO

GAS:

- Gas Valve
- Gas Meter
- Recorded U/G Gas Line — G
- Designated U/G Gas Line (S.U.E.*) — G
- Above Ground Gas Line — A/G Gas

SANITARY SEWER:

- Sanitary Sewer Manhole
- Sanitary Sewer Cleanout
- U/G Sanitary Sewer Line — SS
- Above Ground Sanitary Sewer — A/G Sanitary Sewer
- Recorded SS Forced Main Line — FSS
- Designated SS Forced Main Line (S.U.E.*) — FSS

MISCELLANEOUS:

- Utility Pole
- Utility Pole with Base
- Utility Located Object
- Utility Traffic Signal Box — S
- Utility Unknown U/G Line — ?UTL
- U/G Tank; Water, Gas, Oil
- A/G Tank; Water, Gas, Oil
- U/G Test Hole (S.U.E.*)
- Abandoned According to Utility Records — AATUR
- End of Information — E.O.I.

PROJECT REFERENCE NO.	SHEET NO.
R-2719-A	1-C
Location and Surveys	

SURVEY CONTROL SHEET R-2719-A

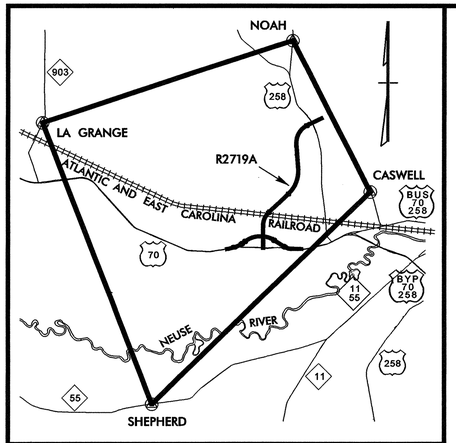

GPS CONTROL NETWORK MAP

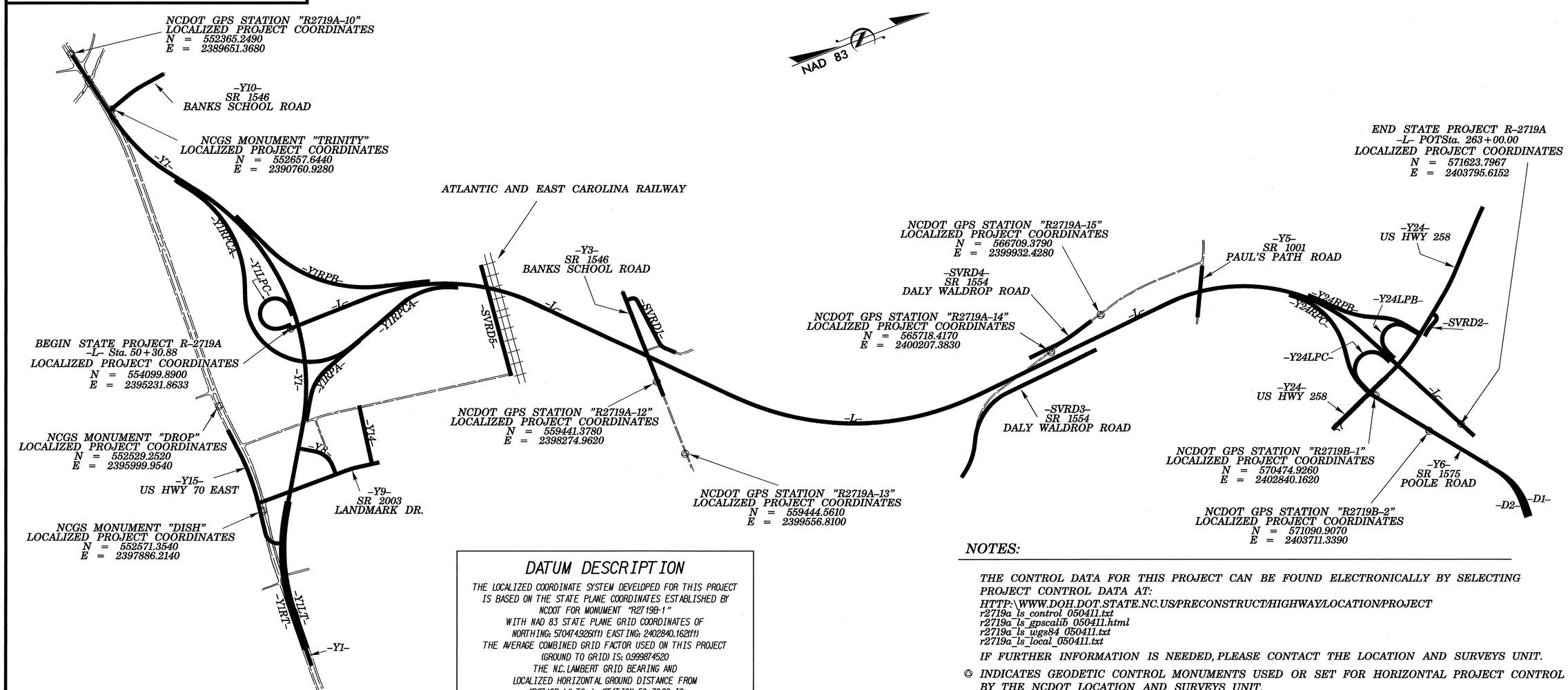

DATUM DESCRIPTION

THE LOCALIZED COORDINATE SYSTEM DEVELOPED FOR THIS PROJECT IS BASED ON THE STATE PLANE COORDINATES ESTABLISHED BY NCDOT FOR MONUMENT "R2719B-1"
WITH NAD 83 STATE PLANE GRID COORDINATES OF
NORTHING: 570474.926(ft) EASTING: 2402840.162(ft)
THE AVERAGE COMBINED GRID FACTOR USED ON THIS PROJECT (GROUND TO GRID) IS: 0.999874520
THE N.C. LAMBERT GRID BEARING AND LOCALIZED HORIZONTAL GROUND DISTANCE FROM "R2719B-1" TO -L- STATION 50+30.88 IS
S 24°55'15.2" W 18056.246 (ft)
ALL LINEAR DIMENSIONS ARE LOCALIZED HORIZONTAL DISTANCES
VERTICAL DATUM USED IS NGVD 29

NOTES:

THE CONTROL DATA FOR THIS PROJECT CAN BE FOUND ELECTRONICALLY BY SELECTING PROJECT CONTROL DATA AT:
HTTP:\WWW.DOH.DOT.STATE.NC.US/PRECONSTRUCT/HIGHWAY/LOCATION/PROJECT
r2719a_ls_control_050411.txt
r2719a_ls_gpscalib_050411.html
r2719a_ls_wgs84_050411.txt
r2719a_ls_local_050411.txt

IF FURTHER INFORMATION IS NEEDED, PLEASE CONTACT THE LOCATION AND SURVEYS UNIT.

◎ INDICATES GEODETIC CONTROL MONUMENTS USED OR SET FOR HORIZONTAL PROJECT CONTROL BY THE NCDOT LOCATION AND SURVEYS UNIT.

PROJECT CONTROL ESTABLISHED USING GLOBAL POSITIONING SYSTEM.

SEE GPS CALIBRATION SHEET FOR HORIZONTAL AND VERTICAL COORDINATE VALUES.

NOTE: DRAWING NOT TO SCALE

6/2/99

3/13/2009
r:\roadway\proj\r2719a_ls_lc_090311.dgn
michael hardgen

PROJECT REFERENCE NO.	SHEET NO.
R-2719-A	1-D
Location and Surveys	

SURVEY CONTROL SHEET R-2719-A

GPS CALIBRATION REPORT

PROJECT : 34501.1.1.1

TIP NUMBER	R-2719A		
USER NAME	BREIGNER	DATE & TIME	10:36:08 AM 5/1/03
COORDINATE SYSTEM	US STATE PLANE 1983(AT GROUND)	ZONE	NORTH CAROLINA 3200
HORIZONTAL DATUM	NAD 1983 (CONUS)		
VERTICAL DATUM	NGVD29	GEOID MODEL	GEOID99 (CONUS)
COORDINATE UNITS	US SURVEY FEET		
DISTANCE UNITS	US SURVEY FEET		
HEIGHT UNITS	US SURVEY FEET		

LOCAL SITE INFORMATION

LOCALIZED AROUND	R2719B-1
LATITUDE	35×18′35.84314"N
LONGITUDE	77×38′58.70182"W
SITE SCALE FACTOR	1.0001254958

THE NORTH CAROLINA DEPARTMENT OF TRANSPORTATION USES A LOCALIZED COORDINATE SYSTEM
WHICH IS VERY SIMILAR TO NORTH CAROLINA ZONE 3200 FROM WHICH IT IS DERIVED.
PLEASE TAKE CARE IN UTILIZING THESE COORDINATES TO ELIMINATE CONFUSION OF THE TWO SYSTEMS.
THIS FILE IS TO AID IN THE USE OF REAL TIME KINEMATIC (RTK) GPS DURING CONSTRUCTION LAYOUT.

DATUM TRANSFORMATION PARAMETERS

DATUM TRANSFORMATION COMPUTATION NOT REQUESTED

UPDATED DEFAULT PROJECTION (TRANSVERSE MERCATOR) DEFINITION

UPDATED DEFAULT PROJECTION NOT REQUESTED

HORIZONTAL ADJUSTMENT PARAMETERS

NORTHING COORDINATE OF ROTATION CENTER	560182.137SFT
EASTING COORDINATE OF ROTATION CENTER	2397074.194SFT
ROTATION ABOUT THE CENTER POINT	0×00′01"
TRANSLATION NORTH	0.143SFT
TRANSLATION EAST	-0.186SFT
SCALE FACTOR	1.00000000

VERTICAL ADJUSTMENT PARAMETERS

NORTHING COORDINATE OF ORIGIN POINT	574509.380SFT
EASTING COORDINATE OF ORIGIN POINT	2400053.914SFT
VERTICAL SEPARATION AT ORIGIN	0.051SFT
SLOPE NORTH	-7.481PPM
SLOPE EAST	-0.754PPM

GEOID MODEL DEFINITION

GEOID99 (CONUS)

RESIDUAL DIFFERENCES BETWEEN GPS (WGS84) AND LOCAL COORDINATES

SUMMARY

	MAXIMUM ERROR	ROOT MEAN SQUARE ERROR	POINT
HORIZONTAL	0.092SFT	0.014	R2719AW-4 - WGS8
VERTICAL	0.064SFT	0.009	TRANSIT - WGS84
THREE-DIMENSIONAL	0.099SFT	0.017	R2719AW-4 - WGS8

POINT RESIDUALS

WGS84 COORDINATES		CALCULATED POINT FOR DISPLAY ONLY		LOCAL COORDINATES	
POINT	R2719AW-1 - WGS8	NORTHING	574509.380SFT	POINT	R2719AW-1 - LOCA
LATITUDE	35×19′16.11332"N	EASTING	2400053.914SFT	NORTHING	574509.413SFT
LONGITUDE	77×39′31.65736"W	ELEVATION	95.532SFT	EASTING	2400053.925SFT
HEIGHT	-22.060SFT	HORZ ERROR	0.035SFT	ELEVATION	95.506SFT
		VERT ERROR	0.026SFT	UTILIZED	HORZ AND VERT
		3D ERROR	0.043SFT	QUALITY	SURVEY QUALITY
POINT	R2719B-2 - WGS84	NORTHING	571090.836SFT	POINT	R2719B-2 - LOCAL
LATITUDE	35×18′41.81550"N	EASTING	2403711.304SFT	NORTHING	571090.907SFT
LONGITUDE	77×38′48.08875"W	ELEVATION	104.638SFT	EASTING	2403711.339SFT
HEIGHT	-13.117SFT	HORZ ERROR	0.079SFT	ELEVATION	104.689SFT
		VERT ERROR	0.051SFT	UTILIZED	HORZ AND VERT
		3D ERROR	0.095SFT	QUALITY	SURVEY QUALITY
POINT	R2719B-1 - WGS84	NORTHING	570474.884SFT	POINT	R2719B-1 - LOCAL
LATITUDE	35×18′35.84146"N	EASTING	2402840.125SFT	NORTHING	570474.926SFT
LONGITUDE	77×38′58.70043"W	ELEVATION	107.786SFT	EASTING	2402840.162SFT
HEIGHT	-9.967SFT	HORZ ERROR	0.056SFT	ELEVATION	107.819SFT
		VERT ERROR	0.033SFT	UTILIZED	HORZ AND VERT
		3D ERROR	0.065SFT	QUALITY	SURVEY QUALITY
POINT	R2719AW-6 - WGS8	NORTHING	566929.352SFT	POINT	R2719AW-6 - LOCA
LATITUDE	35×18′00.57688"N	EASTING	2404336.999SFT	NORTHING	566929.383SFT
LONGITUDE	77×38′41.22518"W	ELEVATION	119.592SFT	EASTING	2404337.010SFT
HEIGHT	1.716SFT	HORZ ERROR	0.032SFT	ELEVATION	119.584SFT
		VERT ERROR	0.008SFT	UTILIZED	HORZ AND VERT
		3D ERROR	0.033SFT	QUALITY	SURVEY QUALITY
POINT	R2719A-15 - WGS8	NORTHING	566709.362SFT	POINT	R2719A-15 - LOCA
LATITUDE	35×17′58.99263"N	EASTING	2399932.432SFT	NORTHING	566709.378SFT
LONGITUDE	77×39′34.39384"W	ELEVATION	113.625SFT	EASTING	2399932.427SFT
HEIGHT	-4.170SFT	HORZ ERROR	0.017SFT	ELEVATION	113.609SFT
		VERT ERROR	0.016SFT	UTILIZED	HORZ AND VERT
		3D ERROR	0.023SFT	QUALITY	SURVEY QUALITY
POINT	R2719A-14 - WGS8	NORTHING	565718.402SFT	POINT	R2719A-14 - LOCA
LATITUDE	35×17′49.15596"N	EASTING	2400207.388SFT	NORTHING	565718.416SFT
LONGITUDE	77×39′31.23853"W	ELEVATION	113.328SFT	EASTING	2400207.383SFT
HEIGHT	-4.498SFT	HORZ ERROR	0.015SFT	ELEVATION	113.314SFT
		VERT ERROR	0.014SFT	UTILIZED	HORZ AND VERT
		3D ERROR	0.021SFT	QUALITY	SURVEY QUALITY
POINT	CASWELL - WGS84	NORTHING	560845.749SFT	POINT	CASWELL - LOCAL
LATITUDE	35×16′59.48725"N	EASTING	2411147.083SFT	NORTHING	560845.748SFT
LONGITUDE	77×37′20.09309"W	ELEVATION	108.744SFT	EASTING	2411147.093SFT
HEIGHT	-9.429SFT	HORZ ERROR	0.011SFT	ELEVATION	108.783SFT
		VERT ERROR	0.039SFT	UTILIZED	HORZ AND VERT
		3D ERROR	0.040SFT	QUALITY	SURVEY QUALITY
POINT	R2719A-12 - WGS8	NORTHING	559441.387SFT	POINT	R2719A-12 - LOCA
LATITUDE	35×16′47.33777"N	EASTING	2398274.961SFT	NORTHING	559441.379SFT
LONGITUDE	77×39′55.56650"W	ELEVATION	64.514SFT	EASTING	2398274.962SFT
HEIGHT	-53.438SFT	HORZ ERROR	0.008SFT	ELEVATION	64.498SFT
		VERT ERROR	0.016SFT	UTILIZED	HORZ AND VERT
		3D ERROR	0.018SFT	QUALITY	SURVEY QUALITY
POINT	R2719A-13 - WGS8	NORTHING	559444.576SFT	POINT	R2719A-13 - LOCA
LATITUDE	35×16′47.19864"N	EASTING	2399556.806SFT	NORTHING	559444.561SFT
LONGITUDE	77×39′40.10679"W	ELEVATION	81.327SFT	EASTING	2399556.810SFT
HEIGHT	-36.650SFT	HORZ ERROR	0.015SFT	ELEVATION	81.316SFT
		VERT ERROR	0.011SFT	UTILIZED	HORZ AND VERT
		3D ERROR	0.019SFT	QUALITY	SURVEY QUALITY
POINT	R2719AW-5 - WGS8	NORTHING	557577.109SFT	POINT	R2719AW-5 - LOCA
LATITUDE	35×16′28.68495"N	EASTING	2399898.564SFT	NORTHING	557577.074SFT
LONGITUDE	77×39′36.28909"W	ELEVATION	53.942SFT	EASTING	2399898.559SFT
HEIGHT	-64.091SFT	HORZ ERROR	0.036SFT	ELEVATION	53.934SFT
		VERT ERROR	0.008SFT	UTILIZED	HORZ AND VERT
		3D ERROR	0.037SFT	QUALITY	SURVEY QUALITY
POINT	R2719AW-7 - WGS8	NORTHING	563046.180SFT	POINT	R2719AW-7 - LOCA
LATITUDE	35×17′23.87379"N	EASTING	2391547.274SFT	NORTHING	563046.161SFT
LONGITUDE	77×41′16.12888"W	ELEVATION	80.763SFT	EASTING	2391547.242SFT
HEIGHT	-36.965SFT	HORZ ERROR	0.037SFT	ELEVATION	80.732SFT
		VERT ERROR	0.031SFT	UTILIZED	HORZ AND VERT
		3D ERROR	0.049SFT	QUALITY	SURVEY QUALITY
POINT	R2719AW-8 - WGS8	NORTHING	557590.108SFT	POINT	R2719AW-8 - LOCA
LATITUDE	35×16′29.99480"N	EASTING	2390947.184SFT	NORTHING	557590.090SFT
LONGITUDE	77×41′24.23521"W	ELEVATION	52.825SFT	EASTING	2390947.158SFT
HEIGHT	-65.033SFT	HORZ ERROR	0.032SFT	ELEVATION	52.822SFT
		VERT ERROR	0.003SFT	UTILIZED	HORZ AND VERT
		3D ERROR	0.032SFT	QUALITY	SURVEY QUALITY
POINT	TRANSIT - WGS84	NORTHING	552109.515SFT	POINT	TRANSIT - LOCAL
LATITUDE	35×15′36.68715"N	EASTING	2384045.734SFT	NORTHING	552109.561SFT
LONGITUDE	77×42′48.31955"W	ELEVATION	59.628SFT	EASTING	2384045.706SFT
HEIGHT	-58.215SFT	HORZ ERROR	0.053SFT	ELEVATION	59.692SFT
		VERT ERROR	0.064SFT	UTILIZED	HORZ AND VERT
		3D ERROR	0.083SFT	QUALITY	SURVEY QUALITY
POINT	R2719A-10 - WGS8	NORTHING	552365.237SFT	POINT	R2719A-10 - LOCA
LATITUDE	35×15′38.49251"N	EASTING	2389651.377SFT	NORTHING	552365.249SFT
LONGITUDE	77×41′40.69032"W	ELEVATION	51.723SFT	EASTING	2389651.368SFT
HEIGHT	-66.237SFT	HORZ ERROR	0.015SFT	ELEVATION	51.710SFT
		VERT ERROR	0.013SFT	UTILIZED	HORZ AND VERT
		3D ERROR	0.019SFT	QUALITY	SURVEY QUALITY
POINT	TRINITY - WGS84	NORTHING	552657.593SFT	POINT	TRINITY - LOCAL
LATITUDE	35×15′41.23928"N	EASTING	2390760.944SFT	NORTHING	552657.643SFT
LONGITUDE	77×41′27.26543"W	ELEVATION	54.611SFT	EASTING	2390760.927SFT
HEIGHT	-63.363SFT	HORZ ERROR	0.053SFT	ELEVATION	54.590SFT
		VERT ERROR	0.021SFT	UTILIZED	HORZ AND VERT
		3D ERROR	0.057SFT	QUALITY	SURVEY QUALITY
POINT	DROP - WGS84	NORTHING	552529.299SFT	POINT	DROP - LOCAL
LATITUDE	35×15′39.28283"N	EASTING	2395999.954SFT	NORTHING	552529.252SFT
LONGITUDE	77×40′24.11721"W	ELEVATION	47.585SFT	EASTING	2395999.954SFT
HEIGHT	-70.495SFT	HORZ ERROR	0.047SFT	ELEVATION	47.550SFT
		VERT ERROR	0.035SFT	UTILIZED	HORZ AND VERT
		3D ERROR	0.059SFT	QUALITY	SURVEY QUALITY
POINT	DISH - WGS84	NORTHING	552571.435SFT	POINT	DISH - LOCAL
LATITUDE	35×15′39.44968"N	EASTING	2397886.214SFT	NORTHING	552571.353SFT
LONGITUDE	77×40′01.36715"W	ELEVATION	48.701SFT	EASTING	2397886.213SFT
HEIGHT	-69.416SFT	HORZ ERROR	0.081SFT	ELEVATION	48.678SFT
		VERT ERROR	0.023SFT	UTILIZED	HORZ AND VERT
		3D ERROR	0.084SFT	QUALITY	SURVEY QUALITY
POINT	R2719AW-4 - WGS8	NORTHING	547670.638SFT	POINT	R2719AW-4 - LOCA
LATITUDE	35×14′52.46907"N	EASTING	2386533.888SFT	NORTHING	547670.549SFT
LONGITUDE	77×42′19.01710"W	ELEVATION	47.155SFT	EASTING	2386533.906SFT
HEIGHT	-70.843SFT	HORZ ERROR	0.092SFT	ELEVATION	47.192SFT
		VERT ERROR	0.037SFT	UTILIZED	HORZ AND VERT
		3D ERROR	0.099SFT	QUALITY	SURVEY QUALITY

DATUM DESCRIPTION

THE LOCALIZED COORDINATE SYSTEM DEVELOPED FOR THIS PROJECT IS BASED ON THE STATE PLANE COORDINATES ESTABLISHED BY NCDOT FOR MONUMENT "R2719B-1"
WITH NAD 83 STATE PLANE GRID COORDINATES OF
NORTHING: 570474.926(ft) EASTING: 2402840.162(ft)
THE AVERAGE COMBINED GRID FACTOR USED ON THIS PROJECT (GROUND TO GRID) IS: 0.999874520
THE N.C. LAMBERT GRID BEARING AND LOCALIZED HORIZONTAL GROUND DISTANCE FROM "R2719B-1" TO -L- STATION 50+30.88 IS
S 24°55′15.2" W 18056.246 (ft)
ALL LINEAR DIMENSIONS ARE LOCALIZED HORIZONTAL DISTANCES
VERTICAL DATUM USED IS NGVD 29

NOTES:

THE CONTROL DATA FOR THIS PROJECT CAN BE FOUND ELECTRONICALLY BY SELECTING PROJECT CONTROL DATA AT:
HTTP:\WWW.DOH.DOT.STATE.NC.US/PRECONSTRUCT/HIGHWAY/LOCATION/PROJECT
r2719a_ls_control_050411.txt
r2719a_ls_gpscali5_050411.html
r2719a_ls_wgs84_050411.txt
r2719a_ls_local_050411.txt

IF FURTHER INFORMATION IS NEEDED, PLEASE CONTACT THE LOCATION AND SURVEYS UNIT.

INDICATES GEODETIC CONTROL MONUMENTS USED OR SET FOR HORIZONTAL PROJECT CONTROL BY THE NCDOT LOCATION AND SURVEYS UNIT.

PROJECT CONTROL ESTABLISHED USING GLOBAL POSITIONING SYSTEM.

SEE GPS CALIBRATION SHEET FOR HORIZONTAL AND VERTICAL COORDINATE VALUES.

NOTE: DRAWING NOT TO SCALE

6/2/99

3/13/2009
H:\roadwy\Proj\r-2719a_ls_ld_090311.dgn
michael.lindgren

6/2/99

PROJECT REFERENCE NO.	SHEET NO.
R-2719-A	1-E
Location and Surveys	

SURVEY CONTROL SHEET R-2719-A

BL

POINT	DESC.	NORTH	EAST	ELEVATION	L STATION	OFFSET
1	BL-1	552647.3930	2395235.8000	50.22	35+78.38	0.10 RT
2	BL-2	553298.0240	2395233.2420	50.72	42+29.01	0.74 LT
3	BL-3	554231.9560	2395231.2780	50.12	51+62.95	0.24 LT
4	BL-4	554943.5170	2395229.8120	51.36	58+74.51	0.18 RT
5	BL-5	556027.7890	2395243.3140	51.54	69+56.46	29.23 LT
6	BL-6	556678.5510	2395382.0910	51.64	76+14.33	55.71 LT
7	BL-7	557557.4790	2395860.3050	51.48	86+04.32	42.41 LT
8	BL-8	558127.5310	2396438.7180	53.20	94+12.18	4.43 RT
9	BL-9	558776.7920	2397115.7870	57.85	103+50.23	0.41 RT
10	BL-10	559426.9960	2397799.0970	68.42	112+93.46	0.01 LT
11	BL-11	559846.1950	2398246.9530	72.10	119+06.88	4.76 RT
12	BL-12	560217.1400	2398629.3430	71.55	124+39.60	0.60 LT
13	BL-13	560673.5900	2399112.4390	70.73	131+04.01	6.44 RT
14	BL-14	561000.8970	2399384.6250	76.84	135+29.64	5.88 LT
15	BL-15	561363.9310	2399644.7710	71.70	139+77.15	9.89 LT
16	BL-16	561665.3930	2399825.9840	78.46	143+29.77	11.75 LT
17	BL-17	561870.2180	2399930.3530	92.44	145+60.30	14.94 LT
18	BL-18	562267.1200	2400132.0940	92.04	150+05.22	10.11 RT
19	BL-19	562612.0690	2400239.1020	77.84	153+65.94	0.16 LT
20	BL-20	563128.7810	2400370.6620	90.00	158+98.96	7.40 RT
21	BL-21	563722.0560	2400435.1250	105.45	164+95.47	2.61 RT
22	BL-22	564102.0130	2400361.7480	112.21	168+77.47	75.86 LT
23	BL-23	564595.2890	2400406.3090	115.69	173+69.75	0.08 RT
24	BL-24	565178.6060	2400361.2230	113.83	179+54.81	0.08 LT
25	BL-25	567041.6770	2400219.9450	117.38	198+23.23	2.13 RT
26	BL-26	567661.0970	2400169.6400	112.76	204+44.68	0.47 LT
27	BL-27	568420.0850	2400169.1810	115.76	212+04.24	8.20 LT
28	BL-28	569068.1010	2400334.5160	112.62	218+72.72	7.15 LT
29	BL-29	569777.9470	2400720.4090	106.73	226+80.74	11.13 LT
30	BL-30	570211.9830	2401128.2940	103.77	232+75.69	5.36 LT
31	BL-31	570562.5660	2401630.1880	102.92	238+88.42	0.35 LT
32	BL-32	570968.3390	2402453.0110	102.90	248+05.94	1.76 RT

BY

POINT	DESC.	NORTH	EAST	ELEVATION	Y1 STATION	OFFSET
210	R2719A-10 GPS	552365.2490	2389651.3680	51.71	OUTSIDE PROJECT LIMITS	
227	NCGS 'TRINITY'	552657.6440	2390760.9280	54.59	20+77.90	58.02 LT
33	BY-33	552676.5110	2391861.1840	50.43	30+87.71	286.64 RT
34	BY-34	552639.8320	2392962.9280	50.02	39+13.72	939.27 RT
35	BY-35	552601.4360	2394068.1230	49.62	52+46.06	1523.98 RT
300	BL-1	552647.3930	2395235.8000	50.22	72+30.92	1570.31 RT
226	NCGS 'DROP'	552529.2520	2395999.9540	47.55	84+83.57	1420.21 RT
36	BY-36	552619.1560	2396773.0700	50.68	91+63.67	936.11 RT
225	NCGS 'DISH'	552571.3540	2397886.2140	48.68	101+24.20	384.54 RT
37	BY-37	552468.1540	2398896.0740	50.01	110+33.00	73.10 RT
38	BY-38	552408.5770	2400109.0170	46.88	122+37.42	8.80 LT
39	BY-39	552388.4550	2401017.2450	44.36	OUTSIDE PROJECT LIMITS	

BY

POINT	DESC.	NORTH	EAST	ELEVATION	Y15 STATION	OFFSET
36	BY-36	552619.1560	2396773.0700	50.68	13+31.82	64.41 LT
225	NCGS 'DISH'	552571.3540	2397886.2140	48.68	24+36.26	45.62 LT
37	BY-37	552468.1540	2398896.0740	50.01	31+31.42	441.33 RT

BY

POINT	DESC.	NORTH	EAST	ELEVATION	Y1RT STATION	OFFSET
225	NCGS 'DISH'	552571.3540	2397886.2140	48.68	101+25.67	361.28 RT
37	BY-37	552468.1540	2398896.0740	50.01	110+40.52	45.55 RT
38	BY-38	552408.5770	2400109.0170	46.88	122+51.53	39.80 LT
39	BY-39	552388.4550	2401017.2450	44.36	OUTSIDE PROJECT LIMITS	

BY

POINT	DESC.	NORTH	EAST	ELEVATION	Y1LT STATION	OFFSET
225	NCGS 'DISH'	552571.3540	2397886.2140	48.68	101+22.51	407.86 RT
37	BY-37	552468.1540	2398896.0740	50.01	110+25.24	100.72 RT
38	BY-38	552408.5770	2400109.0170	46.88	122+23.32	22.20 RT
39	BY-39	552388.4550	2401017.2450	44.36	OUTSIDE PROJECT LIMITS	

BY1

POINT	DESC.	NORTH	EAST	ELEVATION	Y1 STATION	OFFSET
308	BY-33	552676.5110	2391861.1840	50.43	30+87.71	286.64 RT
62	BY1-62	552955.0010	2391778.9580	49.09	31+49.02	3.48 RT
63	BY1-63	553328.0410	2392316.4160	49.31	38+03.32	1.50 RT
52	BY1-52	553866.4150	2393148.7420	50.68	47+96.38	0.49 LT
64	BY1-64	554208.1380	2394248.2140	49.67	59+52.43	2.45 RT
309	BL-3	554231.9560	2395231.2780	50.12	69+39.05	1.64 RT
53	BY1-53	554151.2520	2395702.6320	52.26	74+17.81	2.20 RT
54	BY1-54	553733.0350	2396749.4230	50.58	85+49.99	3.16 RT
307	BY16-57	553303.4100	2397435.4120	58.80	93+59.54	4.15 RT
55	BY1-55	553120.8080	2397729.1600	51.55	97+05.41	2.15 RT
61	BY1-61	552679.2740	2398440.3710	50.72	105+39.85	29.94 RT
310	BY-37	552468.1540	2398896.0740	50.01	110+33.00	73.10 RT

BY2

POINT	DESC.	NORTH	EAST	ELEVATION	SVRD5 STATION	OFFSET
41	BY2-41	557611.4450	2395452.6760	51.77	28+46.50	186.33 RT
301	BL-7	557557.4790	2395860.3050	51.48	24+35.44	176.28 RT
40	BY2-40	557523.9200	2396266.5750	52.90	20+27.91	186.37 RT
2464	BY2-2464	557464.9172	2396475.4436	57.01	18+13.93	150.05 RT
1383	BY2-1383	557408.9679	2396997.6241	57.17	12+88.76	150.28 RT
3266	BY2-3266	557355.3250	2397495.9960	57.31	OUTSIDE PROJECT LIMITS	

BY3

POINT	DESC.	NORTH	EAST	ELEVATION	Y3 STATION	OFFSET
42	BY3-42	559418.8120	2396710.1780	88.26	10+01.35	37.63 RT
302	BL-10	559426.9960	2397799.0970	68.42	20+90.28	30.71 RT
212	R2719A-12 GPS	559441.3780	2398274.9620	64.50	25+66.16	16.88 RT
213	R2719A-13 GPS	559444.5610	2399556.8100	81.32	OUTSIDE PROJECT LIMITS	

BY4

POINT	DESC.	NORTH	EAST	ELEVATION	SVRD3 STATION	OFFSET
43	BY4-43	567437.8950	2399743.0930	109.38	OUTSIDE PROJECT LIMITS	
215	R2719A-15 GPS	566709.3790	2399932.4280	113.60	OUTSIDE PROJECT LIMITS	
214	R2719A-14 GPS	565718.4170	2400207.3830	113.31	35+69.32	292.01 LT
303	BL-24	565178.6060	2400361.2230	113.83	30+19.29	180.08 LT
44	BY4-44	564313.6630	2400616.6670	111.55	21+70.25	108.74 LT
45	BY4-45	563753.6030	2401479.0560	90.34	11+74.54	14.01 RT

BY4

POINT	DESC.	NORTH	EAST	ELEVATION	SVRD4 STATION	OFFSET
43	BY4-43	567437.8950	2399743.0930	109.38	OUTSIDE PROJECT LIMITS	
215	R2719A-15 GPS	566709.3790	2399932.4280	113.60	OUTSIDE PROJECT LIMITS	
214	R2719A-14 GPS	565718.4170	2400207.3830	113.31	18+06.97	67.99 LT
303	BL-24	565178.6060	2400361.2230	113.83	OUTSIDE PROJECT LIMITS	
44	BY4-44	564313.6630	2400616.6670	111.55	OUTSIDE PROJECT LIMITS	
45	BY4-45	563753.6030	2401479.0560	90.34	OUTSIDE PROJECT LIMITS	

BY5

POINT	DESC.	NORTH	EAST	ELEVATION	Y5 STATION	OFFSET
46	BY5-46	568611.4510	2399676.9150	114.09	OUTSIDE PROJECT LIMITS	
304	BL-27	568420.0850	2400169.1810	115.76	13+84.31	32.09 LT
47	BY5-47	568119.9010	2400637.1110	119.76	OUTSIDE PROJECT LIMITS	

BY6

POINT	DESC.	NORTH	EAST	ELEVATION	Y6 STATION	OFFSET
66	BY6-66	571459.0130	2404191.6890	102.37	27+78.47	14.38 RT
222	R2719B-2 GPS	571090.9070	2403711.3390	104.68	21+73.29	13.86 RT
306	R2719B-1 GPS	570474.9260	2402840.1620	108.03	11+07.17	28.03 LT

BY24

POINT	DESC.	NORTH	EAST	ELEVATION	Y24 STATION	OFFSET
48	BY24-48	573189.9960	2400612.3800	98.45	10+62.98	25.28 RT
49	BY24-49	572198.0770	2401680.9170	102.18	25+17.33	31.17 LT
50	BY24-50	571597.4280	2402165.9620	103.11	32+87.87	43.68 LT
305	BL-32	570968.3390	2402453.0110	102.90	39+76.39	62.17 RT
221	R2719B-1 GPS	570474.9260	2402840.1620	108.03	45+85.76	96.58 LT

BY25

POINT	DESC.	NORTH	EAST	ELEVATION	Y10 STATION	OFFSET
1001	BY25-1001	553703.0525	2390541.1302	51.58	OUTSIDE PROJECT LIMITS	
1000	BY25-1000	553038.8553	2390670.1903	52.38	14+49.59	32.77 RT
999	BY25-999	552657.6440	2390760.9280	54.59	10+57.90	4.08 RT

79 ELEVATION = 53.26
N 553519 E 2395699
L STATION 44+49 466 RIGHT
BM-A

88 ELEVATION = 53.43
N 557471 E 2396132
L STATION 87+00 227 RIGHT
BM-B

87 ELEVATION = 62.32
N 558988 E 2397672
L STATION 108+99 230 RIGHT
BM-C

80 ELEVATION = 78.12
N 560332 E 2398479
L STATION 124+10 187 LEFT
BM-D

81 ELEVATION = 72.57
N 561147 E 2399716
L STATION 138+41 171 RIGHT
BM-E

82 ELEVATION = 85.04
N 562327 E 2400003
L STATION 150+16 132 LEFT
BM-F

83 ELEVATION = 113.23
N 564163 E 2400498
L STATION 169+34 63 RIGHT
BM-G

84 ELEVATION = 120.73
N 567250 E 2400469
L STATION 200+11 267 RIGHT
BM-H

86 ELEVATION = 106.62
N 569921 E 2400471
L STATION 226+49 297 LEFT
BM-I

85 ELEVATION = 103.99
N 571253 E 2402442
L STATION 249+21 260 LEFT
BM-J

DATUM DESCRIPTION

THE LOCALIZED COORDINATE SYSTEM DEVELOPED FOR THIS PROJECT IS BASED ON THE STATE PLANE COORDINATES ESTABLISHED BY NCDOT FOR MONUMENT "R2719B-1" WITH NAD 83 STATE PLANE GRID COORDINATES OF NORTHING: 570474.926(ft) EASTING: 2402840.162(ft) THE AVERAGE COMBINED GRID FACTOR USED ON THIS PROJECT (GROUND TO GRID) IS: 0.999874520 THE N.C. LAMBERT GRID BEARING AND LOCALIZED HORIZONTAL GROUND DISTANCE FROM "R2719B-1" TO -L- STATION 50+30.88 IS S 24°55'15.2" W 18056.246 (ft) ALL LINEAR DIMENSIONS ARE LOCALIZED HORIZONTAL DISTANCES VERTICAL DATUM USED IS NGVD 29

NOTES:

THE CONTROL DATA FOR THIS PROJECT CAN BE FOUND ELECTRONICALLY BY SELECTING PROJECT CONTROL DATA AT:
HTTP:\WWW.DOH.DOT.STATE.NC.US/PRECONSTRUCT/HIGHWAY/LOCATION/PROJECT
r2719a_ls_control_050411.txt
r2719a_ls_gpscalib_050411.html
r2719a_ls_wgs84_050411.txt
r2719a_ls_local_050411.txt

IF FURTHER INFORMATION IS NEEDED, PLEASE CONTACT THE LOCATION AND SURVEYS UNIT.

◬ *INDICATES GEODETIC CONTROL MONUMENTS USED OR SET FOR HORIZONTAL PROJECT CONTROL BY THE NCDOT LOCATION AND SURVEYS UNIT.*

PROJECT CONTROL ESTABLISHED USING GLOBAL POSITIONING SYSTEM.

SEE GPS CALIBRATION SHEET FOR HORIZONTAL AND VERTICAL COORDINATE VALUES.

NOTE: DRAWING NOT TO SCALE

3/13/2009
r:\roadway\Proj\r2719a_ls_1e_090311.dgn
michael lindgren

8/17/99

REVISIONS

CENTERLINE COORDINATE LIST SHEET	Prepared by URS	PROJECT REFERENCE NO.	SHEET NO.
	URS Corporation – North Carolina 1600 Perimeter Park Drive Morrisville, North Carolina 27560 TELEPHONE (919) 461-1100 FAX (919) 461-1415	R-2719A	1F
		R/W SHEET NO.	

Disclaimer: This coordinate list is provided for the convenience of interested contractors and is intended for use during the project bidding process only. Coordinates are localized to this particular project and any conversion to state grid coordinates or other formats will be the responsibility of the recipient. While every effort has been made to provide up-to-date, accurateinformation, NCDOT makes no express guarantee as to the validity or potential for revision of this information prior to project letting.

Point #	Chain	Station	Northing(Y)	Easting(X)
1	L	51+00.00	554169.0098	2395231.6805
2	L	52+00.00	554269.0095	2395231.4160
3	L	53+00.00	554369.0091	2395231.1515
4	L	54+00.00	554469.0088	2395230.8871
5	L	55+00.00	554569.0084	2395230.6226
6	L	56+00.00	554669.0081	2395230.3581
7	L	57+00.00	554769.0077	2395230.0937
8	L	58+00.00	554869.0074	2395229.8292
9	L	59+00.00	554969.0070	2395229.5647
10	L	60+00.00	555069.0067	2395229.3003
11	L	61+00.00	555169.0063	2395229.0358
12	L	62+00.00	555269.0060	2395228.7713
13	L	63+00.00	555369.0057	2395228.5758
14	L	64+00.00	555469.0043	2395229.0130
15	L	65+00.00	555568.9858	2395230.8624
16	L	66+00.00	555668.9012	2395234.9034
17	L	67+00.00	555768.6654	2395241.7171
18	L	68+00.00	555868.1943	2395251.3780
19	L	69+00.00	555967.4065	2395263.8783
20	L	70+00.00	556066.2211	2395279.2077
21	L	71+00.00	556164.5574	2395297.3538
22	L	72+00.00	556262.3353	2395318.3016
23	L	73+00.00	556359.4748	2395342.0342
24	L	74+00.00	556455.8967	2395368.5322
25	L	75+00.00	556551.5222	2395397.7739
26	L	76+00.00	556646.2734	2395429.7354
27	L	77+00.00	556740.0728	2395464.3907
28	L	78+00.00	556832.8439	2395501.7115
29	L	79+00.00	556924.5110	2395541.6672
30	L	80+00.00	557014.9992	2395584.2254
31	L	81+00.00	557104.2348	2395629.3512
32	L	82+00.00	557192.1447	2395677.0079
33	L	83+00.00	557278.6574	2395727.1565
34	L	84+00.00	557363.7021	2395779.7560
35	L	85+00.00	557447.2095	2395834.7636
36	L	86+00.00	557529.1114	2395892.1344
37	L	87+00.00	557609.3409	2395951.8215
38	L	88+00.00	557687.8325	2396013.7762
39	L	89+00.00	557764.5222	2396077.9479
40	L	90+00.00	557839.3474	2396144.2842
41	L	91+00.00	557912.2506	2396212.7273
42	L	92+00.00	557983.3845	2396283.0092
43	L	93+00.00	558053.2369	2396354.5667
44	L	94+00.00	558122.3507	2396426.8386
45	L	95+00.00	558191.2559	2396499.3097
46	L	96+00.00	558260.1581	2396571.7837
47	L	97+00.00	558329.0604	2396644.2577
48	L	98+00.00	558397.9626	2396716.7317
49	L	99+00.00	558466.8648	2396789.2057
50	L	100+00.00	558535.7671	2396861.6798
51	L	101+00.00	558604.6693	2396934.1538
52	L	102+00.00	558673.5716	2397006.6278
53	L	103+00.00	558742.4738	2397079.1018
54	L	104+00.00	558811.3760	2397151.5758
55	L	105+00.00	558880.2783	2397224.0498
56	L	106+00.00	558949.1805	2397296.5238
57	L	107+00.00	559018.0828	2397368.9978
58	L	108+00.00	559086.9850	2397441.4718
59	L	109+00.00	559155.8872	2397513.9458
60	L	110+00.00	559224.7895	2397586.4198
61	L	111+00.00	559293.6917	2397658.8938
62	L	112+00.00	559362.5940	2397731.3678
63	L	113+00.00	559431.4962	2397803.8418
64	L	114+00.00	559500.3984	2397876.3158
65	L	115+00.00	559569.3007	2397948.7898
66	L	116+00.00	559638.2029	2398021.2638
67	L	117+00.00	559707.1052	2398093.7378
68	L	118+00.00	559776.0074	2398166.2118
69	L	119+00.00	559844.9096	2398238.6858
70	L	120+00.00	559913.8119	2398311.1598
71	L	121+00.00	559982.7141	2398383.6338
72	L	122+00.00	560051.6164	2398456.1079
73	L	123+00.00	560120.5186	2398528.5819
74	L	124+00.00	560189.4208	2398601.0559
75	L	125+00.00	560258.3231	2398673.5299
76	L	126+00.00	560327.2253	2398746.0039
77	L	127+00.00	560396.1276	2398818.4779
78	L	128+00.00	560465.0316	2398890.9501
79	L	129+00.00	560534.1362	2398963.2310
80	L	130+00.00	560604.0046	2399034.7728
81	L	131+00.00	560675.1788	2399105.0142
82	L	132+00.00	560747.8146	2399173.7431
83	L	133+00.00	560821.8811	2399240.9278
84	L	134+00.00	560897.3455	2399306.5384
85	L	135+00.00	560974.1744	2399370.5459
86	L	136+00.00	561052.3337	2399432.9218
87	L	137+00.00	561131.7887	2399493.6386
88	L	138+00.00	561212.5043	2399552.6693
89	L	139+00.00	561294.4447	2399609.9878
90	L	140+00.00	561377.5735	2399665.5686
91	L	141+00.00	561461.8539	2399719.3872
92	L	142+00.00	561547.2486	2399771.4196
93	L	143+00.00	561633.7197	2399821.6429
94	L	144+00.00	561721.2289	2399870.0347
95	L	145+00.00	561809.7375	2399916.5737
96	L	146+00.00	561899.2061	2399961.2391
97	L	147+00.00	561989.5951	2400004.0113
98	L	148+00.00	562080.8645	2400044.8711
99	L	149+00.00	562172.9738	2400083.8006
100	L	150+00.00	562265.8822	2400120.7825
101	L	151+00.00	562359.5485	2400155.8003
102	L	152+00.00	562453.9313	2400188.8386
103	L	153+00.00	562548.9886	2400219.8828
104	L	154+00.00	562644.6783	2400248.9190
105	L	155+00.00	562740.9581	2400275.9344
106	L	156+00.00	562837.7853	2400300.9170
107	L	157+00.00	562935.1169	2400323.8557
108	L	158+00.00	563032.9098	2400344.7405
109	L	159+00.00	563131.1208	2400363.5619
110	L	160+00.00	563229.7061	2400380.3118
111	L	161+00.00	563328.6222	2400394.9826
112	L	162+00.00	563427.8253	2400407.5678
113	L	163+00.00	563527.2713	2400418.0620
114	L	164+00.00	563626.9161	2400426.4603
115	L	165+00.00	563726.7157	2400432.7592
116	L	166+00.00	563826.6257	2400436.9558
117	L	167+00.00	563926.6020	2400439.0483
118	L	168+00.00	564026.6002	2400439.0357
119	L	169+00.00	564126.5759	2400436.9180
120	L	170+00.00	564226.4849	2400432.6963
121	L	171+00.00	564326.2955	2400426.5610
122	L	172+00.00	564426.0278	2400419.2534
123	L	173+00.00	564525.7331	2400411.5830
124	L	174+00.00	564625.4378	2400403.9040
125	L	175+00.00	564725.1425	2400396.2250
126	L	176+00.00	564824.8472	2400388.5460
127	L	177+00.00	564924.5520	2400380.8670
128	L	178+00.00	565024.2567	2400373.1880
129	L	179+00.00	565123.9614	2400365.5090
130	L	180+00.00	565223.6662	2400357.8300
131	L	181+00.00	565323.3709	2400350.1510
132	L	182+00.00	565423.0756	2400342.4720
133	L	183+00.00	565522.7803	2400334.7930
134	L	184+00.00	565622.4851	2400327.1140
135	L	185+00.00	565722.1898	2400319.4350
136	L	186+00.00	565821.8945	2400311.7560
137	L	187+00.00	565921.5993	2400304.0770
138	L	188+00.00	566021.3040	2400296.3980
139	L	189+00.00	566121.0087	2400288.7190
140	L	190+00.00	566220.7134	2400281.0399
141	L	191+00.00	566320.4182	2400273.3609
142	L	192+00.00	566420.1229	2400265.6819
143	L	193+00.00	566519.8276	2400258.0029
144	L	194+00.00	566619.5324	2400250.3239
145	L	195+00.00	566719.2371	2400242.6449
146	L	196+00.00	566818.9418	2400234.9659
147	L	197+00.00	566918.6465	2400227.2869
148	L	198+00.00	567018.3513	2400219.6079
149	L	199+00.00	567118.0560	2400211.9289
150	L	200+00.00	567217.7607	2400204.2499
151	L	201+00.00	567317.4655	2400196.5709
152	L	202+00.00	567417.1702	2400188.8919
153	L	203+00.00	567516.8749	2400181.2129
154	L	204+00.00	567616.5796	2400173.5339
155	L	205+00.00	567716.2906	2400165.9367
156	L	206+00.00	567816.0573	2400159.1207
157	L	207+00.00	567915.9274	2400154.0685
158	L	208+00.00	568015.8964	2400151.7625
159	L	209+00.00	568115.8856	2400152.8464
160	L	210+00.00	568215.7779	2400157.3769
161	L	211+00.00	568315.4547	2400165.3486
162	L	212+00.00	568414.7974	2400176.7520
163	L	213+00.00	568513.6879	2400191.5736
164	L	214+00.00	568612.0086	2400209.7957
165	L	215+00.00	568709.6427	2400231.3966
166	L	216+00.00	568806.4740	2400256.3508
167	L	217+00.00	568902.3874	2400284.6284
168	L	218+00.00	568997.2689	2400316.1960
169	L	219+00.00	569091.0057	2400351.0159
170	L	220+00.00	569183.4863	2400389.0468
171	L	221+00.00	569274.6008	2400430.2434
172	L	222+00.00	569364.2408	2400474.5568
173	L	223+00.00	569452.2998	2400521.9342
174	L	224+00.00	569538.6730	2400572.3194
175	L	225+00.00	569623.2579	2400625.6525
176	L	226+00.00	569705.9537	2400681.8700
177	L	227+00.00	569786.6622	2400740.9051
178	L	228+00.00	569865.2875	2400802.6876
179	L	229+00.00	569941.7360	2400867.1440
180	L	230+00.00	570015.9169	2400934.1978
181	L	231+00.00	570087.7419	2401003.7691
182	L	232+00.00	570157.1257	2401075.7754
183	L	233+00.00	570223.9858	2401150.1309
184	L	234+00.00	570288.2427	2401226.7472
185	L	235+00.00	570349.8199	2401305.5334
186	L	236+00.00	570408.6443	2401386.3956
187	L	237+00.00	570464.6459	2401469.2378
188	L	238+00.00	570517.7582	2401553.9614
189	L	239+00.00	570567.9184	2401640.4655
190	L	240+00.00	570615.2852	2401728.5321
191	L	241+00.00	570660.5994	2401817.6743
192	L	242+00.00	570704.7226	2401907.4132
193	L	243+00.00	570748.4942	2401997.3245
194	L	244+00.00	570792.2593	2402087.2390
195	L	245+00.00	570836.0244	2402177.1535
196	L	246+00.00	570879.7895	2402267.0680
197	L	247+00.00	570923.5546	2402356.9825
198	L	248+00.00	570967.3197	2402446.8970
199	L	249+00.00	571011.0848	2402536.8115
200	L	250+00.00	571054.8499	2402626.7260
201	L	251+00.00	571098.6150	2402716.6405
202	L	252+00.00	571142.3801	2402806.5550
203	L	253+00.00	571186.1452	2402896.4694
204	L	254+00.00	571229.9103	2402986.3839
205	L	255+00.00	571273.6754	2403076.2984
206	L	256+00.00	571317.4405	2403166.2129
207	L	257+00.00	571361.2056	2403256.1274
208	L	258+00.00	571404.9707	2403346.0419
209	L	259+00.00	571448.7358	2403435.9564
210	L	260+00.00	571492.5009	2403525.8709
211	L	261+00.00	571536.2661	2403615.7854
212	L	262+00.00	571580.0312	2403705.6999
213	L	263+00.00	571623.7963	2403795.6143
214	L	264+00.00	571667.5614	2403885.5288
215	L	265+00.00	571711.3265	2403975.4433
216	L	265+68.01	571741.0908	2404036.5935
217	L	265+68.01	571741.0908	2404036.5935

2/24/2009
R:\Roadway\Proj\r2719a_rdy_psh_1F.dgn
lisa mcarthur

PAVEMENT SCHEDULE

CODE	DESCRIPTION
C	PROP. APPROX. 1.5" ASPH. CONC. SURFACE COURSE, TYPE S9.5C AT AN AVERAGE RATE OF 168 LBS/SY.
C1	PROP. APPROX. 3" ASPH. CONC. SURFACE COURSE, TYPE S9.5B AT AN AVERAGE RATE OF 168 LBS/SY IN EACH OF TWO LAYERS
C2	PROP. APPROX. 3" ASPH. CONC. SURFACE COURSE, TYPE S9.5C AT AN AVERAGE RATE OF 168 LBS/SY IN EACH OF TWO LAYERS
C3	PROP. VARIABLE DEPTH ASPH. CONC. SURFACE COURSE, TYPE S9.5B AT AN AVERAGE RATE OF 112 LBS/SY PER 1" DEPTH TO BE PLACED IN LAYERS NOT LESS THAN 1.5" OR GREATER THAN 2" IN DEPTH.
C4	PROP. VARIABLE DEPTH ASPH. CONC. SURFACE COURSE, TYPE S9.5C AT AN AVERAGE RATE OF 112 LBS/SY PER 1" DEPTH TO BE PLACED IN LAYERS NOT LESS THAN 1.5" OR GREATER THAN 2" IN DEPTH.
C5	PROP. APPROX. 2" ASPH. CONC. SURFACE COURSE, TYPE S9.5B AT AN AVERAGE RATE OF 224 LBS/SY.
D1	PROP. APPROX. 3" ASPH. CONC. INTERMEDIATE COURSE, TYPE I19.0B AT AN AVERAGE RATE OF 342 LBS/SY
D2	PROP. APPROX. 3" ASPH. CONC. INTERMEDIATE COURSE, TYPE I19.0C AT AN AVERAGE RATE OF 342 LBS/SY
D3	PROP. APPROX. 4" ASPH. CONC. INTERMEDIATE COURSE, TYPE I19.0C AT AN AVERAGE RATE OF 456 LBS/SY
D4	PROP. VARIABLE DEPTH ASPH. CONC. INTERMEDIATE COURSE, TYPE I19.0B AT AN AVERAGE RATE OF 114 LBS/SY PER 1" DEPTH TO BE PLACED IN LAYERS NOT LESS THAN 2.5" OR GREATER THAN 4" IN DEPTH.
D5	PROP. VARIABLE DEPTH ASPH. CONC. INTERMEDIATE COURSE, TYPE I19.0C AT AN AVERAGE RATE OF 114 LBS/SY PER 1" DEPTH TO BE PLACED IN LAYERS NOT LESS THAN 2.5" OR GREATER THAN 4" IN DEPTH.
E1	PROP. APPROX. 4" ASPH. CONC. BASE COURSE, TYPE B25.0B AT AN AVERAGE RATE OF 456 LBS/SY
E2	PROP. APPROX. 5.5" ASPH. CONC. BASE COURSE, TYPE B25.0B AT AN AVERAGE RATE OF 627 LBS/SY
E3	PROP. APPROX. 3" ASPH. CONC. BASE COURSE, TYPE B25.0C AT AN AVERAGE RATE OF 342 LBS/SY
E4	PROP. APPROX. 5" ASPH. CONC. BASE COURSE, TYPE B25.0C AT AN AVERAGE RATE OF 570 LBS/SY
E5	PROP. VARIABLE DEPTH ASPH. CONC. BASE COURSE, TYPE B25.0C AT AN AVERAGE RATE OF 114 LBS/SY PER 1" DEPTH TO BE PLACED IN LAYERS NOT LESS THAN 3" OR GREATER THAN 5.5" IN DEPTH.
E6	PROP. APPROX. 8" ASPH. CONC. BASE COURSE, TYPE B25.0C AT AN AVERAGE RATE OF 456 LBS/SY TO BE PLACED IN EACH OF 2 LAYERS
E7	PROP. VARIABLE DEPTH ASPH. CONC. BASE COURSE, TYPE B25.0B AT AN AVERAGE RATE OF 114 LBS/SY PER 1" DEPTH TO BE PLACED IN LAYERS NOT LESS THAN 3" OR GREATER THAN 5.5" IN DEPTH.
J	PROP. APPROX. 6" AGGREGATE BASE COURSE
J1	PROP. APPROX. 8" AGGREGATE BASE COURSE
J2	PROP. APPROX. 10" AGGREGATE BASE COURSE
P	PRIME COAT
R1	2'-6" CONCRETE CURB AND GUTTER
R2	PROP. MONOLITHIC CONC. ISLAND
R3	EXPRESSWAY GUTTER
T	EARTH MATERIAL
U	EXISTING PAVEMENT
V	RUMBLE STRIPS
W	VARIABLE DEPTH WEDGING (SEE DETAILS - THIS SHEET)

NOTE: ALL PAVEMENT EDGE SLOPES ARE 1:1 UNLESS SHOWN OTHERWISE

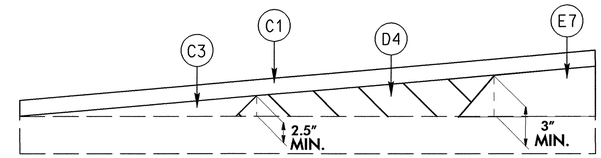

Wedging Detail For Resurfacing

ALL WEDGING EXCEPT Y1 AND Y24

Prepared by
URS
URS Corporation - North Carolina
1600 Perimeter Park Drive
Morrisville, North Carolina 27560
TELEPHONE (919) 461-1100 FAX (919) 461-1415

English

NOT TO SCALE

PROJECT REFERENCE NO.	SHEET NO.
R-2719A	2
R/W SHEET NO.	

ROADWAY DESIGN ENGINEER — NORTH CAROLINA PROFESSIONAL SEAL 025513 ENGINEER MICHAEL D. LINDGREN — 3-11-09

PAVEMENT DESIGN ENGINEER — NORTH CAROLINA PROFESSIONAL SEAL 13768 ENGINEER DAVID CHI CHEN — 3/16/09

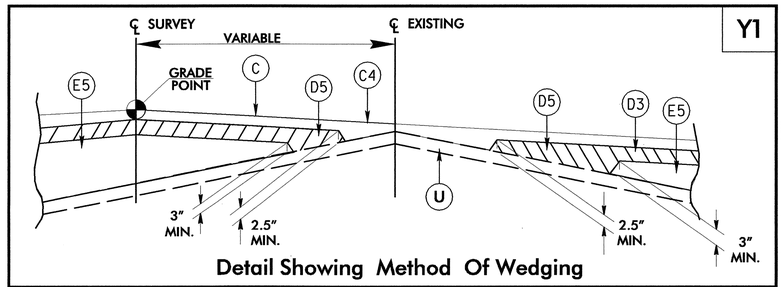

Detail Showing Method Of Wedging

NOTE: THIS DETAIL IS PROVIDED FOR INFORMATION ONLY - FUTURE CONSTRUCTION

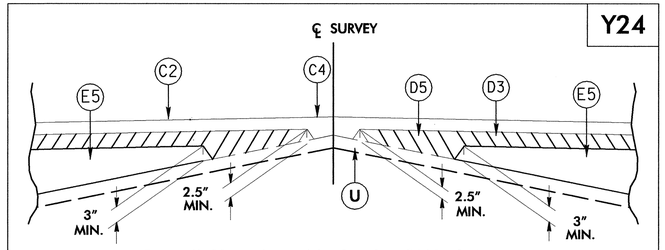

Detail Showing Method of Wedging

UNDERCUT DETAIL

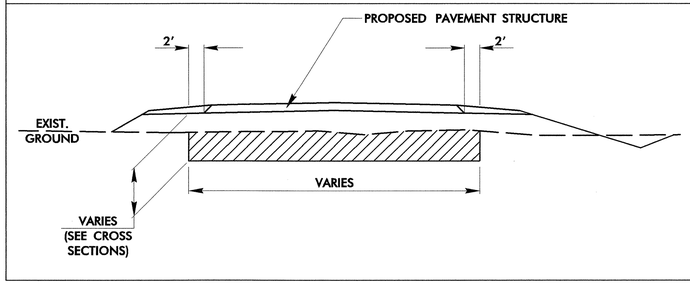

LINE	STATIONS	LOCATION
-L-	128+75 TO 133+25	
-L-	135+75 TO 140+75	
-L-	143+75 TO 150+75	LT.
-L-	144+25 TO 150+75	RT.
-L-	174+25 TO 177+25	LT. & RT.
-L-	188+75 TO 194+75	LT. & RT.
-Y1-	51+25 TO 68+25	RT.
-Y1LPC-	9+25 TO 14+34	
-Y1RPCA	54+75 TO 62+50	
-SVRD5-	13+75 TO 7+96	

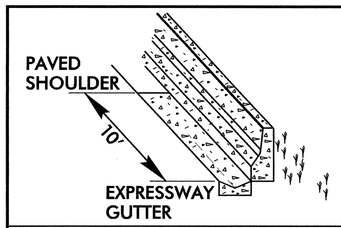

DETAIL OF 10' TRANSITION FROM PAVED SHOULDER TO EXPRESSWAY GUTTER
-L- STA. 139+30 TO 139+40 RT

NOTE: THIS DETAIL IS PROVIDED FOR INFORMATION ONLY - FUTURE CONSTRUCTION

DETAIL OF NOISE WALL ON SHOULDER IN FILL SECTIONS

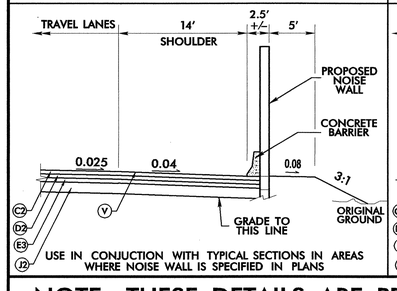

USE IN CONJUCTION WITH TYPICAL SECTIONS IN AREAS WHERE NOISE WALL IS SPECIFIED IN PLANS

DETAIL OF NOISE WALL ON SHOULDER IN CUT SECTIONS

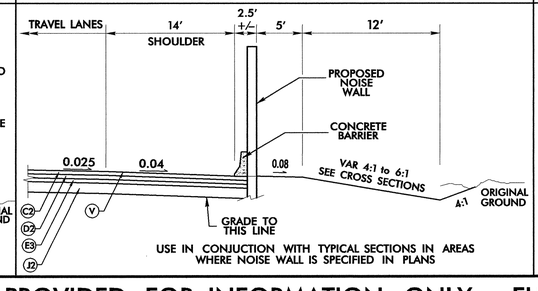

USE IN CONJUCTION WITH TYPICAL SECTIONS IN AREAS WHERE NOISE WALL IS SPECIFIED IN PLANS

DETAIL OF NOISE WALL ON SHOULDER WITH EXPRESSWAY GUTTER

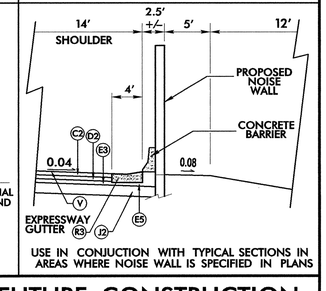

USE IN CONJUCTION WITH TYPICAL SECTIONS IN AREAS WHERE NOISE WALL IS SPECIFIED IN PLANS

NOTE: THESE DETAILS ARE PROVIDED FOR INFORMATION ONLY - FUTURE CONSTRUCTION

NOISE WALL LOCATIONS: -L- LT STA. 114+40 - 132+80
-L- RT STA. 139+00 - 159+00

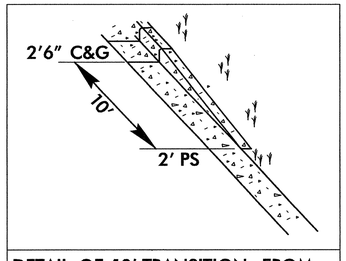

DETAIL OF 10' TRANSITION FROM 2'6" C&G TO 2' PAVED SHOULDER
-Y24- STA. 25+50 TO 25+60

NOTES: TYPICAL SECTIONS SHOWN ARE FOR TANGENT SECTIONS ONLY. SEE PLANS AND STANDARD DRAWINGS FOR SUPERELEVATION DETAILS AND LANE ADDITIONS/WIDENING AT INTERSECTIONS. MAXIMUM ROLLOVER IS 6%.

ALL PAVEMENT EDGES SLOPES ARE 1:1 UNLESS SHOWN OTHERWISE.

FOR PAVEMENT SCHEDULE WITH APPLICATION RATES, SEE SHEET 2.

FDPS – FULL DEPTH PAVED SHOULDERS.

* ADD 3.0 FT WITH GUARDRAIL.

** ADD 5.0 FT WITH GUARDRAIL

*** WHEN THESE DISTANCES INDICATE SLOPES OUTSIDE THE LIMITS OF 6:1 TO 3:1, THE DISTANCE BECOMES VARIABLE AND THE MAXIMUM SLOPE MAINTAINED. SEE CROSS SECTIONS.

MILLED RUMBLE STRIPS (V) SHALL BE PLACED ON –L– & Y1 ACCORDING TO NCDOT STANDARDS

FUTURE PAVING TYPICALS DETAIL GRADING THE TYPICAL SECTIONS 5" ABOVE THE FUTURE SUBGRADE LINE

Prepared by
URS
URS Corporation – North Carolina
1600 Perimeter Park Drive
Morrisville, North Carolina 27560
TELEPHONE (919) 461-1100 FAX (919) 461-1418

English

NOT TO SCALE

PROJECT REFERENCE NO.	SHEET NO.
R-2719A	2A
R/W SHEET NO.	

ROADWAY DESIGN ENGINEER: NORTH CAROLINA PROFESSIONAL SEAL 025513 ENGINEER MICHAEL D. LINDGREN 3-11-09

PAVEMENT DESIGN ENGINEER: NORTH CAROLINA PROFESSIONAL SEAL 13668 ENGINEER DAVID CHI CHEN 3/16/09

USE TYPICAL SECTION NO. 1 FOR:

–L– STA. 50+30.88 TO 50+60.60 (BEG BRG) LT
–L– STA. 52+84.87 (END BRG) TO 65+85.07 LT
–L– STA. 79+11.31 TO 83+95.08 (BEGIN BRG) RT
–L– STA. 88+22.55 (END BRG) TO 111+80.00 RT

DETAIL OF EXPRESSWAY GUTTER INSTALLATION WITH GUARDRAIL

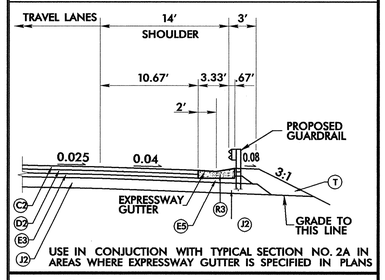

NOTE: THIS DETAIL IS PROVIDED FOR INFORMATION ONLY – FUTURE CONSTRUCTION

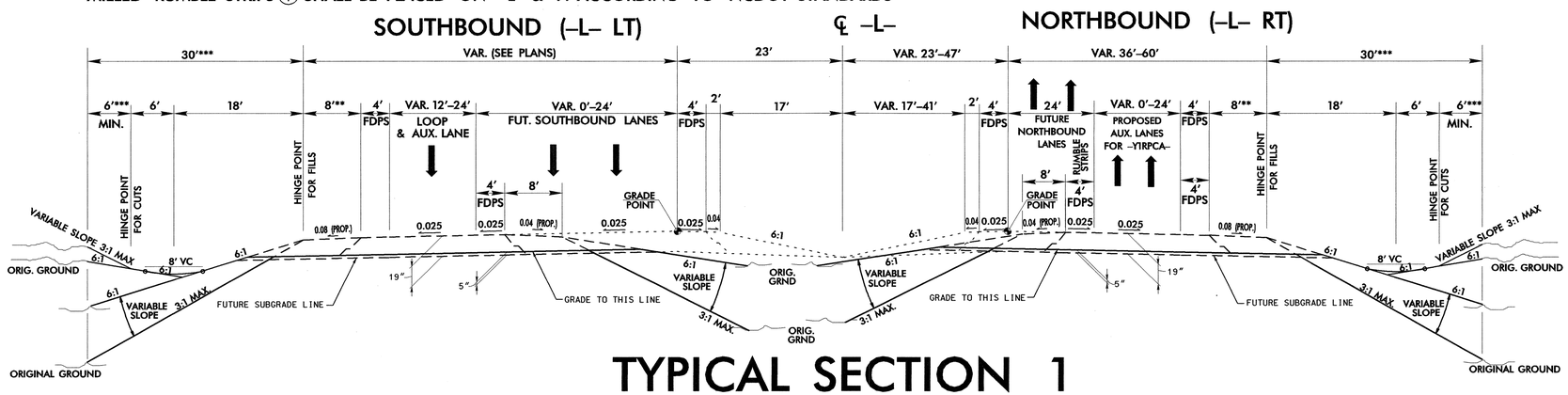

TYPICAL SECTION 1

FUTURE CONSTRUCTION
FUTURE PAVING

USE TYPICAL SECTION NO. 2 FOR:

–L– STA. 65+85.07 TO 83+52.56 (BEGIN BRG) LT
–L– STA. 88+22.55 (END BRG) TO 112+39.09 (BEGIN BRG) LT
–L– STA. 111+80.00 TO 112+87.58 (BEGIN BRG) RT
–L– STA. 113+88.59 (END BRG) LT TO 211+13.92 (BEGIN BRG) LT
–L– STA. 114+37.08 (END BRG) RT TO 210+96.54 (BEGIN BRG) RT
–L– STA. 212+64.76 (END BRG) RT TO 243+60.21 RT
–L– STA. 212+79.47 (END BRG) LT TO 243+60.21 LT

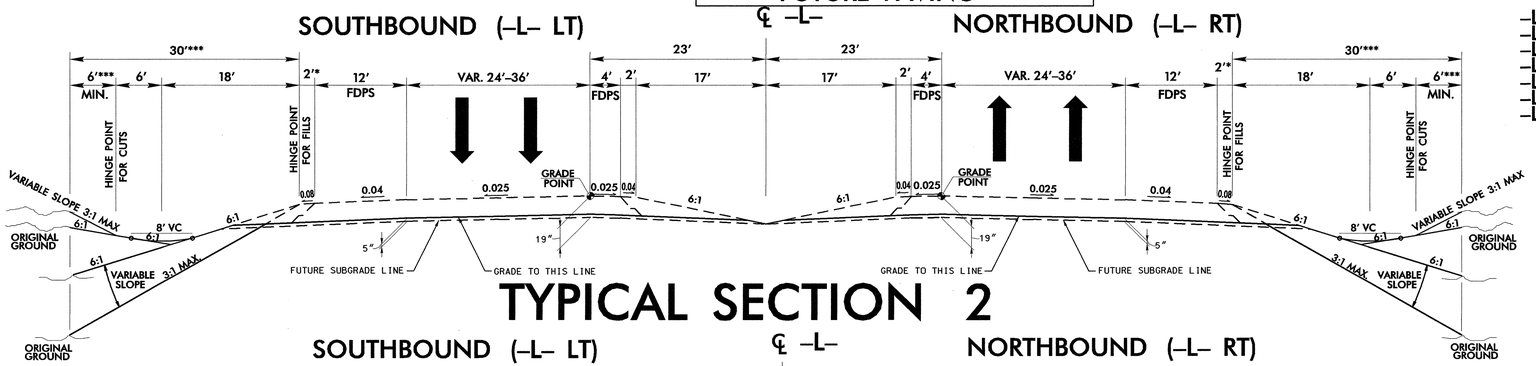

TYPICAL SECTION 2

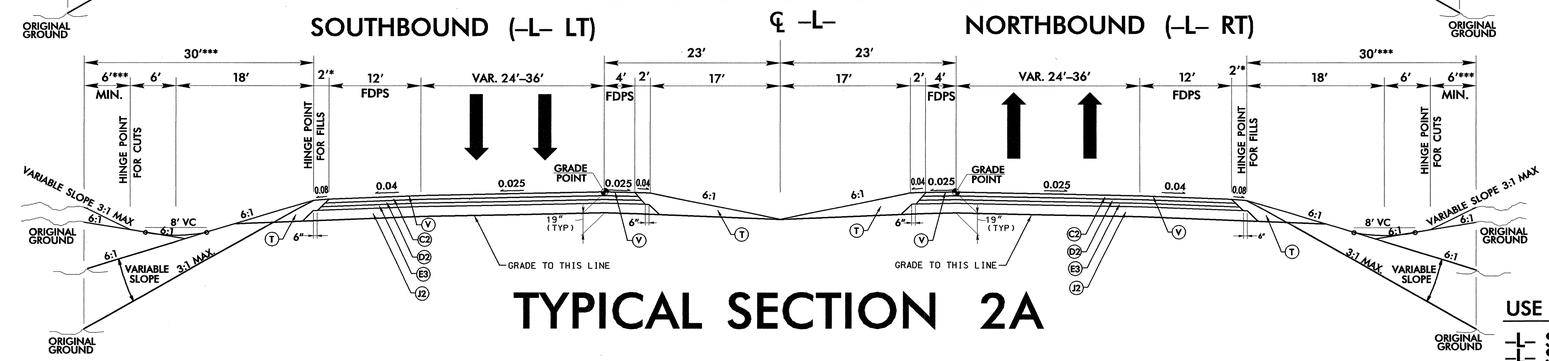

TYPICAL SECTION 2A

USE TYPICAL SECTION NO. 2A FOR:

–L– STA. 243+60.21 RT TO 247+93.28 (BEGIN BRG) RT
–L– STA. 243+60.21 LT TO 247+92.65 (BEGIN BRG) LT
–L– STA. 249+45.65 (END BRG) LT TO 260+50.00 LT
–L– STA. 249+46.28 (END BRG) RT TO 260+50.00 RT

TRANSITION TO EXISTING R-2719B PAVEMENT BETWEEN –L– STA. 260+50.00 TO 263+00.00

PAVEMENT SCHEDULE

CODE	DESCRIPTION
C	1.5" S9.5C
C1	3" S9.5B
C2	3" S9.5C
C3	VAR. S9.5B
C4	VAR. S9.5C
C5	2" S9.5B
D1	3" I19.0B
D2	3" I19.0C
D3	4" I19.0C
D4	VAR. I19.0B
D5	VAR. I19.0C
E1	4.0" B25.0B
E2	5.5" B25.0B
E3	3" B25.0C
E4	5" B25.0C
E5	VAR. B25.0C
E6	8" B25.0C
E7	VAR. B25.0B
J	6" ABC
J1	8" ABC
J2	10" ABC
P	PRIME COAT
R1	CONC C & G (2'-6")
R2	MONO. CONC ISLAND
R3	EXPRESSWAY GUTTER
T	EARTH MATERIAL
U	EXIST PAVEMENT
V	RUMBLE STRIPS
W	WEDGING (SEE SHEET 2)

NOTES: TYPICAL SECTIONS SHOWN ARE FOR TANGENT SECTIONS ONLY. SEE PLANS AND STANDARD DRAWINGS FOR SUPERELEVATION DETAILS AND LANE ADDITIONS/WIDENING AT INTERSECTIONS. MAXIMUM ROLLOVER IS 6%.

ALL PAVEMENT EDGE SLOPES ARE 1:1 UNLESS SHOWN OTHERWISE.

FOR PAVEMENT SCHEDULE WITH APPLICATION RATES, SEE SHEET 2.

FDPS – FULL DEPTH PAVED SHOULDERS.

* ADD 3.0 FT WITH GUARDRAIL.

** WHEN THESE DISTANCES INDICATE SLOPES OUTSIDE THE LIMITS OF 6:1 TO 3:1, THE DISTANCE BECOMES VARIABLE AND THE MAXIMUM SLOPE MAINTAINED. SEE CROSS SECTIONS

MILLED RUMBLE STRIPS SHALL BE PLACED ON –L– & Y1 ACCORDING TO NCDOT STANDARDS

Prepared by
URS
URS Corporation – North Carolina
1600 Perimeter Park Drive
Morrisville, North Carolina 27560
TELEPHONE (919) 461-1100 FAX (919) 461-1415

English

NOT TO SCALE

PROJECT REFERENCE NO.	SHEET NO.
R-2719A	2B
R/W SHEET NO.	

ROADWAY DESIGN ENGINEER: NORTH CAROLINA PROFESSIONAL SEAL 025513 ENGINEER MICHAEL D. LINDGREN 3-11-09

PAVEMENT DESIGN ENGINEER: NORTH CAROLINA PROFESSIONAL SEAL 13668 ENGINEER DON-CHI CHEN 3/16/09

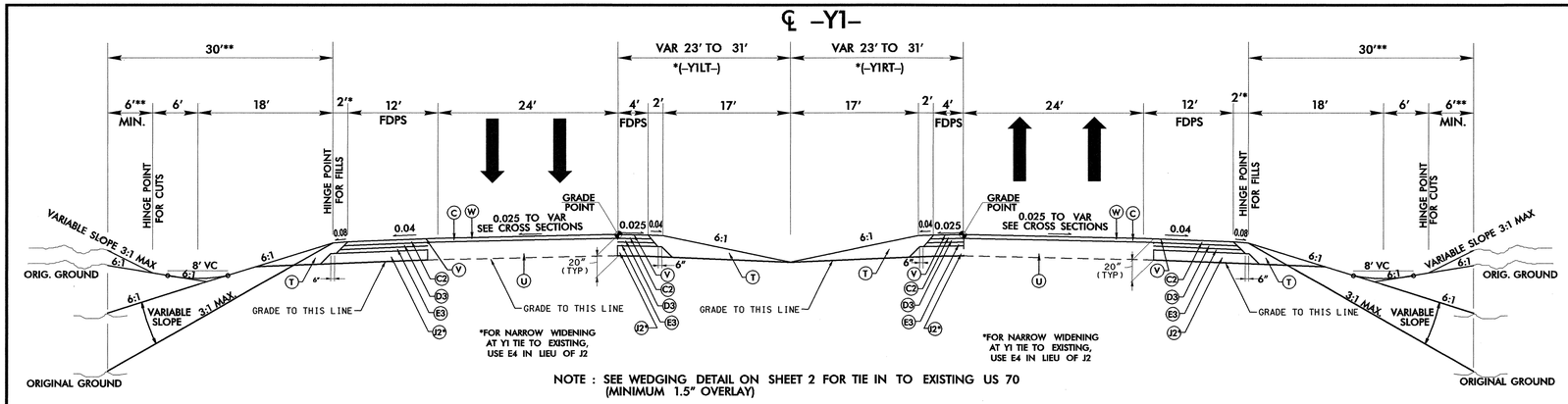

NOTE : SEE WEDGING DETAIL ON SHEET 2 FOR TIE IN TO EXISTING US 70 (MINIMUM 1.5" OVERLAY)

TYPICAL SECTION 3

NOTE: THIS DETAIL IS PROVIDED FOR INFORMATION ONLY – FUTURE CONSTRUCTION

TRANSITION FROM EXISTING TO T.S. NO. 3
–Y1– APPROX. STA. 15+30 (END BRG) TO 16+50

USE TYPICAL SECTION NO. 3 FOR:

–Y1– STA. 16+50.00 TO 22+50.00
–Y1– STA. 22+50.00 TO 24+00.00 LT
–Y1– STA. 114+00.00 TO 119+00.00 RT
–Y1– STA. 114+00.00 TO 120+50 LT

TRANSITION FROM T.S. NO. 3 TO EXISTING
–Y1– STA. 119+00.00 TO 121+63.73 LT
–Y1– STA. 120+50.00 TO 121+63.73 RT

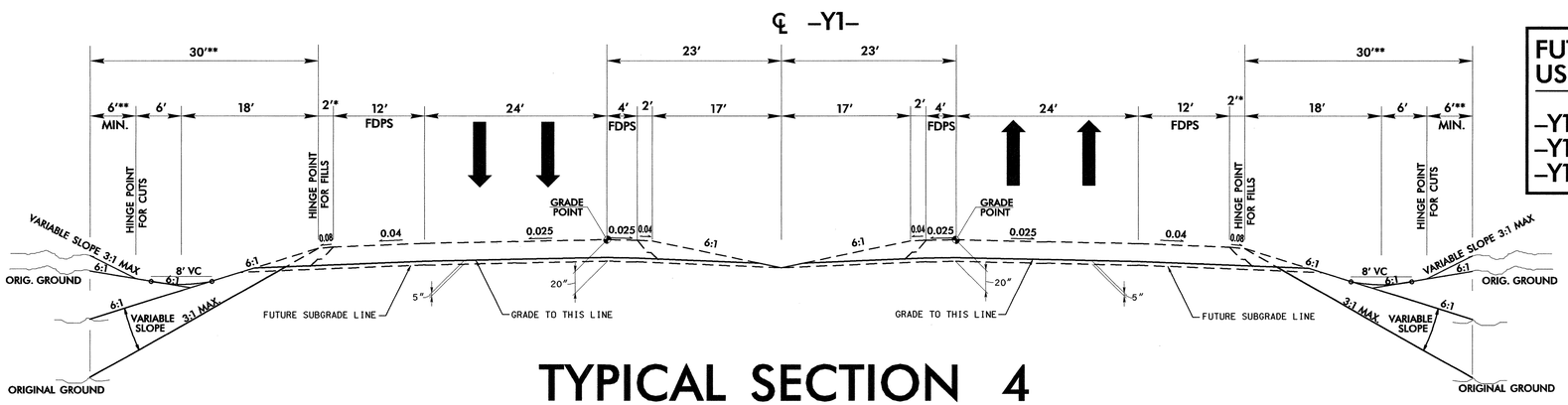

TYPICAL SECTION 4

FUTURE CONSTRUCTION
USE TYPICAL SECTION NO. 4:

–Y1– STA. 22+50.00 TO 30+00.00 LT
–Y1– STA. 24+00.00 TO 30+00.00 RT
–Y1– STA. 105+25.00 TO 114+00.00

PAVEMENT SCHEDULE	
CODE	DESCRIPTION
C	1.5" S9.5C
C1	3" S9.5B
C2	3" S9.5C
C3	VAR. S9.5B
C4	VAR. S9.5C
C5	2" S9.5B
D1	3" I19.0B
D2	3" I19.0C
D3	4" I19.0C
D4	VAR. I19.0B
D5	VAR. I19.0C
E1	4.0" B25.0B
E2	5.5" B25.0B
E3	3" B25.0C
E4	5" B25.0C
E5	VAR. B25.0C
E6	8" B25.0C
E7	VAR. B25.0B
J	6" ABC
J1	8" ABC
J2	10" ABC
P	PRIME COAT
R1	CONC C & G (2'-6")
R2	MONO. CONC ISLAND
R3	EXPRESSWAY GUTTER
T	EARTH MATERIAL
U	EXIST PAVEMENT
V	RUMBLE STRIPS
W	WEDGING (SEE SHEET 2)

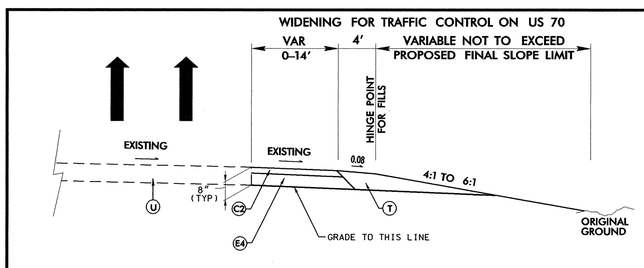

PARTIAL TYPICAL SECTION 4A

USE TYPICAL SECTION NO. 4A FOR EXISTING EASTBOUND US 70:

–Y1– STA. 15+65.83 TO 24+00.00
–Y1– STA. 114+05.00 TO 122+05.00

NOTE: THIS DETAIL IS PROVIDED FOR INFORMATION ONLY – FUTURE CONSTRUCTION

USE TYPICAL SECTION NO. 4 FOR:

–Y1– STA. 30+00.00 TO 96+46.61 LT (BEGIN BRIDGE)
–Y1– STA. 30+00.00 TO 96+74.58 RT (BEGIN BRIDGE)
–Y1– STA. 97+78.21 LT (END BRIDGE) TO 105+25.00 LT
–Y1– STA. 98+06.18 RT (END BRIDGE) TO 105+25.00 RT

---- FUTURE PAVING

Prepared by
URS
URS Corporation – North Carolina
1600 Perimeter Park Drive
Morrisville, North Carolina 27560
TELEPHONE (919) 461-1100 FAX (919) 461-1415

English

NOT TO SCALE

PROJECT REFERENCE NO.	SHEET NO.
R-2719A	2C
R/W SHEET NO.	
ROADWAY DESIGN ENGINEER	PAVEMENT DESIGN ENGINEER

NORTH CAROLINA PROFESSIONAL SEAL 025513 ENGINEER MICHAEL D. LINDGEN 3-11-09

NORTH CAROLINA PROFESSIONAL SEAL 13368 ENGINEER CHI CHEN 3/16/09

NOTES: TYPICAL SECTIONS SHOWN ARE FOR TANGENT SECTIONS ONLY. SEE PLANS AND STANDARD DRAWINGS FOR SUPERELEVATION DETAILS AND LANE ADDITIONS/WIDENING AT INTERSECTIONS. MAXIMUM ROLLOVER IS 6%.

ALL PAVEMENT EDGE SLOPES ARE 1:1 UNLESS SHOWN OTHERWISE.

FOR PAVEMENT SCHEDULE WITH APPLICATION RATES, SEE SHEET 2.

FDPS – FULL DEPTH PAVED SHOULDERS.

* ADD 3.0 FT WITH GUARDRAIL.

** WHEN THESE DISTANCES INDICATE SLOPES OUTSIDE THE LIMITS OF 6:1 TO 3:1 THE DISTANCE BECOMES VARIABLE AND THE MAXIMUM SLOPE MAINTAINED. SEE CROSS SECTIONS.

---- FUTURE PAVING

℄ Y1RPA, Y1RPB & Y1RPCA

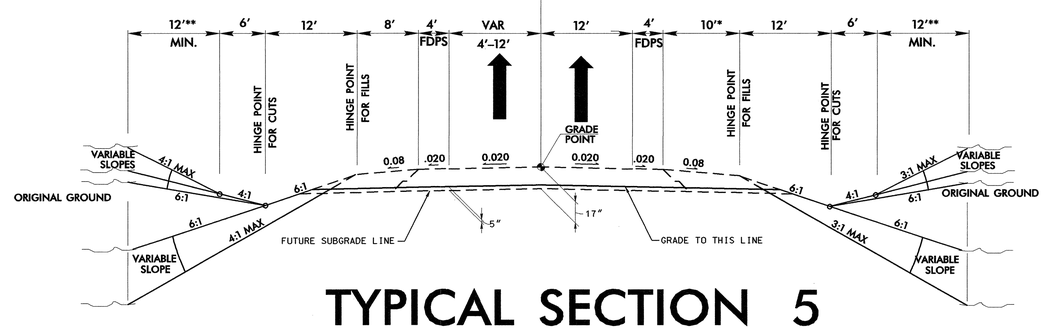

TYPICAL SECTION 5

USE TYPICAL SECTION NO. 5 FOR:

–Y1RPA– STA. 0+00.00 TO 16+04.29
–Y1RPB– STA. 0+00.00 TO 35+55.41
–Y1RPCA– STA. 0+00.00 TO 27+88.18 (BEG BRG)
–Y1RPCA– STA. 30+12.60 (END BRG) TO 68+73.91

℄ Y24RPB & Y24RPC

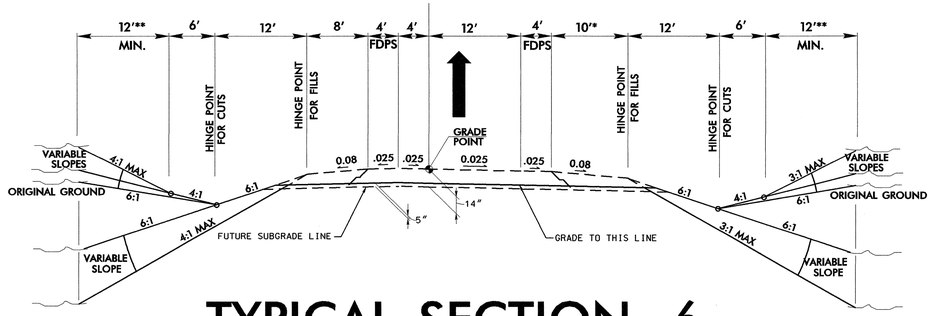

TYPICAL SECTION 6

USE TYPICAL SECTION NO. 6 FOR:

–Y24RPB– STA. 0+00.00 TO 15+65.23 (REVERSE)
–Y24RPC– STA. 0+00.00 TO 17+66.91

℄ Y24RPB & Y24RPC

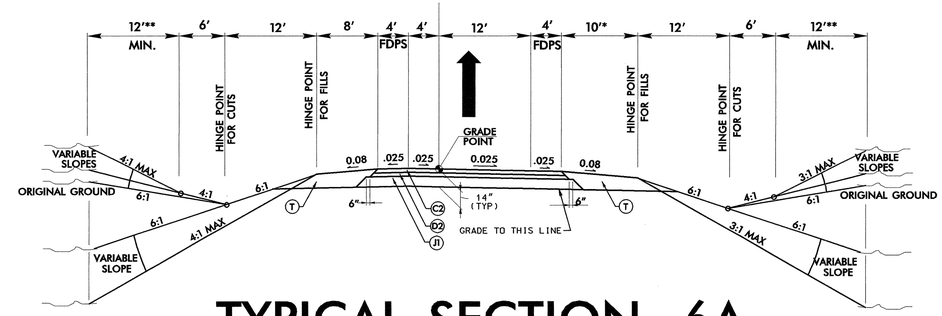

TYPICAL SECTION 6A

USE TYPICAL SECTION NO. 6A FOR:

–Y24RPB– STA. 15+65.23 TO 16+17.10 (REVERSE)
–Y24RPC– STA. 17+66.91 TO 18+17.89

Y24RPB & Y24RPC ℄ ℄ Y24LPB & Y24LPC

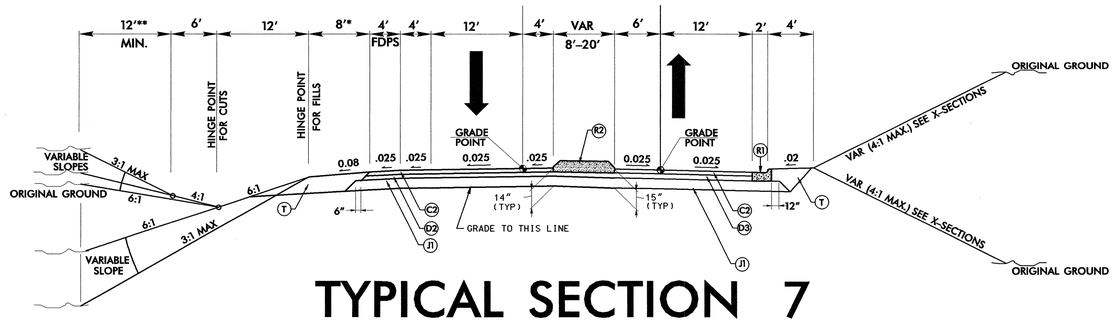

TYPICAL SECTION 7

USE TYPICAL SECTION NO. 7

–Y24RPB– STA. 16+17.10 TO 19+35.23
–Y24LPB– STA. 8+20.12 TO 11+33.87
–Y24RPC– STA. 18+17.89 TO 21+51.82 (REVERSE)
–Y24LPC– STA. 8+76.80 TO 12+04.00

NOTE: SEE PLAN FOR ISLAND LIMITS

PAVEMENT SCHEDULE	
CODE	DESCRIPTION
C	1.5" S9.5C
C1	3" S9.5B
C2	3" S9.5C
C3	VAR. S9.5B
C4	VAR. S9.5C
C5	2" S9.5B
D1	3" I19.0B
D2	3" I19.0C
D3	4" I19.0C
D4	VAR. I19.0B
D5	VAR. I19.0C
E1	4.0" B25.0B
E2	5.5" B25.0B
E3	3" B25.0C
E4	5" B25.0C
E5	VAR. B25.0C
E6	8" B25.0C
E7	VAR. B25.0B
J	6" ABC
J1	8" ABC
J2	10" ABC
P	PRIME COAT
R1	CONC C & G (2'-6")
R2	MONO. CONC ISLAND
R3	EXPRESSWAY GUTTER
T	EARTH MATERIAL
U	EXIST PAVEMENT
V	RUMBLE STRIPS
W	WEDGING (SEE SHEET 2)

NOTES: TYPICAL SECTIONS SHOWN ARE FOR TANGENT SECTIONS ONLY. SEE PLANS AND STANDARD DRAWINGS FOR SUPERELEVATION DETAILS AND LANE ADDITIONS/WIDENING AT INTERSECTIONS. MAXIMUM ROLLOVER IS 6%.

ALL PAVEMENT EDGE SLOPES ARE 1:1 UNLESS SHOWN OTHERWISE.

FOR PAVEMENT SCHEDULE WITH APPLICATION RATES, SEE SHEET 2.

FDPS – FULL DEPTH PAVED SHOULDERS.

* ADD 3.0 FT WITH GUARDRAIL.

** WHEN THESE DISTANCES INDICATE SLOPES OUTSIDE THE LIMITS OF 6:1 TO 3:1, THE DISTANCE BECOMES VARIABLE AND THE MAXIMUM SLOPE MAINTAINED. SEE CROSS SECTIONS.

Prepared by
URS
URS Corporation – North Carolina
1600 Perimeter Park Drive
Morrisville, North Carolina 27560
TELEPHONE (919) 461-1100 FAX (919) 461-1415

English

NOT TO SCALE

PROJECT REFERENCE NO.	SHEET NO.
R-2719A	2D
R/W SHEET NO.	

ROADWAY DESIGN ENGINEER: NORTH CAROLINA PROFESSIONAL SEAL 025513 ENGINEER MICHAEL D. LINDGREN 3-11-09

PAVEMENT DESIGN ENGINEER: NORTH CAROLINA PROFESSIONAL SEAL 13368 DOAN-CHI CHEN 3/16/09

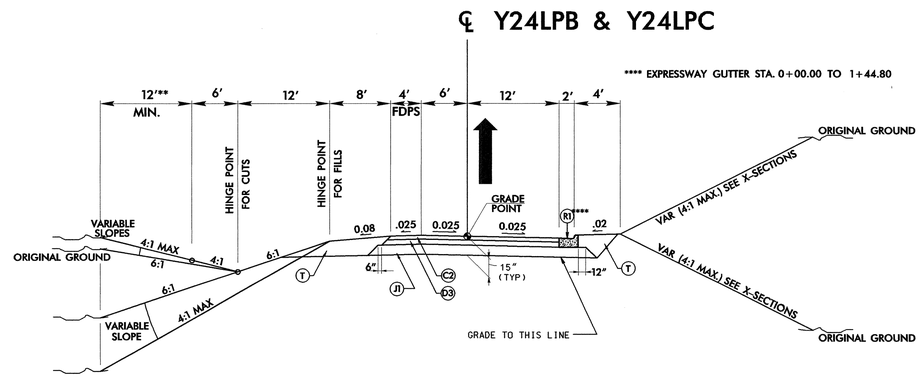

TYPICAL SECTION 8

USE TYPICAL SECTION NO. 8 FOR:

–Y24LPB– STA. 0+00.00 TO 8+20.12
–Y24LPC– STA. 0+00.00 TO 8+76.80 (REVERSE)

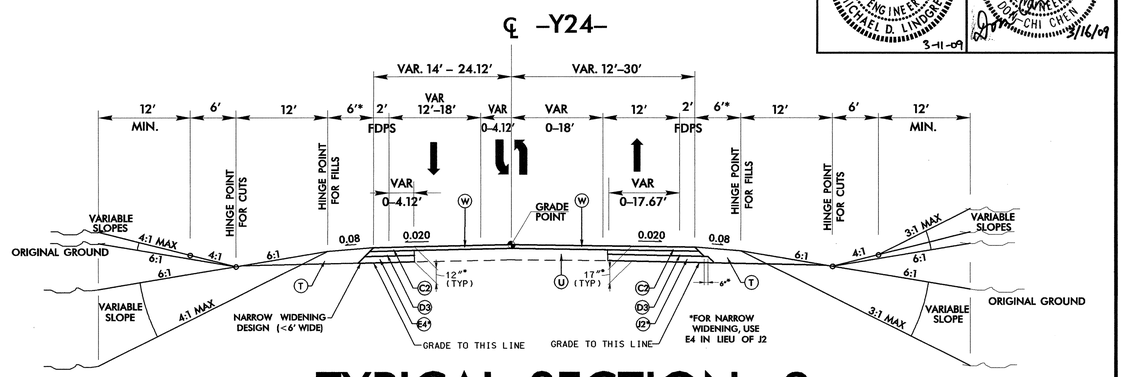

TYPICAL SECTION 9

USE TYPICAL SECTION NO. 9 FOR:

–Y24– STA. 22+50.00 TO 24+37.42 LT
–Y24– STA. 22+50.00 TO 25+50.00 RT

TRANSITION FROM EXISTING TO T.S. NO. 9
–Y24– STA. 22+00.00 TO 22+50.00

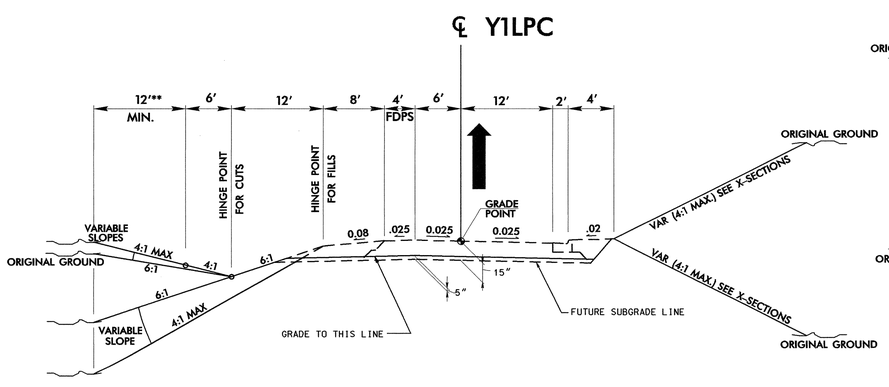

TYPICAL SECTION 8A

USE TYPICAL SECTION NO. 8 FOR:

–Y1LPC– STA. 0+00.00 TO 14+34.42

---- FUTURE PAVING

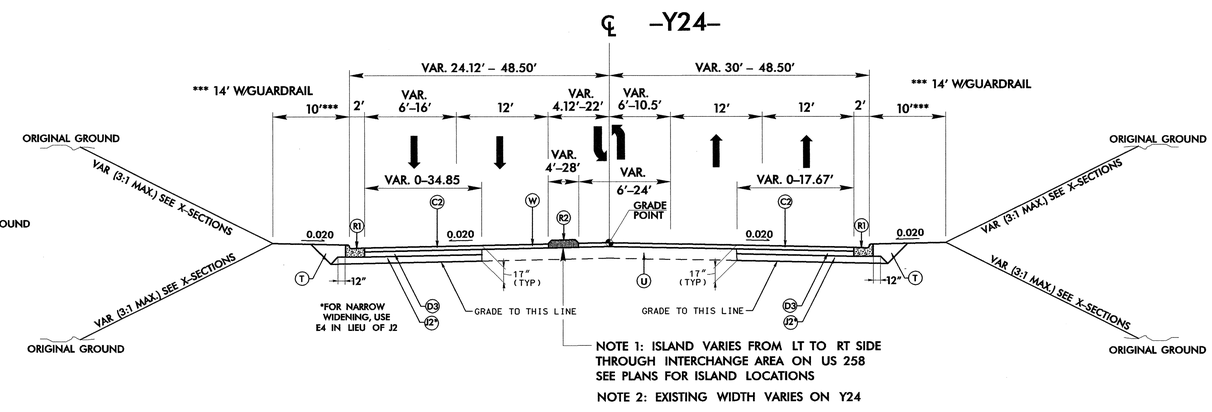

TYPICAL SECTION 10

USE TYPICAL SECTION NO. 10 FOR:

–Y24– STA. 24+37.42 TO 54+00.00 LT
–Y24– STA. 25+50.00 TO 54+00.00 RT

TRANSITION FROM T.S. NO. 10 TO EXISTING
–Y24– STA. 54+00.00 TO 54+50.00

PAVEMENT SCHEDULE	
CODE	DESCRIPTION
C	1.5" S9.5C
C1	3" S9.5B
C2	3" S9.5C
C3	VAR. S9.5B
C4	VAR. S9.5C
C5	2" S9.5B
D1	3" I19.0B
D2	3" I19.0C
D3	4" I19.0C
D4	VAR. I19.0B
D5	VAR. I19.0C
E1	4.0" B25.0B
E2	5.5" B25.0B
E3	3" B25.0C
E4	5" B25.0C
E5	VAR. B25.0C
E6	8" B25.0C
E7	VAR. B25.0B
J	6" ABC
J1	8" ABC
J2	10" ABC
P	PRIME COAT
R1	CONC C & G (2'-6")
R2	MONO. CONC ISLAND
R3	EXPRESSWAY GUTTER
T	EARTH MATERIAL
U	EXIST PAVEMENT
V	RUMBLE STRIPS
W	WEDGING (SEE SHEET 2)

NOTES: TYPICAL SECTIONS SHOWN ARE FOR TANGENT SECTIONS ONLY. SEE PLANS AND STANDARD DRAWINGS FOR SUPERELEVATION DETAILS AND LANE ADDITIONS/WIDENING AT INTERSECTIONS. MAXIMUM ROLLOVER IS 6%.

ALL PAVEMENT EDGE SLOPES ARE 1:1 UNLESS SHOWN OTHERWISE.

FOR PAVEMENT SCHEDULE WITH APPLICATION RATES, SEE SHEET 2.

FDPS – FULL DEPTH PAVED SHOULDERS.

* ADD 3.0 FT WITH GUARDRAIL.

** WHEN THESE DISTANCES INDICATE SLOPES OUTSIDE THE LIMITS OF 6:1 TO 3:1, THE DISTANCE BECOMES VARIABLE AND THE MAXIMUM SLOPE MAINTAINED. SEE CROSS SECTIONS.

Prepared by
URS
URS Corporation – North Carolina
1600 Perimeter Park Drive
Morrisville, North Carolina 27560
TELEPHONE (919) 461-1100 FAX (919) 461-1415

English

NOT TO SCALE

PROJECT REFERENCE NO.	SHEET NO.
R-2719A	2E
R/W SHEET NO.	

ROADWAY DESIGN ENGINEER: NORTH CAROLINA PROFESSIONAL SEAL 025513 ENGINEER MICHAEL D. LINDGREN 3-11-09

PAVEMENT DESIGN ENGINEER: NORTH CAROLINA PROFESSIONAL SEAL 13368 ENGINEER DAVID CHI CHEN 3/16/09

℄ –Y9–

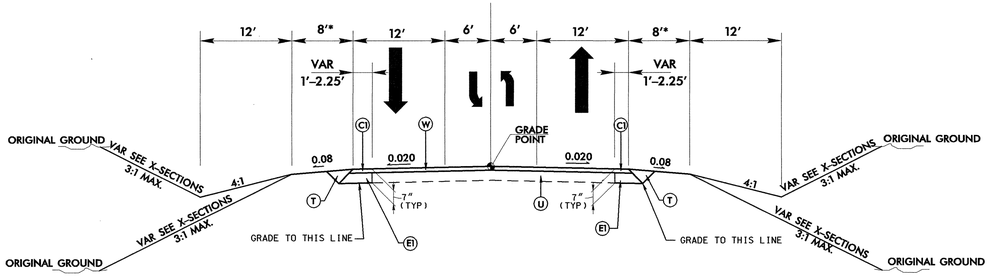

TYPICAL SECTION 11

USE TYPICAL SECTION NO. 11 FOR:

–Y9– STA. 10+12.09 TO 31+30.87

TRANSITION FROM T.S. NO. 11 TO EXISTING
–Y9– STA. 31+30.87 TO 33+30.87

℄ –Y10–

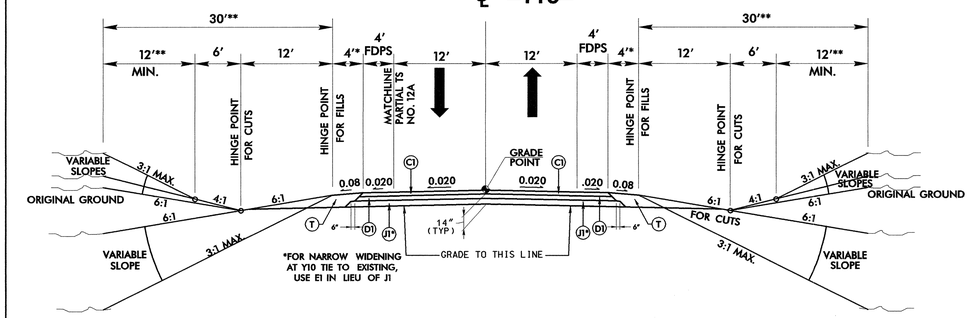

TYPICAL SECTION 12

USE TYPICAL SECTION NO. 12 FOR:

–Y10– STA. 10+47.37 TO STA. 11+90.00
TRANSITION FROM T.S. NO. 11 TO EXISTING
–Y10– STA. 11+90 TO 12+16.98
NOTE: –Y10– UNDERCUTS EXISTING PAVEMENT

NOTE: THESE DETAILS ARE PROVIDED FOR INFORMATION ONLY – FUTURE CONSTRUCTION

℄ CUL–DE–SAC

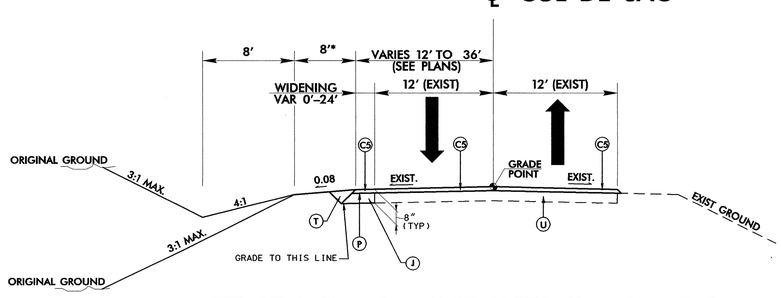

TYPICAL SECTION 12A

USE TYPICAL SECTION NO. 12A FOR:

–Y1– STA. 26+79.06 (OFFSET 172.49′ RT)

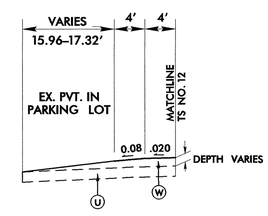

PARTIAL TYPICAL SECTION 13

USE PARTIAL TYPICAL SECTION NO. 13 IN CONJUNCTION WITH TYP. SECTION NO. 12 FOR:

–Y10– STA. 11+37.12 TO STA. 12+16.98 LT SIDE

NOTE: THESE DETAILS ARE PROVIDED FOR INFORMATION ONLY – FUTURE CONSTRUCTION

PAVEMENT SCHEDULE	
CODE	DESCRIPTION
C	1.5″ S9.5C
C1	3″ S9.5B
C2	3″ S9.5C
C3	VAR. S9.5B
C4	VAR. S9.5C
C5	2″ S9.5B
D1	3″ I19.0B
D2	3″ I19.0C
D3	4″ I19.0C
D4	VAR. I19.0B
D5	VAR. I19.0C
E1	4.0″ B25.0B
E2	5.5″ B25.0B
E3	3″ B25.0C
E4	5″ B25.0C
E5	VAR. B25.0C
E6	8″ B25.0C
E7	VAR. B25.0B
J	6″ ABC
J1	8″ ABC
J2	10″ ABC
P	PRIME COAT
R1	CONC C & G (2′–6″)
R2	MONO. CONC ISLAND
R3	EXPRESSWAY GUTTER
T	EARTH MATERIAL
U	EXIST PAVEMENT
V	RUMBLE STRIPS
W	WEDGING (SEE SHEET 2)

NOTES: TYPICAL SECTIONS SHOWN ARE FOR TANGENT SECTIONS ONLY. SEE PLANS AND STANDARD DRAWINGS FOR SUPERELEVATION DETAILS AND LANE ADDITIONS/WIDENING AT INTERSECTIONS. MAXIMUM ROLLOVER IS 6%.

ALL PAVEMENT EDGE SLOPES ARE 1:1 UNLESS SHOWN OTHERWISE.

FOR PAVEMENT SCHEDULE WITH APPLICATION RATES, SEE SHEET 2.

FDPS – FULL DEPTH PAVED SHOULDERS.

* ADD 3.0 FT WITH GUARDRAIL.

** WHEN THESE DISTANCES INDICATE SLOPES OUTSIDE THE LIMITS OF 6:1 TO 3:1, THE DISTANCE BECOMES VARIABLE AND THE MAXIMUM SLOPE MAINTAINED. SEE CROSS SECTIONS.

Prepared by
URS
URS Corporation – North Carolina
1600 Perimeter Park Drive
Morrisville, North Carolina 27560
TELEPHONE (919) 461-1100 FAX (919) 461-1415

English

NOT TO SCALE

PROJECT REFERENCE NO.	SHEET NO.
R-2719A	2F
R/W SHEET NO.	
ROADWAY DESIGN ENGINEER	PAVEMENT DESIGN ENGINEER

NORTH CAROLINA PROFESSIONAL SEAL 025513 ENGINEER MICHAEL D. LINDGREN 3-11-09

NORTH CAROLINA PROFESSIONAL SEAL 13368 ENGINEER DUN-CHI CHEN 3/16/09

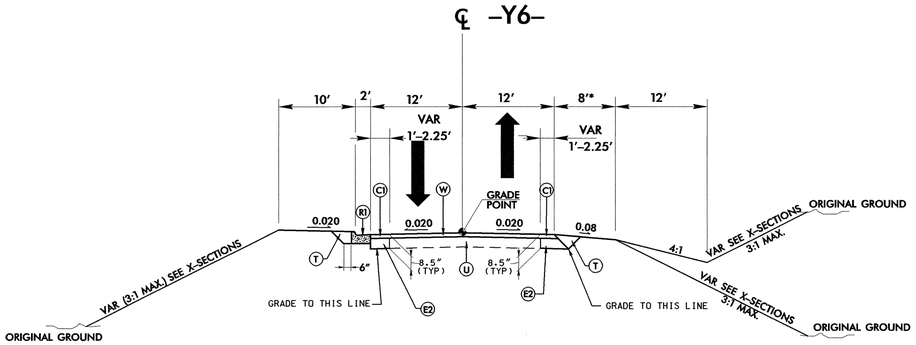

TYPICAL SECTION 14

USE TYPICAL SECTION NO. 14 FOR:

–Y6– STA. 10+29.50 TO 11+02.59

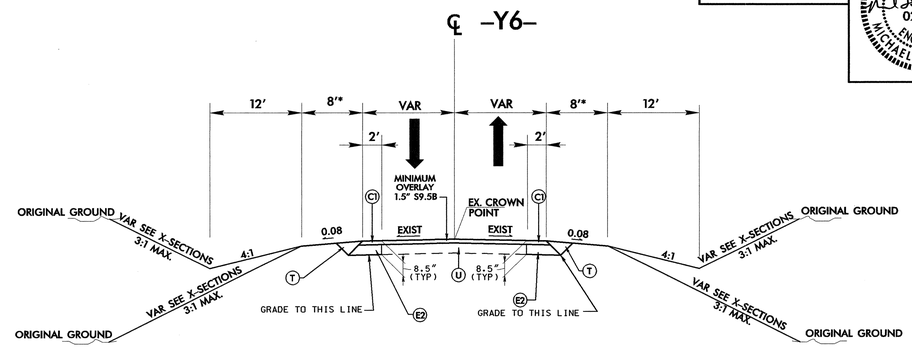

TYPICAL SECTION 15

USE TYPICAL SECTION NO. 15 FOR:

–Y6– STA. 11+02.59 TO 32+95.17

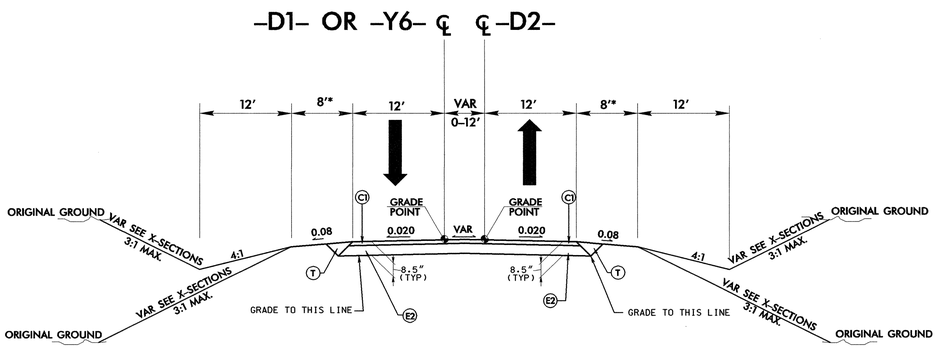

TYPICAL SECTION 16

USE TYPICAL SECTION NO. 16 FOR:

–Y6– STA. 32+95.17 TO 34+00.00
–D1– STA. 10+00.00 TO 12+06.39
–D2– STA. 10+00.00 TO 11+64.17

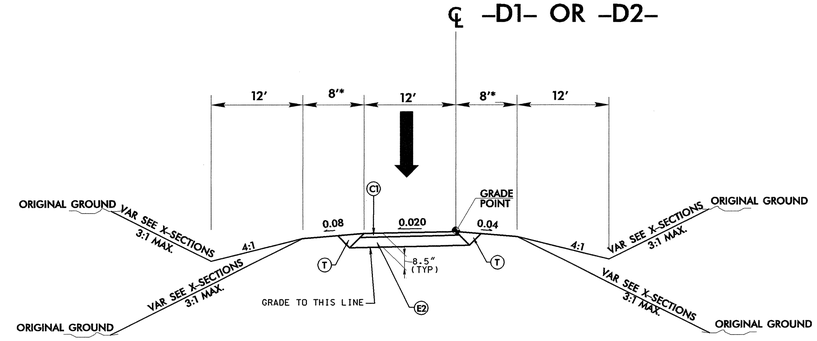

TYPICAL SECTION 17

USE TYPICAL SECTION NO. 17 FOR:

–D1– STA. 12+06.39 TO 13+34.04
–D1– STA. 14+51.67 TO 16+39.23
–D2– STA. 10+00.00 TO 14+32.10 (REVERSE)

TIE TO EXISTING PAVEMENT AT
–D1– STA. 13+34.04, 14+51.67 & 16+39.23
–D2– STA. 14+32.10

USE T.S. NO. 17 FOR WIDENING TO TIE –D1– AND –D2– PAVEMENT INTO EXISTING

PAVEMENT SCHEDULE	
CODE	DESCRIPTION
C	1.5″ S9.5C
C1	3″ S9.5B
C2	3″ S9.5C
C3	VAR. S9.5B
C4	VAR. S9.5C
C5	2″ S9.5B
D1	3″ I19.0B
D2	3″ I19.0C
D3	4″ I19.0C
D4	VAR. I19.0B
D5	VAR. I19.0C
E1	4.0″ B25.0B
E2	5.5″ B25.0B
E3	3″ B25.0C
E4	5″ B25.0C
E5	VAR. B25.0C
E6	8″ B25.0C
E7	VAR. B25.0B
J	6″ ABC
J1	8″ ABC
J2	10″ ABC
P	PRIME COAT
R1	CONC C & G (2′–6″)
R2	MONO. CONC ISLAND
R3	EXPRESSWAY GUTTER
T	EARTH MATERIAL
U	EXIST PAVEMENT
V	RUMBLE STRIPS
W	WEDGING (SEE SHEET 2)

NOTES: TYPICAL SECTIONS SHOWN ARE FOR TANGENT SECTIONS ONLY. SEE PLANS AND STANDARD DRAWINGS FOR SUPERELEVATION DETAILS AND LANE ADDITIONS/WIDENING AT INTERSECTIONS. MAXIMUM ROLLOVER IS 6%.

ALL PAVEMENT EDGE SLOPES ARE 1:1 UNLESS SHOWN OTHERWISE.

FOR PAVEMENT SCHEDULE WITH APPLICATION RATES, SEE SHEET 2.

FDPS – FULL DEPTH PAVED SHOULDERS.

* ADD 3.0 FT WITH GUARDRAIL.

** WHEN THESE DISTANCES INDICATE SLOPES OUTSIDE THE LIMITS OF 6:1 TO 3:1, THE DISTANCE BECOMES VARIABLE AND THE MAXIMUM SLOPE MAINTAINED. SEE CROSS SECTIONS.

Prepared by
URS
URS Corporation – North Carolina
1600 Perimeter Park Drive
Morrisville, North Carolina 27560
TELEPHONE (919) 461-1100 FAX (919) 461-1415

English

NOT TO SCALE

PROJECT REFERENCE NO.	SHEET NO.
R-2719A	2G
R/W SHEET NO.	
ROADWAY DESIGN ENGINEER	PAVEMENT DESIGN ENGINEER

NORTH CAROLINA PROFESSIONAL SEAL 025513 ENGINEER MICHAEL D. LINDGEN 3-11-09

NORTH CAROLINA PROFESSIONAL SEAL 13368 ENGINEER CHI CHEN 3/16/09

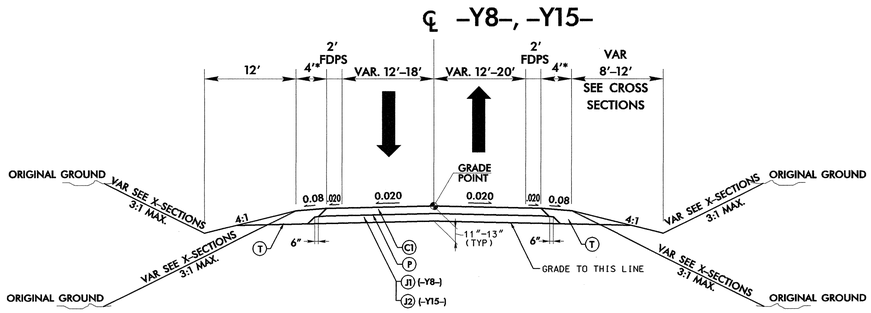

TYPICAL SECTION 18

USE TYPICAL SECTION NO. 18 FOR:

–Y8– STA. 10+47.00 TO 24+72.98
–Y15– STA. 26+57.51 TO 31+26.03

TRANSITION FROM EXISTING TO T.S. NO. 19
–Y15– STA. 26+00.00 TO 26+57.51

NOTE: THIS DETAIL IS PROVIDED FOR INFORMATION ONLY – FUTURE CONSTRUCTION

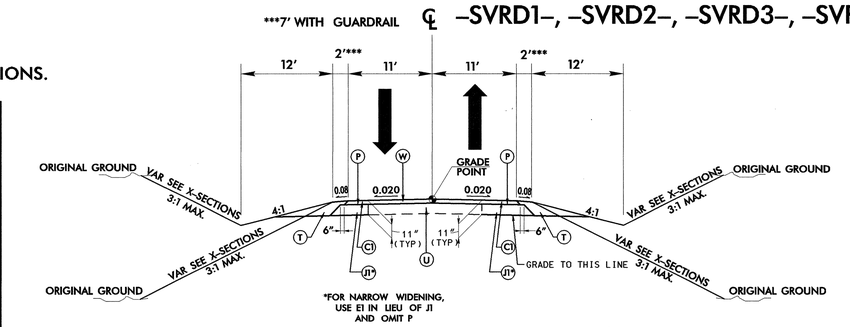

TYPICAL SECTION 19

USE TYPICAL SECTION NO. 19 FOR:

–SVRD1– STA. 12+90.00 TO 13+50.00
–SVRD3– STA. 15+39.05 TO 18+64.04
–SVRD4– STA. 12+00.00 TO 16+32.99

TRANSITION BETWEEN EXISTING AND T.S. NO. 20
–SVRD1– STA. 13+50.00 TO 14+00.00
–SVRD3– STA. 15+39.05 TO 15+39.05
–SVRD4– STA. 11+50.00 TO 12+00.00

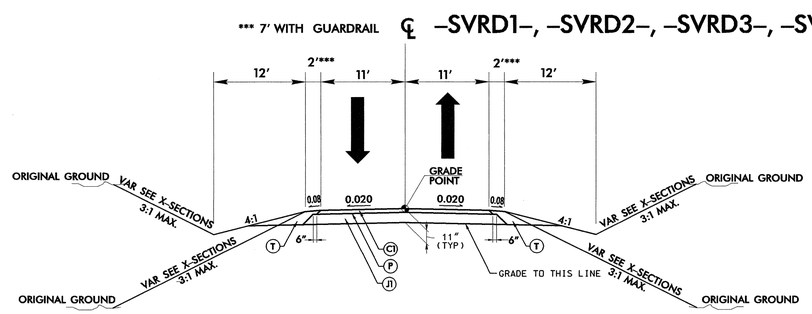

TYPICAL SECTION 20

USE TYPICAL SECTION NO. 20 FOR:

–SVRD1– STA. 10+10.31 TO 12+90.00
–SVRD2– STA. 10+43.18 TO 14+40.01
–SVRD3– STA. 18+64.04 TO 45+00.00
–SVRD4– STA. 16+32.99 TO 18+94.44

PAVEMENT SCHEDULE	
CODE	DESCRIPTION
C	1.5″ S9.5C
C1	3″ S9.5B
C2	3″ S9.5C
C3	VAR. S9.5B
C4	VAR. S9.5C
C5	2″ S9.5B
D1	3″ I19.0B
D2	3″ I19.0C
D3	4″ I19.0C
D4	VAR. I19.0B
D5	VAR. I19.0C
E1	4.0″ B25.0B
E2	5.5″ B25.0B
E3	3″ B25.0C
E4	5″ B25.0C
E5	VAR. B25.0C
E6	8″ B25.0C
E7	VAR. B25.0B
J	6″ ABC
J1	8″ ABC
J2	10″ ABC
P	PRIME COAT
R1	CONC C & G (2′-6″)
R2	MONO. CONC ISLAND
R3	EXPRESSWAY GUTTER
T	EARTH MATERIAL
U	EXIST PAVEMENT
V	RUMBLE STRIPS
W	WEDGING (SEE SHEET 2)

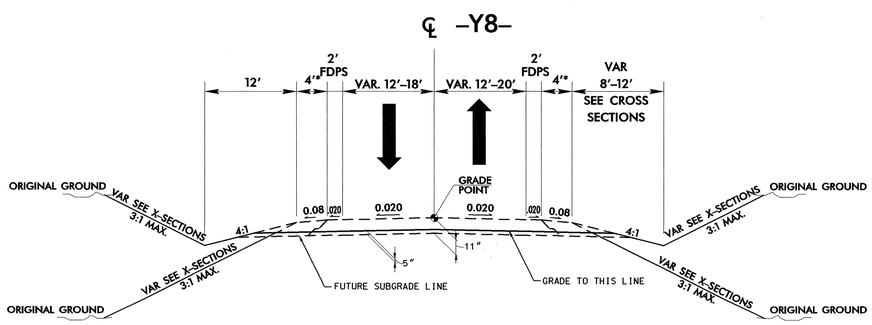

TYPICAL SECTION 18A

USE TYPICAL SECTION NO. 18 FOR:

–Y8– STA. 10+47.00 TO 14+27.78

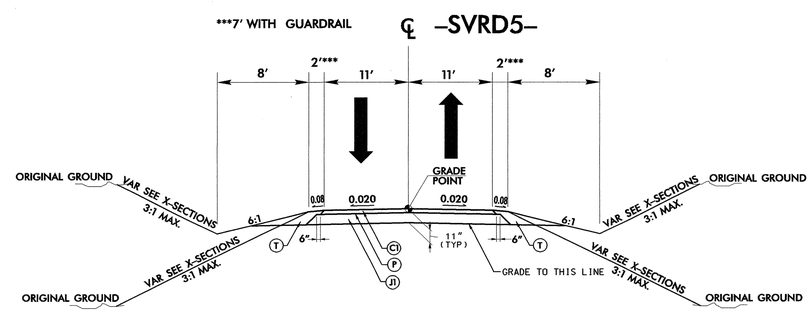

TYPICAL SECTION 21

USE TYPICAL SECTION NO. 21 FOR:

–SVRD5– STA. 10+11.61 TO 27+64.25

---- FUTURE PAVING

GRAPHIC SCALE

200 100 0 200 400

PLANS

Prepared by
URS
URS Corporation – North Carolina
1600 Perimeter Park Drive
Morrisville, North Carolina 27560
TELEPHONE (919) 461-1100 FAX (919) 461-1415

PROJECT REFERENCE NO.	SHEET NO.
R-2719A	2-H
R/W SHEET NO.	

ROADWAY DESIGN ENGINEER

NORTH CAROLINA PROFESSIONAL SEAL 025513 ENGINEER MICHAEL D. LINDGREN

3-11-09

-Y1- INTERCHANGE SHEAR POINT DIAGRAM

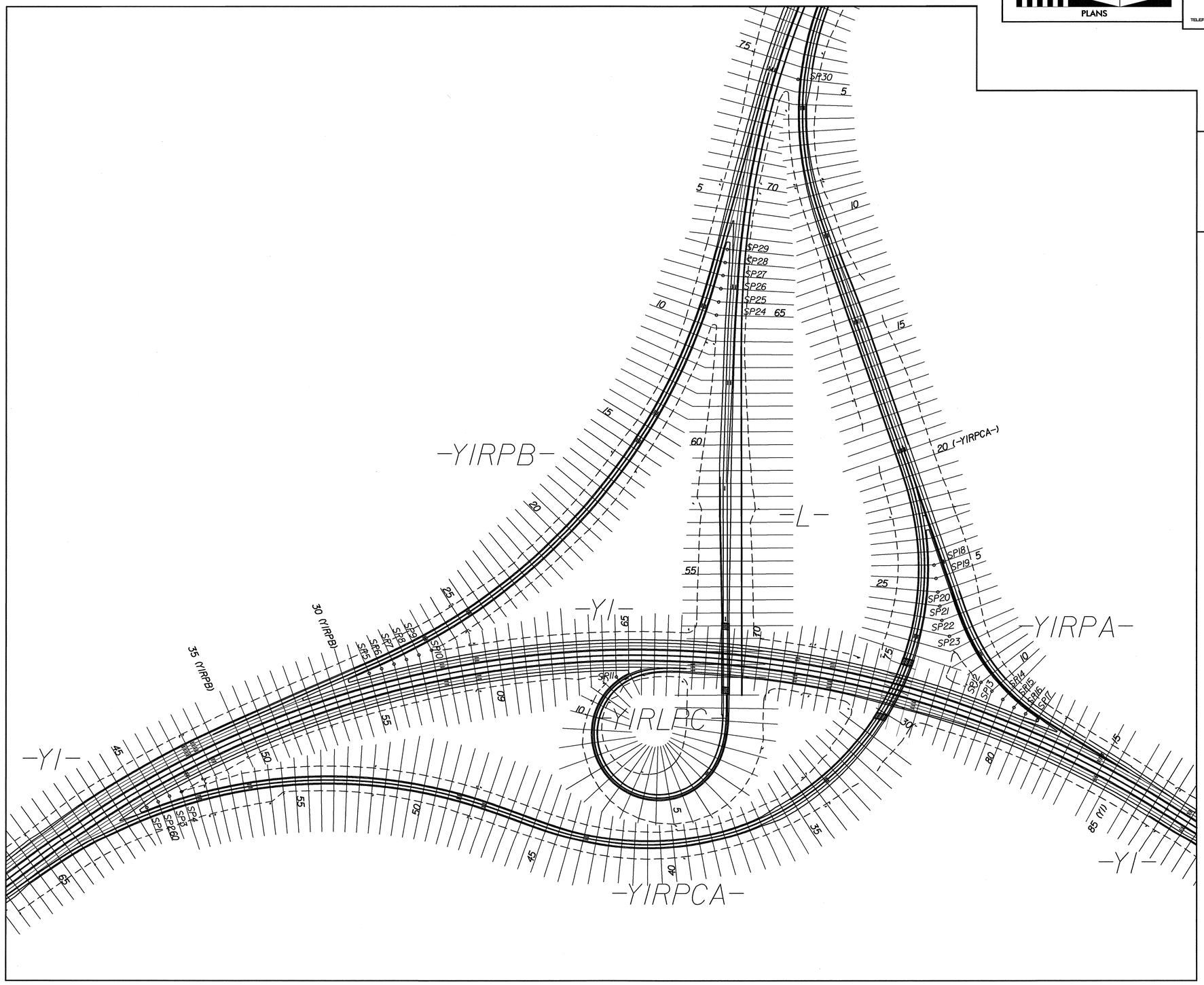

REVISIONS

8/17/99

2/23/2009
R:\Roadway\Grading_Proj\Y1SHEAR_DIAG_2H_GRD.dgn

GRAPHIC SCALE
100 50 0 100 200
PLANS

Prepared by
URS
URS Corporation - North Carolina
1600 Perimeter Park Drive
Morrisville, North Carolina 27560
TELEPHONE (919) 461-1100 FAX (919) 461-1415

PROJECT REFERENCE NO.	SHEET NO.
R-2719A	2-1
R/W SHEET NO.	2-1

ROADWAY DESIGN ENGINEER

NORTH CAROLINA PROFESSIONAL SEAL 025513 ENGINEER MICHAEL D. LINDGREN
3-11-09

-Y24- INTERCHANGE SHEAR POINT DIAGRAM

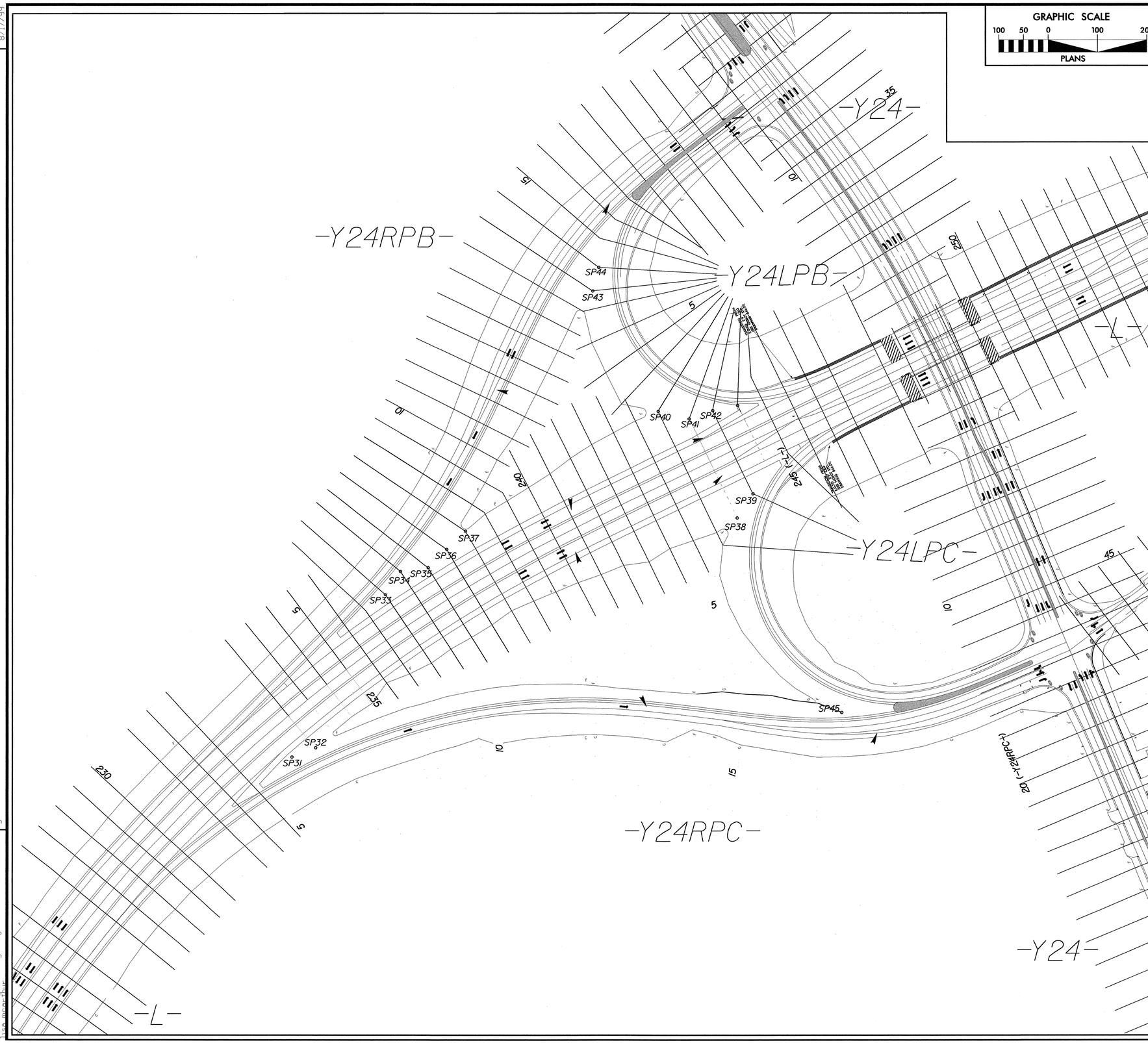

REVISIONS

8/17/99

2/23/2009
R:\Roadway\Grading_Proj\Y24SHEAR_DIAG_21_GRD.dgn
ss_mazzeffer

NOTE: SEE PLAN SHEET 23 FOR DESIGN

GRAPHIC SCALE
25 0 25 50
PLANS

Prepared by
URS
URS Corporation – North Carolina
1600 Perimeter Park Drive
Morrisville, North Carolina 27560
TELEPHONE (919) 461-1100 FAX (919) 461-1415

PROJECT REFERENCE NO.	SHEET NO.
R-2719A	2J
R/W SHEET NO.	2J

ROADWAY DESIGN ENGINEER
NORTH CAROLINA PROFESSIONAL SEAL 025513 ENGINEER MICHAEL D. LINDGREN
3-11-09

-Y10- /-Y1- INTERSECTION DETAIL

-Y10- BANKS SCHOOL RD. — US 70 (Y1)/BANKS SCHOOL ROAD (Y10) TRAFFIC DIAGRAM

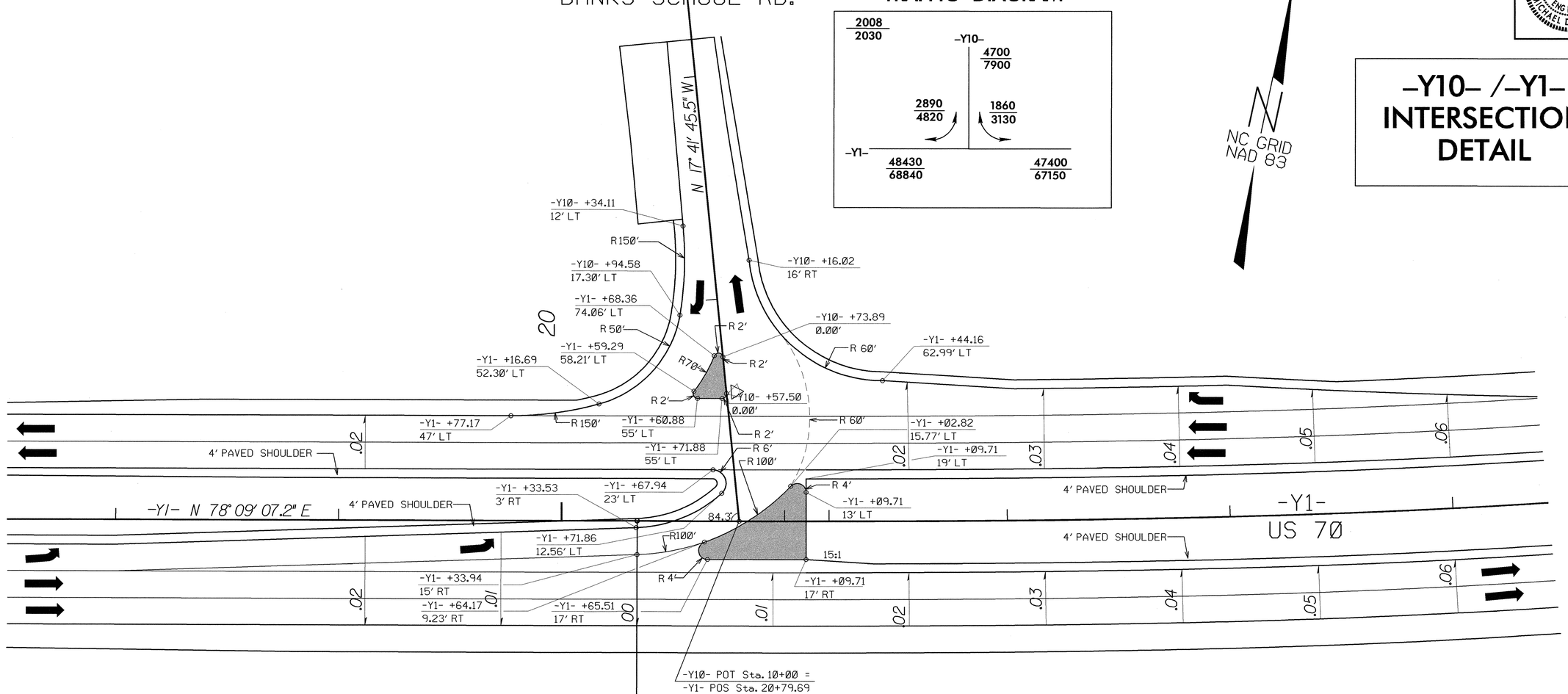

-Y1- CURVE DATA

Pls Sta 23+18.69
Θs = 4° 16' 10.9"
Ls = 427.00'
LT = 284.75'
ST = 142.41'

LEGEND

MONOLITHIC CONCRETE ISLAND (NCDOT STD. 852.01)

-Y1- TS Sta. 20+33.94

THIS SHEET PROVIDED FOR INFORMATION ONLY – FUTURE CONSTRUCTION

NOTE: SEE PLAN SHEET 28 FOR DESIGN

GRAPHIC SCALE
25 0 25 50
PLANS

Prepared by
URS
URS Corporation - North Carolina
1600 Perimeter Park Drive
Morrisville, North Carolina 27560
TELEPHONE (919) 461-1100 FAX (919) 461-1415

PROJECT REFERENCE NO.	SHEET NO.
R-2719A	2K
R/W SHEET NO.	2K

ROADWAY DESIGN ENGINEER

NORTH CAROLINA PROFESSIONAL SEAL 025513 ENGINEER MICHAEL D. LINDGREN
3-11-09

-Y1- /ELECTROLUX DRIVEWAY AND -Y1- /-Y15 INTERSECTION DETAILS

US 70 (Y1)/ELECTROLUX DRIVEWAY TRAFFIC DIAGRAM

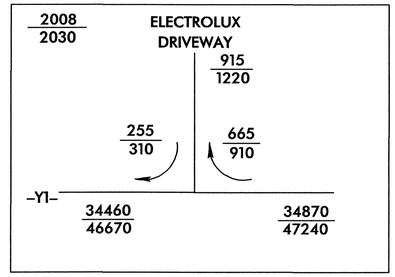

NC GRID NAD 83

LEGEND

MONOLITHIC CONCRETE ISLAND (NCDOT STD. 852.01)

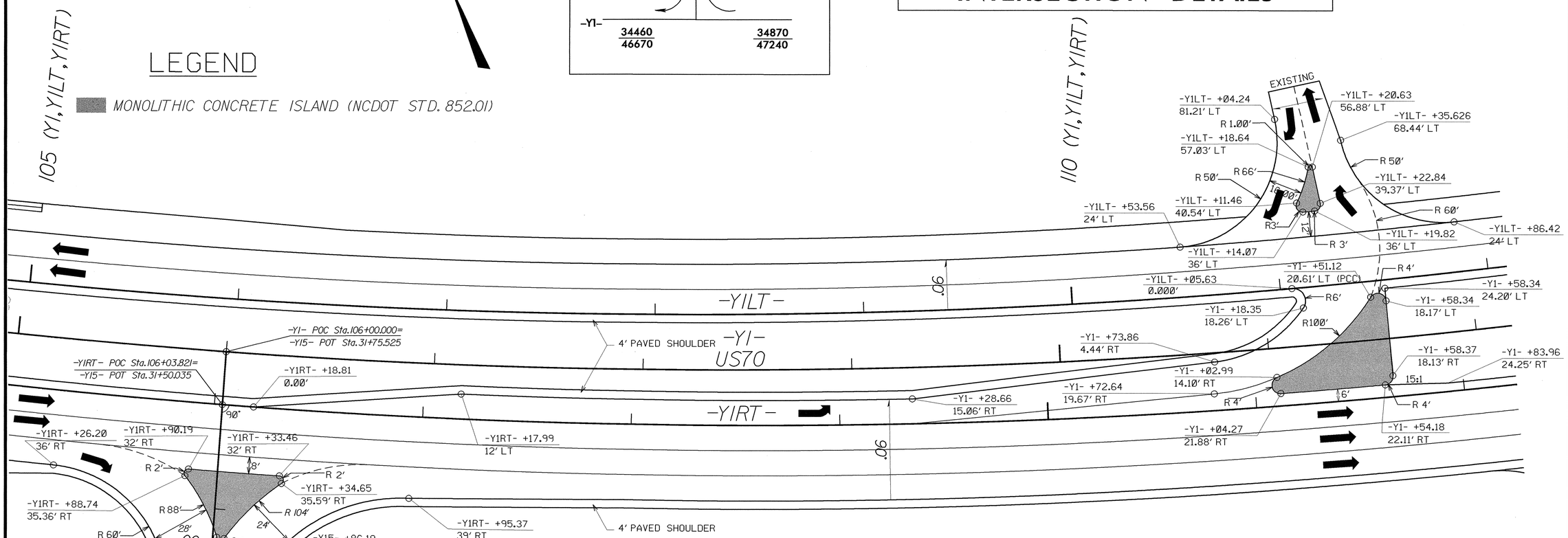

US 70 (Y1)/OLD US 70 (Y15) TRAFFIC DIAGRAM

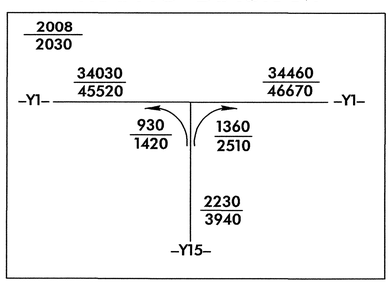

-Y1- CURVE DATA

PIs Sta 101+25.48
θs = 2° 20' 38.1"
Ls = 270.00'
LT = 180.02'
ST = 90.01'

PI Sta 109+51.23
Δ = 25° 08' 18.0" (LT)
D = 1° 44' 10.4"
L = 1,447.86'
T = 735.77'
R = 3,300.00'
e = 6%

-YILT- CURVE DATA

PIs Sta 101+09.40
θs = 2° 21' 37.3"
Ls = 270.00'
LT = 180.02'
ST = 90.01'

PI Sta 109+29.04
Δ = 25° 06' 19.5" (LT)
D = 1° 44' 54.3"
L = 1,435.89'
T = 729.66'
R = 3,277.00'
e = SEE -Y1-

-YIRT- CURVE DATA

PIs Sta 101+41.56
θs = 2° 19' 39.7"
Ls = 270.00'
LT = 180.02'
ST = 90.01'

PI Sta 109+73.44
Δ = 25° 10' 14.8" (LT)
D = 1° 43' 27.2"
L = 1,459.84'
T = 741.89'
R = 3,323.00'
e = SEE -Y1-

THIS SHEET PROVIDED FOR INFORMATION ONLY - FUTURE CONSTRUCTION

8/17/99

SHEET NOT TO SCALE

Prepared by
URS
URS Corporation – North Carolina
1600 Perimeter Park Drive
Morrisville, North Carolina 27560
TELEPHONE (919) 461-1100 FAX (919) 461-1415

PROJECT REFERENCE NO.	SHEET NO.
R-2719A	2-L
R/W SHEET NO. 2-L	
ROADWAY DESIGN ENGINEER	HYDRAULICS ENGINEER
NORTH CAROLINA PROFESSIONAL SEAL 025513 ENGINEER MICHAEL D. LINDGREN 3-11-09	NORTH CAROLINA PROFESSIONAL SEAL 021162 ENGINEER W. HERBERT TURNER, JR. 3-12-09

REVISIONS

DETAIL A
LATERAL 'V' DITCH
(Not to Scale)

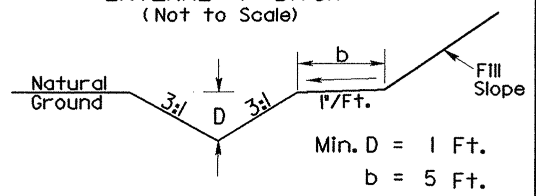

SHEET	ROADWAY	STATION – STATION	SIDE
4	-Y1LPC-	9+00 – 10+87	RT
4	-Y1LPC-	10+87 – 14+34	RT
4,5	-Y1-	71+00 – 74+00	RT
5	-Y1RPCA-	30+70 – 32+70	RT
6	-Y1RPCA-	2+00 – 4+00	LT
11	-L-	141+65 – 144+00	RT
12	-L-	154+10 – 155+77	RT
16	-L-	203+00 – 204+60	RT
18,19	-Y24RPB-	8+50 – 10+20	RT
19	-Y24RPB-	16+05 – 17+50	RT
19	-Y24LPC-	3+87 – 9+08	LT
25,26	-Y1-	46+50 – 48+90	LT
27	-Y1-	98+60 – 99+60	RT

DETAIL B
LATERAL BASE DITCH
(Not to Scale)

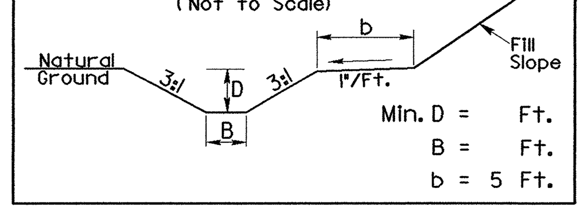

SHEET	ROADWAY	STATION – STATION	SIDE	BASE	MIN. D
4	-Y1-	59+20 – 60+10	RT	2'	1'
4	-Y1-	60+10 – 63+30	RT	5'	2.9'
4	-Y1RPB-	21+20 – 22+90	RT	2'	1'
4,26	-Y1-	48+00 – 60+10	RT	2'	1.6'
5	-Y1RPA-	9+50 – 15+80	LT	2'	1'
5,27	-Y1-	84+80 – 88+00	LT	2'	1'
7,8	-L-	87+80 – 99+00	LT	4'	1'
11	-L-	138+77 – 141+21	RT	4'	1'
12	-L-	153+46 – 155+50	LT	4'	1'
16,17	-L-	211+50 – 214+00	RT	2'	1'
17	-L-	218+00 – 222+50	RT	2'	1'
17	-L-	220+50 – 222+70	RT	4'	1'
18	-L-	233+50 – 235+50	LT	4'	2.5'
18	-L-	235+50 – 237+10	RT	2'	1'
18,19	-L-	237+10 – 241+50	RT	4'	2'
19	-L-	241+50 – 243+00	RT	2'	1.5'
19	-Y24LPB-	8+90 – 10+74	RT	2'	2'
19,20	-L-	251+15 – 253+50	RT	2'	1'
25	-Y1-	37+90 – 39+90	LT	5'	1.7'
25	-Y1-	39+90 – 46+50	LT	2'	1.6'

DETAIL C
SPECIAL CUT DITCH
(Not to Scale)

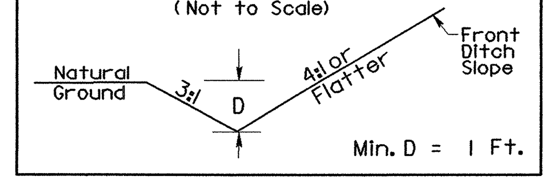

SHEET	ROADWAY	STATION – STATION	SIDE
9	-SVRD1-	13+00 – 14+00	LT
9	-SVRD1-	10+20 – 10+50	LT
9	-SVRD1-	10+20 – 10+50	RT
14,15	-SVRD4-	15+00 – 18+65	LT
14,15	-SVRD4-	15+00 – 19+35	RT
15	-SVRD3-	36+50 – 37+00	RT
15	-SVRD3-	44+50 – 45+18	LT
15	-SVRD3-	45+00 – 45+66	RT
15	-L-	190+00 – 199+50	RT
15	-L-	190+00 – 199+50	LT
15	-SVRD4-	11+50 – 13+50	LT
16	-Y5-	13+50 – 15+00	LT
17,18	-L-	222+70 – 228+00	RT
18	-Y24RPC-	0+90 – 10+00	RT
18	-Y24RPC-	10+00 – 13+75	RT
19	-Y24RPC-	18+50 – 21+00	RT
19	-Y24-	22+50 – 25+35	RT

SHEET	ROADWAY	STATION – STATION	SIDE	
19	-SVRD2-	13+00 – 14+00	LT	
19	-Y24RPB-	17+50 – 18+50	LT	
21	-Y6-	33+93 – 34+00	RT	
21	-Y6-	33+85 – 34+00	LT	
21	-D1-	10+00 – 11+00	LT	
21,22	-D1-	10+00 – 12+00	RT	
23	-Y10-	11+00 – 12+17	RT	FUTURE CONSTRUCTION
23	-Y1-	21+20 – 24+50	LT	FUTURE CONSTRUCTION
24	-Y1-	31+00 – 31+80	LT	
27	-Y9-	11+50 – 14+90	LT	FUTURE CONSTRUCTION
28	-Y1-	105+00 – 110+50	LT	FUTURE CONSTRUCTION
33	-Y9-	11+50 – 13+00	RT	FUTURE CONSTRUCTION
33	-Y9-	11+50 – 14+90	LT	FUTURE CONSTRUCTION
34	-Y8-	14+85 – 15+30	RT	FUTURE CONSTRUCTION
34	-Y8-	15+50 – 24+47	LT	FUTURE CONSTRUCTION
34	-Y8-	17+50 – 24+47	RT	FUTURE CONSTRUCTION
34	-Y9-	26+50 – 30+65	LT	FUTURE CONSTRUCTION
34	-Y9-	25+50 – 31+90	RT	FUTURE CONSTRUCTION

DETAIL Q
TOE PROTECTION W/PRSM
(Not to Scale)

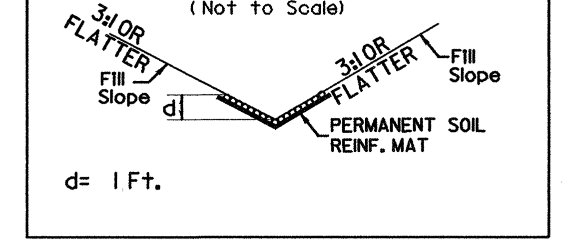

SHEET	RDWY	STATION – STATION	SIDE
6	-L-	73+90 – 78+00	MED
19	-L-	242+72 – 244+66	LT
19	-L-	243+15 – 244+75	RT

DETAIL M
PREFORMED SCOUR HOLE

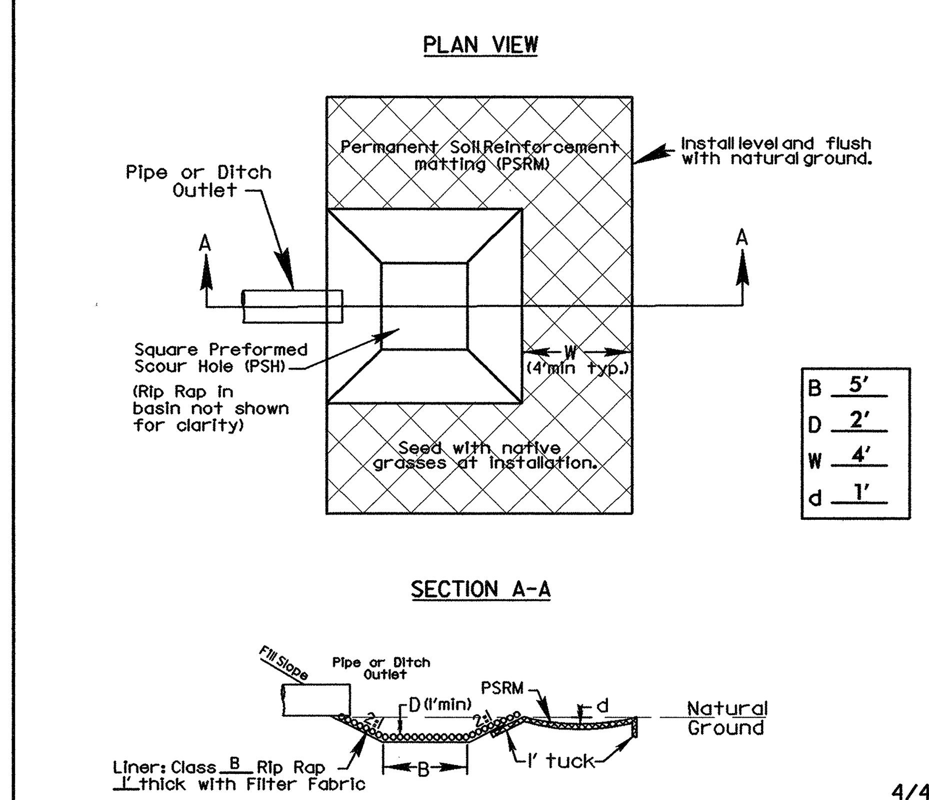

SHEET	ROADWAY	STATION	SIDE	SHEET	ROADWAY	STATION	SIDE
4	-Y1LPC-	5+00	RT	10	-L-	119+00	RT
4	-Y1LPC-	8+00	RT	11	-L-	143+00	LT
4	-Y1RPCA-	35+00	RT	19	-L-	246+00	LT
5	-Y1RPCA-	11+50	RT	19	-L-	246+00	RT
5	-Y1RPCA-	22+65	RT	19	-Y24LPB-	6+00	RT
8	-L-	107+00	RT	20	-Y1-	17+10	RT
				20	-L-	255+00	LT
				23	-L-	258+50	LT

DETAIL D
STANDARD 'V' DITCH
(Not to Scale)

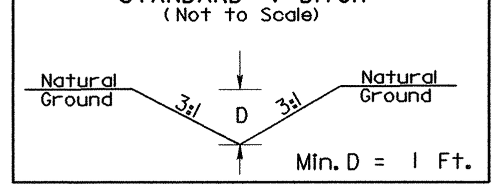

SHEET	ROADWAY	STATION	SIDE
5	-Y1-	85+00	LT
7	-SVRD5-	26+50	RT
9	-Y3-	20+50	LT
13	-SVRD3-	21+60	LT
14	-SVRD4-	18+50	LT
15	-SVRD4-	15+80	LT
16	-Y5-	13+00	RT
24	-Y1-	24+70	RT

FUTURE CONSTRUCTION

DETAIL E
SPECIAL CUT BASE DITCH
(Not to Scale)

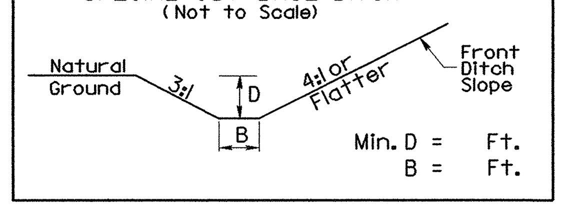

SHEET	ROADWAY	STATION TO STATION	SIDE	BASE	MIN. D
14	-SVRD4-	18+65 – 19+38	RT	2'	1'
25, 26	-Y1RPCA-	55+75 – 67+25	LT	4'	1.4'
28	-Y1-	110+50 – 112+40	LT	2'	1'
28,29	-Y1-	112+40 – 118+00	LT	2'	1.8'

FUTURE CONSTRUCTION

DETAIL F
STANDARD BASE DITCH
(Not to Scale)

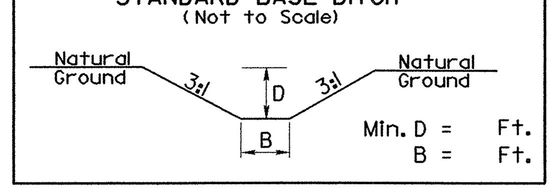

	SHEET	ROADWAY	STATION	SIDE	BASE	MIN. D
	5	-Y1RPCA-	20+70	RT	2'	1'
	14	-SVRD3-	32+45	RT	2'	1'
	17	-L-	222+70	RT	2'	1'
	18	-L-	232+12	LT	4'	2'
	18	-L-	233+50	LT	6'	2.5'
	18	-Y24RPB-	8+00	LT	2'	2'
	18	-Y24RPC-	9+60	LT	2'	2'
	18	-Y24RPC-	5+12	RT	5'	1'
	18	-Y24RPC-	10+00	RT	7'	1'
	19	-Y24-	21+80	LT	2'	2'
	19	-Y24-	36+75	RT	2'	1'
	19	-Y24RPB-	15+85	LT	4'	1'
FUTURE CONSTRUCTION	28	-Y1-	106+30 – 109+60	RT	2'	1'
FUTURE CONSTRUCTION	33	-Y9-	11+50	RT	2'	1'
	4, 26	-Y1-	59+00	RT	3'	1'

DETAIL G
SPECIAL LATERAL 'V' DITCH
(Not to Scale)

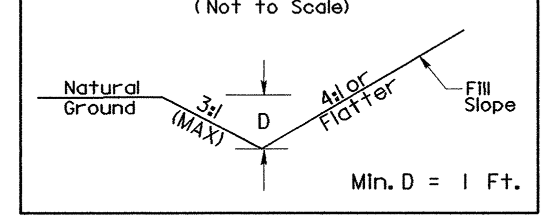

SHEET	ROADWAY	STATION – STATION	SIDE	
18	-L-	234+50 – 235+50	RT	
18	-Y24RPC-	2+80 – 8+00	RT	
19	-Y24RPC-	14+20 – 16+50	LT	
19	-Y24RPC-	16+00 – 18+50	RT	MIN. D = 1.5'
23	-Y1-	20+30 – 22+00	RT	FUTURE CONSTRUCTION

DETAIL H
SPECIAL LATERAL BASE DITCH
(Not to Scale)

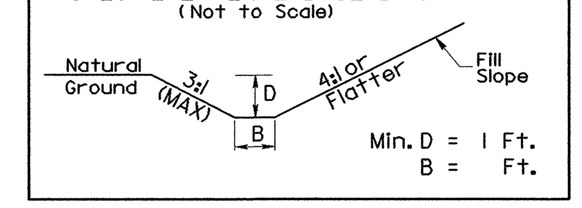

SHEET	ROADWAY	STATION – STATION	SIDE	BASE	MIN. D
19	-Y24RPC-	14+85 – 16+00	RT	2'	1'
19	-Y24-	20+40 – 24+00	LT	2'	2'
21	-Y6-	32+50 – 33+80	RT	4'	1.5'
34	-Y9-	30+65 – 32+50	LT	2'	1'

FUTURE CONSTRUCTION

DETAIL I
SPECIAL LATERAL 'V' DITCH
(Not to Scale)

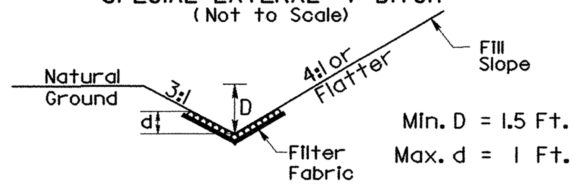

Type of Liner = CLASS 'B' RIPRAP

SHEET	ROADWAY	STATION – STATION	SIDE
21	-Y6-	33+14 – 33+75	LT

DETAIL J
PROPOSED OUTLET CHANNEL
(Not to Scale)

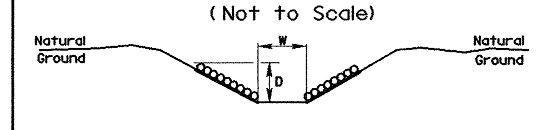

Type of Liner = CL. I RIPRAP

SHEET	ROADWAY	STATION	SIDE	W	D
4	-L-	69+50	RT	5'	4'
5	-Y1RPCA-	9+40	LT	5'	4'
7	-SVRD5-	21+90	LT	10'	4'
8	-L-	101+80	LT	8'	5'
24	-Y1-	31+50	RT	5'	5.5'

DETAIL K
RIPRAP AT EMBANKMENT
(Not to Scale)

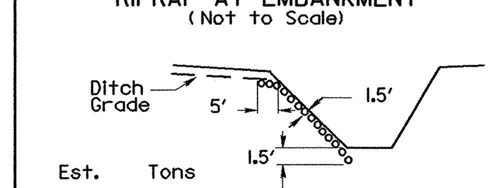

Type of Liner = CLASS I RIPRAP

SHEET	ROADWAY	STATION	SIDE
18	-Y24RPB-	4+50	LT
19	-L-	241+50	RT
21	-Y6-	33+85	LT
21	-Y6-	33+93	RT

DETAIL L
TOE PROTECTION
(Not to Scale)

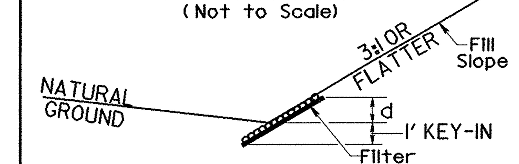

Type of Liner = CLASS B RIPRAP

SHEET	ROADWAY	STATION – STATION	SIDE
4,26	-Y1RPCA-	43+00 – 55+50	LT
8	-L-	101+94 – 109+00	LT
10	-L-	119+80 – 125+00	LT
10	-L-	130+00 – 131+00	LT
11	-L-	131+00 – 133+25	LT
11	-L-	137+75 – 140+20	LT
12	-L-	151+00 – 153+65	RT
17	-L-	216+50 – 218+00	RT

DETAIL N
LATERAL 'V' DITCH
(Not to Scale)

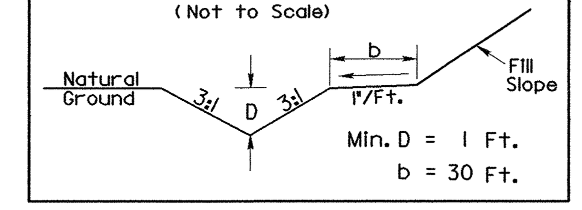

SHEET	ROADWAY	STATION – STATION	SIDE
19	-Y24LPC-	9+08 – 11+75	LT

DETAIL I
FALSE SUMP
(Not to Scale)

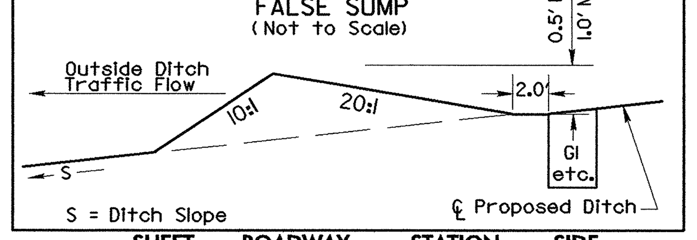

SHEET	ROADWAY	STATION	SIDE
11	-L-	144+00	LT
13	-L-	158+80	LT
13	-L-	161+80	LT
13	-L-	164+80	LT
13	-L-	168+30	LT
14	-L-	172+00	LT
17	-L-	222+90	RT

DETAIL R
STANDARD BASE DITCH
(Not to Scale)

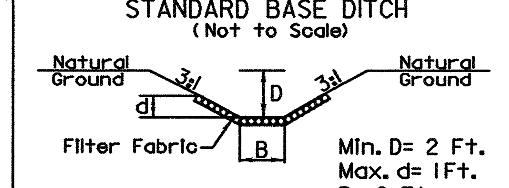

Type of Liner= CL B Rip-Rap

SHEET	ROADWAY	STATION	SIDE
18	-L-	226+75	RT

DETAIL II
FALSE SUMP
(Not to Scale)

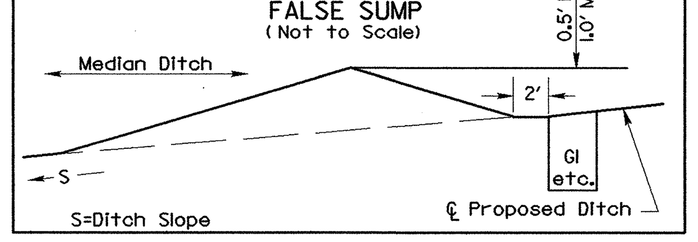

SHEET	ROADWAY	STATION	SIDE	
7	-L-	94+00	MED	
8	-L-	101+50	MED	
8	-L-	107+00	MED	
10	-L-	119+00	MED	
10	-L-	123+00	MED	
11	-L-	144+00	MED	
13	-L-	158+80	MED	
13	-L-	161+80	MED	
13	-L-	164+80	MED	
13	-L-	168+30	MED	
14	-L-	172+00	MED	
14	-L-	175+00	MED	
16	-L-	202+80	MED	
17	-L-	220+50	MED	
18	-L-	227+03	MED	
18	-L-	238+00	MED	
20	-L-	258+50	MED	
23	-Y1-	15+60	MED	FUTURE CONSTRUCTION
27	-Y1-	90+80	MED	
28	-Y1-	105+00	MED	

DETAIL III
FALSE SUMP
(Not to Scale)

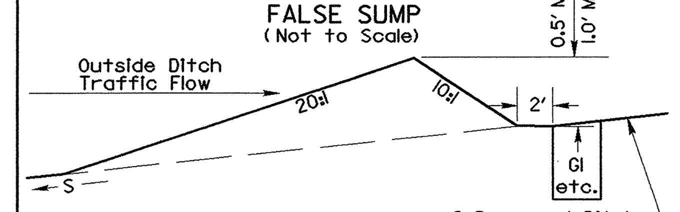

SHEET	ROADWAY	STATION	SIDE
13	-L-	164+80	RT
14	-L-	172+00	RT
18	-Y24RPC-	9+60	RT

DETAIL P
DITCH CLEANOUT
(Not to Scale)

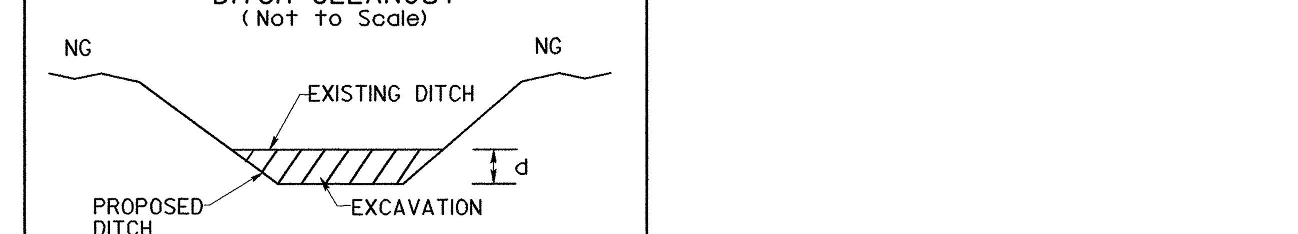

DDE = ____ MAX. d = ____

SHEET	ROADWAY	STATION – STATION	SIDE	MAX. d	DDE (CY)	
29	-Y1-	118+00 – 120+70	LT	1'	50	FUTURE CONSTRUCTION
4	-Y1-	63+30 – 63+80	RT	2.7'	36	
4	-Y1-	64+60 – 67+40	RT	2.7'	160	
4, 5	-Y1-	70+60 – 73+40	RT	2.4'	140	
15	-L-	194+40 – 196+10	RT	2'	100	
18	-L-	227+30 – 227+90	LT	3'	120	
18	-L-	227+90 – 231+10	LT	2.1'	90	

2/20/2009
r:\roadway\grading_proj\R2719A_HYD_2L_GRD.dgr
lisa mcarthur

SHEET
NOT TO SCALE

Prepared by
URS
URS Corporation – North Carolina
1600 Perimeter Park Drive
Morrisville, North Carolina 27560
TELEPHONE (919) 461-1100 FAX (919) 461-1415

PROJECT REFERENCE NO.	SHEET NO.
R-2719A	2M
R/W SHEET NO.	

ROADWAY DESIGN ENGINEER
NORTH CAROLINA PROFESSIONAL SEAL 025513 ENGINEER MICHAEL D. LINDGREN
3-11-09

HYDRAULICS ENGINEER
NORTH CAROLINA PROFESSIONAL SEAL 021162 ENGINEER W. HERBERT TURNER, JR.
3-12-09

CULVERT CHANNEL DETAILS

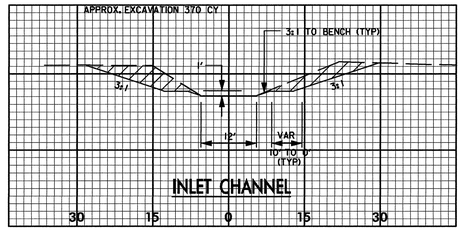

SHEET	ROADWAY	STATION	SIDE
5	-Y1RPCA-	14+00	LT

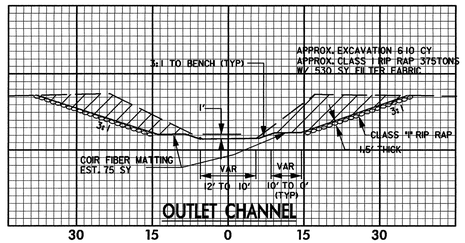

SHEET	ROADWAY	STATION	SIDE
5	-Y1RPCA-	19+00	RT

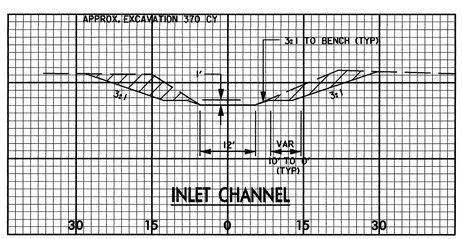

SHEET	ROADWAY	STATION	SIDE
5	-Y1—	74+50	LT

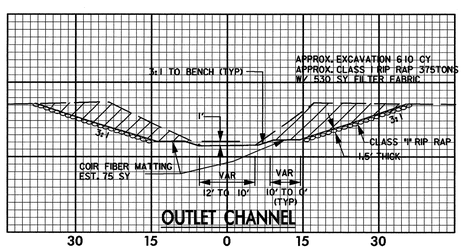

SHEET	ROADWAY	STATION	SIDE
5	-Y1RPCA-	32+50	LT

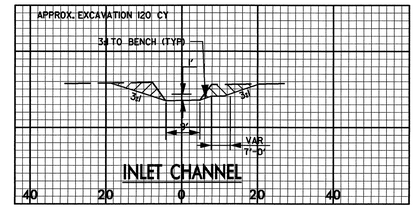

SHEET	ROADWAY	STATION	SIDE
11	-L-	140+26.5	LT

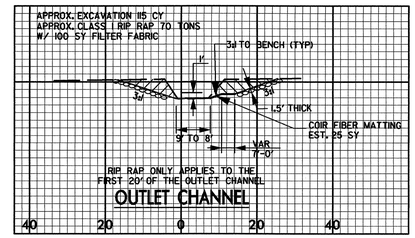

SHEET	ROADWAY	STATION	SIDE
11	-L-	138+91.5	RT

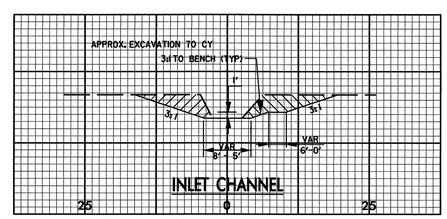

SHEET	ROADWAY	STATION	SIDE
12	-L-	153+91.47	RT

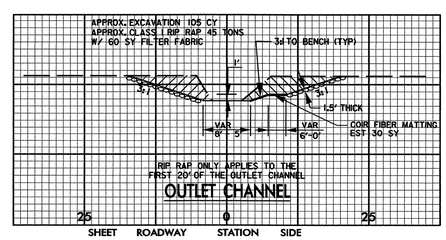

SHEET	ROADWAY	STATION	SIDE
12	-L-	153+36.52	LT

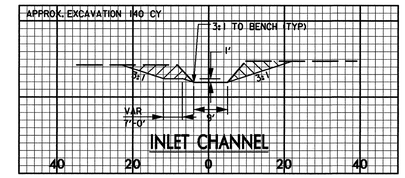

SHEET	ROADWAY	STATION	SIDE
25	-Y1-	38+00	LT

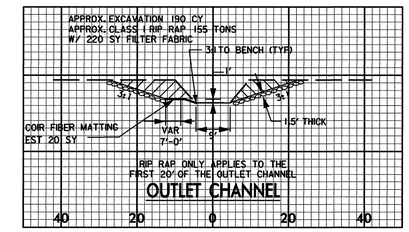

SHEET	ROADWAY	STATION	SIDE
25	-Y1-	38+40	RT

REVISIONS

8/17/99

3/11/2009
P:\Projects\R2719A_HYD_2M.dgn
michael.lindgren

PROJECT REFERENCE NO.	SHEET NO.
R-2719A	2N
R/W SHEET NO.	2N

GRAPHIC SCALE
50 0 50 100
PLANS

Prepared by
URS
URS Corporation – North Carolina
1600 Perimeter Park Drive
Morrisville, North Carolina 27560
TELEPHONE (919) 461-1100 FAX (919) 461-1415

ROADWAY DESIGN ENGINEER
NORTH CAROLINA PROFESSIONAL SEAL 025513 ENGINEER MICHAEL D. LINDGREN
3-11-09

US 70 TEMPORARY PAVEMENT WIDENING DETAILS

NOTE: WIDEN TO EDGE AND ELEVATION AT EXISTING CROSS-SLOPE

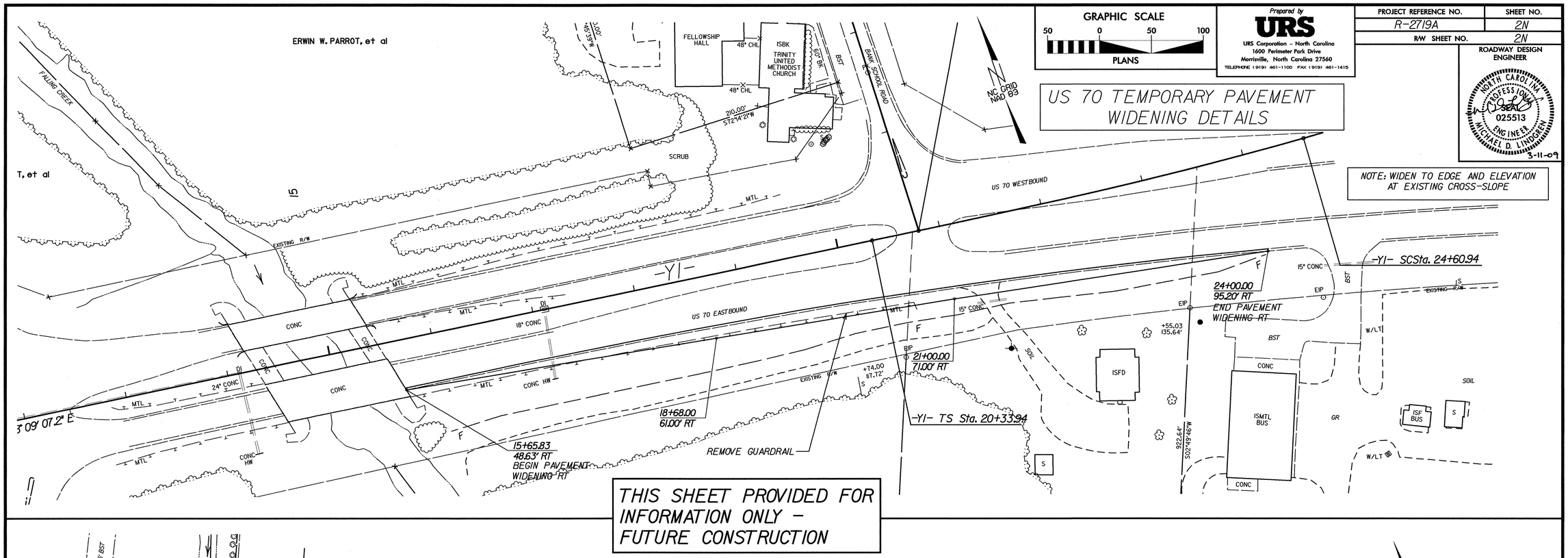

THIS SHEET PROVIDED FOR INFORMATION ONLY – FUTURE CONSTRUCTION

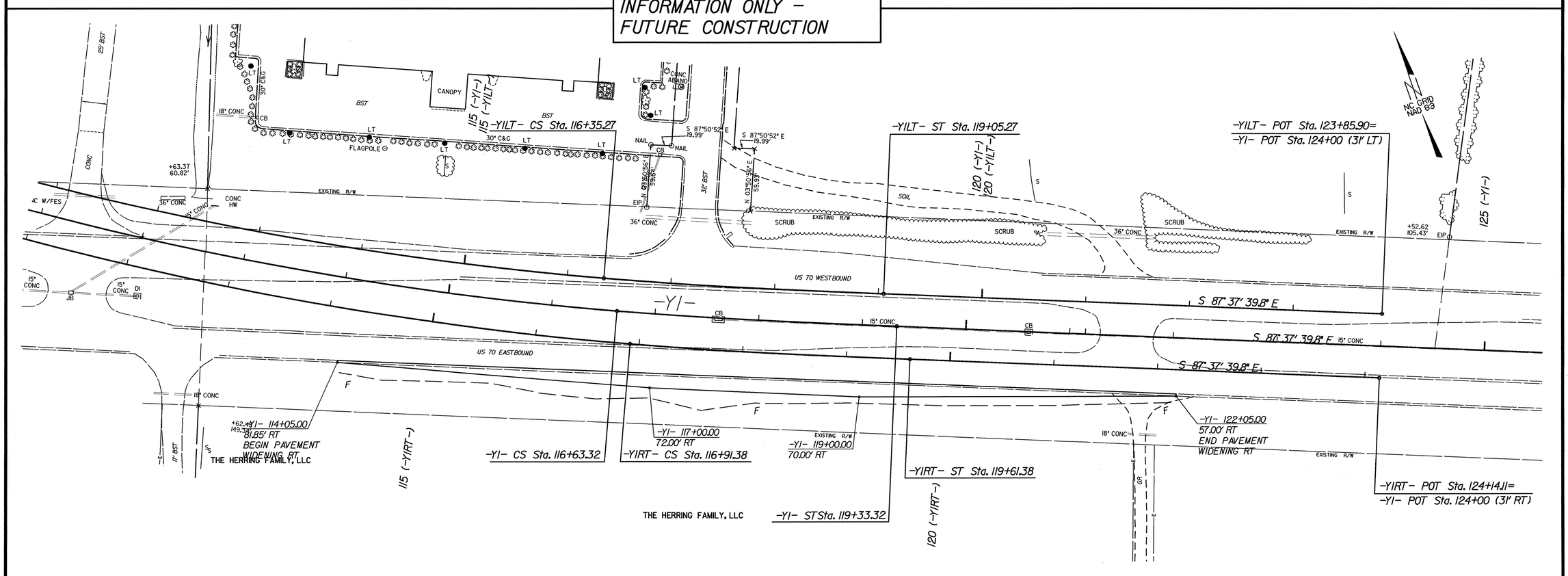

8/17/99

NOISE WALL DETAIL SHEET

NOTE: SEE SHEET 2-A FOR NOISE WALL CROSS SECTION DETAILS

Prepared by
URS
URS Corporation – North Carolina
1600 Perimeter Park Drive
Morrisville, North Carolina 27560
TELEPHONE (919) 461-1100 FAX (919) 461-1415

PROJECT REFERENCE NO.	SHEET NO.
R-2719A	2-0
R/W SHEET NO.	

ROADWAY DESIGN ENGINEER

NORTH CAROLINA PROFESSIONAL SEAL 025513 ENGINEER MICHAEL D. LINDGREN
5-11-09

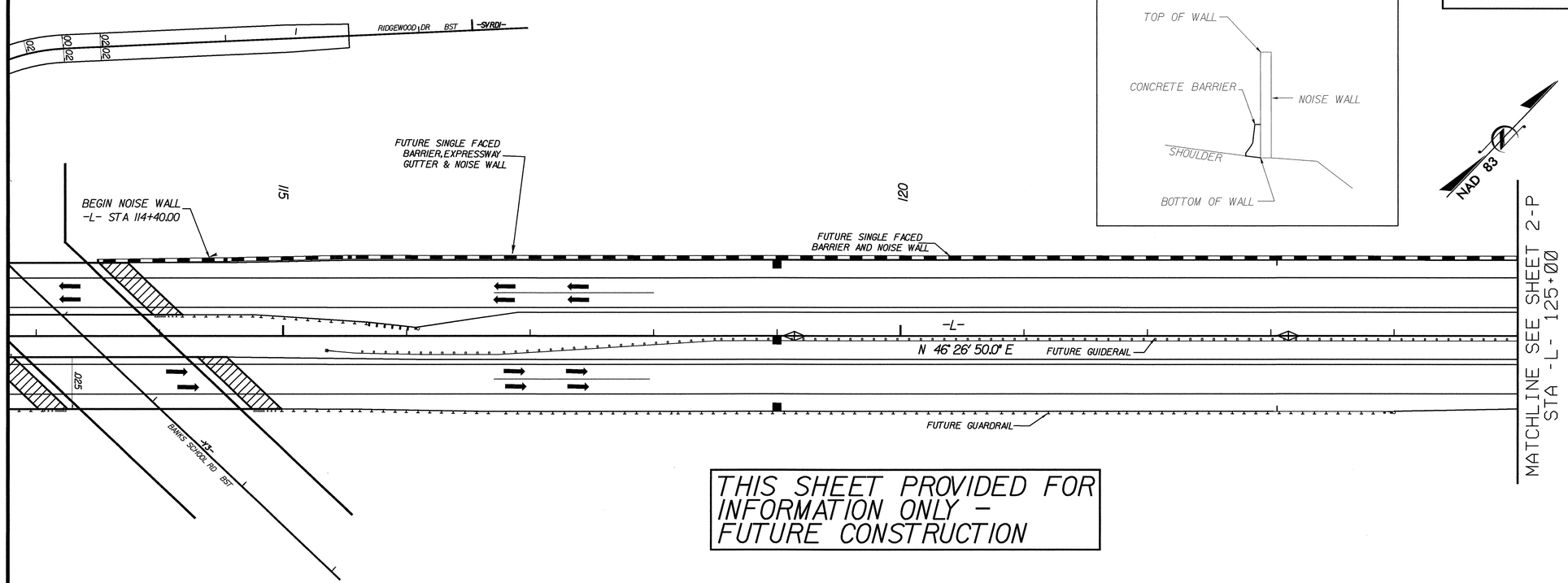

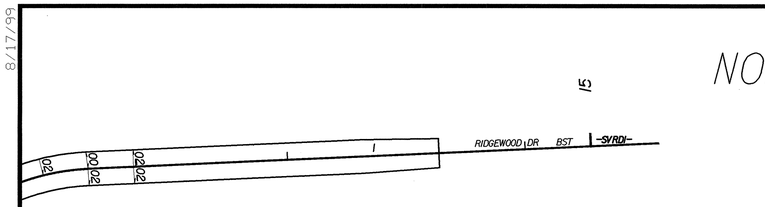

THIS SHEET PROVIDED FOR INFORMATION ONLY – FUTURE CONSTRUCTION

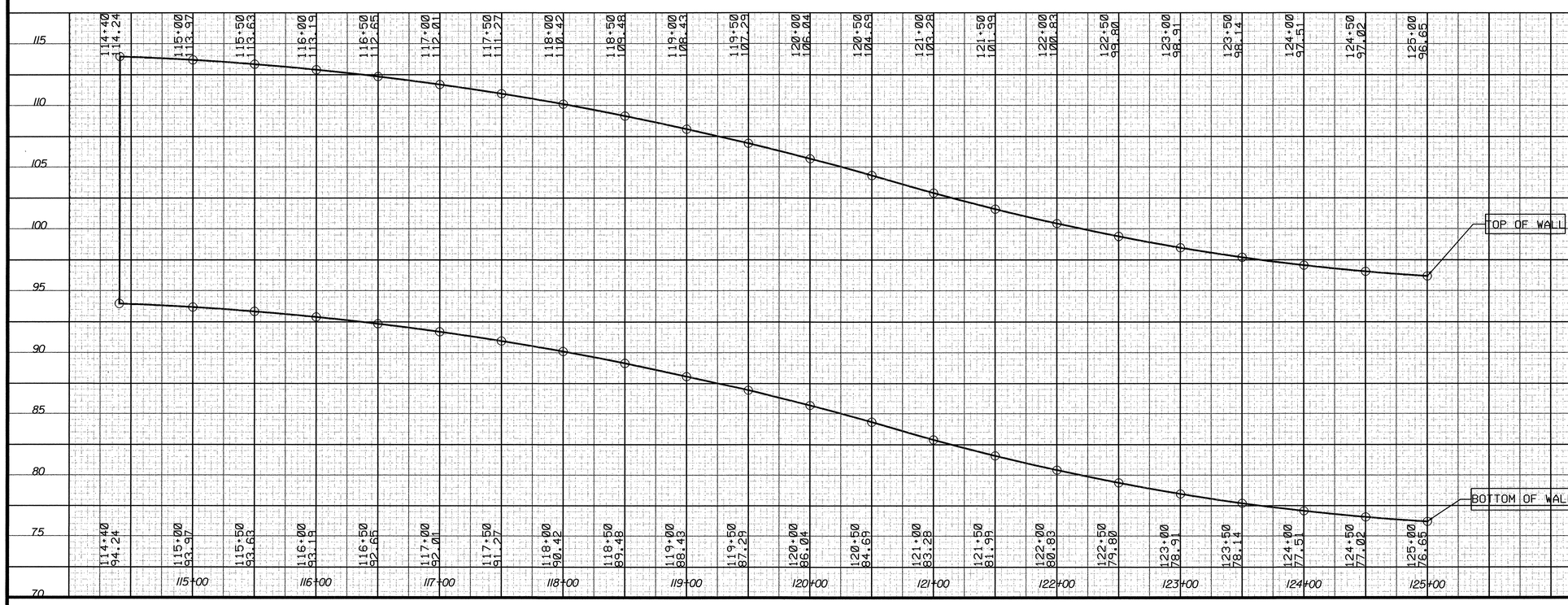

8/17/99

NOTE: SEE SHEET 2-A FOR NOISE WALL CROSS SECTION DETAILS

NOISE WALL DETAIL SHEET

Prepared by
URS
URS Corporation – North Carolina
1600 Perimeter Park Drive
Morrisville, North Carolina 27560
TELEPHONE (919) 461-1100 FAX (919) 461-1415

PROJECT REFERENCE NO.	SHEET NO.
R-2719A	2-P
R/W SHEET NO.	

ROADWAY DESIGN ENGINEER

NORTH CAROLINA PROFESSIONAL SEAL 025513 ENGINEER MICHAEL D. LINDGREN
3-11-09

-L- CURVE DATA

PIs Sta 129+40.45	PI Sta 151+30.46
Θs = 1° 30' 28.0"	Δ = 47° 50' 08.7" (LT)
Ls = 250.00'	D = 1° 12' 22.4"
LT = 166.67'	L = 3,965.73'
ST = 83.34'	T = 2106.68'
	R = 4,750.00'
	e = 5%

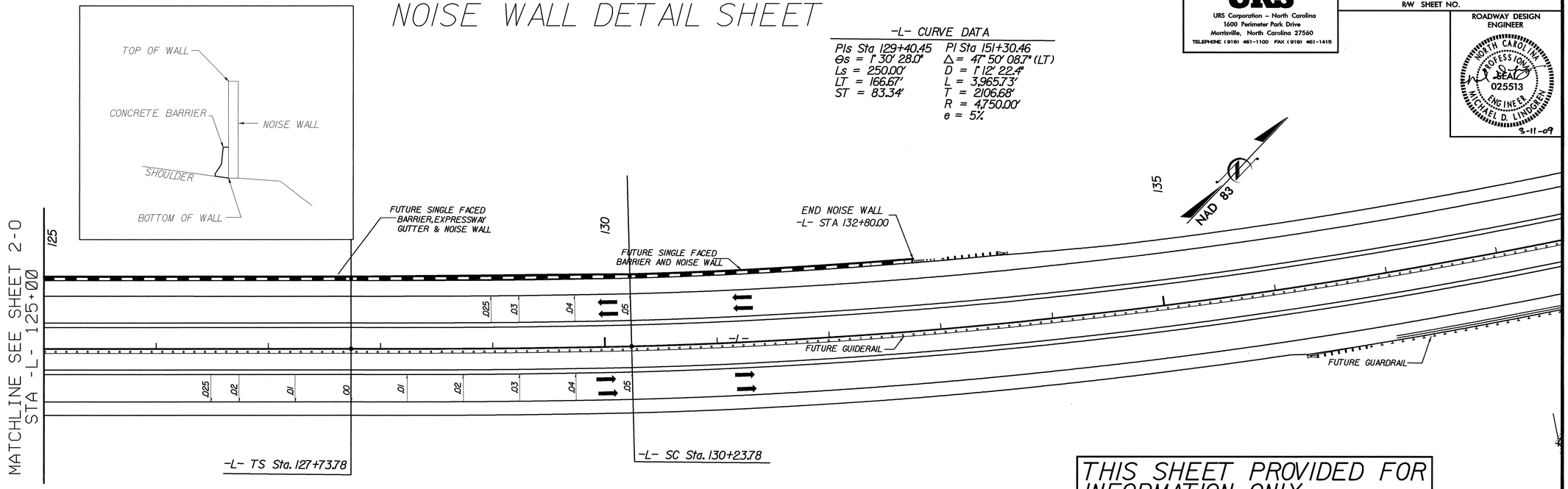

THIS SHEET PROVIDED FOR INFORMATION ONLY – FUTURE CONSTRUCTION

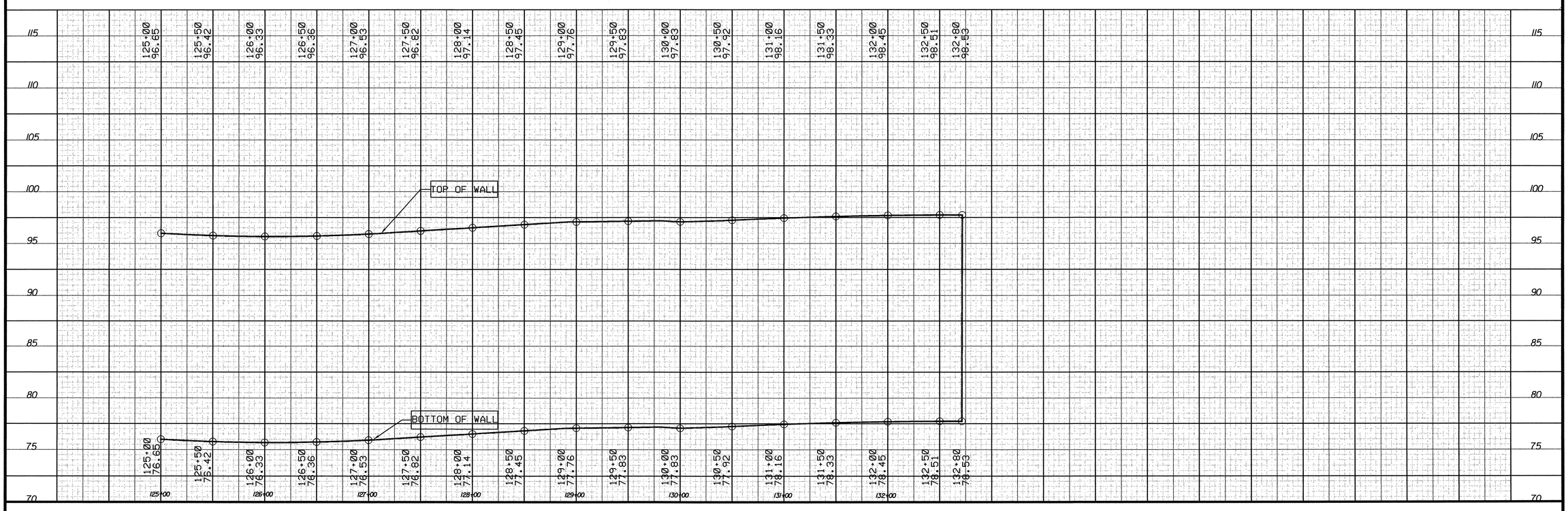

8/17/99

NOISE WALL DETAIL SHEET

Prepared by
URS
URS Corporation – North Carolina
1600 Perimeter Park Drive
Morrisville, North Carolina 27560
TELEPHONE (919) 461-1100 FAX (919) 461-1415

PROJECT REFERENCE NO.	SHEET NO.
R-2719A	2-Q
R/W SHEET NO.	

ROADWAY DESIGN ENGINEER

NORTH CAROLINA PROFESSIONAL SEAL 025513 ENGINEER MICHAEL D. LINDGREN
3-11-09

-L- CURVE DATA
PI Sta 151+30.46
Δ = 47° 50' 08.7" (LT)
D = 1° 12' 22.4"
L = 3,965.73'
T = 2106.68'
R = 4,750.00'
e = 5%

THIS SHEET PROVIDED FOR INFORMATION ONLY – FUTURE CONSTRUCTION

NOTE: SEE SHEET 2-A FOR NOISE WALL CROSS SECTION DETAILS

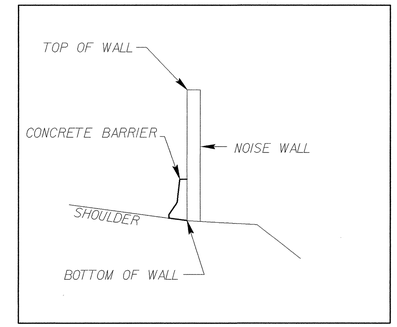

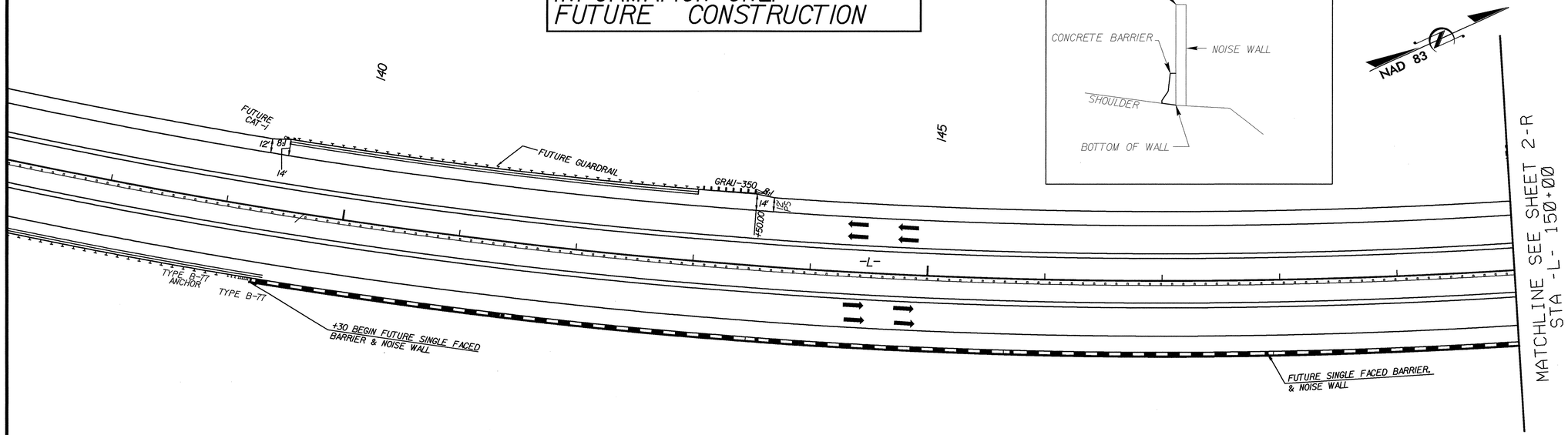

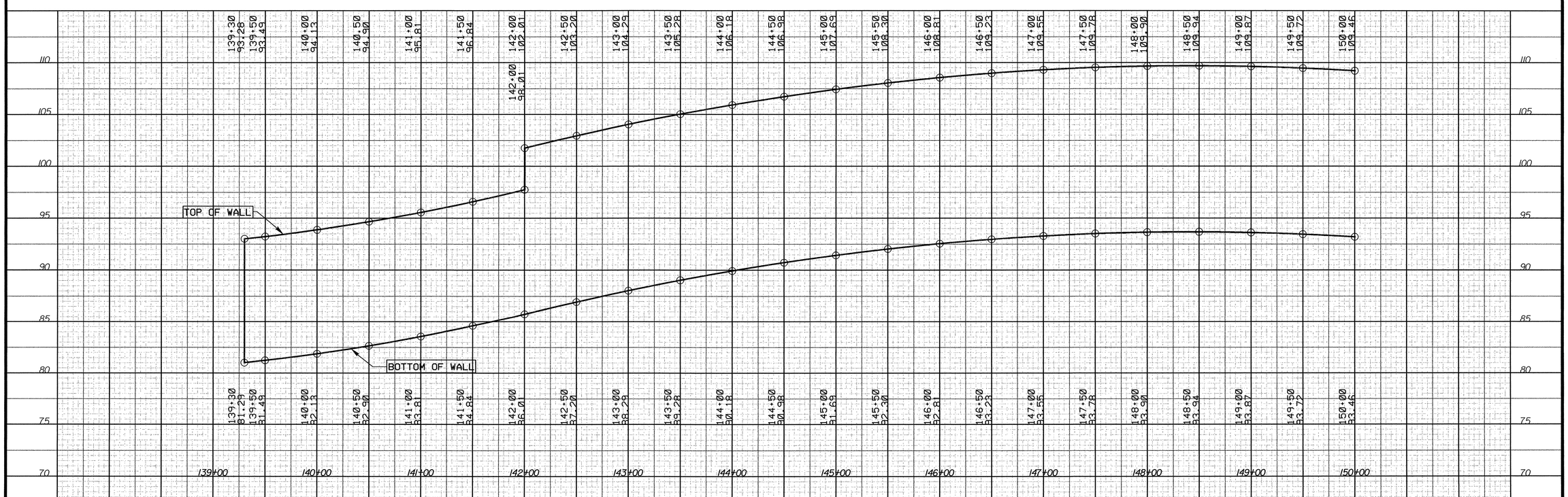

8/17/99

NOTE: SEE SHEET 2-A FOR NOISE WALL CROSS SECTION DETAILS

NOISE WALL DETAIL SHEET

Prepared by
URS
URS Corporation – North Carolina
1600 Perimeter Park Drive
Morrisville, North Carolina 27560
TELEPHONE (919) 461-1100 FAX (919) 461-1415

PROJECT REFERENCE NO.	SHEET NO.
R-2719A	2-R
R/W SHEET NO.	

ROADWAY DESIGN ENGINEER

NORTH CAROLINA PROFESSIONAL SEAL 025513 ENGINEER MICHAEL D. LINDBERG
3-11-09

PI Sta 151+30.46
Δ = 47° 50' 08.7" (LT)
D = 1° 12' 22.4"
L = 3,965.73'
T = 2106.68'
R = 4,750.00'
e = 5%

THIS SHEET PROVIDED FOR INFORMATION ONLY – FUTURE CONSTRUCTION

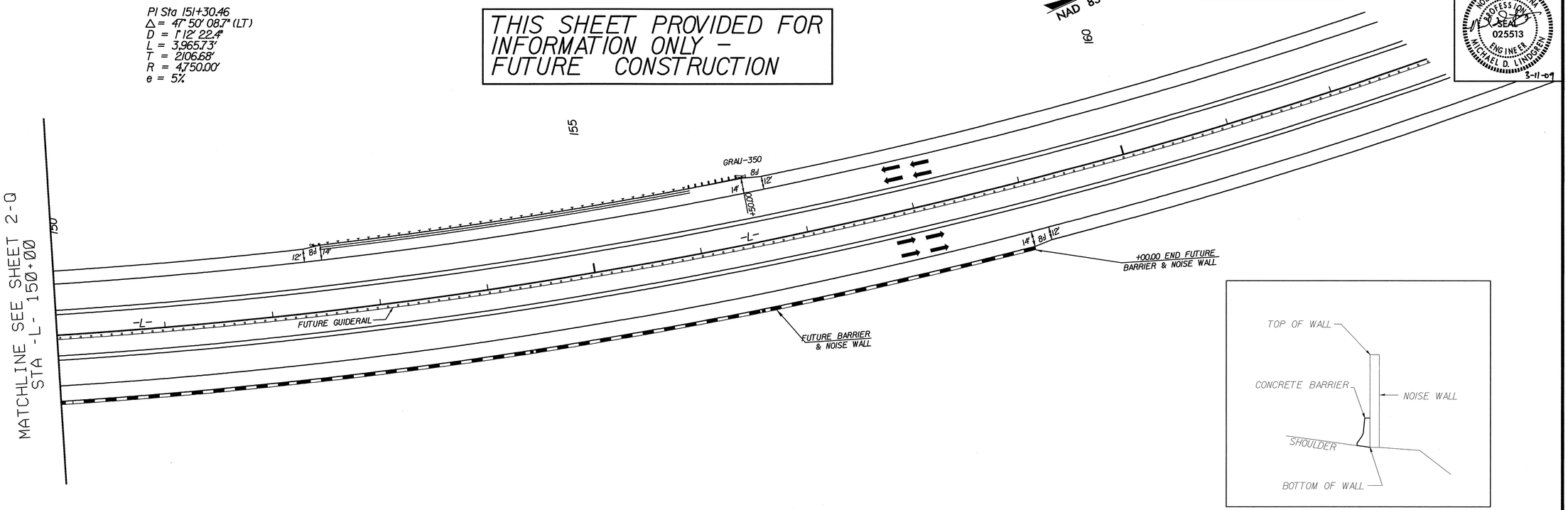

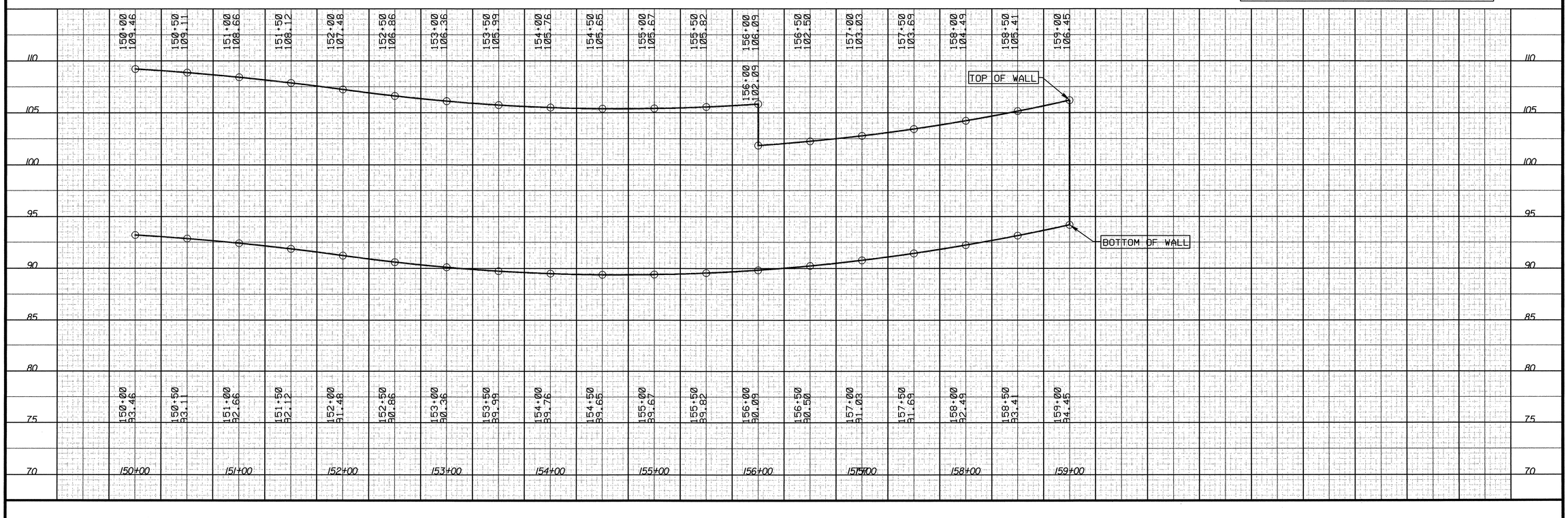

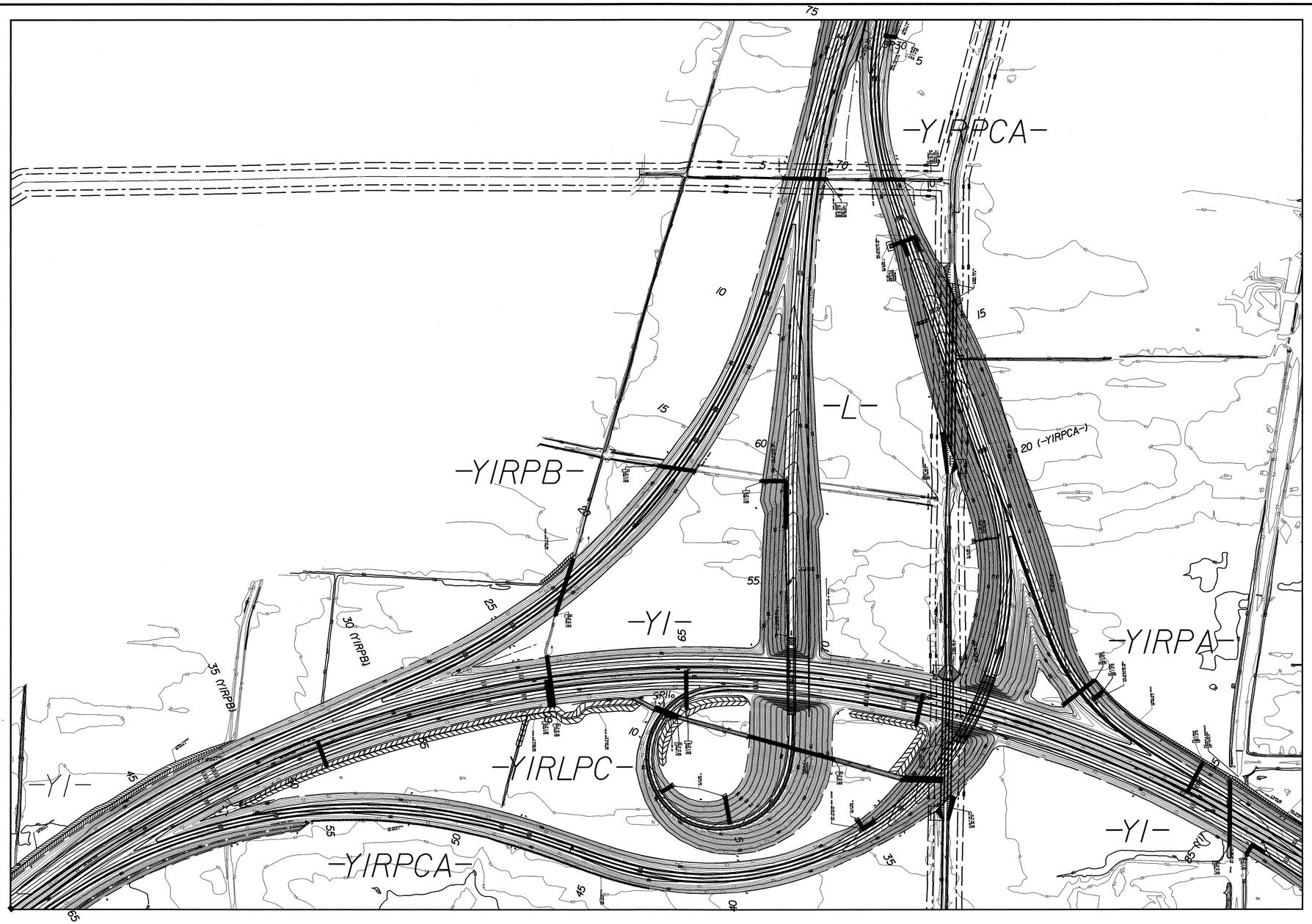

PROJECT REFERENCE NO.	SHEET NO.
R-2719A	2-S
R/W SHEET NO.	

ROADWAY DESIGN ENGINEER

NORTH CAROLINA PROFESSIONAL SEAL 025513 ENGINEER RICHARD D. TINGEN

5-11-99

GRAPHIC SCALE

100 50 0 100 200

PLANS

Prepared by

URS

URS Corporation - North Carolina
1600 Perimeter Park Drive
Morrisville, North Carolina 27560
TELEPHONE (919) 461-1100 FAX (919) 461-1415

-YI-
INTERCHANGE GRADING DETAIL

REVISIONS

r:\roadway\r2719a\rd\yi_int_grading_25_pl50.dgn
5/13/2025
10:22:46 AM

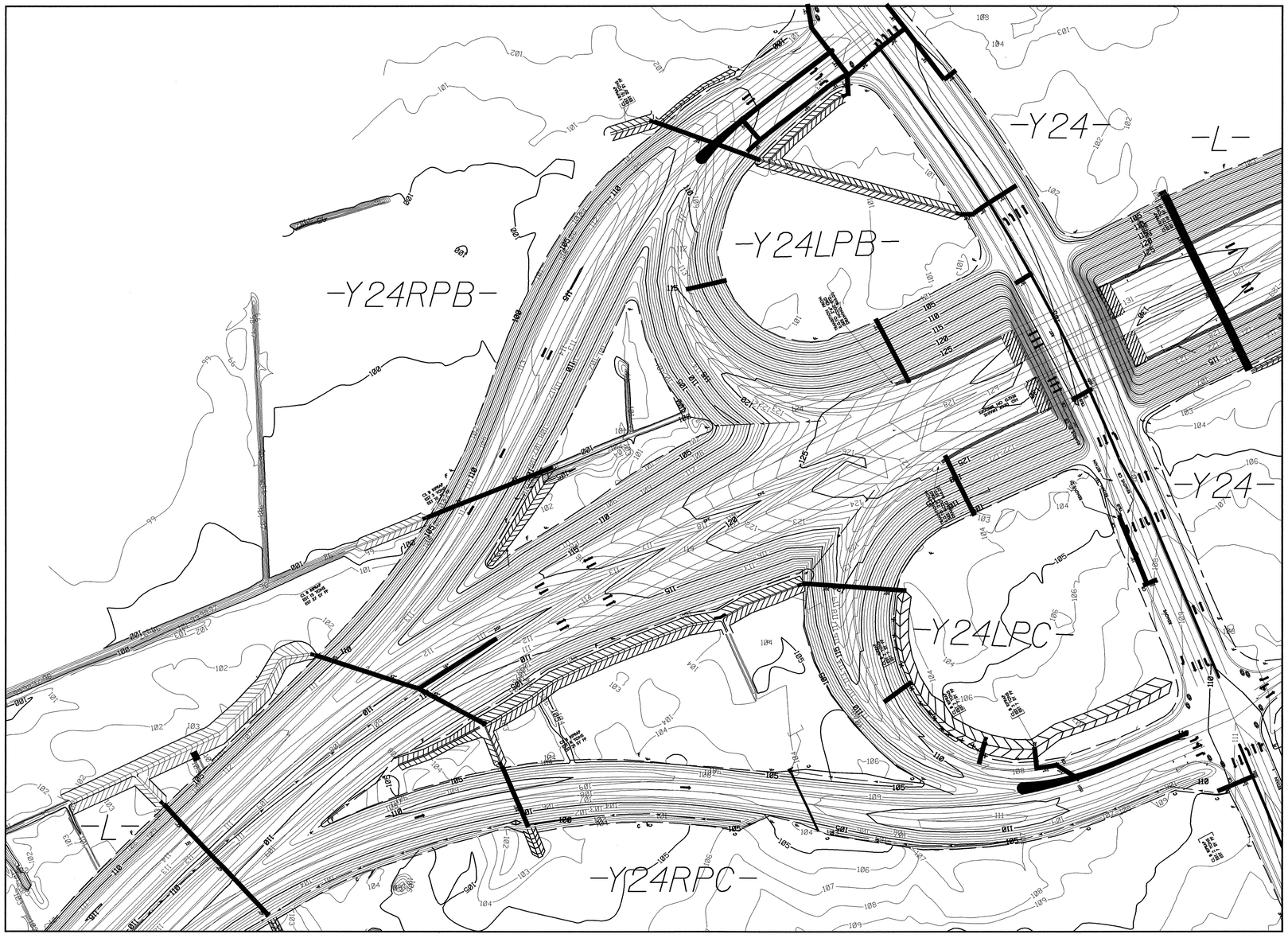

PROJECT REFERENCE NO.	SHEET NO.
R-2719A	2-T
R/W SHEET NO.	
ROADWAY DESIGN ENGINEER	

NORTH CAROLINA PROFESSIONAL SEAL 025513 ENGINEER MICHAEL D. LANDRETH

GRAPHIC SCALE

50 25 0 50 100

PLANS

Prepared by

URS

URS Corporation - North Carolina
1600 Perimeter Park Drive
Morrisville, North Carolina 27560
TELEPHONE (919) 461-1100 FAX (919) 461-1418

-Y24-
INTERCHANGE
GRADING DETAIL

REVISIONS

2/13/2009
R:\Roadway\Proj\2719A_Y24_INT_GRADING_2T_GRD.dgn

PROJECT REFERENCE NO.	SHEET NO.
R-2719A	2-U

STATE OF
NORTH CAROLINA
DEPT. OF TRANSPORTATION
DIVISION OF HIGHWAYS
RALEIGH, N.C.

ENGLISH DETAIL DRAWING FOR
MODIFIED CONCRETE FLUME
WITH CONCRETE OR RIP-RAP DITCH

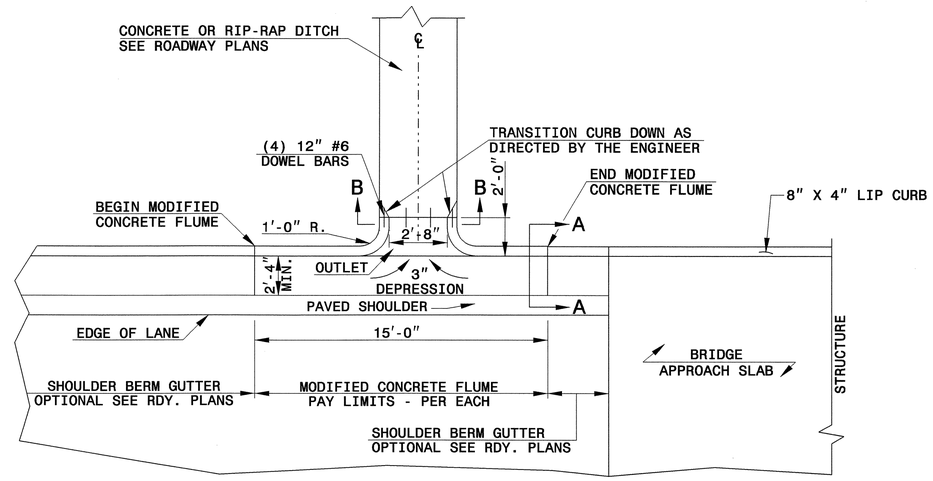

PLAN VIEW

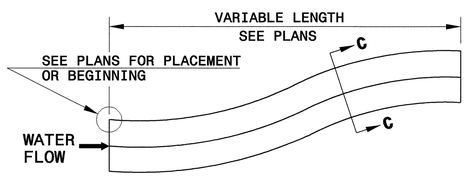

DOWNGRADE OR SAG

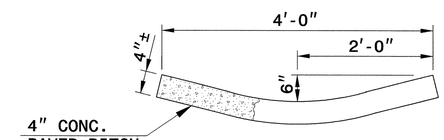

SECTION C-C

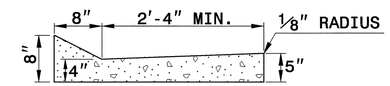

SECTION A-A

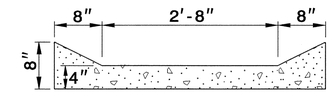

SECTION B-B

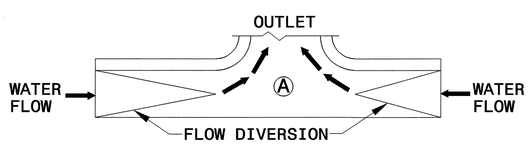

SAG

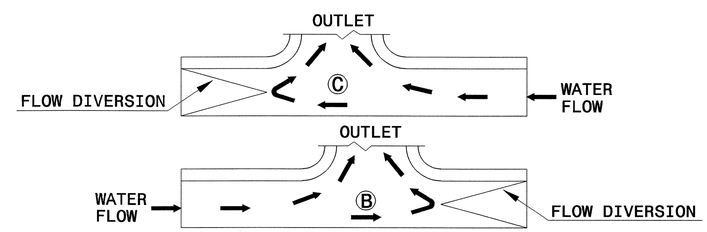

DOWN GRADE

FLOW DIVERSION EXAMPLES

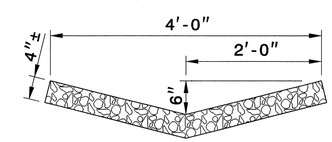

RIP-RAP LINED DITCH

NOTES:

- CONSTRUCT MODIFIED CONCRETE FLUME AND SHOULDER BERM GUTTER IN ACCORDANCE WITH THIS DETAIL.
- CONSTRUCT CONCRETE DITCH IN ACCORDANCE WITH STD. DWG. NO. 850.01.
- CONSTRUCT RIP RAP LINED DITCH IN ACCORDANCE WITH THIS DETAIL, IF CALLED FOR IN PLANS.
- CONCRETE OR RIP RAP LINED DITCH SHALL BE THE TYPE AND LENGTH SPECIFIED BY THE ROADWAY PLANS. THE DITCH SHALL TERMINATE AS SHOWN ON THE PLANS. IF NO TERMINATION IS INDICATED PLACE RIP-RAP AT THE END OF THE DITCH AS INDICATED BY STD. DWG. 876.02 FOR AN 18" PIPE. TRANSITIONS FROM THE DITCH TO TERMINATION SHALL BE AS DIRECTED BY THE ENGINEER.
- MODIFICATIONS SHALL BE AS DICTATED BY SITE CONDITIONS AND DIRECTED BY THE ENGINEER.

SHEET 1 OF 1
MODFLMDTCH

STATE OF
NORTH CAROLINA
DEPT. OF TRANSPORTATION
DIVISION OF HIGHWAYS
RALEIGH, N.C.

ENGLISH DETAIL DRAWING FOR
MODIFIED CONCRETE FLUME
WITH CONCRETE OR RIP-RAP DITCH

SHEET 1 OF 1
MODFLMDTCH

NORTH CAROLINA PROFESSIONAL SEAL 022966 ENGINEER LOUIS S. HOWELL JR.
9/10/08

PROJECT SERVICES UNIT
STANDARDS AND SPECIAL DESIGN
Office 919-250-4128 FAX 919-250-4119

SEE PLATE FOR TITLE

ORIGINAL BY: E.E. Ward DATE: Apr. 2002
MODIFIED BY: E.E. Ward DATE: July 2004
CHECKED BY: Louis S. Howell DATE: 9/10/08
FILE SPEC.: w:\details\stand\modifiedflume.dgn

PROJECT REFERENCE NO.	SHEET NO.
R-2719A	2-V

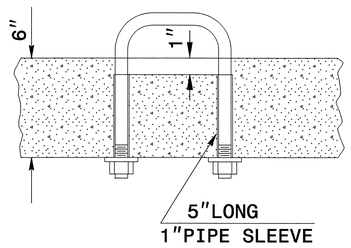

PARTIAL SECTION

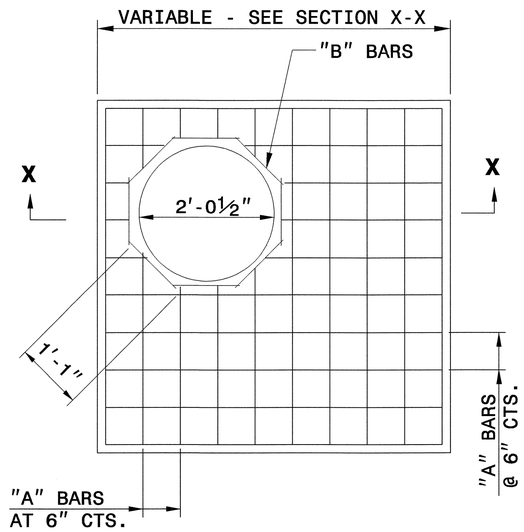

PLAN

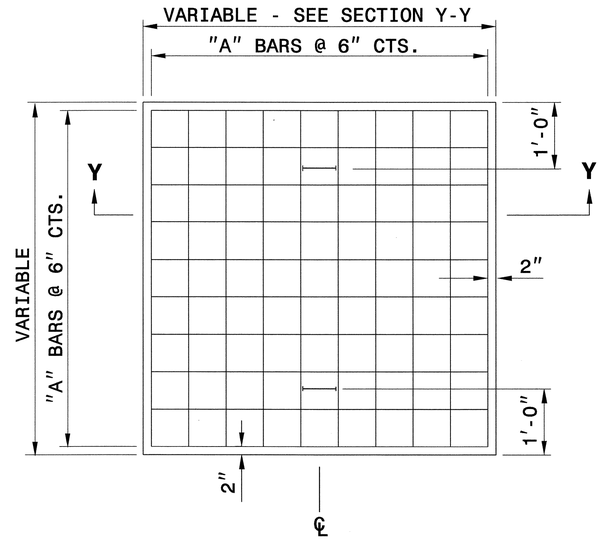

PLAN

GENERAL NOTES:

CONSTRUCT IN ACCORDANCE WITH SECTION 859 OF THE STANDARD SPECIFICATIONS.

FIELD VERIFY THE DIMENSIONS FOR THE EXISTING BOXES

DETAIL INTENDED FOR NON-TRAFFIC BEARING DRAINAGE STRUCTURES.

BILL OF MATERIALS

REINFORCING STEEL				
CODE	SIZE	QTY.	LENGTH	REINF. STEEL LBS.
A	#4	20	4'-6"	60.12
B	#4	8	1'-1"	5.79
TOTAL				65.91 *

MASONRY	CU YDS
TOP SLAB CONCRETE CLASS "B"	.433 *
BRICK MASONRY PER FT HT (MIN)	.4111

* NOTE:
QUANTITIES BASED ON 3'-6" X 3'-6" DRAINAGE STRUCTURE. ADJUST QUANTITIES FOR LARGER STRUCTURES AND MANHOLE CONSTRUCTION.

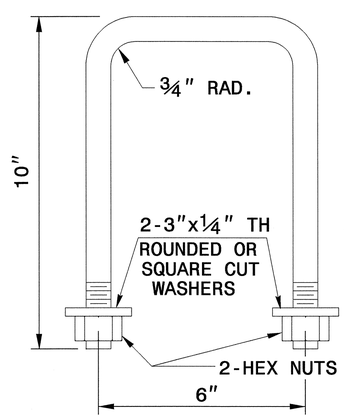

DETAIL OF HANDLE

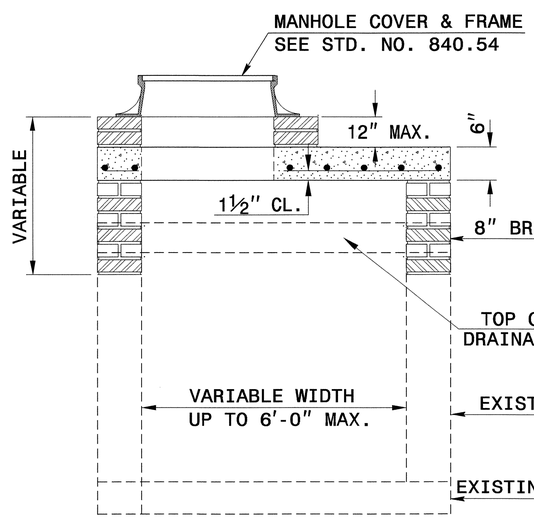

SECTION X-X

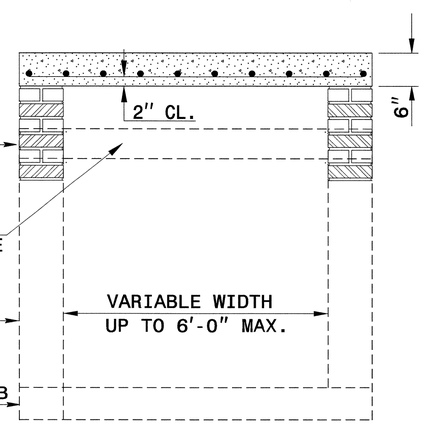

SECTION Y-Y

NORTH CAROLINA PROFESSIONAL SEAL 022966 ENGINEER JOEL E. HOWERTON
9/19/08

PROJECT SERVICES UNIT
STANDARDS AND SPECIAL DESIGN
Office 919-250-4128 FAX 919-250-4119

DETAIL TO CONVERT EXISTING DROP INLET OR CATCH BASIN TO JUNCTION BOX (MANHOLE OPTIONAL)

ORIGINAL BY: T.S.S. DATE: NOV.1997
MODIFIED BY: E.E.W DATE: 8-28-02
CHECKED BY: DATE: 9/19/08
FILE SPEC.: /usr/details/stand/boxtojbe.dgn

PROJECT REFERENCE NO.	SHEET NO.
R-2719A	2-W

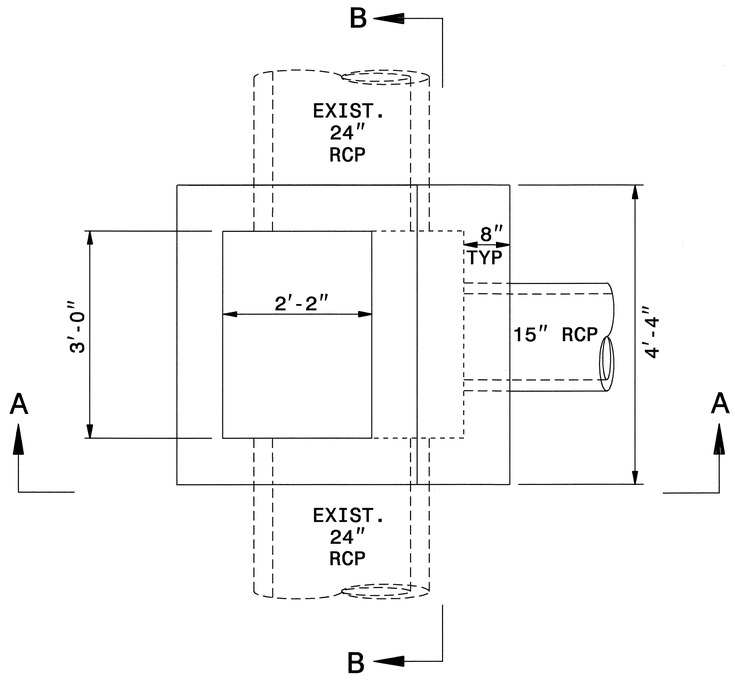

PLAN

NOTES:

USE CLASS "B" CONCRETE THROUGHOUT.

CONSTRUCT CONCRETE BOX IN ACCORADANCE WITH SECTION 825 OF THE STANDARD SPECIFICATIONS.

USE FORMS FOR CONSTRUCTION OF THE BOTTOM SLAB.

ADJUST LENGTH OF STEEL BARS AS NEEDED TO COMPENSATE FOR PIPES AND FRAME AND GRATE OPENINGS.

CONFORM REINFORCING STEEL TO ASTM A 615, GRADE 400.

CUT OR BEND STEEL BARS AS NEEDED TO PROVIDE 2" CLEARANCE AROUND PIPES AND OPENINGS OR AS DIRECTED BY THE ENGINEER.

LOCATE FRAME, GRATE AND HOOD (SEE STANDARD 840.03) AS FIELD CONDITIONS DICTATE AND AS DIRECTED BY THE ENGINEER.

IF REINFORED CONCRETE PIPE IS SET IN BASE SLAB OR BOX, ADD TO BASE AS SHOWN ON STD. NO. 840.00.

BILL OF MATERIALS

BAR	QTY	SIZE	LENGTH	WEIGHT
A	29	#5	4'-0"	163
B	19	#5	4'-8"	92
C	18	#5	3'-1"	58
D	12	#5	2'-5"	30
E	18	#5	1'-8"	31
TOTAL REINF. STEEL (LBS.)				374
TOTAL CONC. (CU.YDS.)				1.94

NOTE: NO DEDUCTIONS HAVE BEEN MADE TO ACCOMMODATE PIPES.

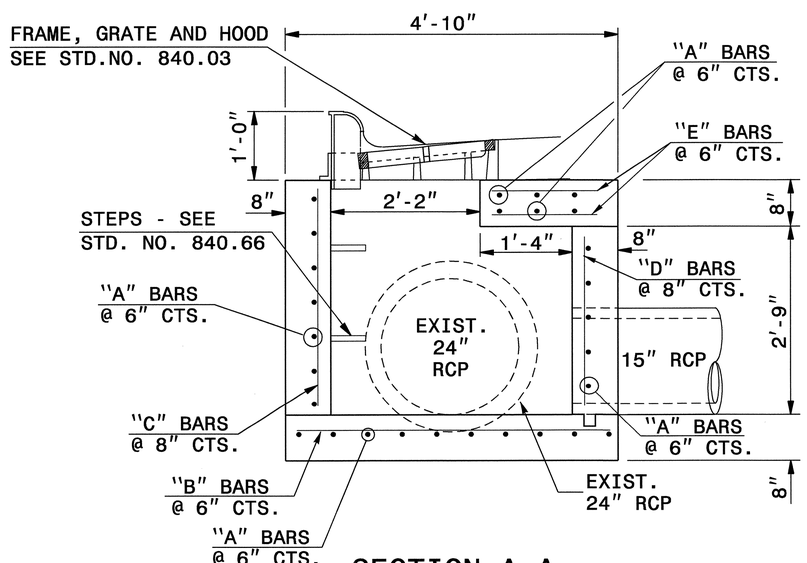

SECTION A-A

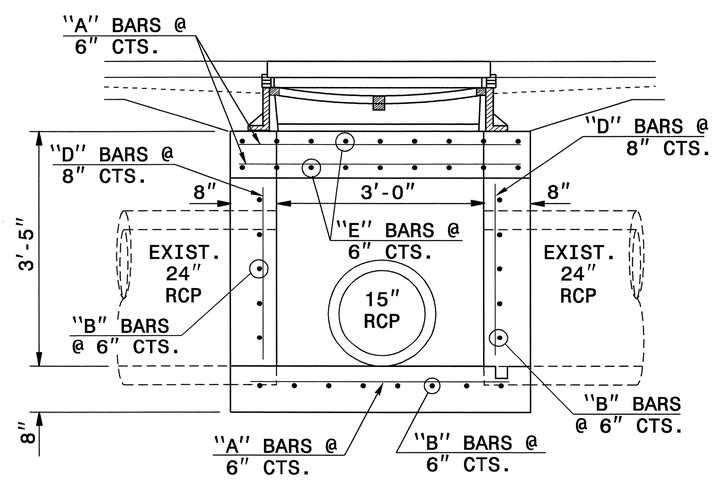

SECTION B-B

NORTH CAROLINA PROFESSIONAL SEAL 022966 ENGINEER JOHN S. HOWERTON
9/16/08

PROJECT SERVICES UNIT
STANDARDS AND SPECIAL DESIGN
Office 919-250-4128 FAX 919-250-4119

DETAIL OF SPECIAL CATCH BASIN

ORIGINAL BY: T.S.Spell DATE: 7-26-02
MODIFIED BY: K.A.KEMPF DATE: 9-4-08
CHECKED BY: DATE: 9/5/08
FILE SPEC.: kkempf/english/cb15rcp_24rcp.dgn

05-SEP-2008 10:40
s:\contracts\contracts\special details\kkempf\english\cb15rcp_24rcp.dgn
kkempf AT PS237489

PROJECT REFERENCE NO.	SHEET NO.
R-2719A	2-X

STATE OF
NORTH CAROLINA
DEPT. OF TRANSPORTATION
DIVISION OF HIGHWAYS
RALEIGH, N.C.

ENGLISH DETAIL DRAWING FOR

CONCRETE ENDWALL FOR 71 DEG. SKEW 3 @ 36" TRIPLE PIPE CULVERT

SHEET 1 OF 1

838D01

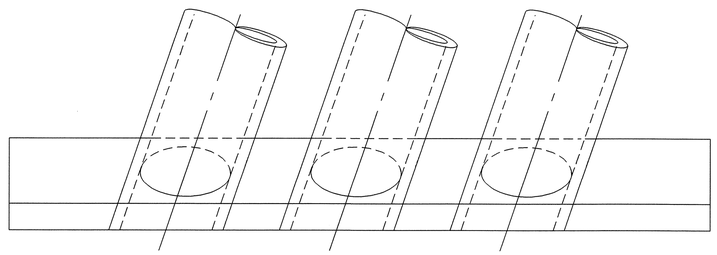

PLAN

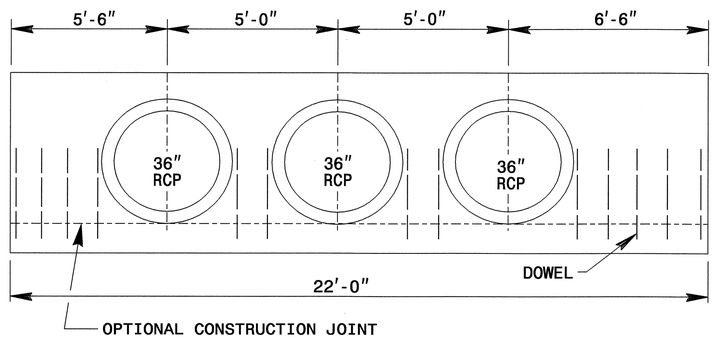

ELEVATION

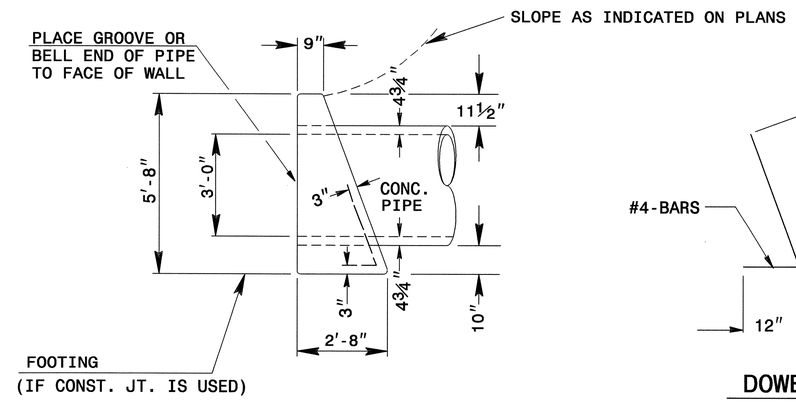

END ELEVATION

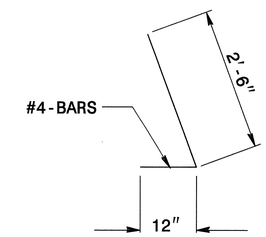

DOWEL
BAR-"X"

STEEL IN ENDWALL WITH REINFORCED CONCRETE PIPE		
LOC.	"X"	"Y"
TOP		65
LEFT	4	
LEFT MID.	2	
RIGHT MID.	2	
RIGHT	5	
TOTAL LBS.	95	

GENERAL NOTES:

- -CHAMFER ALL CORNERS 1".
- -PLACE 2 #6 "Y" BARS IN THE TOP OF ENDWALL WITH A MINIMUM OF 3" COVER AND A LENGTH OF 6" LESS THAN ENDWALL LENGTH.
- -USE FORMS TO CONSTRUCT THE BOTTOM SLAB.
- -WALL THICKNESS (T) SHOWN IS NOT TO BE INTERPRETED TO MEAN THE THICKNESS ACCEPTABLE, BUT IS USED IN COMPUTING ENDWALL QUANTITIES.
- -WHEN THE CONTRACTOR ELECTS TO USE A CONSTRUCTION JOINT AT THE BOTTOM OF THE PIPE, PLACE BAR 'X' DOWELS IN THE BASE AS SHOWN ON PLANS. SPACING OF BARS IS TO BE APPROXIMATELY 12" CENTERS UNLESS OTHERWISE DIRECTED BY THE ENGINEER.
- -WHEN THE CONTRACTOR ELECTS TO USE A CONSTRUCTION JOINT AT THE BOTTOM OF THE PIPE AND POUR THE BASE SEPARATELY THE POUR SHALL BE LEFT ROUGH.
- -USE CLASS "B" CONCRETE.

STATE OF
NORTH CAROLINA
DEPT. OF TRANSPORTATION
DIVISION OF HIGHWAYS
RALEIGH, N.C.

ENGLISH DETAIL DRAWING FOR

CONCRETE ENDWALL FOR 71 DEG. SKEW 3 @ 36" TRIPLE PIPE CULVERT

SHEET 1 OF 1

838D01

STA. 11+13 -Y1LPC-

NORTH CAROLINA PROFESSIONAL SEAL 022966 ENGINEER JOEL B. HOWERTON

9/11/08

DESIGN SERVICES UNIT
STANDARDS AND SPECIAL DESIGN
Office 919-250-4128 FAX 919-250-4119

SEE PLATE FOR TITLE

ORIGINAL BY: T.S.Spell DATE: 8-16-00
MODIFIED BY: K.A.KEMPF DATE: 9-2-08
CHECKED BY: DATE: 9/8/08
FILE SPEC.: details/kkempf/english/skew endwall.dgn

5/14/99

PROJECT REFERENCE NO.	SHEET NO.
R-2719A	2-Y

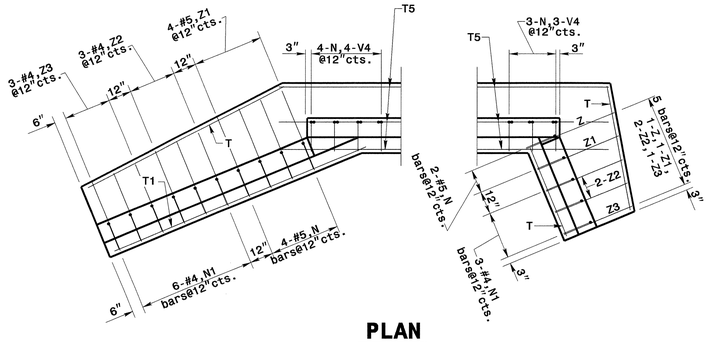

PLAN

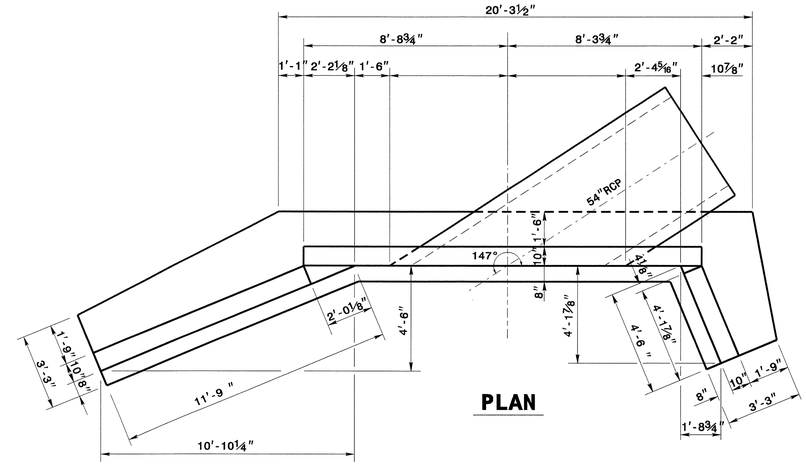

PLAN

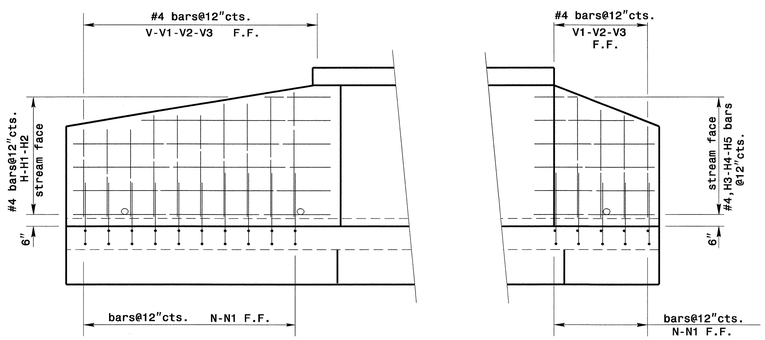

ELEVATION OF WINGS

SHOWING REINFORCEMENT

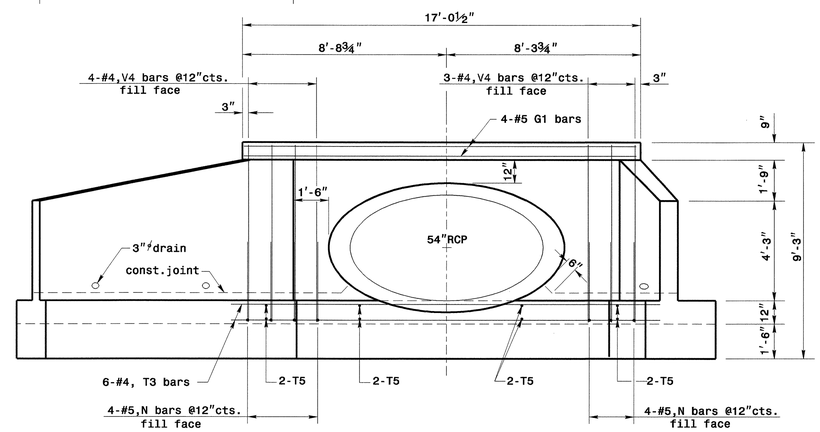

ELEVATION

NOTES:
ALL CONCRETE TO BE CLASS "A".
ALL REINFORCING STEEL SHALL BE ASTMA615-GRADE 60.
ALL REINFORCING STEEL SHALL BE DEFORMED BARS. WHERE SPLICING OF REINFORCMENT IS NECESSARY, BARS ARE TO BE LAPPED 45 DIAMETERS. ALL DIMENSIONS RELATIVE TO REINFORCEMENT ARE TO CENTERS OF BARS.
THE FOOTING, CURTAIN WALL AND 4" OF WALL ARE TO BE POURED IN ONE OPERATION ALLOWING NO TIME FOR INITIAL SET TO TAKE PLACE BETWEEN THEM. THE REMAINING WALL SHALL THEN BE POURED IN ONE OPERATION.
ALL EXPOSED CORNERS ARE TO BE CHAMFERED 1".
3" DIAMETER DRAINS SHALL BE PLACED IN WALL AS SHOWN AND BE 6" ABOVE NORMAL FLOW LINE.
ALL MATERIAL AND WORKMANSHIP AS PER N.C.DEPARTMENT OF TRANSPORTATION STANDARD SPECIFICATIONS.
THE EXTRA BARS ARE PROVIDED FOR HOLDING REINFORCING STEEL IN CORRECT POSITION IN WING.
ADJUST QUANTITIES AND DIMENSIONS AS DIRECTED BY THE ENGINEER.

BILL OF MATERIAL FOR ENDWALL

REINF. STEEL			1 PIPE	
BAR	SIZE	LENGTH	NO.	WEIGHT
G1	#5	16'-8"	4	70
H	#4	13'-6"	6	54
H1	#4	10'-7"	1	7
H2	#4	5'-4"	1	4
H3	#4	7'-2"	4	19
H4	#4	6'-3"	1	4
H5	#4	3'-9"	1	3
N	#5	4'-6"	13	61
N1	#4	4'-1"	9	25
T	#4	9'-5"	3	19
T1	#4	11'-8"	2	16
T3	#4	18'-4"	6	73
T5	#4	2'-9"	8	15
V	#4	3'-8"	4	10
V1	#4	4'-3"	4	11
V2	#4	4'-9"	3	13
V3	#4	5'-3"	3	15
V4	#4	7'-6"	7	35
Z	#5	4'-11"	1	5
Z1	#5	4'-8"	5	24
Z2	#4	4'-4"	5	14
Z3	#4	4'-2"	4	11
extra	#4	12'-0"	4	16
REINF. STEEL LBS.				524
CON./R.C. CU. YDS.				11.3
DEDUCTION FOR 54"RCP@ 147°SKEW				-1.4
CON./R.C. CU. YDS.				9.9

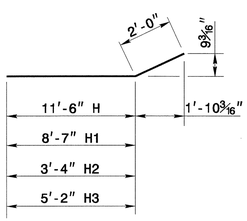

"H" BARS

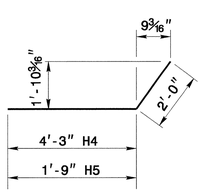

"H" BARS

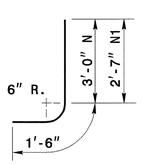

"N" BARS

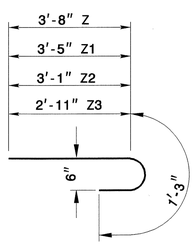

"Z" BARS

"H", "N", & "Z" BAR DIMENSIONS ARE OUT TO OUT.

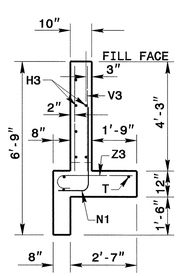

END OF WING

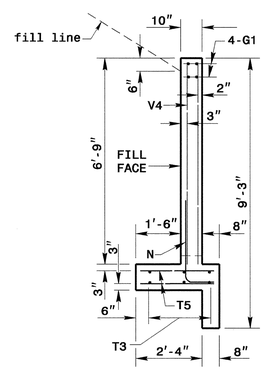

SECTION A-A

FOR ALL ENDWALLS

DESIGN DATA

Specifications	A.A.S.H.T.O. (1944)
Steel in tension	18,000 LBS. PER SQ.IN.
Concrete in compression	1,000 LBS. PER SQ.IN.
Shear Class "A" Concrete	90 LBS. PER SQ. IN.
Equiv. fluid pressure of earth	30 LBS.PER CU. FT.

NORTH CAROLINA PROFESSIONAL SEAL 022966 ENGINEER JOEL E. HOUPE JR.
9/10/08

PROJECT SERVICES UNIT
STANDARDS AND SPECIAL DESIGN
Office 919-250-4128 FAX 919-250-4119

DETAIL OF REINFORCED CONCRETE ENDWALL FOR 54" DIAMETER PIPE-147°SKEW STA.-Y1RPB-22+35

ORIGINAL BY: _____ DATE: _____
MODIFIED BY: nbritt DATE: 09/09/08
CHECKED BY: _____ DATE: 9/2/08
FILE SPEC.: details/nbritt/english/rural/r2719a 54endwall147sk.dgn

10-SEP-2008 12:23
s:\Contracts\Contracts\special details\nbritt\english\rural\r2719a endwall 54 147sk.dgn
nbritt

PROJECT REFERENCE NO.	SHEET NO.
R-2719A	2-Z

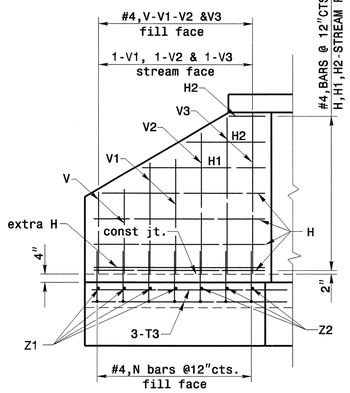

WING ELEVATION

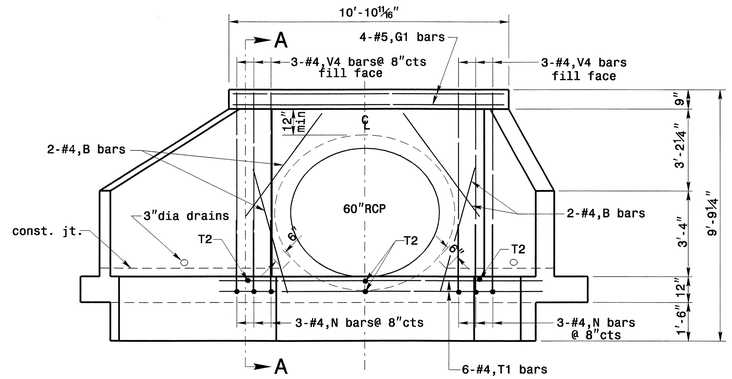

ELEVATION

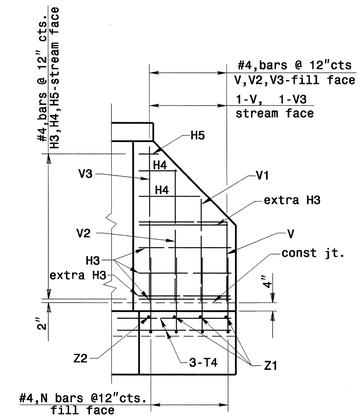

WING ELEVATION

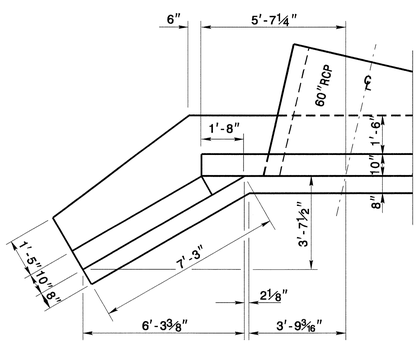

WING PLAN

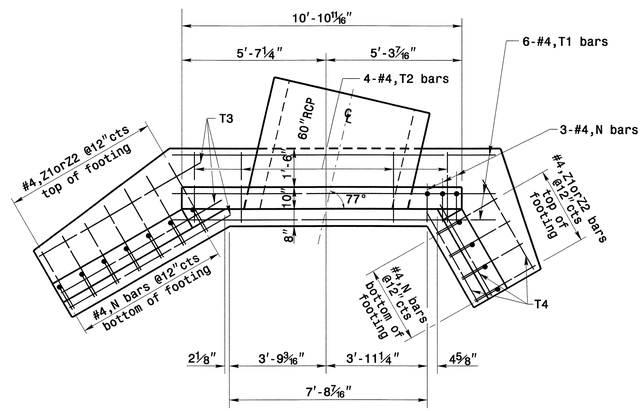

PLAN

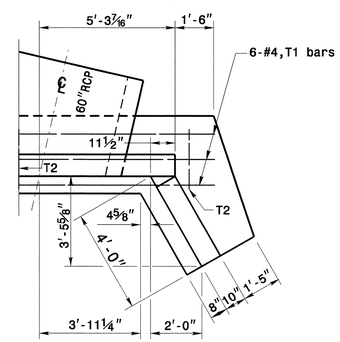

WING PLAN

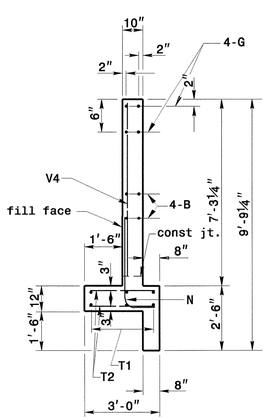

SECTION - AA

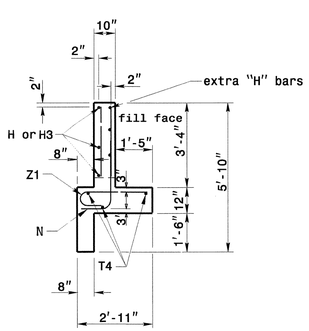

END OF WING

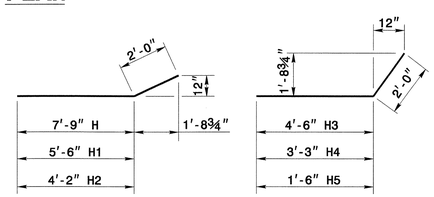

"H" BARS "H" BARS

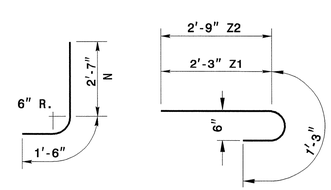

"N" BARS "Z" BARS

"H", "N", & "Z" BAR DIMENSIONS ARE OUT TO OUT.

NOTES:

ALL CONCRETE TO BE CLASS "A".

ALL REINFORCING STEEL SHALL BE ASTMA615-GRADE 60. ADJUST STEEL AS DIRECTED BY THE ENGINEER.

ALL REINFORCING STEEL SHALL BE DEFORMED BARS. WHERE SPLICING OF REINFORCMENT IS NECESSARY, BARS ARE TO BE LAPPED 45 DIAMETERS. ALL DIMENSIONS RELATIVE TO REINFORCEMENT ARE TO CENTERS OF BARS.

THE FOOTING, CURTAIN WALL AND 4" OF WALL ARE TO BE POURED IN ONE OPERATION ALLOWING NO TIME FOR INITIAL SET TO TAKE PLACE BETWEEN THEM. THE REMAINING WALL SHALL THEN BE POURED IN ONE OPERATION.

ALL EXPOSED CORNERS ARE TO BE CHAMFERED 1".

3" DIAMETER DRAINS SHALL BE PLACED IN WALL AS SHOWN AND BE 6" ABOVE NORMAL FLOW LINE.

ALL MATERIAL AND WORKMANSHIP AS PER N.C.DEPARTMENT OF TRANSPORTATION STANDARD SPECIFICATIONS.

THE EXTRA BARS ARE PROVIDED FOR HOLDING REINFORCING STEEL IN CORRECT POSITION IN WING.

BILL OF MATERIAL FOR ENDWALL

REINF. STEEL					1 PIPE			
BAR	SIZE	LENGTH	NO.	WEIGHT	NO.	WEIGHT	NO.	WEIGHT
B	#4	5'-0"			4	13		
G1	#5	10'-6"			4	44		
H	#4	9'-9"			5	33		
H1	#4	7'-6"			1	6		
H2	#4	6'-2"			2	9		
H3	#4	6'-6"			6	27		
H4	#4	5'-3"			2	8		
H5	#4	3'-6"			2	5		
T1	#4	12'-7"			12	101		
T2	#4	2'-8"			8	15		
T3	#4	7'-3"			3	15		
T4	#4	4'-0"			3	9		
V	#4	3'-3"			6	14		
V1	#4	4'-8"			4	13		
V2	#4	5'-6"			3	12		
V3	#4	6'-7"			5	22		
V4	#4	7'-9"			6	32		
Z1	#4	3'-6"			6	15		
Z2	#4	4'-0"			5	14		
REINF. STEEL LBS.						407		
CON./R.C. CU. YDS.								7.5
DEDUCTION OF 60"RCP@ 77°SKEW								1.0
CON./R.C. CU. YDS.								6.5

NORTH CAROLINA PROFESSIONAL SEAL 022966 ENGINEER JOEL S. HOMESTON
9/14/08

DESIGN DATA

Specifications	A.A.S.H.T.O. (1944)
Steel in tension	18,000 LBS. PER SQ.IN.
Concrete in compression	1,000 LBS. PER SQ.IN.
Shear Class "A" Concrete	90 LBS. PER SQ. IN.
Equiv. fluid pressure of earth	30 LBS.PER CU. FT.

PROJECT SERVICES UNIT
STANDARDS AND SPECIAL DESIGN
Office 919-250-4128 FAX 919-250-4119

DETAIL OF REINFORCED CONCRETE ENDWALL FOR 60" DIAMETER PIPE-77°SKEW STA.-L-69+50

ORIGINAL BY: DATE:
MODIFIED BY: rnbritt DATE: 09-08-08
CHECKED BY: DATE: 9/10/08
FILE SPEC.: details/nbritt/english/rural/60endwall77sk.dgn

10-SEP-2008 12:22
s:\contracts\contracts special details\nbritt\english rural\r2719a endwall 54 147sk.dgn
rnbritt

5/14/99

PROJECT REFERENCE NO.	SHEET NO.
R-2719A	2-AA

STATE OF
NORTH CAROLINA
DEPT. OF TRANSPORTATION
DIVISION OF HIGHWAYS
RALEIGH, N.C.

ENGLISH DETAIL DRAWING FOR

CONCRETE ENDWALL FOR 49" DEG. SKEW 2 @ 48" PIPE CULVERT

SHEET 1 OF 1

838D01

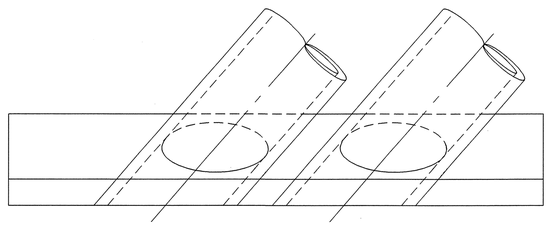

PLAN

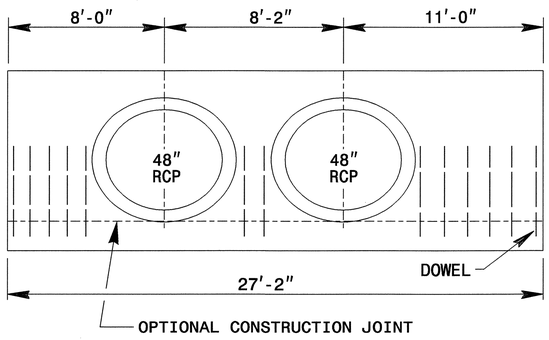

ELEVATION

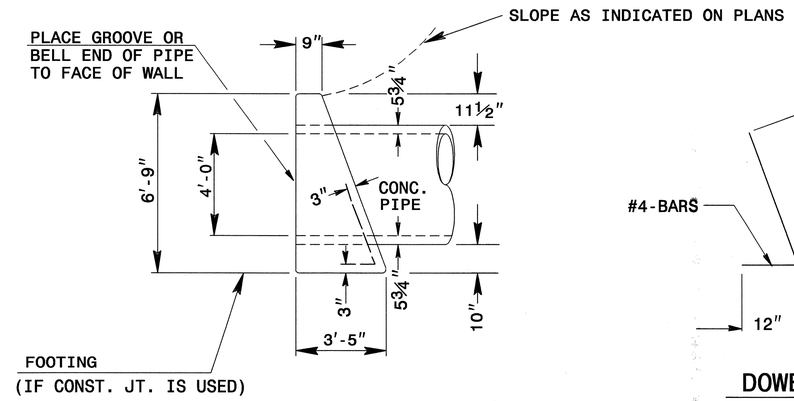

END ELEVATION

DOWEL
BAR-"X"

STEEL IN ENDWALL WITH REINFORCED CONCRETE PIPE		
LOC.	"X"	"Y"
TOP		65
LEFT	5	
MIDDLE	2	
RIGHT	6	
TOTAL LBS. 110		

GENERAL NOTES:

- -CHAMFER ALL CORNERS 1".
- -PLACE 2 #6 "Y" BARS IN THE TOP OF ENDWALL WITH A MINIMUM OF 3" COVER AND A LENGTH OF 6" LESS THAN ENDWALL LENGTH.
- -USE FORMS TO CONSTRUCT THE BOTTOM SLAB.
- -WALL THICKNESS (T) SHOWN IS NOT TO BE INTERPRETED TO MEAN THE THICKNESS ACCEPTABLE, BUT IS USED IN COMPUTING ENDWALL QUANTITIES.
- -WHEN THE CONTRACTOR ELECTS TO USE A CONSTRUCTION JOINT AT THE BOTTOM OF THE PIPE, PLACE BAR 'X' DOWELS IN THE BASE AS SHOWN ON PLANS. SPACING OF BARS IS TO BE APPROXIMATELY 12" CENTERS UNLESS OTHERWISE DIRECTED BY THE ENGINEER.
- -WHEN THE CONTRACTOR ELECTS TO USE A CONSTRUCTION JOINT AT THE BOTTOM OF THE PIPE AND POUR THE BASE SEPARATELY THE POUR SHALL BE LEFT ROUGH.
- -USE CLASS "B" CONCRETE.

STATE OF
NORTH CAROLINA
DEPT. OF TRANSPORTATION
DIVISION OF HIGHWAYS
RALEIGH, N.C.

ENGLISH DETAIL DRAWING FOR

CONCRETE ENDWALL FOR 49" DEG. SKEW 2 @ 48" PIPE CULVERT

SHEET 1 OF 1

838D01

NORTH CAROLINA PROFESSIONAL SEAL 022966 ENGINEER JOEL R. HOWERTON

9/16/08

STA. 32+00 -Y1RPCA-

DESIGN SERVICES UNIT
STANDARDS AND SPECIAL DESIGN
Office 919-250-4128 FAX 919-250-4119

SEE PLATE FOR TITLE

ORIGINAL BY: T.S.Spell DATE: 8-16-00
MODIFIED BY: K.A.KEMPF DATE: 9-2-08
CHECKED BY: DATE: 9/6/08
FILE SPEC.: details/kkempf/english/skew_endwall.dgn

PROJECT REFERENCE NO.	SHEET NO.
R-2719A	2-AB

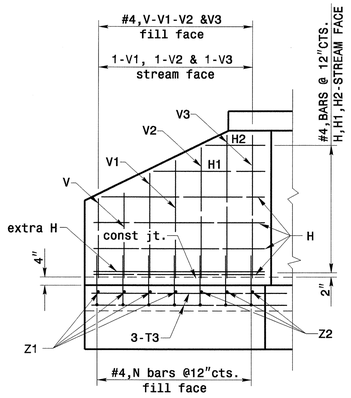

WING ELEVATION

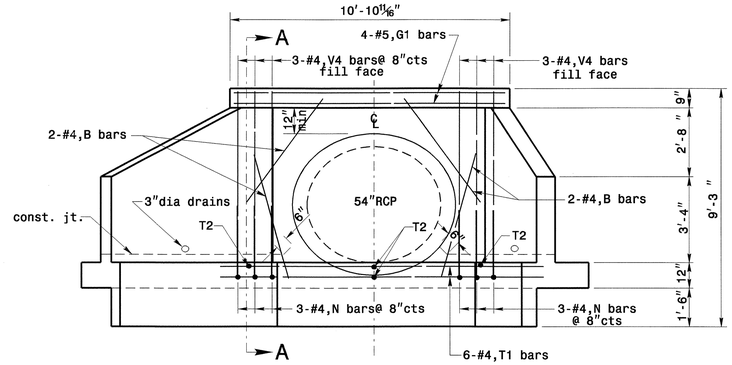

ELEVATION

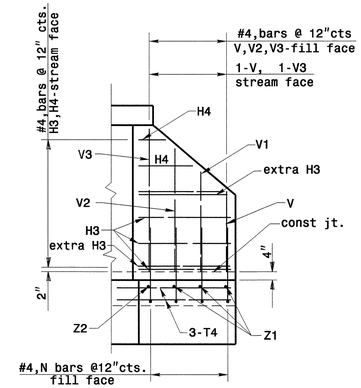

WING ELEVATION

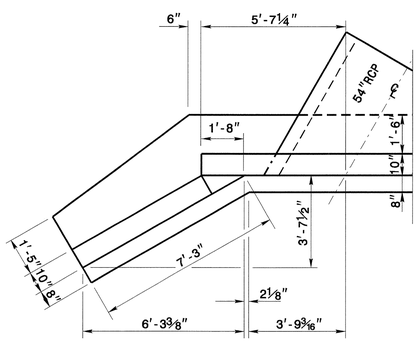

WING PLAN

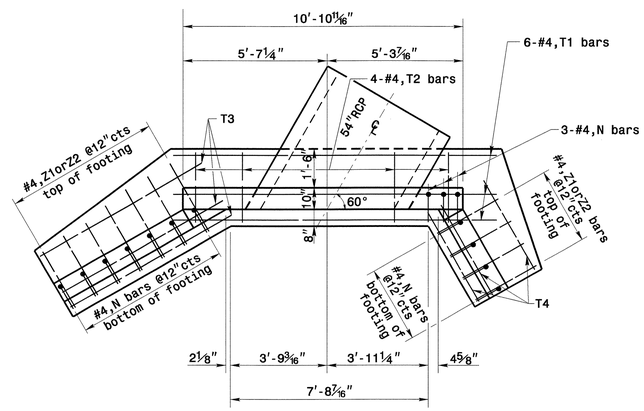

PLAN

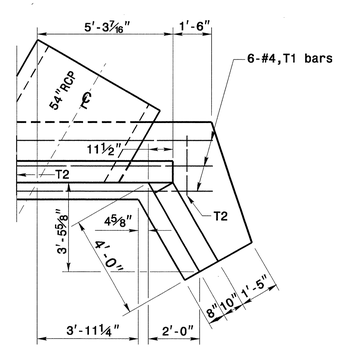

WING PLAN

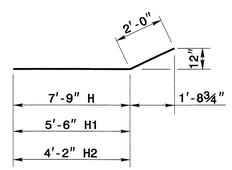

"H" BARS

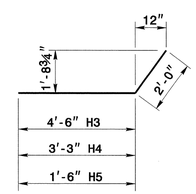

"H" BARS

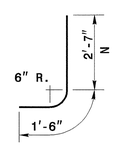

"N" BARS

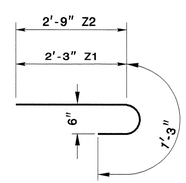

"Z" BARS

"H", "N", & "Z" BAR DIMENSIONS ARE OUT TO OUT.

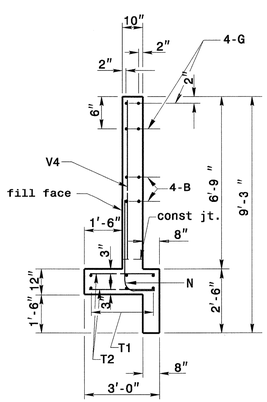

SECTION - AA

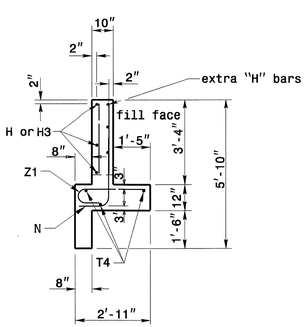

END OF WING

NOTES:

ALL CONCRETE TO BE CLASS "A".

ALL REINFORCING STEEL SHALL BE ASTMA615-GRADE 60. ADJUST STEEL AS DIRECTED BY THE ENGINEER.

ALL REINFORCING STEEL SHALL BE DEFORMED BARS. WHERE SPLICING OF REINFORCMENT IS NECESSARY, BARS ARE TO BE LAPPED 45 DIAMETERS. ALL DIMENSIONS RELATIVE TO REINFORCEMENT ARE TO CENTERS OF BARS.

THE FOOTING, CURTAIN WALL AND 4" OF WALL ARE TO BE POURED IN ONE OPERATION ALLOWING NO TIME FOR INITIAL SET TO TAKE PLACE BETWEEN THEM. THE REMAINING WALL SHALL THEN BE POURED IN ONE OPERATION.

ALL EXPOSED CORNERS ARE TO BE CHAMFERED 1".

3" DIAMETER DRAINS SHALL BE PLACED IN WALL AS SHOWN AND BE 6" ABOVE NORMAL FLOW LINE.

ALL MATERIAL AND WORKMANSHIP AS PER N.C.DEPARTMENT OF TRANSPORTATION STANDARD SPECIFICATIONS.

THE EXTRA BARS ARE PROVIDED FOR HOLDING REINFORCING STEEL IN CORRECT POSITION IN WING.

BILL OF MATERIAL FOR ENDWALL

REINF. STEEL					1 PIPE			
BAR	SIZE	LENGTH	NO.	WEIGHT	NO.	WEIGHT	NO.	WEIGHT
B	#4	5'-0"			4	13		
G1	#5	10'-6"			4	44		
H	#4	9'-9"			5	33		
H1	#4	7'-6"			1	6		
H2	#4	6'-2"			2	9		
H3	#4	6'-6"			6	27		
H4	#4	5'-3"			2	8		
T1	#4	12'-7"			12	101		
T2	#4	2'-8"			8	15		
T3	#4	7'-3"			3	15		
T4	#4	4'-0"			3	9		
V	#4	3'-3"			6	14		
V1	#4	4'-8"			4	13		
V2	#4	5'-6"			3	12		
V3	#4	5'-7"			5	19		
V4	#4	7'-9"			6	32		
Z1	#4	3'-6"			6	15		
Z2	#4	4'-0"			5	14		
REINF. STEEL LBS.						399		
CON./R.C. CU. YDS.								7.2
DEDUCTION OF 54"RCP@ 60°SKEW								0.8
CON./R.C. CU. YDS.								6.4

NORTH CAROLINA PROFESSIONAL SEAL 022966 ENGINEER GEORGE HOWERTON
9/10/08

DESIGN DATA

Specifications	A.A.S.H.T.O. (1944)
Steel in tension	18,000 LBS. PER SQ.IN.
Concrete in compression	1,000 LBS. PER SQ.IN.
Shear Class "A" Concrete	90 LBS. PER SQ. IN.
Equiv. fluid pressure of earth	30 LBS.PER CU. FT.

PROJECT SERVICES UNIT
STANDARDS AND SPECIAL DESIGN
Office 919-250-4128 FAX 919-250-4119

DETAIL OF REINFORCED CONCRETE ENDWALL FOR 54" DIAMETER PIPE-60°SKEW STA.-Y1-85+20

ORIGINAL BY: DATE:
MODIFIED BY: rnbritt DATE: 09-08-08
CHECKED BY: DATE: 9/10/08
FILE SPEC.: details/nbritt/english/rural/60endwall77sk.dgn

10-SEP-2008 12:22
s:\contracts\contracts\special details\nbritt\english\rural\r2719a endwall 54 147sk.dgn
rnbritt

PROJECT REFERENCE NO.	SHEET NO.
R-2719A	2-AC.

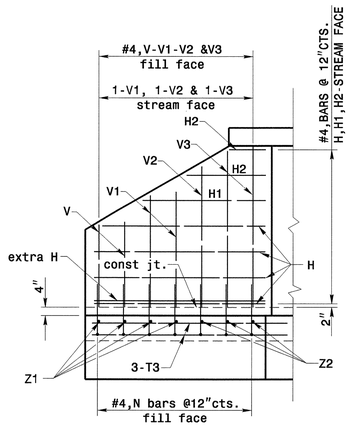

WING ELEVATION

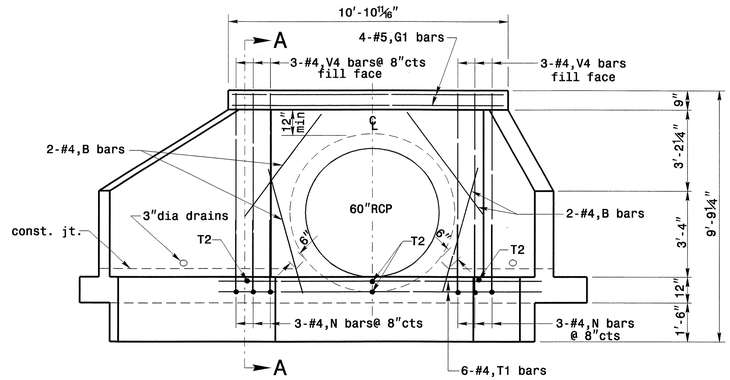

ELEVATION

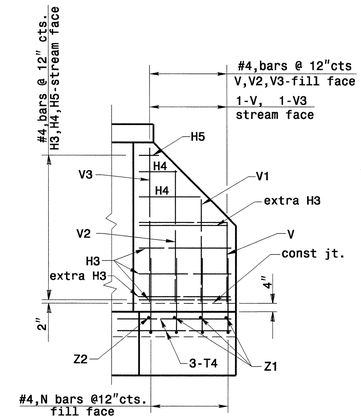

WING ELEVATION

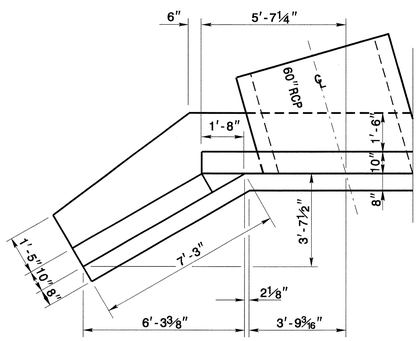

WING PLAN

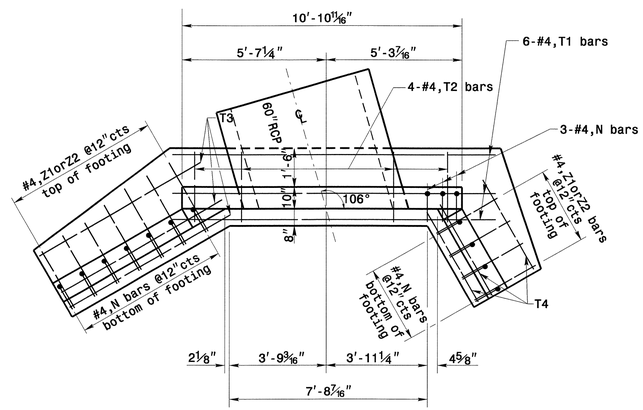

PLAN

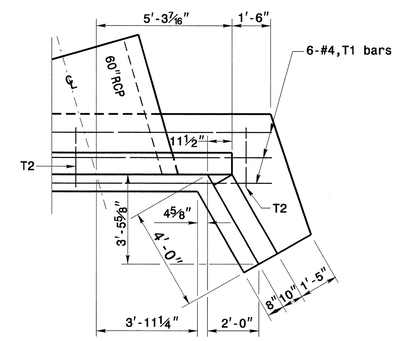

WING PLAN

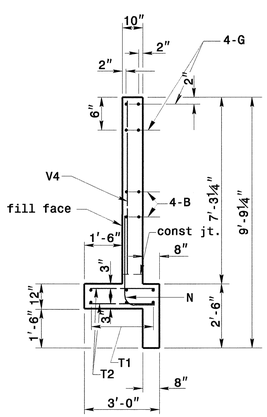

SECTION - AA

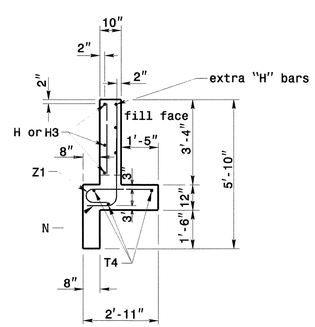

END OF WING

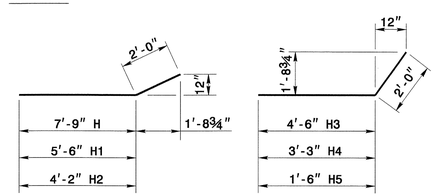

"H" BARS "H" BARS

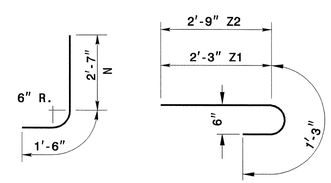

"N" BARS "Z" BARS

"H", "N", & "Z" BAR DIMENSIONS ARE OUT TO OUT.

NOTES:

ALL CONCRETE TO BE CLASS "A".

ALL REINFORCING STEEL SHALL BE ASTMA615-GRADE 60. ADJUST STEEL AS DIRECTED BY THE ENGINEER.

ALL REINFORCING STEEL SHALL BE DEFORMED BARS. WHERE SPLICING OF REINFORCMENT IS NECESSARY, BARS ARE TO BE LAPPED 45 DIAMETERS. ALL DIMENSIONS RELATIVE TO REINFORCEMENT ARE TO CENTERS OF BARS.

THE FOOTING, CURTAIN WALL AND 4" OF WALL ARE TO BE POURED IN ONE OPERATION ALLOWING NO TIME FOR INITIAL SET TO TAKE PLACE BETWEEN THEM. THE REMAINING WALL SHALL THEN BE POURED IN ONE OPERATION.

ALL EXPOSED CORNERS ARE TO BE CHAMFERED 1".

3" DIAMETER DRAINS SHALL BE PLACED IN WALL AS SHOWN AND BE 6" ABOVE NORMAL FLOW LINE.

ALL MATERIAL AND WORKMANSHIP AS PER N.C.DEPARTMENT OF TRANSPORTATION STANDARD SPECIFICATIONS.

THE EXTRA BARS ARE PROVIDED FOR HOLDING REINFORCING STEEL IN CORRECT POSITION IN WING.

BILL OF MATERIAL FOR ENDWALL

REINF. STEEL					1 PIPE			
BAR	SIZE	LENGTH	NO.	WEIGHT	NO.	WEIGHT	NO.	WEIGHT
B	#4	5'-0"			4	13		
G1	#5	10'-6"			4	44		
H	#4	9'-9"			5	33		
H1	#4	7'-6"			1	6		
H2	#4	6'-2"			2	9		
H3	#4	6'-6"			6	27		
H4	#4	5'-3"			2	8		
H5	#4	3'-6"			2	5		
T1	#4	12'-7"			12	101		
T2	#4	2'-8"			8	15		
T3	#4	7'-3"			3	15		
T4	#4	4'-0"			3	9		
V	#4	3'-3"			6	14		
V1	#4	4'-8"			4	13		
V2	#4	5'-6"			3	12		
V3	#4	6'-7"			5	22		
V4	#4	7'-9"			6	32		
Z1	#4	3'-6"			6	15		
Z2	#4	4'-0"			5	14		
REINF. STEEL LBS.						407		
CON./R.C. CU. YDS.								7.5
DEDUCTION OF 60"RCP@ 106°SKEW								0.9
CON./R.C. CU. YDS.								6.6

NORTH CAROLINA PROFESSIONAL SEAL 022966 ENGINEER JOEL S. HOWERTON
9/10/08

DESIGN DATA

Specifications	A.A.S.H.T.O. (1944)
Steel in tension	18,000 LBS. PER SQ.IN.
Concrete in compression	1,000 LBS. PER SQ.IN.
Shear Class "A" Concrete	90 LBS. PER SQ. IN.
Equiv. fluid pressure of earth	30 LBS.PER CU. FT.

PROJECT SERVICES UNIT
STANDARDS AND SPECIAL DESIGN
Office 919-250-4128 FAX 919-250-4119

DETAIL OF REINFORCED CONCRETE ENDWALL FOR 60" DIAMETER PIPE-106°SKEW
STA.-Y1RPCA-9+20

ORIGINAL BY: DATE:
MODIFIED BY: rnbritt DATE: 09-10-08
CHECKED BY: DATE: 9/10/08
FILE SPEC.: details/nbritt/english/rural/60endwall7sk.dgn

10-SEP-2008 12:21
s:\contracts\contracts special details\nbritt\english\rural r2719a endwall 54 147sk.dgn
rnbritt

PROJECT REFERENCE NO.	SHEET NO.
R-2719A	2-AD

STATE OF
NORTH CAROLINA
DEPT. OF TRANSPORTATION
DIVISION OF HIGHWAYS
RALEIGH, N.C.

ENGLISH DETAIL DRAWING FOR

CONCRETE ENDWALL FOR 70 DEG. SKEW 48" PIPE CULVERT

SHEET 1 OF 1

838D01

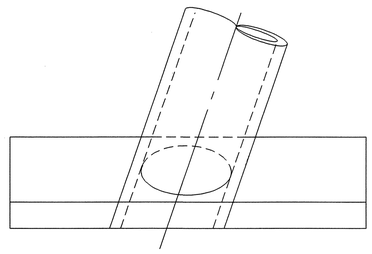

PLAN

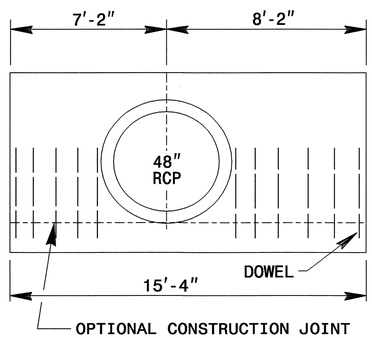

ELEVATION

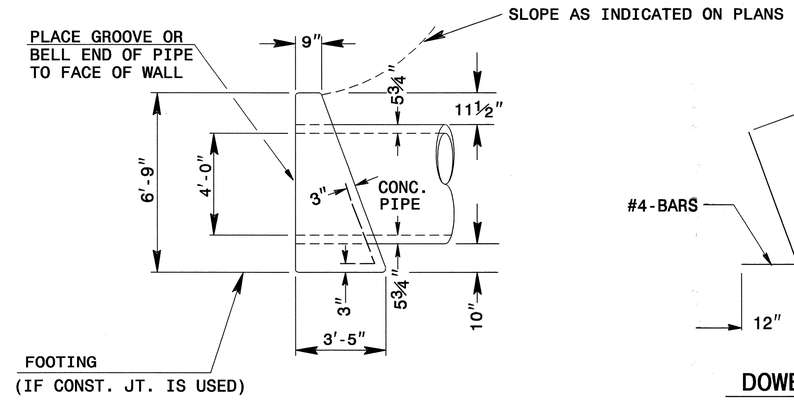

END ELEVATION

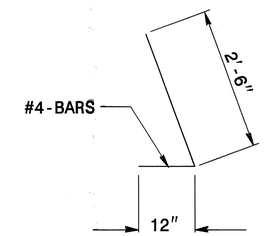

DOWEL
BAR-"X"

STEEL IN ENDWALL WITH REINFORCED CONCRETE PIPE		
LOC.	"X"	"Y"
TOP		45
LEFT	5	
RIGHT	6	
TOTAL LBS. 71		

GENERAL NOTES:

- -CHAMFER ALL CORNERS 1".
- -PLACE 2 #6 "Y" BARS IN THE TOP OF ENDWALL WITH A MINIMUM OF 3" COVER AND A LENGTH OF 6" LESS THAN ENDWALL LENGTH.
- -USE FORMS TO CONSTRUCT THE BOTTOM SLAB.
- -WALL THICKNESS (T) SHOWN IS NOT TO BE INTERPRETED TO MEAN THE THICKNESS ACCEPTABLE, BUT IS USED IN COMPUTING ENDWALL QUANTITIES.
- -WHEN THE CONTRACTOR ELECTS TO USE A CONSTRUCTION JOINT AT THE BOTTOM OF THE PIPE, PLACE BAR 'X' DOWELS IN THE BASE AS SHOWN ON PLANS. SPACING OF BARS IS TO BE APPROXIMATELY 12" CENTERS UNLESS OTHERWISE DIRECTED BY THE ENGINEER.
- -WHEN THE CONTRACTOR ELECTS TO USE A CONSTRUCTION JOINT AT THE BOTTOM OF THE PIPE AND POUR THE BASE SEPARATELY THE POUR SHALL BE LEFT ROUGH.
- -USE CLASS "B" CONCRETE.

STATE OF
NORTH CAROLINA
DEPT. OF TRANSPORTATION
DIVISION OF HIGHWAYS
RALEIGH, N.C.

ENGLISH DETAIL DRAWING FOR

CONCRETE ENDWALL FOR 70 DEG. SKEW 48" PIPE CULVERT

SHEET 1 OF 1

838D01

STA. 76+55 -L-

NORTH CAROLINA PROFESSIONAL SEAL 022966 ENGINEER DOUGLAS HOWERTON

9/16/08

DESIGN SERVICES UNIT
STANDARDS AND SPECIAL DESIGN
Office 919-250-4128 FAX 919-250-4119

SEE PLATE FOR TITLE

ORIGINAL BY: T.S.Spell DATE: 8-16-00
MODIFIED BY: K.A.KEMPF DATE: 9-2-08
CHECKED BY: DATE: 9/16/08
FILE SPEC.: details/kkempf/english/skew endwall.dgn

5/14/99

PROJECT REFERENCE NO.	SHEET NO.
R-2719A	2-AE

STATE OF
NORTH CAROLINA
DEPT. OF TRANSPORTATION
DIVISION OF HIGHWAYS
RALEIGH, N.C.

ENGLISH DETAIL DRAWING FOR

CONCRETE ENDWALL FOR 127 DEG. SKEW 36" PIPE CULVERT

SHEET 1 OF 1

838D01

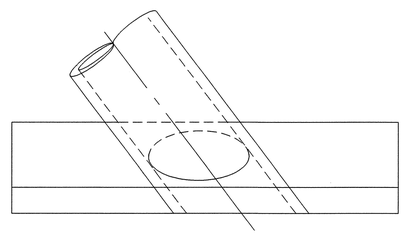

PLAN

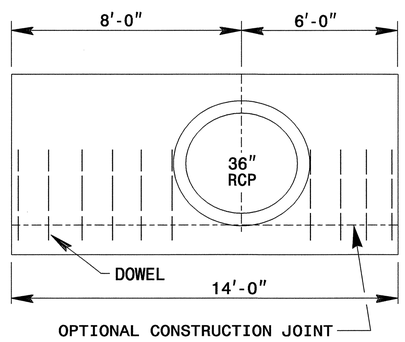

ELEVATION

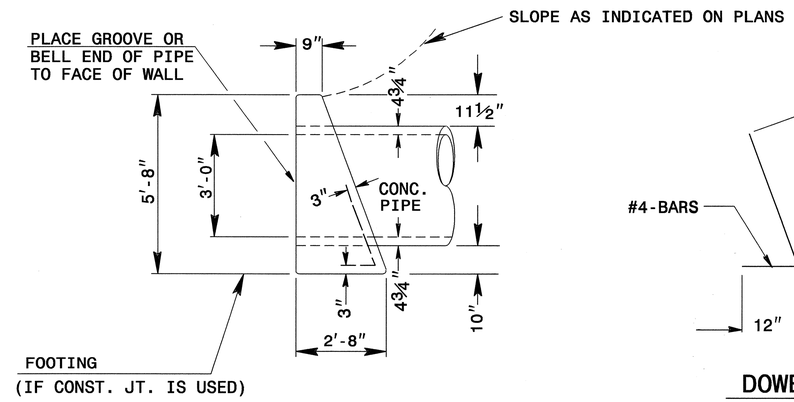

END ELEVATION

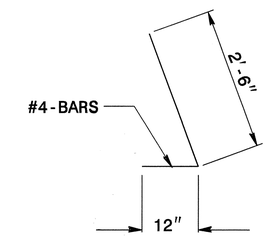

DOWEL
BAR-"X"

DOWELS IN ENDWALL WITH REINFORCED CONCRETE PIPE	
LOC.	"X"
LEFT	6
RIGHT	4
TOTAL LBS.	23

GENERAL NOTES:

- CHAMFER ALL CORNERS 1".
- PLACE 2 #6 "Y" BARS IN THE TOP OF ENDWALL WITH A MINIMUM OF 3" COVER AND A LENGTH OF 6" LESS THAN ENDWALL LENGTH.
- USE FORMS TO CONSTRUCT THE BOTTOM SLAB.
- WALL THICKNESS (T) SHOWN IS NOT TO BE INTERPRETED TO MEAN THE THICKNESS ACCEPTABLE, BUT IS USED IN COMPUTING ENDWALL QUANTITIES.
- WHEN THE CONTRACTOR ELECTS TO USE A CONSTRUCTION JOINT AT THE BOTTOM OF THE PIPE, PLACE BAR 'X' DOWELS IN THE BASE AS SHOWN ON PLANS. SPACING OF BARS IS TO BE APPROXIMATELY 12" CENTERS UNLESS OTHERWISE DIRECTED BY THE ENGINEER.
- WHEN THE CONTRACTOR ELECTS TO USE A CONSTRUCTION JOINT AT THE BOTTOM OF THE PIPE AND POUR THE BASE SEPARATELY THE POUR SHALL BE LEFT ROUGH.
- USE CLASS "B" CONCRETE.

STATE OF
NORTH CAROLINA
DEPT. OF TRANSPORTATION
DIVISION OF HIGHWAYS
RALEIGH, N.C.

ENGLISH DETAIL DRAWING FOR

CONCRETE ENDWALL FOR 127 DEG. SKEW 36" PIPE CULVERT

SHEET 1 OF 1

838D01

STA. 138+30 -L-
STA. 138+95 -L-

NORTH CAROLINA PROFESSIONAL SEAL 022966 ENGINEER LOELLS. HOWERTON
9/16/08

DESIGN SERVICES UNIT
STANDARDS AND SPECIAL DESIGN
Office 919-250-4128 FAX 919-250-4119

SEE PLATE FOR TITLE

ORIGINAL BY: T.S.Spell DATE: 8-16-00
MODIFIED BY: K.A.KEMPF DATE: 9-2-08
CHECKED BY: DATE: 9/5/08
FILE SPEC.: details/kkempf/english/skew endwall.dgn

5/14/99

5/14/99

PROJECT REFERENCE NO.	SHEET NO.
R-2719A	2-AF

STATE OF
NORTH CAROLINA
DEPT. OF TRANSPORTATION
DIVISION OF HIGHWAYS
RALEIGH, N.C.

ENGLISH DETAIL DRAWING FOR

CONCRETE ENDWALL FOR 36" PIPE CULVERT 71 DEG. SKEW

SHEET 1 OF 1

838D01

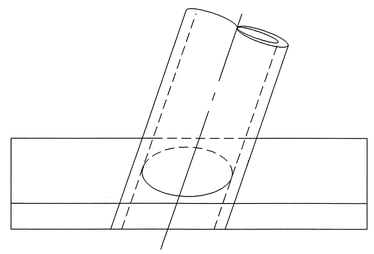

PLAN

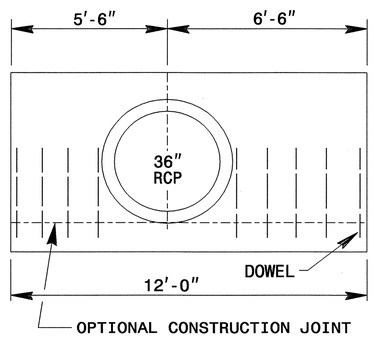

ELEVATION

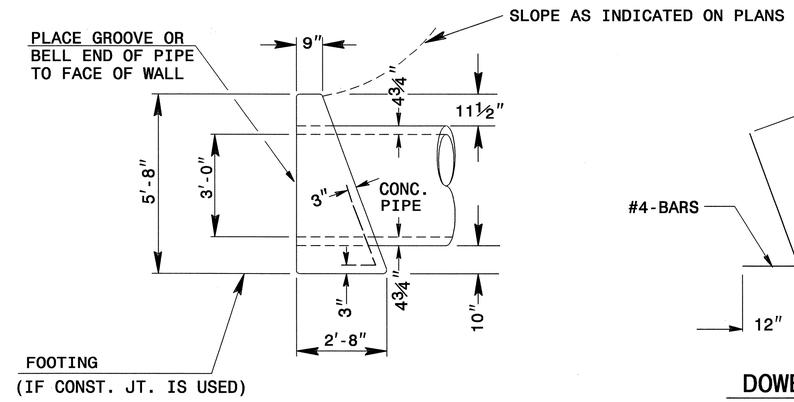

END ELEVATION

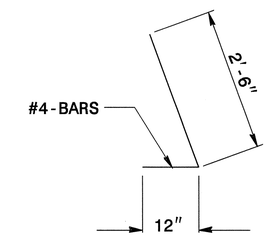

DOWEL
BAR-"X"

DOWELS IN ENDWALL WITH REINFORCED CONCRETE PIPE	
LOC.	"X"
LEFT	4
RIGHT	5
TOTAL LBS.	21

GENERAL NOTES:

- -CHAMFER ALL CORNERS 1".
- -PLACE 2 #6 "Y" BARS IN THE TOP OF ENDWALL WITH A MINIMUM OF 3" COVER AND A LENGTH OF 6" LESS THAN ENDWALL LENGTH.
- -USE FORMS TO CONSTRUCT THE BOTTOM SLAB.
- -WALL THICKNESS (T) SHOWN IS NOT TO BE INTERPRETED TO MEAN THE THICKNESS ACCEPTABLE, BUT IS USED IN COMPUTING ENDWALL QUANTITIES.
- -WHEN THE CONTRACTOR ELECTS TO USE A CONSTRUCTION JOINT AT THE BOTTOM OF THE PIPE, PLACE BAR 'X' DOWELS IN THE BASE AS SHOWN ON PLANS. SPACING OF BARS IS TO BE APPROXIMATELY 12" CENTERS UNLESS OTHERWISE DIRECTED BY THE ENGINEER.
- -WHEN THE CONTRACTOR ELECTS TO USE A CONSTRUCTION JOINT AT THE BOTTOM OF THE PIPE AND POUR THE BASE SEPARATELY THE POUR SHALL BE LEFT ROUGH.
- -USE CLASS "B" CONCRETE.

STATE OF
NORTH CAROLINA
DEPT. OF TRANSPORTATION
DIVISION OF HIGHWAYS
RALEIGH, N.C.

ENGLISH DETAIL DRAWING FOR

CONCRETE ENDWALL FOR 36" PIPE CULVERT 71 DEG. SKEW

SHEET 1 OF 1

838D01

STA. 152+20 -L-
STA. 153+35 -L-

NORTH CAROLINA PROFESSIONAL SEAL 022966 ENGINEER JOEL S. HOWERTON
9/16/08

DESIGN SERVICES UNIT
STANDARDS AND SPECIAL DESIGN
Office 919-250-4128 FAX 919-250-4119

SEE PLATE FOR TITLE

ORIGINAL BY: T.S.Spell DATE: 8-16-00
MODIFIED BY: K.A.KEMPF DATE: 9-2-08
CHECKED BY: DATE: 9/5/08
FILE SPEC.: details/kkempf/english/skew endwall.dgn

PROJECT REFERENCE NO.	SHEET NO.
R-2719A	2-A6

STATE OF
NORTH CAROLINA
DEPT. OF TRANSPORTATION
DIVISION OF HIGHWAYS
RALEIGH, N.C.

ENGLISH DETAIL DRAWING FOR

CONCRETE ENDWALL FOR 42" PIPE CULVERT 78 DEG. SKEW

SHEET 1 OF 1

838D01

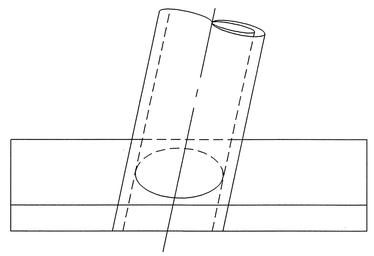

PLAN

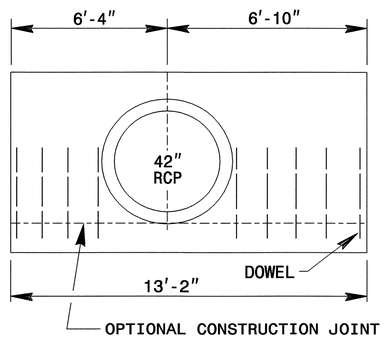

ELEVATION

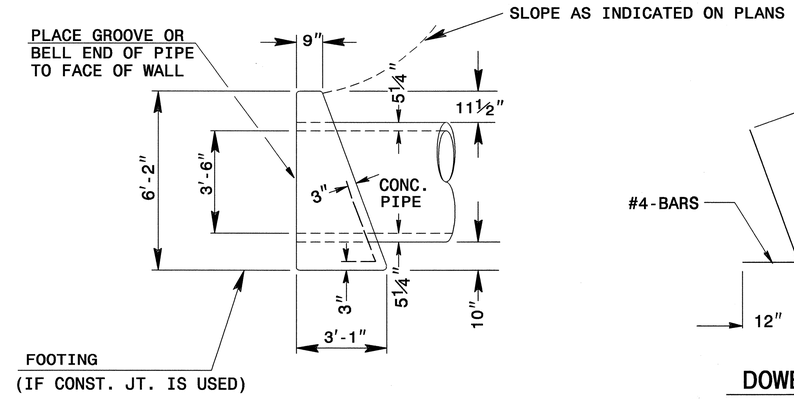

END ELEVATION

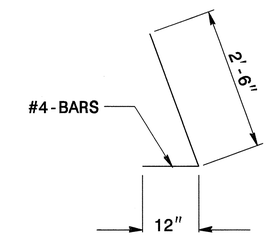

DOWEL
BAR-"X"

STEEL IN ENDWALL WITH REINFORCED CONCRETE PIPE		
LOC.	"X"	"Y"
TOP		38
LEFT	4	
RIGHT	5	
TOTAL LBS. 59		

GENERAL NOTES:

- -CHAMFER ALL CORNERS 1".
- -PLACE 2 #6 "Y" BARS IN THE TOP OF ENDWALL WITH A MINIMUM OF 3" COVER AND A LENGTH OF 6" LESS THAN ENDWALL LENGTH.
- -USE FORMS TO CONSTRUCT THE BOTTOM SLAB.
- -WALL THICKNESS (T) SHOWN IS NOT TO BE INTERPRETED TO MEAN THE THICKNESS ACCEPTABLE, BUT IS USED IN COMPUTING ENDWALL QUANTITIES.
- -WHEN THE CONTRACTOR ELECTS TO USE A CONSTRUCTION JOINT AT THE BOTTOM OF THE PIPE, PLACE BAR 'X' DOWELS IN THE BASE AS SHOWN ON PLANS. SPACING OF BARS IS TO BE APPROXIMATELY 12" CENTERS UNLESS OTHERWISE DIRECTED BY THE ENGINEER.
- -WHEN THE CONTRACTOR ELECTS TO USE A CONSTRUCTION JOINT AT THE BOTTOM OF THE PIPE AND POUR THE BASE SEPARATELY THE POUR SHALL BE LEFT ROUGH.
- -USE CLASS "B" CONCRETE.

STATE OF
NORTH CAROLINA
DEPT. OF TRANSPORTATION
DIVISION OF HIGHWAYS
RALEIGH, N.C.

ENGLISH DETAIL DRAWING FOR

CONCRETE ENDWALL FOR 42" PIPE CULVERT 78 DEG. SKEW

SHEET 1 OF 1

838D01

STA. 232 + 12 -L-

NORTH CAROLINA PROFESSIONAL SEAL 022966 ENGINEER JOHN F. HOWERTON 9/10/08

DESIGN SERVICES UNIT
STANDARDS AND SPECIAL DESIGN
Office 919-250-4128 FAX 919-250-4119

SEE PLATE FOR TITLE

ORIGINAL BY: T.S.Spell DATE: 8-16-00
MODIFIED BY: K.A.KEMPF DATE: 9-2-08
CHECKED BY: DATE: 9/5/08
FILE SPEC.: details/kkempf/english/skewl endwall.dgn

PROJECT REFERENCE NO.	SHEET NO.
R-2719A	2-A11

STATE OF
NORTH CAROLINA
DEPT. OF TRANSPORTATION
DIVISION OF HIGHWAYS
RALEIGH, N.C.

ENGLISH DETAIL DRAWING FOR

CONCRETE ENDWALL FOR 42" PIPE. 62 DEG. SKEW CULVERT

SHEET 1 OF 1

838D01

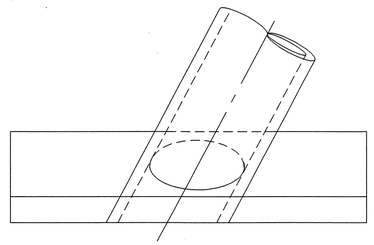

PLAN

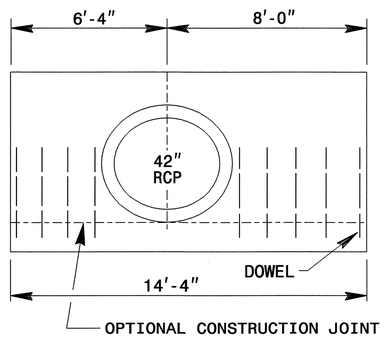

ELEVATION

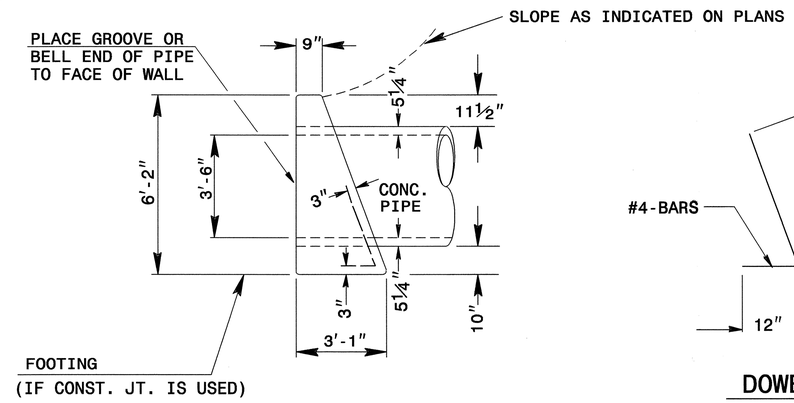

END ELEVATION

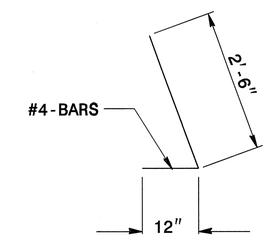

DOWEL
BAR-"X"

STEEL IN ENDWALL WITH REINFORCED CONCRETE PIPE		
LOC.	"X"	"Y"
TOP		42
LEFT	4	
RIGHT	5	
TOTAL LBS.	63	

GENERAL NOTES:

- -CHAMFER ALL CORNERS 1".
- -PLACE 2 #6 "Y" BARS IN THE TOP OF ENDWALL WITH A MINIMUM OF 3" COVER AND A LENGTH OF 6" LESS THAN ENDWALL LENGTH.
- -USE FORMS TO CONSTRUCT THE BOTTOM SLAB.
- -WALL THICKNESS (T) SHOWN IS NOT TO BE INTERPRETED TO MEAN THE THICKNESS ACCEPTABLE, BUT IS USED IN COMPUTING ENDWALL QUANTITIES.
- -WHEN THE CONTRACTOR ELECTS TO USE A CONSTRUCTION JOINT AT THE BOTTOM OF THE PIPE, PLACE BAR 'X' DOWELS IN THE BASE AS SHOWN ON PLANS. SPACING OF BARS IS TO BE APPROXIMATELY 12" CENTERS UNLESS OTHERWISE DIRECTED BY THE ENGINEER.
- -WHEN THE CONTRACTOR ELECTS TO USE A CONSTRUCTION JOINT AT THE BOTTOM OF THE PIPE AND POUR THE BASE SEPARATELY THE POUR SHALL BE LEFT ROUGH.
- -USE CLASS "B" CONCRETE.

STATE OF
NORTH CAROLINA
DEPT. OF TRANSPORTATION
DIVISION OF HIGHWAYS
RALEIGH, N.C.

ENGLISH DETAIL DRAWING FOR

CONCRETE ENDWALL FOR 42" PIPE. 62 DEG. SKEW CULVERT

SHEET 1 OF 1

838D01

STA. 236+50 -L-

NORTH CAROLINA PROFESSIONAL SEAL 022966 ENGINEER LORI S. HOWERTON 9/16/08

DESIGN SERVICES UNIT
STANDARDS AND SPECIAL DESIGN
Office 919-250-4128 FAX 919-250-4119

SEE PLATE FOR TITLE

ORIGINAL BY: T.S.Spell DATE: 8-16-00
MODIFIED BY: K.A.KEMPF DATE: 9-2-08
CHECKED BY: Lori S. Howerton DATE: 9/15/08
FILE SPEC.: details/kkempf/english/skew endwall.dgn

5/14/99

PROJECT REFERENCE NO.	SHEET NO.
R-2719A	2-AI

STATE OF
NORTH CAROLINA
DEPT. OF TRANSPORTATION
DIVISION OF HIGHWAYS
RALEIGH, N.C.

ENGLISH DETAIL DRAWING FOR

CONCRETE ENDWALL FOR 36" PIPE CULVERT 65 DEG. SKEW

SHEET 1 OF 1

838D01

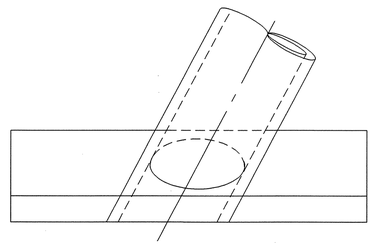

PLAN

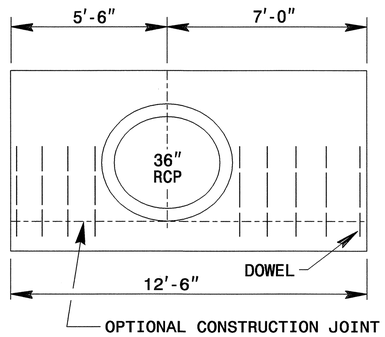

ELEVATION

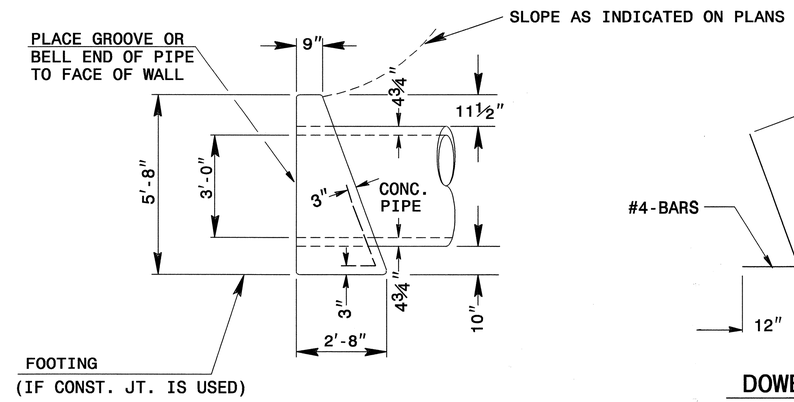

END ELEVATION

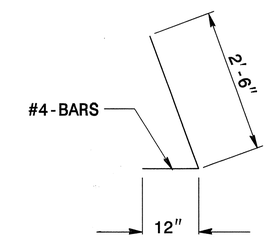

DOWEL
BAR-"X"

DOWELS IN ENDWALL WITH REINFORCED CONCRETE PIPE	
LOC.	"X"
LEFT	4
RIGHT	5
TOTAL LBS.	21

GENERAL NOTES:

- -CHAMFER ALL CORNERS 1".
- -PLACE 2 #6 "Y" BARS IN THE TOP OF ENDWALL WITH A MINIMUM OF 3" COVER AND A LENGTH OF 6" LESS THAN ENDWALL LENGTH.
- -USE FORMS TO CONSTRUCT THE BOTTOM SLAB.
- -WALL THICKNESS (T) SHOWN IS NOT TO BE INTERPRETED TO MEAN THE THICKNESS ACCEPTABLE, BUT IS USED IN COMPUTING ENDWALL QUANTITIES.
- -WHEN THE CONTRACTOR ELECTS TO USE A CONSTRUCTION JOINT AT THE BOTTOM OF THE PIPE, PLACE BAR 'X' DOWELS IN THE BASE AS SHOWN ON PLANS. SPACING OF BARS IS TO BE APPROXIMATELY 12" CENTERS UNLESS OTHERWISE DIRECTED BY THE ENGINEER.
- -WHEN THE CONTRACTOR ELECTS TO USE A CONSTRUCTION JOINT AT THE BOTTOM OF THE PIPE AND POUR THE BASE SEPARATELY THE POUR SHALL BE LEFT ROUGH.
- -USE CLASS "B" CONCRETE.

STATE OF
NORTH CAROLINA
DEPT. OF TRANSPORTATION
DIVISION OF HIGHWAYS
RALEIGH, N.C.

ENGLISH DETAIL DRAWING FOR

CONCRETE ENDWALL FOR 36" PIPE CULVERT 65 DEG. SKEW

SHEET 1 OF 1

838D01

STA. 16 + 40 -Y24RPB-

NORTH CAROLINA PROFESSIONAL SEAL 022966 ENGINEER DEL. S. HOWERTON

9/16/08

DESIGN SERVICES UNIT
STANDARDS AND SPECIAL DESIGN
Office 919-250-4128 FAX 919-250-4119

SEE PLATE FOR TITLE

ORIGINAL BY: T.S.Spell DATE: 8-16-00
MODIFIED BY: K.A.KEMPF DATE: 9-2-08
CHECKED BY: DATE: 9/15/08
FILE SPEC.: details/kkempf/english/skew endwall.dgn

PROJECT REFERENCE NO.	SHEET NO.
R-2719A	2-A1

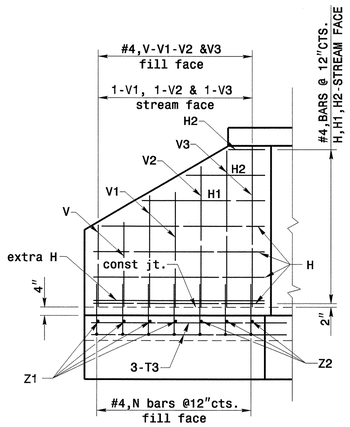

WING ELEVATION

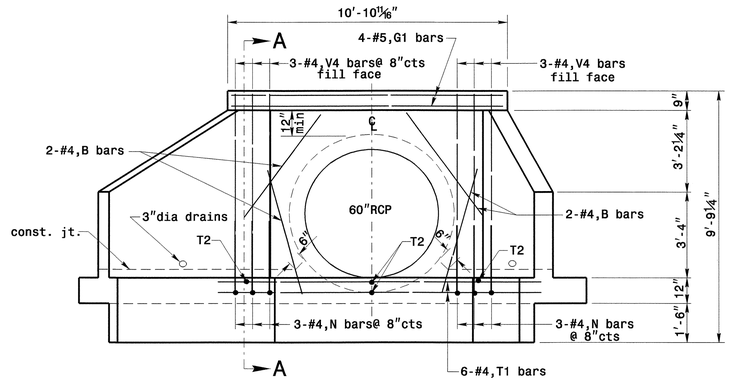

ELEVATION

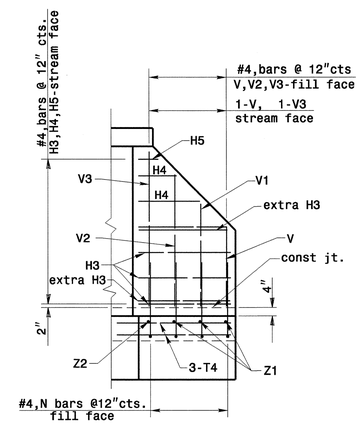

WING ELEVATION

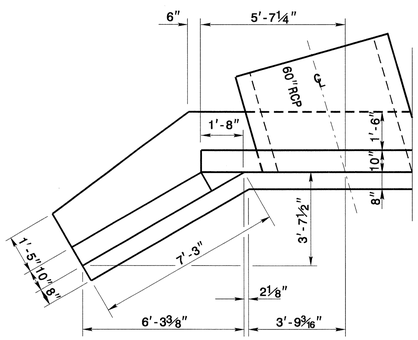

WING PLAN

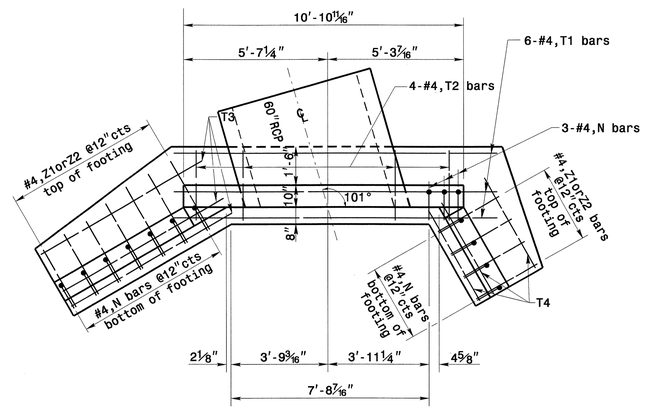

PLAN

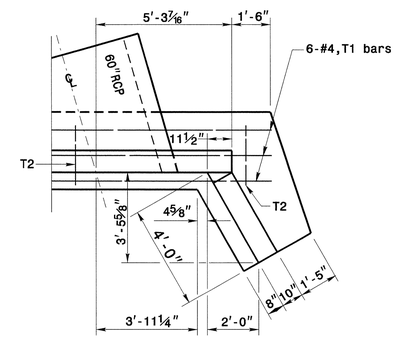

WING PLAN

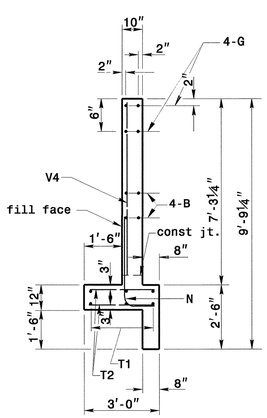

SECTION - AA

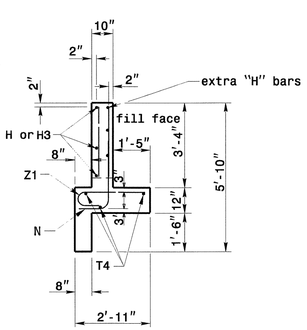

END OF WING

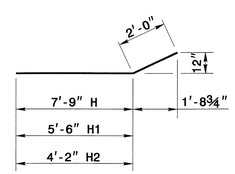

"H" BARS

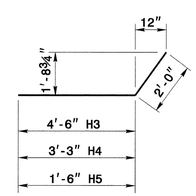

"H" BARS

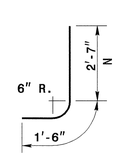

"N" BARS

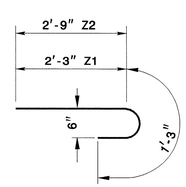

"Z" BARS

"H", "N", & "Z" BAR DIMENSIONS ARE OUT TO OUT.

NOTES:

ALL CONCRETE TO BE CLASS "A".

ALL REINFORCING STEEL SHALL BE ASTMA615-GRADE 60. ADJUST STEEL AS DIRECTED BY THE ENGINEER.

ALL REINFORCING STEEL SHALL BE DEFORMED BARS. WHERE SPLICING OF REINFORCMENT IS NECESSARY, BARS ARE TO BE LAPPED 45 DIAMETERS. ALL DIMENSIONS RELATIVE TO REINFORCEMENT ARE TO CENTERS OF BARS.

THE FOOTING, CURTAIN WALL AND 4" OF WALL ARE TO BE POURED IN ONE OPERATION ALLOWING NO TIME FOR INITIAL SET TO TAKE PLACE BETWEEN THEM. THE REMAINING WALL SHALL THEN BE POURED IN ONE OPERATION.

ALL EXPOSED CORNERS ARE TO BE CHAMFERED 1".

3" DIAMETER DRAINS SHALL BE PLACED IN WALL AS SHOWN AND BE 6" ABOVE NORMAL FLOW LINE.

ALL MATERIAL AND WORKMANSHIP AS PER N.C.DEPARTMENT OF TRANSPORTATION STANDARD SPECIFICATIONS.

THE EXTRA BARS ARE PROVIDED FOR HOLDING REINFORCING STEEL IN CORRECT POSITION IN WING.

BILL OF MATERIAL FOR ENDWALL

REINF. STEEL					1 PIPE			
BAR	SIZE	LENGTH	NO.	WEIGHT	NO.	WEIGHT	NO.	WEIGHT
B	#4	5'-0"			4	13		
G1	#5	10'-6"			4	44		
H	#4	9'-9"			5	33		
H1	#4	7'-6"			1	6		
H2	#4	6'-2"			2	9		
H3	#4	6'-6"			6	27		
H4	#4	5'-3"			2	8		
H5	#4	3'-6"			2	5		
T1	#4	12'-7"			12	101		
T2	#4	2'-8"			8	15		
T3	#4	7'-3"			3	15		
T4	#4	4'-0"			3	9		
V	#4	3'-3"			6	14		
V1	#4	4'-8"			4	13		
V2	#4	5'-6"			3	12		
V3	#4	6'-7"			5	22		
V4	#4	7'-9"			6	32		
Z1	#4	3'-6"			6	15		
Z2	#4	4'-0"			5	14		
REINF. STEEL LBS.						407		
CON./R.C. CU. YDS.								7.5
DEDUCTION OF 60"RCP@ 101°SKEW								0.9
CON./R.C. CU. YDS.								6.6

NORTH CAROLINA PROFESSIONAL SEAL 022966 ENGINEER JOEL S. HOWERTON
9/16/08

DESIGN DATA

Specifications	A.A.S.H.T.O. (1944)
Steel in tension	18,000 LBS. PER SQ.IN.
Concrete in compression	1,000 LBS. PER SQ.IN.
Shear Class "A" Concrete	90 LBS. PER SQ. IN.
Equiv. fluid pressure of earth	30 LBS.PER CU. FT.

PROJECT SERVICES UNIT
STANDARDS AND SPECIAL DESIGN
Office 919-250-4128 FAX 919-250-4119

DETAIL OF REINFORCED CONCRETE ENDWALL FOR 60" DIAMETER PIPE-101°SKEW STA.-Y1-31+60

ORIGINAL BY: DATE:
MODIFIED BY: mbritt DATE: 09-10-08
CHECKED BY: DATE: 9/16/08
FILE SPEC.: details/mbritt/english/rural/60endwall77sk.dgn

10-SEP-2008 14:07
s:\contracts\special details\mbritt\english\rural\r2719a endwall 54 147sk.dgn
rmbritt

PROJECT REFERENCE NO.	SHEET NO.
R-2719A	2-AK

STATE OF
NORTH CAROLINA
DEPT. OF TRANSPORTATION
DIVISION OF HIGHWAYS
RALEIGH, N.C.

ENGLISH DETAIL DRAWING FOR

CONCRETE ENDWALL FOR 111 DEG. SKEW 36" PIPE CULVERT

SHEET 1 OF 1

838D01

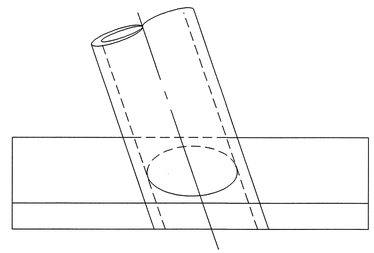

PLAN

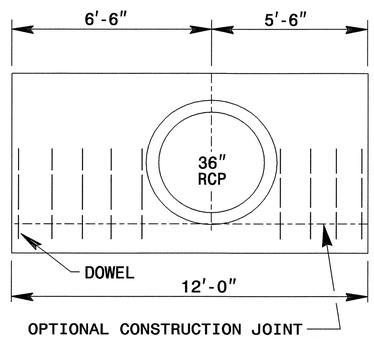

ELEVATION

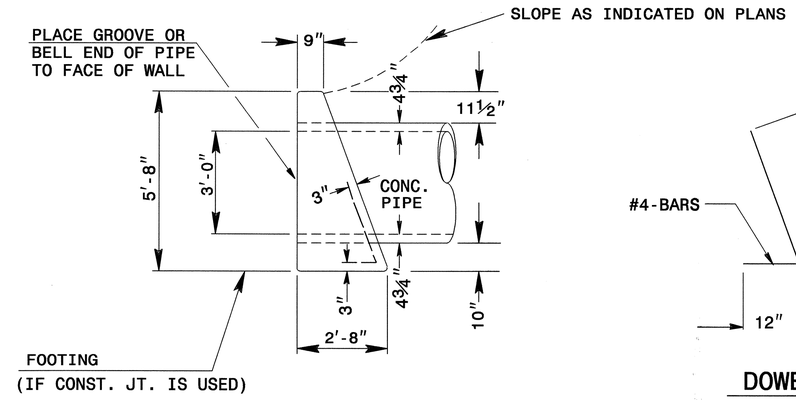

END ELEVATION

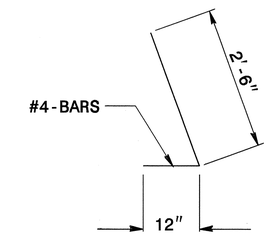

DOWEL
BAR-"X"

DOWELS IN ENDWALL WITH REINFORCED CONCRETE PIPE	
LOC.	"X"
LEFT	5
RIGHT	4
TOTAL LBS.	21

GENERAL NOTES:

- -CHAMFER ALL CORNERS 1".
- -PLACE 2 #6 "Y" BARS IN THE TOP OF ENDWALL WITH A MINIMUM OF 3" COVER AND A LENGTH OF 6" LESS THAN ENDWALL LENGTH.
- -USE FORMS TO CONSTRUCT THE BOTTOM SLAB.
- -WALL THICKNESS (T) SHOWN IS NOT TO BE INTERPRETED TO MEAN THE THICKNESS ACCEPTABLE, BUT IS USED IN COMPUTING ENDWALL QUANTITIES.
- -WHEN THE CONTRACTOR ELECTS TO USE A CONSTRUCTION JOINT AT THE BOTTOM OF THE PIPE, PLACE BAR 'X' DOWELS IN THE BASE AS SHOWN ON PLANS. SPACING OF BARS IS TO BE APPROXIMATELY 12" CENTERS UNLESS OTHERWISE DIRECTED BY THE ENGINEER.
- -WHEN THE CONTRACTOR ELECTS TO USE A CONSTRUCTION JOINT AT THE BOTTOM OF THE PIPE AND POUR THE BASE SEPARATELY THE POUR SHALL BE LEFT ROUGH.
- -USE CLASS "B" CONCRETE.

STATE OF
NORTH CAROLINA
DEPT. OF TRANSPORTATION
DIVISION OF HIGHWAYS
RALEIGH, N.C.

ENGLISH DETAIL DRAWING FOR

CONCRETE ENDWALL FOR 111 DEG. SKEW 36" PIPE CULVERT

SHEET 1 OF 1

838D01

STA. 110+00 -Y1-

NORTH CAROLINA PROFESSIONAL SEAL 022966 ENGINEER JOEL S. HOWERTON
9/16/08

DESIGN SERVICES UNIT
STANDARDS AND SPECIAL DESIGN
Office 919-250-4128 FAX 919-250-4119

SEE PLATE FOR TITLE

ORIGINAL BY: T.S.Spell DATE: 8-16-00
MODIFIED BY: K.A.KEMPF DATE: 9-2-08
CHECKED BY: DATE: 9/5/08
FILE SPEC.: details/kkempf/english/skew endwall.dgn

PROJECT REFERENCE NO.	SHEET
R-2719A	2-AL

GEOTECHNICAL ENGINEER

NORTH CAROLINA PROFESSIONAL SEAL 029413 ENGINEER CHARLES ARTHUR GOVE

23 SEPTEMBER 2008

SIGNATURE DATE

ENGINEER

SIGNATURE DATE

NOTE: FOR -L- PROFILE, SEE SHEET 45
FOR -Y6- PROFILE, SEE SHEET 70
SEE SHEET 2-L FOR DRAINAGE DITCH DETAILS
MILLED RUMBLE STRIPS SHALL BE PLACED ON -L
ACCORDING TO NCDOT STANDARD DRAWING No.665.01

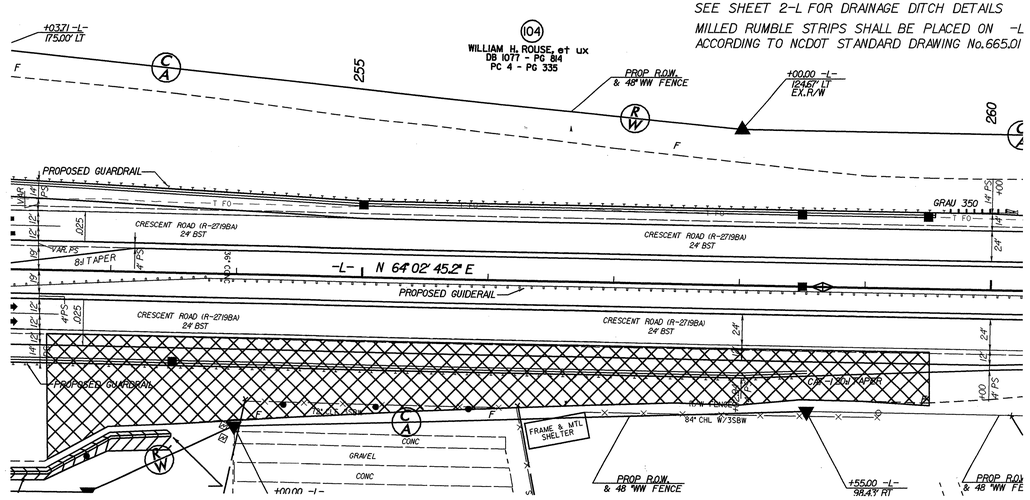

LOCATION SKETCH

N.T.S.

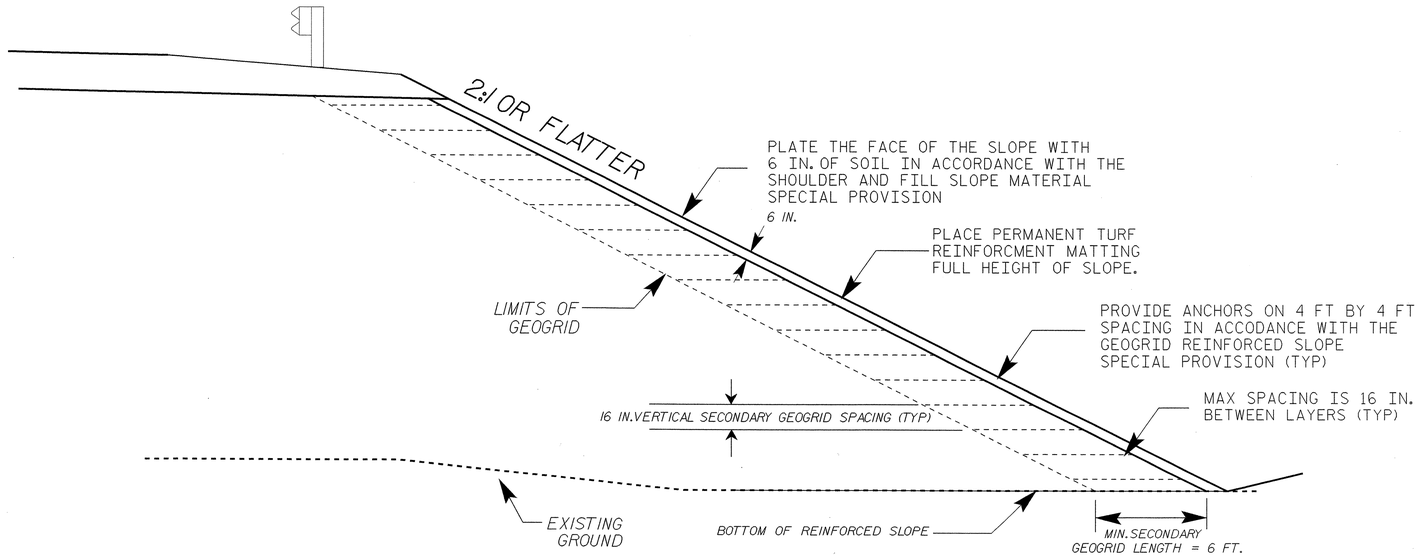

TYPICAL SECTION

N.T.S.

NOTES:

1. GEOGRID REINFORCED SLOPE SHALL BE PLACED FROM STA. 252+50 TO 259+50 -L-, RIGHT, WHERE SLOPE IS STEEPER THAN 3:1 (H:V).
2. LAYERS OF REINFORCEMENT MAY NEED TO BE ADDED OR SUBTRACTED AT THE TOP OF SLOPE AS THE EMBANKMENT HEIGHT VARIES THROUGH THE STEEPENED SECTION.
3. ADJACENT ROWS OF GEOGRID SHALL BE JOINED BY EITHER A SECURE MECHANICAL CONNECTION OR A MINIMUM OF 12 INCHES OF OVERLAP
4. PERMANENT TURF REINFORCEMENT SLOPE PROTECTION SHALL BE PLACED ON THE SLOPE FROM STA. 252+50 TO 259+50, WHERE SLOPE IS STEEPER THAN 3:1 (H:V). SEE THE GEOGRID REINFORCED SOIL SLOPE SPECIAL PROVISION.
5. THE FIRST LAYER OF GEOGRID SHALL BE PLACED ON LEVEL GROUND, NOT STEEPER THAN 5% GRADE.
6. SEE THE SPECIAL PROVISION FOR GEOGRID REINFORCED SLOPE FOR DETAILED REQUIREMENTS OF MATERIALS AND CONSTRUCTION.
7. SEE ROADWAY CROSS SECTIONS FOR LIMITS OF SLOPE.
8. BACKFILL WITHIN THE REINFORCED VOLUME SHALL BE COMMON BORROW MATERIAL IN ACCORDANCE WITH SECTION 1018 OF THE STANDARD SPECIFICATIONS.

ESTIMATED QUANTITIES:

SECONDARY GEOGRID REINFORCEMENT: 10,000 SQ. YD.
PERMENANT TURF REINFORCEMENT MAT: 3500 SQ. YD.

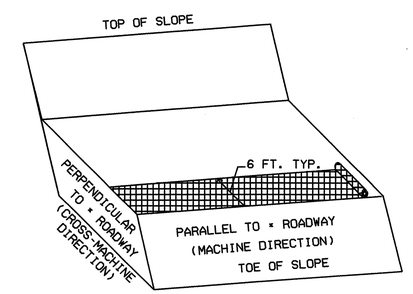

SECONDARY GEOGRID REINFORCEMENT DETAIL

N.T.S.

PREPARED BY: C. A. GOVE	DATE: 08/08
REVIEWED BY: J. R. BATTS	DATE: 08/08

GEOTECHNICAL ENGINEERING UNIT

☒ EASTERN REGIONAL OFFICE
☐ WESTERN REGIONAL OFFICE

STATE OF NORTH CAROLINA
DEPARTMENT OF TRANSPORTATION
RALEIGH

GEOGRID REINFORCED SLOPE AT 252+50 TO 259+50 -L-

REVISIONS

NO.	BY	DATE	NO.	BY	DATE
1	-	-	3	-	-
2	-	-	4	-	-

PROJECT REFERENCE NO.	SHEET NO.
R-2719A	2-AM

STATE OF
NORTH CAROLINA
DEPT. OF TRANSPORTATION
DIVISION OF HIGHWAYS
RALEIGH, N.C.

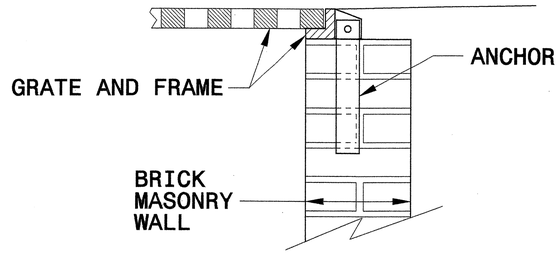

BRICK MASONRY CONSTRUCTION

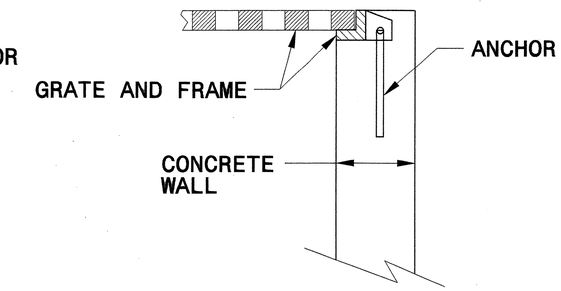

CONCRETE CONSTRUCTION

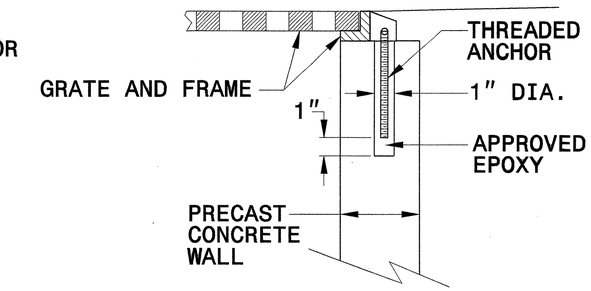

PRECAST CONCRETE CONSTRUCTION

DETAIL SHOWING ANCHORAGE OF FRAME FOR GRATED DROP INLET

NOTE:
CONSTRUCT GRATED DROP INLET TO COINCIDE WITH NORMAL OR SUPERELEVATED SHOULDER OR PAVEMENT SLOPE.

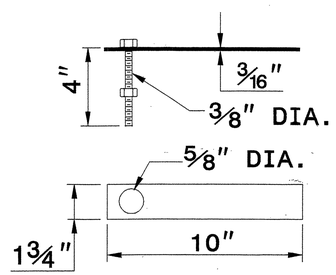

MASONRY ANCHOR
3/8" DIA. BOLT WITH PLATE

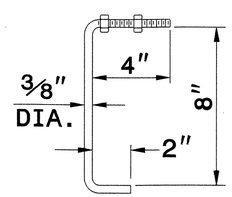

CONCRETE ANCHOR
3/8" DIA. BENT BAR

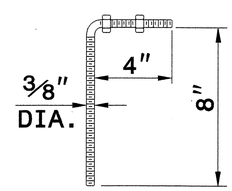

PRECAST CONCRETE ANCHOR
3/8" DIA. BENT BAR

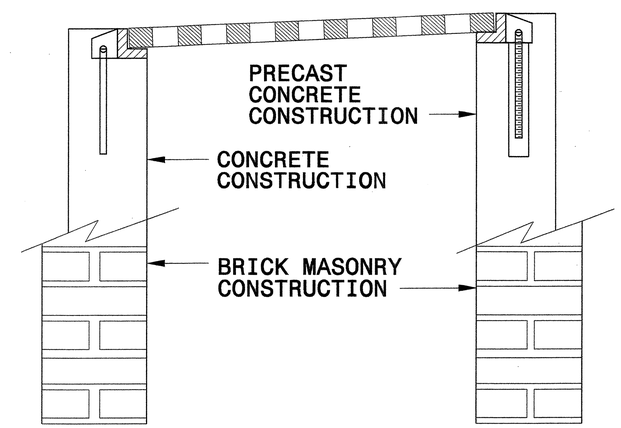

FRAME AND GRATE INSTALLATION FOR NORMAL CROWN AND SUPERELEVATED SECTIONS

STATE OF
NORTH CAROLINA
DEPT. OF TRANSPORTATION
DIVISION OF HIGHWAYS
RALEIGH, N.C.

ENGLISH DETAIL DRAWING FOR
ANCHORAGE FOR FRAMES
BRICK/CONCRETE/PRECAST CONCRETE

SHEET 1 OF 1
840D25

STATE OF
NORTH CAROLINA
DEPT. OF TRANSPORTATION
DIVISION OF HIGHWAYS
RALEIGH, N.C.

ENGLISH DETAIL DRAWING FOR
ANCHORAGE FOR FRAMES
BRICK/CONCRETE/PRECAST CONCRETE

SHEET 1 OF 1
840D25

NORTH CAROLINA PROFESSIONAL SEAL 022966 ENGINEER JOEL S. HOWERTON
4/14/08

PROJECT SERVICES UNIT
STANDARDS AND SPECIAL DESIGN
Office 919-250-4128 FAX 919-250-4119

SEE PLATE FOR TITLE

ORIGINAL BY:	2006 STD 840.25	DATE:	07/18/06
MODIFIED BY:	E.E. WARD	DATE:	9/25/06
CHECKED BY:		DATE:	
FILE SPEC.:			

$$$$SYSTIME$$$$
$$$$SYSTIME$$$$
$$$$USERNAME$$$$

Sheet No. 2-AN

GEOTECHNICAL ENGINEER	ENGINEER
NORTH CAROLINA PROFESSIONAL SEAL 020413 ENGINEER CHARLES ARTHUR GOVE	
SIGNATURE DATE	SIGNATURE DATE

SETTLEMENT GAUGE DETAIL

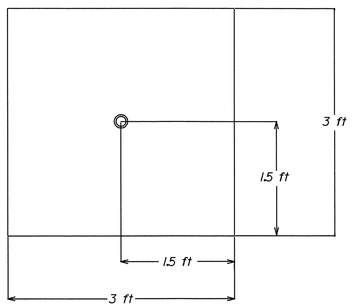

STEEL BASE

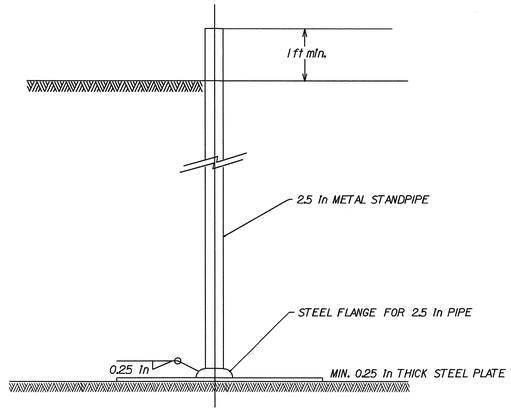

DETAIL OF STEEL BASE

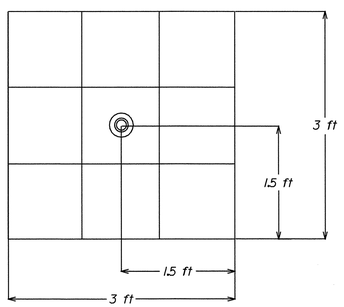

WOOD BASE

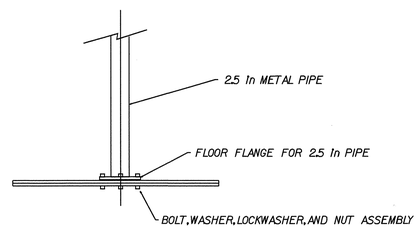

DETAIL OF WOOD BASE

SIX - 1 in X 1 ft X 3 ft PLANKS OF LUMBER OR TWO PIECES 1 in X 3 ft X 3 ft EXTERIOR GRADE PLYWOOD, SECURELY FASTENED AND THEN COATED WITH WOOD PRESERVATIVE

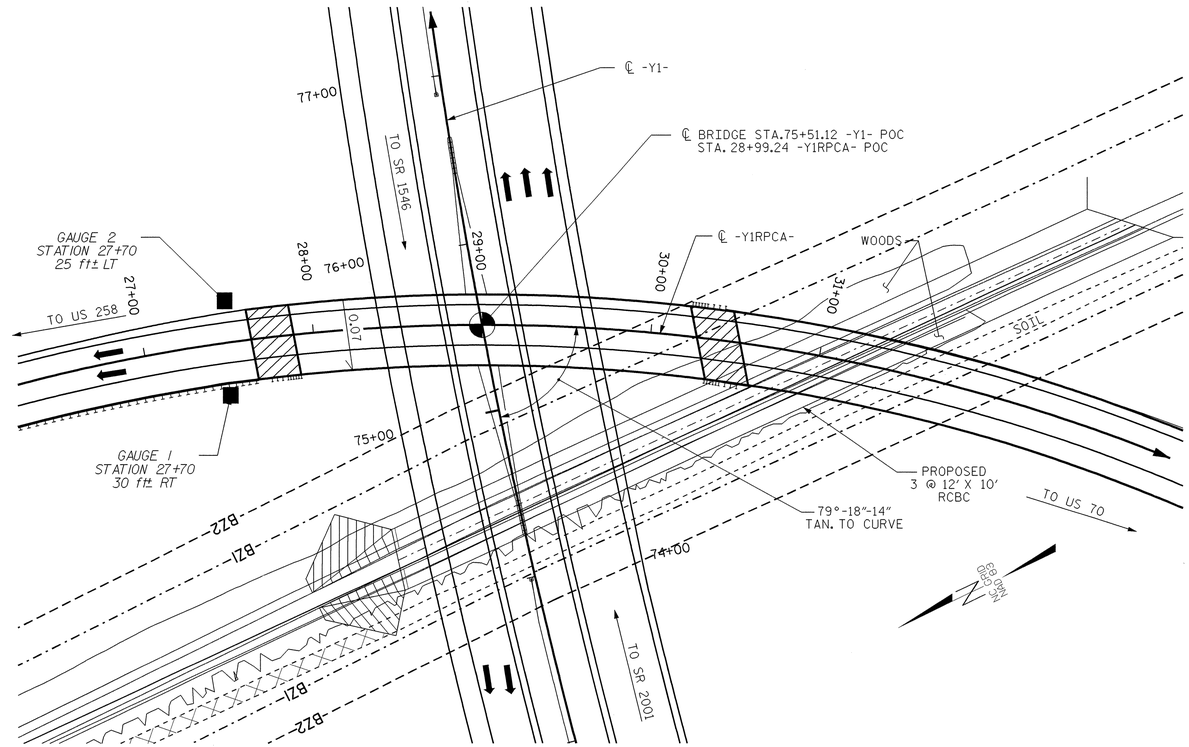

NOTES

1. THE USE OF EITHER THE WOOD BASE OR THE STEEL BASE SETTLEMENT GAUGE SHALL BE THE CONTRACTOR'S OPTION.
2. SETTLEMENT GAUGES SHALL BE INSTALLED BEFORE ANY FILL IS PLACED.
3. SETTLEMENT GAUGE ELEVATIONS ARE TO BE DETERMINED AND RECORDED WEEKLY BY THE RESIDENT ENGINEER. THE INITIAL ELEVATION OF THE SETTLEMENT GAUGE PLATE (AT TOP OF PLATE) SHALL BE DETERMINED AT THE TIME OF INSTALLATION ALONG WITH THE EMBANKMENT ELEVATION. WHEN NEW SECTIONS OF THE PIPE ARE ADDED, ELEVATIONS SHALL BE RECORDED AT THE TOP OF EXISTING PIPE AND AT THE TOP OF THE NEW PIPE. THIS IS TO TAKE INTO ACCOUNT INTERIM SETTLEMENT, VARIABLE PIPE LENGTHS, AND THREAD LENGTHS IN COUPLING. RESULTS OF SETTLEMENT GAUGE READINGS SHALL BE FORWARDED TO MR. K.J. KIM, EASTERN REGIONAL GEOTECHNICAL MANAGER, WITHIN THREE DAYS.

QUANTITIES

EMBANKMENT SETTLEMENT GAUGES ..... 2 EACH

GAUGE NOS.	LINES	STATIONS	OFFSETS
1 & 2	-L-	27+70	30 ft RT & 25 ft LT

PREPARED BY: T.T. WALKER	DATE: 9/08
REVIEWED BY: C.A. GOVE	DATE: 9/08

PROJECT NO.: 34501.1.1 (R-2719A)

LENOIR **COUNTY**

STATION:

SHEET 1 OF 1

GEOTECHNICAL ENGINEERING UNIT

- ■ EASTERN REGIONAL OFFICE
- ☐ WESTERN REGIONAL OFFICE
- ☐ CONTRACT OFFICE

STATE OF NORTH CAROLINA DEPARTMENT OF TRANSPORTATION RALEIGH

PLANS FOR EMBANKMENT MONITORING

REVISIONS						SHEET NO.
NO.	BY	DATE	NO.	BY	DATE	
1			3			TOTAL SHEETS
2			4			

8/17/99

Prepared by URS
URS Corporation – North Carolina
1600 Perimeter Park Drive
Morrisville, North Carolina 27560
TELEPHONE (919) 461-1100 FAX (919) 461-1415

PROJECT REFERENCE NO.	SHEET NO.
R-2719A	3(1of2)
R/W SHEET NO.	

REVISIONS

SUMMARY OF QUANTITIES

STATE OF NORTH CAROLINA
DIVISION OF HIGHWAYS

STATE OF NORTH CAROLINA
DIVISION OF HIGHWAYS
ROADWAY SUMMARY OF QUANTITIES FOR CONTRACT - C201965

ItemNumber	Sec #	Quantity	Unit	Description
0000100000-N	800	Lump Sum		MOBILIZATION
0000700000-N	SP	Lump Sum		FIELD OFFICE
0001000000-E	200	Lump Sum		CLEARING & GRUBBING .. ACRE(S)
0008000000-E	200	5	ACR	SUPPLEMENTARY CLEARING & GRUB-BING
0022000000-E	225	105,200	CY	UNCLASSIFIED EXCAVATION
~~0029000000-N~~	~~SP~~	~~Lump Sum~~		~~REINFORCED BRIDGE APPROACH FILL, STATION ************ (113+13.81-L-LT)~~
~~0029000000-N~~	~~SP~~	~~Lump Sum~~		~~REINFORCED BRIDGE APPROACH FILL, STATION ************ (113+62.33-L-RT)~~
0029000000-N	SP	Lump Sum		REINFORCED BRIDGE APPROACH FILL, STATION ************ (211+80.69-L-RT)
0029000000-N	SP	Lump Sum		REINFORCED BRIDGE APPROACH FILL, STATION ************ (211+96.72-L-LT)
0029000000-N	SP	Lump Sum		REINFORCED BRIDGE APPROACH FILL, STATION ************ (247+69.78-L-RT)
0029000000-N	SP	Lump Sum		REINFORCED BRIDGE APPROACH FILL, STATION ************ (248+69.15-L-LT)
0029000000-N	SP	Lump Sum		REINFORCED BRIDGE APPROACH FILL, STATION ************ (29+01.31-Y1RPCA-)
0029000000-N	SP	Lump Sum		REINFORCED BRIDGE APPROACH FILL, STATION ************ (51+72.74-L-LT)
~~0029000000-N~~	~~SP~~	~~Lump Sum~~		~~REINFORCED BRIDGE APPROACH FILL, STATION ************ (85+87.56-L-LT)~~
~~0029000000-N~~	~~SP~~	~~Lump Sum~~		~~REINFORCED BRIDGE APPROACH FILL, STATION ************ (86+08.82-L-RT)~~
0029000000-N	SP	Lump Sum		REINFORCED BRIDGE APPROACH FILL, STATION ************ (97+12.41-Y1-LT)
0029000000-N	SP	Lump Sum		REINFORCED BRIDGE APPROACH FILL, STATION ************ (97+40.48-Y1-RT)
0036000000-E	225	34,100	CY	UNDERCUT EXCAVATION
0080000000-E	SP	1,000	TON	CLASS IV SUBGRADE STABILIZA-TION
0106000000-E	230	3,188,150	CY	BORROW EXCAVATION
0127000000-N	SP	2	EA	EMBANKMENT SETTLEMENT GAUGES
0134000000-E	240	16,700	CY	DRAINAGE DITCH EXCAVATION
0141000000-E	240	300	LF	BERM DITCH CONSTRUCTION
0156000000-E	250	3,760	SY	REMOVAL OF EXISTING ASPHALT PAVEMENT
0192000000-N	260	12	HR	PROOF ROLLING
0196000000-E	270	5,500	SY	FABRIC FOR SOIL STABILIZATION
0234000000-E	SP	10,000	CY	GENERIC GRADING ITEM SELECT GRANULAR MATERIAL
0241000000-E	SP	3,500	SY	GENERIC GRADING ITEM PERMANENT TURF REINFORCEMENT MAT
0241000000-E	SP	10,000	SY	GENERIC GRADING ITEM SECONDARY GEOGRID REINFORCEMENT
0300000000-E	300	5,650	TON	SELECT MATERIAL, CLASS II
0318000000-E	300	2,285	TON	FOUNDATION CONDITIONING MATE-RIAL, MINOR STRS
0342000000-E	310	52	LF	**" SIDE DRAIN PIPE (12")
0343000000-E	310	100	LF	15" SIDE DRAIN PIPE
0344000000-E	310	84	LF	18" SIDE DRAIN PIPE
0345000000-E	310	36	LF	24" SIDE DRAIN PIPE
0390000000-E	310	1,772	LF	36" RC PIPE CULVERTS, CLASS III
0396000000-E	310	548	LF	42" RC PIPE CULVERTS, CLASS III
0402000000-E	310	296	LF	48" RC PIPE CULVERTS, CLASS III
0408000000-E	310	600	LF	54" RC PIPE CULVERTS, CLASS III
0414000000-E	310	540	LF	60" RC PIPE CULVERTS, CLASS III
0448000000-E	310	268	LF	****" RC PIPE CULVERTS, CLASS IV (30")

ItemNumber	Sec #	Quantity	Unit	Description
0448000000-E	310	624	LF	****" RC PIPE CULVERTS, CLASS IV (36")
0448000000-E	310	372	LF	****" RC PIPE CULVERTS, CLASS IV (48")
0448000000-E	310	308	LF	****" RC PIPE CULVERTS, CLASS IV (66")
0576000000-E	310	96	LF	**" CS PIPE CULVERTS, *****" THICK (36", 0.079")
0576000000-E	310	68	LF	**" CS PIPE CULVERTS, *****" THICK (48", 0.109")
0582000000-E	310	200	LF	15" CS PIPE CULVERTS, 0.064" THICK
0706000000-E	310	136	LF	12" BIT COAT CS PIPE CULVERTS, TYPE B 0.064" THICK
0708000000-E	310	1,807	LF	15" BIT COAT CS PIPE CULVERTS, TYPE B 0.064" THICK
0714000000-E	310	276	LF	18" BIT COAT CS PIPE CULVERTS, TYPE B 0.064" THICK
0720000000-E	310	92	LF	24" BIT COAT CS PIPE CULVERTS, TYPE B 0.064" THICK
0806000000-E	310	31	EA	15" BIT COAT CS PIPE ELBOWS, TYPE B 0.064" THICK
0807000000-E	310	4	EA	18" BIT COAT CS PIPE ELBOWS, T YPE B 0.064" THICK
0995000000-E	340	1,691	LF	PIPE REMOVAL
1011000000-N	500	Lump Sum		FINE GRADING
1077000000-E	SP	100	TON	#57 STONE
1110000000-E	510	3,000	TON	STABILIZER AGGREGATE
1121000000-E	520	18,800	TON	AGGREGATE BASE COURSE
1220000000-E	545	1,000	TON	INCIDENTAL STONE BASE
1275000000-E	600	5,000	GAL	PRIME COAT
1330000000-E	607	200	SY	INCIDENTAL MILLING
1489000000-E	610	1,030	TON	ASPHALT CONC BASE COURSE, TYPE B25.0B
1491000000-E	610	3,310	TON	ASPHALT CONC BASE COURSE, TYPE B25.0C
1503000000-E	610	9,710	TON	ASPHALT CONC INTERMEDIATE COURSE, TYPE I19.0C
1519000000-E	610	3,670	TON	ASPHALT CONC SURFACE COURSE, TYPE S9.5B
1523000000-E	610	8,910	TON	ASPHALT CONC SURFACE COURSE, TYPE S9.5C
1560000000-E	620	865	TON	ASPHALT BINDER FOR PLANT MIX, GRADE PG 64-22
1565000000-E	620	535	TON	ASPHALT BINDER FOR PLANT MIX, GRADE PG 70-22
1693000000-E	654	615	TON	ASPHALT PLANT MIX, PAVEMENT REPAIR
1840000000-E	665	6,960	LF	MILLED RUMBLE STRIPS (ASPHALT CEMENT CONCRETE)
2022000000-E	815	2,184	CY	SUBDRAIN EXCAVATION
2033000000-E	815	1,092	CY	SUBDRAIN FINE AGGREGATE
2044000000-E	815	6,500	LF	6" PERFORATED SUBDRAIN PIPE
2055000000-E	815	195	EA	6" SUBDRAIN PIPE WYES, TEES, & ELBOWS
2066000000-N	815	13	EA	CONCRETE PAD FOR SUBDRAIN PIPE OUTLET
2077000000-E	815	78	LF	6" OUTLET PIPE (SUBDRAINS)
2209000000-E	838	67.1	CY	ENDWALLS
2220000000-E	838	55.2	CY	REINFORCED ENDWALLS
2253000000-E	840	3	CY	PIPE COLLARS
2286000000-N	840	158	EA	MASONRY DRAINAGE STRUCTURES
2308000000-E	840	12.4	LF	MASONRY DRAINAGE STRUCTURES
2354000000-N	840	5	EA	FRAME WITH GRATE, STD 840.22
2364000000-N	840	13	EA	FRAME WITH TWO GRATES, STD 840.16
2364200000-N	840	75	EA	FRAME WITH TWO GRATES, STD 840.20
2365000000-N	840	34	EA	FRAME WITH TWO GRATES, STD 840.22

ItemNumber	Sec #	Quantity	Unit	Description
2374000000-N	840	7	EA	FRAME WITH GRATE & HOOD, STD 840.03, TYPE ** (E)
2374000000-N	840	16	EA	FRAME WITH GRATE & HOOD, STD 840.03, TYPE ** (F)
2374000000-N	840	8	EA	FRAME WITH GRATE & HOOD, STD 840.03, TYPE ** (G)
2549000000-E	846	7,290	LF	2'-6" CONCRETE CURB & GUTTER
2570000000-N	SP	2	EA	MODIFIED CONCRETE FLUME
2577000000-E	846	2,190	LF	CONCRETE EXPRESSWAY GUTTER
2605000000-N	848	18	EA	CONCRETE WHEELCHAIR RAMPS
2612000000-E	848	220	SY	6" CONCRETE DRIVEWAY
2619000000-E	850	50	SY	4" CONCRETE PAVED DITCH
2655000000-E	852	3,080	SY	5" MONOLITHIC CONCRETE ISLANDS (KEYED IN)
2800000000-N	858	4	EA	ADJUSTMENT OF CATCH BASINS
2830000000-N	858	3	EA	ADJUSTMENT OF MANHOLES
2845000000-N	858	7	EA	ADJUSTMENT OF METER BOXES OR VALVE BOXES
2938000000-N	SP	1	EA	CONVERT EXISTING DROP INLET TO JUNCTION BOX WITH MANHOLE COVER
3030000000-E	862	2,500	LF	STEEL BM GUARDRAIL
3150000000-N	862	10	EA	ADDITIONAL GUARDRAIL POSTS
3210000000-N	862	1	EA	GUARDRAIL ANCHOR UNITS, TYPE CAT-1
3270000000-N	SP	2	EA	GUARDRAIL ANCHOR UNITS, TYPE 350
3285000000-N	SP	2	EA	GUARDRAIL ANCHOR UNITS, TYPE M-350
3317000000-N	862	5	EA	GUARDRAIL ANCHOR UNITS, TYPE B-77
3345000000-E	864	213	LF	REMOVE & RESET EXISTING GUARD-RAIL
3380000000-E	862	63	LF	TEMPORARY STEEL BM GUARDRAIL
3389100000-N	SP	1	EA	GUARDRAIL ANCHOR UNITS, TYPE 350 TEMPORARY
3389400000-E	865	1,255	LF	DOUBLE FACED CABLE GUIDERAIL
3389600000-N	865	2	EA	CABLE GUIDERAIL ANCHOR UNITS
3503000000-E	866	58,160	LF	WOVEN WIRE FENCE, 47" FABRIC
3509000000-E	866	3,710	EA	4" TIMBER FENCE POSTS, 7'-6" LONG
3515000000-E	866	760	EA	5" TIMBER FENCE POSTS, 8'-0" LONG
3557000000-E	866	500	LF	ADDITIONAL BARBED WIRE
3628000000-E	876	1,765	TON	RIP RAP, CLASS I
3642000000-E	876	30	TON	RIP RAP, CLASS A
3649000000-E	876	1,880	TON	RIP RAP, CLASS B
3651000000-E	SP	70	TON	BOULDERS
3656000000-E	876	8,850	SY	FILTER FABRIC FOR DRAINAGE
3659000000-N	SP	13	EA	PREFORMED SCOUR HOLES WITH LEVEL SPREADER APRON
4048000000-E	902	6	CY	REINFORCED CONCRETE SIGN FOUN-DATIONS
4060000000-E	903	3,726	LB	SUPPORTS, BREAKAWAY STEEL BEAM
4072000000-E	903	8	LF	SUPPORTS, 3-LB STEEL U-CHANNEL
4082000000-E	903	725	LF	SUPPORTS, WOOD
4096000000-N	904	4	EA	SIGN ERECTION, TYPE D
4102000000-N	904	42	EA	SIGN ERECTION, TYPE E
4108000000-N	904	3	EA	SIGN ERECTION, TYPE F
4110000000-N	904	5	EA	SIGN ERECTION, TYPE *** (GROUND MOUNTED) (A)
4110000000-N	904	1	EA	SIGN ERECTION, TYPE *** (GROUND MOUNTED) (B)
4152000000-N	907	2	EA	DISPOSAL OF SIGN SYSTEM, STEEL BEAM

ItemNumber	Sec #	Quantity	Unit	Description
4155000000-N	907	10	EA	DISPOSAL OF SIGN SYSTEM, U-CHANNEL
4400000000-E	1110	343	SF	WORK ZONE SIGNS (STATIONARY)
4405000000-E	1110	480	SF	WORK ZONE SIGNS (PORTABLE)
4410000000-E	1110	90	SF	WORK ZONE SIGNS (BARRICADE MOUNTED)
4415000000-N	1115	3	EA	FLASHING ARROW PANELS, TYPE C
4420000000-N	1120	2	EA	CHANGEABLE MESSAGE SIGN
4430000000-N	1130	100	EA	DRUMS
4435000000-N	1135	60	EA	CONES
4445000000-E	1145	445	LF	BARRICADES (TYPE III)
4455000000-N	1150	100	MD	FLAGGER
4480000000-N	1165	4	EA	TMIA
4650000000-N	1251	385	EA	TEMPORARY RAISED PAVEMENT MARKERS
4685000000-E	1205	18,919	LF	THERMOPLASTIC PAVEMENT MARKING LINES (4", 90 MILS)
4686000000-E	1205	21,032	LF	THERMOPLASTIC PAVEMENT MARKING LINES (4", 120 MILS)
4688000000-E	1205	5,334	LF	THERMOPLASTIC PAVEMENT MARKING LINES (6", 90 MILS)
4690000000-E	1205	478	LF	THERMOPLASTIC PAVEMENT MARKING LINES (6", 120 MILS)
4700000000-E	1205	228	LF	THERMOPLASTIC PAVEMENT MARKING LINES (12", 90 MILS)
4710000000-E	1205	390	LF	THERMOPLASTIC PAVEMENT MARKING LINES (24", 120 MILS)
4721000000-E	1205	8	EA	THERMOPLASTIC PAVEMENT MARKING CHARACTER (120 MILS)
4725000000-E	1205	41	EA	THERMOPLASTIC PAVEMENT MARKING SYMBOL (90 MILS)
4770000000-E	1205	2,307	LF	COLD APPLIED PLASTIC PAVEMENT MARKING LINES, TYPE ** (4") (IV)
4810000000-E	1205	14,192	LF	PAINT PAVEMENT MARKING LINES (4")
4835000000-E	1205	155	LF	PAINT PAVEMENT MARKING LINES (24")
4840000000-N	1205	8	EA	PAINT PAVEMENT MARKING CHARAC-TER
4845000000-N	1205	11	EA	PAINT PAVEMENT MARKING SYMBOL
4850000000-E	1205	3,900	LF	REMOVAL OF PAVEMENT MARKING LINES (4")
4905000000-N	1253	330	EA	SNOWPLOWABLE PAVEMENT MARKERS
4915000000-E	1264	9	EA	7' U-CHANNEL POSTS
4935000000-N	1267	15	EA	FLEXIBLE DELINEATORS (CRYSTAL)
4940000000-N	1267	40	EA	FLEXIBLE DELINEATORS (YELLOW)
4945000000-N	1267	8	EA	FLEXIBLE DELINEATORS (CRYSTAL & RED)
4950000000-N	1267	5	EA	FLEXIBLE DELINEATORS (YELLOW & RED)
4955000000-N	1264	9	EA	OBJECT MARKERS (END OF ROAD)
5319000000-E	1505	109	CY	CLASS B CONCRETE FOR ENCASING UTILITY LINES
5325400000-E	1510	220	LF	4" WATER LINE
5325600000-E	1510	60	LF	6" WATER LINE
5325800000-E	1510	418	LF	8" WATER LINE
5326200000-E	1510	471	LF	12" WATER LINE
5326600000-E	1510	821	LF	16" WATER LINE
5571800000-E	1515	1	EA	8" TAPPING VALVE
5648000000-N	1515	4	EA	RELOCATE WATER METER
5649000000-N	1515	1	EA	RECONNECT WATER METER
5666000000-E	1515	2	EA	FIRE HYDRANT
5672000000-N	1515	5	EA	RELOCATE FIRE HYDRANT
5804000000-E	1530	447	LF	ABANDON 12" UTILITY PIPE
5810000000-E	1530	808	LF	ABANDON 16" UTILITY PIPE
5815000000-N	1530	5	EA	REMOVE WATER METER
5815500000-N	1530	2	EA	REMOVE FIRE HYDRANT
5836200000-E	1540	280	LF	30" ENCASEMENT PIPE
6000000000-E	1605	144,000	LF	TEMPORARY SILT FENCE
6006000000-E	1610	9,380	TON	STONE FOR EROSION CONTROL, CLASS A
6009000000-E	1610	20,895	TON	STONE FOR EROSION CONTROL, CLASS B
6012000000-E	1610	11,700	TON	SEDIMENT CONTROL STONE

2/24/2009
R:\Roadway\Grading_Proj\r2719A_RDY_PSH3_BLANK_SUM_GRD.dgn
lisa mcarthur

STATE OF NORTH CAROLINA
SUMMARY OF QUANTITIES

PROJECT REFERENCE No.	SHEET No.
R-2719A	3 (2 of 2)

ItemNumber	Sec #	Quantity	Unit	Description
6015000000-E	1615	442	ACR	TEMPORARY MULCHING
6018000000-E	1620	7,800	LB	SEED FOR TEMPORARY SEEDING
6021000000-E	1620	32	TON	FERTILIZER FOR TEMPORARY SEED-ING
6024000000-E	1622	16,550	LF	TEMPORARY SLOPE DRAINS
6027000000-N	1622	119	EA	INLET PROTECTION AT TEMPORARY SLOPE DRAINS
6029000000-E	SP	13,200	LF	SAFETY FENCE
6030000000-E	1630	73,500	CY	SILT EXCAVATION
6036000000-E	1631	48,000	SY	MATTING FOR EROSION CONTROL
6037000000-E	SP	285	SY	COIR FIBER MAT
6038000000-E	SP	650	SY	PERMANENT SOIL REINFORCEMENT MAT
6042000000-E	1632	6,500	LF	1/4" HARDWARE CLOTH
6046000000-E	SP	100	LF	TEMPORARY PIPE FOR STREAM CROSSING
6069000000-E	1638	1,395	CY	STILLING BASINS
6070000000-N	SP	4	EA	SPECIAL STILLING BASINS
6071010000-E	SP	550	LF	WATTLE
6071020000-E	SP	300	LB	POLYACRYLAMIDE (PAM)
6071030000-E	SP	5,150	LF	COIR FIBER BAFFLES
6071050000-E	SP	15	EA	**" SKIMMER (1-1/2")
6071050000-E	SP	9	EA	**" SKIMMER (2")
6084000000-E	1660	510	ACR	SEEDING & MULCHING
6087000000-E	1660	533.5	ACR	MOWING
6090000000-E	1661	3,600	LB	SEED FOR REPAIR SEEDING
6093000000-E	1661	17.25	TON	FERTILIZER FOR REPAIR SEEDING
6096000000-E	1662	10,675	LB	SEED FOR SUPPLEMENTAL SEEDING
6108000000-E	1665	320	TON	FERTILIZER TOPDRESSING
6111000000-E	SP	260	LF	IMPERVIOUS DIKE
6114000000-N	SP	5	HR	SPECIALIZED HAND MOWING
6117000000-N	SP	54	EA	RESPONSE FOR EROSION CONTROL
6120000000-E	SP	2,310	CY	CULVERT DIVERSION CHANNEL
6123000000-E	1670	3	ACR	REFORESTATION
6126000000-E	SP	6.5	ACR	STREAMBANK REFORESTATION
6129000000-E	1670	1.143	ACR	WETLAND REFORESTATION
6132000000-N	SP	18	EA	GENERIC EROSION CONTROL ITEM LOG
6133000000-N	SP	Lump Sum		GENERIC EROSION CONTROL ITEM CONSTRUCTION SURVEYING FOR MITIGATION
6133000000-N	SP	Lump Sum		GENERIC EROSION CONTROL ITEM DIVERSION PUMPING FOR MITIGATION
6133000000-N	SP	Lump Sum		GENERIC EROSION CONTROL ITEM GRADING FOR MITIGATION
6135000000-E	SP	1.143	ACR	GENERIC EROSION CONTROL ITEM DISKING
6135000000-E	SP	1.143	ACR	GENERIC EROSION CONTROL ITEM RIPPING
6138000000-E	SP	140	CY	GENERIC EROSION CONTROL ITEM IMPERVIOUS SELECT MATERIAL
7060000000-E	1705	1,917	LF	SIGNAL CABLE
7120000000-E	1705	18	EA	VEHICLE SIGNAL HEAD (12", 3 SECTION)
7144000000-E	1705	2	EA	VEHICLE SIGNAL HEAD (12", 5 SECTION)
7264000000-E	1710	1,625	LF	MESSENGER CABLE (3/8")
7279000000-E	1715	2,900	LF	TRACER WIRE
7288000000-E	1715	25	LF	PAVED TRENCHING (**********) (1, 2")
7300000000-E	1715	4,085	LF	UNPAVED TRENCHING (**********) (1, 2")
7324000000-N	1716	10	EA	JUNCTION BOX (STANDARD SIZE)
7348000000-N	1716	5	EA	JUNCTION BOX (OVER-SIZED, HEA-VY DUTY)
7360000000-N	1720	3	EA	WOOD POLE
7372000000-N	1721	5	EA	GUY ASSEMBLY
7408000000-E	1722	1	EA	1" RISER WITH WEATHERHEAD
7420000000-E	1722	2	EA	2" RISER WITH WEATHERHEAD
7432000000-E	1722	1	EA	2" RISER WITH HEAT SHRINK TUBING
7444000000-E	1725	2,140	LF	INDUCTIVE LOOP SAWCUT
7456000000-E	1726	7,268	LF	LEAD-IN CABLE (**********) (14-2)
7516000000-E	1730	4,210	LF	COMMUNICATIONS CABLE (**FIBER) (12)
7540000000-N	1731	1	EA	SPLICE ENCLOSURE
7552000000-N	1731	2	EA	INTERCONNECT CENTER
7564000000-N	1732	2	EA	FIBER-OPTIC TRANSCEIVER, DROP & REPEAT
7566000000-N	1733	5	EA	DELINEATOR MARKER
7574000000-N	SP	1	EA	FURNISH FIBER-OPTIC TRANSCEIV-ER
7575160000-E	1734	1,266	LF	REMOVE EXISTING COMMUNICATIONS CABLE
7576000000-N	SP	8	EA	METAL STRAIN SIGNAL POLE
7613000000-N	SP	8	EA	SOIL TEST
7614100000-E	SP	56	CY	DRILLED PIER FOUNDATION
7636000000-N	1745	2	EA	SIGN FOR SIGNALS
7684000000-N	1750	2	EA	SIGNAL CABINET FOUNDATION
7756000000-N	1751	2	EA	CONTROLLER WITH CABINET (TYPE 2070L, BASE MOUNTED)
7780000000-N	1751	13	EA	DETECTOR CARD (TYPE 2070L)
7901000000-N	1753	2	EA	CABINET BASE EXTENDER
7948000000-N	SP	1	EA	TRAFFIC SIGNAL REMOVAL
7960000000-N	SP	4	EA	METAL POLE FOUNDATION REMOVAL
7972000000-N	SP	4	EA	METAL POLE REMOVAL
******* BEGIN SCHEDULE AA ******* ******* (3 ALTERNATES) *******				
0366000000-E AA1	310	6,608	LF	15" RC PIPE CULVERTS, CLASS III
0372000000-E AA1	310	2,292	LF	18" RC PIPE CULVERTS, CLASS III
0378000000-E AA1	310	928	LF	24" RC PIPE CULVERTS, CLASS III
0384000000-E AA1	310	2,664	LF	30" RC PIPE CULVERTS, CLASS III
*** OR ***				
0366000000-E AA2	310	5,728	LF	15" RC PIPE CULVERTS, CLASS III
0372000000-E AA2	310	1,944	LF	18" RC PIPE CULVERTS, CLASS III
0378000000-E AA2	310	880	LF	24" RC PIPE CULVERTS, CLASS III
0384000000-E AA2	310	1,204	LF	30" RC PIPE CULVERTS, CLASS III
0536000000-E AA2	SP	880	LF	***" HDPE PIPE CULVERTS (15")
0536000000-E AA2	SP	348	LF	***" HDPE PIPE CULVERTS (18")
0536000000-E AA2	SP	48	LF	***" HDPE PIPE CULVERTS (24")
0536000000-E AA2	SP	1,460	LF	***" HDPE PIPE CULVERTS (30")
*** OR ***				
0366000000-E AA3	310	5,728	LF	15" RC PIPE CULVERTS, CLASS III
0372000000-E AA3	310	1,944	LF	18" RC PIPE CULVERTS, CLASS III
0378000000-E AA3	310	880	LF	24" RC PIPE CULVERTS, CLASS III
0384000000-E AA3	310	1,204	LF	30" RC PIPE CULVERTS, CLASS III
0540000000-E AA3	SP	880	LF	***" ALUMINIZED CORRUGATED STEEL PIPE CULVERTS, ****" THICK (15", 0.064")
0540000000-E AA3	SP	348	LF	***" ALUMINIZED CORRUGATED STEEL PIPE CULVERTS, ****" THICK (18", 0.064")
0540000000-E AA3	SP	48	LF	***" ALUMINIZED CORRUGATED STEEL PIPE CULVERTS, ****" THICK (24", 0.064")
0540000000-E AA3	SP	1,460	LF	***" ALUMINIZED CORRUGATED STEEL PIPE CULVERTS, ****" THICK (30", 0.079")
******* END SCHEDULE AA *******				

RDUXPW005

COMPUTED BY: BN DATE: 12/19/08
CHECKED BY: MDL DATE: 1/2/08

PROJECT REFERENCE NO.	SHEET NO.
R-2719A	3-A1 (FUT.)

"N" = DISTANCE FROM EDGE OF LANE TO FACE OF GUARDRAIL
TOTAL SHOULDER WIDTH = DISTANCE FROM EDGE OF TRAVEL LANE TO SHOULDER BREAK POINT.
FLARE LENGTH = DISTANCE FROM LAST SECTION OF PARALLEL GUARDRAIL TO END OF GUARDRAIL
W = TOTAL WIDTH OF FLARE FROM BEGIN

DIVISION OF HIGHWAYS
STATE OF NORTH CAROLINA

FUTURE GUARDRAIL SUMMARY

SURVEY LINE	BEG. STA.	END STA.	LOCATION	LENGTH			WARRANT POINT		"N" DIST. FROM E.O.L.	TOTAL SHOUL WIDTH	FLARE LENGTH		W		ANCHORS						IMPACT ATTENUATOR TYPE 350			REMOVE EXISTING GUARDRAIL	REMARKS
				STRAIGHT	SHOP CURVED	DOUBLE FACED	APPROACH END	TRAILING END			APPROACH END	TRAILING END	APPROACH END	TRAILING END	GRAU 350	M-350	XIII	CAT-1	B-83	B-77	EA	G	NG		
L	52+86.88	59+36.88	LT	650.00			57+50.00	52+86.88*	6	9	50	-	1	-	1					1					
L	52+83.76	58+58.76	MED-LT	575.00			57+00.00	58+58.76*	6	9	50	-	1	-	1					1					
L	70+50.56	83+52.56	LT	1302.00			83+52.56*	70+50.56	14	17	-	-	-	-				1		1					
L	52+86.88	59+36.88	LT	650.00			57+50.00	52+86.88*	6	9	50	-	1	-	1					1					
L	52+83.76	58+58.76	MED-LT	575.00			57+00.00	58+58.76*	6	9	50	-	1	-	1					1					
L	70+50.56	83+52.56	LT	1302.00			83+52.56*	70+50.56	14	17	-	-	-	-				1		1					
L	74+45.08	83+95.08	RT	950.00			83+95.08*	-	14	17	50	-	1	-	1					1					CONTINUED FROM Y1RPCA 0+00.00
L	70+50.00	74+50.00	MED-LT	400.00			70+50.00	-	6	9	50	-	1		1			1							FOR OVERHEAD SIGN STR. PROTECTION
L	81+70.08	83+95.08	MED-RT	225.00			83+95.08*	-	10	13	206.25	-	15.25	-		1				1					
L	88+22.55	112+01.14	LT	2378.59			88+52.55*	112+01.14*	14	17	-	-	-	-						2					
L	88+22.55	90+35.05	MED-LT	212.50			-	88+22.55*	12	15	193.75	-	14.42	-		1				1					
L	88+22.55	113+25.53	RT	2502.98			88+22.55*	113+25.53*	14	17	-	-	-	-						2					
L	110+68.76	112+81.26	MED-LT	212.50			112+81.26*	-	6	9	193.75	-	14.42	-		1				1					
L	113+94.92	116+07.42	MED-LT	212.50			113+94.92*	-	6	9	193.75	-	14.42	-		1				1					
L	114+75.03	124+00.03	RT	925.00			114+75.03*	124+00.03	14	17	-	-	-	-				1		1					
L	132+80.00	133+67.50	LT	87.50				132+80.00	14	17	50	-	1	-	1					1					
L	136+18.50	139+30.00	RT	312.50			136+18.50	139+30.00	14	17	50	-	1	-	1					1					
L	139+40.71	143+53.21	LT	412.50			142+00.00	139+40.71	14	17	50	-	1	-	1			1							
L	152+41.00	156+53.50	LT	412.50			155+00.00	152+41.00	14	17	50	-	1	-	1			1							
L	200+93.99	210+81.49	RT	987.50			210+81.49*	202+50.00	14	17	50	-	1	-	1					1					
L	201+88.78	211+26.28	LT	937.50			211+26.28*	201+88.78	14	17	-	-	-	-				1		1					
L	208+77.54	210+97.54	MED-RT	220.00			210+97.54*	-	6	9	201.25	-	14.92	-		1				1					
L	212+91.41	224+03.91	LT	1112.50			222+50.00	212+91.41*	14	17	50	-	1	-	1					1					
L	212+76.96	215+26.96	MED-LT	250.00			212+76.96*	-	12	15	-	231.25	-	16.92		1				1					
L	212+68.04	215+05.54	MED-RT	237.50			212+68.04*	-	6	9	-	37.5	-	4		1				1					
L	212+54.17	220+54.17	RT	800.00			212+54.17*	219+00.00	14	17	-	-	-	-				1		1					
Y1	15+30.53	19+93.03	LT	462.50			15+30.53*	-	VAR	VAR	50	-	1	-	1				1					425	
Y1	15+41.96	17+66.96	MED-LT	225.00			15+41.96*	-	VAR	VAR	200.00	-	4	-	1				1					685	
Y1RPCA	30+14.21	35+76.71	LT	562.50			37+25	-	6	9	50	-	-	1	1					1					
Y1RPCA	30+01.64	35+76.64	RT	575.00			37+25	-	12	15	50	-	-	1	1					1					
Y1	23+80.00	27+06.25	LT	326.25			27+00.00	-	13.58	6	-	-	-	-	1			1							FOR OVERHEAD SIGN STR. PROTECTION
Y1	24+75.00	27+06.25	RT	231.25			27+00.00	-	13.58	15	-	-	-	-	1			1							FOR OVERHEAD SIGN STR. PROTECTION
Y1	67+80.39	69+50.60	LT	175.00			BRIDGE	BRIDGE	N/A	N/A	-	-	-	-						2	1	X	X		BRIDGE PROTECTION
Y1	68+01.00	69+71.61	RT	175.00			BRIDGE	BRIDGE	N/A	N/A	-	-	-	-						2	1	X	X		BRIDGE PROTECTION
Y1	74+24.84	76+38.50	LT	175.00			BRIDGE	BRIDGE	N/A	N/A	-	-	-	-						2	1	X	X		BRIDGE PROTECTION
Y1	74+45.82	76+63.08	RT	175.00			BRIDGE	BRIDGE	N/A	N/A	-	-	-	-						2	1	X	X		BRIDGE PROTECTION
Y1	86+46.52	96+96.52	RT	1050.00			88+00.00	-	14	17	50	-	1	-	1					1					
Y1	35+79.00	38+79.00	RT	300.00			37+50	38+79.00	12	15	50	-	1	-	1			1							
Y1	37+70.00	40+45.00	LT	275.00			38+18.00	37+70.00	12	15	50	-	1	-	1			1							
Y1	90+74.64	96+24.64	LT	550.00			-	90+74.64	12	15	-	-	-	-				1		1					
Y1	94+33.42	96+70.92	MED-RT	237.50			96+70.92*	-	6	9	218.75	-	16.08	-		1				1					
Y1	97+56.24	105+56.24	LT	800.00			10+50	-	14	17	50	-	1	-	1					1					
Y1	97+81.76	100+19.26	MED-LT	237.50			97+81.87	-	6	9	218.75	-	16.08	-		1				1					
Y1	98+28.12	104+53.12	RT	625.00			104+53.12	-	12	15	-	-	-	-				1		1					
Y24RPB	10+37.00	15+74.50		537.50			14+20.00	10+37.00	14	17	50	-	1	-	1			1							
		SUBTOTALS		26538.07											23.00	9.00		15.00	2.00	41.00	4			1110.00	
		LESS ANCHOR DEDUCTIONS																							
		GRAU-350	23@50'	1150.00																					
		M-350	9@37.5'	337.50																					
		CAT-1	15@6.25'	93.75																					
		B-77	41@18.75'	768.75																					
		B-83	2@25'	50																					
		TOTAL		24188.07																					
		SAY		27650																					
	ADDITIONAL GUARDRAIL POSTS:		20	EA																					

RDUXPW025

COMPUTED BY: BN DATE: 12/19/08
CHECKED BY: MDL DATE: 1/26/09

DIVISION OF HIGHWAYS
STATE OF NORTH CAROLINA

PROJECT REFERENCE NO.	SHEET NO.
R-2719A	3-A2 (PROP)

"N" = DISTANCE FROM EDGE OF LANE TO FACE OF GUARDRAIL
TOTAL SHOULDER WIDTH = DISTANCE FROM EDGE OF TRAVEL LANE TO SHOULDER BREAK POINT.
FLARE LENGTH = DISTANCE FROM LAST SECTION OF PARALLEL GUARDRAIL TO END OF GUARDRAIL
W = TOTAL WIDTH OF FLARE FROM BEGING = GATING IMPACT ATTENUATOR TYPE 350
G = GATING IMPACT ATTENUATOR TYPE 350
NG = NON-GATING IMPACT ATTENUATOR TYPE 350

*BRIDGE STATION

PROPOSED GUARDRAIL SUMMARY

SURVEY LINE	BEG. STA.	END STA.	LOCATION	LENGTH			WARRANT POINT		"N" DIST. FROM E.O.L.	TOTAL SHOUL WIDTH	FLARE LENGTH		W		ANCHORS						IMPACT ATTENUATOR TYPE 350			REMOVE EXISTING GUARDRAIL	REMARKS
				STRAIGHT	SHOP CURVED	DOUBLE FACED	APPROACH END	TRAILING END			APPROACH END	TRAILING END	APPROACH END	TRAILING END	GRAU 350	M-350	XIII	CAT-1	B-83	B-77	EA	G	NG		
Y24LPC/L	1+85.28	247+93.24	RT	275.00			247+93.24*	-	12	15	50	-	1	-	1					1					
L	245+43.24	247+93.24	MED-RT	250.00			247+93.24*	-	6	9	231.25	-	16.92	-		1				1					
L	249+45.77	251+95.79	MED-LT	250.00			249+45.77*	-	6	9	231.25	-	16.92	-		1				1					
L	249+44.25	260+19.25	LT	1075.00			258+50.00	-	14	17	50	-	1	-	1					1					
L	249+46.16	258+58.66	RT	912.50			249+46.16*	258+58.66	14	17	-	-	-	-				1		1					
		SUBTOTALS		2762.50											2.00	2.00		1.00		5.00					
		LESS ANCHOR DEDUCTIONS																							
		GRAU-350	2@50'	100.00																					
		M-350	2@37.5'	75.00																					
		CAT-1	1@6.25'	6.25																					
		B-77	5@18.75'	93.75																					
		B-83	0@25'	0																					
		TOTAL		2487.50																					
		SAY		2500																					
	ADDITIONAL GUARDRAIL POSTS:		10	EA																					

COMPUTED BY: BN DATE: 12/19/2008

CHECKED BY: MDL DATE: 4/21/2009

PROJECT NO.	SHEET NO.
R-2719A	3-B

RDUXPW025

STATE OF NORTH CAROLINA
DIVISION OF HIGHWAYS

LIST OF PIPES, ENDWALLS, ETC. (FOR PIPES 48" & UNDER)

STATION	LOCATION (LT, RT, OR CL)	STRUCTURE NO. FROM	STRUCTURE NO. TO	TOP ELEVATION	INVERT ELEVATION	INVERT ELEVATION	SLOPE CRITICAL	CLASS III R.C. PIPE (UNLESS NOTED OTHERWISE) 12"	15"	18"	24"	30"	36"	42"	48"	BITUMINOUS COATED C.S. PIPE TYPE B (UNLESS NOTED OTHERWISE) 12"	15"	18"	24"	30"	36"	42"	48"
THICKNESS OR GAUGE																.064	.064	.064	.064	.079	.079	.109	.109
Y1, 60+00	C	1		52.4	49.6																		
Y1, 60+00		1	OUT		49.6	44.5			84														
Y1LPC, 11+05	CL	3		-	44.0	43.9																	
Y1LPC, 11+05		3	OUT										224										
Y1LPC, 11+14	RT	4		50.8	47.8																		
Y1LPC, 11+14		4	OUT		47.8	43.9											32						
Y1, 65+00	C	5		52.4	49.6																		
Y1, 65+00		5	OUT		49.6	44.4			124														
Y1LPC, 8+00	RT	6		58.1	55.1																		
Y1LPC, 8+00		6	OUT		55.1	50.5											40						
Y1LPC, 5+00	RT	7		71.9	68.9																		
Y1LPC, 5+00		7	OUT		68.9	50.8											92						
Y1RPCA, 35+00	RT	8		59.9	57.2																		
Y1RPCA, 35+00		8	OUT		57.2	51.4											28						
Y1RPCA, 34+50	RT	9		62.9	60.2																		
Y1RPCA, 34+50		9	8		60.2	57.2			44														
L, 57+04	LT	12		75.2	72.4																		
L, 57+04		12	13		72.4	67.8			164														
L, 58+70	LT	13		70.6	67.8																		
L, 58+70		13	OUT		67.8	51.4											80						
Y1RPB, 16+40	CL	14	OUT	-	50.5	49.6					128												
Y1RPCA, 31+90	CL	16		-	45.5	43.0																	
Y1RPCA, 31+90		16	OUT												*128								
Y1RPCA, 32+00	CL	17		-	45.5	43.0																	
Y1RPCA, 32+00		17	OUT												*140								
Y1, 73+50	C	18		53.4	50.6																		
Y1, 73+50		18	OUT		50.6	46.6			96														
Y1, 86+60	RT	19		58.4	55.6																		
Y1, 86+60		19	OUT		55.6	49.5											36						
Y1, 83+61	C	21		54.2	51.4																		
Y1, 83+61		21	OUT		51.4	48.2			112														
Y1RPA, 10+00	LT	23		59.5	56.7																		
Y1RPA, 10+00		23	OUT		56.7	49.7											32						
SHEET TOTALS									624		128		224		0		340						
															*268								

STATION	CLASS III R.C. PIPE OR ALUMINIZED C.S. PIPE, TYPE IR OR HDPE PIPE, TYPE S OR D 12"	15"	18"	24"	30"	36"	42"	48"	12" SIDE DRAIN PIPE	15" SIDE DRAIN PIPE	18" SIDE DRAIN PIPE	24" SIDE DRAIN PIPE	30" SIDE DRAIN PIPE	36" SIDE DRAIN PIPE	ENDWALLS STD. 838.01 OR STD 838.11 OR STD. 838.80 (UNLESS NOTED OTHERWISE) CU. YARDS R.C.P.	C.S.P.	QUANITIES FOR DRAINAGE STRUCTURES PER EACH (0' THRU 5.0')	*TOTAL L.F. FOR PAY QUANTITY SHALL BE COL. 'A' + (1.3 X COL.'B') LIN. FT. A 5.0' THRU 10.0'	B 10.0' AND ABOVE	C.B. STD. 840.01 OR STD. 840.02	FRAME, GRATES, AND HOOD STANDARD 840.03 TYPE OF GRATE E	F	G
Y1, 60+00 (C, 1)																	1						
Y1LPC, 11+05 (CL, 3)															6.0								
Y1LPC, 11+14 (RT, 4)																	1			1	1		
Y1, 65+00 (C, 5)																	1						
Y1LPC, 8+00 (RT, 6)																	1			1		1	
Y1LPC, 5+00 (RT, 7)																	1			1		1	
Y1RPCA, 35+00 (RT, 8)																	1						
Y1RPCA, 34+50 (RT, 9)																	1						
L, 57+04 (LT, 12)																	1						
L, 58+70 (LT, 13)																	1						
Y1RPCA, 31+90 (CL, 16)															10.0								
Y1, 73+50 (C, 18)																	1						
Y1, 86+60 (RT, 19)																	1						
Y1, 83+61 (C, 21)																	1						
Y1RPA, 10+00 (LT, 23)																	1						
SHEET TOTALS															16.0		13	0	0	3	1	2	

STATION	D.I. STD. 840.14 OR STD. 840.15	D.I. FRAME AND GRATE STD. 840.16	G.D.I. TYPE "A" STD. 840.17 OR 840.26	G.D.I. TYPE "B" STD. 840.18 OR 840.27	G.D.I. TYPE "D" STD. 840.19 OR 840.28	G.D.I. FRAME WITH GRATE STD. 840.20	G.D.I. FRAME WITH TWO GRATES STD. 840.20	G.D.I. FRAME WITH GRATE STD. 840.22	G.D.I. FRAME WITH TWO GRATES STD. 840.22	G.D.I. (N.S.) FRAME WITH TWO GRATES STD. 840.24	J.B. STD. 840.31 OR 840.32	T.B.J.B. STD. 830.34	SPECIAL DESIGN CB	MANHOLE STD. 840.51	M.H. STD. 840.51 OR 840.53	M.H. FRAME AND COVER STD. 840.54	ADJUST M.H.
Y1, 60+00 (C, 1)				1					1								
Y1, 65+00 (C, 5)				1					1								
Y1RPCA, 35+00 (RT, 8)				1			1										
Y1RPCA, 34+50 (RT, 9)				1			1										
L, 57+04 (LT, 12)				1			1										
L, 58+70 (LT, 13)				1			1										
Y1, 73+50 (C, 18)				1					1								
Y1, 86+60 (RT, 19)				1			1										
Y1, 83+61 (C, 21)				1					1								
Y1RPA, 10+00 (LT, 23)				1			1										
SHEET TOTALS				10			6		4								

STATION	MODIFIED CONCRETE FLUME	TEMPORARY 15" C.S. PIPE	TEMPORARY 36" C.S. PIPE	TEMPORARY 48" C.S. PIPE	CONVERT 2 G.I. TO JB WITH M.H.	CONVERT DI TO JB	RETAIN AND ADJUST CB	PREFORMED SCOUR HOLE	BDO STD. 850.10 OR 850.11	SPRING BOX STD. 840.41	CORR. STEEL ELBOWS NO. & SIZE	CONC. COLLARS CL. "B" C.Y. STD. 840.72	CONC. & BRICK PIPE PLUG, C.Y. STD. 840.71	PIPE REMOVAL LIN. FT.	REMARKS
Y1LPC, 11+05 (CL, 3)															SEE SHEET 2-X FOR ENDWALL DETAIL
Y1LPC, 8+00 (6, OUT)								1							
Y1LPC, 5+00 (7, OUT)								1							
Y1RPCA, 35+00 (8, OUT)								1							
Y1RPB, 16+40 (CL, 14, OUT)															Cross Pipe Only
Y1RPCA, 31+90 (CL, 16)															SEE SHEET 2-AA FOR ENDWALL DETAIL
Y1RPCA, 31+90 (16, OUT)															* Class IV Pipe, Tie to RCBC
Y1RPCA, 32+00 (CL, 17)															SEE SHEET 2-AA FOR ENDWALL DETAIL
Y1RPCA, 32+00 (17, OUT)															* Class IV Pipe, Tie to RCBC
SHEET TOTALS								3							

ABBREVIATIONS

- C.B. CATCH BASIN
- N.D.I. NARROW DROP INLET
- D.I. DROP INLET
- G.D.I. GRATED DROP INLET
- G.D.I.(N.S.) GRATED DROP INLET (NARROW SLOT)
- J.B. JUNCTION BOX
- M.H. MANHOLE
- T.B.D.I. TRAFFIC BEARING DROP INLET
- T.B.J.B. TRAFFIC BEARING JUNCTION BOX

* CLASS IV

RDUXPW025

COMPUTED BY:	BN	DATE:	12/19/2008
CHECKED BY:	MDL	DATE:	4/21/2009

PROJECT NO.	SHEET NO.
R-2719A	3-C

STATE OF NORTH CAROLINA
DIVISION OF HIGHWAYS

LIST OF PIPES, ENDWALLS, ETC. (FOR PIPES 48" & UNDER)

STATION	LOCATION (LT, RT, OR CL)'	STRUCTURE NO. FROM	STRUCTURE NO. TO	TOP ELEVATION	INVERT ELEVATION	INVERT ELEVATION	SLOPE CRITICAL	CLASS III R.C. PIPE (UNLESS NOTED OTHERWISE) 12"	15"	18"	24"	30"	36"	42"	48"	BITUMINOUS COATED C.S. PIPE TYPE B (UNLESS NOTED OTHERWISE) 12" .064	15" .064	18" .064	24" .064	30" .079	36" .079	42" .109	48" .109	CLASS III R.C. PIPE OR ALUMINIZED C.S. PIPE, TYPE IR OR HDPE PIPE, TYPE S OR D 12"	15"	18"	24"	30"	36"	42"	48"
Y1RPA, 9+47	CL	24		-	50.9	49.8																									
Y1RPA, 9+47		24	OUT							136																					
Y1RPCA, 22+65	RT	25		76.8	74.1																										
Y1RPCA, 22+65		25	OUT		74.1	50.8											84														
Y1RPCA, 16+06	LT	26		-	47.3	45.4																									
Y1RPCA, 16+06		26	OUT												*104																
Y1RPCA, 11+97	LT	27		63.6	60.9																										
Y1RPCA, 11+97		27	28		60.9	59.2			44																						
Y1RPCA, 11+50	LT	28		61.9	59.2																										
Y1RPCA, 11+50		28	30		59.2	58.9			44																						
Y1RPCA, 11+97	RT	29		62.0	58.9																										
Y1RPCA, 11+97		29	30		58.9	52.0				36																					
Y1RPCA, 11+50	RT	30		63.7	61.0																										
Y1RPCA, 11+50		30	OUT		61.0	58.9											44														
Y1RPCA, 4+00	LT	32		60.5	57.8																										
Y1RPCA, 4+00		32	OUT		57.8	50.9										32															
L, 76+52	CL	33		60.5	57.8																										
L, 76+52		33	OUT		57.8	50.9									296																
L, 80+00	RT	34		67.9	65.1																										
L, 80+00		34	35		65.1	48.1			280																						
Y1RPCA, 2+00	LT	35		77.8	75.0																										
Y1RPCA, 2+00		35	OUT		75.0	65.1											52														
SVRD5, 28+05	LT	36	OUT	-	-	-																									
L, 82+61	C	37	OUT	-	-	-																									
L, 83+82	LT	37A		75.2	72.4																										
L, 83+82		37A	OUT		72.4	52.2											175														
L, 87+75	LT	38A	OUT	-	50.1	49.9																									
L, 88+20	LT	38B		76.7	73.9																										
L,88+20		38B	OUT		73.9	53.0											196														
L, 94+00	RT	39		79.6	76.9																										
L, 94+00		39	40		76.9	72.8			64																						
L, 94+00	C	40		75.8	72.8																										
L, 94+00		40	41		72.8	72.4				84																					
L, 94+00	LT	41		80.6	72.4																										
L, 94+00		41	OUT		72.4	51.0												120													
SHEET TOTALS									432	256					296	32	551	120													

*104

STATION	12" SIDE DRAIN PIPE	15" SIDE DRAIN PIPE	18" SIDE DRAIN PIPE	24" SIDE DRAIN PIPE	30" SIDE DRAIN PIPE	36" SIDE DRAIN PIPE	ENDWALLS STD. 838.01 OR STD 838.11 OR STD. 838.80 (UNLESS NOTED OTHERWISE) CU. YARDS R.C.P.	C.S.P.	QUANITIES FOR DRAINAGE STRUCTURES PER EACH (0' THRU 5.0')	*TOTAL L.F. FOR PAY QUANTITY SHALL BE COL. 'A' + (1.3 X COL.'B') LIN. FT. A 5.0' THRU 10.0'	B 10.0' AND ABOVE	C.B. STD. 840.01 OR STD. 840.02	FRAME, GRATES, AND HOOD STANDARD 840.03 TYPE OF GRATE E	F	G	D.I. STD. 840.14 OR STD. 840.15	D.I. FRAME AND GRATE STD. 840.16	G.D.I. TYPE "A" STD. 840.17 OR 840.26	G.D.I. TYPE "B" STD. 840.18 OR 840.27	G.D.I. TYPE "D" STD. 840.19 OR 840.28	G.D.I. FRAME WITH GRATE STD. 840.20	G.D.I. FRAME WITH TWO GRATES STD. 840.20	G.D.I. FRAME WITH GRATE STD. 840.22	G.D.I. FRAME WITH TWO GRATES STD. 840.22	G.D.I. (N.S.) FRAME WITH TWO GRATES STD. 840.24
Y1RPA, 9+47																									
Y1RPA, 9+47																									
Y1RPCA, 22+65									1										1			1			
Y1RPCA, 22+65																									
Y1RPCA, 16+06							6.0																		
Y1RPCA, 16+06																									
Y1RPCA, 11+97									1										1			1			
Y1RPCA, 11+97																									
Y1RPCA, 11+50									1										1			1			
Y1RPCA, 11+50																									
Y1RPCA, 11+97									1										1			1			
Y1RPCA, 11+97																									
Y1RPCA, 11+50									1										1			1			
Y1RPCA, 11+50																									
Y1RPCA, 4+00									1										1			1			
Y1RPCA, 4+00																									
L, 76+52							6.2																		
L, 76+52																									
L, 80+00									1										1			1			
L, 80+00																									
Y1RPCA, 2+00									1										1			1			
Y1RPCA, 2+00																									
SVRD5, 28+05		48																							
L, 82+61																									
L, 83+82									1										1			1			
L, 83+82																									
L, 87+75																									
L, 88+20									1										1			1			
L,88+20																									
L, 94+00									1										1			1			
L, 94+00																									
L, 94+00									1										1					1	
L, 94+00																									
L, 94+00									1										1			1			
L, 94+00																									
SHEET TOTALS		48					12.2		13	0	0								13			12		1	

STATION	J.B. STD. 840.31 OR 840.32	T.B.J.B. STD. 830.34	SPECIAL DESIGN CB	MANHOLE STD. 840.51	M.H. STD. 840.51 OR 840.53	M.H. FRAME AND COVER STD. 840.54	ADJUST M.H.	MODIFIED CONCRETE FLUME	TEMPORARY 15" C.S. PIPE	TEMPORARY 36" C.S. PIPE	TEMPORARY 48" C.S. PIPE	CONVERT 2 G.I. TO JB WITH M.H.	CONVERT DI TO JB	RETAIN AND ADJUST CB	PREFORMED SCOUR HOLE	BDO STD. 850.10 OR 850.11	SPRING BOX STD. 840.41	CORR. STEEL ELBOWS NO. & SIZE	CONC. COLLARS CL. "B" C.Y. STD. 840.72	CONC. & BRICK PIPE PLUG, C.Y. STD. 840.71	PIPE REMOVAL LIN. FT.	REMARKS
Y1RPA, 9+47																						
Y1RPA, 9+47																						
Y1RPCA, 22+65																						
Y1RPCA, 22+65															1			2 @ 15"				
Y1RPCA, 16+06																						
Y1RPCA, 16+06																						Class IV Pipe, Tie to RCBC
Y1RPCA, 11+97																						
Y1RPCA, 11+97																						
Y1RPCA, 11+50																						
Y1RPCA, 11+50																						
Y1RPCA, 11+97																						
Y1RPCA, 11+97																						
Y1RPCA, 11+50																						
Y1RPCA, 11+50															1			2 @ 15"				
Y1RPCA, 4+00																						
Y1RPCA, 4+00																						
L, 76+52																						SEE SHEET 2-AD FOR ENDWALL DETAIL
L, 76+52																						
L, 80+00																						
L, 80+00																						
Y1RPCA, 2+00																						
Y1RPCA, 2+00																		2 @ 15"				
SVRD5, 28+05																						
L, 82+61								1														
L, 83+82																						
L, 83+82																		2 @ 15"				
L, 87+75										96											96	2 Temp. C.S. Pipes
L, 88+20																						
L,88+20																		2 @ 15"				
L, 94+00																						
L, 94+00																						
L, 94+00																						
L, 94+00																						
L, 94+00																						
L, 94+00																						
SHEET TOTALS								1		96					2			10 @ 15"			96	

ABBREVIATIONS

C.B.	CATCH BASIN
N.D.I.	NARROW DROP INLET
D.I.	DROP INLET
G.D.I.	GRATED DROP INLET
G.D.I.(N.S.)	GRATED DROP INLET (NARROW SLOT)
J.B.	JUNCTION BOX
M.H.	MANHOLE
T.B.D.I.	TRAFFIC BEARING DROP INLET
T.B.J.B.	TRAFFIC BEARING JUNCTION BOX

* CLASS IV

RDUXPW025

COMPUTED BY: BN DATE: 12/19/2008

CHECKED BY: MDL DATE: 4/21/2009

PROJECT NO.	SHEET NO.
R-2719A	3-D

STATE OF NORTH CAROLINA
DIVISION OF HIGHWAYS

LIST OF PIPES, ENDWALLS, ETC. (FOR PIPES 48" & UNDER)

ABBREVIATIONS

- C.B. — CATCH BASIN
- N.D.I. — NARROW DROP INLET
- D.I. — DROP INLET
- G.D.I. — GRATED DROP INLET
- G.D.I.(N.S.) — GRATED DROP INLET (NARROW SLOT)
- J.B. — JUNCTION BOX
- M.H. — MANHOLE
- T.B.D.I. — TRAFFIC BEARING DROP INLET
- T.B.J.B. — TRAFFIC BEARING JUNCTION BOX

STATION	LOCATION (LT, RT, OR CL)'	STRUCTURE NO. FROM	STRUCTURE NO. TO	TOP ELEVATION	INVERT ELEVATION	INVERT ELEVATION	SLOPE CRITICAL	CLASS III R.C. PIPE (UNLESS NOTED OTHERWISE) 12"	15"	18"	24"	30"	36"	42"	48"
L, 98+00	RT	42		72.2	69.5										
L, 98+00		42	43		69.5	69.0			44						
L, 98+50	RT	43		71.9	69.0										
L, 98+50		43	44		69.0	68.1			92						
L, 99+44	RT	44		71.7	68.1										
L, 99+44		44	48		68.1	63.7			60						
L, 101+50	RT	45		72.9	70.2										
L, 101+50		45	47		70.2	67.1			60						
L, 101+50	LT	46		72.9	70.1										
L, 101+50		46	47		70.1	67.1			64						
L, 101+50	C	47		69.9	67.1										
L, 101+50		47	48		67.1	63.7									
L, 99+44	C	48		68.4	63.7										
L, 99+44		48	50		63.7	63.3					68				
L, 98+54	LT	49		71.8	69.1										
L, 98+54		49	50		69.1	63.3			88						
L, 99+44	LT	50		71.6	63.3										
L, 99+44		50	OUT		63.3	54.9									
L, 103+70	CL	51		-	56.7										
L, 103+70		51	OUT		56.7	52.2							496		
L, 107+00	LT	52		85.7	83.0										
L, 107+00		52	53		83.0	80.1			64						
L, 107+00	C	53		83.1	80.1		X								
L, 107+00		53	54		80.1	78.5				48					
L, 107+00	RT	54		86.0	79.7										
L, 107+00		54	OUT		79.7	60.0									
SVRD1, 10+19	CL	55	OUT	-	69.7	68.4				64					
SVRD1, 13+51	CL	56	OUT	-	74.6	73.0				56					
L, 116+96	CL	57	OUT	-	74.0	67.8									
L, 119+00	LT	58		88.5	83.6										
L, 119+00		58	59		83.6	69.5			52						
L, 119+00	C	59		86.6	83.9										
L, 119+00		59	60		83.9	83.6			48						
SHEET TOTALS									572	168	68		496		

STATION	FROM	TO	BITUMINOUS COATED C.S. PIPE TYPE B (UNLESS NOTED OTHERWISE) 12" .064	15" .064	18" .064	24" .064	24"	30" .079	30"	36" .079	36"	42" .109	42"	48" .109	48"	CLASS III R.C. PIPE OR ALUMINIZED C.S. PIPE, TYPE IR OR HDPE PIPE, TYPE S OR D 12"	15"	18"	24"	30"	36"	42"	48"	12" SIDE DRAIN PIPE	15" SIDE DRAIN PIPE	18" SIDE DRAIN PIPE	24" SIDE DRAIN PIPE	30" SIDE DRAIN PIPE	36" SIDE DRAIN PIPE	ENDWALLS STD. 838.01 OR STD 838.11 OR STD. 838.80 (UNLESS NOTED OTHERWISE) CU. YARDS R.C.P.	C.S.P.
L, 101+50	47	48															200														
L, 99+44	50	OUT				80																									
L, 103+70	51																													3.4	
L, 107+00	54	OUT			80																										
SHEET TOTALS					80	80											200													3.4	

STATION	FROM	TO	QUANITIES FOR DRAINAGE STRUCTURES PER EACH (0' THRU 5.0')	*TOTAL L.F. FOR PAY QUANTITY SHALL BE COL. 'A' + (1.3 X COL.'B') LIN. FT. A 5.0' THRU 10.0'	B 10.0' AND ABOVE	C.B. STD. 840.01 OR STD. 840.02	FRAME, GRATES, AND HOOD STANDARD 840.03 TYPE OF GRATE E	F	G	D.I. STD. 840.14 OR STD. 840.15	D.I. FRAME AND GRATE STD. 840.16	G.D.I. TYPE "A" STD. 840.17 OR 840.26	G.D.I. TYPE "B" STD. 840.18 OR 840.27	G.D.I. TYPE "D" STD. 840.19 OR 840.28	G.D.I. FRAME WITH GRATE STD. 840.20	G.D.I. FRAME WITH TWO GRATES STD. 840.20	G.D.I. FRAME WITH GRATE STD. 840.22	G.D.I. FRAME WITH TWO GRATES STD. 840.22	G.D.I. (N.S.) FRAME WITH TWO GRATES STD. 840.24	J.B. STD. 840.31 OR 840.32	T.B.J.B. STD. 830.34	SPECIAL DESIGN CB	MANHOLE STD. 840.51	M.H. STD. 840.51 OR 840.53	M.H. FRAME AND COVER STD. 840.54	ADJUST M.H.
L, 98+00	42		1										1			1										
L, 98+50	43		1										1			1										
L, 99+44	44		1										1			1										
L, 101+50	45		1										1			1										
L, 101+50	46		1										1			1										
L, 101+50	47		1										1					1								
L, 99+44	48		1									1					1	1								
L, 98+54	49		1										1			1										
L, 99+44	50		1	3.3									1			1										
L, 107+00	52		1										1			1										
L, 107+00	53		1										1					1								
L, 107+00	54		1	1.3									1			1										
L, 119+00	58		1										1			1										
L, 119+00	59		1										1					1								
SHEET TOTALS			14	4.6	0							1	13			10	1	4								

STATION	FROM	TO			MODIFIED CONCRETE FLUME	TEMPORARY 15" C.S. PIPE	TEMPORARY 36" C.S. PIPE	TEMPORARY 48" C.S. PIPE	CONVERT 2 G.I. TO JB WITH M.H.	CONVERT DI TO JB	RETAIN AND ADJUST CB		PREFORMED SCOUR HOLE		BDO STD. 850.10 OR 850.11		SPRING BOX STD. 840.41	CORR. STEEL ELBOWS NO. & SIZE	CONC. COLLARS CL. "B" C.Y. STD. 840.72	CONC. & BRICK PIPE PLUG, C.Y. STD. 840.71	PIPE REMOVAL LIN. FT.	REMARKS
L, 107+00	52	53																			20	Pipe Removal is of 18" Pipe
L, 107+00	54	OUT											1					2 @ 18"				
SVRD1, 13+51	56	OUT																			36	Pipe Removal is of 2 pipes at 15"
SHEET TOTALS													1					2 @ 18"			56	

RDUXPW025

COMPUTED BY:	BN	DATE:	12/19/2008
CHECKED BY:	MDL	DATE:	4/21/2009

PROJECT NO.	SHEET NO.
R-2719A	3-E

STATE OF NORTH CAROLINA
DIVISION OF HIGHWAYS

LIST OF PIPES, ENDWALLS, ETC. (FOR PIPES 48" & UNDER)

STATION	LOCATION (LT, RT, OR CL)	STRUCTURE NO. FROM	STRUCTURE NO. TO	TOP ELEVATION	INVERT ELEVATION	INVERT ELEVATION	SLOPE CRITICAL	CLASS III R.C. PIPE (UNLESS NOTED OTHERWISE) 12"	15"	18"	24"	30"	36"	42"	48"
L, 119+00	RT	60		88.5	83.6										
L, 119+00		60	OUT		83.6	69.5									
L, 120+50	CL	61	OUT	-	72.2					224					
					72.2	67.3									
L, 122+50	RT	62		79.9	77.2										
L, 122+50		62	63		77.2	76.3			48						
L, 123+00	RT	63		79.0	76.3										
L, 123+00		63	66		76.3	74.4			52						
L, 122+52	LT	64		79.9	72.2										
L, 122+52		64	65		72.2	76.3			52						
L,123+00	LT	65		79.0	76.3										
L, 123+00		65	66		76.3	74.4			48						
L, 123+00	C	66		77.1	74.4										
L, 123+00		66	67		74.4	71.2									
L, 125+50	LT	66A		76.5	73.8										
L, 125+50		66A	66B		73.8	73.4			64						
L, 126+12	LT	66B		76.4	73.4										
L, 126+12		66B	67		73.4	71.2				60					
L, 127+50	LT	67A		76.9	74.2										
L, 127+50		67A	66B		74.2	73.4			144						
L, 126+11	C	67		74.5	71.2										
L, 126+11		67	OUT		71.2	68.5				84					
L, 129+95	CL	68	OUT	-	72.5	68.0						208			
L, 130+66	RT	69		-	-	-									
L, 130+66		69	OUT												
L, 137+33	C	70		75.8	71.5										
L, 137+33		70	71		71.5	71.3				60					
L, 137+33	RT	71		80.0	71.3										
L, 137+33		71	OUT		71.3	70.0				32					
L, 138+30	CL	72		-	72.5	70.6									
L, 138+30		72	OUT										228		
L, 138+92	CL	73		-	71.2	70.6									
L, 138+92		73	OUT										236		
SHEET TOTALS									408	460		208	464		

SIZE / THICKNESS OR GAUGE

STATION	FROM	TO	BITUMINOUS COATED C.S. PIPE TYPE B (UNLESS NOTED OTHERWISE) 12" .064	15" .064	18" .064	24" .064	30" .079	36" .079	42" .109	48" .109	CLASS III R.C. PIPE OR ALUMINIZED C.S. PIPE, TYPE IR OR HDPE PIPE, TYPE S OR D 12"	15"	18"	24"	30"	36"	42"	48"	12" SIDE DRAIN PIPE	15" SIDE DRAIN PIPE	18" SIDE DRAIN PIPE	24" SIDE DRAIN PIPE	30" SIDE DRAIN PIPE	36" SIDE DRAIN PIPE
L, 119+00	60	OUT		60																				
L, 123+00	66	67										308												
L, 130+66	69	OUT	104																					
SHEET TOTALS			104	60								308												

STATION	FROM	TO	ENDWALLS STD. 838.01 OR STD 838.11 OR STD. 838.80 (UNLESS NOTED OTHERWISE) CU. YARDS R.C.P.	C.S.P.	QUANITIES FOR DRAINAGE STRUCTURES PER EACH (0' THRU 5.0')	*TOTAL L.F. FOR PAY QUANTITY SHALL BE COL. 'A' + (1.3 X COL.'B') LIN. FT. A 5.0' THRU 10.0'	B 10.0' AND ABOVE	C.B. STD. 840.01 OR STD. 840.02	FRAME, GRATES, AND HOOD STANDARD 840.03 TYPE OF GRATE E	F	G
L, 119+00	60				1						
L, 122+50	62				1						
L, 123+00	63				1						
L, 122+52	64				1						
L,123+00	65				1						
L, 123+00	66				1						
L, 125+50	66A				1						
L, 126+12	66B				1						
L, 127+50	67A				1						
L, 126+11	67				1						
L, 130+66	69				1						
L, 137+33	70				1						
L, 137+33	71				1	3.7					
L, 138+30	72		4.4								
L, 138+92	73		4.4								
SHEET TOTALS			8.8		13	3.7					

STATION	FROM	TO	D.I. STD. 840.14 OR STD. 840.15	D.I. FRAME AND GRATE STD. 840.16	G.D.I. TYPE "A" STD. 840.17 OR 840.26	G.D.I. TYPE "B" STD. 840.18 OR 840.27	G.D.I. TYPE "D" STD. 840.19 OR 840.28	G.D.I. FRAME WITH GRATE STD. 840.20	G.D.I. FRAME WITH TWO GRATES STD. 840.20	G.D.I. FRAME WITH GRATE STD. 840.22	G.D.I. FRAME WITH TWO GRATES STD. 840.22	G.D.I. (N.S.) FRAME WITH TWO GRATES STD. 840.24	J.B. STD. 840.31 OR 840.32	T.B.J.B. STD. 830.34	SPECIAL DESIGN CB	MANHOLE STD. 840.51	M.H. STD. 840.51 OR 840.53	M.H. FRAME AND COVER STD. 840.54	ADJUST M.H.
L, 119+00	60					1			1										
L, 122+50	62					1			1										
L, 123+00	63					1			1										
L, 122+52	64					1			1										
L,123+00	65					1			1										
L, 123+00	66					1					1								
L, 125+50	66A					1			1										
L, 126+12	66B					1			1										
L, 127+50	67A					1			1										
L, 126+11	67					1					1								
L, 137+33	70				1					1	1								
L, 137+33	71					1			1										
SHEET TOTALS					1	11			9	1	3								

STATION	FROM	TO	MODIFIED CONCRETE FLUME	TEMPORARY 15" C.S. PIPE	TEMPORARY 36" C.S. PIPE	TEMPORARY 48" C.S. PIPE	CONVERT 2 G.I. TO JB WITH M.H.	CONVERT DI TO JB	RETAIN AND ADJUST CB	PREFORMED SCOUR HOLE	BDO STD. 850.10 OR 850.11	SPRING BOX STD. 840.41	CORR. STEEL ELBOWS NO. & SIZE	CONC. COLLARS CL. "B" C.Y. STD. 840.72	CONC. & BRICK PIPE PLUG, C.Y. STD. 840.71	PIPE REMOVAL LIN. FT.	REMARKS
L, 119+00	60	OUT								1			2 @ 15"				
L, 130+66	69											1					
L, 138+30	72																SEE SHEET 2-AE FOR ENDWALL DETAIL
L, 138+92	73																SEE SHEET 2-AE FOR ENDWALL DETAIL
SHEET TOTALS										1		1	2 @ 15"				

ABBREVIATIONS

C.B.	CATCH BASIN
N.D.I.	NARROW DROP INLET
D.I.	DROP INLET
G.D.I.	GRATED DROP INLET
G.D.I.(N.S.)	GRATED DROP INLET (NARROW SLOT)
J.B.	JUNCTION BOX
M.H.	MANHOLE
T.B.D.I.	TRAFFIC BEARING DROP INLET
T.B.J.B.	TRAFFIC BEARING JUNCTION BOX

RDUXPW025,4/21/2009,R:\Roadway\Grading_Proj\R2719A_Drainage_summaries_GRD.xls

COMPUTED BY: BN DATE: 12/19/2008

CHECKED BY: MDL DATE: 4/21/2009

RDUXPW025

PROJECT NO.	SHEET NO.
R-2719A	3-F

STATE OF NORTH CAROLINA
DIVISION OF HIGHWAYS

LIST OF PIPES, ENDWALLS, ETC. (FOR PIPES 48" & UNDER)

STATION	LOCATION (LT, RT, OR CL)	STRUCTURE NO. FROM	STRUCTURE NO. TO	TOP ELEVATION	INVERT ELEVATION	INVERT ELEVATION	SLOPE CRITICAL	CLASS III R.C. PIPE (UNLESS NOTED OTHERWISE) 12"	15"	18"	24"	30"	36"	42"	48"	BITUMINOUS COATED C.S. PIPE TYPE B (UNLESS NOTED OTHERWISE) 12" .064	15" .064	18" .064	24" .064	24"	30" .079	30"	36" .079	36"	42" .109	42"	48" .109	48"
L, 140+00	LT	74		78.9	76.2																							
L, 140+00		74	75		76.2	75.6			44																			
L, 139+50	LT	75		78.3	75.6																							
L, 139+50		75	OUT		75.6	72.0											36											
L, 144+00	LT	76		84.0	81.2																							
L, 144+00		76	OUT		81.2	74.0																						
L, 144+00	C	77		85.7	82.9																							
L, 144+00		77	76		82.9	81.2			72																			
L, 144+00	RT	78		89.9	87.2																							
L, 144+00		78	77		87.2	82.9			52																			
L, 152+50	CL	79		-	78.5																							
L, 152+50		79	OUT		78.5	78.0							208															
L, 153+35	CL	80		-	77.5																							
L, 153+35					77.5	77.5							200															
L, 154+50	RT	81		89.4	86.5																							
L, 154+50		81	81A		86.5	85.6			180																			
L, 152+70	RT	81A		90.6	85.6																							
L, 152+70		81A	OUT		85.6	80.5											40											
L, 154+68	RT	82		89.4	86.6																							
L, 154+68		82	81		86.6	86.5			12																			
L, 154+68	C	83		85.2	79.9																							
L, 154+68		83	OUT		79.9	76.0																						
L, 154+50	LT	84		86.5	83.6																							
L, 154+50		84	84A		83.6	82.7			188																			
L, 152+54	LT	84A		87.7	82.7																							
L, 152+54		84A	OUT		82.7	77.7											36											
L, 154+68	LT	85		86.5	83.7																							
L, 154+68		85	84		83.7	83.6			16																			
L, 159+00	C	86		90.0	84.7																							
L, 159+00		86	83		84.7	79.9																						
L, 159+00	LT	87		88.1	85.4																							
L, 159+00		87	86		85.4	84.7			76																			
L, 162+00	LT	88		-	95.0	91.2																						
L, 162+00		88	89																12									
SHEET TOTALS									640			0	408				112		12									

STATION	FROM	TO	CLASS III R.C. PIPE OR ALUMINIZED C.S. PIPE, TYPE IR OR HDPE PIPE, TYPE S OR D 12"	15"	18"	24"	30"	36"	42"	48"	12" SIDE DRAIN PIPE	15" SIDE DRAIN PIPE	18" SIDE DRAIN PIPE	24" SIDE DRAIN PIPE	30" SIDE DRAIN PIPE	36" SIDE DRAIN PIPE	ENDWALLS STD. 838.01 OR STD 838.11 OR STD. 838.80 (UNLESS NOTED OTHERWISE) CU. YARDS R.C.P.	C.S.P.	QUANITIES FOR DRAINAGE STRUCTURES PER EACH (0' THRU 5.0')	*TOTAL L.F. FOR PAY QUANTITY SHALL BE COL. 'A' + (1.3 X COL.'B') LIN. FT. A 5.0' THRU 10.0'	B 10.0' AND ABOVE	C.B. STD. 840.01 OR STD. 840.02	FRAME, GRATES, AND HOOD STANDARD 840.03 TYPE OF GRATE E	F	G
L, 140+00	74																		1						
L, 140+00	74	75																							
L, 139+50	75																		1						
L, 139+50	75	OUT																							
L, 144+00	76																		1						
L, 144+00	76	OUT		76																					
L, 144+00	77																		1						
L, 144+00	77	76																							
L, 144+00	78																		1						
L, 144+00	78	77																							
L, 152+50	79																4								
L, 152+50	79	OUT																							
L, 153+35	80																4								
L, 153+35																									
L, 154+50	81																		1						
L, 154+50	81	81A																							
L, 152+70	81A																		1						
L, 152+70	81A	OUT																							
L, 154+68	82																		1						
L, 154+68	82	81																							
L, 154+68	83																		1	0.3					
L, 154+68	83	OUT					92																		
L, 154+50	84																		1						
L, 154+50	84	84A																							
L, 152+54	84A																		1						
L, 152+54	84A	OUT																							
L, 154+68	85																		1						
L, 154+68	85	84																							
L, 159+00	86																		1	0.3					
L, 159+00	86	83					432																		
L, 159+00	87																		1						
L, 159+00	87	86																							
L, 162+00	88																								
L, 162+00	88	89																							
SHEET TOTALS				76			524										8		14	0.6	0				

STATION	FROM	TO	D.I. STD. 840.14 OR STD. 840.15	D.I. FRAME AND GRATE STD. 840.16	G.D.I. TYPE "A" STD. 840.17 OR 840.26	G.D.I. TYPE "B" STD. 840.18 OR 840.27	G.D.I. TYPE "D" STD. 840.19 OR 840.28	G.D.I. FRAME WITH GRATE STD. 840.20	G.D.I. FRAME WITH TWO GRATES STD. 840.20	G.D.I. FRAME WITH GRATE STD. 840.22	G.D.I. FRAME WITH TWO GRATES STD. 840.22	G.D.I. (N.S.) FRAME WITH TWO GRATES STD. 840.24	J.B. STD. 840.31 OR 840.32	T.B.J.B. STD. 830.34	SPECIAL DESIGN CB	MANHOLE STD. 840.51	M.H. STD. 840.51 OR 840.53	M.H. FRAME AND COVER STD. 840.54	ADJUST M.H.	(blank)	(blank)
L, 140+00	74					1			1												
L, 140+00	74	75																			
L, 139+50	75					1			1												
L, 139+50	75	OUT																			
L, 144+00	76					1			1												
L, 144+00	76	OUT																			
L, 144+00	77					1					1										
L, 144+00	77	76																			
L, 144+00	78					1			1												
L, 144+00	78	77																			
L, 152+50	79																				
L, 152+50	79	OUT																			
L, 153+35	80																				
L, 153+35																					
L, 154+50	81					1			1												
L, 154+50	81	81A																			
L, 152+70	81A					1			1												
L, 152+70	81A	OUT																			
L, 154+68	82					1			1												
L, 154+68	82	81																			
L, 154+68	83				1					1	1										
L, 154+68	83	OUT																			
L, 154+50	84					1			1												
L, 154+50	84	84A																			
L, 152+54	84A					1			1												
L, 152+54	84A	OUT																			
L, 154+68	85					1			1												
L, 154+68	85	84																			
L, 159+00	86				1						1										
L, 159+00	86	83																			
L, 159+00	87					1			1												
L, 159+00	87	86																			
L, 162+00	88																				
L, 162+00	88	89																			
SHEET TOTALS					2	12			11	1	3										

STATION	FROM	TO	MODIFIED CONCRETE FLUME	TEMPORARY 15" C.S. PIPE	TEMPORARY 36" C.S. PIPE	TEMPORARY 48" C.S. PIPE	CONVERT 2 G.I. TO JB WITH M.H.	CONVERT DI TO JB	RETAIN AND ADJUST CB	(blank)	PREFORMED SCOUR HOLE	(blank)	BDO STD. 850.10 OR 850.11	(blank)	SPRING BOX STD. 840.41	CORR. STEEL ELBOWS NO. & SIZE	CONC. COLLARS CL. "B" C.Y. STD. 840.72	CONC. & BRICK PIPE PLUG, C.Y. STD. 840.71	PIPE REMOVAL LIN. FT.	REMARKS
L, 140+00	74																			
L, 140+00	74	75																		
L, 139+50	75																			
L, 139+50	75	OUT														2 @ 15"				
L, 144+00	76																			
L, 144+00	76	OUT									1									
L, 144+00	77																			
L, 144+00	77	76																		
L, 144+00	78																			
L, 144+00	78	77																		
L, 152+50	79																			SEE SHEET 2-AF FOR ENDWALL DETAIL
L, 152+50	79	OUT																		
L, 153+35	80																			SEE SHEET 2-AF FOR ENDWALL DETAIL
L, 153+35																				
L, 154+50	81																			
L, 154+50	81	81A																		
L, 152+70	81A																			
L, 152+70	81A	OUT																		
L, 154+68	82																			
L, 154+68	82	81																		
L, 154+68	83																			
L, 154+68	83	OUT																		Tie to RCBC
L, 154+50	84																			
L, 154+50	84	84A																		
L, 152+54	84A																			
L, 152+54	84A	OUT																		
L, 154+68	85																			
L, 154+68	85	84																		
L, 159+00	86																			
L, 159+00	86	83																		
L, 159+00	87																			
L, 159+00	87	86																		
L, 162+00	88																			
L, 162+00	88	89											1							
SHEET TOTALS											1		1			2 @ 15"				

ABBREVIATIONS

C.B.	CATCH BASIN
N.D.I.	NARROW DROP INLET
D.I.	DROP INLET
G.D.I.	GRATED DROP INLET
G.D.I.(N.S.)	GRATED DROP INLET (NARROW SLOT)
J.B.	JUNCTION BOX
M.H.	MANHOLE
T.B.D.I.	TRAFFIC BEARING DROP INLET
T.B.J.B.	TRAFFIC BEARING JUNCTION BOX

COMPUTED BY: BN DATE: 12/19/2008

CHECKED BY: MDL DATE: 4/21/2009

RDUXPW025

PROJECT NO. R-2719A SHEET NO. 3-G

STATE OF NORTH CAROLINA
DIVISION OF HIGHWAYS

LIST OF PIPES, ENDWALLS, ETC. (FOR PIPES 48" & UNDER)

STATION	LOCATION (LT, RT, OR CL)'	STRUCTURE NO. FROM	STRUCTURE NO. TO	TOP ELEVATION	INVERT ELEVATION	INVERT ELEVATION	SLOPE CRITICAL	CLASS III R.C. PIPE (UNLESS NOTED OTHERWISE) 12"	15"	18"	24"	30"	36"	42"	48"	BITUMINOUS COATED C.S. PIPE TYPE B (UNLESS NOTED OTHERWISE) 12" .064	15" .064	18" .064	24" .064	30" .079	36" .079	42" .109	48" .109
L, 162+00	LT	89		94.7	91.2																		
L, 162+00		89	91		91.2	90.8					72												
L, 162+00	C	91		96.5	90.8																		
L, 162+00		91	86		90.8	84.7																	
L, 165+00	C	92		100.7	95.4																		
L, 165+00		92	91		95.4	90.8																	
L, 165+00	LT	93		98.9	96.1																		
L, 165+00		93	92		96.1	95.4			72														
L, 165+00	RT	94		101.8	99.0																		
L, 165+00		94	92		99.0	95.4			72														
L, 168+50	LT	96		-	110.0																		
L, 168+50		96	97		110.0	99.1											32						
L, 168+50	LT	97		102.0	99.1																		
L, 168+50		97	98		99.1	98.6			72														
L, 168+50	C	98																					
L, 168+50		98	92																				
SVRD3, 20+60	RT	101	OUT	-	-	-																	
L, 172+00	LT	102		105.9	102.9																		
L, 172+00		102	104		102.9	102.6				76													
L, 172+00	RT	103		106.7	103.7																		
L, 172+00		103	104		103.7	102.6				76													
L, 172+00	C	104		107.2	102.6		X																
L, 172+00		104	98		102.6	98.6																	
L, 175+00	C	105		109.9	107.2																		
L, 175+00		105	104		107.2	102.6																	
SVRD3, 32+30	CL	107	OUT	-	114.5					60													
					114.5	114.2																	
L, 182+53	CL	108	OUT	-	113.8					196													
					113.8	112.8																	
SVRD4, 19+19	CL	109	OUT	-	-	-																	
SHEET TOTALS									216	408	72	0					32						

STATION	FROM	TO	CLASS III R.C. PIPE OR ALUMINIZED C.S. PIPE, TYPE IR OR HDPE PIPE, TYPE S OR D 12"	15"	18"	24"	30"	36"	42"	48"	12" SIDE DRAIN PIPE	15" SIDE DRAIN PIPE	18" SIDE DRAIN PIPE	24" SIDE DRAIN PIPE	30" SIDE DRAIN PIPE	36" SIDE DRAIN PIPE	ENDWALLS STD. 838.01 OR STD 838.11 OR STD. 838.80 (UNLESS NOTED OTHERWISE) CU. YARDS R.C.P.	C.S.P.	QUANITIES FOR DRAINAGE STRUCTURES PER EACH (0' THRU 5.0')	*TOTAL L.F. FOR PAY QUANTITY SHALL BE COL. 'A' + (1.3 X COL.'B') LIN. FT. A 5.0' THRU 10.0'	B 10.0' AND ABOVE	C.B. STD. 840.01 OR STD. 840.02	FRAME, GRATES, AND HOOD STANDARD 840.03 TYPE OF GRATE E	F	G
L, 162+00	89																		1						
L, 162+00	91																		1	0.7					
L, 162+00	91	86					296																		
L, 165+00	92																		1						
L, 165+00	92	91					296																		
L, 165+00	93																		1						
L, 165+00	94																		1						
L, 168+50	97																		1						
L, 168+50	98																		1						
L, 168+50	98	92					344																		
SVRD3, 20+60	101	OUT											24												
L, 172+00	102																		1						
L, 172+00	103																		1						
L, 172+00	104																		1						
L, 172+00	104	98			348																				
L, 175+00	105																		1						
L, 175+00	105	104		296																					
SVRD4, 19+19	109	OUT											60												
SHEET TOTALS				296	348		936						84						11	0.7	0				

STATION	FROM	TO	D.I. STD. 840.14 OR STD. 840.15	D.I. FRAME AND GRATE STD. 840.16	G.D.I. TYPE "A" STD. 840.17 OR 840.26	G.D.I. TYPE "B" STD. 840.18 OR 840.27	G.D.I. TYPE "D" STD. 840.19 OR 840.28	G.D.I. FRAME WITH GRATE STD. 840.20	G.D.I. FRAME WITH TWO GRATES STD. 840.20	G.D.I. FRAME WITH GRATE STD. 840.22	G.D.I. FRAME WITH TWO GRATES STD. 840.22	G.D.I. (N.S.) FRAME WITH TWO GRATES STD. 840.24	J.B. STD. 840.31 OR 840.32	T.B.J.B. STD. 830.34	SPECIAL DESIGN CB	MANHOLE STD. 840.51	M.H. STD. 840.51 OR 840.53	M.H. FRAME AND COVER STD. 840.54	ADJUST M.H.	MODIFIED CONCRETE FLUME	TEMPORARY 15" C.S. PIPE	TEMPORARY 36" C.S. PIPE	TEMPORARY 48" C.S. PIPE	CONVERT 2 G.I. TO JB WITH M.H.	CONVERT DI TO JB	RETAIN AND ADJUST CB	PREFORMED SCOUR HOLE	BDO STD. 850.10 OR 850.11	SPRING BOX STD. 840.41	CORR. STEEL ELBOWS NO. & SIZE	CONC. COLLARS CL. "B" C.Y. STD. 840.72	CONC. & BRICK PIPE PLUG, C.Y. STD. 840.71	PIPE REMOVAL LIN. FT.	REMARKS
L, 162+00	89					1			1																									
L, 162+00	91				1						1																							
L, 165+00	92				1						1																							
L, 165+00	93					1			1																									
L, 165+00	94					1			1																									
L, 168+50	96																											1						
L, 168+50	97					1			1																									
L, 168+50	98				1						1																							
L, 172+00	102					1			1																									
L, 172+00	103					1			1																									
L, 172+00	104					1					1																							
L, 175+00	105					1					1																							
SHEET TOTALS					3	8			6		5																	1						

ABBREVIATIONS

C.B.	CATCH BASIN
N.D.I.	NARROW DROP INLET
D.I.	DROP INLET
G.D.I.	GRATED DROP INLET
G.D.I.(N.S.)	GRATED DROP INLET (NARROW SLOT)
J.B.	JUNCTION BOX
M.H.	MANHOLE
T.B.D.I.	TRAFFIC BEARING DROP INLET
T.B.J.B.	TRAFFIC BEARING JUNCTION BOX

COMPUTED BY: BN DATE: 12/19/2008
CHECKED BY: MDL DATE: 4/21/2009

RDUXPW025

PROJECT NO.	SHEET NO.
R-2719A	3-H

STATE OF NORTH CAROLINA
DIVISION OF HIGHWAYS

LIST OF PIPES, ENDWALLS, ETC. (FOR PIPES 48" & UNDER)

STATION	LOCATION (LT, RT, OR CL)'	STRUCTURE NO. FROM	STRUCTURE NO. TO	TOP ELEVATION	INVERT ELEVATION	INVERT ELEVATION	SLOPE CRITICAL	CLASS III R.C. PIPE (UNLESS NOTED OTHERWISE) 12"	15"	18"	24"	30"	36"	42"	48"
SVRD4, 19+24	RT	110	OUT	-	-	-									
SVRD3, 36+70	CL	111	OUT	-	113.5	112.7				56					
L, 193+56	LT	112	113	-	110.7	110.5					108				
L, 193+91	C	113		115.2	110.5										
L, 193+91		113	OUT		110.5	110.3					108				
SVRD3, 45+39	CL	114	OUT	-	-	-									
L, 203+00	C	115		127.2	124.5										
L, 203+00		115	117		124.5	124.2			56						
L, 203+50	RT	116		130.4	127.6										
L, 203+50		116	117		127.6	124.2			48						
L, 203+00	RT	117		129.2	124.2										
L, 203+00		117	OUT		124.2	115.9									
L, 204+60	CL	118	OUT	-	111.5	110.5						*268			
L, 213+50	C	119		-	-	-									
L, 213+50	C	120		137.4	134.6										
L, 213+50		120	121		134.6	134.3			52						
L, 220+50	RT	121		138.1	134.3										
L, 220+50		121	OUT		134.3	115.5									
L, 220+00	RT	122		123.3	120.5										
L, 220+00		122	124		120.5	118.1			44						
L, 220+50	C	123		121.1	118.4		X								
L, 220+50		123	124		118.4	118.1			56						
L, 220+50	RT	124		121.8	118.1										
L, 220+50		124	OUT		118.1	111.0									
L, 223+31	CL	126	OUT	-	107.8	106.0						220			
L, 226+81	RT	127	128	-	100.8	100.5						104			
SHEET TOTALS									256	56	216	324			

*268

STATION	FROM	TO	BITUMINOUS COATED C.S. PIPE TYPE B (UNLESS NOTED OTHERWISE) 12" .064	15" .064	18" .064	24" .064	30" .079	36" .079	42" .109	48" .109	CLASS III R.C. PIPE OR ALUMINIZED C.S. PIPE, TYPE IR OR HDPE PIPE, TYPE S OR D 12"	15"	18"	24"	30"	36"	42"	48"	12" SIDE DRAIN PIPE	15" SIDE DRAIN PIPE	18" SIDE DRAIN PIPE	24" SIDE DRAIN PIPE	30" SIDE DRAIN PIPE	36" SIDE DRAIN PIPE	ENDWALLS STD. 838.01 OR STD 838.11 OR STD. 838.80 (UNLESS NOTED OTHERWISE) CU. YARDS R.C.P.	C.S.P.
SVRD4, 19+24	110	OUT																		28						
SVRD3, 36+70	111	OUT																								
L, 193+56	112	113																								
L, 193+91	113																									
L, 193+91	113	OUT																								
SVRD3, 45+39	114	OUT																				36				
L, 203+00	115																									
L, 203+00	115	117																								
L, 203+50	116																									
L, 203+50	116	117																								
L, 203+00	117																									
L, 203+00	117	OUT		48																						
L, 204+60	118	OUT																								
L, 213+50	119																									
L, 213+50	120																									
L, 213+50	120	121																								
L, 220+50	121																									
L, 220+50	121	OUT		72																						
L, 220+00	122																									
L, 220+00	122	124																								
L, 220+50	123																									
L, 220+50	123	124																								
L, 220+50	124																									
L, 220+50	124	OUT		32																						
L, 223+31	126	OUT																								
L, 226+81	127	128																								
SHEET TOTALS				152																28		36				

STATION	FROM	TO	QUANITIES FOR DRAINAGE STRUCTURES PER EACH (0' THRU 5.0')	*TOTAL L.F. FOR PAY QUANTITY SHALL BE COL. 'A' + (1.3 X COL.'B') LIN. FT. A 5.0' THRU 10.0'	B 10.0' AND ABOVE	C.B. STD. 840.01 OR STD. 840.02	FRAME, GRATES, AND HOOD STANDARD 840.03 TYPE OF GRATE E	F	G	D.I. STD. 840.14 OR STD. 840.15	D.I. FRAME AND GRATE STD. 840.16	G.D.I. TYPE "A" STD. 840.17 OR 840.26	G.D.I. TYPE "B" STD. 840.18 OR 840.27	G.D.I. TYPE "D" STD. 840.19 OR 840.28	G.D.I. FRAME WITH GRATE STD. 840.20	G.D.I. FRAME WITH TWO GRATES STD. 840.20	G.D.I. FRAME WITH GRATE STD. 840.22	G.D.I. FRAME WITH TWO GRATES STD. 840.22	G.D.I. (N.S.) FRAME WITH TWO GRATES STD. 840.24
SVRD4, 19+24	110	OUT																	
SVRD3, 36+70	111	OUT																	
L, 193+56	112	113																	
L, 193+91	113		1										1					1	
L, 193+91	113	OUT																	
SVRD3, 45+39	114	OUT																	
L, 203+00	115		1										1					1	
L, 203+00	115	117																	
L, 203+50	116		1										1			1			
L, 203+50	116	117																	
L, 203+00	117		1										1			1			
L, 203+00	117	OUT																	
L, 204+60	118	OUT																	
L, 213+50	119																		
L, 213+50	120		1										1					1	
L, 213+50	120	121																	
L, 220+50	121		1										1			1			
L, 220+50	121	OUT																	
L, 220+00	122		1										1			1			
L, 220+00	122	124																	
L, 220+50	123		1										1					1	
L, 220+50	123	124																	
L, 220+50	124		1										1			1			
L, 220+50	124	OUT																	
L, 223+31	126	OUT																	
L, 226+81	127	128																	
SHEET TOTALS			9	0	0								9			5		4	

STATION	FROM	TO	J.B. STD. 840.31 OR 840.32	T.B.J.B. STD. 830.34	SPECIAL DESIGN CB	MANHOLE STD. 840.51	M.H. STD. 840.51 OR 840.53	M.H. FRAME AND COVER STD. 840.54	ADJUST M.H.	MODIFIED CONCRETE FLUME	TEMPORARY 15" C.S. PIPE	TEMPORARY 36" C.S. PIPE	TEMPORARY 48" C.S. PIPE	CONVERT 2 G.I. TO JB WITH M.H.	CONVERT DI TO JB	RETAIN AND ADJUST CB	PREFORMED SCOUR HOLE	BDO STD. 850.10 OR 850.11	SPRING BOX STD. 840.41	CORR. STEEL ELBOWS NO. & SIZE	CONC. COLLARS CL. "B" C.Y. STD. 840.72	CONC. & BRICK PIPE PLUG, C.Y. STD. 840.71	PIPE REMOVAL LIN. FT.	REMARKS
SVRD4, 19+24	110	OUT																						
SVRD3, 36+70	111	OUT																						
L, 193+56	112	113																						
L, 193+91	113																							
L, 193+91	113	OUT																						
SVRD3, 45+39	114	OUT																						
L, 203+00	115																							
L, 203+00	115	117																						
L, 203+50	116																							
L, 203+50	116	117																						
L, 203+00	117																							
L, 203+00	117	OUT																		2 @ 15"				
L, 204+60	118	OUT																					24	*CL IV Pipe; Pipe Removal 15"
L, 213+50	119									1														
L, 213+50	120																							
L, 213+50	120	121																						
L, 220+50	121																							
L, 220+50	121	OUT																		2 @ 15"				
L, 220+00	122																							
L, 220+00	122	124																						
L, 220+50	123																							
L, 220+50	123	124																						
L, 220+50	124																							
L, 220+50	124	OUT																		2 @ 15"				
L, 223+31	126	OUT																						
L, 226+81	127	128																						
SHEET TOTALS										1										6 @ 15"			24	

ABBREVIATIONS

C.B.	CATCH BASIN
N.D.I.	NARROW DROP INLET
D.I.	DROP INLET
G.D.I.	GRATED DROP INLET
G.D.I.(N.S.)	GRATED DROP INLET (NARROW SLOT)
J.B.	JUNCTION BOX
M.H.	MANHOLE
T.B.D.I.	TRAFFIC BEARING DROP INLET
T.B.J.B.	TRAFFIC BEARING JUNCTION BOX

* CLASS IV

RDUXPW025,4/21/2009,R:\Roadway\Grading_Proj\R2719A_Drainage_summaries_GRD.xls

RDUXPW025

COMPUTED BY: BN DATE: 12/19/2008

CHECKED BY: MDL DATE: 4/21/2009

PROJECT NO.	SHEET NO.
R-2719A	3-I

STATE OF NORTH CAROLINA
DIVISION OF HIGHWAYS

LIST OF PIPES, ENDWALLS, ETC. (FOR PIPES 48" & UNDER)

STATION / SIZE / THICKNESS OR GAUGE	LOCATION (LT, RT, OR CL)'	STRUCTURE NO. FROM	STRUCTURE NO. TO	TOP ELEVATION	INVERT ELEVATION	INVERT ELEVATION	SLOPE CRITICAL
L, 227+00	C	128		108.9	100.5		X
L, 227+00		128	OUT		100.5	100.3	
L, 228+12	C	129		108.6	105.9		
L, 228+12		129	128		105.9	100.5	
L, 232+12	CL	131		-	99.9	97.6	
L, 232+12		131	OUT				
Y24RPC, 9+70	CL	132	OUT	-	99.7	98.8	
L, 238+00	C	134		108.4	105.7		
L, 238+00		134	136		105.7	100.0	
L, 237+10	RT	135		-	98.0	97.8	
L, 237+10		135	136				
L, 236+50	C	136		107.3	97.8		
L, 236+50		136	OUT		97.8	97.3	
Y24RPB, 9+48	CL	137	OUT	-	97.4	96.7	
Y24, 48+30	LT	138					
Y24, 48+29	LT	139		111.4	107.1		
Y24, 47+04	LT	140		110.6	106.8		
Y24, 47+40	C	141		111.9	108.8		
Y24, 47+40		141	142		108.8	107.7	
Y24, 47+40	RT	142		110.7	107.7		
Y24, 47+40		142	OUT		107.7	106.1	
Y24RPC, 19+10	LT	143		109.2	106.1		
Y24RPC, 19+10		143	145		106.1	105.1	
Y6, 12+50		144	OUT	-	-	-	
Y24LPC, 9+36	LT	145		107.8	104.8		
Y24LPC, 9+36		145	146		104.8	104.8	
Y24LPC, 9+01	LT	146		107.8	104.8		
Y24LPC, 9+01		146	OUT		104.8	100.8	
Y24LPC, 8+00	LT	148		108.0	104.3		
Y24LPC, 8+00		148	OUT		104.3	100.5	
SHEET TOTALS							

STATION	STR. (FROM–TO)	CLASS III R.C. PIPE (UNLESS NOTED OTHERWISE) 12"	15"	18"	24"	30"	36"	42"	48"	BITUMINOUS COATED C.S. PIPE TYPE B (UNLESS NOTED OTHERWISE) 12" .064	15" .064	18" .064	24" .064	30" .079	36" .079	42" .109	48" .109	CLASS III R.C. PIPE OR ALUMINIZED C.S. PIPE, TYPE IR OR HDPE PIPE, TYPE S OR D 12"	15"	18"	24"	30"	36"	42"	48"
L, 227+00	128–OUT					96																			
L, 228+12	129–128		108																						
L, 232+12	131–OUT							248																	
Y24RPC, 9+70	132–OUT					104																			
L, 238+00	134–136		144																						
L, 237+10	135–136							124																	
L, 236+50	136–OUT							176																	
Y24RPB, 9+48	137–OUT				216																				
Y24, 47+40	141–142		32																						
Y24, 47+40	142–OUT		28																						
Y24RPC, 19+10	143–145		40																						
Y24LPC, 9+36	145–146		32																						
Y24LPC, 9+01	146–OUT										28														
Y24LPC, 8+00	148–OUT										32														
SHEET TOTALS			384		216	200		548			60														

STATION	STR.	12" SIDE DRAIN PIPE	15" SIDE DRAIN PIPE	18" SIDE DRAIN PIPE	24" SIDE DRAIN PIPE	30" SIDE DRAIN PIPE	36" SIDE DRAIN PIPE	ENDWALLS STD. 838.01 OR STD 838.11 OR STD. 838.80 (UNLESS NOTED OTHERWISE) CU. YARDS R.C.P.	C.S.P.	QUANITIES FOR DRAINAGE STRUCTURES PER EACH (0' THRU 5.0')	*TOTAL L.F. FOR PAY QUANTITY SHALL BE COL. 'A' + (1.3 X COL.'B') LIN. FT. A 5.0' THRU 10.0'	B 10.0' AND ABOVE	C.B. STD. 840.01 OR STD. 840.02	FRAME, GRATES, AND HOOD STANDARD 840.03 TYPE OF GRATE E	F	G
L, 227+00	128									1						
L, 228+12	129									1						
L, 232+12	131							5								
L, 238+00	134									1						
L, 237+10	135							5.2								
L, 236+50	136									1						
Y24, 47+40	141									1						
Y24, 47+40	142									1			1		1	
Y24RPC, 19+10	143									1						
Y6, 12+50	144–OUT	52														
Y24LPC, 9+36	145									1			1		1	
Y24LPC, 9+01	146									1			1	1		
Y24LPC, 8+00	148									1			1			1
SHEET TOTALS		52						10.2		10	0		4	1	2	1

STATION	STR.	D.I. STD. 840.14 OR STD. 840.15	D.I. FRAME AND GRATE STD. 840.16	G.D.I. TYPE "A" STD. 840.17 OR 840.26	G.D.I. TYPE "B" STD. 840.18 OR 840.27	G.D.I. TYPE "D" STD. 840.19 OR 840.28	G.D.I. FRAME WITH GRATE STD. 840.20	G.D.I. FRAME WITH TWO GRATES STD. 840.20	G.D.I. FRAME WITH GRATE STD. 840.22	G.D.I. FRAME WITH TWO GRATES STD. 840.22	G.D.I. (N.S.) FRAME WITH TWO GRATES STD. 840.24	J.B. STD. 840.31 OR 840.32	T.B.J.B. STD. 830.34	SPECIAL DESIGN CB	MANHOLE STD. 840.51	M.H. STD. 840.51 OR 840.53	M.H. FRAME AND COVER STD. 840.54	ADJUST M.H.
L, 227+00	128				1					1								
L, 228+12	129				1					1								
L, 238+00	134				1					1								
L, 236+50	136			1					1	1								
Y24, 47+40	141	1	1															
Y24RPC, 19+10	143	1	1															
SHEET TOTALS		2	2	1	3				1	4								

STATION	STR.	MODIFIED CONCRETE FLUME	TEMPORARY 15" C.S. PIPE	TEMPORARY 36" C.S. PIPE	TEMPORARY 48" C.S. PIPE	CONVERT 2 G.I. TO JB WITH M.H.	CONVERT DI TO JB	RETAIN AND ADJUST CB	PREFORMED SCOUR HOLE	BDO STD. 850.10 OR 850.11	SPRING BOX STD. 840.41	CORR. STEEL ELBOWS NO. & SIZE	CONC. COLLARS CL. "B" C.Y. STD. 840.72	CONC. & BRICK PIPE PLUG, C.Y. STD. 840.71	PIPE REMOVAL LIN. FT.	REMARKS
L, 232+12	131															SEE SHEET 2-AG FOR ENDWALL DETAIL
L, 237+10	135															SEE SHEET 2-AH FOR ENDWALL DETAIL
Y24, 48+30	138															Retain DI
Y24, 48+29	139							1								
Y24, 47+04	140															Retain CB
Y24RPC, 19+10	143–145														36	Pipe Removal is of a 18" RCP
SHEET TOTALS								1							36	

ABBREVIATIONS

C.B.	CATCH BASIN
N.D.I.	NARROW DROP INLET
D.I.	DROP INLET
G.D.I.	GRATED DROP INLET
G.D.I.(N.S.)	GRATED DROP INLET (NARROW SLOT)
J.B.	JUNCTION BOX
M.H.	MANHOLE
T.B.D.I.	TRAFFIC BEARING DROP INLET
T.B.J.B.	TRAFFIC BEARING JUNCTION BOX

RDUXPW025

COMPUTED BY: BN DATE: 12/19/2008

CHECKED BY: MDL DATE: 4/21/2009

PROJECT NO.	SHEET NO.
R-2719A	3-J

STATE OF NORTH CAROLINA
DIVISION OF HIGHWAYS

LIST OF PIPES, ENDWALLS, ETC. (FOR PIPES 48" & UNDER)

| STATION | LOCATION (LT, RT, OR CL)' | STRUCTURE NO. FROM | STRUCTURE NO. TO | TOP ELEVATION | INVERT ELEVATION | INVERT ELEVATION | SLOPE CRITICAL | CLASS III R.C. PIPE (UNLESS NOTED OTHERWISE) 12" | 15" | 18" | 24" | 30" | 36" | 42" | 48" | BITUMINOUS COATED C.S. PIPE TYPE B (UNLESS NOTED OTHERWISE) .064 12" | .064 15" | .064 18" | .064 24" | .079 30" | .079 36" | .109 42" | .109 48" | CLASS III R.C. PIPE OR ALUMINIZED C.S. PIPE, TYPE IR OR HDPE PIPE, TYPE S OR D 12" | 15" | 18" | 24" | 30" | 36" | 42" | 48" | 12" SIDE DRAIN PIPE | 15" SIDE DRAIN PIPE | 18" SIDE DRAIN PIPE | 24" SIDE DRAIN PIPE | 30" SIDE DRAIN PIPE | 36" SIDE DRAIN PIPE | ENDWALLS STD. 838.01 OR STD 838.11 OR STD. 838.80 (UNLESS NOTED OTHERWISE) CU. YARDS R.C.P. | C.S.P. | QUANTIES FOR DRAINAGE STRUCTURES PER EACH (0' THRU 5.0') | LIN. FT. A 5.0' THRU 10.0' | LIN. FT. B 10.0' AND ABOVE | *TOTAL L.F. FOR PAY QUANTITY SHALL BE COL. 'A' + (1.3 X COL. 'B') | C.B. STD. 840.01 OR STD. 840.02 | FRAME, GRATES, AND HOOD STANDARD 840.03 TYPE OF GRATE E | F | G | D.I. STD. 840.14 OR STD. 840.15 | D.I. FRAME AND GRATE STD. 840.16 | G.D.I. TYPE "A" STD. 840.17 OR 840.26 | G.D.I. TYPE "B" STD. 840.18 OR 840.27 | G.D.I. TYPE "D" STD. 840.19 OR 840.28 | G.D.I. FRAME WITH GRATE STD. 840.20 | G.D.I. FRAME WITH TWO GRATES STD. 840.20 | G.D.I. FRAME WITH GRATE STD. 840.22 | G.D.I. FRAME WITH TWO GRATES STD. 840.22 | G.D.I. (N.S.) FRAME WITH TWO GRATES STD. 840.24 | J.B. STD. 840.31 OR 840.32 | T.B.J.B. STD. 830.34 | SPECIAL DESIGN CB | MANHOLE STD. 840.51 | M.H. STD. 840.51 OR 840.53 | M.H. FRAME AND COVER STD. 840.54 | ADJUST M.H. | MODIFIED CONCRETE FLUME | TEMPORARY 15" C.S. PIPE | TEMPORARY 36" C.S. PIPE | TEMPORARY 48" C.S. PIPE | CONVERT 2 G.I. TO JB WITH M.H. | CONVERT DI TO JB | RETAIN AND ADJUST CB | PREFORMED SCOUR HOLE | BDO STD. 830.10 OR 830.11 | SPRING BOX STD. 840.41 | CORR. STEEL ELBOWS NO. & SIZE | CONC. COLLARS CL. "B" C.Y. STD. 840.72 | CONC. & BRICK PIPE PLUG, C.Y. STD. 840.71 | PIPE REMOVAL LIN. FT. | REMARKS |
|---|---|---

RDUXPW025

COMPUTED BY: BN DATE: 12/19/2008

CHECKED BY: MDL DATE: 4/21/2009

STATE OF NORTH CAROLINA
DIVISION OF HIGHWAYS

PROJECT NO.	SHEET NO.
R-2719A	3-K

LIST OF PIPES, ENDWALLS, ETC. (FOR PIPES 48" & UNDER)

STATION	LOCATION (LT, RT, OR CL)'	STRUCTURE NO. FROM	STRUCTURE NO. TO	TOP ELEVATION	INVERT ELEVATION	INVERT ELEVATION	SLOPE CRITICAL	CLASS III R.C. PIPE (UNLESS NOTED OTHERWISE) 12"	15"	18"	24"	30"	36"	42"	48"
Y24, 37+00	RT	167		103.0	98.1	98.0									
Y24, 37+00		167	OUT								16				
Y24LPB, 1+23	RT	169		127.9	125.1	98.5									
Y24LPB, 1+23		169	OUT												
Y24LPB, 6+00	RT	171		113.4	110.4	100.5									
Y24LPB, 6+00		171	OUT												
Y24RPB, 17+10	RT	173		105.7	102.5	101.5									
Y24RPB, 17+10		173	175						48						
Y24LPB, 8+84	RT	174		104.7	101.7	101.4									
Y24LPB, 8+84		174	175						20						
Y24LPB, 9+10	RT	175		104.4	101.4	99.5									
Y24LPB, 9+10		175	177						132						
Y24LPB, 8+83	CL	176		-	97.3	96.7									
Y24LPB, 8+83		176	OUT										180		
Y24LPB, 10+50	RT	177		102.5	99.5	98.5									
Y24LPB, 10+50		177	188						36						
Y24, 32+44	RT	178		103.4	100.4	99.5									
Y24, 32+44		178	179						48						
Y24RPB, 18+93	LT	179		102.5	99.5										
Y24RPB, 18+93		179	188		99.5	98.5			92						
Y24, 34+90	LT	180	181	-	100.6	100.4			20						
Y24, 34+90	LT	181		105.7	100.4										
Y24, 34+90		181	186		100.4	99.2			100						
SVRD2, 13+35	CL	182	183	-	101.6	100.3				48					
Y24, 31+88	LT	183		102.8	100.3										
Y24, 31+88		183	184		100.3	100.2				8					
Y24, 31+88	LT	184		103.7	100.2										
Y24, 31+88		184	185		100.2	100.2				4					
Y24, 31+94	LT	185		103.7	100.2										
Y24, 31+94		185	186		100.2	99.2				196					
Y24, 33+85	LT	186		104.5	99.2										
Y24, 33+85		186	187		99.2	99.0					48				
SHEET TOTALS									496	256	64		180		

SIZE / THICKNESS OR GAUGE

STATION	STRUCTURE NO. FROM	TO	BITUMINOUS COATED C.S. PIPE TYPE B (UNLESS NOTED OTHERWISE) 12" .064	15" .064	18" .064	24" .064	30" .079	36" .079	42" .109	48" .109	CLASS III R.C. PIPE OR ALUMINIZED C.S. PIPE, TYPE IR OR HDPE PIPE, TYPE S OR D 12"	15"	18"	24"	30"	36"	42"	48"	12" SIDE DRAIN PIPE	15" SIDE DRAIN PIPE	18" SIDE DRAIN PIPE	24" SIDE DRAIN PIPE	30" SIDE DRAIN PIPE	36" SIDE DRAIN PIPE
Y24LPB, 1+23	169	OUT		108																				
Y24LPB, 6+00	171	OUT		60																				
SHEET TOTALS				168																				

STATION	STRUCTURE NO. FROM	TO	ENDWALLS STD. 838.01 OR STD 838.11 OR STD. 838.80 (UNLESS NOTED OTHERWISE) CU. YARDS R.C.P.	C.S.P.	QUANITIES FOR DRAINAGE STRUCTURES PER EACH (0' THRU 5.0')	*TOTAL L.F. FOR PAY QUANTITY SHALL BE COL. 'A' + (1.3 X COL.'B') LIN. FT. A 5.0' THRU 10.0'	B 10.0' AND ABOVE	C.B. STD. 840.01 OR STD. 840.02	FRAME, GRATES, AND HOOD STANDARD 840.03 TYPE OF GRATE E	F	G	D.I. STD. 840.14 OR STD. 840.15	D.I. FRAME AND GRATE STD. 840.16	G.D.I. TYPE "A" STD. 840.17 OR 840.26	G.D.I. TYPE "B" STD. 840.18 OR 840.27	G.D.I. TYPE "D" STD. 840.19 OR 840.28	G.D.I. FRAME WITH GRATE STD. 840.20	G.D.I. FRAME WITH TWO GRATES STD. 840.20	G.D.I. FRAME WITH GRATE STD. 840.22	G.D.I. FRAME WITH TWO GRATES STD. 840.22	G.D.I. (N.S.) FRAME WITH TWO GRATES STD. 840.24
Y24, 37+00	167				1			1	1												
Y24LPB, 1+23	169				1										1			1			
Y24LPB, 6+00	171				1			1		1											
Y24RPB, 17+10	173				1							1	1								
Y24LPB, 8+84	174				1			1		1											
Y24LPB, 9+10	175				1			1		1											
Y24LPB, 8+83	176		4																		
Y24LPB, 10+50	177				1			1		1											
Y24, 32+44	178				1			1			1										
Y24RPB, 18+93	179				1			1	1												
Y24, 34+90	181				1	0.3		1			1										
Y24, 31+88	183				1							1	1								
Y24, 31+88	184				1			1		1											
Y24, 31+94	185				1			1		1											
Y24, 33+85	186				1	0.3		1	1												
SHEET TOTALS			4		14	0.6		11	3	6	2	2	2		1			1			

STATION	STRUCTURE NO. FROM	TO	J.B. STD. 840.31 OR 840.32	T.B.J.B. STD. 830.34	SPECIAL DESIGN CB	MANHOLE STD. 840.51	M.H. STD. 840.51 OR 840.53	M.H. FRAME AND COVER STD. 840.54	ADJUST M.H.	MODIFIED CONCRETE FLUME	TEMPORARY 15" C.S. PIPE	TEMPORARY 36" C.S. PIPE	TEMPORARY 48" C.S. PIPE	CONVERT 2 G.I. TO JB WITH M.H.	CONVERT DI TO JB	RETAIN AND ADJUST CB	PREFORMED SCOUR HOLE	BDO STD. 850.10 OR 850.11	SPRING BOX STD. 840.41	CORR. STEEL ELBOWS NO. & SIZE	CONC. COLLARS CL. "B" C.Y. STD. 840.72	CONC. & BRICK PIPE PLUG, C.Y. STD. 840.71	PIPE REMOVAL LIN. FT.	REMARKS
Y24LPB, 1+23	169	OUT															1			1 @ 15"				
Y24LPB, 6+00	171	OUT															1			1 @ 15"				
Y24LPB, 9+10	175	177																					48	Pipe Removal is of 24 LF of 15" and 24 LF of 30"
Y24LPB, 8+83	176																							SEE SHEET 2-AI FOR ENDWALL DETAIL
Y24, 31+88	183	184																					48	Pipe Removal is of 18" RCP
SHEET TOTALS																	2			2 @ 15"			96	

ABBREVIATIONS

C.B.	CATCH BASIN
N.D.I.	NARROW DROP INLET
D.I.	DROP INLET
G.D.I.	GRATED DROP INLET
G.D.I.(N.S.)	GRATED DROP INLET (NARROW SLOT)
J.B.	JUNCTION BOX
M.H.	MANHOLE
T.B.D.I.	TRAFFIC BEARING DROP INLET
T.B.J.B.	TRAFFIC BEARING JUNCTION BOX

COMPUTED BY: BN DATE: 12/19/2008

CHECKED BY: MDL DATE: 4/21/2009

RDUXPW025

PROJECT NO.	SHEET NO.
R-2719A	3-L

STATE OF NORTH CAROLINA
DIVISION OF HIGHWAYS

LIST OF PIPES, ENDWALLS, ETC. (FOR PIPES 48" & UNDER)

STATION	LOCATION (LT, RT, OR CL)'	STRUCTURE NO.		TOP ELEVATION	INVERT ELEVATION	INVERT ELEVATION	SLOPE CRITICAL	CLASS III R.C. PIPE (UNLESS NOTED OTHERWISE)								BITUMINOUS COATED C.S. PIPE TYPE B (UNLESS NOTED OTHERWISE)												
SIZE								12"	15"	18"	24"	30"	36"	42"	48"	12"	15"	18"	24"		30"		36"		42"		48"	
THICKNESS OR GAUGE		FROM	TO													.064	.064	.064	.064		.079		.079		.109		.109	
Y24, 33+85	RT	187		104.0	99.0																							
Y24, 33+85		187	188		99.0	98.5					72																	
Y24LPB, 10+92	RT	188		102.3	98.5																							
Y24LPB, 10+92		188	OUT		98.5	98.2					32																	
Y24, 28+80	LT	189		104.6	101.6																							
Y24, 28+80		189	191		101.6	100.9			124																			
Y24, 27+50	LT	190		103.8	101.5																							
Y24, 27+50		190	191		101.5	100.9			16																			
Y24, 27+50	LT	191		104.7	100.9																							
Y24, 27+50		191	192		100.9	97.3			132																			
Y24, 26+16	LT	192		104.1	97.3																							
Y24, 26+16		192	196		97.3	97.2					12																	
Y24, 26+67	LT	193		102.5	100.3																							
Y24, 26+67		193	194		100.3	98.0			48																			
Y24, 26+16	LT	194		100.3	98.0																							
Y24, 26+16		194	192		98.0	97.3			20																			
Y24, 26+16	LT	195		103.5	99.3																							
Y24, 26+16		195	192		99.3	97.3			28																			
Y24, 27+00	RT	197		103.1	100.1																							
Y24, 27+00		197	198		100.1	98.6			128																			
Y24, 25+65	RT	198		101.6	98.6																							
Y24, 25+65		198	OUT		98.6	98.5			20																			
Y24, 24+85	LT	200		103.5	95.4																							
Y24, 24+39	LT	201	OUT	-	94.8	94.7						44																
Y24, 23+50		203	OUT	-	-	-																						
L, 253+50	RT	204		126.6	123.9																							
L, 253+50		204	OUT		123.9	102.1																						
L, 255+00	LT	205		124.1	121.4																							
L, 255+00		205	OUT		121.4	102.6											68											
L, 258+00	RT	207		116.2	113.4																							
L, 258+00		207	208		113.4	112.1			44																			
SHEET TOTALS									560		116	44					68											

STATION	FROM	TO	CLASS III R.C. PIPE OR ALUMINIZED C.S. PIPE, TYPE IR OR HDPE PIPE, TYPE S OR D 12"	15"	18"	24"	30"	36"	42"	48"	12" SIDE DRAIN PIPE	15" SIDE DRAIN PIPE	18" SIDE DRAIN PIPE	24" SIDE DRAIN PIPE	30" SIDE DRAIN PIPE	36" SIDE DRAIN PIPE	ENDWALLS STD. 838.01 OR STD 838.11 OR STD. 838.80 (UNLESS NOTED OTHERWISE) CU. YARDS R.C.P.	C.S.P.	QUANITIES FOR DRAINAGE STRUCTURES PER EACH (0' THRU 5.0')	*TOTAL L.F. FOR PAY QUANTITY SHALL BE COL. 'A' + (1.3 X COL.'B') LIN. FT. A 5.0' THRU 10.0'	B 10.0' AND ABOVE	C.B. STD. 840.01 OR STD. 840.02	FRAME, GRATES, AND HOOD STANDARD 840.03 TYPE OF GRATE E	F	G
Y24, 33+85	187																		1						
Y24, 33+85	187	188																							
Y24LPB, 10+92	188																		1			1	1		
Y24LPB, 10+92	188	OUT																							
Y24, 28+80	189																		1			1			1
Y24, 28+80	189	191																							
Y24, 27+50	190																		1						
Y24, 27+50	190	191																							
Y24, 27+50	191																		1			1			1
Y24, 27+50	191	192																							
Y24, 26+16	192																		1	1.8		1			1
Y24, 26+16	192	196																							
Y24, 26+67	193																		1						
Y24, 26+67	193	194																							
Y24, 26+16	194																		1						
Y24, 26+16	194	192																							
Y24, 26+16	195																		1						
Y24, 26+16	195	192																							
Y24, 27+00	197																		1			1		1	
Y24, 27+00	197	198																							
Y24, 25+65	198																		1			1		1	
Y24, 25+65	198	OUT																							
Y24, 24+85	200																								
Y24, 24+39	201	OUT																							
Y24, 23+50	203	OUT										24													
L, 253+50	204																		1						
L, 253+50	204	OUT				48																			
L, 255+00	205																		1						
L, 255+00	205	OUT																							
L, 258+00	207																		1						
L, 258+00	207	208																							
SHEET TOTALS						48						24							14	1.8	0	6	1	2	3

STATION	FROM	TO	D.I. STD. 840.14 OR STD. 840.15	D.I. FRAME AND GRATE STD. 840.16	G.D.I. TYPE "A" STD. 840.17 OR 840.26	G.D.I. TYPE "B" STD. 840.18 OR 840.27	G.D.I. TYPE "D" STD. 840.19 OR 840.28	G.D.I. FRAME WITH GRATE STD. 840.20	G.D.I. FRAME WITH TWO GRATES STD. 840.20	G.D.I. FRAME WITH GRATE STD. 840.22	G.D.I. FRAME WITH TWO GRATES STD. 840.22	G.D.I. (N.S.) FRAME WITH TWO GRATES STD. 840.24	J.B. STD. 840.31 OR 840.32	T.B.J.B. STD. 830.34	SPECIAL DESIGN CB	MANHOLE STD. 840.51	M.H. STD. 840.51 OR 840.53	M.H. FRAME AND COVER STD. 840.54	ADJUST M.H.			MODIFIED CONCRETE FLUME	TEMPORARY 15" C.S. PIPE	TEMPORARY 36" C.S. PIPE	TEMPORARY 48" C.S. PIPE	CONVERT 2 G.I. TO JB WITH M.H.	CONVERT DI TO JB	RETAIN AND ADJUST CB		PREFORMED SCOUR HOLE		BDO STD. 850.10 OR 850.11		SPRING BOX STD. 840.41	CORR. STEEL ELBOWS NO. & SIZE	CONC. COLLARS CL. "B" C.Y. STD. 840.72	CONC. & BRICK PIPE PLUG, C.Y. STD. 840.71	PIPE REMOVAL LIN. FT.	REMARKS
Y24, 33+85	187		1	1																																			
Y24, 33+85	187	188																																					
Y24LPB, 10+92	188																																						
Y24LPB, 10+92	188	OUT																																					
Y24, 28+80	189																																						
Y24, 28+80	189	191																																					
Y24, 27+50	190		1	1																																			
Y24, 27+50	190	191																																					
Y24, 27+50	191																																						
Y24, 27+50	191	192																																				30	Pipe Removal of 15" RCP
Y24, 26+16	192																																						
Y24, 26+16	192	196																																		1 @ 0.6			
Y24, 26+67	193		1	1																																			
Y24, 26+67	193	194																																					
Y24, 26+16	194		1	1																																			
Y24, 26+16	194	192																																					
Y24, 26+16	195		1	1																																			
Y24, 26+16	195	192																																					
Y24, 27+00	197																																						
Y24, 27+00	197	198																																					
Y24, 25+65	198																																						
Y24, 25+65	198	OUT																																					
Y24, 24+85	200																			1																			
Y24, 24+39	201	OUT																																		1 @ 0.6			
Y24, 23+50	203	OUT																																				20	Pipe Removal is of 15" RCP
L, 253+50	204					1			1																														
L, 253+50	204	OUT																																	2 @ 15"				
L, 255+00	205					1			1																														
L, 255+00	205	OUT																												1					2 @ 15"				
L, 258+00	207					1			1																														
L, 258+00	207	208																																					
SHEET TOTALS			5	5		3			3										1											1					4 @ 15"	2 EA- 1.2		50	

ABBREVIATIONS

- C.B. CATCH BASIN
- N.D.I. NARROW DROP INLET
- D.I. DROP INLET
- G.D.I. GRATED DROP INLET
- G.D.I.(N.S.) GRATED DROP INLET (NARROW SLOT)
- J.B. JUNCTION BOX
- M.H. MANHOLE
- T.B.D.I. TRAFFIC BEARING DROP INLET
- T.B.J.B. TRAFFIC BEARING JUNCTION BOX

RDUXPW025

COMPUTED BY:	BN	DATE:	12/19/2008
CHECKED BY:	MDL	DATE:	4/21/2009

STATE OF NORTH CAROLINA
DIVISION OF HIGHWAYS

PROJECT NO.	SHEET NO.
R-2719A	3-M1 (FUT.)

FUTURE - LIST OF PIPES, ENDWALLS, ETC. (FOR PIPES 48" & UNDER)

STATION	LOCATION (LT, RT, OR CL)	STRUCTURE NO. FROM	STRUCTURE NO. TO	TOP ELEVATION	INVERT ELEVATION	INVERT ELEVATION	SLOPE CRITICAL	CLASS III R.C. PIPE (UNLESS NOTED OTHERWISE) 12"	15"	18"	24"	30"	36"	42"	48"
Y1, 17+09	C	215		50.6	47.6										
Y1, 17+09		215	EX		47.6	47.0									
Y1, 17+10	RT	216	OUT	-	45.7	44.9									
Y1, 21+20	C	217		52.3	49.6										
Y1, 21+20		217	OUT		49.6	48.3			96						
Y1, 25+00	RT	218	OUT	-	-	-									
SHEET TOTALS									96						

STATION	BITUMINOUS COATED C.S. PIPE TYPE B (UNLESS NOTED OTHERWISE) 12" (.064)	15" (.064)	18" (.064)	24" (.064)	30" (.079)	36" (.079)	42" (.109)	48" (.109)
Y1, 17+09								
Y1, 17+09								
Y1, 17+10								
Y1, 21+20								
Y1, 21+20								
Y1, 25+00								
SHEET TOTALS								

STATION	CLASS III R.C. PIPE OR ALUMINIZED C.S. PIPE, TYPE IR OR HDPE PIPE, TYPE S OR D 12"	15"	18"	24"	30"	36"	42"	48"	12" SIDE DRAIN PIPE	15" SIDE DRAIN PIPE	18" SIDE DRAIN PIPE	24" SIDE DRAIN PIPE	30" SIDE DRAIN PIPE	36" SIDE DRAIN PIPE
Y1, 17+09														
Y1, 17+09			8											
Y1, 17+10			28											
Y1, 21+20														
Y1, 21+20														
Y1, 25+00										132				
SHEET TOTALS			36							132				

STATION	ENDWALLS STD. 838.01 OR STD 838.11 OR STD. 838.80 (UNLESS NOTED OTHERWISE) CU. YARDS R.C.P.	C.S.P.	QUANITIES FOR DRAINAGE STRUCTURES PER EACH (0' THRU 5.0')	*TOTAL L.F. FOR PAY QUANTITY SHALL BE COL. 'A' + (1.3 X COL.'B') LIN. FT. A 5.0' THRU 10.0'	B 10.0' AND ABOVE	C.B. STD. 840.01 OR STD. 840.02	FRAME, GRATES, AND HOOD STANDARD 840.03 TYPE OF GRATE E	F	G
Y1, 17+09			1						
Y1, 17+09									
Y1, 17+10									
Y1, 21+20			1						
Y1, 21+20									
Y1, 25+00									
SHEET TOTALS			2						

STATION	D.I. STD. 840.14 OR STD. 840.15	D.I. FRAME AND GRATE STD. 840.16	G.D.I. TYPE "A" STD. 840.17 OR 840.26	G.D.I. TYPE "B" STD. 840.18 OR 840.27	G.D.I. TYPE "D" STD. 840.19 OR 840.28	G.D.I. FRAME WITH GRATE STD. 840.20	G.D.I. FRAME WITH TWO GRATES STD. 840.20	G.D.I. FRAME WITH GRATE STD. 840.22	G.D.I. FRAME WITH TWO GRATES STD. 840.22	G.D.I. (N.S.) FRAME WITH TWO GRATES STD. 840.24	J.B. STD. 840.31 OR 840.32	T.B.J.B. STD. 830.34	SPECIAL DESIGN CB	MANHOLE STD. 840.51	M.H. STD. 840.51 OR 840.53	M.H. FRAME AND COVER STD. 840.54	ADJUST M.H.
Y1, 17+09				1					1								
Y1, 17+09																	
Y1, 17+10																	
Y1, 21+20				1					1								
Y1, 21+20																	
Y1, 25+00																	
SHEET TOTALS				2					2								

STATION			MODIFIED CONCRETE FLUME	TEMPORARY 15" C.S. PIPE	TEMPORARY 36" C.S. PIPE	TEMPORARY 48" C.S. PIPE	CONVERT 2 G.I. TO JB WITH M.H.	CONVERT DI TO JB	RETAIN AND ADJUST CB		PREFORMED SCOUR HOLE		BDO STD. 850.10 OR 850.11		SPRING BOX STD. 840.41	CORR. STEEL ELBOWS NO. & SIZE	CONC. COLLARS CL. "B" C.Y. STD. 840.72	CONC. & BRICK PIPE PLUG, C.Y. STD. 840.71	PIPE REMOVAL LIN. FT.	REMARKS
Y1, 17+09																				
Y1, 17+09																	1 @ 0.5			
Y1, 17+10											1						1 @ 0.5			
Y1, 21+20																				
Y1, 21+20																				
Y1, 25+00																	1 @ 0.1		50	Pipe Removal is of 18" Pipe
SHEET TOTALS											1						3 EA- 1.1		50	

ABBREVIATIONS

C.B.	CATCH BASIN
N.D.I.	NARROW DROP INLET
D.I.	DROP INLET
G.D.I.	GRATED DROP INLET
G.D.I.(N.S.)	GRATED DROP INLET (NARROW SLOT)
J.B.	JUNCTION BOX
M.H.	MANHOLE
T.B.D.I.	TRAFFIC BEARING DROP INLET
T.B.J.B.	TRAFFIC BEARING JUNCTION BOX

RDUXPW025

COMPUTED BY: BN DATE: 12/19/2008

CHECKED BY: MDL DATE: 4/21/2009

PROJECT NO.	SHEET NO.
R-2719A	3-M2 (PROP)

STATE OF NORTH CAROLINA
DIVISION OF HIGHWAYS

PROPOSED - LIST OF PIPES, ENDWALLS, ETC. (FOR PIPES 48" & UNDER)

STATION	LOCATION (LT, RT, OR CL)'	STRUCTURE NO. FROM	STRUCTURE NO. TO	TOP ELEVATION	INVERT ELEVATION	INVERT ELEVATION	SLOPE CRITICAL	CLASS III R.C. PIPE (UNLESS NOTED OTHERWISE) 12"	15"	18"	24"	30"	36"	42"	48"	BITUMINOUS COATED C.S. PIPE TYPE B (UNLESS NOTED OTHERWISE) 12"	15"	18"	24"	30"	36"	42"	48"	CLASS III R.C. PIPE OR ALUMINIZED C.S. PIPE, TYPE IR OR HDPE PIPE, TYPE S OR D 12"	15"	18"	24"	30"	36"	42"	48"
SIZE																																	
THICKNESS OR GAUGE																.064	.064	.064	.064	.079	.079	.109	.109										
L, 258+50	RT	208		114.9	112.1																												
L, 258+50		208	209		112.1	110.5			64																								
L, 258+50	C	209		113.3	110.5																												
L, 258+50		209	210		110.5	109.7			52																								
L, 258+50	LT	210		115.2	109.7																												
L, 258+50		210	212		109.7	103.6										36																	
L, 259+50	LT	211		112.9	110.2																												
L, 259+50		211	210		110.2	109.7			96																								
Y6, 33+79	CL	213	OUT	-	93.4	92.1																											
D1, 15+10	CL	214	OUT	-	99.2	98.3																											
Y1, 31+00	C	219		51.2	48.5																												
Y1, 31+00		219	OUT		48.5	47.0			92																								
Y1, 39+00	C	221		51.4	47.4																												
Y1, 39+00		221	OUT		47.4	44.5			116																								
Y1, 51+52	C	224		-	49.0	48.4																											
Y1, 51+52		224	OUT						84																								
Y1, 90+80	RT	225		67.2	64.5																												
Y1, 90+80		225	226		64.5	62.6			52																								
Y1, 90+80	C	226		65.3	62.6																												
Y1, 90+80		226	228		62.6	62.2			64																								
Y1, 91+50	LT	227		68.4	65.6																												
Y1, 91+50		227	228		65.6	62.2			64																								
SHEET TOTALS									684							36																	

STATION	12" SIDE DRAIN PIPE	15" SIDE DRAIN PIPE	18" SIDE DRAIN PIPE	24" SIDE DRAIN PIPE	30" SIDE DRAIN PIPE	36" SIDE DRAIN PIPE	ENDWALLS STD. 838.01 OR STD 838.11 OR STD. 838.80 (UNLESS NOTED OTHERWISE) CU. YARDS R.C.P.	C.S.P.	QUANTITIES FOR DRAINAGE STRUCTURES PER EACH (0' THRU 5.0')	LIN. FT. 5.0' THRU 10.0' A	10.0' AND ABOVE B	*TOTAL L.F. FOR PAY QUANTITY SHALL BE COL. 'A' * (1.3 X COL. 'B')	C.B. STD. 840.01 OR STD. 840.02	FRAME, GRATES, AND HOOD STANDARD 840.03 TYPE OF GRATE E	F	G	D.I. STD. 840.14 OR STD. 840.15	D.I. FRAME AND GRATE STD. 840.16	G.D.I. TYPE "A" STD. 840.17 OR 840.26	G.D.I. TYPE "B" STD. 840.18 OR 840.27	G.D.I. TYPE "D" STD. 840.19 OR 840.28	G.D.I. FRAME WITH GRATE STD. 840.20	G.D.I. FRAME WITH TWO GRATES STD. 840.20	G.D.I. FRAME WITH GRATE STD. 840.22	G.D.I. FRAME WITH TWO GRATES STD. 840.22	G.D.I. (N.S.) FRAME WITH TWO GRATES STD. 840.24	J.B. STD. 840.31 OR 840.32	T.B.J.B. STD. 930.34	SPECIAL DESIGN CB	MANHOLE STD. 840.51	M.H. STD. 840.51 OR 840.53	M.H. FRAME AND COVER STD. 840.54	ADJUST M.H.	MODIFIED CONCRETE FLUME	TEMPORARY 15" C.S. PIPE	TEMPORARY 36" C.S. PIPE	TEMPORARY 48" C.S. PIPE	CONVERT 2 G.I. TO JB WITH M.H.	CONVERT DI TO JB	RETAIN AND ADJUST CB	PREFORMED SCOUR HOLE	BDO STD. 858.10 OR 858.11	SPRING BOX STD. 840.41	CORR. STEEL ELBOWS NO. & SIZE	CONC. COLLARS CL. "B" C.Y. STD. 840.72	CONC. & BRICK PIPE PLUG, C.Y. STD. 840.71	PIPE REMOVAL LIN. FT.	REMARKS
L, 258+50									1											1					1																				
L, 258+50																																													
L, 258+50									1											1						1																			
L, 258+50																																													
L, 258+50									1											1		1																							
L, 258+50																																							1			2 @ 15"			
L, 259+50									1											1		1																							
L, 259+50																																													
Y6, 33+79																																				68								68	
D1, 15+10																																			200									200	
Y1, 31+00									1											1					1																				
Y1, 31+00																																													
Y1, 39+00									1								1					1	1																						
Y1, 39+00																																													
Y1, 51+52									1											1					1																				
Y1, 51+52																																													
Y1, 90+80									1											1		1																							
Y1, 90+80																																													
Y1, 90+80									1											1					1																				
Y1, 90+80																																													
Y1, 91+50									1											1		1																							
Y1, 91+50																																													
SHEET TOTALS									10								1			9		5	1		5										200		68				1			2 @ 15"			268	

ABBREVIATIONS	
C.B.	CATCH BASIN
N.D.I.	NARROW DROP INLET
D.I.	DROP INLET
G.D.I.	GRATED DROP INLET
G.D.I.(N.S.)	GRATED DROP INLET (NARROW SLOT)
J.B.	JUNCTION BOX
M.H.	MANHOLE
T.B.D.I.	TRAFFIC BEARING DROP INLET
T.B.J.B.	TRAFFIC BEARING JUNCTION BOX

RDUXPW025

COMPUTED BY: BN DATE: 12/19/2008

CHECKED BY: MDL DATE: 4/21/2009

PROJECT NO.	SHEET NO.
R-2719A	3-N1 (FUT.)

STATE OF NORTH CAROLINA
DIVISION OF HIGHWAYS

FUTURE - LIST OF PIPES, ENDWALLS, ETC. (FOR PIPES 48" & UNDER)

STATION	LOCATION (LT, RT, OR CL)'	STRUCTURE NO. FROM	STRUCTURE NO. TO	TOP ELEVATION	INVERT ELEVATION	INVERT ELEVATION	SLOPE CRITICAL	CLASS III R.C. PIPE (UNLESS NOTED OTHERWISE) 12"	15"	18"	24"	30"	36"	42"	48"	BITUMINOUS COATED C.S. PIPE TYPE B (UNLESS NOTED OTHERWISE) 12"	15"	18"	24"	30"		36"		42"		48"		CLASS III R.C. PIPE OR ALUMINIZED C.S. PIPE, TYPE IR OR HDPE PIPE, TYPE S OR D 12"	15"	18"	24"	30"	36"	42"	48"
SIZE																																			
THICKNESS OR GAUGE																.064	.064	.064	.064	.079		.079		.109		.109									
Y9, 13+20	LT	232	OUT	-	-	-																													
Y15, 30+04	CL	237		-	47.0	46.7																													
Y15, 30+04		237	OUT										112																						
Y1, 109+61	RT	238		-	45.6	45.3																													
Y1, 109+61		238	238A										112																						
Y1, 110+00	C	238A		50.2	45.3																														
Y1, 110+00		238A	OUT		45.3	44.9							108																						
Y1, 111+25	LT	239	OUT	-	-	-																													
Y1, 117+30	LT	240	OUT	-	-	-																													
Y1, 120+60	C	241		45.6	42.8																														
Y1, 120+60		241	242		42.8	42.2		4																											
Y1, 120+60	C	242		46.5	42.2	-																													
Y1, 120+60		242	EX																																
Y9, 11+48	CL	243		-	48.2	48.0					120																								
SHEET TOTALS								4			120		332																						

STATION	12" SIDE DRAIN PIPE	15" SIDE DRAIN PIPE	18" SIDE DRAIN PIPE	24" SIDE DRAIN PIPE	30" SIDE DRAIN PIPE	36" SIDE DRAIN PIPE	ENDWALLS STD. 838.01 OR STD 838.11 OR STD. 838.80 (UNLESS NOTED OTHERWISE) CU. YARDS R.C.P.	C.S.P.	QUANTITIES FOR DRAINAGE STRUCTURES PER EACH (0' THRU 5.0')	LIN. FT. A 5.0' THRU 10.0'	LIN. FT. B 10.0' AND ABOVE	*TOTAL L.F. FOR PAY QUANTITY SHALL BE COL. "A" + (1.3 X COL. "B")	C.B. STD. 840.01 OR STD. 840.02	FRAME, GRATES, AND HOOD STANDARD 840.03 TYPE OF GRATE E	F	G	D.I. STD. 840.14 OR STD. 840.15	D.I. FRAME AND GRATE STD. 840.16	G.D.I. TYPE "A" STD. 840.17 OR 840.26	G.D.I. TYPE "B" STD. 840.18 OR 840.27	G.D.I. TYPE "D" STD. 840.19 OR 840.28	G.D.I. FRAME WITH GRATE STD. 840.20	G.D.I. FRAME WITH TWO GRATES STD. 840.20	G.D.I. FRAME WITH GRATE STD. 840.22	G.D.I. FRAME WITH TWO GRATES STD. 840.22	G.D.I. (N.S.) FRAME WITH TWO GRATES STD. 840.24	J.B. STD. 840.31 OR 840.32	T.B.J.B. STD. 839.34	SPECIAL DESIGN CB	MANHOLE STD. 840.51	M.H. STD. 840.51 OR 840.53	M.H. FRAME AND COVER STD. 840.54	ADJUST M.H.		MODIFIED CONCRETE FLUME	TEMPORARY 15" C.S. PIPE	TEMPORARY 36" C.S. PIPE	TEMPORARY 48" C.S. PIPE	CONVERT 2 G.I. TO JB WITH M.H.	CONVERT DI TO JB	RETAIN AND ADJUST CB	PREFORMED SCOUR HOLE	BDO STD. 858.10 OR 858.11	SPRING BOX STD. 840.41	CORR. STEEL ELBOWS NO. & SIZE	CONC. COLLARS CL. "B" C.Y. STD. 840.72	CONC. & BRICK PIPE PLUG, C.Y. STD. 840.71	PIPE REMOVAL LIN. FT.	REMARKS
Y9, 13+20					28																			Y9, 13+21																						36	Pipe Removed is of 18" RCP
Y15, 30+04							3.4																	Y15, 30+04																							
Y15, 30+04																								Y15, 30+04																						88	Pipe Removal is of 36" RCP
Y1, 109+61							4																																								SEE SHEET 2-AK FOR ENDWALL DETAIL
Y1, 109+61																																															
Y1, 110+00									1							1		Y1, 110+01		1																										
Y1, 110+00																																															
Y1, 111+25					68																																										
Y1, 117+30					108																																									120	Pipe Removal is of two (2) 15" R.C. Pipes
Y1, 120+60									1							1					1																										
Y1, 120+60																																														92	Pipe Removal is of two (2) 24" R.C. Pipes
Y1, 120+60																																				1											
Y1, 120+60																																															
Y9, 11+48																																														136	Pipe Removal is of a 15" RCP, 2 parallel R.C. Pipes
																																											2 @ 15"				
SHEET TOTALS					28	176	7.4		2							2				2																1							2 @ 15"			472	

ABBREVIATIONS	
C.B.	CATCH BASIN
N.D.I.	NARROW DROP INLET
D.I.	DROP INLET
G.D.I.	GRATED DROP INLET
G.D.I.(N.S.)	GRATED DROP INLET (NARROW SLOT)
J.B.	JUNCTION BOX
M.H.	MANHOLE
T.B.D.I.	TRAFFIC BEARING DROP INLET
T.B.J.B.	TRAFFIC BEARING JUNCTION BOX

RDUXPW025

COMPUTED BY: BN DATE: 12/19/2008

CHECKED BY: MDL DATE: 4/21/2009

STATE OF NORTH CAROLINA
DIVISION OF HIGHWAYS

PROJECT NO.	SHEET NO.
R-2719A	3-N2 (PROP.)

PROPOSED - LIST OF PIPES, ENDWALLS, ETC. (FOR PIPES 48" & UNDER)

STATION (SIZE / THICKNESS OR GAUGE)	LOCATION (LT, RT, OR CL)'	STRUCTURE NO. FROM	STRUCTURE NO. TO	TOP ELEVATION	INVERT ELEVATION	INVERT ELEVATION	SLOPE CRITICAL	CLASS III R.C. PIPE (UNLESS NOTED OTHERWISE) 12"	15"	18"	24"	30"	36"	42"	48"	BITUMINOUS COATED C.S. PIPE TYPE B (UNLESS NOTED OTHERWISE) 12" .064	15" .064	18" .064	24" .064	30" .079	36" .079	42" .109	48" .109	CLASS III R.C. PIPE OR ALUMINIZED C.S. PIPE, TYPE IR OR HDPE PIPE, TYPE S OR D 12"	15"	18"	24"	30"	36"	42"	48"
Y1, 90+80	LT	228		66.9	62.2																										
Y1, 90+80		228	230		62.2	58.9				264																					
Y1, 87+10	RT	229		59.2	56.4																										
Y1, 87+10		229	19		56.4	55.6			48																						
Y1, 88+10	LT	230		61.9	58.9																										
Y1, 88+10		230	OUT		58.9	48.9												44													
Y1, 96+81	CL	231	OUT	-	49.3	48.5						264																			
Y1, 99+60	RT	233		72.1	69.3																										
Y1, 99+60		233	OUT		69.3	50.2											72														
Y1, 104+50	LT	234		62.4	59.7																										
Y1, 104+50		234	236		59.7	55.6			44																						
Y1, 105+00	C	235		58.7	55.9		X																								
Y1, 105+00		235	236		55.9	55.6			48																						
Y1, 105+00	LT	236		61.0	55.6																										
Y1, 105+00		236	OUT		55.6	51.0												32													
SHEET TOTALS									140	264		264					72	76													

STATION	FROM	TO	12" SIDE DRAIN PIPE	15" SIDE DRAIN PIPE	18" SIDE DRAIN PIPE	24" SIDE DRAIN PIPE	30" SIDE DRAIN PIPE	36" SIDE DRAIN PIPE	ENDWALLS STD. 838.01 OR STD 838.11 OR STD. 838.80 (UNLESS NOTED OTHERWISE) CU. YARDS R.C.P.	C.S.P.	QUANITIES FOR DRAINAGE STRUCTURES PER EACH (0' THRU 5.0')	*TOTAL L.F. FOR PAY QUANTITY SHALL BE COL. 'A' + (1.3 X COL.'B') LIN. FT. A 5.0' THRU 10.0'	B 10.0' AND ABOVE	C.B. STD. 840.01 OR STD. 840.02	FRAME, GRATES, AND HOOD STANDARD 840.03 TYPE OF GRATE E	F	G	D.I. STD. 840.14 OR STD. 840.15	D.I. FRAME AND GRATE STD. 840.16	G.D.I. TYPE "A" STD. 840.17 OR 840.26	G.D.I. TYPE "B" STD. 840.18 OR 840.27	G.D.I. TYPE "D" STD. 840.19 OR 840.28	G.D.I. FRAME WITH GRATE STD. 840.20	G.D.I. FRAME WITH TWO GRATES STD. 840.20	G.D.I. FRAME WITH GRATE STD. 840.22	G.D.I. FRAME WITH TWO GRATES STD. 840.22	G.D.I. (N.S.) FRAME WITH TWO GRATES STD. 840.24	J.B. STD. 840.31 OR 840.32	T.B.J.B. STD. 830.34	SPECIAL DESIGN CB	MANHOLE STD. 840.51	M.H. STD. 840.51 OR 840.53	M.H. FRAME AND COVER STD. 840.54	ADJUST M.H.
Y1, 90+80	228										1										1			1										
Y1, 87+10	229										1										1			1										
Y1, 88+10	230										1										1			1										
Y1, 99+60	233										1										1			1										
Y1, 104+50	234										1										1			1										
Y1, 105+00	235										1										1					1								
Y1, 105+00	236										1	0.4									1			1										
SHEET TOTALS											7	0.4									7			6		1								

STATION	FROM	TO	MODIFIED CONCRETE FLUME	TEMPORARY 15" C.S. PIPE	TEMPORARY 36" C.S. PIPE	TEMPORARY 48" C.S. PIPE	CONVERT 2 G.I. TO JB WITH M.H.	CONVERT DI TO JB	RETAIN AND ADJUST CB	PREFORMED SCOUR HOLE	BDO STD. 850.10 OR 850.11	SPRING BOX STD. 840.41	CORR. STEEL ELBOWS NO. & SIZE	CONC. COLLARS CL. "B" C.Y. STD. 840.72	CONC. & BRICK PIPE PLUG, C.Y. STD. 840.71	PIPE REMOVAL LIN. FT.	REMARKS
Y1, 88+10	230	OUT											2 @ 18"				
Y1, 99+60	233	OUT											2 @ 15"				
Y1, 104+50	234	236														362	Pipe Removed is in four (4) 15" R.C. Pipes
Y1, 105+00	236	OUT														30	Pipe Removal is of 1 PVC Pipe
SHEET TOTALS													2 @ 15" 2 @ 18"			392	

ABBREVIATIONS

C.B.	CATCH BASIN
N.D.I.	NARROW DROP INLET
D.I.	DROP INLET
G.D.I.	GRATED DROP INLET
G.D.I.(N.S.)	GRATED DROP INLET (NARROW SLOT)
J.B.	JUNCTION BOX
M.H.	MANHOLE
T.B.D.I.	TRAFFIC BEARING DROP INLET
T.B.J.B.	TRAFFIC BEARING JUNCTION BOX

RDUXPW025

COMPUTED BY: BN DATE: 12/19/2008

CHECKED BY: MDL DATE: 4/21/2009

PROJECT NO.	SHEET NO.
R-2719A	3-O1 (FUT.)

STATE OF NORTH CAROLINA
DIVISION OF HIGHWAYS

FUTURE - LIST OF PIPES, ENDWALLS, ETC. (FOR PIPES 48" & UNDER)

STATION	LOCATION (LT, RT, OR CL)'	STRUCTURE NO. FROM	STRUCTURE NO. TO	TOP ELEVATION	INVERT ELEVATION	INVERT ELEVATION	SLOPE CRITICAL	CLASS III R.C. PIPE (UNLESS NOTED OTHERWISE) 12"	15"	18"	24"	30"	36"	42"	48"
Y9, 23+30	RT	244	244A	-	48.2	47.1					88				
Y9, 24+13	RT	244A		49.8	47.1										
Y9, 24+13		244A	OUT		47.1	46.9					128				
Y9, 28+05	LT	246	OUT	-	-	-									
Y9, 30+25	RT	247	OUT	-	-	-									
Y9, 31+25	LT	248	OUT	-	-	-									
Y9, 31+88	CL	249		-	45.1	44.8									
Y9, 31+88		249	OUT										72		
Y8, 24+48	CL	251	OUT	-	45.7	45.5					80				
SHEET TOTALS											296		72		
FUTURE PROJECT TOTALS								-	100	-	416	-	404	-	-

STATION	BITUMINOUS COATED C.S. PIPE TYPE B (UNLESS NOTED OTHERWISE) 12" .064	15" .064	18" .064	24" .064	24"	30" .079	30"	36" .079	36"	42" .109	42"	48" .109	48"	CLASS III R.C. PIPE OR ALUMINIZED C.S. PIPE, TYPE IR OR HDPE PIPE, TYPE S OR D 12"	15"	18"	24"	30"	36"	42"	48"
Y9, 23+30																					
Y9, 24+13																					
Y9, 24+13																					
Y9, 28+05																					
Y9, 30+25																					
Y9, 31+25																					
Y9, 31+88																					
Y9, 31+88																					
Y8, 24+48																					
SHEET TOTALS																					
FUTURE PROJECT TOTALS	-	-	-	-	-	-	-	-	-	-	-	-	-	-	-	36	-	-	-	-	-

STATION	12" SIDE DRAIN PIPE	15" SIDE DRAIN PIPE	18" SIDE DRAIN PIPE	24" SIDE DRAIN PIPE	30" SIDE DRAIN PIPE	36" SIDE DRAIN PIPE	ENDWALLS STD. 838.01 OR STD. 838.11 (UNLESS NOTED OTHERWISE) CU. YARDS R.C.P.	C.S.P.	QUANTITIES FOR DRAINAGE STRUCTURES PER EACH (0' THRU 5.0')	*TOTAL L.F. FOR PAY QUANTITY SHALL BE COL. 'A' + (1.3 X COL.'B') LIN. FT. A 5.0' THRU 10.0'	B 10.0' AND ABOVE	C.B. STD. 840.01 OR STD. 840.02	FRAME, GRATES, AND HOOD STANDARD 840.03 TYPE OF GRATE E	F	G
Y9, 23+30															
Y9, 24+13									1						
Y9, 24+13															
Y9, 28+05			40												
Y9, 30+25				88											
Y9, 31+25				52											
Y9, 31+88							3.4								
Y9, 31+88															
Y8, 24+48															
SHEET TOTALS			40	140			3.4		1						
FUTURE PROJECT TOTALS	-	132	40	140	28	176	10.8	-	5	-	-	-	-	-	-

STATION	D.I. STD. 840.14 OR STD. 840.15	D.I. FRAME AND GRATE STD. 840.16	G.D.I. TYPE "A" STD. 840.17 OR 840.26	G.D.I. TYPE "B" STD. 840.18 OR 840.27	G.D.I. TYPE "D" STD. 840.19 OR 840.28	G.D.I. FRAME WITH GRATE STD. 840.20	G.D.I. FRAME WITH TWO GRATES STD. 840.20	G.D.I. FRAME WITH GRATE STD. 840.22	G.D.I. FRAME WITH TWO GRATES STD. 840.22	G.D.I. (N.S.) FRAME WITH TWO GRATES STD. 840.24	J.B. STD. 840.31 OR 840.32	T.B.J.B. STD. 830.34	SPECIAL DESIGN CB	MANHOLE STD. 840.51	M.H. STD. 840.51 OR 840.53	M.H. FRAME AND COVER STD. 840.54	ADJUST M.H.			MODIFIED CONCRETE FLUME	TEMPORARY 15" C.S. PIPE	TEMPORARY 36" C.S. PIPE	TEMPORARY 48" C.S. PIPE	CONVERT 2 G.I. TO JB WITH M.H.	CONVERT DI TO JB	RETAIN AND ADJUST CB		PREFORMED SCOUR HOLE		BDO STD. 850.10 OR 850.11		SPRING BOX STD. 840.41
Y9, 23+30																																
Y9, 24+13					1				1																							
Y9, 24+13																																
Y9, 28+05																																
Y9, 30+25																																
Y9, 31+25																																
Y9, 31+88																																
Y9, 31+88																																
Y8, 24+48																																
SHEET TOTALS					1				1																							
FUTURE PROJECT TOTALS	-	-	-	4	1	-	-	-	5	-	-	-	-	-	-	-	-	-	-	-	-	-	-	1	-	-	-	1	-	-	-	-

STATION	CORR. STEEL ELBOWS NO. & SIZE	CONC. COLLARS CL. "B" C.Y. STD. 840.72	CONC. & BRICK PIPE PLUG, C.Y. STD. 840.71	PIPE REMOVAL LIN. FT.	REMARKS
Y9, 23+30				96	Pipe Removal is of 1-15" RCP and 1-18" RCP
Y9, 24+13					
Y9, 24+13					
Y9, 28+05				40	Pipe Removal is of 18" RCP
Y9, 30+25				72	Pipe Removal is of 36" RCP
Y9, 31+25					
Y9, 31+88					
Y9, 31+88					
Y8, 24+48					
SHEET TOTALS				208	
FUTURE PROJECT TOTALS	2 @ 15"	3 EA- 1.1 SAY 3	-	730	

ABBREVIATIONS

C.B.	CATCH BASIN
N.D.I.	NARROW DROP INLET
D.I.	DROP INLET
G.D.I.	GRATED DROP INLET
G.D.I.(N.S.)	GRATED DROP INLET (NARROW SLOT)
J.B.	JUNCTION BOX
M.H.	MANHOLE
T.B.D.I.	TRAFFIC BEARING DROP INLET
T.B.J.B.	TRAFFIC BEARING JUNCTION BOX

RDUXPW025

COMPUTED BY:	BN	DATE:	12/19/2008
CHECKED BY:	MDL	DATE:	4/21/2009

PROJECT NO.	SHEET NO.
R-2719A	3-O2 (PROP.)

STATE OF NORTH CAROLINA
DIVISION OF HIGHWAYS

PROPOSED - LIST OF PIPES, ENDWALLS, ETC. (FOR PIPES 48" & UNDER)

STATION (SIZE / THICKNESS OR GAUGE)	LOCATION (LT, RT, OR CL')	STRUCTURE NO. FROM	STRUCTURE NO. TO	TOP ELEVATION	INVERT ELEVATION	INVERT ELEVATION	SLOPE CRITICAL	CLASS III R.C. PIPE (UNLESS NOTED OTHERWISE) 12"	15"	18"	24"	30"	36"	42"	48"
Y8, 14+72	CL	250	OUT	-	49.1	48.8				76					
Y24, 52+35	RT	252		111.7	105.9	-									
Y24, 52+35		252	253						4						
Y24, 52+35	RT	253	EX	110.1	105.9		X								
					105.9	105.9									
Y24, 52+00	LT	254		110.5	106.6	-									
Y24, 50+17	RT	255		111.7	107.4	-									
Y24, 49+86	LT	256		110.2	107.9	-									
Y24, 49+86	LT	257		110.2	108.0										
Y24, 49+86		257	256		108.0	107.9			4						
SHEET TOTALS									8	76					
CLASSS IV PIPE PROJECT TOTALS												268	624		372
PROJECT TOTALS								-	5728	1944	880	1204	1772	548	296

STATION	BITUMINOUS COATED C.S. PIPE TYPE B (UNLESS NOTED OTHERWISE) 12" .064	15" .064	18" .064	24" .064	24"	30" .079	30"	36" .079	36"	42" .109	42"	48" .109	48"	CLASS III R.C. PIPE OR ALUMINIZED C.S. PIPE, TYPE IR OR HDPE PIPE, TYPE S OR D 12"	15"	18"	24"	30"	36"	42"	48"
SHEET TOTALS																					
PROJECT TOTALS	136	1807	276	92	-	-	-	-	-	-	-	-	-	-	880	348	48	1460	-	-	-

STATION	STRUCTURE NO.	12" SIDE DRAIN PIPE	15" SIDE DRAIN PIPE	18" SIDE DRAIN PIPE	24" SIDE DRAIN PIPE	30" SIDE DRAIN PIPE	36" SIDE DRAIN PIPE	ENDWALLS STD. 838.01 OR STD. 838.11 (UNLESS NOTED OTHERWISE) CU. YARDS R.C.P.	C.S.P.	QUANITIES FOR DRAINAGE STRUCTURES PER EACH (0' THRU 5.0')	*TOTAL L.F. FOR PAY QUANTITY SHALL BE COL. 'A' + (1.3 X COL.'B') LIN. FT. A 5.0' THRU 10.0'	B 10.0' AND ABOVE	C.B. STD. 840.01 OR STD. 840.02	FRAME, GRATES, AND HOOD STANDARD 840.03 TYPE OF GRATE E	F	G
Y24, 52+35	252									1						
Y24, 52+35	253									1			1			1
Y24, 50+17	255									1						
Y24, 49+86	257									1						
SHEET TOTALS										4			1			1
PROJECT TOTALS		52	100	84	36	-	-	67.1	-	158	12.4	-	31	7	16	8

STATION	STRUCTURE NO.	D.I. STD. 840.14 OR STD. 840.15	D.I. FRAME AND GRATE STD. 840.16	G.D.I. TYPE "A" STD. 840.17 OR 840.26	G.D.I. TYPE "B" STD. 840.18 OR 840.27	G.D.I. TYPE "D" STD. 840.19 OR 840.28	G.D.I. FRAME WITH GRATE STD. 840.20	G.D.I. FRAME WITH TWO GRATES STD. 840.20	G.D.I. FRAME WITH GRATE STD. 840.22	G.D.I. FRAME WITH TWO GRATES STD. 840.22	G.D.I. (N.S.) FRAME WITH TWO GRATES STD. 840.24	J.B. STD. 840.31 OR 840.32	T.B.J.B. STD. 830.34	SPECIAL DESIGN CB
Y24, 52+35	252												1	
Y24, 50+17	255												1	
Y24, 49+86	257	1	1											
SHEET TOTALS		1	1										2	
PROJECT TOTALS		13	13	9	100	-	-	75	5	34	-	-	4	1

STATION	STRUCTURE NO.	MANHOLE STD. 840.51	M.H. STD. 840.51 OR 840.53	M.H. FRAME AND COVER STD. 840.54	ADJUST M.H.			MODIFIED CONCRETE FLUME	TEMPORARY 15" C.S. PIPE	TEMPORARY 36" C.S. PIPE	TEMPORARY 48" C.S. PIPE	CONVERT 2 G.I. TO JB WITH M.H.	CONVERT DI TO JB	RETAIN AND ADJUST CB		PREFORMED SCOUR HOLE		BDO STD. 850.10 OR 850.11		SPRING BOX STD. 840.41	CORR. STEEL ELBOWS NO. & SIZE	CONC. COLLARS CL. "B" C.Y. STD. 840.72	CONC. & BRICK PIPE PLUG, C.Y. STD. 840.71	PIPE REMOVAL LIN. FT.	REMARKS
Y24, 52+00	254													1											
Y24, 49+86	256											1													
SHEET TOTALS												1		1											
PROJECT TOTALS		-	-	-	1	-	-	2	200	96	68	1		4	-	13	-	2	-	1	31 @ 15" 4 @ 18"	3 EA- 1.6 SAY 3	-	1691	

ABBREVIATIONS

C.B.	CATCH BASIN
N.D.I.	NARROW DROP INLET
D.I.	DROP INLET
G.D.I.	GRATED DROP INLET
G.D.I.(N.S.)	GRATED DROP INLET (NARROW SLOT)
J.B.	JUNCTION BOX
M.H.	MANHOLE
T.B.D.I.	TRAFFIC BEARING DROP INLET
T.B.J.B.	TRAFFIC BEARING JUNCTION BOX

RDUXPW025

COMPUTED BY:	BN	DATE:	12/19/2008
CHECKED BY:	MDL	DATE:	1/2/2009

PROJECT NO.	SHEET NO.
R-2719A	3-P

STATE OF NORTH CAROLINA
DIVISION OF HIGHWAYS

LIST OF PIPES, ENDWALLS, ETC. (FOR PIPES 54" & OVER)

STATION / SIZE / THICKNESS OR GAUGE	LOCATION (LT, RT, OR CL)'	STRUCTURE NO. FROM	STRUCTURE NO. TO	TOP ELEVATION	INVERT ELEVATION	INVERT ELEVATION	SLOPE CRITICAL	CLASS III R.C. PIPE (UNLESS NOTED OTHERWISE) 54"	60"	66"	72"	78"	84"			REINFORCED ENDWALLS WITH R.C. - C.Y.	WITH C.S. - C.Y.	MASONRY DRAINAGE STRUCTURES CUBIC YARDS	C.B. STD. 840.01 OR 840.02	FRAMES, GRATES & HOOD STANDARD 840.03 TYPE OF GRATE E	F	G		REINF. CONC. FLARED END SECTIONS NO. & SIZE	CORR. STEEL FLARED END SECTIONS NO. & Size	CORR. STEEL ELBOWS NO. & SIZE	CONC. COLLARS CL. "B" C.Y. STD. 840.72	PIPE REMOVAL LIN. FT.	REMARKS
Y1, 60+14	C	2		-	47.9	44.5										5.0													
Y1, 60+14		2	OUT					172																					
Y1LPC, 1+15	CL	10		-	43.9	43.3										6.3													
Y1LPC, 1+15		10	OUT							*308																			Class IV Pipe
Y1RPB, 22+30	CL	11		-	47.9	47.3										9.9													SEE SHEET 2-Y FOR ENDWALL DETAIL
Y1RPB, 22+30		11	OUT					200																					
L, 69+50	CL	15		-	48	47.8										6.5													SEE SHEET 2-Z FOR ENDWALL DETAIL
L, 69+50		15	OUT						148																				
Y1, 85+33	CL	20		-	47.9	47.7										6.4													SEE SHEET 2-AB FOR ENDWALL DETAIL
Y1, 85+33		20	OUT					228																					
Y1RPCA, 9+23	CL	31		-	47.4	47										6.6													SEE SHEET 2-AC FOR ENDWALL DETAIL
Y1RPCA, 9+23		31	OUT						108																				
SVRD5, 21+90	CL	38		-	47	46.9										7.9													
SVRD5, 21+90		38	OUT						80																				Two (2) 60" Pipes
Y1, 31+60	CL	220		-	44.9	44.6										6.6													SEE SHEET 2-AJ FOR ENDWALL DETAIL
Y1, 31+60		220	OUT						204																				
SHEET TOTALS								600	540	*308						55.2													
PROJECT TOTALS								600	540	*308	-	-	-	-	-	55.2	-	-	-	-	-	-	-						*CLASS IV PIPE

	BITUMINOUS COATED C.S. PIPE TYPE B (UNLESS NOTED OTHERWISE) 54"			54" SHOP ELONGATED		60"		66"		72"			STRUCTURAL PLATE PIPE 60"			66"			72"					
THICKNESS OR GAUGE	.109	.138	.168	.138	.168	.138	.168	.138	.168	.139	.168		12	10		12	10		12	10				
PROJECT TOTALS	-	-	-	-	-	-	-	-	-	-	-	-	-	-	-	-	-	-	-	-	-	-	-	-

ABBREVIATIONS

- C.B. CATCH BASIN
- N.D.I. NARROW DROP INLET
- D.I. DROP INLET
- G.D.I. GRATED DROP INLET
- G.D.I.(N.S.) GRATED DROP INLET (NARROW SLOT)
- J.B. JUNCTION BOX
- M.H. MANHOLE
- T.B.D.I. TRAFFIC BEARING DROP INLET
- T.B.J.B. TRAFFIC BEARING

COMPUTED BY: BRP DATE: 060309
CHECKED BY: MDL DATE: 060409

DIVISION OF HIGHWAYS
STATE OF NORTH CAROLINA

SUMMARY OF EARTHWORK

IN CUBIC YARDS

LOCATION	UNCLASSIFIED EXCAVATION	UNDERCUT	EMBT + %	BORROW	WASTE
SUMMARY #1					
-L- STA.50+30.88 TO 50+60.60 (BEG BRG)	0	0	1359	1359	0
-L- STA.52+84.87 (END BRG) TO 83+73.82 (BEG BRG)	0	0	383340	383340	0
-Y1LPC- STA 0+50.00 TO 11+68.74	51	257	121065	121014	257
-Y1RPCA- STA 4+49.79 TO 27+88.18 (BEG BRG)	0	0	274597	274597	0
-Y1RPCA- STA 30+12.60 (END BRG) TO 60+83.00	4505	1427	95890	93116	3158 *
-Y1RPA- STA 4+75.00 TO 11+98.58	0	0	50569	50569	0
-Y1RPB- STA 6+99.53 TO 29+08.02	0	0	48555	48555	0
TOTAL SUMMARY #1	4556	1684	975375	972550	3415
SUMMARY #2					
-L- STA.88+00.00 (END BRG) TO 112+25.97 (BEG BRG)	0	0	554777	554777	0
-SVRD1- STA.10+50.00 TO 14+00.00	2285	0	38	0	2247
-SVRD5- STA.10+50.00 TO 27+50.00	590	3535	6051	5461	3535
TOTAL SUMMARY #2	2875	3535	560866	560238	5782
SUMMARY #3					
-L- STA.114+51.55 (END BRG) TO 144+00.00	1064	13366	229679	228615	13366
TOTAL SUMMARY #3	1064	13366	229679	228615	13366
SUMMARY #4					
-L- STA.144+00.00 TO 174+00.00	56879	5623	57117	6867	12252 *
-SVRD3- 15+00.00 TO 45+00.00	3469	0	5538	2069	0
TOTAL SUMMARY #4	60348	5623	62655	8936	12252
SUMMARY #5					
-L- STA.174+00.00 TO 211+04.94 (BEG BRG)	21806	3666	216036	194230	3666
-SVRD4- 12+00.00 TO 19+00.00	690	0	568	0	122
TOTAL SUMMARY #5	22496	3666	216604	194230	3788
SUMMARY #6					
-L- STA.212+72.83 (END BRG) TO 247+80.30 (BEG BRG)	4387	0	378566	374179	0
-Y24RPB- STA.6+55.00 TO 19+00.00	215	0	54860	54645	0
-Y24LPB- STA.3+15.00 TO 6+70.00	0	0	28171	28171	0
-Y24RPC- STA.5+75.00 TO 21+00.00	2671	0	15511	12840	0
-Y24LPC- STA.3+00.00 TO 7+75.00	0	0	19863	19863	0
TOTAL SUMMARY #6	7273	0	496971	489698	0
SUMMARY #7					
-L- STA.249+52.96 (END BRG) TO 262+00.00	477	0	134843	134366	0
-Y24- STA.22+50.00 TO 54+00.00	2389	0	6045	3656	0
-Y6- STA.10+50.00 TO 34+00.00	505	0	378	0	127
-D1- & -D2- STA.10+00.00 TO 16+00.00	418	0	383	0	35
TOTAL SUMMARY #7	3789	0	141649	138022	162
SUMMARY #8					
-Y1- STA 30+00.00 TO 45+00.00	3287	0	50862	47575	0
TOTAL SUMMARY #8	3287	0	50862	47575	0
SUMMARY #9					
-Y1- STA 45+00.00 TO 75+00.00	18	1693	94469	94451	1693
TOTAL SUMMARY #9	18	1693	94469	94451	1693
SUMMARY #10					
-Y1- STA 75+00.00 TO 96+60.50 (BEG BRG)	0	0	191466	191466	0
TOTAL SUMMARY #10	0	0	191466	191466	0
SUMMARY #11					
-Y1- STA 97+92.21 (END BRG) TO 105+00.00	4	0	98819	98815	0
-Y8- STA 11+00.00 TO 14+50.00	1681	0	8096	6415	0
TOTAL SUMMARY #11	1685	0	106915	105230	0
SUBTOTAL (SUMMARIES 1-11)	107391	29567	3127511	3031011	40458
SHOULDER MATERIAL			0	0	
WASTE IN LIEU OF BORROW				-2531	-2531
LOSS DUE TO CLEARING AND GRUBBING	-2200			2200	
ADDITIONAL UNDERCUT PER GEOTECH RECS		4500	5625	5625	
PROJECT SUBTOTAL	105191	34067	3133136	3036305	42427
EST.5% FOR REPLACING TOPSOIL ON BORROW PIT				151815	
PROJECT TOTAL	105191	34067		3188120	42427
SAY	105,200	34,100		3,188,150	42,500

* WASTE INCLUDES UNSUITABLE EXCAVATION

ESTIMATED DDE = 16,700 CY

PAVEMENT STRUCTURE VOLUME = 16,931 CY
FOR -L-, -Y24RPB-, -Y24RPC-, -Y10-, -SVRD1-, -SVRD3-, -SVRD5-

NOTE: EMBANKMENT VOLUMES SHOWN INCLUDE ADDITIONAL VOLUME FOR 5" PLACED OVER SUBGRADE FOR GRADING & STRUCTURES ONLY PLANS

NOTE: Earthwork quantities were calculated by URS for the Roadway Design Unit. These earthwork quantities are based in part on subsurface data provided by the Geotechnical Engineering Unit.

PROJECT REFERENCE NO. R-2719A
SHEET NO. 30

Prepared by
URS
URS Corporation – North Carolina
1600 Perimeter Park Drive
Morrisville, North Carolina 27560
TELEPHONE (919) 461-1100 FAX (919) 461-1415

PROJECT REFERENCE NO.	SHEET NO.
R-2719A	3R
R/W SHEET NO.	

NOTE : TITLES SHOW PROPOSED OR FUTURE
PROPOSED = CONSTRUCT UNDER THIS CONTRACT
FUTURE = FUTURE CONSTRUCTION

SUMMARY OF FUTURE PRECAST REINFORCED CONCRETE BARRIER, SINGLE FACED

SURVEY LINE	STATION	STATION	LOCATION	LENGTH
Y1	68+60.0	68+90.0	MED – LT	30.00
Y1	68+60.0	68+90.0	MED – RT	30.00
Y1	75+27.79	75+70.0	MED – LT	42.21
Y1	75+25.40	75+68.07	MED – RT	42.67
L	114+89.35	132+80.0	LT	1790.65
L	139+30.0	159+00.0	RT	1970
			TOTAL:	3906
			SAY:	4000

FUTURE SHOULDER BERM GUTTER SUMMARY

SURVEY LINE	STATION	STATION	LENGTH
L LT	53+15.28	58+75.	559.72
L RT	75+04.7	83+43.13	838.43
Y1RPA LT	6+00.	10+05.	405.00
Y1RPCA RT	30+45.64	35+05.	459.36
Y1RPCA RT	11+45.	27+65.24	1620.24
Y1RPCA LT	11+43.8	19+30.	786.20
		TOTAL:	4669
		SAY:	4700

FUTURE EXPRESSWAY GUTTER SUMMARY

SURVEY LINE	STATION	STATION	LENGTH
L LT	94+30.	111+39.92	1709.92
L RT	89+05.	112+58.73	2353.73
L RT	115+37.57	123+05.2	767.63
L LT	139+45.58	143+00.	354.42
L LT	152+50.64	156+00.	349.36
L RT	137+00.	139+40.	240.00
L RT	202+94.57	210+56.86	762.29
L RT	212+79.9	220+55.	775.10
Y1 RT	86+58.36	96+68.95	1010.59
Y1 LT	88+08.37	89+42.78	134.41
Y1 LT	90+75.	96+00.69	525.69
Y1 LT	97+83.74	105+05.12	721.38
Y1 RT	98+52.04	99+65.	112.96
		TOTAL:	9817.5
		SAY:	9820

PROPOSED EXPRESSWAY GUTTER SUMMARY

SURVEY LINE	STATION	STATION	LENGTH
L RT	245+90.97	247+54.61	163.64
L LT	245+78.66	247+52.6	173.94
L RT	249+80.01	258+54.8	874.79
L LT	249+78.09	259+55.	976.91
		TOTAL:	2189.3
		SAY:	2190

PROPOSED UNDERDRAINS

SURVEY LINE	STATION	TO STATION	LOCATION
–L–	158+00	177+00	LT & RT
–SVRD5–	10+00	27+64	LT OR RT
	TOTAL FROM NCDOT GEOTECHNICAL UNIT:		5500 LF
	CONTINGENCY AMOUNT FROM NCDOT GEOTECHNICAL UNIT:		1000 LF
		SAY:	6500 LF

FUTURE DOUBLE FACED CABLE GUIDERAIL SUMMARY

SURVEY LINE	STATION	STATION	LENGTH	END ANCHOR UNIT	INTERMEDIATE ANCHOR UNIT	COMMENTS
L	77+51	83.33	582	2		
L	88+42	111+43	2301	2	2	
L	115+34	210+64	9530	2	8	
L	215+50	247+29	3179	2	2	
Y1	15+69	20+04	435	2		
Y1	21+36	67+55	4619	2		
Y1	69+97	74+00	403	2	4	
Y1	76+88	96+05	1917	2		
Y1	98+48	110+45	1197	2		
Y1	111+92	120+48	856	2		
		SUBTOTAL:	25019	20	16	
LESS TERMINAL ANCHOR UNITS (20X25)			500			
		GRAND TOTALS:	24519			
		SAY:	24520			

PROPOSED DOUBLE FACED CABLE GUIDERAIL SUMMARY

SURVEY LINE	STATION	STATION	LENGTH	END ANCHOR UNIT	INTERMEDIATE ANCHOR UNIT	COMMENTS
L	249+92	262+96	1304	2		
		SUBTOTAL:	1304	2		
LESS TERMINAL ANCHOR UNITS (2X25)			50			
		GRAND TOTALS:	1254			
		SAY:	1255			

SUMMARY OF FUTURE EXISTING ASPHALT PAVEMENT REMOVAL

SURVEY LINE	STATION	STATION	LOCATION LT/RT/CL	YD^2
EY8	10+48.	17+12.		1393
EY7	28+75.	29+09.		46
EY7	31+46.	31+91.		105
L	150+34.	151+00.	RT	138
L	182+65.	186+92.	LT	732
Y1	24+02.	26+70.	RT	776
EY1	27+58.	44+99.	LT	5534
EY1	45+32.	70+00.	LT	8336
EY1	70+75.	80+50.	LT	3409
EY1	80+83.	90+01.	LT	3588
EY1	91+00.	96+85.	LT	2536
EY1	98+15.	100+58.	LT	546
EY1	97+12.	104+80.	RT	2807
Y15	18+66.	22+40.	LT	300
			TOTAL:	30246
			SAY:	30250

PROPOSED WOVEN WIRE FENCE

$$E = \frac{[A - (8B + 16C + 16D)]}{14} - \frac{(B + C + D)}{2} \qquad F = (2B + 3C + 3D)$$

STATION TO STATION	LT. OR RT.	A FABRIC L.F.	B END BRACE	C CORNER BRACE	D LINE BRACE	E 4" POSTS	F 5" POSTS
L 74+39 TO 82+00	LT	931.09	1	1	3	59	14
L 79+11 TO 83+00	RT	538.69	1	1	1	34	8
L 89+05 TO 110+50	LT	2,475.00	2	2	8	158	34
L 89+05 TO 113+00	RT	2,655.00	2	2	9	169	37
L 114+00 TO 210+84	LT	9,924.00	2	6	33	643	121
L 116+00 TO 210+55	RT	9,575.00	2	8	30	619	118
L 213+15 TO 230+06	LT	1,811.00	1	3	6	114	29
L 212+75 TO 227+09	RT	1,534.00	1	1	6	97	23
L 249+15 TO 263+00	LT	1,385.00	1	2	2	91	14
L 249+15 TO 263+00	RT	1,385.00	1	1	3	91	14
Y1 15+68 TO 23+16.52	RT	780.00	2	1	2	49	13
Y1 29+80 TO 37+00	RT	720	1	1	2	45	11
Y1 21+30 TO 37+76	LT	1,563.31	2		6	100	22
Y1 37+86 TO 48+63	LT	1,108.70	1		4	72	14
Y1 77+00 TO 96+92	RT	2,072.15	1	2	7	132	29
Y1 85+00 TO 89+00	LT	400.00	1		1	26	5
Y1 91+00 TO 95+65	LT	575.29	2	1	1	36	10
Y1 97+50 TO 110+00	LT	1,350.00	2	1	4	86	19
Y1 99+00 TO 105+00	RT	720.00	2	1	2	44	13
Y1RPA 00+00 TO 16+04	LT	1,604.29		2	7	100	27
Y1RPB 00+00 TO 35+55	RT	3,555.41			12	234	36
Y1RPCA 00+00 TO 19+31	LT	1,930.68			7	126	21
Y1RPCA 30+06 TO 68+74	LT	3,867.91			18	247	54
Y24 30+50 TO 37+72	LT	722.00	1		1	49	5
Y24 30+50 TO 31+50	RT	100.00	1	1		4	5
Y24 41+46 TO 46+26	LT	480.00	1		1		5
Y24 47+25 TO 49+25	LT	200.00	2			12	4
Y24 47+80 TO 49+25	RT	145.00	1	1		8	5
					6		
Y24RPB 00+00 TO 19+15	LT	1,915.00	1	1	6	124	23
Y24RPC 00+00 TO 21+36	RT	2,136.00	1	1		140	23
TOTAL		58,159.52				3710	756
SAY		58,160				3710	760

Additional Barbed Wire Say 500 LF

FUTURE WOVEN WIRE FENCE

STATION TO STATION	LT. OR RT.	A FABRIC L.F.	B END BRACE	C CORNER BRACE	D LINE BRACE	E 4" POSTS	F 5" POSTS
Y1 15+68 TO 37+00	RT	722.62	1		4	44	14
TOTAL		722.62				44	14
SAY		723				44	14

PROPOSED TEMPORARY GUARDRAIL SUMMARY

SURVEY LINE	BEG. STA.	END STA.	LOCATION	LENGTH STRAIGHT	LENGTH SHOP CURVED	LENGTH DOUBLE FACED	WARRANT POINT APPROACH END	WARRANT POINT TRAILING END	"N" DIST. FROM E.O.L.	TOTAL SHOULDER WIDTH	FLARE LENGTH APPROACH END	FLARE LENGTH TRAILING END	W APPROACH END	W TRAILING END	ANCHORS GRAU 350	IMPACT ATTENUATOR TYPE 350 EA	PERMITTED G	PERMITTED NG	REMOVE & RESET EXISTING GUARDRAIL	REMARKS
D2	12+63.43	15+38.43	RT	275.00			15+38.43	16+44.20	8	11	50		1		1				212.5	REMOVE CRESCENT RD EX GR & ANCHOR UNIT
	DEDUCT FOR RESET EX. GR LESS ANCHOR UNIT			–162.50																
	DEDUCT FOR PROP. ANCHOR UNIT 1 @ 50'			–50											1				212.5	
			PROJECT TOTAL	62.5															213	
			SAY	63																

SUMMARY OF PROPOSED EXISTING ASPHALT PAVEMENT REMOVAL

SURVEY LINE	STATION	STATION	LOCATION LT/RT/CL	YD^2
SVRD1	10+10.	12+64.	RT	465
SVRD3	18+55.	24+70.	LT	1291
Y24	47+24.	48+72.	LT	69
Y24	48+21.	48+35.	RT	12
D1 & D2				1917
			TOTAL:	3754
			SAY:	3760

REVISIONS

8/17/99

3/11/2009
r:\roadway\Grading_Proj\r-2719A_RDY_PSH3R_SUMMARIES_GRD.dgn
michael.hodgen

Prepared by
URS
URS Corporation – North Carolina
1600 Perimeter Park Drive
Morrisville, North Carolina 27560
TELEPHONE (919) 461-1100 FAX (919) 461-1415

PROJECT REFERENCE NO.	SHEET NO.
R-2719A	3S
R/W SHEET NO.	

STATE OF NORTH CAROLINA
DIVISION OF HIGHWAYS

PARCEL INDEX SHEET

PARCEL No.	SHEET No.	PROPERTY OWNER NAME
4	23	BAPTIST CHILDRENS HOME ON NORTH CAROLINA
7	23	EDWARD A. O'NEAL
8	4,23,24,25, 25A,26,30,31	FALLING CREEK FARMS
9	24	DSL ASSOCIATES LLC
14	4,5,6,7, 25A,26	ERWIN W. PARROT
14A	4,5,31,32	JAMES M PARROT, III
16	5	PROPERTY OF LENOIR COUNTY
18	27,33,34	PROPERTY OF LENOIR COUNTY
19	27,33	ACHQ, LLC
20	27,28,33,34	ELECTROLUX HOME PRODUCTS, INC.
21	34	CITY OF KINSTON
22	28, 29	WALTER POOLE
23	29	WALTER POOLE REALTY, INC
24	29	GORDON R. KELLEY
27	5,27,34	PROPERTY OF LENOIR COUNTY
29	34	JENKINS–ROSE PROPERTIES
31	34	DANIEL D. HOOVER, ET UX
32	5	EAST CAROLINA TOBACCO CONTRACTORS, INC
33	5,7,35	FALLING CREEK FARMS, INC
34	7	JOHN P. CASEY
38	7,7A,8,9,35	STATE ON NORTH CAROLINA
39	7A,9	JOHN P. CASEY
44	9	JEFFREY L. SUTTON
45	9	HENRY H. JOHNSON
46	9,10,11	STATE ON NORTH CAROLINA
48	10,11	STATE ON NORTH CAROLINA
51	11,12	ELLIS A. KING
60	11,12,13,14	HATTIE DALY ESTATE
61	13,14,15	HATTIE DALY ESTATE
62	14,15	NINA L. HILL
63	15	NINA L. HILL
64	15	LAURA E. GRANT
65	15	LAURA E. GRANT
66	15	NINA L. HILL
67	15,16	NINA L. HILL
68	16	BLANEY PARRISH HOFFMAN

PARCEL No.	SHEET No.	PROPERTY OWNER NAME
70	16,17	HOLLY HILL MISSIONARY
81	17	NINA L. HILL
82	17	LEON H. CASH
83	16,17	NINA L. HILL
84	16,17	ELLIOT D. HILL
86	16,17,18,19,	WILLIAM B. CAULEY
94	19	JAMES B. McDONALD
95	19	ALBERT C. BALLARD C/O GARY ALLEN BALLARD
96	19	INDUSTRIAL REWIND
97	18,19	WILLIAM H. ROUSE
98	19	EARL VAN MUMFORD
100	19	TOMMY L. GRIFFIN
101	19	FAYE C. HERRING
102	19	E. RAY HERRING
104	19,20	WILLIAM H. ROUSE
105	19	AUSTIN R. JOHNSON
106	19	LINTON B. PALMER
110	19,36	HULL ROAD FREEWILL BAPTIST CHURCH
111	36	BOFF, INC
112	36	BOFF, INC
138	36	FASCO, INC
140	19	MERLE EDWARDS, JR
143	36	TRUSTEES OF O. W. EDWARDS TRUST
144	36	WILLIAM R. SHACKELFORD
145	19,20	CAROLINA ICE CO.
147	20	ILSE M. ROUSE
901	19	NCDOT
902	19	NCDOT

REVISIONS

8/17/99

3/11/2009
r:\roadwy\proj\r2719a_rdy_psh3s_parcels.dgn
ancrosd1 (nmcrosd)

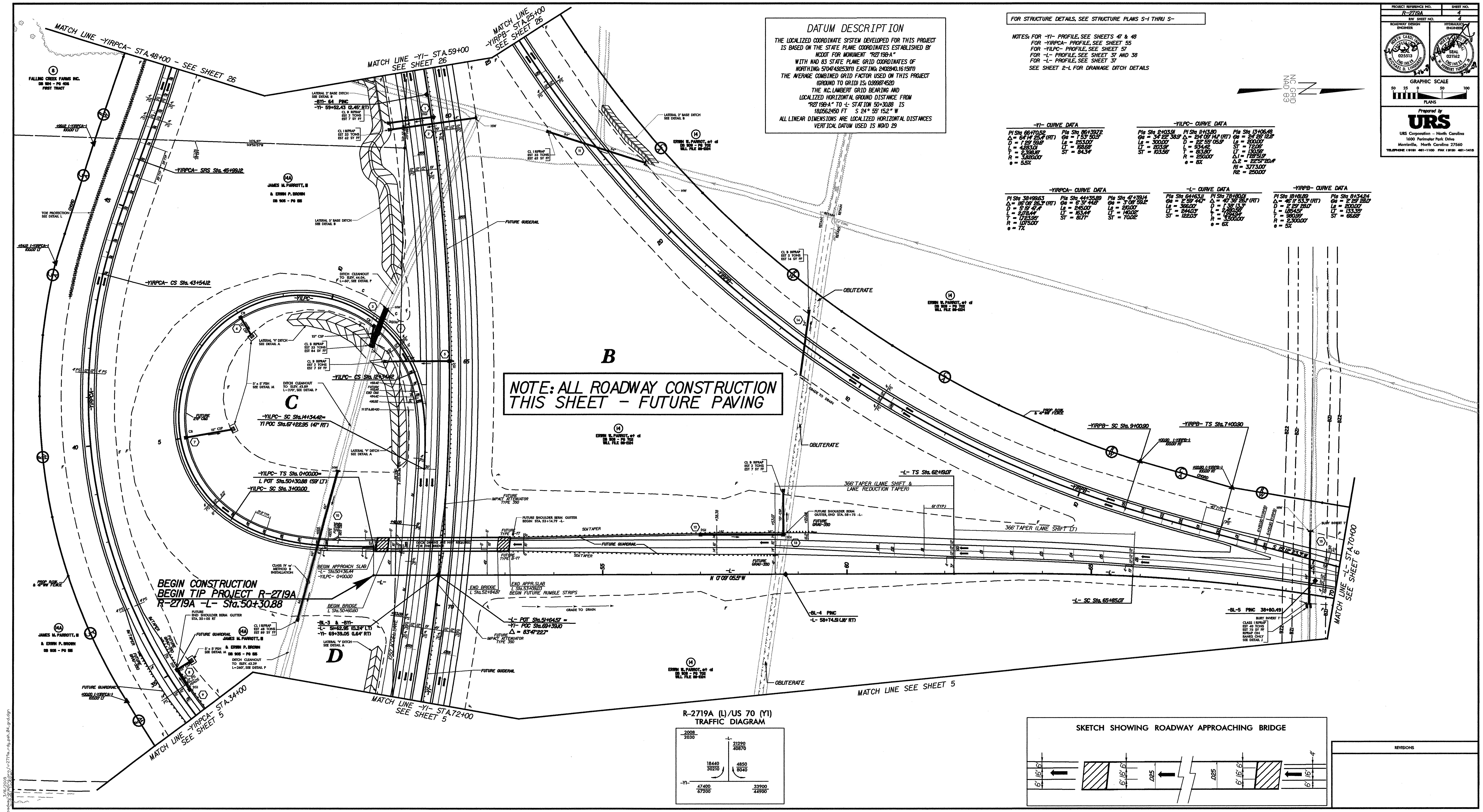
PROJECT REFERENCE NO. R-2719A
SHEET NO. 4
R/W SHEET NO. 4
ROADWAY DESIGN ENGINEER
HYDRAULICS ENGINEER
NORTH CAROLINA PROFESSIONAL SEAL 025513 ENGINEER MICHAEL D. LINDGREN
NORTH CAROLINA PROFESSIONAL SEAL 021162 ENGINEER W. HERBERT TURNER, JR.
GRAPHIC SCALE
50 25 0 50 100
PLANS
Prepared by
URS
URS Corporation – North Carolina
1600 Perimeter Park Drive
Morrisville, North Carolina 27560
TELEPHONE (919) 461-1100 FAX (919) 461-1415
FOR STRUCTURE DETAILS, SEE STRUCTURE PLANS S-1 THRU S-
NOTES: FOR -Y1- PROFILE, SEE SHEETS 47 & 48
FOR -Y1RPCA- PROFILE, SEE SHEET 55
FOR -Y1LPC- PROFILE, SEE SHEET 57
FOR -L- PROFILE, SEE SHEET 37 AND 38
FOR -L- PROFILE, SEE SHEET 37
SEE SHEET 2-L FOR DRAINAGE DITCH DETAILS
NC GRID NAD 83
DATUM DESCRIPTION
THE LOCALIZED COORDINATE SYSTEM DEVELOPED FOR THIS PROJECT IS BASED ON THE STATE PLANE COORDINATES ESTABLISHED BY NCDOT FOR MONUMENT "R2719B-A"
WITH NAD 83 STATE PLANE GRID COORDINATES OF NORTHING: 570474.9253(ft) EASTING: 2402840.1615(ft)
THE AVERAGE COMBINED GRID FACTOR USED ON THIS PROJECT (GROUND TO GRID) IS: 0.999874520
THE N.C. LAMBERT GRID BEARING AND LOCALIZED HORIZONTAL GROUND DISTANCE FROM "R2719B-A" TO -L- STATION 50+30.88 IS 18,056.2450 FT S 24° 55' 15.2" W
ALL LINEAR DIMENSIONS ARE LOCALIZED HORIZONTAL DISTANCES
VERTICAL DATUM USED IS NGVD 29
-Y1- CURVE DATA
PI Sta 66+70.52 Δ = 64°14' 25.4" (RT) D = 1°29' 59.6" L = 4,283.01 T = 2,398.16' R = 3,820.00' e = 5.5%
PIs Sta 86+39.72 θs = 1°53' 50.5" Ls = 253.00' LT = 168.68' ST = 84.34'
-Y1LPC- CURVE DATA
PIs Sta 2+03.91 θs = 34°22' 38.9" Ls = 300.00' LT = 203.91' ST = 103.56'
PI Sta 11+13.80 Δ = 214°09' 14.1" (RT) D = 22°55' 05.9" L = 934.42 T = 813.80' R = 250.00' e = 8%
PIs Sta 13+06.48 θs = 24°26' 12.8" Ls = 200.00' ST = 72.06' LT = 130.56' Δ1 = 1°28' 51.9" Δ2 = 22°57' 20.4" R1 = 3,773.00' R2 = 250.00'
-Y1RPCA- CURVE DATA
PI Sta 38+99.63 Δ = 116°06' 26.3" (RT) D = 5°19' 47.4" L = 2,178.44' T = 1,723.95' R = 1,075.00' e = 7%
PIs Sta 44+35.89 θs = 6°31' 44.6" Ls = 245.00' LT = 163.44' ST = 81.77'
PIs Sta 47+39.14 θs = 3°08' 59.2" Ls = 210.00' LT = 140.02' ST = 70.02'
-L- CURVE DATA
PIs Sta 64+63.11 θs = 2°59' 44.7" Ls = 366.00' LT = 244.03' ST = 122.03'
PI Sta 78+80.01 Δ = 40°36' 25.1" (RT) D = 1°38' 13.3" L = 2,480.56' T = 1,294.94' R = 3,500.00' e = 6%
-Y1RPB- CURVE DATA
PI Sta 18+81.89 Δ = 46°11' 53.3" (RT) D = 2°29' 28.0" L = 1,854.51' T = 980.99' R = 2,300.00' e = 5%
PIs Sta 8+34.24 θs = 2°29' 28.0" Ls = 200.00' LT = 133.35' ST = 66.68'
MATCH LINE -Y1RPCA- STA. 48+00 - SEE SHEET 26
MATCH LINE -Y1- STA. 59+00 SEE SHEET 26
MATCH LINE -Y1RPB- STA. 25+00 SEE SHEET 26
MATCH LINE -Y1RPCA- STA. 34+00 SEE SHEET 5
MATCH LINE -Y1- STA. 72+00 SEE SHEET 5
MATCH LINE SEE SHEET 5
MATCH LINE -L- STA. 70+00 SEE SHEET 6
FALLING CREEK FARMS INC. DB 924 - PG 406 FIRST TRACT
JAMES M. PARROTT, III & ERWIN P. BROWN DB 905 - PG 515
ERWIN W. PARROT, et al DB 909 - PG 702 WILL FILE 88-E124
NOTE: ALL ROADWAY CONSTRUCTION THIS SHEET - FUTURE PAVING
B
C
D
-Y1RPCA- SRS Sta. 45+99.12
-Y1RPCA- CS Sta. 43+54.12
-BYI- 64 PINC -Y1- 59+52.43 (2.45' RT)
-Y1LPC- CS Sta. 12+34.42
-Y1LPC- SC Sta. 14+34.42= Y1 POC Sta. 67+22.95 (47' RT)
-Y1LPC- TS Sta. 0+00.00= L POT Sta. 50+30.88 (59' LT)
-Y1LPC- SC Sta. 3+00.00
BEGIN CONSTRUCTION
BEGIN TIP PROJECT R-2719A
R-2719A -L- Sta. 50+30.88
BEGIN APPROACH SLAB -L- Sta. 50+36.44 -Y1LPC- 0+00.00
BEGIN BRIDGE L Sta. 50+60.60
-BL-3 & -BYI- -L- 51+62.95 (0.24' LT) -Y1- 69+39.05 (1.64' RT)
END BRIDGE L Sta. 52+84.87
END APPR. SLAB L Sta. 53+09.03 BEGIN FUTURE RUMBLE STRIPS
-L- POT Sta. 51+64.57 = -Y1- POC Sta. 69+39.10 Δ = 83°47' 22.7"
DECK DRAINS ARE NOT REQUIRED FOR THIS BRIDGE
-L- TS Sta. 62+19.07
366' TAPER (LANE SHIFT & LANE REDUCTION TAPER)
366' TAPER (LANE SHIFT LT)
-L- SC Sta. 65+85.07
-BL-4 PINC -L- 58+74.51 (.18' RT)
-BL-5 PINC 38+80.49
N 0°09' 05.5" W
-Y1RPB- SC Sta. 9+00.90
-Y1RPB- TS Sta. 7+00.90
1050' ACCEL LANE
OBLITERATE
FUTURE GUARDRAIL
FUTURE IMPACT ATTENUATOR TYPE 350
GRADE TO DRAIN
PROP. R/W & 47" WW FENCE
R-2719A (L)/US 70 (Y1) TRAFFIC DIAGRAM
2008 2030
21290 40870
18440 30210
4850 8040
47400 67200
33900 44900
SKETCH SHOWING ROADWAY APPROACHING BRIDGE
REVISIONS
3/16/2009
r:\roadway\grading-proj\r2719a_rdy_psh_04_grd.dgn

FOR STRUCTURE DETAILS, SEE STRUCTURE PLANS S-1 THRU S-
FOR RCBC DETAILS, SEE CULVERT PLANS C-1 THRU C-

NOTE: FOR -Y1- PROFILE, SEE SHEET 48
FOR -YIRPA- PROFILE, SEE SHEET 51
FOR -YIRPCA- PROFILE, SEE SHEETS 54 & 55
SEE SHEET 2-L FOR DRAINAGE DITCH DETAILS
SEE SHEET 2-M FOR CULVERT CHANNEL DETAILS

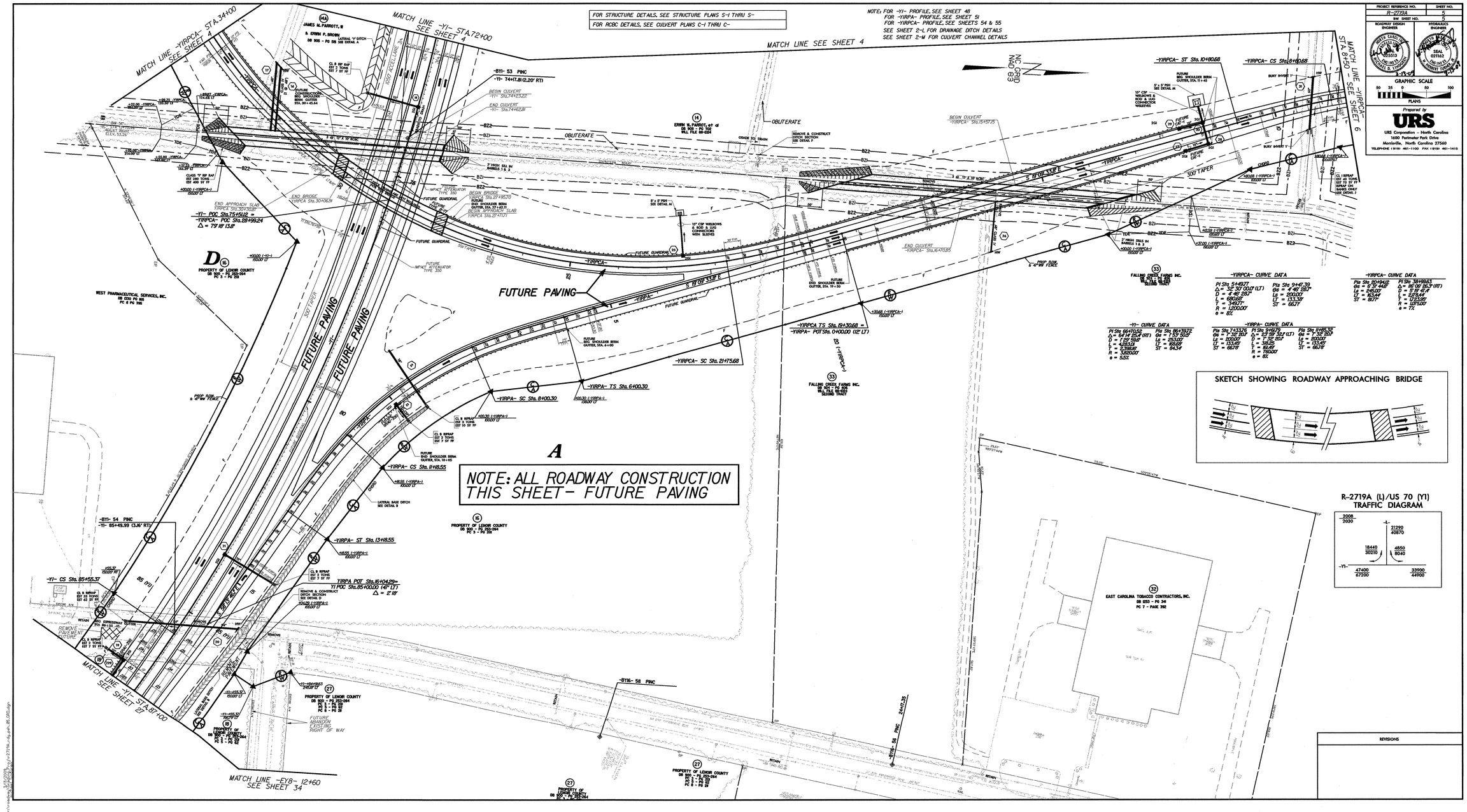

8/17/99

REVISIONS

-L- CURVE DATA

PI Sta 78+80.01
Δ = 40° 36' 26.1" (RT)
D = 1° 38' 13.3"
L = 2,480.56'
T = 1,294.94'
R = 3,500.00'
e = 6%

-YIRPB- CURVE DATA

PIs Sta 0+66.67
Θs = 1° 36' 55.2"
Ls = 200.00'
LT = 133.34'
ST = 66.67'

-YIRPCA- CURVE DATA

PIs Sta 1+16.20
Θs = 6°26'23.1" (LT)
Ls = 200.00'
ST = 84.00'
LT = 116.20'
Δ1 = 1°39'50.7"
Δ2 = 4°46'32.3"
R1 = 3,441.00'
R2 = 1,200.00'

PI Sta 5+49.77
Δ = 32° 30' 00.0" (LT)
D = 4° 46' 28.7"
L = 680.68'
T = 349.77'
R = 1,200.00'
e = 8%

NOTE: FOR -L- PROFILE, SEE SHEET 38
FOR -YIRPB- PROFILE, SEE SHEET 52
FOR -YIRPCA- PROFILE, SEE SHEET 54

SEE SHEET 2-L FOR DRAINAGE DITCH DETAILS

GRAPHIC SCALE
50 25 0 50 100
PLANS

Prepared by
URS
URS Corporation - North Carolina
1600 Perimeter Park Drive
Morrisville, North Carolina 27560
TELEPHONE (919) 461-1100 FAX (919) 461-1415

PROJECT REFERENCE NO.	SHEET NO.
R-2719A	6
R/W SHEET NO.	6
ROADWAY DESIGN ENGINEER	HYDRAULICS ENGINEER

NORTH CAROLINA PROFESSIONAL SEAL 025513 ENGINEER MICHAEL D. LINDGREN 3-11-09

NORTH CAROLINA PROFESSIONAL SEAL 021162 ENGINEER W. HERBERT TURNER, JR. 3-12-09

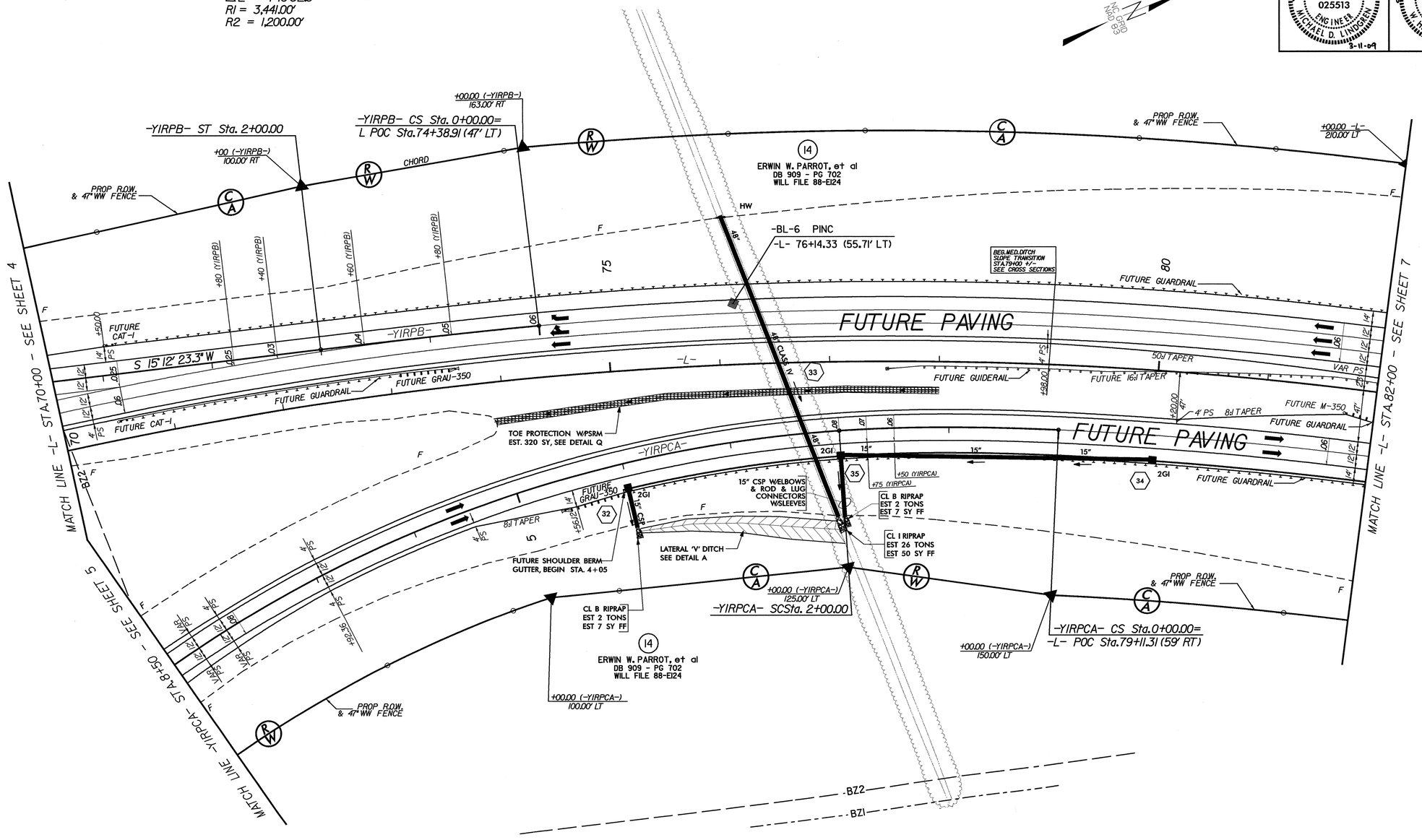

2/24/2009
r:\roadway\grading_proj\r2719a_rdy_psh_06_GRD.dgn

PROJECT REFERENCE NO.	SHEET NO.
R-2719A	7
R/W SHEET NO.	7

ROADWAY DESIGN ENGINEER: NORTH CAROLINA PROFESSIONAL SEAL 025513 ENGINEER MICHAEL D. LINDGREN 3-11-09

HYDRAULICS ENGINEER: NORTH CAROLINA PROFESSIONAL SEAL 021162 ENGINEER W. HERBERT TURNER, JR. 2-12-09

Prepared by URS
URS Corporation – North Carolina
1600 Perimeter Park Drive
Morrisville, North Carolina 27560
TELEPHONE (919) 461-1100 FAX (919) 461-1415

GRAPHIC SCALE
50 25 0 50 100
PLANS

NOTE: FOR -L- PROFILE, SEE SHEETS 38 & 39
FOR -SVRD5- PROFILE, SEE SHEET 72
SEE SHEET 2-L FOR DRAINAGE DITCH DETAILS

-L- CURVE DATA

PI Sta 78+80.01	PIs Sta 91+87.66
Δ = 40° 36' 26.1" (RT)	Θs = 2° 59' 44.7"
D = 1° 38' 13.3"	Ls = 366.00'
L = 2,480.56'	LT = 244.03'
T = 1,294.94'	ST = 122.03'
R = 3,500.00'	
e = 6%	

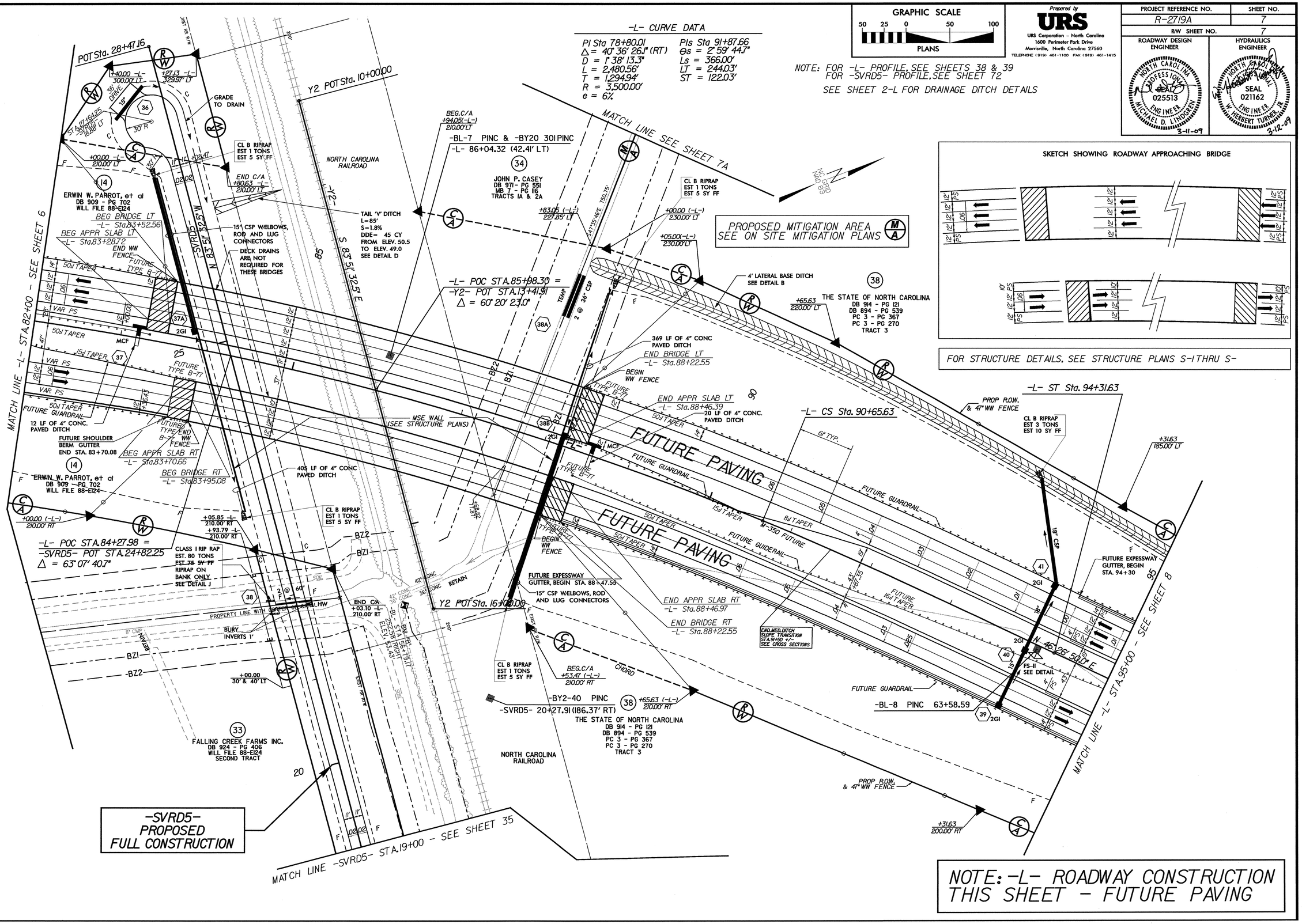

NOTE: -L- ROADWAY CONSTRUCTION THIS SHEET - FUTURE PAVING

REVISIONS

8/17/99

2/20/2009
t:\roadway\grading_proj\r2719a_rdy_psh_07_GRD.dgn

PROJECT REFERENCE NO.	SHEET NO.
R-2719A	7A
R/W SHEET NO.	7A

GRAPHIC SCALE
50 25 0 50 100
PLANS

Prepared by
URS
URS Corporation - North Carolina
1600 Perimeter Park Drive
Morrisville, North Carolina 27560
TELEPHONE (919) 461-1100 FAX (919) 461-1415

ROADWAY DESIGN ENGINEER
NORTH CAROLINA PROFESSIONAL SEAL 025513 ENGINEER MICHAEL D. LINDGREN
3-11-09

HYDRAULICS ENGINEER
NORTH CAROLINA PROFESSIONAL SEAL 021162 ENGINEER W. HERBERT TURNER, JR.
3-12-09

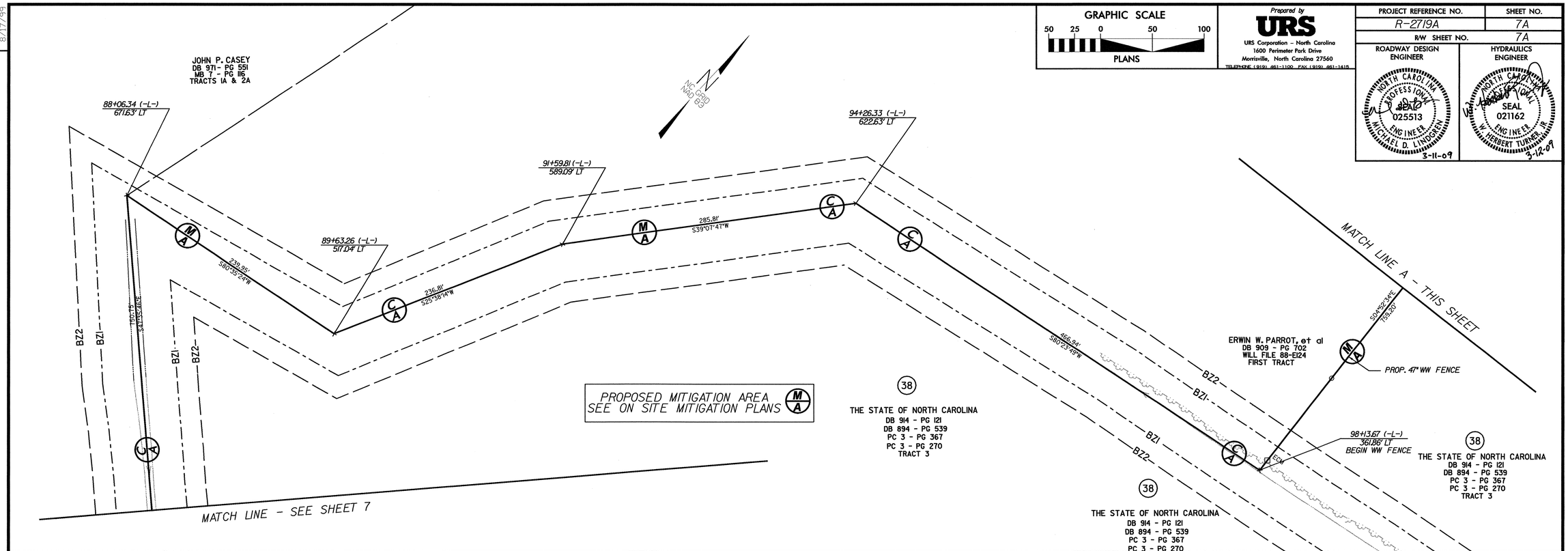

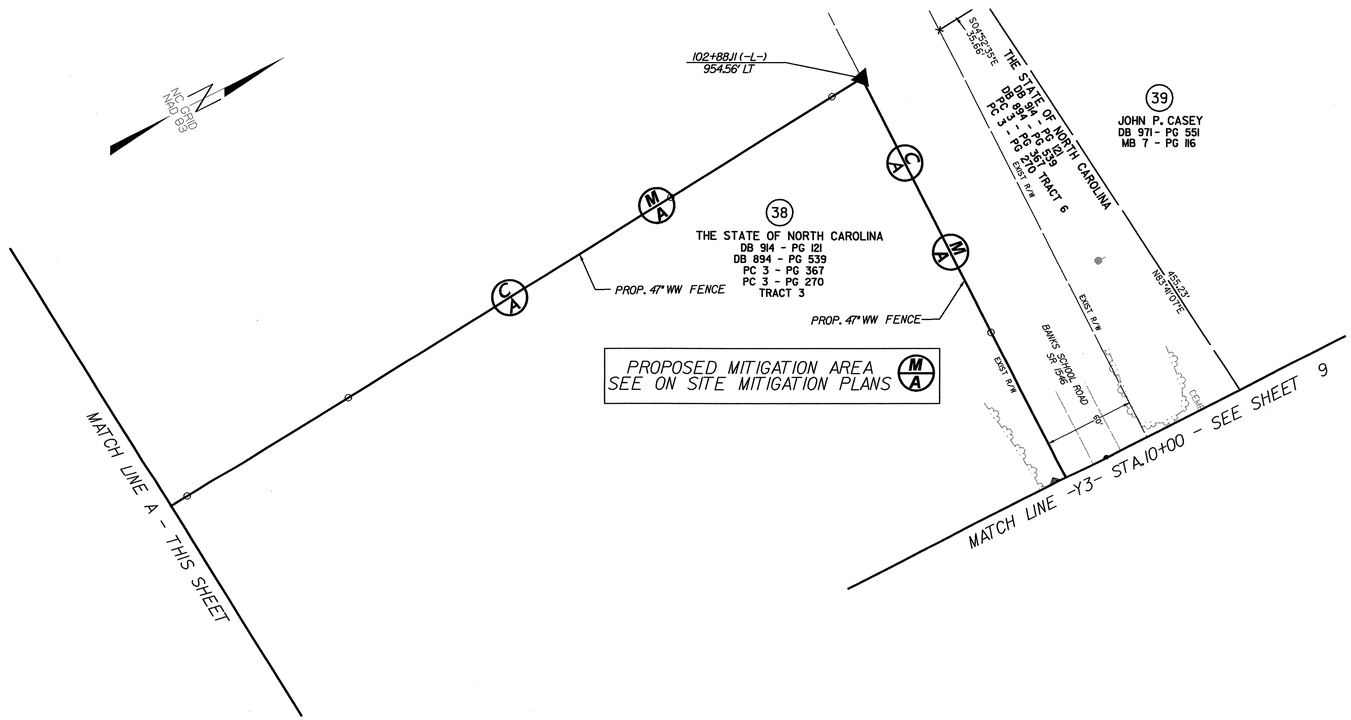

REVISIONS

8/17/99

2/20/2009
r:\roadway\grading_proj\r2719a_rdy_psh_07A_GRD1.dgn
USA WIN32 FNF

NOTE: FOR -L- PROFILE, SEE SHEET 39
SEE SHEET 2-L FOR DRAINAGE DITCH DETAILS

NOTE A: SEE SHEET 7A FOR MITIGATION AREA LIMITS

GRAPHIC SCALE
50 25 0 50 100
PLANS

Prepared by
URS
URS Corporation - North Carolina
1600 Perimeter Park Drive
Morrisville, North Carolina 27560
TELEPHONE (919) 461-1100 FAX (919) 461-1415

PROJECT REFERENCE NO.	SHEET NO.
R-2719A	8
R/W SHEET NO.	8
ROADWAY DESIGN ENGINEER	HYDRAULICS ENGINEER
SEAL 025513 MICHAEL D. LINDGREN	SEAL 021162 W. HERBERT TURNER, JR.
3-11-09	3-12-09

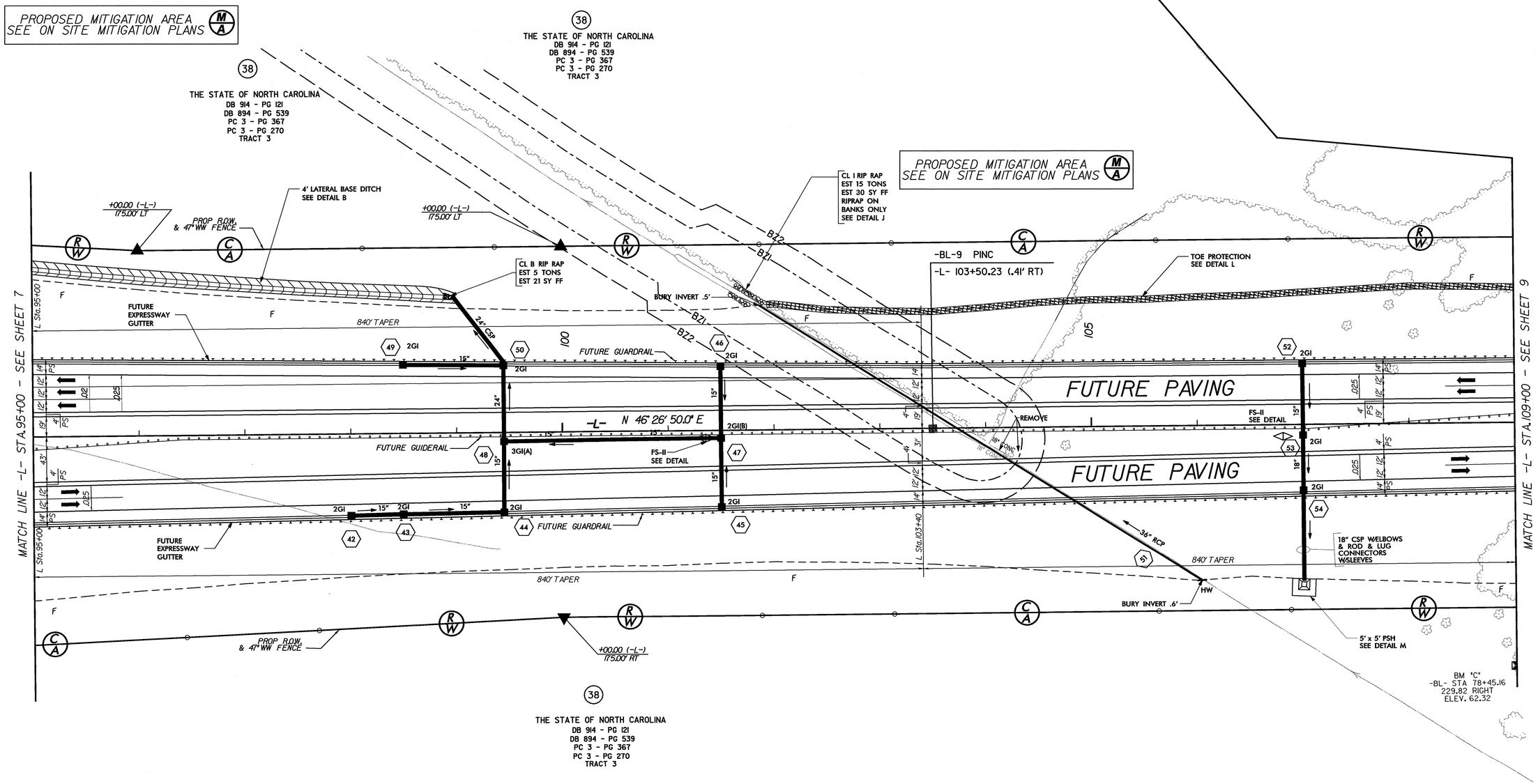

REVISIONS

8/17/99

2/20/2009
r:\roadway\grading.proj\r2719a_rdy_psh_08_GRD.dgn

FOR STRUCTURE DETAILS, SEE STRUCTURE PLANS S-1 THRU S-

SKETCH SHOWING ROADWAY APPROACHING BRIDGE

-SVRDI- CURVE DATA
PI Sta 11+14.00
Δ = 43° 59' 38.8" (RT)
D = 38° 11' 49.9"
L = 115.18'
T = 60.59'
R = 150.00'
R.O.= SEE PLANS

* NOTE A
REMOVE 18" RCP & CONSTRUCT DITCH SECTION SEE DETAIL D (Y3 20+20 LT)

NOTES: FOR -L- PROFILE, SEE SHEET 39
FOR -SVRDI- PROFILE, SEE SHEET 62
SEE SHEET 2-L FOR DRAINAGE DITCH DETAILS

STRUCTURE OVER BANKS SCHOOL ROAD DESIGNED TO ACCOMMODATE FUTURE WIDENING UNDER STRUCTURE

FUTURE CONSTRUCTION - ATTACH SINGLE FACED CONCRETE BARRIER TO SINGLE FACED CONCRETE BRIDGE RAIL - SEE SPECIAL PROVISION

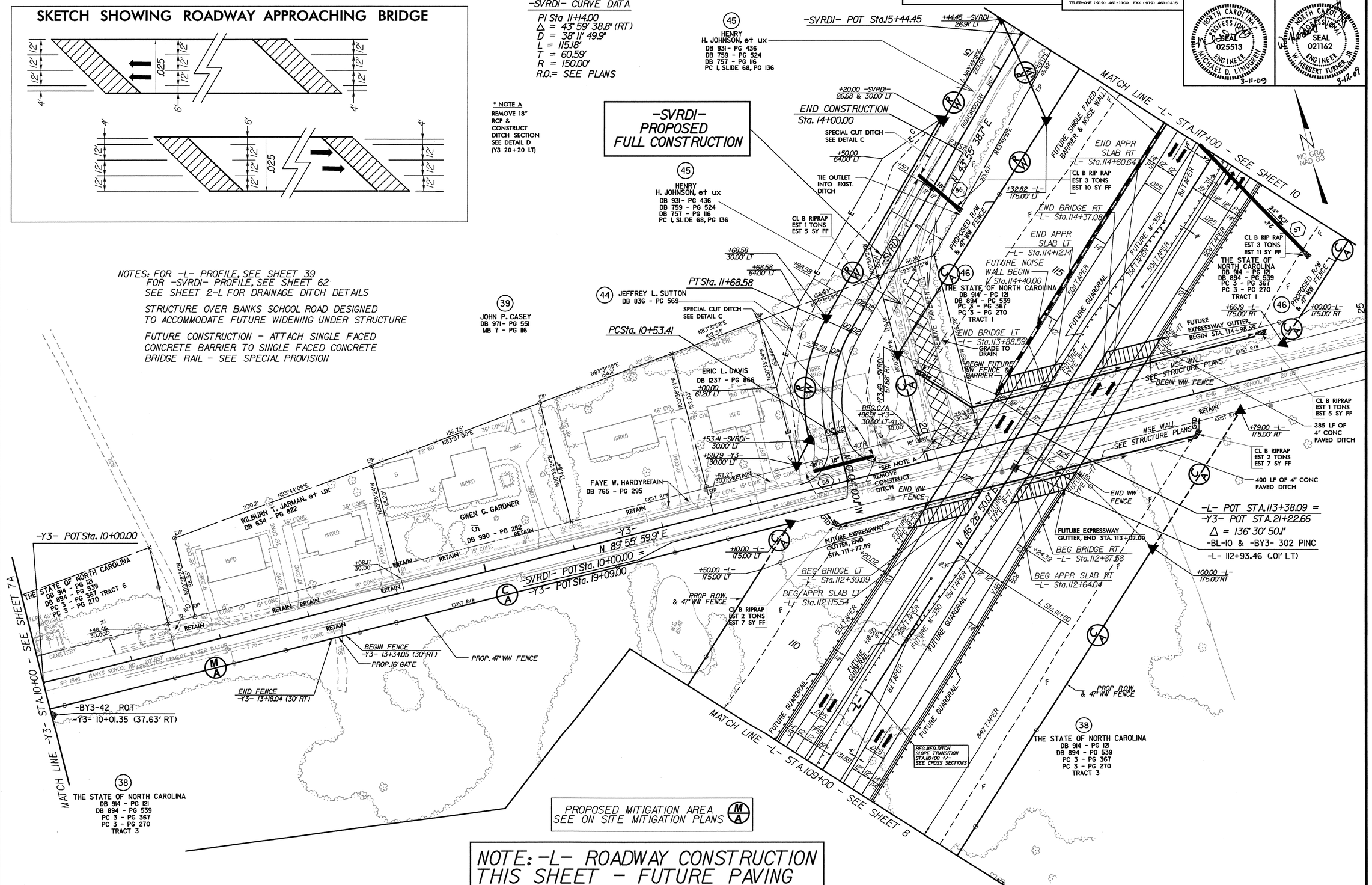

NOTE: -L- ROADWAY CONSTRUCTION THIS SHEET - FUTURE PAVING

REVISIONS

8/17/99

2/20/2009
f:\roadway\grading_proj\r-2719a_rdy_psh_09_GRD.dgn

NOTE: FOR -L- PROFILE, SEE SHEET 40
SEE SHEET 2-L FOR DRAINAGE DITCH DETAILS

GRAPHIC SCALE
50 25 0 50 100
PLANS

Prepared by
URS
URS Corporation - North Carolina
1600 Perimeter Park Drive
Morrisville, North Carolina 27560
TELEPHONE (919) 461-1100 FAX (919) 461-1415

PROJECT REFERENCE NO.	SHEET NO.
R-2719A	10
R/W SHEET NO.	
10	

ROADWAY DESIGN ENGINEER
NORTH CAROLINA PROFESSIONAL SEAL 025513 ENGINEER MICHAEL D. LINDGREN
3-11-09

HYDRAULICS ENGINEER
NORTH CAROLINA PROFESSIONAL SEAL 021162 ENGINEER W. HERBERT TURNER, JR.
3-12-09

-L- CURVE DATA

PIs Sta 129+40.45	PI Sta 151+30.46
Θs = 1° 30' 28.0"	Δ = 47° 50' 08.7" (LT)
Ls = 250.00'	D = 1° 12' 22.4"
LT = 166.67'	L = 3,965.73'
ST = 83.34'	T = 2106.68'
	R = 4,750.00'
	e = 5%

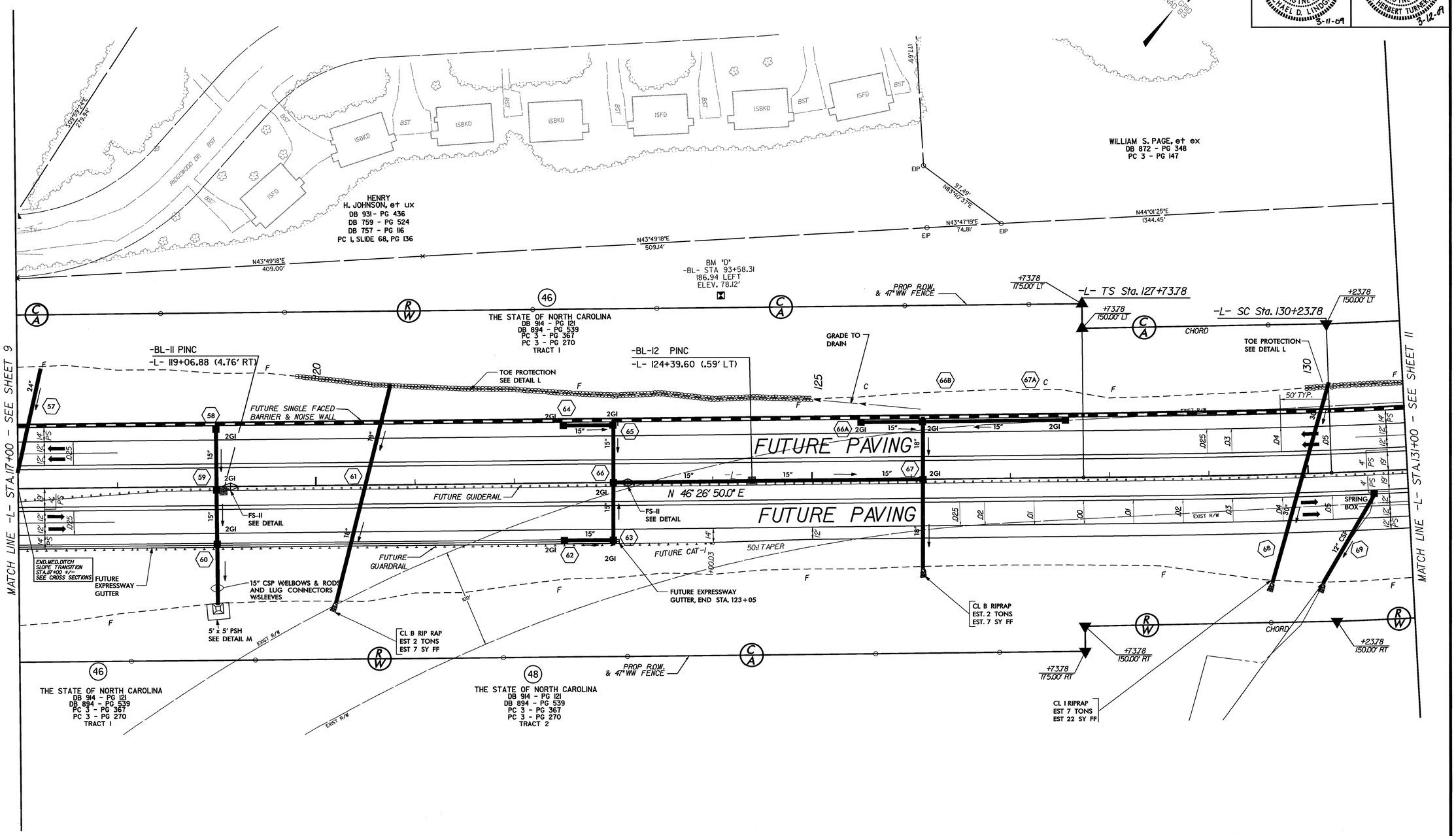

REVISIONS

8/17/99

2/20/2009
f:\roadway\grading\proj\r2719a_rdy_psh_10_GRD.dgn

FOR RCBC DETAILS, SEE CULVERT PLANS C-1 THRU C-

-L- CURVE DATA

PI Sta 151+30.46
Δ = 47° 50' 08.7" (LT)
D = 1° 12' 22.4"
L = 3,965.73'
T = 2106.68'
R = 4,750.00'
e = 5%

NOTE: FOR -L- PROFILE, SEE SHEETS 40 & 41
SEE SHEET 2-L FOR DRAINAGE DITCH DETAILS
SEE SHEET 2-M FOR CULVERT CHANNEL DETAILS
* SEE SHEET 2 FOR DETAIL OF TRANSITION FROM SHOULDER TO EXPRESSWAY GUTTER

GRAPHIC SCALE
50 25 0 50 100
PLANS

Prepared by
URS
URS Corporation - North Carolina
1600 Perimeter Park Drive
Morrisville, North Carolina 27560
TELEPHONE (919) 461-1100 FAX (919) 461-1415

PROJECT REFERENCE NO.	SHEET NO.
R-2719A	11
R/W SHEET NO.	11
ROADWAY DESIGN ENGINEER	HYDRAULICS ENGINEER

NORTH CAROLINA PROFESSIONAL SEAL 025513 ENGINEER MICHAEL D. LINDGREN 3-11-09

NORTH CAROLINA PROFESSIONAL SEAL 021162 ENGINEER W. HERBERT TURNER, JR. 3-12-09

REVISIONS

8/17/99

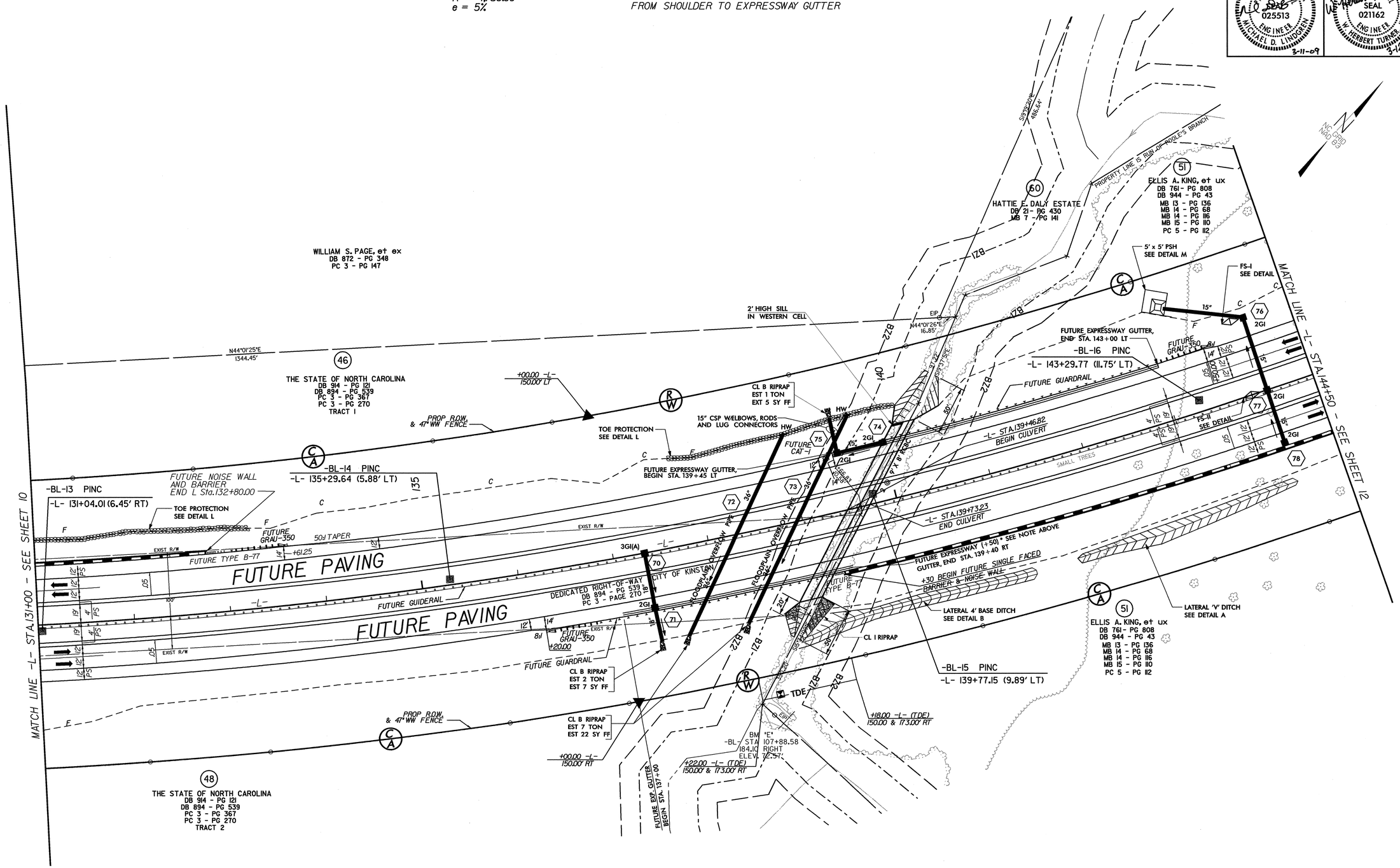

2/20/2009
r:\roadway\grading_proj\r2719a_rdy_psh_11_GRD.dgn

FOR RCBC DETAILS, SEE CULVERT PLANS C-1 THRU C-

-L- CURVE DATA
PI Sta 151+30.46
Δ = 47° 50' 08.7" (LT)
D = 1° 12' 22.4"
L = 3,965.73'
T = 2106.68'
R = 4,750.00'
e = 5%

NOTE: FOR -L- PROFILE, SEE SHEET 41
SEE SHEET 2-L FOR DRAINAGE DITCH DETAILS
SEE SHEET 2-M FOR CULVERT CHANNEL DETAILS

GRAPHIC SCALE
50 25 0 50 100
PLANS

Prepared by
URS
URS Corporation - North Carolina
1600 Perimeter Park Drive
Morrisville, North Carolina 27560
TELEPHONE (919) 461-1100 FAX (919) 461-1415

PROJECT REFERENCE NO.	SHEET NO.
R-2719A	12
R/W SHEET NO.	12

ROADWAY DESIGN ENGINEER
NORTH CAROLINA PROFESSIONAL SEAL 025513 ENGINEER MICHAEL D. LINDGREN
3-11-09

HYDRAULICS ENGINEER
NORTH CAROLINA PROFESSIONAL SEAL 021162 ENGINEER W. HERBERT TURNER, JR.
3-12-09

NC GRID NAD 83

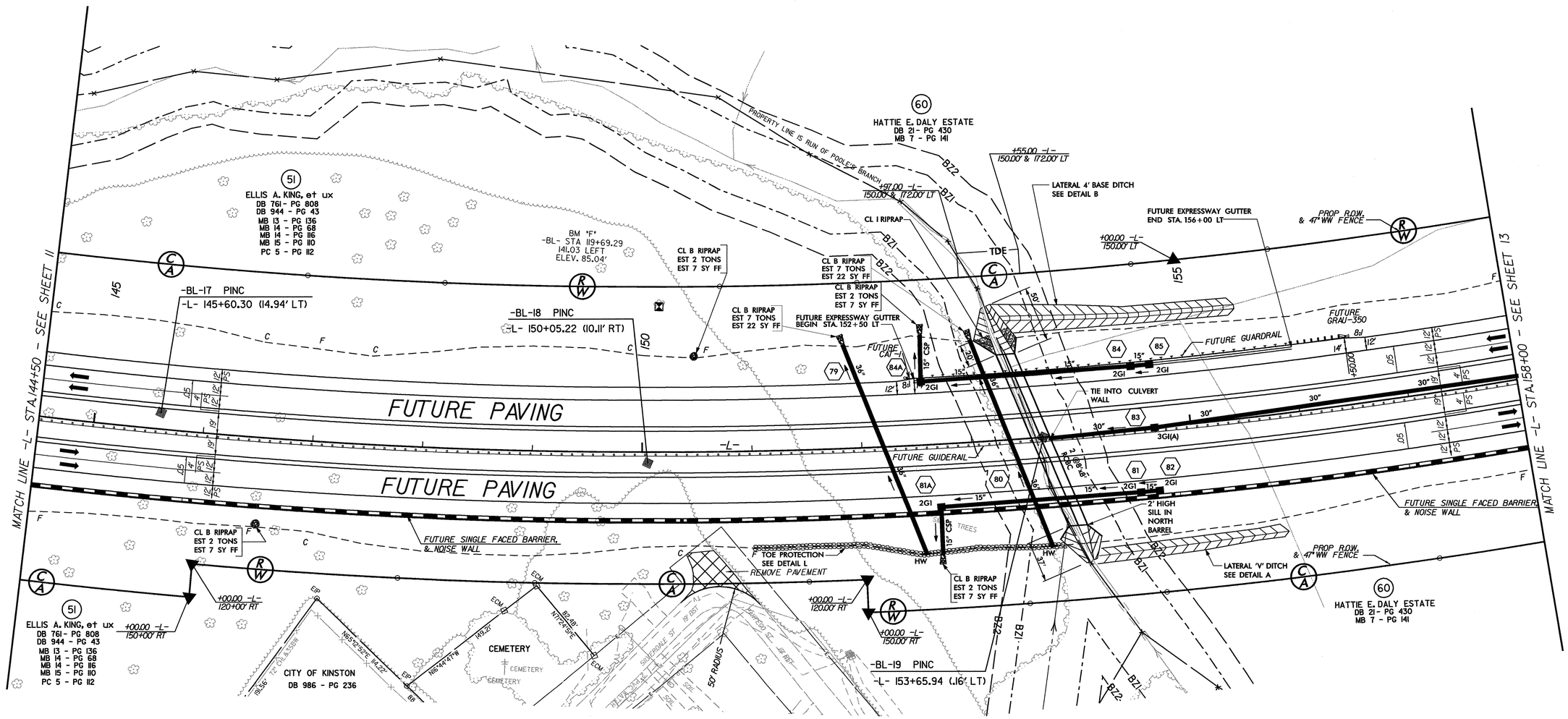

2/24/2009
r:\roadway\grading_proj\r2719a_rdy_psh_12.GRD.dgn

PROJECT REFERENCE NO.	SHEET NO.
R-2719A	13
R/W SHEET NO.	13

ROADWAY DESIGN ENGINEER: NORTH CAROLINA PROFESSIONAL SEAL 025513 ENGINEER MICHAEL D. LINDGREN 3-11-09

HYDRAULICS ENGINEER: NORTH CAROLINA PROFESSIONAL SEAL 021162 ENGINEER W. HERBERT TURNER JR. 3-12-09

GRAPHIC SCALE: 50 25 0 50 100 — PLANS

Prepared by URS
URS Corporation - North Carolina
1600 Perimeter Park Drive
Morrisville, North Carolina 27560
TELEPHONE (919) 461-1100 FAX (919) 461-1415

NOTE: FOR -L- PROFILE, SEE SHEETS 41 & 42
FOR -SVRD3- PROFILE, SEE SHEET 63
SEE SHEET 2-L FOR DRAINAGE DITCH DETAILS

NC GRID NAD 83

-L- CURVE DATA

PI Sta 151+30.46	PIs Sta 170+72.85
Δ = 41° 50' 08.7" (LT)	Θs = 1° 30' 28.0"
D = 1° 12' 22.4"	Ls = 250.00'
L = 3,965.73'	LT = 166.67'
T = 2106.68'	ST = 83.34'
R = 4,750.00'	
e = 5%	

MATCH LINE -L- STA.158+00 - SEE SHEET 12

MATCH LINE -L- STA.171+50 - SEE SHEET 14

STANDARD BERM DITCH
-L- 161+25 to 163+00 LL
SEE ROADWAY STD.

HATTIE E. DALY ESTATE
DB 21 - PG 430
MB 7 - PG 141

PROP R.O.W. & 47" WW FENCE

-BL-21 PINC
-L- 164+95.47 (2.61' RT)

-BL-20 PINC
-L- 158+98.96 (7.40' LT)

+00.00 END FUTURE BARRIER & NOISE WALL

-BL-22 PINC
-L- 168+77.47 (75.86' LT)
STANDARD BERM DITCH
-L- 168+00 TO 169+25 LL
SEE ROADWAY STD. 240.01
+89.51
150.00' LT

-L- CS Sta. 169+89.51

OBLITERATE

FUTURE PAVING

FUTURE GUIDERAIL

CL B RIPRAP
EST 2 TONS
EST 7 SY FF

BM "G"
-BL- STA 139+01.41
130.60 RIGHT
ELEV.-113.23'

+89.51
150.00' RT

MATCH LINE "A" THIS SHEET

REVISIONS

8/17/99

-SVRD3-
PROPOSED FULL CONSTRUCTION

HATTIE E. DALY ESTATE
DB 21 - PG 430
MB 7 - PG 141

WOODS

+39.05
45.00' LT

+66.15
45.00' LT

+00.00
32.57' LT

+00.00
29.96' LT

REMOVE PAVEMENT

REMOVE AND CONSTRUCT DITCH SECTION, SEE DETAIL D

-BY4-44 PINC 37+44.30

MATCH LINE "A" THIS SHEET

-SVRD3-

N 61° 59' 23.9" W

+66.15
40.00' RT

25' TYP.

PROP R.O.W.

+50.00
40.00' RT

+00.00
40.00' RT

+00
30.04' RT
(EX.R/W)

MATCH EXIST.

+39.05
40.00' RT

PCSta. 16+66.15

PTSta. 15+39.05

-SVRD3- POC Sta.15+00
BEGIN CONSTRUCTION

HATTIE E. DALY ESTATE
DB 21 - PG 430
MB 7 - PG 141

-SVRD3- CURVE DATA

PI Sta 21+88.27
Δ = 57° 35' 09.2" (RT)
D = 6° 01' 52.1"
L = 954.81'
T = 522.11'
R = 950.00'
e = 8%

MATCH LINE -SVRD3- STA.23+00 SEE SHEET 14

2/20/2009
F:\roadway\grading-proj\r2719a_rdy_psh_13_GRD.dgn
lisa micarthur

NOTE: FOR -L- PROFILE, SEE SHEET 42
FOR -SVRD3- PROFILE, SEE SHEET 63 & 64
FOR -SVRD4- PROFILE, SEE SHEET 64

SEE SHEET 2-L FOR DRAINAGE DITCH DETAILS

GRAPHIC SCALE
50 25 0 50 100
PLANS

Prepared by
URS
URS Corporation - North Carolina
1600 Perimeter Park Drive
Morrisville, North Carolina 27560
TELEPHONE (919) 461-1100 FAX (919) 461-1415

PROJECT REFERENCE NO.	SHEET NO.
R-2719A	14
R/W SHEET NO.	14
ROADWAY DESIGN ENGINEER	HYDRAULICS ENGINEER

NORTH CAROLINA PROFESSIONAL SEAL 025513 ENGINEER MICHAEL D. LINDGREN 3-11-09

NORTH CAROLINA PROFESSIONAL SEAL 021162 ENGINEER W. HERBERT TURNER, JR. 3-12-09

-L- CURVE DATA
PIs Sta 170+72.85
Θs = 1° 30' 28.0"
Ls = 250.00'
LT = 166.67'
ST = 83.34'

-SVRD4-
PROPOSED
FULL CONSTRUCTION

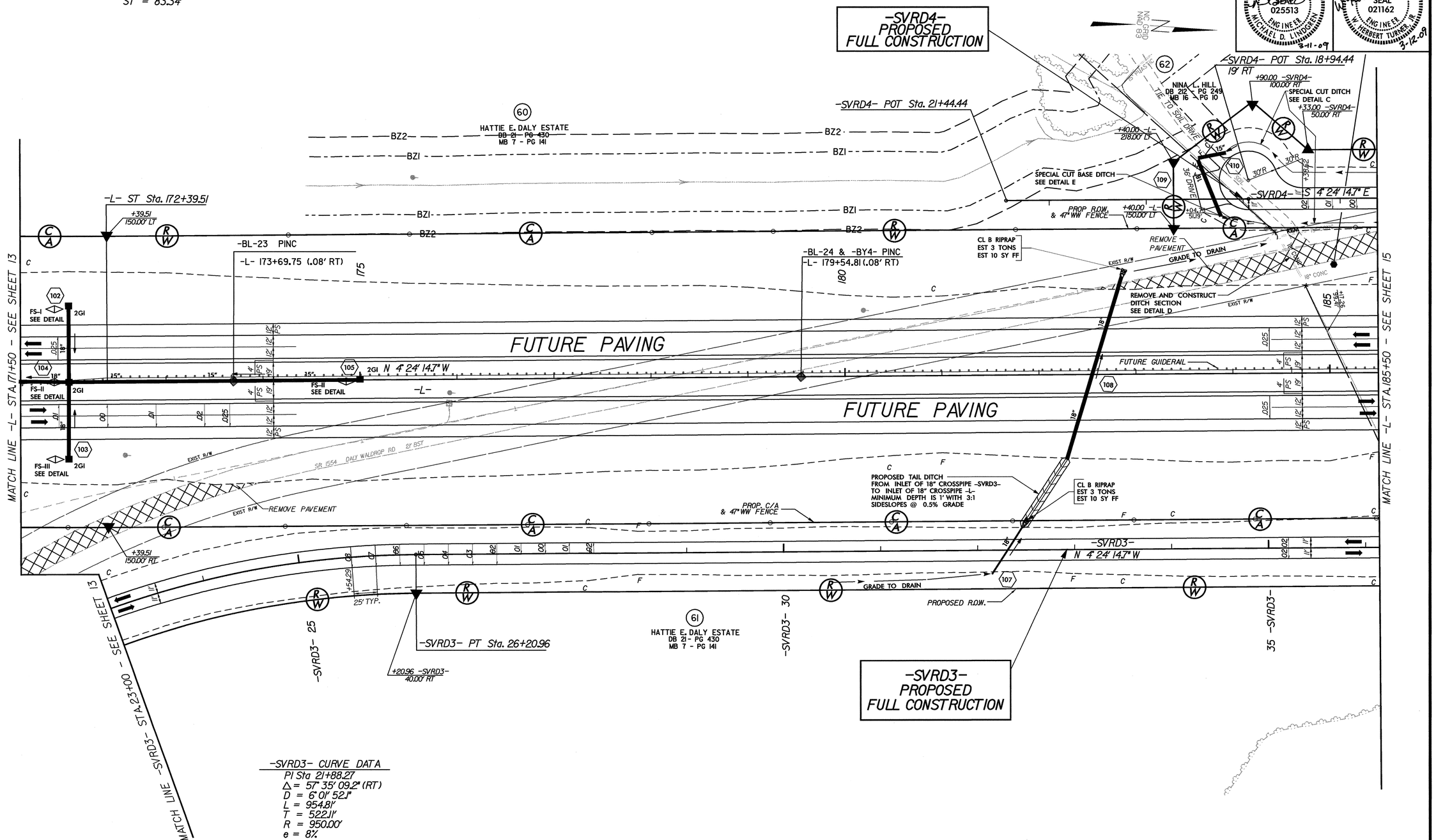

-SVRD3- CURVE DATA
PI Sta 21+88.27
Δ = 57° 35' 09.2" (RT)
D = 6° 01' 52.1"
L = 954.81'
T = 522.11'
R = 950.00'
e = 8%

REVISIONS

8/17/99

2/20/2009
F:\roadway\grading_proj\r2719a_rdy_psh_14_GRD.dgn

NOTE: FOR -L- PROFILE, SEE SHEETS 42 & 43
FOR -SVRD3- PROFILE, SEE SHEET 64
FOR -SVRD4- PROFILE, SEE SHEET 64
SEE SHEET 2-L FOR DRAINAGE DITCH DETAILS

GRAPHIC SCALE
50 25 0 50 100
PLANS

Prepared by
URS
URS Corporation - North Carolina
1600 Perimeter Park Drive
Morrisville, North Carolina 27560
TELEPHONE (919) 461-1100 FAX (919) 461-1415

PROJECT REFERENCE NO.	SHEET NO.
R-2719A	15
R/W SHEET NO.	
15	

ROADWAY DESIGN ENGINEER
NORTH CAROLINA PROFESSIONAL SEAL 025513 ENGINEER MICHAEL D. LINDGREN
3-11-09

HYDRAULICS ENGINEER
NORTH CAROLINA PROFESSIONAL SEAL 021162 ENGINEER W. HERBERT TURNER, JR.
3-12-09

-SVRD4- CURVE DATA
PI Sta 15+38.34
Δ = 11° 11' 22.0" (RT)
D = 2° 51' 53.2"
L = 390.59'
T = 195.92'
R = 2,000.00'
e = 2%

-SVRD4-
PROPOSED FULL CONSTRUCTION

-SVRD4- PT Sta. 17+33.01
-SVRD4- PC Sta. 13+42.43
-SVRD4- POT Sta. 10+00.00
-SVRD4- POT Sta. 11+50 BEGIN CONSTRUCTION
-SVRD4- S 15° 35' 36.8" E
S 4° 24' 14.7" E
SR 1554 DALY WALDROP RD 27' BST
PROPERTY LINE RUNS WITH DITCH
+33.01 -SVRD4- 50.00' RT
+42.43 -SVRD4- 50.00' RT
+50.00 -SVRD4- 30.00' RT
+50.00 -SVRD4- 30.00' LT
+70.00 -L- 150.00' LT
-BY4-215 PINC
212.72' N 11° 18' 49.7" W
OF -SVRD4- POT 10+00.00
-BL-25 PINC
-L- 198+23.23 (2.13' RT)
EXISTING R/W
EXIST R/W
PROP. R.O.W. & 47" WW FENCE
PROP. C/A & 47" WW FENCE
REMOVE PAVEMENT
REMOVE AND CONSTRUCT DITCH SECTION SEE DETAIL D
SPECIAL CUT DITCH SEE DETAIL C
SPECIAL CUT DITCH SEE DETAILC
FUTURE PAVING
FUTURE GUIDERAIL
-L-
N 4° 24' 14.7" W
2GI
MATCH LINE -L- STA.185+50 - SEE SHEET 14
MATCH LINE -L- STA.199+50 - SEE SHEET 16
NAD 83
NC GRID

61 HATTIE E. DALY ESTATE
DB 21 - PG 430
MB 7 - PG 141

62 NINA L. HILL
DB 212 - PG 249
MB 16 - PG 10

63 NINA L. HILL
DB 212 - PG 249
MB 16 - PG 10

64 LAURA E. GRANT
DB 219 - PG 34
ESTATE FILE 90 E 320
MB 16 - PG 10

65 LAURA E. GRANT
DB 219 - PG 34
ESTATE FILE 90 E 320
MB 16 - PG 10

66 NINA L. HILL
DB 241 - PG 72
MB 16 - PG 10

67 NINA L. HILL
DB 241 - PG 72
MB 16 - PG 10

-SVRD3-
PROPOSED FULL CONSTRUCTION

-SVRD3-
N 4° 24' 14.7" W
PROP R.O.W.
SPECIAL CUT DITCH SEE DETAIL C
CL B RIPRAP EST 3 TONS EST 10 SY FF
CL B RIPRAP EST 5 TONS EST 14 SY FF
+30.00 -SVRD3- 40.00' RT
+30.00 -L- 150.00' RT
-SVRD3- POT Sta. 46+80.94
-SVRD3- POT Sta. 45+75.00 END CONSTRUCTION
+95.00 -SVRD3- 40.00' RT
-SVRD3- POT Sta. 45+00.00 19' RT
+15.00 -SVRD3- 100.00' RT
+50.00 -SVRD3- 73.71' RT
+80.00 -SVRD3- 51.18' RT
+80.94 -SVRD3- 306.78' RT
+60.00 -SVRD3- 319.91' RT
DITCH CLEANOUT TO ELEV. 110.34, L = 440', SEE DETAIL P
TDE
DRIVE
30'R
24"
N 24° 24' 19.5" W
100.00'

REVISIONS
8/17/99

2/20/2009
f:\roadway\grading-proj\r2719a_rdy_psh_15.GRD.dgn

FOUNDATION RECOMMENDATION NOTES:
1. DRIVE PILES AT END BENT NO.1 AND END BENT NO.2 TO A REQUIRED BEARING CAPACITY OF 140 TONS PER PILE. THE REQUIRED BEARING CAPACITY IS EQUAL TO THE ALLOWABLE BEARING CAPACITY WITH A MINIMUM FACTOR OF SAFETY OF TWO.

2. THE ALLOWABLE BEARING CAPACITY FOR PILES AT END BENT NO.1 AND END BENT NO.2 IS 70 TONS PER PILE.

3. TESTING PILES WITH THE PILE DRIVING ANALYZER (PDA) DURING DRIVING, RESTRIKING OR REDRIVING MAY BE REQUIRED. THE ENGINEER WILL DETERMINR THE NEED FOR PDA TESTING.

4. OBSERVE A ONE-MONTH WAITING PERIOD AFTER CONSTRUCTING THE EMBANKMENT, END BENT AND REINFORCED APPROACH FILL BEFORE BEGINNING APPROACH SLAB CONSTRUCTION AT END BENT NO.1 AND END BENT NO.2.

NOTE: FOR -L- PROFILE, SEE SHEET 43
SEE SHEET 2-L FOR DRAINAGE DITCH DETAILS

STRUCTURE OVER PAUL'S PATH ROAD DESIGNED TO ACCOMMODATE FUTURE WIDENING UNDER STRUCTURE

FOR STRUCTURE DETAILS SEE STRUCTURE PLANS S-1 THRU S-

GRAPHIC SCALE
50 25 0 50 100
PLANS

Prepared by
URS
URS Corporation - North Carolina
1600 Perimeter Park Drive
Morrisville, North Carolina 27560
TELEPHONE (919) 461-1100 FAX (919) 461-1415

PROJECT REFERENCE NO.	SHEET NO.
R-2719A	16
R/W SHEET NO.	
16	

ROADWAY DESIGN ENGINEER
NORTH CAROLINA PROFESSIONAL SEAL 025513 ENGINEER MICHAEL D. LINDGREN
3-11-09

HYDRAULICS ENGINEER
NORTH CAROLINA PROFESSIONAL SEAL 021162 ENGINEER W. HERBERT TURNER, JR.
3-12-09

REVISIONS
8/17/99

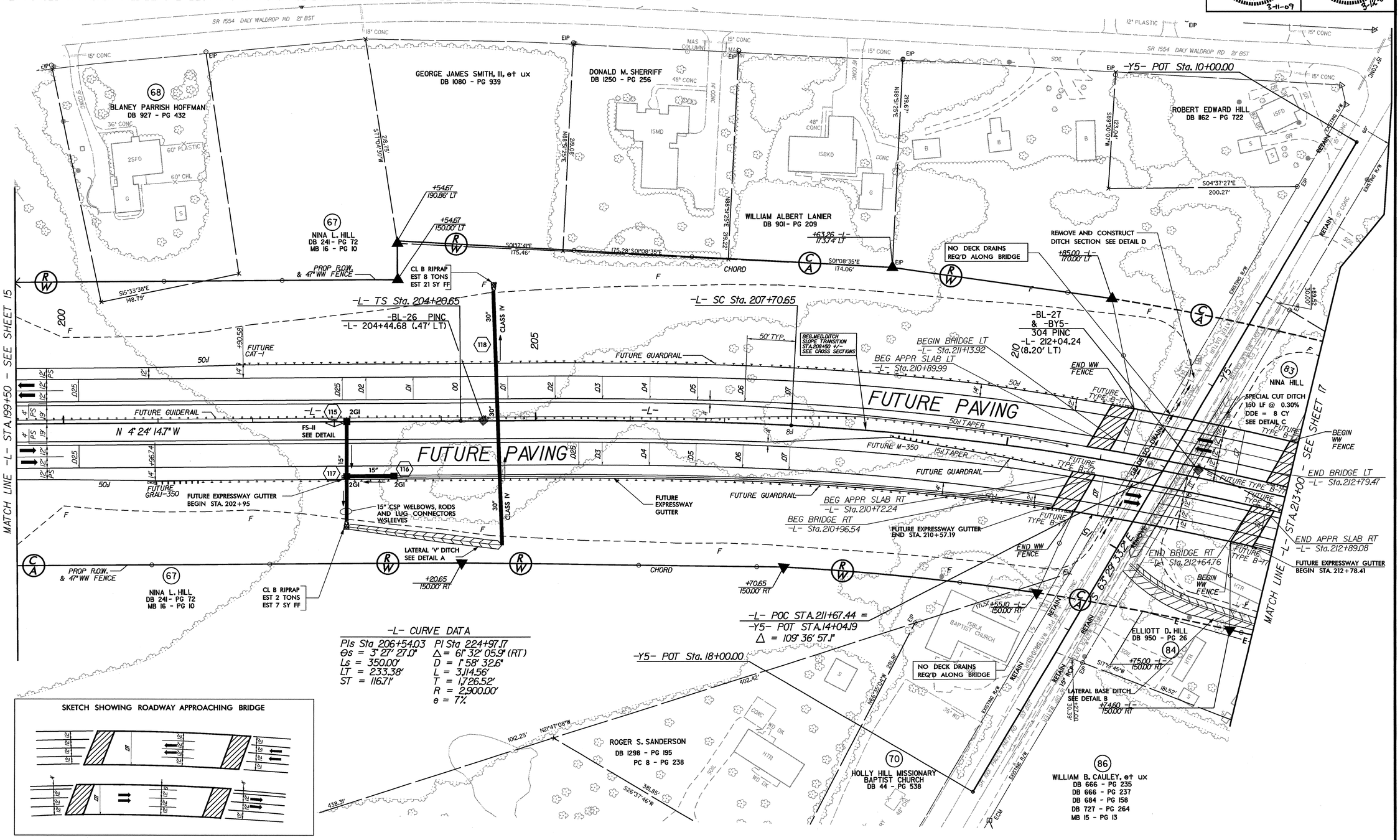

-L- CURVE DATA

PIs Sta 206+54.03	PI Sta 224+97.17
Θs = 3° 27' 27.0"	Δ = 61° 32' 05.9" (RT)
Ls = 350.00'	D = 1° 58' 32.6"
LT = 233.38'	L = 3,114.56'
ST = 116.71'	T = 1,726.52'
	R = 2,900.00'
	e = 7%

2/20/2009
r:\roadway\grading_proj\r-2719a_rdy_psh_16_GRD.dgn

PROJECT REFERENCE NO.	SHEET NO.
R-2719A	17
R/W SHEET NO.	17
ROADWAY DESIGN ENGINEER	HYDRAULICS ENGINEER

GRAPHIC SCALE
50 25 0 50 100
PLANS

Prepared by
URS
URS Corporation - North Carolina
1600 Perimeter Park Drive
Morrisville, North Carolina 27560
TELEPHONE (919) 461-1100 FAX (919) 461-1415

NORTH CAROLINA PROFESSIONAL SEAL 025513 ENGINEER MICHAEL D. LINDGREN 3-11-09

NORTH CAROLINA PROFESSIONAL SEAL 021162 ENGINEER W. HERBERT TURNER, JR. 3-12-09

NOTE: FOR -L- PROFILE, SEE SHEETS 43 & 44
SEE SHEET 2-L FOR DRAINAGE DITCH DETAILS

NC GRID NAD 83

-L- CURVE DATA
PI Sta 224+97.17
Δ = 61° 32' 05.9" (RT)
D = 1° 58' 32.6"
L = 3,114.56'
T = 1,726.52'
R = 2,900.00'
e = 7%

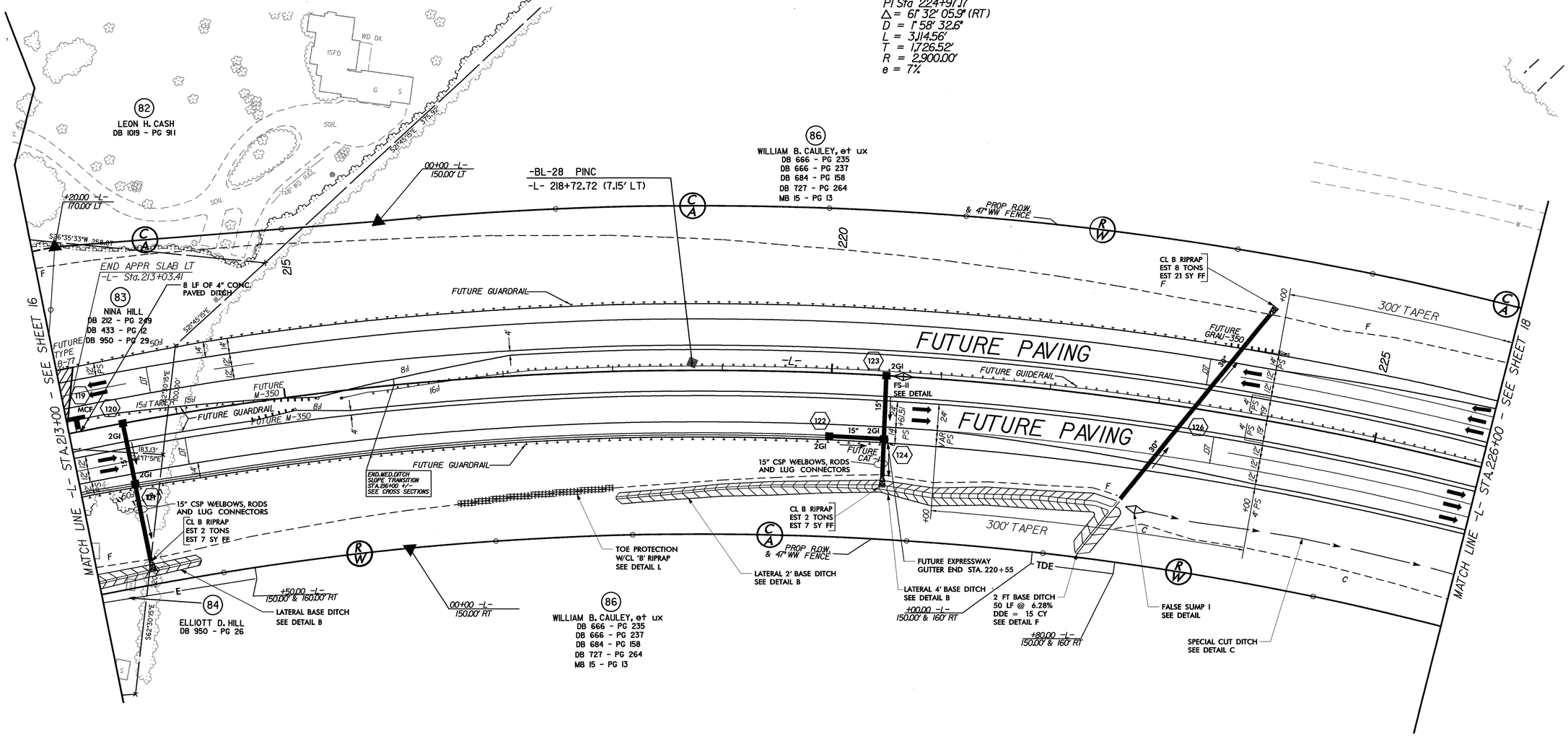

REVISIONS

8/17/99

2/24/2009
r:\roadway\grading_proj\r2719a_rdy_psh_17_GRD.dgn
tes mcarthur

8/17/99

REVISIONS

-L- CURVE DATA	
PI Sta 224+97.17	PIs Sta 240+01.92
Δ = 61° 32' 05.9" (RT)	Θs = 3° 27' 27.0"
D = 1° 58' 32.6"	Ls = 350.00'
L = 3,114.56'	LT = 233.38'
T = 1,726.52'	ST = 116.71'
R = 2,900.00'	
e = 7%	

-Y24RPB- CURVE DATA		
PIs Sta 0+70.01	PIs Sta 5+95.85	PI Sta 8+30.75
Θs = 2°02'29.1"	Θs = 4° 35' 01.2"	Δ = 11° 47' 45.0" (LT)
Ls = 210.00'	Ls = 240.00'	D = 3° 49' 11.0"
LT = 140.01'	LT = 160.05'	L = 308.81'
ST = 70.01'	ST = 80.05'	T = 154.95'
		R = 1,500.00'
		e = 8%

-Y24RPC- CURVE DATA		
PIs Sta 1+13.65	PI Sta 7+15.43	PIs Sta 12+67.55
Θs = 6°45'47.2"	Δ = 46° 19' 00.7" (RT)	Θs = 6° 39' 24.4"
Ls = 200.00'	D = 4° 45' 17.4"	Ls = 280.00'
ST = 86.57'	L = 974.10'	LT = 186.80'
LT = 113.65'	T = 515.43'	ST = 93.45'
Δ1 = 2°00'29.8"	R = 1,205.00'	
Δ2 = 4°45'17.4"	e = 8%	
R1 = 2,853.00'		
R2 = 1,205.00'		

NOTE: FOR -L- PROFILE, SEE SHEET 44
FOR -Y24RPB- PROFILE, SEE SHEET 67
FOR -Y24RPC- PROFILE, SEE SHEET 69
SEE SHEET 2-L FOR DRAINAGE DITCH DETAILS

GRAPHIC SCALE
50 25 0 50 100
PLANS

Prepared by
URS
URS Corporation – North Carolina
1600 Perimeter Park Drive
Morrisville, North Carolina 27560
TELEPHONE (919) 461-1100 FAX (919) 461-1415

PROJECT REFERENCE NO.	SHEET NO.
R-2719A	18
R/W SHEET NO.	
18	

ROADWAY DESIGN ENGINEER
NORTH CAROLINA PROFESSIONAL SEAL 025513 ENGINEER MICHAEL D. LINDGREN
3-11-09

HYDRAULICS ENGINEER
NORTH CAROLINA PROFESSIONAL SEAL 021162 ENGINEER W. HERBERT TURNER, JR.
3-12-09

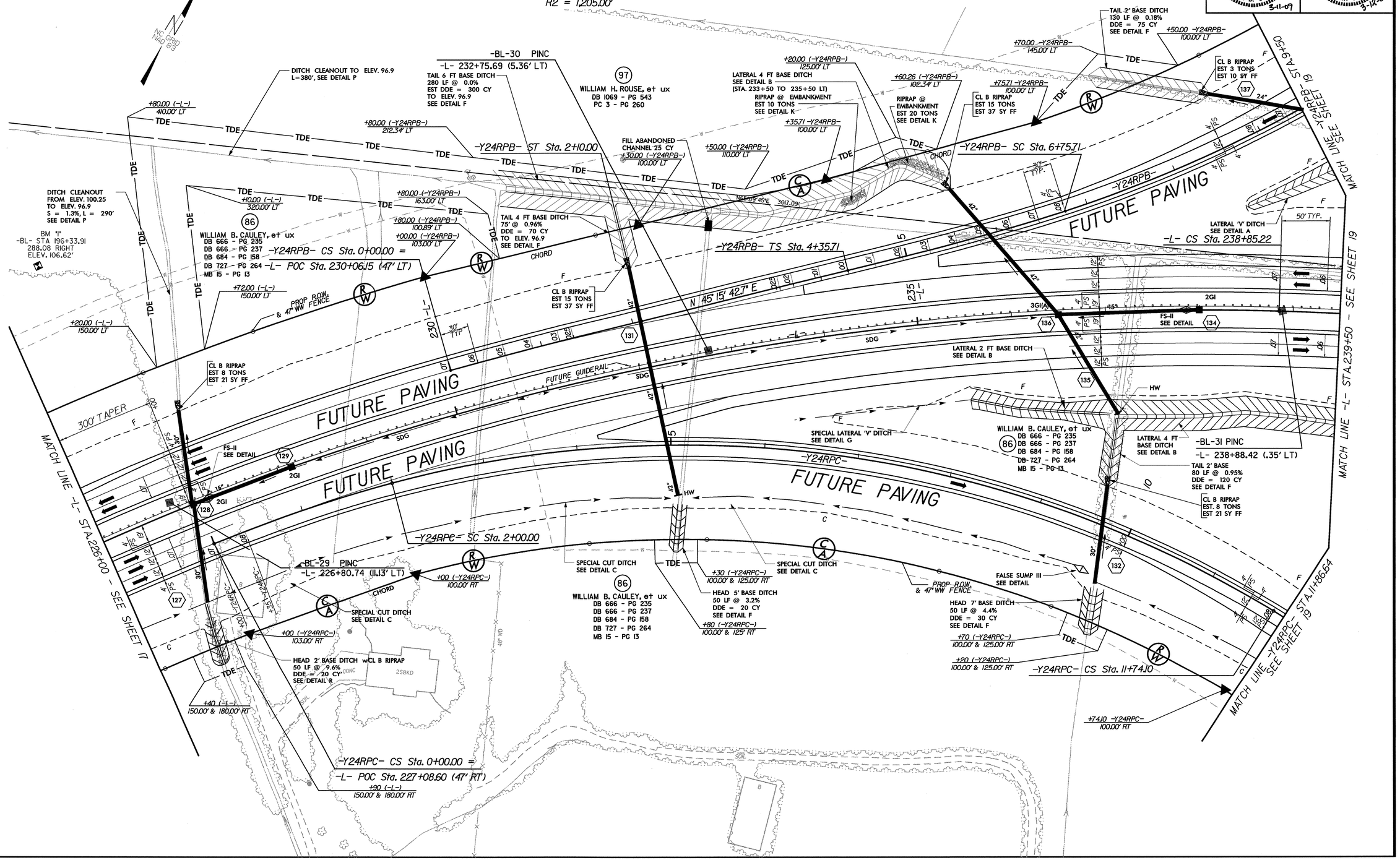

2/24/2009
t:\roadway\grading_proj\r-2719a_rdy_psh_18_GRD.dgn

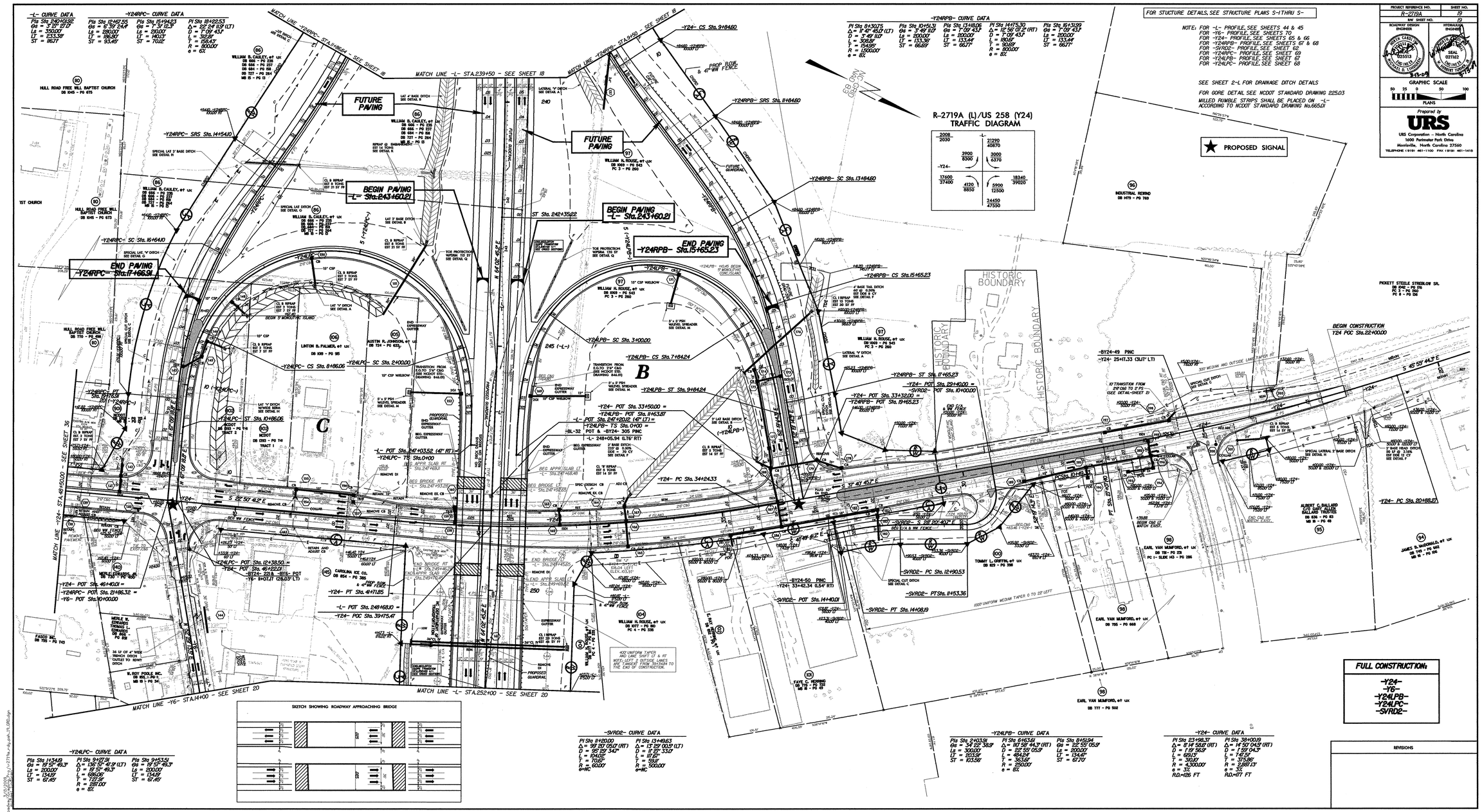

PROJECT REFERENCE NO.	SHEET NO.
R-2719A	19
R/W SHEET NO.	
10	

ROADWAY DESIGN ENGINEER: NORTH CAROLINA PROFESSIONAL SEAL 025513 ENGINEER, D. LYNN WILSON

HYDRAULIC ENGINEER: NORTH CAROLINA PROFESSIONAL SEAL 031762 ENGINEER, R. HERBERT TURNER, IV

5-13-09

GRAPHIC SCALE

50 25 0 50 100

PLANS

Prepared by

URS

URS Corporation – North Carolina
1600 Perimeter Park Drive
Morrisville, North Carolina 27560
TELEPHONE (919) 461-1100 FAX (919) 461-1415

REVISIONS

8/17/99

REVISIONS

NOTE: FOR -L- PROFILE, SEE SHEET 45
FOR -Y6- PROFILE, SEE SHEET 70
SEE SHEET 2-L FOR DRAINAGE DITCH DETAILS
MILLED RUMBLE STRIPS SHALL BE PLACED ON -L-
ACCORDING TO NCDOT STANDARD DRAWING No.665.01

GRAPHIC SCALE
50 25 0 50 100
PLANS

Prepared by
URS
URS Corporation - North Carolina
1600 Perimeter Park Drive
Morrisville, North Carolina 27560
TELEPHONE (919) 461-1100 FAX (919) 461-1415

PROJECT REFERENCE NO.	SHEET NO.
R-2719A	20
R/W SHEET NO.	
20	

ROADWAY DESIGN ENGINEER
NORTH CAROLINA PROFESSIONAL SEAL 025513 ENGINEER MICHAEL D. LINDGREN
5-11-09

HYDRAULICS ENGINEER
NORTH CAROLINA PROFESSIONAL SEAL 021162 ENGINEER W. HERBERT TURNER, JR.
5-12-09

NC GRID NAD 83

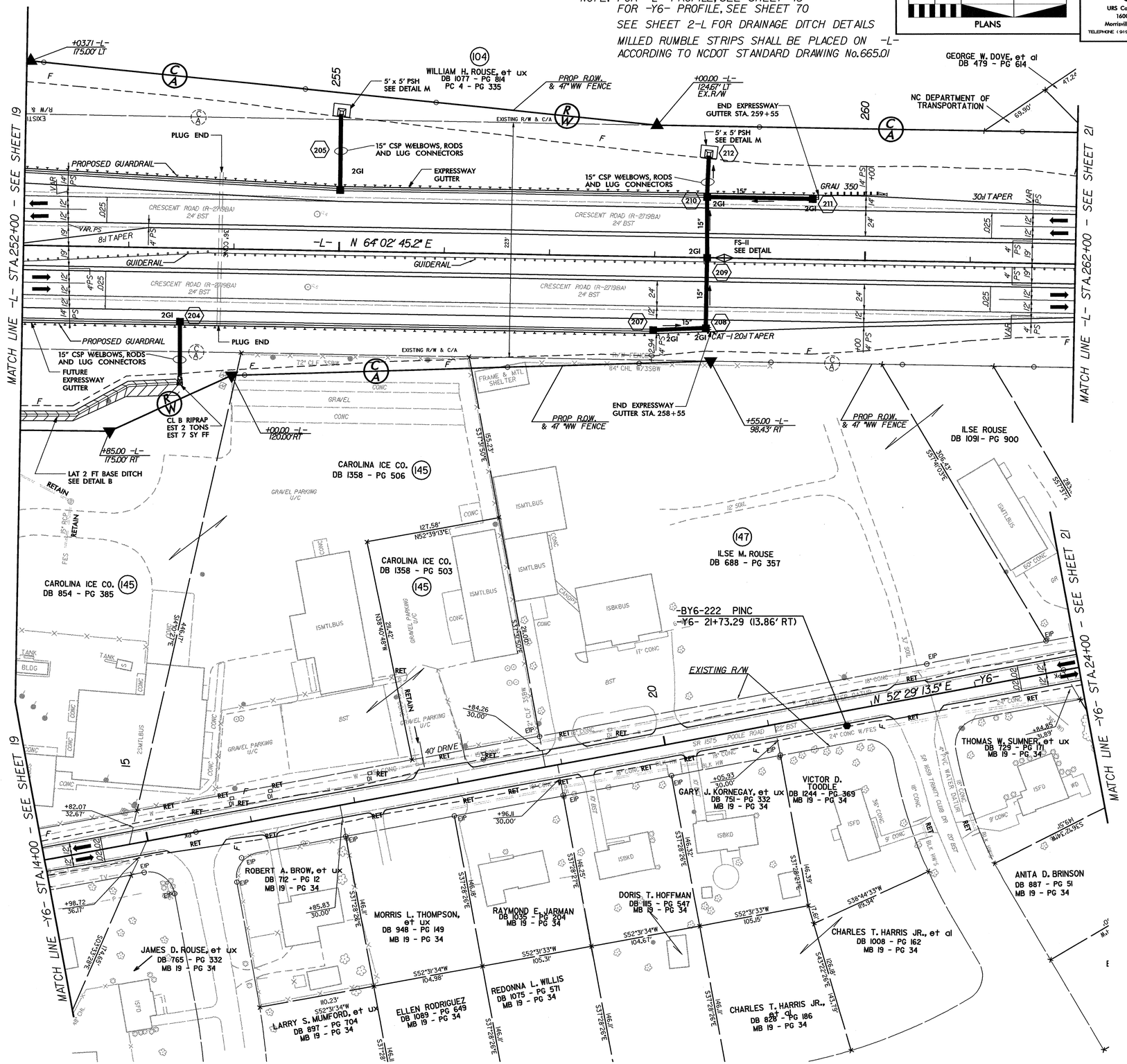

2/20/2009
f:\roadway\grading_proj\r-2719a_rdy_psh_20.GRD.dgn
as mostafa

NOTE: FOR -L- PROFILE, SEE SHEET 45
FOR -Y6- PROFILE, SEE SHEET 70
FOR -DI- & -D2- PROFILE, SEE SHEET 71
SEE SHEET 2-L FOR DRAINAGE DITCH DETAILS
MILLED RUMBLE STRIPS SHALL BE PLACED ON -L-
ACCORDING TO NCDOT STANDARD DRAWING No.665.01

GRAPHIC SCALE
50 25 0 50 100
PLANS

Prepared by
URS
URS Corporation – North Carolina
1600 Perimeter Park Drive
Morrisville, North Carolina 27560
TELEPHONE (919) 461-1100 FAX (919) 461-1415

PROJECT REFERENCE NO.	SHEET NO.
R-2719A	21
R/W SHEET NO.	21
ROADWAY DESIGN ENGINEER	HYDRAULICS ENGINEER

ROADWAY DESIGN ENGINEER: NORTH CAROLINA PROFESSIONAL SEAL 025513 ENGINEER MICHAEL D. LINDGREN 3-16-09

HYDRAULICS ENGINEER: NORTH CAROLINA PROFESSIONAL SEAL 021162 ENGINEER W. HERBERT TURNER, JR. 3-16-09

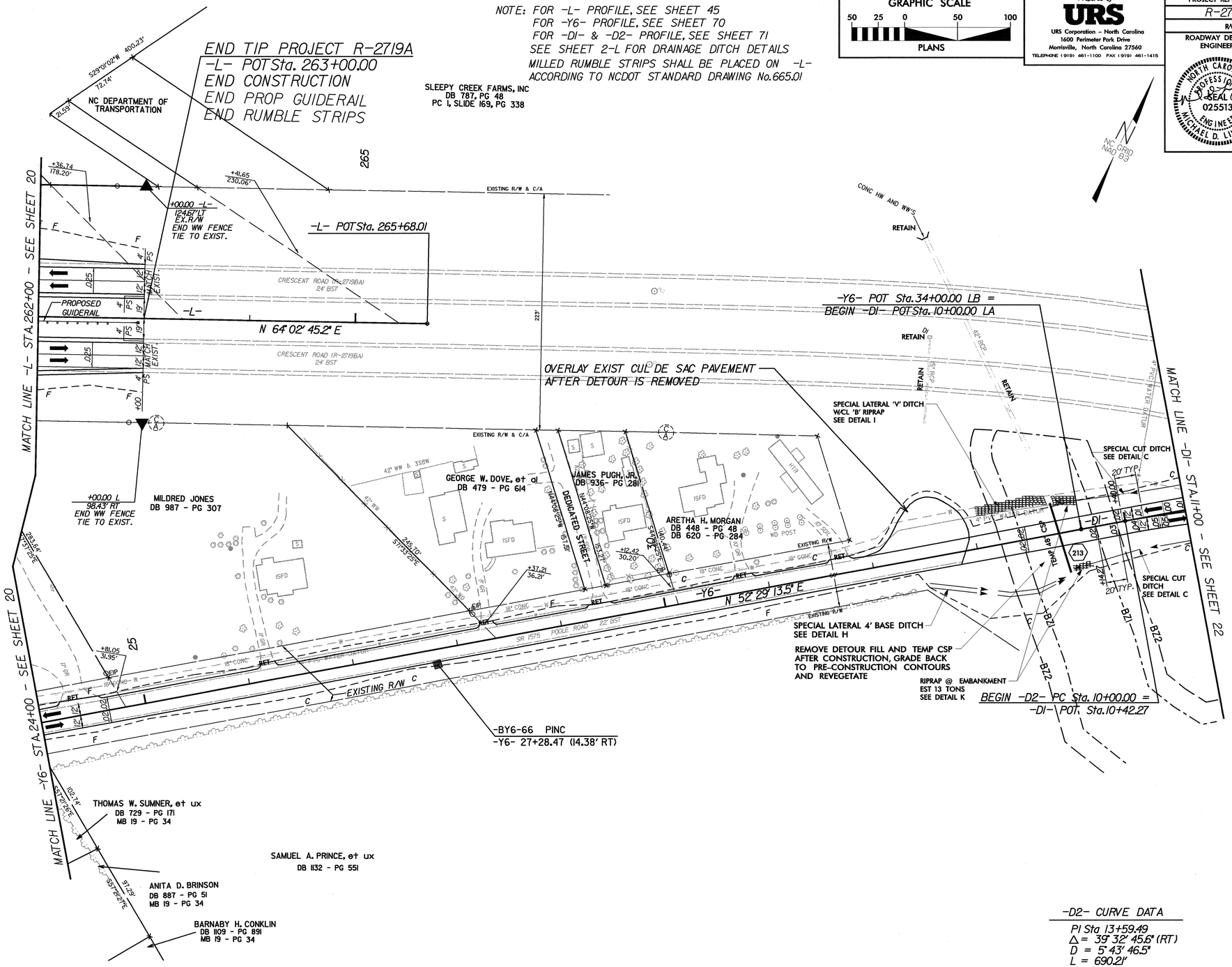

-D2- CURVE DATA

PI Sta 13+59.49
Δ = 39° 32' 45.6" (RT)
D = 5° 43' 46.5"
L = 690.21'
T = 359.49'
R = 1,000.00'
e = 5.1%

REVISIONS

8/17/99

3/16/2009
r:\roadway\Grading_Proj\r2719a_rdy_psh_21_GRD.dgn
michael.lindgren

PROJECT REFERENCE NO.	SHEET NO.
R-2719A	22
R/W SHEET NO.	22

ROADWAY DESIGN ENGINEER: NORTH CAROLINA PROFESSIONAL SEAL 025513 ENGINEER MICHAEL D. LINDGREN 3-11-09

HYDRAULICS ENGINEER: NORTH CAROLINA PROFESSIONAL SEAL 021162 ENGINEER W. HERBERT TURNER, JR. 3-12-09

GRAPHIC SCALE: 50 25 0 50 100 — PLANS

Prepared by URS
URS Corporation – North Carolina
1600 Perimeter Park Drive
Morrisville, North Carolina 27560
TELEPHONE (919) 461-1100 FAX (919) 461-1415

NC GRID NAD 83

-D1- CURVE DATA
PI Sta 15+13.79
Δ = 39° 45' 06.6" (RT)
D = 5° 43' 46.5"
L = 693.80'
T = 361.52'
R = 1,000.00'
e = SEE PLANS
R.O.= SEE PLANS

-D2- CURVE DATA
PI Sta 13+59.49
Δ = 39° 32' 45.6" (RT)
D = 5° 43' 46.5"
L = 690.21'
T = 359.49'
R = 1,000.00'
e = SEE PLANS
R.O.= SEE PLANS

NOTE: FOR -D1- & -D2- PROFILE, SEE SHEET 71
SEE SHEET 2-L FOR DRAINAGE DITCH DETAILS

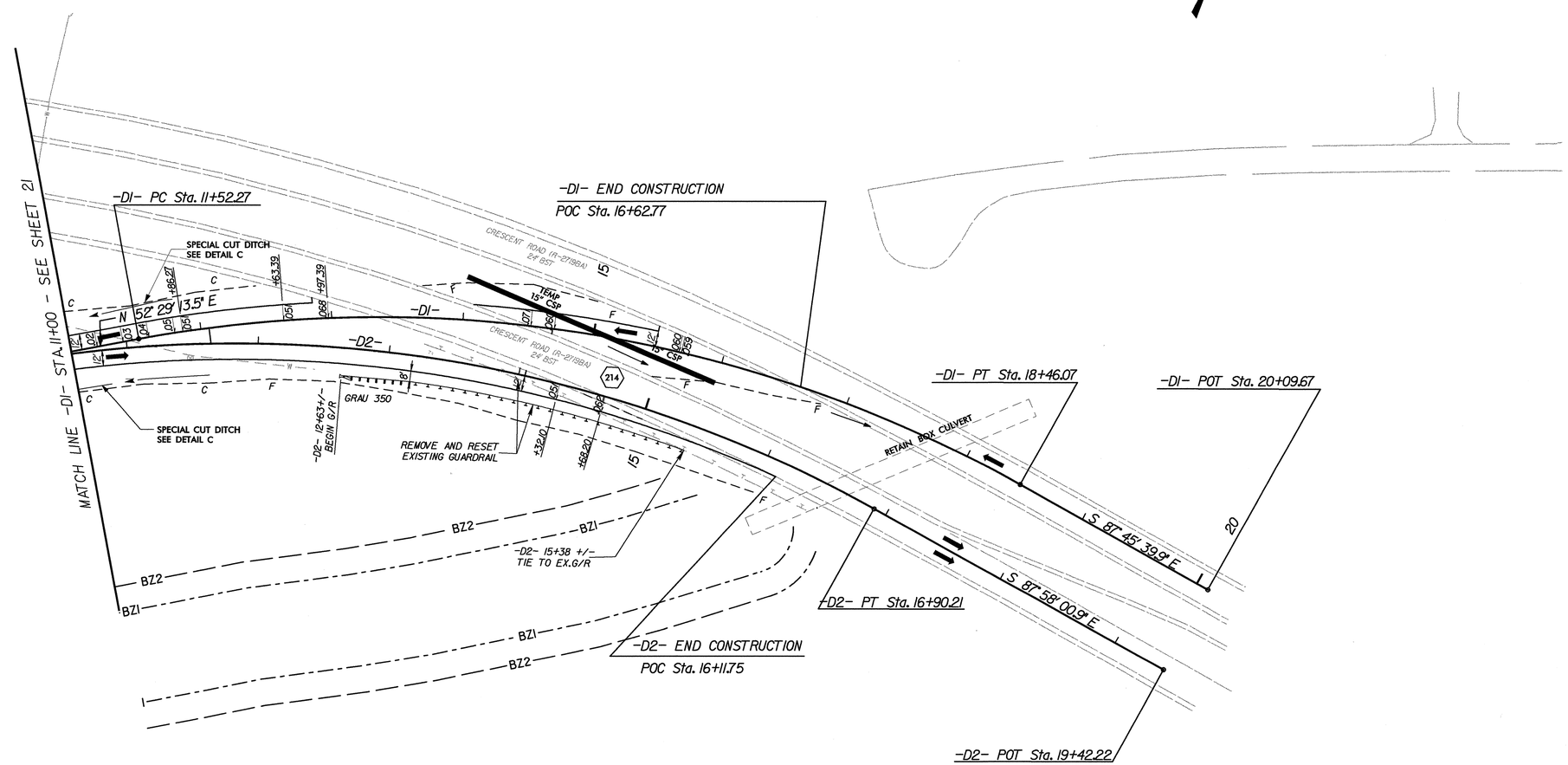

NOTE: WB TRAFFIC ON CRESCENT ROAD TO BE SHIFTED TO OUTSIDE LANE PRIOR TO DETOUR AS PART OF TRAFFIC CONTROL PLAN.

REVISIONS

8/17/99

2/20/2009
r:\roadway\grading_proj\r-2719a_rdy_psh_22.GRD.dgn
rsa mrdatha

NOTE: FOR -Y1- PROFILE, SEE SHEET 46
FOR -Y10- PROFILE, SEE SHEET 60
SEE SHEET 2-L FOR DRAINAGE DITCH DETAILS
FOR INTERSECTION DETAIL SEE SHEET 2-J

GRAPHIC SCALE
50 25 0 50 100
PLANS

Prepared by
URS
URS Corporation - North Carolina
1600 Perimeter Park Drive
Morrisville, North Carolina 27560
TELEPHONE (919) 461-1100 FAX (919) 461-1415

PROJECT REFERENCE NO.	SHEET NO.
R-2719A	23
R/W SHEET NO.	23

ROADWAY DESIGN ENGINEER
NORTH CAROLINA PROFESSIONAL SEAL 025513 ENGINEER MICHAEL D. LINDGREN
3-13-09

HYDRAULICS ENGINEER
NORTH CAROLINA PROFESSIONAL SEAL 021162 ENGINEER W. HERBERT TURNER, JR.
3-13-09

ONLY CONSTRUCTION THIS SHEET - WW FENCE. ALL OTHER DESIGN IS FUTURE CONSTRUCTION

NC GRID NAD 83

-BY25- 1000 PINC
-Y10- 14+49.59 (32.77' RT)

Y10 PC Sta. 13+96.07
EXISTING

8
FALLING CREEK FARMS INC.
DB 924 - PG 406
FIRST TRACT

-Y10- STA 12+16.98
END FUTURE CONSTRUCTION
MATCH EXISTING

RETAIN
15" RCP

+25.00 -Y10-
29.76' & 50.00' RT

-Y10- POT Sta. 10+00.00 =
-Y1- POS Sta. 20+79.69

-BY-227 PINC & -BY25- 999 POT
-Y10- 10+57.90 (4.08' RT)

TRINITY UNITED METHODIST CHURCH
DB 11- PG 254
OVERLAY AND TIE TO FUTURE EOP

BEG 47" WW FENCE
BEGIN C/A LT
+30.00 -Y1-
150.00' LT

ERWIN W. PARROT, et al
DB 909 - PG 702
WILL FILE 88-E124
FOURTH TRACT

BEGIN CONSTRUCTION
-Y1- STA.15+30.53

340.35' TRANSITION
INSIDE WB SHOULDER

308.76' TRANSITION
OUTSIDE WB SHOULDER

ERWIN W. PARROT, et al
DB 909 - PG 702
WILL FILE 88-E124
FIFTH TRACT

SPECIAL CUT DITCH
SEE DETAIL C

150 FT
RT TURN TAPER

61' TYP.

FUTURE GUIDERAIL

FUTURE CONSTRUCTION

FUTURE GUARDRAIL

FUTURE REMOVE EX.G/R LT & RT

FUTURE GRAU 350

TYPE B-83

FS-II
SEE DETAIL

REMOVE

EXTEND W/CONC. COLLAR

FUTURE GUIDERAIL

FUTURE CONSTRUCTION

FUTURE REMOVE EXISTING GUARDRAIL

LT TURN TRANSITION

SPECIAL LATERAL V DITCH
SEE DETAIL G

FUTURE 47" WW FENCE

-Y1- N 78°09'07.2" E

PROP R/W & 47" WW FENCE

CL B RIPRAP
EST 2 TONS
EST 7 SY FF

-Y1- TS Sta. 20+33.94

OBLITERATE

5' x 5' PSH
SEE DETAIL M
+00.00 -Y1-
116.65' RT

VAR. DISTANCE TAPER TO EXISTING.
MATCH EXISTING AT BRIDGE
(MILL AND TIE AT EXIST. ELEV.)

+50.00 -Y1-
75.00' RT

NOTE: NO CONSTRUCTION ACTIVITIES ARE PERMITTED WITHIN THE FALLING CREEK BUFFER ZONE (SHOWN AS "BZ2")

BEGIN WW FENCE
BEGIN C/A RT

-Y1- POT Sta. 10+00.00

4
BAPTIST CHILDREN'S HOME OF NORTH CAROLINA INC.
DB 800 - PG 258
PC 2, SLIDE 21, PG 41

7
EDWARD A. O'NEAL, et ux
DB 802 - PG 21
PC 2, SLIDE 21, PG 41

9
DSL ASSOCIATES LLC
DB 1103 - PG 664
PC 2, SLIDE 21, PG 41

BAPTIST CHILDREN'S HOME OF NORTH CAROLINA INC.
DB 800 - PG 258
PC 2, SLIDE 21, PG 41

JAMES L. DAUGHETY III
DB 1017 - PG 130
PC 2, SLIDE 21, PG 41

-BY-210 POT
68.10' S 77°52'31.5" W OF
-Y1- POT 10+00.00

MATCH LINE -Y1- STA.24+00 - SEE SHEET 24

REVISIONS

8/17/99

3/13/2009
r:\roadway\grading_proj\r-2719a_rdy_psh_23.GRD.dgn
Project Tarheel

PROJECT REFERENCE NO.	SHEET NO.
R-2719A	24
R/W SHEET NO.	
24	

ROADWAY DESIGN ENGINEER: NORTH CAROLINA PROFESSIONAL SEAL 025513 ENGINEER MICHAEL D. LINDGREN 3-13-09

HYDRAULICS ENGINEER: NORTH CAROLINA PROFESSIONAL SEAL 021162 ENGINEER W. HERBERT TURNER, JR. 3-13-09

Prepared by URS
URS Corporation - North Carolina
1600 Perimeter Park Drive
Morrisville, North Carolina 27560
TELEPHONE (919) 461-1100 FAX (919) 461-1415

GRAPHIC SCALE
50 25 0 50 100
PLANS

NOTE: FOR -Y1- PROFILE, SEE SHEET 46
SEE SHEET 2-L FOR DRAINAGE DITCH DETAILS

N
NC GRID NAD 83

-Y1-

PIs Sta 23+18.69
Θs = 4° 16' 10.9"
Ls = 427.00'
LT = 284.75'
ST = 142.41'

PI Sta 28+66.38
Δ = 16° 06' 33.3" (LT)
D = 1° 59' 59.5"
L = 805.52'
T = 405.44'
R = 2,865.00'
e = 7%

PIs Sta 34+08.87
Θs = 4° 16' 10.9"
Ls = 427.00'
LT = 284.75'
ST = 142.41'

FUTURE PAVING

BEGIN GRADING
5" ABOVE SUBGRADE
-Y1-STA 30+00

BEGIN CONSTRUCTION
-Y1-STA 29+60
(PROP. SLOPE LIMITS)

FUTURE CONSTRUCTION

MATCH LINE -Y1- STA.34+00 - SEE SHEET 25

MATCH LINE - SEE SHEET 25

MATCH LINE -Y1- STA.24+00 - SEE SHEET 23

MATCH LINE -EY- STA.37+50 - SEE SHEET 30

+66.46
150.00' LT

+60.94
150.00' LT

+66.46
150.00' RT

-Y1- CS Sta. 32+66.46

-BYI- 62 PINC
-Y1- 31+49.02 (3.48' RT)

-BY-33 PINC & -BYI- PINC
-Y1- 30+87.71 (289.64' RT)

-Y1- SCSta. 24+60.94

+60.94 -Y1-
130.00' RT

BEGIN FENCE
+79.58 -Y1-
130.00' RT
EX.R/W

+21.24 -Y1-
150.00' RT
EX.R/W

Y1 POC STA.26+79.06
(OFFSET 172.49' RT)

+42.58(-Y-1)
395.52'

+99.64
821.41'

EXISTING R/W MON
-EL- STA 30+60.84
99.34' RT

SPECIAL CUT DITCH
SEE DETAIL C

CL B RIPRAP
EST 2 TONS
EST 7 SY FF

CL I RIPRAP,
ON BANKS ONLY
EST 40 TONS
EST 75 SY FF
SEE DETAIL J

PROPOSED SLOPE LIMITS

FUTURE SLOPE LIMITS

FUTURE GUIDERAIL

FUTURE GUARDRAIL

FUTURE CAT-I

FUTURE GRAU-350

300' TAPER

150 FT
RT TURN
TAPER

FUTURE GRAU-350 ON

FUTURE REMOVE

FUTURE
REMOVE 50' OF EX. PIPE
AND PLUG END

FUTURE
REMOVE PAVEMENT

FUTURE R.O.W.
& 47" WW FENCE

PROPOSED R.O.W.
& 47" WW FENCE

FUTURE CUL DE SAC

FUTURE 15"

FUTURE
REMOVE AND CONSTRUCT
'V' DITCH SECTION
SEE DETAIL D

FUTURE
REMOVE PAVEMENT

RETAIN

US 70 EBL 24' BST

8
FALLING CREEK FARMS INC.
DB 924 - PG 406
FIRST TRACT

9
DSL ASSOCIATES LLC
DB 1103 - PG 664
PC 2, SLIDE 21, PG 41

NORMAN MERCER, et ux
DB 815 - PG 42
PC 2, SLIDE 21, PG 41

WINSTON D. SUTTON
DB 1162 - PG 906
PC 2, SLIDE 21, PG 41

LEROY TAYLOR SR., et ux
DB 956 - PG 581
PC 2, SLIDE 21, PG 41

REVISIONS

8/17/99

3/13/2009
r:\roadway\grading_proj\r2719a_rdy_psh_24.GRD.dgn
mlinden | tmpfrsn

PROJECT REFERENCE NO.	SHEET NO.
R-2719A	25
R/W SHEET NO.	
25	

ROADWAY DESIGN ENGINEER: NORTH CAROLINA PROFESSIONAL SEAL 025513 ENGINEER MICHAEL D. LINDGREN 3-11-09

HYDRAULICS ENGINEER: NORTH CAROLINA PROFESSIONAL SEAL 021162 ENGINEER W. HERBERT TURNER, JR. 3-12-09

Prepared by URS
URS Corporation – North Carolina
1600 Perimeter Park Drive
Morrisville, North Carolina 27560
TELEPHONE (919) 461-1100 FAX (919) 461-1415

GRAPHIC SCALE
50 25 0 50 100
PLANS

NOTE: FOR -Y1- PROFILE, SEE SHEETS 46 & 47
FOR -Y1RPCA- PROFILE, SEE SHEET 56

SEE SHEET 2-L FOR DRAINAGE DITCH DETAILS
SEE SHEET 2-M FOR CULVERT CHANNEL DETAILS

FOR RCBC DETAILS, SEE CULVERT PLANS C-1 THRU C-

-Y1- CURVE DATA

PIs Sta 34+08.87	PIs Sta 41+58.72	PI Sta 66+70.52
Θs = 4° 16' 10.9"	Θs = 2° 33' 26.3"	Δ = 64° 14' 25.4" (RT)
Ls = 427.00'	Ls = 341.00'	D = 1° 29' 59.6"
LT = 284.75'	LT = 227.36'	L = 4,283.01'
ST = 142.41'	ST = 113.69'	T = 2,398.16'
		R = 3,820.00'
		e = 5.5%

-Y1RPCA- CURVE DATA

PI Sta 56+51.41	PIs Sta 64+82.65	PI Sta 66+39.81	PIs Sta 67+40.58
Δ = 47° 35' 39.3" (LT)	Θs = 1° 00' 08.6"	Δ = 0° 39' 04.5" (LT)	Θs = 0° 57' 17.7"
D = 2° 59' 59.2"	Ls = 210.00'	D = 0° 57' 17.7"	Ls = 200.00'
L = 1,586.59'	ST = 86.94'	L = 68.20'	LT = 133.34'
T = 842.30'	LT = 123.14'	T = 34.10'	ST = 66.67'
R = 1,910.00'	Δ1 = 0° 57' 17.7"	R = 6,000.00'	
e = 6%	Δ2 = 2° 59' 59.2"	e = 2.5%	
	R1 = 6,000.00'		
	R2 = 1,910.00'		

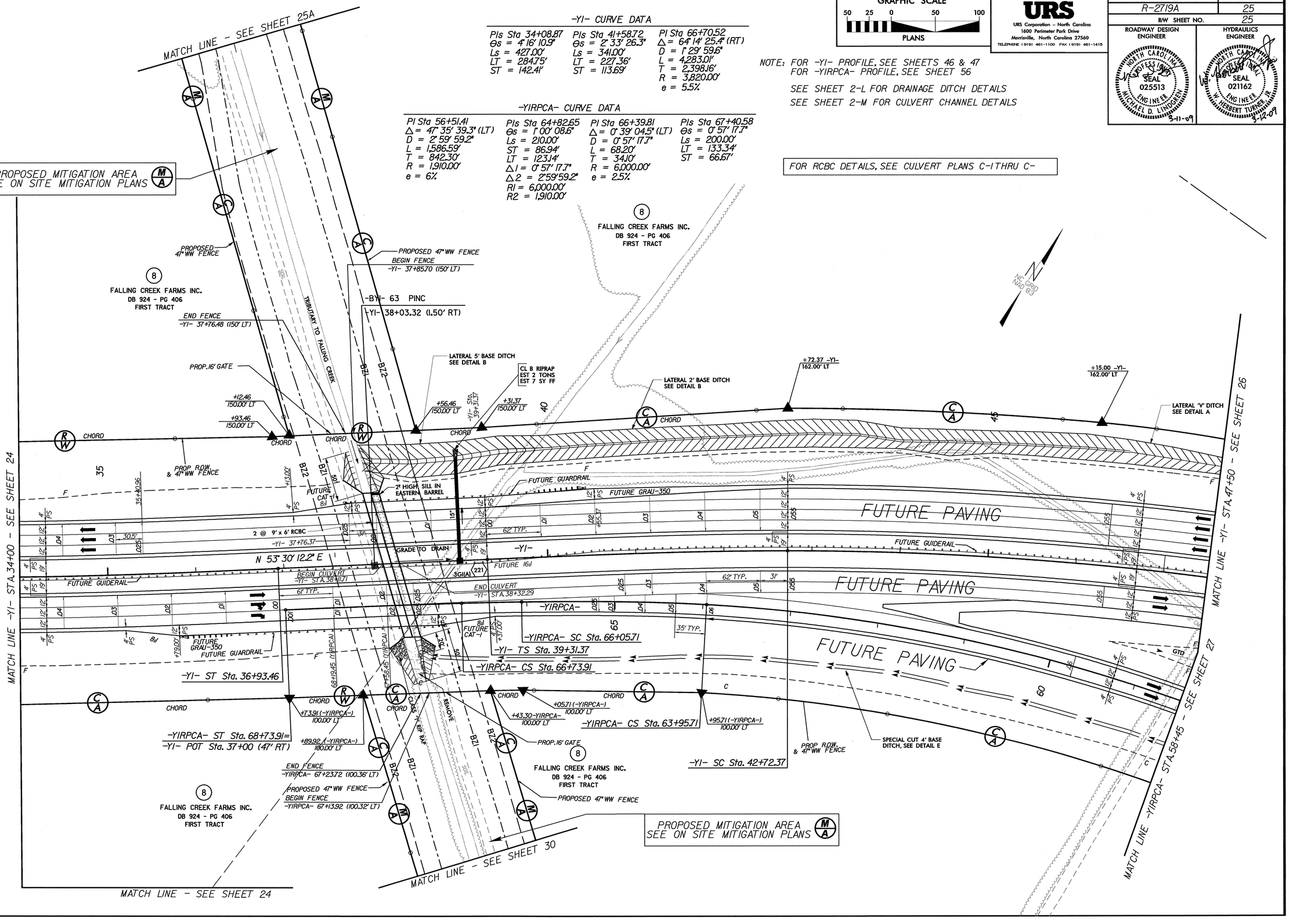

REVISIONS

8/17/99

2/20/2009
I:\roadway\grading-proj\R-2719a_rdy_psh_25_GRD.dgn

PROJECT REFERENCE NO.	SHEET NO.
R-2719A	25A
R/W SHEET NO.	25A

ROADWAY DESIGN ENGINEER

NORTH CAROLINA PROFESSIONAL SEAL 025513 ENGINEER MICHAEL D. LINDGREN

5-11-09

HYDRAULICS ENGINEER

NORTH CAROLINA PROFESSIONAL SEAL 021162 ENGINEER W. HERBERT TURNER, JR.

3-12-09

Prepared by

URS

URS Corporation – North Carolina
1600 Perimeter Park Drive
Morrisville, North Carolina 27560
TELEPHONE (919) 461-1100 FAX (919) 461-1415

GRAPHIC SCALE

50 25 0 50 100

PLANS

MITIGATION AREA

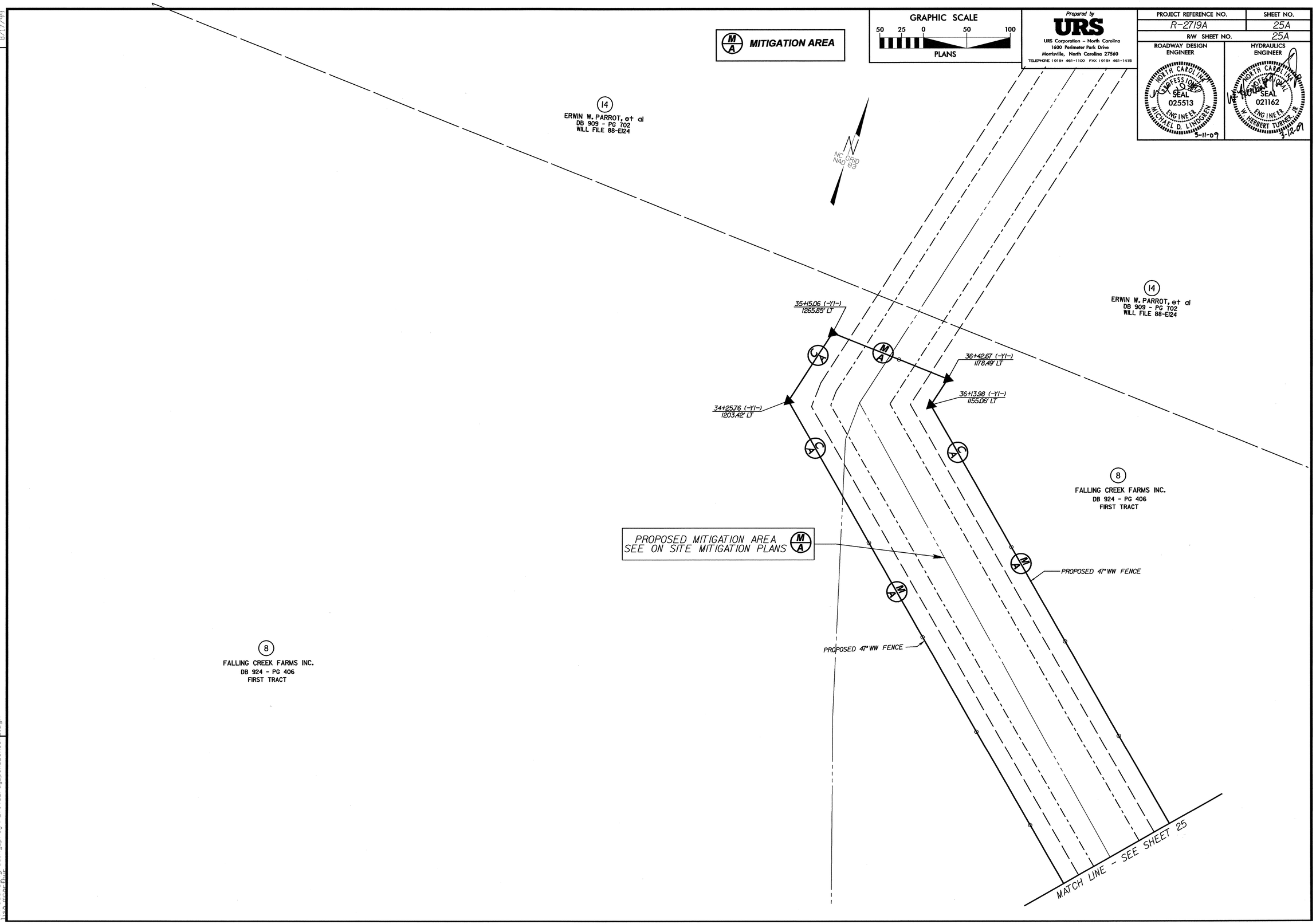

REVISIONS

8/17/99

2/20/2009
F:\roadway\grading_proj\r2719a_rdy_psh_25A_GRD.dgn
lisa mraz-fmr

-YI- CURVE DATA	-YIRPB- CURVE DATA		-YIRPCA- CURVE DATA	
PI Sta 66+70.52	PI Sta 18+81.89	PIs Sta 28+22.09	PIs Sta 47+39.14	PI Sta 56+51.41
Δ = 64° 14' 25.4" (RT)	Δ = 46° 11' 53.3" (RT)	θs = 2° 29' 28.0"	θs = 3° 08' 59.2"	Δ = 47° 35' 39.3" (LT)
D = 1° 29' 59.6"	D = 2° 29' 28.0"	Ls = 200.00'	Ls = 210.00'	D = 2° 59' 59.2"
L = 4,283.01'	L = 1,854.51'	LT = 133.35'	LT = 140.02'	L = 1,586.59'
T = 2,398.16'	T = 980.99'	ST = 66.68'	ST = 70.02'	T = 842.30'
R = 3,820.00'	R = 2,300.00'	PIs Sta 34+88.75		R = 1,910.00'
e = 5.5%	e = 5%	θs = 1° 28' 37.5"		e = 6%
		Ls = 200.00'		
		LT = 133.34'		
		ST = 66.67'		

NOTE: FOR -YI- PROFILE, SEE SHEET 47
FOR -YIRPCA-PROFILE, SEE SHEETS 55
FOR -YIRPB- PROFILE, SEE SHEET 52 & 53
SEE SHEET 2-L FOR DRAINAGE DITCH DETAILS

GRAPHIC SCALE
50 25 0 50 100
PLANS

Prepared by
URS
URS Corporation - North Carolina
1600 Perimeter Park Drive
Morrisville, North Carolina 27560
TELEPHONE (919) 461-1100 FAX (919) 461-1415

PROJECT REFERENCE NO.	SHEET NO.
R-2719A	26
R/W SHEET NO.	
26	

ROADWAY DESIGN ENGINEER
NORTH CAROLINA PROFESSIONAL SEAL 025513 ENGINEER MICHAEL D. LINDGREN
3-11-09

HYDRAULICS ENGINEER
NORTH CAROLINA PROFESSIONAL SEAL 021162 ENGINEER W. HERBERT TURNER, JR.
3-12-09

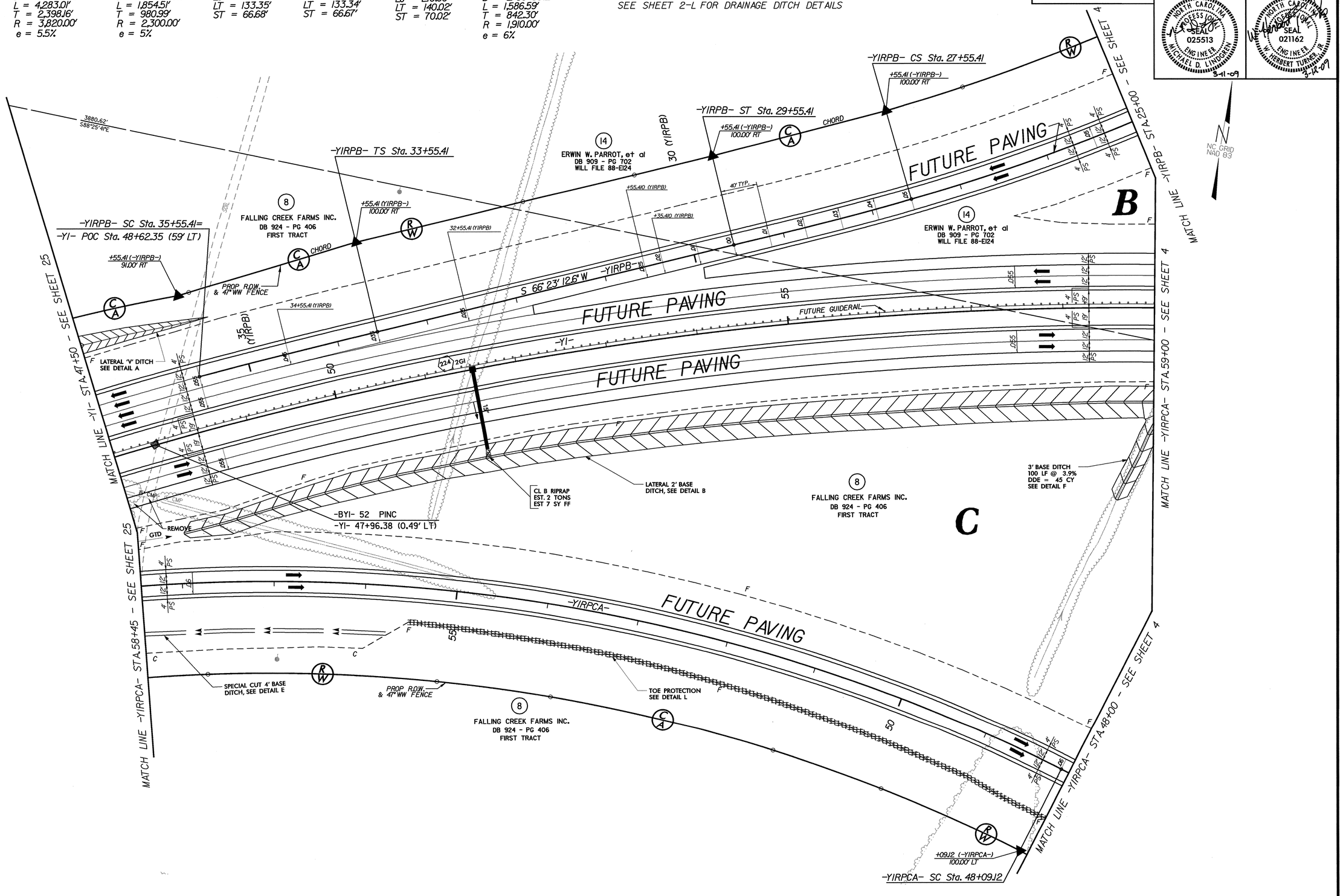

REVISIONS

8/17/99

2/20/2009
f:\roadway\grading-proj\r2719a_rdy_psh_26_GRD.dgn

PROJECT REFERENCE NO.	SHEET NO.
R-2719A	27
R/W SHEET NO.	
27	

ROADWAY DESIGN ENGINEER: NORTH CAROLINA PROFESSIONAL SEAL 025513 ENGINEER MICHAEL D. LINDGREN 3-13-09

HYDRAULICS ENGINEER: NORTH CAROLINA PROFESSIONAL SEAL 021162 ENGINEER W. HERBERT TURNER, JR. 3-13-09

Prepared by URS
URS Corporation - North Carolina
1600 Perimeter Park Drive
Morrisville, North Carolina 27560
TELEPHONE (919) 461-1100 FAX (919) 461-1415

GRAPHIC SCALE 50 25 0 50 100 PLANS

NOTE: FOR -Y1- PROFILE, SEE SHEETS 48 & 49
FOR -Y8- PROFILE, SEE SHEET 58
FOR -Y9- PROFILE, SEE SHEET 59
SEE SHEET 2-L FOR DRAINAGE DITCH DETAILS

-Y1- CURVE DATA
PIs Sta 86+39.72
Θs = 1° 53' 50.5"
Ls = 253.00'
LT = 168.68'
ST = 84.34'

PIs Sta 101+25.48
Θs = 2° 20' 38.1"
Ls = 270.00'
LT = 180.02'
ST = 90.01'

-Y1RT- CURVE DATA
PIs Sta 101+41.56
Θs = 2° 19' 39.7"
Ls = 270.00'
LT = 180.02'
ST = 90.01'

-Y1LT- CURVE DATA
PIs Sta 101+09.40
Θs = 2° 21' 37.3"
Ls = 270.00'
LT = 180.02'
ST = 90.01'

US 70 (Y1)/Y8 TRAFFIC DIAGRAM

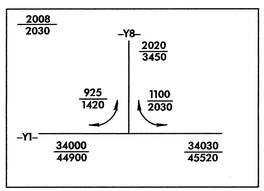

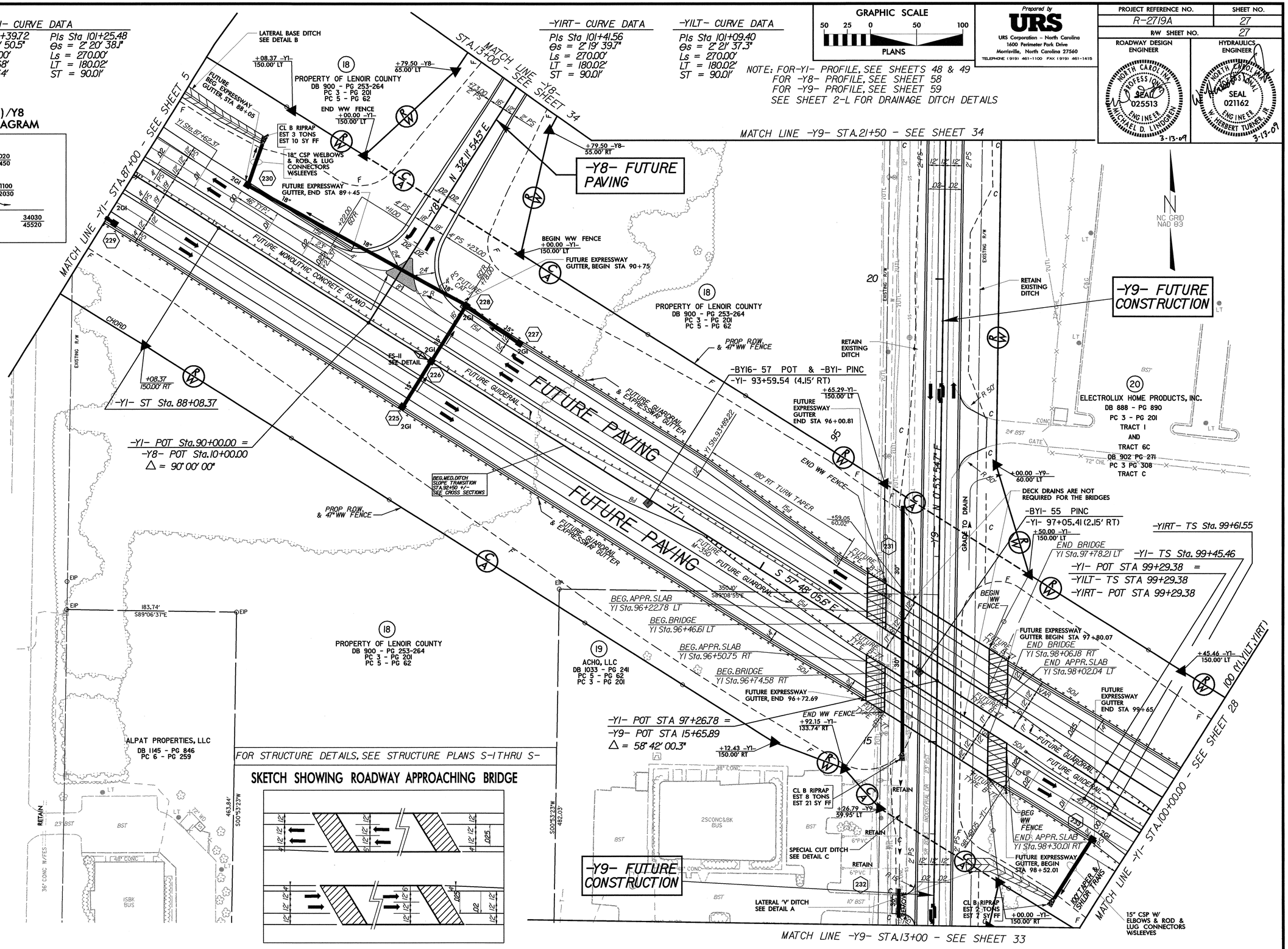

FOR STRUCTURE DETAILS, SEE STRUCTURE PLANS S-1 THRU S-

SKETCH SHOWING ROADWAY APPROACHING BRIDGE

REVISIONS

8/17/99

3/13/2009
r:\roadway\grading_proj\r-2719a_rdy_psh_27.dgn
michael lindgren

PROJECT REFERENCE NO.	SHEET NO.
R-2719A	28
R/W SHEET NO.	28

ROADWAY DESIGN ENGINEER: NORTH CAROLINA PROFESSIONAL SEAL 025513 ENGINEER MICHAEL D. LINDGREN 3-13-09

HYDRAULICS ENGINEER: NORTH CAROLINA PROFESSIONAL SEAL 021162 ENGINEER HERBERT TURNER, JR. 3-13-09

Prepared by URS
URS Corporation - North Carolina
1600 Perimeter Park Drive
Morrisville, North Carolina 27560
TELEPHONE (919) 461-1100 FAX (919) 461-1415

GRAPHIC SCALE
50 25 0 50 100
PLANS

NOTE: FOR -Y1- PROFILE, SEE SHEET 49
FOR -Y15- PROFILE, SEE SHEET 61
SEE SHEET 2-L FOR DRAINAGE DITCH DETAILS
SEE SHEET 2-K FOR INTERSECTION DETAILS

NC GRID NAD 83

US 70 (Y1)/ELECTROLUX DRIVEWAY TRAFFIC DIAGRAM

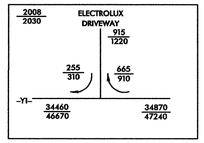

-Y1- CURVE DATA

PIs Sta 101+25.48	PI Sta 109+51.23
Θs = 2° 20' 38.1"	Δ = 25° 08' 18.0" (LT)
Ls = 270.00'	D = 1° 44' 10.4"
LT = 180.02'	L = 1,447.86'
ST = 90.01'	T = 735.77'
	R = 3,300.00'
	e = 6%

-YILT- CURVE DATA

PIs Sta 101+09.40	PI Sta 109+29.04
Θs = 2° 21' 37.3"	Δ = 25° 06' 19.5" (LT)
Ls = 270.00'	D = 1° 44' 54.3"
LT = 180.02'	L = 1,435.89'
ST = 90.01'	T = 729.66'
	R = 3,277.00'
	e = SEE -Y1-

-YIRT- CURVE DATA

PIs Sta 101+41.56	PI Sta 109+73.44
Θs = 2° 19' 39.7"	Δ = 25° 10' 14.8" (LT)
Ls = 270.00'	D = 1° 43' 27.2"
LT = 180.02'	L = 1,459.84'
ST = 90.01'	T = 741.89'
	R = 3,323.00'
	e = SEE -Y1-

END GRADING
-Y1-STA 105+25

END CONSTRUCTION
-Y1-STA 106+00

-Y1- POC STA 106+00.00=
-Y15- POT STA 31+75.53
Δ = 89° 59' 59.6"

-BYI- 61 PINC
-Y1- 105+39.85 (29.94' RT)

-YILT- SC Sta. 101+99.38

-Y1- SC Sta. 102+15.46

-YIRT-SC Sta. 102+31.55

-YIRT- POC STA 106+03.82=
-Y15- POT STA 31+50.03
Δ = 89° 43' 33.5"

-Y15- PT Sta. 30+79.01

-Y15- PC Sta. 28+18.51

-Y15- CURVE DATA
PI Sta 29+70.94
Δ = 74° 37' 40.8" (LT)
D = 28° 38' 52.4"
L = 260.50'
T = 152.44'
R = 200.00'
e = 6%
R.O. = SEE PLANS

-Y15- FUTURE CONSTRUCTION

US 70 (Y1)/OLD US 70 (Y15) TRAFFIC DIAGRAM

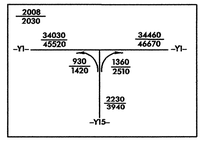

FUTURE SLOPE LIMITS

FUTURE CONSTRUCTION

FUTURE PAVING

PROPOSED 6TD TO EXIST. DITCH

350' LANE DROP

MATCH LINE -Y1- STA.100+00.00 - SEE SHEET 27

MATCH LINE -Y15- STA.24+30 - SEE SHEET 33

MATCH LINE -Y1- STA.114+00 - SEE SHEET 29

ELECTROLUX HOME PRODUCTS, INC.
DB 888 - PG 890
PC 3 - PG 201
TRACT 1
AND
TRACT 6C
DB 902 PG 271
PC 3 PG 308
TRACT C

ELECTROLUX HOME PRODUCTS, INC.
SEE DEED INFO ABOVE

WALTER POOLE REALTY, INC.
DB 860 - PG 107
PC 9 - PG 375

REBECCA V. L. HODGES
C/O C. GRAY JOHNSEY
DB 933 - PG 149

TCC VANDERBUILT LLC
DB 1135 - PG 794
PC 6 - PG 230

THE HERRING FAMILY, LLC
DB 1202 - PG 592
MB 3 - PG 68

-BY-37 PINC & -BYI- POT
-Y1- 110+33.00 (73.10' RT)

TAIL 2' BASE DITCH
L = 350', S = 0.3%
DDE = 430 CY
SEE DETAIL F

NOTE: ALL DESIGN SHOWN EAST OF -Y1-
STA 106+00 IS FUTURE CONSTRUCTION

REVISIONS

8/17/99

3/13/2009
r:\roadway\grading_proj\r-2719a_rdy_psh_28.dgn
michael.lindgren

PROJECT REFERENCE NO.	SHEET NO.
R-2719A	29
R/W SHEET NO.	29

ROADWAY DESIGN ENGINEER: NORTH CAROLINA PROFESSIONAL SEAL 025513 ENGINEER MICHAEL D. LINDGREN 3-13-09

HYDRAULICS ENGINEER: NORTH CAROLINA PROFESSIONAL SEAL 021162 ENGINEER W. HERBERT TURNER, JR. 3-13-09

Prepared by URS
URS Corporation – North Carolina
1600 Perimeter Park Drive
Morrisville, North Carolina 27560
TELEPHONE (919) 461-1100 FAX (919) 461-1415

GRAPHIC SCALE
50 25 0 50 100
PLANS

REVISIONS

8/17/99

-Y1- CURVE DATA

PI Sta 109+51.23
Δ = 25° 08' 18.0" (LT)
D = 1° 44' 10.4"
L = 1,447.86'
T = 735.77'
R = 3,300.00'
e = 6%

Pls Sta 117+53.34
Θs = 2° 20' 38.1"
Ls = 270.00'
LT = 180.02'
ST = 90.01'

-Y1LT- CURVE DATA

PI Sta 109+29.04
Δ = 25° 06' 19.5" (LT)
D = 1° 44' 54.3"
L = 1,435.89'
T = 729.66'
R = 3,277.00'
e = SEE -Y1-

Pls Sta 117+25.28
Θs = 2° 21' 37.3"
Ls = 270.00'
LT = 180.02'
ST = 90.01'

-Y1RT- CURVE DATA

PI Sta 109+73.44
Δ = 25° 10' 14.8" (LT)
D = 1° 43' 27.2"
L = 1,459.84'
T = 741.89'
R = 3,323.00'
e = SEE -Y1-

Pls Sta 117+81.40
Θs = 2° 19' 39.7"
Ls = 270.00'
LT = 180.02'
ST = 90.01'

NOTE: FOR -Y1- PROFILE, SEE SHEET 50
SEE SHEET 2-L FOR DRAINAGE DITCH DETAILS

N
NC GRID NAD 83

THIS SHEET PROVIDED FOR INFORMATION ONLY – FUTURE CONSTRUCTION

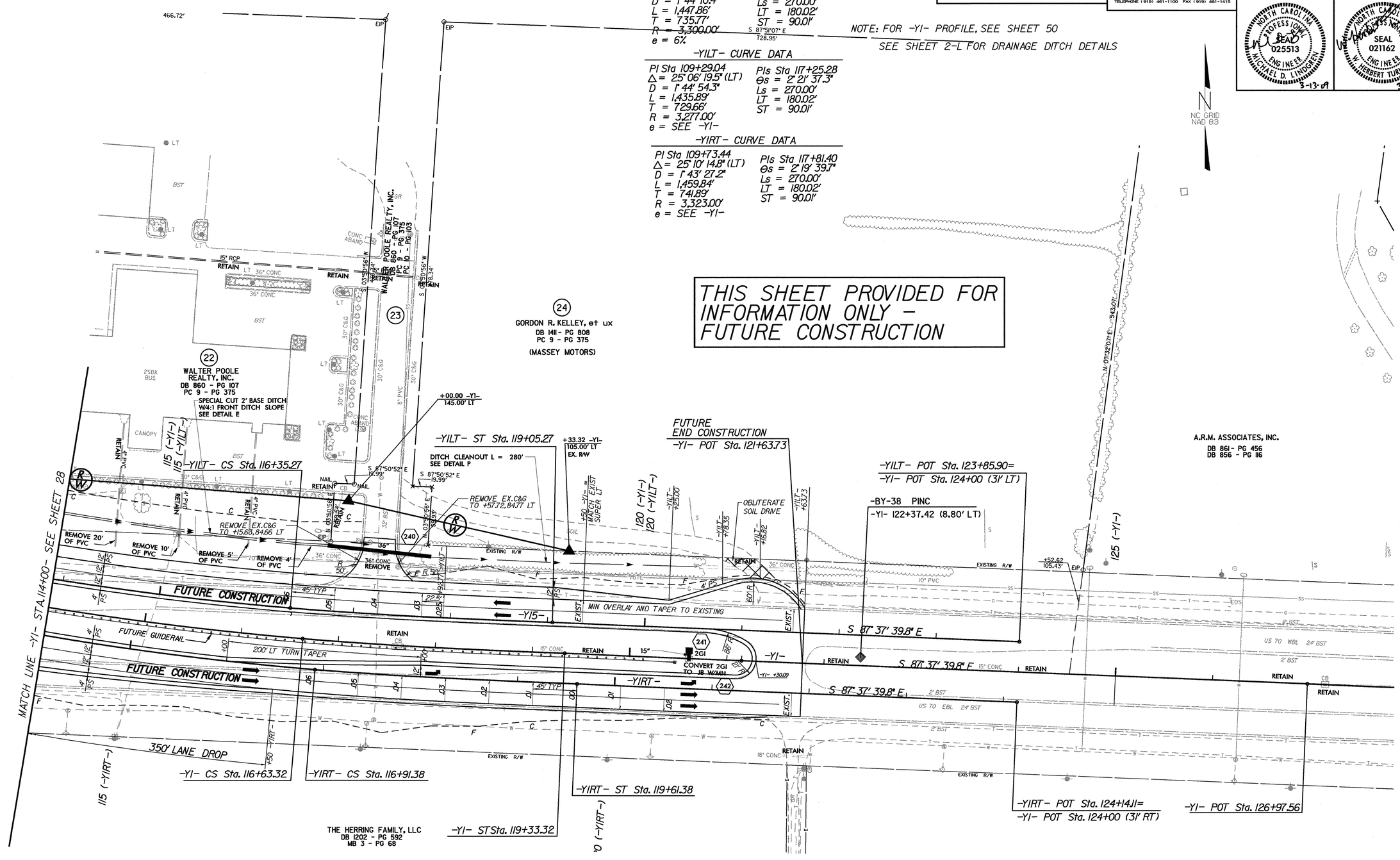

3/13/2009
F:\roadway\grading_proj\r-2719a_rdy_psh_29_GRD.dgn
michael.lindgren

PROJECT REFERENCE NO.	SHEET NO.
R-2719A	30
R/W SHEET NO.	30

ROADWAY DESIGN ENGINEER

NORTH CAROLINA PROFESSIONAL SEAL 025513 ENGINEER MICHAEL D. LINDGREN 3-11-09

HYDRAULICS ENGINEER

NORTH CAROLINA PROFESSIONAL SEAL 021162 ENGINEER W. HERBERT TURNER, JR. 3-12-09

Prepared by
URS
URS Corporation – North Carolina
1600 Perimeter Park Drive
Morrisville, North Carolina 27560
TELEPHONE (919) 461-1100 FAX (919) 461-1415

GRAPHIC SCALE
50 25 0 50 100
PLANS

N
NC GRID NAD 83

ONLY CONSTRUCTION THIS SHEET – WW FENCE

EXISTING US70 – FUTURE CONSTRUCTION

MATCH LINE – SEE SHEET 25

PROPOSED MITIGATION AREA SEE ON SITE MITIGATION PLANS (MA)

(8) FALLING CREEK FARMS INC.
DB 924 – PG 406
FIRST TRACT

(8) FALLING CREEK FARMS INC.
DB 924 – PG 406
FIRST TRACT

PROPOSED 47" WW FENCE

PROPOSED 47" WW FENCE

41+35.76 (-Y1-)
908.58' RT

42+07.39 (-Y1-)
955.29' RT

41+66.04 (-Y1-)
1000.49' RT
END WW FENCE

39+64.24 (-Y1-)
858.71' RT
END WW FENCE

BZ2
BZ1
BZ1
BZ2

EXISTING R/W

FUTURE REMOVE PAVEMENT

FUTURE REMOVE PAVEMENT

2' BST
2' BST US 70 WBL 24' BST
US 70 EBL 24' BST

RETAIN

3X24" CONC
CONC HW
48" CONC
15" CONC
54" CONC
12" CMP
WD HW
DI
SOIL
TIDES
ISBKD

-BY-34 PINC 38+50.21
-Y1- STA. 39+13.72
(939.27' RT)

FALLING CREEK FARMS INC.
DB 924 – PG 409
WILL FILE 88-E124

FALLING CREEK FARMS INC.
DB 924 – PG 409
WILL FILE 88-E124

MATCH LINE -EY- STA.33+30.00 SEE SHEET 24

MATCH LINE -EY- STA.51+50.00 – SEE SHEET 31

REVISIONS

8/17/99

2/20/2009
F:\roadway\grading_proj\r2719a_rdy_psh_30_GRD.dgn
ss mcgrath

8/17/99

REVISIONS

GRAPHIC SCALE
50 25 0 50 100
PLANS

Prepared by
URS
URS Corporation - North Carolina
1600 Perimeter Park Drive
Morrisville, North Carolina 27560
TELEPHONE (919) 461-1100 FAX (919) 461-1415

PROJECT REFERENCE NO.	SHEET NO.
R-2719A	31
R/W SHEET NO.	31

ROADWAY DESIGN ENGINEER
NORTH CAROLINA PROFESSIONAL SEAL 025513 ENGINEER MICHAEL D. LINDGREN
3-11-09

HYDRAULICS ENGINEER
NORTH CAROLINA PROFESSIONAL SEAL 021162 ENGINEER W. HERBERT TURNER, JR.
3-12-09

N
NC GRID
NAD 83

THIS SHEET PROVIDED FOR INFORMATION ONLY - FUTURE CONSTRUCTION

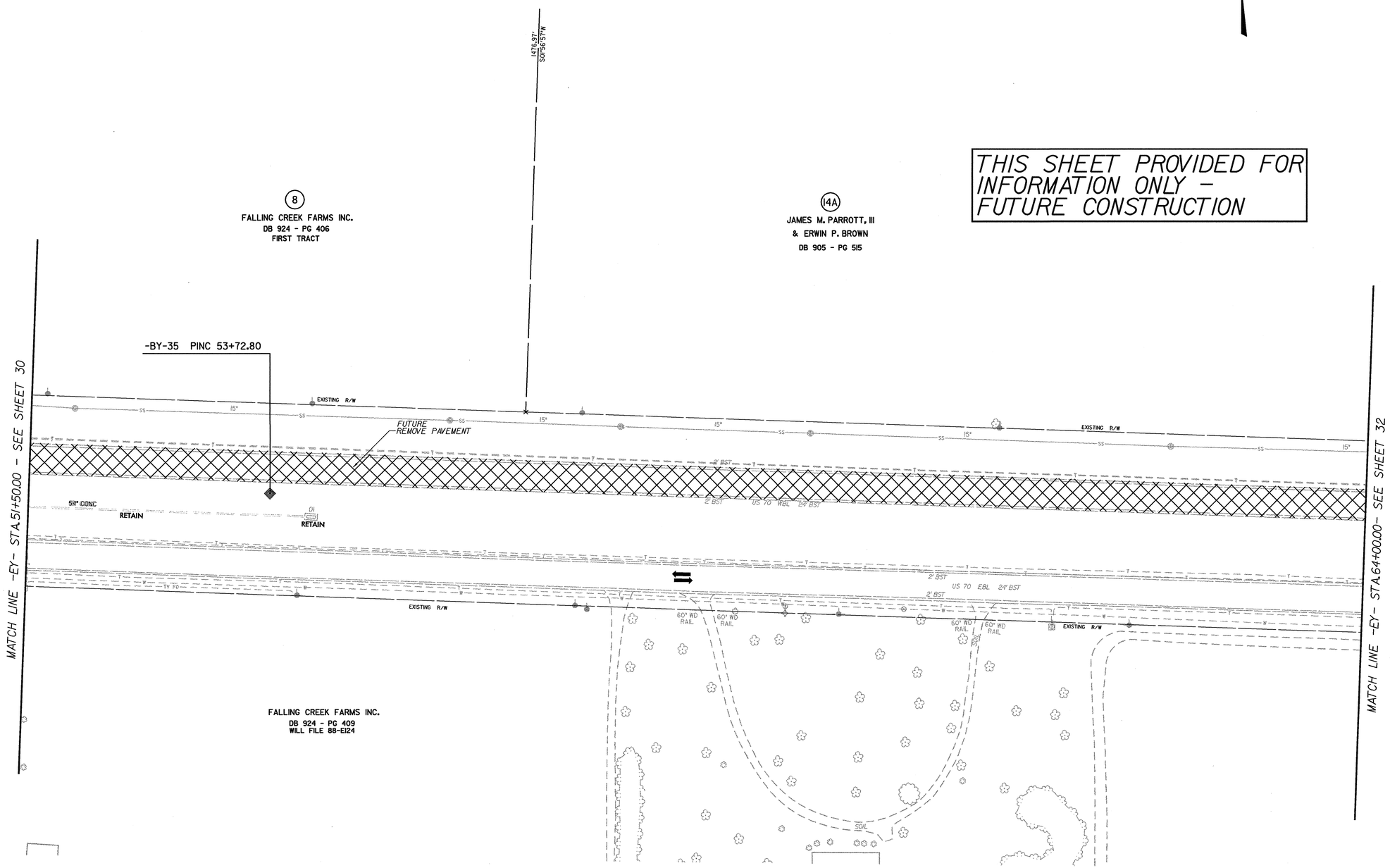

2/20/2009
r:\roadway\grading_proj\r-2719a_rdy_psh_31_GRD.dgn
ca mcastle

GRAPHIC SCALE
50 25 0 50 100
PLANS

Prepared by
URS
URS Corporation – North Carolina
1600 Perimeter Park Drive
Morrisville, North Carolina 27560
TELEPHONE (919) 461-1100 FAX (919) 461-1415

PROJECT REFERENCE NO.	SHEET NO.
R-2719A	32
R/W SHEET NO.	32
ROADWAY DESIGN ENGINEER	HYDRAULICS ENGINEER
NORTH CAROLINA PROFESSIONAL SEAL 025513 ENGINEER MICHAEL D. LINDGREN 3-11-09	NORTH CAROLINA PROFESSIONAL SEAL 021162 ENGINEER W. HERBERT TURNER, JR. 3-12-09

NOTE: FOR -Y15- PROFILE, SEE SHEET 61

N
NC GRID
NAD 83

THIS SHEET PROVIDED FOR INFORMATION ONLY – FUTURE CONSTRUCTION

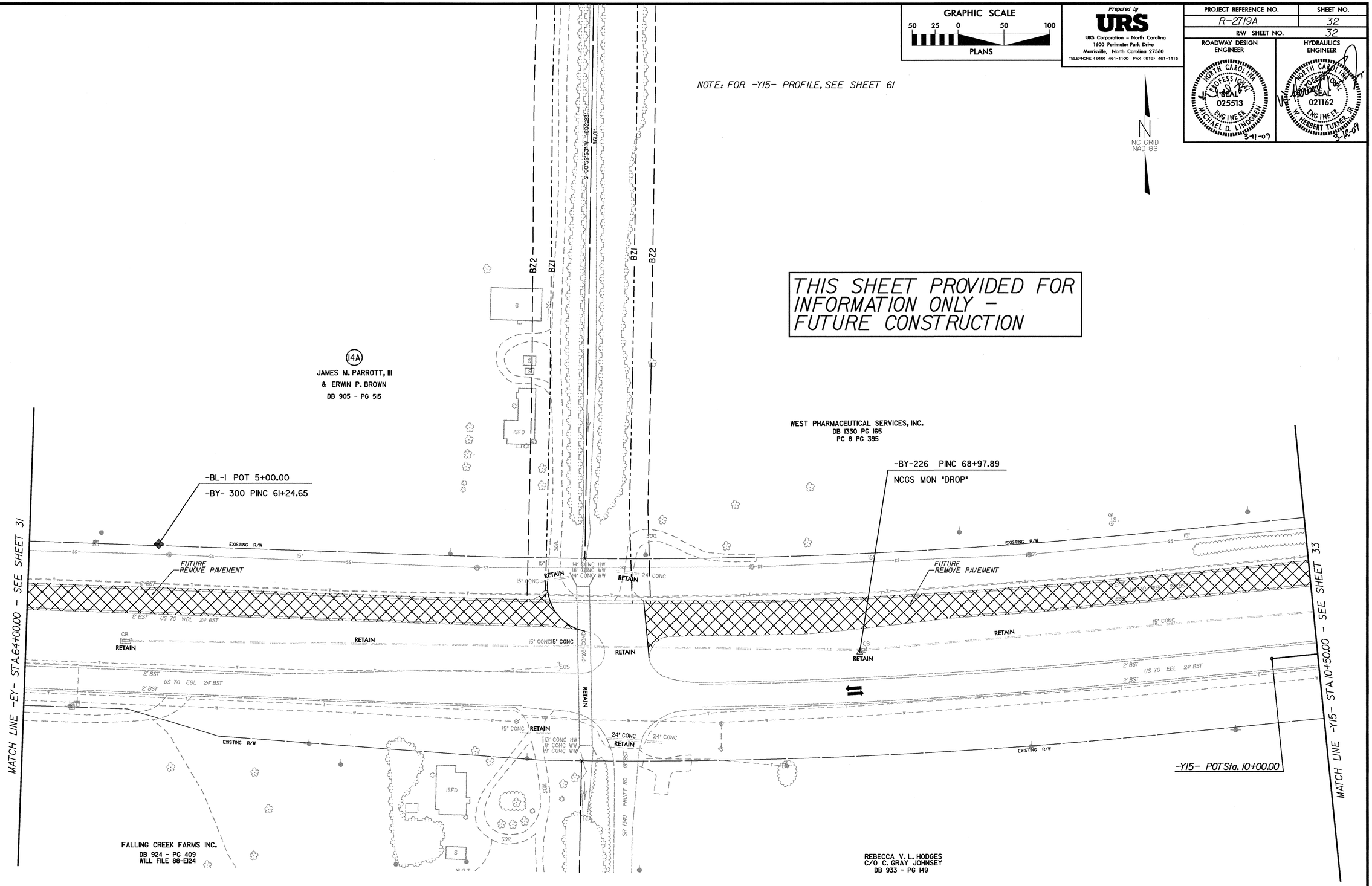

REVISIONS

8/17/99

2/20/2009
I:\roadway\grading-proj\R-2719a_rdy_psh_32_GRD.dgn

NOTE: FOR -Y15- PROFILE, SEE SHEET 61
FOR -Y9- PROFILE, SEE SHEET 59
SEE SHEET 2-L FOR DRAINAGE DITCH DETAILS

GRAPHIC SCALE
50 25 0 50 100
PLANS

Prepared by
URS
URS Corporation - North Carolina
1600 Perimeter Park Drive
Morrisville, North Carolina 27560
TELEPHONE (919) 461-1100 FAX (919) 461-1415

PROJECT REFERENCE NO.	SHEET NO.
R-2719A	33
R/W SHEET NO.	33
ROADWAY DESIGN ENGINEER	HYDRAULICS ENGINEER

NORTH CAROLINA PROFESSIONAL SEAL 025513 ENGINEER MICHAEL D. LINDGREN 3-11-09

NORTH CAROLINA PROFESSIONAL SEAL 021162 ENGINEER W. HERBERT TURNER, JR. 3-12-09

NC GRID NAD 83

-Y15- CURVE DATA
PI Sta 18+49.41
Δ = 13° 30' 03.6" (RT)
D = 1° 31' 01.1"
L = 890.00'
T = 447.07'
R = 3,777.00'
e = EXIST.

THIS SHEET PROVIDED FOR INFORMATION ONLY - FUTURE CONSTRUCTION

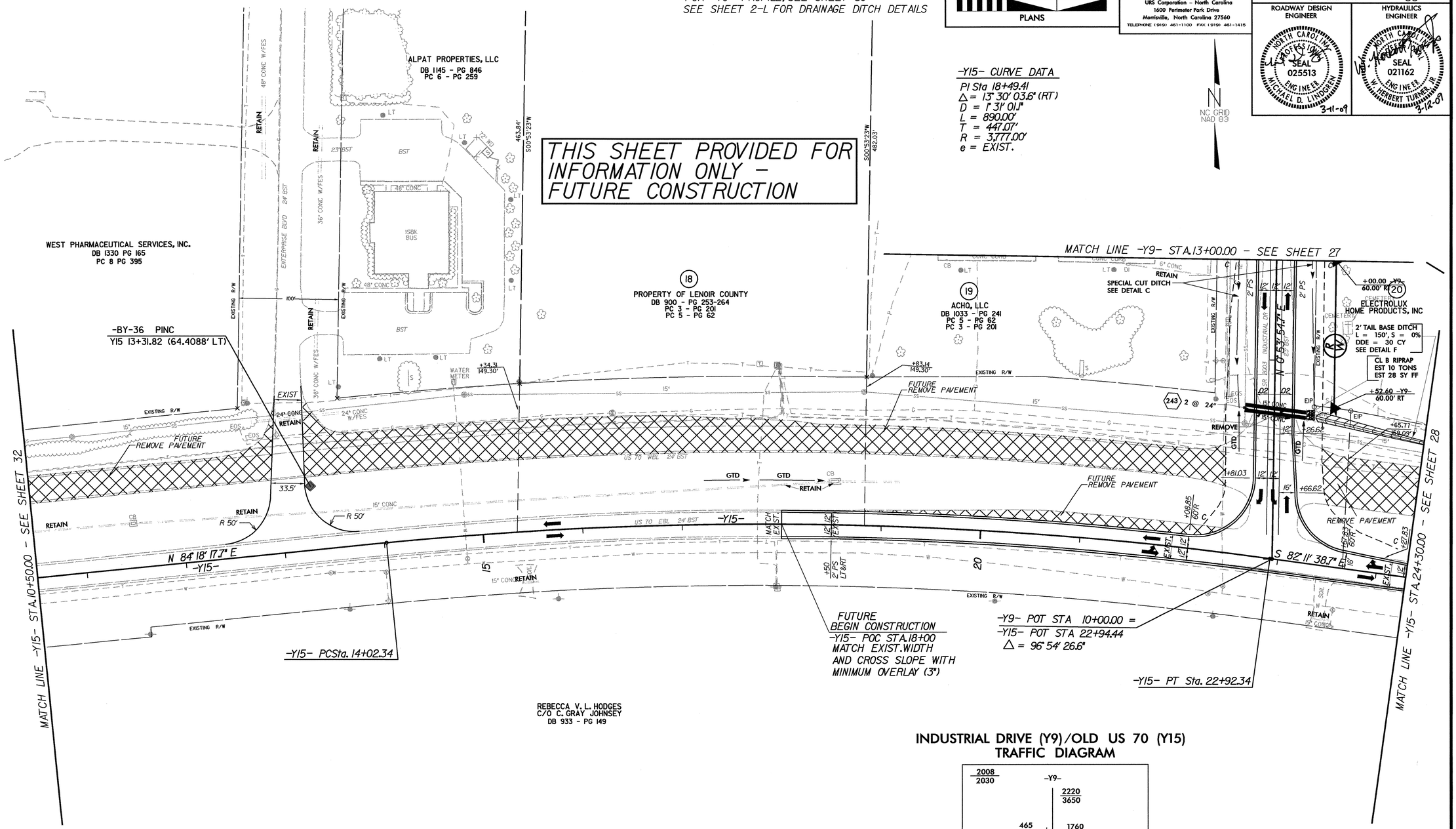

INDUSTRIAL DRIVE (Y9)/OLD US 70 (Y15) TRAFFIC DIAGRAM

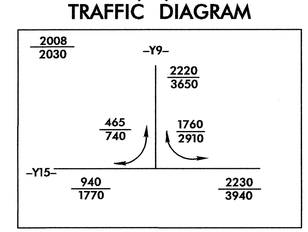

REVISIONS

8/17/99

2/20/2009
f:\roadway\grading_proj\r-2719a_rdy_psh_33_GRD1.dgn
ss_mcallmf

PROJECT REFERENCE NO.	SHEET NO.
R-2719A	34
R/W SHEET NO.	34
ROADWAY DESIGN ENGINEER	HYDRAULICS ENGINEER

NORTH CAROLINA PROFESSIONAL SEAL 025513 ENGINEER MICHAEL D. LINDGREN 3-11-09

NORTH CAROLINA PROFESSIONAL SEAL 021162 ENGINEER W. HERBERT TURNER, JR. 3-12-09

Prepared by **URS**
URS Corporation – North Carolina
1600 Perimeter Park Drive
Morrisville, North Carolina 27560
TELEPHONE (919) 461-1100 FAX (919) 461-1415

GRAPHIC SCALE
50 25 0 50 100
PLANS

-Y8- CURVE DATA

PI Sta 15+17.84
Δ = 33° 25' 17.8" (LT)
D = 19° 05' 54.9"
L = 174.99'
T = 90.07'
R = 300.00'
e = 4%

PI Sta 22+04.48
Δ = 99° 27' 03.4" (LT)
D = 24° 22' 52.3"
L = 407.90'
T = 277.35'
R = 235.00'
e = 4%

-Y9- CURVE DATA

PI Sta 26+52.81
Δ = 8° 02' 44.9" (RT)
D = 4° 58' 56.1"
L = 161.49'
T = 80.88'
R = 1,150.00'
e = NC

NOTE: FOR -Y8- PROFILE, SEE SHEET 58
FOR -Y9- PROFILE, SEE SHEET 59

SEE SHEET 2-L FOR DRAINAGE DITCH DETAILS

NC GRID NAD 83

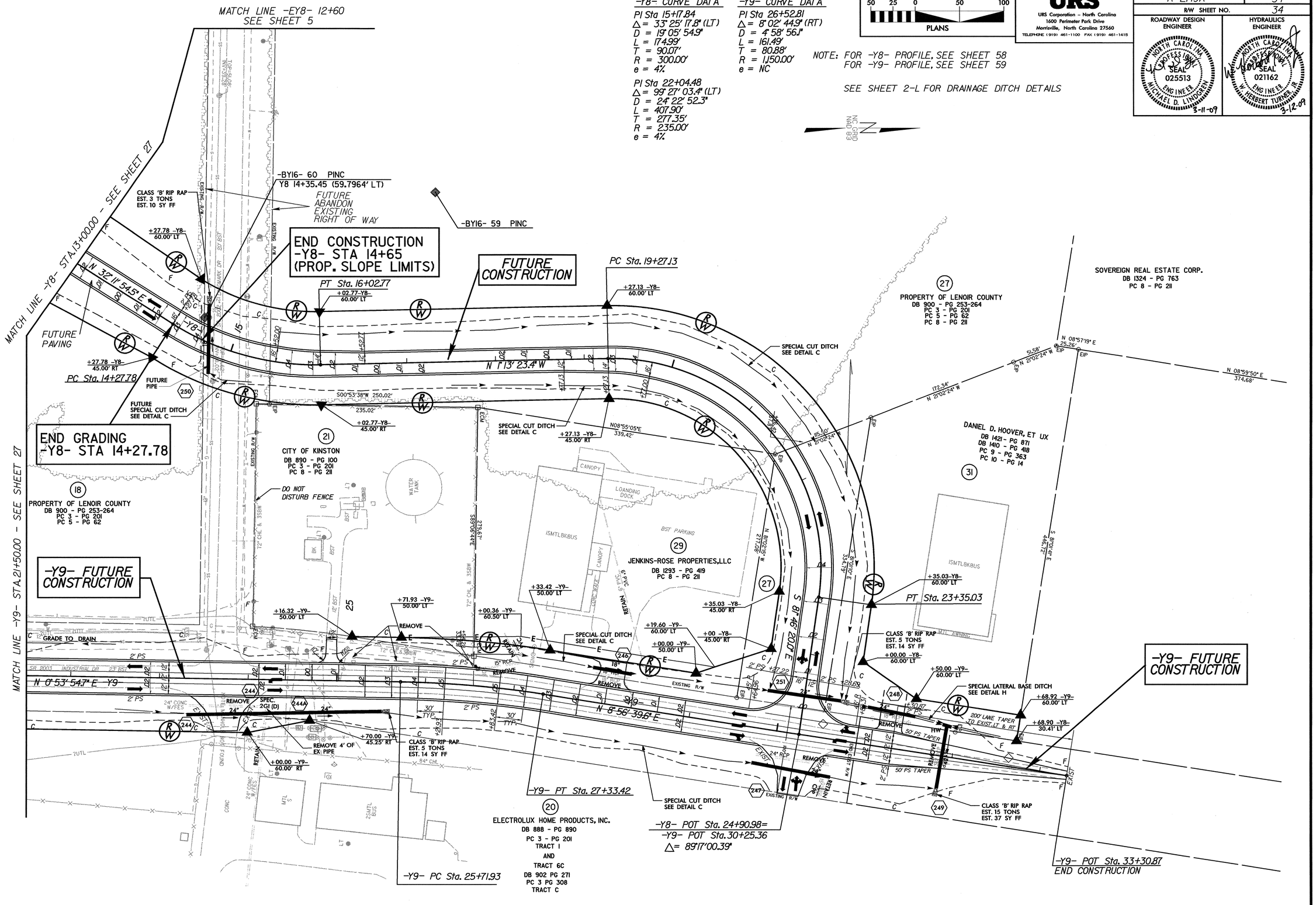

REVISIONS

8/17/99

2/20/2009
I:\roadway\grading_proj\r-2719a_rdy_psh_34_GRD.dgn

NOTE: FOR -SVRD5- PROFILE, SEE SHEET 72

GRAPHIC SCALE
50 25 0 50 100
PLANS

Prepared by
URS
URS Corporation - North Carolina
1600 Perimeter Park Drive
Morrisville, North Carolina 27560
TELEPHONE (919) 461-1100 FAX (919) 461-1415

PROJECT REFERENCE NO.	SHEET NO.
R-2719A	35
R/W SHEET NO.	35

ROADWAY DESIGN ENGINEER
NORTH CAROLINA PROFESSIONAL SEAL 025513 ENGINEER MICHAEL D. LINDGREN
3-11-09

HYDRAULICS ENGINEER
NORTH CAROLINA PROFESSIONAL SEAL 021162 ENGINEER W. HERBERT TURNER, JR.
3-12-09

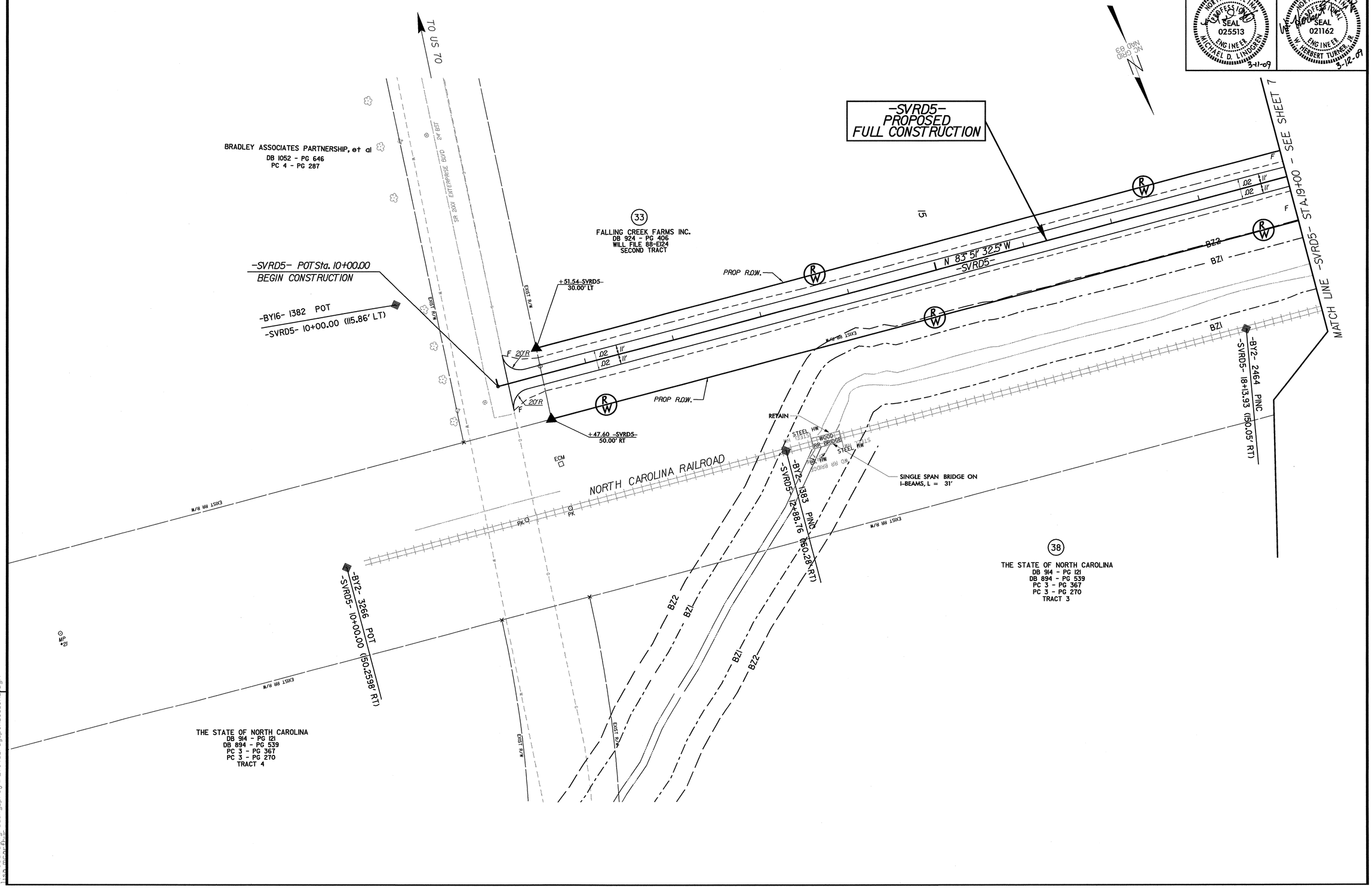

REVISIONS

8/17/99

2/20/2009
f:\roadway\grading_proj\r2719a_rdy_psh_35.GRD.dgn

PROJECT REFERENCE NO.	SHEET NO.
R-2719A	36
R/W SHEET NO.	36

ROADWAY DESIGN ENGINEER: NORTH CAROLINA PROFESSIONAL SEAL 025513 ENGINEER MICHAEL D. LINDGREN — 3-11-09

HYDRAULICS ENGINEER: NORTH CAROLINA PROFESSIONAL SEAL 021162 ENGINEER W. HERBERT TURNER, JR. — 3-12-09

Prepared by URS
URS Corporation – North Carolina
1600 Perimeter Park Drive
Morrisville, North Carolina 27560
TELEPHONE (919) 461-1100 FAX (919) 461-1415

GRAPHIC SCALE
50 25 0 50 100
PLANS

NOTE: FOR -Y24- PROFILE, SEE SHEET 66

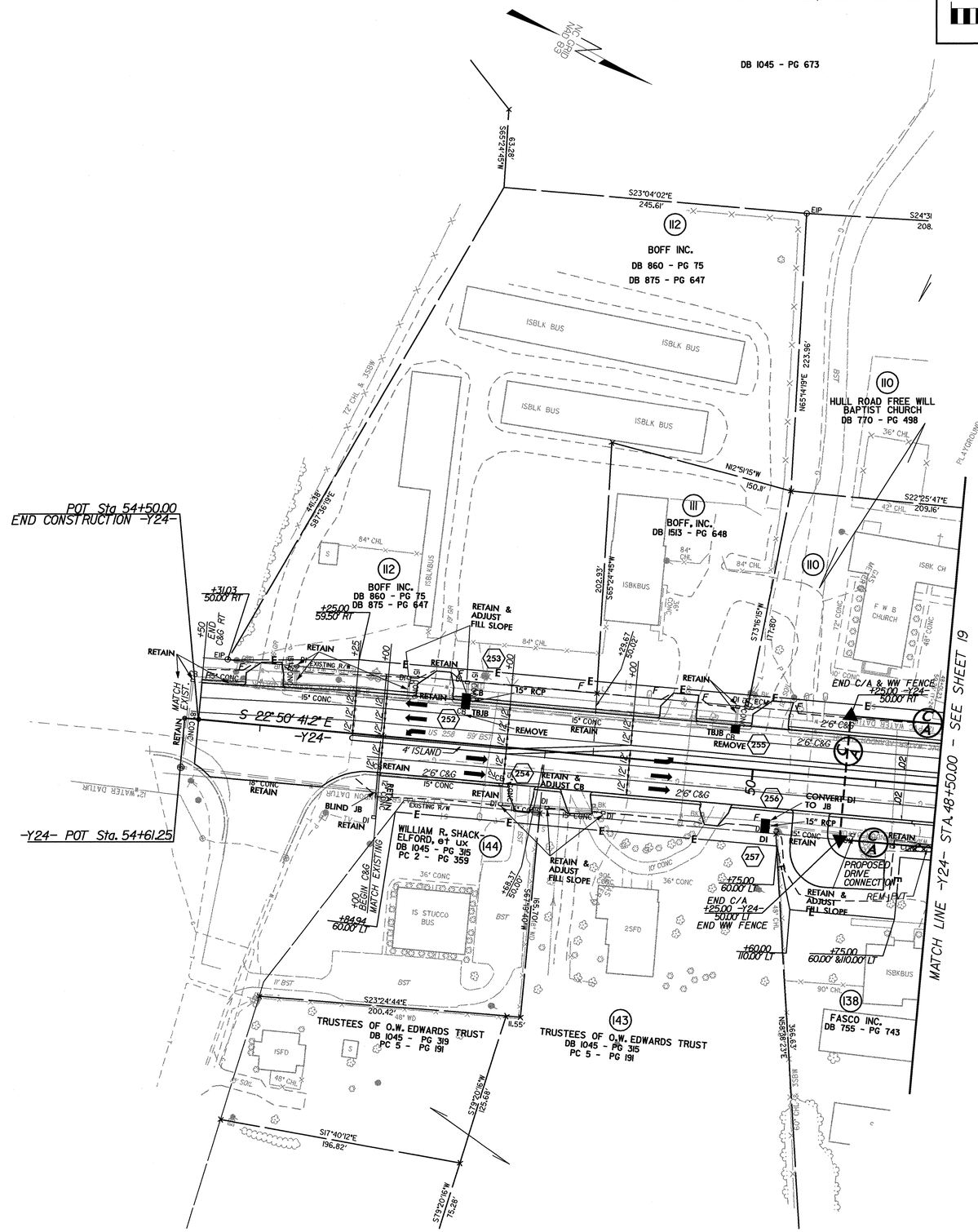

REVISIONS

8/17/99

3/11/2009
r:\roadway\Grading_Proj\r2719a_rdy_psh_36_GRD.dgn
mlindgren

5/28/99

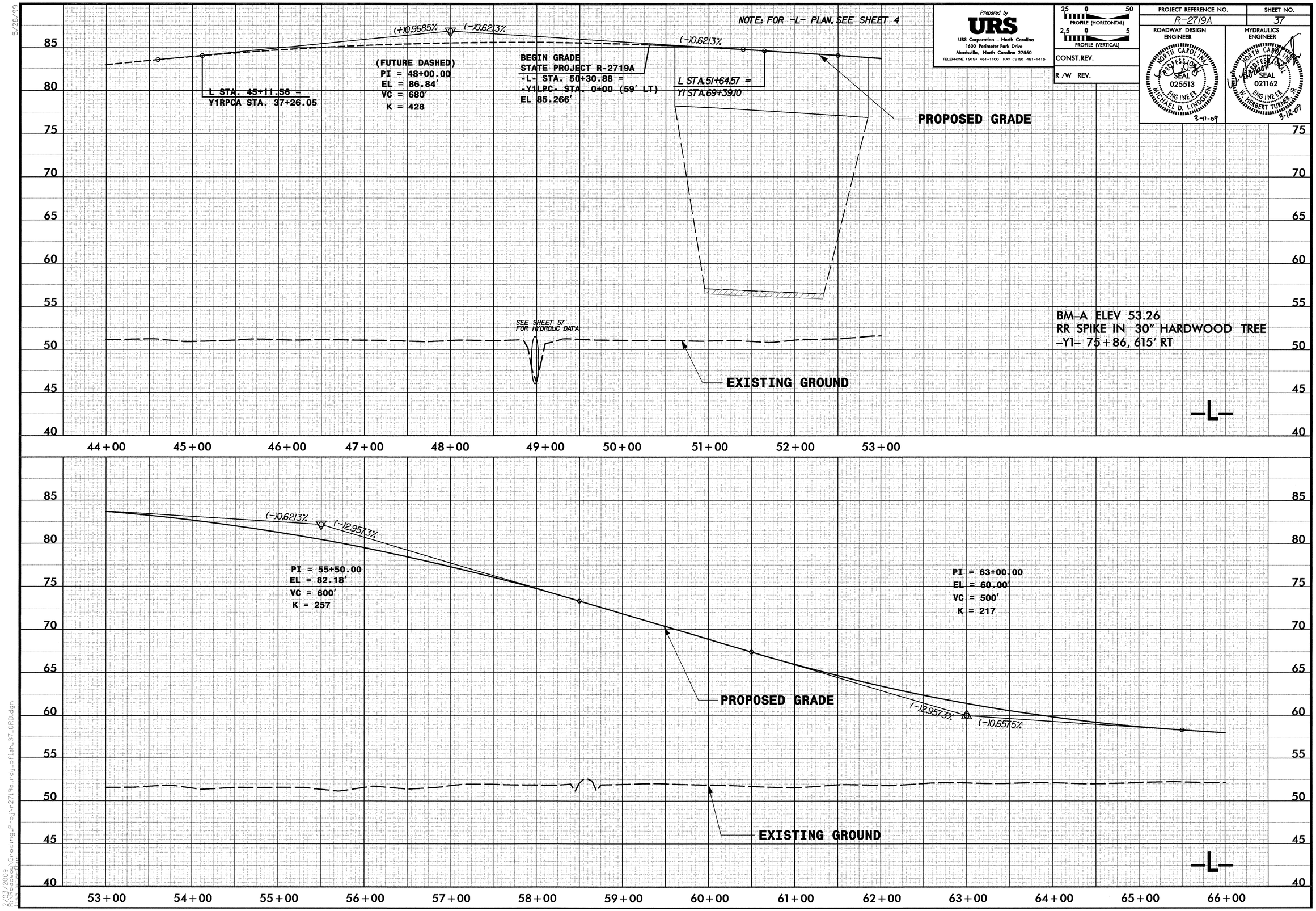

Prepared by
URS
URS Corporation – North Carolina
1600 Perimeter Park Drive
Morrisville, North Carolina 27560
TELEPHONE (919) 461-1100 FAX (919) 461-1415

25 0 50
PROFILE (HORIZONTAL)
2.5 0 5
PROFILE (VERTICAL)

CONST.REV.

R /W REV.

PROJECT REFERENCE NO.	SHEET NO.
R-2719A	37

ROADWAY DESIGN ENGINEER
NORTH CAROLINA PROFESSIONAL SEAL 025513 ENGINEER MICHAEL D. LINDGREN
3-11-09

HYDRAULICS ENGINEER
NORTH CAROLINA PROFESSIONAL SEAL 021162 ENGINEER W. HERBERT TURNER, III
3-12-09

2/23/2009
R:\Roadway\Grading_Proj\r2719a_rdy_pPlan_37_GRD.dgn

5/28/99

NOTE: FOR -L- PLAN, SEE SHEETS 4,6 & 7

Prepared by
URS
URS Corporation – North Carolina
1600 Perimeter Park Drive
Morrisville, North Carolina 27560
TELEPHONE (919) 461-1100 FAX (919) 461-1415

PROFILE (HORIZONTAL) 25 0 50

PROFILE (VERTICAL) 2.5 0 5

CONST.REV.

R /W REV.

PROJECT REFERENCE NO.	SHEET NO.
R-2719A	38

ROADWAY DESIGN ENGINEER: NORTH CAROLINA PROFESSIONAL SEAL 025513 ENGINEER MICHAEL D. LINDGREN 3-11-09

HYDRAULICS ENGINEER: NORTH CAROLINA PROFESSIONAL SEAL 021162 ENGINEER W. HERBERT TURNER JR. 3-12-09

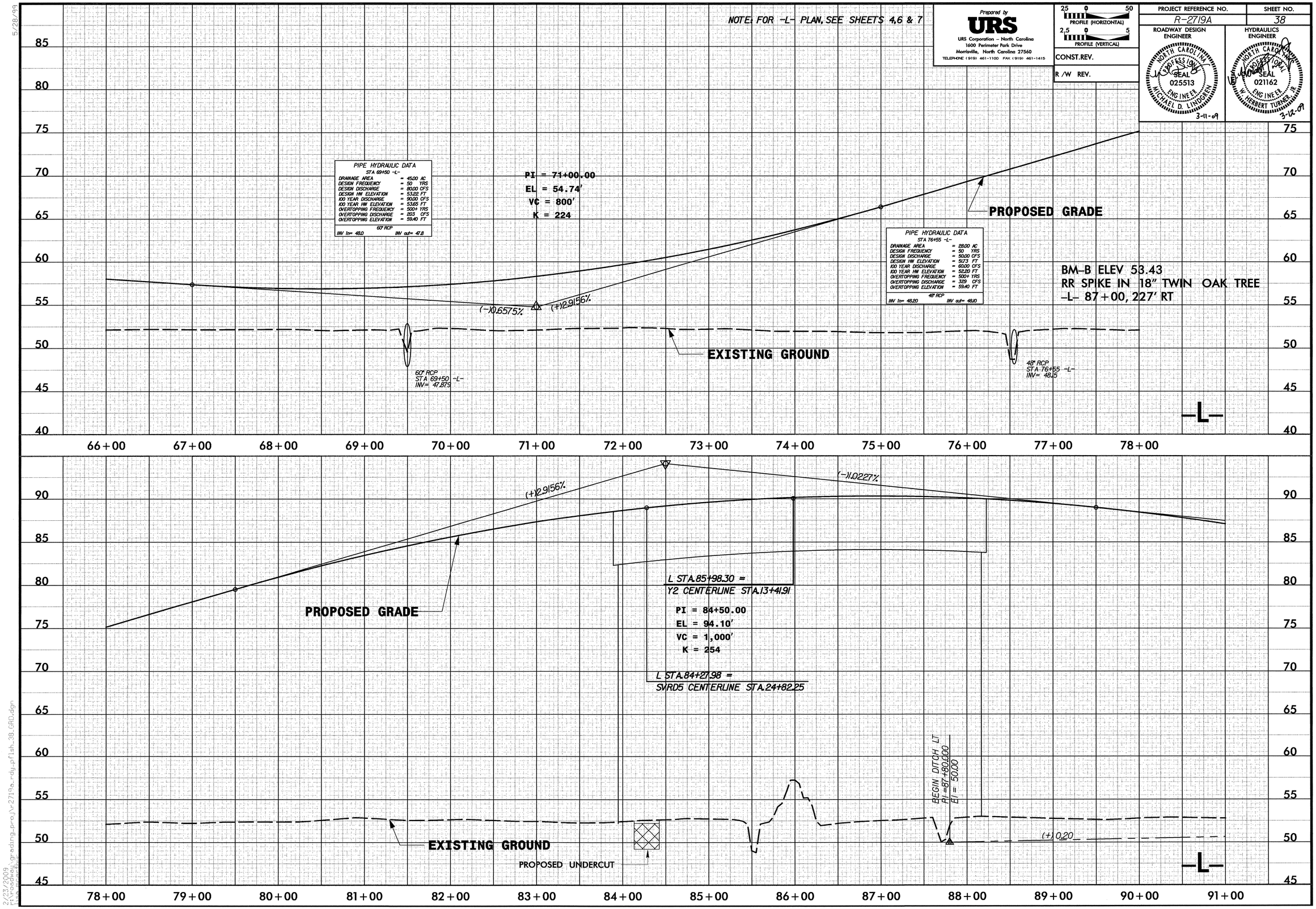

2/23/2009
I:\Roadway\grading_proj\r2719a_rdy_pfish_38_GRD.dgn

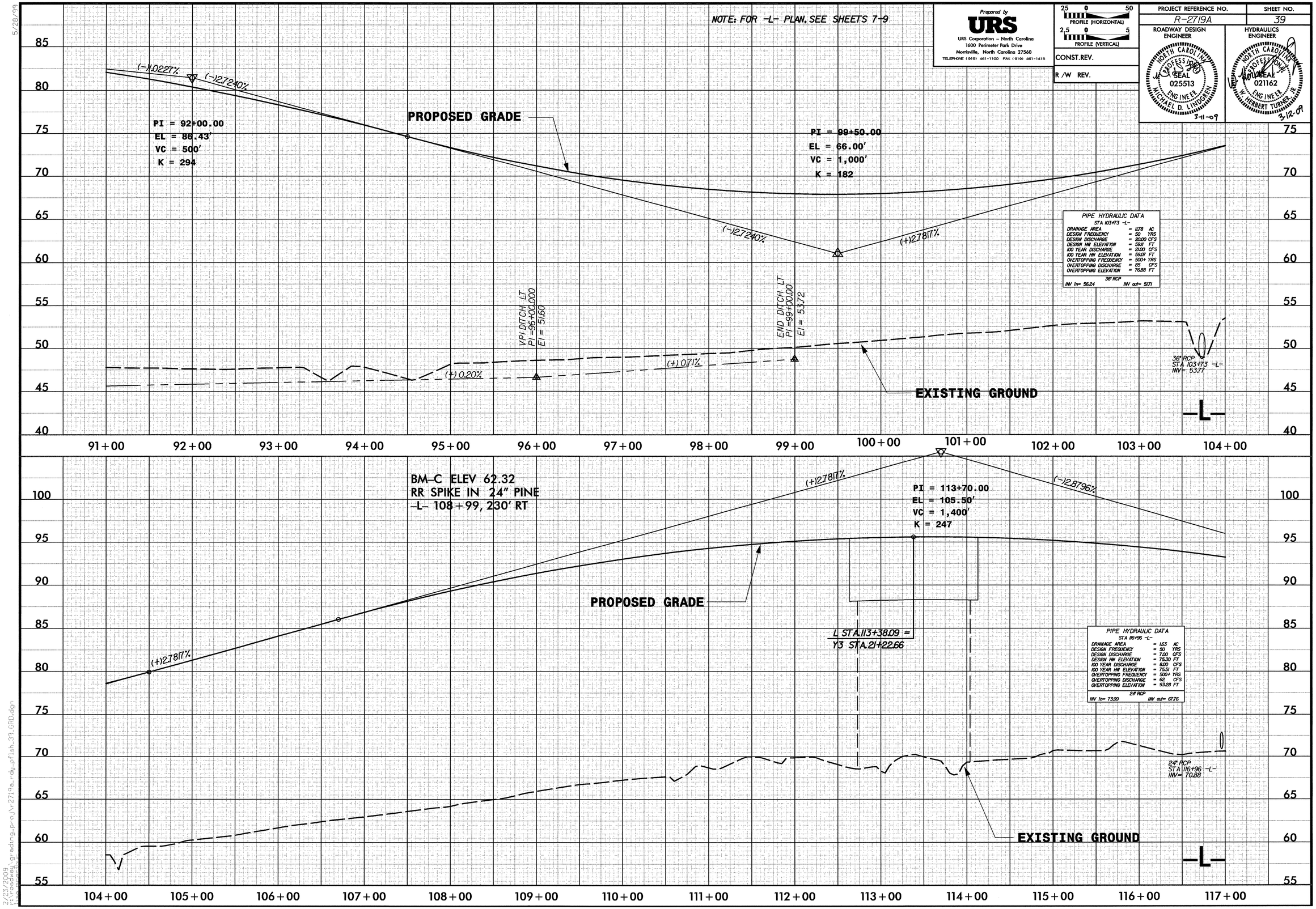
NOTE: FOR -L- PLAN, SEE SHEETS 7-9
Prepared by
URS
URS Corporation – North Carolina
1600 Perimeter Park Drive
Morrisville, North Carolina 27560
TELEPHONE (919) 461-1100 FAX (919) 461-1415
PROFILE (HORIZONTAL)
PROFILE (VERTICAL)
CONST.REV.
R /W REV.
PROJECT REFERENCE NO.
R-2719A
SHEET NO.
39
ROADWAY DESIGN ENGINEER
HYDRAULICS ENGINEER
NORTH CAROLINA PROFESSIONAL SEAL 025513 ENGINEER MICHAEL D. LINDGREN
NORTH CAROLINA PROFESSIONAL SEAL 021162 ENGINEER W. HERBERT TURNER, JR.
3-11-09
3-12-09
PROPOSED GRADE
EXISTING GROUND
PI = 92+00.00
EL = 86.43'
VC = 500'
K = 294
PI = 99+50.00
EL = 66.00'
VC = 1,000'
K = 182
(-)1.0227%
(-)2.7240%
(+)2.7817%
VPI DITCH LT
PI =96+00.000
EI = 51.60
END DITCH LT
PI =99+00.00
EI = 53.72
(+) 0.20%
(+) 0.71%
PIPE HYDRAULIC DATA
STA 103+73 -L-
DRAINAGE AREA = 11.78 AC
DESIGN FREQUENCY = 50 YRS
DESIGN DISCHARGE = 20.00 CFS
DESIGN HW ELEVATION = 59.11 FT
100 YEAR DISCHARGE = 21.00 CFS
100 YEAR HW ELEVATION = 59.07 FT
OVERTOPPING FREQUENCY = 500+ YRS
OVERTOPPING DISCHARGE = 85 CFS
OVERTOPPING ELEVATION = 76.88 FT
36" RCP
INV In= 56.24
INV out= 50.71
36" RCP
STA 103+73 -L-
INV= 53.77
-L-
91+00
92+00
93+00
94+00
95+00
96+00
97+00
98+00
99+00
100+00
101+00
102+00
103+00
104+00
BM-C ELEV 62.32
RR SPIKE IN 24" PINE
-L- 108+99, 230' RT
PI = 113+70.00
EL = 105.50'
VC = 1,400'
K = 247
(+)2.7817%
(-)2.8796%
L STA.113+38.09 =
Y3 STA.21+22.66
PIPE HYDRAULIC DATA
STA 116+96 -L-
DRAINAGE AREA = 1.63 AC
DESIGN FREQUENCY = 50 YRS
DESIGN DISCHARGE = 7.00 CFS
DESIGN HW ELEVATION = 75.30 FT
100 YEAR DISCHARGE = 8.00 CFS
100 YEAR HW ELEVATION = 75.51 FT
OVERTOPPING FREQUENCY = 500+ YRS
OVERTOPPING DISCHARGE = 62 CFS
OVERTOPPING ELEVATION = 93.28 FT
24" RCP
INV In= 73.99
INV out= 67.76
24" RCP
STA 116+96 -L-
INV= 70.88
104+00
105+00
106+00
107+00
108+00
109+00
110+00
111+00
112+00
113+00
114+00
115+00
116+00
117+00
5/28/99
2/23/2009
I:\roadway_grading_proj\r2719a_rdy_pfish_39_GRD.dgn

5/28/99

NOTE: FOR -L- PLAN, SEE SHEETS 10-11

Prepared by
URS
URS Corporation – North Carolina
1600 Perimeter Park Drive
Morrisville, North Carolina 27560
TELEPHONE (919) 461-1100 FAX (919) 461-1415

PROFILE (HORIZONTAL) 2.5 0 50
PROFILE (VERTICAL) 2.5 0 5

CONST.REV.

R /W REV.

PROJECT REFERENCE NO.	SHEET NO.
R-2719A	40

ROADWAY DESIGN ENGINEER
NORTH CAROLINA PROFESSIONAL SEAL 025513 ENGINEER MICHAEL D. LINDGREN
3-11-09

HYDRAULICS ENGINEER
NORTH CAROLINA PROFESSIONAL SEAL 021162 ENGINEER W. HERBERT TURNER, JR.
3-12-09

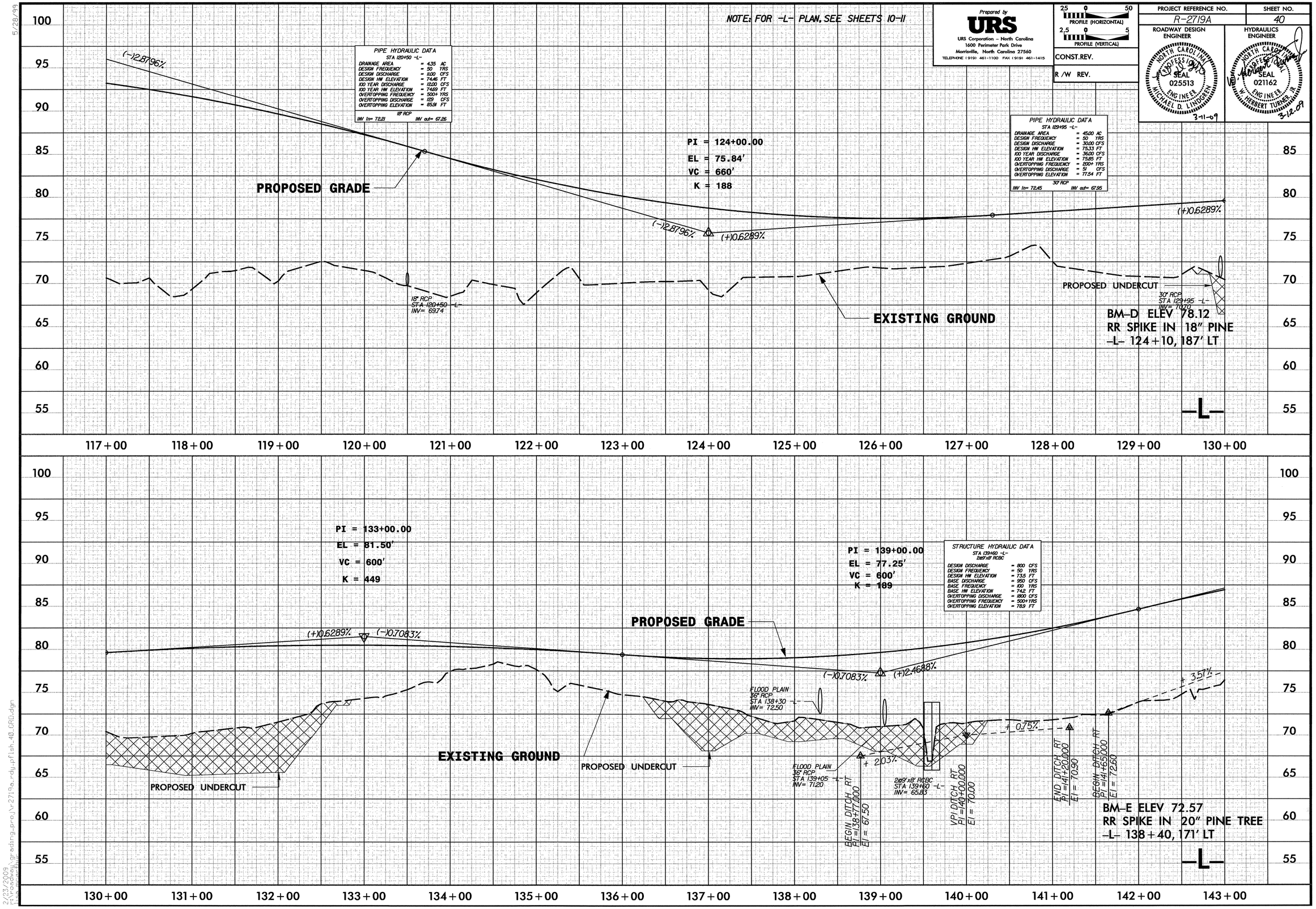

2/23/2009
I:\Roadway\grading_proj\R-2719a_rdy_pfish_40_GRD.dgn

5/28/99

NOTE: FOR -L- PLAN, SEE SHEETS 11-13

Prepared by
URS
URS Corporation – North Carolina
1600 Perimeter Park Drive
Morrisville, North Carolina 27560
TELEPHONE (919) 461-1100 FAX (919) 461-1415

25 0 50 PROFILE (HORIZONTAL)

2.5 0 5 PROFILE (VERTICAL)

CONST.REV.

R /W REV.

PROJECT REFERENCE NO.	SHEET NO.
R-2719A	41

ROADWAY DESIGN ENGINEER: NORTH CAROLINA PROFESSIONAL SEAL 025513 ENGINEER MICHAEL D. LINDGREN 3-11-09

HYDRAULICS ENGINEER: NORTH CAROLINA PROFESSIONAL SEAL 021162 ENGINEER W. HERBERT TURNER, JR. 3-12-09

STRUCTURE HYDRAULIC DATA
STA 153+62 -L-
2@8'x8' RCBC

DESIGN DISCHARGE	= 700 CFS
DESIGN FREQUENCY	= 50 YRS
DESIGN HW ELEVATION	= 82.0 FT
BASE DISCHARGE	= 900 CFS
BASE FREQUENCY	= 100 YRS
BASE HW ELEVATION	= 82.6 FT
OVERTOPPING DISCHARGE	= 1650 CFS
OVERTOPPING FREQUENCY	= 500+YRS
OVERTOPPING ELEVATION	= 88.3 FT

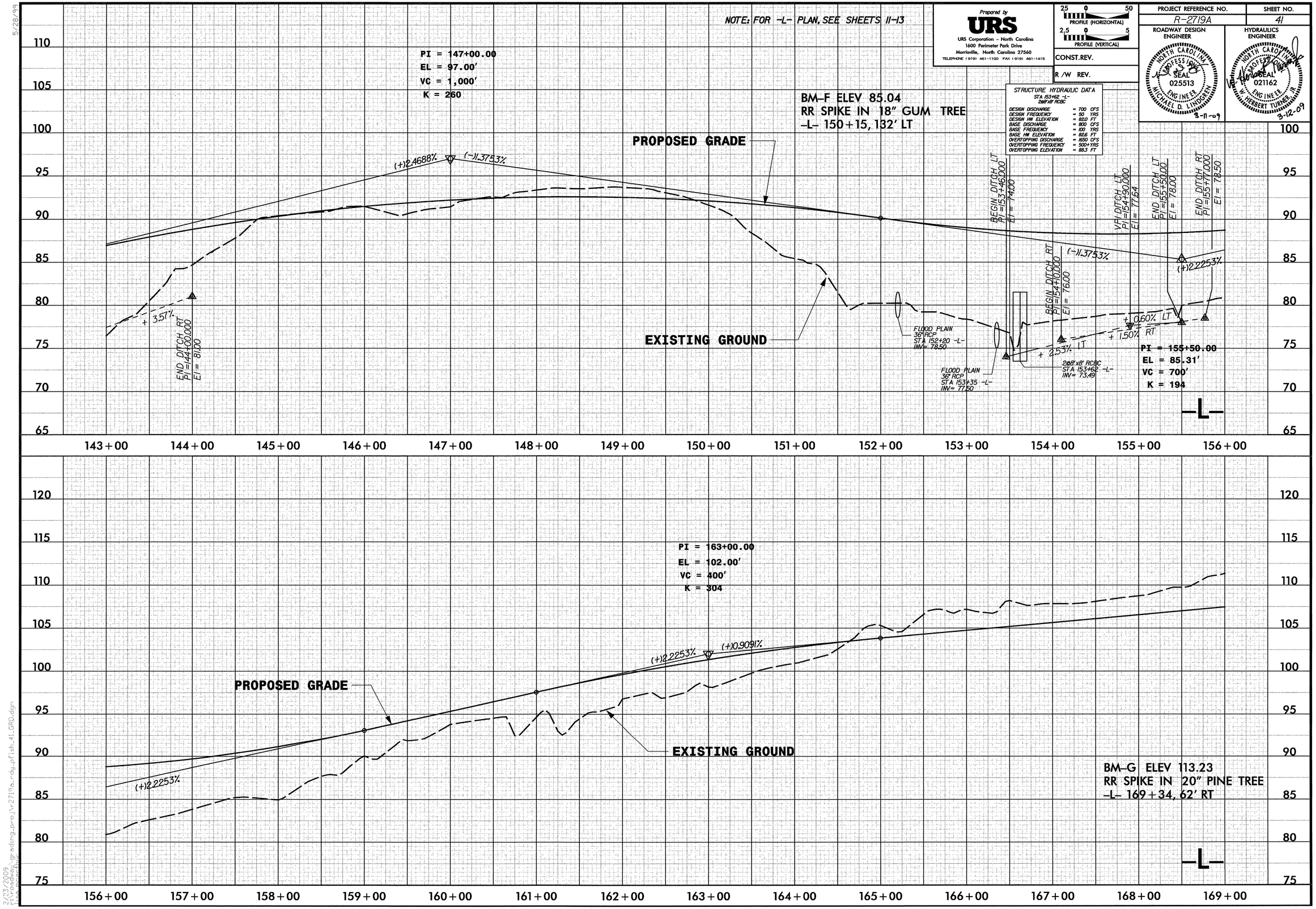

2/23/2009
F:\roadway\grading_proj\r2719a_rdy_pfl_sh_41_GRD.dgn

5/28/99

NOTE: FOR -L- PLAN, SEE SHEETS 13-15

Prepared by
URS
URS Corporation – North Carolina
1600 Perimeter Park Drive
Morrisville, North Carolina 27560
TELEPHONE (919) 461-1100 FAX (919) 461-1415

PROFILE (HORIZONTAL) 25 0 50
PROFILE (VERTICAL) 2.5 0 5

CONST.REV.

R /W REV.

PROJECT REFERENCE NO.	SHEET NO.
R-2719A	42

ROADWAY DESIGN ENGINEER
NORTH CAROLINA PROFESSIONAL SEAL 025513 ENGINEER MICHAEL D. LINDGREN
3-11-09

HYDRAULICS ENGINEER
NORTH CAROLINA PROFESSIONAL SEAL 021162 ENGINEER W. HERBERT TURNER, JR.
3-12-09

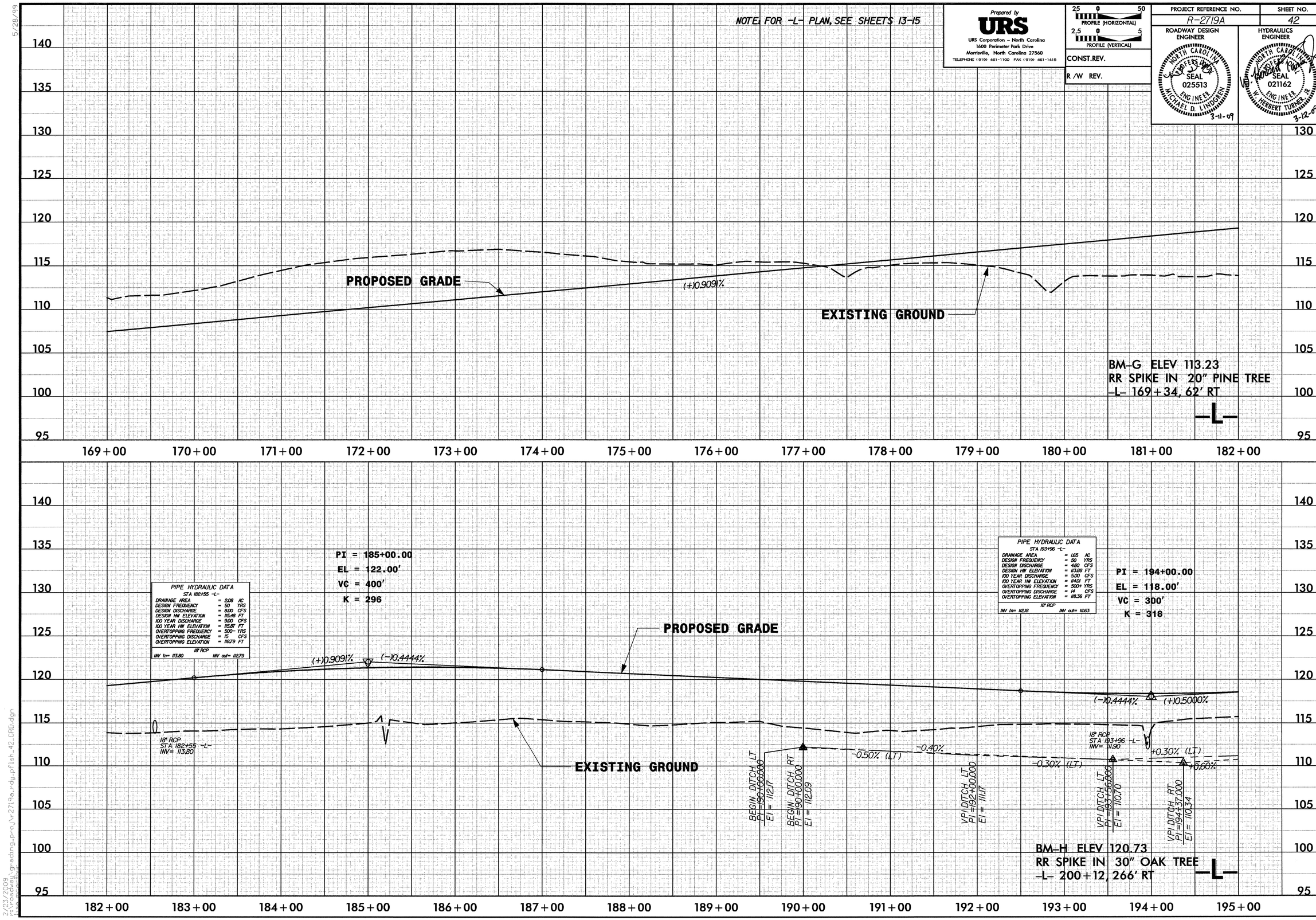

2/23/2009
r:\roadway\grading_proj\r2719a_rdy_pfish_42_GRD.dgn

5/28/99

NOTE: FOR -L- PLAN, SEE SHEETS 15-17

Prepared by
URS
URS Corporation – North Carolina
1600 Perimeter Park Drive
Morrisville, North Carolina 27560
TELEPHONE (919) 461-1100 FAX (919) 461-1415

PROFILE (HORIZONTAL) 25 0 50
PROFILE (VERTICAL) 2.5 0 5

CONST.REV.

R /W REV.

PROJECT REFERENCE NO.	SHEET NO.
R-2719A	43

ROADWAY DESIGN ENGINEER
NORTH CAROLINA PROFESSIONAL SEAL 025513 ENGINEER MICHAEL D. LINDGREN
3-11-09

HYDRAULICS ENGINEER
NORTH CAROLINA PROFESSIONAL SEAL 021162 ENGINEER W. HERBERT TURNER, JR.
3-12-09

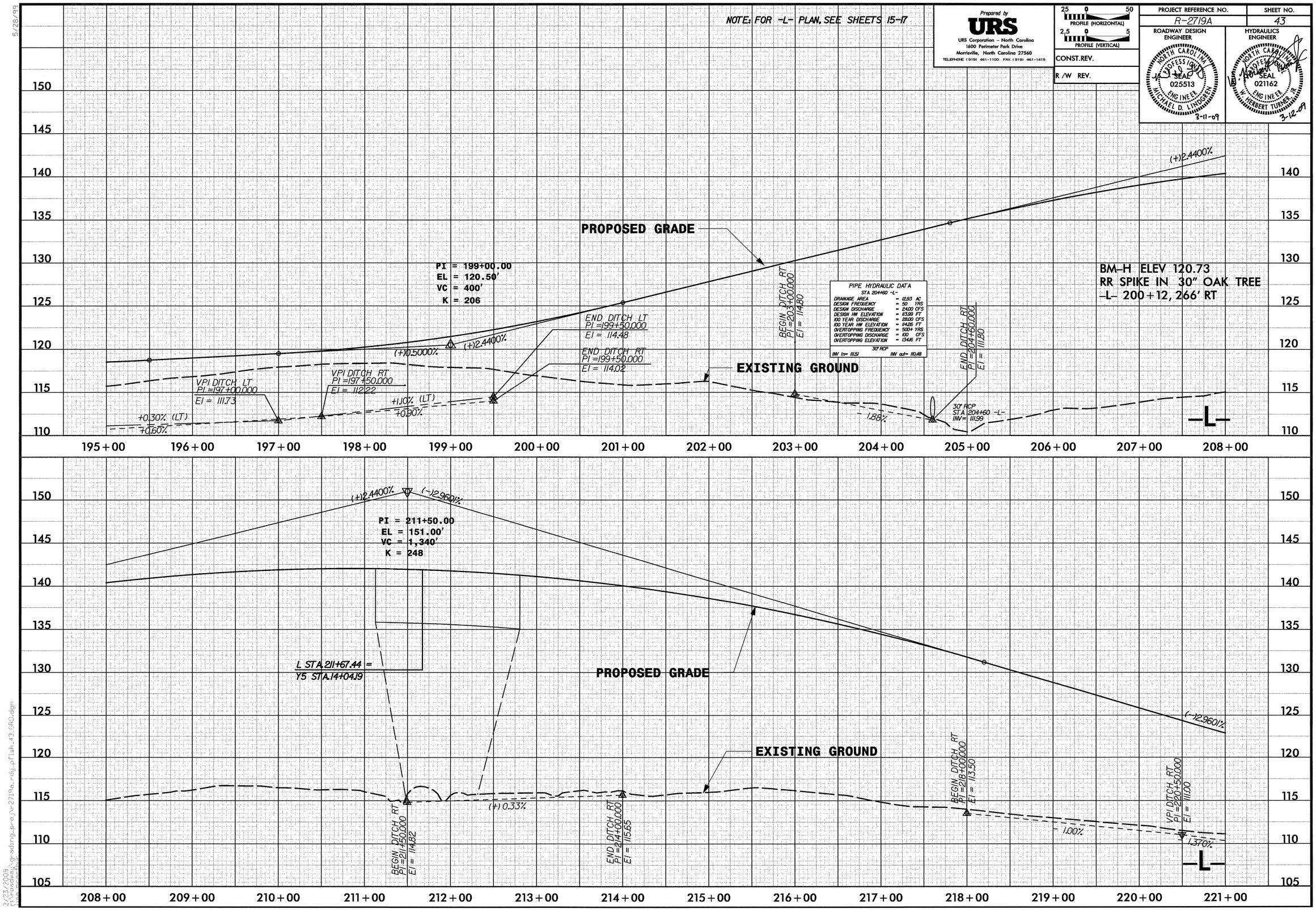

2/23/2009
r:\roadway\grading_proj\r2719a_rdy_pfls_43_GRD.dgn

5/28/99

NOTE: FOR -L- PLAN, SEE SHEETS 17-19

Prepared by
URS
URS Corporation – North Carolina
1600 Perimeter Park Drive
Morrisville, North Carolina 27560
TELEPHONE (919) 461-1100 FAX (919) 461-1415

25 0 50 PROFILE (HORIZONTAL)
2.5 0 5 PROFILE (VERTICAL)

CONST.REV.

R /W REV.

PROJECT REFERENCE NO.	SHEET NO.
R-2719A	44

ROADWAY DESIGN ENGINEER
NORTH CAROLINA PROFESSIONAL ENGINEER SEAL 025513 ENGINEER MICHAEL D. LINDGREN
3-11-09

HYDRAULICS ENGINEER
NORTH CAROLINA PROFESSIONAL ENGINEER SEAL 021162 ENGINEER W. HERBERT TURNER, JR.
3-12-09

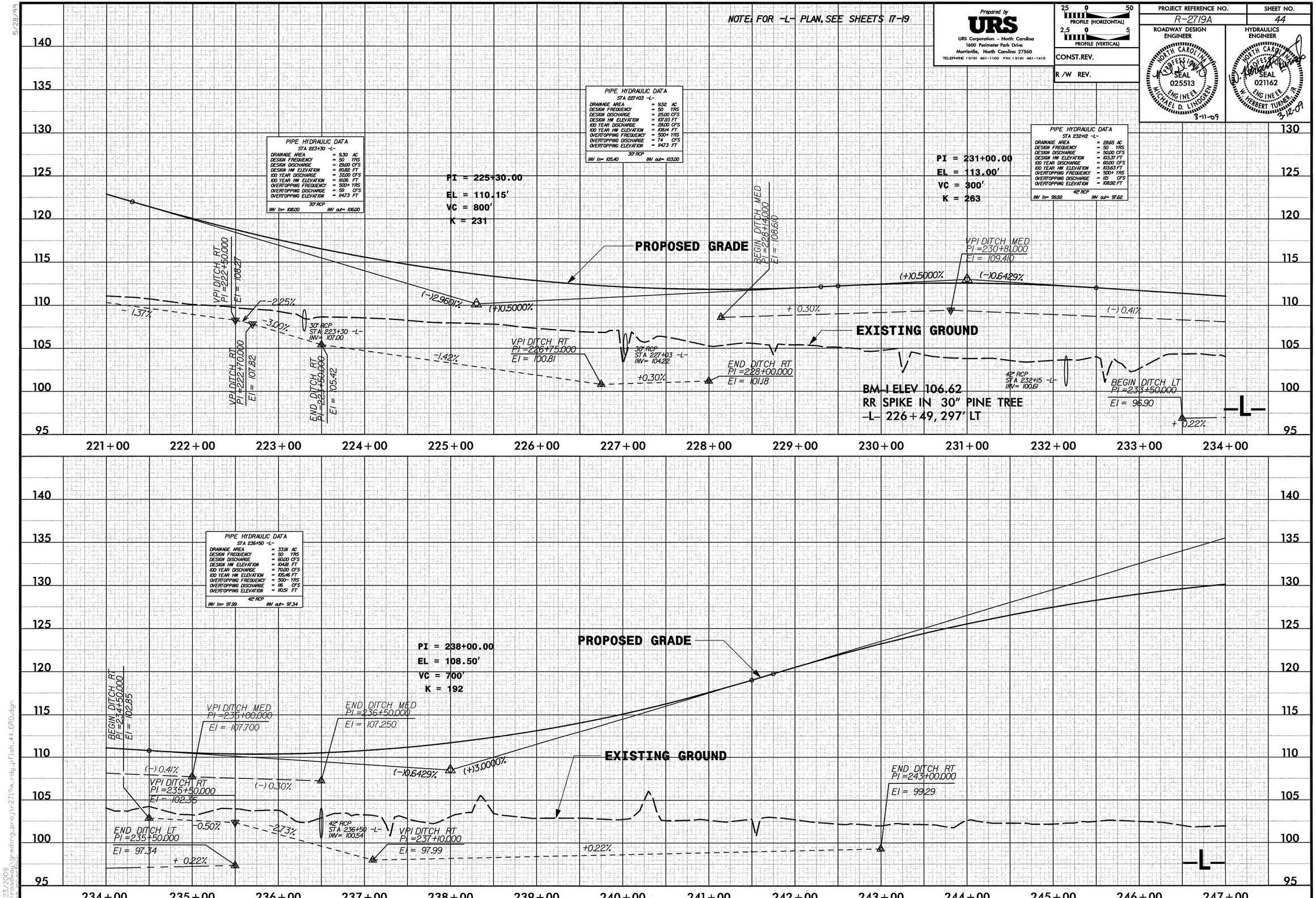

2/23/2009
f:\roadway\grading\proj\2719a_rdy_pfish_44.DGN

5/28/99

NOTE: FOR -L- PLAN, SEE SHEETS 19-21

Prepared by
URS
URS Corporation – North Carolina
1600 Perimeter Park Drive
Morrisville, North Carolina 27560
TELEPHONE (919) 461-1100 FAX (919) 461-1415

25 0 50 PROFILE (HORIZONTAL)
2.5 0 5 PROFILE (VERTICAL)

CONST.REV.

R /W REV.

PROJECT REFERENCE NO.	SHEET NO.
R-2719A	45

ROADWAY DESIGN ENGINEER
NORTH CAROLINA PROFESSIONAL SEAL 025513 ENGINEER MICHAEL D. LINDGREN
3-11-09

HYDRAULICS ENGINEER
NORTH CAROLINA PROFESSIONAL SEAL 021162 ENGINEER W. HERBERT TURNER, JR.
3-12-09

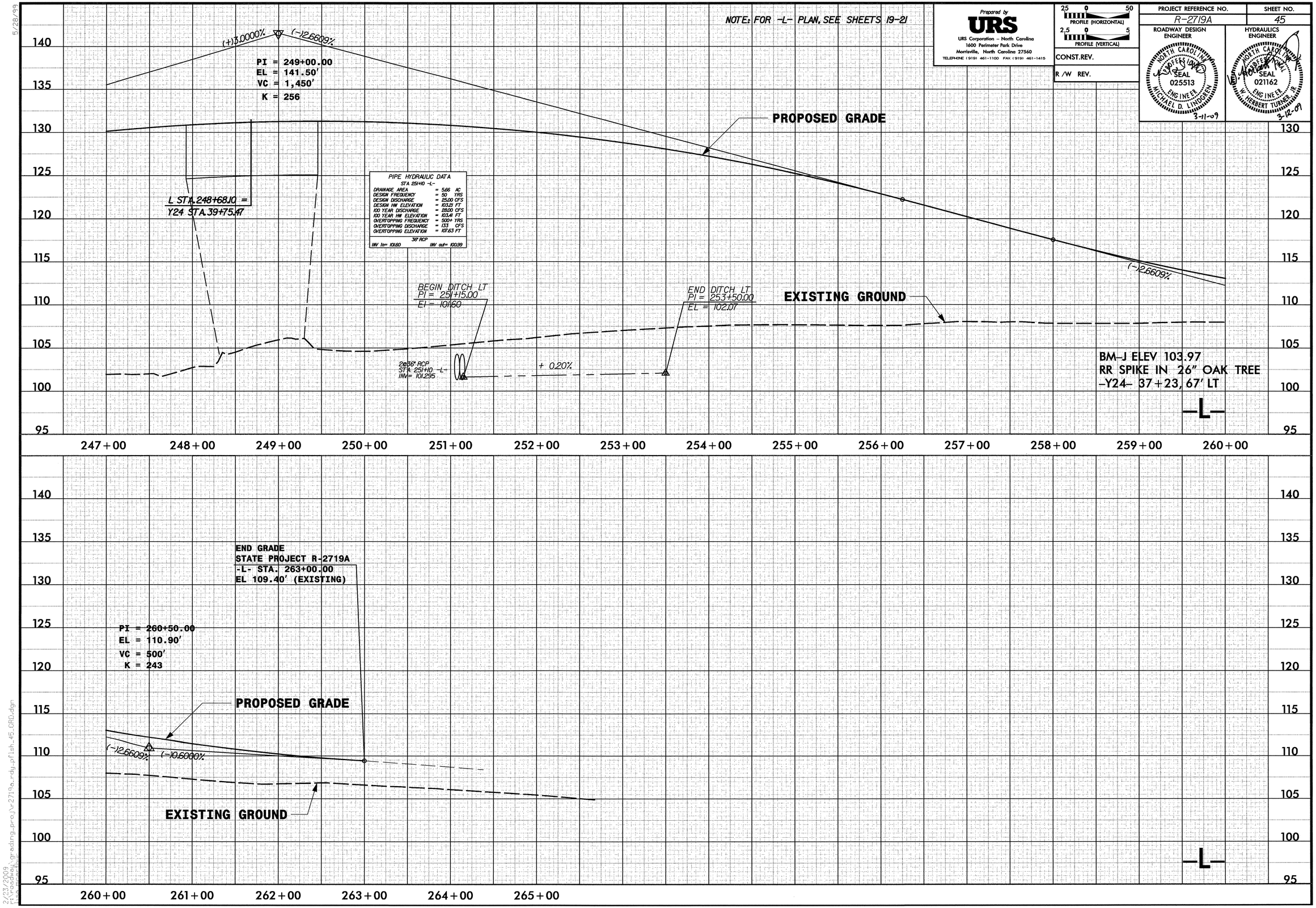

2/23/2009
I:\roadway\grading_proj\r2719a_rdy_pfl\sh_45_GRD.dgn

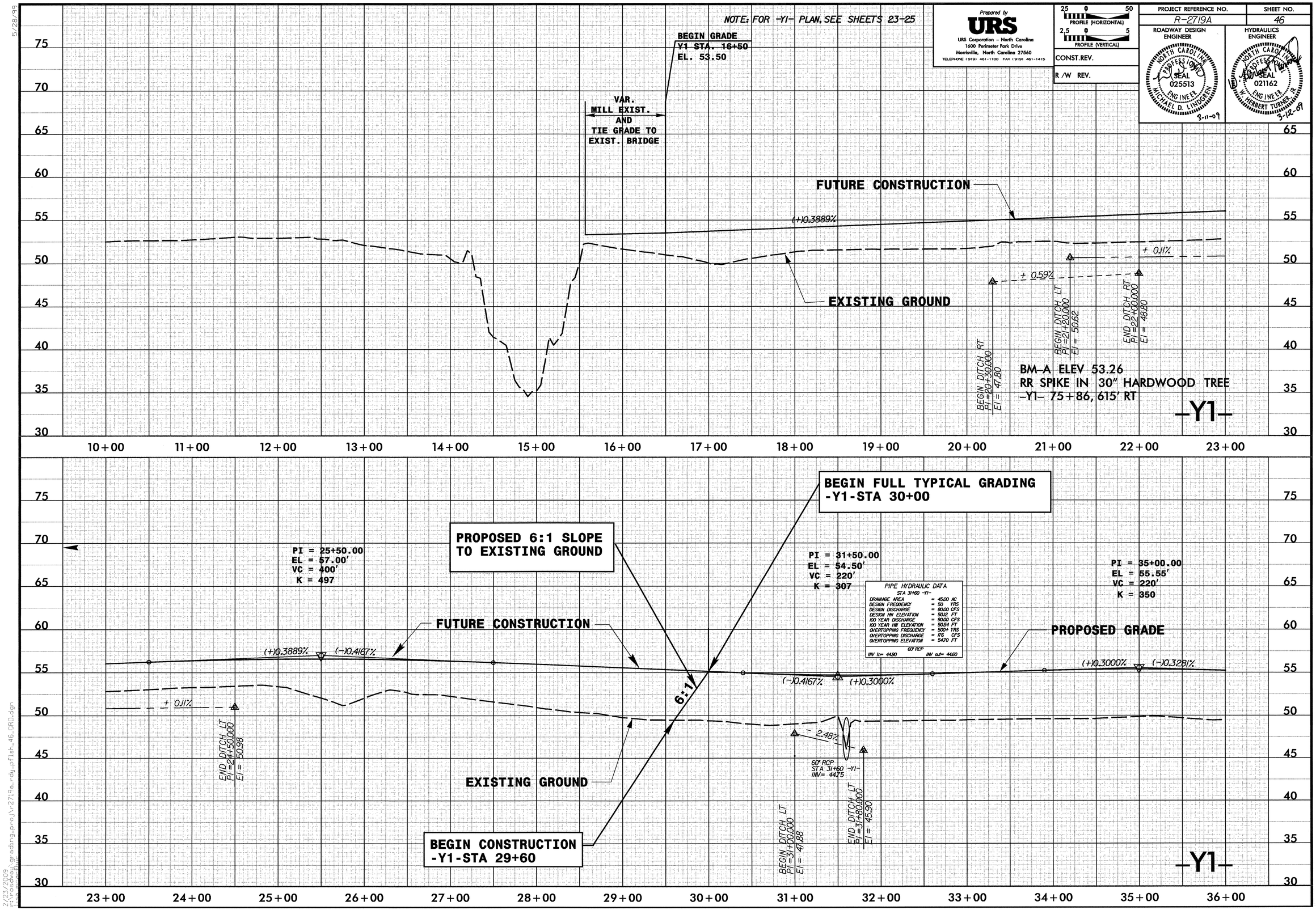

Prepared by
URS
URS Corporation – North Carolina
1600 Perimeter Park Drive
Morrisville, North Carolina 27560
TELEPHONE (919) 461-1100 FAX (919) 461-1415

25 0 50
PROFILE (HORIZONTAL)
2.5 0 5
PROFILE (VERTICAL)

CONST.REV.

R /W REV.

PROJECT REFERENCE NO.	SHEET NO.
R-2719A	46

ROADWAY DESIGN ENGINEER
NORTH CAROLINA PROFESSIONAL SEAL 025513 ENGINEER MICHAEL D. LINDGREN
3-11-09

HYDRAULICS ENGINEER
NORTH CAROLINA PROFESSIONAL SEAL 021162 ENGINEER W. HERBERT TURNER JR.
3-12-09

5/28/99

2/23/2009
I:\Roadway\grading_proj\R-2719a_rdy_plsh_46_GRD.dgn

5/28/99

NOTE: FOR -Y1- PLAN, SEE SHEETS 4,25-26

Prepared by
URS
URS Corporation – North Carolina
1600 Perimeter Park Drive
Morrisville, North Carolina 27560
TELEPHONE (919) 461-1100 FAX (919) 461-1415

25 0 50 PROFILE (HORIZONTAL)
2.5 0 5 PROFILE (VERTICAL)

CONST.REV.

R /W REV.

PROJECT REFERENCE NO.	SHEET NO.
R-2719A	47

ROADWAY DESIGN ENGINEER
NORTH CAROLINA PROFESSIONAL SEAL 025513 ENGINEER MICHAEL D. LINDSAY
3-11-09

HYDRAULICS ENGINEER
NORTH CAROLINA PROFESSIONAL SEAL 021162 ENGINEER W. HERBERT TURNER, JR.
3-12-09

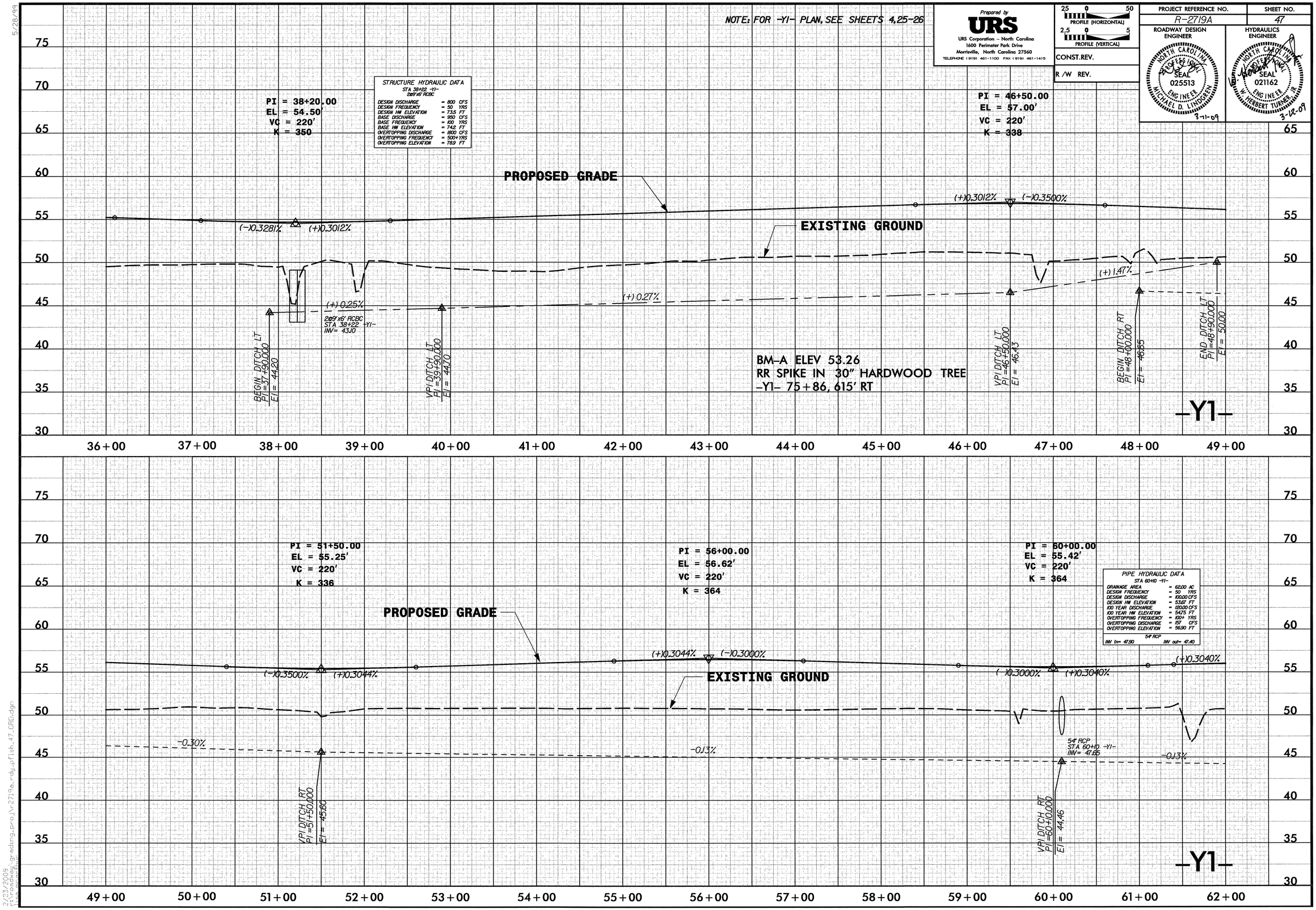

2/23/2009
r:\roadway\grading_proj\r-2719a_rdy_pfish_47_GRD.dgn

NOTE: FOR -Y1- PLAN, SEE SHEETS 4,5,& 27

Prepared by
URS
URS Corporation – North Carolina
1600 Perimeter Park Drive
Morrisville, North Carolina 27560
TELEPHONE (919) 461-1100 FAX (919) 461-1415

25 0 50 PROFILE (HORIZONTAL)
2.5 0 5 PROFILE (VERTICAL)

CONST.REV.

R /W REV.

PROJECT REFERENCE NO.	SHEET NO.
R-2719A	48

ROADWAY DESIGN ENGINEER
NORTH CAROLINA PROFESSIONAL SEAL 025513 ENGINEER MICHAEL D. LINDGREN
3-11-09

HYDRAULICS ENGINEER
NORTH CAROLINA PROFESSIONAL SEAL 021162 ENGINEER W. HERBERT TURNER, JR.
3-12-09

PI = 62+50.00
EL = 56.18'
VC = 220'
K = 362

PI = 65+00.00
EL = 55.42'
VC = 220'
K = 364

PI = 72+30.00
EL = 57.61'
VC = 220'
K = 312

PI = 74+50.00
EL = 56.72'
VC = 220'
K = 311

STRUCTURE HYDRAULIC DATA
STA 74+43 -Y1-
3@12'X10' RCBC

DESIGN DISCHARGE	=	1800 CFS
DESIGN FREQUENCY	=	50 YRS
DESIGN HW ELEVATION	=	53.1 FT
BASE DISCHARGE	=	1800 CFS
BASE FREQUENCY	=	100 YRS
BASE HW ELEVATION	=	53.4 FT
OVERTOPPING DISCHARGE	=	3400 CFS
OVERTOPPING FREQUENCY	=	500+ YRS
OVERTOPPING ELEVATION	=	55.6 FT

PROPOSED GRADE

EXISTING GROUND

(+)0.3040% (-)0.3040% (-)0.3040% (+)0.3000% (+)0.3000% (-)0.4045% (-)0.4045% (+)0.3018%

-0.13%

-0.30%

Y1 STA.69+39.10 =
L STA.51+64.57

END DITCH RT
PI =63+30.000
EI = 44.04

BEGIN DITCH RT
PI =71+00.000
EI = 47.30

END DITCH RT
PI =74+00.000
EI = 46.40

3@12'x10' RCBC
STA 74.43 -Y1-
INV= 42.47

BM-A ELEV 53.26
RR SPIKE IN 30" HARDWOOD TREE
-Y1- 75+86, 615' RT

-Y1-

62+00 63+00 64+00 65+00 66+00 67+00 68+00 69+00 70+00 71+00 72+00 73+00 74+00 75+00

PI = 80+00.00
EL = 58.38'
VC = 220'
K = 364

PI = 85+50.00
EL = 56.72'
VC = 500'
K = 201

PIPE HYDRAULIC DATA
STA 85+20 -Y1-

DRAINAGE AREA	=	40.00 AC
DESIGN FREQUENCY	=	50 YRS
DESIGN DISCHARGE	=	70.00 CFS
DESIGN HW ELEVATION	=	52.53 FT
100 YEAR DISCHARGE	=	80.00 CFS
100 YEAR HW ELEVATION	=	52.98 FT
OVERTOPPING FREQUENCY	=	500+ YRS
OVERTOPPING DISCHARGE	=	206 CFS
OVERTOPPING ELEVATION	=	59.80 FT

54" RCP
INV In= 47.90 INV out= 47.40

PROPOSED GRADE

EXISTING GROUND

(+)0.3018% (+)0.3018% (-)0.3018% (-)0.3018% (+)2.9115%

(+) 0.30%

Y1 STA.75+51.12 =
YIRPCA STA.28+99.24

54" RCP
STA 85+20 -Y1-
INV= 47.805

BEGIN DITCH LT
PI =84+80.000
EI = 47.90

-Y1-

75+00 76+00 77+00 78+00 79+00 80+00 81+00 82+00 83+00 84+00 85+00 86+00 87+00 88+00

5/28/99

2/23/2009
I:\roadway\grading_proj\r-2719a_rdy_pfish_48_GRD.dgn

5/28/99

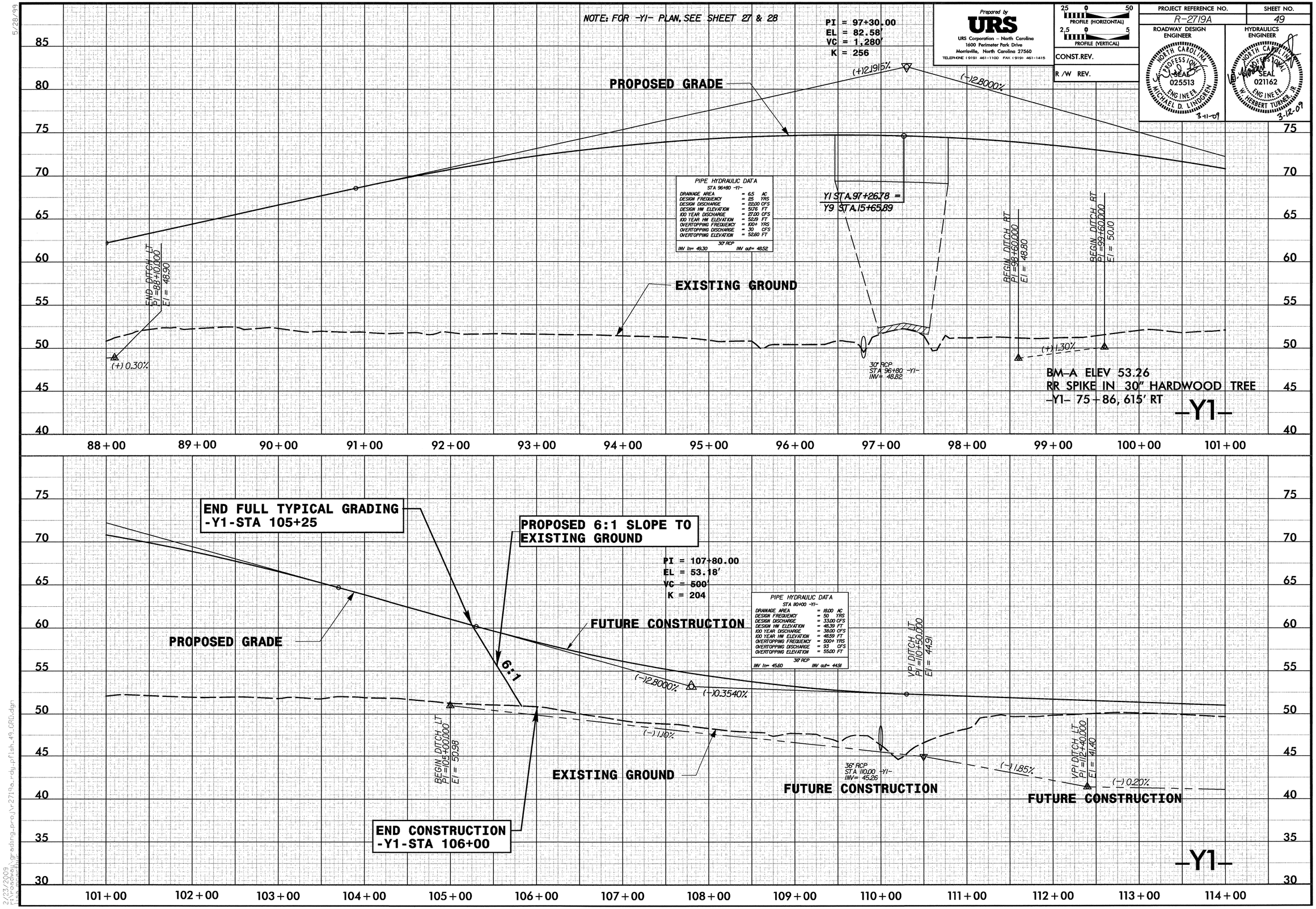

Prepared by
URS
URS Corporation – North Carolina
1600 Perimeter Park Drive
Morrisville, North Carolina 27560
TELEPHONE (919) 461-1100 FAX (919) 461-1415

PROFILE (HORIZONTAL) 25 0 50
PROFILE (VERTICAL) 2.5 0 5

CONST.REV.

R /W REV.

PROJECT REFERENCE NO.	SHEET NO.
R-2719A	49

ROADWAY DESIGN ENGINEER
NORTH CAROLINA PROFESSIONAL SEAL 025513 ENGINEER MICHAEL D. LINDGREN
3-11-09

HYDRAULICS ENGINEER
NORTH CAROLINA PROFESSIONAL SEAL 021162 ENGINEER W. HERBERT TURNER, JR.
3-12-09

2/23/2009
t:\Roadway grading proj\R2719a_rdy_pfish_49_GRD.dgn

5/28/99

NOTE: FOR -Y1- PLAN, SEE SHEET 29

Prepared by
URS
URS Corporation – North Carolina
1600 Perimeter Park Drive
Morrisville, North Carolina 27560
TELEPHONE (919) 461-1100 FAX (919) 461-1415

25 0 50
PROFILE (HORIZONTAL)
2.5 0 5
PROFILE (VERTICAL)

CONST.REV.

R /W REV.

PROJECT REFERENCE NO.	SHEET NO.
R-2719A	50

ROADWAY DESIGN ENGINEER
NORTH CAROLINA PROFESSIONAL SEAL 025513 ENGINEER MICHAEL D. LINDSAY
2-11-09

HYDRAULICS ENGINEER
NORTH CAROLINA PROFESSIONAL SEAL 021162 ENGINEER W. HERBERT TURNER, JR.
3-12-09

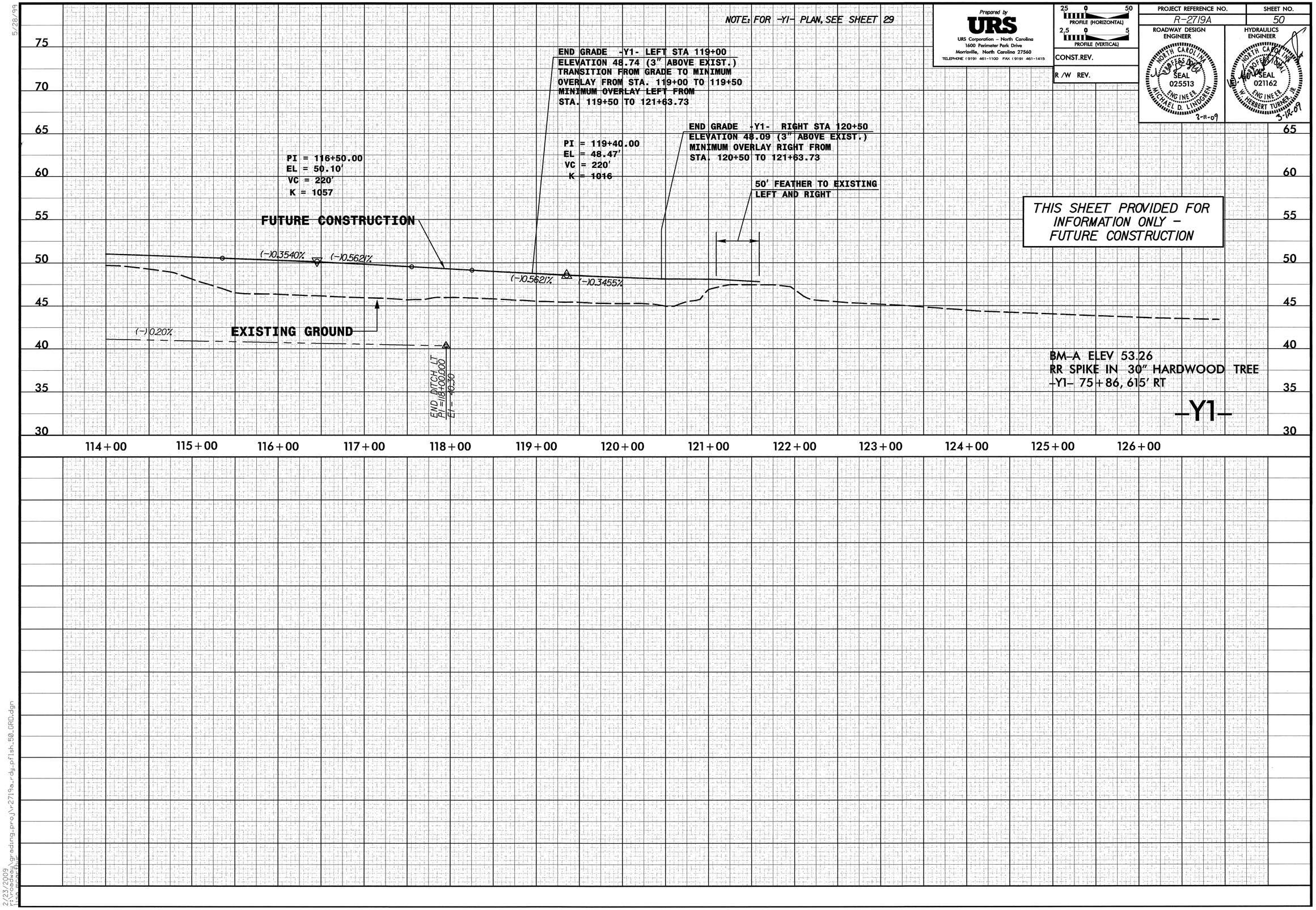

2/23/2009
r:\roadway\proj\r-2719a_rdy_pfls_50_GRD.dgn

5/28/99

NOTE: FOR -Y1RPA- PLAN, SEE SHEET 5

Prepared by
URS
URS Corporation – North Carolina
1600 Perimeter Park Drive
Morrisville, North Carolina 27560
TELEPHONE (919) 461-1100 FAX (919) 461-1415

PROFILE (HORIZONTAL) 25 0 50
PROFILE (VERTICAL) 2.5 0 5

CONST.REV.

R /W REV.

PROJECT REFERENCE NO.	SHEET NO.
R-2719A	51

ROADWAY DESIGN ENGINEER: NORTH CAROLINA PROFESSIONAL SEAL 025513 ENGINEER MICHAEL D. LINDGREN 3-11-09

HYDRAULICS ENGINEER: NORTH CAROLINA PROFESSIONAL SEAL 021162 ENGINEER W. HERBERT TURNER, JR. 3-12-09

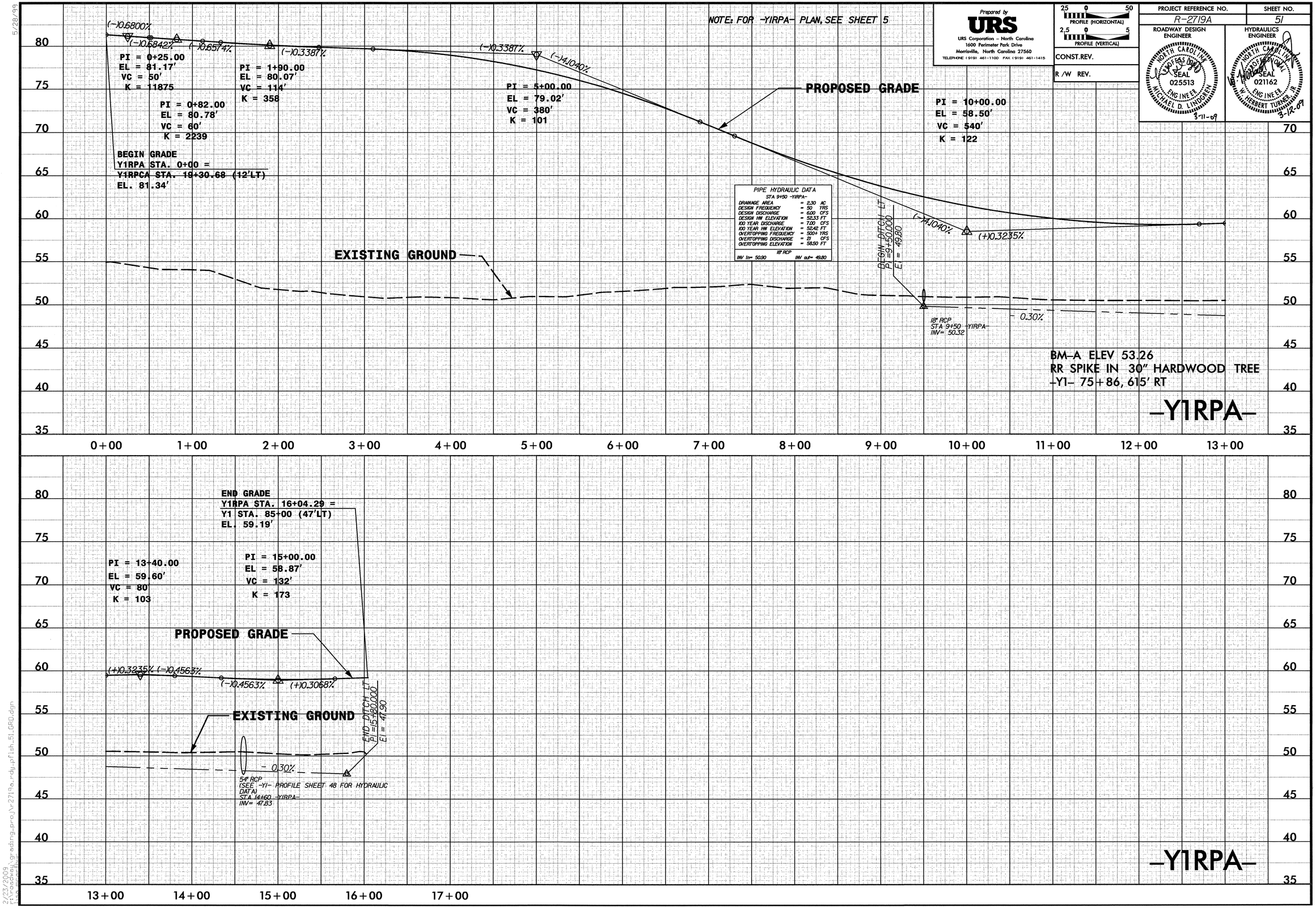

2/23/2009
I:\Roadway\grading_proj\R-2719a_rdy_pfish_51_GRD.dgn

5/28/99

NOTE: FOR -Y1RPB- PLAN, SEE SHEETS 4,6 & 26

Prepared by
URS
URS Corporation – North Carolina
1600 Perimeter Park Drive
Morrisville, North Carolina 27560
TELEPHONE (919) 461-1100 FAX (919) 461-1415

25 0 50 PROFILE (HORIZONTAL)
2.5 0 5 PROFILE (VERTICAL)

CONST.REV.

R /W REV.

PROJECT REFERENCE NO.	SHEET NO.
R-2719A	52

ROADWAY DESIGN ENGINEER
NORTH CAROLINA PROFESSIONAL SEAL 025513 ENGINEER MICHAEL D. LINDGREN
3-11-09

HYDRAULICS ENGINEER
NORTH CAROLINA PROFESSIONAL SEAL 021162 ENGINEER W. HERBERT TURNER, JR.
3-12-09

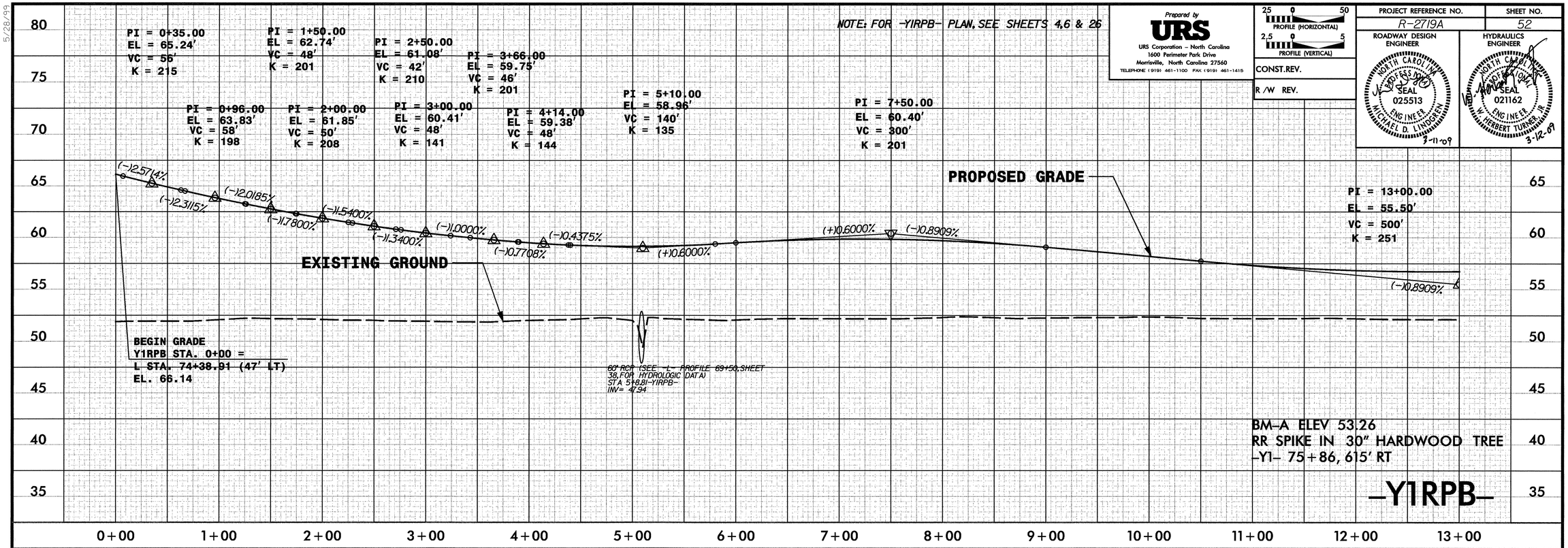

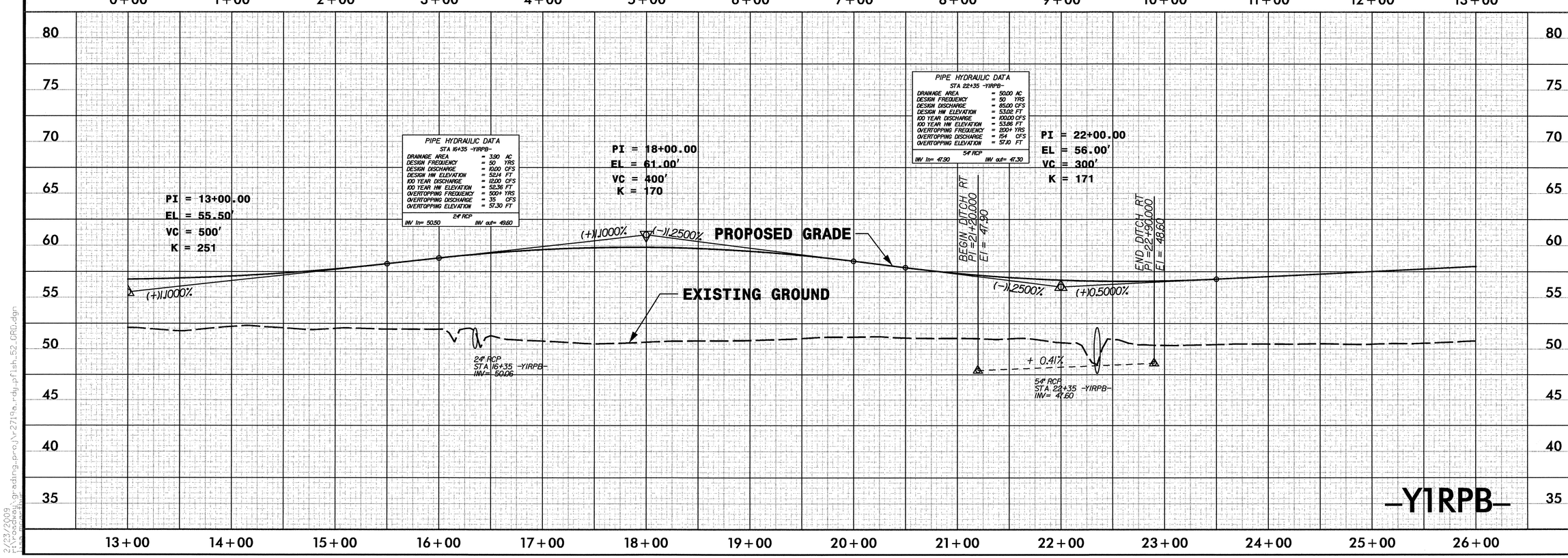

2/23/2009
r:\roadway\grading_proj\r2719a_rdy_pfls_52_ORD.dgn

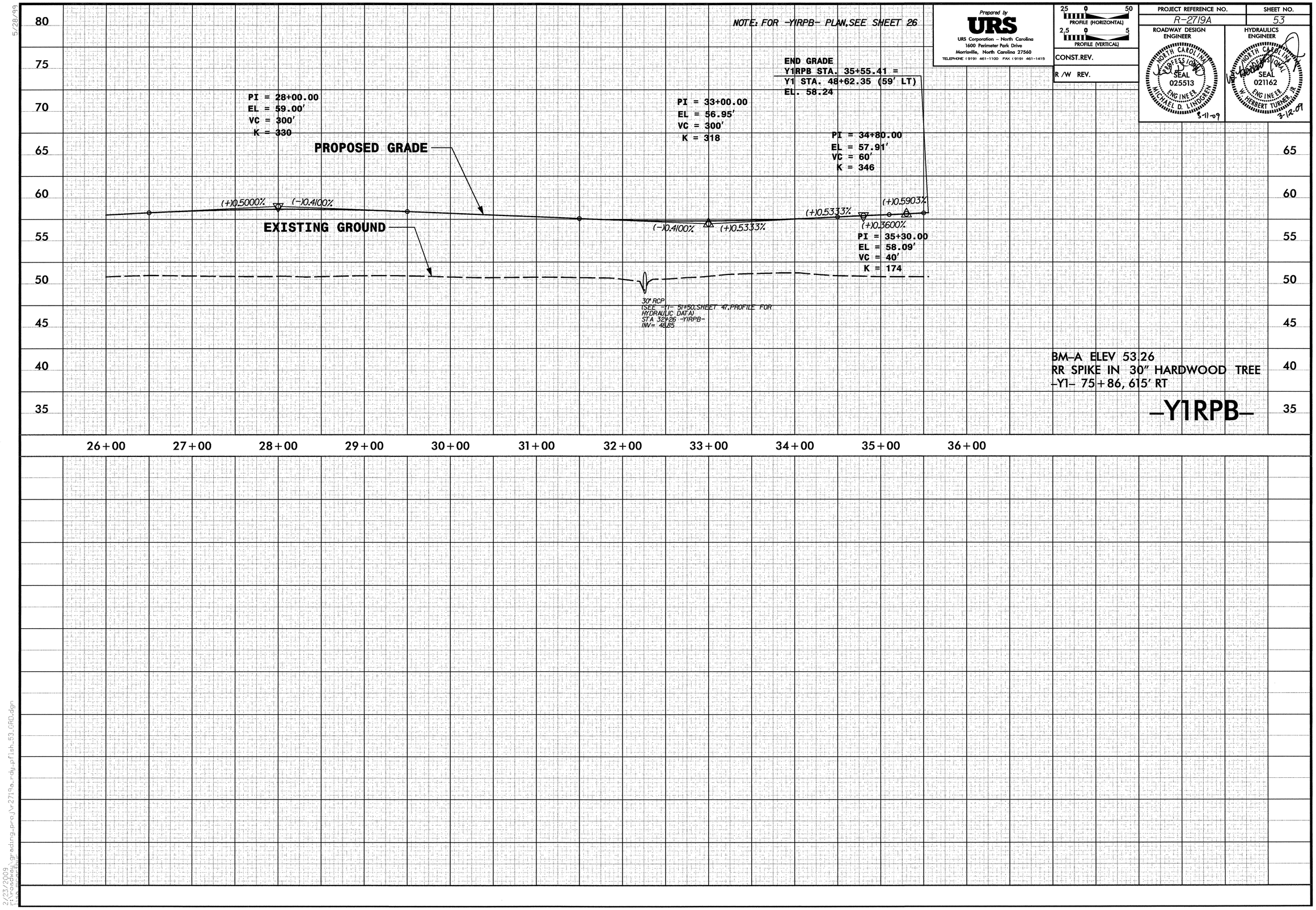

5/28/99

2/23/2009
I:\roadway\grading_proj\r2719a_rdy_pfl_sh_53_GRD.dgn

5/28/99

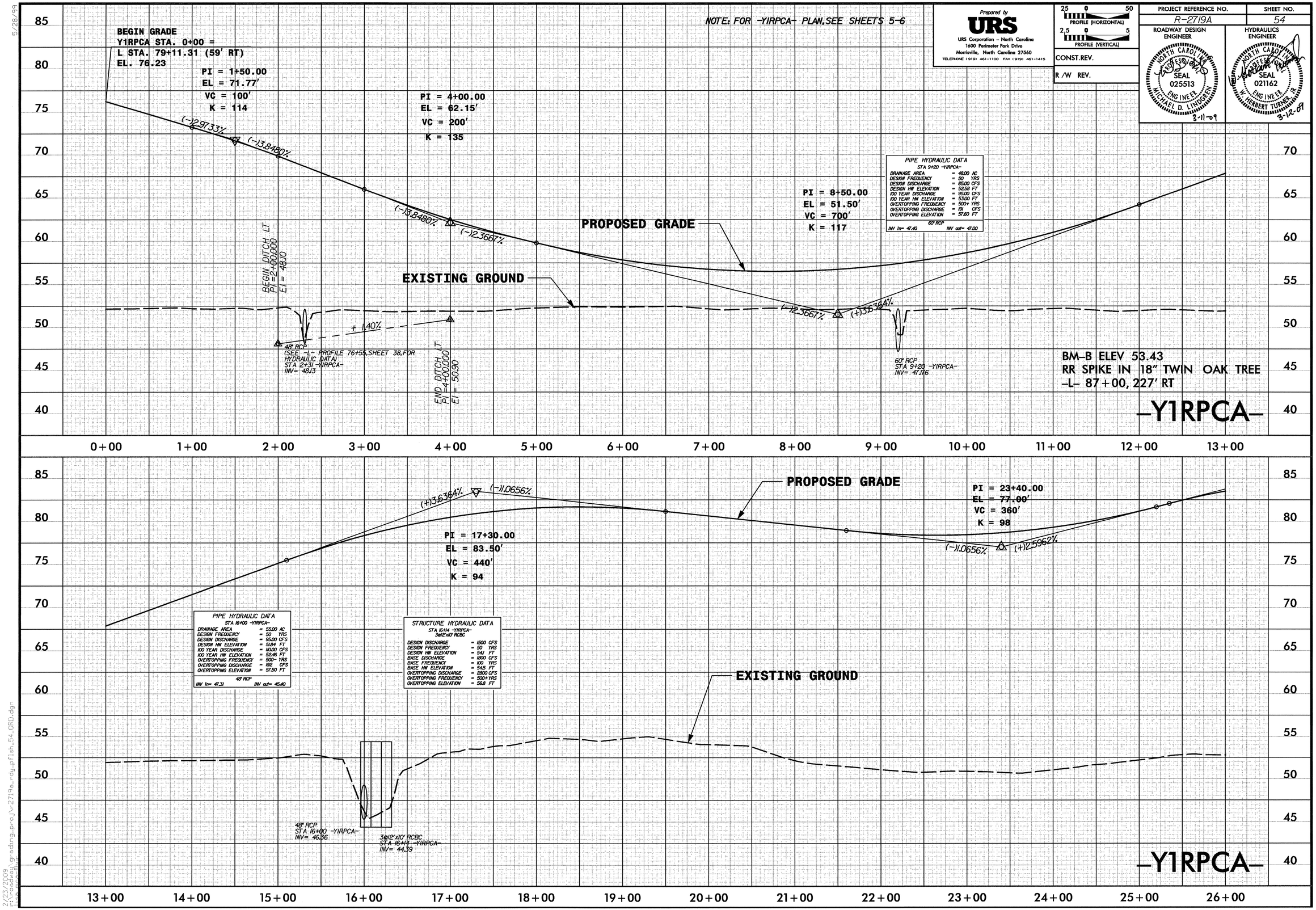

Prepared by
URS
URS Corporation – North Carolina
1600 Perimeter Park Drive
Morrisville, North Carolina 27560
TELEPHONE (919) 461-1100 FAX (919) 461-1415

PROFILE (HORIZONTAL) 25 0 50
PROFILE (VERTICAL) 2.5 0 5

CONST.REV.

R /W REV.

PROJECT REFERENCE NO.	SHEET NO.
R-2719A	54

ROADWAY DESIGN ENGINEER
NORTH CAROLINA PROFESSIONAL SEAL 025513 ENGINEER MICHAEL D. LINDGREN
3-11-09

HYDRAULICS ENGINEER
NORTH CAROLINA PROFESSIONAL SEAL 021162 ENGINEER W. HERBERT TURNER, JR.
3-12-09

2/23/2009
r:\roadway\grading_proj\r2719a_rdy_pflsh_54_GRD.dgn
USER: wpatterson

Prepared by
URS
URS Corporation – North Carolina
1600 Perimeter Park Drive
Morrisville, North Carolina 27560
TELEPHONE (919) 461-1100 FAX (919) 461-1415

PROFILE (HORIZONTAL) 25 0 50
PROFILE (VERTICAL) 2.5 0 5

CONST.REV.

R /W REV.

PROJECT REFERENCE NO.	SHEET NO.
R-2719A	55

ROADWAY DESIGN ENGINEER
NORTH CAROLINA PROFESSIONAL SEAL 025513 ENGINEER MICHAEL D. LINDGREN
3-1-09

HYDRAULICS ENGINEER
NORTH CAROLINA PROFESSIONAL SEAL 021162 ENGINEER W. HERBERT TURNER, JR.
3-12-09

NOTE: FOR -Y1RPCA-PLAN, SEE SHEET 4,5,26

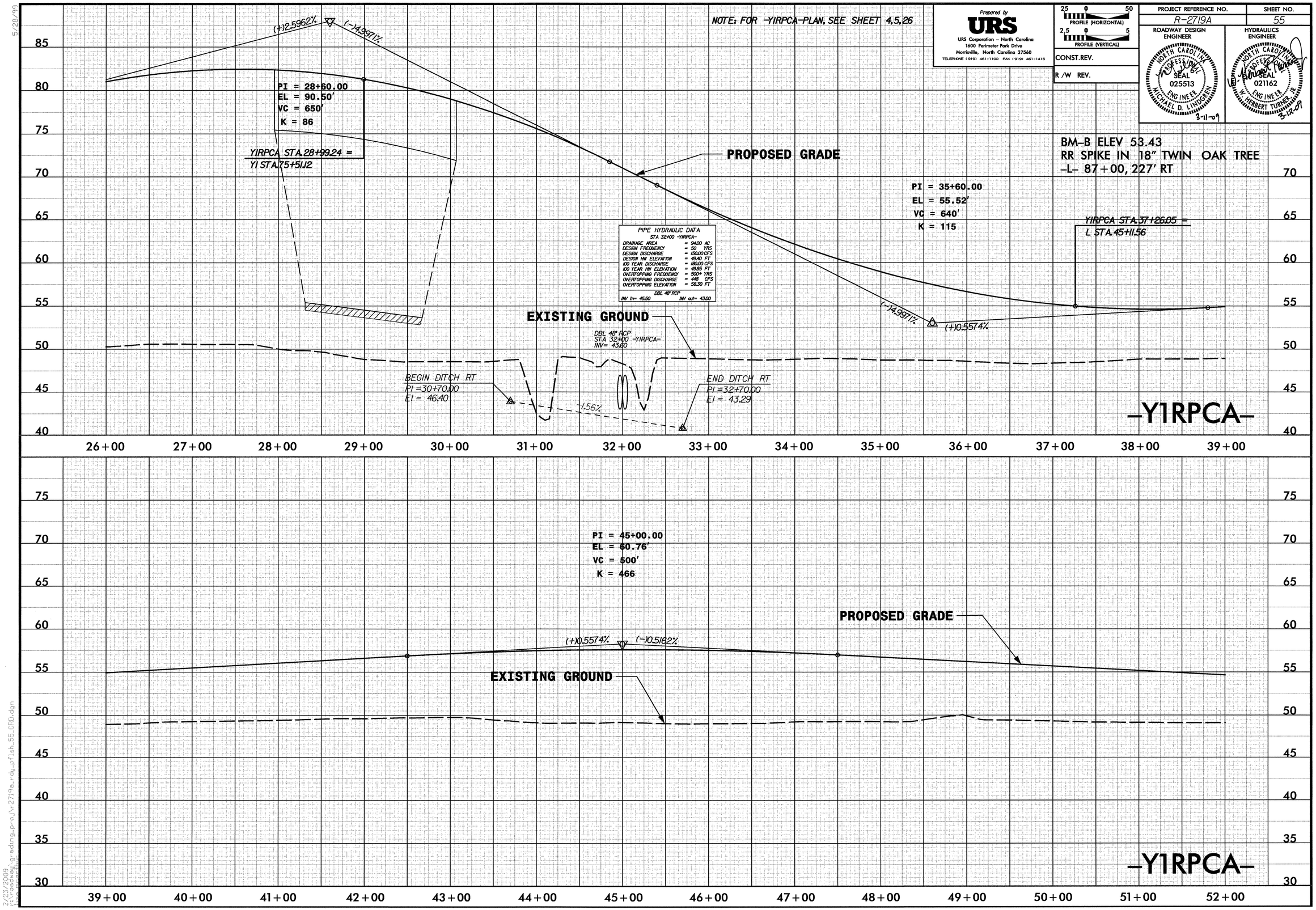

5/28/99

2/23/2009
r:\roadway\grading_proj\r-2719a_rdy_pfish_55_GRD.dgn

5/28/99

NOTE: FOR -Y1RPCA- PLAN, SEE SHEETS 25-26

Prepared by
URS
URS Corporation – North Carolina
1600 Perimeter Park Drive
Morrisville, North Carolina 27560
TELEPHONE (919) 461-1100 FAX (919) 461-1415

25 0 50
2.5 0 5

CONST.REV.

R /W REV.

PROJECT REFERENCE NO.	SHEET NO.
R-2719A	56

ROADWAY DESIGN ENGINEER
NORTH CAROLINA PROFESSIONAL SEAL 025513 ENGINEER MICHAEL D. LINDGREN
3-11-09

HYDRAULICS ENGINEER
NORTH CAROLINA PROFESSIONAL SEAL 021162 ENGINEER W. HERBERT TURNER, JR.
3-12-09

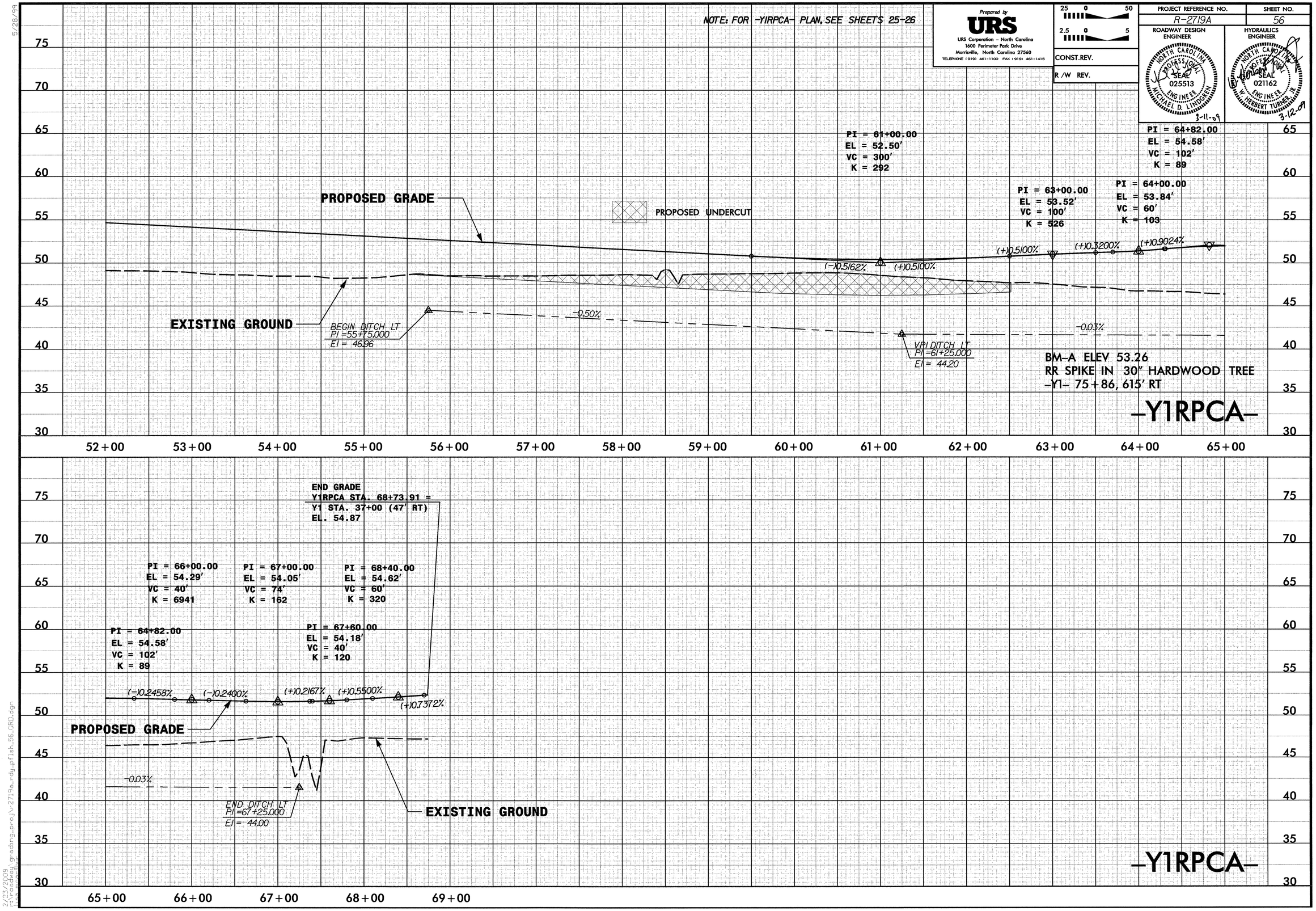

2/23/2009
t:\roadway grading proj\r-2719a_rdy_plsh_56_GRD.dgn

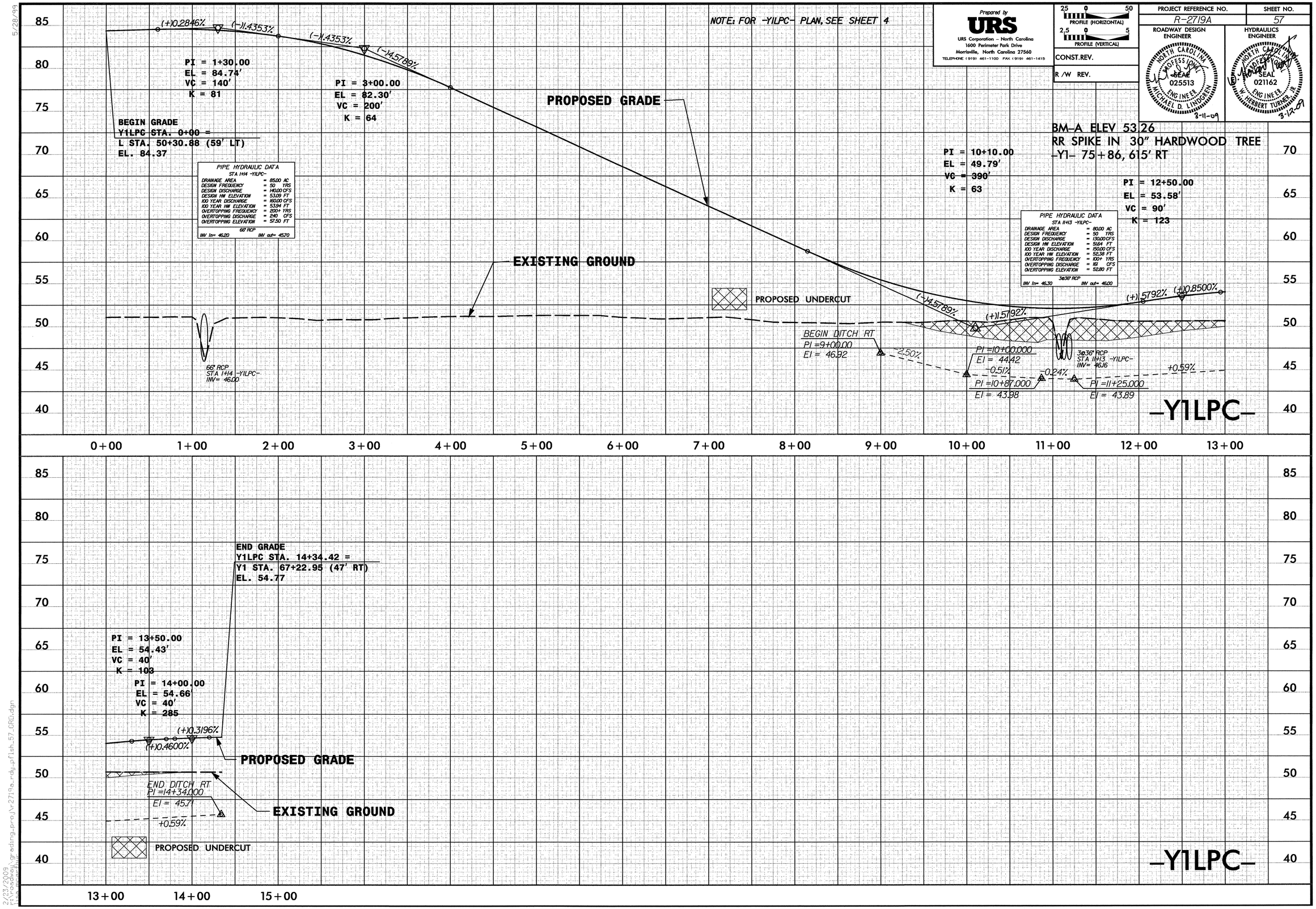

5/28/99

2/23/2009
t:\roadway grading proj\r2719a_rdy_pfls_57_GRD.dgn

NOTE: FOR -Y8- PLAN, SEE SHEETS 27 & 34

Prepared by
URS
URS Corporation – North Carolina
1600 Perimeter Park Drive
Morrisville, North Carolina 27560
TELEPHONE (919) 461-1100 FAX (919) 461-1415

25 0 50 PROFILE (HORIZONTAL)
2.5 0 5 PROFILE (VERTICAL)

CONST.REV.

R /W REV.

PROJECT REFERENCE NO.	SHEET NO.
R-2719A	58

ROADWAY DESIGN ENGINEER
NORTH CAROLINA PROFESSIONAL SEAL 025513 ENGINEER MICHAEL D. LINDGREN
3-11-09

HYDRAULICS ENGINEER
NORTH CAROLINA PROFESSIONAL SEAL 021162 ENGINEER W. HERBERT TURNER, JR.
3-12-09

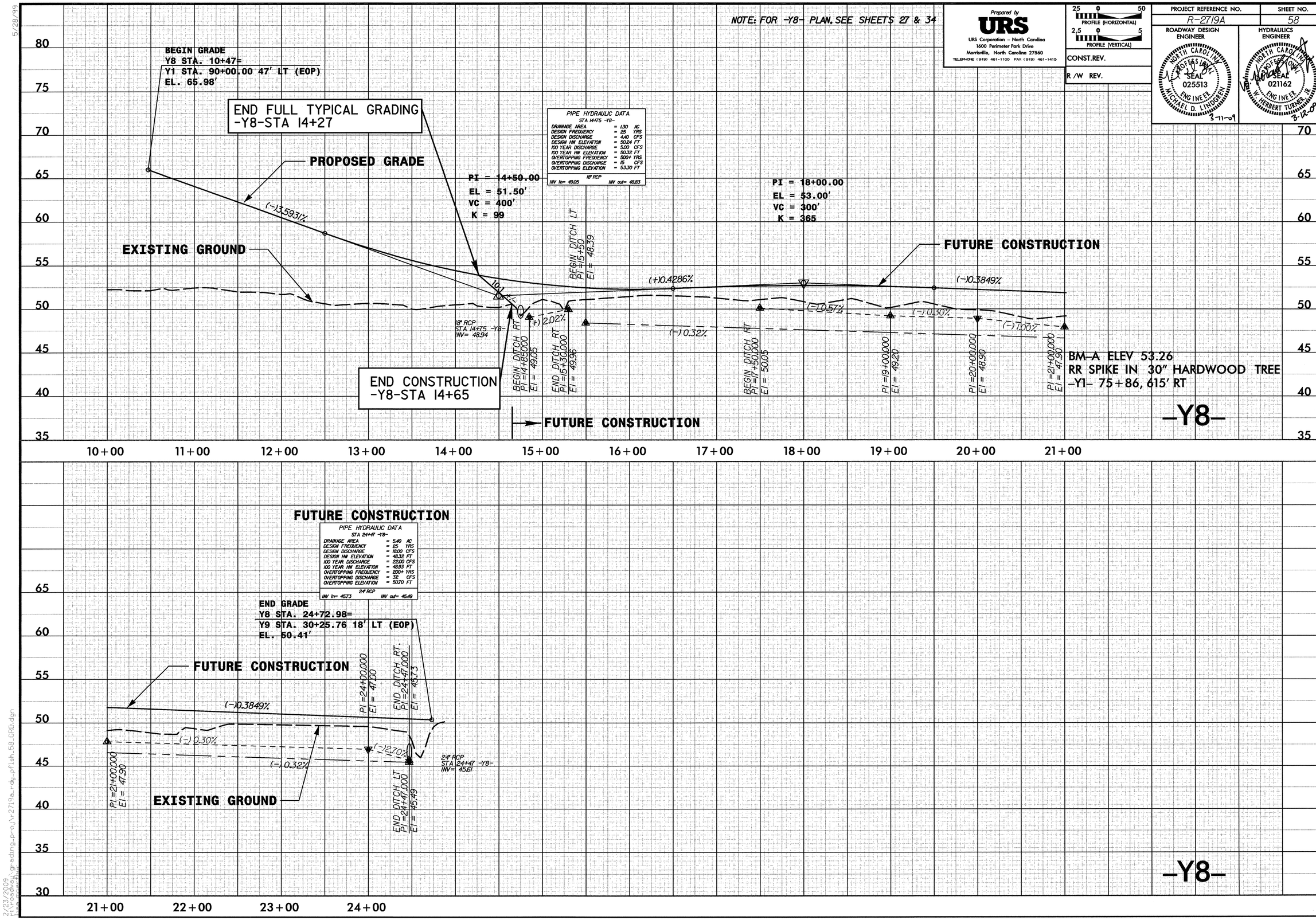

PIPE HYDRAULIC DATA
STA 14+75 -Y8-

DRAINAGE AREA	= 1.30	AC
DESIGN FREQUENCY	= 25	YRS
DESIGN DISCHARGE	= 4.40	CFS
DESIGN HW ELEVATION	= 50.24	FT
100 YEAR DISCHARGE	= 5.00	CFS
100 YEAR HW ELEVATION	= 50.32	FT
OVERTOPPING FREQUENCY	= 500+	YRS
OVERTOPPING DISCHARGE	= 15	CFS
OVERTOPPING ELEVATION	= 53.30	FT

18" RCP
INV In= 49.05 INV out= 48.83

5/28/99

2/23/2009
c:\roadway grading proj\r-2719a_rdy_pfl_sh_58_GRD.dgn

5/28/99

NOTE: FOR -Y9- PLAN, SEE SHEETS 27,33 & 34

Prepared by
URS
URS Corporation – North Carolina
1600 Perimeter Park Drive
Morrisville, North Carolina 27560
TELEPHONE (919) 461-1100 FAX (919) 461-1415

25 0 50 PROFILE (HORIZONTAL)
2.5 0 5 PROFILE (VERTICAL)

CONST.REV.

R /W REV.

PROJECT REFERENCE NO.	SHEET NO.
R-2719A	59

ROADWAY DESIGN ENGINEER: NORTH CAROLINA PROFESSIONAL SEAL 025513 ENGINEER MICHAEL D. LINDGREN 3-11-09

HYDRAULICS ENGINEER: NORTH CAROLINA PROFESSIONAL SEAL 021162 ENGINEER W. HERBERT TURNER, JR. 3-12-09

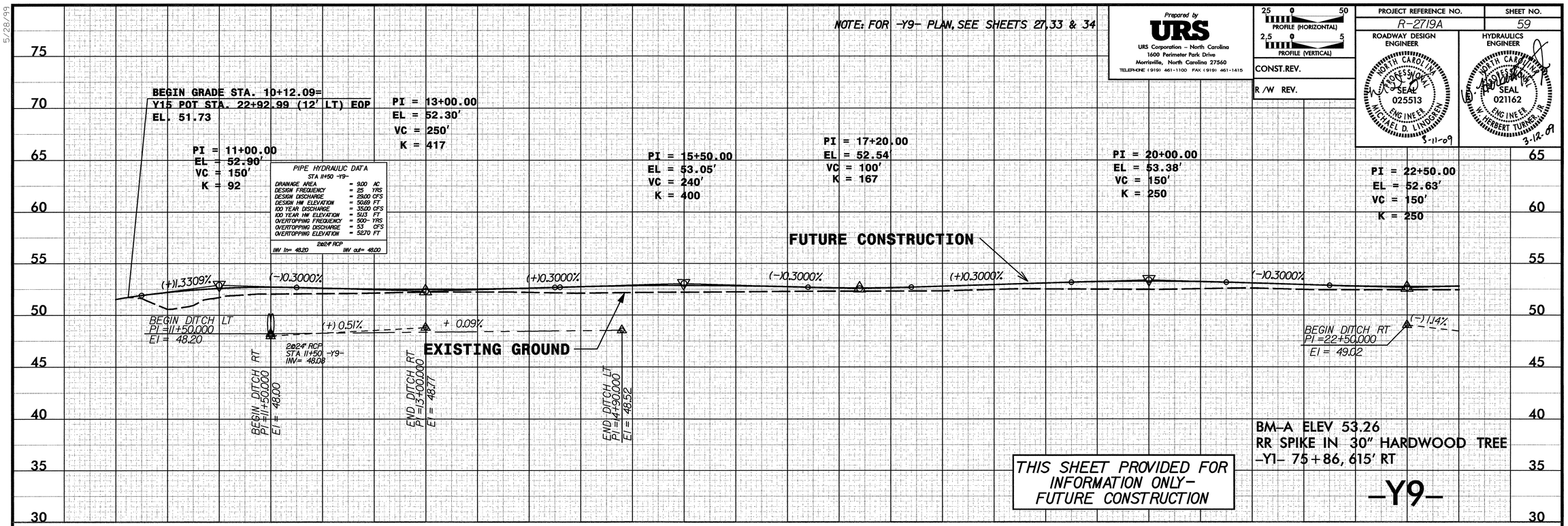

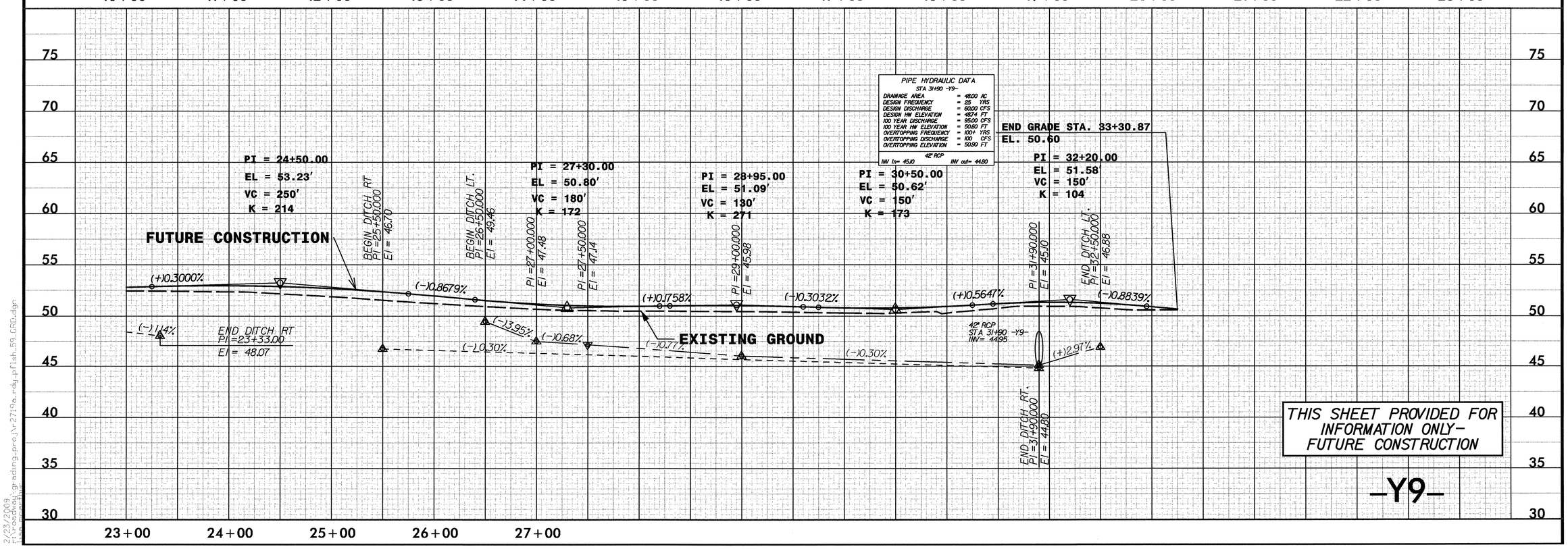

2/23/2009
I:\Roadway\grading_proj\r-2719a_rdy_pflsh_59_GRD.dgn

5/28/99

NOTE: FOR -Y10- PLAN, SEE SHEET 23 & 36

Prepared by
URS
URS Corporation – North Carolina
1600 Perimeter Park Drive
Morrisville, North Carolina 27560
TELEPHONE (919) 461-1100 FAX (919) 461-1415

PROFILE (HORIZONTAL) 25 0 50
PROFILE (VERTICAL) 2.5 0 5

CONST.REV.

R /W REV.

PROJECT REFERENCE NO.	SHEET NO.
R-2719A	60

ROADWAY DESIGN ENGINEER
NORTH CAROLINA PROFESSIONAL SEAL 025513 ENGINEER MICHAEL D. LINDGREN
3-11-09

HYDRAULICS ENGINEER
NORTH CAROLINA PROFESSIONAL SEAL 021162 ENGINEER W. HERBERT TURNER, JR.
3-12-09

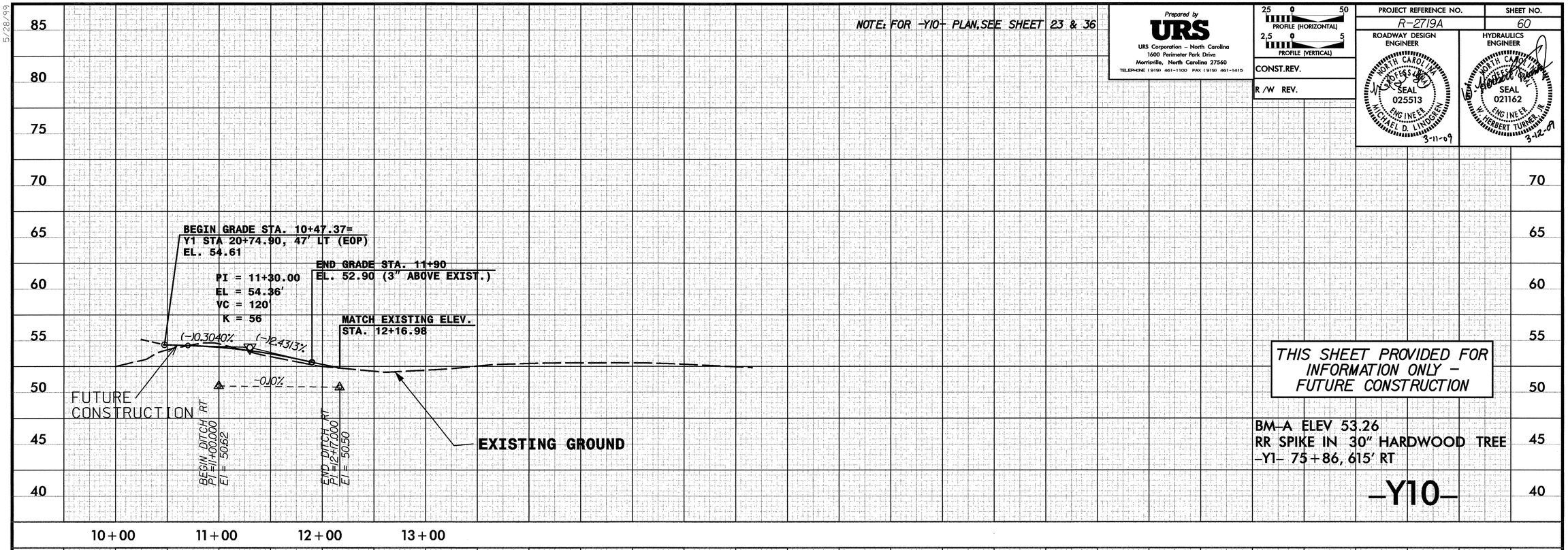

THIS SHEET PROVIDED FOR INFORMATION ONLY – FUTURE CONSTRUCTION

BM-A ELEV 53.26
RR SPIKE IN 30" HARDWOOD TREE
-Y1- 75+86, 615' RT

-Y10-

2/23/2009
t:\roadway\grading_proj\r-2719a_rdy_pfsh_60_GRD.dgn

5/28/99

NOTE: FOR -Y15- PLAN, SEE SHEETS 28,32 & 33

Prepared by
URS
URS Corporation – North Carolina
1600 Perimeter Park Drive
Morrisville, North Carolina 27560
TELEPHONE (919) 461-1100 FAX (919) 461-1415

25 0 50 PROFILE (HORIZONTAL)
2.5 0 5 PROFILE (VERTICAL)

CONST.REV.

R /W REV.

PROJECT REFERENCE NO.	SHEET NO.
R-2719A	61

ROADWAY DESIGN ENGINEER
NORTH CAROLINA PROFESSIONAL SEAL 025513 ENGINEER MICHAEL D. LINDGREN
3-11-09

HYDRAULICS ENGINEER
NORTH CAROLINA PROFESSIONAL SEAL 021162 ENGINEER W. HERBERT TURNER, JR.
3-12-09

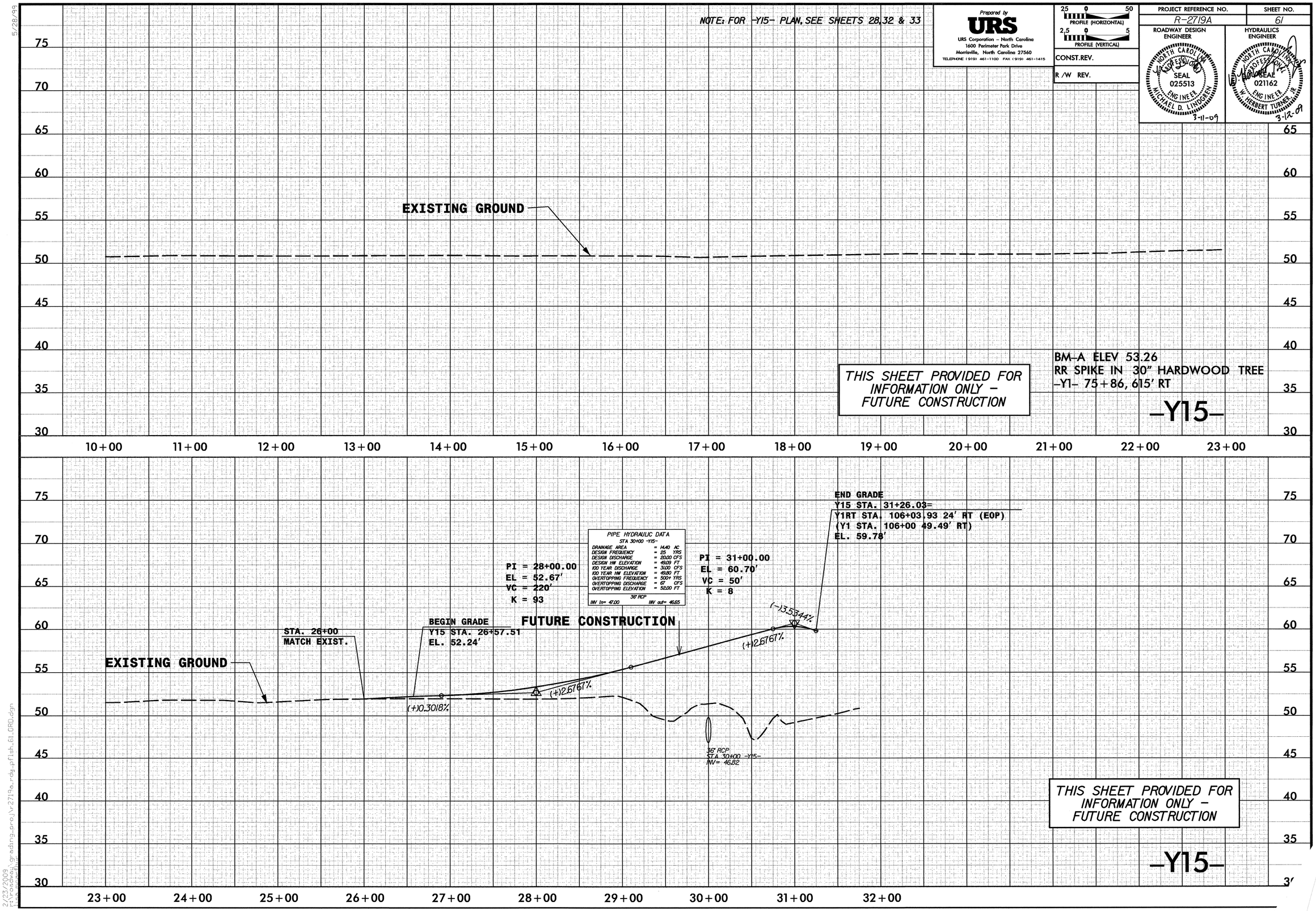

2/23/2009
r:\roadway\grading_proj\r2719a_rdy_plsh_01_GRD.dgn

5/28/99

NOTE: FOR -SVRDI- PLAN, SEE SHEET 9

Prepared by
URS
URS Corporation – North Carolina
1600 Perimeter Park Drive
Morrisville, North Carolina 27560
TELEPHONE (919) 461-1100 FAX (919) 461-1415

PROFILE (HORIZONTAL) 25 0 50
PROFILE (VERTICAL) 2.5 0 5

CONST.REV.

R /W REV.

PROJECT REFERENCE NO.	SHEET NO.
R-2719A	62

ROADWAY DESIGN ENGINEER
NORTH CAROLINA PROFESSIONAL SEAL 025513 ENGINEER MICHAEL D. LINDGREN
3-11-09

HYDRAULICS ENGINEER
NORTH CAROLINA PROFESSIONAL SEAL 021162 ENGINEER W. HERBERT TURNER, JR.
3-12-09

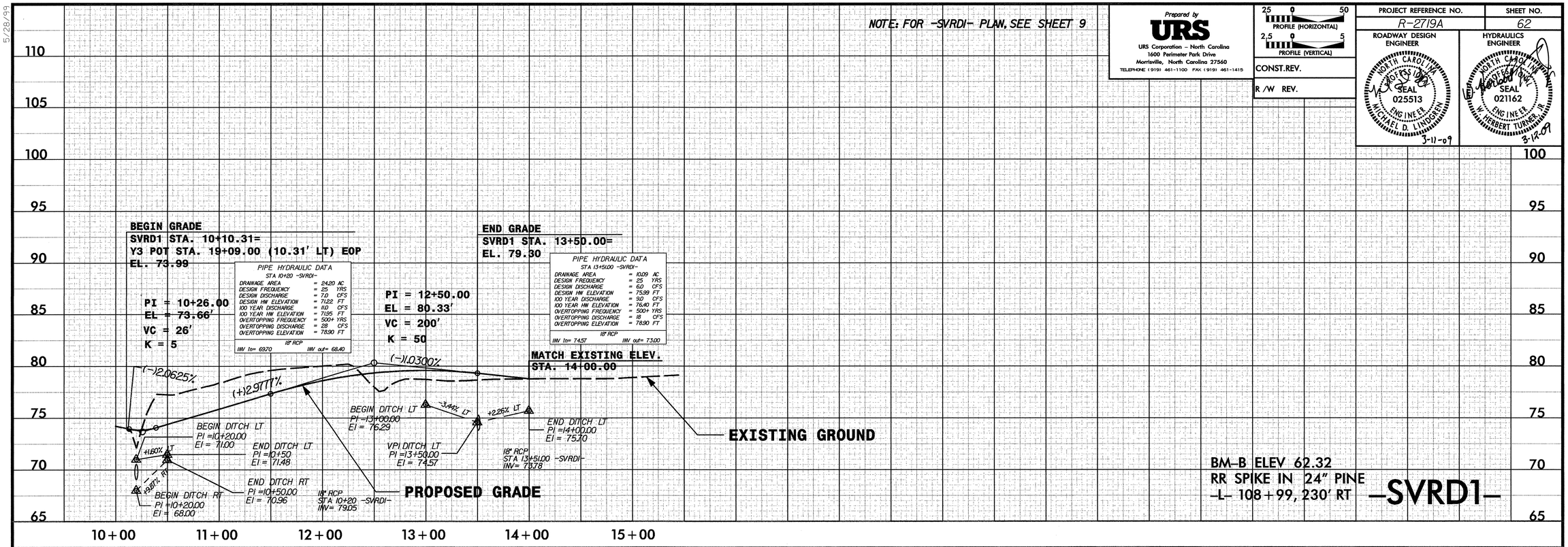

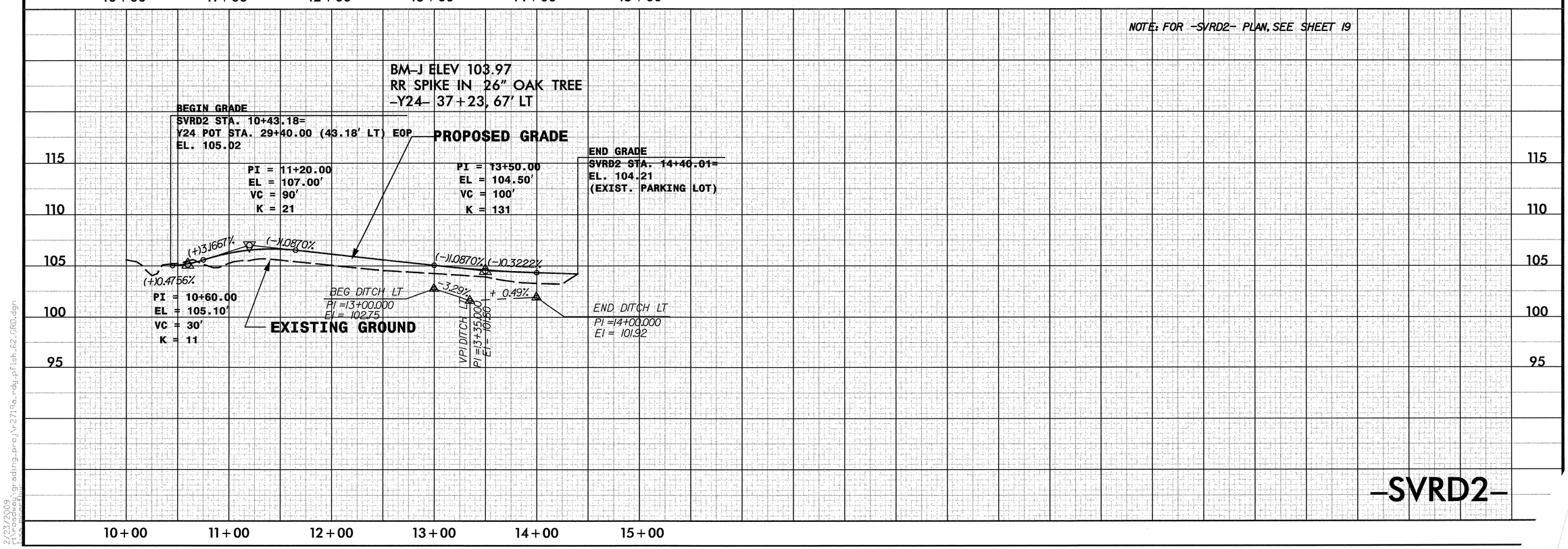

2/23/2009
r:\roadway\grading_proj\r2719a_rdy_pfish_62_GRD.dgn

5/28/99

NOTE: FOR -SVRD3- PLAN, SEE SHEETS 13-14

Prepared by
URS
URS Corporation – North Carolina
1600 Perimeter Park Drive
Morrisville, North Carolina 27560
TELEPHONE (919) 461-1100 FAX (919) 461-1415

25 0 50 PROFILE (HORIZONTAL)
2.5 0 5 PROFILE (VERTICAL)

CONST.REV.

R /W REV.

PROJECT REFERENCE NO.	SHEET NO.
R-2719A	63

ROADWAY DESIGN ENGINEER
NORTH CAROLINA PROFESSIONAL SEAL 025513 ENGINEER MICHAEL D. LINDGREN
3-11-09

HYDRAULICS ENGINEER
NORTH CAROLINA PROFESSIONAL SEAL 021162 ENGINEER W. HERBERT TURNER, JR.
3-12-09

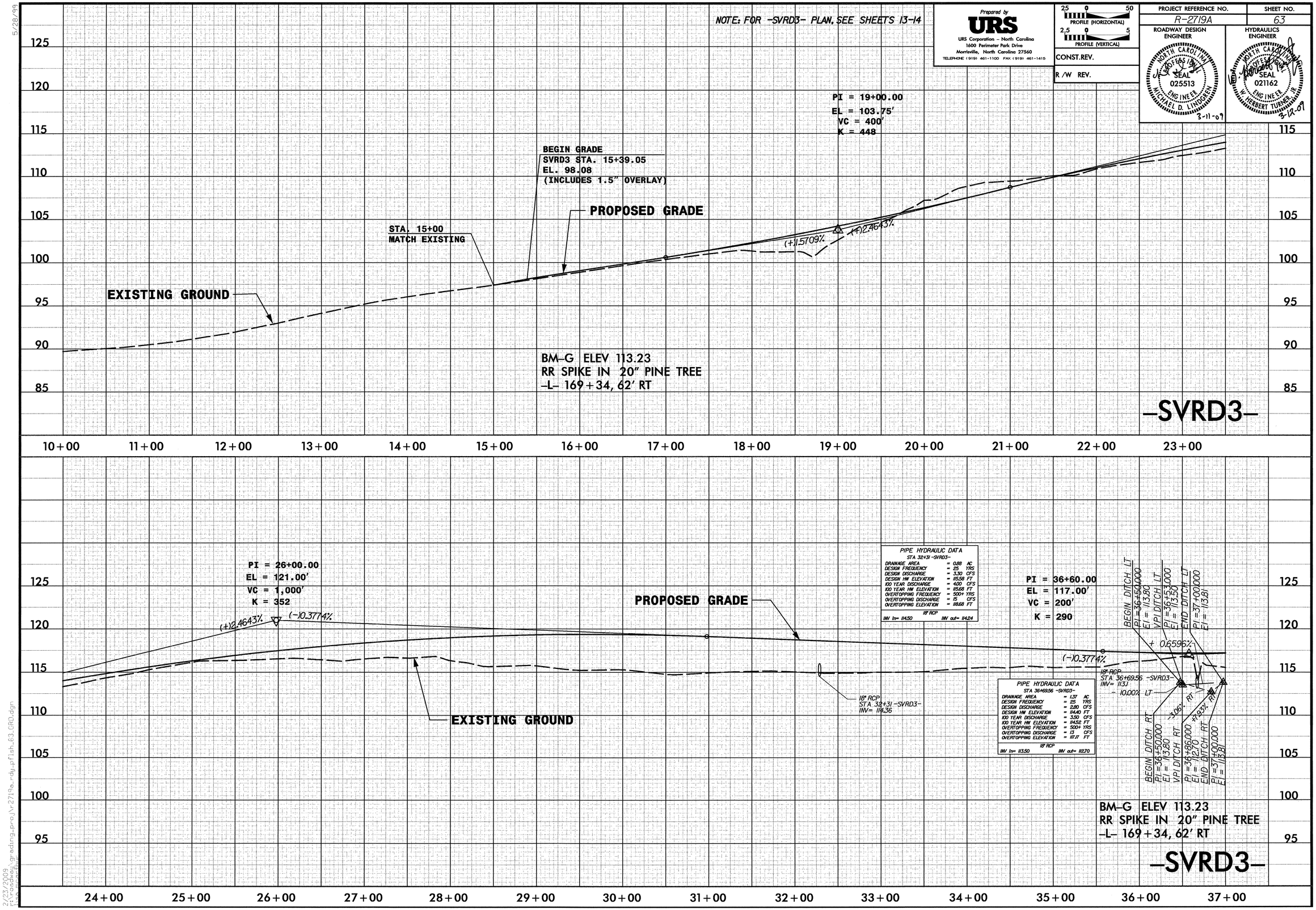

2/23/2009
t:\roadway grading proj\r-2719a_rdg_pflsh_63_GRD.dgn

5/28/99

NOTE: FOR -SVRD3- PLAN, SEE SHEETS 14-15

Prepared by
URS
URS Corporation – North Carolina
1600 Perimeter Park Drive
Morrisville, North Carolina 27560
TELEPHONE (919) 461-1100 FAX (919) 461-1415

PROFILE (HORIZONTAL) 25 0 50
PROFILE (VERTICAL) 2.5 0 5

CONST.REV.

R /W REV.

PROJECT REFERENCE NO.	SHEET NO.
R-2719A	64

ROADWAY DESIGN ENGINEER
NORTH CAROLINA PROFESSIONAL SEAL 025513 ENGINEER MICHAEL D. LINDGREN
3-11-09

HYDRAULICS ENGINEER
NORTH CAROLINA PROFESSIONAL SEAL 021162 ENGINEER W. HERBERT TURNER, JR.
3/12/09

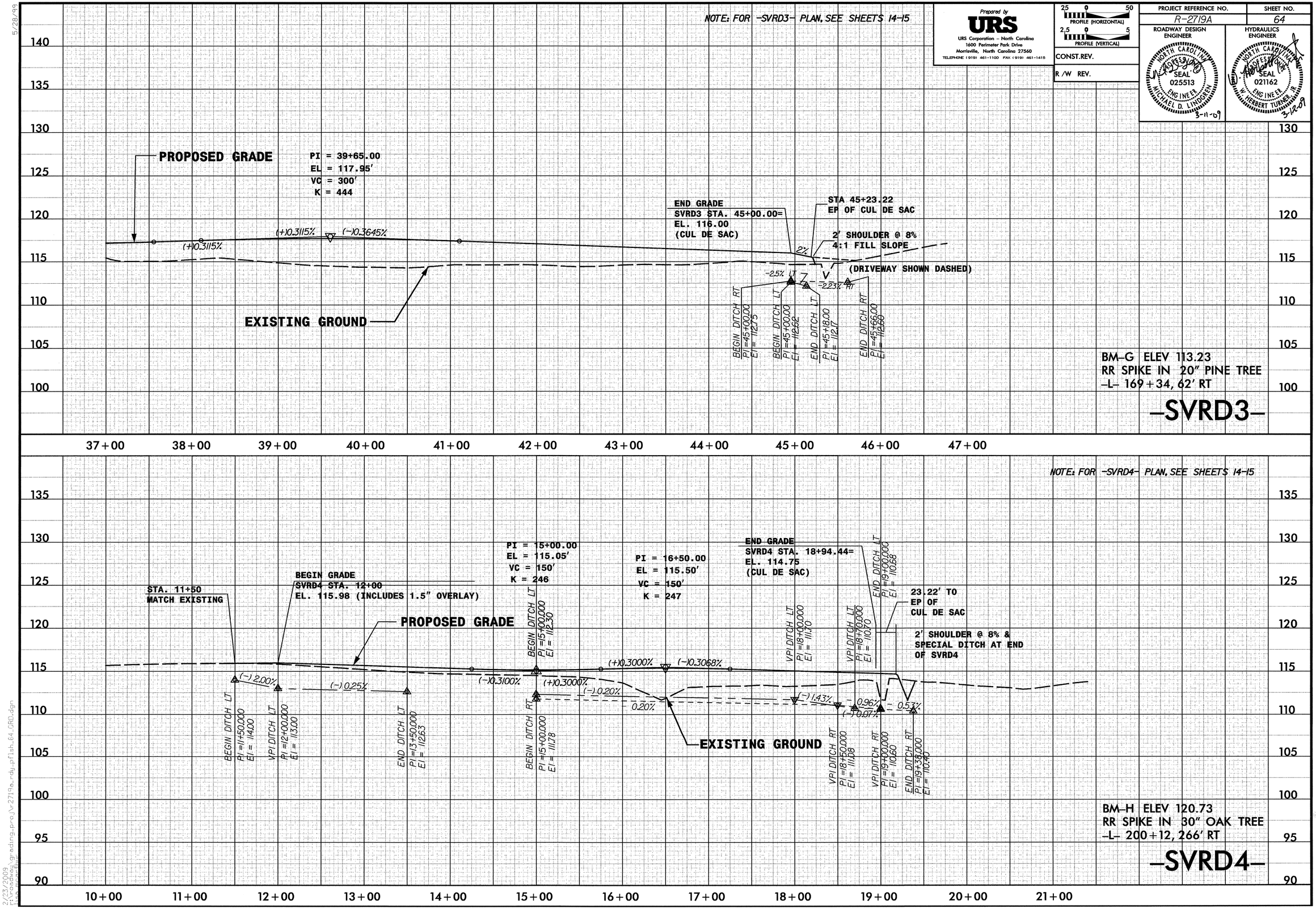

2/23/2009
r:\roadway\grading_proj\r-2719a_rdy_pfls_64_GRD.dgn

5/28/99

NOTE: FOR -Y24- PLAN, SEE SHEETS 19

Prepared by
URS
URS Corporation – North Carolina
1600 Perimeter Park Drive
Morrisville, North Carolina 27560
TELEPHONE (919) 461-1100 FAX (919) 461-1415

25 0 50 PROFILE (HORIZONTAL)
2.5 0 5 PROFILE (VERTICAL)

CONST.REV.

R /W REV.

PROJECT REFERENCE NO.	SHEET NO.
R-2719A	65

ROADWAY DESIGN ENGINEER
NORTH CAROLINA PROFESSIONAL SEAL 025513 ENGINEER MICHAEL D. LINDGREN
3-11-09

HYDRAULICS ENGINEER
NORTH CAROLINA PROFESSIONAL SEAL 021162 ENGINEER W. HERBERT TURNER, JR.
3-12-09

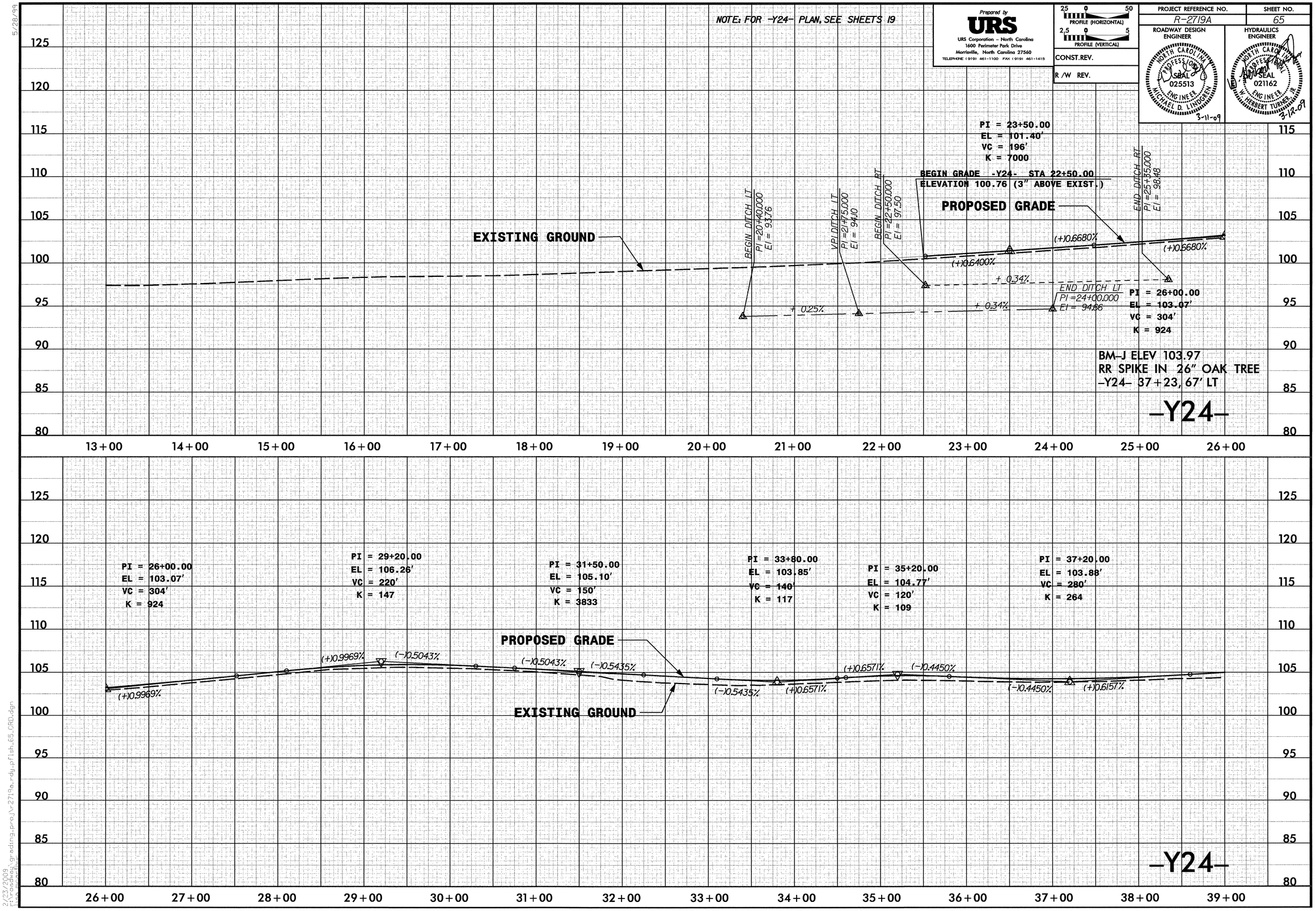

2/23/2009
r:\roadway\grading_proj\r-2719a_rdy_pfls_65_GRD.dgn

5/28/99

NOTE: FOR -Y24- PLAN, SEE SHEETS 19 & 36

Prepared by
URS
URS Corporation – North Carolina
1600 Perimeter Park Drive
Morrisville, North Carolina 27560
TELEPHONE (919) 461-1100 FAX (919) 461-1415

PROFILE (HORIZONTAL) 25 0 50
PROFILE (VERTICAL) 2.5 0 5

CONST.REV.

R /W REV.

PROJECT REFERENCE NO.	SHEET NO.
R-2719A	66

ROADWAY DESIGN ENGINEER: NORTH CAROLINA PROFESSIONAL SEAL 025513 ENGINEER MICHAEL D. LINDGREN 3-11-09

HYDRAULICS ENGINEER: NORTH CAROLINA PROFESSIONAL SEAL 021162 ENGINEER W. HERBERT TURNER, JR. 3-11-09

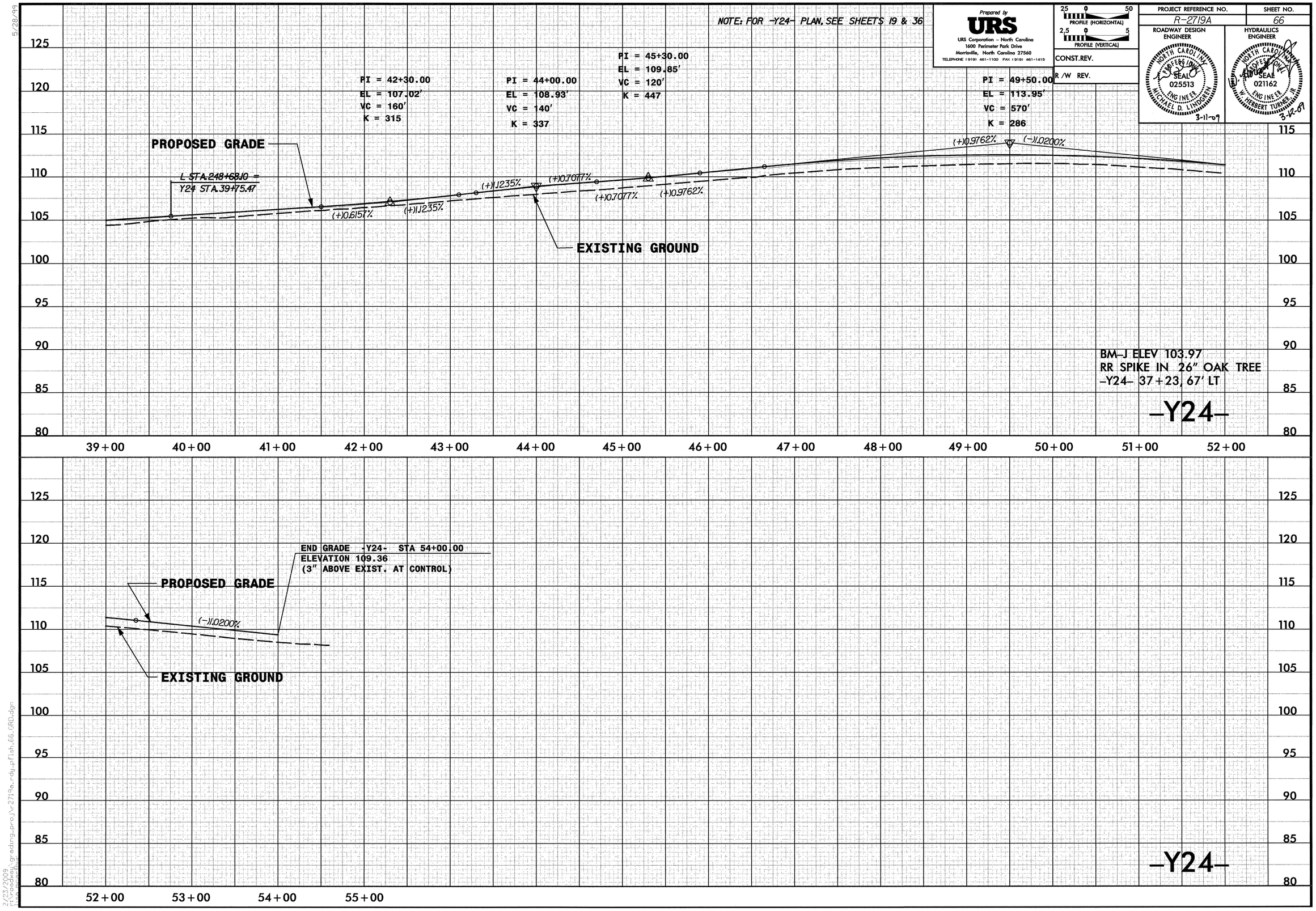

2/23/2009
r:\roadway\grading_proj\r2719a_rdy_pfish66_GRD.dgn

5/28/99

Prepared by
URS
URS Corporation – North Carolina
1600 Perimeter Park Drive
Morrisville, North Carolina 27560
TELEPHONE (919) 461-1100 FAX (919) 461-1415

25 0 50 PROFILE (HORIZONTAL)
2.5 0 5 PROFILE (VERTICAL)

CONST.REV.

R /W REV.

PROJECT REFERENCE NO.	SHEET NO.
R-2719A	67

ROADWAY DESIGN ENGINEER
NORTH CAROLINA PROFESSIONAL SEAL 025513 ENGINEER MICHAEL D. LINDGREN
3-11-09

HYDRAULICS ENGINEER
NORTH CAROLINA PROFESSIONAL SEAL 021162 ENGINEER W. HERBERT TURNER, JR.
3-12-09

NOTE: FOR -Y24LPB- PLAN, SEE SHEET 19

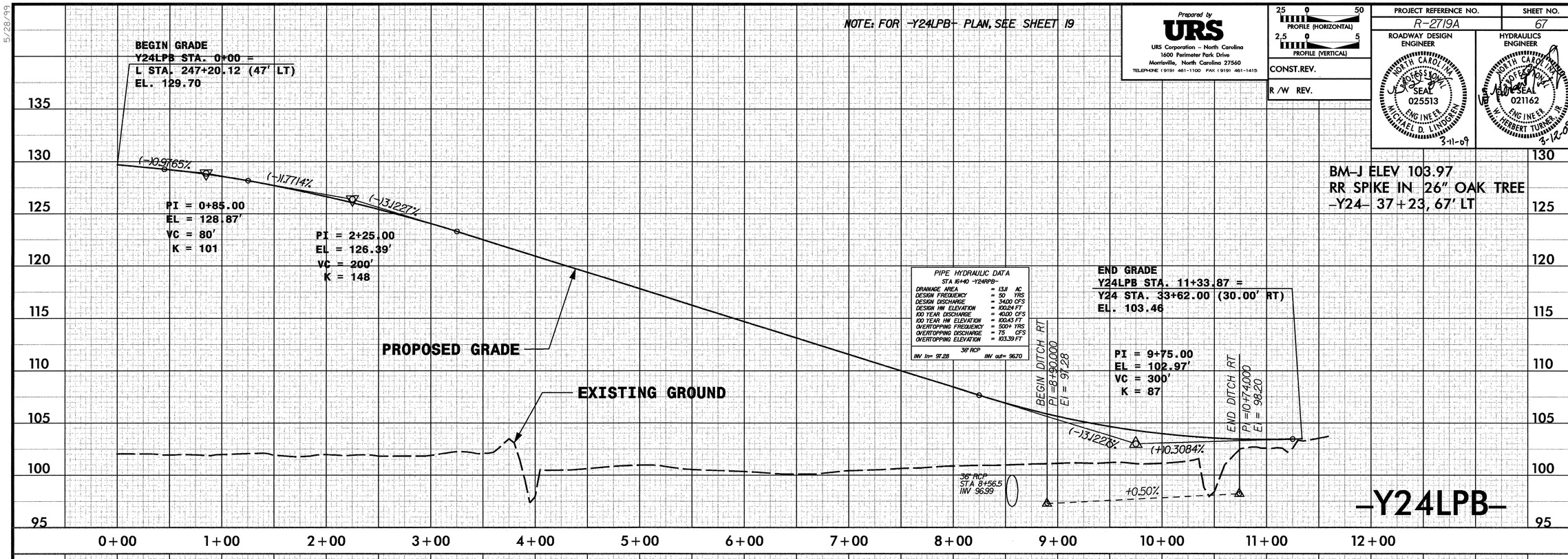

NOTE: FOR -Y24RPB- PLAN, SEE SHEETS 18 & 19

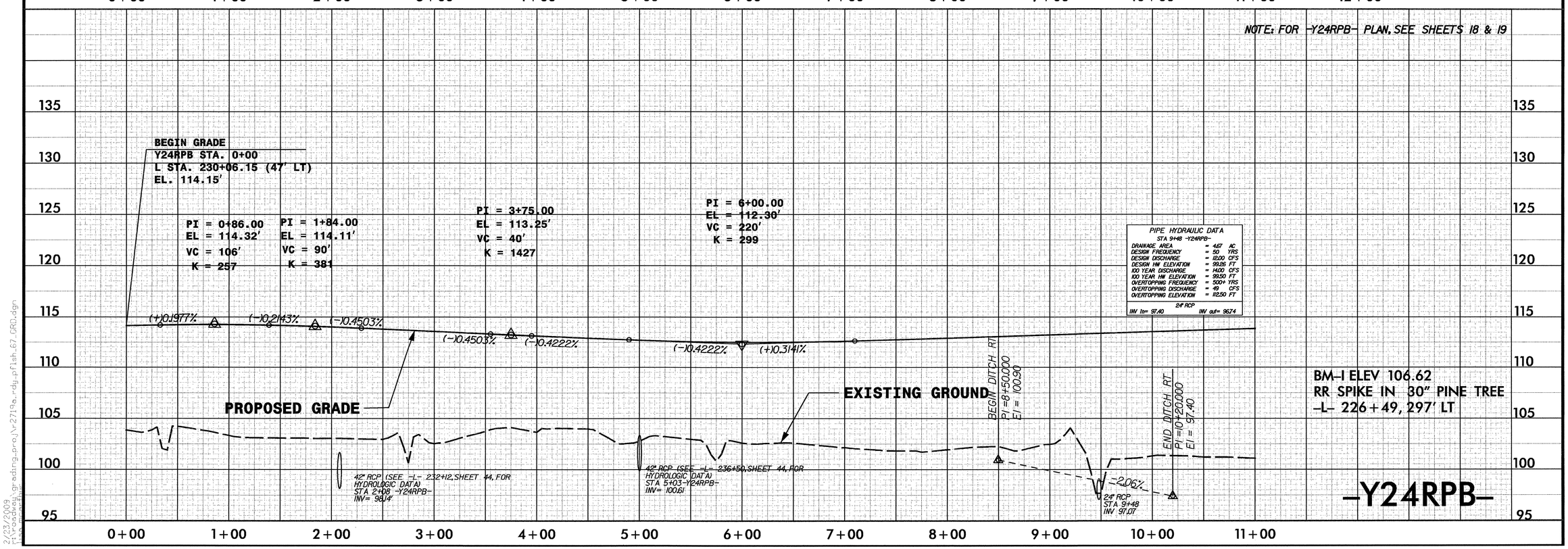

2/23/2009
r:\Roadway\grading_proj\r-2719a_rdy_pflsh_67_GRD.dgn

5/28/99

Prepared by
URS
URS Corporation – North Carolina
1600 Perimeter Park Drive
Morrisville, North Carolina 27560
TELEPHONE (919) 461-1100 FAX (919) 461-1415

PROFILE (HORIZONTAL) 2.5 0 50
PROFILE (VERTICAL) 2.5 0 5

CONST.REV.

R /W REV.

PROJECT REFERENCE NO.	SHEET NO.
R-2719A	68

ROADWAY DESIGN ENGINEER
NORTH CAROLINA PROFESSIONAL SEAL 025513 ENGINEER MICHAEL D. LINDGREN
3-11-09

HYDRAULICS ENGINEER
NORTH CAROLINA PROFESSIONAL SEAL 021162 ENGINEER W. HERBERT TURNER, JR.
3-12-09

NOTE: FOR -Y24RPB- PLAN, SEE SHEET 19

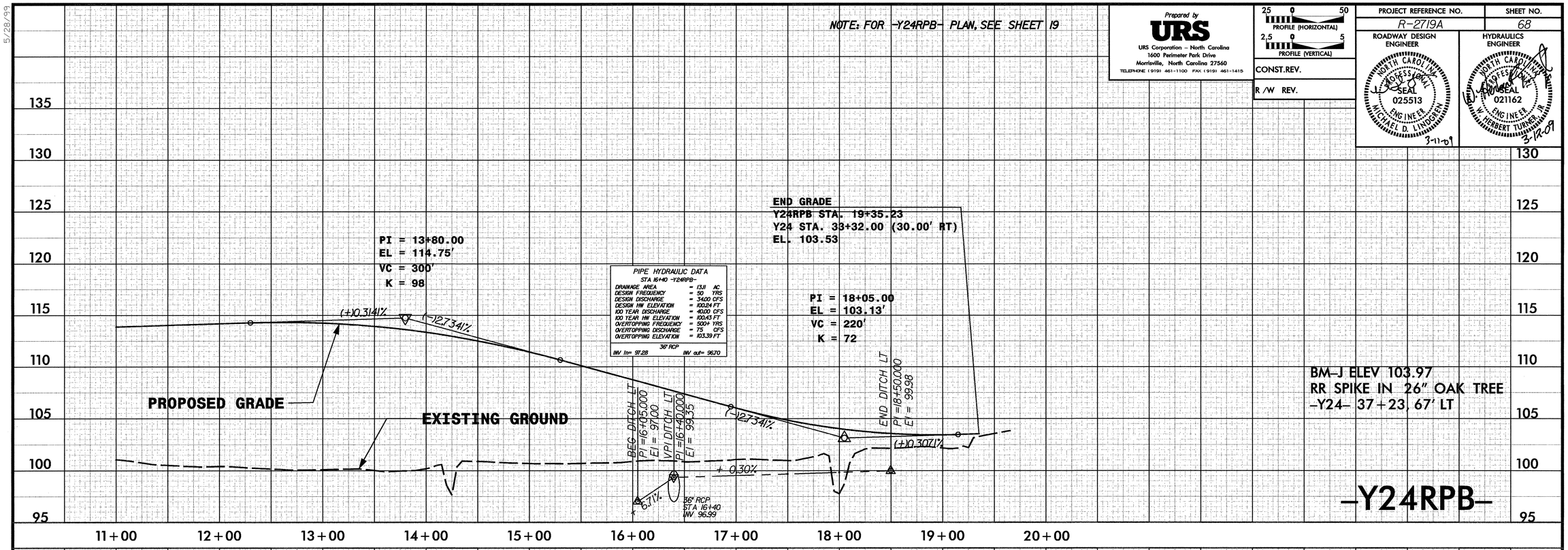

NOTE: FOR -Y24LPC- PLAN, SEE SHEET 19

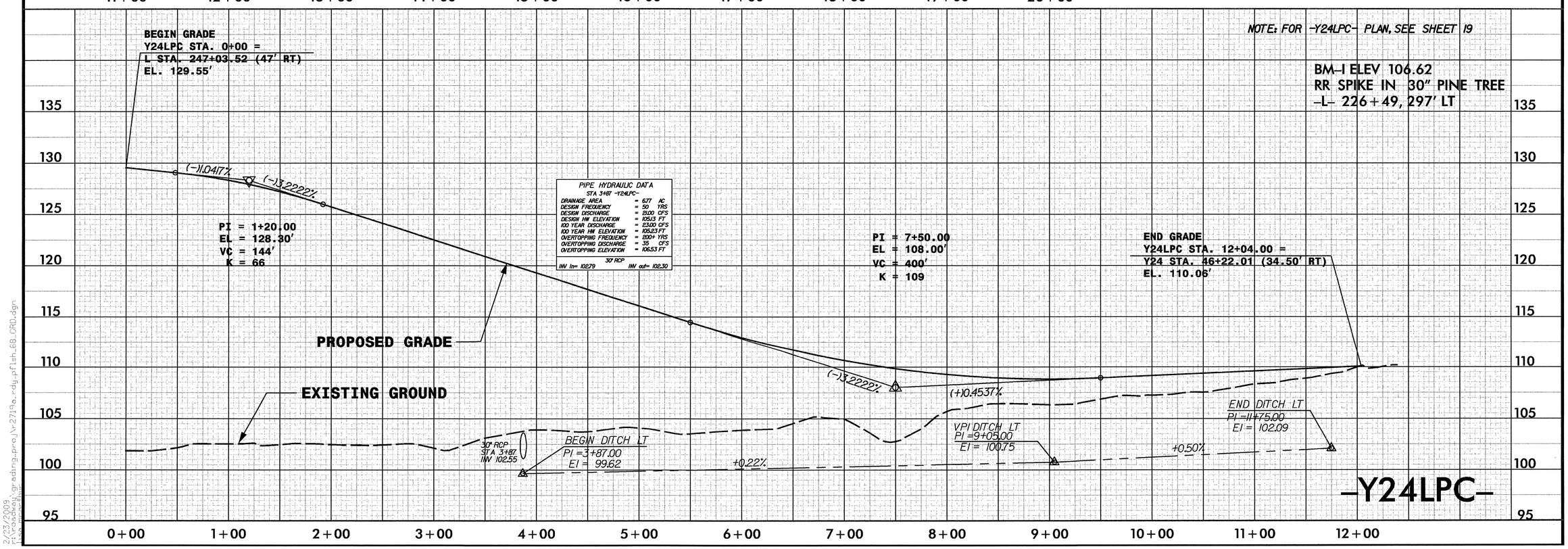

2/23/2009
r:\roadway\grading_proj\r-2719a_rdy_pfish_68_GRD.dgn

5/28/99

NOTE: FOR -Y24RPC- PLAN, SEE SHEETS 18 & 19

Prepared by
URS
URS Corporation – North Carolina
1600 Perimeter Park Drive
Morrisville, North Carolina 27560
TELEPHONE (919) 461-1100 FAX (919) 461-1415

PROFILE (HORIZONTAL) 25 0 50
PROFILE (VERTICAL) 2.5 0 5

CONST.REV.

R /W REV.

PROJECT REFERENCE NO.	SHEET NO.
R-2719A	69

ROADWAY DESIGN ENGINEER: NORTH CAROLINA PROFESSIONAL SEAL 025513 ENGINEER MICHAEL D. LINDGREN 3-11-09

HYDRAULICS ENGINEER: NORTH CAROLINA PROFESSIONAL SEAL 021162 ENGINEER W. HERBERT TURNER, JR. 3-12-09

BEGIN GRADE
Y24RPC STA. 0+00 =
L STA. 227+08.60 (47' RT)
EL. 110.42'

PI = 0+65.00
EL = 110.17'
VC = 84'
K = 261

PI = 1+60.00
EL = 110.11'
VC = 60'
K = 487

PI = 2+60.00
EL = 110.17'
VC = 140'
K = 218

PI = 5+00.00
EL = 108.77'
VC = 190'
K = 215

PI = 9+50.00
EL = 110.12'
VC = 200'
K = 256

BM-I ELEV 106.62
RR SPIKE IN 30" PINE TREE
-L- 226+49, 297' LT

PIPE HYDRAULIC DATA
STA 9+70 -Y24RPC-

DRAINAGE AREA	= 13.97	AC
DESIGN FREQUENCY	= 50	YRS
DESIGN DISCHARGE	= 26.00	CFS
DESIGN HW ELEVATION	= 105.91	FT
100 YEAR DISCHARGE	= 30.00	CFS
100 YEAR HW ELEVATION	= 106.61	FT
OVERTOPPING FREQUENCY	= 500+	YRS
OVERTOPPING DISCHARGE	= 61	CFS
OVERTOPPING ELEVATION	= 108.47	FT

30" RCP
INV In= 101.90 INV out= 101.33

PROPOSED GRADE

EXISTING GROUND

(-)0.3846% (-)0.0632% (+)0.0600% (-)0.5833% (-)0.5833% (+)0.3000% (+)0.3000% (-)0.4800% (-)0.4800%

-0.30% +0.30% +0.30%

30" RCP
STA 14+47
INV 102.66

BEGIN DITCH RT
PI =0+90.000
EI = 101.18

VPI DITCH RT
PI =5+12.000
EI = 99.92

42" RCP (SEE -L- 232+12, SHEET 44, FOR HYDROLOGIC DATA)
STA. 4+96 -Y24RPC-
INV= 99.34

END DITCH RT
PI =10+00.000
101.39

BEGIN DITCH RT
PI =10+00.000
99.70

-Y24RPC-

0+00 1+00 2+00 3+00 4+00 5+00 6+00 7+00 8+00 9+00 10+00 11+00 12+00 13+00

135 130 125 120 115 110 105 100 95

PI = 13+50.00
EL = 108.20'
VC = 200'
K = 182

PIPE HYDRAULIC DATA
STA 14+47 -Y24RPC-

DRAINAGE AREA	= 6.01	AC
DESIGN FREQUENCY	= 50	YRS
DESIGN DISCHARGE	= 23.00	CFS
DESIGN HW ELEVATION	= 105.26	FT
100 YEAR DISCHARGE	= 25.00	CFS
100 YEAR HW ELEVATION	= 105.43	FT
OVERTOPPING FREQUENCY	= 500+	YRS
OVERTOPPING DISCHARGE	= 54	CFS
OVERTOPPING ELEVATION	= 108.47	FT

30" RCP
INV In= 102.82 INV out= 102.50

PI = 16+50.00
EL = 110.05'
VC = 200'
K = 213

END GRADE
Y24RPC STA. 21+51.82 =
Y24 STA. 46+40.01 (34.50' RT)
EL. 110.23'

PI = 19+25.00
EL = 109.16'
VC = 160'
K = 201

PROPOSED GRADE

(+)0.6167% (+)0.6167% (-)0.3236% (-)0.3236% (+)0.4117%

+0.6522% +0.85% +0.60% +0.30% +0.30%

EXISTING GROUND

BM-J ELEV 103.97
RR SPIKE IN 26" OAK TREE
-Y24- 37+23, 67' LT

END DITCH RT
PI =13+75.000
EI = 100.83

BEGIN DITCH LT
PI =14+20.000
EI = 102.50

30" RCP
STA 14+47
INV 102.66

BEGIN DITCH RT
PI =14+85.000
EI = 102.82

VPI DITCH RT
PI =16+00.000
EI = 103.80

BEGIN DITCH LT
PI =16+50.000
EI = 104.69

VPI DITCH RT
PI =18+50.000
EI = 105.30

END DITCH RT
PI =21+00.000
EI = 106.05

-Y24RPC-

13+00 14+00 15+00 16+00 17+00 18+00 19+00 20+00 21+00 22+00

135 130 125 120 115 110 105 100 95

2/23/2009
f:\roadway\grading-proj\r2719a_rdy_pfish_69_URD.dgn

5/28/99

NOTE: FOR -Y6- PLAN, SEE SHEETS 19-21

Prepared by
URS
URS Corporation – North Carolina
1600 Perimeter Park Drive
Morrisville, North Carolina 27560
TELEPHONE (919) 461-1100 FAX (919) 461-1415

25 0 50 PROFILE (HORIZONTAL)
2.5 0 5 PROFILE (VERTICAL)

CONST.REV.

R /W REV.

PROJECT REFERENCE NO.	SHEET NO.
R-2719A	70

ROADWAY DESIGN ENGINEER: NORTH CAROLINA PROFESSIONAL SEAL 025513 ENGINEER MICHAEL D. LINDGREN 3-11-09

HYDRAULICS ENGINEER: NORTH CAROLINA PROFESSIONAL SEAL 021162 ENGINEER W. HERBERT TURNER, JR. 3-12-09

BM-J ELEV 103.97
RR SPIKE IN 26" OAK TREE
-Y24- 37+23, 67' LT

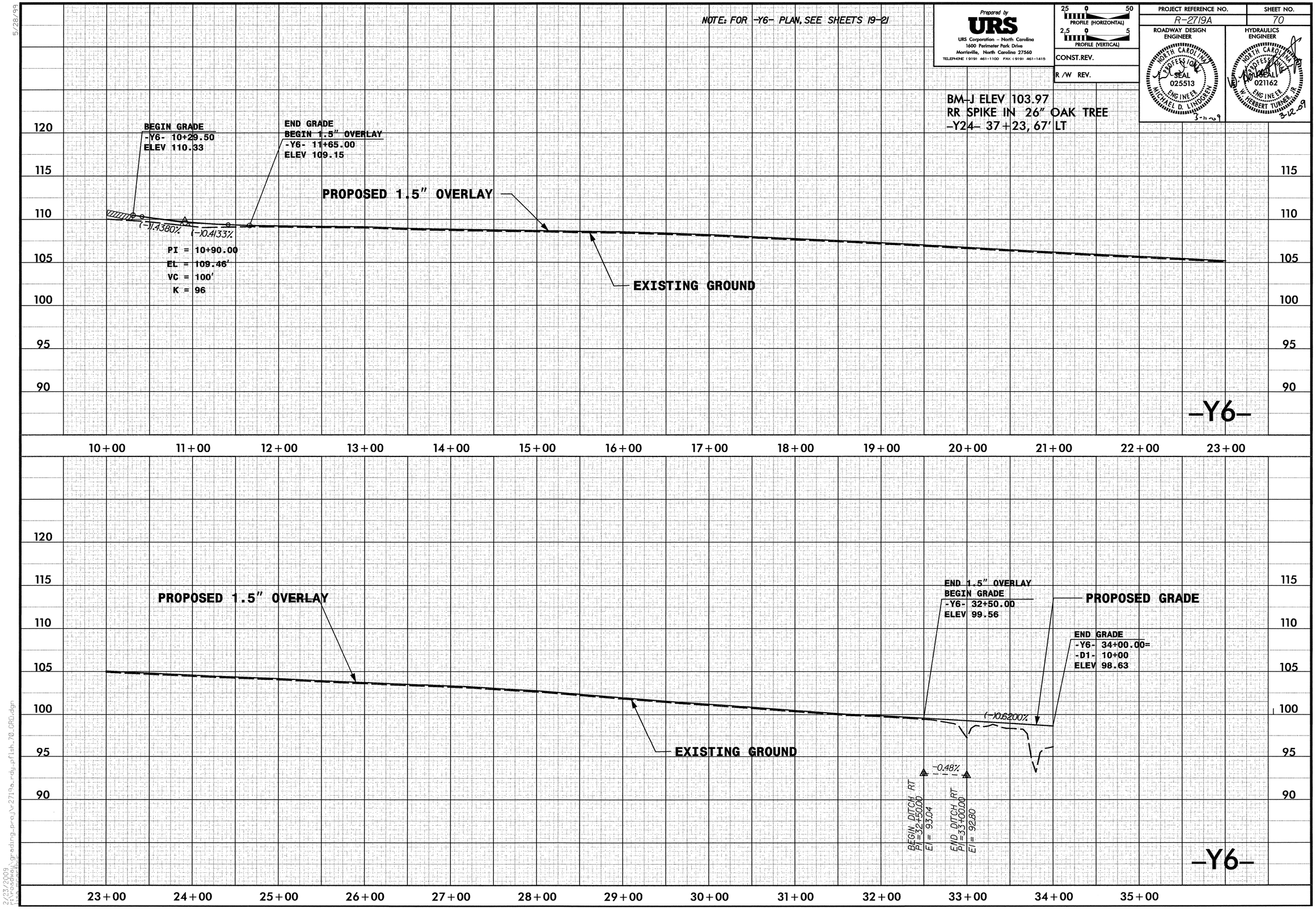

2/23/2009
I:\roadway\grading_proj\r2719a_rdy_pfish_70_DRD.dgn

5/28/99

BM-J ELEV 103.97
RR SPIKE IN 26" OAK TREE
-Y24- 37+23, 67' LT

NOTE: FOR -D1- & -D2- PLAN, SEE SHEETS 21-22

Prepared by
URS
URS Corporation - North Carolina
1600 Perimeter Park Drive
Morrisville, North Carolina 27560
TELEPHONE (919) 461-1100 FAX (919) 461-1415

PROFILE (HORIZONTAL) 25 0 50
PROFILE (VERTICAL) 2.5 0 5

CONST.REV.

R /W REV.

PROJECT REFERENCE NO.	SHEET NO.
R-2719A	71

ROADWAY DESIGN ENGINEER
NORTH CAROLINA PROFESSIONAL SEAL 025513 ENGINEER MICHAEL D. LINDGREN
3-11-09

HYDRAULICS ENGINEER
NORTH CAROLINA PROFESSIONAL SEAL 021162 ENGINEER W. HERBERT TURNER, JR.
3-12-09

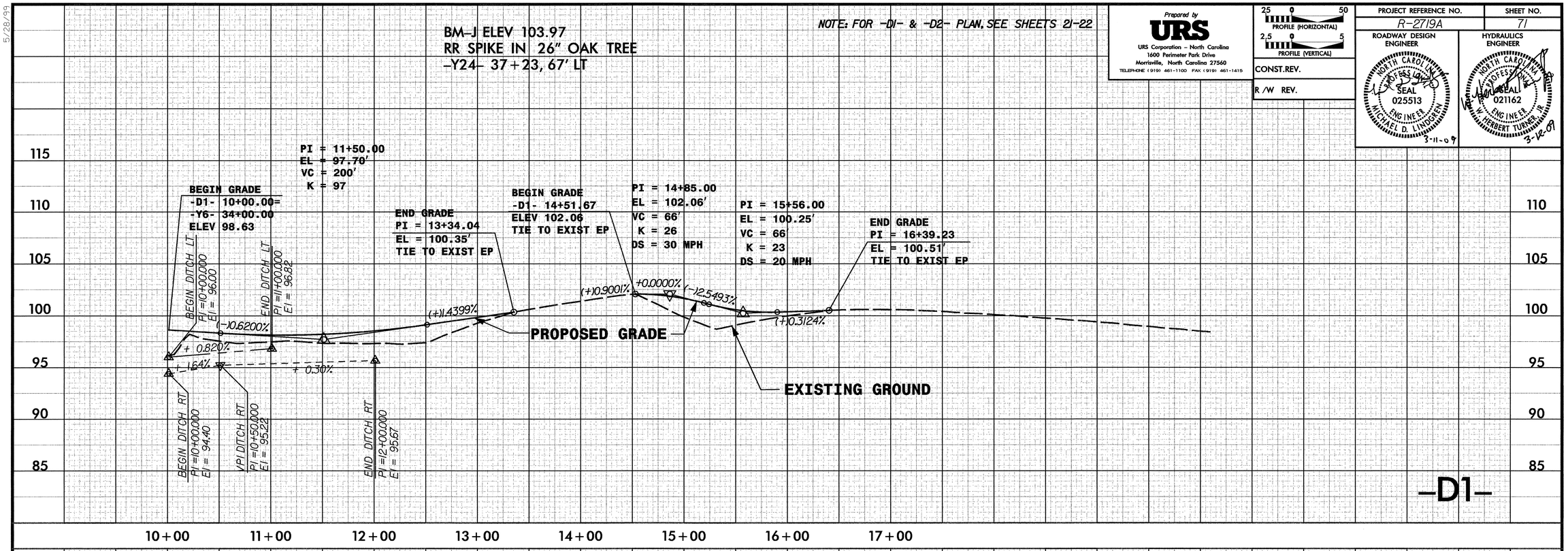

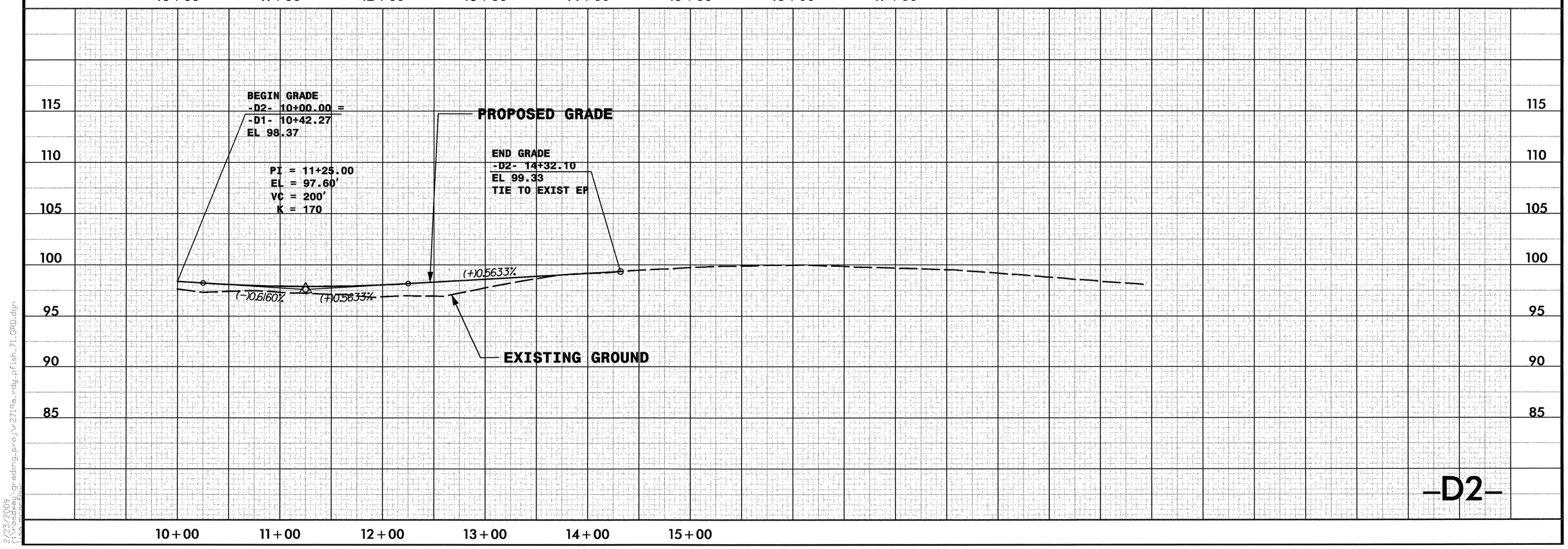

2/23/2009
r:\roadway\grading_proj\r-2719a_rdy_pfish_71_GRD.dgn

5/28/99

BM-B ELEV 53.43
RR SPIKE IN 18" TWIN OAK TREE
-L- 87+00, 227' RT

NOTE: FOR -SVRD5- PLAN, SEE SHEETS 7 & 35

Prepared by
URS
URS Corporation – North Carolina
1600 Perimeter Park Drive
Morrisville, North Carolina 27560
TELEPHONE (919) 461-1100 FAX (919) 461-1415

25 0 50 PROFILE (HORIZONTAL)
2.5 0 5 PROFILE (VERTICAL)

CONST.REV.

R /W REV.

PROJECT REFERENCE NO.	SHEET NO.
R-2719A	72

ROADWAY DESIGN ENGINEER
NORTH CAROLINA PROFESSIONAL SEAL 025513 ENGINEER MICHAEL D. LINDEMAN
3-11-09

HYDRAULICS ENGINEER
NORTH CAROLINA PROFESSIONAL SEAL 021162 ENGINEER W. HERBERT TURNER, JR.
3-12-09

PIPE HYDRAULIC DATA
STA 21+90 -SVRD5-

DRAINAGE AREA	= 2.40	AC
DESIGN FREQUENCY	= 5	YRS
DESIGN DISCHARGE	= 650.00	CFS
DESIGN HW ELEVATION	= 53.96	FT
100 YEAR DISCHARGE	= 1700.00	CFS
100 YEAR HW ELEVATION	= 55.08	FT
OVERTOPPING FREQUENCY	= 5-	YRS
OVERTOPPING DISCHARGE	= 222.	CFS
OVERTOPPING ELEVATION	= 53.20	FT

DBL 60" RCP
INV in= 47.00 INV out= 46.87

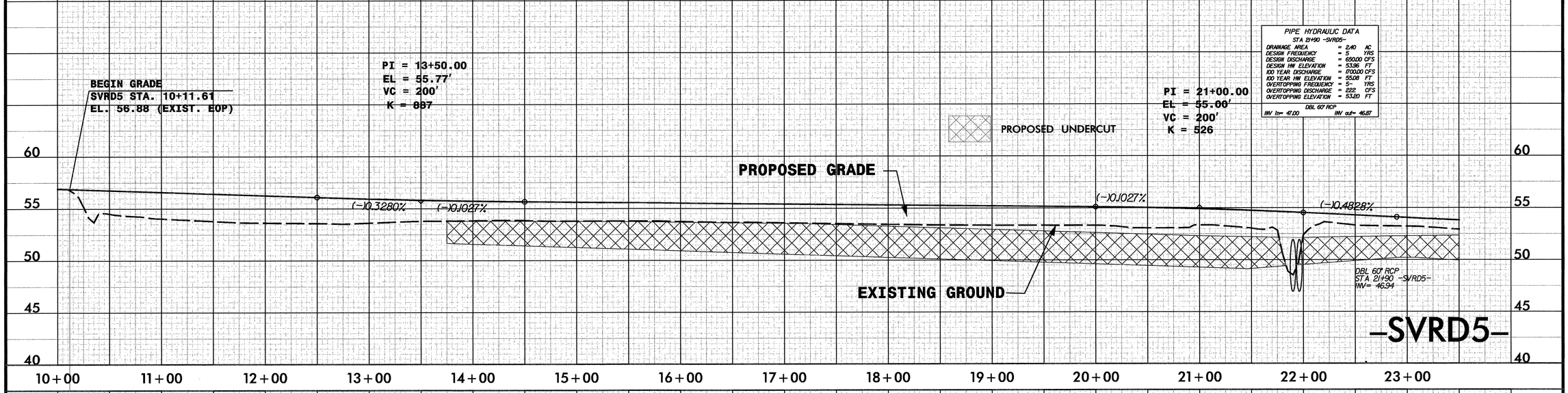

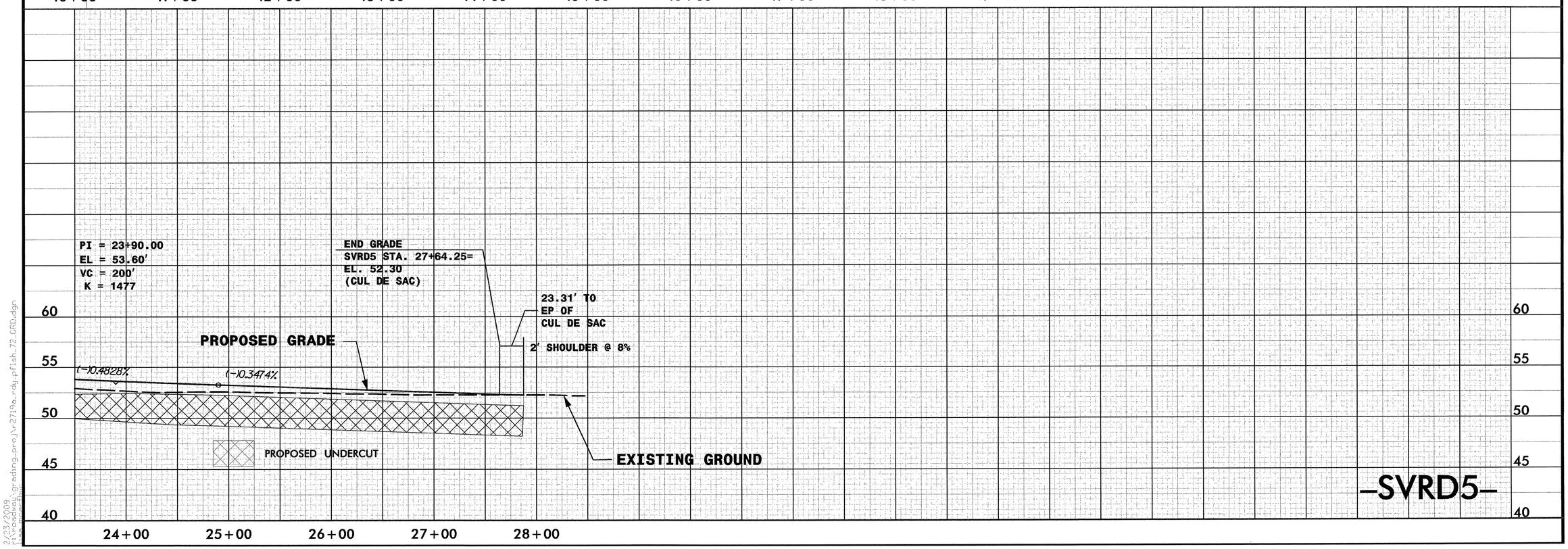

2/23/2009
r:\roadway\grading_proj\r2719a_rdy_plish_72_GRD.dgn