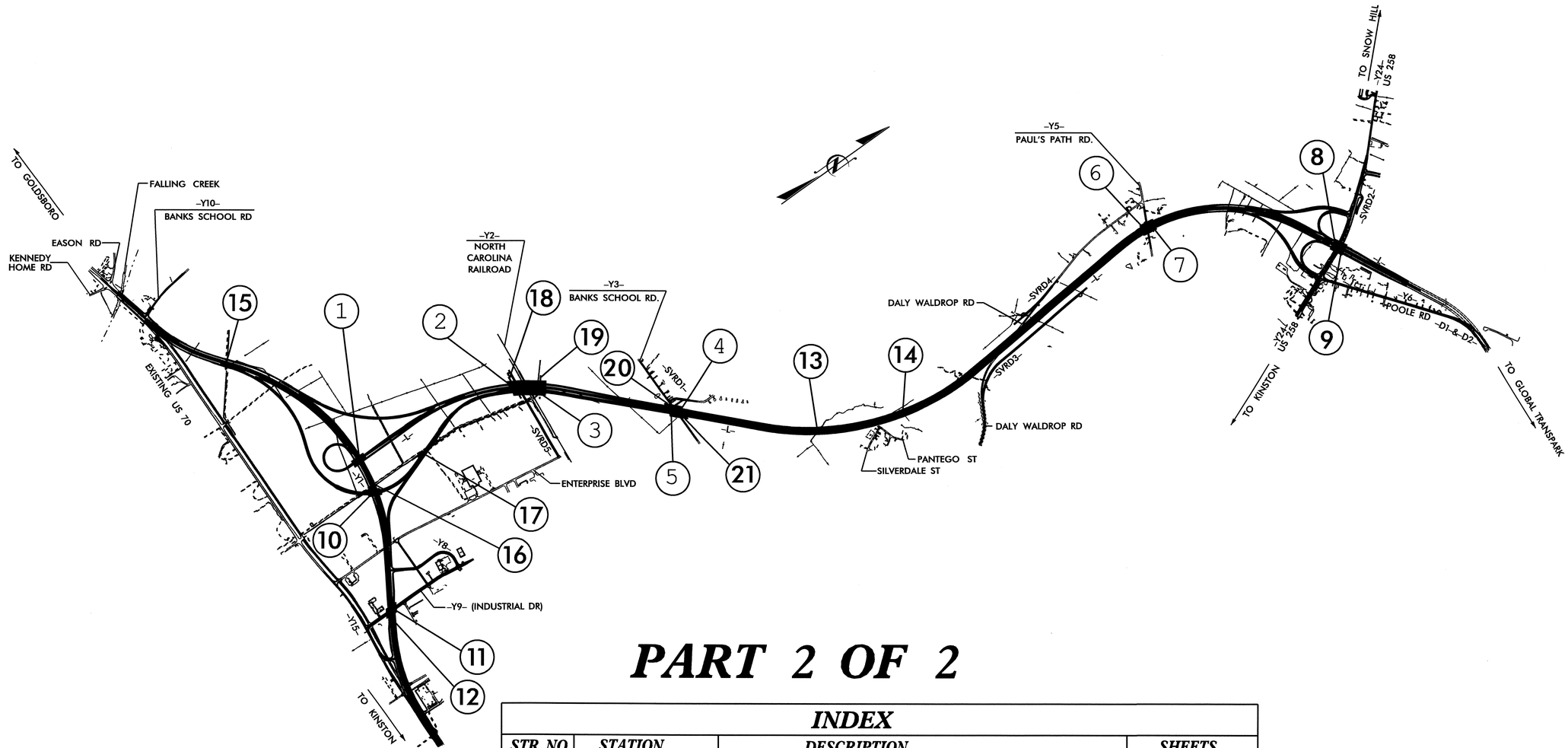

PART 2 OF 2

INDEX

	STR. NO.	STATION	DESCRIPTION	SHEETS
PART 1	1	51+64.57 -L-	BRIDGE OVER RELOCATED US 70	S-1 THRU S-29
	2	85+98.30 -L-	BRIDGE OVER N.C. RAILROAD (LEFT LANE)	S-30 THRU S-75
	3	85+98.30 -L-	BRIDGE OVER N.C. RAILROAD (RIGHT LANE)	S-76 THRU S-119
	4	113+38.09 -L-	BRIDGE OVER BANKS SCHOOL RD. -Y3-(LEFT LANE)	S-120 THRU S-143
	5	113+38.09 -L-	BRIDGE OVER BANKS SCHOOL RD. -Y3-(RIGHT LANE)	S-144 THRU S-166
	6	211+67.44 -L-	BRIDGE ON CRESCENT RD. (LEFT LANE)	S-167 THRU S-191
	7	211+67.44 -L-	BRIDGE ON CRESCENT RD. (RIGHT LANE)	S-192 THRU S-216
PART 2	8	248+68.10 -L-	BRIDGE OVER US 258 ON CRESCENT RD. (LEFT LANE)	S-217 THRU S-240
	9	248+68.10 -L-	BRIDGE OVER US 258 ON CRESCENT RD. (RIGHT LANE)	S-241 THRU S-264
	10	28+99.24 -Y1RPCA-	FOR FLYOVER OVER RELOCATED US 70	S-265 THRU S-294
	11	97+26.78 -Y1-	BRIDGE OVER SR 2003 (LEFT LANE)	S-295 THRU S-317
	12	97+26.78 -Y1-	BRIDGE OVER SR 2003 (RIGHT LANE)	S-318 THRU S-340
	13	139+60.00 -L-	DOUBLE 9' X 8' RCBC	C-1 THRU C-4
	14	153+60.00 -L-	DOUBLE 8' X 8' RCBC	C-5 THRU C-8
	15	38+23.00 -Y1-	DOUBLE 9' X 6' RCBC	C-9 THRU C-12
	16	74+43.00 -Y1-	TRIPLE 12' X 10' RCBC	C-13 THRU C-19
	17	16+14.00 -Y1RPCA-	TRIPLE 12' X 10' RCBC	C-20 THRU C-23
	18	10+43.55 -Y2-	MSE RETAINING WALL #1 @ STR. #2/#3 (END BENT #1)	W-1 THRU W-5
	19	12+99.85 -Y2-	MSE RETAINING WALL #2 @ STR. #2/#3 (END BENT #2)	W-1 THRU W-5
	20	18+90.00 -Y3-	MSE RETAINING WALL #3 @ STR. #4/#5 (END BENT #1)	W-6 THRU W-10
	21	20+16.47 -Y3-	MSE RETAINING WALL #4 @ STR. #4/#5 (END BENT #2)	W-6 THRU W-10

PROJECT NO. R-2719A

LENOIR COUNTY

STATE OF NORTH CAROLINA
DEPARTMENT OF TRANSPORTAION
RALEIGH

INDEX

REVISIONS					
NO.	BY:	DATE:	NO.	BY:	DATE:
1			3		
2			4		

F.A. PROJECT: STP-0224(12)

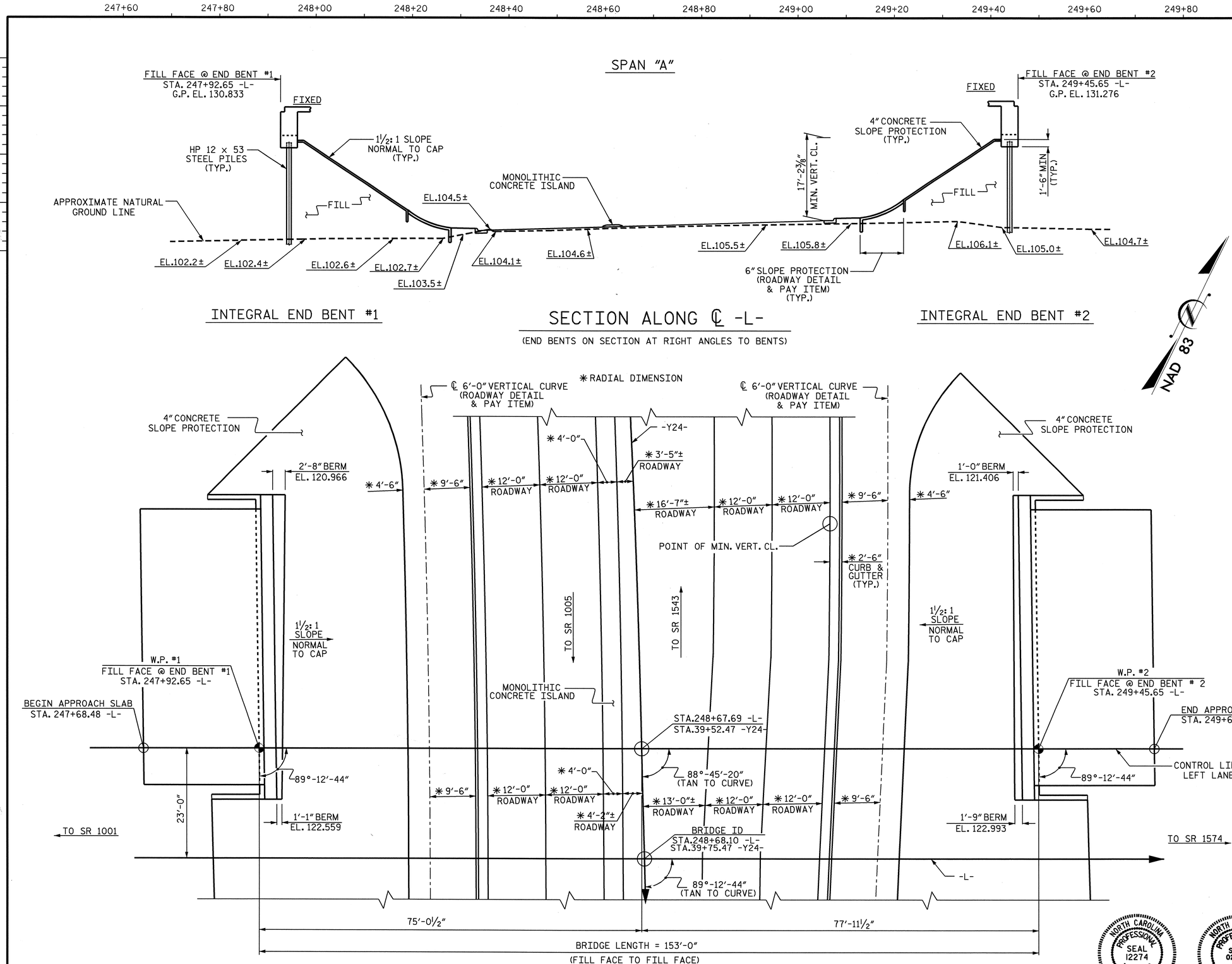

PLAN

(PILES NOT SHOWN FOR CLARITY)

+3.0000% -2.6609%

PI STA. = 249+00.000 -L-
ELEV. = 141.500
VC = 1450.000'

GRADE DATA

NAD 83

HORIZONTAL CURVE DATA

PI STA. = 38+00.19 -Y24-
Δ = 14°-50'-04.5" (RT)
L = 747.51'
T = 375.86'
R = 2887.13'

PROJECT NO. R-2719A

LENOIR COUNTY

STATION: 248+68.10 -L-
39+75.47 -Y24-

SHEET 1 OF 3

BRIDGE NO. 198

STATE OF NORTH CAROLINA
DEPARTMENT OF TRANSPORTATION
RALEIGH

GENERAL DRAWING

FOR BRIDGE OVER
US 258 ON CRESCENT RD
BETWEEN SR 1001 & SR 1574
(LEFT LANE)

NORTH CAROLINA PROFESSIONAL SEAL 12274 ENGINEER OMAR R. AZIZI
10-9-08

NORTH CAROLINA PROFESSIONAL SEAL 025516 ENGINEER EMILY E. MURRAY
10/7/08

REVISIONS						SHEET NO.
NO.	BY:	DATE:	NO.	BY:	DATE:	S-217
1			3			TOTAL SHEETS
2			4			340

DRAWN BY : C.R.MCDUFFEE DATE : 8/23/07
CHECKED BY : E. E. MURRAY DATE : 9/15/08

30-SEP-2008 16:47
k:\structures\Final plans\Str #8\r2719a_sd_gd_08*.dgn
bbarodawala

STR. #8

NCBDS

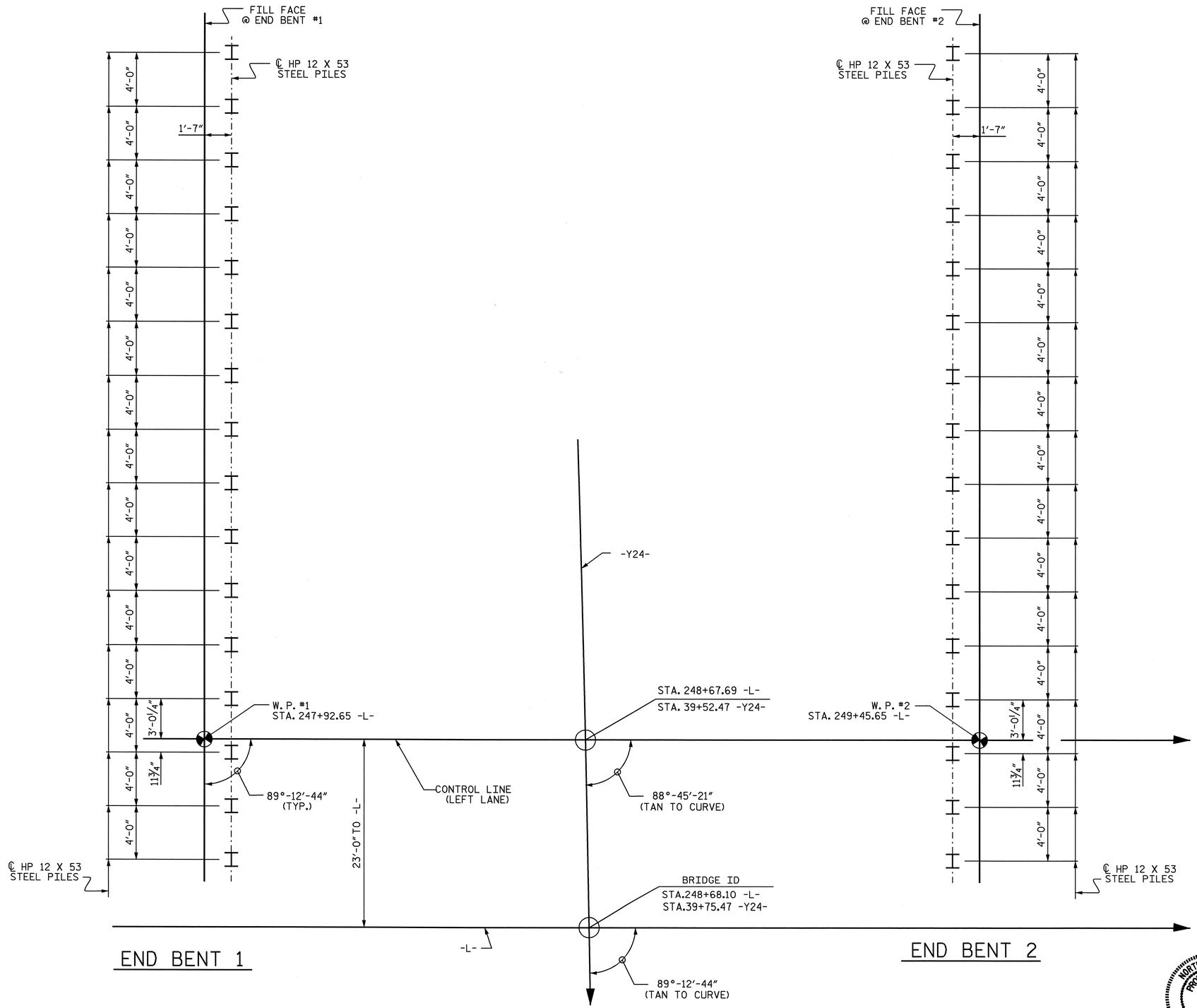

FOUNDATION LAYOUT

DIMENSIONS LOCATING PILES ARE SHOWN TO PILE CENTERLINE AT BOTTOM OF CAP

PROJECT NO. R-2719A
LENOIR COUNTY
STATION: 248+68.10 -L-
39+75.47 -Y24-

SHEET 2 OF 3

STATE OF NORTH CAROLINA
DEPARTMENT OF TRANSPORTATION
RALEIGH

GENERAL DRAWING
FOR BRIDGE OVER
US 258 ON CRESCENT RD
BETWEEN SR 1001 & SR 1574
(LEFT LANE)

NORTH CAROLINA PROFESSIONAL SEAL 025516 ENGINEER EMILY E. MURRAY
10/7/08

REVISIONS						SHEET NO.
NO.	BY:	DATE:	NO.	BY:	DATE:	S-218
1			3			TOTAL SHEETS
2			4			340

DRAWN BY : B.N.BARODAWALA DATE : 8-15-08
CHECKED BY : E. E. MURRAY DATE : 9-15-08

30-SEP-2008 16:47
k:\structures\Final plans\Str #8\r2719a_sd_gd_08*.dgn
bbarodawala

STR. #8

BM #1: RR SPIKE IN 30" PINE LOCATED 297' LT. OF -L- STA. 226+49, ELEV. 106.62

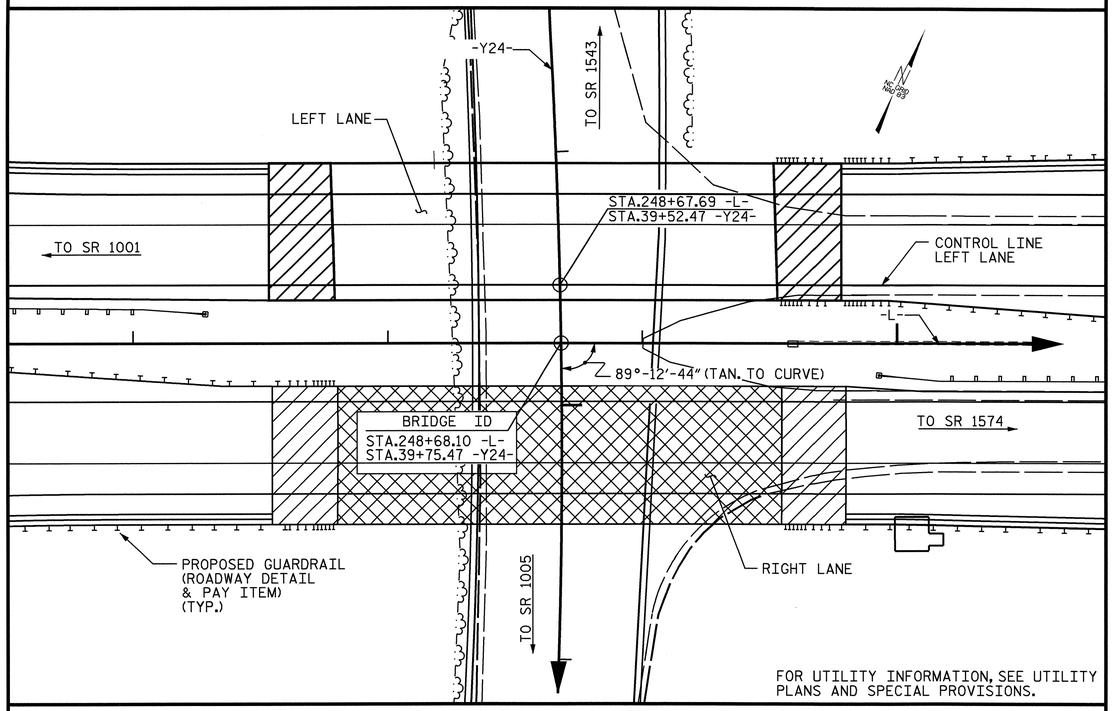

FOR UTILITY INFORMATION, SEE UTILITY PLANS AND SPECIAL PROVISIONS.

LOCATION SKETCH

NOTES:

ASSUMED LIVE LOAD = HS20 OR ALTERNATE LOADING, EXCEPT THE GIRDERS HAVE BEEN DESIGNED FOR HS25.

THIS BRIDGE HAS BEEN DESIGNED BY THE STRENGTH DESIGN METHOD AS SPECIFIED IN AASHTO STANDARD SPECIFICATIONS.

THIS BRIDGE HAS BEEN DESIGNED IN ACCORDANCE WITH THE REQUIREMENTS OF THE AASHTO STANDARD SPECIFICATIONS FOR SEISMIC DESIGN OF HIGHWAY BRIDGES FOR SEISMIC PERFORMANCE CATEGORY A.

FOR OTHER DESIGN DATA AND GENERAL NOTES, SEE SHEET SN.

FOR EROSION CONTROL MEASURES SEE EROSION CONTROL PLANS.

ALL STRUCTURAL STEEL SHALL BE AASHTO M270 GRADE 50W.

REMOVABLE FORMS MAY BE USED IN LIEU OF METAL STAY-IN-PLACE FORMS IN ACCORDANCE WITH ARTICLE 420-3 OF THE STANDARD SPECIFICATIONS.

FOR MAINTENANCE AND PROTECTION OF TRAFFIC BENEATH PROPOSED STRUCTURE, SEE SPECIAL PROVISIONS.

THE CONTRACTOR SHALL PROVIDE INDEPENDENT ASSURANCE SAMPLES OF REINFORCING STEEL AS FOLLOWS: FOR PROJECTS REQUIRING UP TO 400 TONS OF REINFORCING STEEL, ONE 30 INCH SAMPLE OF EACH SIZE BAR USED, AND FOR PROJECTS REQUIRING OVER 400 TONS OF REINFORCING STEEL, TWO 30 INCH SAMPLES OF EACH SIZE BAR USED. THE BARS FROM WHICH THE SAMPLES ARE TAKEN MUST THEN BE SPLICED WITH REPLACEMENT BARS OF THE SIZE AND LENGTH OF THE SAMPLE, PLUS A MINIMUM LAP SPLICE OF THIRTY BAR DIAMETERS.

NEEDLE BEAMS WILL NOT BE ALLOWED UNLESS OTHERWISE CALLED FOR ON THE PLANS OR APPROVED BY THE ENGINEER.

FOR SUBMITTAL OF WORKING DRAWINGS, SEE SPECIAL PROVISIONS.

FOR FALSEWORK AND FORMWORK, SEE SPECIAL PROVISIONS.

FOR CRANE SAFETY, SEE SPECIAL PROVISIONS.

FOR GROUT FOR STRUCTURES, SEE SPECIAL PROVISIONS.

FOR SHIPPING STEEL STRUCTURAL MEMBERS, SEE SPECIAL PROVISIONS.

DRIVE PILES AT END BENT NO. 1 AND END BENT NO. 2 TO A REQUIRED BEARING CAPACITY OF 120 TONS PER PILE. THE REQUIRED BEARING CAPACITY IS EQUAL TO THE ALLOWABLE BEARING CAPACITY WITH A MINIMUM FACTOR OF SAFETY OF TWO.

THE ALLOWABLE BEARING CAPACITY FOR PILES AT END BENT NO. 1 AND END BENT NO. 2 IS 60 TONS PER PILE.

OBSERVE A ONE MONTH WAITING PERIOD AFTER CONSTRUCTING THE EMBANKMENT, END BENT AND REINFORCED BRIDGE APPROACH FILL, IF APPLICABLE, BEFORE BEGINNING APPROACH SLAB CONSTRUCTION AT END BENT NO. 1 AND END BENT NO. 2.

TESTING PILES WITH THE PILE DRIVING ANALYZER (PDA) DURING DRIVING, RESTRIKING OR REDRIVING MAY BE REQUIRED. THE ENGINEER WILL DETERMINE THE NEED FOR PDA TESTING. FOR PILE DRIVING ANALYZER, SEE SPECIAL PROVISIONS.

TOTAL BILL OF MATERIAL

	PDA TESTING	PDA ASSISTANCE	REINFORCED CONCRETE DECK SLAB	GROOVING BRIDGE FLOORS	CLASS A CONCRETE	BRIDGE APPROACH SLABS	REINFORCING STEEL	STRUCTURAL STEEL	HP 12 X 53 STEEL PILES		PILE REDRIVES	CONCRETE BARRIER RAIL	4" SLOPE PROTECTION	EVAZOTE JOINT SEALS
	EACH	EACH	SQ.FT.	SQ.FT.	CU.YDS.	LUMP SUM	LBS.	APPROX. LBS.	NO.	LIN.FT.	EACH	LIN.FT.	SQ. YD.	LUMP SUM
SUPERSTRUCTURE			8759	10217		LUMP SUM		352,045				302.67		LUMP SUM
END BENT NO.1					25.7		5763		16	1120			412	
END BENT NO.2					25.7		5763		16	1120			361	
TOTAL	1	1	8759	10217	51.4	LUMP SUM	11526	352,045	32	2240	20	302.67	773	LUMP SUM

PROJECT NO. R-2719A

LENOIR COUNTY

STATION: 248+68.10 -L-
39+75.47 -Y24-

SHEET 3 OF 3

STATE OF NORTH CAROLINA
DEPARTMENT OF TRANSPORTATION
RALEIGH

GENERAL DRAWING

FOR BRIDGE OVER
US 258 ON CRESCENT RD
BETWEEN SR 1001 & SR 1574
(LEFT LANE)

NORTH CAROLINA PROFESSIONAL SEAL 025516 ENGINEER EMALY E. MURRAY
5/29/09

REVISIONS						SHEET NO.
NO.	BY:	DATE:	NO.	BY:	DATE:	S-219
1			3			TOTAL SHEETS
2			4			340

DRAWN BY : B.N.BARODAWALA DATE : 8-15-08
CHECKED BY : E. E. MURRAY DATE : 9-15-08

28-MAY-2009 14:33
r:\structures\finalplans\str #8\r2719a_sd_gd_08*.dgn
PADKINS

STR. #8 NCBDS

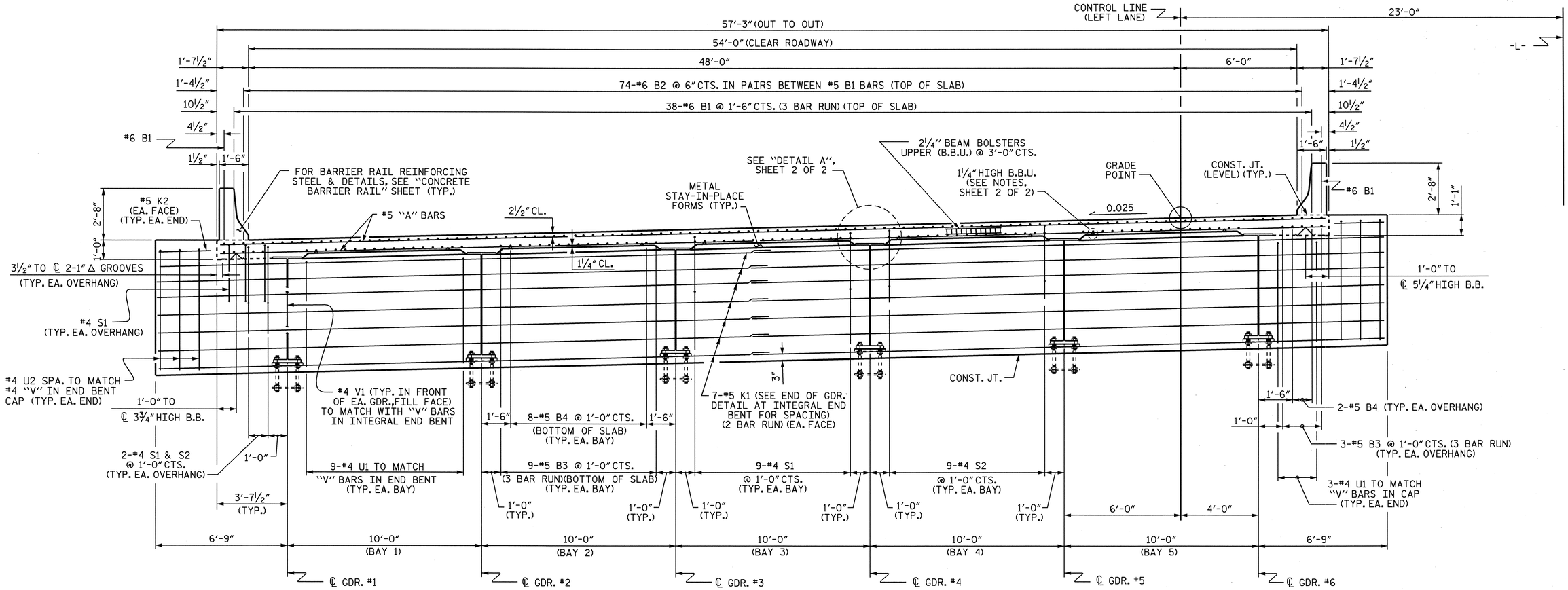

TYPICAL SECTION @ INTEGRAL END BENT

APPROACH SLAB BLOCKOUT & WINGS NOT SHOWN FOR CLARITY.

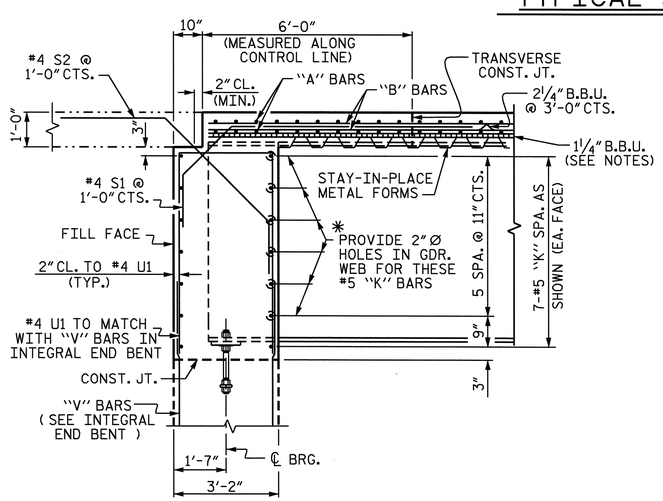

END OF GIRDER DETAIL AT INTEGRAL END BENT

✳ DIAMETER OF HOLES IN WEB MAY BE INCREASED TO ACCOMODATE SKEW

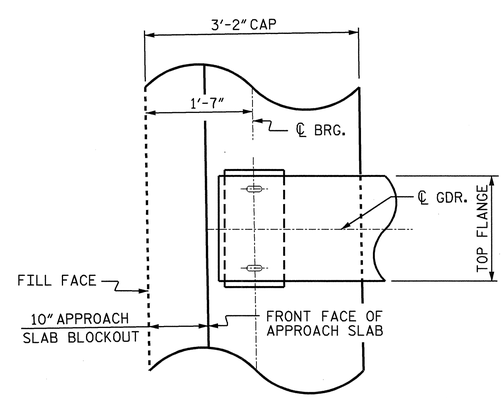

PLAN OF GIRDER AT INTEGRAL END BENT

PROJECT NO. R-2719A
LENOIR COUNTY
STATION: 248+68.10 -L-

SHEET 1 OF 2

STATE OF NORTH CAROLINA
DEPARTMENT OF TRANSPORTATION
RALEIGH

SUPERSTRUCTURE
TYPICAL SECTION
(LEFT LANE)

NORTH CAROLINA PROFESSIONAL SEAL 025516 ENGINEER EMILY E. MURRAY
10/7/08

REVISIONS						SHEET NO.
NO.	BY:	DATE:	NO.	BY:	DATE:	S-220
1			3			TOTAL SHEETS
2			4			340

STR. #8

DRAWN BY : B.N.BARODAWALA DATE : 1-29-07
CHECKED BY : PEGGY ADKINS DATE : 6-08

30-SEP-2008 16:48
k:\structures\Final plans\Str #8\r2719a_sd_ts_08.dgn
bbarodawala

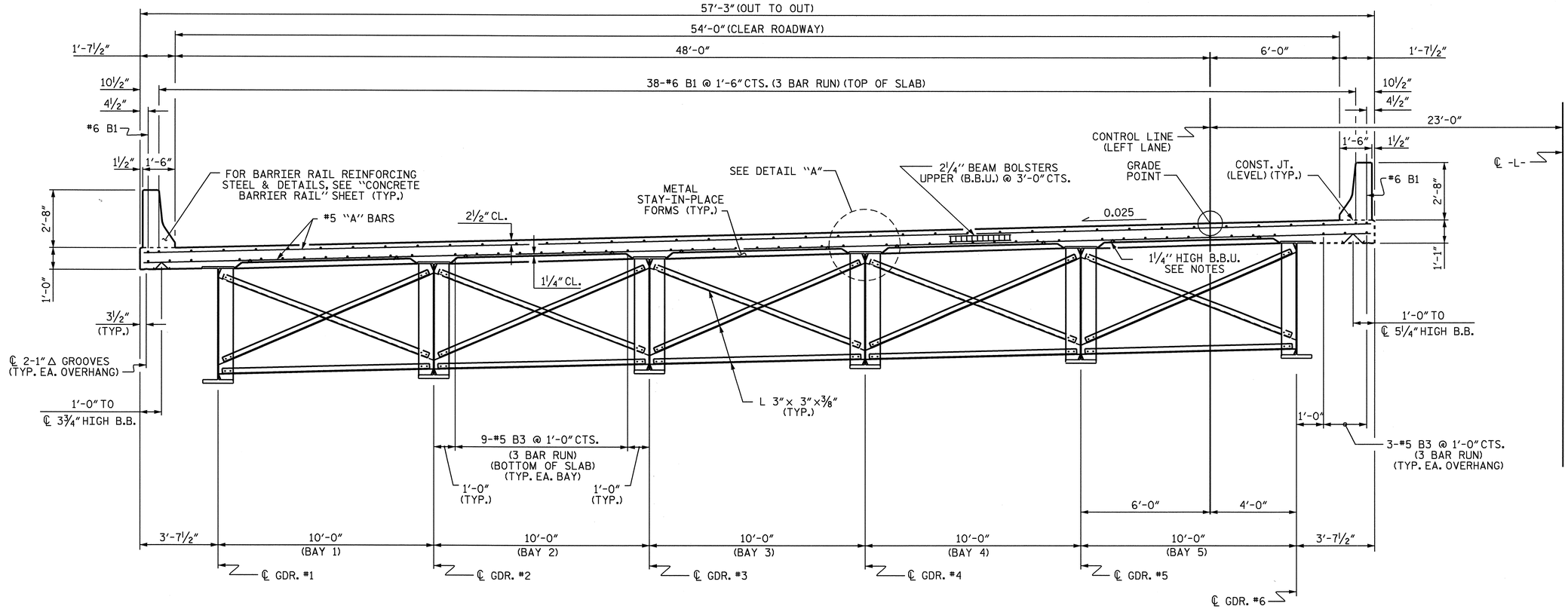

TYPICAL SECTION

(SHOWING INTERMEDIATE DIAPHRAGMS)

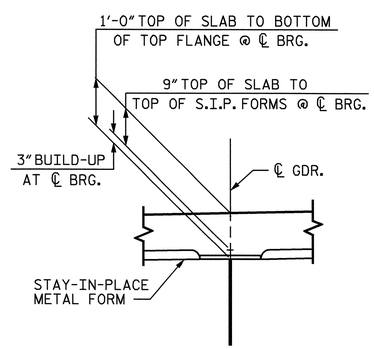

DETAIL "A"

NOTES

PROVIDE 1¼" HIGH BEAM BOLSTERS UPPER AT 4'-0" CTS. ATOP THE METAL STAY-IN-PLACE FORMS TO SUPPORT THE BOTTOM MAT OF "A" BARS. WHEN USING REMOVABLE FORMS, PROVIDE CONTINUOUS HIGH CHAIRS FOR METAL DECK (C.H.C.M.) @ 4'-0" CTS. WITH A HEIGHT TO SUPPORT THE BOTTOM MAT OF "A" BARS A CLEAR DISTANCE OF 2½" ABOVE THE TOP OF THE REMOVABLE FORM.

PREVIOUSLY CAST CONCRETE IN A CONTINUOUS UNIT SHALL HAVE ATTAINED A MINIMUM COMPRESSIVE STRENGTH OF 3000 PSI BEFORE ADDITIONAL CONCRETE IS CAST IN THE UNIT.

BARRIER RAIL SHALL NOT BE CAST UNTIL ALL SLAB CONCRETE HAS BEEN CAST AND HAS REACHED A MINIMUM COMPRESSIVE STRENGTH OF 3000 PSI.

STRUCTURAL STEEL ERECTION SHALL BE COMPLETE BEFORE FALSEWORK OR FORMS ARE PLACED ON THE UNIT.

THE CONTRACTOR MAY, WHEN NECESSARY, PROPOSE A SCHEME FOR AVOIDING INTERFERENCE BETWEEN METAL STAY-IN-PLACE FORM SUPPORTS OR FORMS AND BEAM/GIRDER STIFFENERS OR CONNECTOR PLATES. THE PROPOSAL SHALL BE INDICATED, AS APPROPRIATE, ON EITHER THE STEEL WORKING DRAWINGS OR THE METAL STAY-IN-PLACE FORM WORKING DRAWINGS.

PROJECT NO. R-2719A
LENOIR COUNTY
STATION: 248+68.10 -L-

SHEET 2 OF 2

STATE OF NORTH CAROLINA
DEPARTMENT OF TRANSPORTATION
RALEIGH

SUPERSTRUCTURE
TYPICAL SECTION
(LEFT LANE)

NORTH CAROLINA PROFESSIONAL SEAL 025516 ENGINEER EMILY E. MURRAY
10/7/08

REVISIONS						SHEET NO.
NO.	BY:	DATE:	NO.	BY:	DATE:	S-221
1			3			TOTAL SHEETS
2			4			340

DRAWN BY : B.N.BARODAWALA DATE : 1-29-07
CHECKED BY : PEGGY ADKINS DATE : 6-08

30-SEP-2008 16:48
k:\structures\Final plans\Str #8\r2719a_sd_ts_08.dgn
bbarodawala

STR. #8

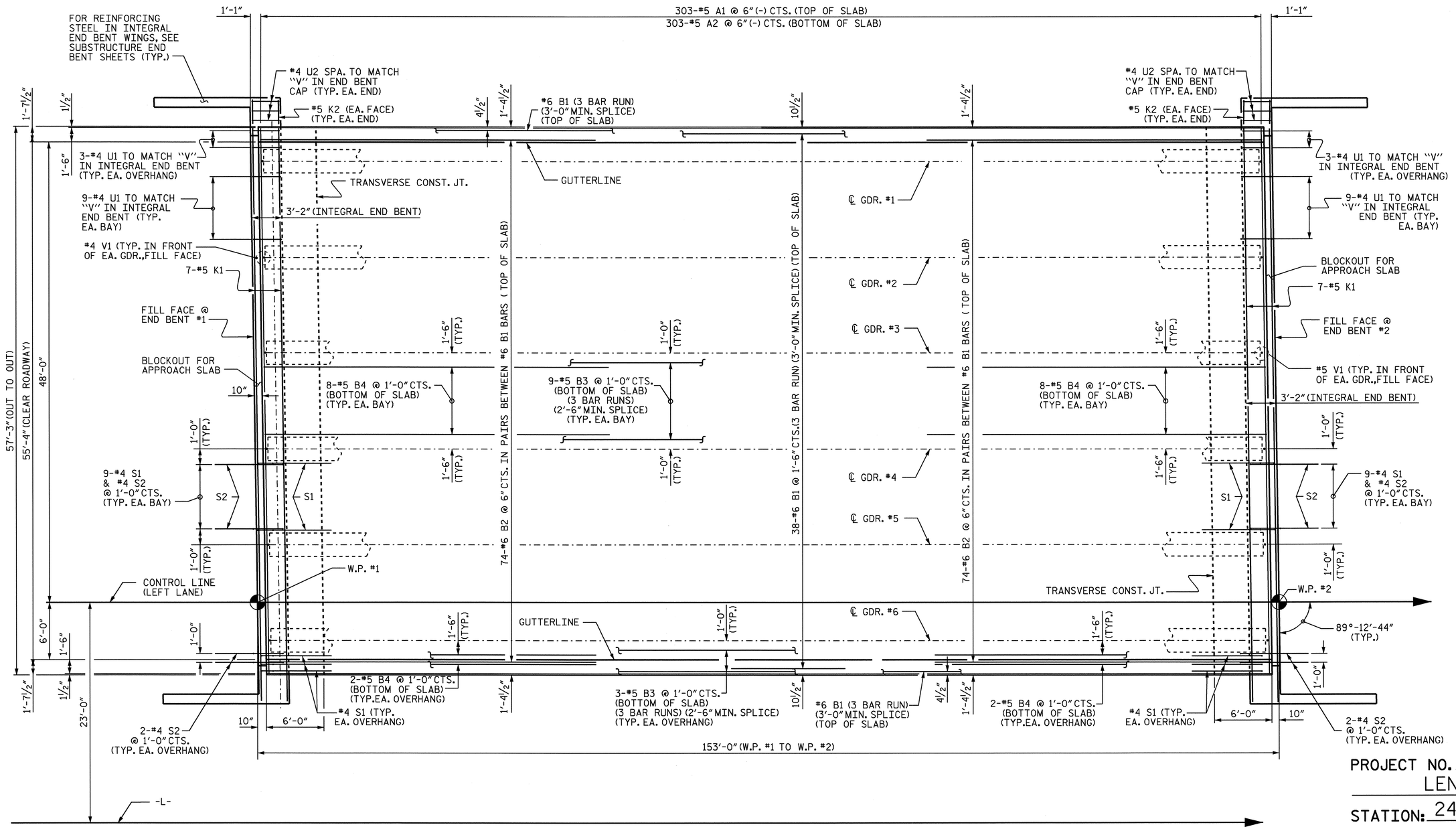

PROJECT NO. R-2719A

LENOIR COUNTY

STATION: 248+68.10 -L-

PLAN OF SPAN

STATE OF NORTH CAROLINA
DEPARTMENT OF TRANSPORTATION
RALEIGH

SUPERSTRUCTURE

PLAN OF SPAN

(LEFT LANE)

NORTH CAROLINA PROFESSIONAL SEAL 025516 ENGINEER EMILY E. MURRAY
10/7/08

REVISIONS						SHEET NO.
NO.	BY:	DATE:	NO.	BY:	DATE:	S-222
1			3			TOTAL SHEETS
2			4			340

DRAWN BY : B.N.BARODAWALA DATE : 2-28-07
CHECKED BY : PEGGY ADKINS DATE : 6-08

30-SEP-2008 16:48
k:\structures\Final plans\Str #8\R2719A_sd_PS_08.dgn
bbarodawala

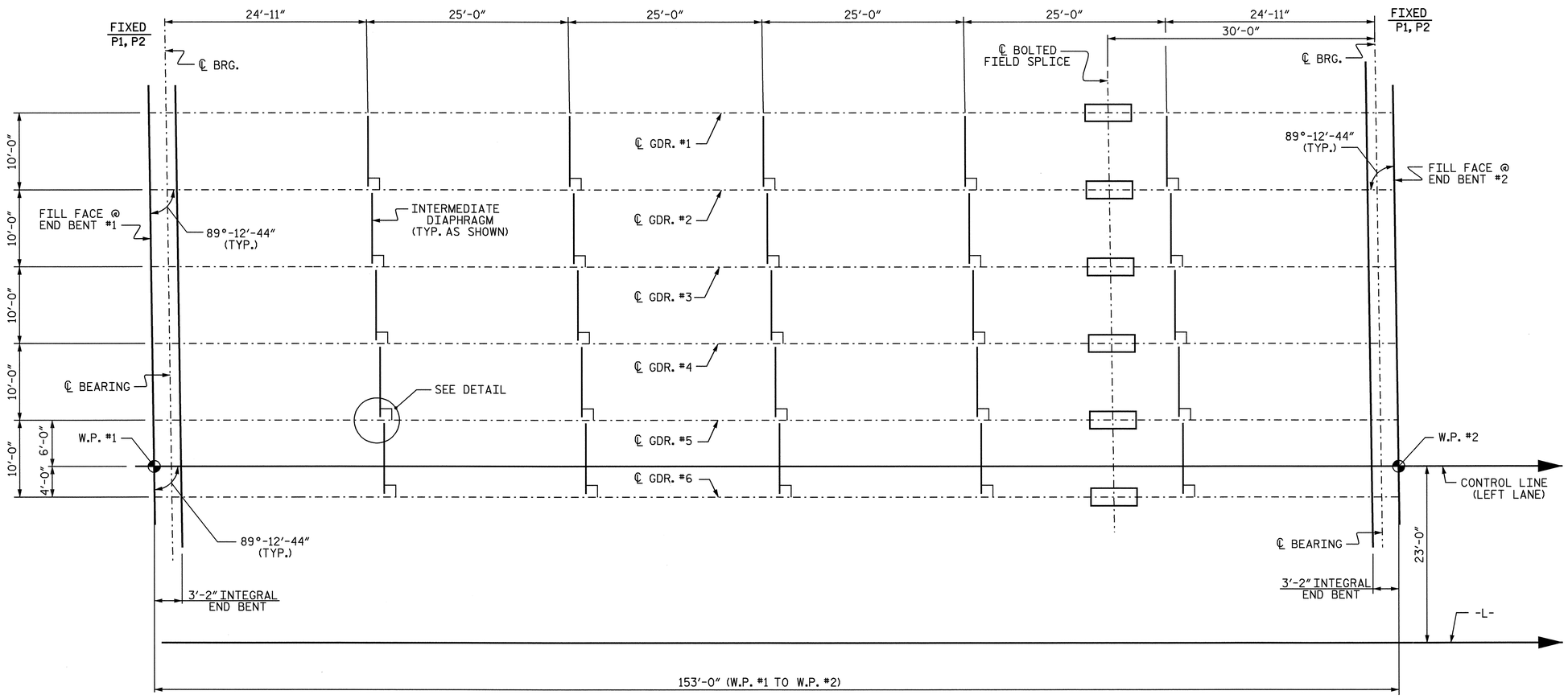

FRAMING PLAN

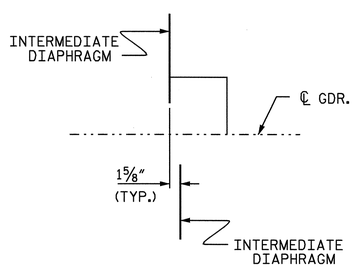

DETAIL

PROJECT NO. R-2719A
LENOIR COUNTY
STATION: 248+68.10 -L-

STATE OF NORTH CAROLINA
DEPARTMENT OF TRANSPORTATION
RALEIGH

SUPERSTRUCTURE
FRAMING PLAN
(LEFT LANE)

NORTH CAROLINA PROFESSIONAL SEAL 025516 ENGINEER EMILY E. MURRAY
10/7/08

REVISIONS						SHEET NO.
NO.	BY:	DATE:	NO.	BY:	DATE:	S-223
1			3			TOTAL SHEETS
2			4			340

DRAWN BY : B.N.BARODAWALA DATE : 3-14-07
CHECKED BY : PEGGY ADKINS DATE : 6-08

02-OCT-2008 09:43
k:\structures\finalplans\str #8\R2719A_sd_FP_08.dgn
bbarodawala

STR. #8

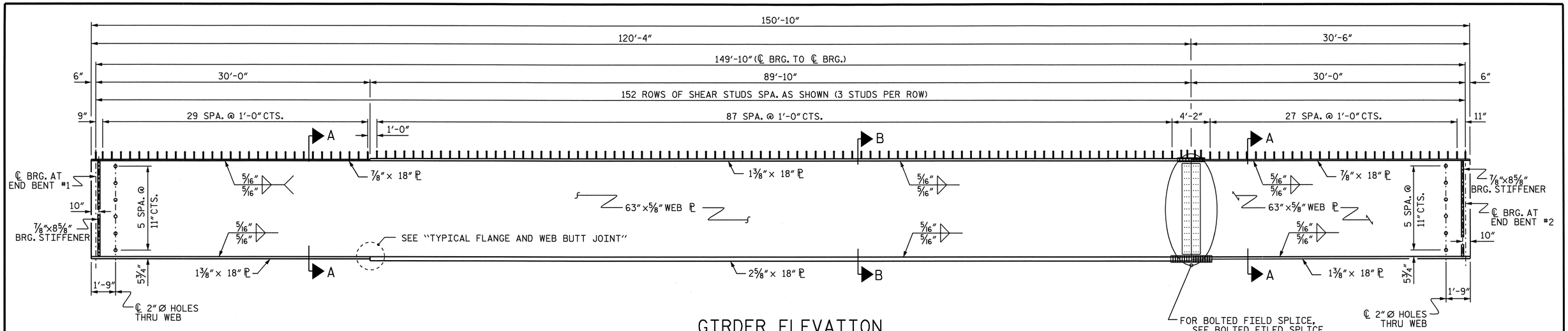

GIRDER ELEVATION

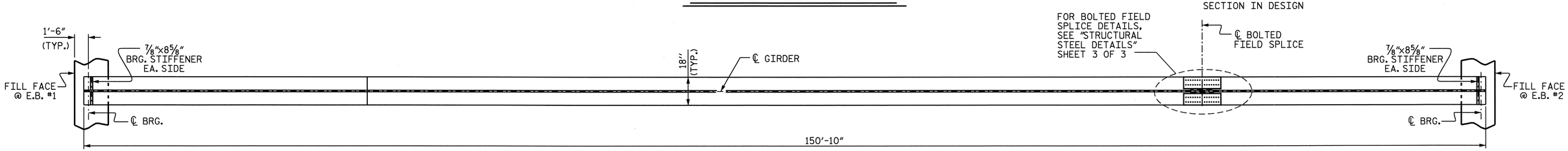

BOTTOM FLANGE DETAIL

(FOR CLARITY, INTERMEDIATE DIAPHRAGMS NOT SHOWN)
INTERIOR GIRDER SHOWN, EXTERIOR GIRDER SIMILAR,
EXCEPT NO CONNECTOR PLATES SHALL BE PLACED ON THE OUTSIDE OF THE WEB

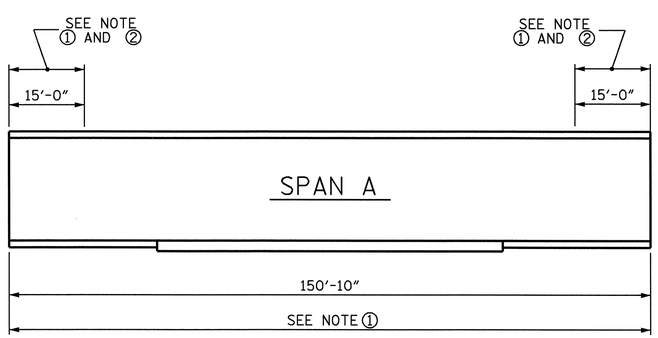

GIRDER MAKE UP

FOR CHARPY V-NOTCH TEST

NOTE ①: CHARPY V-NOTCH TESTS ARE REQUIRED FOR TOP FLANGE PLATES WHICH FALL WITHIN THE LIMITS SHOWN, ALL BOTTOM FLANGE PLATES, ALL WEB PLATES, AND SPLICE PLATES. IF A PERMITTED SHOP FLANGE SPLICE IS NOT USED, CHARPY V-NOTCH TESTS WILL BE REQUIRED FOR THE ENTIRE FLANGE PLATE. FOR CHARPY V-NOTCH TESTS, SEE ARTICLE 1072-9 OF THE STANDARD SPECIFICATIONS.

NOTE ②: NO WELDING OF FORMS OR FALSEWORK TO THE TOP FLANGE WILL BE PERMITTED IN THIS REGION.

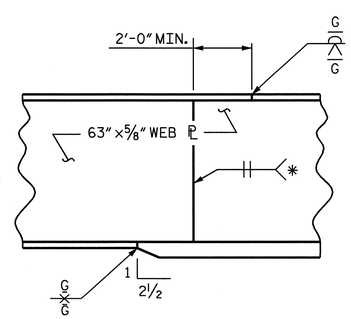

TYPICAL FLANGE AND WEB BUTT JOINT

* GRIND SMOOTH AND FLUSH ON OUTSIDE OF EXTERIOR GIRDERS

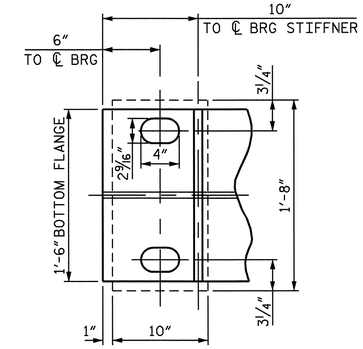

END OF GIRDER DETAIL

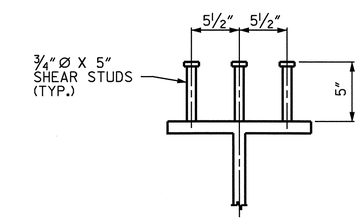

SHEAR STUD DETAIL

PROJECT NO. R-2719A
LENOIR COUNTY
STATION: 248+68.10 -L-

SHEET 1 OF 3

STATE OF NORTH CAROLINA
DEPARTMENT OF TRANSPORTATION
RALEIGH

STRUCTURAL STEEL DETAILS

(LEFT LANE)

NORTH CAROLINA PROFESSIONAL SEAL 025516 ENGINEER EMILY E. MURRAY
10/7/08

REVISIONS						SHEET NO.
NO.	BY:	DATE:	NO.	BY:	DATE:	S-224
1			3			TOTAL SHEETS
2			4			340

DRAWN BY : B.N.BARODAWALA DATE : 3-5-07
CHECKED BY : PEGGY ADKINS DATE : 6-08

30-SEP-2008 16:48
k:\structures\Final plans\Str #8\R2719A_sd_SS_08.dgn
bbarodawala

STR. #8

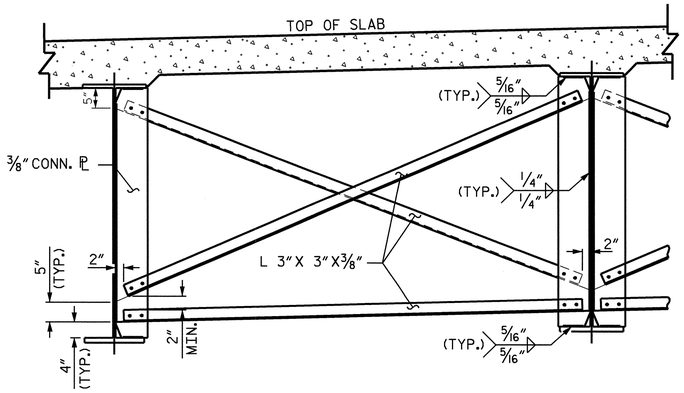

INTERMEDIATE DIAPHRAGM

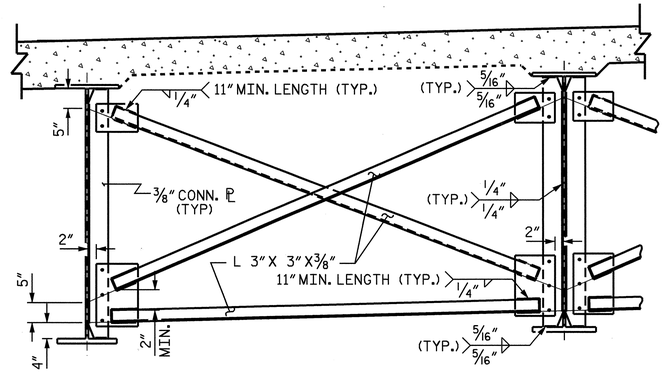

OPTIONAL INTERMEDIATE DIAPHRAGM

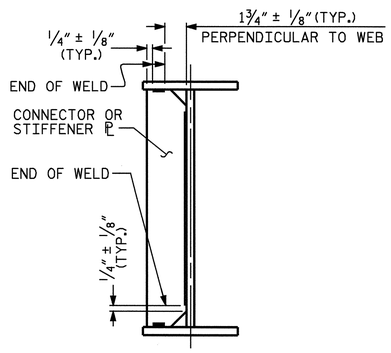

TYPICAL STIFFENER OR CONNECTOR PLATE CONNECTIONS

WELD TERMINATION DETAILS

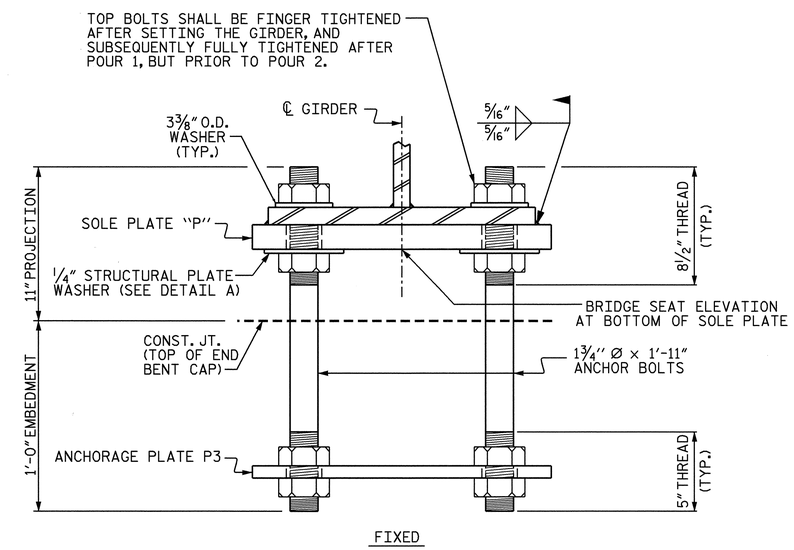

FIXED

END VIEW

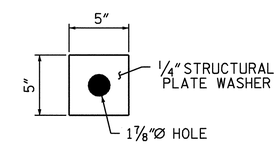

DETAIL "A"

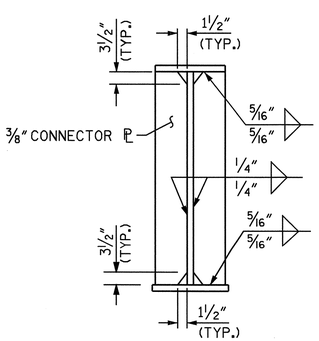

CONNECTOR PLATE DETAILS

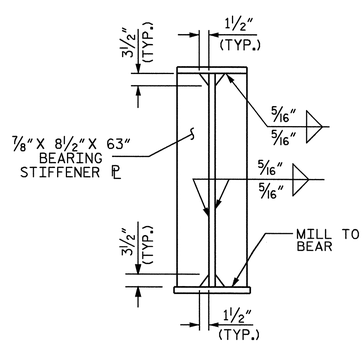

BEARING STIFFENER

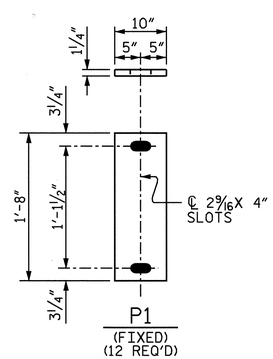

SOLE PLATE DETAILS

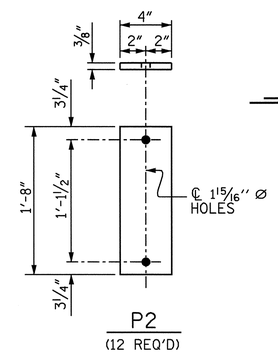

ANCHORAGE PLATE DETAILS

BEARING DETAILS

NOTES:

ALL STRUCTURAL STEEL SHALL BE AASHTO M270 GRADE 50W.

ALL DIMENSIONS SHOWN ARE HORIZONTAL OR VERTICAL, UNLESS OTHERWISE NOTED.

ALL FIELD CONNECTIONS TO BE 7/8" DIA. HIGH STRENGTH BOLTS UNLESS OTHERWISE NOTED.

BEARING STIFFENERS ARE TO BE PLACED NORMAL TO THE WEB OF THE GIRDER AND SHALL BE PLUMB.

SHOP SPLICES ARE PERMITTED TO LIMIT THE MAXIMUM REQUIRED FLANGE PIECE LENGTHS TO 60 FEET AND WEB PIECE LENGTHS TO 45 FEET. PERMITTED FLANGE AND WEB SHOP SPLICES SHALL NOT BE LOCATED WITHIN 15 FEET OF MAXIMUM DEAD LOAD DEFLECTION. KEEP 2 FEET MINIMUM BETWEEN WEB AND FLANGE SHOP SPLICES. KEEP 6" MINIMUM BETWEEN CONNECTOR PLATE AND WEB OR FLANGE SHOP SPLICES.

STUDS ON GIRDERS MAY BE SHIFTED UP TO 1" IF NECESSARY TO CLEAR FLANGE SPLICE WELD.

TENSION ON THE AASHTO M164 BOLTS SHALL BE CALIBRATED USING DIRECT TENSION INDICATOR WASHERS IN ACCORDANCE WITH ARTICLE 440-8 OF THE STANDARD SPECIFICATIONS.

END OF GIRDERS SHALL BE PLUMB.

FOR SHIPPING STEEL STRUCTURAL MEMBERS, SEE SPECIAL PROVISIONS.

FOR HIGH STRENGTH BOLTS, SEE SPECIAL PROVISIONS.

FOR AASHTO M270 GRADE 50W STRUCTURAL STEEL, SOLE PLATES AND ANCHORAGE PLATES SHALL BE AASHTO M270 GRADE 50W AND SHALL NOT BE GALVANIZED. ANCHOR BOLTS, NUTS AND WASHERS SHALL BE GALVANIZED IN ACCORDANCE WITH THE STANDARD SPECIFICATIONS.

ANCHOR BOLTS SHALL MEET THE REQUIREMENTS OF ASTM A449. NUTS SHALL MEET THE REQUIREMENTS OF AASHTO M291-DH OR AASHTO M292-2H. WASHERS SHALL MEET THE REQUIREMENTS OF AASHTO M293. SHOP DRAWINGS ARE NOT REQUIRED FOR ANCHOR BOLTS, NUTS AND WASHERS. SHOP INSPECTION IS REQUIRED.

ALL SURFACES OF SOLE PLATES SHALL BE SMOOTH AND STRAIGHT.

STRUCTURAL PLATE WASHERS SHALL BE AASHTO M270 GRADE 50W.

PROJECT NO. R-2719A
LENOIR COUNTY
STATION: 248+68.10 -L-

SHEET 2 OF 3

STATE OF NORTH CAROLINA
DEPARTMENT OF TRANSPORTATION
RALEIGH

SUPERSTRUCTURE

STRUCTURAL STEEL DETAILS
(LEFT LANE)

NORTH CAROLINA PROFESSIONAL SEAL 025516 ENGINEER EMILY E. MURRAY
10/7/08

REVISIONS						SHEET NO.
NO.	BY:	DATE:	NO.	BY:	DATE:	S-225
1			3			TOTAL SHEETS
2			4			340

DRAWN BY : B.N.BARODAWALA DATE : 3-5-07
CHECKED BY : PEGGY ADKINS DATE : 6-08

30-SEP-2008 16:48
k:\structures\Final plans\Str #8\R2719A_sd_SS_08.dgn
bbarodawala

STR. #8

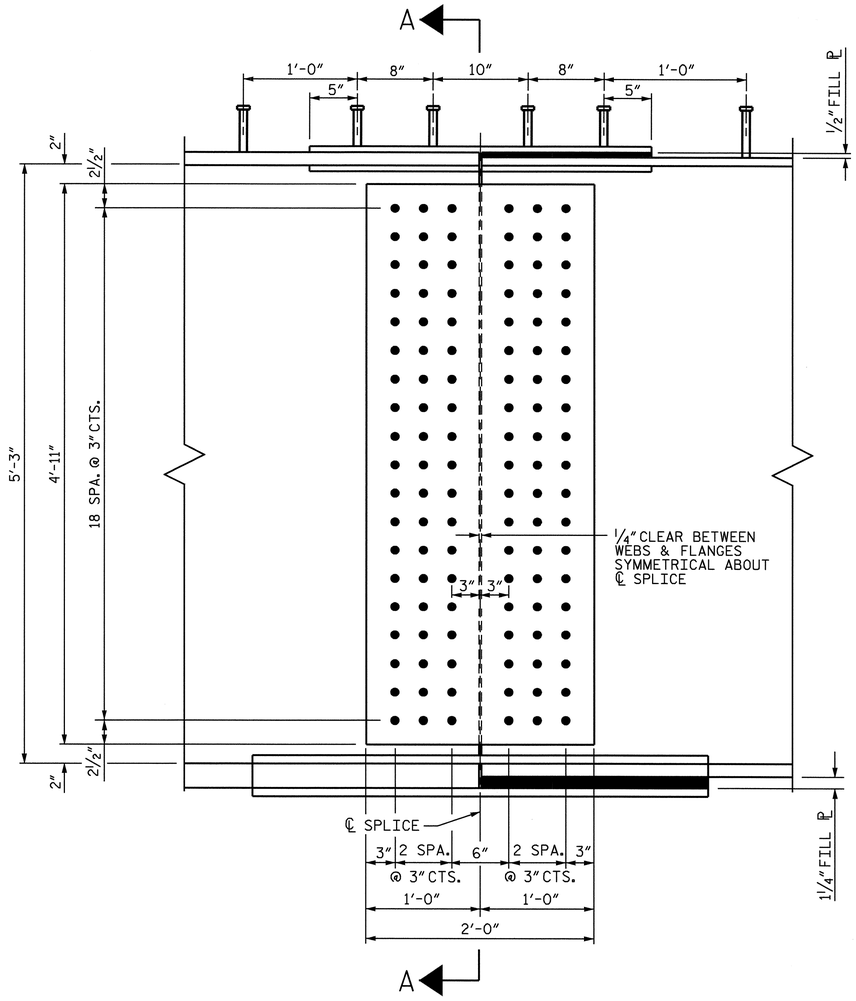

ELEVATION

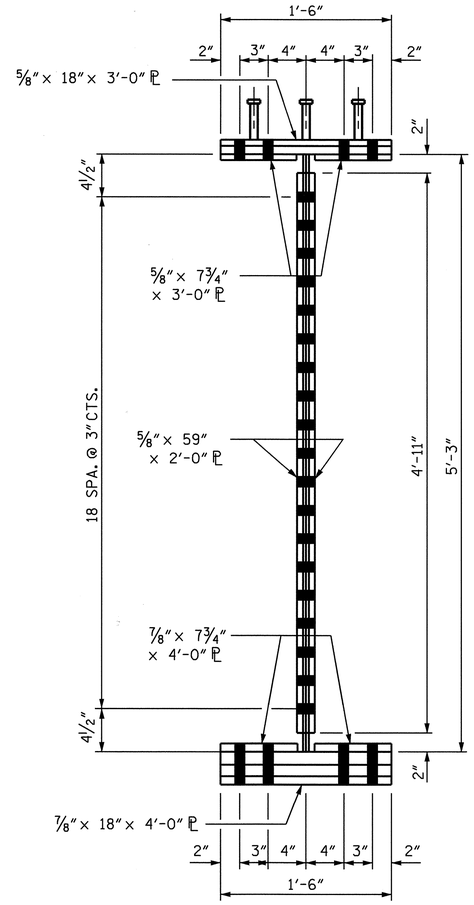

SECTION A-A

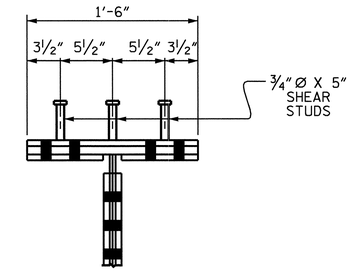

SHEAR STUD DETAIL FOR TOP FLANGE SPLICE PLATE

BOLTED FIELD SPLICE DETAILS

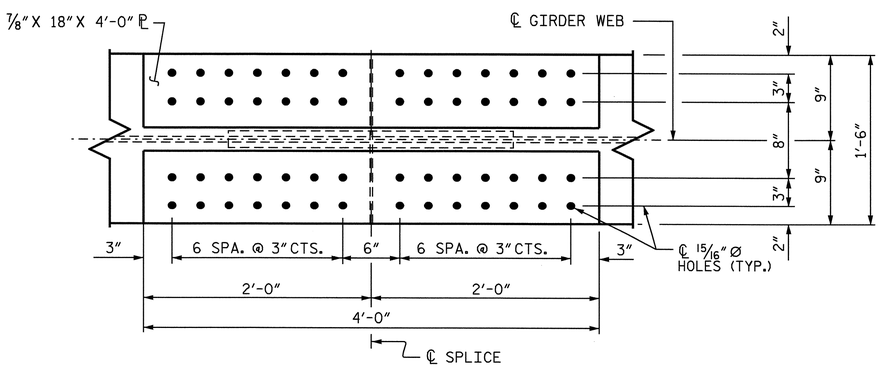

PLAN OF TOP OF BOTTOM FLANGE

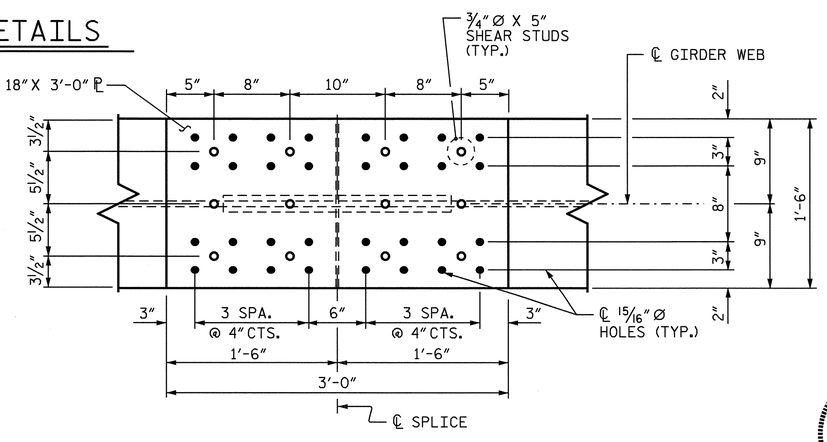

PLAN OF TOP OF TOP FLANGE

NORTH CAROLINA PROFESSIONAL SEAL 025516 ENGINEER EMILY E. MURRAY
10/7/08

PROJECT NO. R-2719A
LENOIR COUNTY
STATION: 248+68.10 -L-

SHEET 3 OF 3

STATE OF NORTH CAROLINA
DEPARTMENT OF TRANSPORTATION
RALEIGH

SUPERSTRUCTURE
STRUCTURAL STEEL DETAILS
BOLTED FIELD SPLICE
(LEFT LANE)

REVISIONS						SHEET NO.
NO.	BY:	DATE:	NO.	BY:	DATE:	S-226
1			3			TOTAL SHEETS
2			4			340

DRAWN BY : B.N.BARODAWALA DATE : 3-5-07
CHECKED BY : PEGGY ADKINS DATE : 6-08

30-SEP-2008 16:48
k:\structures\Final plans\Str #8\R2719A_sd_SS_08.dgn
bbarodawala

STR. #8

DEAD LOAD DEFLECTION TABLE FOR GIRDERS - SPAN A

	GIRDER #1 & #6																				
@ TWENTIETH POINTS BETWEEN ℄ BEARINGS	0	.05	.10	.15	.20	.25	.30	.35	.40	.45	.50	.55	.60	.65	.70	.75	.80	.85	.90	.95	0
DEFLECTION DUE TO WEIGHT OF GIRDER ↓	0.000	0.028	0.054	0.079	0.100	0.119	0.134	0.147	0.156	0.162	0.163	0.162	0.156	0.147	0.134	0.119	0.100	0.079	0.054	0.028	0.000
DEFLECTION DUE TO WEIGHT OF SLAB ✳ ↓	0.000	0.072	0.161	0.242	0.314	0.376	0.428	0.470	0.500	0.519	0.525	0.519	0.500	0.470	0.428	0.376	0.314	0.242	0.161	0.072	0.000
DEFLECTION DUE TO WEIGHT OF BARRIER RAIL ↓	0.000	0.006	0.012	0.018	0.023	0.027	0.031	0.034	0.036	0.037	0.038	0.037	0.036	0.034	0.031	0.027	0.023	0.018	0.012	0.006	0.000
TOTAL DEAD LOAD DEFLECTION ↓	0.000	0.106	0.227	0.339	0.437	0.522	0.593	0.650	0.692	0.718	0.726	0.718	0.692	0.650	0.593	0.522	0.437	0.339	0.227	0.106	0.000
VERTICAL CURVE ORDINATE	0.000	0.021	0.039	0.056	0.070	0.082	0.092	0.100	0.105	0.109	0.110	0.109	0.105	0.100	0.092	0.082	0.070	0.056	0.039	0.021	0.000
SUPERELEVATION ORDINATE	0.000	0.000	0.000	0.000	0.000	0.000	0.000	0.000	0.000	0.000	0.000	0.000	0.000	0.000	0.000	0.000	0.000	0.000	0.000	0.000	0.000
REQUIRED CAMBER ↑	0	1 1/2"	3 3/16"	4 3/4"	6 1/16"	7 1/4"	8 1/4"	9"	9 9/16"	9 15/16"	10"	9 15/16"	9 9/16"	9"	8 1/4"	7 1/4"	6 1/16"	4 3/4"	3 3/16"	1 1/2"	0

✳ INCLUDES SLAB, BUILDUPS & STAY-IN-PLACE FORMS.
ALL VALUES ARE SHOWN IN FEET EXCEPT " REQUIRED CAMBER ", WHICH IS GIVEN IN INCHES (FRACTION FORM).

DEAD LOAD DEFLECTION TABLE FOR GIRDERS - SPAN A

	GIRDERS #2 & #5																				
@ TWENTIETH POINTS BETWEEN ℄ BEARINGS	0	.05	.10	.15	.20	.25	.30	.35	.40	.45	.50	.55	.60	.65	.70	.75	.80	.85	.90	.95	0
DEFLECTION DUE TO WEIGHT OF GIRDER ↓	0.000	0.028	0.054	0.079	0.100	0.119	0.134	0.147	0.156	0.162	0.163	0.162	0.156	0.147	0.134	0.119	0.100	0.079	0.054	0.028	0.000
DEFLECTION DUE TO WEIGHT OF SLAB ✳ ↓	0.000	0.073	0.163	0.246	0.318	0.381	0.434	0.476	0.507	0.526	0.532	0.526	0.507	0.476	0.434	0.381	0.318	0.246	0.163	0.073	0.000
DEFLECTION DUE TO WEIGHT OF BARRIER RAIL ↓	0.000	0.006	0.012	0.018	0.023	0.027	0.031	0.034	0.036	0.037	0.038	0.037	0.036	0.034	0.031	0.027	0.023	0.018	0.012	0.006	0.000
TOTAL DEAD LOAD DEFLECTION ↓	0.000	0.107	0.230	0.342	0.441	0.527	0.599	0.657	0.699	0.724	0.733	0.724	0.699	0.657	0.599	0.527	0.441	0.342	0.230	0.107	0.000
VERTICAL CURVE ORDINATE	0.000	0.021	0.039	0.056	0.070	0.082	0.092	0.100	0.105	0.109	0.110	0.109	0.105	0.100	0.092	0.082	0.070	0.056	0.039	0.021	0.000
SUPERELEVATION ORDINATE	0.000	0.000	0.000	0.000	0.000	0.000	0.000	0.000	0.000	0.000	0.000	0.000	0.000	0.000	0.000	0.000	0.000	0.000	0.000	0.000	0.000
REQUIRED CAMBER ↑	0	1 9/16"	3 1/4"	4 3/4"	6 1/8"	7 5/16"	8 5/16"	9 1/16"	9 5/8"	10"	10 1/8"	10"	9 5/8"	9 1/16"	8 5/16"	7 5/16"	6 1/8"	4 3/4"	3 1/4"	1 9/16"	0

✳ INCLUDES SLAB, BUILDUPS & STAY-IN-PLACE FORMS.
ALL VALUES ARE SHOWN IN FEET EXCEPT " REQUIRED CAMBER ", WHICH IS GIVEN IN INCHES (FRACTION FORM).

DEAD LOAD DEFLECTION TABLE FOR GIRDERS - SPAN A

	GIRDERS #3 & #4																				
@ TWENTIETH POINTS BETWEEN ℄ BEARINGS	0	.05	.10	.15	.20	.25	.30	.35	.40	.45	.50	.55	.60	.65	.70	.75	.80	.85	.90	.95	0
DEFLECTION DUE TO WEIGHT OF GIRDER ↓	0.000	0.028	0.054	0.079	0.100	0.119	0.134	0.147	0.156	0.162	0.163	0.162	0.156	0.147	0.134	0.119	0.100	0.079	0.054	0.028	0.000
DEFLECTION DUE TO WEIGHT OF SLAB ✳ ↓	0.000	0.074	0.165	0.249	0.322	0.386	0.439	0.482	0.513	0.532	0.539	0.532	0.513	0.482	0.439	0.386	0.322	0.249	0.165	0.074	0.000
DEFLECTION DUE TO WEIGHT OF BARRIER RAIL ↓	0.000	0.006	0.012	0.018	0.023	0.027	0.031	0.034	0.036	0.037	0.038	0.037	0.036	0.034	0.031	0.027	0.023	0.018	0.012	0.006	0.000
TOTAL DEAD LOAD DEFLECTION ↓	0.000	0.108	0.232	0.346	0.446	0.531	0.604	0.663	0.705	0.731	0.740	0.731	0.705	0.663	0.604	0.531	0.446	0.346	0.232	0.108	0.000
VERTICAL CURVE ORDINATE	0.000	0.021	0.039	0.056	0.070	0.082	0.092	0.100	0.105	0.109	0.110	0.109	0.105	0.100	0.092	0.082	0.070	0.056	0.039	0.021	0.000
SUPERELEVATION ORDINATE	0.000	0.000	0.000	0.000	0.000	0.000	0.000	0.000	0.000	0.000	0.000	0.000	0.000	0.000	0.000	0.000	0.000	0.000	0.000	0.000	0.000
REQUIRED CAMBER ↑	0	1 9/16"	3 1/4"	4 13/16"	6 3/16"	7 3/8"	8 3/8"	9 1/8"	9 3/4"	10 1/16"	10 3/16"	10 1/16"	9 3/4"	9 1/8"	8 3/8"	7 3/8"	6 3/16"	4 13/16"	3 1/4"	1 9/16"	0

✳ INCLUDES SLAB, BUILDUPS & STAY-IN-PLACE FORMS.
ALL VALUES ARE SHOWN IN FEET EXCEPT " REQUIRED CAMBER ", WHICH IS GIVEN IN INCHES (FRACTION FORM).

PROJECT NO. R-2719A
LENOIR COUNTY
STATION: 248+68.10 -L-

NORTH CAROLINA PROFESSIONAL SEAL 025516 ENGINEER EMILY E. MURRAY
Emily E. Murray
10/7/08

STATE OF NORTH CAROLINA
DEPARTMENT OF TRANSPORTATION
RALEIGH

SUPERSTRUCTURE

DEAD LOAD DEFLECTION (LEFT LANE)

REVISIONS								SHEET NO.
NO.	BY:	DATE:	NO.	BY:	DATE:			S-227
1			3					TOTAL SHEETS
2			4					340

DRAWN BY : B.N.BARODAWALA DATE : 5-5-07
CHECKED BY : PEGGY ADKINS DATE : 6-08

30-SEP-2008 16:47
k:\structures\Final plans\Str #8\R2719A_sd_DL_08.dgn
bbarodawala

STR. #8

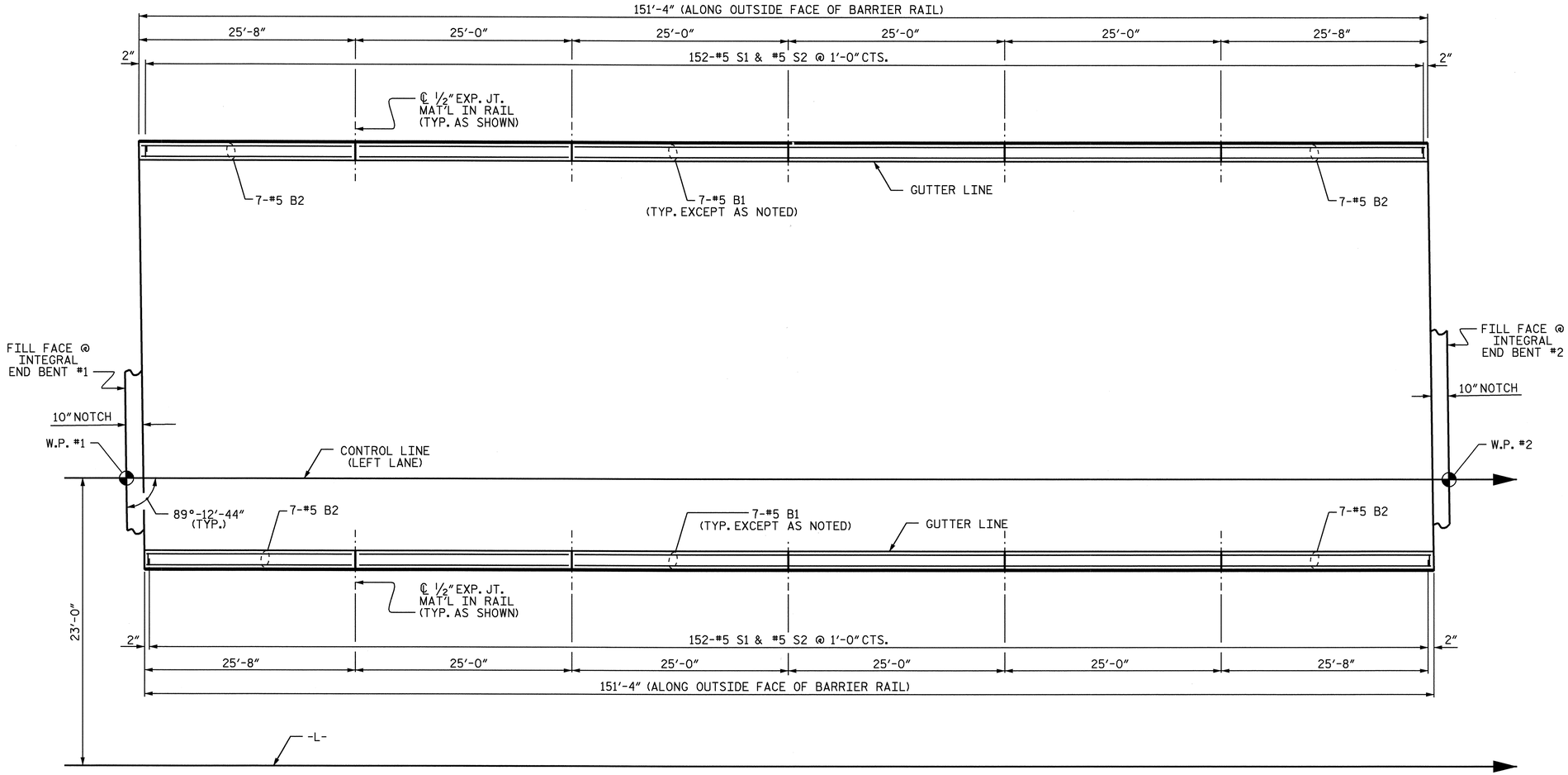

PLAN OF BARRIER RAIL

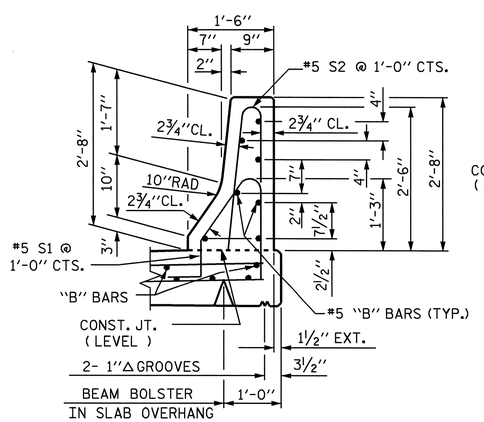

SECTION THRU RAIL

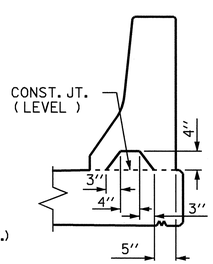

SECTION S-S

AT DAM IN OPEN JOINT
(THIS IS TO BE USED ONLY WHEN SLIP FORM IS USED)

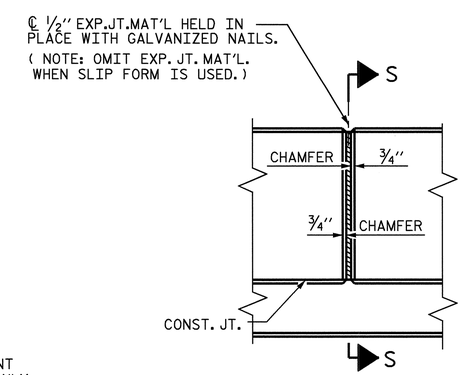

ELEVATION AT EXPANSION JOINTS

BARRIER RAIL DETAILS

BAR TYPES

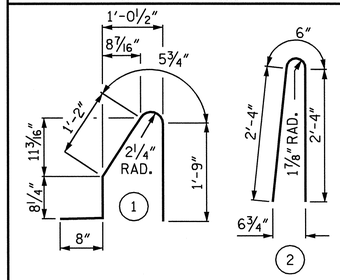

ALL BAR DIMENSIONS ARE OUT TO OUT

BILL OF MATERIAL

FOR CONCRETE BARRIER RAIL ONLY

BAR	NO.	SIZE	TYPE	LENGTH	WEIGHT
* B1	56	#5	STR	24'-7"	1436
* B2	28	#5	STR	25'-3"	737
* S1	304	#5	1	4'-9"	1506
* S2	304	#5	2	5'-2"	1638
* EPOXY COATED REINFORCING STEEL					5,317 LBS.
CLASS AA CONCRETE					30.3 CU. YDS.
CONCRETE BARRIER RAIL					302.67 LIN. FT.

NOTES:

THE BARRIER RAIL SHALL NOT BE CAST UNTIL ALL SLAB CONCRETE HAS BEEN CAST AND HAS REACHED A MINIMUM COMPRESSIVE STRENGTH OF 3,000 PSI.

ALL REINFORCING STEEL IN BARRIER RAILS SHALL BE EPOXY COATED.

THE #5 S1 AND #5 S2 BARS MAY BE SHIFTED SLIGHTLY IN ORDER TO MAINTAIN A 2" MINIMUM CLEARANCE TO 1/2" EXPANSION JOINT MATERIAL IN THE BARRIER RAIL.

VERTICAL GROOVED CONTRACTION JOINTS, 1/2" IN DEPTH, SHALL BE TOOLED IN ALL EXPOSED FACES OF THE BARRIER RAIL AND IN ACCORDANCE WITH ARTICLE 825-10(B) OF THE STANDARD SPECIFICATIONS. THE CONTRACTION JOINT SHALL BE LOCATED AT EACH THIRD POINT BETWEEN BARRIER RAIL EXPANSION JOINTS. ONLY ONE CONTRACTION JOINT IS REQUIRED AT MIDPOINT OF BARRIER RAIL SEGMENTS LESS THAN 20 FEET IN LENGTH AND NO CONTRACTION JOINTS ARE REQUIRED FOR THOSE SEGMENTS LESS THAN 10 FEET IN LENGTH.

PROJECT NO. R-2719A
LENOIR COUNTY
STATION: 248+68.10 -L-

STATE OF NORTH CAROLINA
DEPARTMENT OF TRANSPORTATION
RALEIGH

STANDARD
CONCRETE BARRIER RAIL
(LEFT LANE)

NORTH CAROLINA PROFESSIONAL SEAL 025516 ENGINEER EMILY E. MURRAY
10/7/08

REVISIONS						SHEET NO.
NO.	BY:	DATE:	NO.	BY:	DATE:	S-228
1			3			TOTAL SHEETS
2			4			340

ASSEMBLED BY : B.N.BARODAWALA DATE : 3-9-07
CHECKED BY : PEGGY ADKINS DATE : 6-08

DRAWN BY : ARB 5/87 — REV. 10/17/00 RWW/LES
CHECKED BY : SJD 9/87 — REV. 5/7/03R RWW/JTE
REV. 5/1/06 TLA/GM

30-SEP-2008 16:47
k:\structures\Final plans\Str #8\R2719A_sd_BR_08.dgn
bbarodawala

STR. #8

STD. NO. CBR1

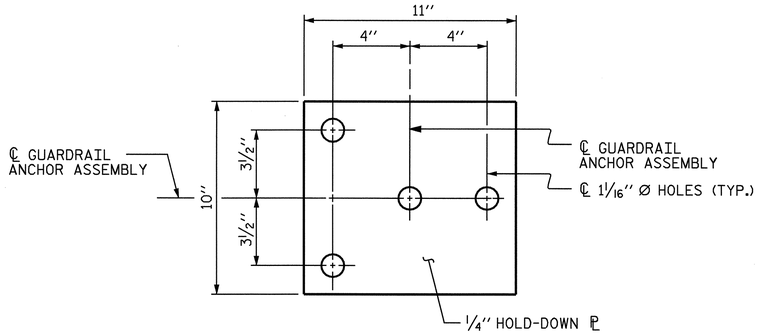

PLAN

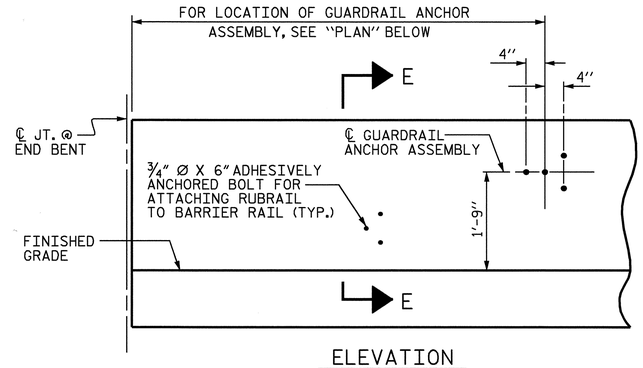

ELEVATION

FOR LOCATION OF RUBRAIL, SEE ROADWAY STD. 862.03

NOTES

THE GUARDRAIL ANCHOR ASSEMBLY SHALL CONSIST OF A 1/4" HOLD DOWN PLATE AND 4 - 7/8" Ø BOLTS WITH NUTS AND WASHERS, RUBRAIL, AND ADHESIVELY ANCHORED BOLTS.

THE HOLD-DOWN PLATE SHALL CONFORM TO AASHTO M270 GRADE 36. AFTER FABRICATION, THE HOLD-DOWN PLATE SHALL BE HOT-DIP GALVANIZED IN ACCORDANCE WITH AASHTO M111.

BOLTS SHALL CONFORM TO THE REQUIREMENTS OF ASTM A307 AND NUTS SHALL CONFORM TO THE REQUIREMENTS OF AASHTO M291. BOLTS, NUTS AND WASHERS SHALL BE GALVANIZED. (AT THE CONTRACTOR'S OPTION, STAINLESS STEEL BOLTS, NUTS AND WASHERS MAY BE USED AS AN ALTERNATE FOR THE 7/8" Ø GALVANIZED BOLTS, NUTS AND WASHERS. THEY SHALL CONFORM TO OR EXCEED THE MECHANICAL REQUIREMENTS OF ASTM A307. THE USE OF THIS ALTERNATE SHALL BE APPROVED BY THE ENGINEER.)

THE GUARDRAIL ANCHOR ASSEMBLY IS REQUIRED AT ALL POINTS WHERE APPROACH GUARDRAIL IS TO BE ATTACHED TO THE END OF BARRIER RAIL. FOR POINTS OF ATTACHMENT, SEE SKETCH.

AFTER INSTALLATION, THE EXPOSED THREAD OF THE BOLT SHALL BE BURRED WITH A SHARP POINTED TOOL.

THE COST OF THE GUARDRAIL ANCHOR ASSEMBLY SHALL BE INCLUDED IN THE UNIT CONTRACT PRICE BID FOR CONCRETE BARRIER RAIL.

THE 1 1/4" Ø HOLES SHALL BE FORMED OR DRILLED WITH A CORE BIT. IMPACT TOOLS WILL NOT BE PERMITTED. ANY CONCRETE DAMAGED BY THIS WORK SHALL BE REPAIRED TO THE SATISFACTION OF THE ENGINEER.

THE C6 X 8.2 RUBRAIL IS TO BE ADHESIVELY ANCHORED TO THE RAIL USING THREE 3/4"Ø X 6" BOLTS WITH WASHERS. LEVEL ONE FIELD TESTING IS REQUIRED, AND THE YIELD LOAD OF THE 3/4"Ø BOLT IS 12 KIPS. FOR ADHESIVELY ANCHORED ANCHOR BOLTS OR DOWELS, SEE SPECIAL PROVISIONS. SEE ROADWAY STANDARD 862.03 FOR DETAILS AND LOCATION OF THE RUBRAIL.

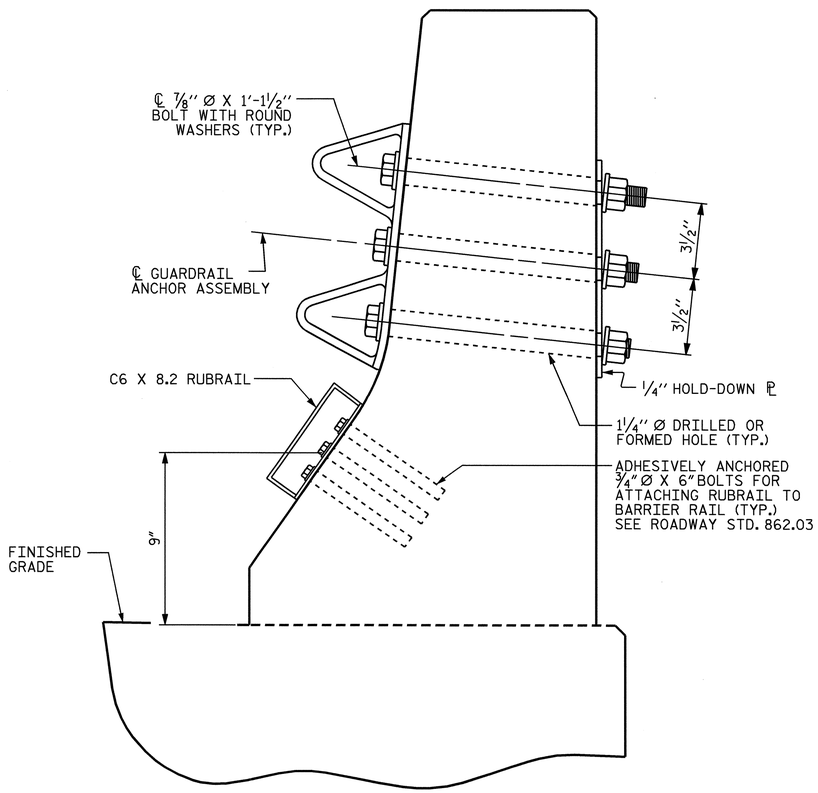

SECTION E-E

GUARDRAIL ANCHOR ASSEMBLY DETAILS

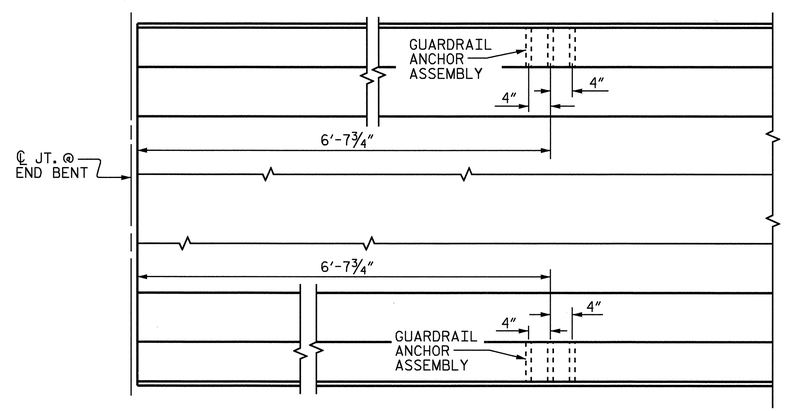

PLAN

LOCATION OF ANCHORS FOR GUARDRAIL

END BENT #1 SHOWN, END BENT #2 SIMILAR.

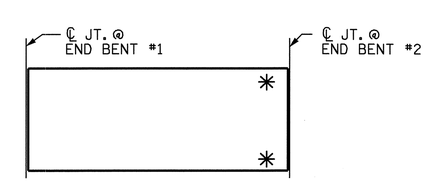

SKETCH SHOWING POINTS OF ATTACHMENTS

✳ DENOTES GUARDRAIL ANCHOR ASSEMBLY

PROJECT NO. R-2719A
LENOIR COUNTY
STATION: 248+68.10 -L-

STATE OF NORTH CAROLINA
DEPARTMENT OF TRANSPORTATION
RALEIGH

STANDARD
GUARDRAIL ANCHORAGE FOR BARRIER RAIL
(LEFT LANE)

NORTH CAROLINA PROFESSIONAL SEAL 025516 ENGINEER EMILY E. MURRAY
10/7/08

REVISIONS						SHEET NO.
NO.	BY:	DATE:	NO.	BY:	DATE:	S-229
1			3			TOTAL SHEETS
2			4			340

STR. #8 STD. NO. GRA2

ASSEMBLED BY : B.N.BARODAWALA DATE : 3-9-07
CHECKED BY : PEGGY ADKINS DATE : 6-08
DRAWN BY : TLA 5/06
CHECKED BY : GM 5/06
ADDED 5/1/06R KMM/GM

30-SEP-2008 16:47
k:\structures\Final plans\Str #8\R2719A_sd_BR_08.dgn
bbarodawala

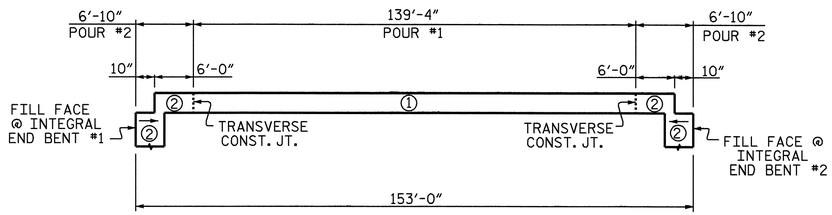

POURING SEQUENCE

SUPERSTRUCTURE REINFORCING STEEL LENGTHS ARE BASED ON THE FOLLOWING MINIMUM SPLICE LENGTHS					
BAR SIZE	SUPERSTRUCTURE EXCEPT APPROACH SLABS, PARAPET, AND BARRIER RAIL		APPROACH SLABS		PARAPET AND BARRIER RAIL
	EPOXY COATED	UNCOATED	EPOXY COATED	UNCOATED	
#4	2'-0"	1'-9"	2'-0"	1'-9"	2'-9"
#5	2'-6"	2'-2"	2'-6"	2'-2"	3'-5"
#6	3'-0"	2'-7"	3'-10"	2'-7"	4'-4"
#7	5'-3"	3'-6"			
#8	6'-10"	4'-7"			

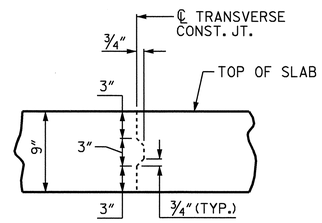

TRANSVERSE CONSTRUCTION JOINT DETAIL

NOTE:
REINFORCING STEEL IN SLAB NOT SHOWN.
LONGITUDINAL REINFORCING STEEL SHALL BE CONTINUOUS THRU JOINT

BILL OF MATERIAL

BAR	NO.	SIZE	TYPE	LENGTH	WEIGHT
✳ A1	303	#5	STR	56'-11"	17987
A2	303	#5	STR	56'-11"	17987
✳ B1	120	#6	STR	52'-4"	9433
✳ B2	148	#6	STR	35'-0"	7780
B3	153	#5	STR	52'-0"	8298
B4	88	#5	STR	36'-0"	3304
K1	56	#5	STR	32'-8"	1908
K2	4	#5	STR	2'-9"	11
✳ S1	102	#4	1	11'-8"	795
✳ S2	98	#4	1	9'-10"	644
U1	102	#4	2	13'-2"	897
U2	12	#4	2	15'-2""	122
V1	10	#4	STR	5'-2"	35

REINFORCING STEEL 32562 LBS.

✳ EPOXY COATED REINFORCING STEEL 36639 LBS.

BAR TYPES

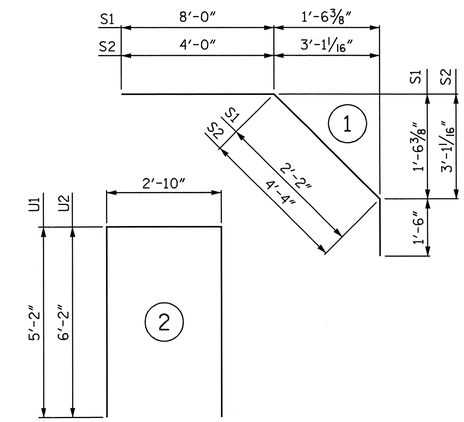

ALL BAR DIMENSIONS ARE OUT TO OUT

SUPERSTRUCTURE BILL OF MATERIAL

	CLASS AA CONCRETE	REINFORCING STEEL	EPOXY COATED REINFORCING STEEL
	(CU.YDS.)	(LBS.)	(LBS.)
POUR #1	259.6	——	——
POUR #2	113.5	——	——
TOTALS ✳✳	373.1	32562	36639

✳✳QUANTITIES FOR BARRIER RAIL ARE NOT INCLUDED

GROOVING BRIDGE FLOORS

APPROACH SLABS	2516	SQ.FT.
BRIDGE DECK	7701	SQ.FT.
TOTAL	10217	SQ.FT.

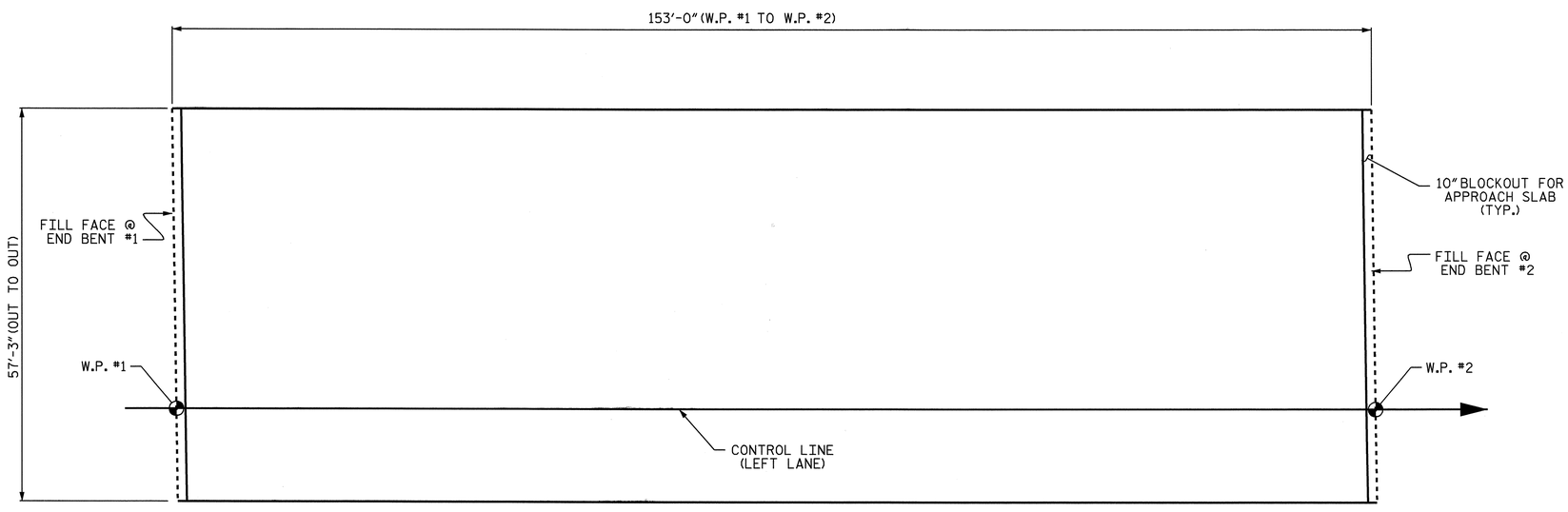

LAYOUT FOR COMPUTING AREA OF REINFORCED CONCRETE DECK SLAB (SQ. FT. = 8,759)

PROJECT NO. R-2719A
LENOIR COUNTY
STATION: 248+68.10 -L-

STATE OF NORTH CAROLINA
DEPARTMENT OF TRANSPORTATION
RALEIGH

SUPERSTRUCTURE
BILL OF MATERIAL
(LEFT LANE)

NORTH CAROLINA PROFESSIONAL SEAL 025516 ENGINEER EMILY E. MURRAY
6-10-08

REVISIONS						SHEET NO.
NO.	BY:	DATE:	NO.	BY:	DATE:	S-230
1			3			TOTAL SHEETS
2			4			340

STR. #8

DRAWN BY : B.N.BARODAWALA DATE : 3-14-07
CHECKED BY : PEGGY ADKINS DATE : 6-08

07-OCT-2008 14:49
J:\Structures\Final plans\Str #8\R2719A_sd_BM_08.dgn
emurray

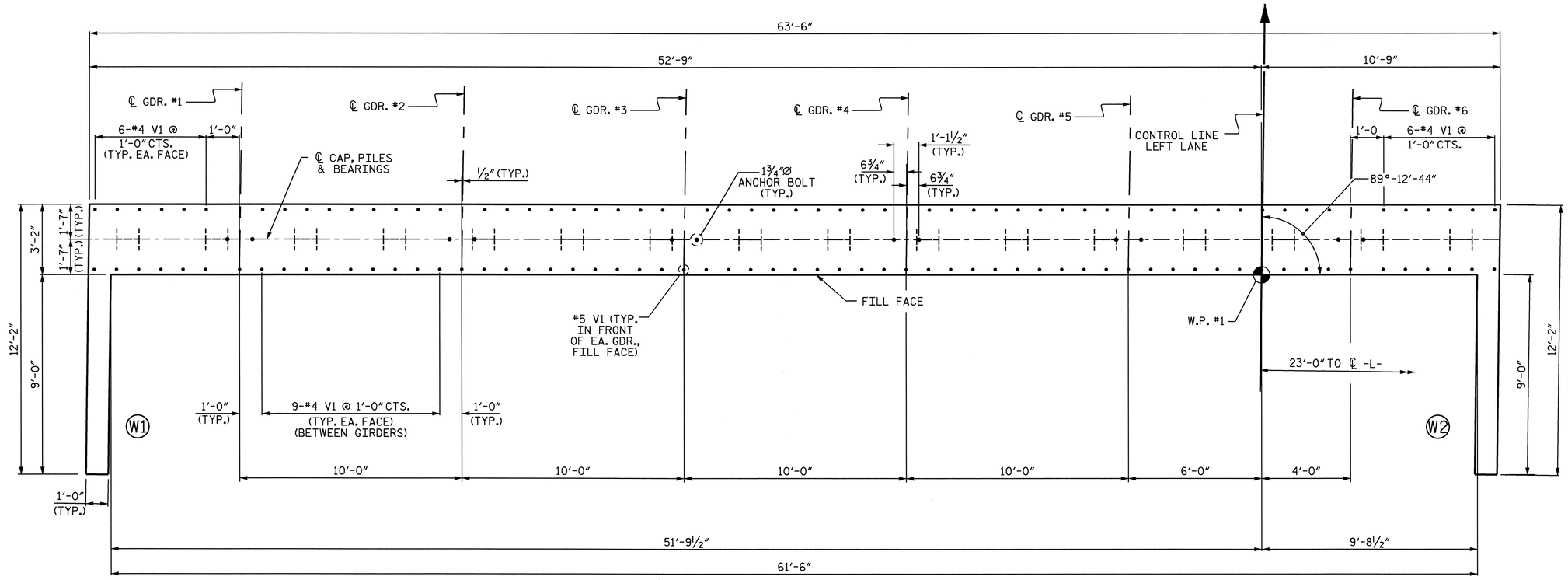

PLAN

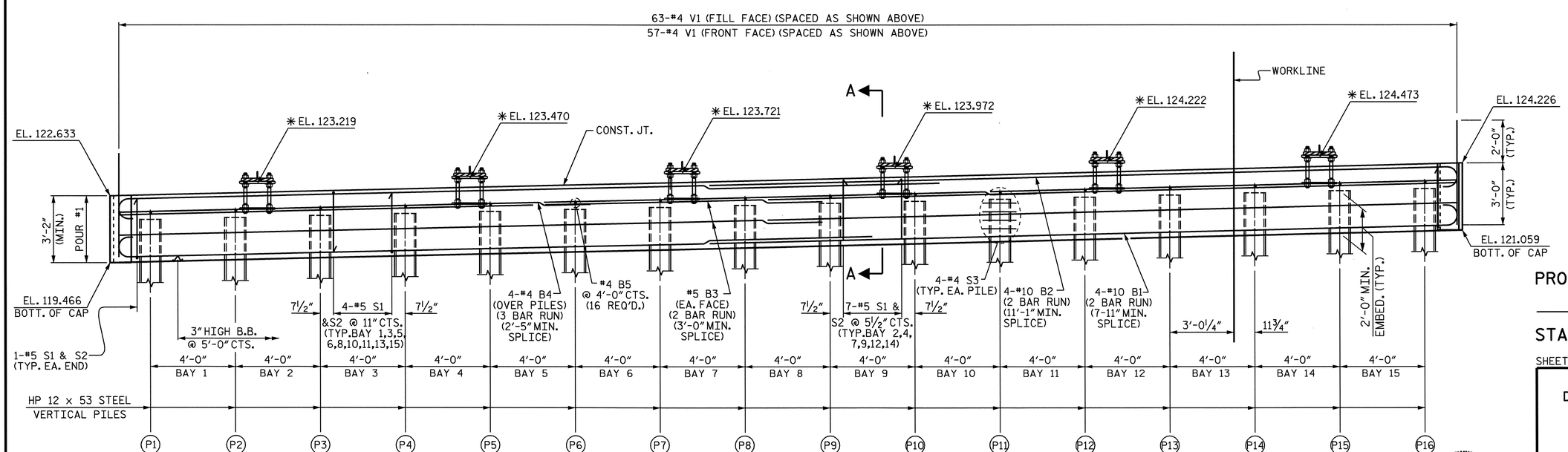

ELEVATION

UPPER PART OF WING NOT SHOWN FOR CLARITY
✳ ELEVATION GIVEN FROM BOTTOM OF SOLE PLATE

NOTES

STIRRUPS IN CAP MAY BE SHIFTED AS NECESSARY TO CLEAR ANCHOR BOLTS.

THE CONTRACTOR SHALL PROVIDE FOR INSTALLATION OF THE 4" DIAMETER DRAIN PIPE THROUGH THE WING WALL AS REQUIRED FOR REINFORCED BRIDGE APPROACH FILLS, SEE THE ROADWAY PLANS. REINFORCING STEEL IN THE WING WALL MAY BE SHIFTED AS NECESSARY TO CLEAR THE DRAIN PIPE.

SEE SUPERSTRUCTURE SHEETS FOR UPPER PART OF INTEGRAL END BENT DETAIL.

THE CONTRACTOR'S ATTENTION IS CALLED TO THE FACT THAT UPPER PART OF WINGS ARE TO BE POURED WITH THE SUPERSTRUCTURE.

STIRRUPS IN CAP MAY BE SHIFTED AS NECESSARY TO CLEAR ANCHOR BOLTS.

THE TOP SURFACE OF POUR #1 OF THE END BENT CAP AND WINGS, EXCLUDING THE OUTSIDE 4" AND THE BEARING AREA, SHALL BE RAKED TO A DEPTH OF 1/4".

TOP OF PILE ELEVATIONS	
P1	121.510
P2	121.611
P3	121.711
P4	121.811
P5	121.912
P6	122.012
P7	122.112
P8	122.213
P9	122.313
P10	122.413
P11	122.514
P12	122.614
P13	122.714
P14	122.814
P15	122.915
P16	123.015

PROJECT NO. R-2719A
LENOIR COUNTY
STATION: 248+68.10 -L-

SHEET 1 OF 3

STATE OF NORTH CAROLINA
DEPARTMENT OF TRANSPORTATION
RALEIGH

SUBSTRUCTURE

INTEGRAL END BENT #1
(LEFT LANE)

NORTH CAROLINA PROFESSIONAL SEAL 025516 ENGINEER EMILY E. MURRAY
Emily E. Murray 10/7/08

REVISIONS						SHEET NO.
NO.	BY:	DATE:	NO.	BY:	DATE:	S-231
1			3			TOTAL SHEETS
2			4			340

DRAWN BY : J.B. WILSON DATE : 5/2008
CHECKED BY : B.N. BARODAWALA DATE : 7/22/08

30-SEP-2008 16:45
k:\structures\Final plans\Str #8\R-2719A_sd_EB.dgn
bbarodawala

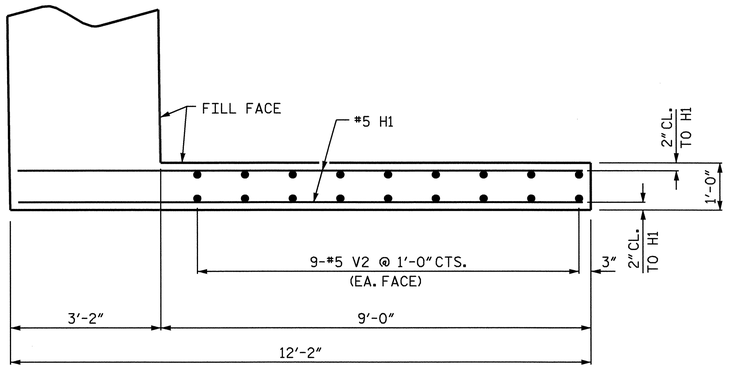

PLAN OF WING W1

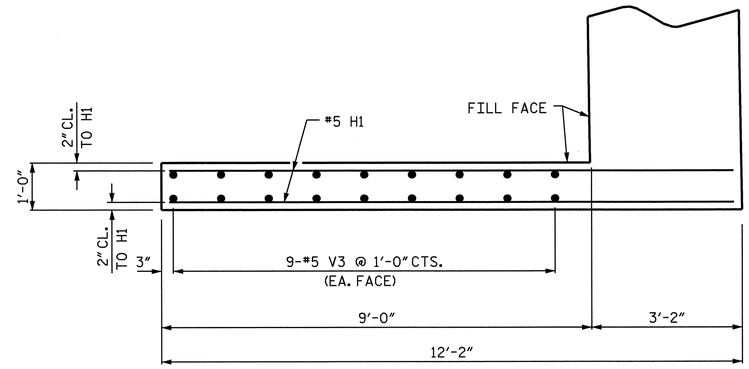

PLAN OF WING W2

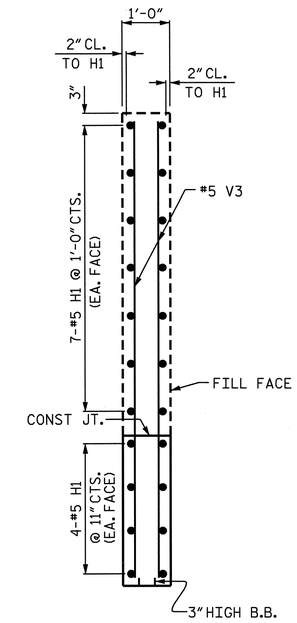

SECTION C-C

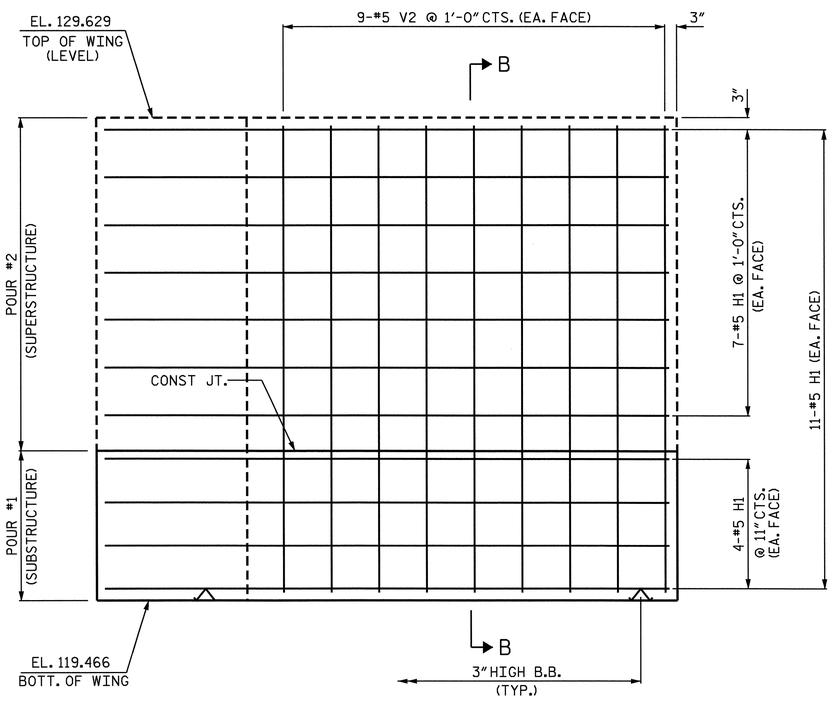

ELEVATION OF WING W1

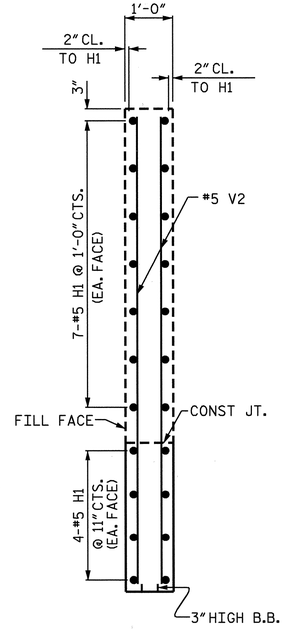

SECTION B-B

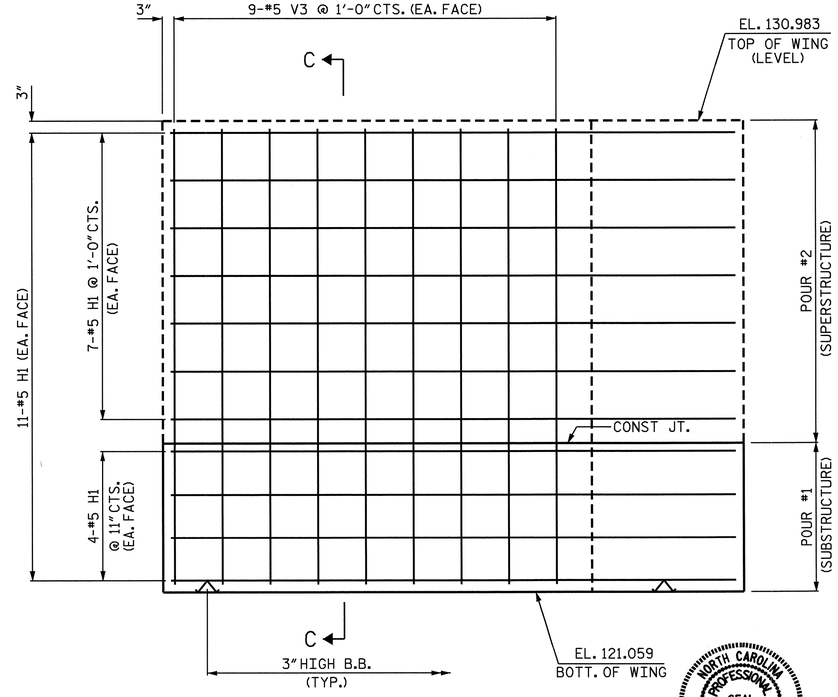

ELEVATION OF WING W2

NORTH CAROLINA PROFESSIONAL SEAL 025516 ENGINEER EMILY E. MARRY

Emily E. Marry 10/7/08

PROJECT NO. R-2719A

LENOIR COUNTY

STATION: 248+68.10 -L-

SHEET 2 OF 3

STATE OF NORTH CAROLINA
DEPARTMENT OF TRANSPORTATION
RALEIGH

SUBSTRUCTURE

INTEGRAL END BENT #1

(LEFT LANE)

REVISIONS						SHEET NO.
NO.	BY:	DATE:	NO.	BY:	DATE:	S-232
1			3			TOTAL SHEETS
2			4			340

DRAWN BY : J.B. WILSON DATE : 5/2008
CHECKED BY : B.N. BARODAWALA DATE : 7/22/08

30-SEP-2008 16:45
k:\structures\Final plans\Str #8\R-2719A_sd_EB.dgn
bbarodawala

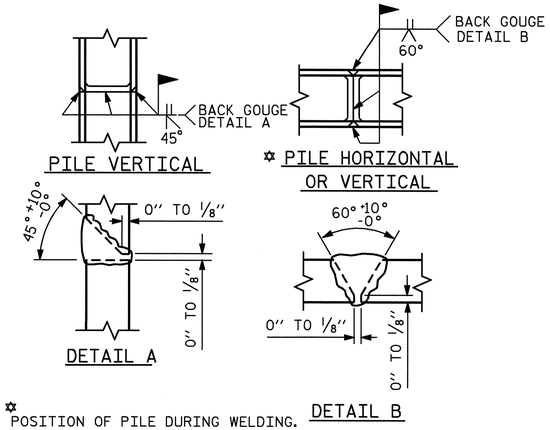

✡ POSITION OF PILE DURING WELDING.

PILE SPLICE DETAILS

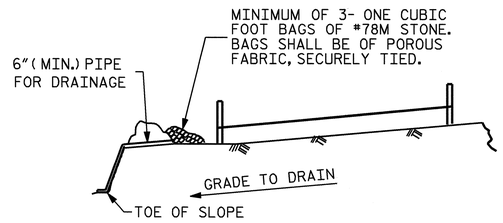

BAGGED STONE AND PIPE SHALL BE PLACED IMMEDIATELY AFTER COMPLETION OF END BENT EXCAVATION. PIPE MAY BE EITHER CONCRETE, CORRUGATED STEEL, CORRUGATED ALUMINUM ALLOY, OR CORRUGATED PLASTIC. PERFORATED PIPE WILL NOT BE ALLOWED.

BAGGED STONE SHALL REMAIN IN PLACE UNTIL THE ENGINEER DIRECTS THAT IT BE REMOVED. THE CONTRACTOR SHALL REMOVE AND DISPOSE OF SILT ACCUMULATIONS AT BAGGED STONE WHEN SO DIRECTED BY THE ENGINEER. BAGS SHALL BE REMOVED AND REPLACED WHENEVER THE ENGINEER DETERMINES THAT THEY HAVE DETERIORATED AND LOST THEIR EFFECTIVENESS.

NO SEPARATE PAYMENT WILL BE MADE FOR THIS WORK AND THE ENTIRE COST OF THIS WORK SHALL BE INCLUDED IN THE UNIT CONTRACT PRICE BID FOR THE SEVERAL PAY ITEMS.

TEMPORARY DRAINAGE AT END BENT

BAR TYPES

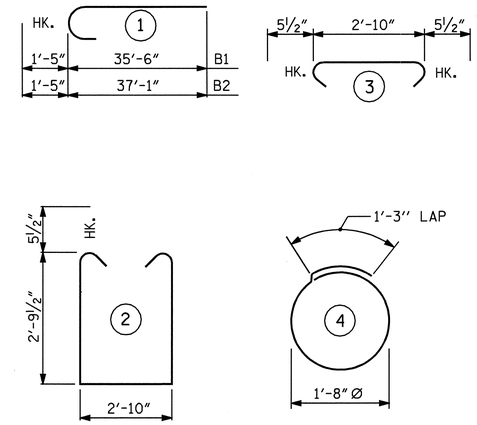

ALL BAR DIMENSIONS ARE OUT TO OUT.

BILL OF MATERIAL

END BENT #1

BAR	NO.	SIZE	TYPE	LENGTH	WEIGHT
B1	8	#10	1	36'-11"	1271
B2	8	#10	1	38'-6"	1325
B3	8	#5	STR	33'-1"	276
B4	12	#4	STR	22'-8"	182
B5	16	#4	STR	2'-10"	30
H1	44	#5	STR	11'-10"	543
S1	80	#5	2	9'-4"	779
S2	80	#5	3	3'-9"	313
S3	64	#4	4	6'-6"	278
V1	120	#4	STR	5'-0"	401
V2	18	#5	STR	9'-10"	185
V3	18	#5	STR	9'-7"	180
REINFORCING STEEL				=	5763 LBS

CLASS A CONCRETE BREAKDOWN

POUR 1
CAP AND LOWER PART OF WINGS__C.Y. 25.7

HP 12 x 53 STEEL PILES
NO. 16 LIN. FT. 1120

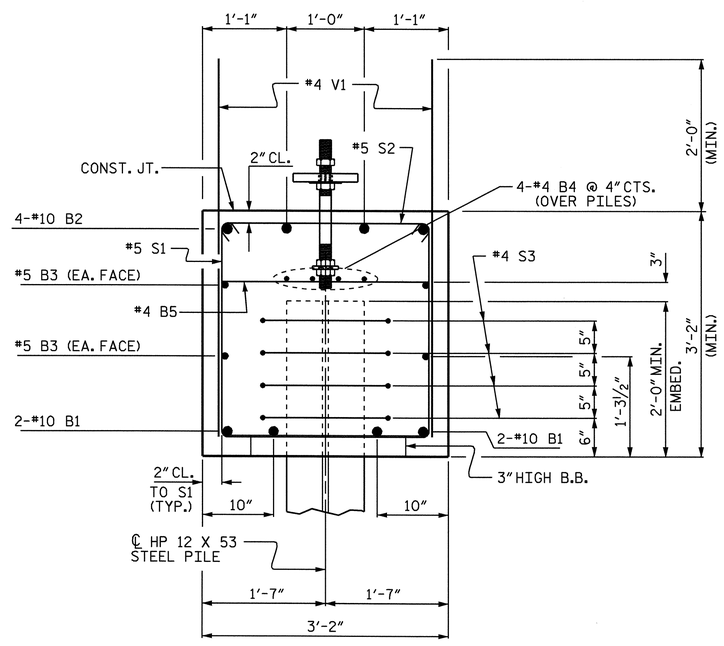

SECTION A-A

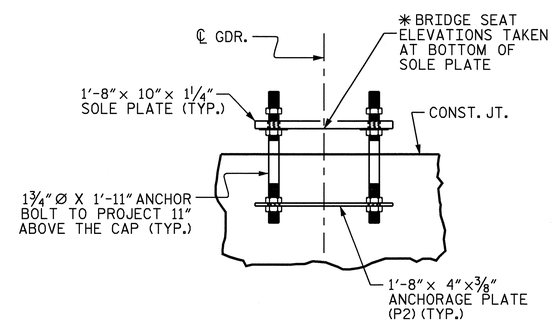

ANCHORAGE DETAILS

(FOR DETAIL SEE
STRUCTURAL STEEL SHEET)

PROJECT NO. R-2719A
LENOIR COUNTY
STATION: 248+68.10 -L-

SHEET 3 OF 3

STATE OF NORTH CAROLINA
DEPARTMENT OF TRANSPORTATION
RALEIGH

SUBSTRUCTURE

INTEGRAL
END BENT #1
(LEFT LANE)

NORTH CAROLINA PROFESSIONAL SEAL 025516 ENGINEER EMILY E. MURRAY
10/7/08

REVISIONS						SHEET NO.
NO.	BY:	DATE:	NO.	BY:	DATE:	S-233
1			3			TOTAL SHEETS
2			4			340

DRAWN BY : J.B. WILSON DATE : 5/2008
CHECKED BY : B.N.BARODAWALA DATE : 7/22/08

30-SEP-2008 16:46
k:\structures\Final plans\Str #8\R-2719A_sd_EB.dgn
bbarodawala

STR. #8

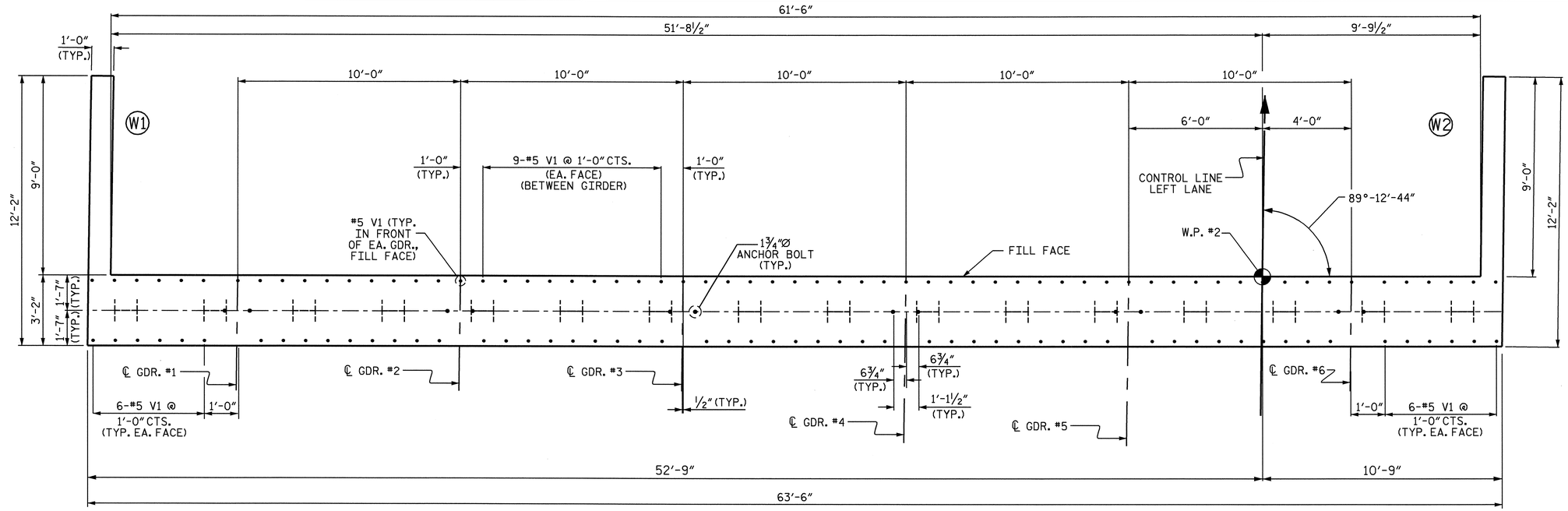

PLAN

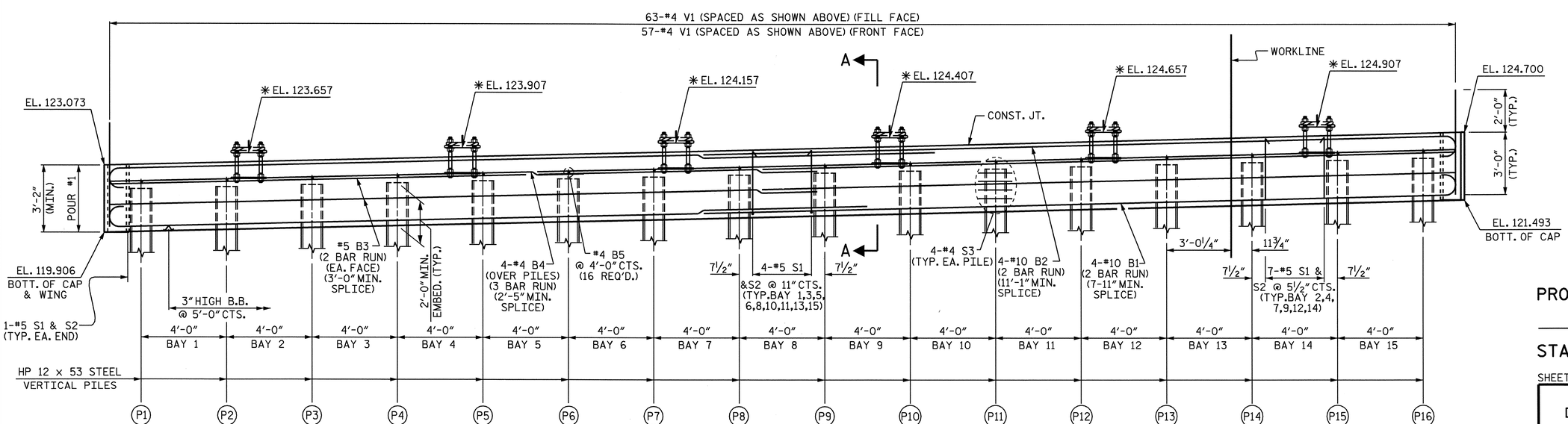

ELEVATION

WINGS OMITTED FOR CLARITY

✱ ELEVATION GIVEN FROM BOTTOM OF SOLE PLATE

NOTES

STIRRUPS IN CAP MAY BE SHIFTED AS NECESSARY TO CLEAR ANCHOR BOLTS.

THE CONTRACTOR SHALL PROVIDE FOR INSTALLATION OF THE 4" DIAMETER DRAIN PIPE THROUGH THE WING WALL AS REQUIRED FOR REINFORCED BRIDGE APPROACH FILLS, SEE THE ROADWAY PLANS. REINFORCING STEEL IN THE WING WALL MAY BE SHIFTED AS NECESSARY TO CLEAR THE DRAIN PIPE.

SEE SUPERSTRUCTURE SHEETS FOR UPPER PART OF INTEGRAL END BENT DETAIL.

THE CONTRACTOR'S ATTENTION IS CALLED TO THE FACT THAT UPPER PART OF WINGS ARE TO BE POURED WITH THE SUPERSTRUCTURE.

STIRRUPS IN CAP MAY BE SHIFTED AS NECESSARY TO CLEAR ANCHOR BOLT.

THE TOP SURFACE OF POUR #1 OF THE END BENT CAP AND WINGS, EXCLUDING THE OUTSIDE 4" AND THE BEARING AREA, SHALL BE RAKED TO A DEPTH OF ¼".

TOP OF PILE ELEVATIONS	
P1	121.949
P2	122.049
P3	122.149
P4	122.249
P5	122.349
P6	122.449
P7	122.549
P8	122.649
P9	122.749
P10	122.849
P11	122.949
P12	123.049
P13	123.149
P14	123.249
P15	123.349
P16	123.449

PROJECT NO. R-2719A

LENOIR COUNTY

STATION: 248+68.10 -L-

SHEET 1 OF 3

STATE OF NORTH CAROLINA
DEPARTMENT OF TRANSPORTATION
RALEIGH

SUBSTRUCTURE

INTEGRAL END BENT #2
(LEFT LANE)

NORTH CAROLINA PROFESSIONAL SEAL 025516 ENGINEER EMILY E. MURRAY
Emily E. Murray 10/7/08

REVISIONS						SHEET NO.
NO.	BY:	DATE:	NO.	BY:	DATE:	S-234
1			3			TOTAL SHEETS
2			4			340

DRAWN BY : J.B. WILSON DATE : 5/2008
CHECKED BY : B.N. BARODAWALA DATE : 7/22/08

30-SEP-2008 16:46
k:\structures\Final plans\Str #8\R-2719A_sd_EB.dgn
bbarodawala

STR. #8

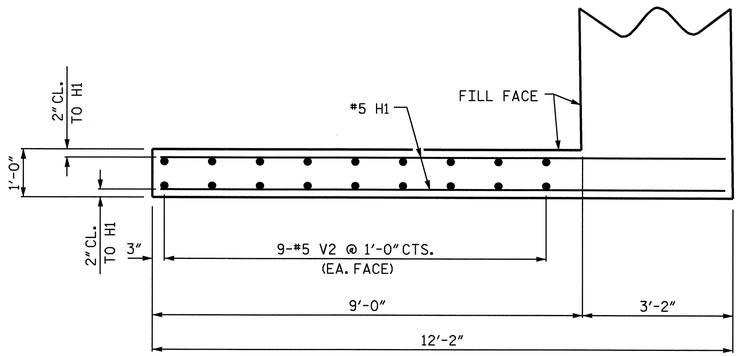

PLAN OF WING W1

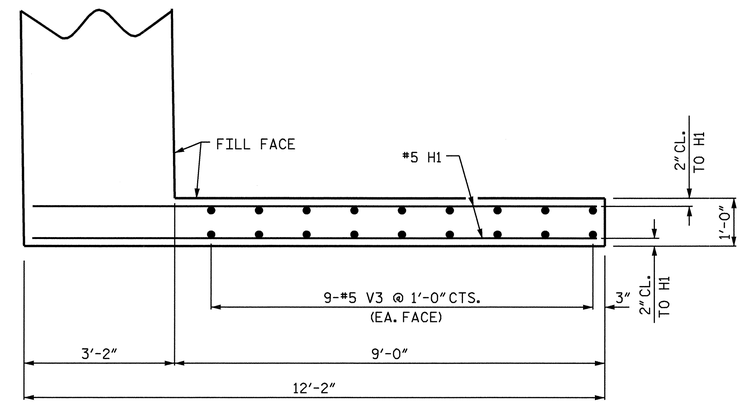

PLAN OF WING W2

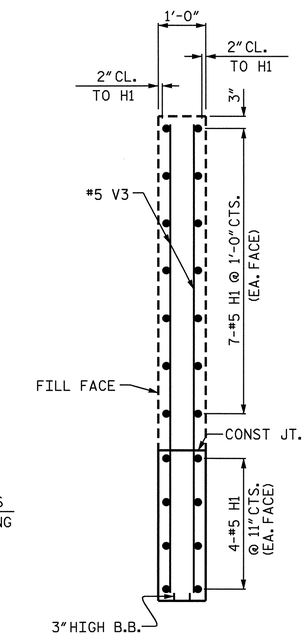

SECTION C-C

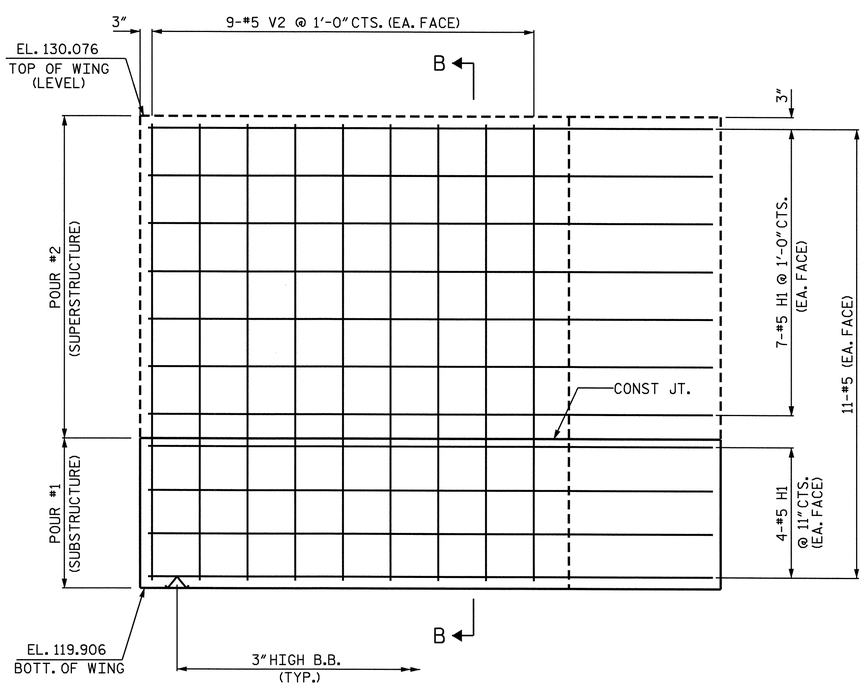

ELEVATION OF WING W1

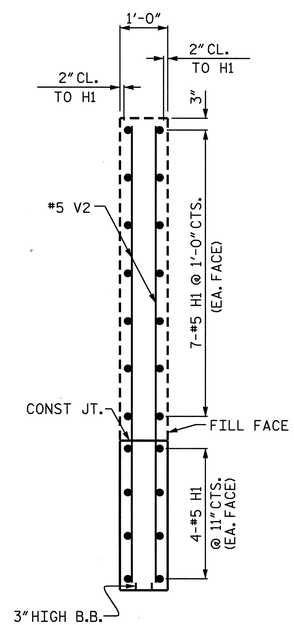

SECTION B-B

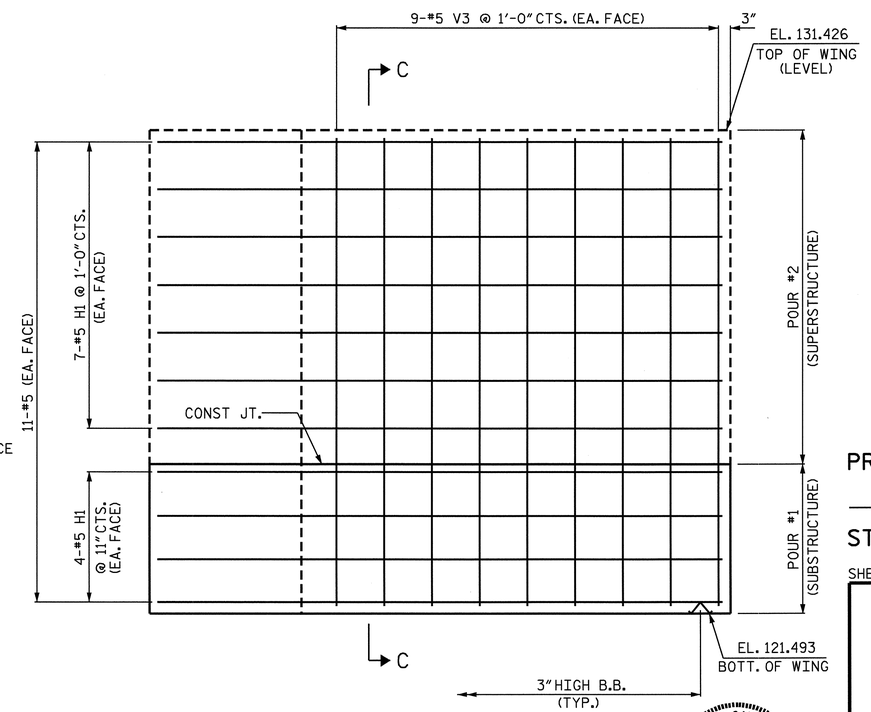

ELEVATION OF WING W2

NORTH CAROLINA PROFESSIONAL SEAL 025516 ENGINEER EMILY E. MURRAY
10/7/08

PROJECT NO. R-2719A
LENOIR COUNTY
STATION: 248+68.10 -L-

SHEET 2 OF 3

STATE OF NORTH CAROLINA
DEPARTMENT OF TRANSPORTATION
RALEIGH

SUBSTRUCTURE

INTEGRAL END BENT #2
(LEFT LANE)

REVISIONS						SHEET NO.
NO.	BY:	DATE:	NO.	BY:	DATE:	S-235
1			3			TOTAL SHEETS
2			4			340

DRAWN BY : J.B. WILSON DATE : 5/2008
CHECKED BY : B.N. BARODAWALA DATE : 7/22/08

30-SEP-2008 16:46
k:\structures\Final plans\Str #8\R-2719A_sd_EB.dgn
bbarodawala

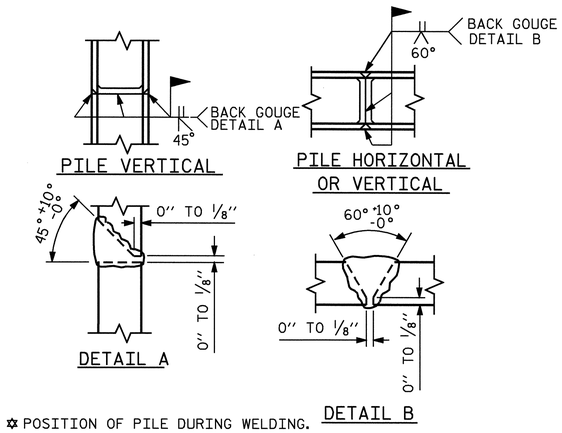

✡ POSITION OF PILE DURING WELDING.

PILE SPLICE DETAILS

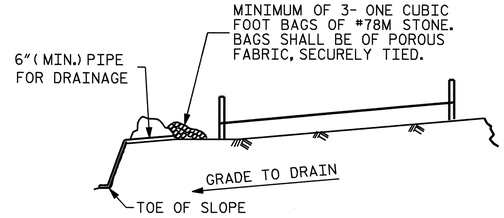

BAGGED STONE AND PIPE SHALL BE PLACED IMMEDIATELY AFTER COMPLETION OF END BENT EXCAVATION. PIPE MAY BE EITHER CONCRETE, CORRUGATED STEEL, CORRUGATED ALUMINUM ALLOY, OR CORRUGATED PLASTIC. PERFORATED PIPE WILL NOT BE ALLOWED.

BAGGED STONE SHALL REMAIN IN PLACE UNTIL THE ENGINEER DIRECTS THAT IT BE REMOVED. THE CONTRACTOR SHALL REMOVE AND DISPOSE OF SILT ACCUMULATIONS AT BAGGED STONE WHEN SO DIRECTED BY THE ENGINEER. BAGS SHALL BE REMOVED AND REPLACED WHENEVER THE ENGINEER DETERMINES THAT THEY HAVE DETERIORATED AND LOST THEIR EFFECTIVENESS.

NO SEPARATE PAYMENT WILL BE MADE FOR THIS WORK AND THE ENTIRE COST OF THIS WORK SHALL BE INCLUDED IN THE UNIT CONTRACT PRICE BID FOR THE SEVERAL PAY ITEMS.

TEMPORARY DRAINAGE AT END BENT

BAR TYPES

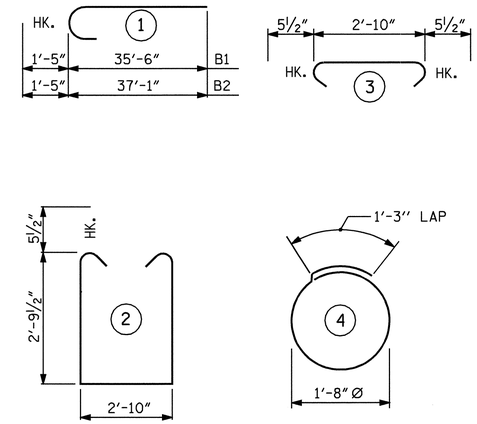

ALL BAR DIMENSIONS ARE OUT TO OUT.

BILL OF MATERIAL

END BENT #2

BAR	NO.	SIZE	TYPE	LENGTH	WEIGHT
B1	8	#10	1	36'-11"	1271
B2	8	#10	1	38'-6"	1325
B3	8	#5	STR	33'-1"	276
B4	12	#4	STR	22'-8"	182
B5	16	#4	STR	2'-10"	30
H1	44	#5	STR	11'-10"	543
S1	80	#5	2	9'-4"	779
S2	80	#5	3	3'-9"	313
S3	64	#4	4	6'-6"	278
V1	120	#4	STR	5'-0"	401
V2	18	#5	STR	9'-10"	185
V3	18	#5	STR	9'-7"	180
REINFORCING STEEL				=	5763 LBS

CLASS A CONCRETE BREAKDOWN

POUR 1
CAP AND LOWER PART OF WINGS__C.Y. 25.7

HP 12 x 53 STEEL PILES
NO. 16 LIN. FT. 1120

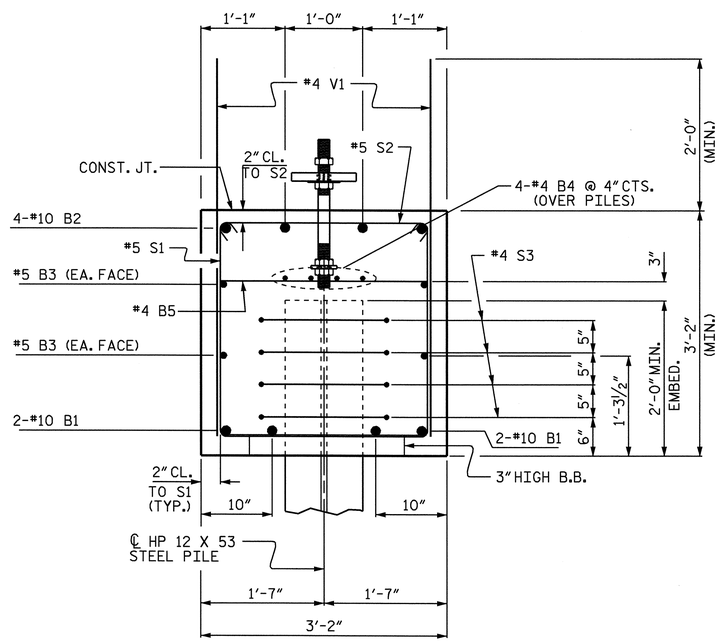

SECTION A-A

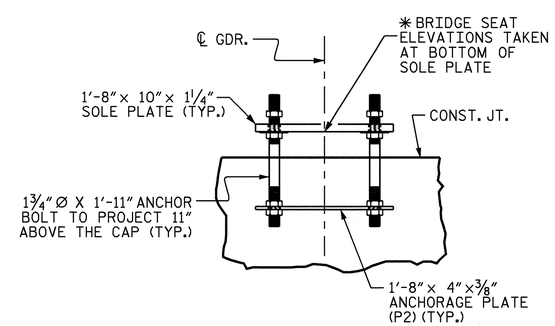

ANCHORAGE DETAILS

(FOR DETAIL SEE STRUCTURAL STEEL SHEET)

PROJECT NO. R-2719A
LENOIR COUNTY
STATION: 248+68.10 -L-

SHEET 3 OF 3

STATE OF NORTH CAROLINA
DEPARTMENT OF TRANSPORTATION
RALEIGH

SUBSTRUCTURE

INTEGRAL END BENT #2
(LEFT LANE)

NORTH CAROLINA PROFESSIONAL SEAL 025516 ENGINEER EMILY E. MURRAY
10/7/08

REVISIONS						SHEET NO.
NO.	BY:	DATE:	NO.	BY:	DATE:	S-236
1			3			TOTAL SHEETS
2			4			340

DRAWN BY : J.B. WILSON DATE : 5/2008
CHECKED BY : B.N. BARODAWALA DATE : 7/22/08

30-SEP-2008 16:46
k:\structures\Final plans\Str #8\R-2719A_sd_EB.dgn
bbarodawala

STR. #8

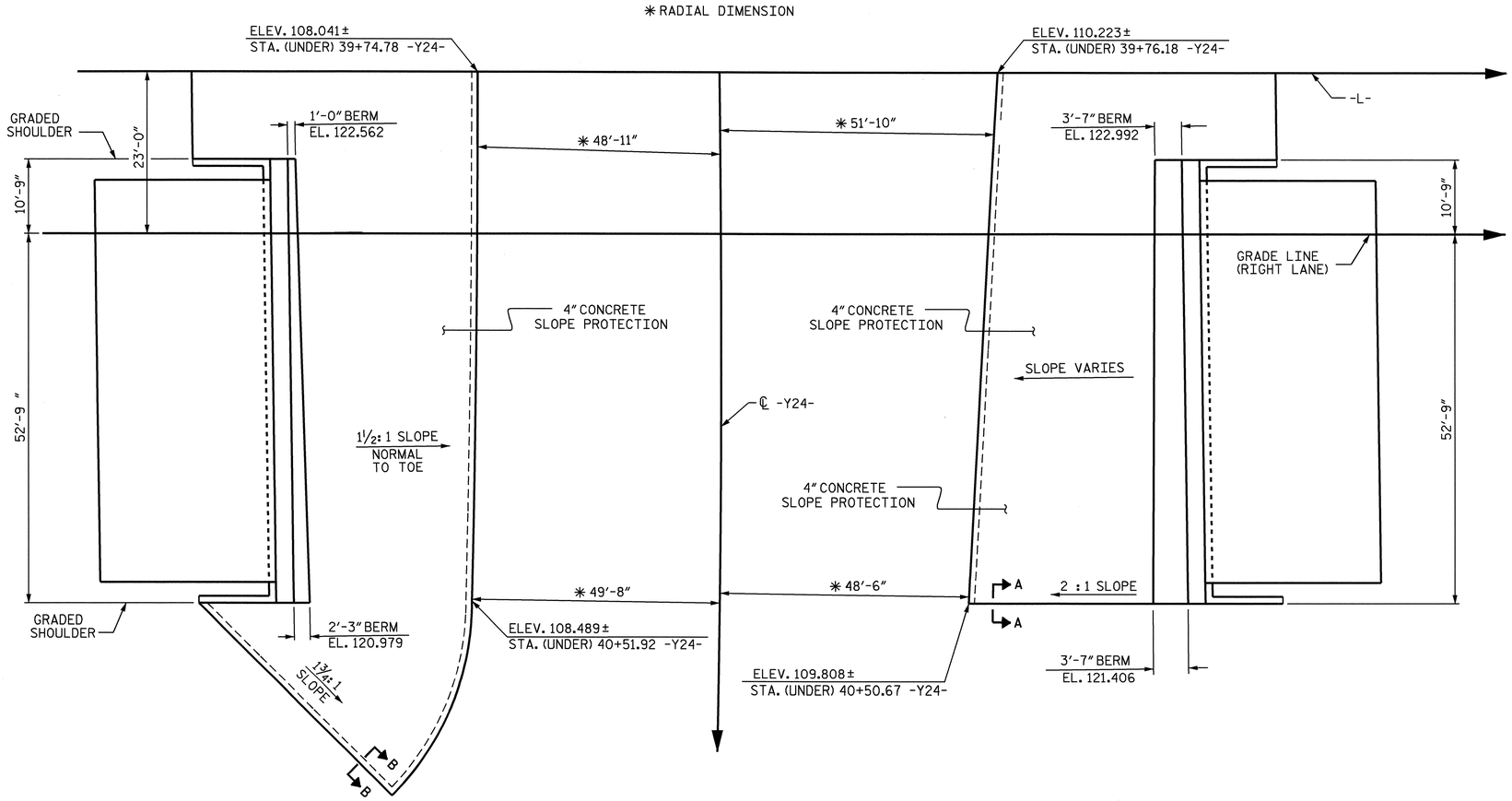

GENERAL NOTES

SLOPE PROTECTION SHALL BE PLACED UNDER THE ENDS OF THE BRIDGE AS SHOWN IN THE DETAILS. THE CONTRACTOR, AT HIS OPTION, MAY USE ALTERNATE "B" ONLY FOR HIGHWAY OVER HIGHWAY GRADE SEPARATIONS WITH 2:1 END BENT SLOPE IN RURAL, UNPOPULATED AREAS. STRAIGHT EDGING WILL NOT BE REQUIRED UNLESS, IN THE OPINION OF THE ENGINEER, VISUAL INSPECTION INDICATES A NEED FOR IT. MEASUREMENT AND PAYMENT SHALL BE AS PRESCRIBED IN SECTION 462 OF THE STANDARD SPECIFICATIONS. FOR BERM WIDTH, SEE GENERAL DRAWING.

ALTERNATE "A"

ALTERNATE "A" SHALL CONSIST OF 4" POURED-IN-PLACE CONCRETE PAVING AS SHOWN IN THE DETAILS ON THIS SHEET. CONCRETE SHALL BE CLASS "B". THE CONCRETE SURFACE SHALL BE FLOATED WITH A WOODEN FLOAT AND FINISHED. WELDED WIRE FABRIC REINFORCING SHALL BE 6 X 6 - W1.4 X W1.4, 60" WIDE. SLOPE PROTECTION SHALL BE POURED IN 5' STRIPS AS SHOWN IN THE "POURING DETAIL" WITH 2'-0" LONG #4 BARS PLACED ALONG THE SLOPE BETWEEN STRIPS AT 1'-6" MAXIMUM SPACING. SLOPE PROTECTION MAY BE POURED IN ALTERNATE 4' AND 5' STRIPS AS SHOWN IN THE "OPTIONAL POURING DETAIL" WITH ADJACENT RUNS OF WELDED WIRE FABRIC LAPPING AT LEAST 6". THE COST OF THE WELDED WIRE FABRIC AND #4 BARS, IF USED, SHALL BE INCLUDED IN THE CONTRACT UNIT PRICE BID PER SQUARE YARD FOR SLOPE PROTECTION.

BRIDGE @ STA. 248+68.10 -L- STA. 39+75.47 -Y24-	4 INCH SLOPE PROTECTION	✳ WELDED WIRE FABRIC 60 INCHES WIDE
	SQUARE YARDS	APPROX. L.F.
END BENT 1	398	860
END BENT 2	319	689

✳ QUANTITY SHOWN IS BASED ON 5' POURS.

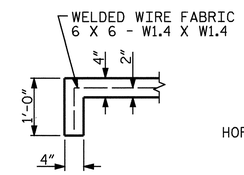

SECTION A-A

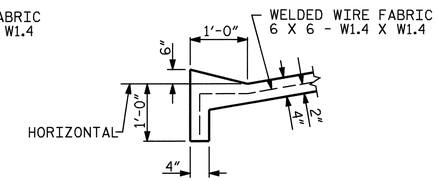

SECTION B-B

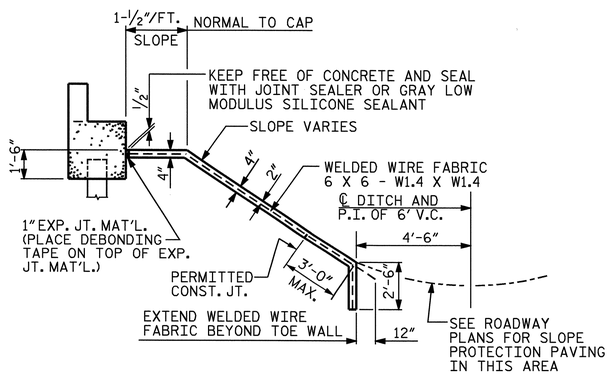

SECTION ALONG ℄ ROADWAY WHEN FILL CATCHES IN DITCH

DETAILS FOR ALTERNATE "A"

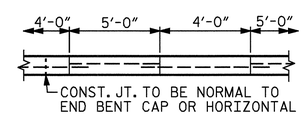

POUR A 4'-0" STRIP FIRST. STRIP WIDTHS MAY VARY IN CURVED PORTION.

OPTIONAL POURING DETAIL

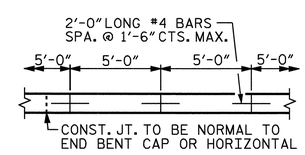

STRIP WIDTHS MAY VARY IN CURVED PORTION.

POURING DETAIL

PROJECT NO. R-2719A
LENOIR COUNTY
STATION: 248+68.10 -L-

STATE OF NORTH CAROLINA
DEPARTMENT OF TRANSPORTATION
RALEIGH

STANDARD
SLOPE PROTECTION DETAILS
(RIGHT LANE)

NORTH CAROLINA PROFESSIONAL SEAL 025516 ENGINEER EMILY E. MURRAY
10/13/08

REVISIONS						SHEET NO.
NO.	BY:	DATE:	NO.	BY:	DATE:	S-237
1			3			TOTAL SHEETS
2			4			340

ASSEMBLED BY : M.GUDLAUGSSON	DATE : 04/2008		
CHECKED BY : M. PISO	DATE : 06/2008		
DRAWN BY : ELR 5/92	REV. 7/10/01	LES/RDR	
CHECKED BY : GRP 6/92	REV. 5/7/03	RWW/JTE	
	REV. 5/1/06	TLA/GM	

13-OCT-2008 16:59
g:\tfpprojects-r\r2719a\structures\finalplans\Str #9\R2719A_sd_SP_9.dgn
taverette

STR. #9

STD. NO. SP1 (SHT 4)

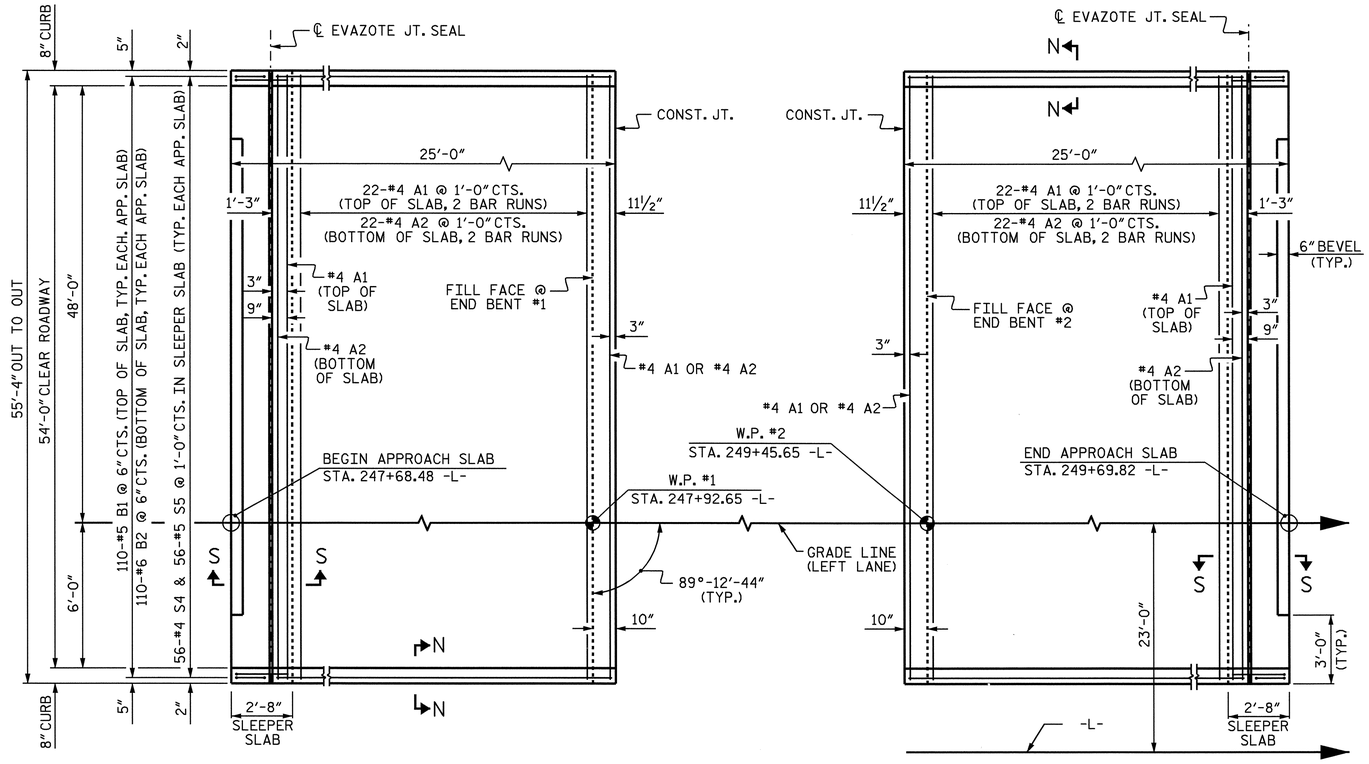

PLAN @ END BENT #1

PLAN @ END BENT #2

DIMENSIONS SHOWN ARE TYPICAL FOR BOTH APPROACH SLABS. #4 A1 BARS IN SLEEPER SLAB NOT SHOWN FOR CLARITY.

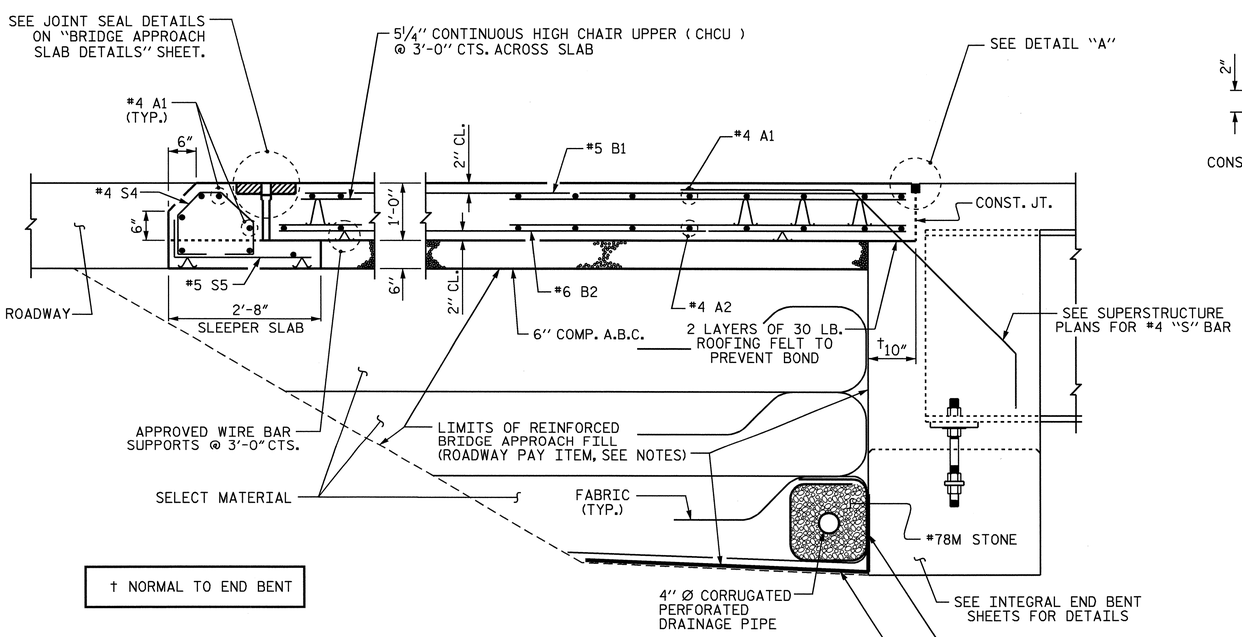

SECTION THRU SLAB

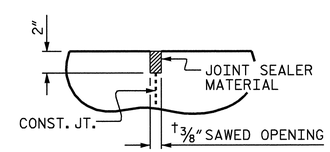

DETAIL "A"

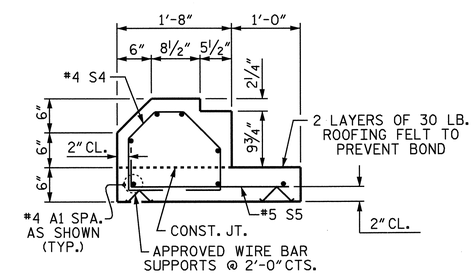

SECTION S-S

SHOWING SLEEPER SLAB

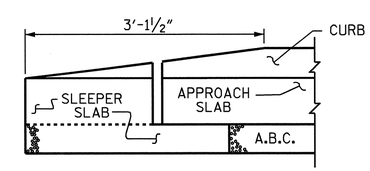

END OF CURB WITHOUT SHOULDER BERM GUTTER

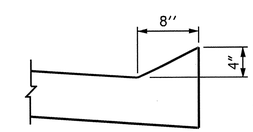

SECTION N-N

NOTES

APPROACH SLAB SHALL NOT BE CONSTRUCTED PRIOR TO COMPLETION OF THE BRIDGE DECK.

FOR REINFORCED BRIDGE APPROACH FILL INCLUDING FABRIC, IMPERMEABLE GEOMEMBRANE, 4" Ø DRAINAGE PIPE, #78M STONE, AND SELECT MATERIAL, SEE ROADWAY PLANS.

AREA BETWEEN THE WINGWALL AND APPROACH SLAB SHALL BE GRADED TO DRAIN THE WATER AWAY FROM THE FILL FACE OF THE BRIDGE AND SHALL BE PAVED. SEE ROADWAY PLANS.

THE 6" COMP. A.B.C. SHALL BE FLUSH WITH THE SLEEPER SLAB AND SHALL EXTEND 1'-0" OUTSIDE OF EACH EDGE OF THE APPROACH SLAB.

THE CONTRACTOR MAY USE 4" TYPE B-25.0B ASPHALT CONCRETE BASE COURSE IN LIEU OF 6" COMP. A.B.C. IF THIS OPTION IS USED, THE BASE COURSE SHALL BE FLUSH WITH THE SLEEPER SLAB, AND THE WIDTH SHALL BE THE SAME AS THAT OF THE APPROACH SLAB.

THE CONTRACTOR MAY USE 5" CLASS "A" CONCRETE BASE IN LIEU OF 6" COMP. A.B.C. IF THIS OPTION IS USED, THE CONCRETE BASE SHALL BE FLUSH WITH THE SLEEPER SLAB, AND THE WIDTH SHALL BE THE SAME AS THAT OF THE APPROACH SLAB. THE CONCRETE SHALL BE FINISHED TO A SMOOTH SURFACE AND A LAYER OF 30 LB ROOFING FELT SHALL BE PLACED BETWEEN THE CONCRETE BASE AND THE APPROACH SLAB TO PREVENT BOND. THE APPROACH SLAB SHALL NOT BE CAST UNTIL THE CONCRETE BASE HAS REACHED AN AGE OF THREE CURING DAYS.

THE VERTICAL JOINT ON THE RIGHT AND LEFT SIDE OF THE APPROACH SLAB AT THE ENDS OF THE EVAZOTE JOINT SHALL BE FILLED WITH SILICONE OR OTHER APPROVED MATERIAL IN ORDER TO PREVENT BACKFILL FROM ENTERING THE JOINT OPENING.

THE JOINT OPENING AT THE APPROACH SLAB/DECK INTERFACE SHALL BE SAWED NO MORE THAN 12 HOURS AFTER THE APPROACH SLAB IS CAST. THE JOINT SHALL BE CLEANED OF ALL DEBRIS BEFORE THE SEALANT IS APPLIED. THE JOINT SEALER MATERIAL SHALL CONFORM TO THE REQUIREMENTS OF TYPE SL LOW MODULUS SILICONE SEALANT.

WITH EVAZOTE JOINT SEAL

FOR EVAZOTE JOINT SEALS, SEE SPECIAL PROVISIONS.

THE NOMINAL UNCOMPRESSED SEAL WIDTH OF THE EVAZOTE JOINT SEAL SHALL BE 2½".

FOR ELASTOMERIC CONCRETE, SEE SPECIAL PROVISIONS.

BILL OF MATERIAL

FOR ONE APPROACH SLAB (2 REQ'D)

BAR	NO.	SIZE	TYPE	LENGTH	WEIGHT
✳ A1	62	#4	STR	28'-6"	1180
A2	48	#4	STR	28'-5"	911
✳ B1	110	#5	STR	22'-5"	2572
B2	110	#6	STR	22'-11"	3786
✳ S4	56	#4	1	3'-11"	147
S5	56	#5	2	2'-11"	170

REINFORCING STEEL	LBS.	4867
✳ EPOXY COATED REINFORCING STEEL	LBS.	3899
CLASS AA CONCRETE		
POUR #1 - SLAB & CURB	C. Y.	47.6
POUR #2 - SLEEPER SLAB	C. Y.	5.7
TOTAL	C. Y.	53.3

BAR TYPES

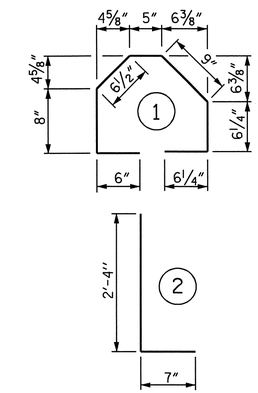

ALL BAR DIMENSIONS ARE OUT TO OUT

SPLICE CHART

BAR SIZE	SPLICE LENGTH
#4 A1	2'-0"
#4 A2	1'-9"

PROJECT NO. R-2719A

LENOIR COUNTY

STATION: 248+68.10 -L-

SHEET 1 OF 3

STATE OF NORTH CAROLINA
DEPARTMENT OF TRANSPORTATION
RALEIGH

STANDARD

BRIDGE APPROACH SLAB FOR INTEGRAL ABUTMENT (LEFT LANE)

NORTH CAROLINA PROFESSIONAL SEAL 025516 ENGINEER BRIAN E. MURRAY
4/7/08

REVISIONS						SHEET NO.
NO.	BY:	DATE:	NO.	BY:	DATE:	S-238
1			3			TOTAL SHEETS
2			4			340

ASSEMBLED BY: M.GUDLAUGSSON DATE : 04/2008
CHECKED BY : C.R. MCDUFFEE DATE : 05/2008
DRAWN BY : TLA 10/05
CHECKED BY : GM 5/06
ADDED 5/1/06R KMM/GM

30-SEP-2008 16:46
K:\structures\Final plans\Str #8\R2719A_sd_AS_8.dgn
bbarodawala

STR. #8

STD. NO. BAS11 (SHT 10)

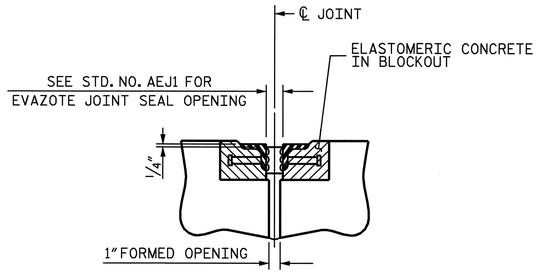

SECTION C-C

ARMORED EVAZOTE JOINT SEAL

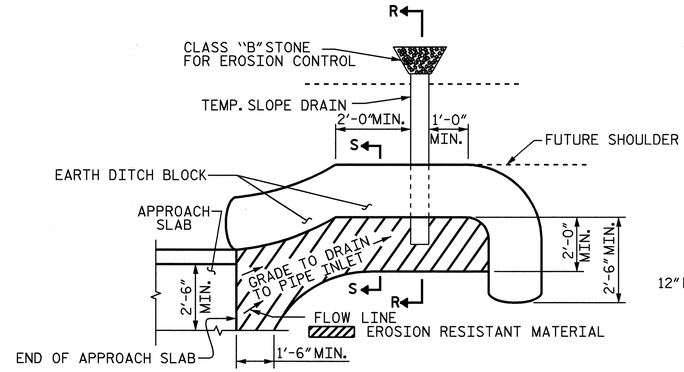

NOTE: IMMEDIATELY AFTER THE CONSTRUCTION OF THE APPROACH SLAB, THE CONTRACTOR SHALL PROVIDE TEMPORARY BERM AND SLOPE DRAIN. CONTRACTOR SHALL GRADE TO PIPE INLET AND PROVIDE EROSION RESISTANT MATERIAL AS SHOWN. THE EROSION RESISTANT MATERIAL SHALL BE EITHER 1) ASPHALT PLANT MIX, TYPE 1 OR TYPE 2, MIN. 2" DEPTH, 2) EROSION CONTROL MAT, OR 3) CONCRETE, AS DIRECTED BY THE ENGINEER. THE SLOPE DRAIN SHALL CONSIST OF A NON-PERFORATED TEMPORARY DRAINAGE PIPE, 12 INCHES IN DIAMETER.

PLAN VIEW

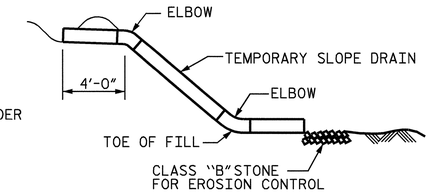

SECTION R-R

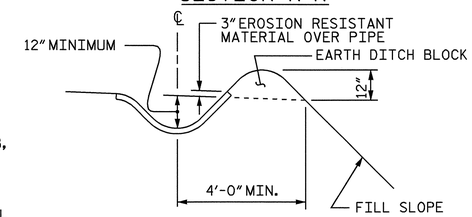

SECTION S-S

TEMPORARY BERM AND SLOPE DRAIN DETAILS

(TO BE USED WHEN SHOULDER BERM GUTTER IS REQUIRED)

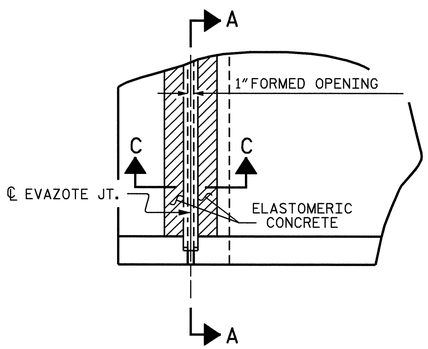

PLAN

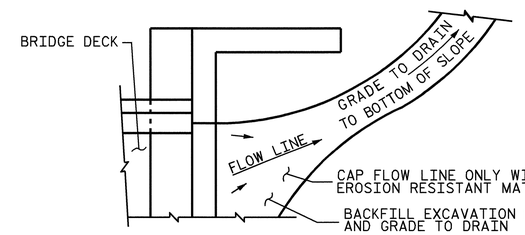

NOTE: IF THE APPROACH SLAB IS NOT CONSTRUCTED IMMEDIATELY AFTER THE BACKFILLING OF THE END BENT EXCAVATION, GRADE TO DRAIN TO THE BOTTOM OF THE SLOPE AND PROVIDE EROSION RESISTANT MATERIAL, SUCH AS FIBERGLASS ROVING OR AS DIRECTED BY THE ENGINEER TO PREVENT SOIL EROSION AND TO PROTECT THE AREA ADJACENT TO THE STRUCTURE. THE CONTRACTOR WILL BE REQUIRED TO REMOVE THESE MATERIALS PRIOR TO CONSTRUCTION OF THE APPROACH SLAB.

TEMPORARY DRAINAGE DETAIL

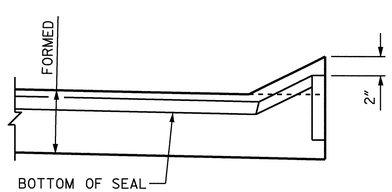

SECTION A-A

PROJECT NO. R-2719A

LENOIR COUNTY

STATION: 248+68.10 -L-

SHEET 2 OF 3

STATE OF NORTH CAROLINA
DEPARTMENT OF TRANSPORTATION
RALEIGH

STANDARD

BRIDGE APPROACH SLAB DETAILS

(LEFT LANE)

NORTH CAROLINA PROFESSIONAL SEAL 025516 ENGINEER EMILY E. MURRAY

Emily E. Murray 10/7/08

ASSEMBLED BY : M.GUDLAUGSSON	DATE : 04/2008
CHECKED BY : C.R. MCDUFFEE	DATE : 05/2008

DRAWN BY : FCJ	11/88	REV. 10/17/00	RWW/LES
CHECKED BY : ARB	11/88	REV. 5/7/03	RWW/JTE
		REV. 5/1/06R	MAA/KMM

REVISIONS						SHEET NO.
NO.	BY:	DATE:	NO.	BY:	DATE:	S-239
1			3			TOTAL SHEETS
2			4			340

30-SEP-2008 16:46
k:\structures\Final plans\Str #8\R2719A_sd_AS_8.dgn
bbarodawala

STR. #8

STD. NO. BAS10 (SHT 9)

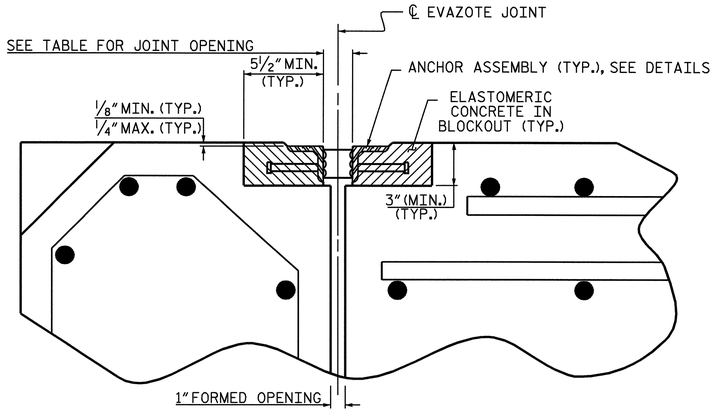

ARMORED JOINT DETAILS

SECTION NORMAL TO JOINT AT APPROACH SLAB SLEEPER SLAB

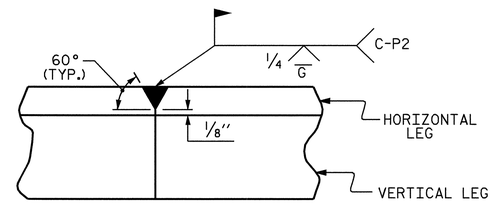

DETAIL- FIELD WELD SPLICE OF ANGLE

NOTES

ANGLES SHALL CONFORM TO AASHTO M270 GRADE 36 STEEL OR APPROVED EQUAL. ALL STUD ANCHORS SHALL CONFORM TO AASHTO M169 GRADES 1010 THRU 1020 OR APPROVED EQUAL.

STUD ANCHORS SHALL BE SHOP WELDED AND ALL HOLES SHALL BE SHOP DRILLED AS SHOWN ON THE PLANS. STUD ANCHORS SHALL BE ELECTRIC ARC END WELDED WITH COMPLETE FUSION.

UPON COMPLETION OF SHOP FABRICATION, THE ENTIRE ANCHOR ASSEMBLY SHALL BE METALLIZED. THE ½" Ø STUD ANCHORS AND ANCHOR TABS NEED NOT BE METALLIZED. SEE SPECIAL PROVISION FOR THERMAL SPRAYED COATINGS (METALLIZATION).

ANCHOR ASSEMBLY SHALL BE MADE CONTINUOUS THE LENGTH OF THE JOINT FROM GUTTER TO GUTTER. FOR FIELD SPLICES AT ALL CROWN BREAK POINTS, THE ENDS OF THE STEEL ANGLES SHALL BE CUT PARALLEL TO THE BRIDGE CENTERLINE. FINISHED FIELD WELDS SHALL BE GROUND SMOOTH AND COATED WITH A MINIMUM THICKNESS OF 4 DRY MILS OF ZINC-RICH PAINT IN ACCORDANCE WITH THE STANDARD SPECIFICATIONS.

ANCHOR ASSEMBLY SEGMENTS SHALL NOT BE LESS THAN 12 FEET NOR MORE THAN 20 FEET IN LENGTH. SHORTER SEGMENTS MAY BE USED AT THE EDGE OF ROADWAY OR AT POINTS OF STAGED CONSTRUCTION.

THE ANCHOR ASSEMBLY SHALL BE SECURED AND LEVELED AS SHOWN IN THE "ARMORED JOINT ANCHOR ASSEMBLY DETAILS". NO SUBMITTALS ARE REQUIRED FOR ⅜" Ø EXPANSION ANCHORS, NUTS OR WASHERS. THE CONTRACTOR MAY SUBMIT FOR APPROVAL AN ALTERNATE METHOD OF ALIGNING AND LEVELING THE ANGLES. THE ALTERNATE METHOD SHALL NOT INCLUDE ANY WELDING TO THE OUTSIDE FACE OF THE ANGLES.

AFTER THE ELASTOMERIC CONCRETE HAS BEEN CAST ON BOTH SIDES OF THE JOINT, REMOVE ANY EXCESS CONCRETE THAT COMES THROUGH THE WEEP HOLES AND THOROUGHLY CLEAN THE ANGLES. ANY DAMAGED STEEL SHALL BE COATED WITH A MINIMUM OF 4 MILS OF ZINC-RICH PAINT IN ACCORDANCE WITH THE STANDARD SPECIFICATIONS.

SEE SPECIAL PROVISIONS FOR EVAZOTE JOINT SEALS.

SEE SPECIAL PROVISIONS FOR ELASTOMERIC CONCRETE.

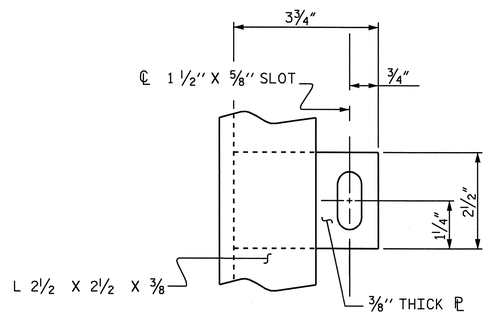

PLAN VIEW OF TAB

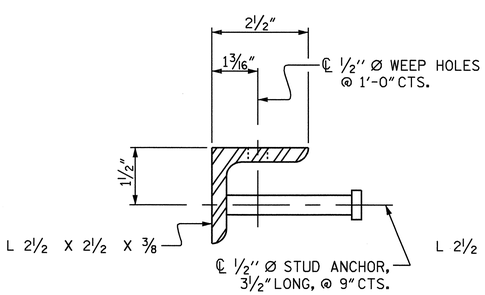

SECTION VIEW OF STUD

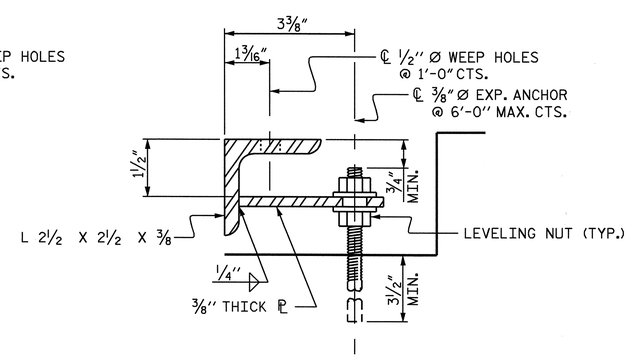

SECTION VIEW OF TAB

ARMORED JOINT ANCHOR ASSEMBLY DETAILS

MOVEMENT AND SETTING AT EVAZOTE JOINT

END BENT NO.	SKEW ANGLE	NOMINAL UNCOMPRESSED SEAL WIDTH	TOTAL MOVEMENT (ALONG ℄ RDWY)	PERPENDICULAR JOINT OPENING AT 45° F	PERPENDICULAR JOINT OPENING AT 60° F	PERPENDICULAR JOINT OPENING AT 90° F
1	89°-12'-44"	2½"	1"	2"	1⅞"	1⁹⁄₁₆"
2	89°-12'-44"	2½"	1"	2"	1⅞"	1⁹⁄₁₆"

TOTAL MOVEMENT IS CALCULATED ALONG THE CENTERLINE OF ROADWAY.
JOINT OPENINGS ARE MEASURED PERPENDICULAR TO THE JOINT.

BILL OF MATERIAL

BENT NO.	ELASTOMERIC CONCRETE ✳ (CU. FT.)	TOTAL LENGTH OF ANGLE (FT)
1	12.4	54'-0"
2	12.4	54'-0"
TOTAL	24.8	108'-0"

✳ BASED ON THE MINIMUM BLOCKOUT SHOWN.

PROJECT NO. R-2719A
LENOIR COUNTY
STATION: 248+68.10 -L-

SHEET 3 OF 3

STATE OF NORTH CAROLINA
DEPARTMENT OF TRANSPORTATION
RALEIGH

STANDARD

ARMORED EVAZOTE JOINT DETAILS

(LEFT LANE)

NORTH CAROLINA PROFESSIONAL SEAL 025516 ENGINEER EMILY E. MURRAY
10/7/08

REVISIONS						SHEET NO.
NO.	BY:	DATE:	NO.	BY:	DATE:	S-240
1			3			TOTAL SHEETS
2			4			340

STR. #8 STD. NO. AEJ1

ASSEMBLED BY : M.GUDLAUGSSON DATE : 04/2008	
CHECKED BY : C.R. MCDUFFEE DATE : 05/2008	
DRAWN BY : EEM 1/96	REV. 7/10/01 LES/RDR
CHECKED BY : RGW 1/96	REV. 5/7/03RR RWW/JTE
	REV. 5/1/06 TLA/GM

30-SEP-2008 16:46
k:\structures\finalplans\Str #8\R2719A_sd_AS_8.dgn
bbarodawala

F.A. PROJECT: STP-0224(12)

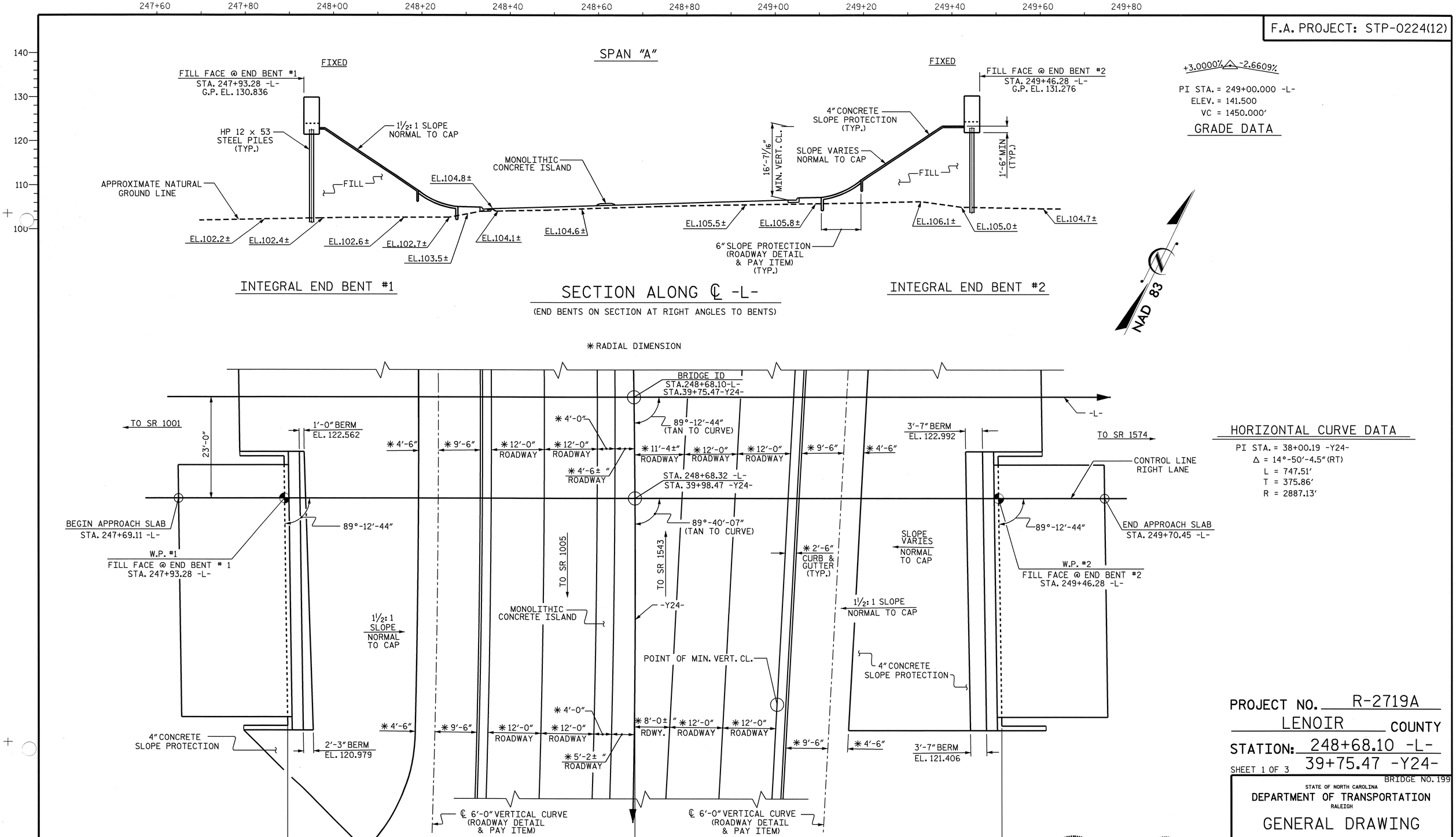

HORIZONTAL CURVE DATA

PI STA. = 38+00.19 -Y24-
Δ = 14°-50'-4.5" (RT)
L = 747.51'
T = 375.86'
R = 2887.13'

PROJECT NO. R-2719A
LENOIR COUNTY
STATION: 248+68.10 -L-
39+75.47 -Y24-

SHEET 1 OF 3

BRIDGE NO. 199

STATE OF NORTH CAROLINA
DEPARTMENT OF TRANSPORTATION
RALEIGH

GENERAL DRAWING

FOR BRIDGE OVER
US 258 ON CRESCENT RD
BETWEEN SR 1001 & SR 1574
(RIGHT LANE)

NORTH CAROLINA PROFESSIONAL SEAL 12274 ENGINEER OMAR R. AZIZ
Omar R Aziz 10-10-08

NORTH CAROLINA PROFESSIONAL SEAL 025516 ENGINEER EMILY E. MURRAY
Emily E. Murray 10-10-08

REVISIONS						SHEET NO.
NO.	BY:	DATE:	NO.	BY:	DATE:	S-241
1			3			TOTAL SHEETS
2			4			340

DRAWN BY : C.R.MCDUFFEE DATE : 8/23/07
CHECKED BY : T.L. AVERETTE DATE : 9/17/07

10-OCT-2008 12:21
J:\Structures\Final plans\Str #9\r2719a_sd_gd_09*.dgn
emurray

STR. # 9

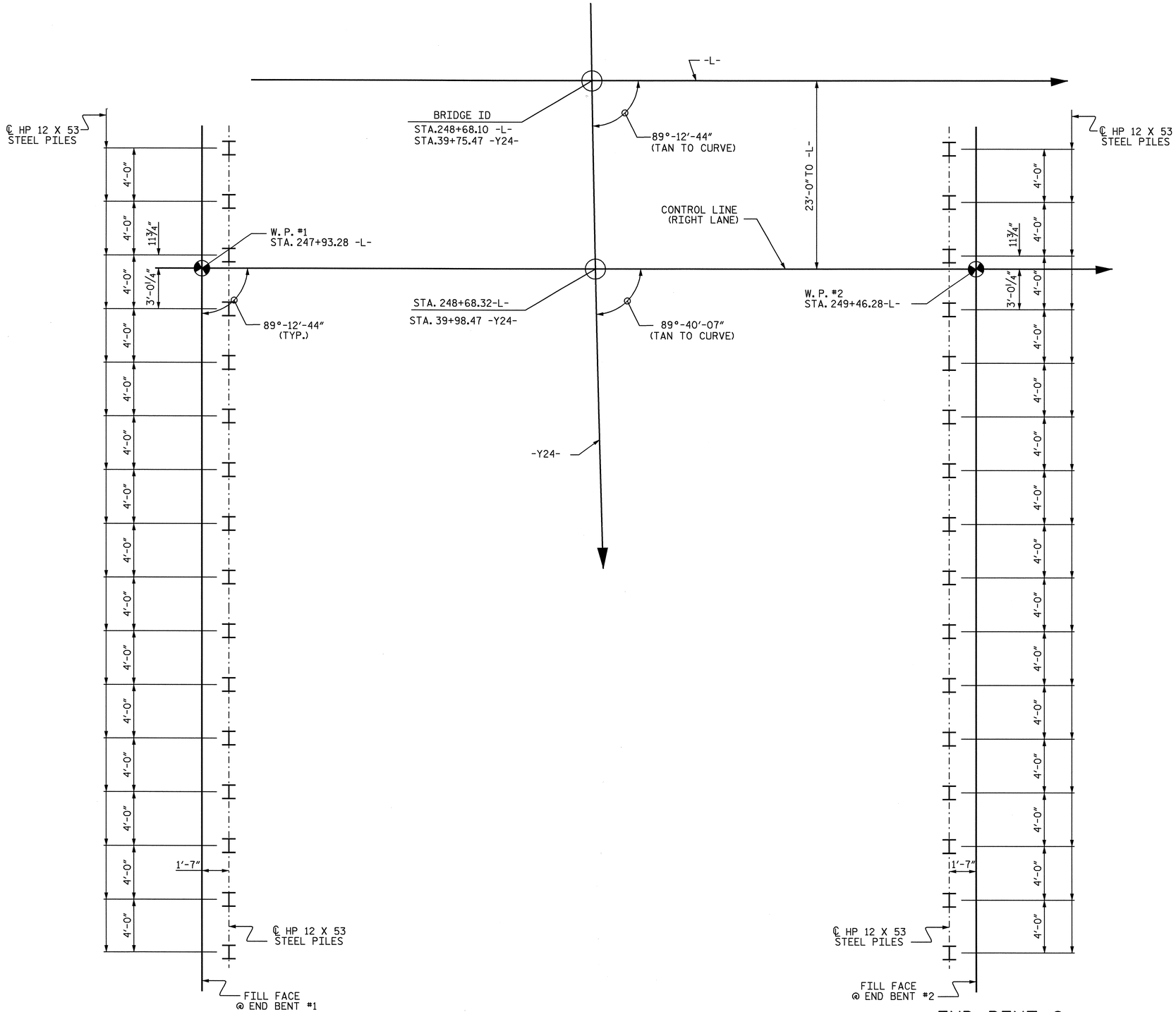

FOUNDATION LAYOUT

DIMENSIONS LOCATING PILES ARE SHOWN TO PILE CENTERLINE AT BOTTOM OF CAP

PROJECT NO. R-2719A

LENOIR COUNTY

STATION: 248+68.10 -L-
39+75.47 -Y24-

SHEET 2 OF 3

STATE OF NORTH CAROLINA
DEPARTMENT OF TRANSPORTATION
RALEIGH

GENERAL DRAWING
FOR BRIDGE OVER
US 258 ON CRESCENT RD
BETWEEN SR 1001 & SR 1574
(RIGHT LANE)

NORTH CAROLINA PROFESSIONAL SEAL 025516 ENGINEER EMILY E. MURRAY
10/7/08

REVISIONS						SHEET NO.
NO.	BY:	DATE:	NO.	BY:	DATE:	S-242
1			3			TOTAL SHEETS
2			4			340

DRAWN BY : B.N.BARODAWALA DATE : 8-15-08
CHECKED BY : E. E. MURRAY DATE : 9-15-08

30-SEP-2008 16:43
k:\structures\Final plans\Str #9\r2719a_sd_gd_09*.dgn
bbarodawala

STR. #9

BM #1: RR SPIKE IN 30" PINE LOCATED 297' LT. OF -L- STA. 226+49, ELEV. 106.62

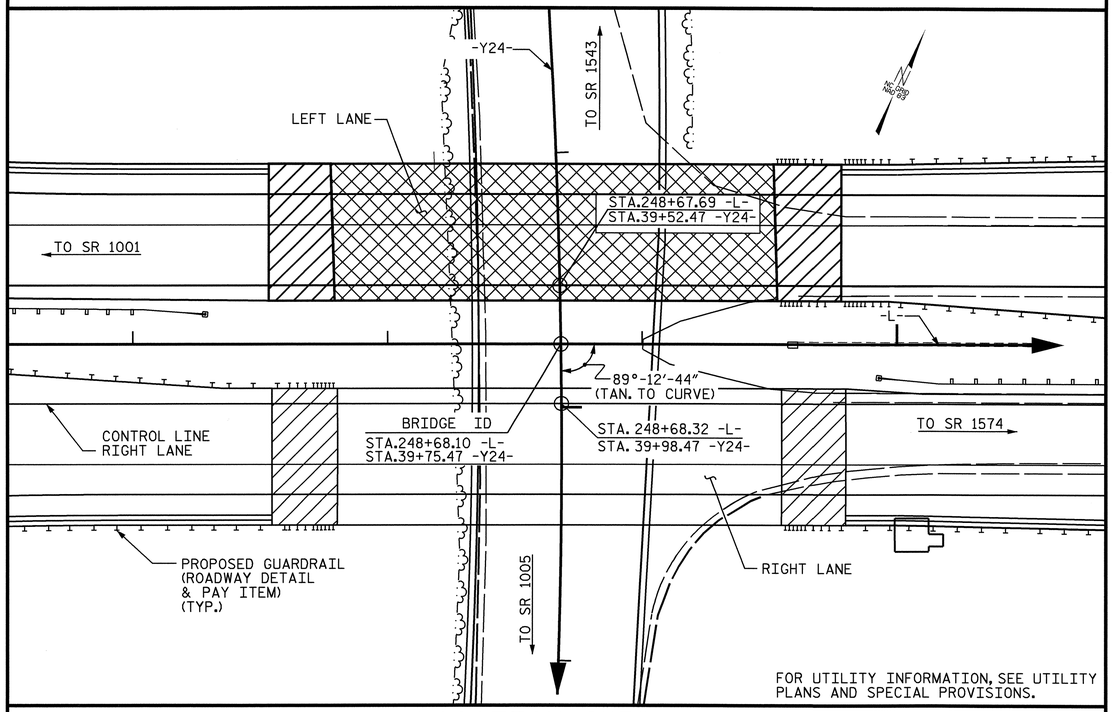

FOR UTILITY INFORMATION, SEE UTILITY PLANS AND SPECIAL PROVISIONS.

LOCATION SKETCH

NOTES:

ASSUMED LIVE LOAD = HS20 OR ALTERNATE LOADING, EXCEPT THE GIRDERS HAVE BEEN DESIGNED FOR HS25.

THIS BRIDGE HAS BEEN DESIGNED BY THE STRENGTH DESIGN METHOD AS SPECIFIED IN AASHTO STANDARD SPECIFICATIONS.

THIS BRIDGE HAS BEEN DESIGNED IN ACCORDANCE WITH THE REQUIREMENTS OF THE AASHTO STANDARD SPECIFICATIONS FOR SEISMIC DESIGN OF HIGHWAY BRIDGES FOR SEISMIC PERFORMANCE CATEGORY A.

FOR OTHER DESIGN DATA AND GENERAL NOTES, SEE SHEET SN.

FOR EROSION CONTROL MEASURES SEE EROSION CONTROL PLANS.

ALL STRUCTURAL STEEL SHALL BE AASHTO M270 GRADE 50W.

REMOVABLE FORMS MAY BE USED IN LIEU OF METAL STAY-IN-PLACE FORMS IN ACCORDANCE WITH ARTICLE 420-3 OF THE STANDARD SPECIFICATIONS.

FOR MAINTENANCE AND PROTECTION OF TRAFFIC BENEATH PROPOSED STRUCTURE, SEE SPECIAL PROVISIONS.

THE CONTRACTOR SHALL PROVIDE INDEPENDENT ASSURANCE SAMPLES OF REINFORCING STEEL AS FOLLOWS: FOR PROJECTS REQUIRING UP TO 400 TONS OF REINFORCING STEEL, ONE 30 INCH SAMPLE OF EACH SIZE BAR USED, AND FOR PROJECTS REQUIRING OVER 400 TONS OF REINFORCING STEEL, TWO 30 INCH SAMPLES OF EACH SIZE BAR USED. THE BARS FROM WHICH THE SAMPLES ARE TAKEN MUST THEN BE SPLICED WITH REPLACEMENT BARS OF THE SIZE AND LENGTH OF THE SAMPLE, PLUS A MINIMUM LAP SPLICE OF THIRTY BAR DIAMETERS.

NEEDLE BEAMS WILL NOT BE ALLOWED UNLESS OTHERWISE CALLED FOR ON THE PLANS OR APPROVED BY THE ENGINEER.

FOR SUBMITTAL OF WORKING DRAWINGS, SEE SPECIAL PROVISIONS.

FOR FALSEWORK AND FORMWORK, SEE SPECIAL PROVISIONS.

FOR CRANE SAFETY, SEE SPECIAL PROVISIONS.

FOR GROUT FOR STRUCTURES, SEE SPECIAL PROVISIONS.

FOR SHIPPING STEEL STRUCTURAL MEMBERS, SEE SPECIAL PROVISIONS.

DRIVE PILES AT END BENT NO. 1 AND END BENT NO. 2 TO A REQUIRED BEARING CAPACITY OF 120 TONS PER PILE. THE REQUIRED BEARING CAPACITY IS EQUAL TO THE ALLOWABLE BEARING CAPACITY WITH A MINIMUM FACTOR OF SAFETY OF TWO.

THE ALLOWABLE BEARING CAPACITY FOR PILES AT END BENT NO. 1 AND END BENT NO. 2 IS 60 TONS PER PILE.

OBSERVE A ONE MONTH WAITING PERIOD AFTER CONSTRUCTING THE EMBANKMENT, END BENT AND REINFORCED BRIDGE APPROACH FILL, IF APPLICABLE, BEFORE BEGINNING APPROACH SLAB CONSTRUCTION AT END BENT NO. 1 AND END BENT NO. 2.

TESTING PILES WITH THE PILE DRIVING ANALYZER (PDA) DURING DRIVING, RESTRIKING OR REDRIVING MAY BE REQUIRED. THE ENGINEER WILL DETERMINE THE NEED FOR PDA TESTING. FOR PILE DRIVING ANALYZER, SEE SPECIAL PROVISIONS.

TOTAL BILL OF MATERIAL

	PDA TESTING	PDA ASSISTANCE	REINFORCED CONCRETE DECK SLAB	GROOVING BRIDGE FLOORS	CLASS A CONCRETE	BRIDGE APPROACH SLABS	REINFORCING STEEL	STRUCTURAL STEEL	HP 12 X 53 STEEL PILES		PILE REDRIVES	CONCRETE BARRIER RAIL	4" SLOPE PROTECTION	EVAZOTE JOINT SEALS
	EACH	EACH	SQ.FT.	SQ.FT.	CU.YDS.	LUMP SUM	LBS.	APPROX. LBS.	NO.	LIN.FT.	EACH	LIN.FT.	SQ. YD.	LUMP SUM
SUPERSTRUCTURE			8759	10217		LUMP SUM		352,045				302.67		LUMP SUM
END BENT NO.1					25.7		5763		16	1120			398	
END BENT NO.2					25.7		5763		16	1120			319	
TOTAL	1	1	8759	10217	51.4	LUMP SUM	11526	352,045	32	2240	20	302.67	717	LUMP SUM

PROJECT NO. R-2719A

LENOIR COUNTY

STATION: 248+68.10 -L-
39+75.47 -Y24-

SHEET 3 OF 3

STATE OF NORTH CAROLINA
DEPARTMENT OF TRANSPORTATION
RALEIGH

GENERAL DRAWING

FOR BRIDGE OVER
US 258 ON CRESCENT RD
BETWEEN SR 1001 & SR 1574
(RIGHT LANE)

NORTH CAROLINA PROFESSIONAL SEAL 025516 ENGINEER EMILY E. MURRAY

5/29/09

REVISIONS						SHEET NO.
NO.	BY:	DATE:	NO.	BY:	DATE:	S-243
1			3			TOTAL SHEETS
2			4			340

DRAWN BY : B.N.BARODAWALA DATE : 8-15-08
CHECKED BY : E. E. MURRAY DATE : 9-15-08

28-MAY-2009 14:36
r:\structures\finalplans\Str #9\r2719a_sd_gd_09*.dgn
PADKINS

STR. #9 NCBDS

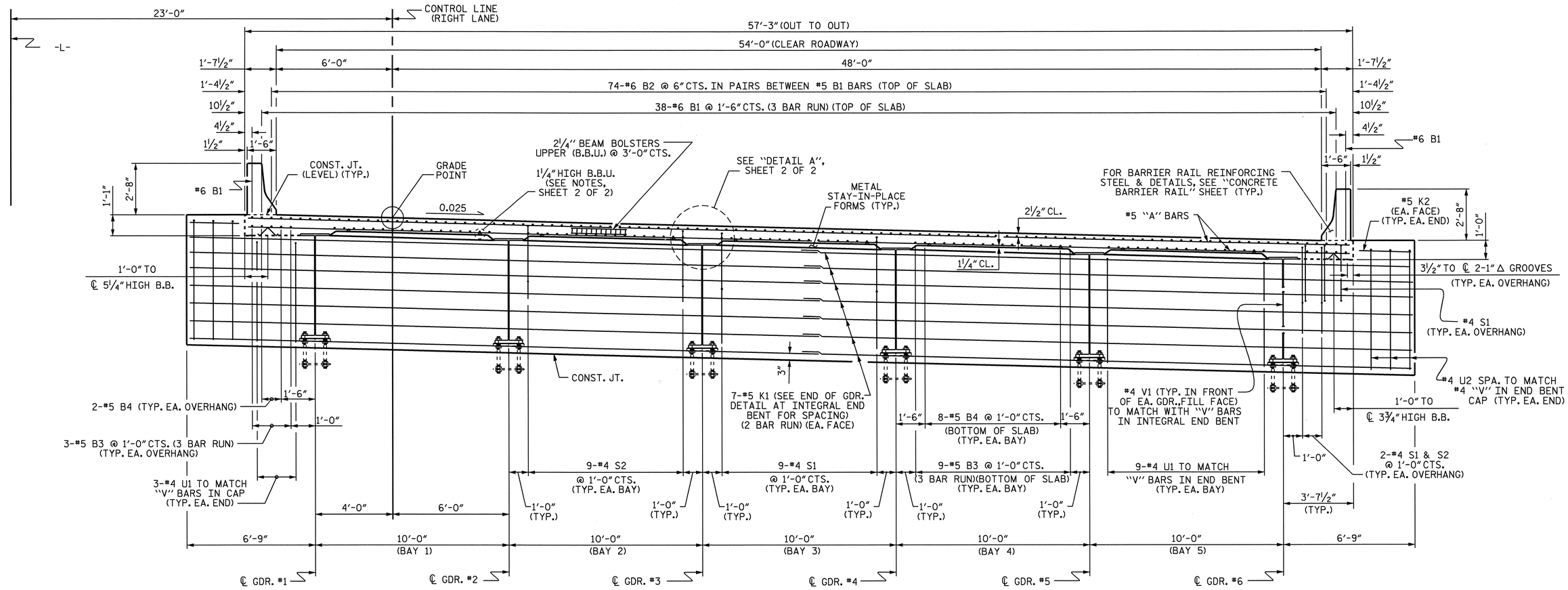

TYPICAL SECTION @ INTEGRAL END BENT

APPROACH SLAB BLOCKOUT & WINGS NOT SHOWN FOR CLARITY.

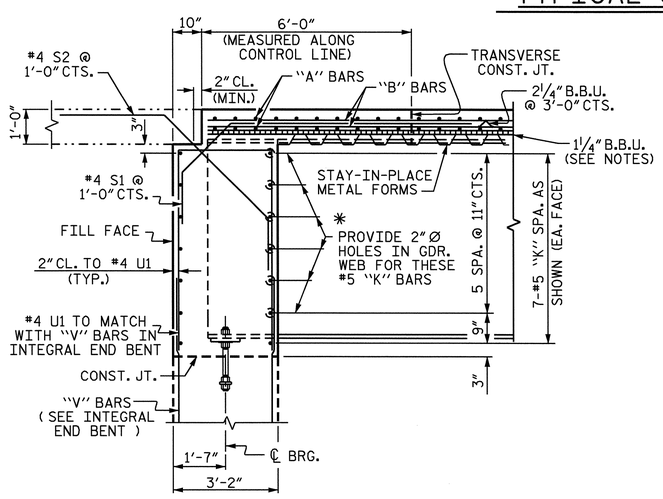

END OF GIRDER DETAIL AT INTEGRAL END BENT

✱ DIAMETER OF HOLES IN WEB MAY BE INCREASED TO ACCOMODATE SKEW

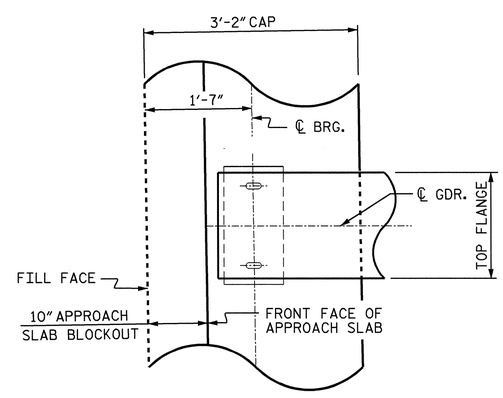

PLAN OF GIRDER AT INTEGRAL END BENT

PROJECT NO. R-2719A
LENOIR COUNTY
STATION: 248+68.10 -L-

SHEET 1 OF 2

STATE OF NORTH CAROLINA
DEPARTMENT OF TRANSPORTATION
RALEIGH

SUPERSTRUCTURE
TYPICAL SECTION
(RIGHT LANE)

NORTH CAROLINA PROFESSIONAL SEAL 025516 ENGINEER EMILY E. MURRAY
10/7/08

REVISIONS						SHEET NO.
NO.	BY:	DATE:	NO.	BY:	DATE:	S-244
1			3			TOTAL SHEETS
2			4			340

DRAWN BY : B.N.BARODAWALA DATE : 1-29-07
CHECKED BY : PEGGY ADKINS DATE : 6-08

30-SEP-2008 16:44
k:\structures\Final plans\Str #9\r2719a_sd_ts_09.dgn
bbarodawala

STR. #9

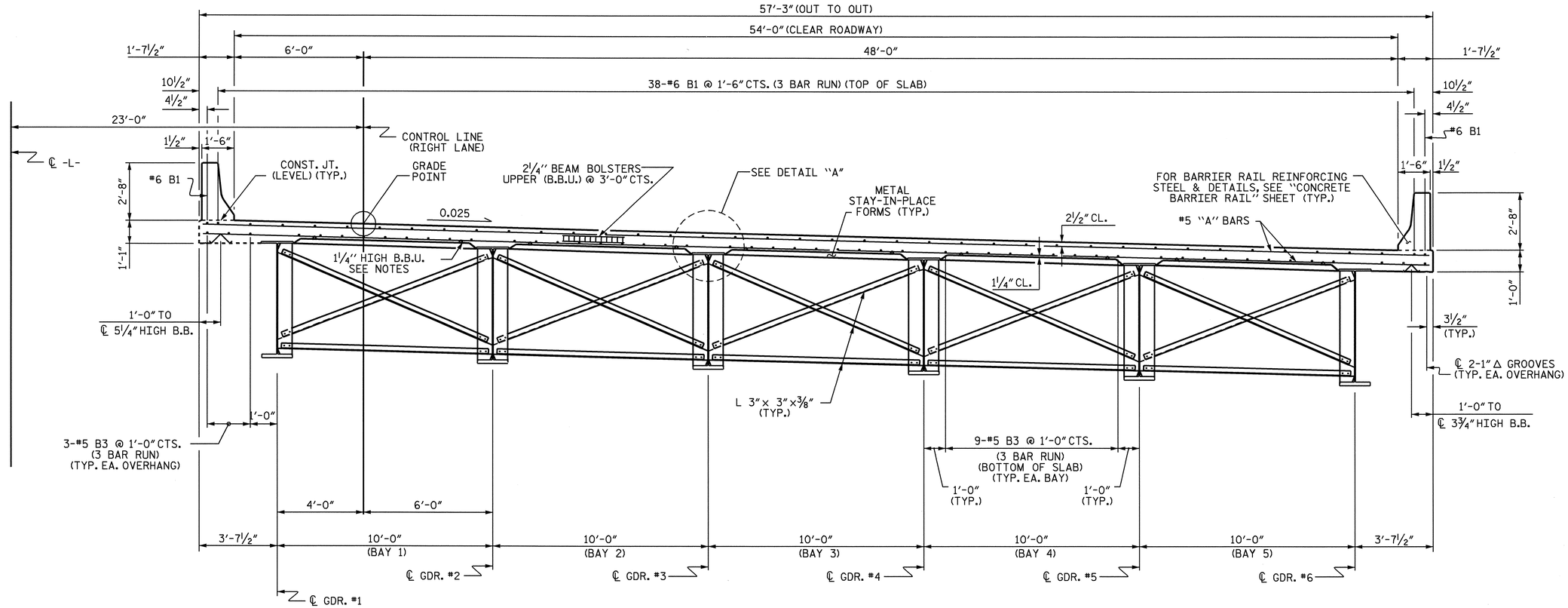

TYPICAL SECTION

(SHOWING INTERMEDIATE DIAPHRAGMS)

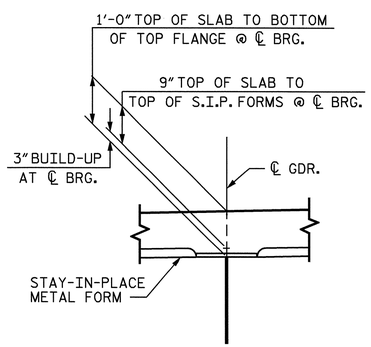

DETAIL "A"

NOTES

PROVIDE 1¼" HIGH BEAM BOLSTERS UPPER AT 4'-0" CTS. ATOP THE METAL STAY-IN-PLACE FORMS TO SUPPORT THE BOTTOM MAT OF "A" BARS. WHEN USING REMOVABLE FORMS, PROVIDE CONTINUOUS HIGH CHAIRS FOR METAL DECK (C.H.C.M.) @ 4'-0" CTS. WITH A HEIGHT TO SUPPORT THE BOTTOM MAT OF "A" BARS A CLEAR DISTANCE OF 2½" ABOVE THE TOP OF THE REMOVABLE FORM.

PREVIOUSLY CAST CONCRETE IN A CONTINUOUS UNIT SHALL HAVE ATTAINED A MINIMUM COMPRESSIVE STRENGTH OF 3000 PSI BEFORE ADDITIONAL CONCRETE IS CAST IN THE UNIT.

BARRIER RAIL SHALL NOT BE CAST UNTIL ALL SLAB CONCRETE HAS BEEN CAST AND HAS REACHED A MINIMUM COMPRESSIVE STRENGTH OF 3000 PSI.

STRUCTURAL STEEL ERECTION SHALL BE COMPLETE BEFORE FALSEWORK OR FORMS ARE PLACED ON THE UNIT.

THE CONTRACTOR MAY, WHEN NECESSARY, PROPOSE A SCHEME FOR AVOIDING INTERFERENCE BETWEEN METAL STAY-IN-PLACE FORM SUPPORTS OR FORMS AND BEAM/GIRDER STIFFENERS OR CONNECTOR PLATES. THE PROPOSAL SHALL BE INDICATED, AS APPROPRIATE, ON EITHER THE STEEL WORKING DRAWINGS OR THE METAL STAY-IN-PLACE FORM WORKING DRAWINGS.

PROJECT NO. R-2719A
LENOIR COUNTY
STATION: 248+68.10 -L-

SHEET 2 OF 2

STATE OF NORTH CAROLINA
DEPARTMENT OF TRANSPORTATION
RALEIGH

NORTH CAROLINA PROFESSIONAL SEAL 025516 ENGINEER EMILY E. MURRAY
10/7/08

SUPERSTRUCTURE
TYPICAL SECTION
(RIGHT LANE)

REVISIONS						SHEET NO.
NO.	BY:	DATE:	NO.	BY:	DATE:	S-245
1			3			TOTAL SHEETS
2			4			340

DRAWN BY : B.N.BARODAWALA DATE : 1-29-07
CHECKED BY : PEGGY ADKINS DATE : 6-08

30-SEP-2008 16:45
k:\structures\Final plans\Str #9\r2719a_sd_ts_09.dgn
bbarodawala

STR. #9

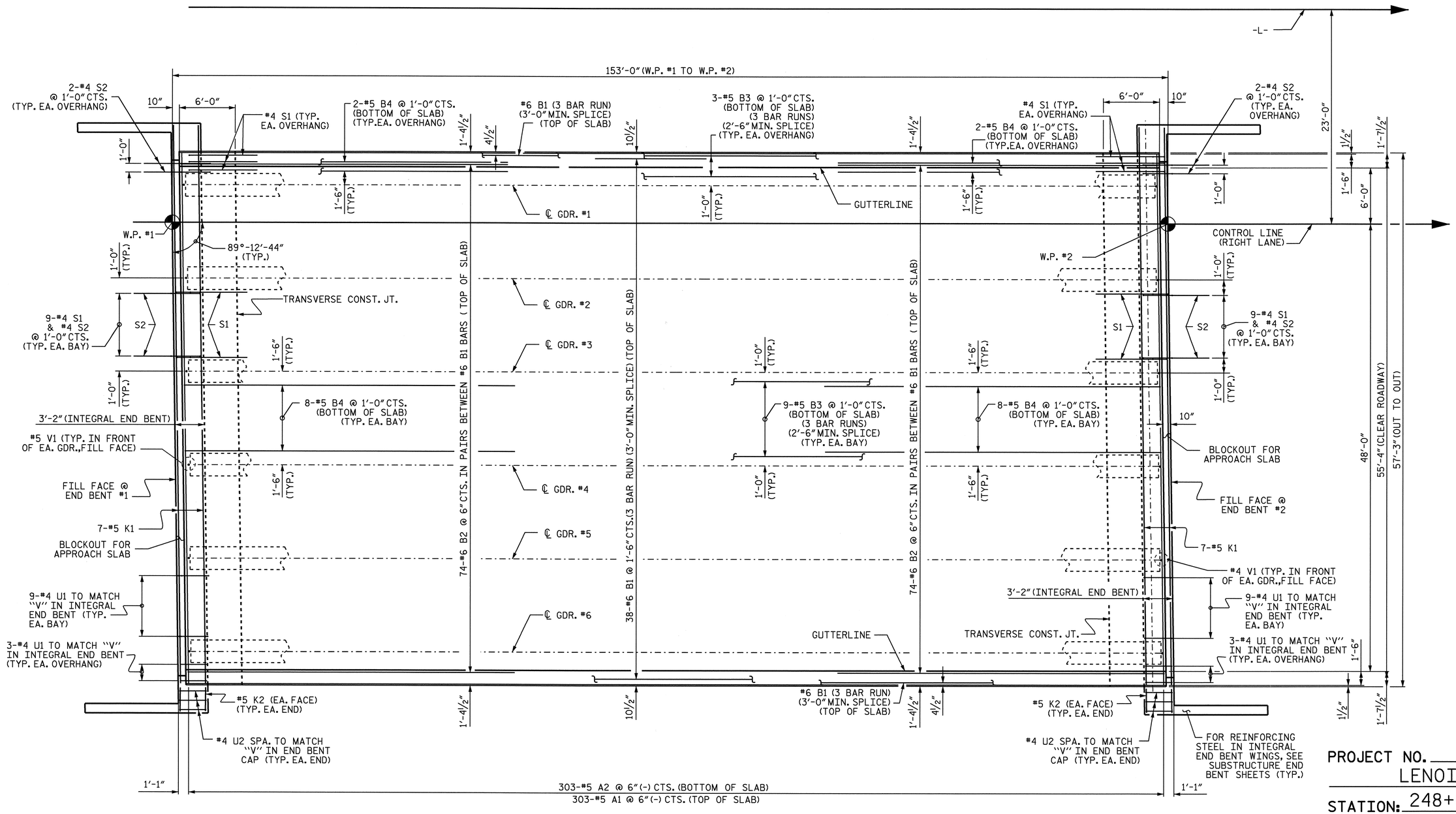

PROJECT NO. R-2719A

LENOIR COUNTY

STATION: 248+68.10 -L-

STATE OF NORTH CAROLINA
DEPARTMENT OF TRANSPORTATION
RALEIGH

SUPERSTRUCTURE

PLAN OF SPAN

(RIGHT LANE)

NORTH CAROLINA PROFESSIONAL SEAL 025516 ENGINEER EMILY E. MURRAY
10/7/08

REVISIONS						SHEET NO.
NO.	BY:	DATE:	NO.	BY:	DATE:	S-246
1			3			TOTAL SHEETS
2			4			340

DRAWN BY : B.N.BARODAWALA DATE : 2-28-07
CHECKED BY : PEGGY ADKINS DATE : 6-08

30-SEP-2008 16:44
k:\structures\Final plans\Str #9\R2719A_sd_PS_09.dgn
bbarodawala

STR. #9

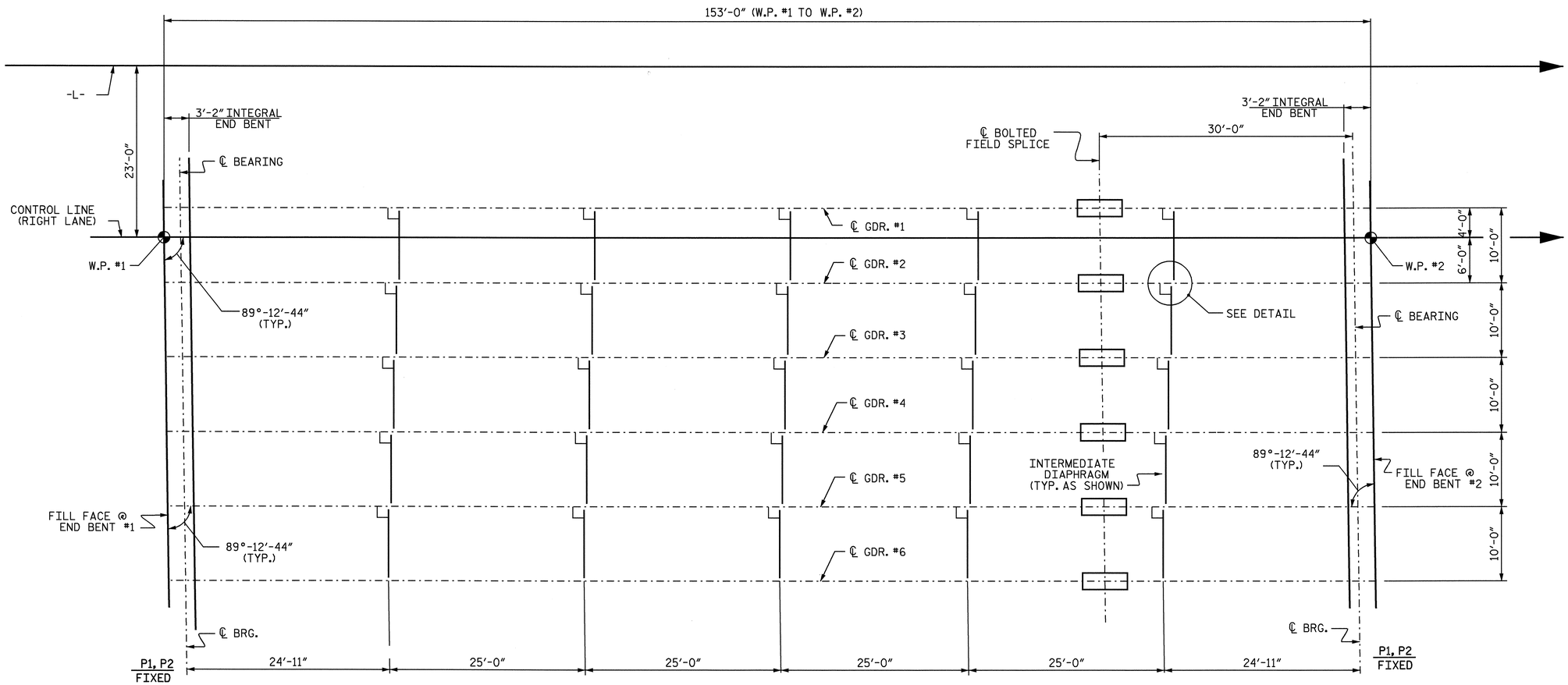

FRAMING PLAN

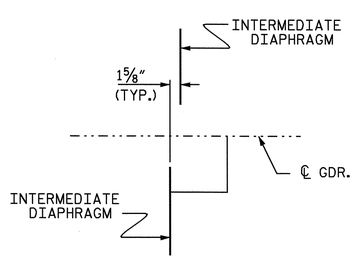

DETAIL

PROJECT NO. R-2719A
LENOIR COUNTY
STATION: 248+68.10 -L-

STATE OF NORTH CAROLINA
DEPARTMENT OF TRANSPORTATION
RALEIGH

SUPERSTRUCTURE
FRAMING PLAN
(RIGHT LANE)

NORTH CAROLINA PROFESSIONAL SEAL 025516 ENGINEER EMILY E. MURRAY
10/7/08

REVISIONS						SHEET NO.
NO.	BY:	DATE:	NO.	BY:	DATE:	S-247
1			3			TOTAL SHEETS
2			4			340

DRAWN BY : B.N.BARODAWALA DATE : 3-14-07
CHECKED BY : PEGGY ADKINS DATE : 6-08

02-OCT-2008 09:36
k:\structures\finalplans\Str #9\R2719A_sd_FP_09.dgn
bbarodawala

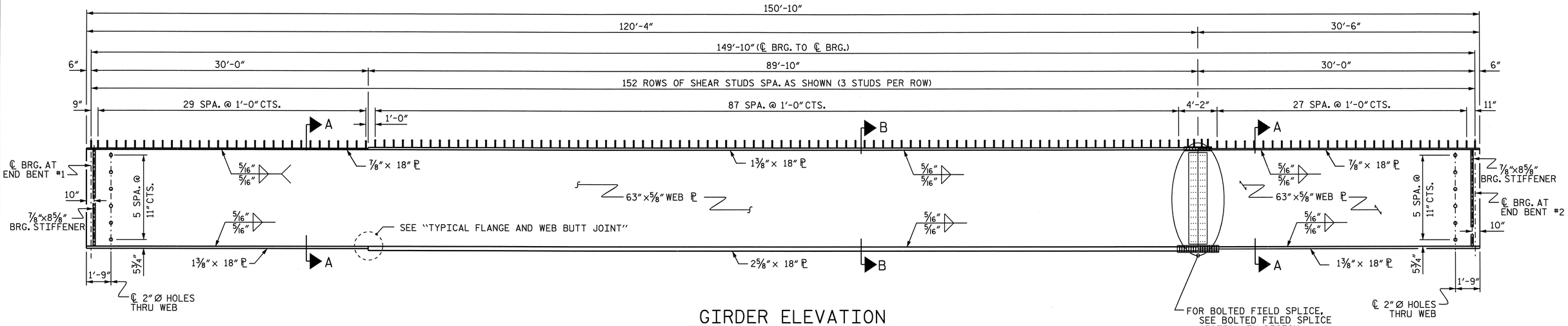

GIRDER ELEVATION

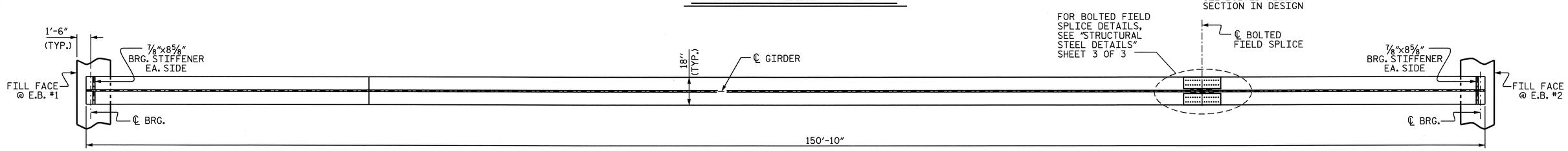

BOTTOM FLANGE DETAIL

(FOR CLARITY, INTERMEDIATE DIAPHRAGMS NOT SHOWN)
INTERIOR GIRDER SHOWN, EXTERIOR GIRDER SIMILAR,
EXCEPT NO CONNECTOR PLATES SHALL BE PLACED ON THE OUTSIDE OF THE WEB

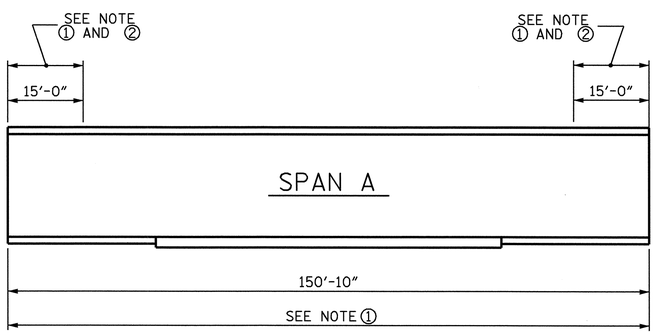

GIRDER MAKE UP

FOR CHARPY V-NOTCH TEST

NOTE ①: CHARPY V-NOTCH TESTS ARE REQUIRED FOR TOP FLANGE PLATES WHICH FALL WITHIN THE LIMITS SHOWN, ALL BOTTOM FLANGE PLATES, ALL WEB PLATES, AND SPLICE PLATES. IF A PERMITTED SHOP FLANGE SPLICE IS NOT USED, CHARPY V-NOTCH TESTS WILL BE REQUIRED FOR THE ENTIRE FLANGE PLATE. FOR CHARPY V-NOTCH TESTS, SEE ARTICLE 1072-9 OF THE STANDARD SPECIFICATIONS.

NOTE ②: NO WELDING OF FORMS OR FALSEWORK TO THE TOP FLANGE WILL BE PERMITTED IN THIS REGION.

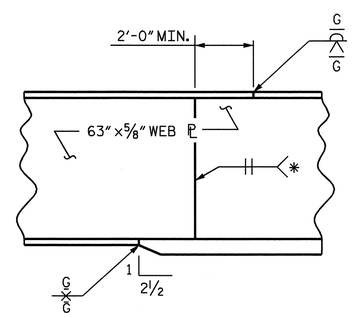

TYPICAL FLANGE AND WEB BUTT JOINT

* GRIND SMOOTH AND FLUSH ON OUTSIDE OF EXTERIOR GIRDERS

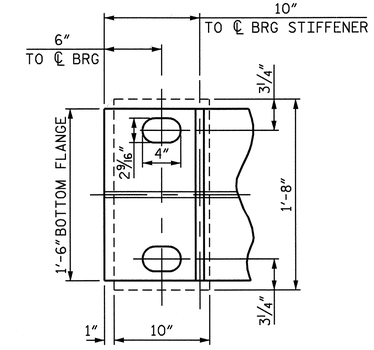

END OF GIRDER DETAIL

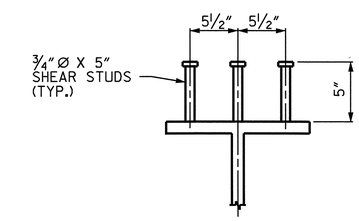

SHEAR STUD DETAIL

PROJECT NO. R-2719A
LENOIR COUNTY
STATION: 248+68.10 -L-

SHEET 1 OF 3

STATE OF NORTH CAROLINA
DEPARTMENT OF TRANSPORTATION
RALEIGH

STRUCTURAL STEEL DETAILS

(RIGHT LANE)

NORTH CAROLINA PROFESSIONAL SEAL 025516 ENGINEER EMILY E. MURRAY
Emily E. Murray 10/7/08

REVISIONS						SHEET NO.
NO.	BY:	DATE:	NO.	BY:	DATE:	S-248
1			3			TOTAL SHEETS
2			4			348

DRAWN BY : B.N.BARODAWALA DATE : 3-5-07
CHECKED BY : PEGGY ADKINS DATE : 6-08

02-OCT-2008 12:06
k:\structures\finalplans\str #9\R2719A_sd_SS_09.dgn
bbarodawala

STR. #9

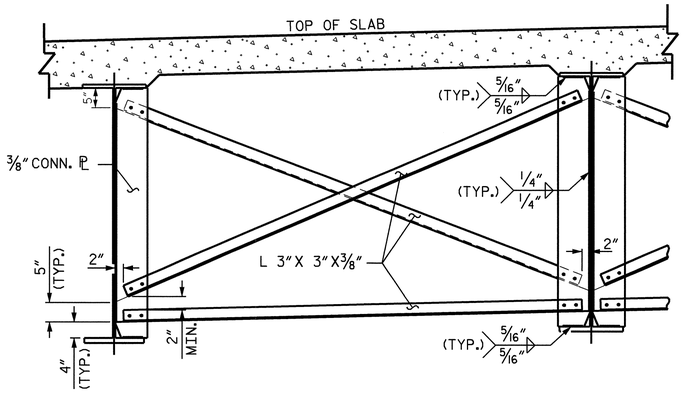

INTERMEDIATE DIAPHRAGM

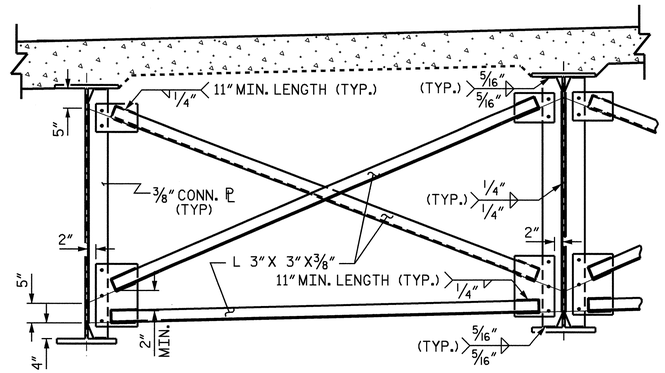

OPTIONAL INTERMEDIATE DIAPHRAGM

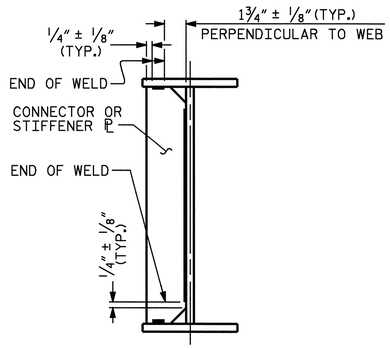

TYPICAL STIFFENER OR CONNECTOR PLATE CONNECTIONS

WELD TERMINATION DETAILS

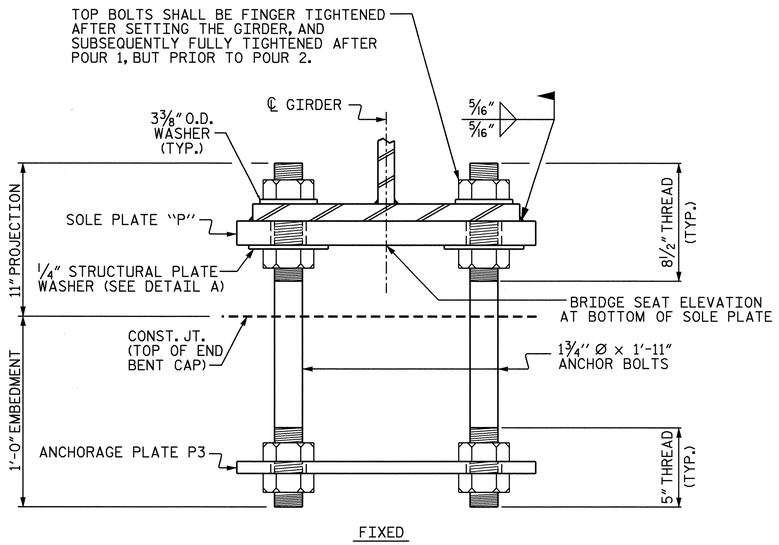

FIXED

END VIEW

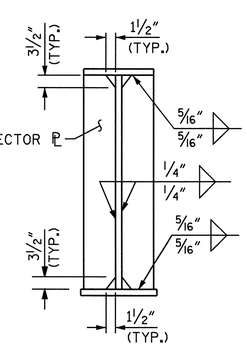

CONNECTOR PLATE DETAILS

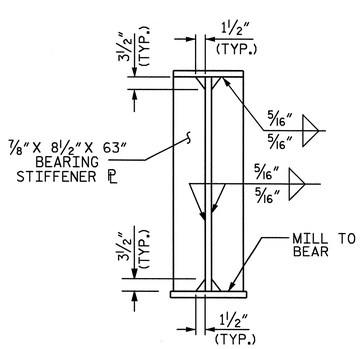

BEARING STIFFENER

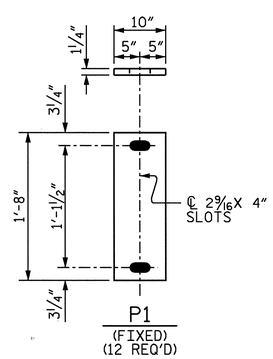

SOLE PLATE DETAILS

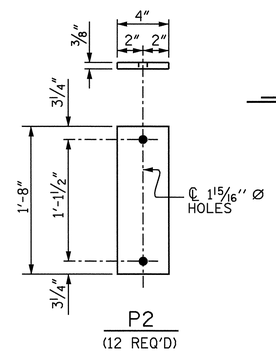

ANCHORAGE PLATE DETAILS

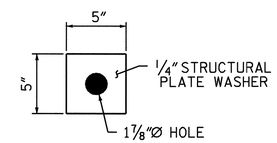

DETAIL "A"

BEARING DETAILS

NOTES:

ALL STRUCTURAL STEEL SHALL BE AASHTO M270 GRADE 50W.

ALL DIMENSIONS SHOWN ARE HORIZONTAL OR VERTICAL, UNLESS OTHERWISE NOTED.

ALL FIELD CONNECTIONS TO BE 7/8" DIA. HIGH STRENGTH BOLTS UNLESS OTHERWISE NOTED.

BEARING STIFFENERS ARE TO BE PLACED NORMAL TO THE WEB OF THE GIRDER AND SHALL BE PLUMB.

SHOP SPLICES ARE PERMITTED TO LIMIT THE MAXIMUM REQUIRED FLANGE PIECE LENGTHS TO 60 FEET AND WEB PIECE LENGTHS TO 45 FEET. PERMITTED FLANGE AND WEB SHOP SPLICES SHALL NOT BE LOCATED WITHIN 15 FEET OF MAXIMUM DEAD LOAD DEFLECTION. KEEP 2 FEET MINIMUM BETWEEN WEB AND FLANGE SHOP SPLICES. KEEP 6" MINIMUM BETWEEN CONNECTOR PLATE AND WEB OR FLANGE SHOP SPLICES.

STUDS ON GIRDERS MAY BE SHIFTED UP TO 1" IF NECESSARY TO CLEAR FLANGE SPLICE WELD.

TENSION ON THE AASHTO M164 BOLTS SHALL BE CALIBRATED USING DIRECT TENSION INDICATOR WASHERS IN ACCORDANCE WITH ARTICLE 440-8 OF THE STANDARD SPECIFICATIONS.

END OF GIRDERS SHALL BE PLUMB.

FOR SHIPPING STEEL STRUCTURAL MEMBERS, SEE SPECIAL PROVISIONS.

FOR HIGH STRENGTH BOLTS, SEE SPECIAL PROVISIONS.

FOR AASHTO M270 GRADE 50W STRUCTURAL STEEL, SOLE PLATES AND ANCHORAGE PLATES SHALL BE AASHTO M270 GRADE 50W AND SHALL NOT BE GALVANIZED. ANCHOR BOLTS, NUTS AND WASHERS SHALL BE GALVANIZED IN ACCORDANCE WITH THE STANDARD SPECIFICATIONS.

ANCHOR BOLTS SHALL MEET THE REQUIREMENTS OF ASTM A449. NUTS SHALL MEET THE REQUIREMENTS OF AASHTO M291-DH OR AASHTO M292-2H. WASHERS SHALL MEET THE REQUIREMENTS OF AASHTO M293. SHOP DRAWINGS ARE NOT REQUIRED FOR ANCHOR BOLTS, NUTS AND WASHERS. SHOP INSPECTION IS REQUIRED.

ALL SURFACES OF SOLE PLATES SHALL BE SMOOTH AND STRAIGHT.

STRUCTURAL PLATE WASHERS SHALL BE AASHTO M270 GRADE 50W.

PROJECT NO. R-2719A
LENOIR COUNTY
STATION: 248+68.10 -L-

SHEET 2 OF 3

STATE OF NORTH CAROLINA
DEPARTMENT OF TRANSPORTATION
RALEIGH

SUPERSTRUCTURE

STRUCTURAL STEEL DETAILS
(RIGHT LANE)

NORTH CAROLINA PROFESSIONAL SEAL 025516 ENGINEER EMILY E. MURRAY
10/7/08

REVISIONS						SHEET NO.
NO.	BY:	DATE:	NO.	BY:	DATE:	S-249
1			3			TOTAL SHEETS
2			4			340

DRAWN BY : B.N.BARODAWALA DATE : 3-5-07
CHECKED BY : PEGGY ADKINS DATE : 6-08

30-SEP-2008 16:44
k:\structures\Final plans\Str #9\R2719A_sd_SS_09.dgn
bbarodawala

STR. #9

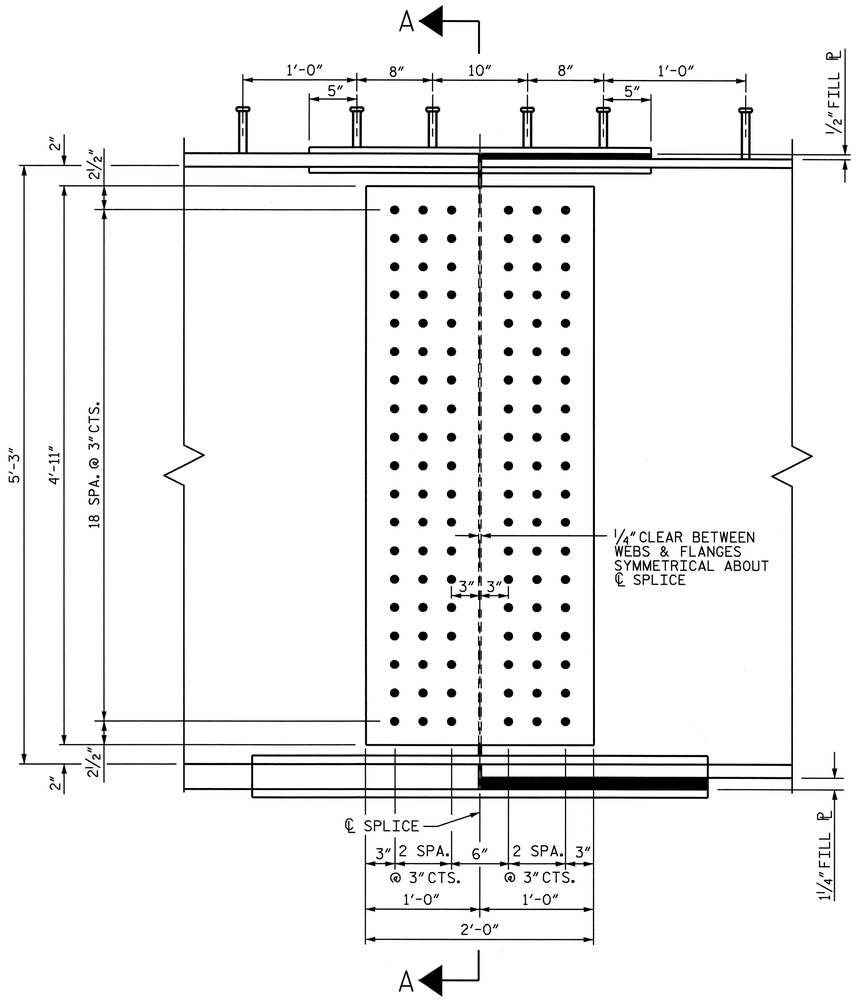

ELEVATION

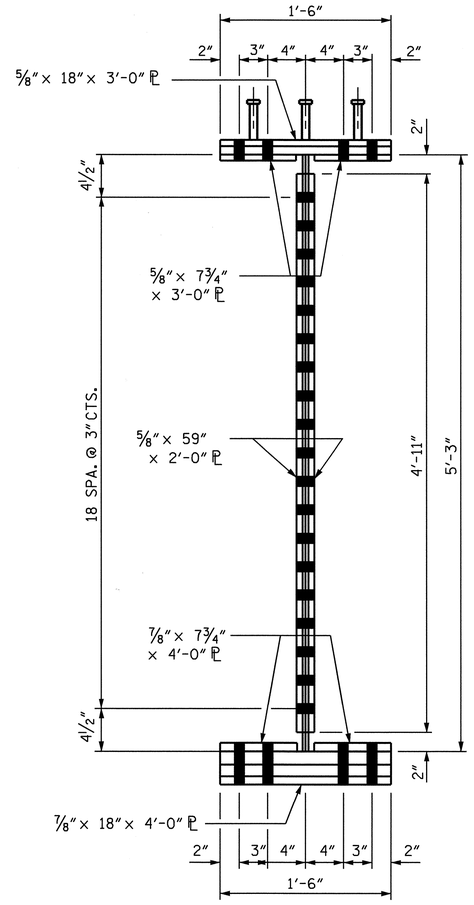

SECTION A-A

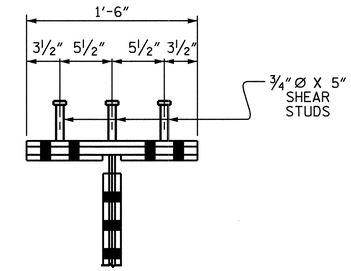

SHEAR STUD DETAIL FOR TOP FLANGE SPLICE PLATE

BOLTED FIELD SPLICE DETAILS

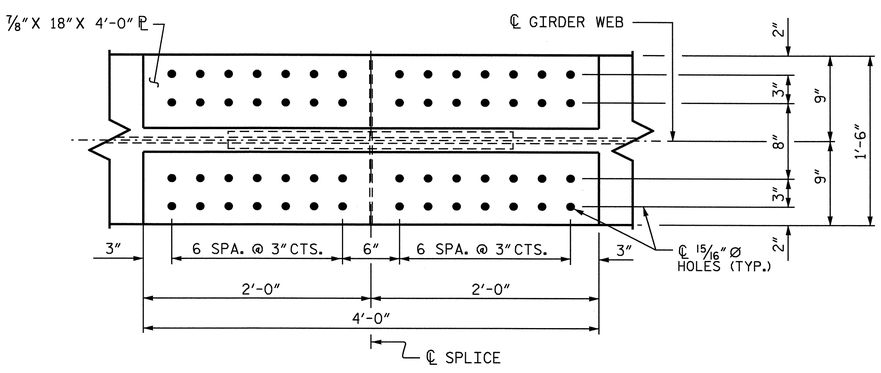

PLAN OF TOP OF BOTTOM FLANGE

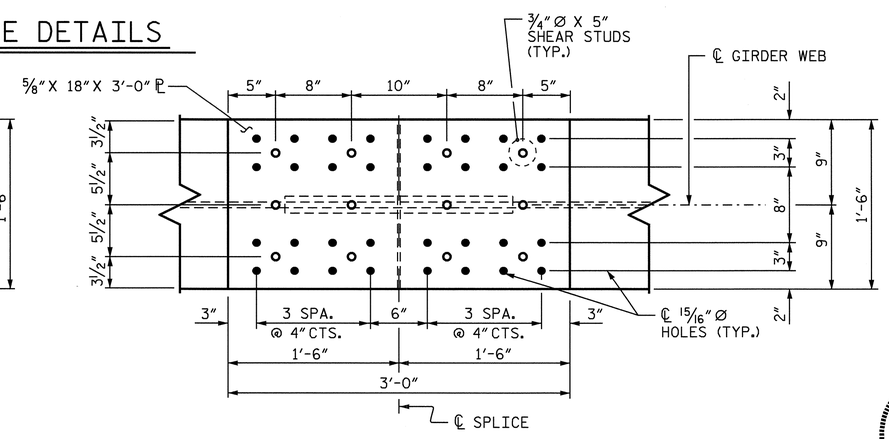

PLAN OF TOP OF TOP FLANGE

NORTH CAROLINA PROFESSIONAL SEAL 025516 ENGINEER EMILY E. MURRAY

10/7/08

PROJECT NO. R-2719A
LENOIR COUNTY
STATION: 248+68.10 -L-

SHEET 3 OF 3

STATE OF NORTH CAROLINA
DEPARTMENT OF TRANSPORTATION
RALEIGH

SUPERSTRUCTURE
STRUCTURAL STEEL DETAILS
BOLTED FIELD SPLICE
(RIGHT LANE)

REVISIONS						SHEET NO.
NO.	BY:	DATE:	NO.	BY:	DATE:	S-250
1			3			TOTAL SHEETS
2			4			340

STR. #9

DRAWN BY : B.N.BARODAWALA DATE : 3-5-07
CHECKED BY : PEGGY ADKINS DATE : 6-08

30-SEP-2008 16:44
k:\structures\Final plans\Str #9\R2719A_sd_SS_09.dgn
bbarodawala

DEAD LOAD DEFLECTION TABLE FOR GIRDERS - SPAN A

	GIRDER #1 & #6																				
@ TWENTIETH POINTS BETWEEN ℄ BEARINGS	0	.05	.10	.15	.20	.25	.30	.35	.40	.45	.50	.55	.60	.65	.70	.75	.80	.85	.90	.95	0
DEFLECTION DUE TO WEIGHT OF GIRDER ↓	0.000	0.028	0.054	0.079	0.100	0.119	0.134	0.147	0.156	0.162	0.163	0.162	0.156	0.147	0.134	0.119	0.100	0.079	0.054	0.028	0.000
DEFLECTION DUE TO WEIGHT OF SLAB ✳ ↓	0.000	0.072	0.161	0.242	0.314	0.376	0.428	0.470	0.500	0.519	0.525	0.519	0.500	0.470	0.428	0.376	0.314	0.242	0.161	0.072	0.000
DEFLECTION DUE TO WEIGHT OF BARRIER RAIL ↓	0.000	0.006	0.012	0.018	0.023	0.027	0.031	0.034	0.036	0.037	0.038	0.037	0.036	0.034	0.031	0.027	0.023	0.018	0.012	0.006	0.000
TOTAL DEAD LOAD DEFLECTION ↓	0.000	0.106	0.227	0.339	0.437	0.522	0.593	0.650	0.692	0.718	0.726	0.718	0.692	0.650	0.593	0.522	0.437	0.339	0.227	0.106	0.000
VERTICAL CURVE ORDINATE	0.000	0.021	0.039	0.056	0.070	0.082	0.092	0.100	0.105	0.109	0.110	0.109	0.105	0.100	0.092	0.082	0.070	0.056	0.039	0.021	0.000
SUPERELEVATION ORDINATE	0.000	0.000	0.000	0.000	0.000	0.000	0.000	0.000	0.000	0.000	0.000	0.000	0.000	0.000	0.000	0.000	0.000	0.000	0.000	0.000	0.000
REQUIRED CAMBER ↑	0	1 1/2"	3 3/16"	4 3/4"	6 1/16"	7 1/4"	8 1/4"	9"	9 9/16"	9 15/16"	10"	9 15/16"	9 9/16"	9"	8 1/4"	7 1/4"	6 1/16"	4 3/4"	3 3/16"	1 1/2"	0

✳ INCLUDES SLAB, BUILDUPS & STAY-IN-PLACE FORMS.
ALL VALUES ARE SHOWN IN FEET EXCEPT " REQUIRED CAMBER ", WHICH IS GIVEN IN INCHES (FRACTION FORM).

DEAD LOAD DEFLECTION TABLE FOR GIRDERS - SPAN A

	GIRDERS #2 & #5																				
@ TWENTIETH POINTS BETWEEN ℄ BEARINGS	0	.05	.10	.15	.20	.25	.30	.35	.40	.45	.50	.55	.60	.65	.70	.75	.80	.85	.90	.95	0
DEFLECTION DUE TO WEIGHT OF GIRDER ↓	0.000	0.028	0.054	0.079	0.100	0.119	0.134	0.147	0.156	0.162	0.163	0.162	0.156	0.147	0.134	0.119	0.100	0.079	0.054	0.028	0.000
DEFLECTION DUE TO WEIGHT OF SLAB ✳ ↓	0.000	0.073	0.163	0.246	0.318	0.381	0.434	0.476	0.507	0.526	0.532	0.526	0.507	0.476	0.434	0.381	0.318	0.246	0.163	0.073	0.000
DEFLECTION DUE TO WEIGHT OF BARRIER RAIL ↓	0.000	0.006	0.012	0.018	0.023	0.027	0.031	0.034	0.036	0.037	0.038	0.037	0.036	0.034	0.031	0.027	0.023	0.018	0.012	0.006	0.000
TOTAL DEAD LOAD DEFLECTION ↓	0.000	0.107	0.230	0.342	0.441	0.527	0.599	0.657	0.699	0.724	0.733	0.724	0.699	0.657	0.599	0.527	0.441	0.342	0.230	0.107	0.000
VERTICAL CURVE ORDINATE	0.000	0.021	0.039	0.056	0.070	0.082	0.092	0.100	0.105	0.109	0.110	0.109	0.105	0.100	0.092	0.082	0.070	0.056	0.039	0.021	0.000
SUPERELEVATION ORDINATE	0.000	0.000	0.000	0.000	0.000	0.000	0.000	0.000	0.000	0.000	0.000	0.000	0.000	0.000	0.000	0.000	0.000	0.000	0.000	0.000	0.000
REQUIRED CAMBER ↑	0	1 9/16"	3 1/4"	4 3/4"	6 1/8"	7 5/16"	8 5/16"	9 1/16"	9 5/8"	10"	10 1/8"	10"	9 5/8"	9 1/16"	8 5/16"	7 5/16"	6 1/8"	4 3/4"	3 1/4"	1 9/16"	0

✳ INCLUDES SLAB, BUILDUPS & STAY-IN-PLACE FORMS.
ALL VALUES ARE SHOWN IN FEET EXCEPT " REQUIRED CAMBER ", WHICH IS GIVEN IN INCHES (FRACTION FORM).

DEAD LOAD DEFLECTION TABLE FOR GIRDERS - SPAN A

	GIRDERS #3 & #4																				
@ TWENTIETH POINTS BETWEEN ℄ BEARINGS	0	.05	.10	.15	.20	.25	.30	.35	.40	.45	.50	.55	.60	.65	.70	.75	.80	.85	.90	.95	0
DEFLECTION DUE TO WEIGHT OF GIRDER ↓	0.000	0.028	0.054	0.079	0.100	0.119	0.134	0.147	0.156	0.162	0.163	0.162	0.156	0.147	0.134	0.119	0.100	0.079	0.054	0.028	0.000
DEFLECTION DUE TO WEIGHT OF SLAB ✳ ↓	0.000	0.074	0.165	0.249	0.322	0.386	0.439	0.482	0.513	0.532	0.539	0.532	0.513	0.482	0.439	0.386	0.322	0.249	0.165	0.074	0.000
DEFLECTION DUE TO WEIGHT OF BARRIER RAIL ↓	0.000	0.006	0.012	0.018	0.023	0.027	0.031	0.034	0.036	0.037	0.038	0.037	0.036	0.034	0.031	0.027	0.023	0.018	0.012	0.006	0.000
TOTAL DEAD LOAD DEFLECTION ↓	0.000	0.108	0.232	0.346	0.446	0.531	0.604	0.663	0.705	0.731	0.740	0.731	0.705	0.663	0.604	0.531	0.446	0.346	0.232	0.108	0.000
VERTICAL CURVE ORDINATE	0.000	0.021	0.039	0.056	0.070	0.082	0.092	0.100	0.105	0.109	0.110	0.109	0.105	0.100	0.092	0.082	0.070	0.056	0.039	0.021	0.000
SUPERELEVATION ORDINATE	0.000	0.000	0.000	0.000	0.000	0.000	0.000	0.000	0.000	0.000	0.000	0.000	0.000	0.000	0.000	0.000	0.000	0.000	0.000	0.000	0.000
REQUIRED CAMBER ↑	0	1 9/16"	3 1/4"	4 13/16"	6 3/16"	7 3/8"	8 3/8"	9 1/8"	9 3/4"	10 1/16"	10 3/16"	10 1/16"	9 3/4"	9 1/8"	8 3/8"	7 3/8"	6 3/16"	4 13/16"	3 1/4"	1 9/16"	0

✳ INCLUDES SLAB, BUILDUPS & STAY-IN-PLACE FORMS.
ALL VALUES ARE SHOWN IN FEET EXCEPT " REQUIRED CAMBER ", WHICH IS GIVEN IN INCHES (FRACTION FORM).

PROJECT NO. R-2719A
LENOIR COUNTY
STATION: 248+68.10 -L-

STATE OF NORTH CAROLINA
DEPARTMENT OF TRANSPORTATION
RALEIGH

SUPERSTRUCTURE

DEAD LOAD DEFLECTION (RIGHT LANE)

NORTH CAROLINA PROFESSIONAL SEAL 025516 ENGINEER EMILY E. MURRAY
10/7/08

REVISIONS						SHEET NO.
NO.	BY:	DATE:	NO.	BY:	DATE:	S-251
1			3			TOTAL SHEETS
2			4			340

DRAWN BY : B.N.BARODAWALA DATE : 5-5-07
CHECKED BY : PEGGY ADKINS DATE : 6-08

30-SEP-2008 16:43
k:\structures\Final plans\Str #9\R2719A_sd_DL_09.dgn
bbarodawala

STR. #9

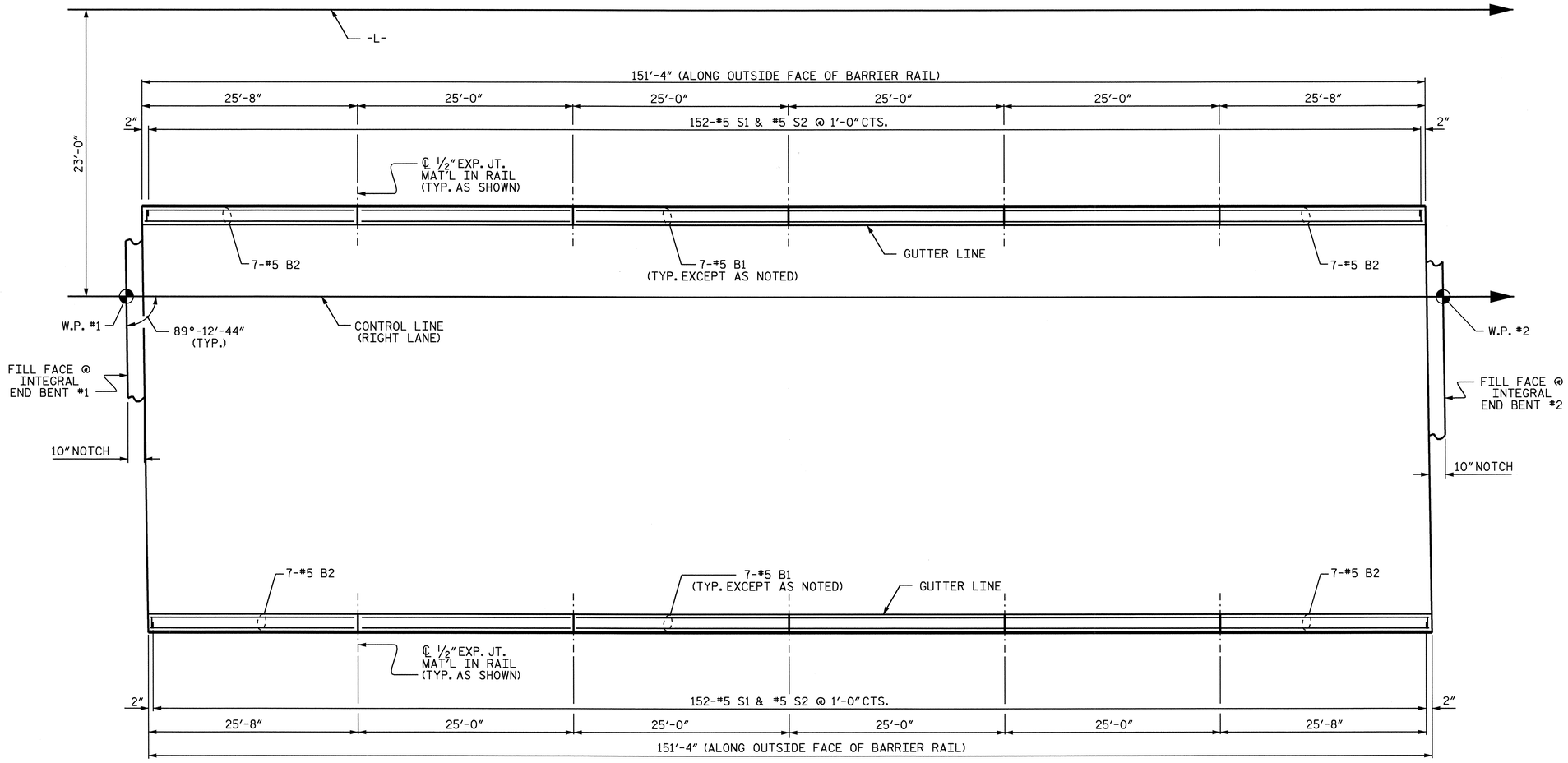

PLAN OF BARRIER RAIL

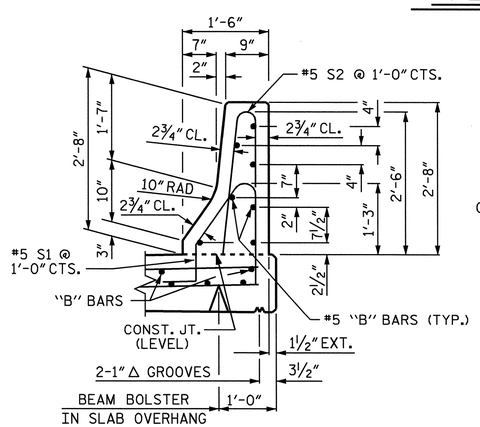

SECTION THRU RAIL

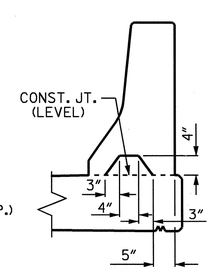

SECTION S-S

AT DAM IN OPEN JOINT (THIS IS TO BE USED ONLY WHEN SLIP FORM IS USED)

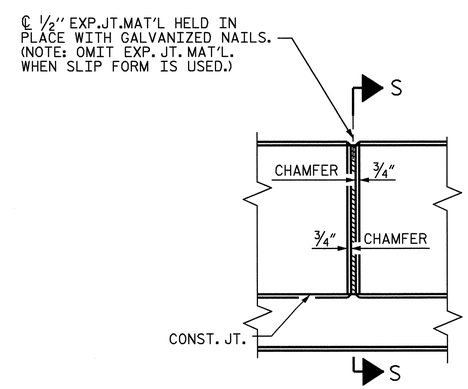

ELEVATION AT EXPANSION JOINTS

BARRIER RAIL DETAILS

BAR TYPES

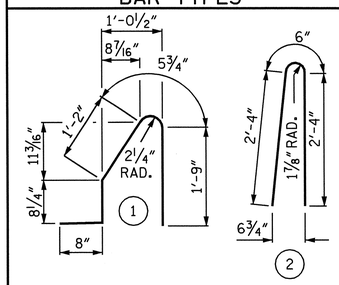

ALL BAR DIMENSIONS ARE OUT TO OUT

BILL OF MATERIAL

FOR CONCRETE BARRIER RAIL ONLY

BAR	NO.	SIZE	TYPE	LENGTH	WEIGHT
* B1	56	#5	STR	24'-7"	1436
* B2	28	#5	STR	25'-3"	737
* S1	304	#5	1	4'-9"	1506
* S2	304	#5	2	5'-2"	1638

* EPOXY COATED REINFORCING STEEL	5,317 LBS.
CLASS AA CONCRETE	30.3 CU. YDS.
CONCRETE BARRIER RAIL	302.67 LIN. FT.

NOTES:

THE BARRIER RAIL SHALL NOT BE CAST UNTIL ALL SLAB CONCRETE HAS BEEN CAST AND HAS REACHED A MINIMUM COMPRESSIVE STRENGTH OF 3,000 PSI.

ALL REINFORCING STEEL IN BARRIER RAILS SHALL BE EPOXY COATED.

THE #5 S1 AND #5 S2 BARS MAY BE SHIFTED SLIGHTLY IN ORDER TO MAINTAIN A 2" MINIMUM CLEARANCE TO 1/2" EXPANSION JOINT MATERIAL IN THE BARRIER RAIL.

VERTICAL GROOVED CONTRACTION JOINTS, 1/2" IN DEPTH, SHALL BE TOOLED IN ALL EXPOSED FACES OF THE BARRIER RAIL AND IN ACCORDANCE WITH ARTICLE 825-10(B) OF THE STANDARD SPECIFICATIONS. THE CONTRACTION JOINT SHALL BE LOCATED AT EACH THIRD POINT BETWEEN BARRIER RAIL EXPANSION JOINTS. ONLY ONE CONTRACTION JOINT IS REQUIRED AT MIDPOINT OF BARRIER RAIL SEGMENTS LESS THAN 20 FEET IN LENGTH AND NO CONTRACTION JOINTS ARE REQUIRED FOR THOSE SEGMENTS LESS THAN 10 FEET IN LENGTH.

PROJECT NO. R-2719A
LENOIR COUNTY
STATION: 248+68.10 -L-

STATE OF NORTH CAROLINA
DEPARTMENT OF TRANSPORTATION
RALEIGH

STANDARD
CONCRETE BARRIER RAIL
(RIGHT LANE)

NORTH CAROLINA PROFESSIONAL SEAL 025516 ENGINEER EMILY E. MURRAY
10/7/08

REVISIONS							SHEET NO.
NO.	BY:	DATE:	NO.	BY:	DATE:		S-252
1			3				TOTAL SHEETS
2			4				340

ASSEMBLED BY : B.N.BARODAWALA DATE : 6-14-07
CHECKED BY : PEGGY ADKINS DATE : 6-08

DRAWN BY : ARB 5/87
CHECKED BY : SJD 9/87

REV. 8/16/99 RWW/LES
REV. 10/17/00 RWW/LES
REV. 5/7/03R RWW/JTE

30-SEP-2008 16:42
k:\structures\Finalplans\Str #9\r2719a_sd_br_09.dgn
bbarodawala

STR. #9

STD. NO. CBRI

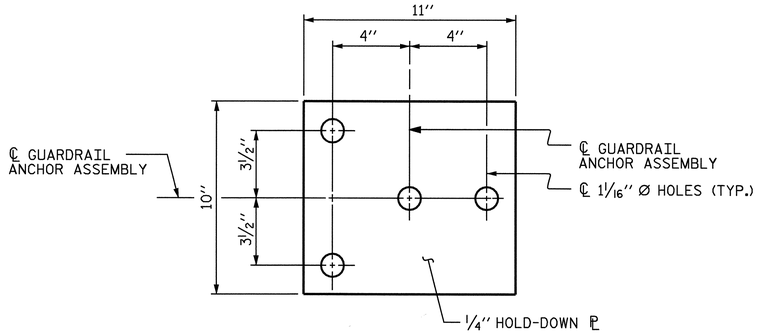

PLAN

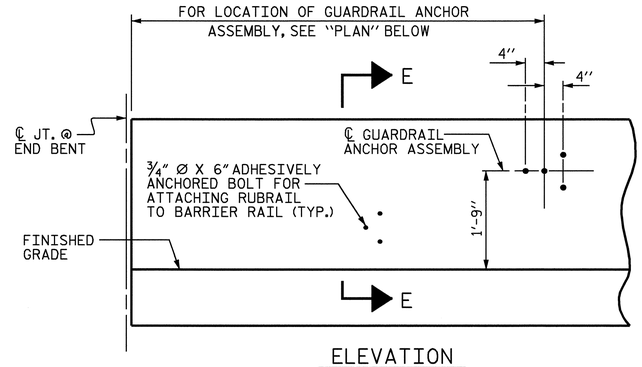

ELEVATION

FOR LOCATION OF RUBRAIL, SEE ROADWAY STD. 862.03

NOTES

THE GUARDRAIL ANCHOR ASSEMBLY SHALL CONSIST OF A 1/4'' HOLD DOWN PLATE AND 4 - 7/8'' Ø BOLTS WITH NUTS AND WASHERS, RUBRAIL, AND ADHESIVELY ANCHORED BOLTS.

THE HOLD-DOWN PLATE SHALL CONFORM TO AASHTO M270 GRADE 36. AFTER FABRICATION, THE HOLD-DOWN PLATE SHALL BE HOT-DIP GALVANIZED IN ACCORDANCE WITH AASHTO M111.

BOLTS SHALL CONFORM TO THE REQUIREMENTS OF ASTM A307 AND NUTS SHALL CONFORM TO THE REQUIREMENTS OF AASHTO M291. BOLTS, NUTS AND WASHERS SHALL BE GALVANIZED. (AT THE CONTRACTOR'S OPTION, STAINLESS STEEL BOLTS, NUTS AND WASHERS MAY BE USED AS AN ALTERNATE FOR THE 7/8'' Ø GALVANIZED BOLTS, NUTS AND WASHERS. THEY SHALL CONFORM TO OR EXCEED THE MECHANICAL REQUIREMENTS OF ASTM A307. THE USE OF THIS ALTERNATE SHALL BE APPROVED BY THE ENGINEER.)

THE GUARDRAIL ANCHOR ASSEMBLY IS REQUIRED AT ALL POINTS WHERE APPROACH GUARDRAIL IS TO BE ATTACHED TO THE END OF BARRIER RAIL. FOR POINTS OF ATTACHMENT, SEE SKETCH.

AFTER INSTALLATION, THE EXPOSED THREAD OF THE BOLT SHALL BE BURRED WITH A SHARP POINTED TOOL.

THE COST OF THE GUARDRAIL ANCHOR ASSEMBLY SHALL BE INCLUDED IN THE UNIT CONTRACT PRICE BID FOR CONCRETE BARRIER RAIL.

THE 1 1/4'' Ø HOLES SHALL BE FORMED OR DRILLED WITH A CORE BIT. IMPACT TOOLS WILL NOT BE PERMITTED. ANY CONCRETE DAMAGED BY THIS WORK SHALL BE REPAIRED TO THE SATISFACTION OF THE ENGINEER.

THE C6 X 8.2 RUBRAIL IS TO BE ADHESIVELY ANCHORED TO THE RAIL USING THREE 3/4''Ø X 6'' BOLTS WITH WASHERS. LEVEL ONE FIELD TESTING IS REQUIRED, AND THE YIELD LOAD OF THE 3/4''Ø BOLT IS 12 KIPS. FOR ADHESIVELY ANCHORED ANCHOR BOLTS OR DOWELS, SEE SPECIAL PROVISIONS. SEE ROADWAY STANDARD 862.03 FOR DETAILS AND LOCATION OF THE RUBRAIL.

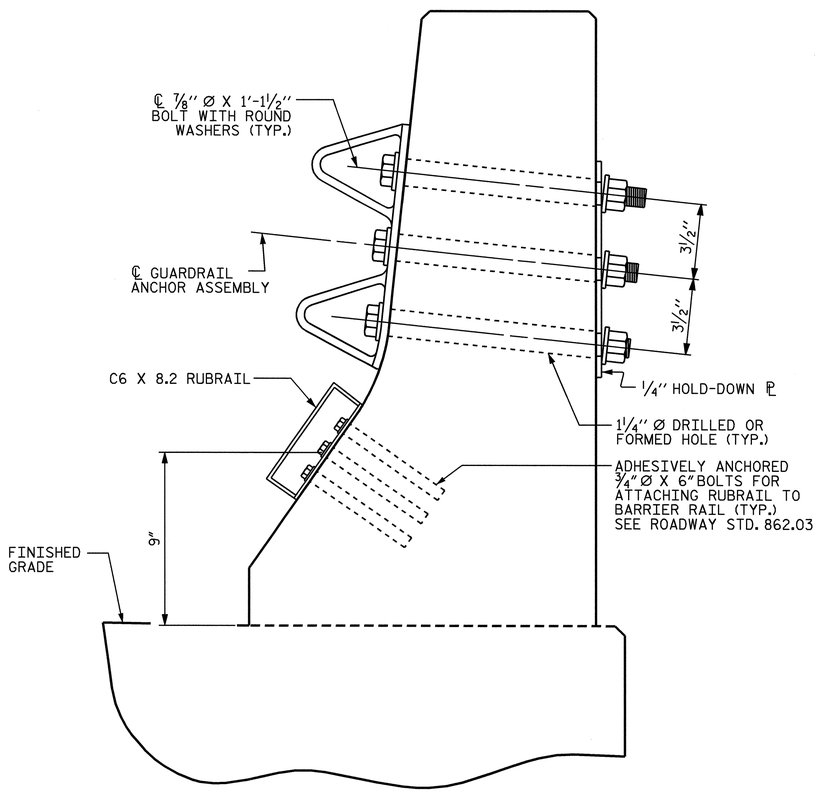

SECTION E-E

GUARDRAIL ANCHOR ASSEMBLY DETAILS

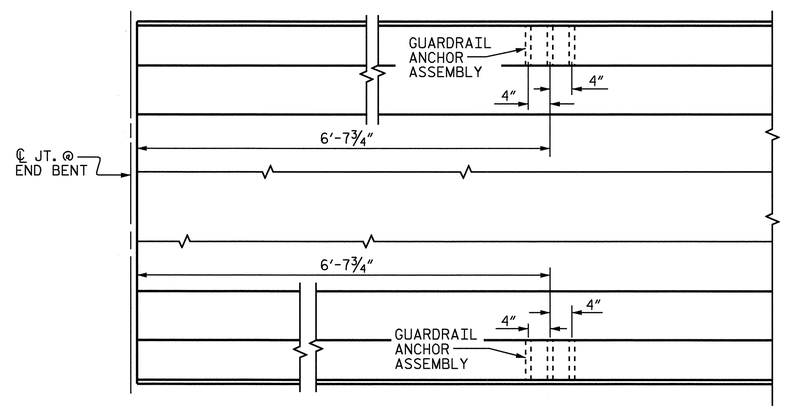

PLAN

LOCATION OF ANCHORS FOR GUARDRAIL

END BENT #1 SHOWN, END BENT #2 SIMILAR.

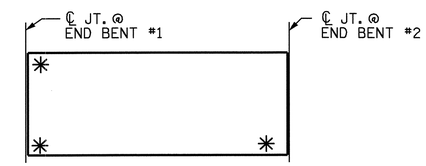

SKETCH SHOWING POINTS OF ATTACHMENTS

✳ DENOTES GUARDRAIL ANCHOR ASSEMBLY

PROJECT NO. R-2719A
LENOIR COUNTY
STATION: 248+68.10 -L-

STATE OF NORTH CAROLINA
DEPARTMENT OF TRANSPORTATION
RALEIGH

STANDARD
GUARDRAIL ANCHORAGE FOR BARRIER RAIL
(RIGHT LANE)

NORTH CAROLINA PROFESSIONAL SEAL 025516 ENGINEER EMILY E. MURRAY
10/7/08

REVISIONS						SHEET NO.
NO.	BY:	DATE:	NO.	BY:	DATE:	S-253
1			3			TOTAL SHEETS
2			4			340

STR. #9 STD. NO. GRA2

ASSEMBLED BY : B.N.BARODAWALA DATE : 3-9-07
CHECKED BY : PEGGY ADKINS DATE : 6-08
DRAWN BY : TLA 5/06
CHECKED BY : GM 5/06
ADDED 5/1/06R KMM/GM

30-SEP-2008 16:42
k:\structures\Final plans\Str #9\r2719a_sd_br_09.dgn
bbarodawala

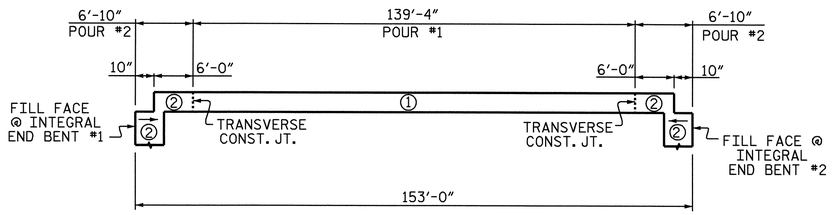

POURING SEQUENCE

SUPERSTRUCTURE REINFORCING STEEL LENGTHS ARE BASED ON THE FOLLOWING MINIMUM SPLICE LENGTHS					
BAR SIZE	SUPERSTRUCTURE EXCEPT APPROACH SLABS, PARAPET, AND BARRIER RAIL		APPROACH SLABS		PARAPET AND BARRIER RAIL
	EPOXY COATED	UNCOATED	EPOXY COATED	UNCOATED	
#4	2'-0"	1'-9"	2'-0"	1'-9"	2'-9"
#5	2'-6"	2'-2"	2'-6"	2'-2"	3'-5"
#6	3'-0"	2'-7"	3'-10"	2'-7"	4'-4"
#7	5'-3"	3'-6"			
#8	6'-10"	4'-7"			

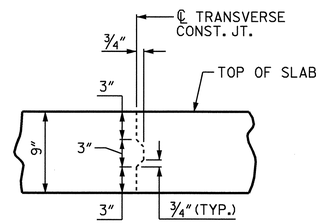

TRANSVERSE CONSTRUCTION JOINT DETAIL

NOTE:
REINFORCING STEEL IN SLAB NOT SHOWN.
LONGITUDINAL REINFORCING STEEL SHALL BE CONTINUOUS THRU JOINT

BILL OF MATERIAL

BAR	NO.	SIZE	TYPE	LENGTH	WEIGHT
✳ A1	303	#5	STR	56'-11"	17987
A2	303	#5	STR	56'-11"	17987
✳ B1	120	#6	STR	52'-4"	9433
✳ B2	148	#6	STR	35'-0"	7780
B3	153	#5	STR	52'-0"	8298
B4	88	#5	STR	36'-0"	3304
K1	56	#5	STR	32'-8"	1908
K2	4	#5	STR	2'-9"	11
✳ S1	102	#4	1	11'-8"	795
✳ S2	98	#4	1	9'-10"	644
U1	102	#4	2	13'-2"	897
U2	12	#4	2	15'-2""	122
V1	10	#4	STR	5'-2"	35

REINFORCING STEEL 32562 LBS.

✳ EPOXY COATED REINFORCING STEEL 36639 LBS.

BAR TYPES

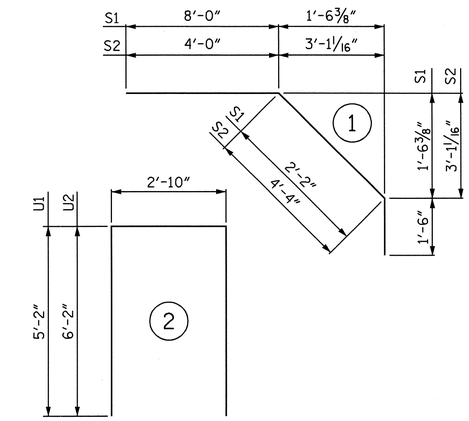

ALL BAR DIMENSIONS ARE OUT TO OUT

SUPERSTRUCTURE BILL OF MATERIAL

	CLASS AA CONCRETE	REINFORCING STEEL	EPOXY COATED REINFORCING STEEL
	(CU.YDS.)	(LBS.)	(LBS.)
POUR #1	259.6	——	——
POUR #2	113.5	——	——
TOTALS ✳✳	373.1	32562	36639

✳✳QUANTITIES FOR BARRIER RAIL ARE NOT INCLUDED

GROOVING BRIDGE FLOORS

APPROACH SLABS	2516	SQ.FT.
BRIDGE DECK	7701	SQ.FT.
TOTAL	10217	SQ.FT.

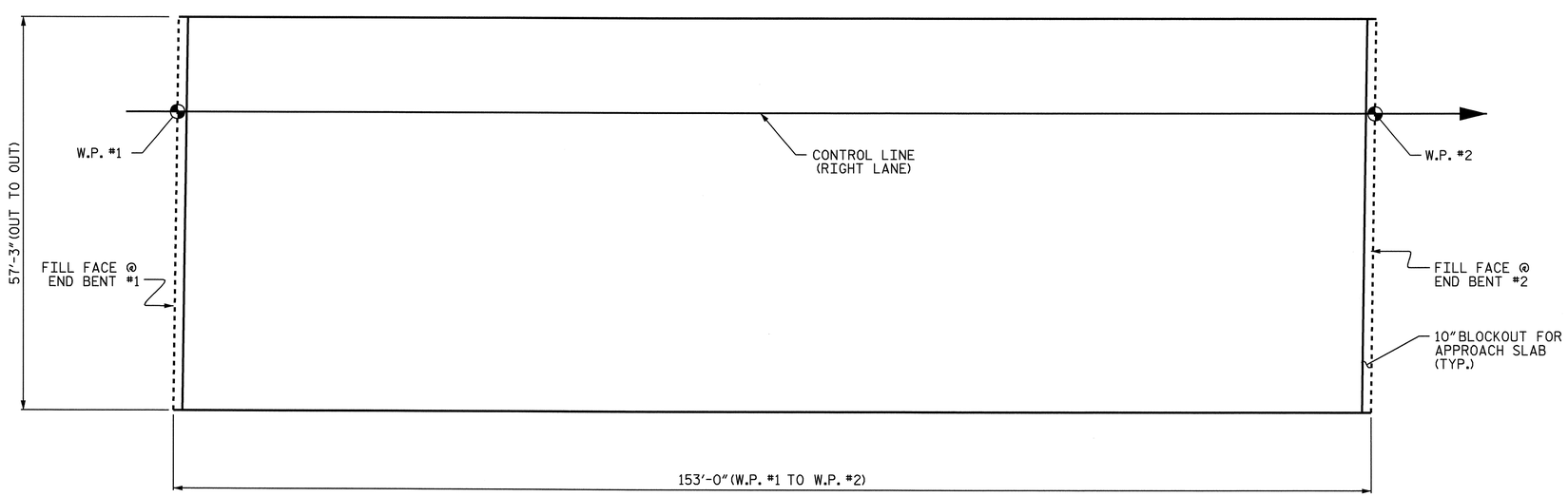

LAYOUT FOR COMPUTING AREA OF REINFORCED CONCRETE DECK SLAB AND POURING SEQUENCE (SQ. FT. = 8,759)

PROJECT NO. R-2719A
LENOIR COUNTY
STATION: 248+68.10 -L-

STATE OF NORTH CAROLINA
DEPARTMENT OF TRANSPORTATION
RALEIGH

SUPERSTRUCTURE
BILL OF MATERIAL
(RIGHT LANE)

NORTH CAROLINA PROFESSIONAL SEAL 025516 ENGINEER EMILY E. MURRAY
Emily E. Murray 10-10-08

REVISIONS						SHEET NO.
NO.	BY:	DATE:	NO.	BY:	DATE:	S-254
1			3			TOTAL SHEETS
2			4			340

STR. #9

DRAWN BY : B.N.BARODAWALA DATE : 3-14-07
CHECKED BY : P.S.ADKINS DATE : 6-08

10-OCT-2008 12:58
J:\Structures\Final plans\Str #9\R2719A_sd_BM_09.dgn
emurray

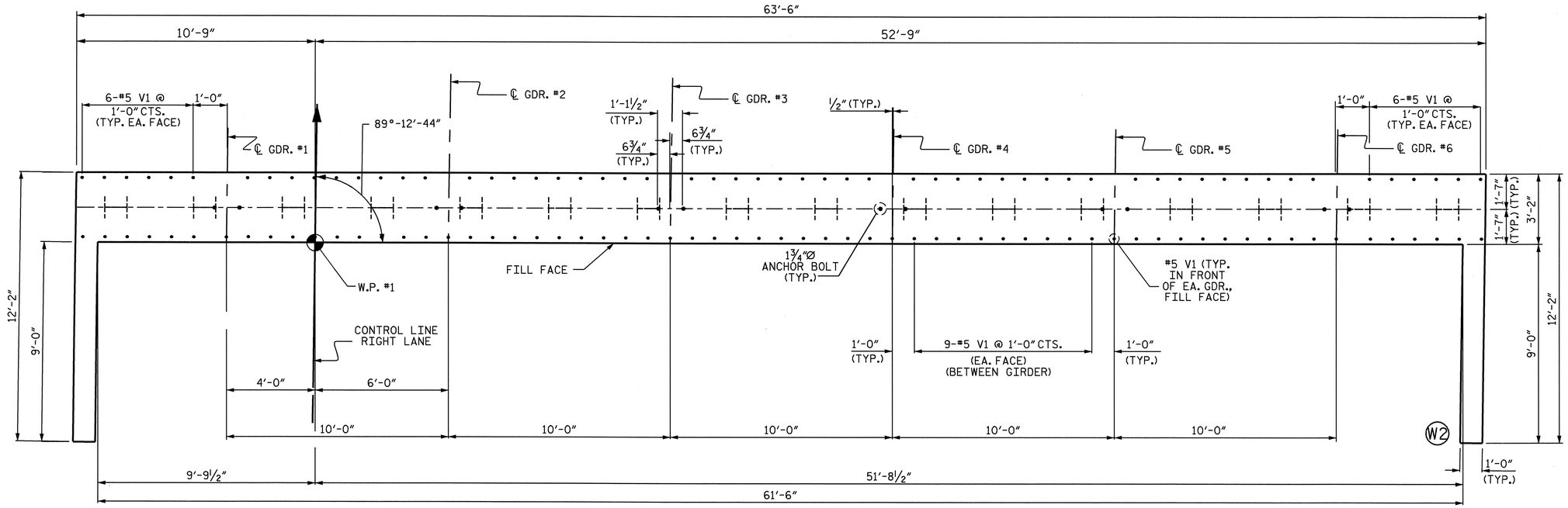

PLAN

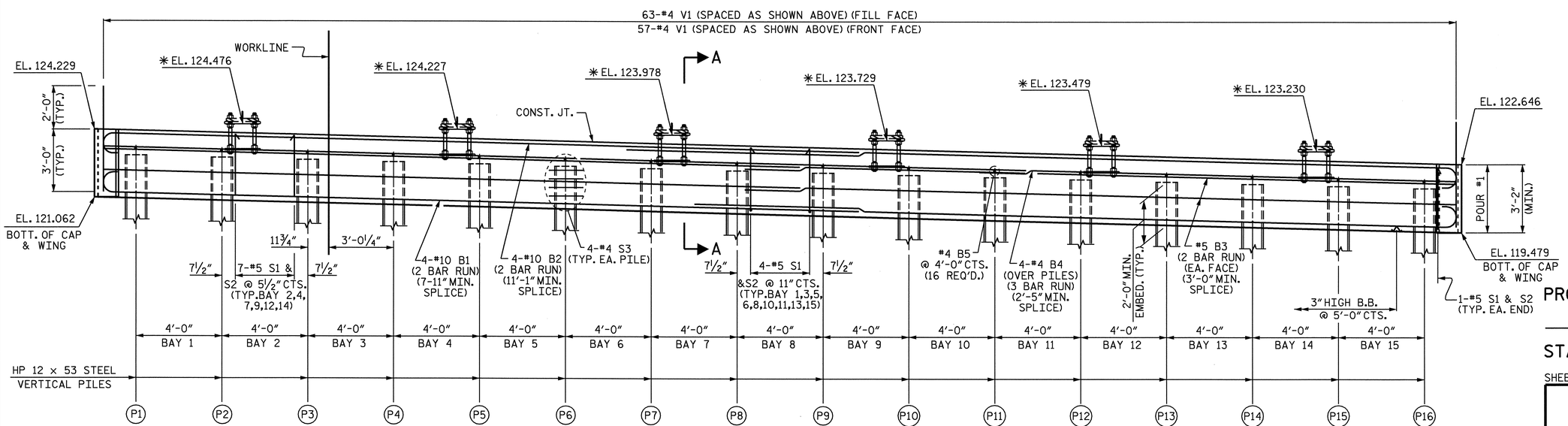

ELEVATION

WINGS OMITTED FOR CLARITY
✳ ELEVATION GIVEN FROM BOTTOM OF SOLE PLATE

NOTES

STIRRUPS IN CAP MAY BE SHIFTED AS NECESSARY TO CLEAR ANCHOR BOLTS.

THE CONTRACTOR SHALL PROVIDE FOR INSTALLATION OF THE 4" DIAMETER DRAIN PIPE THROUGH THE WING WALL AS REQUIRED FOR REINFORCED BRIDGE APPROACH FILLS, SEE THE ROADWAY PLANS. REINFORCING STEEL IN THE WING WALL MAY BE SHIFTED AS NECESSARY TO CLEAR THE DRAIN PIPE.

SEE SUPERSTRUCTURE SHEETS FOR UPPER PART OF INTEGRAL END BENT DETAIL.

THE CONTRACTOR'S ATTENTION IS CALLED TO THE FACT THAT UPPER PART OF WINGS ARE TO BE POURED WITH THE SUPERSTRUCTURE.

STIRRUPS IN CAP MAY BE SHIFTED AS NECESSARY TO CLEAR ANCHOR BOLT.

THE TOP SURFACE OF POUR #1 OF THE END BENT CAP AND WINGS, EXCLUDING THE OUTSIDE 4" AND THE BEARING AREA, SHALL BE RAKED TO A DEPTH OF ¼".

TOP OF PILE ELEVATIONS

P1	123.018
P2	122.918
P3	122.818
P4	122.718
P5	122.618
P6	122.518
P7	122.418
P8	122.318
P9	122.218
P10	122.118
P11	122.018
P12	121.918
P13	121.818
P14	121.718
P15	121.618
P16	121.518

PROJECT NO. R-2719A
LENOIR COUNTY
STATION: 248+68.10 -L-

SHEET 1 OF 3

STATE OF NORTH CAROLINA
DEPARTMENT OF TRANSPORTATION
RALEIGH

SUBSTRUCTURE

INTEGRAL END BENT #1
(RIGHT LANE)

NORTH CAROLINA PROFESSIONAL SEAL 025516 ENGINEER M.Y.E. MURRAY
10/7/08

REVISIONS								SHEET NO.
NO.	BY:	DATE:		NO.	BY:	DATE:		S-255
1				3				TOTAL SHEETS
2				4				340

DRAWN BY : J.B. WILSON DATE : 5/2008
CHECKED BY B.N. BARODAWALA DATE : 7/22/08

30-SEP-2008 16:45
k:\structures\Final plans\Str #9\R-2719A_sd_EB.dgn
bbarodawala

STR. #9

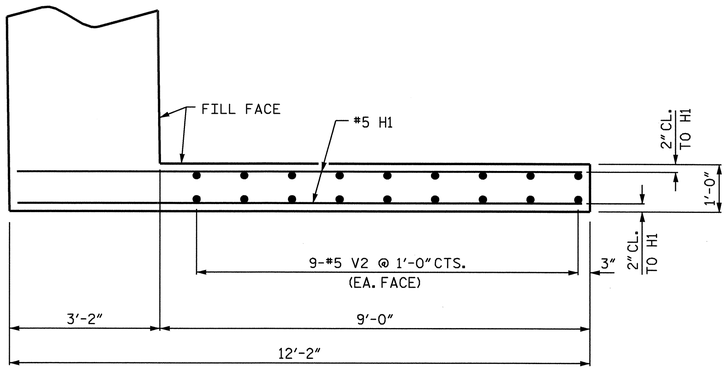

PLAN OF WING W1

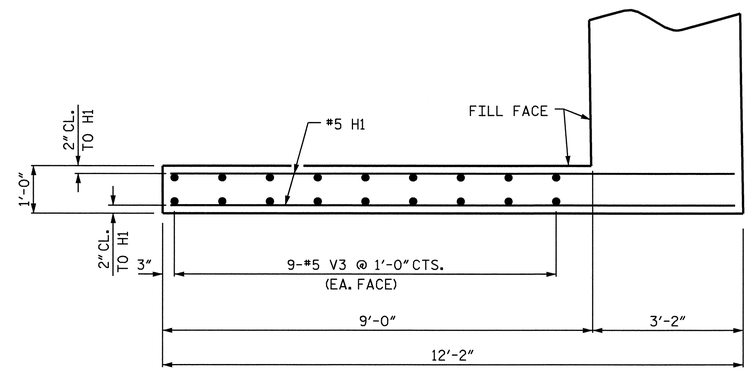

PLAN OF WING W2

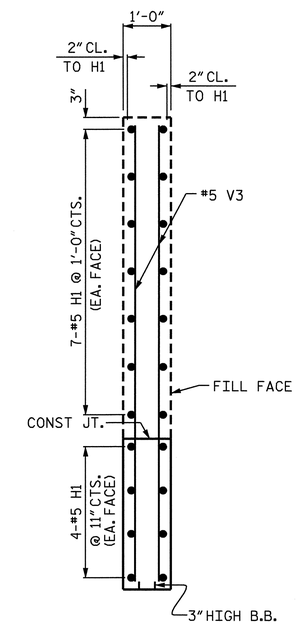

SECTION C-C

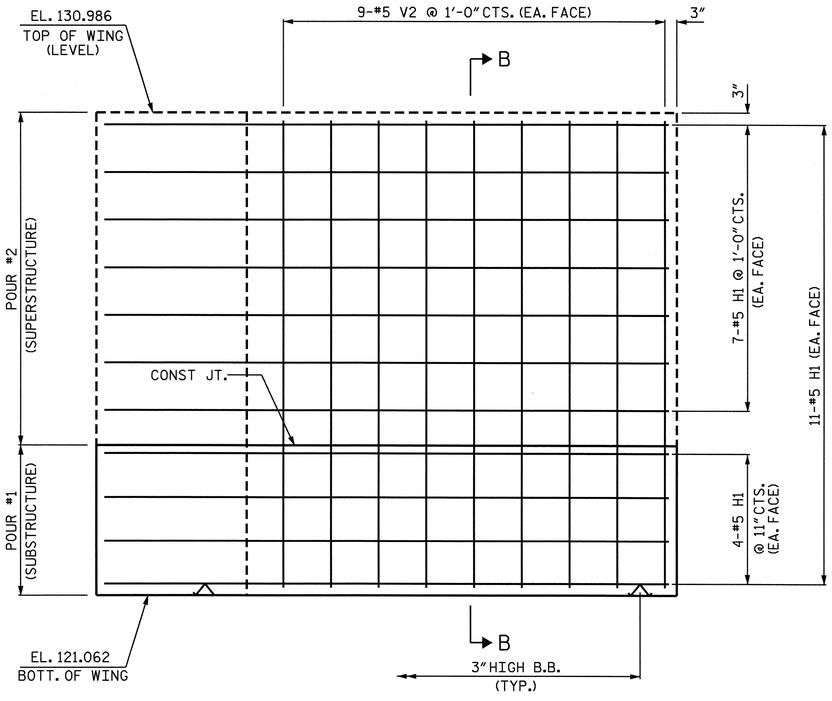

ELEVATION OF WING W1

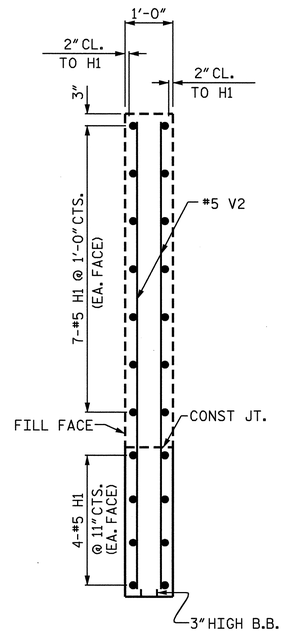

SECTION B-B

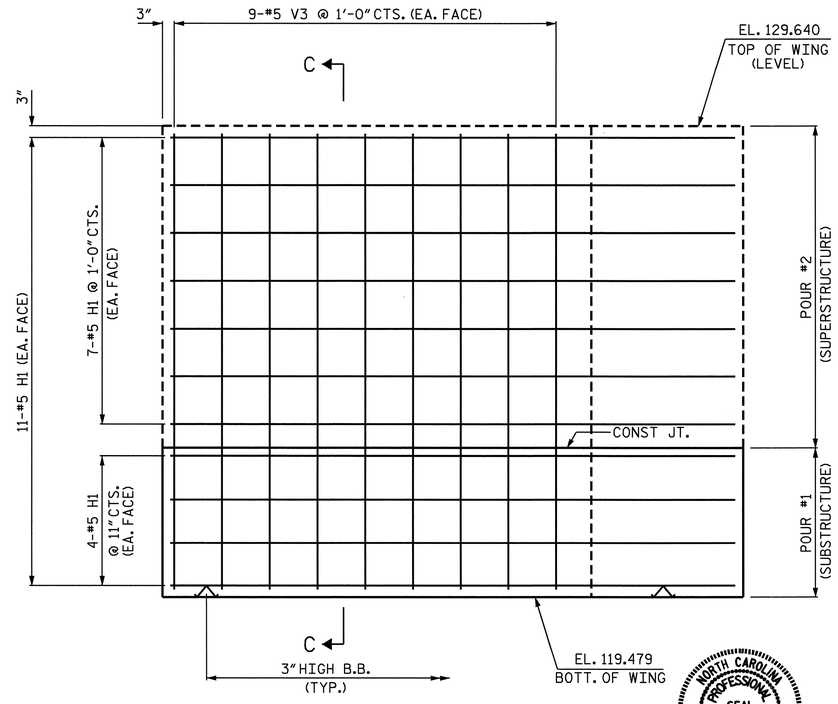

ELEVATION OF WING W2

NORTH CAROLINA PROFESSIONAL SEAL 025516 ENGINEER EMILY E. MURRAY
10/7/08

PROJECT NO. R-2719A
LENOIR COUNTY
STATION: 248+68.10 -L-

SHEET 2 OF 3

STATE OF NORTH CAROLINA
DEPARTMENT OF TRANSPORTATION
RALEIGH

SUBSTRUCTURE
INTEGRAL END BENT #1
(RIGHT LANE)

REVISIONS						SHEET NO.
NO.	BY:	DATE:	NO.	BY:	DATE:	S-256
1			3			TOTAL SHEETS
2			4			340

DRAWN BY : J.B. WILSON DATE : 5/2008
CHECKED BY : B.N. BARODAWALA DATE : 7/22/08

30-SEP-2008 16:45
k:\structures\Final plans\Str #9\R-2719A_sd_EB.dgn
bbarodawala

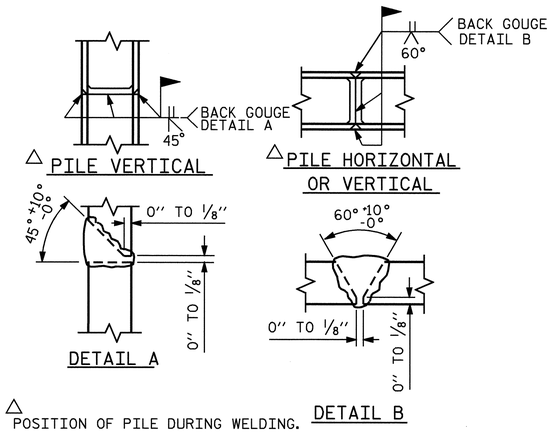

△ POSITION OF PILE DURING WELDING.

PILE SPLICE DETAILS

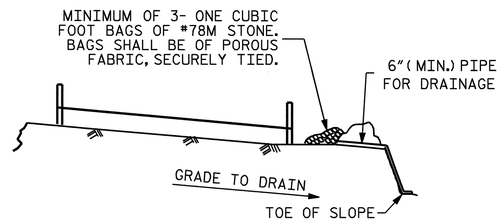

BAGGED STONE AND PIPE SHALL BE PLACED IMMEDIATELY AFTER COMPLETION OF END BENT EXCAVATION. PIPE MAY BE EITHER CONCRETE, CORRUGATED STEEL, CORRUGATED ALUMINUM ALLOY, OR CORRUGATED PLASTIC. PERFORATED PIPE WILL NOT BE ALLOWED.

BAGGED STONE SHALL REMAIN IN PLACE UNTIL THE ENGINEER DIRECTS THAT IT BE REMOVED. THE CONTRACTOR SHALL REMOVE AND DISPOSE OF SILT ACCUMULATIONS AT BAGGED STONE WHEN SO DIRECTED BY THE ENGINEER. BAGS SHALL BE REMOVED AND REPLACED WHENEVER THE ENGINEER DETERMINES THAT THEY HAVE DETERIORATED AND LOST THEIR EFFECTIVENESS.

NO SEPARATE PAYMENT WILL BE MADE FOR THIS WORK AND THE ENTIRE COST OF THIS WORK SHALL BE INCLUDED IN THE UNIT CONTRACT PRICE BID FOR THE SEVERAL PAY ITEMS.

TEMPORARY DRAINAGE AT END BENT

BAR TYPES

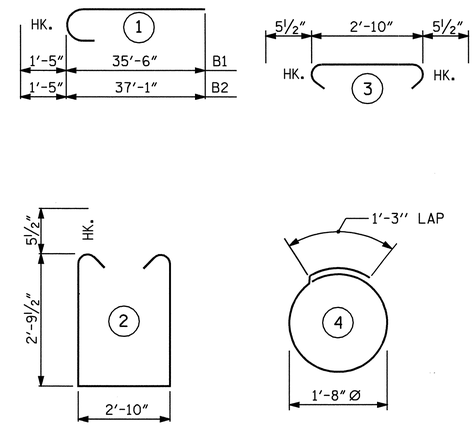

ALL BAR DIMENSIONS ARE OUT TO OUT.

BILL OF MATERIAL

END BENT #1

BAR	NO.	SIZE	TYPE	LENGTH	WEIGHT
B1	8	#10	1	36'-11"	1271
B2	8	#10	1	38'-6"	1325
B3	8	#5	STR	33'-1"	276
B4	12	#4	STR	22'-8"	182
B5	16	#4	STR	2'-10"	30
H1	44	#5	STR	11'-10"	543
S1	80	#5	2	9'-4"	779
S2	80	#5	3	3'-9"	313
S3	64	#4	4	6'-6"	278
V1	120	#4	STR	5'-0"	401
V2	18	#5	STR	9'-7"	180
V3	18	#5	STR	9'-10"	185
REINFORCING STEEL				=	5763 LBS

CLASS A CONCRETE BREAKDOWN

POUR 1
CAP AND LOWER PART OF WINGS__C.Y. 25.7

HP 12 x 53 STEEL PILES
NO. 16 LIN. FT. 1120

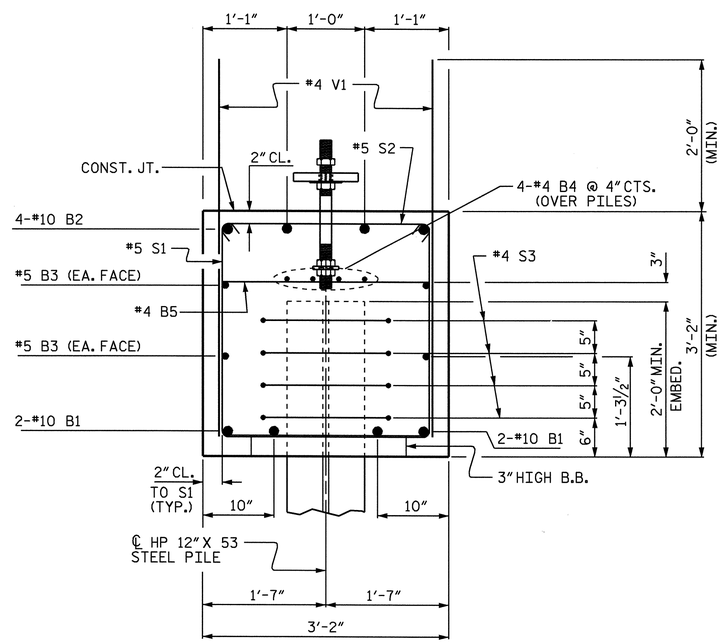

SECTION A-A

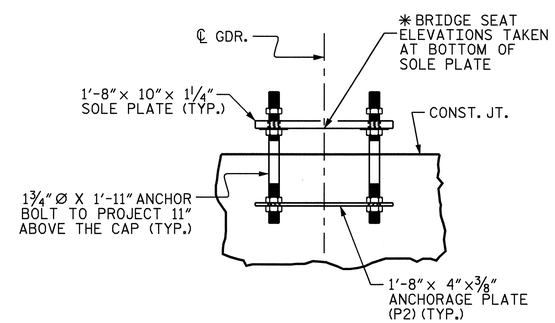

ANCHORAGE DETAILS

(FOR DETAIL SEE STRUCTURAL STEEL SHEET)

PROJECT NO. R-2719A
LENOIR COUNTY
STATION: 248+68.10 -L-

SHEET 3 OF 3

STATE OF NORTH CAROLINA
DEPARTMENT OF TRANSPORTATION
RALEIGH

SUBSTRUCTURE

INTEGRAL END BENT #1
(RIGHT LANE)

NORTH CAROLINA PROFESSIONAL SEAL 025516 ENGINEER EMILY E. MURRAY
10/7/08

REVISIONS							SHEET NO.
NO.	BY:	DATE:	NO.	BY:	DATE:		S-257
1			3				TOTAL SHEETS
2			4				340

DRAWN BY : J.B. WILSON DATE : 5/2008
CHECKED BY : B.N.BARODAWALA DATE : 7/22/08

30-SEP-2008 16:45
k:\structures\Final plans\Str #9\R-2719A_sd_EB.dgn
bbarodawala

STR. #9

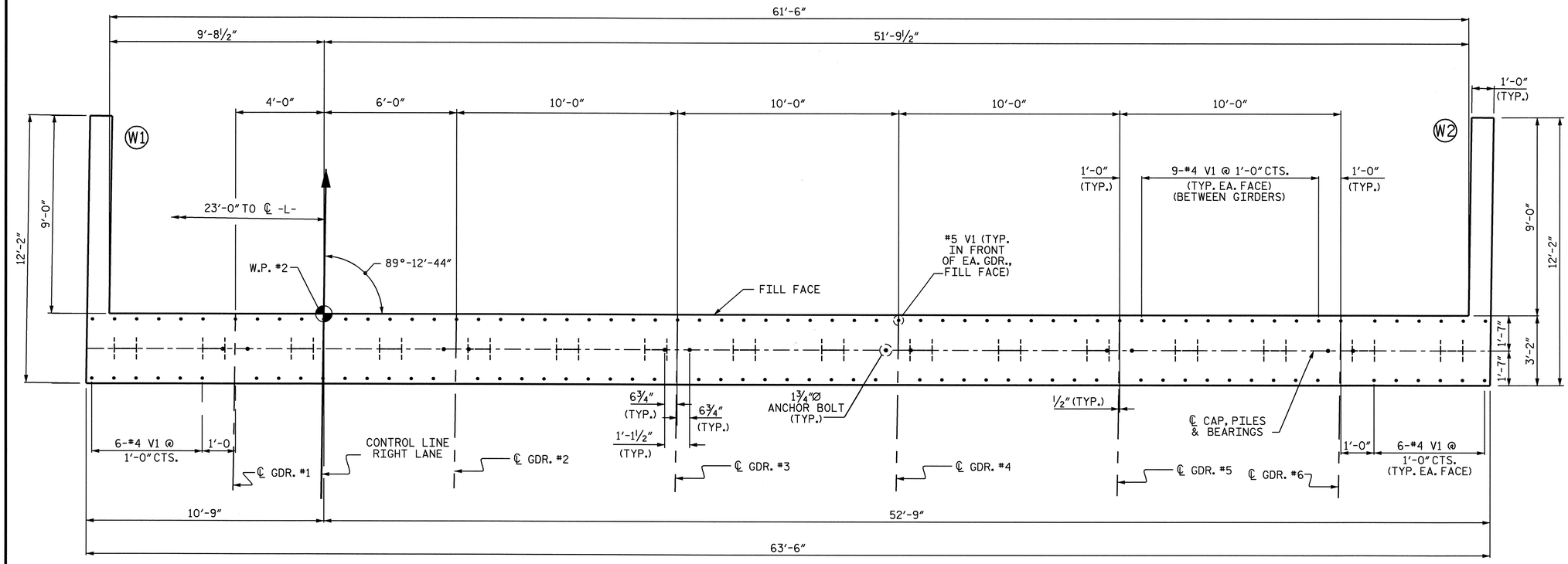

PLAN

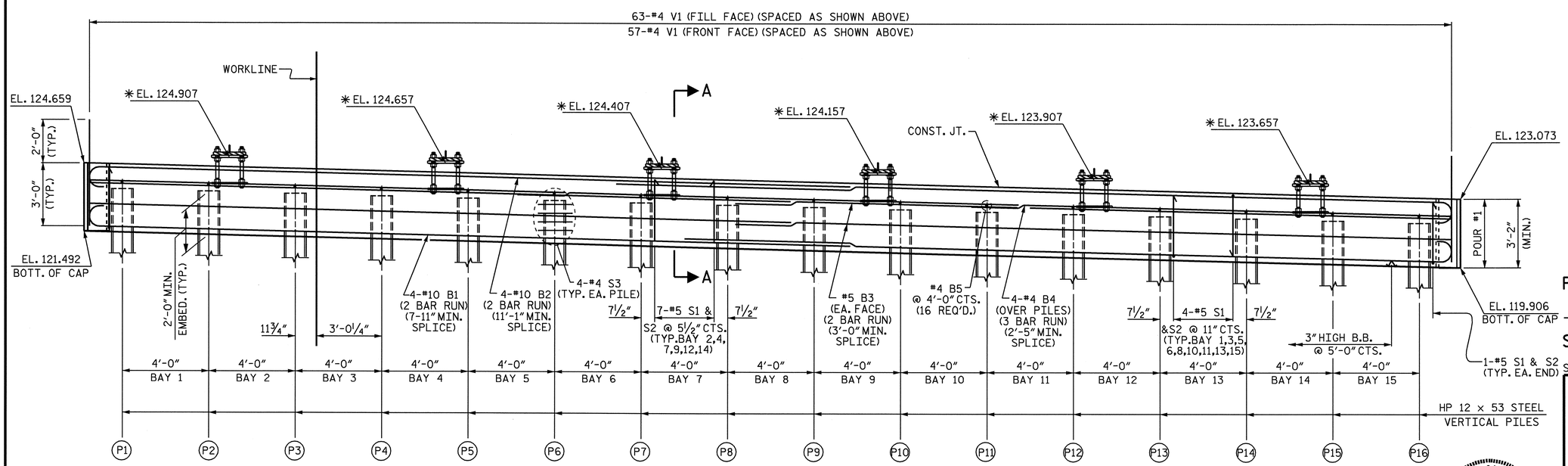

ELEVATION

UPPER PART OF WING NOT SHOWN FOR CLARITY
✳ ELEVATION GIVEN FROM BOTTOM OF SOLE PLATE

NOTES

STIRRUPS IN CAP MAY BE SHIFTED AS NECESSARY TO CLEAR ANCHOR BOLTS.

THE CONTRACTOR SHALL PROVIDE FOR INSTALLATION OF THE 4" DIAMETER DRAIN PIPE THROUGH THE WING WALL AS REQUIRED FOR REINFORCED BRIDGE APPROACH FILLS, SEE THE ROADWAY PLANS. REINFORCING STEEL IN THE WING WALL MAY BE SHIFTED AS NECESSARY TO CLEAR THE DRAIN PIPE.

SEE SUPERSTRUCTURE SHEETS FOR UPPER PART OF INTEGRAL END BENT DETAIL.

THE CONTRACTOR'S ATTENTION IS CALLED TO THE FACT THAT UPPER PART OF WINGS ARE TO BE POURED WITH THE SUPERSTRUCTURE.

STIRRUPS IN CAP MAY BE SHIFTED AS NECESSARY TO CLEAR ANCHOR BOLTS.

THE TOP SURFACE OF POUR #1 OF THE END BENT CAP AND WINGS, EXCLUDING THE OUTSIDE 4" AND THE BEARING AREA, SHALL BE RAKED TO A DEPTH OF ¼".

TOP OF PILE ELEVATIONS	
P1	123.448
P2	123.348
P3	123.248
P4	123.148
P5	123.048
P6	122.948
P7	122.848
P8	122.748
P9	122.648
P10	122.548
P11	122.448
P12	122.348
P13	122.248
P14	122.148
P15	122.048
P16	121.948

PROJECT NO. R-2719A
LENOIR COUNTY
STATION: 248+68.10 -L-

SHEET 1 OF 3

STATE OF NORTH CAROLINA
DEPARTMENT OF TRANSPORTATION
RALEIGH

SUBSTRUCTURE
INTEGRAL END BENT #2
(RIGHT LANE)

NORTH CAROLINA PROFESSIONAL SEAL 025516 ENGINEER BRIAN E. MURRAY
10/7/08

REVISIONS						SHEET NO.
NO.	BY:	DATE:	NO.	BY:	DATE:	S-258
1			3			TOTAL SHEETS
2			4			340

DRAWN BY : J.B. WILSON DATE : 5/2008
CHECKED BY : B.N. BARODAWALA DATE : 7/22/08

30-SEP-2008 16:45
k:\structures\Final plans\Str #9\R-2719A_sd_EB.dgn
bbarodawala

STR. #9

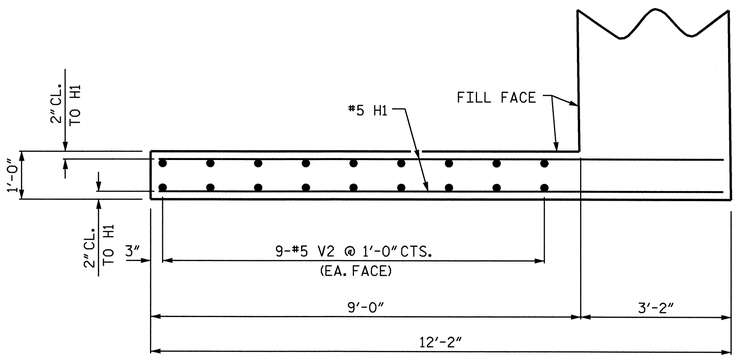

PLAN OF WING W1

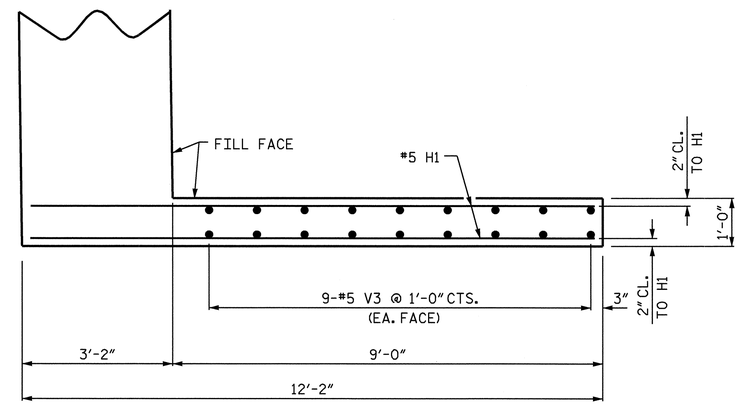

PLAN OF WING W2

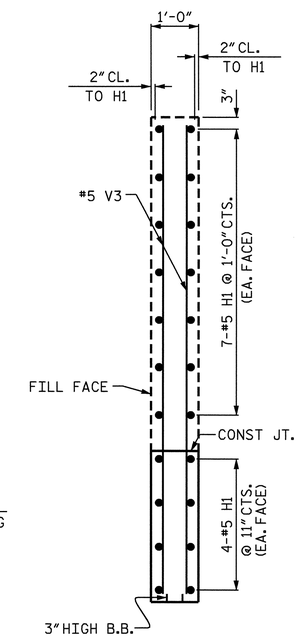

SECTION C-C

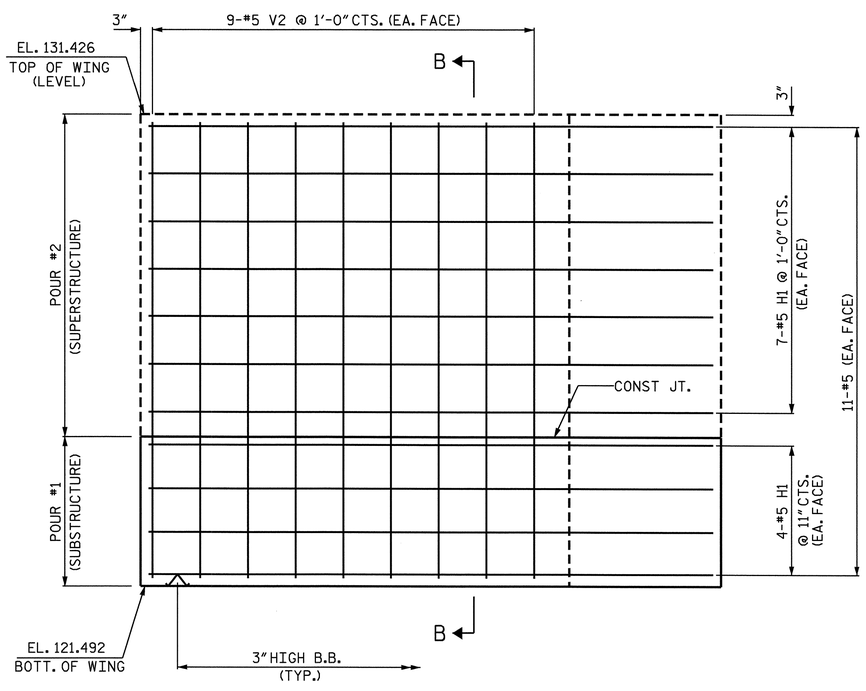

ELEVATION OF WING W1

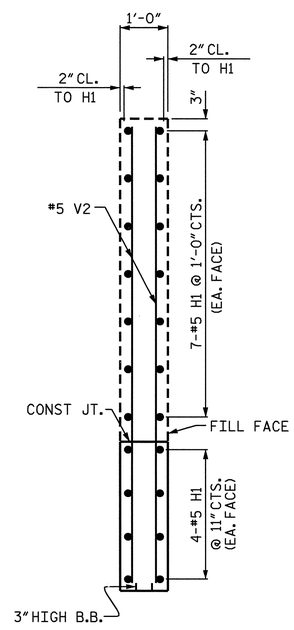

SECTION B-B

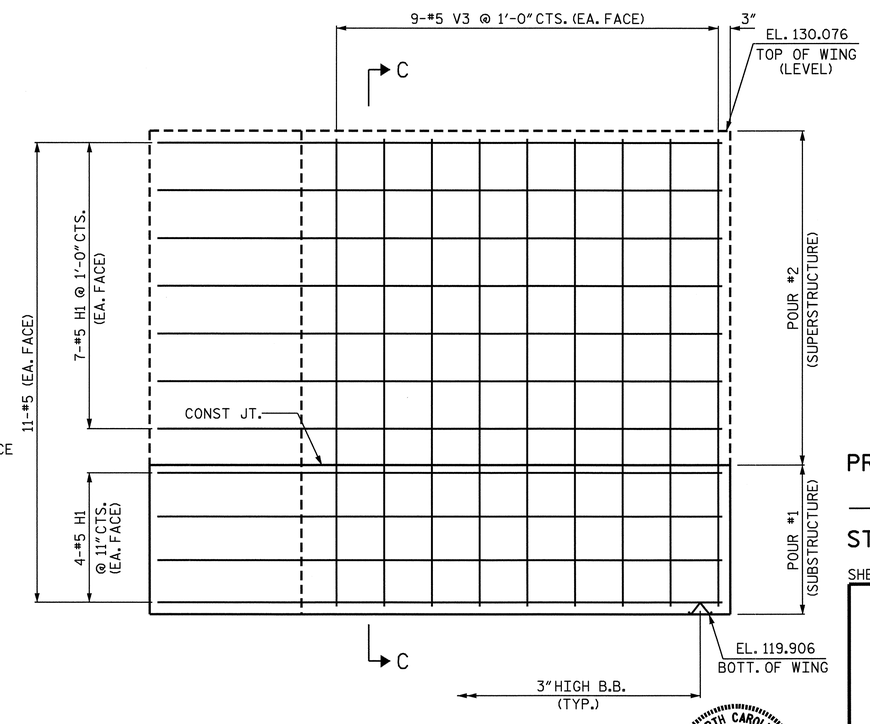

ELEVATION OF WING W2

PROJECT NO. R-2719A

LENOIR COUNTY

STATION: 248+68.10 -L-

SHEET 2 OF 3

STATE OF NORTH CAROLINA
DEPARTMENT OF TRANSPORTATION
RALEIGH

SUBSTRUCTURE

INTEGRAL END BENT #2
(RIGHT LANE)

NORTH CAROLINA PROFESSIONAL SEAL 025516 ENGINEER EMILY E. MURRAY
10/7/08

REVISIONS						SHEET NO.
NO.	BY:	DATE:	NO.	BY:	DATE:	S-259
1			3			TOTAL SHEETS
2			4			340

DRAWN BY : J.B. WILSON DATE : 5/2008
CHECKED BY : B.N. BARODAWALA DATE : 7/22/08

02-OCT-2008 10:21
k:\structures\finalplans\Str #9\R-2719A_sd_EB.dgn
bbarodawala

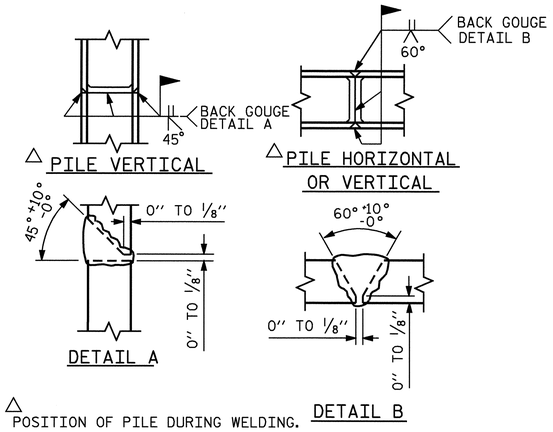

△ POSITION OF PILE DURING WELDING.

PILE SPLICE DETAILS

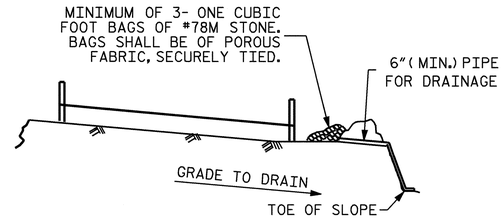

BAGGED STONE AND PIPE SHALL BE PLACED IMMEDIATELY AFTER COMPLETION OF END BENT EXCAVATION. PIPE MAY BE EITHER CONCRETE, CORRUGATED STEEL, CORRUGATED ALUMINUM ALLOY, OR CORRUGATED PLASTIC. PERFORATED PIPE WILL NOT BE ALLOWED.

BAGGED STONE SHALL REMAIN IN PLACE UNTIL THE ENGINEER DIRECTS THAT IT BE REMOVED. THE CONTRACTOR SHALL REMOVE AND DISPOSE OF SILT ACCUMULATIONS AT BAGGED STONE WHEN SO DIRECTED BY THE ENGINEER. BAGS SHALL BE REMOVED AND REPLACED WHENEVER THE ENGINEER DETERMINES THAT THEY HAVE DETERIORATED AND LOST THEIR EFFECTIVENESS.

NO SEPARATE PAYMENT WILL BE MADE FOR THIS WORK AND THE ENTIRE COST OF THIS WORK SHALL BE INCLUDED IN THE UNIT CONTRACT PRICE BID FOR THE SEVERAL PAY ITEMS.

TEMPORARY DRAINAGE AT END BENT

BAR TYPES

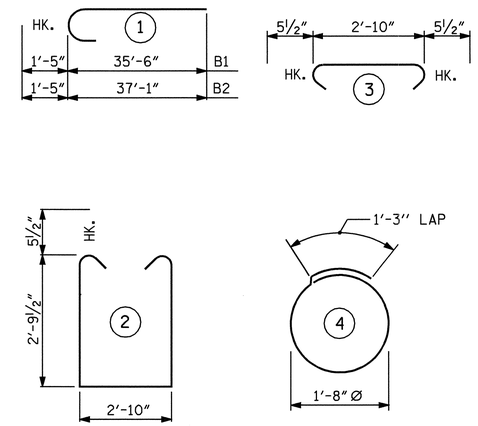

ALL BAR DIMENSIONS ARE OUT TO OUT.

BILL OF MATERIAL

END BENT #2

BAR	NO.	SIZE	TYPE	LENGTH	WEIGHT
B1	8	#10	1	36'-11"	1271
B2	8	#10	1	38'-6"	1325
B3	8	#5	STR	33'-1"	276
B4	12	#4	STR	22'-8"	182
B5	16	#4	STR	2'-10"	30
H1	44	#5	STR	11'-10"	543
S1	80	#5	2	9'-4"	779
S2	80	#5	3	3'-9"	313
S3	64	#4	4	6'-6"	278
V1	120	#4	STR	5'-0"	401
V2	18	#5	STR	9'-7"	180
V3	18	#5	STR	9'-10"	185
REINFORCING STEEL				=	5763 LBS

CLASS A CONCRETE BREAKDOWN

POUR 1
CAP AND LOWER PART OF WINGS__C.Y. 25.7

HP 12 x 53 STEEL PILES
NO. 16 LIN. FT. 1120

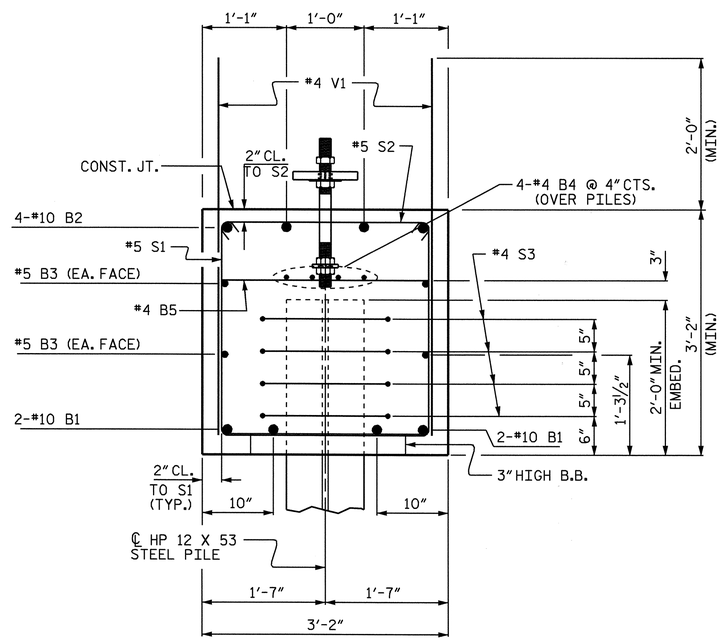

SECTION A-A

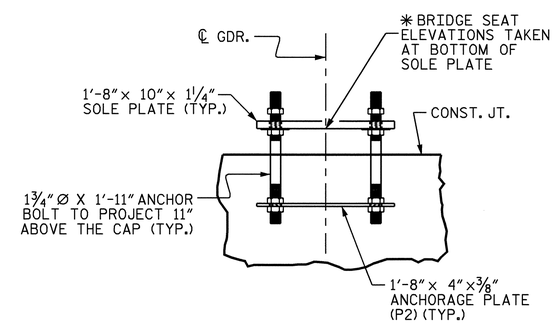

ANCHORAGE DETAILS

(FOR DETAIL SEE STRUCTURAL STEEL SHEET)

PROJECT NO. R-2719A
LENOIR COUNTY
STATION: 248+68.10 -L-

SHEET 3 OF 3

STATE OF NORTH CAROLINA
DEPARTMENT OF TRANSPORTATION
RALEIGH

SUBSTRUCTURE

INTEGRAL END BENT #2
(RIGHT LANE)

NORTH CAROLINA PROFESSIONAL SEAL 025516 ENGINEER EMILY E. MURRAY
10/7/08

REVISIONS						SHEET NO.
NO.	BY:	DATE:	NO.	BY:	DATE:	S-260
1			3			TOTAL SHEETS
2			4			340

DRAWN BY : J.B. WILSON DATE : 5/2008
CHECKED BY : B.N. BARODAWALA DATE : 7/22/08

30-SEP-2008 16:45
k:\structures\final plans\Str #9\R-2719A_sd_EB.dgn
bbarodawala

STR. #9

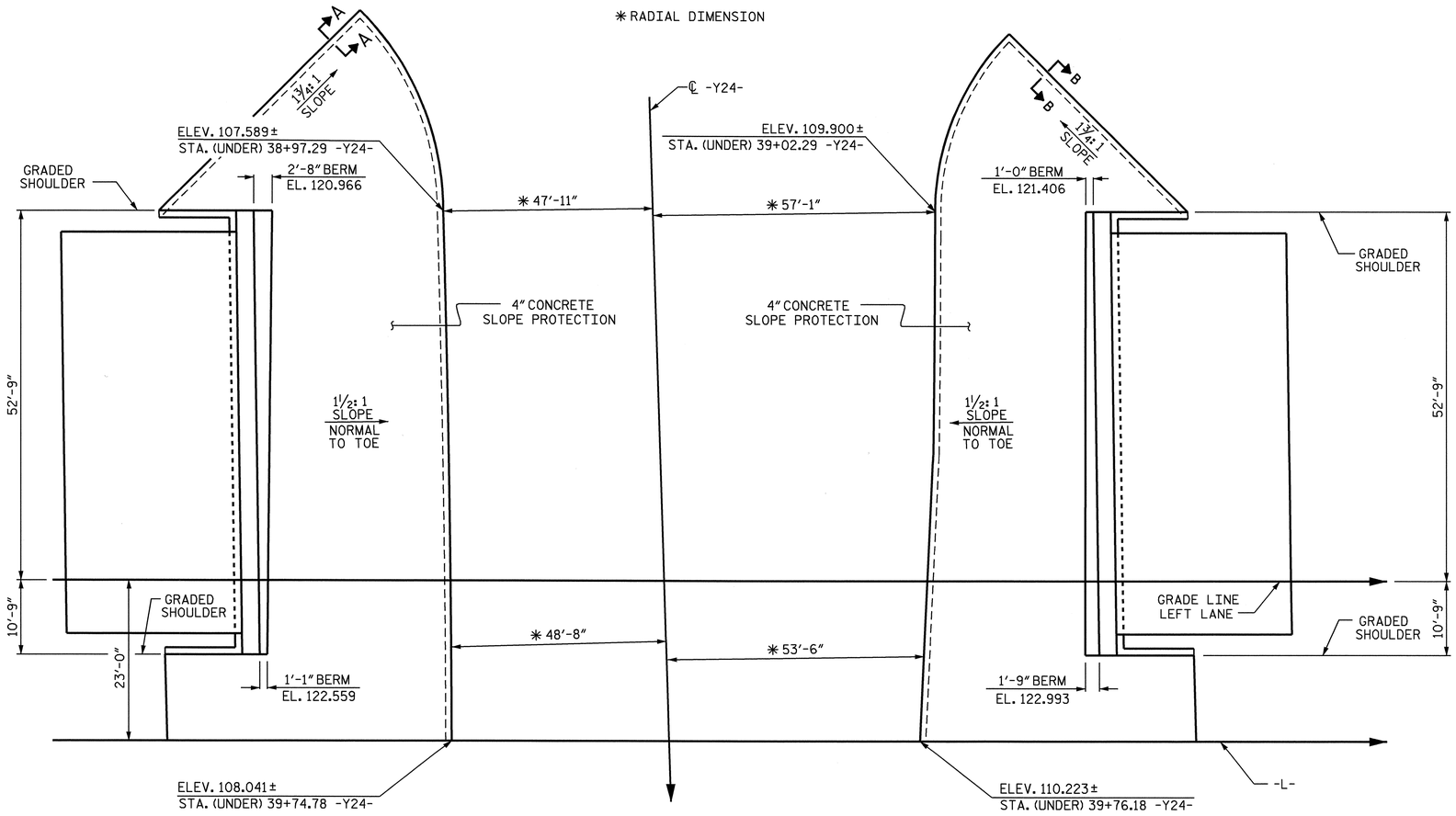

GENERAL NOTES

SLOPE PROTECTION SHALL BE PLACED UNDER THE ENDS OF THE BRIDGE AS SHOWN IN THE DETAILS. THE CONTRACTOR, AT HIS OPTION, MAY USE ALTERNATE "B" ONLY FOR HIGHWAY OVER HIGHWAY GRADE SEPARATIONS WITH 2:1 END BENT SLOPE IN RURAL, UNPOPULATED AREAS. STRAIGHT EDGING WILL NOT BE REQUIRED UNLESS, IN THE OPINION OF THE ENGINEER, VISUAL INSPECTION INDICATES A NEED FOR IT. MEASUREMENT AND PAYMENT SHALL BE AS PRESCRIBED IN SECTION 462 OF THE STANDARD SPECIFICATIONS. FOR BERM WIDTH, SEE GENERAL DRAWING.

ALTERNATE "A"

ALTERNATE "A" SHALL CONSIST OF 4" POURED-IN-PLACE CONCRETE PAVING AS SHOWN IN THE DETAILS ON THIS SHEET. CONCRETE SHALL BE CLASS "B". THE CONCRETE SURFACE SHALL BE FLOATED WITH A WOODEN FLOAT AND FINISHED. WELDED WIRE FABRIC REINFORCING SHALL BE 6 X 6 - W1.4 X W1.4, 60" WIDE. SLOPE PROTECTION SHALL BE POURED IN 5' STRIPS AS SHOWN IN THE "POURING DETAIL" WITH 2'-0" LONG #4 BARS PLACED ALONG THE SLOPE BETWEEN STRIPS AT 1'-6" MAXIMUM SPACING. SLOPE PROTECTION MAY BE POURED IN ALTERNATE 4' AND 5' STRIPS AS SHOWN IN THE "OPTIONAL POURING DETAIL" WITH ADJACENT RUNS OF WELDED WIRE FABRIC LAPPING AT LEAST 6". THE COST OF THE WELDED WIRE FABRIC AND #4 BARS, IF USED, SHALL BE INCLUDED IN THE CONTRACT UNIT PRICE BID PER SQUARE YARD FOR SLOPE PROTECTION.

BRIDGE @ STA. 248+68.10 -L- STA. 39+75.47 -Y24-	4 INCH SLOPE PROTECTION	✳ WELDED WIRE FABRIC 60 INCHES WIDE
	SQUARE YARDS	APPROX. L.F.
END BENT 1	412	890
END BENT 2	361	780

✳ QUANTITY SHOWN IS BASED ON 5' POURS.

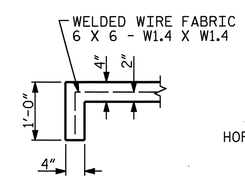

SECTION A-A

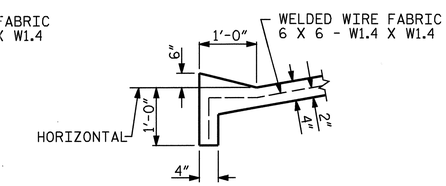

SECTION B-B

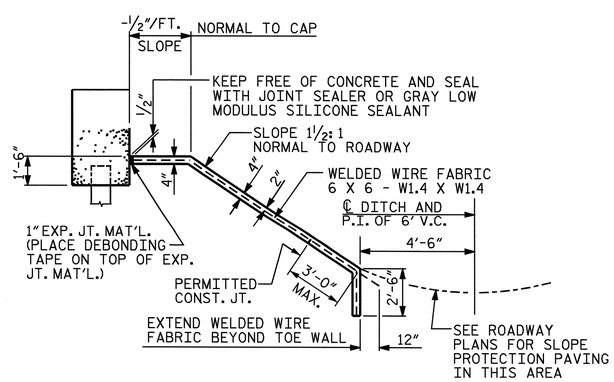

SECTION ALONG ℄ ROADWAY WHEN FILL CATCHES IN DITCH

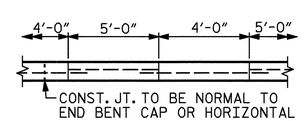

POUR A 4'-0" STRIP FIRST. STRIP WIDTHS MAY VARY IN CURVED PORTION.

OPTIONAL POURING DETAIL

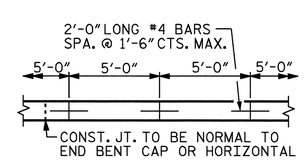

STRIP WIDTHS MAY VARY IN CURVED PORTION.

POURING DETAIL

DETAILS FOR ALTERNATE "A"

PROJECT NO. R-2719A
LENOIR COUNTY
STATION: 248+68.10 -L-

STATE OF NORTH CAROLINA
DEPARTMENT OF TRANSPORTATION
RALEIGH

STANDARD

SLOPE PROTECTION DETAILS
(LEFT LANE)

NORTH CAROLINA PROFESSIONAL SEAL 025516 ENGINEER EMILY E. MURRAY
10/13/08

REVISIONS							SHEET NO.
NO.	BY:	DATE:	NO.	BY:	DATE:		S-261
1			3				TOTAL SHEETS
2			4				340

ASSEMBLED BY : M.GUDLAUGSSON	DATE : 04/2008		
CHECKED BY : M. PISO	DATE : 06/2008		
DRAWN BY : ELR 5/92	REV. 7/10/01	LES/RDR	
CHECKED BY : GRP 6/92	REV. 5/7/03	RWW/JTE	
	REV. 5/1/06	TLA/GM	

13-OCT-2008 15:56
g:\tipprojects-r\r2719a\structures\finalplans\str #8\r2719a_sd_sp_8.dgn
taverette

STR. #8

STD. NO. SP1 (SHT 4)

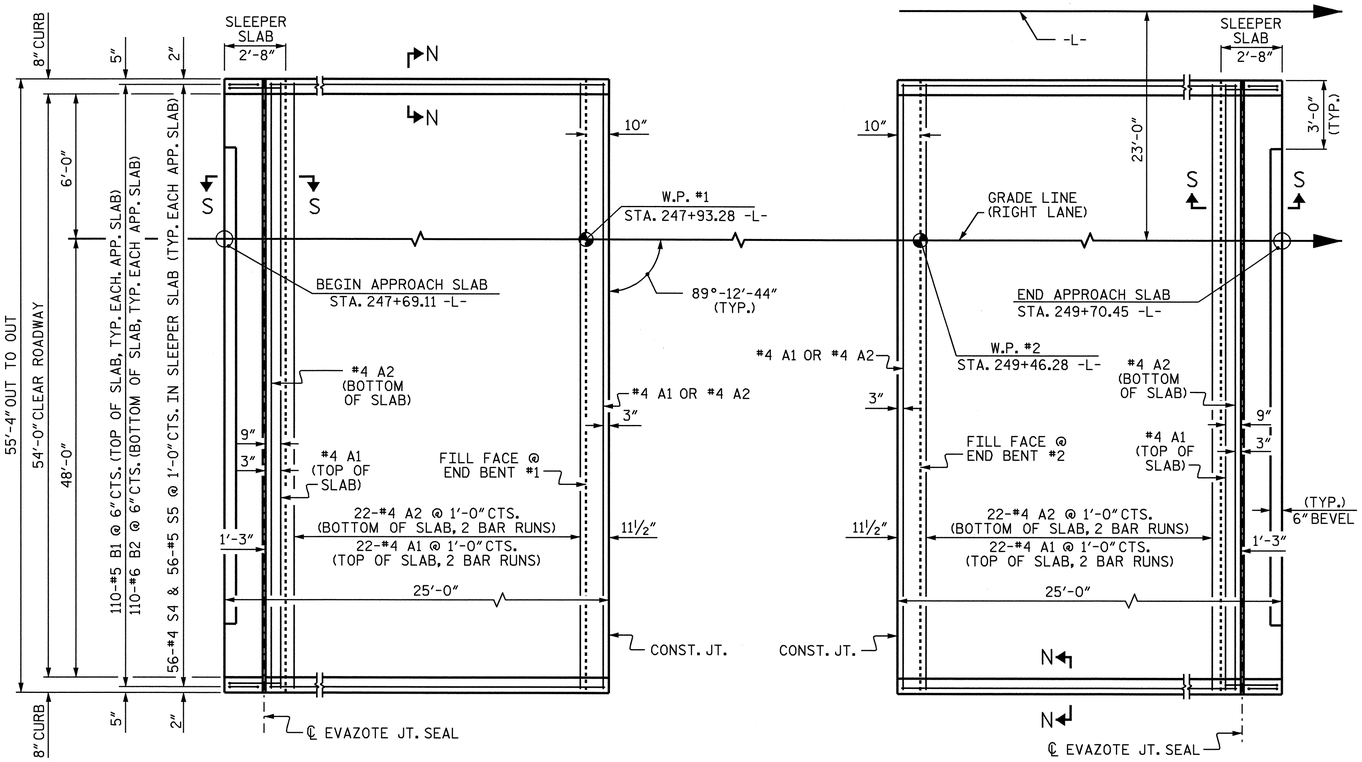

PLAN @ END BENT #1

PLAN @ END BENT #2

DIMENSIONS SHOWN ARE TYPICAL FOR BOTH APPROACH SLABS. #4 A1 BARS IN SLEEPER SLAB NOT SHOWN FOR CLARITY.

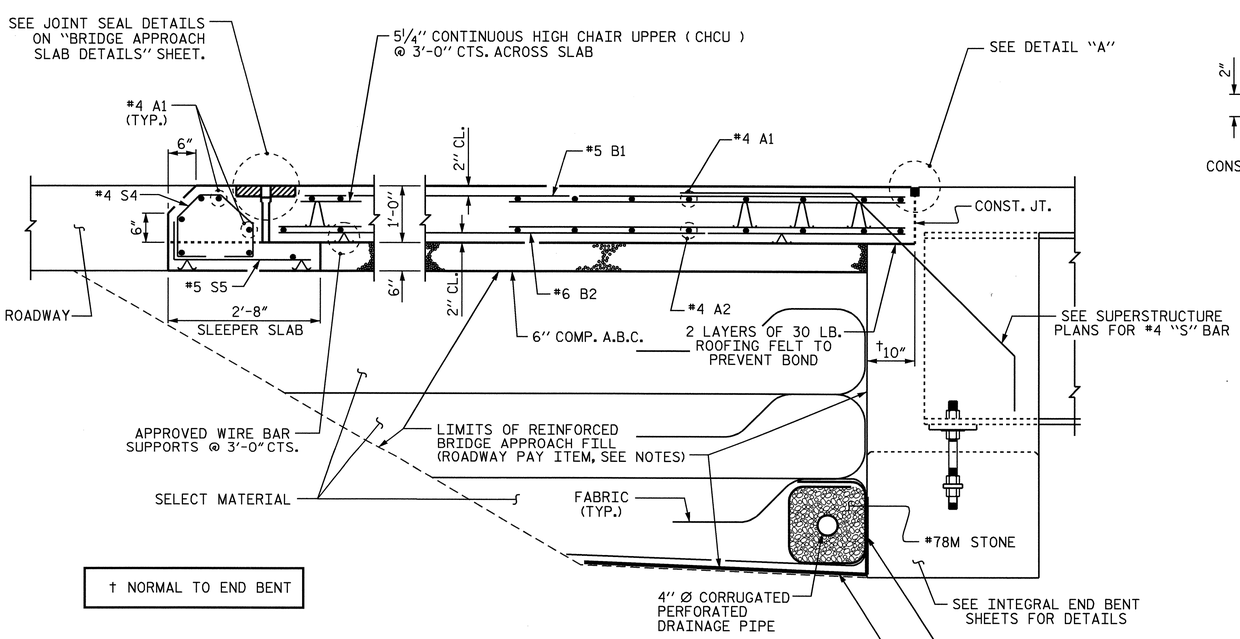

† NORMAL TO END BENT

SECTION THRU SLAB

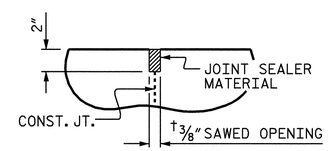

DETAIL "A"

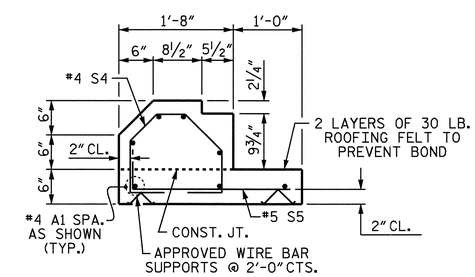

SECTION S-S

SHOWING SLEEPER SLAB

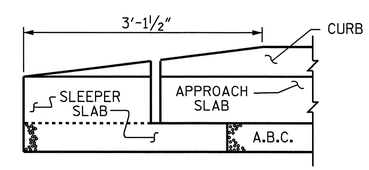

END OF CURB WITHOUT SHOULDER BERM GUTTER

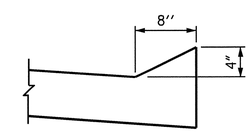

SECTION N-N

NOTES

APPROACH SLAB SHALL NOT BE CONSTRUCTED PRIOR TO COMPLETION OF THE BRIDGE DECK.

FOR REINFORCED BRIDGE APPROACH FILL INCLUDING FABRIC, IMPERMEABLE GEOMEMBRANE, 4" Ø DRAINAGE PIPE, #78M STONE, AND SELECT MATERIAL, SEE ROADWAY PLANS.

AREA BETWEEN THE WINGWALL AND APPROACH SLAB SHALL BE GRADED TO DRAIN THE WATER AWAY FROM THE FILL FACE OF THE BRIDGE AND SHALL BE PAVED. SEE ROADWAY PLANS.

THE 6" COMP. A.B.C. SHALL BE FLUSH WITH THE SLEEPER SLAB AND SHALL EXTEND 1'-0" OUTSIDE OF EACH EDGE OF THE APPROACH SLAB.

THE CONTRACTOR MAY USE 4" TYPE B-25.0B ASPHALT CONCRETE BASE COURSE IN LIEU OF 6" COMP. A.B.C. IF THIS OPTION IS USED, THE BASE COURSE SHALL BE FLUSH WITH THE SLEEPER SLAB, AND THE WIDTH SHALL BE THE SAME AS THAT OF THE APPROACH SLAB.

THE CONTRACTOR MAY USE 5" CLASS "A" CONCRETE BASE IN LIEU OF 6" COMP. A.B.C. IF THIS OPTION IS USED, THE CONCRETE BASE SHALL BE FLUSH WITH THE SLEEPER SLAB, AND THE WIDTH SHALL BE THE SAME AS THAT OF THE APPROACH SLAB. THE CONCRETE SHALL BE FINISHED TO A SMOOTH SURFACE AND A LAYER OF 30 LB ROOFING FELT SHALL BE PLACED BETWEEN THE CONCRETE BASE AND THE APPROACH SLAB TO PREVENT BOND. THE APPROACH SLAB SHALL NOT BE CAST UNTIL THE CONCRETE BASE HAS REACHED AN AGE OF THREE CURING DAYS.

THE VERTICAL JOINT ON THE RIGHT AND LEFT SIDE OF THE APPROACH SLAB AT THE ENDS OF THE EVAZOTE JOINT SHALL BE FILLED WITH SILICONE OR OTHER APPROVED MATERIAL IN ORDER TO PREVENT BACKFILL FROM ENTERING THE JOINT OPENING.

THE JOINT OPENING AT THE APPROACH SLAB/DECK INTERFACE SHALL BE SAWED NO MORE THAN 12 HOURS AFTER THE APPROACH SLAB IS CAST. THE JOINT SHALL BE CLEANED OF ALL DEBRIS BEFORE THE SEALANT IS APPLIED. THE JOINT SEALER MATERIAL SHALL CONFORM TO THE REQUIREMENTS OF TYPE SL LOW MODULUS SILICONE SEALANT.

WITH EVAZOTE JOINT SEAL

FOR EVAZOTE JOINT SEALS, SEE SPECIAL PROVISIONS.

THE NOMINAL UNCOMPRESSED SEAL WIDTH OF THE EVAZOTE JOINT SEAL SHALL BE 2½".

FOR ELASTOMERIC CONCRETE, SEE SPECIAL PROVISIONS.

BILL OF MATERIAL

FOR ONE APPROACH SLAB (2 REQ'D)

BAR	NO.	SIZE	TYPE	LENGTH	WEIGHT
✳ A1	62	#4	STR	28'-6"	1180
A2	48	#4	STR	28'-5"	911
✳ B1	110	#5	STR	22'-5"	2572
B2	110	#6	STR	22'-11"	3786
✳ S4	56	#4	1	3'-11"	147
S5	56	#5	2	2'-11"	170
REINFORCING STEEL				LBS.	4867
✳ EPOXY COATED REINFORCING STEEL				LBS.	3899
CLASS AA CONCRETE					
POUR #1 - SLAB & CURB				C. Y.	47.6
POUR #2 - SLEEPER SLAB				C. Y.	5.7
TOTAL				C. Y.	53.3

BAR TYPES

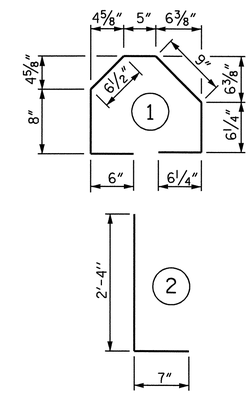

ALL BAR DIMENSIONS ARE OUT TO OUT

SPLICE CHART

BAR SIZE	SPLICE LENGTH
#4 A1	2'-0"
#4 A2	1'-9"

PROJECT NO. R-2719A

LENOIR COUNTY

STATION: 248+68.10 -L-

SHEET 1 OF 3

STATE OF NORTH CAROLINA
DEPARTMENT OF TRANSPORTATION
RALEIGH

STANDARD

BRIDGE APPROACH SLAB FOR INTEGRAL ABUTMENT (RIGHT LANE)

NORTH CAROLINA PROFESSIONAL SEAL 025516 ENGINEER DALY E. MURRAY

REVISIONS							SHEET NO.
NO.	BY:	DATE:	NO.	BY:	DATE:		S-262
1			3				TOTAL SHEETS
2			4				340

ASSEMBLED BY: M. GUDLAUGSSON DATE: 04/2008
CHECKED BY: C.R. MCDUFFEE DATE: 05/2008
DRAWN BY: TLA 10/05
CHECKED BY: GM 5/06
ADDED 5/1/06R KMM/GM

30-SEP-2008 16:42
k:\structures\finalplans\Str #9\R2719A_sd_AS_9.dgn
bbarodawala

STR. #9

STD. NO. BAS11 (SHT 10)

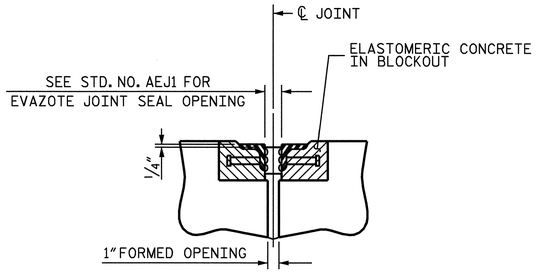

SECTION C-C
ARMORED EVAZOTE JOINT SEAL

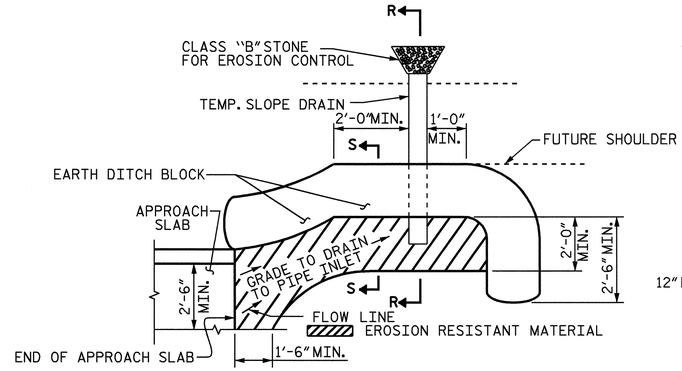

NOTE: IMMEDIATELY AFTER THE CONSTRUCTION OF THE APPROACH SLAB, THE CONTRACTOR SHALL PROVIDE TEMPORARY BERM AND SLOPE DRAIN. CONTRACTOR SHALL GRADE TO PIPE INLET AND PROVIDE EROSION RESISTANT MATERIAL AS SHOWN. THE EROSION RESISTANT MATERIAL SHALL BE EITHER 1) ASPHALT PLANT MIX, TYPE 1 OR TYPE 2, MIN. 2" DEPTH, 2) EROSION CONTROL MAT, OR 3) CONCRETE, AS DIRECTED BY THE ENGINEER. THE SLOPE DRAIN SHALL CONSIST OF A NON-PERFORATED TEMPORARY DRAINAGE PIPE, 12 INCHES IN DIAMETER.

PLAN VIEW

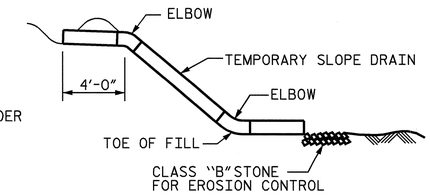

SECTION R-R

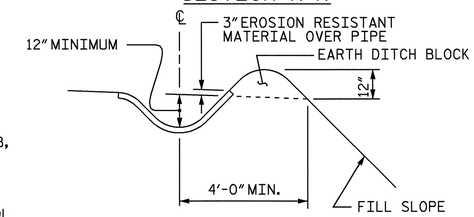

SECTION S-S

TEMPORARY BERM AND SLOPE DRAIN DETAILS

(TO BE USED WHEN SHOULDER BERM GUTTER IS REQUIRED)

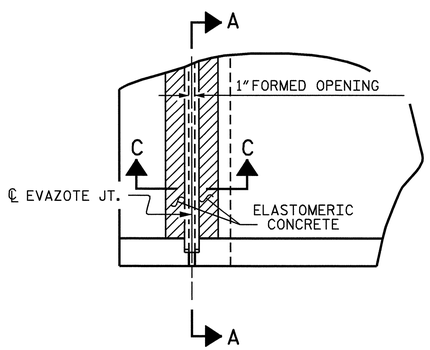

PLAN

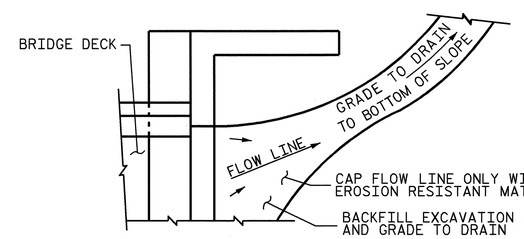

NOTE: IF THE APPROACH SLAB IS NOT CONSTRUCTED IMMEDIATELY AFTER THE BACKFILLING OF THE END BENT EXCAVATION, GRADE TO DRAIN TO THE BOTTOM OF THE SLOPE AND PROVIDE EROSION RESISTANT MATERIAL, SUCH AS FIBERGLASS ROVING OR AS DIRECTED BY THE ENGINEER TO PREVENT SOIL EROSION AND TO PROTECT THE AREA ADJACENT TO THE STRUCTURE. THE CONTRACTOR WILL BE REQUIRED TO REMOVE THESE MATERIALS PRIOR TO CONSTRUCTION OF THE APPROACH SLAB.

TEMPORARY DRAINAGE DETAIL

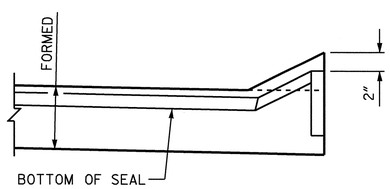

SECTION A-A

PROJECT NO. R-2719A
LENOIR COUNTY
STATION: 248+68.10 -L-

SHEET 2 OF 3

STATE OF NORTH CAROLINA
DEPARTMENT OF TRANSPORTATION
RALEIGH

STANDARD

BRIDGE APPROACH SLAB DETAILS
(RIGHT LANE)

NORTH CAROLINA PROFESSIONAL SEAL 025516 ENGINEER EMILY E. MURRAY
10/7/08

REVISIONS						SHEET NO.
NO.	BY:	DATE:	NO.	BY:	DATE:	S-263
1			3			TOTAL SHEETS
2			4			340

ASSEMBLED BY : M.GUDLAUGSSON		DATE : 04/2008	
CHECKED BY : C.R. MCDUFFEE		DATE : 05/2008	
DRAWN BY : FCJ	11/88	REV. 10/17/00	RWW/LES
CHECKED BY : ARB	11/88	REV. 5/7/03	RWW/JTE
		REV. 5/1/06R	MAA/KMM

30-SEP-2008 16:42
k:\structures\Final plans\Str #9\R2719A_sd_AS_9.dgn
bbarodawala

STR. #9 STD. NO. BAS10 (SHT 9)

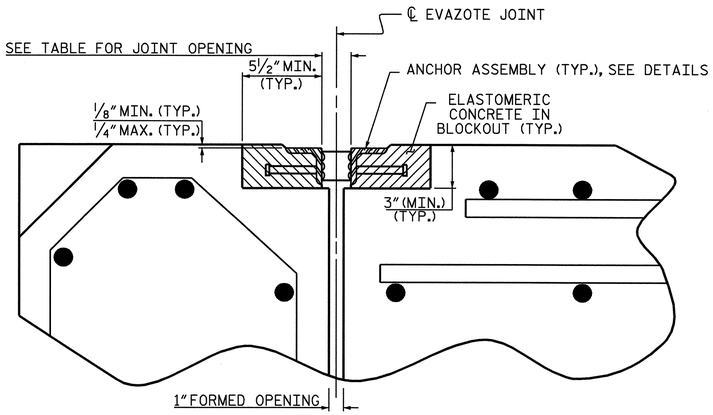

ARMORED JOINT DETAILS

SECTION NORMAL TO JOINT AT APPROACH SLAB SLEEPER SLAB

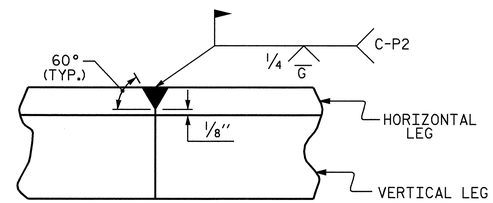

DETAIL- FIELD WELD SPLICE OF ANGLE

NOTES

ANGLES SHALL CONFORM TO AASHTO M270 GRADE 36 STEEL OR APPROVED EQUAL. ALL STUD ANCHORS SHALL CONFORM TO AASHTO M169 GRADES 1010 THRU 1020 OR APPROVED EQUAL.

STUD ANCHORS SHALL BE SHOP WELDED AND ALL HOLES SHALL BE SHOP DRILLED AS SHOWN ON THE PLANS. STUD ANCHORS SHALL BE ELECTRIC ARC END WELDED WITH COMPLETE FUSION.

UPON COMPLETION OF SHOP FABRICATION, THE ENTIRE ANCHOR ASSEMBLY SHALL BE METALLIZED. THE ½" Ø STUD ANCHORS AND ANCHOR TABS NEED NOT BE METALLIZED. SEE SPECIAL PROVISION FOR THERMAL SPRAYED COATINGS (METALLIZATION).

ANCHOR ASSEMBLY SHALL BE MADE CONTINUOUS THE LENGTH OF THE JOINT FROM GUTTER TO GUTTER. FOR FIELD SPLICES AT ALL CROWN BREAK POINTS, THE ENDS OF THE STEEL ANGLES SHALL BE CUT PARALLEL TO THE BRIDGE CENTERLINE. FINISHED FIELD WELDS SHALL BE GROUND SMOOTH AND COATED WITH A MINIMUM THICKNESS OF 4 DRY MILS OF ZINC-RICH PAINT IN ACCORDANCE WITH THE STANDARD SPECIFICATIONS.

ANCHOR ASSEMBLY SEGMENTS SHALL NOT BE LESS THAN 12 FEET NOR MORE THAN 20 FEET IN LENGTH. SHORTER SEGMENTS MAY BE USED AT THE EDGE OF ROADWAY OR AT POINTS OF STAGED CONSTRUCTION.

THE ANCHOR ASSEMBLY SHALL BE SECURED AND LEVELED AS SHOWN IN THE "ARMORED JOINT ANCHOR ASSEMBLY DETAILS". NO SUBMITTALS ARE REQUIRED FOR ⅜" Ø EXPANSION ANCHORS, NUTS OR WASHERS. THE CONTRACTOR MAY SUBMIT FOR APPROVAL AN ALTERNATE METHOD OF ALIGNING AND LEVELING THE ANGLES. THE ALTERNATE METHOD SHALL NOT INCLUDE ANY WELDING TO THE OUTSIDE FACE OF THE ANGLES.

AFTER THE ELASTOMERIC CONCRETE HAS BEEN CAST ON BOTH SIDES OF THE JOINT, REMOVE ANY EXCESS CONCRETE THAT COMES THROUGH THE WEEP HOLES AND THOROUGHLY CLEAN THE ANGLES. ANY DAMAGED STEEL SHALL BE COATED WITH A MINIMUM OF 4 MILS OF ZINC-RICH PAINT IN ACCORDANCE WITH THE STANDARD SPECIFICATIONS.

SEE SPECIAL PROVISIONS FOR EVAZOTE JOINT SEALS.

SEE SPECIAL PROVISIONS FOR ELASTOMERIC CONCRETE.

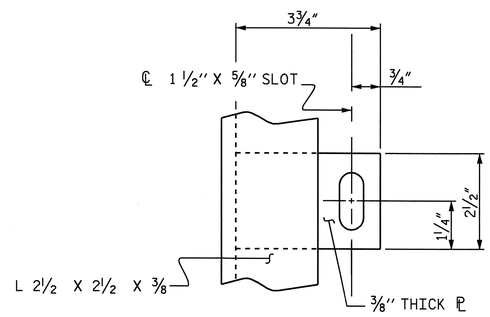

PLAN VIEW OF TAB

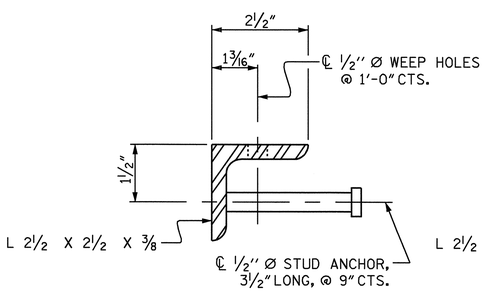

SECTION VIEW OF STUD

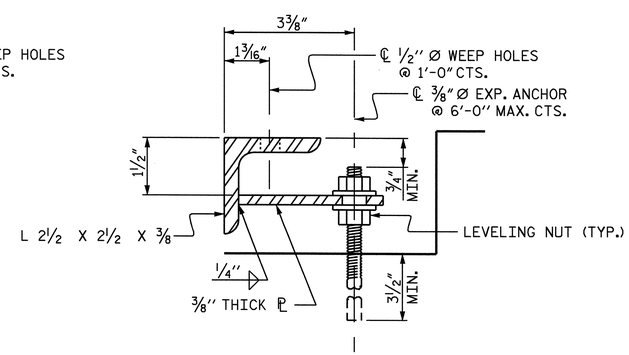

SECTION VIEW OF TAB

ARMORED JOINT ANCHOR ASSEMBLY DETAILS

MOVEMENT AND SETTING AT EVAZOTE JOINT						
BENT NO.	SKEW ANGLE	NOMINAL UNCOMPRESSED SEAL WIDTH	TOTAL MOVEMENT (ALONG ℄ RDWY)	PERPENDICULAR JOINT OPENING AT 45° F	PERPENDICULAR JOINT OPENING AT 60° F	PERPENDICULAR JOINT OPENING AT 90° F
1	89°-12'-44"	2½"	1"	2"	1⅞"	1⁹⁄₁₆"
2	89°-12'-44"	2½"	1"	2"	1⅞"	1⁹⁄₁₆"

TOTAL MOVEMENT IS CALCULATED ALONG THE CENTERLINE OF ROADWAY.
JOINT OPENINGS ARE MEASURED PERPENDICULAR TO THE JOINT.

BILL OF MATERIAL		
END BENT NO.	ELASTOMERIC CONCRETE ✳ (CU. FT.)	TOTAL LENGTH OF ANGLE (FT)
1	12.4	54'-0"
2	12.4	54'-0"
TOTAL	24.8	108'-0"

✳ BASED ON THE MINIMUM BLOCKOUT SHOWN.

PROJECT NO. R-2719A
LENOIR COUNTY
STATION: 248+68.10 -L-

SHEET 3 OF 3

STATE OF NORTH CAROLINA
DEPARTMENT OF TRANSPORTATION
RALEIGH

STANDARD
ARMORED EVAZOTE JOINT DETAILS
(RIGHT LANE)

NORTH CAROLINA PROFESSIONAL SEAL 025516 ENGINEER EMILY E. MURRAY
10/7/08

REVISIONS						SHEET NO.
NO.	BY:	DATE:	NO.	BY:	DATE:	S-264
1			3			TOTAL SHEETS
2			4			340

STR. #9 STD. NO. AEJ1

ASSEMBLED BY : M.GUDLAUGSSON DATE : 04/2008	
CHECKED BY : C.R. MCDUFFEE DATE : 05/2008	
DRAWN BY : EEM 1/96	REV. 7/10/01 LES/RDR
CHECKED BY : RGW 1/96	REV. 5/7/03RR RWW/JTE
	REV. 5/1/06 TLA/GM

30-SEP-2008 16:42
k:\structures\Final plans\Str #9\R2719A_sd_AS_9.dgn
bbarodawala

F. A. PROJECT NO.: STP-0224(12)

GRADE DATA

+2.5962% -4.9971%

PI = 28+60.00 -Y1RPCA-
EL. = 90.50′
VC = 650′

HORIZONTAL CURVE DATA -Y1-

PI STA. 66+70.52
Δ = 64°-14′-25.4″(RT)
D = 1°-29′-59.6″
L = 4,283.01′
T = 2,398.16′
R = 3,820.00′
e = 5.5%

HORIZONTAL CURVE DATA -Y1RPCA-

PIs STA. 20+94.12
Θs = 6°-31′-44.6″
Ls = 245.00′
LT = 163.44′
ST = 81.77′

PI STA. 38+99.63
Δ = 116°-06′-26.3″(RT)
D = 5°-19′-47.4″
L = 2,178.44′
T = 1,723.95′
R = 1,075.00′
e = 7%

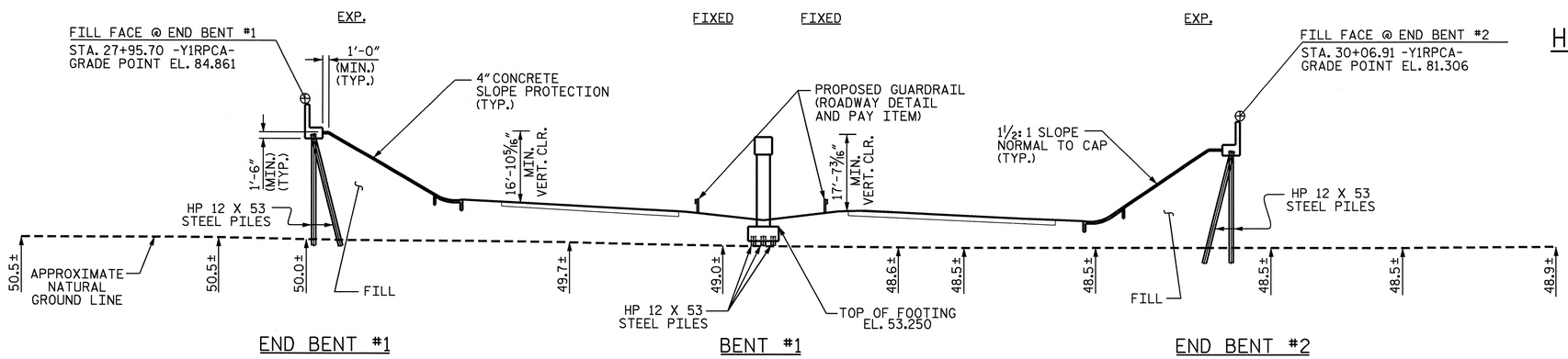

SECTION ALONG ℄ -Y1RPCA-

SECTION AT END BENTS AND BENT ARE AT RIGHT ANGLES.

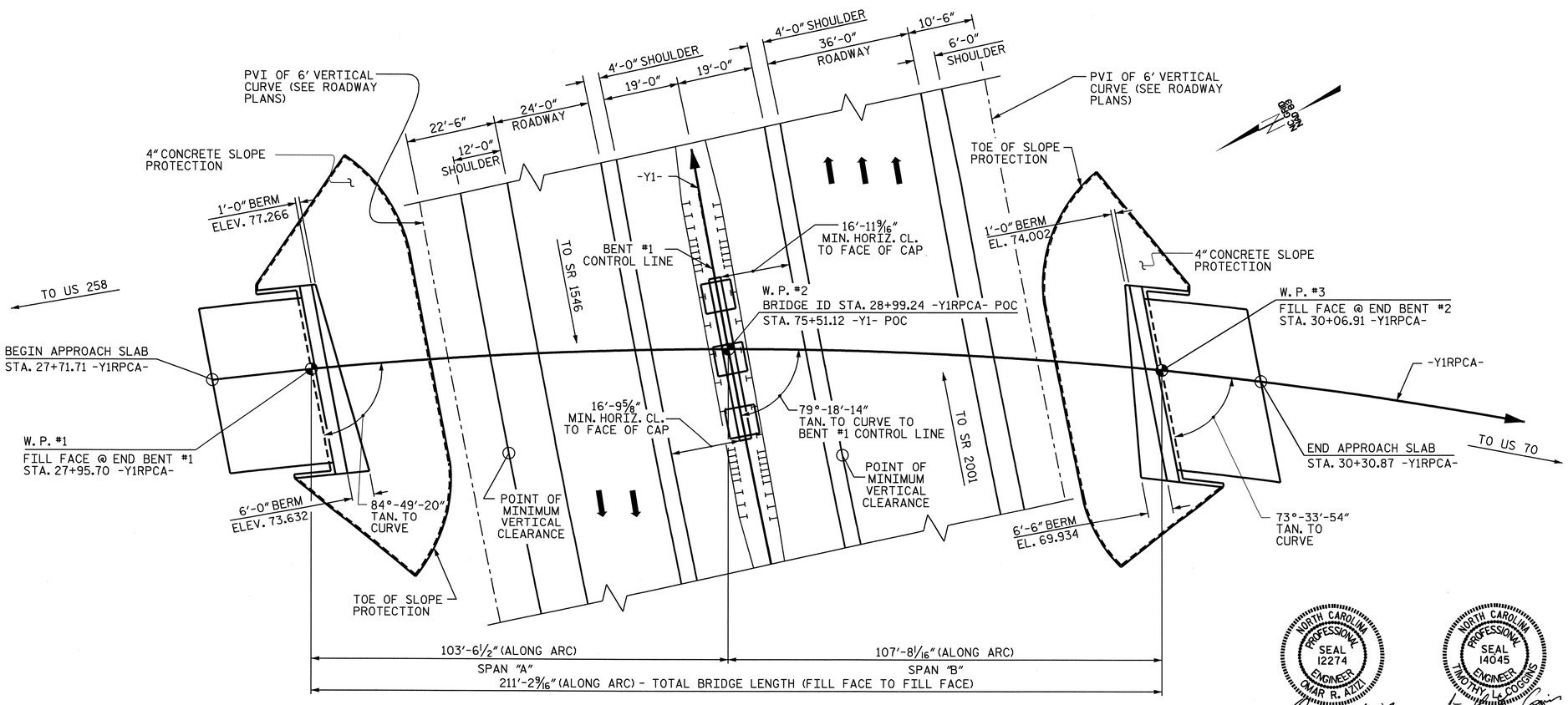

PLAN

(PILES NOT SHOWN FOR CLARITY)

NORTH CAROLINA PROFESSIONAL SEAL 12274 ENGINEER OMAR R. AZIZI
10-10-08

NORTH CAROLINA PROFESSIONAL SEAL 14045 ENGINEER TIMOTHY L. COGGINS
10/3/08

PROJECT NO. R-2719A
LENOIR COUNTY
STATION: 28+99.24-Y1RPCA- / 75+51.12 -Y1-

SHEET 1 OF 4 BRIDGE NO. 200

STATE OF NORTH CAROLINA
DEPARTMENT OF TRANSPORTATION
RALEIGH

GENERAL DRAWING

FOR FLYOVER OVER RELOCATED US 70 BETWEEN EXISTING US 70 AND SR 1546

REVISIONS						SHEET NO.
NO.	BY:	DATE:	NO.	BY:	DATE:	S-265
1			3			TOTAL SHEETS
2			4			540

DRAWN BY : PEGGY ADKINS DATE : 2-07
CHECKED BY : B.N. BARODAWALA DATE : 2-07

09-OCT-2008 15:42
r:\structures\str*10\final plans\R2719A_sd_gd_10.dgn
padkins

STR. #10

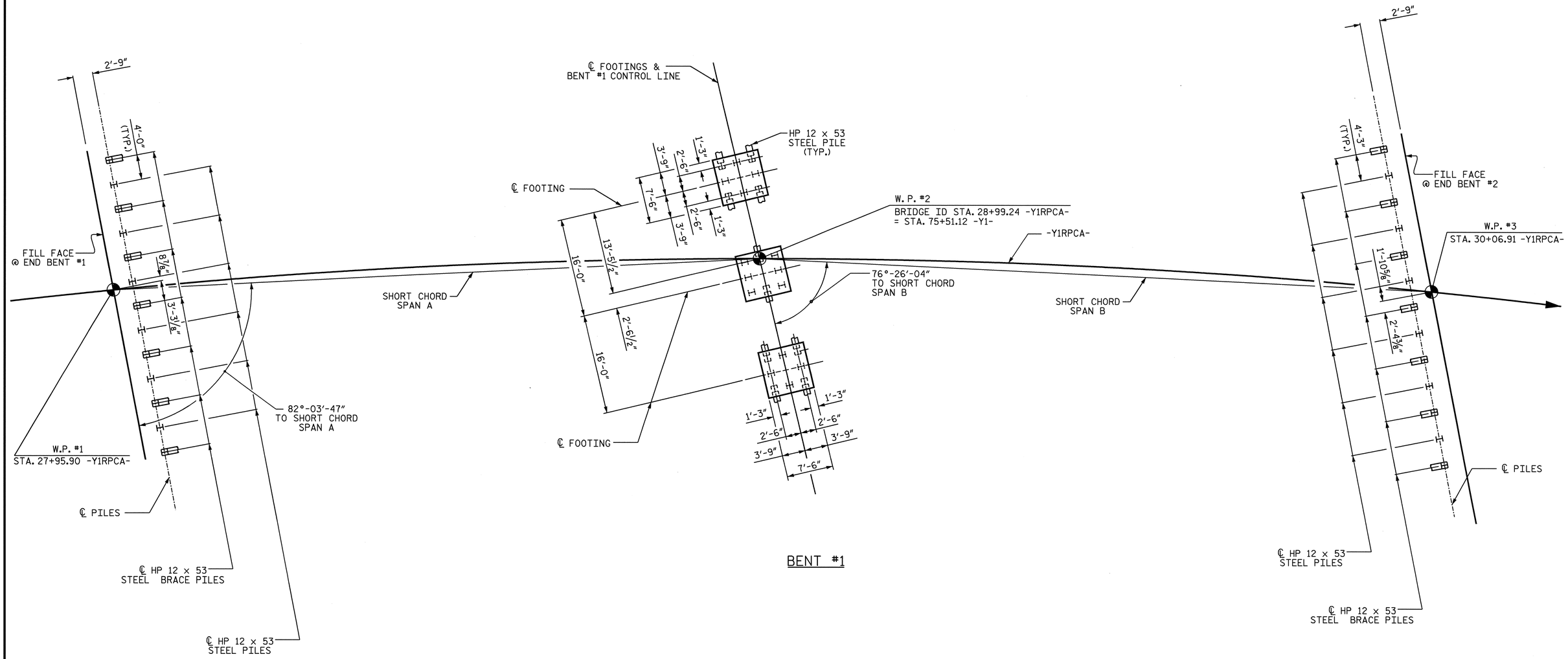

PROJECT NO. R-2719A

LENOIR COUNTY

STATION: 28+99.24-Y1RPCA-

SHEET 2 OF 4

FOUNDATION LAYOUT

DIMENSIONS LOCATING PILES ARE SHOWN TO THE PILE CENTERLINE.
BRACE PILES AT THE END BENTS ARE TO BE BATTERED @ 3:12.
BRACE PILES AT THE INTERIOR BENT ARE LOCATED AS SHOWN AND ARE TO BE BATTERED @ 1½:12.
DIMENSIONS SHOWN ARE TYPICAL FOR EACH BENT FOOTING.

NORTH CAROLINA PROFESSIONAL SEAL 14045 ENGINEER TIMOTHY L. COGGINS

3/11/09

STATE OF NORTH CAROLINA
DEPARTMENT OF TRANSPORTATION
RALEIGH

GENERAL DRAWING

FOR FLYOVER OVER RELOCATED US 70 BETWEEN EXISTING US 70 AND SR 1546

REVISIONS						SHEET NO.
NO.	BY:	DATE:	NO.	BY:	DATE:	S-266
1			3			TOTAL SHEETS
2			4			340

DRAWN BY : J.B. WILSON DATE : 8/20/09
CHECKED BY : T.L. AVERETTE DATE : 10/03/08

11-MAR-2009 08:27
h:\structures\str#10\final plans\r2719a_sd_gd_10.dgn
tcoggins

STR. #10

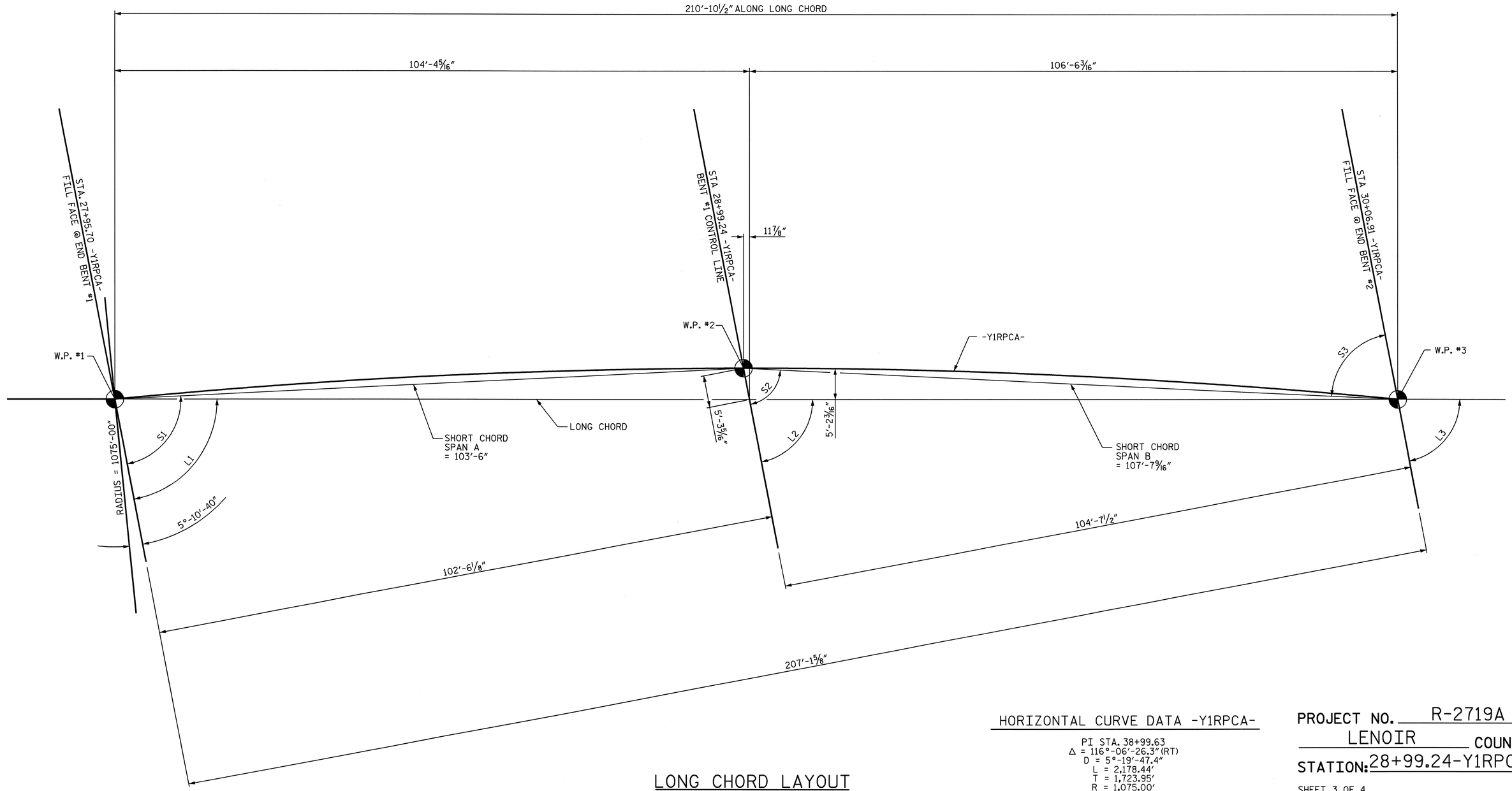

HORIZONTAL CURVE DATA -Y1RPCA-

PI STA. 38+99.63
Δ = 116°-06'-26.3"(RT)
D = 5°-19'-47.4"
L = 2,178.44'
T = 1,723.95'
R = 1,075.00'
e = 7%

LONG CHORD LAYOUT

END BENTS AND BENT ARE PARALLEL

ANGLES			
LONG CHORD		SHORT CHORD	
L1	79°-11'-37"	S1	82°-03'-47"
L2	79°-11'-37"	S2	76°-26'-04"
L3	79°-11'-37"	S3	76°-26'-04"

PROJECT NO. R-2719A
LENOIR COUNTY
STATION: 28+99.24-Y1RPCA-

SHEET 3 OF 4

STATE OF NORTH CAROLINA
DEPARTMENT OF TRANSPORTATION
RALEIGH

GENERAL DRAWING
LONG CHORD LAYOUT
FOR FLYOVER OVER
RELOCATED US 70 BETWEEN
EXISTING US 70 AND SR 1546

NORTH CAROLINA PROFESSIONAL SEAL 14045 ENGINEER TIMOTHY L. COGGINS
10/13/08

REVISIONS						SHEET NO.
NO.	BY:	DATE:	NO.	BY:	DATE:	S-267
1			3			TOTAL SHEETS
2			4			340

DRAWN BY : J.B. WILSON DATE : 10/2/08
CHECKED BY : T.L. AVERETTE DATE : 10/3/08

13-OCT-2008 11:38
R:\Structures\Str#10\Final Plans\R2719A_sd_gd_10.dgn
pruffin

STR. #10

BM-B ELEV. 53.43; RR SPIKE IN 18" TWIN OAK TREE; STA. 87+00.00 -L-; 227' RT.

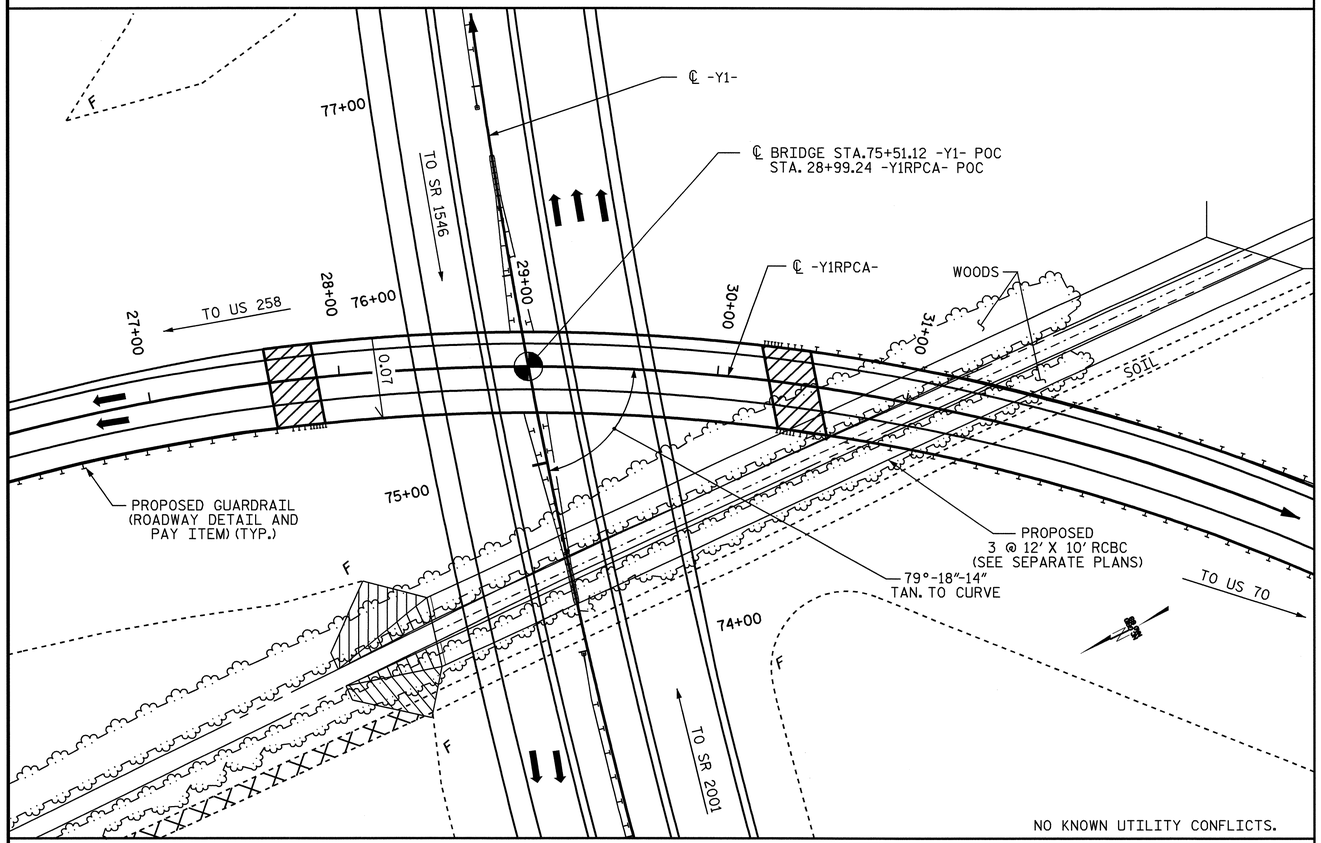

LOCATION SKETCH

NOTES:

ASSUMED LIVE LOAD = HS20 OR ALTERNATE LOADING, EXCEPT THAT THE GIRDERS HAVE BEEN DESIGNED FOR HS25.

THIS BRIDGE HAS BEEN DESIGNED IN ACCORDANCE WITH THE REQUIREMENTS OF AASHTO STANDARD SPECIFICATIONS FOR SEISMIC DESIGN OF HIGHWAY BRIDGES FOR SEISMIC PERFORMANCE CATEGORY A.

DRIVE PILES AT END BENT NO. 1 AND END BENT NO. 2 TO A REQUIRED BEARING CAPACITY OF 120 TONS PER PILE. THE REQUIRED BEARING CAPACITY IS EQUAL TO THE ALLOWABLE BEARING CAPACITY WITH A MINIMUM FACTOR OF SAFETY OF TWO.

THE ALLOWABLE BEARING CAPACITY FOR PILES AT END BENT NO. 1 AND END BENT NO. 2 IS 60 TONS PER PILE.

DRIVE PILES AT BENT NO. 1 TO A REQUIRED BEARING CAPACITY OF 120 TONS PER PILE. THE REQUIRED BEARING CAPACITY IS EQUAL TO THE ALLOWABLE BEARING CAPACITY WITH A MINIMUM FACTOR OF SAFETY OF TWO.

THE ALLOWABLE BEARING CAPACITY FOR PILES AT BENT NO. 1 IS 60 TONS PER PILE.

OBSERVE A 3 MONTH WAITING PERIOD AFTER CONSTRUCTING THE EMBANKMENT TO WITHIN 2 FEET OF FINISHED GRADE BEFORE BEGINNING END BENT CONSTRUCTION AT END BENT NO. 1.

THE EMBANKMENT TO BE CONSTRUCTED AT END BENT NO. 1 WILL BE INSTRUMENTED TO MONITOR SETTLEMENT. SEE ROADWAY PLAN FOR DETAIL.

THIS BRIDGE HAS BEEN DESIGNED BY THE STRENGTH DESIGN METHOD AS SPECIFIED IN AASHTO STANDARD SPECIFICATIONS.

FOR FOR OTHER DESIGN DATA AND GENERAL NOTES, SEE SHEET SN.

FOR EROSION CONTROL MEASURES SEE EROSION CONTROL PLANS.

THE CONTRACTOR SHALL PROVIDE INDEPENDENT ASSURANCE SAMPLES OF REINFORCING STEEL AS FOLLOWS: FOR PROJECTS REQUIRING UP TO 400 TONS OF REINFORCING STEEL, ONE 30 INCH SAMPLE OF EACH SIZE BAR USED, AND FOR PROJECTS REQUIRING OVER 400 TONS OF REINFORCING STEEL, TWO 30 INCH SAMPLES OF EACH SIZE BAR USED. THE BARS FROM WHICH THE SAMPLES ARE TAKEN MUST THEN BE SPLICED WITH REPLACEMENT BARS OF THE SIZE AND LENGTH OF THE SAMPLE, PLUS A MINIMUM LAP SPLICE OF THIRTY BAR DIAMETERS.

REMOVABLE FORMS MAY BE USED IN LIEU OF METAL STAY-IN-PLACE FORMS IN ACCORDANCE WITH ARTICLE 420-3 OF THE STANDARD SPECIFICATIONS.

NEEDLE BEAMS WILL NOT BE ALLOWED UNLESS OTHERWISE CALLED FOR ON THE PLANS OR APPROVED BY THE ENGINEER.

FOR SUBMITTAL OF WORKING DRAWINGS, SEE SPECIAL PROVISIONS.

FOR FALSEWORK AND FORMWORK, SEE SPECIAL PROVISIONS.

FOR CRANE SAFETY, SEE SPECIAL PROVISIONS.

FOR GROUT FOR STRUCTURES, SEE SPECIAL PROVISIONS.

FOR FAA REQUIREMENTS, SEE ROADWAY SPECIAL PROVISIONS.

THE EXTERIOR WALL OF THE BOX CULVERT IN THE VICINITY OF END BENT #2 SHALL BE LOCATED PRIOR TO DRIVING PILES FOR END BENT #2.

TOTAL BILL OF MATERIAL

	FOUNDATION EXCAVATION FOR BENT	REINFORCED CONCRETE DECK SLAB	GROOVING BRIDGE FLOORS	CLASS A CONCRETE	BRIDGE APPROACH SLABS	REINFORCING STEEL	SPIRAL COLUMN REINFORCING STEEL	72" MODIFIED PRESTRESSED CONCRETE GIRDERS		HP 12 X 53 STEEL PILES		PILE REDRIVES	CONCRETE BARRIER RAIL	4" SLOPE PROTECTION	ELASTOMERIC BEARINGS	EVAZOTE JOINT SEALS
	LUMP SUM	SQ.FT.	SQ.FT.	CU.YDS.	LUMP SUM	LBS.	LBS.	NO.	LIN.FT.	NO.	LIN.FT.	EACH	LIN.FT.	SQ.YDS.	LUMP SUM	LUMP SUM
SUPERSTRUCTURE		9,462	10,002		LUMP SUM			10	1,030.64				418.22		LUMP SUM	LUMP SUM
END BENT NO.1				42.1		6,289				13	975	4		319		
BENT NO.1	LUMP SUM			63.4		9,224	1,288			24	1,080	9				
END BENT NO.2				43.3		6,726				13	1,040	4		371		
TOTAL	LUMP SUM	9,462	10,002	148.8	LUMP SUM	22,239	1,288	10	1,030.64	50	3,095	17	418.22	690	LUMP SUM	LUMP SUM

PROJECT NO. R-2719A
LENOIR COUNTY
STATION: 28+99.24-Y1RPCA-

SHEET 4 OF 4

STATE OF NORTH CAROLINA
DEPARTMENT OF TRANSPORTATION
RALEIGH

GENERAL DRAWING

FOR FLYOVER OVER RELOCATED US 70 BETWEEN EXISTING US 70 AND SR 1546

NORTH CAROLINA PROFESSIONAL SEAL 14045 ENGINEER TIMOTHY K. COGGINS
3/11/09

REVISIONS						SHEET NO.
NO.	BY:	DATE:	NO.	BY:	DATE:	S-268
1			3			TOTAL SHEETS
2			4			340

DRAWN BY : PEGGY ADKINS DATE : 2-07
CHECKED BY : B.N. BARODAWALA DATE : 2-07

11-MAR-2009 08:21
h:\structures\str#10\final plans\r2719a_sd_gd_10.dgn
tcoggins

STR. #10

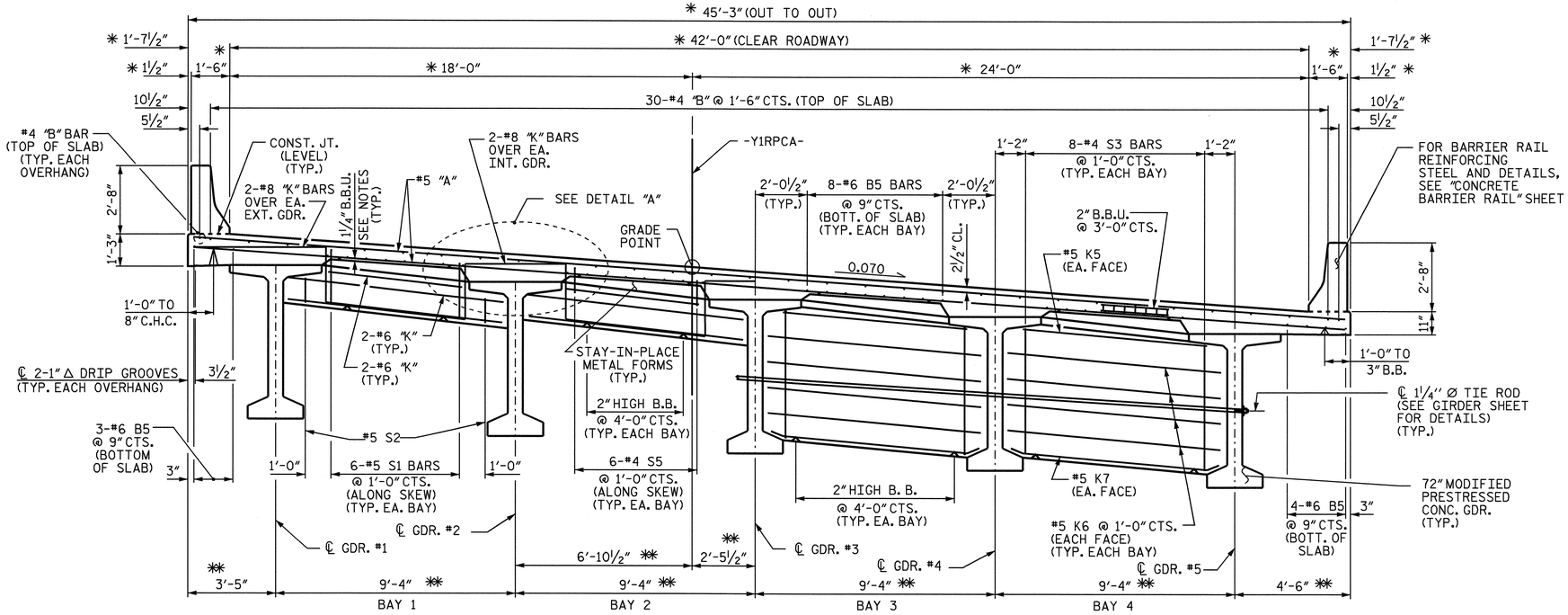

TYPICAL SECTION

(SHOWING END BENT DIAPHRAGM AND INTERMEDIATE DIAPHRAGM)

* RADIAL DIMENSION
** RADIAL DIMENSION THRU WORKPOINT

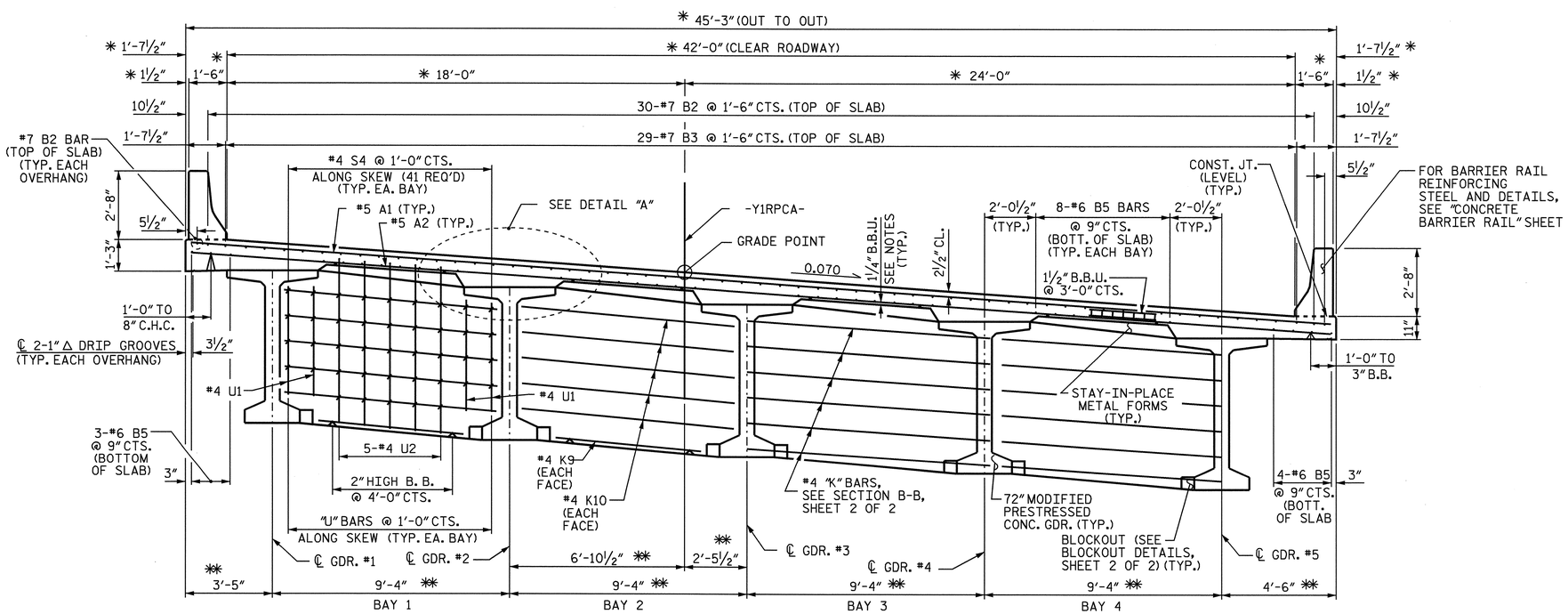

TYPICAL SECTION

(SHOWING BENT DIAPHRAGM)

NOTES:

LONGITUDINAL STEEL MAY BE SHIFTED SLIGHTLY, AS NECESSARY, TO AVOID INTERFERENCE WITH STIRRUPS IN PRESTRESSED CONCRETE GIRDERS.

BARRIER RAIL IN A CONTINUOUS UNIT SHALL NOT BE CAST UNTIL ALL SLAB CONCRETE IN THE UNIT HAS BEEN CAST AND HAS REACHED A MINIMUM STRENGTH OF 3,000 PSI.

PREVIOUSLY CAST CONCRETE IN A CONINUOUS UNIT SHALL HAVE ATTAINED A MINIMUM COMPRESSIVE STRENGTH OF 3,000 PSI BEFORE ADDITIONAL CONCRETE IS CAST IN THE UNIT.

CONCRETE IN INTERMEDIATE DIAPHRAGMS MAY BE CLASS A IN LIEU OF CLASS AA. PAYMENT SHALL BE MADE UNDER THE UNIT CONTRACT PRICE FOR REINFORCED CONCRETE DECK SLAB.

#5 "G" BAR MAY BE SHIFTED SLIGHTLY, AS NECESSARY, TO CLEAR REINFORCING STEEL AND STIRRUPS.

TEMPORARY STRUTS SHALL BE PLACED BETWEEN PRESTRESSED GIRDERS ADJACENT TO THE DIAPHRAGMS AND THE NUTS ON THE 1¼" DIA. TIE RODS SHALL BE FULLY TIGHTENED BEFORE THE DIAPHRAGMS ARE CAST. STRUTS SHALL REMAIN IN PLACE THREE (3) DAYS AFTER CONCRETE IS PLACED. THE TIE RODS SHALL BE RE-TIGHTENED AFTER THE STRUTS HAVE BEEN REMOVED.

PROVIDE 1¼" HIGH BEAM BOLSTERS UPPER AT 4'-0" CTS. ATOP THE METAL STAY-IN-PLACE FORMS TO SUPPORT THE BOTTOM MAT OF 'A' BARS. WHEN USING REMOVABLE FORMS, PROVIDE CONTINUOUS HIGH CHAIRS FOR METAL DECK (C.H.C.M.) @ 4'-0" CTS. WITH A HEIGH TO SUPPORT THE BOTTOM MAT OF 'A' BARS A CLEAR DISTANCE OF 2½" ABOVE THE TOP OF THE REMOVABLE FORM.

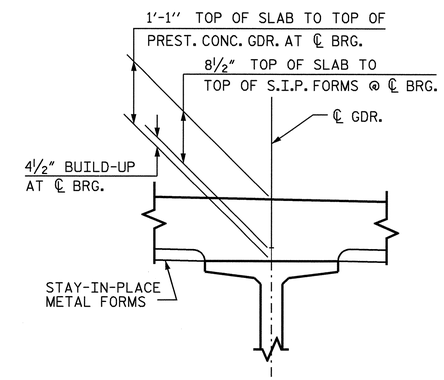

DETAIL "A"

PROJECT NO. R-2719A
LENOIR COUNTY
STATION: 28+99.24-Y1RPCA-

SHEET 1 OF 2

STATE OF NORTH CAROLINA
DEPARTMENT OF TRANSPORTATION
RALEIGH

SUPERSTRUCTURE

TYPICAL SECTION

NORTH CAROLINA PROFESSIONAL SEAL 14045 ENGINEER TIMOTHY L. COGGINS
3/11/09

REVISIONS								SHEET NO.
NO.	BY:	DATE:	NO.	BY:	DATE:			S-269
1			3					TOTAL SHEETS
2			4					340

DRAWN BY : PEGGY ADKINS DATE : 8-07
CHECKED BY : J. B. WILSON DATE : 11-07

11-MAR-2009 08:31
h:\structures\str#10\final plans\R2719A_sd_TS_10.dgn
tcoggins

STR. #10

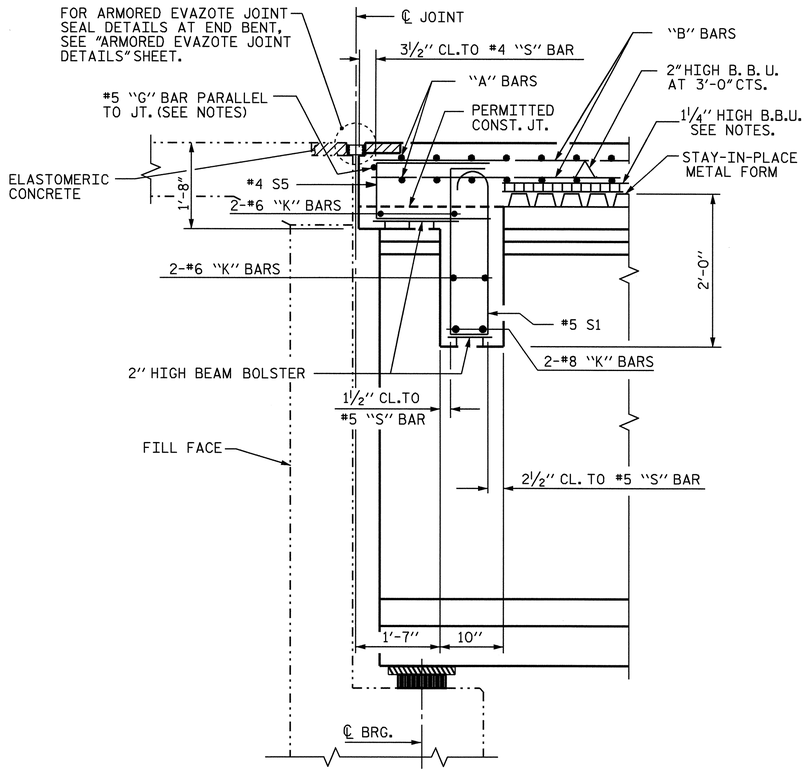

SECTION A-A

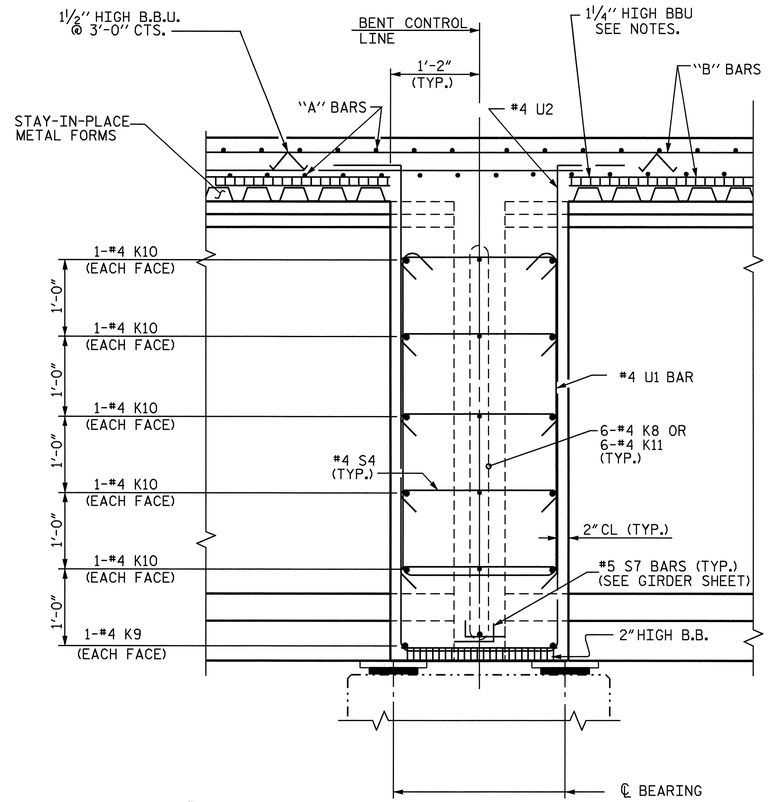

SECTION B-B

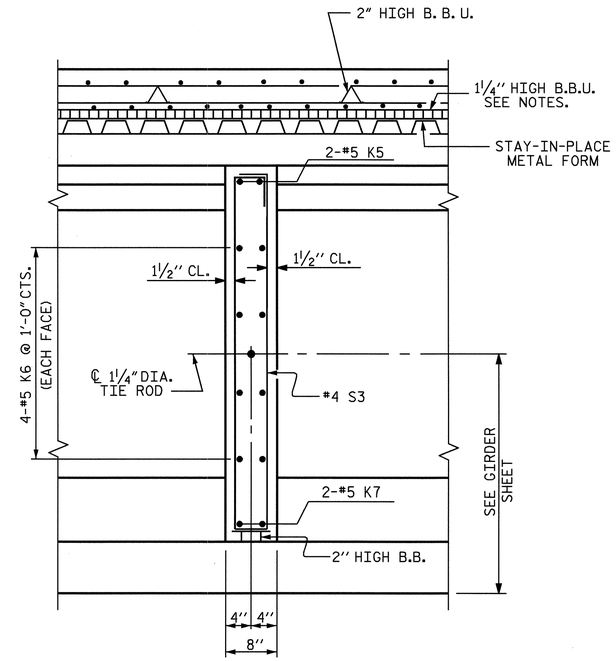

SECTION C-C

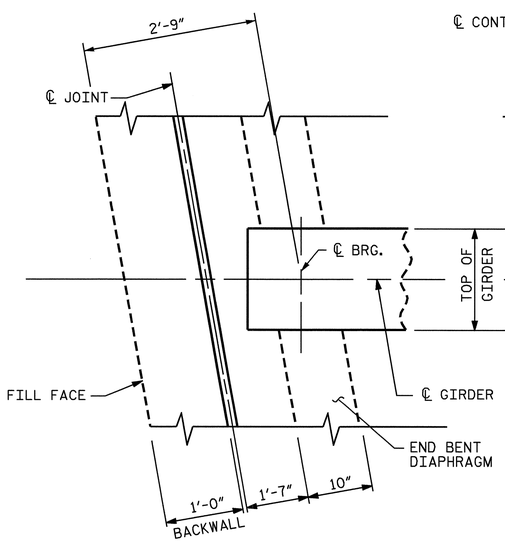

END BENT DIAPHRAGM

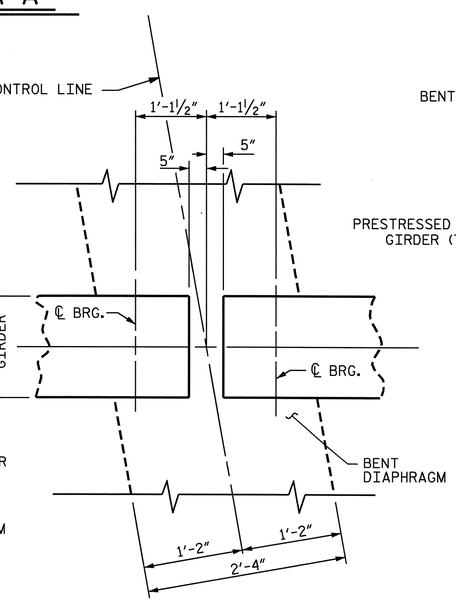

BENT DIAPHRAGM

PLAN

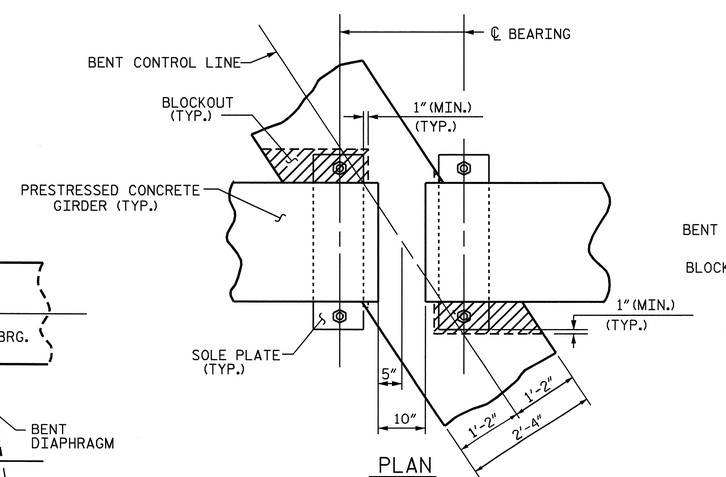

PLAN

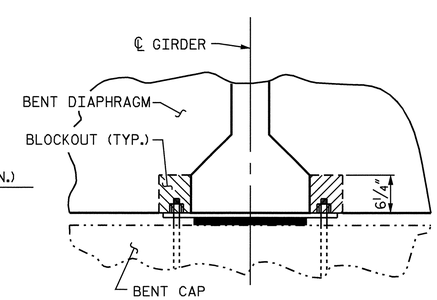

SECTION

BENT DIAPHRAGM BLOCK-OUT DETAIL

PROJECT NO. R-2719A
LENOIR COUNTY
STATION: 28+99.24-Y1RPCA-

SHEET 2 OF 2

STATE OF NORTH CAROLINA
DEPARTMENT OF TRANSPORTATION
RALEIGH

SUPERSTRUCTURE

TYPICAL SECTION DETAILS

NORTH CAROLINA PROFESSIONAL SEAL 14045 ENGINEER TIMOTHY L. COGGINS
3/11/09

REVISIONS						SHEET NO.
NO.	BY:	DATE:	NO.	BY:	DATE:	S-270
1			3			TOTAL SHEETS
2			4			340

DRAWN BY : PEGGY ADKINS DATE : 8-07
CHECKED BY : J. B. WILSON DATE : 11-07

11-MAR-2009 08:31
h:\structures\str#10\finalplans\R2719A_sd_TS_10.dgn
tcoggins

STR. #10

211'-2 9/16" FILL FACE TO FILL FACE (ALONG ARC)

103'-6 1/2" W. P. #1 TO W. P. #2 (ALONG ARC)
SPAN A

73'-0" (TYP.)

36'-0" (TYP.)

37'-0" (TYP.)

15'-6" (TYP.)

16'-0' (TYP.)

2'-0" MIN. SPLICE (TYP.)

℄ BENT #1 CONTROL LINE

℄ JT. @ END BENT #1

3-#6 B5 @ 9" CTS. (BOTTOM OF OVERHANG) (4 BAR RUN) (2'-7" SPLICE)

#4 B1 (3 BAR RUN) (2'-0" SPLICE) (TYP.)

#7 B2 (2 BAR RUN) (5'-3" SPLICE) (TYP.)

30-#4 B1 @ 1'-6" CTS. (TOP OF SLAB) (3 BAR RUN) (2'-0" SPLICE)

30-#7 B2 @ 1'-6" CTS. (TOP OF SLAB) (2 BAR RUN)

29-#7 B3 @ 1'-6" CTS. (TOP OF SLAB)

6-#4 K11 (TYP. EA. EXT. GDR.)

6-#4 K8 (TYP. EA. INT. GDR.)

GDR. B1

GDR. B2

GDR. B3

GDR. B4

GDR. B5

GDR. A1

GDR. A2

GDR. A3

GDR. A4

GDR. A5

℄ 72" MODIFIED PRESTRESSED CONCRETE GIRDER (TYP.)

℄ 1 1/4" Ø TIE ROD (TYP.)

#6 K12 (TYP. EACH BAY)

6-#5 S1 @ 1'-0" CTS. (TYP. EA. BAY)

#5 S2

8-#4 S3 @ 1'-0" CTS. (TYP. EA. BAY)

#5 "K" (TYP. EA. INT. DIAPH.)

82°-03'-47" TO SHORT CHORD

2'-4" CONTINUOUS BENT DIAPHRAGM (TYP.)

SHORT CHORD (SPAN B)

SPAN B

SPAN A

-Y1RPCA-

SHORT CHORD (SPAN A)

10" END BENT DIAPHRAGM

8" INTERMEDIATE DIAPHRAGM (TYP.)

FILL FACE @ END BENT #1

W. P. #1

W. P. #2

SEE DETAIL "B"

TRANSVERSE CONST. JT.

76°-26'-04" TO SHORT CHORD

8-#6 B5 @ 9" CTS. (BOTTOM OF SLAB) (4 BAR RUN) (2'-7" SPLICE)

#4 "K" (TYP. EA. BAY)

#4 U1 (TYP. EA. BAY)

5-#4 U2 @ 1'-0" CTS. (TYP. EA. BAY)

#4 S4 @ 1'-0" CTS. (41 REQ'D) (TYP. EA. BAY)

#8 K2 (TYP. EA. INT. GDR.)

#6 K14 (TYP. EA. BAY)

#5 A101 OR #5 A201

#5 A1 OR #5 A2

6-#4 S5 @ 1'-0" CTS. (TYP. EA. BAY)

#5 G1

#8 K1 (TYP. EA. EXT. GDR.)

CONCRETE BARRIER RAIL (TYP.) FOR REINFORCING STEEL AND DETAILS, SEE "CONCRETE BARRIER RAIL" SHEET

4-#6 B5 @ 9" CTS. (BOTTOM OF OVERHANG) (4 BAR RUN) (2'-7" SPLICE)

6'-8 1/2"

6'-1 1/2"

TO FIRST MAIN A1 BAR @ TOP OF SLAB (ALONG LONG CHORD)

TO FIRST MAIN A2 BAR @ BOTTOM OF SLAB (ALONG LONG CHORD)

7"

#5 A101 THRU #5 A108 @ 7" CTS. ALL ARE 2 BARS PER MARK EXCEPT A107 & A108 (TOP OF SLAB)

#5 A201 THRU #5 A208 @ 7" CTS. ALL ARE 2 BARS PER MARK EXCEPT A207 & A208 (BOTTOM OF SLAB)

341-#5 A1 @ 7" CTS. (TOP OF SLAB)

343-#5 A2 @ 7" CTS. (BOTTOM OF SLAB)

* RADIAL DIMENSION

PLAN OF SPAN A

FOR LOCATION OF INTERMEDIATE DIAPHRAGMS, SEE "FRAMING PLAN."
FOR SECTIONS A-A, B-B AND C-C, SEE "TYPICAL SECTION AND DETAILS" SHEET 2 OF 2.
"A" BARS ARE PLACED PERPENDICULAR TO THE LONG CHORD.

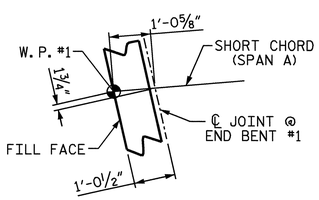

DETAIL "B"

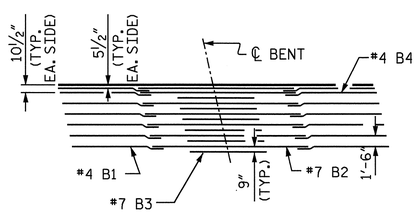

REINFORCING STEEL LAYOUT AT BENT # 1

PROJECT NO. R-2719A
LENOIR COUNTY
STATION: 28+99.24-Y1RPCA-

SHEET 1 OF 2

STATE OF NORTH CAROLINA
DEPARTMENT OF TRANSPORTATION
RALEIGH

SUPERSTRUCTURE

PLAN OF SPAN A

NORTH CAROLINA PROFESSIONAL SEAL 14045 ENGINEER TIMOTHY A. COGGINS
3/11/09

REVISIONS						SHEET NO.
NO.	BY:	DATE:	NO.	BY:	DATE:	S-271
1			3			TOTAL SHEETS
2			4			340

DRAWN BY : PEGGY ADKINS DATE : 8-07
CHECKED BY : J. B. WILSON DATE : 11-07

11-MAR-2009 08:34
h:\structures\str#10\final plans\R2719A_sd_ps_10.dgn
tcoggins

STR. #10

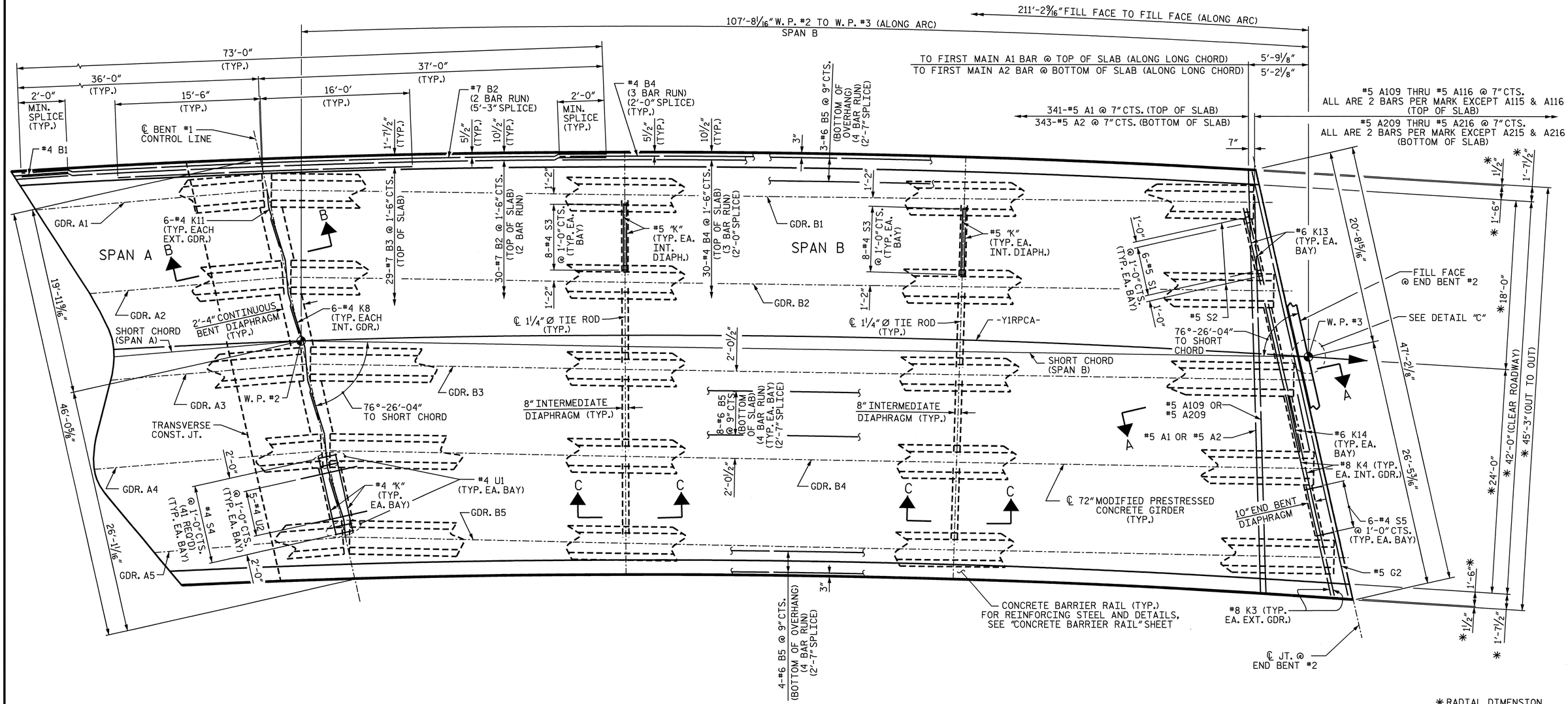

* RADIAL DIMENSION

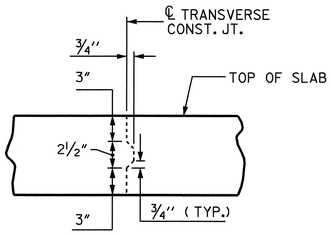

TRANSVERSE CONSTRUCTION JOINT DETAIL

NOTE: REINFORCING STEEL IN SLAB NOT SHOWN. LONGITUDINAL REINFORCING STEEL SHALL BE CONTINUOUS THRU JOINT.

PLAN OF SPAN B

FOR LOCATION OF INTERMEDIATE DIAPHRAGMS, SEE "FRAMING PLAN."
FOR SECTIONS A-A, B-B AND C-C, SEE "TYPICAL SECTION AND DETAILS" SHEET 2 OF 2.
"A" BARS ARE PLACED PERPENDICULAR TO THE LONG CHORD.

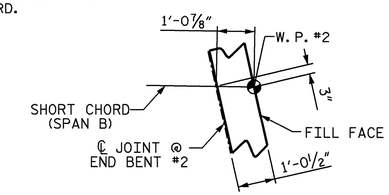

DETAIL "C"

NORTH CAROLINA PROFESSIONAL SEAL 14045 ENGINEER TIMOTHY L. COGGINS
3/11/09

PROJECT NO. R-2719A
LENOIR COUNTY
STATION: 28+99.24-Y1RPCA-

SHEET 2 OF 2

STATE OF NORTH CAROLINA
DEPARTMENT OF TRANSPORTATION
RALEIGH

SUPERSTRUCTURE

PLAN OF SPAN B

REVISIONS						SHEET NO.
NO.	BY:	DATE:	NO.	BY:	DATE:	S-272
1			3			TOTAL SHEETS
2			4			340

DRAWN BY : PEGGY ADKINS DATE : 8-07
CHECKED BY : J. B. WILSON DATE : 11-07

11-MAR-2009 08:34
h:\structures\str*10\finalplans\R2719A_sd_ps_10.dgn
tcoggins

STR. #10

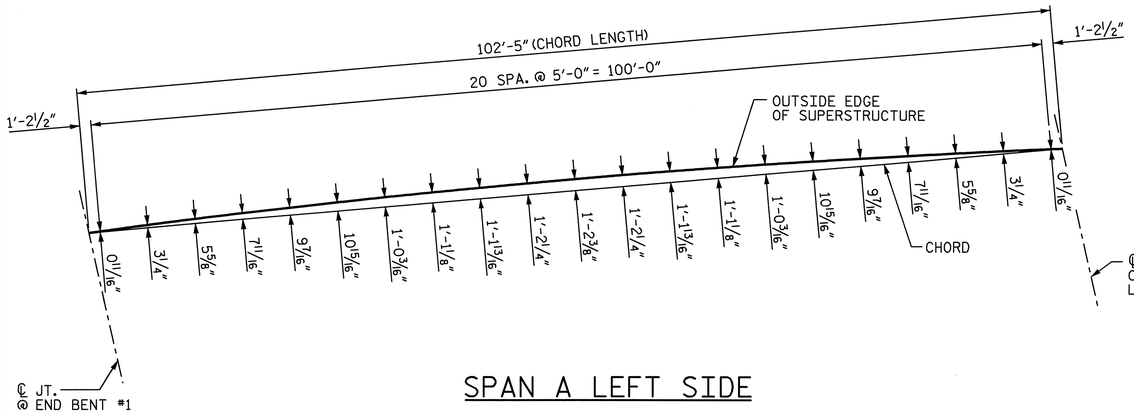

SPAN A LEFT SIDE

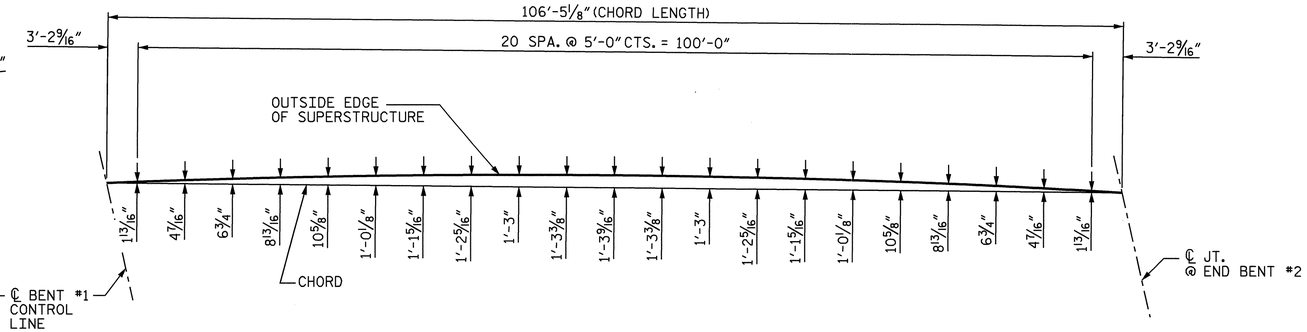

SPAN B LEFT SIDE

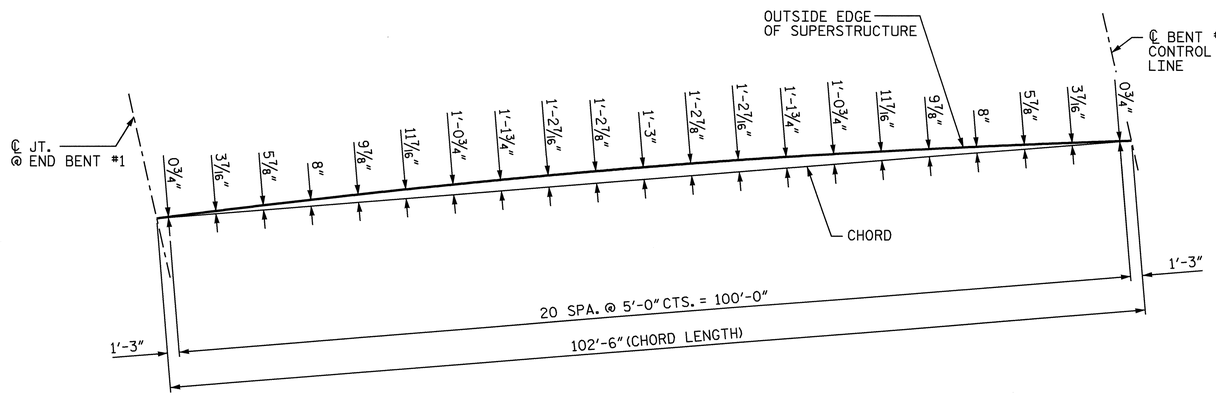

SPAN A RIGHT SIDE

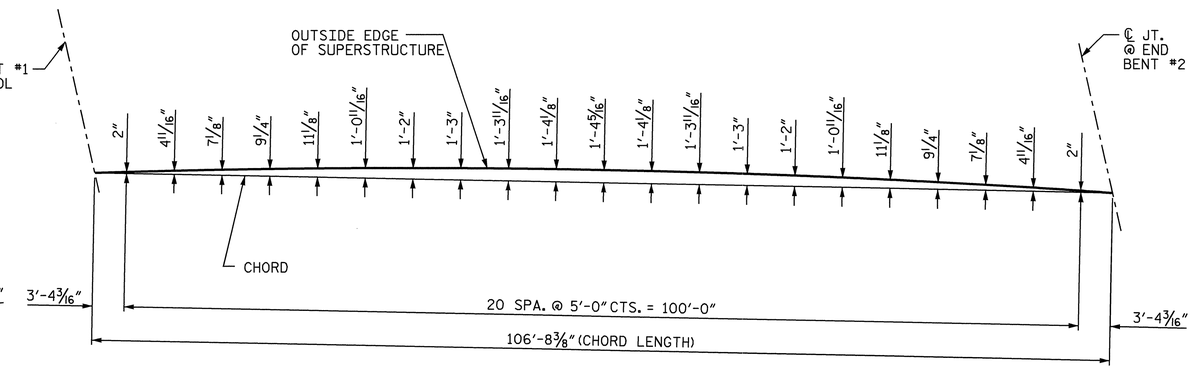

SPAN B RIGHT SIDE

ARC OFFSETS

PROJECT NO. R-2719A
LENOIR COUNTY
STATION: 28+99.24-Y1RPCA-

STATE OF NORTH CAROLINA
DEPARTMENT OF TRANSPORTATION
RALEIGH

SUPERSTRUCTURE

ARC OFFSETS

NORTH CAROLINA PROFESSIONAL SEAL 14045 ENGINEER TIMOTHY M. COGGINS
3/11/09

REVISIONS						SHEET NO.
NO.	BY:	DATE:	NO.	BY:	DATE:	S-273
1			3			TOTAL SHEETS
2			4			340

DRAWN BY : PEGGY ADKINS DATE : 8-07
CHECKED BY : J. B. WILSON DATE : 11-07

11-MAR-2009 08:37
h:\structures\str#10\final plans\R2719A_sd_fp_10.dgn
tcoggins

STR. #10

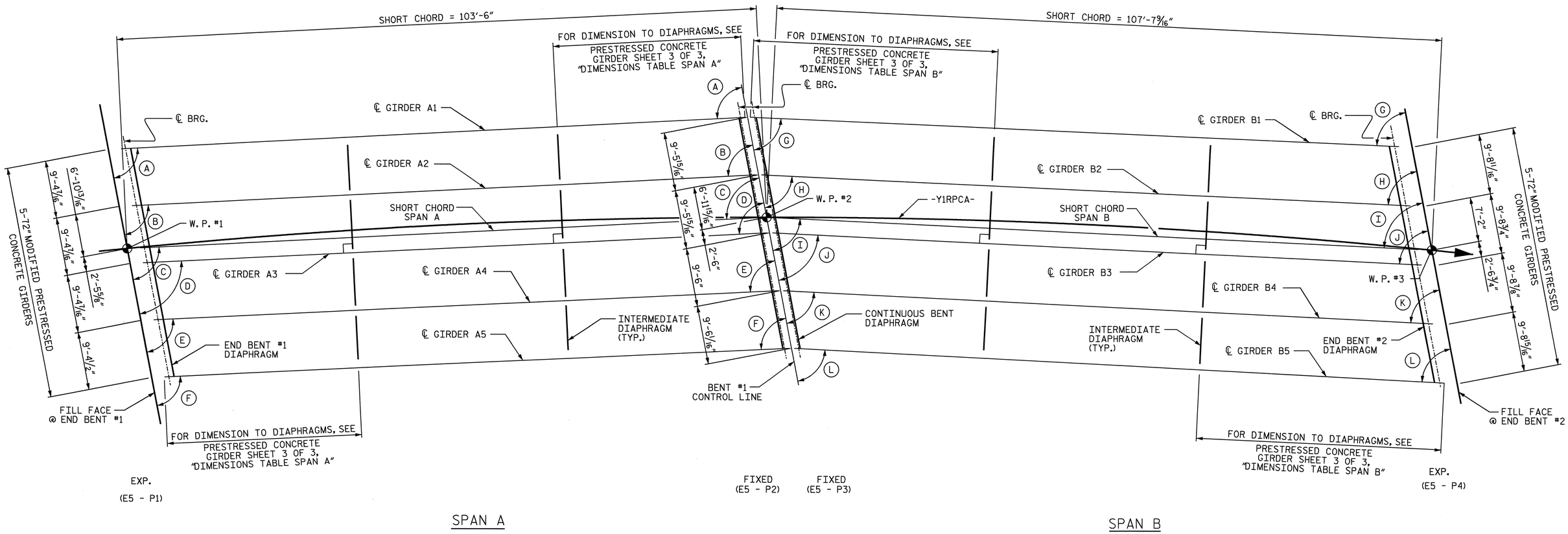

FRAMING PLAN

ANGLES			
A	82°-10'-55"	G	76°-38'-25"
B	82°-06'-50"	H	76°-31'-21"
C	82°-03'-47"	I	76°-26'-04"
D	82°-02'-41"	J	76°-24'-10"
E	81°-58'-27"	K	76°-16'-50"
F	81°-54'-09"	L	76°-09'-23"

PROJECT NO. R-2719A
LENOIR COUNTY
STATION: 28+99.24-Y1RPCA-

STATE OF NORTH CAROLINA
DEPARTMENT OF TRANSPORTATION
RALEIGH

SUPERSTRUCTURE

FRAMING PLAN

NORTH CAROLINA PROFESSIONAL SEAL 14045 ENGINEER TIMOTHY L. COGGINS
3/11/09

REVISIONS						SHEET NO.
NO.	BY:	DATE:	NO.	BY:	DATE:	S-274
1			3			TOTAL SHEETS
2			4			340

DRAWN BY : PEGGY ADKINS DATE : 8-07
CHECKED BY : J. B. WILSON DATE : 11-07

11-MAR-2009 08:37
h:\structures\str#10\final plans\R2719A_sd_fp_10.dgn
tcoggins

STR. #10

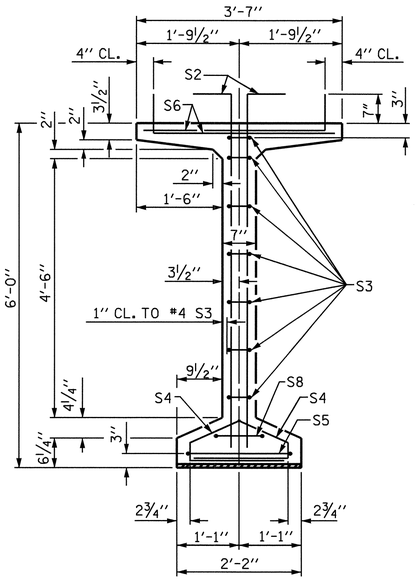

SECTION A-A

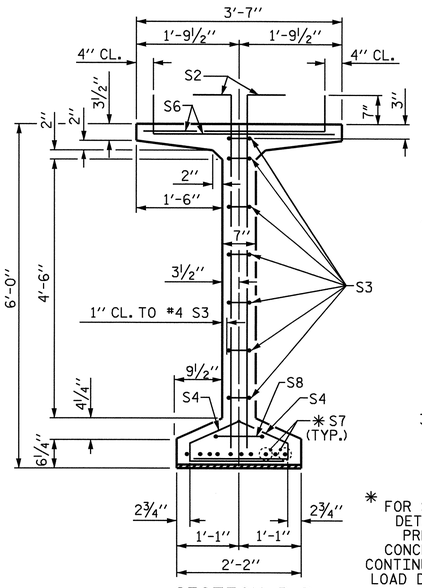

SECTION B-B

✳ FOR S7 BARS. SEE DETAIL "C" OF PRESTRESSED CONCRETE GIRDER CONTINUOUS FOR LIVE LOAD DETAILS SHEET

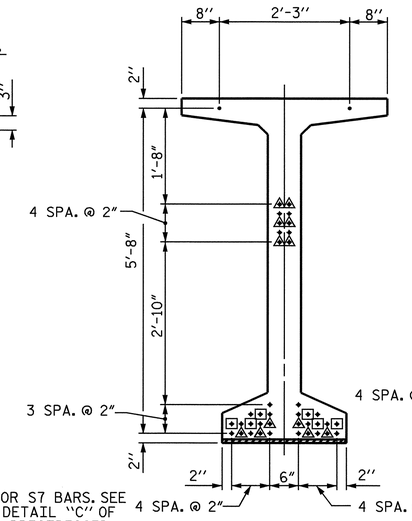

AT END OF GIRDER

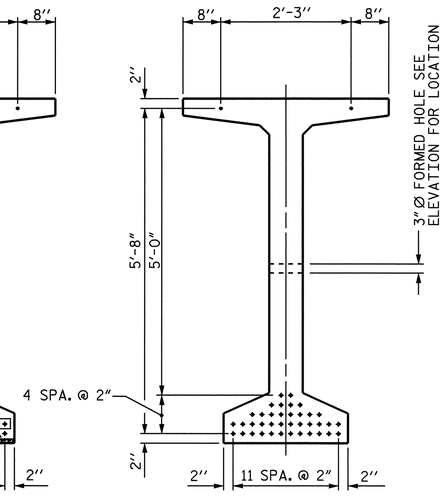

AT ℄ OF GIRDER

½" Ø LOW RELAXATION STRAND LAYOUT

DEBONDING LEGEND

- ● FULLY BONDED STRANDS
- ▲ STRANDS DEBONDED FOR 2'-0" FROM END OF GIRDER
- ▣ STRANDS DEBONDED FOR 4'-0" FROM END OF GIRDER

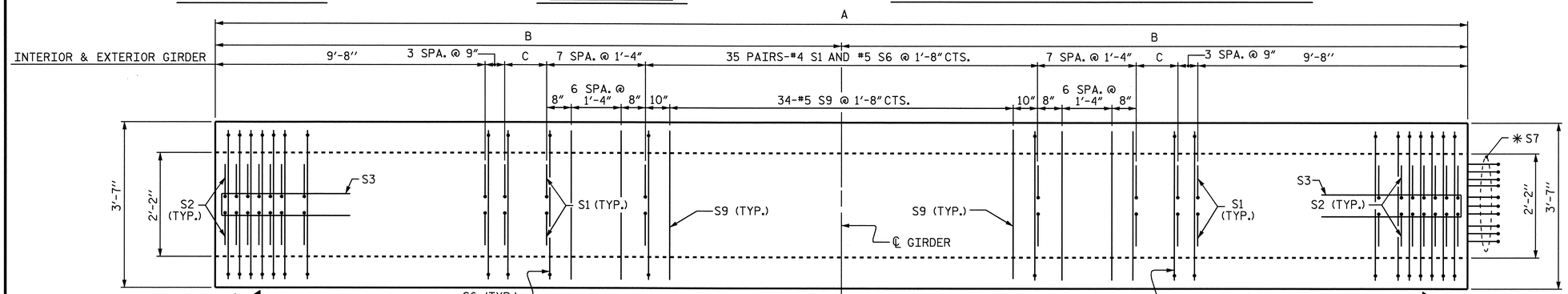

PLAN OF GIRDER

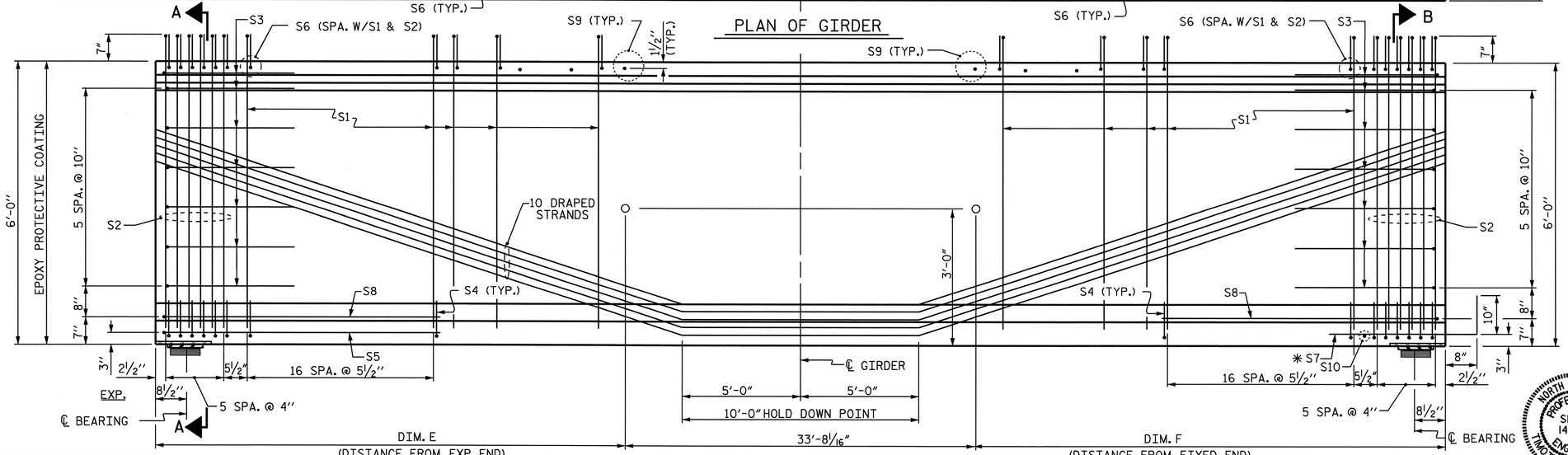

ELEVATION OF GIRDER

FOR DIMENSION TABLE SEE SHEET 3 OF 3

½" Ø L. R. GRADE 270 STRANDS		
AREA (SQUARE INCHES)	ULTIMATE STRENGTH (LBS. PER STRAND)	APPLIED PRESTRESS (LBS. PER STRAND)
0.153	41,300	30,980

REINFORCING STEEL FOR ONE GIRDER

BAR	NUMBER	SIZE	TYPE	LENGTH	WEIGHT
S1	178	#4	1	6'-10"	813
S2	24	#5	1	6'-10"	171
S3	14	#4	2	8'-5"	79
S4	92	#4	3	3'-0"	184
S5	1	#5	2	9'-10"	10
S6	202	#5	1	3'-9"	790
✳ S7	10	#5	STR	3'-8"	38
S8	2	#5	2	9'-0"	19
S9	48	#5	STR	3'-3"	163
S10	1	#3	STR	1'-10"	1

✳ NOTE: S7 BARS SHALL BE BENT BEFORE SHIPMENT. HEAT BENDING SHALL NOT BE ALLOWED.

BAR TYPES

ALL BAR DIMENSIONS ARE OUT-TO-OUT

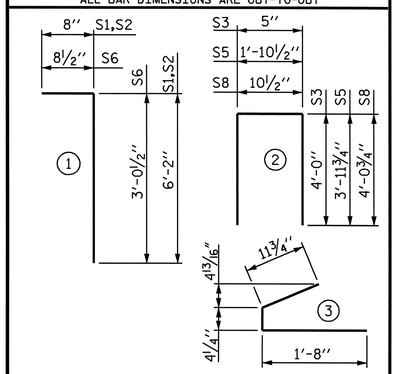

QUANTITIES FOR ONE GIRDER

	REINFORCING STEEL	7000 PSI CONCRETE	½" Ø L.R. STRANDS
	LB.	C.Y.	No.
EXT. GIRDER	2268	21.6	40
INT. GIRDER	2268	21.6	40

GIRDERS REQUIRED

NUMBER	LENGTH	TOTAL LENGTH
5	SEE CHART	505'-1¼"

PROJECT NO. R-2719A

LENOIR COUNTY

STATION: 28+99.24-Y1RPCA-

SHEET 1 OF 3

STATE OF NORTH CAROLINA
DEPARTMENT OF TRANSPORTATION
RALEIGH

72" PRESTRESSED CONCRETE MODIFIED BULB TEE CONTINUOUS FOR LIVE LOAD

SPAN A

NORTH CAROLINA PROFESSIONAL SEAL 14045 ENGINEER TIMOTHY L. COGGINS
3/11/09

ASSEMBLED BY : PEGGY ADKINS	DATE : 9-07
CHECKED BY : J. B. WILSON	DATE : 11-07
DRAWN BY : EEM 2/6/97	REV. 8/16/99 RWW/LES
CHECKED BY : VAP 2/6/97	REV. 10/17/00 RWW/LES
	REV. 5/1/06 TLA/GM

REVISIONS

NO.	BY:	DATE:	NO.	BY:	DATE:
1			3		
2			4		

SHEET NO. S-275

TOTAL SHEETS 340

STR. #10 STD. NO. PCG10

11-MAR-2009 08:42
h:\structures\str#10\final plans\R2719A_sd_g1_10.dgn
tcoggins

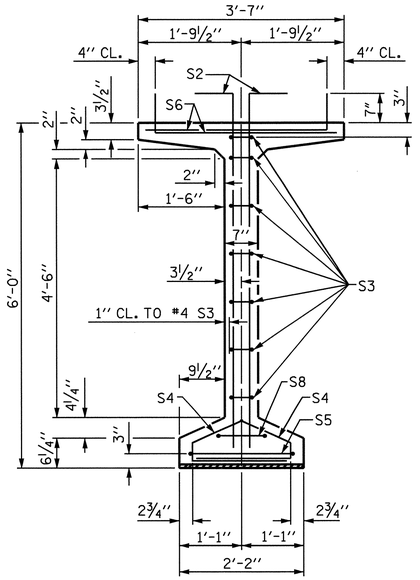

SECTION A-A

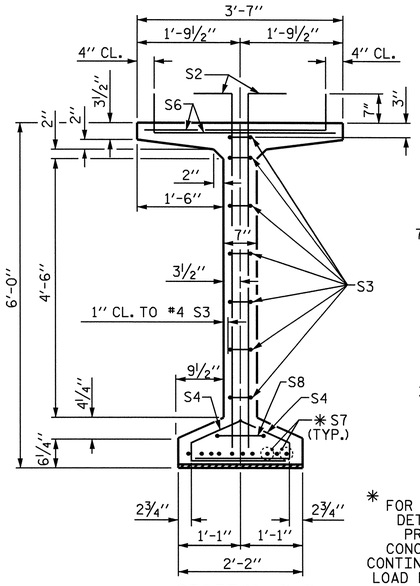

SECTION B-B

✱ FOR S7 BARS. SEE DETAIL "C" OF PRESTRESSED CONCRETE GIRDER CONTINUOUS FOR LIVE LOAD DETAILS SHEET

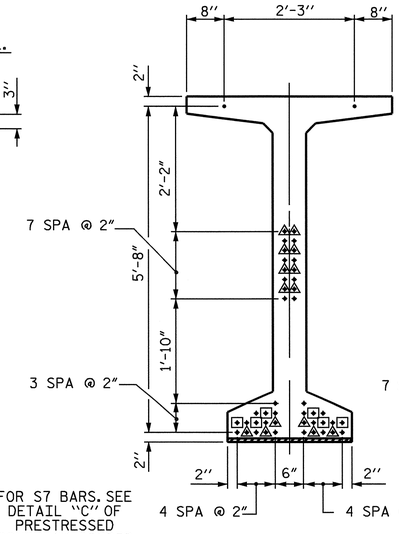

AT END OF GIRDER

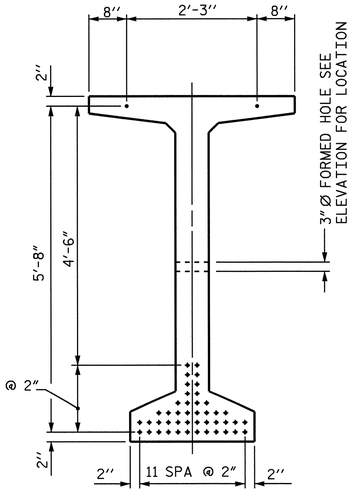

AT ℄ OF GIRDER

½" Ø LOW RELAXATION STRAND LAYOUT

DEBONDING LEGEND

- ● FULLY BONDED STRANDS
- ▲ STRANDS DEBONDED FOR 2'-0" FROM END OF GIRDER
- ▣ STRANDS DEBONDED FOR 4'-0" FROM END OF GIRDER

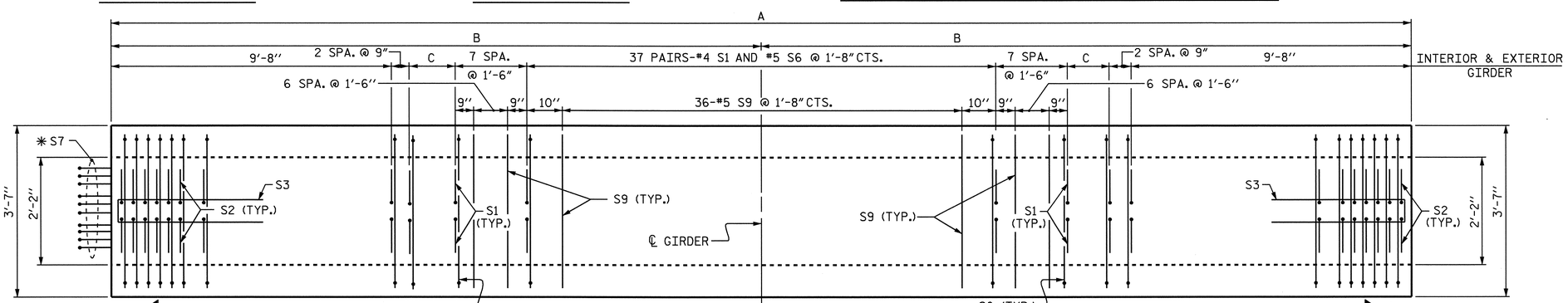

PLAN OF GIRDER

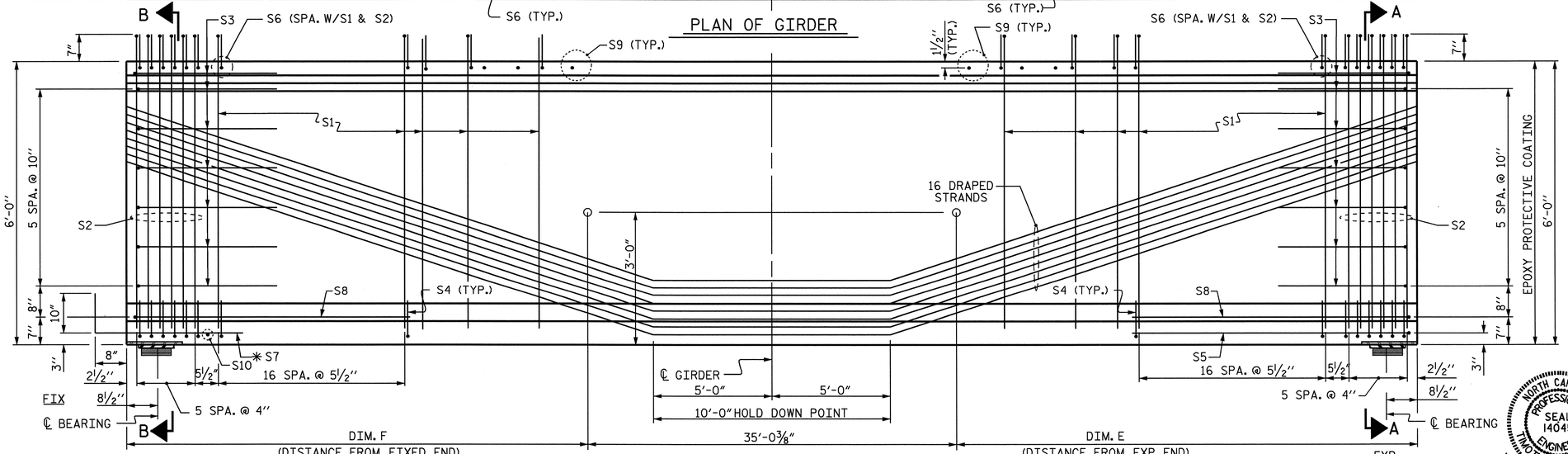

ELEVATION OF GIRDER

FOR DIMENSION TABLE SEE SHEET 3 OF 3

½" Ø L. R. GRADE 270 STRANDS

AREA (SQUARE INCHES)	ULTIMATE STRENGTH (LBS. PER STRAND)	APPLIED PRESTRESS (LBS. PER STRAND)
0.153	41,300	30,980

REINFORCING STEEL FOR ONE GIRDER

BAR	NUMBER	SIZE	TYPE	LENGTH	WEIGHT
S1	178	#4	1	6'-10"	813
S2	24	#5	1	6'-10"	171
S3	14	#4	2	8'-5"	79
S4	92	#4	3	3'-0"	184
S5	1	#5	2	9'-10"	10
S6	202	#5	1	3'-9"	790
✱ S7	10	#5	STR	3'-8"	38
S8	2	#5	2	9'-0"	19
S9	50	#5	STR	3'-3"	169
S10	1	#3	STR	1'-10"	1

✱ NOTE: S7 BARS SHALL BE BENT BEFORE SHIPMENT. HEAT BENDING SHALL NOT BE ALLOWED.

BAR TYPES

ALL BAR DIMENSIONS ARE OUT-TO-OUT

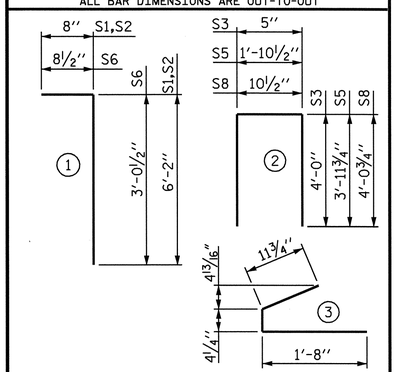

QUANTITIES FOR ONE GIRDER

	REINFORCING STEEL	7000 PSI CONCRETE	½" Ø L.R. STRANDS
	LB.	C.Y.	No.
EXT. GIRDER	2274	22.5	46
INT. GIRDER	2274	22.5	46

GIRDERS REQUIRED

NUMBER	LENGTH	TOTAL LENGTH
5	SEE CHART	525'-6⅜"

PROJECT NO. R-2719A

LENOIR COUNTY

STATION: 28+99.24-Y1RPCA-

SHEET 2 OF 3

STATE OF NORTH CAROLINA
DEPARTMENT OF TRANSPORTATION
RALEIGH

72" PRESTRESSED CONCRETE MODIFIED BULB TEE CONTINUOUS FOR LIVE LOAD

SPAN B

NORTH CAROLINA PROFESSIONAL SEAL 14045 ENGINEER TIMOTHY U. COGGINS
3/11/09

REVISIONS						SHEET NO.
NO.	BY:	DATE:	NO.	BY:	DATE:	S-276
1			3			TOTAL SHEETS
2			4			340

ASSEMBLED BY : PEGGY ADKINS	DATE : 9-07		
CHECKED BY : J. B. WILSON	DATE : 11-07		
DRAWN BY : EEM 2/6/97	REV. 8/16/99	RWW/LES	
CHECKED BY : VAP 2/6/97	REV. 10/17/00	RWW/LES	
	REV. 5/1/06	TLA/GM	

11-MAR-2009 08:46
h:\str\ucfurse\str#10\final plans\R2719A_sd_g1_10.dgn
tcoggins

STR. #10 STD. NO. PCG10

DIMENSIONS TABLE SPAN A

	A	B	C	E	F
GIRDER 1	100′-11¾″	50′-5⅞″	10⅞″	36′-3 3/16″	31′-0½″
GIRDER 2	101′-0″	50′-6″	11″	34′-11⅝″	32′-4 5/16″
GIRDER 3	101′-0¼″	50′-6⅛″	11⅛″	33′-8 1/16″	33′-8⅛″
GIRDER 4	101′-0½″	50′-6¼″	11¼″	32′-4½″	34′-11 15/16″
GIRDER 5	101′-0¾″	50′-6⅜″	11⅜″	31′-0 15/16″	36′-3¾″

DIMENSIONS TABLE SPAN B

	A	B	C	E	F
GIRDER 1	105′-0″	52′-6″	10″	30′-5 9/16″	39′-6 1/16″
GIRDER 2	105′-0⅝″	52′-6 5/16″	10 5/16″	32′-8 15/16″	37′-3 5/16″
GIRDER 3	105′-1¼″	52′-6⅝″	10⅝″	35′-0⅜″	35′-0½″
GIRDER 4	105′-1⅞″	52′-6 15/16″	10 15/16″	37′-3 13/16″	32′-9 11/16″
GIRDER 5	105′-2⅝″	52′-7 5/16″	11 5/16″	39′-7 5/16″	30′-6 15/16″

NOTES

ALL PRESTRESSING STRANDS SHALL BE 7-WIRE LOW-RELAXATION GRADE 270 STRANDS AND SHALL CONFORM TO AASHTO M203 EXCEPT FOR SAMPLING REQUIREMENTS WHICH SHALL BE IN ACCORDANCE WITH THE STANDARD SPECIFICATIONS.

TIE ROD ASSEMBLY SHALL BE AASHTO M270 GRADE 36 STRUCTURAL STEEL.

ALL REINFORCING STEEL SHALL BE GRADE 60.

APPLY EPOXY PROTECTIVE COATING TO END OF GIRDER SURFACES INDICATED IN ELEVATION VIEW.

EMBEDDED PLATE "B-1" SHALL BE GALVANIZED IN ACCORDANCE WITH THE STANDARD SPECIFICATIONS. BEVEL EDGES OF PLATE "B-1" TO GIVE CLOSE FIT BUT NOT TIGHT FIT TO STEEL CASTING FORM.

ANCHOR STUDS SHALL CONFORM TO AASHTO M169 GRADES 1010 THROUGH 1020 OR APPROVED EQUAL, AND SHALL MEET THE TYPE "B" REQUIREMENTS OF SUBSECTION 7.3 OF THE ANSI/AASHTO/AWS D1.5 BRIDGE WELDING CODE.

AT ENDS OF GIRDERS TO BE EMBEDDED IN CONCRETE DIAPHRAGMS OR END WALLS, PRESTRESSING STRANDS MAY EXTEND A MAXIMUM OF 2″ BEYOND THE GIRDER ENDS. OTHERWISE, PRESTRESSING STRANDS SHALL BE CUT FLUSH WITH THE GIRDER ENDS.

THE TRANSFER OF LOAD FROM THE ANCHORAGES TO THE GIRDER SHALL BE DONE WHEN CONCRETE HAS REACHED A COMPRESSIVE STRENGTH OF NOT LESS THAN 5200 PSI.

DEPENDING ON THE TYPE OF SYSTEM USED TO SUPPORT THE DECK SLAB FORMS, PRESET ANCHORS MAY BE NECESSARY IN THE PRESTRESSED CONCRETE GIRDER.

THE TOP SURFACE OF THE GIRDER, EXCLUDING THE OUTSIDE 4″, SHALL BE RAKED TO A DEPTH OF ¼″.

WHEN DRAPED STRANDS ARE DETAILED, THE LONGITUDINAL LOCATION OF THE HOLD DOWN DEVICES SHALL BE WITHIN 6″ OF THE LOCATION SHOWN AND THE CENTER OF GRAVITY OF THE GROUP OF DRAPED STRANDS SHALL BE LOCATED WITHIN ½″ OF THE THEORETICAL LOCATION SHOWN.

A 2″ × 2″ CHAMFER IS ALLOWED AT THE INTERSECTION OF THE WEB AND THE BOTTOM FLANGE OF THE 72″ MODIFIED BULB TEES ONLY.

THE CONTRACTOR HAS THE OPTION TO PROVIDE, AT NO ADDITIONAL COST TO THE DEPARTMENT, 2 ADDITIONAL STRANDS AT THE TOP OF THE GIRDER TO FACILITATE TYING OF THE REINFORCING STEEL. THESE STRANDS SHALL BE PULLED TO A LOAD OF 4500 lbs.

THE UPLIFT FORCE DUE TO DRAPED STRANDS IS 22.6 KIPS FOR SPAN A AND 24.3 KIPS FOR SPAN B.

FOR PRESTRESSED CONCRETE MEMBERS, SEE SPECIAL PROVISIONS.

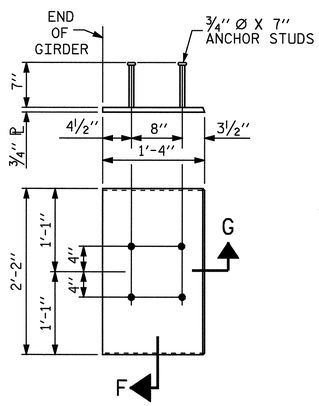

EMBEDDED PLATE "B-1" DETAILS FOR AASHTO 72″ MODIFIED BULB TEES

(2 REQ'D PER GIRDER)

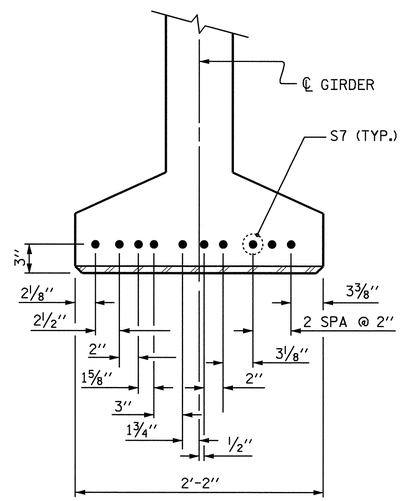

DETAIL "C"

(FOR 72″ MODIFIED BULB TEES)

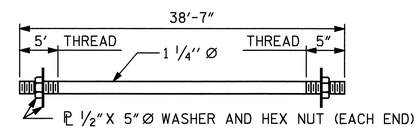

1¼″ Ø TIE ROD ASSEMBLY

(4 COMPLETE ASSEMBLIES REQUIRED)

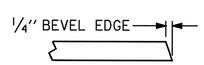

SECTION "G"

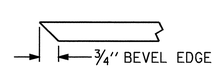

SECTION "F"

(SEE NOTES)

PROJECT NO. R-2719A

LENOIR COUNTY

STATION: 28+99.24-Y1RPCA-

SHEET 3 OF 3

STATE OF NORTH CAROLINA
DEPARTMENT OF TRANSPORTATION
RALEIGH

STANDARD

PRESTRESSED CONCRETE GIRDER CONTINUOUS FOR LIVE LOAD DETAILS

NORTH CAROLINA PROFESSIONAL SEAL 14045 ENGINEER TIMOTHY L. COGGINS

4/6/09

REVISIONS						SHEET NO.
NO.	BY:	DATE:	NO.	BY:	DATE:	S-277
1			3			TOTAL SHEETS
2			4			340

ASSEMBLED BY : PEGGY ADKINS DATE : 9-07
CHECKED BY : J. B. WILSON DATE : 11-07

DRAWN BY : ELR 11/91
CHECKED BY : GRP 11/91

REV. 10/17/00 RWW/LES
REV. 7/10/01RR LES/RDR
REV. 5/1/06 TLA/GM

06-APR-2009 14:16
h:\structures\Str#10\Final Plans\R2719A_sd_g1_10.dgn
tcoggins

STR. #10

STD. NO. PCG11

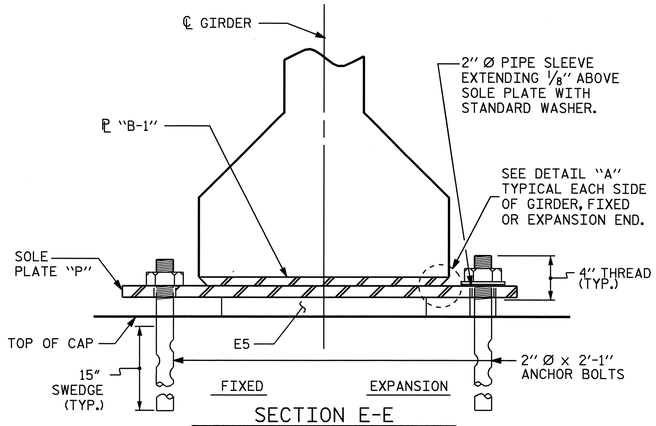

SECTION E-E

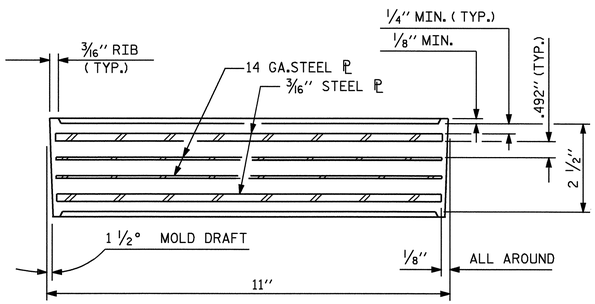

TYPICAL SECTION OF ELASTOMERIC BEARINGS

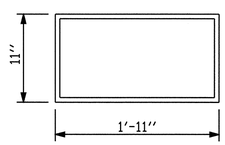

E5 (20 REQ'D)

PLAN VIEW OF ELASTOMERIC BEARING

TYPE VI

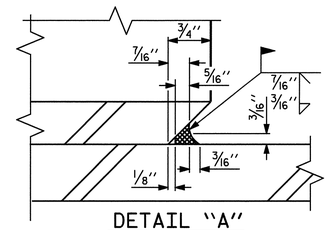

DETAIL "A"

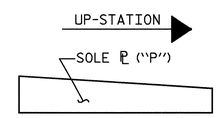

SOLE ℗ PLACEMENT DETAIL

LOAD RATINGS	
	MAX.D.L.+ L.L.
TYPE VI	211 K

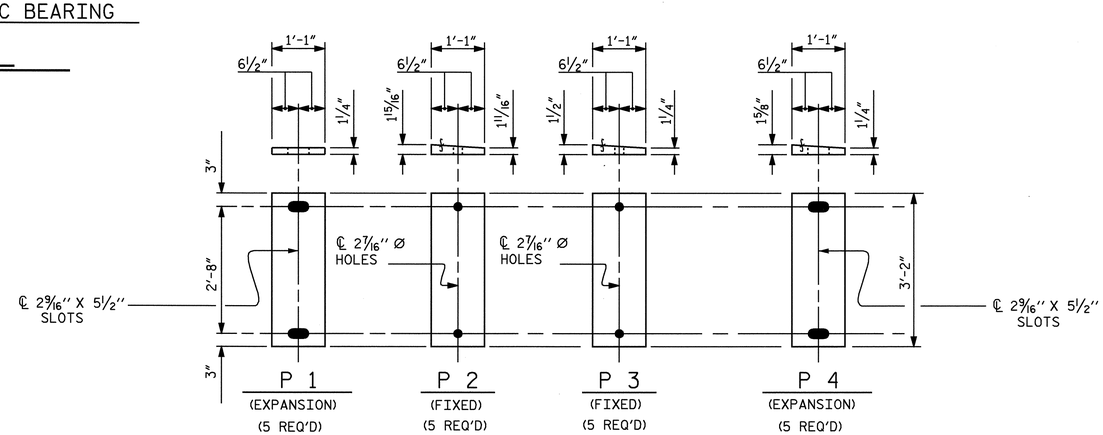

SOLE PLATE DETAILS ("P")

NOTES

AT ALL FIXED POINTS OF SUPPORT, NUTS FOR ANCHOR BOLTS ARE TO BE TIGHTENED FINGER TIGHT AND THEN BACKED OFF 1/2 TURN. THE THREAD OF THE NUT AND BOLT SHALL THEN BE BURRED WITH A SHARP POINTED TOOL.

THE 2" Ø PIPE SLEEVE SHALL BE CUT FROM SCHEDULE 40 PVC PLASTIC PIPE. THE PVC PLASTIC PIPE SHALL MEET THE REQUIREMENTS OF ASTM D1785.

STEEL SOLE PLATES, ANCHOR BOLTS, NUTS, AND WASHERS SHALL BE GALVANIZED IN ACCORDANCE WITH THE STANDARD SPECIFICATIONS.

PRIOR TO WELDING, GRIND THE GALVANIZED SURFACE OF THE PORTION OF THE EMBEDDED PLATE AND SOLE PLATE THAT ARE TO BE WELDED. AFTER WELDING, DAMAGED GALVANIZED SURFACES SHALL BE REPAIRED IN ACCORDANCE WITH THE STANDARD SPECIFICATIONS.

WHEN WELDING THE SOLE PLATE TO THE EMBEDDED PLATE IN THE GIRDER, USE TEMPERATURE INDICATING WAX PENS, OR OTHER SUITABLE MEANS, TO ENSURE THAT THE TEMPERATURE OF THE SOLE PLATE DOES NOT EXCEED 300°F. TEMPERATURES ABOVE THIS MAY DAMAGE THE ELASTOMER.

SOLE PLATE "P", BOLTS, NUTS, WASHERS, AND PIPE SLEEVE SHALL BE INCLUDED IN THE PAY ITEM FOR PRESTRESSED CONCRETE GIRDERS.

ANCHOR BOLTS SHALL MEET THE REQUIREMENTS OF ASTM A449. NUTS SHALL MEET THE REQUIREMENTS OF AASHTO M291-DH OR AASHTO M292-2H. WASHERS SHALL MEET THE REQUIREMENTS OF AASHTO M293. NO SHOP DRAWINGS ARE REQUIRED FOR ANCHOR BOLTS, NUTS AND WASHERS. SHOP INSPECTION IS REQUIRED.

ALL SURFACES OF BEARING PLATES SHALL BE SMOOTH AND STRAIGHT.

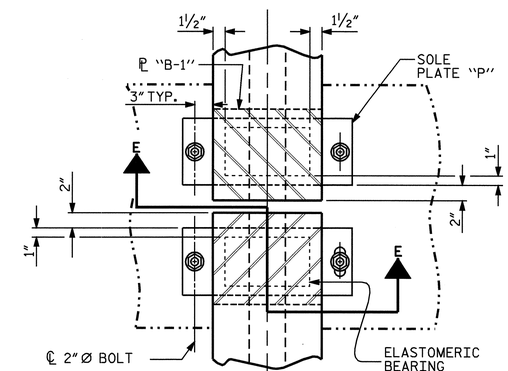

TYPICAL HALF-PLAN (SHOWING CONTINUOUS BENT)

TYPICAL HALF-PLAN (SHOWING END BENT)

PROJECT NO. R-2719A
LENOIR COUNTY
STATION: 28+99.24-Y1RPCA-

STATE OF NORTH CAROLINA
DEPARTMENT OF TRANSPORTATION
RALEIGH

STANDARD ELASTOMERIC BEARING DETAILS

PRESTRESSED CONCRETE GIRDER SUPERSTRUCTURE

NORTH CAROLINA PROFESSIONAL SEAL 14045 ENGINEER TIMOTHY L. COGGINS
4/6/09

ASSEMBLED BY : PEGGY ADKINS		DATE : 8-07			
CHECKED BY : J. B. WILSON		DATE : 11-07			
DRAWN BY : EEM 2/97	REV. 8/16/99	RWW/LES			
CHECKED BY : VAP 2/97	REV. 10/17/00	RWW/LES			
	REV. 5/1/06	TLA/GM			

REVISIONS						SHEET NO.
NO.	BY:	DATE:	NO.	BY:	DATE:	S-278
1			3			TOTAL SHEETS
2			4			340

STR. #10

STD.No.EB4

06-APR-2009 16:18
h:\structures\str#10\finalplans\r2719a_sd_gl_10.dgn
tcoggins

DEAD LOAD DEFLECTION TABLE FOR GIRDERS

0.5"Ø LOW RELAXATION	SPAN A GIRDER 1										
TENTH POINTS	0	.1	.2	.3	.4	.5	.6	.7	.8	.9	0
CAMBER (GIRDER ALONE IN PLACE) ↑	0	0.087	0.164	0.224	0.263	0.276	0.263	0.224	0.164	0.087	0
✳ DEFLECTION DUE TO SUPERIMPOSED D.L. ↓	0	0.036	0.068	0.092	0.108	0.114	0.108	0.092	0.068	0.036	0
FINAL CAMBER ↑	0	5/8"	1 1/8"	1 9/16"	1 7/8"	1 15/16"	1 7/8"	1 9/16"	1 1/8"	5/8"	0

✳ INCLUDES FUTURE WEARING SURFACE
ALL VALUES ARE SHOWN IN FEET (DECIMAL FORM), EXCEPT "FINAL CAMBER", WHICH IS GIVEN IN INCHES (FRACTION FORM).

DEAD LOAD DEFLECTION TABLE FOR GIRDERS

0.5"Ø LOW RELAXATION	SPAN B GIRDER 1										
TENTH POINTS	0	.1	.2	.3	.4	.5	.6	.7	.8	.9	0
CAMBER (GIRDER ALONE IN PLACE) ↑	0	0.105	0.199	0.272	0.318	0.334	0.318	0.272	0.199	0.105	0
✳ DEFLECTION DUE TO SUPERIMPOSED D.L. ↓	0	0.042	0.079	0.108	0.127	0.133	0.127	0.108	0.079	0.042	0
FINAL CAMBER ↑	0	3/4"	1 7/16"	1 15/16"	2 5/16"	2 7/16"	2 5/16"	1 15/16"	1 7/16"	3/4"	0

✳ INCLUDES FUTURE WEARING SURFACE
ALL VALUES ARE SHOWN IN FEET (DECIMAL FORM), EXCEPT "FINAL CAMBER", WHICH IS GIVEN IN INCHES (FRACTION FORM).

DEAD LOAD DEFLECTION TABLE FOR GIRDERS

0.5"Ø LOW RELAXATION	SPAN A GIRDERS 2, 3 AND 4										
TENTH POINTS	0	.1	.2	.3	.4	.5	.6	.7	.8	.9	0
CAMBER (GIRDER ALONE IN PLACE) ↑	0	0.087	0.164	0.224	0.263	0.276	0.263	0.224	0.164	0.087	0
✳ DEFLECTION DUE TO SUPERIMPOSED D.L. ↓	0	0.033	0.063	0.086	0.101	0.106	0.101	0.086	0.063	0.033	0
FINAL CAMBER ↑	0	5/8"	1 3/16"	1 11/16"	1 15/16"	2 1/16"	1 15/16"	1 11/16"	1 3/16"	5/8"	0

✳ INCLUDES FUTURE WEARING SURFACE
ALL VALUES ARE SHOWN IN FEET (DECIMAL FORM), EXCEPT "FINAL CAMBER", WHICH IS GIVEN IN INCHES (FRACTION FORM).

DEAD LOAD DEFLECTION TABLE FOR GIRDERS

0.5"Ø LOW RELAXATION	SPAN B GIRDERS 2, 3 AND 4										
TENTH POINTS	0	.1	.2	.3	.4	.5	.6	.7	.8	.9	0
CAMBER (GIRDER ALONE IN PLACE) ↑	0	0.105	0.199	0.272	0.319	0.335	0.319	0.272	0.199	0.105	0
✳ DEFLECTION DUE TO SUPERIMPOSED D.L. ↓	0	0.039	0.074	0.101	0.118	0.124	0.118	0.101	0.074	0.039	0
FINAL CAMBER ↑	0	13/16"	1 1/2"	2 1/16"	2 7/16"	2 9/16"	2 7/16"	2 1/16"	1 1/2"	13/16"	0

✳ INCLUDES FUTURE WEARING SURFACE
ALL VALUES ARE SHOWN IN FEET (DECIMAL FORM), EXCEPT "FINAL CAMBER", WHICH IS GIVEN IN INCHES (FRACTION FORM).

DEAD LOAD DEFLECTION TABLE FOR GIRDERS

0.5"Ø LOW RELAXATION	SPAN A GIRDER 5										
TENTH POINTS	0	.1	.2	.3	.4	.5	.6	.7	.8	.9	0
CAMBER (GIRDER ALONE IN PLACE) ↑	0	0.087	0.164	0.225	0.263	0.276	0.263	0.225	0.164	0.087	0
✳ DEFLECTION DUE TO SUPERIMPOSED D.L. ↓	0	0.030	0.058	0.079	0.092	0.097	0.092	0.079	0.058	0.030	0
FINAL CAMBER ↑	0	11/16"	1 1/4"	1 3/4"	2 1/16"	2 1/8"	2 1/16"	1 3/4"	1 1/4"	11/16"	0

✳ INCLUDES FUTURE WEARING SURFACE
ALL VALUES ARE SHOWN IN FEET (DECIMAL FORM), EXCEPT "FINAL CAMBER", WHICH IS GIVEN IN INCHES (FRACTION FORM).

DEAD LOAD DEFLECTION TABLE FOR GIRDERS

0.5"Ø LOW RELAXATION	SPAN B GIRDER 5										
TENTH POINTS	0	.1	.2	.3	.4	.5	.6	.7	.8	.9	0
CAMBER (GIRDER ALONE IN PLACE) ↑	0	0.105	0.199	0.272	0.319	0.335	0.319	0.272	0.199	0.105	0
✳ DEFLECTION DUE TO SUPERIMPOSED D.L. ↓	0	0.036	0.068	0.093	0.109	0.114	0.109	0.093	0.068	0.036	0
FINAL CAMBER ↑	0	13/16"	1 9/16"	2 1/8"	2 1/2"	2 5/8"	2 1/2"	2 1/8"	1 9/16"	13/16"	0

✳ INCLUDES FUTURE WEARING SURFACE
ALL VALUES ARE SHOWN IN FEET (DECIMAL FORM), EXCEPT "FINAL CAMBER", WHICH IS GIVEN IN INCHES (FRACTION FORM).

PROJECT NO. R-2719A
LENOIR COUNTY
STATION: 28+99.24-Y1RPCA-

NORTH CAROLINA PROFESSIONAL SEAL 14045 ENGINEER TIMOTHY L. COGGINS
10/13/08

STATE OF NORTH CAROLINA
DEPARTMENT OF TRANSPORTATION
RALEIGH

SUPERSTRUCTURE

DEAD LOAD DEFLECTIONS

REVISIONS								SHEET NO.
NO.	BY:	DATE:		NO.	BY:	DATE:		S-279
1				3				TOTAL SHEETS
2				4				340

ASSEMBLED BY : PEGGY ADKINS	DATE : 8-07	
CHECKED BY : J. B. WILSON	DATE : 11-07	
DRAWN BY : EEM 6/94	REV. 8/16/99	RWW/LES
CHECKED BY : RGW 6/94	REV. 10/17/00	RWW/LES

NOTES

THE BARRIER RAIL IN CONTINUOUS UNIT SHALL NOT BE CAST UNTIL ALL SLAB CONCRETE IN THE UNIT HAS BEEN CAST AND HAS REACHED A MINIMUM COMPRESSIVE STRENGTH OF 3,000 PSI.

ALL REINFORCING STEEL IN BARRIER RAILS SHALL BE EPOXY COATED.

VERTICAL GROOVED CONTRACTION JOINTS, 1/2" IN DEPTH, SHALL BE TOOLED IN ALL EXPOSED FACES OF THE BARRIER RAIL AND IN ACCORDANCE WITH ARTICLE 825-10(B) OF THE STANDARD SPECIFICATIONS. THE CONTRACTION JOINT SHALL BE LOCATED AT EACH THIRD POINT BETWEEN BARRIER RAIL EXPANSION JOINTS. ONLY ONE CONTRACTION JOINT IS REQUIRED AT MIDPOINT OF BARRIER RAIL SEGMENTS LESS THAN 20 FEET IN LENGTH AND NO CONTRACTION JOINTS ARE REQUIRED FOR THOSE SEGMENTS LESS THAN 10 FEET IN LENGTH.

#5 S1 AND #5 S2 MAY BE SHIFTED SLIGHTLY AS NECESSARY TO MAINTAIN 2" COVER AT 1/2" EXPANSION JOINTS IN RAIL.

BAR TYPES

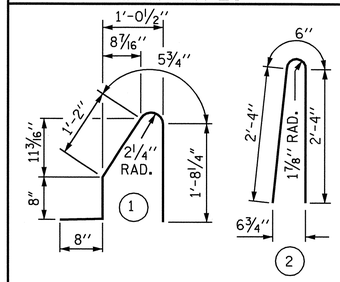

ALL BAR DIMENSIONS ARE OUT TO OUT

BILL OF MATERIAL

FOR CONCRETE BARRIER RAIL ONLY

BAR	NO.	SIZE	TYPE	LENGTH	WEIGHT
* B1	56	#5	STR	25'-1"	1465
* B2	49	#5	STR	26'-2"	1337
* B3	7	#5	STR	25'-10"	189
* S1	418	#5	1	4'-8"	2035
* S2	418	#5	2	5'-2"	2253

* EPOXY COATED REINFORCING STEEL	7279	LBS.
CLASS AA CONCRETE	41.9	CU. YDS.
CONCRETE BARRIER RAIL	418.22	LIN. FT.

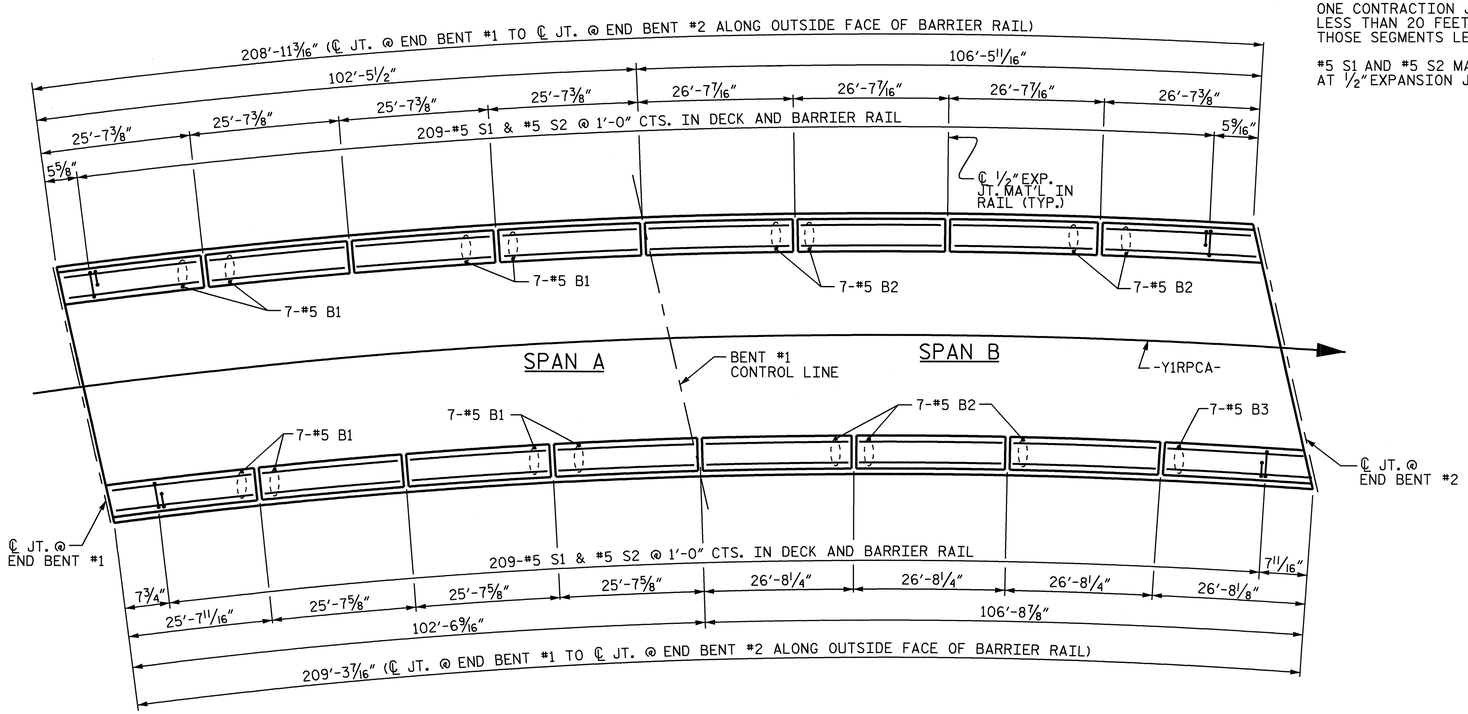

PLAN

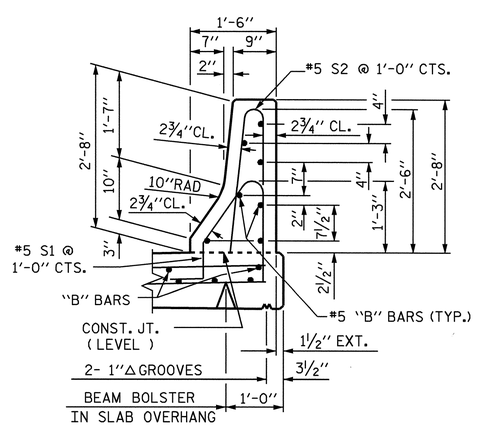

SECTION THRU RAIL

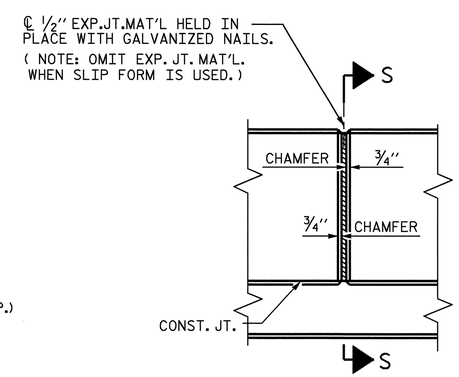

ELEVATION AT EXPANSION JOINTS

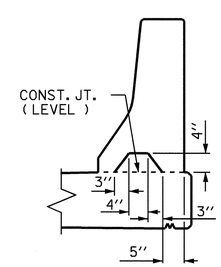

SECTION S-S

AT DAM IN OPEN JOINT
(THIS IS TO BE USED ONLY WHEN SLIP FORM IS USED)

BARRIER RAIL DETAILS

PROJECT NO. R-2719A
LENOIR COUNTY
STATION: 28+99.24-Y1RPCA-

STATE OF NORTH CAROLINA
DEPARTMENT OF TRANSPORTATION
RALEIGH

CONCRETE BARRIER RAIL

NORTH CAROLINA PROFESSIONAL SEAL 14045 ENGINEER TIMOTHY L. COGGINS
3/11/09

REVISIONS						SHEET NO.
NO.	BY:	DATE:	NO.	BY:	DATE:	S-280
1			3			TOTAL SHEETS
2			4			340

ASSEMBLED BY : PEGGY ADKINS	DATE : 9-07		
CHECKED BY : J. B. WILSON	DATE : 11-07		
DRAWN BY : ARB 5/87	REV. 10/17/00	RWW/LES	
CHECKED BY : SJD 9/87	REV. 5/7/03R	RWW/JTE	
	REV. 5/1/06	TLA/GM	

11-MAR-2009 08:55
h:\structures\str#10\final plans\R2719A_sd_br_10.dgn
tcoggins

STR. #10

STD. NO. CBR1 (SHT 1)

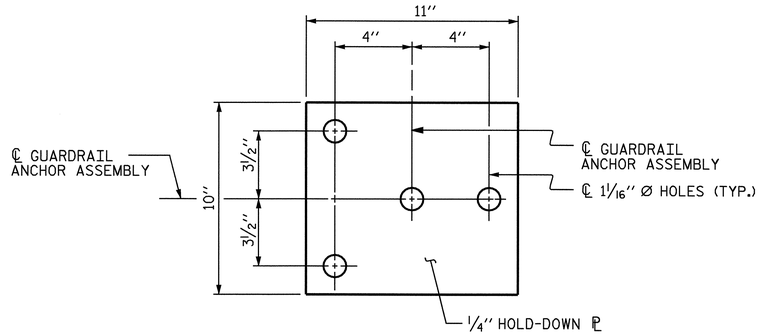

PLAN

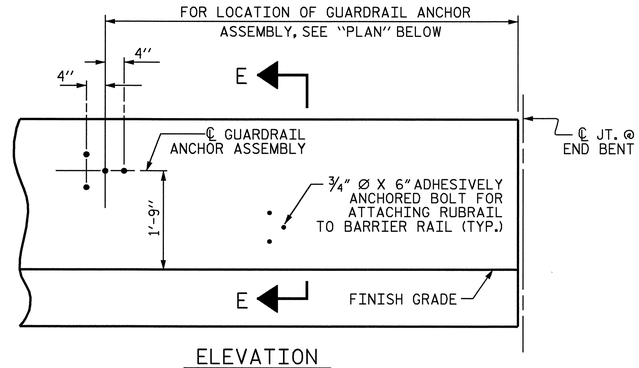

ELEVATION

FOR LOCATION OF RUBRAIL, SEE ROADWAY STD. 862.03

NOTES

THE GUARDRAIL ANCHOR ASSEMBLY SHALL CONSIST OF A 1/4" HOLD DOWN PLATE AND 4 - 7/8" Ø BOLTS WITH NUTS AND WASHERS, RUBRAIL, AND ADHESIVELY ANCHORED BOLTS.

THE HOLD-DOWN PLATE SHALL CONFORM TO AASHTO M270 GRADE 36. AFTER FABRICATION, THE HOLD-DOWN PLATE SHALL BE HOT-DIP GALVANIZED IN ACCORDANCE WITH AASHTO M111.

BOLTS SHALL CONFORM TO THE REQUIREMENTS OF ASTM A307 AND NUTS SHALL CONFORM TO THE REQUIREMENTS OF AASHTO M291. BOLTS, NUTS AND WASHERS SHALL BE GALVANIZED. (AT THE CONTRACTOR'S OPTION, STAINLESS STEEL BOLTS, NUTS AND WASHERS MAY BE USED AS AN ALTERNATE FOR THE 7/8" Ø GALVANIZED BOLTS, NUTS AND WASHERS. THEY SHALL CONFORM TO OR EXCEED THE MECHANICAL REQUIREMENTS OF ASTM A307. THE USE OF THIS ALTERNATE SHALL BE APPROVED BY THE ENGINEER.)

THE GUARDRAIL ANCHOR ASSEMBLY IS REQUIRED AT ALL POINTS WHERE APPROACH GUARDRAIL IS TO BE ATTACHED TO THE END OF BARRIER RAIL. FOR POINTS OF ATTACHMENT, SEE SKETCH.

AFTER INSTALLATION, THE EXPOSED THREAD OF THE BOLT SHALL BE BURRED WITH A SHARP POINTED TOOL.

THE COST OF THE GUARDRAIL ANCHOR ASSEMBLY SHALL BE INCLUDED IN THE UNIT CONTRACT PRICE BID FOR CONCRETE BARRIER RAIL.

THE 1 1/4" Ø HOLES SHALL BE FORMED OR DRILLED WITH A CORE BIT. IMPACT TOOLS WILL NOT BE PERMITTED. ANY CONCRETE DAMAGED BY THIS WORK SHALL BE REPAIRED TO THE SATISFACTION OF THE ENGINEER.

THE C6 X 8.2 RUBRAIL IS TO BE ADHESIVELY ANCHORED TO THE RAIL USING THREE 3/4"Ø X 6" BOLTS WITH WASHERS. LEVEL ONE FIELD TESTING IS REQUIRED, AND THE YIELD LOAD OF THE 3/4"Ø BOLT IS 12 KIPS. FOR ADHESIVELY ANCHORED ANCHOR BOLTS OR DOWELS, SEE SPECIAL PROVISIONS. SEE ROADWAY STANDARD 862.03 FOR DETAILS AND LOCATION OF THE RUBRAIL.

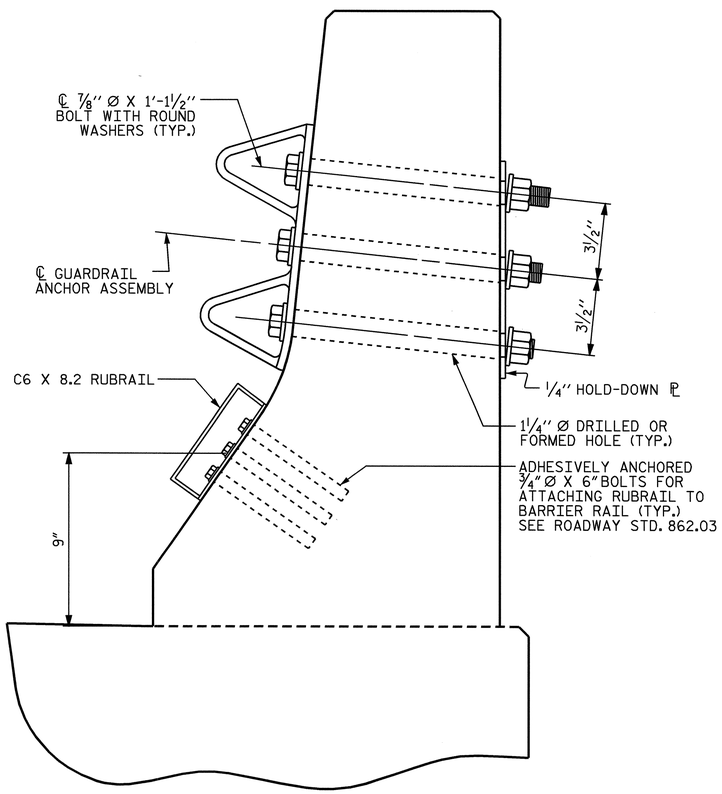

SECTION E-E

GUARDRAIL ANCHOR ASSEMBLY DETAILS

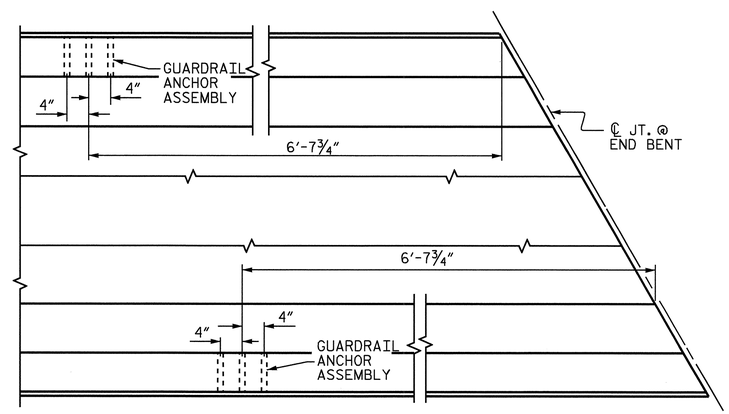

PLAN

LOCATION OF ANCHORS FOR GUARDRAIL

END BENT #2 SHOWN, END BENT #1 SIMILAR.

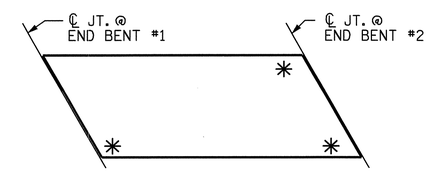

SKETCH SHOWING POINTS OF ATTACHMENTS

✳ DENOTES GUARDRAIL ANCHOR ASSEMBLY

PROJECT NO. R-2719A
LENOIR COUNTY
STATION: 28+99.24-Y1RPCA-

STATE OF NORTH CAROLINA
DEPARTMENT OF TRANSPORTATION
RALEIGH

STANDARD
GUARDRAIL ANCHORAGE FOR BARRIER RAIL

NORTH CAROLINA PROFESSIONAL SEAL 14045 ENGINEER TIMOTHY W. COGGINS
10/13/08

REVISIONS							SHEET NO.
NO.	BY:	DATE:	NO.	BY:	DATE:		S-281
1			3				TOTAL SHEETS
2			4				340

ASSEMBLED BY : PEGGY ADKINS DATE : 9-07
CHECKED BY : J. B. WILSON DATE : 11-07
DRAWN BY : TLA 5/06
CHECKED BY : GM 5/06
ADDED 5/1/06R KMM/GM

09-OCT-2008 15:37
r:\structures\str#10\finalplans\R2719A_sd_br_10.dgn
padkins

STR. #10 STD. NO. GRA2

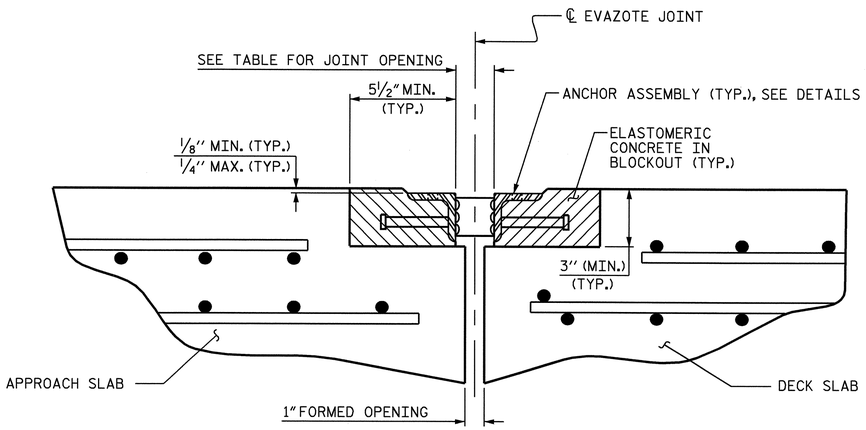

ARMORED JOINT DETAILS

SECTION NORMAL TO JOINT AT END BENT

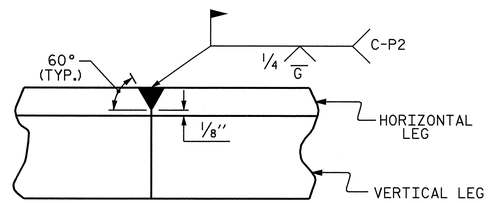

DETAIL- FIELD WELD SPLICE OF ANGLE

NOTES

ANGLES SHALL CONFORM TO AASHTO M270 GRADE 36 STEEL OR APPROVED EQUAL. ALL STUD ANCHORS SHALL CONFORM TO AASHTO M169 GRADES 1010 THRU 1020 OR APPROVED EQUAL.

STUD ANCHORS SHALL BE SHOP WELDED AND ALL HOLES SHALL BE SHOP DRILLED AS SHOWN ON THE PLANS. STUD ANCHORS SHALL BE ELECTRIC ARC END WELDED WITH COMPLETE FUSION.

UPON COMPLETION OF SHOP FABRICATION, THE ENTIRE ANCHOR ASSEMBLY SHALL BE METALLIZED. THE ½" Ø STUD ANCHORS AND ANCHOR TABS NEED NOT BE METALLIZED. SEE SPECIAL PROVISION FOR THERMAL SPRAYED COATINGS (METALLIZATION).

ANCHOR ASSEMBLY SHALL BE MADE CONTINUOUS THE LENGTH OF THE JOINT FROM GUTTER TO GUTTER. FOR FIELD SPLICES AT ALL CROWN BREAK POINTS, THE ENDS OF THE STEEL ANGLES SHALL BE CUT PARALLEL TO THE BRIDGE CENTERLINE. FINISHED FIELD WELDS SHALL BE GROUND SMOOTH AND COATED WITH A MINIMUM THICKNESS OF 4 DRY MILS OF ZINC-RICH PAINT IN ACCORDANCE WITH THE STANDARD SPECIFICATIONS.

ANCHOR ASSEMBLY SEGMENTS SHALL NOT BE LESS THAN 12 FEET NOR MORE THAN 20 FEET IN LENGTH. SHORTER SEGMENTS MAY BE USED AT THE EDGE OF ROADWAY OR AT POINTS OF STAGED CONSTRUCTION.

THE ANCHOR ASSEMBLY SHALL BE SECURED AND LEVELED AS SHOWN IN THE "ARMORED JOINT ANCHOR ASSEMBLY DETAILS". NO SUBMITTALS ARE REQUIRED FOR ⅜" Ø EXPANSION ANCHORS, NUTS OR WASHERS. THE CONTRACTOR MAY SUBMIT FOR APPROVAL AN ALTERNATE METHOD OF ALIGNING AND LEVELING THE ANGLES. THE ALTERNATE METHOD SHALL NOT INCLUDE ANY WELDING TO THE OUTSIDE FACE OF THE ANGLES.

AFTER THE ELASTOMERIC CONCRETE HAS BEEN CAST ON BOTH SIDES OF THE JOINT, REMOVE ANY EXCESS CONCRETE THAT COMES THROUGH THE WEEP HOLES AND THOROUGHLY CLEAN THE ANGLES. ANY DAMAGED STEEL SHALL BE COATED WITH A MINIMUM OF 4 MILS OF ZINC-RICH PAINT IN ACCORDANCE WITH THE STANDARD SPECIFICATIONS.

SEE SPECIAL PROVISIONS FOR EVAZOTE JOINT SEALS.

SEE SPECIAL PROVISIONS FOR ELASTOMERIC CONCRETE.

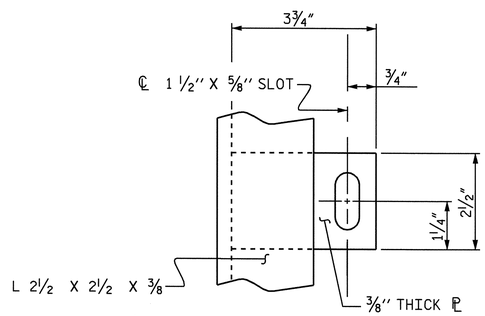

PLAN VIEW OF TAB

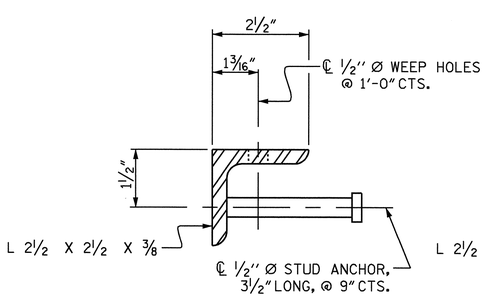

SECTION VIEW OF STUD

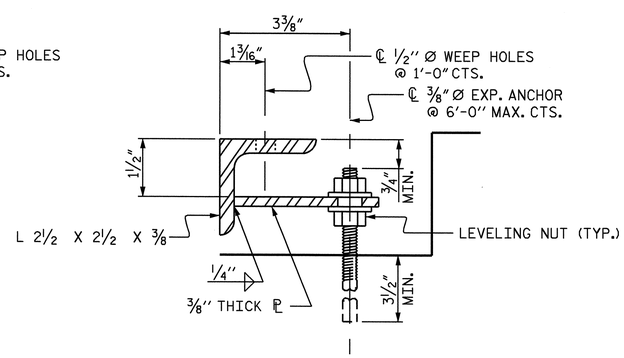

SECTION VIEW OF TAB

ARMORED JOINT ANCHOR ASSEMBLY DETAILS

MOVEMENT AND SETTING AT EVAZOTE JOINT						
END BENT NO.	SKEW ANGLE	NOMINAL UNCOMPRESSED SEAL WIDTH	TOTAL MOVEMENT (ALONG ℄ RDWY)	PERPENDICULAR JOINT OPENING AT 45° F	PERPENDICULAR JOINT OPENING AT 60° F	PERPENDICULAR JOINT OPENING AT 90° F
1	84°46'00"	2½"	⅞"	2⅛"	2"	1¹¹⁄₁₆"
2	73°37'22"	2½"	⅞"	2⅛"	2"	1¹¹⁄₁₆"

TOTAL MOVEMENT IS CALCULATED ALONG THE CENTERLINE OF ROADWAY.
JOINT OPENINGS ARE MEASURED PERPENDICULAR TO THE JOINT.

BILL OF MATERIAL		
END BENT NO.	ELASTOMERIC CONCRETE ✳ (CU. FT.)	TOTAL LENGTH OF ANGLE (FT)
1	9.7	84.6
2	10.1	87.8

✳ BASED ON THE MINIMUM BLOCKOUT SHOWN.

PROJECT NO. R-2719A
LENIOR COUNTY
STATION: 28+99.24-Y1RPCA-

STATE OF NORTH CAROLINA
DEPARTMENT OF TRANSPORTATION
RALEIGH

STANDARD

ARMORED EVAZOTE JOINT DETAILS

NORTH CAROLINA PROFESSIONAL SEAL 14045 ENGINEER TIMOTHY W. COGGINS
10/13/08

REVISIONS							SHEET NO.
NO.	BY:	DATE:	NO.	BY:	DATE:		S-282
1			3				TOTAL SHEETS
2			4				340

ASSEMBLED BY : PEGGY ADKINS	DATE : 9-07		
CHECKED BY : J. B. WILSON	DATE : 11-07		
DRAWN BY : EEM 1/96	REV. 7/10/01 LES/RDR		
CHECKED BY : RGW 1/96	REV. 5/7/03RR RWW/JTE		
	REV. 5/1/06 TLA/GM		

09-OCT-2008 15:38
r:\structures\str#10\final plans\R2719A_sd_ej_10.dgn
pdkins

STR #10 STD. NO. AEJ1

SUPERSTRUCTURE REINFORCING STEEL LENGTHS ARE BASED ON THE FOLLOWING MINIMUM SPLICE LENGTHS

BAR SIZE	SUPERSTRUCTURE EXCEPT APPROACH SLABS, PARAPET, AND BARRIER RAIL		APPROACH SLABS		PARAPET AND BARRIER RAIL
	EPOXY COATED	UNCOATED	EPOXY COATED	UNCOATED	
#4	2′-0″	1′-9″	2′-0″	1′-9″	2′-9″
#5	2′-6″	2′-2″	2′-6″	2′-2″	3′-5″
#6	3′-0″	2′-7″	3′-10″	2′-7″	4′-4″
#7	5′-3″	3′-6″			
#8	6′-10″	4′-7″			

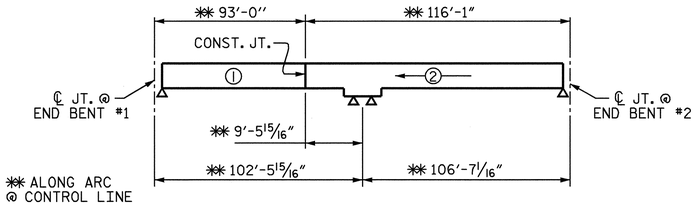

POURING SEQUENCE-PRESTRESSED CONCRETE SUPERSTRUCTURE

(CONTINUOUS FOR LIVE LOAD)

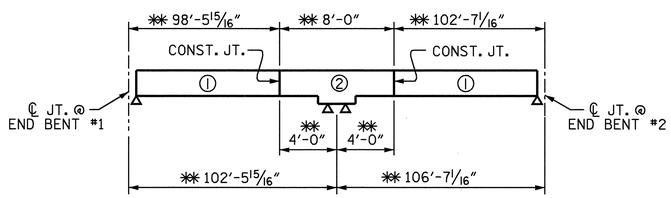

OPTIONAL POURING SEQUENCE-PRESTRESSED CONCRETE SUPERSTRUCTURE

(CONTINUOUS FOR LIVE LOAD)

BILL OF MATERIAL
SPANS A & B

BAR	NO	SIZE	TYPE	LENGTH	WEIGHT	BAR	NO	SIZE	TYPE	LENGTH	WEIGHT
✱ A1	341	#5	STR	44′-11″	15975	✱ B1	96	#4	STR	24′-2″	1550
✱ A101	2	#5	STR	39′-4″	82	✱ B2	64	#7	STR	39′-2″	5124
✱ A102	2	#5	STR	33′-1″	69	✱ B3	29	#7	STR	31′-6″	1867
✱ A103	2	#5	STR	26′-10″	56	✱ B4	96	#4	STR	25′-2″	1614
✱ A104	2	#5	STR	20′-8″	43	B5	156	#6	STR	54′-2″	12692
✱ A105	2	#5	STR	14′-5″	30						
✱ A106	2	#5	STR	8′-2″	17	✱ G1	1	#5	STR	45′-1″	47
✱ A107	1	#5	STR	5′-1″	5	✱ G2	1	#5	STR	46′-10″	49
✱ A108	1	#5	STR	2′-0″	2						
✱ A109	2	#5	STR	39′-6″	82	✱ K1	4	#8	1	14′-0″	150
✱ A110	2	#5	STR	33′-6″	70	✱ K2	6	#8	2	21′-7″	346
✱ A111	2	#5	STR	27′-6″	57	✱ K3	4	#8	1	14′-7″	156
✱ A112	2	#5	STR	21′-6′	45	✱ K4	6	#8	2	22′-3″	356
✱ A113	2	#5	STR	15′-6″	32	K5	32	#5	STR	7′-2″	239
✱ A114	2	#5	STR	9′-6″	20	K6	128	#5	STR	8′-5″	1124
✱ A115	1	#5	STR	6′-6″	7	K7	32	#5	6	8′-2″	273
✱ A116	1	#5	STR	3′-6″	4	K8	18	#4	7	11′-4″	136
						K9	8	#4	STR	5′-8″	30
A2	343	#5	STR	44′-11″	16069	K10	40	#4	STR	8′-7″	229
A201	2	#5	STR	39′-4″	82	K11	12	#4	10	5′-8″	45
A202	2	#5	STR	33′-1″	69	K12	8	#6	STR	8′-5″	101
A203	2	#5	STR	26′-10″	56	K13	8	#6	STR	8′-9″	105
A204	2	#5	STR	20′-8″	43	✱ K14	16	#6	STR	5′-5″	130
A205	2	#5	STR	14′-5″	30						
A206	2	#5	STR	8′-2″	17	✱ S1	48	#5	3	5′-11″	296
A207	1	#5	STR	5′-1″	5	✱ S2	16	#5	3	3′-7″	60
A208	1	#5	STR	2′-0″	2	✱ S3	128	#4	4	11′-4″	969
A209	2	#5	STR	39′-6″	82	S4	164	#4	8	2′-9″	301
A210	2	#5	STR	33′-6″	70	✱ S5	48	#4	9	4′-9″	152
A211	2	#5	STR	27′-6″	57						
A212	2	#5	STR	21′-6′	45	U1	16	#4	5	11′-3″	120
A213	2	#5	STR	15′-6″	32	✱ U2	20	#4	2	17′-0″	227
A214	2	#5	STR	9′-6″	20						
A215	1	#5	STR	6′-6″	7	REINFORCING STEEL					LBS. 32085
A216	1	#5	STR	3′-6″	4	✱ EPOXY COATED REINFORCING STEEL					LBS. 29689

SUPERSTRUCTURE BILL OF MATERIAL

	CLASS AA CONCRETE		REINFORCING STEEL	EPOXY COATED REINFORCING STEEL
	POUR	(CU. YDS.)	(LBS.)	(LBS.)
SPANS A & B	POUR 1	159.0	32085	29689
	POUR 2	212.5		
TOTALS✱✱		371.5	32085	29689

✱✱ QUANTITIES FOR BARRIER RAIL ARE NOT INCLUDED

BAR TYPES

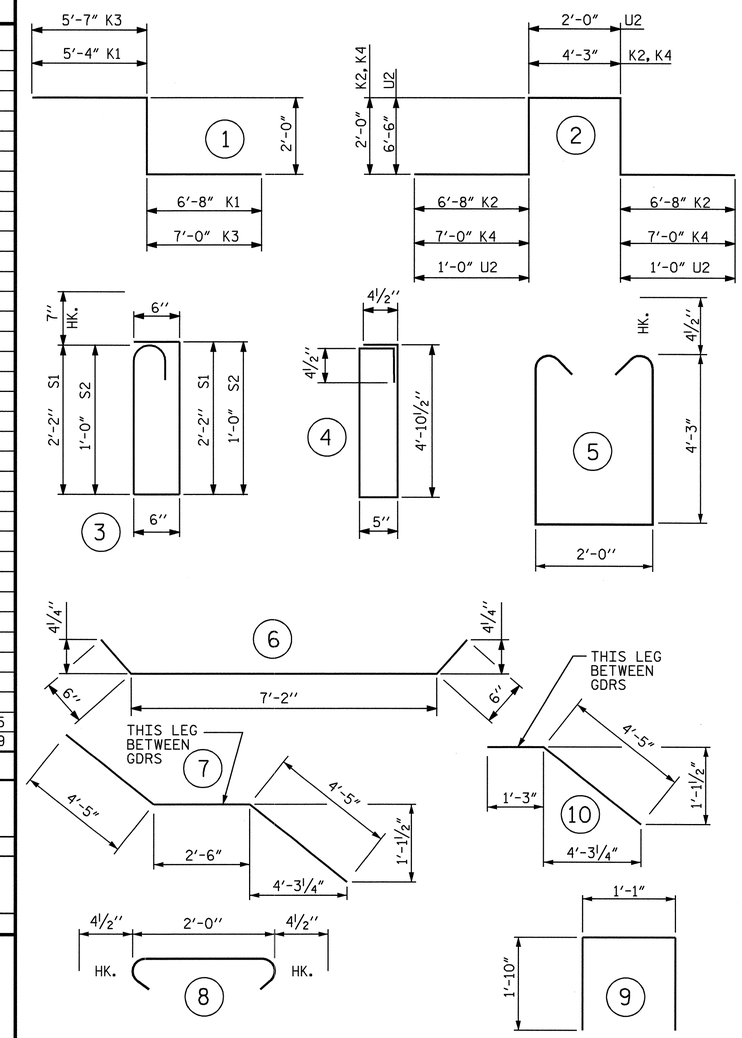

ALL BAR DIMENSIONS ARE OUT TO OUT

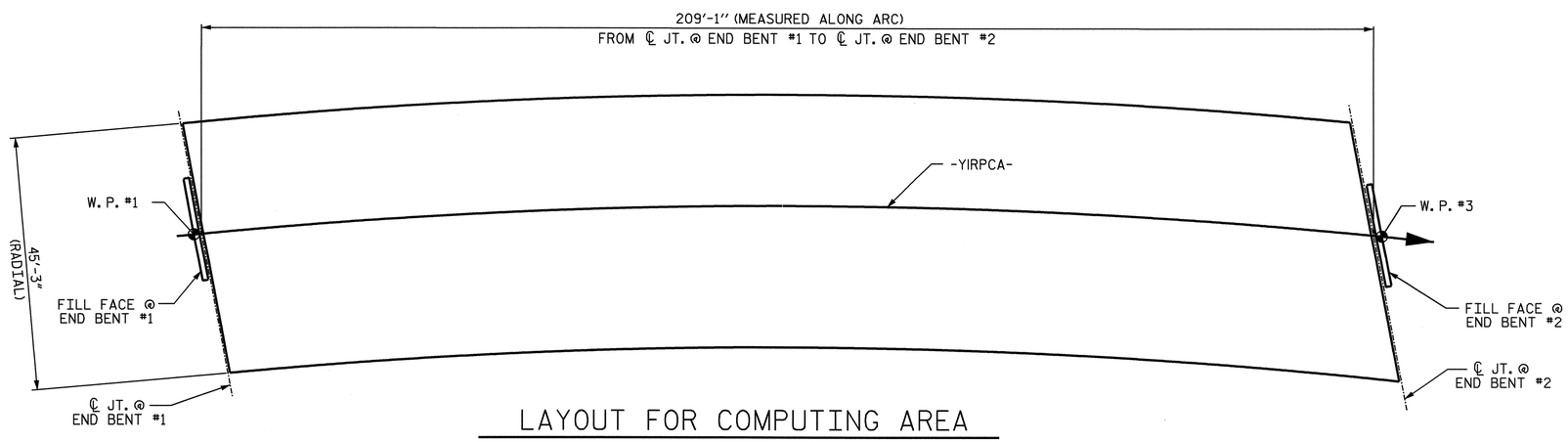

LAYOUT FOR COMPUTING AREA OF REINFORCED CONCRETE DECK SLAB (SQ. FT. = 9462)

GROOVING BRIDGE FLOORS		
APPROACH SLABS	1900	SQ. FT.
BRIDGE DECK	8102	SQ. FT.
TOTAL	10002	SQ. FT.

PROJECT NO. R-2719A
LENOIR COUNTY
STATION: 28+99.24-Y1RPCA-

STATE OF NORTH CAROLINA
DEPARTMENT OF TRANSPORTATION
RALEIGH

STANDARD
SUPERSTRUCTURE BILL OF MATERIAL

NORTH CAROLINA PROFESSIONAL SEAL 14045 ENGINEER TIMOTHY J. COGGINS
3/11/09

ASSEMBLED BY : PEGGY ADKINS	DATE : 9-07
CHECKED BY : J. B. WILSON	DATE : 11-07

DRAWN BY : JMB 5/87	REV. 6/1/94	EEM/GRP
CHECKED BY : SJD 9/87	REV. 8/16/99	RWW/LES
	REV. 5/1/06	TLA/GM

REVISIONS						SHEET NO.
NO.	BY:	DATE:	NO.	BY:	DATE:	S-283
1			3			TOTAL SHEETS
2			4			340

STR. #10 STD. NO. BOM2

11-MAR-2009 09:00
h:\structures\str#10\finalplans\R2719A_sd_bm_10.dgn
tcoggins

NOTES

STIRRUPS IN CAP MAY BE SHIFTED AS NECESSARY TO CLEAR ANCHOR BOLTS.

BACKWALL SHALL BE PLACED BEFORE APPLYING THE EPOXY PROTECTIVE COATING.

THE TOP SURFACE AREAS OF THE END BENT CAPS SHALL BE CURED IN ACCORDANCE WITH THE STANDARD SPECIFICATIONS EXCEPT THE MEMBRANE CURING COMPOUND METHOD SHALL NOT BE USED.

THE TOP SURFACE OF THE END BENT CAP EXCEPT THE BRIDGE SEAT BUILDUPS SHALL BE SLOPED TRANSVERSELY FROM THE FILL FACE TO THE BACK FACE AT THE RATE OF 2%.

THE CONTRACTOR SHALL PROVIDE FOR INSTALLATION OF THE 4"Ø DRAIN PIPE THROUGH THE WING WALL AS REQUIRED FOR REINFORCED BRIDGE APPROACH FILLS, SEE THE ROADWAY PLANS. REINFORCING STEEL IN THE WING WALL MAY BE SHIFTED AS NECESSARY TO CLEAR THE DRAIN PIPE.

THE CONCRETE IN THE SHADED AREA OF THE WING SHALL BE POURED AFTER THE BARRIER RAIL IS CAST IF SLIP FORMING IS USED.

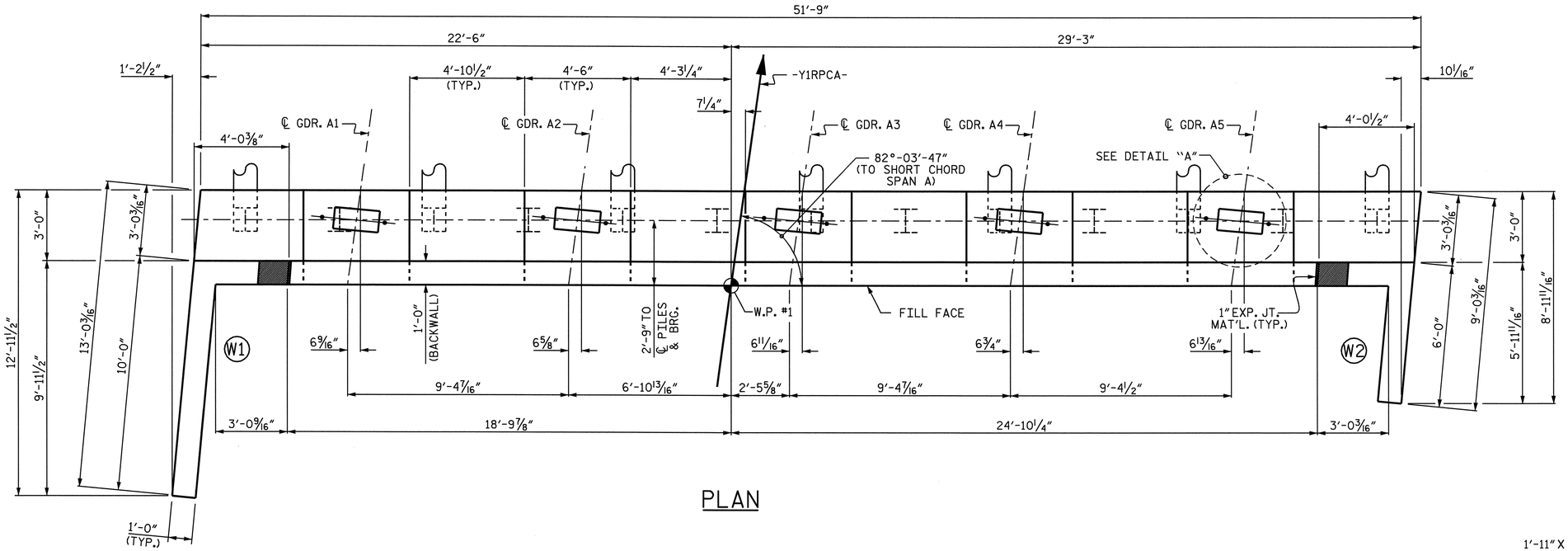

PLAN

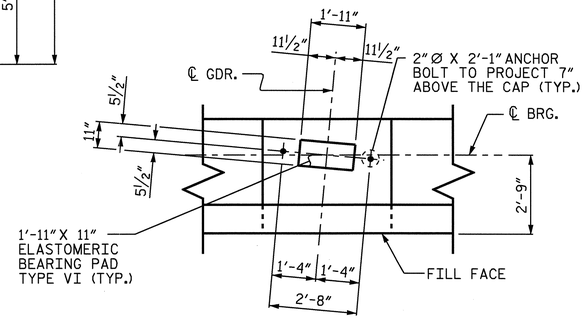

DETAIL "A"

(TYP. EA. GIRDER)

TOP OF PILE ELEVATIONS					
PILE No.	EL.	PILE No.	EL.	PILE No.	EL.
P1	76.661	P6	75.257	P11	73.854
P2	76.380	P7	74.977	P12	73.573
P3	76.099	P8	74.696	P13	73.293
P4	75.818	P9	74.415		
P5	75.538	P10	74.135		

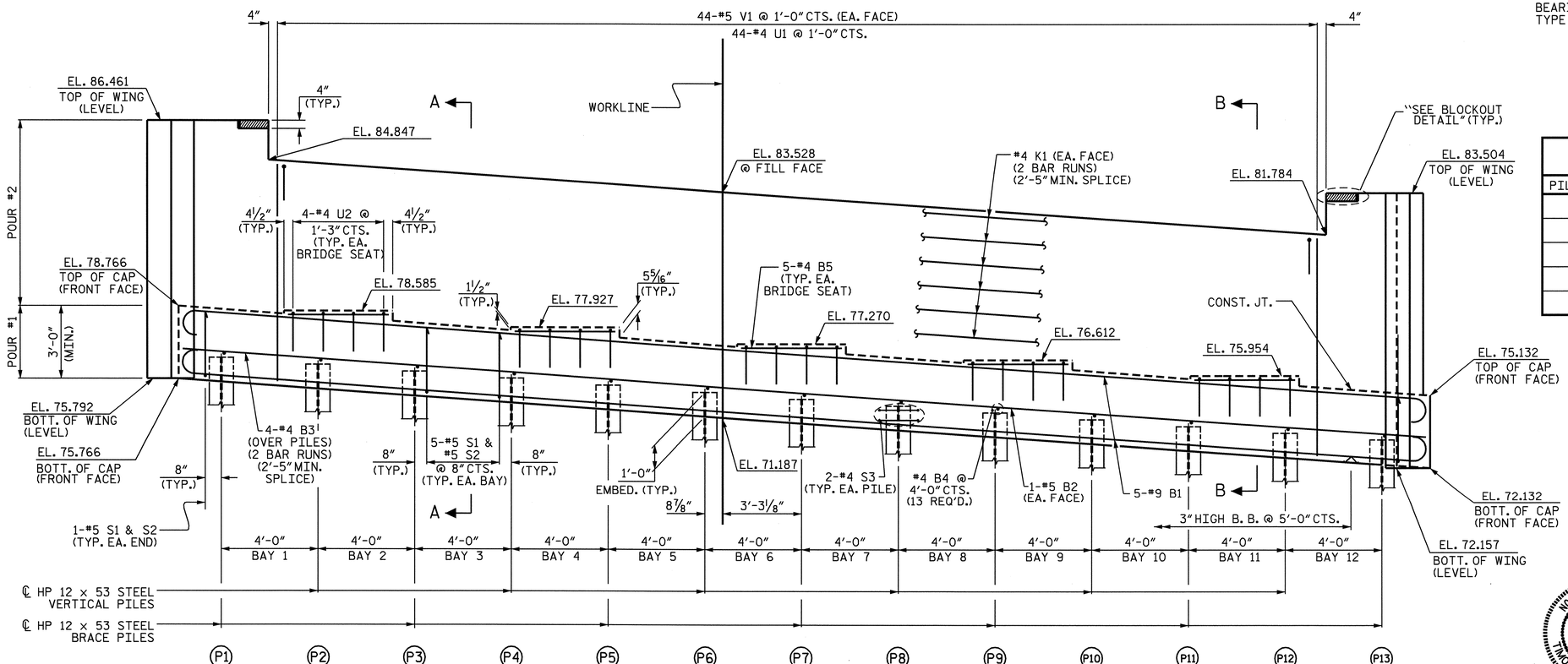

ELEVATION

PROJECT NO. R-2719A

LENOIR COUNTY

STATION: 28+99.24 -Y1RPCA-

SHEET 1 OF 3

STATE OF NORTH CAROLINA
DEPARTMENT OF TRANSPORTATION
RALEIGH

SUBSTRUCTURE
END BENT #1

NORTH CAROLINA PROFESSIONAL SEAL 14045 ENGINEER TIMOTHY W. COGGINS

3/11/09

REVISIONS						SHEET NO.
NO.	BY:	DATE:	NO.	BY:	DATE:	S-284
1			3			TOTAL SHEETS
2			4			340

STR. #10

DRAWN BY : J.B. WILSON DATE : 5/04/08
CHECKED BY : B.N. BARODAWALA DATE : 7/29/08

11-MAR-2009 09:54
r:\structures\str#10\final plans\r-2719a_sd_e#_10.dgn
PADKINS

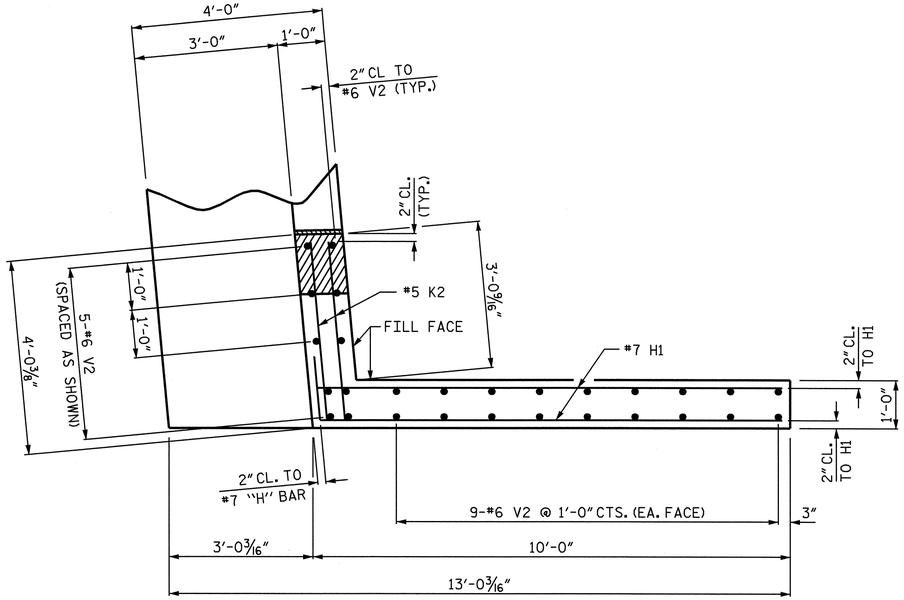

PLAN OF WING W1

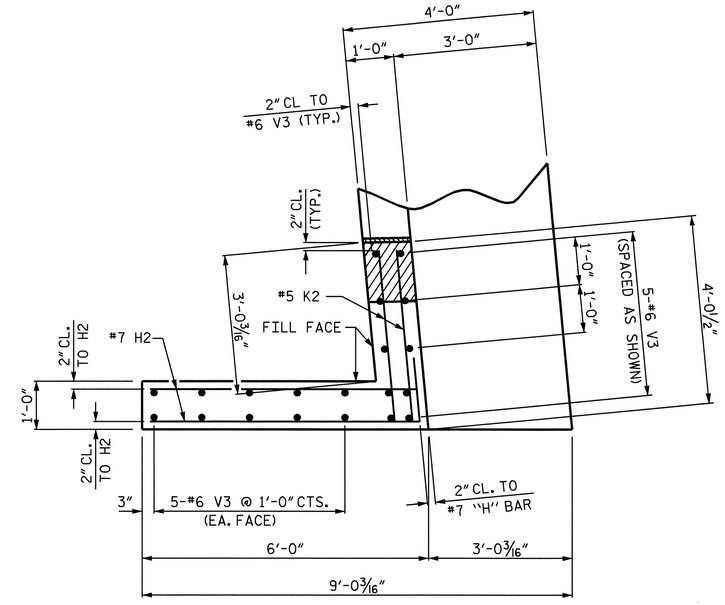

PLAN OF WING W2

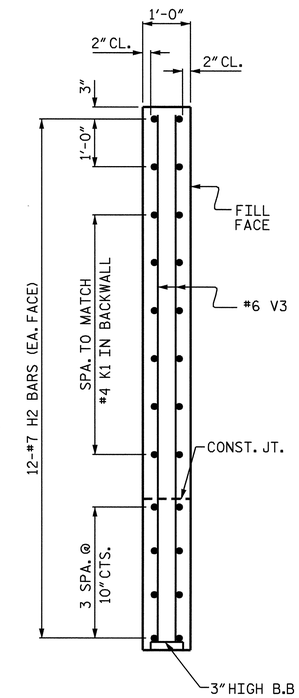

SECTION Y-Y

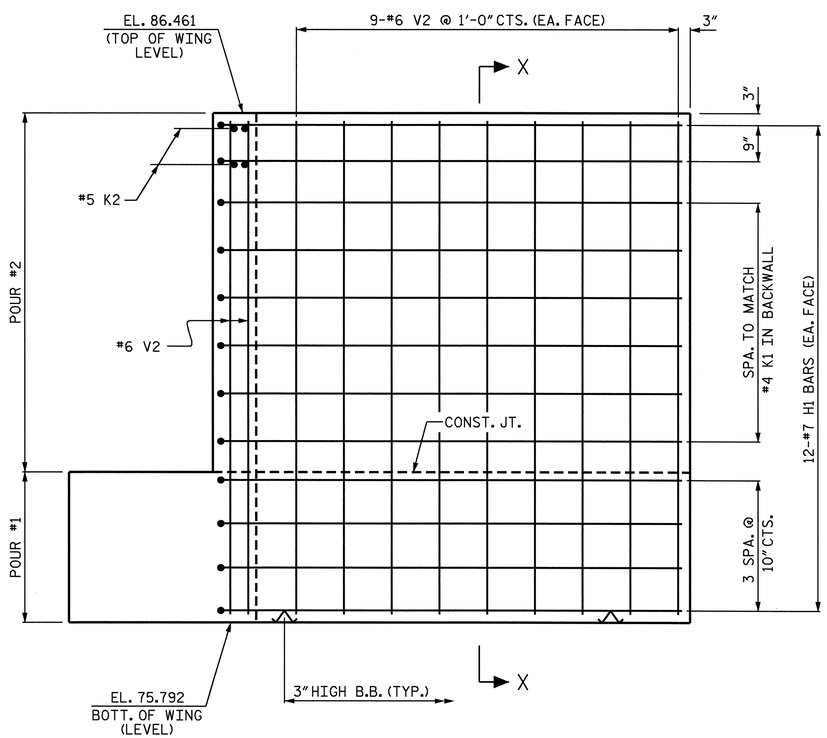

ELEVATION OF WING W1

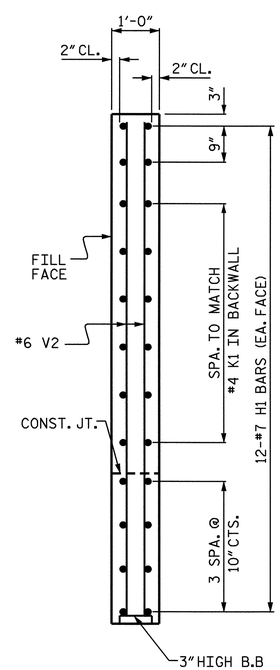

SECTION X-X

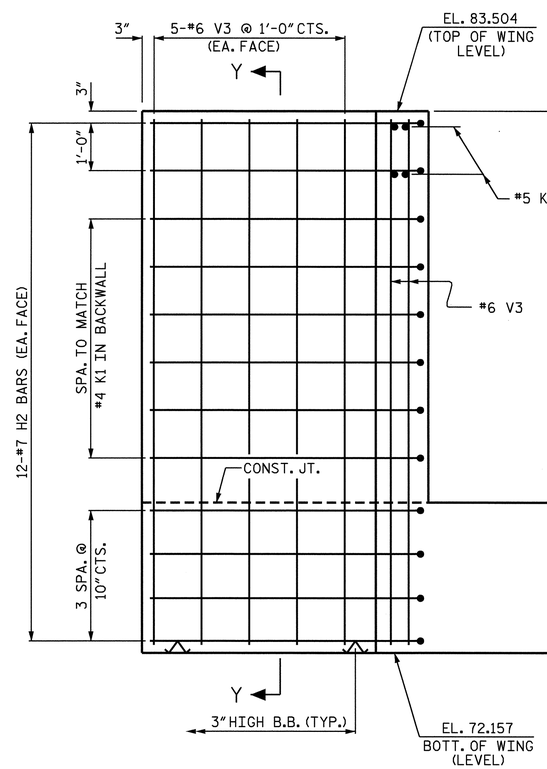

ELEVATION OF WING W2

NORTH CAROLINA PROFESSIONAL SEAL 14045 ENGINEER TIMOTHY W. COGGINS
3/11/09

PROJECT NO. R-2719A
LENOIR COUNTY
STATION: 28+99.24 -Y1RPCA-

SHEET 2 OF 3

STATE OF NORTH CAROLINA
DEPARTMENT OF TRANSPORTATION
RALEIGH

SUBSTRUCTURE
END BENT #1

REVISIONS						SHEET NO.
NO.	BY:	DATE:	NO.	BY:	DATE:	S-285
1			3			TOTAL SHEETS
2			4			340

DRAWN BY : J.B. WILSON DATE : 5/04/08
CHECKED BY : B.N. BARODAWALA DATE : 7/29/08

11-MAR-2009 09:58
r:\structures\str#10\final plans\r-2719a_sd_e*_10.dgn
PADKINS

STR. #10

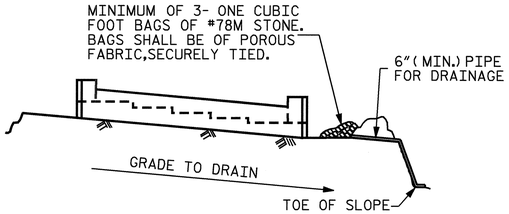

BAGGED STONE AND PIPE SHALL BE PLACED IMMEDIATELY AFTER COMPLETION OF END BENT EXCAVATION. PIPE MAY BE EITHER CONCRETE, CORRUGATED STEEL, CORRUGATED ALUMINUM ALLOY, OR CORRUGATED PLASTIC. PERFORATED PIPE WILL NOT BE ALLOWED.

BAGGED STONE SHALL REMAIN IN PLACE UNTIL THE ENGINEER DIRECTS THAT IT BE REMOVED. THE CONTRACTOR SHALL REMOVE AND DISPOSE OF SILT ACCUMULATIONS AT BAGGED STONE WHEN SO DIRECTED BY THE ENGINEER. BAGS SHALL BE REMOVED AND REPLACED WHENEVER THE ENGINEER DETERMINES THAT THEY HAVE DETERIORATED AND LOST THEIR EFFECTIVENESS.

NO SEPARATE PAYMENT WILL BE MADE FOR THIS WORK AND THE ENTIRE COST OF THIS WORK SHALL BE INCLUDED IN THE UNIT CONTRACT PRICE BID FOR THE SEVERAL PAY ITEMS.

TEMPORARY DRAINAGE AT END BENT

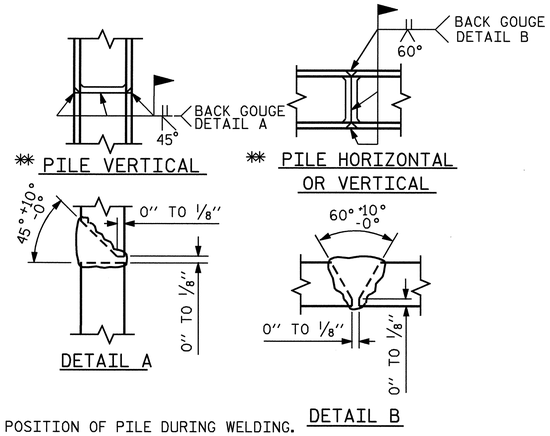

✱ POSITION OF PILE DURING WELDING.

PILE SPLICE DETAILS

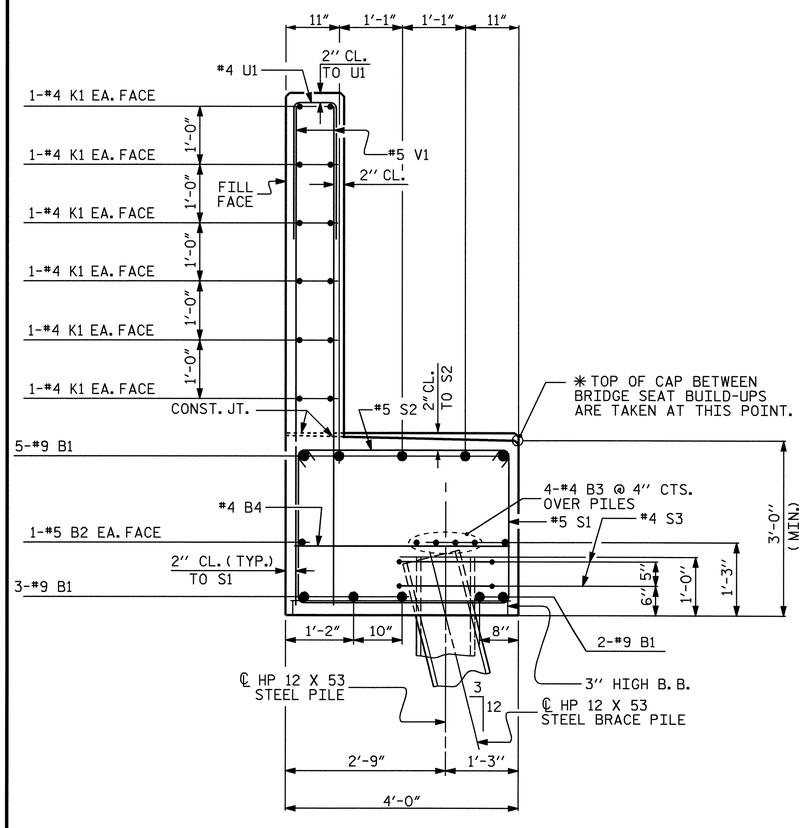

SECTION A-A

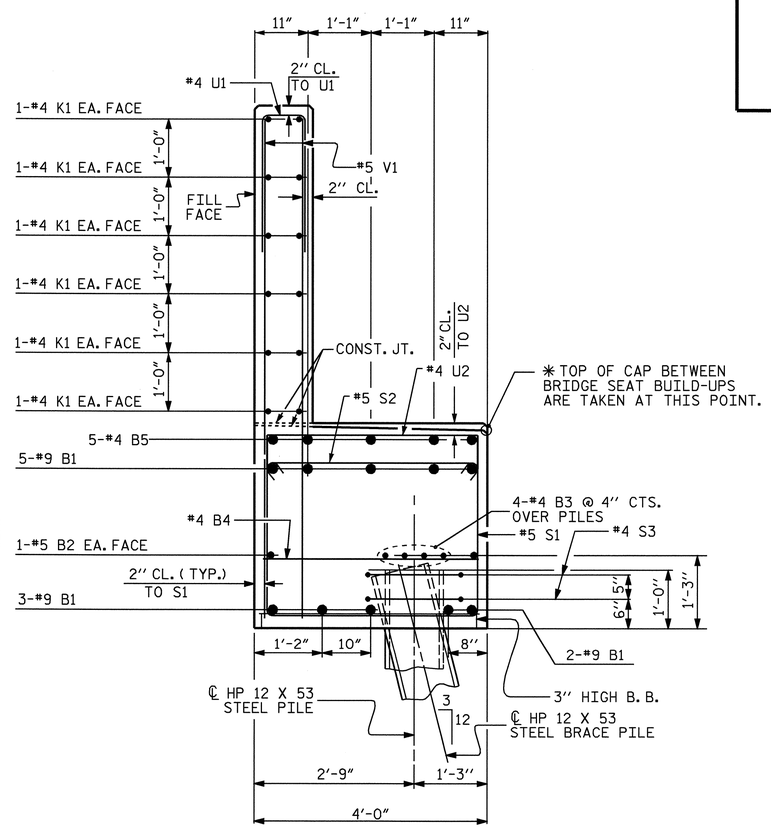

SECTION B-B

DRAWN BY : J.B. WILSON DATE : 5/04/08
CHECKED BY : B.N. BARODAWALA DATE : 7/29/08

BAR TYPES

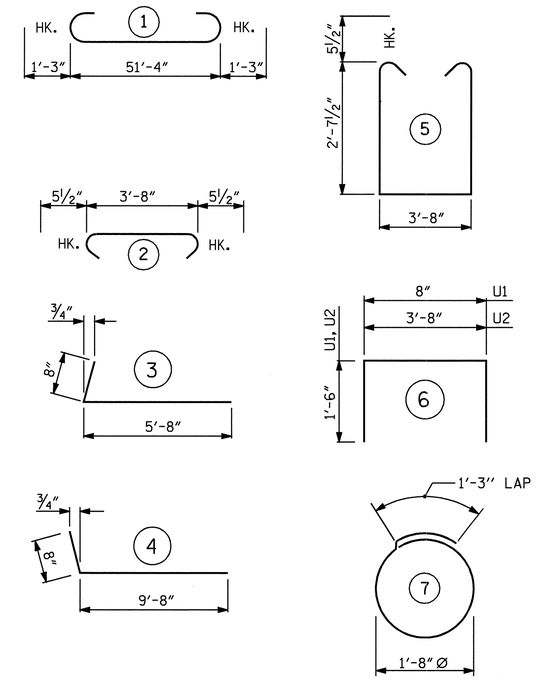

ALL BAR DIMENSIONS ARE OUT TO OUT.

BILL OF MATERIAL

END BENT #1

BAR	NO.	SIZE	TYPE	LENGTH	WEIGHT
B1	10	#9	1	53'-10"	1830
B2	2	#5	STR	51'-5"	107
B3	8	#4	STR	26'-11"	144
B4	13	#4	STR	3'-8"	32
B5	25	#4	STR	4'-2"	70
H1	24	#7	4	10'-4"	507
H2	24	#7	3	6'-4"	311
K1	24	#4	STR	26'-11"	432
K2	8	#5	STR	3'-8"	31
S1	62	#5	5	9'-10"	636
S2	62	#5	2	4'-7"	296
S3	26	#4	7	6'-6"	113
U1	44	#4	6	3'-8"	108
U2	20	#4	6	6'-8"	89
V1	88	#5	STR	8'-11"	818
V2	28	#6	STR	10'-4"	435
V3	20	#6	STR	11'-0"	330

REINFORCING STEEL = 6289 LBS

CLASS "A" CONCRETE BREAKDOWN

POUR #1
CAP AND LOWER PART OF WINGS 25.7 YD.3

POUR #2
BACKWALL AND
UPPER PART OF WINGS 16.4 YD.3

CLASS "A" CONCRETE TOTAL 42.1 YD.3

HP 12 x 53 STEEL PILES
No. 13 LIN. FT. 975

PILE REDRIVES EA. 4

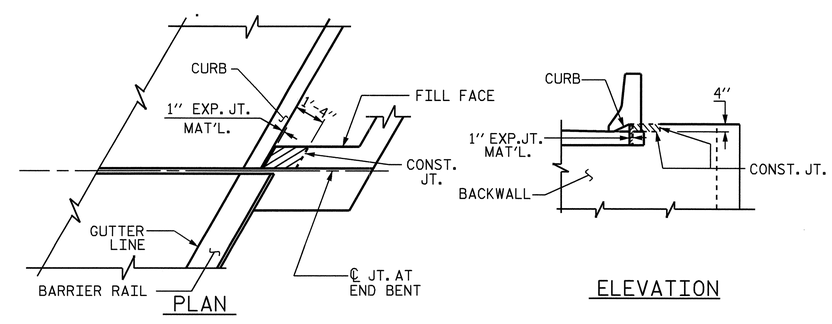

BLOCKOUT IN WING WALL

PROJECT NO. R-2719A
LENOIR COUNTY
STATION: 28+99.24 -Y1RPCA-

SHEET 3 OF 3

STATE OF NORTH CAROLINA
DEPARTMENT OF TRANSPORTATION
RALEIGH

SUBSTRUCTURE
END BENT #1

NORTH CAROLINA PROFESSIONAL SEAL 14045 ENGINEER TIMOTHY W. COGGINS
3/11/09

REVISIONS						SHEET NO.
NO.	BY:	DATE:	NO.	BY:	DATE:	S-286
1			3			TOTAL SHEETS
2			4			340

STR. #10

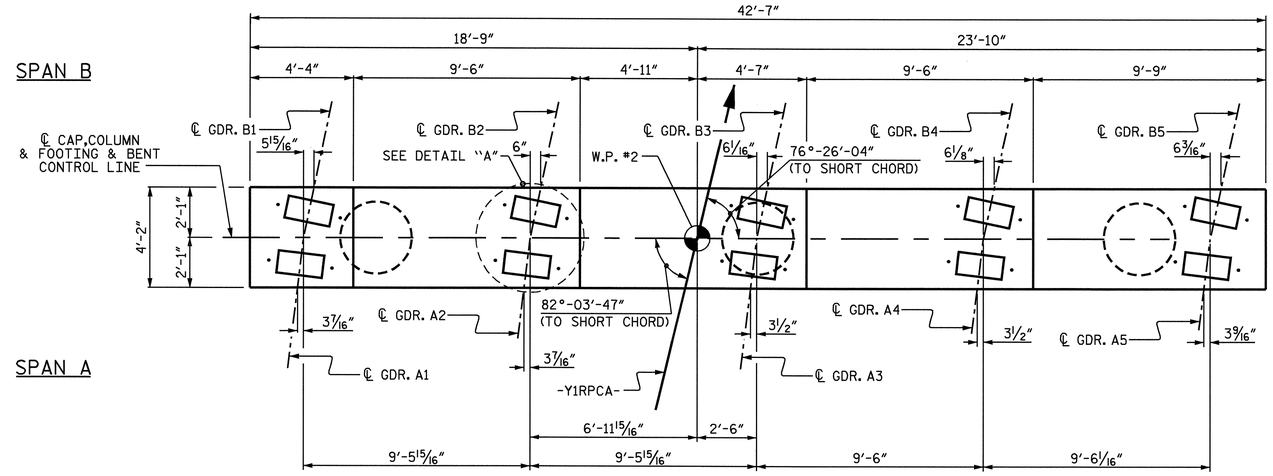

PLAN

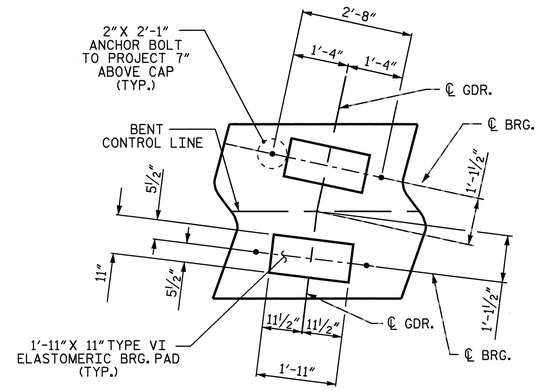

DETAIL "A"

(TYP. EA. GDR.)

NOTES

STIRRUPS IN CAP MAY BE SHIFTED AS NECESSARY TO CLEAR ANCHOR BOLTS.

HOOKS ON "V" BARS MAY BE TURNED AS NECESSARY FOR PLACING REINFORCING STEEL.

PILE SPLICE SHALL BE IN ACCORDANCE WITH THE STANDARD SPECIFICATIONS AND AWS D1.1.

FOR PILE SPLICE DETAILS, SEE END BENT #1, SHEET 3 OF 3.

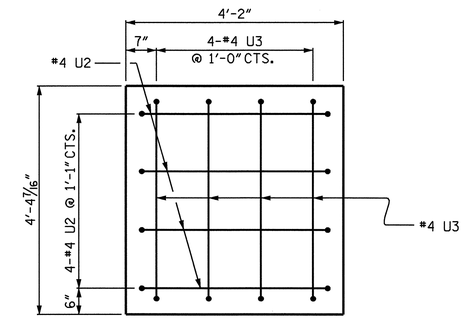

END VIEW

(LEFT SIDE)

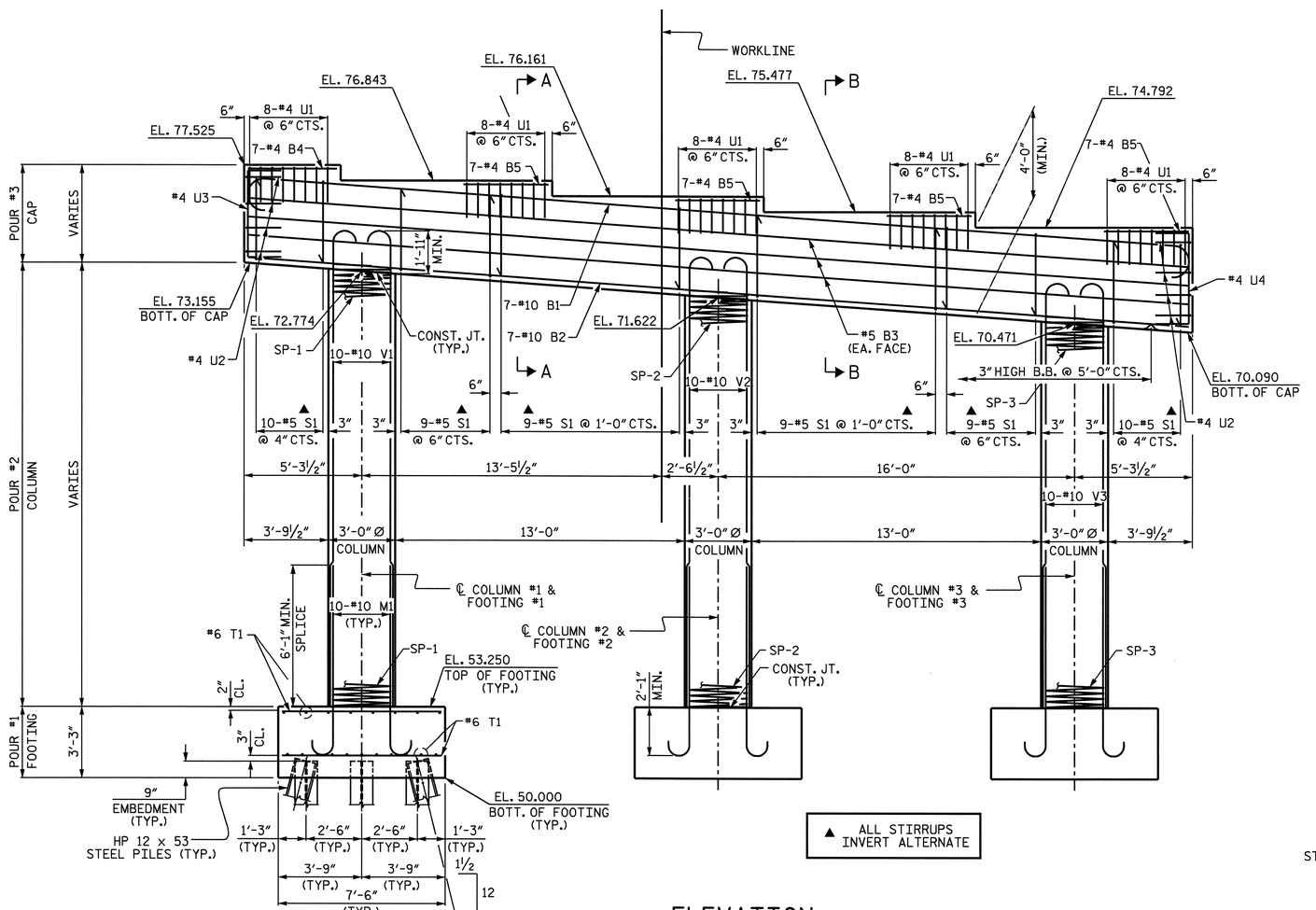

ELEVATION

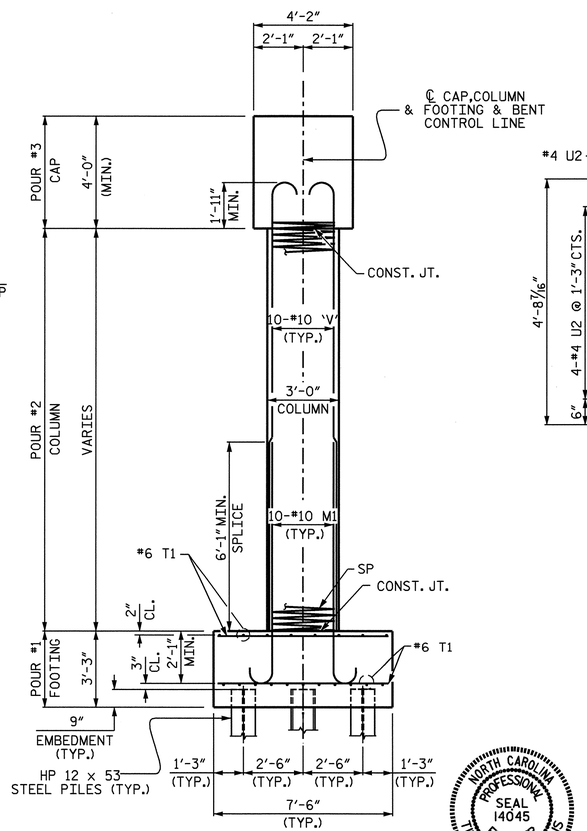

END ELEVATION

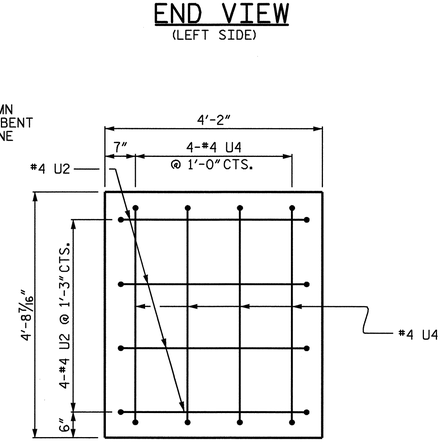

END VIEW

(RIGHT SIDE)

PROJECT NO. R-2719A

LENOIR COUNTY

STATION: 28+99.24 -Y1RPCA-

SHEET 1 OF 2

STATE OF NORTH CAROLINA
DEPARTMENT OF TRANSPORTATION
RALEIGH

SUBSTRUCTURE
BENT #1

NORTH CAROLINA PROFESSIONAL SEAL 14045 ENGINEER TIMOTHY W. COGGINS
3/11/09

REVISIONS						SHEET NO.
NO.	BY:	DATE:	NO.	BY:	DATE:	S-287
1			3			TOTAL SHEETS
2			4			340

STR.# 10

DRAWN BY : J.B. WILSON DATE : 7/23/08
CHECKED BY : B.N. BARODAWALA DATE : 7/25/08

11-MAR-2009 09:54
r:\structures\str#10\finalplans\R-2719A_sd_b#_10.dgn
PADKINS

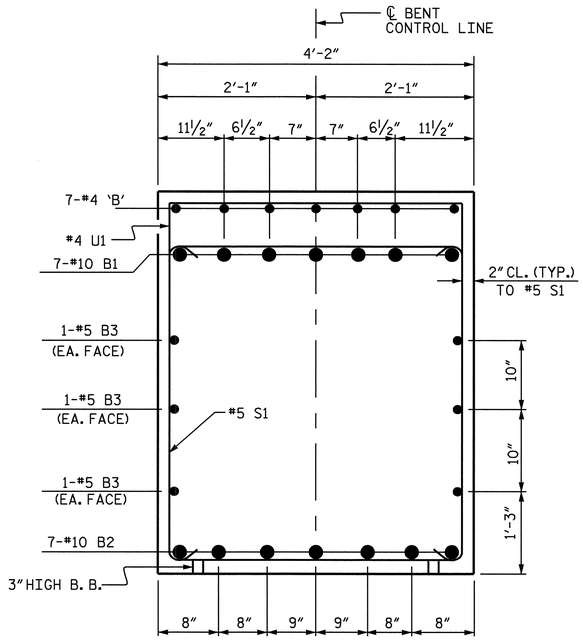

SECTION A-A

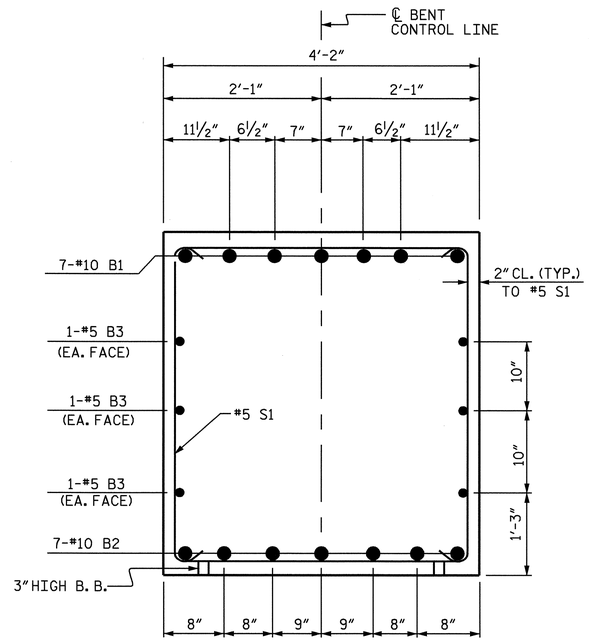

SECTION B-B

BAR TYPES

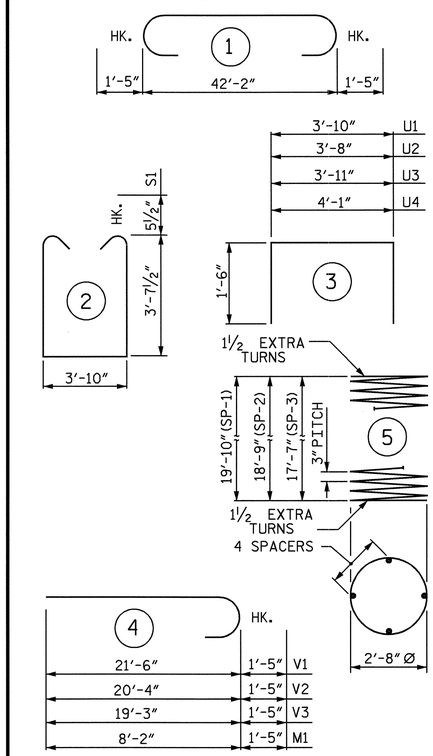

ALL BAR DIMENSIONS ARE OUT TO OUT.

BILL OF MATERIAL

BENT #1

BAR	NO.	SIZE	TYPE	LENGTH	WEIGHT
B1	7	#10	1	45'-0"	1355
B2	7	#10	STR	42'-3"	1273
B3	6	#5	STR	42'-3"	264
B4	7	#4	STR	4'-0"	19
B5	28	#4	STR	4'-4"	81
S1	56	#5	2	12'-0"	701
U1	40	#4	3	6'-10"	183
U2	8	#4	3	6'-8"	36
U3	4	#4	3	6'-11"	18
U4	4	#4	3	7'-1"	19
M1	30	#10	4	9'-7"	1237
V1	10	#10	4	22'-11"	986
V2	10	#10	4	21'-9"	936
V3	10	#10	4	20'-8"	889
T1	114	#6	STR	7'-2"	1227
REINFORCING STEEL				=	9224 LBS

SPIRAL COLUMN REINFORCING STEEL					
SP-1	1	*	5	679'-4"	454 LBS.
SP-2	1	*	5	643'-7"	430 LBS.
SP-3	1	*	5	605'-1"	404 LBS.
SPIRAL COLUMN REINFORCING STEEL					1288 LBS.

CLASS A CONCRETE BREAKDOWN		
POUR #1 FOOTINGS	CU. YD.	20.3
POUR #2 COLUMNS	CU. YD.	14.4
POUR #3 CAP	CU. YD.	28.7
TOTAL CLASS A CONCRETE	CU. YD.	63.4

HP 12 x 53 STEEL PILES

No. 24 LIN. FT. 1080

PILE REDRIVES EA. 9

FOUNDATION EXCAVATION LUMP SUM

*THE SP-1, SP-2, SP-3 SPIRAL REINFORCING STEEL SHALL BE W20 OR D-20 COLD DRAWN WIRE OR #4 PLAIN OR DEFORMED BAR.

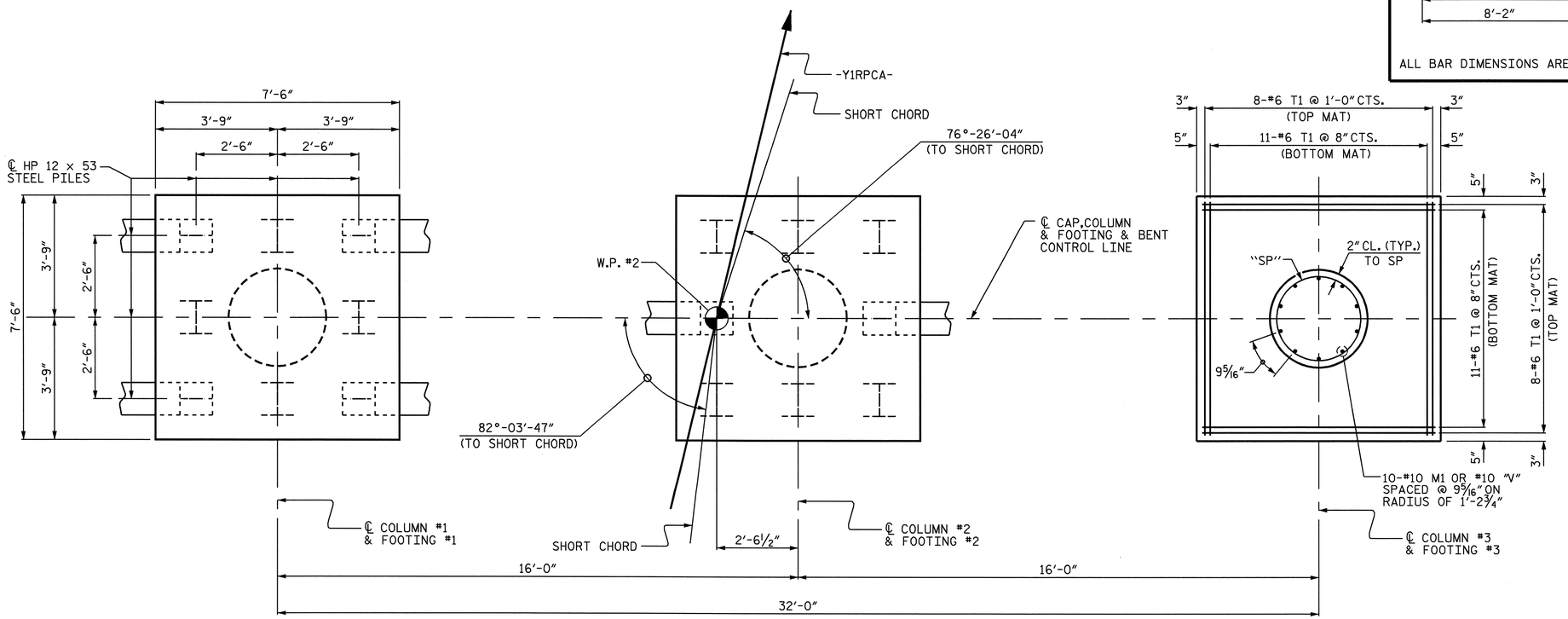

PLAN OF FOOTINGS

(ALL FOOTING, COLUMN DIMENSIONS AND REINFORCING STEEL ARE TYPICAL)
(PILE ARRANGEMENT FOR FOOTING #1 AND #3 ARE THE SAME)

PROJECT NO. R-2719A
LENOIR COUNTY
STATION: 28+99.24 Y1RPCA

SHEET 2 OF 2

STATE OF NORTH CAROLINA
DEPARTMENT OF TRANSPORTATION
RALEIGH

SUBSTRUCTURE
BENT #1

NORTH CAROLINA PROFESSIONAL SEAL 14045 ENGINEER TIMOTHY W. COGGINS
3/11/09

REVISIONS							SHEET NO.
NO.	BY:	DATE:	NO.	BY:	DATE:		S-288
1			3				TOTAL SHEETS
2			4				340

DRAWN BY : J.B. WILSON DATE : 7/23/08
CHECKED BY : B.N. BARODAWALA DATE : 7/25/08

11-MAR-2009 10:03
r:\structures\str#10\final plans\R-2719A_sd_b#_10.dgn
PADKINS

STR.# 10

NOTES

STIRRUPS IN CAP MAY BE SHIFTED AS NECESSARY TO CLEAR ANCHOR BOLTS.

BACKWALL SHALL BE PLACED BEFORE APPLYING THE EPOXY PROTECTIVE COATING.

THE TOP SURFACE AREAS OF THE END BENT CAPS SHALL BE CURED IN ACCORDANCE WITH THE STANDARD SPECIFICATIONS EXCEPT THE MEMBRANE CURING COMPOUND METHOD SHALL NOT BE USED.

THE TOP SURFACE OF THE END BENT CAP EXCEPT THE BRIDGE SEAT BUILDUPS SHALL BE SLOPED TRANSVERSELY FROM THE FILL FACE TO THE BACK FACE AT THE RATE OF 2%.

THE CONTRACTOR SHALL PROVIDE FOR INSTALLATION OF THE 4" Ø DRAIN PIPE THROUGH THE WING WALL AS REQUIRED FOR REINFORCED BRIDGE APPROACH FILLS. SEE THE ROADWAY PLANS. REINFORCING STEEL IN THE WING WALL MAY BE SHIFTED AS NECESSARY TO CLEAR THE DRAIN PIPE.

THE CONCRETE IN THE SHADED AREA OF THE WING SHALL BE POURED AFTER THE BARRIER RAIL IS CAST IF SLIP FORMING IS USED.

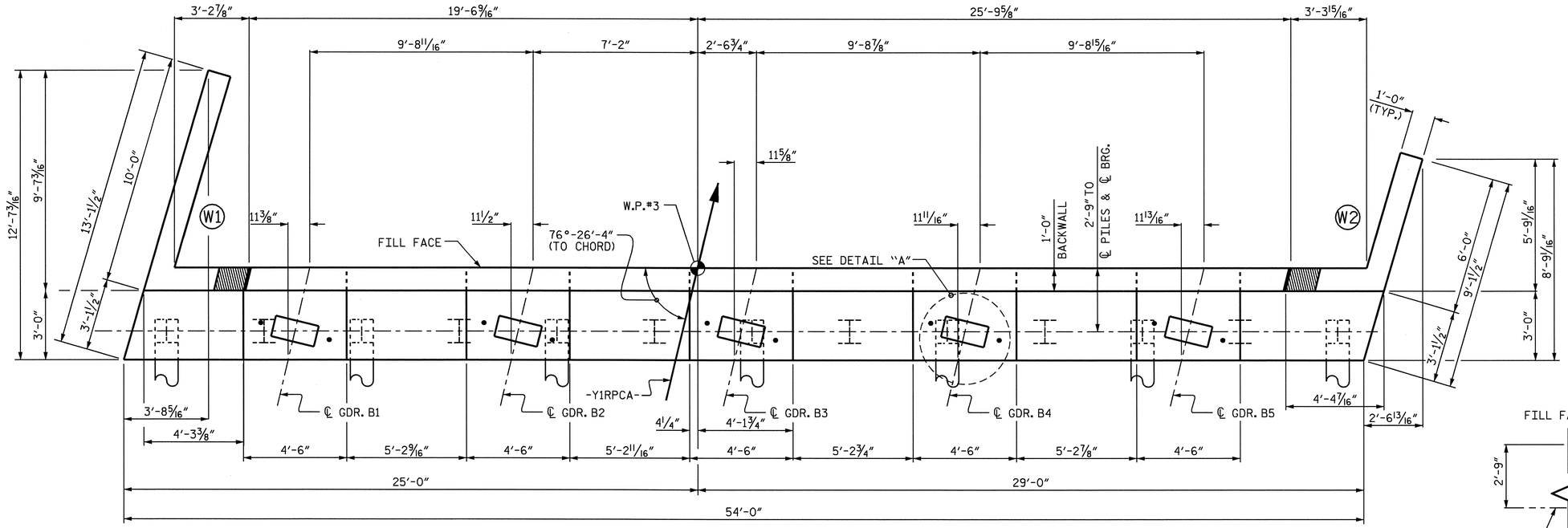

PLAN

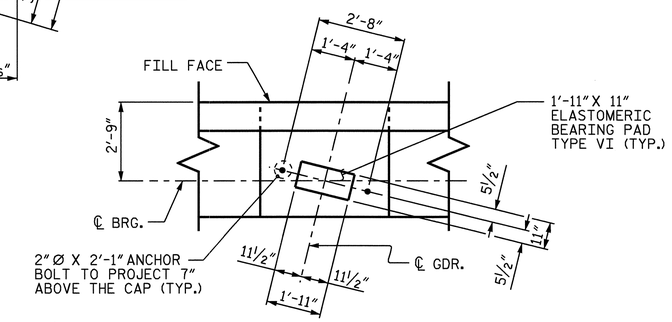

DETAIL "A"

(TYP. EA. GIRDER)

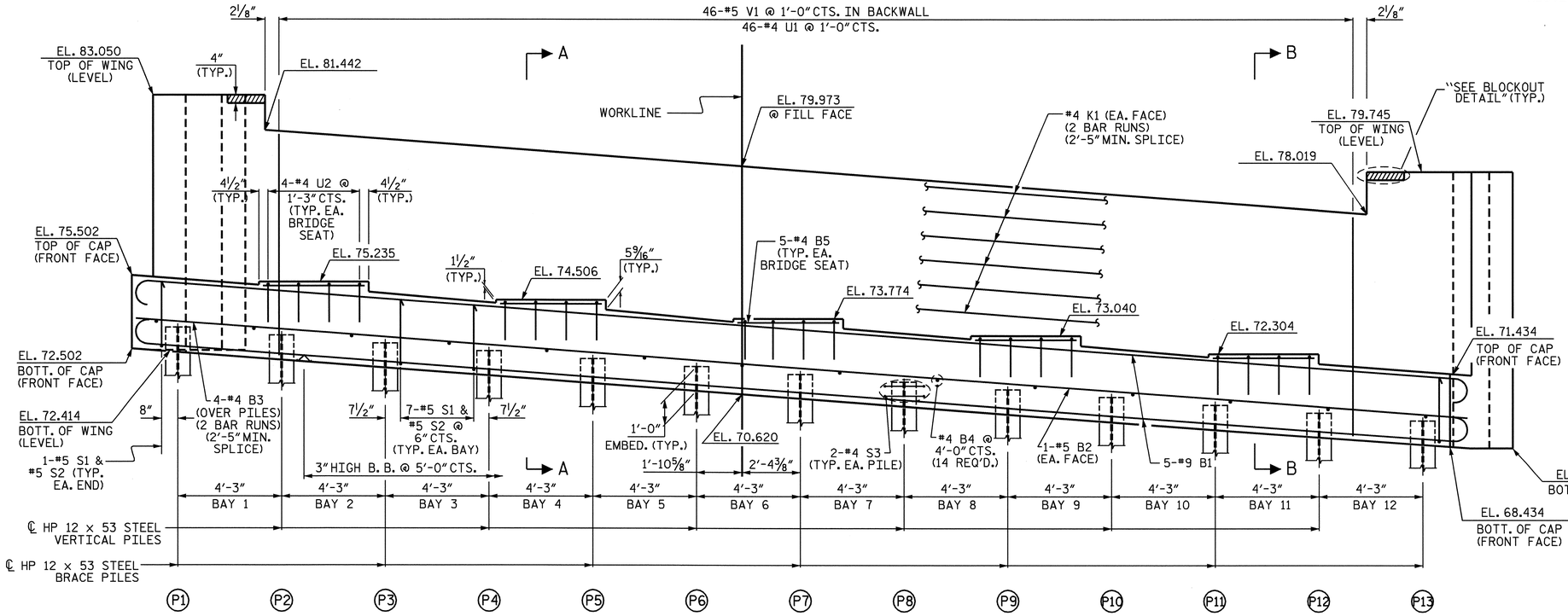

ELEVATION

TOP OF PILE ELEVATIONS					
PILE No.	EL.	PILE No.	EL.	PILE No.	EL.
P1	73.389	P6	71.788	P11	70.187
P2	73.069	P7	71.468	P12	69.867
P3	72.749	P8	71.148	P13	69.547
P4	72.429	P9	70.828		
P5	72.108	P10	70.508		

PROJECT NO. R-2719A

LENOIR COUNTY

STATION: 28+99.24 -Y1RPCA-

SHEET 1 OF 3

STATE OF NORTH CAROLINA
DEPARTMENT OF TRANSPORTATION
RALEIGH

SUBSTRUCTURE
END BENT #2

NORTH CAROLINA PROFESSIONAL SEAL 14045 ENGINEER TIMOTHY W. COGGINS
3/11/09

REVISIONS						SHEET NO.
NO.	BY:	DATE:	NO.	BY:	DATE:	S-289
1			3			TOTAL SHEETS
2			4			340

STR. #10

DRAWN BY : J.B. WILSON DATE : 5/04/08
CHECKED BY : B.N. BARODAWALA DATE : 7/29/08

11-MAR-2009 10:02
r:\structures\str#10\final plans\r-2719a_sd_e#_10.dgn
PADKINS

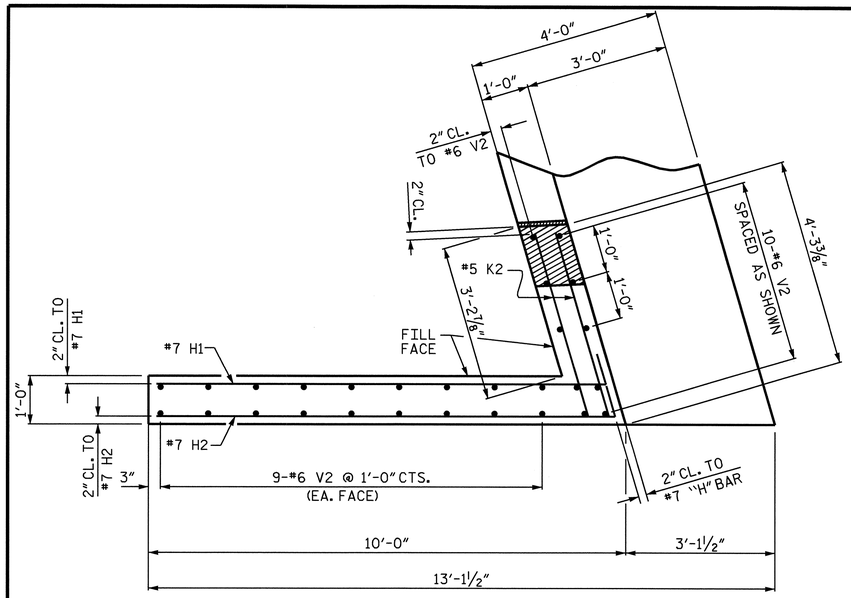

PLAN OF WING 1

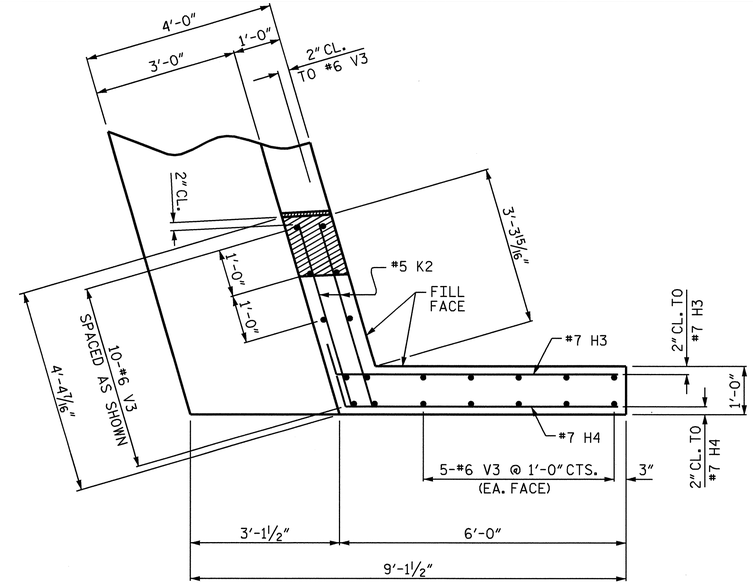

PLAN OF WING 2

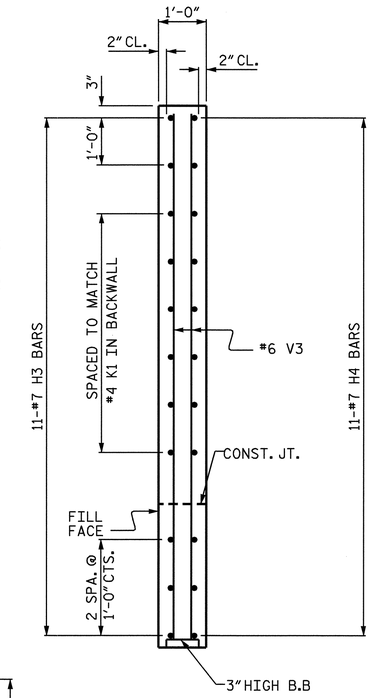

SECTION Y-Y

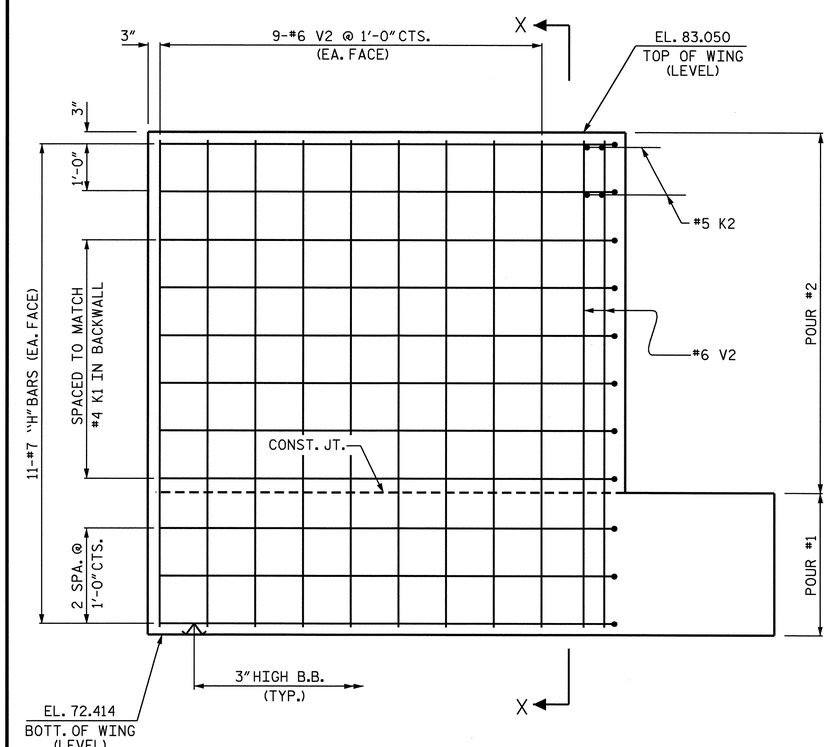

ELEVATION OF WING 1

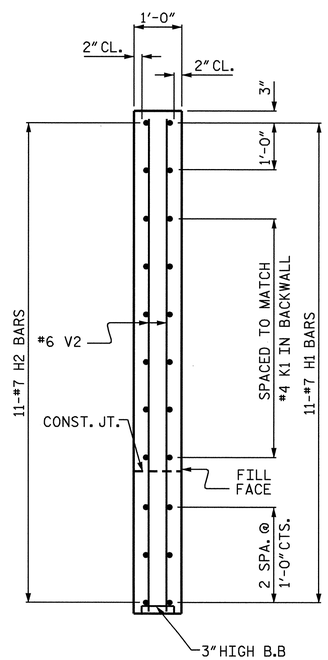

SECTION X-X

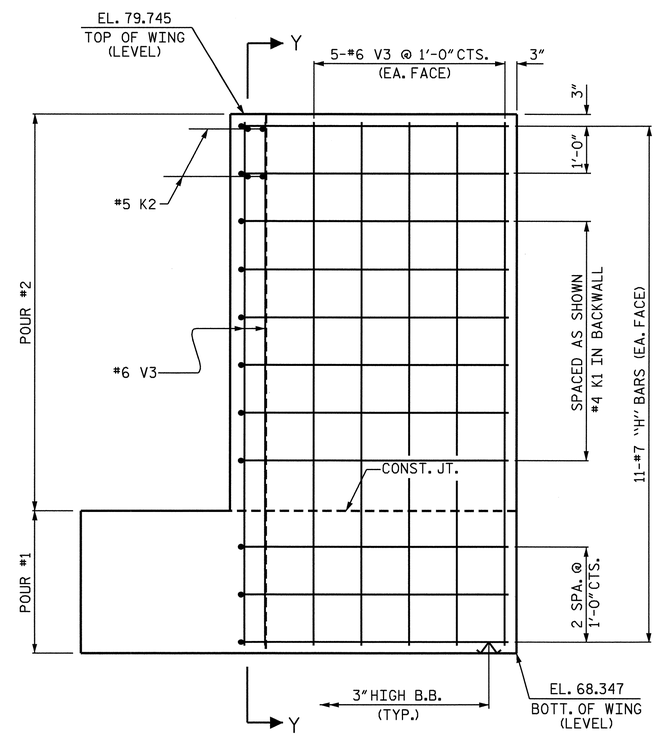

ELEVATION OF WING 2

PROJECT NO. R-2719A
LENOIR COUNTY
STATION: 28+99.24 -Y1RPCA-

SHEET 2 OF 3

STATE OF NORTH CAROLINA
DEPARTMENT OF TRANSPORTATION
RALEIGH

SUBSTRUCTURE
END BENT #2

NORTH CAROLINA PROFESSIONAL SEAL 14045 ENGINEER TIMOTHY W. COGGINS
3/11/09

REVISIONS						SHEET NO.
NO.	BY:	DATE:	NO.	BY:	DATE:	S-290
1			3			TOTAL SHEETS
2			4			340

DRAWN BY : J.B. WILSON DATE : 5/04/08
CHECKED BY : B.N. BARODAWALA DATE : 7/29/08

11-MAR-2009 10:02
r:\structures\str#10\final plans\r-2719a_sd_e*_10.dgn
PADKINS

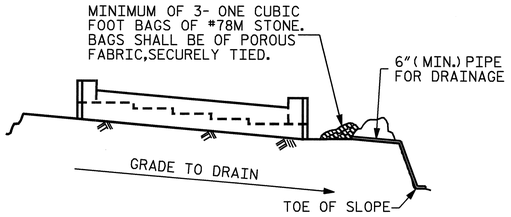

BAGGED STONE AND PIPE SHALL BE PLACED IMMEDIATELY AFTER COMPLETION OF END BENT EXCAVATION. PIPE MAY BE EITHER CONCRETE, CORRUGATED STEEL, CORRUGATED ALUMINUM ALLOY, OR CORRUGATED PLASTIC. PERFORATED PIPE WILL NOT BE ALLOWED.

BAGGED STONE SHALL REMAIN IN PLACE UNTIL THE ENGINEER DIRECTS THAT IT BE REMOVED. THE CONTRACTOR SHALL REMOVE AND DISPOSE OF SILT ACCUMULATIONS AT BAGGED STONE WHEN SO DIRECTED BY THE ENGINEER. BAGS SHALL BE REMOVED AND REPLACED WHENEVER THE ENGINEER DETERMINES THAT THEY HAVE DETERIORATED AND LOST THEIR EFFECTIVENESS.

NO SEPARATE PAYMENT WILL BE MADE FOR THIS WORK AND THE ENTIRE COST OF THIS WORK SHALL BE INCLUDED IN THE UNIT CONTRACT PRICE BID FOR THE SEVERAL PAY ITEMS.

TEMPORARY DRAINAGE AT END BENT

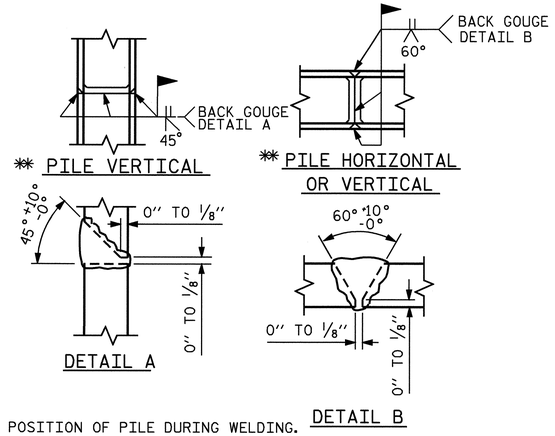

** POSITION OF PILE DURING WELDING.

PILE SPLICE DETAILS

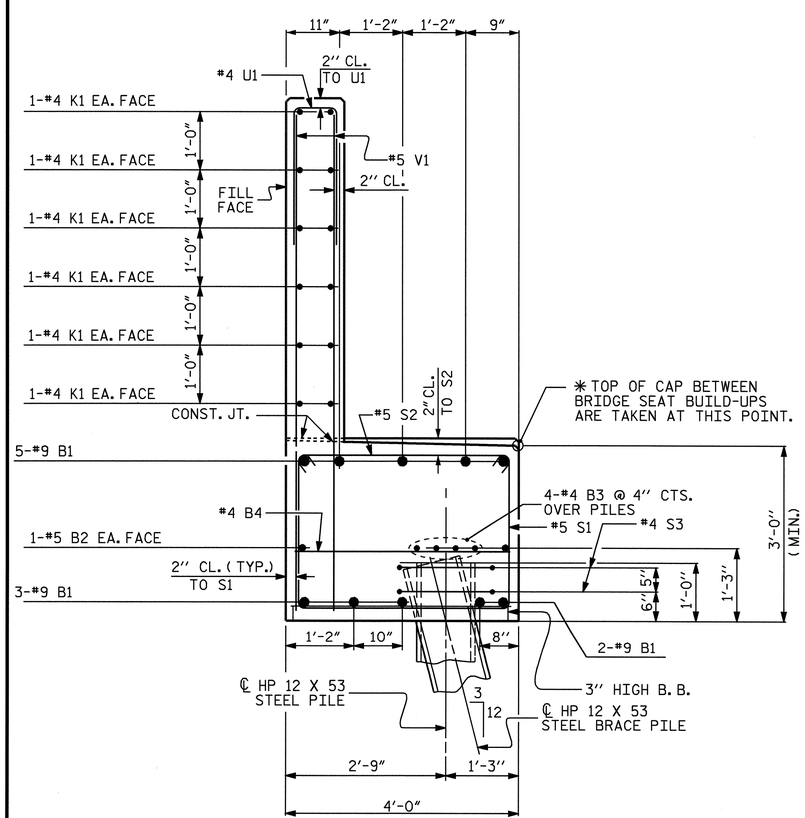

SECTION A-A

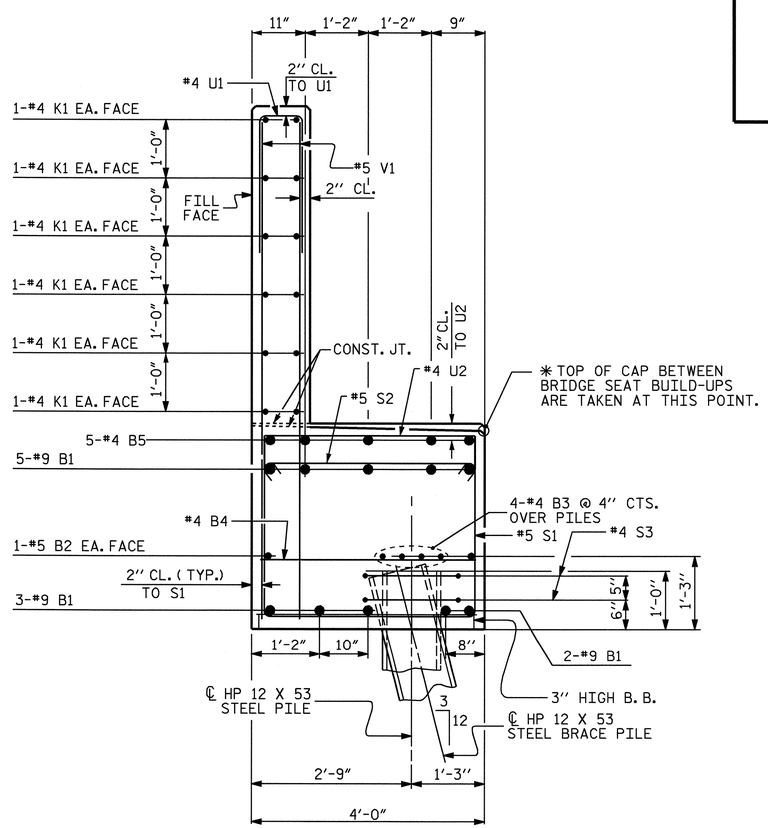

SECTION B-B

BAR TYPES

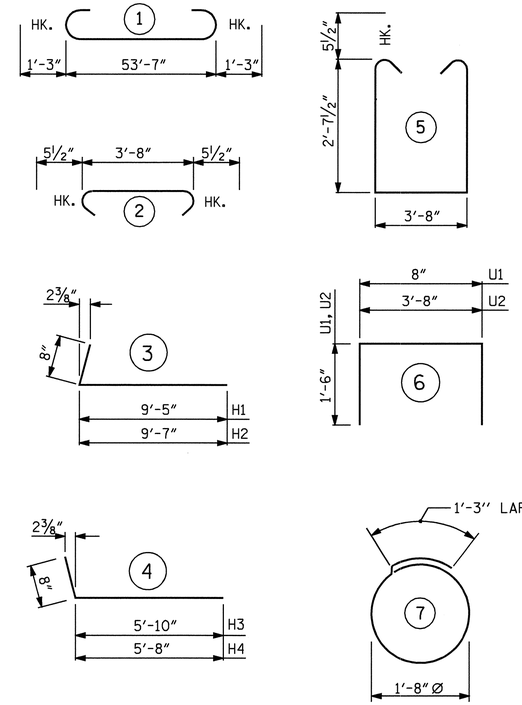

ALL BAR DIMENSIONS ARE OUT TO OUT.

BILL OF MATERIAL

END BENT #2

BAR	NO.	SIZE	TYPE	LENGTH	WEIGHT
B1	10	#9	1	56'-1"	1907
B2	2	#5	STR	53'-8"	112
B3	8	#4	STR	28'-1"	150
B4	14	#4	STR	3'-8"	34
B5	25	#4	STR	4'-2"	70
H1	11	#7	3	10'-1"	227
H2	11	#7	3	10'-3"	230
H3	11	#7	4	6'-6"	146
H4	11	#7	4	6'-4"	142
K1	24	#4	STR	28'-1"	450
K2	8	#5	STR	3'-11"	33
S1	86	#5	5	9'-10"	882
S2	86	#5	2	4'-7"	411
S3	26	#4	7	6'-6"	113
U1	46	#4	6	3'-8"	113
U2	20	#4	6	6'-8"	89
V1	92	#5	STR	8'-11"	856
V2	28	#6	STR	10'-3"	431
V3	20	#6	STR	11'-0"	330

REINFORCING STEEL = 6726 LBS

CLASS "A" CONCRETE BREAKDOWN

POUR #1
CAP AND LOWER PART OF WINGS 26.1 YD.3

POUR #2
BACKWALL AND
UPPER PART OF WINGS 17.2 YD.3

CLASS "A" CONCRETE TOTAL 43.3 YD.3

HP 12 x 53 STEEL PILES
No. 13 LIN. FT. 1040

PILE REDRIVES EA. 4

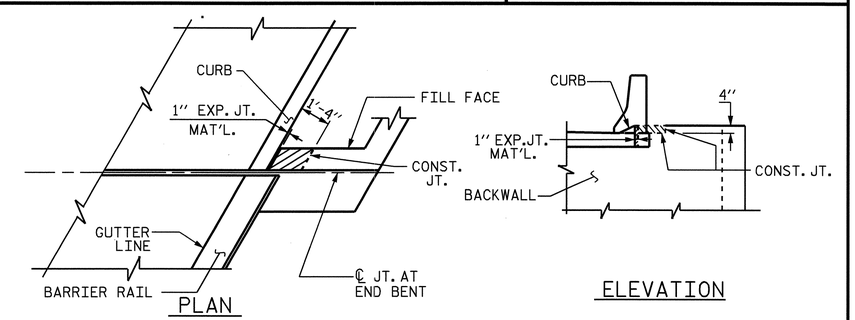

BLOCKOUT IN WING WALL

PROJECT NO. R-2719A
LENOIR COUNTY
STATION: 28+99.24 -Y1RPCA-

SHEET 3 OF 3

STATE OF NORTH CAROLINA
DEPARTMENT OF TRANSPORTATION
RALEIGH

SUBSTRUCTURE
END BENT #2

NORTH CAROLINA PROFESSIONAL SEAL 14045 ENGINEER TIMOTHY L. CRAGINS
3/11/09

REVISIONS						SHEET NO.
NO.	BY:	DATE:	NO.	BY:	DATE:	S-291
1			3			TOTAL SHEETS
2			4			340

DRAWN BY : J.B. WILSON DATE : 5/04/08
CHECKED BY : B.N. BARODAWALA DATE : 7/29/08

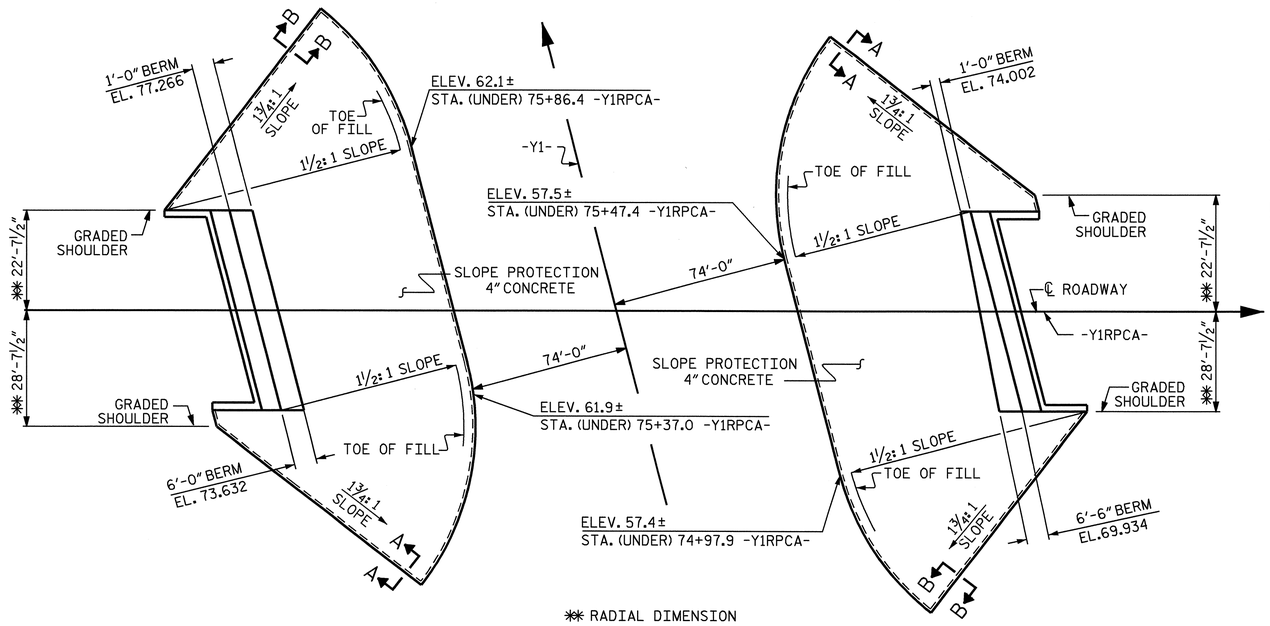

✱✱ RADIAL DIMENSION

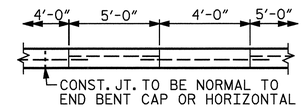

POUR A 4'-0" STRIP FIRST. STRIP WIDTHS MAY VARY IN CURVED PORTION.

OPTIONAL POURING DETAIL

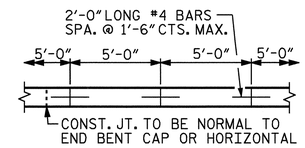

STRIP WIDTHS MAY VARY IN CURVED PORTION.

POURING DETAIL

GENERAL NOTES

SLOPE PROTECTION SHALL BE PLACED UNDER THE ENDS OF THE BRIDGE AS SHOWN IN THE DETAILS. STRAIGHT EDGING WILL NOT BE REQUIRED UNLESS, IN THE OPINION OF THE ENGINEER, VISUAL INSPECTION INDICATES A NEED FOR IT. MEASUREMENT AND PAYMENT SHALL BE AS PRESCRIBED IN SECTION 462 OF THE STANDARD SPECIFICATIONS. FOR BERM WIDTH, SEE GENERAL DRAWING.

ALTERNATE "A"

ALTERNATE "A" SHALL CONSIST OF 4" POURED-IN-PLACE CONCRETE PAVING AS SHOWN IN THE DETAILS ON THIS SHEET. CONCRETE SHALL BE CLASS "B". THE CONCRETE SURFACE SHALL BE FLOATED WITH A WOODEN FLOAT AND FINISHED. WELDED WIRE FABRIC REINFORCING SHALL BE 6 X 6 - W1.4 X W1.4, 60" WIDE. SLOPE PROTECTION SHALL BE POURED IN 5' STRIPS AS SHOWN IN THE "POURING DETAIL" WITH 2'-0" LONG #4 BARS PLACED ALONG THE SLOPE BETWEEN STRIPS AT 1'-6" MAXIMUM SPACING. SLOPE PROTECTION MAY BE POURED IN ALTERNATE 4' AND 5' STRIPS AS SHOWN IN THE "OPTIONAL POURING DETAIL" WITH ADJACENT RUNS OF WELDED WIRE FABRIC LAPPING AT LEAST 6". THE COST OF THE WELDED WIRE FABRIC AND #4 BARS, IF USED, SHALL BE INCLUDED IN THE CONTRACT UNIT PRICE BID PER SQUARE YARD FOR SLOPE PROTECTION.

BRIDGE @ STA. 28+99.24 -Y1RPCA- 75+51.12 -Y1-	4 INCH SLOPE PROTECTION	✱ WELDED WIRE FABRIC 60 INCHES WIDE
	SQUARE YARDS	APPROX. L.F.
END BENT 1	319	638
END BENT 2	371	743

✱ QUANTITY SHOWN IS BASED ON 5' POURS.

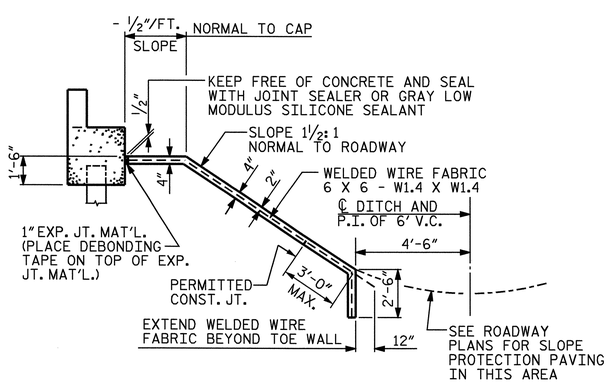

SECTION ALONG ℄ ROADWAY WHEN FILL CATCHES IN DITCH

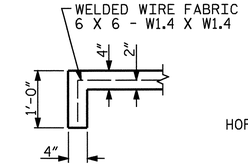

SECTION A-A

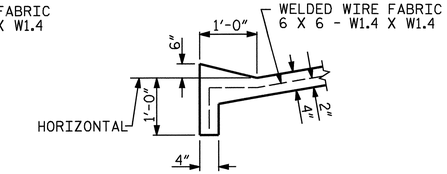

SECTION B-B

DETAILS FOR ALTERNATE "A"

PROJECT NO. R-2719A
LENOIR COUNTY
STATION: 28+99.24-Y1RPCA-

NORTH CAROLINA PROFESSIONAL SEAL 14045 ENGINEER TIMOTHY L. COGGINS
10/13/08

STATE OF NORTH CAROLINA
DEPARTMENT OF TRANSPORTATION
RALEIGH

STANDARD
SLOPE PROTECTION DETAILS

REVISIONS						SHEET NO.
NO.	BY:	DATE:	NO.	BY:	DATE:	S-292
1			3			TOTAL SHEETS
2			4			340

ASSEMBLED BY : M.GUDLAUGSSON	DATE : 04/2008	
CHECKED BY : M. PISO	DATE : 07/2008	
DRAWN BY : ELR 5/92	REV. 7/10/01	LES/RDR
CHECKED BY : GRP 6/92	REV. 5/7/03	RWW/JTE
	REV. 5/1/06	TLA/GM

09-OCT-2008 15:34
r:\structures\str#10\finalplans\R2719A_sd_SP__10.dgn
padkins

STR. #10

STD. NO. SP1 (SHT 5)

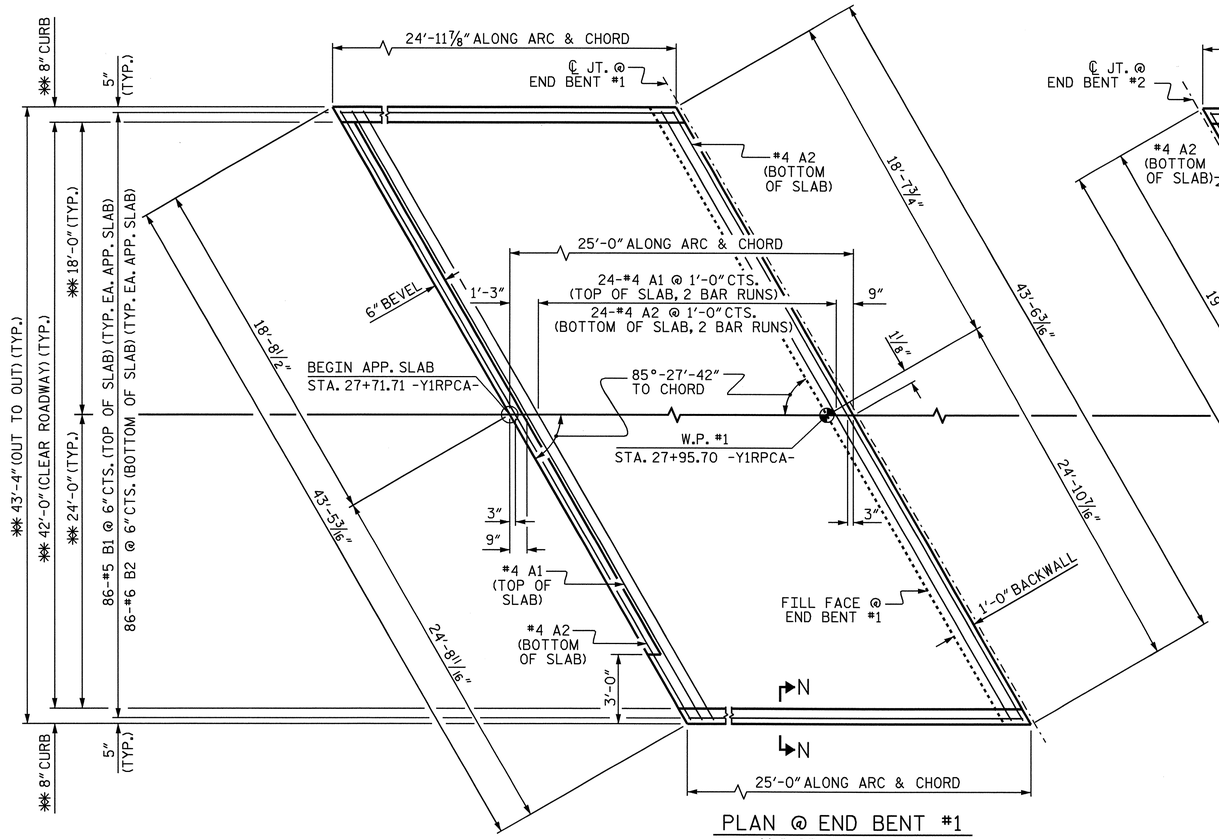

PLAN @ END BENT #1

✱✱ RADIAL DIMENSIONS

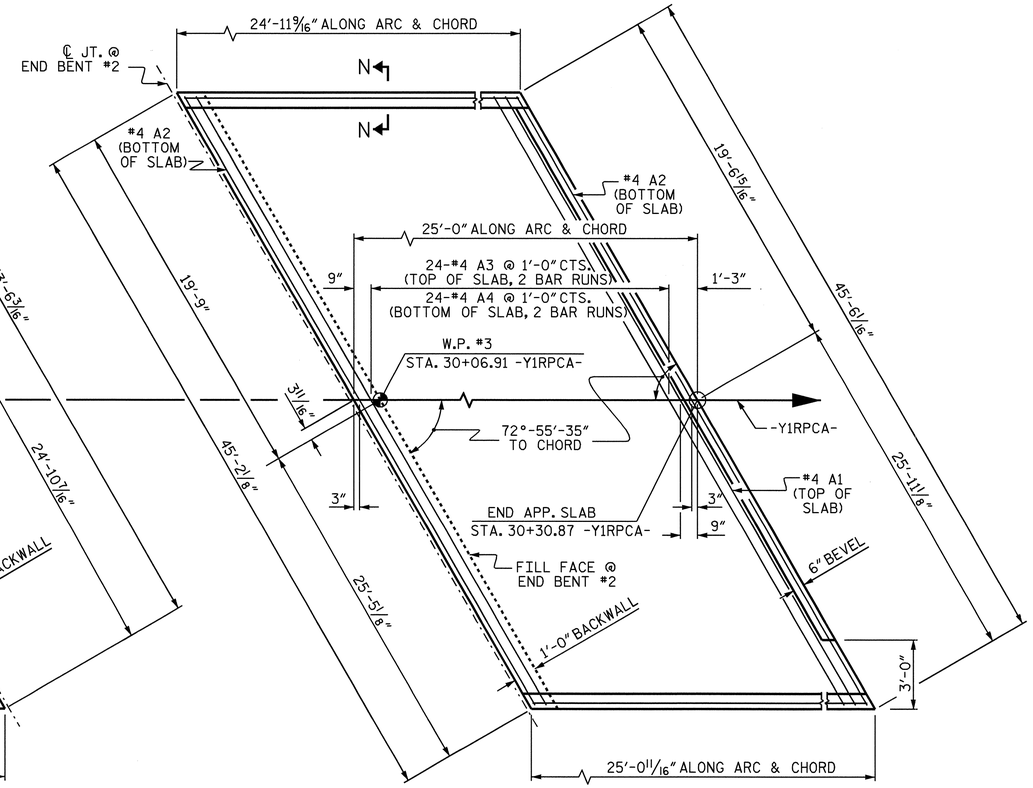

PLAN @ END BENT #2

BILL OF MATERIAL

APPROACH SLAB AT EB #1

BAR	NO.	SIZE	TYPE	LENGTH	WEIGHT
✱ A1	50	#4	STR	22'-7"	754
A2	52	#4	STR	22'-6"	782
✱ B1	86	#5	STR	23'-8"	2123
B2	86	#6	STR	24'-8"	3186
REINFORCING STEEL				LBS.	3968
✱ EPOXY COATED REINFORCING STEEL				LBS.	2877
CLASS AA CONCRETE				C. Y.	40.9

APPROACH SLAB AT EB #2

BAR	NO.	SIZE	TYPE	LENGTH	WEIGHT
✱ A3	50	#4	STR	23'-7"	788
A4	52	#4	STR	23'-5"	813
✱ B1	86	#5	STR	23'-8"	2123
B2	86	#6	STR	24'-8"	3186
REINFORCING STEEL				LBS.	3999
✱ EPOXY COATED REINFORCING STEEL				LBS.	2911
CLASS AA CONCRETE				C. Y.	42.9

SPLICE CHART

BAR SIZE	SPLICE LENGTH
#4 A1/A3	2'-0"
#4 A2/A4	1'-9"

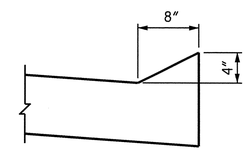

SECTION N-N

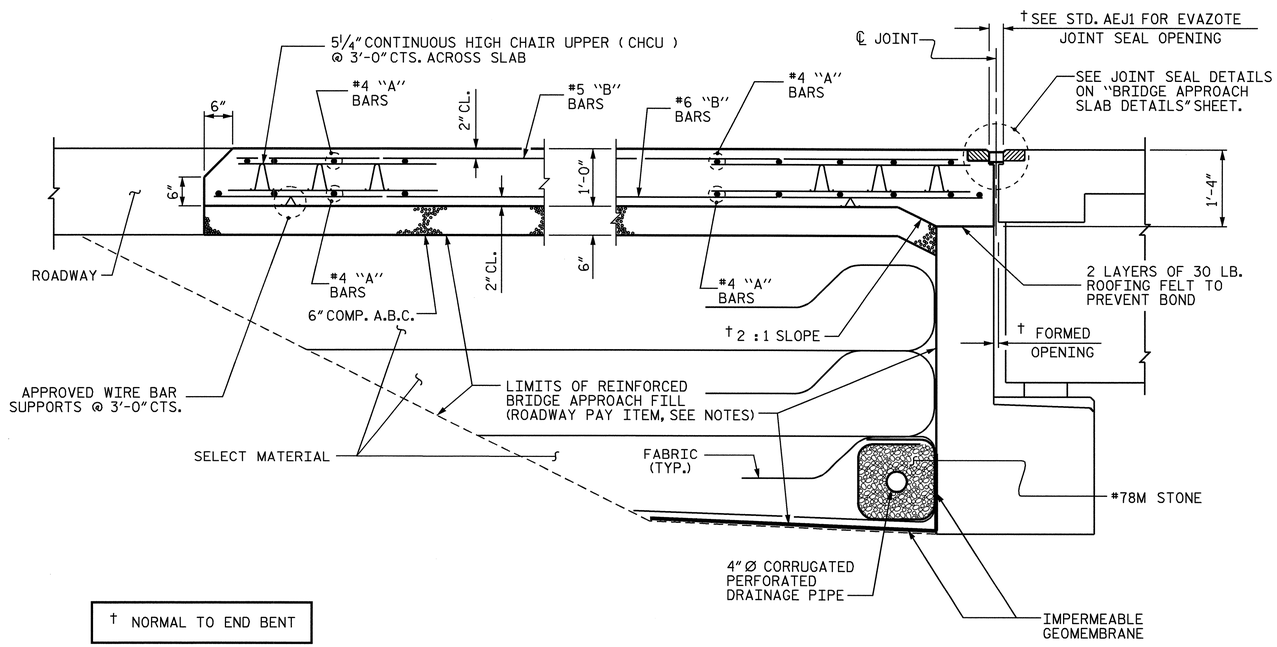

† NORMAL TO END BENT

SECTION THRU SLAB

SHOWING SECTION WITHOUT CONCRETE WEARING SURFACE

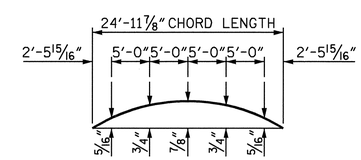

ARC OFFSET - LEFT

(APPROACH SLAB @ END BENT #1)

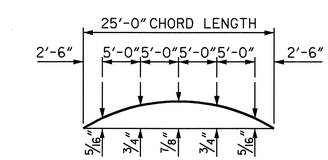

ARC OFFSET - RIGHT

(APPROACH SLAB @ END BENT #1)

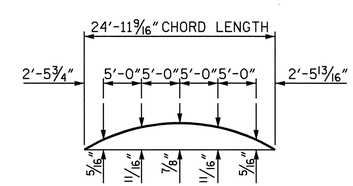

ARC OFFSET - LEFT

(APPROACH SLAB @ END BENT #2)

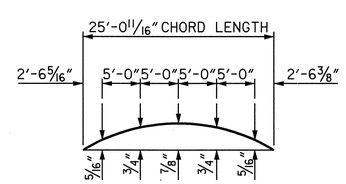

ARC OFFSET - RIGHT

(APPROACH SLAB @ END BENT #2)

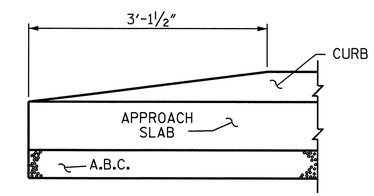

END OF CURB WITHOUT SHOULDER BERM GUTTER

PROJECT NO. R-2719A

LENOIR COUNTY

STATION: 28+99.24-Y1RPCA

SHEET 1 OF 2

STATE OF NORTH CAROLINA
DEPARTMENT OF TRANSPORTATION
RALEIGH

STANDARD

BRIDGE APPROACH SLAB FOR FLEXIBLE PAVEMENT

NORTH CAROLINA PROFESSIONAL SEAL 14045 ENGINEER TIMOTHY L. COGGINS

3/11/09

REVISIONS							SHEET NO.
NO.	BY:	DATE:	NO.	BY:	DATE:		S-293
1			3				TOTAL SHEETS
2			4				340

ASSEMBLED BY: M.GUDLAUGSSON	DATE : 05/2008		
CHECKED BY : M. PISO	DATE : 07/2008		
DRAWN BY : EEM 3/95	REV. 7/10/01	LES/RDR	
CHECKED BY : VAP 3/95	REV. 5/7/03R	RWW/JTE	
	REV. 5/1/06R	KMM/GM	

11-MAR-2009 09:44
h:\structures\str#10\final plans\R2719A_sd_AS__10.dgn
tcoggins

STR. #10

STD. NO. BAS4 (SHT 6)

NOTES

APPROACH SLAB SHALL NOT BE CONSTRUCTED PRIOR TO COMPLETION OF THE BRIDGE DECK.

FOR REINFORCED BRIDGE APPROACH FILL INCLUDING FABRIC, IMPERMEABLE GEOMEMBRANE, 4" Ø DRAINAGE PIPE, #78M STONE, AND SELECT MATERIAL, SEE ROADWAY PLANS.

AREA BETWEEN THE WINGWALL AND APPROACH SLAB SHALL BE GRADED TO DRAIN THE WATER AWAY FROM THE FILL FACE OF THE BRIDGE AND SHALL BE PAVED. SEE ROADWAY PLANS.

THE 6" COMP. A.B.C. SHALL BE FLUSH WITH THE ROADWAY END OF THE APPROACH SLAB AND SHALL EXTEND 1'-0" OUTSIDE EACH EDGE OF THE APPROACH SLAB.

THE CONTRACTOR MAY USE 4" TYPE B-25.0B ASPHALT CONCRETE BASE COURSE IN LIEU OF 6" COMP. A.B.C. IF THIS OPTION IS USED, THE BASE COURSE SHALL BE FLUSH WITH THE ROADWAY END OF THE APPROACH SLAB, AND THE WIDTH SHALL BE THE SAME AS THAT OF THE APPROACH SLAB.

THE CONTRACTOR MAY USE 5" CLASS "A" CONCRETE BASE IN LIEU OF 6" COMP. A.B.C. IF THIS OPTION IS USED, THE CONCRETE BASE SHALL BE FLUSH WITH THE ROADWAY END OF THE APPROACH SLAB, AND THE WIDTH SHALL BE THE SAME AS THAT OF THE APPROACH SLAB. THE CONCRETE SHALL BE FINISHED TO A SMOOTH SURFACE AND A LAYER OF 30 LB ROOFING FELT SHALL BE PLACED BETWEEN THE CONCRETE BASE AND THE APPROACH SLAB TO PREVENT BOND. THE APPROACH SLAB SHALL NOT BE CAST UNTIL THE CONCRETE BASE HAS REACHED AN AGE OF THREE CURING DAYS.

WITH EVAZOTE JOINT SEAL

FOR EVAZOTE JOINT SEALS, SEE SPECIAL PROVISIONS.

THE NOMINAL UNCOMPRESSED SEAL WIDTH OF THE EVAZOTE JOINT SEAL SHALL BE 2½".

FOR ELASTOMERIC CONCRETE, SEE SPECIAL PROVISIONS.

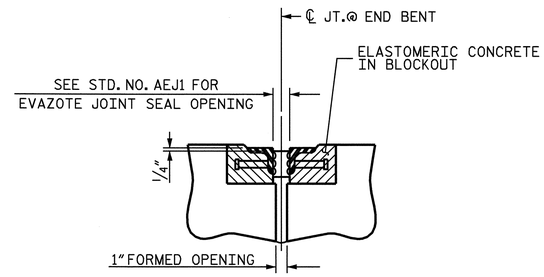

SECTION C-C
ARMORED EVAZOTE JOINT SEAL

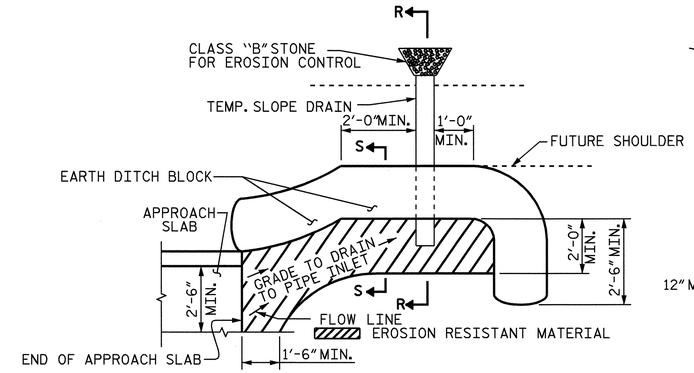

NOTE: IMMEDIATELY AFTER THE CONSTRUCTION OF THE APPROACH SLAB, THE CONTRACTOR SHALL PROVIDE TEMPORARY BERM AND SLOPE DRAIN. CONTRACTOR SHALL GRADE TO PIPE INLET AND PROVIDE EROSION RESISTANT MATERIAL AS SHOWN. THE EROSION RESISTANT MATERIAL SHALL BE EITHER 1) ASPHALT PLANT MIX, TYPE 1 OR TYPE 2, MIN. 2" DEPTH, 2) EROSION CONTROL MAT, OR 3) CONCRETE, AS DIRECTED BY THE ENGINEER. THE SLOPE DRAIN SHALL CONSIST OF A NON-PERFORATED TEMPORARY DRAINAGE PIPE, 12 INCHES IN DIAMETER.

PLAN VIEW

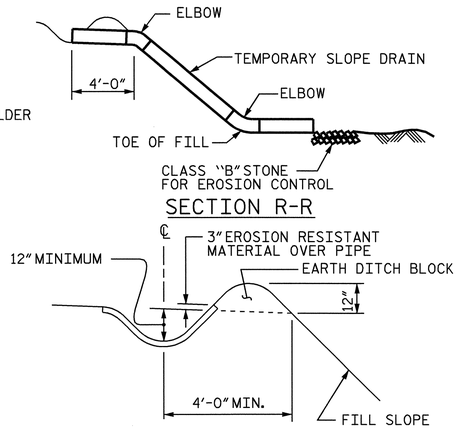

SECTION S-S

TEMPORARY BERM AND SLOPE DRAIN DETAILS

(TO BE USED WHEN SHOULDER BERM GUTTER IS REQUIRED)

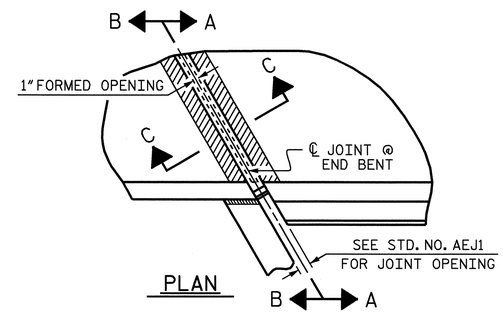

PLAN

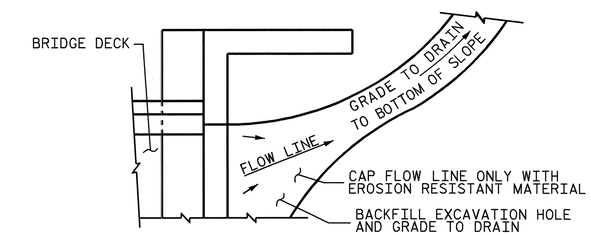

NOTE: IF THE APPROACH SLAB IS NOT CONSTRUCTED IMMEDIATELY AFTER THE BACKFILLING OF THE END BENT EXCAVATION, GRADE TO DRAIN TO THE BOTTOM OF THE SLOPE AND PROVIDE EROSION RESISTANT MATERIAL, SUCH AS FIBERGLASS ROVING OR AS DIRECTED BY THE ENGINEER TO PREVENT SOIL EROSION AND TO PROTECT THE AREA ADJACENT TO THE STRUCTURE. THE CONTRACTOR WILL BE REQUIRED TO REMOVE THESE MATERIALS PRIOR TO CONSTRUCTION OF THE APPROACH SLAB.

TEMPORARY DRAINAGE DETAIL

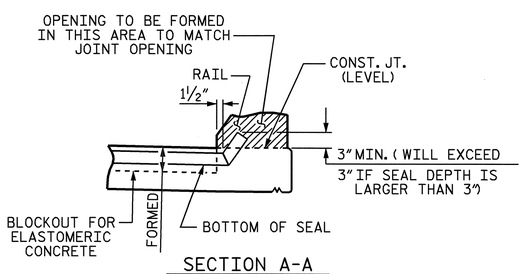

SECTION A-A

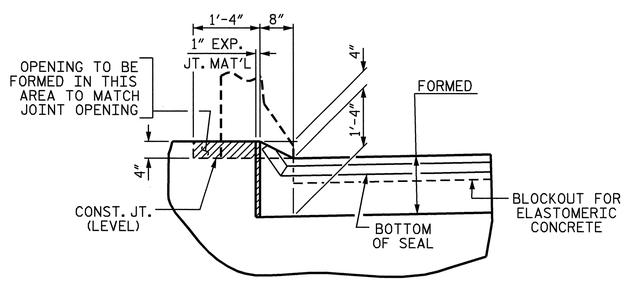

SECTION B-B

JOINT SEAL DETAILS @ END BENT

EVAZOTE JOINT SEAL TO BE CUT, HEAT WELDED AND TURNED UP PARALLEL TO SLOPED FACE OF THE BARRIER RAIL.

PROJECT NO. R-2719A
LENOIR COUNTY
STATION: 28+99.24-Y1RPCA-

SHEET 2 OF 2

STATE OF NORTH CAROLINA
DEPARTMENT OF TRANSPORTATION
RALEIGH

STANDARD

BRIDGE APPROACH SLAB DETAILS

NORTH CAROLINA PROFESSIONAL SEAL 14045 ENGINEER TIMOTHY R. COGGINS
10/13/08

REVISIONS						SHEET NO.
NO.	BY:	DATE:	NO.	BY:	DATE:	S-294
1			3			TOTAL SHEETS
2			4			340

ASSEMBLED BY : M.GUDLAUGSSON		DATE : 05/2008	
CHECKED BY : M. PISO		DATE : 07/2008	
DRAWN BY : FCJ	11/88	REV. 10/17/00	RWW/LES
CHECKED BY : ARB	11/88	REV. 5/7/03	RWW/JTE
		REV. 5/1/06R	MAA/KMM

09-OCT-2008 15:33
r:\structures\str-#10\final plans\R2719A_sd_AS__10.dgn
padkins

STR. #10 STD. NO. BAS10 (SHT 2)

F. A. PROJECT NO: STP-0224(12)

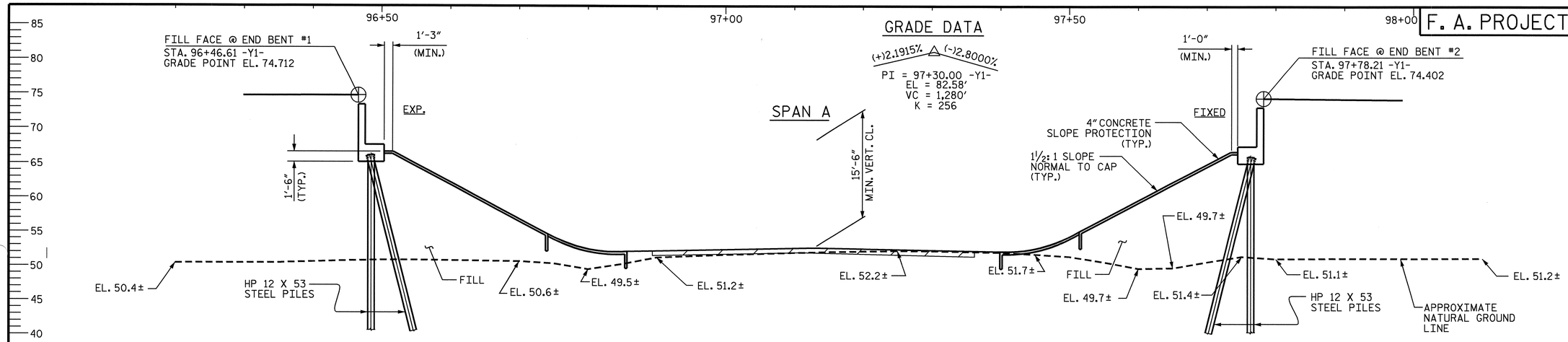

END BENT #1

SECTION ALONG -Y1-

(END BENTS SHOWN AT RIGHT ANGLES)

END BENT #2

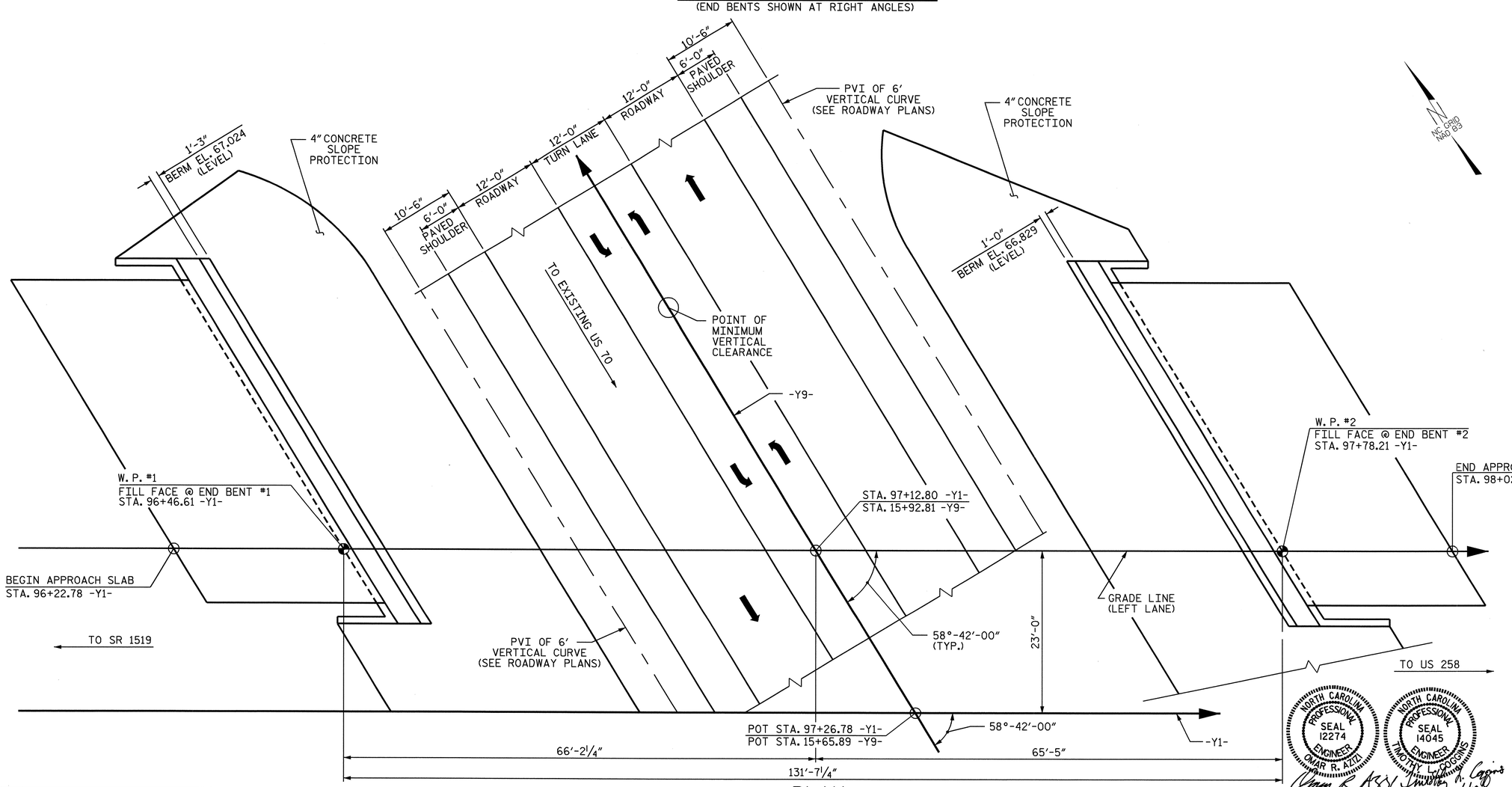

PLAN

(PILES NOT SHOWN FOR CLARITY)

PROJECT NO. R-2719A

LENOIR COUNTY

STATION: 97+26.78 -Y1-

15+65.89 -Y9-

SHEET 1 OF 3

BRIDGE NO. 201

STATE OF NORTH CAROLINA

DEPARTMENT OF TRANSPORTATION

RALEIGH

GENERAL DRAWING

FOR BRIDGE OVER SR 2003
ON US 70
BETWEEN SR 1519 AND US 258

(LEFT LANE)

NORTH CAROLINA PROFESSIONAL SEAL 12274 ENGINEER OMAR R. AZIZI
Omar R. Azizi 10-9-08

NORTH CAROLINA PROFESSIONAL SEAL 14045 ENGINEER TIMOTHY L. COGGINS
Timothy L. Coggins 10/9/08

REVISIONS						SHEET NO.
NO.	BY:	DATE:	NO.	BY:	DATE:	S-295
1			3			TOTAL SHEETS
2			4			340

STR. #11

DRAWN BY : PEGGY ADKINS DATE : 2-07

CHECKED BY : B.N.BARODAWALA DATE : 8-07

09-OCT-2008 14:09
R:\Structures\Str*11\Final Plans\r2719a_sd_gd_11.dgn
nruffin

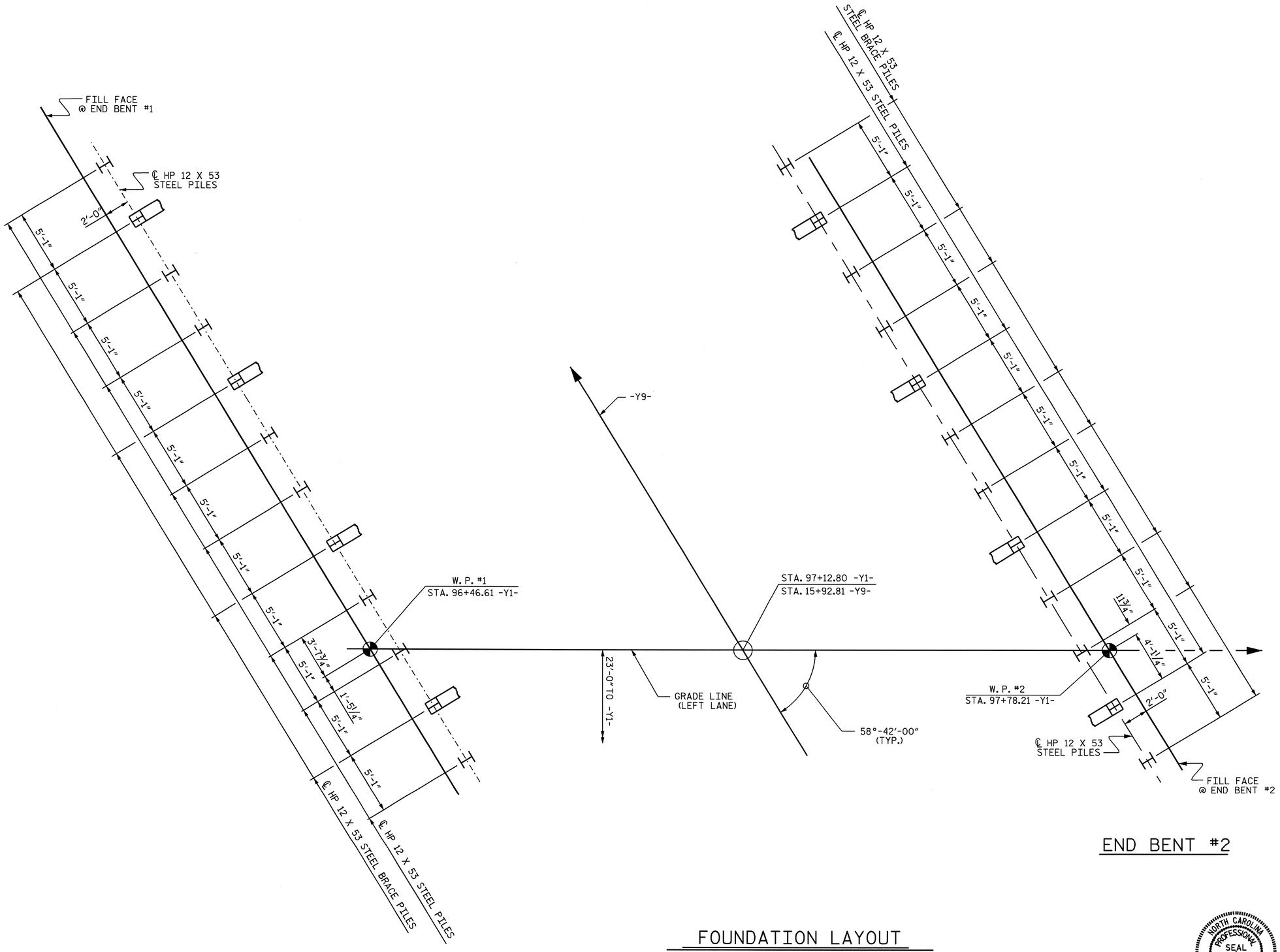

FOUNDATION LAYOUT

DIMENSIONS LOCATING PILES ARE SHOWN TO PILE CENTERLINE AT BOTTOM OF CAP.

BRACE PILES ARE BATTERED AT 3:12.

NORTH CAROLINA PROFESSIONAL SEAL 14045 ENGINEER TIMOTHY L. COGGINS

Timothy L. Coggins 10/10/08

PROJECT NO. R-2719A

LENOIR COUNTY

STATION: 97+26.78 -Y1-

SHEET 2 OF 3

STATE OF NORTH CAROLINA
DEPARTMENT OF TRANSPORTATION
RALEIGH

GENERAL DRAWING

FOR BRIDGE OVER SR 2003
ON US 70
BETWEEN SR 1519 AND US 258

(LEFT LANE)

REVISIONS						SHEET NO.
NO.	BY:	DATE:	NO.	BY:	DATE:	S-296
1			3			TOTAL SHEETS
2			4			340

STR. #11

DRAWN BY : B.N.BARODAWALA DATE : 8-12-08
CHECKED BY : T.L. COGGINS DATE : 08/2008

09-OCT-2008 14:09
R:\Structures\Str*11\Final Plans\r2719a_sd_gd_11.dgn
nruffin

BM-A: ELEV 53.26; RR SPIKE IN 30" HARDWOOD TREE; STA. 75+86 -Y1-; 615' RT

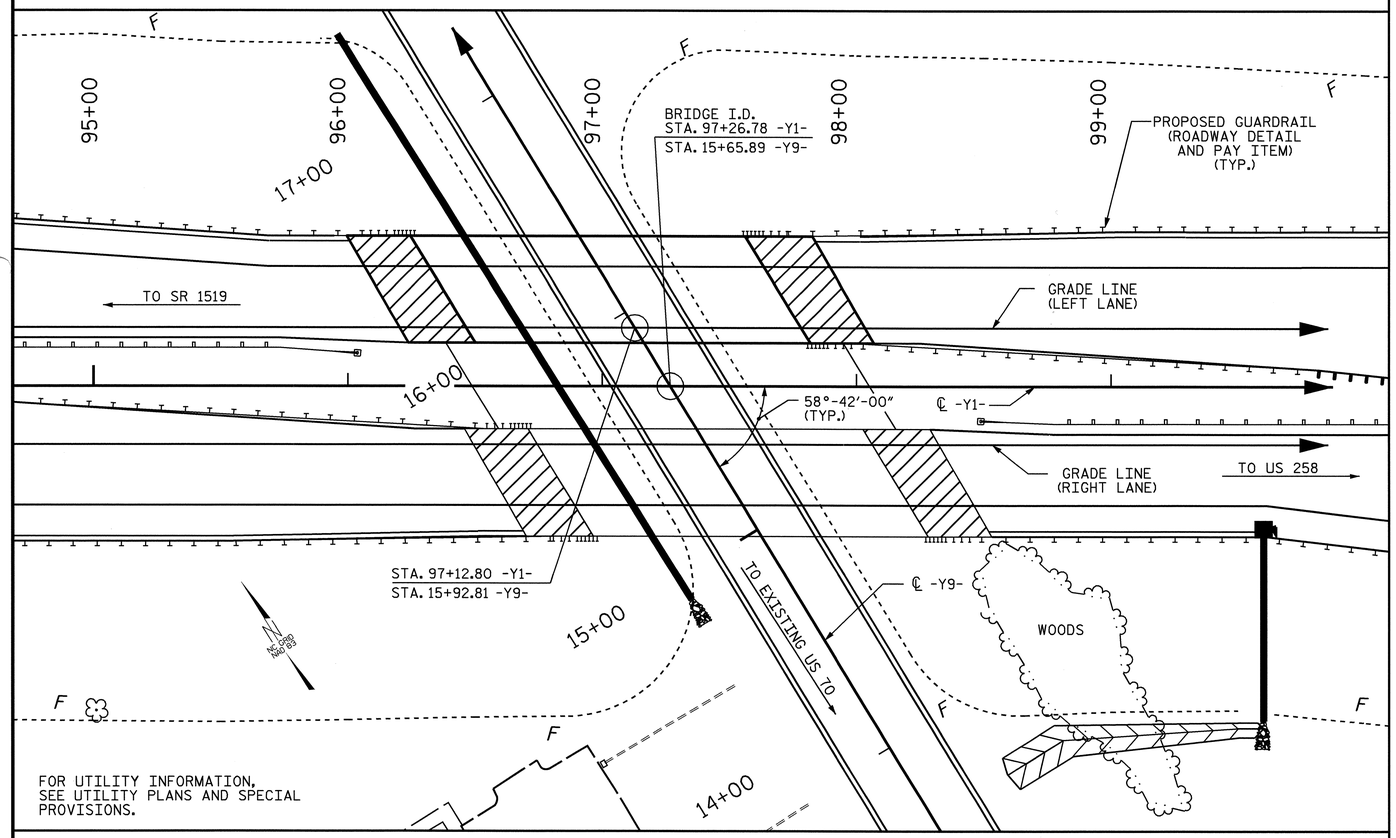

LOCATION SKETCH

NOTES:

ASSUMED LIVE LOAD = HS20 OR ALTERNATE LOADING, EXCEPT THE GIRDERS HAVE BEEN DESIGNED FOR HS25.

THIS BRIDGE HAS BEEN DESIGNED BY THE STRENGTH DESIGN METHOD AS SPECIFIED IN AASHTO STANDARD SPECIFICATIONS.

THIS BRIDGE HAS BEEN DESIGNED IN ACCORDANCE WITH THE REQUIREMENTS OF THE AASHTO STANDARD SPECIFICATIONS FOR SEISMIC DESIGN OF HIGHWAY BRIDGES FOR SEISMIC PERFORMANCE CATEGORY A.

FOR OTHER DESIGN DATA AND GENERAL NOTES, SEE SHEET SN.

FOR EROSION CONTROL MEASURES SEE EROSION CONTROL PLANS.

REMOVABLE FORMS MAY BE USED IN LIEU OF METAL STAY-IN-PLACE FORMS IN ACCORDANCE WITH ARTICLE 420-3 OF THE STANDARD SPECIFICATIONS.

FOR MAINTENANCE AND PROTECTION OF TRAFFIC BENEATH PROPOSED STRUCTURE, SEE SPECIAL PROVISIONS.

OBSERVE AN ONE MONTH WAITING PERIOD AFTER CONSTRUCTING THE EMBANKMENT TO WITHIN 2 FT. OF FINISHED GRADE BEFORE BEGINNING END BENT CONSTRUCTION AT END BENT NO. 1 AND END BENT NO. 2.

ALL STRUCTURAL STEEL SHALL BE AASHTO M270 GRADE 50W AND PAINTED IN ACCORDANCE WITH SYSTEM 4 OF ARTICLE 442-7 OF THE STANDARD SPECIFICATIONS UNLESS OTHERWISE NOTED ON THE PLANS.

THE CONTRACTOR SHALL PROVIDE INDEPENDENT ASSURANCE SAMPLES OF REINFORCING STEEL AS FOLLOWS: FOR PROJECTS REQUIRING UP TO 400 TONS OF REINFORCING STEEL, ONE 30 INCH SAMPLE OF EACH SIZE BAR USED, AND FOR PROJECTS REQUIRING OVER 400 TONS OF REINFORCING STEEL, TWO 30 INCH SAMPLES OF EACH SIZE BAR USED. THE BARS FROM WHICH THE SAMPLES ARE TAKEN MUST THEN BE SPLICED WITH REPLACEMENT BARS OF THE SIZE AND LENGTH OF THE SAMPLE, PLUS A MINIMUM LAP SPLICE OF THIRTY BAR DIAMETERS.

NEEDLE BEAMS WILL NOT BE ALLOWED UNLESS OTHERWISE CALLED FOR ON THE PLANS OR APPROVED BY THE ENGINEER.

FOR SUBMITTAL OF WORKING DRAWINGS, SEE SPECIAL PROVISIONS.

FOR FALSEWORK AND FORMWORK, SEE SPECIAL PROVISIONS.

FOR CRANE SAFETY, SEE SPECIAL PROVISIONS.

FOR GROUT FOR STRUCTURES, SEE SPECIAL PROVISIONS.

FOR SHIPPING STEEL STRUCTURAL MEMBERS, SEE SPECIAL PROVISIONS.

DRIVE PILES AT END BENT NO. 1 AND END BENT NO. 2 TO A REQUIRED BEARING CAPACITY OF 120 TONS PER PILE. THE REQUIRED BEARING CAPACITY IS EQUAL TO THE ALLOWABLE BEARING CAPACITY WITH A MINIMUM FACTOR OF SAFETY OF TWO.

THE ALLOWABLE BEARING CAPACITY FOR PILES AT END BENT NO. 1 AND END BENT NO. 2 IS 60 TONS PER PILE.

FOR FAA REQUIREMENTS, SEE ROADWAY SPECIAL PROVISIONS.

TOTAL BILL OF MATERIAL

	REINFORCED CONCRETE DECK SLAB	GROOVING BRIDGE FLOORS	CLASS A CONCRETE	BRIDGE APPROACH SLABS	REINFORCING STEEL	STRUCTURAL STEEL	HP 12 X 53 STEEL PILES		PILE REDRIVES	CONCRETE BARRIER RAIL	4" SLOPE PROTECTION	ELASTOMERIC BEARINGS	EVAZOTE JOINT SEALS
	SQ.FT.	SQ.FT.	CU.YDS.	LUMP SUM	LBS.	APPROX.LBS.	NO.	LIN.FT.	EACH	LIN.FT.	SQ. YD.	LUMP SUM	LUMP SUM
SUPERSTRUCTURE	5845	6802		LUMP SUM		208,400				258.33		LUMP SUM	LUMP SUM
END BENT NO.1			40.9		6059		12	840	6		287		
END BENT NO.2			39.7		6052		12	840	6		309		
TOTAL	5845	6802	80.6	LUMP SUM	12111	208,400	24	1680	12	258.33	596	LUMP SUM	LUMP SUM

PROJECT NO. R-2719A
LENOIR COUNTY
STATION: 97+26.78 -Y1-

SHEET 3 OF 3

STATE OF NORTH CAROLINA
DEPARTMENT OF TRANSPORTATION
RALEIGH

GENERAL DRAWING
FOR BRIDGE OVER SR 2003
ON US 70
BETWEEN SR 1519 AND US 258
(LEFT LANE)

NORTH CAROLINA PROFESSIONAL SEAL 14045 ENGINEER TIMOTHY L. COGGINS
10/14/08

REVISIONS						SHEET NO.
NO.	BY:	DATE:	NO.	BY:	DATE:	S-297
1			3			TOTAL SHEETS
2			4			340

DRAWN BY : B.N.BARODAWALA DATE : 8-12-08
CHECKED BY : T.L. COGGINS DATE : 08/2008

09-OCT-2008 14:08
R:\Structures\Str#11\Final Plans\r2719a_sd_gd_11.dgn
nruffin

STR. #11

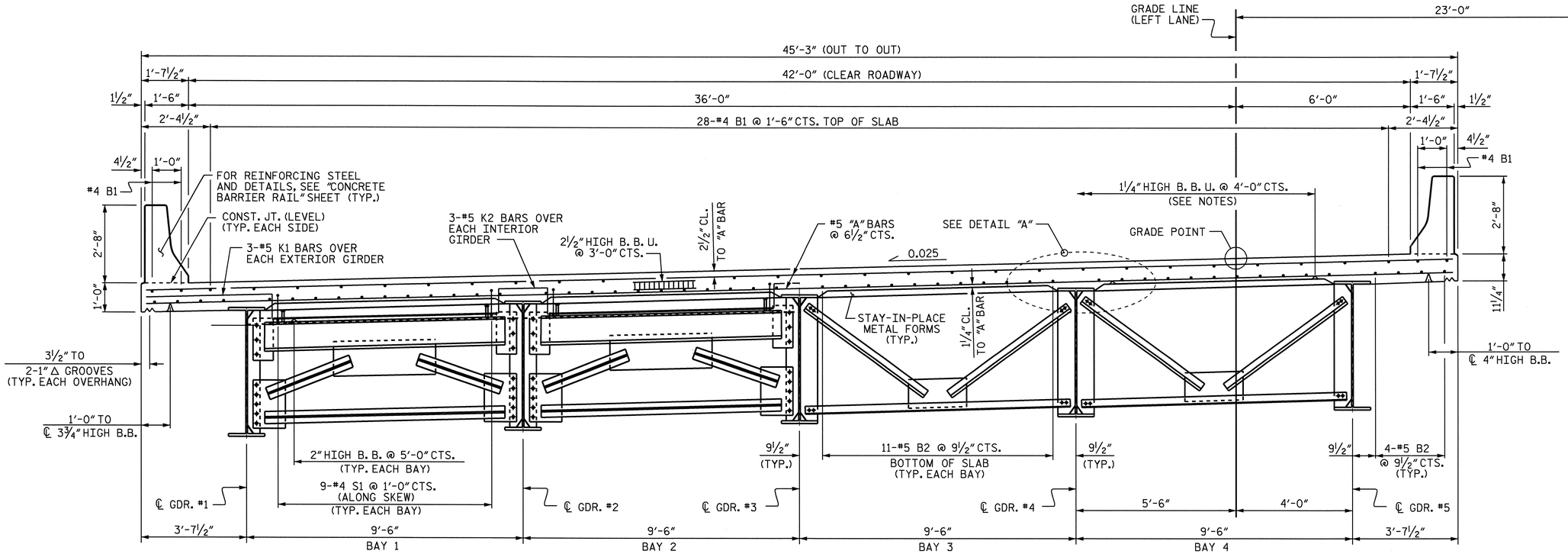

PART TYPICAL SECTION

SHOWING END BENT DIAPHRAGM

PART TYPICAL SECTION

SHOWING INTERMEDIATE DIAPHRAGM

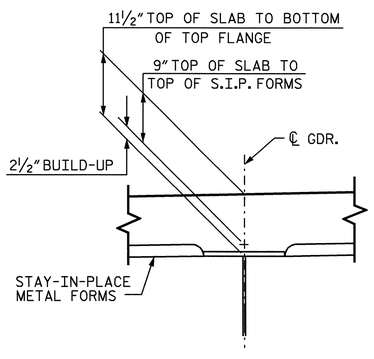

DETAIL 'A'

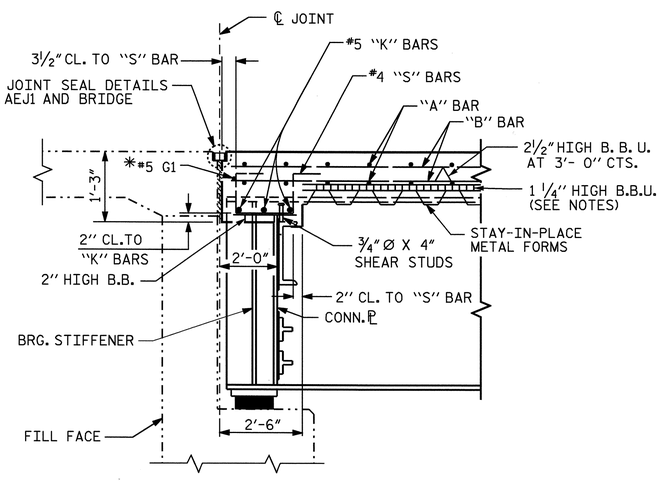

SECTION THRU END BENT

* #5G BAR MAY BE SHIFTED SLIGHTLY, AS NECESSARY, TO CLEAR DIAPHRAGM AND REINFORCING STEEL.

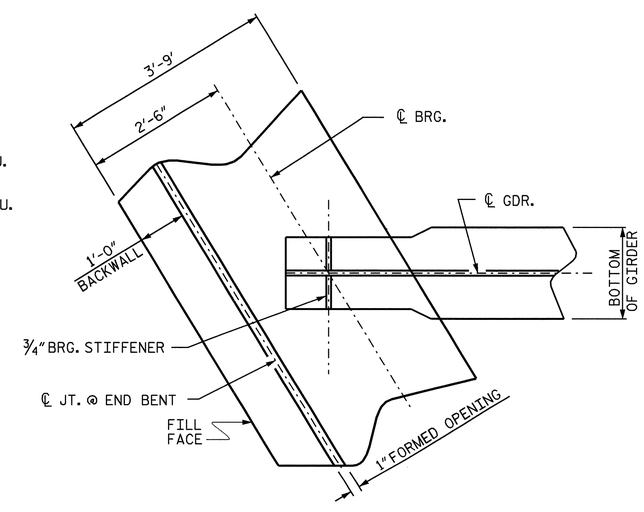

PLAN OF GIRDER @ END BENT

NOTES:

PROVIDE 1¼" HIGH BEAM BOLSTERS UPPER AT 4'-0" CTS. ATOP THE METAL STAY-IN-PLACE FORMS TO SUPPORT THE BOTTOM MAT OF 'A' BARS. WHEN USING REMOVABLE FORMS, PROVIDE CONTINUOUS HIGH CHAIRS FOR METAL DECK (C.H.C.M.) @ 4'-0" CTS. WITH A HEIGHT TO SUPPORT THE BOTTOM MAT OF 'A' BARS A CLEAR DISTANCE OF 2½" ABOVE THE TOP OF THE REMOVABLE FORM.

THE CONTRACTOR MAY, WHEN NECESSARY, PROPOSE A SCHEME FOR AVOIDING INTERFERENCE BETWEEN METAL STAY-IN-PLACE FORM SUPPORTS OR FORMS AND GIRDER STIFFENERS OR CONNECTOR PLATES. THE PROPOSAL SHALL BE INDICATED, AS APPROPRIATE, ON EITHER THE STEEL WORKING DRAWINGS OR THE METAL STAY-IN-PLACE FORM WORKING DRAWINGS.

BARRIER RAIL IN THE SPAN SHALL NOT BE CAST UNTIL ALL SLAB CONCRETE HAS BEEN CAST AND HAS REACHED A MINIMUM COMPRESSIVE STRENGTH OF 3,000 PSI.

PROJECT NO. R-2719A
LENOIR COUNTY
STATION: 97+26.78 -Y1-

NORTH CAROLINA PROFESSIONAL SEAL 14045 ENGINEER TIMOTHY L. COGGINS
10/11/08

STATE OF NORTH CAROLINA
DEPARTMENT OF TRANSPORTATION
RALEIGH

SUPERSTRUCTURE

TYPICAL SECTION

(LEFT LANE)

REVISIONS						SHEET NO.
NO.	BY:	DATE:	NO.	BY:	DATE:	S-298
1			3			TOTAL SHEETS
2			4			340

DRAWN BY : B.N.BARODAWALA DATE : 12-27-07
CHECKED BY : PEGGY ADKINS DATE : 2-08

09-OCT-2008 14:08
R:\Structures\Str*11\Final Plans\r2719a_sd_ts_11.dgn
gruffin

STR. #11

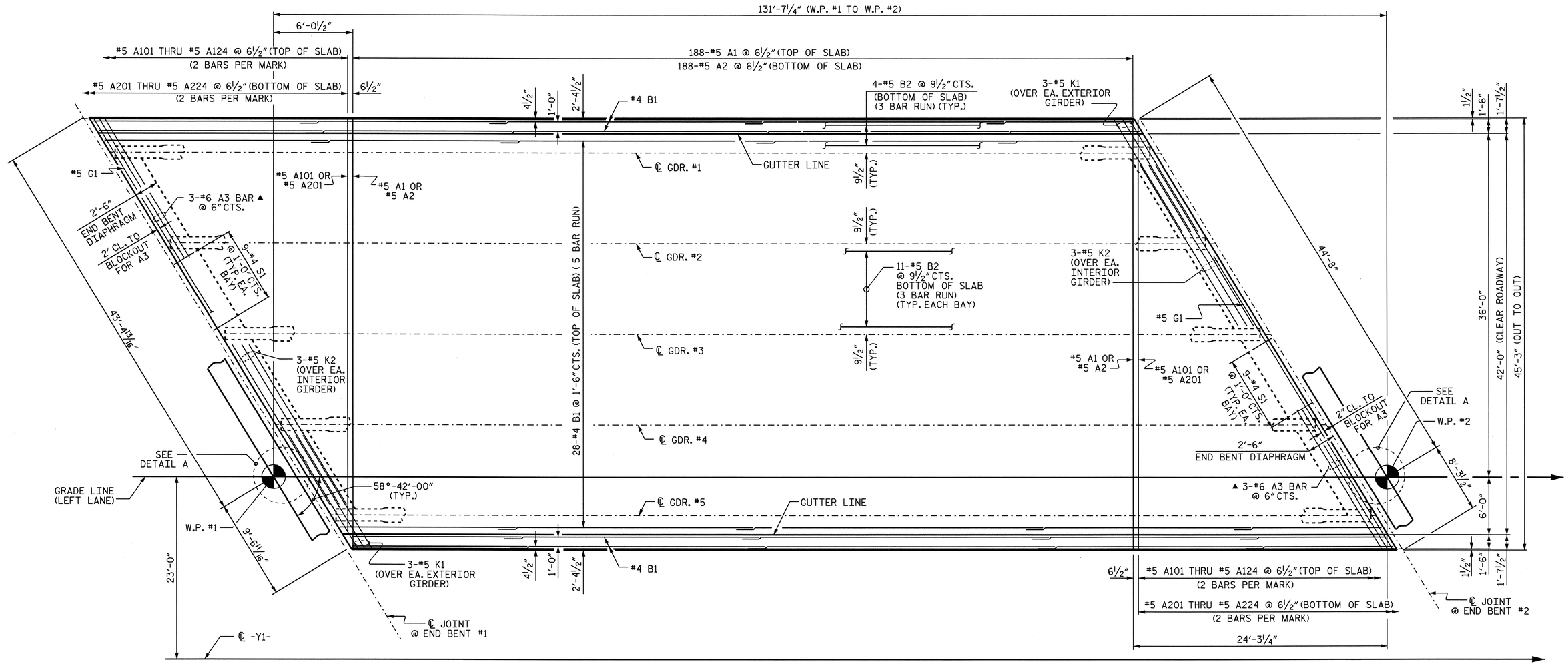

PLAN OF SPAN

▲ #6 A3 BARS ARE POSITIONED ONLY AT THE ACUTE CORNERS OF DECK SLAB. PLACE BARS UNDER TOP "B" BARS

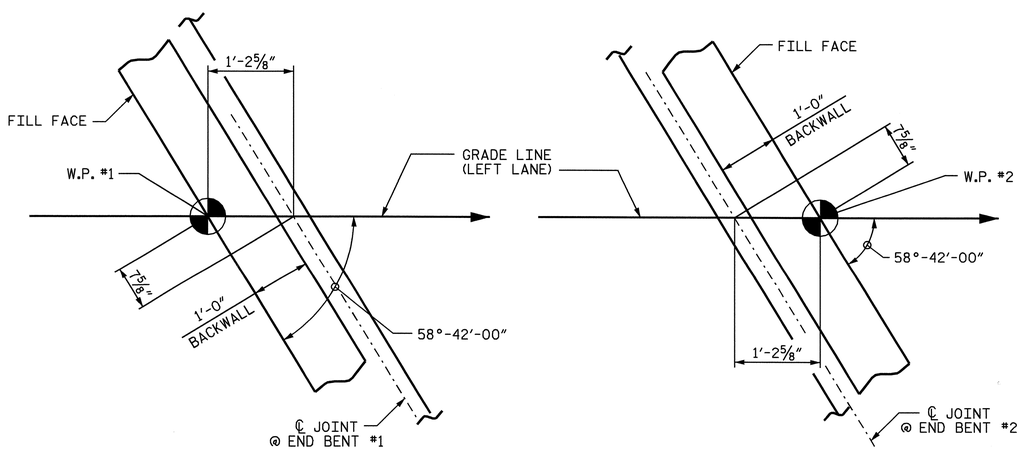

AT END BENT #1

AT END BENT #2

DETAIL A

PROJECT NO. R-2719A
LENOIR COUNTY
STATION: 97+26.78 -Y1-

STATE OF NORTH CAROLINA
DEPARTMENT OF TRANSPORTATION
RALEIGH

SUPERSTRUCTURE

PLAN OF SPAN

(LEFT LANE)

NORTH CAROLINA PROFESSIONAL SEAL 14045 ENGINEER TIMOTHY L. COGGINS
10/11/08

REVISIONS						SHEET NO.
NO.	BY:	DATE:	NO.	BY:	DATE:	S-299
1			3			TOTAL SHEETS
2			4			340

DRAWN BY : B.N.BARODAWALA DATE : 12-27-07
CHECKED BY : PEGGY ADKINS DATE : 2-08

09-OCT-2008 14:08
R:\Structures\Str*11\Final Plans\R2719a_sd_ps_11.dgn
nruffin

STR. #11

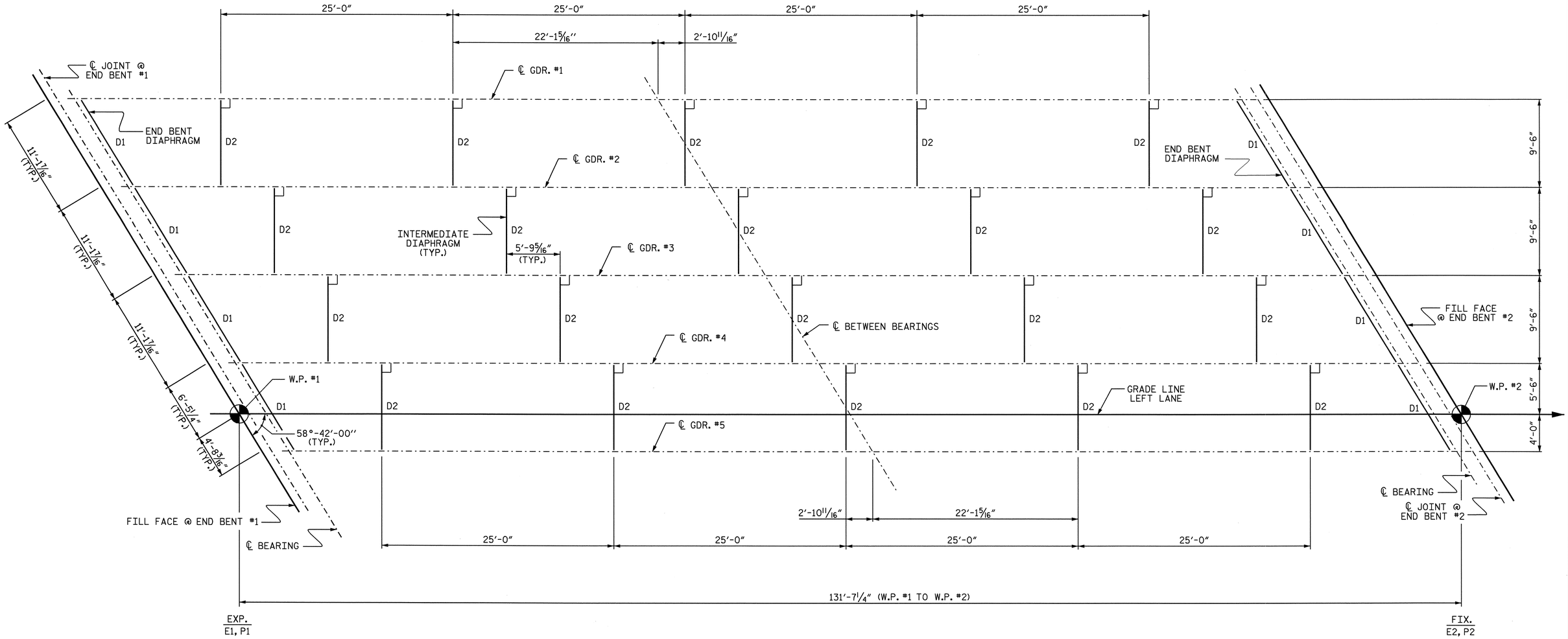

FRAMING PLAN

PROJECT NO. R-2719A
LENOIR COUNTY
STATION: 97+26.78 -Y1-

STATE OF NORTH CAROLINA
DEPARTMENT OF TRANSPORTATION
RALEIGH

SUPERSTRUCTURE

FRAMING PLAN

(LEFT LANE)

NORTH CAROLINA PROFESSIONAL SEAL 14045 ENGINEER TIMOTHY L. COGGINS
Timothy L. Coggins 10/11/08

REVISIONS						SHEET NO.
NO.	BY:	DATE:	NO.	BY:	DATE:	S-300
1			3			TOTAL SHEETS
2			4			340

STR. #11

DRAWN BY : B.N.BARODAWALA DATE : 12-27-07
CHECKED BY : PEGGY ADKINS DATE : 2-08

09-OCT-2008 14:08
R:\Structures\Str*11\Final Plans\r2719a_sd_fp_11.dgn
nruffin

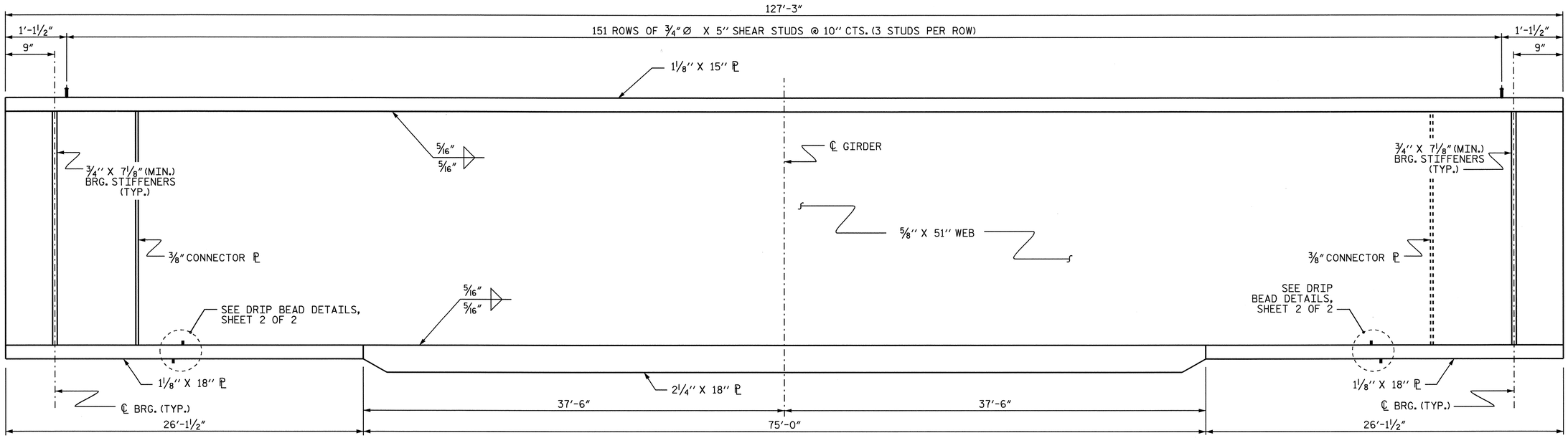

GIRDER ELEVATION

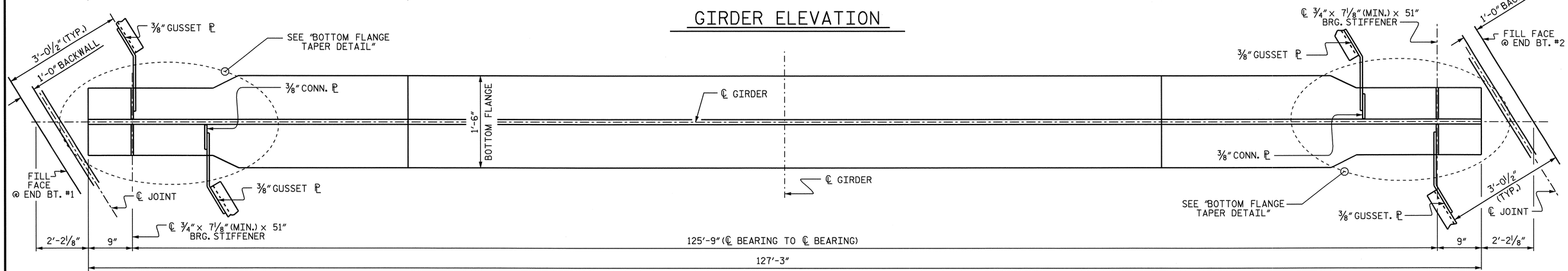

BOTTOM FLANGE DETAIL

INTERIOR GIRDERS SHOWN. EXTERIOR GIRDER SIMILAR, EXCEPT NO CONNECTOR PLATES SHALL BE PLACED ON THE OUTSIDE OF THE WEB.

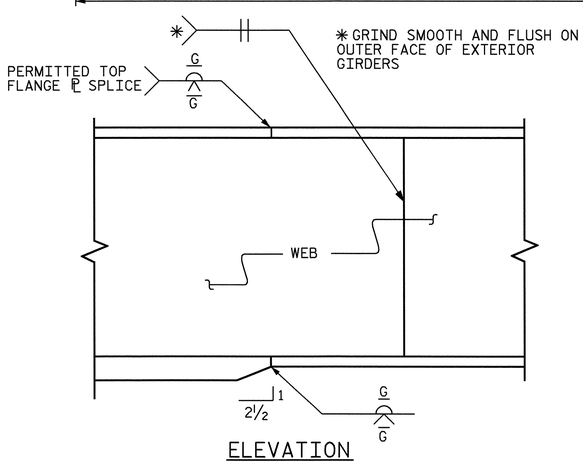

ELEVATION

TYPICAL FLANGE AND WEB BUTT JOINT

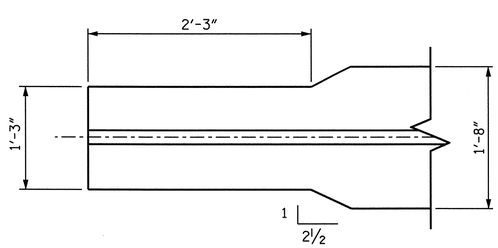

BOTTOM FLANGE TAPER DETAIL

(TYPICAL EACH END)

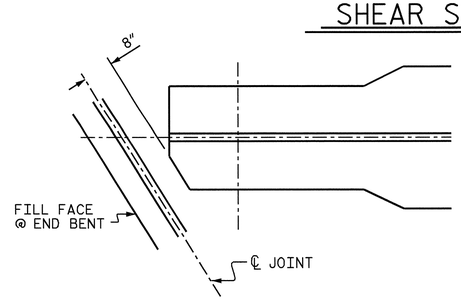

TOP FLANGE CLIP DETAIL

(TYP. AT BOTH ENDS OF GIRDER)

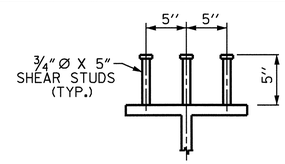

SHEAR STUD DETAILS

PROJECT NO. R-2719A
LENOIR COUNTY
STATION: 97+26.78 -Y1-

SHEET 1 OF 2

STATE OF NORTH CAROLINA
DEPARTMENT OF TRANSPORTATION
RALEIGH

SUPERSTRUCTURE

STRUCTURAL STEEL DETAILS

(LEFT LANE)

NORTH CAROLINA PROFESSIONAL SEAL 14045 ENGINEER TIMOTHY L. COGGINS
10/1/08

REVISIONS						SHEET NO.
NO.	BY:	DATE:	NO.	BY:	DATE:	S-301
1			3			TOTAL SHEETS
2			4			340

DRAWN BY : B.N.BARODAWALA DATE : 1-11-08
CHECKED BY : PEGGY ADKINS DATE : 2-08

09-OCT-2008 14:22
h:\structures\str*11\final plans\r2719a_sd_ss_11.dgn
tcoggins

STR. #11

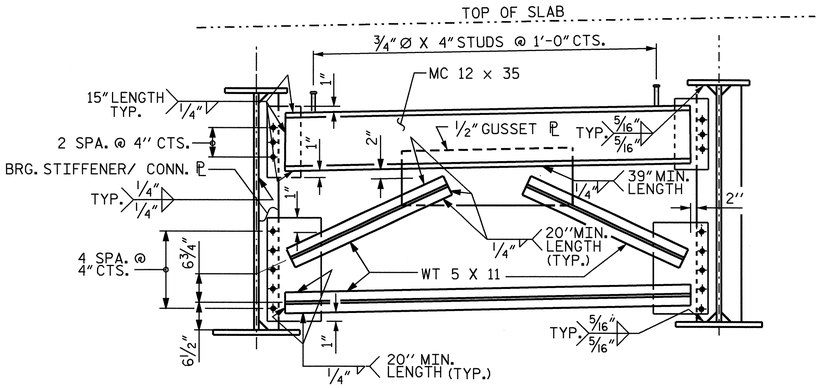

END BENT CROSSFRAME (D1)

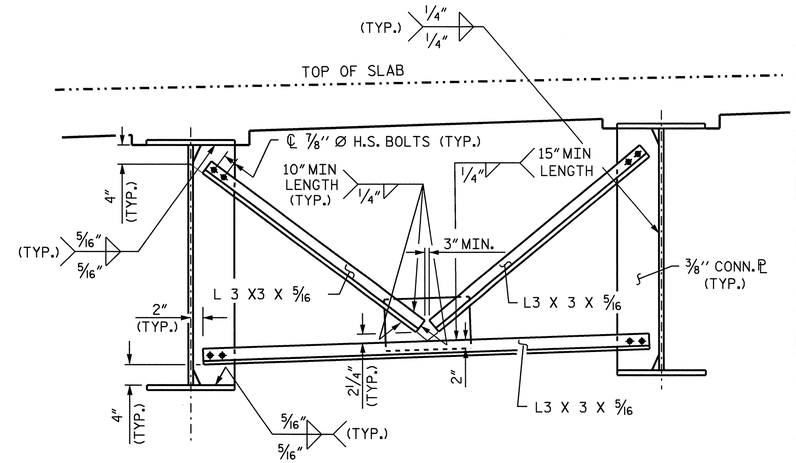

TYPICAL INTERMEDIATE DIAPHRAGM (D2)

NOTES

ALL STRUCTURAL STEEL SHALL BE AASHTO M270 GRADE 50W AND PAINTED IN ACCORDANCE WITH SYSTEM 4 OF ARTICLE 442-7 OF THE STANDARD SPECIFICATIONS UNLESS OTHERWISE NOTED ON THE PLANS.

ALL DIMENSIONS SHOWN ARE HORIZONTAL OR VERTICAL, UNLESS OTHERWISE NOTED.

ALL FIELD CONNECTIONS TO BE 7/8" DIA. HIGH STRENGTH BOLTS UNLESS OTHERWISE NOTED.

FOR HIGH STRENGTH BOLTS, SEE SPECIAL PROVISIONS.

BEARING STIFFENERS ARE TO BE PLACED NORMAL TO THE WEB OF THE GIRDER AND SHALL BE PLUMB.

A CHARPY V-NOTCH TEST IS REQUIRED FOR WEB PLATES, BOTTOM FLANGE PLATES, BOTTOM FLANGE SPLICE PLATES AND WEB SPLICE PLATES (IF USED) FOR ALL GIRDERS AND IN ACCORDANCE WITH ARTICLE 1072-9 OF THE STANDARD SPECIFICATIONS.

SHOP SPLICES ARE PERMITTED TO LIMIT THE MAXIMUM REQUIRED FLANGE PIECE LENGTHS TO 60 FEET AND WEB PIECE LENGTHS TO 45 FEET. PERMITTED FLANGE AND WEB SHOP SPLICES SHALL NOT BE LOCATED WITHIN 15 FEET OF MAXIMUM DEAD LOAD DEFLECTION (NOR WITHIN 15 FEET OF INTERMEDIATE BEARINGS OF CONTINUOUS UNITS). KEEP 2 FEET MINIMUM BETWEEN WEB AND FLANGE SHOP SPLICES. KEEP 6" MINIMUM BETWEEN CONNECTOR PLATE OR TRANSVERSE STIFFENER WELDS AND WEB OR FLANGE SHOP SPLICES.

STUDS ON GIRDERS MAY BE SHIFTED UP TO 1" IF NECESSARY TO CLEAR FLANGE SPLICE WELD.

TENSION ON THE AASHTO M164 BOLTS SHALL BE CALIBRATED USING DIRECT TENSION INDICATOR WASHERS IN ACCORDANCE WITH ARTICLE 440-8 OF THE STANDARD SPECIFICATIONS.

END OF BEAMS AND GIRDERS SHALL BE PLUMB.

BEARING STIFFENER MAY REQUIRE COPING IF WIDER THAN BOTTOM FLANGE TO AVOID INTERFERENCE WITH THE ANCHOR BOLT.

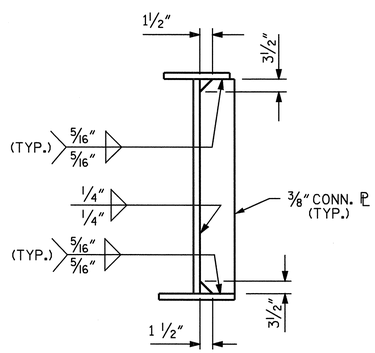

INTERMEDIATE DIAPHRAGM CONNECTOR PLATE

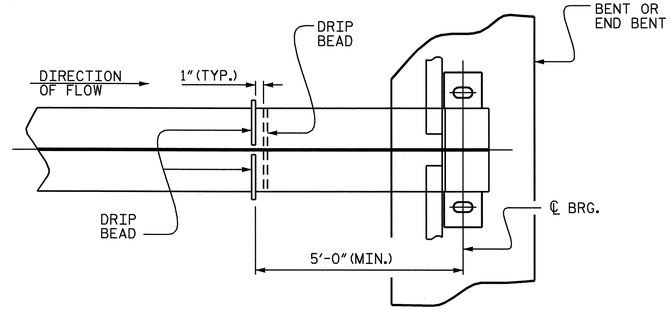

PART PLAN - BOTTOM FLANGE

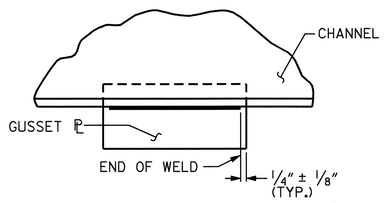

TYPICAL GUSSET PLATE CONNECTION

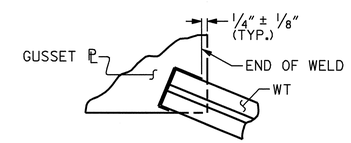

TYPICAL "TEE" TO GUSSET PLATE CONNECTION

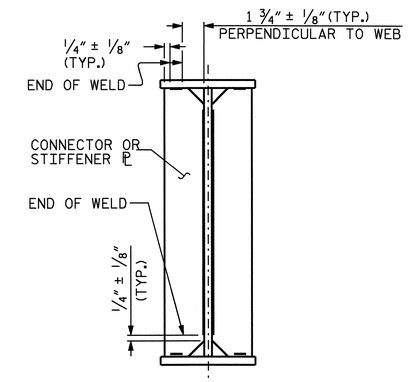

TYPICAL STIFFENER OR CONNECTOR PLATE CONNECTIONS

WELD TERMINATION DETAILS

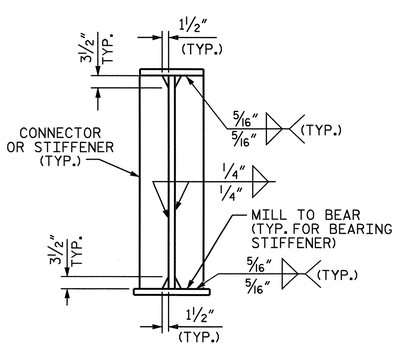

BEARING STIFFENER/ CONNECTOR PLATE

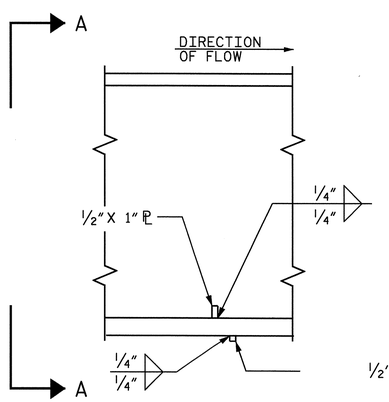

SECTION

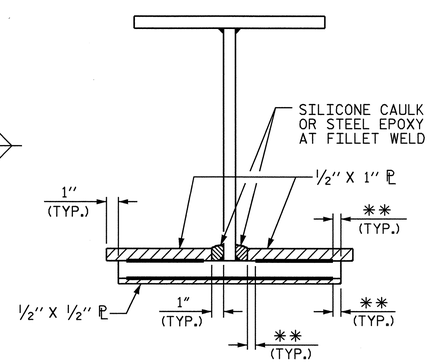

VIEW A-A

**SEE "WELD TERMINATION DETAILS"

DRIP BEAD DETAILS

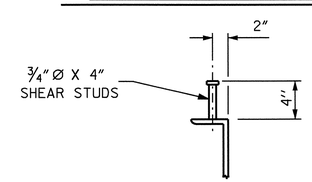

SHEAR STUD DETAIL

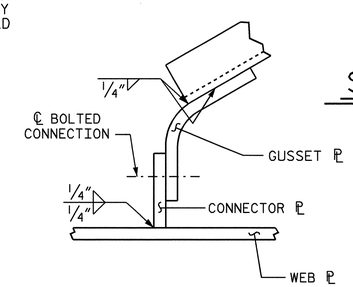

WEB STIFFENER OR CONNECTOR PLATE WELD DETAIL

PROJECT NO. R-2719A
LENOIR COUNTY
STATION: 97+26.78 -Y1-

SHEET 2 OF 2

STATE OF NORTH CAROLINA
DEPARTMENT OF TRANSPORTATION
RALEIGH

SUPERSTRUCTURE

STRUCTURAL STEEL DETAILS
(LEFT LANE)

NORTH CAROLINA PROFESSIONAL SEAL 14045 ENGINEER TIMOTHY E. COGGINS
10/10/08

REVISIONS						SHEET NO.
NO.	BY:	DATE:	NO.	BY:	DATE:	S-302
1			3			TOTAL SHEETS
2			4			340

DRAWN BY : B.N.BARODAWALA DATE : 1-8-08
CHECKED BY : PEGGY ADKINS DATE : 2-08

09-OCT-2008 14:22
h:\structures\str#11\final plans\r2719a_sd_ss_11.dgn
tcoggins

STR. #11

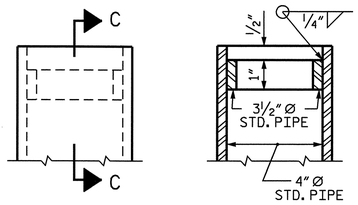

SECTION C-C

DETAIL "A"

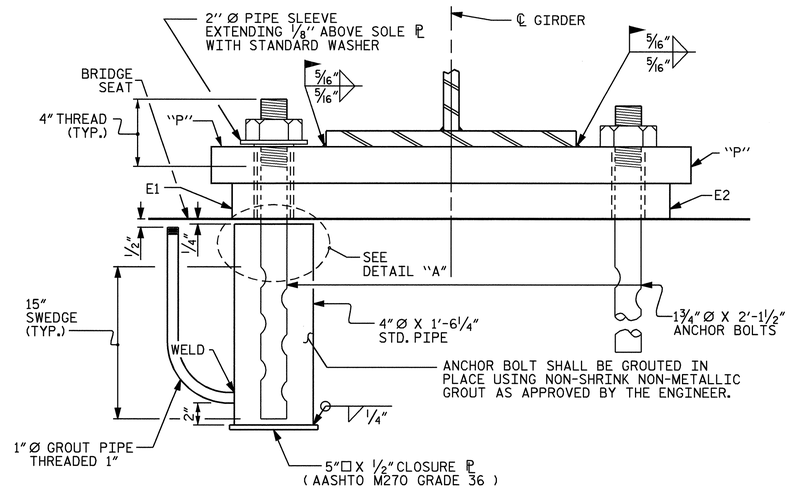

END VIEW

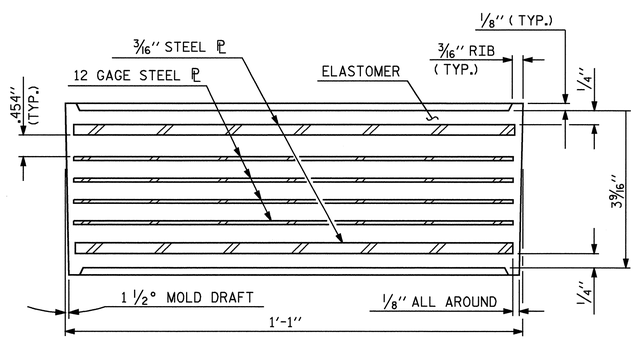

TYPICAL SECTION OF ELASTOMERIC BEARING

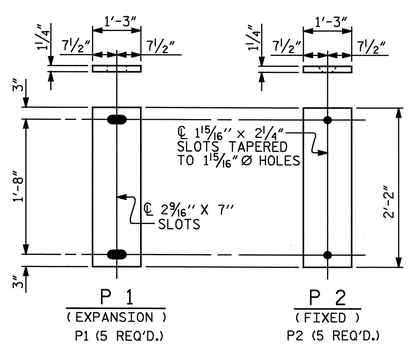

SOLE PLATE DETAILS ("P")

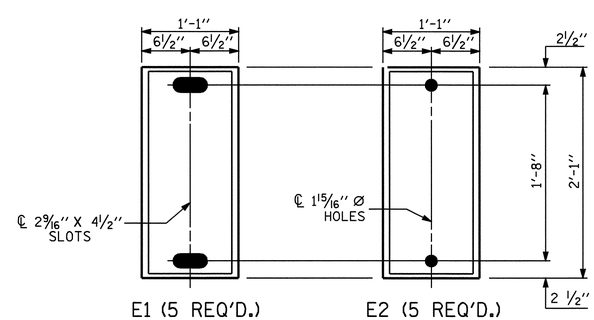

PLAN VIEW OF ELASTOMERIC BEARING

TYPE V

NOTES

AT ALL FIXED POINTS OF SUPPORT, NUTS FOR ANCHOR BOLTS ARE TO BE TIGHTENED FINGER TIGHT AND THEN BACKED OFF 1/2 TURN. THE THREAD OF THE NUT AND BOLT SHALL THEN BE BURRED WITH A SHARP POINTED TOOL.

THE 2" Ø PIPE SLEEVE SHALL BE CUT FROM SCHEDULE 40 PVC PLASTIC PIPE. THE PVC PLASTIC PIPE SHALL MEET THE REQUIREMENTS OF ASTM D1785.

THE PAYMENT FOR THE PIPE SLEEVES SHALL BE INCLUDED IN THE SEVERAL PAY ITEMS.

FOR AASHTO M270 GRADE 50W STRUCTURAL STEEL, SOLE PLATE SHALL BE AASHTO M270 GRADE 50W AND SHALL NOT BE GALVANIZED. ANCHOR BOLTS, NUTS AND WASHERS SHALL BE GALVANIZED IN ACCORDANCE WITH THE STANDARD SPECIFICATIONS.

ANCHOR BOLTS SHALL MEET THE REQUIREMENTS OF ASTM A449. NUTS SHALL MEET THE REQUIREMENTS OF AASHTO M291-DH OR AASHTO M292-2H. WASHERS SHALL MEET THE REQUIREMENTS OF AASHTO M293. SHOP DRAWINGS ARE NOT REQUIRED FOR ANCHOR BOLTS, NUTS AND WASHERS. SHOP INSPECTION IS REQUIRED.

WHEN FIELD WELDING THE SOLE PLATE TO THE GIRDER FLANGE, USE TEMPERATURE INDICATING WAX PENS, OR OTHER SUITABLE MEANS, TO ENSURE THAT THE TEMPERATURE OF THE SOLE PLATE DOES NOT EXCEED 300°F. TEMPERATURES ABOVE THIS MAY DAMAGE THE ELASTOMER.

ALL SURFACES OF BEARING PLATES SHALL BE SMOOTH AND STRAIGHT.

THE CLOSURE PLATE, GROUT PIPE AND STANDARD PIPE FOR THE EXPANSION ASSEMBLY NEED NOT BE GALVANIZED.

THE CONTRACTOR'S ATTENTION IS CALLED TO THE FOLLOWING PROCEDURE, WHICH MAY BE REQUIRED BY THE ENGINEER, TO RESET ELASTOMERIC BEARINGS DUE TO GIRDER TRANSLATION AND END ROTATION:

1. ONCE THE DECK HAS CURED, THE GIRDERS SHALL BE JACKED THEN THE ANCHOR BOLTS AND ELASTOMERIC BEARING SLOTS CENTERED AS NEARLY AS PRACTICAL ABOUT THE BEARING STIFFENER. THIS OPERATION SHALL BE PERFORMED AT APPROXIMATELY 60° F.
2. AFTER CENTERING THE ELASTOMERIC BERARING SLOTS AND ANCHOR BOLTS, THE ANCHOR BOLTS SHALL BE GROUTED.

   THE CONTRACTOR MAY PROPOSE ALTERNATE METHODS, PROVIDED DETAILS ARE SUBMITTED TO THE ENGINEER FOR REVIEW AND APPROVAL.

—LOAD RATINGS—	
	MAX.D.L.+ L.L.
TYPE V	200 K

PROJECT NO. R-2719A
LENOIR COUNTY
STATION: 97+26.78 -Y1-

NORTH CAROLINA PROFESSIONAL SEAL 14045 ENGINEER TIMOTHY L. COGGINS
Timothy L. Coggins 4/6/09

STATE OF NORTH CAROLINA
DEPARTMENT OF TRANSPORTATION
RALEIGH

STANDARD

ELASTOMERIC BEARING DETAILS

(STEEL SUPERSTRUCTURE)
(LEFT LANE)

REVISIONS						SHEET NO.
NO.	BY:	DATE:	NO.	BY:	DATE:	S-303
1			3			TOTAL SHEETS
2			4			340

ASSEMBLED BY : B.N.BARODAWALA	DATE : 1-11-08		
CHECKED BY : PEGGY ADKINS	DATE : 2-08		
DRAWN BY : EEM 10/95	REV. 10/17/00	RWW/LES	
CHECKED BY : PEK 10/95	REV. 7/10/01	LES/RDR	
	REV. 5/1/06	TLA/GM	

06-APR-2009 14:36
h:\structures\Str#11\Final Plans\r2719a_sd_bg_11.dgn
tcoggins

STR. #11

STD. NO. EB2

DEAD LOAD DEFLECTION TABLE

	GIRDERS 1 & 5																				
TWENTIETH POINTS	0	0.05	0.10	0.15	0.20	0.25	0.30	0.35	0.40	0.45	0.50	0.55	0.60	0.65	0.70	0.75	0.80	0.85	0.90	0.95	1.0
DEFLECTION DUE TO WEIGHT OF GIRDER	0.000	0.021	0.040	0.059	0.075	0.090	0.102	0.111	0.118	0.123	0.124	0.123	0.118	0.111	0.102	0.090	0.075	0.059	0.040	0.021	0.000
DEFLECTION DUE TO WEIGHT OF SLAB *	0.000	0.069	0.143	0.212	0.274	0.328	0.373	0.410	0.436	0.452	0.458	0.452	0.436	0.410	0.373	0.328	0.274	0.212	0.143	0.069	0.000
DEFLECTION DUE TO WEIGHT OF BARRIER RAIL	0.000	0.005	0.011	0.016	0.021	0.025	0.028	0.031	0.033	0.034	0.034	0.034	0.033	0.031	0.028	0.025	0.021	0.016	0.011	0.005	0.000
TOTAL DEAD LOAD DEFLECTION	0.000	0.095	0.194	0.287	0.370	0.443	0.503	0.552	0.587	0.609	0.616	0.609	0.587	0.552	0.503	0.443	0.370	0.287	0.194	0.095	0.000
VERTICAL CURVE ORDINATE	0.000	0.015	0.028	0.039	0.049	0.058	0.065	0.070	0.074	0.076	0.077	0.076	0.074	0.070	0.065	0.058	0.049	0.039	0.028	0.015	0.000
REQUIRED CAMBER	0"	1 5/16"	2 11/16"	3 15/16"	5"	6"	6 13/16"	7 7/16"	7 15/16"	8 1/4"	8 5/16"	8 1/4"	7 15/16"	7 7/16"	6 13/16"	6"	5"	3 15/16"	2 11/16"	1 5/16"	0"

* INCLUDES SLAB, BUILDUPS & STAY-IN-PLACE FORMS.
ALL VALUES ARE SHOWN IN FEET (DECIMAL FORM), EXCEPT "FINAL CAMBER", WHICH IS GIVEN IN INCHES (FRACTION FORM).

DEAD LOAD DEFLECTION TABLE

	GIRDERS 2 & 4																				
TWENTIETH POINTS	0	0.05	0.10	0.15	0.20	0.25	0.30	0.35	0.40	0.45	0.50	0.55	0.60	0.65	0.70	0.75	0.80	0.85	0.90	0.95	1.0
DEFLECTION DUE TO WEIGHT OF GIRDER	0.000	0.021	0.040	0.059	0.075	0.090	0.102	0.111	0.118	0.123	0.124	0.123	0.118	0.111	0.102	0.090	0.075	0.059	0.040	0.021	0.000
DEFLECTION DUE TO WEIGHT OF SLAB *	0.000	0.067	0.140	0.208	0.268	0.321	0.366	0.401	0.427	0.443	0.449	0.443	0.427	0.401	0.366	0.321	0.268	0.208	0.140	0.067	0.000
DEFLECTION DUE TO WEIGHT OF BARRIER RAIL	0.000	0.005	0.011	0.016	0.020	0.024	0.027	0.030	0.032	0.033	0.033	0.033	0.032	0.030	0.027	0.024	0.020	0.016	0.011	0.005	0.000
TOTAL DEAD LOAD DEFLECTION	0.000	0.093	0.191	0.283	0.363	0.435	0.495	0.542	0.577	0.599	0.606	0.599	0.577	0.542	0.495	0.435	0.363	0.283	0.191	0.093	0.000
VERTICAL CURVE ORDINATE	0.000	0.015	0.028	0.039	0.049	0.058	0.065	0.070	0.074	0.076	0.077	0.076	0.074	0.070	0.065	0.058	0.049	0.039	0.028	0.015	0.000
REQUIRED CAMBER	0"	1 5/16"	2 5/8"	3 7/8"	4 15/16"	5 15/16"	6 3/4"	7 3/8"	7 13/16"	8 1/8"	8 3/16"	8 1/8"	7 13/16"	7 3/8"	6 3/4"	5 15/16"	4 15/16"	3 7/8"	2 5/8"	1 5/16"	0"

* INCLUDES SLAB, BUILDUPS & STAY-IN-PLACE FORMS.
ALL VALUES ARE SHOWN IN FEET (DECIMAL FORM), EXCEPT "FINAL CAMBER", WHICH IS GIVEN IN INCHES (FRACTION FORM).

DEAD LOAD DEFLECTION TABLE

	GIRDER 3																				
TWENTIETH POINTS	0	0.05	0.10	0.15	0.20	0.25	0.30	0.35	0.40	0.45	0.50	0.55	0.60	0.65	0.70	0.75	0.80	0.85	0.90	0.95	1.0
DEFLECTION DUE TO WEIGHT OF GIRDER	0.000	0.021	0.040	0.059	0.075	0.090	0.102	0.111	0.118	0.123	0.124	0.123	0.118	0.111	0.102	0.090	0.075	0.059	0.040	0.021	0.000
DEFLECTION DUE TO WEIGHT OF SLAB *	0.000	0.066	0.137	0.204	0.263	0.314	0.358	0.393	0.419	0.434	0.439	0.434	0.419	0.393	0.358	0.314	0.263	0.204	0.137	0.066	0.000
DEFLECTION DUE TO WEIGHT OF BARRIER RAIL	0.000	0.006	0.011	0.016	0.020	0.024	0.027	0.030	0.032	0.033	0.033	0.033	0.032	0.030	0.027	0.024	0.020	0.016	0.011	0.006	0.000
TOTAL DEAD LOAD DEFLECTION	0.000	0.093	0.188	0.279	0.358	0.428	0.487	0.534	0.569	0.590	0.596	0.590	0.569	0.534	0.487	0.428	0.358	0.279	0.188	0.093	0.000
VERTICAL CURVE ORDINATE	0.000	0.015	0.028	0.039	0.049	0.058	0.065	0.070	0.074	0.076	0.077	0.076	0.074	0.070	0.065	0.058	0.049	0.039	0.028	0.015	0.000
REQUIRED CAMBER	0"	1 5/16"	2 9/16"	3 13/16"	4 7/8"	5 13/16"	6 5/8"	7 1/4"	7 11/16"	8"	8 1/16"	8"	7 11/16"	7 1/4"	6 5/8"	5 13/16"	4 7/8"	3 13/16"	2 9/16"	1 5/16"	0"

* INCLUDES SLAB, BUILDUPS & STAY-IN-PLACE FORMS.
ALL VALUES ARE SHOWN IN FEET (DECIMAL FORM), EXCEPT "FINAL CAMBER", WHICH IS GIVEN IN INCHES (FRACTION FORM).

PROJECT NO. R-2719A
LENOIR COUNTY
STATION: 97+26.78 -Y1-

NORTH CAROLINA PROFESSIONAL SEAL 14045 ENGINEER TIMOTHY L. COGGINS
10/11/08

STATE OF NORTH CAROLINA
DEPARTMENT OF TRANSPORTATION
RALEIGH

SUPERSTRUCTURE

DEAD LOAD DEFLECTIONS

(LEFT LANE)

REVISIONS						SHEET NO.
NO.	BY:	DATE:	NO.	BY:	DATE:	S-304
1			3			TOTAL SHEETS
2			4			340

STR. #11

DRAWN BY : B.N.BARODAWALA DATE : 1-11-08
CHECKED BY : PEGGY ADKINS DATE : 2-08

09-OCT-2008 14:08
R:\Structures\Str*11\Final Plans\r2719a_sd_dl_11.dgn
nruffin

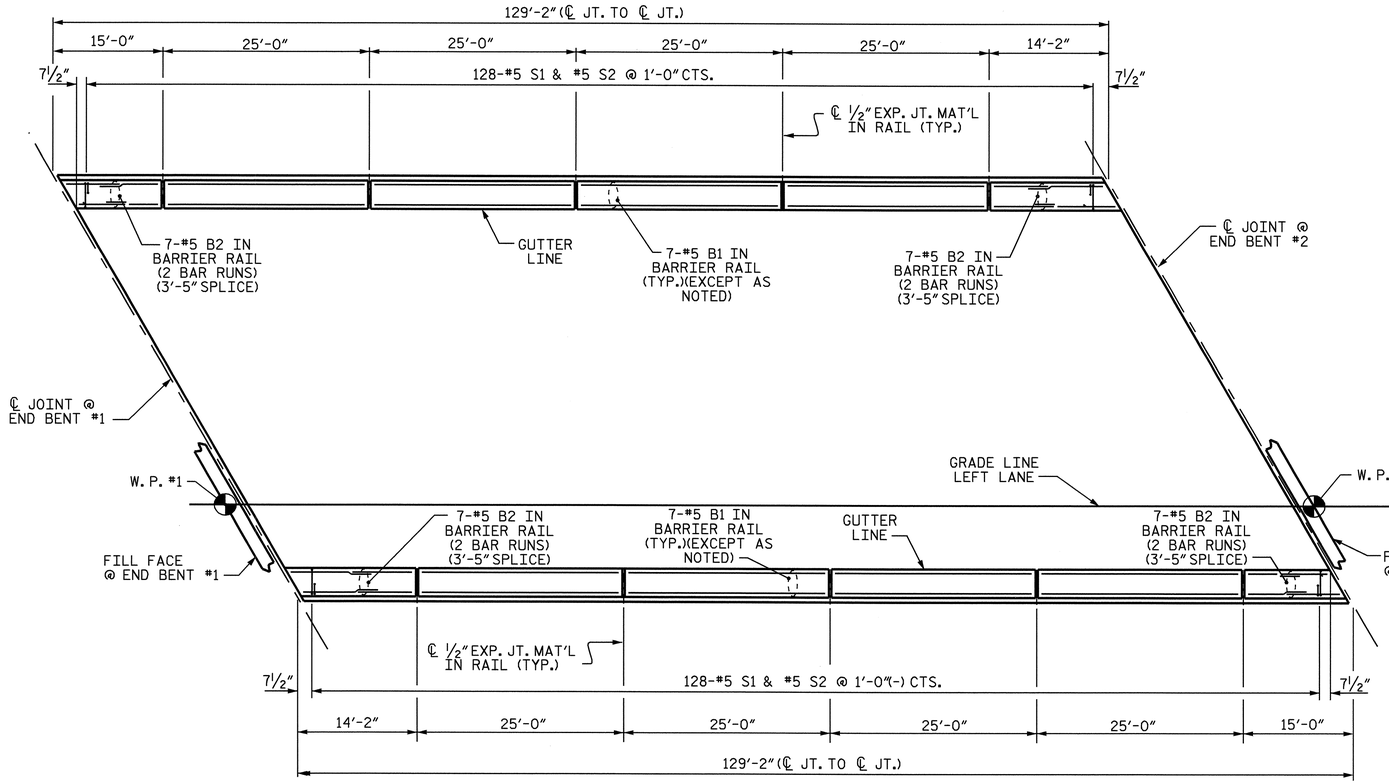

PLAN OF BARRIER RAIL

NOTES

BARRIER RAIL IN THE SPAN SHALL NOT BE CAST UNTIL ALL SLAB CONCRETE IN THAT SPAN HAS BEEN CAST AND HAS REACHED A MINIMUM COMPRESSIVE STRENGTH OF 3,000 PSI.

ALL REINFORCING STEEL IN BARRIER RAILS SHALL BE EPOXY COATED.

VERTICAL GROOVED CONTRACTION JOINTS, ½" IN DEPTH, SHALL BE TOOLED IN ALL EXPOSED FACES OF THE BARRIER RAIL AND IN ACCORDANCE WITH ARTICLE 825-10(B) OF THE STANDARD SPECIFICATIONS. THE CONTRACTION JOINT SHALL BE LOCATED AT EACH THIRD POINT BETWEEN BARRIER RAIL EXPANSION JOINTS. ONLY ONE CONTRACTION JOINT IS REQUIRED AT MIDPOINT OF BARRIER RAIL SEGMENTS LESS THAN 20 FEET IN LENGTH AND NO CONTRACTION JOINTS ARE REQUIRED FOR THOSE SEGMENTS LESS THAN 10 FEET IN LENGTH.

BAR TYPES

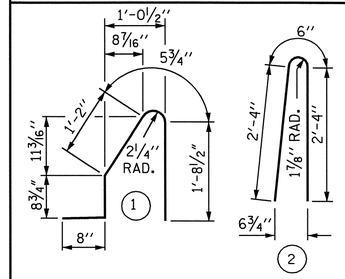

ALL BAR DIMENSIONS ARE OUT TO OUT

BILL OF MATERIAL

FOR CONCRETE BARRIER RAIL ONLY

BAR	NO.	SIZE	TYPE	LENGTH	WEIGHT
* B1	56	#5	STR	24'-7"	1436
* B2	56	#5	STR	8'-11"	521
* S1	256	#5	1	4'-9"	1268
* S2	256	#5	2	5'-2"	1380

* EPOXY COATED REINFORCING STEEL	4605 LBS.
CLASS AA CONCRETE	25.8 CU. YDS.
CONCRETE BARRIER RAIL	258.33 LIN. FT.

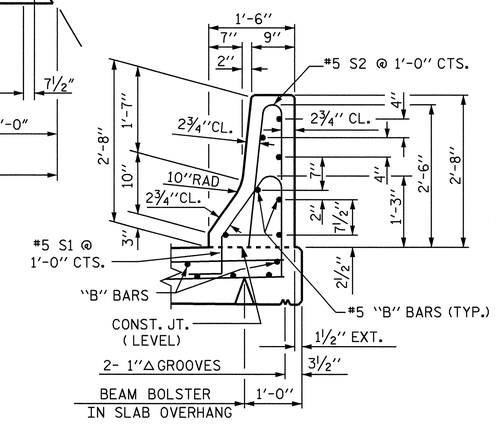

SECTION THRU RAIL

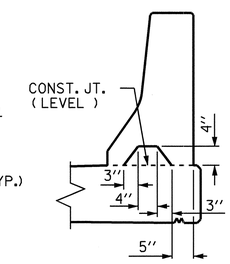

SECTION S-S

AT DAM IN OPEN JOINT
(THIS IS TO BE USED ONLY WHEN SLIP FORM IS USED)

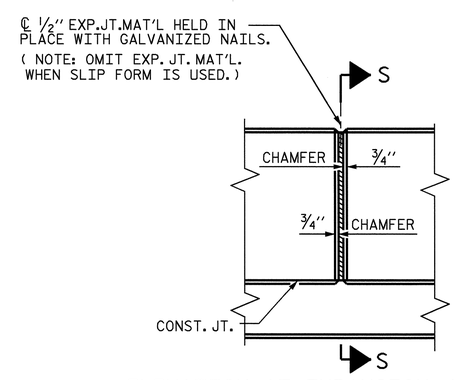

ELEVATION AT EXPANSION JOINTS

BARRIER RAIL DETAILS

NORTH CAROLINA PROFESSIONAL SEAL 14045 ENGINEER TIMOTHY W. COGGINS
10/1/08

PROJECT NO. R-2719A

LENOIR COUNTY

STATION: 97+26.78 -Y1-

SHEET 1 OF 2

STATE OF NORTH CAROLINA
DEPARTMENT OF TRANSPORTATION
RALEIGH

STANDARD

CONCRETE BARRIER RAIL

(LEFT LANE)

REVISIONS						SHEET NO.
NO.	BY:	DATE:	NO.	BY:	DATE:	S-305
1			3			TOTAL SHEETS
2			4			340

ASSEMBLED BY : B.N.BARODAWALA DATE : 1-7-08
CHECKED BY : PEGGY ADKINS DATE : 2-08

DRAWN BY : ARB 5/87
CHECKED BY : SJD 9/87

REV. 10/17/00 RWW/LES
REV. 5/7/03R RWW/JTE
REV. 5/1/06 TLA/GM

09-OCT-2008 14:08
R:\Structures\Str*11\Final Plans\r2719a_sd_br_11.dgn
nruffin

STR. #11

STD. NO. CBRI

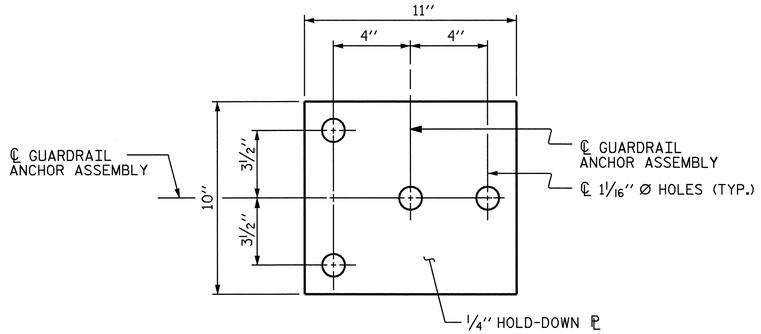

PLAN

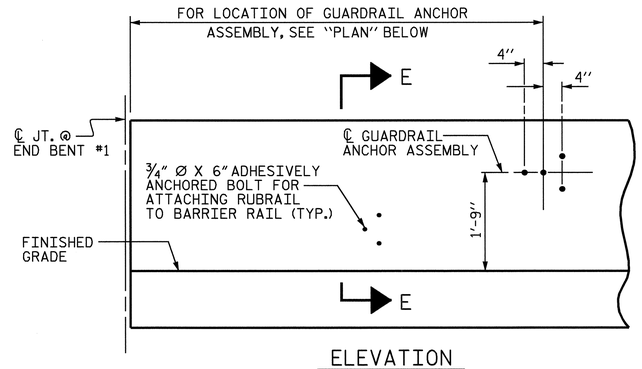

ELEVATION

FOR LOCATION OF RUBRAIL, SEE ROADWAY STD. 862.03

NOTES

THE GUARDRAIL ANCHOR ASSEMBLY SHALL CONSIST OF A 1/4" HOLD DOWN PLATE AND 4 - 7/8" Ø BOLTS WITH NUTS AND WASHERS, RUBRAIL, AND ADHESIVELY ANCHORED BOLTS.

THE HOLD-DOWN PLATE SHALL CONFORM TO AASHTO M270 GRADE 36. AFTER FABRICATION, THE HOLD-DOWN PLATE SHALL BE HOT-DIP GALVANIZED IN ACCORDANCE WITH AASHTO M111.

BOLTS SHALL CONFORM TO THE REQUIREMENTS OF ASTM A307 AND NUTS SHALL CONFORM TO THE REQUIREMENTS OF AASHTO M291. BOLTS, NUTS AND WASHERS SHALL BE GALVANIZED. (AT THE CONTRACTOR'S OPTION, STAINLESS STEEL BOLTS, NUTS AND WASHERS MAY BE USED AS AN ALTERNATE FOR THE 7/8" Ø GALVANIZED BOLTS, NUTS AND WASHERS. THEY SHALL CONFORM TO OR EXCEED THE MECHANICAL REQUIREMENTS OF ASTM A307. THE USE OF THIS ALTERNATE SHALL BE APPROVED BY THE ENGINEER.)

THE GUARDRAIL ANCHOR ASSEMBLY IS REQUIRED AT ALL POINTS WHERE APPROACH GUARDRAIL IS TO BE ATTACHED TO THE END OF BARRIER RAIL. FOR POINTS OF ATTACHMENT, SEE SKETCH.

AFTER INSTALLATION, THE EXPOSED THREAD OF THE BOLT SHALL BE BURRED WITH A SHARP POINTED TOOL.

THE COST OF THE GUARDRAIL ANCHOR ASSEMBLY SHALL BE INCLUDED IN THE UNIT CONTRACT PRICE BID FOR CONCRETE BARRIER RAIL.

THE 1 1/4" Ø HOLES SHALL BE FORMED OR DRILLED WITH A CORE BIT. IMPACT TOOLS WILL NOT BE PERMITTED. ANY CONCRETE DAMAGED BY THIS WORK SHALL BE REPAIRED TO THE SATISFACTION OF THE ENGINEER.

THE C6 X 8.2 RUBRAIL IS TO BE ADHESIVELY ANCHORED TO THE RAIL USING THREE 3/4" Ø X 6" BOLTS WITH WASHERS. LEVEL ONE FIELD TESTING IS REQUIRED, AND THE YIELD LOAD OF THE 3/4" Ø BOLT IS 12 KIPS. FOR ADHESIVELY ANCHORED ANCHOR BOLTS OR DOWELS, SEE SPECIAL PROVISIONS. SEE ROADWAY STANDARD 862.03 FOR DETAILS AND LOCATION OF THE RUBRAIL.

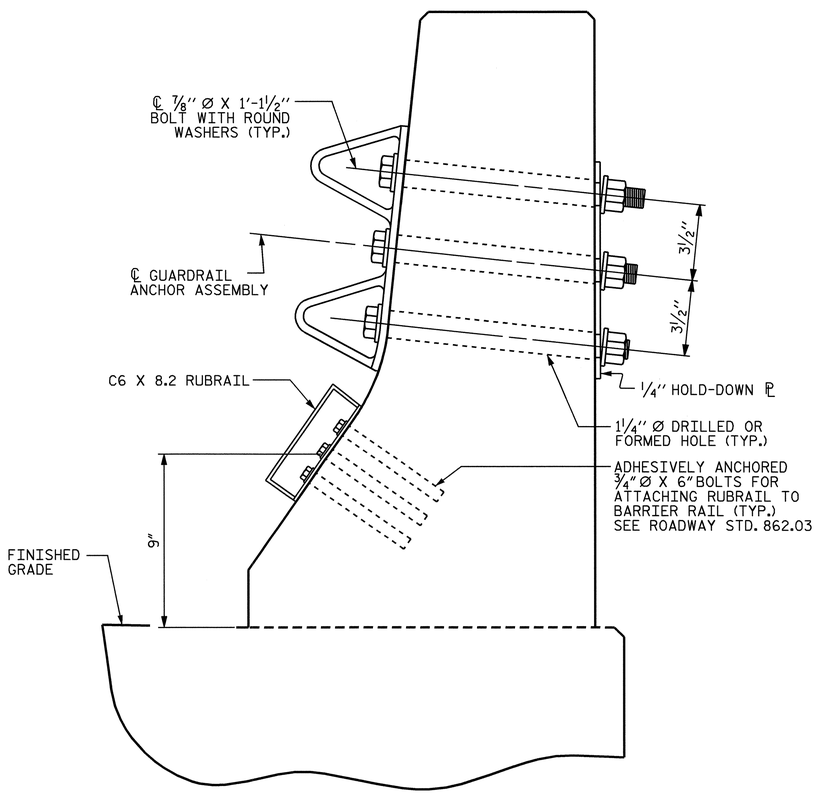

SECTION E-E

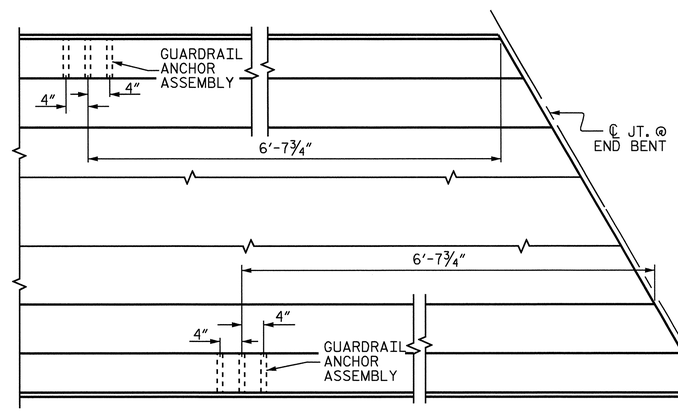

PLAN

LOCATION OF ANCHORS FOR GUARDRAIL

END BENT #2 SHOWN, END BENT #1 SIMILAR.

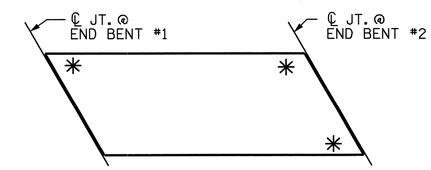

SKETCH SHOWING POINTS OF ATTACHMENTS

✳ DENOTES GUARDRAIL ANCHOR ASSEMBLY

GUARDRAIL ANCHOR ASSEMBLY DETAILS

PROJECT NO. R-2719A
LENOIR COUNTY
STATION: 97+26.78 -Y1-

SHEET 2 OF 2

STATE OF NORTH CAROLINA
DEPARTMENT OF TRANSPORTATION
RALEIGH

STANDARD
GUARDRAIL ANCHORAGE FOR BARRIER RAIL
(LEFT LANE)

NORTH CAROLINA PROFESSIONAL SEAL 14045 ENGINEER TIMOTHY L. COGGINS
10/1/08

REVISIONS						SHEET NO.
NO.	BY:	DATE:	NO.	BY:	DATE:	S-306
1			3			TOTAL SHEETS
2			4			340

ASSEMBLED BY : B.N.BARODAWALA DATE : 1-7-08
CHECKED BY : PEGGY ADKINS DATE : 2-08
DRAWN BY : TLA 5/06
CHECKED BY : GM 5/06
ADDED 5/1/06R KMM/GM

09-OCT-2008 14:08
R:\Structures\Str*11\Final Plans\r2719a_sd_br_11.dgn
nruffin

STR. #11 STD. NO. GRA2

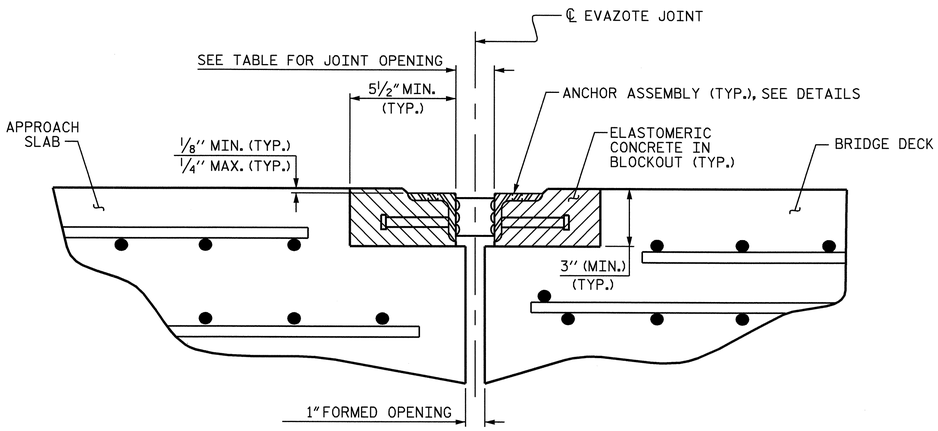

ARMORED JOINT DETAILS

SECTION NORMAL TO JOINT AT END BENT

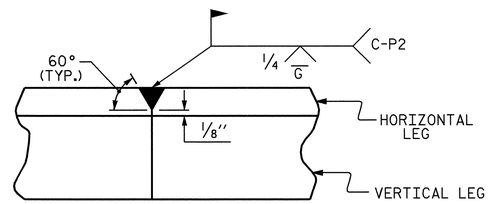

DETAIL- FIELD WELD SPLICE OF ANGLE

NOTES

ANGLES SHALL CONFORM TO AASHTO M270 GRADE 36 STEEL OR APPROVED EQUAL. ALL STUD ANCHORS SHALL CONFORM TO AASHTO M169 GRADES 1010 THRU 1020 OR APPROVED EQUAL.

STUD ANCHORS SHALL BE SHOP WELDED AND ALL HOLES SHALL BE SHOP DRILLED AS SHOWN ON THE PLANS. STUD ANCHORS SHALL BE ELECTRIC ARC END WELDED WITH COMPLETE FUSION.

UPON COMPLETION OF SHOP FABRICATION, THE ENTIRE ANCHOR ASSEMBLY SHALL BE METALLIZED. THE ½" Ø STUD ANCHORS AND ANCHOR TABS NEED NOT BE METALLIZED. SEE SPECIAL PROVISION FOR THERMAL SPRAYED COATINGS (METALLIZATION).

ANCHOR ASSEMBLY SHALL BE MADE CONTINUOUS THE LENGTH OF THE JOINT FROM GUTTER TO GUTTER. FOR FIELD SPLICES AT ALL CROWN BREAK POINTS, THE ENDS OF THE STEEL ANGLES SHALL BE CUT PARALLEL TO THE BRIDGE CENTERLINE. FINISHED FIELD WELDS SHALL BE GROUND SMOOTH AND COATED WITH A MINIMUM THICKNESS OF 4 DRY MILS OF ZINC-RICH PAINT IN ACCORDANCE WITH THE STANDARD SPECIFICATIONS.

ANCHOR ASSEMBLY SEGMENTS SHALL NOT BE LESS THAN 12 FEET NOR MORE THAN 20 FEET IN LENGTH. SHORTER SEGMENTS MAY BE USED AT THE EDGE OF ROADWAY OR AT POINTS OF STAGED CONSTRUCTION.

THE ANCHOR ASSEMBLY SHALL BE SECURED AND LEVELED AS SHOWN IN THE "ARMORED JOINT ANCHOR ASSEMBLY DETAILS". NO SUBMITTALS ARE REQUIRED FOR ⅜" Ø EXPANSION ANCHORS, NUTS OR WASHERS. THE CONTRACTOR MAY SUBMIT FOR APPROVAL AN ALTERNATE METHOD OF ALIGNING AND LEVELING THE ANGLES. THE ALTERNATE METHOD SHALL NOT INCLUDE ANY WELDING TO THE OUTSIDE FACE OF THE ANGLES.

AFTER THE ELASTOMERIC CONCRETE HAS BEEN CAST ON BOTH SIDES OF THE JOINT, REMOVE ANY EXCESS CONCRETE THAT COMES THROUGH THE WEEP HOLES AND THOROUGHLY CLEAN THE ANGLES. ANY DAMAGED STEEL SHALL BE COATED WITH A MINIMUM OF 4 MILS OF ZINC-RICH PAINT IN ACCORDANCE WITH THE STANDARD SPECIFICATIONS.

SEE SPECIAL PROVISIONS FOR EVAZOTE JOINT SEALS.

SEE SPECIAL PROVISIONS FOR ELASTOMERIC CONCRETE.

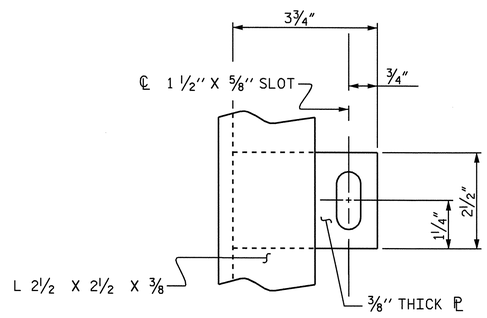

PLAN VIEW OF TAB

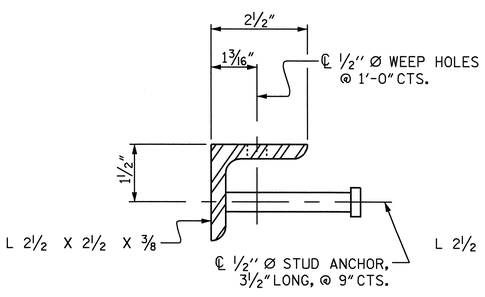

SECTION VIEW OF STUD

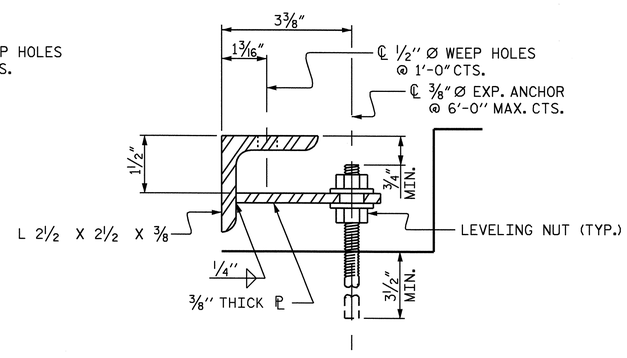

SECTION VIEW OF TAB

ARMORED JOINT ANCHOR ASSEMBLY DETAILS

MOVEMENT AND SETTING AT EVAZOTE JOINT

END BENT NO.	SKEW ANGLE	NOMINAL UNCOMPRESSED SEAL WIDTH	TOTAL MOVEMENT (ALONG ℄ RDWY)	PERPENDICULAR JOINT OPENING AT 45° F	PERPENDICULAR JOINT OPENING AT 60° F	PERPENDICULAR JOINT OPENING AT 90° F
1	58°-42'-00"	2½"	1¼"	2 1/16"	1⅞"	1 9/16"
2	58°-42'-00"	2½"	—	—	—	—

TOTAL MOVEMENT IS CALCULATED ALONG THE CENTERLINE OF ROADWAY.
JOINT OPENINGS ARE MEASURED PERPENDICULAR TO THE JOINT.

BILL OF MATERIAL

END BENT NO.	ELASTOMERIC CONCRETE ✳ (CU. FT.)	TOTAL LENGTH OF ANGLE (FT)
1	11.3	98.33'
2	11.3	98.33'

✳ BASED ON THE MINIMUM BLOCKOUT SHOWN.

PROJECT NO. R-2719A
LENOIR COUNTY
STATION: 97+26.78 -Y1-

STATE OF NORTH CAROLINA
DEPARTMENT OF TRANSPORTATION
RALEIGH

STANDARD
ARMORED EVAZOTE JOINT DETAILS
(LEFT LANE)

NORTH CAROLINA PROFESSIONAL SEAL 14045 ENGINEER TIMOTHY L. COGGINS
10/1/08

REVISIONS						
NO.	BY:	DATE:	NO.	BY:	DATE:	
1			3			
2			4			

SHEET NO. S-307
TOTAL SHEETS 340

ASSEMBLED BY : B.N.BARODAWALA DATE : 08/08
CHECKED BY : T.L. COGGINS DATE : 08/08
DRAWN BY : EEM 1/96
CHECKED BY : RGW 1/96
REV. 7/10/01 LES/RDR
REV. 5/7/03RR RWW/JTE
REV. 5/1/06 TLA/GM

09-OCT-2008 14:08
R:\Structures\Str*11\Final Plans\r2719a_sd_jt_11.dgn
druffin

STR. #11 STD. NO. AEJ1

SUPERSTRUCTURE REINFORCING STEEL LENGTHS ARE BASED ON THE FOLLOWING MINIMUM SPLICE LENGTHS

BAR SIZE	SUPERSTRUCTURE EXCEPT APPROACH SLABS, PARAPET, AND BARRIER RAIL		APPROACH SLABS		PARAPET AND BARRIER RAIL
	EPOXY COATED	UNCOATED	EPOXY COATED	UNCOATED	
#4	2′-0″	1′-9″	2′-0″	1′-9″	2′-9″
#5	2′-6″	2′-2″	2′-6″	2′-2″	3′-5″
#6	3′-0″	2′-7″	3′-10″	2′-7″	4′-4″
#7	5′-3″	3′-6″			
#8	6′-10″	4′-7″			

GROOVING BRIDGE FLOORS

APPROACH SLABS	1829	SQ.FT.
BRIDGE DECK	4973	SQ.FT.
TOTAL	6802	SQ.FT.

REINFORCING STEEL BAR SCHEDULE

BAR	NO.	SIZE	TYPE	LENGTH	WEIGHT	BAR	NO.	SIZE	TYPE	LENGTH	WEIGHT
✳ A1	188	#5	STR	44′-11″	8807	A205	4	#5	STR	36′-0″	150
A2	188	#5	STR	44′-11″	8807	A206	4	#5	STR	34′-2″	143
✳ A3	6	#6	STR	16′-0″	144	A207	4	#5	STR	32′-5″	135
						A208	4	#5	STR	30′-8″	128
✳ A101	4	#5	STR	42′-2″	176	A209	4	#5	STR	28′-10″	120
✳ A102	4	#5	STR	40′-4″	168	A210	4	#5	STR	27′-1″	113
✳ A103	4	#5	STR	38′-7″	161	A211	4	#5	STR	25′-3″	105
✳ A104	4	#5	STR	36′-9″	153	A212	4	#5	STR	23′-6″	98
✳ A105	4	#5	STR	35′-0″	146	A213	4	#5	STR	21′-9″	91
✳ A106	4	#5	STR	33′-3″	139	A214	4	#5	STR	19′-11″	83
✳ A107	4	#5	STR	31′-5″	131	A215	4	#5	STR	18′-2″	76
✳ A108	4	#5	STR	29′-8″	124	A216	4	#5	STR	16′-4″	68
✳ A109	4	#5	STR	27′-11″	116	A217	4	#5	STR	14′-7″	61
✳ A110	4	#5	STR	26′-1″	109	A218	4	#5	STR	12′-10″	54
✳ A111	4	#5	STR	24′-4″	102	A219	4	#5	STR	11′-0″	46
✳ A112	4	#5	STR	22′-6″	94	A220	4	#5	STR	9′-3″	39
✳ A113	4	#5	STR	20′-9″	87	A221	4	#5	STR	7′-6″	31
✳ A114	4	#5	STR	19′-0″	79	A222	4	#5	STR	5′-8″	24
✳ A115	4	#5	STR	17′-2″	72	A223	4	#5	STR	3′-11″	16
✳ A116	4	#5	STR	15′-5″	64	A224	4	#5	STR	2′-1″	9
✳ A117	4	#5	STR	13′-8″	57						
✳ A118	4	#5	STR	11′-10″	49	✳ B1	160	#4	STR	27′-4″	2921
✳ A119	4	#5	STR	10′-1″	42	B2	156	#5	STR	44′-4″	7213
✳ A120	4	#5	STR	8′-3″	34						
✳ A121	4	#5	STR	6′-6″	27	✳ G1	2	#5	STR	52′-6″	110
✳ A122	4	#5	STR	4′-9″	20						
✳ A123	4	#5	STR	2′-11″	12	✳ K1	12	#5	1	14′-9″	185
✳ A124	4	#5	STR	1′-2″	5	✳ K2	18	#5	2	21′-7″	405
A201	4	#5	STR	43′-1″	180	✳ S1	72	#4	3	4′-6″	216
A202	4	#5	STR	41′-4″	172						
A203	4	#5	STR	39′-6″	165	REINFORCING STEEL				LBS.	18,284
A204	4	#5	STR	37′-9″	157	✳ EPOXY COATED REINF. STEEL				LBS.	14,955

BAR TYPES

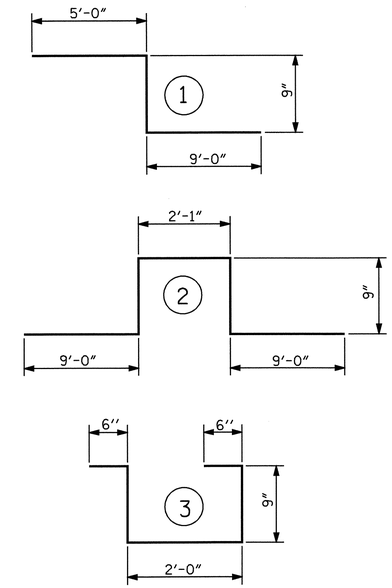

ALL BAR DIMENSIONS ARE OUT TO OUT

SUPERSTRUCTURE BILL OF MATERIAL

	CLASS AA CONCRETE	REINFORCING STEEL	EPOXY COATED REINFORCING STEEL
	(CU.YDS.)	(LBS.)	(LBS.)
SPAN "A"	192.5	18,284	14,955
TOTALS✳✳	192.5	18,284	14,955

✳✳ QUANTITIES FOR BARRIER RAIL ARE NOT INCLUDED

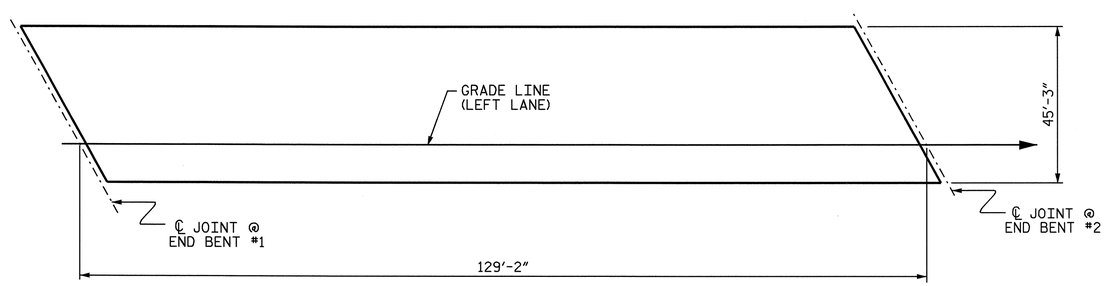

LAYOUT FOR COMPUTING AREA OF REINFORCED CONCRETE DECK SLAB (SQ. FT. = 5845)

PROJECT NO. R-2719A
LENOIR COUNTY
STATION: 97+26.78 -Y1-

STATE OF NORTH CAROLINA
DEPARTMENT OF TRANSPORTATION
RALEIGH

STANDARD
SUPERSTRUCTURE
BILL OF MATERIAL
(LEFT LANE)

NORTH CAROLINA PROFESSIONAL SEAL 14045 ENGINEER TIMOTHY K. COGGINS
10/1/08

REVISIONS						SHEET NO.
NO.	BY:	DATE:	NO.	BY:	DATE:	S-308
1			3			TOTAL SHEETS
2			4			340

ASSEMBLED BY : B.N.BARODAWALA DATE : 1-8-08
CHECKED BY : PEGGY ADKINS DATE : 2-08

DRAWN BY : JMB 5/87
CHECKED BY : SJD 9/87

REV. 6/1/94 EEM/GRP
REV. 8/16/99 RWW/LES
REV. 5/1/06 TLA/GM

09-OCT-2008 14:08
R:\Structures\Str#11\Final Plans\r2719a_sd_bm_11.dgn
nruffin

STR. #11 STD. NO. BOM1

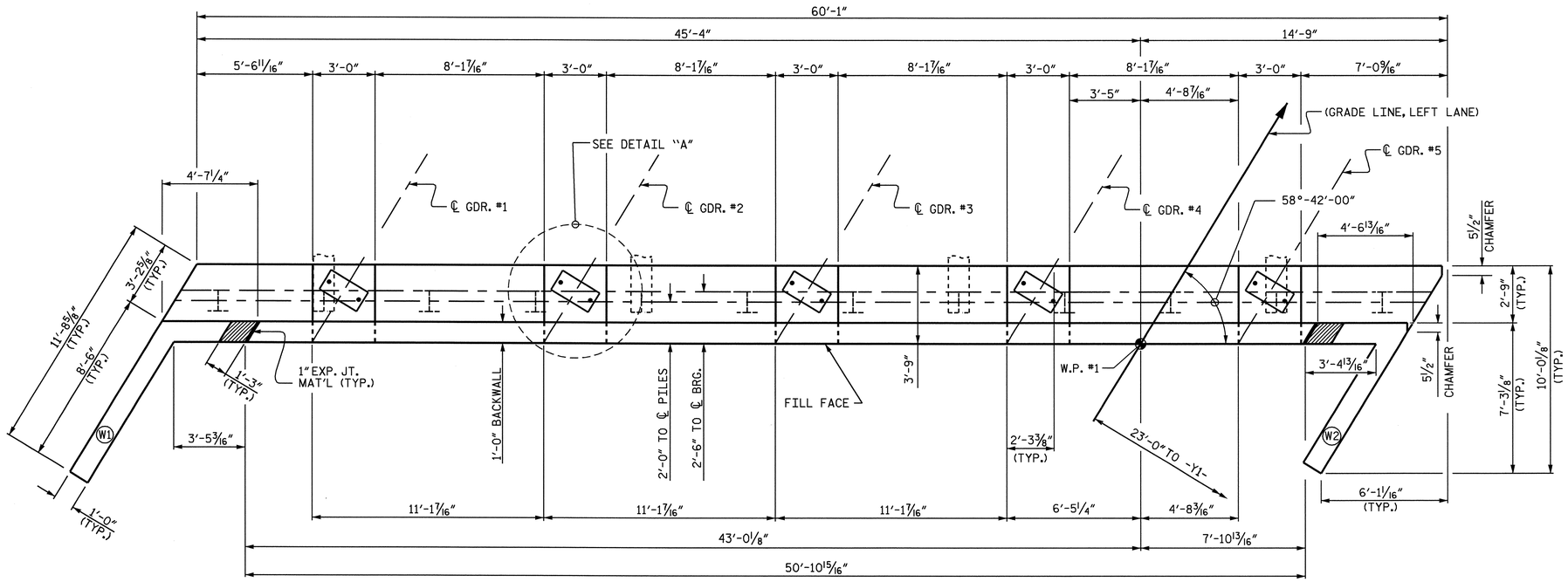

PLAN

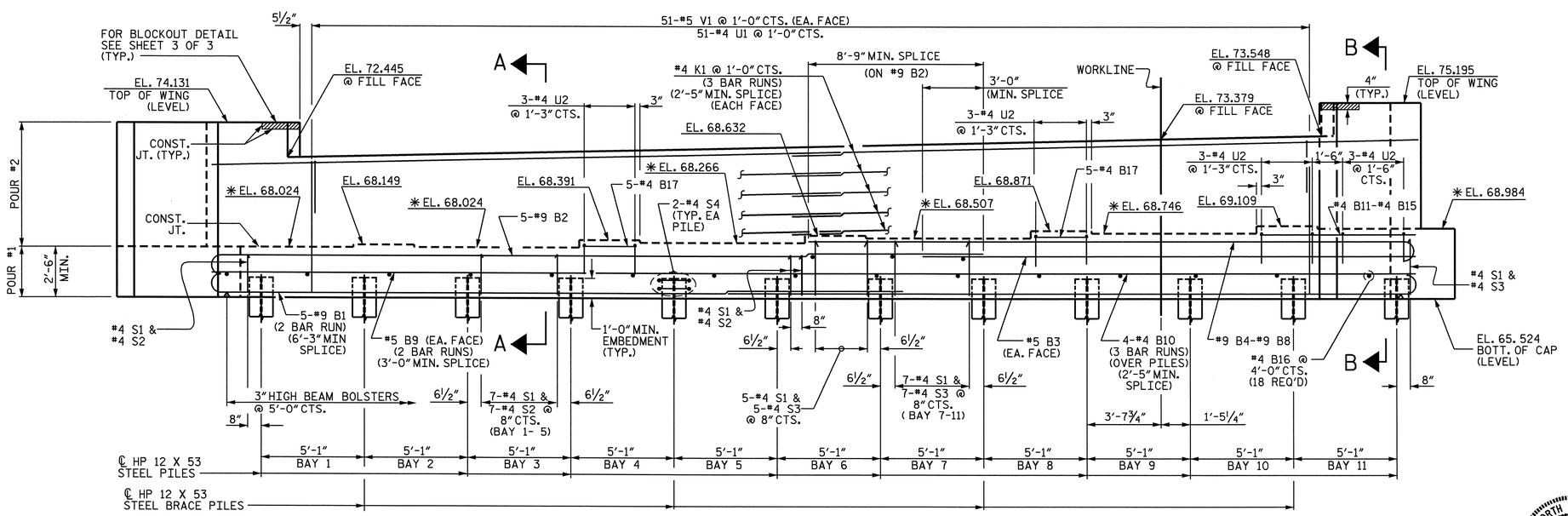

ELEVATION

NOTES

STIRRUPS IN CAP MAY BE SHIFTED AS NECESSARY TO CLEAR ANCHOR BOLTS.

BACKWALL SHALL BE PLACED BEFORE APPLYING THE EPOXY PROTECTIVE COATING.

THE TOP SURFACE AREAS OF THE END BENT CAPS SHALL BE CURED IN ACCORDANCE WITH THE STANDARD SPECIFICATIONS EXCEPT THE MEMBRANE CURING COMPOUND METHOD SHALL NOT BE USED.

THE TOP SURFACE OF THE CAP EXCEPT THE BRIDGE SEAT BUILDUPS SHALL BE SLOPED TRANSVERSELY FROM THE FILL FACE TO THE BACK FACE AT THE RATE OF 2%.

THE CONCRETE IN THE SHADED AREA OF THE WING SHALL BE POURED AFTER THE BARRIER RAIL IS CAST IF SLIP FORMING IS USED.

THE CONTRACTOR SHALL PROVIDE FOR INSTALLATION OF THE 4" DIAMETER DRAIN PIPE THROUGH THE WING WALL AS REQUIRED FOR REINFORCED BRIDGE APPROACH FILLS, SEE THE ROADWAY PLANS. REINFORCING STEEL IN THE WING WALL MAY BE SHIFTED AS NECESSARY TO CLEAR THE DRAIN PIPE.

EPOXY COAT THE END BENT CAP AFTER ADJUSTMENTS ARE MADE TO BEARINGS AND ANCHOR BOLTS ARE GROUTED.

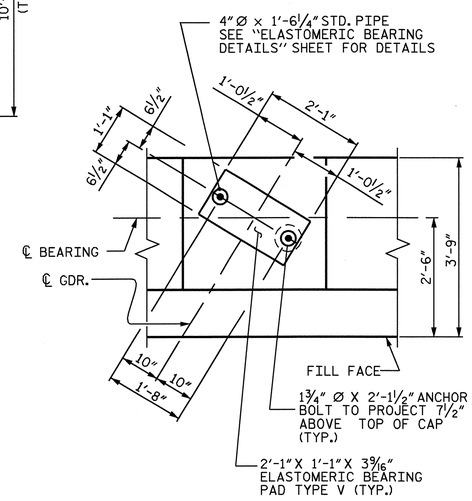

DETAIL "A"
(TYP. EA. GDR.)

PROJECT NO. R-2719A
LENOIR COUNTY
STATION: 97+26.78 -Y1-

SHEET 1 OF 3

STATE OF NORTH CAROLINA
DEPARTMENT OF TRANSPORTATION
RALEIGH

SUBSTRUCTURE

END BENT #1

(LEFT LANE)

NORTH CAROLINA PROFESSIONAL SEAL 14045 ENGINEER TIMOTHY W. COGGINS
10/14/08

REVISIONS						SHEET NO.
NO.	BY:	DATE:	NO.	BY:	DATE:	S-309
1			3			TOTAL SHEETS
2			4			340

STR.#11

DRAWN BY : M.D.PISO DATE : 04/2008
CHECKED BY : H.T.BARBOUR DATE : 06/2008

09-OCT-2008 14:08
R:\Structures\Str*11\Final Plans\r2719a_sd_e*_11.dgn
nruffin

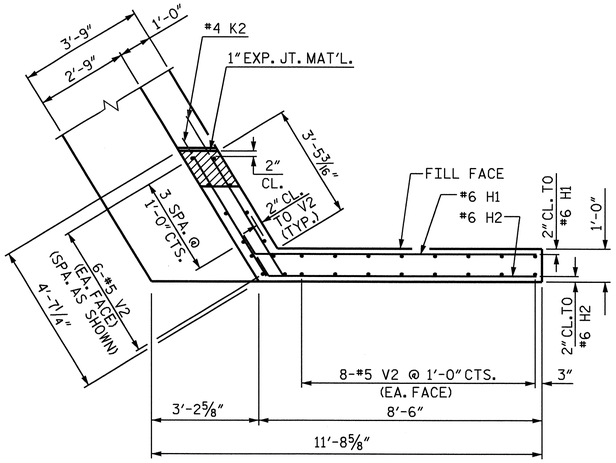

PLAN OF LEFT WING (W1)

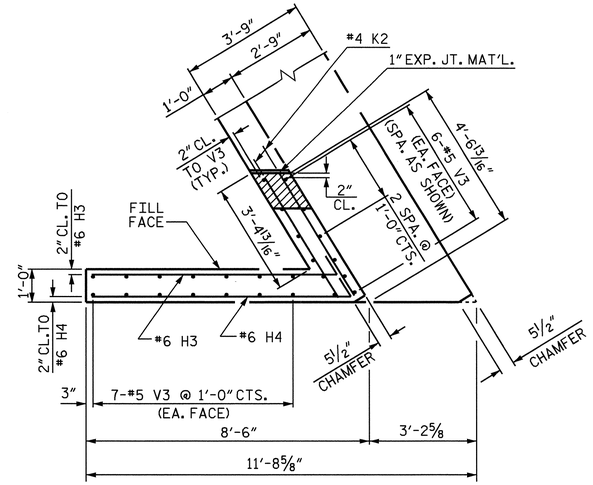

PLAN OF RIGHT WING (W2)

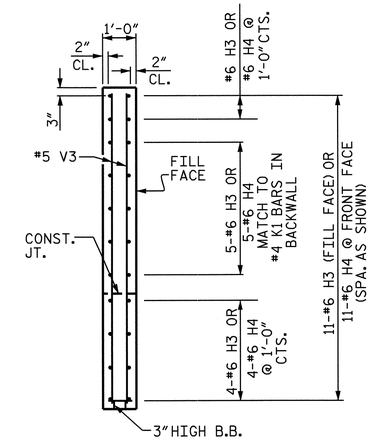

SECTION Y-Y

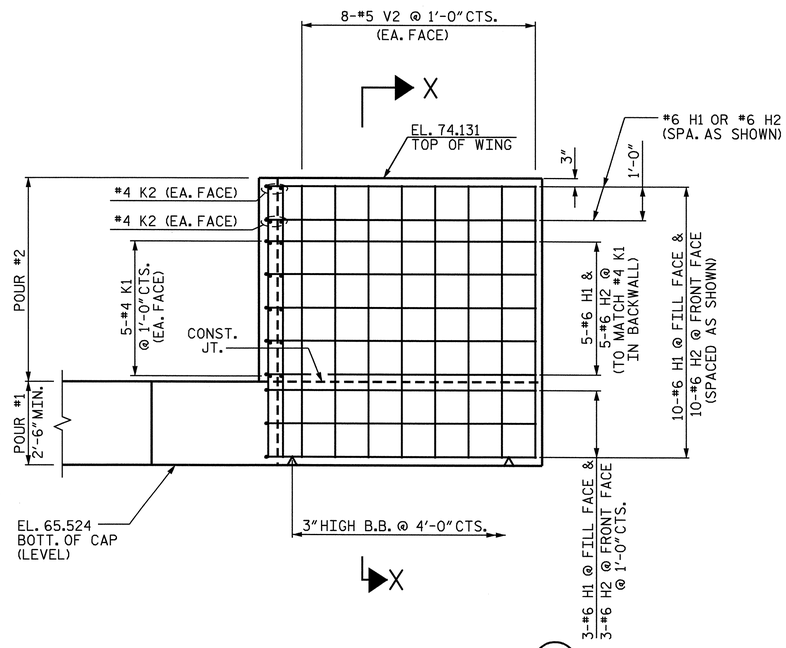

ELEVATION OF LEFT WING (W1)

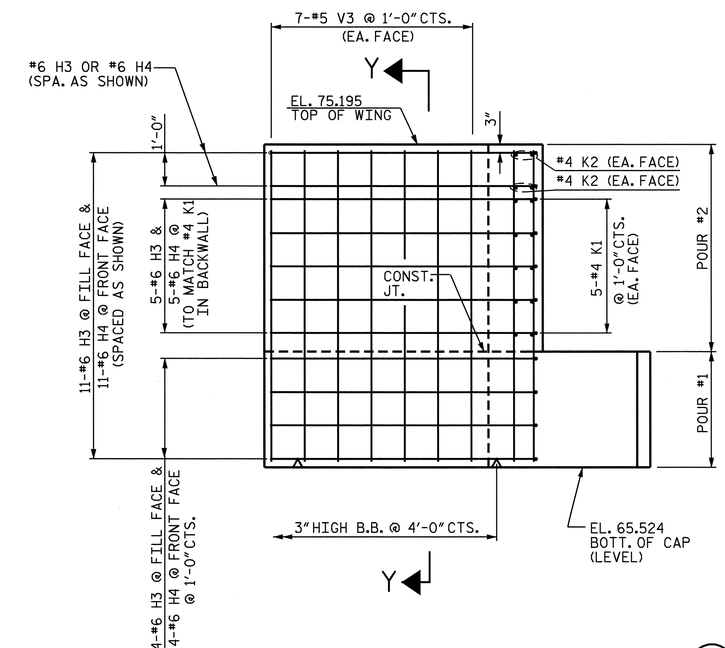

ELEVATION OF RIGHT WING (W2)

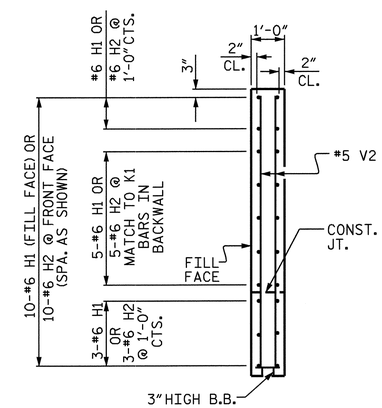

SECTION X-X

PROJECT NO. R-2719A

LENOIR COUNTY

STATION: 97+26.78 -Y1-

SHEET 2 OF 3

STATE OF NORTH CAROLINA
DEPARTMENT OF TRANSPORTATION
RALEIGH

SUBSTRUCTURE

END BENT #1

(LEFT LANE)

NORTH CAROLINA PROFESSIONAL SEAL 14045 ENGINEER TIMOTHY L. COGGINS

10/11/08

REVISIONS						SHEET NO.
NO.	BY:	DATE:	NO.	BY:	DATE:	S-310
1			3			TOTAL SHEETS
2			4			340

STR. #11

DRAWN BY : M.D.PISO DATE : 04/2008
CHECKED BY : H.T.BARBOUR DATE : 06/2008

09-OCT-2008 14:08
R:\Structures\Str*11\Final Plans\r2719a_sd_e*_11.dgn
nruffin

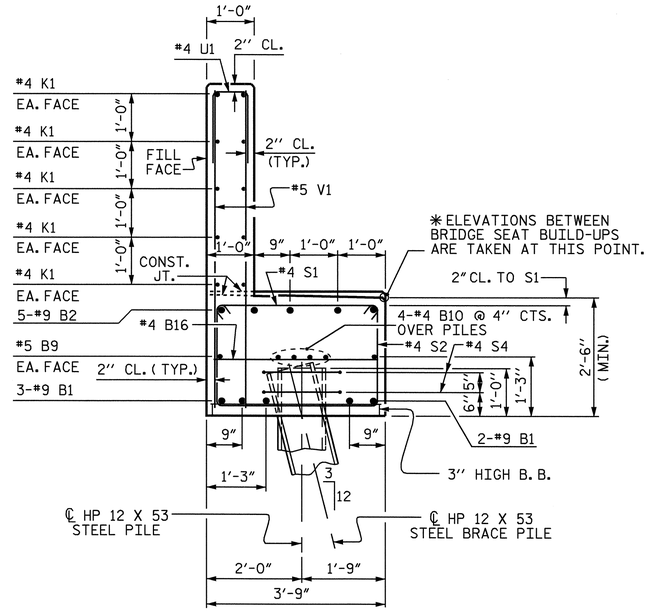

SECTION A-A

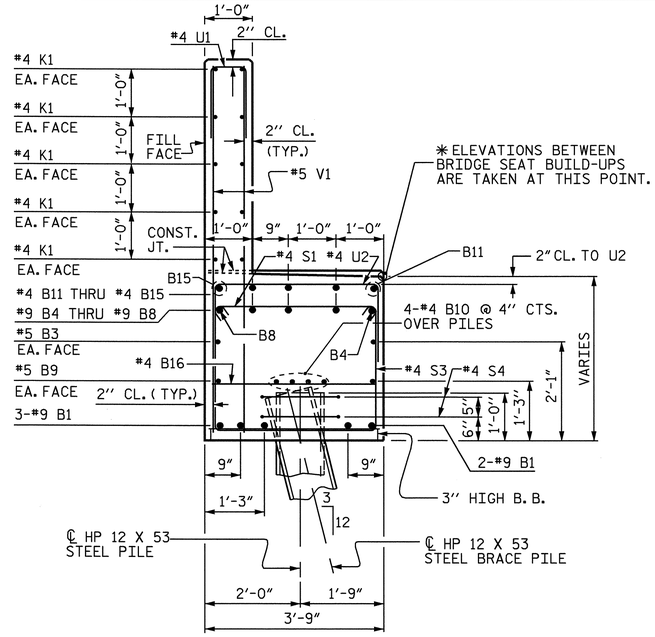

SECTION B-B

BAR TYPES

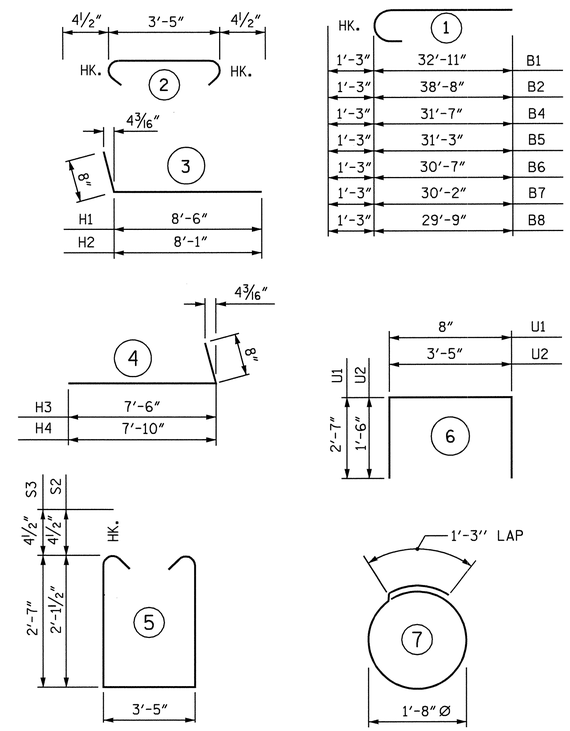

ALL BAR DIMENSIONS ARE OUT TO OUT.

BILL OF MATERIAL
END BENT #1

BAR	NO.	SIZE	TYPE	LENGTH	WEIGHT
B1	10	#9	1	34'-2"	1162
B2	5	#9	1	39'-11"	679
B3	2	#5	STR.	24'-1"	50
B4	1	#9	1	32'-10"	112
B5	1	#9	1	32'-6"	111
B6	1	#9	1	31'-10"	108
B7	1	#9	1	31'-5"	107
B8	1	#9	1	31'-0"	105
B9	4	#5	STR.	31'-4"	131
B10	12	#4	STR.	21'-6"	172
B11	1	#4	STR.	9'-5"	6
B12	1	#4	STR.	9'-0"	6
B13	1	#4	STR.	8'-5"	6
B14	1	#4	STR.	8'-0"	5
B15	1	#4	STR.	7'-6"	5
B16	18	#4	STR.	3'-5"	41
B17	10	#4	STR.	2'-8"	18
H1	10	#6	3	9'-2"	138
H2	10	#6	3	8'-9"	131
H3	11	#6	4	8'-2"	135
H4	11	#6	4	8'-6"	140
K1	30	#4	STR.	21'-6"	431
K2	8	#4	STR.	4'-2"	22
S1	79	#4	2	4'-2"	220
S2	38	#4	5	8'-5"	214
S3	41	#4	5	9'-4"	256
S4	24	#4	7	6'-6"	104
U1	51	#4	6	5'-10"	199
U2	12	#4	6	6'-5"	51
V1	102	#5	STR.	6'-7"	700
V2	28	#5	STR.	8'-3"	241
V3	26	#5	STR.	9'-4"	253
TOTAL REINFORCING STEEL					6059 LBS.

CLASS 'A' CONCRETE

CAP & LOWER WING	27.5 C.Y.
BACKWALL & UPPER WING	13.4 C.Y.
TOTAL CLASS 'A' CONCRETE (C.Y.)	40.9 C.Y.

HP 12 X 53 STEEL PILES

NO.	TOTAL LENGTH (LIN. FT.)
12	840

PILE REDRIVES EA. 6

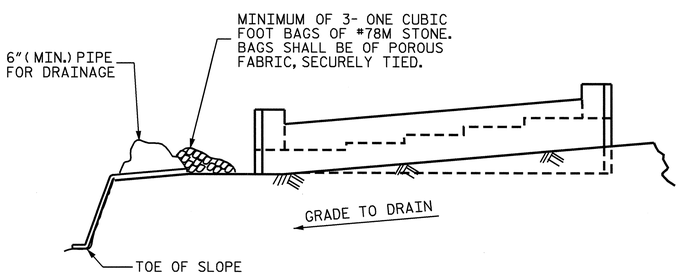

BAGGED STONE AND PIPE SHALL BE PLACED IMMEDIATELY AFTER COMPLETION OF END BENT EXCAVATION. PIPE MAY BE EITHER CONCRETE, CORRUGATED STEEL, CORRUGATED ALUMINUM ALLOY, OR CORRUGATED PLASTIC. PERFORATED PIPE WILL NOT BE ALLOWED.

BAGGED STONE SHALL REMAIN IN PLACE UNTIL THE ENGINEER DIRECTS THAT IT BE REMOVED. THE CONTRACTOR SHALL REMOVE AND DISPOSE OF SILT ACCUMULATIONS AT BAGGED STONE WHEN SO DIRECTED BY THE ENGINEER. BAGS SHALL BE REMOVED AND REPLACED WHENEVER THE ENGINEER DETERMINES THAT THEY HAVE DETERIORATED AND LOST THEIR EFFECTIVENESS.

NO SEPARATE PAYMENT WILL BE MADE FOR THIS WORK AND THE ENTIRE COST OF THIS WORK SHALL BE INCLUDED IN THE UNIT CONTRACT PRICE BID FOR THE SEVERAL PAY ITEMS.

TEMPORARY DRAINAGE AT END BENT

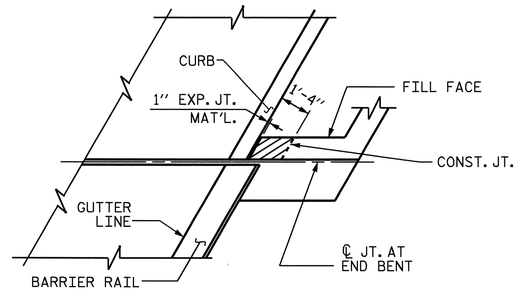

PLAN

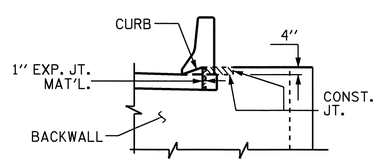

ELEVATION

BLOCKOUT IN WING WALL

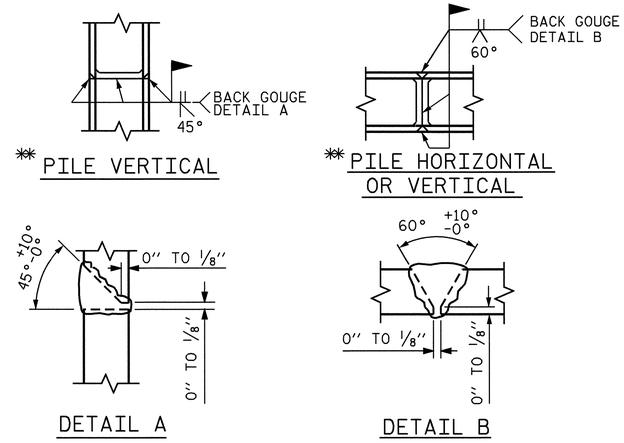

PILE SPLICE DETAILS

✱✱ POSITION OF PILE DURING WELDING.

NORTH CAROLINA PROFESSIONAL SEAL 14045 ENGINEER TIMOTHY L. COGGINS
Timothy L. Coggins 10/1/08

PROJECT NO. R-2719A
LENOIR COUNTY
STATION: 97+26.78 -Y1-

SHEET 3 OF 3

STATE OF NORTH CAROLINA
DEPARTMENT OF TRANSPORTATION
RALEIGH

SUBSTRUCTURE

END BENT #1

(LEFT LANE)

REVISIONS							SHEET NO.
NO.	BY:	DATE:	NO.	BY:	DATE:		S-311
1			3				TOTAL SHEETS
2			4				340

DRAWN BY : M.D.PISO DATE : 04/2008
CHECKED BY : H.T.BARBOUR DATE : 06/2008

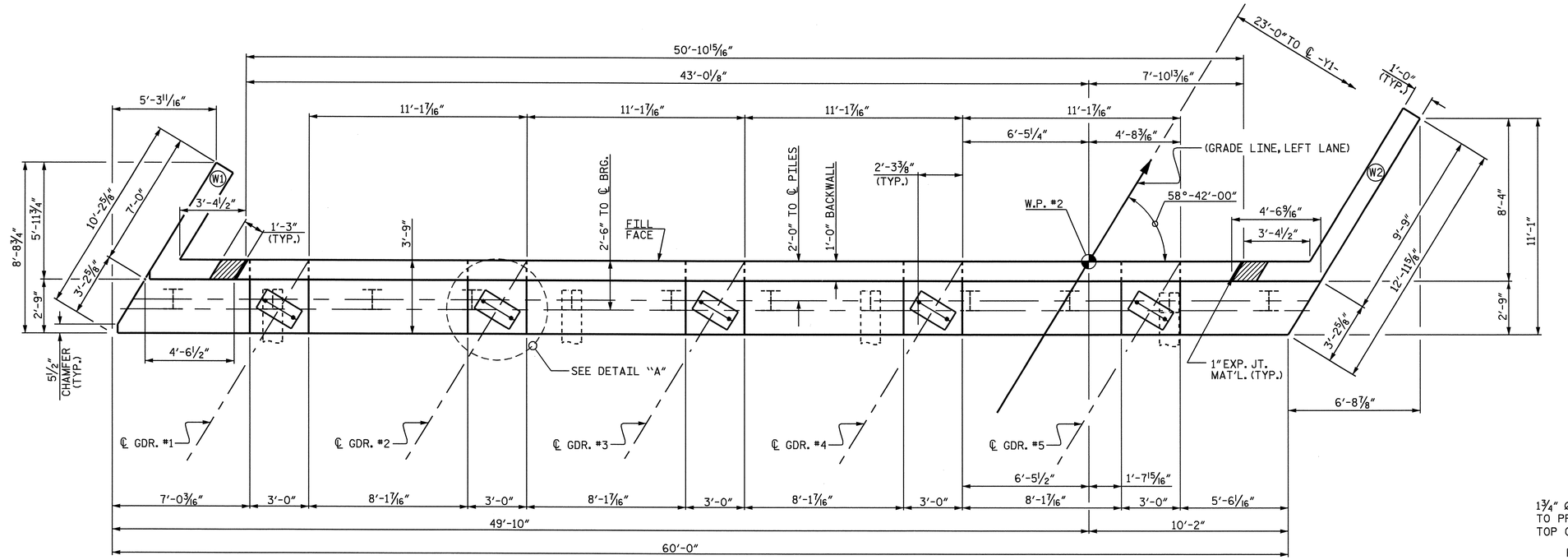

PLAN

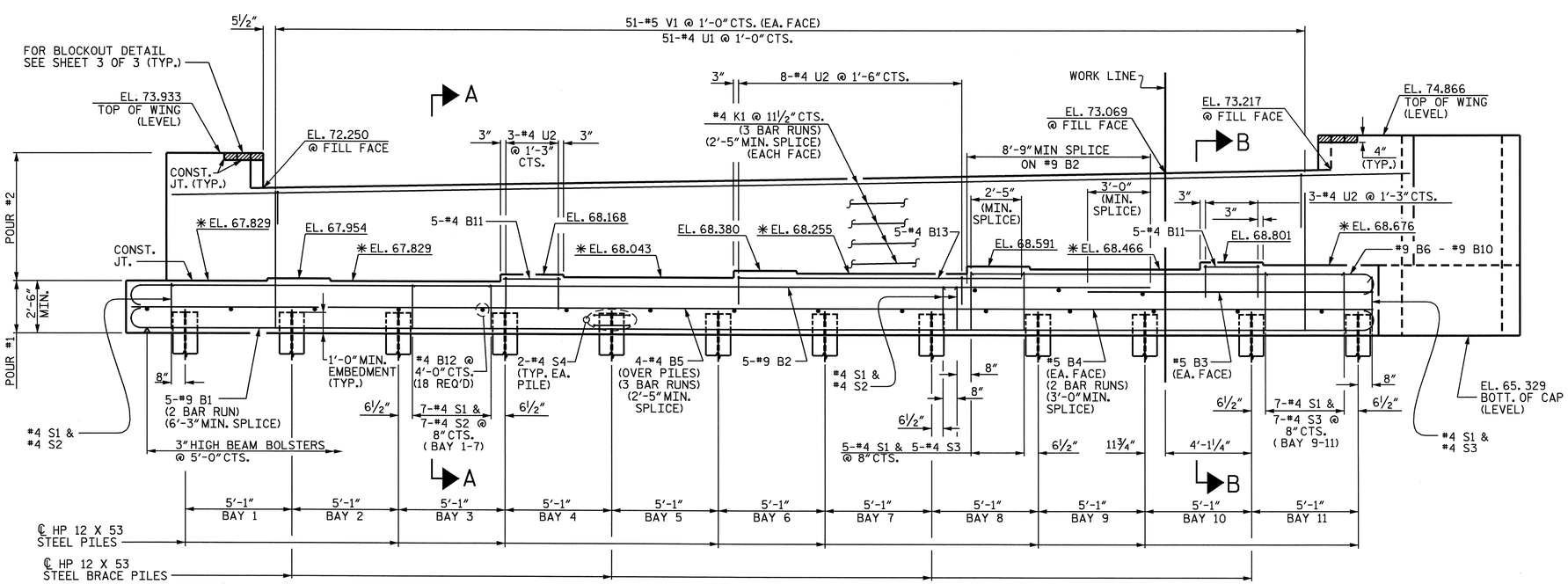

ELEVATION

NOTES

STIRRUPS IN CAP MAY BE SHIFTED AS NECESSARY TO CLEAR ANCHOR BOLTS.

BACKWALL SHALL BE PLACED BEFORE APPLYING THE EPOXY PROTECTIVE COATING.

THE TOP SURFACE AREAS OF THE END BENT CAPS SHALL BE CURED IN ACCORDANCE WITH THE STANDARD SPECIFICATIONS EXCEPT THE MEMBRANE CURING COMPOUND METHOD SHALL NOT BE USED.

THE TOP SURFACE OF THE CAP EXCEPT THE BRIDGE SEAT BUILDUPS SHALL BE SLOPED TRANSVERSELY FROM THE FILL FACE TO THE BACK FACE AT THE RATE OF 2%.

THE CONCRETE IN THE SHADED AREA OF THE WING SHALL BE POURED AFTER THE BARRIER RAIL IS CAST IF SLIP FORMING IS USED.

THE CONTRACTOR SHALL PROVIDE FOR INSTALLATION OF THE 4" DIAMETER DRAIN PIPE THROUGH THE WING WALL AS REQUIRED FOR REINFORCED BRIDGE APPROACH FILLS, SEE THE ROADWAY PLANS. REINFORCING STEEL IN THE WING WALL MAY BE SHIFTED AS NECESSARY TO CLEAR THE DRAIN PIPE.

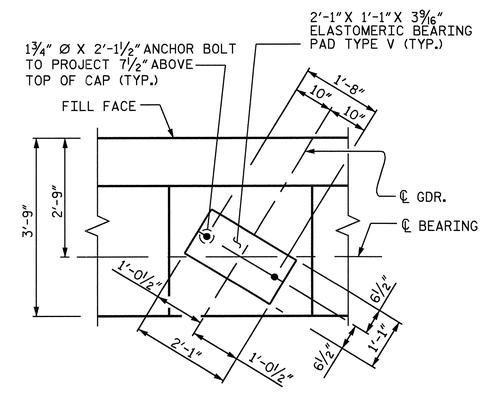

DETAIL "A"

(TYP. EA. GDR.)

PROJECT NO. R-2719A

LENOIR COUNTY

STATION: 97+26.78 -Y1-

SHEET 1 OF 3

STATE OF NORTH CAROLINA
DEPARTMENT OF TRANSPORTATION
RALEIGH

SUBSTRUCTURE

END BENT #2

(LEFT LANE)

NORTH CAROLINA PROFESSIONAL SEAL 14045 ENGINEER TIMOTHY H. COGGINS

10/14/08

REVISIONS						SHEET NO.
NO.	BY:	DATE:	NO.	BY:	DATE:	S-312
1			3			TOTAL SHEETS
2			4			340

STR.#11

DRAWN BY : M.D.PISO DATE : 04/2008
CHECKED BY : H.T.BARBOUR DATE : 06/2008

09-OCT-2008 14:08
R:\Structures\Str*11\Final Plans\r2719a_sd_e*_11.dgn
nruffin

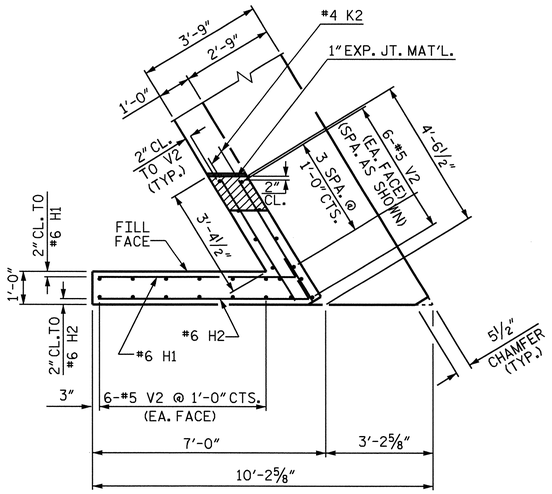

PLAN OF LEFT WING (W1)

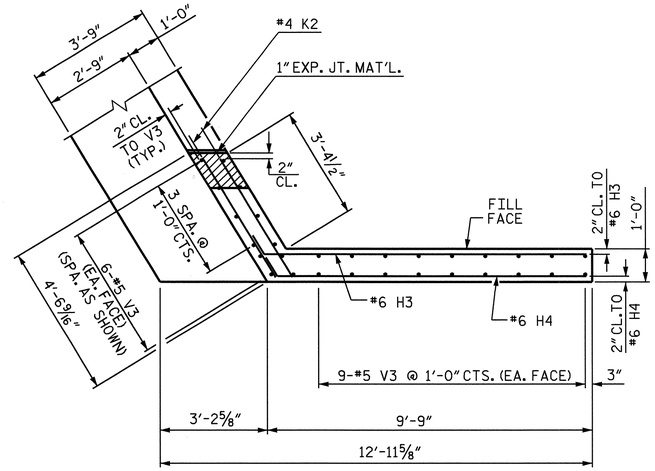

PLAN OF RIGHT WING (W2)

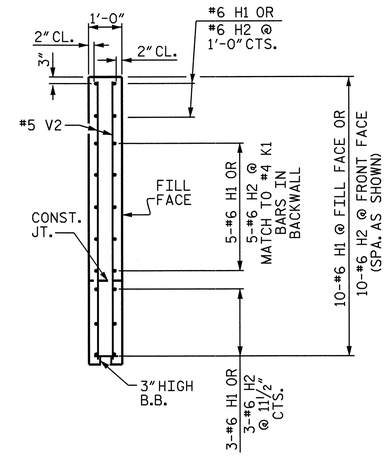

SECTION X-X

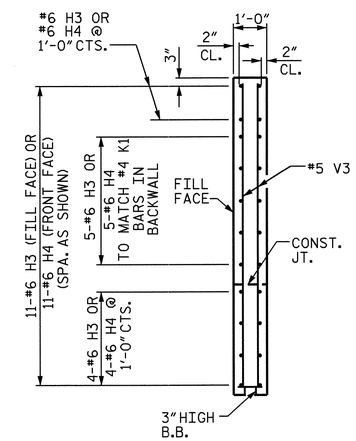

SECTION Y-Y

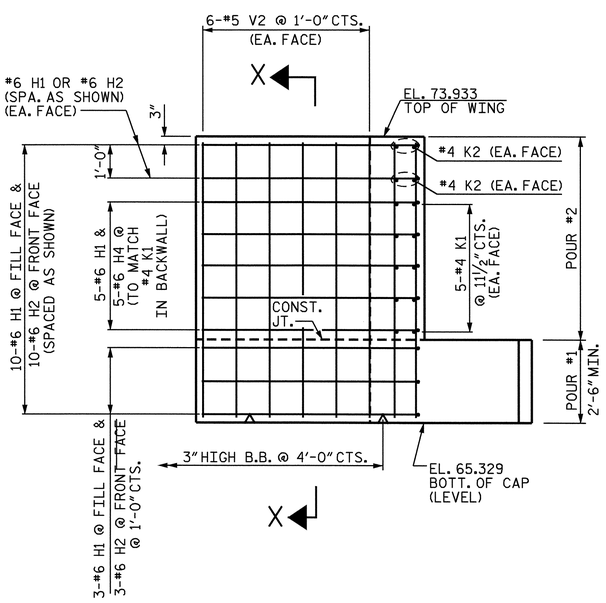

ELEVATION OF LEFT WING (W1)

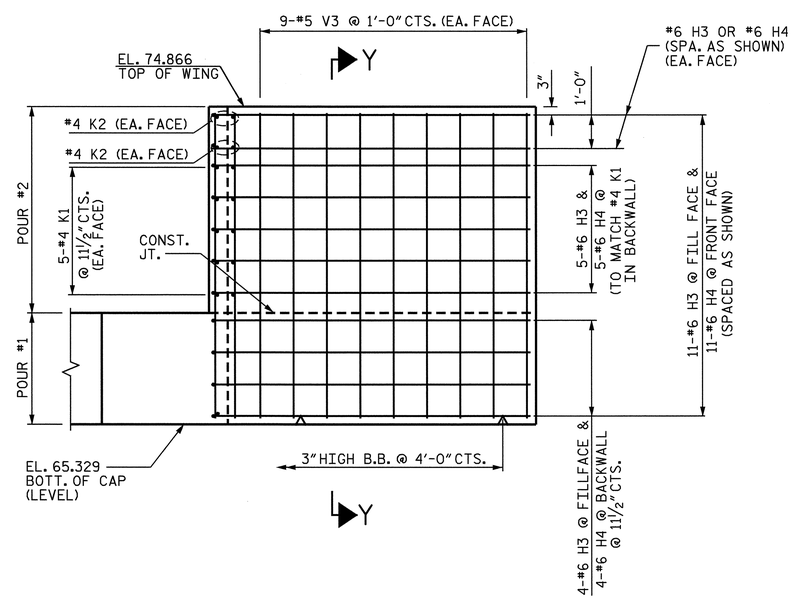

ELEVATION OF RIGHT WING (W2)

PROJECT NO. R-2719A

LENOIR COUNTY

STATION: 97+26.78 -Y1-

SHEET 2 OF 3

STATE OF NORTH CAROLINA
DEPARTMENT OF TRANSPORTATION
RALEIGH

SUBSTRUCTURE

END BENT #2

(LEFT LANE)

NORTH CAROLINA PROFESSIONAL SEAL 14045 ENGINEER TIMOTHY H. COGGINS

Timothy H. Coggins 10/11/08

REVISIONS						SHEET NO.
NO.	BY:	DATE:	NO.	BY:	DATE:	S-313
1			3			TOTAL SHEETS
2			4			340

STR. #11

DRAWN BY : M.D.PISO DATE : 04/2008
CHECKED BY : H.T.BARBOUR DATE : 06/2008

09-OCT-2008 14:08
R:\Structures\Str*11\Final Plans\r2719a_sd_e*_11.dgn
nruffin

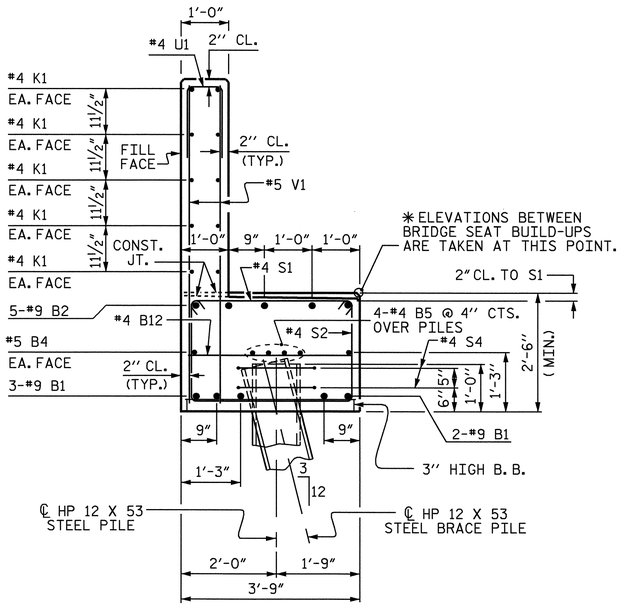

SECTION A-A

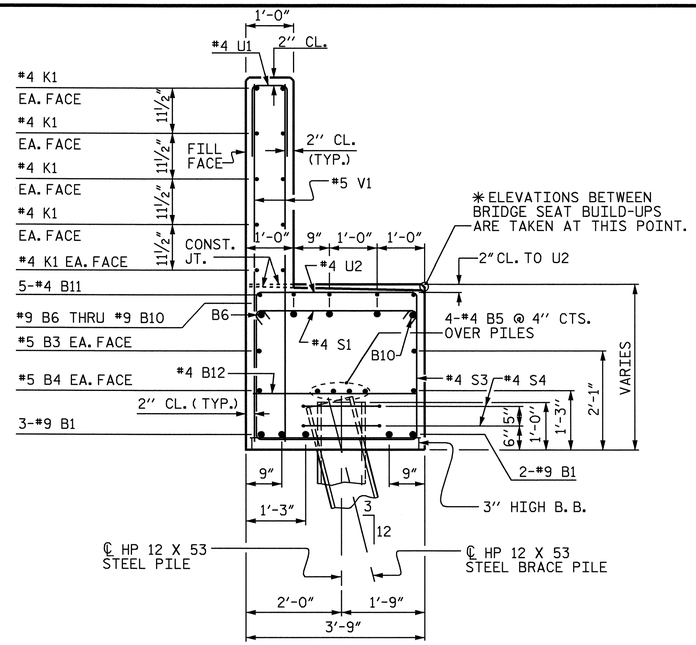

SECTION B-B

BAR TYPES

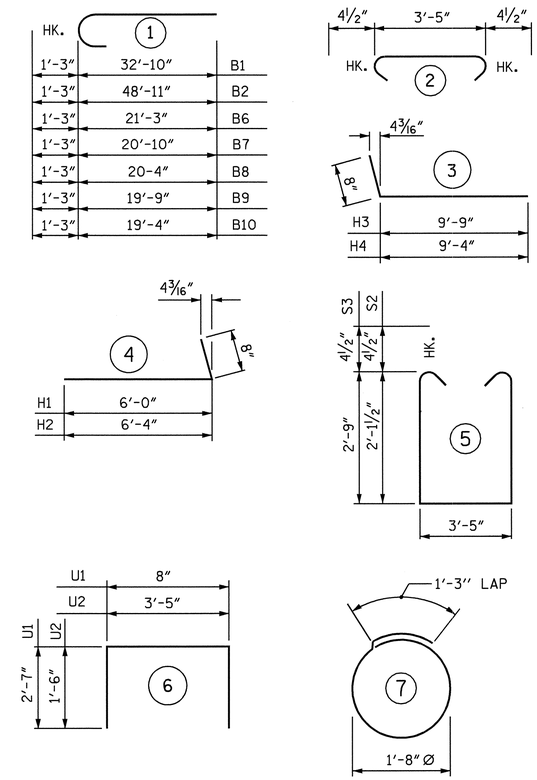

ALL BAR DIMENSIONS ARE OUT TO OUT.

BILL OF MATERIAL
END BENT #2

BAR	NO.	SIZE	TYPE	LENGTH	WEIGHT
B1	10	#9	1	34'-1"	1159
B2	5	#9	1	50'-2"	853
B3	2	#5	STR.	13'-9"	29
B4	4	#5	STR.	31'-4"	131
B5	12	#4	STR.	21'-6"	172
B6	1	#9	1	22'-6"	77
B7	1	#9	1	22'-1"	75
B8	1	#9	1	21'-7"	73
B9	1	#9	1	21'-0"	71
B10	1	#9	1	20'-7"	70
B11	10	#4	STR.	2'-8"	18
B12	18	#4	STR.	3'-5"	41
B13	5	#4	STR.	13'-7"	45
H1	10	#6	4	6'-8"	100
H2	10	#6	4	7'-0"	105
H3	11	#6	3	10-5"	172
H4	11	#6	3	10'-0"	165
K1	30	#4	STR.	21'-6"	431
K2	8	#4	STR.	4'-1"	22
S1	79	#4	2	4'-2"	220
S2	52	#4	5	8'-5"	292
S3	27	#4	5	9'-8"	174
S4	24	#4	7	6'-6"	104
U1	51	#4	6	5'-10"	199
U2	14	#4	6	6'-5"	60
V1	102	#5	STR.	6'-7"	700
V2	24	#5	STR.	8'-3"	207
V3	30	#5	STR.	9'-2"	287
TOTAL REINFORCING STEEL					6052 LBS.

CLASS 'A' CONCRETE	
CAP & LOWER WING	25.9 C.Y.
BACKWALL & UPPER WING	13.8 C.Y.
TOTAL CLASS 'A' CONCRETE (C.Y.)	39.7 C.Y.

HP 12 X 53 STEEL PILES	
NO.	TOTAL LENGTH (LIN. FT.)
12	840
PILE REDRIVES	EA. 6

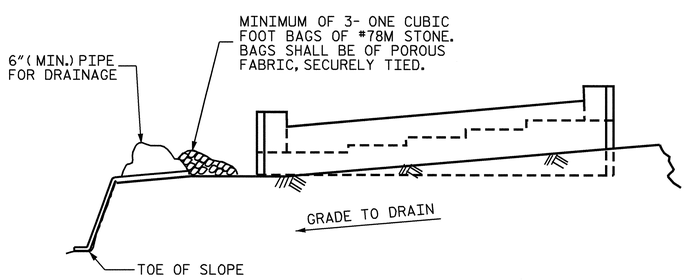

BAGGED STONE AND PIPE SHALL BE PLACED IMMEDIATELY AFTER COMPLETION OF END BENT EXCAVATION. PIPE MAY BE EITHER CONCRETE, CORRUGATED STEEL, CORRUGATED ALUMINUM ALLOY, OR CORRUGATED PLASTIC. PERFORATED PIPE WILL NOT BE ALLOWED.

BAGGED STONE SHALL REMAIN IN PLACE UNTIL THE ENGINEER DIRECTS THAT IT BE REMOVED. THE CONTRACTOR SHALL REMOVE AND DISPOSE OF SILT ACCUMULATIONS AT BAGGED STONE WHEN SO DIRECTED BY THE ENGINEER. BAGS SHALL BE REMOVED AND REPLACED WHENEVER THE ENGINEER DETERMINES THAT THEY HAVE DETERIORATED AND LOST THEIR EFFECTIVENESS.

NO SEPARATE PAYMENT WILL BE MADE FOR THIS WORK AND THE ENTIRE COST OF THIS WORK SHALL BE INCLUDED IN THE UNIT CONTRACT PRICE BID FOR THE SEVERAL PAY ITEMS.

TEMPORARY DRAINAGE AT END BENT

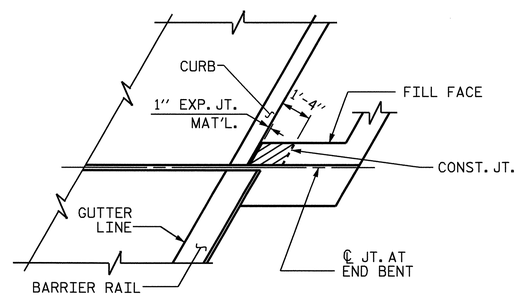

PLAN

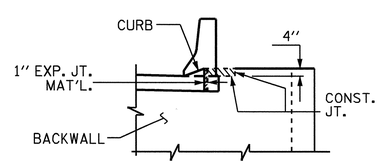

ELEVATION

BLOCKOUT IN WING WALL

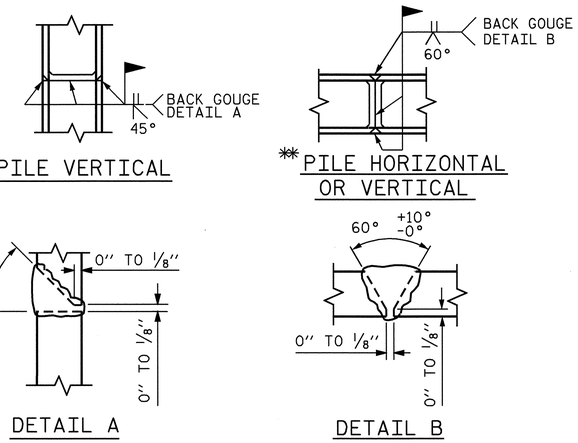

PILE SPLICE DETAILS

✱✱ POSITION OF PILE DURING WELDING.

NORTH CAROLINA PROFESSIONAL SEAL 14045 ENGINEER TIMOTHY L. COGGINS
10/11/08

PROJECT NO. R-2719A
LENOIR COUNTY
STATION: 97+26.78 -Y1-

SHEET 3 OF 3

STATE OF NORTH CAROLINA
DEPARTMENT OF TRANSPORTATION
RALEIGH

SUBSTRUCTURE

END BENT #2

(LEFT LANE)

REVISIONS						SHEET NO.
NO.	BY:	DATE:	NO.	BY:	DATE:	S-314
1			3			TOTAL SHEETS
2			4			340

DRAWN BY : M.D.PISO DATE : 04/2008
CHECKED BY : H.T.BARBOUR DATE : 06/2008

STR. #11

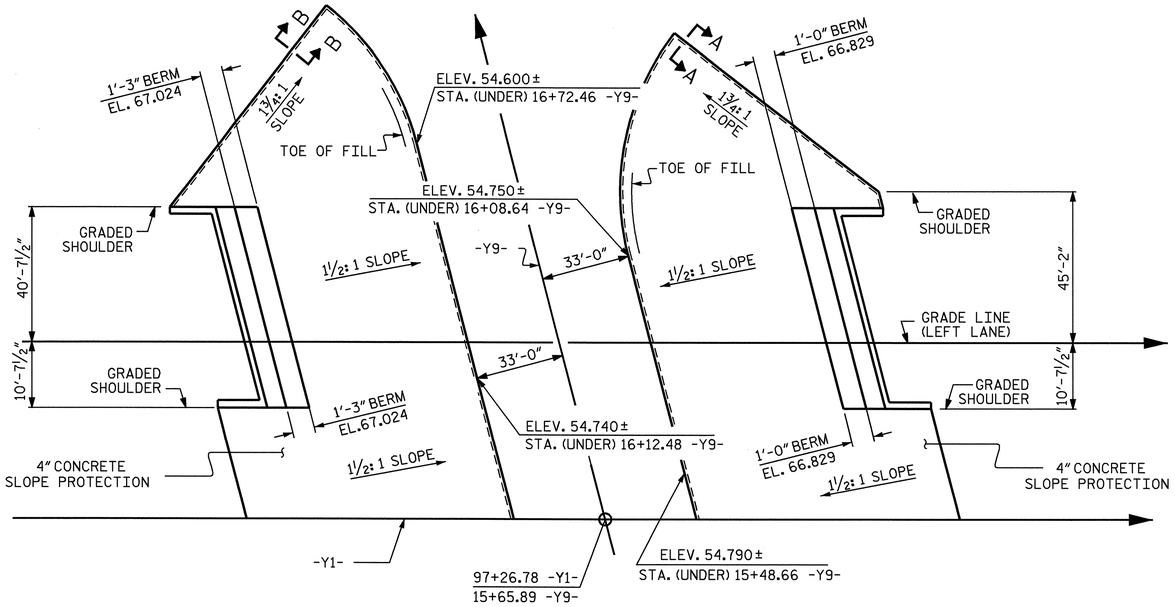

PLAN OF SLOPE PROTECTION

GENERAL NOTES

SLOPE PROTECTION SHALL BE PLACED UNDER THE ENDS OF THE BRIDGE AS SHOWN IN THE DETAILS. STRAIGHT EDGING WILL NOT BE REQUIRED UNLESS, IN THE OPINION OF THE ENGINEER, VISUAL INSPECTION INDICATES A NEED FOR IT. MEASUREMENT AND PAYMENT SHALL BE AS PRESCRIBED IN SECTION 462 OF THE STANDARD SPECIFICATIONS.

ALTERNATE "A"

ALTERNATE "A" SHALL CONSIST OF 4" POURED-IN-PLACE CONCRETE PAVING AS SHOWN IN THE DETAILS ON THIS SHEET. CONCRETE SHALL BE CLASS "B". THE CONCRETE SURFACE SHALL BE FLOATED WITH A WOODEN FLOAT AND FINISHED. WELDED WIRE FABRIC REINFORCING SHALL BE 6 X 6 - W1.4 X W1.4, 60" WIDE. SLOPE PROTECTION SHALL BE POURED IN 5' STRIPS AS SHOWN IN THE "POURING DETAIL" WITH 2'-0" LONG #4 BARS PLACED ALONG THE SLOPE BETWEEN STRIPS AT 1'-6" MAXIMUM SPACING. SLOPE PROTECTION MAY BE POURED IN ALTERNATE 4' AND 5' STRIPS AS SHOWN IN THE "OPTIONAL POURING DETAIL" WITH ADJACENT RUNS OF WELDED WIRE FABRIC LAPPING AT LEAST 6". THE COST OF THE WELDED WIRE FABRIC AND #4 BARS, IF USED, SHALL BE INCLUDED IN THE CONTRACT UNIT PRICE BID PER SQUARE YARD FOR SLOPE PROTECTION.

BRIDGE @ STA. 97+26.78 -Y1- (LEFT LANE)	4 INCH SLOPE PROTECTION	✳ WELDED WIRE FABRIC 60 INCHES WIDE
	SQUARE YARDS	APPROX. L.F.
END BENT #1	287	618
END BENT #2	309	667

✳ QUANTITY SHOWN IS BASED ON 5' POURS.

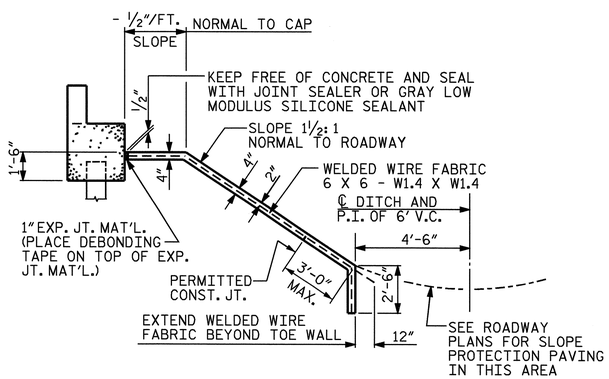

SECTION ALONG ℄ ROADWAY WHEN FILL CATCHES IN DITCH

DETAILS FOR ALTERNATE "A"

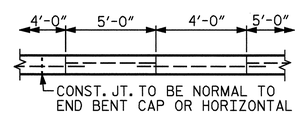

POUR A 4'-0" STRIP FIRST. STRIP WIDTHS MAY VARY IN CURVED PORTION.

OPTIONAL POURING DETAIL

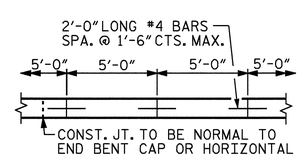

STRIP WIDTHS MAY VARY IN CURVED PORTION.

POURING DETAIL

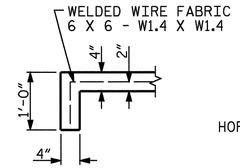

SECTION A-A

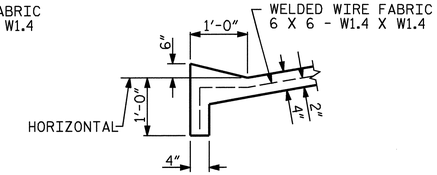

SECTION B-B

PROJECT NO. R-2719A
LENOIR COUNTY
STATION: 97+26.78 -Y1-

STATE OF NORTH CAROLINA
DEPARTMENT OF TRANSPORTATION
RALEIGH

STANDARD
SLOPE PROTECTION DETAILS
(LEFT LANE)

NORTH CAROLINA PROFESSIONAL SEAL 14045 ENGINEER TIMOTHY W. COSORIS
Timothy W. Cosoris 10/11/08

REVISIONS						SHEET NO.
NO.	BY:	DATE:	NO.	BY:	DATE:	S-315
1			3			TOTAL SHEETS
2			4			340

ASSEMBLED BY : M.GUDLAUGSSON	DATE : 04/2008		
CHECKED BY : M.PISO	DATE : 07/2008		
DRAWN BY : ELR 5/92	REV. 7/10/01	LES/RDR	
CHECKED BY : GRP 6/92	REV. 5/7/03	RWW/JTE	
	REV. 5/1/06	TLA/GM	

09-OCT-2008 14:08
R:\Structures\Str#11\Final Plans\R2719A_sd_sp_11.dgn
nruffin

STR. #11

STD. NO. SP1 (SHT 5)

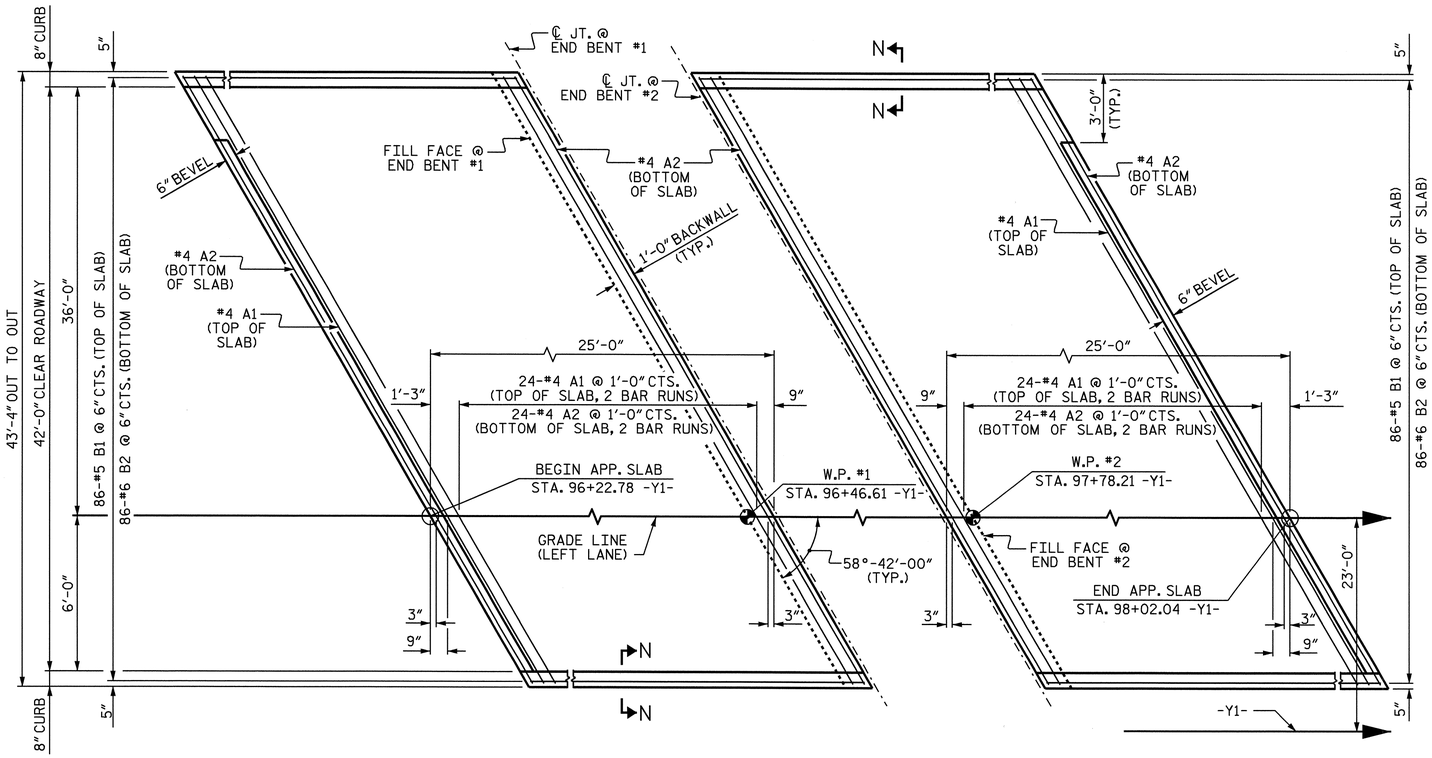

PLAN @ END BENT #1

PLAN @ END BENT #2

DIMENSIONS SHOWN ARE TYPICAL FOR BOTH APPROACH SLABS

NOTES

APPROACH SLAB SHALL NOT BE CONSTRUCTED PRIOR TO COMPLETION OF THE BRIDGE DECK.

FOR REINFORCED BRIDGE APPROACH FILL INCLUDING FABRIC, IMPERMEABLE GEOMEMBRANE, 4" Ø DRAINAGE PIPE, #78M STONE, AND SELECT MATERIAL, SEE ROADWAY PLANS.

AREA BETWEEN THE WINGWALL AND APPROACH SLAB SHALL BE GRADED TO DRAIN THE WATER AWAY FROM THE FILL FACE OF THE BRIDGE AND SHALL BE PAVED. SEE ROADWAY PLANS.

THE 6" COMP. A.B.C. SHALL BE FLUSH WITH THE ROADWAY END OF THE APPROACH SLAB AND SHALL EXTEND 1'-0" OUTSIDE EACH EDGE OF THE APPROACH SLAB.

THE CONTRACTOR MAY USE 4" TYPE B-25.0B ASPHALT CONCRETE BASE COURSE IN LIEU OF 6" COMP. A.B.C. IF THIS OPTION IS USED, THE BASE COURSE SHALL BE FLUSH WITH THE ROADWAY END OF THE APPROACH SLAB, AND THE WIDTH SHALL BE THE SAME AS THAT OF THE APPROACH SLAB.

THE CONTRACTOR MAY USE 5" CLASS "A" CONCRETE BASE IN LIEU OF 6" COMP. A.B.C. IF THIS OPTION IS USED, THE CONCRETE BASE SHALL BE FLUSH WITH THE ROADWAY END OF THE APPROACH SLAB, AND THE WIDTH SHALL BE THE SAME AS THAT OF THE APPROACH SLAB. THE CONCRETE SHALL BE FINISHED TO A SMOOTH SURFACE AND A LAYER OF 30 LB ROOFING FELT SHALL BE PLACED BETWEEN THE CONCRETE BASE AND THE APPROACH SLAB TO PREVENT BOND. THE APPROACH SLAB SHALL NOT BE CAST UNTIL THE CONCRETE BASE HAS REACHED AN AGE OF THREE CURING DAYS.

WITH EVAZOTE JOINT SEAL

FOR EVAZOTE JOINT SEALS, SEE SPECIAL PROVISIONS.

THE NOMINAL UNCOMPRESSED SEAL WIDTH OF THE EVAZOTE JOINT SEAL SHALL BE 2½".

FOR ELASTOMERIC CONCRETE, SEE SPECIAL PROVISIONS.

BILL OF MATERIAL

APPROACH SLAB AT EB #1

BAR	NO.	SIZE	TYPE	LENGTH	WEIGHT
✳ A1	50	#4	STR	26'-2"	874
A2	52	#4	STR	26'-1"	906
✳ B1	86	#5	STR	23'-8"	2123
B2	86	#6	STR	24'-8"	3186
REINFORCING STEEL				LBS.	4092
✳ EPOXY COATED REINFORCING STEEL				LBS.	2997
CLASS AA CONCRETE				C.Y.	40.8

APPROACH SLAB AT EB #2

BAR	NO.	SIZE	TYPE	LENGTH	WEIGHT
✳ A1	50	#4	STR	26'-2"	874
A2	52	#4	STR	26'-1"	906
✳ B1	86	#5	STR	23'-8"	2123
B2	86	#6	STR	24'-8"	3186
REINFORCING STEEL				LBS.	4092
✳ EPOXY COATED REINFORCING STEEL				LBS.	2997
CLASS AA CONCRETE				C.Y.	40.8

SPLICE CHART

BAR SIZE	SPLICE LENGTH
#4 A1	2'-0"
#4 A2	1'-9"

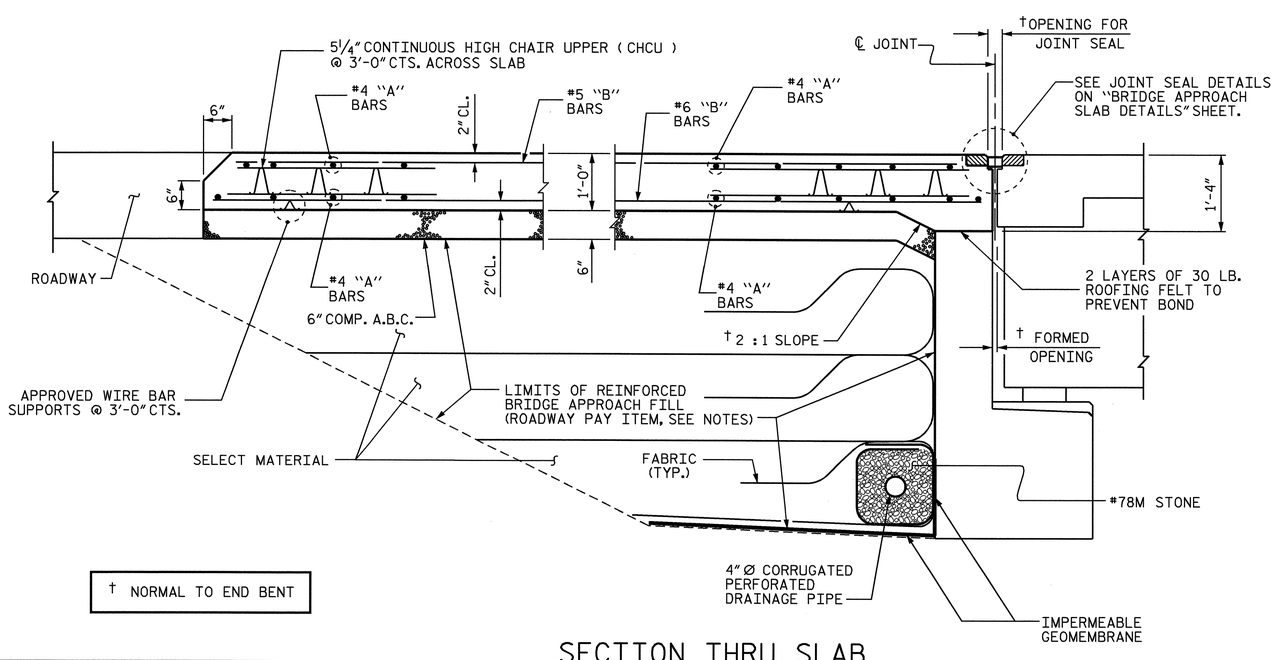

† NORMAL TO END BENT

SECTION THRU SLAB

SHOWING SECTION WITHOUT CONCRETE WEARING SURFACE

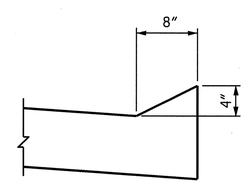

SECTION N-N

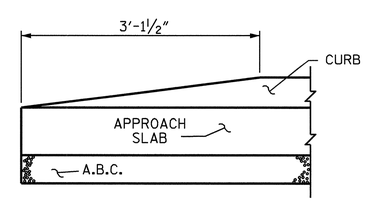

END OF CURB WITHOUT SHOULDER BERM GUTTER

PROJECT NO. R-2719A

LENOIR COUNTY

STATION: 97+26.78 -Y1-

SHEET 1 OF 2

STATE OF NORTH CAROLINA
DEPARTMENT OF TRANSPORTATION
RALEIGH

STANDARD

BRIDGE APPROACH SLAB FOR FLEXIBLE PAVEMENT (LEFT LANE)

NORTH CAROLINA PROFESSIONAL SEAL 14045 ENGINEER TIMOTHY L. COGGINS

10/1/08

REVISIONS						SHEET NO.
NO.	BY:	DATE:	NO.	BY:	DATE:	S-316
1			3			TOTAL SHEETS
2			4			340

ASSEMBLED BY: M.GUDLAUGSSON DATE : 03/2008
CHECKED BY : C.R. MCDUFFEE DATE : 05/2008

DRAWN BY : EEM 3/95
CHECKED BY : VAP 3/95

REV. 7/10/01 LES/RDR
REV. 5/7/03R RWW/JTE
REV. 5/1/06R KMM/GM

09-OCT-2008 14:07
R:\Structures\Str#11\Final Plans\R2719A_sd_as_11.dgn
nruffin

STR. #11

STD. NO. BAS4 (SHT 6)

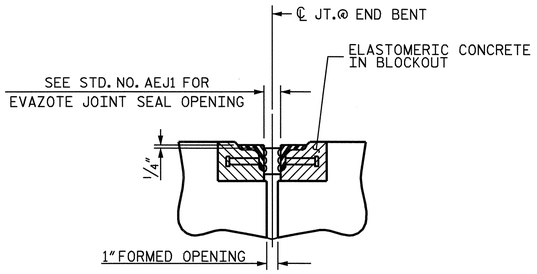

SECTION C-C

ARMORED EVAZOTE JOINT SEAL

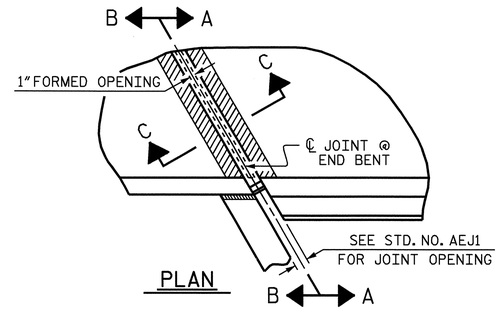

PLAN

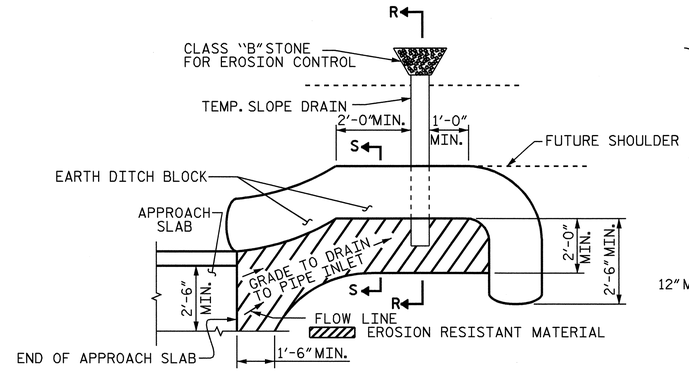

NOTE: IMMEDIATELY AFTER THE CONSTRUCTION OF THE APPROACH SLAB, THE CONTRACTOR SHALL PROVIDE TEMPORARY BERM AND SLOPE DRAIN. CONTRACTOR SHALL GRADE TO PIPE INLET AND PROVIDE EROSION RESISTANT MATERIAL AS SHOWN. THE EROSION RESISTANT MATERIAL SHALL BE EITHER 1) ASPHALT PLANT MIX, TYPE 1 OR TYPE 2, MIN. 2" DEPTH, 2) EROSION CONTROL MAT, OR 3) CONCRETE, AS DIRECTED BY THE ENGINEER. THE SLOPE DRAIN SHALL CONSIST OF A NON-PERFORATED TEMPORARY DRAINAGE PIPE, 12 INCHES IN DIAMETER.

PLAN VIEW

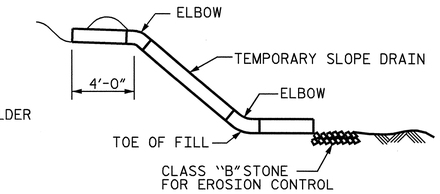

SECTION R-R

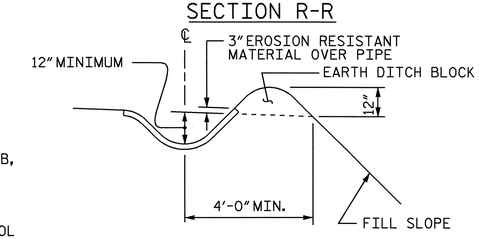

SECTION S-S

TEMPORARY BERM AND SLOPE DRAIN DETAILS

(TO BE USED WHEN SHOULDER BERM GUTTER IS REQUIRED)

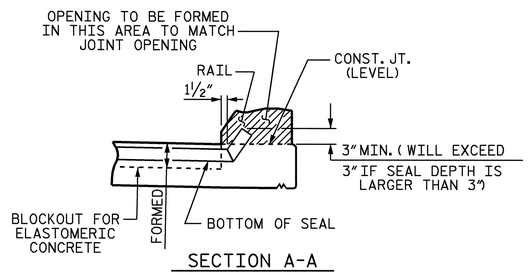

SECTION A-A

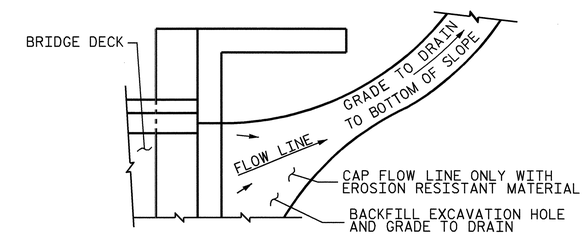

NOTE: IF THE APPROACH SLAB IS NOT CONSTRUCTED IMMEDIATELY AFTER THE BACKFILLING OF THE END BENT EXCAVATION, GRADE TO DRAIN TO THE BOTTOM OF THE SLOPE AND PROVIDE EROSION RESISTANT MATERIAL, SUCH AS FIBERGLASS ROVING OR AS DIRECTED BY THE ENGINEER TO PREVENT SOIL EROSION AND TO PROTECT THE AREA ADJACENT TO THE STRUCTURE. THE CONTRACTOR WILL BE REQUIRED TO REMOVE THESE MATERIALS PRIOR TO CONSTRUCTION OF THE APPROACH SLAB.

TEMPORARY DRAINAGE DETAIL

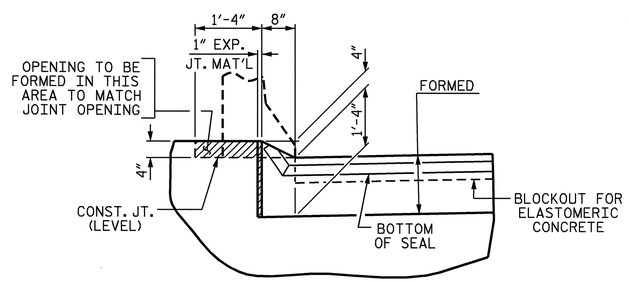

SECTION B-B

JOINT SEAL DETAILS @ END BENT

EVAZOTE JOINT SEAL TO BE CUT, HEAT WELDED AND TURNED UP PARALLEL TO SLOPED FACE OF THE BARRIER RAIL.

PROJECT NO. R-2719A

LENOIR COUNTY

STATION: 97+26.78 -Y1-

SHEET 2 OF 2

STATE OF NORTH CAROLINA
DEPARTMENT OF TRANSPORTATION
RALEIGH

STANDARD

BRIDGE APPROACH SLAB DETAILS (LEFT LANE)

NORTH CAROLINA PROFESSIONAL SEAL 14045 ENGINEER TIMOTHY L. COGGINS

Timothy L. Coggins 10/1/08

REVISIONS						SHEET NO.
NO.	BY:	DATE:	NO.	BY:	DATE:	S-317
1			3			TOTAL SHEETS
2			4			340

ASSEMBLED BY : M.GUDLAUGSSON		DATE : 03/2008	
CHECKED BY : C.R. MCDUFFEE		DATE : 05/2008	
DRAWN BY : FCJ	11/88	REV. 10/17/00	RWW/LES
CHECKED BY : ARB	11/88	REV. 5/7/03	RWW/JTE
		REV. 5/1/06R	MAA/KMM

09-OCT-2008 14:07
R:\Structures\Str*11\Final Plans\R2719A_sd_as_11.dgn
nruffin

STR. #11 STD. NO. BAS10 (SHT 2)

F. A. PROJECT NO: STP-0224(12)

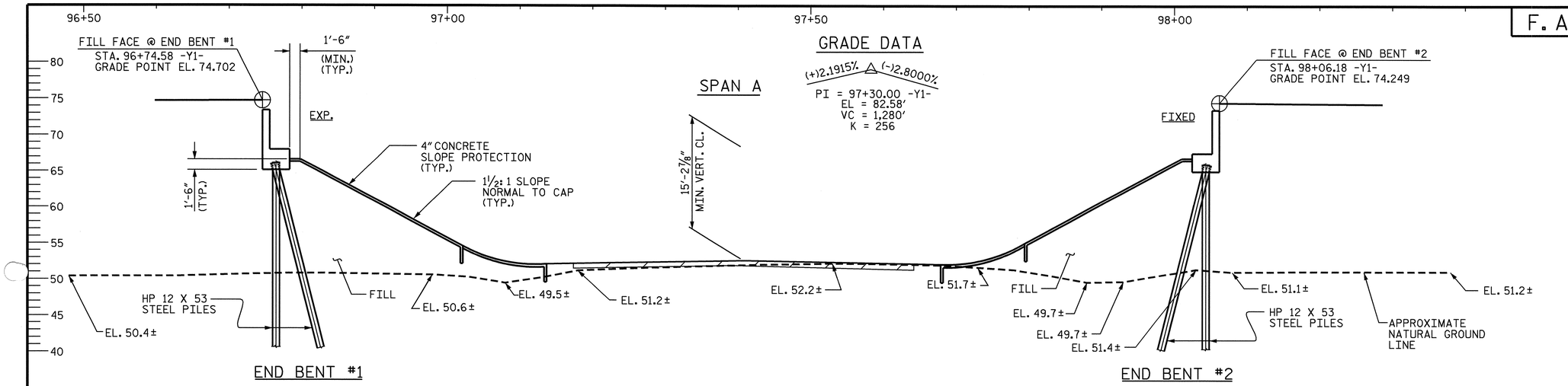

SECTION ALONG -Y1-

(END BENTS SHOWN AT RIGHT ANGLES)

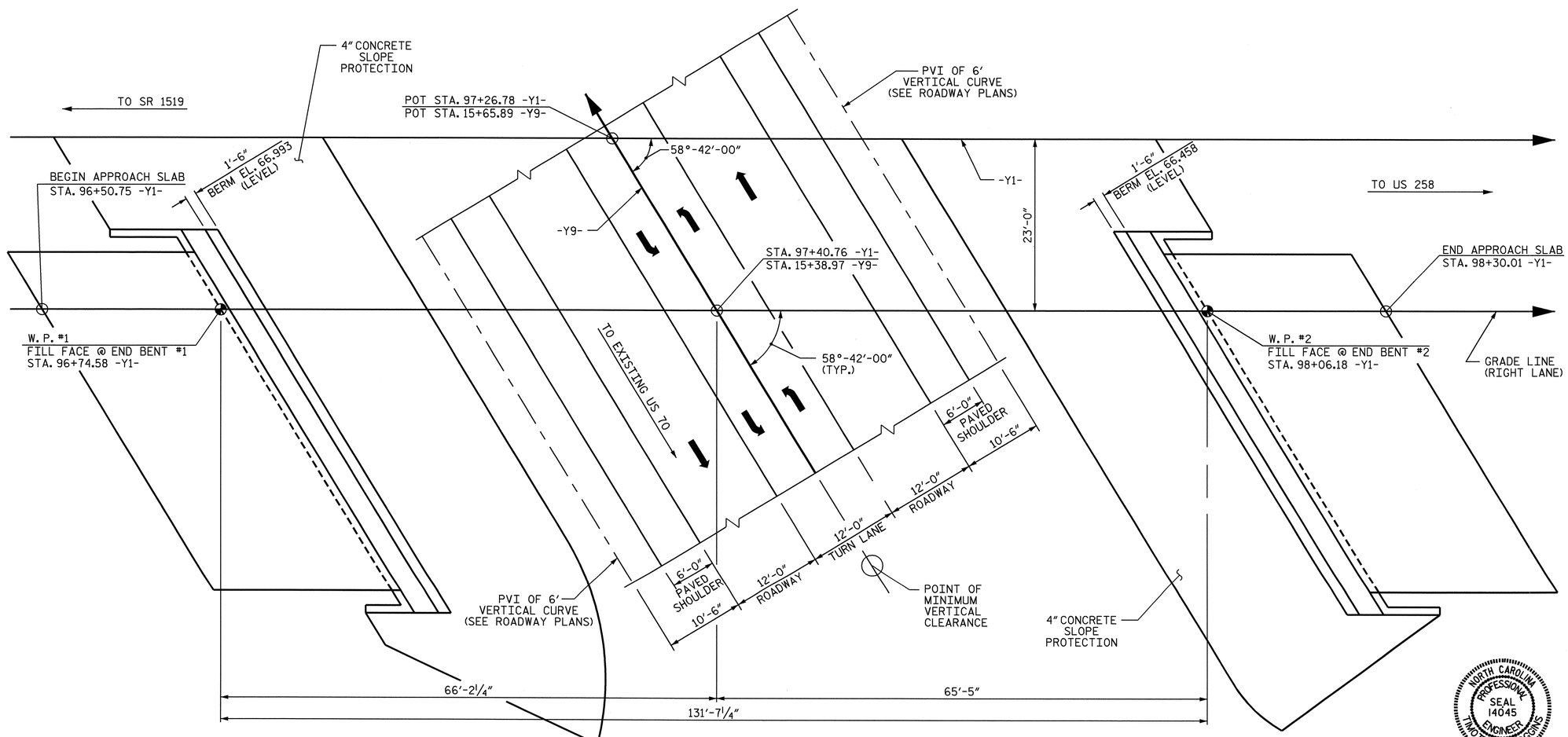

PLAN

(PILES NOT SHOWN FOR CLARITY)

NORTH CAROLINA PROFESSIONAL SEAL 12274 ENGINEER OMAR R. AZIZI

Omar R Azizi 10-10-08

NORTH CAROLINA PROFESSIONAL SEAL 14045 ENGINEER TIMOTHY L. COGGINS

Timothy L. Coggins 10/10/08

PROJECT NO. R-2719A

LENOIR COUNTY

STATION: 97+26.78 -Y1-
15+65.89 -Y9-

SHEET 1 OF 3

BRIDGE NO. 202

STATE OF NORTH CAROLINA
DEPARTMENT OF TRANSPORTATION
RALEIGH

GENERAL DRAWING

FOR BRIDGE OVER SR 2003
ON US 70
BETWEEN SR 1519 AND US 258

(RIGHT LANE)

REVISIONS						SHEET NO.
NO.	BY:	DATE:	NO.	BY:	DATE:	S-318
1			3			TOTAL SHEETS
2			4			340

STR. #12

DRAWN BY : PEGGY ADKINS DATE : 2-07
CHECKED BY : B.N.BARODAWALA DATE : 8-07

09-OCT-2008 15:18
R:\Structures\Str*12\Final Plans\r2719a_sd_gd_12.dgn
nruffin

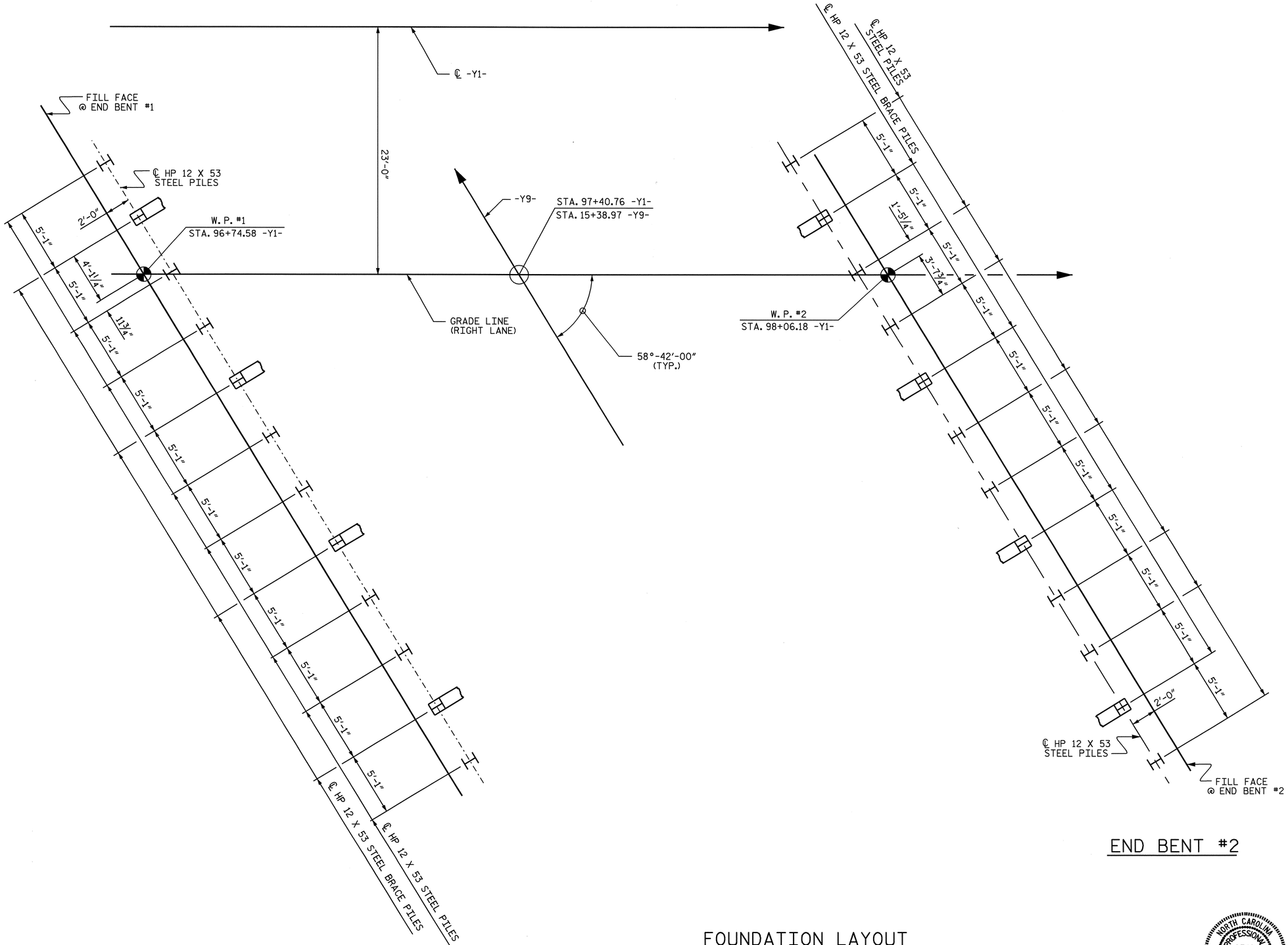

END BENT #1

END BENT #2

FOUNDATION LAYOUT

DIMENSIONS LOCATING PILES ARE SHOWN TO PILE CENTERLINE AT BOTTOM OF CAP
BRACE PILES ARE BATTERED 3:12.

NORTH CAROLINA PROFESSIONAL SEAL 14045 ENGINEER TIMOTHY L. COGGINS
10/11/08

PROJECT NO. R-2719A
LENOIR COUNTY
STATION: 97+26.78 -Y1-

SHEET 2 OF 3

STATE OF NORTH CAROLINA
DEPARTMENT OF TRANSPORTATION
RALEIGH

GENERAL DRAWING
FOR BRIDGE OVER SR 2003
ON US 70
BETWEEN SR 1519 AND US 258
(RIGHT LANE)

REVISIONS						SHEET NO.
NO.	BY:	DATE:	NO.	BY:	DATE:	S-319
1			3			TOTAL SHEETS
2			4			340

STR. #12

DRAWN BY : B.N.BARODAWALA DATE : 8-12-08
CHECKED BY : T.L. COGGINS DATE : 08/2008

09-OCT-2008 15:18
R:\Structures\Str*12\Final Plans\r2719a_sd_gd_12.dgn
druffin

BM-A: ELEV 53.26; RR SPIKE IN 30" HARDWOOD TREE; STA. 75+86 -Y1-, 615' RT

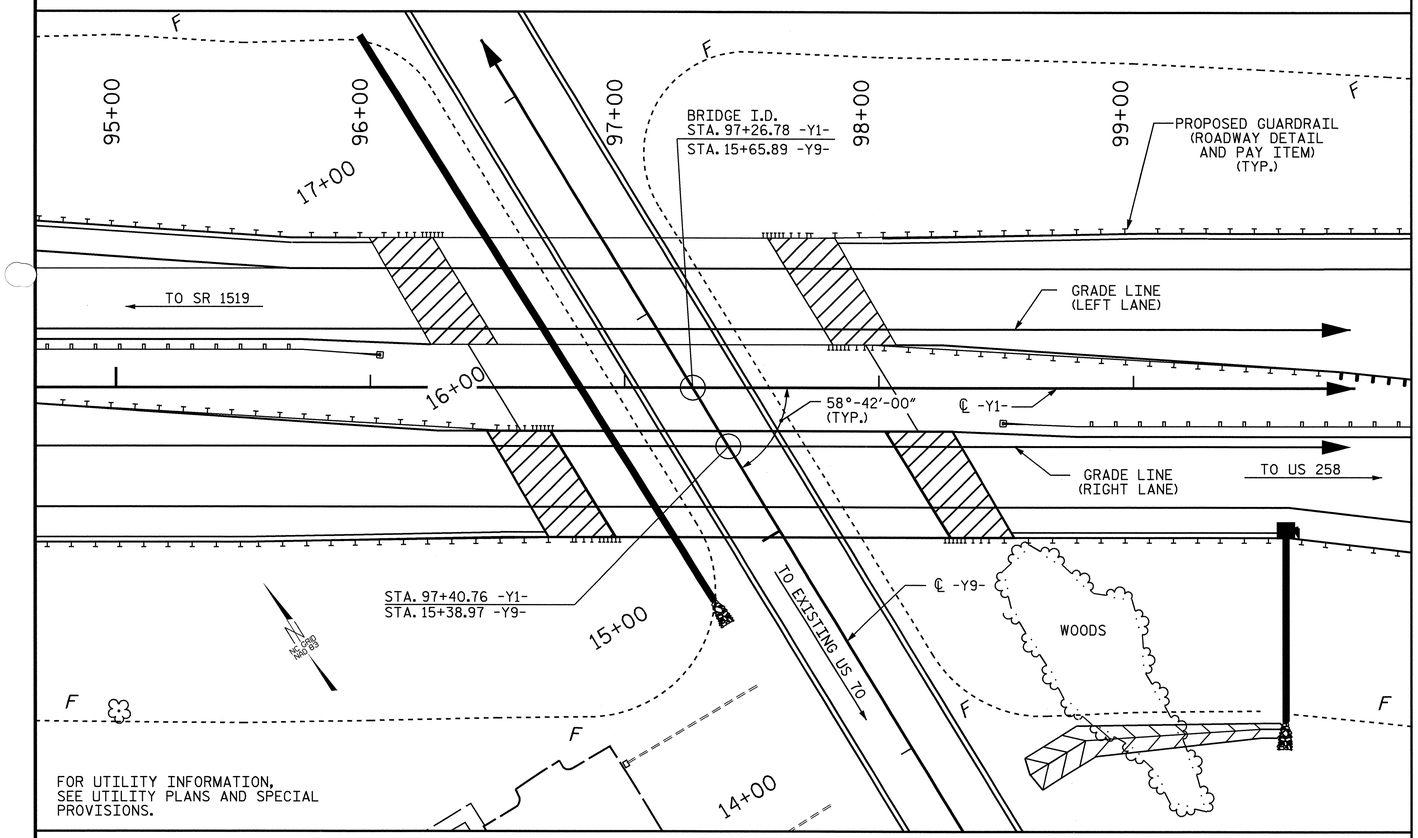

FOR UTILITY INFORMATION,
SEE UTILITY PLANS AND SPECIAL
PROVISIONS.

LOCATION SKETCH

NOTES:

ASSUMED LIVE LOAD = HS20 OR ALTERNATE LOADING, EXCEPT THE GIRDERS HAVE BEEN DESIGNED FOR HS25.

THIS BRIDGE HAS BEEN DESIGNED BY THE STRENGTH DESIGN METHOD AS SPECIFIED IN AASHTO STANDARD SPECIFICATIONS.

THIS BRIDGE HAS BEEN DESIGNED IN ACCORDANCE WITH THE REQUIREMENTS OF THE AASHTO STANDARD SPECIFICATIONS FOR SEISMIC DESIGN OF HIGHWAY BRIDGES FOR SEISMIC PERFORMANCE CATEGORY A.

FOR OTHER DESIGN DATA AND GENERAL NOTES, SEE SHEET SN.

FOR EROSION CONTROL MEASURES SEE EROSION CONTROL PLANS.

REMOVABLE FORMS MAY BE USED IN LIEU OF METAL STAY-IN-PLACE FORMS IN ACCORDANCE WITH ARTICLE 420-3 OF THE STANDARD SPECIFICATIONS.

FOR MAINTENANCE AND PROTECTION OF TRAFFIC BENEATH PROPOSED STRUCTURE, SEE SPECIAL PROVISIONS.

OBSERVE AN ONE MONTH WAITING PERIOD AFTER CONSTRUCTING THE EMBANKMENT TO WITHIN 2 FT. OF FINISHED GRADE BEFORE BEGINNING END BENT CONSTRUCTION AT END BENT NO. 1 AND END BENT NO. 2.

ALL STRUCTURAL STEEL SHALL BE AASHTO M270 GRADE 50W AND PAINTED IN ACCORDANCE WITH SYSTEM 4 OF ARTICLE 442-7 OF THE STANDARD SPECIFICATIONS UNLESS OTHERWISE NOTED ON THE PLANS.

THE CONTRACTOR SHALL PROVIDE INDEPENDENT ASSURANCE SAMPLES OF REINFORCING STEEL AS FOLLOWS: FOR PROJECTS REQUIRING UP TO 400 TONS OF REINFORCING STEEL, ONE 30 INCH SAMPLE OF EACH SIZE BAR USED, AND FOR PROJECTS REQUIRING OVER 400 TONS OF REINFORCING STEEL, TWO 30 INCH SAMPLES OF EACH SIZE BAR USED. THE BARS FROM WHICH THE SAMPLES ARE TAKEN MUST THEN BE SPLICED WITH REPLACEMENT BARS OF THE SIZE AND LENGTH OF THE SAMPLE, PLUS A MINIMUM LAP SPLICE OF THIRTY BAR DIAMETERS.

NEEDLE BEAMS WILL NOT BE ALLOWED UNLESS OTHERWISE CALLED FOR ON THE PLANS OR APPROVED BY THE ENGINEER.

FOR SUBMITTAL OF WORKING DRAWINGS, SEE SPECIAL PROVISIONS.

FOR FALSEWORK AND FORMWORK, SEE SPECIAL PROVISIONS.

FOR CRANE SAFETY, SEE SPECIAL PROVISIONS.

FOR GROUT FOR STRUCTURES, SEE SPECIAL PROVISIONS.

FOR SHIPPING STEEL STRUCTURAL MEMBERS, SEE SPECIAL PROVISIONS.

DRIVE PILES AT END BENT NO. 1 AND END BENT NO. 2 TO A REQUIRED BEARING CAPACITY OF 120 TONS PER PILE. THE REQUIRED BEARING CAPACITY IS EQUAL TO THE ALLOWABLE BEARING CAPACITY WITH A MINIMUM FACTOR OF SAFETY OF TWO.

THE ALLOWABLE BEARING CAPACITY FOR PILES AT END BENT NO. 1 AND END BENT NO. 2 IS 60 TONS PER PILE.

FOR FAA REQUIREMENTS, SEE ROADWAY SPECIAL PROVISIONS.

TOTAL BILL OF MATERIAL

	REINFORCED CONCRETE DECK SLAB	GROOVING BRIDGE FLOORS	CLASS A CONCRETE	BRIDGE APPROACH SLABS	REINFORCING STEEL	STRUCTURAL STEEL	HP 12 X 53 STEEL PILES		PILE REDRIVES	CONCRETE BARRIER RAIL	4" SLOPE PROTECTION	ELASTOMERIC BEARINGS	EVAZOTE JOINT SEALS
	SQ.FT.	SQ.FT.	CU.YDS.	LUMP SUM	LBS.	APPROX. LBS.	NO.	LIN.FT.	EACH	LIN.FT.	SQ. YD.	LUMP SUM	LUMP SUM
SUPERSTRUCTURE	5845	6802		LUMP SUM		208,400				258.33		LUMP SUM	LUMP SUM
END BENT NO.1			39.2		6009		12	900	6		309		
END BENT NO.2			39.9		6004		12	900	6		286		
TOTAL	5845	6802	79.1	LUMP SUM	12013	208,400	24	1800	12	258.33	595	LUMP SUM	LUMP SUM

PROJECT NO. R-2719A
LENOIR COUNTY
STATION: 97+26.78 -Y1-

SHEET 3 OF 3

STATE OF NORTH CAROLINA
DEPARTMENT OF TRANSPORTATION
RALEIGH

GENERAL DRAWING
FOR BRIDGE OVER SR 2003
ON US 70
BETWEEN SR 1519 AND US 258

(RIGHT LANE)

NORTH CAROLINA PROFESSIONAL SEAL 14045 ENGINEER TIMOTHY L. COGGINS
Timothy L. Coggins 10/1/08

REVISIONS						SHEET NO.
NO.	BY:	DATE:	NO.	BY:	DATE:	S-320
1			3			TOTAL SHEETS
2			4			340

DRAWN BY : B.N.BARODAWALA DATE : 8-12-08
CHECKED BY : T.L. COGGINS DATE : 08/2008

09-OCT-2008 15:18
R:\Structures\Str*12\Final Plans\r2719a_sd_gd_12.dgn
nruffin

STR. #12

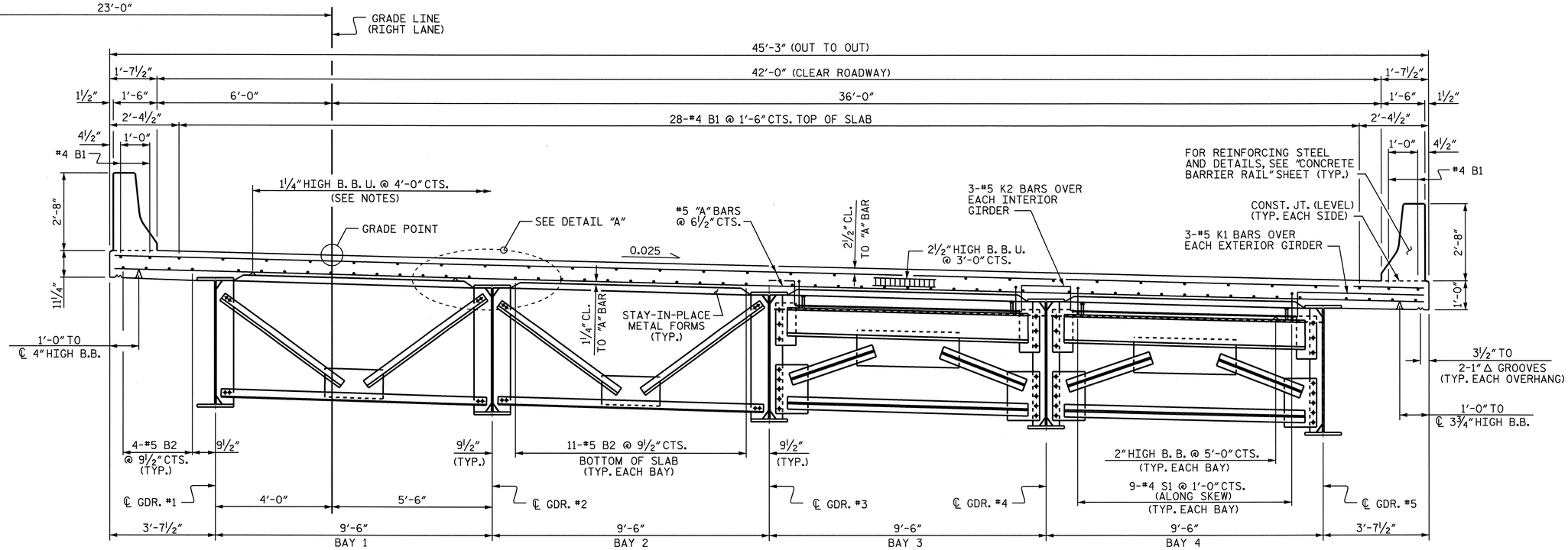

PART TYPICAL SECTION

SHOWING INTERMEDIATE DIAPHRAGM

PART TYPICAL SECTION

SHOWING END BENT DIAPHRAGM

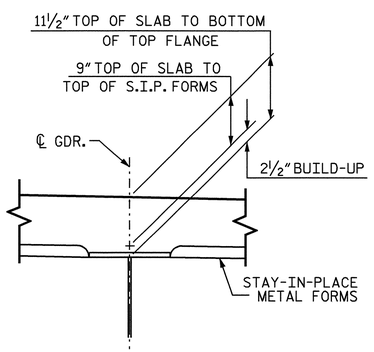

DETAIL 'A'

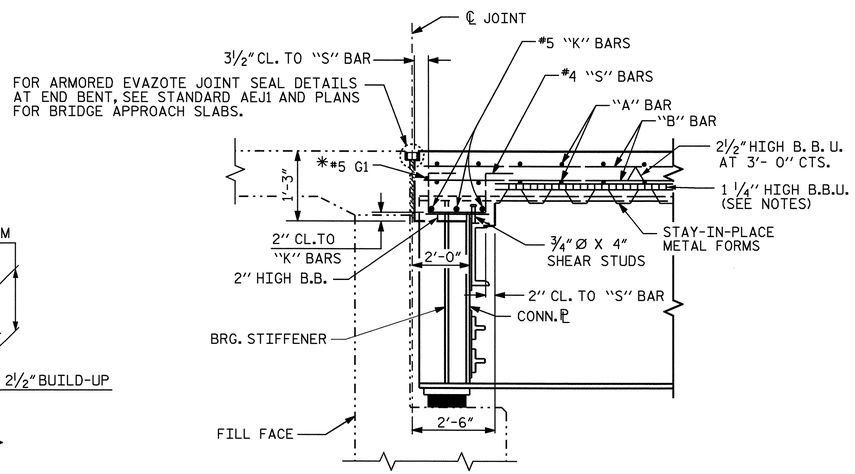

SECTION THRU END BENT

* #5G BAR MAY BE SHIFTED SLIGHTLY, AS NECESSARY, TO CLEAR DIAPHRAGM AND REINFORCING STEEL.

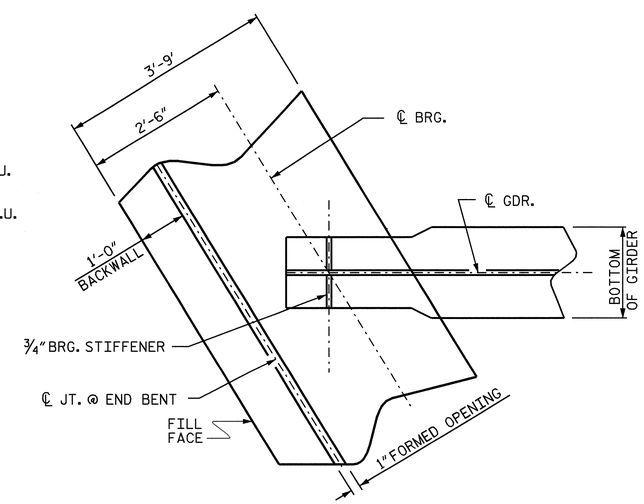

PLAN OF GIRDER @ END BENT

NOTES:

PROVIDE 1¼" HIGH BEAM BOLSTERS UPPER AT 4'-0" CTS. ATOP THE METAL STAY-IN-PLACE FORMS TO SUPPORT THE BOTTOM MAT OF 'A' BARS. WHEN USING REMOVABLE FORMS, PROVIDE CONTINUOUS HIGH CHAIRS FOR METAL DECK (C.H.C.M.) @ 4'-0" CTS. WITH A HEIGHT TO SUPPORT THE BOTTOM MAT OF 'A' BARS A CLEAR DISTANCE OF 2½" ABOVE THE TOP OF THE REMOVABLE FORM.

THE CONTRACTOR MAY, WHEN NECESSARY, PROPOSE A SCHEME FOR AVOIDING INTERFERENCE BETWEEN METAL STAY-IN-PLACE FORM SUPPORTS OR FORMS AND GIRDER STIFFENERS OR CONNECTOR PLATES. THE PROPOSAL SHALL BE INDICATED, AS APPROPRIATE, ON EITHER THE STEEL WORKING DRAWINGS OR THE METAL STAY-IN-PLACE FORM WORKING DRAWINGS.

BARRIER RAIL IN THE SPAN SHALL NOT BE CAST UNTIL ALL SLAB CONCRETE HAS BEEN CAST AND HAS REACHED A MINIMUM COMPRESSIVE STRENGTH OF 3,000 PSI.

PROJECT NO. R-2719A
LENOIR COUNTY
STATION: 97+26.78 -Y1-

NORTH CAROLINA PROFESSIONAL SEAL 14045 ENGINEER TIMOTHY JON COGGINS
10/13/08

STATE OF NORTH CAROLINA
DEPARTMENT OF TRANSPORTATION
RALEIGH

SUPERSTRUCTURE

TYPICAL SECTION

(RIGHT LANE)

REVISIONS						SHEET NO.
NO.	BY:	DATE:	NO.	BY:	DATE:	S-321
1			3			TOTAL SHEETS
2			4			340

DRAWN BY : B.N.BARODAWALA DATE : 12-27-07
CHECKED BY : PEGGY ADKINS DATE : 2-08

13-OCT-2008 09:20
k:\structures\str#12\finalplans\r2719a_sd_ts_12.dgn
bbarodawala

STR. #12

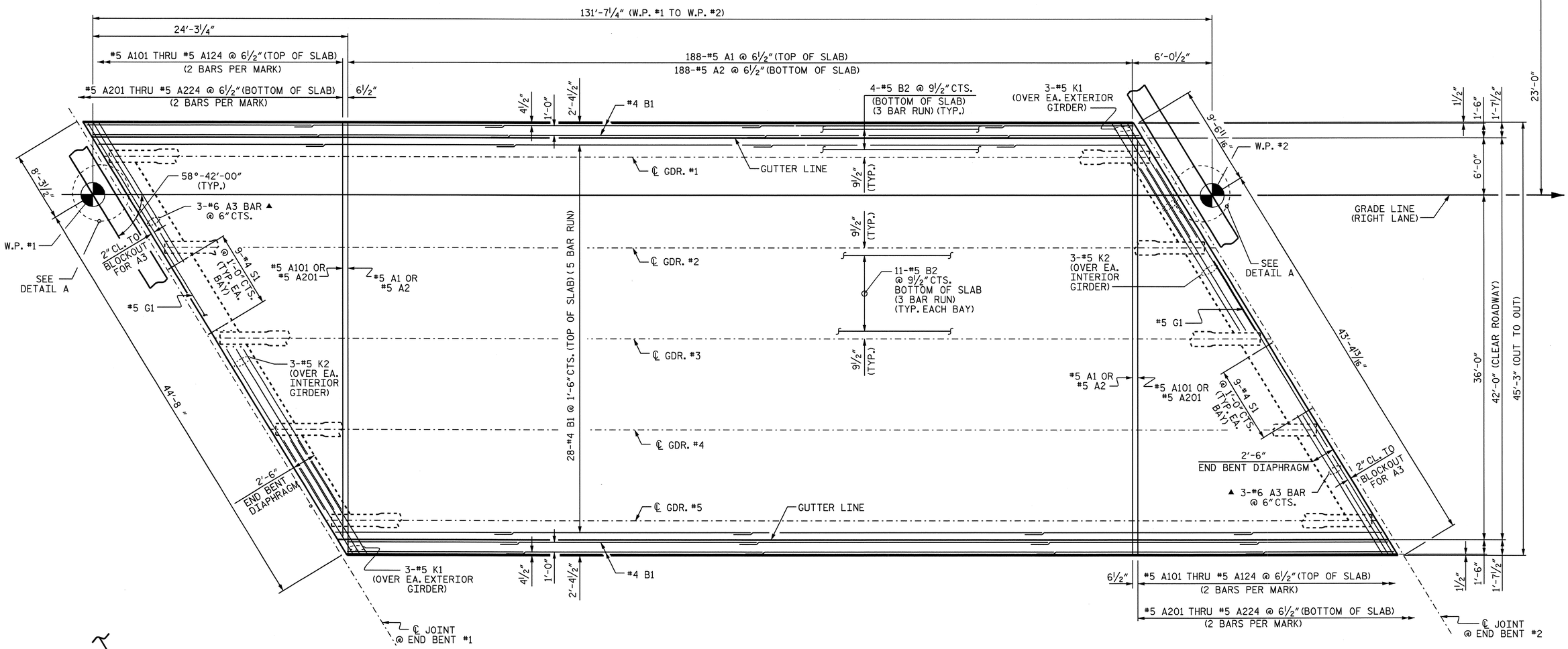

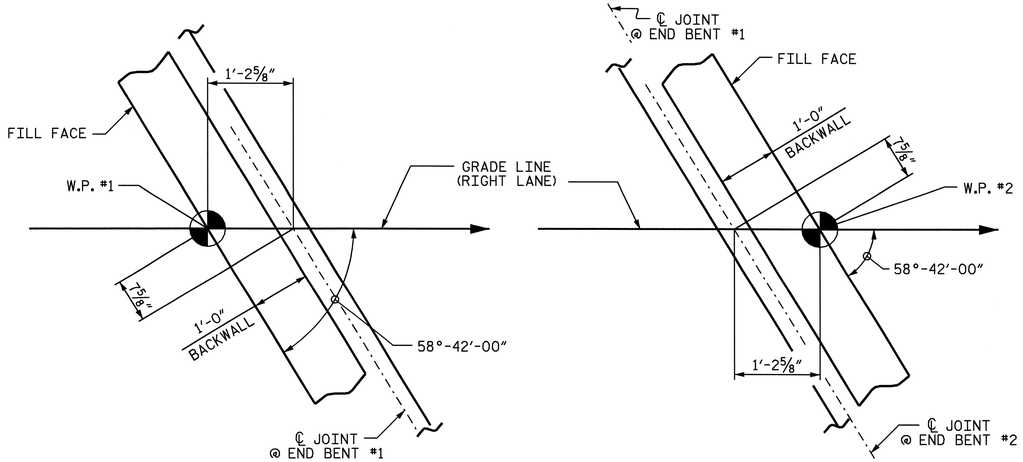

AT END BENT #1

AT END BENT #2

DETAIL A

PLAN OF SPAN

▲ #6 A3 BARS ARE POSITIONED ONLY AT THE ACUTE CORNERS OF DECK SLAB. PLACE BARS UNDER TOP "B" BARS

PROJECT NO. R-2719A

LENOIR COUNTY

STATION: 97+26.78 -Y1-

STATE OF NORTH CAROLINA
DEPARTMENT OF TRANSPORTATION
RALEIGH

SUPERSTRUCTURE

PLAN OF SPAN

(RIGHT LANE)

NORTH CAROLINA PROFESSIONAL SEAL 14045 ENGINEER TIMOTHY L. COGGINS

Timothy L. Coggins 10/14/08

REVISIONS						SHEET NO.
NO.	BY:	DATE:	NO.	BY:	DATE:	S-322
1			3			TOTAL SHEETS
2			4			340

DRAWN BY : B.N.BARODAWALA DATE : 12-27-07
CHECKED BY : PEGGY ADKINS DATE : 2-08

09-OCT-2008 15:18
R:\Structures\Str*12\Final Plans\r2719a_sd_ps_12.dgn
nruffin

STR. #12

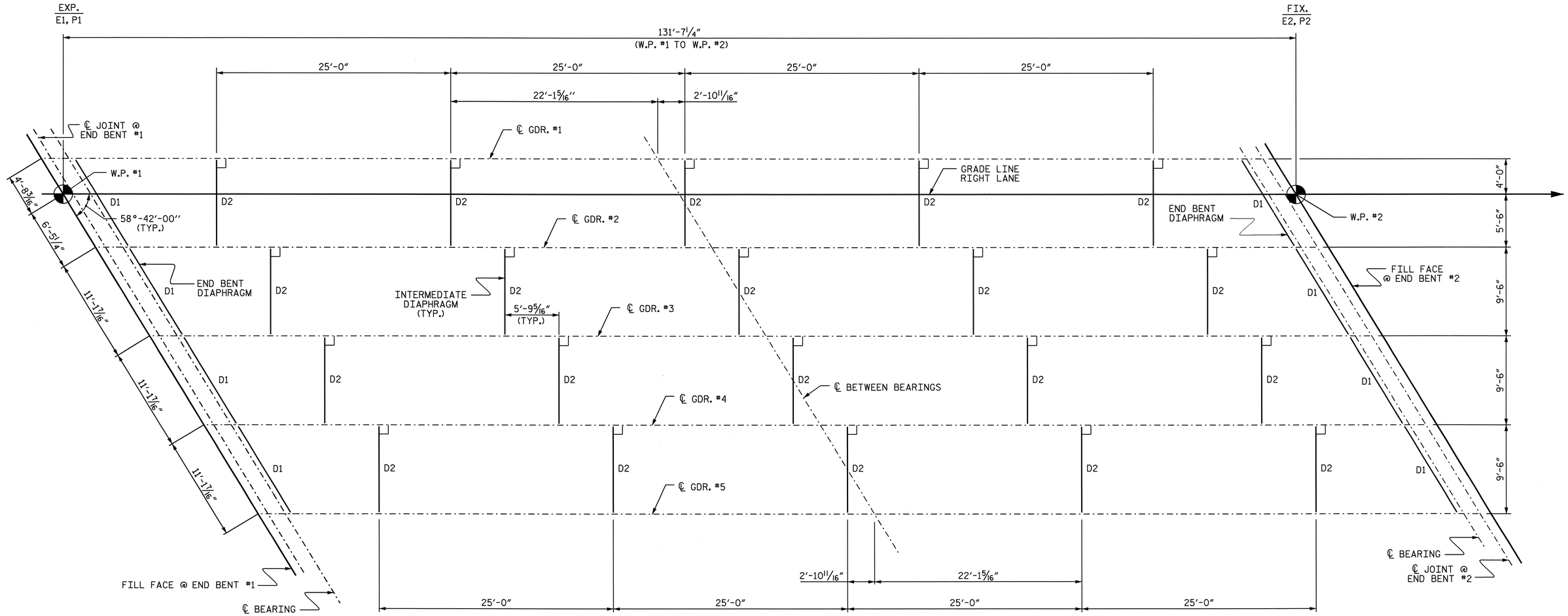

FRAMING PLAN

PROJECT NO. R-2719A
LENOIR COUNTY
STATION: 97+26.78 -Y1-

STATE OF NORTH CAROLINA
DEPARTMENT OF TRANSPORTATION
RALEIGH

SUPERSTRUCTURE

FRAMING PLAN

(RIGHT LANE)

NORTH CAROLINA PROFESSIONAL SEAL 14045 ENGINEER TIMOTHY L. COGGINS
10/11/08

REVISIONS						SHEET NO.
NO.	BY:	DATE:	NO.	BY:	DATE:	S-323
1			3			TOTAL SHEETS
2			4			340

DRAWN BY : B.N.BARODAWALA DATE : 12-27-07
CHECKED BY : PEGGY ADKINS DATE : 2-08

09-OCT-2008 15:18
R:\Structures\Str*12\Final Plans\r2719a_sd_fp_12.dgn
druffin

STR. #12

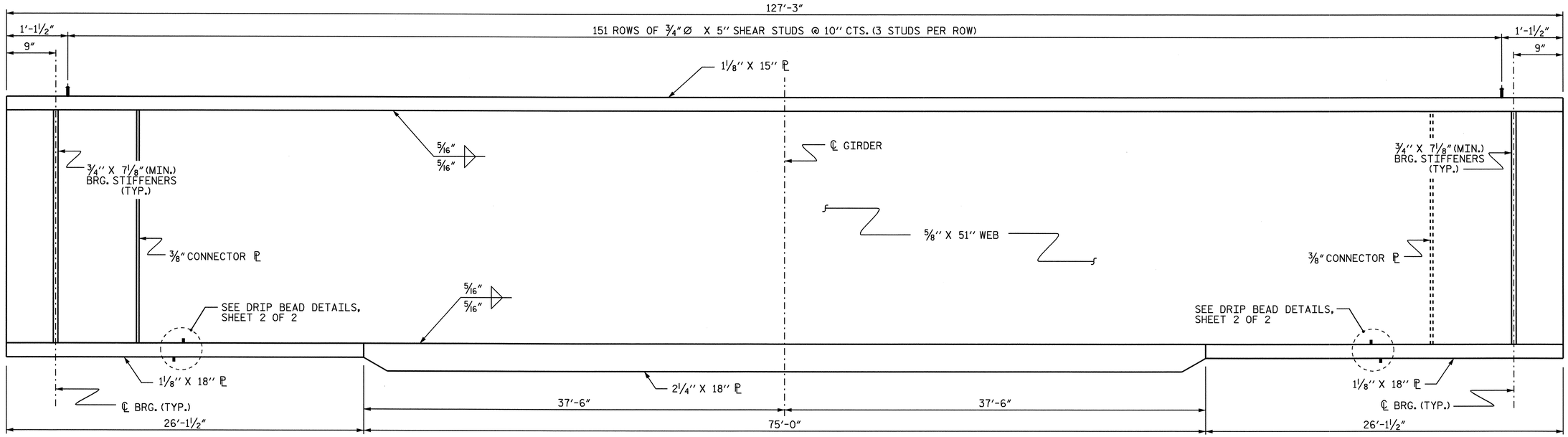

GIRDER ELEVATION

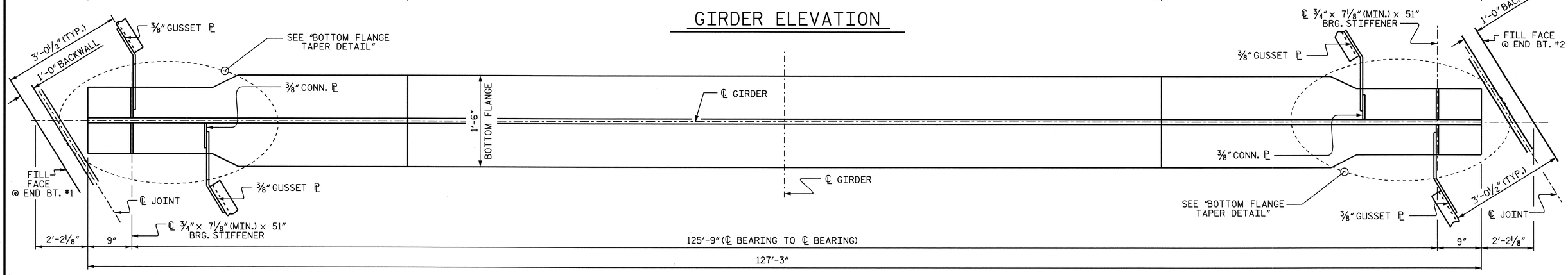

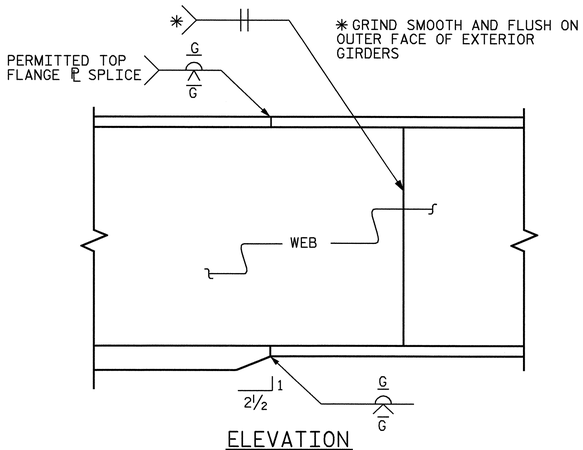

ELEVATION

TYPICAL FLANGE AND WEB BUTT JOINT

BOTTOM FLANGE DETAIL

INTERIOR GIRDERS SHOWN. EXTERIOR GIRDER SIMILAR, EXCEPT NO CONNECTOR PLATES SHALL BE PLACED ON THE OUTSIDE OF THE WEB.

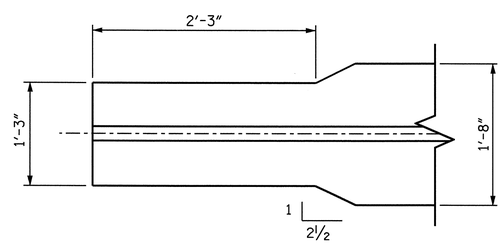

BOTTOM FLANGE TAPER DETAIL

(TYPICAL EACH END)

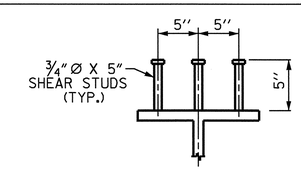

SHEAR STUD DETAILS

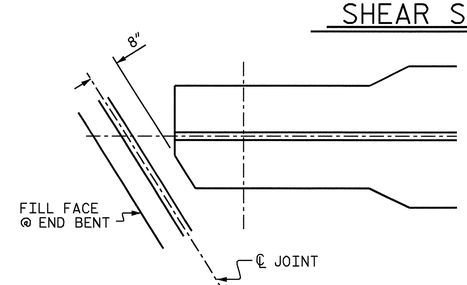

TOP FLANGE CLIP DETAIL

(TYP. AT BOTH ENDS OF GIRDER)

PROJECT NO. R-2719A
LENOIR COUNTY
STATION: 97+26.78 -Y1-

SHEET 1 OF 2

STATE OF NORTH CAROLINA
DEPARTMENT OF TRANSPORTATION
RALEIGH

SUPERSTRUCTURE

STRUCTURAL STEEL DETAILS
(RIGHT LANE)

NORTH CAROLINA PROFESSIONAL SEAL 14045 ENGINEER TIMOTHY W. COGGINS
10/1/08

REVISIONS						SHEET NO.
NO.	BY:	DATE:	NO.	BY:	DATE:	S-324
1			3			TOTAL SHEETS
2			4			340

DRAWN BY : B.N.BARODAWALA DATE : 1-11-08
CHECKED BY : PEGGY ADKINS DATE : 2-08

09-OCT-2008 15:18
R:\Structures\Str*12\Final Plans\r2719a_sd_ss_12.dgn
nruffin

STR. #12

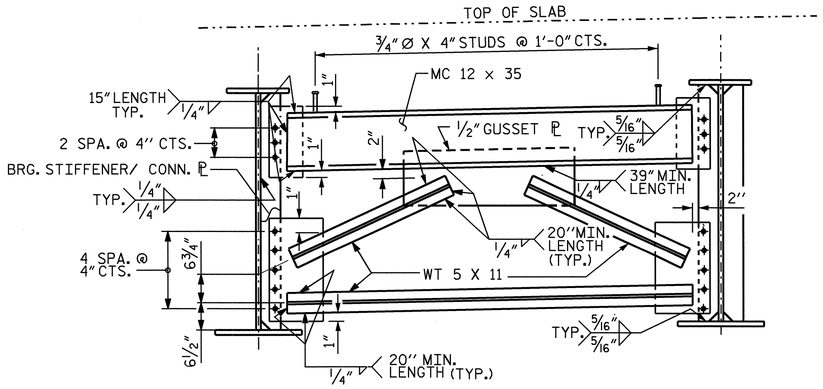

END BENT CROSSFRAME (D1)

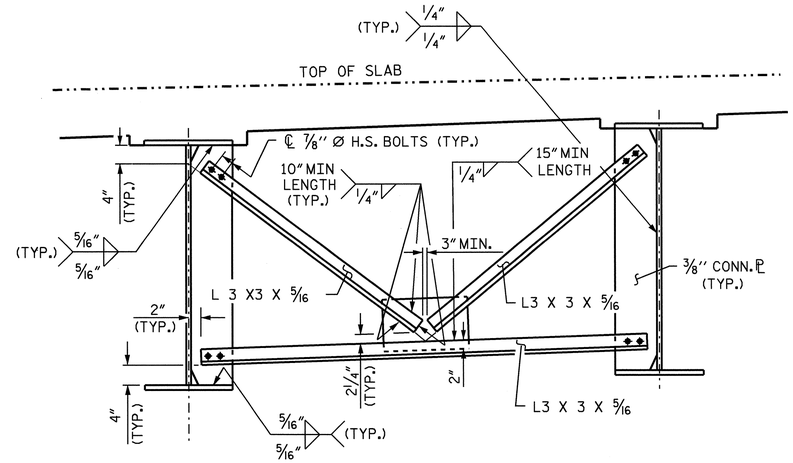

TYPICAL INTERMEDIATE DIAPHRAGM (D2)

NOTES

ALL STRUCTURAL STEEL SHALL BE AASHTO M270 GRADE 50W AND PAINTED IN ACCORDANCE WITH SYSTEM 4 OF ARTICLE 442-7 OF THE STANDARD SPECIFICATIONS UNLESS OTHERWISE NOTED ON THE PLANS.

ALL DIMENSIONS SHOWN ARE HORIZONTAL OR VERTICAL, UNLESS OTHERWISE NOTED.

ALL FIELD CONNECTIONS TO BE 7/8" DIA. HIGH STRENGTH BOLTS UNLESS OTHERWISE NOTED.

FOR HIGH STRENGTH BOLTS, SEE SPECIAL PROVISIONS.

BEARING STIFFENERS ARE TO BE PLACED NORMAL TO THE WEB OF THE GIRDER AND SHALL BE PLUMB.

A CHARPY V-NOTCH TEST IS REQUIRED FOR WEB PLATES, BOTTOM FLANGE PLATES, BOTTOM FLANGE SPLICE PLATES AND WEB SPLICE PLATES (IF USED) FOR ALL GIRDERS AND IN ACCORDANCE WITH ARTICLE 1072-9 OF THE STANDARD SPECIFICATIONS.

SHOP SPLICES ARE PERMITTED TO LIMIT THE MAXIMUM REQUIRED FLANGE PIECE LENGTHS TO 60 FEET AND WEB PIECE LENGTHS TO 45 FEET. PERMITTED FLANGE AND WEB SHOP SPLICES SHALL NOT BE LOCATED WITHIN 15 FEET OF MAXIMUM DEAD LOAD DEFLECTION (NOR WITHIN 15 FEET OF INTERMEDIATE BEARINGS OF CONTINUOUS UNITS). KEEP 2 FEET MINIMUM BETWEEN WEB AND FLANGE SHOP SPLICES. KEEP 6" MINIMUM BETWEEN CONNECTOR PLATE OR TRANSVERSE STIFFENER WELDS AND WEB OR FLANGE SHOP SPLICES.

STUDS ON GIRDERS MAY BE SHIFTED UP TO 1" IF NECESSARY TO CLEAR FLANGE SPLICE WELD.

TENSION ON THE AASHTO M164 BOLTS SHALL BE CALIBRATED USING DIRECT TENSION INDICATOR WASHERS IN ACCORDANCE WITH ARTICLE 440-8 OF THE STANDARD SPECIFICATIONS.

END OF BEAMS AND GIRDERS SHALL BE PLUMB.

BEARING STIFFENER MAY REQUIRE COPING IF WIDER THAN BOTTOM FLANGE TO AVOID INTERFERENCE WITH THE ANCHOR BOLT.

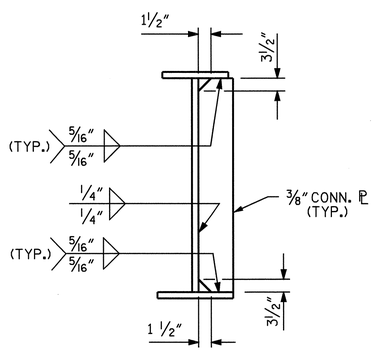

INTERMEDIATE DIAPHRAGM CONNECTOR PLATE

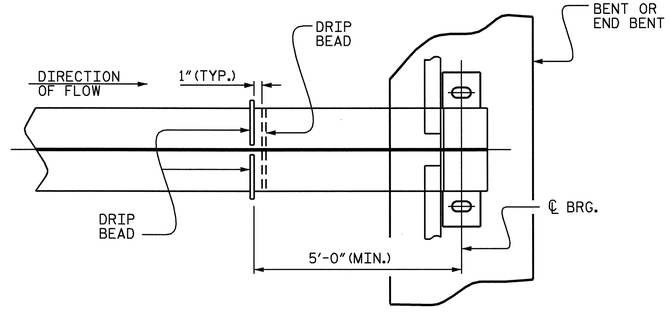

PART PLAN - BOTTOM FLANGE

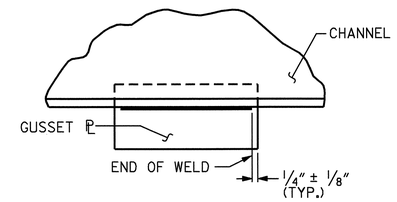

TYPICAL GUSSET PLATE CONNECTION

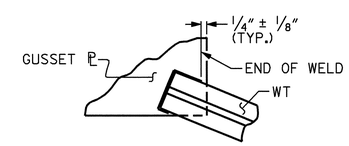

TYPICAL "TEE" TO GUSSET PLATE CONNECTION

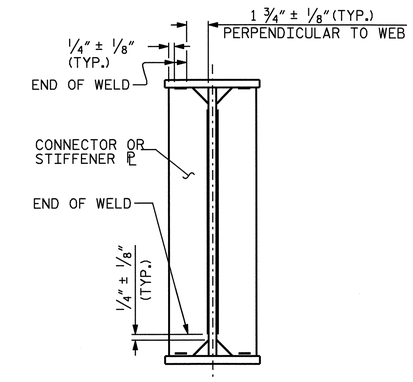

TYPICAL STIFFENER OR CONNECTOR PLATE CONNECTIONS

WELD TERMINATION DETAILS

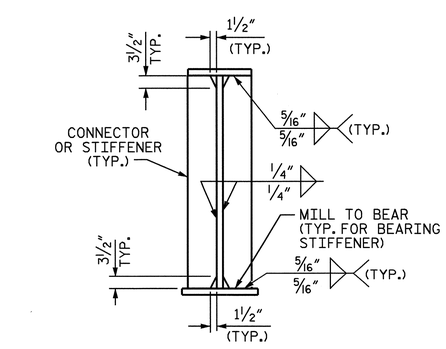

BEARING STIFFENER/ CONNECTOR PLATE

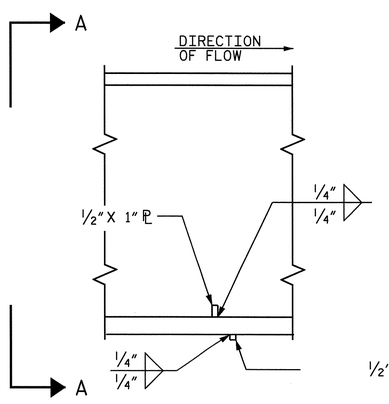

SECTION

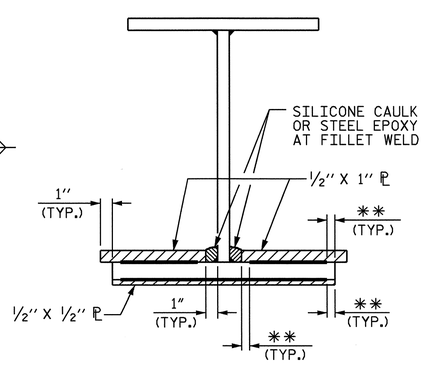

VIEW A-A

**SEE "WELD TERMINATION DETAILS"

DRIP BEAD DETAILS

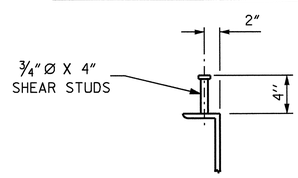

SHEAR STUD DETAIL

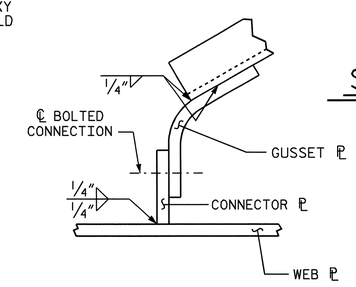

WEB STIFFENER OR CONNECTOR PLATE WELD DETAIL

PROJECT NO. R-2719A
LENOIR COUNTY
STATION: 97+26.78 -Y1-

SHEET 2 OF 2

STATE OF NORTH CAROLINA
DEPARTMENT OF TRANSPORTATION
RALEIGH

SUPERSTRUCTURE

STRUCTURAL STEEL DETAILS
(RIGHT LANE)

NORTH CAROLINA PROFESSIONAL SEAL 14045 ENGINEER TIMOTHY L. COGGINS
Timothy L. Coggins 10/10/08

REVISIONS						SHEET NO.
NO.	BY:	DATE:	NO.	BY:	DATE:	S-325
1			3			TOTAL SHEETS
2			4			340

DRAWN BY : B.N.BARODAWALA DATE : 1-8-08
CHECKED BY : PEGGY ADKINS DATE : 2-08

09-OCT-2008 15:18
R:\Structures\Str*12\Final Plans\r2719a_sd_ss_12.dgn
nruffin

STR. #12

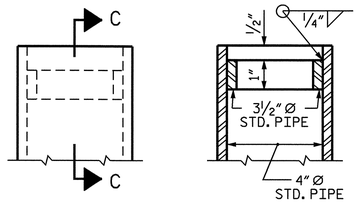

SECTION C-C

DETAIL "A"

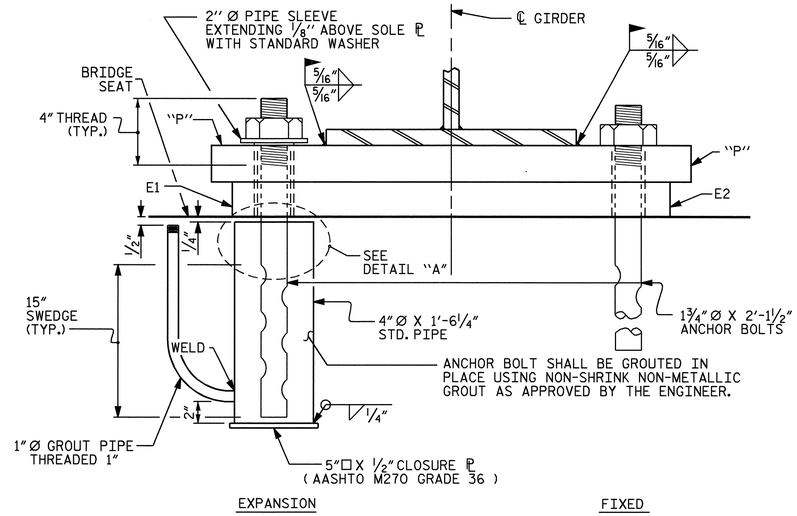

END VIEW

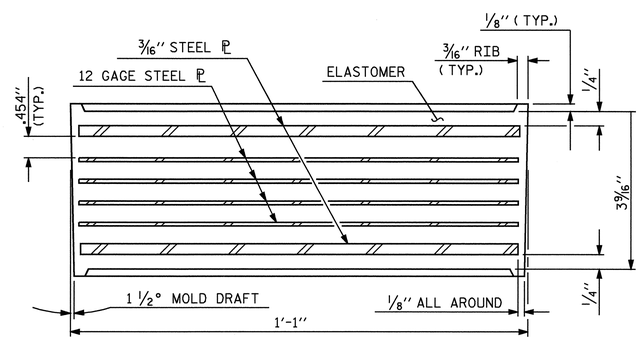

TYPICAL SECTION OF ELASTOMERIC BEARING

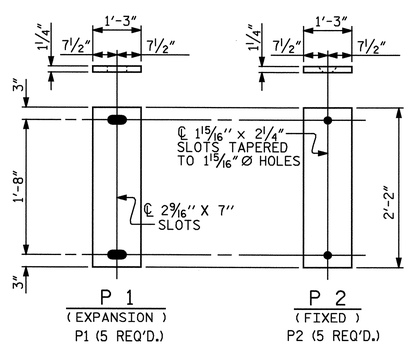

SOLE PLATE DETAILS ("P")

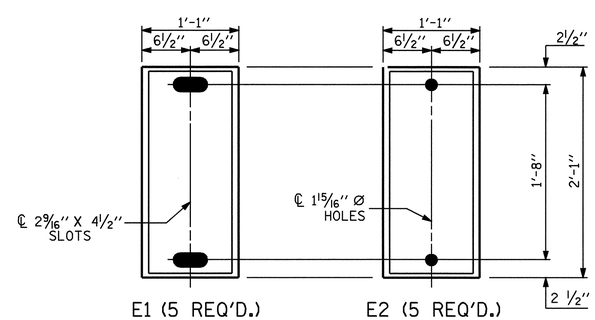

PLAN VIEW OF ELASTOMERIC BEARING

TYPE V

NOTES

AT ALL FIXED POINTS OF SUPPORT, NUTS FOR ANCHOR BOLTS ARE TO BE TIGHTENED FINGER TIGHT AND THEN BACKED OFF 1/2 TURN. THE THREAD OF THE NUT AND BOLT SHALL THEN BE BURRED WITH A SHARP POINTED TOOL.

THE 2" Ø PIPE SLEEVE SHALL BE CUT FROM SCHEDULE 40 PVC

PLASTIC PIPE. THE PVC PLASTIC PIPE SHALL MEET THE REQUIREMENTS OF ASTM D1785.

THE PAYMENT FOR THE PIPE SLEEVES SHALL BE INCLUDED IN THE SEVERAL PAY ITEMS.

FOR AASHTO M270 GRADE 50W STRUCTURAL STEEL, SOLE PLATE SHALL BE AASHTO M270 GRADE 50W AND SHALL NOT BE GALVANIZED. ANCHOR BOLTS, NUTS AND WASHERS SHALL BE GALVANIZED IN ACCORDANCE WITH THE STANDARD SPECIFICATIONS.

ANCHOR BOLTS SHALL MEET THE REQUIREMENTS OF ASTM A449. NUTS SHALL MEET THE REQUIREMENTS OF AASHTO M291-DH OR AASHTO M292-2H. WASHERS SHALL MEET THE REQUIREMENTS OF

AASHTO M293. SHOP DRAWINGS ARE NOT REQUIRED FOR ANCHOR

BOLTS, NUTS AND WASHERS. SHOP INSPECTION IS REQUIRED.

WHEN FIELD WELDING THE SOLE PLATE TO THE GIRDER FLANGE,

USE TEMPERATURE INDICATING WAX PENS, OR OTHER SUITABLE MEANS, TO ENSURE THAT THE TEMPERATURE OF THE SOLE PLATE DOES NOT EXCEED 300°F. TEMPERATURES ABOVE THIS MAY DAMAGE THE ELASTOMER.

ALL SURFACES OF BEARING PLATES SHALL BE SMOOTH AND STRAIGHT.

THE CLOSURE PLATE, GROUT PIPE AND STANDARD PIPE FOR THE EXPANSION ASSEMBLY NEED NOT BE GALVANIZED.

THE CONTRACTOR'S ATTENTION IS CALLED TO THE FOLLOWING PROCEDURE, WHICH MAY BE REQUIRED BY THE ENGINEER, TO RESET ELASTOMERIC BEARINGS DUE TO GIRDER TRANSLATION AND END ROTATION:

1. ONCE THE DECK HAS CURED, THE GIRDERS SHALL BE JACKED THEN THE ANCHOR BOLTS AND ELASTOMERIC BEARING SLOTS CENTERED AS NEARLY AS PRACTICAL ABOUT THE BEARING STIFFENER. THIS OPERATION SHALL BE PERFORMED AT APPROXIMATELY 60° F.

2. AFTER CENTERING THE ELASTOMERIC BERARING SLOTS AND ANCHOR BOLTS, THE ANCHOR BOLTS SHALL BE GROUTED.

THE CONTRACTOR MAY PROPOSE ALTERNATE METHODS, PROVIDED DETAILS ARE SUBMITTED TO THE ENGINEER FOR REVIEW AND APPROVAL.

—LOAD RATINGS—	
	MAX.D.L.+ L.L.
TYPE V	200 K

PROJECT NO. R-2719A
LENOIR COUNTY
STATION: 97+26.78 -Y1-

STATE OF NORTH CAROLINA
DEPARTMENT OF TRANSPORTATION
RALEIGH

STANDARD

ELASTOMERIC BEARING DETAILS

(STEEL SUPERSTRUCTURE)
(RIGHT LANE)

NORTH CAROLINA PROFESSIONAL SEAL 14045 ENGINEER TIMOTHY L. COGGINS
4/6/09

REVISIONS						SHEET NO.
NO.	BY:	DATE:	NO.	BY:	DATE:	S-326
1			3			TOTAL SHEETS
2			4			340

ASSEMBLED BY : B.N.BARODAWALA	DATE : 1-11-08		
CHECKED BY : PEGGY ADKINS	DATE : 2-08		
DRAWN BY : EEM 10/95	REV. 10/17/00	RWW/LES	
CHECKED BY : PEK 10/95	REV. 7/10/01	LES/RDR	
	REV. 5/1/06	TLA/GM	

06-APR-2009 14:47
h:\structures\Str#12\Final Plans\r2719a_sd_bg_12.dgn
tcoggins

STR. #12

STD. NO. EB2

DEAD LOAD DEFLECTION TABLE

	GIRDERS 1 & 5																				
TWENTIETH POINTS	0	0.05	0.10	0.15	0.20	0.25	0.30	0.35	0.40	0.45	0.50	0.55	0.60	0.65	0.70	0.75	0.80	0.85	0.90	0.95	1.0
DEFLECTION DUE TO WEIGHT OF GIRDER	0.000	0.021	0.040	0.059	0.075	0.090	0.102	0.111	0.118	0.123	0.124	0.123	0.118	0.111	0.102	0.090	0.075	0.059	0.040	0.021	0.000
DEFLECTION DUE TO WEIGHT OF SLAB ✳	0.000	0.069	0.143	0.212	0.274	0.328	0.373	0.410	0.436	0.452	0.458	0.452	0.436	0.410	0.373	0.328	0.274	0.212	0.143	0.069	0.000
DEFLECTION DUE TO WEIGHT OF BARRIER RAIL	0.000	0.005	0.011	0.016	0.021	0.025	0.028	0.031	0.033	0.034	0.034	0.034	0.033	0.031	0.028	0.025	0.021	0.016	0.011	0.005	0.000
TOTAL DEAD LOAD DEFLECTION	0.000	0.095	0.194	0.287	0.370	0.443	0.503	0.552	0.587	0.609	0.616	0.609	0.587	0.552	0.503	0.443	0.370	0.287	0.194	0.095	0.000
VERTICAL CURVE ORDINATE	0.000	0.015	0.028	0.039	0.049	0.058	0.065	0.070	0.074	0.076	0.077	0.076	0.074	0.070	0.065	0.058	0.049	0.039	0.028	0.015	0.000
REQUIRED CAMBER	0"	1 5/16"	2 11/16"	3 15/16"	5"	6"	6 13/16"	7 7/16"	7 15/16"	8 1/4"	8 5/16"	8 1/4"	7 15/16"	7 7/16"	6 13/16"	6"	5"	3 15/16"	2 11/16"	1 5/16"	0"

✳ INCLUDES SLAB, BUILDUPS & STAY-IN-PLACE FORMS.
ALL VALUES ARE SHOWN IN FEET (DECIMAL FORM), EXCEPT "FINAL CAMBER", WHICH IS GIVEN IN INCHES (FRACTION FORM).

DEAD LOAD DEFLECTION TABLE

	GIRDERS 2 & 4																				
TWENTIETH POINTS	0	0.05	0.10	0.15	0.20	0.25	0.30	0.35	0.40	0.45	0.50	0.55	0.60	0.65	0.70	0.75	0.80	0.85	0.90	0.95	1.0
DEFLECTION DUE TO WEIGHT OF GIRDER	0.000	0.021	0.040	0.059	0.075	0.090	0.102	0.111	0.118	0.123	0.124	0.123	0.118	0.111	0.102	0.090	0.075	0.059	0.040	0.021	0.000
DEFLECTION DUE TO WEIGHT OF SLAB ✳	0.000	0.067	0.140	0.208	0.268	0.321	0.366	0.401	0.427	0.443	0.449	0.443	0.427	0.401	0.366	0.321	0.268	0.208	0.140	0.067	0.000
DEFLECTION DUE TO WEIGHT OF BARRIER RAIL	0.000	0.005	0.011	0.016	0.020	0.024	0.027	0.030	0.032	0.033	0.033	0.033	0.032	0.030	0.027	0.024	0.020	0.016	0.011	0.005	0.000
TOTAL DEAD LOAD DEFLECTION	0.000	0.093	0.191	0.283	0.363	0.435	0.495	0.542	0.577	0.599	0.606	0.599	0.577	0.542	0.495	0.435	0.363	0.283	0.191	0.093	0.000
VERTICAL CURVE ORDINATE	0.000	0.015	0.028	0.039	0.049	0.058	0.065	0.070	0.074	0.076	0.077	0.076	0.074	0.070	0.065	0.058	0.049	0.039	0.028	0.015	0.000
REQUIRED CAMBER	0"	1 5/16"	2 5/8"	3 7/8"	4 15/16"	5 15/16"	6 3/4"	7 3/8"	7 13/16"	8 1/8"	8 3/16"	8 1/8"	7 13/16"	7 3/8"	6 3/4"	5 15/16"	4 15/16"	3 7/8"	2 5/8"	1 5/16"	0"

✳ INCLUDES SLAB, BUILDUPS & STAY-IN-PLACE FORMS.
ALL VALUES ARE SHOWN IN FEET (DECIMAL FORM), EXCEPT "FINAL CAMBER", WHICH IS GIVEN IN INCHES (FRACTION FORM).

DEAD LOAD DEFLECTION TABLE

	GIRDER 3																				
TWENTIETH POINTS	0	0.05	0.10	0.15	0.20	0.25	0.30	0.35	0.40	0.45	0.50	0.55	0.60	0.65	0.70	0.75	0.80	0.85	0.90	0.95	1.0
DEFLECTION DUE TO WEIGHT OF GIRDER	0.000	0.021	0.040	0.059	0.075	0.090	0.102	0.111	0.118	0.123	0.124	0.123	0.118	0.111	0.102	0.090	0.075	0.059	0.040	0.021	0.000
DEFLECTION DUE TO WEIGHT OF SLAB ✳	0.000	0.066	0.137	0.204	0.263	0.314	0.358	0.393	0.419	0.434	0.439	0.434	0.419	0.393	0.358	0.314	0.263	0.204	0.137	0.066	0.000
DEFLECTION DUE TO WEIGHT OF BARRIER RAIL	0.000	0.006	0.011	0.016	0.020	0.024	0.027	0.030	0.032	0.033	0.033	0.033	0.032	0.030	0.027	0.024	0.020	0.016	0.011	0.006	0.000
TOTAL DEAD LOAD DEFLECTION	0.000	0.093	0.188	0.279	0.358	0.428	0.487	0.534	0.569	0.590	0.596	0.590	0.569	0.534	0.487	0.428	0.358	0.279	0.188	0.093	0.000
VERTICAL CURVE ORDINATE	0.000	0.015	0.028	0.039	0.049	0.058	0.065	0.070	0.074	0.076	0.077	0.076	0.074	0.070	0.065	0.058	0.049	0.039	0.028	0.015	0.000
REQUIRED CAMBER	0"	1 5/16"	2 9/16"	3 13/16"	4 7/8"	5 13/16"	6 5/8"	7 1/4"	7 11/16"	8"	8 1/16"	8"	7 11/16"	7 1/4"	6 5/8"	5 13/16"	4 7/8"	3 13/16"	2 9/16"	1 5/16"	0"

✳ INCLUDES SLAB, BUILDUPS & STAY-IN-PLACE FORMS.
ALL VALUES ARE SHOWN IN FEET (DECIMAL FORM), EXCEPT "FINAL CAMBER", WHICH IS GIVEN IN INCHES (FRACTION FORM).

PROJECT NO. R-2719A
LENOIR COUNTY
STATION: 97+26.78 -Y1-

NORTH CAROLINA PROFESSIONAL SEAL 14045 ENGINEER TIMOTHY L. COGGINS
Timothy L. Coggins 10/11/08

STATE OF NORTH CAROLINA
DEPARTMENT OF TRANSPORTATION
RALEIGH

SUPERSTRUCTURE

DEAD LOAD DEFLECTIONS

(RIGHT LANE)

REVISIONS						SHEET NO.
NO.	BY:	DATE:	NO.	BY:	DATE:	S-327
1			3			TOTAL SHEETS
2			4			340

DRAWN BY : B.N.BARODAWALA DATE : 1-11-08
CHECKED BY : PEGGY ADKINS DATE : 2-08

09-OCT-2008 15:18
R:\Structures\Str#12\Final Plans\r2719a_sd_dl_12.dgn
nruffin

STR. #12

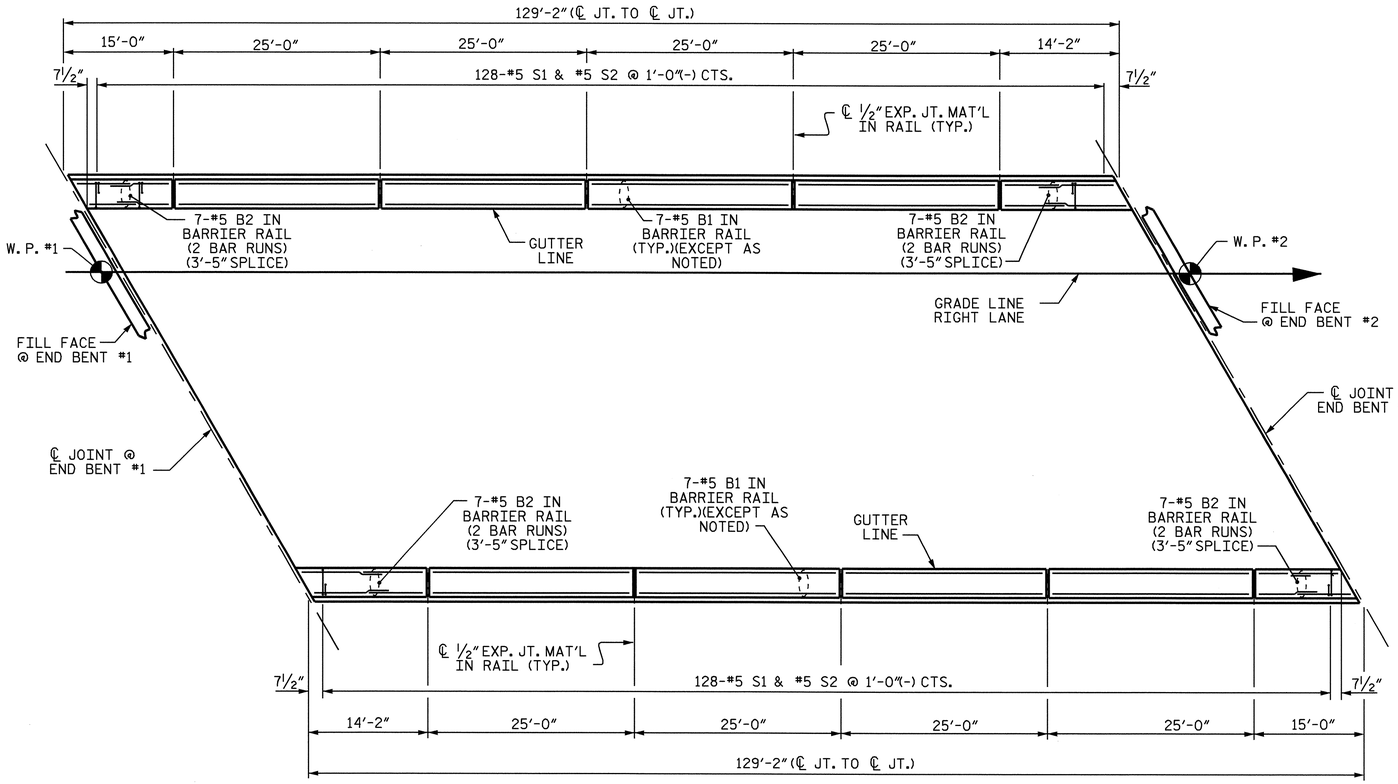

PLAN OF BARRIER RAIL

NOTES

BARRIER RAIL IN THE SPAN SHALL NOT BE CAST UNTIL ALL SLAB CONCRETE IN THAT SPAN HAS BEEN CAST AND HAS REACHED A MINIMUM COMPRESSIVE STRENGTH OF 3,000 PSI.

ALL REINFORCING STEEL IN BARRIER RAILS SHALL BE EPOXY COATED.

VERTICAL GROOVED CONTRACTION JOINTS, ½" IN DEPTH, SHALL BE TOOLED IN ALL EXPOSED FACES OF THE BARRIER RAIL AND IN ACCORDANCE WITH ARTICLE 825-10(B) OF THE STANDARD SPECIFICATIONS. THE CONTRACTION JOINT SHALL BE LOCATED AT EACH THIRD POINT BETWEEN BARRIER RAIL EXPANSION JOINTS. ONLY ONE CONTRACTION JOINT IS REQUIRED AT MIDPOINT OF BARRIER RAIL SEGMENTS LESS THAN 20 FEET IN LENGTH AND NO CONTRACTION JOINTS ARE REQUIRED FOR THOSE SEGMENTS LESS THAN 10 FEET IN LENGTH.

BAR TYPES

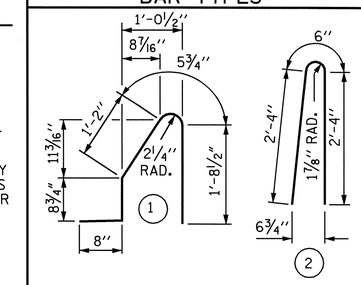

ALL BAR DIMENSIONS ARE OUT TO OUT

BILL OF MATERIAL

FOR CONCRETE BARRIER RAIL ONLY

BAR	NO.	SIZE	TYPE	LENGTH	WEIGHT
* B1	56	#5	STR	24'-7"	1436
* B2	56	#5	STR	8'-11"	521
* S1	256	#5	1	4'-9"	1268
* S2	256	#5	2	5'-2"	1380

* EPOXY COATED REINFORCING STEEL	4605 LBS.
CLASS AA CONCRETE	25.8 CU. YDS.
CONCRETE BARRIER RAIL	258.33 LIN. FT.

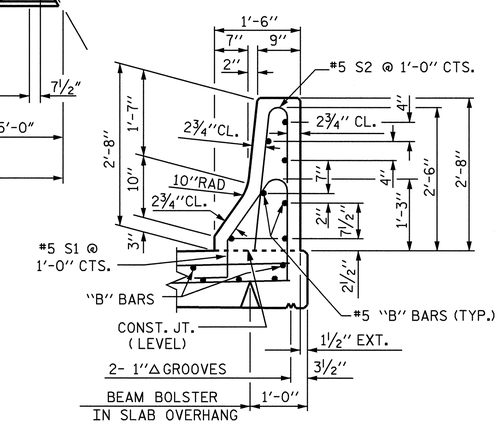

SECTION THRU RAIL

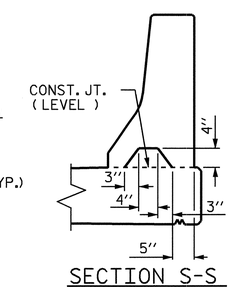

SECTION S-S

AT DAM IN OPEN JOINT (THIS IS TO BE USED ONLY WHEN SLIP FORM IS USED)

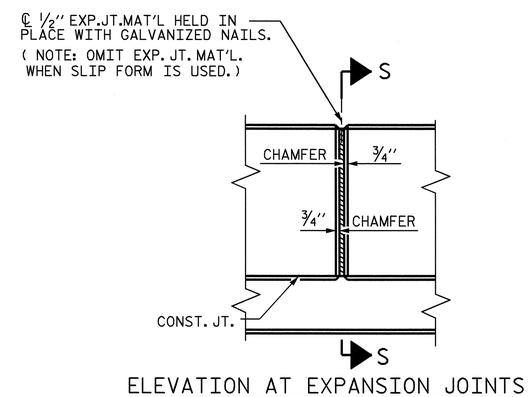

ELEVATION AT EXPANSION JOINTS

BARRIER RAIL DETAILS

PROJECT NO. R-2719A

LENOIR COUNTY

STATION: 97+26.78 -Y1-

STATE OF NORTH CAROLINA
DEPARTMENT OF TRANSPORTATION
RALEIGH

STANDARD

CONCRETE BARRIER RAIL

(RIGHT LANE)

REVISIONS						SHEET NO.
NO.	BY:	DATE:	NO.	BY:	DATE:	S-328
1			3			TOTAL SHEETS
2			4			340

ASSEMBLED BY : B.N.BARODAWALA	DATE : 1-7-08		
CHECKED BY : PEGGY ADKINS	DATE : 2-08		
DRAWN BY : ARB 5/87	REV. 10/17/00	RWW/LES	
CHECKED BY : SJD 9/87	REV. 5/7/03R	RWW/JTE	
	REV. 5/1/06	TLA/GM	

09-OCT-2008 15:18
R:\Structures\Str#12\Final Plans\r2719a_sd_br_12.dgn
nruffin

STR. #12

STD. NO. CBRI

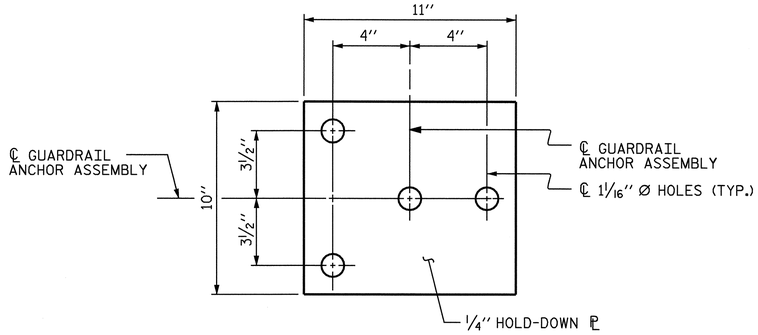

PLAN

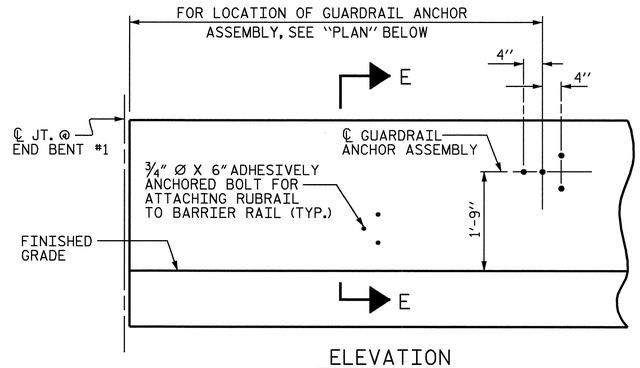

ELEVATION

FOR LOCATION OF RUBRAIL, SEE ROADWAY STD. 862.03

NOTES

THE GUARDRAIL ANCHOR ASSEMBLY SHALL CONSIST OF A 1/4" HOLD DOWN PLATE AND 4 - 7/8" Ø BOLTS WITH NUTS AND WASHERS, RUBRAIL, AND ADHESIVELY ANCHORED BOLTS.

THE HOLD-DOWN PLATE SHALL CONFORM TO AASHTO M270 GRADE 36. AFTER FABRICATION, THE HOLD-DOWN PLATE SHALL BE HOT-DIP GALVANIZED IN ACCORDANCE WITH AASHTO M111.

BOLTS SHALL CONFORM TO THE REQUIREMENTS OF ASTM A307 AND NUTS SHALL CONFORM TO THE REQUIREMENTS OF AASHTO M291. BOLTS, NUTS AND WASHERS SHALL BE GALVANIZED. (AT THE CONTRACTOR'S OPTION, STAINLESS STEEL BOLTS, NUTS AND WASHERS MAY BE USED AS AN ALTERNATE FOR THE 7/8" Ø GALVANIZED BOLTS, NUTS AND WASHERS. THEY SHALL CONFORM TO OR EXCEED THE MECHANICAL REQUIREMENTS OF ASTM A307. THE USE OF THIS ALTERNATE SHALL BE APPROVED BY THE ENGINEER.)

THE GUARDRAIL ANCHOR ASSEMBLY IS REQUIRED AT ALL POINTS WHERE APPROACH GUARDRAIL IS TO BE ATTACHED TO THE END OF BARRIER RAIL. FOR POINTS OF ATTACHMENT, SEE SKETCH.

AFTER INSTALLATION, THE EXPOSED THREAD OF THE BOLT SHALL BE BURRED WITH A SHARP POINTED TOOL.

THE COST OF THE GUARDRAIL ANCHOR ASSEMBLY SHALL BE INCLUDED IN THE UNIT CONTRACT PRICE BID FOR CONCRETE BARRIER RAIL.

THE 1 1/4" Ø HOLES SHALL BE FORMED OR DRILLED WITH A CORE BIT. IMPACT TOOLS WILL NOT BE PERMITTED. ANY CONCRETE DAMAGED BY THIS WORK SHALL BE REPAIRED TO THE SATISFACTION OF THE ENGINEER.

THE C6 X 8.2 RUBRAIL IS TO BE ADHESIVELY ANCHORED TO THE RAIL USING THREE 3/4" Ø X 6" BOLTS WITH WASHERS. LEVEL ONE FIELD TESTING IS REQUIRED, AND THE YIELD LOAD OF THE 3/4" Ø BOLT IS 12 KIPS. FOR ADHESIVELY ANCHORED ANCHOR BOLTS OR DOWELS, SEE SPECIAL PROVISIONS. SEE ROADWAY STANDARD 862.03 FOR DETAILS AND LOCATION OF THE RUBRAIL.

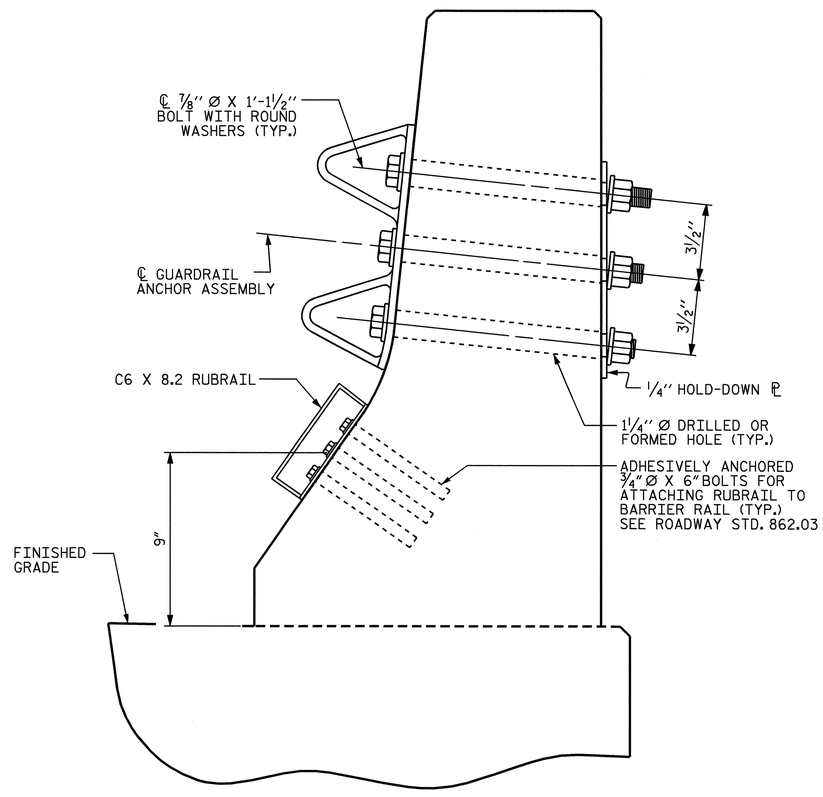

SECTION E-E

GUARDRAIL ANCHOR ASSEMBLY DETAILS

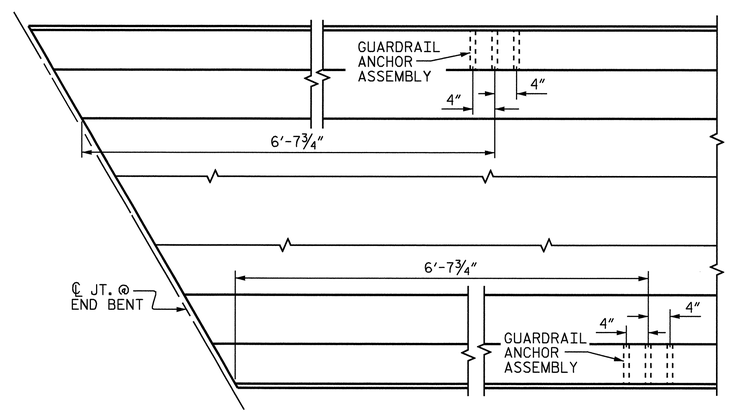

PLAN

LOCATION OF ANCHORS FOR GUARDRAIL

END BENT #1 SHOWN, END BENT #2 SIMILAR.

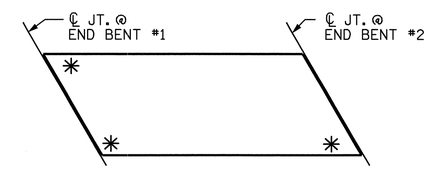

SKETCH SHOWING POINTS OF ATTACHMENTS

✳ DENOTES GUARDRAIL ANCHOR ASSEMBLY

PROJECT NO. R-2719A
LENOIR COUNTY
STATION: 97+26.78 -Y1-

STATE OF NORTH CAROLINA
DEPARTMENT OF TRANSPORTATION
RALEIGH

STANDARD
GUARDRAIL ANCHORAGE FOR BARRIER RAIL
(RIGHT LANE)

NORTH CAROLINA PROFESSIONAL SEAL 14045 ENGINEER TIMOTHY W. COGGINS
10/1/08

REVISIONS						SHEET NO.
NO.	BY:	DATE:	NO.	BY:	DATE:	S-329
1			3			TOTAL SHEETS
2			4			340

ASSEMBLED BY : B.N.BARODAWALA DATE : 1-7-08
CHECKED BY : PEGGY ADKINS DATE : 2-08
DRAWN BY : TLA 5/06
CHECKED BY : GM 5/06
ADDED 5/1/06R KMM/GM

09-OCT-2008 15:17
R:\Structures\Str*12\Final Plans\r2719a_sd_br_12.dgn
nruffin

STR. #12 STD. NO. GRA2

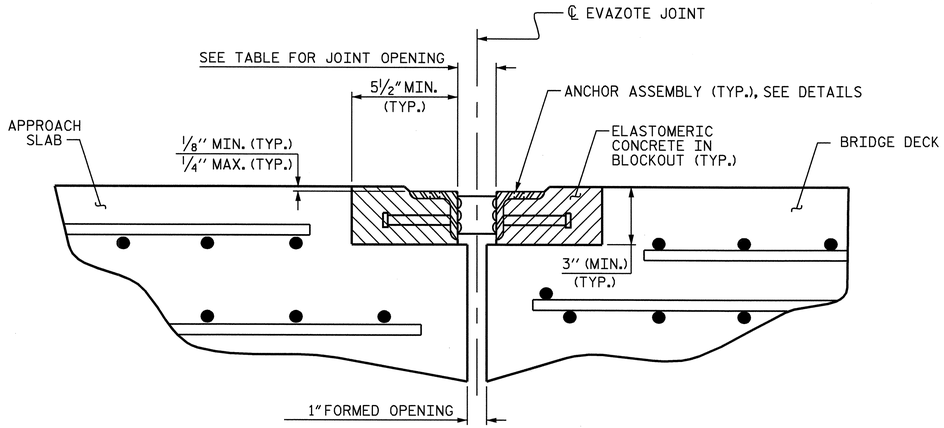

ARMORED JOINT DETAILS

SECTION NORMAL TO JOINT AT END BENT

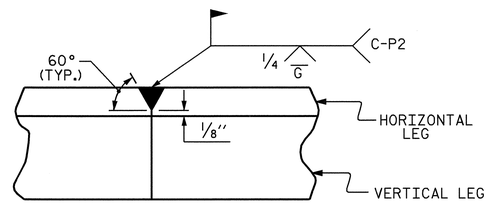

DETAIL- FIELD WELD SPLICE OF ANGLE

NOTES

ANGLES SHALL CONFORM TO AASHTO M270 GRADE 36 STEEL OR APPROVED EQUAL. ALL STUD ANCHORS SHALL CONFORM TO AASHTO M169 GRADES 1010 THRU 1020 OR APPROVED EQUAL.

STUD ANCHORS SHALL BE SHOP WELDED AND ALL HOLES SHALL BE SHOP DRILLED AS SHOWN ON THE PLANS. STUD ANCHORS SHALL BE ELECTRIC ARC END WELDED WITH COMPLETE FUSION.

UPON COMPLETION OF SHOP FABRICATION, THE ENTIRE ANCHOR ASSEMBLY SHALL BE METALLIZED. THE ½" Ø STUD ANCHORS AND ANCHOR TABS NEED NOT BE METALLIZED. SEE SPECIAL PROVISION FOR THERMAL SPRAYED COATINGS (METALLIZATION).

ANCHOR ASSEMBLY SHALL BE MADE CONTINUOUS THE LENGTH OF THE JOINT FROM GUTTER TO GUTTER. FOR FIELD SPLICES AT ALL CROWN BREAK POINTS, THE ENDS OF THE STEEL ANGLES SHALL BE CUT PARALLEL TO THE BRIDGE CENTERLINE. FINISHED FIELD WELDS SHALL BE GROUND SMOOTH AND COATED WITH A MINIMUM THICKNESS OF 4 DRY MILS OF ZINC-RICH PAINT IN ACCORDANCE WITH THE STANDARD SPECIFICATIONS.

ANCHOR ASSEMBLY SEGMENTS SHALL NOT BE LESS THAN 12 FEET NOR MORE THAN 20 FEET IN LENGTH. SHORTER SEGMENTS MAY BE USED AT THE EDGE OF ROADWAY OR AT POINTS OF STAGED CONSTRUCTION.

THE ANCHOR ASSEMBLY SHALL BE SECURED AND LEVELED AS SHOWN IN THE "ARMORED JOINT ANCHOR ASSEMBLY DETAILS". NO SUBMITTALS ARE REQUIRED FOR ⅜" Ø EXPANSION ANCHORS, NUTS OR WASHERS. THE CONTRACTOR MAY SUBMIT FOR APPROVAL AN ALTERNATE METHOD OF ALIGNING AND LEVELING THE ANGLES. THE ALTERNATE METHOD SHALL NOT INCLUDE ANY WELDING TO THE OUTSIDE FACE OF THE ANGLES.

AFTER THE ELASTOMERIC CONCRETE HAS BEEN CAST ON BOTH SIDES OF THE JOINT, REMOVE ANY EXCESS CONCRETE THAT COMES THROUGH THE WEEP HOLES AND THOROUGHLY CLEAN THE ANGLES. ANY DAMAGED STEEL SHALL BE COATED WITH A MINIMUM OF 4 MILS OF ZINC-RICH PAINT IN ACCORDANCE WITH THE STANDARD SPECIFICATIONS.

SEE SPECIAL PROVISIONS FOR EVAZOTE JOINT SEALS.

SEE SPECIAL PROVISIONS FOR ELASTOMERIC CONCRETE.

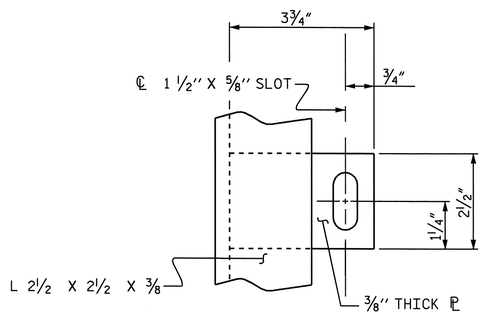

PLAN VIEW OF TAB

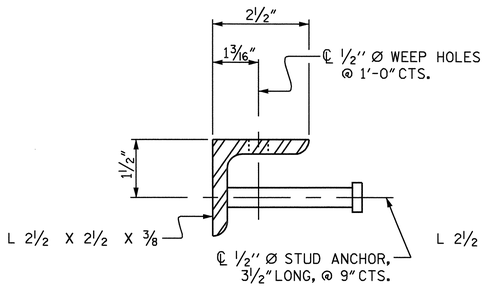

SECTION VIEW OF STUD

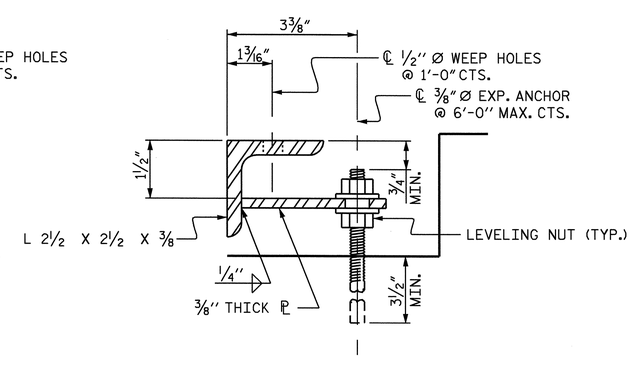

SECTION VIEW OF TAB

ARMORED JOINT ANCHOR ASSEMBLY DETAILS

MOVEMENT AND SETTING AT EVAZOTE JOINT

END BENT NO.	SKEW ANGLE	NOMINAL UNCOMPRESSED SEAL WIDTH	TOTAL MOVEMENT (ALONG ℄ RDWY)	PERPENDICULAR JOINT OPENING AT 45° F	PERPENDICULAR JOINT OPENING AT 60° F	PERPENDICULAR JOINT OPENING AT 90° F
1	58°-42'-00"	2½"	1¼"	2 1/16"	1⅞"	1 9/16"
2	58°-42'-00"	2½"	—	—	—	—

TOTAL MOVEMENT IS CALCULATED ALONG THE CENTERLINE OF ROADWAY.
JOINT OPENINGS ARE MEASURED PERPENDICULAR TO THE JOINT.

BILL OF MATERIAL

END BENT NO.	ELASTOMERIC CONCRETE * (CU. FT.)	TOTAL LENGTH OF ANGLE (FT)
1	11.3	98.33'
2	11.3	98.33'

* BASED ON THE MINIMUM BLOCKOUT SHOWN.

PROJECT NO. R-2719A
LENOIR COUNTY
STATION: 97+26.78 -Y1-

NORTH CAROLINA PROFESSIONAL SEAL 14045 ENGINEER TIMOTHY L. COGGINS
Timothy L. Coggins 10/1/08

STATE OF NORTH CAROLINA
DEPARTMENT OF TRANSPORTATION
RALEIGH

STANDARD
ARMORED EVAZOTE JOINT DETAILS
(RIGHT LANE)

REVISIONS						SHEET NO.
NO.	BY:	DATE:	NO.	BY:	DATE:	S-330
1			3			TOTAL SHEETS
2			4			340

ASSEMBLED BY : B.N.BARODAWALA DATE : 08/08
CHECKED BY : T.L. COGGINS DATE : 08/08

DRAWN BY : EEM 1/96
CHECKED BY : RGW 1/96

REV. 7/10/01 LES/RDR
REV. 5/7/03RR RWW/JTE
REV. 5/1/06 TLA/GM

09-OCT-2008 15:17
R:\Structures\Str*12\Final Plans\r2719a_sd_jt_12.dgn
nruffin

STR. #12

STD. NO. AEJ1

SUPERSTRUCTURE REINFORCING STEEL LENGTHS ARE BASED ON THE FOLLOWING MINIMUM SPLICE LENGTHS

BAR SIZE	SUPERSTRUCTURE EXCEPT APPROACH SLABS, PARAPET, AND BARRIER RAIL		APPROACH SLABS		PARAPET AND BARRIER RAIL
	EPOXY COATED	UNCOATED	EPOXY COATED	UNCOATED	
#4	2'-0"	1'-9"	2'-0"	1'-9"	2'-9"
#5	2'-6"	2'-2"	2'-6"	2'-2"	3'-5"
#6	3'-0"	2'-7"	3'-10"	2'-7"	4'-4"
#7	5'-3"	3'-6"			
#8	6'-10"	4'-7"			

GROOVING BRIDGE FLOORS

APPROACH SLABS	1829	SQ.FT.
BRIDGE DECK	4973	SQ.FT.
TOTAL	6802	SQ.FT.

REINFORCING STEEL BAR SCHEDULE

BAR	NO.	SIZE	TYPE	LENGTH	WEIGHT	BAR	NO.	SIZE	TYPE	LENGTH	WEIGHT
✳ A1	188	#5	STR	44'-11"	8807	A205	4	#5	STR	36'-0"	150
A2	188	#5	STR	44'-11"	8807	A206	4	#5	STR	34'-2"	143
✳ A3	6	#6	STR	16'-0"	144	A207	4	#5	STR	32'-5"	135
						A208	4	#5	STR	30'-8"	128
✳ A101	4	#5	STR	42'-2"	176	A209	4	#5	STR	28'-10"	120
✳ A102	4	#5	STR	40'-4"	168	A210	4	#5	STR	27'-1"	113
✳ A103	4	#5	STR	38'-7"	161	A211	4	#5	STR	25'-3"	105
✳ A104	4	#5	STR	36'-9"	153	A212	4	#5	STR	23'-6"	98
✳ A105	4	#5	STR	35'-0"	146	A213	4	#5	STR	21'-9"	91
✳ A106	4	#5	STR	33'-3"	139	A214	4	#5	STR	19'-11"	83
✳ A107	4	#5	STR	31'-5"	131	A215	4	#5	STR	18'-2"	76
✳ A108	4	#5	STR	29'-8"	124	A216	4	#5	STR	16'-4"	68
✳ A109	4	#5	STR	27'-11"	116	A217	4	#5	STR	14'-7"	61
✳ A110	4	#5	STR	26'-1"	109	A218	4	#5	STR	12'-10"	54
✳ A111	4	#5	STR	24'-4"	102	A219	4	#5	STR	11'-0"	46
✳ A112	4	#5	STR	22'-6"	94	A220	4	#5	STR	9'-3"	39
✳ A113	4	#5	STR	20'-9"	87	A221	4	#5	STR	7'-6"	31
✳ A114	4	#5	STR	19'-0"	79	A222	4	#5	STR	5'-8"	24
✳ A115	4	#5	STR	17'-2"	72	A223	4	#5	STR	3'-11"	16
✳ A116	4	#5	STR	15'-5"	64	A224	4	#5	STR	2'-1"	9
✳ A117	4	#5	STR	13'-8"	57						
✳ A118	4	#5	STR	11'-10"	49	✳ B1	160	#4	STR	27'-4"	2921
✳ A119	4	#5	STR	10'-1"	42	B2	156	#5	STR	44'-4"	7213
✳ A120	4	#5	STR	8'-3"	34						
✳ A121	4	#5	STR	6'-6"	27	✳ G1	2	#5	STR	52'-6"	110
✳ A122	4	#5	STR	4'-9"	20						
✳ A123	4	#5	STR	2'-11"	12	✳ K1	12	#5	1	14'-9"	185
✳ A124	4	#5	STR	1'-2"	5	✳ K2	18	#5	2	21'-7"	405
A201	4	#5	STR	43'-1"	180	✳ S1	72	#4	3	4'-6"	216
A202	4	#5	STR	41'-4"	172						
A203	4	#5	STR	39'-6"	165	REINFORCING STEEL				LBS.	18,284
A204	4	#5	STR	37'-9"	157	✳ EPOXY COATED REINF. STEEL				LBS.	14,955

BAR TYPES

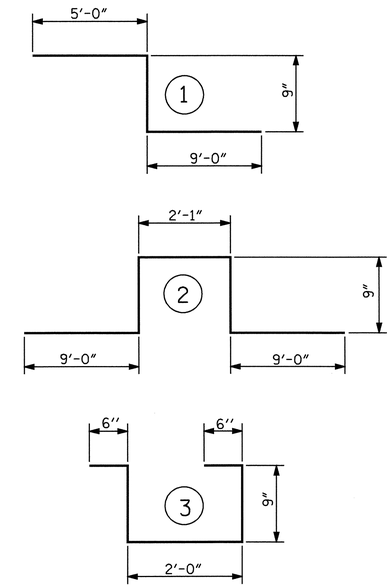

ALL BAR DIMENSIONS ARE OUT TO OUT

SUPERSTRUCTURE BILL OF MATERIAL

	CLASS AA CONCRETE	REINFORCING STEEL	EPOXY COATED REINFORCING STEEL
	(CU.YDS.)	(LBS.)	(LBS.)
SPAN "A"	192.5	18,284	14,955
TOTALS✳✳	192.5	18,284	14,955

✳✳ QUANTITIES FOR BARRIER RAIL ARE NOT INCLUDED

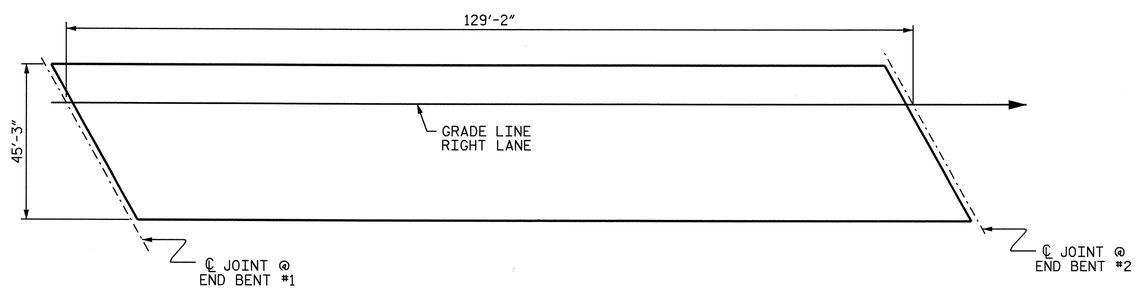

LAYOUT FOR COMPUTING AREA OF REINFORCED CONCRETE DECK SLAB (SQ. FT. = 5845)

PROJECT NO. R-2719A

LENOIR COUNTY

STATION: 97+26.78 -Y1-

STATE OF NORTH CAROLINA
DEPARTMENT OF TRANSPORTATION
RALEIGH

STANDARD

SUPERSTRUCTURE

BILL OF MATERIAL
(RIGHT LANE)

NORTH CAROLINA PROFESSIONAL SEAL 14045 ENGINEER TIMOTHY W. COGGINS
10/14/08

ASSEMBLED BY : B.N.BARODAWALA	DATE : 1-8-08		
CHECKED BY : PEGGY ADKINS	DATE : 2-08		
DRAWN BY : JMB 5/87	REV. 6/1/94	EEM/GRP	
CHECKED BY : SJD 9/87	REV. 8/16/99	RWW/LES	
	REV. 5/1/06	TLA/GM	

REVISIONS						SHEET NO.
NO.	BY:	DATE:	NO.	BY:	DATE:	S-331
1			3			TOTAL SHEETS
2			4			340

STR. #12 STD. NO. BOM1

09-OCT-2008 15:17
R:\Structures\Str*12\Final Plans\r2719a_sd_bm_12.dgn
mruffin

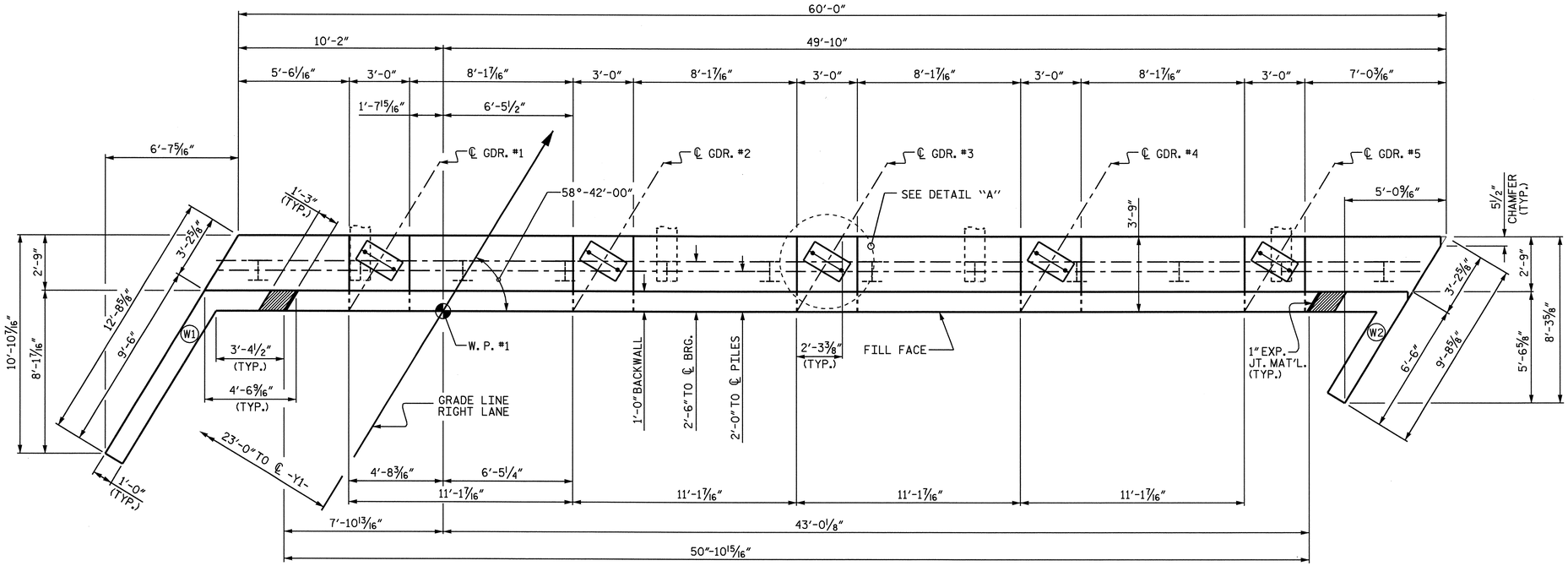

PLAN

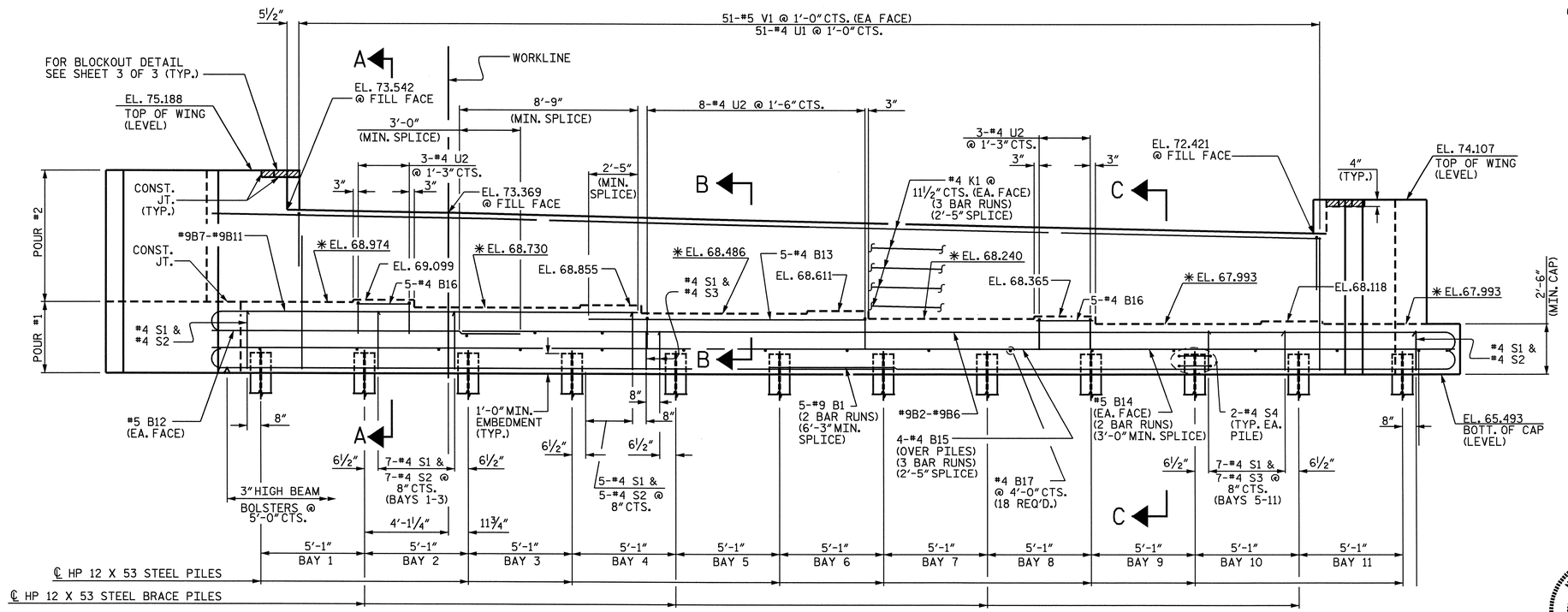

ELEVATION

NOTES

STIRRUPS IN CAP MAY BE SHIFTED AS NECESSARY TO CLEAR ANCHOR BOLTS.

BACKWALL SHALL BE PLACED BEFORE APPLYING THE EPOXY PROTECTIVE COATING.

THE TOP SURFACE AREAS OF THE END BENT CAPS SHALL BE CURED IN ACCORDANCE WITH THE STANDARD SPECIFICATIONS EXCEPT THE MEMBRANE CURING COMPOUND METHOD SHALL NOT BE USED.

THE TOP SURFACE OF THE CAP EXCEPT THE BRIDGE SEAT BUILDUPS SHALL BE SLOPED TRANSVERSELY FROM THE FILL FACE TO THE BACK FACE AT THE RATE OF 2%.

THE CONCRETE IN THE SHADED AREA OF THE WING SHALL BE POURED AFTER THE BARRIER RAIL IS CAST IF SLIP FORMING IS USED.

THE CONTRACTOR SHALL PROVIDE FOR INSTALLATION OF THE 4" DIAMETER DRAIN PIPE THROUGH THE WING WALL AS REQUIRED FOR REINFORCED BRIDGE APPROACH FILLS, SEE THE ROADWAY PLANS. REINFORCING STEEL IN THE WING WALL MAY BE SHIFTED AS NECESSARY TO CLEAR THE DRAIN PIPE.

EPOXY COAT THE END BENT CAP AFTER ADJUSTMENTS ARE MADE TO BEARINGS AND ANCHOR BOLTS ARE GROUTED.

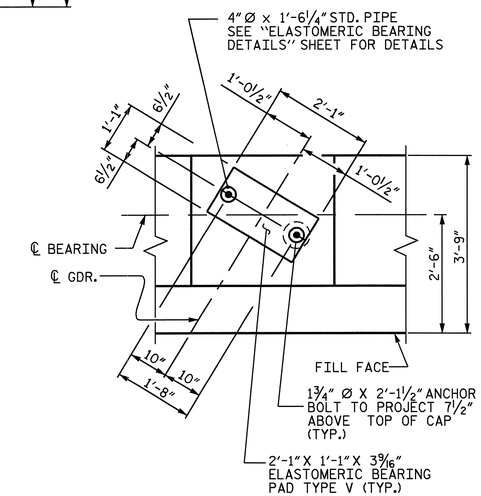

DETAIL "A"

(TYP. EA. GDR.)

PROJECT NO. R-2719A

LENOIR COUNTY

STATION: 97+26.78 -Y1-

SHEET 1 OF 3

STATE OF NORTH CAROLINA
DEPARTMENT OF TRANSPORTATION
RALEIGH

SUBSTRUCTURE

END BENT #1

(RIGHT LANE)

NORTH CAROLINA PROFESSIONAL SEAL 14045 ENGINEER TIMOTHY H. COGGINS
10/10/08

REVISIONS						SHEET NO.
NO.	BY:	DATE:	NO.	BY:	DATE:	S-332
1			3			TOTAL SHEETS
2			4			340

DRAWN BY : M.D.PISO DATE : 05/2008
CHECKED BY : H.T.BARBOUR DATE : 06/2008

09-OCT-2008 15:17
R:\Structures\Str*12\Final Plans\r2719a_sd_e*_12.dgn
nruffin

STR. #12

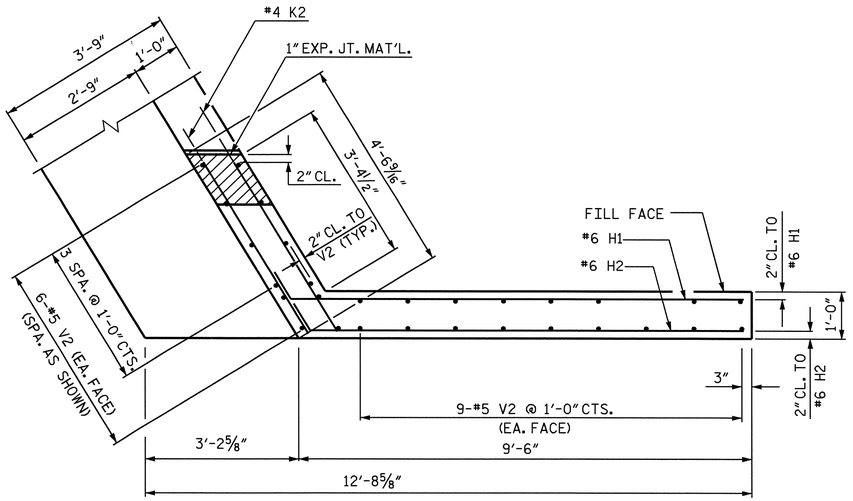

PLAN OF LEFT WING (W1)

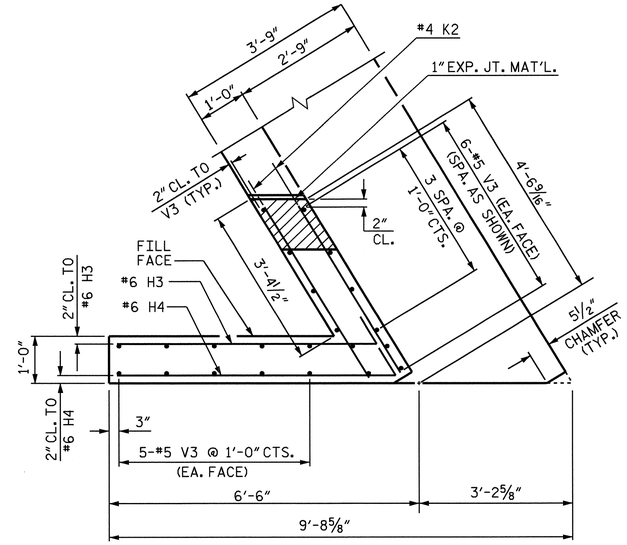

PLAN OF RIGHT WING (W2)

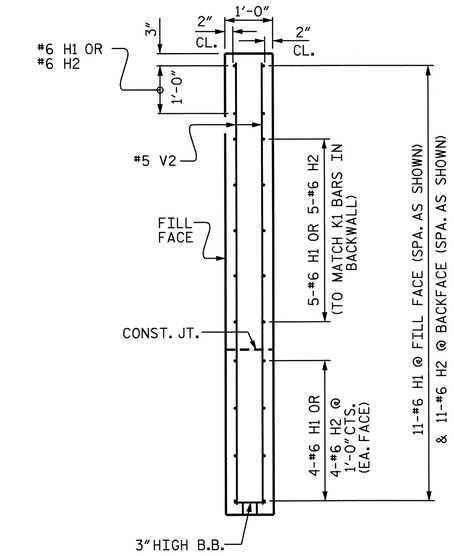

SECTION X-X

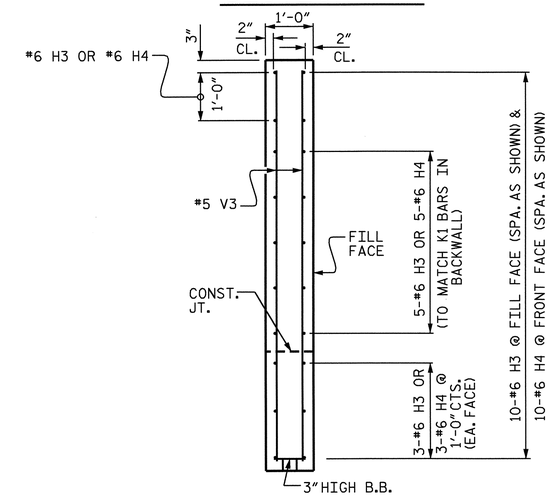

SECTION Y-Y

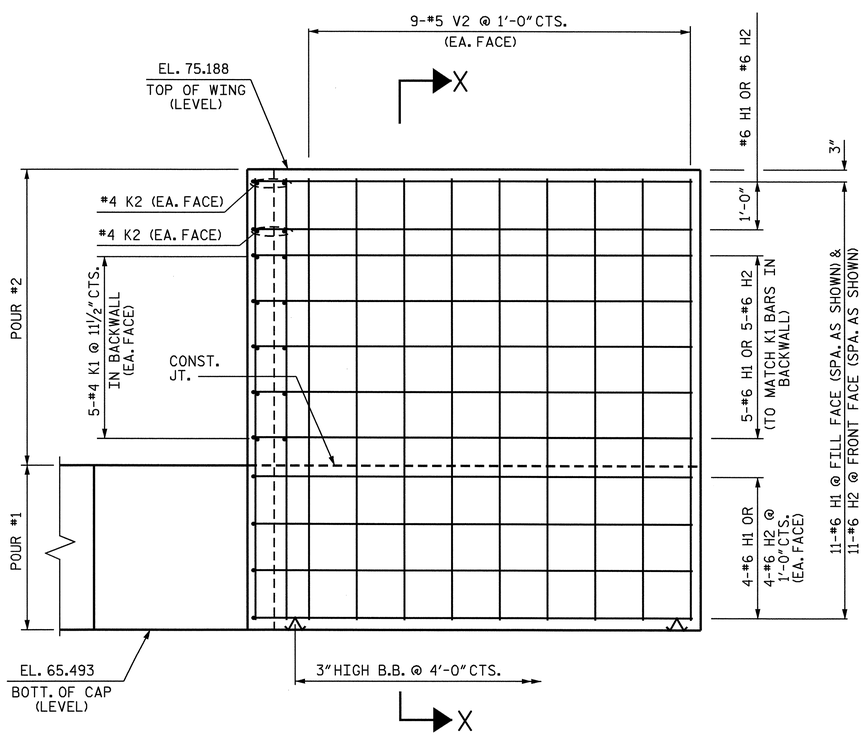

ELEVATION OF LEFT WING (W1)

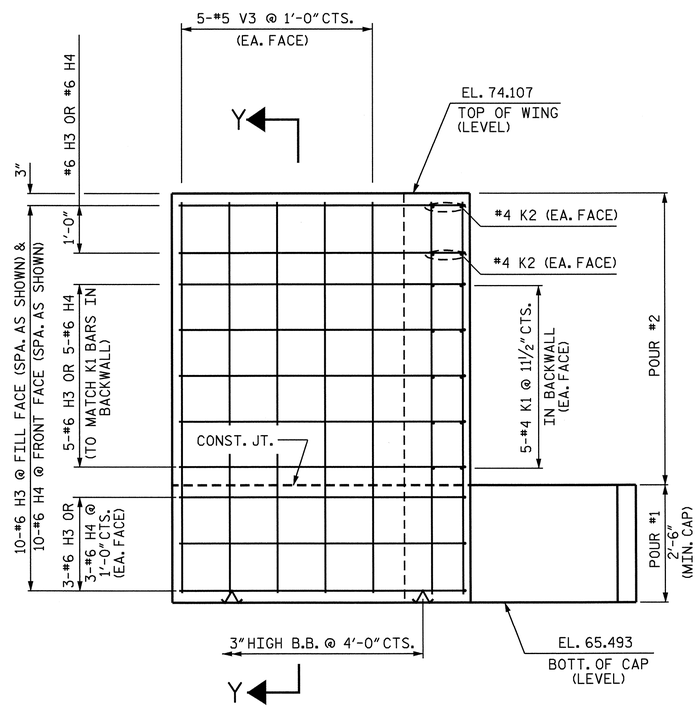

ELEVATION OF RIGHT WING (W2)

PROJECT NO. R-2719A
LENOIR COUNTY
STATION: 97+26.78 -L-

SHEET 2 OF 3

STATE OF NORTH CAROLINA
DEPARTMENT OF TRANSPORTATION
RALEIGH

SUBSTRUCTURE

END BENT #1

(RIGHT LANE)

NORTH CAROLINA PROFESSIONAL SEAL 14045 ENGINEER TIMOTHY L. COGGINS
10/1/08

REVISIONS						SHEET NO.
NO.	BY:	DATE:	NO.	BY:	DATE:	S-333
1			3			TOTAL SHEETS
2			4			340

STR. #12

DRAWN BY : M.D.PISO DATE : 05/2008
CHECKED BY : H.T.BARBOUR DATE : 06/2008

09-OCT-2008 15:17
R:\Structures\Str*12\Final Plans\r2719a_sd_e*_12.dgn
nrufflin

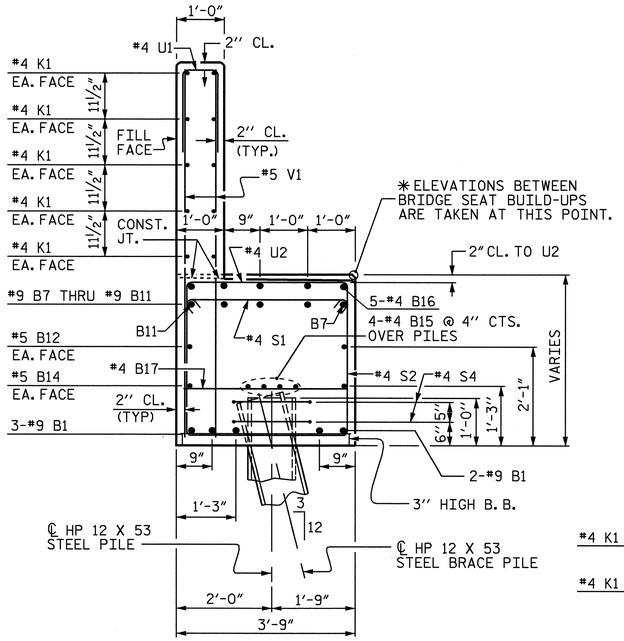

SECTION A-A

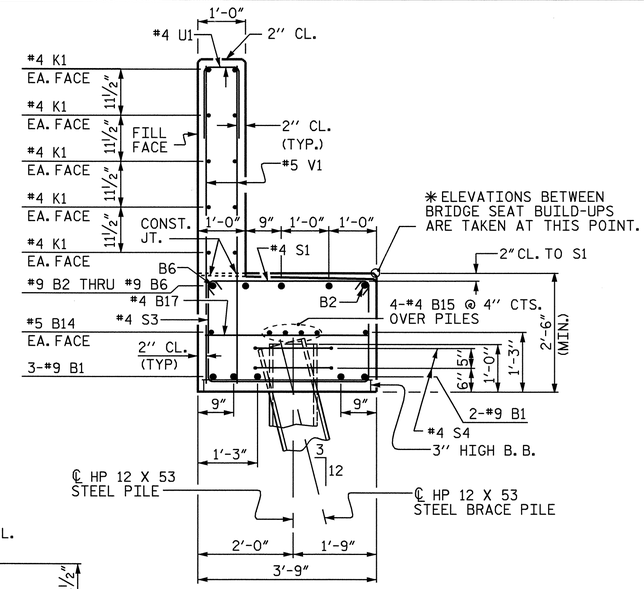

SECTION C-C

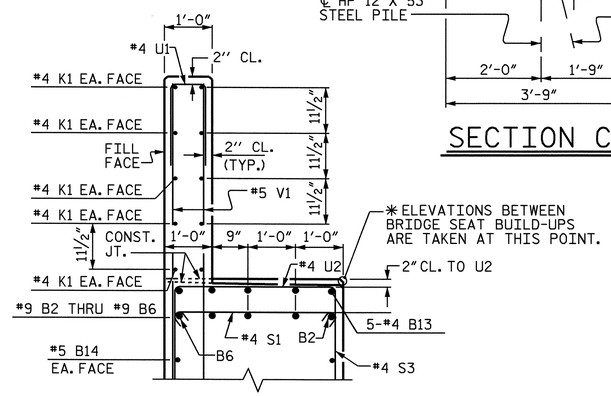

HALF SECTION @ B-B

BAR TYPES

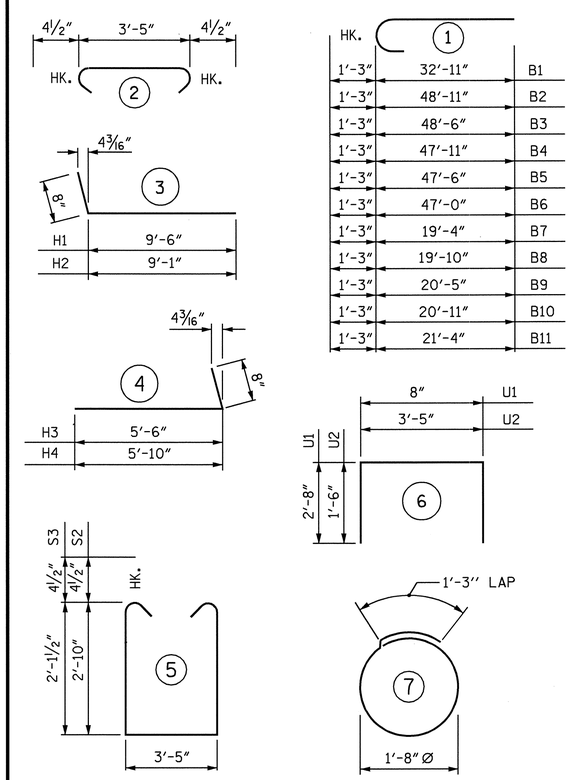

ALL BAR DIMENSIONS ARE OUT TO OUT.

BILL OF MATERIAL
END BENT #1

BAR	NO.	SIZE	TYPE	LENGTH	WEIGHT
B1	10	#9	1	34'-2"	1162
B2	1	#9	1	50'-2"	171
B3	1	#9	1	49'-9"	169
B4	1	#9	1	49'-2"	167
B5	1	#9	1	48'-9"	166
B6	1	#9	1	48'-3"	164
B7	1	#9	1	20'-7"	70
B8	1	#9	1	21'-1"	72
B9	1	#9	1	21'-8"	74
B10	1	#9	1	22'-2"	75
B11	1	#9	1	22'-7"	77
B12	2	#5	STR.	15'-8"	33
B13	5	#4	STR.	13'-7"	45
B14	4	#5	STR.	31'-4"	131
B15	12	#4	STR.	21'-6"	172
B16	10	#4	STR.	2'-8"	18
B17	18	#4	STR.	3'-5"	41
H1	11	#6	3	10'-2"	168
H2	11	#6	3	9'-9"	161
H3	10	#6	4	6'-2"	93
H4	10	#6	4	6'-6"	98
K1	30	#4	STR.	21'-6"	431
K2	8	#4	STR.	4'-1"	22
S1	79	#4	2	4'-2"	220
S2	27	#4	5	9'-10"	177
S3	52	#4	5	8'-5"	292
S4	24	#4	7	6'-6"	104
U1	51	#4	6	6'-0"	204
U2	14	#4	6	6'-5"	51
V1	102	#5	STR.	6'-7"	700
V2	30	#5	STR.	9'-4"	292
V3	22	#5	STR.	8'-3"	189

TOTAL REINFORCING STEEL 6009 LBS.

CLASS 'A' CONCRETE
CAP & LOWER WING 25.1 C.Y.
BACKWALL & UPPER WING 14.1 C.Y.

TOTAL CLASS 'A' CONCRETE (C.Y.) 39.2 C.Y.

HP 12 X 53 STEEL PILES
NO. = 12 LIN. FT. 900

PILE REDRIVES EA. 6

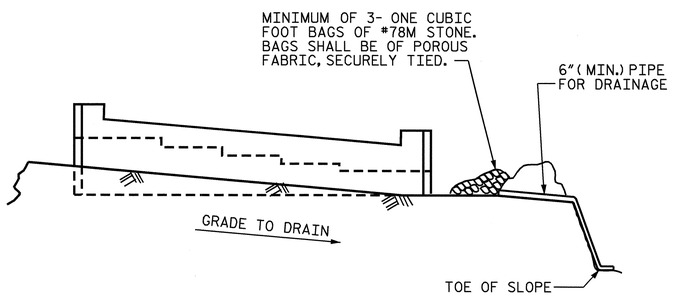

BAGGED STONE AND PIPE SHALL BE PLACED IMMEDIATELY AFTER COMPLETION OF END BENT EXCAVATION. PIPE MAY BE EITHER CONCRETE, CORRUGATED STEEL, CORRUGATED ALUMINUM ALLOY, OR CORRUGATED PLASTIC. PERFORATED PIPE WILL NOT BE ALLOWED.

BAGGED STONE SHALL REMAIN IN PLACE UNTIL THE ENGINEER DIRECTS THAT IT BE REMOVED. THE CONTRACTOR SHALL REMOVE AND DISPOSE OF SILT ACCUMULATIONS AT BAGGED STONE WHEN SO DIRECTED BY THE ENGINEER. BAGS SHALL BE REMOVED AND REPLACED WHENEVER THE ENGINEER DETERMINES THAT THEY HAVE DETERIORATED AND LOST THEIR EFFECTIVENESS.

NO SEPARATE PAYMENT WILL BE MADE FOR THIS WORK AND THE ENTIRE COST OF THIS WORK SHALL BE INCLUDED IN THE UNIT CONTRACT PRICE BID FOR THE SEVERAL PAY ITEMS.

TEMPORARY DRAINAGE AT END BENT

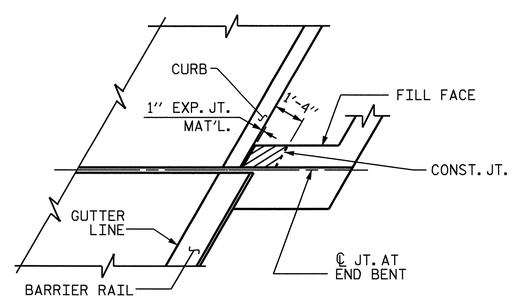

PLAN

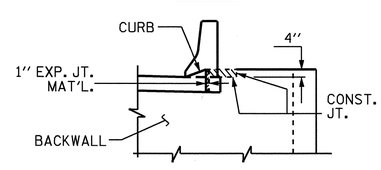

ELEVATION

BLOCKOUT IN WING WALL

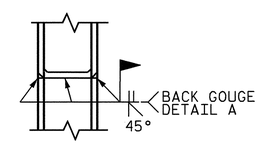

✱✱ PILE VERTICAL

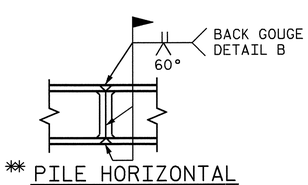

✱✱ PILE HORIZONTAL OR VERTICAL

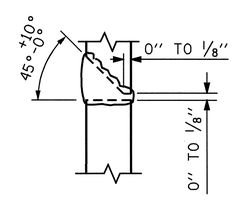

DETAIL A

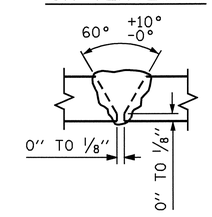

DETAIL B

PILE SPLICE DETAILS

✱✱ POSITION OF PILE DURING WELDING.

NORTH CAROLINA PROFESSIONAL SEAL 14045 ENGINEER TIMOTHY K. COGGINS
7 10/1/08

PROJECT NO. R-2719A
LENOIR COUNTY
STATION: 97+26.78 -Y1-

SHEET 3 OF 3

STATE OF NORTH CAROLINA
DEPARTMENT OF TRANSPORTATION
RALEIGH

SUBSTRUCTURE

END BENT #1

(RIGHT LANE)

REVISIONS						SHEET NO.
NO.	BY:	DATE:	NO.	BY:	DATE:	S-334
1			3			TOTAL SHEETS
2			4			340

DRAWN BY : M.D.PISO DATE : 04/2008
CHECKED BY : H.T.BARBOUR DATE : 06/2008

STR. #12

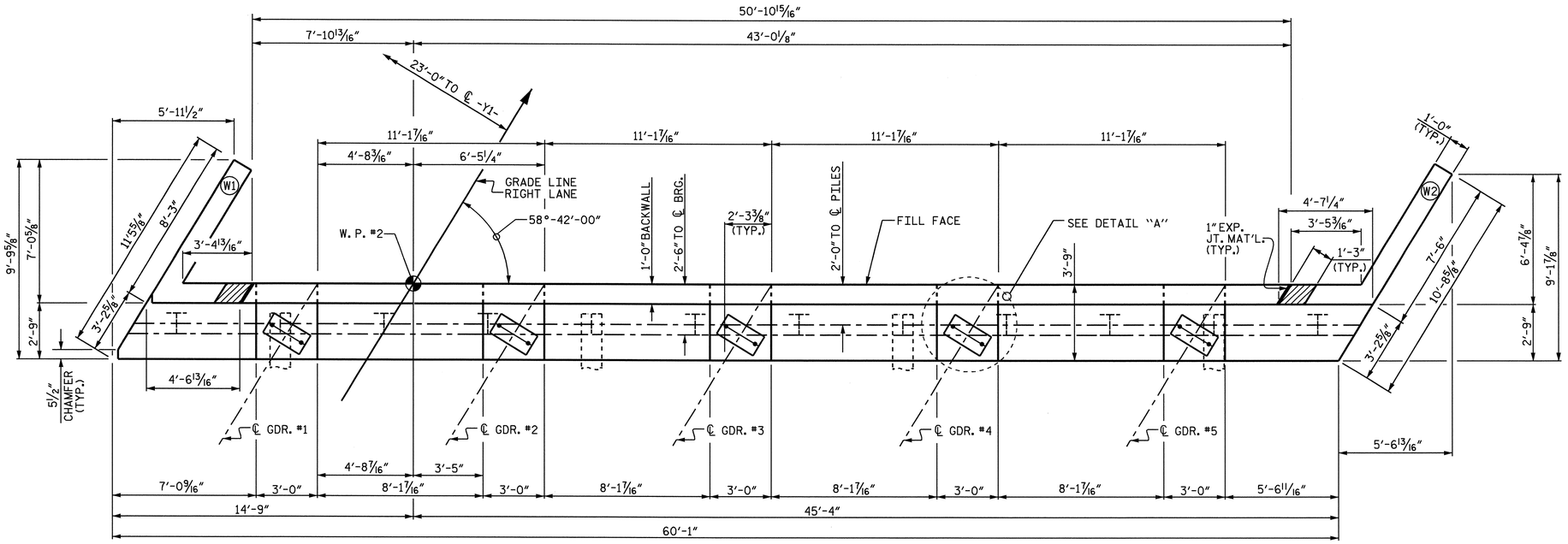

PLAN

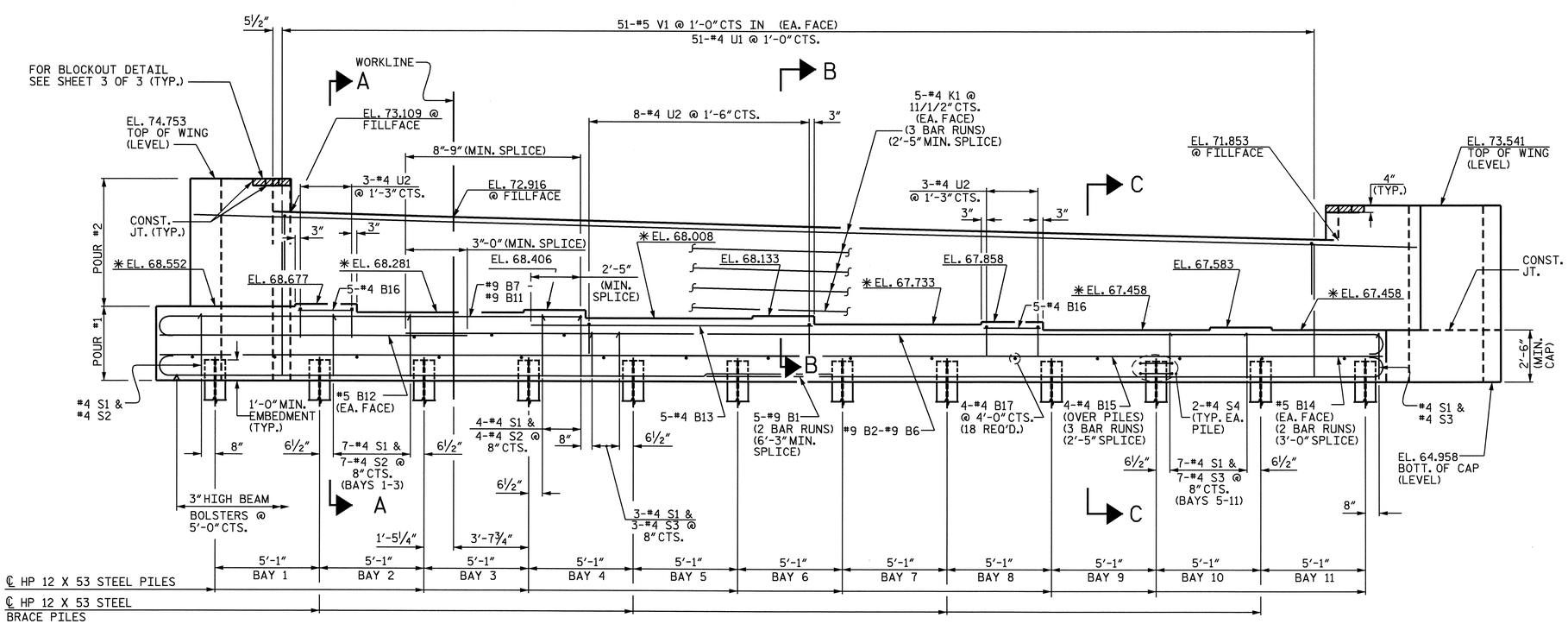

ELEVATION

NOTES

STIRRUPS IN CAP MAY BE SHIFTED AS NECESSARY TO CLEAR ANCHOR BOLTS.

BACKWALL SHALL BE PLACED BEFORE APPLYING THE EPOXY PROTECTIVE COATING.

THE TOP SURFACE AREAS OF THE END BENT CAPS SHALL BE CURED IN ACCORDANCE WITH THE STANDARD SPECIFICATIONS EXCEPT THE MEMBRANE CURING COMPOUND METHOD SHALL NOT BE USED.

THE TOP SURFACE OF THE CAP EXCEPT THE BRIDGE SEAT BUILDUPS SHALL BE SLOPED TRANSVERSELY FROM THE FILL FACE TO THE BACK FACE AT THE RATE OF 2%.

THE CONCRETE IN THE SHADED AREA OF THE WING SHALL BE POURED AFTER THE BARRIER RAIL IS CAST IF SLIP FORMING IS USED.

THE CONTRACTOR SHALL PROVIDE FOR INSTALLATION OF THE 4" DIAMETER DRAIN PIPE THROUGH THE WING WALL AS REQUIRED FOR REINFORCED BRIDGE APPROACH FILLS, SEE THE ROADWAY PLANS. REINFORCING STEEL IN THE WING WALL MAY BE SHIFTED AS NECESSARY TO CLEAR THE DRAIN PIPE.

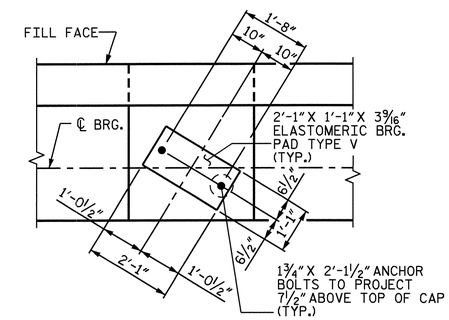

DETAIL "A"

PROJECT NO. R-2719A

LENOIR COUNTY

STATION: 97+26.78 -Y1-

SHEET 1 OF 3

STATE OF NORTH CAROLINA
DEPARTMENT OF TRANSPORTATION
RALEIGH

SUBSTRUCTURE

END BENT #2

(RIGHT LANE)

NORTH CAROLINA PROFESSIONAL SEAL 14045 ENGINEER TIMOTHY L. COGGINS

Timothy L. Coggins 10/1/08

REVISIONS						SHEET NO.
NO.	BY:	DATE:	NO.	BY:	DATE:	S-335
1			3			TOTAL SHEETS
2			4			240

DRAWN BY : M.D.PISO DATE : 05/2008
CHECKED BY : H.T.BARBOUR DATE : 06/2008

09-OCT-2008 15:17
R:\Structures\Str#12\Final Plans\r2719a_sd_e*_12.dgn
gruffin

STR. #12

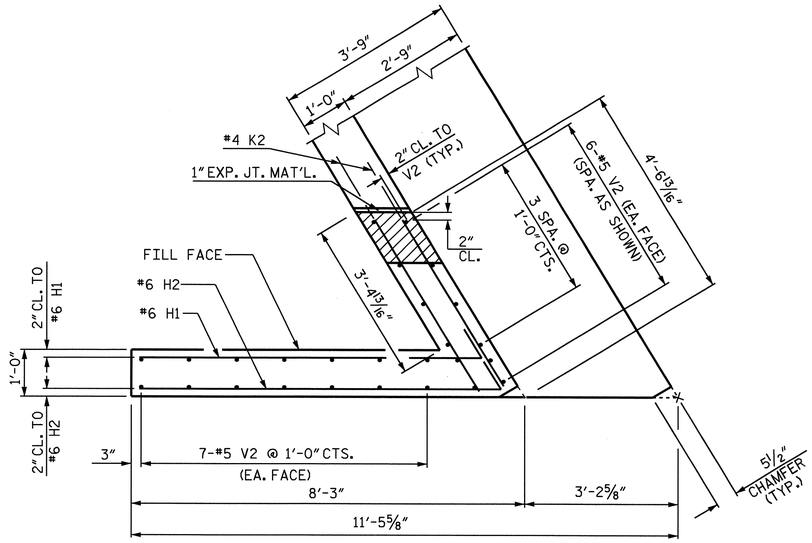

PLAN OF LEFT WING (W1)

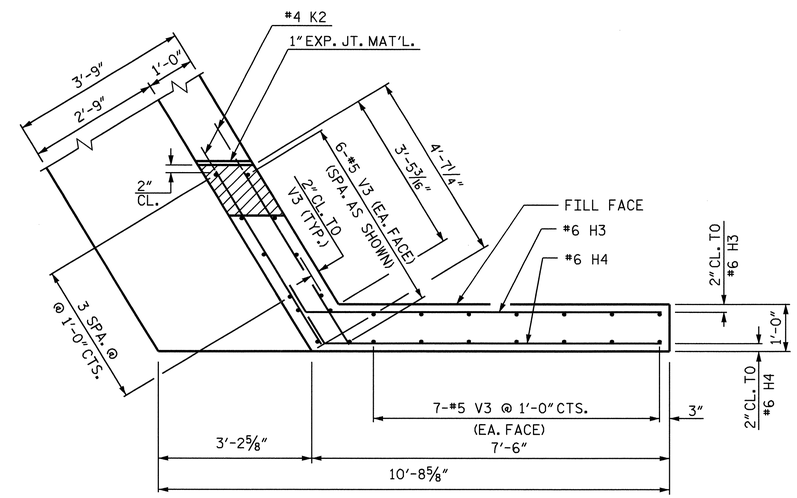

PLAN OF RIGHT WING (W2)

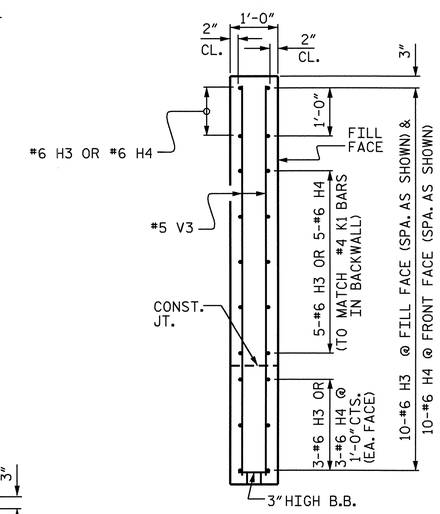

SECTION Y-Y

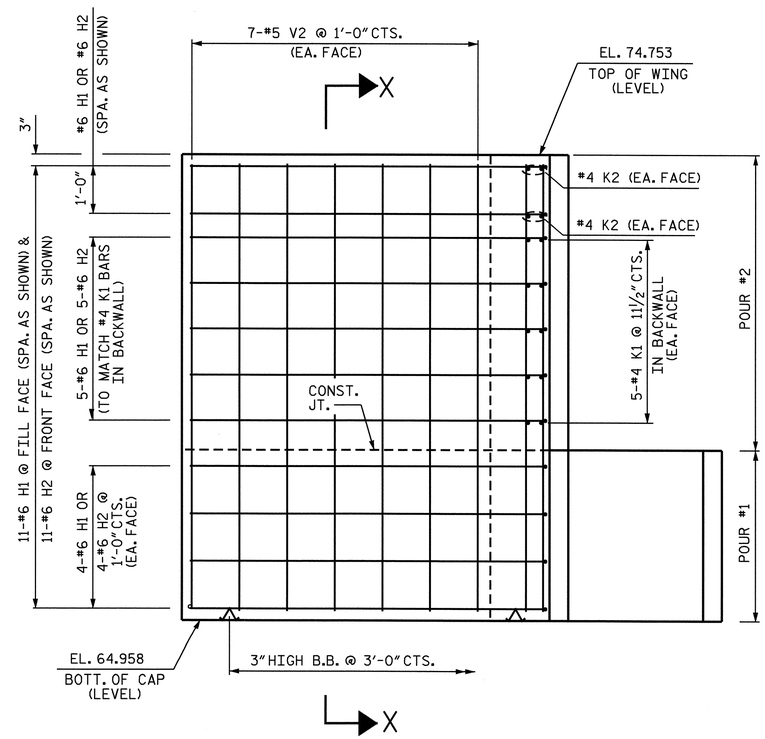

ELEVATION OF LEFT WING (W1)

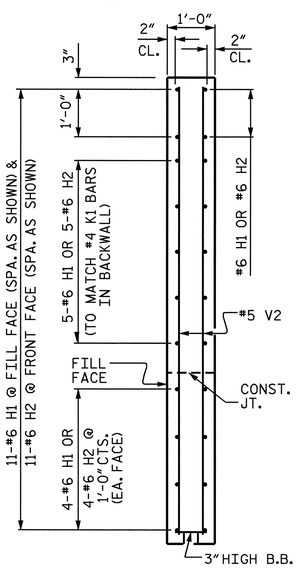

SECTION X-X

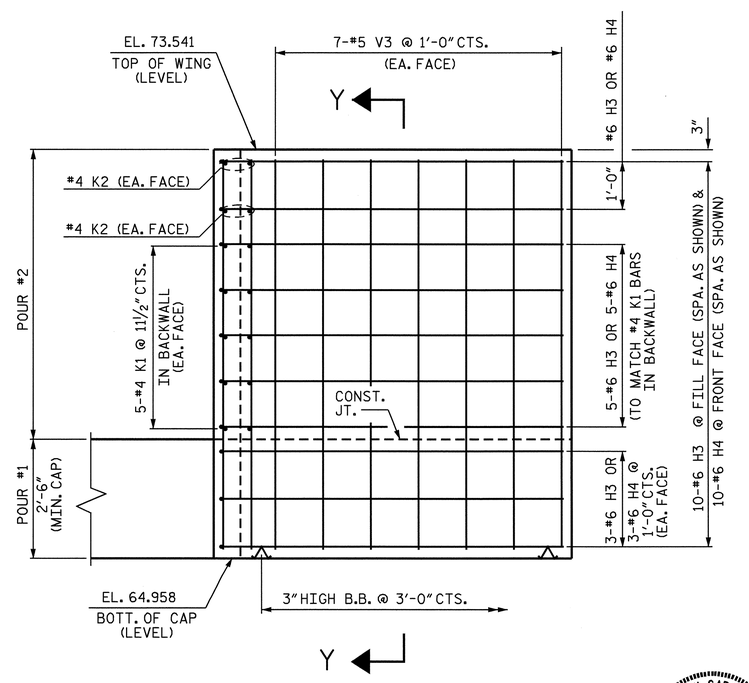

ELEVATION OF RIGHT WING (W2)

NORTH CAROLINA PROFESSIONAL SEAL 14045 ENGINEER TIMOTHY H. COGGINS
10/11/08

PROJECT NO. R-2719A
LENOIR COUNTY
STATION: 97+26.78 -Y1-

SHEET 2 OF 3

STATE OF NORTH CAROLINA
DEPARTMENT OF TRANSPORTATION
RALEIGH

SUBSTRUCTURE

END BENT #2

(RIGHT LANE)

REVISIONS								SHEET NO.
NO.	BY:	DATE:	NO.	BY:	DATE:			S-336
1			3					TOTAL SHEETS
2			4					340

STR. #12

DRAWN BY : M.D.PISO DATE : 05/2008
CHECKED BY : H.T.BARBOUR DATE : 06/2008

09-OCT-2008 15:17
R:\Structures\Str*12\Final Plans\r2719a_sd_e*_12.dgn
nruffin

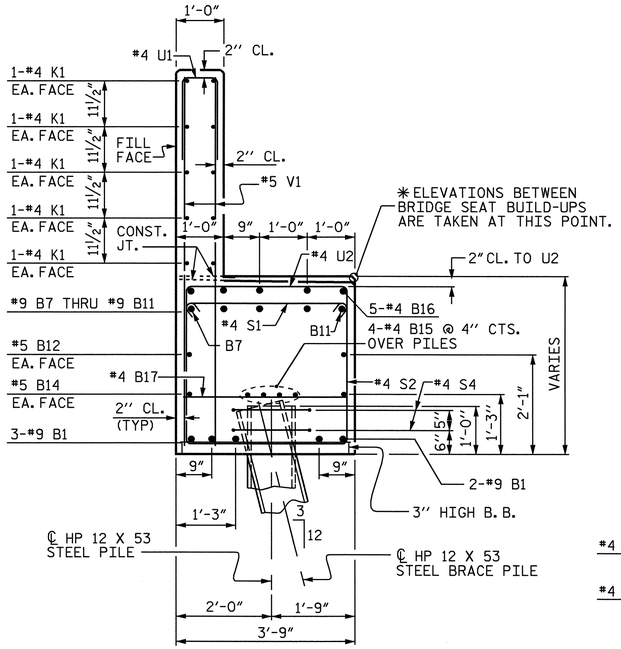

SECTION A-A

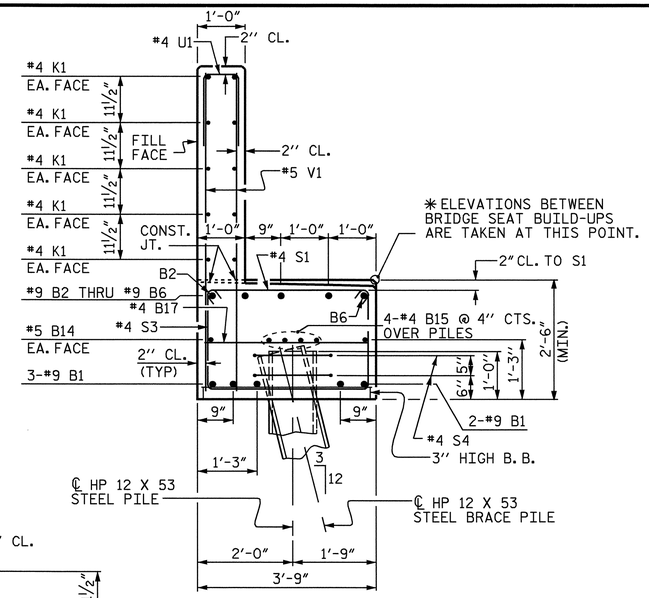

SECTION C-C

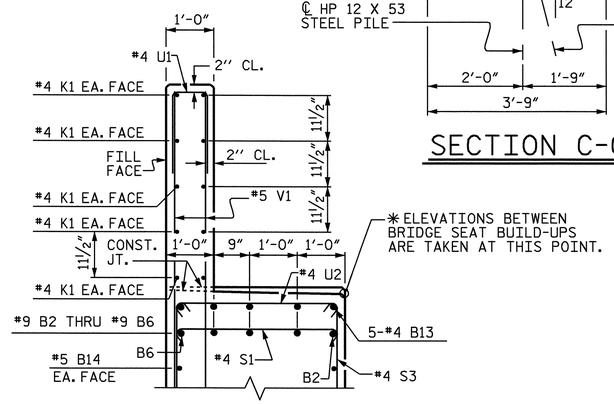

HALF SECTION @ B-B

BAR TYPES

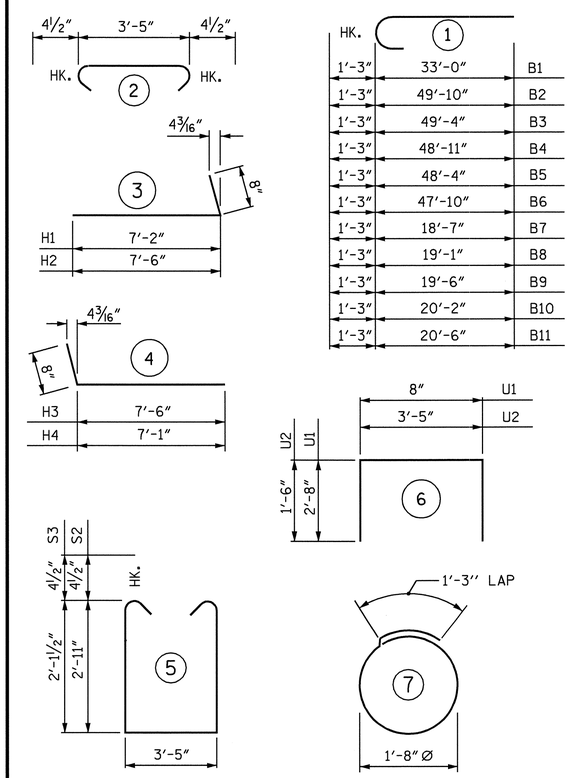

ALL BAR DIMENSIONS ARE OUT TO OUT.

BILL OF MATERIAL
END BENT #2

BAR	NO.	SIZE	TYPE	LENGTH	WEIGHT
B1	10	#9	1	34'-3"	1165
B2	1	#9	1	51'-1"	174
B3	1	#9	1	50'-7"	172
B4	1	#9	1	50'-2"	171
B5	1	#9	1	49'-7"	169
B6	1	#9	1	49'-1"	167
B7	1	#9	1	19'-10"	67
B8	1	#9	1	20'-4"	69
B9	1	#9	1	20'-9"	71
B10	1	#9	1	21'-5"	73
B11	1	#9	1	21'-9"	74
B12	2	#5	STR.	13'-0"	27
B13	5	#4	STR.	13'-7"	45
B14	4	#5	STR.	31'-5"	131
B15	12	#4	STR.	21'-7"	173
B16	10	#4	STR.	2'-8"	18
B17	18	#4	STR.	3'-5"	41
H1	11	#6	3	7'-10"	129
H2	11	#6	3	8'-2"	135
H3	10	#6	4	8'-2"	123
H4	10	#6	4	7'-9"	116
K1	30	#4	STR.	21'-7"	433
K2	8	#4	STR.	4'-2"	22
S1	79	#4	2	4'-2"	220
S2	26	#4	5	10'-0"	174
S3	53	#4	5	8'-5"	298
S4	24	#4	7	6'-6"	104
U1	51	#4	6	6'-0"	204
U2	14	#4	6	6'-5"	60
V1	102	#5	STR.	6'-7"	700
V2	26	#5	STR.	9'-5"	255
V3	26	#5	STR.	8'-3"	224

TOTAL REINFORCING STEEL 6004 LBS.

CLASS 'A' CONCRETE
CAP & LOWER WING 26.0 C.Y.
BACKWALL & UPPER WING 13.9 C.Y.

TOTAL CLASS 'A' CONCRETE (C.Y.) 39.9 C.Y.

HP 12 X 53 STEEL PILES
NO. = 12 LIN. FT. 900

PILE REDRIVES EA. 6

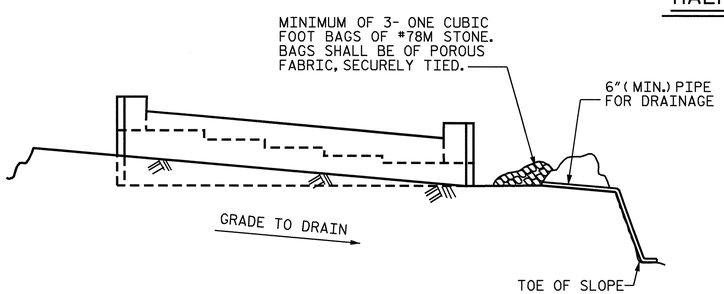

BAGGED STONE AND PIPE SHALL BE PLACED IMMEDIATELY AFTER COMPLETION OF END BENT EXCAVATION. PIPE MAY BE EITHER CONCRETE, CORRUGATED STEEL, CORRUGATED ALUMINUM ALLOY, OR CORRUGATED PLASTIC. PERFORATED PIPE WILL NOT BE ALLOWED.

BAGGED STONE SHALL REMAIN IN PLACE UNTIL THE ENGINEER DIRECTS THAT IT BE REMOVED. THE CONTRACTOR SHALL REMOVE AND DISPOSE OF SILT ACCUMULATIONS AT BAGGED STONE WHEN SO DIRECTED BY THE ENGINEER. BAGS SHALL BE REMOVED AND REPLACED WHENEVER THE ENGINEER DETERMINES THAT THEY HAVE DETERIORATED AND LOST THEIR EFFECTIVENESS.

NO SEPARATE PAYMENT WILL BE MADE FOR THIS WORK AND THE ENTIRE COST OF THIS WORK SHALL BE INCLUDED IN THE UNIT CONTRACT PRICE BID FOR THE SEVERAL PAY ITEMS.

TEMPORARY DRAINAGE AT END BENT

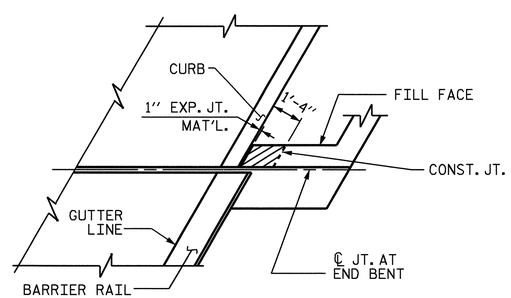

PLAN

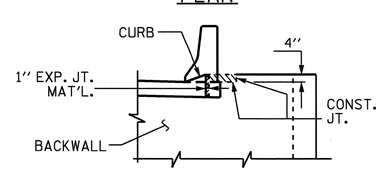

ELEVATION

BLOCKOUT IN WING WALL

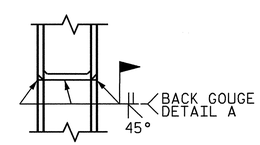

✱✱ PILE VERTICAL

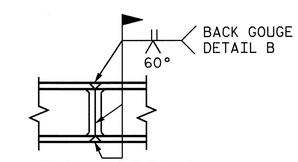

✱✱ PILE HORIZONTAL OR VERTICAL

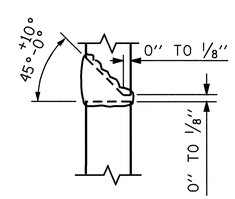

DETAIL A

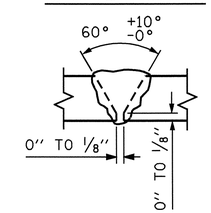

DETAIL B

PILE SPLICE DETAILS

✱✱ POSITION OF PILE DURING WELDING.

PROJECT NO. R-2719A
LENOIR COUNTY
STATION: 97+26.78-Y1-

SHEET 3 OF 3

STATE OF NORTH CAROLINA
DEPARTMENT OF TRANSPORTATION
RALEIGH

SUBSTRUCTURE

END BENT #2

(RIGHT LANE)

NORTH CAROLINA PROFESSIONAL SEAL 14045 ENGINEER TIMOTHY L. COGGINS
Timothy L. Coggins 10/11/08

REVISIONS						SHEET NO.
NO.	BY:	DATE:	NO.	BY:	DATE:	S-337
1			3			TOTAL SHEETS
2			4			340

DRAWN BY : M.D.PISO DATE : 04/2008
CHECKED BY : H.T.BARBOUR DATE : 06/2008

STR. #12

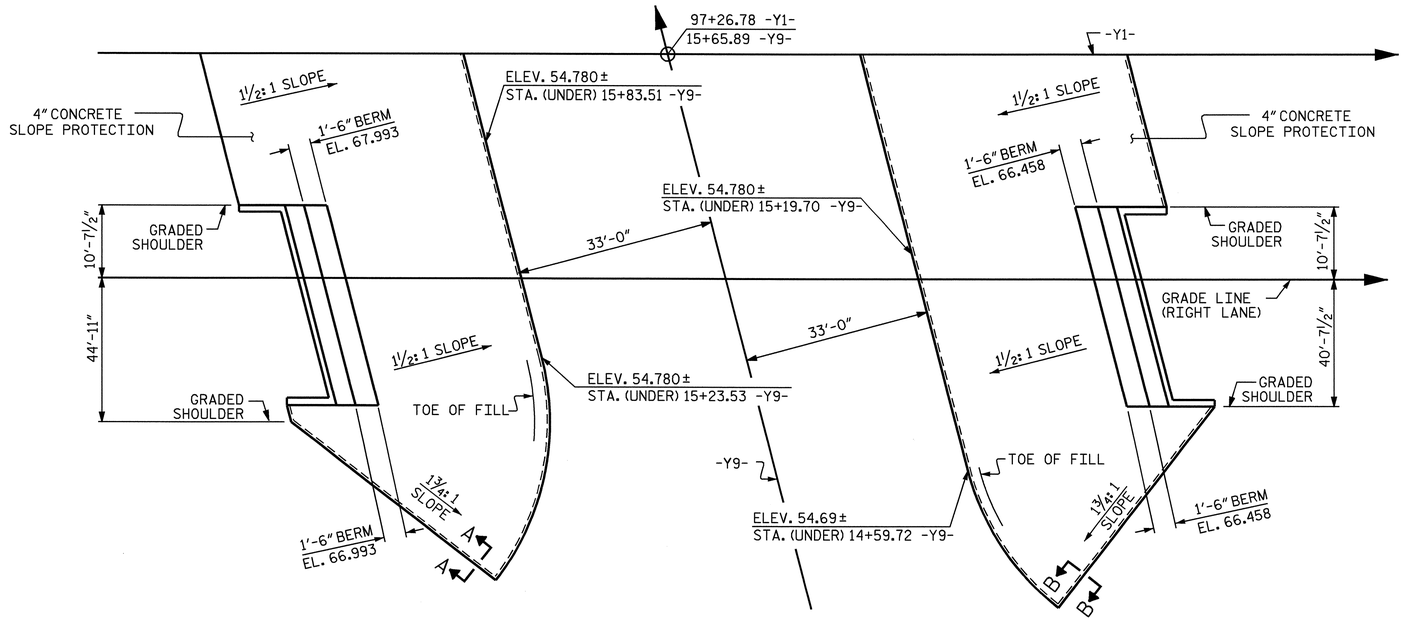

PLAN OF SLOPE PROTECTION

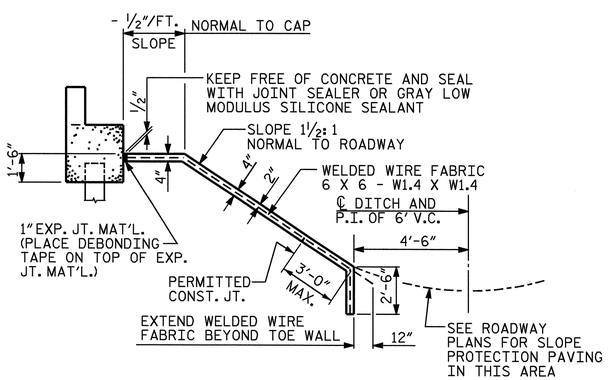

SECTION ALONG ℄ ROADWAY WHEN FILL CATCHES IN DITCH

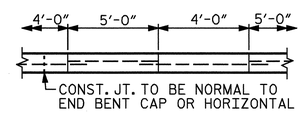

POUR A 4'-0" STRIP FIRST. STRIP WIDTHS MAY VARY IN CURVED PORTION.

OPTIONAL POURING DETAIL

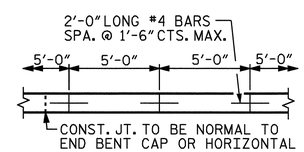

STRIP WIDTHS MAY VARY IN CURVED PORTION.

POURING DETAIL

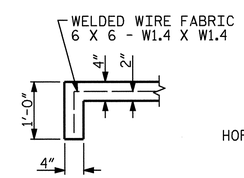

SECTION A-A

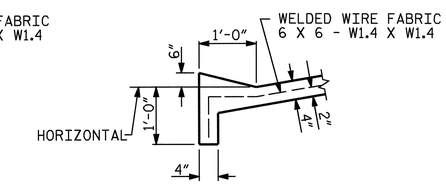

SECTION B-B

DETAILS FOR ALTERNATE "A"

GENERAL NOTES

SLOPE PROTECTION SHALL BE PLACED UNDER THE ENDS OF THE BRIDGE AS SHOWN IN THE DETAILS. STRAIGHT EDGING WILL NOT BE REQUIRED UNLESS, IN THE OPINION OF THE ENGINEER, VISUAL INSPECTION INDICATES A NEED FOR IT. MEASUREMENT AND PAYMENT SHALL BE AS PRESCRIBED IN SECTION 462 OF THE STANDARD SPECIFICATIONS.

ALTERNATE "A"

ALTERNATE "A" SHALL CONSIST OF 4" POURED-IN-PLACE CONCRETE PAVING AS SHOWN IN THE DETAILS ON THIS SHEET. CONCRETE SHALL BE CLASS "B". THE CONCRETE SURFACE SHALL BE FLOATED WITH A WOODEN FLOAT AND FINISHED. WELDED WIRE FABRIC REINFORCING SHALL BE 6 X 6 - W1.4 X W1.4, 60" WIDE. SLOPE PROTECTION SHALL BE POURED IN 5' STRIPS AS SHOWN IN THE "POURING DETAIL" WITH 2'-0" LONG #4 BARS PLACED ALONG THE SLOPE BETWEEN STRIPS AT 1'-6" MAXIMUM SPACING. SLOPE PROTECTION MAY BE POURED IN ALTERNATE 4' AND 5' STRIPS AS SHOWN IN THE "OPTIONAL POURING DETAIL" WITH ADJACENT RUNS OF WELDED WIRE FABRIC LAPPING AT LEAST 6". THE COST OF THE WELDED WIRE FABRIC AND #4 BARS, IF USED, SHALL BE INCLUDED IN THE CONTRACT UNIT PRICE BID PER SQUARE YARD FOR SLOPE PROTECTION.

BRIDGE @ STA. 97+26.78 -Y1- (RIGHT LANE)	4 INCH SLOPE PROTECTION	* WELDED WIRE FABRIC 60 INCHES WIDE
	SQUARE YARDS	APPROX. L.F.
END BENT #1	309	668
END BENT #2	286	618

* QUANTITY SHOWN IS BASED ON 5' POURS.

PROJECT NO. R-2719A
LENOIR COUNTY
STATION: 97+26.78 -Y1-

STATE OF NORTH CAROLINA
DEPARTMENT OF TRANSPORTATION
RALEIGH

STANDARD
SLOPE PROTECTION DETAILS
(RIGHT LANE)

NORTH CAROLINA PROFESSIONAL SEAL 14045 ENGINEER TIMOTHY L. COGGINS
10/1/08

REVISIONS							SHEET NO.
NO.	BY:	DATE:	NO.	BY:	DATE:		S-338
1			3				TOTAL SHEETS
2			4				340

ASSEMBLED BY : M.GUDLAUGSSON		DATE : 04/2008	
CHECKED BY : M. PISO		DATE : 07/2008	
DRAWN BY : ELR 5/92	REV. 7/10/01	LES/RDR	
CHECKED BY : GRP 6/92	REV. 5/7/03	RWW/JTE	
	REV. 5/1/06	TLA/GM	

09-OCT-2008 15:17
R:\Structures\Str*12\Final Plans\R2719A_sd_sp_12.dgn
nruffin

STR.#12

STD. NO. SP1 (SHT 5)

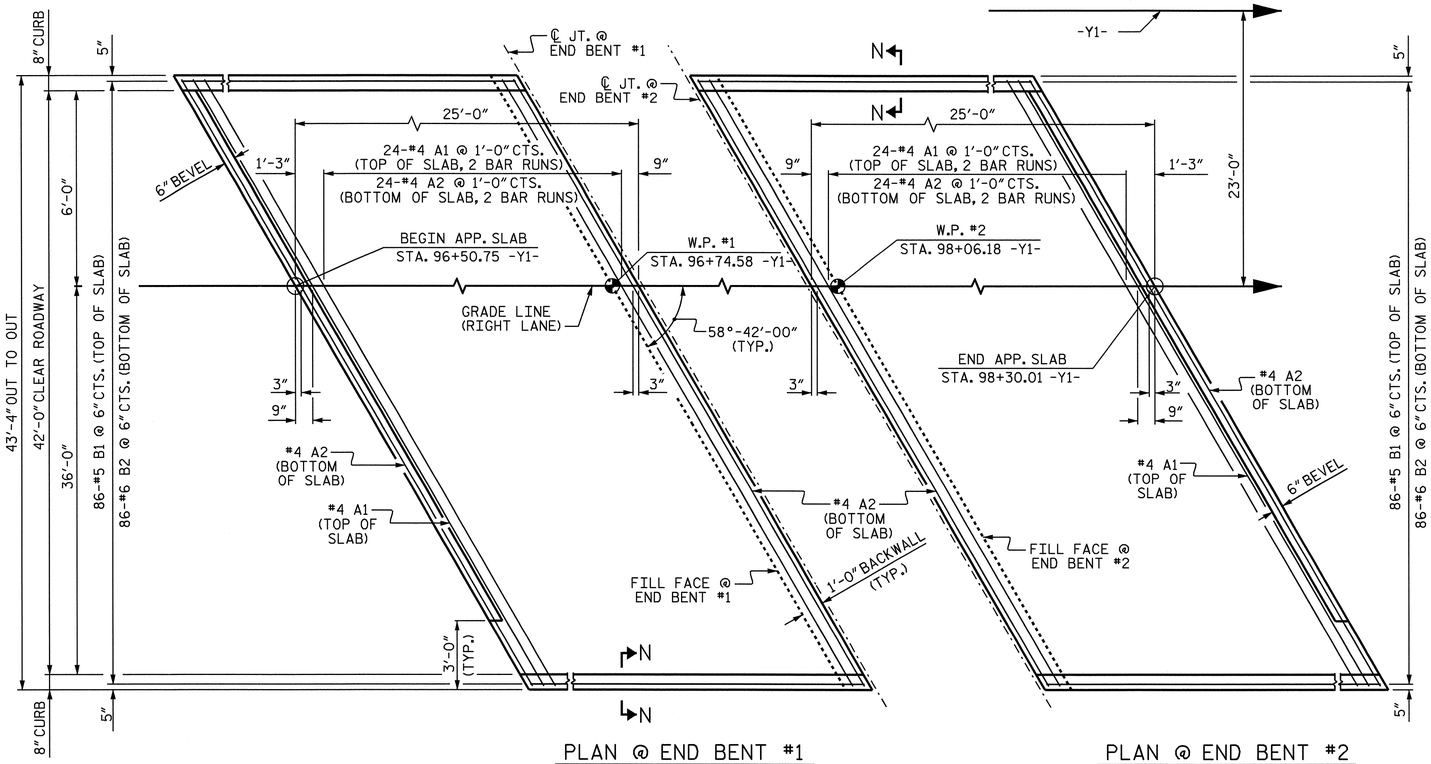

PLAN @ END BENT #1

PLAN @ END BENT #2

DIMENSIONS SHOWN ARE TYPICAL FOR BOTH APPROACH SLABS

NOTES

APPROACH SLAB SHALL NOT BE CONSTRUCTED PRIOR TO COMPLETION OF THE BRIDGE DECK.

FOR REINFORCED BRIDGE APPROACH FILL INCLUDING FABRIC, IMPERMEABLE GEOMEMBRANE, 4" Ø DRAINAGE PIPE, #78M STONE, AND SELECT MATERIAL, SEE ROADWAY PLANS.

AREA BETWEEN THE WINGWALL AND APPROACH SLAB SHALL BE GRADED TO DRAIN THE WATER AWAY FROM THE FILL FACE OF THE BRIDGE AND SHALL BE PAVED. SEE ROADWAY PLANS.

THE 6" COMP. A.B.C. SHALL BE FLUSH WITH THE ROADWAY END OF THE APPROACH SLAB AND SHALL EXTEND 1'-0" OUTSIDE EACH EDGE OF THE APPROACH SLAB.

THE CONTRACTOR MAY USE 4" TYPE B-25.0B ASPHALT CONCRETE BASE COURSE IN LIEU OF 6" COMP. A.B.C. IF THIS OPTION IS USED, THE BASE COURSE SHALL BE FLUSH WITH THE ROADWAY END OF THE APPROACH SLAB, AND THE WIDTH SHALL BE THE SAME AS THAT OF THE APPROACH SLAB.

THE CONTRACTOR MAY USE 5" CLASS "A" CONCRETE BASE IN LIEU OF 6" COMP. A.B.C. IF THIS OPTION IS USED, THE CONCRETE BASE SHALL BE FLUSH WITH THE ROADWAY END OF THE APPROACH SLAB, AND THE WIDTH SHALL BE THE SAME AS THAT OF THE APPROACH SLAB. THE CONCRETE SHALL BE FINISHED TO A SMOOTH SURFACE AND A LAYER OF 30 LB ROOFING FELT SHALL BE PLACED BETWEEN THE CONCRETE BASE AND THE APPROACH SLAB TO PREVENT BOND. THE APPROACH SLAB SHALL NOT BE CAST UNTIL THE CONCRETE BASE HAS REACHED AN AGE OF THREE CURING DAYS.

WITH EVAZOTE JOINT SEAL

FOR EVAZOTE JOINT SEALS, SEE SPECIAL PROVISIONS.

THE NOMINAL UNCOMPRESSED SEAL WIDTH OF THE EVAZOTE JOINT SEAL SHALL BE 2½".

FOR ELASTOMERIC CONCRETE, SEE SPECIAL PROVISIONS.

BILL OF MATERIAL

APPROACH SLAB AT EB #1

BAR	NO.	SIZE	TYPE	LENGTH	WEIGHT
✳A1	50	#4	STR	26'-2"	874
A2	52	#4	STR	26'-1"	906
✳B1	86	#5	STR	23'-8"	2123
B2	86	#6	STR	24'-8"	3186
REINFORCING STEEL				LBS.	4092
✳EPOXY COATED REINFORCING STEEL				LBS.	2997
CLASS AA CONCRETE				C.Y.	40.8

APPROACH SLAB AT EB #2

BAR	NO.	SIZE	TYPE	LENGTH	WEIGHT
✳A1	50	#4	STR	26'-2"	874
A2	52	#4	STR	26'-1"	906
✳B1	86	#5	STR	23'-8"	2123
B2	86	#6	STR	24'-8"	3186
REINFORCING STEEL				LBS.	4092
✳EPOXY COATED REINFORCING STEEL				LBS.	2997
CLASS AA CONCRETE				C.Y.	40.8

SPLICE CHART

BAR SIZE	SPLICE LENGTH
#4 A1	2'-0"
#4 A2	1'-9"

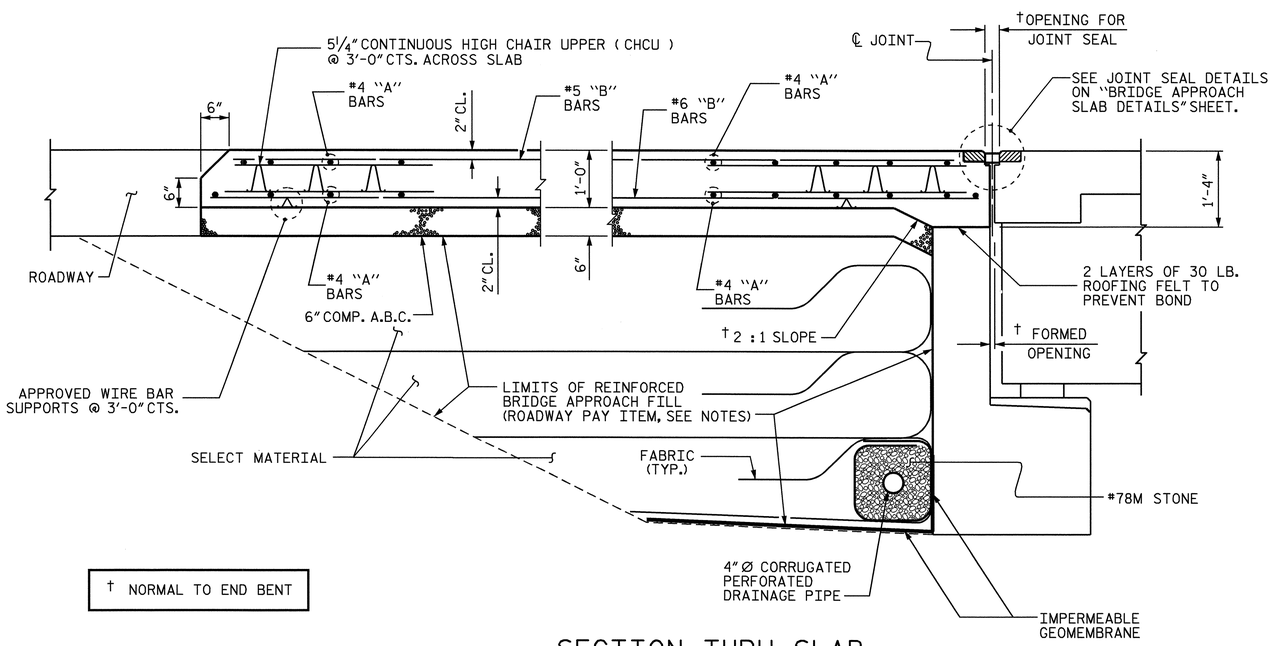

† NORMAL TO END BENT

SECTION THRU SLAB

SHOWING SECTION WITHOUT CONCRETE WEARING SURFACE

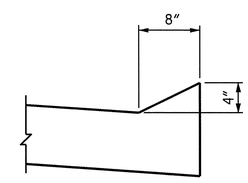

SECTION N-N

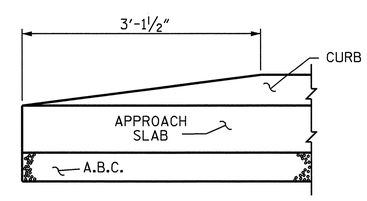

END OF CURB WITHOUT SHOULDER BERM GUTTER

PROJECT NO. R-2719A

LENOIR COUNTY

STATION: 97+26.78 -Y1-

SHEET 1 OF 2

STATE OF NORTH CAROLINA
DEPARTMENT OF TRANSPORTATION
RALEIGH

STANDARD

BRIDGE APPROACH SLAB FOR FLEXIBLE PAVEMENT (RIGHT LANE)

NORTH CAROLINA PROFESSIONAL SEAL 14045 ENGINEER TIMOTHY L. COGGINS

10/14/08

REVISIONS						SHEET NO.
NO.	BY:	DATE:	NO.	BY:	DATE:	S-339
1			3			TOTAL SHEETS
2			4			340

ASSEMBLED BY: M.GUDLAUGSSON DATE: 03/2008
CHECKED BY: C.R. MCDUFFEE DATE: 05/2008

DRAWN BY: EEM 3/95
CHECKED BY: VAP 3/95

REV. 7/10/01 LES/RDR
REV. 5/7/03R RWW/JTE
REV. 5/1/06R KMM/GM

09-OCT-2008 15:17
R:\Structures\Str#12\Final Plans\R2719A_sd_as_12.dgn
druffin

STR. #12

STD. NO. BAS4 (SHT 6)

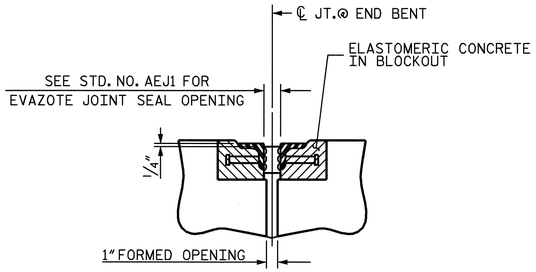

SECTION C-C
ARMORED EVAZOTE JOINT SEAL

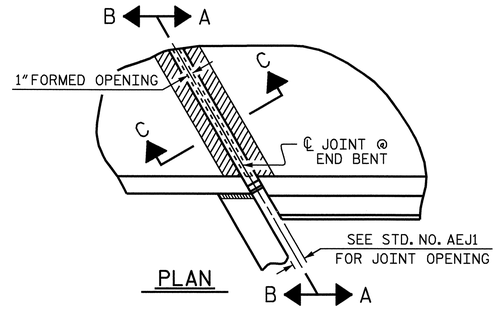

PLAN

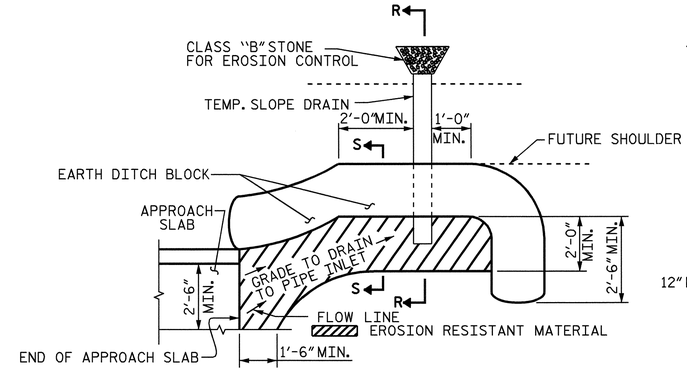

NOTE: IMMEDIATELY AFTER THE CONSTRUCTION OF THE APPROACH SLAB, THE CONTRACTOR SHALL PROVIDE TEMPORARY BERM AND SLOPE DRAIN. CONTRACTOR SHALL GRADE TO PIPE INLET AND PROVIDE EROSION RESISTANT MATERIAL AS SHOWN. THE EROSION RESISTANT MATERIAL SHALL BE EITHER 1) ASPHALT PLANT MIX, TYPE 1 OR TYPE 2, MIN. 2" DEPTH, 2) EROSION CONTROL MAT, OR 3) CONCRETE, AS DIRECTED BY THE ENGINEER. THE SLOPE DRAIN SHALL CONSIST OF A NON-PERFORATED TEMPORARY DRAINAGE PIPE, 12 INCHES IN DIAMETER.

PLAN VIEW

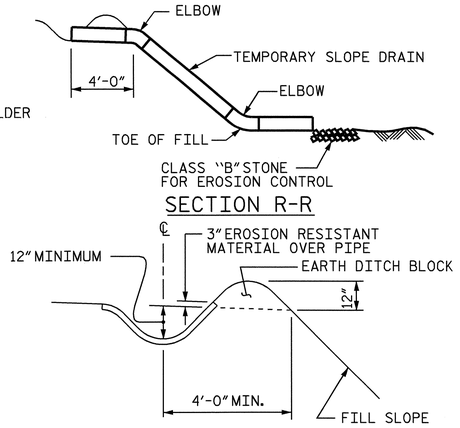

TEMPORARY BERM AND SLOPE DRAIN DETAILS

(TO BE USED WHEN SHOULDER BERM GUTTER IS REQUIRED)

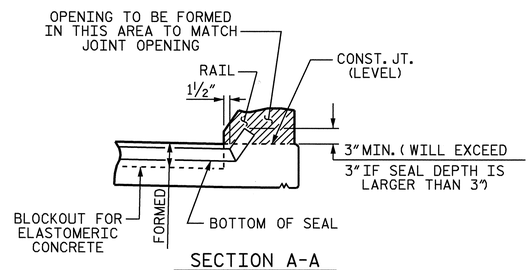

SECTION A-A

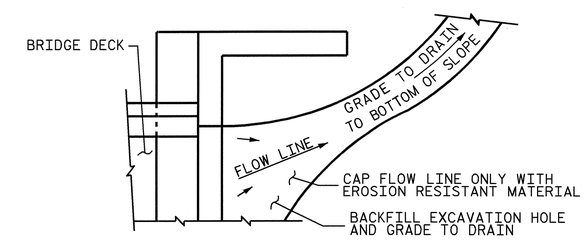

NOTE: IF THE APPROACH SLAB IS NOT CONSTRUCTED IMMEDIATELY AFTER THE BACKFILLING OF THE END BENT EXCAVATION, GRADE TO DRAIN TO THE BOTTOM OF THE SLOPE AND PROVIDE EROSION RESISTANT MATERIAL, SUCH AS FIBERGLASS ROVING OR AS DIRECTED BY THE ENGINEER TO PREVENT SOIL EROSION AND TO PROTECT THE AREA ADJACENT TO THE STRUCTURE. THE CONTRACTOR WILL BE REQUIRED TO REMOVE THESE MATERIALS PRIOR TO CONSTRUCTION OF THE APPROACH SLAB.

TEMPORARY DRAINAGE DETAIL

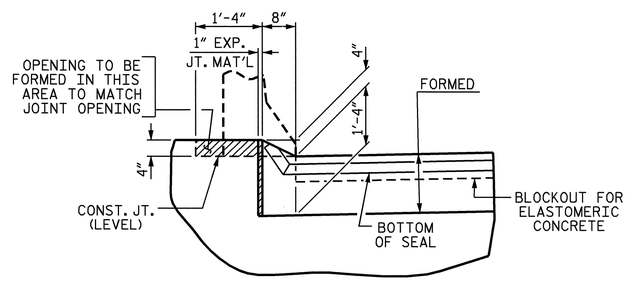

SECTION B-B

JOINT SEAL DETAILS @ END BENT

EVAZOTE JOINT SEAL TO BE CUT, HEAT WELDED AND TURNED UP PARALLEL TO SLOPED FACE OF THE BARRIER RAIL.

PROJECT NO. R-2719A
LENOIR COUNTY
STATION: 97+26.78 -Y1-

SHEET 2 OF 2

STATE OF NORTH CAROLINA
DEPARTMENT OF TRANSPORTATION
RALEIGH

STANDARD

BRIDGE APPROACH SLAB DETAILS (RIGHT LANE)

NORTH CAROLINA PROFESSIONAL SEAL 14045 ENGINEER TIMOTHY L. GOODSONS
10/11/08

REVISIONS						SHEET NO.
NO.	BY:	DATE:	NO.	BY:	DATE:	S-340
1			3			TOTAL SHEETS
2			4			340

ASSEMBLED BY : M.GUDLAUGSSON		DATE : 03/2008	
CHECKED BY : C.R. MCDUFFEE		DATE : 05/2008	
DRAWN BY : FCJ	11/88	REV. 10/17/00	RWW/LES
CHECKED BY : ARB	11/88	REV. 5/7/03	RWW/JTE
		REV. 5/1/06R	MAA/KMM

09-OCT-2008 15:17
R:\Structures\Str*12\Final Plans\R2719A_sd_as_12.dgn
nruffin

STR. #12 STD. NO. BAS10 (SHT 2)

B.M. "E": RAILROAD SPIKE IN 20" PINE TREE, -BL- STA. 107+88.58, 184.10' RT. ELEV. 72.57

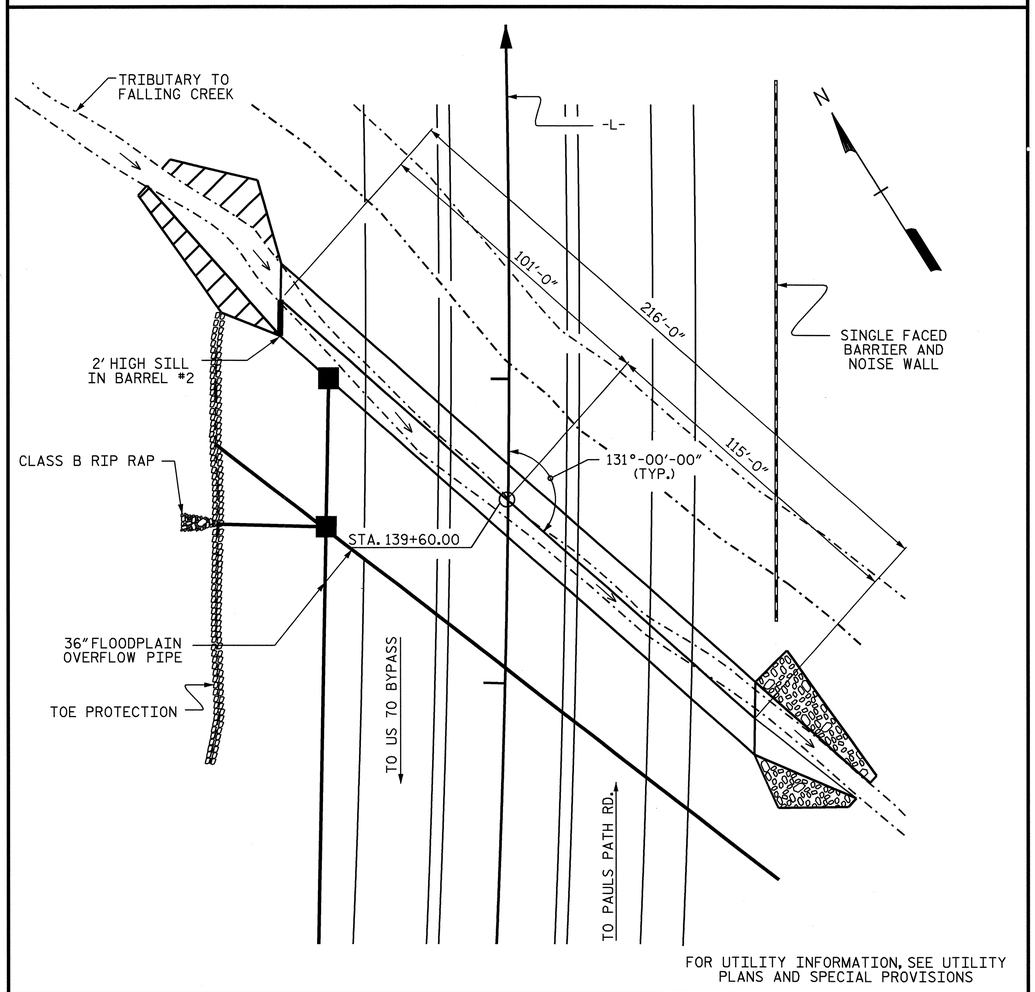

FOR UTILITY INFORMATION, SEE UTILITY PLANS AND SPECIAL PROVISIONS

LOCATION SKETCH

HYDRAULIC DATA

DESIGN DISCHARGE	= 800 CFS.
FREQUENCY OF DESIGN FLOOD	= 50 YRS.
DESIGN HIGH WATER ELEVATION	= 73.5
DRAINAGE AREA	= 505 Ac
BASIC DISCHARGE (Q100)	= 950 CFS.
BASIC HIGH WATER ELEVATION	= 74.2

OVERTOPPING FLOOD DATA

OVERTOPPING DISCHARGE	= 1800 CFS.
FREQUENCY OF OVERTOPPING FLOOD	= 500 YR.+
OVERTOPPING FLOOD ELEVATION	= 78.9

ROADWAY DATA

GRADEPOINT ELEVATION @ STATION 139+60.00	= 80.256
BED ELEVATION @ STATION 139+60.00	= 65.830
ROADWAY SLOPE	= 3:1

TOTAL STRUCTURE QUANTITIES

CLASS A CONCRETE			
BARREL @ 1.866 CY/FT	403.1	C.Y.	
WING ETC.	49.2	C.Y.	
TOTAL	452.3	C.Y.	
REINFORCING STEEL			
BARREL	67964	LBS.	
WINGS ETC.	3203	LBS.	
TOTAL	71167	LBS.	
CULVERT EXCAVATION	LUMP SUM		
FOUNDATION CONDITIONING MAT'L	305 TONS		

NOTES

F. A. PROJECT STP-0224(12)

ASSUMED LIVE LOAD ---------- HS20-44 OR ALTERNATE LOADING.

DESIGN FILL---------- 7.63

FOR OTHER DESIGN DATA AND NOTES SEE STANDARD NOTE SHEET.

3"Ø WEEP HOLES INDICATED TO BE IN ACCORDANCE WITH THE SPECIFICATIONS.

CONCRETE IN CULVERTS TO BE POURED IN THE FOLLOWING ORDER:

1. WING FOOTINGS AND FLOOR SLAB INCLUDING 4" OF ALL VERTICAL WALLS.
2. THE REMAINING PORTIONS OF THE WALLS AND WINGS FULL HEIGHT FOLLOWED BY ROOF SLAB AND HEADWALLS.

THE RESIDENT ENGINEER SHALL CHECK THE LENGTH OF CULVERT BEFORE STAKING IT OUT TO MAKE CERTAIN THAT IT WILL PROPERLY TAKE CARE OF THE FILL.

DIMENSIONS FOR WING LAYOUT AS WELL AS ADDITIONAL REINFORCING STEEL EMBEDDED IN BARREL ARE SHOWN ON WING SHEET.

TRANSVERSE CONSTRUCTION JOINTS SHALL BE USED IN THE BARREL, SPACED TO LIMIT THE POURS TO A MAXIMUM OF 70 FT. LOCATION OF JOINTS SHALL BE SUBJECT TO APPROVAL OF THE ENGINEER.

STEEL IN THE BOTTOM SLAB MAY BE SPLICED AT THE PERMITTED CONSTRUCTION JOINT AT THE CONTRACTOR'S OPTION. EXTRA WEIGHT OF STEEL DUE TO THE SPLICES SHALL BE PAID FOR BY THE CONTRACTOR.

AT THE CONTRACTOR'S OPTION, HE MAY SPLICE THE VERTICAL REINFORCING STEEL IN THE INTERIOR FACE OF EXTERIOR WALL AND BOTH FACES OF INTERIOR WALLS ABOVE LOWER WALL CONSTRUCTION JOINT. THE SPLICE LENGTH SHALL BE AS PROVIDED IN THE SPLICE LENGTH CHART SHOWN ON THE PLANS. EXTRA WEIGHT OF STEEL DUE TO THE SPLICES SHALL BE PAID FOR BY THE CONTRACTOR.

AT THE CONTRACTOR'S OPTION HE MAY SUBMIT, TO THE ENGINEER FOR APPROVAL, DESIGN AND DETAIL DRAWINGS FOR A PRECAST REINFORCED CONCRETE BOX CULVERT IN LIEU OF THE CAST-IN-PLACE CULVERT SHOWN ON THE PLANS. THE DESIGN SHALL PROVIDE THE SAME SIZE AND NUMBER OF BARRELS AS USED ON THE CAST-IN-PLACE DESIGN. FOR OPTIONAL PRECAST REINFORCED CONCRETE BOX CULVERT, SEE SPECIAL PROVISIONS.

A 3 FOOT STRIP OF FILTER FABRIC SHALL BE ATTACHED TO THE FILL FACE OF THE WING COVERING THE ENTIRE LENGTH OF THE EXPANSION JOINT.

FOR CULVERT DIVERSION DETAILS AND PAY ITEM, SEE EROSION CONTROL PLANS.

THE CONTRACTOR SHALL PROVIDE INDEPENDENT ASSURANCE SAMPLES OF REINFORCING STEEL AS FOLLOWS: FOR PROJECTS REQUIRING UP TO 400 TONS OF REINFORCING STEEL, ONE 30 INCH SAMPLE OF EACH SIZE BAR USED, AND FOR PROJECTS REQUIRING OVER 400 TONS OF REINFORCING STEEL, TWO 30 INCH SAMPLES OF EACH SIZE BAR USED. THE BARS FROM WHICH THE SAMPLES ARE TAKEN MUST THEN BE SPLICED WITH REPLACEMENT BARS OF THE SIZE AND LENGTH OF THE SAMPLE, PLUS A MINIMUM LAP SPLICE OF THIRTY BAR DIAMETERS.

FOR CRANE SAFETY, SEE SPECIAL PROVISIONS.

FOR FALSEWORK AND FORMWORK, SEE SPECIAL PROVISIONS.

FOR SUBMITTAL OF WORKING DRAWINGS, SEE SPECIAL PROVISIONS.

FOR GROUT FOR STRUCTURES, SEE SPECIAL PROVISIONS.

FOR FAA REQUIREMENTS, SEE ROADWAY SPECIAL PROVISIONS.

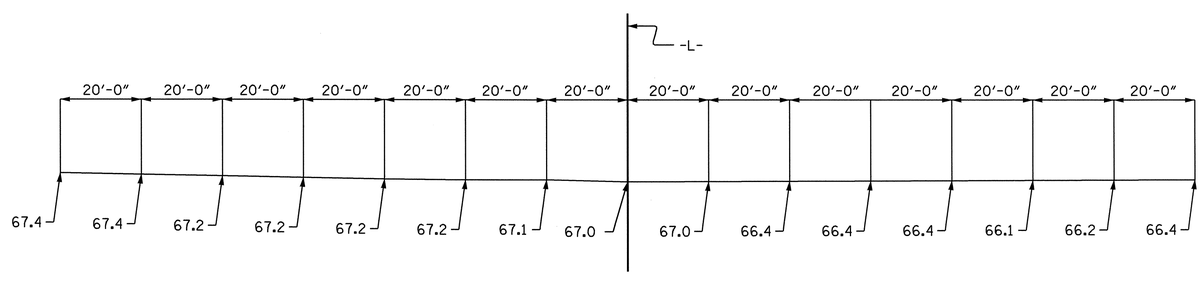

PROFILE ALONG ℄ CULVERT

PROJECT NO. R-2719A
LENOIR COUNTY
STATION: 139+60.00 -L-

SHEET 1 OF 4 BRIDGE NO. C-203

STATE OF NORTH CAROLINA
DEPARTMENT OF TRANSPORTATION
RALEIGH

DOUBLE 8 FT. X 9 FT.
CONCRETE BOX CULVERT
131° SKEW

NORTH CAROLINA PROFESSIONAL SEAL 12274 ENGINEER OMAR R. AZIZI
Omar R. Azizi 10-9-08

NORTH CAROLINA PROFESSIONAL SEAL 025516 ENGINEER EMILY E. MURRAY
Emily E. Murray 10/7/08

REVISIONS						SHEET NO.
NO.	BY:	DATE:	NO.	BY:	DATE:	C-1
1			3			TOTAL SHEETS
2			4			23

ASSEMBLED BY : M.GUDLAUGSSON	DATE : 08/2008	SPECIAL	
CHECKED BY : AMBER LEE, PE	DATE : 09/2008		
DRAWN BY : C.O. CUEVAS	DATE : 8-20-90	STANDARD	
CHECKED BY : ELR	DATE : 10-3-90		

ADDED 11/90

02-OCT-2008 12:09
k:\structures\str#13\mgudlaugsson\2719a_sd_gb.dgn

STR. #13 STD. NO. CB552A

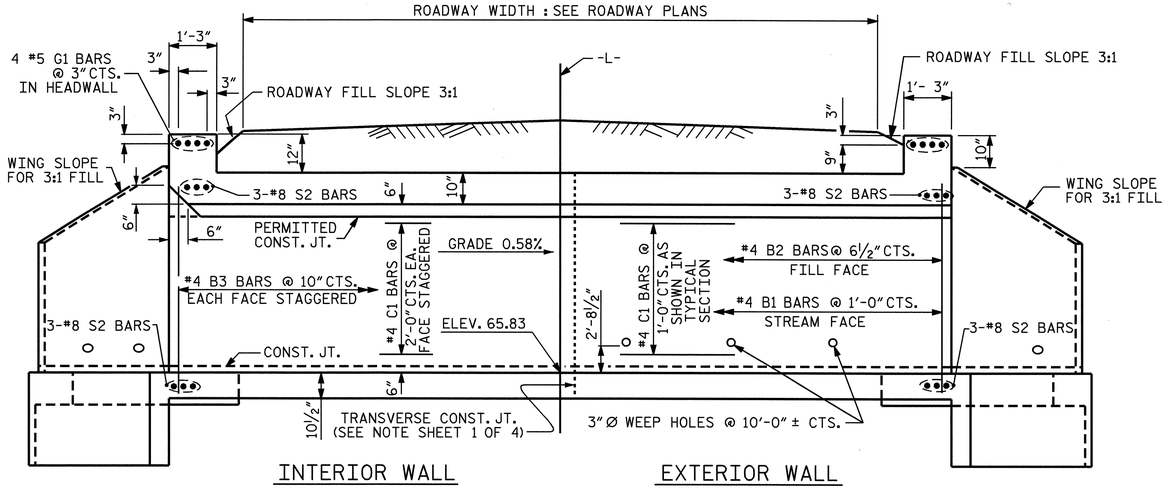

CULVERT SECTION NORMAL TO ROADWAY

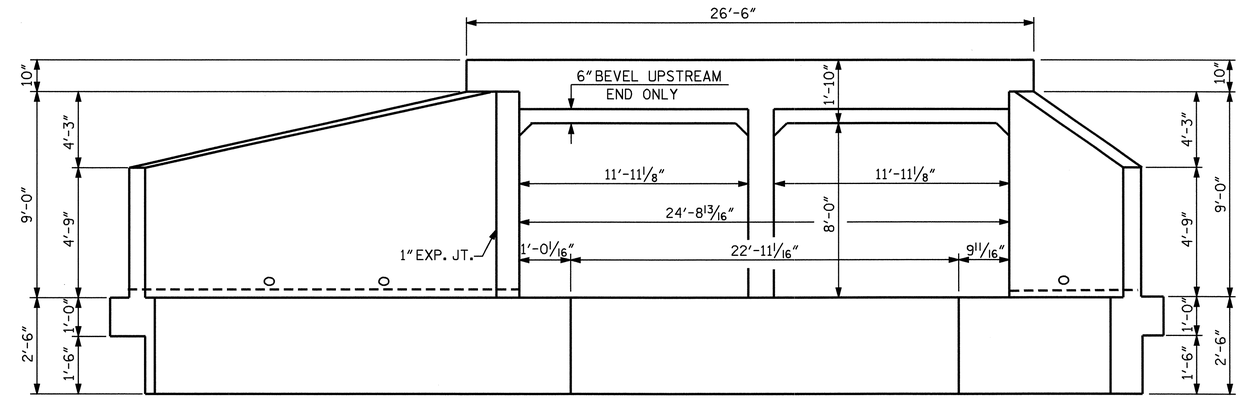

END ELEVATION NORMAL TO SKEW

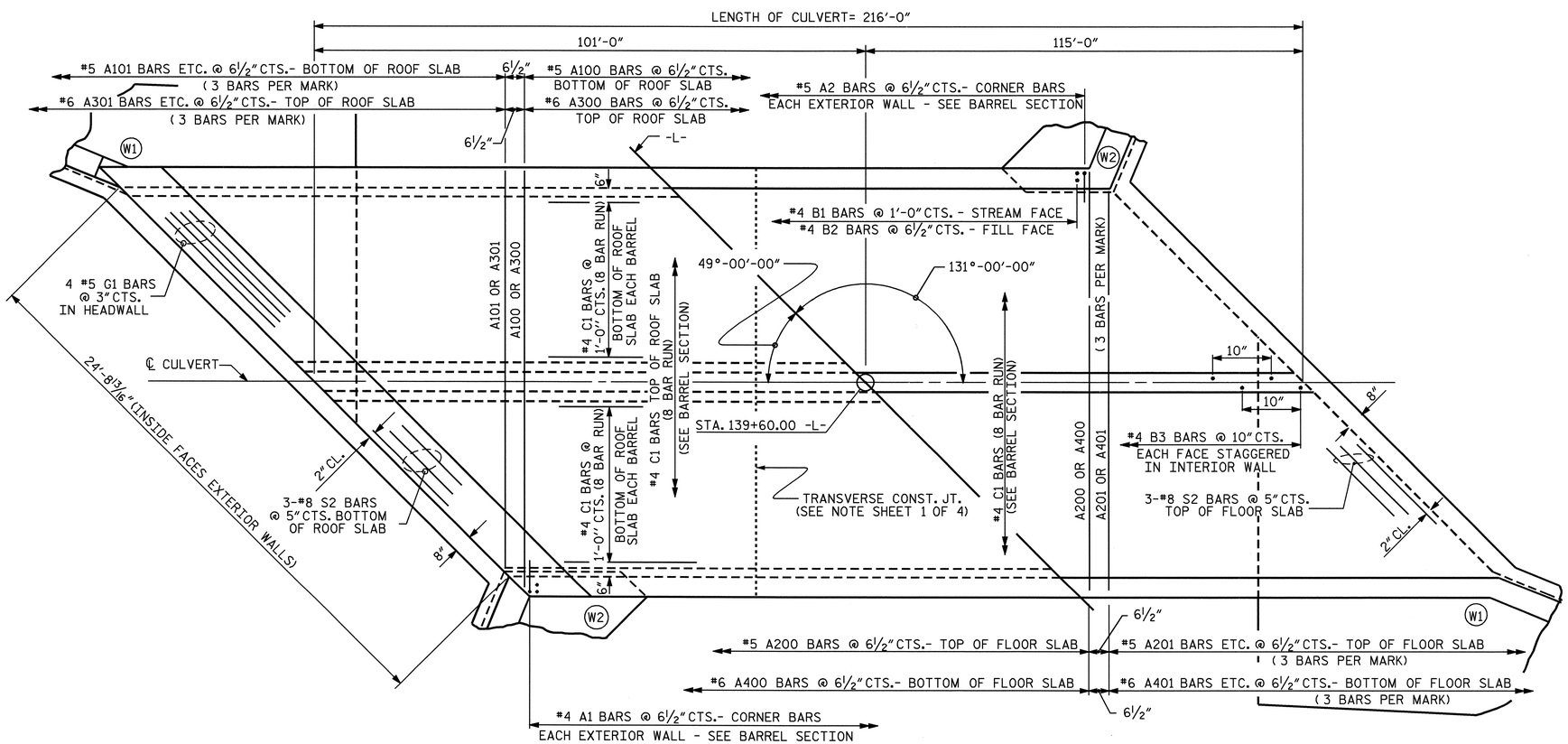

PART PLAN - ROOF SLAB

PART PLAN - FLOOR SLAB

PROJECT NO. R-2719A

LENOIR COUNTY

STATION: 139+60.00 -L-

SHEET 2 OF 4

STATE OF NORTH CAROLINA
DEPARTMENT OF TRANSPORTATION
RALEIGH

BARREL STANDARD
DOUBLE 9 FT. X 8 FT.
CONCRETE BOX CULVERT
131° SKEW

NORTH CAROLINA PROFESSIONAL SEAL 025516 ENGINEER EMILY E. MURRAY
10/7/08

REVISIONS							SHEET NO.
NO.	BY:	DATE:	NO.	BY:	DATE:		C-2
1			3				TOTAL SHEETS
2			4				23

STR. #13 STD. NO. CB552

ASSEMBLED BY : M.GUDLAUGSSON	DATE : 08/2008	SPECIAL	
CHECKED BY : AMBER LEE	DATE : 09/2008		
DRAWN BY : RALPH D. UNDERWOOD	DATE : APR. 1972	STANDARD	
CHECKED BY : HASON A. JUDEH	DATE : 5-23-1972		

REVISED 11-19-99 BY M.M. CHECKED BY R.W. ...0/90
REDRAWN BY: CDC 11/90 CHECKED BY: EL...0/90

26-SEP-2008 09:18
h:\structures\str#13\mgudlaugsson\2719a_sd_ab.dgn

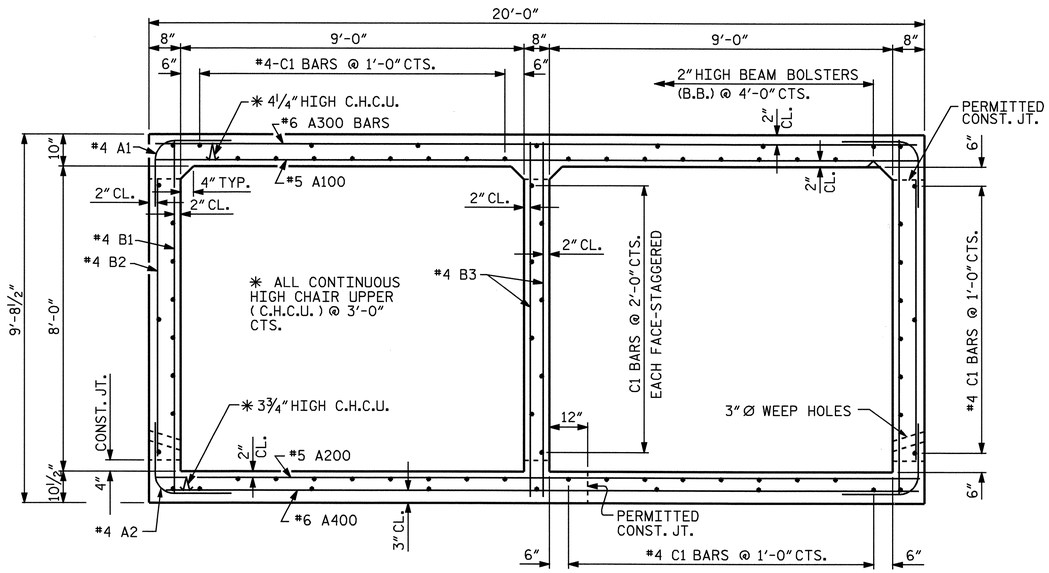

RIGHT ANGLE SECTION OF BARREL

THERE ARE 76 "C" BARS IN SECTION OF BARREL.

BAR TYPE

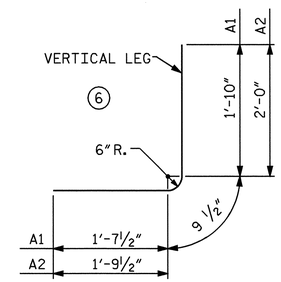

BAR DIMENSIONS ARE OUT TO OUT

BILL OF MATERIAL

BAR	NO.	SIZE	TYPE	LENGTH	WEIGHT
A1	798	#4	6	4'-3"	2266
A2	798	#5	6	4'-7"	3815
A100	367	#5	STR	19'-7"	7496
A101	6	#5	STR	17'-8"	111
A102	6	#5	STR	15'-9"	99
A103	6	#5	STR	13'-11"	87
A104	6	#5	STR	12'-0"	75
A105	6	#5	STR	10'-2"	64
A106	6	#5	STR	8'-3"	52
A107	6	#5	STR	6'-5"	40
A108	6	#5	STR	4'-6"	28
A109	6	#5	STR	2'-8"	17
A200	367	#5	STR	19'-7"	7496
A201	6	#5	STR	17'-8"	111
A202	6	#5	STR	15'-9"	99
A203	6	#5	STR	13'-11"	87
A204	6	#5	STR	12'-0"	75
A205	6	#5	STR	10'-2"	64
A206	6	#5	STR	8'-3"	52
A207	6	#5	STR	6'-5"	40
A208	6	#5	STR	4'-6"	28
A209	6	#5	STR	2'-8"	17

BAR	NO.	SIZE	TYPE	LENGTH	WEIGHT
A300	367	#6	STR	19'-7"	10795
A301	6	#6	STR	17'-8"	159
A302	6	#6	STR	15'-9"	142
A303	6	#6	STR	13'-11"	125
A304	6	#6	STR	12'-0"	108
A305	6	#6	STR	10'-2"	92
A306	6	#6	STR	8'-3"	74
A307	6	#6	STR	6'-5"	58
A308	6	#6	STR	4'-6"	41
A309	6	#6	STR	2'-8"	24
A400	367	#6	STR	19'-7"	10795
A401	6	#6	STR	17'-8"	159
A402	6	#6	STR	15'-9"	142
A403	6	#6	STR	13'-11"	125
A404	6	#6	STR	12'-0"	108
A405	6	#6	STR	10'-2"	92
A406	6	#6	STR	8'-3"	74
A407	6	#6	STR	6'-5"	58
A408	6	#6	STR	4'-6"	41
A409	6	#6	STR	2'-8"	24
B1	432	#4	STR	9'-2"	2645
B2	798	#4	STR	7'-4"	3909
B3	520	#4	STR	9'-2"	3184
C1	608	#4	STR	28'-10"	11710
D1	3	#6	STR	2'-5½"	11
G1	8	#5	STR	26'-0"	217
S2	12	#8	STR	26'-0"	833
REINFORCING STEEL					67964

SPLICE CHART

BAR	SIZE	SPLICE LENGTH
A200	#5	1'-9"
A400	#6	2'-4"
B1	#4	1'-9"
B3	#4	1'-9"
C1	#4	1'-11"

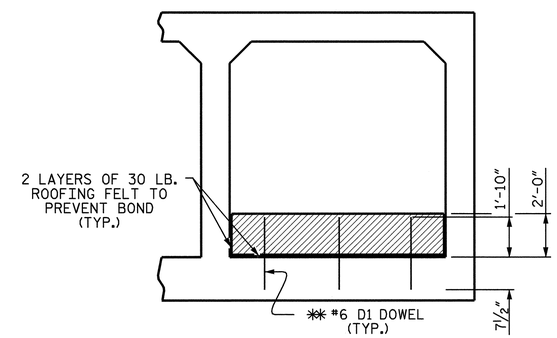

ELEVATION

(@ INLET, BARREL 2)

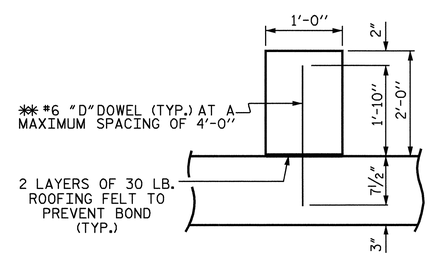

SECTION THROUGH HIGH SILL

SILL DETAILS

✱ DOWELS MAY BE PUSHED INTO GREEN CONCRETE AFTER SLAB HAS BEEN FLOAT FINISHED.

NORTH CAROLINA PROFESSIONAL SEAL 025516 ENGINEER EMILY E. MURRAY

10/7/08

PROJECT NO. R-2719A

LENOIR COUNTY

STATION: 139+60.00 -Y1-

SHEET 3 OF 4

STATE OF NORTH CAROLINA
DEPARTMENT OF TRANSPORTATION
RALEIGH

DOUBLE 8 FT. X 9 FT.
CONCRETE BOX CULVERT
131° SKEW

REVISIONS						SHEET NO.
NO.	BY:	DATE:	NO.	BY:	DATE:	C-3
1			3			TOTAL SHEETS
2			4			23

DRAWN BY : M.GUDLAUGSSON DATE : 08/2008
CHECKED BY : AMBER LEE DATE : 09/2008

26-SEP-2008 09:18
hi\structures\str#13\mgudlaugsson\2719a_sd_ab.dgn
mgudlaugsson

STR. #13

BAR TYPES

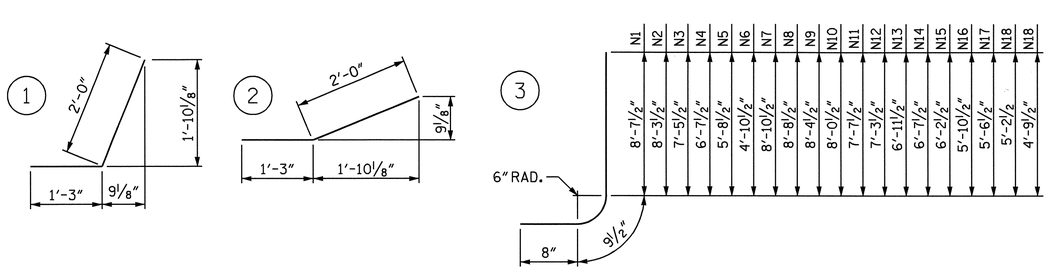

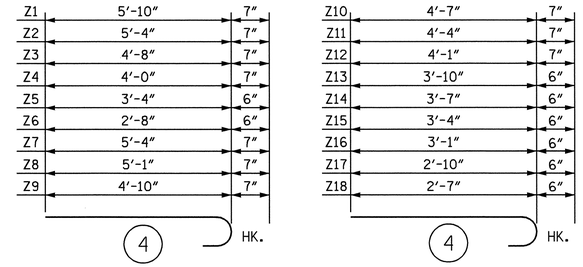

ALL BAR DIMENSIONS ARE OUT TO OUT.

BILL OF MATERIAL

BAR	NO.	SIZE	TYPE	LENGTH	WEIGHT	BAR	NO.	SIZE	TYPE	LENGTH	WEIGHT
H1	20	#4	STR	12'-11"	173	V9	6	#4	STR	7'-9"	31
H2	4	#4	STR	9'-10"	26	V10	6	#4	STR	7'-5"	30
H3	4	#4	STR	6'-4"	17	V11	6	#4	STR	7'-1"	28
H4	4	#4	STR	2'-11"	8	V12	6	#4	STR	6'-9"	27
H5	36	#4	1	3'-3"	78	V13	6	#4	STR	6'-4"	25
H6	4	#4	STR	13'-5"	36	V14	6	#4	STR	6'-0"	24
H7	48	#4	STR	18'-2"	582	V15	6	#4	STR	5'-8"	23
H8	4	#4	STR	26'-6"	71	V16	6	#4	STR	5'-4"	21
H9	4	#4	STR	18'-1"	48	V17	6	#4	STR	4'-11"	20
H10	4	#4	STR	9'-7"	26	V18	6	#4	STR	4'-7"	18
H11	36	#4	2	3'-3"	78	V19	6	#4	STR	4'-3"	17
N1	4	#5	3	10'-1"	42	Z1	2	#5	4	6'-5"	13
N2	4	#5	3	9'-9"	41	Z2	4	#5	4	5'-11"	25
N3	6	#5	3	8'-11"	56	Z3	6	#5	4	5'-3"	33
N4	6	#5	3	8'-1"	51	Z4	6	#5	4	4'-7"	29
N5	6	#4	3	7'-2"	29	Z5	6	#5	4	3'-10"	24
N6	6	#4	3	6'-4"	25	Z6	6	#4	4	3'-2"	13
N7	4	#5	3	10'-4"	43	Z7	2	#4	4	5'-11"	24
N8	4	#5	3	10'-2"	42	Z8	6	#5	4	5'-8"	35
N9	6	#5	3	9'-10"	62	Z9	6	#5	4	5'-5"	34
N10	6	#5	3	9'-6"	59	Z10	6	#5	4	5'-2"	32
N11	6	#5	3	9'-1"	57	Z11	6	#5	4	4'-11"	31
N12	6	#5	3	8'-9"	55	Z12	6	#5	4	4'-8"	29
N13	6	#5	3	8'-5"	53	Z13	6	#4	4	4'-4"	17
N14	6	#4	3	8'-1"	32	Z14	6	#4	4	4'-1"	16
N15	6	#4	3	7'-8"	31	Z15	6	#4	4	3'-10"	15
N16	6	#4	3	7'-4"	29	Z16	6	#4	4	3'-7"	14
N17	6	#4	3	7'-0"	28	Z17	6	#4	4	3'-4"	13
N18	6	#4	3	6'-8"	27	Z18	6	#4	4	3'-1"	12
N19	6	#4	3	6'-3"	25						
S1	12	#6	STR	6'-0"	108						
T1	4	#5	STR	14'-9"	62						
T2	2	#5	STR	14'-6"	30						
T3	4	#5	STR	36'-0"	150						
T4	2	#5	STR	35'-0"	73						
V1	4	#4	STR	8'-1"	22						
V2	4	#4	STR	7'-9"	21						
V3	6	#4	STR	6'-11"	28						
V4	6	#4	STR	6'-0"	24						
V5	6	#4	STR	5'-2"	21						
V6	6	#4	STR	4'-3"	17						
V7	4	#4	STR	8'-4"	22						
V8	4	#4	STR	8'-2"	22						

REINFORCING STEEL FOR 4 WINGS 3203 LBS

CLASS A CONCRETE

4 WINGS	43.9	CY
2 HEADWALLS	2.5	CY
2 END CURTAIN WALLS	2.8	CY
TOTAL	49.2	CY

SPLICE CHART

BAR SIZE	SPLICE LENGTH
H7	1'-11"

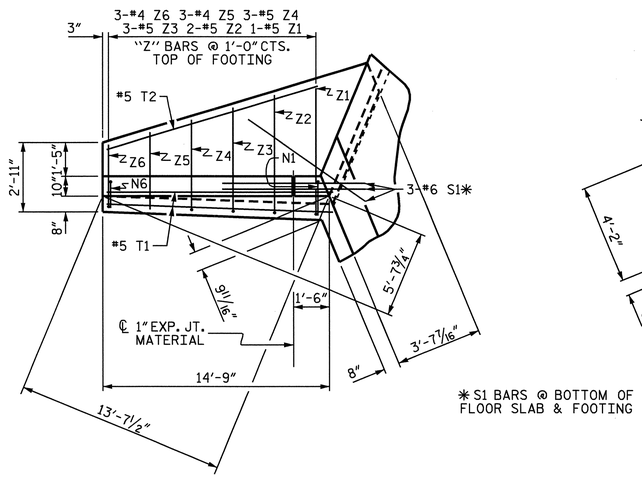

✱S1 BARS @ BOTTOM OF FLOOR SLAB & FOOTING

PLAN W2

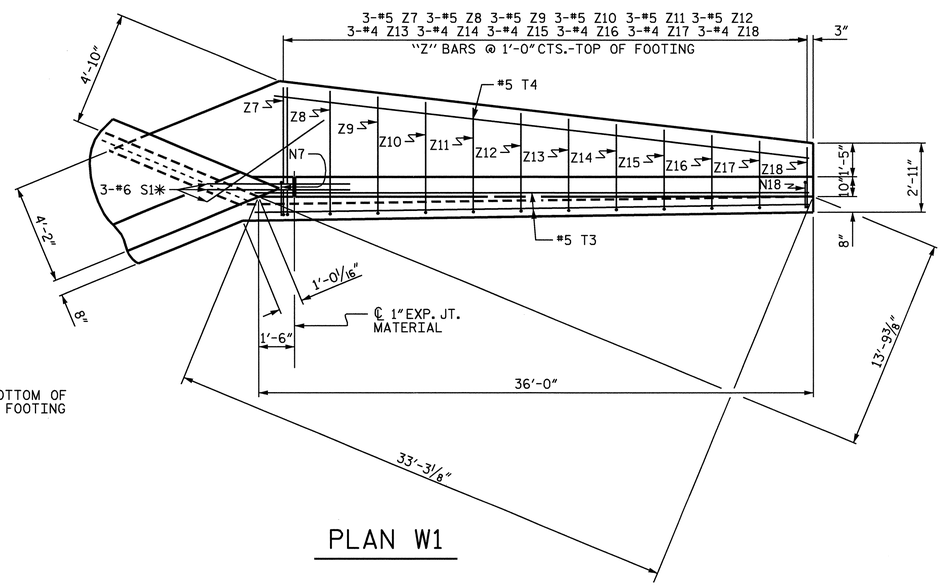

PLAN W1

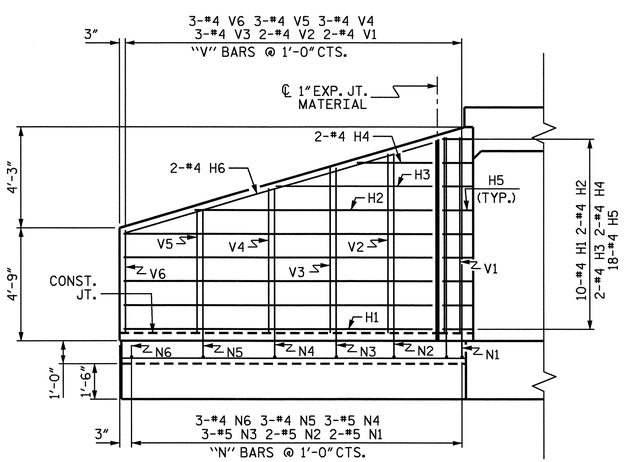

ELEVATION W2

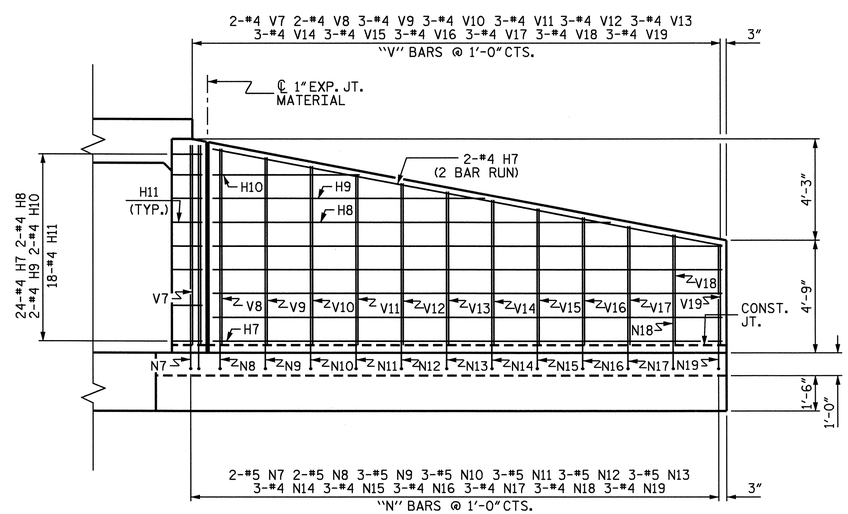

ELEVATION W1

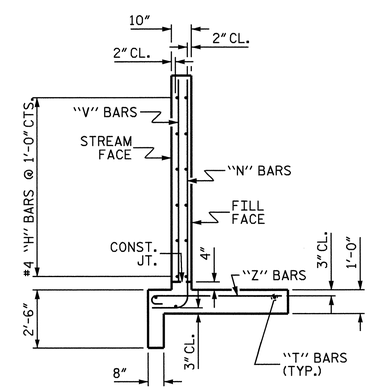

TYPICAL WING SECTION

PROJECT NO. R-2719A

LENOIR COUNTY

STATION: 139+60.00 -L-

SHEET 4 OF 4

STATE OF NORTH CAROLINA
DEPARTMENT OF TRANSPORTATION
RALEIGH

WINGS FOR CONCRETE BOX CULVERT

H = 8'-0" SLOPE = 3:1

135° SKEW

NORTH CAROLINA PROFESSIONAL SEAL 025516 ENGINEER EMILY E. MURRAY

10/7/08

REVISIONS						SHEET NO.
NO.	BY:	DATE:	NO.	BY:	DATE:	C-4
1			3			TOTAL SHEETS
2			4			23

ASSEMBLED BY : M. GUDLAUGSSON DATE : 08/2008
CHECKED BY : AMBER LEE DATE : 09/2008

DRAWN BY : CCJ 01/00
CHECKED BY : RWW 03/00

02-OCT-2008 11:02
h:\structures\str#13\mgudlaugsson\2719a_sd_ab.dgn
mgudlaugsson

STR #13

BM-"F"; RAILROAD SPIKE IN 18" GUM TREE -BL- STA. 119+69.29, 141.03' LT EL. 85.04

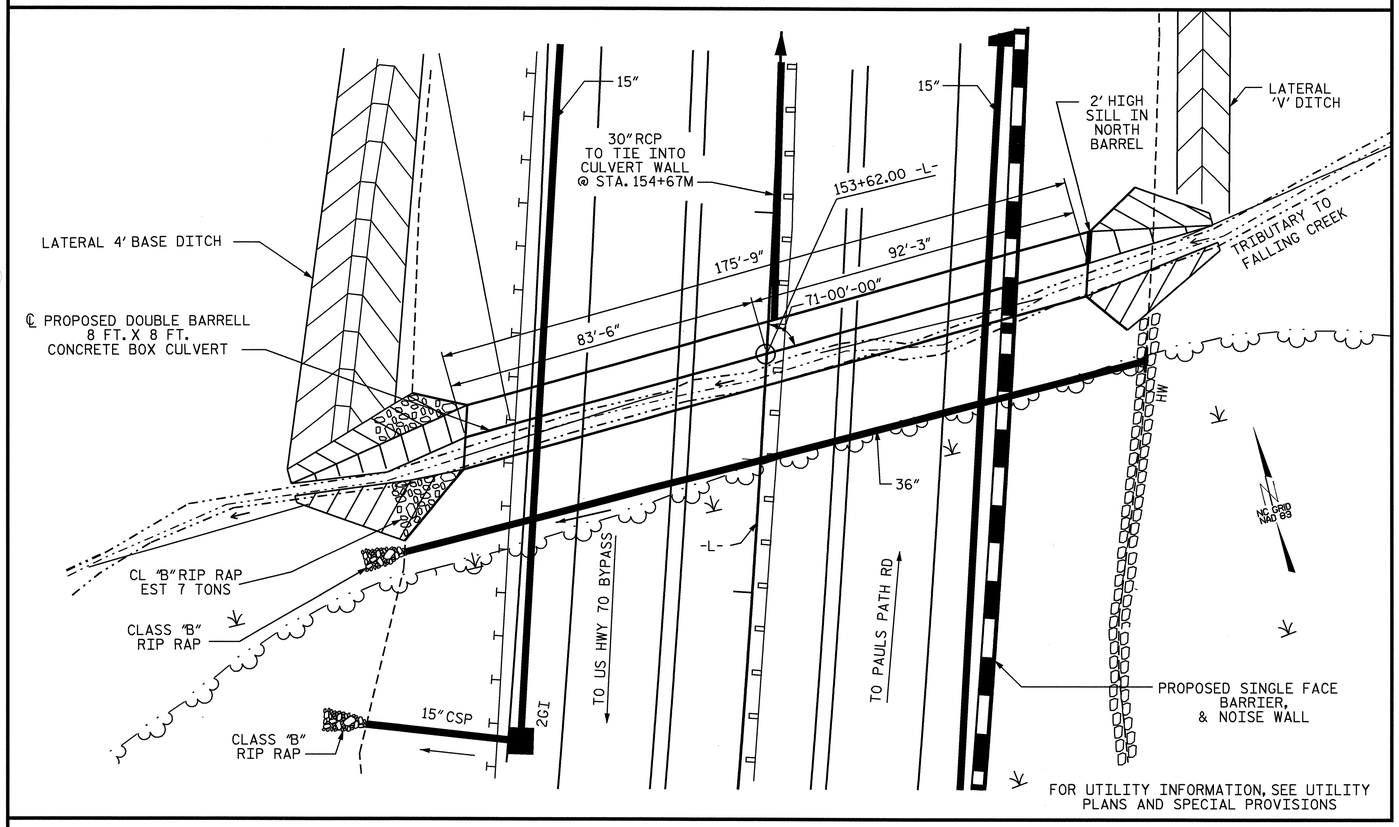

LOCATION SKETCH

ROADWAY DATA

GRADEPOINT ELEVATION @ STATION 153+62.00 -L-	= 88.57
BED ELEVATION @ STATION 153+62.00 -L-	= 73.49
ROADWAY SLOPE	= 3:1

HYDRAULIC DATA

DESIGN DISCHARGE	= 700 CFS.
FREQUENCY OF DESIGN FLOOD	= 50 YRS.
DESIGN HIGH WATER ELEVATION	= 82.0
DRAINAGE AREA	= 400 Ac
BASIC DISCHARGE (Q100)	= 800 CFS.
BASIC HIGH WATER ELEVATION	= 82.6

OVERTOPPING FLOOD DATA

OVERTOPPING DISCHARGE	= 1650 CFS.
FREQUENCY OF OVERTOPPING FLOOD	= 500 YR.+
OVERTOPPING FLOOD ELEVATION	= 88.3

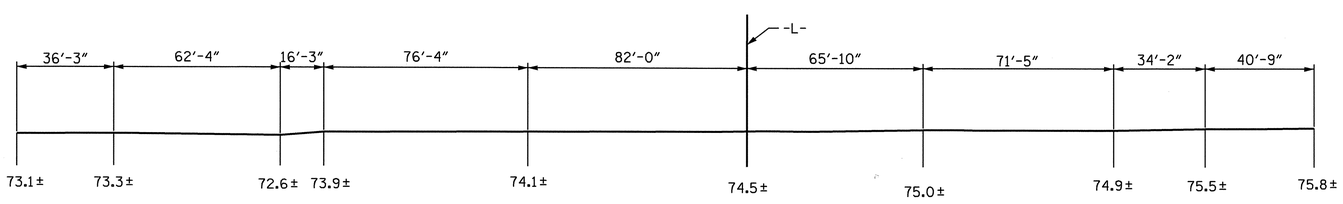

PROFILE ALONG ℄ CULVERT

F.A. PROJECT NO. STP-0224(12)

NOTES

ASSUMED LIVE LOAD ----------HS20-44 OR ALTERNATE LOADING.

DESIGN FILL ---------- 8.03 FT

FOR OTHER DESIGN DATA AND NOTES SEE STANDARD NOTE SHEET.

3"Ø WEEP HOLES INDICATED TO BE IN ACCORDANCE WITH THE SPECIFICATIONS.

CONCRETE IN CULVERTS TO BE POURED IN THE FOLLOWING ORDER:

1. WING FOOTINGS AND FLOOR SLAB INCLUDING 4" OF ALL VERTICAL WALLS.
2. THE REMAINING PORTIONS OF THE WALLS AND WINGS FULL HEIGHT FOLLOWED BY ROOF SLAB AND HEADWALLS.

THE RESIDENT ENGINEER SHALL CHECK THE LENGTH OF CULVERT BEFORE STAKING IT OUT TO MAKE CERTAIN THAT IT WILL PROPERLY TAKE CARE OF THE FILL.

DIMENSIONS FOR WING LAYOUT AS WELL AS ADDITIONAL REINFORCING STEEL EMBEDDED IN BARREL ARE SHOWN ON WING SHEET.

TRANSVERSE CONSTRUCTION JOINTS SHALL BE USED IN THE BARREL, SPACED TO LIMIT THE POURS TO A MAXIMUM OF 70 FT. LOCATION OF JOINTS SHALL BE SUBJECT TO APPROVAL OF THE ENGINEER.

STEEL IN THE BOTTOM SLAB MAY BE SPLICED AT THE PERMITTED CONSTRUCTION JOINT AT THE CONTRACTOR'S OPTION. EXTRA WEIGHT OF STEEL DUE TO THE SPLICES SHALL BE PAID FOR BY THE CONTRACTOR.

AT THE CONTRACTOR'S OPTION, HE MAY SPLICE THE VERTICAL REINFORCING STEEL IN THE INTERIOR FACE OF EXTERIOR WALL AND BOTH FACES OF INTERIOR WALLS ABOVE LOWER WALL CONSTRUCTION JOINT. THE SPLICE LENGTH SHALL BE AS PROVIDED IN THE SPLICE LENGTH CHART SHOWN ON THE PLANS. EXTRA WEIGHT OF STEEL DUE TO THE SPLICES SHALL BE PAID FOR BY THE CONTRACTOR.

AT THE CONTRACTOR'S OPTION HE MAY SUBMIT, TO THE ENGINEER FOR APPROVAL, DESIGN AND DETAIL DRAWINGS FOR A PRECAST REINFORCED CONCRETE BOX CULVERT IN LIEU OF THE CAST-IN-PLACE CULVERT SHOWN ON THE PLANS. THE DESIGN SHALL PROVIDE THE SAME SIZE AND NUMBER OF BARRELS AS USED ON THE CAST-IN-PLACE DESIGN. FOR OPTIONAL PRECAST REINFORCED CONCRETE BOX CULVERT, SEE SPECIAL PROVISIONS.

FOR CRANE SAFETY, SEE SPECIAL PROVISIONS.

FOR FALSEWORK AND FORMWORK, SEE SPECIAL PROVISIONS.

FOR SUBMITTAL OF WORKING DRAWINGS, SEE SPECIAL PROVISIONS.

THE CONTRACTOR SHALL PROVIDE INDEPENDENT ASSURANCE SAMPLES OF REINFORCING STEEL AS FOLLOWS: FOR PROJECTS REQUIRING UP TO 400 TONS OF REINFORCING STEEL, ONE 30 INCH SAMPLE OF EACH SIZE BAR USED, AND FOR PROJECTS REQUIRING OVER 400 TONS OF REINFORCING STEEL, TWO 30 INCH SAMPLES OF EACH SIZE BAR USED. THE BARS FROM WHICH THE SAMPLES ARE TAKEN MUST THEN BE SPLICED WITH REPLACEMENT BARS OF THE SIZE AND LENGTH OF THE SAMPLE, PLUS A MINIMUM LAP SPLICE OF THIRTY BAR DIAMETERS.

FOR CULVERT DIVERSION DETAILS AND PAY ITEM, SEE EROSION CONTROL PLANS.

FOR GROUT FOR STRUCTURES, SEE SPECIAL PROVISIONS.

FOR FAA REQUIREMENTS, SEE ROADWAY SPECIAL PROVISIONS.

A 3 FOOT STRIP OF FILTER FABRIC SHALL BE ATTACHED TO THE FILL FACE OF THE WING COVERING THE ENTIRE LENGTH OF THE EXPANSION JOINT.

TOTAL STRUCTURE QUANTITIES

CLASS A CONCRETE				
BARREL @	1.667	CY/FT	293.0	C.Y.
WING ETC.			42.7	C.Y.
TOTAL			335.7	C.Y.
REINFORCING STEEL				
BARREL			48243	LBS.
WINGS ETC.			2220	LBS.
TOTAL			50463	LBS.
FOUNDATION COND. MAT'L.			223 TONS	
CULVERT EXCAVATION			LUMP SUM	

PROJECT NO. R-2719A
LENOIR COUNTY
STATION: 153+62.00 -L-

SHEET 1 OF 4

STATE OF NORTH CAROLINA
DEPARTMENT OF TRANSPORTATION
RALEIGH

BARREL STANDARD

DOUBLE 8 FT. X 8 FT. CONCRETE BOX CULVERT 71° SKEW

NORTH CAROLINA PROFESSIONAL SEAL 12274 ENGINEER OMAR R. AZIZI
Omar R Azizi 10-9-08

NORTH CAROLINA PROFESSIONAL SEAL 025516 ENGINEER EMILY E. MURRAY
Emily E. Murray 10/7/08

REVISIONS						SHEET NO.
NO.	BY:	DATE:	NO.	BY:	DATE:	C-5
1			3			TOTAL SHEETS
2			4			23

ASSEMBLED BY : M.GUDLAUGSSON	DATE : 08/2008	SPECIAL	
CHECKED BY : M. RORIE	DATE : 09/2008		
DRAWN BY : R.W.WRIGHT	DATE : OCT. 1989	STANDARD	
CHECKED BY : A.R.BISSETTE	DATE : OCT. 1989		

ADDED 11-1-90

02-OCT-2008 11:51
h:\structures\str#14\mgudlaugsson\2719a_sd_cu_14.dgn

STR #14 STD. NO. CB22A

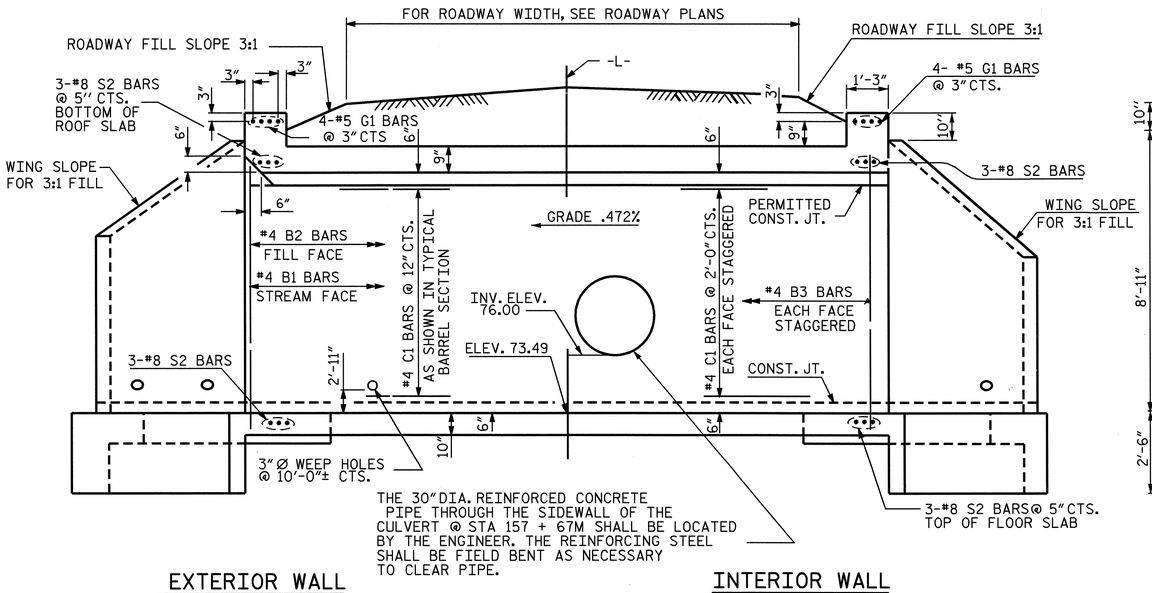

CULVERT SECTION NORMAL TO ROADWAY

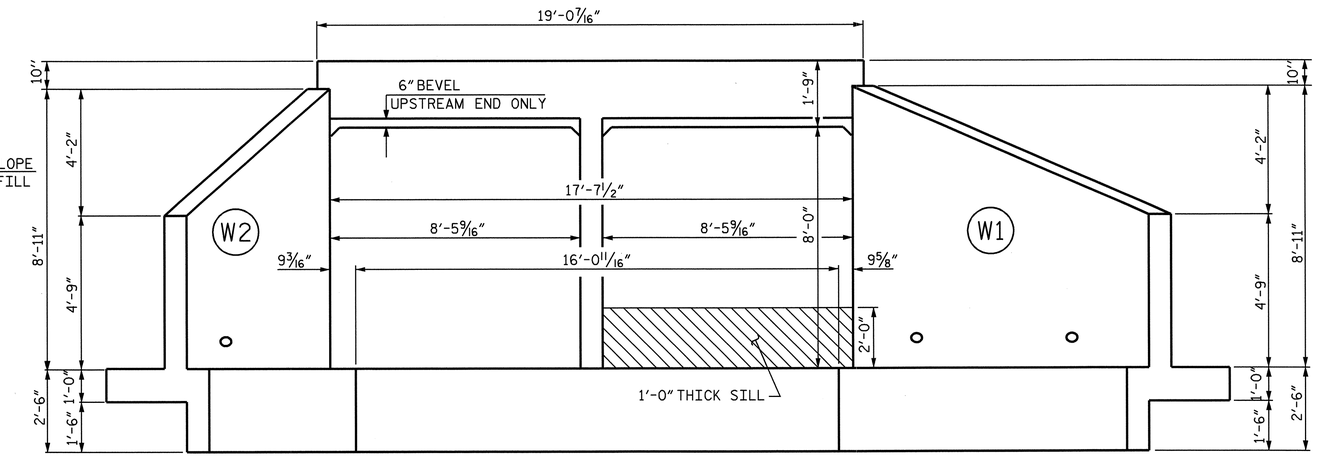

INLET END ELEVATION NORMAL TO SKEW

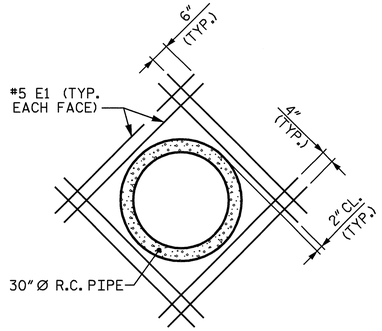

DETAIL OF REINFORCING AROUND 30" Ø PIPE

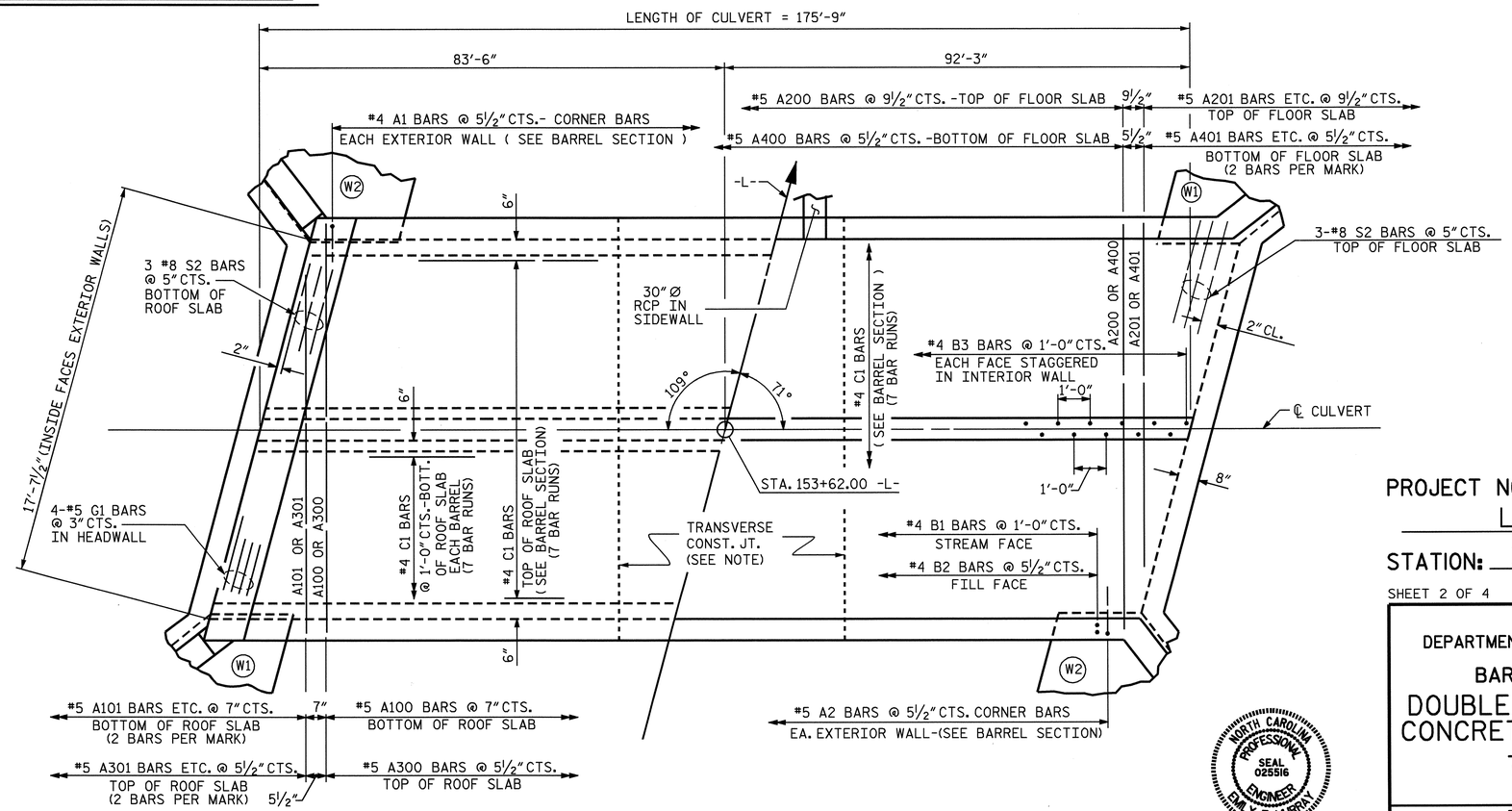

PART PLAN - ROOF SLAB

PART PLAN - FLOOR SLAB

SILL NOT SHOWN. SEE SHEET 3 OF 4 FOR DETAILS.

NORTH CAROLINA PROFESSIONAL SEAL 025516 ENGINEER EMILY E. MURRAY

10/7/08

PROJECT NO. R-2719A

LENOIR COUNTY

STATION: 153+62.00 -L-

SHEET 2 OF 4

STATE OF NORTH CAROLINA
DEPARTMENT OF TRANSPORTATION
RALEIGH

BARREL STANDARD

DOUBLE 8 FT. X 8 FT. CONCRETE BOX CULVERT 71° SKEW

REVISIONS						SHEET NO.
NO.	BY:	DATE:	NO.	BY:	DATE:	C-6
1			3			TOTAL SHEETS
2			4			23

ASSEMBLED BY : M.GUDLAUGSSON DATE : 08/2008 CHECKED BY : M. RORIE DATE : 09/2008	SPECIAL	
DRAWN BY : W.BRYAN STALEY II DATE : SEPT. 21,1971 CHECKED BY : JOEL A. JOHNSON DATE : NOV. 12,1971	STANDARD	

REVISED 11-19-99 BY M.M. CHECKED BY R.W.W.
REDRAWN NOV. 1990 BY TSS CHECKED BY ARB

26-SEP-2008 08:47
h:\structures\str#14\mgudlaugsson\2719a_sd_cu_14.dgn

STR #14 STD. NO. CB22

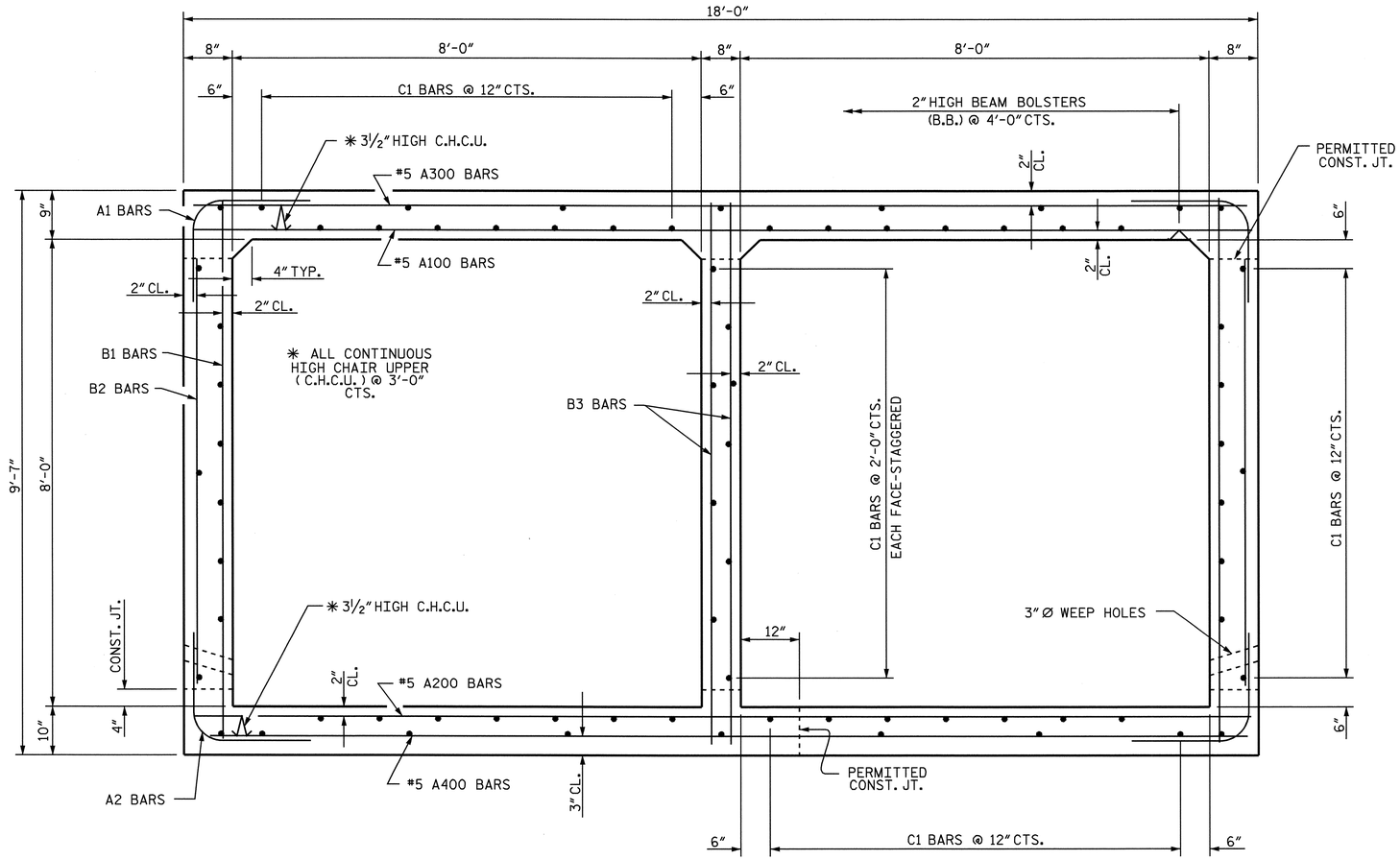

RIGHT ANGLE SECTION OF BARREL

THERE ARE 72 "C" BARS IN SECTION OF BARREL.
2' SILL NOT SHOWN FOR CLARITY.

BAR TYPE

BAR DIMENSIONS ARE OUT TO OUT

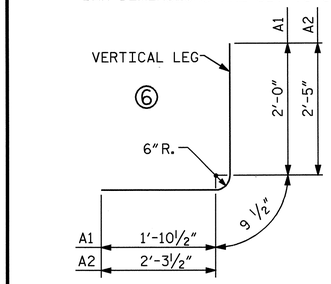

BAR TYPE

BAR DIMENSIONS ARE OUT TO OUT

SPLICE CHART

BAR	SIZE	SPLICE LENGTH
A200	#5	1'-9"
A400	#5	2'-2"
B1	#4	1'-9"
B3	#4	1'-9"
C1	#4	1'-11"

BILL OF MATERIAL

BAR	NO.	SIZE	TYPE	LENGTH	WEIGHT
A1	768	#4	6	4'-8"	2394
A2	768	#5	6	5'-6"	4406
A100	291	#5	STR	17'-7"	5337
A101	4	#5	STR	13'-10"	58
A102	4	#5	STR	10'-6"	44
A103	4	#5	STR	7'-1"	30
A104	4	#5	STR	3'-8"	15
A200	215	#5	STR	17'-7"	3943
A201	2	#5	STR	14'-11	31
A202	2	#5	STR	12'-8"	26
A203	2	#5	STR	10'-4"	22
A204	2	#5	STR	8'-0"	17
A205	2	#5	STR	5'-9"	12
A206	2	#5	STR	3'-5"	7
A300	370	#5	STR	17'-7"	6786
A301	4	#5	STR	14'-7"	61
A302	4	#5	STR	11'-11"	50
A303	4	#5	STR	9'-3"	39
A304	4	#5	STR	6'-7"	27
A305	4	#5	STR	3'-11"	16
A400	370	#5	STR	17'-7"	6786
A401	4	#5	STR	14'-7"	61
A402	4	#5	STR	11'-11"	50
A403	4	#5	STR	9'-3"	39
A404	4	#5	STR	6'-7"	27
A405	4	#5	STR	3'-11"	16
B1	352	#4	STR	9'-1"	2136
B2	768	#4	STR	7'-4"	3762
B3	352	#4	STR	9'-1"	2136
C1	504	#4	STR	26'-11"	9062
D1	2	#6	STR	2'-5"	7
E1	16	#5	STR	5'-2"	86
G1	8	#5	STR	18'-8"	156
S2	12	#8	STR	18'-8"	598
REINFORCING STEEL					48243

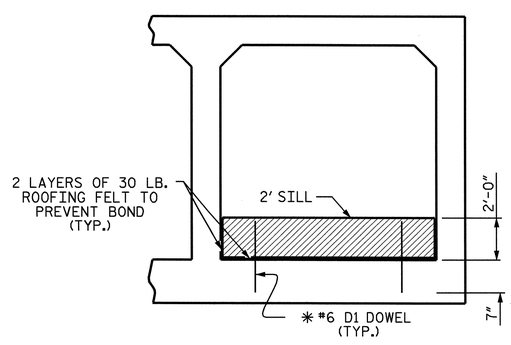

ELEVATION

(@ INLET, BARREL 2)

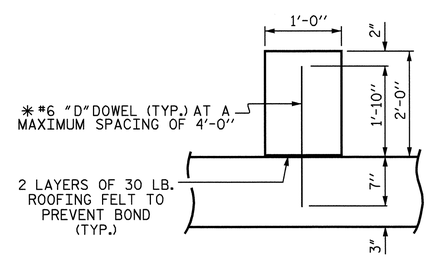

SECTION THROUGH SILL

✱ DOWELS MAY BE PUSHED INTO GREEN CONCRETE AFTER SLAB HAS BEEN FLOAT FINISHED.

SILL DETAILS

PROJECT NO. R-2719A

LENOIR COUNTY

STATION: 153+62.00 -L-

SHEET 3 OF 4

STATE OF NORTH CAROLINA
DEPARTMENT OF TRANSPORTATION
RALEIGH

BARREL STANDARD
DOUBLE 8 FT. X 8 FT.
CONCRETE BOX CULVERT
71° SKEW

NORTH CAROLINA PROFESSIONAL SEAL 025516 ENGINEER EMILY E. MURRAY

10/7/08

REVISIONS							SHEET NO.
NO.	BY:	DATE:	NO.	BY:	DATE:		C-7
1			3				TOTAL SHEETS
2			4				23

DRAWN BY : M. GUDLAUGSSON DATE : 07/2008
CHECKED BY : M. RORIE DATE : 09/2008

26-SEP-2008 08:47
h:\structures\str#14\mgudlaugsson\2719a_sd_cu_14.dgn
mgudlaugsson

STR #14

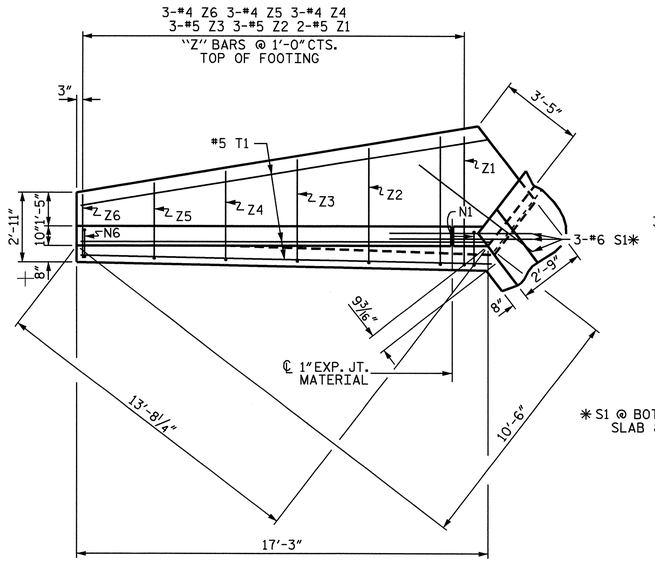

PLAN W2

* S1 @ BOTTOM OF FLOOR SLAB & FOOTING

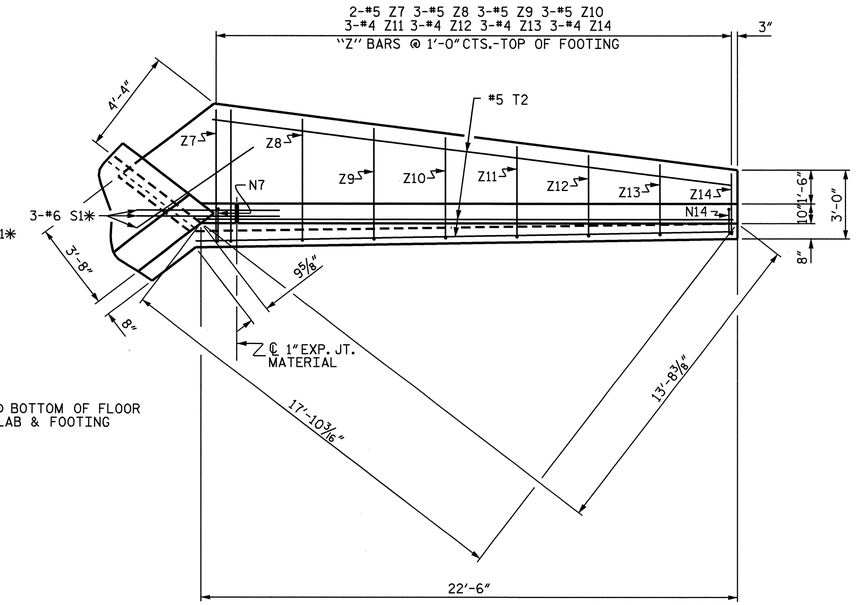

PLAN W1

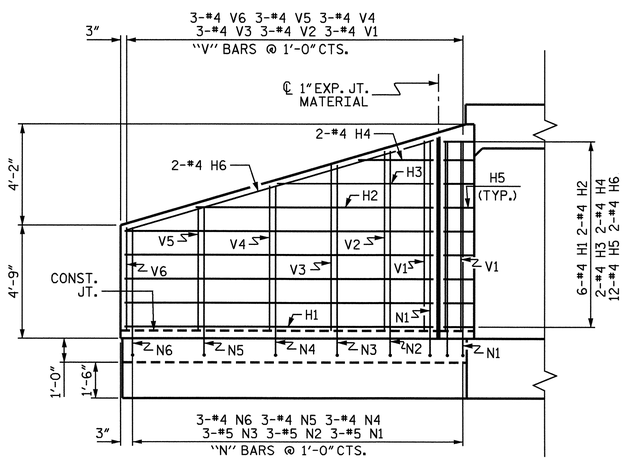

ELEVATION W2

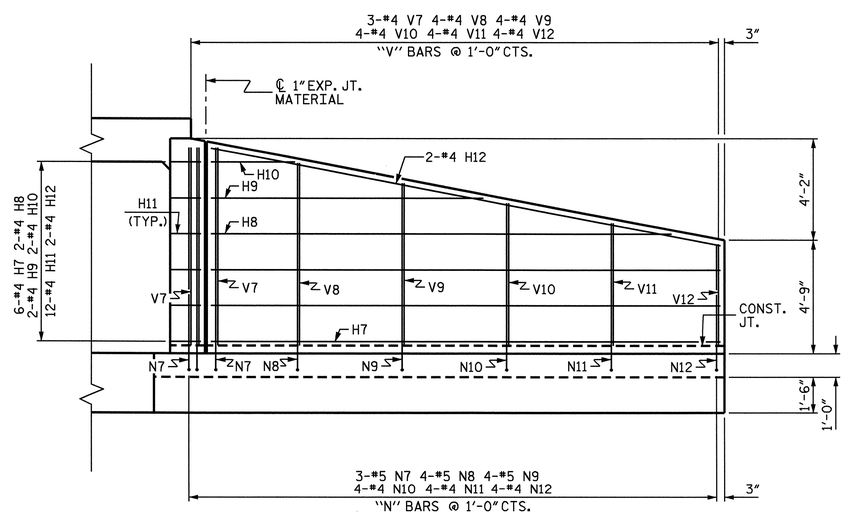

ELEVATION W1

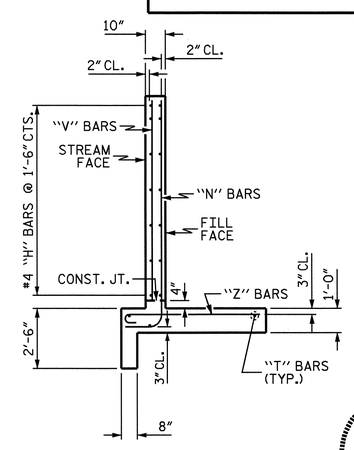

TYPICAL WING SECTION

BAR TYPES

ALL BAR DIMENSIONS ARE OUT TO OUT.

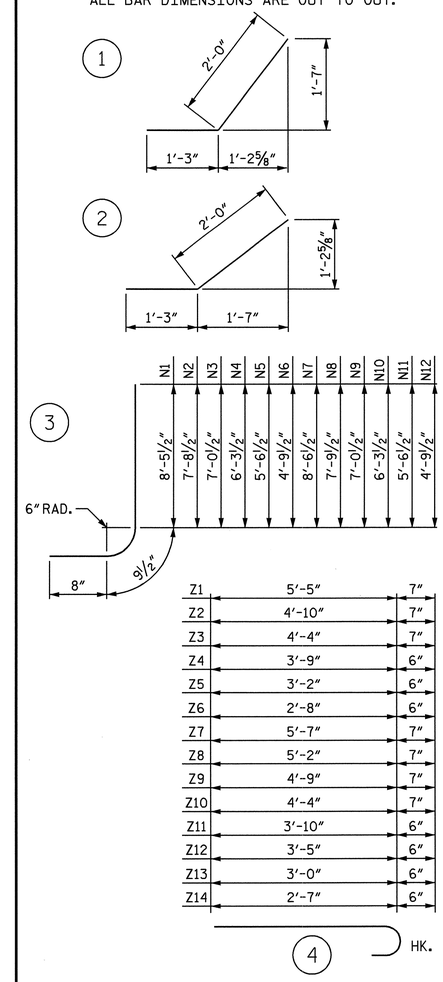

BILL OF MATERIAL

BAR	NO.	SIZE	TYPE	LENGTH	WEIGHT
H1	12	#4	STR	15'-4"	123
H2	4	#4	STR	14'-1"	38
H3	4	#4	STR	7'-11"	21
H4	4	#4	STR	1'-8"	4
H5	24	#4	1	3'-3"	52
H6	4	#4	STR	15'-9"	42
H7	12	#4	STR	20'-0"	160
H8	4	#4	STR	18'-5"	49
H9	4	#4	STR	10'-4"	28
H10	4	#4	STR	2'-2"	6
H11	24	#4	2	3'-3"	52
H12	4	#4	STR	20'-5"	55
N1	6	#5	3	9'-11"	62
N2	6	#5	3	9'-2"	57
N3	6	#5	3	8'-6"	53
N4	6	#4	3	7'-9"	31
N5	6	#4	3	7'-0"	28
N6	6	#4	3	6'-3"	25
N7	6	#5	3	10'-0"	63
N8	8	#5	3	9'-3"	77
N9	8	#5	3	8'-6"	71
N10	8	#4	3	7'-9"	41
N11	8	#4	3	7'-0"	37
N12	8	#4	3	6'-3"	33
S1	12	#6	STR	6'-0"	108
T1	6	#5	STR	17'-3"	108
T2	6	#5	STR	22'-6"	141
V1	6	#4	STR	7'-11"	32
V2	6	#4	STR	7'-2"	29
V3	6	#4	STR	6'-5"	26
V4	6	#4	STR	5'-9"	23
V5	6	#4	STR	5'-0"	20
V6	6	#4	STR	4'-3"	18
V7	6	#4	STR	8'-0"	32
V8	8	#4	STR	7'-3"	39
V9	8	#4	STR	6'-6"	35
V10	8	#4	STR	5'-9"	31
V11	8	#4	STR	5'-0"	27
V12	8	#4	STR	4'-3"	23
Z1	4	#5	4	6'-0"	25
Z2	6	#5	4	5'-5"	34
Z3	6	#5	4	4'-11"	31
Z4	6	#4	4	4'-3"	17
Z5	6	#4	4	3'-8"	15
Z6	6	#4	4	3'-2"	13
Z7	4	#5	4	6'-2"	26
Z8	6	#5	4	5'-9"	36
Z9	6	#5	4	5'-4"	33
Z10	6	#5	4	4'-11"	31
Z11	6	#4	4	4'-4"	17
Z12	6	#4	4	3'-11"	16
Z13	6	#4	4	3'-6"	14
Z14	6	#4	4	3'-1"	12

REINFORCING STEEL FOR 4 WINGS 2220 LBS

CLASS A CONCRETE
- 4 WINGS 38.9 CY
- 2 HEADWALLS 1.8 CY
- 2 END CURTAIN WALLS 2.0 CY
- TOTAL 42.7 CY

PROJECT NO. R-2719A

LENOIR COUNTY

STATION: 153+62.00 -L-

SHEET 4 OF 4

STATE OF NORTH CAROLINA
DEPARTMENT OF TRANSPORTATION
RALEIGH

WINGS FOR CONCRETE BOX CULVERT

H = 8'-0" SLOPE = 3:1

75° SKEW

NORTH CAROLINA PROFESSIONAL SEAL 025516 ENGINEER EMILY E. MURRAY

Emily E. Murray 08/7/08

REVISIONS						SHEET NO.
NO.	BY:	DATE:	NO.	BY:	DATE:	C-8
1			3			TOTAL SHEETS
2			4			23

ASSEMBLED BY : M. GUDLAUGSSON DATE : 08/2008
CHECKED BY : M. RORIE DATE : 09/2008

DRAWN BY : CCJ 01/00
CHECKED BY : RWW 03/00

26-SEP-2008 08:47

STR #14

BM-"A"; RAILROAD SPIKE IN 30" HARDWOOD TREE -Y1- STA. 75+86.615' RIGHT

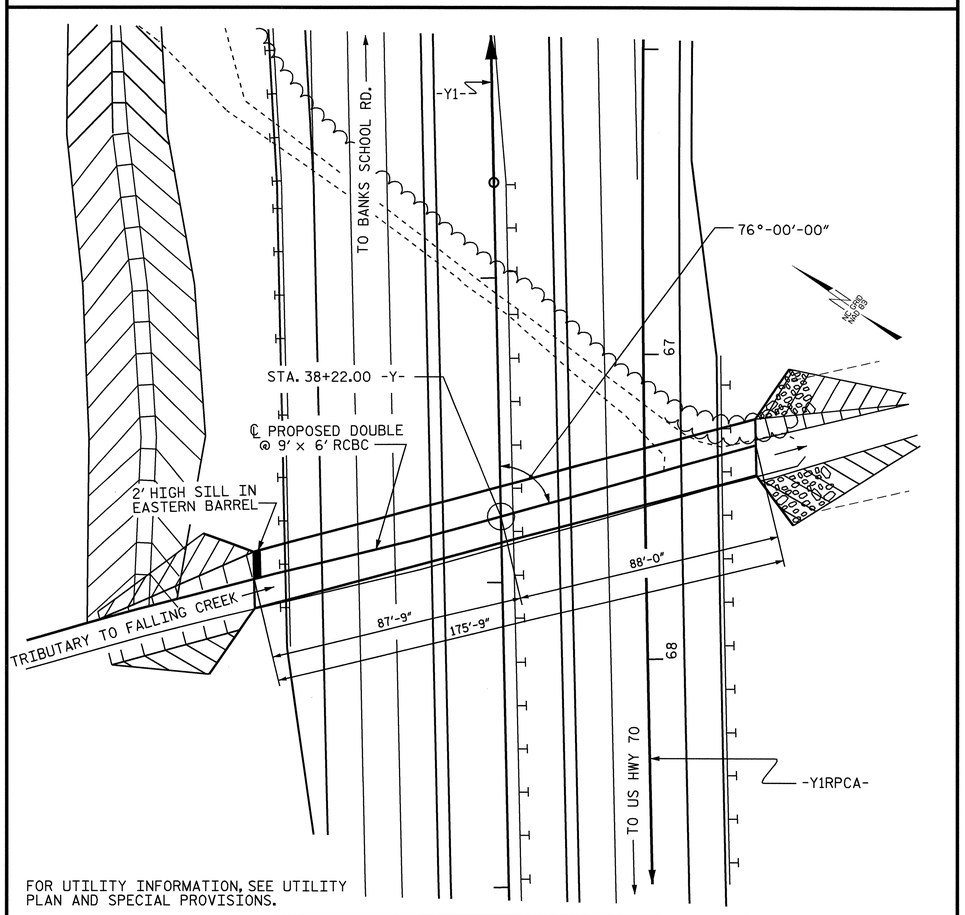

FOR UTILITY INFORMATION, SEE UTILITY PLAN AND SPECIAL PROVISIONS.

LOCATION SKETCH

ROADWAY DATA

GRADE POINT ELEV. @ STATION 38+22.00 -Y1-	54.67 FT.
BED ELEV. @ STATION 38+22.00 -Y1-	43.10 FT.
ROADWAY SLOPES	3:1

HYDRAULIC DATA

DESIGN DISCHARGE	460 C.F.S.
FREQUENCY OF DESIGN FLOOD	50 YRS
DESIGN HIGH WATER ELEVATION	50.6 FT.
DRAINAGE AREA	166 AC
BASIC DISCHARGE (Q100)	550 C.F.S
BASIC HIGH WATER ELEVATION	51.0 FT.

OVERTOPPING FLOOD DATA

OVERTOPPING DISCHARGE	1060 C.F.S.
FREQUENCY OF OVERTOPPING FLOOD	500+ YR.
OVERTOPPING FLOOD ELEVATION	54.7 FT.

TOTAL STRUCTURE QUANTITIES

CLASS A CONCRETE			
BARREL @ 1.749 CY/FT		307.4	C.Y.
WING ETC.		26.2	C.Y.
TOTAL		333.6	C.Y.
REINFORCING STEEL			
BARREL		54187	LBS.
WINGS ETC.		1538	LBS.
TOTAL		55725	LBS.
CULVERT EXCAVATION		LUMP SUM	
FOUNDATION COND. MAT'L.		248 TONS	

F.A. PROJECT NO. STP-0224(12)

NOTES

ASSUMED LIVE LOAD HS20-44 OR ALTERNATE LOADING.

MAX DESIGN FILL---------- 5.61 FT
MIN DESIGN FILL---------- 2.50 FT

FOR OTHER DESIGN DATA AND NOTES SEE STANDARD NOTE SHEET.

3"Ø WEEP HOLES INDICATED TO BE IN ACCORDANCE WITH THE SPECIFICATIONS.

CONCRETE IN CULVERTS TO BE POURED IN THE FOLLOWING ORDER:

1. WING FOOTINGS AND FLOOR SLAB INCLUDING 4" OF ALL VERTICAL WALLS.
2. THE REMAINING PORTIONS OF THE WALLS AND WINGS FULL HEIGHT FOLLOWED BY ROOF SLAB AND HEADWALLS.

THE RESIDENT ENGINEER SHALL CHECK THE LENGTH OF CULVERT BEFORE STAKING IT OUT TO MAKE CERTAIN THAT IT WILL PROPERLY TAKE CARE OF THE FILL.

DIMENSIONS FOR WING LAYOUT AS WELL AS ADDITIONAL REINFORCING STEEL EMBEDDED IN BARREL ARE SHOWN ON WING SHEET.

TRANSVERSE CONSTRUCTION JOINTS SHALL BE USED IN THE BARREL, SPACED TO LIMIT THE POURS TO A MAXIMUM OF 70 FT. LOCATION OF JOINTS SHALL BE SUBJECT TO APPROVAL OF THE ENGINEER.

STEEL IN THE BOTTOM SLAB MAY BE SPLICED AT THE PERMITTED CONSTRUCTION JOINT AT THE CONTRACTOR'S OPTION. EXTRA WEIGHT OF STEEL DUE TO THE SPLICES SHALL BE PAID FOR BY THE CONTRACTOR.

AT THE CONTRACTOR'S OPTION, HE MAY SPLICE THE VERTICAL REINFORCING STEEL IN THE INTERIOR FACE OF EXTERIOR WALL AND BOTH FACES OF INTERIOR WALLS ABOVE LOWER WALL CONSTRUCTION JOINT. THE SPLICE LENGTH SHALL BE AS PROVIDED IN THE SPLICE LENGTH CHART SHOWN ON THE PLANS. EXTRA WEIGHT OF STEEL DUE TO THE SPLICES SHALL BE PAID FOR BY THE CONTRACTOR.

AT THE CONTRACTOR'S OPTION HE MAY SUBMIT, TO THE ENGINEER FOR APPROVAL, DESIGN AND DETAIL DRAWINGS FOR A PRECAST REINFORCED CONCRETE BOX CULVERT IN LIEU OF THE CAST-IN-PLACE CULVERT SHOWN ON THE PLANS. THE DESIGN SHALL PROVIDE THE SAME SIZE AND NUMBER OF BARRELS AS USED ON THE CAST-IN-PLACE DESIGN. FOR OPTIONAL PRECAST REINFORCED CONCRETE BOX CULVERT, SEE SPECIAL PROVISIONS.

A 3 FOOT STRIP OF FILTER FABRIC SHALL BE ATTACHED TO THE FILL FACE OF THE WING COVERING THE ENTIRE LENGTH OF THE EXPANSION JOINT.

THE CONTRACTOR SHALL PROVIDE INDEPENDENT ASSURANCE SAMPLES OF REINFORCING STEEL AS FOLLOWS: FOR PROJECTS REQUIRING UP TO 400 TONS OF REINFORCING STEEL, ONE 30 INCH SAMPLE OF EACH SIZE BAR USED, AND FOR PROJECTS REQUIRING OVER 400 TONS OF REINFORCING STEEL, TWO 30 INCH SAMPLES OF EACH SIZE BAR USED. THE BARS FROM WHICH THE SAMPLES ARE TAKEN MUST THEN BE SPLICED WITH REPLACEMENT BARS OF THE SIZE AND LENGTH OF THE SAMPLE, PLUS A MINIMUM LAP SPLICE OF THIRTY BAR DIAMETERS.

FOR CULVERT DIVERSION DETAILS AND PAY ITEM, SEE EROSION CONTROL PLANS.

FOR SUBMITTAL OF WORKING DRAWINGS, SEE SPECIAL PROVISIONS.

FOR FALSEWORK AND FORMWORK, SEE SPECIAL PROVISIONS.

FOR GROUT FOR STRUCTURES, SEE SPECIAL PROVISIONS.

FOR CRANE SAFETY, SEE SPECIAL PROVISIONS.

FOR FAA REQUIREMENTS, SEE ROADWAY SPECIAL PROVISIONS.

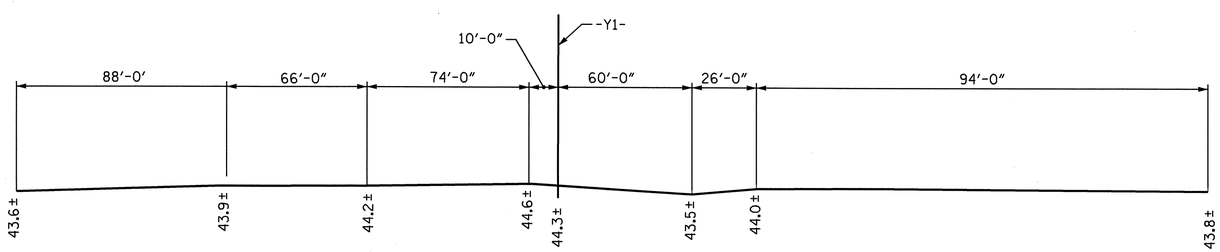

PROFILE ALONG ℄ CULVERT

PROJECT NO. R-2719A
LENOIR COUNTY
STATION: 38+22.00 -Y1-

SHEET 1 OF 4

STATE OF NORTH CAROLINA
DEPARTMENT OF TRANSPORTATION
RALEIGH

BARREL STANDARD

DOUBLE 9 FT.X 6 FT. CONCRETE BOX CULVERT 76° SKEW

NORTH CAROLINA PROFESSIONAL SEAL 12274 ENGINEER OMAR R. AZIZI
10-9-08

NORTH CAROLINA PROFESSIONAL SEAL 025516 ENGINEER EMILY E. MURRAY
10/7/08

REVISIONS						SHEET NO.
NO.	BY:	DATE:	NO.	BY:	DATE:	C-9
1			3			TOTAL SHEETS
2			4			23

REVISED 11-19-99 BY M.M. CHECKED BY R.W.W.
REDRAWN NOV. 1990 BY TSS CHECKED BY ARB

ASSEMBLED BY : B.N.BARODAWALA DATE : 9/2008		SPECIAL
CHECKED BY : A. M. LEE, PE DATE : 9/2008		
DRAWN BY : W.BRYAN STALEY II DATE : SEPT. 21,1971		STANDARD
CHECKED BY : JOEL A. JOHNSON DATE : NOV. 12,1971		

02-OCT-2008 11:53
h:\structures\str#15\barodawala\r-2719_sd_cul.dgn
mgudlaugsson

STR. #15 STD. NO. CB22A

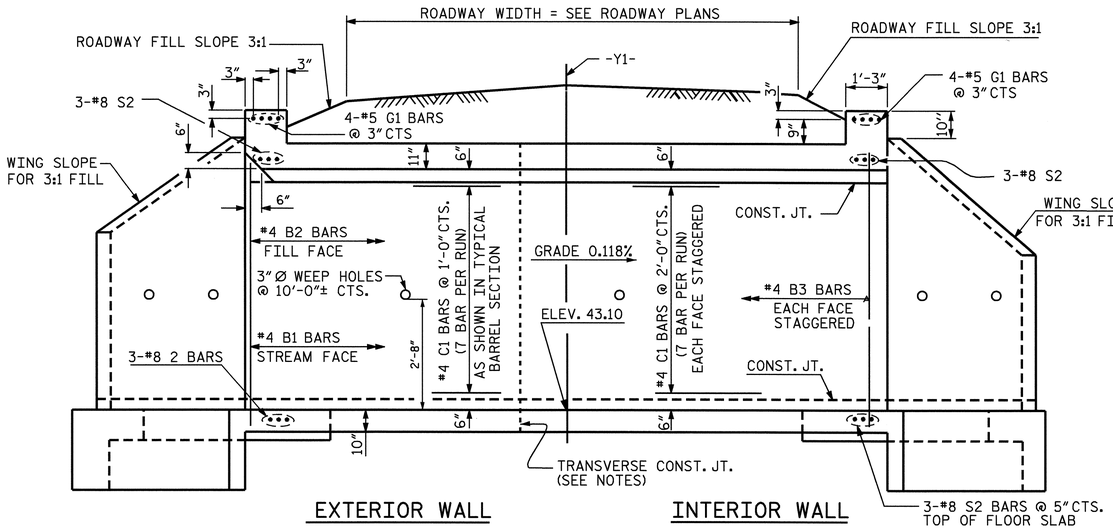

CULVERT SECTION NORMAL TO ROADWAY

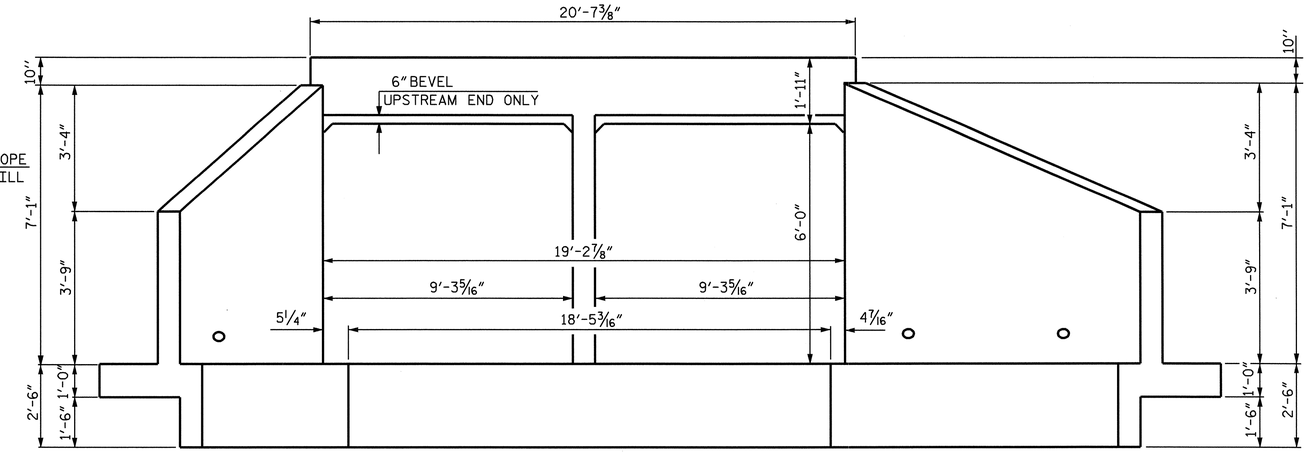

END ELEVATION NORMAL TO SKEW

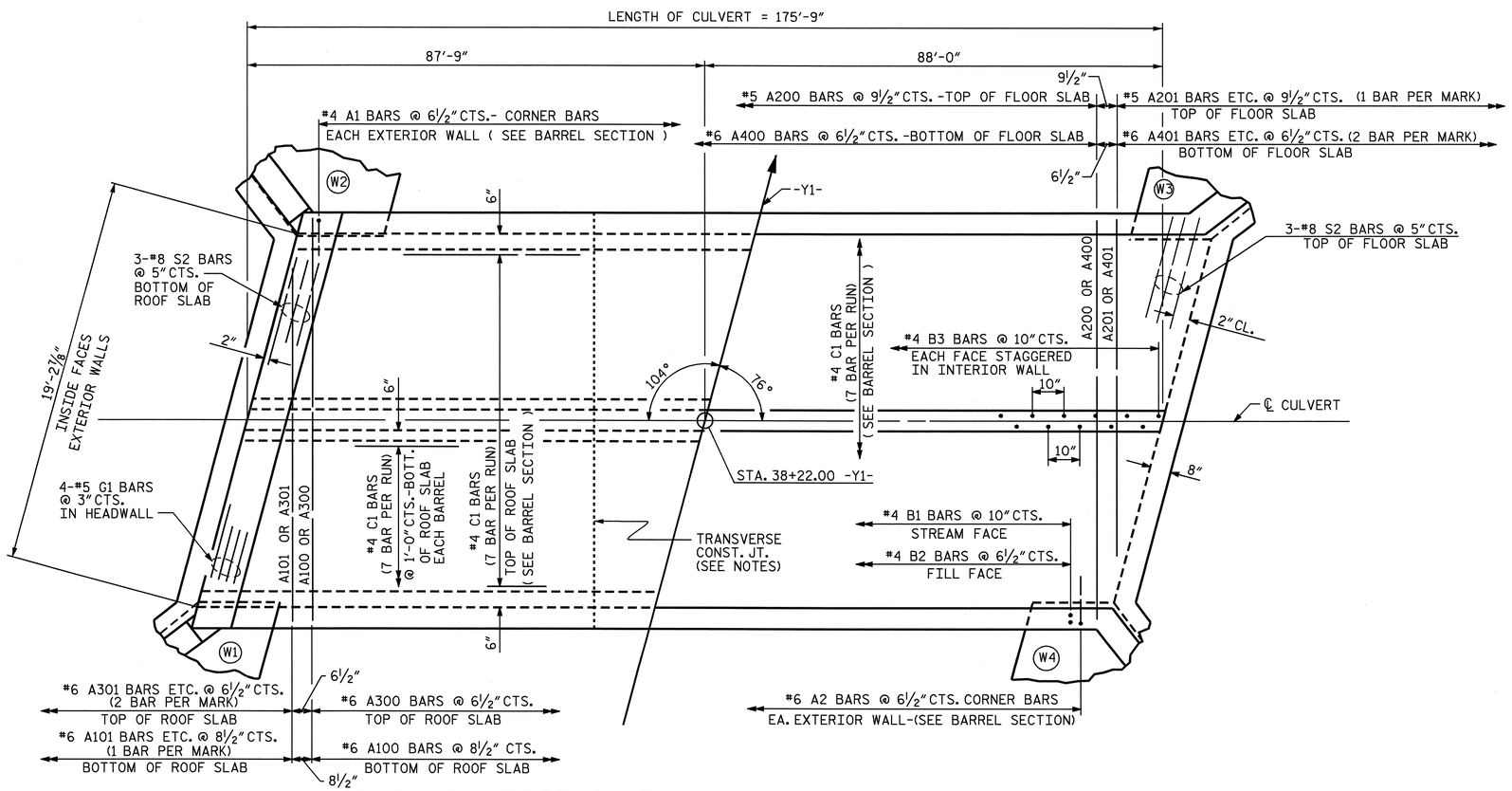

PART PLAN - ROOF SLAB

PART PLAN - FLOOR SLAB

PROJECT NO. R-2719A
LENOIR COUNTY
STATION: 38+22.00 -Y1-

SHEET 2 OF 4

STATE OF NORTH CAROLINA
DEPARTMENT OF TRANSPORTATION
RALEIGH

BARREL STANDARD

DOUBLE 9 FT. X 6 FT. CONCRETE BOX CULVERT 76° SKEW

NORTH CAROLINA PROFESSIONAL SEAL 025516 ENGINEER EMILY E. MURRAY

Emily E. Murray 10/7/08

REVISIONS							SHEET NO.
NO.	BY:	DATE:	NO.	BY:	DATE:		C-10
1			3				TOTAL SHEETS
2			4				23

ASSEMBLED BY : B.N.BARODAWALA	DATE : 9/2008	SPECIAL	
CHECKED BY : A. M. LEE, PE	DATE : 9/2008		
DRAWN BY : W.BRYAN STALEY II	DATE : SEPT. 21,1971	STANDARD	
CHECKED BY : JOEL A. JOHNSON	DATE : NOV. 12,1971		

REVISED 11-19-99 BY M.A.M. CHECKED BY R.W.W.
REDRAWN NOV. 1990 BY TSS CHECKED BY ARB

26-SEP-2008 14:04
k:\structures\str#15\barodawala\r-2719_sd_cul.dgn
bbarodawala

STR. #15 STD. NO. CB22

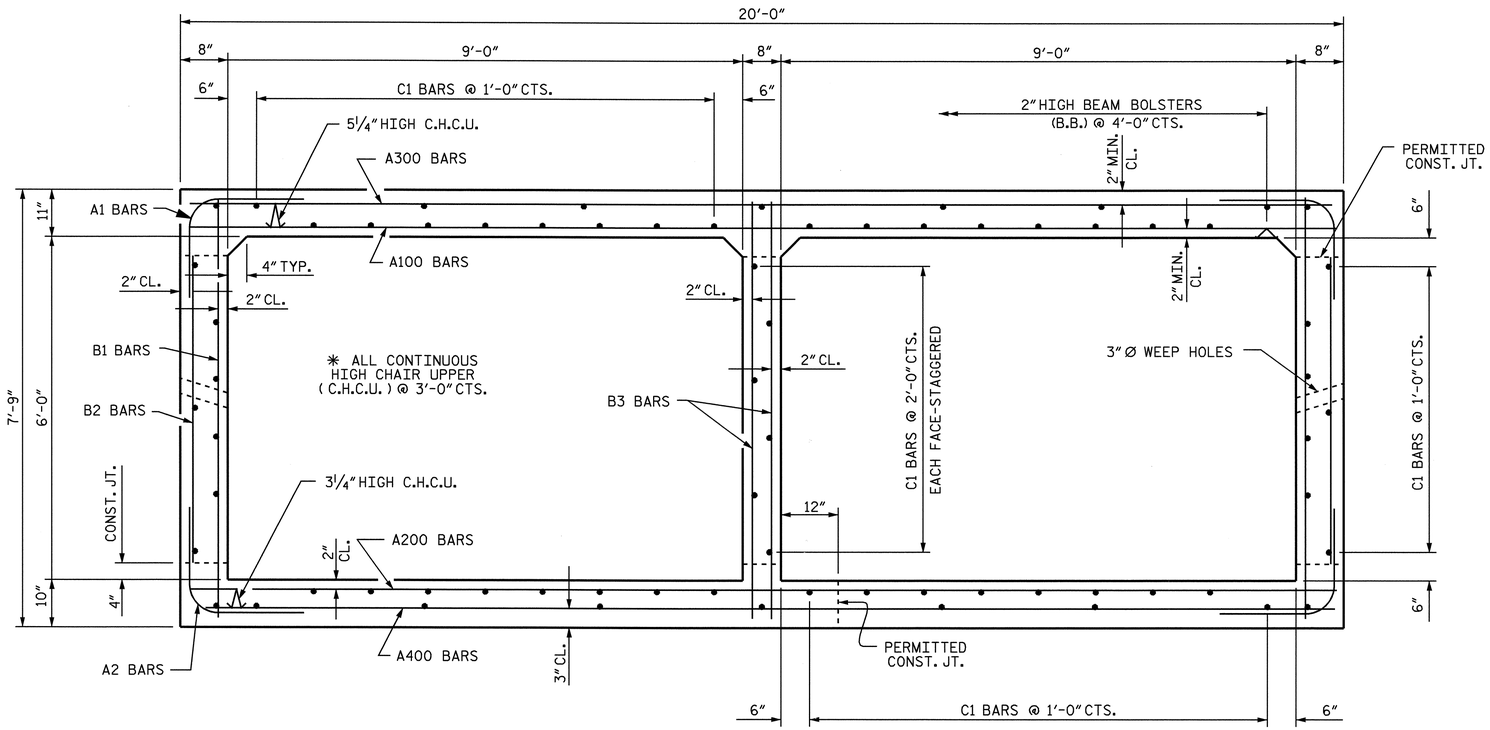

RIGHT ANGLE SECTION OF BARREL

THERE ARE 70 "C" BARS IN SECTION OF BARREL.

BAR TYPE

BAR DIMENSIONS ARE OUT TO OUT

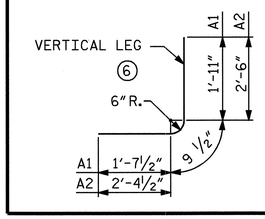

BILL OF MATERIAL

BAR	NO.	SIZE	TYPE	LENGTH	WEIGHT
A1	650	#4	6	4'-4"	1882
A2	650	#6	6	5'-8"	5532
A100	241	#6	STR	19'-7"	7089
A101	2	#6	STR	16'-3"	49
A102	2	#6	STR	13'-5"	40
A103	2	#6	STR	10'-6"	32
A104	2	#6	STR	7'-8"	23
A105	2	#6	STR	4'-10"	15
A106	2	#6	STR	2'-0"	6
A200	216	#5	STR	19'-7"	4412
A201	2	#5	STR	15'-11"	33
A202	2	#5	STR	12'-9"	27
A203	2	#5	STR	9'-6"	20
A204	2	#5	STR	6'-4"	13
A205	2	#5	STR	3'-2"	7
A300	316	#6	STR	19'-7"	9295
A301	4	#6	STR	14'-9"	89
A302	4	#6	STR	10'-4"	62
A303	4	#6	STR	6'-0"	36
A400	316	#6	STR	19'-7"	9295
A401	4	#6	STR	14'-9"	89
A402	4	#6	STR	10'-4"	62
A403	4	#6	STR	6'-0"	36
B1	422	#4	STR	7'-3"	2044
B2	650	#4	STR	5'-4"	2316
B3	422	#4	STR	7'-3"	2044
C1	490	#4	STR	26'-11"	8810
D1	3	#6	STR	2'-5"	11
G1	8	#5	STR	20'-3"	169
S2	12	#8	STR	20'-3"	649
REINFORCING STEEL					54187

SPLICE CHART

BAR	SIZE	SPLICE LENGTH
A200	#5	1'-9"
A400	#6	2'-4"
B1	#4	1'-9"
B3	#4	1'-9"
C1	#4	1'-11"

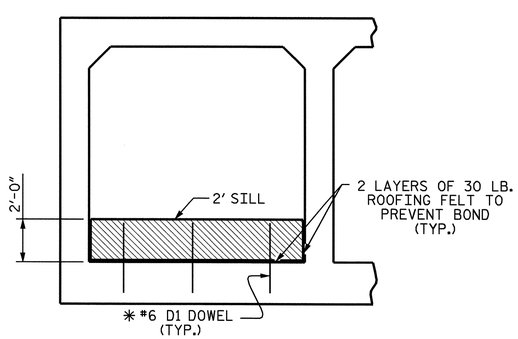

ELEVATION

(@ INLET, BARREL 1)

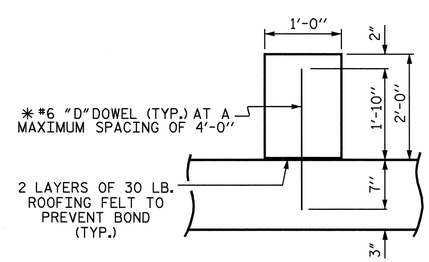

SECTION THROUGH HIGH SILL

SILL DETAILS

✳ DOWELS MAY BE PUSHED INTO GREEN CONCRETE AFTER SLAB HAS BEEN FLOAT FINISHED.

PROJECT NO. R-2719A

LENOIR COUNTY

STATION: 38+22.00 -Y1-

SHEET 3 OF 4

STATE OF NORTH CAROLINA
DEPARTMENT OF TRANSPORTATION
RALEIGH

BARREL STANDARD DOUBLE 9 FT. X 6 FT. CONCRETE BOX CULVERT 76° SKEW

NORTH CAROLINA PROFESSIONAL SEAL 025516 ENGINEER EMILY E. MURRAY

10/7/08

REVISIONS						SHEET NO.
NO.	BY:	DATE:	NO.	BY:	DATE:	C-11
1			3			TOTAL SHEETS
2			4			23

DRAWN BY : B.N.BARODAWALA DATE : 09/2008
CHECKED BY : A. M. LEE, PE DATE : 9/2008

26-SEP-2008 14:04
k:\structures\str#15\barodawala\r-2719_sd_cul.dgn
bbarodawala

STR. #15

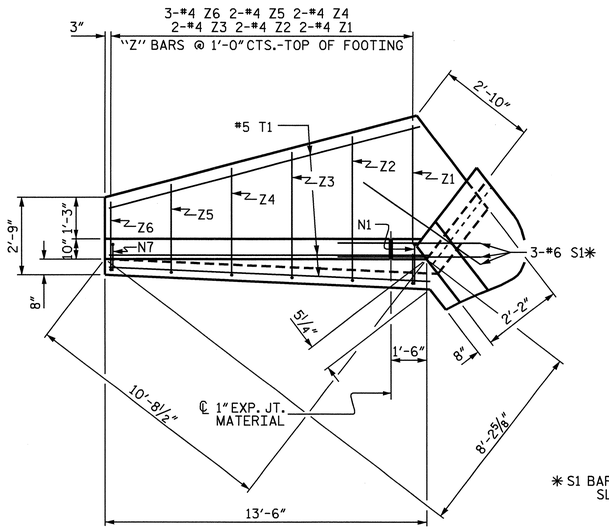

PLAN W2

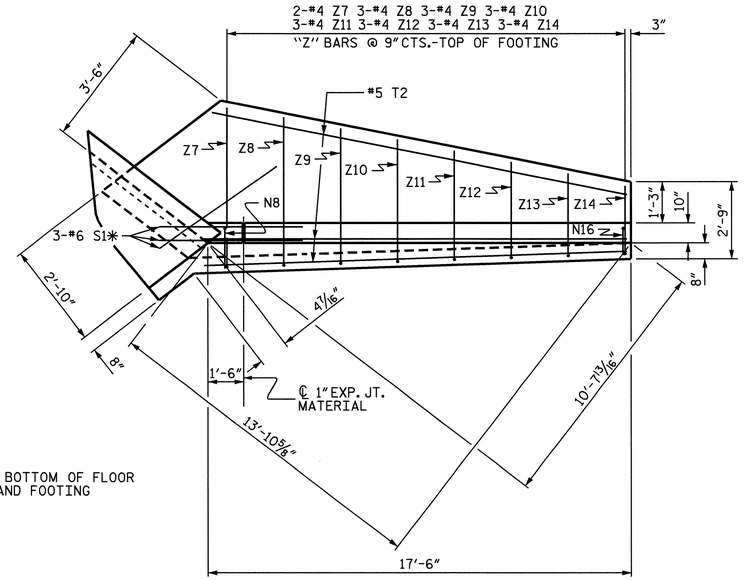

✱ S1 BARS @ BOTTOM OF FLOOR SLAB AND FOOTING

PLAN W1

BAR TYPES

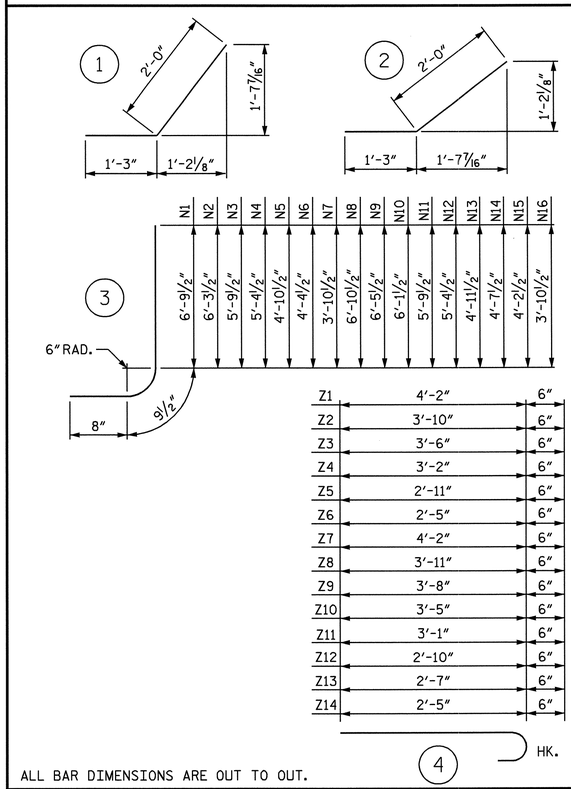

ALL BAR DIMENSIONS ARE OUT TO OUT.

BILL OF MATERIAL

BAR	NO.	SIZE	TYPE	LENGTH	WEIGHT
N1	4	#4	3	8'-3"	22
N2	4	#4	3	7'-9"	21
N3	4	#4	3	7'-3"	19
N4	4	#4	3	6'-10"	18
N5	4	#4	3	6'-4"	17
N6	4	#4	3	5'-10"	16
N7	4	#4	3	5'-4"	14
N8	4	#4	3	8'-4"	22
N9	4	#4	3	7'-11"	21
N10	4	#4	3	7'-7"	20
N11	4	#4	3	7'-3"	19
N12	4	#4	3	6'-10"	18
N13	4	#4	3	6'-5"	17
N14	4	#4	3	6'-1"	16
N15	4	#4	3	5'-8"	15
N16	4	#4	3	5'-4"	14
S1	12	#6	STR	6'-0"	108
T1	6	#5	STR	13'-0"	81
T2	6	#5	STR	17'-1"	107
V1	4	#4	STR	6'-3"	17
V2	4	#4	STR	5'-9"	15
V3	4	#4	STR	5'-3"	14
V4	4	#4	STR	4'-9"	13
V5	4	#4	STR	4'-3"	11
V6	4	#4	STR	3'-9"	10
V7	4	#4	STR	3'-3"	9
V8	4	#4	STR	6'-5"	17
V9	4	#4	STR	5'-11"	16
V10	4	#4	STR	5'-7"	15
V11	4	#4	STR	5'-2"	14
V12	4	#4	STR	4'-9"	13
V13	4	#4	STR	4'-5"	12
V14	4	#4	STR	4'-0"	11
V15	4	#4	STR	3'-8"	10
V16	4	#4	STR	3'-3"	9
Z1	4	#4	4	4'-8"	12
Z2	4	#4	4	4'-4"	12
Z3	4	#4	4	4'-0"	11
Z4	4	#4	4	3'-8"	10
Z5	4	#4	4	3'-5"	9
Z6	6	#4	4	2'-11"	12
Z7	4	#4	4	4'-8"	12
Z8	6	#4	4	4'-5"	18
Z9	6	#4	4	4'-2"	17
Z10	6	#4	4	3'-11"	16
Z11	6	#4	4	3'-7"	14
Z12	6	#4	4	3'-4"	13
Z13	6	#4	4	3'-1"	12
Z14	6	#4	4	2'-11"	12

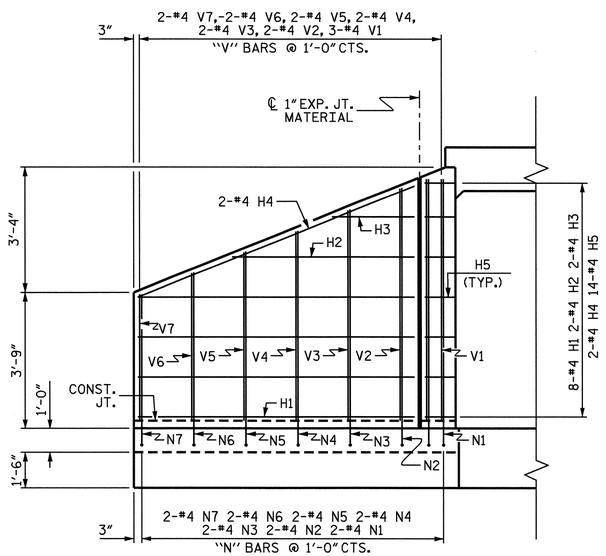

ELEVATION W2

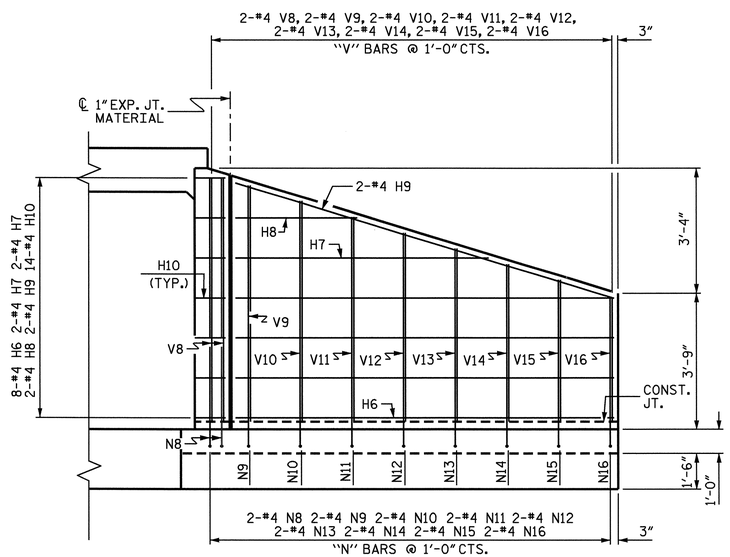

ELEVATION W1

BILL OF MATERIAL

BAR	NO.	SIZE	TYPE	LENGTH	WEIGHT
H1	8	#4	STR	11'-7"	62
H2	4	#4	STR	8'-0"	21
H3	4	#4	STR	4'-0"	11
H4	4	#4	STR	11'-11"	32
H5	28	#4	1	3'-3"	61
H6	16	#4	STR	15'-7"	167
H7	4	#4	STR	10'-11"	29
H8	4	#4	STR	5'-8"	15
H9	4	#4	STR	15'-10"	42
H10	28	#4	2	3'-3"	61

REINFORCING STEEL FOR 4 WINGS 1538 LBS

CLASS A CONCRETE

4 WINGS	22.0	CY
2 HEADWALL	2.0	CY
2 END CURTAIN WALL	2.2	CY
TOTAL	26.2	CY

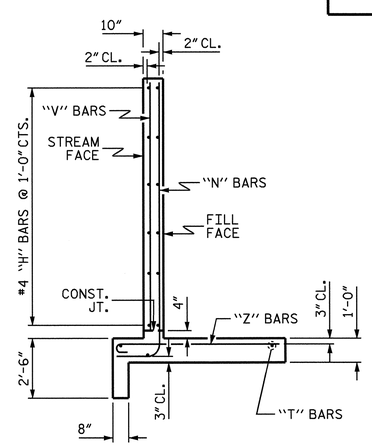

TYPICAL WING SECTION

NORTH CAROLINA PROFESSIONAL SEAL 025516 ENGINEER EMILY E. MURRAY
10/7/08

PROJECT NO. R-2719A

LENOIR COUNTY

STATION: 38+22.00 -Y1-

SHEET 4 OF 4

STATE OF NORTH CAROLINA
DEPARTMENT OF TRANSPORTATION
RALEIGH

WINGS FOR MULTIPLE BARREL CONCRETE BOX CULVERT

H = 6'-0" SLOPE = 3:1

75° SKEW

REVISIONS						SHEET NO.
NO.	BY:	DATE:	NO.	BY:	DATE:	C-12
1			3			TOTAL SHEETS
2			4			23

ASSEMBLED BY : B.N.BARODAWALA DATE : 9/23/09
CHECKED BY : A. M. LEE, PE DATE : 9/2008

DRAWN BY : CCJ 01/00
CHECKED BY : RWW 03/00

26-SEP-2008 14:04
k:\structures\str#15\barodawala\r-2719_sd_cul.dgn
bbarodawala

STR. #15

BM-"A": RAILROAD SPIKE IN 30" HARDWOOD TREE -Y1- STA. 75+86.46, 615' RT EL. 53.26

F. A. PROJECT NO. STP-0224(12)

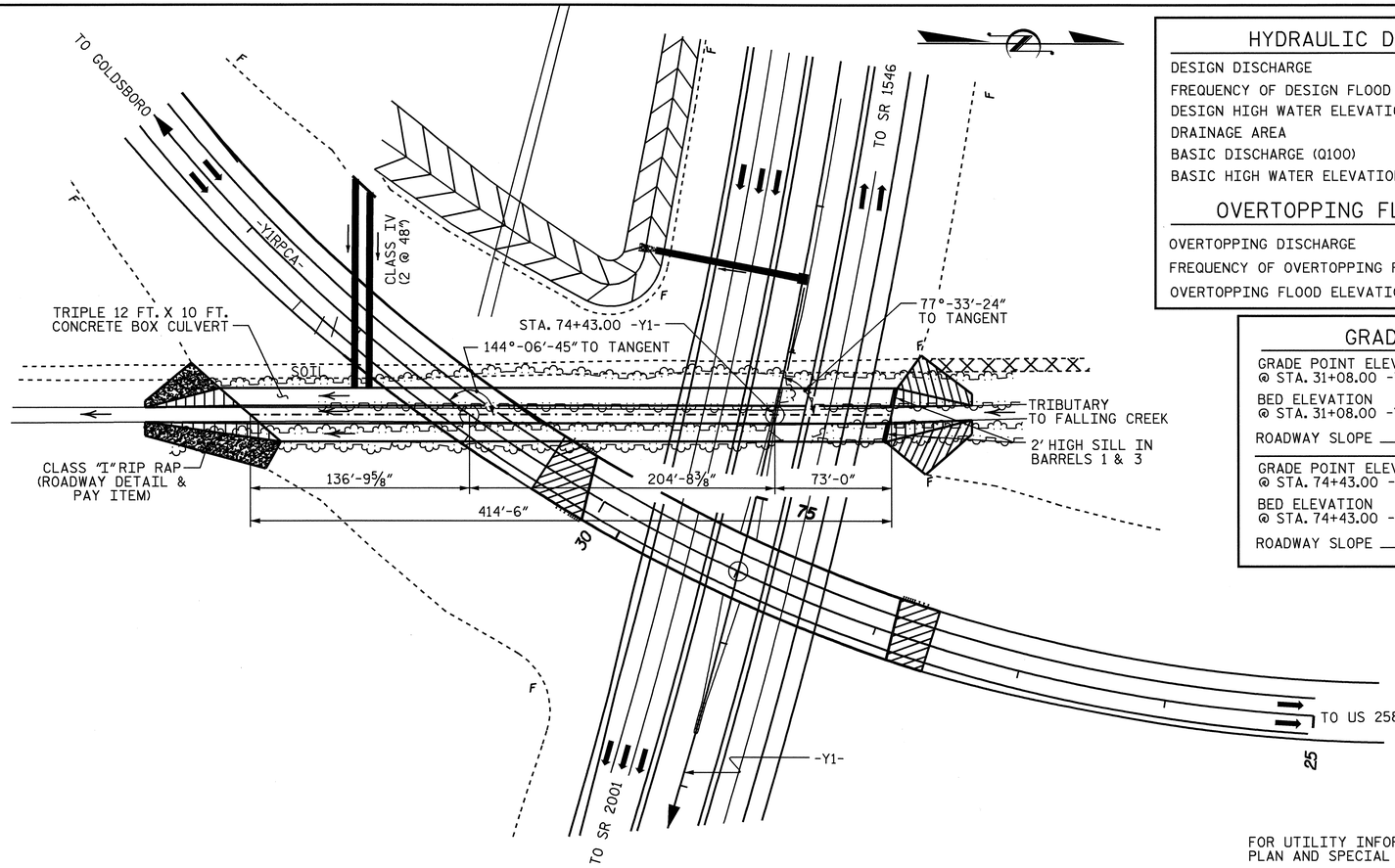

FOR UTILITY INFORMATION, SEE UTILITY PLAN AND SPECIAL PROVISIONS.

HYDRAULIC DATA

DESIGN DISCHARGE	= 1600 CFS.
FREQUENCY OF DESIGN FLOOD	= 50 YRS.
DESIGN HIGH WATER ELEVATION	= 53.1
DRAINAGE AREA	= 2.77 SQ. MI
BASIC DISCHARGE (Q100)	= 1900 CFS.
BASIC HIGH WATER ELEVATION	= 53.4

OVERTOPPING FLOOD DATA

OVERTOPPING DISCHARGE	= 3400 CFS.
FREQUENCY OF OVERTOPPING FLOOD	= 500 YR.+
OVERTOPPING FLOOD ELEVATION	= 55.6

GRADE DATA

GRADE POINT ELEVATION @ STA. 31+08.00 -Y1RPCA-	77.761'
BED ELEVATION @ STA. 31+08.00 -Y1RPCA-	42.14'
ROADWAY SLOPE	3 : 1
GRADE POINT ELEVATION @ STA. 74+43.00 -Y1-	56.919'
BED ELEVATION @ STA. 74+43.00 -Y1-	42.47'
ROADWAY SLOPE	3 : 1

LOCATION SKETCH

NOTES

ASSUMED LIVE LOAD HS20-44 OR ALTERNATE LOADING.

MAX DESIGN FILL = 27.11 FEET. AND MIN. DESIGN FILL = 2.60 FEET.

FOR OTHER DESIGN DATA AND NOTES SEE STANDARD NOTE SHEET.

3" Ø WEEP HOLES INDICATED TO BE IN ACCORDANCE WITH THE SPECIFICATIONS.

CONCRETE IN CULVERTS TO BE POURED IN THE FOLLOWING ORDER:

1. WING FOOTINGS AND FLOOR SLAB INCLUDING 4" OF ALL VERTICAL WALLS.
2. THE REMAINING PORTIONS OF THE WALLS AND WINGS FULL HEIGHT FOLLOWED BY ROOF SLAB AND HEADWALLS.

THE RESIDENT ENGINEER SHALL CHECK THE LENGTH OF CULVERT BEFORE STAKING IT OUT TO MAKE CERTAIN THAT IT WILL PROPERLY TAKE CARE OF THE FILL.

DIMENSIONS FOR WING LAYOUT AS WELL ADDITIONAL REINFORCING STEEL EMBEDDED IN BARREL ARE SHOWN ON WING SHEETS.

TRANSVERSE CONSTRUCTION JOINTS SHALL BE USED IN THE BARREL, SPACED TO LIMIT THE POURS TO A MAXIMUM OF 70 FT. LOCATION OF JOINTS SHALL BE SUBJECT TO APPROVAL OF THE ENGINEER.

STEEL IN THE BOTTOM SLAB MAY BE SPLICED AT THE PERMITTED CONSTRUCTION JOINT AT THE CONTRACTOR'S OPTION. EXTRA WEIGHT OF STEEL DUE TO THE SPLICES SHALL BE PAID FOR BY THE CONTRACTOR.

AT THE CONTRACTOR'S OPTION, HE MAY SPLICE THE VERTICAL REINFORCING STEEL IN THE INTERIOR FACE OF EXTERIOR WALL AND BOTH FACES OF INTERIOR WALLS ABOVE LOWER WALL CONSTRUCTION JOINT. THE SPLICE LENGTH SHALL BE AS PROVIDED IN THE SPLICE LENGTH CHART SHOWN ON THE PLANS. EXTRA WEIGHT OF STEEL DUE TO THE SPLICES SHALL BE PAID FOR BY THE CONTRACTOR.

A 3 FOOT STRIP OF FILTER FABRIC SHALL BE ATTACHED TO THE FILL FACE OF THE WING COVERING THE ENTIRE LENGTH OF THE EXPANSION JOINT.

THE CONTRACTOR SHALL PROVIDE INDEPENDENT ASSURANCE SAMPLES OF REINFORCING STEEL AS FOLLOWS: FOR PROJECTS REQUIRING UP TO 400 TONS OF REINFORCING STEEL, ONE 30 INCH SAMPLE OF EACH SIZE BAR USED, AND FOR PROJECTS REQUIRING OVER 400 TONS OF REINFORCING STEEL, TWO 30 INCH SAMPLES OF EACH SIZE BAR USED. THE BARS FROM WHICH THE SAMPLES ARE TAKEN MUST THEN BE SPLICED WITH REPLACEMENT BARS OF THE SIZE AND LENGTH OF THE SAMPLE, PLUS A MINIMUM LAP SPLICE OF THIRTY BAR DIAMETERS.

FOR CULVERT DIVERSION DETAILS AND PAY ITEM, SEE EROSION CONTROL PLANS.

FOR SUBMITTAL OF WORKING DRAWINGS, SEE SPECIAL PROVISIONS.

FOR FALSEWORK AND FORMWORK, SEE SPECIAL PROVISIONS.

DETAILED DRAWINGS FOR FALSEWORK AND FORMS FOR THIS CULVERT SHALL BE SUBMITTED. SEE SHEET SN.

NO PRECAST REINFORCED BOX CULVERT OPTION WILL BE ALLOWED.

FOR GROUT FOR STRUCTURES, SEE SPECIAL PROVISIONS.

FOR CRANE SAFETY, SEE SPECIAL PROVISIONS.

FOR FAA REQUIREMENTS, SEE ROADWAY SPECIAL PROVISIONS.

PILES AT END BENT #2 FOR BRIDGE AT STA. 28+99.24-Y1RPCA- SHALL BE LOCATED PRIOR TO CONSTRUCTION OF THE BOX CULVERT.

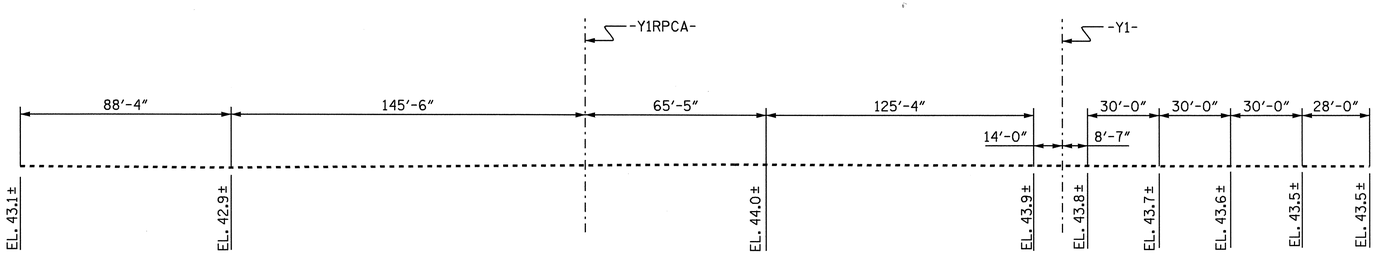

PROFILE ALONG ℄ CULVERT

TOTAL STRUCTURE QUANTITIES

CLASS A CONCRETE		
BARREL @ 6.311 CY/FT	2615.9	C.Y.
WINGS ETC.	81.4	C.Y.
TOTAL	2698.3	C.Y.
REINFORCING STEEL		
BARREL	406959	LBS.
WINGS ETC.	5433	LBS.
TOTAL	412392	LBS.
CULVERT EXCAVATION		LUMP SUM
FOUNDATION COND. MAT'L		1130 TONS

PROJECT NO. R-2719A

LENOIR COUNTY

STATION: 74+43.00-Y1-

SHEET 1 OF 7

BRIDGE NO. C-204

STATE OF NORTH CAROLINA
DEPARTMENT OF TRANSPORTATION
RALEIGH

TRIPLE 12 FT. X 10 FT. CONCRETE BOX CULVERT

NORTH CAROLINA PROFESSIONAL SEAL 12274 ENGINEER OMAR R. AZIZI
10-9-08

NORTH CAROLINA PROFESSIONAL SEAL 025516 ENGINEER EMILY E. MURRAY
10/7/08

REVISIONS							SHEET NO.
NO.	BY:	DATE:	NO.	BY:	DATE:		C-13
1			3				TOTAL SHEETS
2			4				23

ASSEMBLED BY : B.N.BARODAWALA DATE : 8/18/08
CHECKED BY : TRACY AVERETTE DATE : 9/08
DRAWN BY : R.W.WRIGHT DATE : OCT. 1989
CHECKED BY : A.R.BISSETTE DATE : OCT. 1989

SPECIAL STANDARD

ADDED 11-1-90

02-OCT-2008 11:55
h:\structures\str#16\barodawala\r-2719_sd_cul_16.dgn
mgudlaugsson

STR. #16

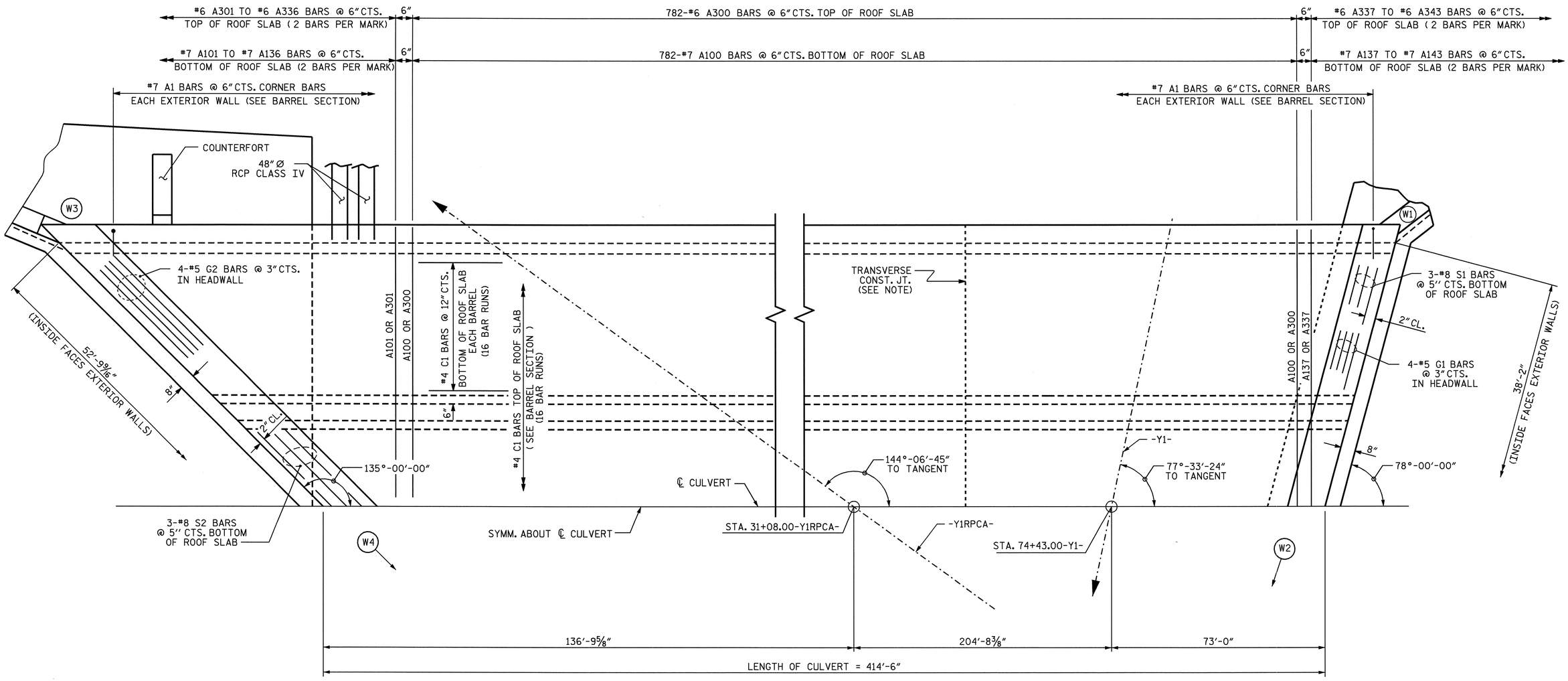

PART PLAN - ROOF SLAB

PROJECT NO. R-2719A

LENOIR COUNTY

STATION: 74+43.00-Y1-

SHEET 2 OF 7

STATE OF NORTH CAROLINA
DEPARTMENT OF TRANSPORTATION
RALEIGH

TRIPLE 12 FT. X 10 FT.
CONCRETE BOX CULVERT

NORTH CAROLINA PROFESSIONAL SEAL 025516 ENGINEER EMILY E. MURRAY

Emily E. Murray 10/7/08

REVISIONS						SHEET NO.
NO.	BY:	DATE:	NO.	BY:	DATE:	C-14
1			3			TOTAL SHEETS
2			4			23

DRAWN BY : B.N.BARODAWALA DATE : 8/18/08
CHECKED BY : TRACY AVERETTE DATE : 9/08

23-SEP-2008 15:40
gi\tlpprojects-r\r2719a\structures\str#16\barodawala\r-2719_sd_cul_16.dgn
taverette

STR. #16

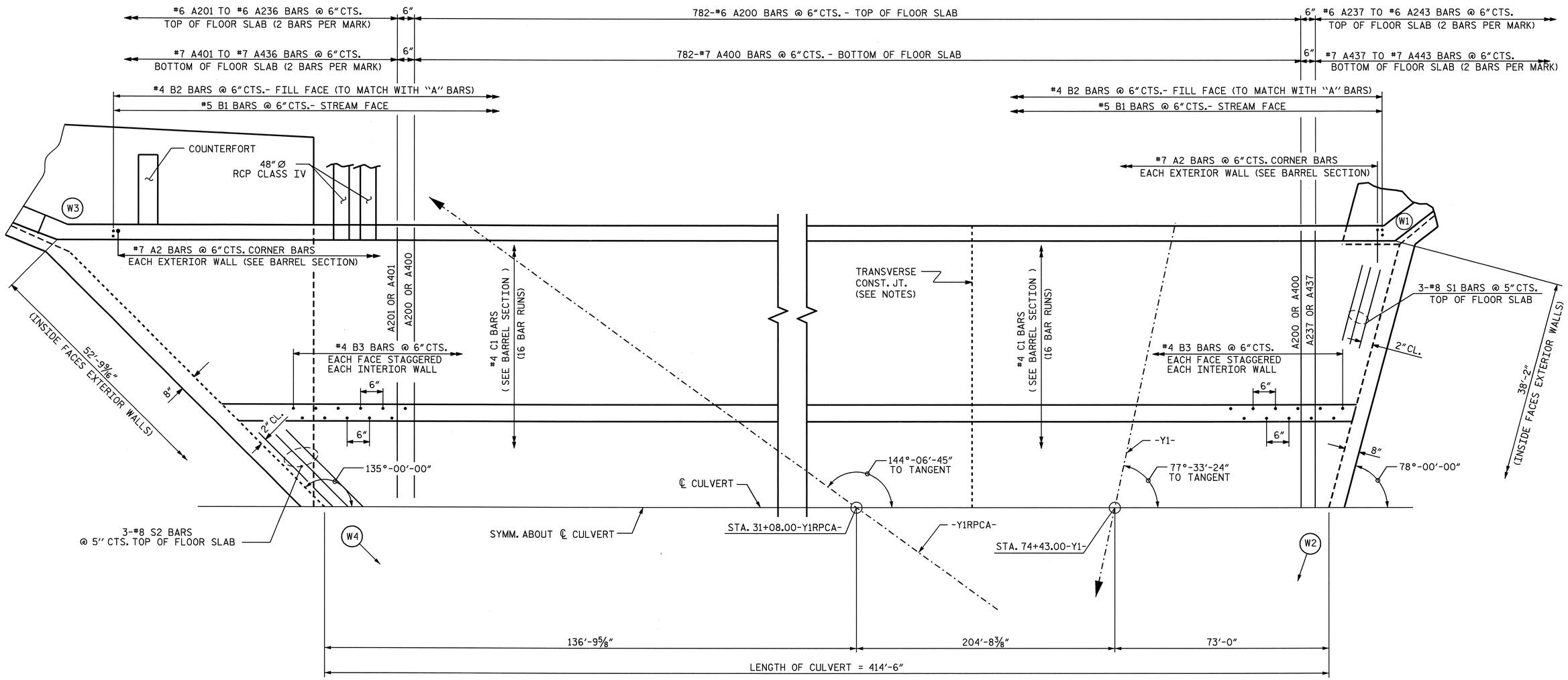

PART PLAN - FLOOR SLAB

SILLS AT INLET END NOT SHOWN,
SEE SHEET 4 OF 7 FOR SILL DETAILS.

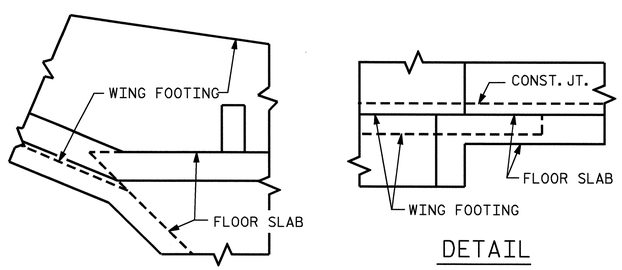

DETAIL

CONNECTION OF WING FOOTING AND FLOOR SLAB WHEN SLAB IS THICKER THAN FOOTING

PROJECT NO. R-2719A
LENOIR COUNTY
STATION: 74+43.00-Y1-

SHEET 3 OF 7

STATE OF NORTH CAROLINA
DEPARTMENT OF TRANSPORTATION
RALEIGH

TRIPLE 12 FT. X 10 FT.
CONCRETE BOX CULVERT

NORTH CAROLINA PROFESSIONAL SEAL 025516 ENGINEER EMILY E. MURRAY
10/7/08

REVISIONS						SHEET NO.
NO.	BY:	DATE:	NO.	BY:	DATE:	C-15
1			3			TOTAL SHEETS
2			4			23

DRAWN BY : B.N.BARODAWALA DATE : 8/18/08
CHECKED BY : TRACY AVERETTE DATE : 9/08

23-SEP-2008 15:40
gi\tlpprojects-r\r2719a\structures\str#16\barodawala\r-2719_sd_cul_16.dgn
taveretta

STR. #16

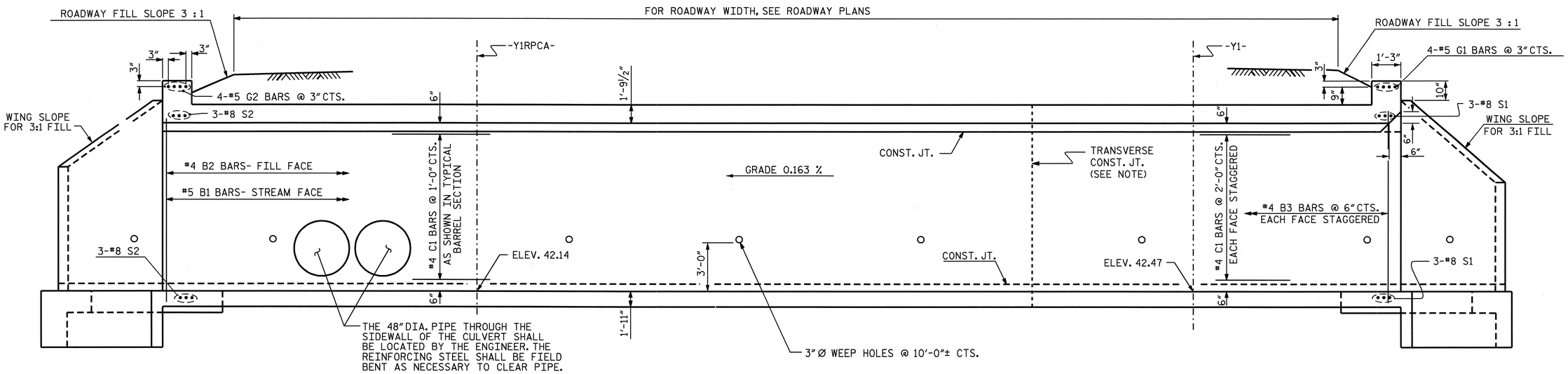

EXTERIOR WALL

INTERIOR WALL

CULVERT SECTION NORMAL TO ROADWAY

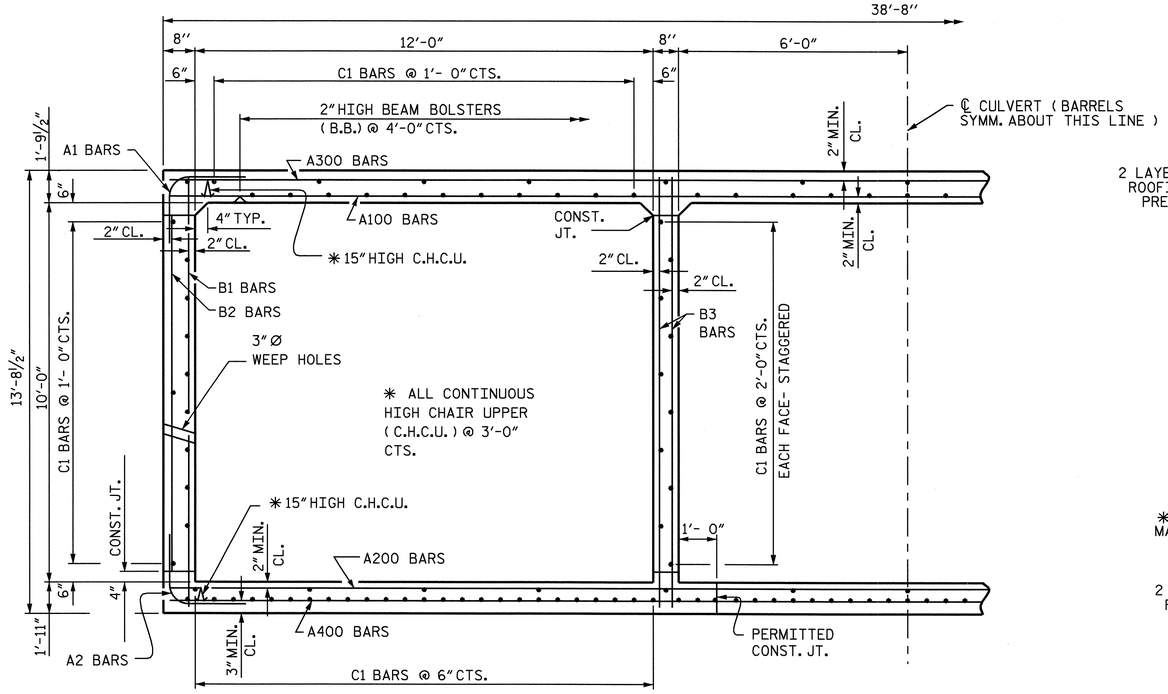

RIGHT ANGLE SECTION OF BARREL

THERE ARE 179 "C" BARS IN SECTION OF BARREL.

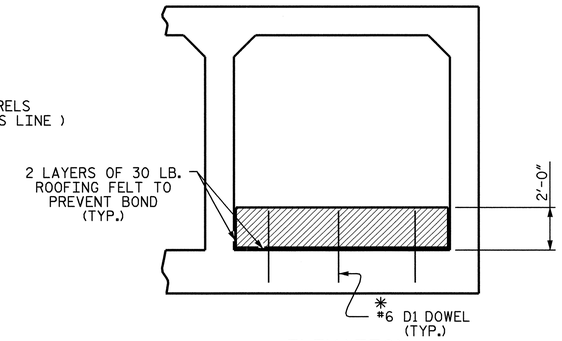

ELEVATION

(@ INLET, BARRELS 1 AND 3)

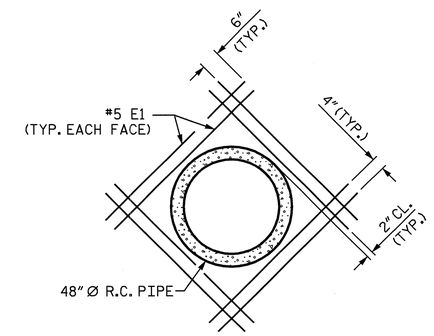

DETAIL OF REINFORCING AROUND R.C. PIPE

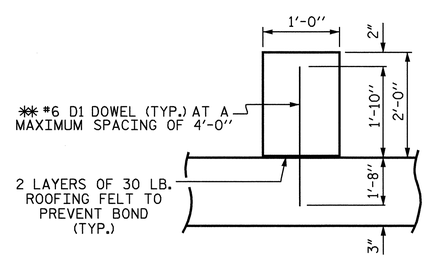

SECTION THROUGH SILL

SILL DETAILS

✳✳ DOWELS MAY BE PUSHED INTO GREEN CONCRETE AFTER SLAB HAS BEEN FLOAT FINISHED.

PROJECT NO. R-2719A

LENOIR COUNTY

STATION: 74+43.00-Y1-

SHEET 4 OF 7

STATE OF NORTH CAROLINA
DEPARTMENT OF TRANSPORTATION
RALEIGH

TRIPLE 12 FT. X 10 FT. CONCRETE BOX CULVERT

NORTH CAROLINA PROFESSIONAL SEAL 025516 ENGINEER EMILY E. MURRAY

10/7/08

REVISIONS							SHEET NO.
NO.	BY:	DATE:	NO.	BY:	DATE:		C-16
1			3				TOTAL SHEETS
2			4				23

DRAWN BY : B.N.BARODAWALA DATE : 8/18/08
CHECKED BY : TRACY AVERETTE DATE : 9/08

03-OCT-2008 11:23
J:\Structures\Str#16\Barodawala\r-2719_sd_cul_16.dgn
emurray

STR. #16

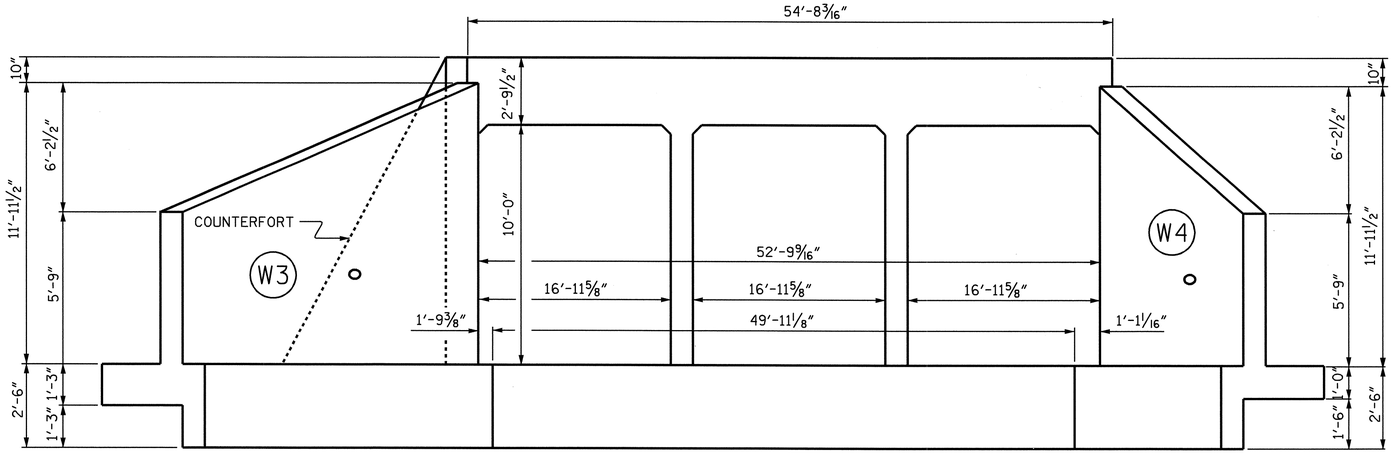

OUTLET END ELEVATION NORMAL TO SKEW (135°)

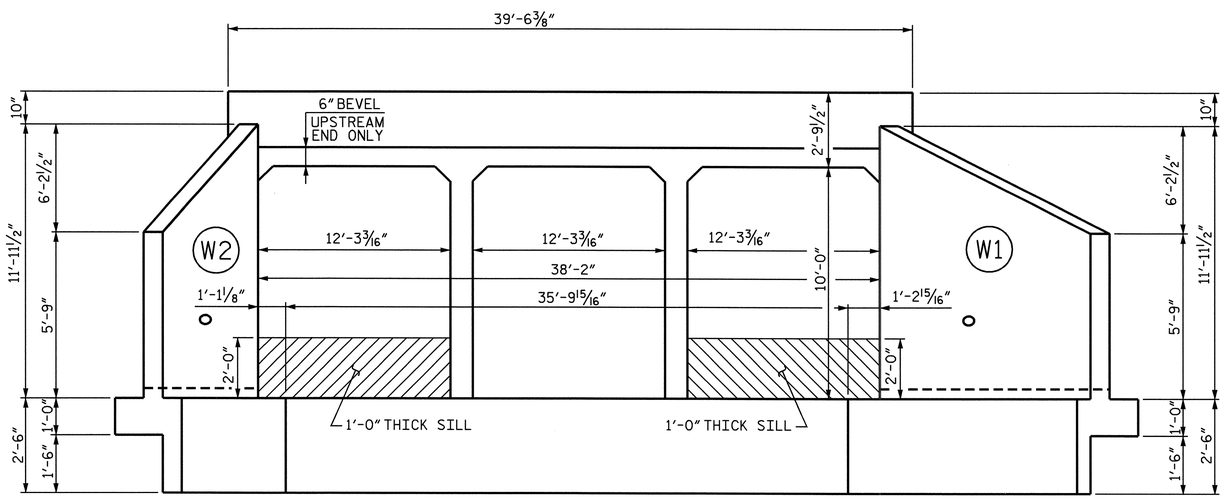

INLET END ELEVATION NORMAL TO SKEW (78°)

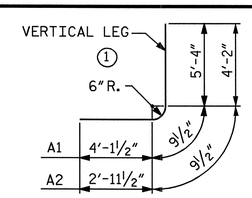

BAR TYPE

BAR DIMENSIONS ARE OUT TO OUT

*** SPLICE LENGTHS CHART ***

BAR	SIZE	SPLICE LENGTH
A200	#6	3'-2"
A400	#7	3'-1"
B1	#5	1'-9"
B3	#4	1'-9"
C1	#4	1'-11"

BILL OF MATERIAL

BAR	NO.	SIZE	TYPE	LENGTH	WEIGHT	BAR	NO.	SIZE	TYPE	LENGTH	WEIGHT	BAR	NO.	SIZE	TYPE	LENGTH	WEIGHT
A100	782	#7	STR	38'-4"	61272	A240	2	#6	STR	20'-3"	61	A411	2	#7	STR	27'-6"	112
A101	2	#7	STR	37'-6"	153	A241	2	#6	STR	15'-6"	47	A412	2	#7	STR	26'-6"	108
A102	2	#7	STR	36'-6"	149	A242	2	#6	STR	10'-10"	33	A413	2	#7	STR	25'-6"	104
A103	2	#7	STR	35'-6"	145	A243	2	#6	STR	6'-2"	19	A414	2	#7	STR	24'-6"	100
A104	2	#7	STR	34'-6"	141							A415	2	#7	STR	23'-6"	96
A105	2	#7	STR	33'-6"	137	A300	782	#6	STR	38'-4"	45025	A416	2	#7	STR	22'-6"	92
A106	2	#7	STR	32'-6"	133	A301	2	#6	STR	37'-6"	113	A417	2	#7	STR	21'-6"	88
A107	2	#7	STR	31'-6"	129	A302	2	#6	STR	36'-6"	110	A418	2	#7	STR	20'-6"	84
A108	2	#7	STR	30'-6"	125	A303	2	#6	STR	35'-6"	107	A419	2	#7	STR	19'-6"	80
A109	2	#7	STR	29'-6"	121	A304	2	#6	STR	34'-6"	104	A420	2	#7	STR	18'-6"	76
A110	2	#7	STR	28'-6"	117	A305	2	#6	STR	33'-6"	101	A421	2	#7	STR	17'-6"	72
A111	2	#7	STR	27'-6"	112	A306	2	#6	STR	32'-6"	98	A422	2	#7	STR	16'-6"	67
A112	2	#7	STR	26'-6"	108	A307	2	#6	STR	31'-6"	95	A423	2	#7	STR	15'-6"	63
A113	2	#7	STR	25'-6"	104	A308	2	#6	STR	30'-6"	92	A424	2	#7	STR	14'-6"	59
A114	2	#7	STR	24'-6"	100	A309	2	#6	STR	29'-6"	89	A425	2	#7	STR	13'-6"	55
A115	2	#7	STR	23'-6"	96	A310	2	#6	STR	28'-6"	86	A426	2	#7	STR	12'-6"	51
A116	2	#7	STR	22'-6"	92	A311	2	#6	STR	27'-6"	83	A427	2	#7	STR	11'-6"	47
A117	2	#7	STR	21'-6"	88	A312	2	#6	STR	26'-6"	80	A428	2	#7	STR	10'-6"	43
A118	2	#7	STR	20'-6"	84	A313	2	#6	STR	25'-6"	77	A429	2	#7	STR	9'-6"	39
A119	2	#7	STR	19'-6"	80	A314	2	#6	STR	24'-6"	74	A430	2	#7	STR	8'-6'	35
A120	2	#7	STR	18'-6"	76	A315	2	#6	STR	23'-6"	71	A431	2	#7	STR	7'-6"	31
A121	2	#7	STR	17'-6"	72	A316	2	#6	STR	22'-6"	68	A432	2	#7	STR	6'-6"	27
A122	2	#7	STR	16'-6"	67	A317	2	#6	STR	21'-6"	65	A433	2	#7	STR	5'-6"	22
A123	2	#7	STR	15'-6"	63	A318	2	#6	STR	20'-6"	62	A434	2	#7	STR	4'-5"	18
A124	2	#7	STR	14'-6"	59	A319	2	#6	STR	19'-6"	59	A435	2	#7	STR	3'-6"	14
A125	2	#7	STR	13'-6"	55	A320	2	#6	STR	18'-6"	56	A436	2	#7	STR	2'-6"	10
A126	2	#7	STR	12'-6"	51	A321	2	#6	STR	17'-6"	53	A437	2	#7	STR	34'-4"	140
A127	2	#7	STR	11'-6"	47	A322	2	#6	STR	16'-6"	50	A438	2	#7	STR	29'-8"	121
A128	2	#7	STR	10'-6"	43	A323	2	#6	STR	15'-6"	47	A439	2	#7	STR	24'-11"	102
A129	2	#7	STR	9'-6"	39	A324	2	#6	STR	14'-6"	44	A440	2	#7	STR	20'-3"	83
A130	2	#7	STR	8'-6'	35	A325	2	#6	STR	13'-6"	41	A441	2	#7	STR	15'-6"	63
A131	2	#7	STR	7'-6"	31	A326	2	#6	STR	12'-6"	38	A442	2	#7	STR	10'-10"	44
A132	2	#7	STR	6'-6"	27	A327	2	#6	STR	11'-6"	35	A443	2	#7	STR	6'-2"	25
A133	2	#7	STR	5'-6"	22	A328	2	#6	STR	10'-6"	32						
A134	2	#7	STR	4'-5"	18	A329	2	#6	STR	9'-6"	29	A1	1658	#7	1	10'-3"	34737
A135	2	#7	STR	3'-6"	14	A330	2	#6	STR	8'-6'	26	A2	1658	#7	1	7'-11"	26829
A136	2	#7	STR	2'-6"	10	A331	2	#6	STR	7'-6"	23						
A137	2	#7	STR	34'-4"	140	A332	2	#6	STR	6'-6"	20	B1	1658	#5	STR	13'-3"	22913
A138	2	#7	STR	29'-8"	121	A333	2	#6	STR	5'-6"	17	B2	1658	#4	STR	9'-4"	10337
A139	2	#7	STR	24'-11"	102	A334	2	#6	STR	4'-5"	14	B3	3316	#4	STR	13'-3"	29350
A140	2	#7	STR	20'-3"	83	A335	2	#6	STR	3'-6"	11						
A141	2	#7	STR	15'-6"	63	A336	2	#6	STR	2'-6"	8	C1	2864	#4	STR	29'-2"	55800
A142	2	#7	STR	10'-10"	44	A337	2	#6	STR	34'-4"	103						
A143	2	#7	STR	6'-2"	25	A338	2	#6	STR	29'-8"	89	D1	6	#6	STR	3'-6"	32
						A339	2	#6	STR	24'-11"	75						
A200	782	#6	STR	38'-4"	45025	A340	2	#6	STR	20'-3"	61	E1	32	#5	STR	6'-11"	231
A201	2	#6	STR	37'-6"	113	A341	2	#6	STR	15'-6"	47						
A202	2	#6	STR	36'-6"	110	A342	2	#6	STR	10'-10"	33	G1	4	#5	STR	39'-2"	163
A203	2	#6	STR	35'-6"	107	A343	2	#6	STR	6'-2"	19	G2	4	#5	STR	54'-2"	226
A204	2	#6	STR	34'-6"	104												
A205	2	#6	STR	33'-6"	101	A400	782	#7	STR	38'-4"	61272	S1	6	#8	STR	39'-2"	627
A206	2	#6	STR	32'-6"	98	A401	2	#7	STR	37'-6"	153	S2	6	#8	STR	54'-2"	868
A207	2	#6	STR	31'-6"	95	A402	2	#7	STR	36'-6"	149						
A208	2	#6	STR	30'-6"	92	A403	2	#7	STR	35'-6"	145						
A209	2	#6	STR	29'-6"	89	A404	2	#7	STR	34'-6"	141						
A210	2	#6	STR	28'-6"	86	A405	2	#7	STR	33'-6"	137						
A211	2	#6	STR	27'-6"	83	A406	2	#7	STR	32'-6"	133						
A212	2	#6	STR	26'-6"	80	A407	2	#7	STR	31'-6"	129						
A213	2	#6	STR	25'-6"	77	A408	2	#7	STR	30'-6"	125						
A214	2	#6	STR	24'-6"	74	A409	2	#7	STR	29'-6"	121	REINFORCING STEEL				406959 LBS.	
A215	2	#6	STR	23'-6"	71	A410	2	#7	STR	28'-6"	117						
A216	2	#6	STR	22'-6"	68												
A217	2	#6	STR	21'-6"	65												
A218	2	#6	STR	20'-6"	62												
A219	2	#6	STR	19'-6"	59												
A220	2	#6	STR	18'-6"	56												
A221	2	#6	STR	17'-6"	53												
A222	2	#6	STR	16'-6"	50												
A223	2	#6	STR	15'-6"	47												
A224	2	#6	STR	14'-6"	44												
A225	2	#6	STR	13'-6"	41												
A226	2	#6	STR	12'-6"	38												
A227	2	#6	STR	11'-6"	35												
A228	2	#6	STR	10'-6"	32												
A229	2	#6	STR	9'-6"	29												
A230	2	#6	STR	8'-6'	26												
A231	2	#6	STR	7'-6"	23												
A232	2	#6	STR	6'-6"	20												
A233	2	#6	STR	5'-6"	17												
A234	2	#6	STR	4'-5"	14												
A235	2	#6	STR	3'-6"	11												
A236	2	#6	STR	2'-6"	8												
A237	2	#6	STR	34'-4"	103												
A238	2	#6	STR	29'-8"	89												
A239	2	#6	STR	24'-11"	75												

PROJECT NO. R-2719A

LENOIR COUNTY

STATION: 74+43.00-Y1-

SHEET 5 OF 7

STATE OF NORTH CAROLINA
DEPARTMENT OF TRANSPORTATION
RALEIGH

TRIPLE 12 FT. X 10 FT. CONCRETE BOX CULVERT

NORTH CAROLINA PROFESSIONAL SEAL 025516 ENGINEER EMILY E. MURRAY

Em E. Murray 10/7/08

REVISIONS						SHEET NO.
NO.	BY:	DATE:	NO.	BY:	DATE:	C-17
1			3			TOTAL SHEETS
2			4			23

DRAWN BY : B.N.BARODAWALA DATE : 8/18/08
CHECKED BY : TRACY AVERETTE DATE : 9/08

23-SEP-2008 15:40
g:\tlpprojects-r\r2719a\structures\str#16\barodawala\r-2719_sd_cul_16.dgn
taverette

STR. #16

BAR TYPES

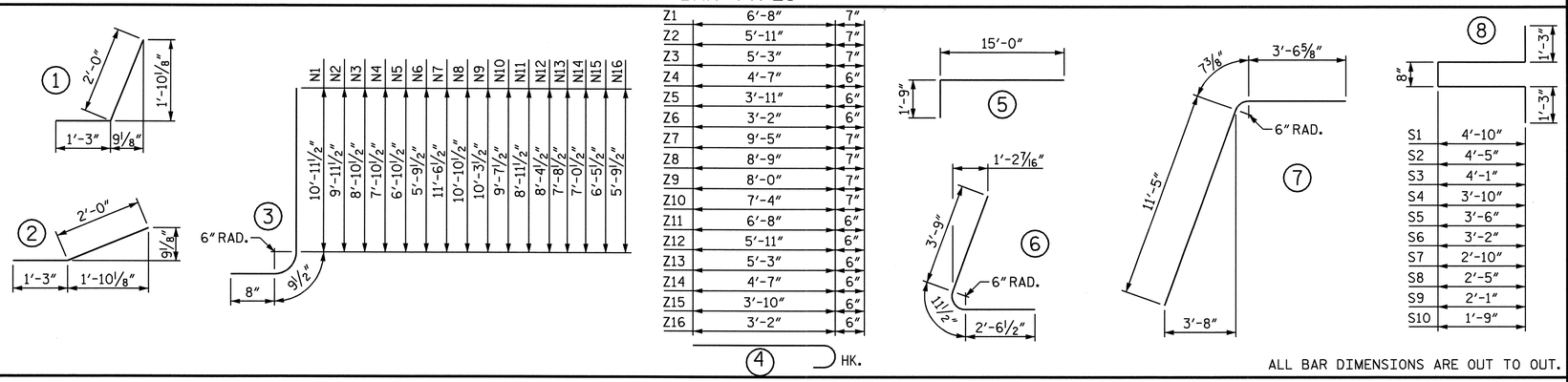

ALL BAR DIMENSIONS ARE OUT TO OUT.

BILL OF MATERIAL

BAR	NO.	SIZE	TYPE	LENGTH	WEIGHT	BAR	NO.	SIZE	TYPE	LENGTH	WEIGHT
B10	2	#4	STR	12'-3"	16	S6	1	#4	8	9'-6"	6
						S7	1	#4	8	8'-10"	6
C10	13	#6	STR	10'-0"	195	S8	1	#4	8	8'-0"	5
						S9	1	#4	8	7'-4"	5
H1	8	#4	STR	16'-1"	86	S10	1	#4	8	6'-8"	4
H2	2	#4	STR	13'-7"	18	S11	3	#6	STR	6'-0"	27
H3	2	#4	STR	9'-3"	12						
H4	2	#4	STR	4'-10"	6	T1	3	#5	STR	18'-0"	56
H5	2	#4	STR	17'-0"	23	T2	3	#5	STR	43'-9"	137
H6	16	#4	1	3'-3"	35	T3	2	#5	STR	14'-0"	29
H7	16	#4	STR	21'-11"	234						
H8	4	#4	STR	18'-8"	50	V1	4	#4	STR	10'-5"	28
H9	2	#4	STR	25'-4"	34	V2	2	#4	STR	9'-5"	13
H10	2	#4	STR	14'-11"	20	V3	2	#4	STR	8'-4"	11
H11	2	#4	STR	4'-7"	6	V4	2	#4	STR	7'-4"	10
H12	16	#4	2	3'-3"	35	V5	2	#4	STR	6'-4"	8
H13	4	#4	STR	22'-2"	59	V6	2	#4	STR	5'-3"	7
						V7	4	#4	STR	11'-0"	29
M1	5	#8	5	16'-9"	224	V8	3	#4	STR	10'-4"	21
						V9	3	#4	STR	9'-9"	20
N1	4	#6	3	12'-5"	75	V10	3	#4	STR	9'-1"	18
N2	4	#6	3	11'-5"	69	V11	3	#4	STR	8'-5"	17
N3	4	#6	3	10'-4"	62	V12	3	#4	STR	7'-10"	16
N4	4	#5	3	9'-4"	39	V13	3	#4	STR	7'-2"	14
N5	4	#5	3	8'-4"	35	V14	3	#4	STR	6'-6"	13
N6	4	#4	3	7'-3"	19	V15	3	#4	STR	5'-11"	12
N7	4	#6	3	13'-0"	78	V16	3	#4	STR	5'-3"	11
N8	6	#6	3	12'-4"	111	V17	2	#4	STR	9'-5"	13
N9	6	#6	3	11'-9"	106	V18	2	#4	STR	5'-0"	7
N10	6	#6	3	11'-1"	100						
N11	6	#6	3	10'-5"	94	Z1	4	#5	4	7'-3"	30
N12	6	#5	3	9'-10"	62	Z2	4	#5	4	6'-6"	27
N13	6	#5	3	9'-2"	57	Z3	4	#5	4	5'-10"	24
N14	6	#5	3	8'-6"	53	Z4	4	#4	4	5'-1"	14
N15	6	#4	3	7'-11"	32	Z5	4	#4	4	4'-5"	12
N16	6	#4	3	7'-3"	29	Z6	4	#4	4	3'-8"	10
						Z7	8	#5	4	10'-0"	83
P1	2	#9	6	7'-3"	49	Z8	6	#5	4	9'-4"	58
P2	2	#9	7	15'-7"	106	Z9	6	#5	4	8'-7"	54
						Z10	6	#5	4	7'-11"	50
S1	1	#4	8	12'-10"	9	Z11	6	#4	4	7'-2"	29
S2	1	#4	8	12'-0"	8	Z12	6	#4	4	6'-5"	26
S3	1	#4	8	11'-4"	8	Z13	6	#4	4	5'-9"	23
S4	1	#4	8	10'-10"	7	Z14	6	#4	4	5'-1"	20
S5	1	#4	8	10'-2"	7	Z15	6	#4	4	4'-4"	17
						Z16	6	#4	4	3'-8"	15
						Z17	3	#5	STR	10'-11"	34
						Z18	4	#5	STR	10'-2"	42
						Z19	4	#5	STR	9'-4"	39
						Z20	4	#5	STR	8'-7"	36

REINFORCING STEEL FOR 2 WINGS	LBS.	3454
CLASS A CONCRETE		
2 WINGS	CU. YDS.	47.0
1 HEADWALL	CU. YDS.	2.5
1 END CURTAIN WALL	CU. YDS.	3.1
TOTAL		52.6

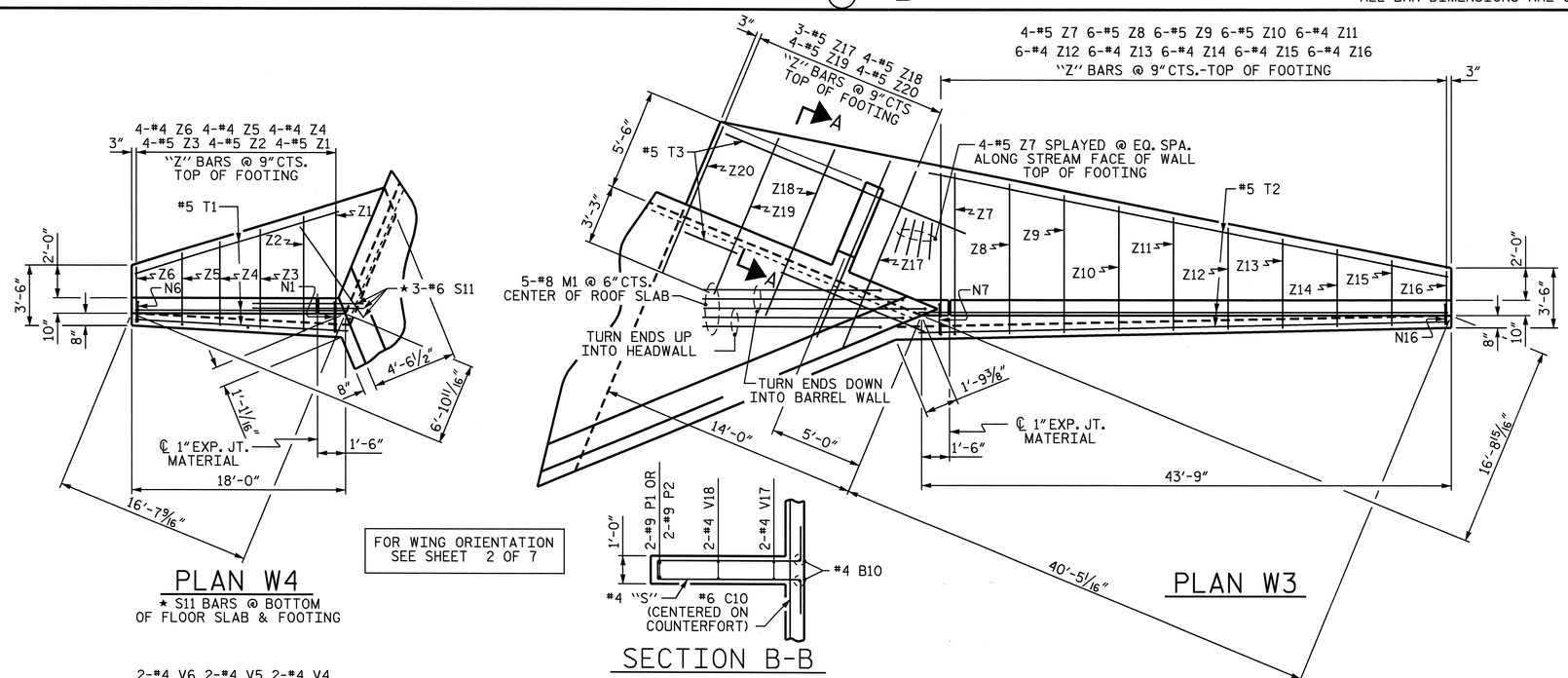

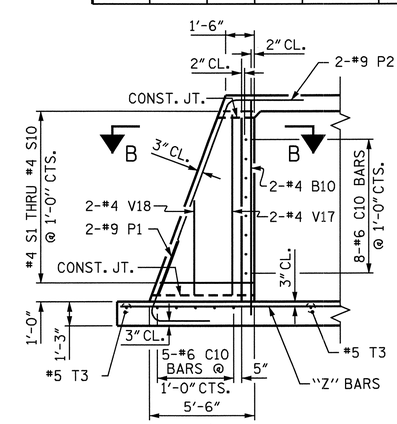

SECTION A-A

STANDARD REINFORCING STEEL IN BARREL NOT SHOWN

PROJECT NO. R-2719A

LENOIR COUNTY

STATION: 74+43.00-Y1-

SHEET 6 OF 7

STATE OF NORTH CAROLINA
DEPARTMENT OF TRANSPORTATION
RALEIGH

OUTLET WINGS FOR MULTIPLE BARREL CONCRETE BOX CULVERT

H = 10'-0" SLOPE = 3:1

135° SKEW

NORTH CAROLINA PROFESSIONAL SEAL 025516 ENGINEER EMILY E. MURRAY

10/7/08

REVISIONS						SHEET NO.
NO.	BY:	DATE:	NO.	BY:	DATE:	C-18
1			3			TOTAL SHEETS
2			4			23

DRAWN BY : B.N.BARODAWALA DATE : 8/20/08
CHECKED BY : TRACY AVERETTE DATE : 9/08

23-SEP-2008 15:40
g:\tipprojects-r\r2719a\structures\str#16\barodawala\r-2719_sd_cul_16.dgn
taverette

STR. #16

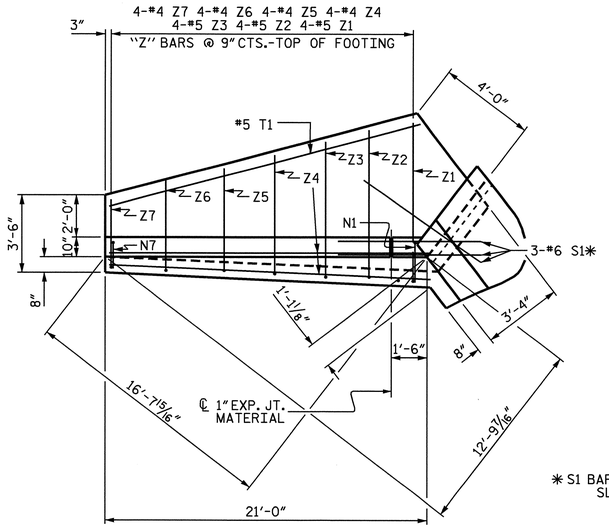

✱ S1 BARS @ BOTTOM OF FLOOR SLAB AND FOOTING

PLAN W2

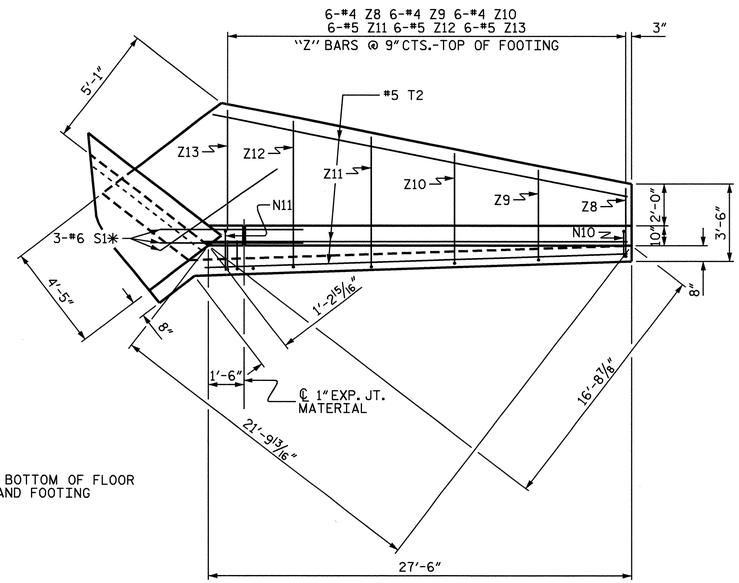

PLAN W1

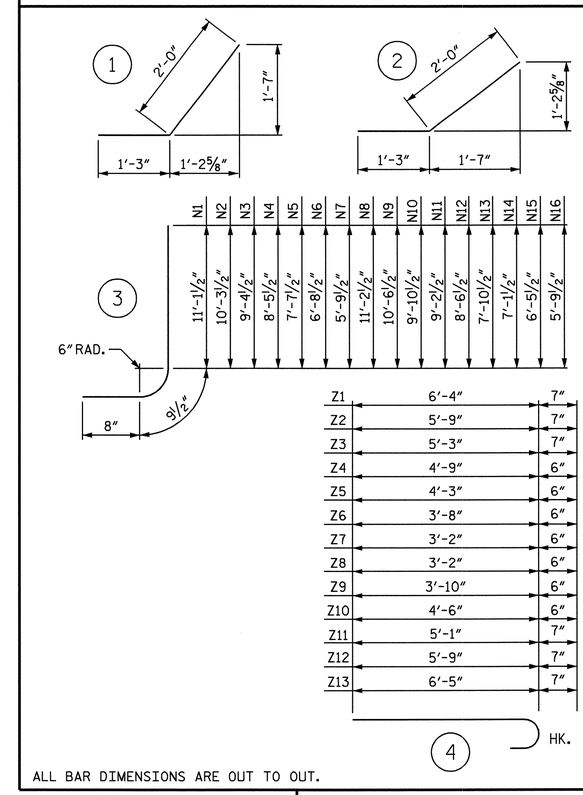

ALL BAR DIMENSIONS ARE OUT TO OUT.

BILL OF MATERIAL

BAR	NO.	SIZE	TYPE	LENGTH	WEIGHT
N1	4	#6	3	12'-7"	76
N2	4	#6	3	11'-9"	71
N3	4	#6	3	10'-10"	65
N4	4	#5	3	9'-11"	41
N5	4	#5	3	9'-1"	38
N6	4	#5	3	8'-2"	34
N7	4	#4	3	7'-3"	19
N8	5	#6	3	12'-8"	95
N9	4	#6	3	12'-0"	72
N10	4	#6	3	11'-4"	68
N11	4	#6	3	10'-8"	64
N12	4	#5	3	10'-0"	42
N13	4	#5	3	9'-4"	39
N14	4	#5	3	8'-7"	36
N15	4	#4	3	7'-11"	21
N16	4	#4	3	7'-3"	19
S1	6	#6	STR	6'-0"	54
T1	3	#5	STR	21'-0"	66
T2	3	#5	STR	27'-6"	86
V1	4	#4	STR	10'-7"	28
V2	2	#4	STR	9'-9"	13
V3	2	#4	STR	8'-10"	12
V4	2	#4	STR	7'-11"	11
V5	2	#4	STR	7'-1"	9
V6	2	#4	STR	6'-2"	8
V7	2	#4	STR	5'-3"	7
V8	4	#4	STR	10'-8"	29
V9	2	#4	STR	10'-0"	13
V10	2	#4	STR	9'-4"	12
V11	2	#4	STR	8'-8"	12
V12	2	#4	STR	8'-0"	11
V13	2	#4	STR	7'-4"	10
V14	2	#4	STR	6'-7"	9
V15	2	#4	STR	5'-11"	8
V16	2	#4	STR	5'-3"	7
Z1	4	#5	4	6'-11"	29
Z2	4	#5	4	6'-4"	26
Z3	4	#5	4	5'-10"	24
Z4	4	#4	4	5'-3"	14
Z5	4	#4	4	4'-9"	13
Z6	4	#4	4	4'-2"	11
Z7	4	#4	4	3'-8"	10
Z8	6	#4	4	3'-8"	15
Z9	6	#4	4	4'-4"	17
Z10	6	#4	4	5'-0"	20
Z11	6	#5	4	5'-8"	35
Z12	6	#5	4	6'-4"	40
Z13	6	#5	4	7'-0"	44

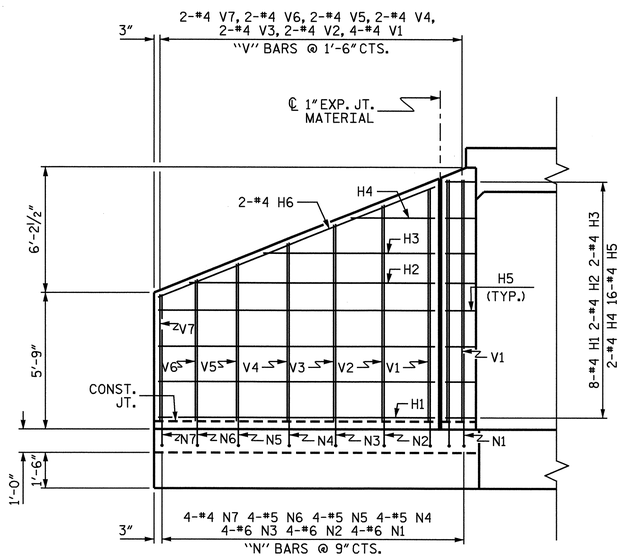

ELEVATION W2

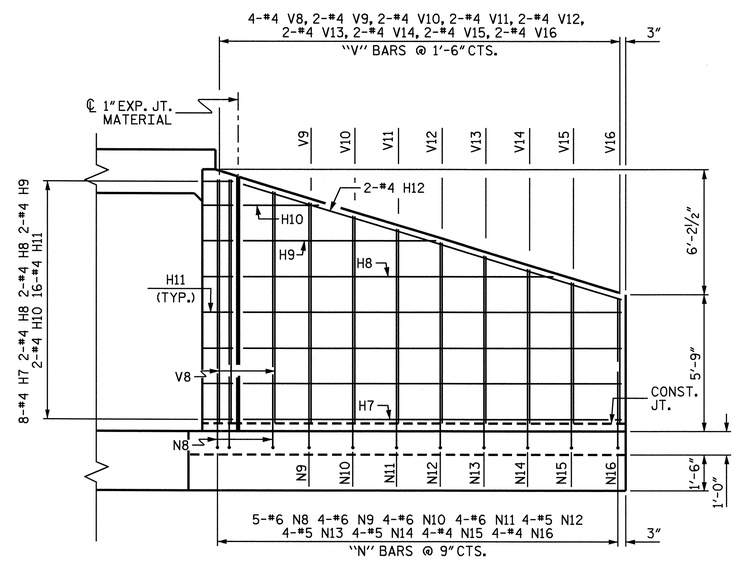

ELEVATION W1

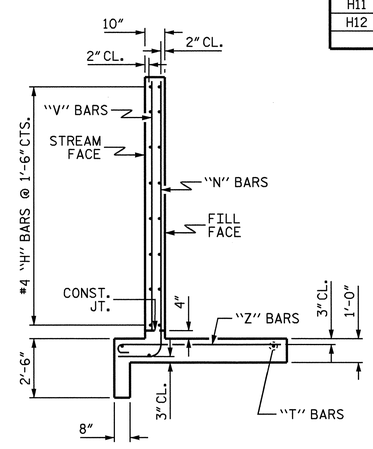

TYPICAL WING SECTION

BILL OF MATERIAL

BAR	NO.	SIZE	TYPE	LENGTH	WEIGHT
H1	8	#4	STR	19'-1'	102
H2	2	#4	STR	16'-2"	22
H3	2	#4	STR	11'-1"	15
H4	2	#4	STR	6'-0"	8
H5	16	#4	1	3'-3"	35
H6	2	#4	STR	19'-11"	27
H7	8	#4	STR	25'-7"	137
H8	2	#4	STR	21'-8"	29
H9	2	#4	STR	15'-0"	20
H10	2	#4	STR	8'-5"	11
H11	16	#4	2	3'-3"	35
H12	2	#4	STR	26'-3"	35

REINFORCING STEEL FOR 2 WINGS	1979	LBS
CLASS A CONCRETE		
2 WINGS	25.8	CY
1 HEADWALL	1.8	CY
1 END CURTAIN WALL	2.2	CY
TOTAL	28.8	CY

PROJECT NO. R-2719A

LENOIR COUNTY

STATION: 74+43.00-Y1-

SHEET 7 OF 7

STATE OF NORTH CAROLINA
DEPARTMENT OF TRANSPORTATION
RALEIGH

INLET WINGS FOR MULTIPLE BARREL CONCRETE BOX CULVERT

H = 10'-0" SLOPE = 3:1

75° SKEW

NORTH CAROLINA PROFESSIONAL SEAL 025516 ENGINEER EMILY E. MURRAY

Eng 10/7/08

REVISIONS								SHEET NO.
NO.	BY:	DATE:	NO.	BY:	DATE:			C-19
1			3					TOTAL SHEETS
2			4					23

STR. #16

ASSEMBLED BY : B.N.BARODAWALA DATE : 8/20/08
CHECKED BY : TRACY AVERETTE DATE : 9/08

DRAWN BY : CCJ 01/00
CHECKED BY : RWW 03/00

23-SEP-2008 15:41
g:\tlpprojects-r\r2719a\structures\str#16\barodawala\r-2719_sd_cul_16.dgn
taverette

BM "A", RAILROAD SPIKE IN 30" HARDWOOD TREE -Y1- STA. 75+86 615' RT, ELEV. 53.26

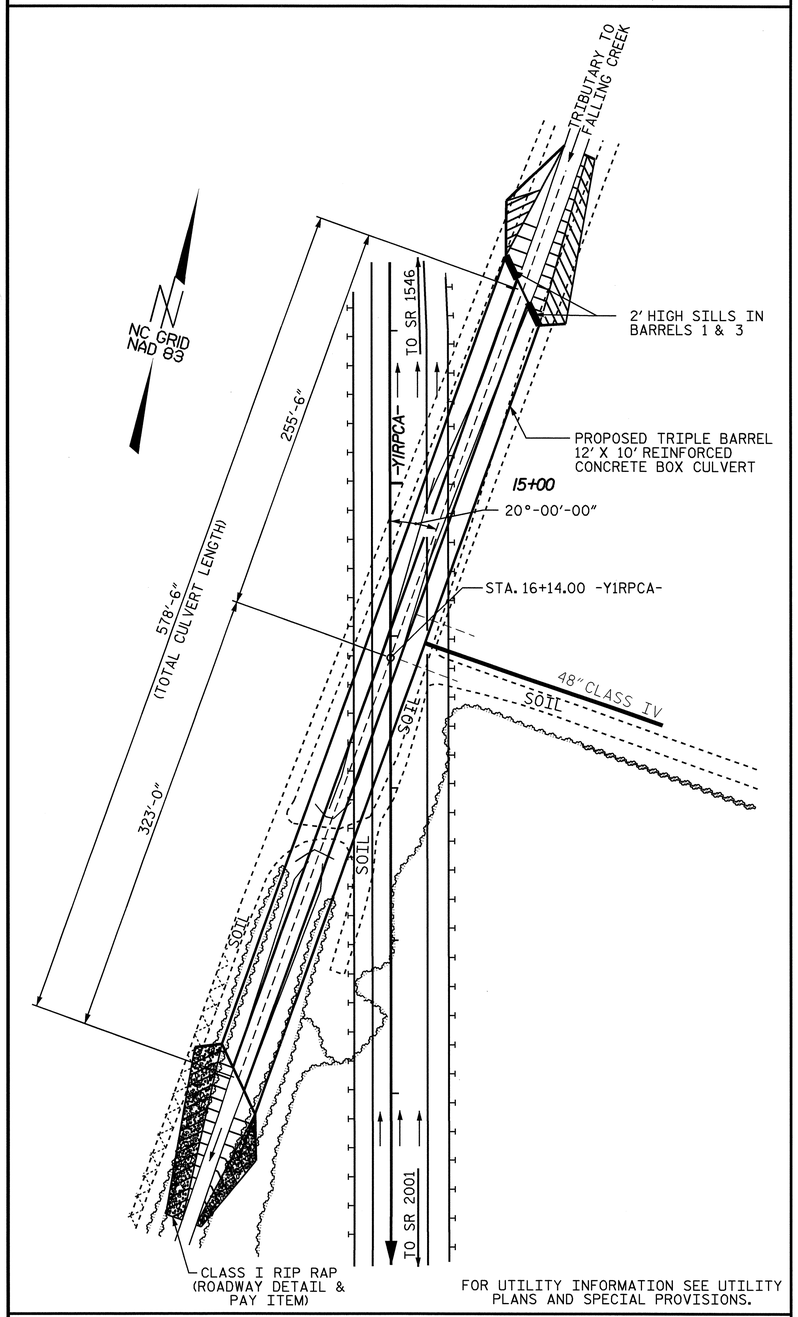

FOR UTILITY INFORMATION SEE UTILITY PLANS AND SPECIAL PROVISIONS.

LOCATION SKETCH

ROADWAY DATA

GRADE POINT ELEV. @ STATION 16+14.00 -Y1RPCA- = 78.704 FT.
BED ELEV. @ STATION 16+14.00 -Y1RPCA- = 44.39 FT.
ROADWAY SLOPES = 3:1

HYDRAULIC DATA

DESIGN DISCHARGE = 1500 C.F.S.
FREQUENCY OF DESIGN FLOOD = 50 YRS
DESIGN HIGH WATER ELEVATION = 54.1 FT.
DRAINAGE AREA = 2.56 SQ. MI.
BASIC DISCHARGE (Q100) = 1800 C.F.S
BASIC HIGH WATER ELEVATION = 54.5 FT.

OVERTOPPING FLOOD DATA

OVERTOPPING DISCHARGE = 2800 C.F.S.
FREQUENCY OF OVERTOPPING FLOOD = 500+ YR.
OVERTOPPING FLOOD ELEVATION = 56.8 FT.

TOTAL STRUCTURE QUANTITIES

CLASS A CONCRETE				
BARREL @	6.251	CY/FT	3616.2	C.Y.
WINGS ETC.			105.3	C.Y.
TOTAL			3721.5	C.Y.
REINFORCING STEEL				
BARREL			465495	LBS.
WINGS ETC.			6905	LBS.
TOTAL			472400	LBS.
CULVERT EXCAVATION			LUMP SUM	
FOUND. COND. MAT'L.			1577 TONS	

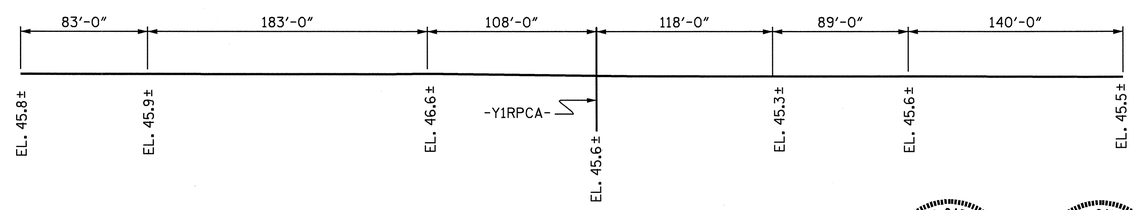

PROFILE ALONG ℄ CULVERT LOOKING DOWN STATION

F.A. PROJECT NO. STP-0224(12)

NOTES

ASSUMED LIVE LOAD HS20-44 OR ALTERNATE LOADING.
DESIGN FILL---------- 26.01 FT.

FOR OTHER DESIGN DATA AND NOTES SEE STANDARD NOTE SHEET.

3" Ø WEEP HOLES INDICATED TO BE IN ACCORDANCE WITH THE SPECIFICATIONS.

CONCRETE IN CULVERTS TO BE POURED IN THE FOLLOWING ORDER:

1. WING FOOTINGS AND FLOOR SLAB INCLUDING 4" OF ALL VERTICAL WALLS.
2. THE REMAINING PORTIONS OF THE WALLS AND WINGS FULL HEIGHT FOLLOWED BY ROOF SLAB AND HEADWALLS.

THE RESIDENT ENGINEER SHALL CHECK THE LENGTH OF CULVERT BEFORE STAKING IT OUT TO MAKE CERTAIN THAT IT WILL PROPERLY TAKE CARE OF THE FILL.

DIMENSIONS FOR WING LAYOUT AS WELL AS ADDITIONAL REINFORCING STEEL EMBEDDED IN BARREL ARE SHOWN ON WING SHEET.

TRANSVERSE CONSTRUCTION JOINTS SHALL BE USED IN THE BARREL, SPACED TO LIMIT THE POURS TO A MAXIMUM OF 70 FT. LOCATION OF JOINTS SHALL BE SUBJECT TO APPROVAL OF THE ENGINEER.

STEEL IN THE BOTTOM SLAB MAY BE SPLICED AT THE PERMITTED CONSTRUCTION JOINT AT THE CONTRACTORS OPTION. EXTRA WEIGHT OF STEEL DUE TO THE SPLICES SHALL BE PAID FOR BY THE CONTRACTOR.

AT THE CONTRACTORS OPTION, HE MAY SPLICE THE VERTICAL REINFORCING STEEL IN THE INTERIOR FACE OF EXTERIOR WALL AND BOTH FACES OF INTERIOR WALLS ABOVE LOWER WALL CONSTRUCTION JOINT. THE SPLICE LENGTH SHALL BE AS PROVIDED IN THE SPLICE LENGTH CHART SHOWN ON THE PLANS. EXTRA WEIGHT OF STEEL DUE TO THE SPLICES SHALL BE PAID FOR BY THE CONTRACTOR.

FOR CULVERT DIVERSION DETAILS AND PAY ITEM, SEE EROSION CONTROL PLANS.

A 3 FOOT STRIP OF FILTER FABRIC SHALL BE ATTACHED TO THE FILL FACE OF THE WING COVERING THE ENTIRE LENGTH OF THE EXPANSION JOINT.

THE CONTRACTOR SHALL PROVIDE INDEPENDENT ASSURANCE SAMPLES OF REINFORCING STEEL AS FOLLOWS: FOR PROJECTS REQUIRING UP TO 400 TONS OF REINFORCING STEEL, ONE 30 INCH SAMPLE OF EACH SIZE BAR USED, AND FOR PROJECTS REQUIRING OVER 400 TONS OF REINFORCING STEEL, TWO 30 INCH SAMPLES OF EACH SIZE BAR USED. THE BARS FROM WHICH THE SAMPLES ARE TAKEN MUST THEN BE SPLICED WITH REPLACEMENT BARS OF THE SIZE AND LENGTH OF THE SAMPLE, PLUS A MINIMUM LAP SPLICE OF THIRTY BAR DIAMETERS.

DETAILED DRAWINGS FOR FALSEWORK AND FORMS FOR THIS CULVERT SHALL BE SUBMITTED. SEE SHEET SN.

NO PRECAST REINFORCED BOX CULVERT OPTION WILL BE ALLOWED.

FOR SUBMITTAL OF WORKING DRAWINGS, SEE SPECIAL PROVISIONS.

FOR FALSEWORK AND FORMWORK, SEE SPECIAL PROVISIONS.

FOR CRANE SAFETY, SEE SPECIAL PROVISIONS.

FOR GROUT FOR STRUCTURES, SEE SPECIAL PROVISIONS.

FOR FAA REQUIREMENTS, SEE ROADWAY SPECIAL PROVISIONS.

PROJECT NO. R-2719A
LENOIR COUNTY
STATION: 16+14.00-Y1RPCA-

SHEET 1 OF 4 BRIDGE NO. C-205

STATE OF NORTH CAROLINA
DEPARTMENT OF TRANSPORTATION
RALEIGH

BARREL STANDARD
TRIPLE 12 FT. X 10 FT.
CONCRETE BOX CULVERT

NORTH CAROLINA PROFESSIONAL SEAL 12274 ENGINEER OMAR R. AZIZ
NORTH CAROLINA PROFESSIONAL SEAL 025516 ENGINEER EMILY E. MURRAY
10/7/08

REVISIONS						SHEET NO.
NO.	BY:	DATE:	NO.	BY:	DATE:	C-20
1			3			TOTAL SHEETS
2			4			23

ASSEMBLED BY : M.GUDLAUGSSON	DATE : 06/2008	SPECIAL	
CHECKED BY : T. L. AVERETTE	DATE : 09/2008		
DRAWN BY : D.P.DONOVAN	DATE : OCT.1990	STANDARD	
CHECKED BY : A.R.BISSETTE	DATE : OCT.1990		

ADDED 10-1-90

02-OCT-2008 11:56
h:\structures\str#17\mgudlaugsson\2719a_sd_cu_17.dgn

STR #17 STD NO. CB53A

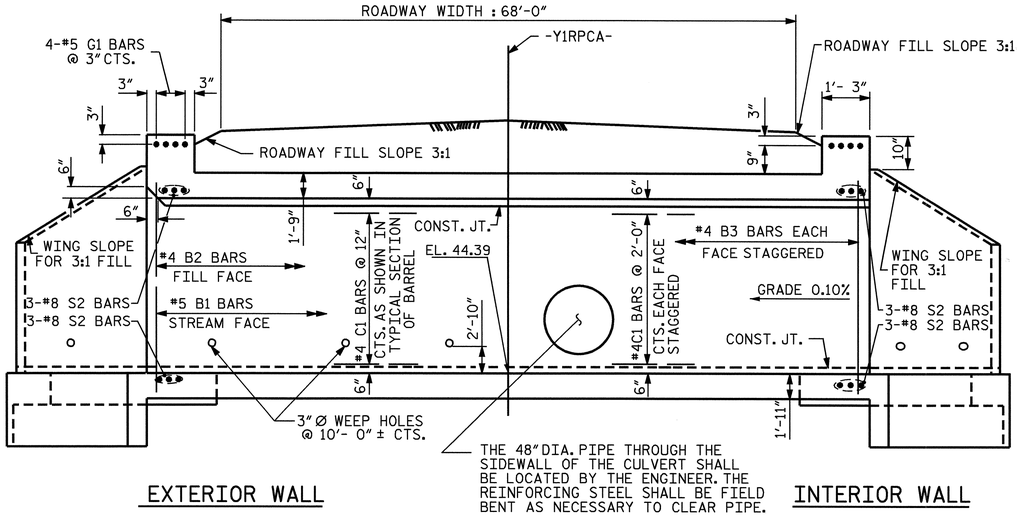

CULVERT SECTION NORMAL TO ROADWAY

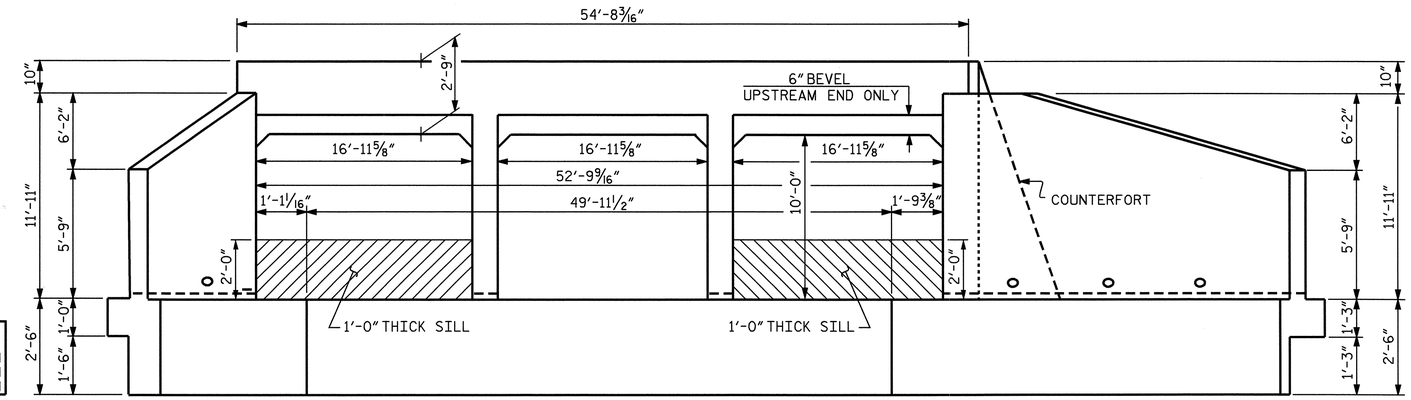

INLET END ELEVATION NORMAL TO SKEW

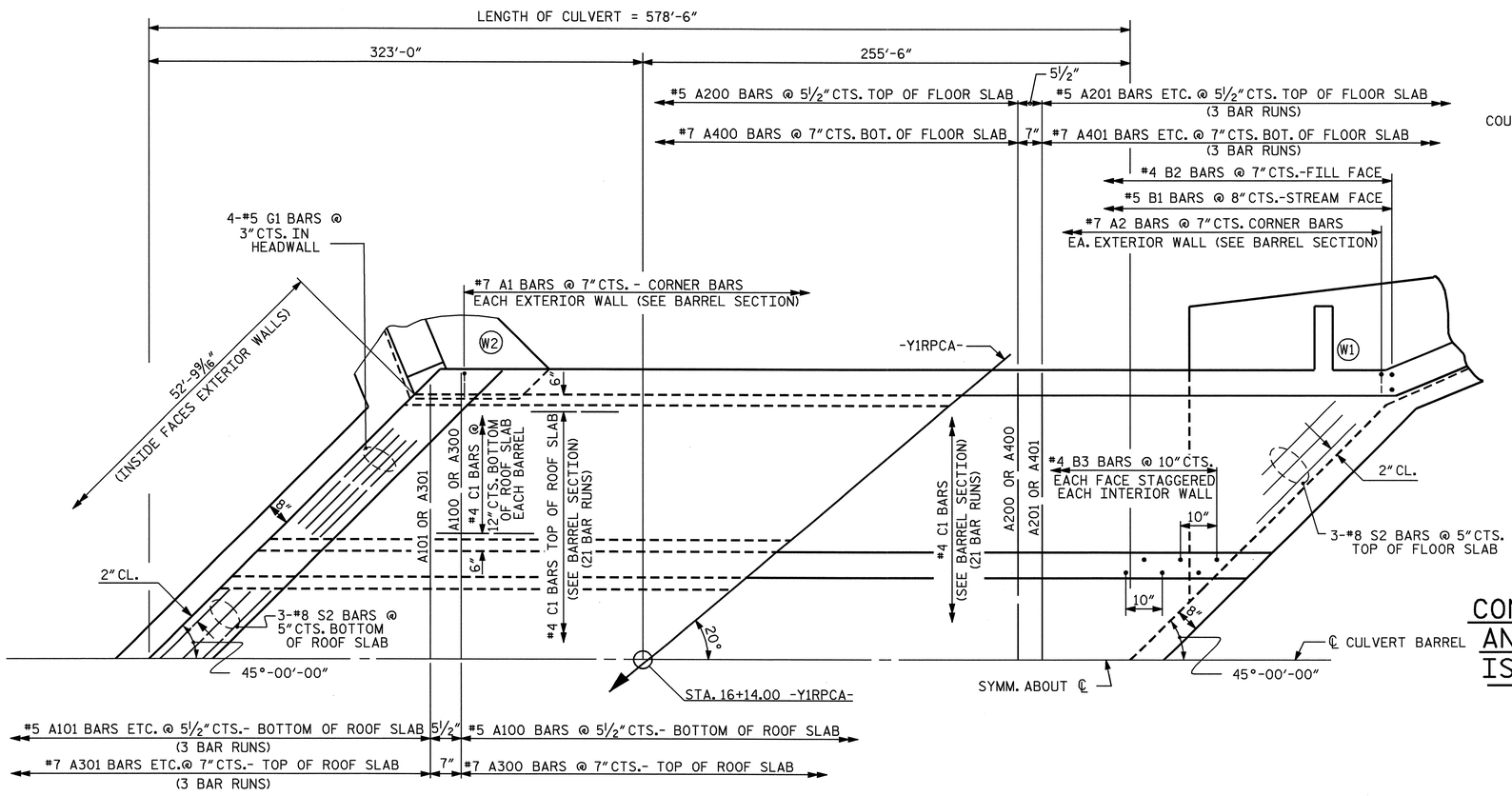

PART PLAN - ROOF SLAB

PART PLAN - FLOOR SLAB

48" DIAMETER RCP NOT SHOWN.
SILLS NOT SHOWN, SEE SHEET 3 OF 4 FOR DETAILS.

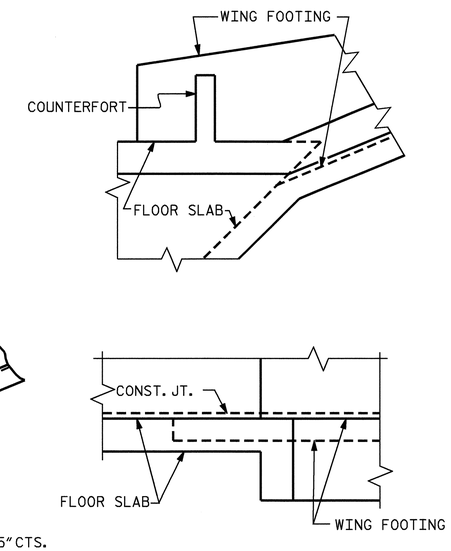

DETAIL

CONNECTION OF WING FOOTING AND FLOOR SLAB WHEN SLAB IS THICKER THAN FOOTING

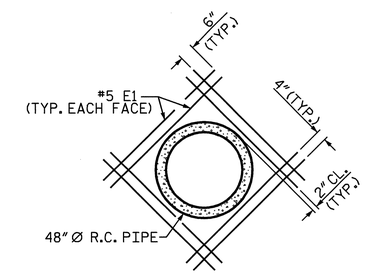

DETAIL OF REINFORCING AROUND R.C. PIPE

PROJECT NO. R-2719A
LENOIR COUNTY
STATION: 16+14.00-Y1RPCA

SHEET 2 OF 4

STATE OF NORTH CAROLINA
DEPARTMENT OF TRANSPORTATION
RALEIGH

BARREL STANDARD
TRIPLE 12 FT. X 10 FT.
CONCRETE BOX CULVERT

NORTH CAROLINA PROFESSIONAL SEAL 025516 ENGINEER EMILY E. MURRAY
10/7/08

REVISIONS						SHEET NO.
NO.	BY:	DATE:	NO.	BY:	DATE:	C-21
1			3			TOTAL SHEETS
2			4			23

STR. #17 STD. NO. CB53

ASSEMBLED BY : M.GUDLAUGSSON DATE : 06/2008 CHECKED BY : T. L. AVERETTE DATE : 09/2008	SPECIAL	
DRAWN BY : D.P.DONOVAN DATE : OCT.1990 CHECKED BY : A.R.BISSETTE DATE : OCT.1990	STANDARD	

REVISED 11-19-99 BY M.M. CHECKED BY R.W.W.
REDRAWN 10-1-90 BY P.DONOVAN CHECKED BY A.R.BISSETTE

02-OCT-2008 11:04
h:\structures\str#17\gudlaugsson\2719a_sd_cu_17.dgn

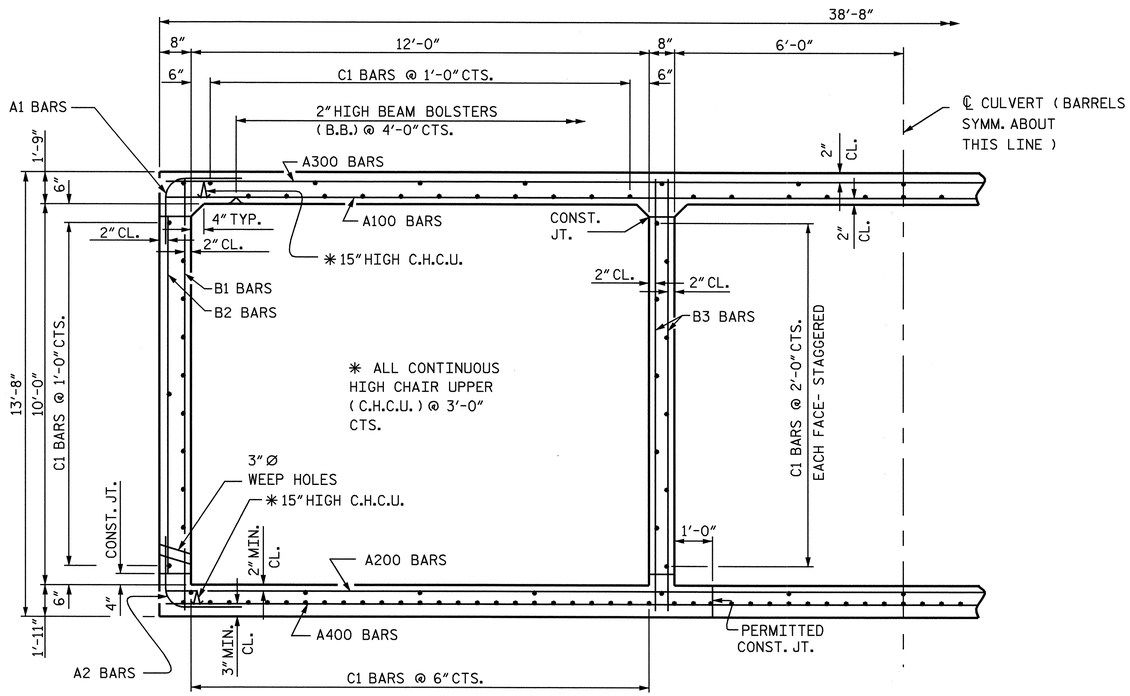

RIGHT ANGLE SECTION OF BARREL

THERE ARE 179 "C" BARS IN SECTION OF BARREL.

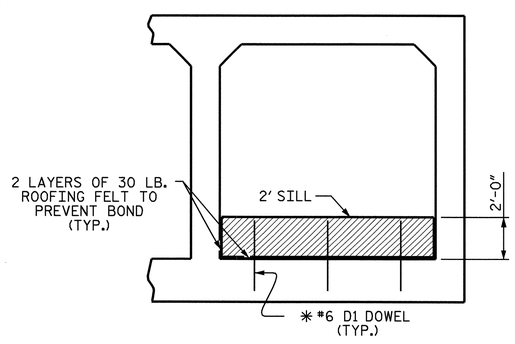

ELEVATION

(@ INLET, BARREL 1 & 3)

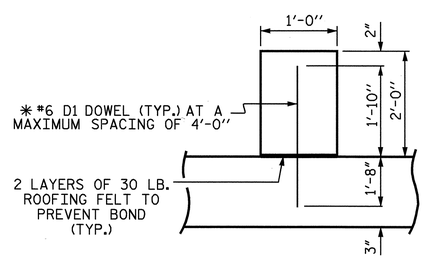

SECTION THROUGH SILL

SILL DETAILS

✳ DOWELS MAY BE PUSHED INTO GREEN CONCRETE AFTER SLAB HAS BEEN FLOAT FINISHED.

BILL OF MATERIAL

BAR	NO.	SIZE	TYPE	LENGTH	WEIGHT
A1	1984	#7	6	10'-2"	41229
A2	1984	#7	6	7'-11"	32104
A100	1178	#5	STR	38'-3"	46996
A101	6	#5	STR	36'-10"	231
A102	6	#5	STR	35'-5"	222
A103	6	#5	STR	34'-1"	213
A104	6	#5	STR	32'-8"	204
A105	6	#5	STR	31'-4"	196
A106	6	#5	STR	29'-11"	187
A107	6	#5	STR	28'-7"	179
A108	6	#5	STR	27'-2"	170
A109	6	#5	STR	25'-10"	162
A110	6	#5	STR	25'-4"	153
A111	6	#5	STR	23'-1"	144
A112	6	#5	STR	21'-8"	136
A113	6	#5	STR	20'-4"	127
A114	6	#5	STR	18'-11"	118
A115	6	#5	STR	17'-7"	110
A116	6	#5	STR	16'-2"	101
A117	6	#5	STR	14'-10"	93
A118	6	#5	STR	13'-5"	84
A119	6	#5	STR	12'-1"	76
A120	6	#5	STR	10'-8"	67
A121	6	#5	STR	9'-4"	58
A122	6	#5	STR	7'-11"	50
A123	6	#5	STR	6'-7"	41
A124	6	#5	STR	5'-2"	32
A125	6	#5	STR	3'-10"	24
A126	6	#5	STR	2'-5"	15
A200	1178	#5	STR	38'-3"	46996
A201	6	#5	STR	36'-10"	231
A202	6	#5	STR	35'-5"	222
A203	6	#5	STR	34'-1"	213
A204	6	#5	STR	32'-8"	204
A205	6	#5	STR	31'-4"	196
A206	6	#5	STR	29'-11"	187
A207	6	#5	STR	28'-7"	179
A208	6	#5	STR	27'-2"	170
A209	6	#5	STR	25'-10"	162
A210	6	#5	STR	25'-4"	153
A211	6	#5	STR	23'-1"	144
A212	6	#5	STR	21'-8"	136
A213	6	#5	STR	20'-4"	127
A214	6	#5	STR	18'-11"	118

BILL OF MATERIAL

BAR	NO.	SIZE	TYPE	LENGTH	WEIGHT
A215	6	#5	STR	17'-7"	110
A216	6	#5	STR	16'-2"	101
A217	6	#5	STR	14'-10"	93
A218	6	#5	STR	13'-5"	84
A219	6	#5	STR	12'-1"	76
A220	6	#5	STR	10'-8"	67
A221	6	#5	STR	9'-4"	58
A222	6	#5	STR	7'-11"	50
A223	6	#5	STR	6'-7"	41
A224	6	#5	STR	5'-2"	32
A225	6	#5	STR	3'-10"	24
A226	6	#5	STR	2'-5"	15
A300	926	#7	STR	38'-3"	72397
A301	6	#7	STR	36'-5"	447
A302	6	#7	STR	34'-8"	425
A303	6	#7	STR	32'-11"	404
A304	6	#7	STR	31'-2"	382
A305	6	#7	STR	29'-5"	361
A306	6	#7	STR	27'-8"	339
A307	6	#7	STR	25'-11"	318
A308	6	#7	STR	24'-2"	296
A309	6	#7	STR	22'-5"	275
A310	6	#7	STR	20'-8"	253
A311	6	#7	STR	18'-11"	232
A312	6	#7	STR	17'-2"	211
A313	6	#7	STR	15'-5"	189
A314	6	#7	STR	13'-8"	168
A315	6	#7	STR	11'-11"	146
A316	6	#7	STR	10'-2"	125
A317	6	#7	STR	8'-5"	103
A318	6	#7	STR	6'-8"	82
A319	6	#7	STR	4'-11"	60
A320	6	#7	STR	3'-2"	39

BILL OF MATERIAL

BAR	NO.	SIZE	TYPE	LENGTH	WEIGHT
A400	926	#7	STR	38'-3"	72397
A401	6	#7	STR	36'-5"	447
A402	6	#7	STR	34'-8"	425
A403	6	#7	STR	32'-11"	404
A404	6	#7	STR	31'-2"	382
A405	6	#7	STR	29'-5"	361
A406	6	#7	STR	27'-8"	339
A407	6	#7	STR	25'-11"	318
A408	6	#7	STR	24'-2"	296
A409	6	#7	STR	22'-5"	275
A410	6	#7	STR	20'-8"	253
A411	6	#7	STR	18'-11"	232
A412	6	#7	STR	17'-2"	211
A413	6	#7	STR	15'-5"	189
A414	6	#7	STR	13'-8"	168
A415	6	#7	STR	11'-11"	146
A416	6	#7	STR	10'-2"	125
A417	6	#7	STR	8'-5"	103
A418	6	#7	STR	6'-8"	82
A419	6	#7	STR	4'-11"	60
A420	6	#7	STR	3'-2"	39
B1	1736	#5	STR	13'-2"	23840
B2	1984	#4	STR	9'-4"	12370
B3	2780	#4	STR	13'-2"	24451
C1	3759	#4	STR	29'-7"	74285
D1	6	#6	STR	3'-6"	32
E1	16	#5	STR	6'-11"	115
G1	8	#5	STR	54'-2"	452
S2	12	#8	STR	54'-2"	1735
REINFORCING STEEL					465495 LBS.

BAR TYPE

BAR DIMENSIONS ARE OUT TO OUT

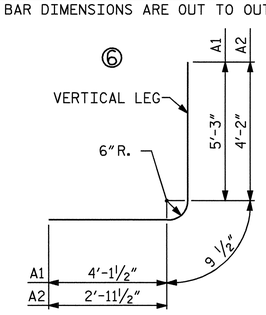

SPLICE CHART

BAR	SIZE	SPLICE LENGTH
A200	#5	3'-0"
A400	#7	3'-1"
B1	#5	1'-9"
B3	#4	1'-9"
C1	#4	1'-11"

PROJECT NO. R-2719A

LENOIR COUNTY

STATION: 16+14.00-Y1RPCA-

SHEET 3 OF 4

STATE OF NORTH CAROLINA
DEPARTMENT OF TRANSPORTATION
RALEIGH

BARREL STANDARD
TRIPLE 12 FT. X 10 FT.
CONCRETE BOX CULVERT

NORTH CAROLINA PROFESSIONAL SEAL 025516 ENGINEER EMILY E. MURRAY

Emily E. Murray 10/7/08

REVISIONS						SHEET NO.
NO.	BY:	DATE:	NO.	BY:	DATE:	C-22
1			3			TOTAL SHEETS
2			4			23

DRAWN BY : M.GUDLAUGSSON DATE : 06/2008
CHECKED BY : T. L. AVERETTE DATE : 09/2008

25-SEP-2008 11:24
g:\tipprojects-r\r2719a\structures\str#17\mgudlaugsson\2719a_sd_cu_17.dgn
taverette

STR. #17

BAR TYPES

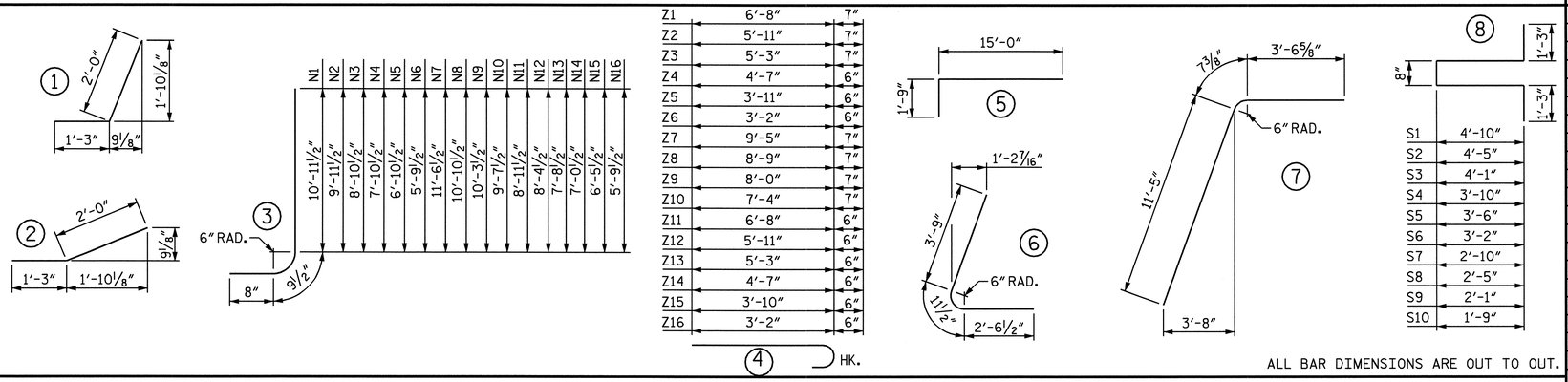

Z1	6'-8" / 7"
Z2	5'-11" / 7"
Z3	5'-3" / 7"
Z4	4'-7" / 6"
Z5	3'-11" / 6"
Z6	3'-2" / 6"
Z7	9'-5" / 7"
Z8	8'-9" / 7"
Z9	8'-0" / 7"
Z10	7'-4" / 7"
Z11	6'-8" / 6"
Z12	5'-11" / 6"
Z13	5'-3" / 6"
Z14	4'-7" / 6"
Z15	3'-10" / 6"
Z16	3'-2" / 6"

ALL BAR DIMENSIONS ARE OUT TO OUT.

BILL OF MATERIAL

BAR	NO.	SIZE	TYPE	LENGTH	WEIGHT
B10	4	#4	STR	12'-3"	33
C10	26	#6	STR	10'-0"	391
H1	16	#4	STR	16'-1"	172
H2	4	#4	STR	13'-7"	36
H3	4	#4	STR	9'-3"	25
H4	4	#4	STR	4'-10"	13
H5	4	#4	STR	17'-0"	45
H6	32	#4	1	3'-3"	69
H7	32	#4	STR	21'-11"	468
H8	8	#4	STR	18'-8"	100
H9	4	#4	STR	25'-4"	68
H10	4	#4	STR	14'-11"	40
H11	4	#4	STR	4'-7"	12
H12	32	#4	2	3'-3"	69
H13	8	#4	STR	22'-2"	118
M1	10	#8	5	16'-9"	447
N1	8	#6	3	12'-5"	149
N2	8	#6	3	11'-5"	137
N3	8	#6	3	10'-4"	124
N4	8	#5	3	9'-4"	78
N5	8	#5	3	8'-4"	70
N6	8	#4	3	7'-3"	39
N7	8	#6	3	13'-0"	156
N8	12	#6	3	12'-4"	222
N9	12	#6	3	11'-9"	212
N10	12	#6	3	11'-1"	200
N11	12	#6	3	10'-5"	188
N12	12	#5	3	9'-10"	123
N13	12	#5	3	9'-2"	115
N14	12	#5	3	8'-6"	106
N15	12	#4	3	7'-11"	63
N16	12	#4	3	7'-3"	58
P1	4	#9	6	7'-3"	99
P2	4	#9	7	15'-7"	212
S1	2	#4	8	12'-10"	17
S2	2	#4	8	12'-0"	16
S3	2	#4	8	11'-4"	15
S4	2	#4	8	10'-10"	14
S5	2	#4	8	10'-2"	14

BAR	NO.	SIZE	TYPE	LENGTH	WEIGHT
S6	2	#4	8	9'-6"	13
S7	2	#4	8	8'-10"	12
S8	2	#4	8	8'-0"	11
S9	2	#4	8	7'-4"	10
S10	2	#4	8	6'-8"	9
S11	6	#6	STR	6'-0"	54
T1	6	#5	STR	18'-0"	113
T2	6	#5	STR	43'-9"	274
T3	4	#5	STR	14'-0"	58
V1	8	#4	STR	10'-5"	56
V2	4	#4	STR	9'-5"	25
V3	4	#4	STR	8'-4"	22
V4	4	#4	STR	7'-4"	20
V5	4	#4	STR	6'-4"	17
V6	4	#4	STR	5'-3"	14
V7	8	#4	STR	11'-0"	59
V8	6	#4	STR	10'-4"	41
V9	6	#4	STR	9'-9"	39
V10	6	#4	STR	9'-1"	36
V11	6	#4	STR	8'-5"	34
V12	6	#4	STR	7'-10"	31
V13	6	#4	STR	7'-2"	29
V14	6	#4	STR	6'-6"	26
V15	6	#4	STR	5'-11"	24
V16	6	#4	STR	5'-3"	21
V17	4	#4	STR	9'-5"	25
V18	4	#4	STR	5'-0"	13
Z1	8	#5	4	7'-3"	60
Z2	8	#5	4	6'-6"	54
Z3	8	#5	4	5'-10"	49
Z4	8	#4	4	5'-1"	27
Z5	8	#4	4	4'-5"	24
Z6	8	#4	4	3'-8"	20
Z7	16	#5	4	10'-0"	167
Z8	12	#5	4	9'-4"	117
Z9	12	#5	4	8'-7"	107
Z10	12	#5	4	7'-11"	99
Z11	12	#4	4	7'-2"	57
Z12	12	#4	4	6'-5"	51
Z13	12	#4	4	5'-9"	46
Z14	12	#4	4	5'-1"	41
Z15	12	#4	4	4'-4"	35
Z16	12	#4	4	3'-8"	29
Z17	6	#5	STR	10'-11"	68
Z18	8	#5	STR	10'-2"	85
Z19	8	#5	STR	9'-4"	78
Z20	8	#5	STR	8'-7"	72

REINFORCING STEEL FOR 4 WINGS	LBS.	6905
CLASS A CONCRETE		
4 WINGS	CU. YDS.	94.0
2 HEADWALL	CU. YDS.	5.1
2 END CURTAIN WALL	CU. YDS.	6.2
TOTAL	CU. YDS.	105.3

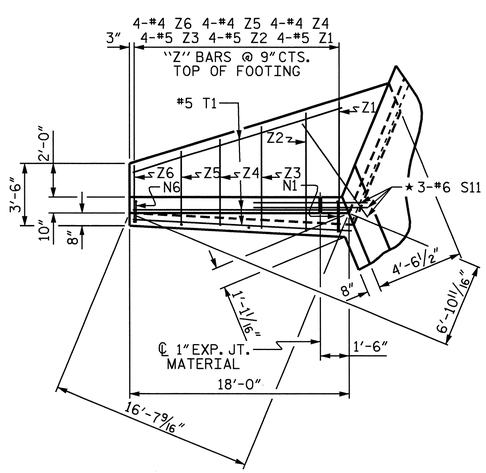

PLAN W4

★ S11 BARS @ BOTTOM OF FLOOR SLAB & FOOTING

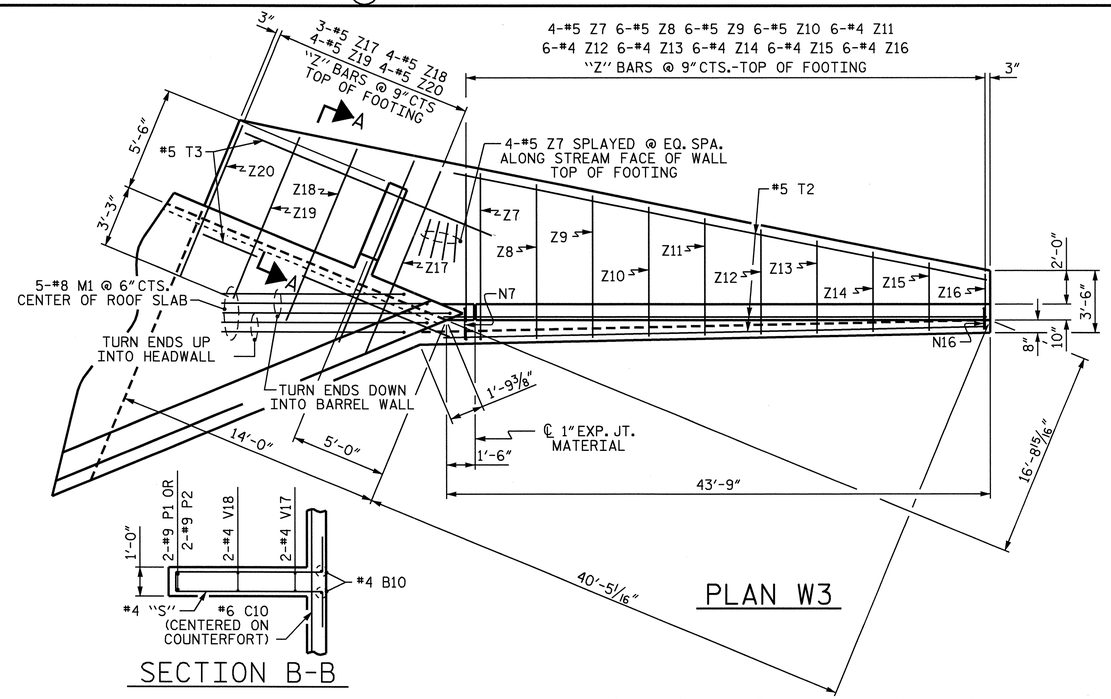

PLAN W3

SECTION B-B

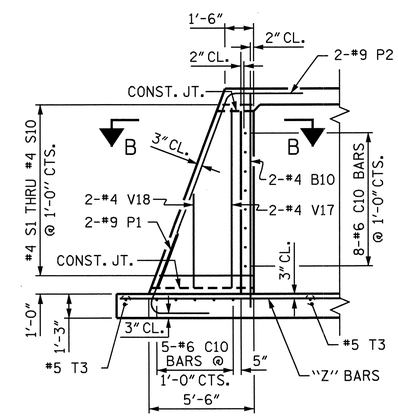

SECTION A-A

STANDARD REINFORCING STEEL IN BARREL NOT SHOWN

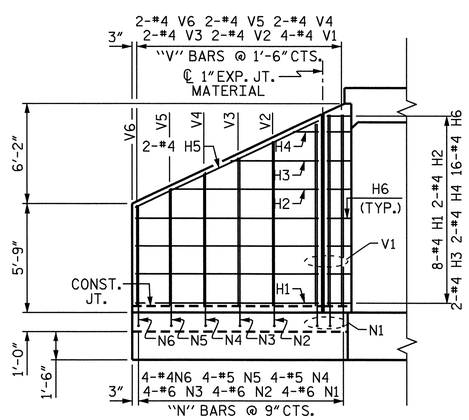

ELEVATION W4

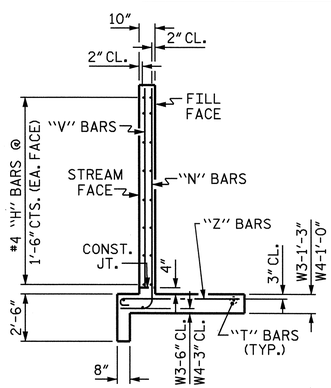

TYPICAL WING SECTION

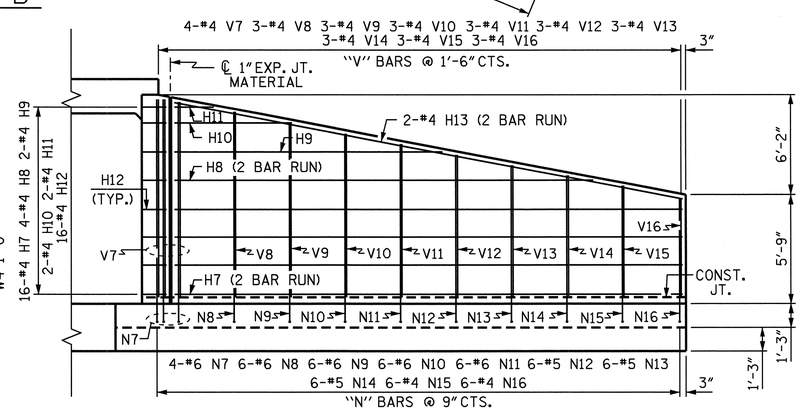

ELEVATION W3

"H" BAR 1'-11" MIN. SPLICE

PROJECT NO. R-2719A

LENOIR COUNTY

STATION: 74+43.00-Y1-

SHEET 4 OF 4

STATE OF NORTH CAROLINA
DEPARTMENT OF TRANSPORTATION
RALEIGH

WINGS FOR MULTIPLE BARREL CONCRETE BOX CULVERT

H = 10'-0" SLOPE = 3:1

45° SKEW

NORTH CAROLINA PROFESSIONAL SEAL 025516 ENGINEER EMILY E. MURRAY

10/7/08

REVISIONS								SHEET NO.
NO.	BY:	DATE:	NO.	BY:	DATE:			C-23
1			3					TOTAL SHEETS
2			4					23

DRAWN BY : M. GUDLAUGSSON DATE : 09/2008
CHECKED BY : TRACY AVERETTE DATE : 9/08

25-SEP-2008 11:24
g:\tippprojects-r\r2719a\structures\str#17\mgudlaugsson\2719a_sd_cu_17.dgn
taveretta

STR. #17

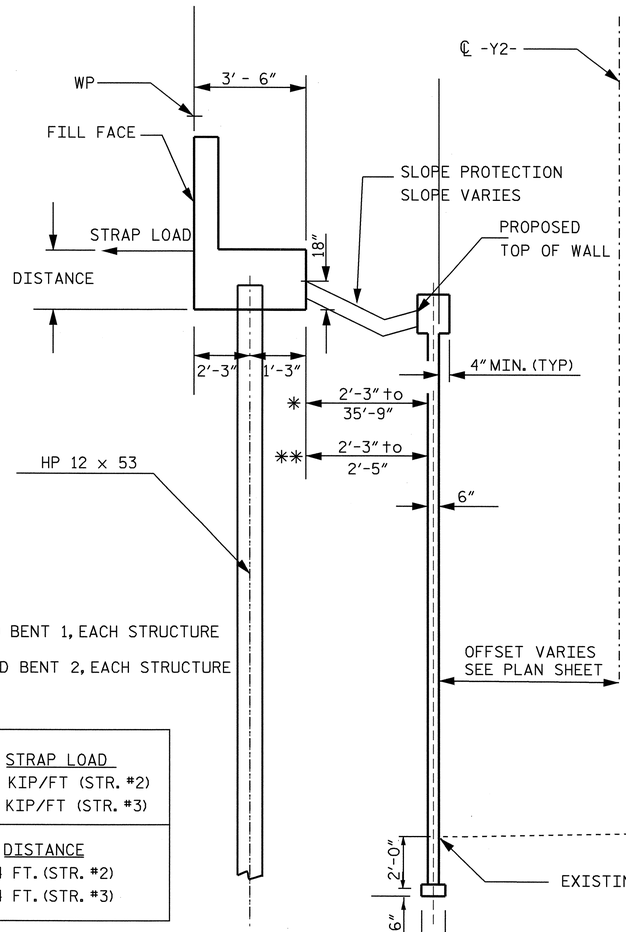

STRAP LOAD
2.8 KIP/FT (STR. #2)
1.7 KIP/FT (STR. #3)
DISTANCE
4.4 FT. (STR. #2)
3.4 FT. (STR. #3)

TYPICAL SECTION A-A

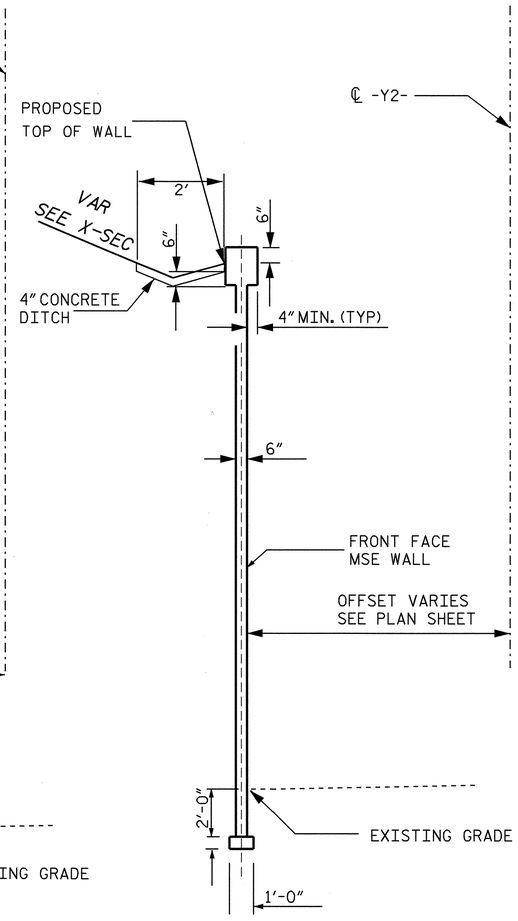

TYPICAL SECTION B-B

NOTES

1. FOR MECHANICALLY STABILIZED EARTH (MSE) RETAINING WALLS, SEE MECHANICALLY STABILIZED EARTH RETAINING WALLS SPECIAL PROVISION.

2. FOR SINGLE FACED PRECAST CONCRETE BARRIER, SEE ROADWAY PLANS AND SECTION 857 OF THE STANDARD SPECIFICATIONS.

3. DO NOT USE AN MSE WALL SYSTEM WITH SEGMENTAL RETAINING WALL UNITS FOR WALL NO. 1 OR WALL NO. 2.

4. DO NOT USE STANDARD SIZE 2S OR 2MS FOR WALL BACKFILL FOR RETAINING WALL NO. 1 OR WALL NO. 2.

5. BEFORE BEGINNING MSE WALL DESIGN FOR RETAINING WALL NO. 1 OR WALL NO.2 , SURVEY ALL EXISTING GROUND ELEVATIONS SHOWN ON THE PLANS AND SUBMIT A REVISED WALL ENVELOPE FOR REVIEW. DO NOT START WALL DESIGN OR CONSTRUCTION UNTIL THE ENVELOPE IS ACCEPTED.

6. CAST IN PLACE CONCRETE COPING IS REQUIRED FOR RETAINING WALL NO. 1 AND NO. 2.

7. DESIGN RETAINING WALL NO. 1 AND NO. 2 FOR A WALL HEIGHT (DIFFERENCE BETWEEN GRADE ELEVATION AND BOTTOM OF WALL ELEVATION) PLUS EMBEDMENT (DIFFERENCE BETWEEN BOTTOM OF WALL ELEVATION AND TOP OF LEVELING PAD ELEVATION).

8. DESIGN RETAINING WALL NO. 1 AND NO.2 FOR THE FOLLOWING:
   1) MINIMUM SERVICE LIFE = 100 YEARS
   2) ALLOWABLE BEARING CAPACITY = 3000 PSF
   3) WALL BACKFILL PARAMETERS:

MATERIAL STANDARD SIZE NO. (IN ACCORDANCE WITH SECTIONS 1005 AND 1014 OF THE STANDARD SPECIFICATIONS)	UNIT WEIGHT PCF	FRICTION ANGLE DEGREES	COHESION PSF
57, 67 AND 78M	110	38	0

   4) IN-SITU ASSUMED SOIL MATERIAL PARAMETERES:

MATERIAL TYPE	UNIT WEIGHT PCF	FRICTION ANGLE DEGREES	COHESION (c) PSF
RETAINED AND RANDOM BACKFILL	120	30	0
FOUNDATION	120	30	0

9. DESIGN RETAINING WALL NO. 1 AND NO. 2 FOR A LIVE LOAD (TRAFFIC) SURCHARGE.

10. DESIGN REINFORCEMENT CONNECTED TO THE END BENT CAPS FOR THE LOADING SHOWN AND CAST THE REINFORCEMENT CONNECTION HARDWARE INTO THE CAP BACKWALL FOR END BENT NO. 1 AND END BENT NO.2 AT WALL NO. 1 AND WALL NO. 2. MAINTAIN A MINIMUM CLEARANCE OF 3″ BETWEEN THE HARDWARE AND THE REINFORCING STEEL IN THE CAP. A MINIMUM OF 2 LAYERS OF REINFORCING IS REQUIRED.

11. FOUNDATIONS FOR END BENT NO.1 AND END BENT NO.2 WILL INTERFERE WITH REINFORCEMENT FOR WALL NO. 1 AND WALL NO. 2. SEE "FOUNDATION LAYOUT" SHEET FOR FOUNDATION LOCATIONS.

12. DO NOT PLACE LEVELING PAD CONCRETE, WALL BACKFILL, OR FIRST REINFORCEMENT LAYER FOR RETAINING WALL NO. 1 OR NO. 2 UNTIL OBTAINING APPROVAL OF THE EXCAVATION DEPTH AND FOUNDATION MATERIAL.

13. EXISTING OR FUTURE OBSTRUCTIONS SUCH AS DRAINAGE BOXES MAY INTERFERE WITH REINFORCEMENT FOR RETAINING WALL NO. 1 OR NO.2. SEE ROADWAY PLANS FOR LOCATION OF DRAINAGE BOXES.

14. INCLUDE IN THE UNIT BID PRICE FOR MSE RETAINING WALLS ALL COSTS FOR DESIGN, SUBMITTALS, FURNISHING LABOR, TOOLS, EQUIPMENT AND MATERIALS, PERFORMING ANY EXCAVATION, PROVIDING SITE ASSISTANCE, LEVELING PADS, FACING ELEMENTS, REINFORCEMENT, BACKFILL, FABRIC, COPING, 4″ CONCRETE SLOPE PROTECTION, 24″ CORRUGATED STEEL PIPE, AND MISCELLANEOUS COMPONENTS AND ANY INCIDENTALS NECESSARY TO DESIGN AND CONSTRUCT MSE WALLS.

15. FOR FAA REQUIREMENTS, SEE ROADWAY SPECIAL PROVISIONS.

GEOTECHNICAL ENGINEER	ENGINEER
NORTH CAROLINA PROFESSIONAL SEAL 027869 ENGINEER DAVID L. TEAGUE	
SIGNATURE DATE 10/8/08	SIGNATURE DATE

PROJECT NO.: R-2719A (34501.1.1)
LENOIR *COUNTY*
STATION: 10+43.55 -Y2- to 14+37.20 -Y2-
12+99.85 -Y2- to 16+00.00 -Y2-
SHEET 1 OF 5

GEOTECHNICAL ENGINEERING UNIT
☐ *EASTERN REGIONAL OFFICE*
☐ *WESTERN REGIONAL OFFICE*
■ *CONTRACT OFFICE*

STATE OF NORTH CAROLINA
DEPARTMENT OF TRANSPORTATION
RALEIGH

MSE WALL #1 and #2

REVISIONS						SHEET NO.
NO.	BY	DATE	NO.	BY	DATE	W-1
1			3			TOTAL SHEETS
2			4			10

PREPARED BY:	D. TEAGUE	DATE: 8-08
REVIEWED BY:	E. WILLIAMS	DATE: 8-08

GEOTECHNICAL ENGINEER	ENGINEER
NORTH CAROLINA PROFESSIONAL SEAL 027869 ENGINEER DAVID L. TEAGUE SIGNATURE: D. L. Teague DATE: 10/8/08	SIGNATURE DATE

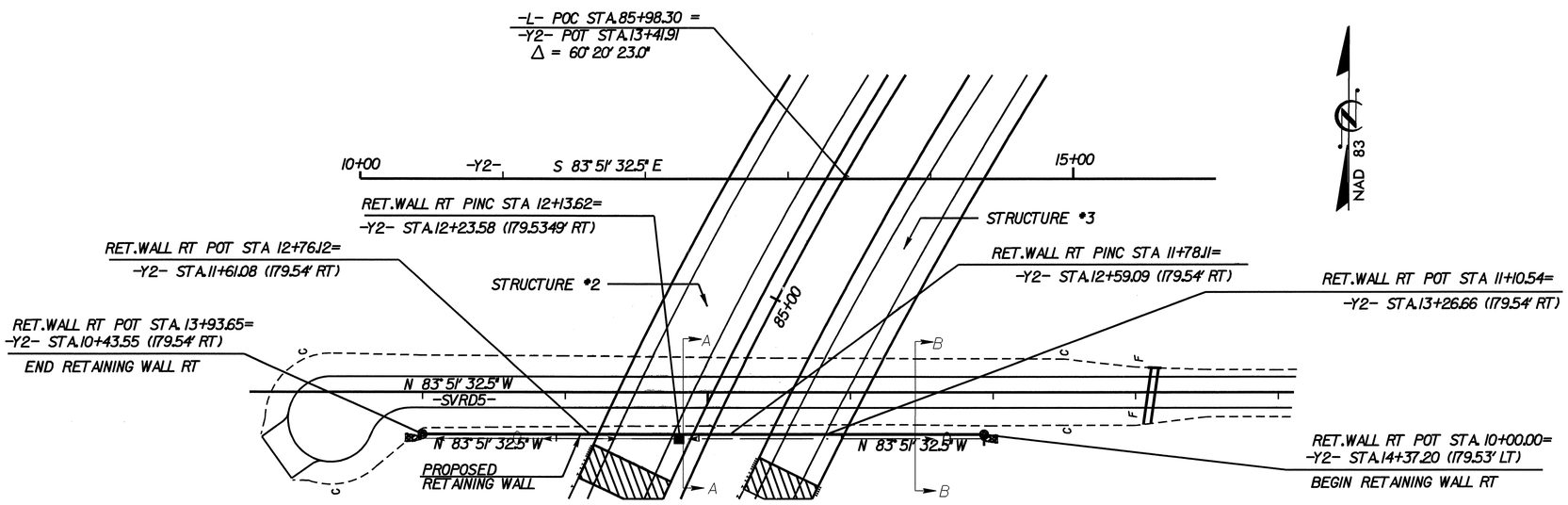

PLAN VIEW MSE WALL #1

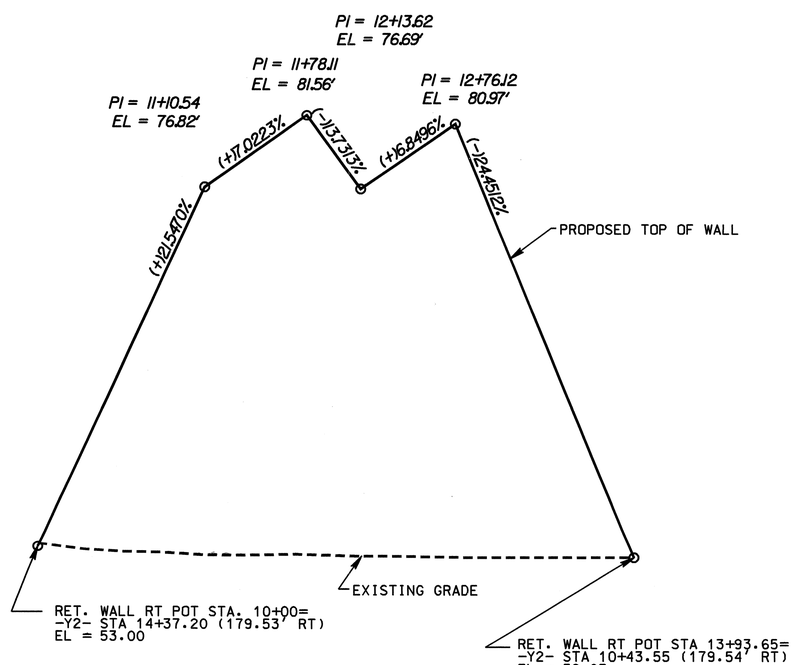

ELEVATION VIEW MSE WALL #1 - FRONT FACE

PROJECT NO.: R-2719A (34501.1.1)

LENOIR **COUNTY**

STATION: 10+43.55 -Y2- to 14+37.20 -Y2-

SHEET 2 OF 5

GEOTECHNICAL ENGINEERING UNIT

☐ EASTERN REGIONAL OFFICE
☐ WESTERN REGIONAL OFFICE
■ CONTRACT OFFICE

STATE OF NORTH CAROLINA
DEPARTMENT OF TRANSPORTATION
RALEIGH

MSE WALL #1

REVISIONS						SHEET NO.
NO.	BY	DATE	NO.	BY	DATE	W-2
1			3			TOTAL SHEETS
2			4			10

PREPARED BY:	D. TEAGUE	DATE: 8/08
REVIEWED BY:	E. WILLIAMS	DATE: 8/08

GEOTECHNICAL ENGINEER	ENGINEER
NORTH CAROLINA PROFESSIONAL SEAL 027869 ENGINEER DAVID L. TEAGUE — SIGNATURE: D. L. Teague — DATE: 10/8/08	SIGNATURE — DATE

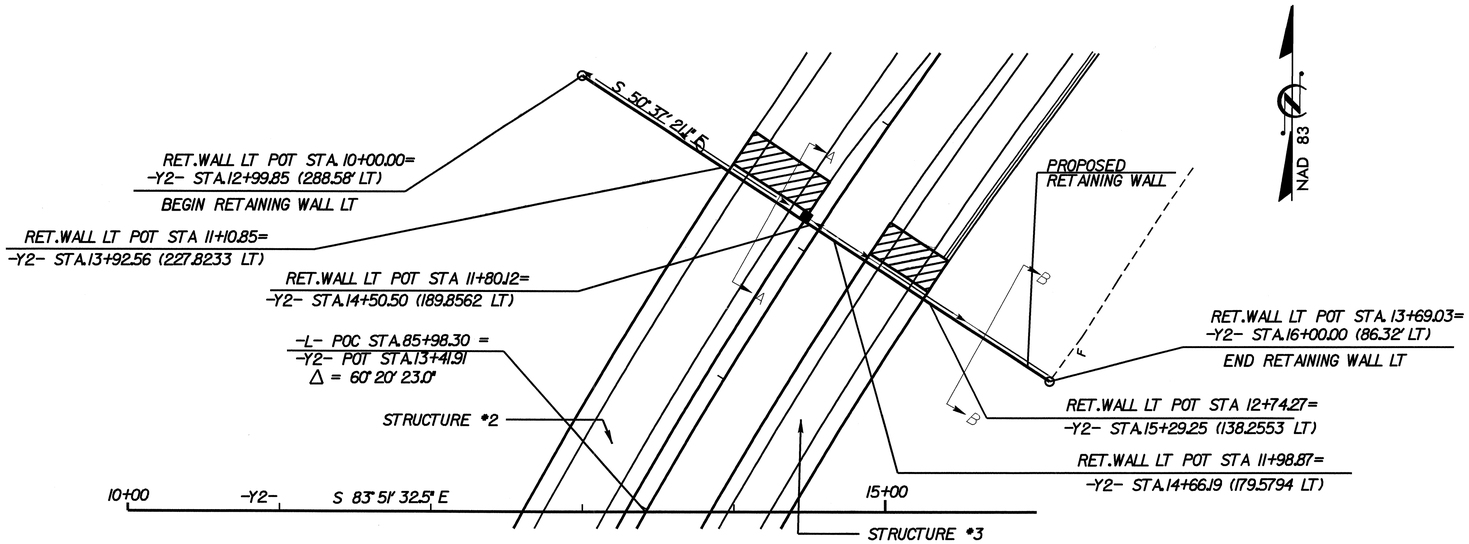

PLAN VIEW MSE WALL #2

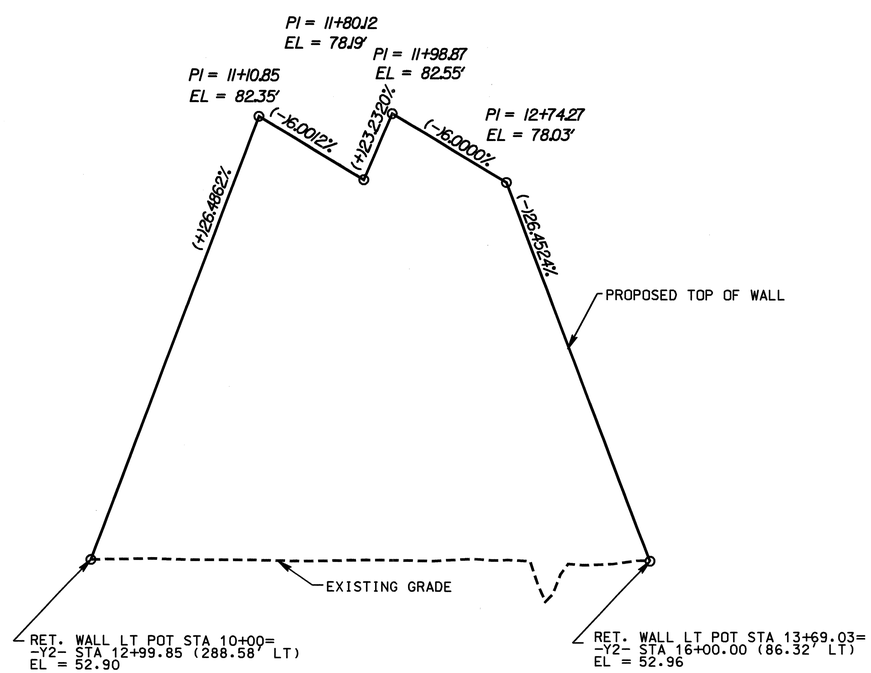

ELEVATION VIEW MSE WALL #2 - FRONT FACE

PROJECT NO.: R-2719A (34501.1.1)

LENOIR ***COUNTY***

STATION: 12+99.85 -Y2- to 16+00.00 -Y2-

SHEET 3 OF 5

GEOTECHNICAL ENGINEERING UNIT

☐ *EASTERN REGIONAL OFFICE*
☐ *WESTERN REGIONAL OFFICE*
■ *CONTRACT OFFICE*

STATE OF NORTH CAROLINA
DEPARTMENT OF TRANSPORTATION
RALEIGH

MSE WALL #2

REVISIONS							SHEET NO.
NO.	BY	DATE	NO.	BY	DATE		W-3
1			3				TOTAL SHEETS
2			4				10

PREPARED BY:	D. TEAGUE	DATE: 8/08
REVIEWED BY:	E. WILLIAMS	DATE: 8/08

GENERAL NOTES

SLOPE PROTECTION SHALL BE PLACED UNDER THE ENDS OF THE BRIDGE AS SHOWN IN THE DETAILS. STRAIGHT EDGING WILL NOT BE REQUIRED UNLESS, IN THE OPINION OF THE ENGINEER, VISUAL INSPECTION INDICATES A NEED FOR IT. FOR BERM WIDTH, SEE GENERAL DRAWING.

THE SLOPE PROTECTION SHALL CONSIST OF 4" POURED-IN-PLACE CONCRETE PAVING AS SHOWN IN THE DETAILS ON THIS SHEET. CONCRETE SHALL BE CLASS "B". THE CONCRETE SURFACE SHALL BE FLOATED WITH A WOODEN FLOAT AND FINISHED. WELDED WIRE FABRIC REINFORCING SHALL BE 6 X 6 - W1.4 X W1.4, 60" WIDE. SLOPE PROTECTION SHALL BE POURED IN 5' STRIPS AS SHOWN IN THE "POURING DETAIL" WITH 2'-0" LONG #4 BARS PLACED ALONG THE SLOPE BETWEEN STRIPS AT 1'-6" MAXIMUM SPACING. SLOPE PROTECTION MAY BE POURED IN ALTERNATE 4' AND 5' STRIPS AS SHOWN IN THE "OPTIONAL POURING DETAIL" WITH ADJACENT RUNS OF WELDED WIRE FABRIC LAPPING AT LEAST 6".

PAYMENT FOR THE SLOPE PROTECTION AND THE WELDED WIRE FABRIC SHALL BE INCLUDED IN THE LUMP SUM PRICE BID FOR MSE RETAINING WALLS.

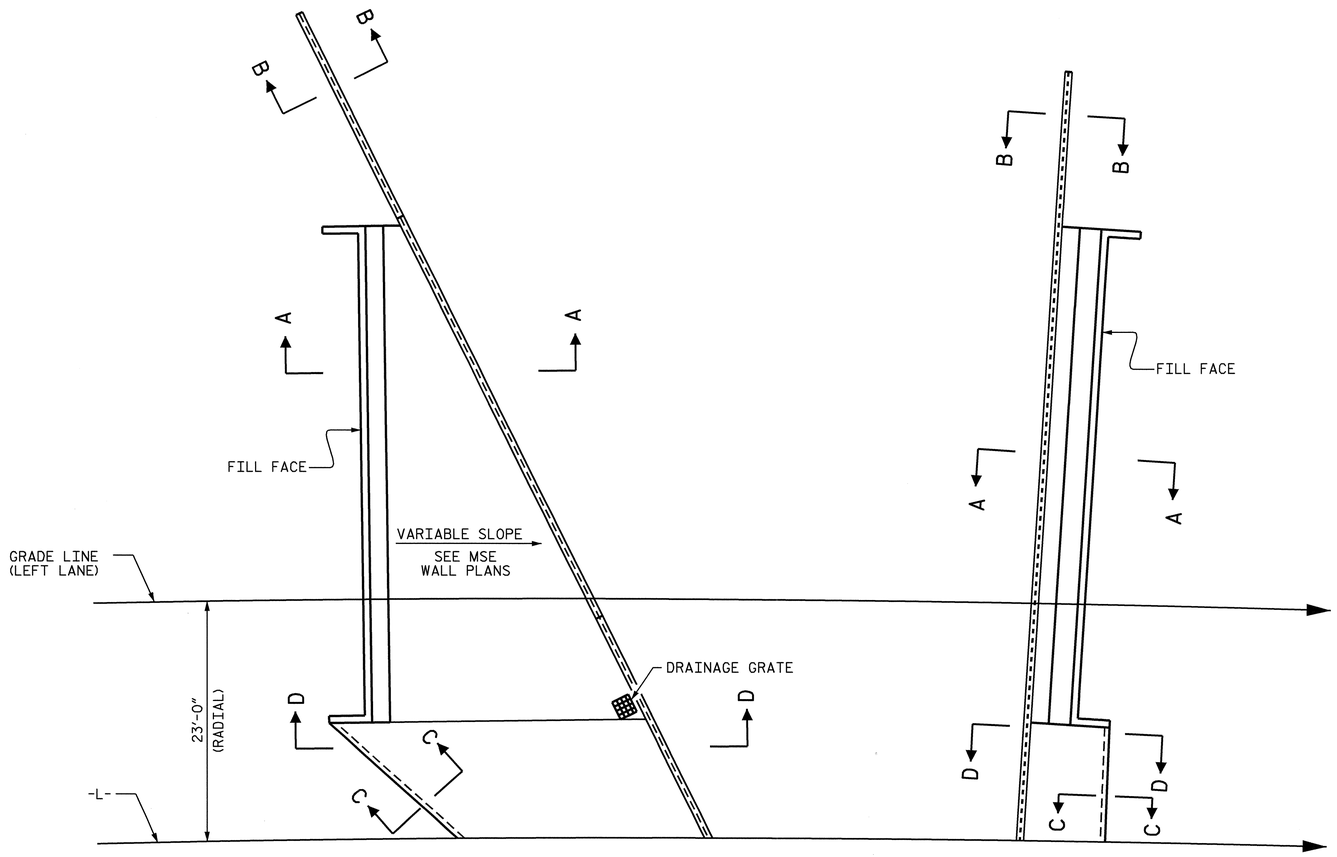

PLAN OF SLOPE PROTECTION

FOR SECTION A-A AND B-B, SEE MSE WALL SHEET.

BRIDGE @ STA. 85+98.30 -L- (LEFT LANE)	4" INCH SLOPE PROTECTION	* WELDED WIRE FABRIC 60 INCHES WIDE
	SQUARE YARDS	APPROX. L.F.
END BENT 1	178	356
END BENT 2	26	52

* QUANTITY SHOWN IS BASED ON 5' POURS.

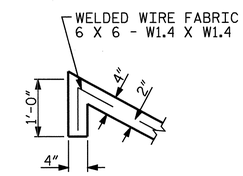

SECTION C-C

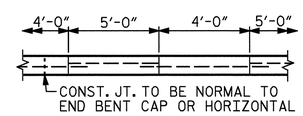

POUR A 4'-0" STRIP FIRST. STRIP WIDTHS MAY VARY IN CURVED PORTION.

OPTIONAL POURING DETAIL

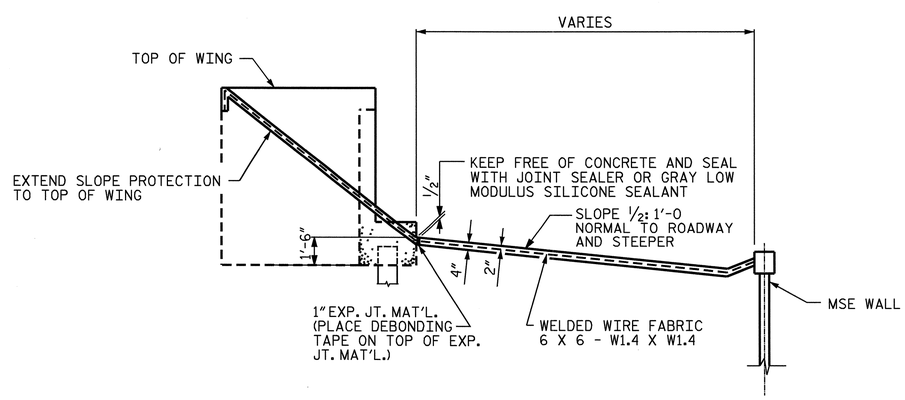

SECTION D-D

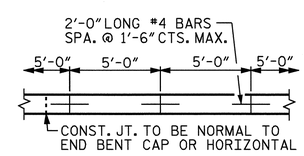

STRIP WIDTHS MAY VARY IN CURVED PORTION.

POURING DETAIL

PROJECT NO. R-2719A
LENOIR COUNTY
STATION: 10+43.55 -Y2-
12+99.85 -Y2-

STATE OF NORTH CAROLINA
DEPARTMENT OF TRANSPORTATION
RALEIGH

SLOPE PROTECTION DETAILS @ MSE WALL (LEFT LANE)

NORTH CAROLINA PROFESSIONAL SEAL 14045 ENGINEER TIMOTHY L. COGGINS
10/13/08

REVISIONS						SHEET NO.
NO.	BY:	DATE:	NO.	BY:	DATE:	W-4
1			3			TOTAL SHEETS
2			4			10

DRAWN BY : J.B. WILSON DATE : 9/25/08
CHECKED BY : T.L. COGGINS DATE : 10/2008

13-OCT-2008 17:07
H:\Structures\Str#2\Final Plans\R-2719A_sd_SP_02.dgn
tcoggins

STR. #2

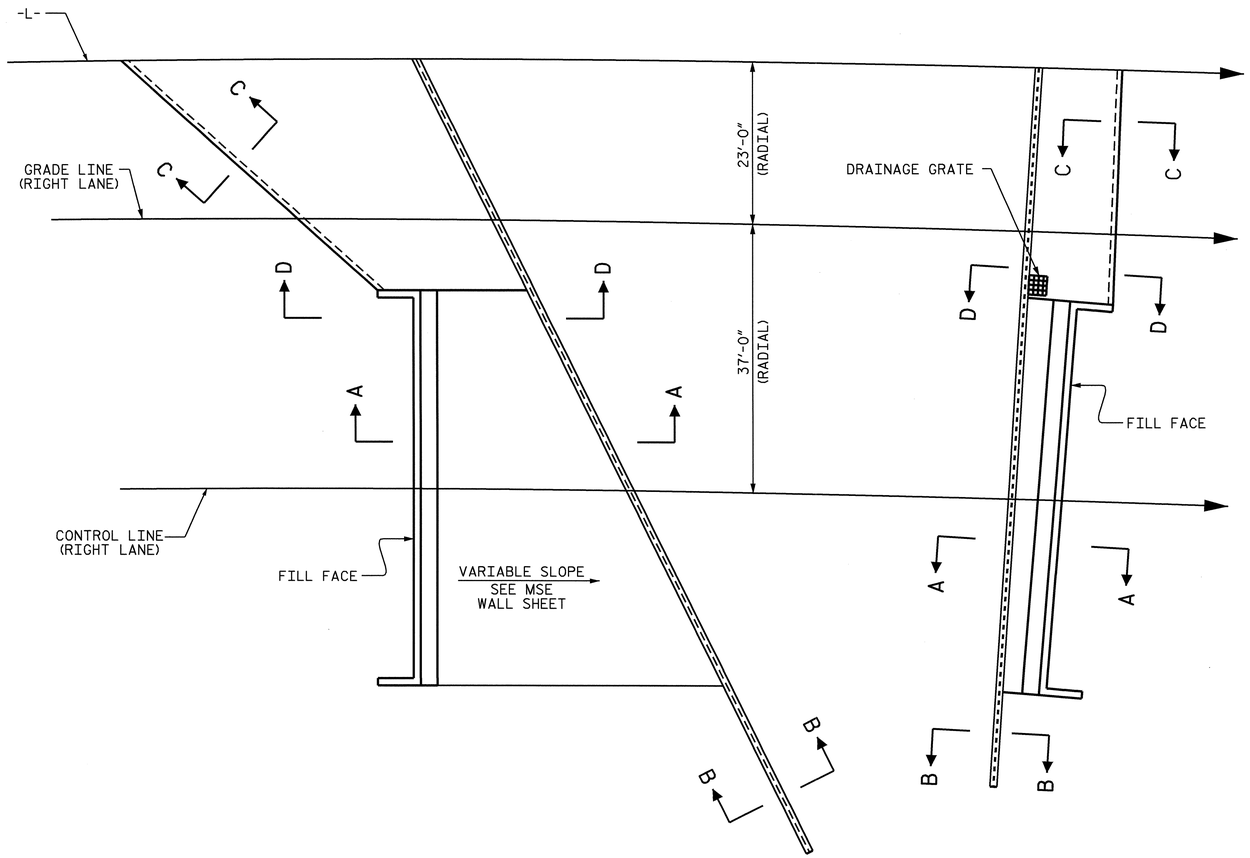

FOR SECTION A-A AND B-B, SEE MSE WALL SHEET.

PLAN OF SLOPE PROTECTION

GENERAL NOTES

SLOPE PROTECTION SHALL BE PLACED UNDER THE ENDS OF THE BRIDGE AS SHOWN IN THE DETAILS. STRAIGHT EDGING WILL NOT BE REQUIRED UNLESS, IN THE OPINION OF THE ENGINEER, VISUAL INSPECTION INDICATES A NEED FOR IT. FOR BERM WIDTH, SEE GENERAL DRAWING.

THE SLOPE PROTECTION SHALL CONSIST OF 4" POURED-IN-PLACE CONCRETE PAVING AS SHOWN IN THE DETAILS ON THIS SHEET. CONCRETE SHALL BE CLASS "B". THE CONCRETE SURFACE SHALL BE FLOATED WITH A WOODEN FLOAT AND FINISHED. WELDED WIRE FABRIC REINFORCING SHALL BE 6 X 6 - W1.4 X W1.4, 60" WIDE. SLOPE PROTECTION SHALL BE POURED IN 5' STRIPS AS SHOWN IN THE "POURING DETAIL" WITH 2'-0" LONG #4 BARS PLACED ALONG THE SLOPE BETWEEN STRIPS AT 1'-6" MAXIMUM SPACING. SLOPE PROTECTION MAY BE POURED IN ALTERNATE 4' AND 5' STRIPS AS SHOWN IN THE "OPTIONAL POURING DETAIL" WITH ADJACENT RUNS OF WELDED WIRE FABRIC LAPPING AT LEAST 6".

PAYMENT FOR THE SLOPE PROTECTION AND WELDED WIRE FABRIC SHALL BE INCLUDED IN THE LUMP SUM PRICE BID FOR MSE RETAINING WALLS.

BRIDGE @ STA. 85+98.30 -L- (RIGHT LANE)	4" INCH SLOPE PROTECTION	* WELDED WIRE FABRIC 60 INCHES WIDE
	SQUARE YARDS	APPROX. L.F.
END BENT 1	272	544
END BENT 2	63	126

* QUANTITY SHOWN IS BASED ON 5' POURS.

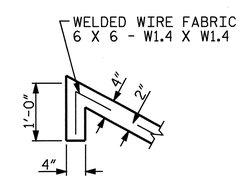

SECTION C-C

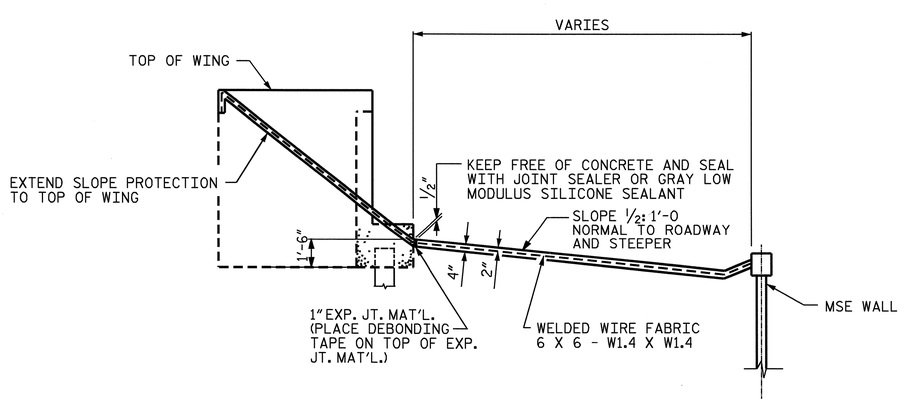

SECTION D-D

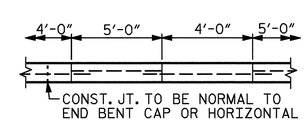

POUR A 4'-0" STRIP FIRST. STRIP WIDTHS MAY VARY IN CURVED PORTION.

OPTIONAL POURING DETAIL

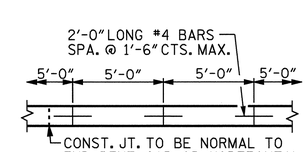

STRIP WIDTHS MAY VARY IN CURVED PORTION.

POURING DETAIL

PROJECT NO. R-2719A
LENOIR COUNTY
STATION: 10+43.55 -Y2-
12+99.85 -Y2-

STATE OF NORTH CAROLINA
DEPARTMENT OF TRANSPORTATION
RALEIGH

SLOPE PROTECTION DETAILS @ MSE WALL (RIGHT LANE)

NORTH CAROLINA PROFESSIONAL SEAL 14045 ENGINEER TIMOTHY L. COGGINS
10/13/08

REVISIONS						SHEET NO.
NO.	BY:	DATE:	NO.	BY:	DATE:	W-5
1			3			TOTAL SHEETS
2			4			10

DRAWN BY : J.B. WILSON DATE : 9/25/08
CHECKED BY : T.L. COGGINS DATE : 10/2008

13-OCT-2008 17:11
H:\Structures\Str#3\Final Plans\R-2719A_sd_SP_03.dgn
tcoggins

STR. #3

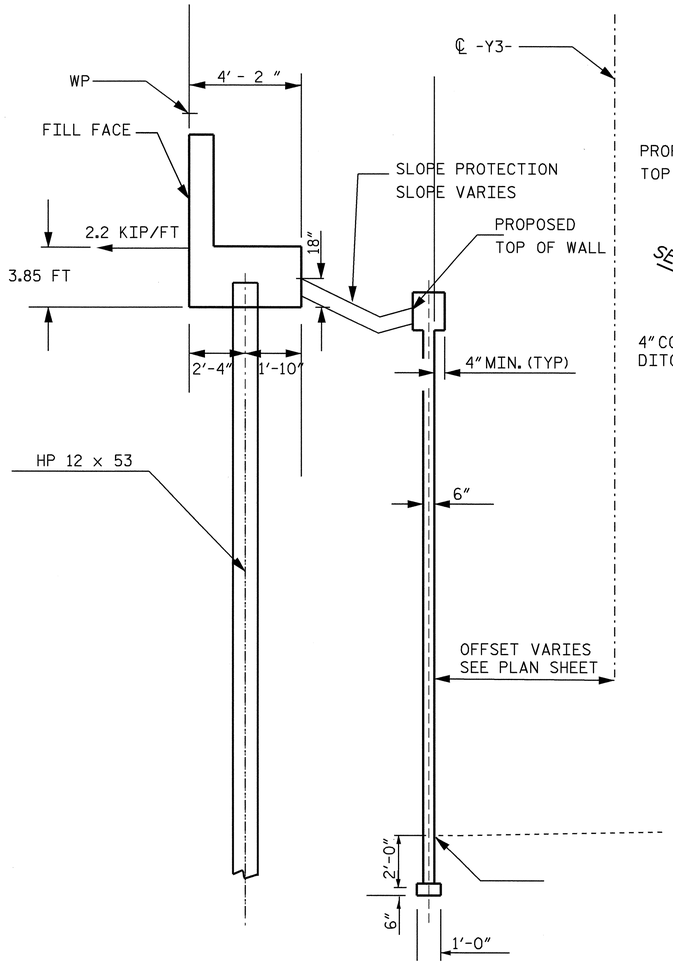

TYPICAL SECTION A-A

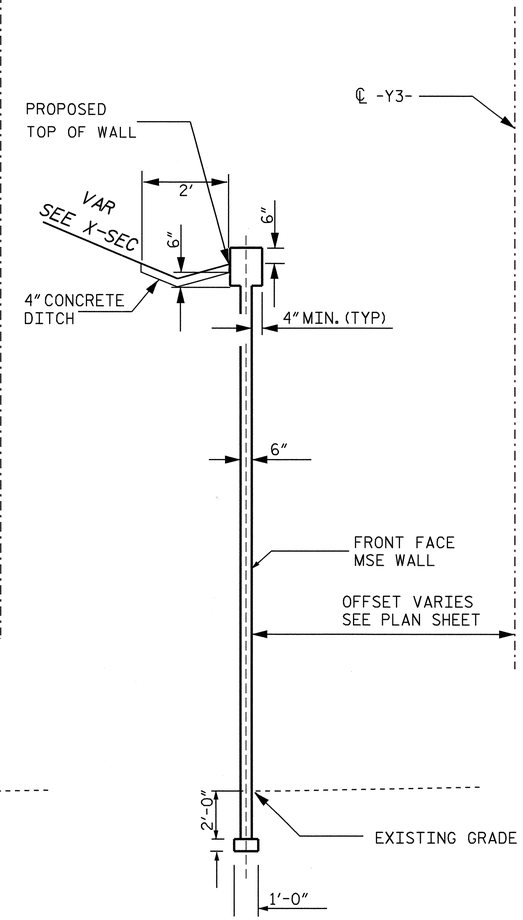

TYPICAL SECTION B-B

NOTES

1. FOR MECHANICALLY STABILIZED EARTH (MSE) RETAINING WALLS, SEE MECHANICALLY STABILIZED EARTH RETAINING WALLS SPECIAL PROVISION.

2. FOR SINGLE FACED PRECAST CONCRETE BARRIER, SEE ROADWAY PLANS AND SECTION 857 OF THE STANDARD SPECIFICATIONS.

3. DO NOT USE AN MSE WALL SYSTEM WITH SEGMENTAL RETAINING WALL UNITS FOR WALL NO. 3 OR WALL NO. 4.

4. DO NOT USE STANDARD SIZE 2S OR 2MS FOR WALL BACKFILL FOR RETAINING WALL NO. 3 OR WALL NO. 4.

5. BEFORE BEGINNING MSE WALL DESIGN FOR RETAINING WALL NO. 3 OR WALL NO.4 , SURVEY ALL EXISTING GROUND ELEVATIONS SHOWN ON THE PLANS AND SUBMIT A REVISED WALL ENVELOPE FOR REVIEW. DO NOT START WALL DESIGN OR CONSTRUCTION UNTIL THE ENVELOPE IS ACCEPTED.

6. CAST IN PLACE CONCRETE COPING IS REQUIRED FOR RETAINING WALL NO. 3 AND NO. 4.

7. DESIGN RETAINING WALL NO. 3 AND NO. 4 FOR A WALL HEIGHT (DIFFERENCE BETWEEN GRADE ELEVATION AND BOTTOM OF WALL ELEVATION) PLUS EMBEDMENT (DIFFERENCE BETWEEN BOTTOM OF WALL ELEVATION AND TOP OF LEVELING PAD ELEVATION).

8. DESIGN RETAINING WALL NO. 3 AND NO.4 FOR THE FOLLOWING:
   1) MINIMUM SERVICE LIFE = 100 YEARS
   2) ALLOWABLE BEARING CAPACITY = 3000 PSF
   3) WALL BACKFILL PARAMETERS:

MATERIAL STANDARD SIZE NO. (IN ACCORDANCE WITH SECTIONS 1005 AND 1014 OF THE STANDARD SPECIFICATIONS)	UNIT WEIGHT PCF	FRICTION ANGLE DEGREES	COHESION PSF
57, 67 AND 78M	110	38	0

   4) IN-SITU ASSUMED SOIL MATERIAL PARAMETERES:

MATERIAL TYPE	UNIT WEIGHT PCF	FRICTION ANGLE DEGREES	COHESION (c) PSF
RETAINED AND RANDOM BACKFILL	120	30	0
FOUNDATION	120	30	0

9. DESIGN RETAINING WALL NO. 3 AND NO.4 FOR A LIVE LOAD (TRAFFIC) SURCHARGE.

10. DESIGN REINFORCEMENT CONNECTED TO THE END BENT CAPS FOR THE LOADING SHOWN AND CAST THE REINFORCEMENT CONNECTION HARDWARE INTO THE CAP BACKWALL FOR END BENT NO. 1 AND END BENT NO.2 AT WALL NO. 3 AND WALL NO. 4. MAINTAIN A MINIMUM CLEARANCE OF 3" BETWEEN THE HARDWARE AND THE REINFORCING STEEL IN THE CAP. A MINIMUM OF 2 LAYERS OF REINFORCING IS REQUIRED.

11. FOUNDATIONS FOR END BENT NO.1 AND END BENT NO.2 WILL INTERFERE WITH REINFORCEMENT FOR WALL NO. 3 AND WALL NO. 4. SEE "FOUNDATION LAYOUT" SHEET ON STRUCTURE PLANS FOR FOUNDATION LOCATIONS.

12. DO NOT PLACE LEVELING PAD CONCRETE, WALL BACKFILL, OR FIRST REINFORCEMENT LAYER FOR RETAINING WALL NO. 3 OR NO. 4 UNTIL OBTAINING APPROVAL OF THE EXCAVATION DEPTH AND FOUNDATION MATERIAL.

13. INCLUDE IN THE UNIT BID PRICE FOR MSE RETAINING WALLS ALL COSTS FOR DESIGN, SUBMITTALS, FURNISHING LABOR, TOOLS, EQUIPMENT AND MATERIALS, PERFORMING ANY EXCAVATION, PROVIDING SITE ASSISTANCE, LEVELING PADS, FACING ELEMENTS, REINFORCEMENT, BACKFILL, FABRIC, COPING, 4" CONCRETE SLOPE PROTECTION, AND MISCELLANEOUS COMPONENTS AND ANY INCIDENTALS NECESSARY TO DESIGN AND CONSTRUCT MSE WALLS.

14. FOR FAA REQUIREMENTS, SEE ROADWAY SPECIAL PROVISIONS.

GEOTECHNICAL ENGINEER	ENGINEER
NORTH CAROLINA PROFESSIONAL SEAL 027869 ENGINEER DAVID L. TEAGUE — SIGNATURE — DATE 10/8/08	SIGNATURE — DATE

PROJECT NO.: R-2719A (34501.1.1)
COUNTY: LENOIR
STATION: 18+90.00 -Y3- to 22+89.50 -Y3-
20+16.47 -Y3- to 23+80.00 -Y3-
SHEET 1 OF 5

GEOTECHNICAL ENGINEERING UNIT
☐ EASTERN REGIONAL OFFICE
☐ WESTERN REGIONAL OFFICE
■ CONTRACT OFFICE

STATE OF NORTH CAROLINA
DEPARTMENT OF TRANSPORTATION
RALEIGH

MSE WALL #3 and #4

REVISIONS						SHEET NO.
NO.	BY	DATE	NO.	BY	DATE	W-6
1			3			TOTAL SHEETS
2			4			10

PREPARED BY: D. TEAGUE	DATE: 7-08	
REVIEWED BY: E. WILLIAMS	DATE: 7-08	

GEOTECHNICAL ENGINEER	ENGINEER
NORTH CAROLINA PROFESSIONAL SEAL 027869 ENGINEER DAVID L. TEAGUE	
SIGNATURE DATE 10/8/08	SIGNATURE DATE

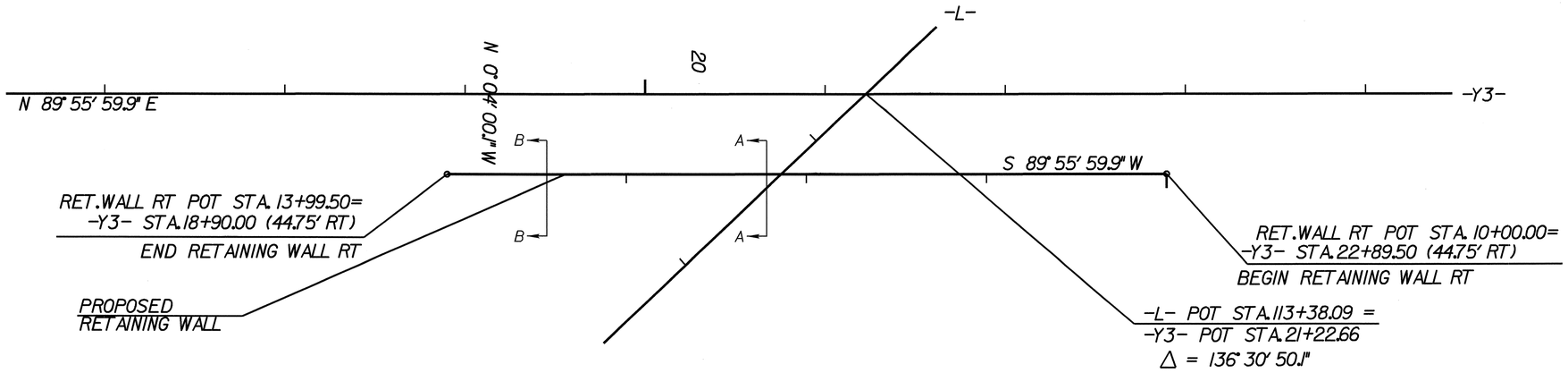

PLAN VIEW MSE WALL #3

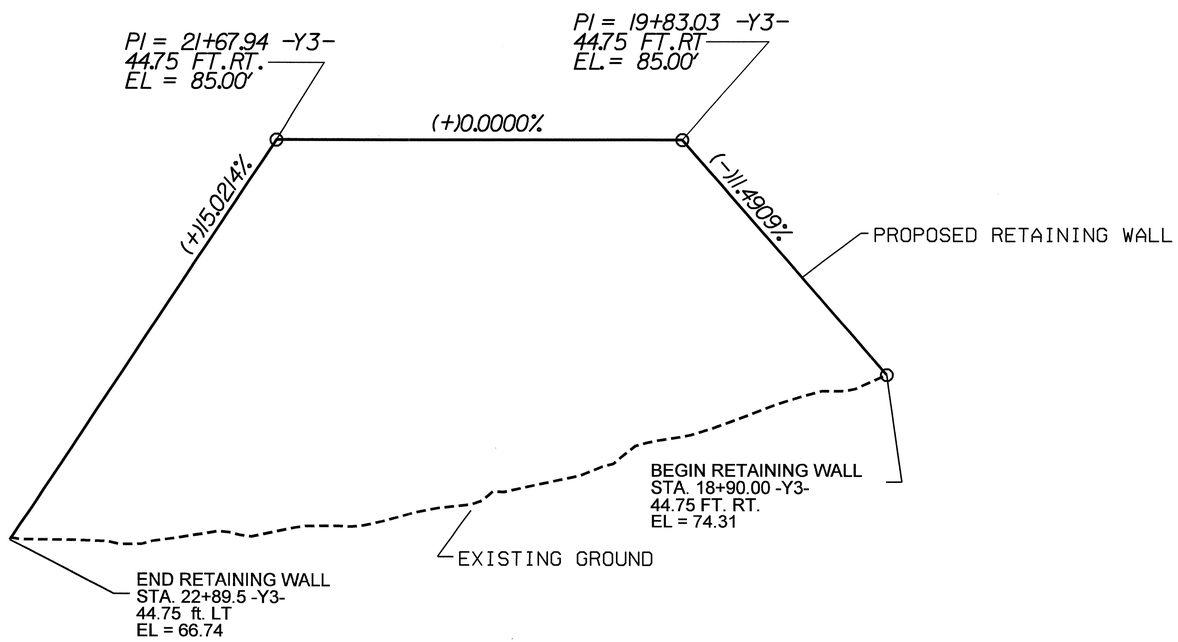

ELEVATION VIEW MSE WALL #3 - FRONT FACE

PROJECT NO.: R-2719A (34501.1.1)

LENOIR **COUNTY**

STATION: 113+38.09 -L-, 22+89.50 -Y3-

SHEET 2 OF 5

GEOTECHNICAL ENGINEERING UNIT

☐ EASTERN REGIONAL OFFICE
☐ WESTERN REGIONAL OFFICE
■ CONTRACT OFFICE

STATE OF NORTH CAROLINA
DEPARTMENT OF TRANSPORTATION
RALEIGH

MSE WALL #3
END BENT 1

REVISIONS						SHEET NO.
NO.	BY	DATE	NO.	BY	DATE	W-7
1			3			TOTAL SHEETS
2			4			10

PREPARED BY:	D. TEAGUE	DATE: 6/08
REVIEWED BY:	E. WILLIAMS	DATE: 6/08

GEOTECHNICAL ENGINEER	ENGINEER
NORTH CAROLINA PROFESSIONAL SEAL 027869 ENGINEER DAVID L. TEAGUE SIGNATURE D. L. Teague DATE 10/8/08	SIGNATURE DATE

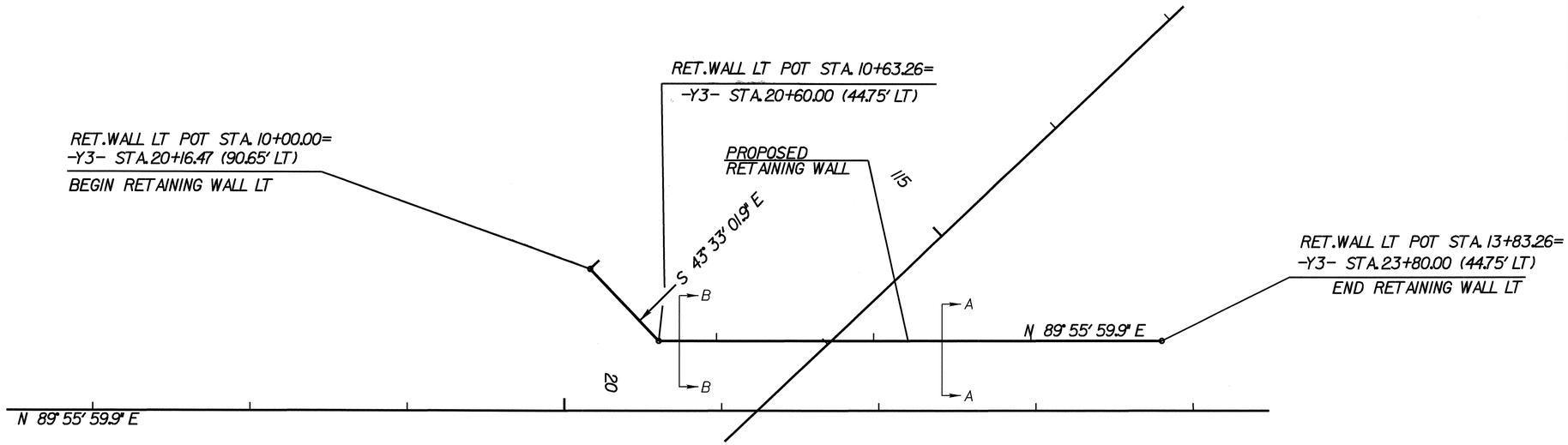

PLAN VIEW MSE WALL #4

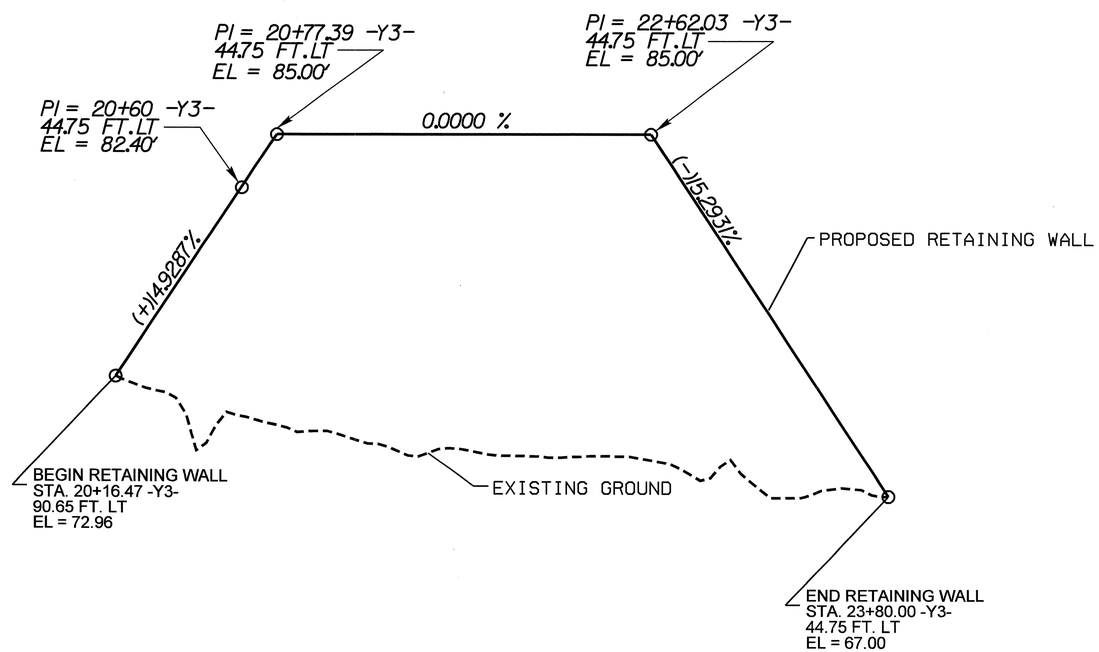

ELEVATION VIEW MSE WALL #4 - FRONT FACE

PROJECT NO.: R-2719A (34501.1.1)

LENOIR **COUNTY**

STATION: 113+38.09 -L-, 22+89.50 -Y3-

SHEET 3 OF 5

GEOTECHNICAL ENGINEERING UNIT

☐ EASTERN REGIONAL OFFICE
☐ WESTERN REGIONAL OFFICE
■ CONTRACT OFFICE

STATE OF NORTH CAROLINA
DEPARTMENT OF TRANSPORTATION
RALEIGH

MSE WALL #4
END BENT 2

REVISIONS						SHEET NO.
NO.	BY	DATE	NO.	BY	DATE	W-8
1			3			TOTAL SHEETS
2			4			10

PREPARED BY:	D. TEAGUE	DATE:	6/08
REVIEWED BY:	E. WILLIAMS	DATE:	6/08

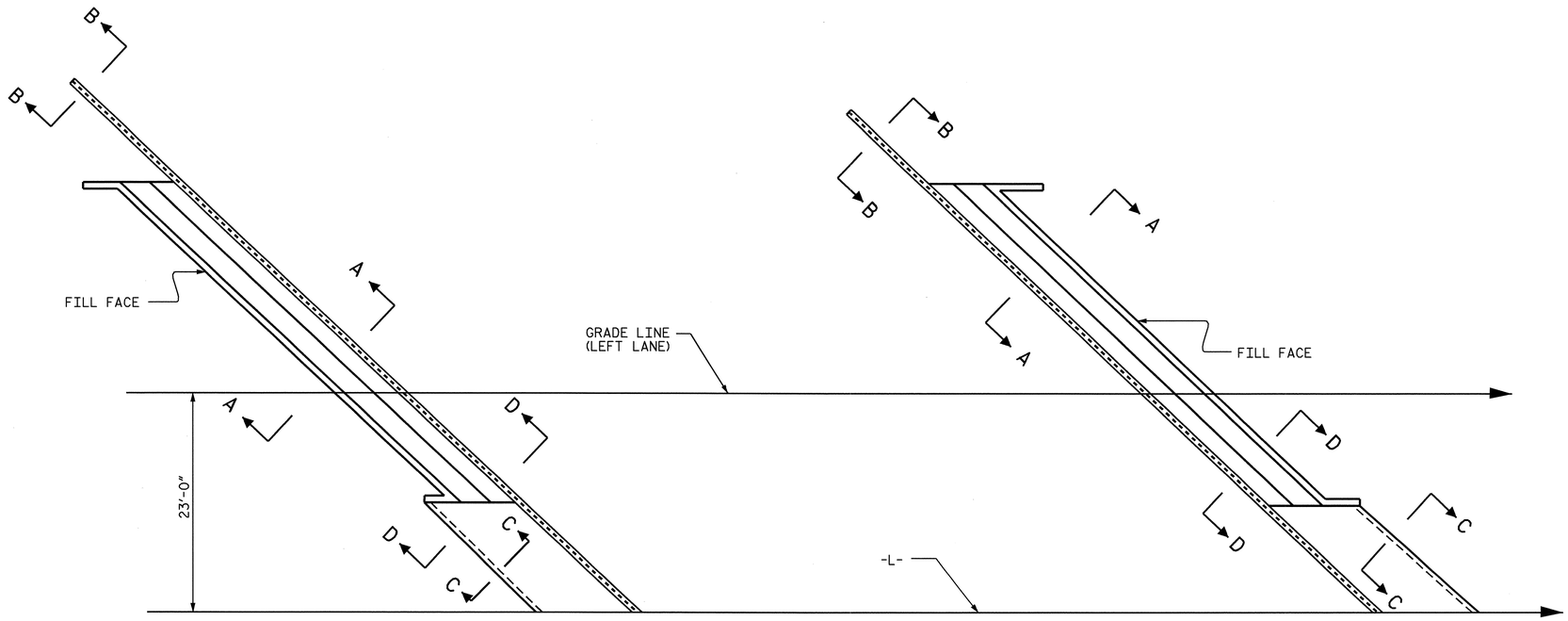

PLAN OF SLOPE PROTECTION

GENERAL NOTES

SLOPE PROTECTION SHALL BE PLACED UNDER THE ENDS OF THE BRIDGE AS SHOWN IN THE DETAILS. STRAIGHT EDGING WILL NOT BE REQUIRED UNLESS, IN THE OPINION OF THE ENGINEER, VISUAL INSPECTION INDICATES A NEED FOR IT. FOR BERM WIDTH, SEE GENERAL DRAWING.

THE SLOPE PROTECTION SHALL CONSIST OF 4" POURED-IN-PLACE CONCRETE PAVING AS SHOWN IN THE DETAILS ON THIS SHEET. CONCRETE SHALL BE CLASS "B". THE CONCRETE SURFACE SHALL BE FLOATED WITH A WOODEN FLOAT AND FINISHED. WELDED WIRE FABRIC REINFORCING SHALL BE 6 X 6 - W1.4 X W1.4, 60" WIDE. SLOPE PROTECTION SHALL BE POURED IN 5' STRIPS AS SHOWN IN THE "POURING DETAIL" WITH 2'-0" LONG #4 BARS PLACED ALONG THE SLOPE BETWEEN STRIPS AT 1'-6" MAXIMUM SPACING. SLOPE PROTECTION MAY BE POURED IN ALTERNATE 4' AND 5' STRIPS AS SHOWN IN THE "OPTIONAL POURING DETAIL" WITH ADJACENT RUNS OF WELDED WIRE FABRIC LAPPING AT LEAST 6".

PAYMENT FOR THE SLOPE PROTECTION AND WELDED WIRE FABRIC SHALL BE INCLUDED IN THE LUMP SUM PRICE BID FOR MSE RETAINING WALLS.

BRIDGE @ STA. 85+98.30 -L- (LEFT LANE)	4" INCH SLOPE PROTECTION	* WELDED WIRE FABRIC 60 INCHES WIDE
	SQUARE YARDS	APPROX. L.F.
END BENT 1	37	74
END BENT 2	35	70

* QUANTITY SHOWN IS BASED ON 5' POURS.

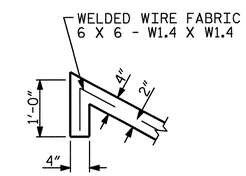

SECTION C-C

FOR SECTION A-A AND B-B, SEE MSE WALL SHEET.

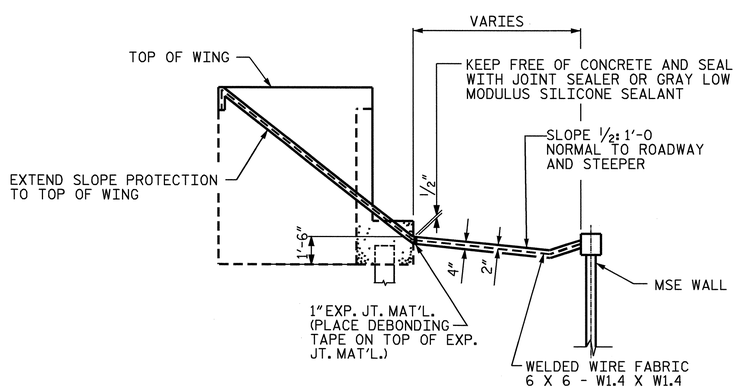

SECTION D-D

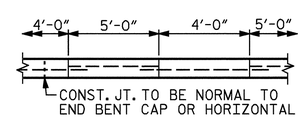

POUR A 4'-0" STRIP FIRST. STRIP WIDTHS MAY VARY IN CURVED PORTION.

OPTIONAL POURING DETAIL

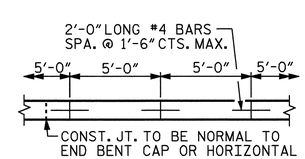

STRIP WIDTHS MAY VARY IN CURVED PORTION.

POURING DETAIL

PROJECT NO. R-2719A
LENOIR COUNTY
STATION: 18+90.00 -Y3-
20+16.47 -Y3-

STATE OF NORTH CAROLINA
DEPARTMENT OF TRANSPORTATION
RALEIGH

SLOPE PROTECTION DETAILS @ MSE WALL (LEFT LANE)

NORTH CAROLINA PROFESSIONAL SEAL 14045 ENGINEER TIMOTHY L. COGGINS
10/13/08

REVISIONS							SHEET NO.
NO.	BY:	DATE:	NO.	BY:	DATE:		W-9
1			3				TOTAL SHEETS
2			4				10

DRAWN BY : J.B. WILSON DATE : 9/30/08
CHECKED BY : T.L. COGGINS DATE : 10/2008

13-OCT-2008 17:18
H:\Structures\Str#4\Final Plans\R-2719A_sd_SP_04-05.dgn
tcoggins

GENERAL NOTES

SLOPE PROTECTION SHALL BE PLACED UNDER THE ENDS OF THE BRIDGE AS SHOWN IN THE DETAILS. STRAIGHT EDGING WILL NOT BE REQUIRED UNLESS, IN THE OPINION OF THE ENGINEER, VISUAL INSPECTION INDICATES A NEED FOR IT. FOR BERM WIDTH, SEE GENERAL DRAWING.

THE SLOPE PROTECTION SHALL CONSIST OF 4" POURED-IN-PLACE CONCRETE PAVING AS SHOWN IN THE DETAILS ON THIS SHEET. CONCRETE SHALL BE CLASS "B". THE CONCRETE SURFACE SHALL BE FLOATED WITH A WOODEN FLOAT AND FINISHED. WELDED WIRE FABRIC REINFORCING SHALL BE 6 X 6 - W1.4 X W1.4, 60" WIDE. SLOPE PROTECTION SHALL BE POURED IN 5' STRIPS AS SHOWN IN THE "POURING DETAIL" WITH 2'-0" LONG #4 BARS PLACED ALONG THE SLOPE BETWEEN STRIPS AT 1'-6" MAXIMUM SPACING. SLOPE PROTECTION MAY BE POURED IN ALTERNATE 4' AND 5' STRIPS AS SHOWN IN THE "OPTIONAL POURING DETAIL" WITH ADJACENT RUNS OF WELDED WIRE FABRIC LAPPING AT LEAST 6".

PAYMENT FOR THE SLOPE PROTECTION AND WELDED WIRE FABRIC SHALL BE INCLUDED IN THE LUMP SUM PRICE BID FOR MSE RETAINING WALLS.

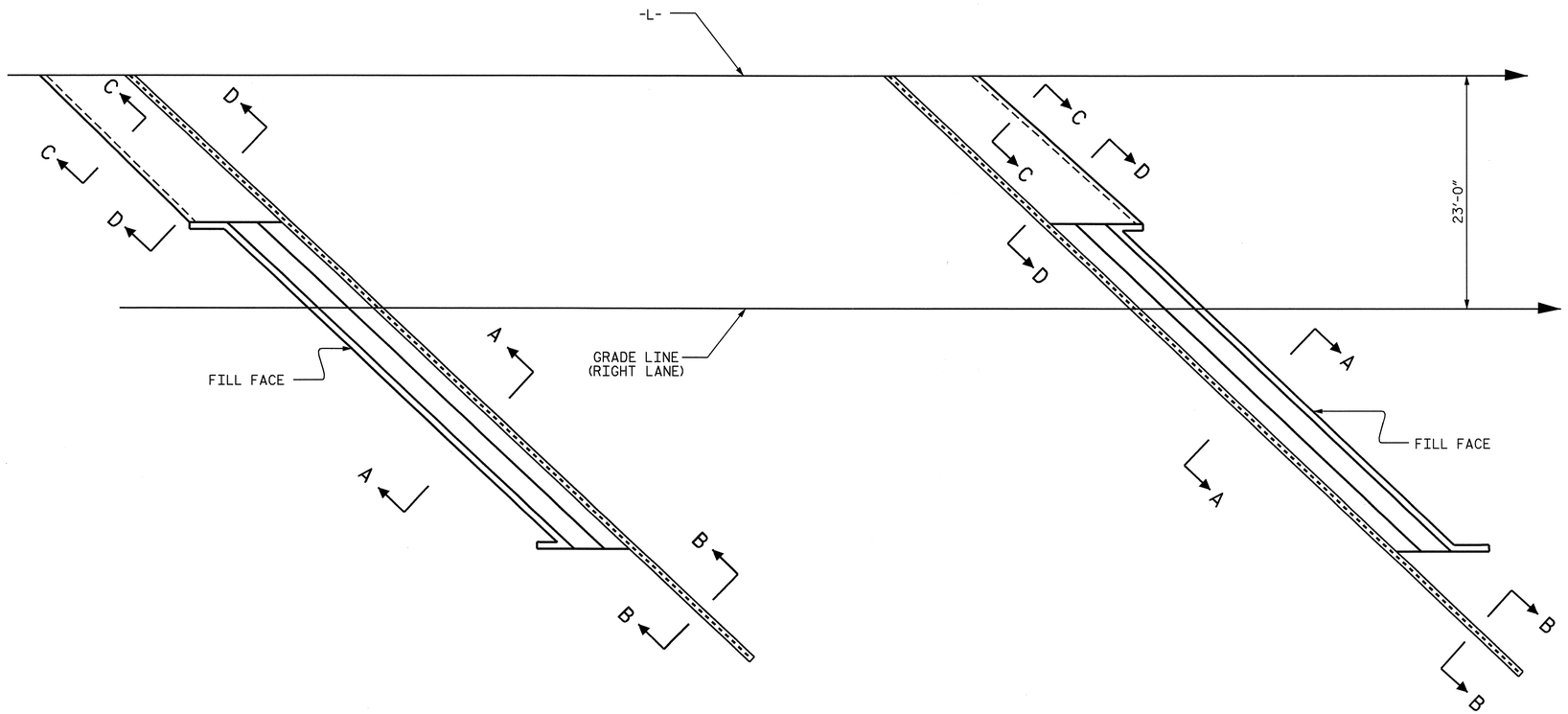

PLAN OF SLOPE PROTECTION

BRIDGE @ STA. 85+98.30 -L- (RIGHT LANE)	4" INCH SLOPE PROTECTION	* WELDED WIRE FABRIC 60 INCHES WIDE
	SQUARE YARDS	APPROX. L.F.
END BENT 1	29	58
END BENT 2	29	58

* QUANTITY SHOWN IS BASED ON 5' POURS.

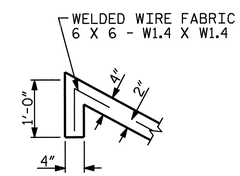

SECTION C-C

FOR SECTION A-A AND B-B, SEE MSE WALL SHEET.

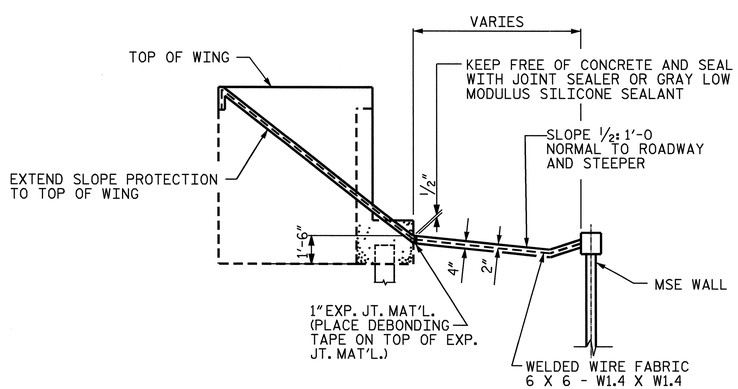

SECTION D-D

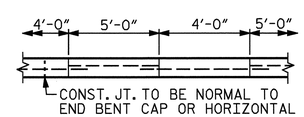

POUR A 4'-0" STRIP FIRST. STRIP WIDTHS MAY VARY IN CURVED PORTION.

OPTIONAL POURING DETAIL

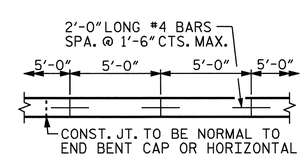

STRIP WIDTHS MAY VARY IN CURVED PORTION.

POURING DETAIL

PROJECT NO. R-2719A
LENOIR COUNTY
STATION: 18+90.00 -Y3-
20+16.47 -Y3-

STATE OF NORTH CAROLINA
DEPARTMENT OF TRANSPORTATION
RALEIGH

SLOPE PROTECTION DETAILS @ MSE WALL (RIGHT LANE)

NORTH CAROLINA PROFESSIONAL SEAL 14045 ENGINEER TIMOTHY L. COGGINS
10/13/08

REVISIONS						SHEET NO.
NO.	BY:	DATE:	NO.	BY:	DATE:	W-10
1			3			TOTAL SHEETS
2			4			10

DRAWN BY : J.B. WILSON DATE : 9/30/08
CHECKED BY : T. L. COGGINS DATE : 10/2008

13-OCT-2008 17:18
H:\Structures\Str#4\Final Plans\R-2719A_sd_SP_04-05.dgn
tcoggins

STR. #5

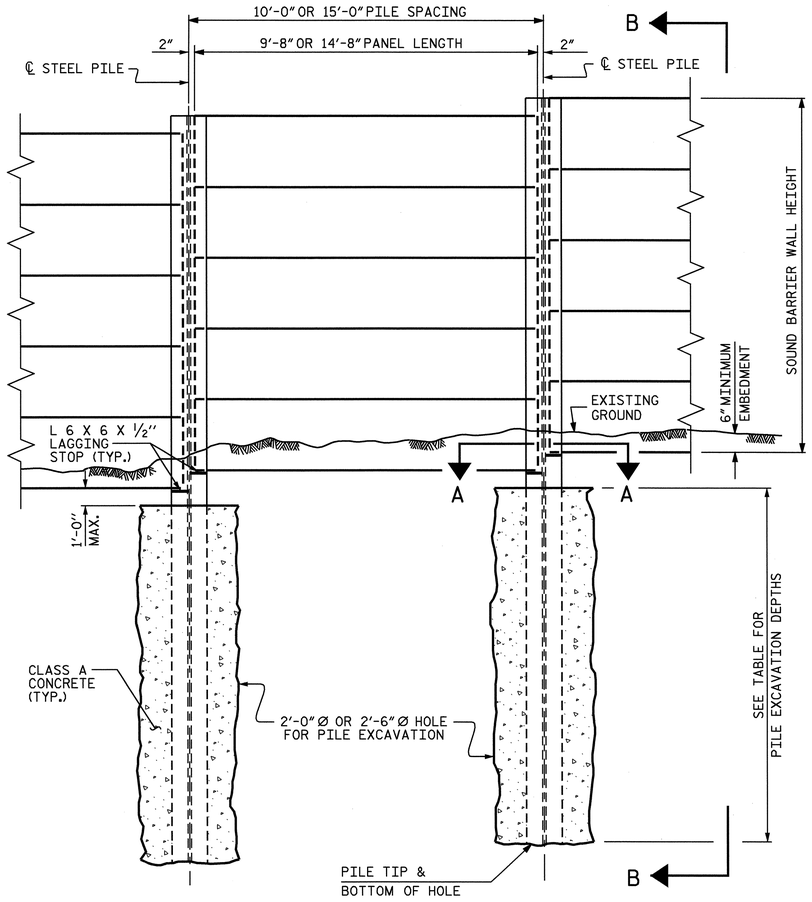

ELEVATION

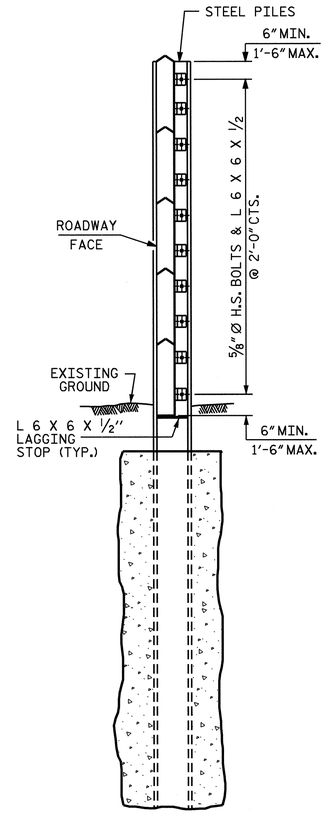

SECTION B-B

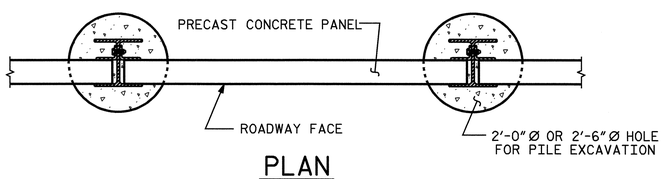

PLAN

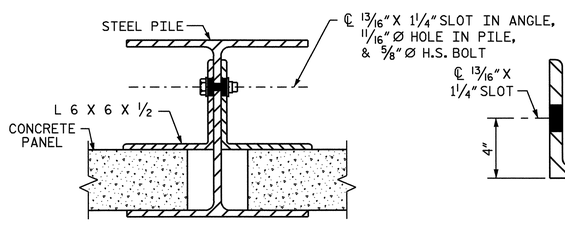

CONNECTION DETAIL

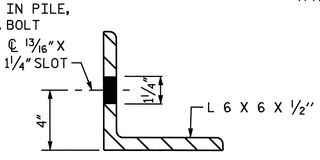

ANGLE DETAIL

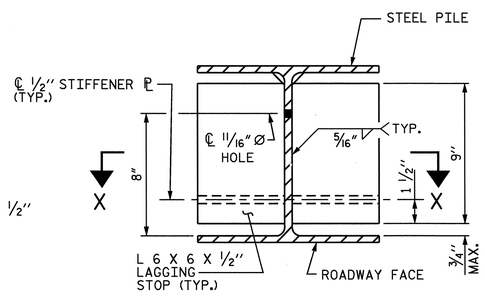

SECTION A-A

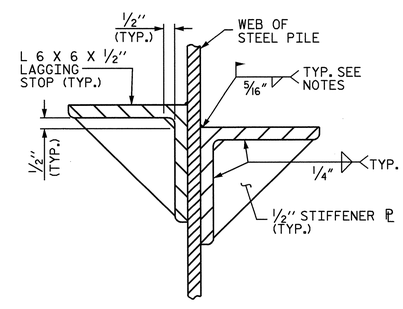

SECTION X-X

PILE EXCAVATION

2'-0" Ø CHART

STATION	PILE SPACING	SHAFT DEPTH
WALL 1 (62'-0" LEFT)		
STA. 114 + 40 -L- TO STA. 132 + 80 -L-	10'-0"	19'-0"
	15'-0"	22'-0"
WALL 2 (62'-0" RIGHT)		
STA. 139 + 30 -L- TO STA. 142 + 00 -L-	10'-0"	14'-0"
	15'-0"	16'-0"
STA. 142 + 00 -L- TO STA. 153 + 71 -L- ±	10'-0"	17'-0"
	15'-0"	20'-0"
STA. 153 + 71 -L- ± TO STA. 153 + 96 -L- ±	25'-0"	24'-0"
STA. 153 + 96 -L- ± TO STA. 156 + 00 -L-	10'-0"	17'-0"
	15'-0"	20'-0"
STA. 156 + 00 -L- TO STA. 159 + 00 -L-	10'-0"	14'-0"
	15'-0"	16'-0"

2'-6" Ø SHAFT DEPTH CHART

STATION	PILE SPACING	SHAFT DEPTH
WALL 1 (62'-0" LEFT)		
STA. 114 + 40 -L- TO STA. 132 + 80 -L-	10'-0"	17'-0"
	15'-0"	20'-0"
WALL 2 (62'-0" RIGHT)		
STA. 139 + 30 -L- TO STA. 142 + 00 -L-	10'-0"	13'-0"
	15'-0"	15'-0"
STA. 142 + 00 -L- TO STA. 153 + 71 -L- ±	10'-0"	15'-0"
	15'-0"	18'-0"
STA. 153 + 71 -L- ± TO STA. 153 + 96 -L- ±	25'-0"	22'-0"
STA. 153 + 96 -L- ± TO STA. 156 + 00 -L-	10'-0"	15'-0"
	15'-0"	18'-0"
STA. 156 + 00 -L- TO STA. 159 + 00 -L-	10'-0"	13'-0"
	15'-0"	15'-0"

NOTES

FOR SOUND BARRIER WALL, SEE SPECIAL PROVISIONS.

CONSTRUCT SOUND BARRIER WALL TO LINES AND GRADES SHOWN ON THE ROADWAY PLANS.

PROVIDE PANELS WITH A FLAT BOTTOM.

USE STEEL PILES, ANGLES, AND LAGGING STOPS MEETING THE REQUIREMENTS OF AASHTO M270, GRADE 50. GALVANIZE ALL STEEL COMPONENTS INCLUDING PILES, ANGLES, LAGGING STOPS, BOLTS, NUTS, AND WASHERS IN ACCORDANCE WITH SECTION 1076 OF THE STANDARD SPECIFICATIONS. REPAIR ANY DAMAGED GALVANIZATION IN ACCORDANCE WITH ARTICLE 1076-6 OF THE STANDARD SPECIFICATIONS.

VERIFY THE LOCATION OF UNDERGROUND UTILITIES BEFORE DRILLING HOLES TO ENSURE SUFFICIENT CLEARANCE IS AVAILABLE.

AT THE CONTRACTOR'S OPTION, USE AN APPROVED NON-SHRINK NON-METALLIC GROUT BETWEEN THE FLANGES OF THE STEEL PILES TO SUPPORT THE BOTTOM PANEL IN LIEU OF LAGGING STOPS.

ADJUST PILE EXCAVATION ELEVATIONS TO MAINTAIN 6" MINIMUM EMBEDMENT OF THE BOTTOM PANEL.

USE CLASS AA AND CLASS A CONCRETE FOR PANELS AND PILES EXCAVATION, RESPECTIVELY, IN ACCORDANCE WITH ARTICLE 1000-4 OF THE STANDARD SPECIFICATIONS.

PROVIDE PLATES AND ANGLES TO SECURE PANELS 6" LONG AS MEASURED ALONG THE STEEL PILE.

AT THE CONTRACTOR'S OPTION, USE EITHER 'W' OR 'HP' PILES THAT SATISFY THE MINIMUM PILE SIZE REQUIRED IN THE "EXPOSURE CATEGORY" TABLE. PILES SMALLER THAN W12 OR HP12 ARE NOT PERMITTED. AT TURNS WITH A 3 FOOT DIAMETER HOLE FOR PILE EXCAVATION, USE ONLY W12 OR HP12 PILES, AS SHOWN.

AT THE CONTRACTOR'S OPTION, USE EITHER 10 FOOT OR 15 FOOT PILE SPACINGS, AND EITHER 2 FOOT OR 2 1/2 FOOT DIAMETER HOLES FOR PILE EXCAVATION, EXCEPT FOR WALL TURNS.

FOR WALL TURNS, PROVIDE HOLES FOR PILE EXCAVATION AS SHOWN ON THE PLANS. A 2 FOOT DIAMETER HOLE FOR PILE EXCAVATION IS NOT AN OPTION. FOR 3 FOOT DIAMETER HOLES AT TURNS, USE DEPTHS DESIGNATED FOR THE 2 1/2 FOOT DIAMETER HOLES.

AT THE CONTRACTOR'S OPTION, USE CONTINUOUS FLIGHT AUGER PILES IN LIEU OF PILE EXCAVATION FOR SOUND BARRIER WALL FOUNDATIONS. SEE CONTINUOUS FLIGHT AUGER PILES FOR SOUND BARRIER WALLS SPECIAL PROVISIONS.

DO NOT SPLICE STEEL PILES.

FOR FAA REQUIREMENTS, SEE ROADWAY SPECIAL PROVISIONS.

CONTRACTOR TO SUBMIT NEOPRENE PAD TYPE FOR APPROVAL.

EXPOSURE CATEGORY C

DESIGN WIND PRESSURE =

34 PSF (0' < H ≤ 14'); 42 PSF (14' < H ≤ 29')

PILE SPACING	MAXIMUM WALL HEIGHT (H)	MINIMUM W SIZE STEEL PILES	MINIMUM HP SIZE STEEL PILES
10'	H ≤ 25'	W 12 X 40 W 14 X 48	HP 12 X 53 HP 14 X 73
	25' < H ≤ 29'	W 12 X 53 W 14 X 48	HP 12 X 53 HP 14 X 73
15'	H ≤ 20'	W 12 X 40 W 14 X 48	HP 12 X 53 HP 14 X 73
	20' < H ≤ 25'	W 12 X 58 W 14 X 53	HP 12 X 53 HP 14 X 73
	25' < H ≤ 29'	W 12 X 72 W 14 X 68	HP 12 X 84 HP 14 X 73
25'	H ≤ 20'		HP 14 X 73

PROJECT NO. R-2719A

LENOIR COUNTY

STATION:

SHEET 1 OF 3

STATE OF NORTH CAROLINA
DEPARTMENT OF TRANSPORTATION
RALEIGH

SOUND BARRIER WALL

NORTH CAROLINA PROFESSIONAL SEAL 14045 ENGINEER TIMOTHY L. COGGINS
10/13/08

ASSEMBLED BY : M. GUDLAUGSSON	DATE : 08/2008		
CHECKED BY : T.L. COGGINS	DATE : 08/2008		
DRAWN BY : JAD 5/01	REV. 2/4/03 RWW/CVC		
CHECKED BY : RDR 5/01	REV. 5/7/03 RWW/JTE		
	REV. 5/1/06R KMM/GM		

REVISIONS							SHEET NO.
NO.	BY:	DATE:	NO.	BY:	DATE:		SW-1
1			3				TOTAL SHEETS
2			4				3

13-OCT-2008 09:46
gr\tlpprojects-r\r2719a\structures\str#18\mgudlaugsson\microstation\r-2719a_sd_sbw_18.dgn
faverette

STD. NO. SBW1

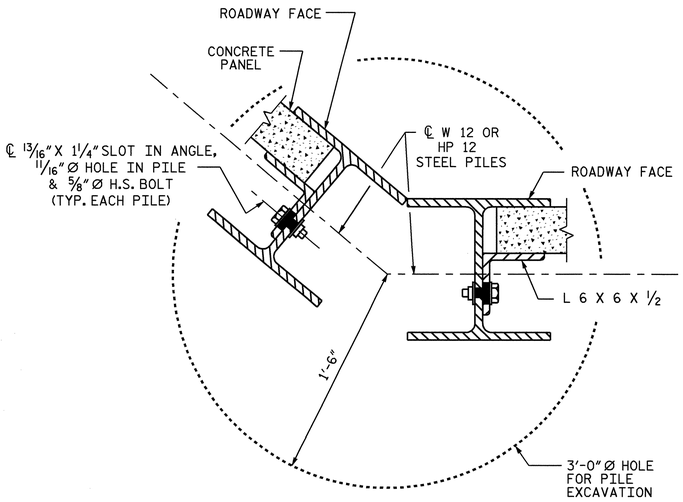

TYPICAL WALL TURN DETAIL

(FOR GREATER THAN 15° TURNS, CONCAVE TOWARD ROADWAY)

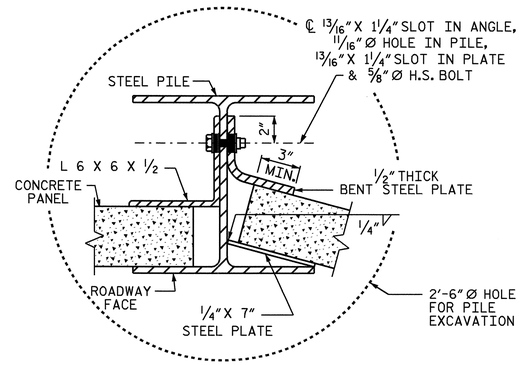

TYPICAL WALL TURN DETAIL

(USE ONLY FOR TURNS 15° OR LESS, CONCAVE TOWARD ROADWAY)

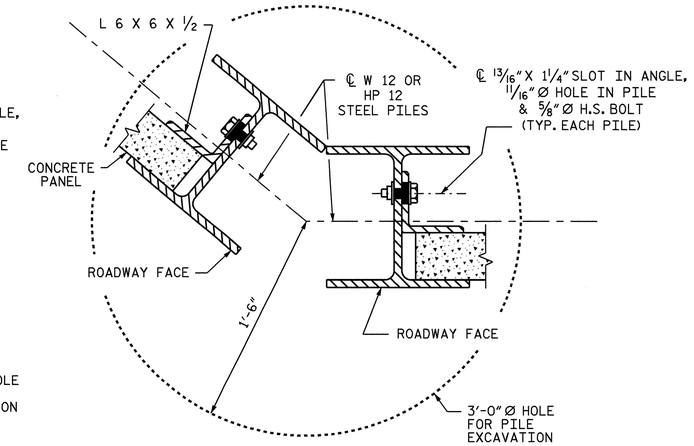

TYPICAL WALL TURN DETAIL

(FOR GREATER THAN 15° TURNS, CONVEX TOWARD ROADWAY)

BILL OF MATERIAL	
SOUND BARRIER WALL 1	S.F. 36800
SOUND BARRIER WALL 2	S.F. 29234
TOTAL	S.F. 66034

QUANTITIES PROVIDED ARE APPROXIMATE AND ARE FOR BID PURPOSES ONLY.

NOTE

FOR PANELS LOCATED IN AREA OF CIRCULAR CURVE FOR WALL 1, MODIFICATIONS TO PANEL ARE LESS THAN 1/16". THE CONTRACTOR SHALL DETERMINE WHAT MODIFICATIONS ARE NECESSARY.

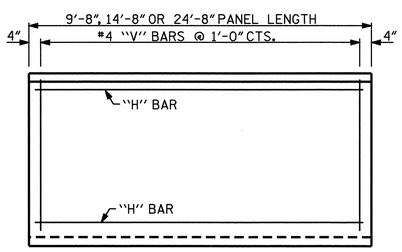

FRONT ELEVATION OF UPPER PRECAST PANELS

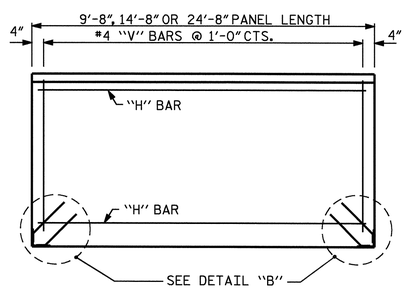

FRONT ELEVATION OF BOTTOM PRECAST PANEL

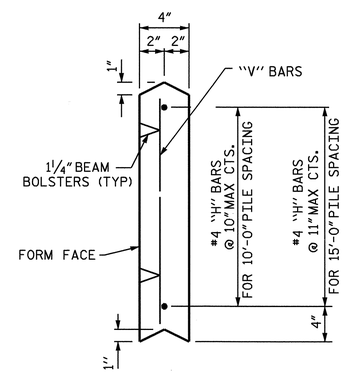

SECTION THROUGH PRECAST PANELS

(FOR 10' AND 15' PANELS)

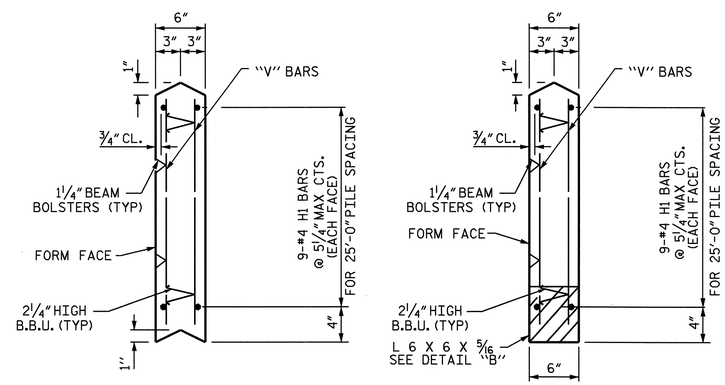

SECTION THROUGH PRECAST PANELS

(FOR 25' PANEL)

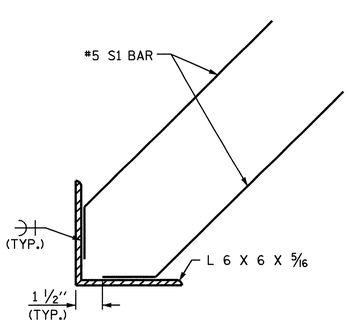

DETAIL "B"

ADDITIONAL BARS FOR ONE BOTTOM PANEL					
NO.	BAR	SIZE	TYPE	LENGTH	WEIGHT (lb)
4	S1	#5	1	1'-6"	6

BAR TYPE

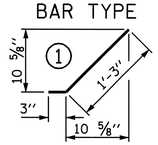

QUANTITIES FOR ONE PRECAST PANEL (FOR 10'-0" PILE SPACING)													
PANEL HEIGHT	CLASS AA CONCRETE	BAR TYPES											
		HORIZONTAL						VERTICAL					
	C.Y.	NO.	BAR	SIZE	TYPE	LENGTH	WEIGHT (lb)	NO.	BAR	SIZE	TYPE	LENGTH	WEIGHT (lb)
2'-0"	0.24	3	H1	#4	STR	9'-4"	19	10	V1	#4	STR	1'-8"	11
3'-0"	0.36	4	H2	#4	STR	9'-4"	25	10	V2	#4	STR	2'-8"	18
4'-0"	0.48	5	H3	#4	STR	9'-4"	31	10	V3	#4	STR	3'-8"	24

QUANTITIES FOR ONE PRECAST PANEL (FOR 15'-0" PILE SPACING)													
PANEL HEIGHT	CLASS AA CONCRETE	BAR TYPES											
		HORIZONTAL						VERTICAL					
	C.Y.	NO.	BAR	SIZE	TYPE	LENGTH	WEIGHT (lb)	NO.	BAR	SIZE	TYPE	LENGTH	WEIGHT (lb)
3'-0"	0.54	4	H1	#4	STR	14'-4"	38	15	V1	#4	STR	2'-8"	27
4'-0"	0.72	5	H2	#4	STR	14'-4"	48	15	V2	#4	STR	3'-8"	37
5'-0"	0.91	6	H3	#4	STR	14'-4"	57	15	V3	#4	STR	4'-8"	47
6'-0"	1.09	7	H4	#4	STR	14'-4"	67	15	V4	#4	STR	5'-8"	57

QUANTITIES FOR ONE PRECAST PANEL (FOR 25'-0" PILE SPACING)													
PANEL HEIGHT	CLASS AA CONCRETE	BAR TYPES											
		HORIZONTAL						VERTICAL					
	C.Y.	NO.	BAR	SIZE	TYPE	LENGTH	WEIGHT (lb)	NO.	BAR	SIZE	TYPE	LENGTH	WEIGHT (lb)
4'-0"	1.83	18	H1	#4	STR	24'-4"	293	50	V1	#4	STR	3'-8"	122

PROJECT NO. R-2719A

LENOIR COUNTY

STATION:

SHEET 2 OF 3

STATE OF NORTH CAROLINA
DEPARTMENT OF TRANSPORTATION
RALEIGH

SOUND BARRIER WALL DETAILS

NORTH CAROLINA PROFESSIONAL SEAL 14045 ENGINEER TIMOTHY L. COGGINS

Timothy L. Coggins 10/13/08

ASSEMBLED BY : M. GUDLAUGSSON	DATE : 08/2008
CHECKED BY : T.L. COGGINS	DATE : 08/2008

DRAWN BY : JAD 5/01	REV. 7/10/01	RWW/LES
CHECKED BY : RDR 5/01	REV. 5/7/03	RWW/JTE
	REV. 5/1/06R	KMM/GM

REVISIONS								SHEET NO.
NO.	BY:	DATE:	NO.	BY:	DATE:			SW-2
1			3					TOTAL SHEETS
2			4					3

13-OCT-2008 07:42
g:\tiprojects-r\r2719a\structures\str#18\mgudlaugsson\microstation\r-2719a_sd_sbw_18.dgn
taverette

STD. NO. SBW2

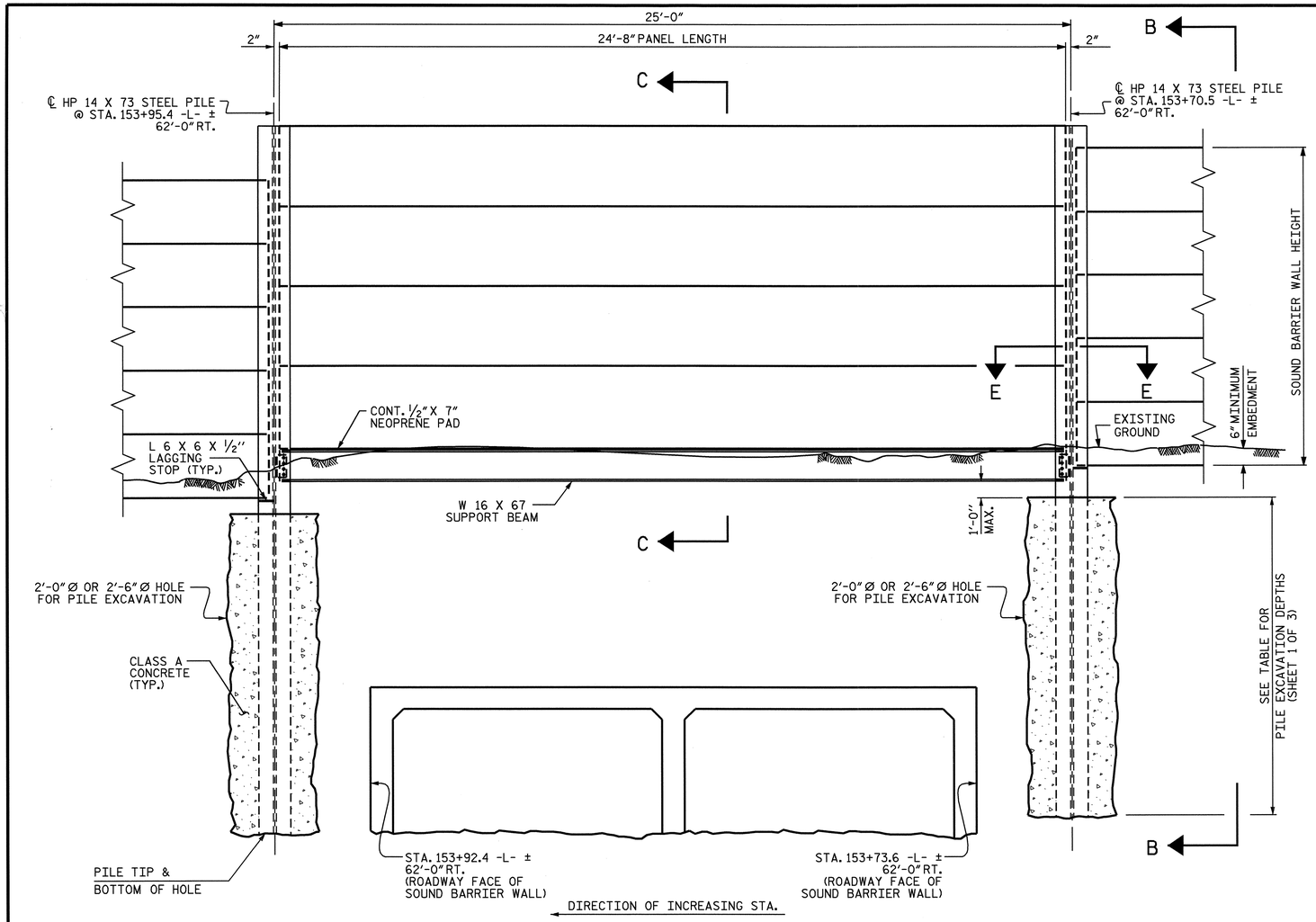

ELEVATION

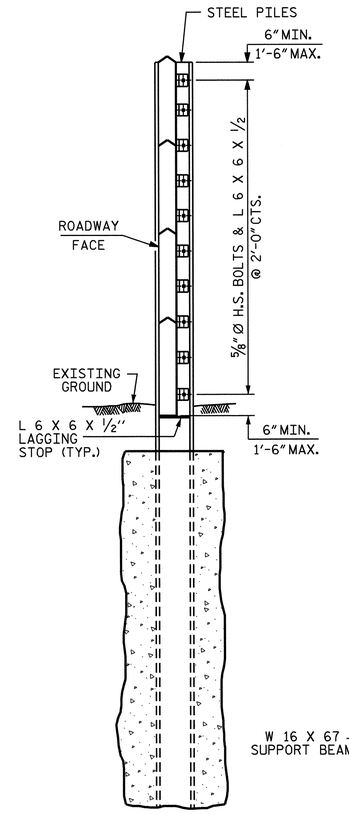

SECTION B-B

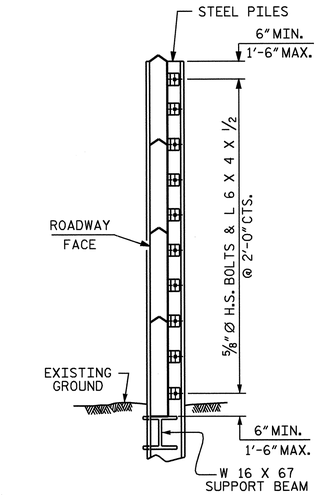

SECTION C-C

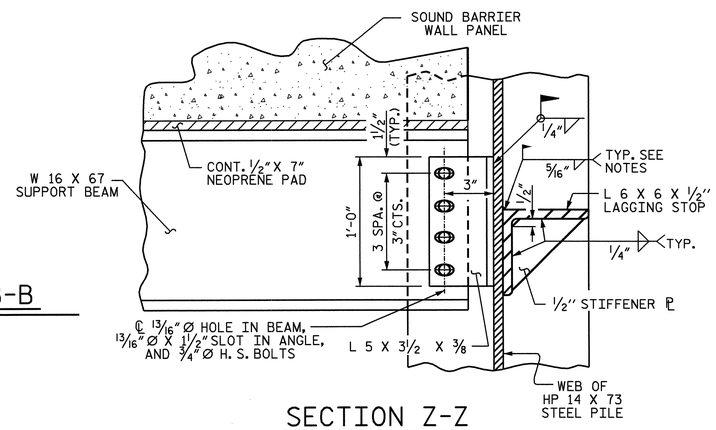

SECTION Z-Z

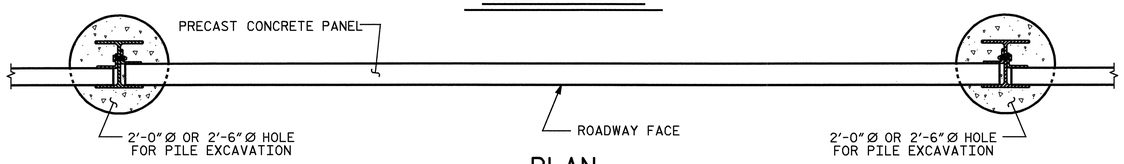

PLAN

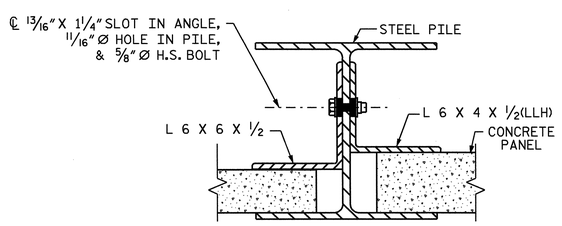

CONNECTION DETAIL

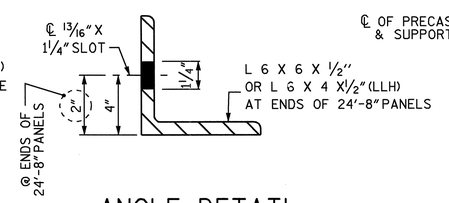

ANGLE DETAIL

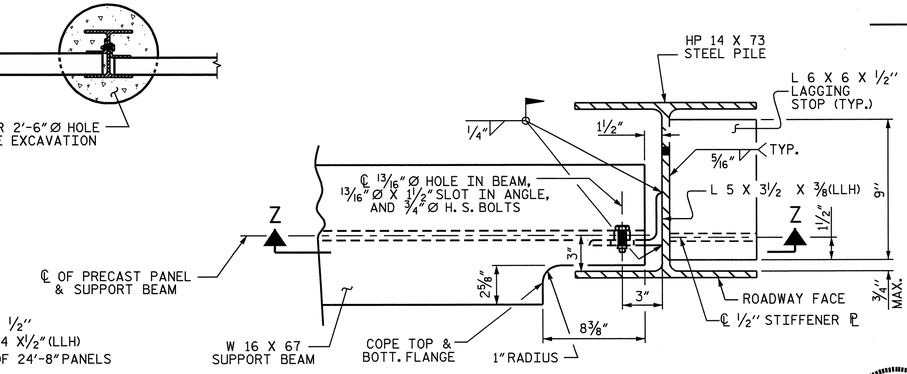

SECTION E-E

NOTE: PRECAST PANELS NOT SHOWN FOR CLARITY.

PROJECT NO. R-2719A

LENOIR COUNTY

STATION:

SHEET 3 OF 3

STATE OF NORTH CAROLINA
DEPARTMENT OF TRANSPORTATION
RALEIGH

SOUND BARRIER WALL

DETAILS FOR 25'-0" PILE SPACING FROM STA. 153+71 -L- ± TO 153+96 -L- ±

NORTH CAROLINA PROFESSIONAL SEAL 14045 ENGINEER TIMOTHY L. COGGINS
10/13/08

REVISIONS						SHEET NO.
NO.	BY:	DATE:	NO.	BY:	DATE:	SW-3
1			3			TOTAL SHEETS
2			4			3

DRAWN BY : T.L. AVERETTE DATE : 09/08
CHECKED BY : PEGGY PARISI DATE : 09/08

13-OCT-2008 07:42
g:\tipprojects-r\r2719a\structures\str*18\mgudlaugsson\microstation\r-2719a_sd_sbw_18.dgn
taverette

STANDARD NOTES

DESIGN DATA:

SPECIFICATIONS	A.A.S.H.T.O. (CURRENT)
LIVE LOAD	SEE PLANS
IMPACT ALLOWANCE	SEE A.A.S.H.T.O.
STRESS IN EXTREME FIBER OF	
STRUCTURAL STEEL - AASHTO M270 GRADE 36	20,000 LBS. PER SQ. IN.
- AASHTO M270 GRADE 50W	27,000 LBS. PER SQ. IN.
- AASHTO M270 GRADE 50	27,000 LBS. PER SQ. IN.
REINFORCING STEEL IN TENSION	
GRADE 60	24,000 LBS. PER SQ. IN.
CONCRETE IN COMPRESSION	1,200 LBS. PER SQ. IN.
CONCRETE IN SHEAR	SEE A.A.S.H.T.O.
STRUCTURAL TIMBER - TREATED OR	
UNTREATED - EXTREME FIBER STRESS	1,800 LBS. PER SQ. IN.
COMPRESSION PERPENDICULAR TO GRAIN OF TIMBER	375 LBS. PER SQ. IN.
EQUIVALENT FLUID PRESSURE OF EARTH	30 LBS. PER CU. FT. (MINIMUM)

MATERIAL AND WORKMANSHIP:

EXCEPT AS MAY OTHERWISE BE SPECIFIED ON PLANS OR IN THE SPECIAL PROVISIONS, ALL MATERIAL AND WORKMANSHIP SHALL BE IN ACCORDANCE WITH THE 2006 "STANDARD SPECIFICATIONS FOR ROADS AND STRUCTURES" OF THE N. C. DEPARTMENT OF TRANSPORTATION.

STEEL SHEET PILING FOR PERMANENT OR TEMPORARY APPLICATIONS SHALL BE HOT ROLLED.

CONCRETE:

UNLESS OTHERWISE REQUIRED ON PLANS, CLASS A CONCRETE SHALL BE USED FOR ALL PORTIONS OF ALL STRUCTURES WITH THE EXCEPTION THAT: CLASS AA CONCRETE SHALL BE USED IN BRIDGE SUPERSTRUCTURES, ABUTMENT BACKWALLS, AND APPROACH SLABS; AND CLASS B CONCRETE SHALL BE USED FOR SLOPE PROTECTION AND RIP RAP.

CONCRETE CHAMFERS:

UNLESS OTHERWISE NOTED ON THE PLANS, ALL EXPOSED CORNERS ON STRUCTURES SHALL BE CHAMFERED 3/4" WITH THE FOLLOWING EXCEPTIONS: TOP CORNERS OF CURBS MAY BE ROUNDED TO 1-1/2" RADIUS WHICH IS BUILT INTO CURB FORMS; CORNERS OF TRANSVERSE FLOOR EXPANSION JOINTS SHALL BE ROUNDED WITH A 1/4" FINISHING TOOL UNLESS OTHERWISE REQUIRED ON PLANS; AND CORNERS OF EXPANSION JOINTS IN THE ROADWAY FACES AND TOPS OF CURBS AND SIDEWALKS SHALL BE ROUNDED TO A 1/4" RADIUS WITH A FINISHING STONE OR TOOL UNLESS OTHERWISE REQUIRED ON PLANS.

DOWELS:

DOWELS WHEN INDICATED ON PLANS AS FOR CULVERT EXTENSIONS, SHALL BE EMBEDDED AT LEAST 12" INTO THE OLD CONCRETE AND GROUTED INTO PLACE WITH 1:2 CEMENT MORTAR.

ALLOWANCE FOR DEAD LOAD DEFLECTION, SETTLEMENT, ETC. IN CASTING SUPERSTRUCTURES:

BRIDGES SHALL BE BUILT ON THE GRADE OR VERTICAL CURVE SHOWN ON PLANS. SLABS, CURBS AND PARAPETS SHALL CONFORM TO THE GRADE OR CURVE.

ALL DIMENSIONS WHICH ARE GIVEN IN SECTION AND ARE AFFECTED BY DEAD LOAD DEFLECTIONS ARE DIMENSIONS AT CENTER LINE OF BEARING UNLESS OTHERWISE NOTED ON PLANS. IN SETTING FORMS FOR STEEL BEAM BRIDGES AND PRESTRESSED CONCRETE GIRDER BRIDGES, ADJUSTMENTS SHALL BE MADE DUE TO THE DEAD LOAD DEFLECTIONS FOR THE ELEVATIONS SHOWN. WHERE BLOCKS ARE SHOWN OVER BEAMS FOR BUILDING UP TO THE SLAB, THE VERTICAL DIMENSIONS OF THE BLOCKS SHALL BE ADJUSTED BETWEEN BEARINGS TO COMPENSATE FOR DEAD LOAD DEFLECTIONS, VERTICAL CURVE ORDINATE, AND ACTUAL BEAM CAMBER. WHERE BOTTOM OF SLAB IS IN LINE WITH BOTTOM OF TOP FLANGES, DEPTH OF SLAB BETWEEN BEARINGS SHALL BE ADJUSTED TO COMPENSATE FOR DEAD LOAD DEFLECTION, VERTICAL CURVE ORDINATE, AND ACTUAL BEAM CAMBER.

IN SETTING FALSEWORK AND FORMS FOR REINFORCED CONCRETE SPANS, AN ALLOWANCE SHALL BE MADE FOR DEAD LOAD DEFLECTIONS, SETTLEMENT OF FALSEWORK, AND PERMANENT CAMBER WHICH SHALL BE PROVIDED FOR IN ADDITION TO THE ELEVATIONS SHOWN. AFTER REMOVAL OF THE FALSEWORK, THE FINISHED STRUCTURES SHALL CONFORM TO THE PROFILE AND ELEVATIONS SHOWN ON THE PLANS AND CONSTRUCTION ELEVATIONS FURNISHED BY THE ENGINEER.

DETAILED DRAWINGS FOR FALSEWORK OR FORMS FOR BRIDGE SUPERSTRUCTURE AND ANY STRUCTURE OR PARTS OF A STRUCTURE AS NOTED ON THE PLANS SHALL BE SUBMITTED TO THE ENGINEER FOR APPROVAL BEFORE CONSTRUCTION OF THE FALSEWORK OR FORMS IS STARTED.

REINFORCING STEEL:

ALL REINFORCING STEEL SHALL BE DEFORMED. DIMENSIONS RELATIVE TO PLACEMENT OF REINFORCING ARE TO CENTERS OF BARS UNLESS OTHERWISE INDICATED IN THE PLANS. DIMENSIONS ON BAR DETAILS ARE TO CENTERS OF BARS OR ARE OUT TO OUT AS INDICATED ON PLANS.

WIRE BAR SUPPORTS SHALL BE PROVIDED FOR REINFORCING STEEL WHERE INDICATED ON THE PLANS. WHEN BAR SUPPORT PIECES ARE PLACED IN CONTINUOUS LINES, THEY SHALL BE SO PLACED THAT THE ENDS OF THE SUPPORTING WIRES SHALL BE LAPPED TO LOCK LEGS ON ADJOINING PIECES.

STRUCTURAL STEEL:

AT THE CONTRACTOR'S OPTION, HE MAY SUBSTITUTE 7/8" Ø SHEAR STUDS FOR THE 3/4" Ø STUDS SPECIFIED ON THE PLANS. THIS SUBSTITUTION SHALL BE MADE AT THE RATE OF 3 - 7/8" Ø STUDS FOR 4 - 3/4" Ø STUDS, AND STUD SPACING CHANGES SHALL BE MADE AS NECESSARY TO PROVIDE THE SAME EQUIVALENT NUMBER OF 7/8" Ø STUDS ALONG THE BEAM AS SHOWN FOR 3/4" Ø STUDS BASED ON THE RATIO OF 3 - 7/8" Ø STUDS FOR 4 - 3/4" Ø STUDS. STUDS OF THE LENGTH SPECIFIED ON THE PLANS MUST BE PROVIDED. THE MAXIMUM SPACING SHALL BE 2'-0".

EXCEPT AT THE INTERIOR SUPPORTS OF CONTINUOUS BEAMS WHERE THE COVER PLATE IS IN CONTACT WITH BEARING PLATE, THE CONTRACTOR MAY, AT HIS OPTION, SUBSTITUTE FOR THE COVER PLATES DESIGNATED ON THE PLANS COVER PLATES OF THE EQUIVALENT AREA PROVIDED THESE PLATES ARE AT LEAST 5/16" IN THICKNESS AND DO NOT EXCEED A WIDTH EQUAL TO THE FLANGE WIDTH LESS 2" OR A THICKNESS EQUAL TO 2 TIMES THE FLANGE THICKNESS. THE SIZE OF FILLET WELDS SHALL CONFORM TO THE REQUIREMENTS OF THE CURRENT ANSI/AASHTO/AWS "BRIDGE WELDING CODE". ELECTROSLAG WELDING WILL NOT BE PERMITTED.

WITH THE SOLE EXCEPTION OF EDGES AT SURFACES WHICH BEAR ON OTHER SURFACES, ALL SHARP EDGES AND ENDS OF SHAPES AND PLATES SHALL BE SLIGHTLY ROUNDED BY SUITABLE MEANS TO A RADIUS OF APPROXIMATELY 1/16 INCH OR EQUIVALENT FLAT SURFACE AT A SUITABLE ANGLE PRIOR TO PAINTING, GALVANIZING, OR METALLIZING.

HANDRAILS AND POSTS:

METAL STANDARDS AND FACES OF THE CONCRETE END POSTS FOR THE METAL RAIL SHALL BE SET NORMAL TO THE GRADE OF THE CURB, UNLESS OTHERWISE SHOWN ON PLANS. THE METAL RAIL AND TOPS OF CONCRETE POSTS USED WITH THE ALUMINUM RAIL SHALL BE BUILT PARALLEL TO THE GRADE OF THE CURB.

METAL HANDRAILS SHALL BE IN ACCORDANCE WITH THE PLANS. RAILS SHALL BE AS MANUFACTURED FOR BRIDGE RAILING. CASTINGS SHALL BE OF A UNIFORM APPEARANCE. FINS AND OTHER DEFORMATIONS RESULTING FROM CASTING OR OTHERWISE SHALL BE REMOVED IN A MANNER SO THAT A UNIFORM COLORING OF THE COMPLETED CASTING SHALL BE OBTAINED. CASTINGS WITH DISCOLORATIONS OR OF NON-UNIFORM COLORING WILL NOT BE ACCEPTED. CERTIFIED MILL REPORTS ARE REQUIRED FOR METAL RAILS AND POSTS.

SPECIAL NOTES:

GENERALLY, IN CASE OF DISCREPANCY, THIS STANDARD SHEET OF NOTES SHALL GOVERN OVER THE SPECIFICATIONS, BUT THE REMAINDER OF THE PLANS SHALL GOVERN OVER NOTES HEREON, AND SPECIAL PROVISIONS SHALL GOVERN OVER ALL. SEE SPECIFICATIONS ARTICLE 105-4.

ENGLISH

JANUARY, 1990

STD. NO. SN