09/08/99

TIP PROJECT: R-2719A

CONTRACT: C201965

STRUCTURES, CULVERTS & WALLS

INTERIM PLANS
FEBRUARY 22, 2008

STATE OF NORTH CAROLINA
DIVISION OF HIGHWAYS

LENOIR COUNTY

STATE	STATE PROJECT REFERENCE NO.	SHEET NO.	TOTAL SHEETS
N.C.	R-2719A	1	

STATE PROJ. NO.	F.A. PROJ. NO.	DESCRIPTION
34501.1.1	STP-0224(3)	PE
34501.2.4	STP-0224(8)	ROW, Util.
34501.3.4	STP-0224(12)	CONSTR.

LOCATION: CRESCENT ROAD IN KINSTON FROM US 70 TO US 258

TYPE OF WORK: GRADING, PAVING, STRUCTURES, DRAINAGE

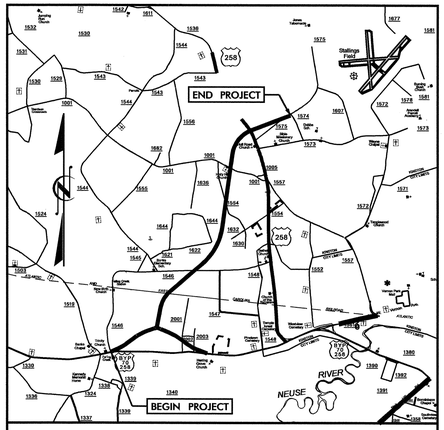

VICINITY MAP

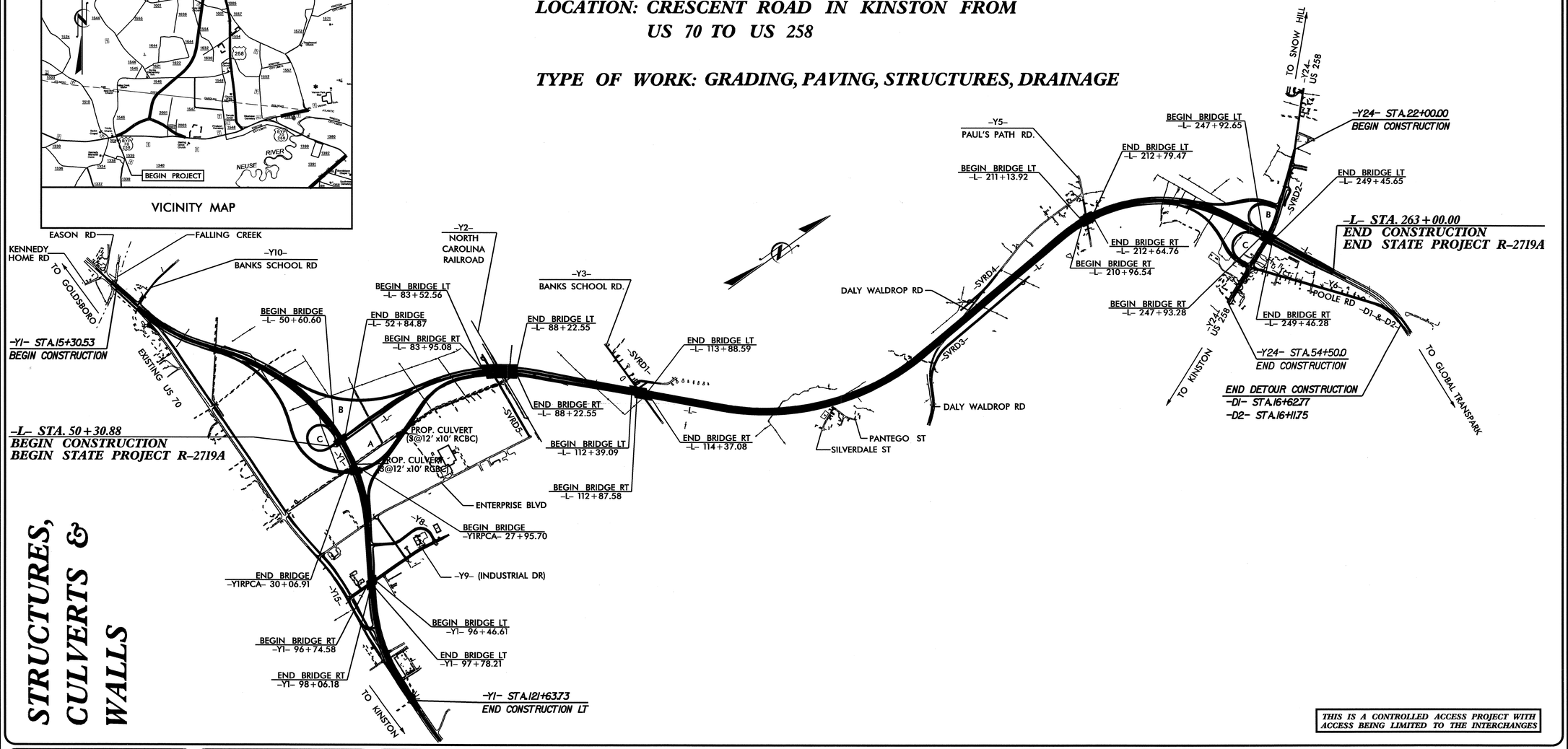

THIS IS A CONTROLLED ACCESS PROJECT WITH ACCESS BEING LIMITED TO THE INTERCHANGES

STATE OF NORTH CAROLINA DEPARTMENT OF TRANSPORTATION

DESIGN DATA

ADT 2007	=	26,510
ADT 2027	=	46,060
DHV	=	10 %
D	=	55 %
T	=	14 % *
V	=	70 MPH
* TTST 10%		DUAL 4%
FUNCTIONAL CLASSIFICATION		FREEWAY

PROJECT LENGTH

LENGTH ROADWAY TIP PROJECT R-2719A = 3.803 MI

LENGTH STRUCTURE TIP PROJECT R-2719A = 0.225 MI

TOTAL LENGTH OF TIP PROJECT R-2719A = 4.028 MI

NOTE: SOUTHBOUND LANES WERE USED FOR PROJECT LENGTH CALCULATIONS

PREPARED IN THE OFFICES OF:
DEPARTMENT OF TRANSPORTATION
DIVISION OF HIGHWAYS
1000 BIRCH RIDGE DRIVE, RALEIGH N. C., 27610

2006 STANDARD SPECIFICATIONS

LETTING DATE:
JUNE 16, 2009

O. R. AZIZI, P.E.
PROJECT ENGINEER

E. E. MURRAY, P.E.
T. L. COGGINS, P.E.
PROJECT DESIGN ENGINEER

STRUCTURE DESIGN UNIT

DIVISION OF HIGHWAYS
STATE OF NORTH CAROLINA

P.E.
STATE DESIGN ENGINEER

DEPARTMENT OF TRANSPORTATION
FEDERAL HIGHWAY ADMINISTRATION

APPROVED
DIVISION ADMINISTRATOR DATE

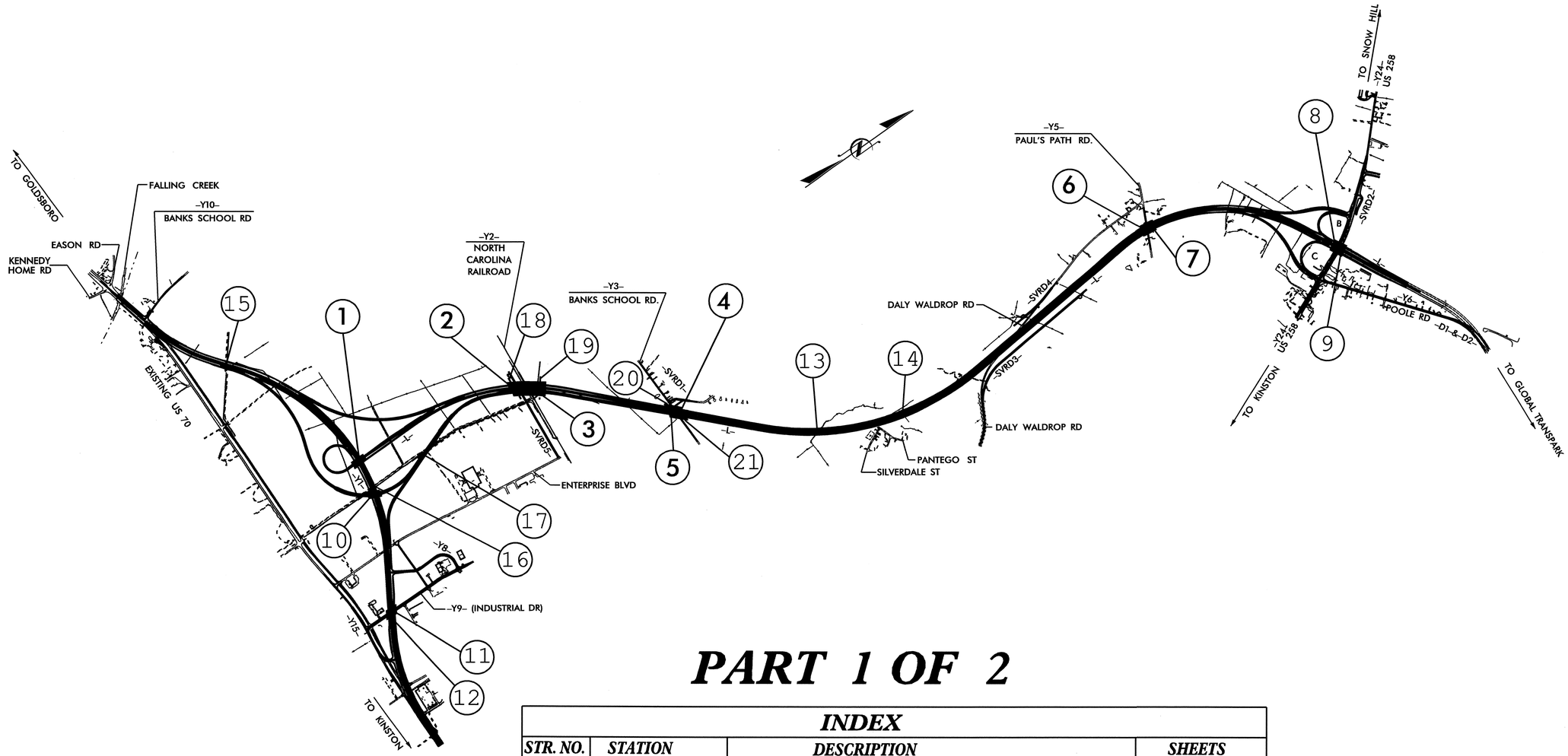

PART 1 OF 2

INDEX

	STR. NO.	STATION	DESCRIPTION	SHEETS
PART 1	1	51+64.57 -L-	BRIDGE OVER RELOCATED US 70	S-1 THRU S-29
	2	85+98.30 -L-	BRIDGE OVER N.C. RAILROAD (LEFT LANE)	S-30 THRU S-75
	3	85+98.30 -L-	BRIDGE OVER N.C. RAILROAD (RIGHT LANE)	S-76 THRU S-119
	4	113+38.09 -L-	BRIDGE OVER BANKS SCHOOL RD. -Y3- (LEFT LANE)	S-120 THRU S-143
	5	113+38.09 -L-	BRIDGE OVER BANKS SCHOOL RD. -Y3- (RIGHT LANE)	S-144 THRU S-166
	6	211+67.44 -L-	BRIDGE ON CRESCENT RD. (LEFT LANE)	S-167 THRU S-191
	7	211+67.44 -L-	BRIDGE ON CRESCENT RD. (RIGHT LANE)	S-192 THRU S-216
PART 2	8	248+68.10 -L-	BRIDGE OVER US 258 ON CRESCENT RD. (LEFT LANE)	S-217 THRU S-240
	9	248+68.10 -L-	BRIDGE OVER US 258 ON CRESCENT RD. (RIGHT LANE)	S-241 THRU S-264
	10	28+99.24 -Y1RPCA-	FOR FLYOVER OVER RELOCATED US 70	S-265 THRU S-294
	11	97+26.78 -Y1-	BRIDGE OVER SR 2003 (LEFT LANE)	S-295 THRU S-317
	12	97+26.78 -Y1-	BRIDGE OVER SR 2003 (RIGHT LANE)	S-318 THRU S-340
	13	139+60.00 -L-	DOUBLE 9' X 8' RCBC	C-1 THRU C-4
	14	153+62.00 -L-	DOUBLE 8' X 8' RCBC	C-5 THRU C-8
	15	38+22.00 -Y1-	DOUBLE 9' X 6' RCBC	C-9 THRU C-12
	16	74+43.00 -Y1-	TRIPLE 12' X 10' RCBC	C-13 THRU C-19
	17	16+14.00 -Y1RPCA-	TRIPLE 12' X 10' RCBC	C-20 THRU C-23
	18	10+43.55 -Y2-	MSE RETAINING WALL #1 @ STR. #2/#3 (END BENT #1)	W-1 THRU W-5
	19	12+99.85 -Y2-	MSE RETAINING WALL #2 @ STR. #2/#3 (END BENT #2)	W-1 THRU W-5
	20	18+90.00 -Y3-	MSE RETAINING WALL #3 @ STR. #4/#5 (END BENT #1)	W-6 THRU W-10
	21	20+16.47 -Y3-	MSE RETAINING WALL #4 @ STR. #4/#5 (END BENT #2)	W-6 THRU W-10

PROJECT NO. R-2719A

LENOIR COUNTY

STATE OF NORTH CAROLINA
DEPARTMENT OF TRANSPORTAION
RALEIGH

INDEX

REVISIONS

NO.	BY:	DATE:	NO.	BY:	DATE:
1			3		
2			4		

F. A. PROJECT NO.: STP-0224(12)

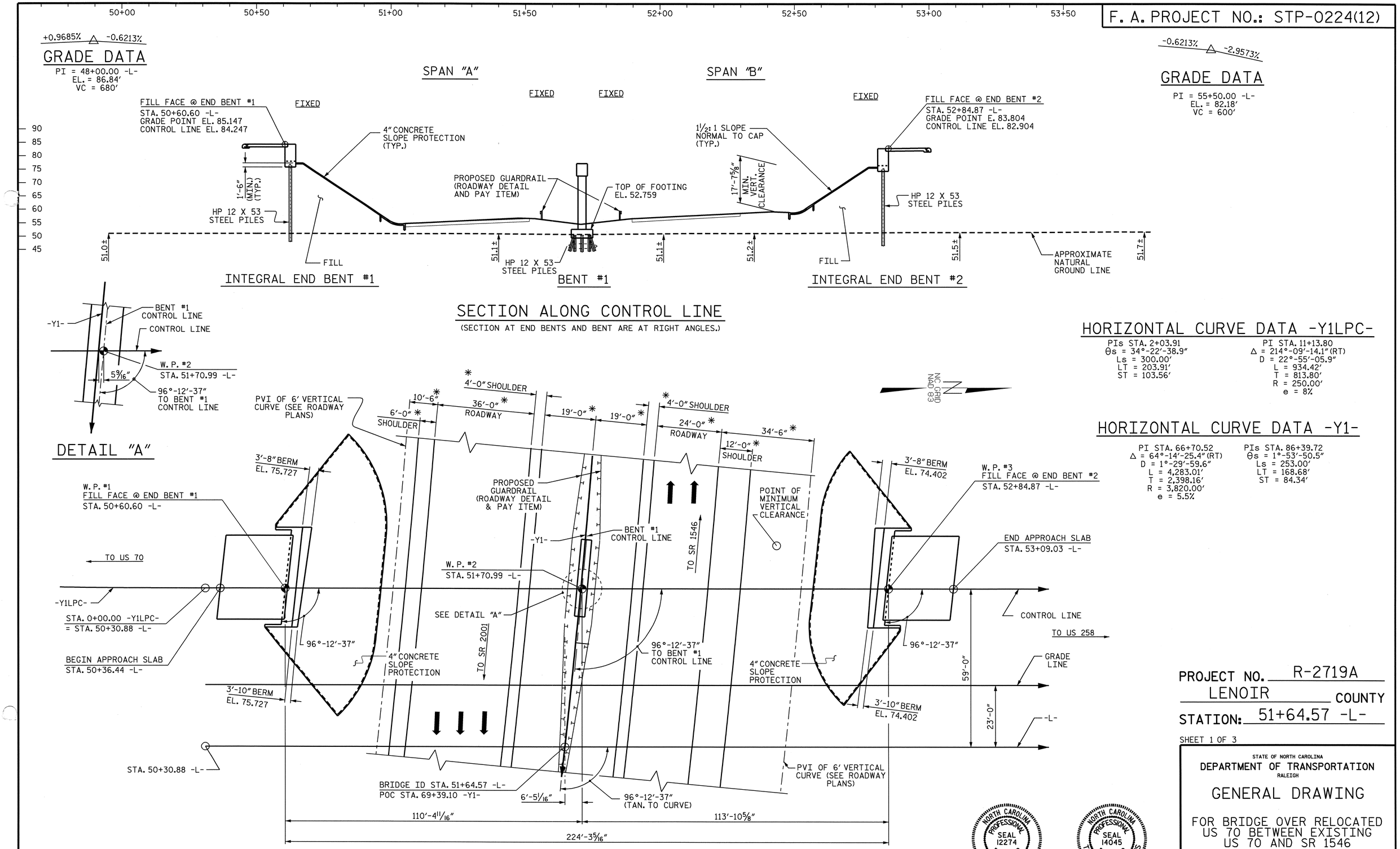

HORIZONTAL CURVE DATA -Y1LPC-

PIs STA. 2+03.91
θs = 34°-22'-38.9"
Ls = 300.00'
LT = 203.91'
ST = 103.56'

PI STA. 11+13.80
Δ = 214°-09'-14.1" (RT)
D = 22°-55'-05.9"
L = 934.42'
T = 813.80'
R = 250.00'
e = 8%

HORIZONTAL CURVE DATA -Y1-

PI STA. 66+70.52
Δ = 64°-14'-25.4" (RT)
D = 1°-29'-59.6"
L = 4,283.01'
T = 2,398.16'
R = 3,820.00'
e = 5.5%

PIs STA. 86+39.72
θs = 1°-53'-50.5"
Ls = 253.00'
LT = 168.68'
ST = 84.34'

PROJECT NO. R-2719A
LENOIR COUNTY
STATION: 51+64.57 -L-

SHEET 1 OF 3

STATE OF NORTH CAROLINA
DEPARTMENT OF TRANSPORTATION
RALEIGH

GENERAL DRAWING

FOR BRIDGE OVER RELOCATED US 70 BETWEEN EXISTING US 70 AND SR 1546

NORTH CAROLINA PROFESSIONAL SEAL 12274 ENGINEER OMAR R. AZIZI
Omar R Azizi 10-10-08

NORTH CAROLINA PROFESSIONAL SEAL 14045 ENGINEER TIMOTHY L. COGGINS
Timothy L. Coggins 10/10/08

REVISIONS						SHEET NO.
NO.	BY:	DATE:	NO.	BY:	DATE:	S-1
1			3			TOTAL SHEETS
2			4			340

DRAWN BY : PEGGY ADKINS DATE : 2-07
CHECKED BY : B.N. BARODAWALA DATE : 6-07

10-OCT-2008 12:31
k:\structures\str#1\finalplans\r-2719a_sd_gd_01.dgn
bbarodawala

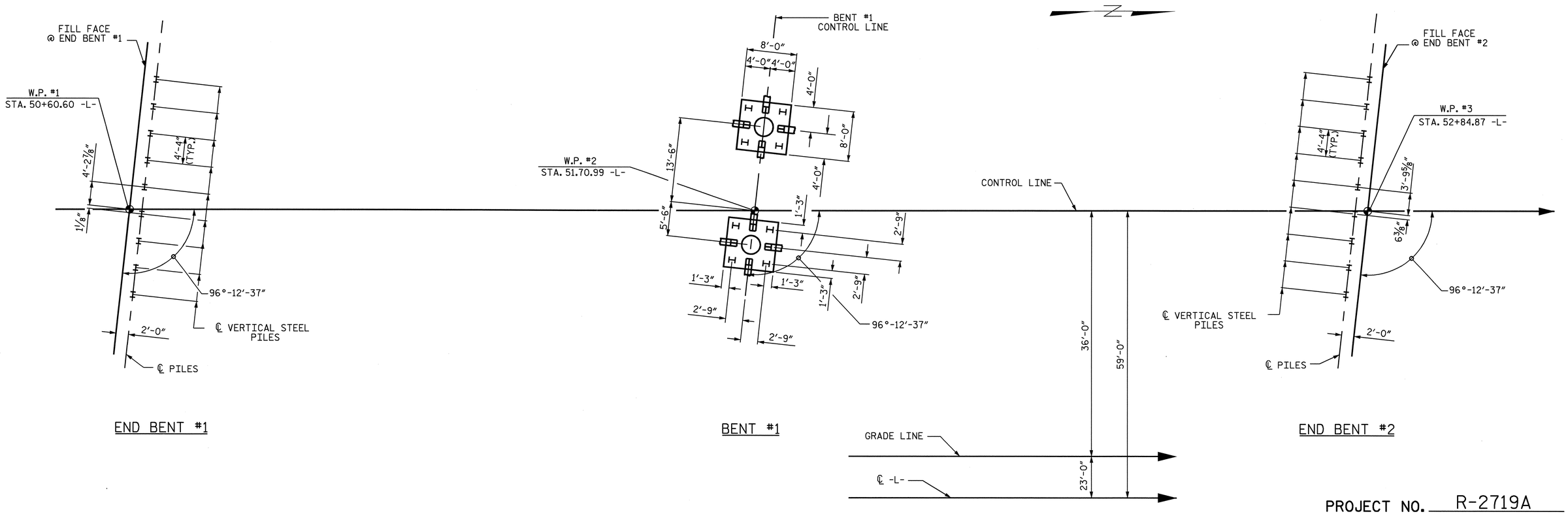

PROJECT NO. R-2719A

LENOIR COUNTY

STATION: 51+64.57 -L-

SHEET 2 OF 3

FOUNDATION LAYOUT PLAN

ALL PILES ARE 12 x 53 STEEL PILES.
DIMENSIONS & PILE LAYOUT ARE TYPICAL FOR EACH FOOTING.
BRACE PILES IN FOOTINGS ARE BATTERED 1½:12.

STATE OF NORTH CAROLINA
DEPARTMENT OF TRANSPORTATION
RALEIGH

GENERAL DRAWING

FOR BRIDGE OVER RELOCATED US 70 BETWEEN EXISTING US 70 AND SR 1546

NORTH CAROLINA PROFESSIONAL SEAL 14045 ENGINEER TIMOTHY L. COGGINS

Timothy L. Coggins 2/25/09

REVISIONS						SHEET NO.
NO.	BY:	DATE:	NO.	BY:	DATE:	S-2
1			3			TOTAL SHEETS
2			4			340

DRAWN BY : J.B. WILSON DATE : 8/19/08
CHECKED BY : T. L. COGGINS DATE : 08/2008

25-FEB-2009 09:57
h:\structures\str#1\finalplans\r-2719a_sd_gd_01.dgn
tcoggins

STR. #1

BM-A ELEV. 53.26; RR SPIKE IN 30" HARDWOOD TREE; STA. 75+86.00 -Y1-, 615' RT.

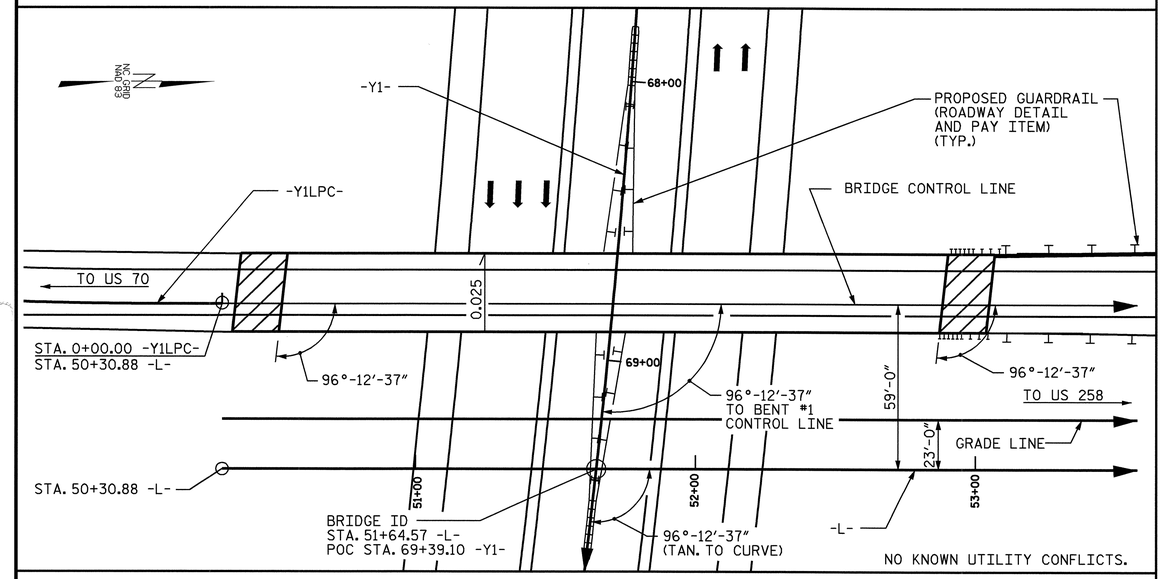

LOCATION SKETCH

NOTES:

ASSUMED LIVE LOAD = HS20 OR ALTERNATE LOADING, EXCEPT THAT THE GIRDERS HAVE BEEN DESIGNED FOR HS25.

THIS BRIDGE HAS BEEN DESIGNED IN ACCORDANCE WITH THE REQUIREMENTS OF AASHTO STANDARD SPECIFICATIONS FOR SEISMIC DESIGN OF HIGHWAY BRIDGES FOR SEISMIC PERFORMANCE CATEGORY A.

DRIVE PILES AT END BENT NO. 1 AND END BENT NO. 2 TO A REQUIRED BEARING CAPACITY OF 140 TONS PER PILE. THE REQUIRED BEARING CAPACITY IS EQUAL TO THE ALLOWABLE BEARING CAPACITY WITH MINIMUM FACTOR OF SAFETY OF TWO.

THE ALLOWABLE BEARING CAPACITY FOR PILES AT END BENT NO. 1 AND END BENT NO. 2 IS 70 TONS PER PILE.

DRIVE PILES AT BENT NO. 1 TO A REQUIRED BEARING CAPACITY OF 120 TONS PER PILE. THE REQUIRED BEARING CAPACITY IS EQUAL TO THE ALLOWABLE BEARING CAPACITY WITH A MINIMUM FACTOR OF SAFETY OF TWO.

THE ALLOWABLE BEARING CAPACITY FOR PILES AT BENT NO. 1 IS 60 TONS PER PILE.

THIS BRIDGE HAS BEEN DESIGNED BY THE STRENGTH DESIGN METHOD AS SPECIFIED IN AASHTO STANDARD SPECIFICATIONS.

FOR FOR OTHER DESIGN DATA AND GENERAL NOTES, SEE SHEET SN.

FOR EROSION CONTROL MEASURES, SEE EROSION CONTROL PLANS.

THE CONTRACTOR SHALL PROVIDE INDEPENDENT ASSURANCE SAMPLES OF REINFORCING STEEL AS FOLLOWS: FOR PROJECTS REQUIRING UP TO 400 TONS OF REINFORCING STEEL, ONE 30 INCH SAMPLE OF EACH SIZE BAR USED, AND FOR PROJECTS REQUIRING OVER 400 TONS OF REINFORCING STEEL, TWO 30 INCH SAMPLES OF EACH SIZE BAR USED. THE BARS FROM WHICH THE SAMPLES ARE TAKEN MUST THEN BE SPLICED WITH REPLACEMENT BARS OF THE SIZE AND LENGTH OF THE SAMPLE, PLUS A MINIMUM LAP SPLICE OF THIRTY BAR DIAMETERS.

REMOVABLE FORMS MAY BE USED IN LIEU OF METAL STAY-IN-PLACE FORMS IN ACCORDANCE WITH ARTICLE 420-3 OF THE STANDARD SPECIFICATIONS.

NEEDLE BEAMS WILL NOT BE ALLOWED UNLESS OTHERWISE CALLED FOR ON THE PLANS OR APPROVED BY THE ENGINEER.

FOR SUBMITTAL OF WORKING DRAWINGS, SEE SPECIAL PROVISIONS.

FOR FALSEWORK AND FORMWORK, SEE SPECIAL PROVISIONS.

FOR CRANE SAFETY, SEE SPECIAL PROVISIONS.

FOR GROUT FOR STRUCTURES, SEE SPECIAL PROVISIONS.

FOR FAA REQUIREMENTS, SEE ROADWAY SPECIAL PROVISIONS.

TOTAL BILL OF MATERIAL

	FOUNDATION EXCAVATION FOR BENT	REINFORCED CONCRETE DECK SLAB	GROOVING BRIDGE FLOORS	CLASS A CONCRETE	BRIDGE APPROACH SLABS	REINFORCING STEEL	SPIRAL COLUMN REINFORCING STEEL	63" MODIFIED PRESTRESSED CONCRETE GIRDERS		HP 12 X 53 STEEL PILES		PILE REDRIVES	CONCRETE BARRIER RAIL	4" SLOPE PROTECTION	ELASTOMERIC BEARINGS	EVAZOTE JOINT SEALS
	LUMP SUM	SQ.FT.	SQ.FT.	CU.YDS.	LUMP SUM	LBS.	LBS.	NO.	LIN.FT.	NO.	LIN.FT.	EACH	LIN.FT.	SQ.YDS.	LUMP SUM	LUMP SUM
SUPERSTRUCTURE		6956	6790		LUMP SUM			8	883.33				445.19		LUMP SUM	LUMP SUM
END BENT NO.1				19.7		4030				9	720	5		344		
BENT NO.1	LUMP SUM			43.1		8244	915			16	800	9				
END BENT NO.2				19.7		4039				9	675	5		271		
TOTAL	LUMP SUM	6956	6790	82.5	LUMP SUM	16313	915	8	883.33	34	2195	19	445.19	615	LUMP SUM	LUMP SUM

PROJECT NO. R-2719A
LENOIR COUNTY
STATION: 51+64.57 -L-

SHEET 3 OF 3

STATE OF NORTH CAROLINA
DEPARTMENT OF TRANSPORTATION
RALEIGH

GENERAL DRAWING

FOR BRIDGE OVER RELOCATED US 70 BETWEEN EXISTING US 70 AND SR 1546

NORTH CAROLINA PROFESSIONAL SEAL 14045 ENGINEER TIMOTHY L. COGGINS
2/25/09

REVISIONS						SHEET NO.
NO.	BY:	DATE:	NO.	BY:	DATE:	S-3
1			3			TOTAL SHEETS
2			4			340

DRAWN BY : J.B. WILSON DATE : 9/2008
CHECKED BY : T.L. COGGINS DATE : 9/2008

25-FEB-2009 09:57
h:\structures\str#1\finalplans\r-2719a_sd_gd_01.dgn
tcoggins

STR. #1

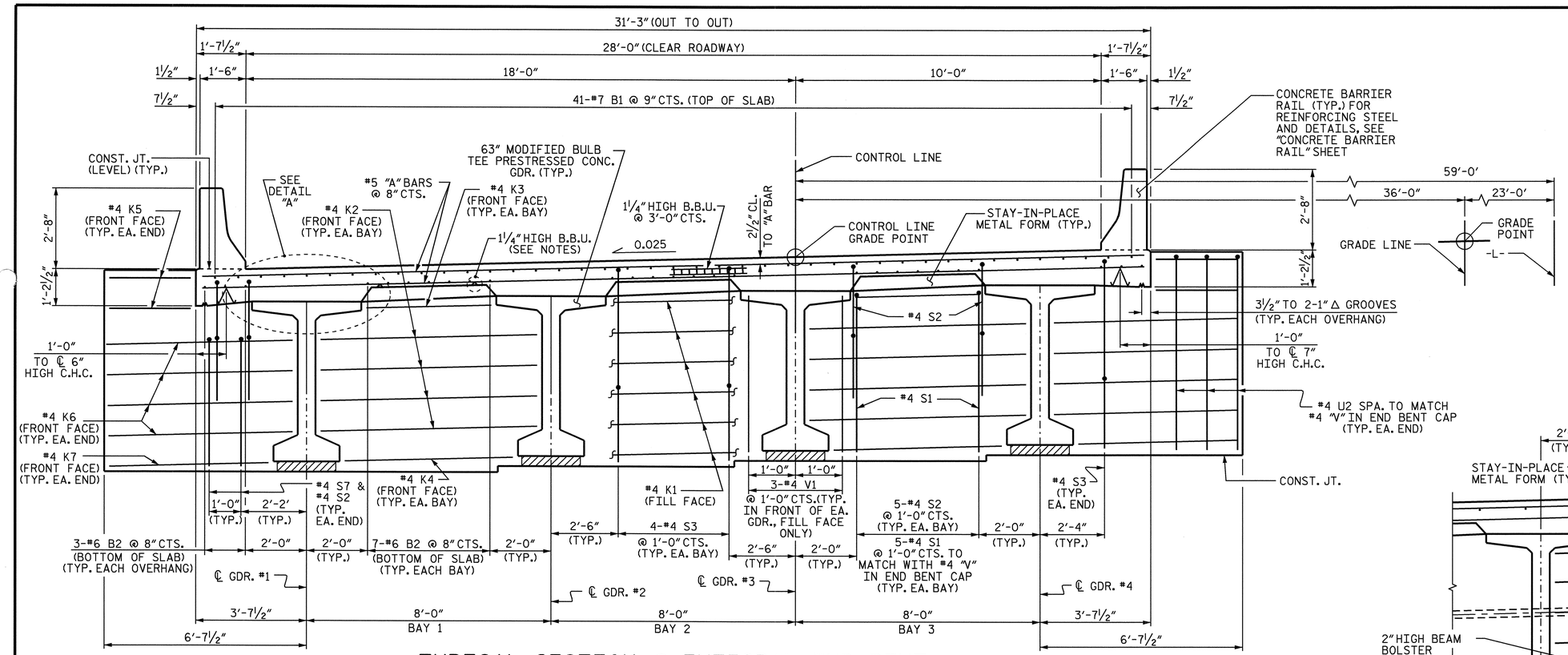

TYPICAL SECTION @ INTEGRAL END BENT

(END BENT #1 SHOWN, END BENT #2 SIMILAR)

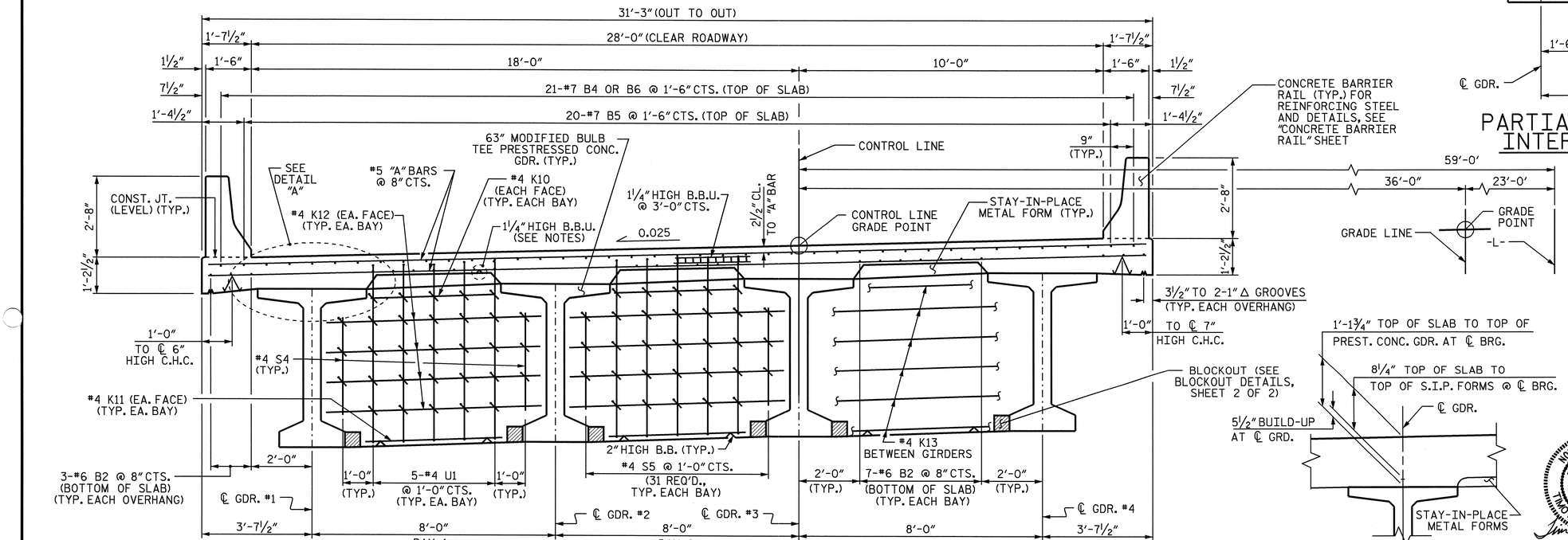

TYPICAL SECTION

AT CONTINUOUS BENT DIAPHRAGM

DETAIL "A"

DIMENSIONS ARE TYP. FOR EACH GDR.

NOTES:

PROVIDE 1¼" HIGH BEAM BOLSTERS UPPER AT 4'-0" CTS. ATOP THE METAL STAY-IN-PLACE FORMS TO SUPPORT THE BOTTOM MAT OF 'A' BARS. WHEN USING REMOVABLE FORMS, PROVIDE CONTINUOUS HIGH CHAIRS FOR METAL DECK (C.H.C.M.) @ 4'-0" CTS. WITH A HEIGHT TO SUPPORT THE BOTTOM MAT OF 'A' BARS A CLEAR DISTANCE OF 2½" ABOVE THE TOP OF THE REMOVABLE FORM.

LONGITUDINAL STEEL MAY BE SHIFTED SLIGHTLY, AS NECESSARY, TO AVOID INTERFERENCE WITH STIRRUPS IN PRESTRESSED CONCRETE GIRDERS.

CONCRETE IN THE INTERMEDIATE DIAPHRAGMS MAY BE CLASS A IN LIEU OF CLASS AA. PAYMENT SHALL BE MADE UNDER THE UNIT CONTRACT PRICE FOR REINFORCED CONCRETE DECK SLAB.

TEMPORARY STRUTS SHALL BE PLACED BETWEEN PRESTRESSED GIRDERS ADJACENT TO THE DIAPHRAGMS, AND THE NUTS ON THE 1¼" DIA. TIE RODS SHALL BE FULLY TIGHTENED BEFORE THE DIAPHRAGMS ARE CAST. STRUTS SHALL REMAIN IN PLACE 3 DAYS AFTER CONCRETE IS PLACED. THE TIE RODS SHALL BE RE-TIGHTENED AFTER THE STRUTS HAVE BEEN REMOVED.

PREVIOUSLY CAST CONCRETE IN A CONTINUOUS UNIT SHALL HAVE ATTAINED A MINIMUM COMPRESSIVE STRENGTH OF 3,000 PSI BEFORE ADDITIONAL CONCRETE IS CAST IN THE UNIT.

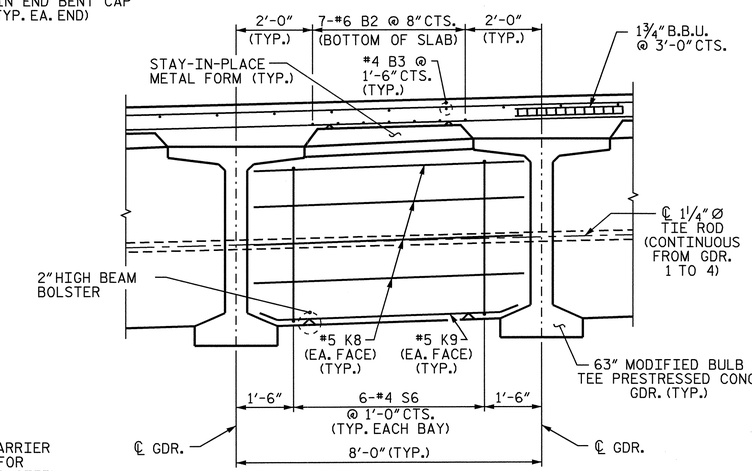

PARTIAL TYPICAL SECTION AT INTERMEDIATE DIAPHRAGMS

PROJECT NO. R-2719A

LENOIR COUNTY

STATION: 51+64.57 -L-

SHEET 1 OF 2

STATE OF NORTH CAROLINA
DEPARTMENT OF TRANSPORTATION
RALEIGH

SUPERSTRUCTURE

TYPICAL SECTION

NORTH CAROLINA PROFESSIONAL SEAL 14045 ENGINEER TIMOTHY L. COGGINS
10/14/08

REVISIONS						SHEET NO.
NO.	BY:	DATE:	NO.	BY:	DATE:	S-4
1			3			TOTAL SHEETS
2			4			340

DRAWN BY : PEGGY ADKINS DATE : 12-07
CHECKED BY : B.N. BARODAWALA DATE : 2-08

09-OCT-2008 15:37
g:\tlpprojects-r\r2719a\structures\str#1\finalplans\r2719a_sd_ts_01.dgn
taverette

STR. #1

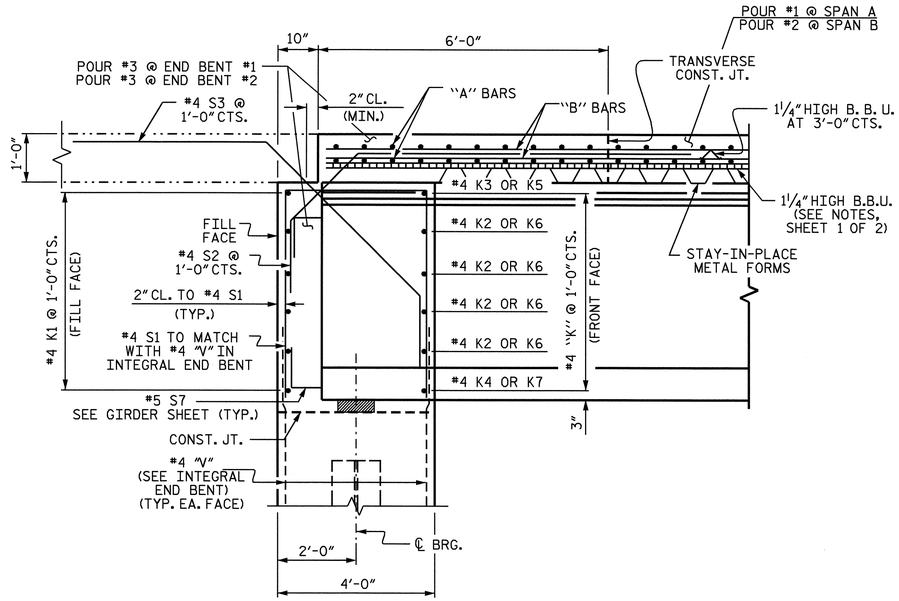

END OF GIRDER DETAIL AT INTEGRAL END BENT

#4 V1 BARS IN FRONT OF GIRDER NOT SHOWN

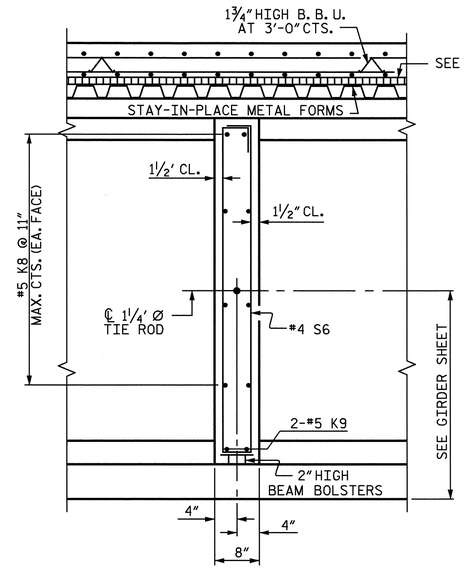

SECTION B-B

SECTION THRU INTERMEDIATE DIAPHGRAM

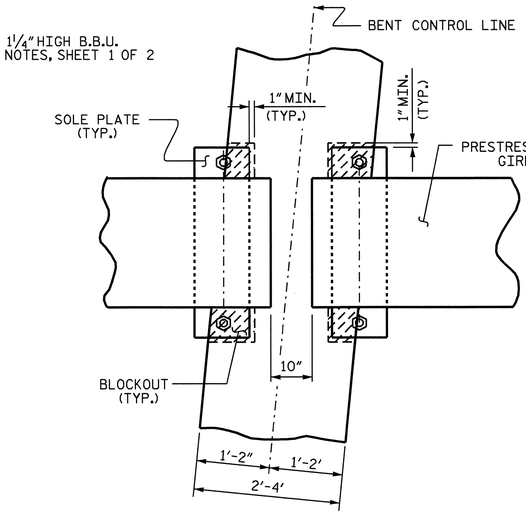

PLAN VIEW

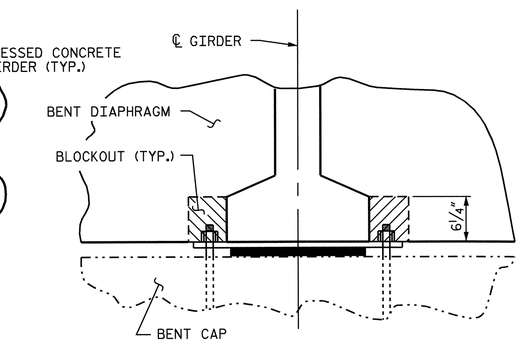

SECTION

BENT DIAPHRAGM BLOCK-OUT DETAIL

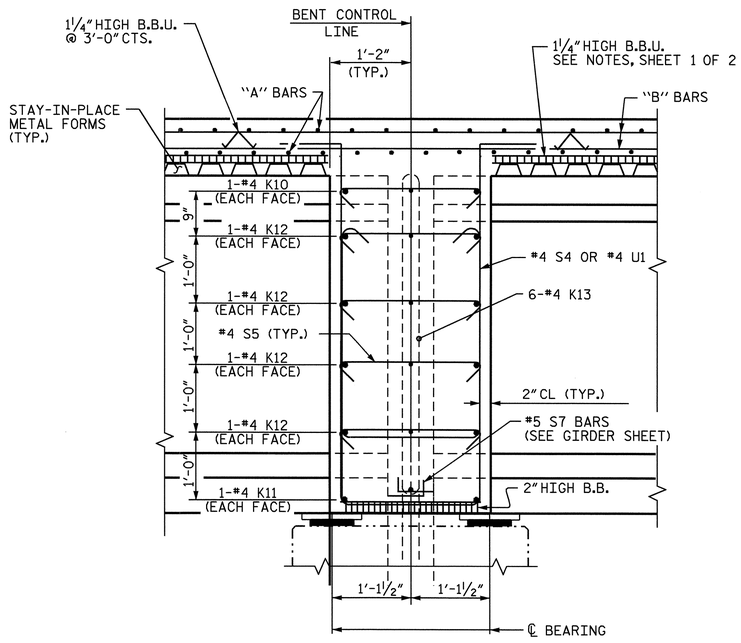

SECTION C-C

SECTION THRU BENT DIAPHGRAM

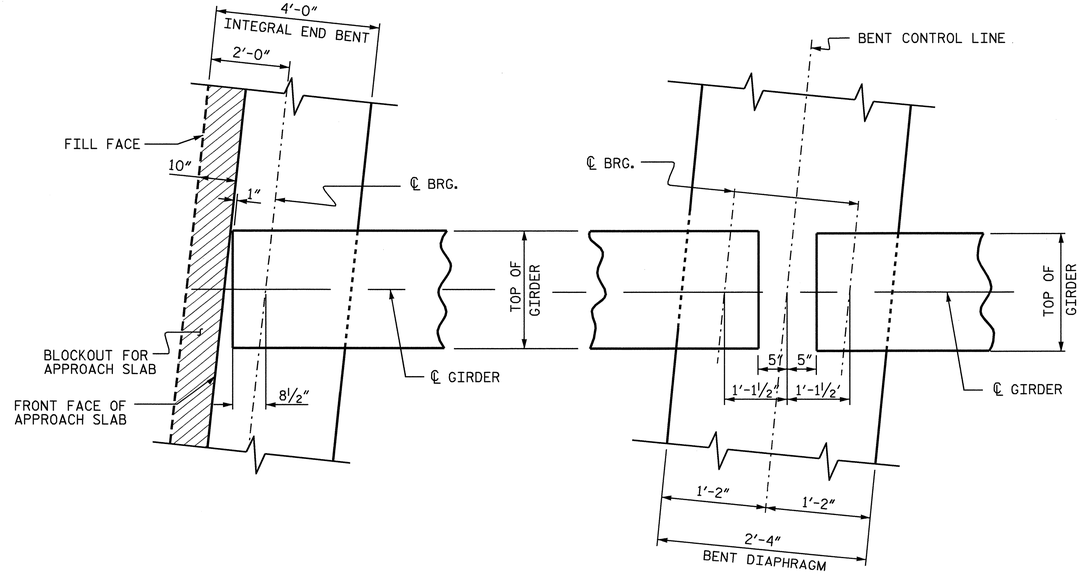

AT INTEGRAL END BENT

AT BENT DIAPHRAGM

PLAN OF GIRDER

PROJECT NO. R-2719A
LENOIR COUNTY
STATION: 51+64.57 -L-

SHEET 2 OF 2

STATE OF NORTH CAROLINA
DEPARTMENT OF TRANSPORTATION
RALEIGH

SUPERSTRUCTURE
TYPICAL SECTION

NORTH CAROLINA PROFESSIONAL SEAL 14045 ENGINEER TIMOTHY L. LEGGINS
10/10/08

REVISIONS						SHEET NO.
NO.	BY:	DATE:	NO.	BY:	DATE:	S-5
1			3			TOTAL SHEETS
2			4			340

STR. #1

DRAWN BY : PEGGY ADKINS DATE : 12-07
CHECKED BY : B.N. BARODAWALA DATE : 2-08

09-OCT-2008 15:37
g:\tlpprojects-r\r2719a\structures\str#1\finalplans\r2719a_sd_ts_01.dgn
taverette

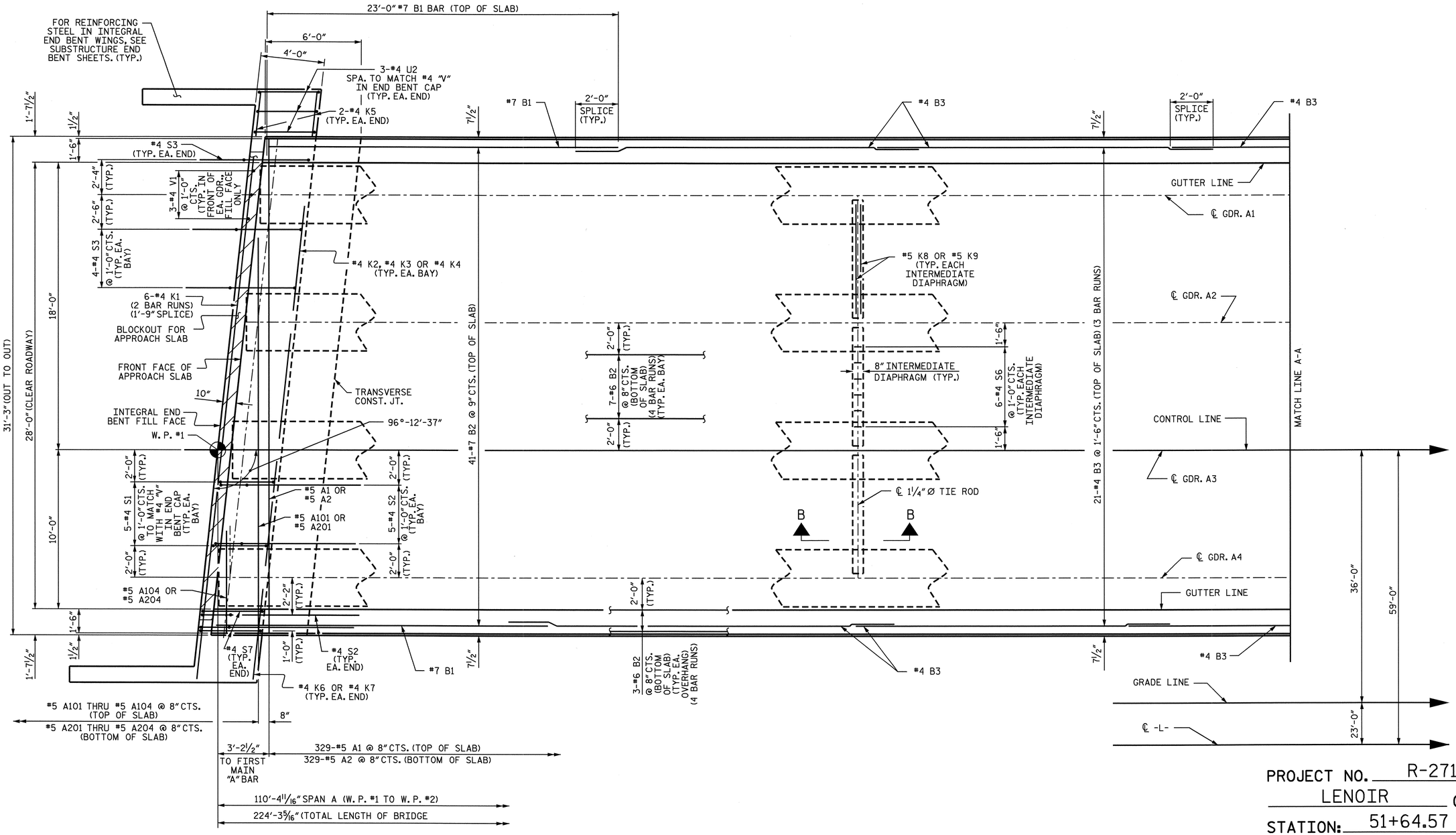

PLAN OF SPAN

FOR LOCATION OF INTERMEDIATE DIAPHRAGMS, SEE "FRAMING PLAN."
FOR SECTION B-B, SEE "TYPICAL SECTION" SHEET 2 OF 2.
FOR TRANSVERSE CONSTRUCTION JOINT DETAIL, SEE SHEET 2 OF 3.

PROJECT NO. R-2719A
LENOIR COUNTY
STATION: 51+64.57 -L-

SHEET 1 OF 3

STATE OF NORTH CAROLINA
DEPARTMENT OF TRANSPORTATION
RALEIGH

SUPERSTRUCTURE

PLAN OF SPAN
@ END BENT #1

NORTH CAROLINA PROFESSIONAL SEAL 14045 ENGINEER TIMOTHY L. COGGINS
10/10/08

REVISIONS								SHEET NO.
NO.	BY:	DATE:		NO.	BY:	DATE:		S-6
1				3				TOTAL SHEETS
2				4				340

DRAWN BY : PEGGY ADKINS DATE : 1-08
CHECKED BY : B.N. BARODAWALA DATE : 3-08

09-OCT-2008 15:36
g:\ttprojects-r\r2719a\structures\str#1\final plans\R2719A_sd_S1_01.dgn
taverette

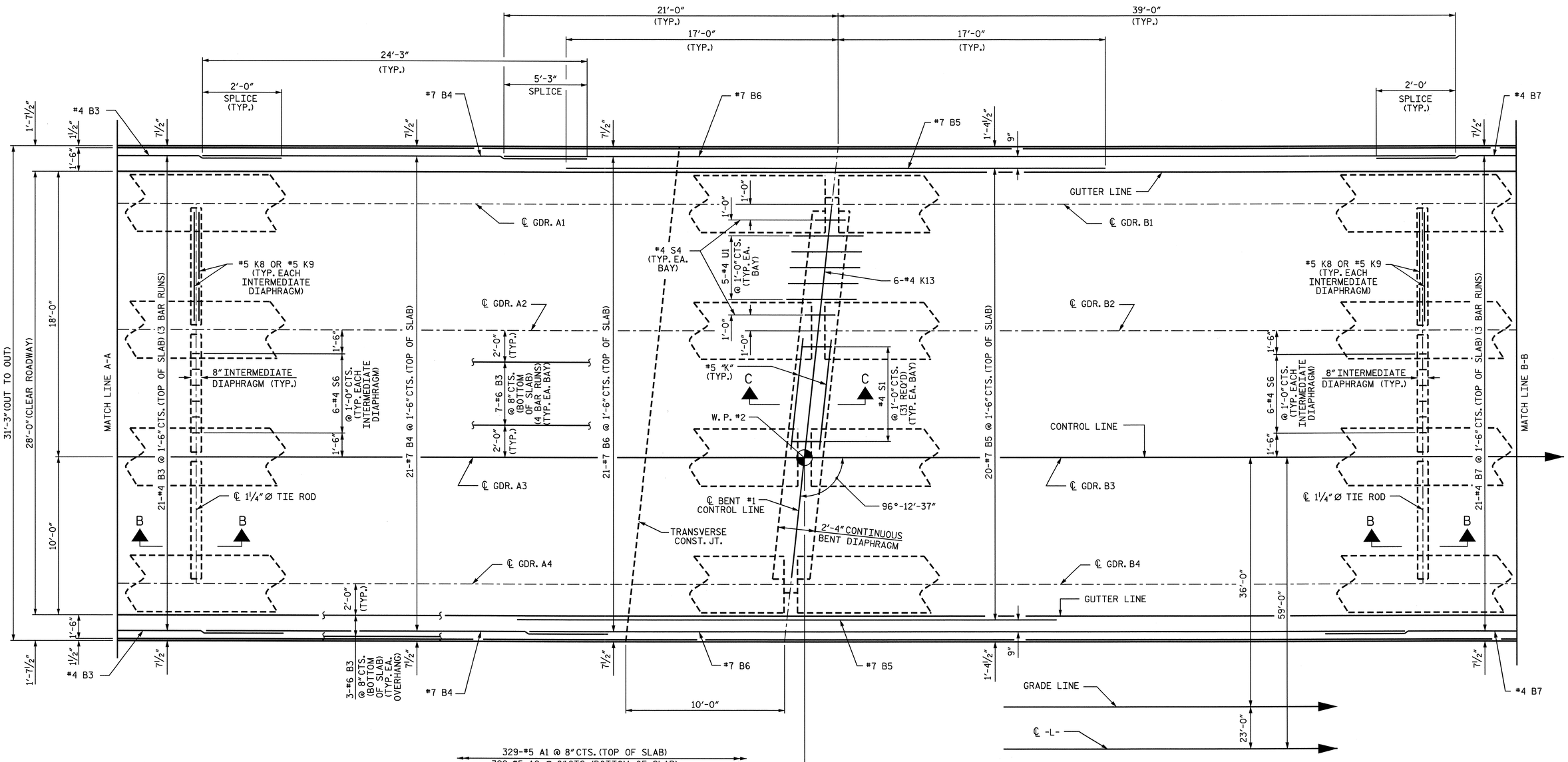

PLAN OF SPAN

FOR LOCATION OF INTERMEDIATE DIAPHRAGMS, SEE "FRAMING PLAN."
FOR SECTION B-B AND C-C, SEE "TYPICAL SECTION" SHEET 2 OF 2.

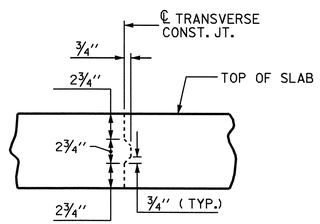

TRANSVERSE CONSTRUCTION JOINT DETAIL

NOTE: REINFORCING STEEL IN SLAB NOT SHOWN.
LONGITUDINAL REINFORCING STEEL SHALL BE CONTINUOUS THRU JOINT

PROJECT NO. R-2719A
LENOIR COUNTY
STATION: 51+64.57 -L-

SHEET 2 OF 3

STATE OF NORTH CAROLINA
DEPARTMENT OF TRANSPORTATION
RALEIGH

SUPERSTRUCTURE

PLAN OF SPAN @ BENT #1

NORTH CAROLINA PROFESSIONAL SEAL 14045 ENGINEER TIMOTHY W. COGGINS
10/10/08

REVISIONS						SHEET NO.
NO.	BY:	DATE:	NO.	BY:	DATE:	S-7
1			3			TOTAL SHEETS
2			4			340

DRAWN BY : PEGGY ADKINS DATE : 1-08
CHECKED BY : B.N. BARODAWALA DATE : 3-08

09-OCT-2008 15:36
g:\tipprojects-r\r2719a\structures\str#1\final plans\R2719A_sd_S1_01.dgn
taverette

STR. #1

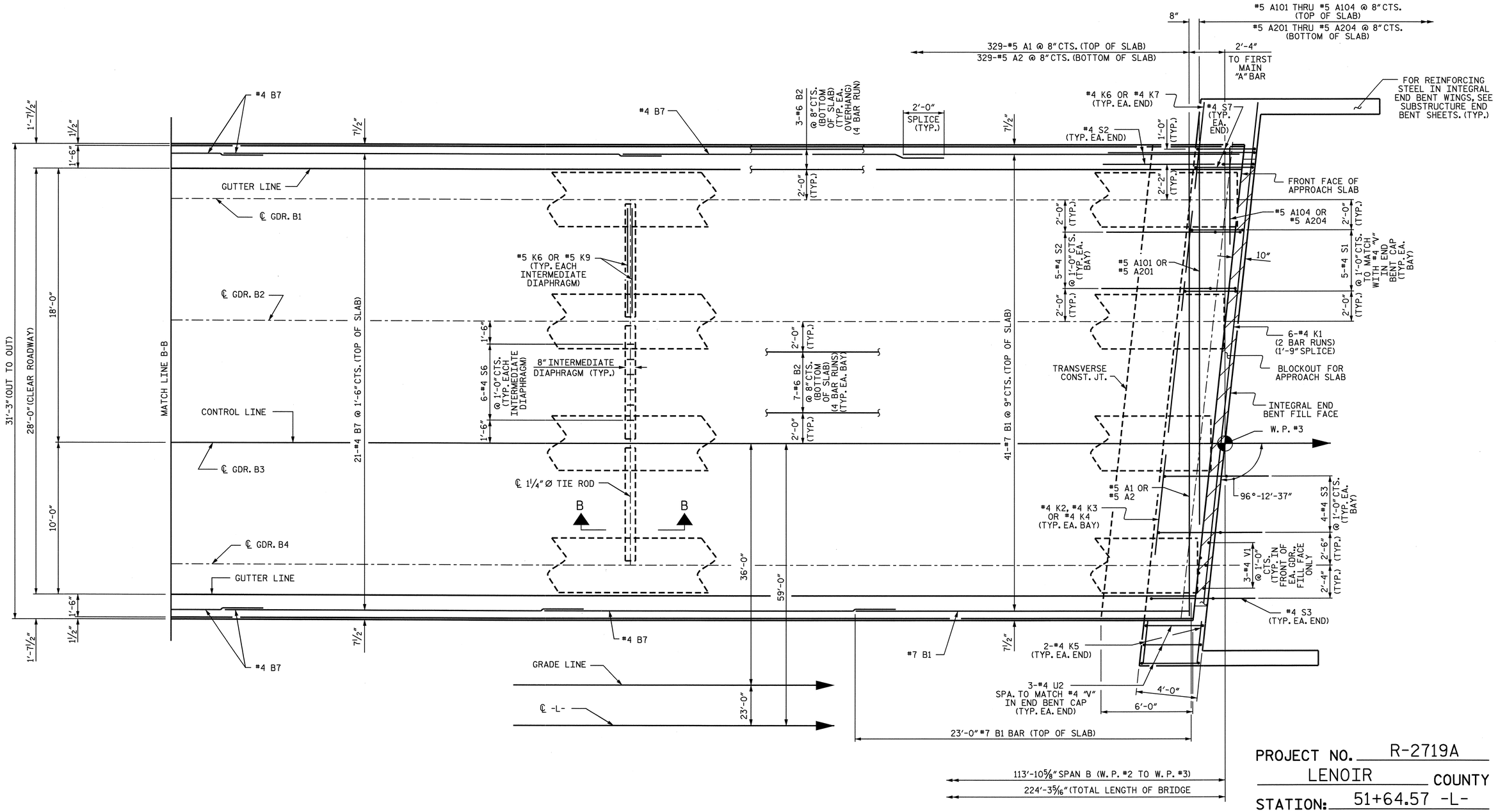

PLAN OF SPAN

FOR LOCATION OF INTERMEDIATE DIAPHRAGMS, SEE "FRAMING PLAN."
FOR SECTION B-B, SEE "TYPICAL SECTION" SHEET 2 OF 2.
FOR TRANSVERSE CONSTRUCTION JOINT DETAIL, SEE SHEET 2 OF 3.

PROJECT NO. R-2719A
LENOIR COUNTY
STATION: 51+64.57 -L-

SHEET 3 OF 3

STATE OF NORTH CAROLINA
DEPARTMENT OF TRANSPORTATION
RALEIGH

SUPERSTRUCTURE

PLAN OF SPAN
@ END BENT #2

NORTH CAROLINA PROFESSIONAL SEAL 14045 ENGINEER TIMOTHY L. COGGINS
10/10/08

REVISIONS						SHEET NO.
NO.	BY:	DATE:	NO.	BY:	DATE:	S-8
1			3			TOTAL SHEETS
2			4			340

DRAWN BY : PEGGY ADKINS DATE : 1-08
CHECKED BY : B.N. BARODAWALA DATE : 3-08

09-OCT-2008 15:36
g:\tlpprojects-r\r2719a\structures\str#1\final plans\R2719A_sd_S1_01.dgn
taverette

STR. #1

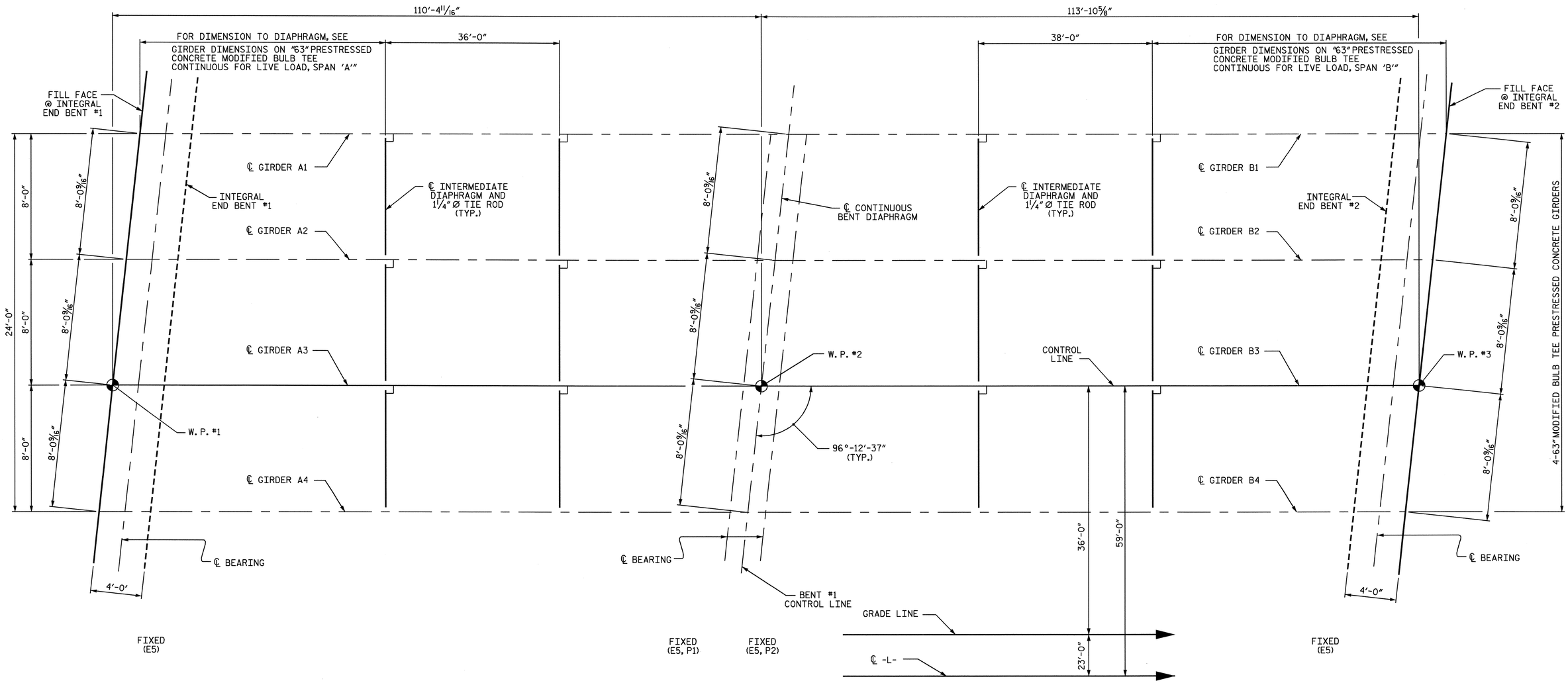

FRAMING PLAN

PROJECT NO. R-2719A
LENOIR COUNTY
STATION: 51+64.57 -L-

STATE OF NORTH CAROLINA
DEPARTMENT OF TRANSPORTATION
RALEIGH

SUPERSTRUCTURE

FRAMING PLAN

NORTH CAROLINA PROFESSIONAL SEAL 14045 ENGINEER TIMOTHY R. COGGINS
10/10/08

REVISIONS						SHEET NO.
NO.	BY:	DATE:	NO.	BY:	DATE:	S-9
1			3			TOTAL SHEETS
2			4			340

DRAWN BY : PEGGY ADKINS DATE : 1-08
CHECKED BY : B.N. BARODAWALA DATE : 3-08

09-OCT-2008 15:36
g:\tipprojects-r\r2719a\structures\str#1\finalplans\R2719A_sd_FP_01.dgn
taverette

STR. #1

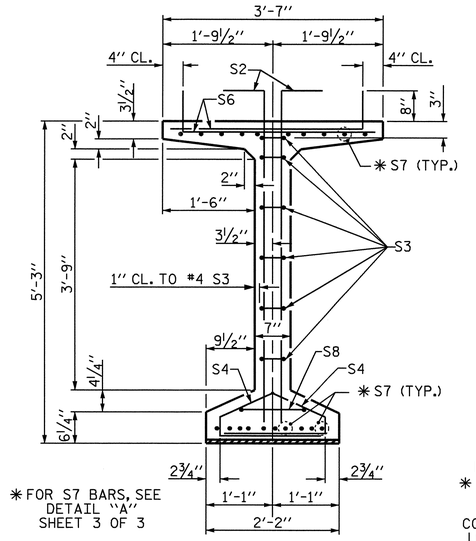

SECTION A-A

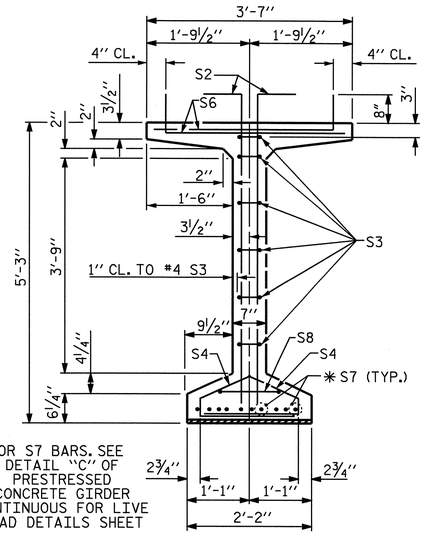

SECTION B-B

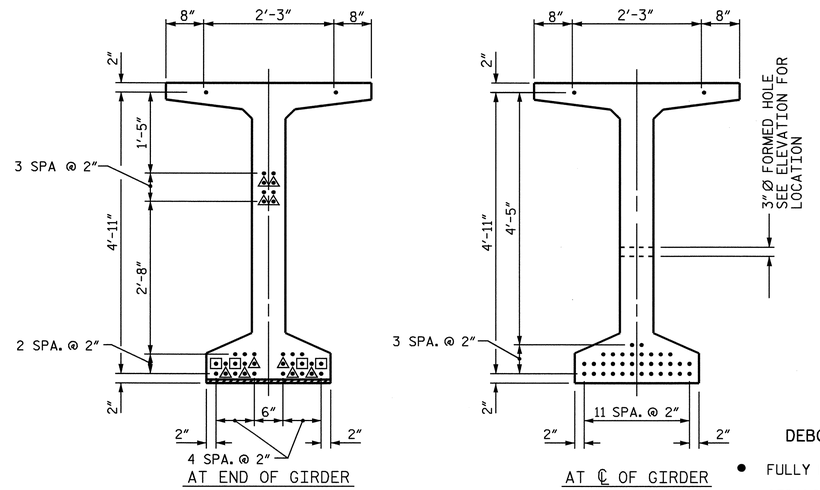

0.6"Ø LOW RELAXATION STRAND LAYOUT

DEBONDING LEGEND

- ● FULLY BONDED STRANDS
- △ STRANDS DEBONDED FOR 2'-0" FROM END OF GIRDER
- ▣ STRANDS DEBONDED FOR 4'-0" FROM END OF GIRDER

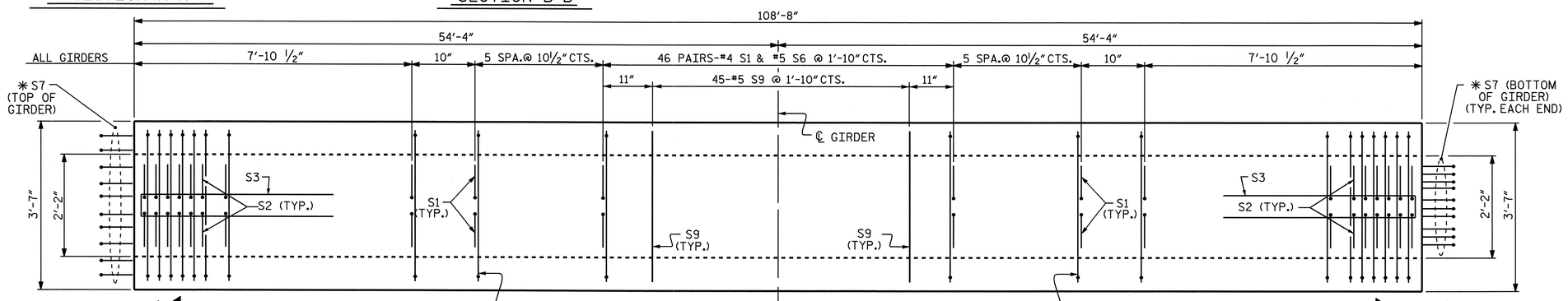

PLAN OF GIRDER

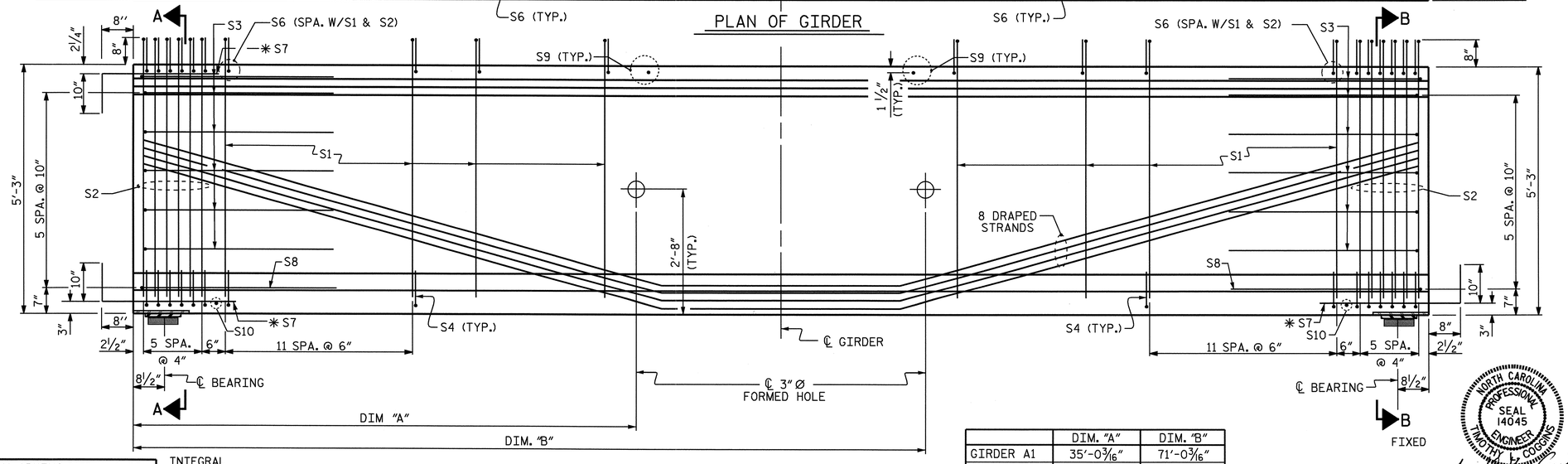

ELEVATION OF GIRDER

	DIM. "A"	DIM. "B"
GIRDER A1	35'-0 3/16"	71'-0 3/16"
GIRDER A2	35'-10 5/8"	71'-10 5/8"
GIRDER A3	36'-9 1/8"	72'-9 1/8"
GIRDER A4	37'-7 1/2"	73'-7 1/2"

0.6"Ø L.R GRADE 270 STRANDS

AREA (SQUARE INCHES)	ULTIMATE STRENGTH (LBS. PER STRAND)	APPLIED PRESTRESS (LBS. PER STRAND)
0.217	58,600	43,950

REINFORCING STEEL FOR ONE GIRDER

BAR	NUMBER	SIZE	TYPE	LENGTH	WEIGHT
S1	160	#4	1	6'-3"	668
S2	24	#5	1	6'-3"	156
S3	12	#4	2	8'-5"	67
S4	72	#4	3	3'-0"	144
S6	184	#5	1	3'-10"	736
✱ S7	30	#5	STR	3'-8"	115
S8	2	#5	2	9'-0"	19
S9	45	#5	STR	3'-3"	153
S10	2	#3	STR	1'-10"	2

✱ NOTE: S7 BARS SHALL BE BENT BEFORE SHIPMENT. HEAT BENDING SHALL NOT BE ALLOWED.

BAR TYPES

ALL BAR DIMENSIONS ARE OUT-TO-OUT

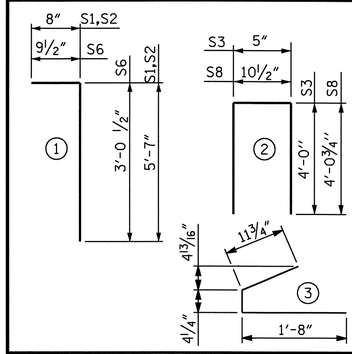

QUANTITIES FOR ONE GIRDER

	REINFORCING STEEL LB.	9000 PSI CONCRETE C.Y.	0.6"Ø L.R STRAND No.
INTERIOR GIRDER	2060	21.5	36
EXTERIOR GIRDER	2060	21.5	36

GIRDERS REQUIRED

NUMBER	LENGTH	TOTAL LENGTH
4	108'-8"	434'-8"

PROJECT NO. R-2719A

LENOIR COUNTY

STATION: 51+64.57 -L-

SHEET 1 OF 3

STATE OF NORTH CAROLINA
DEPARTMENT OF TRANSPORTATION
RALEIGH

63" PRESTRESSED CONCRETE MODIFIED BULB TEE CONTINUOUS FOR LIVE LOAD SPAN 'A'

NORTH CAROLINA PROFESSIONAL SEAL 14045 ENGINEER TIMOTHY L. COGGINS

10/10/08

REVISIONS								SHEET NO.
NO.	BY:	DATE:	NO.	BY:	DATE:			S-10
1			3					TOTAL SHEETS
2			4					340

ASSEMBLED BY : PEGGY ADKINS DATE : 1-08
CHECKED BY : B.N. BARODAWALA DATE : 3-08

DRAWN BY : EEM 2/6/97	REV. 8/16/99	RWW/LES
CHECKED BY : VAP 2/6/97	REV. 10/17/00	RWW/LES
	REV. 5/1/06	TLA/GM

09-OCT-2008 15:35
g:\tbprojects-r\r2719a\structures\str#1\final plans\R2719A_sd_G1_01.dgn
taverette

STR. #1

STD. NO. PCG9

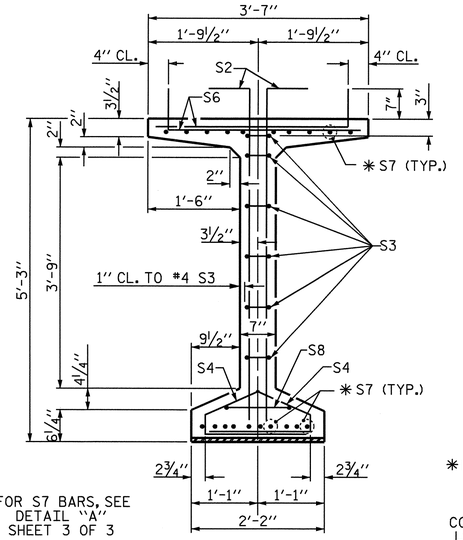

✱ FOR S7 BARS, SEE DETAIL "A" SHEET 3 OF 3

SECTION A-A

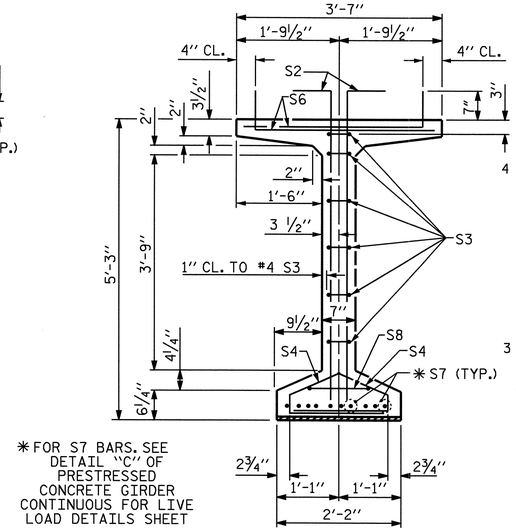

✱ FOR S7 BARS. SEE DETAIL "C" OF PRESTRESSED CONCRETE GIRDER CONTINUOUS FOR LIVE LOAD DETAILS SHEET

SECTION B-B

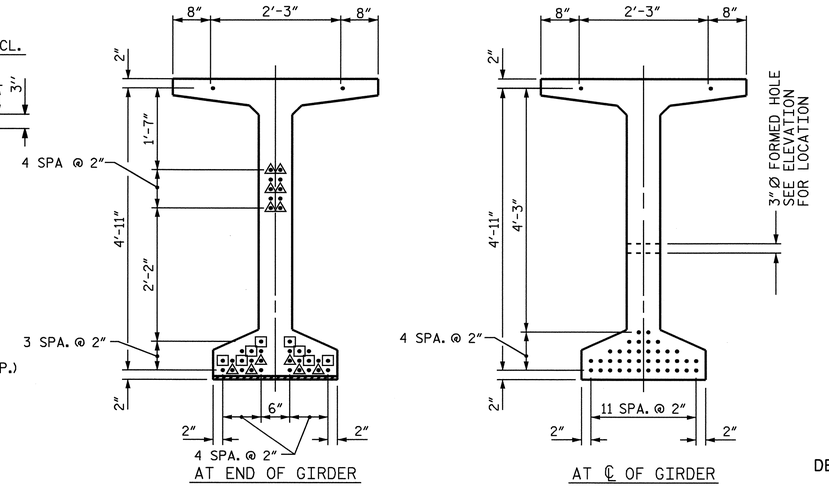

0.6" Ø LOW RELAXATION STRAND LAYOUT

DEBONDING LEGEND

- ● FULLY BONDED STRANDS
- △ STRANDS DEBONDED FOR 2'-0" FROM END OF GIRDER
- ▣ STRANDS DEBONDED FOR 4'-0" FROM END OF GIRDER

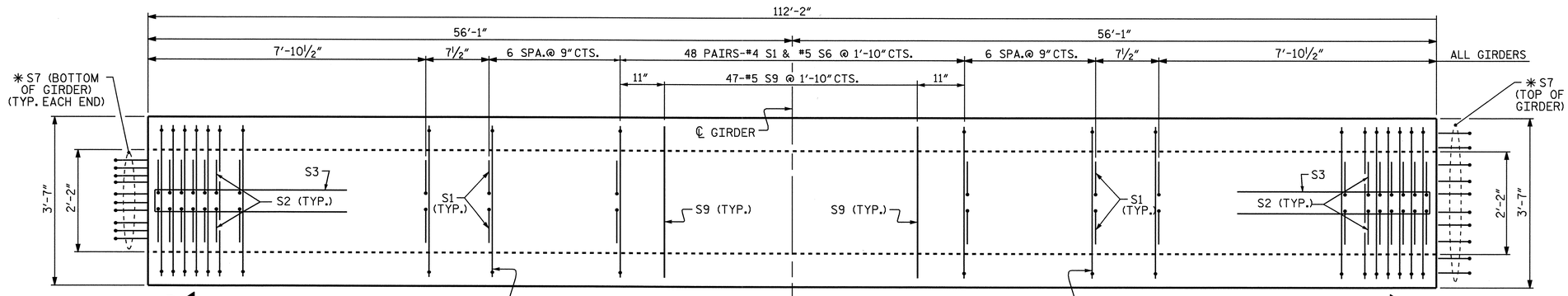

PLAN OF GIRDER

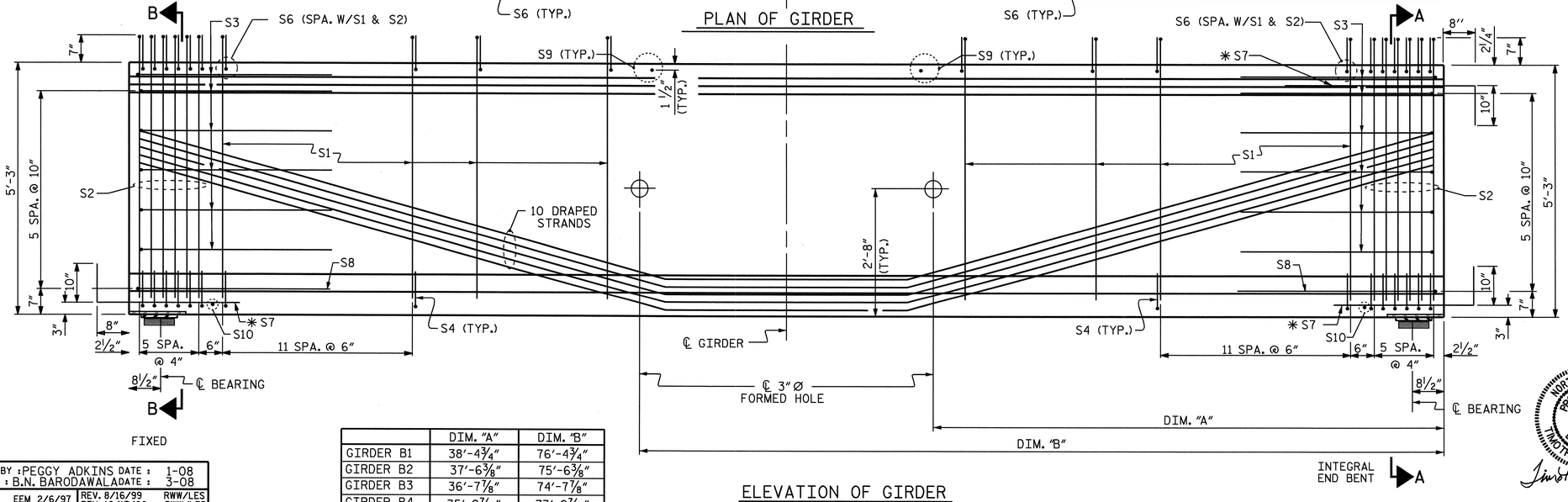

ELEVATION OF GIRDER

	DIM. "A"	DIM. "B"
GIRDER B1	38'-4¾"	76'-4¾"
GIRDER B2	37'-6⅜"	75'-6⅜"
GIRDER B3	36'-7⅞"	74'-7⅞"
GIRDER B4	35'-9 7/16"	73'-9 7/16"

0.6"Ø L.R GRADE 270 STRANDS

AREA (SQUARE INCHES)	ULTIMATE STRENGTH (LBS. PER STRAND)	APPLIED PRESTRESS (LBS. PER STRAND)
0.217	58,600	43,950

REINFORCING STEEL FOR ONE GIRDER

BAR	NUMBER	SIZE	TYPE	LENGTH	WEIGHT
S1	168	#4	1	6'-2"	692
S2	24	#5	1	6'-2"	154
S3	12	#4	2	8'-5"	67
S4	72	#4	3	3'-0"	144
S6	192	#5	1	3'-9"	751
✱ S7	30	#5	STR	3'-8"	115
S8	2	#5	2	9'-0"	19
S9	47	#5	STR	3'-3"	159
S10	2	#3	STR	1'-10"	2

✱ NOTE: S7 BARS SHALL BE BENT BEFORE SHIPMENT. HEAT BENDING SHALL NOT BE ALLOWED.

BAR TYPES

ALL BAR DIMENSIONS ARE OUT-TO-OUT

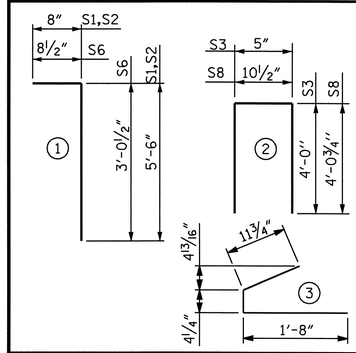

QUANTITIES FOR ONE GIRDER

	REINFORCING STEEL	9000 PSI CONCRETE	0.6"Ø L.R STRAND
	LB.	C.Y.	No.
INTERIOR GIRDER	2103	22.2	40
EXTERIOR GIRDER	2103	22.2	40

GIRDERS REQUIRED

NUMBER	LENGTH	TOTAL LENGTH
4	112'-2"	448'-8"

PROJECT NO. R-2719A

LENOIR COUNTY

STATION: 51+64.57 -L-

SHEET 2 OF 3

STATE OF NORTH CAROLINA
DEPARTMENT OF TRANSPORTATION
RALEIGH

63" PRESTRESSED CONCRETE MODIFIED BULB TEE CONTINUOUS FOR LIVE LOAD SPAN 'B'

NORTH CAROLINA PROFESSIONAL SEAL 14045 ENGINEER TIMOTHY L. COSGING

10/10/08

ASSEMBLED BY : PEGGY ADKINS	DATE : 1-08
CHECKED BY : B.N. BARODAWALA	DATE : 3-08

DRAWN BY : EEM 2/6/97	REV. 8/16/99	RWW/LES
CHECKED BY : VAP 2/6/97	REV. 10/17/00	RWW/LES
	REV. 5/1/06	TLA/GM

REVISIONS

NO.	BY:	DATE:	NO.	BY:	DATE:
1			3		
2			4		

SHEET NO. S-11

TOTAL SHEETS 340

09-OCT-2008 15:35
gi\tlpprojects-r\r2719d\structures\str-#1\final plans\R2719A_sd_G1_01.dgn
tavarette

STR. #1

STD. NO. PCG9

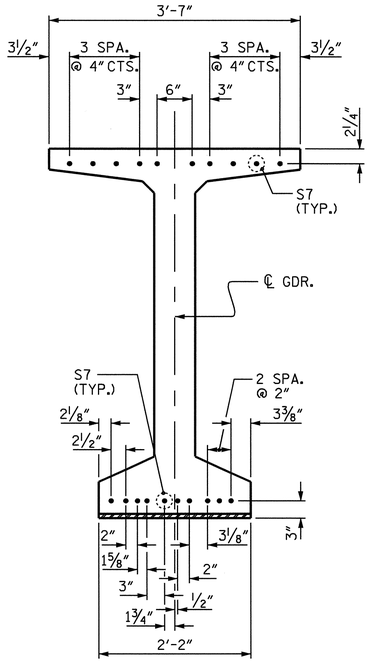

DETAIL "A"

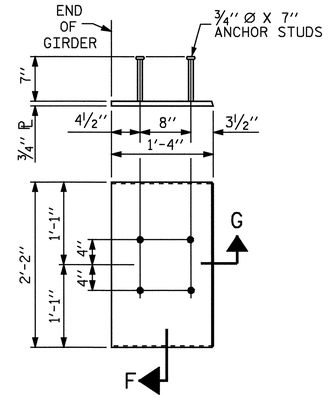

EMBEDDED PLATE "B-1" DETAILS
FOR AASHTO TYPE
63" MODIFIED BULB TEES

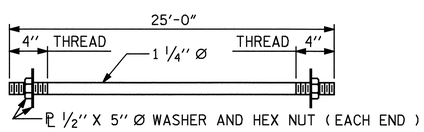

1¼" Ø TIE ROD ASSEMBLY

(4 COMPLETE ASSEMBLIES REQUIRED)

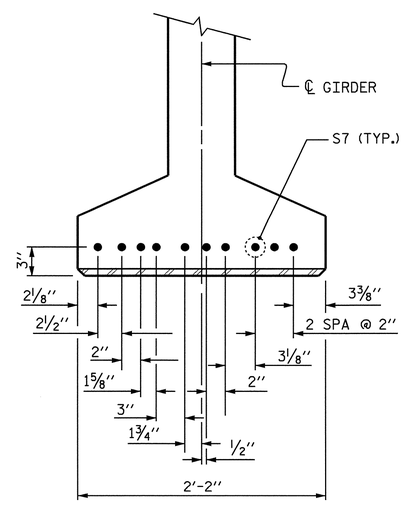

DETAIL "C"

(FOR 63" MODIFIED BULB TEES)

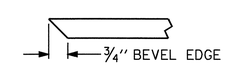

SECTION "F"

(SEE NOTES)

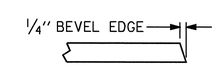

SECTION "G"

NOTES

ALL PRESTRESSING STRANDS SHALL BE 7-WIRE LOW-RELAXATION GRADE 270 STRANDS AND SHALL CONFORM TO AASHTO M203 EXCEPT FOR SAMPLING REQUIREMENTS WHICH SHALL BE IN ACCORDANCE WITH THE STANDARD SPECIFICATIONS.

TIE ROD ASSEMBLY SHALL BE AASHTO M270 GRADE 36 STRUCTURAL STEEL.

ALL REINFORCING STEEL SHALL BE GRADE 60.

EMBEDDED PLATE "B-1" SHALL BE GALVANIZED IN ACCORDANCE WITH THE STANDARD SPECIFICATIONS. BEVEL EDGES OF PLATE "B-1" TO GIVE CLOSE FIT BUT NOT TIGHT FIT TO STEEL CASTING FORM.

ANCHOR STUDS SHALL CONFORM TO AASHTO M169 GRADES 1010 THROUGH 1020 OR APPROVED EQUAL, AND SHALL MEET THE TYPE "B" REQUIREMENTS OF SUBSECTION 7.3 OF THE ANSI/AASHTO/AWS D1.5 BRIDGE WELDING CODE.

AT ENDS OF GIRDERS TO BE EMBEDDED IN CONCRETE DIAPHRAGMS OR END WALLS, PRESTRESSING STRANDS MAY EXTEND A MAXIMUM OF 2" BEYOND THE GIRDER ENDS. OTHERWISE, PRESTRESSING STRANDS SHALL BE CUT FLUSH WITH THE GIRDER ENDS.

THE TRANSFER OF LOAD FROM THE ANCHORAGES TO THE GIRDER SHALL BE DONE WHEN CONCRETE HAS REACHED A COMPRESSIVE STRENGTH OF NOT LESS THAN 6600 PSI FOR SPAN A GIRDERS AND 7000 PSI FOR SPAN B GIRDERS.

DEPENDING ON THE TYPE OF SYSTEM USED TO SUPPORT THE DECK SLAB FORMS, PRESET ANCHORS MAY BE NECESSARY IN THE PRESTRESSED CONCRETE GIRDER.

THE TOP SURFACE OF THE GIRDER, EXCLUDING THE OUTSIDE 4", SHALL BE RAKED TO A DEPTH OF ¼".

WHEN DRAPED STRANDS ARE DETAILED, THE LONGITUDINAL LOCATION OF THE HOLD DOWN DEVICES SHALL BE WITHIN 6" OF THE LOCATION SHOWN AND THE CENTER OF GRAVITY OF THE GROUP OF DRAPED STRANDS SHALL BE LOCATED WITHIN ½" OF THE THEORETICAL LOCATION SHOWN.

A 2" x 2" CHAMFER IS ALLOWED AT THE INTERSECTION OF THE WEB AND THE BOTTOM FLANGE OF THE 63" MODIFIED BULB TEE ONLY.

THE CONTRACTOR HAS THE OPTION TO PROVIDE, AT NO ADDITIONAL COST TO THE DEPARTMENT, 2 ADDITIONAL STRANDS AT THE TOP OF THE GIRDER TO FACILITATE TYING OF THE REINFORCING STEEL. THESE STRANDS SHALL BE PULLED TO A LOAD OF 4500 lbs.

FOR PRESTRESSED CONCRETE MEMBERS, SEE SPECIAL PROVISIONS.

THE UPLIFT FORCE DUE TO DRAPED STRANDS IS 21.3 KIPS FOR SPAN A AND 22.9 KIPS FOR SPAN B.

PROJECT NO. R-2719A
LENOIR COUNTY
STATION: 51+64.57 -L-

SHEET 3 OF 3

STATE OF NORTH CAROLINA
DEPARTMENT OF TRANSPORTATION
RALEIGH

STANDARD

PRESTRESSED CONCRETE GIRDER CONTINUOUS FOR LIVE LOAD DETAILS

NORTH CAROLINA PROFESSIONAL SEAL 14045 ENGINEER TIMOTHY L. COGGINS
Timothy L. Coggins 4/6/09

REVISIONS						SHEET NO.
NO.	BY:	DATE:	NO.	BY:	DATE:	S-12
1			3			TOTAL SHEETS
2			4			340

STR. #1 STD. NO. PCG11

ASSEMBLED BY : PEGGY ADKINS DATE : 1-08
CHECKED BY : B.N. BARODAWALA DATE : 3-08

DRAWN BY : ELR 11/91
CHECKED BY : GRP 11/91

REV. 10/17/00 RWW/LES
REV. 7/10/01RR LES/RDR
REV. 5/1/06 TLA/GM

06-APR-2009 14:15
h:\structures\str#1\finalplans\r2719a_sd_g1_01.dgn
tcoggins

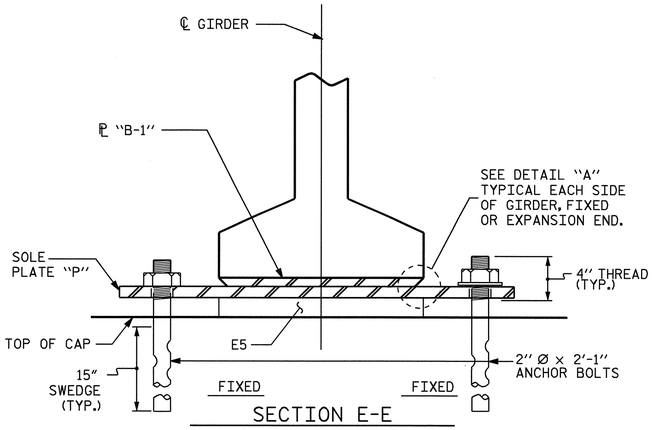

SECTION E-E

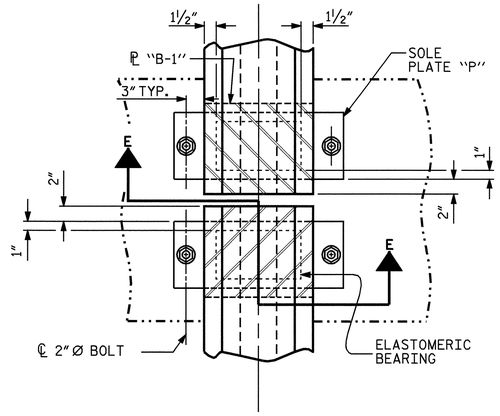

TYPICAL HALF-PLAN

(SHOWING CONTINUOUS BENT)

NOTES

AT ALL FIXED POINTS OF SUPPORT, NUTS FOR ANCHOR BOLTS ARE TO BE TIGHTENED FINGER TIGHT AND THEN BACKED OFF ½ TURN. THE THREAD OF THE NUT AND BOLT SHALL THEN BE BURRED WITH A SHARP POINTED TOOL.

STEEL SOLE PLATES, ANCHOR BOLTS, NUTS, AND WASHERS SHALL BE GALVANIZED IN ACCORDANCE WITH THE STANDARD SPECIFICATIONS.

PRIOR TO WELDING, GRIND THE GALVANIZED SURFACE OF THE PORTION OF THE EMBEDDED PLATE AND SOLE PLATE THAT ARE TO BE WELDED. AFTER WELDING, DAMAGED GALVANIZED SURFACES SHALL BE REPAIRED IN ACCORDANCE WITH THE STANDARD SPECIFICATIONS.

WHEN WELDING THE SOLE PLATE TO THE EMBEDDED PLATE IN THE GIRDER, USE TEMPERATURE INDICATING WAX PENS, OR OTHER SUITABLE MEANS, TO ENSURE THAT THE TEMPERATURE OF THE SOLE PLATE DOES NOT EXCEED 300°F. TEMPERATURES ABOVE THIS MAY DAMAGE THE ELASTOMER.

SOLE PLATE "P", BOLTS, NUTS AND WASHERS SHALL BE INCLUDED IN THE PAY ITEM FOR PRESTRESSED CONCRETE GIRDERS.

ANCHOR BOLTS SHALL MEET THE REQUIREMENTS OF ASTM A449. NUTS SHALL MEET THE REQUIREMENTS OF AASHTO M291-DH OR AASHTO M292-2H. WASHERS SHALL MEET THE REQUIREMENTS OF AASHTO M293. NO SHOP DRAWINGS ARE REQUIRED FOR ANCHOR BOLTS, NUTS AND WASHERS. SHOP INSPECTION IS REQUIRED.

ALL SURFACES OF BEARING PLATES SHALL BE SMOOTH AND STRAIGHT.

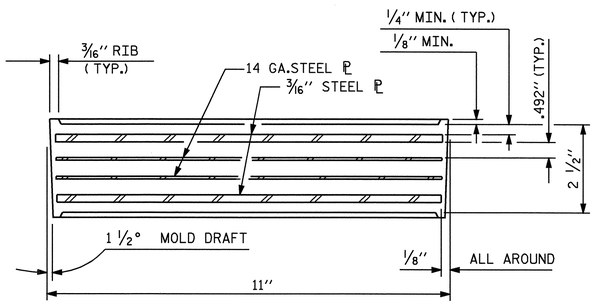

TYPICAL SECTION OF ELASTOMERIC BEARINGS

SOLE ℙ PLACEMENT DETAIL

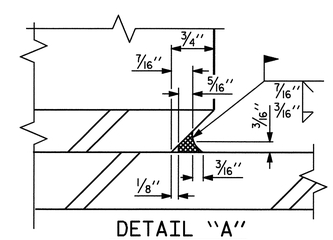

DETAIL "A"

LOAD RATINGS	
	MAX.D.L.+ L.L.
TYPE VI	211 K

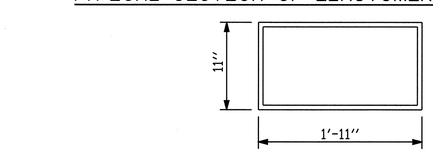

E5 (16 REQ'D)

PLAN VIEW OF ELASTOMERIC BEARING

TYPE VI

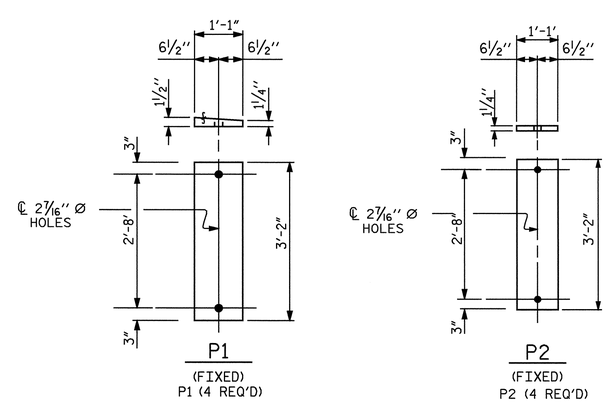

SOLE PLATE DETAILS ("P")

AT THE BENTS

PROJECT NO. R-2719A

LENOIR COUNTY

STATION: 51+64.57 -L-

STATE OF NORTH CAROLINA
DEPARTMENT OF TRANSPORTATION
RALEIGH

STANDARD ELASTOMERIC BEARING DETAILS

PRESTRESSED CONCRETE GIRDER SUPERSTRUCTURE

NORTH CAROLINA PROFESSIONAL SEAL 14045 ENGINEER TIMOTHY L. COGGINS

4/3/09

REVISIONS							
NO.	BY:	DATE:	NO.	BY:	DATE:		SHEET NO. S-13
1			3				TOTAL SHEETS 340
2			4				

ASSEMBLED BY : PEGGY ADKINS	DATE : 1-08		
CHECKED BY : B.N. BARODAWALA	DATE : 3-08		
DRAWN BY : EEM 2/97	REV. 8/16/99	RWW/LES	
CHECKED BY : VAP 2/97	REV. 10/17/00	RWW/LES	
	REV. 5/1/06	TLA/GM	

03-APR-2009 16:23
h:\structures\str#1\final plans\r2719a_sd_bg_01.dgn
tcoggins

STR. #1

STD.No.EB4

DEAD LOAD DEFLECTION TABLE FOR GIRDERS

0.6 Ø LOW RELAXATION	SPAN A											SPAN A											SPAN A										
	GIRDER 1											GIRDERS 2 & 3											GIRDER 4										
TENTH POINTS	0	.1	.2	.3	.4	.5	.6	.7	.8	.9	0	0	.1	.2	.3	.4	.5	.6	.7	.8	.9	0	0	.1	.2	.3	.4	.5	.6	.7	.8	.9	0
CAMBER (GIRDER ALONE IN PLACE) ↑	0.0	0.138	0.261	0.358	0.419	0.440	0.419	0.358	0.261	0.138	0.0	0.0	0.138	0.261	0.358	0.419	0.440	0.419	0.358	0.261	0.138	0.0	0.0	0.138	0.261	0.358	0.419	0.440	0.419	0.358	0.261	0.138	0.0
✳ DEFLECTION DUE TO SUPERIMPOSED D.L. ↓	0.0	0.050	0.095	0.130	0.153	0.160	0.153	0.130	0.095	0.050	0.0	0.0	0.049	0.093	0.128	0.150	0.157	0.150	0.128	0.093	0.049	0.0	0.0	0.051	0.097	0.133	0.156	0.163	0.156	0.133	0.097	0.051	0.0
FINAL CAMBER ↑	0	1 1/16"	2"	2 3/4"	3 3/16"	3 3/8"	3 3/16"	2 3/4"	2"	1 1/16"	0	0	1 1/16"	2"	2 3/4"	3 1/4"	3 3/8"	3 1/4"	2 3/4"	2"	1 1/16"	0	0	1 1/16"	1 15/16"	2 11/16"	3 1/8"	3 5/16"	3 1/8"	2 11/16"	1 15/16"	1 1/16"	0

✳ INCLUDES FUTURE WEARING SURFACE
ALL VALUES ARE SHOWN IN FEET (DECIMAL FORM), EXCEPT "FINAL CAMBER", WHICH IS GIVEN IN INCHES (FRACTION FORM).

DEAD LOAD DEFLECTION TABLE FOR GIRDERS

0.6 Ø LOW RELAXATION	SPAN B											SPAN B											SPAN B										
	GIRDER 1											GIRDERS 2 & 3											GIRDER 4										
TENTH POINTS	0	.1	.2	.3	.4	.5	.6	.7	.8	.9	0	0	.1	.2	.3	.4	.5	.6	.7	.8	.9	0	0	.1	.2	.3	.4	.5	.6	.7	.8	.9	0
CAMBER (GIRDER ALONE IN PLACE) ↑	0.0	0.159	0.300	0.411	0.481	0.505	0.481	0.411	0.300	0.159	0.0	0.0	0.159	0.300	0.411	0.481	0.505	0.481	0.411	0.300	0.159	0.0	0.0	0.159	0.300	0.411	0.481	0.505	0.481	0.411	0.300	0.159	0.0
✳ DEFLECTION DUE TO SUPERIMPOSED D.L. ↓	0.0	0.057	0.108	0.148	0.173	0.182	0.173	0.148	0.108	0.057	0.0	0.0	0.056	0.106	0.145	0.170	0.179	0.170	0.145	0.106	0.056	0.0	0.0	0.058	0.110	0.151	0.177	0.186	0.177	0.151	0.110	0.058	0.0
FINAL CAMBER ↑	0	1 1/4"	2 5/16"	3 1/8"	3 11/16"	3 7/8"	3 11/16"	3 1/8"	2 5/16"	1 1/4"	0	0	1 1/4"	2 5/16"	3 3/16"	3 3/4"	3 15/16"	3 3/4"	3 3/16"	2 5/16"	1 1/4"	0	0	1 3/16"	2 1/4"	3 1/8"	3 5/8"	3 13/16"	3 5/8"	3 1/8"	2 1/4"	1 3/16"	0

✳ INCLUDES FUTURE WEARING SURFACE
ALL VALUES ARE SHOWN IN FEET (DECIMAL FORM), EXCEPT "FINAL CAMBER", WHICH IS GIVEN IN INCHES (FRACTION FORM).

PROJECT NO. R-2719A
LENOIR COUNTY
STATION: 51+64.57 -L-

STATE OF NORTH CAROLINA
DEPARTMENT OF TRANSPORTATION
RALEIGH

DEAD LOAD DEFLECTIONS

NORTH CAROLINA PROFESSIONAL SEAL 14045 ENGINEER TIMOTHY D. COGGINS
Timothy D. Coggins 10/9/08

REVISIONS						SHEET NO.
NO.	BY:	DATE:	NO.	BY:	DATE:	S-14
1			3			TOTAL SHEETS
2			4			340

ASSEMBLED BY : PEGGY ADKINS DATE : 1-08
CHECKED BY : B.N. BARODAWALA DATE : 3-08

DRAWN BY : ELR 11/91
CHECKED BY : GRP 11/91

REV. 10/17/00 RWW/LES
REV. 7/10/01RR LES/RDR
REV. 5/1/06 TLA/GM

09-OCT-2008 15:34
g:\tlpprojects-r\r2719a\structures\str#1\finalplans\R2719A_sd_DL_01.dgn
taverette

STR. #1

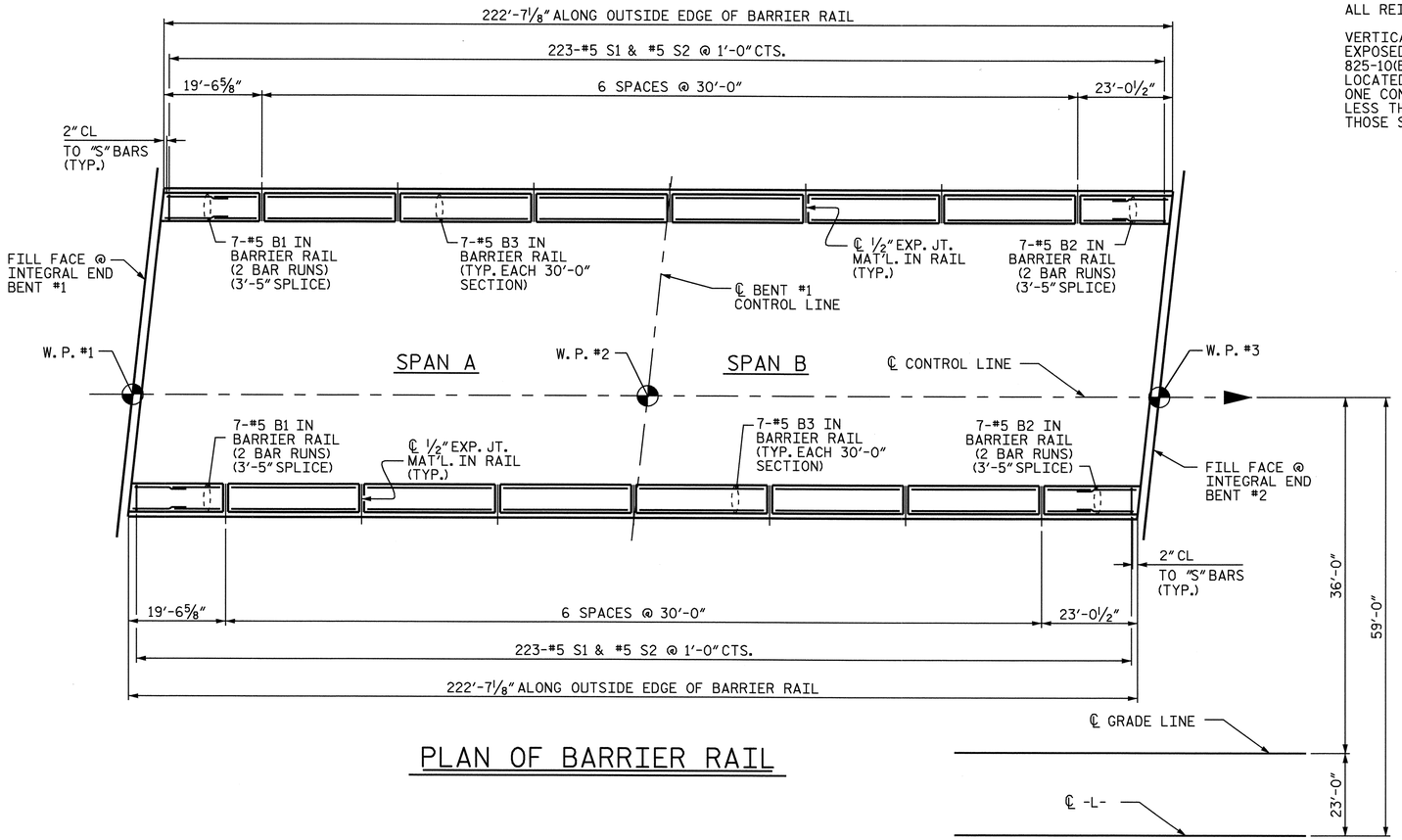

PLAN OF BARRIER RAIL

NOTES

THE BARRIER RAIL IN A CONTINUOUS UNIT SHALL NOT BE CAST UNTIL ALL SLAB CONCRETE IN THE UNIT HAS BEEN CAST AND HAS REACHED A MINIMUM COMPRESSIVE STRENGTH OF 3,000 PSI.

ALL REINFORCING STEEL IN BARRIER RAILS SHALL BE EPOXY COATED.

VERTICAL GROOVED CONTRACTION JOINTS, 1/2" IN DEPTH, SHALL BE TOOLED IN ALL EXPOSED FACES OF THE BARRIER RAIL AND IN ACCORDANCE WITH ARTICLE 825-10(B) OF THE STANDARD SPECIFICATIONS. THE CONTRACTION JOINT SHALL BE LOCATED AT EACH THIRD POINT BETWEEN BARRIER RAIL EXPANSION JOINTS. ONLY ONE CONTRACTION JOINT IS REQUIRED AT MIDPOINT OF BARRIER RAIL SEGMENTS LESS THAN 20 FEET IN LENGTH AND NO CONTRACTION JOINTS ARE REQUIRED FOR THOSE SEGMENTS LESS THAN 10 FEET IN LENGTH.

BAR TYPES

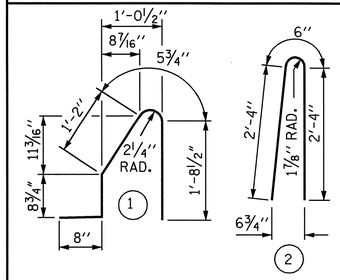

ALL BAR DIMENSIONS ARE OUT TO OUT

BILL OF MATERIAL

FOR CONCRETE BARRIER RAIL ONLY

BAR	NO.	SIZE	TYPE	LENGTH	WEIGHT
* B1	28	#5	STR	11'-4"	331
* B2	28	#5	STR	13'-1"	382
* B3	84	#5	STR	29'-7"	2592
* S1	446	#5	1	4'-9"	2210
* S2	446	#5	2	5'-2"	2403

* EPOXY COATED REINFORCING STEEL	7918	LBS.
CLASS AA CONCRETE	44.6	CU. YDS.
CONCRETE BARRIER RAIL	445.19	LIN. FT.

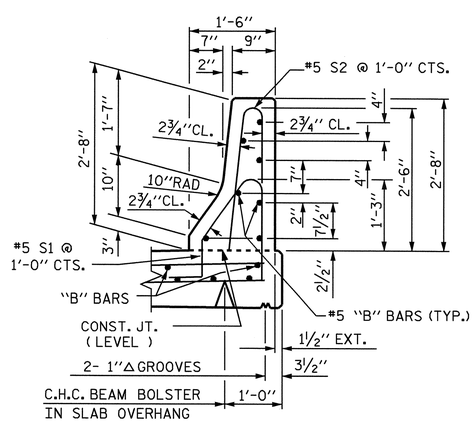

SECTION THRU RAIL

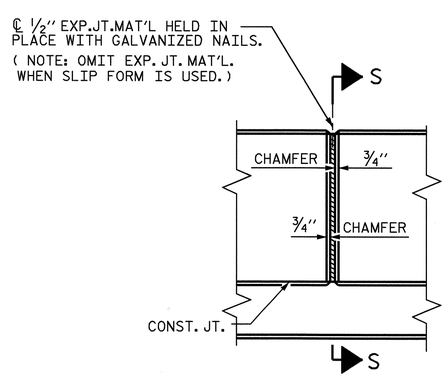

ELEVATION AT EXPANSION JOINTS

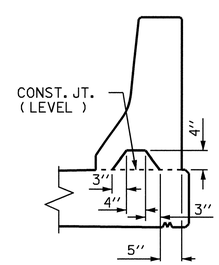

SECTION S-S

AT DAM IN OPEN JOINT
(THIS IS TO BE USED ONLY WHEN SLIP FORM IS USED)

BARRIER RAIL DETAILS

PROJECT NO. R-2719A

LENOIR COUNTY

STATION: 51+64.57 -L-

STATE OF NORTH CAROLINA
DEPARTMENT OF TRANSPORTATION
RALEIGH

STANDARD

CONCRETE BARRIER RAIL

NORTH CAROLINA PROFESSIONAL SEAL 14045 ENGINEER TIMOTHY L. COGGINS
10/10/08

ASSEMBLED BY : PEGGY ADKINS	DATE : 1-08				
CHECKED BY : B.N. BARODAWALA	DATE : 3-08				
DRAWN BY : ARB 5/87	REV. 10/17/00 RWW/LES				
CHECKED BY : SJD 9/87	REV. 5/7/03R RWW/JTE				
	REV. 5/1/06 TLA/GM				

REVISIONS

NO.	BY:	DATE:	NO.	BY:	DATE:
1			3		
2			4		

SHEET NO. S-15

TOTAL SHEETS 340

STR. #1

STD. NO. CBR1

09-OCT-2008 15:34
gi\tlpprojects-r\r2719a\structures\str#1\final plans\R2719A_sd_BR_01.dgn
taverette

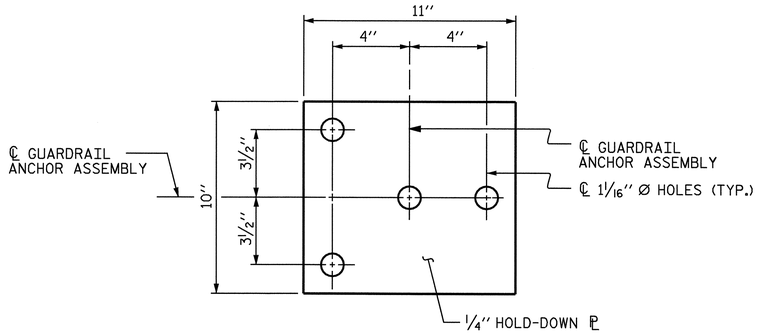

PLAN

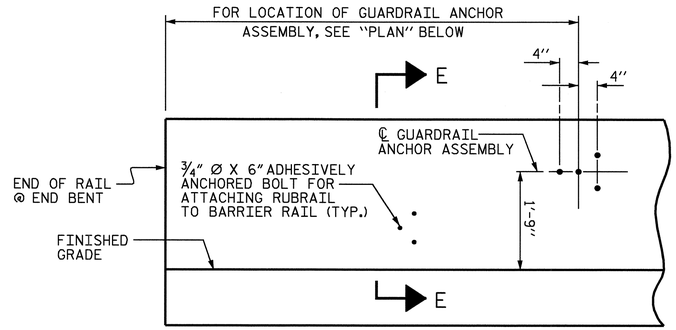

ELEVATION

FOR LOCATION OF RUBRAIL, SEE ROADWAY STD. 862.03

NOTES

THE GUARDRAIL ANCHOR ASSEMBLY SHALL CONSIST OF A 1/4" HOLD DOWN PLATE AND 4 - 7/8" Ø BOLTS WITH NUTS AND WASHERS, RUBRAIL, AND ADHESIVELY ANCHORED BOLTS.

THE HOLD-DOWN PLATE SHALL CONFORM TO AASHTO M270 GRADE 36. AFTER FABRICATION, THE HOLD-DOWN PLATE SHALL BE HOT-DIP GALVANIZED IN ACCORDANCE WITH AASHTO M111.

BOLTS SHALL CONFORM TO THE REQUIREMENTS OF ASTM A307 AND NUTS SHALL CONFORM TO THE REQUIREMENTS OF AASHTO M291. BOLTS, NUTS AND WASHERS SHALL BE GALVANIZED. (AT THE CONTRACTOR'S OPTION, STAINLESS STEEL BOLTS, NUTS AND WASHERS MAY BE USED AS AN ALTERNATE FOR THE 7/8" Ø GALVANIZED BOLTS, NUTS AND WASHERS. THEY SHALL CONFORM TO OR EXCEED THE MECHANICAL REQUIREMENTS OF ASTM A307. THE USE OF THIS ALTERNATE SHALL BE APPROVED BY THE ENGINEER.)

THE GUARDRAIL ANCHOR ASSEMBLY IS REQUIRED AT ALL POINTS WHERE APPROACH GUARDRAIL IS TO BE ATTACHED TO THE END OF BARRIER RAIL. FOR POINTS OF ATTACHMENT, SEE SKETCH.

AFTER INSTALLATION, THE EXPOSED THREAD OF THE BOLT SHALL BE BURRED WITH A SHARP POINTED TOOL.

THE COST OF THE GUARDRAIL ANCHOR ASSEMBLY SHALL BE INCLUDED IN THE UNIT CONTRACT PRICE BID FOR CONCRETE BARRIER RAIL.

THE 1 1/4" Ø HOLES SHALL BE FORMED OR DRILLED WITH A CORE BIT. IMPACT TOOLS WILL NOT BE PERMITTED. ANY CONCRETE DAMAGED BY THIS WORK SHALL BE REPAIRED TO THE SATISFACTION OF THE ENGINEER.

THE C6 X 8.2 RUBRAIL IS TO BE ADHESIVELY ANCHORED TO THE RAIL USING THREE 3/4" Ø X 6" BOLTS WITH WASHERS. LEVEL ONE FIELD TESTING IS REQUIRED, AND THE YIELD LOAD OF THE 3/4" Ø BOLT IS 12 KIPS. FOR ADHESIVELY ANCHORED ANCHOR BOLTS OR DOWELS, SEE SPECIAL PROVISIONS. SEE ROADWAY STANDARD 862.03 FOR DETAILS AND LOCATION OF THE RUBRAIL.

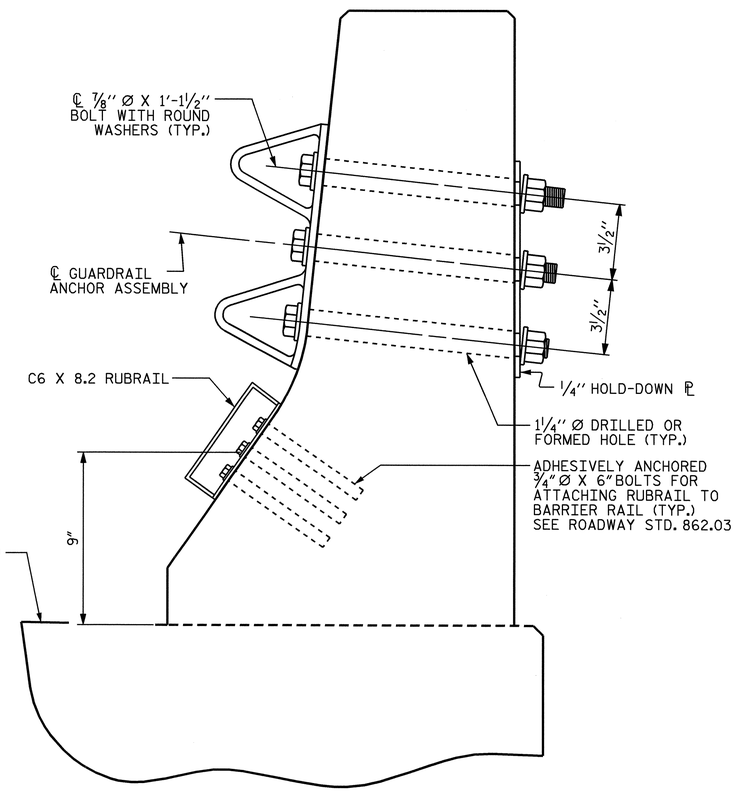

SECTION E-E

GUARDRAIL ANCHOR ASSEMBLY DETAILS

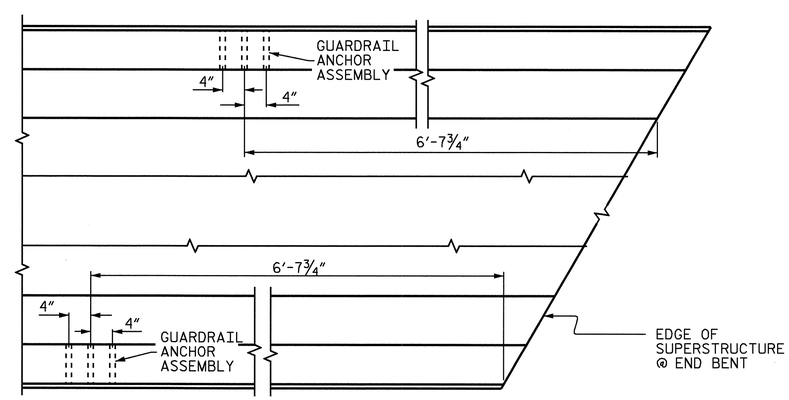

PLAN

LOCATION OF ANCHORS FOR GUARDRAIL

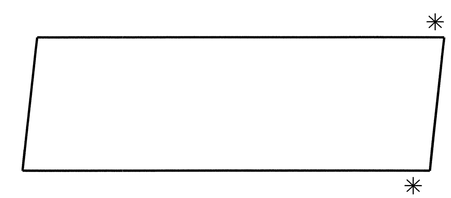

SKETCH SHOWING POINTS OF ATTACHMENTS

✳ DENOTES GUARDRAIL ANCHOR ASSEMBLY

PROJECT NO. R-2719A

LENOIR COUNTY

STATION: 51+64.57 -L-

STATE OF NORTH CAROLINA
DEPARTMENT OF TRANSPORTATION
RALEIGH

STANDARD

GUARDRAIL ANCHORAGE FOR BARRIER RAIL

NORTH CAROLINA PROFESSIONAL SEAL 14045 ENGINEER TIMOTHY L. COGGINS

Timothy L. Coggins 10/10/08

REVISIONS						SHEET NO.
NO.	BY:	DATE:	NO.	BY:	DATE:	S-16
1			3			TOTAL SHEETS
2			4			340

ASSEMBLED BY : PEGGY ADKINS DATE : 1-08	
CHECKED BY : B.N. BARODAWALA DATE : 3-08	
DRAWN BY : TLA 5/06	ADDED 5/1/06R KMM/GM
CHECKED BY : GM 5/06	

09-OCT-2008 15:34
g:\tipprojects-r\r2719a\structures\str#1\finalplans\R2719A_sd_BR_01.dgn
tavarette

STR. #1

STD. NO. GRA2

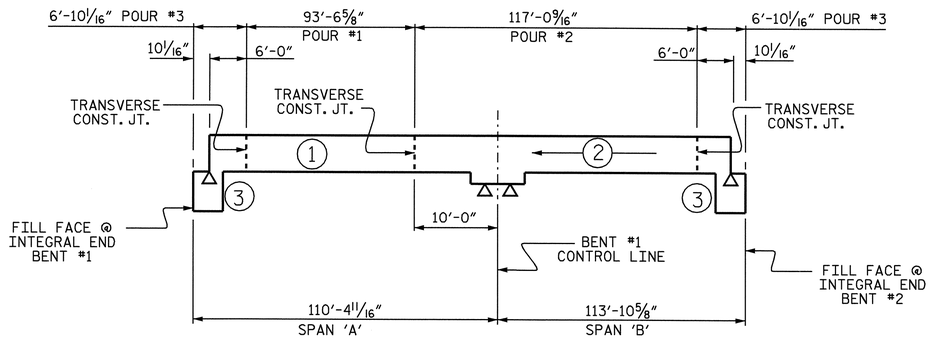

POURING SEQUENCE

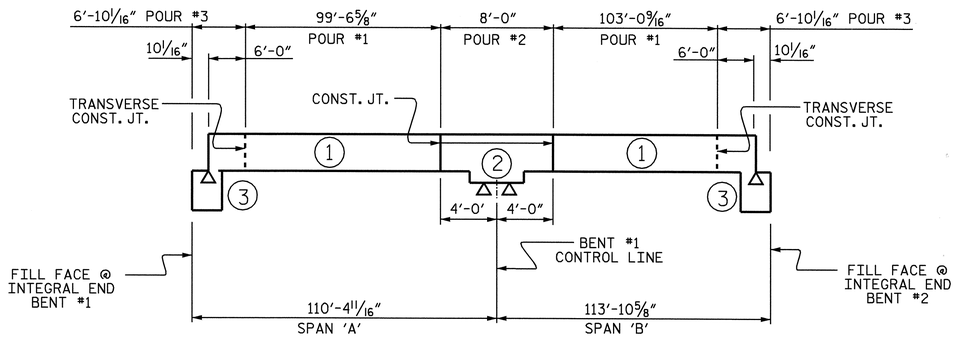

OPTIONAL POURING SEQUENCE

POUR #2 CANNOT BE STARTED UNTIL BOTH
ADJACENT POUR #1 REACH A MINIMUM OF 3000 P.S.I.

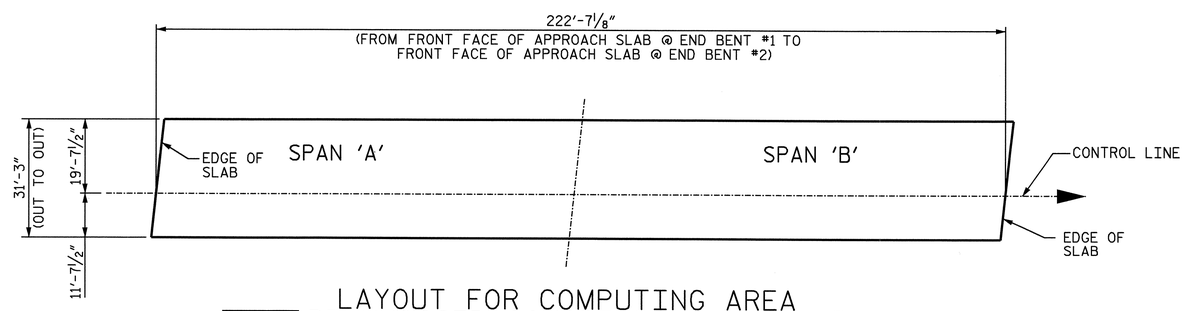

LAYOUT FOR COMPUTING AREA REINFORCED CONCRETE DECK SLAB (SQ. FT. = 6956)

BILL OF MATERIAL

BAR	NO.	SIZE	TYPE	LENGTH	WEIGHT
✱ A1	329	#5	STR	30'-11"	10609
✱A101	2	#5	STR	24'-9"	52
✱A102	2	#5	STR	18'-8"	39
✱A103	2	#5	STR	12'-6"	26
✱A104	2	#5	STR	6'-5"	13
A2	329	#5	STR	30'-11"	10609
A201	2	#5	STR	24'-9"	52
A202	2	#5	STR	18'-8"	39
A203	2	#5	STR	12'-6"	26
A204	2	#5	STR	6'-5"	13
✱ B1	82	#7	STR	23'-0"	3855
B2	108	#6	STR	57'-6"	9327
✱ B3	63	#4	STR	25'-10"	1087
✱ B4	21	#7	STR	24'-3"	1041
✱ B5	20	#7	STR	34'-0"	1390
✱ B6	21	#7	STR	60'-0"	2575
✱ B7	63	#4	STR	27'-4"	1150

BAR	NO.	SIZE	TYPE	LENGTH	WEIGHT
K1	24	#4	STR	19'-6"	313
K2	24	#4	STR	7'-1"	114
K3	6	#4	STR	4'-1"	16
K4	6	#4	STR	5'-6"	22
K5	8	#4	STR	2'-8"	14
K6	16	#4	STR	6'-0"	64
K7	4	#4	STR	5'-2"	14
K8	96	#5	STR	7'-1"	709
K9	24	#5	6	6'-10"	171
K10	6	#4	STR	4'-1"	16
K11	6	#4	STR	4'-4"	17
K12	24	#4	STR	7'-1"	114
K13	6	#4	STR	24'-0"	96
S1	30	#4	2	14'-2"	284
✱ S2	38	#4	7	11'-8"	296
✱ S3	28	#4	7	11'-0"	206
S4	6	#4	3	9'-3"	37
S5	93	#4	5	2'-9"	171
S6	72	#4	4	9'-10"	473
S7	8	#4	2	12'-2"	65
U1	15	#4	1	16'-8"	167
U2	12	#4	2	16'-0"	128
V1	24	#4	STR	5'-2"	83

REINFORCING STEEL 23154 LBS
✱ EPOXY COATED REINF. STEEL 22339 LBS

BAR TYPES

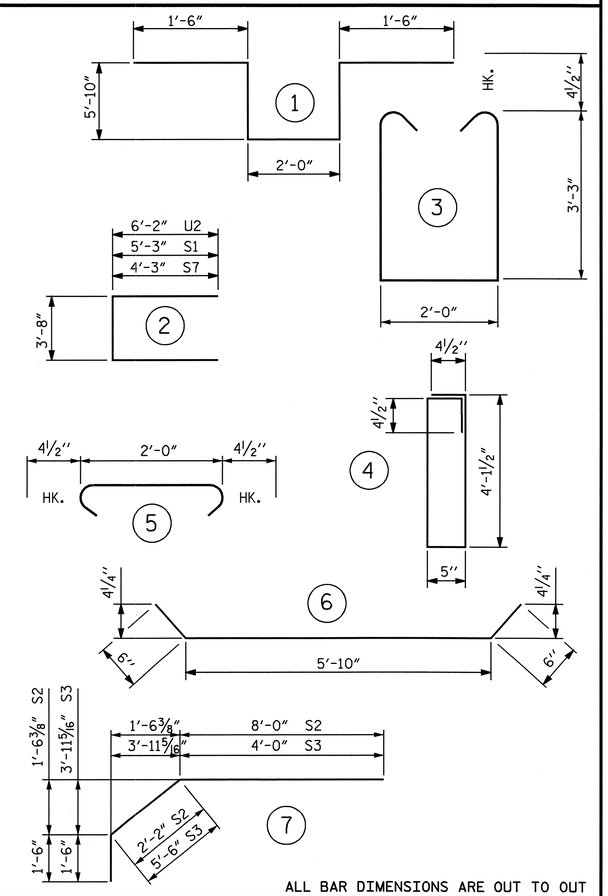

ALL BAR DIMENSIONS ARE OUT TO OUT

SUPERSTRUCTURE BILL OF MATERIAL

	CLASS AA CONCRETE	REINFORCING STEEL	EPOXY COATED REINFORCING STEEL
	(CU. YDS.)	(LBS.)	(LBS.)
POUR 1	127.9	23154	22339
POUR 2	153.6		
POUR 3	109.0		
TOTALS✱✱	390.5	23154	22339

✱✱QUANTITIES FOR BARRIER RAIL ARE NOT INCLUDED

SUPERSTRUCTURE REINFORCING STEEL LENGTHS ARE BASED ON THE FOLLOWING MINIMUM SPLICE LENGTHS

BAR SIZE	SUPERSTRUCTURE EXCEPT APPROACH SLABS, PARAPET, AND BARRIER RAIL		APPROACH SLABS		PARAPET AND BARRIER RAIL
	EPOXY COATED	UNCOATED	EPOXY COATED	UNCOATED	
#4	2'-0"	1'-9"	2'-0"	1'-9"	2'-9"
#5	2'-6"	2'-2"	2'-6"	2'-2"	3'-5"
#6	3'-0"	2'-7"	3'-10"	2'-7"	4'-4"
#7	5'-3"	3'-6"			
#8	6'-10"	4'-7"			

GROOVING BRIDGE FLOORS

APPROACH SLABS	1233	SQ.FT.
BRIDGE DECK	5557	SQ.FT.
TOTAL	6790	SQ.FT.

PROJECT NO. R-2719A
LENOIR COUNTY
STATION: 51+64.57 -L-

NORTH CAROLINA PROFESSIONAL SEAL 14045 ENGINEER TIMOTHY W. COGGINS
10/10/08

STATE OF NORTH CAROLINA
DEPARTMENT OF TRANSPORTATION
RALEIGH

STANDARD
SUPERSTRUCTURE BILL OF MATERIAL

REVISIONS						SHEET NO.
NO.	BY:	DATE:	NO.	BY:	DATE:	S-17
1			3			TOTAL SHEETS
2			4			340

ASSEMBLED BY : PEGGY ADKINS DATE : 1-08
CHECKED BY : B.N. BARODAWALA DATE : 3-08

DRAWN BY : JMB 5/87
CHECKED BY : SJD 9/87

REV. 6/1/94 EEM/GRP
REV. 8/16/99 RWW/LES
REV. 5/1/06 TLA/GM

09-OCT-2008 15:34
g:\tipprojects-r\r2719a\structures\str#1\finalplans\R2719A_sd_BM_01.dgn
tayerette

STR. #1 STD. NO. BOM2

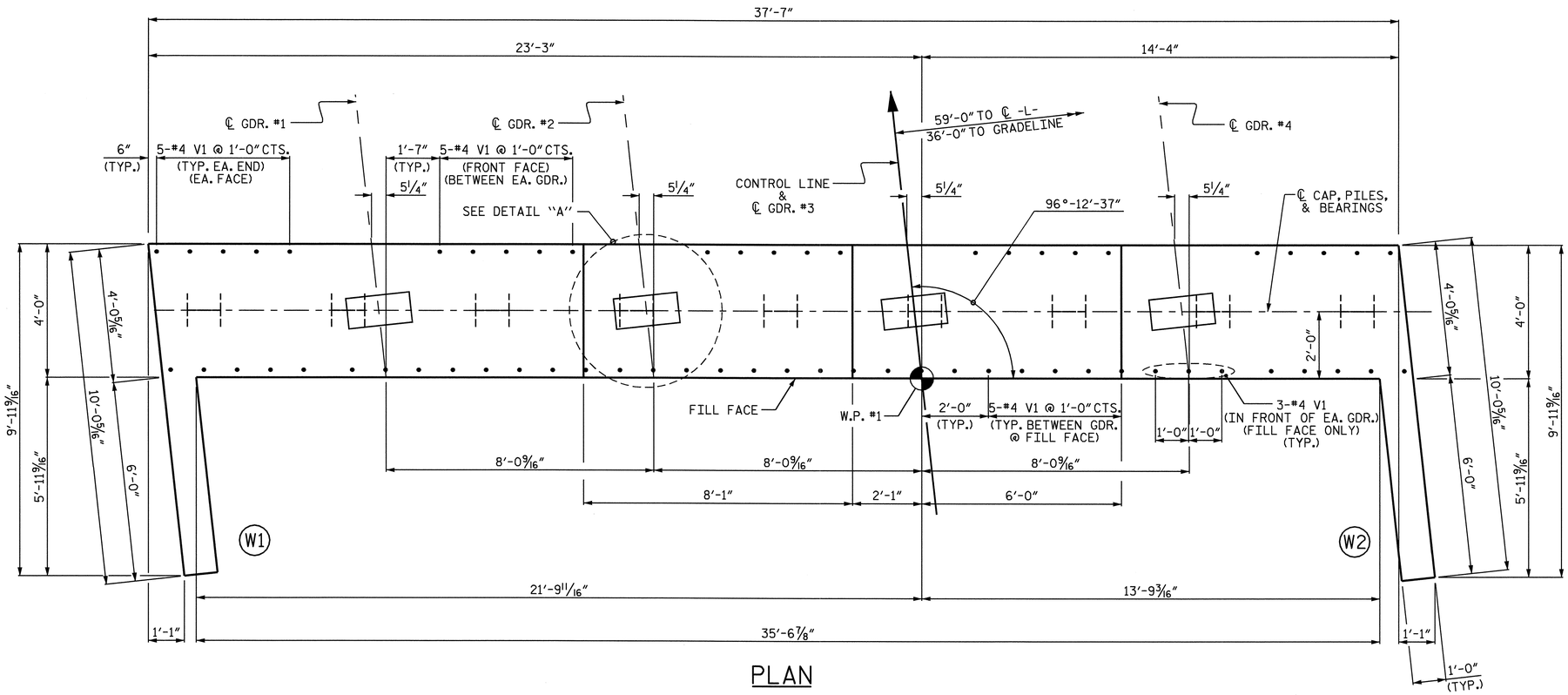

PLAN

NOTES

STIRRUPS IN CAP MAY BE SHIFTED AS NECESSARY TO CLEAR #4 V1 BARS.

THE CONTRACTOR SHALL PROVIDE FOR INSTALLATION OF THE 4" DIAMETER DRAIN PIPE THROUGH THE WING WALL AS REQUIRED FOR REINFORCED BRIDGE APPROACH FILLS, SEE THE ROADWAY PLANS. REINFORCING STEEL IN THE WING WALL MAY BE SHIFTED AS NECESSARY TO CLEAR THE DRAIN PIPE.

SEE SUPERSTRUCTURE SHEETS FOR UPPER PART OF INTEGRAL END BENT DETAIL.

THE CONTRACTOR'S ATTENTION IS CALLED TO THE FACT THAT UPPER PART OF WINGS ARE TO BE POURED WITH THE SUPERSTRUCTURE.

THE TOP SURFACE OF POUR #1 OF THE END BENT CAP AND WINGS, EXCLUDING THE OUTSIDE 4" AND THE BEARING AREA, SHALL BE RAKED TO A DEPTH OF ¼".

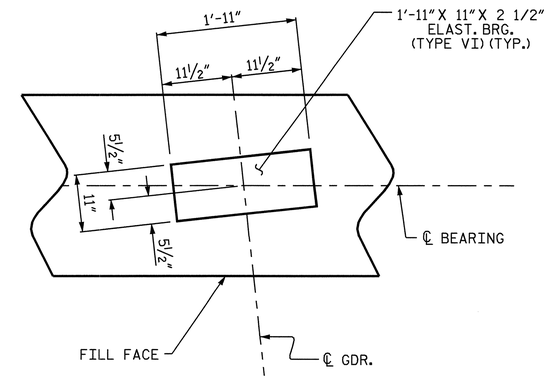

DETAIL "A"
(TYP. EA. GDR.)

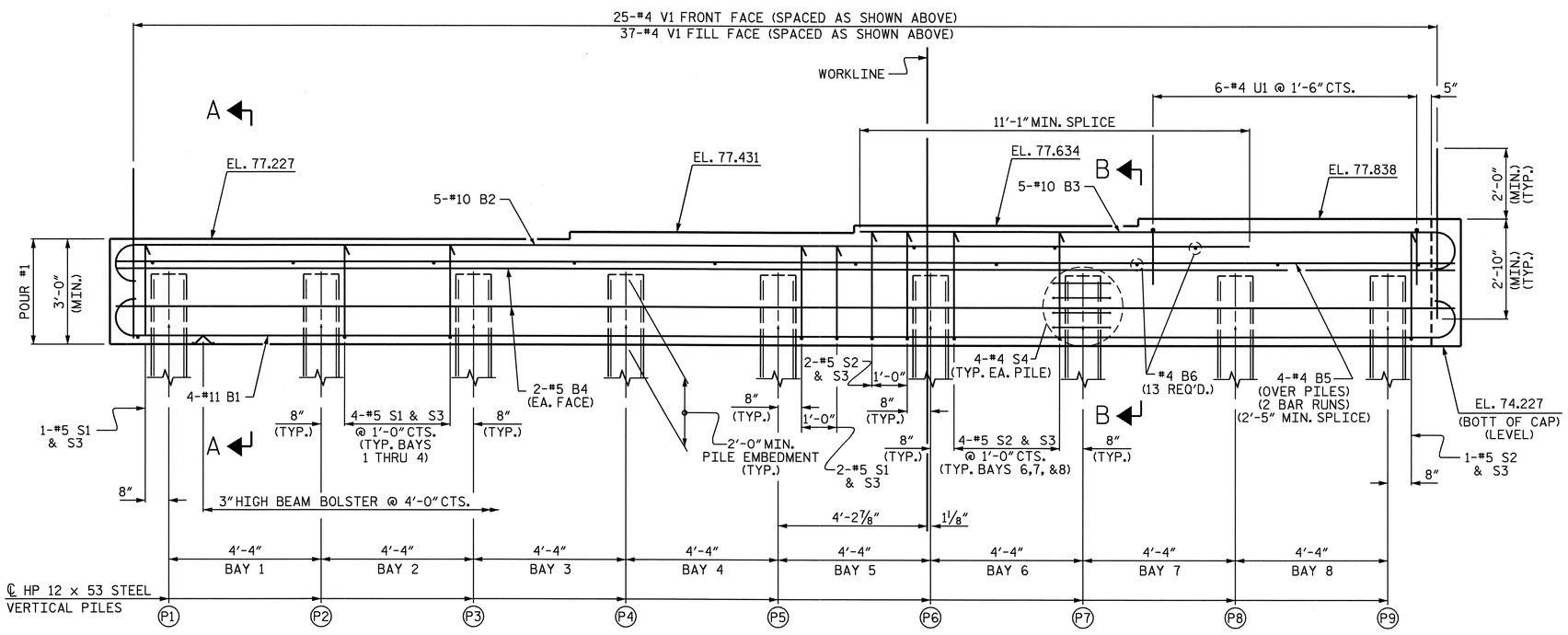

ELEVATION

PROJECT NO. R-2719A
LENOIR COUNTY
STATION: 51+64.57 -L-

SHEET 1 OF 3

STATE OF NORTH CAROLINA
DEPARTMENT OF TRANSPORTATION
RALEIGH

SUBSTRUCTURE
INTEGRAL
END BENT #1

NORTH CAROLINA PROFESSIONAL SEAL 14045 ENGINEER TIMOTHY R. COGGINS
2/25/09

REVISIONS						SHEET NO.
NO.	BY:	DATE:	NO.	BY:	DATE:	S-18
1			3			TOTAL SHEETS
2			4			340

DRAWN BY : J.B. WILSON DATE : 4/2008
CHECKED BY : B.N. BARODAWALA DATE : 8/04/08

25-FEB-2009 09:58
h:\structures\str*1\finalplans\R-2719A_sd_e*_01.dgn
tcoggins

STR. #1

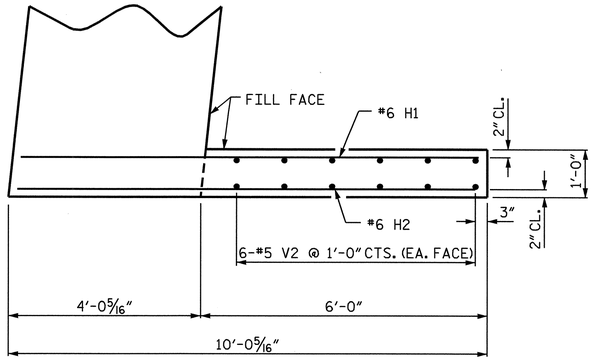

PLAN OF WING W1

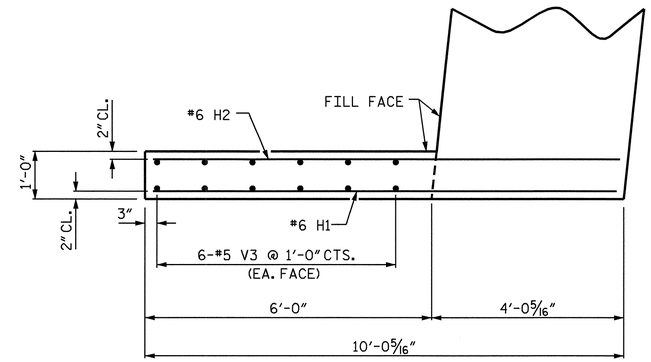

PLAN OF WING W2

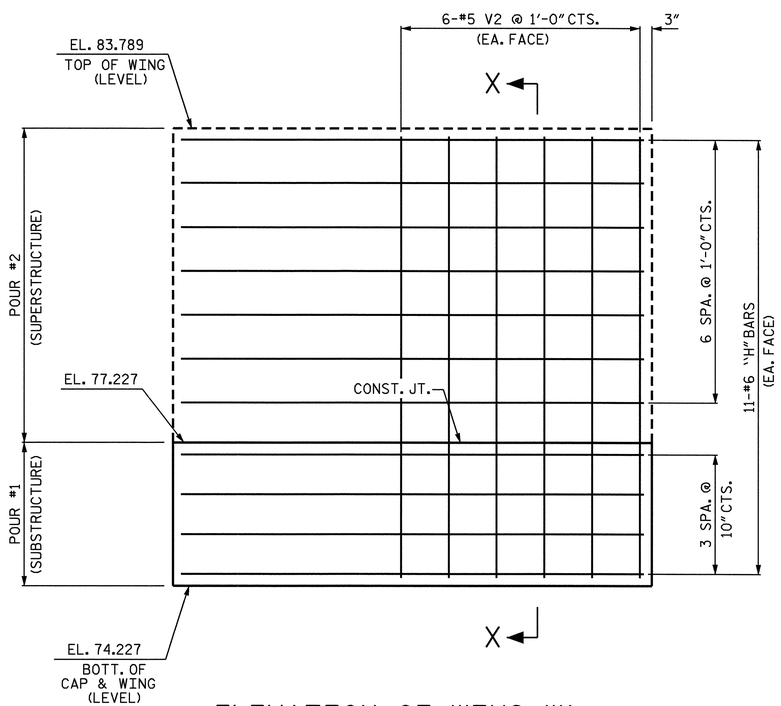

ELEVATION OF WING W1

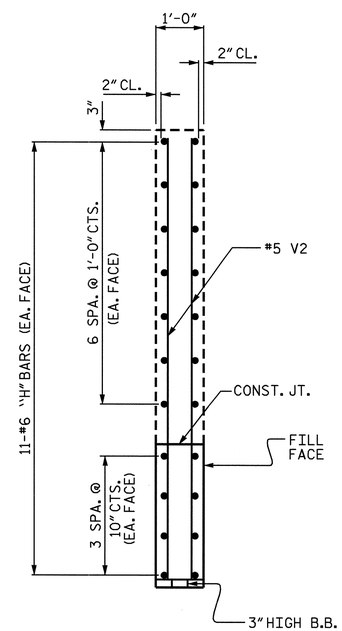

SECTION X-X

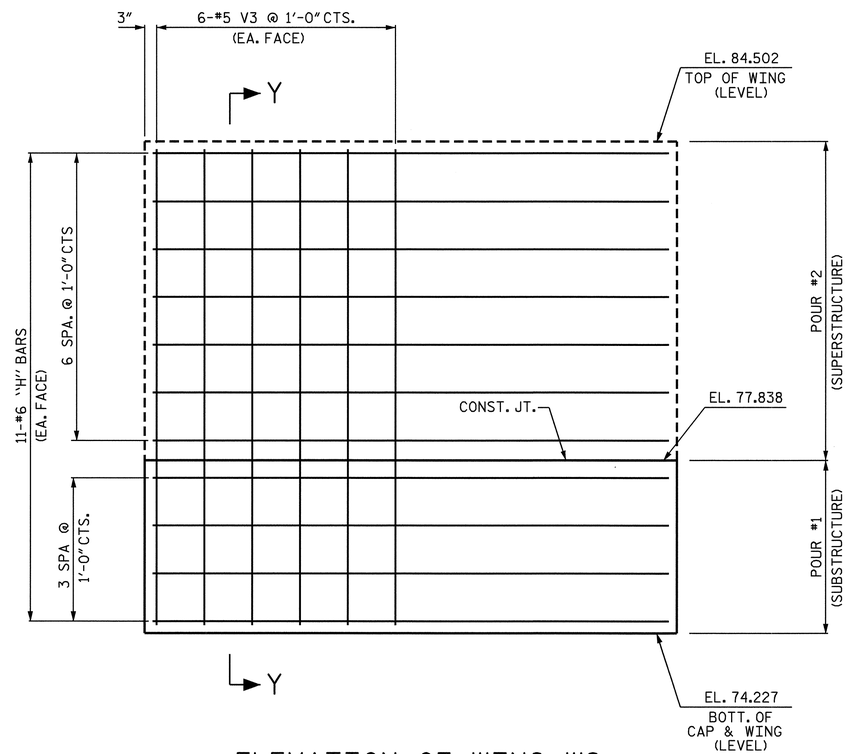

ELEVATION OF WING W2

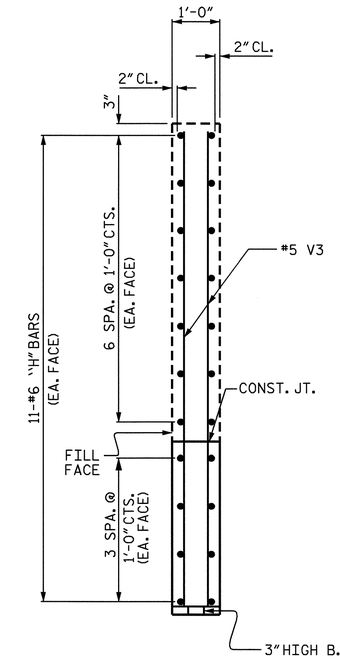

SECTION Y-Y

PROJECT NO. R-2719A

LENOIR COUNTY

STATION: 51+64.57 -L-

SHEET 2 OF 3

STATE OF NORTH CAROLINA
DEPARTMENT OF TRANSPORTATION
RALEIGH

SUBSTRUCTURE

INTEGRAL
END BENT #1

NORTH CAROLINA PROFESSIONAL SEAL 14045 ENGINEER TIMOTHY L. COGGINS

Timothy L. Coggins 2/25/09

REVISIONS						SHEET NO.
NO.	BY:	DATE:	NO.	BY:	DATE:	S-19
1			3			TOTAL SHEETS
2			4			340

DRAWN BY : J.B. WILSON DATE : 5/2008
CHECKED BY : B.N. BARODAWALA DATE : 8/2008

25-FEB-2009 09:58
h:\structures\str*1\final plans\R-2719A_sd_e*_01.dgn
tcoggins

STR. #1

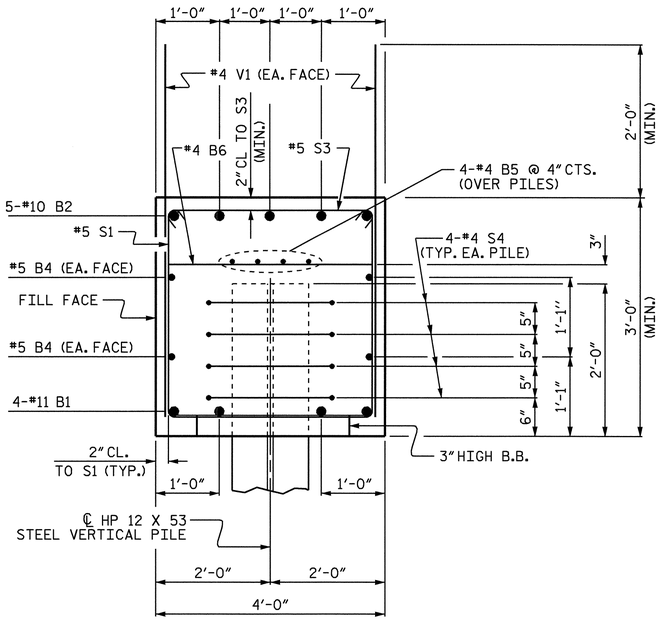

SECTION A-A

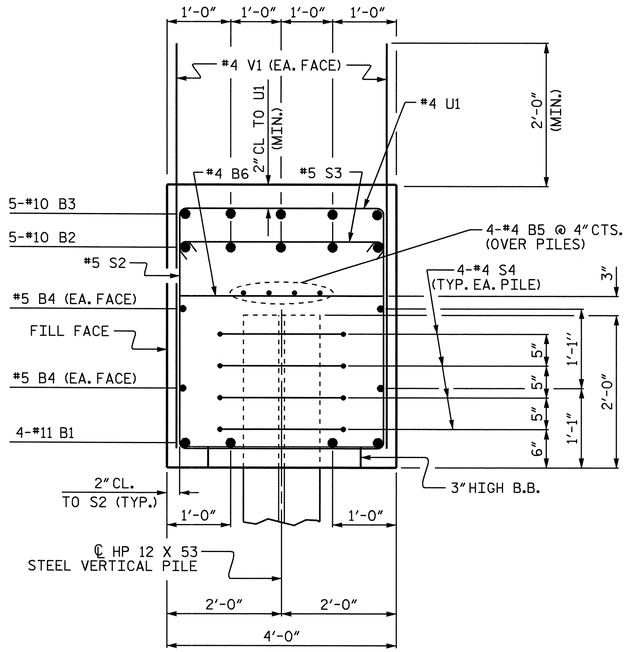

SECTION B-B

BAR TYPES

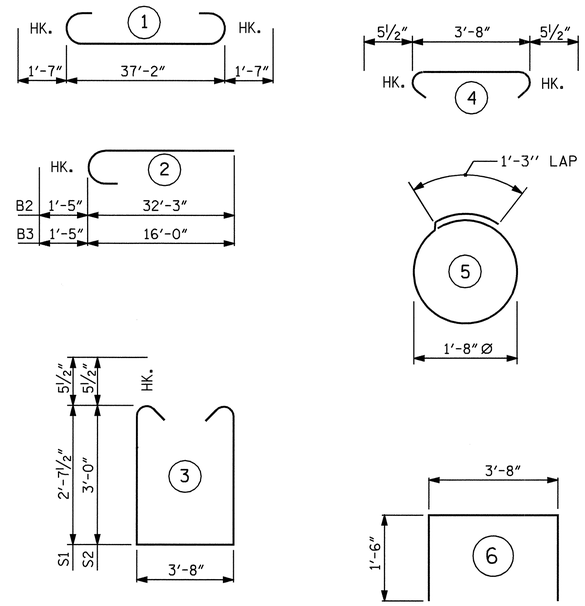

ALL BAR DIMENSIONS ARE OUT TO OUT.

BILL OF MATERIAL

END BENT #1

BAR	NO.	SIZE	TYPE	LENGTH	WEIGHT
B1	4	#11	1	40'-4"	857
B2	5	#10	2	33'-8"	724
B3	5	#10	2	17'-5"	375
B4	4	#5	STR	37'-3"	155
B5	8	#4	STR	19'-10"	106
B6	13	#4	STR	3'-8"	32
H1	22	#6	STR	9'-7"	317
H2	22	#6	STR	9'-8"	319
S1	19	#5	3	9'-10"	195
S2	15	#5	3	10'-7"	166
S3	34	#5	4	4'-7"	163
S4	36	#4	5	6'-6"	156
U1	6	#4	6	6'-8"	27
V1	62	#4	STR	4'-10"	200
V2	12	#5	STR	9'-2"	115
V3	12	#5	STR	9'-10"	123
REINFORCING STEEL				=	4030 LBS

CLASS A CONCRETE

POUR #1 (CAP & LOWER PART OF WINGS) C.Y. 19.7

TOTAL C.Y. 19.7

HP 12 x 53 STEEL PILES
No. 9 720 LIN FT.

PILE REDRIVES EA. 5

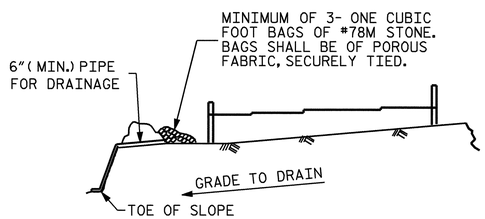

BAGGED STONE AND PIPE SHALL BE PLACED IMMEDIATELY AFTER COMPLETION OF END BENT EXCAVATION. PIPE MAY BE EITHER CONCRETE, CORRUGATED STEEL, CORRUGATED ALUMINUM ALLOY, OR CORRUGATED PLASTIC. PERFORATED PIPE WILL NOT BE ALLOWED.

BAGGED STONE SHALL REMAIN IN PLACE UNTIL THE ENGINEER DIRECTS THAT IT BE REMOVED. THE CONTRACTOR SHALL REMOVE AND DISPOSE OF SILT ACCUMULATIONS AT BAGGED STONE WHEN SO DIRECTED BY THE ENGINEER. BAGS SHALL BE REMOVED AND REPLACED WHENEVER THE ENGINEER DETERMINES THAT THEY HAVE DETERIORATED AND LOST THEIR EFFECTIVENESS.

NO SEPARATE PAYMENT WILL BE MADE FOR THIS WORK AND THE ENTIRE COST OF THIS WORK SHALL BE INCLUDED IN THE UNIT CONTRACT PRICE BID FOR THE SEVERAL PAY ITEMS.

TEMPORARY DRAINAGE AT END BENT

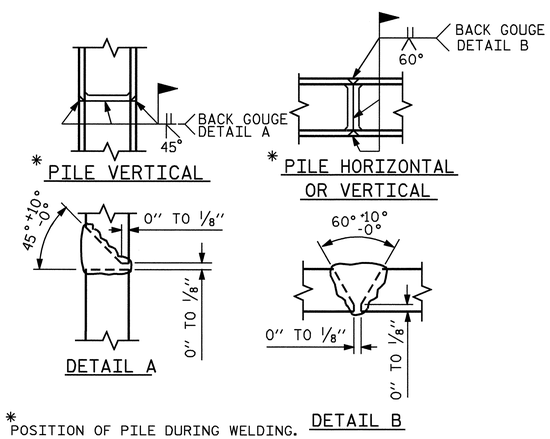

* POSITION OF PILE DURING WELDING.

PILE SPLICE DETAILS

PROJECT NO. R-2719A
LENOIR COUNTY
STATION: 51+64.57 -L-

SHEET 3 OF 3

STATE OF NORTH CAROLINA
DEPARTMENT OF TRANSPORTATION
RALEIGH

SUBSTRUCTURE
INTEGRAL END BENT #1

NORTH CAROLINA PROFESSIONAL SEAL 14045 ENGINEER TIMOTHY L. COGGINS
Timothy 2/25/09

REVISIONS						SHEET NO.
NO.	BY:	DATE:	NO.	BY:	DATE:	S-20
1			3			TOTAL SHEETS
2			4			340

DRAWN BY : J.B. WILSON DATE : 5/2008
CHECKED BY : B.N. BARODAWALA DATE : 8/2008

25-FEB-2009 09:58
h:\structures\str#1\finalplans\R-2719A_sd_e#_01.dgn
tcoggins

NOTES

STIRRUPS IN CAP MAY BE SHIFTED AS NECESSARY TO CLEAR ANCHOR BOLTS.

HOOKS ON "V" BARS MAY BE TURNED AS NECESSARY FOR PLACING REINFORCING STEEL.

PILE SPLICE SHALL BE IN ACCORDANCE WITH THE STANDARD SPECIFICATIONS AND AWS D1.1.

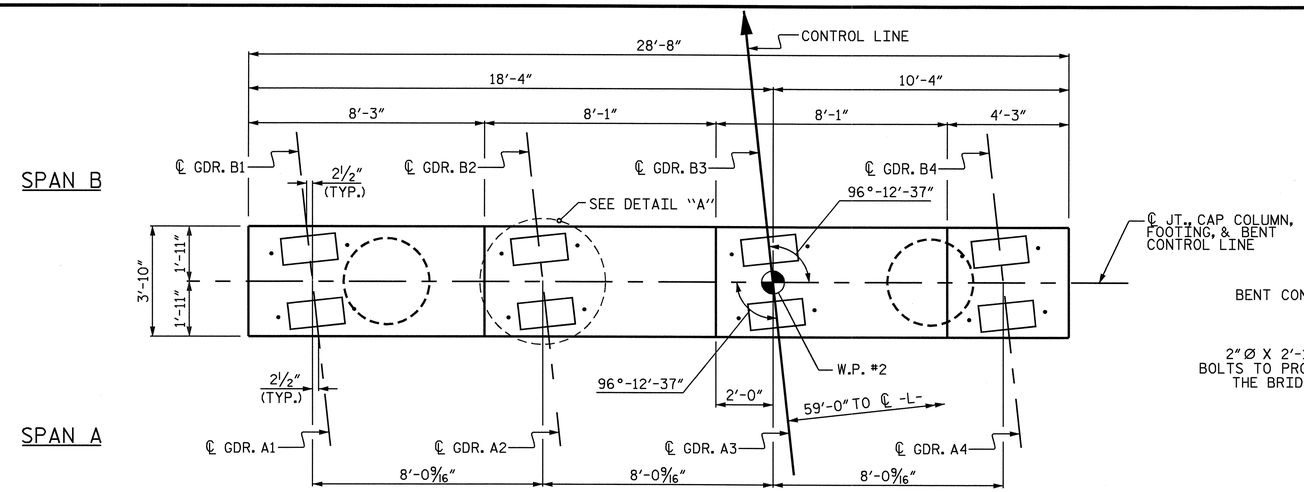

PLAN

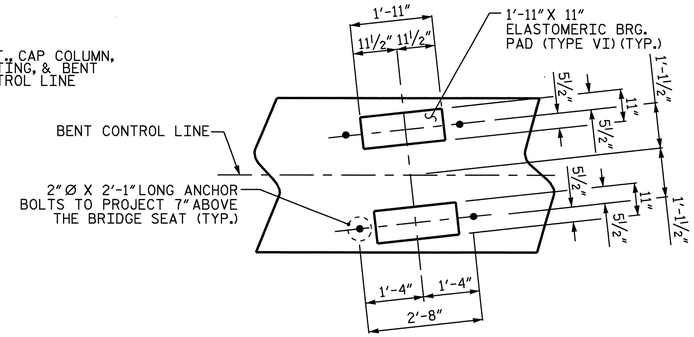

DETAIL A
(TYP. EA. GDR.)

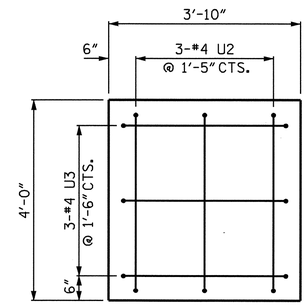

END VIEW
(LEFT SIDE)

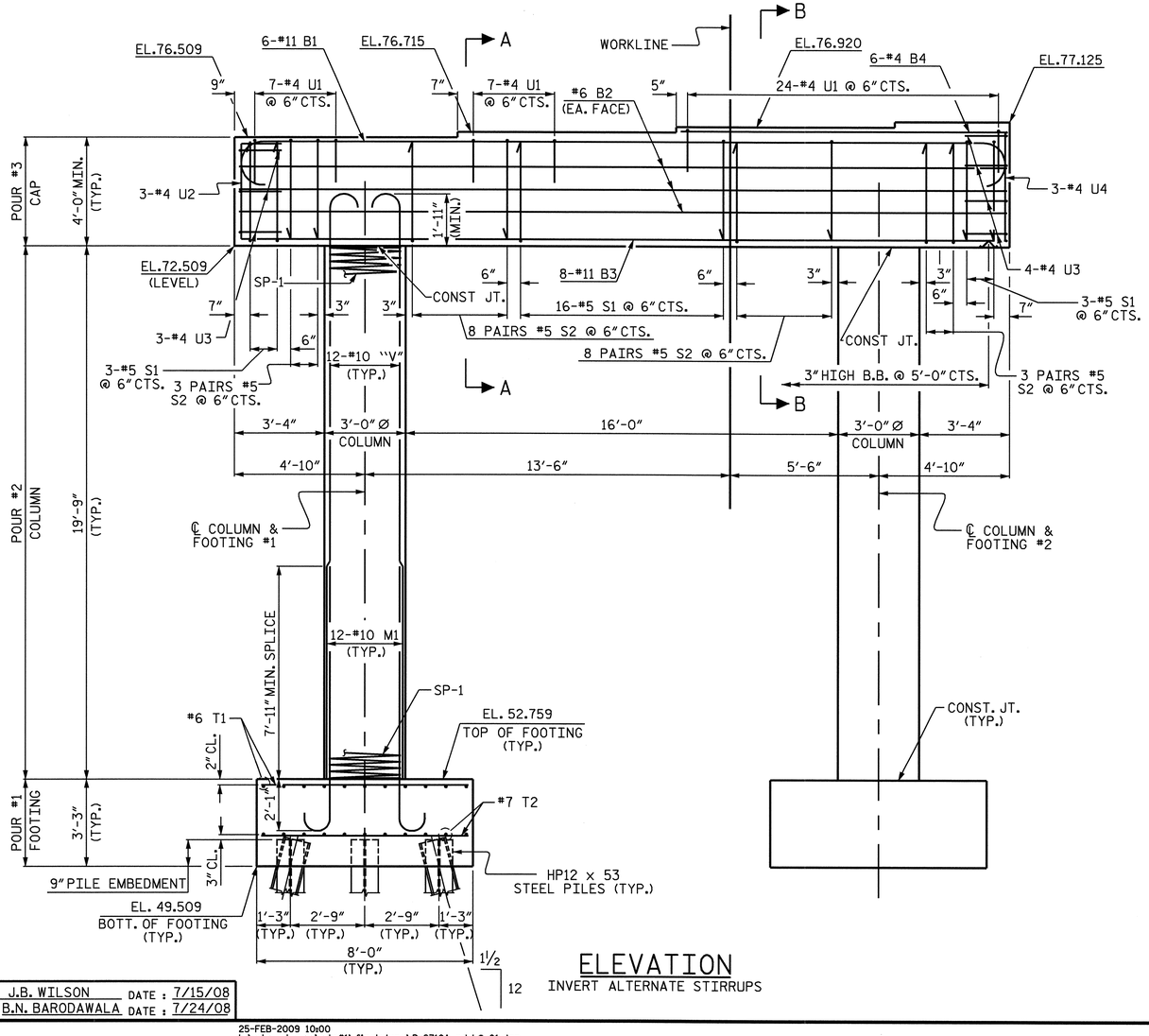

ELEVATION
INVERT ALTERNATE STIRRUPS

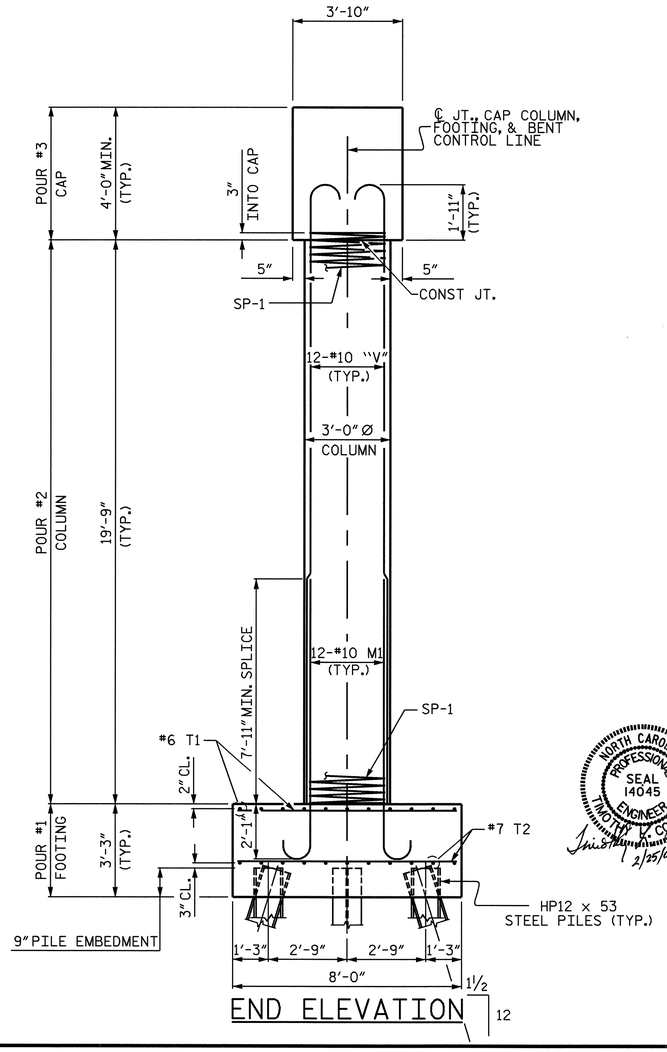

END ELEVATION

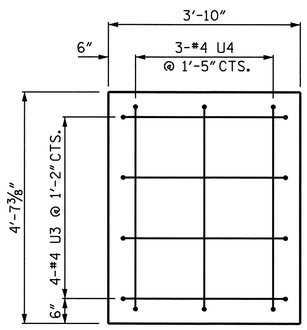

END VIEW
(RIGHT SIDE)

PROJECT NO. R-2719A
LENOIR COUNTY
STATION: 51+64.57 -L-

SHEET 1 OF 2

STATE OF NORTH CAROLINA
DEPARTMENT OF TRANSPORTATION
RALEIGH

SUBSTRUCTURE
BENT #1

NORTH CAROLINA PROFESSIONAL SEAL 14045 ENGINEER TIMOTHY K. COGGINS 2/25/09

REVISIONS						SHEET NO.
NO.	BY:	DATE:	NO.	BY:	DATE:	S-21
1			3			TOTAL SHEETS
2			4			340

DRAWN BY : J.B. WILSON DATE : 7/15/08
CHECKED BY : B.N. BARODAWALA DATE : 7/24/08

25-FEB-2009 10:00
h:\structures\str#1\finalplans\R-2719A_sd_b#_01.dgn
tcoggins

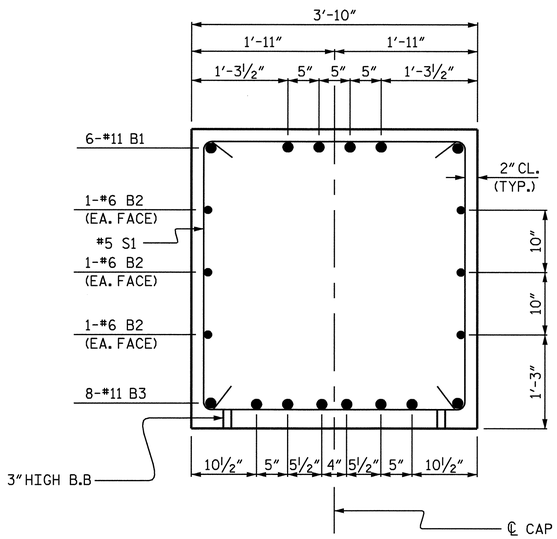

SECTION A-A

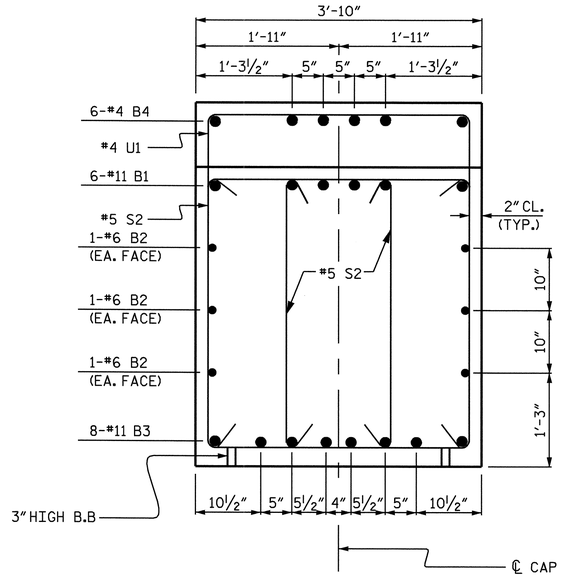

SECTION B-B

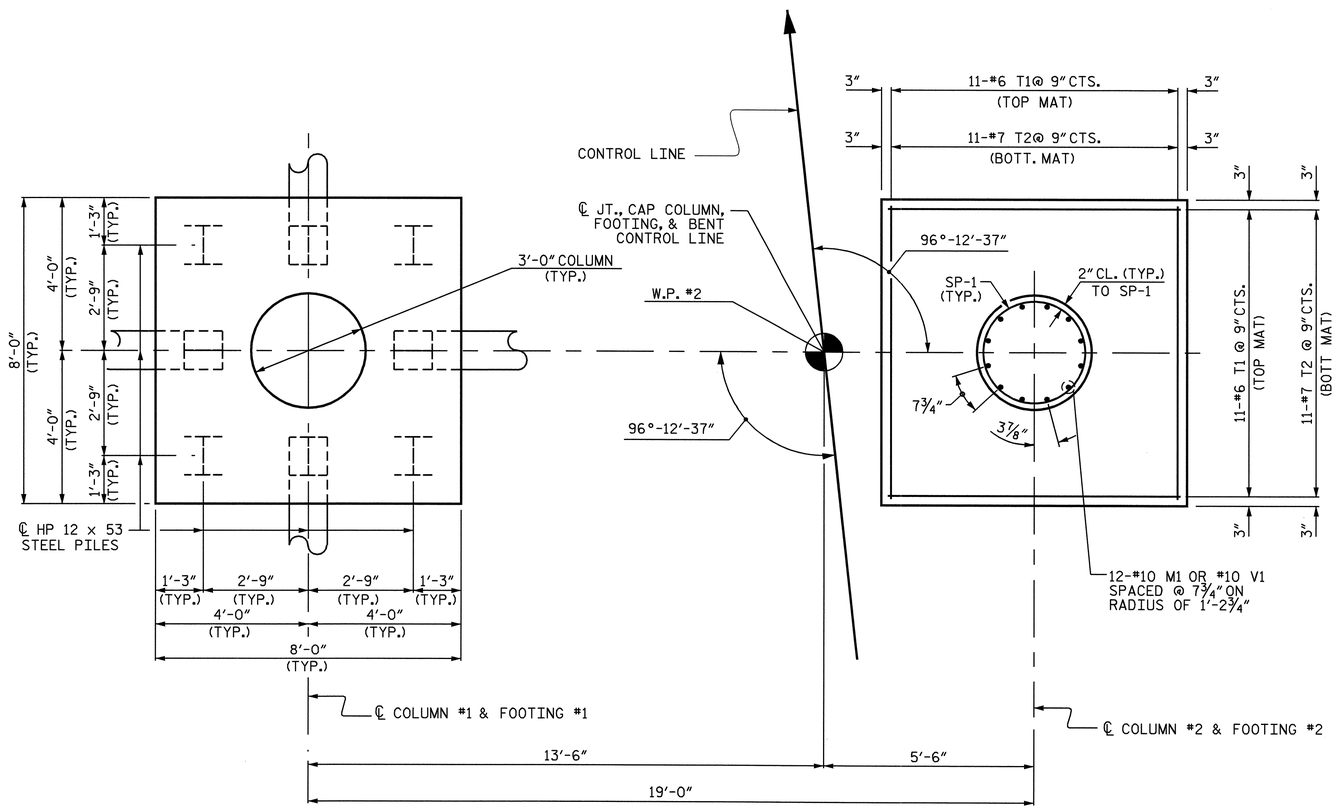

PLAN OF FOOTINGS

(ALL FOOTING, COLUMN DIMENSIONS AND REINFORCING STEEL ARE TYPICAL)

BAR TYPES

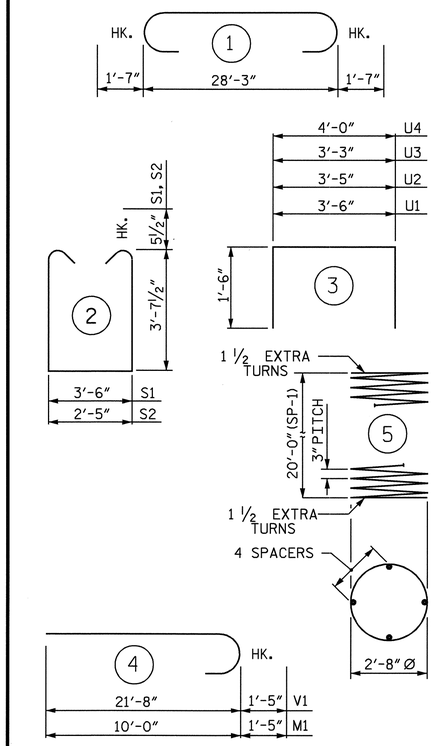

ALL BAR DIMENSIONS ARE OUT TO OUT.

BILL OF MATERIAL

BENT #1

BAR	NO.	SIZE	TYPE	LENGTH	WEIGHT
B1	6	11	1	31'-5"	1002
B2	6	6	STR	28'-4"	255
B3	8	11	STR	28'-4"	1204
B4	6	4	STR	12'-0"	48
S1	22	5	2	11'-8"	268
S2	44	5	2	10'-7"	486
U1	38	4	3	6'-6"	165
U2	3	4	3	6'-5"	13
U3	7	4	3	6'-3"	29
U4	3	4	3	7'-0"	14
M1	24	10	4	11'-5"	1179
V1	24	10	4	23'-1"	2384
T1	44	6	STR	7'-8"	507
T2	44	7	STR	7'-8"	690
REINFORCING STEEL					8244 LBS.
SP-1	2	✳	5	684'-10"	915 LBS.

CLASS A CONCRETE BREAKDOWN

POUR #1 FOOTINGS	CU. YD.	15.4
POUR #2 COLUMNS	CU. YD.	10.3
POUR #3 CAP	CU. YD.	17.4
TOTAL CLASS A CONCRETE	CU. YD.	43.1

HP 12 x 53 STEEL PILES
No. 16 LIN. FT. 800

PILE REDRIVES EA. 9

FOUNDATION EXCAVATION LUMP SUM

✳ THE SP-1 SPIRAL REINFORCING STEEL SHALL BE W20 OR D-20 COLD DRAWN WIRE OR #4 PLAIN OR DEFORMED BAR.

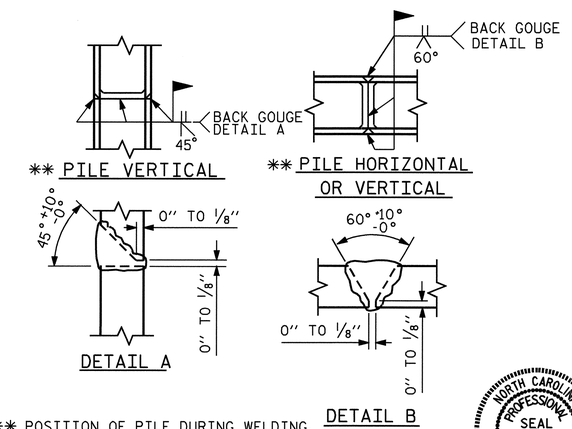

** POSITION OF PILE DURING WELDING.

PILE SPLICE DETAILS

NORTH CAROLINA PROFESSIONAL SEAL 14045 ENGINEER TIMOTHY L. COGGINS
2/25/09

PROJECT NO. R-2719A
LENOIR COUNTY
STATION: 51+64.57 -L-

SHEET 2 OF 2

STATE OF NORTH CAROLINA
DEPARTMENT OF TRANSPORTATION
RALEIGH

SUBSTRUCTURE
BENT #1

REVISIONS							SHEET NO.
NO.	BY:	DATE:	NO.	BY:	DATE:		S-22
1			3				TOTAL SHEETS
2			4				340

DRAWN BY : J.B. WILSON DATE : 7/16/08
CHECKED BY : B.N. BARODWALA DATE : 7/24/08

25-FEB-2009 10:00
h:\structures\str-#1\final plans\R-2719A_sd_b*_01.dgn
tcoggins

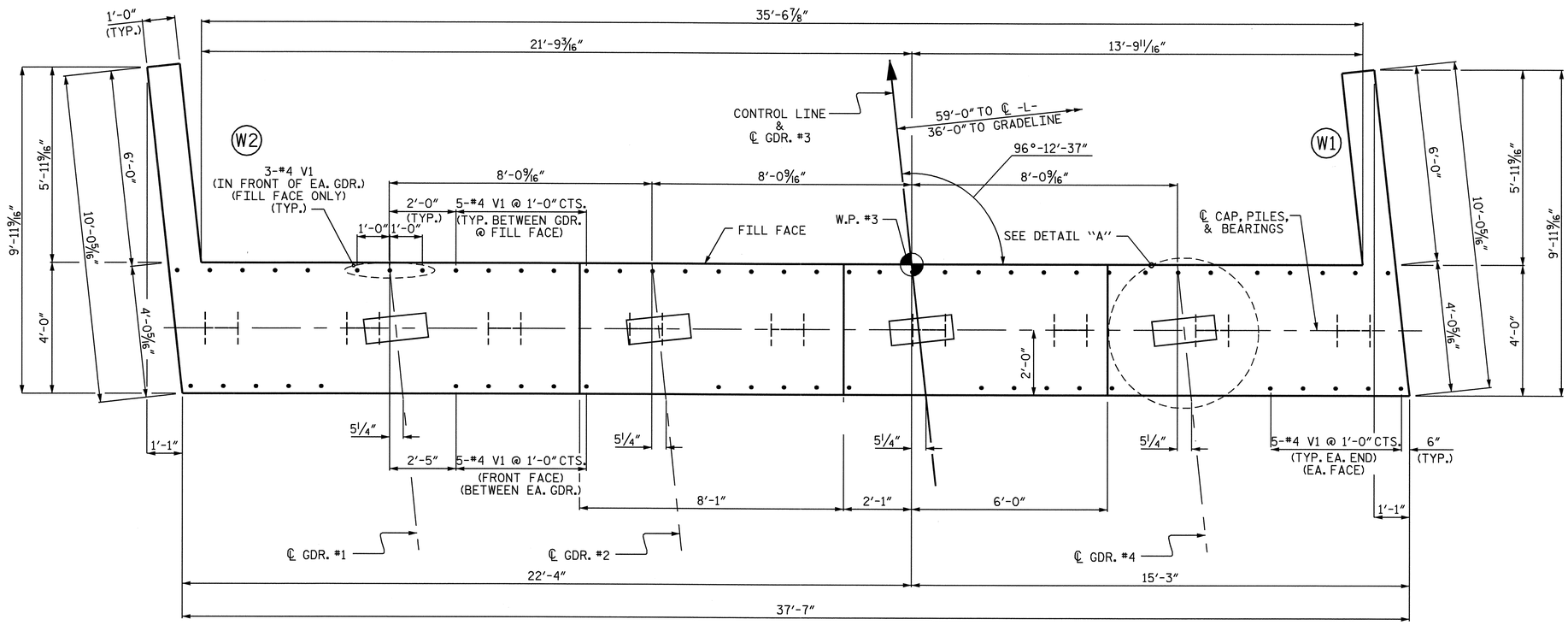

PLAN

NOTES

STIRRUPS IN CAP MAY BE SHIFTED AS NECESSARY TO CLEAR #4 V1.

THE CONTRACTOR SHALL PROVIDE FOR INSTALLATION OF THE 4" DIAMETER DRAIN PIPE THROUGH THE WING WALL AS REQUIRED FOR REINFORCED BRIDGE APPROACH FILLS, SEE THE ROADWAY PLANS. REINFORCING STEEL IN THE WING WALL MAY BE SHIFTED AS NECESSARY TO CLEAR THE DRAIN PIPE.

SEE SUPERSTRUCTURE SHEETS FOR UPPER PART OF INTEGRAL END BENT DETAIL.

THE CONTRACTOR'S ATTENTION IS CALLED TO THE FACT THAT UPPER PART OF WINGS ARE TO BE POURED WITH THE SUPERSTRUCTURE.

THE TOP SURFACE OF POUR #1 OF THE END BENT CAP AND WINGS, EXCLUDING THE OUTSIDE 4" AND THE BEARING AREA, SHALL BE RAKED TO A DEPTH OF 1/4".

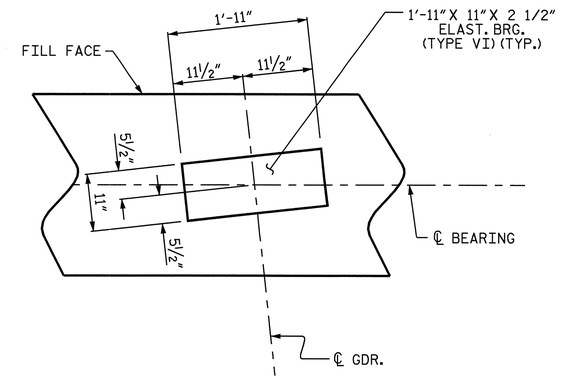

DETAIL "A"

(TYP. EA. GDR.)

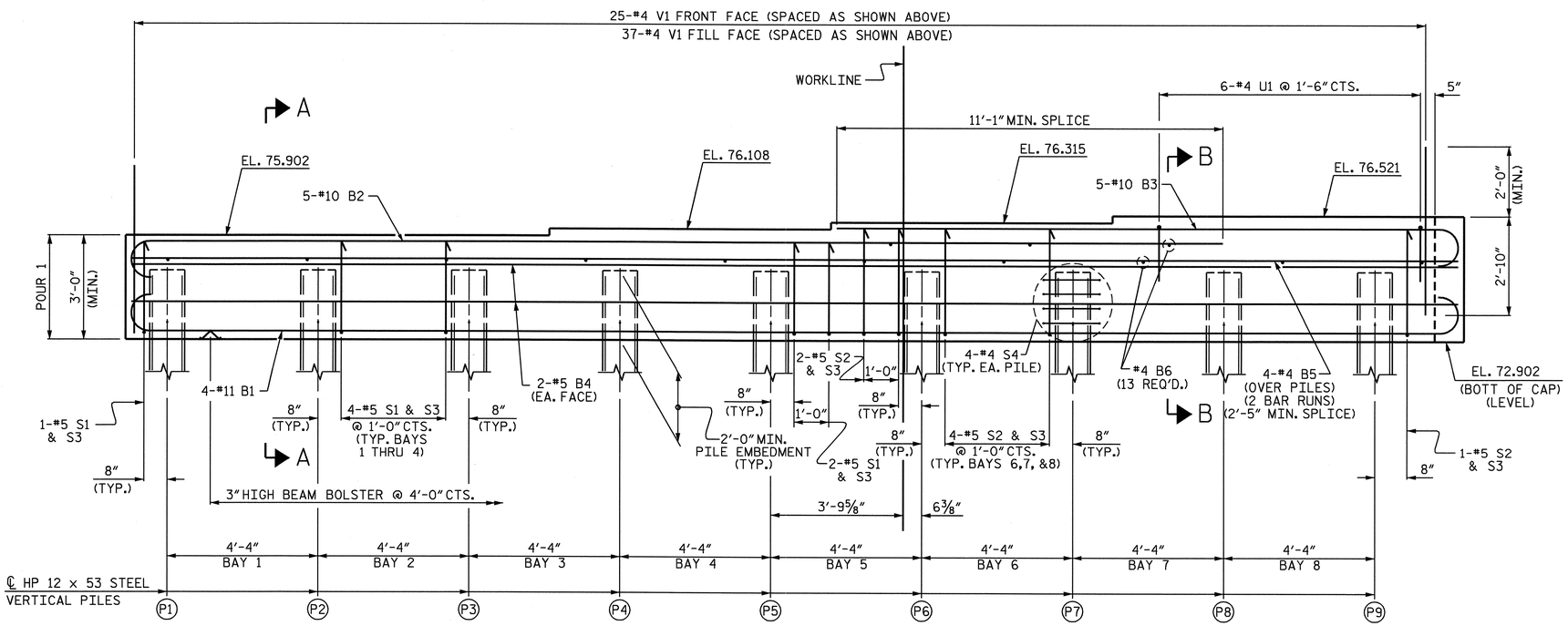

ELEVATION

PROJECT NO. R-2719A

LENOIR COUNTY

STATION: 51+64.57 -L-

SHEET 1 OF 3

STATE OF NORTH CAROLINA
DEPARTMENT OF TRANSPORTATION
RALEIGH

SUBSTRUCTURE
INTEGRAL
END BENT #2

NORTH CAROLINA PROFESSIONAL SEAL 14045 ENGINEER TIMOTHY W. COGGINS
2/25/09

REVISIONS						SHEET NO.
NO.	BY:	DATE:	NO.	BY:	DATE:	S-23
1			3			TOTAL SHEETS
2			4			34

DRAWN BY : J.B. WILSON DATE : 4/2008
CHECKED BY : B.N. BARODAWALA DATE : 8/04/08

25-FEB-2009 09:59
h:\structures\str#1\finalplans\R-2719A_sd_e#_01.dgn
tcoggins

STR. #1

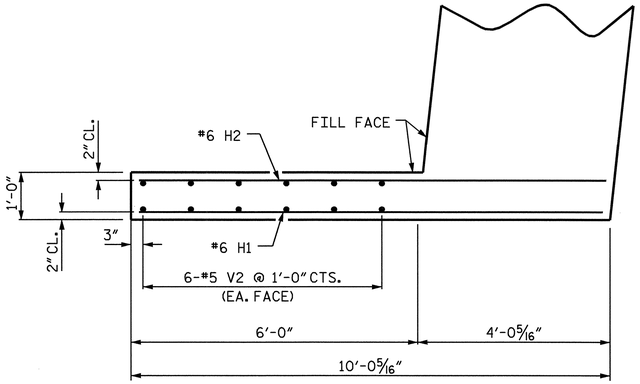

PLAN OF WING W2

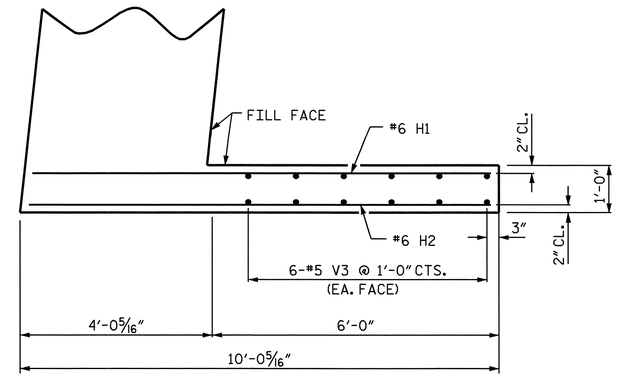

PLAN OF WING W1

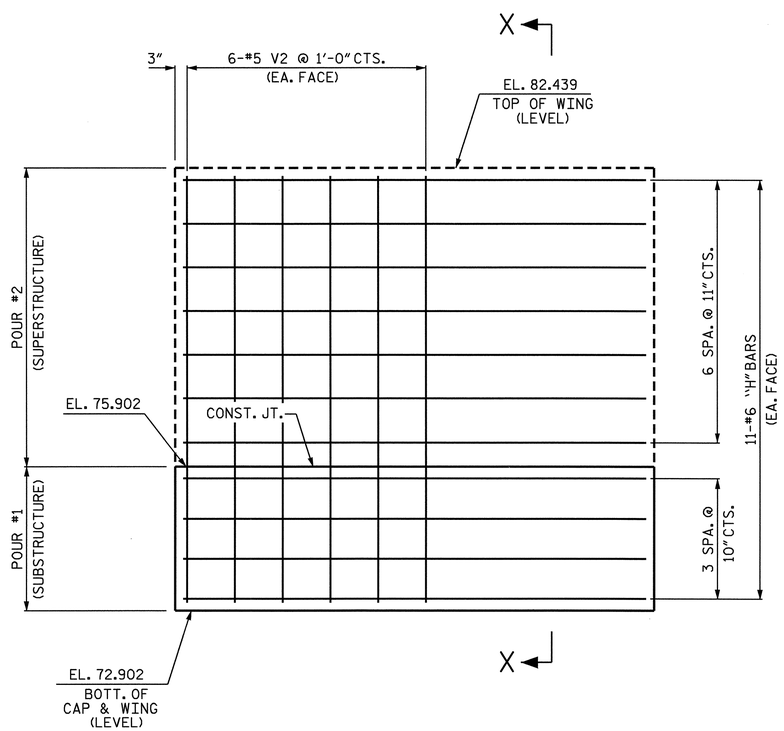

ELEVATION OF WING W2

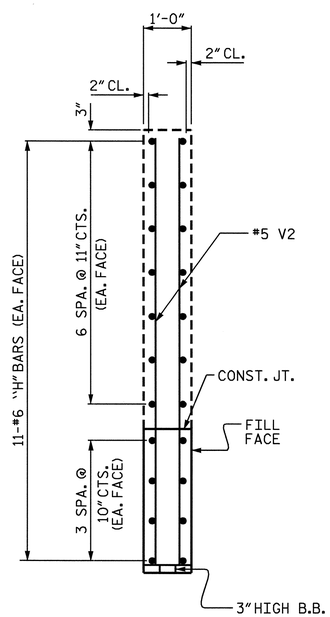

SECTION X-X

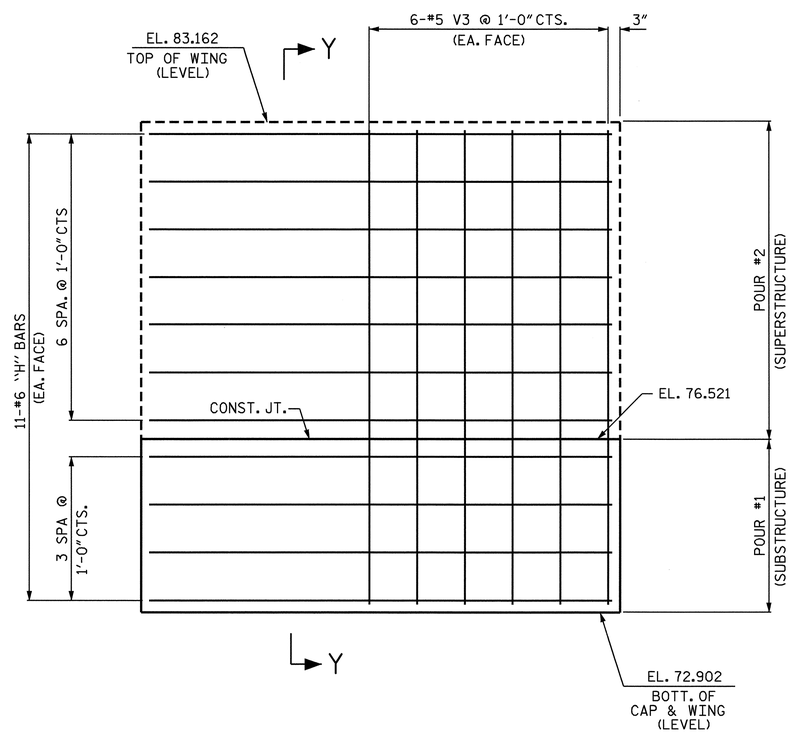

ELEVATION OF WING W1

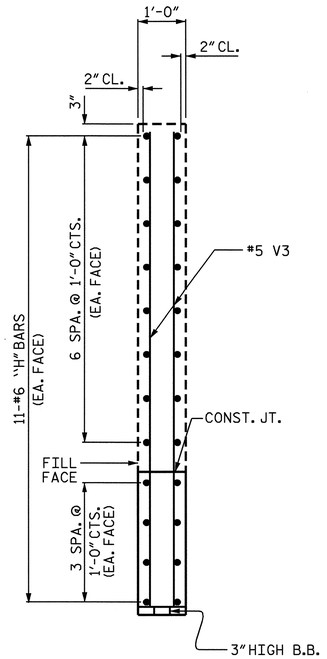

SECTION Y-Y

PROJECT NO. R-2719A

LENOIR COUNTY

STATION: 51+64.57 -L-

SHEET 2 OF 3

STATE OF NORTH CAROLINA
DEPARTMENT OF TRANSPORTATION
RALEIGH

SUBSTRUCTURE

INTEGRAL
END BENT #2

NORTH CAROLINA PROFESSIONAL SEAL 14045 ENGINEER TIMOTHY W. COGGINS
2/25/09

REVISIONS						SHEET NO.
NO.	BY:	DATE:	NO.	BY:	DATE:	S-24
1			3			TOTAL SHEETS
2			4			340

DRAWN BY : J.B. WILSON DATE : 5/2008
CHECKED BY : B.N. BARODAWALA DATE : 8/2008

25-FEB-2009 09:59
h:\structures\str#1\finalplans\R-2719A_sd_e*_01.dgn
tcoggins

STR. #1

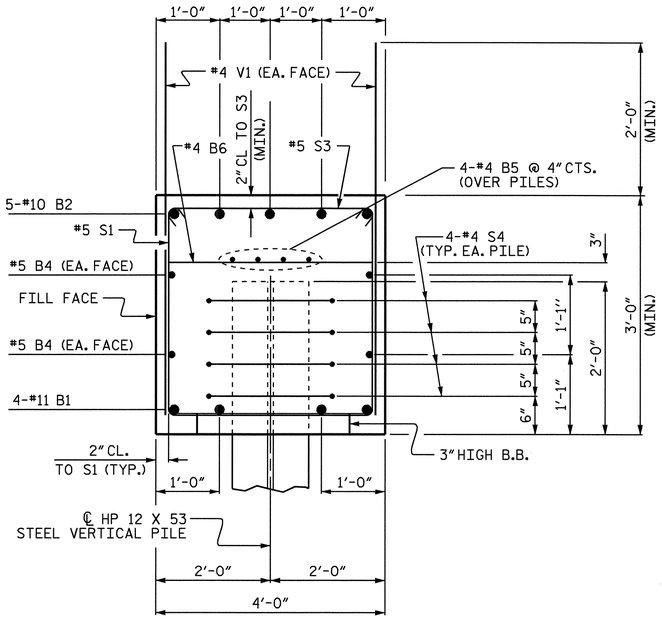

SECTION A-A

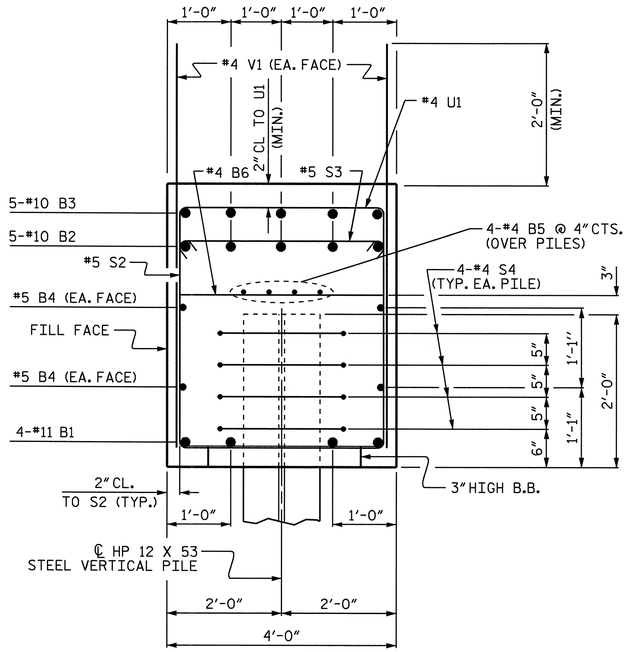

SECTION B-B

BAR TYPES

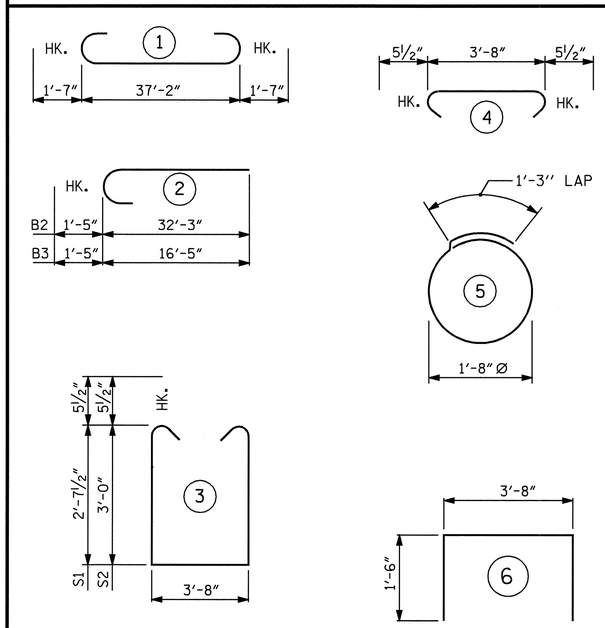

ALL BAR DIMENSIONS ARE OUT TO OUT.

BILL OF MATERIAL

END BENT #2

BAR	NO.	SIZE	TYPE	LENGTH	WEIGHT
B1	4	#11	1	40'-4"	857
B2	5	#10	2	33'-8"	724
B3	5	#10	2	17'-10"	384
B4	4	#5	STR	37'-3"	155
B5	8	#4	STR	19'-10"	106
B6	13	#4	STR	3'-8"	32
H1	22	#6	STR	9'-7"	317
H2	22	#6	STR	9'-8"	319
S1	19	#5	3	9'-10"	195
S2	15	#5	3	10'-7"	166
S3	34	#5	4	4'-7"	163
S4	36	#4	5	6'-6"	156
U1	6	#4	6	6'-8"	27
V1	62	#4	STR	4'-10"	200
V2	12	#5	STR	9'-2"	115
V3	12	#5	STR	9'-10"	123
REINFORCING STEEL				=	4039 LBS

CLASS A CONCRETE

POUR #1 (CAP & LOWER PART OF WINGS)	C.Y. 19.7
TOTAL	C.Y. 19.7

HP 12 x 53 STEEL PILES No. 9	675 LIN FT.

PILE REDRIVES	EA. 5

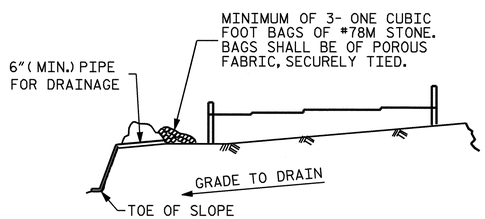

BAGGED STONE AND PIPE SHALL BE PLACED IMMEDIATELY AFTER COMPLETION OF END BENT EXCAVATION. PIPE MAY BE EITHER CONCRETE, CORRUGATED STEEL, CORRUGATED ALUMINUM ALLOY, OR CORRUGATED PLASTIC. PERFORATED PIPE WILL NOT BE ALLOWED.

BAGGED STONE SHALL REMAIN IN PLACE UNTIL THE ENGINEER DIRECTS THAT IT BE REMOVED. THE CONTRACTOR SHALL REMOVE AND DISPOSE OF SILT ACCUMULATIONS AT BAGGED STONE WHEN SO DIRECTED BY THE ENGINEER. BAGS SHALL BE REMOVED AND REPLACED WHENEVER THE ENGINEER DETERMINES THAT THEY HAVE DETERIORATED AND LOST THEIR EFFECTIVENESS.

NO SEPARATE PAYMENT WILL BE MADE FOR THIS WORK AND THE ENTIRE COST OF THIS WORK SHALL BE INCLUDED IN THE UNIT CONTRACT PRICE BID FOR THE SEVERAL PAY ITEMS.

TEMPORARY DRAINAGE AT END BENT

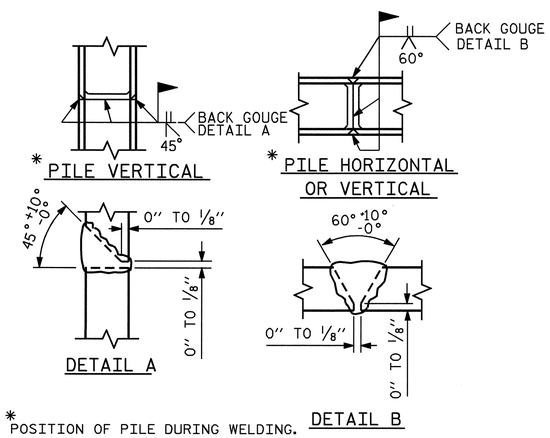

* POSITION OF PILE DURING WELDING.

PILE SPLICE DETAILS

PROJECT NO. R-2719A
LENOIR COUNTY
STATION: 51+64.57 -L-

SHEET 3 OF 3

STATE OF NORTH CAROLINA
DEPARTMENT OF TRANSPORTATION
RALEIGH

SUBSTRUCTURE

INTEGRAL END BENT #2

NORTH CAROLINA PROFESSIONAL SEAL 14045 ENGINEER TIMOTHY A. COGGINS
2/25/09

REVISIONS						SHEET NO.
NO.	BY:	DATE:	NO.	BY:	DATE:	S-25
1			3			TOTAL SHEETS
2			4			340

DRAWN BY : J.B. WILSON DATE : 5/2008
CHECKED BY : B.N. BARODAWALA DATE : 8/2008

25-FEB-2009 09:59
h:\structures\str#1\finalplans\R-2719A_sd_e*_01.dgn
tcoggins

STR. #1

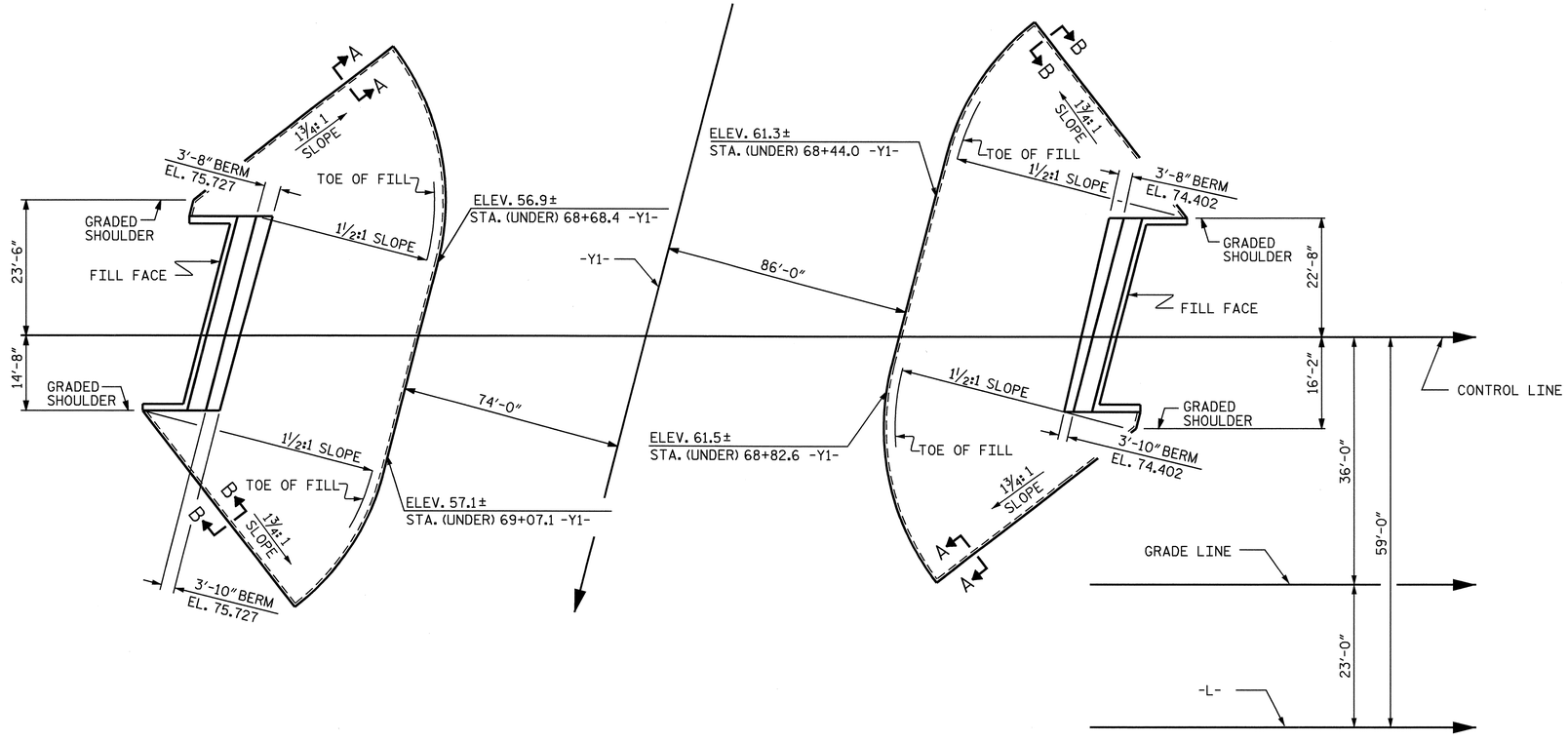

PLAN OF SLOPE PROTECTION

GENERAL NOTES

SLOPE PROTECTION SHALL BE PLACED UNDER THE ENDS OF THE BRIDGE AS SHOWN IN THE DETAILS. THE CONTRACTOR, AT HIS OPTION, MAY USE ALTERNATE "B" ONLY FOR HIGHWAY OVER HIGHWAY GRADE SEPARATIONS WITH 2:1 END BENT SLOPE IN RURAL, UNPOPULATED AREAS. STRAIGHT EDGING WILL NOT BE REQUIRED UNLESS, IN THE OPINION OF THE ENGINEER, VISUAL INSPECTION INDICATES A NEED FOR IT. MEASUREMENT AND PAYMENT SHALL BE AS PRESCRIBED IN SECTION 462 OF THE STANDARD SPECIFICATIONS. FOR BERM WIDTH, SEE GENERAL DRAWING.

ALTERNATE "A"

ALTERNATE "A" SHALL CONSIST OF 4" POURED-IN-PLACE CONCRETE PAVING AS SHOWN IN THE DETAILS ON THIS SHEET. CONCRETE SHALL BE CLASS "B". THE CONCRETE SURFACE SHALL BE FLOATED WITH A WOODEN FLOAT AND FINISHED. WELDED WIRE FABRIC REINFORCING SHALL BE 6 X 6 - W1.4 X W1.4, 60" WIDE. SLOPE PROTECTION SHALL BE POURED IN 5' STRIPS AS SHOWN IN THE "POURING DETAIL" WITH 2'-0" LONG #4 BARS PLACED ALONG THE SLOPE BETWEEN STRIPS AT 1'-6" MAXIMUM SPACING. SLOPE PROTECTION MAY BE POURED IN ALTERNATE 4' AND 5' STRIPS AS SHOWN IN THE "OPTIONAL POURING DETAIL" WITH ADJACENT RUNS OF WELDED WIRE FABRIC LAPPING AT LEAST 6". THE COST OF THE WELDED WIRE FABRIC AND #4 BARS, IF USED, SHALL BE INCLUDED IN THE CONTRACT UNIT PRICE BID PER SQUARE YARD FOR SLOPE PROTECTION.

BRIDGE @ STA. 51+64.57 -L- 69+39.10 -Y1-POC	4 INCH SLOPE PROTECTION	* WELDED WIRE FABRIC 60 INCHES WIDE
	SQUARE YARDS	APPROX. L.F.
END BENT 1	344	745
END BENT 2	271	585

* QUANTITY SHOWN IS BASED ON 5' POURS.

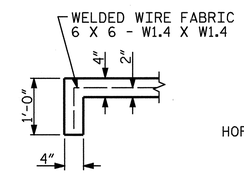

SECTION A-A

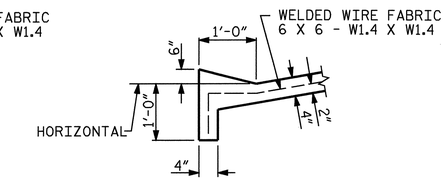

SECTION B-B

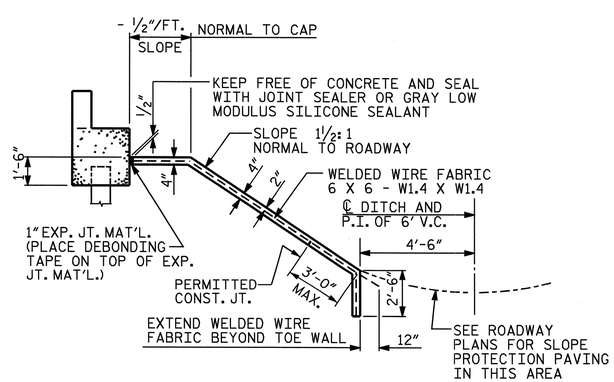

SECTION ALONG ℄ ROADWAY WHEN FILL CATCHES IN DITCH

DETAILS FOR ALTERNATE "A"

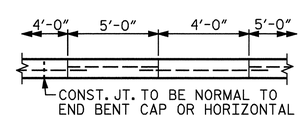

POUR A 4'-0" STRIP FIRST. STRIP WIDTHS MAY VARY IN CURVED PORTION.

OPTIONAL POURING DETAIL

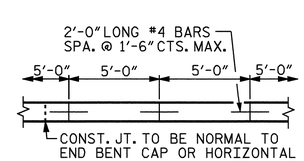

STRIP WIDTHS MAY VARY IN CURVED PORTION.

POURING DETAIL

PROJECT NO. R-2719A
LENOIR COUNTY
STATION: 51+64.57 -L-

STATE OF NORTH CAROLINA
DEPARTMENT OF TRANSPORTATION
RALEIGH

STANDARD
SLOPE PROTECTION DETAILS

NORTH CAROLINA PROFESSIONAL SEAL 14045 ENGINEER TIMOTHY A. COUGHLIN
10/10/08

REVISIONS						SHEET NO.
NO.	BY:	DATE:	NO.	BY:	DATE:	S-26
1			3			TOTAL SHEETS
2			4			340

STR. #1

STD. NO. SP1 (SHT 6)

ASSEMBLED BY : M.GUDLAUGSSON		DATE : 03/2008	
CHECKED BY : M. PISO		DATE : 05/2008	
DRAWN BY : ELR 5/92	REV. 7/10/01	LES/RDR	
CHECKED BY : GRP 6/92	REV. 5/7/03	RWW/JTE	
	REV. 5/1/06	TLA/GM	

09-OCT-2008 15:31
g:\tlpprojects-r\r2719a\structures\str#1\finalplans\R2719A_sd_sp_01.dgn
taverette

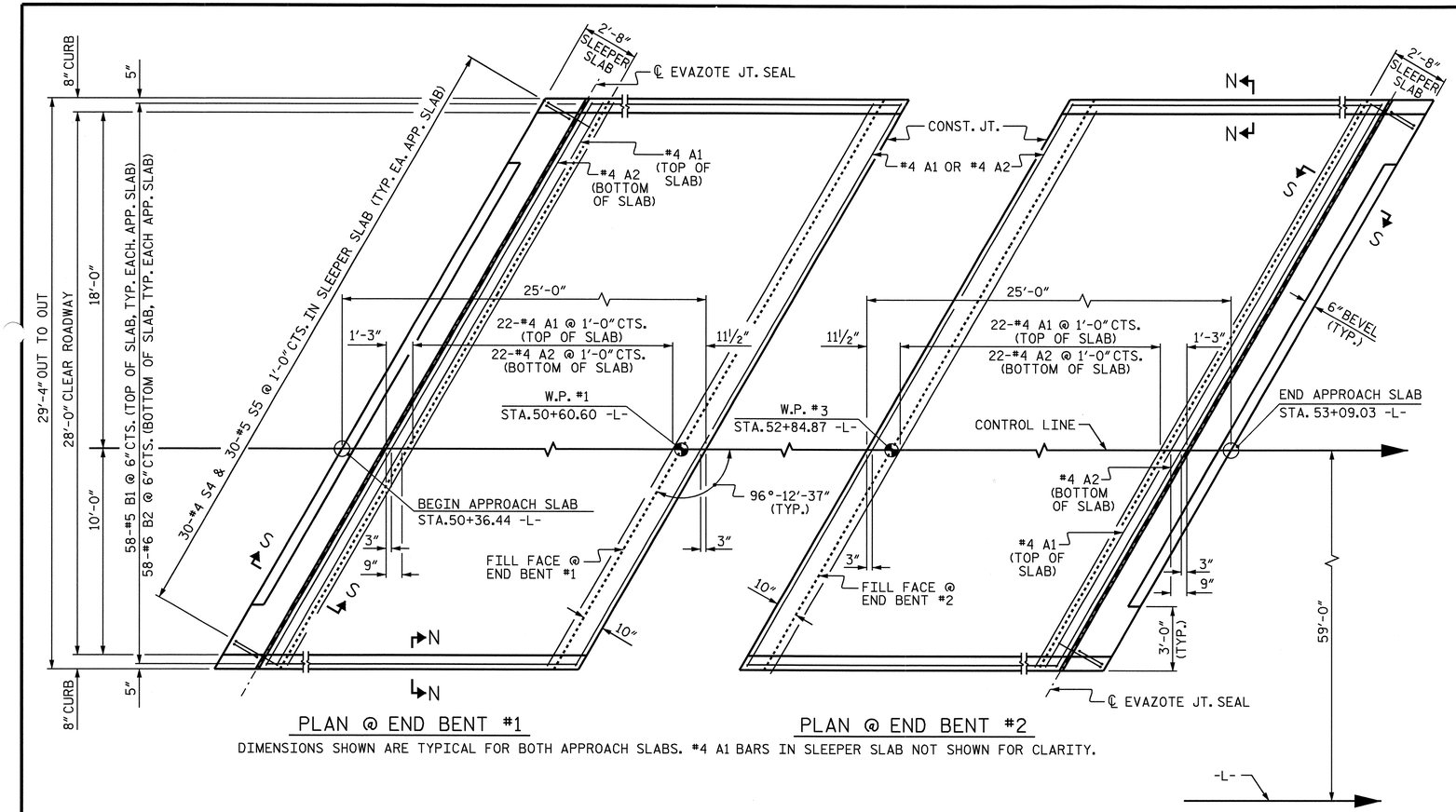

PLAN @ END BENT #1

PLAN @ END BENT #2

DIMENSIONS SHOWN ARE TYPICAL FOR BOTH APPROACH SLABS. #4 A1 BARS IN SLEEPER SLAB NOT SHOWN FOR CLARITY.

NOTES

APPROACH SLAB SHALL NOT BE CONSTRUCTED PRIOR TO COMPLETION OF THE BRIDGE DECK.

FOR REINFORCED BRIDGE APPROACH FILL INCLUDING FABRIC, IMPERMEABLE GEOMEMBRANE, 4" Ø DRAINAGE PIPE, #78M STONE, AND SELECT MATERIAL, SEE ROADWAY PLANS.

AREA BETWEEN THE WINGWALL AND APPROACH SLAB SHALL BE GRADED TO DRAIN THE WATER AWAY FROM THE FILL FACE OF THE BRIDGE AND SHALL BE PAVED. SEE ROADWAY PLANS.

THE 6" COMP. A.B.C. SHALL BE FLUSH WITH THE SLEEPER SLAB AND SHALL EXTEND 1'-0" OUTSIDE OF EACH EDGE OF THE APPROACH SLAB.

THE CONTRACTOR MAY USE 4" TYPE B-25.0B ASPHALT CONCRETE BASE COURSE IN LIEU OF 6" COMP. A.B.C. IF THIS OPTION IS USED, THE BASE COURSE SHALL BE FLUSH WITH THE SLEEPER SLAB, AND THE WIDTH SHALL BE THE SAME AS THAT OF THE APPROACH SLAB.

THE CONTRACTOR MAY USE 5" CLASS "A" CONCRETE BASE IN LIEU OF 6" COMP. A.B.C. IF THIS OPTION IS USED, THE CONCRETE BASE SHALL BE FLUSH WITH THE SLEEPER SLAB, AND THE WIDTH SHALL BE THE SAME AS THAT OF THE APPROACH SLAB. THE CONCRETE SHALL BE FINISHED TO A SMOOTH SURFACE AND A LAYER OF 30 LB ROOFING FELT SHALL BE PLACED BETWEEN THE CONCRETE BASE AND THE APPROACH SLAB TO PREVENT BOND. THE APPROACH SLAB SHALL NOT BE CAST UNTIL THE CONCRETE BASE HAS REACHED AN AGE OF THREE CURING DAYS.

THE VERTICAL JOINT ON THE RIGHT AND LEFT SIDE OF THE APPROACH SLAB AT THE ENDS OF THE EVAZOTE JOINT SHALL BE FILLED WITH SILICONE OR OTHER APPROVED MATERIAL IN ORDER TO PREVENT BACKFILL FROM ENTERING THE JOINT OPENING.

THE JOINT OPENING AT THE APPROACH SLAB/DECK INTERFACE SHALL BE SAWED NO MORE THAN 12 HOURS AFTER THE APPROACH SLAB IS CAST. THE JOINT SHALL BE CLEANED OF ALL DEBRIS BEFORE THE SEALANT IS APPLIED. THE JOINT SEALER MATERIAL SHALL CONFORM TO THE REQUIREMENTS OF TYPE SL LOW MODULUS SILICONE SEALANT.

WITH EVAZOTE JOINT SEAL

FOR EVAZOTE JOINT SEALS, SEE SPECIAL PROVISIONS.

THE NOMINAL UNCOMPRESSED SEAL WIDTH OF THE EVAZOTE JOINT SEAL SHALL BE 2½".

FOR ELASTOMERIC CONCRETE, SEE SPECIAL PROVISIONS.

BILL OF MATERIAL

FOR ONE APPROACH SLAB (2 REQ'D)

BAR	NO.	SIZE	TYPE	LENGTH	WEIGHT
* A1	31	#4	STR	29'-2"	604
A2	24	#4	STR	29'-2"	468
* B1	58	#5	STR	22'-5"	1356
B2	58	#6	STR	22'-10"	1989
* S4	30	#4	1	3'-11"	79
S5	30	#5	2	2'-11"	91

REINFORCING STEEL	LBS.	2548
* EPOXY COATED REINFORCING STEEL	LBS.	2039
CLASS AA CONCRETE		
POUR #1 - SLAB & CURB	C. Y.	25.3
POUR #2 - SLEEPER SLAB	C. Y.	3.1
TOTAL	C. Y.	28.4

BAR TYPES

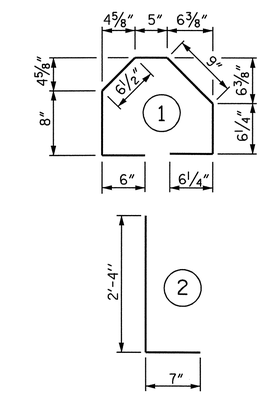

ALL BAR DIMENSIONS ARE OUT TO OUT

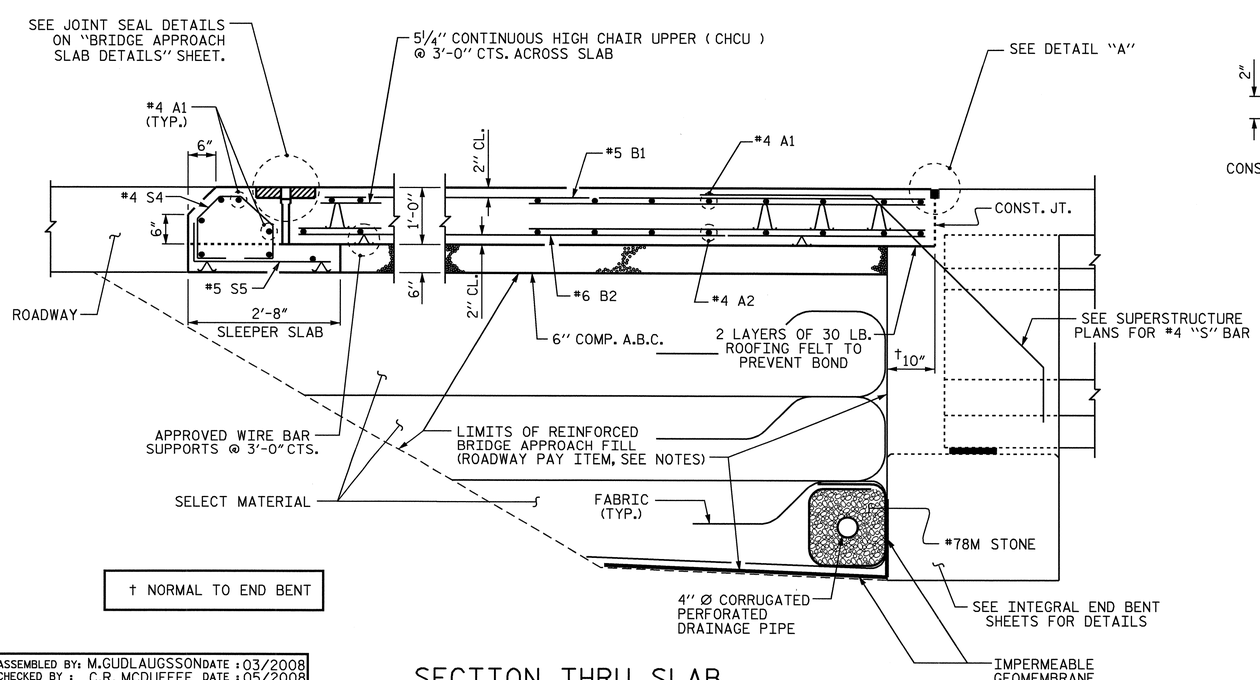

† NORMAL TO END BENT

SECTION THRU SLAB

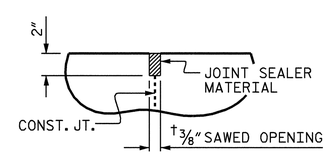

DETAIL "A"

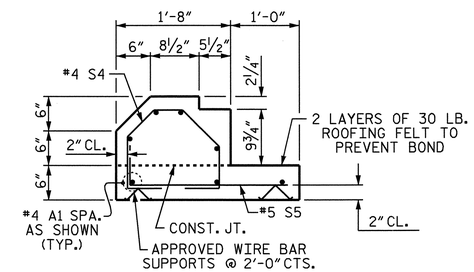

SECTION S-S

SHOWING SLEEPER SLAB

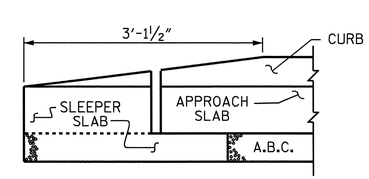

END OF CURB WITHOUT SHOULDER BERM GUTTER

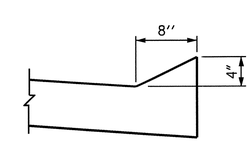

SECTION N-N

NORTH CAROLINA PROFESSIONAL SEAL 14045 ENGINEER TIMOTHY W. COGGINS
10/10/08

PROJECT NO. R-2719A

LENOIR COUNTY

STATION: 51+64.57 -L-

SHEET 1 OF 3

STATE OF NORTH CAROLINA
DEPARTMENT OF TRANSPORTATION
RALEIGH

STANDARD

BRIDGE APPROACH SLAB FOR INTEGRAL ABUTMENT

REVISIONS						SHEET NO.
NO.	BY:	DATE:	NO.	BY:	DATE:	S-27
1			3			TOTAL SHEETS
2			4			240

ASSEMBLED BY: M.GUDLAUGSSON DATE : 03/2008
CHECKED BY : C.R. MCDUFFEE DATE : 05/2008
DRAWN BY : TLA 10/05
CHECKED BY : GM 5/06
ADDED 5/1/06R KMM/GM

09-OCT-2008 15:31
g:\tlpprojects-r\r2719a\structures\str#1\final plans\r2719a_sd_as_01.dgn
taverette

STR. #1

STD. NO. BAS11 (SHT 5)

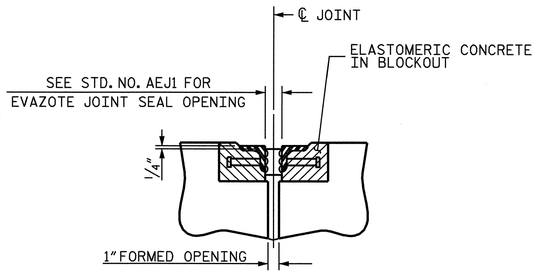

SECTION C-C
ARMORED EVAZOTE JOINT SEAL

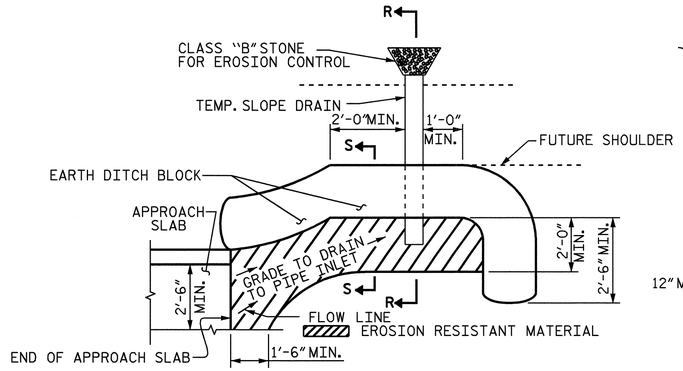

NOTE: IMMEDIATELY AFTER THE CONSTRUCTION OF THE APPROACH SLAB, THE CONTRACTOR SHALL PROVIDE TEMPORARY BERM AND SLOPE DRAIN. CONTRACTOR SHALL GRADE TO PIPE INLET AND PROVIDE EROSION RESISTANT MATERIAL AS SHOWN. THE EROSION RESISTANT MATERIAL SHALL BE EITHER 1) ASPHALT PLANT MIX, TYPE 1 OR TYPE 2, MIN. 2" DEPTH, 2) EROSION CONTROL MAT, OR 3) CONCRETE, AS DIRECTED BY THE ENGINEER. THE SLOPE DRAIN SHALL CONSIST OF A NON-PERFORATED TEMPORARY DRAINAGE PIPE, 12 INCHES IN DIAMETER.

PLAN VIEW

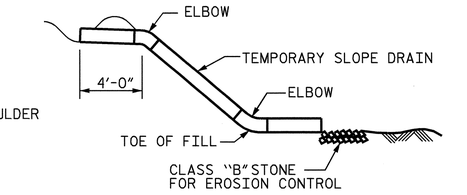

SECTION R-R

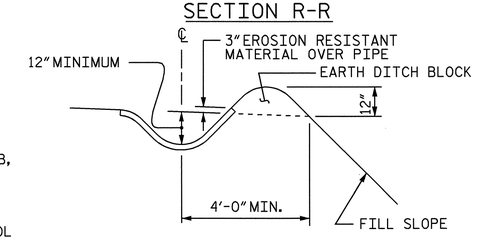

SECTION S-S

TEMPORARY BERM AND SLOPE DRAIN DETAILS

(TO BE USED WHEN SHOULDER BERM GUTTER IS REQUIRED)

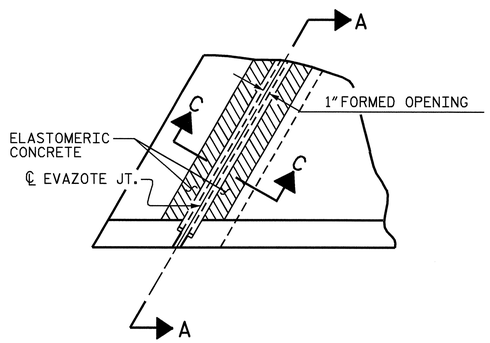

PLAN

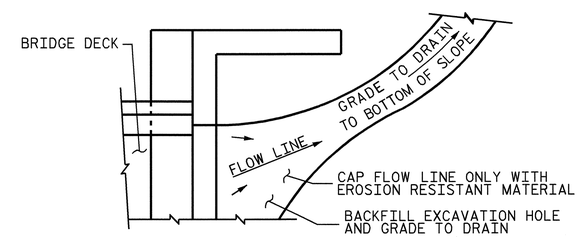

NOTE: IF THE APPROACH SLAB IS NOT CONSTRUCTED IMMEDIATELY AFTER THE BACKFILLING OF THE END BENT EXCAVATION, GRADE TO DRAIN TO THE BOTTOM OF THE SLOPE AND PROVIDE EROSION RESISTANT MATERIAL, SUCH AS FIBERGLASS ROVING OR AS DIRECTED BY THE ENGINEER TO PREVENT SOIL EROSION AND TO PROTECT THE AREA ADJACENT TO THE STRUCTURE. THE CONTRACTOR WILL BE REQUIRED TO REMOVE THESE MATERIALS PRIOR TO CONSTRUCTION OF THE APPROACH SLAB.

TEMPORARY DRAINAGE DETAIL

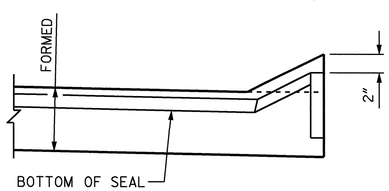

SECTION A-A

PROJECT NO. R-2719A
LENOIR COUNTY
STATION: 51+64.57 -L-

SHEET 2 OF 3

STATE OF NORTH CAROLINA
DEPARTMENT OF TRANSPORTATION
RALEIGH

STANDARD

BRIDGE APPROACH SLAB DETAILS

NORTH CAROLINA PROFESSIONAL SEAL 14045 ENGINEER TIMOTHY L. COGGINS
10/10/08

REVISIONS						SHEET NO.
NO.	BY:	DATE:	NO.	BY:	DATE:	S-28
1			3			TOTAL SHEETS
2			4			340

ASSEMBLED BY : M.GUDLAUGSSON		DATE : 03/2008	
CHECKED BY : C.R. MCDUFFEE		DATE : 05/2008	
DRAWN BY : FCJ	11/88	REV. 10/17/00	RWW/LES
CHECKED BY : ARB	11/88	REV. 5/7/03	RWW/JTE
		REV. 5/1/06R	MAA/KMM

09-OCT-2008 15:31
g:\tlpprojects-r\r2719a\structures\str#1\finalplans\r2719a_sd_as_01.dgn
taverette

STR. #1

STD. NO. BAS10 (SHT 7)

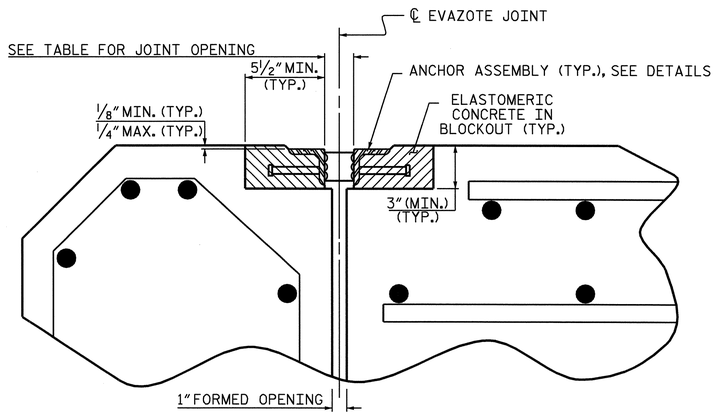

ARMORED JOINT DETAILS

SECTION NORMAL TO JOINT AT APPROACH SLAB SLEEPER SLAB

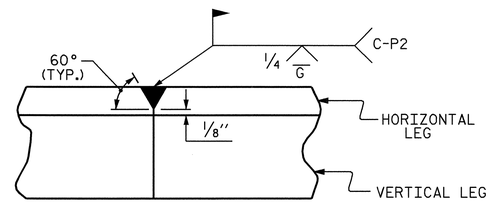

DETAIL- FIELD WELD SPLICE OF ANGLE

NOTES

ANGLES SHALL CONFORM TO AASHTO M270 GRADE 36 STEEL OR APPROVED EQUAL. ALL STUD ANCHORS SHALL CONFORM TO AASHTO M169 GRADES 1010 THRU 1020 OR APPROVED EQUAL.

STUD ANCHORS SHALL BE SHOP WELDED AND ALL HOLES SHALL BE SHOP DRILLED AS SHOWN ON THE PLANS. STUD ANCHORS SHALL BE ELECTRIC ARC END WELDED WITH COMPLETE FUSION.

UPON COMPLETION OF SHOP FABRICATION, THE ENTIRE ANCHOR ASSEMBLY SHALL BE METALLIZED. THE ½" Ø STUD ANCHORS AND ANCHOR TABS NEED NOT BE METALLIZED. SEE SPECIAL PROVISION FOR THERMAL SPRAYED COATINGS (METALLIZATION).

ANCHOR ASSEMBLY SHALL BE MADE CONTINUOUS THE LENGTH OF THE JOINT FROM GUTTER TO GUTTER. FOR FIELD SPLICES AT ALL CROWN BREAK POINTS, THE ENDS OF THE STEEL ANGLES SHALL BE CUT PARALLEL TO THE BRIDGE CENTERLINE. FINISHED FIELD WELDS SHALL BE GROUND SMOOTH AND COATED WITH A MINIMUM THICKNESS OF 4 DRY MILS OF ZINC-RICH PAINT IN ACCORDANCE WITH THE STANDARD SPECIFICATIONS.

ANCHOR ASSEMBLY SEGMENTS SHALL NOT BE LESS THAN 12 FEET NOR MORE THAN 20 FEET IN LENGTH. SHORTER SEGMENTS MAY BE USED AT THE EDGE OF ROADWAY OR AT POINTS OF STAGED CONSTRUCTION.

THE ANCHOR ASSEMBLY SHALL BE SECURED AND LEVELED AS SHOWN IN THE "ARMORED JOINT ANCHOR ASSEMBLY DETAILS". NO SUBMITTALS ARE REQUIRED FOR ⅜" Ø EXPANSION ANCHORS, NUTS OR WASHERS. THE CONTRACTOR MAY SUBMIT FOR APPROVAL AN ALTERNATE METHOD OF ALIGNING AND LEVELING THE ANGLES. THE ALTERNATE METHOD SHALL NOT INCLUDE ANY WELDING TO THE OUTSIDE FACE OF THE ANGLES.

AFTER THE ELASTOMERIC CONCRETE HAS BEEN CAST ON BOTH SIDES OF THE JOINT, REMOVE ANY EXCESS CONCRETE THAT COMES THROUGH THE WEEP HOLES AND THOROUGHLY CLEAN THE ANGLES. ANY DAMAGED STEEL SHALL BE COATED WITH A MINIMUM OF 4 MILS OF ZINC-RICH PAINT IN ACCORDANCE WITH THE STANDARD SPECIFICATIONS.

SEE SPECIAL PROVISIONS FOR EVAZOTE JOINT SEALS.

SEE SPECIAL PROVISIONS FOR ELASTOMERIC CONCRETE.

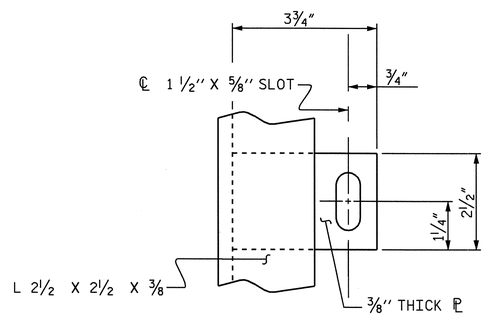

PLAN VIEW OF TAB

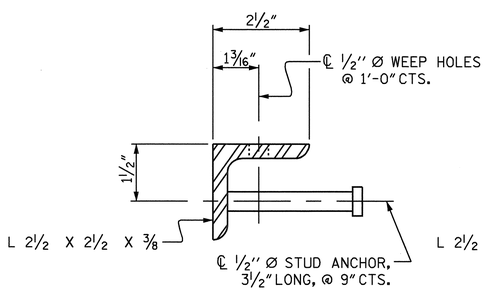

SECTION VIEW OF STUD

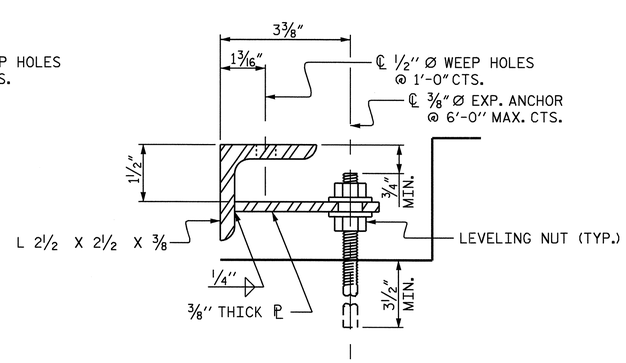

SECTION VIEW OF TAB

ARMORED JOINT ANCHOR ASSEMBLY DETAILS

MOVEMENT AND SETTING AT EVAZOTE JOINT

APPROACH SLAB NO.	SKEW ANGLE	NOMINAL UNCOMPRESSED SEAL WIDTH	TOTAL MOVEMENT (ALONG ℄ RDWY)	PERPENDICULAR JOINT OPENING AT 45° F	PERPENDICULAR JOINT OPENING AT 60° F	PERPENDICULAR JOINT OPENING AT 90° F
1	96°-12'-37"	2½"	15⁄16"	2³⁄₁₆"	2"	1¹¹⁄₁₆"
2	96°-12'-37"	2½"	15⁄16"	2³⁄₁₆"	2"	1¹¹⁄₁₆"

TOTAL MOVEMENT IS CALCULATED ALONG THE CENTERLINE OF ROADWAY.
JOINT OPENINGS ARE MEASURED PERPENDICULAR TO THE JOINT.

BILL OF MATERIAL

APPROACH SLAB NO.	ELASTOMERIC CONCRETE ✳ (CU. FT.)	TOTAL LENGTH OF ANGLE (FT)
1	6.5	56.35'
2	6.5	56.35'
TOTAL	13.0	112.70'

✳ BASED ON THE MINIMUM BLOCKOUT SHOWN.

PROJECT NO. R-2719A
LENOIR COUNTY
STATION: 51+64.57 -L-

SHEET 3 OF 3

STATE OF NORTH CAROLINA
DEPARTMENT OF TRANSPORTATION
RALEIGH

STANDARD
ARMORED EVAZOTE JOINT DETAILS

NORTH CAROLINA PROFESSIONAL SEAL 14045 ENGINEER TIMOTHY W. COGGINS
10/10/08

REVISIONS						SHEET NO.
NO.	BY:	DATE:	NO.	BY:	DATE:	S-29
1			3			TOTAL SHEETS
2			4			340

ASSEMBLED BY: M.GUDLAUGSSON DATE :03/2008			
CHECKED BY : C.R. MCDUFFEE DATE :05/2008			
DRAWN BY : EEM 1/96	REV. 7/10/01 LES/RDR		
CHECKED BY : RGW 1/96	REV. 5/7/03RR RWW/JTE		
	REV. 5/1/06 TLA/GM		

09-OCT-2008 15:30
gi\tipprojects-r\r2719a\structures\str#1\finalplans\r2719a_sd_as_01.dgn
taverette

STR. #1

STD. NO. AEJ1

F. A. PROJECT NO.: STP-0224(12)

GRADE DATA

+2.9156% △ -1.0227%

PI = 84+50.00 -L-
EL. = 94.10′
VC = 1000′

HORIZONTAL CURVE DATA -L-

PI STA. 78+80.01 -L-
Δ = 40°-36′-26.1″(RT)
D = 1°-38′-13.3″
L = 2,480.56′
T = 1,294.94′
R = 3,500.00′
e = 6.0%

PIs STA. 91+87.66 -L-
Θs = 2°-59′-44.7″
Ls = 366.00′
LT = 244.03′
ST = 122.03′

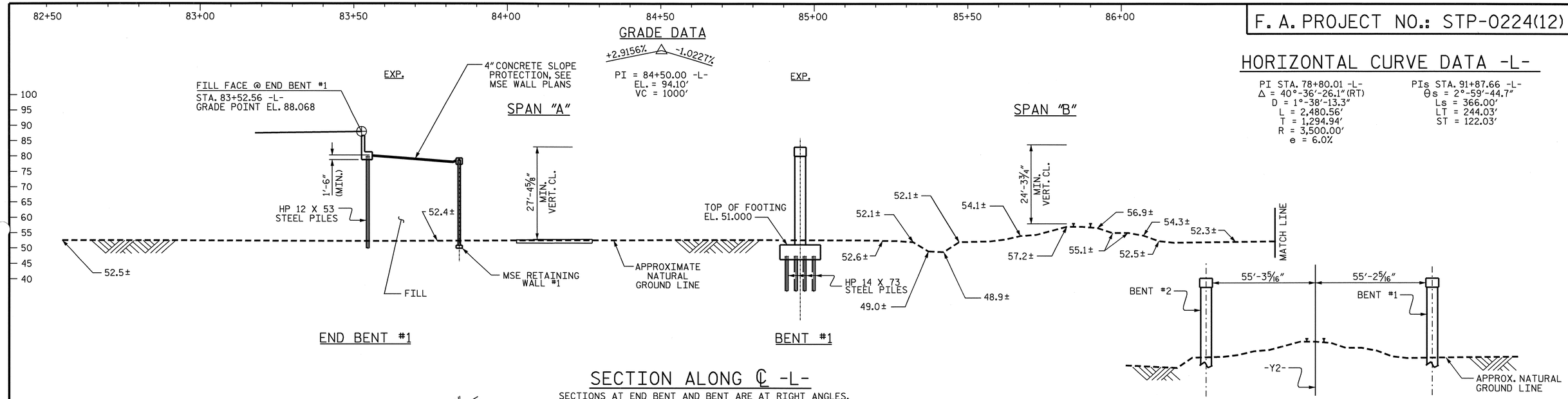

SECTION ALONG ℄ -L-

SECTIONS AT END BENT AND BENT ARE AT RIGHT ANGLES.

TYPICAL SECTION

(LOOKING STATION AHEAD ALONG RAILROAD)
SPAN LENGTH BASED ON THIS TYPICAL SECTION

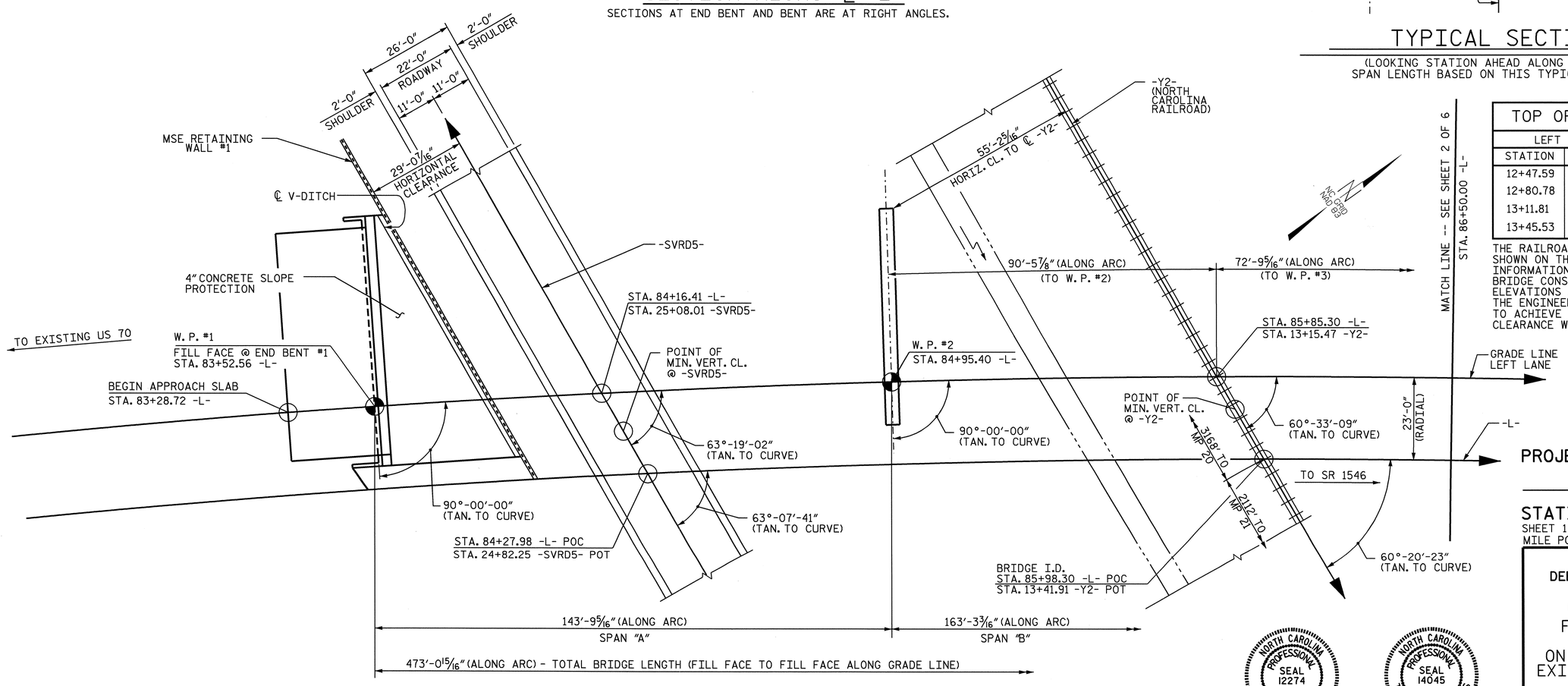

PLAN

(PILES NOT SHOWN FOR CLARITY)

TOP OF RAIL ELEVATIONS -Y2-

LEFT RAIL		RIGHT RAIL	
STATION	ELEV.	STATION	ELEV.
12+47.59	57.252	12+44.87	57.277
12+80.78	57.268	12+77.93	57.299
13+11.81	57.288	13+09.05	57.320
13+45.53	57.310	13+42.62	57.314

THE RAILROAD TRACK TOP OF RAIL ELEVATIONS SHOWN ON THE PLANS ARE FROM THE BEST INFORMATION AVAILABLE. PRIOR TO BEGINNING BRIDGE CONSTRUCTION, VERIFY THE TOP OF RAIL ELEVATIONS AND REPORT ANY VARIATIONS TO THE ENGINEER. ANY PLAN REVISIONS NECESSARY TO ACHIEVE THE REQUIRED MINIMUM VERTICAL CLEARANCE WILL BE PROVIDED BY THE DEPARTMENT.

PROJECT NO. R-2719A
LENOIR COUNTY
STATION: 85+98.30 -L-
13+41.91 -Y2-
SHEET 1 OF 6
MILE POST EC-20.6
BRIDGE NO. 192

STATE OF NORTH CAROLINA
DEPARTMENT OF TRANSPORTATION
RALEIGH

GENERAL DRAWING
FOR BRIDGE OVER NORTH CAROLINA RAILROAD ON CRESCENT ROAD BETWEEN EXISTING US 70 AND SR 1546 (LEFT LANE)

NORTH CAROLINA PROFESSIONAL SEAL 12274 ENGINEER OMAR R. AZIZI
Omar R. Aziz 10-9-08

NORTH CAROLINA PROFESSIONAL SEAL 14045 ENGINEER TIMOTHY L. COGGINS
Timothy L. Coggins 10/11/08

REVISIONS						SHEET NO.
NO.	BY:	DATE:	NO.	BY:	DATE:	S-30
1			3			TOTAL SHEETS
2			4			340

DRAWN BY : PEGGY ADKINS DATE : 11-07
CHECKED BY : T. AVERETTE DATE : 11-07

08-OCT-2008 16:18
g:\tipprojects-r\r2719a\structures\str#2\finalplans\r2719a_sd_gd_02.dgn
taverette

STR. #2

GRADE DATA

+2.9156% △ -1.0227%

PI = 84+50.00 -L-
EL. = 94.10'
VC = 1000'

86+50 | 87+00 | 87+50 | 88+00 | 88+50 | 89+00 | 89+50

100 | 95 | 90 | 85 | 80 | 75 | 70 | 65 | 60 | 55 | 50 | 45 | 40

HORIZONTAL CURVE DATA -L-

PI STA. 78+80.01 -L-
Δ = 40°-36'-26.1"(RT)
D = 1°-38'-13.3"
L = 2,480.56'
T = 1,294.94'
R = 3,500.00'
e = 6.0%

PIs STA. 91+87.66 -L-
θs = 2°-59'-44.7"
Ls = 366.00'
LT = 244.03'
ST = 122.03'

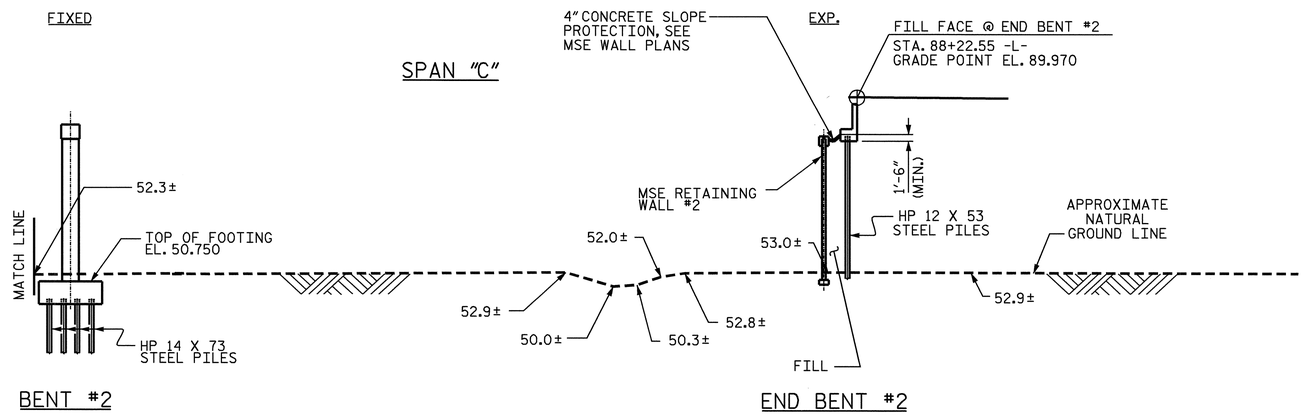

SECTION ALONG ℄ -L-

SECTIONS AT END BENT AND BENT ARE AT RIGHT ANGLES.

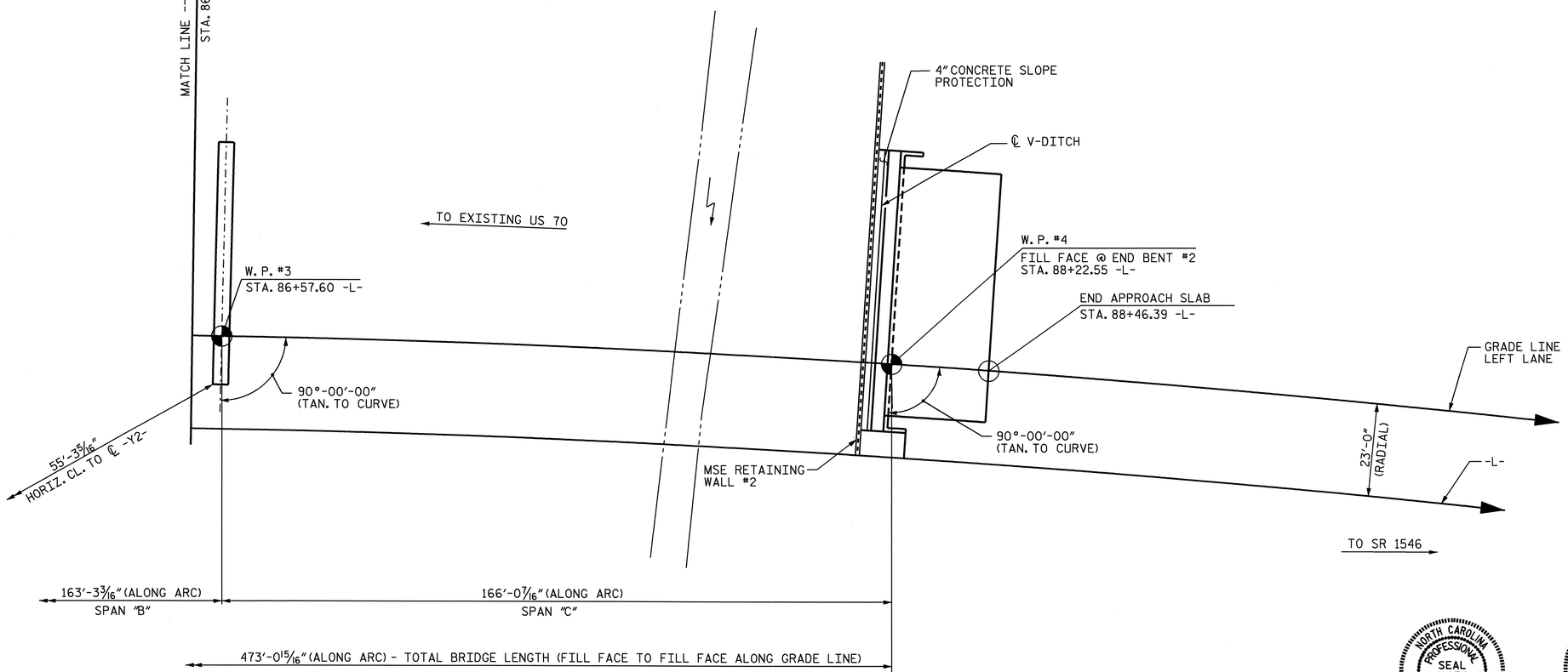

PLAN

(PILES NOT SHOWN FOR CLARITY)

PROJECT NO. R-2719A
LENOIR COUNTY
STATION: 85+98.30 -L-
13+41.91 -Y2-

SHEET 2 OF 6

STATE OF NORTH CAROLINA
DEPARTMENT OF TRANSPORTATION
RALEIGH

GENERAL DRAWING
FOR BRIDGE OVER NORTH CAROLINA RAILROAD ON CRESCENT ROAD BETWEEN EXISTING US 70 AND SR 1546 (LEFT LANE)

NORTH CAROLINA PROFESSIONAL SEAL 12274 ENGINEER OMAR R. AZIZ
Omar R. Aziz
10-9-08

NORTH CAROLINA PROFESSIONAL SEAL 14045 ENGINEER TIMOTHY L. COGGINS
Timothy L. Coggins
10/9/08

REVISIONS						SHEET NO.
NO.	BY:	DATE:	NO.	BY:	DATE:	S-31
1			3			TOTAL SHEETS
2			4			340

DRAWN BY : PEGGY ADKINS DATE : 11-07
CHECKED BY : T. AVERETTE DATE : 11-07

08-OCT-2008 16:18
gi\tlpprojects-r\r2719a\structures\str#2\final plans\r2719a_sd_gd_02.dgn
taverette

STR. #2

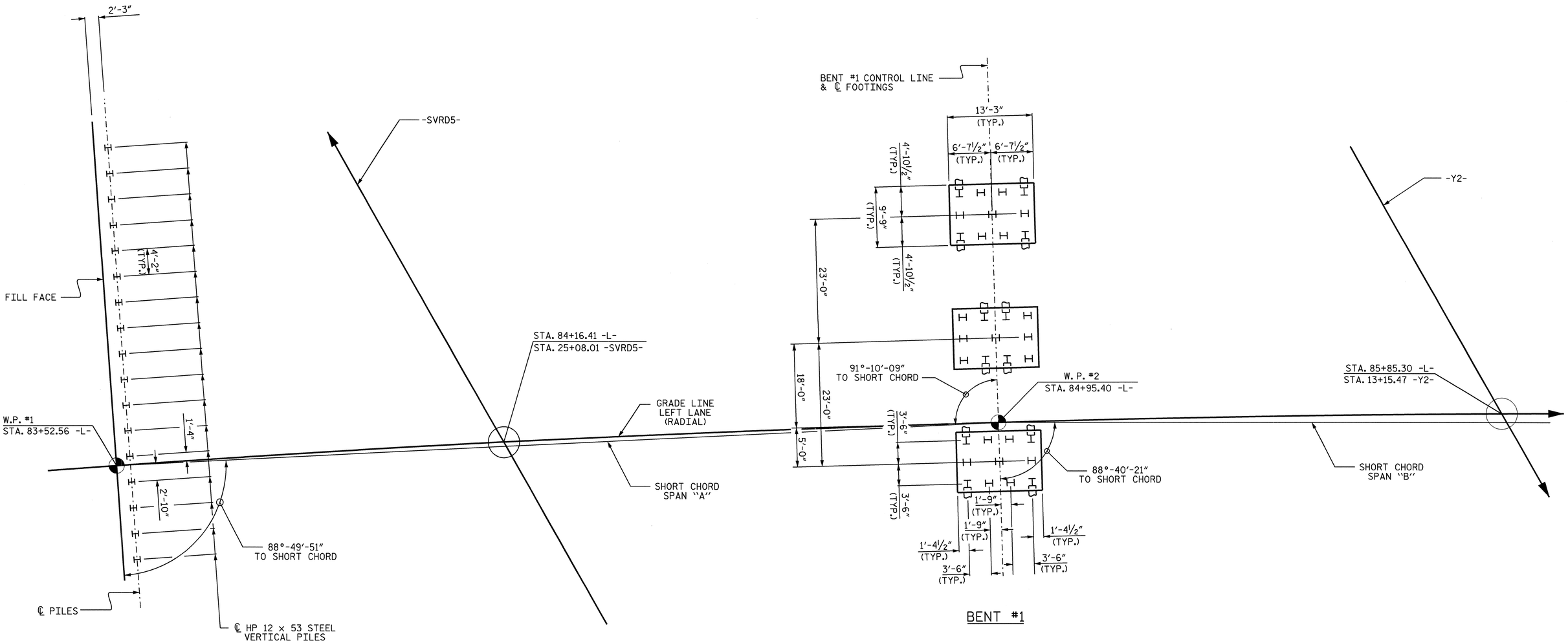

FOUNDATION LAYOUT PLAN

PILES IN END BENT #1 ARE HP 12 x 53.

PILES IN INTERIOR BENT #1 ARE HP 14 x 73.

DIMENSIONS AND PILE LAYOUT ARE TYPICAL FOR EACH INTERIOR BENT FOOTING, EXCEPT AS SHOWN.

BRACE PILES IN INTERIOR BENT #1 ARE BATTERED 1½:12.

PROJECT NO. R-2719A

LENOIR COUNTY

STATION: 85+98.30 -L-

SHEET 3 OF 6

STATE OF NORTH CAROLINA
DEPARTMENT OF TRANSPORTATION
RALEIGH

GENERAL DRAWING

FOR BRIDGE OVER NORTH CAROLINA RAILROAD ON CRESCENT ROAD BETWEEN EXISTING US 70 AND SR 1546 (LEFT LANE)

NORTH CAROLINA PROFESSIONAL SEAL 14045 ENGINEER TIMOTHY L. COGGINS
4/3/09

REVISIONS						SHEET NO.
NO.	BY:	DATE:	NO.	BY:	DATE:	S-32
1			3			TOTAL SHEETS
2			4			340

DRAWN BY : J. B. WILSON DATE : 09/2008
CHECKED BY : T. L. COGGINS DATE : 09/2008

03-APR-2009 13:11
h:\structures\str#2\finalplans\r2719a_sd_gd_02.dgn
tcoggins

STR. #2

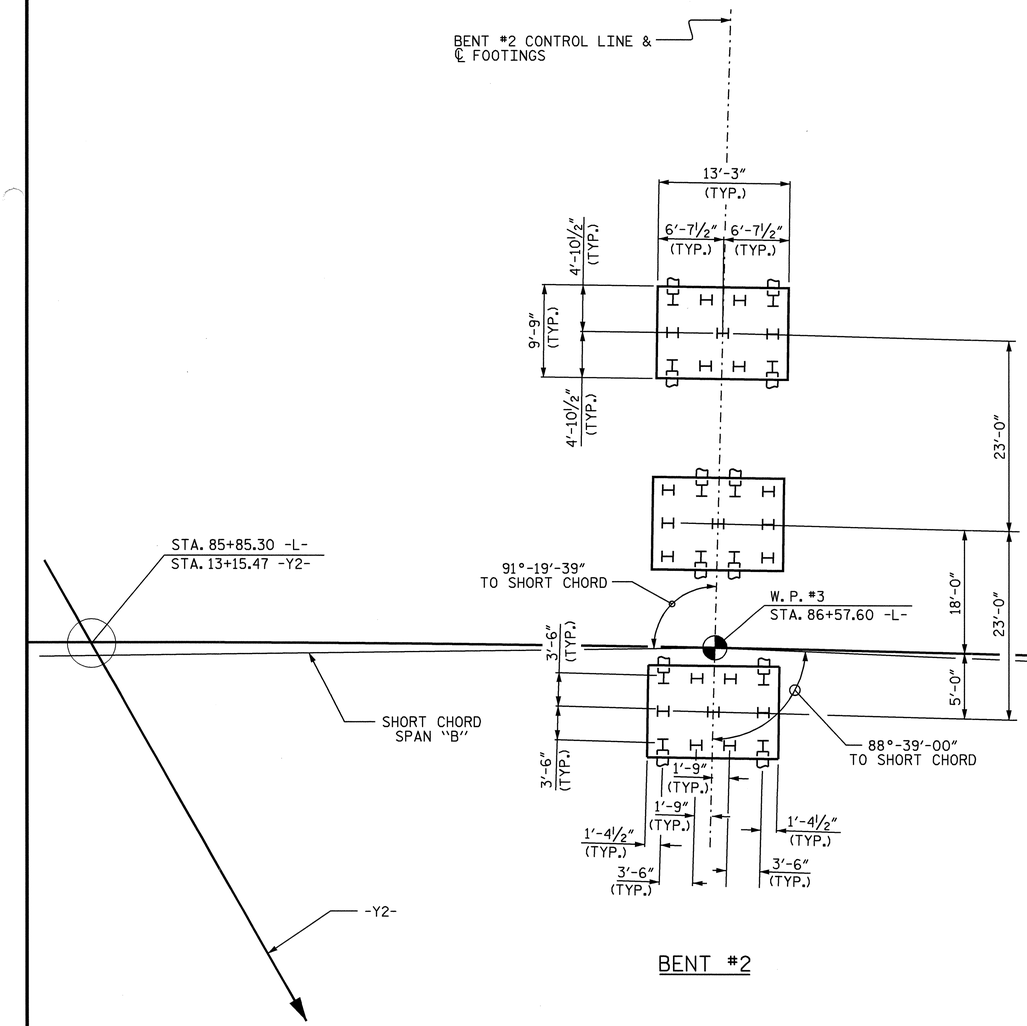

BENT #2

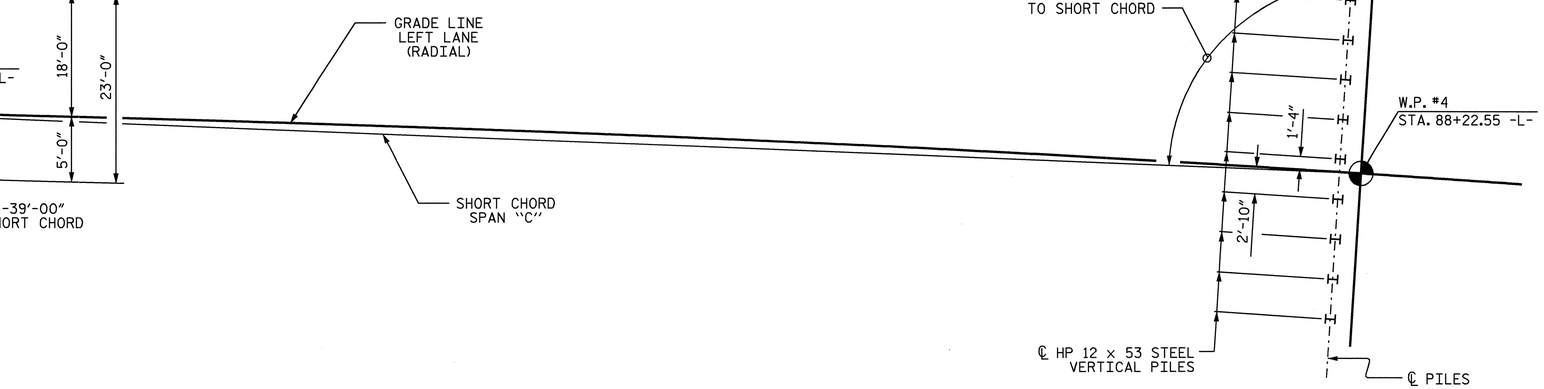

END BENT #2

PROJECT NO. R-2719A

LENOIR COUNTY

STATION: 85+98.30 -L-

SHEET 4 OF 6

FOUNDATION LAYOUT PLAN

PILES IN END BENT #2 ARE HP 12 x 53.

PILES IN INTERIOR BENT #2 ARE HP 14 x 73.

DIMENSIONS AND PILE LAYOUT ARE TYPICAL FOR EACH INTERIOR BENT FOOTING, EXCEPT AS SHOWN.

BRACE PILES IN INTERIOR BENT #2 ARE BATTERED 1½: 12.

NORTH CAROLINA PROFESSIONAL SEAL 14045 ENGINEER TIMOTHY L. COGGINS

4/3/09

STATE OF NORTH CAROLINA
DEPARTMENT OF TRANSPORTATION
RALEIGH

GENERAL DRAWING

FOR BRIDGE OVER NORTH CAROLINA RAILROAD ON CRESCENT ROAD BETWEEN EXISTING US 70 AND SR 1546 (LEFT LANE)

REVISIONS						SHEET NO.
NO.	BY:	DATE:	NO.	BY:	DATE:	S-33
1			3			TOTAL SHEETS
2			4			340

DRAWN BY : J. B. WILSON DATE : 09/2008

CHECKED BY : T. L. COGGINS DATE : 09/2008

03-APR-2009 13:11
h:\structures\str#2\finalplans\r2719a_sd_gd_02.dgn
tcoggins

STR. #2

HORIZONTAL CURVE DATA -L-

PI STA. 78+80.01 -L-
Δ = 40°-36′-26.1″(RT)
D = 1°-38′-13.3″
L = 2,480.56′
T = 1,294.94′
R = 3,500.00′
e = 6.0%

PIs STA. 91+87.66 -L-
θs = 2°-59′-44.7″
Ls = 366.00′
LT = 244.03′
ST = 122.03′

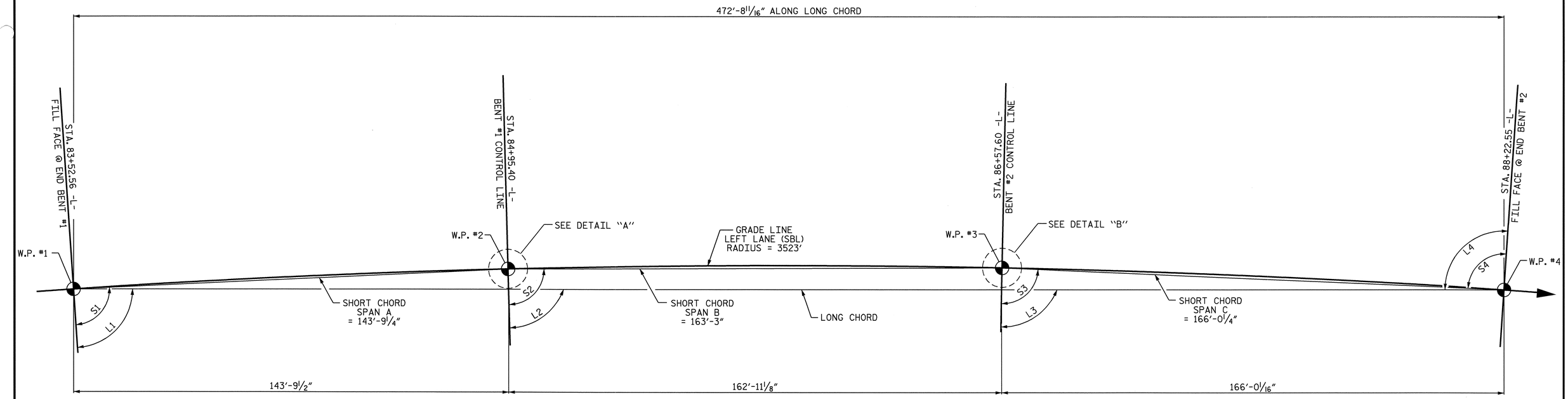

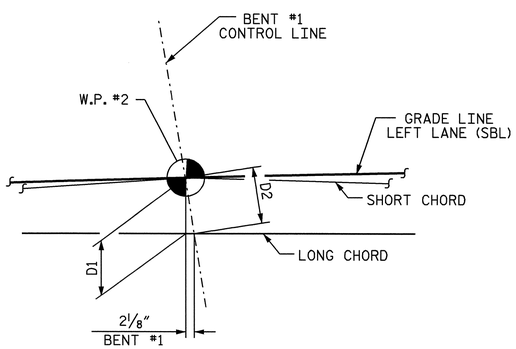

DETAIL "A"

LONG CHORD LAYOUT

OFFSETS	
D1 & D2	6′-8 5/8″
D3 & D4	7′-2 13/16″

ANGLES			
LONG CHORD		SHORT CHORD	
L1	86°-09′-11″	S1	88°-49′-51″
L2	88°-29′-29″	S2	88°-40′-21″
L3	91°-08′-48″	S3	88°-39′-00″
L4	93°-50′-49″	S4	91°-21′-00″

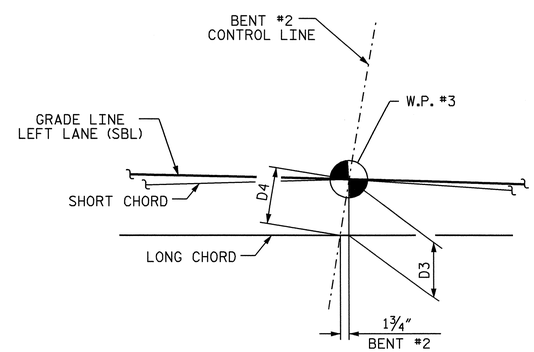

DETAIL "B"

PROJECT NO. R-2719A
LENOIR COUNTY
STATION: 85+98.30 -L-

SHEET 5 OF 6

STATE OF NORTH CAROLINA
DEPARTMENT OF TRANSPORTATION
RALEIGH

GENERAL DRAWING
FOR BRIDGE OVER NORTH CAROLINA RAILROAD ON CRESCENT ROAD BETWEEN EXISTING US 70 AND SR 1546 (LEFT LANE)

NORTH CAROLINA PROFESSIONAL SEAL 14045 ENGINEER TIMOTHY L. COGGINS
10/1/08

REVISIONS						SHEET NO.
NO.	BY:	DATE:	NO.	BY:	DATE:	S-34
1			3			TOTAL SHEETS
2			4			340

DRAWN BY : J.B. WILSON DATE : 9/22/08
CHECKED BY : T. L. COGGINS DATE : 9/2008

09-OCT-2008 12:01
g:\tlpprojects-r\r2719a\structures\str#2\finalplans\r2719a_sd_gd_02.dgn
taverette

STR. #2

BM-B: RR SPIKE IN 18" TWIN OAK TREE; STA. 87+00.00 -L-; 227' RT.; ELEV. 53.43.

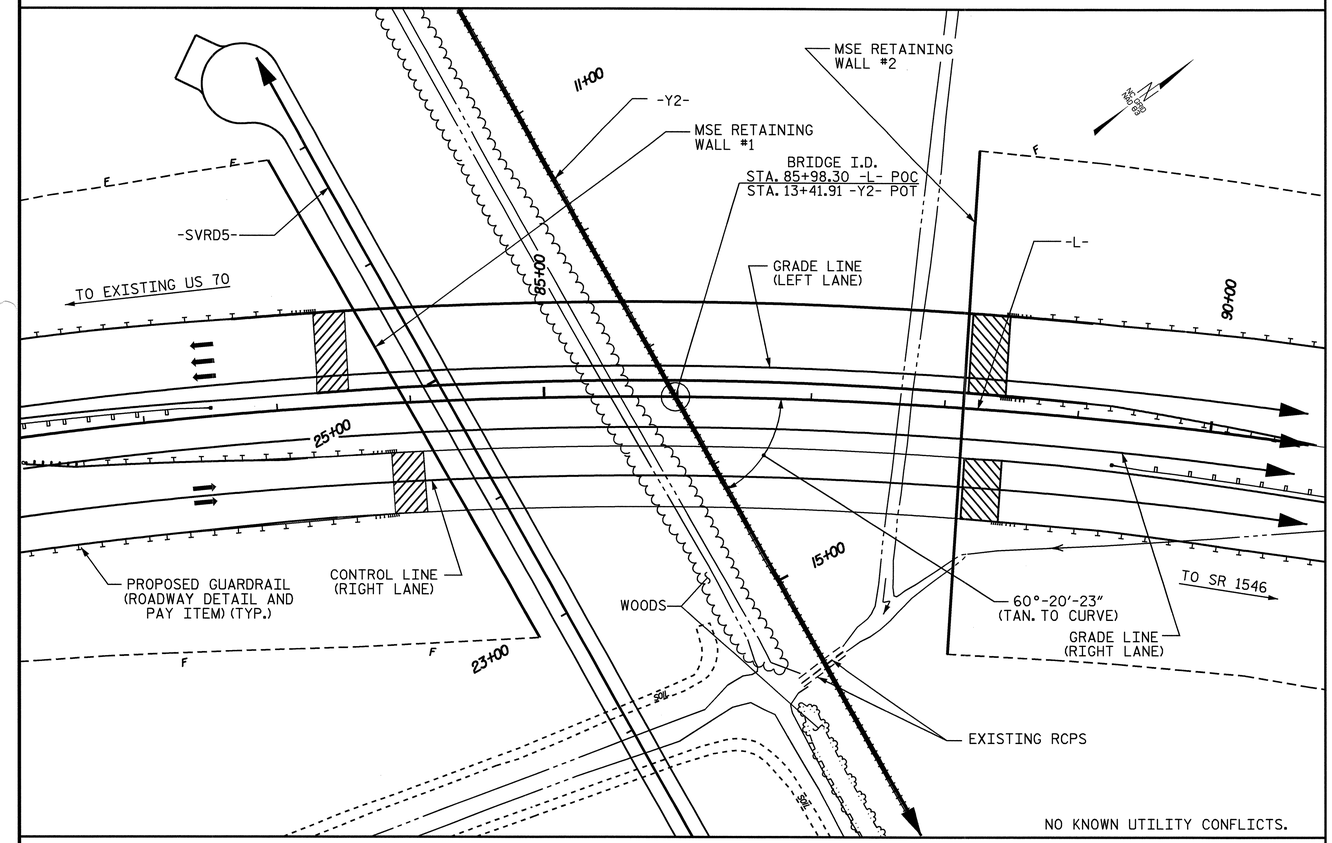

LOCATION SKETCH

NOTES:

ASSUMED LIVE LOAD = HS20 OR ALTERNATE LOADING, EXCEPT THE GIRDERS HAVE BEEN DESIGNED FOR HS25.

THIS BRIDGE HAS BEEN DESIGNED BY THE STRENGTH DESIGN METHOD AS SPECIFIED IN AASHTO STANDARD SPECIFICATIONS.

THIS BRIDGE HAS BEEN DESIGNED IN ACCORDANCE WITH THE REQUIREMENTS OF THE STANDARD SPECIFICATIONS FOR SEISMIC DESIGN OF HIGHWAY BRIDGES FOR SEISMIC PERFORMANCE CATEGORY A.

FOR OTHER DESIGN DATA AND GENERAL NOTES, SEE SHEET SN.

FOR EROSION CONTROL MEASURES SEE EROSION CONTROL PLANS.

ALL STRUCTURAL STEEL SHALL BE AASHTO M270 GRADE 50W AND PAINTED IN ACCORDANCE WITH SYSTEM 4 OF ARTICLE 442-7 OF THE STANDARD SPECIFICATIONS UNLESS OTHERWISE NOTED ON THE PLANS.

REMOVABLE FORMS MAY BE USED IN LIEU OF METAL STAY-IN-PLACE FORMS IN ACCORDANCE WITH ARTICLE 420-3 OF THE STANDARD SPECIFICATIONS.

THE CONTRACTOR SHALL PROVIDE INDEPENDENT ASSURANCE SAMPLES OF REINFORCING STEEL AS FOLLOWS: FOR PROJECTS REQUIRING UP TO 400 TONS OF REINFORCING STEEL, ONE 30 INCH SAMPLE OF EACH SIZE BAR USED, AND FOR PROJECTS REQUIRING OVER 400 TONS OF REINFORCING STEEL, TWO 30 INCH SAMPLES OF EACH SIZE BAR USED. THE BARS FROM WHICH THE SAMPLES ARE TAKEN MUST THEN BE SPLICED WITH REPLACEMENT BARS OF THE SIZE AND LENGTH OF THE SAMPLE, PLUS A MINIMUM LAP SPLICE OF THIRTY BAR DIAMETERS.

NEEDLE BEAMS WILL NOT BE ALLOWED UNLESS OTHERWISE CALLED FOR ON THE PLANS OR APPROVED BY THE ENGINEER.

FOR SUBMITTAL OF WORKING DRAWINGS, SEE SPECIAL PROVISIONS.

FOR FALSEWORK AND FORMWORK, SEE SPECIAL PROVISIONS.

FOR CRANE SAFETY, SEE SPECIAL PROVISIONS.

FOR GROUT FOR STRUCTURES, SEE SPECIAL PROVISIONS.

FOR SHIPPING STEEL STRUCTURAL MEMBERS, SEE SPECIAL PROVISIONS.

DRIVE PILES AT END BENT NO. 1 AND END BENT NO. 2 TO A REQUIRED BEARING CAPACITY OF 130 TONS PER PILE. THE REQUIRED BEARING CAPACITY IS EQUAL TO THE ALLOWABLE BEARING CAPACITY WITH A MINIMUM FACTOR OF SAFETY OF TWO.

THE ALLOWABLE BEARING CAPACITY FOR PILES AT END BENT NO. 1 AND END BENT NO. 2 IS 65 TONS PER PILE.

DRIVE PILES AT INTERIOR BENT NO. 1 AND INTERIOR BENT NO. 2 TO A REQUIRED BEARING CAPACITY OF 140 TONS PER PILE. THE REQUIRED BEARING CAPACITY IS EQUAL TO THE ALLOWABLE BEARING CAPACITY WITH A MINIMUM FACTOR OF SAFETY OF TWO.

THE ALLOWABLE BEARING CAPACITY FOR PILES AT INTERIOR BENT NO. 1 AND INTERIOR BENT NO. 2 IS 70 TONS PER PILE.

TESTING PILES WITH THE PILE DRIVING ANALYZER (PDA) DURING DRIVING, RESTRIKING OR REDRIVING MAY BE REQUIRED. THE ENGINEER WILL DETERMINE THE NEED FOR PDA TESTING.

OBSERVE A ONE-MONTH WAITING PERIOD AFTER CONSTRUCTING THE EMBANKMENT, END BENT AND REINFORCED APPROACH FILL BEFORE BEGINNING APPROACH SLAB CONSTRUCTION AT END BENT NO. 1 AND END BENT NO. 2.

FOR FAA REQUIREMENTS, SEE ROADWAY SPECIAL PROVISIONS.

FOR SLOPE PROTECTION DETAILS AND PAY ITEM, SEE MSE WALL #1 AND MSE WALL #2 PLANS.

TOTAL BILL OF MATERIAL

	FOUNDATION EXCAVATION FOR BENT	PDA TESTING	PDA ASSISTANCE	REINFORCED CONCRETE DECK SLAB	GROOVING BRIDGE FLOORS	CLASS A CONCRETE	BRIDGE APPROACH SLABS	REINFORCING STEEL	SPIRAL COLUMN REINFORCING STEEL	STRUCTURAL STEEL	HP 12 X 53 STEEL PILES		HP 14 X 73 STEEL PILES		PILE REDRIVES	CONCRETE BARRIER RAIL	POT BEARINGS	ELASTOMERIC BEARINGS	EVAZOTE JOINT SEALS	EXPANSION JOINT SEALS
	LUMP SUM	EA.	EA.	SQ.FT.	SQ.FT.	CU.YDS.	LUMP SUM	LBS.	LBS.	APPROX.LBS.	NO.	LIN.FT.	NO.	LIN.FT.	EA.	LIN.FT.	LUMP SUM	LUMP SUM	LUMP SUM	LUMP SUM
SUPERSTRUCTURE				29,939	29,694		LUMP SUM			1,197,700						946.69	LUMP SUM	LUMP SUM	LUMP SUM	LUMP SUM
END BENT NO.1						48.6		10,035			17	1,445								
BENT NO.1	LUMP SUM					141.5		28,177	2,116				33	2,310						
BENT NO.2	LUMP SUM					142.4		28,522	2,203				33	2,145						
END BENT NO.2						48.9		9,667			17	1,275								
TOTAL	LUMP SUM	1	1	29,939	29,694	381.4	LUMP SUM	76,401	4,319	1,197,700	34	2,720	66	4,455	20	946.69	LUMP SUM	LUMP SUM	LUMP SUM	LUMP SUM

PROJECT NO. R-2719A
LENOIR COUNTY
STATION: 85+98.30 -L-

SHEET 6 OF 6

STATE OF NORTH CAROLINA
DEPARTMENT OF TRANSPORTATION
RALEIGH

GENERAL DRAWING

FOR BRIDGE OVER NORTH CAROLINA RAILROAD ON CRESCENT ROAD BETWEEN EXISTING US 70 AND SR 1546 (LEFT LANE)

NORTH CAROLINA PROFESSIONAL SEAL 14045 ENGINEER TIMOTHY L. COGGINS
4/3/09

REVISIONS						SHEET NO.
NO.	BY:	DATE:	NO.	BY:	DATE:	S-35
1			3			TOTAL SHEETS
2			4			340

DRAWN BY : J. B. WILSON DATE : 09/2008
CHECKED BY : T. L. COGGINS DATE : 09/2008

03-APR-2009 13:12
h:\structures\str#2\finalplans\r2719a_sd_gd_02.dgn
tcoggins

STR. #2

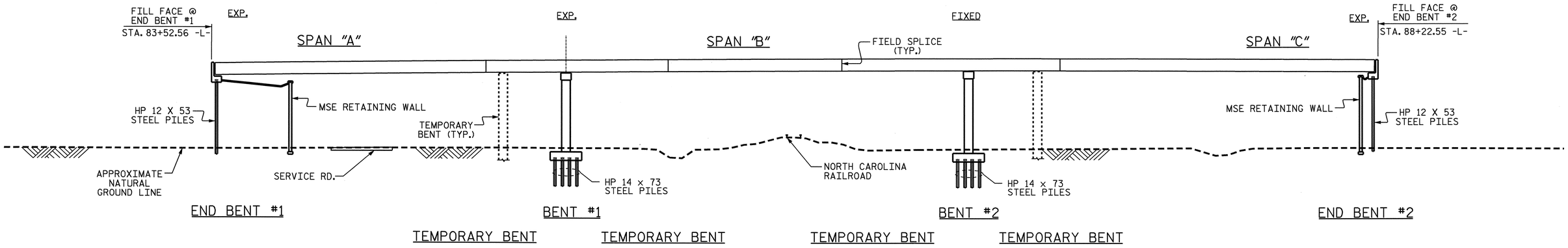

SECTION ALONG ℄ -L-

SCHEMATIC ELEVATION VIEW

ERECTION NOTES

INITIAL SET WILL REQUIRE PLACEMENT OF TWO ADJACENT GIRDERS WITH DIAPHRAGMS.

TEMPORARY BENT WILL SUPPORT ALL GIRDERS IN THE TYPICAL SECTION.

THE STRUCTURAL STEEL SHALL BE SUPPORTED DURING ERECTION IN ITS CAMBERED POSITION. A MINIMUM OF ONE TEMPORARY BENT SHALL BE USED IN SPANS "A" AND "C".

PLACEMENT OF TEMPORARY BENTS SHALL BE COORDINATED WITH RAILROAD COMPANY AND TRAFFIC PHASING REQUIREMENTS. SEE TRAFFIC CONTROL PLANS.

TEMPORARY BENTS SHALL REMAIN IN PLACE UNTIL ALL CROSSFRAMES ARE IN PLACE AND HIGH STRENGTH BOLTS ARE TIGHTENED.

TEMPORARY BENTS SHALL BE LOCATED AT CONNECTOR PLATES.

THE CONTRACTOR'S ERECTION PLANS SHALL INCLUDE A METHOD OF TEMPORARY BENT REMOVAL THAT WILL UNIFORMLY APPLY THE STRUCTURAL STEEL WEIGHT TO THE GIRDERS AND DIAPHRAGMS.

THE CONTRACTOR MAY SUBMIT ALTERNATE ERECTION METHODS. PLANS FOR SUCH ERECTION METHODS SHALL BE APPROVED BY THE ENGINEER.

PLANS FOR TEMPORARY BENTS, ERECTION SEQUENCE, AND TEMPORARY BENT REMOVAL SHALL BE SUBMITTED TO THE ENGINEER FOR REVIEW.

THE CONTRACTOR IS RESPONSIBLE FOR DESIGNING THE TEMPORARY BENTS. THE DESIGNS SHALL FOLLOW THE AASHTO GUIDE DESIGN SPECIFICATIONS FOR BRIDGE TEMPORARY WORKS, 1995 AND SHALL BE COMPLETED BY A PROFESSIONAL ENGINEER REGISTERED IN NORTH CAROLINA. THE CONTRACTOR SHALL SUBMIT SIGNED AND SEALED WORKING DRAWINGS AND CALCULATIONS FOR APPROVAL BY THE ENGINEER.

DURING THE GIRDER ERECTION PROCEDURE, THE CONTRACTOR IS RESPONSIBLE FOR PROVIDING TEMPORARY LATERAL BRACING AND OTHER MEANS OF SUPPORT, AS REQUIRED, TO ENSURE STABILITY OF THE GIRDERS, TO AVOID UPLIFT OF THE GIRDERS AT THE TEMPORARY BENTS AND TO MAINTAIN PLUMBNESS OF THE GIRDER WEBS.

NO SEPARATE MEASUREMENT OR PAYMENT WILL BE MADE FOR PROVIDING THE TEMPORARY BENT. THE COST FOR ALL MATERIALS, EQUIPMENT, TOOLS, LABOR AND ANY INCIDENTALS NECESSARY TO PROVIDE THE TEMPORARY BENT SHALL BE CONSIDERED INCIDENTAL TO THE LUMP SUM BID PRICE FOR STRUCTURAL STEEL.

PROJECT NO. R-2719A
LENOIR COUNTY
STATION: 85+98.30 -L-

NORTH CAROLINA PROFESSIONAL SEAL 12274 ENGINEER OMAR R. AZIZI

Omar R Azizi
10-9-08

STATE OF NORTH CAROLINA
DEPARTMENT OF TRANSPORTATION
RALEIGH

GIRDER ERECTION DETAILS

(LEFT LANE)

REVISIONS						SHEET NO.
NO.	BY:	DATE:	NO.	BY:	DATE:	S-36
1			3			TOTAL SHEETS
2			4			340

DRAWN BY : T.L. AVERETTE DATE : 08-2008
CHECKED BY : O. R. AZIZI DATE : 09-2008

08-OCT-2008 16:19
g:\tlprojects-r\r2719a\structures\str#2\finalplans\r2719a_sd_gd_02.dgn
taverette

STR. #2 NCDOS

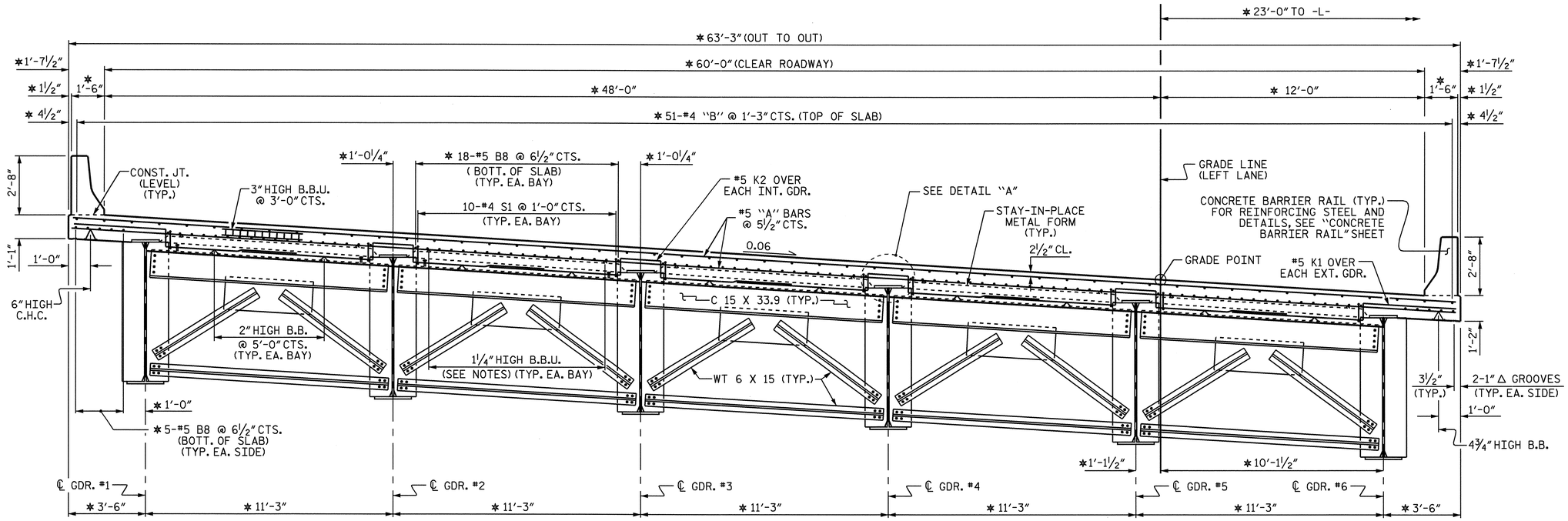

TYPICAL SECTION @ END BENT DIAPHRAGM

✱ RADIAL DIMENSIONS AND SPACES

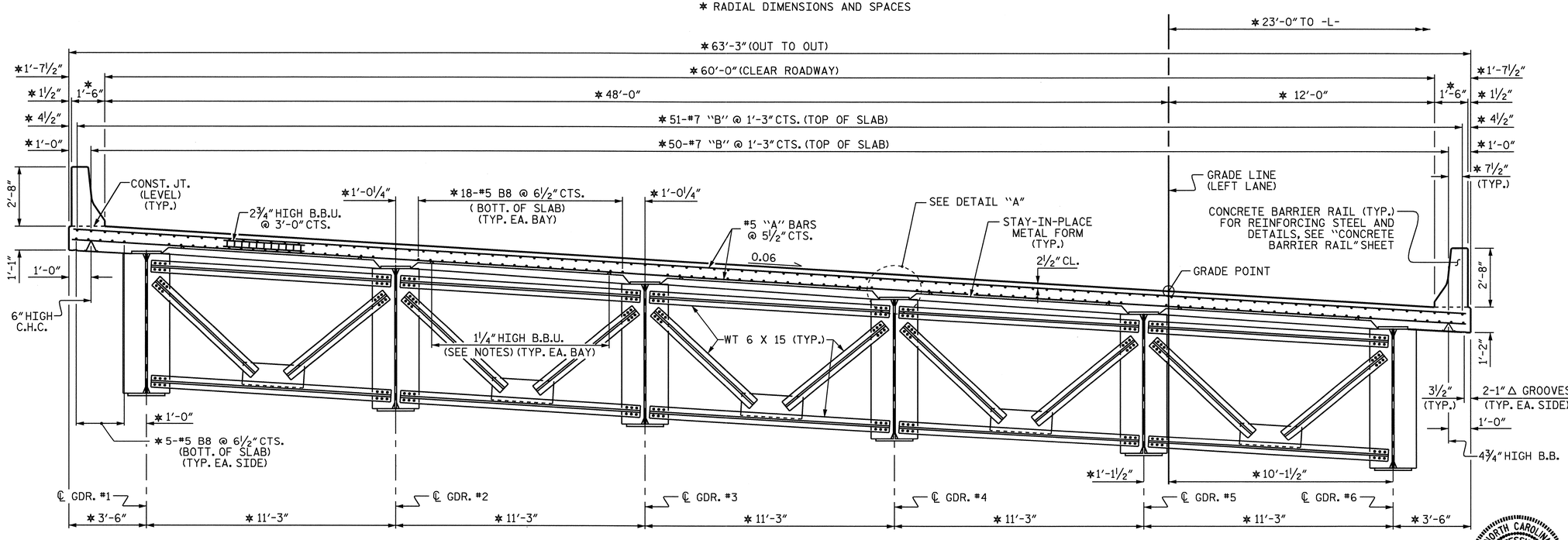

TYPICAL SECTION @ BENT DIAPHRAGM

✱ RADIAL DIMENSIONS AND SPACES

NOTES

PROVIDE 1¼" HIGH BEAM BOLSTERS UPPER AT 4'-0" CTS. ATOP THE METAL STAY-IN-PLACE FORMS TO SUPPORT THE BOTTOM MAT OF 'A' BARS. WHEN USING REMOVABLE FORMS, PROVIDE CONTINUOUS HIGH CHAIRS FOR METAL DECK (C.H.C.M.) @ 4'-0" CTS. WITH A HEIGHT TO SUPPORT THE BOTTOM MAT OF 'A' BARS A CLEAR DISTANCE OF 2½" ABOVE THE TOP OF THE REMOVABLE FORM.

METAL STAY-IN-PLACE FORMS SHALL NOT BE WELDED TO GIRDER FLANGES IN THE ZONES REQUIRING CHARPY V-NOTCH TEST. SEE STRUCTURAL STEEL DETAIL SHEETS.

PREVIOUSLY CAST CONCRETE IN A CONTINUOUS UNIT SHALL HAVE ATTAINED A MINIMUM COMPRESSIVE STRENGTH OF 3,000 PSI BEFORE ADDITIONAL CONCRETE IS CAST IN THE UNIT.

BARRIER RAIL IN A CONTINUOUS UNIT SHALL NOT BE CAST UNTIL ALL SLAB CONCRETE IN THE UNIT HAS BEEN CAST AND HAS REACHED A MINIMUM COMPRESSIVE STRENGTH OF 3,000 PSI.

STRUCTURAL STEEL ERECTION IN A CONTINUOUS UNIT SHALL BE COMPLETE BEFORE FALSEWORK OR FORMS ARE PLACED ON THE UNIT.

THE CONTRACTOR MAY, WHEN NECESSARY, PROPOSE A SCHEME FOR AVOIDING INTERFERENCE BETWEEN METAL STAY-IN-PLACE FORM SUPPORTS OR FORMS AND GIRDER STIFFENERS OR CONNECTOR PLATES. THE PROPOSAL SHALL BE INDICATED, AS APPROPRIATE, ON EITHER THE STEEL WORKING DRAWINGS OR THE METAL STAY-IN-PLACE FORM WORKING DRAWINGS.

THE CONTRACTOR SHALL ADJUST THE GIRDER BUILDUPS AS NECESSARY TO INCORPORATE A MAXIMUM PERMISSIBLE VARIATION IN POT BEARING DEPTH OF ½", SEE SPECIAL PROVISION FOR POT BEARINGS.

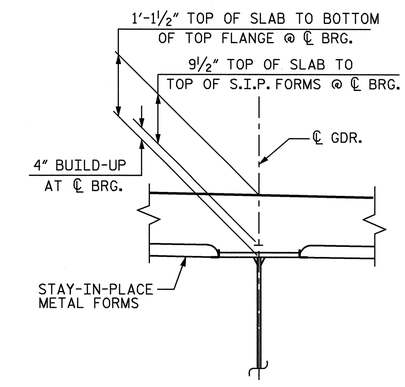

DETAIL "A"

PROJECT NO. R-2719A

LENOIR COUNTY

STATION: 85+98.30 -L-

SHEET 1 OF 2

STATE OF NORTH CAROLINA
DEPARTMENT OF TRANSPORTATION
RALEIGH

SUPERSTRUCTURE

TYPICAL SECTION

(LEFT LANE)

NORTH CAROLINA PROFESSIONAL SEAL 14045 ENGINEER TIMOTHY R. COGGINS

4/3/09

REVISIONS						SHEET NO.
NO.	BY:	DATE:	NO.	BY:	DATE:	S-37
1			3			TOTAL SHEETS
2			4			340

DRAWN BY : T.L. AVERETTE DATE : 05-08
CHECKED BY : PEGGY PARISI DATE : 08-08

02-APR-2009 16:46
gs:\tipprojects-r\r-2719a\structures\str#2\finalplans\R2719A_sd_TS_02.dgn
taverette

STR. #2

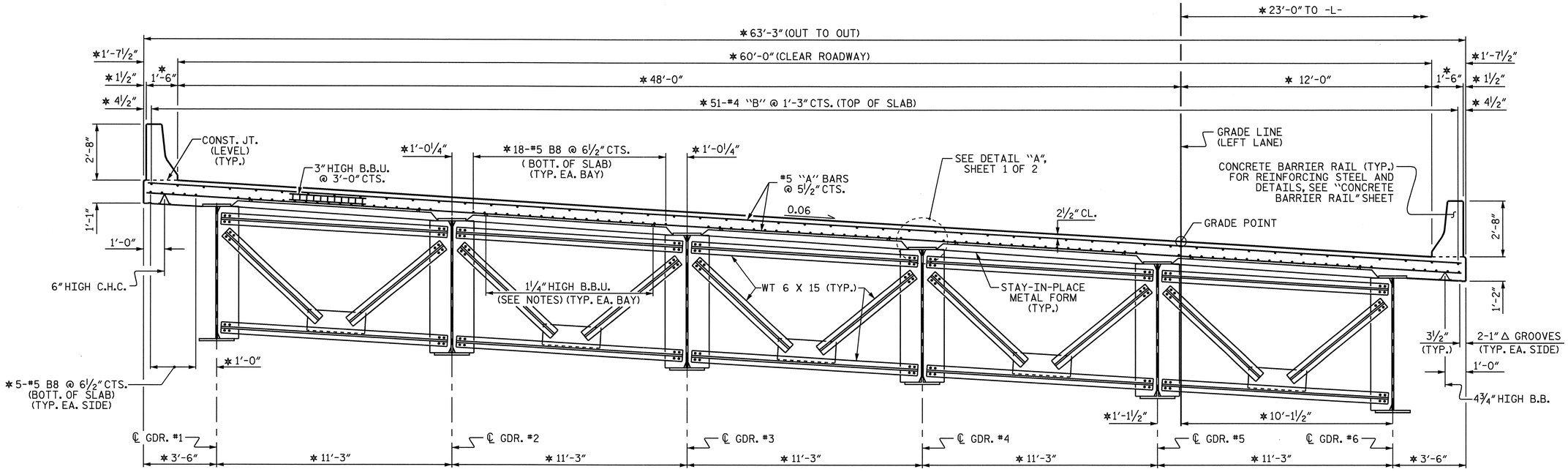

TYPICAL SECTION @ INTERMEDIATE DIAPHRAGM

* RADIAL DIMENSIONS AND SPACES

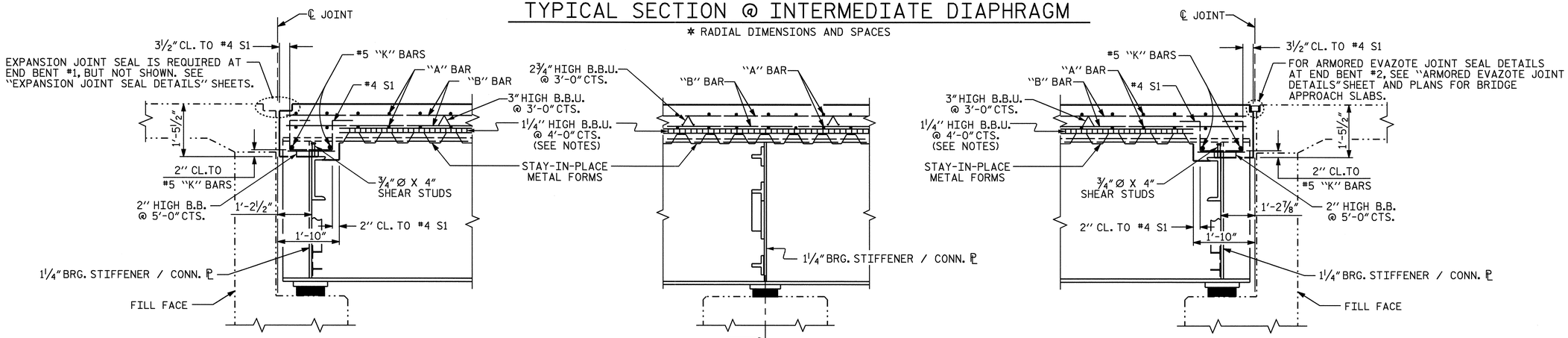

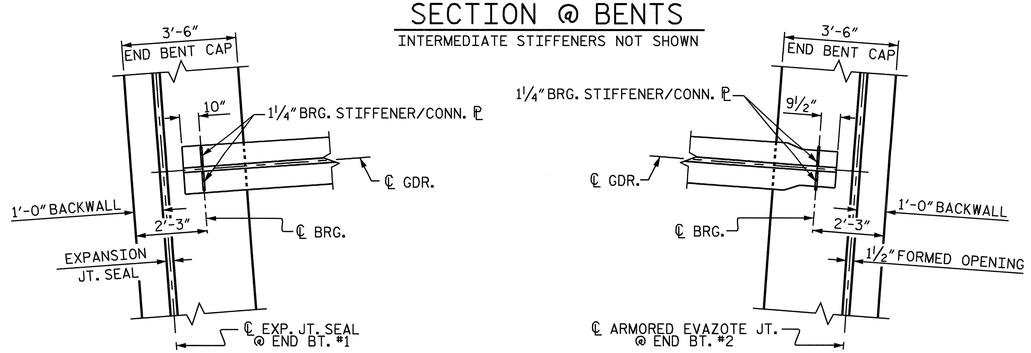

PROJECT NO. R-2719A
LENOIR COUNTY
STATION: 85+98.30 -L-

SHEET 2 OF 2

STATE OF NORTH CAROLINA
DEPARTMENT OF TRANSPORTATION
RALEIGH

SUPERSTRUCTURE
TYPICAL SECTION
(LEFT LANE)

NORTH CAROLINA PROFESSIONAL SEAL 14045 ENGINEER TIMOTHY C. COGGINS
4/3/09

REVISIONS						SHEET NO.
NO.	BY:	DATE:	NO.	BY:	DATE:	S-38
1			3			TOTAL SHEETS
2			4			340

DRAWN BY : T.L. AVERETTE DATE : 06-08
CHECKED BY : PEGGY PARISI DATE : 08-08

02-APR-2009 16:45
g:\tlpprojects-r\r2719a\structures\str#2\finalplans\R2719A_sd_TS_02.dgn
taverette

STR. #2

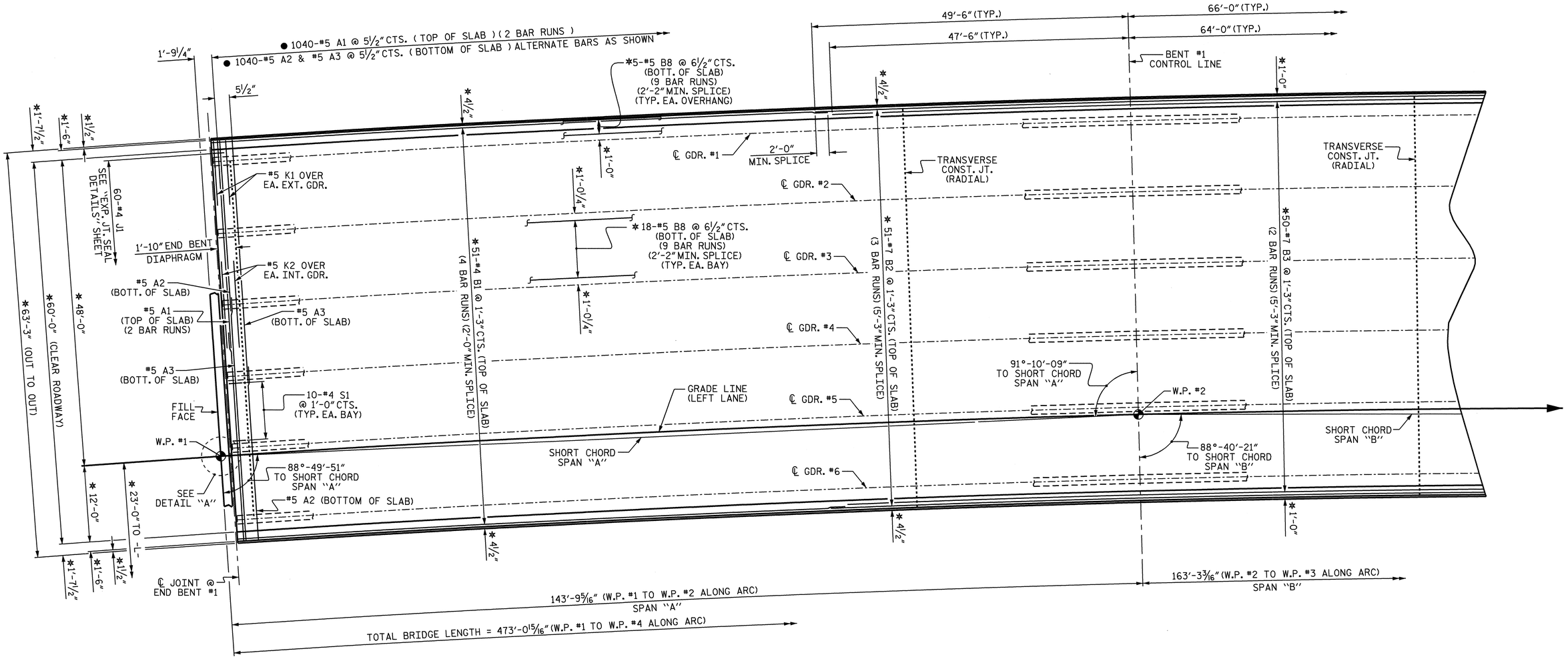

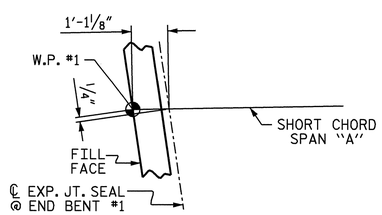

DETAIL "A"

PLAN OF SPAN "A"

* RADIAL DIMENSIONS AND SPACES.

● "A" BARS ARE SPACED RADIALLY ALONG LEFT OUTER EDGE OF SUPERSTRUCTURE. FOR LOCATION OF INTERMEDIATE DIAPHRAGMS, SEE "FRAMING PLAN." FOR LOCATION OF TRANSVERSE CONSTRUCTION JOINT, SEE POURING SEQUENCE.

PROJECT NO. R-2719A

LENOIR COUNTY

STATION: 85+98.30 -L-

SHEET 1 OF 3

STATE OF NORTH CAROLINA
DEPARTMENT OF TRANSPORTATION
RALEIGH

SUPERSTRUCTURE

PLAN OF SPAN "A"

(LEFT LANE)

NORTH CAROLINA PROFESSIONAL SEAL 14045 ENGINEER TIMOTHY L. COGGINS

4/3/09

REVISIONS						SHEET NO.
NO.	BY:	DATE:	NO.	BY:	DATE:	S-39
1			3			TOTAL SHEETS
2			4			340

DRAWN BY : T.L. AVERETTE DATE : 06-08
CHECKED BY : PEGGY PARISI DATE : 08-08

02-APR-2009 16:45
g:\tlpprojects-r\r2719a\structures\str#2\finalplans\r2719a_sd_S1_02.dgn
taverette

STR. #2

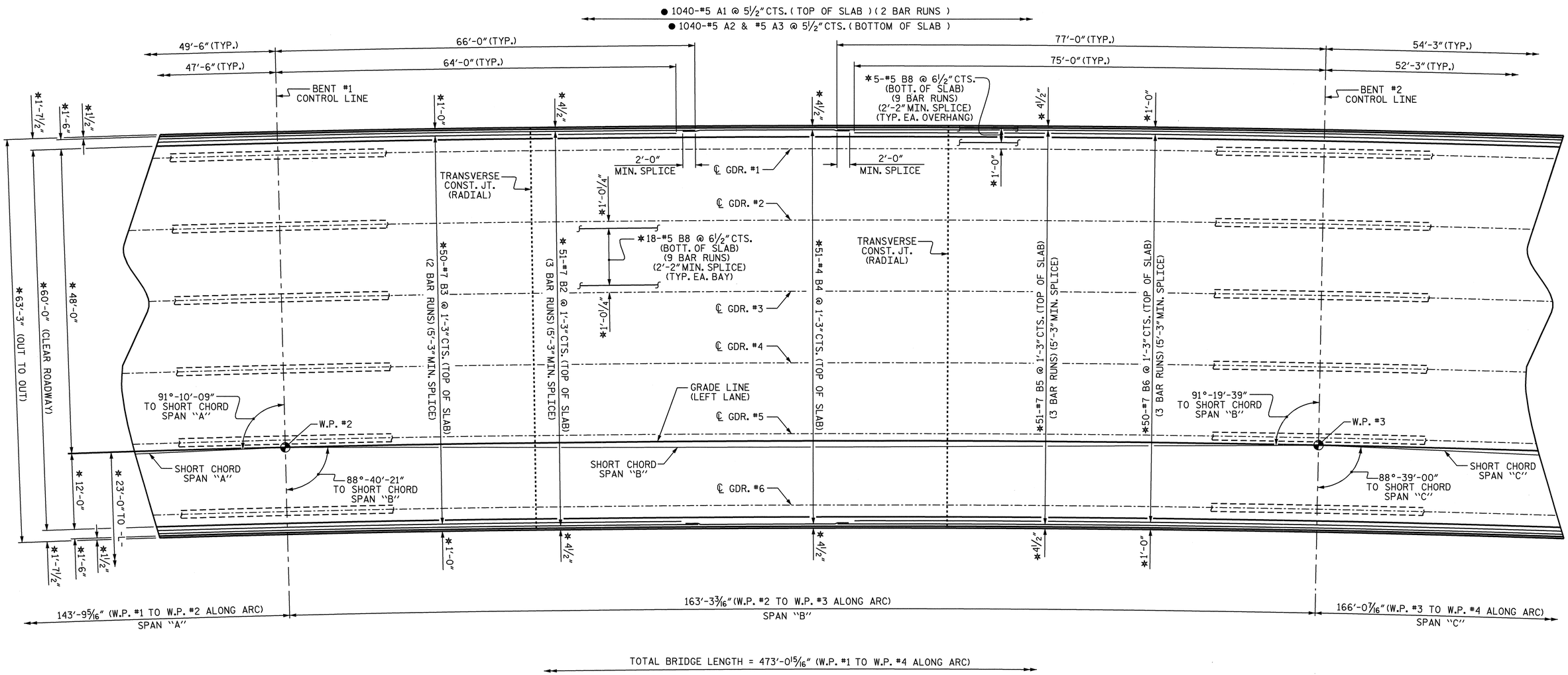

PLAN OF SPAN "B"

* RADIAL DIMENSIONS AND SPACES.

● "A" BARS ARE SPACED RADIALLY ALONG LEFT OUTER EDGE OF SUPERSTRUCTURE. FOR LOCATION OF INTERMEDIATE DIAPHRAGMS, SEE "FRAMING PLAN." FOR LOCATION OF TRANSVERSE CONSTRUCTION JOINT, SEE POURING SEQUENCE.

PROJECT NO. R-2719A
LENOIR COUNTY
STATION: 85+98.30 -L-

SHEET 2 OF 3

STATE OF NORTH CAROLINA
DEPARTMENT OF TRANSPORTATION
RALEIGH

SUPERSTRUCTURE
PLAN OF SPAN "B"
(LEFT LANE)

NORTH CAROLINA PROFESSIONAL SEAL 14045 ENGINEER TIMOTHY L. COGGINS
4/3/09

REVISIONS						SHEET NO.
NO.	BY:	DATE:	NO.	BY:	DATE:	S-40
1			3			TOTAL SHEETS
2			4			340

DRAWN BY : T.L. AVERETTE DATE : 06-08
CHECKED BY : PEGGY PARISI DATE : 08-08

02-APR-2009 16:45
g:\tlpprojects-r\r2719a\structures\str#2\finalplans\r2719a_sd_S1_02.dgn
taverette

STR. #2

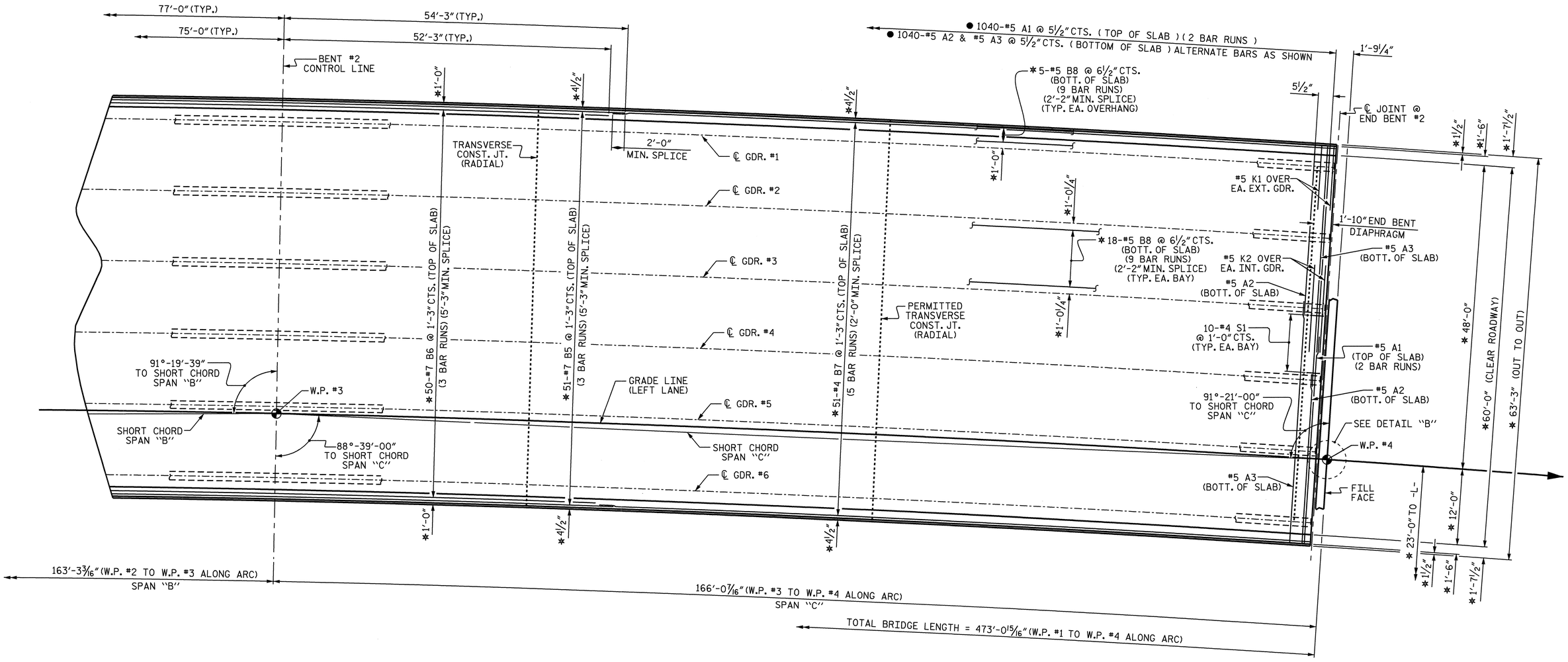

PLAN OF SPAN "C"

✱ RADIAL DIMENSIONS AND SPACES.

● "A" BARS ARE SPACED RADIALLY ALONG LEFT OUTER EDGE OF SUPERSTRUCTURE.
FOR LOCATION OF INTERMEDIATE DIAPHRAGMS, SEE "FRAMING PLAN."
FOR LOCATION OF TRANSVERSE CONSTRUCTION JOINT, SEE POURING SEQUENCE.

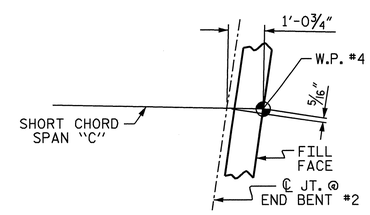

DETAIL "B"

PROJECT NO. R-2719A

LENOIR COUNTY

STATION: 85+98.30 -L-

SHEET 3 OF 3

STATE OF NORTH CAROLINA
DEPARTMENT OF TRANSPORTATION
RALEIGH

SUPERSTRUCTURE

PLAN OF SPAN "C"

(LEFT LANE)

NORTH CAROLINA PROFESSIONAL SEAL 14045 ENGINEER TIMOTHY L. COGGINS

4/3/09

REVISIONS						SHEET NO.
NO.	BY:	DATE:	NO.	BY:	DATE:	S-41
1			3			TOTAL SHEETS
2			4			340

DRAWN BY : T.L. AVERETTE DATE : 06-08
CHECKED BY : PEGGY PARISI DATE : 08-08

02-APR-2009 16:45
g:\tlpprojects-r\r2719a\structures\str#2\finalplans\r2719a_sd_S1_02.dgn
taverette

STR. #2

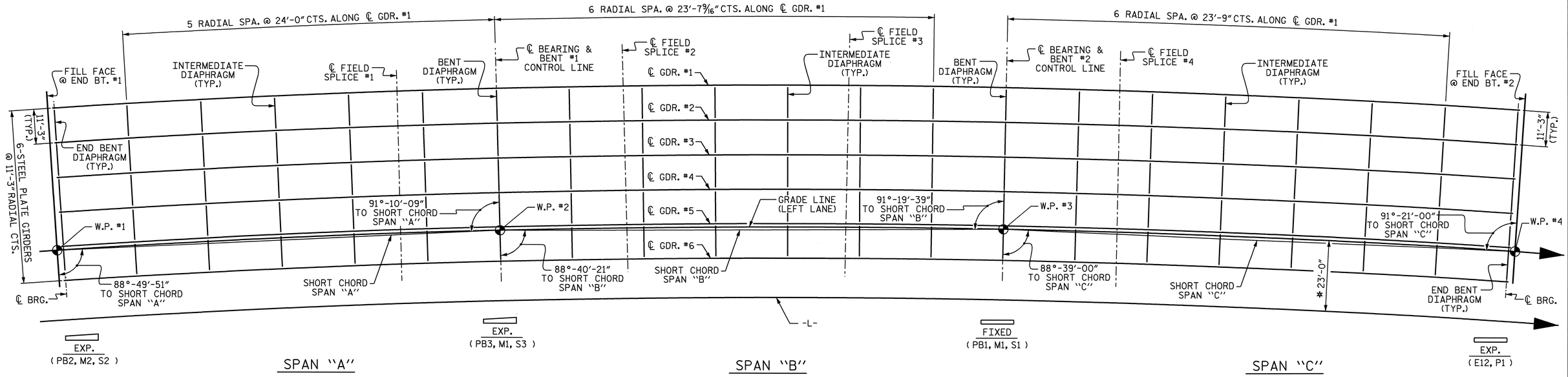

FRAMING PLAN

ALL BENT AND INTERMEDIATE DIAPHRAGMS ARE TO BE PLACED RADIALLY TO ℄ GIRDERS.

PROJECT NO. R-2719A
LENOIR COUNTY
STATION: 85+98.30 -L-

STATE OF NORTH CAROLINA
DEPARTMENT OF TRANSPORTATION
RALEIGH

SUPERSTRUCTURE
FRAMING PLAN
(LEFT LANE)

NORTH CAROLINA PROFESSIONAL SEAL 14045 ENGINEER TIMOTHY L. COGGINS
10/3/08

REVISIONS						SHEET NO.
NO.	BY:	DATE:	NO.	BY:	DATE:	S-42
1			3			TOTAL SHEETS
2			4			340

DRAWN BY : T.L. AVERETTE DATE : 06-08
CHECKED BY : PEGGY PARISI DATE : 08-08

08-OCT-2008 16:20
gi\tlpprojects-r\r2719a\structures\str#2\finalplans\R2719A_sd_FP_02.dgn
taverette

STR. #2

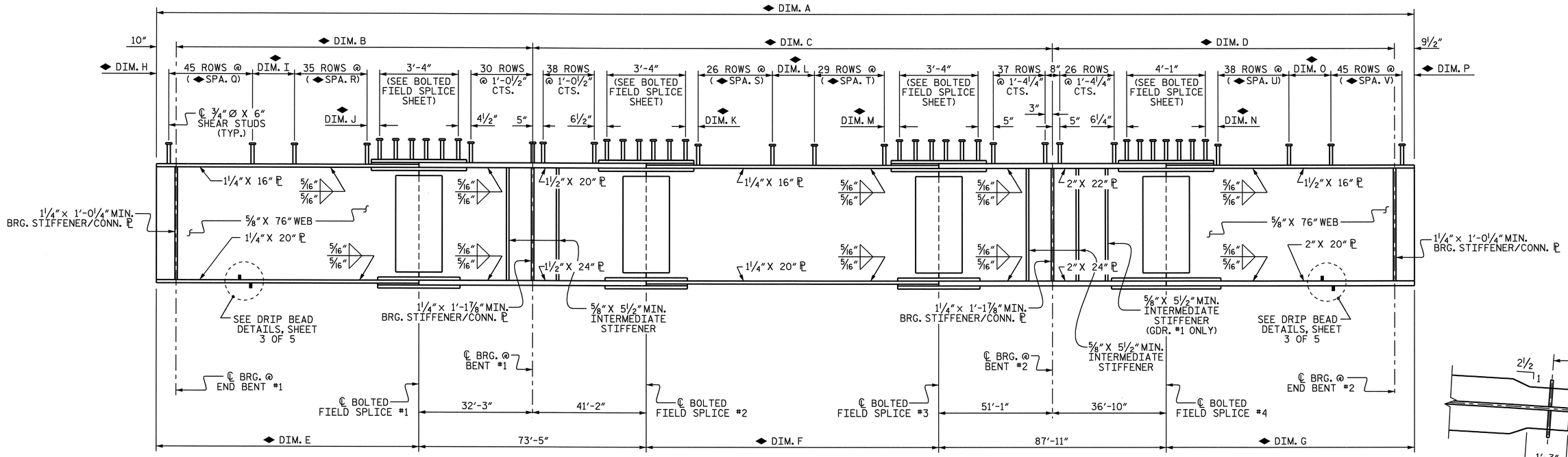

GIRDER ELEVATION

◆ FOR DIMENSIONS, SEE "GIRDER TABLE" BELOW.
4 SHEAR STUDS PER ROW

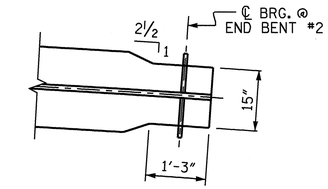

BOTTOM FLANGE TAPER DETAIL

(TYP. @ END BENT #2)

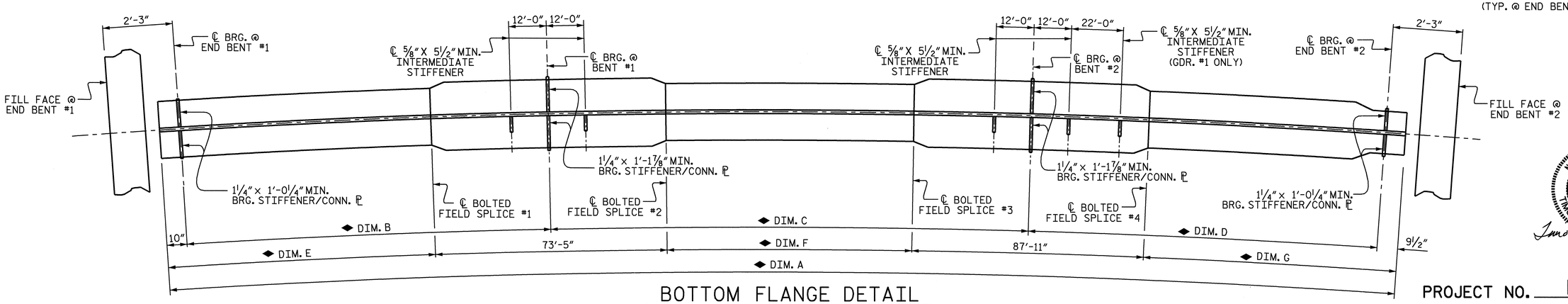

BOTTOM FLANGE DETAIL

◆ FOR DIMENSIONS, SEE "GIRDER TABLE" BELOW.
INTERMEDIATE STIFFENERS TO BE ON INTERIOR SIDE OF WEB FOR ALL GIRDERS.

GIRDER TABLE

	RADIUS	DIM. A	DIM. B	DIM. C	DIM. D	DIM. E	DIM. F	DIM. G	DIM. H	DIM. I	DIM. J	DIM. K	DIM. L	DIM. M	DIM. N	DIM. O	DIM. P	SPA. Q	SPA. R	SPA. S	SPA. T	SPA. U	SPA. V
GDR. #1	3569'-1½"	476'-4¾"	143'-4 15/16"	165'-4 13/16"	165'-11½"	111'-11 15/16"	73'-1 13/16"	129'-11"	4"	1'-0 1/16"	7⅞"	6 11/16"	11"	5⅛"	8"	1'-3¾"	7"	1'-7½"	1'-1"	1'-1"	1'-5½"	1'-5¾"	1'-7¼"
GDR. #2	3557'-10½"	474'-10⅝"	142'-11 7/16"	164'-10 9/16"	165'-5⅛"	111'-6 7/16"	72'-7 9/16"	129'-4⅝"	3"	1'-1 1/16"	10⅞"	8¼"	1'-2"	7 9/16"	6⅜"	1'-0"	6"	1'-7½"	1'-0¾"	1'-0¾"	1'-5¼"	1'-5¾"	1'-7¼"
GDR. #3	3546'-7½"	473'-4½"	142'-5 15/16"	164'-4 5/16"	164'-10¾"	111'-0 15/16"	72'-1 5/16"	128'-10¼"	7"	1'-4 1/16"	9⅜"	7½"	10"	6 1/16"	6"	8"	4"	1'-7¼"	1'-0¾"	1'-0¾"	1'-5¼"	1'-5¾"	1'-7¼"
GDR. #4	3535'-4½"	471'-10⅜"	142'-0⅜"	163'-10 1/16"	164'-4 7/16"	110'-7⅜"	71'-7 1/16"	128'-3 15/16"	6⅝"	11½"	8¾"	5⅞"	10"	8 7/16"	8 15/16"	1'-3"	8"	1'-7¼"	1'-0¾"	1'-0¾"	1'-5"	1'-5½"	1'-7"
GDR. #5	3524'-1½"	470'-4¼"	141'-6⅞"	163'-3 13/16"	163'-10 1/16"	110'-1⅞"	71'-0 13/16"	127'-9 9/16"	4"	9¾"	7⅝"	7"	1'-2½"	9 13/16"	11⅜"	1'-5 7/16"	6"	1'-7¼"	1'-0¾"	1'-0½"	1'-4¾"	1'-5¼"	1'-7"
GDR. #6	3512'-10½"	468'-10⅛"	141'-1⅜"	162'-9 9/16"	163'-3 11/16"	109'-8⅜"	70'-6 9/16"	127'-3 3/16"	3"	8"	4⅞"	4⅜"	1'-0½"	8 3/16"	7"	1'-3 7/16"	6"	1'-7¼"	1'-0¾"	1'-0½"	1'-4¾"	1'-5¼"	1'-7"

PROJECT NO. R-2719A
LENOIR COUNTY
STATION: 85+98.30 -L-

SHEET 1 OF 5

STATE OF NORTH CAROLINA
DEPARTMENT OF TRANSPORTATION
RALEIGH

SUPERSTRUCTURE
STRUCTURAL STEEL DETAILS
(LEFT LANE)

REVISIONS						SHEET NO.
NO.	BY:	DATE:	NO.	BY:	DATE:	S-43
1			3			TOTAL SHEETS
2			4			340

DRAWN BY : T.L. AVERETTE DATE : 06-08
CHECKED BY : PEGGY PARISI DATE : 08-08

02-APR-2009 16:44
g:\tlpprojects-r\r2719a\structures\str#2\finalplans\R2719A_sd_SS_02.dgn
taverette

STR. #2

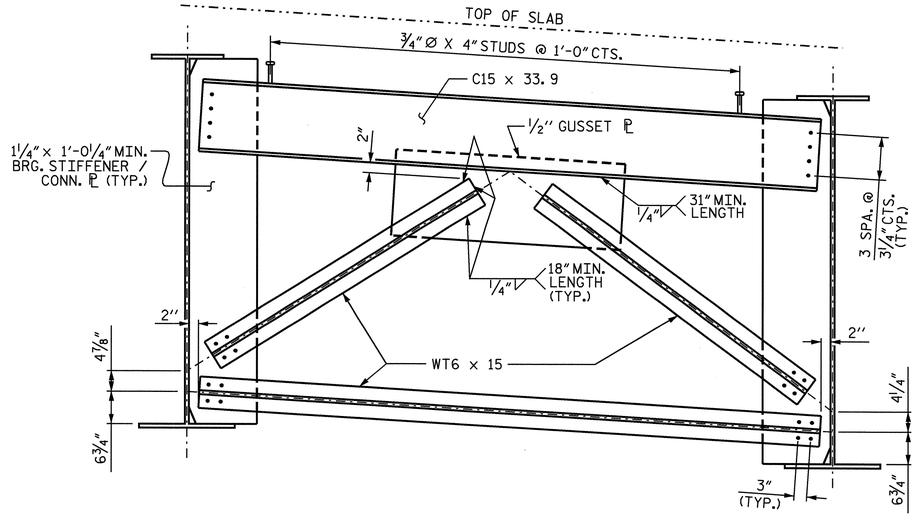

TYPICAL END BENT DIAPHRAGM

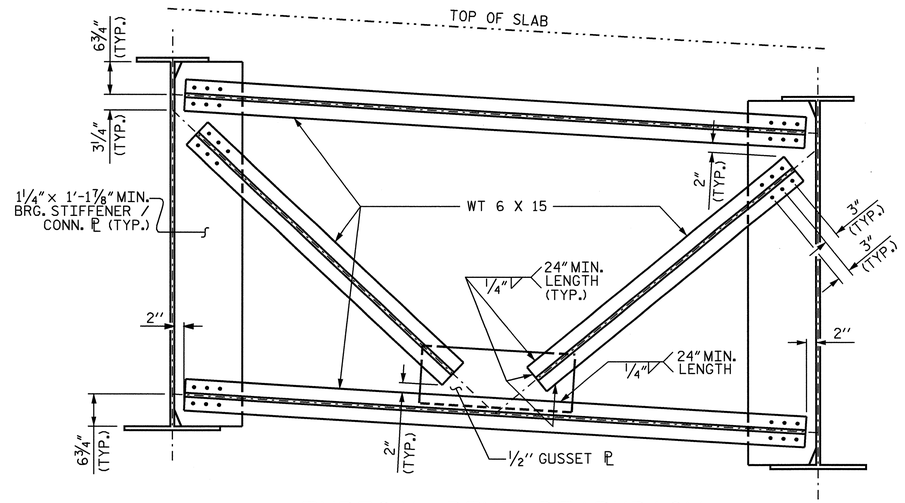

TYPICAL BENT DIAPHRAGM

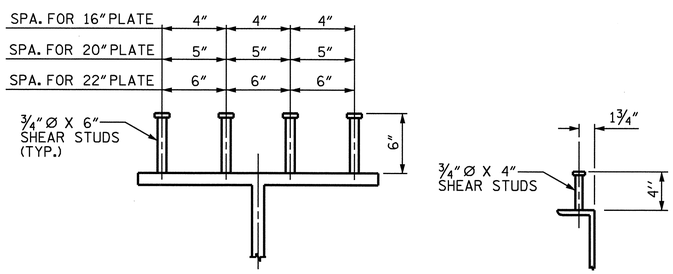

ON GIRDERS

ON CHANNELS

SHEAR STUD DETAILS

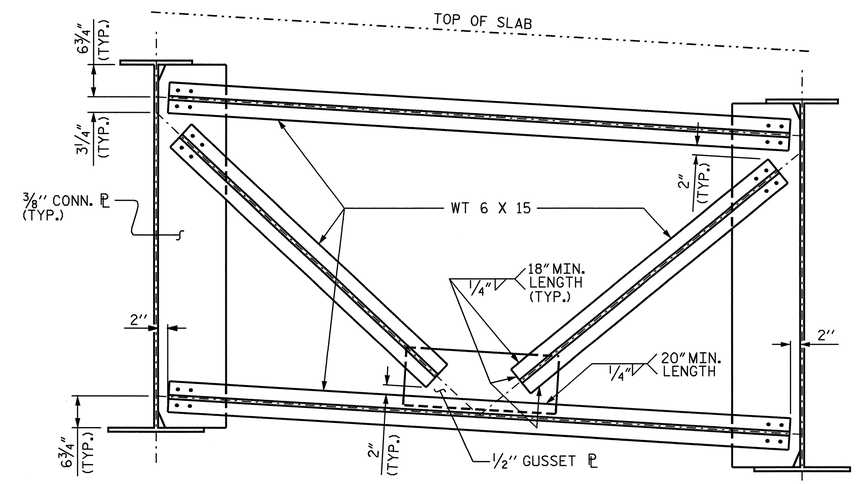

TYPICAL INTERMEDIATE DIAPHRAGM

FOR OPTIONAL INTERMEDIATE DIAPHRAGM IN SPAN "B," SEE SHEET 3 OF 5.

NOTES

ALL STRUCTURAL STEEL SHALL BE AASHTO M270 GRADE 50W AND PAINTED IN ACCORDANCE WITH SYSTEM 4 OF ARTICLE 442-7 OF THE STANDARD SPECIFICATIONS UNLESS OTHERWISE NOTED ON THE PLANS.

ALL DIMENSIONS SHOWN ARE HORIZONTAL OR VERTICAL, UNLESS OTHERWISE NOTED.

ALL FIELD CONNECTIONS TO BE 7/8" DIA. HIGH STRENGTH BOLTS UNLESS OTHERWISE NOTED. FOR HIGH STRENGTH BOLTS, SEE SPECIAL PROVISIONS.

BEARING STIFFENERS ARE TO BE PLACED NORMAL TO THE WEB OF THE GIRDER AND SHALL BE PLUMB.

SHOP SPLICES ARE PERMITTED TO LIMIT THE MAXIMUM REQUIRED FLANGE PIECE LENGTHS TO 60 FEET AND WEB PIECE LENGTHS TO 45 FEET. PERMITTED FLANGE AND WEB SHOP SPLICES SHALL NOT BE LOCATED WITHIN 15 FEET OF MAXIMUM DEAD LOAD DEFLECTION (NOR WITHIN 15 FEET OF INTERMEDIATE BEARINGS OF CONTINUOUS UNITS). KEEP 2 FEET MINIMUM BETWEEN WEB AND FLANGE SHOP SPLICES. KEEP 6" MINIMUM BETWEEN CONNECTOR PLATE OR TRANSVERSE STIFFENER WELDS AND WEB OR FLANGE SHOP SPLICES.

STUDS ON GIRDERS MAY BE SHIFTED UP TO 1" IF NECESSARY TO CLEAR FLANGE SPLICE WELD.

TENSION ON THE AASHTO M164 BOLTS SHALL BE CALIBRATED USING DIRECT TENSION INDICATOR WASHERS IN ACCORDANCE WITH ARTICLE 440-8 OF THE STANDARD SPECIFICATIONS.

END OF GIRDERS SHALL BE PLUMB.

BEARING STIFFENER MAY REQUIRE COPING IF WIDER THAN BOTTOM FLANGE TO AVOID INTERFERENCE WITH THE ANCHOR BOLT.

HEAT CURVING OF STEEL GIRDERS IS ALLOWED. SEE SPECIAL PROVISIONS.

FOR SHIPPING STEEL STRUCTURAL MEMBERS, SEE SPECIAL PROVISIONS.

THE CONTRACTOR SHALL MAINTAIN STABILITY OF THE CURVED GIRDERS UNTIL ALL BOLTED FIELD SPLICES AND DIAPHRAGM CONNECTIONS HAVE BEEN COMPLETED.

AT THE CONTRACTOR'S OPTION, THE DIAPHRAGM WITH THE WELDED GUSSET PLATES MAY BE USED IN LIEU OF THE DIAPHRAGM WITH BOLTED ANGLES AT NO ADDITIONAL COST TO THE DEPARTMENT.

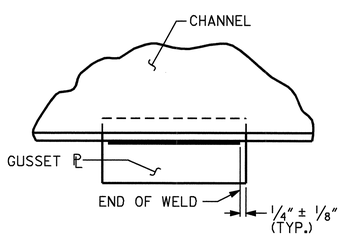

TYPICAL GUSSET PLATE CONNECTION

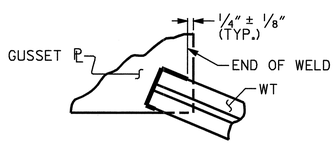

TYPICAL "TEE" TO GUSSET PLATE CONNECTION

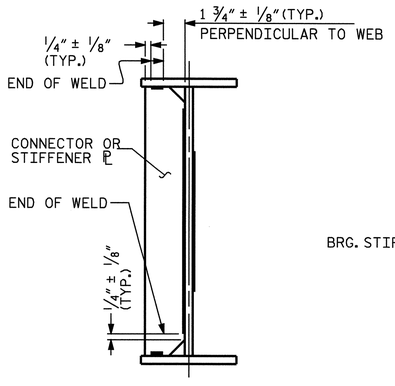

TYPICAL STIFFENER OR CONNECTOR PLATE CONNECTIONS

WELD TERMINATION DETAILS

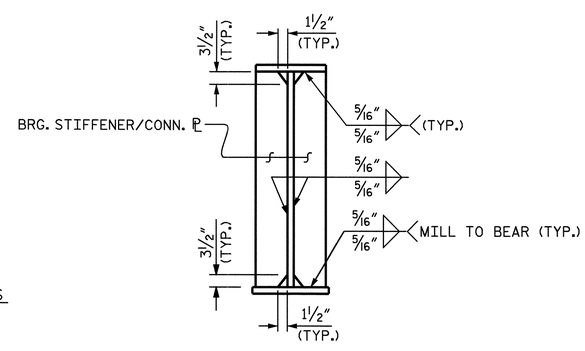

BEARING STIFFENER / CONNECTOR PLATE

(@ END BENT & INTERIOR BENT DIAPHRAGMS)

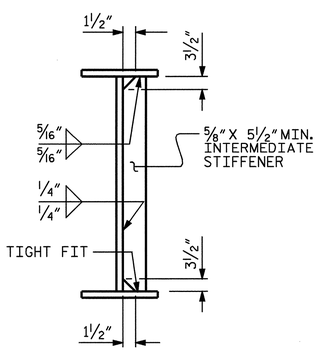

INTERMEDIATE STIFFENER

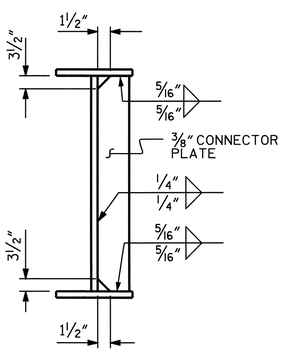

CONNECTOR PLATE

(@ INTERMEDIATE DIAPHRAGMS)

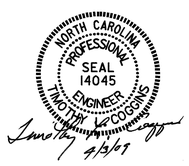

PROJECT NO. R-2719A

LENOIR COUNTY

STATION: 85+98.30 -L-

SHEET 2 OF 5

STATE OF NORTH CAROLINA
DEPARTMENT OF TRANSPORTATION
RALEIGH

SUPERSTRUCTURE
STRUCTURAL STEEL DETAILS
(LEFT LANE)

REVISIONS						SHEET NO.
NO.	BY:	DATE:	NO.	BY:	DATE:	S-44
1			3			TOTAL SHEETS
2			4			340

DRAWN BY : T.L. AVERETTE DATE : 07-08
CHECKED BY : PEGGY PARISI DATE : 08-08

STR. #2

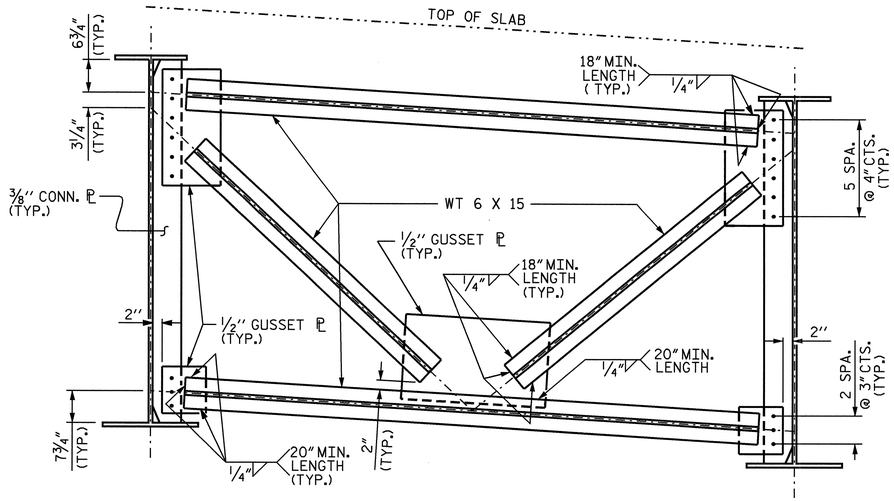

TYPICAL OPTIONAL INTERMEDIATE DIAPHRAGM

SPAN "B"

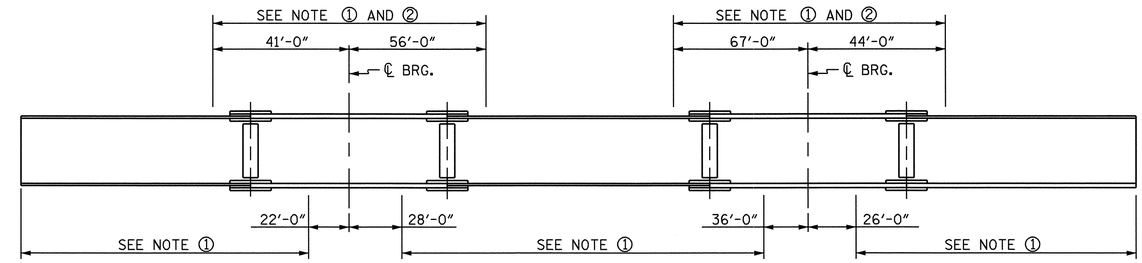

GIRDER MAKE UP

NOTE ①: CHARPY V-NOTCH TESTS ARE REQUIRED FOR TOP OR BOTTOM FLANGE PLATES WHICH FALL WITHIN THESE LIMITS. ALSO, CHARPY V-NOTCH TESTS WILL BE REQUIRED FOR ALL WEB PLATES, WEB SPLICE PLATES, FLANGE SPLICE PLATES, AND ALL MEMBERS IN THE DIAPHRAGMS. IF A PERMITTED SHOP FLANGE SPLICE IS NOT USED, CHARPY V-NOTCH TESTS WILL BE REQUIRED FOR THE ENTIRE FLANGE PLATE. FOR CHARPY V-NOTCH TESTS, SEE ARTICLE 1072-9 OF THE STANDARD SPECIFICATIONS.

NOTE ②: NO WELDING OF FORMS OR FALSEWORK TO THE TOP FLANGE WILL BE PERMITTED IN THIS REGION.

CHARPY V-NOTCH TESTS FOR CONTINUOUS PLATE GIRDERS

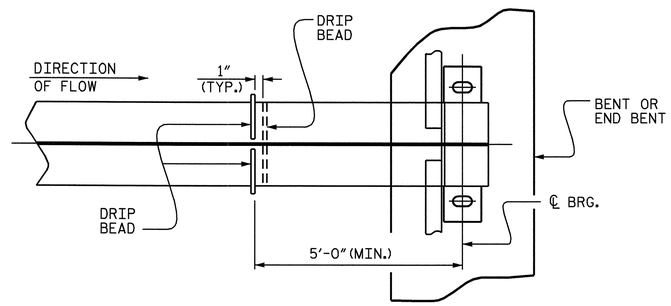

PART PLAN - BOTTOM FLANGE

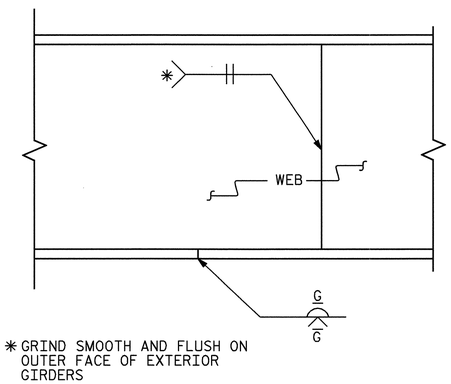

* GRIND SMOOTH AND FLUSH ON OUTER FACE OF EXTERIOR GIRDERS

ELEVATION

TYPICAL FLANGE AND WEB BUTT JOINT

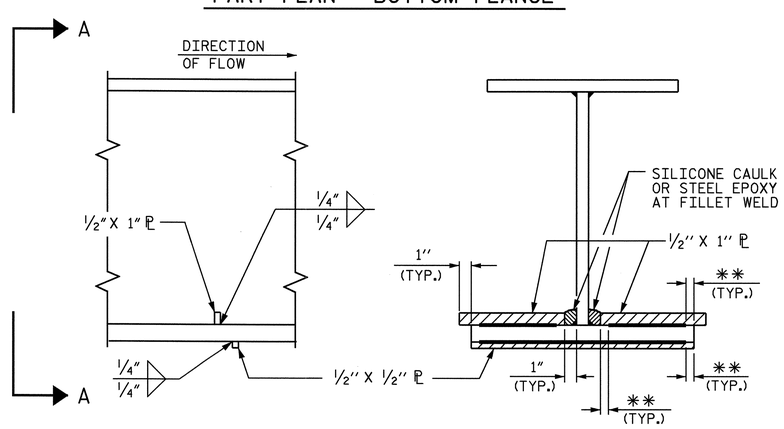

SECTION

VIEW A-A

**SEE "WELD TERMINATION DETAILS"

DRIP BEAD DETAILS

PROJECT NO. R-2719A

LENOIR COUNTY

STATION: 85+98.30 -L-

SHEET 3 OF 5

STATE OF NORTH CAROLINA
DEPARTMENT OF TRANSPORTATION
RALEIGH

SUPERSTRUCTURE
STRUCTURAL STEEL DETAILS
(LEFT LANE)

NORTH CAROLINA PROFESSIONAL SEAL 14045 ENGINEER TIMOTHY L. COGGINS
4/3/09

REVISIONS						SHEET NO.
NO.	BY:	DATE:	NO.	BY:	DATE:	S-45
1			3			TOTAL SHEETS
2			4			340

DRAWN BY: T.L. AVERETTE DATE: 07-08
CHECKED BY: PEGGY PARISI DATE: 08-08

02-APR-2009 16:42
g:\tlpprojects-r\r2719a\structures\str#2\finalplans\R2719A_sd_SS_02.dgn
taverette

STR. #2

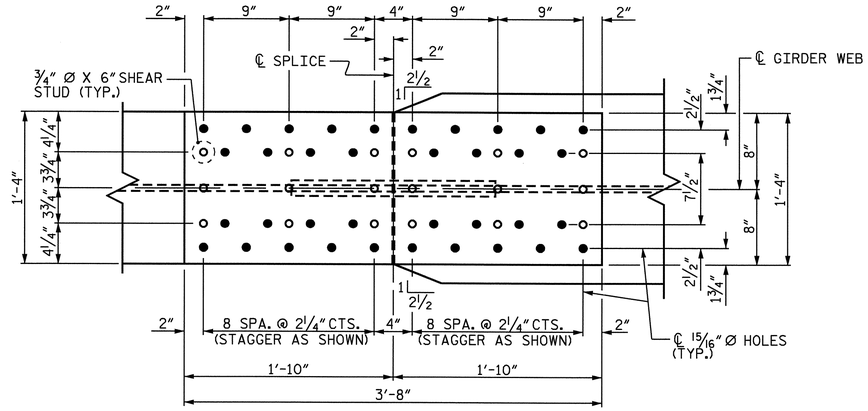

PLAN (TOP OF TOP FLANGE)

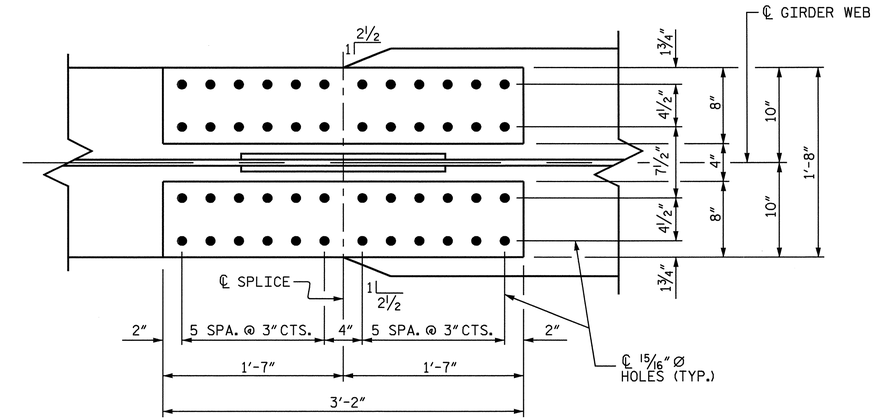

PLAN (TOP OF BOTTOM FLANGE)

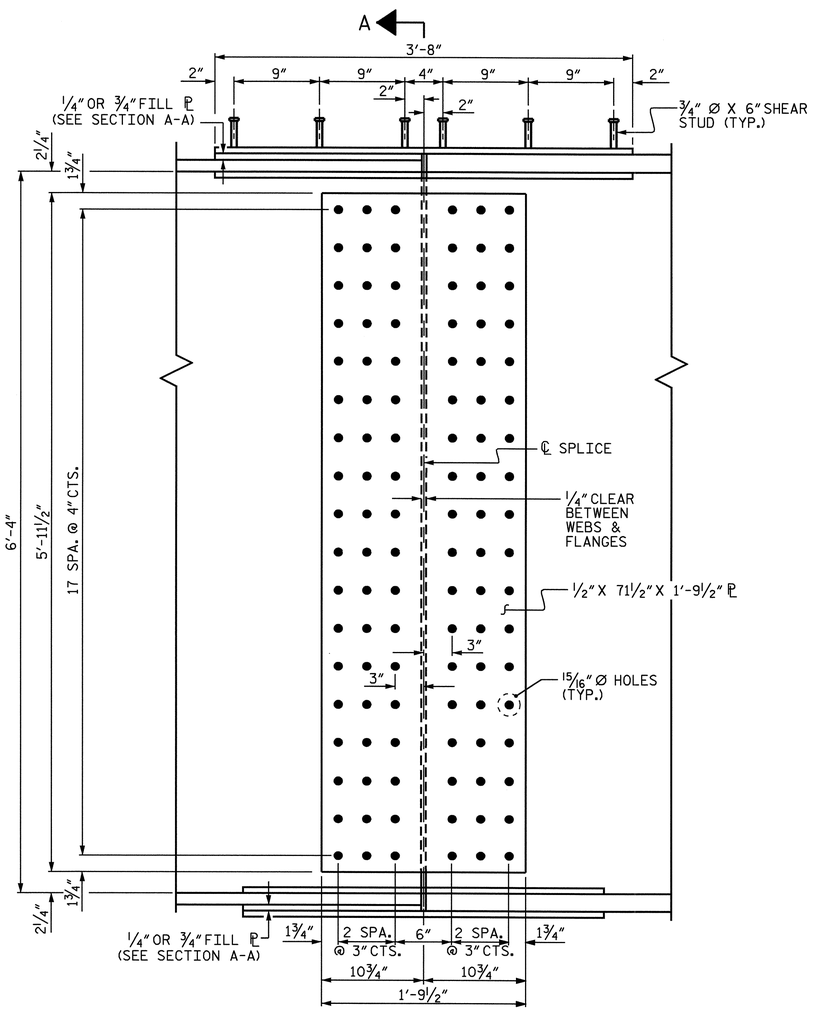

ELEVATION

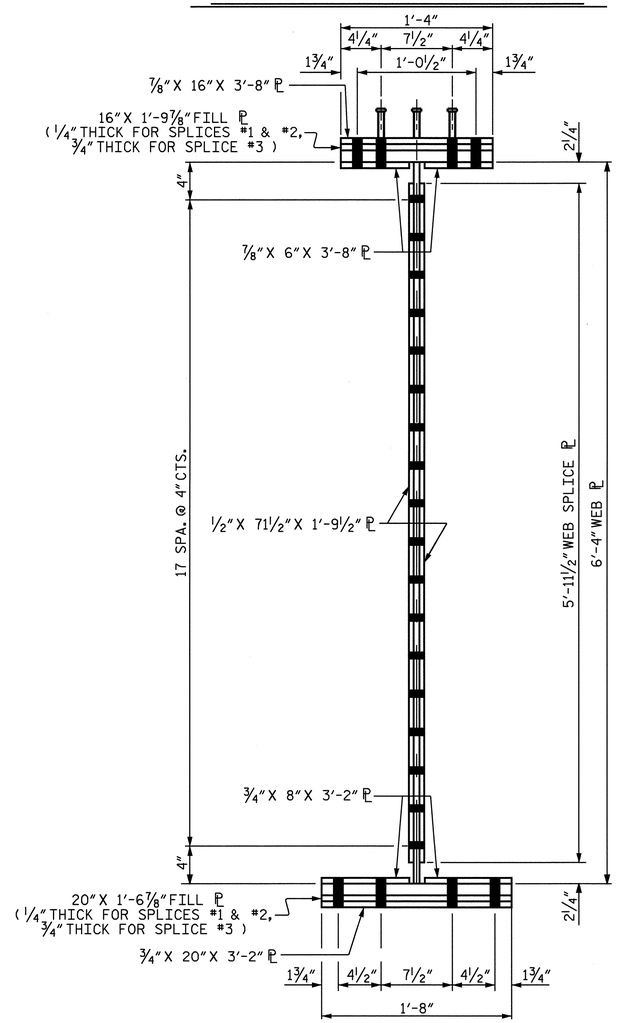

SECTION A-A

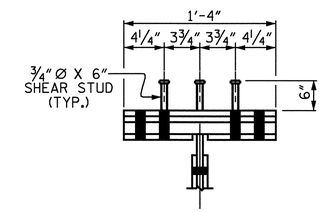

SHEAR STUD DETAIL FOR TOP FLANGE SPLICE PLATE

BOLTED FIELD SPLICE DETAILS

PROJECT NO. R-2719A
LENOIR COUNTY
STATION: 85+98.30 -L-

SHEET 4 OF 5

STATE OF NORTH CAROLINA
DEPARTMENT OF TRANSPORTATION
RALEIGH

SUPERSTRUCTURE
STRUCTURAL STEEL
BOLTED FIELD SPLICE
#1 THRU #3 DETAILS
(LEFT LANE)

NORTH CAROLINA PROFESSIONAL SEAL 14045 ENGINEER TIMOTHY L. COGGINS
4/3/09

REVISIONS						SHEET NO.
NO.	BY:	DATE:	NO.	BY:	DATE:	S-46
1			3			TOTAL SHEETS
2			4			340

DRAWN BY : T.L. AVERETTE DATE : 07-08
CHECKED BY : PEGGY PARISI DATE : 08-08

02-APR-2009 16:41
g:\flpprojects-r\r2719a\structures\str#2\finalplans\R2719A_sd_SS_02.dgn
taverette

STR. #2

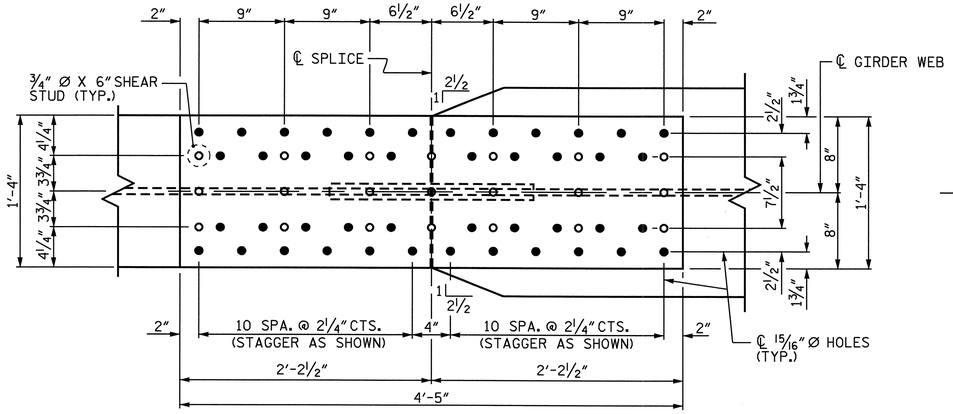

PLAN (TOP OF TOP FLANGE)

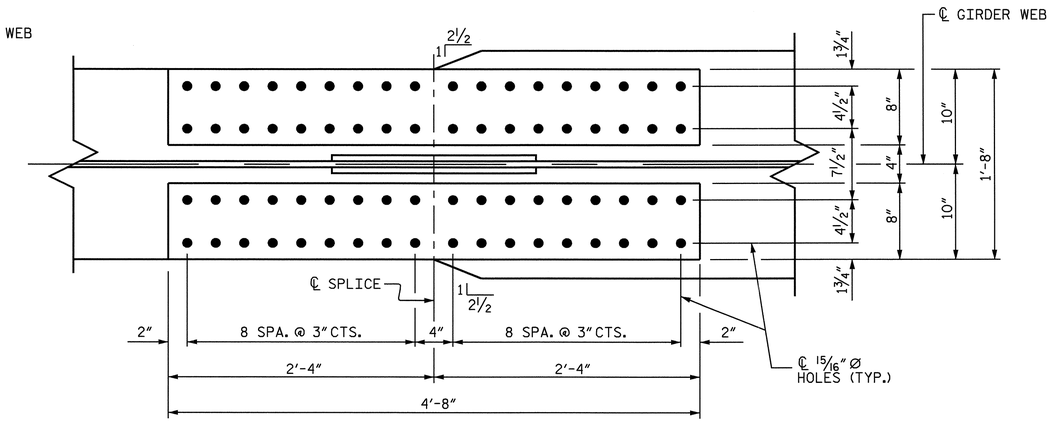

PLAN (TOP OF BOTTOM FLANGE)

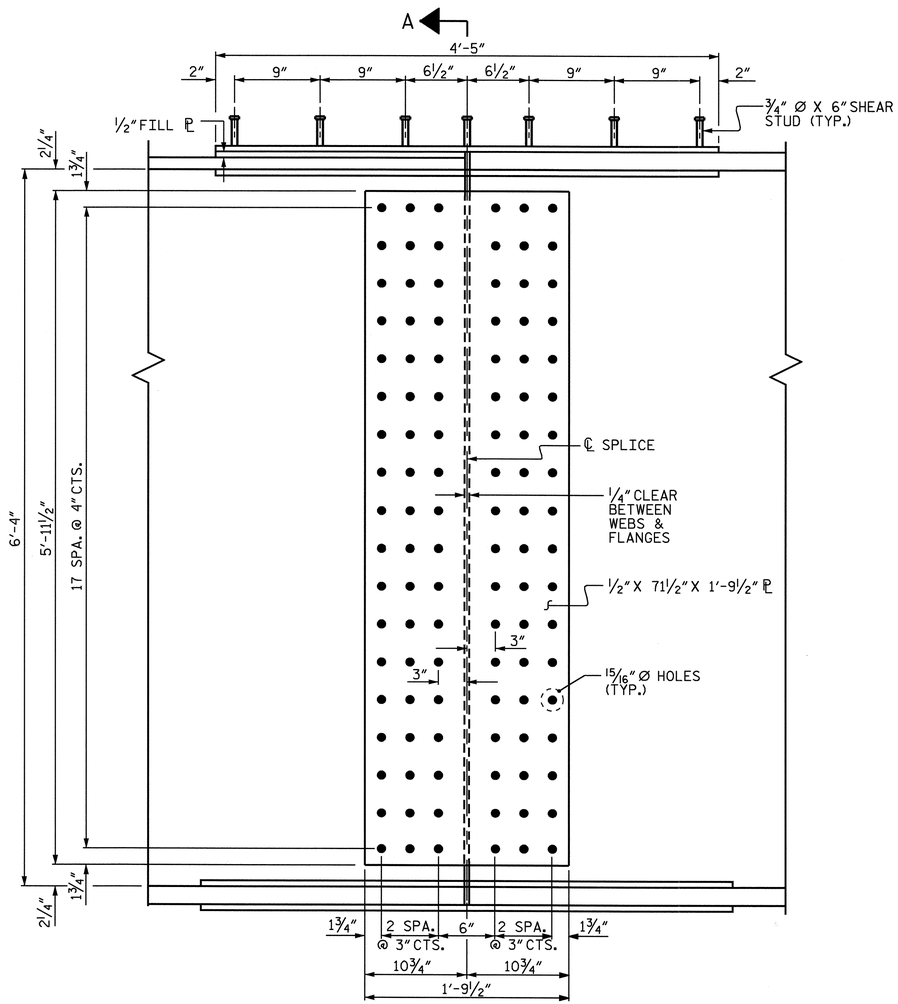

ELEVATION

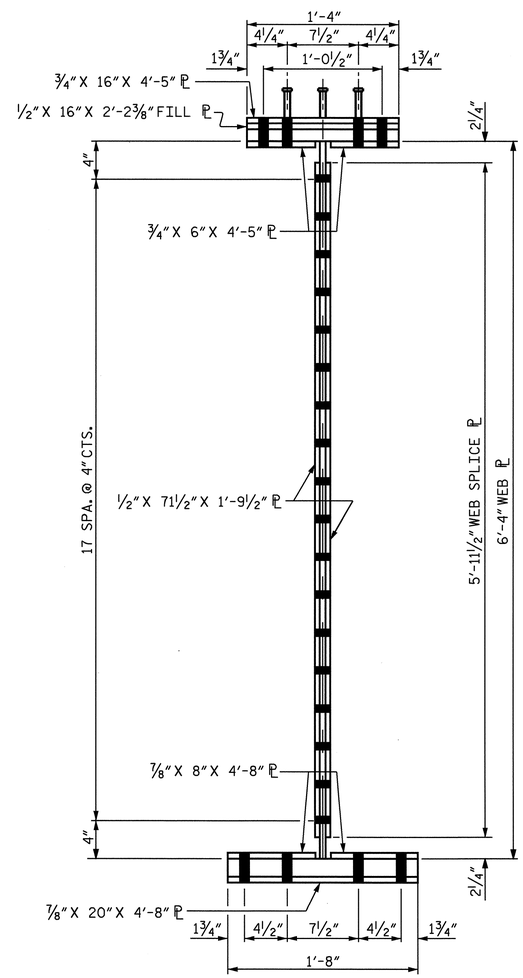

SECTION A-A

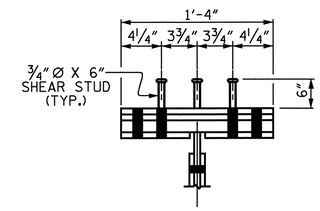

SHEAR STUD DETAIL FOR TOP FLANGE SPLICE PLATE

BOLTED FIELD SPLICE DETAILS

PROJECT NO. R-2719A

LENOIR COUNTY

STATION: 85+98.30 -L-

SHEET 5 OF 5

STATE OF NORTH CAROLINA
DEPARTMENT OF TRANSPORTATION
RALEIGH

SUPERSTRUCTURE

STRUCTURAL STEEL BOLTED FIELD SPLICE #4 DETAILS (LEFT LANE)

NORTH CAROLINA PROFESSIONAL SEAL 14045 ENGINEER TIMOTHY W. COGGINS

Timothy W. Coggins 10/3/08

REVISIONS						SHEET NO.
NO.	BY:	DATE:	NO.	BY:	DATE:	S-47
1			3			TOTAL SHEETS
2			4			340

DRAWN BY : T.L. AVERETTE DATE : 07-08
CHECKED BY : PEGGY PARISI DATE : 08-08

08-OCT-2008 16:22
g:\tlprojects-r\r2719a\structures\str#2\finalplans\R2719A_sd_SS_02.dgn
taverette

STR. #2

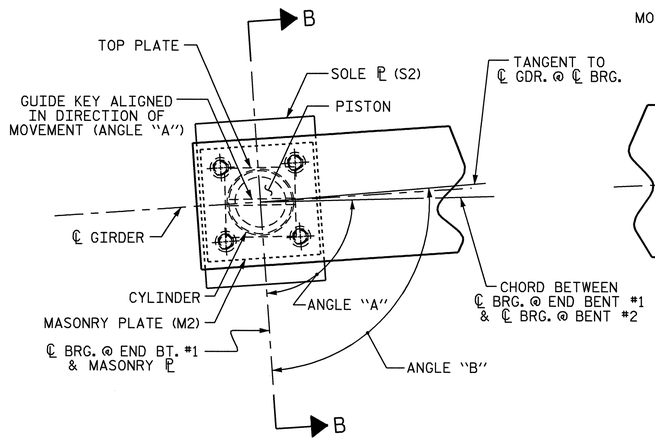

PLAN @ END BENT #1

PB2, EXP.

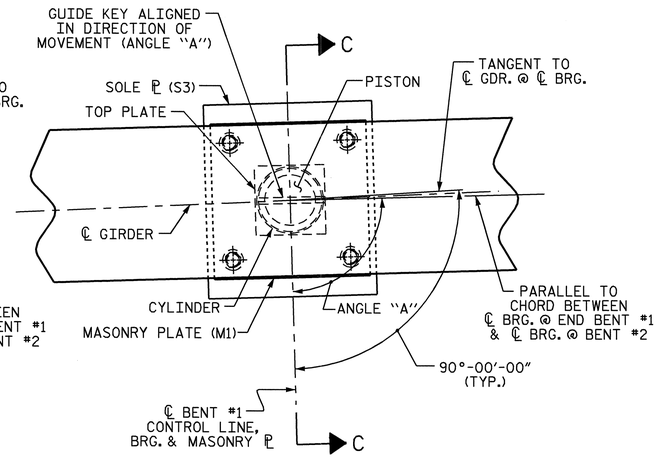

PLAN @ BENT #1

PB3, EXP.

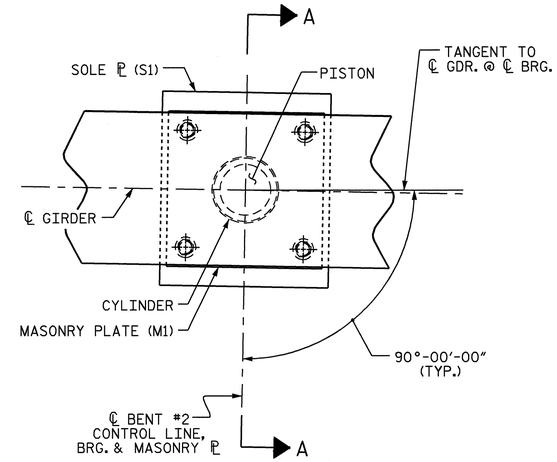

PLAN @ BENT #2

PB1, FIXED

NOTES

FOR POT BEARINGS, SEE SPECIAL PROVISIONS.

AT ALL POINTS OF SUPPORT IN SPANS "A" AND "B", NUTS FOR ANCHOR BOLTS SHALL BE TIGHTENED FINGER TIGHT AND GIVEN AN ADDITIONAL 1/4 TURN. THE THREAD OF THE NUT AND BOLT SHALL THEN BE BURRED WITH A SHARP POINTED TOOL.

WHEN WELDING THE SOLE PLATE TO THE GIRDER, USE TEMPERATURE INDICATING WAX PENS, OR OTHER SUITABLE MEANS, TO ENSURE THAT THE TEMPERATURE OF THE BEARING DOES NOT EXCEED 250°F TEMPERATURES ABOVE THIS MAY DAMAGE THE TFE OR ELASTOMER.

AFTER BEARING ASSEMBLY IS IN PLACE AND ANCHOR BOLTS HAVE BEEN FINALLY POSITIONED. THEY SHALL BE GROUTED IN PLACE AS SHOWN.

THE CLOSURE PLATE, GROUT PIPE AND STANDARD PIPE FOR THIS ASSEMBLY NEED NOT BE GALVANIZED.

SOLE PLATES SHOULD BE WELDED TO BEAM FLANGES AND ANCHOR BOLTS SHOULD BE GROUTED BEFORE FALSEWORK IS PLACED.

ALL SURFACES OF BEARING PLATES SHALL BE SMOOTH AND STRAIGHT.

FOR THERMAL SPRAYED COATINGS (METALLIZATION), SEE SPECIAL PROVISIONS.

THE CONTRACTOR MAY SUBSTITUTE DISC BEARINGS FOR THE POT BEARINGS SHOWN. FOR OPTIONAL DISC BEARINGS, SEE SPECIAL PROVISIONS.

THE CONTRACTOR SHALL ADJUST THE GIRDER BUILDUPS AS NECESSARY TO INCORPORATE A MAXIMUM PERMISSIBLE VARIATION IN POT BEARING DEPTH OF 1/2", SEE SPECIAL PROVISION FOR POT BEARINGS.

POT BEARING DETAILS

FOR SECTIONS A-A, B-B, C-C AND ADDITIONAL DETAILS, SEE SHEET 2 OF 2.
FOR ANGLES "A" AND "B," SEE TABLE BELOW.

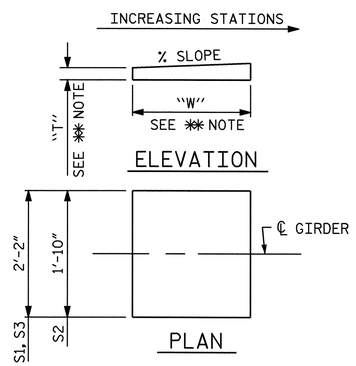

✱✱ NOTE:
DIMENSIONS "W" AND "T" ARE TO BE DETERMINED BY THE MANUFACTURER.

SOLE PLATE DETAILS

SOLE PLATE DIMENSIONS			
MARK	LOCATION	No.	% SLOPE
S1	BENT #2	6	0.13 (NEGLIGIBLE)
S2	END BENT #1	6	1.32
S3	BENT #1	6	0.77

POT BEARING ANGLES			
BEARING LOCATION		CHORD ANGLE "A"	ANGLE "B"
BENT	GIRDER		
END BENT #1	1	87°-29'-07"	89°-57'-50"
	2	87°-29'-06"	89°-57'-50"
	3	87°-29'-06"	89°-57'-49"
	4	87°-29'-06"	89°-57'-49"
	5	87°-29'-06"	89°-57'-48"
	6	87°-29'-06"	89°-57'-48"
BENT #1	1	89°-49'-25"	-
	2	89°-49'-24"	-
	3	89°-49'-24"	-
	4	89°-49'-24"	-
	5	89°-49'-24"	-
	6	89°-49'-24"	-

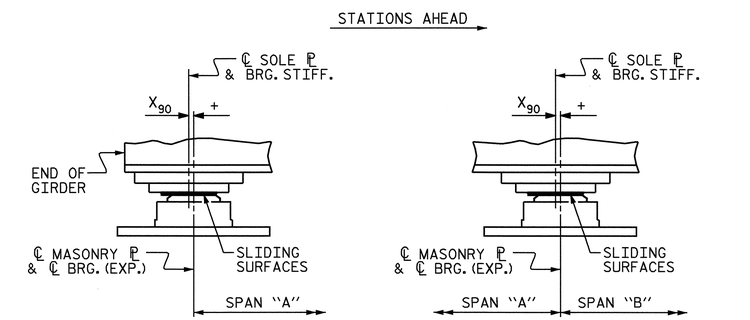

END BENT #1 BENT #1

TEMPERATURE AND ROTATION SETTING DETAILS

(TEMPERATURE SETTING FOR 90° IS SHOWN)

TABLE FOR PLATE SETTING DATA

(EXPANSION POT BEARINGS)

TEMPERATURE AT TIME OF SETTING	30° F	60° F	90° F	✱
END BENT #1	-11/16"	0	+11/16"	-1/2"
BENT #1	-3/8"	0	+3/8"	0

✱ CORRECTION FOR END ROTATION DUE TO WEIGHT OF SLAB AND COMPOSITE DEAD LOAD.

TABLE FOR LOADS AND MOVEMENTS

BEARING	LOCATION	VERTICAL LOAD (KIPS)			LATERAL LOAD (KIPS)	TOTAL MOVEMENT (INCHES)
		DEAD	LIVE	TOTAL		
PB1 (FIXED)	BENT #2	453.8	107.2	561.0	90.8	0
PB2 (EXP.)	END BENT #1	127.7	48.6	176.3	25.5	2 1/8"
PB3 (EXP.)	BENT #1	385.2	99.5	484.7	77.0	1 1/8"

NORTH CAROLINA PROFESSIONAL SEAL 14045 ENGINEER TIMOTHY L. COGGINS
4/3/09

PROJECT NO. R-2719A
LENOIR COUNTY
STATION: 85+98.30 -L-

SHEET 1 OF 2

STATE OF NORTH CAROLINA
DEPARTMENT OF TRANSPORTATION
RALEIGH

SUPERSTRUCTURE
POT BEARING DETAILS
(LEFT LANE)

REVISIONS						SHEET NO.
NO.	BY:	DATE:	NO.	BY:	DATE:	S-48
1			3			TOTAL SHEETS
2			4			340

DRAWN BY : T.L. AVERETTE DATE : 07-08
CHECKED BY : PEGGY PARISI DATE : 08-08

02-APR-2009 16:41
g:\tlpprojects-r\r2719a\structures\str#2\final plans\R2719A_sd_BG_02.dgn
taverette

STR. #2

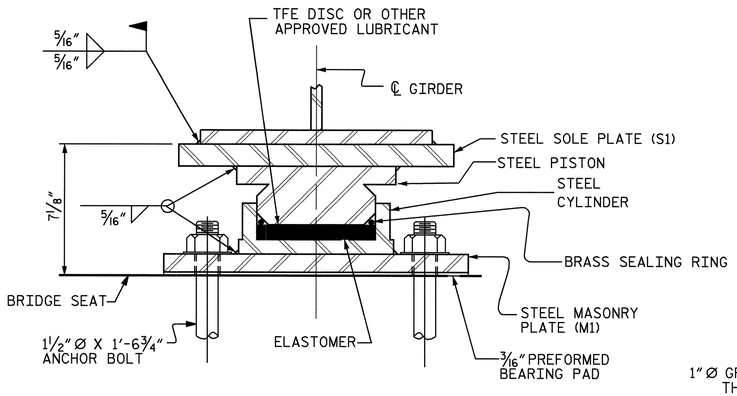

SECTION A-A

PB1, FIXED

(6 REQ'D. @ BENT #2)

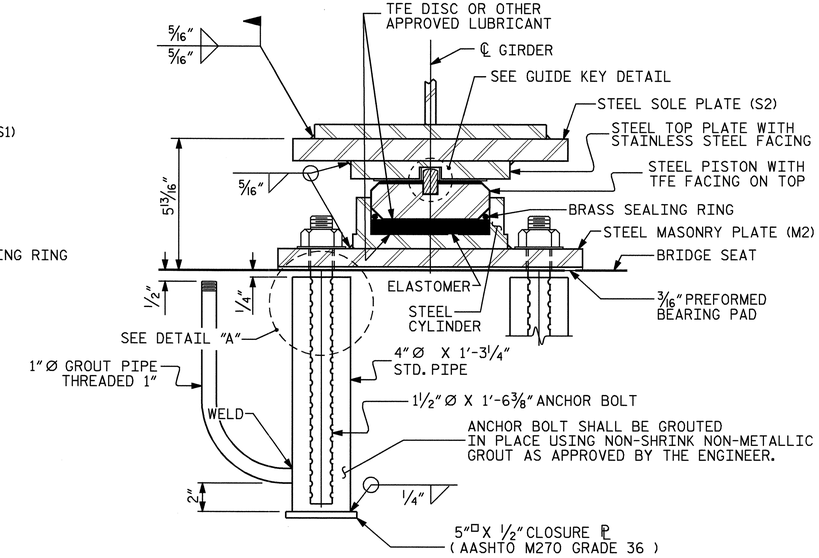

SECTION B-B

PB2, EXP.

(6 REQ'D. @ END BENT #1)

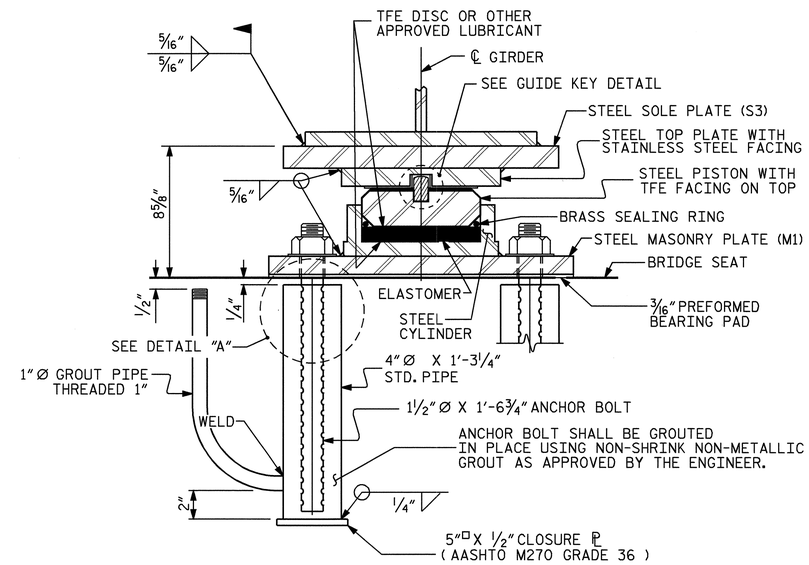

SECTION C-C

PB3, EXP.

(6 REQ'D. @ BENT #1)

POT BEARING DETAILS

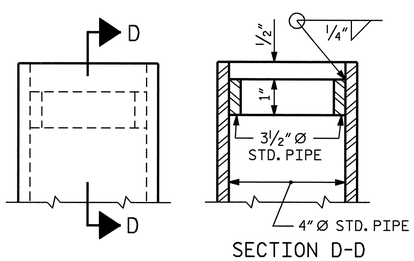

SECTION D-D

DETAIL "A"

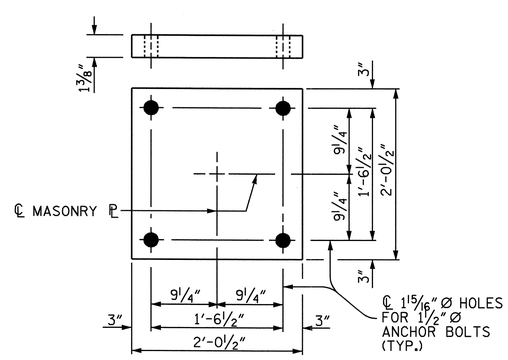

PLAN

M1 (12 REQ'D.)

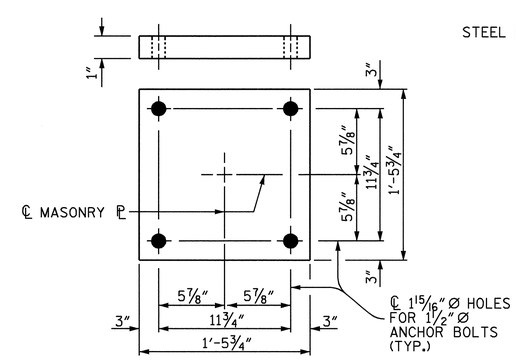

PLAN

M2 (6 REQ'D.)

MASONRY PLATE DETAILS

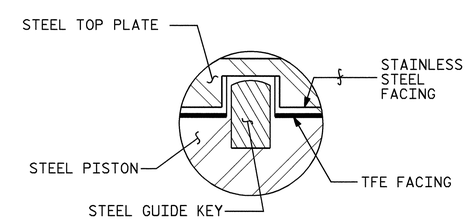

GUIDE KEY DETAIL

PROJECT NO. R-2719A

LENOIR COUNTY

STATION: 85+98.30 -L-

SHEET 2 OF 2

STATE OF NORTH CAROLINA
DEPARTMENT OF TRANSPORTATION
RALEIGH

SUPERSTRUCTURE

POT BEARING DETAILS

(LEFT LANE)

NORTH CAROLINA PROFESSIONAL SEAL 14045 ENGINEER TIMOTHY L. COGGINS

4/3/09

REVISIONS						SHEET NO.
NO.	BY:	DATE:	NO.	BY:	DATE:	S-49
1			3			TOTAL SHEETS
2			4			340

DRAWN BY : T.L. AVERETTE DATE : 07-08

CHECKED BY : PEGGY PARISI DATE : 08-08

02-APR-2009 16:40
g:\tlpprojects-r\r2719a\structures\str#2\final plans\R2719A_sd_BG_02.dgn
taverette

STR. #2

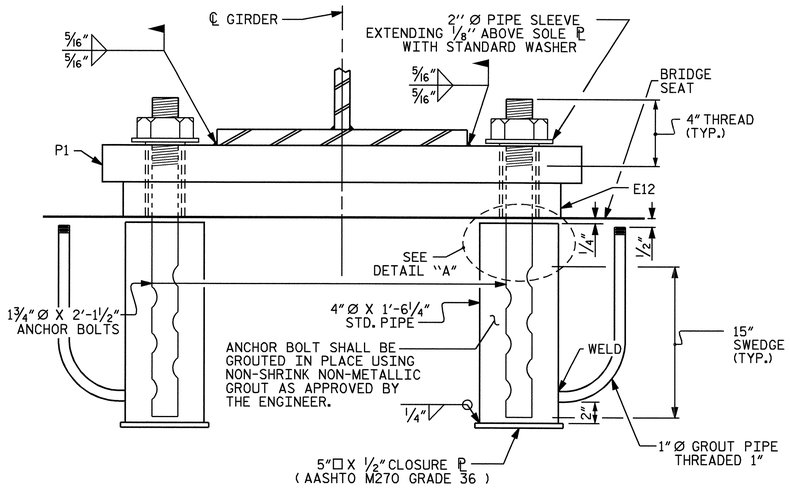

EXPANSION

END VIEW

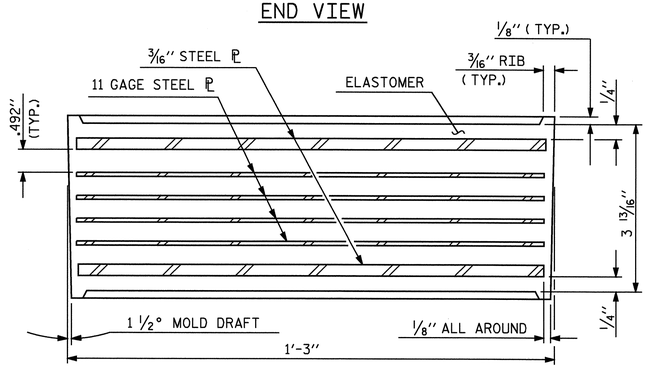

TYPICAL SECTION OF ELASTOMERIC BEARING

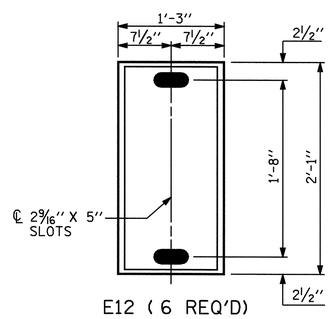

E12 (6 REQ'D)

PLAN VIEW OF ELASTOMERIC BEARING

TYPE VI

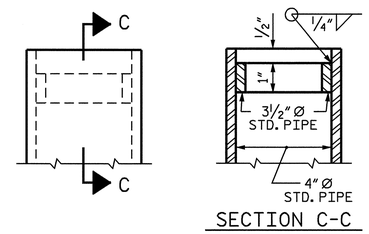

SECTION C-C

DETAIL "A"

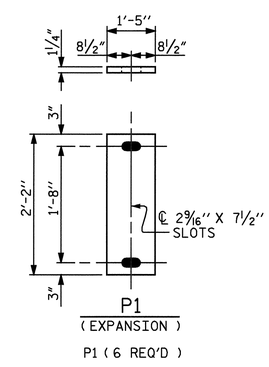

P1

(EXPANSION)

P1 (6 REQ'D)

SOLE PLATE DETAILS ("P")

NOTES

THE 2" Ø PIPE SLEEVE SHALL BE CUT FROM SCHEDULE 40 PVC PLASTIC PIPE. THE PVC PLASTIC PIPE SHALL MEET THE REQUIREMENTS OF ASTM D1785.

THE PAYMENT FOR THE PIPE SLEEVES SHALL BE INCLUDED IN THE SEVERAL PAY ITEMS.

FOR AASHTO M270 GRADE 50W STRUCTURAL STEEL, SOLE PLATE SHALL BE AASHTO M270 GRADE 50W AND SHALL NOT BE GALVANIZED. ANCHOR BOLTS, NUTS AND WASHERS SHALL BE GALVANIZED IN ACCORDANCE WITH THE STANDARD SPECIFICATIONS.

ANCHOR BOLTS SHALL MEET THE REQUIREMENTS OF ASTM A449. NUTS SHALL MEET THE REQUIREMENTS OF AASHTO M291-DH OR AASHTO M292-2H. WASHERS SHALL MEET THE REQUIREMENTS OF AASHTO M293. SHOP DRAWINGS ARE NOT REQUIRED FOR ANCHOR BOLTS, NUTS AND WASHERS. SHOP INSPECTION IS REQUIRED.

WHEN FIELD WELDING THE SOLE PLATE TO THE GIRDER FLANGE, USE TEMPERATURE INDICATING WAX PENS, OR OTHER SUITABLE MEANS, TO ENSURE THAT THE TEMPERATURE OF THE SOLE PLATE DOES NOT EXCEED 300°F. TEMPERATURES ABOVE THIS MAY DAMAGE THE ELASTOMER.

ALL SURFACES OF BEARING PLATES SHALL BE SMOOTH AND STRAIGHT.

THE CLOSURE PLATE, GROUT PIPE AND STANDARD PIPE FOR THE EXPANSION ASSEMBLY NEED NOT BE GALVANIZED.

THE CONTRACTOR'S ATTENTION IS CALLED TO THE FOLLOWING PROCEDURE, WHICH MAY BE REQUIRED BY THE ENGINEER, TO RESET ELASTOMERIC BEARINGS DUE TO GIRDER TRANSLATION AND END ROTATION:

1. ONCE THE DECK HAS CURED, THE GIRDERS SHALL BE JACKED THEN THE ANCHOR BOLTS AND ELASTOMERIC BEARING SLOTS CENTERED AS NEARLY AS PRACTICAL ABOUT THE BEARING STIFFENER. THIS OPERATION SHALL BE PERFORMED AT APPROXIMATELY 60° F.
2. AFTER CENTERING THE ELASTOMERIC BEARING SLOTS AND ANCHOR BOLTS, THE ANCHOR BOLTS SHALL BE GROUTED.

   THE CONTRACTOR MAY PROPOSE ALTERNATE METHODS, PROVIDED DETAILS ARE SUBMITTED TO THE ENGINEER FOR REVIEW AND APPROVAL.

—LOAD RATINGS—	
	MAX.D.L.+ L.L.
TYPE VI	262 k

PROJECT NO. R-2719A

LENOIR COUNTY

STATION: 85+98.30 -L-

NORTH CAROLINA PROFESSIONAL SEAL 14045 ENGINEER TIMOTHY W. COGGINS

Timothy W. Coggins 4/3/09

STATE OF NORTH CAROLINA
DEPARTMENT OF TRANSPORTATION
RALEIGH

STANDARD

ELASTOMERIC BEARING DETAILS

(STEEL SUPERSTRUCTURE)

(LEFT LANE)

REVISIONS						SHEET NO.
NO.	BY:	DATE:	NO.	BY:	DATE:	S-50
1			3			TOTAL SHEETS
2			4			340

ASSEMBLED BY : T.L. AVERETTE		DATE : 06-08
CHECKED BY : PEGGY PARISI		DATE : 08-08
DRAWN BY : EEM 10/95	REV. 10/17/00	RWW/LES
CHECKED BY : PEK 10/95	REV. 7/10/01	LES/RDR
	REV. 5/1/06	TLA/GM

02-APR-2009 16:40
g:\tipprojects-r\r2719g\structures\str#2\finalplans\R2719A_sd_BG_02.dgn
taverette

STR. #2 STD. NO. EB2

DEAD LOAD DEFLECTION TABLE FOR GIRDERS - SPAN "A"

	GIRDERS 1, 2 & 3																				
@ TWENTIETH POINTS BETWEEN ℄ BEARINGS	0	.05	.10	.15	.20	.25	.30	.35	.40	.45	.50	.55	.60	.65	.70	.75	.80	.85	.90	.95	0
DEFLECTION DUE TO WEIGHT OF GIRDER	0.000	0.009	0.018	0.026	0.033	0.039	0.043	0.046	0.048	0.048	0.047	0.045	0.042	0.037	0.031	0.026	0.019	0.013	0.008	0.004	0.000
DEFLECTION DUE TO WEIGHT OF SLAB ✳	0.000	0.043	0.082	0.116	0.149	0.176	0.196	0.210	0.218	0.220	0.215	0.205	0.189	0.167	0.142	0.115	0.087	0.060	0.037	0.017	0.000
DEFLECTION DUE TO WEIGHT OF BARRIER RAIL	0.000	0.002	0.004	0.006	0.008	0.009	0.011	0.012	0.012	0.012	0.012	0.011	0.010	0.009	0.008	0.006	0.005	0.003	0.002	0.001	0.000
TOTAL DEAD LOAD DEFLECTION	0.000	0.054	0.104	0.148	0.190	0.224	0.250	0.268	0.278	0.280	0.274	0.261	0.241	0.213	0.181	0.147	0.111	0.076	0.047	0.022	0.000
VERTICAL CURVE ORDINATE	0.000	0.019	0.035	0.050	0.062	0.073	0.082	0.089	0.094	0.096	0.097	0.096	0.094	0.089	0.082	0.073	0.062	0.050	0.035	0.019	0.000
ORDINATE DUE TO SUPERELEVATION	0.000	0.000	0.000	0.000	0.000	0.000	0.000	0.000	0.000	0.000	0.000	0.000	0.000	0.000	0.000	0.000	0.000	0.000	0.000	0.000	0.000
CAMBER FROM HEAT CURVING	0.000	0.000	0.000	0.000	0.000	0.000	0.000	0.000	0.000	0.000	0.000	0.000	0.000	0.000	0.000	0.000	0.000	0.000	0.000	0.000	0.000
REQUIRED CAMBER	0	7/8"	1 11/16"	2 3/8"	3"	3 9/16"	4"	4 1/4"	4 7/16"	4 1/2"	4 7/16"	4 5/16"	4"	3 5/8"	3 3/16"	2 5/8"	2 1/16"	1 1/2"	1"	1/2"	0

✳ INCLUDES SLAB, BUILDUPS & STAY-IN-PLACE FORMS.
ALL VALUES ARE SHOWN IN FEET EXCEPT "REQUIRED CAMBER", WHICH IS GIVEN IN INCHES (FRACTION FORM).

DEAD LOAD DEFLECTION TABLE FOR GIRDERS - SPAN "A"

	GIRDERS 4 & 5																				
@ TWENTIETH POINTS BETWEEN ℄ BEARINGS	0	.05	.10	.15	.20	.25	.30	.35	.40	.45	.50	.55	.60	.65	.70	.75	.80	.85	.90	.95	0
DEFLECTION DUE TO WEIGHT OF GIRDER	0.000	0.009	0.017	0.024	0.031	0.037	0.041	0.044	0.046	0.046	0.045	0.043	0.039	0.035	0.030	0.024	0.018	0.012	0.008	0.003	0.000
DEFLECTION DUE TO WEIGHT OF SLAB ✳	0.000	0.041	0.079	0.113	0.144	0.170	0.190	0.203	0.210	0.212	0.208	0.198	0.182	0.160	0.136	0.110	0.083	0.057	0.035	0.016	0.000
DEFLECTION DUE TO WEIGHT OF BARRIER RAIL	0.000	0.002	0.003	0.005	0.006	0.007	0.008	0.009	0.009	0.009	0.009	0.009	0.008	0.007	0.006	0.005	0.004	0.003	0.002	0.001	0.000
TOTAL DEAD LOAD DEFLECTION	0.000	0.052	0.100	0.142	0.181	0.214	0.239	0.256	0.265	0.267	0.262	0.249	0.229	0.202	0.172	0.139	0.105	0.072	0.045	0.020	0.000
VERTICAL CURVE ORDINATE	0.000	0.019	0.035	0.050	0.062	0.073	0.082	0.089	0.093	0.096	0.097	0.096	0.093	0.089	0.082	0.073	0.062	0.050	0.035	0.019	0.000
ORDINATE DUE TO SUPERELEVATION	0.000	0.000	0.000	0.000	0.000	0.000	0.000	0.000	0.000	0.000	0.000	0.000	0.000	0.000	0.000	0.000	0.000	0.000	0.000	0.000	0.000
CAMBER FROM HEAT CURVING	0.000	0.000	0.000	0.000	0.000	0.000	0.000	0.000	0.000	0.000	0.000	0.000	0.000	0.000	0.000	0.000	0.000	0.000	0.000	0.000	0.000
REQUIRED CAMBER	0	7/8"	1 5/8"	2 5/16"	2 15/16"	3 7/16"	3 7/8"	4 1/8"	4 5/16"	4 3/8"	4 5/16"	4 1/8"	3 7/8"	3 1/2"	3 1/16"	2 9/16"	2"	1 7/16"	15/16"	7/16"	0

✳ INCLUDES SLAB, BUILDUPS & STAY-IN-PLACE FORMS.
ALL VALUES ARE SHOWN IN FEET EXCEPT "REQUIRED CAMBER", WHICH IS GIVEN IN INCHES (FRACTION FORM).

DEAD LOAD DEFLECTION TABLE FOR GIRDER - SPAN "A"

	GIRDER 6																				
@ TWENTIETH POINTS BETWEEN ℄ BEARINGS	0	.05	.10	.15	.20	.25	.30	.35	.40	.45	.50	.55	.60	.65	.70	.75	.80	.85	.90	.95	0
DEFLECTION DUE TO WEIGHT OF GIRDER	0.000	0.009	0.016	0.023	0.029	0.035	0.039	0.041	0.043	0.043	0.042	0.040	0.037	0.033	0.028	0.022	0.017	0.011	0.007	0.003	0.000
DEFLECTION DUE TO WEIGHT OF SLAB ✳	0.000	0.037	0.071	0.101	0.129	0.152	0.170	0.182	0.188	0.189	0.186	0.178	0.163	0.143	0.122	0.098	0.074	0.051	0.031	0.014	0.000
DEFLECTION DUE TO WEIGHT OF BARRIER RAIL	0.000	0.003	0.005	0.007	0.009	0.010	0.012	0.013	0.013	0.013	0.013	0.012	0.012	0.010	0.009	0.008	0.005	0.004	0.002	0.001	0.000
TOTAL DEAD LOAD DEFLECTION	0.000	0.049	0.092	0.131	0.167	0.197	0.221	0.236	0.244	0.246	0.241	0.230	0.212	0.186	0.159	0.128	0.096	0.066	0.040	0.018	0.000
VERTICAL CURVE ORDINATE	0.000	0.019	0.035	0.050	0.062	0.073	0.082	0.089	0.093	0.096	0.097	0.096	0.093	0.089	0.082	0.073	0.062	0.050	0.035	0.019	0.000
ORDINATE DUE TO SUPERELEVATION	0.000	0.000	0.000	0.000	0.000	0.000	0.000	0.000	0.000	0.000	0.000	0.000	0.000	0.000	0.000	0.000	0.000	0.000	0.000	0.000	0.000
CAMBER FROM HEAT CURVING	0.000	0.000	0.000	0.000	0.000	0.000	0.000	0.000	0.000	0.000	0.000	0.000	0.000	0.000	0.000	0.000	0.000	0.000	0.000	0.000	0.000
REQUIRED CAMBER	0	13/16"	1 1/2"	2 3/16"	2 3/4"	3 1/4"	3 5/8"	3 7/8"	4 1/16"	4 1/8"	4 1/16"	3 7/8"	3 5/8"	3 5/16"	2 7/8"	2 7/16"	1 7/8"	1 3/8"	7/8"	7/16"	0

✳ INCLUDES SLAB, BUILDUPS & STAY-IN-PLACE FORMS.
ALL VALUES ARE SHOWN IN FEET EXCEPT "REQUIRED CAMBER", WHICH IS GIVEN IN INCHES (FRACTION FORM).

PROJECT NO. R-2719A
LENOIR COUNTY
STATION: 85+98.30 -L-

SHEET 1 OF 3

STATE OF NORTH CAROLINA
DEPARTMENT OF TRANSPORTATION
RALEIGH

SUPERSTRUCTURE
DEAD LOAD DEFLECTIONS
SPAN "A"
(LEFT LANE)

NORTH CAROLINA PROFESSIONAL SEAL 14045 ENGINEER TIMOTHY L. COGGINS
Timothy L. Coggins 10/3/08

REVISIONS						SHEET NO.
NO.	BY:	DATE:	NO.	BY:	DATE:	S-51
1			3			TOTAL SHEETS
2			4			340

DRAWN BY : T.L. AVERETTE DATE : 08-08
CHECKED BY : PEGGY PARISI DATE : 08-08

DEAD LOAD DEFLECTION TABLE FOR GIRDERS - SPAN "B"

	GIRDERS 1, 2 & 3																				
@ TWENTIETH POINTS BETWEEN ℄ BEARINGS	0	.05	.10	.15	.20	.25	.30	.35	.40	.45	.50	.55	.60	.65	.70	.75	.80	.85	.90	.95	0
DEFLECTION DUE TO WEIGHT OF GIRDER	0.000	-0.001	-0.001	0.000	0.002	0.004	0.006	0.008	0.010	0.010	0.009	0.008	0.006	0.004	0.002	-0.001	-0.003	-0.004	-0.004	-0.003	0.000
DEFLECTION DUE TO WEIGHT OF SLAB ✳	0.000	-0.005	-0.006	-0.002	0.008	0.018	0.029	0.038	0.044	0.047	0.047	0.043	0.036	0.026	0.014	0.004	-0.005	-0.013	-0.014	-0.009	0.000
DEFLECTION DUE TO WEIGHT OF BARRIER RAIL	0.000	0.000	0.000	0.001	0.002	0.003	0.004	0.005	0.005	0.005	0.005	0.005	0.005	0.004	0.003	0.002	0.001	0.000	0.000	0.000	0.000
TOTAL DEAD LOAD DEFLECTION	0.000	-0.006	-0.007	-0.001	0.012	0.025	0.039	0.051	0.059	0.062	0.061	0.056	0.047	0.034	0.019	0.005	-0.007	-0.017	-0.018	-0.012	0.000
VERTICAL CURVE ORDINATE	0.000	0.025	0.047	0.066	0.083	0.097	0.109	0.118	0.124	0.128	0.130	0.128	0.124	0.118	0.109	0.097	0.083	0.066	0.047	0.025	0.000
ORDINATE DUE TO SUPERELEVATION	0.000	0.000	0.000	0.000	0.000	0.000	0.000	0.000	0.000	0.000	0.000	0.000	0.000	0.000	0.000	0.000	0.000	0.000	0.000	0.000	0.000
CAMBER FROM HEAT CURVING	0.000	0.000	0.000	0.000	0.000	0.000	0.000	0.000	0.000	0.000	0.000	0.000	0.000	0.000	0.000	0.000	0.000	0.000	0.000	0.000	0.000
REQUIRED CAMBER	0	1/4"	1/2"	13/16"	1 1/8"	1 7/16"	1 3/4"	2"	2 3/16"	2 1/4"	2 5/16"	2 3/16"	2 1/16"	1 13/16"	1 1/2"	1 1/4"	15/16"	9/16"	5/16"	1/8"	0

✳ INCLUDES SLAB, BUILDUPS & STAY-IN-PLACE FORMS.
ALL VALUES ARE SHOWN IN FEET EXCEPT " REQUIRED CAMBER ", WHICH IS GIVEN IN INCHES (FRACTION FORM).

DEAD LOAD DEFLECTION TABLE FOR GIRDERS - SPAN "B"

	GIRDERS 4, 5 & 6																				
@ TWENTIETH POINTS BETWEEN ℄ BEARINGS	0	.05	.10	.15	.20	.25	.30	.35	.40	.45	.50	.55	.60	.65	.70	.75	.80	.85	.90	.95	0
DEFLECTION DUE TO WEIGHT OF GIRDER	0.000	-0.001	-0.001	0.001	0.003	0.005	0.007	0.010	0.011	0.011	0.011	0.010	0.008	0.006	0.003	0.001	-0.001	-0.003	-0.003	-0.002	0.000
DEFLECTION DUE TO WEIGHT OF SLAB ✳	0.000	-0.003	-0.003	0.001	0.011	0.022	0.033	0.042	0.049	0.052	0.052	0.048	0.041	0.031	0.020	0.008	-0.001	-0.009	-0.011	-0.008	0.000
DEFLECTION DUE TO WEIGHT OF BARRIER RAIL	0.000	0.000	0.001	0.001	0.002	0.003	0.004	0.005	0.005	0.005	0.005	0.005	0.005	0.004	0.003	0.002	0.001	0.000	0.000	0.000	0.000
TOTAL DEAD LOAD DEFLECTION	0.000	-0.004	-0.003	0.003	0.016	0.030	0.044	0.057	0.065	0.068	0.068	0.063	0.054	0.041	0.026	0.011	-0.001	-0.012	-0.014	-0.010	0.000
VERTICAL CURVE ORDINATE	0.000	0.025	0.047	0.066	0.083	0.097	0.109	0.118	0.124	0.128	0.130	0.128	0.124	0.118	0.109	0.097	0.083	0.066	0.047	0.025	0.000
ORDINATE DUE TO SUPERELEVATION	0.000	0.000	0.000	0.000	0.000	0.000	0.000	0.000	0.000	0.000	0.000	0.000	0.000	0.000	0.000	0.000	0.000	0.000	0.000	0.000	0.000
CAMBER FROM HEAT CURVING	0.000	0.000	0.000	0.000	0.000	0.000	0.000	0.000	0.000	0.000	0.000	0.000	0.000	0.000	0.000	0.000	0.000	0.000	0.000	0.000	0.000
REQUIRED CAMBER	0	1/4"	1/2"	13/16"	1 3/16"	1 1/2"	1 13/16"	2 1/8"	2 1/4"	2 3/8"	2 3/8"	2 5/16"	2 1/8"	1 15/16"	1 5/8"	1 5/16"	1"	5/8"	3/8"	3/16"	0

✳ INCLUDES SLAB, BUILDUPS & STAY-IN-PLACE FORMS.
ALL VALUES ARE SHOWN IN FEET EXCEPT " REQUIRED CAMBER ", WHICH IS GIVEN IN INCHES (FRACTION FORM).

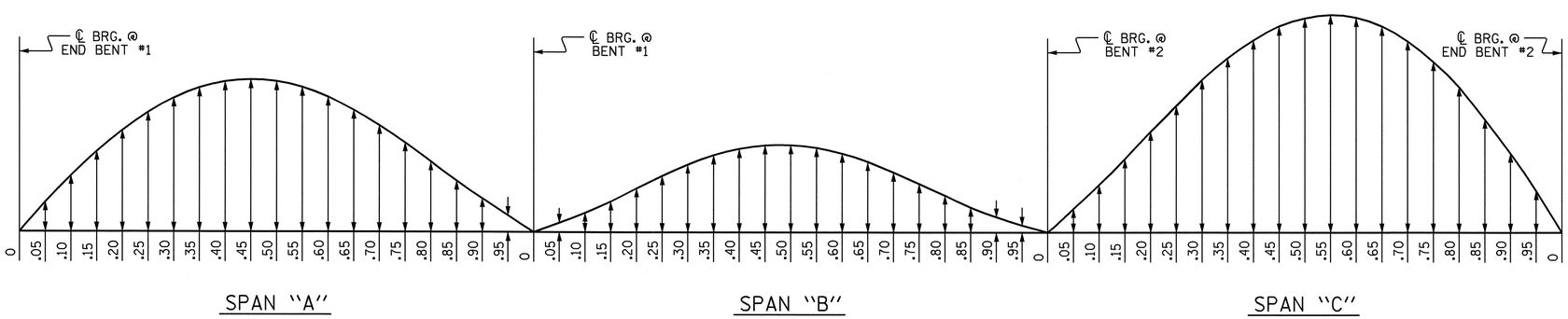

SCHEMATIC CAMBER ORDINATES

SLOPE FOR THE ZERO CAMBER BASE LINE VARIES.

PROJECT NO. R-2719A
LENOIR COUNTY
STATION: 85+98.30 -L-

SHEET 2 OF 3

STATE OF NORTH CAROLINA
DEPARTMENT OF TRANSPORTATION
RALEIGH

SUPERSTRUCTURE
DEAD LOAD DEFLECTIONS SPAN "B"
(LEFT LANE)

NORTH CAROLINA PROFESSIONAL SEAL 14045 ENGINEER TIMOTHY L. COGGINS
4/3/07

REVISIONS						SHEET NO.
NO.	BY:	DATE:	NO.	BY:	DATE:	S-52
1			3			TOTAL SHEETS
2			4			340

DRAWN BY : T.L. AVERETTE DATE : 08-08
CHECKED BY : PEGGY PARISI DATE : 08-08

STR. #2

DEAD LOAD DEFLECTION TABLE FOR GIRDERS - SPAN "C"

	GIRDERS 1 & 2																				
@ TWENTIETH POINTS BETWEEN ℄ BEARINGS	0	.05	.10	.15	.20	.25	.30	.35	.40	.45	.50	.55	.60	.65	.70	.75	.80	.85	.90	.95	0
DEFLECTION DUE TO WEIGHT OF GIRDER	0.000	0.007	0.015	0.025	0.036	0.047	0.057	0.067	0.075	0.081	0.085	0.087	0.086	0.083	0.077	0.069	0.058	0.046	0.032	0.017	0.000
DEFLECTION DUE TO WEIGHT OF SLAB ✳	0.000	0.025	0.054	0.088	0.126	0.166	0.204	0.241	0.270	0.291	0.306	0.314	0.312	0.301	0.280	0.250	0.212	0.165	0.115	0.060	0.000
DEFLECTION DUE TO WEIGHT OF BARRIER RAIL	0.000	0.001	0.004	0.006	0.009	0.012	0.014	0.017	0.019	0.020	0.021	0.021	0.021	0.020	0.019	0.017	0.014	0.011	0.008	0.004	0.000
TOTAL DEAD LOAD DEFLECTION	0.000	0.034	0.073	0.119	0.171	0.224	0.276	0.324	0.363	0.392	0.412	0.422	0.420	0.404	0.375	0.336	0.285	0.222	0.155	0.081	0.000
VERTICAL CURVE ORDINATE	0.000	0.025	0.047	0.067	0.083	0.098	0.110	0.119	0.125	0.129	0.130	0.129	0.125	0.119	0.110	0.098	0.083	0.067	0.047	0.025	0.000
ORDINATE DUE TO SUPERELEVATION	0.000	0.000	0.000	0.000	0.000	0.000	0.000	0.000	0.000	0.000	0.000	0.000	0.000	0.000	0.000	0.000	0.000	0.000	0.000	0.000	0.000
CAMBER FROM HEAT CURVING	0.000	0.000	0.000	0.000	0.000	0.000	0.000	0.000	0.000	0.000	0.000	0.000	0.000	0.000	0.000	0.000	0.000	0.000	0.000	0.000	0.000
REQUIRED CAMBER	0	11/16"	1 7/16"	2 1/4"	3 1/16"	3 7/8"	4 5/8"	5 5/16"	5 7/8"	6 1/4"	6 1/2"	6 5/8"	6 9/16"	6 1/4"	5 13/16"	5 3/16"	4 7/16"	3 7/16"	2 7/16"	1 1/4"	0

✳ INCLUDES SLAB, BUILDUPS & STAY-IN-PLACE FORMS.
ALL VALUES ARE SHOWN IN FEET EXCEPT " REQUIRED CAMBER ", WHICH IS GIVEN IN INCHES (FRACTION FORM).

DEAD LOAD DEFLECTION TABLE FOR GIRDERS - SPAN "C"

	GIRDERS 3 & 4																				
@ TWENTIETH POINTS BETWEEN ℄ BEARINGS	0	.05	.10	.15	.20	.25	.30	.35	.40	.45	.50	.55	.60	.65	.70	.75	.80	.85	.90	.95	0
DEFLECTION DUE TO WEIGHT OF GIRDER	0.000	0.007	0.014	0.023	0.034	0.044	0.054	0.063	0.071	0.076	0.080	0.082	0.081	0.078	0.073	0.065	0.055	0.043	0.030	0.016	0.000
DEFLECTION DUE TO WEIGHT OF SLAB ✳	0.000	0.024	0.052	0.085	0.122	0.161	0.198	0.234	0.262	0.284	0.298	0.306	0.305	0.293	0.273	0.244	0.207	0.162	0.113	0.059	0.000
DEFLECTION DUE TO WEIGHT OF BARRIER RAIL	0.000	0.001	0.003	0.004	0.006	0.008	0.010	0.012	0.013	0.014	0.015	0.015	0.015	0.014	0.013	0.012	0.010	0.008	0.005	0.003	0.000
TOTAL DEAD LOAD DEFLECTION	0.000	0.031	0.069	0.112	0.162	0.213	0.262	0.308	0.346	0.374	0.393	0.403	0.401	0.385	0.358	0.321	0.272	0.212	0.148	0.077	0.000
VERTICAL CURVE ORDINATE	0.000	0.025	0.047	0.067	0.083	0.098	0.110	0.119	0.125	0.129	0.130	0.129	0.125	0.119	0.110	0.098	0.083	0.067	0.047	0.025	0.000
ORDINATE DUE TO SUPERELEVATION	0.000	0.000	0.000	0.000	0.000	0.000	0.000	0.000	0.000	0.000	0.000	0.000	0.000	0.000	0.000	0.000	0.000	0.000	0.000	0.000	0.000
CAMBER FROM HEAT CURVING	0.000	0.000	0.000	0.000	0.000	0.000	0.000	0.000	0.000	0.000	0.000	0.000	0.000	0.000	0.000	0.000	0.000	0.000	0.000	0.000	0.000
REQUIRED CAMBER	0	11/16"	1 3/8"	2 1/8"	2 15/16"	3 3/4"	4 7/16"	5 1/8"	5 5/8"	6 1/16"	6 1/4"	6 3/8"	6 5/16"	6 1/16"	5 5/8"	5"	4 1/4"	3 3/8"	2 5/16"	1 1/4"	0

✳ INCLUDES SLAB, BUILDUPS & STAY-IN-PLACE FORMS.
ALL VALUES ARE SHOWN IN FEET EXCEPT " REQUIRED CAMBER ", WHICH IS GIVEN IN INCHES (FRACTION FORM).

DEAD LOAD DEFLECTION TABLE FOR GIRDER - SPAN "C"

	GIRDER 5																				
@ TWENTIETH POINTS BETWEEN ℄ BEARINGS	0	.05	.10	.15	.20	.25	.30	.35	.40	.45	.50	.55	.60	.65	.70	.75	.80	.85	.90	.95	0
DEFLECTION DUE TO WEIGHT OF GIRDER	0.000	0.006	0.013	0.021	0.031	0.041	0.051	0.059	0.067	0.072	0.075	0.077	0.076	0.071	0.069	0.061	0.052	0.039	0.027	0.014	0.000
DEFLECTION DUE TO WEIGHT OF SLAB ✳	0.000	0.022	0.048	0.078	0.113	0.149	0.184	0.217	0.244	0.264	0.277	0.284	0.283	0.273	0.254	0.227	0.193	0.151	0.105	0.055	0.000
DEFLECTION DUE TO WEIGHT OF BARRIER RAIL	0.000	0.001	0.003	0.005	0.007	0.009	0.011	0.012	0.014	0.015	0.016	0.016	0.016	0.015	0.014	0.013	0.011	0.008	0.006	0.003	0.000
TOTAL DEAD LOAD DEFLECTION	0.000	0.029	0.064	0.104	0.151	0.198	0.245	0.289	0.324	0.350	0.368	0.377	0.376	0.361	0.336	0.301	0.255	0.198	0.138	0.072	0.000
VERTICAL CURVE ORDINATE	0.000	0.025	0.047	0.067	0.083	0.098	0.110	0.119	0.125	0.129	0.130	0.129	0.125	0.119	0.110	0.098	0.083	0.067	0.047	0.025	0.000
ORDINATE DUE TO SUPERELEVATION	0.000	0.000	0.000	0.000	0.000	0.000	0.000	0.000	0.000	0.000	0.000	0.000	0.000	0.000	0.000	0.000	0.000	0.000	0.000	0.000	0.000
CAMBER FROM HEAT CURVING	0.000	0.000	0.000	0.000	0.000	0.000	0.000	0.000	0.000	0.000	0.000	0.000	0.000	0.000	0.000	0.000	0.000	0.000	0.000	0.000	0.000
REQUIRED CAMBER	0	5/8"	1 5/16"	2 1/16"	2 13/16"	3 9/16"	4 1/4"	4 7/8"	5 3/8"	5 3/4"	6"	6 1/16"	6"	5 3/4"	5 3/8"	4 13/16"	4 1/16"	3 3/16"	2 1/4"	1 3/16"	0

✳ INCLUDES SLAB, BUILDUPS & STAY-IN-PLACE FORMS.
ALL VALUES ARE SHOWN IN FEET EXCEPT " REQUIRED CAMBER ", WHICH IS GIVEN IN INCHES (FRACTION FORM).

DEAD LOAD DEFLECTION TABLE FOR GIRDER - SPAN "C"

	GIRDER 6																				
@ TWENTIETH POINTS BETWEEN ℄ BEARINGS	0	.05	.10	.15	.20	.25	.30	.35	.40	.45	.50	.55	.60	.65	.70	.75	.80	.85	.90	.95	0
DEFLECTION DUE TO WEIGHT OF GIRDER	0.000	0.006	0.013	0.021	0.030	0.040	0.049	0.057	0.064	0.069	0.073	0.075	0.074	0.071	0.066	0.059	0.050	0.039	0.027	0.014	0.000
DEFLECTION DUE TO WEIGHT OF SLAB ✳	0.000	0.021	0.045	0.074	0.106	0.140	0.173	0.204	0.229	0.248	0.261	0.267	0.266	0.256	0.238	0.213	0.181	0.141	0.098	0.052	0.000
DEFLECTION DUE TO WEIGHT OF BARRIER RAIL	0.000	0.001	0.003	0.005	0.007	0.010	0.012	0.014	0.016	0.017	0.018	0.018	0.018	0.018	0.016	0.014	0.012	0.010	0.007	0.004	0.000
TOTAL DEAD LOAD DEFLECTION	0.000	0.028	0.061	0.100	0.144	0.190	0.234	0.276	0.309	0.334	0.351	0.360	0.359	0.345	0.331	0.287	0.243	0.190	0.132	0.069	0.000
VERTICAL CURVE ORDINATE	0.000	0.025	0.047	0.067	0.083	0.098	0.110	0.119	0.125	0.129	0.130	0.129	0.125	0.119	0.110	0.098	0.083	0.067	0.047	0.025	0.000
ORDINATE DUE TO SUPERELEVATION	0.000	0.000	0.000	0.000	0.000	0.000	0.000	0.000	0.000	0.000	0.000	0.000	0.000	0.000	0.000	0.000	0.000	0.000	0.000	0.000	0.000
CAMBER FROM HEAT CURVING	0.000	0.000	0.000	0.000	0.000	0.000	0.000	0.000	0.000	0.000	0.000	0.000	0.000	0.000	0.000	0.000	0.000	0.000	0.000	0.000	0.000
REQUIRED CAMBER	0	5/8"	1 5/16"	2"	2 3/4"	3 7/16"	4 1/8"	4 3/4"	5 3/16"	5 9/16"	5 3/4"	5 7/8"	5 13/16"	5 9/16"	5 3/16"	4 5/8"	3 15/16"	3 1/16"	2 1/8"	1 1/8"	0

✳ INCLUDES SLAB, BUILDUPS & STAY-IN-PLACE FORMS.
ALL VALUES ARE SHOWN IN FEET EXCEPT " REQUIRED CAMBER ", WHICH IS GIVEN IN INCHES (FRACTION FORM).

PROJECT NO. R-2719A
LENOIR COUNTY
STATION: 85+98.30 -L-

SHEET 3 OF 3

STATE OF NORTH CAROLINA
DEPARTMENT OF TRANSPORTATION
RALEIGH

SUPERSTRUCTURE
DEAD LOAD DEFLECTIONS SPAN "C"
(LEFT LANE)

NORTH CAROLINA PROFESSIONAL SEAL 14045 ENGINEER TIMOTHY L. COGGINS
10/13/08

REVISIONS						SHEET NO.
NO.	BY:	DATE:	NO.	BY:	DATE:	S-53
1			3			TOTAL SHEETS
2			4			340

DRAWN BY : T.L. AVERETTE DATE : 08-08
CHECKED BY : PEGGY PARISI DATE : 08-08

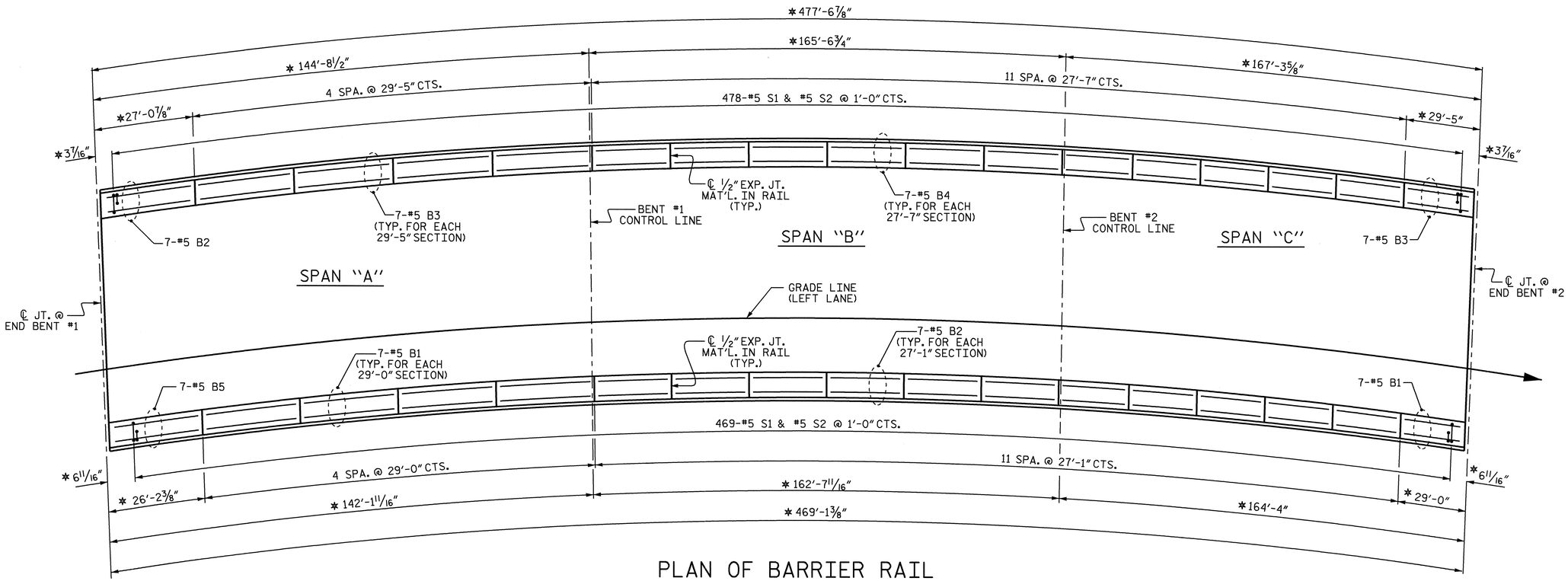

PLAN OF BARRIER RAIL

* ARC DIMENSION ALONG OUTSIDE EDGE OF BARRIER RAIL.

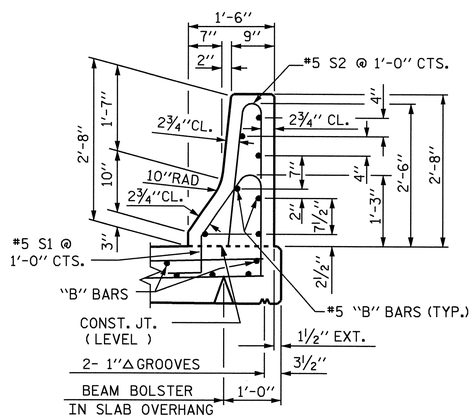

SECTION THRU RAIL

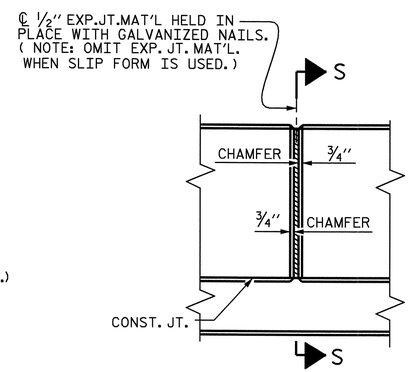

ELEVATION AT EXPANSION JOINTS

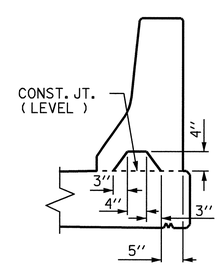

SECTION S-S

AT DAM IN OPEN JOINT
(THIS IS TO BE USED ONLY WHEN SLIP FORM IS USED)

BARRIER RAIL DETAILS

BAR TYPES

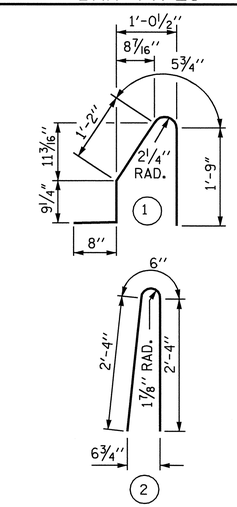

ALL BAR DIMENSIONS ARE OUT TO OUT

BILL OF MATERIAL

FOR CONCRETE BARRIER RAIL ONLY

BAR	NO.	SIZE	TYPE	LENGTH	WEIGHT
* S1	947	#5	1	4'-10"	4774
* S2	947	#5	2	5'-2"	5103
* B1	35	#5	STR	28'-7"	1043
* B2	84	#5	STR	26'-8"	2336
* B3	35	#5	STR	29'-0"	1059
* B4	77	#5	STR	27'-2"	2182
* B5	7	#5	STR	25'-10"	189

* EPOXY COATED REINFORCING STEEL	16,686 LBS.
CLASS AA CONCRETE	94.8 CU. YDS.
CONCRETE BARRIER RAIL	946.69 LIN. FT.

NOTES

THE BARRIER RAIL IN A CONTINUOUS UNIT SHALL NOT BE CAST UNTIL ALL SLAB CONCRETE IN THE UNIT HAS BEEN CAST AND HAS REACHED A MINIMUM COMPRESSIVE STRENGTH OF 3,000 PSI.

ALL REINFORCING STEEL IN BARRIER RAILS SHALL BE EPOXY COATED.

VERTICAL GROOVED CONTRACTION JOINTS, 1/2" IN DEPTH, SHALL BE TOOLED IN ALL EXPOSED FACES OF THE BARRIER RAIL AND IN ACCORDANCE WITH ARTICLE 825-10(B) OF THE STANDARD SPECIFICATIONS. THE CONTRACTION JOINT SHALL BE LOCATED AT EACH THIRD POINT BETWEEN BARRIER RAIL EXPANSION JOINTS. ONLY ONE CONTRACTION JOINT IS REQUIRED AT MIDPOINT OF BARRIER RAIL SEGMENTS LESS THAN 20 FEET IN LENGTH AND NO CONTRACTION JOINTS ARE REQUIRED FOR THOSE SEGMENTS LESS THAN 10 FEET IN LENGTH.

PROJECT NO. R-2719A
LENOIR COUNTY
STATION: 85+98.30 -L-

STATE OF NORTH CAROLINA
DEPARTMENT OF TRANSPORTATION
RALEIGH

STANDARD
CONCRETE BARRIER RAIL
(LEFT LANE)

NORTH CAROLINA PROFESSIONAL SEAL 14045 ENGINEER TIMOTHY L. COGGINS
10/13/08

REVISIONS						SHEET NO.
NO.	BY:	DATE:	NO.	BY:	DATE:	S-54
1			3			TOTAL SHEETS
2			4			340

ASSEMBLED BY : T.L. AVERETTE		DATE : 06-08	
CHECKED BY : PEGGY PARISI		DATE : 08-08	
DRAWN BY : ARB 5/87	REV. 10/17/00	RWW/LES	
CHECKED BY : SJD 9/87	REV. 5/7/03R	RWW/JTE	
	REV. 5/1/06	TLA/GM	

08-OCT-2008 16:23
g:\tipprojects-r\r2719a\structures\str#2\final plans\R2719A_sd_BR_02.dgn
taverette

STR. #2 STD. NO. CBR1

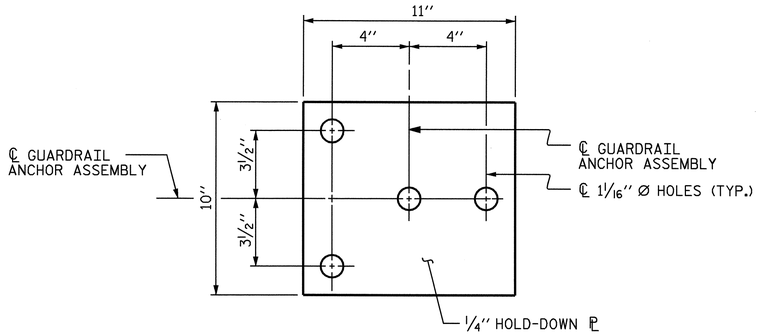

PLAN

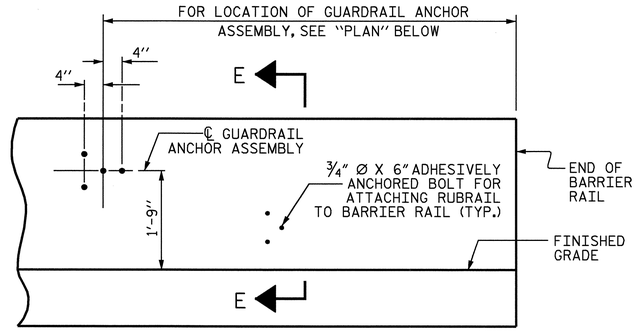

ELEVATION

FOR LOCATION OF RUBRAIL, SEE ROADWAY STD. 862.03

NOTES

THE GUARDRAIL ANCHOR ASSEMBLY SHALL CONSIST OF A 1/4'' HOLD DOWN PLATE AND 4 - 7/8'' Ø BOLTS WITH NUTS AND WASHERS, RUBRAIL, AND ADHESIVELY ANCHORED BOLTS.

THE HOLD-DOWN PLATE SHALL CONFORM TO AASHTO M270 GRADE 36. AFTER FABRICATION, THE HOLD-DOWN PLATE SHALL BE HOT-DIP GALVANIZED IN ACCORDANCE WITH AASHTO M111.

BOLTS SHALL CONFORM TO THE REQUIREMENTS OF ASTM A307 AND NUTS SHALL CONFORM TO THE REQUIREMENTS OF AASHTO M291. BOLTS, NUTS AND WASHERS SHALL BE GALVANIZED. (AT THE CONTRACTOR'S OPTION, STAINLESS STEEL BOLTS, NUTS AND WASHERS MAY BE USED AS AN ALTERNATE FOR THE 7/8'' Ø GALVANIZED BOLTS, NUTS AND WASHERS. THEY SHALL CONFORM TO OR EXCEED THE MECHANICAL REQUIREMENTS OF ASTM A307. THE USE OF THIS ALTERNATE SHALL BE APPROVED BY THE ENGINEER.)

THE GUARDRAIL ANCHOR ASSEMBLY IS REQUIRED AT ALL POINTS WHERE APPROACH GUARDRAIL IS TO BE ATTACHED TO THE END OF BARRIER RAIL. FOR POINTS OF ATTACHMENT, SEE SKETCH.

AFTER INSTALLATION, THE EXPOSED THREAD OF THE BOLT SHALL BE BURRED WITH A SHARP POINTED TOOL.

THE COST OF THE GUARDRAIL ANCHOR ASSEMBLY SHALL BE INCLUDED IN THE UNIT CONTRACT PRICE BID FOR CONCRETE BARRIER RAIL.

THE 1 1/4'' Ø HOLES SHALL BE FORMED OR DRILLED WITH A CORE BIT. IMPACT TOOLS WILL NOT BE PERMITTED. ANY CONCRETE DAMAGED BY THIS WORK SHALL BE REPAIRED TO THE SATISFACTION OF THE ENGINEER.

THE C6 X 8.2 RUBRAIL IS TO BE ADHESIVELY ANCHORED TO THE RAIL USING THREE 3/4''Ø X 6'' BOLTS WITH WASHERS. LEVEL ONE FIELD TESTING IS REQUIRED, AND THE YIELD LOAD OF THE 3/4''Ø BOLT IS 12 KIPS. FOR ADHESIVELY ANCHORED ANCHOR BOLTS OR DOWELS, SEE SPECIAL PROVISIONS. SEE ROADWAY STANDARD 862.03 FOR DETAILS AND LOCATION OF THE RUBRAIL.

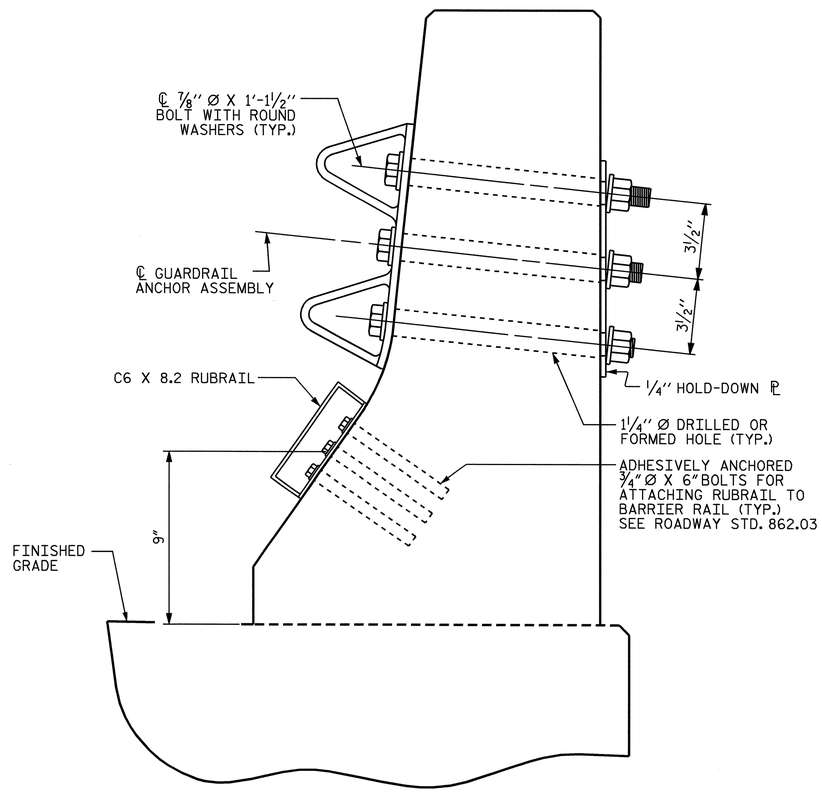

SECTION E-E

GUARDRAIL ANCHOR ASSEMBLY DETAILS

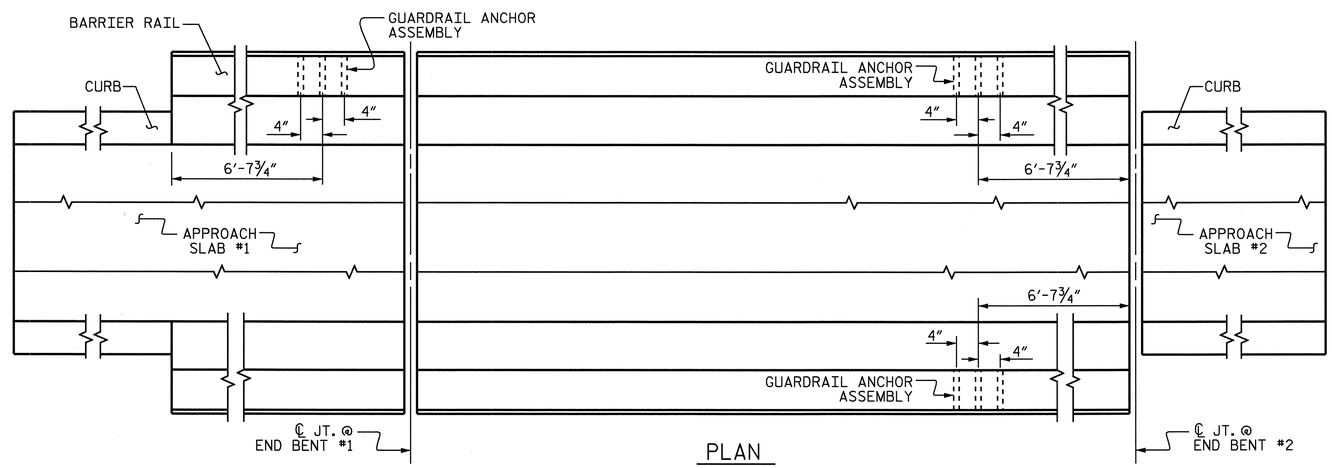

PLAN

LOCATION OF ANCHORS FOR GUARDRAIL

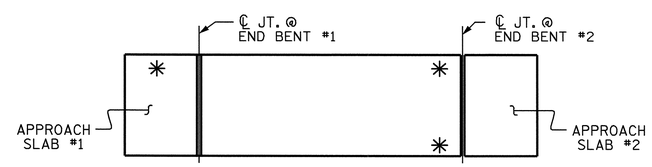

SKETCH SHOWING POINTS OF ATTACHMENTS

✳ DENOTES B-77 GUARDRAIL ANCHOR ASSEMBLY

PROJECT NO. R-2719A

LENOIR COUNTY

STATION: 85+98.30 -L-

STATE OF NORTH CAROLINA
DEPARTMENT OF TRANSPORTATION
RALEIGH

STANDARD

GUARDRAIL ANCHORAGE FOR BARRIER RAIL (LEFT LANE)

NORTH CAROLINA PROFESSIONAL SEAL 14045 ENGINEER TIMOTHY W. COGGINS
10/13/08

REVISIONS						SHEET NO.
NO.	BY:	DATE:	NO.	BY:	DATE:	S-55
1			3			TOTAL SHEETS
2			4			340

ASSEMBLED BY : T.L. AVERETTE	DATE : 06-08
CHECKED BY : PEGGY PARISI	DATE : 08-08
DRAWN BY : TLA 5/06	ADDED 5/1/06R KMM/GM
CHECKED BY : GM 5/06	

08-OCT-2008 16:23
g:\tlpprojects-r\r2719a\structures\str#2\final plans\R2719A_sd_BR_02.dgn
taverette

STR. #2 STD. NO. GRA2

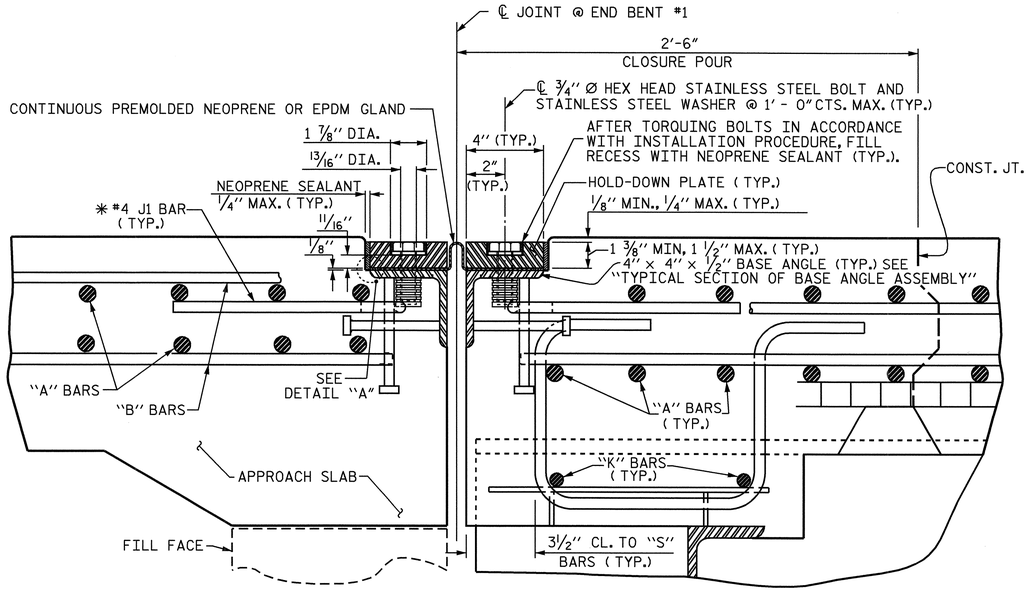

EXPANSION JOINT DETAILS

SECTION NORMAL TO JOINT -- STEEL SUPERSTRUCTURE

✱ THE QUANTITY OF #4 J1 BARS ON THE BILL OF MATERIAL IS BASED ON 1'-0" CENTERS. J1 BARS SHALL BE PLACED AT EACH VERTICAL STUD ANCHOR BOLT. IN THE EVENT THAT THE NUMBER OF VERTICAL STUD ANCHORS EXCEEDS THE NUMBER OF J1 BARS SPECIFIED, ADDITIONAL J1 BARS WILL NOT BE REQUIRED.

INSTALLATION PROCEDURE

1. A TEMPLATE OR OTHER SUITABLE DEVICE SHALL BE USED TO FORM THE TOP OF THE EXPANSION JOINT SEAL BLOCKOUT TO THE PROPER DEPTH AND WIDTH. THE TEMPLATE SHALL BE 4⅛" TO 4¼" WIDE AND OF SUCH THICKNESS AS TO PROVIDE FOR CORRECT FINAL ELEVATION OF TOP OF HOLD-DOWN PLATES. THE TEMPLATE SHALL BE ATTACHED TO THE BASE ANGLE ASSEMBLY WITH THE ¾"Ø HEX HEAD BOLTS PROVIDED FOR THE HOLD-DOWN PLATES. A 1"Ø HOLE SHALL BE PROVIDED IN THE TEMPLATE CENTERED OVER EACH WEEP HOLE IN THE 4"X 4"X ½" BASE ANGLE. OTHER METHODS OF INSURING DRAINAGE THROUGH WEEP HOLES MAY BE EMPLOYED SUBJECT TO ENGINEER'S APPROVAL.
2. AFTER THE CONCRETE HAS BEEN CAST ON BOTH SIDES OF THE JOINT, REMOVE THE TEMPLATE. THOROUGHLY CLEAN THE BOLT HOLES AND THE ANGLE PLATE. REMOVE ANY EXCESS CONCRETE THAT COMES OUT OF THE WEEP HOLES. ANY DAMAGED STEEL SHALL BE COATED WITH A MINIMUM THICKNESS OF 4 DRY MILS OF ZINC-RICH PAINT IN ACCORDANCE WITH THE STANDARD SPECIFICATIONS.
3. LAY THE GLAND ON THE BASE ANGLE AND FIELD MARK THE GLAND FOR THE BOLT HOLES. HOLES IN THE GLAND SHALL BE PUNCHED ⅞" IN DIAMETER WITH A HAND PUNCH.
4. IN ORDER TO CHECK FOR PROPER ALIGNMENT, PLACE THE GLAND AND HOLD-DOWN PLATES ON THE BASE ANGLE. DO NOT APPLY NEOPRENE SEALANT. BOLT THE HOLD-DOWN PLATES TO THE BASE ANGLE BUT DO NOT TIGHTEN. THE ENGINEER SHALL INSPECT THE JOINT SEAL DEVICE FOR PROPER ALIGNMENT.
5. AFTER INSPECTION, REMOVE THE HOLD-DOWN PLATES AND GLAND. APPLY NEOPRENE SEALANT TO THE BASE ANGLE IN ACCORDANCE WITH THE "INSTALLATION SKETCH". PLACE GLAND AND HOLD-DOWN PLATES ON THE BASE ANGLE. BOLT THE HOLD-DOWN PLATES TO THE BASE ANGLE ASSEMBLY AND TORQUE THE BOLTS TO 88 FT-LBS WITH A TORQUE WRENCH. THE TORQUE WRENCH SHALL BE CALIBRATED IN ACCORDANCE WITH SECTION 440-10 (D) OF THE STANDARD SPECIFICATIONS. CHECK THE TORQUE AFTER THREE (3) HOURS AND, IF NECESSARY, RETIGHTEN TO 88 FT-LBS. A FINAL CHECK SHALL BE MADE AT SEVEN (7) DAYS. TORQUE SHALL NOT BE LESS THAN 80 FT-LBS AFTER SEVEN (7) DAYS.
6. AFTER PROPER TORQUING, CLEAN THE BOLT HOLE RECESSES AND THE RECESS BETWEEN THE JOINT SEAL DEVICE AND CONCRETE, COMPLETELY FILL THESE RECESSES WITH NEOPRENE SEALANT.

GENERAL NOTES

1. FOR EXPANSION JOINT SEALS, SEE SPECIAL PROVISIONS.
2. ALL PLATES AND ANGLES SHALL CONFORM TO AASHTO M270 GRADE 36 STEEL OR APPROVED EQUAL. ALL HOLD-DOWN BOLTS SHALL CONFORM TO ASTM F593 ALLOY 304 STAINLESS STEEL AND WASHERS SHALL CONFORM TO ASTM F844 EXCEPT THEY SHALL BE MADE FROM ALLOY 304 STAINLESS STEEL. ALL STUD ANCHORS SHALL CONFORM TO AASHTO M169, GRADES 1010 THRU 1020 OR APPROVED EQUAL. ALL CONCRETE INSERTS SHALL BE CLOSED END AND SHALL CONFORM TO AASHTO M169, GRADE 12L14. TENSILE CAPACITY SHALL BE 3000 LBS. MIN.
3. A PREMOLDED CORRUGATED OR NON-CORRUGATED GLAND SHALL BE USED FOR JOINTS SKEWED BETWEEN 50° THRU 130°. FOR JOINTS SKEWED LESS THAN 50° OR MORE THAN 130°, ONLY A CORRUGATED GLAND SHALL BE USED.
4. CLOSED END FERRULES AND STUD ANCHORS SHALL BE SHOP WELDED AND ALL HOLES SHALL BE SHOP DRILLED AS SHOWN ON PLANS. STUD ANCHORS SHALL BE ELECTRIC ARC END WELDED WITH COMPLETE FUSION.
5. SURFACES COMING IN CONTACT WITH NEOPRENE SHALL BE GROUND SMOOTH PRIOR TO METALLIZING.
6. UPON COMPLETION OF SHOP FABRICATION, THE HOLD DOWN PLATE AND BASE ANGLE ASSEMBLY, AS SHOWN IN THE " TYPICAL SECTION OF BASE ANGLE ASSEMBLY", SHALL BE METALLIZED. SEE SPECIAL PROVISION FOR THERMAL SPRAYED COATINGS (METALLIZATION).
7. BASE ANGLE ASSEMBLY SHALL BE CONTINUOUS FOR THE LENGTH OF THE JOINT. AT CROWN BREAKS, THE ENDS OF THE BASE ANGLE ASSEMBLY SHALL BE CUT PARALLEL TO THE BRIDGE CENTERLINE FOR SKEWS LESS THAN 80° AND GREATER THAN 100°. FINISHED WELD SHALL BE GROUND SMOOTH AND COATED WITH A MINIMUM THICKNESS OF 4 DRY MILS OF ZINC-RICH PAINT IN ACCORDANCE WITH THE STANDARD SPECIFICATIONS.
8. FIELD SPLICES OF HOLD-DOWN PLATES SHALL BE KEPT TO A MINIMUM. CONTRACTOR SHALL FURNISH DETAILED PLANS SHOWING PROPOSED SPLICE LOCATIONS FOR APPROVAL. HOLD-DOWN PLATES SHALL NOT EXCEED 20' LENGTHS UNLESS APPROVED BY THE ENGINEER.
9. NO ALTERNATE JOINT DETAILS SHALL BE PERMITTED IN LIEU OF THOSE SHOWN ON THESE PLANS.
10. THE CONTRACTOR MAY, AT HIS OPTION, USE ADHESIVELY ANCHORED ANCHOR BOLTS IN PLACE OF CONCRETE INSERTS FOR COVER PLATES. THE YIELD LOAD OF THE ¾"Ø BOLT IS 10 KIPS. FIELD TESTING OF THE ADHESIVE BONDING SYSTEM IS NOT REQUIRED.

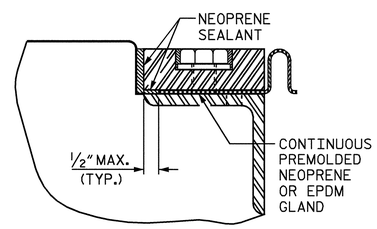

DETAIL "A"

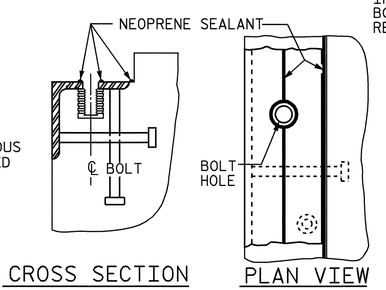

INSTALLATION SKETCH

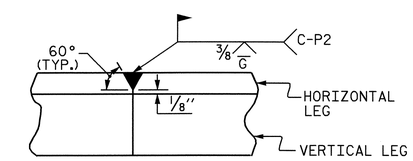

DETAIL- FIELD WELD SPLICE OF BASE ANGLE

MOVEMENT AND SETTING AT JOINT					
END BENT NO.	SKEW ANGLE	TOTAL MOVEMENT (ALONG ℄ RDWY)	PERPENDICULAR JOINT OPENING AT 45° F	PERPENDICULAR JOINT OPENING AT 60° F	PERPENDICULAR JOINT OPENING AT 90° F
1	90°-00'-00"	2 3/16"	2 9/16"	2 3/16"	1½"

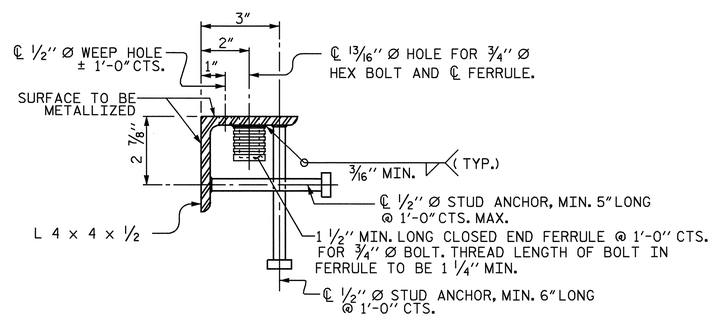

TYPICAL SECTION OF BASE ANGLE ASSEMBLY

NORTH CAROLINA PROFESSIONAL SEAL 14045 ENGINEER TIMOTHY L. COGGINS

Timothy L. Coggins 10/13/08

PROJECT NO. R-2719A
LENOIR COUNTY
STATION: 85+98.30 -L-

SHEET 1 OF 2

STATE OF NORTH CAROLINA
DEPARTMENT OF TRANSPORTATION
RALEIGH

STANDARD

EXPANSION JOINT SEAL DETAILS

(LEFT LANE)

REVISIONS						SHEET NO.
NO.	BY:	DATE:	NO.	BY:	DATE:	S-56
1			3			TOTAL SHEETS
2			4			340

ASSEMBLED BY : T.L. AVERETTE		DATE : 07-08	
CHECKED BY : PEGGY PARISI		DATE : 08-08	
DRAWN BY : REK 9/87	REV. 10/17/00	RWW/LES	
CHECKED BY : CRK 10/87	REV. 5/7/03R	RWW/JTE	
	REV. 5/1/06	TLA/GM	

STR. #2 STD. NO. EJS1

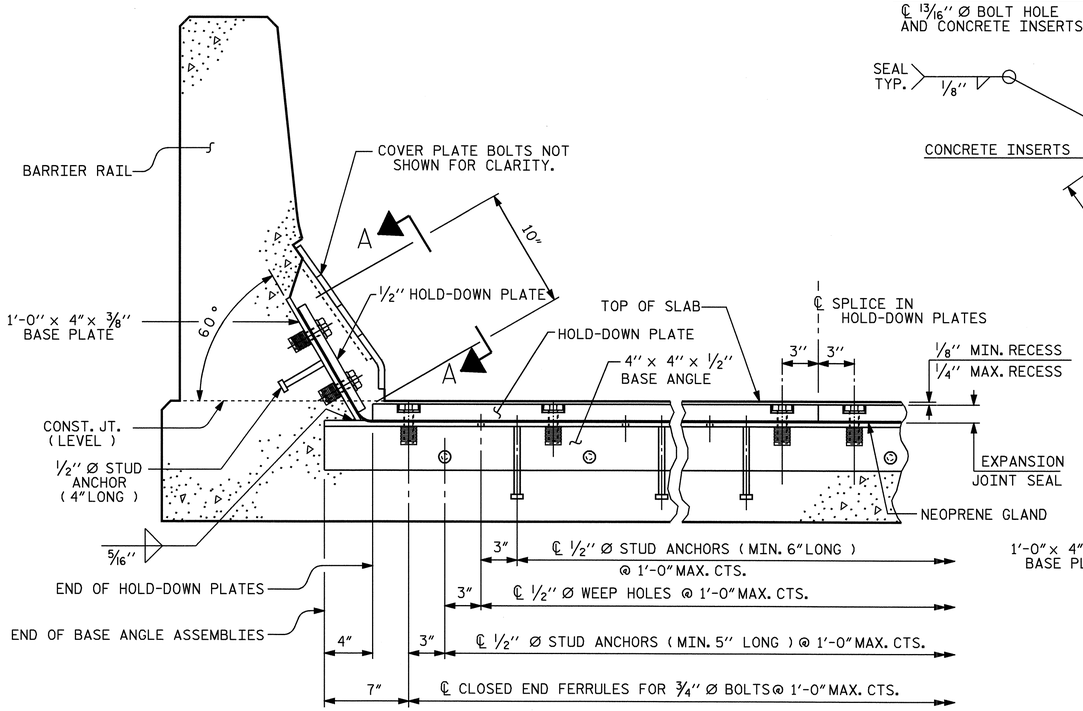

SECTION THRU RAIL NORMAL TO JOINT

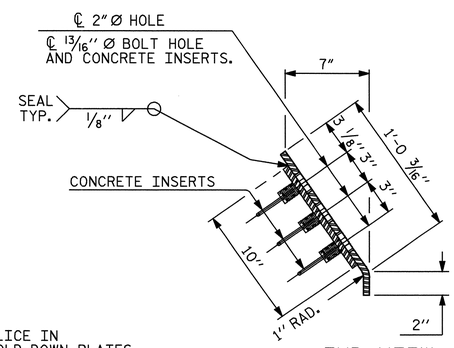

END VIEW

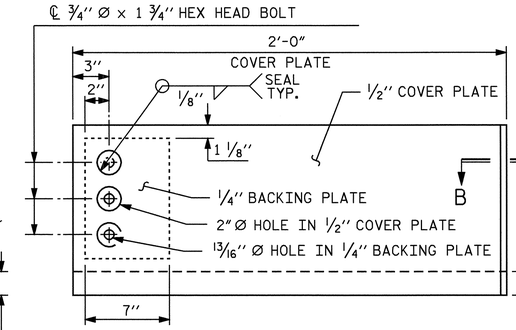

TYPE I - ELEVATION VIEW

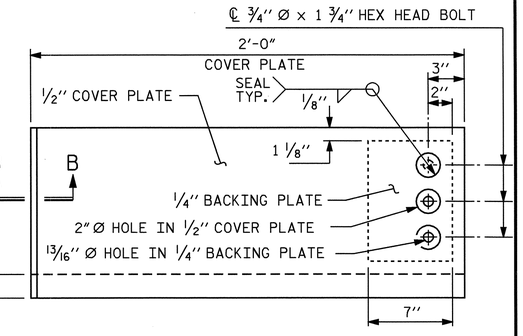

TYPE II - ELEVATION VIEW

BEND ALONG THIS LINE

COVER PLATE DETAILS

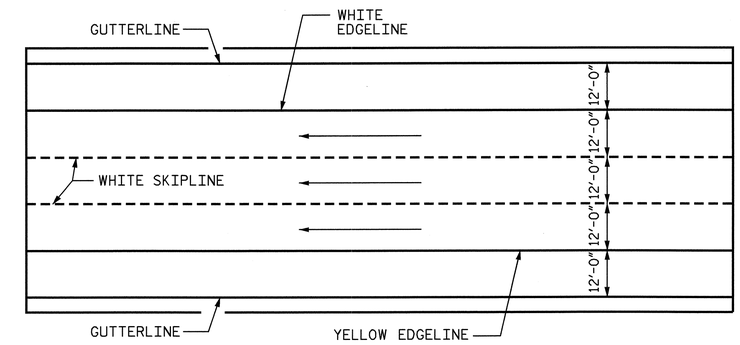

PAVEMENT MARKING ALIGNMENT

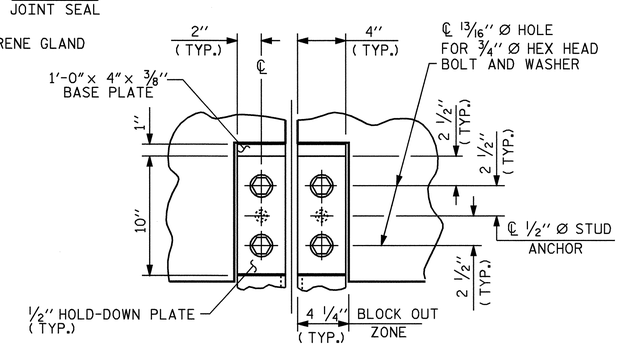

SECTION A - A

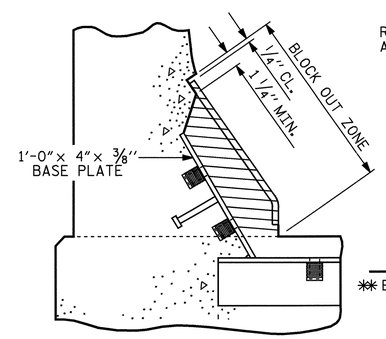

BLOCK OUT DETAIL

SEE " SECTION A - A " FOR OTHER DETAILS.

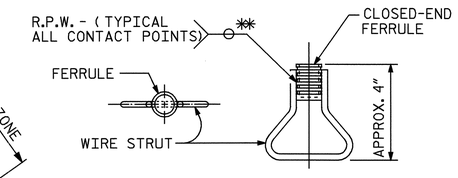

CONCRETE INSERT

** EACH WELDED ATTACHMENT OF WIRE TO FERRULE SHALL DEVELOP THE TENSILE STRENGTH OF THE WIRE.

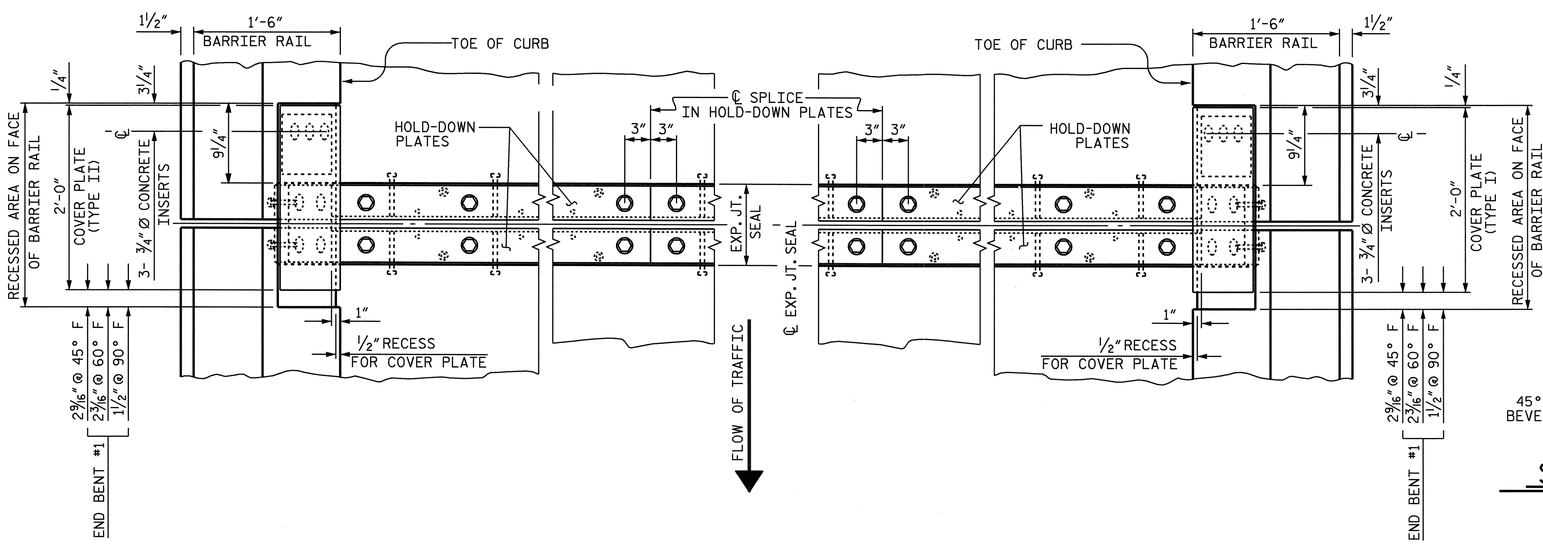

PLAN OF EXPANSION JOINT SEAL - LEFT SIDE

PLAN OF EXPANSION JOINT SEAL - RIGHT SIDE

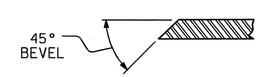

SECTION B - B

PROJECT NO. R-2719A
LENOIR COUNTY
STATION: 85+98.30 -L-

SHEET 2 OF 2

STATE OF NORTH CAROLINA
DEPARTMENT OF TRANSPORTATION
RALEIGH

STANDARD

EXPANSION JOINT SEAL DETAILS FOR BARRIER RAIL

(LEFT LANE)

NORTH CAROLINA PROFESSIONAL SEAL 14045 ENGINEER TIMOTHY L. COGGINS
10/13/08

ASSEMBLED BY : T.L. AVERETTE	DATE : 07-08
CHECKED BY : PEGGY PARISI	DATE : 08-08

DRAWN BY : REK 9/87	REV. 7/17/98 RWW/LES
CHECKED BY : CRK 10/87	REV. 10/17/00 RWW/LES
	REV. 5/1/06 TLA/GM

REVISIONS						SHEET NO.
NO.	BY:	DATE:	NO.	BY:	DATE:	S-57
1			3			TOTAL SHEETS
2			4			340

STR. #2 STD. NO. EJS2

08-OCT-2008 16:24
g:\tipprojects-r\r2719a\structures\str#2\finalplans\R2719A_sd_JS_02.dgn
taverette

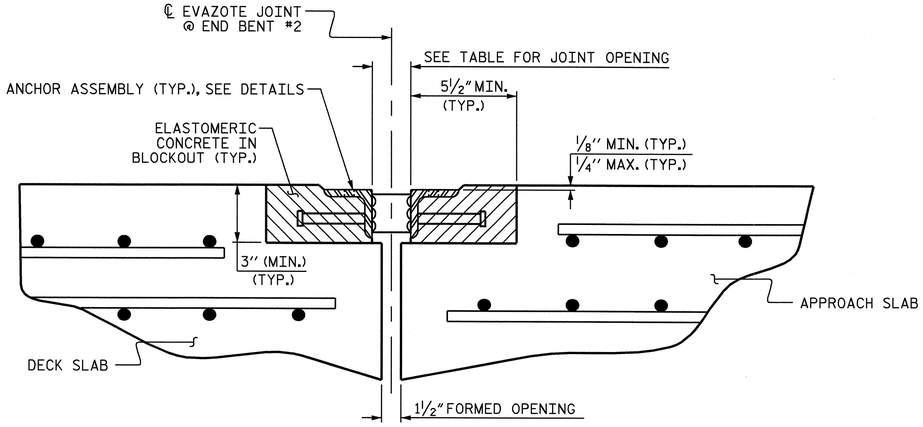

ARMORED JOINT DETAILS

SECTION NORMAL TO JOINT AT END BENT #2

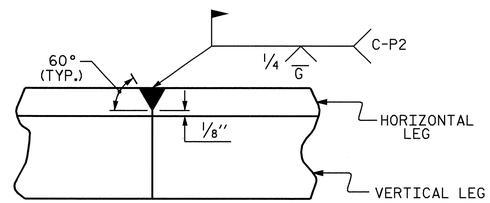

DETAIL- FIELD WELD SPLICE OF ANGLE

NOTES

ANGLES SHALL CONFORM TO AASHTO M270 GRADE 36 STEEL OR APPROVED EQUAL. ALL STUD ANCHORS SHALL CONFORM TO AASHTO M169 GRADES 1010 THRU 1020 OR APPROVED EQUAL.

STUD ANCHORS SHALL BE SHOP WELDED AND ALL HOLES SHALL BE SHOP DRILLED AS SHOWN ON THE PLANS. STUD ANCHORS SHALL BE ELECTRIC ARC END WELDED WITH COMPLETE FUSION.

UPON COMPLETION OF SHOP FABRICATION, THE ENTIRE ANCHOR ASSEMBLY SHALL BE METALLIZED. THE ½" Ø STUD ANCHORS AND ANCHOR TABS NEED NOT BE METALLIZED. SEE SPECIAL PROVISION FOR THERMAL SPRAYED COATINGS (METALLIZATION).

ANCHOR ASSEMBLY SHALL BE MADE CONTINUOUS THE LENGTH OF THE JOINT FROM GUTTER TO GUTTER. FOR FIELD SPLICES AT ALL CROWN BREAK POINTS, THE ENDS OF THE STEEL ANGLES SHALL BE CUT PARALLEL TO THE BRIDGE CENTERLINE. FINISHED FIELD WELDS SHALL BE GROUND SMOOTH AND COATED WITH A MINIMUM THICKNESS OF 4 DRY MILS OF ZINC-RICH PAINT IN ACCORDANCE WITH THE STANDARD SPECIFICATIONS.

ANCHOR ASSEMBLY SEGMENTS SHALL NOT BE LESS THAN 12 FEET NOR MORE THAN 20 FEET IN LENGTH. SHORTER SEGMENTS MAY BE USED AT THE EDGE OF ROADWAY OR AT POINTS OF STAGED CONSTRUCTION.

THE ANCHOR ASSEMBLY SHALL BE SECURED AND LEVELED AS SHOWN IN THE "ARMORED JOINT ANCHOR ASSEMBLY DETAILS". NO SUBMITTALS ARE REQUIRED FOR ⅜" Ø EXPANSION ANCHORS, NUTS OR WASHERS. THE CONTRACTOR MAY SUBMIT FOR APPROVAL AN ALTERNATE METHOD OF ALIGNING AND LEVELING THE ANGLES. THE ALTERNATE METHOD SHALL NOT INCLUDE ANY WELDING TO THE OUTSIDE FACE OF THE ANGLES.

AFTER THE ELASTOMERIC CONCRETE HAS BEEN CAST ON BOTH SIDES OF THE JOINT, REMOVE ANY EXCESS CONCRETE THAT COMES THROUGH THE WEEP HOLES AND THOROUGHLY CLEAN THE ANGLES. ANY DAMAGED STEEL SHALL BE COATED WITH A MINIMUM OF 4 MILS OF ZINC-RICH PAINT IN ACCORDANCE WITH THE STANDARD SPECIFICATIONS.

SEE SPECIAL PROVISIONS FOR EVAZOTE JOINT SEALS.

SEE SPECIAL PROVISIONS FOR ELASTOMERIC CONCRETE.

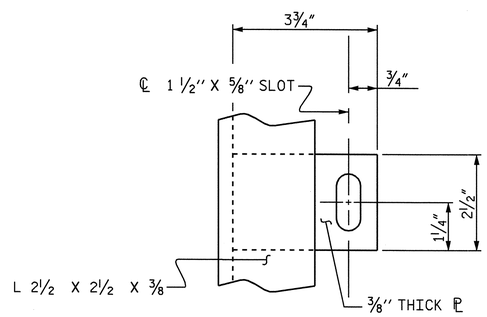

PLAN VIEW OF TAB

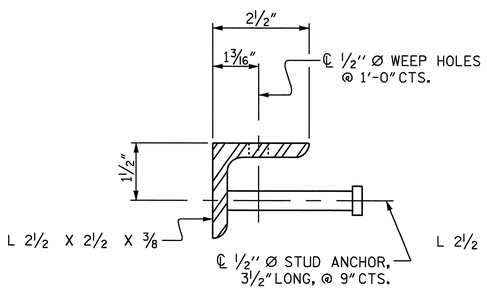

SECTION VIEW OF STUD

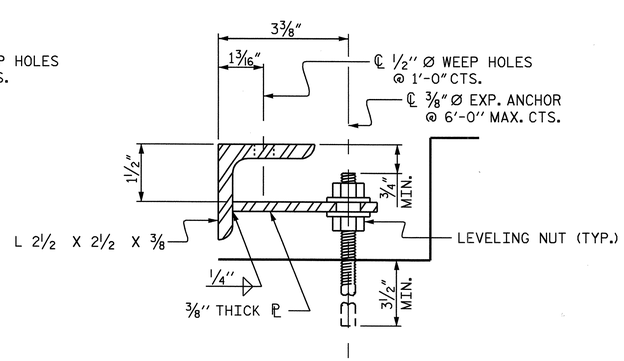

SECTION VIEW OF TAB

ARMORED JOINT ANCHOR ASSEMBLY DETAILS

MOVEMENT AND SETTING AT EVAZOTE JOINT

END BENT NO.	SKEW ANGLE	NOMINAL UNCOMPRESSED SEAL WIDTH	TOTAL MOVEMENT (ALONG ℄ RDWY)	PERPENDICULAR JOINT OPENING AT 45° F	PERPENDICULAR JOINT OPENING AT 60° F	PERPENDICULAR JOINT OPENING AT 90° F
2	90°-00'-00"	3 7/16"	1 11/16"	2 13/16"	2 9/16"	2 1/16"

TOTAL MOVEMENT IS CALCULATED ALONG THE CENTERLINE OF ROADWAY.
JOINT OPENINGS ARE MEASURED PERPENDICULAR TO THE JOINT.

BILL OF MATERIAL

END BENT NO.	ELASTOMERIC CONCRETE ✳ (CU. FT.)	TOTAL LENGTH OF ANGLE (FT)
2	13.8	120.22'

✳ BASED ON THE MINIMUM BLOCKOUT SHOWN.

PROJECT NO. R-2719A
LENOIR COUNTY
STATION: 85+98.30 -L-

STATE OF NORTH CAROLINA
DEPARTMENT OF TRANSPORTATION
RALEIGH

STANDARD
ARMORED EVAZOTE JOINT DETAILS
(LEFT LANE)

NORTH CAROLINA PROFESSIONAL SEAL 14045 ENGINEER TIMOTHY LEE COGGINS
10/13/08

REVISIONS						SHEET NO.
NO.	BY:	DATE:	NO.	BY:	DATE:	S-58
1			3			TOTAL SHEETS
2			4			340

ASSEMBLED BY : T.L. AVERETTE DATE : 06-08
CHECKED BY : PEGGY PARISI DATE : 09-08
DRAWN BY : EEM 1/96
CHECKED BY : RGW 1/96
REV. 7/10/01 LES/RDR
REV. 5/7/03RR RWW/JTE
REV. 5/1/06 TLA/GM

08-OCT-2008 16:24
g:\tlpprojects-r\r2719a\structures\str#2\finalplans\R2719A_sd_JS_02.dgn
taverette

STR. #2 STD. NO. AEJ1

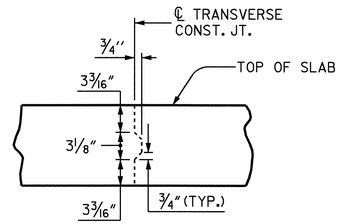

TRANSVERSE CONSTRUCTION JOINT DETAIL

REINFORCING STEEL IN SLAB NOT SHOWN. LONGITUDINAL REINFORCING STEEL SHALL BE CONTINUOUS THROUGH JOINT.

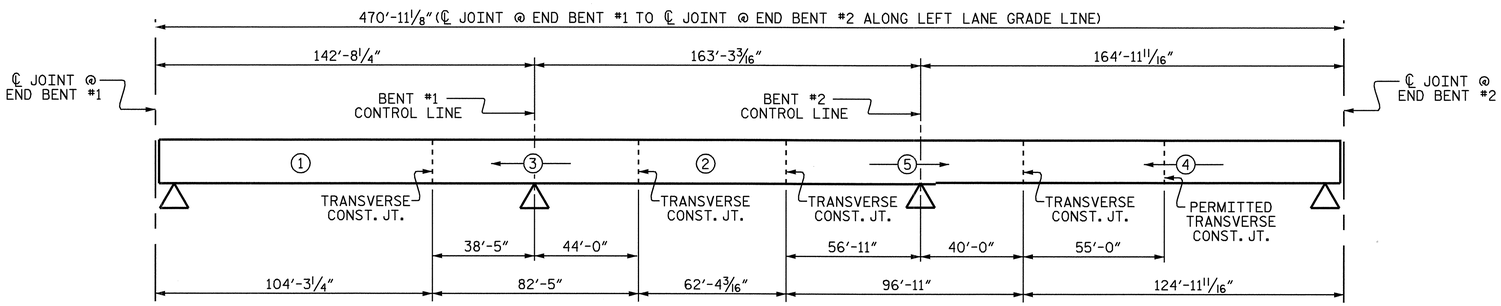

POURING SEQUENCE

DIMENSIONS GIVEN ALONG ARC OF GRADE LINE.
TRANSVERSE CONSTRUCTION JOINTS ARE RADIAL.

BILL OF MATERIAL

BAR	NO.	SIZE	TYPE	LENGTH	WEIGHT
* A1	2080	#5	STR	32'-9"	71049
A2	1040	#5	STR	26'-11"	29197
A3	1040	#5	STR	38'-2"	41400
* B1	204	#4	STR	25'-9"	3509
* B2	153	#7	STR	42'-0"	13135
* B3	100	#7	STR	58'-5"	11940
* B4	51	#4	STR	26'-7"	906
* B5	153	#7	STR	47'-3"	14777
* B6	150	#7	STR	45'-11"	14078
* B7	255	#4	STR	24'-6"	4173
B8	900	#5	STR	55'-0"	51629
* J1	60	#4	4	1'-5"	57
* K1	8	#5	1	11'-2"	93
* K2	16	#5	2	15'-10"	264
* S1	100	#4	3	4'-1"	273
REINFORCING STEEL = 122,226 LBS					
*EPOXY COATED REINF. STEEL = 134,254 LBS					

BAR TYPES

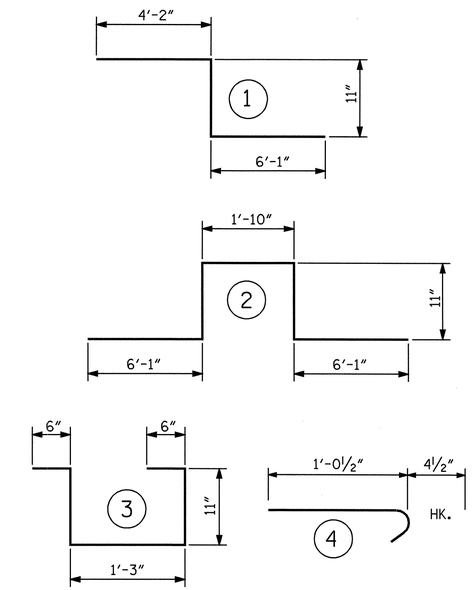

ALL BAR DIMENSIONS ARE OUT TO OUT

SUPERSTRUCTURE BILL OF MATERIAL

	CONCRETE CLASS AA	REINFORCING STEEL	EPOXY COATED REINFORCING STEEL
	(CU. YDS.)	(LBS.)	(LBS.)
POUR #1	230.2	122,226	134,254
POUR #2	136.4		
POUR #3	181.7		
POUR #4	275.5		
POUR #5	214.6		
* * TOTALS	1038.4		

* * QUANTITIES FOR BARRIER RAILS ARE NOT INCLUDED

GROOVING BRIDGE FLOORS

APPROACH SLABS	2,786	SQ.FT.
BRIDGE DECK	26,908	SQ.FT.
TOTAL	29,694	SQ.FT.

SUPERSTRUCTURE REINFORCING STEEL LENGTHS ARE BASED ON THE FOLLOWING MINIMUM SPLICE LENGTHS

BAR SIZE	SUPERSTRUCTURE EXCEPT APPROACH SLABS, PARAPET, AND BARRIER RAIL		APPROACH SLABS		PARAPET AND BARRIER RAIL
	EPOXY COATED	UNCOATED	EPOXY COATED	UNCOATED	
#4	2'-0"	1'-9"	2'-0"	1'-9"	2'-9"
#5	2'-6"	2'-2"	2'-6"	2'-2"	3'-5"
#6	3'-0"	2'-7"	3'-10"	2'-7"	4'-4"
#7	5'-3"	3'-6"			
#8	6'-10"	4'-7"			

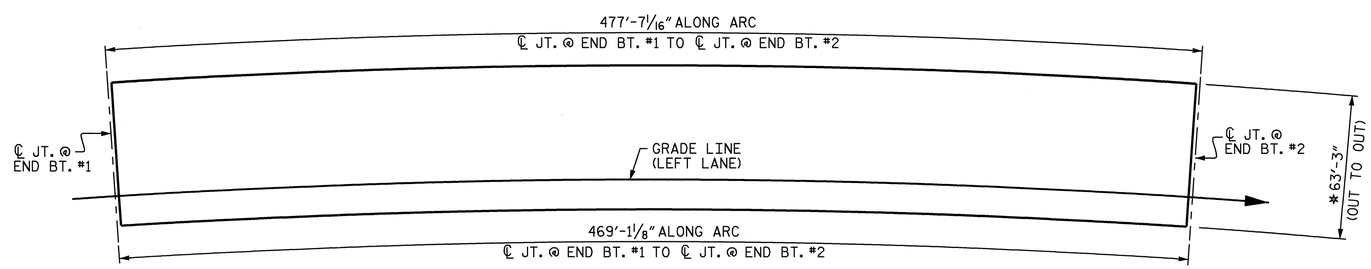

LAYOUT FOR COMPUTING AREA OF REINFORCED CONCRETE DECK SLAB (SQ. FT. = 29,939)

* RADIAL DIMENSION

PROJECT NO. R-2719A
LENOIR COUNTY
STATION: 85+98.30 -L-

STATE OF NORTH CAROLINA
DEPARTMENT OF TRANSPORTATION
RALEIGH

SUPERSTRUCTURE
BILL OF MATERIAL
(LEFT LANE)

NORTH CAROLINA PROFESSIONAL SEAL 14045 ENGINEER TIMOTHY R. COBBINS
4/3/09

REVISIONS						SHEET NO.
NO.	BY:	DATE:	NO.	BY:	DATE:	S-59
1			3			TOTAL SHEETS
2			4			340

DRAWN BY : T.L. AVERETTE DATE : 06-08
CHECKED BY : PEGGY PARISI DATE : 08-08

02-APR-2009 16:39
g:\tlpprojects-r\r2719a\structures\str#2\finalplans\r2719a_sd_bm_02.dgn
taverette

STR. #2 NC005

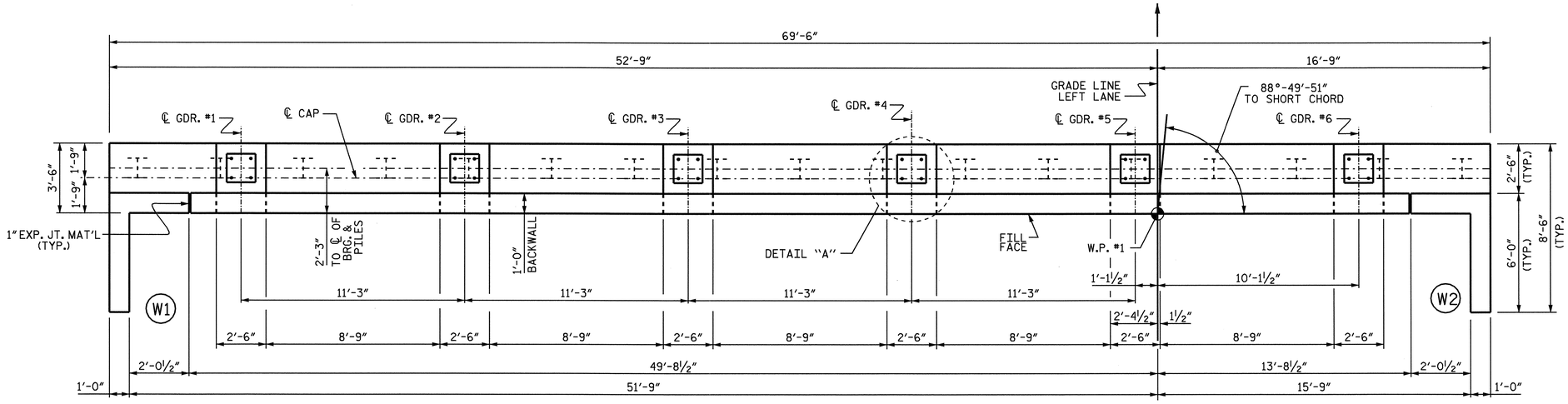

PLAN

NOTES

STIRRUPS IN CAP MAY BE SHIFTED AS NECESSARY TO CLEAR ANCHOR BOLTS.

BACKWALL SHALL BE PLACED BEFORE APPLYING THE EPOXY PROTECTIVE COATING.

THE TOP SURFACE AREAS OF THE END BENT CAPS SHALL BE CURED IN ACCORDANCE WITH THE STANDARD SPECIFICATIONS EXCEPT THE MEMBRANE CURING COMPOUND METHOD SHALL NOT BE USED.

THE TOP SURFACE OF THE END BENT CAP EXCEPT THE BRIDGE SEAT BUILDUPS SHALL BE SLOPED TRANSVERSELY FROM THE FILL FACE TO THE BACK FACE AT THE RATE OF 2%.

FOR PIPE INSERT DETAILS, SEE "POT BEARING DETAILS" SHEET.

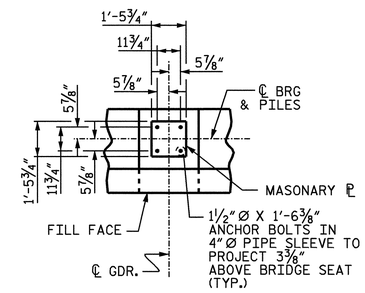

DETAIL "A"

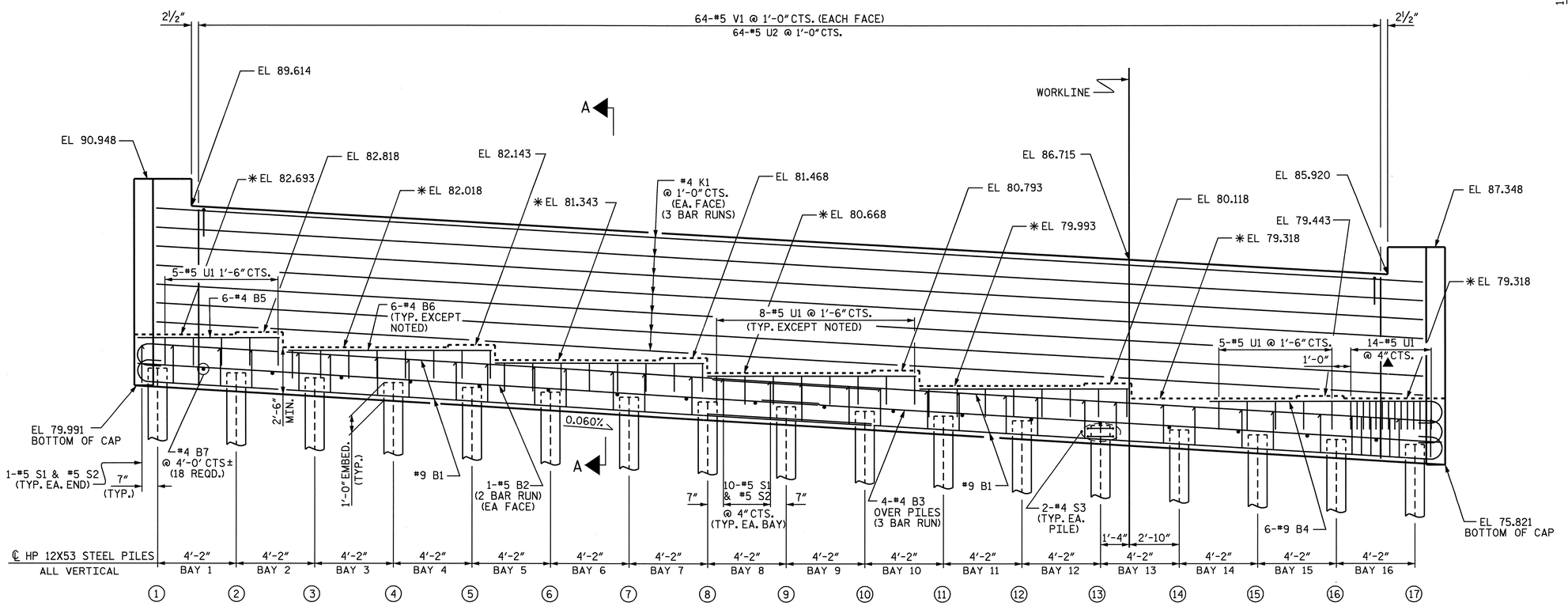

ELEVATION

✱ SEE SECTION A-A, SHEET 3 OF 3.

▲ S1 BARS TO MATCH WITH U1 BARS IN BAY #16

TOP OF PILE ELEVATIONS			
PILE No.	EL.	PILE No.	EL.
P1	80.936	P10	78.686
P2	80.686	P11	78.436
P3	80.436	P12	78.186
P4	80.186	P13	77.936
P5	79.936	P14	77.686
P6	79.686	P15	77.436
P7	79.436	P16	77.186
P8	79.186	P17	76.936
P9	78.936		

SPLICE CHART		
	SIZE	MIN. SPLICE
B1	#9	8'-9"
B2	#5	3'-0"
B3	#4	2'-5"
K1	#4	2'-5"

PROJECT NO. R-2719A

LENOIR COUNTY

STATION: 85+98.30 -L-

SHEET 1 OF 3

STATE OF NORTH CAROLINA
DEPARTMENT OF TRANSPORTATION
RALEIGH

SUBSTRUCTURE

END BENT #1

(LEFT LANE)

NORTH CAROLINA PROFESSIONAL SEAL 14045 ENGINEER TIMOTHY L. COGGINS

4/3/09

REVISIONS						SHEET NO.
NO.	BY:	DATE:	NO.	BY:	DATE:	S-60
1			3			TOTAL SHEETS
2			4			340

STR. #2

DRAWN BY : B.N.BARODAWALA DATE : 8-4-08
CHECKED BY : A. M. LEE (PE) DATE : 9/08

03-APR-2009 14:56
h:\structures\str#2\finalplans\r2719a_sd_eb#_02.dgn
tcoggins

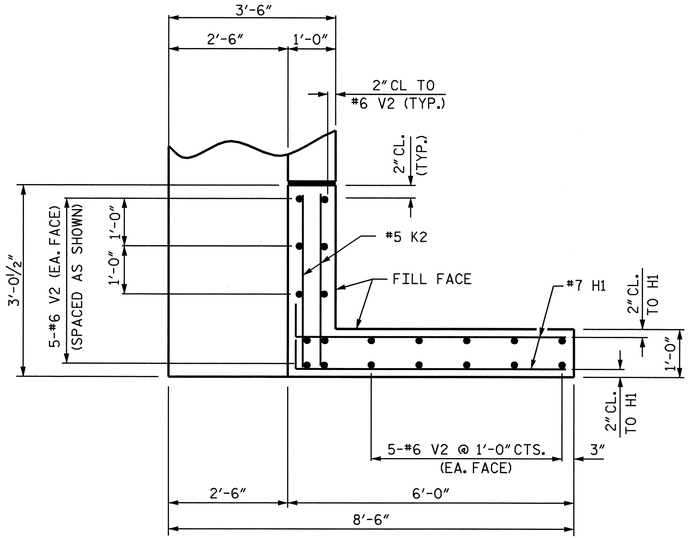

PLAN OF WING W1

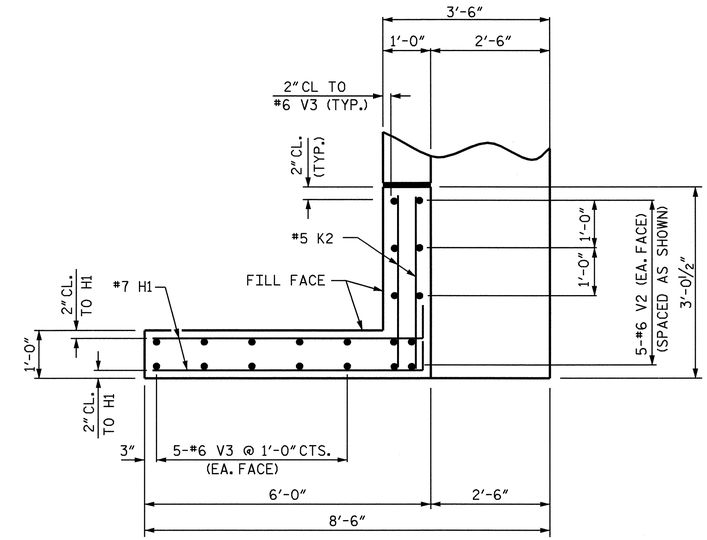

PLAN OF WING W2

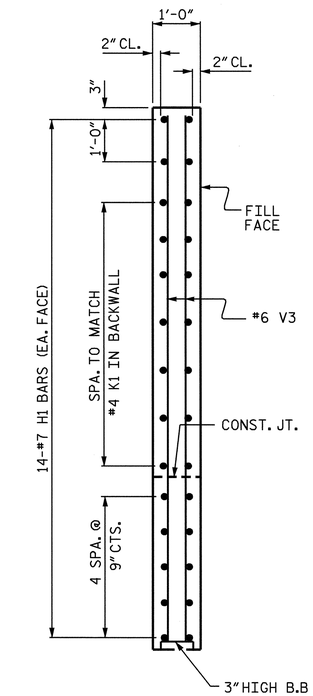

SECTION Y-Y

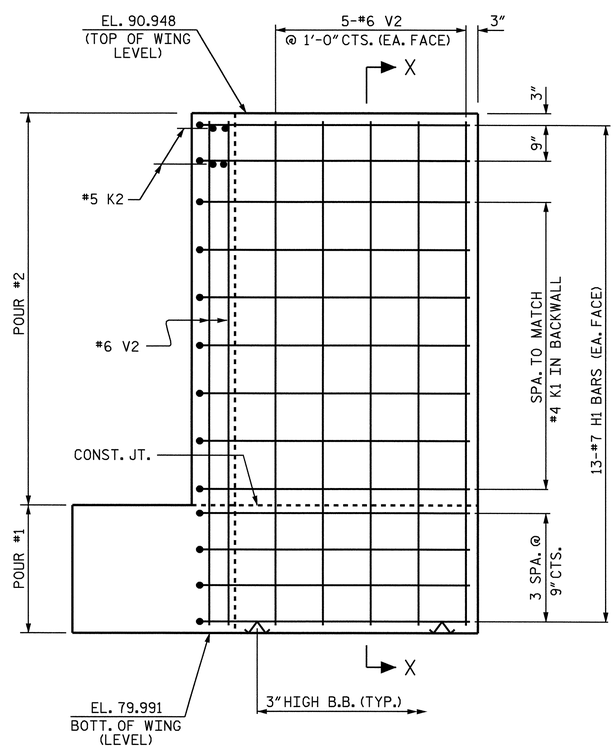

ELEVATION OF WING W1

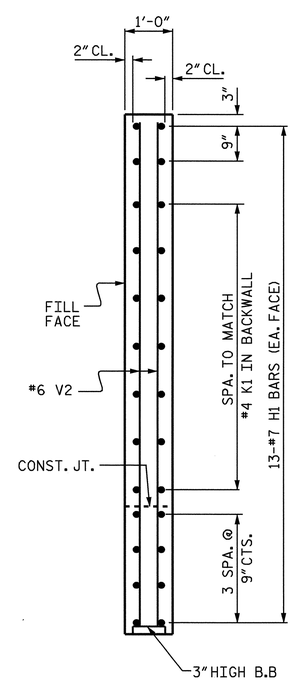

SECTION X-X

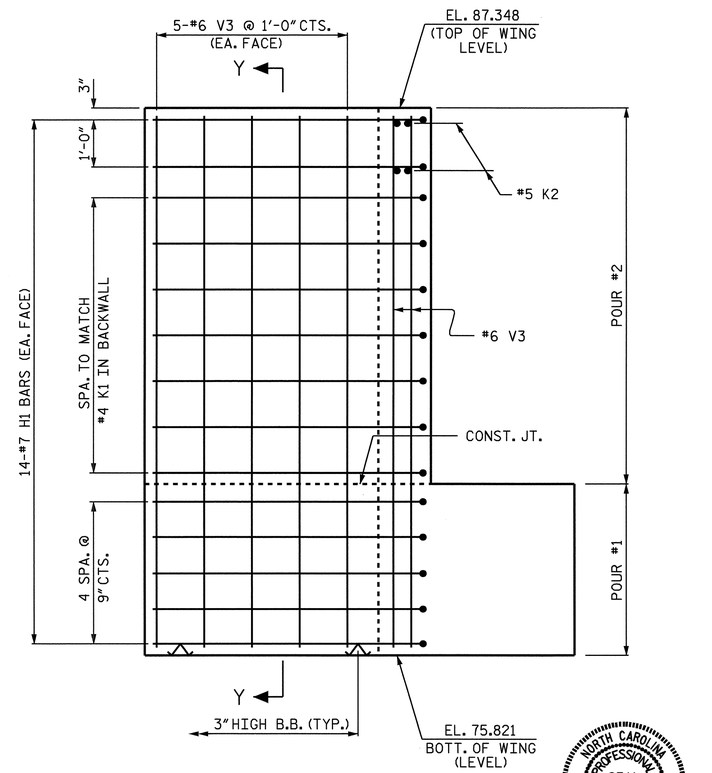

ELEVATION OF WING W2

NORTH CAROLINA PROFESSIONAL SEAL 14045 ENGINEER TIMOTHY A. COGGINS

PROJECT NO. R-2719A

LENOIR COUNTY

STATION: 85+98.30 -L-

SHEET 2 OF 3

STATE OF NORTH CAROLINA
DEPARTMENT OF TRANSPORTATION
RALEIGH

SUBSTRUCTURE
END BENT #1
(LEFT LANE)

REVISIONS						SHEET NO.
NO.	BY:	DATE:	NO.	BY:	DATE:	S-61
1			3			TOTAL SHEETS
2			4			340

DRAWN BY : B.N. BARODAWALA DATE : 8/4/08
CHECKED BY : A. M. LEE (PE) DATE : 9/08

03-APR-2009 14:56
h:\structures\str#2\finalplans\r2719a_sd_eb#_02.dgn
tcoggins

STR. #2

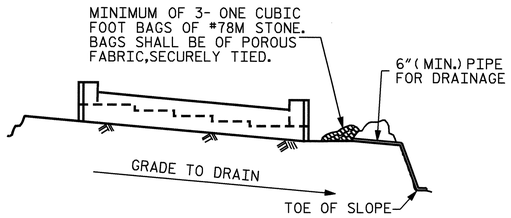

BAGGED STONE AND PIPE SHALL BE PLACED IMMEDIATELY AFTER COMPLETION OF END BENT EXCAVATION. PIPE MAY BE EITHER CONCRETE, CORRUGATED STEEL, CORRUGATED ALUMINUM ALLOY, OR CORRUGATED PLASTIC. PERFORATED PIPE WILL NOT BE ALLOWED.

BAGGED STONE SHALL REMAIN IN PLACE UNTIL THE ENGINEER DIRECTS THAT IT BE REMOVED. THE CONTRACTOR SHALL REMOVE AND DISPOSE OF SILT ACCUMULATIONS AT BAGGED STONE WHEN SO DIRECTED BY THE ENGINEER. BAGS SHALL BE REMOVED AND REPLACED WHENEVER THE ENGINEER DETERMINES THAT THEY HAVE DETERIORATED AND LOST THEIR EFFECTIVENESS.

NO SEPARATE PAYMENT WILL BE MADE FOR THIS WORK AND THE ENTIRE COST OF THIS WORK SHALL BE INCLUDED IN THE UNIT CONTRACT PRICE BID FOR THE SEVERAL PAY ITEMS.

TEMPORARY DRAINAGE AT END BENT

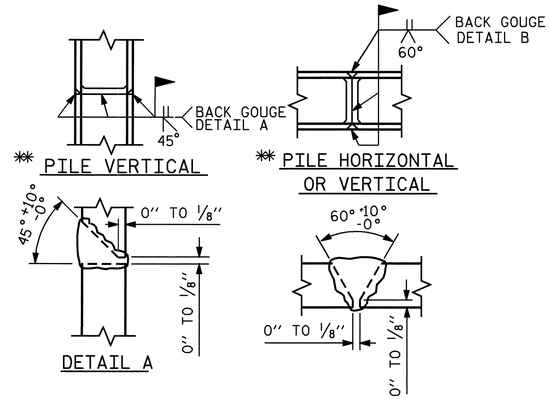

** POSITION OF PILE DURING WELDING.

PILE SPLICE DETAILS

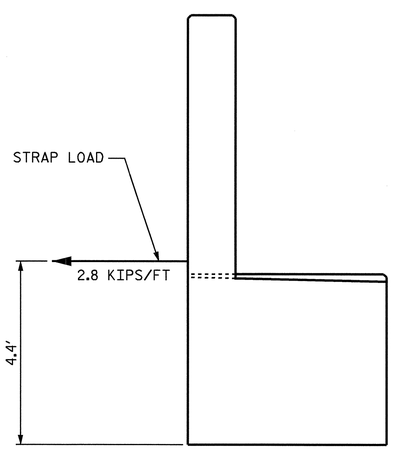

STRAP LOAD DETAIL

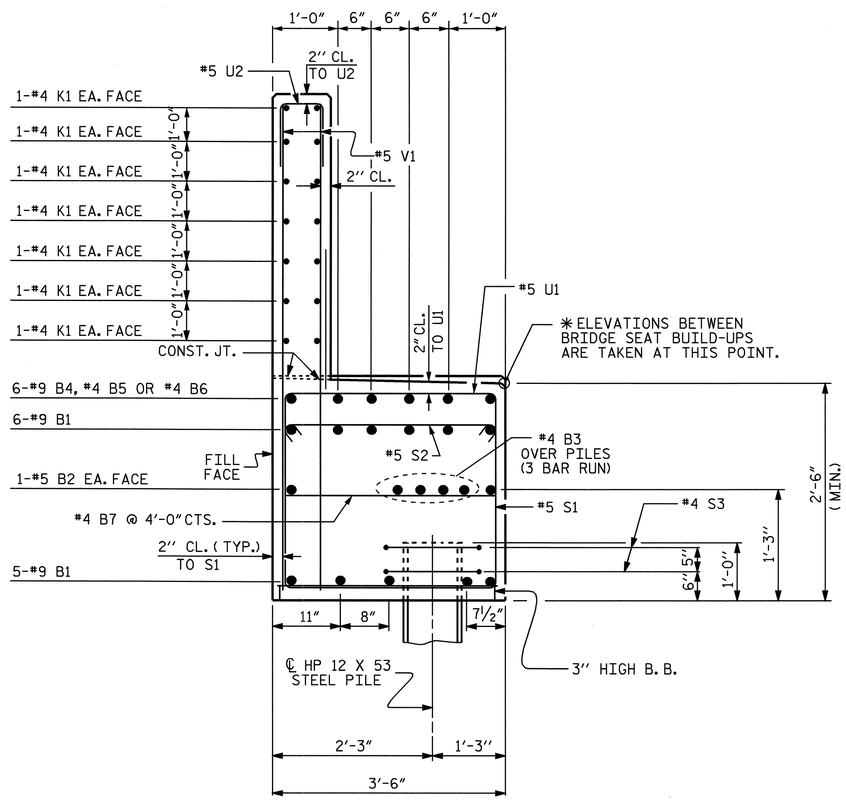

SECTION A-A

BAR TYPES

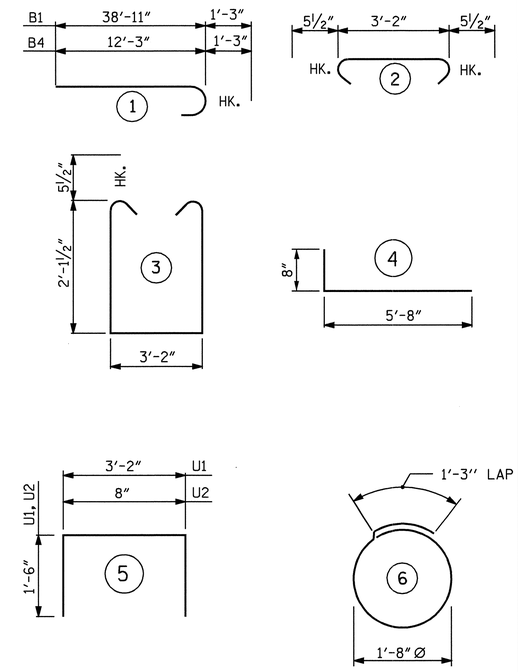

ALL BAR DIMENSIONS ARE OUT TO OUT.

BILL OF MATERIAL

END BENT #1

BAR	NO.	SIZE	TYPE	LENGTH	WEIGHT
B1	22	#9	1	40'-2"	3004
B2	4	#5	STR	36'-2"	151
B3	12	#4	STR	24'-9"	198
B4	6	#9	1	13'-6"	275
B5	6	#4	STR	7'-6"	30
B6	24	#4	STR	10'-10"	174
B7	18	#4	STR	3'-2"	38
H1	54	#7	4	6'-4"	699
K1	42	#4	STR	24'-9"	694
K2	8	#5	STR	2'-8"	22
S1	162	#5	3	8'-4"	1408
S2	162	#5	2	4'-1"	690
S3	34	#4	6	6'-6"	148
U1	56	#5	5	6'-2"	360
U2	64	#5	5	3'-8"	245
V1	128	#5	STR	9'-4"	1246
V2	20	#6	STR	10'-7"	318
V3	20	#6	STR	11'-2"	335

REINFORCING STEEL = 10035 LBS

CLASS "A" CONCRETE BREAKDOWN

POUR #1
CAP AND LOWER PART OF WINGS 27.4 YD.3

POUR #2
BACKWALL AND
UPPER PART OF WINGS 21.2 YD.3

CLASS "A" CONCRETE TOTAL 48.6 YD.3

HP 12 x 53 STEEL PILES

No. 17 LIN. FT. 1445

PROJECT NO. R-2719A
LENOIR COUNTY
STATION: 85+98.30 -L-

SHEET 3 OF 3

STATE OF NORTH CAROLINA
DEPARTMENT OF TRANSPORTATION
RALEIGH

SUBSTRUCTURE
END BENT #1
(LEFT LANE)

NORTH CAROLINA PROFESSIONAL SEAL 14045 ENGINEER TIMOTHY J. COGGINS
4/9/09

REVISIONS						SHEET NO.
NO.	BY:	DATE:	NO.	BY:	DATE:	S-62
1			3			TOTAL SHEETS
2			4			340

STR. #2

DRAWN BY : B.N. BARODAWALA DATE : 8/4/08
CHECKED BY : A. M. LEE (PE) DATE : 9/08

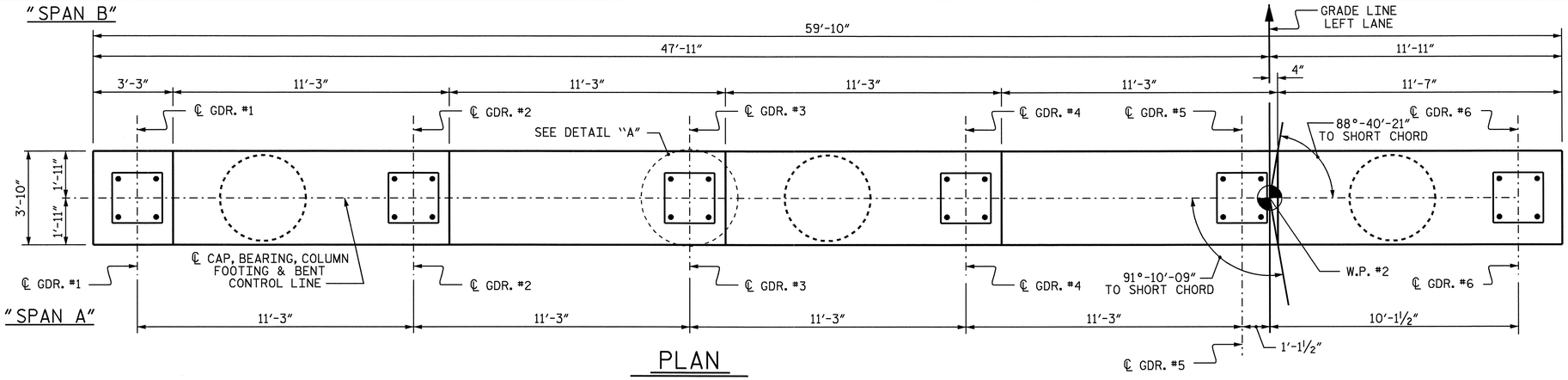

PLAN

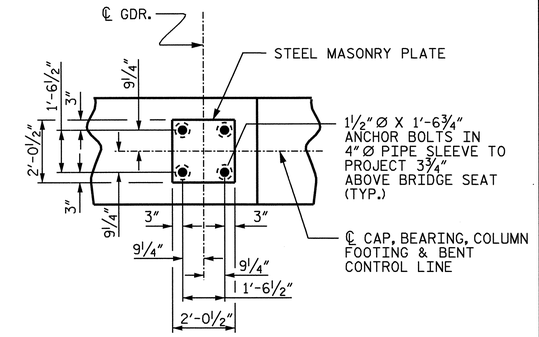

DETAIL "A"

(TYP. EACH GDR.)

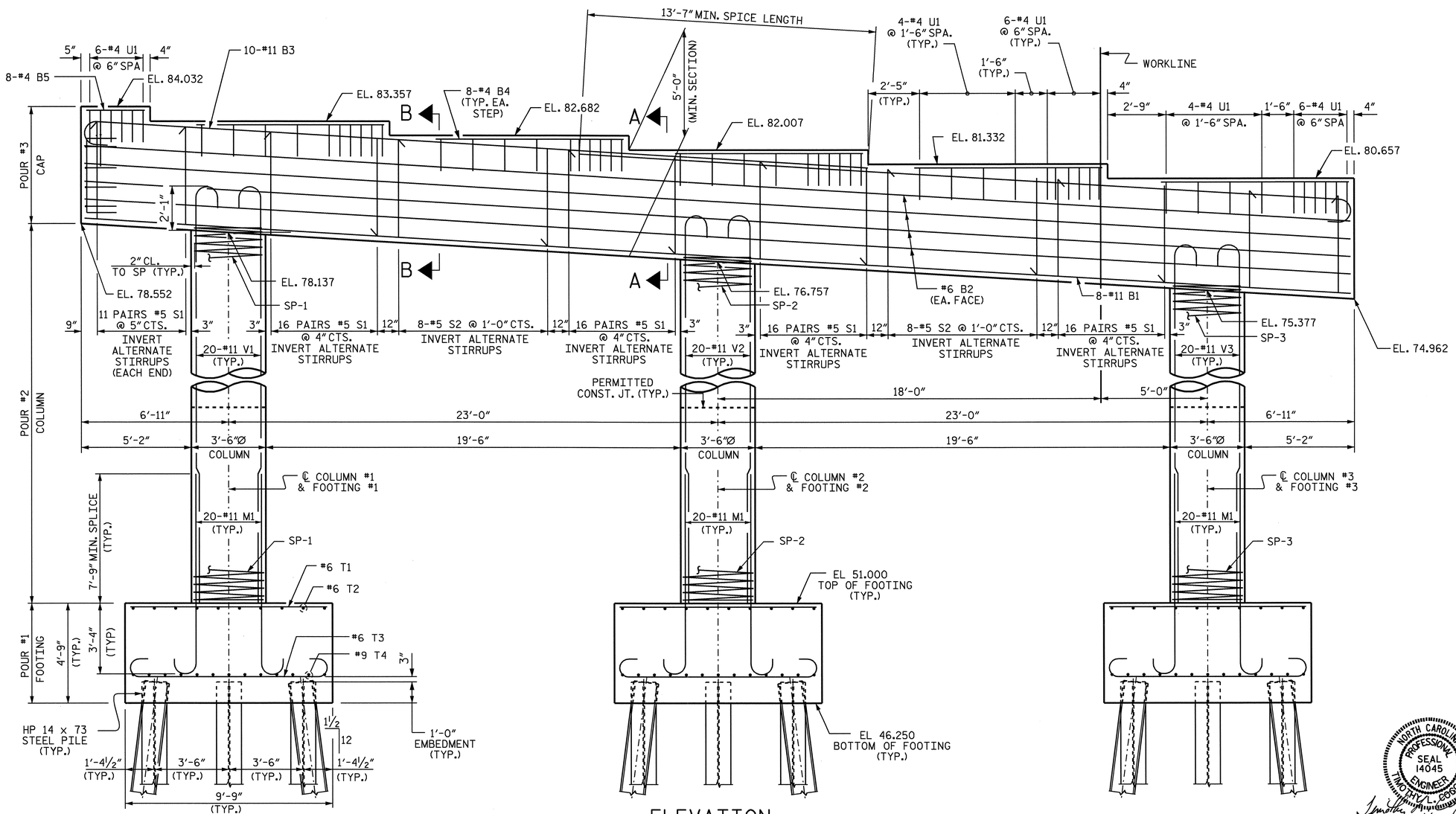

ELEVATION

PROJECT NO. R-2719A

LENOIR COUNTY

STATION: 85+98.30 -L-

SHEET 1 OF 3

STATE OF NORTH CAROLINA
DEPARTMENT OF TRANSPORTATION
RALEIGH

SUBSTRUCTURE

BENT #1

(LEFT LANE)

NORTH CAROLINA PROFESSIONAL SEAL 14045 ENGINEER TIMOTHY L. COGGINS
4/3/09

REVISIONS						SHEET NO.
NO.	BY:	DATE:	NO.	BY:	DATE:	S-63
1			3			TOTAL SHEETS
2			4			340

DRAWN BY : B.N.BARODAWALA DATE : 8-8-08
CHECKED BY : A. M. LEE (PE) DATE : 9/08

03-APR-2009 14:56
h:\structures\str#2\final plans\r2719a_sd_b#_02.dgn
tcoggins

STR. #2

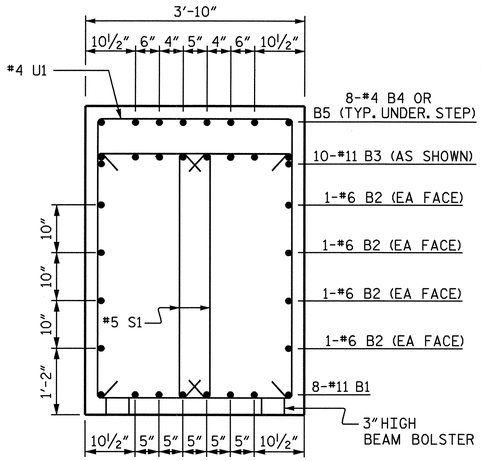

SECTION A-A

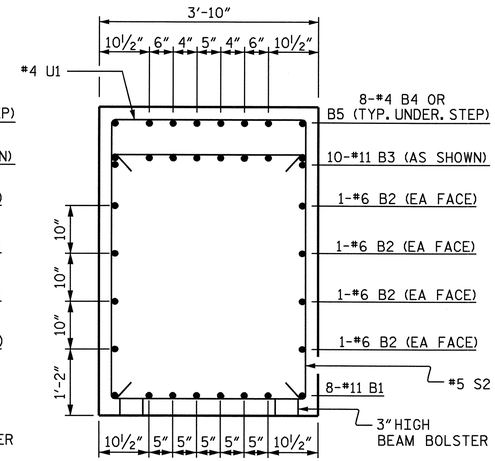

SECTION B-B

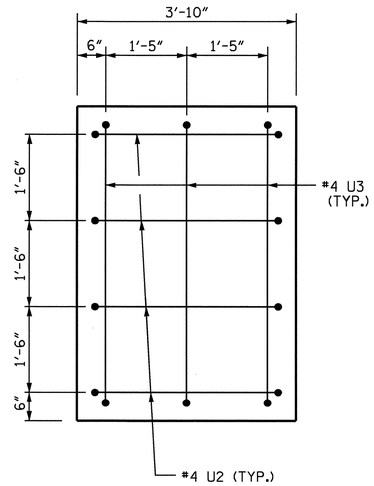

END VIEW

LEFT END

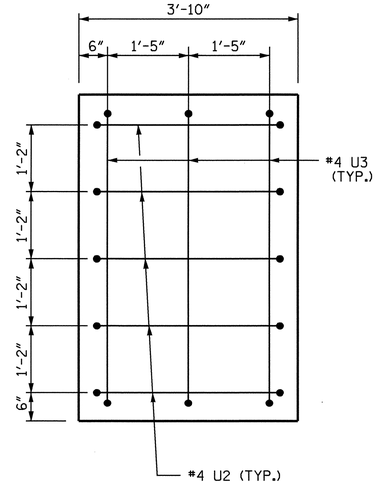

END VIEW

RIGHT END

NOTES

STIRRUPS IN CAP MAY BE SHIFTED AS NECESSARY TO CLEAR ANCHOR BOLTS.

HOOKS ON "V" BARS MAY BE TURNED AS NECESSARY FOR PLACING REINFORCING STEEL.

FOR PIPE INSERT DETAILS, SEE POT BEARINGS SHEET.

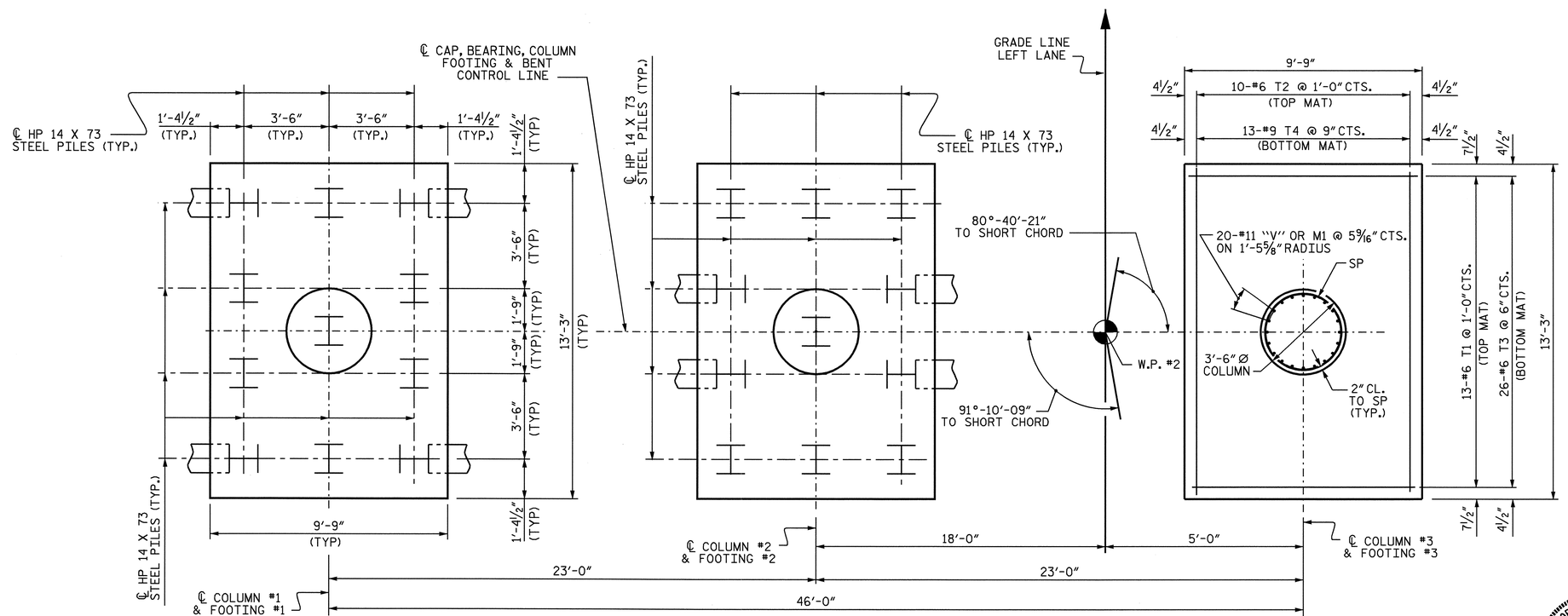

PLAN OF FOOTING

ALL FOOTING, COLUMN DIMENSIONS AND REINFORCING STEEL ARE TYPICAL.
PILE ARRANGEMENT FOR FOOTING #1 AND #3 ARE SIMILAR

PROJECT NO. R-2719A
LENOIR COUNTY
STATION: 85+98.30 -L-

SHEET 2 OF 3

STATE OF NORTH CAROLINA
DEPARTMENT OF TRANSPORTATION
RALEIGH

SUBSTRUCTURE

BENT #1

(LEFT LANE)

NORTH CAROLINA PROFESSIONAL SEAL 14045 ENGINEER TIMOTHY W. COGGINS
4/3/09

REVISIONS						SHEET NO.
NO.	BY:	DATE:	NO.	BY:	DATE:	S-64
1			3			TOTAL SHEETS
2			4			340

DRAWN BY : B.N.BARODAWALA DATE : 8-8-08
CHECKED BY : A. M. LEE (PE) DATE : 9/08

03-APR-2009 14:55
h:\structures\str#2\finalplans\r2719a_sd_b#_02.dgn
tcoggins

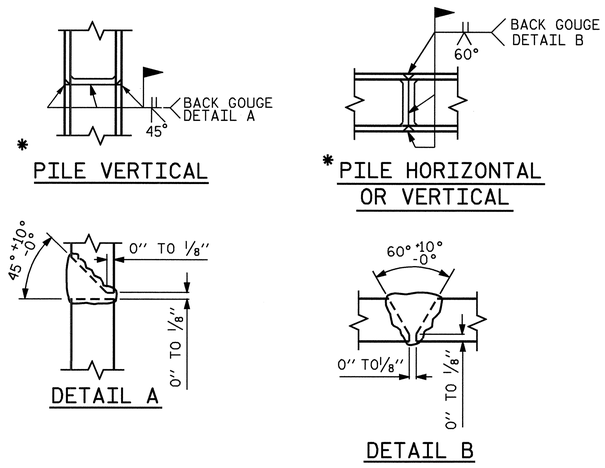

PILE SPLICE DETAILS

✱ POSITION OF PILE DURING WELDING.

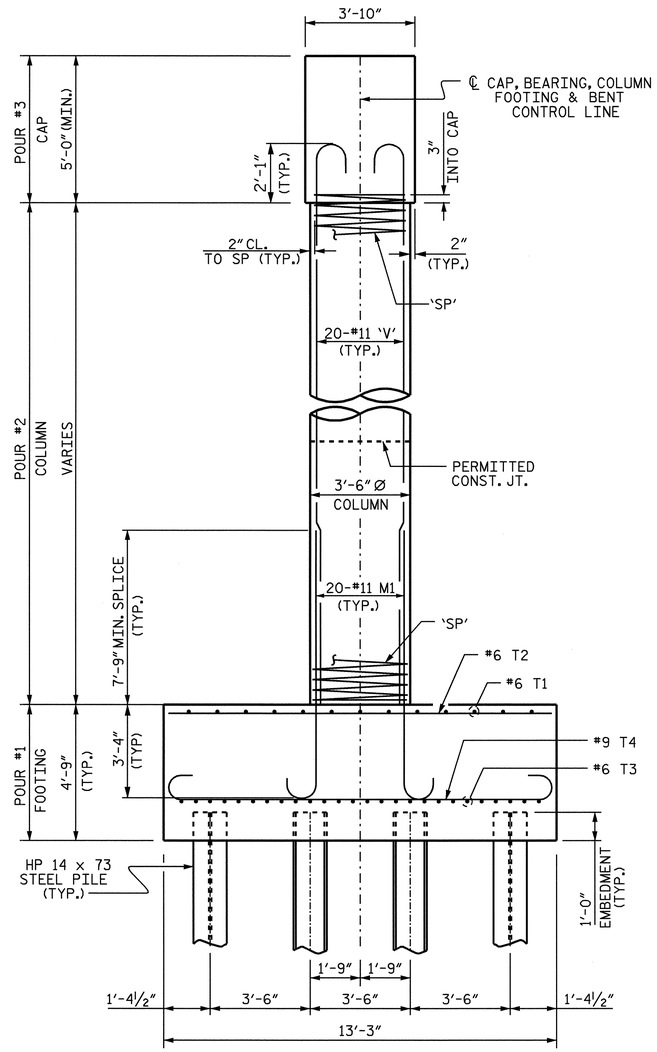

END ELEVATION

BAR TYPES

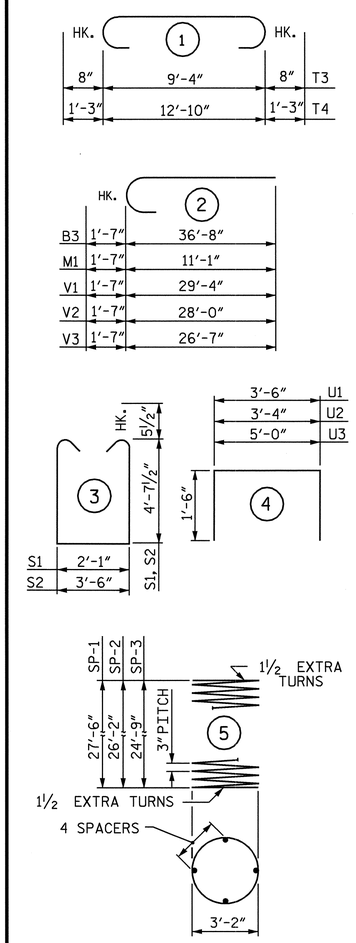

ALL BAR DIMENSIONS ARE OUT TO OUT.

✱✱ THE "SP" SPIRAL REINFORCING STEEL SHALL BE W20 OR D-20 COLD DRAWN WIRE OR #4 PLAIN OR DEFORMED BAR.

BILL OF MATERIAL

BENT #1

BAR	NO.	SIZE	TYPE	LENGTH	WEIGHT
B1	8	11	STR	59'-6"	2529
B2	8	6	STR	59'-7"	716
B3	20	11	2	38'-3"	4064
B4	40	4	STR	8'-10"	236
B5	8	4	STR	2'-11"	16
M1	60	11	2	12'-8"	4038
S1	172	5	3	12'-3"	2198
S2	16	5	3	13'-8"	228
T1	39	6	STR	9'-5"	552
T2	30	6	STR	12'-11"	582
T3	78	6	1	10'-8"	1250
T4	39	9	1	15'-4"	2033
U1	56	4	4	6'-6"	243
U2	9	4	4	6'-4"	38
U3	6	4	4	8'-0"	32
V1	20	11	2	30'-11"	3285
V2	20	11	2	29'-7"	3144
V3	20	11	2	28'-2"	2993
REINFORCING STEEL					28177 LBS
SP-1	1	✱✱	5	1109'-9"	741
SP-2	1	✱✱	5	1057'-4"	706
SP-3	1	✱✱	5	1001'-9"	669
SPIRAL COLUMN REINFORCING STEEL					2116 LBS

CLASS A CONCRETE BREAKDOWN

POUR #1 FOOTING	CU. YD.	68.2
POUR #2 COLUMNS	CU. YD.	27.8
POUR #3 CAP	CU. YD.	45.5
TOTAL CLASS A CONCRETE	CU. YD.	141.5

HP 14 x 73 STEEL PILES	NO. 33	LIN. FT. 2310
FOUNDATION EXCAVATION		LUMP SUM

PROJECT NO. R-2719A

LENOIR COUNTY

STATION: 85+98.30 -L-

SHEET 3 OF 3

STATE OF NORTH CAROLINA
DEPARTMENT OF TRANSPORTATION
RALEIGH

SUBSTRUCTURE

BENT #1

(LEFT LANE)

NORTH CAROLINA PROFESSIONAL SEAL 14045 ENGINEER TIMOTHY J. COGGINS
4/3/09

REVISIONS						SHEET NO.
NO.	BY:	DATE:	NO.	BY:	DATE:	S-65
1			3			TOTAL SHEETS
2			4			340

DRAWN BY : B.N.BARODAWALA DATE : 4-17-08
CHECKED BY : A. M. LEE (PE) DATE : 9/08

03-APR-2009 14:55
h:\structures\str#2\finalplans\r2719a_sd_b*_02.dgn
tcoggins

STR. #2

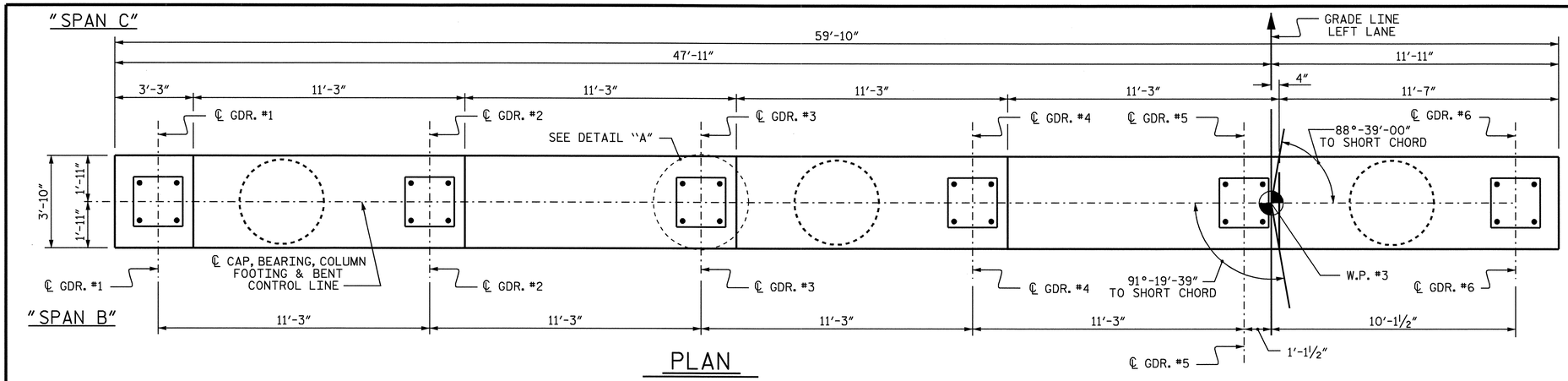

PLAN

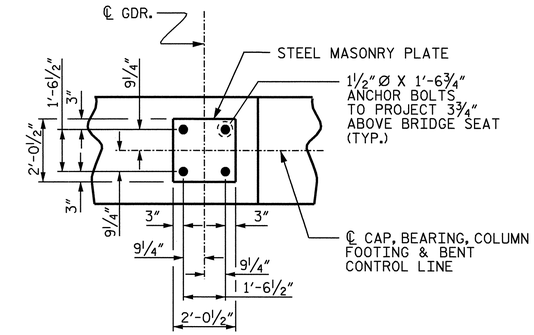

DETAIL "A"

(TYP. EACH GDR.)

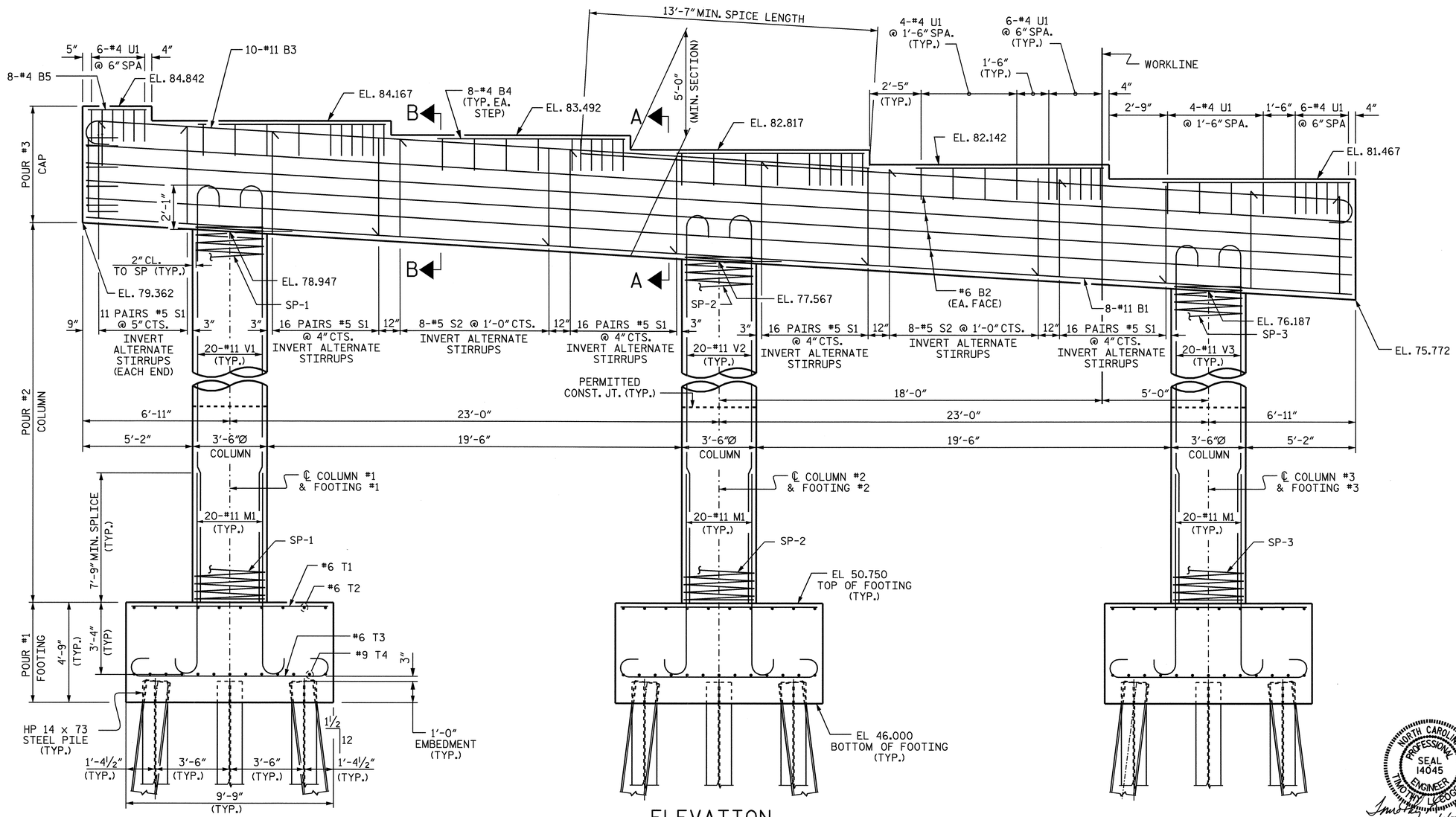

ELEVATION

PROJECT NO. R-2719A

LENOIR COUNTY

STATION: 85+98.30 -L-

SHEET 1 OF 3

STATE OF NORTH CAROLINA
DEPARTMENT OF TRANSPORTATION
RALEIGH

SUBSTRUCTURE

BENT #2

(LEFT LANE)

NORTH CAROLINA PROFESSIONAL SEAL 14045 ENGINEER TIMOTHY LEE COGGINS

4/3/09

REVISIONS						SHEET NO.
NO.	BY:	DATE:	NO.	BY:	DATE:	S-66
1			3			TOTAL SHEETS
2			4			340

DRAWN BY : B.N.BARODAWALA DATE : 8-8-08
CHECKED BY : A. M. LEE (PE) DATE : 9/08

03-APR-2009 14:55
h:\structures\str#2\finalplans\r2719a_sd_b*_02.dgn
tcoggins

STR. #2

NOTES

STIRRUPS IN CAP MAY BE SHIFTED AS NECESSARY TO CLEAR ANCHOR BOLTS.

HOOKS ON "V" BARS MAY BE TURNED AS NECESSARY FOR PLACING REINFORCING STEEL.

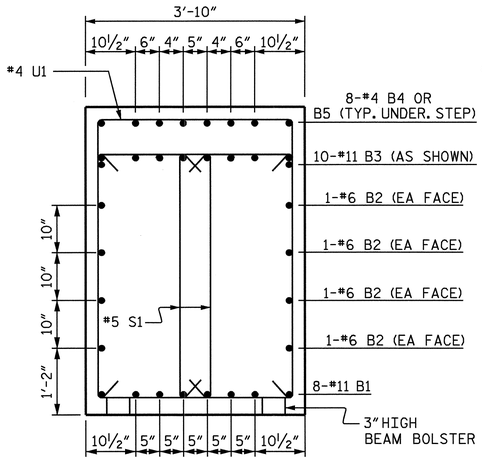

SECTION A-A

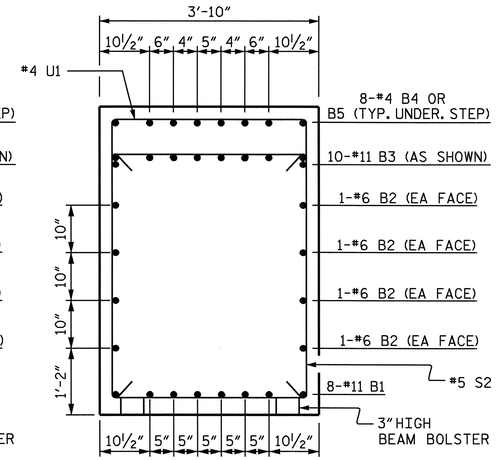

SECTION B-B

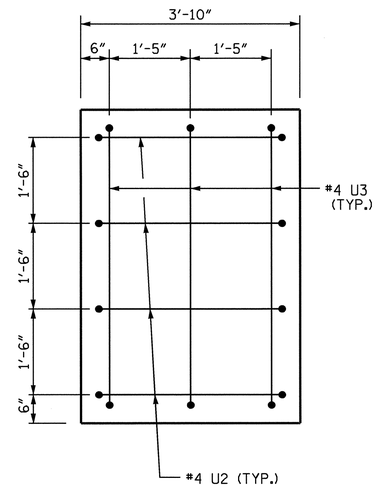

END VIEW

LEFT END

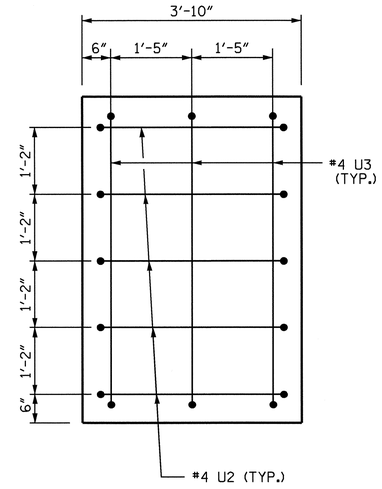

END VIEW

RIGHT END

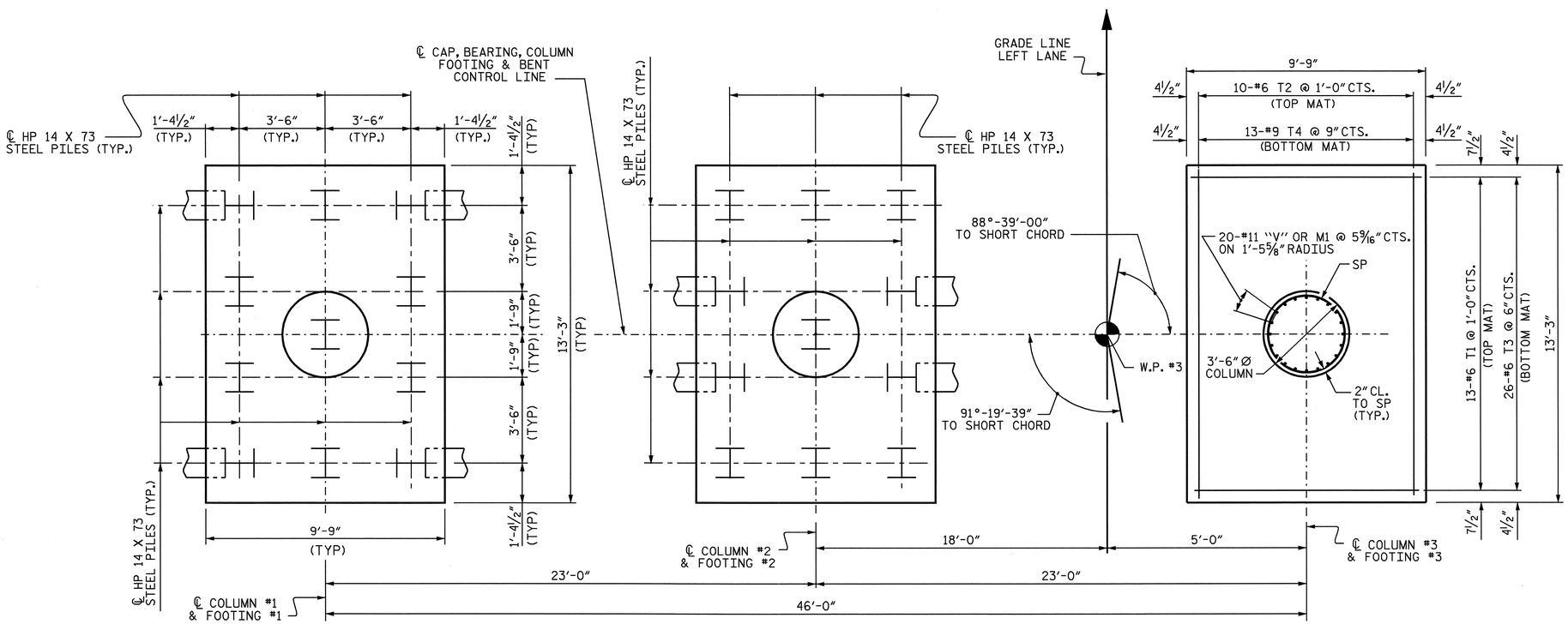

PLAN OF FOOTING

ALL FOOTING, COLUMN DIMENSIONS AND REINFORCING STEEL ARE TYPICAL.
PILE ARRANGEMENT FOR FOOTING #1 AND #3 ARE SIMILAR

PROJECT NO. R-2719A
LENOIR COUNTY
STATION: 85+98.30 -L-

SHEET 2 OF 3

STATE OF NORTH CAROLINA
DEPARTMENT OF TRANSPORTATION
RALEIGH

SUBSTRUCTURE

BENT #2

(LEFT LANE)

NORTH CAROLINA PROFESSIONAL SEAL 14045 ENGINEER TIMOTHY D. COGGINS
4/14/09

REVISIONS						SHEET NO.
NO.	BY:	DATE:	NO.	BY:	DATE:	S-67
1			3			TOTAL SHEETS
2			4			340

DRAWN BY : B.N.BARODAWALA DATE : 8-8-08
CHECKED BY : A. M. LEE (PE) DATE : 9/08

14-APR-2009 09:45
h:\structures\str#2\finalplans\r2719a_sd_b#_02.dgn
tcoggins

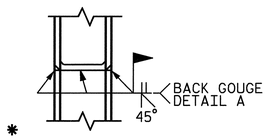

* PILE VERTICAL

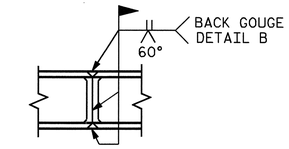

* PILE HORIZONTAL OR VERTICAL

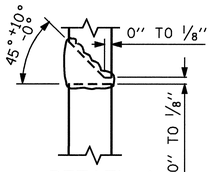

DETAIL A

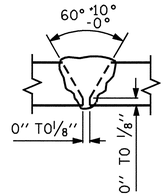

DETAIL B

PILE SPLICE DETAILS

* POSITION OF PILE DURING WELDING.

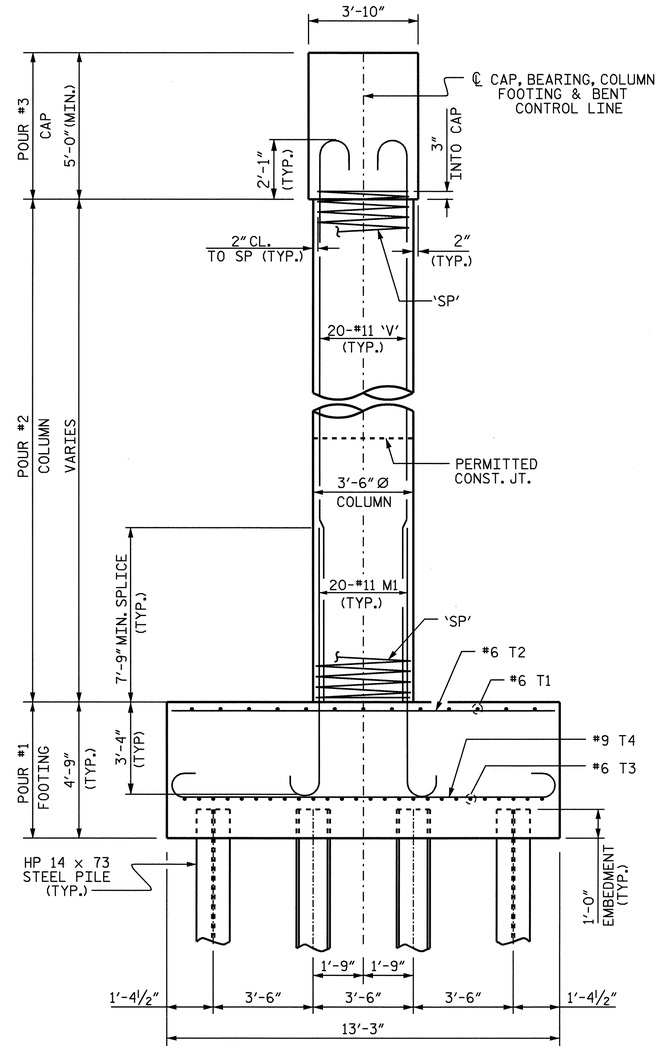

END ELEVATION

BAR TYPES

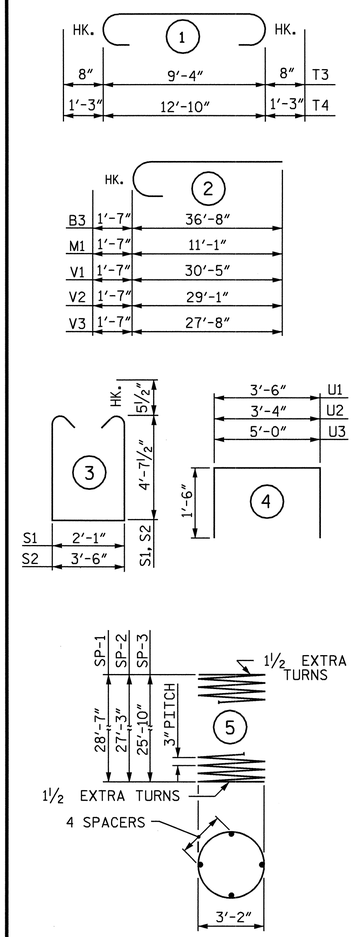

ALL BAR DIMENSIONS ARE OUT TO OUT.

** THE "SP" SPIRAL REINFORCING STEEL SHALL BE W20 OR D-20 COLD DRAWN WIRE OR #4 PLAIN OR DEFORMED BAR.

BILL OF MATERIAL

BENT #2

BAR	NO.	SIZE	TYPE	LENGTH	WEIGHT
B1	8	11	STR	59'-6"	2529
B2	8	6	STR	59'-7"	716
B3	20	11	2	38'-3"	4064
B4	40	4	STR	8'-10"	236
B5	8	4	STR	2'-11"	16
M1	60	11	2	12'-8"	4038
S1	172	5	3	12'-3"	2198
S2	16	5	3	13'-8"	228
T1	39	6	STR	9'-5"	552
T2	30	6	STR	12'-11"	582
T3	78	6	1	10'-8"	1250
T4	39	9	1	15'-4"	2033
U1	56	4	4	6'-6"	243
U2	9	4	4	6'-4"	38
U3	6	4	4	8'-0"	32
V1	20	11	2	32'-0"	3400
V2	20	11	2	30'-8"	3259
V3	20	11	2	29'-3"	3108
REINFORCING STEEL					28522 LBS
SP-1	1	✱✱	5	1152'-3"	770
SP-2	1	✱✱	5	1099'-11"	735
SP-3	1	✱✱	5	1044'-4"	698
SPIRAL COLUMN REINFORCING STEEL					2203 LBS

CLASS A CONCRETE BREAKDOWN

POUR #1 FOOTING	CU. YD.	68.2
POUR #2 COLUMNS	CU. YD.	28.7
POUR #3 CAP	CU. YD.	45.5
TOTAL CLASS A CONCRETE	CU. YD.	142.4

HP 14 x 73 STEEL PILES	NO. 33	LIN. FT. 2145
FOUNDATION EXCAVATION		LUMP SUM

PROJECT NO. R-2719A

LENOIR COUNTY

STATION: 85+98.30 -L-

SHEET 3 OF 3

STATE OF NORTH CAROLINA
DEPARTMENT OF TRANSPORTATION
RALEIGH

SUBSTRUCTURE

BENT #2

(LEFT LANE)

NORTH CAROLINA PROFESSIONAL SEAL 14045 ENGINEER TIMOTHY L. COGGINS

4/3/09

REVISIONS						SHEET NO.
NO.	BY:	DATE:	NO.	BY:	DATE:	S-68
1			3			TOTAL SHEETS
2			4			340

DRAWN BY : B.N.BARODAWALA DATE : 4-17-08
CHECKED BY : A. M. LEE (PE) DATE : 9/08

03-APR-2009 14:54
h:\structures\str#2\finalplans\r2719a_sd_b#_02.dgn
tcoggins

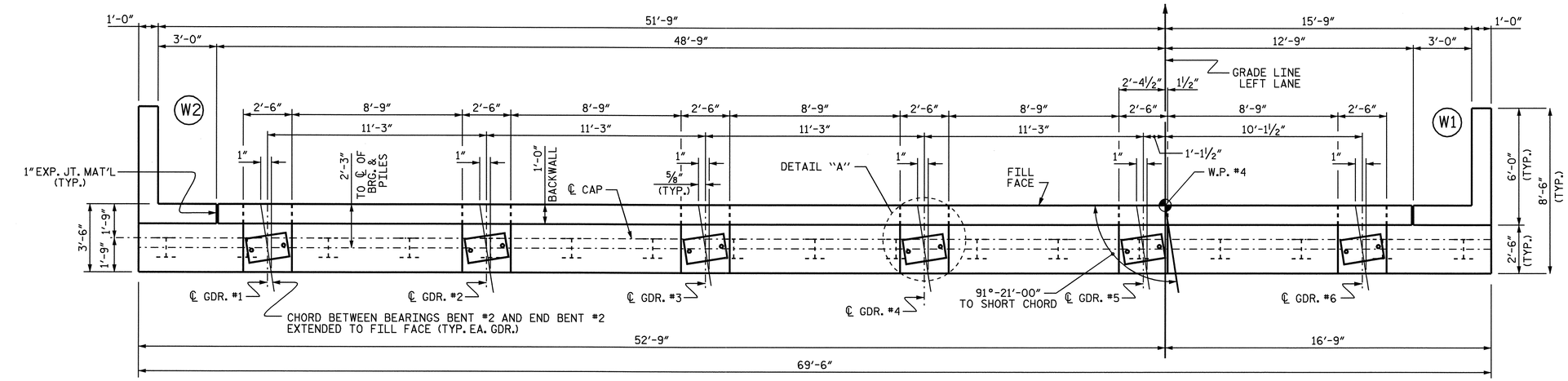

PLAN

NOTES

STIRRUPS IN CAP MAY BE SHIFTED AS NECESSARY TO CLEAR ANCHOR BOLTS.

EPOXY COAT THE END BENT CAP AFTER ADJUSTMENTS ARE MADE TO BEARINGS AND ANCHOR BOLTS ARE GROUTED.

BACKWALL SHALL BE PLACED BEFORE APPLYING THE EPOXY PROTECTIVE COATING.

THE TOP SURFACE AREAS OF THE END BENT CAPS SHALL BE CURED IN ACCORDANCE WITH THE STANDARD SPECIFICATIONS EXCEPT THE MEMBRANE CURING COMPOUND METHOD SHALL NOT BE USED.

THE TOP SURFACE OF THE END BENT CAP EXCEPT THE BRIDGE SEAT BUILDUPS SHALL BE SLOPED TRANSVERSELY FROM THE FILL FACE TO THE BACK FACE AT THE RATE OF 2%.

FOR PIPE INSERT DETAILS, SEE "ELASTOMERIC BEARING DETAILS" SHEET.

THE CENTERLINE OF THE ANCHOR BOLTS, ELASTOMERIC BEARINGS, AND SOLE PLATES ARE TO BE PERPENDICULAR TO THE CHORDS BETWEEN BEARINGS.

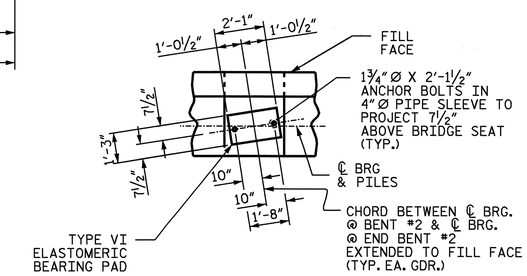

DETAIL "A"

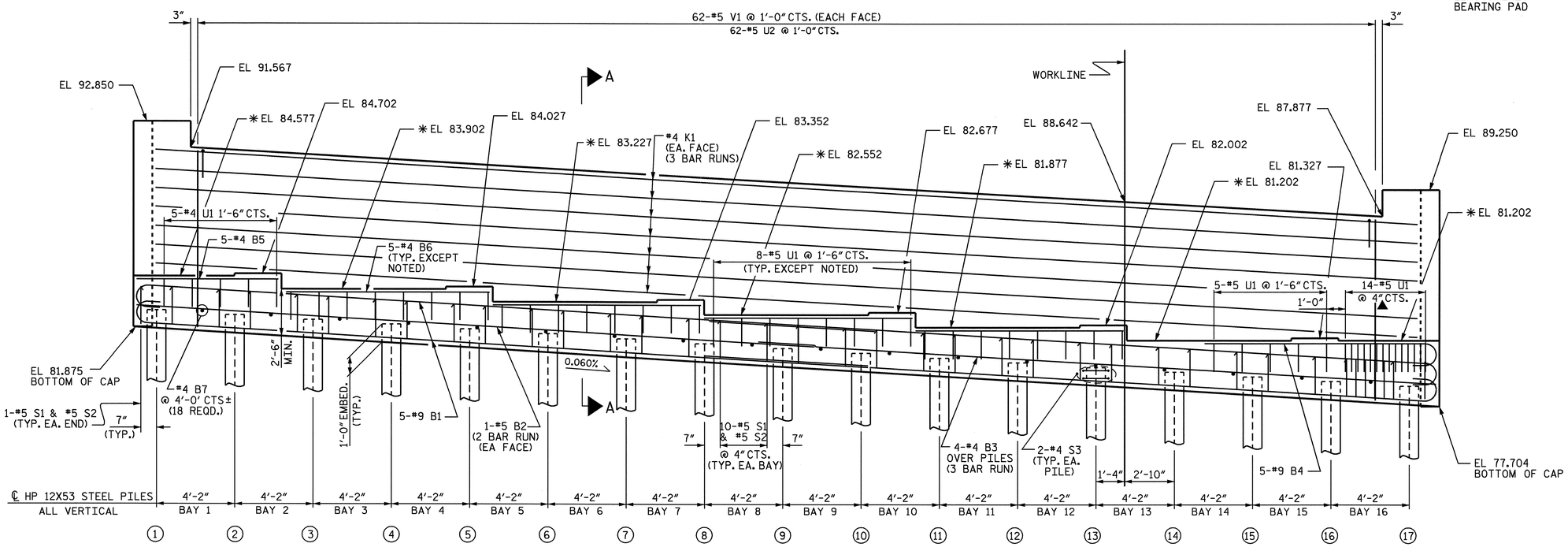

ELEVATION

✱ SEE SECTION A-A, SHEET 3 OF 3.

▲ S1 BARS TO MATCH WITH U1 BARS IN BAY #16

TOP OF PILE ELEVATIONS			
PILE No.	EL.	PILE No.	EL.
P1	82.820	P10	80.569
P2	82.570	P11	80.319
P3	82.320	P12	80.069
P4	82.070	P13	79.819
P5	81.820	P14	79.569
P6	81.570	P15	79.319
P7	81.320	P16	79.069
P8	81.070	P17	78.819
P9	80.820		

SPLICE CHART		
	SIZE	MIN. SPLICE
B1	#9	8'-9"
B2	#5	3'-0"
B3	#4	2'-5"
K1	#4	2'-5"

PROJECT NO. R-2719A
LENOIR COUNTY
STATION: 85+98.30 -L-

SHEET 1 OF 3

STATE OF NORTH CAROLINA
DEPARTMENT OF TRANSPORTATION
RALEIGH

SUBSTRUCTURE

END BENT #2
(LEFT LANE)

NORTH CAROLINA PROFESSIONAL SEAL 14045 ENGINEER TIMOTHY L. COGGINS
4/3/09

REVISIONS							SHEET NO. S-69
NO.	BY:	DATE:	NO.	BY:	DATE:		TOTAL SHEETS 340
1			3				
2			4				

STR. #2

DRAWN BY : B.N.BARODAWALA DATE : 8-4-08
CHECKED BY : A. M. LEE (PE) DATE : 9/08

03-APR-2009 14:52
h:\structures\str#2\finalplans\r2719a_sd_eb*_02.dgn
tcoggins

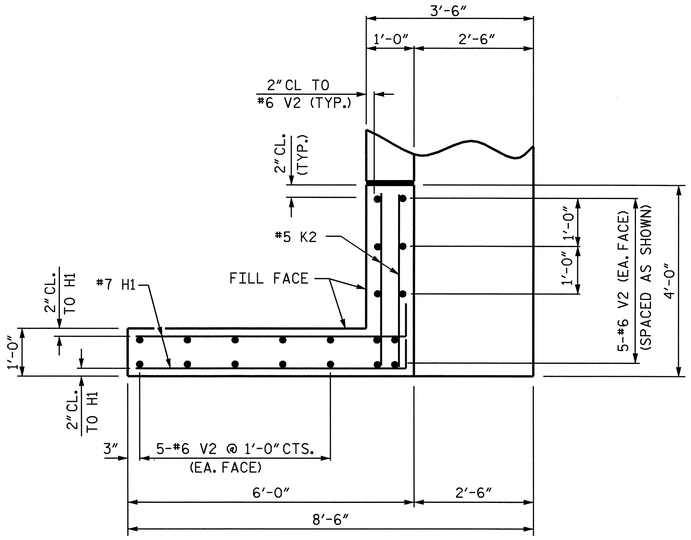

PLAN OF WING W2

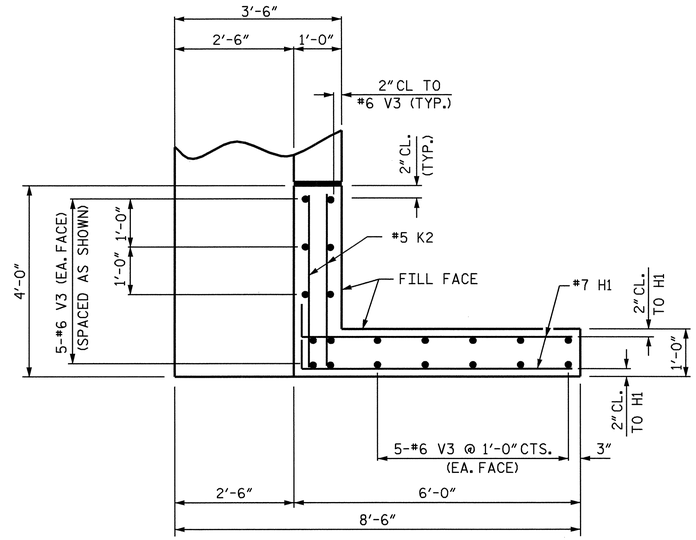

PLAN OF WING W1

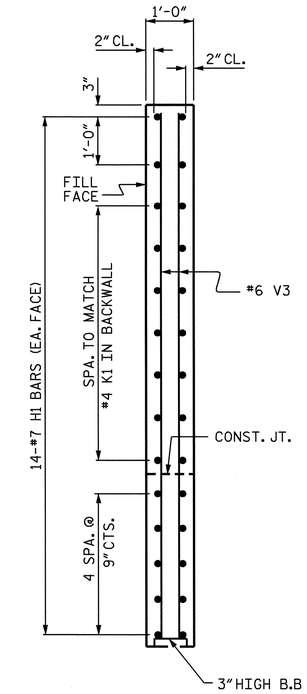

SECTION Y-Y

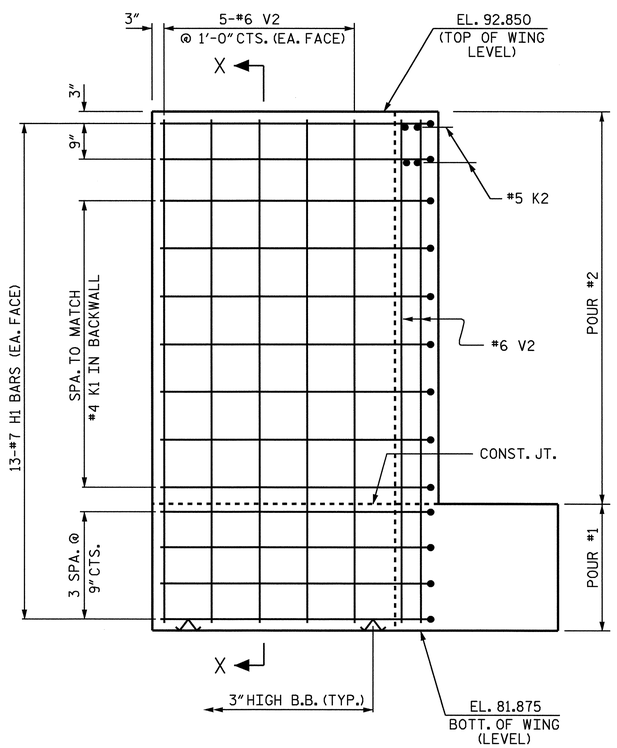

ELEVATION OF WING W2

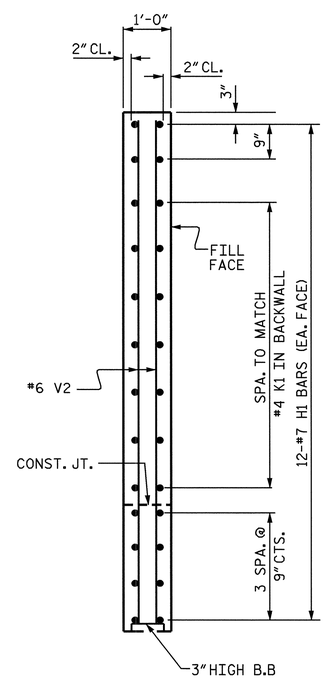

SECTION X-X

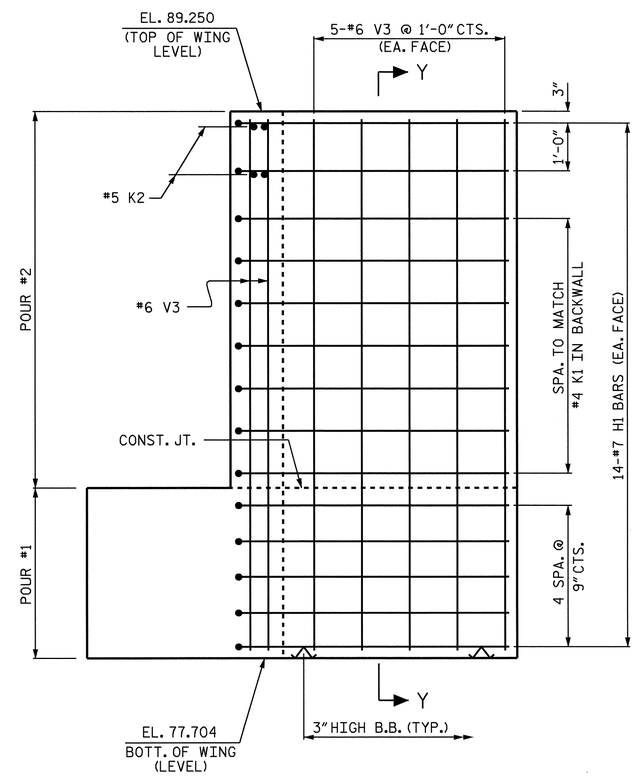

ELEVATION OF WING W1

PROJECT NO. R-2719A

LENOIR COUNTY

STATION: 85+98.30 -L-

SHEET 2 OF 3

STATE OF NORTH CAROLINA
DEPARTMENT OF TRANSPORTATION
RALEIGH

SUBSTRUCTURE
END BENT #2
(LEFT LANE)

NORTH CAROLINA PROFESSIONAL SEAL 14045 ENGINEER TIMOTHY L. COGGINS

Timothy L. Coggins 4/3/09

REVISIONS						SHEET NO.
NO.	BY:	DATE:	NO.	BY:	DATE:	S-70
1			3			TOTAL SHEETS
2			4			340

STR. #2

DRAWN BY : B.N. BARODAWALA DATE : 8/4/08
CHECKED BY : A. M. LEE (PE) DATE : 9/08

03-APR-2009 14:52
h:\structures\str#2\finalplans\r2719a_sd_eb#_02.dgn
tcoggins

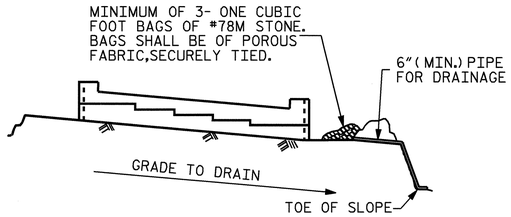

BAGGED STONE AND PIPE SHALL BE PLACED IMMEDIATELY AFTER COMPLETION OF END BENT EXCAVATION. PIPE MAY BE EITHER CONCRETE, CORRUGATED STEEL, CORRUGATED ALUMINUM ALLOY, OR CORRUGATED PLASTIC. PERFORATED PIPE WILL NOT BE ALLOWED.

BAGGED STONE SHALL REMAIN IN PLACE UNTIL THE ENGINEER DIRECTS THAT IT BE REMOVED. THE CONTRACTOR SHALL REMOVE AND DISPOSE OF SILT ACCUMULATIONS AT BAGGED STONE WHEN SO DIRECTED BY THE ENGINEER. BAGS SHALL BE REMOVED AND REPLACED WHENEVER THE ENGINEER DETERMINES THAT THEY HAVE DETERIORATED AND LOST THEIR EFFECTIVENESS.

NO SEPARATE PAYMENT WILL BE MADE FOR THIS WORK AND THE ENTIRE COST OF THIS WORK SHALL BE INCLUDED IN THE UNIT CONTRACT PRICE BID FOR THE SEVERAL PAY ITEMS.

TEMPORARY DRAINAGE AT END BENT

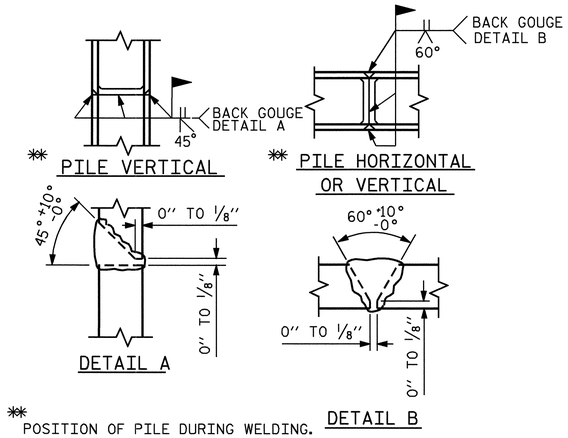

** POSITION OF PILE DURING WELDING.

PILE SPLICE DETAILS

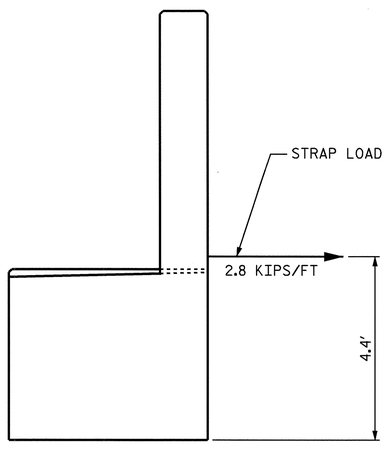

STRAP LOAD DETAIL

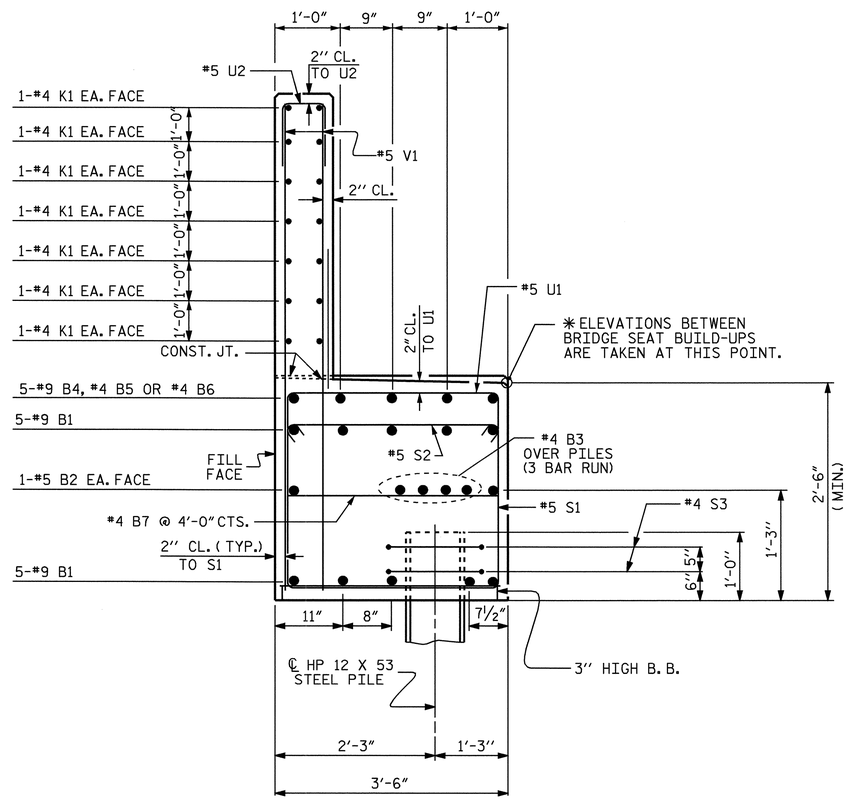

SECTION A-A

BAR TYPES

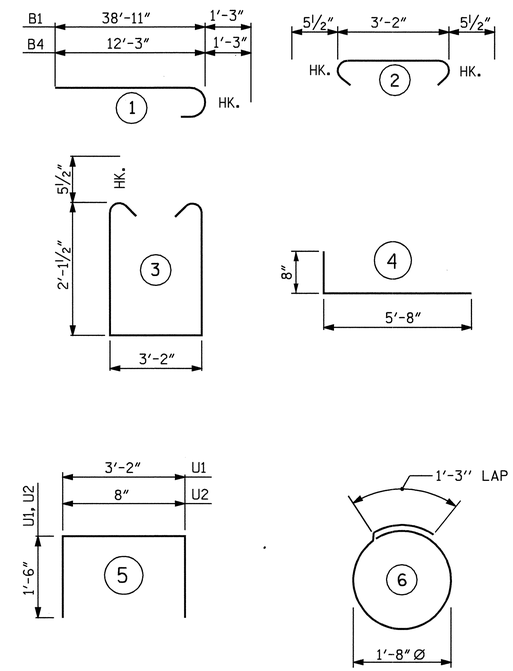

ALL BAR DIMENSIONS ARE OUT TO OUT.

BILL OF MATERIAL

END BENT #2

BAR	NO.	SIZE	TYPE	LENGTH	WEIGHT
B1	20	#9	1	40'-2"	2731
B2	4	#5	STR	36'-2"	151
B3	12	#4	STR	24'-9"	198
B4	5	#9	1	13'-6"	230
B5	5	#4	STR	7'-6"	25
B6	20	#4	STR	10'-10"	145
B7	18	#4	STR	3'-2"	38
H1	54	#7	4	6'-4"	699
K1	42	#4	STR	24'-9"	694
K2	8	#5	STR	3'-8"	31
S1	162	#5	3	8'-4"	1408
S2	162	#5	2	4'-1"	690
S3	34	#4	6	6'-6"	148
U1	56	#5	5	6'-2"	360
U2	62	#5	5	3'-8"	237
V1	124	#5	STR	9'-6"	1229
V2	20	#6	STR	10'-7"	318
V3	20	#6	STR	11'-2"	335

REINFORCING STEEL = 9667 LBS

CLASS "A" CONCRETE BREAKDOWN

POUR #1
CAP AND LOWER PART OF WINGS 27.4 YD.3

POUR #2
BACKWALL AND
UPPER PART OF WINGS 21.5 YD.3

CLASS "A" CONCRETE TOTAL 48.9 YD.3

HP 12 x 53 STEEL PILES

No. 17 LIN. FT. 1275

PROJECT NO. R-2719A
LENOIR COUNTY
STATION: 85+98.30 -L-

SHEET 3 OF 3

STATE OF NORTH CAROLINA
DEPARTMENT OF TRANSPORTATION
RALEIGH

SUBSTRUCTURE
END BENT #2
(LEFT LANE)

NORTH CAROLINA PROFESSIONAL SEAL 14045 ENGINEER TIMOTHY L. COGGINS
4/3/09

REVISIONS						SHEET NO.
NO.	BY:	DATE:	NO.	BY:	DATE:	S-71
1			3			TOTAL SHEETS
2			4			340

DRAWN BY : B.N. BARODAWALA DATE : 8/4/08
CHECKED BY : A. M. LEE (PE) DATE : 9/08

STR. #2

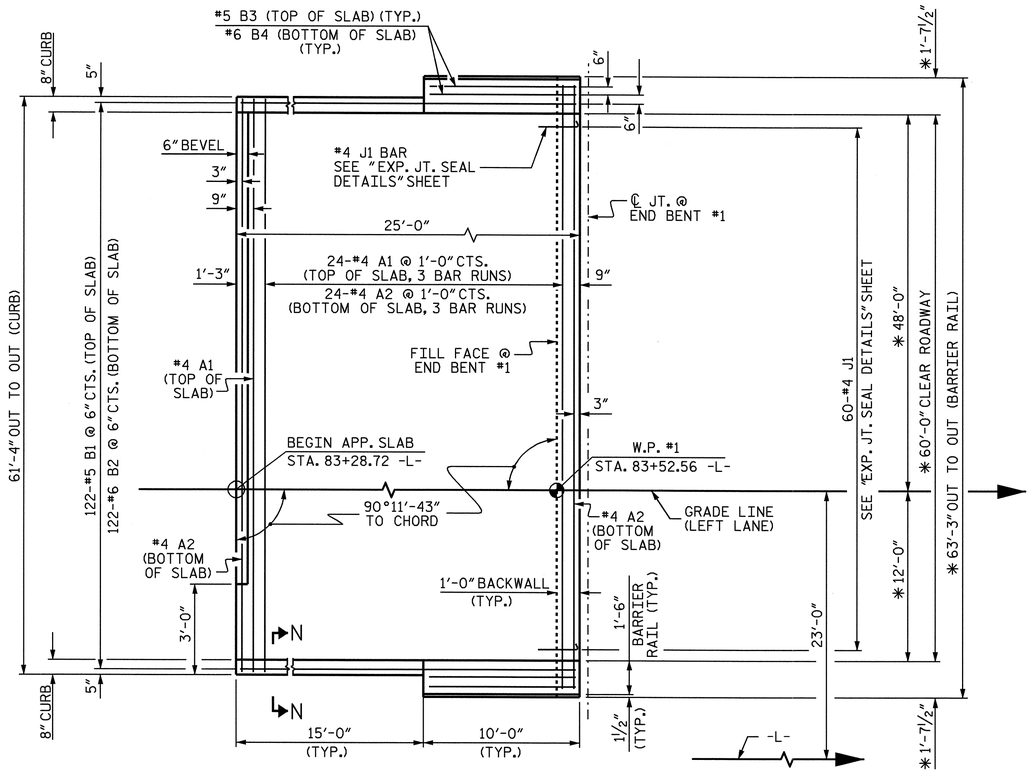

PLAN @ END BENT #1

✱ RADIAL DIMENSION

FOR PLAN VIEW @ END BENT #2 SEE "SHEET 2".

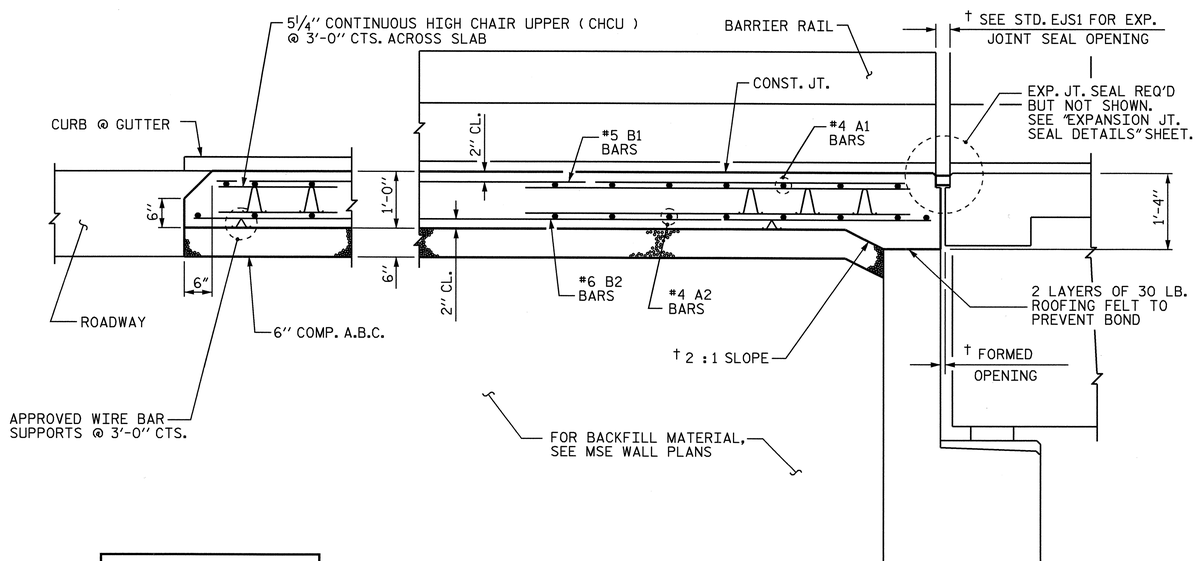

† NORMAL TO END BENT

SECTION THRU SLAB

SHOWING SECTION WITHOUT CONCRETE WEARING SURFACE

NOTES

THE COST OF THE BARRIER RAIL ON THE APPROACH SLAB SHALL BE INCLUDED IN THE LUMP SUM CONTRACT PRICE BID FOR BRIDGE APPROACH SLABS.

APPROACH SLAB SHALL NOT BE CONSTRUCTED PRIOR TO COMPLETION OF THE BRIDGE DECK.

AREA BETWEEN THE WINGWALL AND APPROACH SLAB SHALL BE GRADED TO DRAIN THE WATER AWAY FROM THE FILL FACE OF THE BRIDGE AND SHALL BE PAVED. SEE ROADWAY PLANS.

THE 6" COMP. A.B.C. SHALL BE FLUSH WITH THE ROADWAY END OF THE APPROACH SLAB AND SHALL EXTEND 1'-0" OUTSIDE OF EACH EDGE OF THE APPROACH SLAB.

THE CONTRACTOR MAY USE 4" TYPE B-25.0B ASPHALT CONCRETE BASE COURSE IN LIEU OF 6" COMP. A.B.C. IF THIS OPTION IS USED, THE BASE COURSE SHALL BE FLUSH WITH THE ROADWAY END OF THE APPROACH SLAB, AND THE WIDTH SHALL BE THE SAME AS THAT OF THE APPROACH SLAB.

THE CONTRACTOR MAY USE CLASS "A" CONCRETE BASE IN LIEU OF 6" COMP. A.B.C. IF THIS OPTION IS USE, THE CONCRETE BASE SHALL BE FLUSH WITH THE ROADWAY END OF THE APPROACH SLAB, AND THE WIDTH SHALL BE THE SAME AS THAT OF THE APPROACH SLAB. THE CONCRETE SHALL BE FINISHED TO A SMOOTH SURFACE AND A LAYER OF 30 LB ROOFING FELT SHALL BE PLACED BETWEEN THE CONCRETE BASE AND THE APPROACH SLAB TO PREVENT BOND. THE APPROACH SLAB SHALL NOT BE CAST UNTIL THE CONCRETE BASE HAS REACHED AN AGE OF THREE CURING DAYS.

WITH EVAZOTE JOINT SEAL

FOR EVAZOTE JOINT SEALS, SEE SPECIAL PROVISIONS.

THE NOMINAL UNCOMPRESSED SEAL WIDTH OF THE ARMORED EVAZOTE JOINT SEAL @ END BENT #2 SHALL BE 3 7/16".

FOR ELASTOMERIC CONCRETE, SEE SPECIAL PROVISIONS.

WITH EXPANSION JOINT SEAL

FOR EXPANSION JOINT SEALS, SEE SPECIAL PROVISIONS.

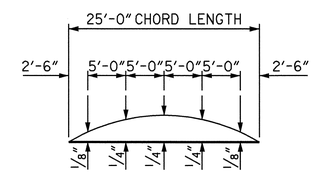

ARC OFFSET - LEFT AND RIGHT

(APPROACH SLAB @ END BENT #1 & END BENT #2)

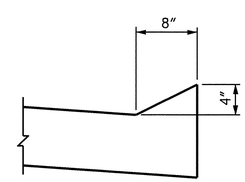

SECTION N-N

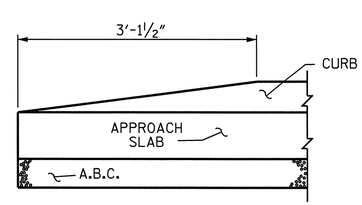

END OF CURB WITHOUT SHOULDER BERM GUTTER

BILL OF MATERIAL

FOR APPROACH SLAB @ END BENT #1

BAR	NO.	SIZE	TYPE	LENGTH	WEIGHT
✱ A1	75	#4	STR	22'-4"	1119
A2	78	#4	STR	22'-2"	1155
✱ B1	122	#5	STR	23'-10"	3033
B2	122	#6	STR	24'-8"	4520
✱ B3	18	#5	STR	9'-8"	181
B4	4	#6	STR	9'-8"	58
✱ S1	20	#5	1	5'-0"	104
✱ S2	20	#5	2	5'-2"	108
✱ J1	60	#4	3	1'-5"	57
REINFORCING STEEL				LBS.	5733
✱ EPOXY COATED REINFORCING STEEL				LBS.	4602
CLASS AA CONCRETE BREAKDOWN					
POUR 1 SLAB AND CURB				C. Y.	58.4
POUR 2 RAIL				C. Y.	2.0
CLASS AA CONCRETE				C. Y.	60.4

BAR TYPES

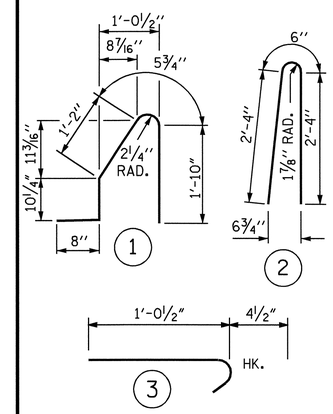

ALL BAR DIMENSIONS ARE OUT TO OUT

SPLICE CHART

BAR SIZE	SPLICE LENGTH
#4 A1	2'-0"
#4 A2	1'-9"

PROJECT NO. R-2719A

LENOIR COUNTY

STATION: 85+98.30 -L-

SHEET 1 OF 4

STATE OF NORTH CAROLINA
DEPARTMENT OF TRANSPORTATION
RALEIGH

STANDARD

BRIDGE APPROACH SLAB FOR FLEXIBLE PAVEMENT WITH BARRIER RAIL (LEFT LANE)

NORTH CAROLINA PROFESSIONAL SEAL 14045 ENGINEER TIMOTHY L. COGGINS

10/14/08

REVISIONS						SHEET NO.
NO.	BY:	DATE:	NO.	BY:	DATE:	S-72
1			3			TOTAL SHEETS
2			4			340

ASSEMBLED BY: M.GUDLAUGSSON DATE : 08/2008
CHECKED BY : M. PISO DATE : 09/2008

DRAWN BY : LES 8/01 REV. 5/7/03R RWW/JTE
CHECKED BY : RDR 8/01 REV. 5/1/06R KMM/GM

09-OCT-2008 09:04
g:\tlpprojects-r\r2719a\structures\str#2\finalplans\r2719a_sd_as_02.dgn
taverette

STR. #2

STD. NO. BAS5 (SHT 7)

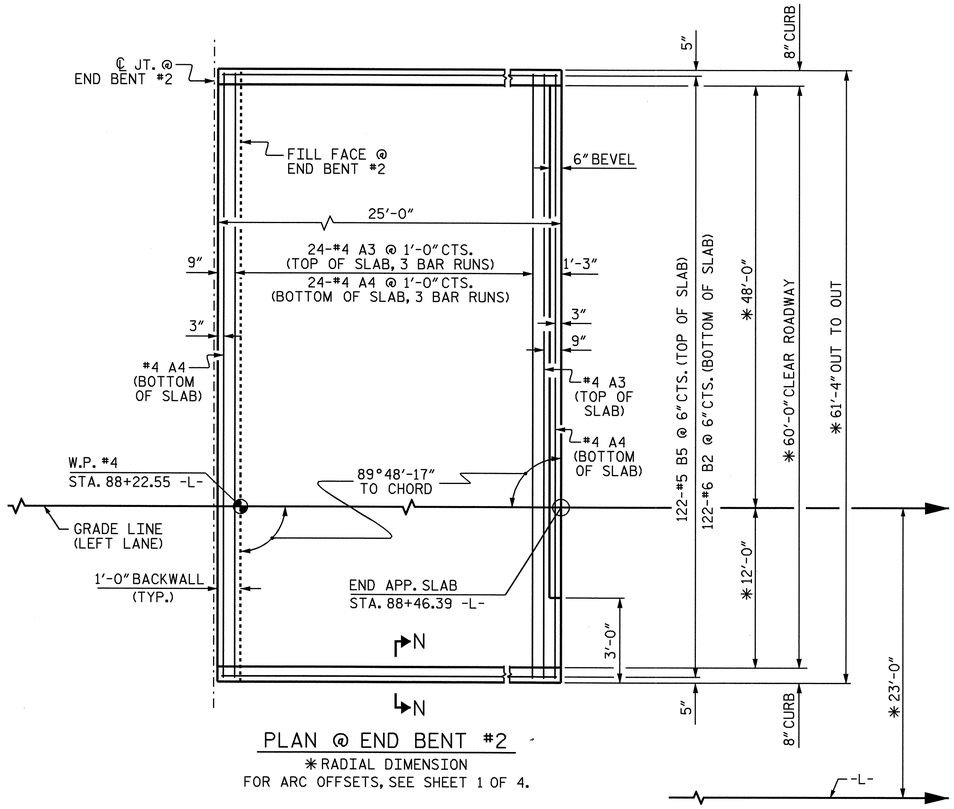

PLAN @ END BENT #2

*RADIAL DIMENSION
FOR ARC OFFSETS, SEE SHEET 1 OF 4.

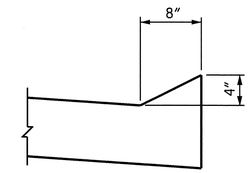

SECTION N-N

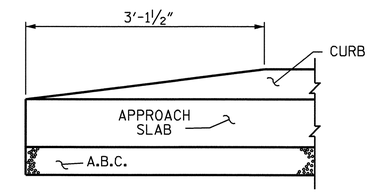

END OF CURB WITHOUT SHOULDER BERM GUTTER

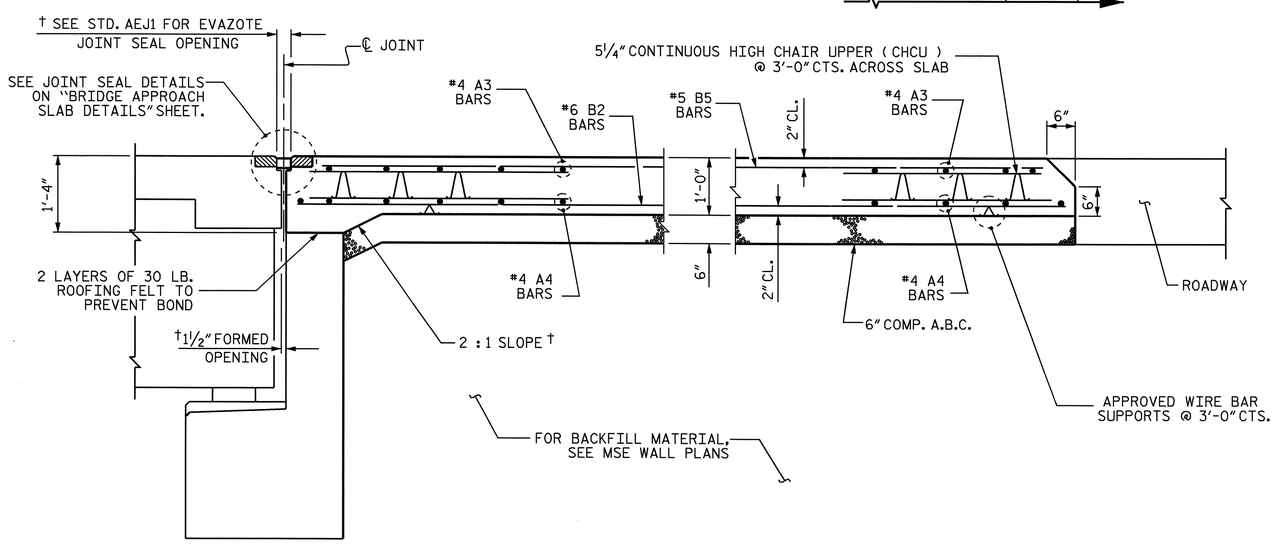

† NORMAL TO END BENT

SECTION THRU SLAB

SHOWING SECTION WITHOUT CONCRETE WEARING SURFACE

BILL OF MATERIAL
APPROACH SLAB AT EB #2

BAR	NO.	SIZE	TYPE	LENGTH	WEIGHT
*A3	75	#4	STR	21'-8"	1086
A4	78	#4	STR	21'-6"	1120
*B5	122	#5	STR	23'-8"	3012
B2	122	#6	STR	24'-8"	4520
REINFORCING STEEL				LBS.	5640
*EPOXY COATED REINFORCING STEEL				LBS.	4098
CLASS AA CONCRETE				C. Y.	57.8

SPLICE CHART

BAR SIZE	SPLICE LENGTH
#4 A3	2'-0"
#4 A4	1'-9"

PROJECT NO. R-2719A
LENOIR COUNTY
STATION: 85+98.30 -L-

SHEET 2 OF 4

STATE OF NORTH CAROLINA
DEPARTMENT OF TRANSPORTATION
RALEIGH

STANDARD

BRIDGE APPROACH SLAB FOR FLEXIBLE PAVEMENT (LEFT LANE)

NORTH CAROLINA PROFESSIONAL SEAL 14045 ENGINEER TIMOTHY L. COGGINS
10/11/08

REVISIONS						SHEET NO.
NO.	BY:	DATE:	NO.	BY:	DATE:	S-73
1			3			TOTAL SHEETS
2			4			340

ASSEMBLED BY: M.GUDLAUGSSON DATE : 08/2008
CHECKED BY : M. PISO DATE : 09/2008

DRAWN BY : EEM 3/95
CHECKED BY : VAP 3/95

REV. 7/10/01 LES/RDR
REV. 5/7/03R RWW/JTE
REV. 5/1/06R KMM/GM

09-OCT-2008 09:04
g:\tlpprojects-r\r2719a\structures\str*2\finalplans\r2719a_sd_as_02.dgn
taverette

STR. #2

STD. NO. BAS4 (SHT 4)

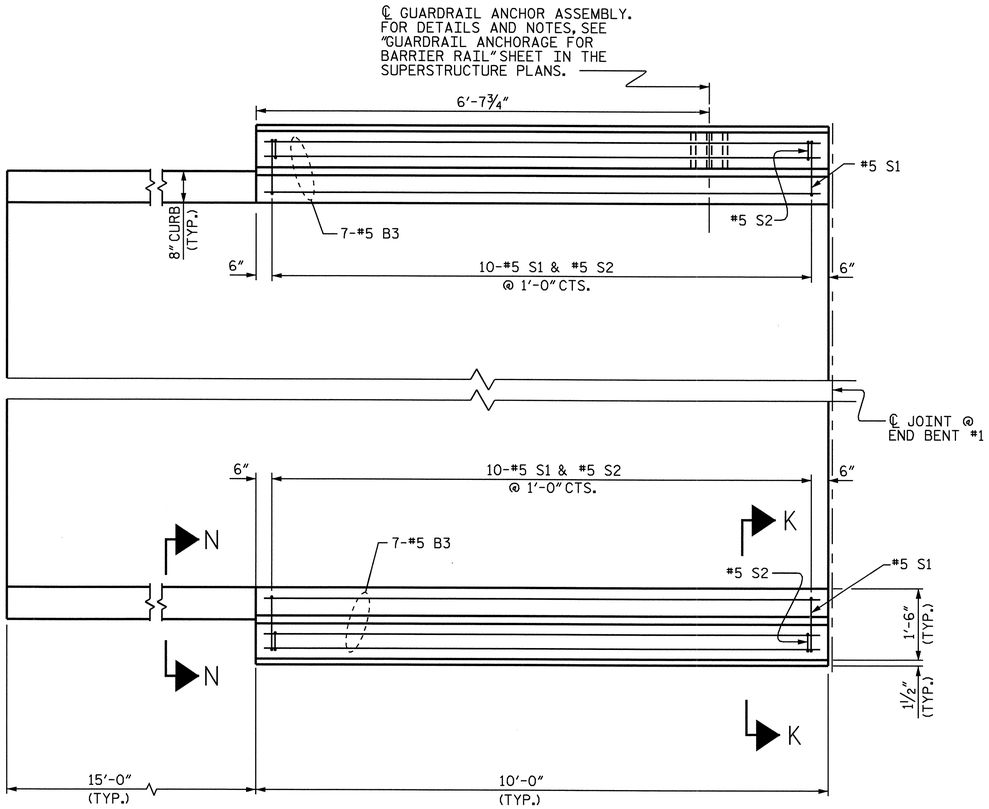

PLAN @ END BENT #1

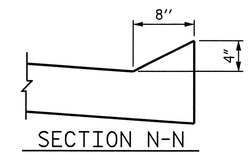

SECTION N-N

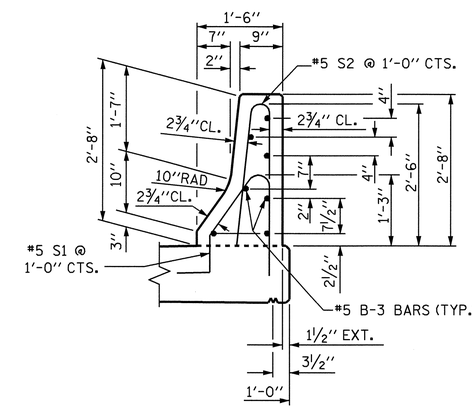

SECTION THRU RAIL K-K

PROJECT NO. R-2719A

LENOIR COUNTY

STATION: 85+98.30 -L-

SHEET 3 OF 4

STATE OF NORTH CAROLINA
DEPARTMENT OF TRANSPORTATION
RALEIGH

BRIDGE APPROACH SLAB DETAILS FOR FLEXIBLE PAVEMENT WITH BARRIER RAIL @ END BENT #1 (LEFT LANE)

NORTH CAROLINA PROFESSIONAL SEAL 14045 ENGINEER TIMOTHY L. COGGINS

10/1/08

REVISIONS						SHEET NO.
NO.	BY:	DATE:	NO.	BY:	DATE:	S-74
1			3			TOTAL SHEETS
2			4			340

ASSEMBLED BY : M.GUDLAUGSSON		DATE : 08/2008	
CHECKED BY : M. PISO		DATE : 09/2008	
DRAWN BY : LES	8/01	REV. 5/7/03R	RWW/JTE
CHECKED BY : RDR	8/01	REV. 5/1/06	TLA/GM

08-OCT-2008 16:48
gi\tlpprojects-r\r2719a\structures\Str#2\FInalPlans\r2719a_sd_as_02.dgn

STR. #2 STD. NO. BAS6 (SHT 4)

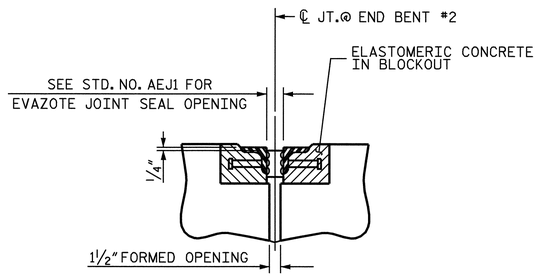

SECTION C-C
ARMORED EVAZOTE JOINT SEAL

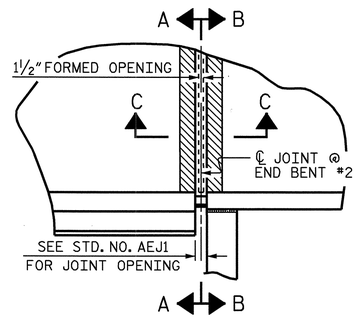

PLAN

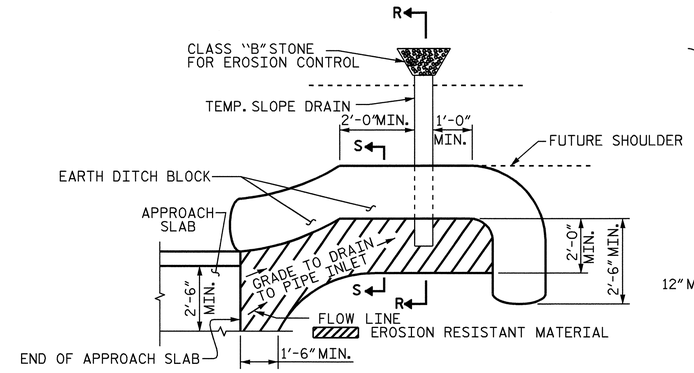

NOTE: IMMEDIATELY AFTER THE CONSTRUCTION OF THE APPROACH SLAB, THE CONTRACTOR SHALL PROVIDE TEMPORARY BERM AND SLOPE DRAIN. CONTRACTOR SHALL GRADE TO PIPE INLET AND PROVIDE EROSION RESISTANT MATERIAL AS SHOWN. THE EROSION RESISTANT MATERIAL SHALL BE EITHER 1) ASPHALT PLANT MIX, TYPE 1 OR TYPE 2, MIN. 2" DEPTH, 2) EROSION CONTROL MAT, OR 3) CONCRETE, AS DIRECTED BY THE ENGINEER. THE SLOPE DRAIN SHALL CONSIST OF A NON-PERFORATED TEMPORARY DRAINAGE PIPE, 12 INCHES IN DIAMETER.

PLAN VIEW

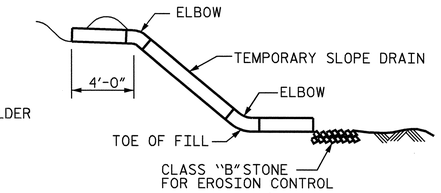

SECTION R-R

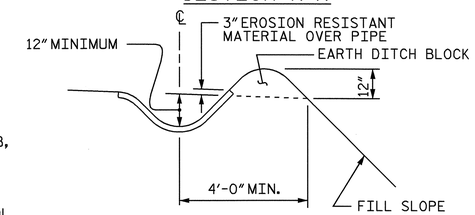

SECTION S-S

TEMPORARY BERM AND SLOPE DRAIN DETAILS

(TO BE USED WHEN SHOULDER BERM GUTTER IS REQUIRED)

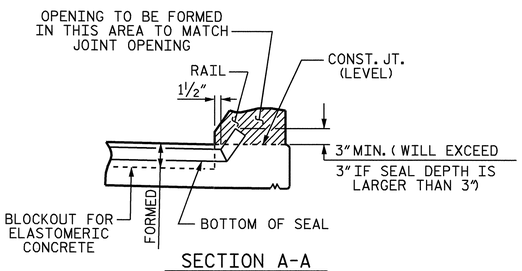

SECTION A-A

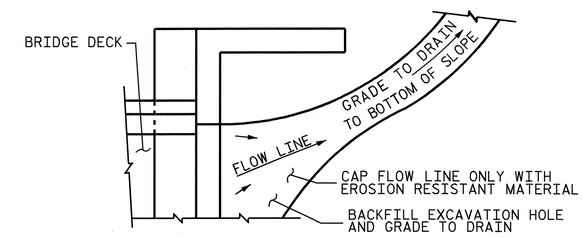

NOTE: IF THE APPROACH SLAB IS NOT CONSTRUCTED IMMEDIATELY AFTER THE BACKFILLING OF THE END BENT EXCAVATION, GRADE TO DRAIN TO THE BOTTOM OF THE SLOPE AND PROVIDE EROSION RESISTANT MATERIAL, SUCH AS FIBERGLASS ROVING OR AS DIRECTED BY THE ENGINEER TO PREVENT SOIL EROSION AND TO PROTECT THE AREA ADJACENT TO THE STRUCTURE. THE CONTRACTOR WILL BE REQUIRED TO REMOVE THESE MATERIALS PRIOR TO CONSTRUCTION OF THE APPROACH SLAB.

TEMPORARY DRAINAGE DETAIL

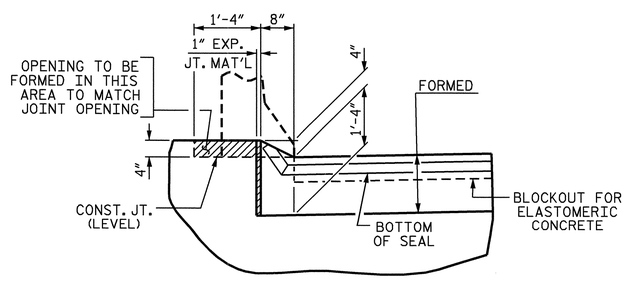

SECTION B-B

JOINT SEAL DETAILS @ END BENT #2

EVAZOTE JOINT SEAL TO BE CUT, HEAT WELDED AND TURNED UP PARALLEL TO SLOPED FACE OF THE BARRIER RAIL.

PROJECT NO. R-2719A
LENOIR COUNTY
STATION: 85+98.30 -L-

SHEET 4 OF 4

STATE OF NORTH CAROLINA
DEPARTMENT OF TRANSPORTATION
RALEIGH

STANDARD
BRIDGE APPROACH
SLAB DETAILS @
END BENT #2
(LEFT LANE)

NORTH CAROLINA PROFESSIONAL SEAL 14045 ENGINEER TIMOTHY L. COGGINS
10/11/08

REVISIONS						SHEET NO.
NO.	BY:	DATE:	NO.	BY:	DATE:	S-75
1			3			TOTAL SHEETS
2			4			340

ASSEMBLED BY : M.GUDLAUGSSON		DATE : 08/2008	
CHECKED BY : M. PISO		DATE : 09/2008	
DRAWN BY : FCJ	11/88	REV. 10/17/00	RWW/LES
CHECKED BY : ARB	11/88	REV. 5/7/03	RWW/JTE
		REV. 5/1/06R	MAA/KMM

08-OCT-2008 17:00
g:\tlpprojects-r\r2719a\structures\Str#2\Final Plans\r2719a_sd_as_02.dgn
taverette

STR. #2 STD. NO. BAS10 (SHT 3)

F. A. PROJECT NO.: STP-0224(12)

GRADE DATA

+2.9156% △ -1.0227%

PI = 84+50.00 -L-
EL. = 94.10'
VC = 1000'

HORIZONTAL CURVE DATA -L-

PI STA. 78+80.01 -L-
Δ = 40°-36'-26.1" (RT)
D = 1°-38'-13.3"
L = 2,480.56'
T = 1,294.94'
R = 3,500.00'
e = 6.0%

PIs STA. 91+87.66 -L-
θs = 2°-59'-44.7"
Ls = 366.00'
LT = 244.03'
ST = 122.03'

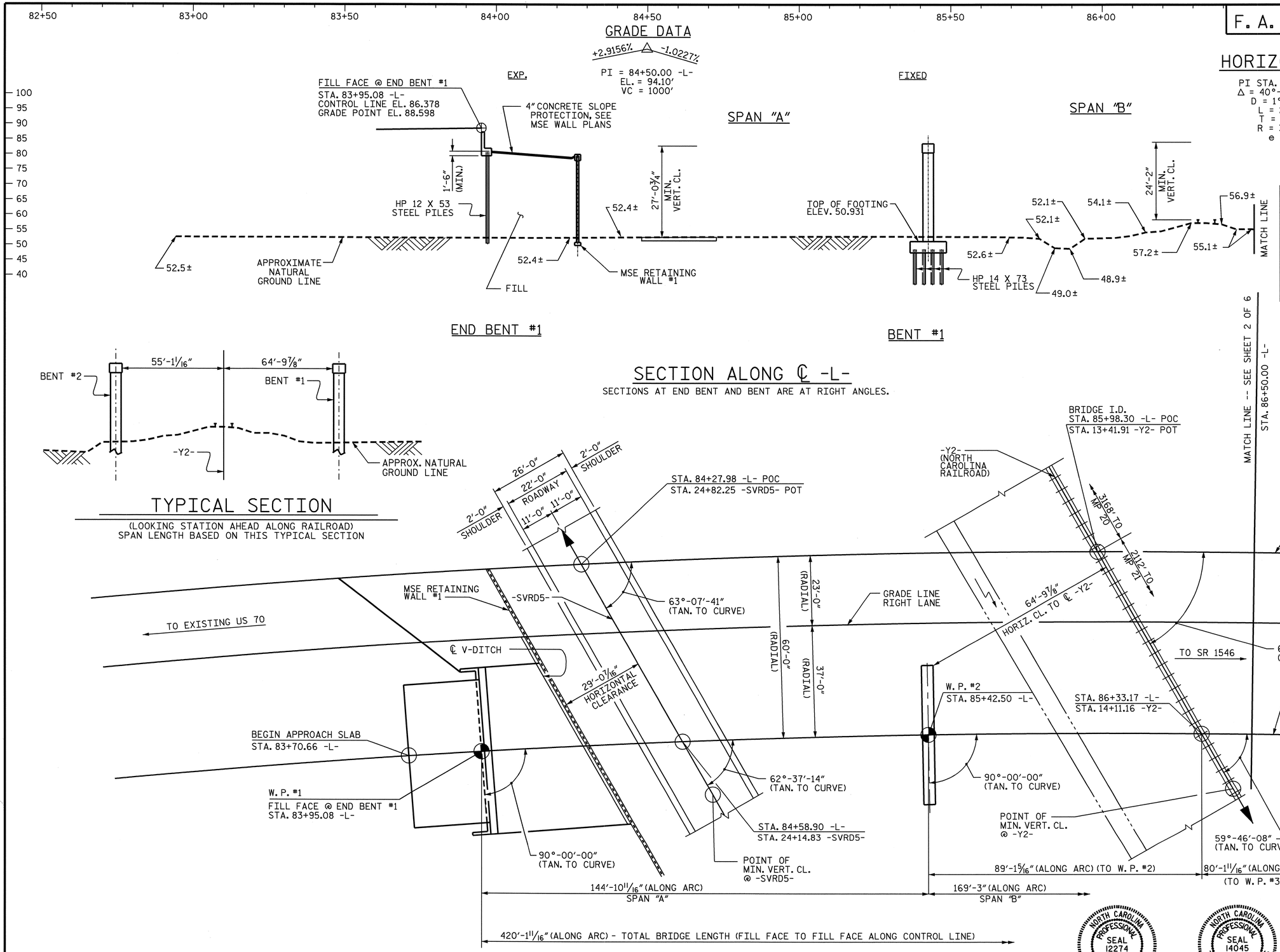

TOP OF RAIL ELEVATIONS -Y2-

LEFT RAIL		RIGHT RAIL	
STATION	ELEV.	STATION	ELEV.
13+71.15	57.330	13+68.32	57.323
14+05.90	57.346	14+02.95	57.342
14+19.50	57.346	14+16.63	57.348
14+54.83	57.346	14+51.82	57.363

THE RAILROAD TRACK TOP OF RAIL ELEVATIONS SHOWN ON THE PLANS ARE FROM THE BEST INFORMATION AVAILABLE. PRIOR TO BEGINNING BRIDGE CONSTRUCTION, VERIFY THE TOP OF RAIL ELEVATIONS AND REPORT ANY VARIATIONS TO THE ENGINEER. ANY PLAN REVISIONS NECESSARY TO ACHIEVE THE REQUIRED MINIMUM VERTICAL CLEARANCE WILL BE PROVIDED BY THE DEPARTMENT.

PROJECT NO. R-2719A
LENOIR COUNTY
STATION: 85+98.30 -L-
13+41.91 -Y2-
SHEET 1 OF 6
MILE POST EC-20.6
BRIDGE NO. 193

STATE OF NORTH CAROLINA
DEPARTMENT OF TRANSPORTATION
RALEIGH

GENERAL DRAWING

FOR BRIDGE OVER NORTH CAROLINA RAILROAD ON CRESCENT ROAD BETWEEN EXISTING US 70 AND SR 1546 (RIGHT LANE)

NORTH CAROLINA PROFESSIONAL SEAL 12274 ENGINEER OMAR R. AZIZI
10-9-08

NORTH CAROLINA PROFESSIONAL SEAL 14045 ENGINEER TIMOTHY L. LOGGINS
10/11/08

REVISIONS						SHEET NO.
NO.	BY:	DATE:	NO.	BY:	DATE:	S-76
1			3			TOTAL SHEETS
2			4			340

DRAWN BY : PEGGY ADKINS DATE : 11-07
CHECKED BY : T. AVERETTE DATE : 11-07

09-OCT-2008 09:26
q:\tlprojects-r\r2719a\structures\Str#3\FinalPlans\R2719A_sd_gd_03.dgn
taverette

STR. #3

GRADE DATA

+2.9156% △ -1.0227%

PI = 84+50.00 -L-
EL. = 94.10'
VC = 1000'

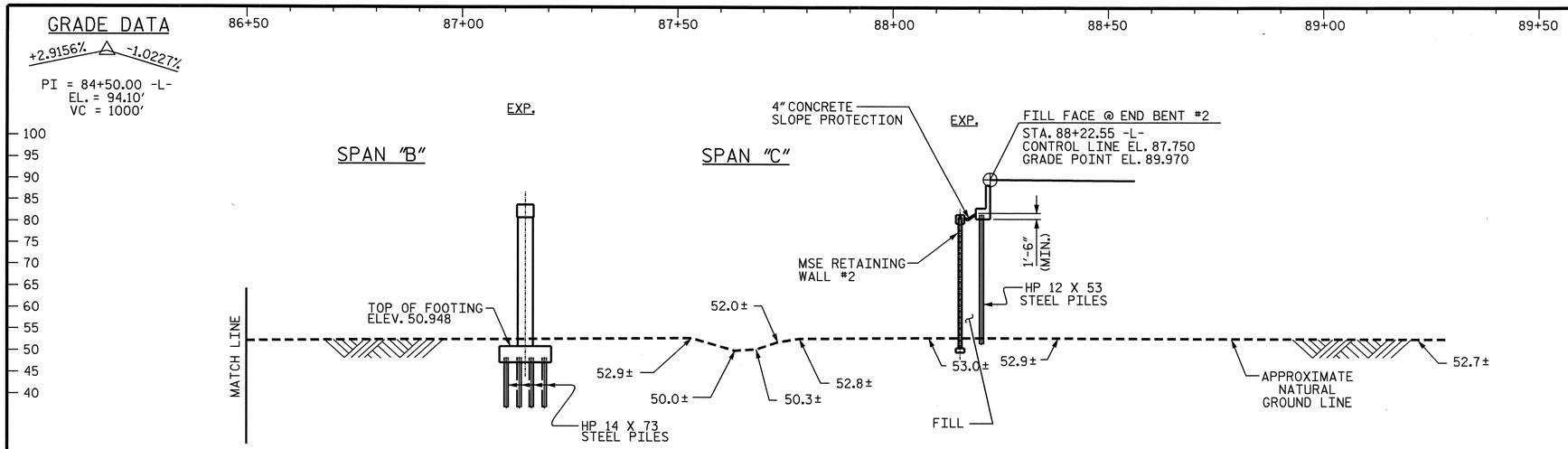

SECTION ALONG ℄ -L-

SECTIONS AT END BENT AND BENT ARE AT RIGHT ANGLES.

HORIZONTAL CURVE DATA -L-

PI STA. 78+80.01 -L-
Δ = 40°-36'-26.1" (RT)
D = 1°-38'-13.3"
L = 2,480.56'
T = 1,294.94'
R = 3,500.00'
e = 6.0%

PIs STA. 91+87.66 -L-
θs = 2°-59'-44.7"
Ls = 366.00'
LT = 244.03'
ST = 122.03'

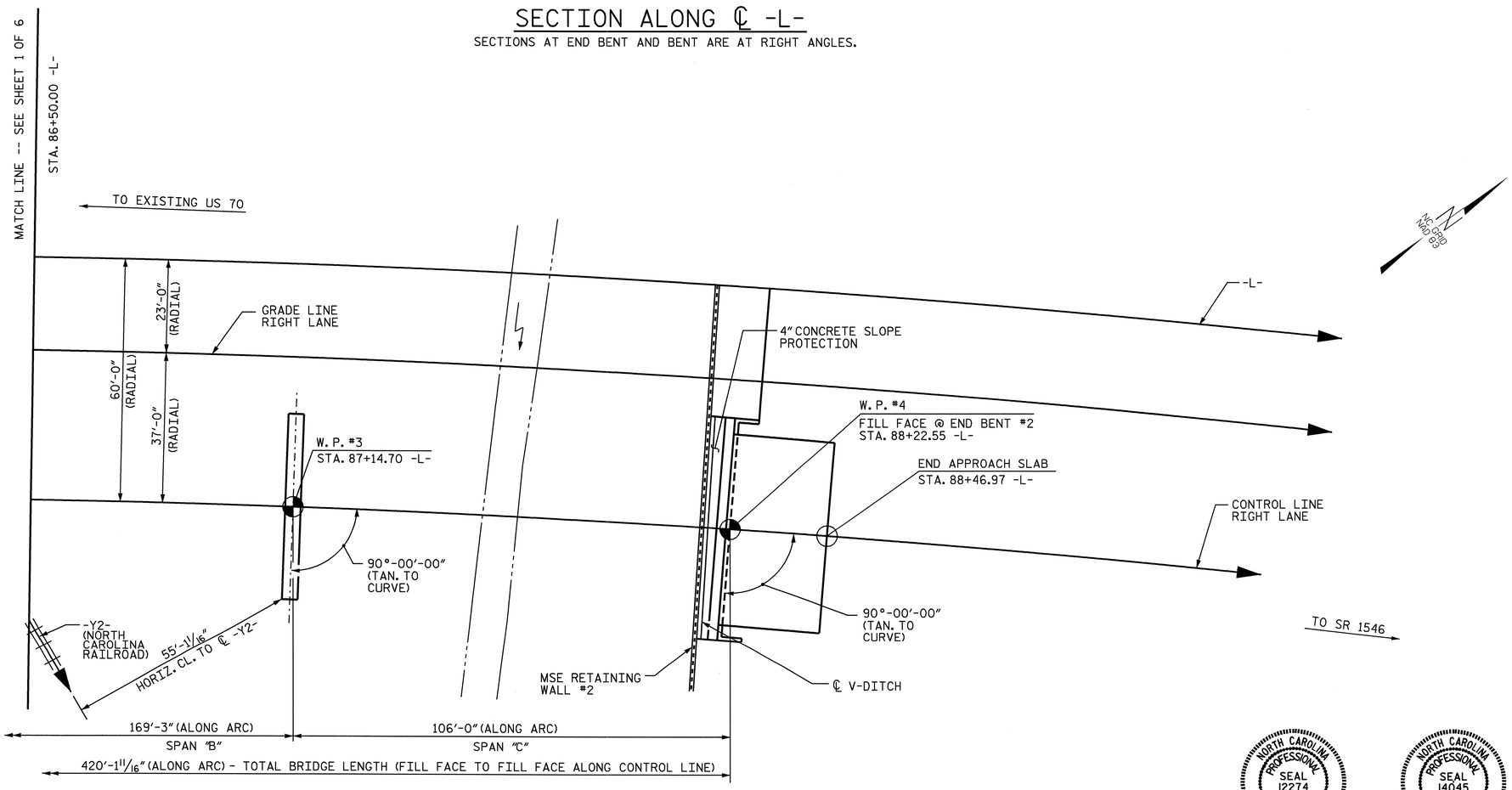

PLAN

(PILES NOT SHOWN FOR CLARITY)

NORTH CAROLINA PROFESSIONAL SEAL 12274 ENGINEER OMAR R. AZIZI
Omar R Aziz 10-9-08

NORTH CAROLINA PROFESSIONAL SEAL 14045 ENGINEER TIMOTHY L. COGGINS
Timothy L. Coggins 10/11/08

PROJECT NO. R-2719A
LENOIR COUNTY
STATION: 85+98.30 -L-
13+41.91 -Y2-
SHEET 2 OF 6

STATE OF NORTH CAROLINA
DEPARTMENT OF TRANSPORTATION
RALEIGH

GENERAL DRAWING

FOR BRIDGE OVER NORTH CAROLINA RAILROAD ON CRESCENT ROAD BETWEEN EXISTING US 70 AND SR 1546 (RIGHT LANE)

REVISIONS								SHEET NO.
NO.	BY:	DATE:	NO.	BY:	DATE:			S-77
1			3					TOTAL SHEETS
2			4					340

DRAWN BY : PEGGY ADKINS DATE : 11-07
CHECKED BY : T. AVERETTE DATE : 11-07

09-OCT-2008 09:26
g:\tipprojects-r\r2719a\structures\Str#3\FinalPlans\R2719A_sd_gd_03.dgn
taverette

STR. #3

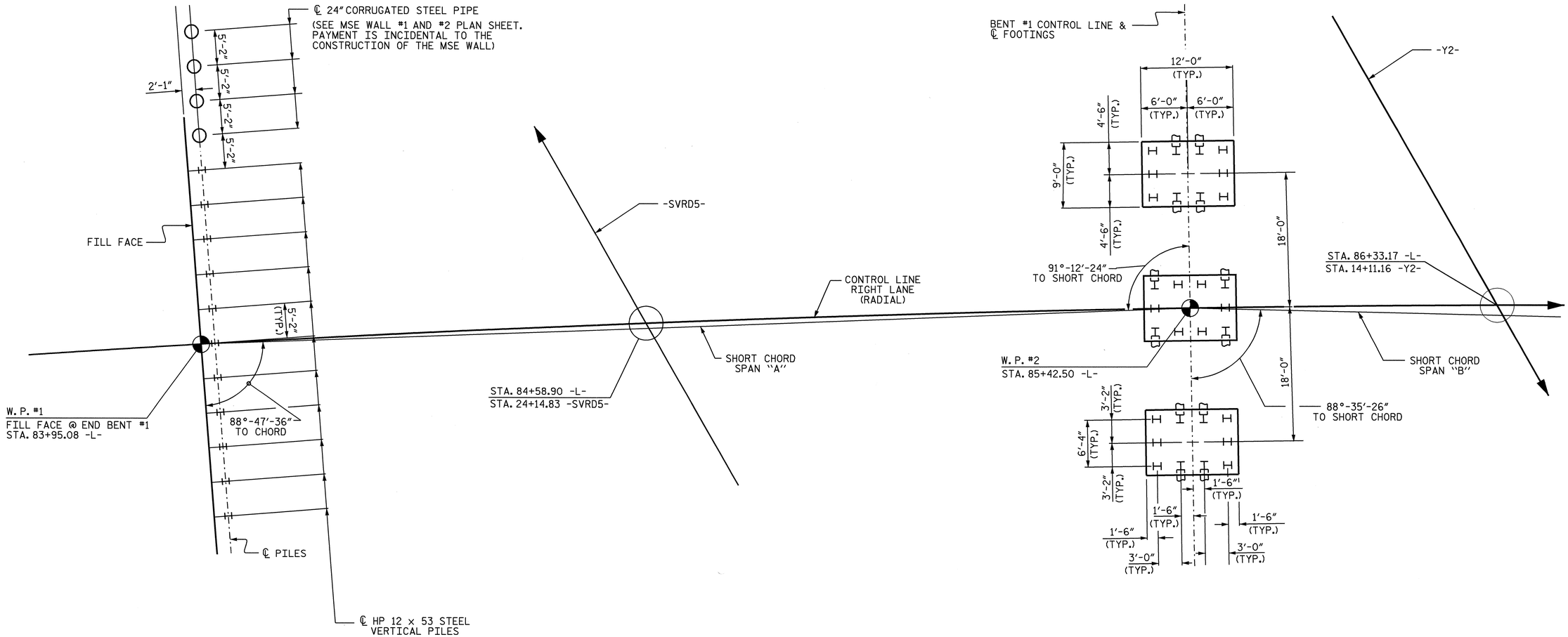

END BENT #1

BENT #1

FOUNDATION LAYOUT PLAN

PILES IN END BENT #1 ARE HP 12 x 53.

PILES IN INTERIOR BENT #1 ARE HP 14 x 73.

DIMENSIONS AND PILE LAYOUT ARE TYPICAL FOR EACH INTERIOR BENT FOOTING, EXCEPT AS NOTED.

BRACE PILES IN INTERIOR BENT #1 ARE BATTERED 1½:12.

THE 24" CORRUGATED STEEL PIPES AT END BENT #1 SHALL EXTEND FROM NATURAL GROUND TO ELEVATION 79.900. TO ENCLOSE, A ½" STEEL PLATE SHALL BE TACK WELDED TO THE TOP OF THE PIPE.

NORTH CAROLINA PROFESSIONAL SEAL 14045 ENGINEER TIMOTHY L. COGGINS
4/21/09

PROJECT NO. R-2719A
LENOIR COUNTY
STATION: 85+98.30 -L-

SHEET 3 OF 6

STATE OF NORTH CAROLINA
DEPARTMENT OF TRANSPORTATION
RALEIGH

GENERAL DRAWING
FOR BRIDGE OVER NORTH CAROLINA RAILROAD ON CRESCENT ROAD BETWEEN EXISTING US 70 AND SR 1546 (RIGHT LANE)

REVISIONS						SHEET NO.
NO.	BY:	DATE:	NO.	BY:	DATE:	S-78
1			3			TOTAL SHEETS
2			4			340

STR. #3

DRAWN BY : J. B. WILSON DATE : 8/28/08
CHECKED BY : T. L. COGGINS DATE : 09/2008

21-APR-2009 12:54
z:\structures\str#3\final plans\r2719a_sd_gd_03.dgn
tcoggins

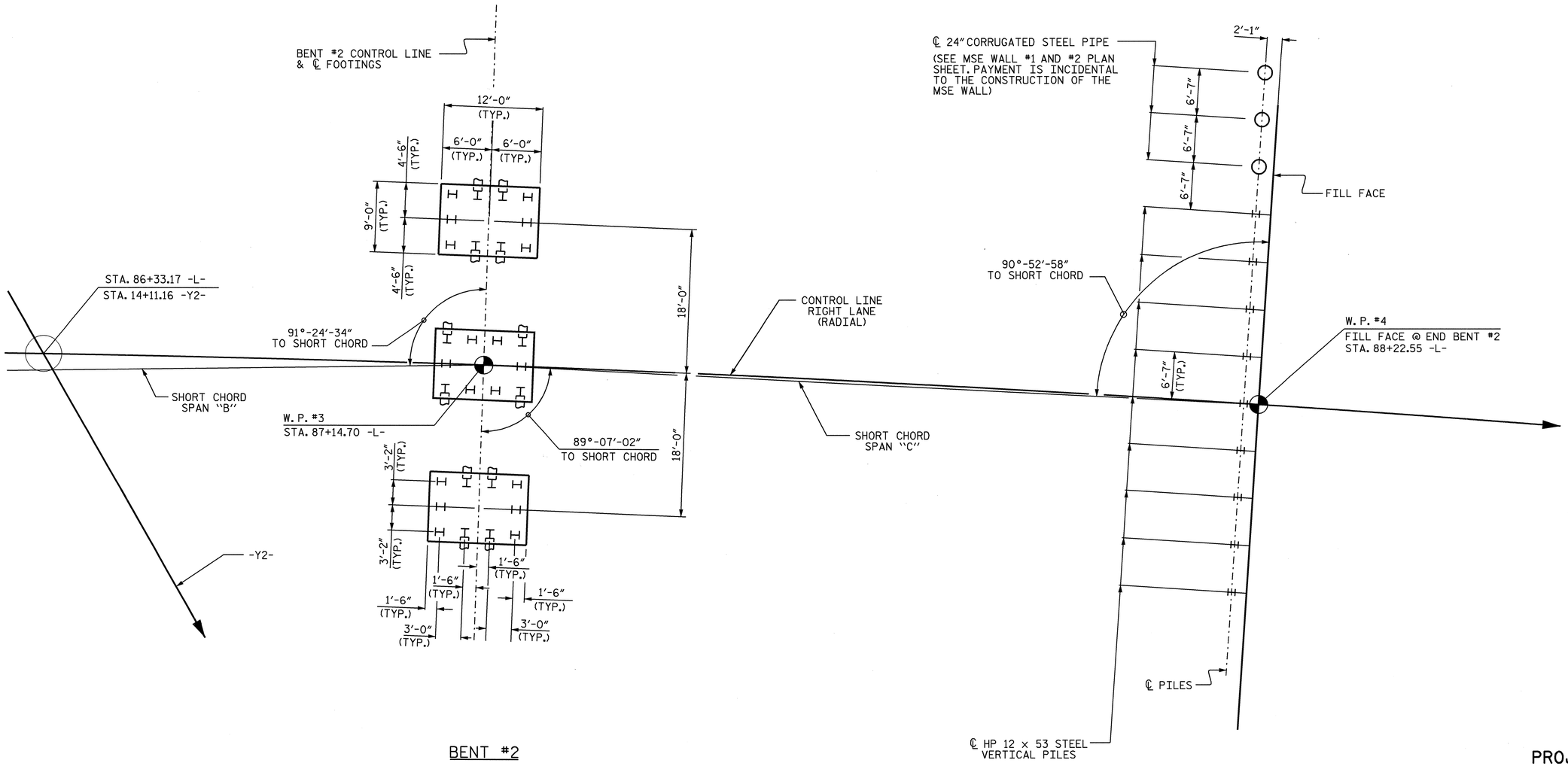

BENT #2

END BENT #2

FOUNDATION LAYOUT PLAN

PILES IN END BENT #2 ARE HP 12 x 53.

PILES IN INTERIOR BENT #2 ARE HP 14 x 73.

DIMENSIONS AND PILE LAYOUT ARE TYPICAL FOR EACH INTERIOR BENT FOOTING EXCEPT AS NOTED.

BRACE PILES IN INTERIOR BENT #2 ARE BATTERED 1½: 12.

THE 24" CORRUGATED STEEL PIPES AT END BENT #2 SHALL EXTEND FROM NATURAL GROUND TO ELEVATION 80.900. TO ENCLOSE, A ½" STEEL PLATE SHALL BE TACK WELDED TO THE TOP OF THE PIPE.

PROJECT NO. R-2719A

LENOIR COUNTY

STATION: 85+98.30 -L-

SHEET 4 OF 6

STATE OF NORTH CAROLINA
DEPARTMENT OF TRANSPORTATION
RALEIGH

GENERAL DRAWING

FOR BRIDGE OVER NORTH CAROLINA RAILROAD ON CRESCENT ROAD BETWEEN EXISTING US 70 AND SR 1546 (RIGHT LANE)

NORTH CAROLINA PROFESSIONAL SEAL 14045 ENGINEER TIMOTHY L. COGGINS

4/21/09

REVISIONS						SHEET NO.
NO.	BY:	DATE:	NO.	BY:	DATE:	S-79
1			3			TOTAL SHEETS
2			4			340

STR. #3

DRAWN BY : J. B. WILSON DATE : 8/28/08
CHECKED BY : T. L. COGGINS DATE : 09/2008

21-APR-2009 12:54
z:\structures\str#3\finalplans\r2719a_sd_gd_03.dgn
tcoggins

HORIZONTAL CURVE DATA -L-

PI STA. 78+80.01 -L-
Δ = 40°-36′-26.1″(RT)
D = 1°-38′-13.3″
L = 2,480.56′
T = 1,294.94′
R = 3,500.00′
e = 6.0%

PIs STA. 91+87.66 -L-
θs = 2°-59′-44.7″
Ls = 366.00′
LT = 244.03′
ST = 122.03′

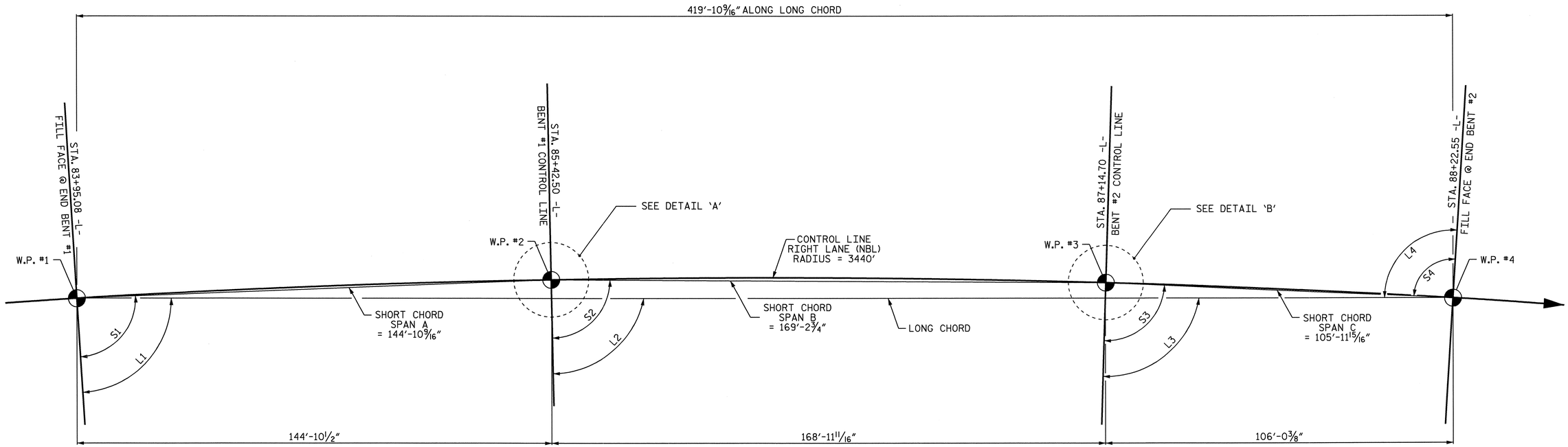

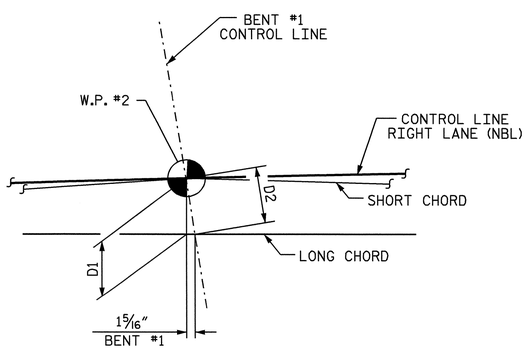

DETAIL "A"

LONG CHORD LAYOUT

OFFSETS	
D1 & D2	5′-9 9/16″
D3 & D4	4′-10 1/16″

ANGLES			
LONG CHORD		SHORT CHORD	
L1	86°-30′-04″	S1	88°47′-36″
L2	88°-54′-52″	S2	88°-35′-26″
L3	91°-44′-00″	S3	89°-07′-02″
L4	93°-29′-56″	S4	90°-52′-58″

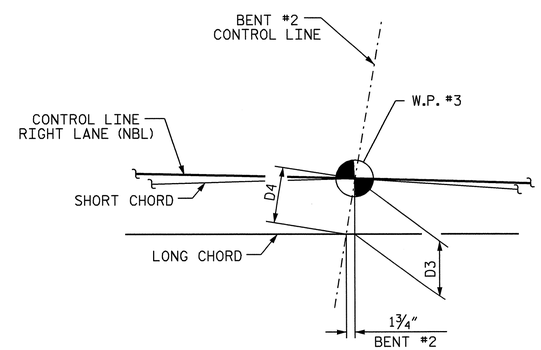

DETAIL "B"

PROJECT NO. R-2719A
LENOIR COUNTY
STATION: 85+98.30 -L-

SHEET 5 OF 6

STATE OF NORTH CAROLINA
DEPARTMENT OF TRANSPORTATION
RALEIGH

GENERAL DRAWING
FOR BRIDGE OVER NORTH CAROLINA RAILROAD ON CRESCENT ROAD BETWEEN EXISTING US 70 AND SR 1546 (RIGHT LANE)

NORTH CAROLINA PROFESSIONAL SEAL 14045 ENGINEER TIMOTHY L. COGGINS
10/11/08

REVISIONS						SHEET NO.
NO.	BY:	DATE:	NO.	BY:	DATE:	S-80
1			3			TOTAL SHEETS
2			4			340

DRAWN BY : J.B. WILSON DATE : 9/22/08
CHECKED BY : T. L. COGGINS DATE : 9/2008

09-OCT-2008 09:26
g:\tlpprojects-r\r2719a\structures\Str#3\FinalPlans\R2719A_sd_gd_03.dgn
taverette

STR. #3

BM-B: RR SPIKE IN 18" TWIN OAK TREE; STA. 87+00.00 -L-; 227' RT.; ELEV. 53.43.

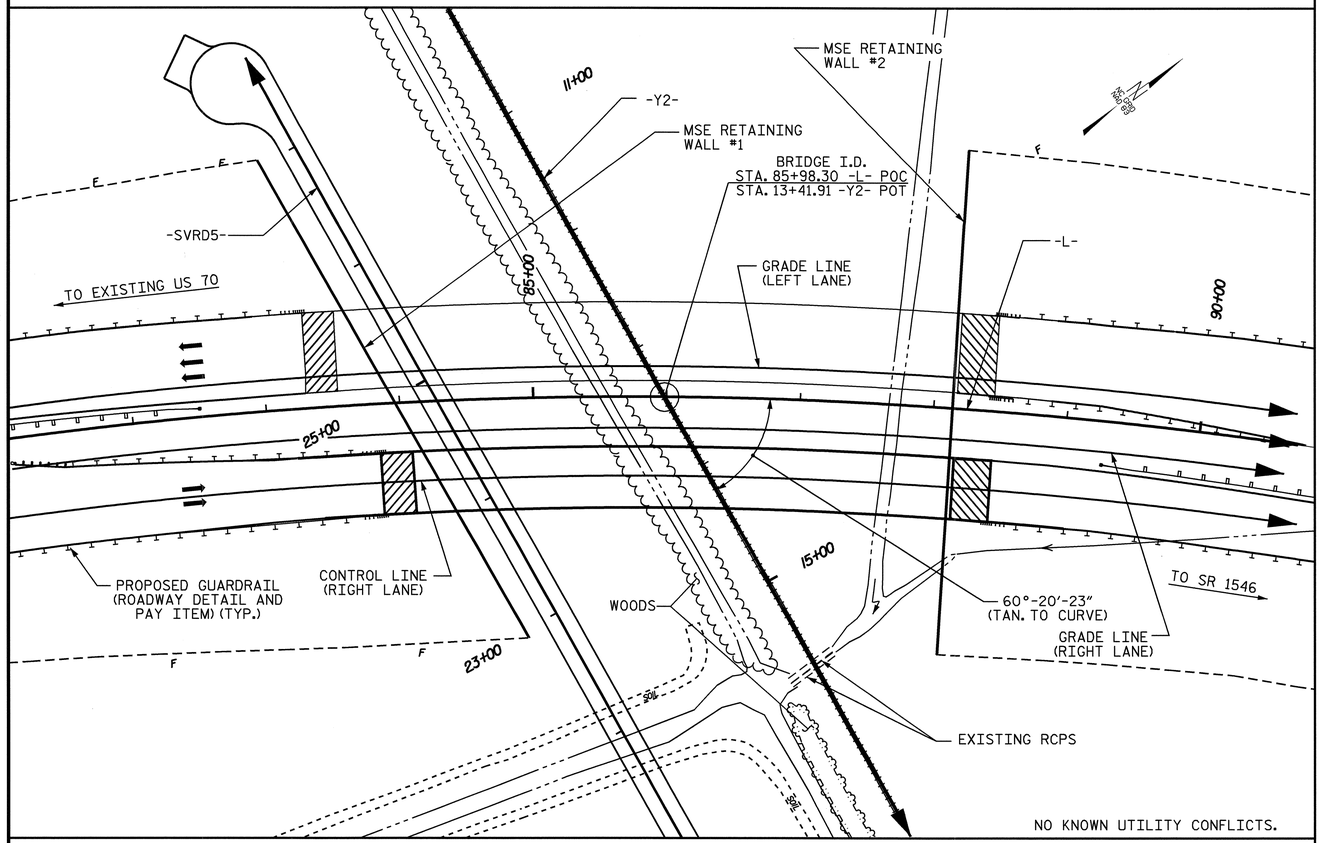

LOCATION SKETCH

NOTES:

ASSUMED LIVE LOAD = HS20 OR ALTERNATE LOADING, EXCEPT THE GIRDERS HAVE BEEN DESIGNED FOR HS25.

THIS BRIDGE HAS BEEN DESIGNED BY THE STRENGTH DESIGN METHOD AS SPECIFIED IN AASHTO STANDARD SPECIFICATIONS.

THIS BRIDGE HAS BEEN DESIGNED IN ACCORDANCE WITH THE REQUIREMENTS OF THE STANDARD SPECIFICATIONS FOR SEISMIC DESIGN OF HIGHWAY BRIDGES FOR SEISMIC PERFORMANCE CATEGORY A.

FOR OTHER DESIGN DATA AND GENERAL NOTES, SEE SHEET SN.

FOR EROSION CONTROL MEASURES SEE EROSION CONTROL PLANS.

ALL STRUCTURAL STEEL SHALL BE AASHTO M270 GRADE 50W AND PAINTED IN ACCORDANCE WITH SYSTEM 4 OF ARTICLE 442-7 OF THE STANDARD SPECIFICATIONS UNLESS OTHERWISE NOTED ON THE PLANS.

REMOVABLE FORMS MAY BE USED IN LIEU OF METAL STAY-IN-PLACE FORMS IN ACCORDANCE WITH ARTICLE 420-3 OF THE STANDARD SPECIFICATIONS.

THE CONTRACTOR SHALL PROVIDE INDEPENDENT ASSURANCE SAMPLES OF REINFORCING STEEL AS FOLLOWS: FOR PROJECTS REQUIRING UP TO 400 TONS OF REINFORCING STEEL, ONE 30 INCH SAMPLE OF EACH SIZE BAR USED, AND FOR PROJECTS REQUIRING OVER 400 TONS OF REINFORCING STEEL, TWO 30 INCH SAMPLES OF EACH SIZE BAR USED. THE BARS FROM WHICH THE SAMPLES ARE TAKEN MUST THEN BE SPLICED WITH REPLACEMENT BARS OF THE SIZE AND LENGTH OF THE SAMPLE, PLUS A MINIMUM LAP SPLICE OF THIRTY BAR DIAMETERS.

NEEDLE BEAMS WILL NOT BE ALLOWED UNLESS OTHERWISE CALLED FOR ON THE PLANS OR APPROVED BY THE ENGINEER.

FOR SUBMITTAL OF WORKING DRAWINGS, SEE SPECIAL PROVISIONS.

FOR FALSEWORK AND FORMWORK, SEE SPECIAL PROVISIONS.

FOR CRANE SAFETY, SEE SPECIAL PROVISIONS.

FOR GROUT FOR STRUCTURES, SEE SPECIAL PROVISIONS.

FOR SHIPPING STEEL STRUCTURAL MEMBERS, SEE SPECIAL PROVISIONS.

DRIVE PILES AT END BENT NO. 1 AND END BENT NO. 2 TO A REQUIRED BEARING CAPACITY OF 130 TONS PER PILE. THE REQUIRED BEARING CAPACITY IS EQUAL TO THE ALLOWABLE BEARING CAPACITY WITH A MINIMUM FACTOR OF SAFETY OF TWO.

THE ALLOWABLE BEARING CAPACITY FOR PILES AT END BENT NO. 1 AND END BENT NO. 2 IS 65 TONS PER PILE.

DRIVE PILES AT INTERIOR BENT NO. 1 AND INTERIOR BENT NO. 2 TO A REQUIRED BEARING CAPACITY OF 140 TONS PER PILE. THE REQUIRED BEARING CAPACITY IS EQUAL TO THE ALLOWABLE BEARING CAPACITY WITH A MINIMUM FACTOR OF SAFETY OF TWO.

THE ALLOWABLE BEARING CAPACITY FOR PILES AT INTERIOR BENT NO. 1 AND INTERIOR BENT NO. 2 IS 70 TONS PER PILE.

TESTING PILES WITH THE PILE DRIVING ANALYZER (PDA) DURING DRIVING, RESTRIKING OR REDRIVING MAY BE REQUIRED. THE ENGINEER WILL DETERMINE THE NEED FOR PDA TESTING.

OBSERVE A ONE-MONTH WAITING PERIOD AFTER CONSTRUCTING THE EMBANKMENT, END BENT AND REINFORCED APPROACH FILL BEFORE BEGINNING APPROACH SLAB CONSTRUCTION AT END BENT NO. 1 AND END BENT NO. 2.

FOR FAA REQUIREMENTS, SEE ROADWAY SPECIAL PROVISIONS.

FOR SLOPE PROTECTION DETAILS AND PAY ITEM, SEE MSE WALL #1 AND WALL #2 PLANS.

TOTAL BILL OF MATERIAL

	FOUNDATION EXCAVATION FOR BENT	PDA TESTING	PDA ASSISTANCE	REINFORCED CONCRETE DECK SLAB	GROOVING BRIDGE FLOORS	CLASS A CONCRETE	BRIDGE APPROACH SLABS	REINFORCING STEEL	SPIRAL COLUMN REINFORCING STEEL	STRUCTURAL STEEL	HP 12 X 53 STEEL PILES		HP 14 X 73 STEEL PILES		PILE REDRIVES	CONCRETE BARRIER RAIL	POT BEARINGS	ELASTOMERIC BEARINGS	EVAZOTE JOINT SEALS	EXPANSION JOINT SEALS
	LUMP SUM	EA.	EA.	SQ.FT.	SQ.FT.	CU.YDS.	LUMP SUM	LBS.	LBS.	APPROX.LBS.	NO.	LIN.FT.	NO.	LIN.FT.	EA.	LIN.FT.	LUMP SUM	LUMP SUM	LUMP SUM	LUMP SUM
SUPERSTRUCTURE				20,587	20,022		LUMP SUM			1,260,500						836.01	LUMP SUM	LUMP SUM	LUMP SUM	LUMP SUM
END BENT NO.1						31.0		5,094			11	770								
BENT NO.1	LUMP SUM					105.3		20,554	2,198				30	1,950						
BENT NO.2	LUMP SUM					102.7		20,595	2,231				30	1,950						
END BENT NO.2						31.1		5,261			9	675								
TOTAL	LUMP SUM	1	1	20,587	20,022	270.1	LUMP SUM	51,504	4,429	1,260,500	20	1,445	60	3,900	20	836.01	LUMP SUM	LUMP SUM	LUMP SUM	LUMP SUM

PROJECT NO. R-2719A
LENOIR COUNTY
STATION: 85+98.30 -L-

SHEET 6 OF 6

STATE OF NORTH CAROLINA
DEPARTMENT OF TRANSPORTATION
RALEIGH

GENERAL DRAWING
FOR BRIDGE OVER NORTH CAROLINA RAILROAD ON CRESCENT ROAD BETWEEN EXISTING US 70 AND SR 1546 (RIGHT LANE)

NORTH CAROLINA PROFESSIONAL SEAL 14045 ENGINEER TIMOTHY L. COGGINS
4/21/09

REVISIONS						SHEET NO.
NO.	BY:	DATE:	NO.	BY:	DATE:	S-81
1			3			TOTAL SHEETS
2			4			340

DRAWN BY : J. B. WILSON DATE : 09/2008
CHECKED BY : T. L. COGGINS DATE : 09/2008

21-APR-2009 12:54
z:\structures\str#3\final plans\r2719a_sd_gd_03.dgn
tcoggins

STR. #3

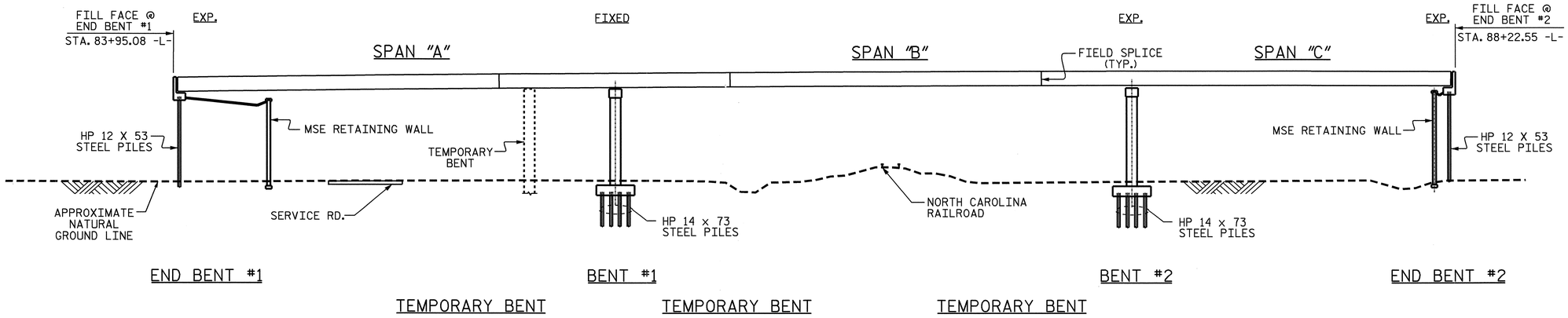

SECTION ALONG ℄ -L-

SCHEMATIC ELEVATION VIEW

ERECTION NOTES

INITIAL SET WILL REQUIRE PLACEMENT OF TWO ADJACENT GIRDERS WITH DIAPHRAGMS.

TEMPORARY BENT WILL SUPPORT ALL GIRDERS IN THE TYPICAL SECTION.

THE STRUCTURAL STEEL SHALL BE SUPPORTED DURING ERECTION IN ITS CAMBERED POSITION. A MINIMUM OF ONE TEMPORARY BENT SHALL BE USED IN SPAN "A".

PLACEMENT OF TEMPORARY BENT SHALL BE COORDINATED WITH RAILROAD COMPANY AND TRAFFIC PHASING REQUIREMENTS. SEE TRAFFIC CONTROL PLANS.

TEMPORARY BENT SHALL REMAIN IN PLACE UNTIL ALL CROSSFRAMES ARE IN PLACE AND HIGH STRENGTH BOLTS ARE TIGHTENED.

TEMPORARY BENT SHALL BE LOCATED AT CONNECTOR PLATES.

THE CONTRACTOR'S ERECTION PLANS SHALL INCLUDE A METHOD OF TEMPORARY BENT REMOVAL THAT WILL UNIFORMLY APPLY THE STRUCTURAL STEEL WEIGHT TO THE GIRDERS AND DIAPHRAGMS.

THE CONTRACTOR MAY SUBMIT ALTERNATE ERECTION METHODS. PLANS FOR SUCH ERECTION METHODS SHALL BE APPROVED BY THE ENGINEER.

PLANS FOR TEMPORARY BENT, ERECTION SEQUENCE, AND TEMPORARY BENT REMOVAL SHALL BE SUBMITTED TO THE ENGINEER FOR REVIEW.

THE CONTRACTOR IS RESPONSIBLE FOR DESIGNING THE TEMPORARY BENTS. THE DESIGNS SHALL FOLLOW THE AASHTO GUIDE DESIGN SPECIFICATIONS FOR BRIDGE TEMPORARY WORKS, 1995 AND SHALL BE COMPLETED BY A PROFESSIONAL ENGINEER REGISTERED IN NORTH CAROLINA. THE CONTRACTOR SHALL SUBMIT SIGNED AND SEALED WORKING DRAWINGS AND CALCULATIONS FOR APPROVAL BY THE ENGINEER.

DURING THE GIRDER ERECTION PROCEDURE, THE CONTRACTOR IS RESPONSIBLE FOR PROVIDING TEMPORARY LATERAL BRACING AND OTHER MEANS OF SUPPORT, AS REQUIRED, TO ENSURE STABILITY OF THE GIRDERS, TO AVOID UPLIFT OF THE GIRDERS AT THE TEMPORARY BENTS AND TO MAINTAIN PLUMBNESS OF THE GIRDER WEBS.

NO SEPARATE MEASUREMENT OR PAYMENT WILL BE MADE FOR PROVIDING THE TEMPORARY BENT. THE COST FOR ALL MATERIALS, EQUIPMENT, TOOLS, LABOR AND ANY INCIDENTALS NECESSARY TO PROVIDE THE TEMPORARY BENT SHALL BE CONSIDERED INCIDENTAL TO THE LUMP SUM BID PRICE FOR STRUCTURAL STEEL.

PROJECT NO. R-2719A
LENOIR COUNTY
STATION: 85+98.30 -L-

STATE OF NORTH CAROLINA
DEPARTMENT OF TRANSPORTATION
RALEIGH

GIRDER ERECTION DETAILS

(RIGHT LANE)

NORTH CAROLINA PROFESSIONAL SEAL 12274 ENGINEER OMAR R. AZIZI

Omar R Azizi
10-9-08

REVISIONS						SHEET NO.
NO.	BY:	DATE:	NO.	BY:	DATE:	S-82
1			3			TOTAL SHEETS
2			4			340

DRAWN BY : T.L. AVERETTE DATE : 08-2008
CHECKED BY : O. R. AZIZI DATE : 09-2008

09-OCT-2008 09:26
g:\tlpprojects-r\r2719a\structures\Str#3\FinalPlans\R2719A_sd_gd_03.dgn
taverette

STR. #3 NCBDS

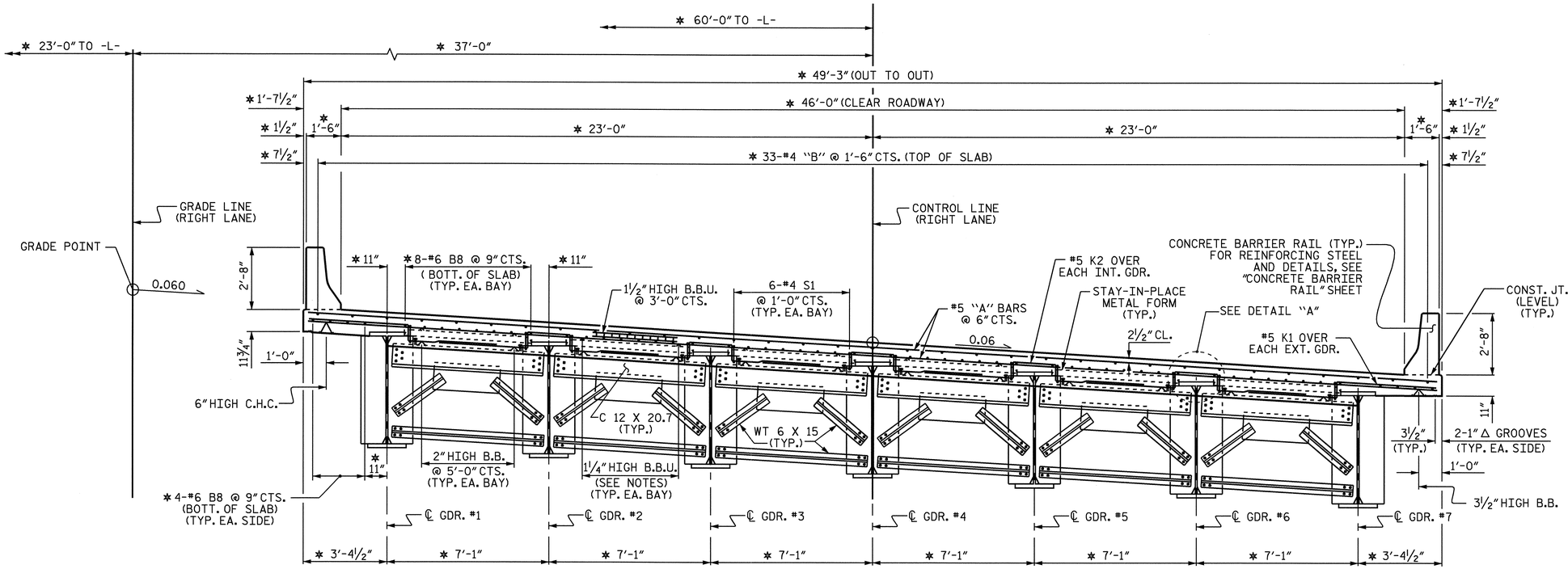

TYPICAL SECTION @ END BENT DIAPHRAGM

* RADIAL DIMENSIONS AND SPACES

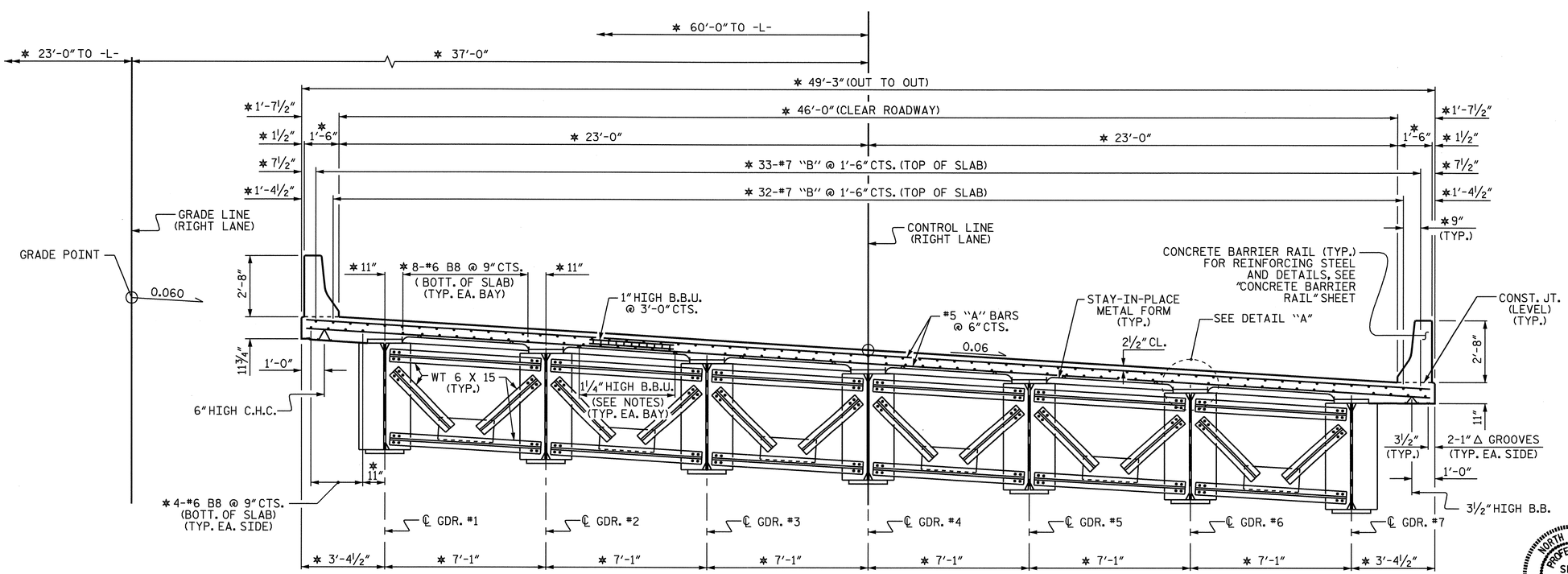

TYPICAL SECTION @ BENT DIAPHRAGM

* RADIAL DIMENSIONS AND SPACES

NOTES

PROVIDE 1¼" HIGH BEAM BOLSTERS UPPER AT 4'-0" CTS. ATOP THE METAL STAY-IN-PLACE FORMS TO SUPPORT THE BOTTOM MAT OF 'A' BARS. WHEN USING REMOVABLE FORMS, PROVIDE CONTINUOUS HIGH CHAIRS FOR METAL DECK (C.H.C.M.) @ 4'-0" CTS. WITH A HEIGHT TO SUPPORT THE BOTTOM MAT OF 'A' BARS A CLEAR DISTANCE OF 2½" ABOVE THE TOP OF THE REMOVABLE FORM.

METAL STAY-IN-PLACE FORMS SHALL NOT BE WELDED TO GIRDER FLANGES IN THE ZONES REQUIRING CHARPY V NOTCH TEST. SEE STRUCTURAL STEEL DETAIL SHEETS.

PREVIOUSLY CAST CONCRETE IN A CONTINUOUS UNIT SHALL HAVE ATTAINED A MINIMUM COMPRESSIVE STRENGTH OF 3,000 PSI BEFORE ADDITIONAL CONCRETE IS CAST IN THE UNIT.

BARRIER RAIL IN A CONTINUOUS UNIT SHALL NOT BE CAST UNTIL ALL SLAB CONCRETE IN THE UNIT HAS BEEN CAST AND HAS REACHED A MINIMUM COMPRESSIVE STRENGTH OF 3,000 PSI.

STRUCTURAL STEEL ERECTION IN A CONTINUOUS UNIT SHALL BE COMPLETE BEFORE FALSEWORK OR FORMS ARE PLACED ON THE UNIT.

THE CONTRACTOR MAY, WHEN NECESSARY, PROPOSE A SCHEME FOR AVOIDING INTERFERENCE BETWEEN METAL STAY-IN-PLACE FORM SUPPORTS OR FORMS AND GIRDER STIFFENERS OR CONNECTOR PLATES. THE PROPOSAL SHALL BE INDICATED, AS APPROPRIATE, ON EITHER THE STEEL WORKING DRAWINGS OR THE METAL STAY-IN-PLACE FORM WORKING DRAWINGS.

THE CONTRACTOR SHALL ADJUST THE GIRDER BUILDUPS AS NECESSARY TO INCORPORATE A MAXIMUM PERMISSIBLE VARIATION IN POT BEARING DEPTH OF ½", SEE SPECIAL PROVISION FOR POT BEARINGS.

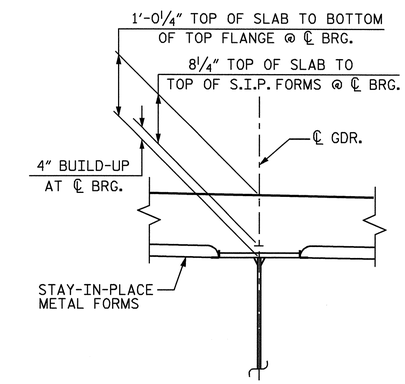

DETAIL "A"

PROJECT NO. R-2719A

LENOIR COUNTY

STATION: 85+98.30 -L-

SHEET 1 OF 2

STATE OF NORTH CAROLINA
DEPARTMENT OF TRANSPORTATION
RALEIGH

SUPERSTRUCTURE
TYPICAL SECTION
(RIGHT LANE)

NORTH CAROLINA PROFESSIONAL SEAL 14045 ENGINEER TIMOTHY L. COGGINS
4/14/09

REVISIONS						SHEET NO.
NO.	BY:	DATE:	NO.	BY:	DATE:	S-83
1			3			TOTAL SHEETS
2			4			340

DRAWN BY : T.L. AVERETTE DATE : 07-08
CHECKED BY : B.N. BARODAWALA DATE : 08-08

14-APR-2009 07:17
q:\tipprojects-r\r2719a\structures\str#3\final plans\R2719A_sd_TS_03.dgn
taverette

STR. #3

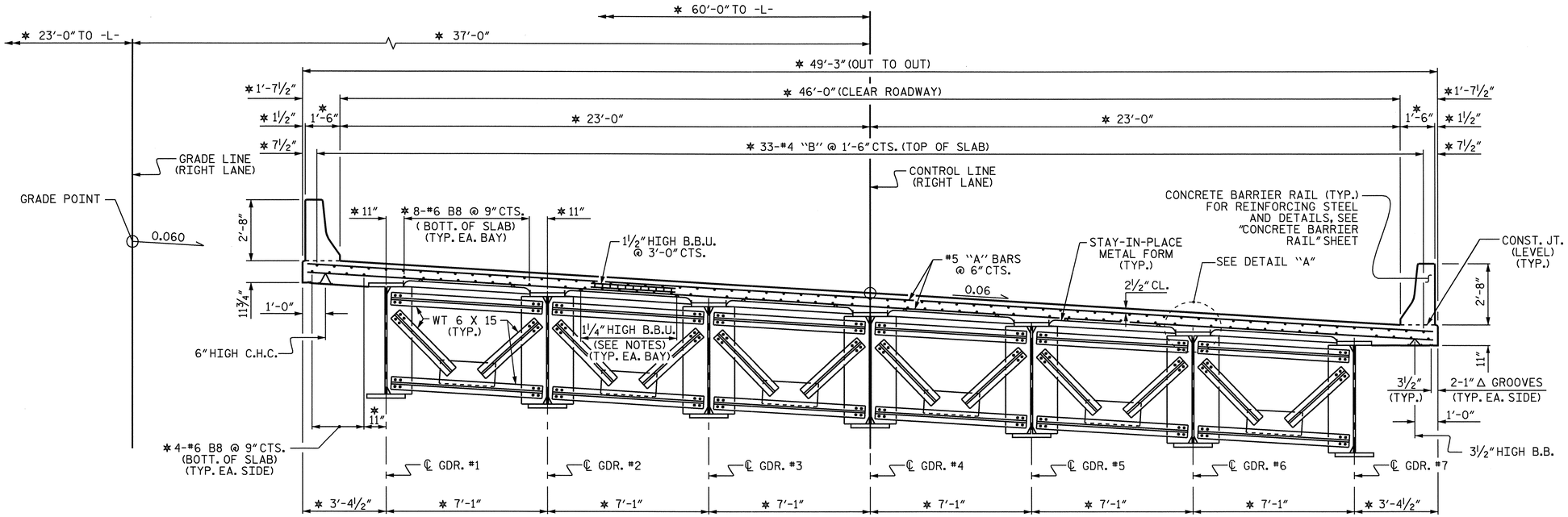

TYPICAL SECTION @ INTERMEDIATE DIAPHRAGM

* RADIAL DIMENSIONS AND SPACES

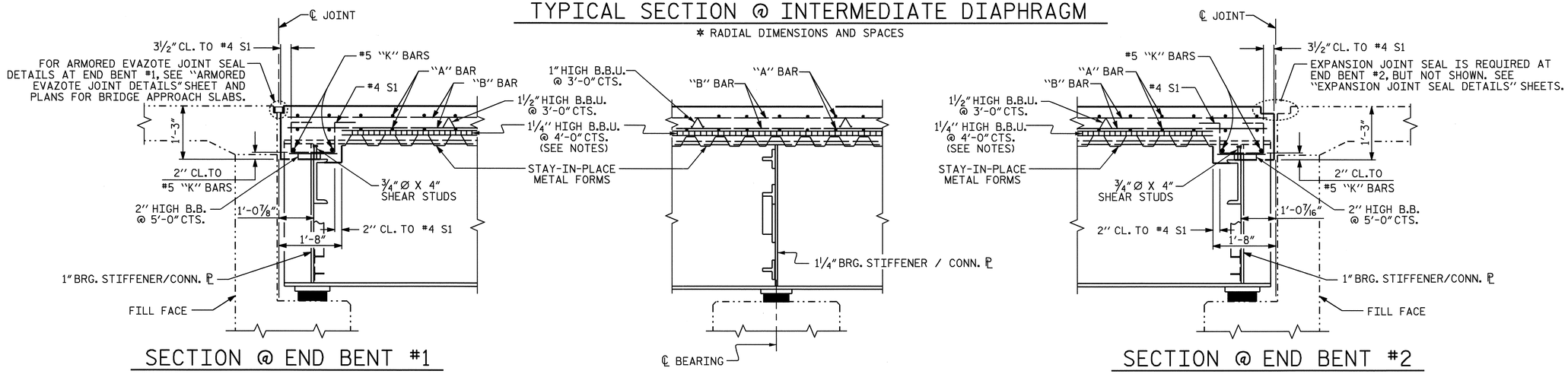

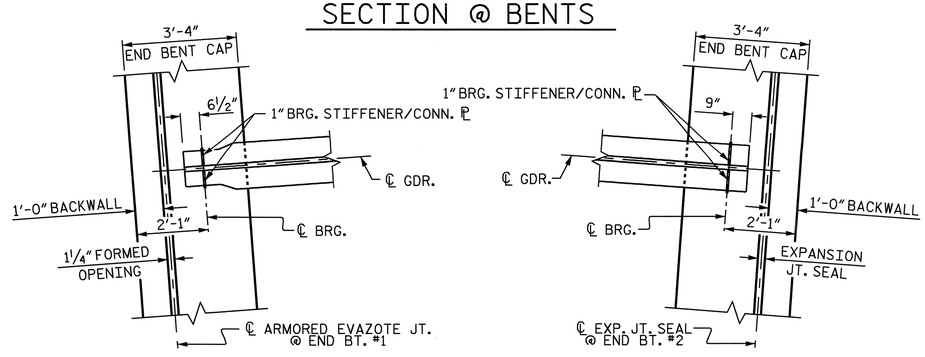

PROJECT NO. R-2719A

LENOIR COUNTY

STATION: 85+98.30 -L-

SHEET 2 OF 2

STATE OF NORTH CAROLINA
DEPARTMENT OF TRANSPORTATION
RALEIGH

SUPERSTRUCTURE

TYPICAL SECTION

(RIGHT LANE)

NORTH CAROLINA PROFESSIONAL SEAL 14045 ENGINEER TIMOTHY L. COGGINS
10/13/08

REVISIONS						SHEET NO.
NO.	BY:	DATE:	NO.	BY:	DATE:	S-84
1			3			TOTAL SHEETS
2			4			340

DRAWN BY : T.L. AVERETTE DATE : 07-08
CHECKED BY : B.N. BARODAWALA DATE : 08-08

09-OCT-2008 07:22
g:\tlpprojects-r\r2719a\structures\str#3\finalplans\R2719A_sd_TS_03.dgn
taverette

STR. #3

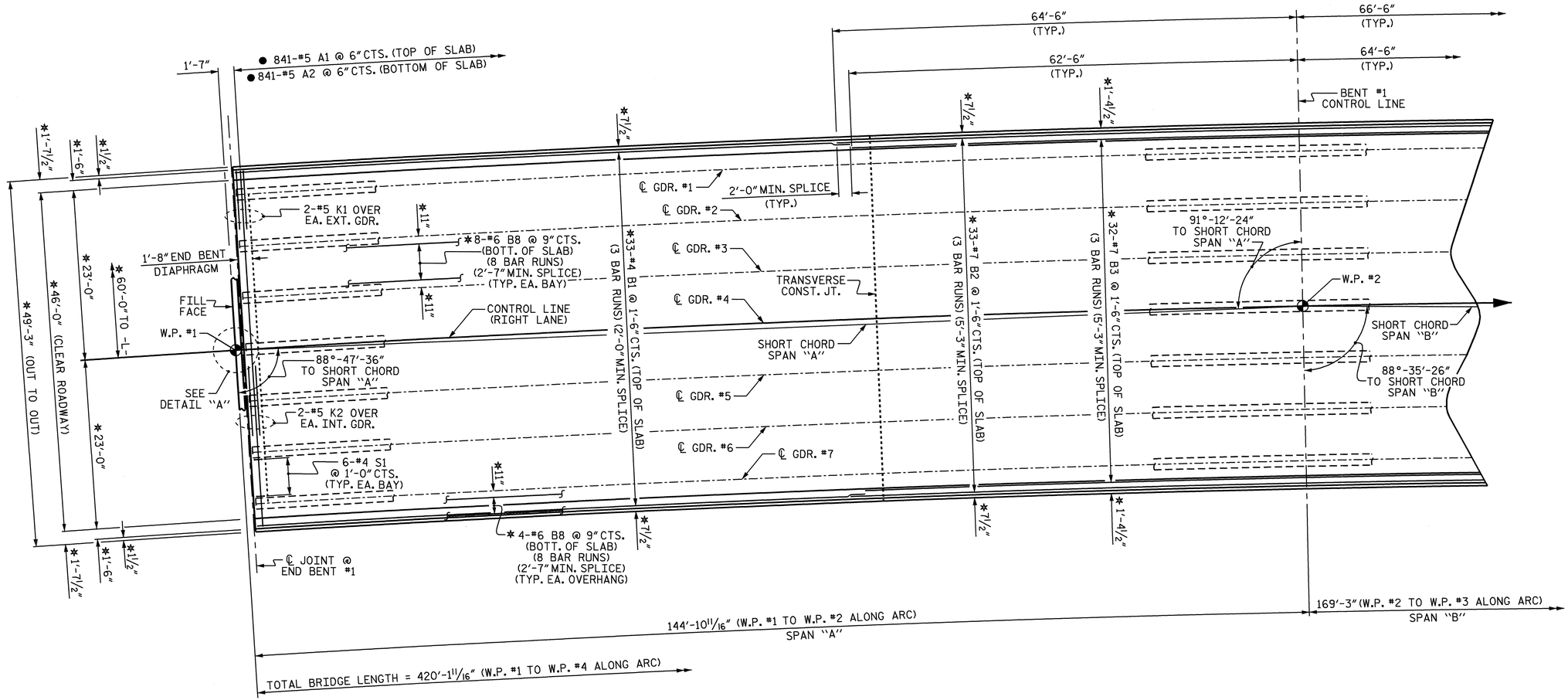

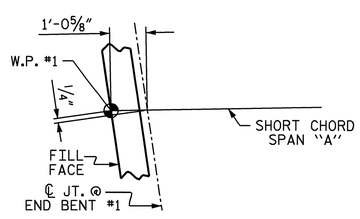

DETAIL "A"

PLAN OF SPAN "A"

* RADIAL DIMENSIONS AND SPACES.

● "A" BARS ARE SPACED RADIALLY ALONG LEFT OUTER EDGE OF SUPERSTRUCTURE. FOR LOCATION OF INTERMEDIATE DIAPHRAGMS, SEE "FRAMING PLAN." FOR LOCATION OF TRANSVERSE CONSTRUCTION JOINT, SEE POURING SEQUENCE.

PROJECT NO. R-2719A

LENOIR COUNTY

STATION: 85+98.30 -L-

SHEET 1 OF 3

STATE OF NORTH CAROLINA
DEPARTMENT OF TRANSPORTATION
RALEIGH

SUPERSTRUCTURE

PLAN OF SPAN "A"

(RIGHT LANE)

NORTH CAROLINA PROFESSIONAL SEAL 14045 ENGINEER TIMOTHY A. COGGINS

Timothy A. Coggins 4/14/09

REVISIONS						SHEET NO.
NO.	BY:	DATE:	NO.	BY:	DATE:	S-85
1			3			TOTAL SHEETS
2			4			340

DRAWN BY : T.L. AVERETTE DATE : 06-08
CHECKED BY : B.N. BARODAWALA DATE : 08-08

14-APR-2009 07:17
g:\tipprojects-r\r2719a\structures\str#3\finalplans\R2719A_sd_S1_03.dgn
taverette

STR. #3

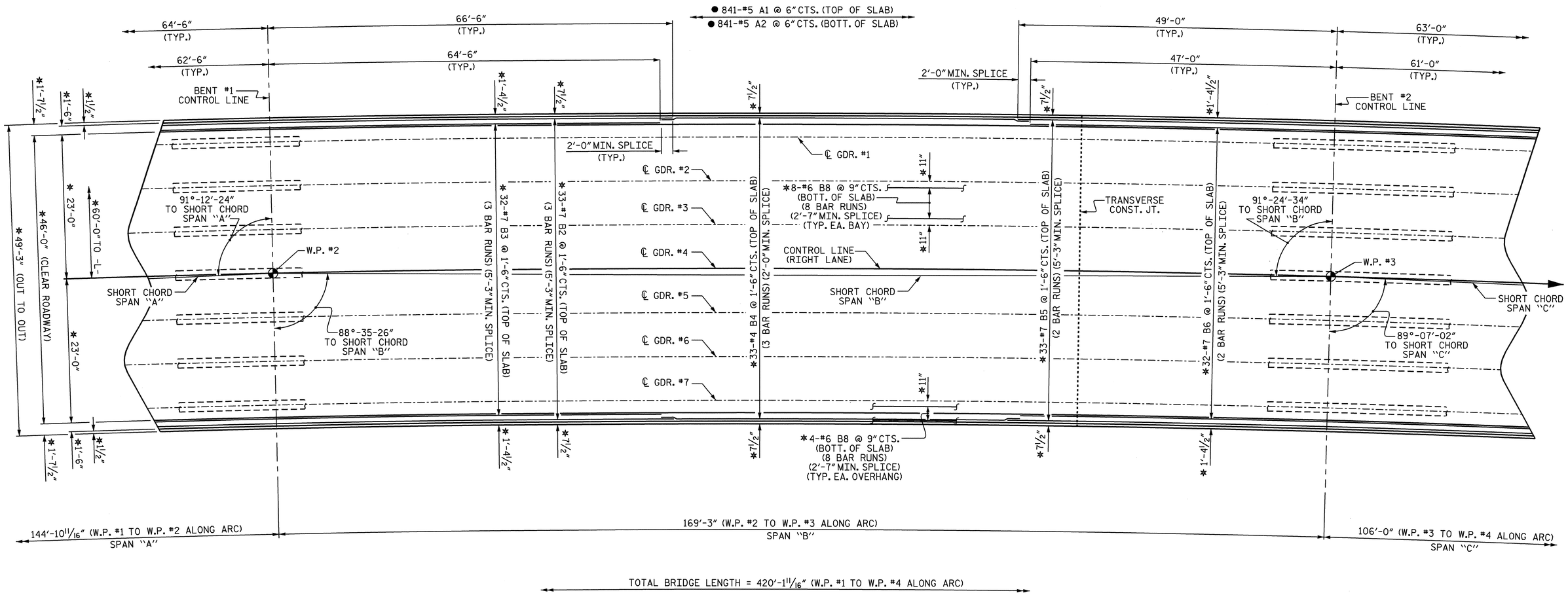

PLAN OF SPAN "B"

* RADIAL DIMENSIONS AND SPACES.

● "A" BARS ARE SPACED RADIALLY ALONG LEFT OUTER EDGE OF SUPERSTRUCTURE.
FOR LOCATION OF INTERMEDIATE DIAPHRAGMS, SEE "FRAMING PLAN."
FOR LOCATION OF TRANSVERSE CONSTRUCTION JOINT, SEE POURING SEQUENCE.

PROJECT NO. R-2719A
LENOIR COUNTY
STATION: 85+98.30 -L-

SHEET 2 OF 3

STATE OF NORTH CAROLINA
DEPARTMENT OF TRANSPORTATION
RALEIGH

SUPERSTRUCTURE
PLAN OF SPAN "B"
(RIGHT LANE)

NORTH CAROLINA PROFESSIONAL SEAL 14045 ENGINEER TIMOTHY W. COGGINS
4/14/09

REVISIONS						SHEET NO.
NO.	BY:	DATE:	NO.	BY:	DATE:	S-86
1			3			TOTAL SHEETS
2			4			340

DRAWN BY : T.L. AVERETTE DATE : 05-08
CHECKED BY : B.N. BARODAWALA DATE : 08-08

14-APR-2009 07:16
g:\tlpprojects-r\r2719a\structures\str#3\finalplans\R2719A_sd_S1_03.dgn
taverette

STR. #3

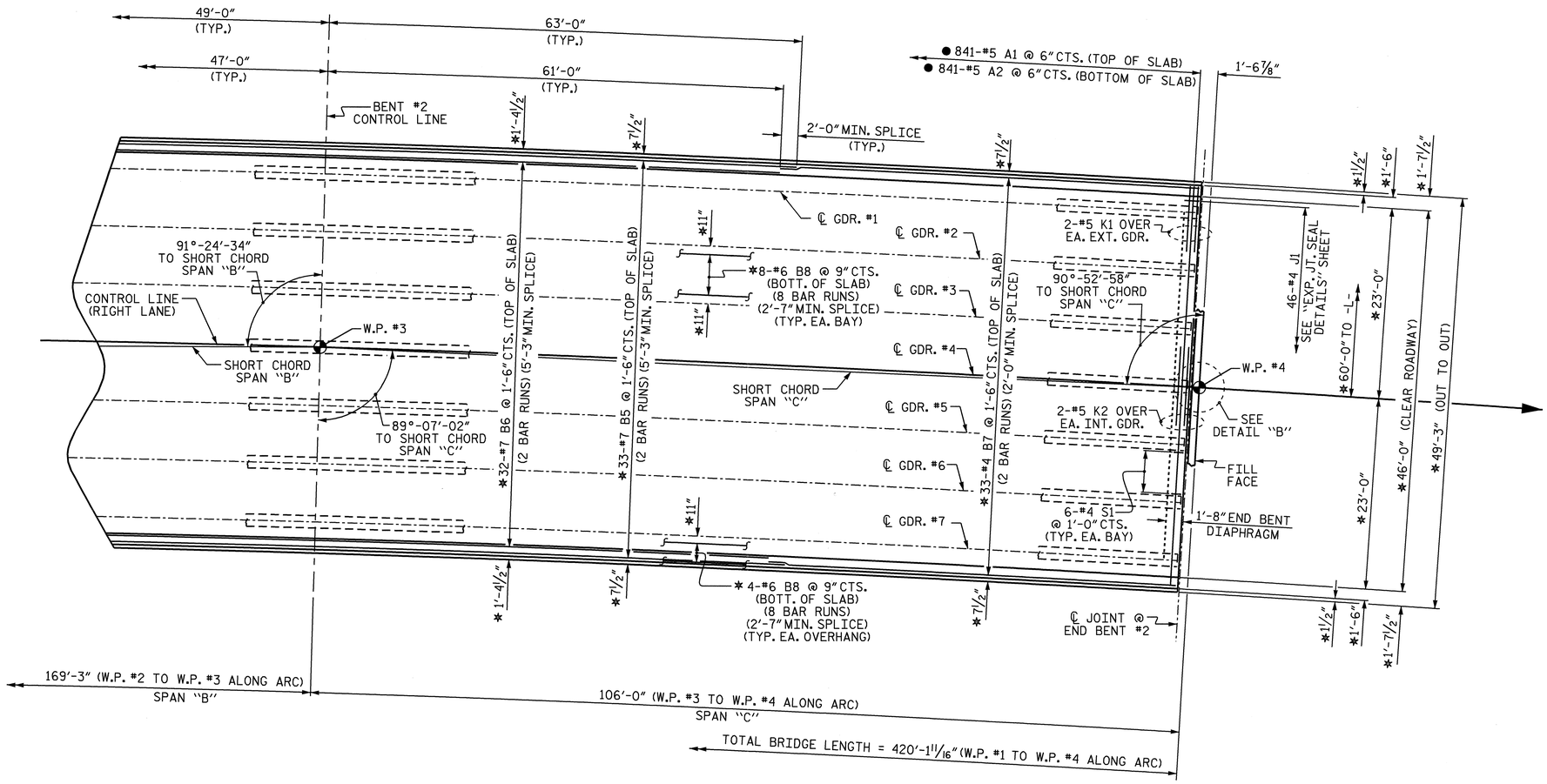

PLAN OF SPAN "C"

* RADIAL DIMENSIONS AND SPACES.

● "A" BARS ARE SPACED RADIALLY ALONG LEFT OUTER EDGE OF SUPERSTRUCTURE. FOR LOCATION OF INTERMEDIATE DIAPHRAGMS, SEE "FRAMING PLAN."

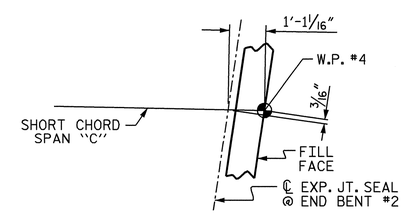

DETAIL "B"

PROJECT NO. R-2719A

LENOIR COUNTY

STATION: 85+98.30 -L-

SHEET 3 OF 3

STATE OF NORTH CAROLINA
DEPARTMENT OF TRANSPORTATION
RALEIGH

SUPERSTRUCTURE

PLAN OF SPAN "C"

(RIGHT LANE)

NORTH CAROLINA PROFESSIONAL SEAL 14045 ENGINEER TIMOTHY W. COGGINS

Timothy W. Coggins 10/13/08

REVISIONS						SHEET NO.
NO.	BY:	DATE:	NO.	BY:	DATE:	S-87
1			3			TOTAL SHEETS
2			4			340

DRAWN BY : T.L. AVERETTE DATE : 05-08
CHECKED BY : B.N. BARODAWALA DATE : 08-08

13-OCT-2008 09:56
g:\tipprojects-r\r2719a\structures\str#3\finalplans\r2719a_sd_s1_03.dgn
taverette

STR. #3

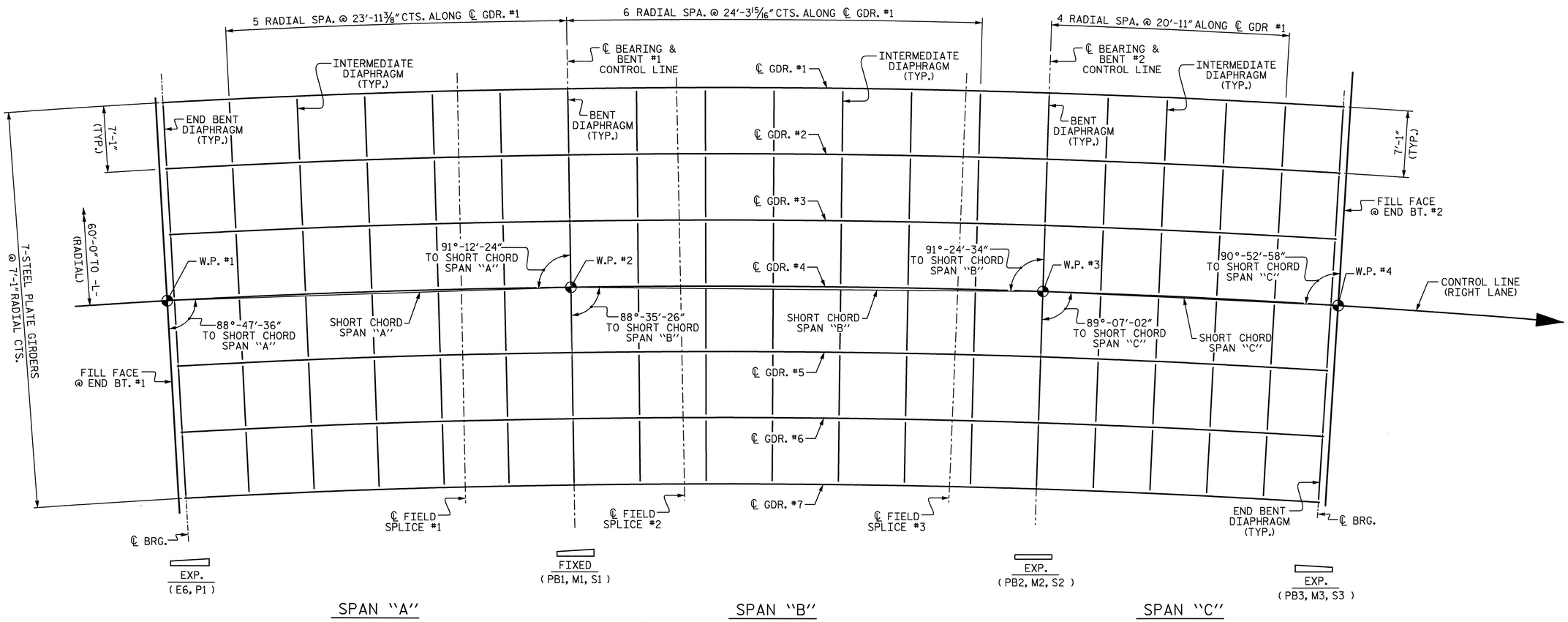

FRAMING PLAN

ALL BENT AND INTERMEDIATE DIAPHRAGMS ARE TO BE PLACED RADIALLY TO ℄ GIRDERS.

PROJECT NO. R-2719A
LENOIR COUNTY
STATION: 85+98.30 -L-

STATE OF NORTH CAROLINA
DEPARTMENT OF TRANSPORTATION
RALEIGH

SUPERSTRUCTURE
FRAMING PLAN
(RIGHT LANE)

NORTH CAROLINA PROFESSIONAL SEAL 14045 ENGINEER TIMOTHY K. COGGINS
10/13/08

REVISIONS						SHEET NO.
NO.	BY:	DATE:	NO.	BY:	DATE:	S-88
1			3			TOTAL SHEETS
2			4			340

DRAWN BY : T.L. AVERETTE DATE : 07-08
CHECKED BY : B.N. BARODAWALA DATE : 08-08

09-OCT-2008 07:21
g:\tlpprojects-r\r2719a\structures\str#3\finalplans\R2719A_sd_FP_03.dgn
taverette

STR. #3

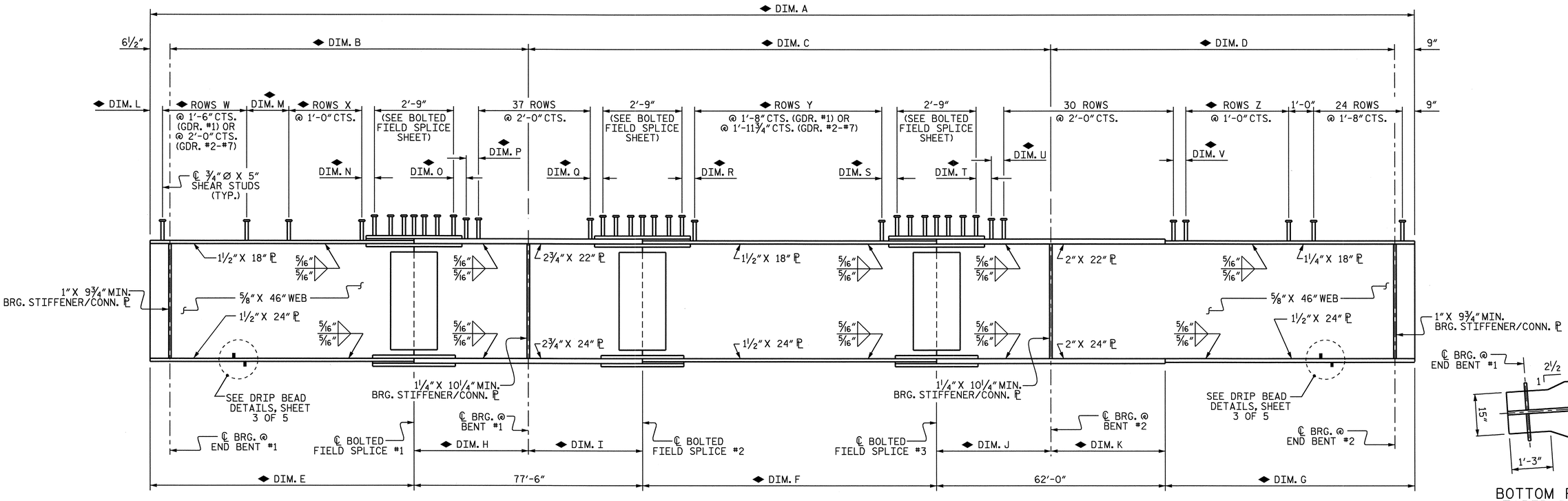

GIRDER ELEVATION

◆ FOR DIMENSIONS, SEE "GIRDER TABLE" BELOW.
5 SHEAR STUDS PER ROW

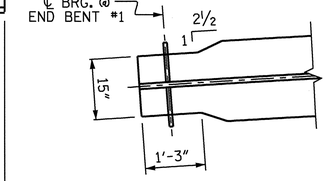

BOTTOM FLANGE TAPER DETAIL

(TYP. @ END BENT #1)

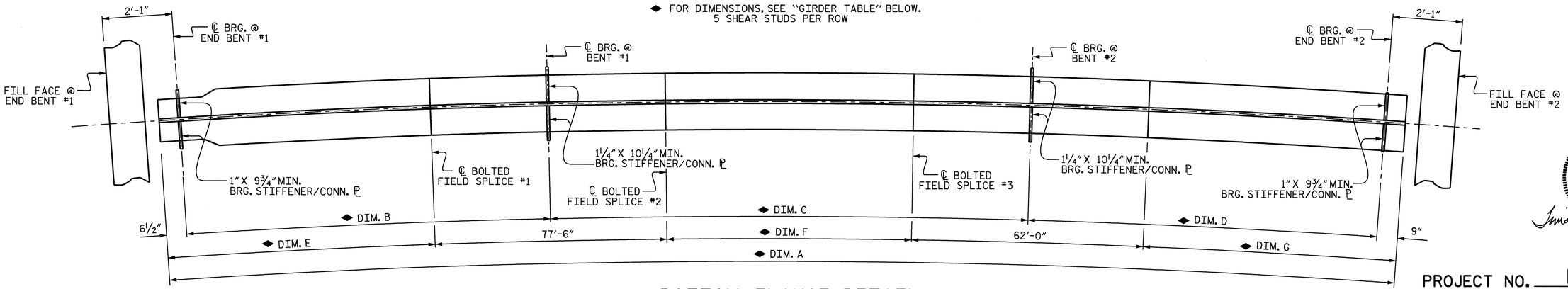

BOTTOM FLANGE DETAIL

◆ FOR DIMENSIONS, SEE "GIRDER TABLE" BELOW.

NORTH CAROLINA PROFESSIONAL SEAL 14045 ENGINEER TIMOTHY L. COGGINS
Timothy L. Coggins 4/14/09

PROJECT NO. R-2719A
LENOIR COUNTY
STATION: 85+98.30 -L-

SHEET 1 OF 5

GIRDER TABLE

	RADIUS	DIM. A	DIM. B	DIM. C	DIM. D	DIM. E	DIM. F	DIM. G	DIM. H	DIM. I	DIM. J	DIM. K	DIM. L	DIM. M	DIM. N	DIM. O	DIM. P	DIM. Q	DIM. R	DIM. S	DIM. T	DIM. U	DIM. V	ROWS W	ROWS X	ROWS Y	ROWS Z
GDR. #1	3461'-3"	419'-10 3/8"	143'-8 1/2"	170'-3 1/2"	104'-6 7/8"	105'-3"	102'-4 5/16"	72'-9 1/16"	39'-0"	38'-6"	29'-5 3/16"	32'-6 13/16"	10 1/2"	1'-6"	6"	10 1/2"	9"	1'-1 1/2"	7 5/8"	7 11/16"	1'-0 3/8"	1'-0 5/16"	1'-2 7/8"	49	30	60	33
GDR. #2	3454'-2"	418'-11 15/16"	143'-4 7/8"	169'-11 5/16"	104'-4 1/4"	105'-0 3/8"	101'-8 1/2"	72'-9 1/16"	38'-11"	38'-7"	29'-7 13/16"	32'-4 3/16"	7 7/8"	1'-6"	6"	9 1/2"	9"	1'-2 1/2"	11 7/8"	11 7/8"	1'-1 11/16"	1'-1 5/8"	1'-0 1/4"	37	30	50	33
GDR. #3	3447'-1"	418'-1 9/16"	143'-1 5/16"	169'-7 1/8"	104'-1 5/8"	104'-9 3/4"	101'-0 13/16"	72'-9"	38'-10 1/16"	38'-7 15/16"	29'-10 3/8"	32'-1 5/8"	5 1/4"	1'-6"	6"	8 9/16"	9"	1'-3 7/16"	8"	8 1/16"	1'-2 15/16"	1'-2 15/16"	9 5/8"	37	30	50	33
GDR. #4	3440'-0"	417'-3 3/16"	142'-9 11/16"	169'-3"	103'-11"	104'-7 1/16"	100'-5 1/4"	72'-8 7/8"	38'-9 1/8"	38'-8 7/8"	30'-0 7/8"	31'-11 1/8"	8 9/16"	1'-0"	6"	7 5/8"	9"	1'-4 3/8"	1'-4 1/8"	1'-4 1/8"	1'-4 3/16"	1'-4 3/16"	7"	37	30	49	33
GDR. #5	3432'-11"	416'-4 13/16"	142'-6 1/8"	168'-10 13/16"	103'-8 3/8"	104'-4 1/2"	99'-9 1/2"	72'-8 13/16"	38'-8 1/8"	38'-9 7/8"	30'-3 7/16"	31'-8 9/16"	6"	1'-0"	6"	6 5/8"	9"	1'-5 3/8"	1'-0 1/4"	1'-0 1/4"	1'-5 1/2"	1'-5 7/16"	1'-4 3/8"	37	30	49	32
GDR. #6	3425'-10"	415'-6 7/16"	142'-2 9/16"	168'-6 5/8"	103'-5 3/4"	104'-1 7/8"	99'-1 13/16"	72'-8 3/4"	38'-7 3/16"	38'-10 13/16"	30'-6"	31'-6"	9 3/8"	1'-0"	1'-0"	8 11/16"	6"	1'-6 5/16"	8 3/8"	8 7/16"	1'-6 3/4"	1'-6 3/4"	1'-1 3/4"	36	31	49	32
GDR. #7	3418'-9"	414'-8 1/16"	141'-11"	168'-2 7/16"	103'-3 1/8"	103'-11 5/16"	98'-6"	72'-8 3/4"	38'-6 3/16"	38'-11 13/16"	30'-8 5/8"	31'-3 3/8"	6 13/16"	1'-0"	1'-0"	7 11/16"	6"	1'-7 5/16"	1'-4 3/8"	1'-4 3/8"	1'-8 1/16"	1'-8 1/16"	11 1/8"	36	31	48	32

DRAWN BY : T.L. AVERETTE DATE : 06-08
CHECKED BY : B.N. BARODAWALA DATE : 08-08

STATE OF NORTH CAROLINA
DEPARTMENT OF TRANSPORTATION
RALEIGH

SUPERSTRUCTURE
STRUCTURAL STEEL DETAILS
(RIGHT LANE)

REVISIONS						SHEET NO.
NO.	BY:	DATE:	NO.	BY:	DATE:	S-89
1			3			TOTAL SHEETS
2			4			340

STR. #3

14-APR-2009 07:16
g:\tipprojects-r\r2719a\structures\str#3\finalplans\R2719A_sd_SS_03.dgn
taverette

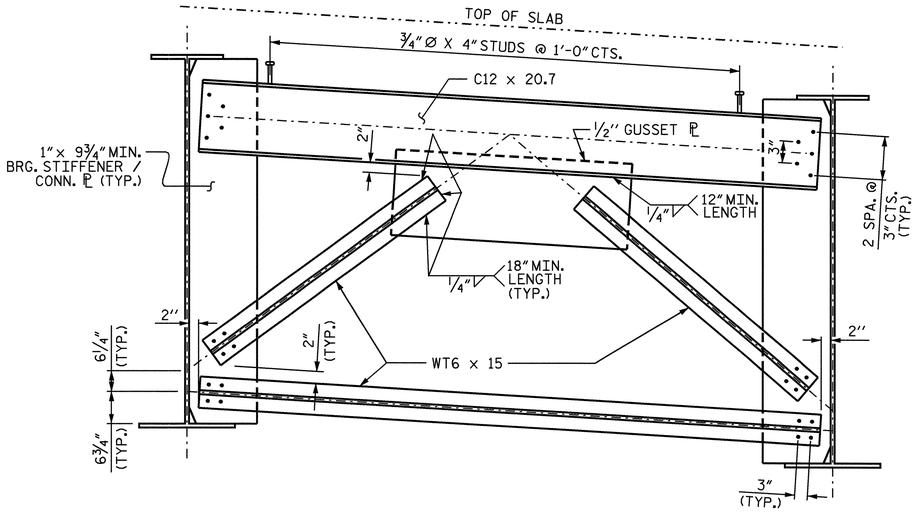

TYPICAL END BENT DIAPHRAGM

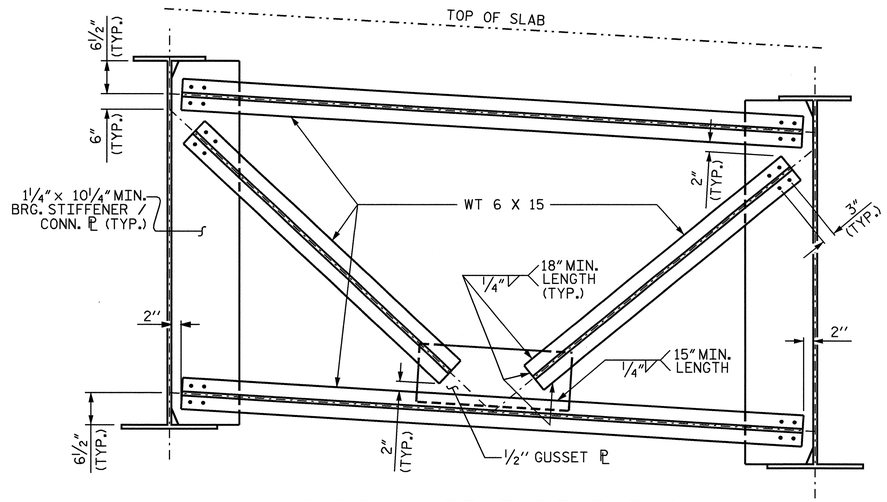

TYPICAL BENT DIAPHRAGM

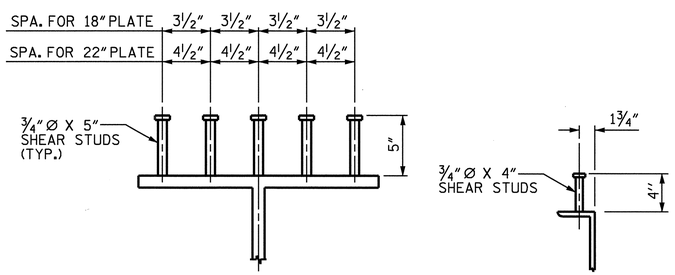

ON GIRDERS

ON CHANNELS

SHEAR STUD DETAILS

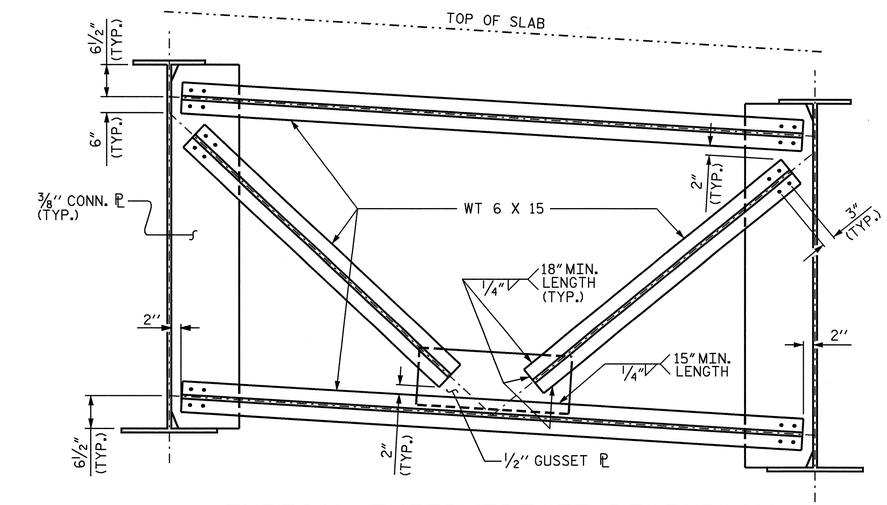

TYPICAL INTERMEDIATE DIAPHRAGM

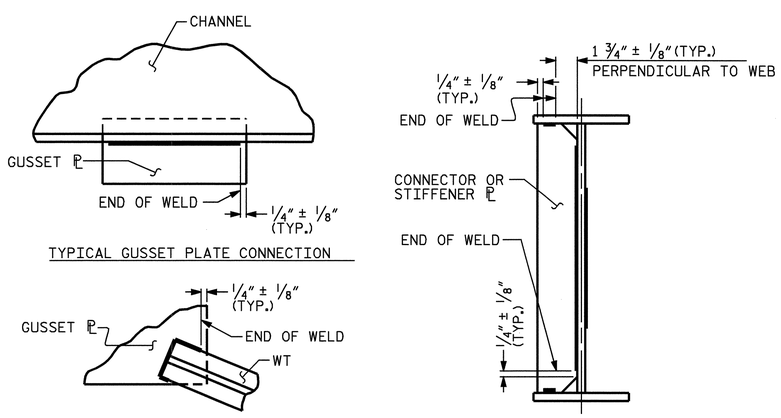

TYPICAL GUSSET PLATE CONNECTION

TYPICAL "TEE" TO GUSSET PLATE CONNECTION

TYPICAL STIFFENER OR CONNECTOR PLATE CONNECTIONS

WELD TERMINATION DETAILS

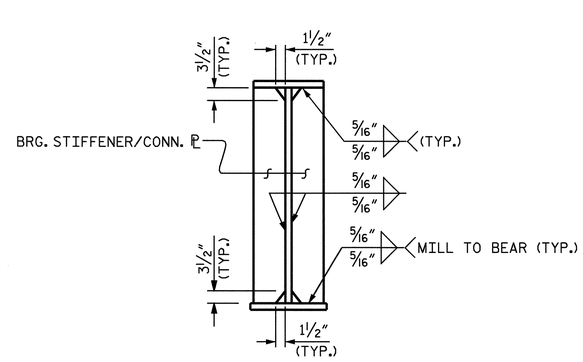

BEARING STIFFENER / CONNECTOR PLATE

(@ END BENT & INTERIOR BENT DIAPHRAGMS)

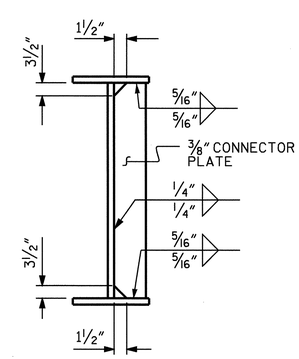

CONNECTOR PLATE

(@ INTERMEDIATE DIAPHRAGMS)

NOTES

ALL STRUCTURAL STEEL SHALL BE AASHTO M270 GRADE 50W AND PAINTED IN ACCORDANCE WITH SYSTEM 4 OF ARTICLE 442-7 OF THE STANDARD SPECIFICATIONS UNLESS OTHERWISE NOTED ON THE PLANS.

ALL DIMENSIONS SHOWN ARE HORIZONTAL OR VERTICAL, UNLESS OTHERWISE NOTED.

ALL FIELD CONNECTIONS TO BE 7/8" DIA. HIGH STRENGTH BOLTS UNLESS OTHERWISE NOTED. FOR HIGH STRENGTH BOLTS, SEE SPECIAL PROVISIONS.

BEARING STIFFENERS ARE TO BE PLACED NORMAL TO THE WEB OF THE GIRDER AND SHALL BE PLUMB.

SHOP SPLICES ARE PERMITTED TO LIMIT THE MAXIMUM REQUIRED FLANGE PIECE LENGTHS TO 60 FEET AND WEB PIECE LENGTHS TO 45 FEET. PERMITTED FLANGE AND WEB SHOP SPLICES SHALL NOT BE LOCATED WITHIN 15 FEET OF MAXIMUM DEAD LOAD DEFLECTION (NOR WITHIN 15 FEET OF INTERMEDIATE BEARINGS OF CONTINUOUS UNITS). KEEP 2 FEET MINIMUM BETWEEN WEB AND FLANGE SHOP SPLICES. KEEP 6" MINIMUM BETWEEN CONNECTOR PLATE OR TRANSVERSE STIFFENER WELDS AND WEB OR FLANGE SHOP SPLICES.

STUDS ON GIRDERS MAY BE SHIFTED UP TO 1" IF NECESSARY TO CLEAR FLANGE SPLICE WELD.

TENSION ON THE AASHTO M164 BOLTS SHALL BE CALIBRATED USING DIRECT TENSION INDICATOR WASHERS IN ACCORDANCE WITH ARTICLE 440-8 OF THE STANDARD SPECIFICATIONS.

END OF GIRDERS SHALL BE PLUMB.

BEARING STIFFENER MAY REQUIRE COPING IF WIDER THAN BOTTOM FLANGE TO AVOID INTERFERENCE WITH THE ANCHOR BOLT.

HEAT CURVING OF STEEL GIRDERS IS ALLOWED. SEE SPECIAL PROVISIONS.

FOR SHIPPING STEEL STRUCTURAL MEMBERS, SEE SPECIAL PROVISIONS.

THE CONTRACTOR SHALL MAINTAIN STABILITY OF THE CURVED GIRDERS UNTIL ALL BOLTED FIELD SPLICES AND DIAPHRAGM CONNECTIONS HAVE BEEN COMPLETED.

PROJECT NO. R-2719A

LENOIR COUNTY

STATION: 85+98.30 -L-

SHEET 2 OF 5

STATE OF NORTH CAROLINA
DEPARTMENT OF TRANSPORTATION
RALEIGH

SUPERSTRUCTURE
STRUCTURAL STEEL DETAILS
(RIGHT LANE)

NORTH CAROLINA PROFESSIONAL SEAL 14045 ENGINEER TIMOTHY L. COGGINS
4/14/09

REVISIONS						SHEET NO.
NO.	BY:	DATE:	NO.	BY:	DATE:	S-90
1			3			TOTAL SHEETS
2			4			340

DRAWN BY : T.L. AVERETTE DATE : 07-08
CHECKED BY : B.N. BARODAWALA DATE : 08-08

14-APR-2009 07:16
g:\tlpprojects-r\r2719a\structures\str#3\finalplans\R2719A_sd_SS_03.dgn

STR. #3

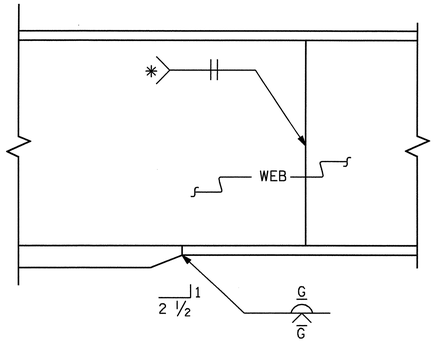

* GRIND SMOOTH AND FLUSH ON OUTER FACE OF EXTERIOR GIRDERS

ELEVATION

TYPICAL FLANGE AND WEB BUTT JOINT

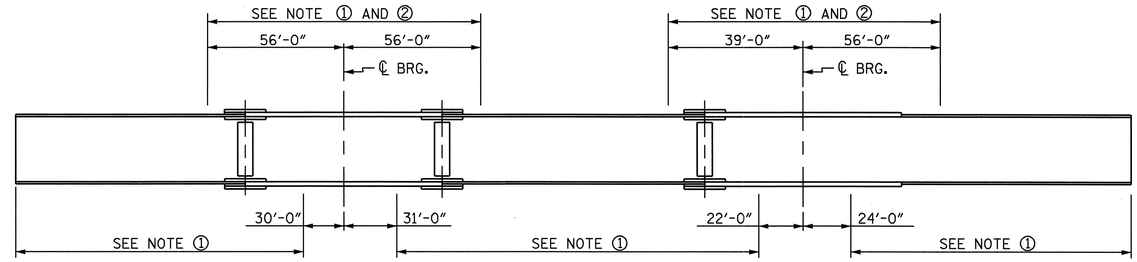

GIRDER MAKE UP

NOTE ① : CHARPY V-NOTCH TESTS ARE REQUIRED FOR TOP OR BOTTOM FLANGE PLATES WHICH FALL WITHIN THESE LIMITS. ALSO, CHARPY V-NOTCH TESTS WILL BE REQUIRED FOR ALL WEB PLATES, WEB SPLICE PLATES, FLANGE SPLICE PLATES, AND ALL MEMBERS IN THE DIAPHRAGMS. IF A PERMITTED SHOP FLANGE SPLICE IS NOT USED, CHARPY V-NOTCH TESTS WILL BE REQUIRED FOR THE ENTIRE FLANGE PLATE. FOR CHARPY V-NOTCH TESTS, SEE ARTICLE 1072-9 OF THE STANDARD SPECIFICATIONS.

NOTE ② : NO WELDING OF FORMS OR FALSEWORK TO THE TOP FLANGE WILL BE PERMITTED IN THIS REGION.

CHARPY V-NOTCH TESTS FOR CONTINUOUS PLATE GIRDERS

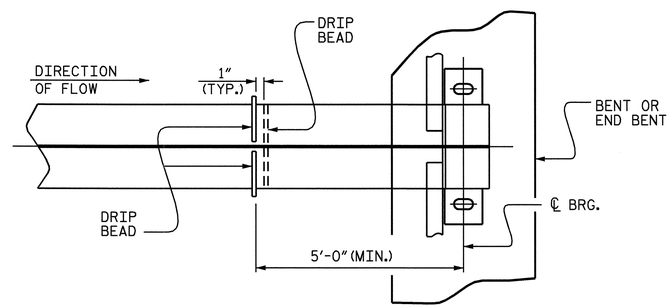

PART PLAN - BOTTOM FLANGE

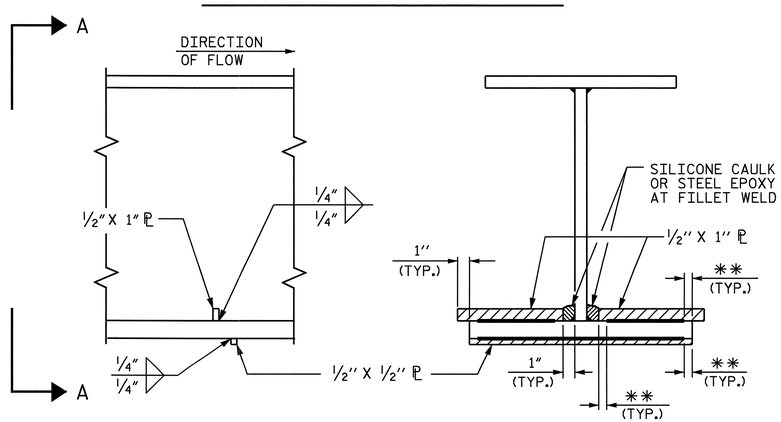

SECTION

VIEW A-A

**SEE "WELD TERMINATION DETAILS"

DRIP BEAD DETAILS

PROJECT NO. R-2719A

LENOIR COUNTY

STATION: 85+98.30 -L-

SHEET 3 OF 5

STATE OF NORTH CAROLINA
DEPARTMENT OF TRANSPORTATION
RALEIGH

SUPERSTRUCTURE
STRUCTURAL STEEL DETAILS
(RIGHT LANE)

NORTH CAROLINA PROFESSIONAL SEAL 14045 ENGINEER TIMOTHY A. COGGINS

4/14/09

REVISIONS						SHEET NO.
NO.	BY:	DATE:	NO.	BY:	DATE:	S-91
1			3			TOTAL SHEETS
2			4			340

DRAWN BY : T.L. AVERETTE DATE : 07-08
CHECKED BY : B.N. BARODAWALA DATE : 08-08

14-APR-2009 07:14
g:\tlpprojects-r\r2719a\structures\str#3\finalplans\R2719A_sd_SS_03.dgn
taverette

STR. #3

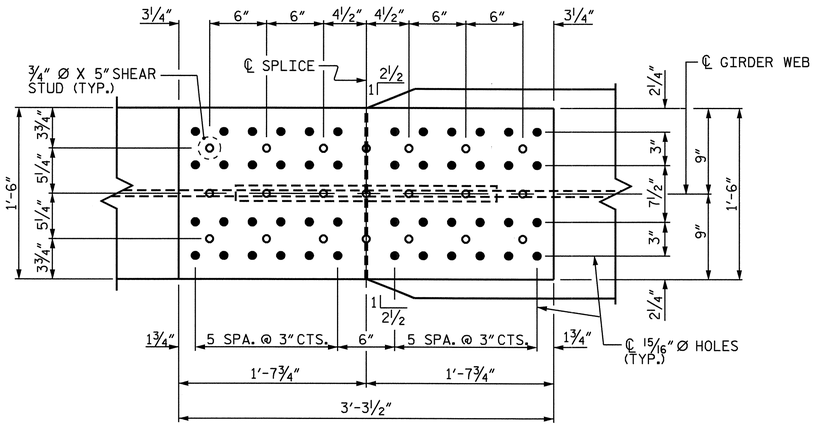

PLAN (TOP OF TOP FLANGE)

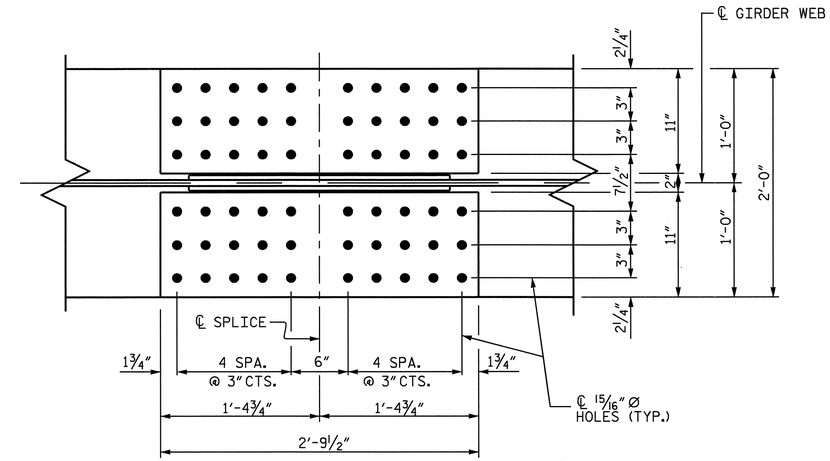

PLAN (TOP OF BOTTOM FLANGE)

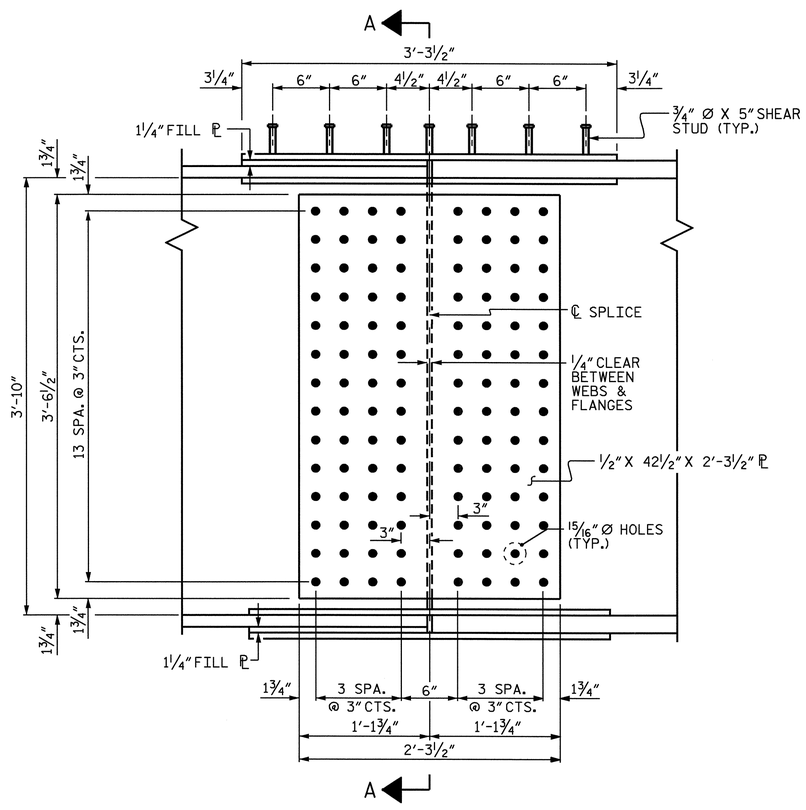

ELEVATION

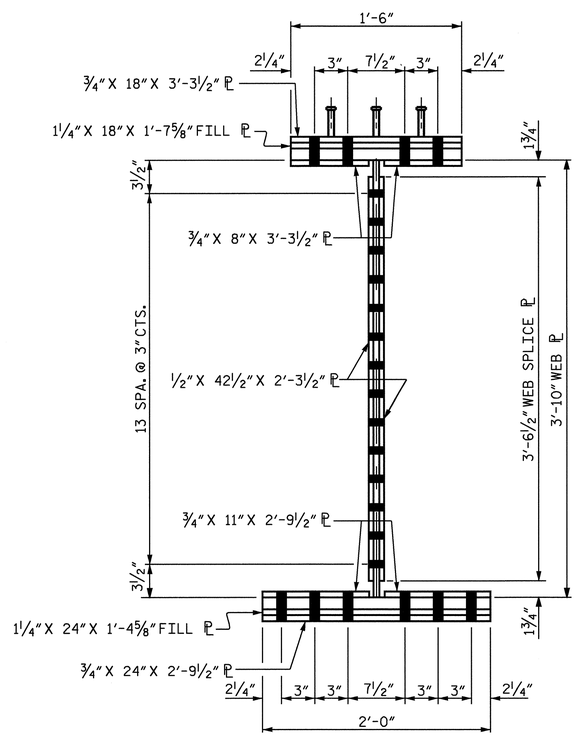

SECTION A-A

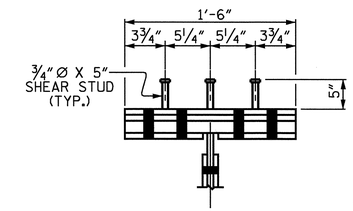

SHEAR STUD DETAIL FOR TOP FLANGE SPLICE PLATE

PROJECT NO. R-2719A

LENOIR COUNTY

STATION: 85+98.30 -L-

SHEET 4 OF 5

STATE OF NORTH CAROLINA
DEPARTMENT OF TRANSPORTATION
RALEIGH

SUPERSTRUCTURE

STRUCTURAL STEEL BOLTED FIELD SPLICE #1 DETAILS (RIGHT LANE)

NORTH CAROLINA PROFESSIONAL SEAL 14045 ENGINEER TIMOTHY L. COGGINS

4/14/09

REVISIONS						SHEET NO.
NO.	BY:	DATE:	NO.	BY:	DATE:	S-92
1			3			TOTAL SHEETS
2			4			340

DRAWN BY : T.L. AVERETTE DATE : 07-08
CHECKED BY : B.N. BARODAWALA DATE : 08-08

BOLTED FIELD SPLICE DETAILS

14-APR-2009 07:13
gi\tlpprojects-r\r2719a\structures\str#3\finalplans\R2719A_sd_SS_03.dgn
taverette

STR. #3

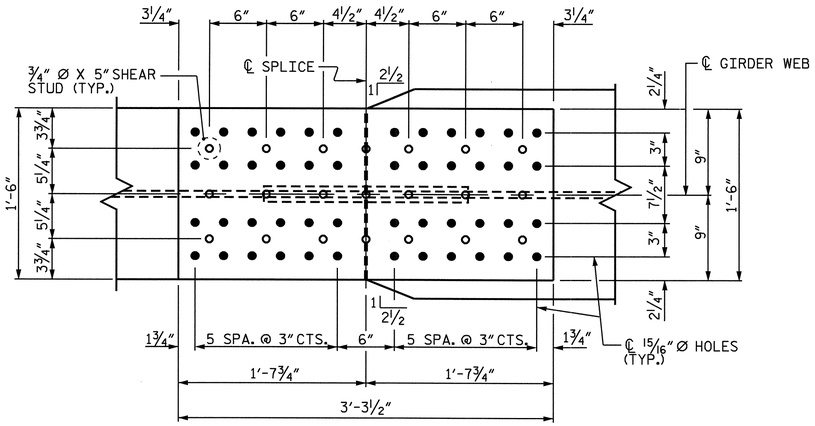

PLAN (TOP OF TOP FLANGE)

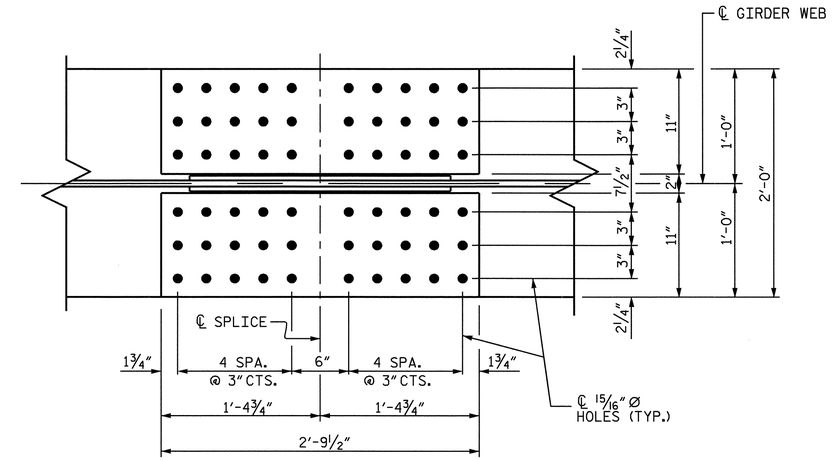

PLAN (TOP OF BOTTOM FLANGE)

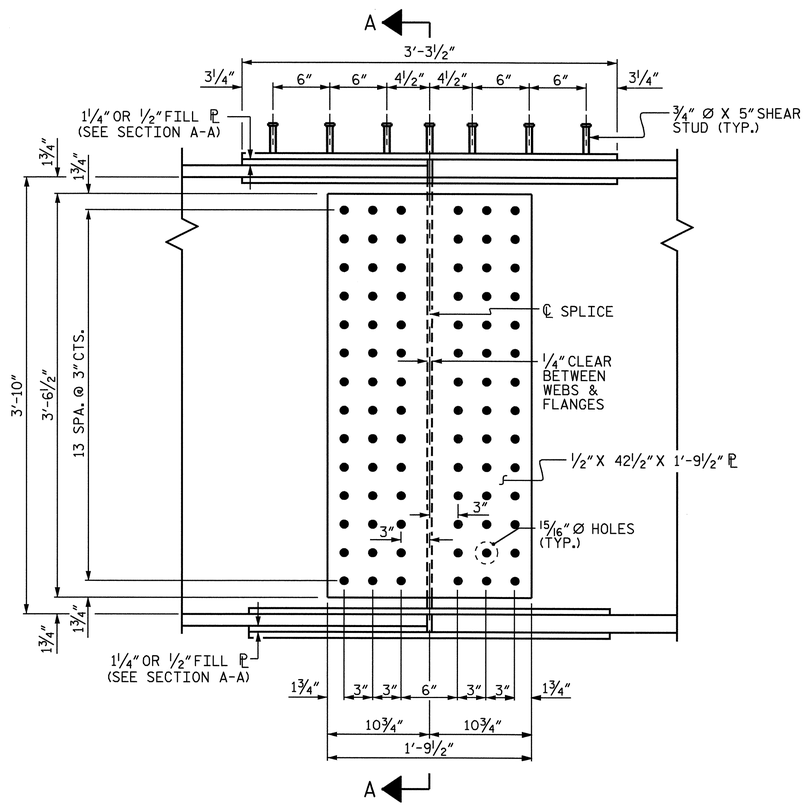

ELEVATION

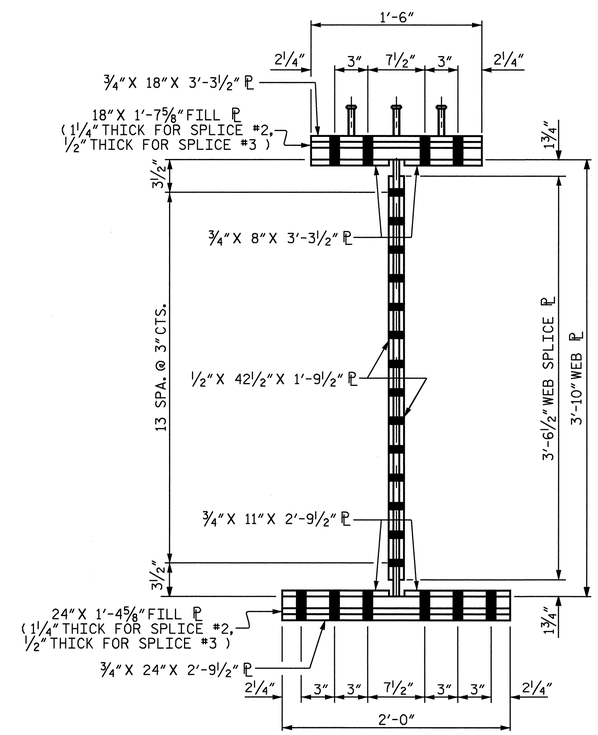

SECTION A-A

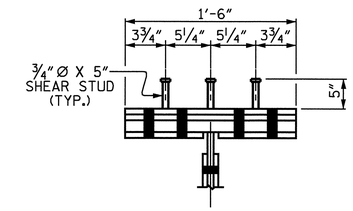

SHEAR STUD DETAIL FOR TOP FLANGE SPLICE PLATE

PROJECT NO. R-2719A

LENOIR COUNTY

STATION: 85+98.30 -L-

SHEET 5 OF 5

STATE OF NORTH CAROLINA
DEPARTMENT OF TRANSPORTATION
RALEIGH

SUPERSTRUCTURE

STRUCTURAL STEEL BOLTED FIELD SPLICE #2 & #3 DETAILS

(RIGHT LANE)

NORTH CAROLINA PROFESSIONAL SEAL 14045 ENGINEER TIMOTHY L. COGGINS

4/14/09

REVISIONS						SHEET NO.
NO.	BY:	DATE:	NO.	BY:	DATE:	S-93
1			3			TOTAL SHEETS
2			4			340

DRAWN BY : T.L. AVERETTE DATE : 07-08
CHECKED BY : B.N. BARODAWALA DATE : 08-08

BOLTED FIELD SPLICE DETAILS

14-APR-2009 07:13
gi\tippr0jects-r\r2719a\structures\str#3\final plans\R2719A_sd_SS_03.dgn
taverette

STR. #3

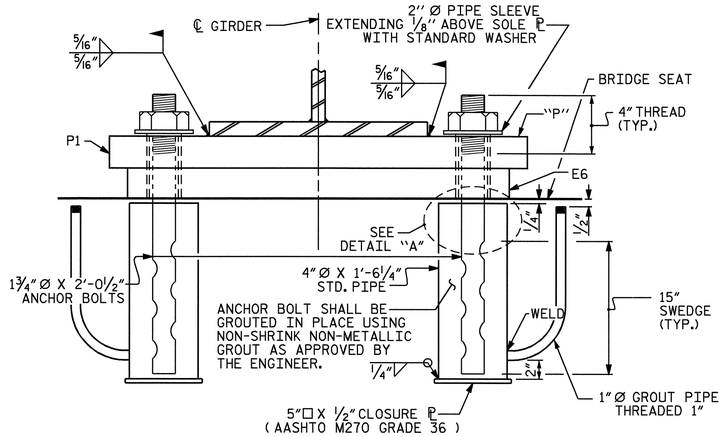

EXPANSION

END VIEW

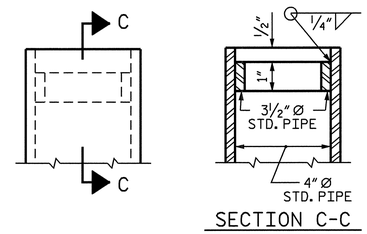

SECTION C-C

DETAIL "A"

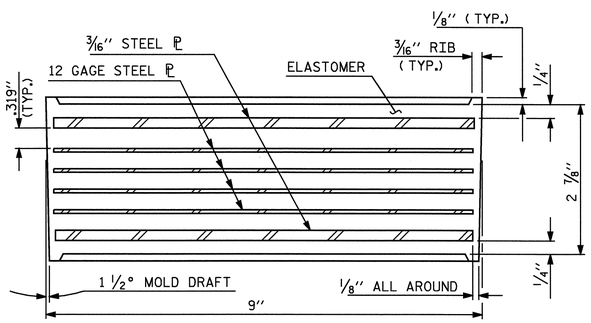

TYPICAL SECTION OF ELASTOMERIC BEARINGS

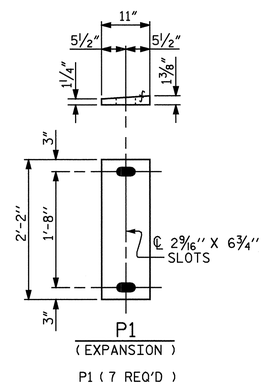

SOLE PLATE DETAILS ("P")

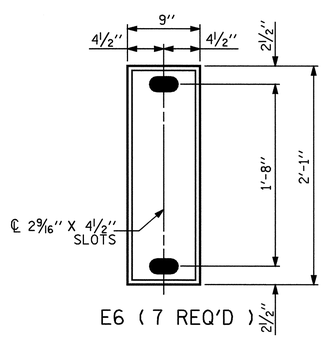

PLAN VIEW OF ELASTOMERIC BEARING

TYPE III

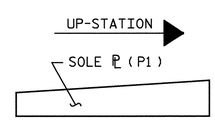

SOLE ℙ PLACEMENT DETAIL

NOTES

THE 2" Ø PIPE SLEEVE SHALL BE CUT FROM SCHEDULE 40 PVC PLASTIC PIPE. THE PVC PLASTIC PIPE SHALL MEET THE REQUIREMENTS OF ASTM D1785.

THE PAYMENT FOR THE PIPE SLEEVES SHALL BE INCLUDED IN THE SEVERAL PAY ITEMS.

FOR AASHTO M270 GRADE 50W STRUCTURAL STEEL, SOLE PLATE SHALL BE AASHTO M270 GRADE 50W AND SHALL NOT BE GALVANIZED. ANCHOR BOLTS, NUTS AND WASHERS SHALL BE GALVANIZED IN ACCORDANCE WITH THE STANDARD SPECIFICATIONS.

ANCHOR BOLTS SHALL MEET THE REQUIREMENTS OF ASTM A449. NUTS SHALL MEET THE REQUIREMENTS OF AASHTO M291-DH OR AASHTO M292-2H. WASHERS SHALL MEET THE REQUIREMENTS OF AASHTO M293. SHOP DRAWINGS ARE NOT REQUIRED FOR ANCHOR BOLTS, NUTS AND WASHERS. SHOP INSPECTION IS REQUIRED.

WHEN FIELD WELDING THE SOLE PLATE TO THE GIRDER FLANGE, USE TEMPERATURE INDICATING WAX PENS, OR OTHER SUITABLE MEANS, TO ENSURE THAT THE TEMPERATURE OF THE SOLE PLATE DOES NOT EXCEED 300°F. TEMPERATURES ABOVE THIS MAY DAMAGE THE ELASTOMER.

ALL SURFACES OF BEARING PLATES SHALL BE SMOOTH AND STRAIGHT.

THE CLOSURE PLATE, GROUT PIPE AND STANDARD PIPE FOR THE EXPANSION ASSEMBLY NEED NOT BE GALVANIZED.

THE CONTRACTOR'S ATTENTION IS CALLED TO THE FOLLOWING PROCEDURE, WHICH MAY BE REQUIRED BY THE ENGINEER, TO RESET ELASTOMERIC BEARINGS DUE TO GIRDER TRANSLATION AND END ROTATION:

1. ONCE THE DECK HAS CURED, THE GIRDERS SHALL BE JACKED THEN THE ANCHOR BOLTS AND ELASTOMERIC BEARING SLOTS CENTERED AS NEARLY AS PRACTICAL ABOUT THE BEARING STIFFENER. THIS OPERATION SHALL BE PERFORMED AT APPROXIMATELY 60° F.

2. AFTER CENTERING THE ELASTOMERIC BEARING SLOTS AND ANCHOR BOLTS, THE ANCHOR BOLTS SHALL BE GROUTED.

   THE CONTRACTOR MAY PROPOSE ALTERNATE METHODS, PROVIDED DETAILS ARE SUBMITTED TO THE ENGINEER FOR REVIEW AND APPROVAL.

LOAD RATINGS	
	MAX.D.L.+L.L.
TYPE III	144 K

PROJECT NO. R-2719A
LENOIR COUNTY
STATION: 85+98.30 -L-

STATE OF NORTH CAROLINA
DEPARTMENT OF TRANSPORTATION
RALEIGH

STANDARD
ELASTOMERIC BEARING DETAILS
(STEEL SUPERSTRUCTURE)
(RIGHT LANE)

NORTH CAROLINA PROFESSIONAL SEAL 14045 ENGINEER TIMOTHY L. COGGINS
4/14/09

REVISIONS						SHEET NO.
NO.	BY:	DATE:	NO.	BY:	DATE:	S-94
1			3			TOTAL SHEETS
2			4			340

ASSEMBLED BY : T.L. AVERETTE	DATE : 07-08	
CHECKED BY : B.N. BARODAWALA	DATE : 08-08	
DRAWN BY : JMB 11/87	REV. 8/16/99	MAB/LES
CHECKED BY : ARB 11/87	REV. 10/17/00	RWW/LES
	REV. 5/1/06	TLA/GM

14-APR-2009 07:12
g:\tlpprojects-r\r2719a\structures\str#3\finalplans\R2719A_sd_BG_03.dgn
taverette

STR. #3 STD. NO. EB1

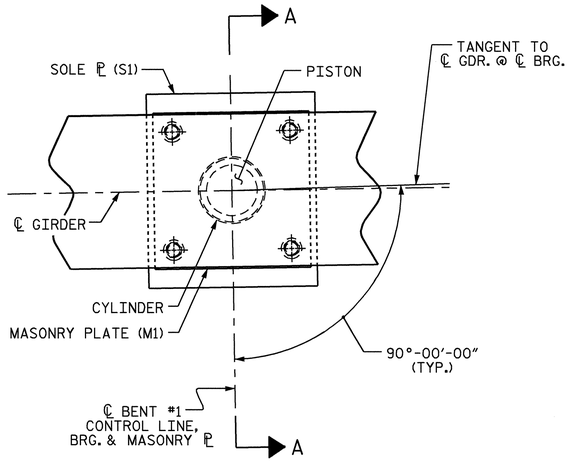

PLAN @ BENT #1

PB1, FIXED

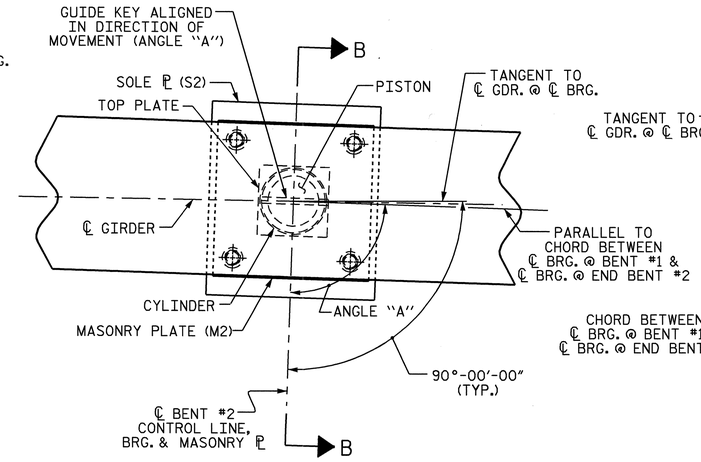

PLAN @ BENT #2

PB2, EXP.

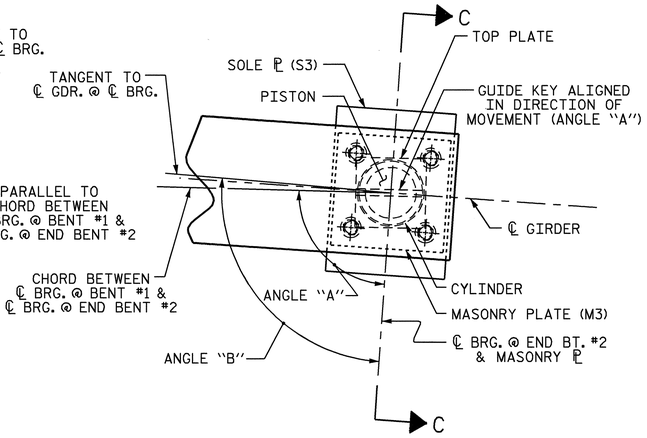

PLAN @ END BENT #2

PB3, EXP.

NOTES

FOR POT BEARINGS, SEE SPECIAL PROVISIONS.

AT ALL POINTS OF SUPPORT IN SPANS "B" AND "C", NUTS FOR ANCHOR BOLTS SHALL BE TIGHTENED FINGER TIGHT AND GIVEN AN ADDITIONAL 1/4 TURN. THE THREAD OF THE NUT AND BOLT SHALL THEN BE BURRED WITH A SHARP POINTED TOOL.

WHEN WELDING THE SOLE PLATE TO THE GIRDER, USE TEMPERATURE INDICATING WAX PENS, OR OTHER SUITABLE MEANS, TO ENSURE THAT THE TEMPERATURE OF THE BEARING DOES NOT EXCEED 250°F TEMPERATURES ABOVE THIS MAY DAMAGE THE TFE OR ELASTOMER.

AFTER BEARING ASSEMBLY IS IN PLACE AND ANCHOR BOLTS HAVE BEEN FINALLY POSITIONED. THEY SHALL BE GROUTED IN PLACE AS SHOWN.

THE CLOSURE PLATE, GROUT PIPE AND STANDARD PIPE FOR THIS ASSEMBLY NEED NOT BE GALVANIZED.

SOLE PLATES SHOULD BE WELDED TO BEAM FLANGES AND ANCHOR BOLTS SHOULD BE GROUTED BEFORE FALSEWORK IS PLACED.

ALL SURFACES OF BEARING PLATES SHALL BE SMOOTH AND STRAIGHT.

FOR THERMAL SPRAYED COATINGS (METALLIZATION), SEE SPECIAL PROVISIONS.

THE CONTRACTOR MAY SUBSTITUTE DISC BEARINGS FOR THE POT BEARINGS SHOWN. FOR OPTIONAL DISC BEARINGS, SEE SPECIAL PROVISIONS.

THE CONTRACTOR SHALL ADJUST THE GIRDER BUILDUPS AS NECESSARY TO INCORPORATE A MAXIMUM PERMISSIBLE VARIATION IN POT BEARING DEPTH OF 1/2″. SEE SPECIAL PROVISION FOR POT BEARINGS.

POT BEARING DETAILS

FOR SECTIONS A-A, B-B, C-C AND ADDITIONAL DETAILS, SEE SHEET 2 OF 2.
FOR ANGLES "A" AND "B," SEE TABLE BELOW.

POT BEARING ANGLES			
BEARING LOCATION		CHORD ANGLE "A"	ANGLE "B"
BENT	GIRDER		
BENT #2	1	90°-32′-38″	-
	2	90°-32′-38″	-
	3	90°-32′-38″	-
	4	90°-32′-39″	-
	5	90°-32′-39″	-
	6	90°-32′-39″	-
	7	90°-32′-39″	-
END BENT #2	1	87°-41′-26″	89°-57′-56″
	2	87°-41′-26″	89°-57′-56″
	3	87°-41′-26″	89°-57′-55″
	4	87°-41′-25″	89°-57′-55″
	5	87°-41′-25″	89°-57′-55″
	6	87°-41′-25″	89°-57′-55″
	7	87°-41′-25″	89°-57′-54″

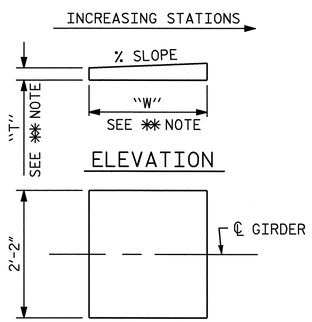

✱✱ NOTE:
DIMENSIONS "W" AND "T" ARE TO BE DETERMINED BY THE MANUFACTURER.

SOLE PLATE DETAILS

SOLE PLATE DIMENSIONS			
MARK	LOCATION	No.	% SLOPE
S1	BENT #1	7	0.58
S2	BENT #2	7	-0.10 (NEGLIGIBLE)
S3	END BENT #2	7	-0.51

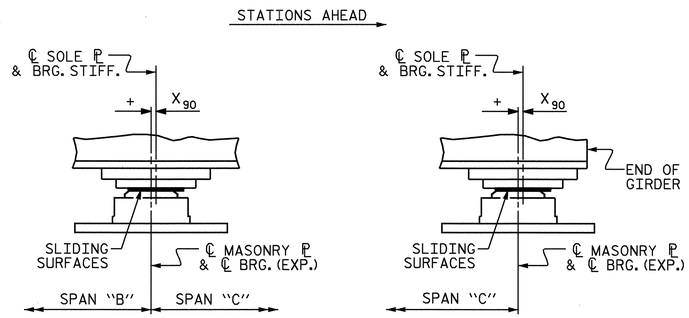

BENT #2 END BENT #2

TEMPERATURE AND ROTATION SETTING DETAILS

(TEMPERATURE SETTING FOR 90° IS SHOWN)

TABLE FOR PLATE SETTING DATA

(EXPANSION POT BEARINGS)

TEMPERATURE AT TIME OF SETTING	30° F	60° F	90° F	✱
BENT #2	-7/16″	0	+7/16″	0
END BENT #2	-11/16″	0	+11/16″	- 1/16″

✱ CORRECTION FOR END ROTATION DUE TO WEIGHT OF SLAB AND COMPOSITE DEAD LOAD.

TABLE FOR LOADS AND MOVEMENTS

BEARING	LOCATION	VERTICAL LOAD (KIPS)			LATERAL LOAD (KIPS)	TOTAL MOVEMENT (INCHES)
		DEAD	LIVE	TOTAL		
PB1 (FIXED)	BENT #1	316.1	111.3	427.4	63.2	0
PB2 (EXP.)	BENT #2	250.3	100.0	350.3	50.1	1 3/4″
PB3 (EXP.)	END BENT #2	55.3	52.3	107.6	11.1	2 13/16″

PROJECT NO. R-2719A
LENOIR COUNTY
STATION: 85+98.30 -L-

SHEET 1 OF 2

STATE OF NORTH CAROLINA
DEPARTMENT OF TRANSPORTATION
RALEIGH

SUPERSTRUCTURE
POT BEARING DETAILS
(RIGHT LANE)

NORTH CAROLINA PROFESSIONAL SEAL 14045 ENGINEER TIMOTHY L. COGGINS
4/22/09

REVISIONS						SHEET NO.
NO.	BY:	DATE:	NO.	BY:	DATE:	S-95
1			3			TOTAL SHEETS
2			4			340

ASSEMBLED BY : T.L. AVERETTE DATE : 07-08
CHECKED BY : B.N. BARODAWALA DATE : 08-08

DRAWN BY : RWW 8/99
CHECKED BY : LES 8/99

REV. 7/10/01 LES/RDR
REV. 5/7/03 RWW/JTE
REV. 5/1/06 TLA/GM

22-APR-2009 11:17
z:\structures\str#3\finalplans\r2719a_sd_bg_03.dgn
tcoggins

STR. #3

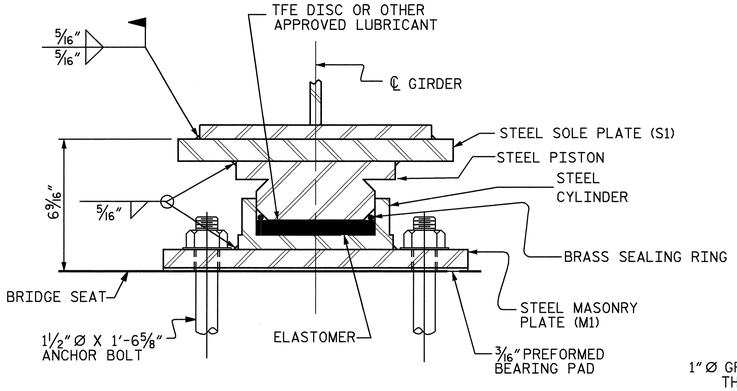

SECTION A-A

PB1, FIXED
(7 REQ'D. @ BENT #1)

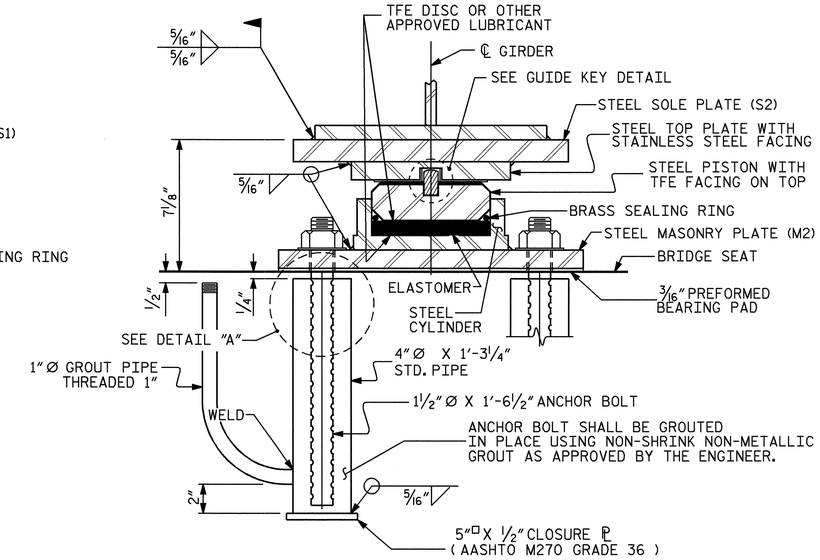

SECTION B-B

PB2, EXP.
(7 REQ'D. @ BENT #2)

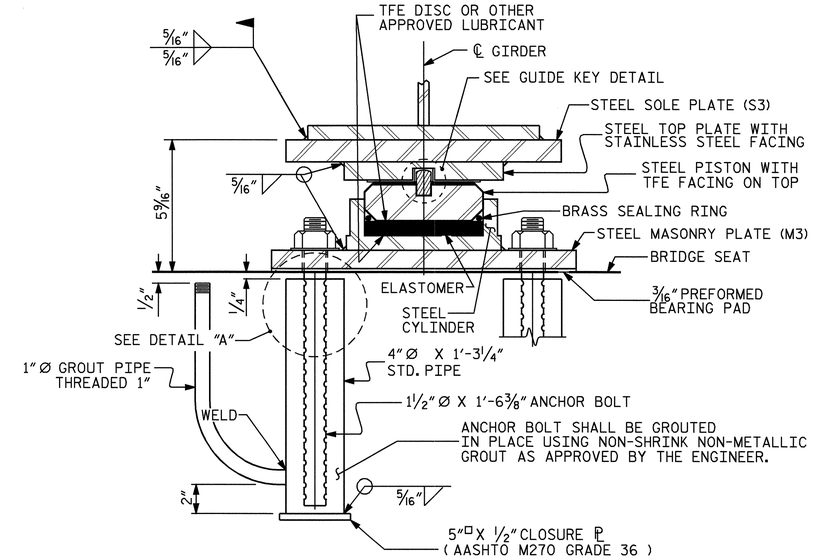

SECTION C-C

PB3, EXP.
(7 REQ'D. @ END BENT #2)

POT BEARING DETAILS

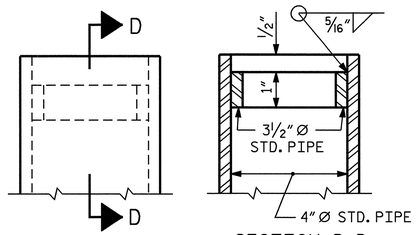

SECTION D-D

DETAIL "A"

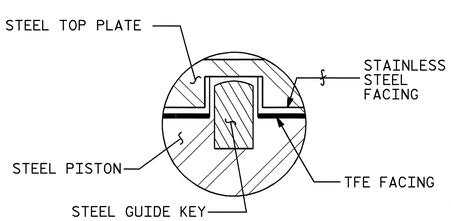

GUIDE KEY DETAIL

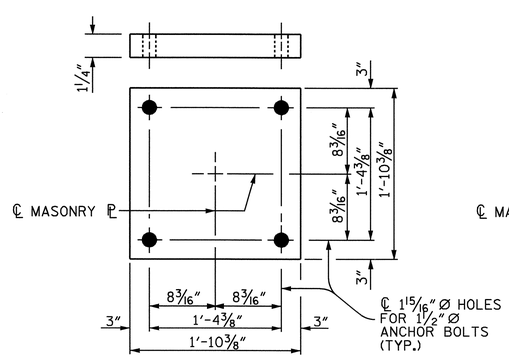

PLAN
M1 (7 REQ'D.)

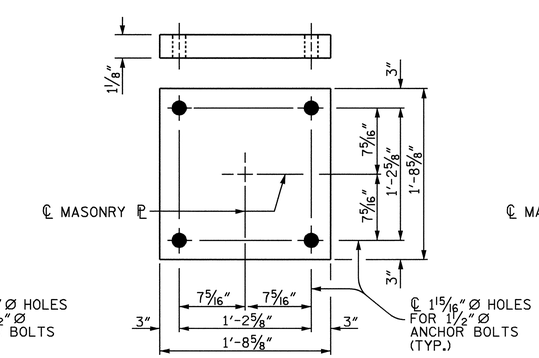

PLAN
M2 (7 REQ'D.)

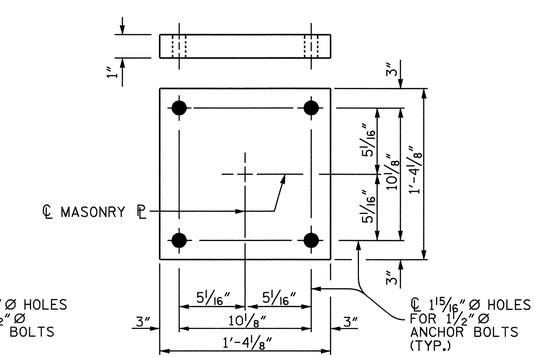

PLAN
M3 (7 REQ'D.)

MASONRY PLATE DETAILS

PROJECT NO. R-2719A
LENOIR COUNTY
STATION: 85+98.30 -L-

SHEET 2 OF 2

STATE OF NORTH CAROLINA
DEPARTMENT OF TRANSPORTATION
RALEIGH

SUPERSTRUCTURE
POT BEARING DETAILS
(RIGHT LANE)

NORTH CAROLINA PROFESSIONAL SEAL 14045 ENGINEER TIMOTHY L. COGGINS
4/14/09

REVISIONS						SHEET NO.
NO.	BY:	DATE:	NO.	BY:	DATE:	S-96
1			3			TOTAL SHEETS
2			4			340

ASSEMBLED BY : T.L. AVERETTE DATE : 07-08
CHECKED BY : B.N. BARODAWALA DATE : 08-08

14-APR-2009 07:12
gi\tlpprojects-r\r2719a\structures\str#3\final plans\R2719A_sd_BG_03.dgn
taverette

STR. #3

DEAD LOAD DEFLECTION TABLE FOR GIRDERS - SPAN "A"

	GIRDERS 1 & 2																				
@ TWENTIETH POINTS BETWEEN ℄ BEARINGS	0	.05	.10	.15	.20	.25	.30	.35	.40	.45	.50	.55	.60	.65	.70	.75	.80	.85	.90	.95	0
DEFLECTION DUE TO WEIGHT OF GIRDER	0.000	0.018	0.034	0.048	0.061	0.071	0.079	0.083	0.085	0.084	0.080	0.075	0.067	0.056	0.046	0.035	0.024	0.015	0.008	0.003	0.000
DEFLECTION DUE TO WEIGHT OF SLAB ✳	0.000	0.047	0.088	0.125	0.158	0.184	0.204	0.215	0.218	0.215	0.206	0.191	0.170	0.143	0.114	0.087	0.061	0.038	0.021	0.008	0.000
DEFLECTION DUE TO WEIGHT OF BARRIER RAIL	0.000	0.004	0.007	0.011	0.013	0.016	0.017	0.019	0.019	0.019	0.018	0.017	0.015	0.013	0.010	0.008	0.006	0.003	0.002	0.001	0.000
TOTAL DEAD LOAD DEFLECTION	0.000	0.069	0.130	0.183	0.232	0.271	0.300	0.316	0.321	0.317	0.304	0.282	0.252	0.212	0.170	0.129	0.091	0.056	0.031	0.012	0.000
VERTICAL CURVE ORDINATE	0.000	0.020	0.037	0.053	0.067	0.078	0.087	0.095	0.100	0.103	0.104	0.103	0.100	0.095	0.087	0.078	0.067	0.053	0.037	0.020	0.000
ORDINATE DUE TO SUPERELEVATION	0.000	0.000	0.000	0.000	0.000	0.000	0.000	0.000	0.000	0.000	0.000	0.000	0.000	0.000	0.000	0.000	0.000	0.000	0.000	0.000	0.000
CAMBER FROM HEAT CURVING	0.000	0.000	0.000	0.000	0.000	0.000	0.000	0.000	0.000	0.000	0.000	0.000	0.000	0.000	0.000	0.000	0.000	0.000	0.000	0.000	0.000
REQUIRED CAMBER	0	1 1/16"	2"	2 13/16"	3 9/16"	4 3/16"	4 5/8"	4 15/16"	5 1/16"	5 1/16"	4 7/8"	4 5/8"	4 3/16"	3 11/16"	3 1/16"	2 1/2"	1 7/8"	1 5/16"	13/16"	3/8"	0

✳ INCLUDES SLAB, BUILDUPS & STAY-IN-PLACE FORMS.
ALL VALUES ARE SHOWN IN FEET EXCEPT "REQUIRED CAMBER", WHICH IS GIVEN IN INCHES (FRACTION FORM).

DEAD LOAD DEFLECTION TABLE FOR GIRDERS - SPAN "A"

	GIRDERS 3 & 4																				
@ TWENTIETH POINTS BETWEEN ℄ BEARINGS	0	.05	.10	.15	.20	.25	.30	.35	.40	.45	.50	.55	.60	.65	.70	.75	.80	.85	.90	.95	0
DEFLECTION DUE TO WEIGHT OF GIRDER	0.000	0.017	0.033	0.046	0.058	0.068	0.076	0.080	0.081	0.080	0.077	0.072	0.064	0.054	0.044	0.033	0.024	0.015	0.008	0.003	0.000
DEFLECTION DUE TO WEIGHT OF SLAB ✳	0.000	0.044	0.083	0.117	0.148	0.173	0.191	0.201	0.204	0.201	0.193	0.179	0.159	0.134	0.107	0.081	0.057	0.035	0.019	0.008	0.000
DEFLECTION DUE TO WEIGHT OF BARRIER RAIL	0.000	0.004	0.007	0.010	0.013	0.015	0.017	0.018	0.018	0.018	0.017	0.016	0.015	0.012	0.010	0.008	0.005	0.003	0.002	0.001	0.000
TOTAL DEAD LOAD DEFLECTION	0.000	0.065	0.123	0.173	0.219	0.256	0.283	0.299	0.304	0.300	0.288	0.267	0.238	0.201	0.161	0.122	0.086	0.053	0.029	0.012	0.000
VERTICAL CURVE ORDINATE	0.000	0.020	0.037	0.053	0.067	0.078	0.087	0.095	0.100	0.103	0.104	0.103	0.100	0.095	0.087	0.078	0.067	0.053	0.037	0.020	0.000
ORDINATE DUE TO SUPERELEVATION	0.000	0.000	0.000	0.000	0.000	0.000	0.000	0.000	0.000	0.000	0.000	0.000	0.000	0.000	0.000	0.000	0.000	0.000	0.000	0.000	0.000
CAMBER FROM HEAT CURVING	0.000	0.000	0.000	0.000	0.000	0.000	0.000	0.000	0.000	0.000	0.000	0.000	0.000	0.000	0.000	0.000	0.000	0.000	0.000	0.000	0.000
REQUIRED CAMBER	0	1"	1 15/16"	2 11/16"	3 7/16"	4"	4 7/16"	4 3/4"	4 13/16"	4 13/16"	4 11/16"	4 7/16"	4 1/16"	3 9/16"	3"	2 3/8"	1 13/16"	1 1/4"	13/16"	3/8"	0

✳ INCLUDES SLAB, BUILDUPS & STAY-IN-PLACE FORMS.
ALL VALUES ARE SHOWN IN FEET EXCEPT "REQUIRED CAMBER", WHICH IS GIVEN IN INCHES (FRACTION FORM).

DEAD LOAD DEFLECTION TABLE FOR GIRDERS - SPAN "A"

	GIRDERS 5, 6 & 7																				
@ TWENTIETH POINTS BETWEEN ℄ BEARINGS	0	.05	.10	.15	.20	.25	.30	.35	.40	.45	.50	.55	.60	.65	.70	.75	.80	.85	.90	.95	0
DEFLECTION DUE TO WEIGHT OF GIRDER	0.000	0.016	0.031	0.044	0.055	0.065	0.072	0.076	0.077	0.076	0.073	0.068	0.061	0.051	0.041	0.031	0.022	0.014	0.007	0.003	0.000
DEFLECTION DUE TO WEIGHT OF SLAB ✳	0.000	0.041	0.078	0.110	0.139	0.162	0.179	0.189	0.192	0.189	0.181	0.168	0.150	0.126	0.101	0.076	0.054	0.033	0.018	0.007	0.000
DEFLECTION DUE TO WEIGHT OF BARRIER RAIL	0.000	0.004	0.007	0.010	0.012	0.014	0.016	0.017	0.017	0.017	0.017	0.015	0.014	0.012	0.010	0.007	0.005	0.003	0.002	0.001	0.000
TOTAL DEAD LOAD DEFLECTION	0.000	0.061	0.115	0.163	0.206	0.241	0.267	0.282	0.286	0.282	0.271	0.252	0.224	0.189	0.152	0.115	0.081	0.050	0.027	0.011	0.000
VERTICAL CURVE ORDINATE	0.000	0.020	0.037	0.053	0.067	0.078	0.087	0.095	0.100	0.103	0.104	0.103	0.100	0.095	0.087	0.078	0.067	0.053	0.037	0.020	0.000
ORDINATE DUE TO SUPERELEVATION	0.000	0.000	0.000	0.000	0.000	0.000	0.000	0.000	0.000	0.000	0.000	0.000	0.000	0.000	0.000	0.000	0.000	0.000	0.000	0.000	0.000
CAMBER FROM HEAT CURVING	0.000	0.000	0.000	0.000	0.000	0.000	0.000	0.000	0.000	0.000	0.000	0.000	0.000	0.000	0.000	0.000	0.000	0.000	0.000	0.000	0.000
REQUIRED CAMBER	0	1"	1 13/16"	2 9/16"	3 1/4"	3 13/16"	4 1/4"	4 1/2"	4 5/8"	4 5/8"	4 1/2"	4 1/4"	3 7/8"	3 3/8"	2 7/8"	2 5/16"	1 3/4"	1 1/4"	3/4"	3/8"	0

✳ INCLUDES SLAB, BUILDUPS & STAY-IN-PLACE FORMS.
ALL VALUES ARE SHOWN IN FEET EXCEPT "REQUIRED CAMBER", WHICH IS GIVEN IN INCHES (FRACTION FORM).

PROJECT NO. R-2719A
LENOIR COUNTY
STATION: 85+98.30 -L-

SHEET 1 OF 3

STATE OF NORTH CAROLINA
DEPARTMENT OF TRANSPORTATION
RALEIGH

SUPERSTRUCTURE
DEAD LOAD DEFLECTIONS SPAN "A"
(RIGHT LANE)

NORTH CAROLINA PROFESSIONAL SEAL 14045 ENGINEER TIMOTHY L. COGGINS
10/13/08

REVISIONS						SHEET NO.
NO.	BY:	DATE:	NO.	BY:	DATE:	S-97
1			3			TOTAL SHEETS
2			4			340

DRAWN BY : T.L. AVERETTE DATE : 08-08
CHECKED BY : B.N. BARODAWALA DATE : 08-08

DEAD LOAD DEFLECTION TABLE FOR GIRDERS - SPAN "B"

	GIRDERS 1 & 2																				
@ TWENTIETH POINTS BETWEEN ℄ BEARINGS	0	.05	.10	.15	.20	.25	.30	.35	.40	.45	.50	.55	.60	.65	.70	.75	.80	.85	.90	.95	0
DEFLECTION DUE TO WEIGHT OF GIRDER	0.000	0.004	0.011	0.020	0.032	0.045	0.058	0.071	0.080	0.087	0.091	0.091	0.089	0.082	0.072	0.061	0.047	0.033	0.020	0.009	0.000
DEFLECTION DUE TO WEIGHT OF SLAB ✳	0.000	0.009	0.024	0.047	0.076	0.109	0.142	0.174	0.199	0.216	0.226	0.229	0.222	0.206	0.181	0.151	0.117	0.081	0.049	0.022	0.000
DEFLECTION DUE TO WEIGHT OF BARRIER RAIL	0.000	0.001	0.003	0.006	0.009	0.013	0.016	0.019	0.021	0.023	0.024	0.024	0.023	0.021	0.019	0.016	0.013	0.009	0.005	0.002	0.000
TOTAL DEAD LOAD DEFLECTION	0.000	0.014	0.038	0.073	0.117	0.166	0.216	0.264	0.301	0.326	0.340	0.344	0.334	0.310	0.273	0.228	0.177	0.122	0.074	0.033	0.000
VERTICAL CURVE ORDINATE	0.000	0.028	0.053	0.074	0.093	0.110	0.123	0.133	0.140	0.145	0.146	0.145	0.140	0.133	0.123	0.110	0.093	0.074	0.053	0.028	0.000
ORDINATE DUE TO SUPERELEVATION	0.000	0.000	0.000	0.000	0.000	0.000	0.000	0.000	0.000	0.000	0.000	0.000	0.000	0.000	0.000	0.000	0.000	0.000	0.000	0.000	0.000
CAMBER FROM HEAT CURVING	0.000	0.000	0.000	0.000	0.000	0.000	0.000	0.000	0.000	0.000	0.000	0.000	0.000	0.000	0.000	0.000	0.000	0.000	0.000	0.000	0.000
REQUIRED CAMBER	0	1/2"	1 1/16"	1 3/4"	2 1/2"	3 5/16"	4 1/16"	4 3/4"	5 5/16"	5 5/8"	5 13/16"	5 7/8"	5 11/16"	5 5/16"	4 3/4"	4 1/16"	3 1/4"	2 3/8"	1 1/2"	3/4"	0

✳ INCLUDES SLAB, BUILDUPS & STAY-IN-PLACE FORMS.
ALL VALUES ARE SHOWN IN FEET EXCEPT " REQUIRED CAMBER ", WHICH IS GIVEN IN INCHES (FRACTION FORM).

DEAD LOAD DEFLECTION TABLE FOR GIRDERS - SPAN "B"

	GIRDERS 3 & 4																				
@ TWENTIETH POINTS BETWEEN ℄ BEARINGS	0	.05	.10	.15	.20	.25	.30	.35	.40	.45	.50	.55	.60	.65	.70	.75	.80	.85	.90	.95	0
DEFLECTION DUE TO WEIGHT OF GIRDER	0.000	0.004	0.010	0.020	0.031	0.044	0.057	0.069	0.078	0.085	0.088	0.089	0.086	0.080	0.070	0.059	0.046	0.032	0.019	0.009	0.000
DEFLECTION DUE TO WEIGHT OF SLAB ✳	0.000	0.009	0.023	0.045	0.073	0.103	0.135	0.165	0.189	0.205	0.214	0.216	0.210	0.195	0.171	0.143	0.111	0.076	0.046	0.021	0.000
DEFLECTION DUE TO WEIGHT OF BARRIER RAIL	0.000	0.001	0.003	0.006	0.009	0.012	0.015	0.018	0.020	0.022	0.023	0.023	0.022	0.021	0.018	0.015	0.012	0.008	0.005	0.002	0.000
TOTAL DEAD LOAD DEFLECTION	0.000	0.014	0.037	0.070	0.113	0.159	0.207	0.253	0.287	0.311	0.325	0.328	0.318	0.295	0.260	0.217	0.169	0.116	0.071	0.032	0.000
VERTICAL CURVE ORDINATE	0.000	0.028	0.053	0.074	0.093	0.110	0.123	0.133	0.140	0.145	0.146	0.145	0.140	0.133	0.123	0.110	0.093	0.074	0.053	0.028	0.000
ORDINATE DUE TO SUPERELEVATION	0.000	0.000	0.000	0.000	0.000	0.000	0.000	0.000	0.000	0.000	0.000	0.000	0.000	0.000	0.000	0.000	0.000	0.000	0.000	0.000	0.000
CAMBER FROM HEAT CURVING	0.000	0.000	0.000	0.000	0.000	0.000	0.000	0.000	0.000	0.000	0.000	0.000	0.000	0.000	0.000	0.000	0.000	0.000	0.000	0.000	0.000
REQUIRED CAMBER	0	1/2"	1 1/16"	1 3/4"	2 1/2"	3 1/4"	3 15/16"	4 5/8"	5 1/8"	5 1/2"	5 5/8"	5 11/16"	5 1/2"	5 1/8"	4 9/16"	3 15/16"	3 1/8"	2 5/16"	1 1/2"	11/16"	0

✳ INCLUDES SLAB, BUILDUPS & STAY-IN-PLACE FORMS.
ALL VALUES ARE SHOWN IN FEET EXCEPT " REQUIRED CAMBER ", WHICH IS GIVEN IN INCHES (FRACTION FORM).

DEAD LOAD DEFLECTION TABLE FOR GIRDERS - SPAN "B"

	GIRDERS 5, 6 & 7																				
@ TWENTIETH POINTS BETWEEN ℄ BEARINGS	0	.05	.10	.15	.20	.25	.30	.35	.40	.45	.50	.55	.60	.65	.70	.75	.80	.85	.90	.95	0
DEFLECTION DUE TO WEIGHT OF GIRDER	0.000	0.004	0.010	0.019	0.031	0.043	0.055	0.067	0.076	0.082	0.085	0.086	0.083	0.077	0.068	0.057	0.044	0.0301	0.019	0.008	0.000
DEFLECTION DUE TO WEIGHT OF SLAB ✳	0.000	0.008	0.023	0.043	0.070	0.099	0.129	0.157	0.179	0.195	0.203	0.205	0.199	0.185	0.162	0.135	0.104	0.072	0.044	0.020	0.000
DEFLECTION DUE TO WEIGHT OF BARRIER RAIL	0.000	0.001	0.003	0.005	0.008	0.012	0.015	0.017	0.019	0.021	0.022	0.022	0.021	0.020	0.017	0.015	0.011	0.008	0.005	0.002	0.000
TOTAL DEAD LOAD DEFLECTION	0.000	0.014	0.036	0.068	0.109	0.153	0.198	0.241	0.274	0.297	0.310	0.312	0.303	0.281	0.247	0.207	0.160	0.111	0.067	0.030	0.000
VERTICAL CURVE ORDINATE	0.000	0.028	0.053	0.074	0.093	0.110	0.123	0.133	0.140	0.145	0.146	0.145	0.140	0.133	0.123	0.110	0.093	0.074	0.053	0.028	0.000
ORDINATE DUE TO SUPERELEVATION	0.000	0.000	0.000	0.000	0.000	0.000	0.000	0.000	0.000	0.000	0.000	0.000	0.000	0.000	0.000	0.000	0.000	0.000	0.000	0.000	0.000
CAMBER FROM HEAT CURVING	0.000	0.000	0.000	0.000	0.000	0.000	0.000	0.000	0.000	0.000	0.000	0.000	0.000	0.000	0.000	0.000	0.000	0.000	0.000	0.000	0.000
REQUIRED CAMBER	0	1/2"	1 1/16"	1 11/16"	2 7/16"	3 1/8"	3 7/8"	4 1/2"	5"	5 5/16"	5 1/2"	5 1/2"	5 5/16"	4 15/16"	4 7/16"	3 13/16"	3 1/16"	2 1/4"	1 7/16"	11/16"	0

✳ INCLUDES SLAB, BUILDUPS & STAY-IN-PLACE FORMS.
ALL VALUES ARE SHOWN IN FEET EXCEPT " REQUIRED CAMBER ", WHICH IS GIVEN IN INCHES (FRACTION FORM).

NORTH CAROLINA PROFESSIONAL SEAL 14045 ENGINEER TIMOTHY W. COGGINS
10/13/08

PROJECT NO. R-2719A
LENOIR COUNTY
STATION: 85+98.30 -L-

SHEET 2 OF 3

STATE OF NORTH CAROLINA
DEPARTMENT OF TRANSPORTATION
RALEIGH

SUPERSTRUCTURE
DEAD LOAD DEFLECTIONS SPAN "B"
(RIGHT LANE)

REVISIONS						SHEET NO.
NO.	BY:	DATE:	NO.	BY:	DATE:	S-98
1			3			TOTAL SHEETS
2			4			340

DRAWN BY : T.L. AVERETTE DATE : 08-08
CHECKED BY : B.N. BARODAWALA DATE : 08-08

DEAD LOAD DEFLECTION TABLE FOR GIRDERS - SPAN "C"

	ALL GIRDERS																				
@ TWENTIETH POINTS BETWEEN ℄ BEARINGS	0	.05	.10	.15	.20	.25	.30	.35	.40	.45	.50	.55	.60	.65	.70	.75	.80	.85	.90	.95	0
DEFLECTION DUE TO WEIGHT OF GIRDER	0.000	-0.002	-0.003	-0.003	-0.003	-0.001	0.001	0.003	0.005	0.007	0.009	0.010	0.012	0.012	0.012	0.011	0.010	0.008	0.006	0.003	0.000
DEFLECTION DUE TO WEIGHT OF SLAB *	0.000	-0.004	-0.006	-0.007	-0.005	0.000	0.005	0.011	0.017	0.022	0.027	0.031	0.035	0.035	0.034	0.032	0.028	0.023	0.017	0.009	0.000
DEFLECTION DUE TO WEIGHT OF BARRIER RAIL	0.000	0.000	-0.001	-0.001	-0.001	0.000	0.000	0.001	0.002	0.002	0.002	0.003	0.003	0.003	0.003	0.003	0.002	0.002	0.001	0.001	0.000
TOTAL DEAD LOAD DEFLECTION	0.000	-0.007	-0.010	-0.011	-0.008	-0.002	0.006	0.015	0.024	0.031	0.038	0.044	0.049	0.050	0.049	0.046	0.040	0.033	0.024	0.013	0.000
VERTICAL CURVE ORDINATE	0.000	0.011	0.020	0.028	0.035	0.041	0.046	0.050	0.053	0.055	0.055	0.055	0.053	0.050	0.046	0.041	0.035	0.028	0.020	0.011	0.000
ORDINATE DUE TO SUPERELEVATION	0.000	0.000	0.000	0.000	0.000	0.000	0.000	0.000	0.000	0.000	0.000	0.000	0.000	0.000	0.000	0.000	0.000	0.000	0.000	0.000	0.000
CAMBER FROM HEAT CURVING	0.000	0.000	0.000	0.000	0.000	0.000	0.000	0.000	0.000	0.000	0.000	0.000	0.000	0.000	0.000	0.000	0.000	0.000	0.000	0.000	0.000
REQUIRED CAMBER	0	1/16"	1/8"	3/16"	5/16"	1/2"	5/8"	13/16"	15/16"	1"	1 1/8"	1 3/16"	1 1/4"	1 3/16"	1 1/8"	1 1/16"	15/16"	3/4"	1/2"	5/16"	0

* INCLUDES SLAB, BUILDUPS & STAY-IN-PLACE FORMS.
ALL VALUES ARE SHOWN IN FEET EXCEPT " REQUIRED CAMBER ", WHICH IS GIVEN IN INCHES (FRACTION FORM).

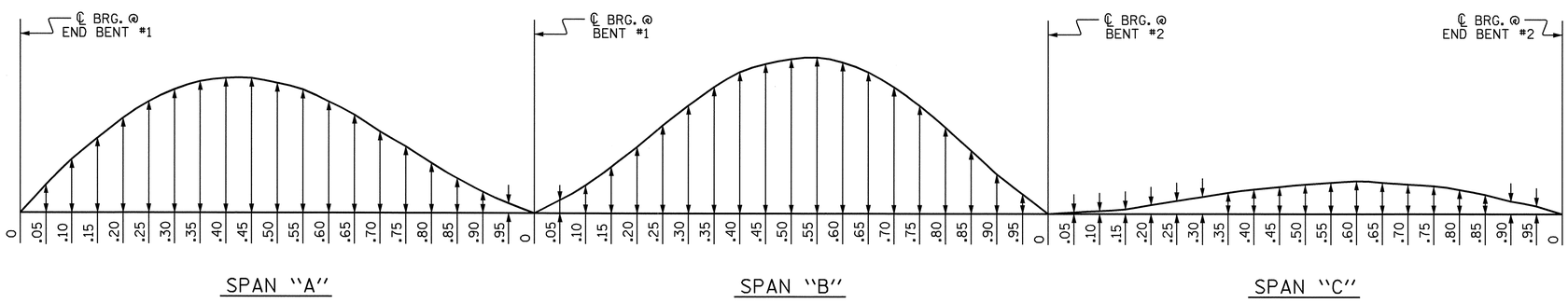

SCHEMATIC CAMBER ORDINATES

SLOPE FOR THE ZERO CAMBER BASE LINE VARIES.

PROJECT NO. R-2719A
LENOIR COUNTY
STATION: 85+98.30 -L-

SHEET 3 OF 3

STATE OF NORTH CAROLINA
DEPARTMENT OF TRANSPORTATION
RALEIGH

SUPERSTRUCTURE
DEAD LOAD DEFLECTIONS SPAN "C"
(RIGHT LANE)

NORTH CAROLINA PROFESSIONAL SEAL 14045 ENGINEER TIMOTHY L. COGGINS
10/13/08

REVISIONS						SHEET NO.
NO.	BY:	DATE:	NO.	BY:	DATE:	S-99
1			3			TOTAL SHEETS
2			4			340

DRAWN BY : T.L. AVERETTE DATE : 08-08
CHECKED BY : B.N. BARODAWALA DATE : 08-08

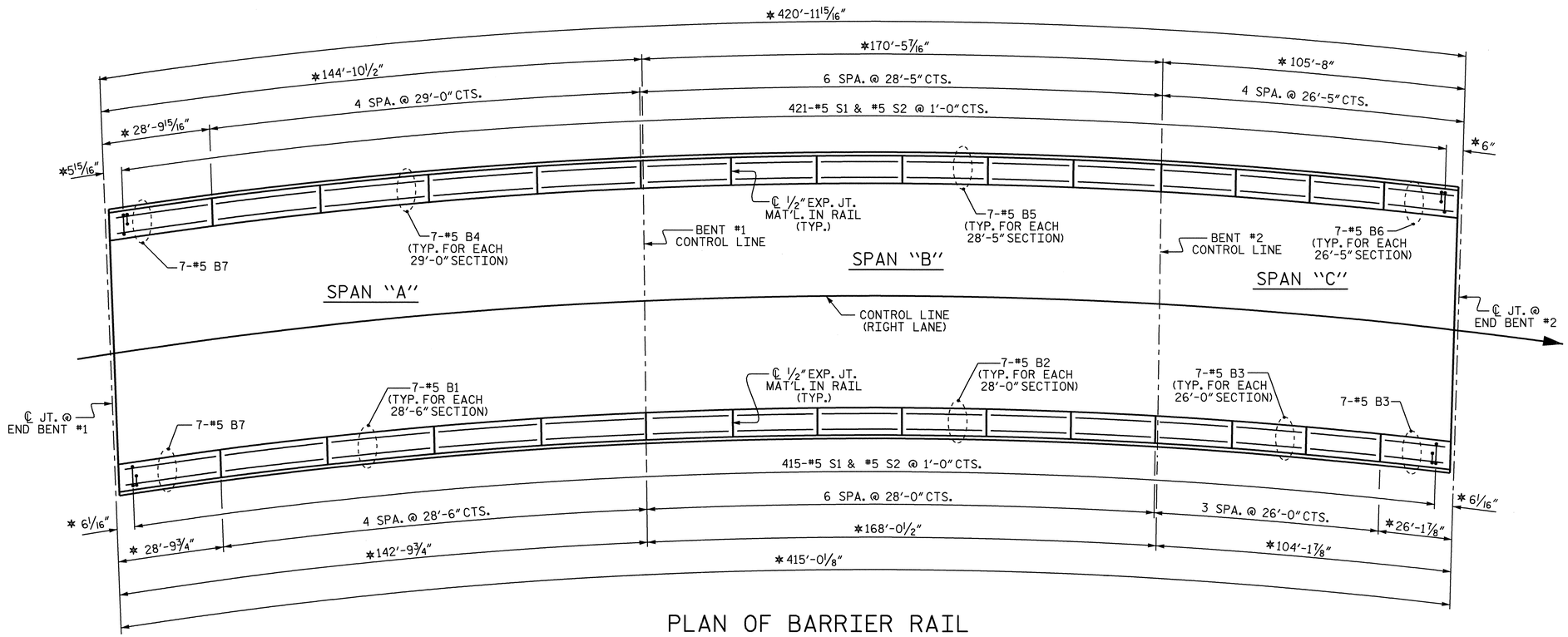

PLAN OF BARRIER RAIL

* ARC DIMENSION ALONG OUTSIDE EDGE OF BARRIER RAIL.

BAR TYPES

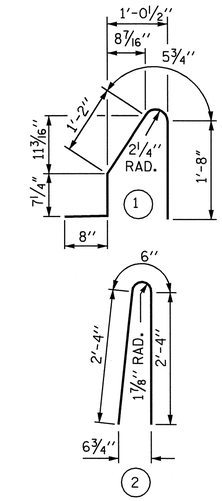

ALL BAR DIMENSIONS ARE OUT TO OUT

BILL OF MATERIAL

FOR CONCRETE BARRIER RAIL ONLY

BAR	NO.	SIZE	TYPE	LENGTH	WEIGHT
* S1	836	#5	1	4'-7"	3996
* S2	836	#5	2	5'-2"	4505
* B1	28	#5	STR	28'-1"	820
* B2	42	#5	STR	27'-7"	1208
* B3	28	#5	STR	25'-7"	747
* B4	28	#5	STR	28'-7"	835
* B5	42	#5	STR	28'-0"	1227
* B6	28	#5	STR	26'-0"	759
* B7	14	#5	STR	28'-5"	415

* EPOXY COATED REINFORCING STEEL	14,512 LBS.
CLASS AA CONCRETE	83.7 CU. YDS.
CONCRETE BARRIER RAIL	836.01 LIN. FT.

NOTES

THE BARRIER RAIL IN A CONTINUOUS UNIT SHALL NOT BE CAST UNTIL ALL SLAB CONCRETE IN THE UNIT HAS BEEN CAST AND HAS REACHED A MINIMUM COMPRESSIVE STRENGTH OF 3,000 PSI.

ALL REINFORCING STEEL IN BARRIER RAILS SHALL BE EPOXY COATED.

VERTICAL GROOVED CONTRACTION JOINTS, 1/2" IN DEPTH, SHALL BE TOOLED IN ALL EXPOSED FACES OF THE BARRIER RAIL AND IN ACCORDANCE WITH ARTICLE 825-10(B) OF THE STANDARD SPECIFICATIONS. THE CONTRACTION JOINT SHALL BE LOCATED AT EACH THIRD POINT BETWEEN BARRIER RAIL EXPANSION JOINTS. ONLY ONE CONTRACTION JOINT IS REQUIRED AT MIDPOINT OF BARRIER RAIL SEGMENTS LESS THAN 20 FEET IN LENGTH AND NO CONTRACTION JOINTS ARE REQUIRED FOR THOSE SEGMENTS LESS THAN 10 FEET IN LENGTH.

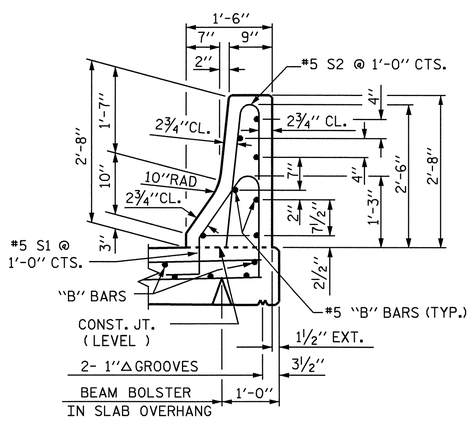

SECTION THRU RAIL

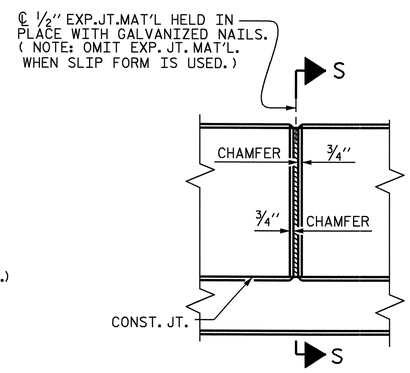

ELEVATION AT EXPANSION JOINTS

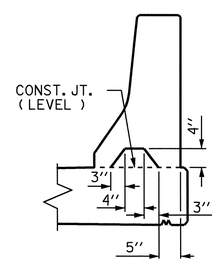

SECTION S-S

AT DAM IN OPEN JOINT (THIS IS TO BE USED ONLY WHEN SLIP FORM IS USED)

BARRIER RAIL DETAILS

PROJECT NO. R-2719A

LENOIR COUNTY

STATION: 85+98.30 -L-

STATE OF NORTH CAROLINA
DEPARTMENT OF TRANSPORTATION
RALEIGH

STANDARD

CONCRETE BARRIER RAIL

(RIGHT LANE)

NORTH CAROLINA PROFESSIONAL SEAL 14045 ENGINEER TIMOTHY L. COGGINS

Timothy L. Coggins 10/13/08

REVISIONS						SHEET NO.
NO.	BY:	DATE:	NO.	BY:	DATE:	S-100
1			3			TOTAL SHEETS
2			4			340

ASSEMBLED BY : T.L. AVERETTE	DATE : 06-08			
CHECKED BY : B.N. BARODAWALA	DATE : 08-08			
DRAWN BY : ARB 5/87	REV. 10/17/00	RWW/LES		
CHECKED BY : SJD 9/87	REV. 5/7/03R	RWW/JTE		
	REV. 5/1/06	TLA/GM		

09-OCT-2008 07:11
g:\tlpprojects-r\r2719a\structures\str#3\final plans\R2719A_sd_BR_03.dgn
taverette

STR. #3 STD. NO. CBR1

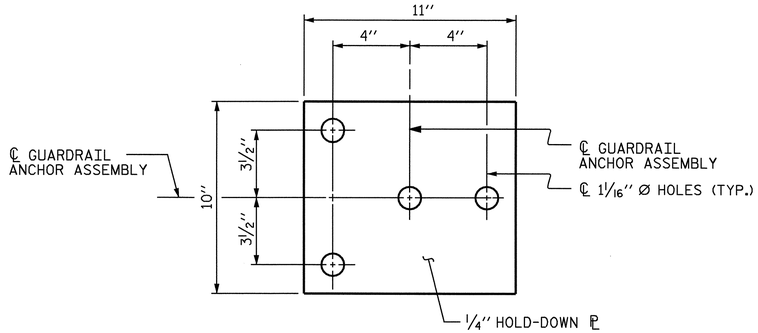

PLAN

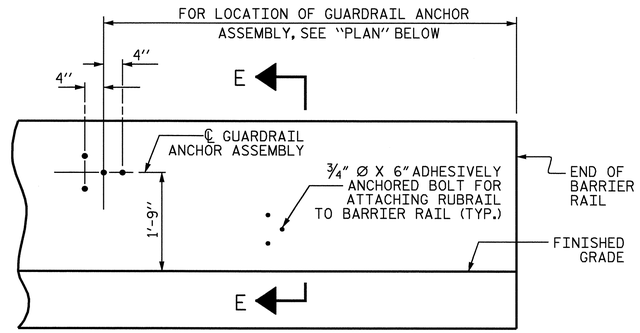

ELEVATION

FOR LOCATION OF RUBRAIL, SEE ROADWAY STD. 862.03

NOTES

THE GUARDRAIL ANCHOR ASSEMBLY SHALL CONSIST OF A 1/4'' HOLD DOWN PLATE AND 4 - 7/8'' Ø BOLTS WITH NUTS AND WASHERS, RUBRAIL, AND ADHESIVELY ANCHORED BOLTS.

THE HOLD-DOWN PLATE SHALL CONFORM TO AASHTO M270 GRADE 36. AFTER FABRICATION, THE HOLD-DOWN PLATE SHALL BE HOT-DIP GALVANIZED IN ACCORDANCE WITH AASHTO M111.

BOLTS SHALL CONFORM TO THE REQUIREMENTS OF ASTM A307 AND NUTS SHALL CONFORM TO THE REQUIREMENTS OF AASHTO M291. BOLTS, NUTS AND WASHERS SHALL BE GALVANIZED. (AT THE CONTRACTOR'S OPTION, STAINLESS STEEL BOLTS, NUTS AND WASHERS MAY BE USED AS AN ALTERNATE FOR THE 7/8'' Ø GALVANIZED BOLTS, NUTS AND WASHERS. THEY SHALL CONFORM TO OR EXCEED THE MECHANICAL REQUIREMENTS OF ASTM A307. THE USE OF THIS ALTERNATE SHALL BE APPROVED BY THE ENGINEER.)

THE GUARDRAIL ANCHOR ASSEMBLY IS REQUIRED AT ALL POINTS WHERE APPROACH GUARDRAIL IS TO BE ATTACHED TO THE END OF BARRIER RAIL. FOR POINTS OF ATTACHMENT, SEE SKETCH.

AFTER INSTALLATION, THE EXPOSED THREAD OF THE BOLT SHALL BE BURRED WITH A SHARP POINTED TOOL.

THE COST OF THE GUARDRAIL ANCHOR ASSEMBLY SHALL BE INCLUDED IN THE UNIT CONTRACT PRICE BID FOR CONCRETE BARRIER RAIL.

THE 1 1/4'' Ø HOLES SHALL BE FORMED OR DRILLED WITH A CORE BIT. IMPACT TOOLS WILL NOT BE PERMITTED. ANY CONCRETE DAMAGED BY THIS WORK SHALL BE REPAIRED TO THE SATISFACTION OF THE ENGINEER.

THE C6 X 8.2 RUBRAIL IS TO BE ADHESIVELY ANCHORED TO THE RAIL USING THREE 3/4'' Ø X 6'' BOLTS WITH WASHERS. LEVEL ONE FIELD TESTING IS REQUIRED, AND THE YIELD LOAD OF THE 3/4'' Ø BOLT IS 12 KIPS. FOR ADHESIVELY ANCHORED ANCHOR BOLTS OR DOWELS, SEE SPECIAL PROVISIONS. SEE ROADWAY STANDARD 862.03 FOR DETAILS AND LOCATION OF THE RUBRAIL.

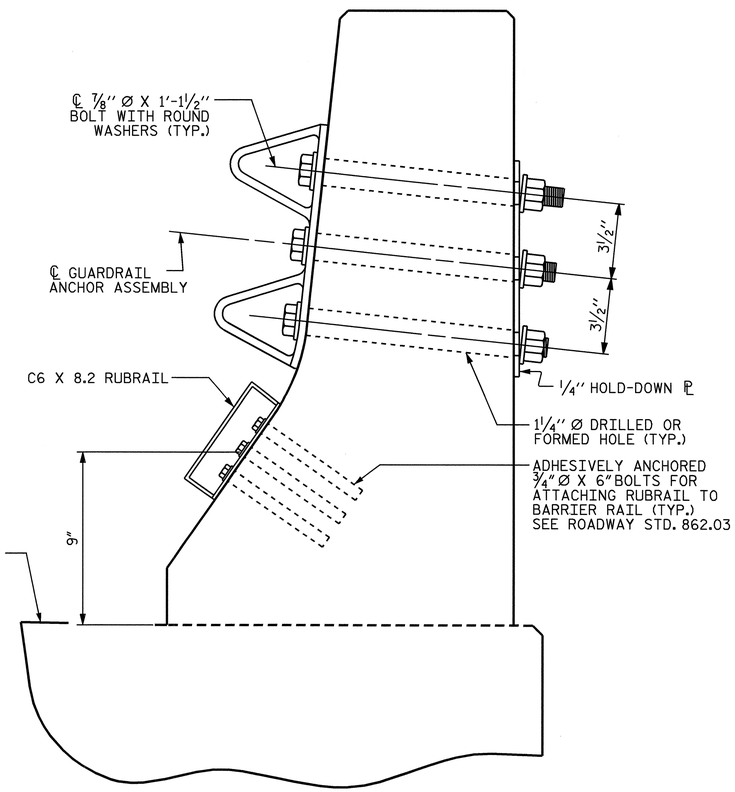

SECTION E-E

GUARDRAIL ANCHOR ASSEMBLY DETAILS

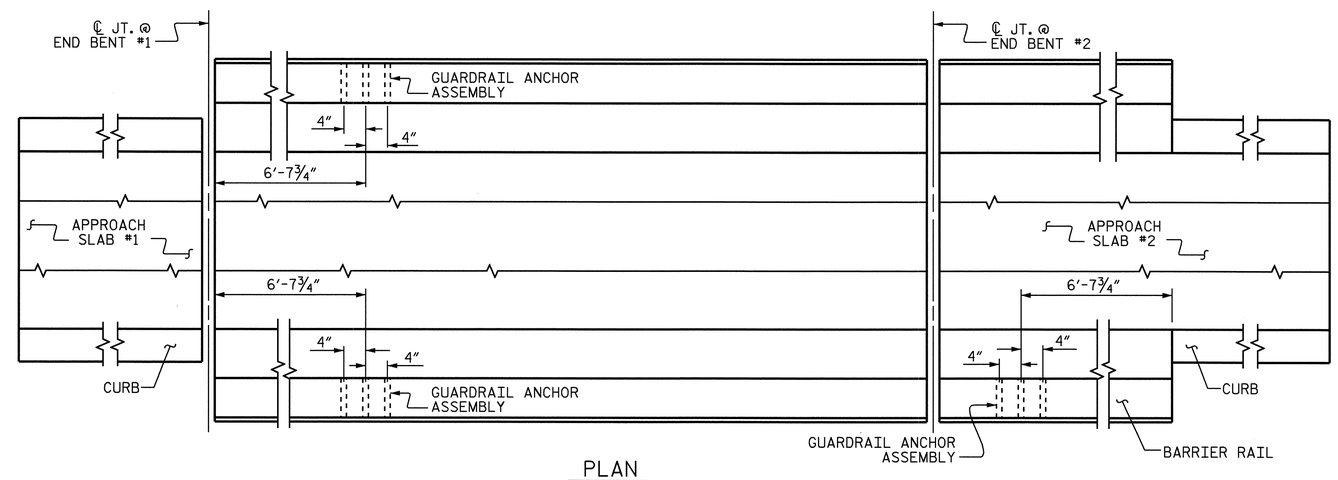

PLAN

LOCATION OF ANCHORS FOR GUARDRAIL

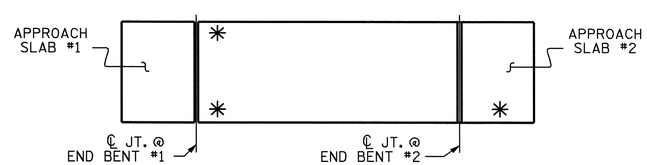

SKETCH SHOWING POINTS OF ATTACHMENTS

✳ DENOTES B-77 GUARDRAIL ANCHOR ASSEMBLY

PROJECT NO. R-2719A

LENOIR COUNTY

STATION: 85+98.30 -L-

STATE OF NORTH CAROLINA
DEPARTMENT OF TRANSPORTATION
RALEIGH

STANDARD

GUARDRAIL ANCHORAGE FOR BARRIER RAIL (RIGHT LANE)

NORTH CAROLINA PROFESSIONAL SEAL 14045 ENGINEER TIMOTHY L. COGGINS

10/13/08

REVISIONS						SHEET NO.
NO.	BY:	DATE:	NO.	BY:	DATE:	S-101
1			3			TOTAL SHEETS
2			4			340

ASSEMBLED BY : T.L. AVERETTE	DATE : 06-08
CHECKED BY : B.N. BARODAWALA	DATE : 08-08
DRAWN BY : TLA 5/06	ADDED 5/1/06R KMM/GM
CHECKED BY : GM 5/06	

09-OCT-2008 07:11
g:\tlpprojects-r\r2719a\structures\str#3\finalplans\R2719A_sd_BR_03.dgn
taverette

STR. #3 STD. NO. GRA2

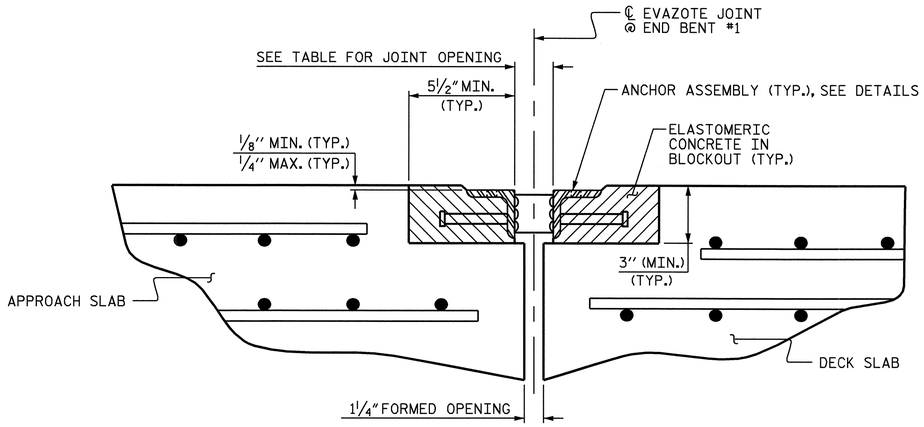

ARMORED JOINT DETAILS

SECTION NORMAL TO JOINT AT END BENT #1

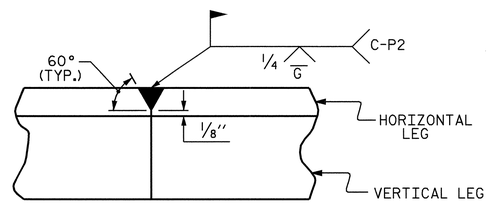

DETAIL- FIELD WELD SPLICE OF ANGLE

NOTES

ANGLES SHALL CONFORM TO AASHTO M270 GRADE 36 STEEL OR APPROVED EQUAL. ALL STUD ANCHORS SHALL CONFORM TO AASHTO M169 GRADES 1010 THRU 1020 OR APPROVED EQUAL.

STUD ANCHORS SHALL BE SHOP WELDED AND ALL HOLES SHALL BE SHOP DRILLED AS SHOWN ON THE PLANS. STUD ANCHORS SHALL BE ELECTRIC ARC END WELDED WITH COMPLETE FUSION.

UPON COMPLETION OF SHOP FABRICATION, THE ENTIRE ANCHOR ASSEMBLY SHALL BE METALLIZED. THE ½" Ø STUD ANCHORS AND ANCHOR TABS NEED NOT BE METALLIZED. SEE SPECIAL PROVISION FOR THERMAL SPRAYED COATINGS (METALLIZATION).

ANCHOR ASSEMBLY SHALL BE MADE CONTINUOUS THE LENGTH OF THE JOINT FROM GUTTER TO GUTTER. FOR FIELD SPLICES AT ALL CROWN BREAK POINTS, THE ENDS OF THE STEEL ANGLES SHALL BE CUT PARALLEL TO THE BRIDGE CENTERLINE. FINISHED FIELD WELDS SHALL BE GROUND SMOOTH AND COATED WITH A MINIMUM THICKNESS OF 4 DRY MILS OF ZINC-RICH PAINT IN ACCORDANCE WITH THE STANDARD SPECIFICATIONS.

ANCHOR ASSEMBLY SEGMENTS SHALL NOT BE LESS THAN 12 FEET NOR MORE THAN 20 FEET IN LENGTH. SHORTER SEGMENTS MAY BE USED AT THE EDGE OF ROADWAY OR AT POINTS OF STAGED CONSTRUCTION.

THE ANCHOR ASSEMBLY SHALL BE SECURED AND LEVELED AS SHOWN IN THE "ARMORED JOINT ANCHOR ASSEMBLY DETAILS". NO SUBMITTALS ARE REQUIRED FOR ⅜" Ø EXPANSION ANCHORS, NUTS OR WASHERS. THE CONTRACTOR MAY SUBMIT FOR APPROVAL AN ALTERNATE METHOD OF ALIGNING AND LEVELING THE ANGLES. THE ALTERNATE METHOD SHALL NOT INCLUDE ANY WELDING TO THE OUTSIDE FACE OF THE ANGLES.

AFTER THE ELASTOMERIC CONCRETE HAS BEEN CAST ON BOTH SIDES OF THE JOINT, REMOVE ANY EXCESS CONCRETE THAT COMES THROUGH THE WEEP HOLES AND THOROUGHLY CLEAN THE ANGLES. ANY DAMAGED STEEL SHALL BE COATED WITH A MINIMUM OF 4 MILS OF ZINC-RICH PAINT IN ACCORDANCE WITH THE STANDARD SPECIFICATIONS.

SEE SPECIAL PROVISIONS FOR EVAZOTE JOINT SEALS.

SEE SPECIAL PROVISIONS FOR ELASTOMERIC CONCRETE.

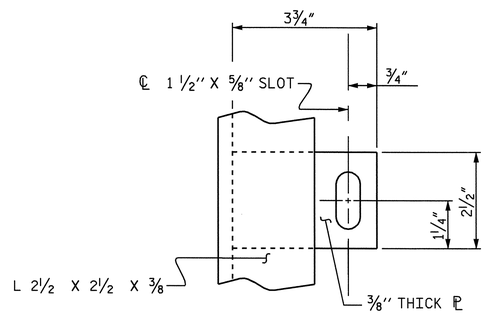

PLAN VIEW OF TAB

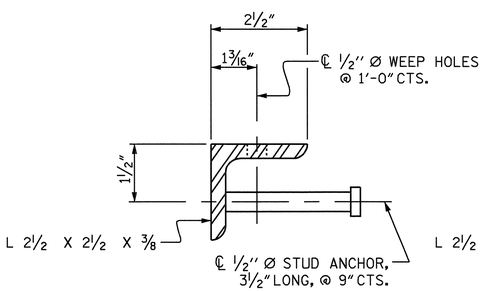

SECTION VIEW OF STUD

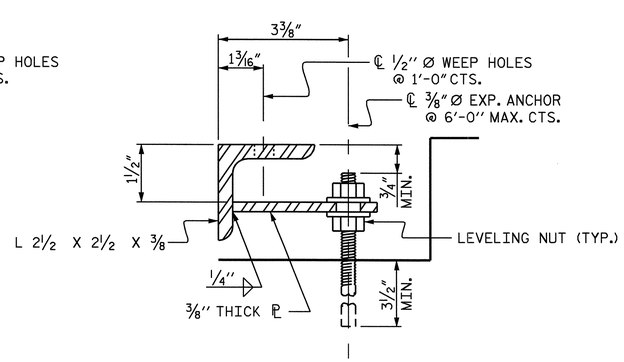

SECTION VIEW OF TAB

ARMORED JOINT ANCHOR ASSEMBLY DETAILS

MOVEMENT AND SETTING AT EVAZOTE JOINT

END BENT NO.	SKEW ANGLE	NOMINAL UNCOMPRESSED SEAL WIDTH	TOTAL MOVEMENT (ALONG ℄ RDWY)	PERPENDICULAR JOINT OPENING AT 45° F	PERPENDICULAR JOINT OPENING AT 60° F	PERPENDICULAR JOINT OPENING AT 90° F
1	90°-00'-00"	2¹³⁄₁₆"	1⁷⁄₁₆"	2⅜"	2⅛"	1¹¹⁄₁₆"

TOTAL MOVEMENT IS CALCULATED ALONG THE CENTERLINE OF ROADWAY.
JOINT OPENINGS ARE MEASURED PERPENDICULAR TO THE JOINT.

BILL OF MATERIAL

END BENT NO.	ELASTOMERIC CONCRETE ✳ (CU. FT.)	TOTAL LENGTH OF ANGLE (FT)
1	10.5	92.17'

✳ BASED ON THE MINIMUM BLOCKOUT SHOWN.

PROJECT NO. R-2719A
LENOIR COUNTY
STATION: 85+98.30 -L-

STATE OF NORTH CAROLINA
DEPARTMENT OF TRANSPORTATION
RALEIGH

STANDARD
ARMORED EVAZOTE JOINT DETAILS
(RIGHT LANE)

NORTH CAROLINA PROFESSIONAL SEAL 14045 ENGINEER TIMOTHY A. COGGINS
10/13/08

REVISIONS						SHEET NO.
NO.	BY:	DATE:	NO.	BY:	DATE:	S-102
1			3			TOTAL SHEETS
2			4			340

ASSEMBLED BY : T.L. AVERETTE	DATE : 05-08		
CHECKED BY : B.N. BARODAWALA	DATE : 08-08		
DRAWN BY : EEM 1/96	REV. 7/10/01 LES/RDR		
CHECKED BY : RGW 1/96	REV. 5/7/03RR RWW/JTE		
	REV. 5/1/06 TLA/GM		

09-OCT-2008 07:10
g:\tlpprojects-r\r2719a\structures\str#3\final plans\R2719A_sd_JS_03.dgn
taverette

STR. #3 STD. NO. AEJ1

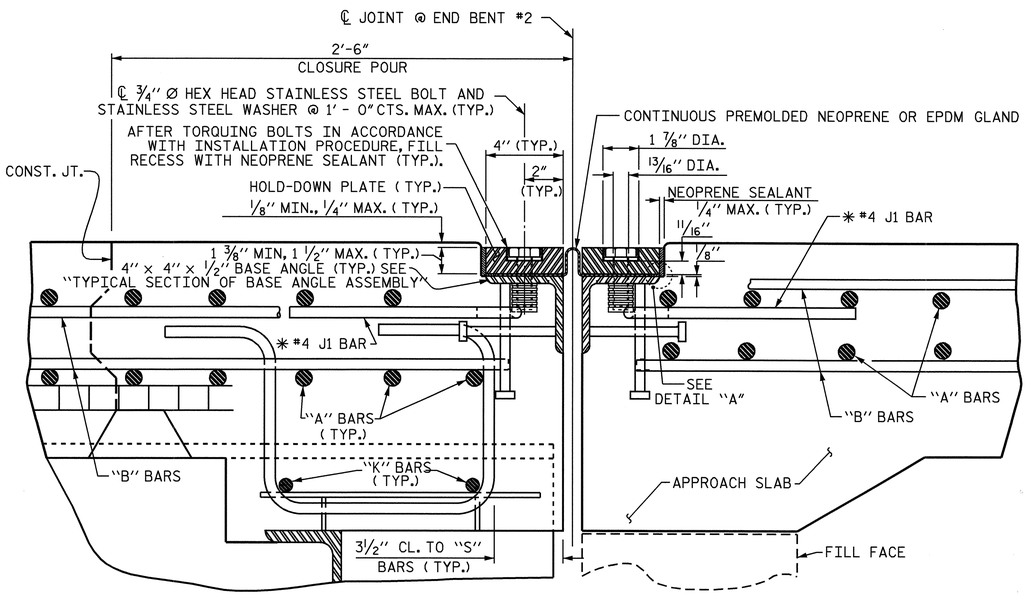

EXPANSION JOINT DETAILS

SECTION NORMAL TO JOINT -- STEEL SUPERSTRUCTURE

✱ THE QUANTITY OF #4 J1 BARS ON THE BILL OF MATERIAL IS BASED ON 1'-0" CENTERS. J1 BARS SHALL BE PLACED AT EACH VERTICAL STUD ANCHOR BOLT. IN THE EVENT THAT THE NUMBER OF VERTICAL STUD ANCHORS EXCEEDS THE NUMBER OF J1 BARS SPECIFIED, ADDITIONAL J1 BARS WILL NOT BE REQUIRED.

INSTALLATION PROCEDURE

1. A TEMPLATE OR OTHER SUITABLE DEVICE SHALL BE USED TO FORM THE TOP OF THE EXPANSION JOINT SEAL BLOCKOUT TO THE PROPER DEPTH AND WIDTH. THE TEMPLATE SHALL BE 4⅛" TO 4¼" WIDE AND OF SUCH THICKNESS AS TO PROVIDE FOR CORRECT FINAL ELEVATION OF TOP OF HOLD-DOWN PLATES. THE TEMPLATE SHALL BE ATTACHED TO THE BASE ANGLE ASSEMBLY WITH THE ¾" Ø HEX HEAD BOLTS PROVIDED FOR THE HOLD-DOWN PLATES. A 1" Ø HOLE SHALL BE PROVIDED IN THE TEMPLATE CENTERED OVER EACH WEEP HOLE IN THE 4" X 4" X ½" BASE ANGLE. OTHER METHODS OF INSURING DRAINAGE THROUGH WEEP HOLES MAY BE EMPLOYED SUBJECT TO ENGINEER'S APPROVAL.
2. AFTER THE CONCRETE HAS BEEN CAST ON BOTH SIDES OF THE JOINT, REMOVE THE TEMPLATE. THOROUGHLY CLEAN THE BOLT HOLES AND THE ANGLE PLATE. REMOVE ANY EXCESS CONCRETE THAT COMES OUT OF THE WEEP HOLES. ANY DAMAGED STEEL SHALL BE COATED WITH A MINIMUM THICKNESS OF 4 DRY MILS OF ZINC-RICH PAINT IN ACCORDANCE WITH THE STANDARD SPECIFICATIONS.
3. LAY THE GLAND ON THE BASE ANGLE AND FIELD MARK THE GLAND FOR THE BOLT HOLES. HOLES IN THE GLAND SHALL BE PUNCHED ⅞" IN DIAMETER WITH A HAND PUNCH.
4. IN ORDER TO CHECK FOR PROPER ALIGNMENT, PLACE THE GLAND AND HOLD-DOWN PLATES ON THE BASE ANGLE. DO NOT APPLY NEOPRENE SEALANT. BOLT THE HOLD-DOWN PLATES TO THE BASE ANGLE BUT DO NOT TIGHTEN. THE ENGINEER SHALL INSPECT THE JOINT SEAL DEVICE FOR PROPER ALIGNMENT.
5. AFTER INSPECTION, REMOVE THE HOLD-DOWN PLATES AND GLAND. APPLY NEOPRENE SEALANT TO THE BASE ANGLE IN ACCORDANCE WITH THE "INSTALLATION SKETCH". PLACE GLAND AND HOLD-DOWN PLATES ON THE BASE ANGLE. BOLT THE HOLD-DOWN PLATES TO THE BASE ANGLE ASSEMBLY AND TORQUE THE BOLTS TO 88 FT-LBS WITH A TORQUE WRENCH. THE TORQUE WRENCH SHALL BE CALIBRATED IN ACCORDANCE WITH SECTION 440-10 (D) OF THE STANDARD SPECIFICATIONS. CHECK THE TORQUE AFTER THREE (3) HOURS AND, IF NECESSARY, RETIGHTEN TO 88 FT-LBS. A FINAL CHECK SHALL BE MADE AT SEVEN (7) DAYS. TORQUE SHALL NOT BE LESS THAN 80 FT-LBS AFTER SEVEN (7) DAYS.
6. AFTER PROPER TORQUING, CLEAN THE BOLT HOLE RECESSES AND THE RECESS BETWEEN THE JOINT SEAL DEVICE AND CONCRETE, COMPLETELY FILL THESE RECESSES WITH NEOPRENE SEALANT.

GENERAL NOTES

1. FOR EXPANSION JOINT SEALS, SEE SPECIAL PROVISIONS.
2. ALL PLATES AND ANGLES SHALL CONFORM TO AASHTO M270 GRADE 36 STEEL OR APPROVED EQUAL. ALL HOLD-DOWN BOLTS SHALL CONFORM TO ASTM F593 ALLOY 304 STAINLESS STEEL AND WASHERS SHALL CONFORM TO ASTM F844 EXCEPT THEY SHALL BE MADE FROM ALLOY 304 STAINLESS STEEL. ALL STUD ANCHORS SHALL CONFORM TO AASHTO M169, GRADES 1010 THRU 1020 OR APPROVED EQUAL. ALL CONCRETE INSERTS SHALL BE CLOSED END AND SHALL CONFORM TO AASHTO M169, GRADE 12L14. TENSILE CAPACITY SHALL BE 3000 LBS. MIN.
3. A PREMOLDED CORRUGATED OR NON-CORRUGATED GLAND SHALL BE USED FOR JOINTS SKEWED BETWEEN 50° THRU 130°. FOR JOINTS SKEWED LESS THAN 50° OR MORE THAN 130°, ONLY A CORRUGATED GLAND SHALL BE USED.
4. CLOSED END FERRULES AND STUD ANCHORS SHALL BE SHOP WELDED AND ALL HOLES SHALL BE SHOP DRILLED AS SHOWN ON PLANS. STUD ANCHORS SHALL BE ELECTRIC ARC END WELDED WITH COMPLETE FUSION.
5. SURFACES COMING IN CONTACT WITH NEOPRENE SHALL BE GROUND SMOOTH PRIOR TO METALLIZING.
6. UPON COMPLETION OF SHOP FABRICATION, THE HOLD DOWN PLATE AND BASE ANGLE ASSEMBLY, AS SHOWN IN THE "TYPICAL SECTION OF BASE ANGLE ASSEMBLY", SHALL BE METALLIZED. SEE SPECIAL PROVISION FOR THERMAL SPRAYED COATINGS (METALLIZATION).
7. BASE ANGLE ASSEMBLY SHALL BE CONTINUOUS FOR THE LENGTH OF THE JOINT. AT CROWN BREAKS, THE ENDS OF THE BASE ANGLE ASSEMBLY SHALL BE CUT PARALLEL TO THE BRIDGE CENTERLINE FOR SKEWS LESS THAN 80° AND GREATER THAN 100°. FINISHED WELD SHALL BE GROUND SMOOTH AND COATED WITH A MINIMUM THICKNESS OF 4 DRY MILS OF ZINC-RICH PAINT IN ACCORDANCE WITH THE STANDARD SPECIFICATIONS.
8. FIELD SPLICES OF HOLD-DOWN PLATES SHALL BE KEPT TO A MINIMUM. CONTRACTOR SHALL FURNISH DETAILED PLANS SHOWING PROPOSED SPLICE LOCATIONS FOR APPROVAL. HOLD-DOWN PLATES SHALL NOT EXCEED 20' LENGTHS UNLESS APPROVED BY THE ENGINEER.
9. NO ALTERNATE JOINT DETAILS SHALL BE PERMITTED IN LIEU OF THOSE SHOWN ON THESE PLANS.
10. THE CONTRACTOR MAY, AT HIS OPTION, USE ADHESIVELY ANCHORED ANCHOR BOLTS IN PLACE OF CONCRETE INSERTS FOR COVER PLATES. THE YIELD LOAD OF THE ¾" Ø BOLT IS 10 KIPS. FIELD TESTING OF THE ADHESIVE BONDING SYSTEM IS NOT REQUIRED.

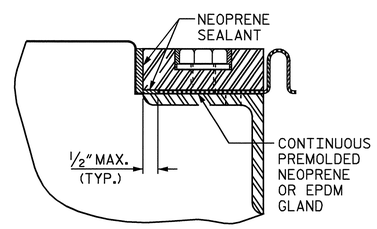

DETAIL "A"

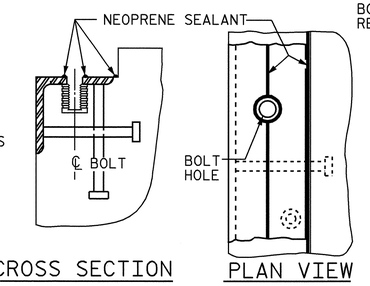

INSTALLATION SKETCH

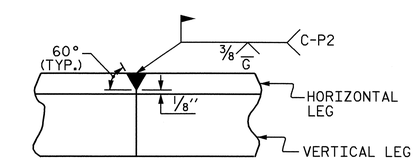

DETAIL- FIELD WELD SPLICE OF BASE ANGLE

MOVEMENT AND SETTING AT JOINT					
END BENT NO.	SKEW ANGLE	TOTAL MOVEMENT (ALONG ℄ RDWY)	PERPENDICULAR JOINT OPENING AT 45° F	PERPENDICULAR JOINT OPENING AT 60° F	PERPENDICULAR JOINT OPENING AT 90° F
2	90°-00'-00"	1 15/16"	2 7/16"	2⅛"	1 7/16"

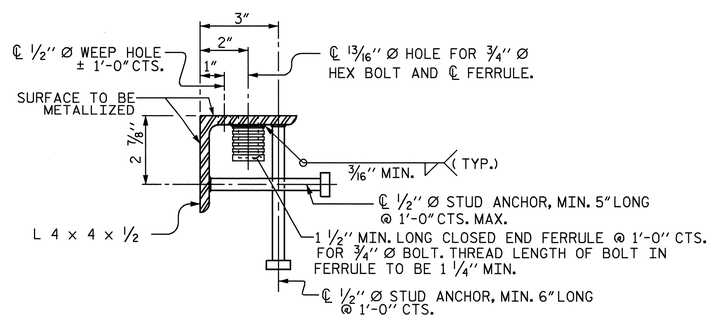

TYPICAL SECTION OF BASE ANGLE ASSEMBLY

NORTH CAROLINA PROFESSIONAL SEAL 14045 ENGINEER TIMOTHY W. COGGINS

10/13/08

PROJECT NO. R-2719A

LENOIR COUNTY

STATION: 85+98.30 -L-

SHEET 1 OF 2

STATE OF NORTH CAROLINA
DEPARTMENT OF TRANSPORTATION
RALEIGH

STANDARD

EXPANSION JOINT SEAL DETAILS

(RIGHT LANE)

REVISIONS						SHEET NO.
NO.	BY:	DATE:	NO.	BY:	DATE:	S-103
1			3			TOTAL SHEETS
2			4			340

ASSEMBLED BY : T.L. AVERETTE	DATE : 05-08
CHECKED BY : B.N. BARODAWALA	DATE : 08-08
DRAWN BY : REK 9/87	REV. 10/17/00 RWW/LES
CHECKED BY : CRK 10/87	REV. 5/7/03R RWW/JTE
	REV. 5/1/06 TLA/GM

09-OCT-2008 07:10
g:\tippprojects-r\r2719a\structures\str#3\finalplans\R2719A_sd_JS_03.dgn
taverette

STR. #3 STD. NO. EJS1

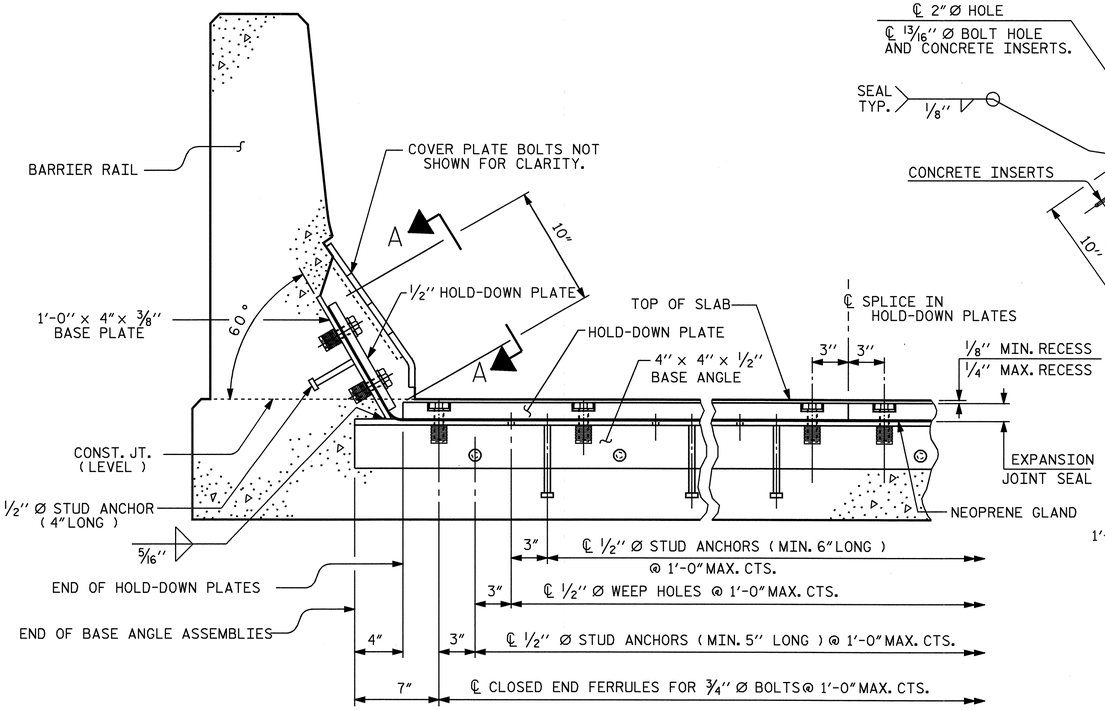

SECTION THRU RAIL NORMAL TO JOINT

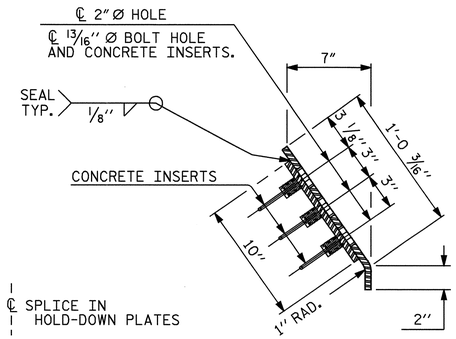

END VIEW

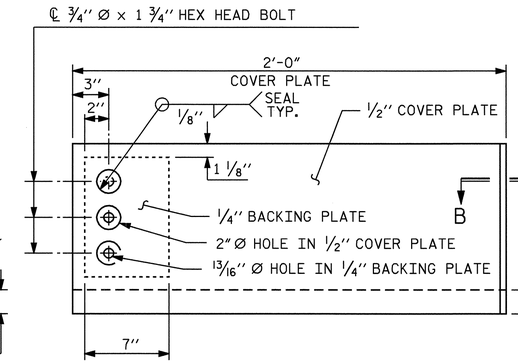

TYPE I - ELEVATION VIEW

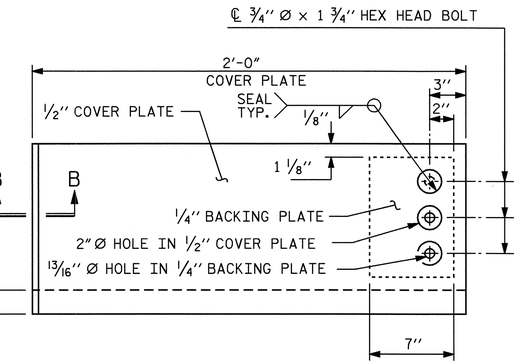

TYPE II - ELEVATION VIEW

COVER PLATE DETAILS

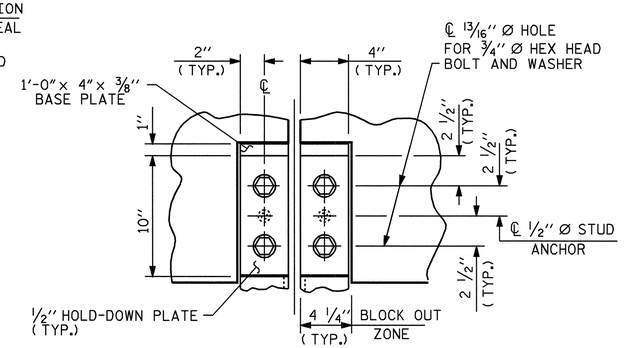

SECTION A - A

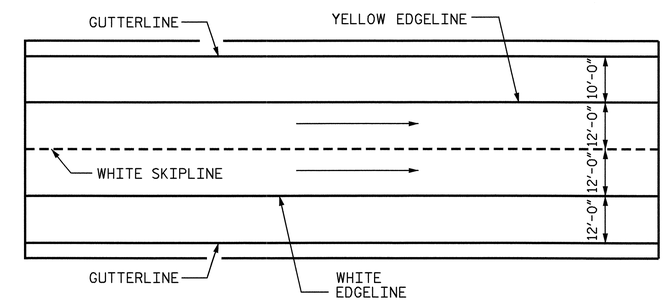

PAVEMENT MARKING ALIGNMENT

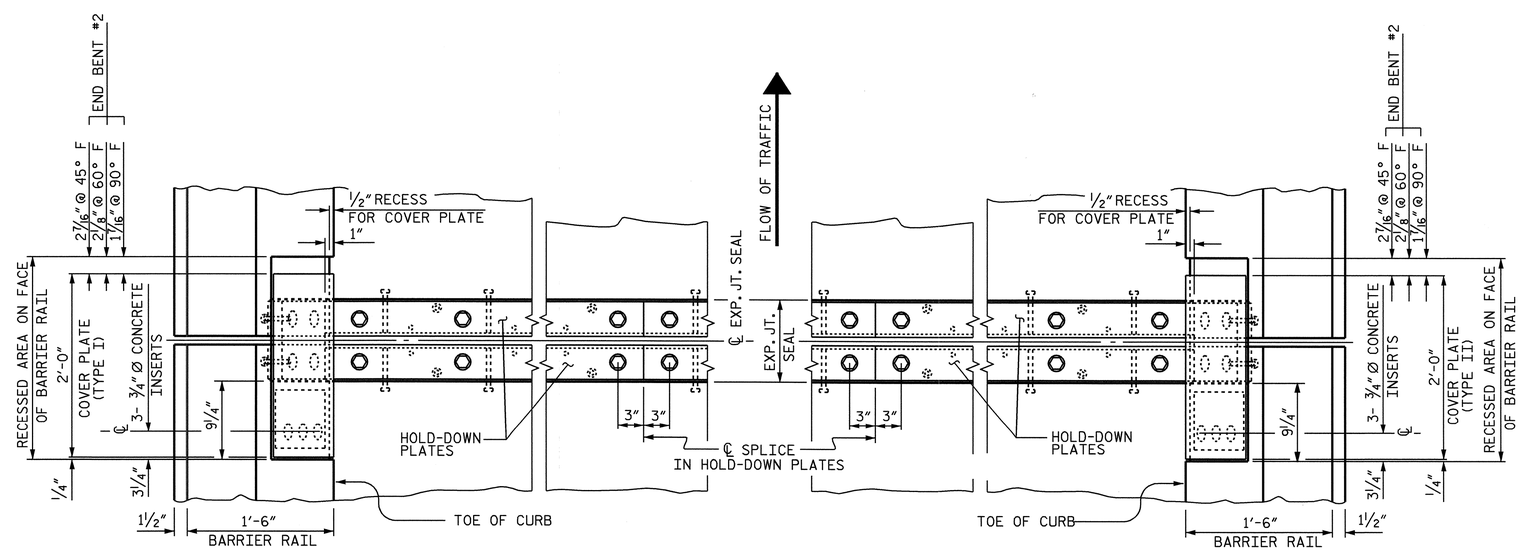

PLAN OF EXPANSION JOINT SEAL - LEFT SIDE

PLAN OF EXPANSION JOINT SEAL - RIGHT SIDE

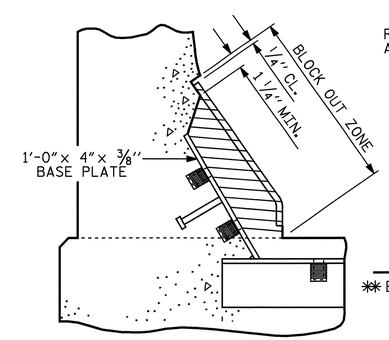

BLOCK OUT DETAIL

SEE "SECTION A - A" FOR OTHER DETAILS.

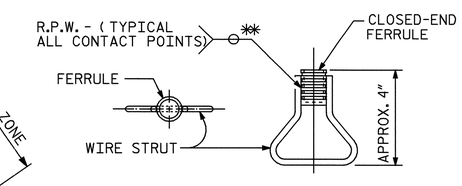

CONCRETE INSERT

✱✱ EACH WELDED ATTACHMENT OF WIRE TO FERRULE SHALL DEVELOP THE TENSILE STRENGTH OF THE WIRE.

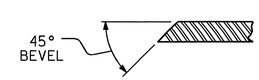

SECTION B - B

PROJECT NO. R-2719A

LENOIR COUNTY

STATION: 85+98.30 -L-

SHEET 2 OF 2

STATE OF NORTH CAROLINA
DEPARTMENT OF TRANSPORTATION
RALEIGH

STANDARD

EXPANSION JOINT SEAL DETAILS FOR BARRIER RAIL

(RIGHT LANE)

NORTH CAROLINA PROFESSIONAL SEAL 14045 ENGINEER TIMOTHY R. COGGINS
Timothy R. Coggins 10/13/08

REVISIONS						SHEET NO.
NO.	BY:	DATE:	NO.	BY:	DATE:	S-104
1			3			TOTAL SHEETS
2			4			340

ASSEMBLED BY : T.L. AVERETTE		DATE : 05-08	
CHECKED BY : B.N. BARODAWALA		DATE : 08-08	
DRAWN BY : REK 9/87	REV. 7/17/98	RWW/LES	
CHECKED BY : CRK 10/87	REV. 10/17/00	RWW/LES	
	REV. 5/1/06	TLA/GM	

09-OCT-2008 07:10
g:\tlpprojects-r\r2719a\structures\str#3\final plans\R2719A_sd_JS_03.dgn
taverette

STR. #3 STD. NO. EJS2

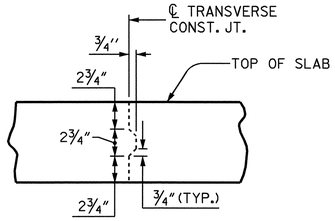

TRANSVERSE CONSTRUCTION JOINT DETAIL

REINFORCING STEEL IN SLAB NOT SHOWN. LONGITUDINAL REINFORCING STEEL SHALL BE CONTINUOUS THROUGH JOINT.

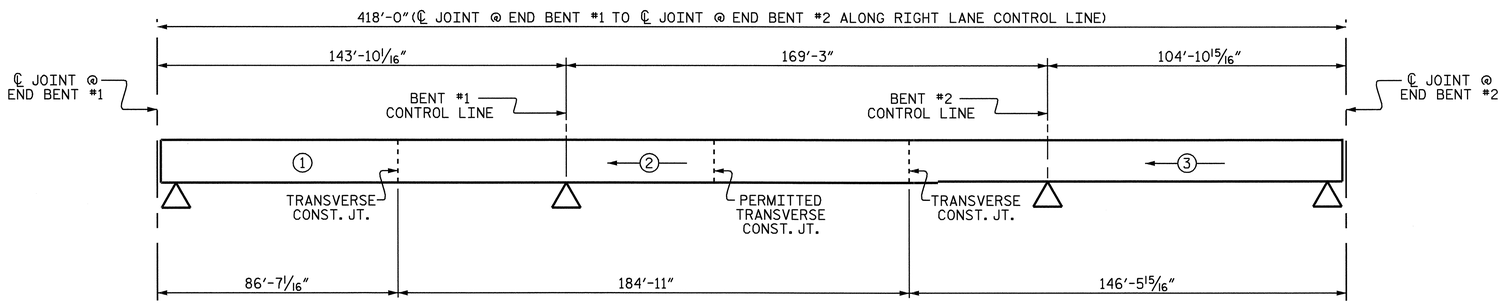

POURING SEQUENCE

DIMENSIONS GIVEN ALONG ARC OF CONTROL LINE.
TRANSVERSE CONSTRUCTION JOINTS ARE RADIAL.

BILL OF MATERIAL

BAR	NO.	SIZE	TYPE	LENGTH	WEIGHT
* A1	841	#5	STR	48'-11"	42908
A2	841	#5	STR	48'-11"	42908
* B1	99	#4	STR	28'-9"	1901
* B2	99	#7	STR	47'-2"	9544
* B3	96	#7	STR	45'-10"	8994
* B4	99	#4	STR	21'-0"	1389
* B5	66	#7	STR	58'-8"	7914
* B6	64	#7	STR	56'-8"	7413
* B7	66	#4	STR	23'-3"	1025
B8	448	#6	STR	54'-10"	36897
* J1	46	#4	4	1'-5"	44
* K1	8	#5	1	8'-10"	74
* K2	20	#5	2	11'-4"	236
* S1	72	#4	3	3'-7"	172
REINFORCING STEEL = 79,805 LBS					
*EPOXY COATED REINF. STEEL = 81,614 LBS					

BAR TYPES

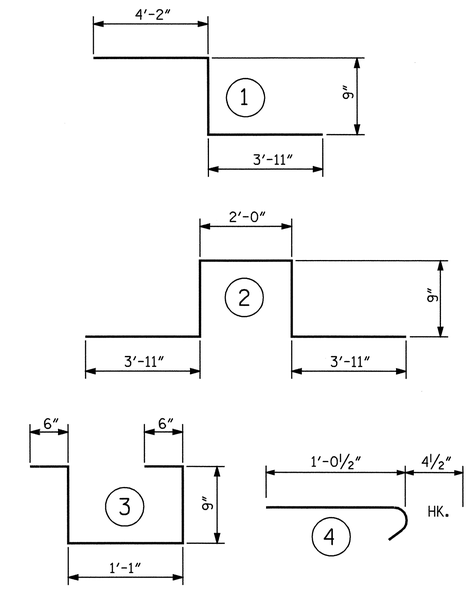

ALL BAR DIMENSIONS ARE OUT TO OUT

SUPERSTRUCTURE BILL OF MATERIAL

	CONCRETE CLASS AA	REINFORCING STEEL	EPOXY COATED REINFORCING STEEL
	(CU. YDS.)	(LBS.)	(LBS.)
POUR #1	135.0	79,805	81,614
POUR #2	287.3		
POUR #3	228.8		
* * TOTALS	651.1		

* * QUANTITIES FOR BARRIER RAILS ARE NOT INCLUDED

GROOVING BRIDGE FLOORS

APPROACH SLABS	2,102	SQ.FT.
BRIDGE DECK	17,920	SQ.FT.
TOTAL	20,022	SQ.FT.

SUPERSTRUCTURE REINFORCING STEEL LENGTHS ARE BASED ON THE FOLLOWING MINIMUM SPLICE LENGTHS

BAR SIZE	SUPERSTRUCTURE EXCEPT APPROACH SLABS, PARAPET, AND BARRIER RAIL		APPROACH SLABS		PARAPET AND BARRIER RAIL
	EPOXY COATED	UNCOATED	EPOXY COATED	UNCOATED	
#4	2'-0"	1'-9"	2'-0"	1'-9"	2'-9"
#5	2'-6"	2'-2"	2'-6"	2'-2"	3'-5"
#6	3'-0"	2'-7"	3'-10"	2'-7"	4'-4"
#7	5'-3"	3'-6"			
#8	6'-10"	4'-7"			

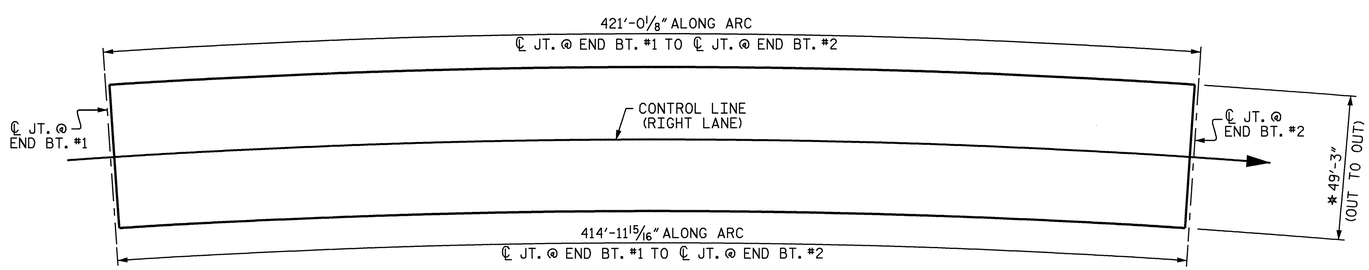

LAYOUT FOR COMPUTING AREA OF REINFORCED CONCRETE DECK SLAB (SQ. FT. = 20587)

* RADIAL DIMENSION

PROJECT NO. R-2719A
LENOIR COUNTY
STATION: 85+98.30 -L-

STATE OF NORTH CAROLINA
DEPARTMENT OF TRANSPORTATION
RALEIGH

SUPERSTRUCTURE
BILL OF MATERIAL
(RIGHT LANE)

NORTH CAROLINA PROFESSIONAL SEAL 14045 ENGINEER TIMOTHY W. COGGINS
4/14/17

REVISIONS						SHEET NO.
NO.	BY:	DATE:	NO.	BY:	DATE:	S-105
1			3			TOTAL SHEETS
2			4			340

DRAWN BY : T.L. AVERETTE DATE : 06-08
CHECKED BY : B.N. BARODAWALA DATE : 08-08

14-APR-2009 07:09
g:\tlpprojects-r\r2719a\structures\str#3\finalplans\r2719a_sd_bm_03.dgn
taverette

STR. #3

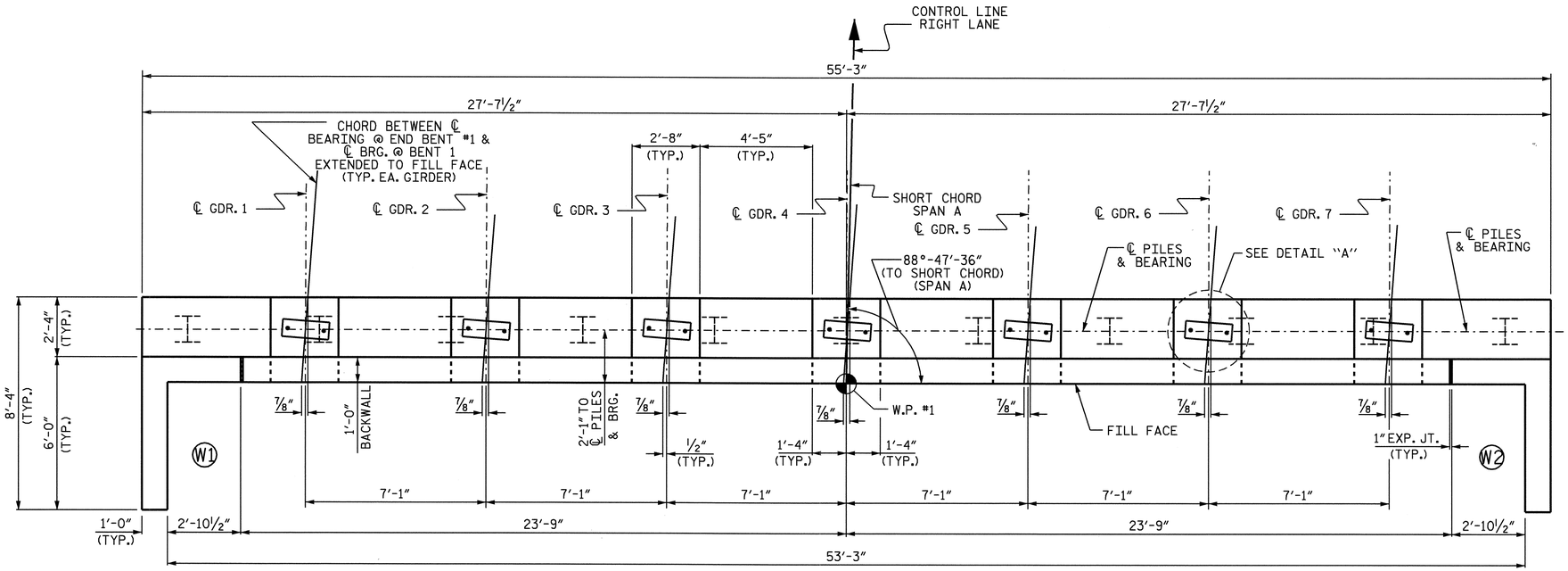

PLAN

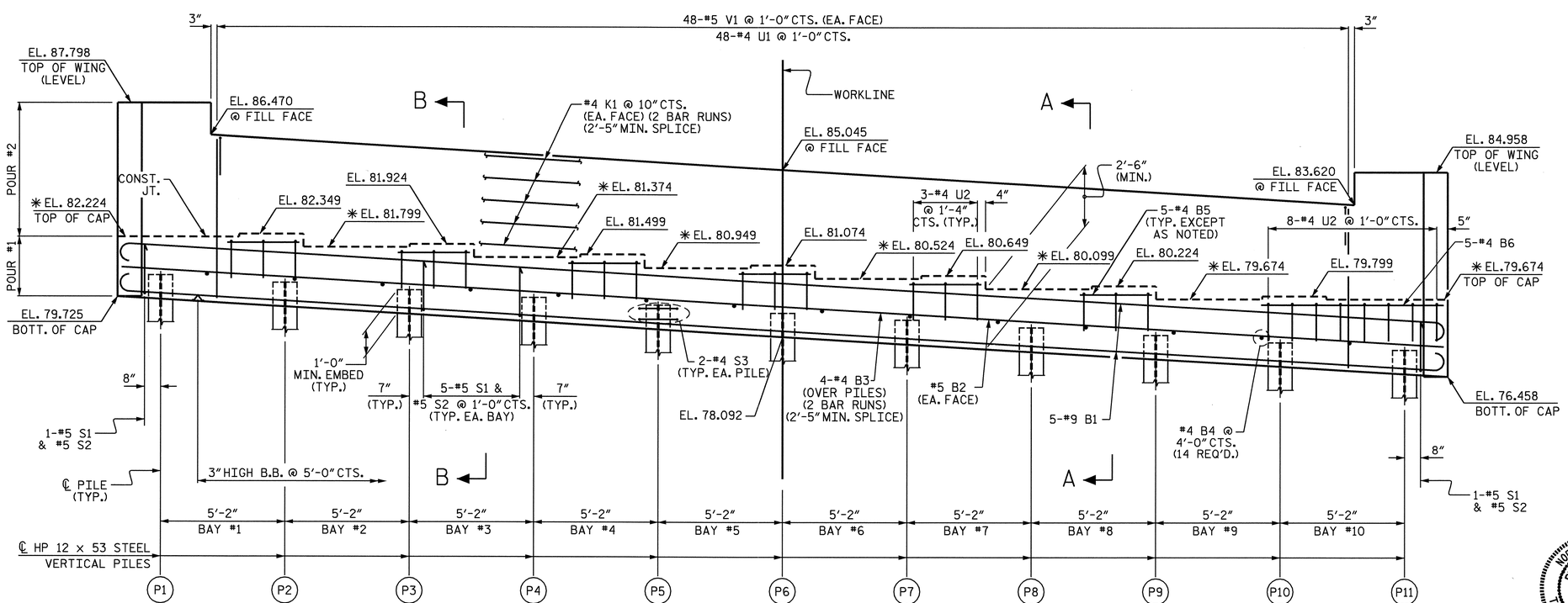

ELEVATION

✳SEE SECTION A-A & B-B, SHEET 3 OF 3

NOTES

STIRRUPS IN CAP MAY BE SHIFTED AS NECESSARY TO CLEAR ANCHOR BOLTS.

BACKWALL SHALL BE PLACED BEFORE APPLYING THE EPOXY PROTECTIVE COATING.

THE TOP SURFACE AREAS OF THE END BENT CAPS SHALL BE CURED IN ACCORDANCE WITH THE STANDARD SPECIFICATIONS EXCEPT THE MEMBRANE CURING COMPOUND METHOD SHALL NOT BE USED.

THE TOP SURFACE OF THE END BENT CAP EXCEPT THE BRIDGE SEAT BUILDUPS SHALL BE SLOPED TRANSVERSELY FROM THE FILL FACE TO THE BACK FACE AT THE RATE OF 2%.

EPOXY COAT THE END BENT CAP AFTER ADJUSTMENTS ARE MADE TO BEARINGS AND ANCHOR BOLTS ARE GROUTED.

THE CENTERLINE OF THE ANCHOR BOLTS, ELASTOMERIC BEARINGS, AND SOLE PLATES ARE TO BE PERPENDICULAR TO THE CHORDS BETWEEN BEARINGS.

FOR PIPE INSERT DETAILS, SEE "ELASTOMERIC BEARING DETAILS" SHEET.

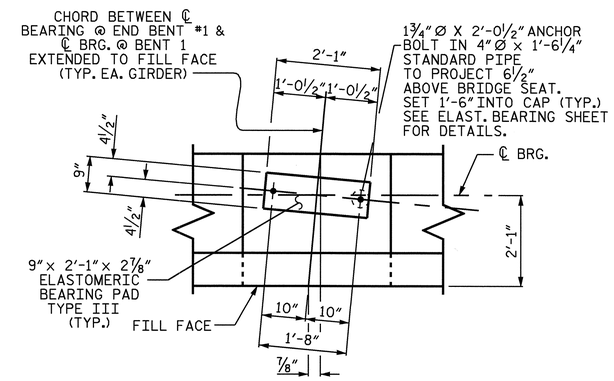

DETAIL "A"

(TYP. EA. GIRDER)

TOP OF PILE ELEVATIONS			
PILE No.	ELEVATION	PILE No.	ELEVATION
P1	80.649	P7	78.816
P2	80.343	P8	78.510
P3	80.038	P9	78.205
P4	79.732	P10	77.900
P5	79.427	P11	75.594
P6	79.121		

PROJECT NO. R-2719A

LENOIR COUNTY

STATION: 85+98.30 -L-

SHEET 1 OF 3

STATE OF NORTH CAROLINA
DEPARTMENT OF TRANSPORTATION
RALEIGH

SUBSTRUCTURE
END BENT #1
(RIGHT LANE)

NORTH CAROLINA PROFESSIONAL SEAL 14045 ENGINEER TIMOTHY J. COGGINS

4/21/09

REVISIONS							SHEET NO.
NO.	BY:	DATE:	NO.	BY:	DATE:		S-106
1			3				TOTAL SHEETS
2			4				340

DRAWN BY : J.B. WILSON DATE : 8/13/08
CHECKED BY : M.L. RORIE DATE : 9/24/08

21-APR-2009 09:53
z:\structures\str#3\finalplans\r-2719a_sd_e*_03.dgn
tcoggins

STR. #3

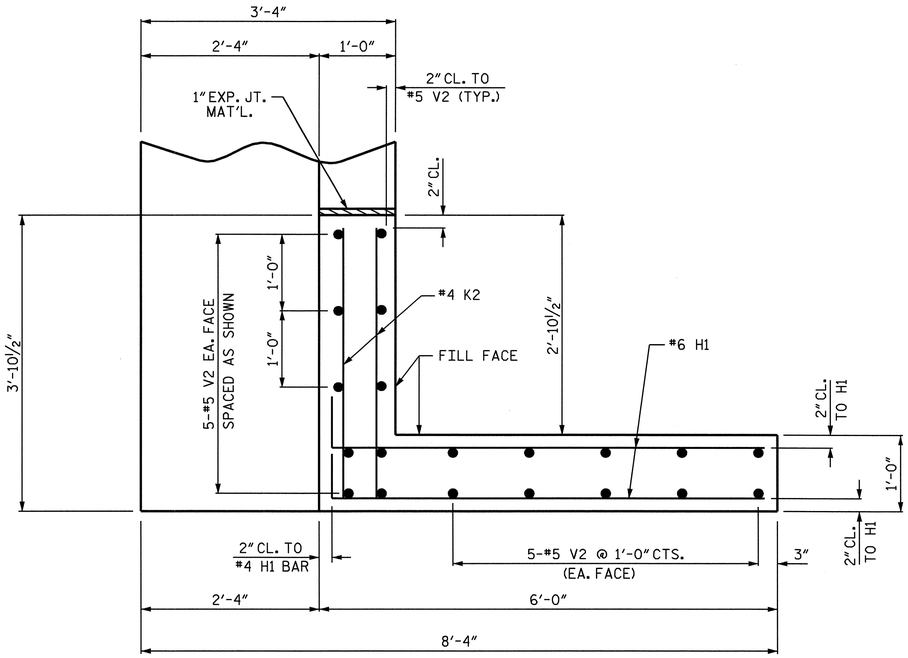

PLAN WING (W1)

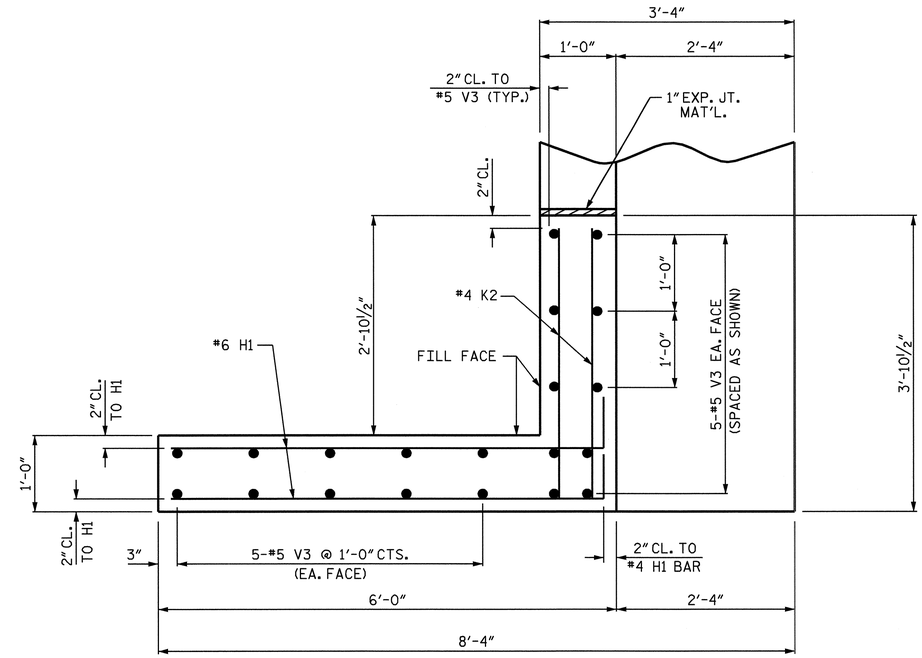

PLAN OF WING (W2)

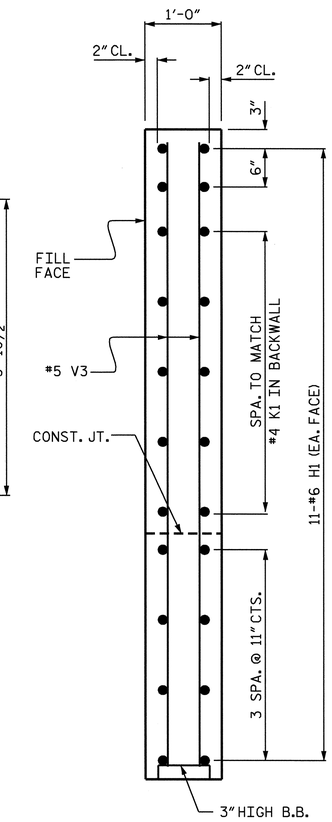

SECTION Y-Y

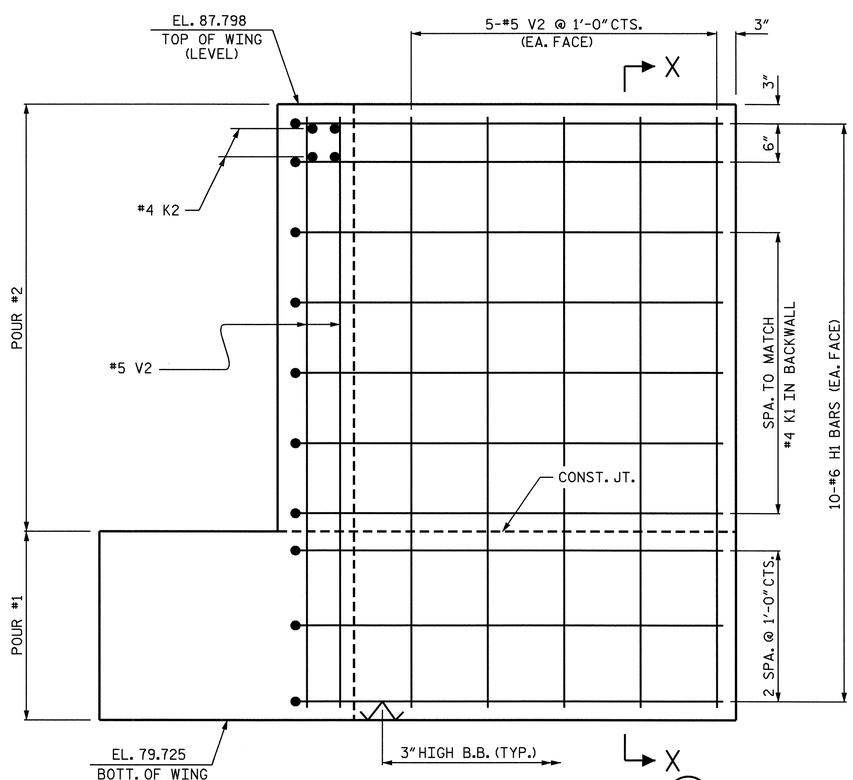

ELEVATION OF WING (W1)

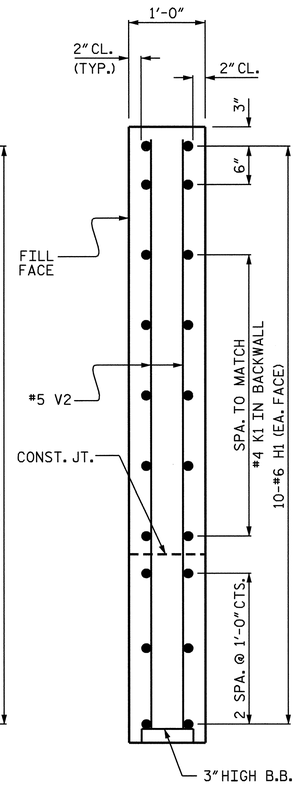

SECTION X-X

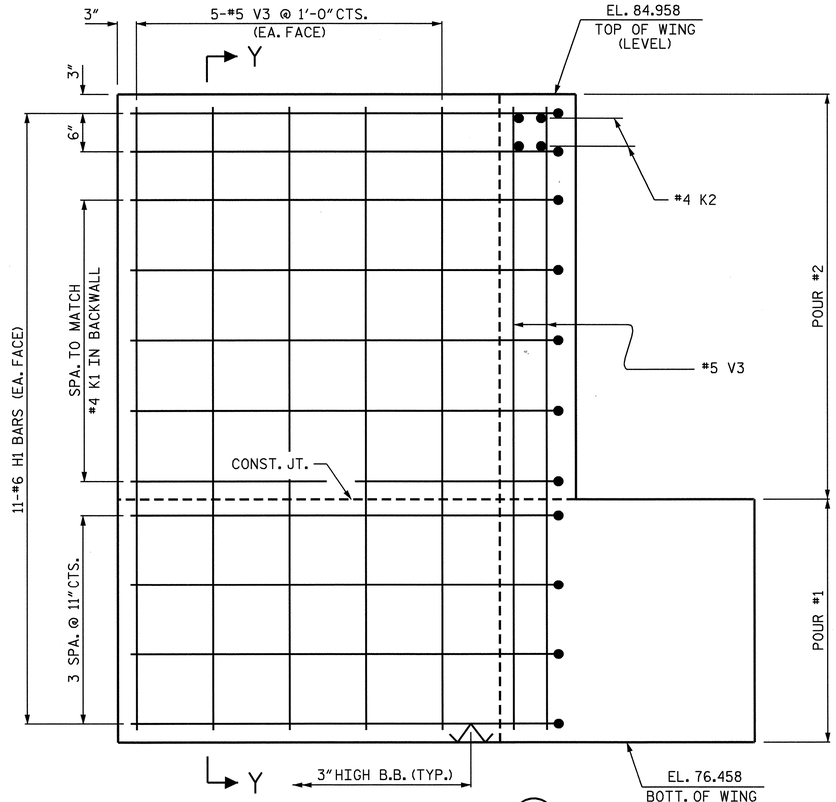

ELEVATION OF WING (W2)

NORTH CAROLINA PROFESSIONAL SEAL 14045 ENGINEER TIMOTHY L. COGGINS

4/21/09

PROJECT NO. R-2719A

LENOIR COUNTY

STATION: 85+98.30 -L-

SHEET 2 OF 3

STATE OF NORTH CAROLINA
DEPARTMENT OF TRANSPORTATION
RALEIGH

SUBSTRUCTURE

END BENT #1
(RIGHT LANE)

REVISIONS							SHEET NO.
NO.	BY:	DATE:	NO.	BY:	DATE:		S-107
1			3				TOTAL SHEETS
2			4				340

DRAWN BY : J.B. WILSON DATE : 8/12/08
CHECKED BY : M.L. RORIE DATE : 9/24/08

21-APR-2009 09:53
z:\structures\str*3\final plans\r-2719a_sd_e*_03.dgn
tcoggins

STR. #3

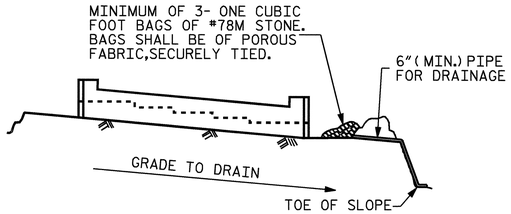

BAGGED STONE AND PIPE SHALL BE PLACED IMMEDIATELY AFTER COMPLETION OF END BENT EXCAVATION. PIPE MAY BE EITHER CONCRETE, CORRUGATED STEEL, CORRUGATED ALUMINUM ALLOY, OR CORRUGATED PLASTIC. PERFORATED PIPE WILL NOT BE ALLOWED.

BAGGED STONE SHALL REMAIN IN PLACE UNTIL THE ENGINEER DIRECTS THAT IT BE REMOVED. THE CONTRACTOR SHALL REMOVE AND DISPOSE OF SILT ACCUMULATIONS AT BAGGED STONE WHEN SO DIRECTED BY THE ENGINEER. BAGS SHALL BE REMOVED AND REPLACED WHENEVER THE ENGINEER DETERMINES THAT THEY HAVE DETERIORATED AND LOST THEIR EFFECTIVENESS.

NO SEPARATE PAYMENT WILL BE MADE FOR THIS WORK AND THE ENTIRE COST OF THIS WORK SHALL BE INCLUDED IN THE UNIT CONTRACT PRICE BID FOR THE SEVERAL PAY ITEMS.

TEMPORARY DRAINAGE AT END BENT

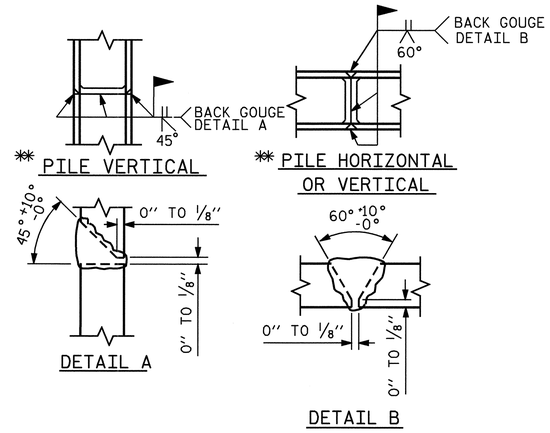

✱ POSITION OF PILE DURING WELDING.

PILE SPLICE DETAILS

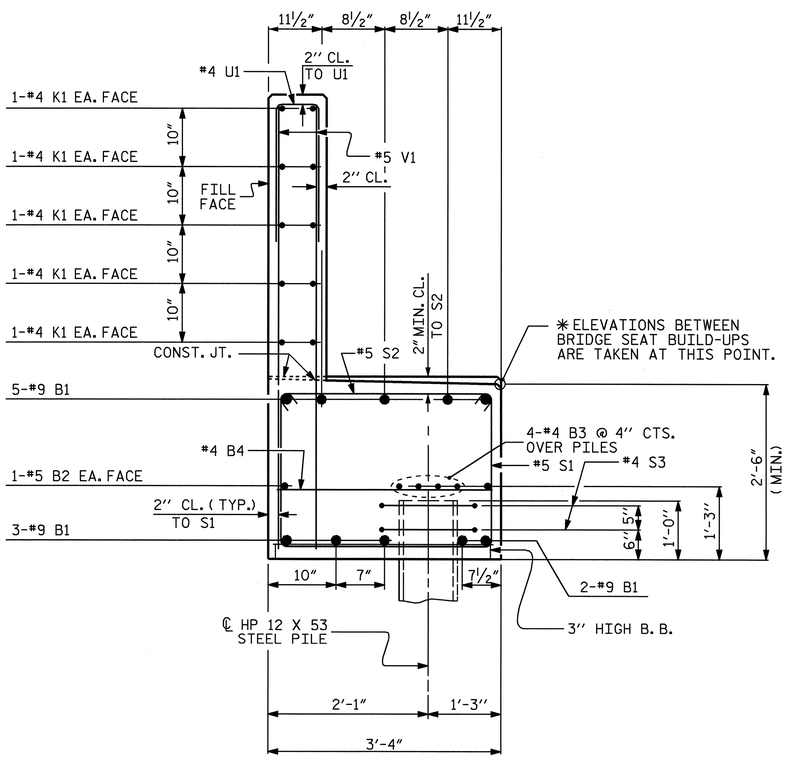

SECTION A-A

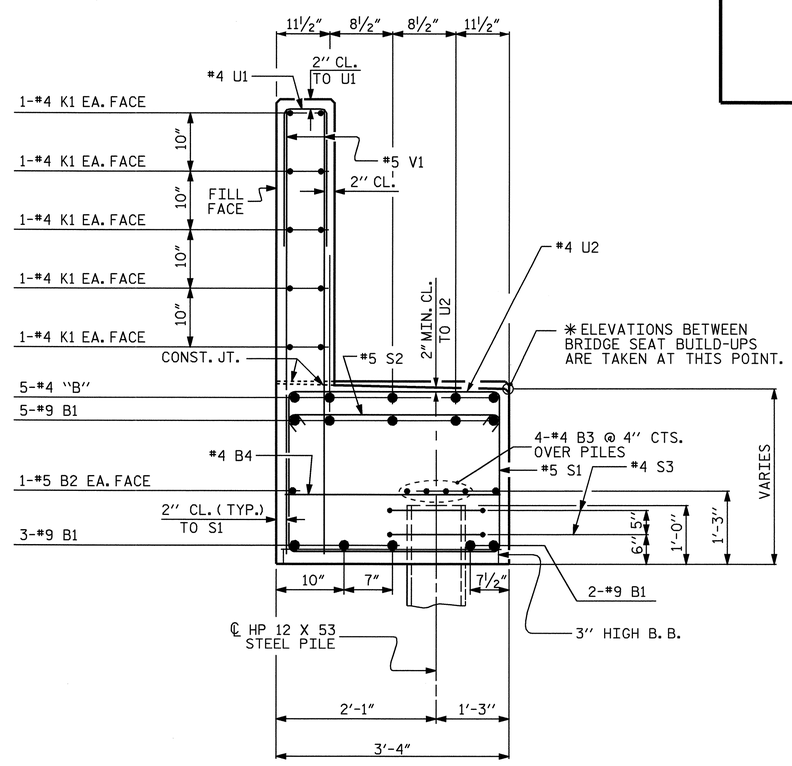

SECTION B-B

BAR TYPES

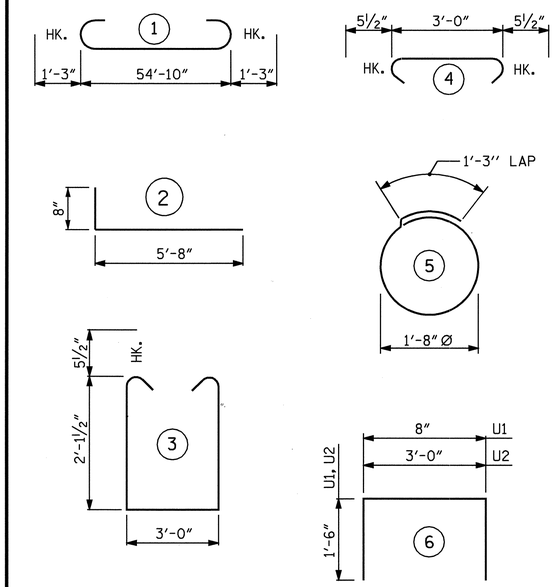

ALL BAR DIMENSIONS ARE OUT TO OUT.

BILL OF MATERIAL

END BENT #1

BAR	NO.	SIZE	TYPE	LENGTH	WEIGHT
B1	10	#9	1	57'-4"	1949
B2	2	#5	STR	54'-11"	115
B3	8	#4	STR	28'-8"	153
B4	14	#4	STR	3'-0"	28
B5	30	#4	STR	3'-0"	60
B6	5	#4	STR	7'-7"	25
H1	42	#6	2	6'-4"	400
K1	20	#4	STR	28'-8"	383
K2	8	#4	STR	3'-6"	19
S1	52	#5	3	8'-2"	443
S2	52	#5	4	3'-11"	212
S3	22	#4	5	6'-6"	96
U1	48	#4	6	3'-8"	118
U2	26	#4	6	6'-0"	104
V1	96	#5	STR	6'-7"	659
V2	20	#5	STR	7'-8"	160
V3	20	#5	STR	8'-2"	170
REINFORCING STEEL				=	5094 LBS

CLASS "A" CONCRETE BREAKDOWN

POUR #1
CAP AND LOWER PART OF WINGS 20.1 YD.3

POUR #2
BACKWALL AND
UPPER PART OF WINGS 10.9 YD.3

CLASS "A" CONCRETE TOTAL 31.0 YD.3

HP 12 x 53 STEEL PILES

No. 11 LIN. FT. 770

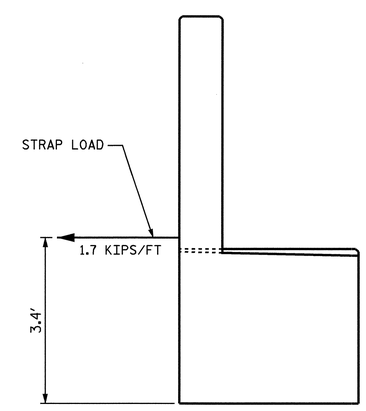

STRAP LOAD DETAIL

PROJECT NO. R-2719A
LENOIR COUNTY
STATION: 85+98.30 -L-

SHEET 3 OF 3

STATE OF NORTH CAROLINA
DEPARTMENT OF TRANSPORTATION
RALEIGH

SUBSTRUCTURE
END BENT #1
(RIGHT LANE)

NORTH CAROLINA PROFESSIONAL SEAL 14045 ENGINEER TIMOTHY A. COGGINS
4/21/09

REVISIONS								SHEET NO.
NO.	BY:	DATE:	NO.	BY:	DATE:			S-108
1			3					TOTAL SHEETS
2			4					340

DRAWN BY : J.B. WILSON DATE : 8/13/08
CHECKED BY : M.L. RORIE DATE : 9/24/08

STR. #3

NOTES

STIRRUPS IN CAP MAY BE SHIFTED AS NECESSARY TO CLEAR ANCHOR BOLTS.

HOOKS ON "V" BARS MAY BE TURNED AS NECESSARY FOR PLACING REINFORCING STEEL..

FOR PILE SPLICE DETAILS, SEE END BENT #1.

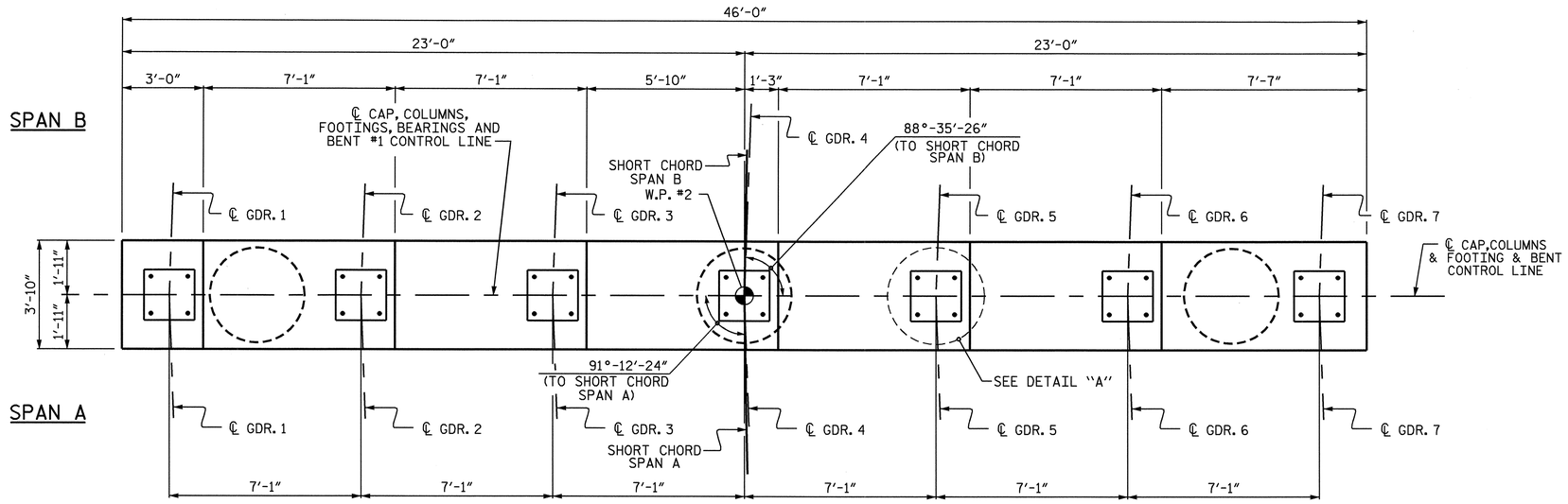

PLAN

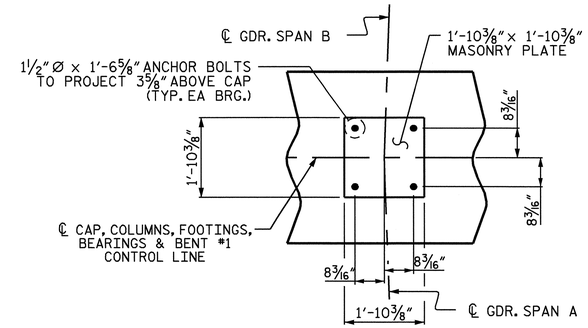

DETAIL "A"
(TYP. EA. GDR.)

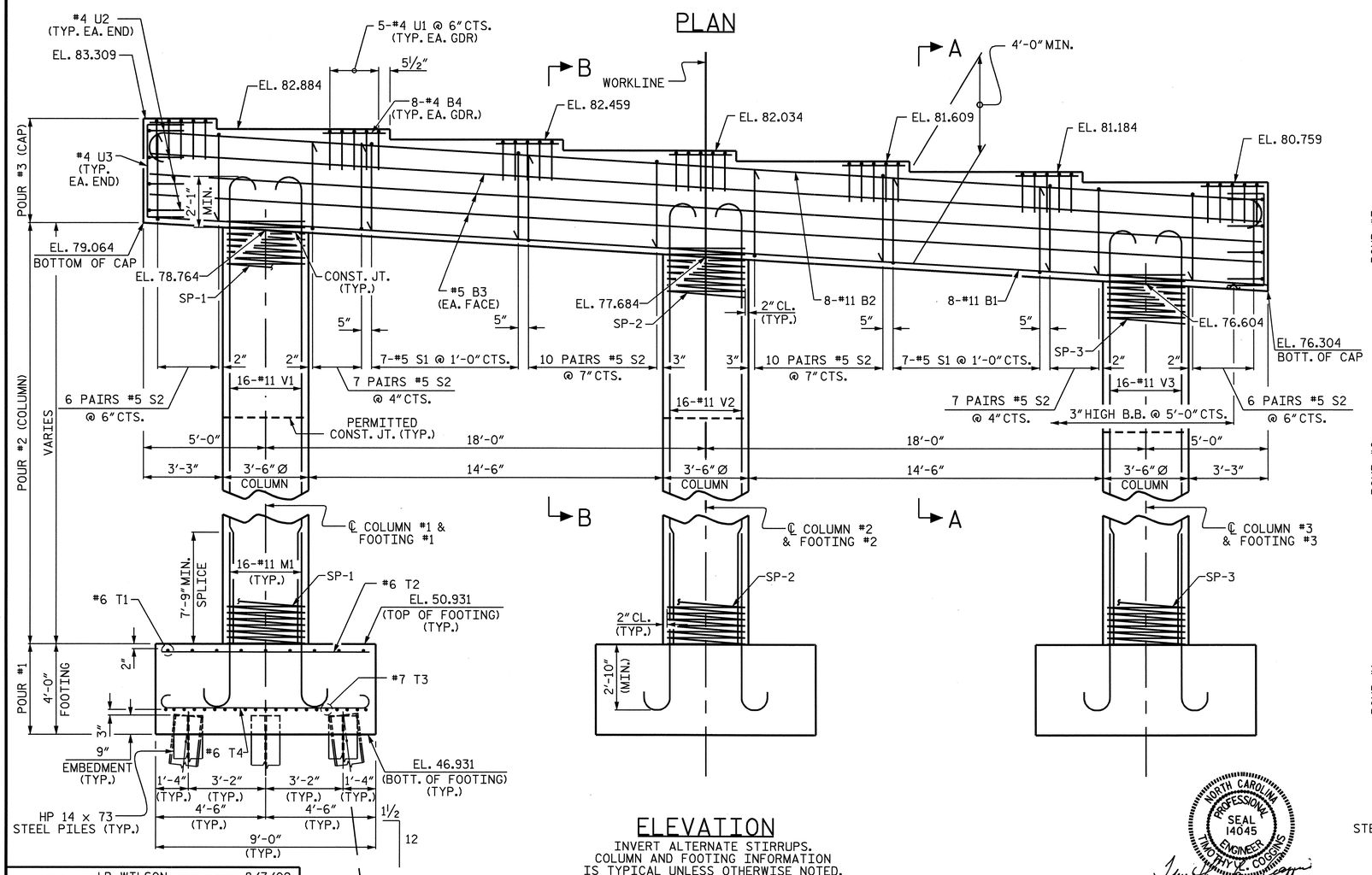

ELEVATION

INVERT ALTERNATE STIRRUPS.
COLUMN AND FOOTING INFORMATION IS TYPICAL UNLESS OTHERWISE NOTED.

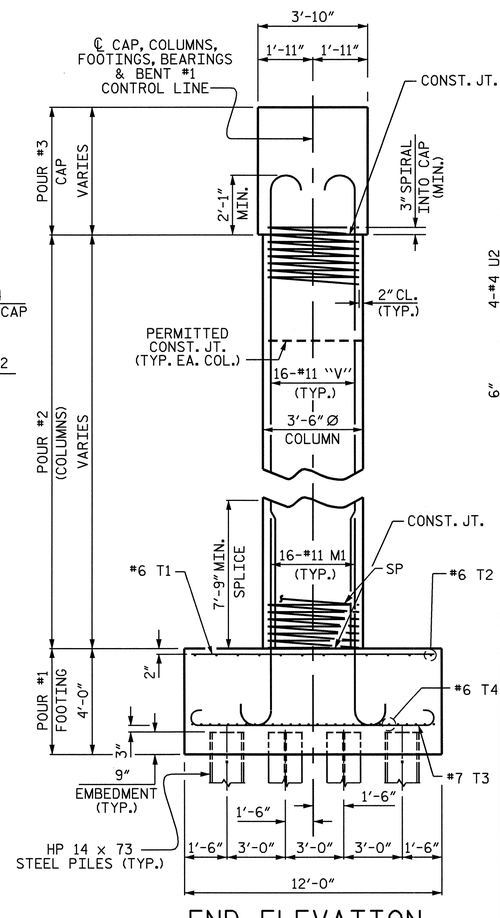

END ELEVATION

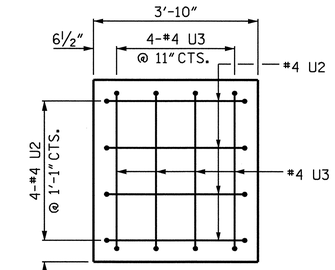

END VIEW
(TYP. EA. END)

PROJECT NO. R-2719A
LENOIR COUNTY
STATION: 85+98.30 -L-

SHEET 1 OF 2

STATE OF NORTH CAROLINA
DEPARTMENT OF TRANSPORTATION
RALEIGH

SUBSTRUCTURE
BENT #1
(RIGHT LANE)

NORTH CAROLINA PROFESSIONAL SEAL 14045 ENGINEER TIMOTHY W. COGGINS
4/21/09

REVISIONS								SHEET NO.
NO.	BY:	DATE:	NO.	BY:	DATE:			S-109
1			3					TOTAL SHEETS
2			4					340

DRAWN BY : J.B. WILSON DATE : 8/7/09
CHECKED BY : M.L. RORIE DATE : 9/25/08

21-APR-2009 12:43
z:\structures\str*3\final plans\r-2719a_sd_b*_03.dgn
tcoggins

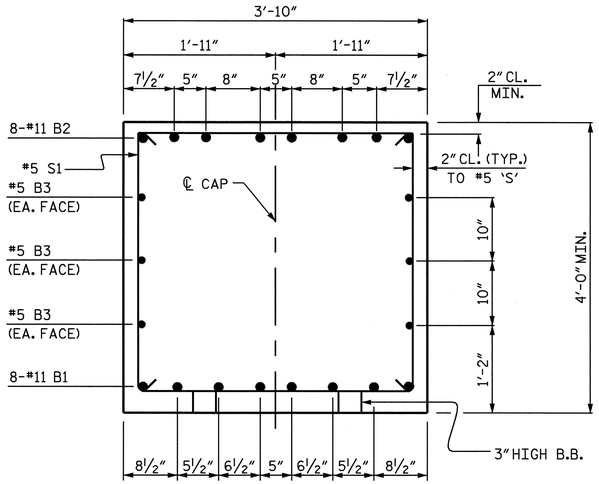

SECTION A-A

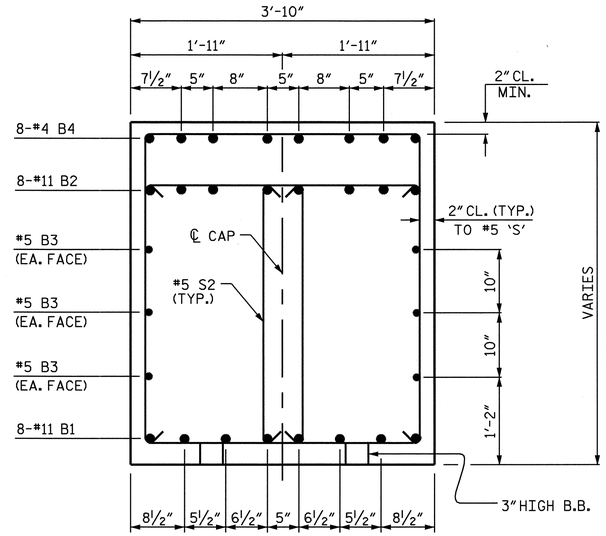

SECTION B-B

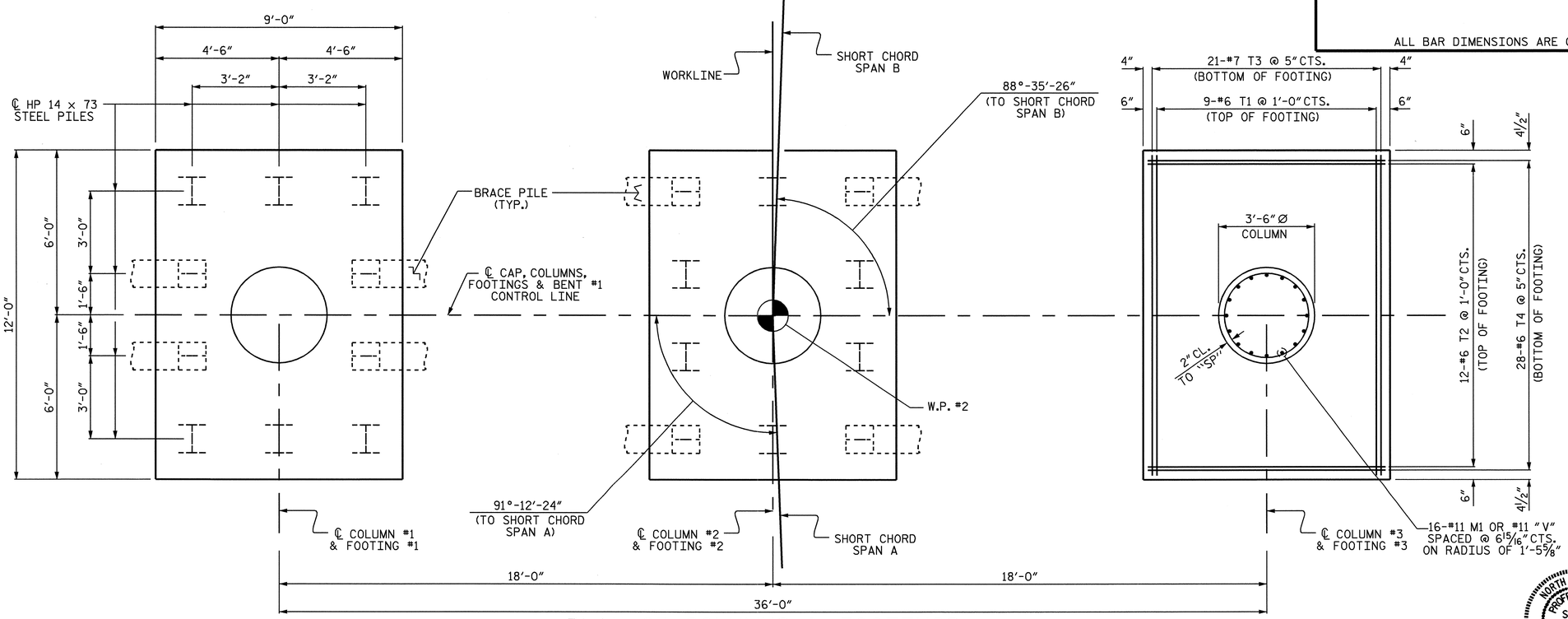

PLAN OF COLUMNS & FOOTINGS

COLUMN AND FOOTING INFORMATION IS TYPICAL UNLESS OTHERWISE NOTED.
PILE ARRANGEMENT PER FOOTING #1 AND #3 IS SIMILAR.
BATTER ALL BRACE PILES 1½:12.
BRACE PILES AS SHOWN.

BAR TYPES

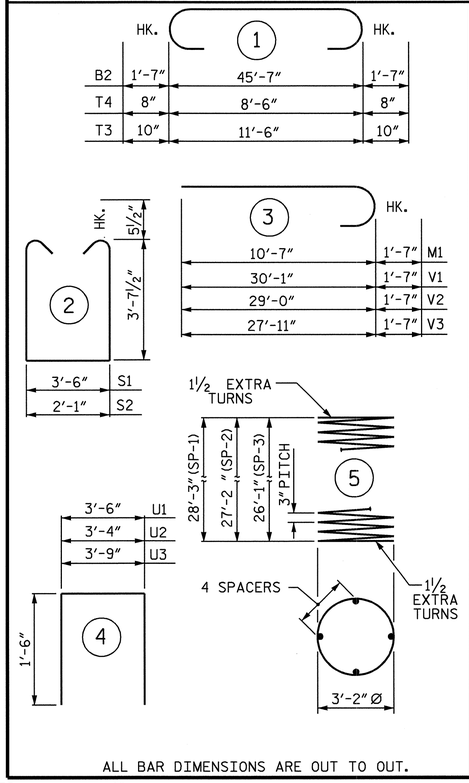

ALL BAR DIMENSIONS ARE OUT TO OUT.

BILL OF MATERIAL

BENT #1

BAR	NO.	SIZE	TYPE	LENGTH	WEIGHT
B1	8	#11	STR	45'-8"	1941
B2	8	#11	1	48'-9"	2072
B3	6	#5	STR	45'-8"	286
B4	56	#4	STR	2'-7"	97
S1	14	#5	2	11'-8"	170
S2	92	#5	2	10'-3"	984
M1	48	#11	3	12'-2"	3103
V1	16	#11	3	31'-8"	2692
V2	16	#11	3	30'-7"	2600
V3	16	#11	3	29'-6"	2508
T1	27	#6	STR	11'-8"	473
T2	36	#6	STR	8'-8"	469
T3	63	#7	1	13'-2"	1696
T4	84	#6	1	9'-10"	1241
U1	35	#4	4	6'-6"	152
U2	8	#4	4	6'-4"	34
U3	8	#4	4	6'-9"	36
REINFORCING STEEL = 20554 LBS.					
SP-1	1	*	5	1139'-3"	761 LBS.
SP-2	1	*	5	1096'-8"	733 LBS.
SP-3	1	*	5	1054'-1"	704 LBS.
SPIRAL COLUMN REINFORCING STEEL 2198 LBS.					

CLASS A CONCRETE BREAKDOWN

POUR #1 FOOTINGS	CU. YD.	48.0
POUR #2 COLUMNS	CU. YD.	28.6
POUR #3 CAP	CU. YD.	28.7
TOTAL CLASS A CONCRETE	CU. YD.	105.3

HP 14 x 73 STEEL PILES
No. 30 LIN. FT. 1950

FOUNDATION EXCAVATION LUMP SUM

* THE SP-1, SP-2, SP-3 SPIRAL REINFORCING STEEL SHALL BE W20 OR D-20 COLD DRAWN WIRE OR #4 PLAIN OR DEFORMED BAR.

PROJECT NO. R-2719A
LENOIR COUNTY
STATION: 85+98.30 -L-

SHEET 2 OF 2

STATE OF NORTH CAROLINA
DEPARTMENT OF TRANSPORTATION
RALEIGH

SUBSTRUCTURE
BENT #1
(RIGHT LANE)

NORTH CAROLINA PROFESSIONAL SEAL 14045 ENGINEER TIMOTHY L. COGGINS
4/21/09

REVISIONS						SHEET NO.
NO.	BY:	DATE:	NO.	BY:	DATE:	S-110
1			3			TOTAL SHEETS
2			4			340

DRAWN BY : J.B. WILSON DATE : 8/7/09
CHECKED BY : M.L. RORIE DATE : 9/25/08

21-APR-2009 12:42
z:\structures\str#3\finalplans\r-2719a_sd_b#_03.dgn
tcoggins

STR. #3

NOTES

STIRRUPS IN CAP MAY BE SHIFTED AS NECESSARY TO CLEAR ANCHOR BOLTS.

HOOKS ON "V" BARS MAY BE TURNED AS NECESSARY FOR PLACING REINFORCING STEEL.

FOR PIPE INSERT DETAILS, SEE POT BEARING SHEET.

FOR PILE SPLICE DETAILS, SEE END BENT #1.

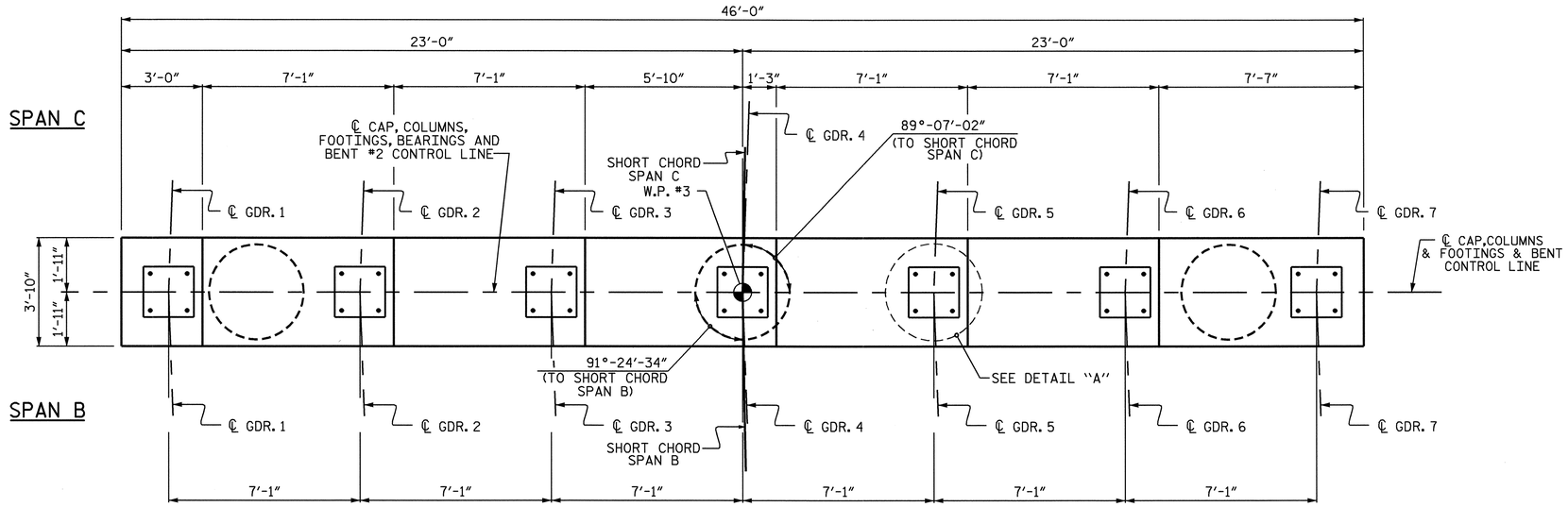

PLAN

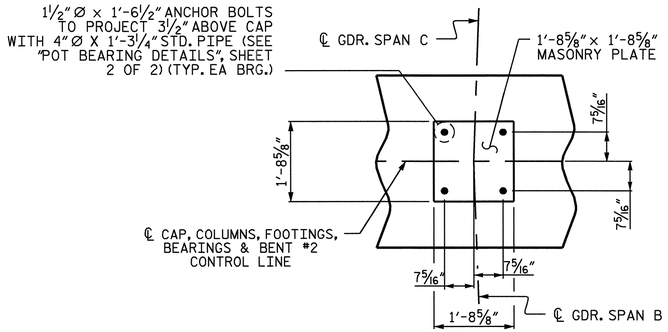

DETAIL "A"
(TYP. EA. GDR.)

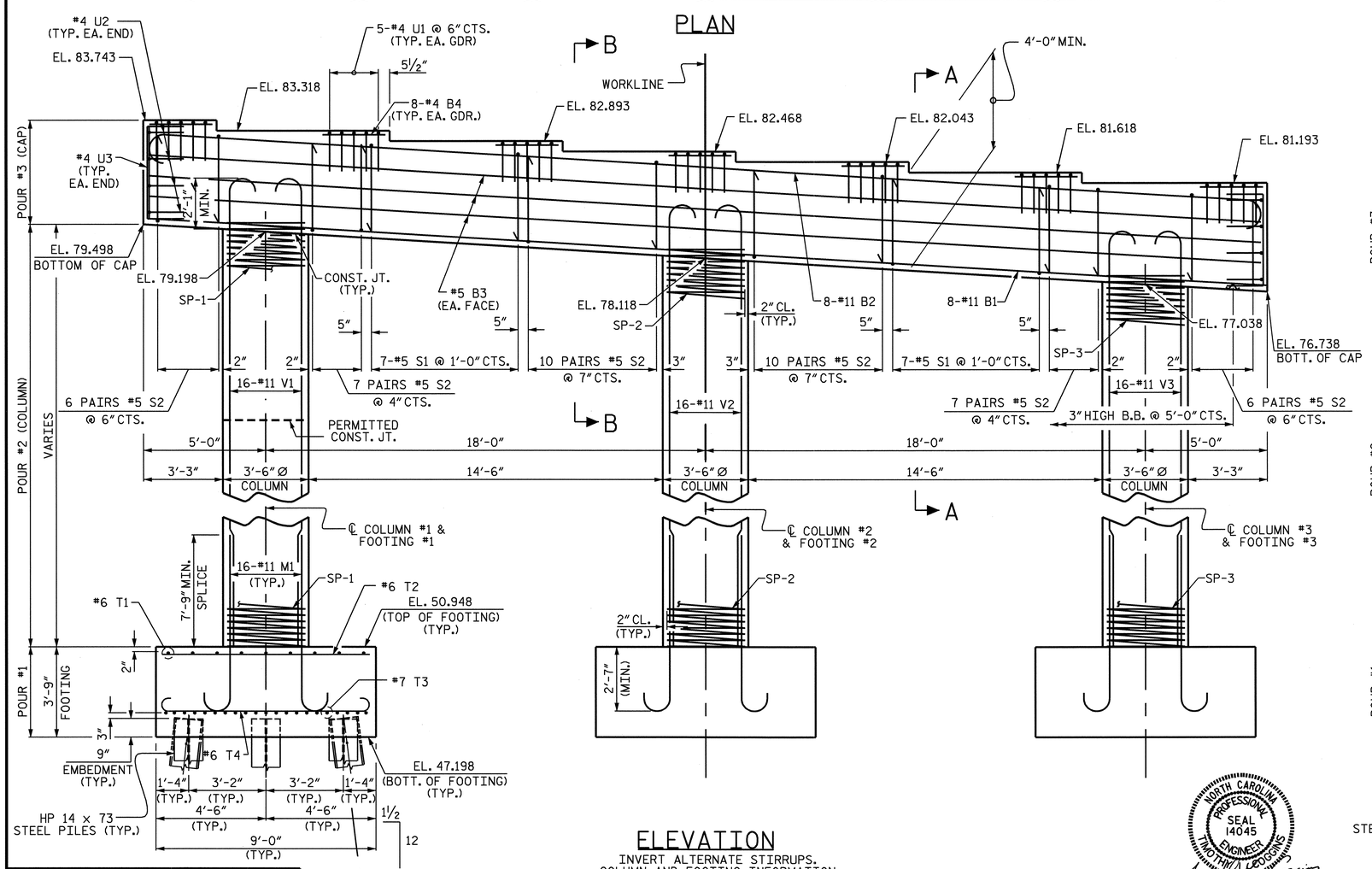

ELEVATION
INVERT ALTERNATE STIRRUPS.
COLUMN AND FOOTING INFORMATION IS TYPICAL UNLESS OTHERWISE NOTED.

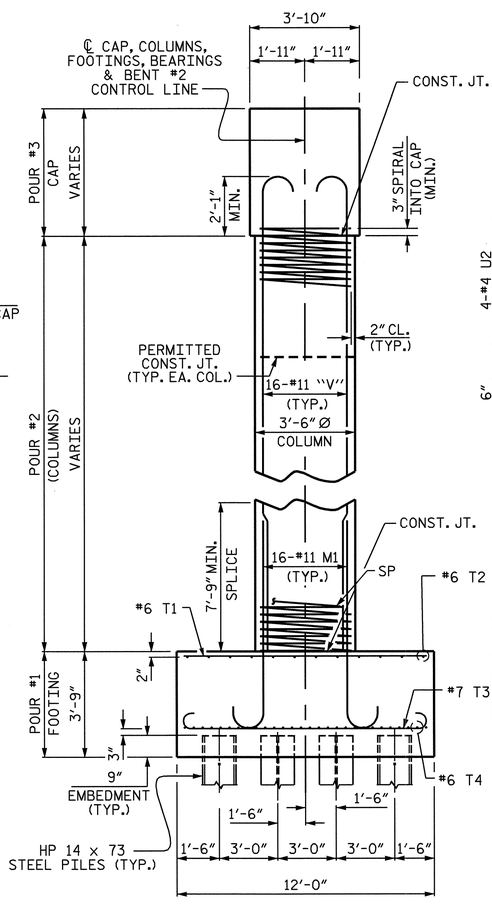

END ELEVATION

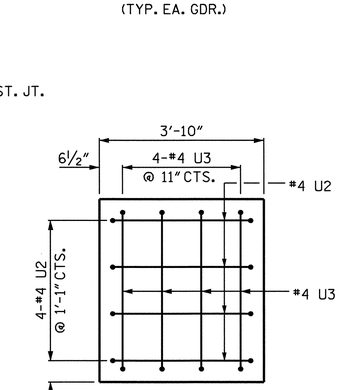

END VIEW
(TYP. EA. END)

PROJECT NO. R-2719A
LENOIR COUNTY
STATION: 85+98.30 -L-

SHEET 1 OF 2

STATE OF NORTH CAROLINA
DEPARTMENT OF TRANSPORTATION
RALEIGH

SUBSTRUCTURE
BENT #2
(RIGHT LANE)

NORTH CAROLINA PROFESSIONAL SEAL 14045 ENGINEER TIMOTHY L. COGGINS
4/21/09

REVISIONS								SHEET NO.
NO.	BY:	DATE:	NO.	BY:	DATE:			S-111
1			3					TOTAL SHEETS
2			4					340

DRAWN BY : J.B. WILSON DATE : 8/7/09
CHECKED BY : M.L. RORIE DATE : 9/25/08

21-APR-2009 12:42
z:\structures\str#3\final plans\r-2719a_sd_b*_03.dgn
tcoggins

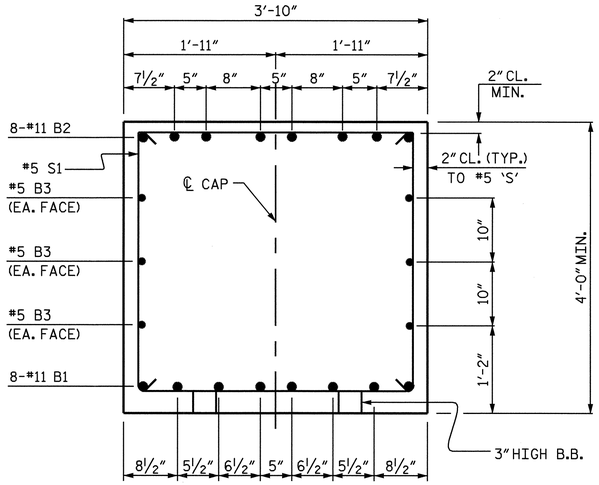

SECTION A-A

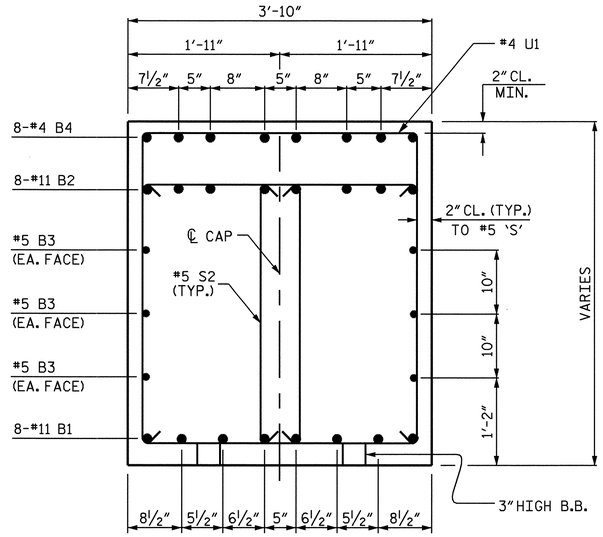

SECTION B-B

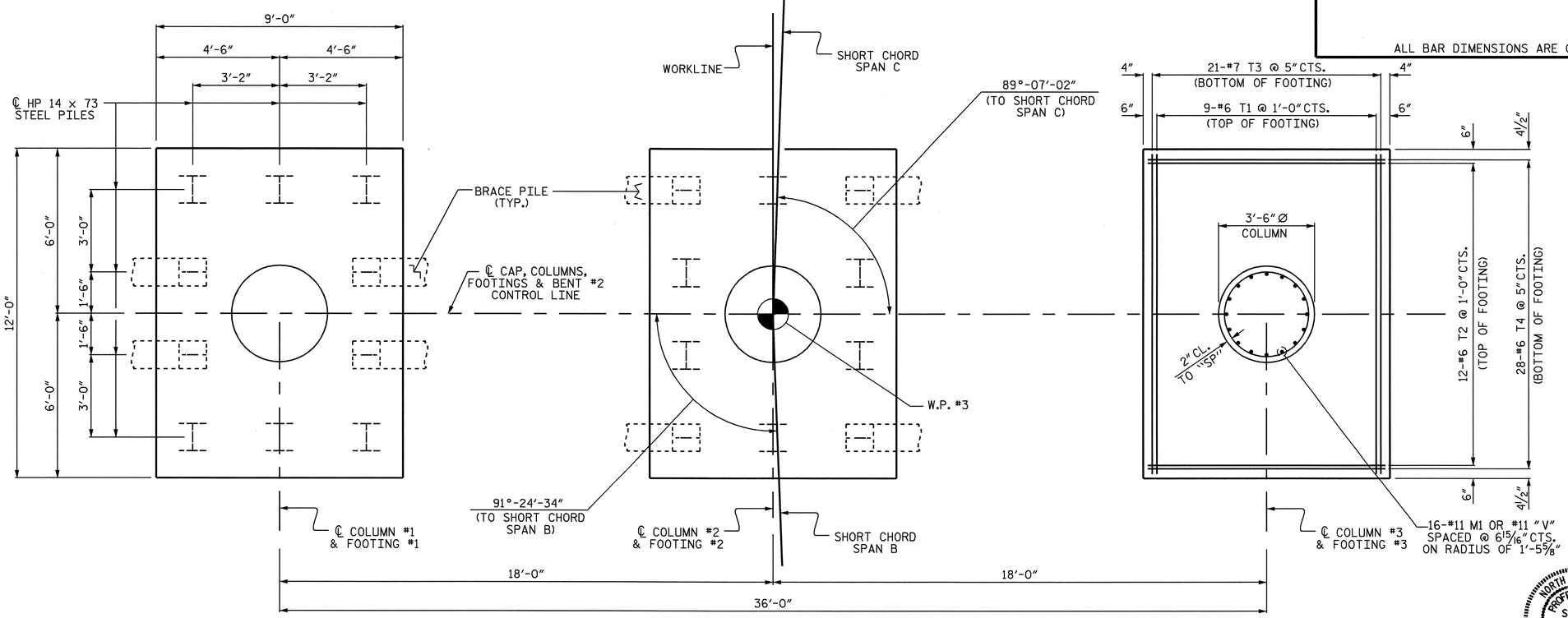

PLAN OF COLUMNS & FOOTINGS

COLUMN AND FOOTING INFORMATION IS TYPICAL UNLESS OTHERWISE NOTED.
PILE ARRANGEMENT PER FOOTING #1 AND #3 IS THE SAME.
BATTER ALL BRACE PILES 1½: 12.
BRACE PILES AS SHOWN.

BAR TYPES

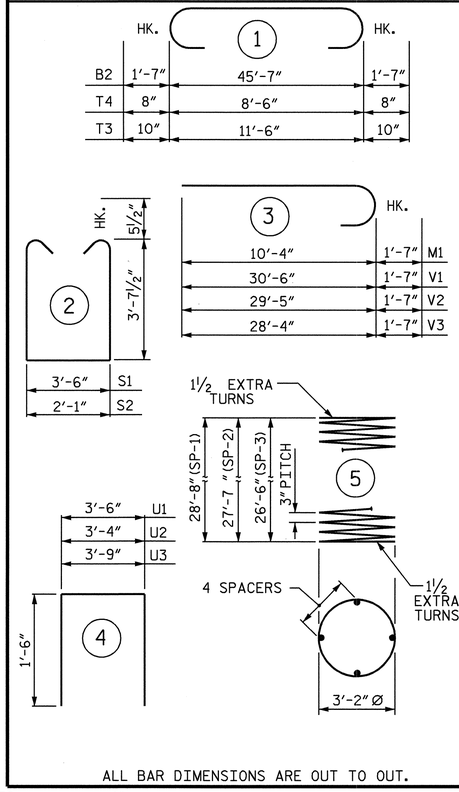

ALL BAR DIMENSIONS ARE OUT TO OUT.

BILL OF MATERIAL

BENT #2

BAR	NO.	SIZE	TYPE	LENGTH	WEIGHT
B1	8	#11	STR	45'-8"	1941
B2	8	#11	1	48'-9"	2072
B3	6	#5	STR	45'-8"	286
B4	56	#4	STR	2'-7"	97
S1	14	#5	2	11'-8"	170
S2	92	#5	2	10'-3"	984
M1	48	#11	3	11'-11	3039
V1	16	#11	3	32'-1"	2727
V2	16	#11	3	31'-0"	2635
V3	16	#11	3	29'-11"	2543
T1	27	#6	STR	11'-8"	473
T2	36	#6	STR	8'-8"	469
T3	63	#7	1	13'-2"	1696
T4	84	#6	1	9'-10"	1241
U1	35	#4	4	6'-6"	152
U2	8	#4	4	6'-4"	34
U3	8	#4	4	6'-9"	36
REINFORCING STEEL = 20595 LBS.					
SP-1	1	*	5	1155'-7"	772 LBS.
SP-2	1	*	5	1113'-1"	744 LBS.
SP-3	1	*	5	1070'-6"	715 LBS.
SPIRAL COLUMN REINFORCING STEEL					2231 LBS.

CLASS A CONCRETE BREAKDOWN

POUR #1 FOOTINGS	CU. YD.	45.0
POUR #2 COLUMNS	CU. YD.	29.0
POUR #3 CAP	CU. YD.	28.7
TOTAL CLASS A CONCRETE	CU. YD.	102.7

HP 14 x 73 STEEL PILES
No. 30 LIN. FT. 1950

FOUNDATION EXCAVATION LUMP SUM

*THE SP-1, SP-2, SP-3 SPIRAL REINFORCING STEEL SHALL BE W20 OR D-20 COLD DRAWN WIRE OR #4 PLAIN OR DEFORMED BAR.

PROJECT NO. R-2719A
LENOIR COUNTY
STATION: 85+98.30 -L-

SHEET 2 OF 2

STATE OF NORTH CAROLINA
DEPARTMENT OF TRANSPORTATION
RALEIGH

SUBSTRUCTURE
BENT #2
(RIGHT LANE)

NORTH CAROLINA PROFESSIONAL SEAL 14045 ENGINEER TIMOTHY M. COGGINS
4/21/09

REVISIONS						SHEET NO.
NO.	BY:	DATE:	NO.	BY:	DATE:	S-112
1			3			TOTAL SHEETS
2			4			340

DRAWN BY : J.B. WILSON DATE : 8/7/09
CHECKED BY : M.L. RORIE DATE : 9/25/08

21-APR-2009 12:42
z:\structures\str*3\final plans\r-2719a_sd_b*_03.dgn
tcoggins

STR. #3

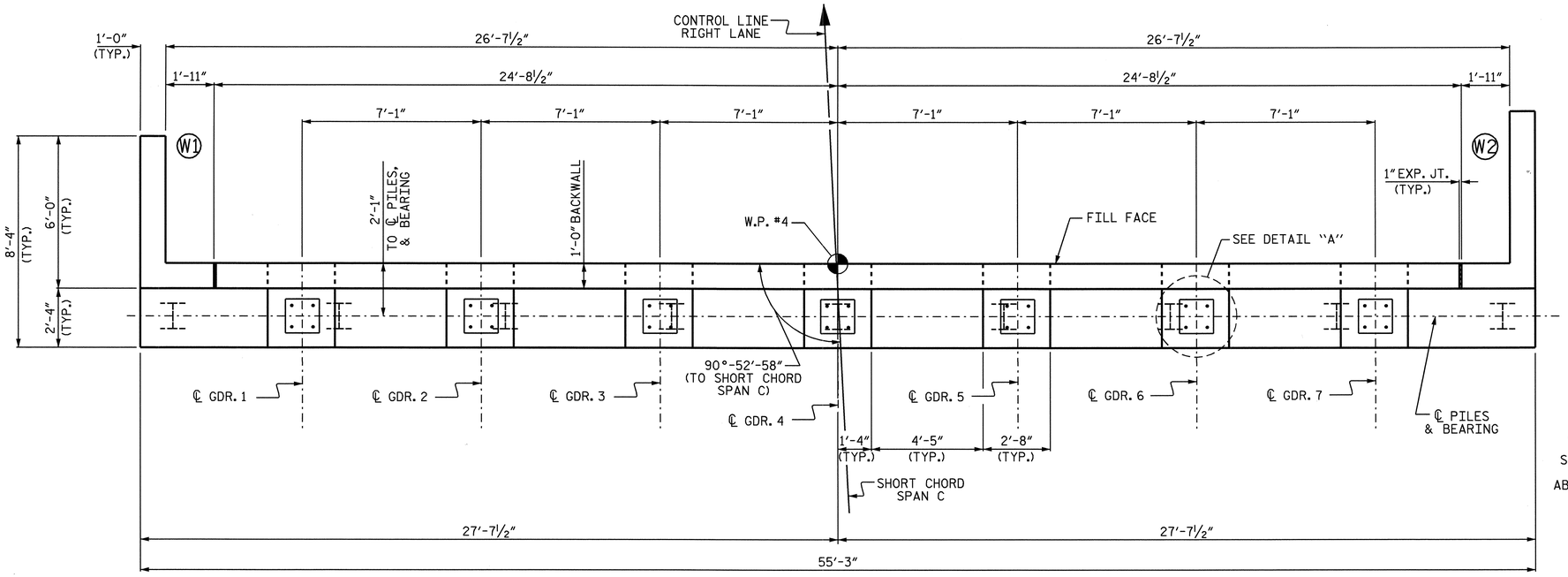

PLAN

NOTES

STIRRUPS IN CAP MAY BE SHIFTED AS NECESSARY TO CLEAR ANCHOR BOLTS.

BACKWALL SHALL BE PLACED BEFORE APPLYING THE EPOXY PROTECTIVE COATING.

THE TOP SURFACE AREAS OF THE END BENT CAPS SHALL BE CURED IN ACCORDANCE WITH THE STANDARD SPECIFICATIONS EXCEPT THE MEMBRANE CURING COMPOUND METHOD SHALL NOT BE USED.

THE TOP SURFACE OF THE END BENT CAP EXCEPT THE BRIDGE SEAT BUILDUPS SHALL BE SLOPED TRANSVERSELY FROM THE FILL FACE TO THE BACK FACE AT THE RATE OF 2%.

FOR PIPE INSERT DETAILS, SEE "POT BEARING DETAILS" SHEET.

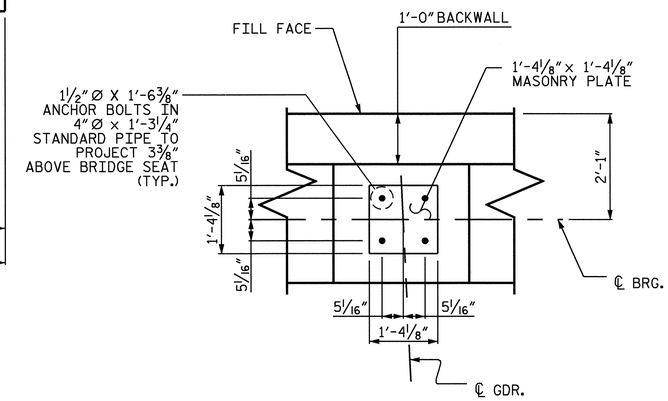

DETAIL "A"
(TYP. EA. GIRDER)

TOP OF PILE ELEVATIONS			
PILE No.	ELEVATION	PILE No.	ELEVATION
P1	81.921	P6	79.975
P2	81.532	P7	79.586
P3	81.143	P8	79.196
P4	80.753	P9	78.807
P5	80.364		

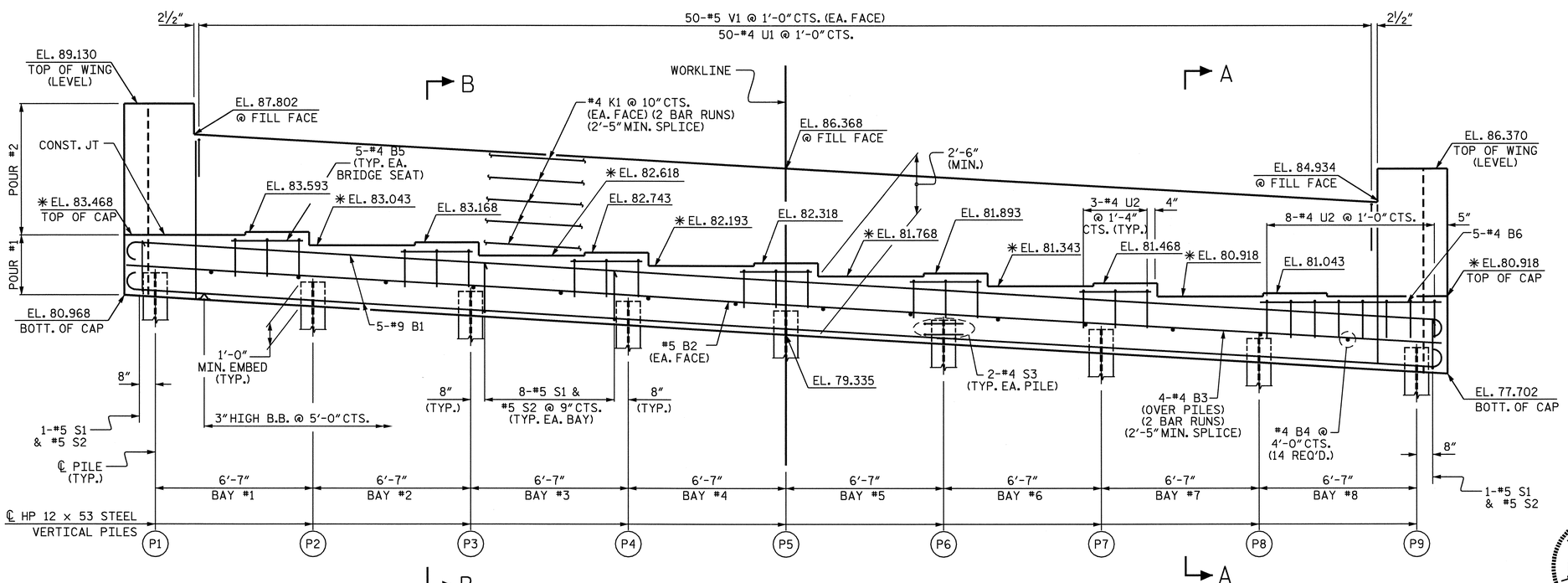

ELEVATION

PROJECT NO. R-2719A
LENOIR COUNTY
STATION: 85+98.30 -L-

SHEET 1 OF 3

STATE OF NORTH CAROLINA
DEPARTMENT OF TRANSPORTATION
RALEIGH

SUBSTRUCTURE
END BENT #2
(RIGHT LANE)

NORTH CAROLINA PROFESSIONAL SEAL 14045 ENGINEER TIMOTHY W. COGGINS
4/21/09

REVISIONS								SHEET NO.
NO.	BY:	DATE:	NO.	BY:	DATE:			S-113
1			3					TOTAL SHEETS
2			4					340

DRAWN BY : J.B. WILSON DATE : 8/14/08
CHECKED BY : M.L. RORIE DATE : 9/24/08

21-APR-2009 09:52
z:\structures\str#3\finalplans\r-2719a_sd_e#_03.dgn
tcoggins

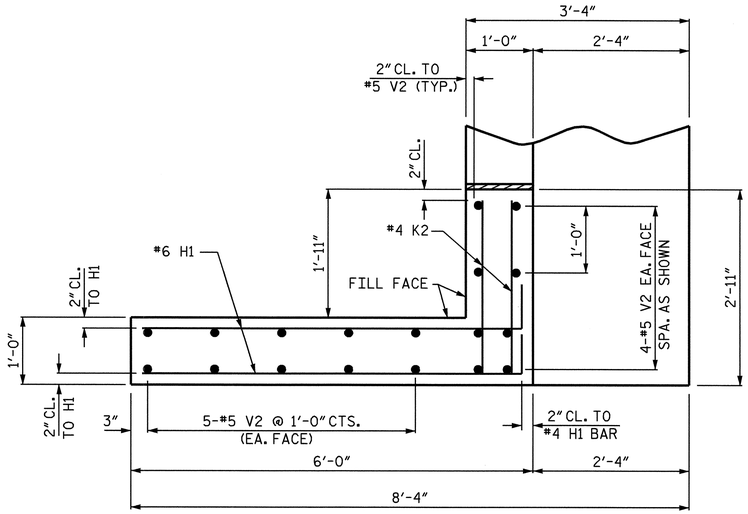

PLAN WING (W1)

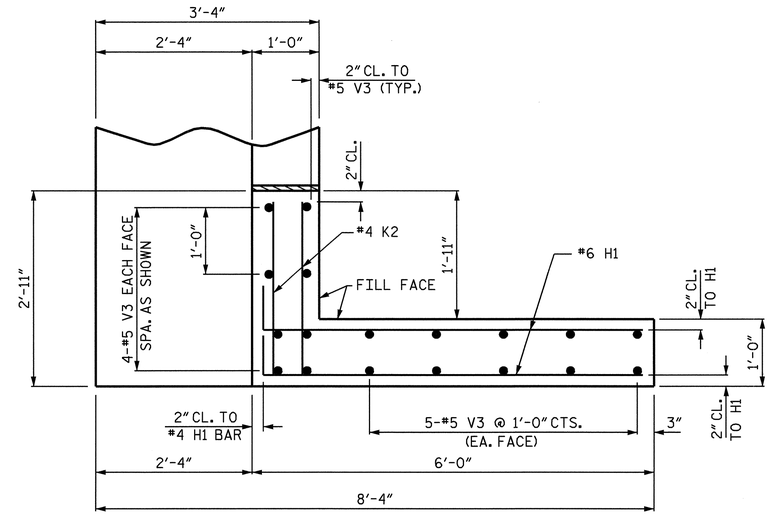

PLAN OF WING (W2)

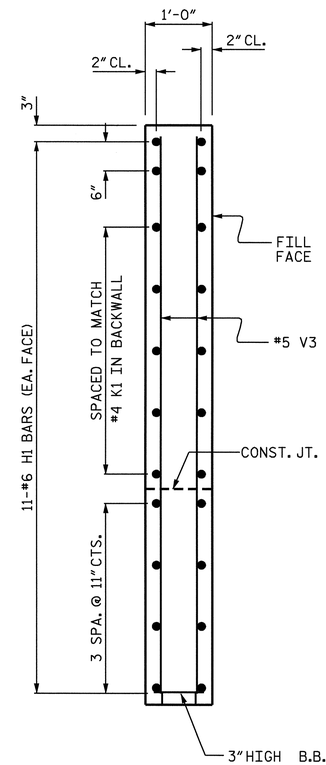

SECTION Y-Y

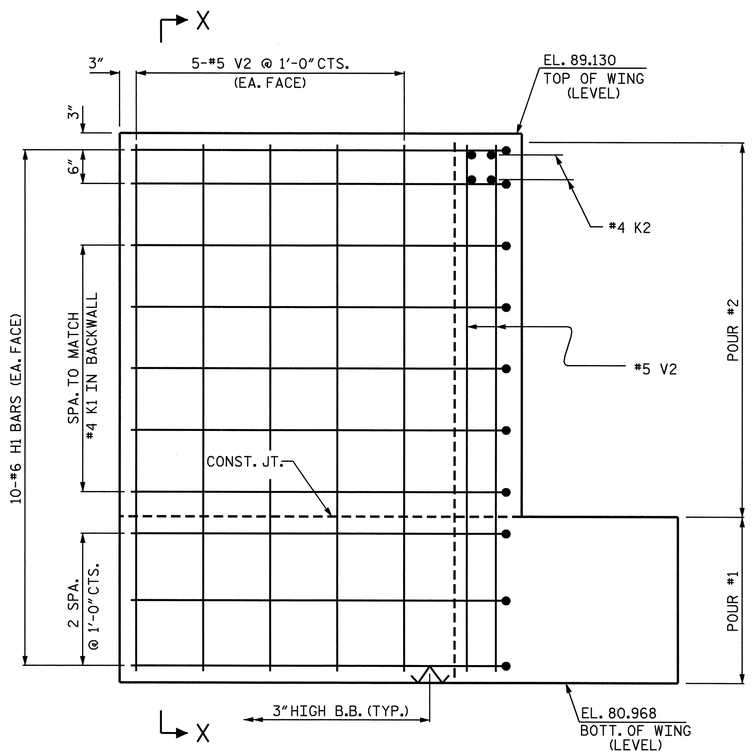

ELEVATION OF WING (W1)

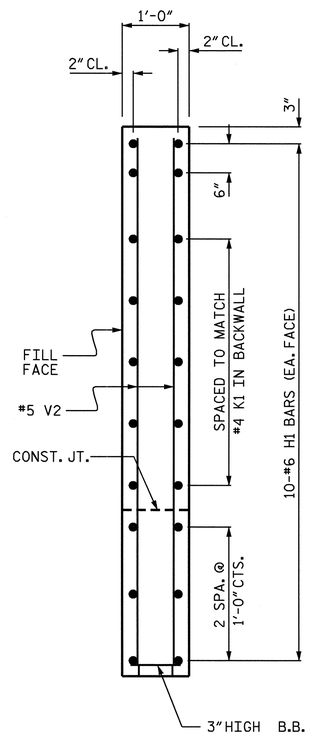

SECTION X-X

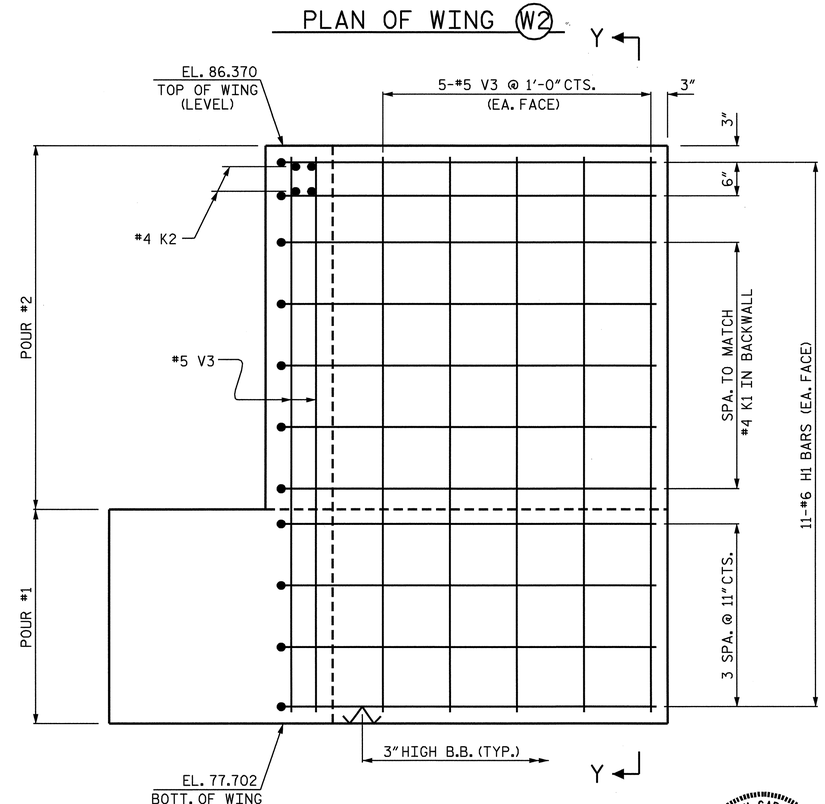

ELEVATION OF WING (W2)

NORTH CAROLINA PROFESSIONAL SEAL 14045 ENGINEER TIMOTHY L. COGGINS

Timothy L. Coggins 4/21/09

PROJECT NO. R-2719A

LENOIR COUNTY

STATION: 85+98.30 -L-

SHEET 2 OF 3

STATE OF NORTH CAROLINA
DEPARTMENT OF TRANSPORTATION
RALEIGH

SUBSTRUCTURE
END BENT #2
(RIGHT LANE)

REVISIONS						SHEET NO.
NO.	BY:	DATE:	NO.	BY:	DATE:	S-114
1			3			TOTAL SHEETS
2			4			340

DRAWN BY : J.B. WILSON DATE : 8/13/08
CHECKED BY : M.L. RORIE DATE : 9/24/08

21-APR-2009 09:52
z:\structures\str*3\final plans\r-2719a_sd_e*_03.dgn
tcoggins

STR. #3

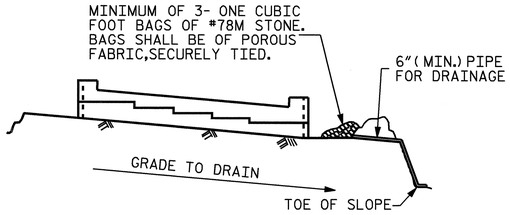

BAGGED STONE AND PIPE SHALL BE PLACED IMMEDIATELY AFTER COMPLETION OF END BENT EXCAVATION. PIPE MAY BE EITHER CONCRETE, CORRUGATED STEEL, CORRUGATED ALUMINUM ALLOY, OR CORRUGATED PLASTIC. PERFORATED PIPE WILL NOT BE ALLOWED.

BAGGED STONE SHALL REMAIN IN PLACE UNTIL THE ENGINEER DIRECTS THAT IT BE REMOVED. THE CONTRACTOR SHALL REMOVE AND DISPOSE OF SILT ACCUMULATIONS AT BAGGED STONE WHEN SO DIRECTED BY THE ENGINEER. BAGS SHALL BE REMOVED AND REPLACED WHENEVER THE ENGINEER DETERMINES THAT THEY HAVE DETERIORATED AND LOST THEIR EFFECTIVENESS.

NO SEPARATE PAYMENT WILL BE MADE FOR THIS WORK AND THE ENTIRE COST OF THIS WORK SHALL BE INCLUDED IN THE UNIT CONTRACT PRICE BID FOR THE SEVERAL PAY ITEMS.

TEMPORARY DRAINAGE AT END BENT

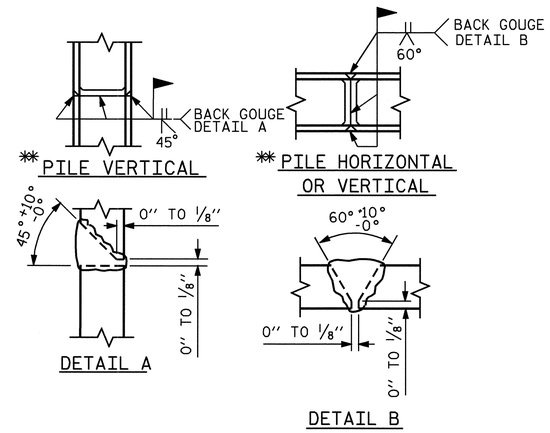

** POSITION OF PILE DURING WELDING.

PILE SPLICE DETAILS

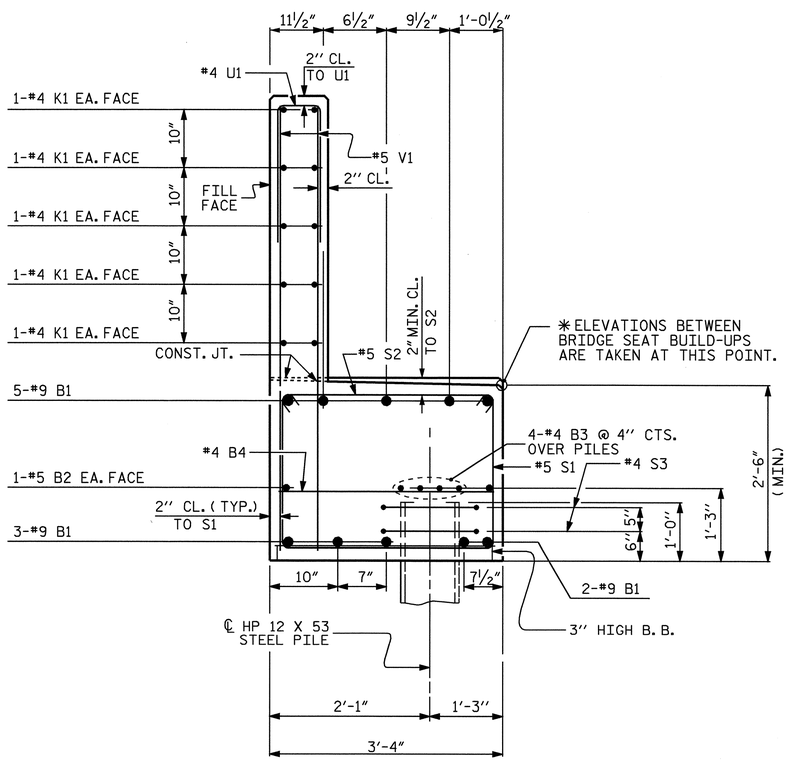

SECTION A-A

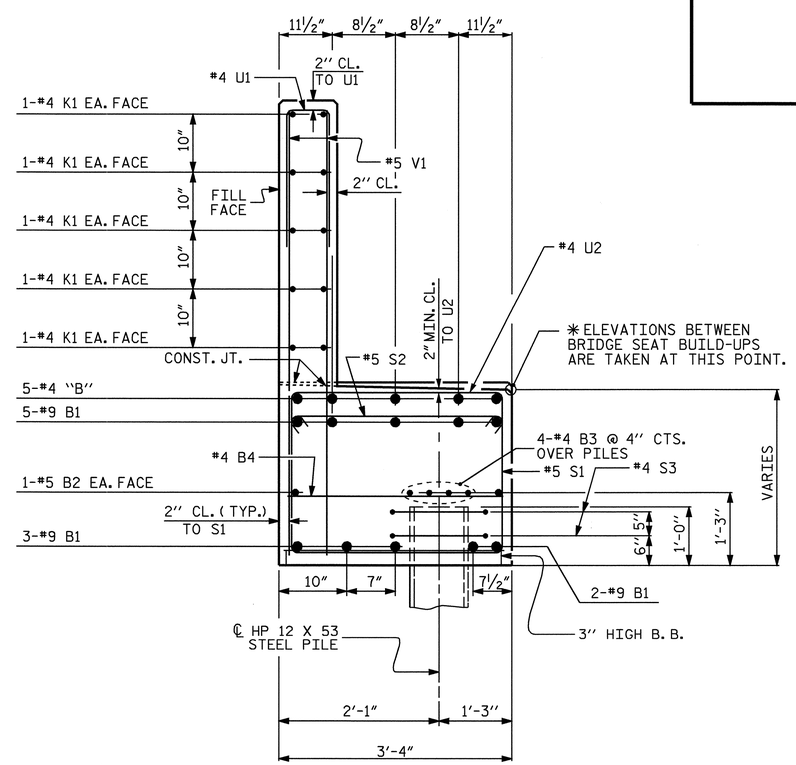

SECTION B-B

BAR TYPES

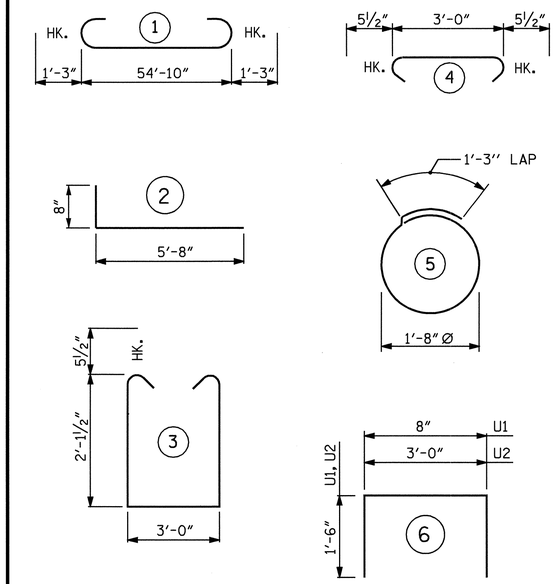

ALL BAR DIMENSIONS ARE OUT TO OUT.

BILL OF MATERIAL

END BENT #2

BAR	NO.	SIZE	TYPE	LENGTH	WEIGHT
B1	10	#9	1	57'-4"	1949
B2	2	#5	STR	54'-11"	115
B3	8	#4	STR	28'-8"	153
B4	14	#4	STR	3'-0"	28
B5	30	#4	STR	3'-0"	60
B6	5	#4	STR	7'-7"	25
H1	42	#6	2	6'-4"	400
K1	20	#4	STR	28'-8"	383
K2	8	#4	STR	2'-7"	14
S1	66	#5	3	8'-2"	562
S2	66	#5	4	3'-11"	270
S3	18	#4	5	6'-6"	78
U1	50	#4	6	3'-8"	122
U2	26	#4	6	6'-0"	104
V1	100	#5	STR	6'-8"	695
V2	18	#5	STR	7'-10"	147
V3	18	#5	STR	8'-4"	156
REINFORCING STEEL				=	5261 LBS

CLASS "A" CONCRETE BREAKDOWN

POUR #1
CAP AND LOWER PART OF WINGS 20.1 YD.3

POUR #2
BACKWALL AND
UPPER PART OF WINGS 11.0 YD.3

CLASS "A" CONCRETE TOTAL 31.1 YD.3

HP 12 x 53 STEEL PILES

No. 9 LIN. FT. 675

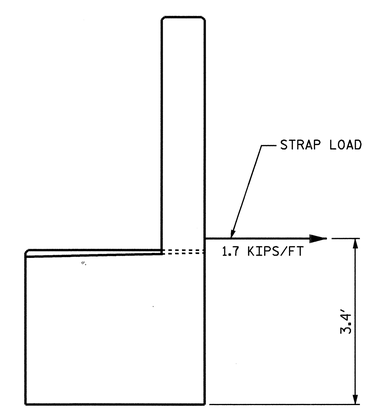

STRAP LOAD DETAIL

PROJECT NO. R-2719A
LENOIR COUNTY
STATION: 85+98.30 -L-

SHEET 3 OF 3

STATE OF NORTH CAROLINA
DEPARTMENT OF TRANSPORTATION
RALEIGH

SUBSTRUCTURE
END BENT #2
(RIGHT LANE)

NORTH CAROLINA PROFESSIONAL SEAL 14045 ENGINEER TIMOTHY L. COGGINS
4/21/09

REVISIONS						SHEET NO.
NO.	BY:	DATE:	NO.	BY:	DATE:	S-115
1			3			TOTAL SHEETS
2			4			340

DRAWN BY : J.B. WILSON DATE : 8/15/08
CHECKED BY : M.L. RORIE DATE : 9/24/08

STR. #3

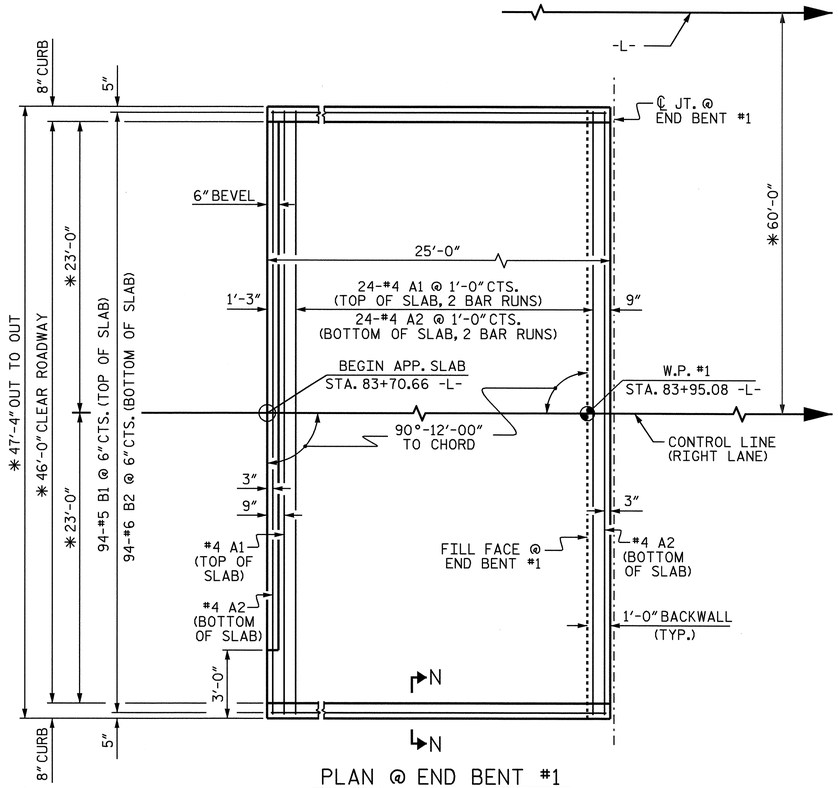

PLAN @ END BENT #1

FOR PLAN VIEW @ END BENT #2 SEE "SHEET 2".
✳RADIAL DIMENSION

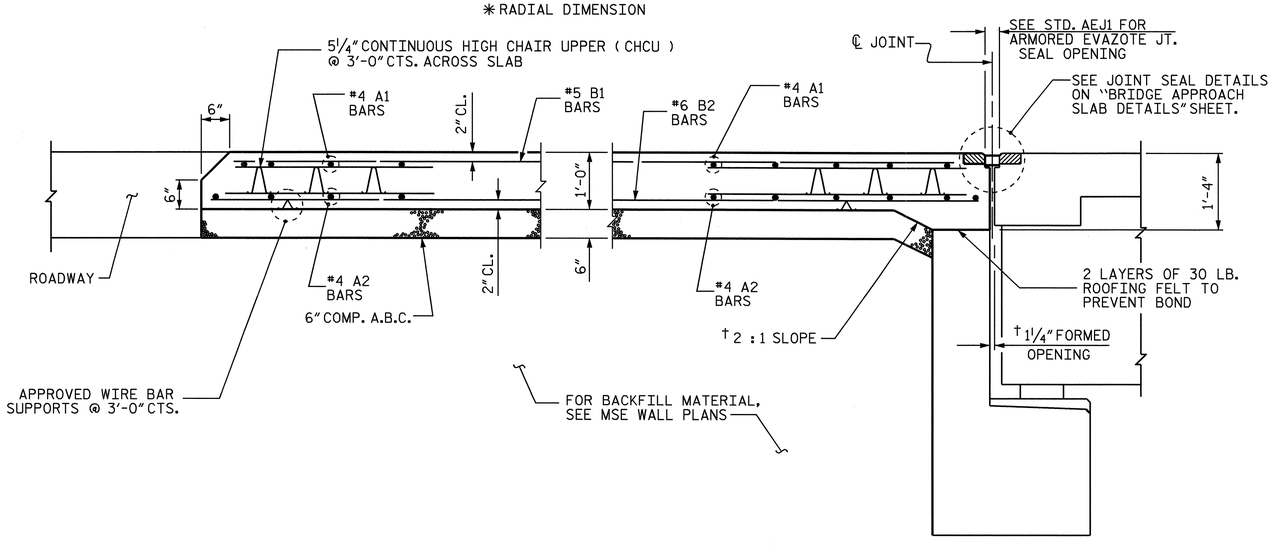

† NORMAL TO END BENT

SECTION THRU SLAB

SHOWING SECTION WITHOUT CONCRETE WEARING SURFACE

NOTES

THE COST OF THE BARRIER RAIL ON THE APPROACH SLAB SHALL BE INCLUDED IN THE LUMP SUM CONTRACT PRICE BID FOR BRIDGE APPROACH SLABS.

APPROACH SLAB SHALL NOT BE CONSTRUCTED PRIOR TO COMPLETION OF THE BRIDGE DECK.

AREA BETWEEN THE WINGWALL AND APPROACH SLAB SHALL BE GRADED TO DRAIN THE WATER AWAY FROM THE FILL FACE OF THE BRIDGE AND SHALL BE PAVED. SEE ROADWAY PLANS.

THE 6" COMP. A.B.C. SHALL BE FLUSH WITH THE ROADWAY END OF THE APPROACH SLAB AND SHALL EXTEND 1'-0" OUTSIDE OF EACH EDGE OF THE APPROACH SLAB.

THE CONTRACTOR MAY USE 4" TYPE B-25.0B ASPHALT CONCRETE BASE COURSE IN LIEU OF 6" COMP. A.B.C. IF THIS OPTION IS USED, THE BASE COURSE SHALL BE FLUSH WITH THE ROADWAY END OF THE APPROACH SLAB, AND THE WIDTH SHALL BE THE SAME AS THAT OF THE APPROACH SLAB.

THE CONTRACTOR MAY USE CLASS "A" CONCRETE BASE IN LIEU OF 6" COMP. A.B.C. IF THIS OPTION IS USE, THE CONCRETE BASE SHALL BE FLUSH WITH THE ROADWAY END OF THE APPROACH SLAB, AND THE WIDTH SHALL BE THE SAME AS THAT OF THE APPROACH SLAB. THE CONCRETE SHALL BE FINISHED TO A SMOOTH SURFACE AND A LAYER OF 30 LB ROOFING FELT SHALL BE PLACED BETWEEN THE CONCRETE BASE AND THE APPROACH SLAB TO PREVENT BOND. THE APPROACH SLAB SHALL NOT BE CAST UNTIL THE CONCRETE BASE HAS REACHED AN AGE OF THREE CURING DAYS.

WITH EVAZOTE JOINT SEAL

FOR EVAZOTE JOINT SEALS, SEE SPECIAL PROVISIONS.

THE NOMINAL UNCOMPRESSED SEAL WIDTH OF THE EVAZOTE JOINT SEAL @ END BENT #1 SHALL BE $2\frac{13}{16}$".

FOR ELASTOMERIC CONCRETE, SEE SPECIAL PROVISIONS.

WITH EXPANSION JOINT SEAL

FOR EXPANSION JOINT SEALS, SEE SPECIAL PROVISIONS.

BILL OF MATERIAL

APPROACH SLAB AT EB #1

BAR	NO.	SIZE	TYPE	LENGTH	WEIGHT
✳A1	50	#4	STR	24'-6"	818
A2	52	#4	STR	24'-5"	848
✳B1	94	#5	STR	23'-8"	2320
B2	94	#6	STR	24'-8"	3483
REINFORCING STEEL				LBS.	4331
✳EPOXY COATED REINFORCING STEEL				LBS.	3138
CLASS AA CONCRETE				C.Y.	44.4

SPLICE CHART

BAR SIZE	SPLICE LENGTH
#4 A1	2'-0"
#4 A2	1'-9"

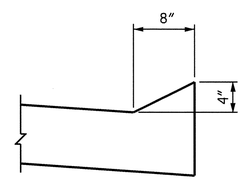

SECTION N-N

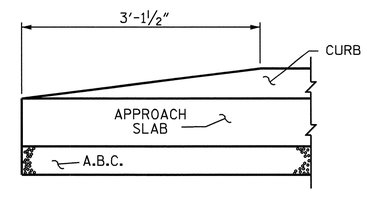

END OF CURB WITHOUT SHOULDER BERM GUTTER

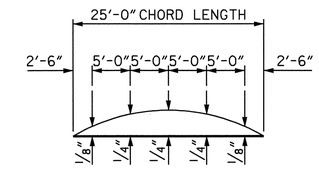

ARC OFFSET - LEFT AND RIGHT

(APPROACH SLAB @ END BENT #1 & END BENT #2)

PROJECT NO. R-2719A
LENOIR COUNTY
STATION: 85+98.30 -L-

SHEET 1 OF 4

STATE OF NORTH CAROLINA
DEPARTMENT OF TRANSPORTATION
RALEIGH

STANDARD

BRIDGE APPROACH SLAB
FOR FLEXIBLE PAVEMENT
(RIGHT LANE)

NORTH CAROLINA PROFESSIONAL SEAL 14045 ENGINEER TIMOTHY L. COGGINS
10/11/08

REVISIONS						SHEET NO.
NO.	BY:	DATE:	NO.	BY:	DATE:	S-116
1			3			TOTAL SHEETS
2			4			340

ASSEMBLED BY: M.GUDLAUGSSON	DATE : 08/2008		
CHECKED BY : M. PISO	DATE : 09/2008		
DRAWN BY : EEM 3/95	REV. 7/10/01	LES/RDR	
CHECKED BY : VAP 3/95	REV. 5/7/03R	RWW/JTE	
	REV. 5/1/06R	KMM/GM	

STR. #3

STD. NO. BAS4 (SHT 4)

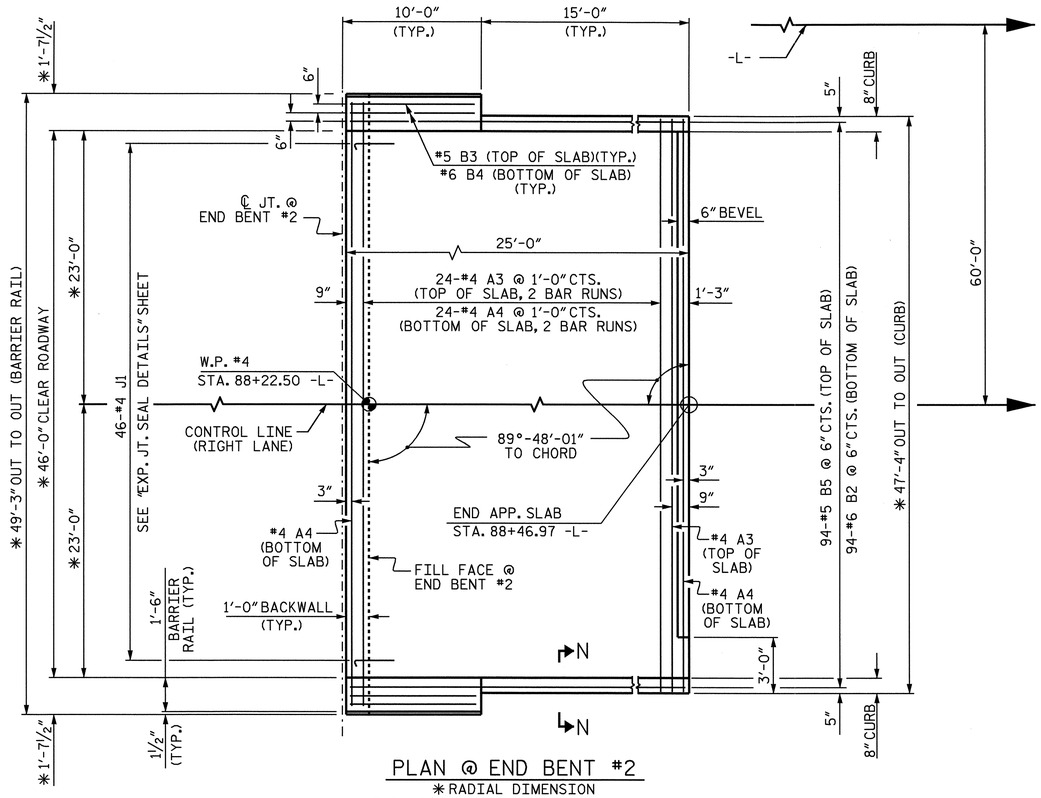

PLAN @ END BENT #2

*RADIAL DIMENSION
FOR ARC OFFSETS SEE SHEET 1 OF 4

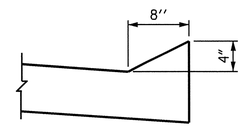

SECTION N-N

BILL OF MATERIAL FOR APPROACH SLAB @ END BENT #2					
BAR	NO.	SIZE	TYPE	LENGTH	WEIGHT
*A3	50	#4	STR	25'-6"	852
A4	52	#4	STR	25'-4"	880
*B5	94	#5	STR	23'-10"	2337
B2	94	#6	STR	24'-8"	3483
*B3	18	#5	STR	9'-8"	181
B4	4	#6	STR	9'-8"	58
*J1	46	#4	4	1'-5"	44
*S1	20	#5	1	5'-0"	104
*S2	20	#5	2	5'-2"	108
REINFORCING STEEL				LBS.	4421
*EPOXY COATED REINFORCING STEEL				LBS.	3626
CLASS AA CONCRETE BREAKDOWN					
POUR 1 SLAB AND CURB				C.Y.	45.3
POUR 2 RAIL				C.Y.	2.0
CLASS AA CONCRETE				C.Y.	47.3

BAR TYPES

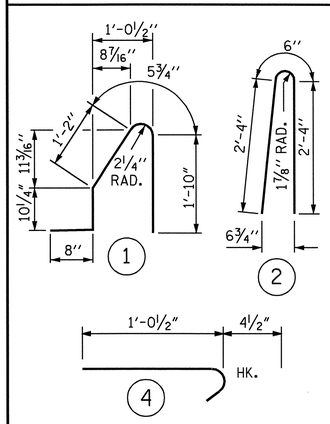

ALL BAR DIMENSIONS ARE OUT TO OUT

†SEE STD. EJS1 FOR EXP. JOINT SEAL OPENING

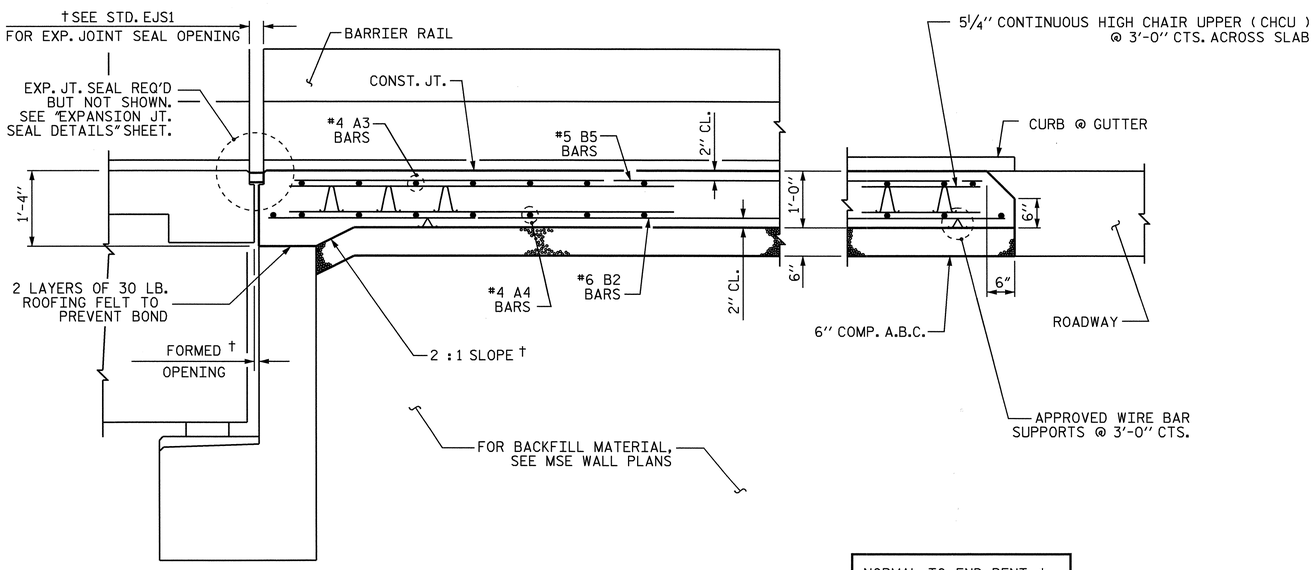

NORMAL TO END BENT †

SECTION THRU SLAB

SHOWING SECTION WITHOUT CONCRETE WEARING SURFACE

SPLICE CHART	
BAR SIZE	SPLICE LENGTH
#4 A3	2'-0"
#4 A4	1'-9"

PROJECT NO. R-2719A
LENOIR COUNTY
STATION: 85+98.30 -L-

SHEET 2 OF 4

STATE OF NORTH CAROLINA
DEPARTMENT OF TRANSPORTATION
RALEIGH

STANDARD
BRIDGE APPROACH SLAB FOR FLEXIBLE PAVEMENT WITH BARRIER RAIL (RIGHT LANE)

NORTH CAROLINA PROFESSIONAL SEAL 14045 ENGINEER TIMOTHY L. COGGINS
10/11/08

REVISIONS						SHEET NO.
NO.	BY:	DATE:	NO.	BY:	DATE:	S-117
1			3			TOTAL SHEETS
2			4			340

ASSEMBLED BY: M.GUDLAUGSSON DATE: 08/2008	
CHECKED BY: M. PISO DATE: 09/2008	
DRAWN BY: LES 8/01	REV. 5/7/03R RWW/JTE
CHECKED BY: RDR 8/01	REV. 5/1/06R KMM/GM

09-OCT-2008 07:06
g:\flpprojects-r\r2719a\structures\str#3\finalplans\r2719a_sd_as_03.dgn
tavarette

STR. #3 STD. NO. BAS5 (SHT 7)

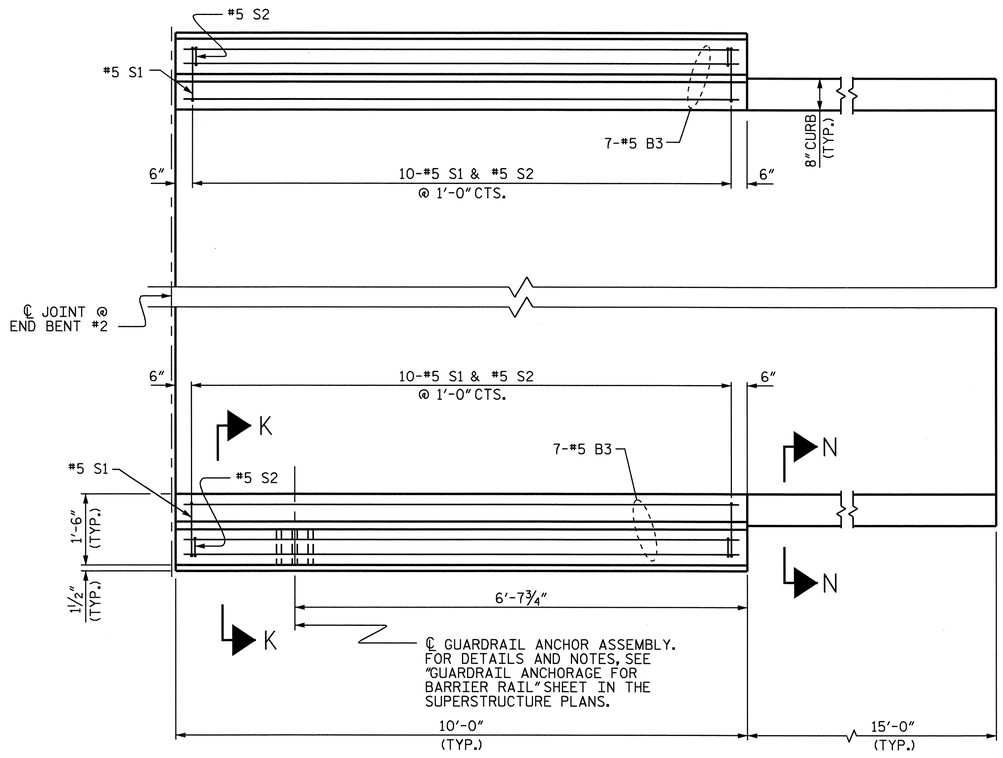

PLAN @ END BENT #2

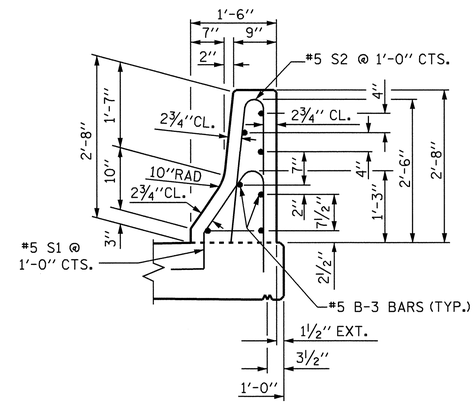

SECTION THRU RAIL K-K

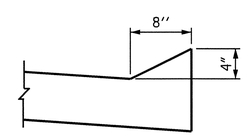

SECTION N-N

PROJECT NO. R-2719A

LENOIR COUNTY

STATION: 85+98.30 -L-

SHEET 3 OF 4

STATE OF NORTH CAROLINA
DEPARTMENT OF TRANSPORTATION
RALEIGH

BRIDGE APPROACH SLAB DETAILS FOR FLEXIBLE PAVEMENT WITH BARRIER RAIL @ END BENT #2 (RIGHT LANE)

NORTH CAROLINA PROFESSIONAL SEAL 14045 ENGINEER TIMOTHY W. COGGINS

10/11/08

REVISIONS						SHEET NO.
NO.	BY:	DATE:	NO.	BY:	DATE:	S-118
1			3			TOTAL SHEETS
2			4			340

ASSEMBLED BY : M.GUDLAUGSSON		DATE : 08/2008	
CHECKED BY : M. PISO		DATE : 09/2008	
DRAWN BY : LES	8/01	REV. 5/7/03R	RWW/JTE
CHECKED BY : RDR	8/01	REV. 5/1/06	TLA/GM

09-OCT-2008 07:05
g:\tlpprojects-r\r2719a\structures\str#3\final plans\r2719a_sd_as_03.dgn
taverette

STR. #3

STD. NO. BAS6 (SHT 4)

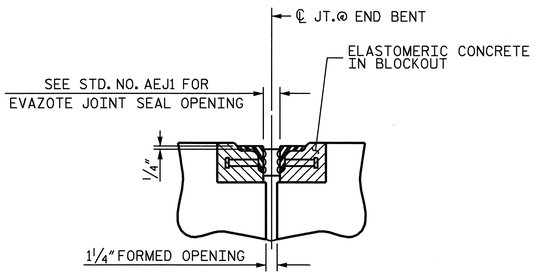

SECTION C-C
ARMORED EVAZOTE JOINT SEAL

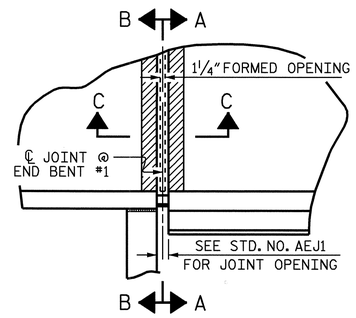

PLAN

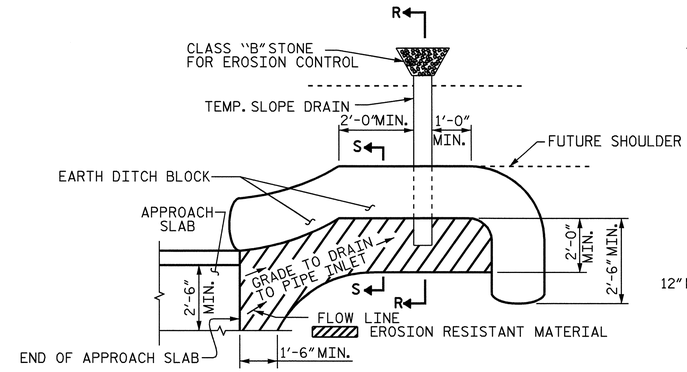

NOTE: IMMEDIATELY AFTER THE CONSTRUCTION OF THE APPROACH SLAB, THE CONTRACTOR SHALL PROVIDE TEMPORARY BERM AND SLOPE DRAIN. CONTRACTOR SHALL GRADE TO PIPE INLET AND PROVIDE EROSION RESISTANT MATERIAL AS SHOWN. THE EROSION RESISTANT MATERIAL SHALL BE EITHER 1) ASPHALT PLANT MIX, TYPE 1 OR TYPE 2, MIN. 2" DEPTH, 2) EROSION CONTROL MAT, OR 3) CONCRETE, AS DIRECTED BY THE ENGINEER. THE SLOPE DRAIN SHALL CONSIST OF A NON-PERFORATED TEMPORARY DRAINAGE PIPE, 12 INCHES IN DIAMETER.

PLAN VIEW

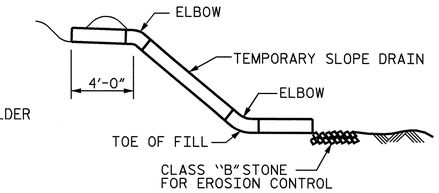

SECTION R-R

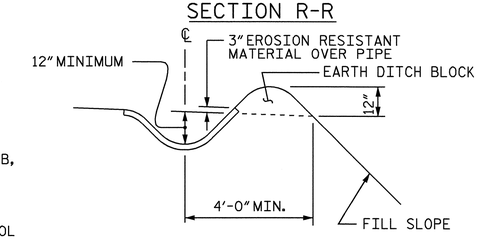

SECTION S-S

TEMPORARY BERM AND SLOPE DRAIN DETAILS

(TO BE USED WHEN SHOULDER BERM GUTTER IS REQUIRED)

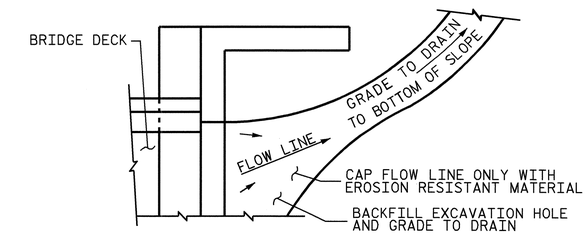

NOTE: IF THE APPROACH SLAB IS NOT CONSTRUCTED IMMEDIATELY AFTER THE BACKFILLING OF THE END BENT EXCAVATION, GRADE TO DRAIN TO THE BOTTOM OF THE SLOPE AND PROVIDE EROSION RESISTANT MATERIAL, SUCH AS FIBERGLASS ROVING OR AS DIRECTED BY THE ENGINEER TO PREVENT SOIL EROSION AND TO PROTECT THE AREA ADJACENT TO THE STRUCTURE. THE CONTRACTOR WILL BE REQUIRED TO REMOVE THESE MATERIALS PRIOR TO CONSTRUCTION OF THE APPROACH SLAB.

TEMPORARY DRAINAGE DETAIL

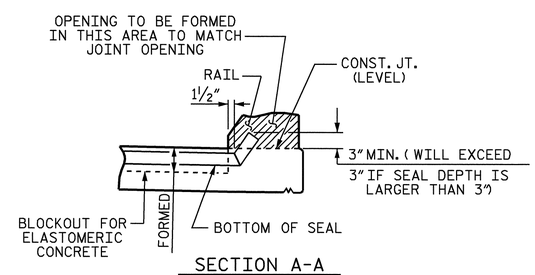

SECTION A-A

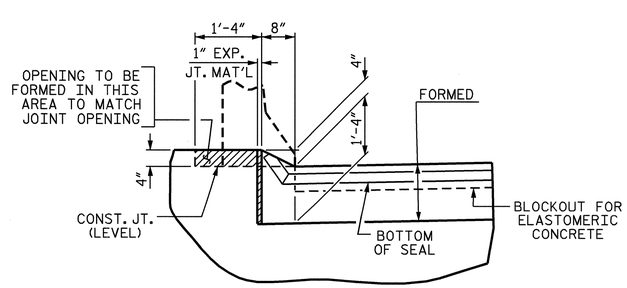

SECTION B-B

JOINT SEAL DETAILS @ END BENT #1

EVAZOTE JOINT SEAL TO BE CUT, HEAT WELDED AND TURNED UP PARALLEL TO SLOPED FACE OF THE BARRIER RAIL.

PROJECT NO. R-2719A
LENOIR COUNTY
STATION: 85+98.30 -L-

SHEET 4 OF 4

STATE OF NORTH CAROLINA
DEPARTMENT OF TRANSPORTATION
RALEIGH

STANDARD
BRIDGE APPROACH SLAB
DETAILS @
END BENT #1
(RIGHT LANE)

NORTH CAROLINA PROFESSIONAL SEAL 14045 ENGINEER TIMOTHY L. COGGINS
10/11/08

REVISIONS						SHEET NO.
NO.	BY:	DATE:	NO.	BY:	DATE:	S-119
1			3			TOTAL SHEETS
2			4			340

ASSEMBLED BY : M.GUDLAUGSSON		DATE : 08/2008	
CHECKED BY : M. PISO		DATE : 09/2008	
DRAWN BY : FCJ	11/88	REV. 10/17/00	RWW/LES
CHECKED BY : ARB	11/88	REV. 5/7/03	RWW/JTE
		REV. 5/1/06R	MAA/KMM

STR. #3 STD. NO. BAS10 (SHT 3)

09-OCT-2008 07:05
g:\tlpprojects-r\r2719a\structures\str#3\finalplans\r2719a_sd_as_03.dgn
taverette

F.A. PROJECT No. STP-0224(12)

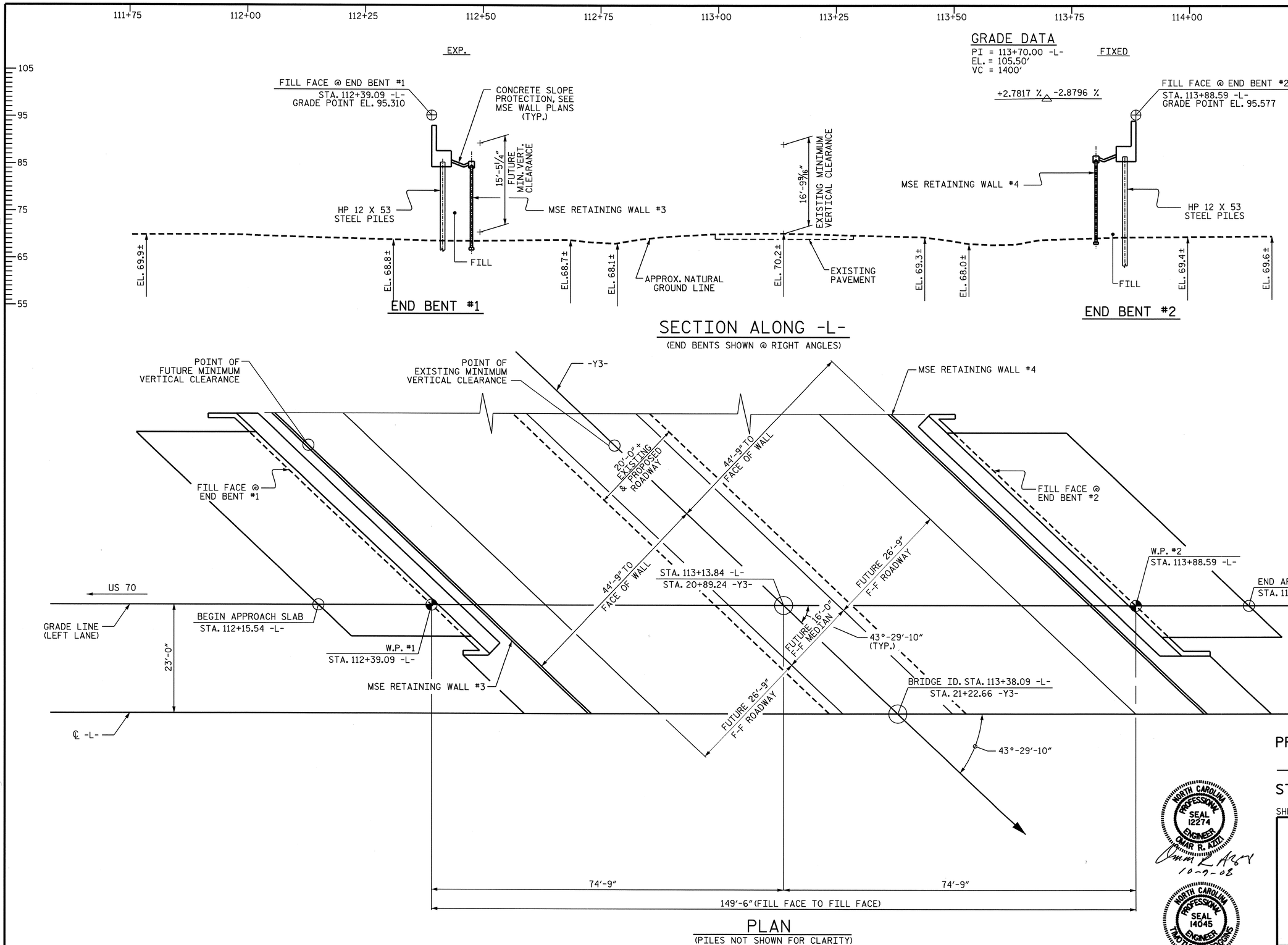

PROJECT NO. R-2719A

LENOIR COUNTY

STATION: 113+38.09 -L-
21+22.66-Y3- BRIDGE #194

SHEET 1 OF 3

NORTH CAROLINA PROFESSIONAL SEAL 12274 ENGINEER OMAR R. AZIZ
10-7-08

NORTH CAROLINA PROFESSIONAL SEAL 14045 ENGINEER TIMOTHY L. COGGINS
10/14/08

STATE OF NORTH CAROLINA
DEPARTMENT OF TRANSPORTATION
RALEIGH

GENERAL DRAWING
FOR BRIDGE OVER
BANKS SCHOOL ROAD (-Y3-)
ON CRESCENT RD.
BETWEEN US 70 & US 258
(LEFT LANE)

REVISIONS						SHEET NO.
NO.	BY:	DATE:	NO.	BY:	DATE:	S-120
1			3			TOTAL SHEETS
2			4			340

DRAWN BY : J.B. WILSON DATE : 9/2007
CHECKED BY : B.N. BARODAWALA DATE : 10/12/07

09-OCT-2008 09:12
R:\Structures\Str#4\Final Plans\R-2719A_sd_gd_04.dgn
nruffin

STR. #4

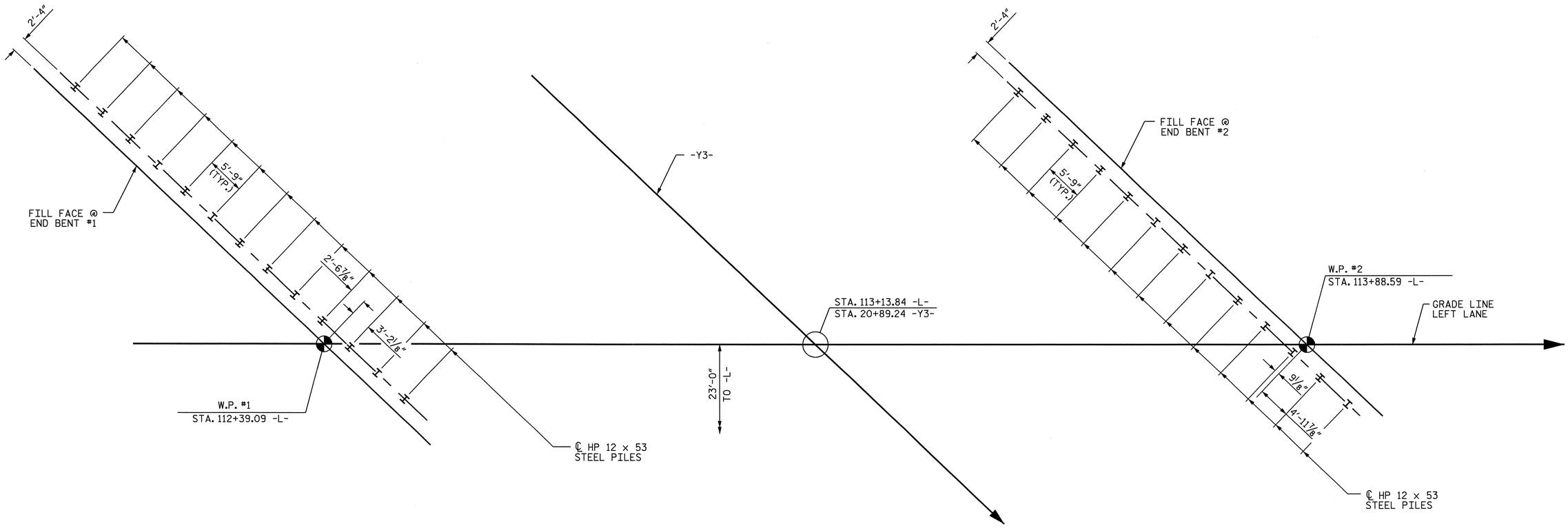

END BENT #1

END BENT #2

FOUNDATION LAYOUT

DIMENSIONS LOCATING PILES ARE SHOWN TO PILE CENTERLINE AT BOTTOM OF CAP. ALL PILES ARE VERTICAL.

PROJECT NO. R-2719A

LENOIR COUNTY

STATION: 113+38.09 -L-

SHEET 2 OF 3

STATE OF NORTH CAROLINA
DEPARTMENT OF TRANSPORTATION
RALEIGH

GENERAL DRAWING
FOR BRIDGE OVER
BANKS SCHOOL ROAD (-Y3-)
ON CRESCENT RD.
BETWEEN US 70 & US 258
(LEFT LANE)

NORTH CAROLINA PROFESSIONAL SEAL 14045 ENGINEER TIMOTHY L. COGGINS

10/1/08

REVISIONS						SHEET NO.
NO.	BY:	DATE:	NO.	BY:	DATE:	S-121
1			3			TOTAL SHEETS
2			4			340

DRAWN BY : J.B. WILSON DATE : 8/20/08
CHECKED BY : T.L. COGGINS DATE : 09/2008

09-OCT-2008 09:12
R:\Structures\Str*4\Final Plans\R-2719A_sd_gd_04.dgn
nruffin

STR. #4

BM - C ELEV 62.32 RR SPIKE IN 24"PINE TREE -L- 108+99, 230' RT

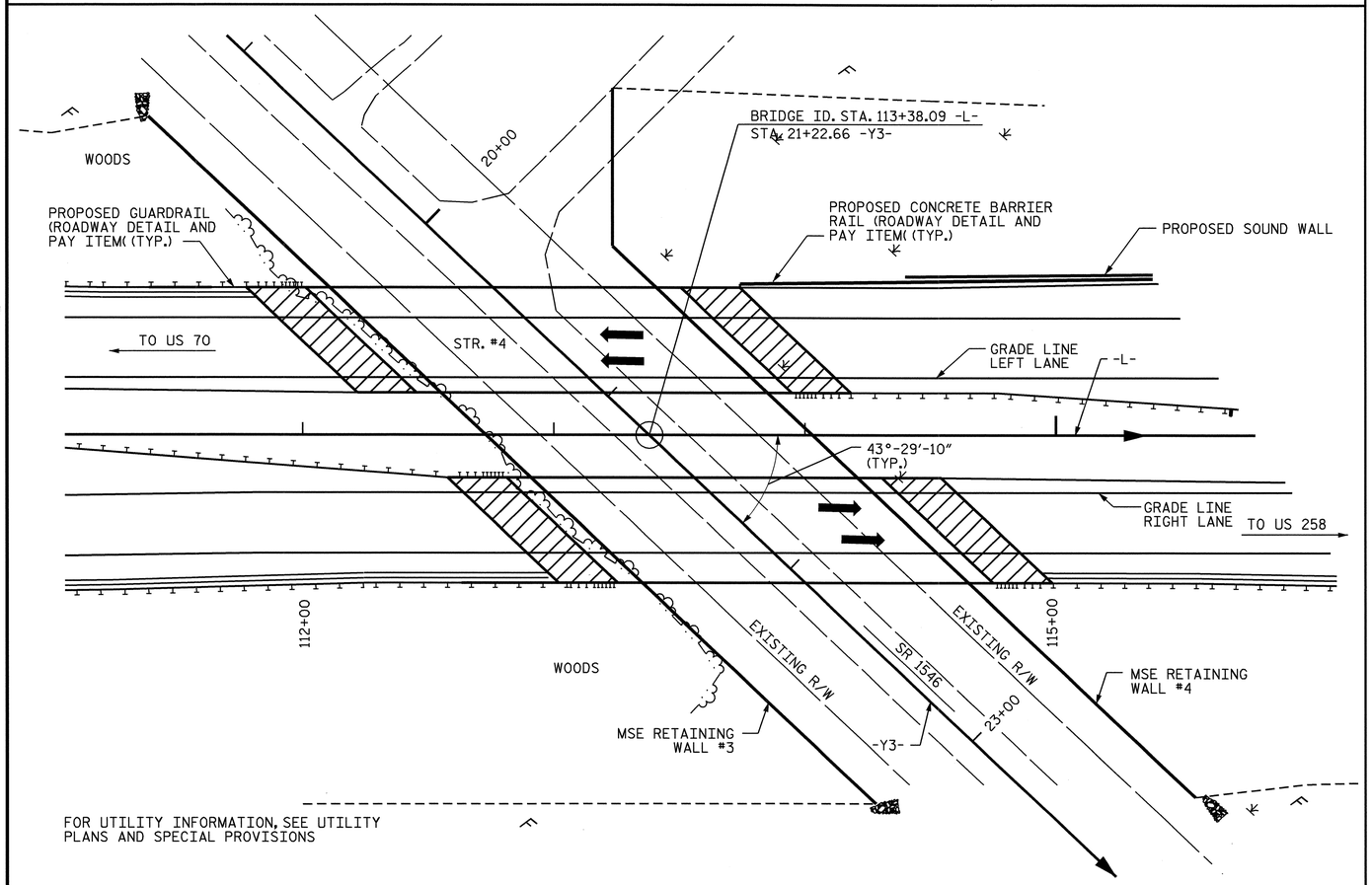

LOCATION SKETCH

NOTES

ASSUMED LIVE LOAD = HS20 OR ALTERNATE LOADING, EXCEPT THE GIRDERS HAVE BEEN DESIGNED FOR HS25.

THIS BRIDGE HAS BEEN DESIGNED BY THE STRENGTH DESIGN METHOD AS SPECIFIED IN AASHTO STANDARD SPECIFICATIONS.

THIS BRIDGE HAS BEEN DESIGNED IN ACCORDANCE WITH THE REQUIREMENTS OF THE AASHTO STANDARD SPECIFICATIONS FOR SEISMIC DESIGN OF HIGHWAY BRIDGES FOR SEISMIC PERFORMANCE CATEGORY A.

FOR OTHER DESIGN DATA AND GENERAL NOTES, SEE SHEET SN.

FOR EROSION CONTROL MEASURES SEE EROSION CONTROL PLANS.

ALL STRUCTURAL STEEL SHALL BE AASHTO M270 GRADE 50W AND PAINTED IN ACCORDANCE WITH SYSTEM 4 OF ARTICLE 442-7 OF THE STANDARD SPECIFICATIONS UNLESS OTHERWISE NOTED ON THE PLANS.

REMOVABLE FORMS MAY BE USED IN LIEU OF METAL STAY-IN-PLACE FORMS IN ACCORDANCE WITH ARTICLE 420-3 OF THE STANDARD SPECIFICATIONS.

THE CONTRACTOR SHALL PROVIDE INDEPENDENT ASSURANCE SAMPLES OF REINFORCING STEEL AS FOLLOWS: FOR PROJECTS REQUIRING UP TO 400 TONS OF REINFORCING STEEL, ONE 30 INCH SAMPLE OF EACH SIZE BAR USED, AND FOR PROJECTS REQUIRING OVER 400 TONS OF REINFORCING STEEL, TWO 30 INCH SAMPLES OF EACH SIZE BAR USED. THE BARS FROM WHICH THE SAMPLES ARE TAKEN MUST THEN BE SPLICED WITH REPLACEMENT BARS OF THE SIZE AND LENGTH OF THE SAMPLE, PLUS A MINIMUM LAP SPLICE OF THIRTY BAR DIAMETERS.

FOR MAINTENANCE AND PROTECTION OF TRAFFIC BENEATH PROPOSED STRUCTURE, SEE SPECIAL PROVISIONS.

NEEDLE BEAMS WILL NOT BE ALLOWED UNLESS OTHERWISE CALLED FOR ON THE PLANS OR APPROVED BY THE ENGINEER.

FOR SUBMITTAL OF WORKING DRAWINGS, SEE SPECIAL PROVISIONS.

FOR FALSEWORK AND FORMWORK, SEE SPECIAL PROVISIONS.

FOR CRANE SAFETY, SEE SPECIAL PROVISIONS.

FOR GROUT FOR STRUCTURES, SEE SPECIAL PROVISIONS.

FOR SHIPPING STEEL STRUCTURAL MEMBERS, SEE SPECIAL PROVISIONS.

DRIVE PILES AT END BENT NO. 1 AND END BENT NO. 2 TO A REQUIRED BEARING CAPACITY OF 120 TONS PER PILE. THE REQUIRED BEARING CAPACITY IS EQUAL TO THE ALLOWABLE BEARING CAPACITY WITH A MINIMUM FACTOR OF SAFETY OF TWO.

THE ALLOWABLE BEARING CAPACITY FOR PILES AT END BENT NO. 1 AND END BENT NO. 2 IS 60 TONS PER PILE.

INSTALL PILES AT END BENT NO. 1 AND END BENT NO. 2 TO A TIP ELEVATION NO HIGHER THAT 25 FEET.

STEEL PILE POINTS ARE REQUIRED FOR STEEL PILES AT END BENT NO. 1 AND END BENT NO. 2.

TESTING PILES WITH THE PILE DRIVING ANALYZER (PDA) DURING DRIVING, RESTRIKING OR REDRIVING MAY BE REQUIRED. THE ENGINEER WILL DETERMINE THE NEED FOR PDA TESTING.

FOR FAA REQUIREMENTS, SEE ROADWAY SPECIAL PROVISIONS.

FOR SLOPE PROTECTION DETAILS AND PAY ITEM, SEE MSE WALL #3 AND MSE WALL #4 PLANS.

TOTAL BILL OF MATERIAL

	PDA TESTING	PDA ASSISTANCE	REINFORCED CONCRETE DECK SLAB	GROOVING BRIDGE FLOORS	CLASS A CONCRETE	BRIDGE APPROACH SLABS	REINFORCING STEEL	STRUCTURAL STEEL	HP 12 X 53 STEEL PILES		STEEL PILE POINTS	PILE REDRIVES	CONCRETE BARRIER RAIL	ELASTOMERIC BEARINGS	EVAZOTE JOINT SEALS
	EA.	EA.	SQ.FT.	SQ.FT.	CU.YDS.	LUMP SUM	LBS.	APPROX.LBS.	NO.	LIN.FT.	NO.	EACH	LIN.FT.	LUMP SUM	LUMP SUM
SUPERSTRUCTURE			6628	7554		LUMP SUM		209,300					292.94	LUMP SUM	LUMP SUM
END BENT NO.1					52.4		8123		13	1040	13	10			
END BENT NO.2					52.1		7938		13	1105	13	10			
TOTAL	1	1	6628	7554	104.5	LUMP SUM	16061	209,300	26	2145	26	20	292.94	LUMP SUM	LUMP SUM

PROJECT NO. R-2719A
LENOIR COUNTY
STATION: 113+38.09 -L-

SHEET 3 OF 3

STATE OF NORTH CAROLINA
DEPARTMENT OF TRANSPORTATION
RALEIGH

GENERAL DRAWING
FOR BRIDGE OVER
BANKS SCHOOL ROAD (-Y3-)
ON CRESCENT RD.
BETWEEN US 70 & US 258
(LEFT LANE)

NORTH CAROLINA PROFESSIONAL SEAL 14045 ENGINEER TIMOTHY L. COGGINS
10/1/08

REVISIONS						SHEET NO.
NO.	BY:	DATE:	NO.	BY:	DATE:	S-122
1			3			TOTAL SHEETS
2			4			340

DRAWN BY : J. B. WILSON DATE : 08/2008
CHECKED BY : T. L. COGGINS DATE : 09/2008

09-OCT-2008 09:12
R:\Structures\Str#4\Final Plans\R-2719A_sd_gd_04.dgn
nruffin

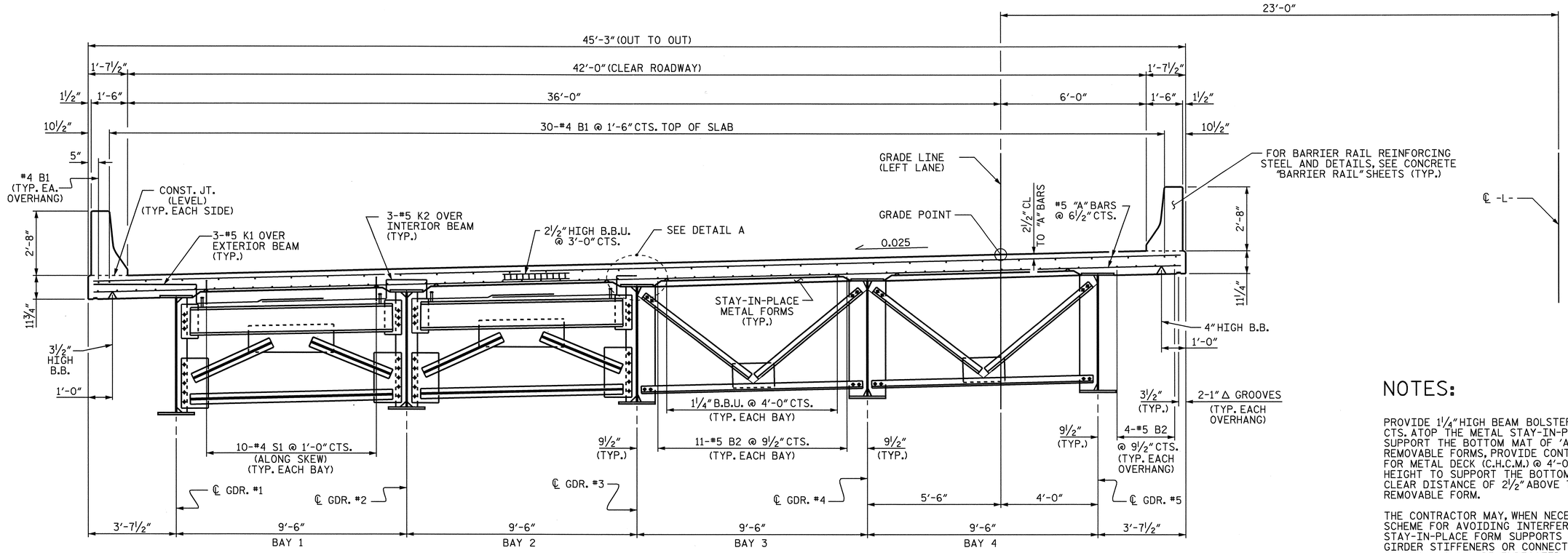

SHOWING END BENT DIAPHRAGM

SHOWING INTERMEDIATE DIAPHRAGM

TYPICAL SECTION

NOTES:

PROVIDE 1¼" HIGH BEAM BOLSTERS UPPER AT 4'-0" CTS. ATOP THE METAL STAY-IN-PLACE FORMS TO SUPPORT THE BOTTOM MAT OF 'A' BARS. WHEN USING REMOVABLE FORMS, PROVIDE CONTINUOUS HIGH CHAIRS FOR METAL DECK (C.H.C.M.) @ 4'-0" CTS. WITH A HEIGHT TO SUPPORT THE BOTTOM MAT OF 'A' BARS A CLEAR DISTANCE OF 2½" ABOVE THE TOP OF THE REMOVABLE FORM.

THE CONTRACTOR MAY, WHEN NECESSARY, PROPOSE A SCHEME FOR AVOIDING INTERFERENCE BETWEEN METAL STAY-IN-PLACE FORM SUPPORTS OR FORMS AND GIRDER STIFFENERS OR CONNECTOR PLATES. THE PROPOSAL SHALL BE INDICATED, AS APPROPRIATE, ON EITHER THE STEEL WORKING DRAWINGS OR THE METAL STAY-IN-PLACE FORM WORKING DRAWINGS.

BARRIER RAIL IN THE SPAN SHALL NOT BE CAST UNTIL ALL SLAB CONCRETE HAS BEEN CAST AND HAS REACHED A MINIMUM COMPRESSIVE STRENGTH OF 3000 PSI.

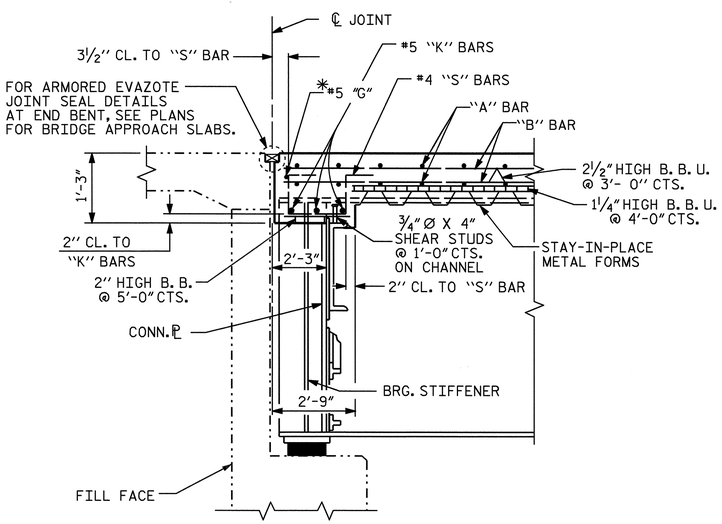

SECTION THRU END BENT DIAPHRAGM

* #5 "G" BAR MAY BE SHIFTED SLIGHTLY, AS NECESSARY, TO CLEAR REINFORCING STEEL AND STIRRUPS. PLACE #5 "G" PARALLEL TO JOINT.

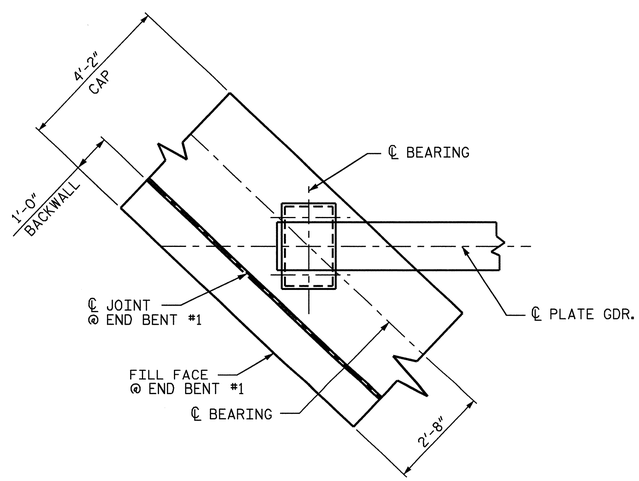

PLAN OF GIRDER @ END BENT #1

END BENT #1 SHOWN, END BENT #2 SIMILAR.

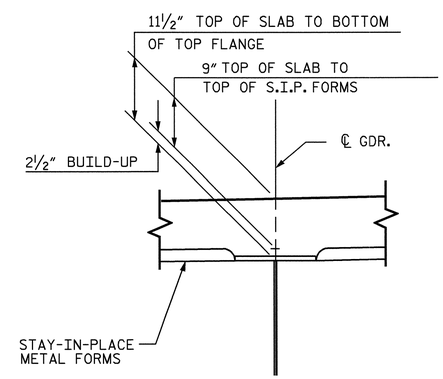

DETAIL A

PROJECT NO. R-2719A
LENOIR COUNTY
STATION: 113+38.09 -L-

STATE OF NORTH CAROLINA
DEPARTMENT OF TRANSPORTATION
RALEIGH

SUPERSTRUCTURE

TYPICAL SECTION

(LEFT LANE)

NORTH CAROLINA PROFESSIONAL SEAL 14045 ENGINEER TIMOTHY L. COGGINS
10/11/08

REVISIONS						SHEET NO.
NO.	BY:	DATE:	NO.	BY:	DATE:	S-123
1			3			TOTAL SHEETS
2			4			340

DRAWN BY : PEGGY PARISI DATE : 4-08
CHECKED BY : B. N. BARODAWALA DATE : 5-08

09-OCT-2008 09:12
R:\Structures\Str#4\Final Plans\R-2719A_sd_ts_04.dgn
nruffin

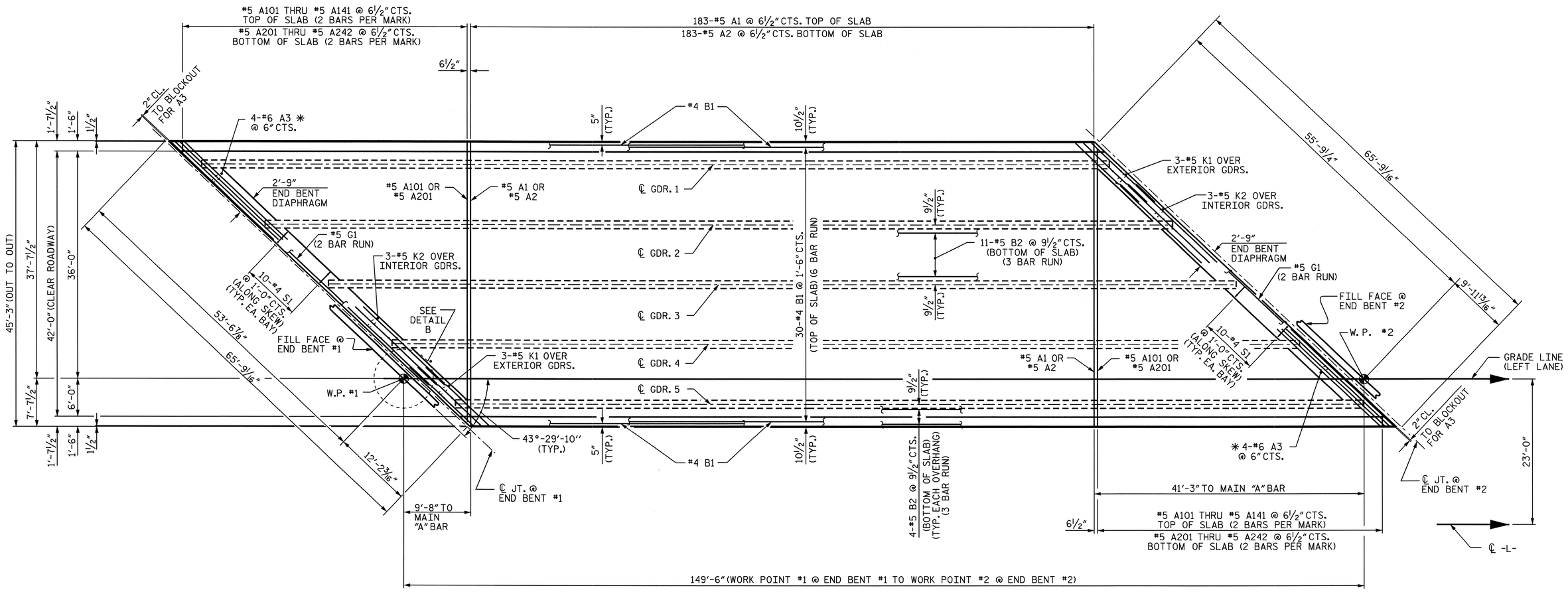

✳ #6 A3 BARS ARE POSITIONED ONLY AT THE ACUTE CORNERS OF DECK SLAB. PLACE BARS UNDER TOP "B" BARS.

PLAN OF SPAN

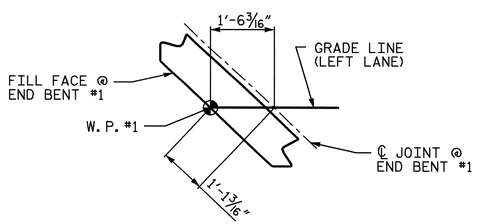

DETAIL B

(TYP. AT END BENT #2

PROJECT NO. R-2719A

LENOIR COUNTY

STATION: 113+38.09 -L-

STATE OF NORTH CAROLINA
DEPARTMENT OF TRANSPORTATION
RALEIGH

SUPERSTRUCTURE

PLAN OF SPAN

(LEFT LANE)

NORTH CAROLINA PROFESSIONAL SEAL 14045 ENGINEER TIMOTHY L. COGGINS

Timothy L. Coggins 10/1/08

REVISIONS						SHEET NO.
NO.	BY:	DATE:	NO.	BY:	DATE:	S-124
1			3			TOTAL SHEETS
2			4			340

DRAWN BY : PEGGY PARISI DATE : 4-08
CHECKED BY : B. N. BARODAWALA DATE : 5-08

09-OCT-2008 09:12
R:\Structures\Str#4\Final Plans\R-2719A_sd_ps_04.dgn
nruffin

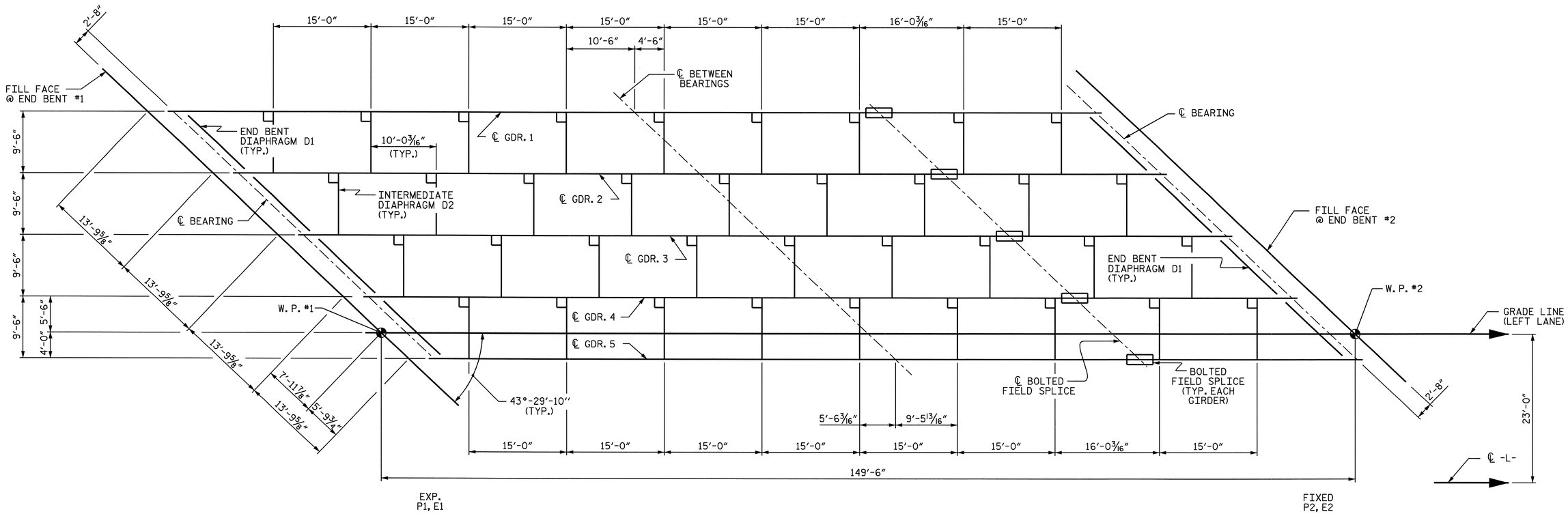

FRAMING PLAN

DIMENSIONS ARE TYPICAL FOR EACH GIRDER.

PROJECT NO. R-2719A

LENOIR COUNTY

STATION: 113+38.09 -L-

STATE OF NORTH CAROLINA
DEPARTMENT OF TRANSPORTATION
RALEIGH

SUPERSTRUCTURE

FRAMING PLAN

(LEFT LANE)

NORTH CAROLINA PROFESSIONAL SEAL 14045 ENGINEER TIMOTHY L. COGGINS

Timothy L. Coggins 10/1/08

REVISIONS						SHEET NO.
NO.	BY:	DATE:	NO.	BY:	DATE:	S-125
1			3			TOTAL SHEETS
2			4			340

DRAWN BY : PEGGY PARISI DATE : 4-08
CHECKED BY : B. N. BARODAWALA DATE : 5-08

09-OCT-2008 09:12
R:\Structures\Str*4\Final Plans\R-2719A_sd_fp_04.dgn
nruffin

STR. #4

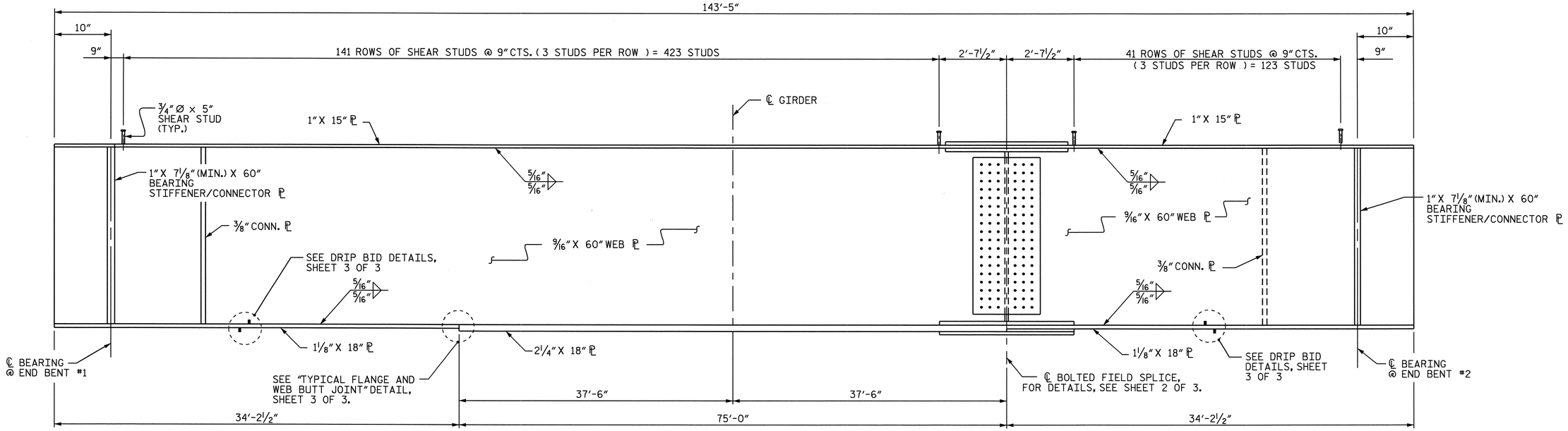

GIRDER ELEVATION

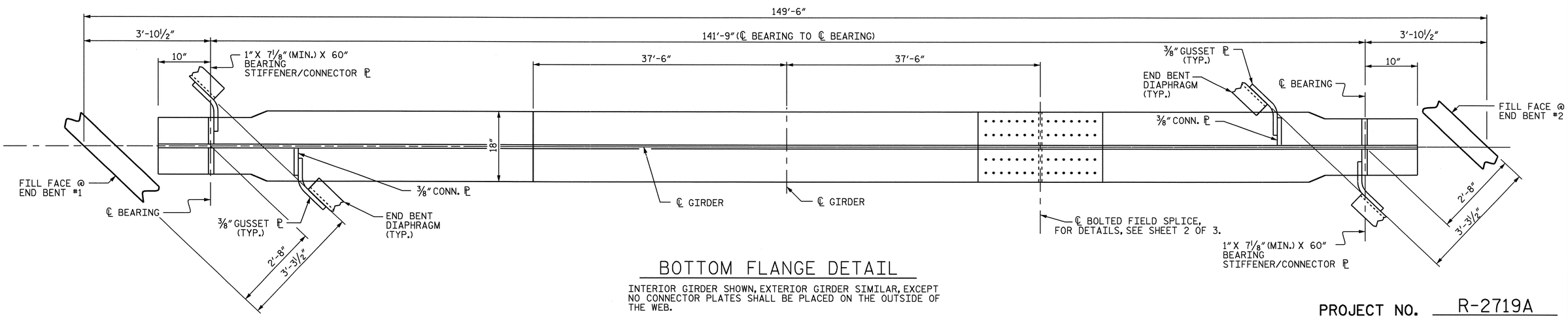

BOTTOM FLANGE DETAIL

INTERIOR GIRDER SHOWN, EXTERIOR GIRDER SIMILAR, EXCEPT NO CONNECTOR PLATES SHALL BE PLACED ON THE OUTSIDE OF THE WEB.

PROJECT NO. R-2719A

LENOIR COUNTY

STATION: 113+38.09 -L-

SHEET 1 OF 3

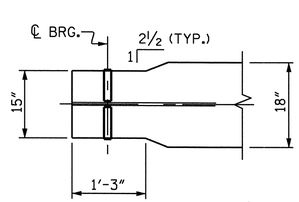

BOTTOM FLANGE TAPER DETAIL

(TYP. BOTH ENDS)

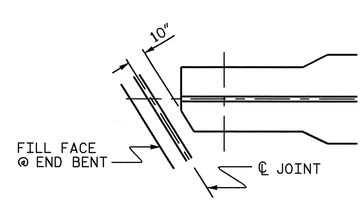

TOP FLANGE CLIP DETAIL

(TYP. AT BOTH ENDS OF GIRDER)

NORTH CAROLINA PROFESSIONAL SEAL 14045 ENGINEER TIMOTHY L. COGGINS

Timothy L. Coggins 10/11/08

STATE OF NORTH CAROLINA
DEPARTMENT OF TRANSPORTATION
RALEIGH

SUPERSTRUCTURE
STRUCTURAL STEEL DETAILS

(LEFT LANE)

REVISIONS						SHEET NO.
NO.	BY:	DATE:	NO.	BY:	DATE:	S-126
1			3			TOTAL SHEETS
2			4			340

DRAWN BY : PEGGY PARISI DATE : 5-08
CHECKED BY : B.N. BARODAWALA DATE : 7-08

09-OCT-2008 09:12
R:\Structures\Str#4\Final Plans\R-2719A_sd_ss_04.dgn

STR. #4

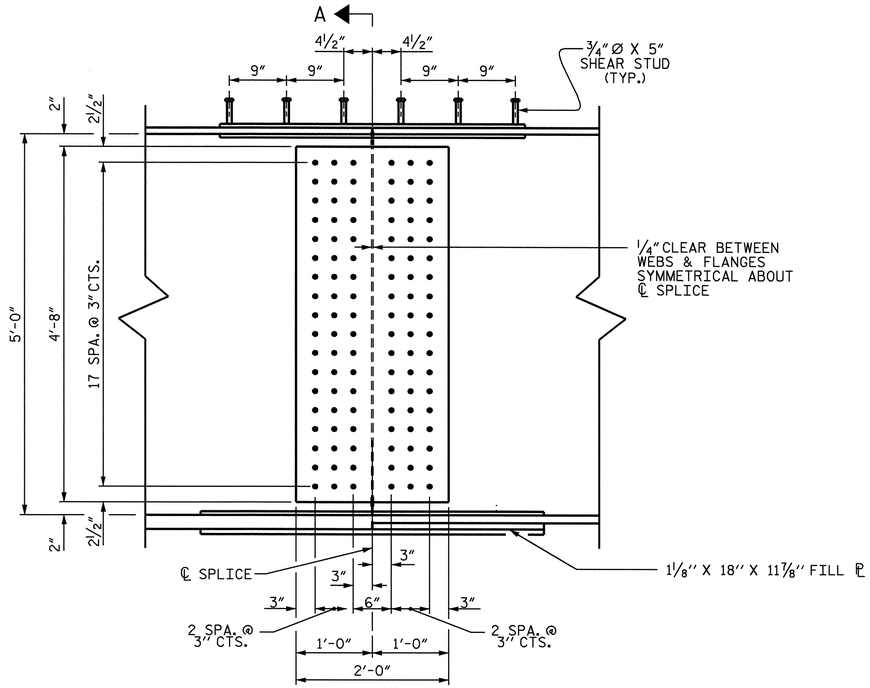

ELEVATION

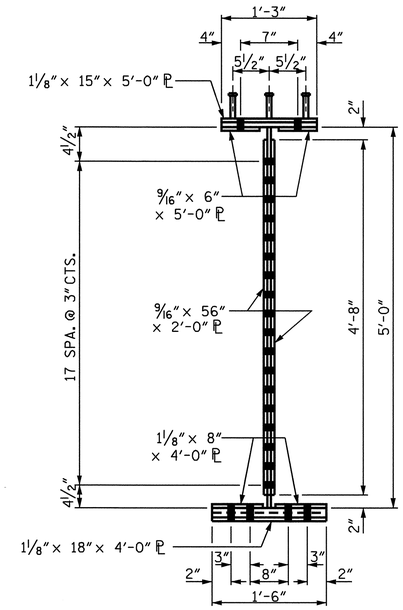

SECTION A-A

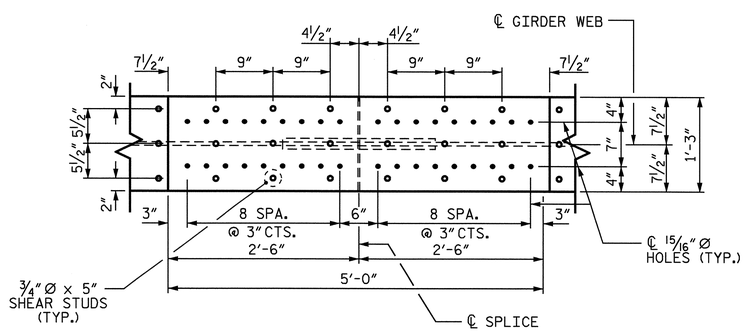

PLAN (TOP OF TOP FLANGE)

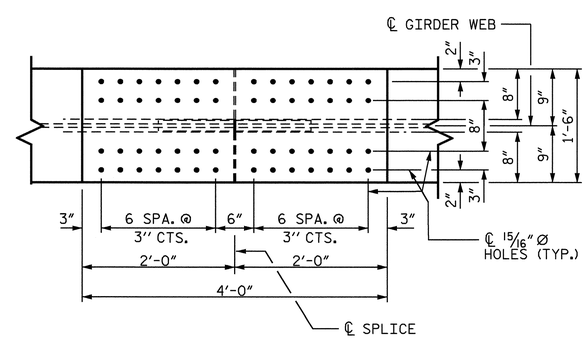

PLAN (BOTTOM OF BOTTOM FLANGE)

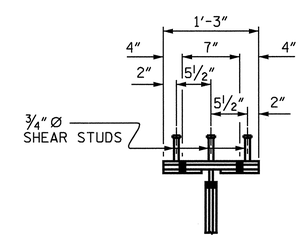

SHEAR STUD DETAIL
FOR TOP FLANGE SPLICE PLATE

NOTES :

ALL STRUCTURAL STEEL SHALL BE AASHTO M270 GRADE 50W AND PAINTED IN ACCORDANCE WITH SYSTEM 4 OF ARTICLE 442-7 OF THE STANDARD SPECIFICATIONS UNLESS OTHERWISE NOTED ON THE PLANS.

ALL DIMENSIONS SHOWN ARE HORIZONTAL OR VERTICAL, UNLESS OTHERWISE NOTED.

ALL FIELD CONNECTIONS TO BE 7/8" DIA. HIGH STRENGTH BOLTS UNLESS OTHERWISE NOTED.

FOR HIGH STRENGTH BOLTS, SEE SPECIAL PROVISIONS.

BEARING STIFFENERS ARE TO BE PLACED NORMAL TO THE WEB OF THE GIRDER AND SHALL BE PLUMB.

A CHARPY V-NOTCH TEST IS REQUIRED FOR WEB PLATES, BOTTOM FLANGE PLATES, BOTTOM FLANGE SPLICE PLATES AND WEB SPLICE PLATES FOR ALL GIRDERS AND IN ACCORDANCE WITH ARTICLE 1072-9 OF THE STANDARD SPECIFICATIONS.

SHOP SPLICES ARE PERMITTED TO LIMIT THE MAXIMUM REQUIRED FLANGE PIECE LENGTHS TO 60 FEET AND WEB PIECE LENGTHS TO 45 FEET. PERMITTED FLANGE AND WEB SHOP SPLICES SHALL NOT BE LOCATED WITHIN 15 FEET OF MAXIMUM DEAD LOAD DEFLECTION NOR WITHIN 15 FEET OF INTERMEDIATE BEARINGS OF CONTINUOUS UNITS. KEEP 2 FEET MINIMUM BETWEEN WEB AND FLANGE SHOP SPLICES. KEEP 6" MINIMUM BETWEEN CONNECTOR PLATE OR TRANSVERSE STIFFENER WELDS AND WEB OR FLANGE SHOP SPLICES.

STUDS ON GIRDERS MAY BE SHIFTED UP TO 1" IF NECESSARY TO CLEAR FLANGE SPLICE WELD.

TENSION ON THE AASHTO M164 BOLTS SHALL BE CALIBRATED USING DIRECT TENSION INDICATOR WASHERS IN ACCORDANCE WITH ARTICLE 440-10 ON THE STANDARD SPECIFICATIONS.

END OF GIRDERS SHALL BE PLUMB.

* NOTE: SHEAR STUDS ARE TO BE SHOP WELDED ON TOP OF PLATE BEFORE FIELD ASSEMBLY

BEARING STIFFENER MAY REQUIRE COPING IF WIDER THAN BOTTOM FLANGE TO AVOID INTERFERENCE WITH THE ANCHOR BOLT.

BOLTED FIELD SPLICE DETAILS

(TYPICAL EACH FIELD SPLICE)

PROJECT NO. R-2719A
LENOIR COUNTY
STATION: 113+38.09 -L-

SHEET 2 OF 3

STATE OF NORTH CAROLINA
DEPARTMENT OF TRANSPORTATION
RALEIGH

SUPERSTRUCTURE
STRUCTURAL STEEL DETAILS
BOLTED FIELD SPLICE
(LEFT LANE)

NORTH CAROLINA PROFESSIONAL SEAL 14045 ENGINEER TIMOTHY L. COGGINS
10/1/08

REVISIONS						SHEET NO.
NO.	BY:	DATE:	NO.	BY:	DATE:	S-127
1			3			TOTAL SHEETS
2			4			340

STR. #4

DRAWN BY : PEGGY PARISI DATE : 5-08
CHECKED BY : B.N. BARODAWALA DATE : 7-08

09-OCT-2008 09:12
R:\Structures\Str#4\Final Plans\R-2719A_sd_ss_04.dgn
nruffin

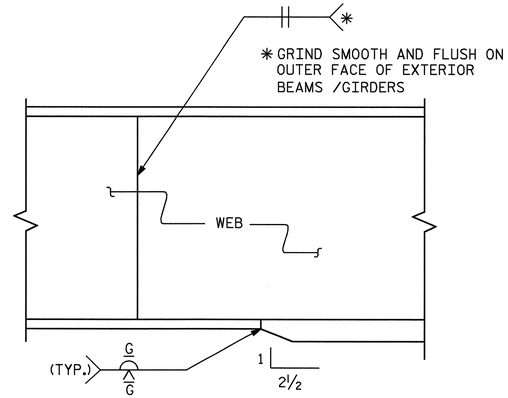

ELEVATION

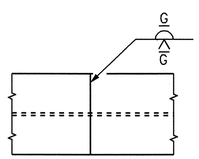

PLAN OF FLANGE

TYPICAL FLANGE AND WEB BUTT JOINT

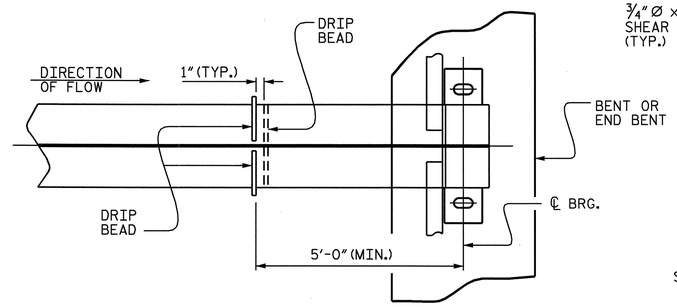

PART PLAN - BOTTOM FLANGE

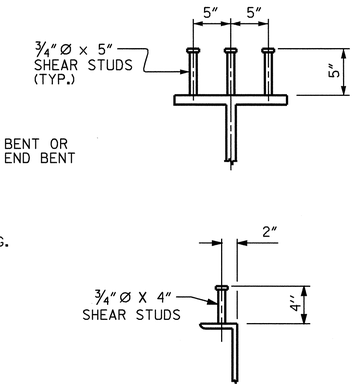

SHEAR STUD DETAILS

(TYPICAL ALL GIRDERS)

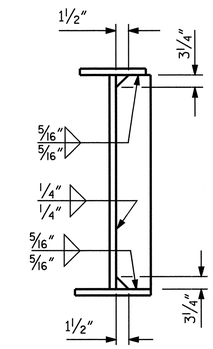

CONNECTOR PLATE DETAILS

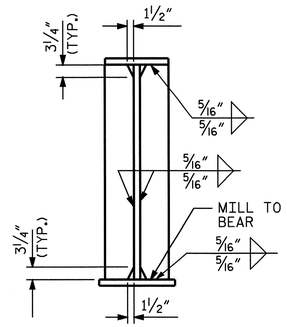

BEARING STIFFENER PLATE DETAILS

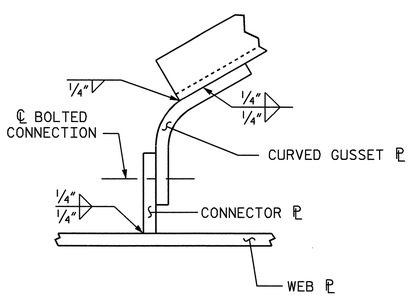

DETAIL "C"

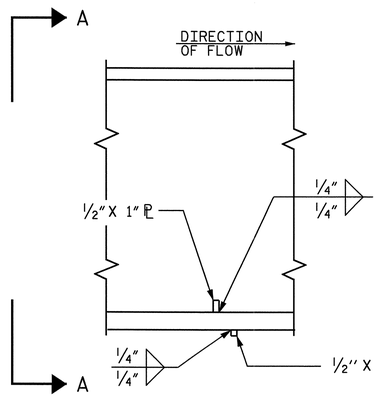

SECTION

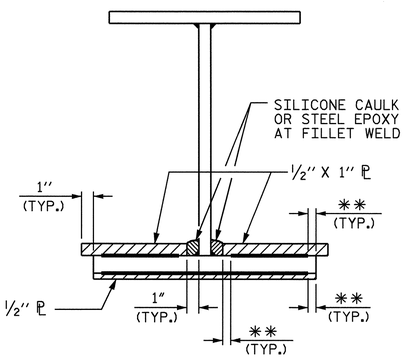

VIEW A-A

✱✱SEE "WELD TERMINATION DETAILS"

DRIP BEAD DETAILS

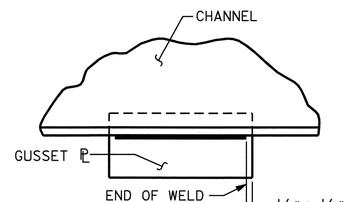

TYPICAL GUSSET PLATE CONNECTION

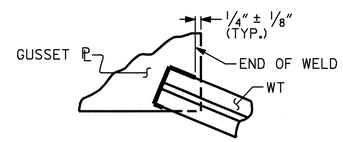

TYPICAL "TEE" TO GUSSET PLATE CONNECTION

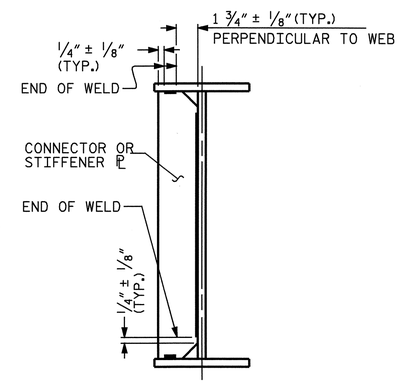

TYPICAL STIFFENER OR CONNECTOR PLATE CONNECTIONS

WELD TERMINATION DETAILS

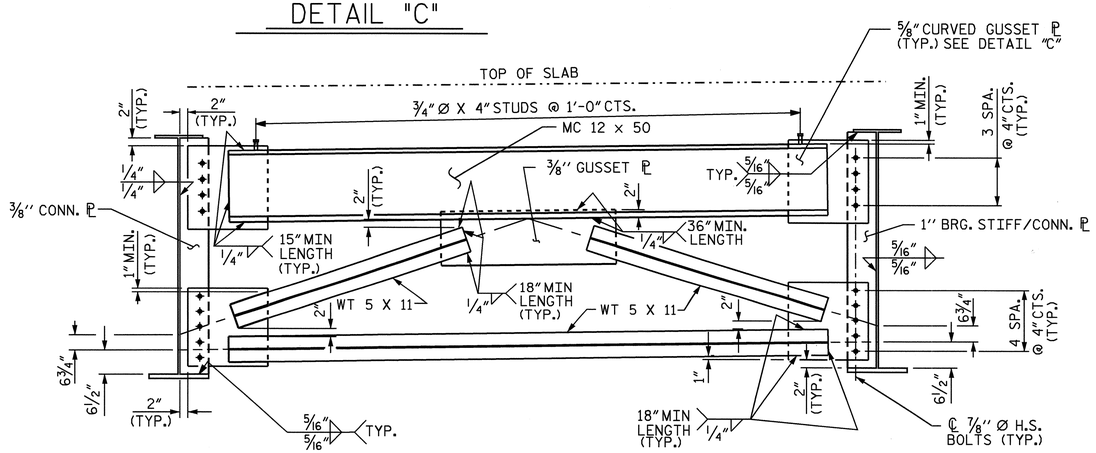

TYPICAL END BENT CROSSFRAME (D1)

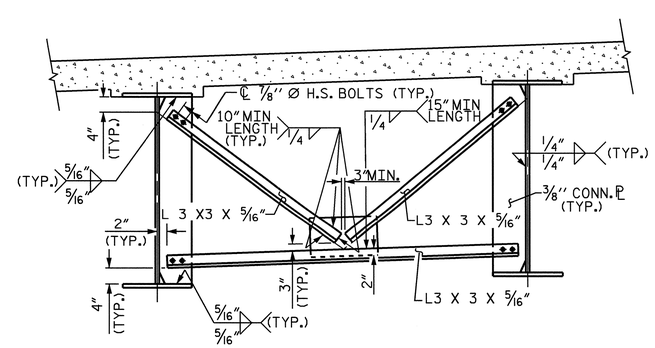

TYPICAL INTERMEDIATE DIAPHRAGM (D2)

PROJECT NO. R-2719A

LENOIR COUNTY

STATION: 113+38.09 -L-

SHEET 3 OF 3

STATE OF NORTH CAROLINA
DEPARTMENT OF TRANSPORTATION
RALEIGH

SUPERSTRUCTURE
STRUCTURAL STEEL DETAILS
(LEFT LANE)

NORTH CAROLINA PROFESSIONAL SEAL 14045 ENGINEER TIMOTHY L. COGGINS
10/1/08

REVISIONS						SHEET NO.
NO.	BY:	DATE:	NO.	BY:	DATE:	S-128
1			3			TOTAL SHEETS
2			4			340

DRAWN BY : PEGGY PARISI DATE : 4-02
CHECKED BY : B.N. BARODAWALA DATE : 7-08

09-OCT-2008 09:12
R:\Structures\Str#4\Final Plans\R-2719A_sd_ss_04.dgn

STR. #4

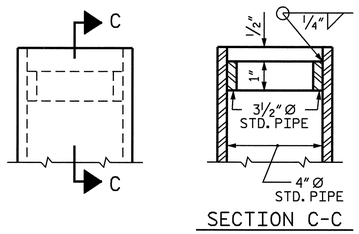

DETAIL "A"

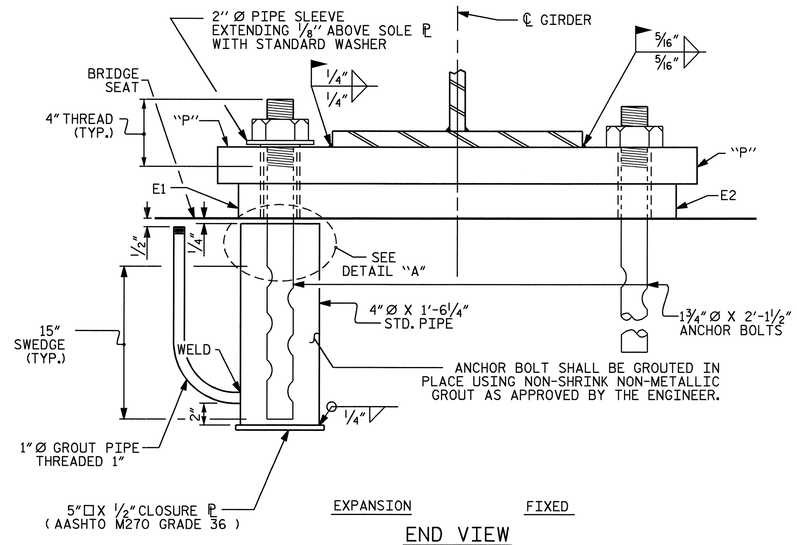

END VIEW

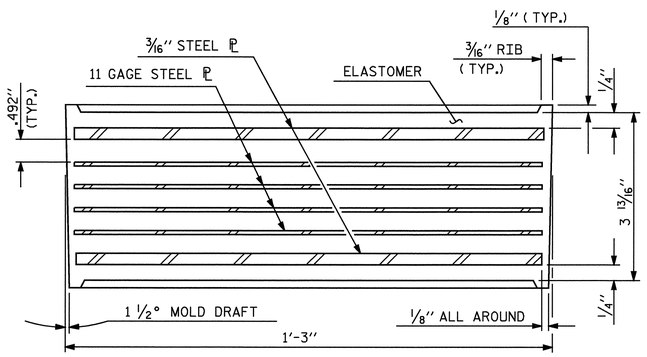

TYPICAL SECTION OF ELASTOMERIC BEARING

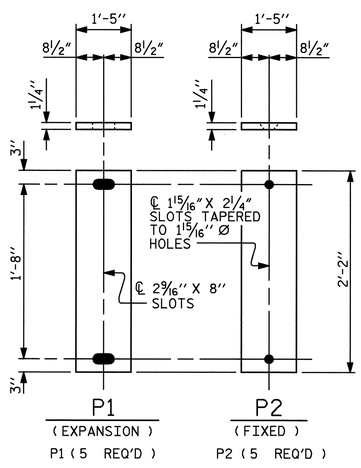

SOLE PLATE DETAILS ("P")

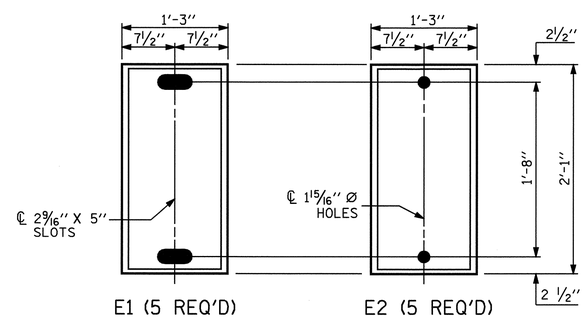

PLAN VIEW OF ELASTOMERIC BEARING

TYPE VI

NOTES

AT ALL FIXED POINTS OF SUPPORT, NUTS FOR ANCHOR BOLTS ARE TO BE TIGHTENED FINGER TIGHT AND THEN BACKED OFF 1/2 TURN. THE THREAD OF THE NUT AND BOLT SHALL THEN BE BURRED WITH A SHARP POINTED TOOL.

THE 2" Ø PIPE SLEEVE SHALL BE CUT FROM SCHEDULE 40 PVC PLASTIC PIPE. THE PVC PLASTIC PIPE SHALL MEET THE REQUIREMENTS OF ASTM D1785.

THE PAYMENT FOR THE PIPE SLEEVES SHALL BE INCLUDED IN THE SEVERAL PAY ITEMS.

FOR AASHTO M270 GRADE 50W STRUCTURAL STEEL, SOLE PLATE SHALL BE AASHTO M270 GRADE 50W AND SHALL NOT BE GALVANIZED. ANCHOR BOLTS, NUTS AND WASHERS SHALL BE GALVANIZED IN ACCORDANCE WITH THE STANDARD SPECIFICATIONS.

ANCHOR BOLTS SHALL MEET THE REQUIREMENTS OF ASTM A449. NUTS SHALL MEET THE REQUIREMENTS OF AASHTO M291-DH OR AASHTO M292-2H. WASHERS SHALL MEET THE REQUIREMENTS OF AASHTO M293. SHOP DRAWINGS ARE NOT REQUIRED FOR ANCHOR BOLTS, NUTS AND WASHERS. SHOP INSPECTION IS REQUIRED.

WHEN FIELD WELDING THE SOLE PLATE TO THE GIRDER FLANGE, USE TEMPERATURE INDICATING WAX PENS, OR OTHER SUITABLE MEANS, TO ENSURE THAT THE TEMPERATURE OF THE SOLE PLATE DOES NOT EXCEED 300°F. TEMPERATURES ABOVE THIS MAY DAMAGE THE ELASTOMER.

ALL SURFACES OF BEARING PLATES SHALL BE SMOOTH AND STRAIGHT.

—LOAD RATINGS—	
	MAX.D.L.+ L.L.
TYPE VI	262 k

PROJECT NO. R-2719A
LENOIR COUNTY
STATION: 113+38.09 -L-

STATE OF NORTH CAROLINA
DEPARTMENT OF TRANSPORTATION
RALEIGH

STANDARD

ELASTOMERIC BEARING DETAILS

(STEEL SUPERSTRUCTURE)
(LEFT LANE)

NORTH CAROLINA PROFESSIONAL SEAL 14045 ENGINEER TIMOTHY L. COGGINS
4/6/09

REVISIONS						SHEET NO.
NO.	BY:	DATE:	NO.	BY:	DATE:	S-129
1			3			TOTAL SHEETS
2			4			340

ASSEMBLED BY : PEGGY PARISI DATE : 5-08
CHECKED BY : B. N. BARODAWALA DATE : 5-08

DRAWN BY : EEM 10/95	REV. 10/17/00	RWW/LES	
CHECKED BY : PEK 10/95	REV. 7/10/01	LES/RDR	
	REV. 5/1/06	TLA/GM	

06-APR-2009 14:53
h:\structures\Str#4\Final Plans\r-2719a_sd_bg_04.dgn
toogglns

STR. #4 STD. NO. EB2

DEAD LOAD DEFLECTION TABLE FOR GIRDERS

	GIRDERS 1 & 5																				
@ TWENTIETH POINTS BETWEEN ℄ BEARINGS	0	.05	.10	.15	.20	.25	.30	.35	.40	.45	.50	.55	.60	.65	.70	.75	.80	.85	.90	.95	0
DEFLECTION DUE TO WEIGHT OF GIRDER	0.000	0.025	0.049	0.072	0.092	0.110	0.124	0.136	0.145	0.150	0.151	0.150	0.145	0.136	0.124	0.110	0.092	0.072	0.049	0.025	0.000
DEFLECTION DUE TO WEIGHT OF SLAB ✳	0.000	0.087	0.173	0.252	0.324	0.385	0.437	0.478	0.508	0.526	0.533	0.526	0.508	0.478	0.437	0.385	0.324	0.252	0.173	0.087	0.000
DEFLECTION DUE TO WEIGHT OF BARRIER RAIL	0.000	0.007	0.014	0.020	0.025	0.030	0.034	0.037	0.039	0.041	0.041	0.041	0.039	0.037	0.034	0.030	0.025	0.020	0.014	0.007	0.000
TOTAL DEAD LOAD DEFLECTION	0.000	0.119	0.236	0.344	0.441	0.525	0.595	0.651	0.692	0.717	0.725	0.717	0.692	0.651	0.595	0.525	0.441	0.344	0.236	0.119	0.000
VERTICAL CURVE ORDINATE	0.000	0.019	0.037	0.052	0.065	0.076	0.085	0.092	0.098	0.101	0.102	0.101	0.098	0.092	0.085	0.076	0.065	0.052	0.037	0.019	0.000
REQUIRED CAMBER	0	1 5/8″	3 1/4″	4 3/4″	6 1/16″	7 3/16″	8 3/16″	8 15/16″	9 1/2″	9 13/16″	9 15/16″	9 13/16″	9 1/2″	8 15/16″	8 3/16″	7 3/16″	6 1/16″	4 3/4″	3 1/4″	1 5/8″	0

✳ INCLUDES SLAB, BUILDUPS & STAY-IN-PLACE FORMS.
ALL VALUES ARE SHOWN IN FEET EXCEPT " REQUIRED CAMBER ", WHICH IS GIVEN IN INCHES (FRACTION FORM).

DEAD LOAD DEFLECTION TABLE FOR GIRDERS

	GIRDERS 2 & 4																				
@ TWENTIETH POINTS BETWEEN ℄ BEARINGS	0	.05	.10	.15	.20	.25	.30	.35	.40	.45	.50	.55	.60	.65	.70	.75	.80	.85	.90	.95	0
DEFLECTION DUE TO WEIGHT OF GIRDER	0.000	0.025	0.049	0.072	0.092	0.110	0.124	0.136	0.145	0.150	0.151	0.150	0.145	0.136	0.124	0.110	0.092	0.072	0.049	0.025	0.000
DEFLECTION DUE TO WEIGHT OF SLAB ✳	0.000	0.085	0.169	0.247	0.317	0.377	0.428	0.468	0.497	0.515	0.521	0.515	0.497	0.468	0.428	0.377	0.317	0.247	0.169	0.085	0.000
DEFLECTION DUE TO WEIGHT OF BARRIER RAIL	0.000	0.007	0.014	0.020	0.025	0.030	0.034	0.037	0.039	0.041	0.041	0.041	0.039	0.037	0.034	0.030	0.025	0.020	0.014	0.007	0.000
TOTAL DEAD LOAD DEFLECTION	0.000	0.117	0.232	0.339	0.434	0.517	0.586	0.641	0.681	0.706	0.713	0.706	0.681	0.641	0.586	0.517	0.434	0.339	0.232	0.117	0.000
VERTICAL CURVE ORDINATE	0.000	0.019	0.037	0.052	0.065	0.076	0.085	0.092	0.098	0.101	0.102	0.101	0.098	0.092	0.085	0.076	0.065	0.052	0.037	0.019	0.000
REQUIRED CAMBER	0	1 5/8″	3 1/4″	4 11/16″	6″	7 1/8″	8 1/16″	8 13/16″	9 3/8″	9 11/16″	9 3/4″	9 11/16″	9 3/8″	8 13/16″	8 1/16″	7 1/8″	6″	4 11/16″	3 1/4″	1 5/8″	0

✳ INCLUDES SLAB, BUILDUPS & STAY-IN-PLACE FORMS.
ALL VALUES ARE SHOWN IN FEET EXCEPT " REQUIRED CAMBER ", WHICH IS GIVEN IN INCHES (FRACTION FORM).

DEAD LOAD DEFLECTION TABLE FOR GIRDERS

	GIRDER 3																				
@ TWENTIETH POINTS BETWEEN ℄ BEARINGS	0	.05	.10	.15	.20	.25	.30	.35	.40	.45	.50	.55	.60	.65	.70	.75	.80	.85	.90	.95	0
DEFLECTION DUE TO WEIGHT OF GIRDER	0.000	0.025	0.049	0.072	0.092	0.110	0.124	0.136	0.145	0.150	0.151	0.150	0.145	0.136	0.124	0.110	0.092	0.072	0.049	0.025	0.000
DEFLECTION DUE TO WEIGHT OF SLAB ✳	0.000	0.083	0.165	0.242	0.310	.0369	0.418	0.458	0.486	0.504	0.510	0.504	0.486	0.458	0.418	.0369	0.310	0.242	0.165	0.083	0.000
DEFLECTION DUE TO WEIGHT OF BARRIER RAIL	0.000	0.007	0.014	0.020	0.025	0.030	0.034	0.037	0.039	0.041	0.041	0.041	0.039	0.037	0.034	0.030	0.025	0.020	0.014	0.007	0.000
TOTAL DEAD LOAD DEFLECTION	0.000	0.115	0.228	0.334	0.427	0.509	0.576	0.631	0.670	0.695	0.702	0.695	0.670	0.631	0.576	0.509	0.427	0.334	0.228	0.115	0.000
VERTICAL CURVE ORDINATE	0.000	0.019	0.037	0.052	0.065	0.076	0.085	0.092	0.098	0.101	0.102	0.101	0.098	0.092	0.085	0.076	0.065	0.052	0.037	0.019	0.000
REQUIRED CAMBER	0	1 5/8″	3 3/16″	4 5/8″	5 7/8″	7″	7 15/16″	8 11/16″	9 3/16″	9 9/16″	9 5/8″	9 9/16″	9 3/16″	8 11/16″	7 15/16″	7″	5 7/8″	4 5/8″	3 3/16″	1 5/8″	0

✳ INCLUDES SLAB, BUILDUPS & STAY-IN-PLACE FORMS.
ALL VALUES ARE SHOWN IN FEET EXCEPT " REQUIRED CAMBER ", WHICH IS GIVEN IN INCHES (FRACTION FORM).

PROJECT NO. R-2719A
LENOIR COUNTY
STATION: 113+38.09 -L-

NORTH CAROLINA PROFESSIONAL SEAL 14045 ENGINEER TIMOTHY L. COGGINS
10/1/08

STATE OF NORTH CAROLINA
DEPARTMENT OF TRANSPORTATION
RALEIGH

SUPERSTRUCTURE
DEAD LOAD DEFLECTIONS
(LEFT LANE)

REVISIONS						SHEET NO.
NO.	BY:	DATE:	NO.	BY:	DATE:	S-130
1			3			TOTAL SHEETS
2			4			340

DRAWN BY : PEGGY PARISI DATE : 5-08
CHECKED BY : B.N. BARODAWALA DATE : 7-08

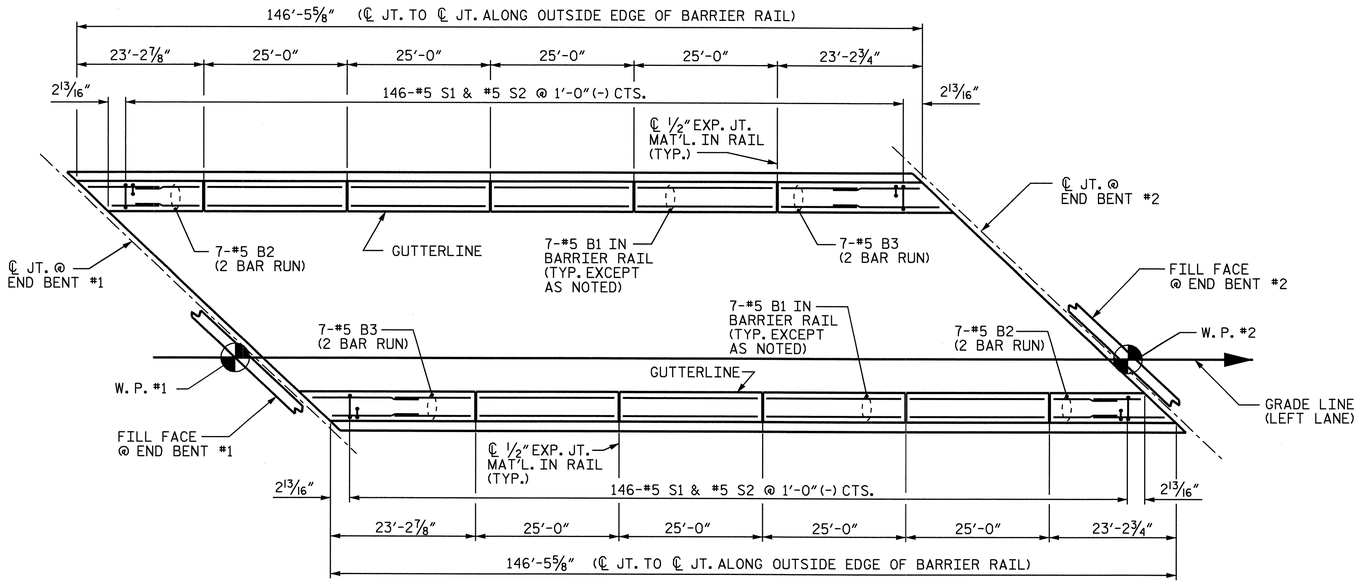

PLAN

NOTES

BARRIER RAIL IN THE SPAN SHALL NOT BE CAST UNTIL ALL SLAB CONCRETE IN THAT SPAN HAS BEEN CAST AND HAS REACHED A MINIMUM COMPRESSIVE STRENGTH OF 3,000 PSI.

ALL REINFORCING STEEL IN BARRIER RAILS SHALL BE EPOXY COATED.

VERTICAL GROOVED CONTRACTION JOINTS, ½" IN DEPTH, SHALL BE TOOLED IN ALL EXPOSED FACES OF THE BARRIER RAIL AND IN ACCORDANCE WITH ARTICLE 825-10(B) OF THE STANDARD SPECIFICATIONS. THE CONTRACTION JOINT SHALL BE LOCATED AT EACH THIRD POINT BETWEEN BARRIER RAIL EXPANSION JOINTS. ONLY ONE CONTRACTION JOINT IS REQUIRED AT MIDPOINT OF BARRIER RAIL SEGMENTS LESS THAN 20 FEET IN LENGTH AND NO CONTRACTION JOINTS ARE REQUIRED FOR THOSE SEGMENTS LESS THAN 10 FEET IN LENGTH.

BAR TYPES

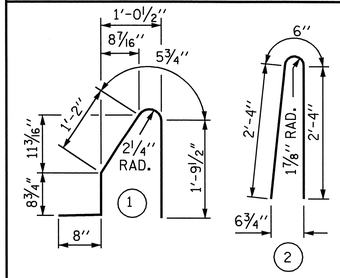

ALL BAR DIMENSIONS ARE OUT TO OUT

BILL OF MATERIAL

FOR CONCRETE BARRIER RAIL ONLY

BAR	NO.	SIZE	TYPE	LENGTH	WEIGHT
* B1	56	#5	STR	24'-7"	1436
* B2	28	#5	STR	13'-0"	380
* B3	28	#5	STR	13'-9"	402
* S1	292	#5	1	4'-10"	1472
* S2	292	#5	2	5'-2"	1574

* EPOXY COATED REINFORCING STEEL	5264 LBS.
CLASS AA CONCRETE	29.3 CU. YDS.
CONCRETE BARRIER RAIL	292.94 LIN. FT.

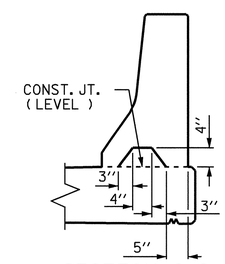

SECTION S-S

AT DAM IN OPEN JOINT
(THIS IS TO BE USED ONLY WHEN SLIP FORM IS USED)

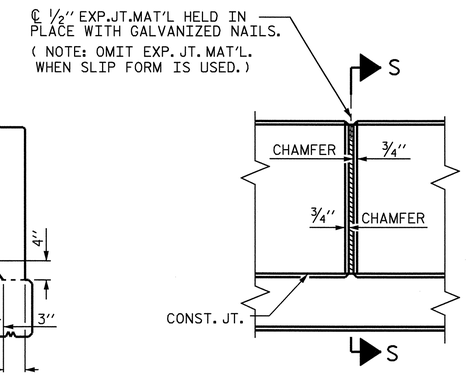

ELEVATION AT EXPANSION JOINTS

BARRIER RAIL DETAILS

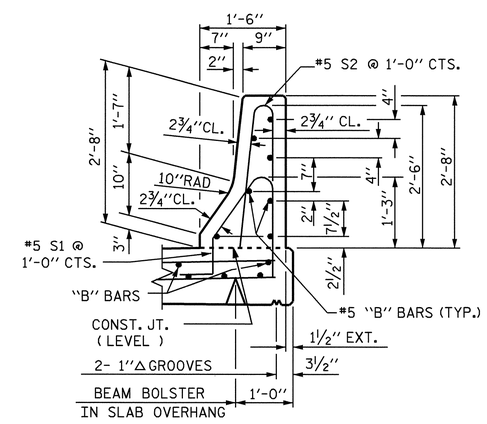

SECTION THRU RAIL

PROJECT NO. R-2719A

LENOIR COUNTY

STATION: 113+38.09 -L-

SHEET 1 OF 2

STATE OF NORTH CAROLINA
DEPARTMENT OF TRANSPORTATION
RALEIGH

STANDARD

CONCRETE BARRIER RAIL

(LEFT LANE)

NORTH CAROLINA PROFESSIONAL SEAL 14045 ENGINEER TIMOTHY L. COGGINS

10/1/08

REVISIONS						SHEET NO.
NO.	BY:	DATE:	NO.	BY:	DATE:	S-131
1			3			TOTAL SHEETS
2			4			340

ASSEMBLED BY : PEGGY PARISI	DATE : 5-08		
CHECKED BY : B. N. BARODAWALA	DATE : 5-08		
DRAWN BY : ARB 5/87	REV. 10/17/00	RWW/LES	
CHECKED BY : SJD 9/87	REV. 5/7/03R	RWW/JTE	
	REV. 5/1/06	TLA/GM	

09-OCT-2008 09:12
R:\Structures\Str*4\Final Plans\R-2719A_sd_br_04.dgn
pruffin

STR. #4 STD. NO. CBR1

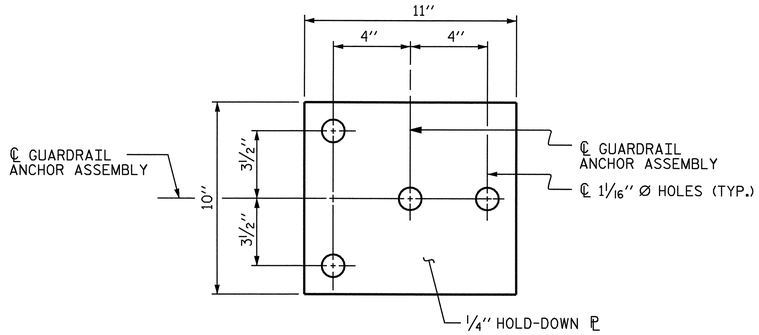

PLAN

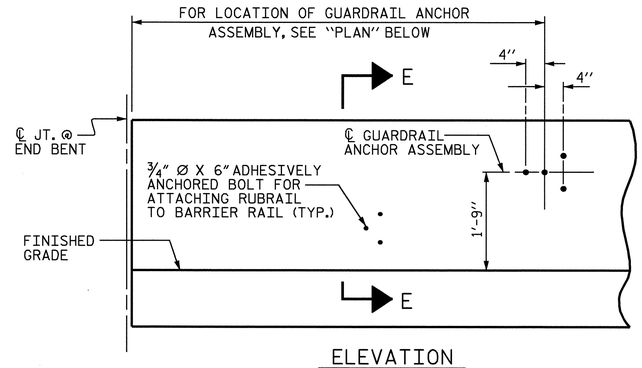

ELEVATION

FOR LOCATION OF RUBRAIL, SEE ROADWAY STD. 862.03

NOTES

THE GUARDRAIL ANCHOR ASSEMBLY SHALL CONSIST OF A 1/4" HOLD DOWN PLATE AND 4 - 7/8" Ø BOLTS WITH NUTS AND WASHERS, RUBRAIL, AND ADHESIVELY ANCHORED BOLTS.

THE HOLD-DOWN PLATE SHALL CONFORM TO AASHTO M270 GRADE 36. AFTER FABRICATION, THE HOLD-DOWN PLATE SHALL BE HOT-DIP GALVANIZED IN ACCORDANCE WITH AASHTO M111.

BOLTS SHALL CONFORM TO THE REQUIREMENTS OF ASTM A307 AND NUTS SHALL CONFORM TO THE REQUIREMENTS OF AASHTO M291. BOLTS, NUTS AND WASHERS SHALL BE GALVANIZED. (AT THE CONTRACTOR'S OPTION, STAINLESS STEEL BOLTS, NUTS AND WASHERS MAY BE USED AS AN ALTERNATE FOR THE 7/8" Ø GALVANIZED BOLTS, NUTS AND WASHERS. THEY SHALL CONFORM TO OR EXCEED THE MECHANICAL REQUIREMENTS OF ASTM A307. THE USE OF THIS ALTERNATE SHALL BE APPROVED BY THE ENGINEER.)

THE GUARDRAIL ANCHOR ASSEMBLY IS REQUIRED AT ALL POINTS WHERE APPROACH GUARDRAIL IS TO BE ATTACHED TO THE END OF BARRIER RAIL. FOR POINTS OF ATTACHMENT, SEE SKETCH.

AFTER INSTALLATION, THE EXPOSED THREAD OF THE BOLT SHALL BE BURRED WITH A SHARP POINTED TOOL.

THE COST OF THE GUARDRAIL ANCHOR ASSEMBLY SHALL BE INCLUDED IN THE UNIT CONTRACT PRICE BID FOR CONCRETE BARRIER RAIL.

THE 1 1/4" Ø HOLES SHALL BE FORMED OR DRILLED WITH A CORE BIT. IMPACT TOOLS WILL NOT BE PERMITTED. ANY CONCRETE DAMAGED BY THIS WORK SHALL BE REPAIRED TO THE SATISFACTION OF THE ENGINEER.

THE C6 X 8.2 RUBRAIL IS TO BE ADHESIVELY ANCHORED TO THE RAIL USING THREE 3/4" Ø X 6" BOLTS WITH WASHERS. LEVEL ONE FIELD TESTING IS REQUIRED, AND THE YIELD LOAD OF THE 3/4" Ø BOLT IS 12 KIPS. FOR ADHESIVELY ANCHORED ANCHOR BOLTS OR DOWELS, SEE SPECIAL PROVISIONS. SEE ROADWAY STANDARD 862.03 FOR DETAILS AND LOCATION OF THE RUBRAIL.

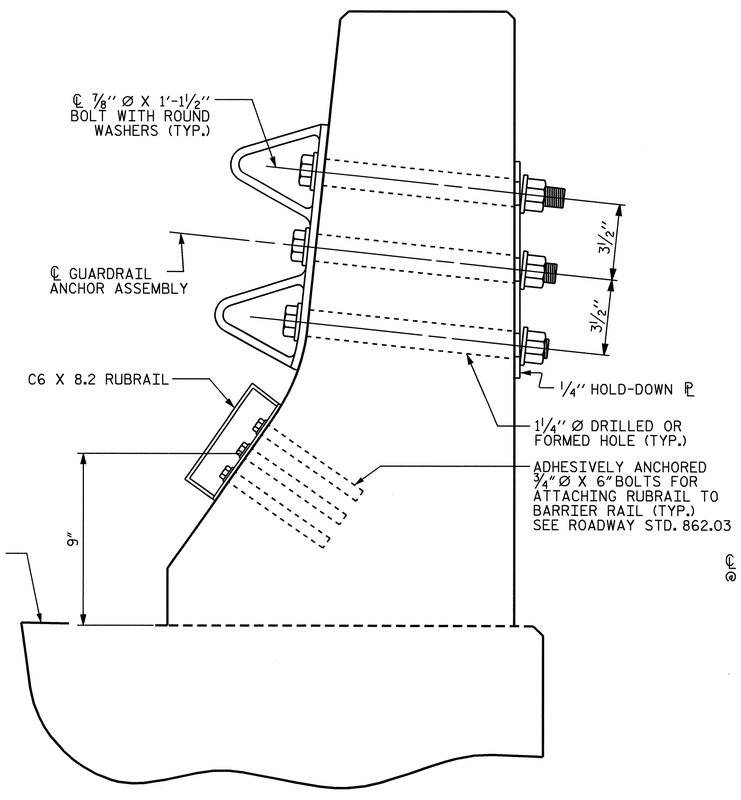

SECTION E-E

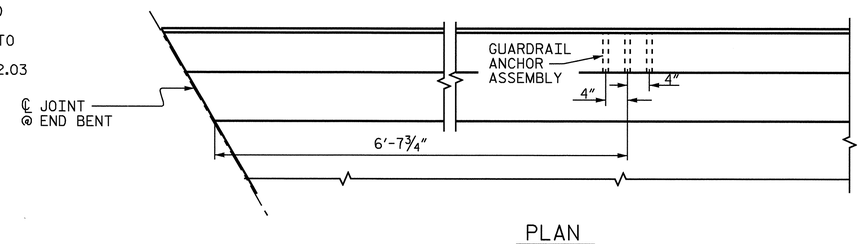

PLAN

LOCATION OF ANCHORS FOR GUARDRAIL

END BENT #1 SHOWN, END BENT #2 SIMILAR.

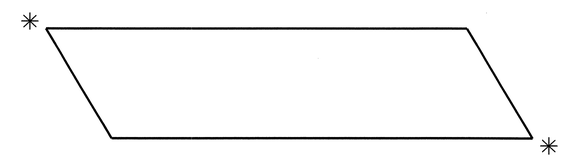

SKETCH SHOWING POINTS OF ATTACHMENTS

✳ DENOTES GUARDRAIL ANCHOR ASSEMBLY

GUARDRAIL ANCHOR ASSEMBLY DETAILS

PROJECT NO. R-2719A
LENOIR COUNTY
STATION: 113+38.09 -L-

SHEET 2 OF 2

STATE OF NORTH CAROLINA
DEPARTMENT OF TRANSPORTATION
RALEIGH

STANDARD
GUARDRAIL ANCHORAGE FOR BARRIER RAIL

(LEFT LANE)

NORTH CAROLINA PROFESSIONAL SEAL 14045 ENGINEER TIMOTHY L. COGGINS
10/11/08

REVISIONS						SHEET NO.
NO.	BY:	DATE:	NO.	BY:	DATE:	S-132
1			3			TOTAL SHEETS
2			4			340

ASSEMBLED BY : PEGGY PARISI DATE : 5-08	
CHECKED BY : B. N. BARODAWALA DATE : 5-08	
DRAWN BY : TLA 5/06	ADDED 5/1/06R KMM/GM
CHECKED BY : GM 5/06	

09-OCT-2008 09:12
R:\Structures\Str#4\Final Plans\R-2719A_sd_br_04.dgn
nruffin

STR. #4

STD. NO. GRA2

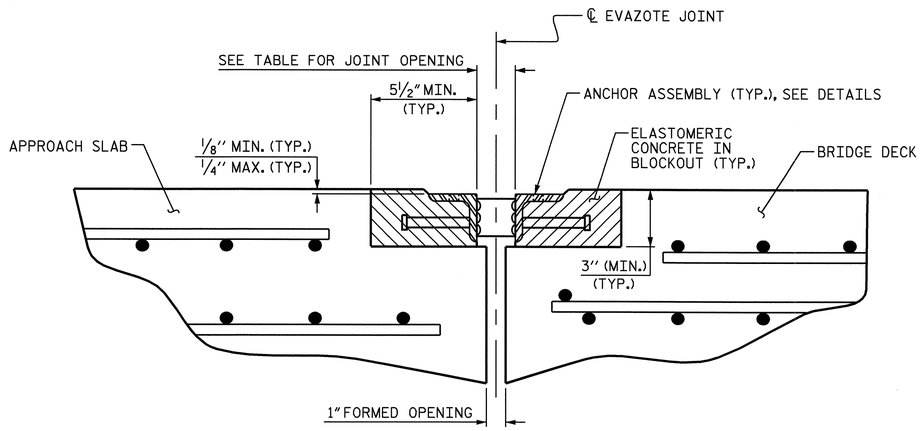

ARMORED JOINT DETAILS

SECTION NORMAL TO JOINT AT END BENT

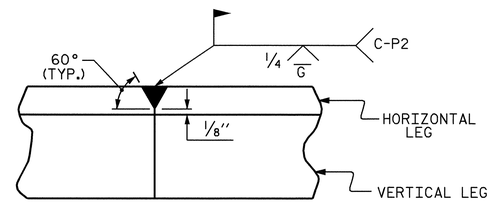

DETAIL- FIELD WELD SPLICE OF ANGLE

NOTES

ANGLES SHALL CONFORM TO AASHTO M270 GRADE 36 STEEL OR APPROVED EQUAL. ALL STUD ANCHORS SHALL CONFORM TO AASHTO M169 GRADES 1010 THRU 1020 OR APPROVED EQUAL.

STUD ANCHORS SHALL BE SHOP WELDED AND ALL HOLES SHALL BE SHOP DRILLED AS SHOWN ON THE PLANS. STUD ANCHORS SHALL BE ELECTRIC ARC END WELDED WITH COMPLETE FUSION.

UPON COMPLETION OF SHOP FABRICATION, THE ENTIRE ANCHOR ASSEMBLY SHALL BE METALLIZED. THE ½" Ø STUD ANCHORS AND ANCHOR TABS NEED NOT BE METALLIZED. SEE SPECIAL PROVISION FOR THERMAL SPRAYED COATINGS (METALLIZATION).

ANCHOR ASSEMBLY SHALL BE MADE CONTINUOUS THE LENGTH OF THE JOINT FROM GUTTER TO GUTTER. FOR FIELD SPLICES AT ALL CROWN BREAK POINTS, THE ENDS OF THE STEEL ANGLES SHALL BE CUT PARALLEL TO THE BRIDGE CENTERLINE. FINISHED FIELD WELDS SHALL BE GROUND SMOOTH AND COATED WITH A MINIMUM THICKNESS OF 4 DRY MILS OF ZINC-RICH PAINT IN ACCORDANCE WITH THE STANDARD SPECIFICATIONS.

ANCHOR ASSEMBLY SEGMENTS SHALL NOT BE LESS THAN 12 FEET NOR MORE THAN 20 FEET IN LENGTH. SHORTER SEGMENTS MAY BE USED AT THE EDGE OF ROADWAY OR AT POINTS OF STAGED CONSTRUCTION.

THE ANCHOR ASSEMBLY SHALL BE SECURED AND LEVELED AS SHOWN IN THE "ARMORED JOINT ANCHOR ASSEMBLY DETAILS". NO SUBMITTALS ARE REQUIRED FOR ⅜" Ø EXPANSION ANCHORS, NUTS OR WASHERS. THE CONTRACTOR MAY SUBMIT FOR APPROVAL AN ALTERNATE METHOD OF ALIGNING AND LEVELING THE ANGLES. THE ALTERNATE METHOD SHALL NOT INCLUDE ANY WELDING TO THE OUTSIDE FACE OF THE ANGLES.

AFTER THE ELASTOMERIC CONCRETE HAS BEEN CAST ON BOTH SIDES OF THE JOINT, REMOVE ANY EXCESS CONCRETE THAT COMES THROUGH THE WEEP HOLES AND THOROUGHLY CLEAN THE ANGLES. ANY DAMAGED STEEL SHALL BE COATED WITH A MINIMUM OF 4 MILS OF ZINC-RICH PAINT IN ACCORDANCE WITH THE STANDARD SPECIFICATIONS.

SEE SPECIAL PROVISIONS FOR EVAZOTE JOINT SEALS.

SEE SPECIAL PROVISIONS FOR ELASTOMERIC CONCRETE.

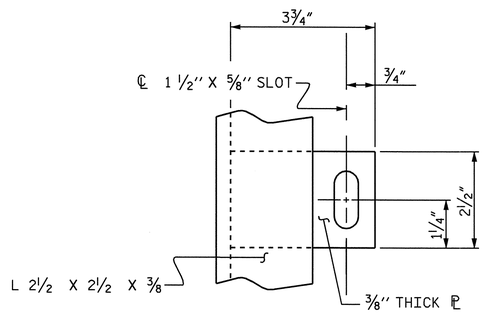

PLAN VIEW OF TAB

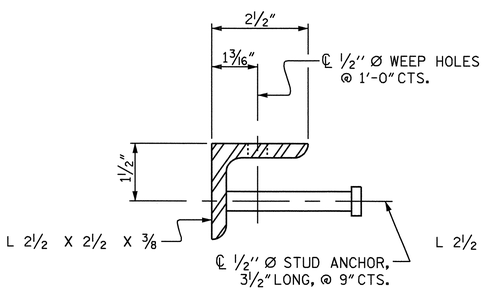

SECTION VIEW OF STUD

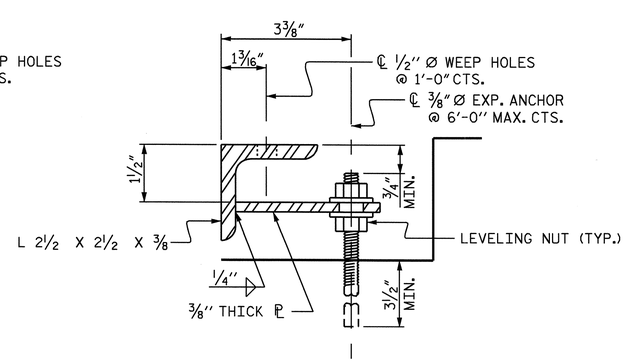

SECTION VIEW OF TAB

ARMORED JOINT ANCHOR ASSEMBLY DETAILS

MOVEMENT AND SETTING AT EVAZOTE JOINT

END BENT NO.	SKEW ANGLE	NOMINAL UNCOMPRESSED SEAL WIDTH	TOTAL MOVEMENT (ALONG ℄ RDWY)	PERPENDICULAR JOINT OPENING AT 45° F	PERPENDICULAR JOINT OPENING AT 60° F	PERPENDICULAR JOINT OPENING AT 90° F
1	43°-29'-10"	2½"	11⅞"	2"	1⅞"	1⁹⁄₁₆"
2	43°-29'-10"	2½"	—	—	—	—

TOTAL MOVEMENT IS CALCULATED ALONG THE CENTERLINE OF ROADWAY.
JOINT OPENINGS ARE MEASURED PERPENDICULAR TO THE JOINT.

BILL OF MATERIAL

END BENT NO.	ELASTOMERIC CONCRETE ✳ (CU. FT.)	TOTAL LENGTH OF ANGLE (FT)
1	14.0	122.09'
2	14.0	122.09'

✳ BASED ON THE MINIMUM BLOCKOUT SHOWN.

PROJECT NO. R-2719A
LENOIR COUNTY
STATION: 113+38.09 -L-

STATE OF NORTH CAROLINA
DEPARTMENT OF TRANSPORTATION
RALEIGH

STANDARD
ARMORED EVAZOTE JOINT DETAILS
(LEFT LANE)

NORTH CAROLINA PROFESSIONAL SEAL 14045 ENGINEER TIMOTHY L. COGGINS
10/11/08

REVISIONS						SHEET NO.
NO.	BY:	DATE:	NO.	BY:	DATE:	S-133
1			3			TOTAL SHEETS
2			4			340

ASSEMBLED BY : PEGGY PARISI	DATE : 6-08		
CHECKED BY : T. COGGINS	DATE : 9-08		
DRAWN BY : EEM 1/96	REV. 7/10/01 LES/RDR		
CHECKED BY : RGW 1/96	REV. 5/7/03RR RWW/JTE		
	REV. 5/1/06 TLA/GM		

09-OCT-2008 09:12
R:\Structures\Str#4\Final Plans\R-2719A_sd_ej_04.dgn
nruffin

STR. #4

STD. NO. AEJ1

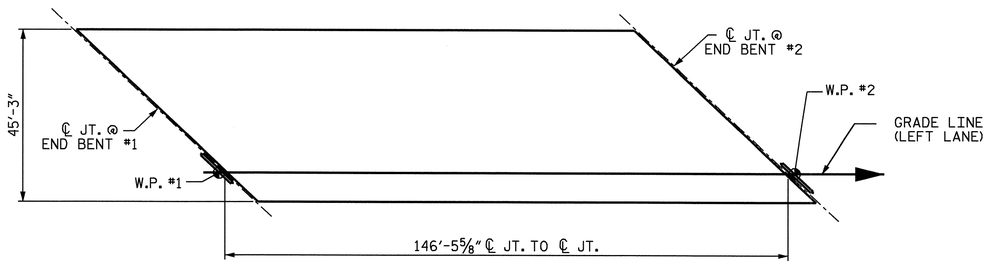

LAYOUT FOR COMPUTING AREA OF REINFORCED CONCRETE DECK SLAB
(SQ. FT. = 6628)

BILL OF MATERIAL

BAR	NO.	SIZE	TYPE	LENGTH	WEIGHT	BAR	NO.	SIZE	TYPE	LENGTH	WEIGHT
✳ A1	183	#5	STR	44'-11"	8573	A207	4	#5	STR	37'-8"	157
A2	183	#5	STR	44'-11"	8573	A208	4	#5	STR	36'-8"	153
✳ A3	8	#6	STR	22'-5"	269	A209	4	#5	STR	35'-8"	149
						A210	4	#5	STR	34'-7"	144
✳A101	4	#5	STR	43'-2"	180	A211	4	#5	STR	33'-7"	140
✳A102	4	#5	STR	42'-2"	176	A212	4	#5	STR	32'-7"	136
✳A103	4	#5	STR	41'-1"	171	A213	4	#5	STR	31'-6"	131
✳A104	4	#5	STR	40'-1"	167	A214	4	#5	STR	30'-6"	127
✳A105	4	#5	STR	39'-1"	163	A215	4	#5	STR	29'-6"	123
✳A106	4	#5	STR	38'-1"	159	A216	4	#5	STR	28'-5"	119
✳A107	4	#5	STR	37'-0"	154	A217	4	#5	STR	27'-5"	114
✳A108	4	#5	STR	36'-0"	150	A218	4	#5	STR	26'-5"	110
✳A109	4	#5	STR	34'-11"	146	A219	4	#5	STR	25'-4"	106
✳A110	4	#5	STR	33'-11"	142	A220	4	#5	STR	24'-4"	102
✳A111	4	#5	STR	32'-11"	137	A221	4	#5	STR	23'-4"	97
✳A112	4	#5	STR	31'-10"	133	A222	4	#5	STR	22'-3"	93
✳A113	4	#5	STR	30'-10"	129	A223	4	#5	STR	21'-3"	89
✳A114	4	#5	STR	29'-10"	124	A224	4	#5	STR	20'-3"	84
✳A115	4	#5	STR	28'-9"	120	A225	4	#5	STR	19'-2"	80
✳A116	4	#5	STR	27'-9"	116	A226	4	#5	STR	18'-2"	76
✳A117	4	#5	STR	26'-9"	112	A227	4	#5	STR	17'-2"	72
✳A118	4	#5	STR	25'-8"	107	A228	4	#5	STR	16'-1"	67
✳A119	4	#5	STR	24'-8"	103	A229	4	#5	STR	15'-1"	63
✳A120	4	#5	STR	23'-8"	99	A230	4	#5	STR	14'-1"	59
✳A121	4	#5	STR	22'-7"	94	A231	4	#5	STR	13'-0"	54
✳A122	4	#5	STR	21'-7"	90	A232	4	#5	STR	12'-0"	50
✳A123	4	#5	STR	20'-7"	86	A233	4	#5	STR	11'-0"	46
✳A124	4	#5	STR	19'-6"	81	A234	4	#5	STR	9'-11"	41
✳A125	4	#5	STR	18'-6"	77	A235	4	#5	STR	8'-11"	37
✳A126	4	#5	STR	17'-6"	73	A236	4	#5	STR	7'-11"	33
✳A127	4	#5	STR	16'-6"	69	A237	4	#5	STR	6'-10"	29
✳A128	4	#5	STR	15'-5"	64	A238	4	#5	STR	5'-10"	24
✳A129	4	#5	STR	14'-5"	60	A239	4	#5	STR	4'-10"	20
✳A130	4	#5	STR	13'-5"	56	A240	4	#5	STR	3'-9"	16
✳A131	4	#5	STR	12'-4"	51	A241	4	#5	STR	2'-9"	11
✳A132	4	#5	STR	11'-4"	47	A242	4	#5	STR	1'-9"	7
✳A133	4	#5	STR	10'-4"	43						
✳A134	4	#5	STR	9'-3"	39	✳ B1	192	#4	STR	26'-1"	3324
✳A135	4	#5	STR	8'-3"	34	B2	156	#5	STR	50'-2"	8163
✳A136	4	#5	STR	7'-3"	30						
✳A137	4	#5	STR	6'-2"	26	✳ G1	4	#5	STR	33'-10"	141
✳A138	4	#5	STR	5'-2"	22						
✳A139	4	#5	STR	4'-2"	17	✳ K1	12	#5	1	13'-11"	174
✳A140	4	#5	STR	3'-1"	13	✳ K2	18	#5	2	17'-10"	335
✳A141	4	#5	STR	2'-1"	9						
						✳ S1	80	#4	3	4'-9"	254
A201	4	#5	STR	43'-10"	183						
A202	4	#5	STR	42'-10"	179						
A203	4	#5	STR	41'-10"	175	REINFORCING STEEL 20,730					
A204	4	#5	STR	40'-9"	170						
A205	4	#5	STR	39'-9"	166	✳ EPOXY COATED					
A206	4	#5	STR	38'-9"	162	REINFORCING STEEL 16,939					

BAR TYPES

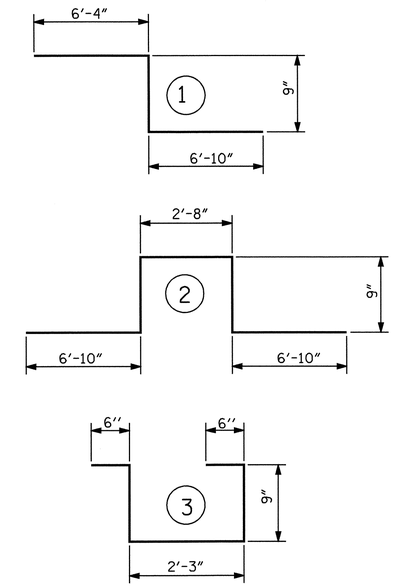

ALL BAR DIMENSIONS ARE OUT TO OUT

SUPERSTRUCTURE BILL OF MATERIAL

	CLASS AA CONCRETE	REINFORCING STEEL	EPOXY COATED REINFORCING STEEL
	(CU.YDS.)	(LBS.)	(LBS.)
SPAN "A"	245.2	20,730	16,939
TOTALS✳✳	245.2	20,730	16,939

✳✳QUANTITIES FOR BARRIER RAIL ARE NOT INCLUDED

SUPERSTRUCTURE REINFORCING STEEL LENGTHS ARE BASED ON THE FOLLOWING MINIMUM SPLICE LENGTHS

BAR SIZE	SUPERSTRUCTURE EXCEPT APPROACH SLABS, PARAPET, AND BARRIER RAIL		APPROACH SLABS		PARAPET AND BARRIER RAIL
	EPOXY COATED	UNCOATED	EPOXY COATED	UNCOATED	
#4	2'-0"	1'-9"	2'-0"	1'-9"	2'-9"
#5	2'-6"	2'-2"	2'-6"	2'-2"	3'-5"
#6	3'-0"	2'-7"	3'-10"	2'-7"	4'-4"
#7	5'-3"	3'-6"			
#8	6'-10"	4'-7"			

GROOVING BRIDGE FLOORS

APPROACH SLABS	1870	SQ.FT.
BRIDGE DECK	5684	SQ.FT.
TOTAL	7554	SQ.FT.

PROJECT NO. R-2719A
LENOIR COUNTY
STATION: 113+38.09 -L-

NORTH CAROLINA PROFESSIONAL SEAL 14045 ENGINEER TIMOTHY W. COGGINS
10/11/08

STATE OF NORTH CAROLINA
DEPARTMENT OF TRANSPORTATION
RALEIGH

STANDARD
SUPERSTRUCTURE BILL OF MATERIAL
(LEFT LANE)

REVISIONS						SHEET NO.
NO.	BY:	DATE:	NO.	BY:	DATE:	S-134
1			3			TOTAL SHEETS
2			4			340

ASSEMBLED BY : PEGGY PARISI DATE : 5-08
CHECKED BY : B. N. BARODAWALA DATE : 5-08

DRAWN BY : JMB 5/87
CHECKED BY : SJD 9/87

REV. 6/1/94 EEM/GRP
REV. 8/16/99 RWW/LES
REV. 5/1/06 TLA/GM

09-OCT-2008 09:12
R:\Structures\Str#4\Final Plans\R-2719A_sd_bm_04.dgn
nruffin

STR. #4 STD. NO. BOM1

NOTES

STIRRUPS IN CAP MAY BE SHIFTED AS NECESSARY TO CLEAR ANCHOR BOLTS.

BACKWALL SHALL BE PLACED BEFORE APPLYING THE EPOXY PROTECTIVE COATING.

THE TOP SURFACE AREAS OF THE END BENT CAP SHALL BE CURED IN ACCORDANCE WITH THE STANDARD SPECIFICATIONS EXCEPT THE MEMBRANE CURING COMPOUND METHOD SHALL NOT BE USED.

THE TOP SURFACE OF THE CAP EXCEPT THE BRIDGE SEAT BUILDUPS SHALL BE SLOPED TRANSVERSELY FROM THE FILL FACE TO THE BACK FACE AT THE RATE OF 2%.

EPOXY COAT THE END BENT CAP AFTER ADJUSTMENTS ARE MADE TO BEARINGS AND ANCHOR BOLTS ARE GROUTED.

FOR "TEMPORARY DRAINAGE AT END BENT" SEE DETAIL SHEET 3 OF 3 OF END BENT #2.

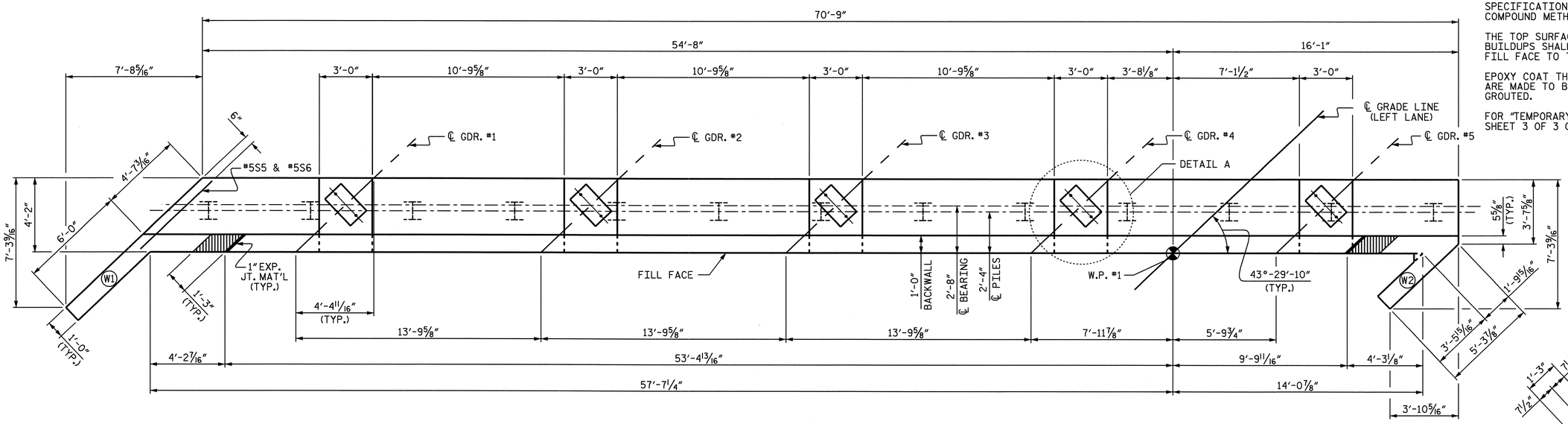

PLAN

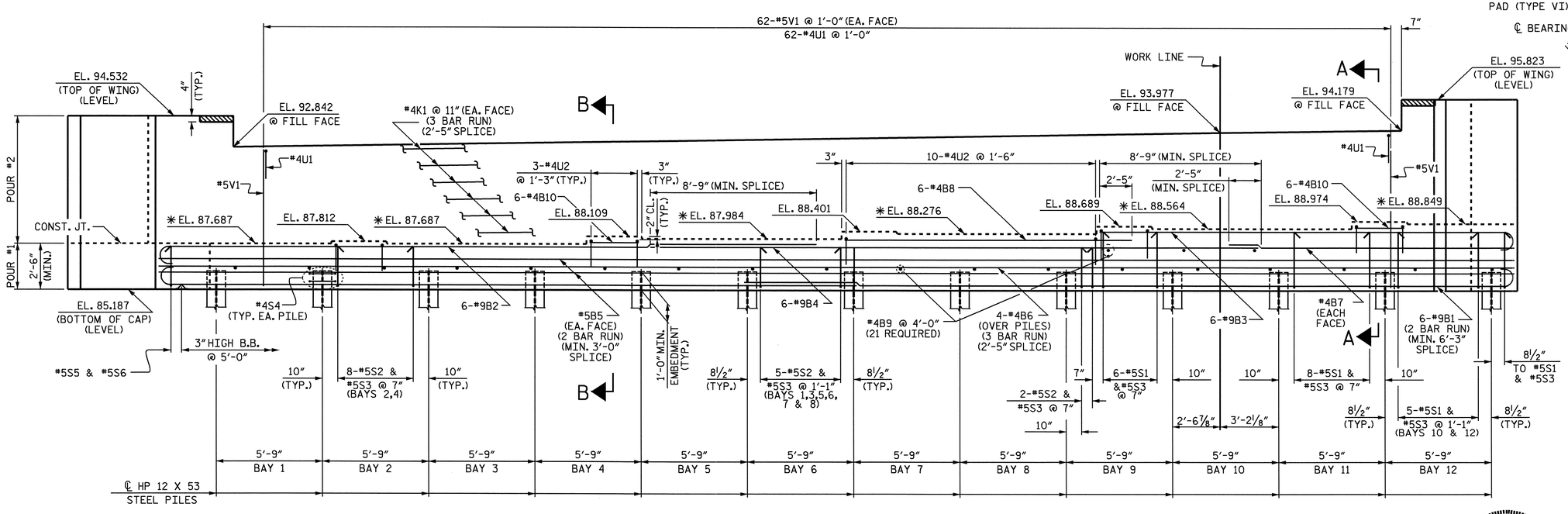

ELEVATION

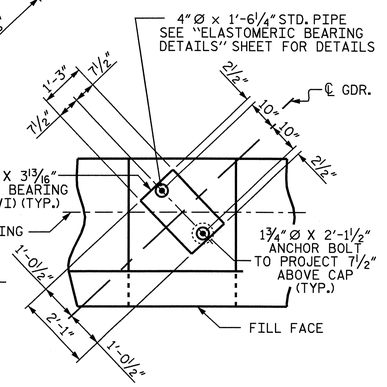

DETAIL A

(DIMENSIONS TYP. EA. BEARING)

PROJECT NO. R-2719A

LENOIR COUNTY

STATION: 113+38.09-L-

SHEET 1 OF 3

STATE OF NORTH CAROLINA
DEPARTMENT OF TRANSPORTATION
RALEIGH

SUBSTRUCTURE
END BENT #1
(LEFT LANE)

NORTH CAROLINA PROFESSIONAL SEAL 14045 ENGINEER TIMOTHY L. COGGINS
10/14/08

REVISIONS						SHEET NO.
NO.	BY:	DATE:	NO.	BY:	DATE:	S-135
1			3			TOTAL SHEETS
2			4			340

DRAWN BY : S.H. SOCKWELL DATE : 6/12/08
CHECKED BY : PEGGY PARISI DATE : 6/18/08

09-OCT-2008 16:14
h:\structures\str#4\finalplans\r-2719a_sd_e#_04.dgn
tcoggins

STR. #4

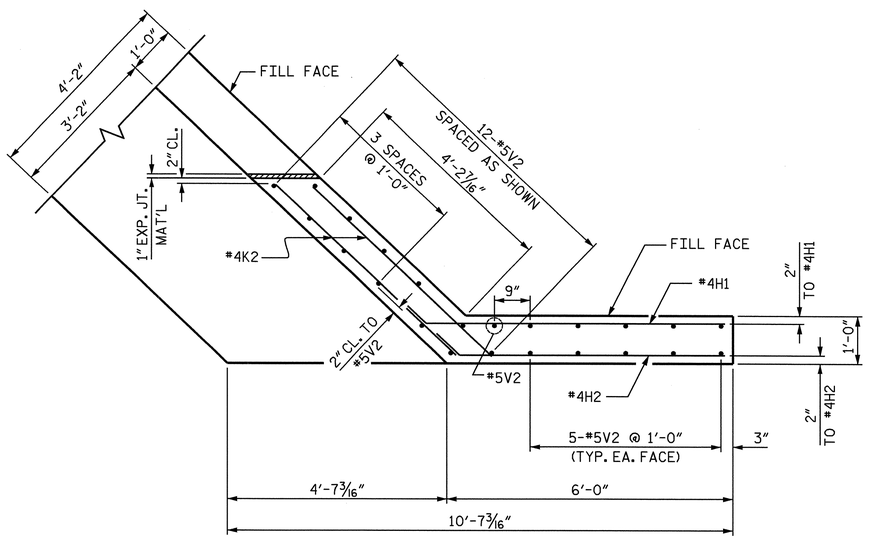

PLAN OF LEFT WING (W1)

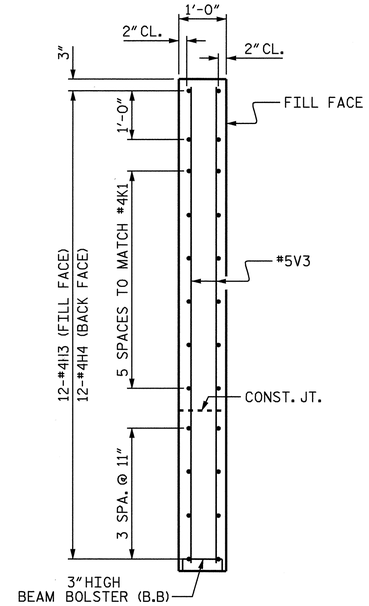

SECTION Y-Y

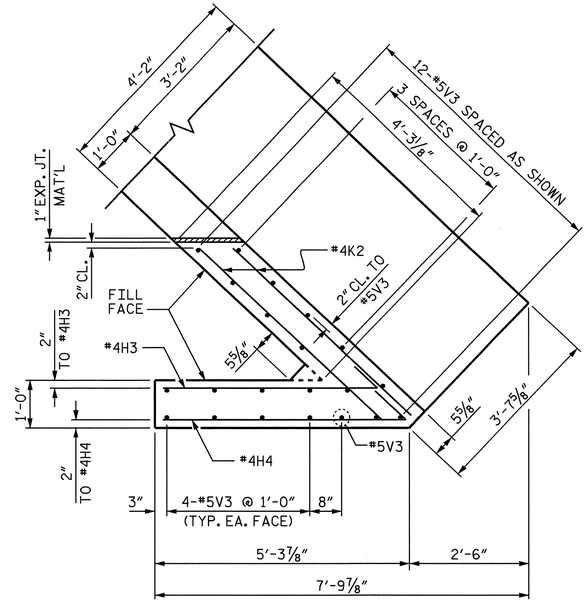

PLAN OF RIGHT WING (W2)

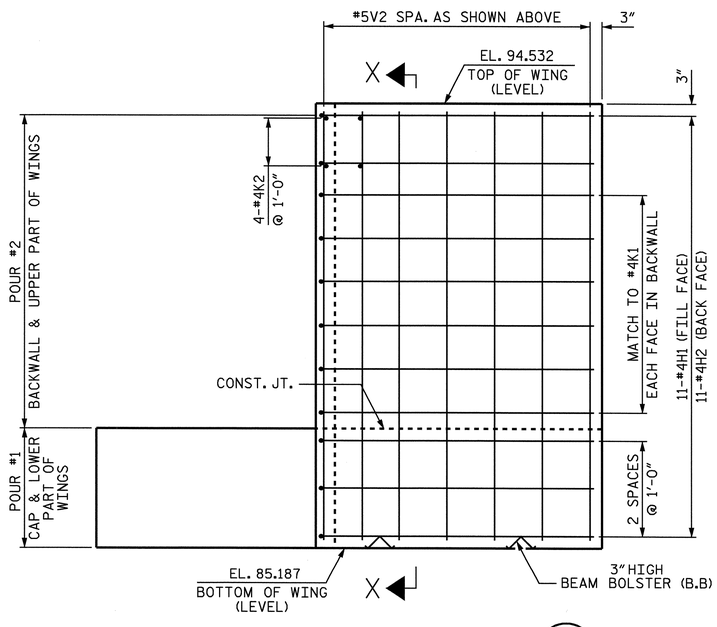

ELEVATION OF LEFT WING (W1)

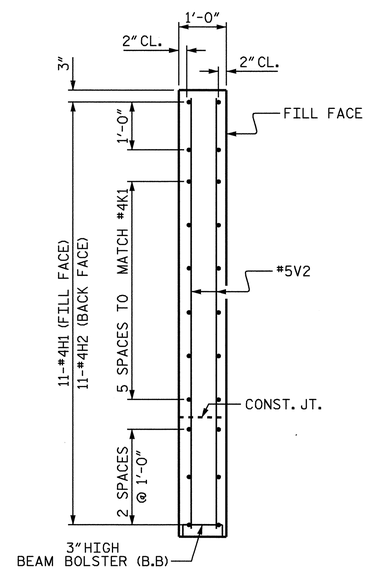

SECTION X-X

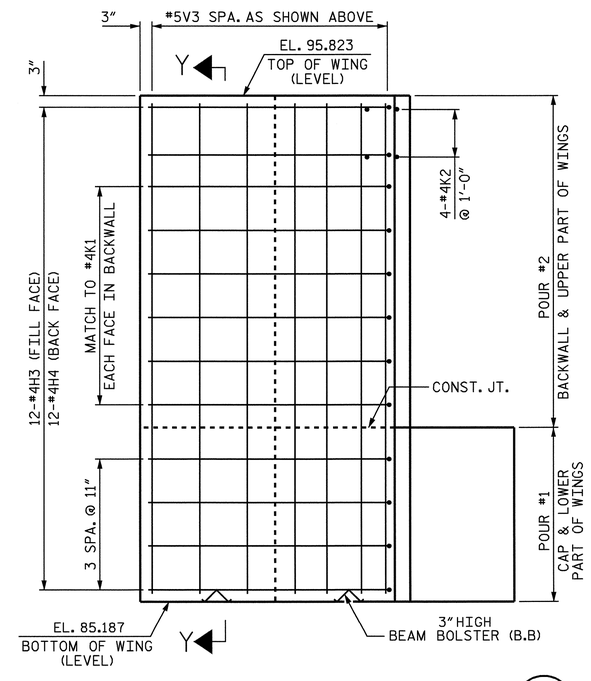

ELEVATION OF RIGHT WING (W2)

PROJECT NO. R-2719A
LENOIR COUNTY
STATION: 113+38.09-L-

SHEET 2 OF 3

STATE OF NORTH CAROLINA
DEPARTMENT OF TRANSPORTATION
RALEIGH

SUBSTRUCTURE
END BENT #1
(LEFT LANE)

NORTH CAROLINA PROFESSIONAL SEAL 14045 ENGINEER TIMOTHY L. COGGINS
10/1/08

REVISIONS						SHEET NO.
NO.	BY:	DATE:	NO.	BY:	DATE:	S-136
1			3			TOTAL SHEETS
2			4			340

DRAWN BY : S.H. SOCKWELL DATE : 6/12/08
CHECKED BY : PEGGY PARISI DATE : 6/18/08

09-OCT-2008 09:11
R:\Structures\Str#4\Final Plans\R-2719A_sd_e*_04.dgn
nruffin

STR. #4

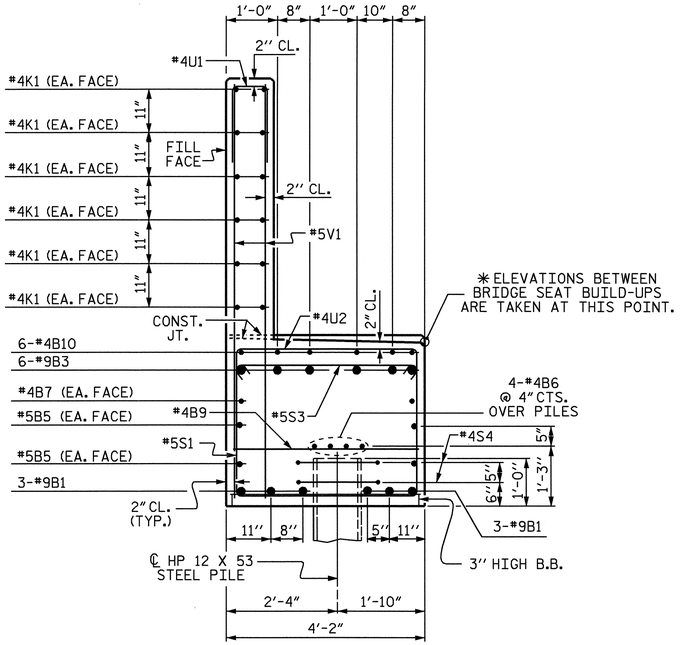

SECTION A-A

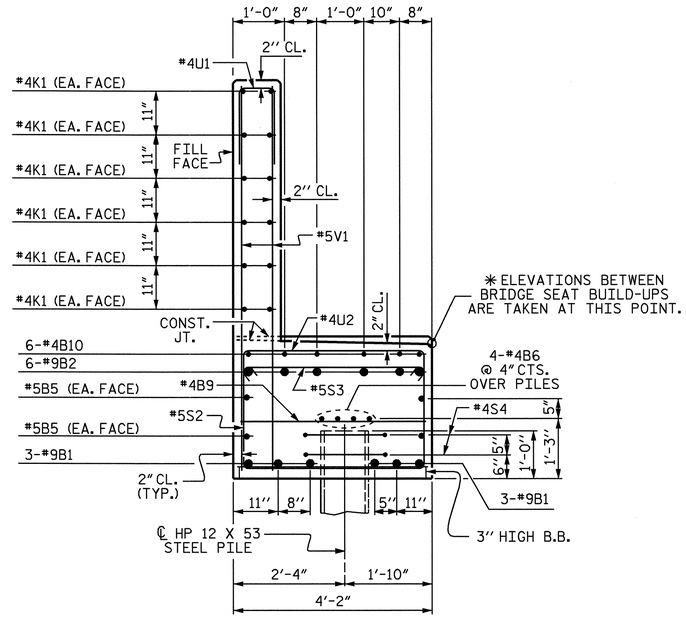

SECTION B-B

BAR TYPES

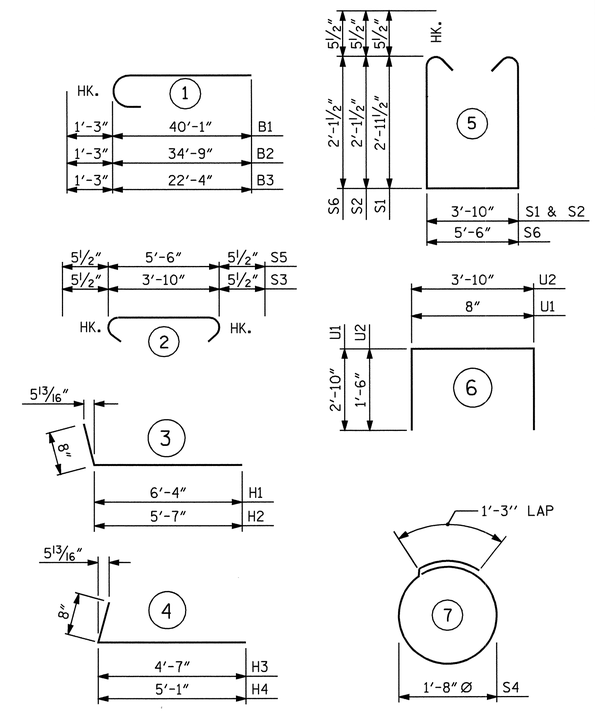

ALL BAR DIMENSIONS ARE OUT TO OUT.

BILL OF MATERIAL

END BENT #1

BAR	NO.	SIZE	TYPE	LENGTH	WEIGHT
B1	12	#9	1	41'-4"	1686
B2	6	#9	1	36'-0"	734
B3	6	#9	1	23'-7"	481
B4	6	#9	STR	34'-9"	709
B5	8	#5	STR	38'-7"	322
B6	12	#4	STR	26'-4"	211
B7	2	#4	STR	16'-1"	21
B8	6	#4	STR	16'-3"	65
B9	21	#4	STR	3'-10"	54
B10	12	#4	STR	2'-8"	21
H1	11	#4	3	7'-0"	51
H2	11	#4	3	6'-3"	46
H3	12	#4	4	5'-3"	42
H4	12	#4	4	5'-9"	46
K1	36	#4	STR	26'-4"	633
K2	8	#4	STR	5'-2"	28
S1	25	#5	5	10'-8"	278
S2	48	#5	5	9'-0"	451
S3	73	#5	2	4'-9"	362
S4	26	#4	7	6'-6"	113
S5	1	#5	2	6'-5"	7
S6	1	#5	5	10'-8"	11
U1	62	#4	6	6'-4"	262
U2	22	#4	6	6'-10"	100
V1	124	#5	STR	7'-4"	948
V2	23	#5	STR	9'-0"	216
V3	21	#5	STR	10'-3"	225

REINFORCING STEEL = 8123 LBS

CLASS A CONCRETE BREAKDOWN

POUR #1
CAP & LOWER PART OF WINGS 34.8 CU. YDS.

POUR #2
BACKWALL & UPPER PART OF WINGS 17.6 CU. YDS.

CLASS A CONCRETE TOTAL 52.4 CU. YDS.

HP 12 X 53 STEEL PILES
NO. 13 1040 LIN. FT.

STEEL PILE POINTS NO. 13

PILE REDRIVES EA. 10

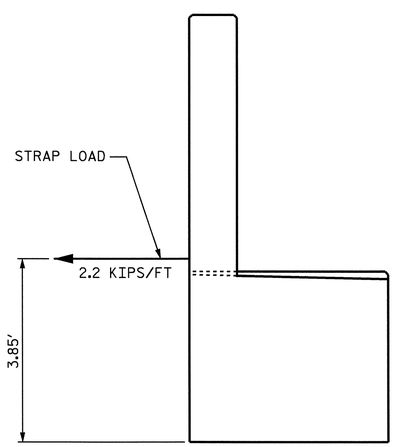

STRAP LOAD DETAIL

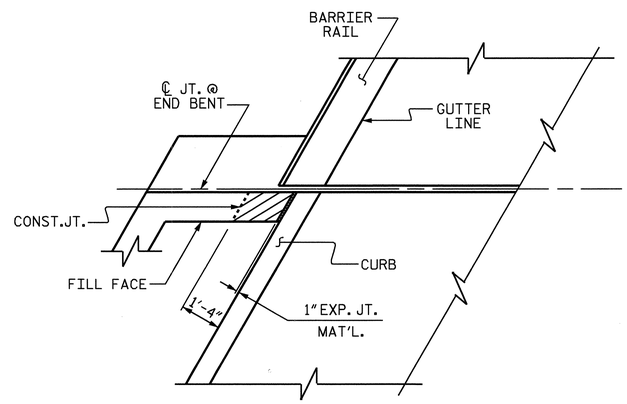

PLAN

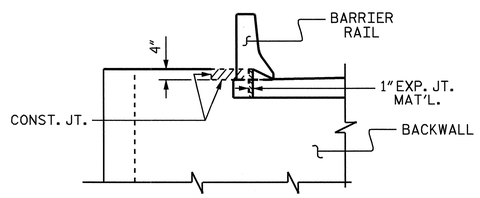

ELEVATION

BLOCKOUT IN WING WALL

NOTE: THE CONCRETE IN THE SHADED AREA OF THE WING SHALL BE POURED AFTER THE BARRIER RAIL IS CAST IF SLIP FORMING IS USED.

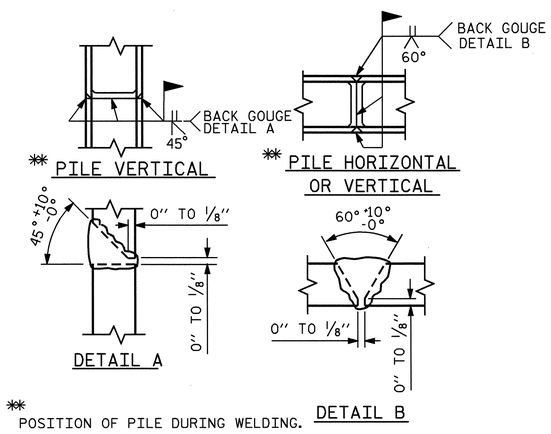

✱ POSITION OF PILE DURING WELDING.

PILE SPLICE DETAILS

PROJECT NO. R-2719A
LENOIR COUNTY
STATION: 113+38.09-L-

SHEET 3 OF 3

STATE OF NORTH CAROLINA
DEPARTMENT OF TRANSPORTATION
RALEIGH

SUBSTRUCTURE
END BENT #1
(LEFT LANE)

NORTH CAROLINA PROFESSIONAL SEAL 14045 ENGINEER TIMOTHY L. COSGRIS
10/11/08

REVISIONS						SHEET NO.
NO.	BY:	DATE:	NO.	BY:	DATE:	S-137
1			3			TOTAL SHEETS
2			4			340

DRAWN BY : S.H. SOCKWELL DATE : 6/12/08
CHECKED BY : PEGGY PARISI DATE : 6/18/08

STR. #4

NOTES

STIRRUPS IN CAP MAY BE SHIFTED AS NECESSARY TO CLEAR ANCHOR BOLTS.

BACKWALL SHALL BE PLACED BEFORE APPLYING THE EPOXY PROTECTIVE COATING.

THE TOP SURFACE AREAS OF THE END BENT CAP SHALL BE CURED IN ACCORDANCE WITH THE STANDARD SPECIFICATIONS EXCEPT THE MEMBRANE CURING COMPOUND METHOD SHALL NOT BE USED.

THE TOP SURFACE OF THE CAP EXCEPT THE BRIDGE SEAT BUILDUPS SHALL BE SLOPED TRANSVERSELY FROM THE FILL FACE TO THE BACK FACE AT THE RATE OF 2%.

FOR "PILE SPLICE DETAILS" SEE SHEET 3 OF 3 OF END BENT #1.

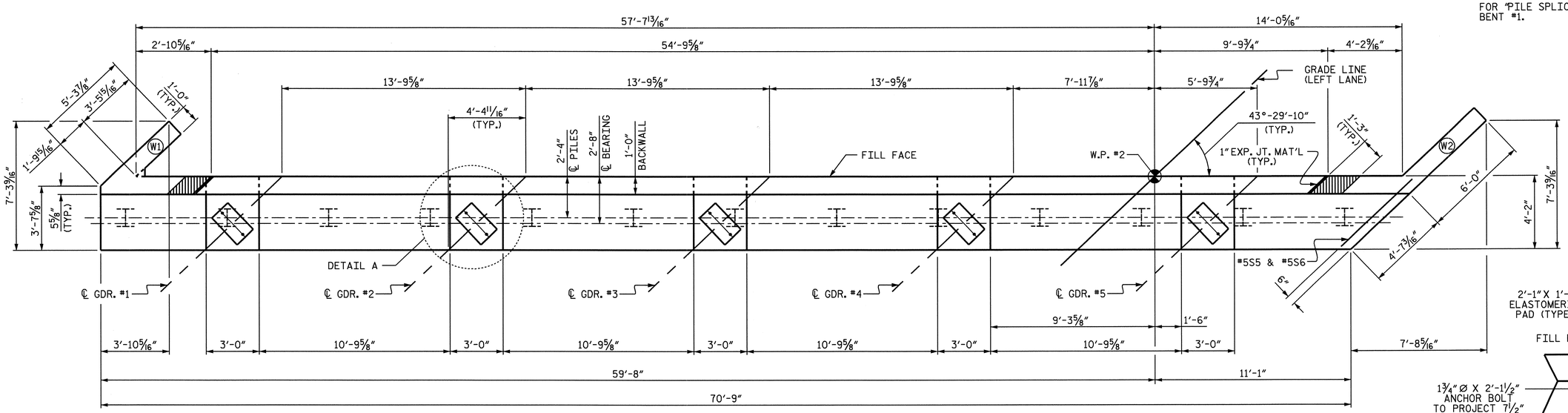

PLAN

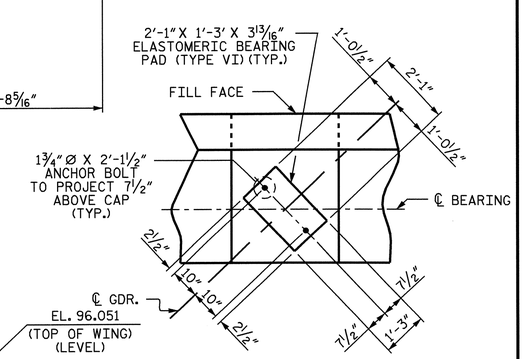

DETAIL A

(DIMENSIONS TYP. EA. BEARING)

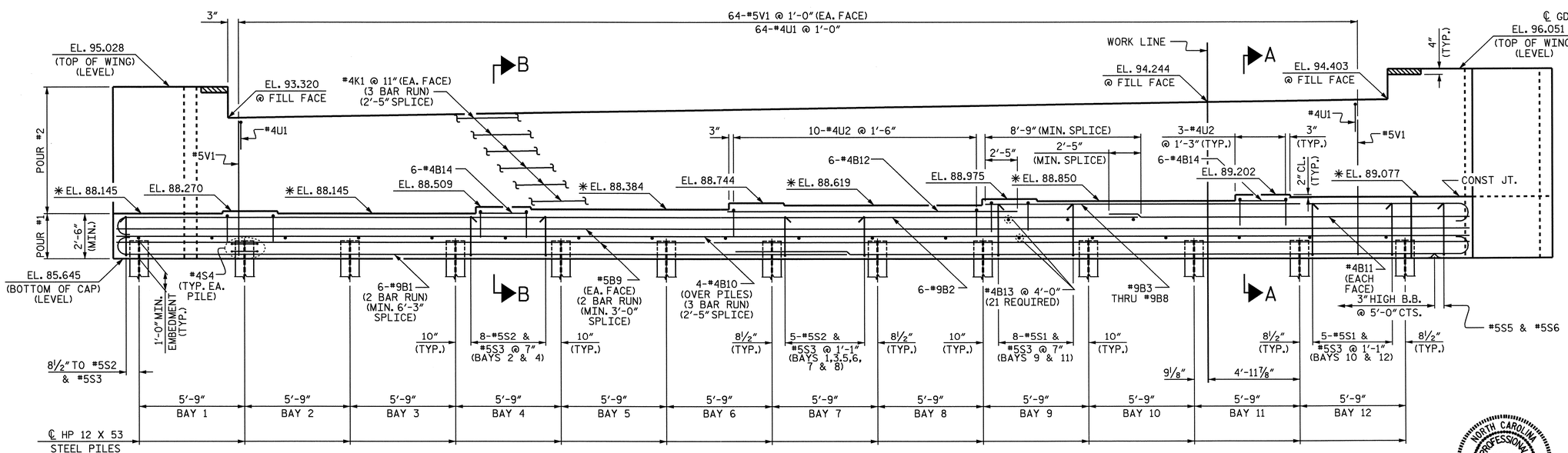

ELEVATION

PROJECT NO. R-2719A

LENOIR COUNTY

STATION: 113+38.09-L-

SHEET 1 OF 3

STATE OF NORTH CAROLINA
DEPARTMENT OF TRANSPORTATION
RALEIGH

SUBSTRUCTURE
END BENT #2
(LEFT LANE)

NORTH CAROLINA PROFESSIONAL SEAL 14045 ENGINEER TIMOTHY L. COGGINS
10/14/08

REVISIONS						SHEET NO.
NO.	BY:	DATE:	NO.	BY:	DATE:	S-138
1			3			TOTAL SHEETS
2			4			340

DRAWN BY : S.H. SOCKWELL DATE : 6/12/08
CHECKED BY : PEGGY PARISI DATE : 6/18/08

09-OCT-2008 11:52
R:\Structures\Str*4\Final Plans\R-2719A_sd_e*_04.dgn
gruffin

STR. #4

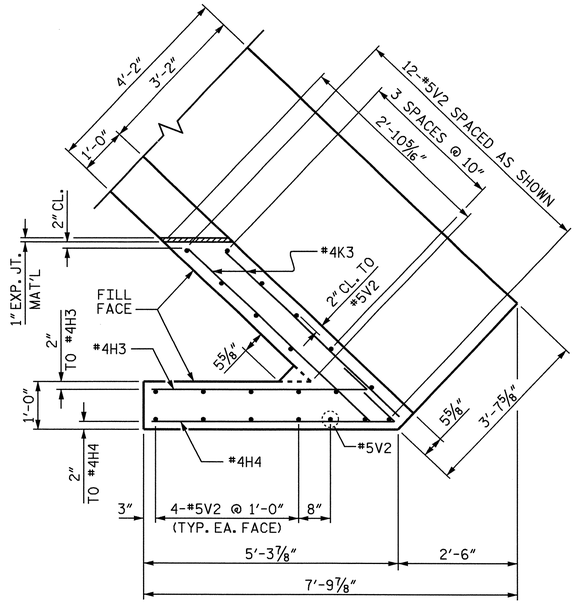

PLAN OF LEFT WING (W1)

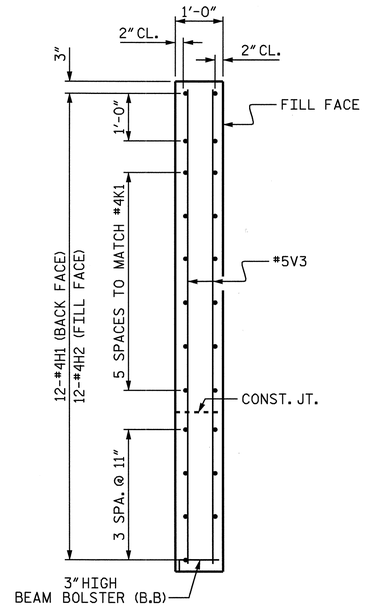

SECTION Y-Y

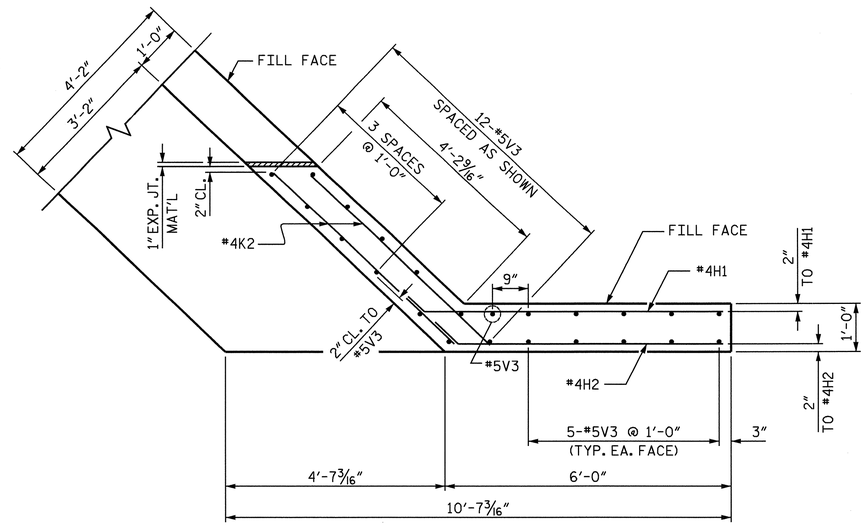

PLAN OF RIGHT WING (W2)

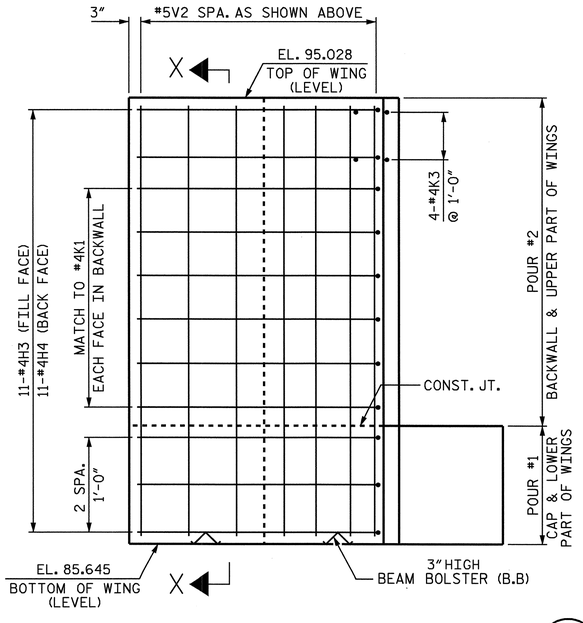

ELEVATION OF LEFT WING (W1)

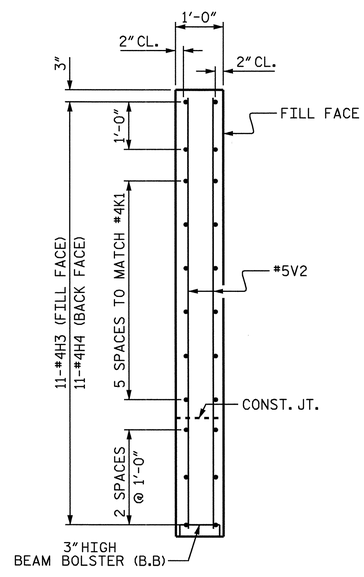

SECTION X-X

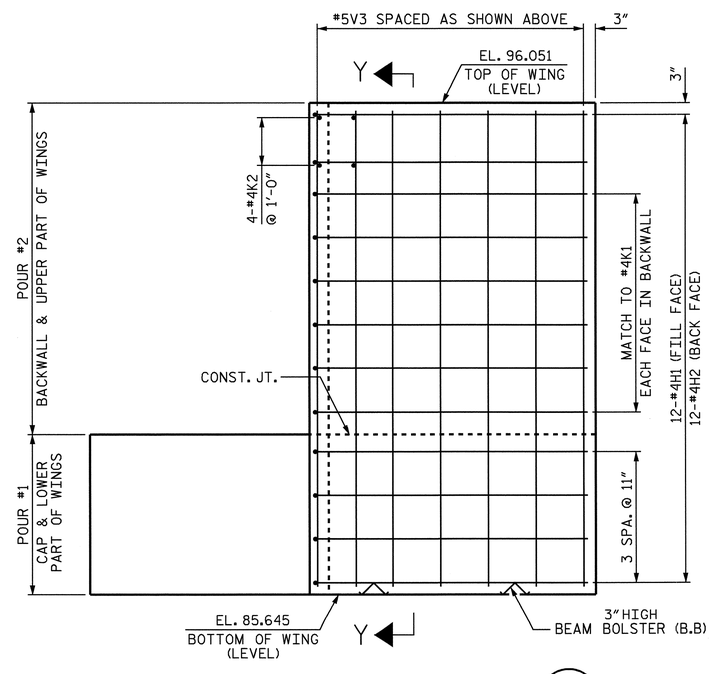

ELEVATION OF RIGHT WING (W2)

PROJECT NO. R-2719A
LENOIR COUNTY
STATION: 113+38.09-L-

SHEET 2 OF 3

STATE OF NORTH CAROLINA
DEPARTMENT OF TRANSPORTATION
RALEIGH

SUBSTRUCTURE
END BENT #2
(LEFT LANE)

NORTH CAROLINA PROFESSIONAL SEAL 14045 ENGINEER TIMOTHY W. COGGINS
10/1/08

REVISIONS						SHEET NO.
NO.	BY:	DATE:	NO.	BY:	DATE:	S-139
1			3			TOTAL SHEETS
2			4			340

STR. #4

DRAWN BY : S.H. SOCKWELL DATE : 6/12/08
CHECKED BY : PEGGY PARISI DATE : 6/18/08

09-OCT-2008 09:11
R:\Structures\Str#4\Final Plans\R-2719A_sd_e*_04.dgn
nruffin

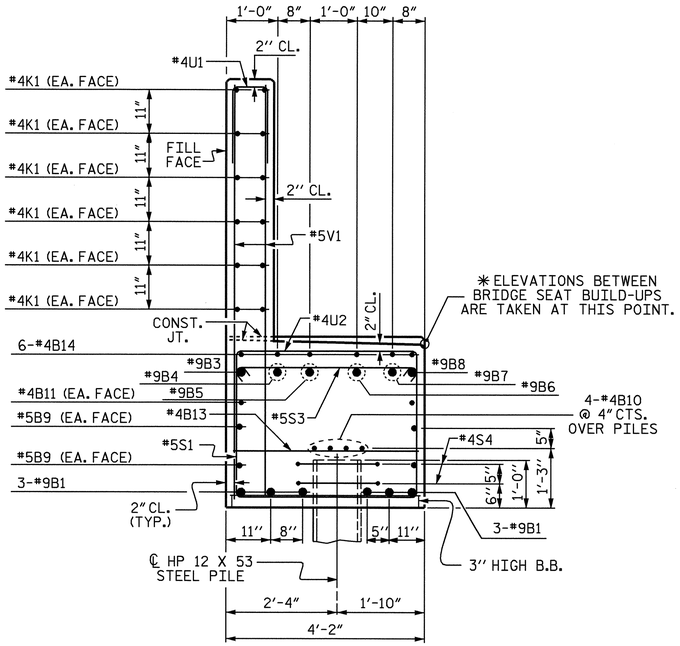

SECTION A-A

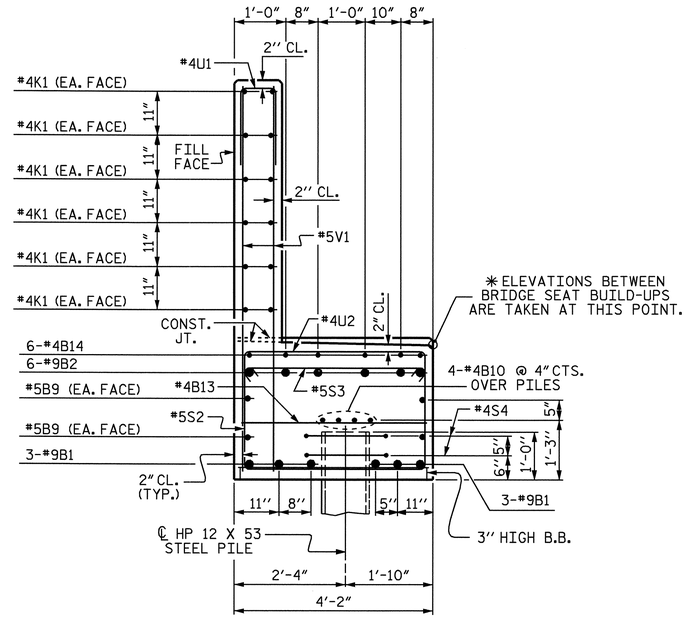

SECTION B-B

BAR TYPES

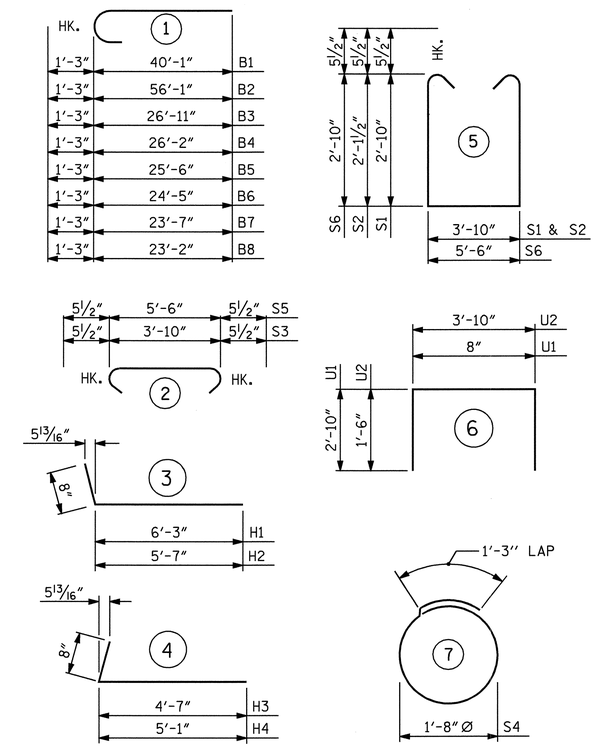

ALL BAR DIMENSIONS ARE OUT TO OUT.

BILL OF MATERIAL
END BENT #2

BAR	NO.	SIZE	TYPE	LENGTH	WEIGHT
B1	12	#9	1	41'-4"	1686
B2	6	#9	1	57'-4"	1170
B3	1	#9	1	28'-2"	96
B4	1	#9	1	27'-5"	93
B5	1	#9	1	26'-9"	91
B6	1	#9	1	25'-8"	87
B7	1	#9	1	24'-10"	84
B8	1	#9	1	24'-5"	83
B9	8	#5	STR	38'-7"	322
B10	12	#4	STR	26'-4"	211
B11	2	#4	STR	20'-7"	27
B12	6	#4	STR	16'-3"	65
B13	21	#4	STR	3'-10"	54
B14	12	#4	STR	2'-8"	21
H1	12	#4	3	6'-11"	55
H2	12	#4	3	6'-3"	50
H3	11	#4	4	5'-3"	39
H4	11	#4	4	5'-9"	42
K1	36	#4	STR	26'-4"	633
K2	4	#4	STR	5'-2"	14
K3	4	#4	STR	3'-11"	10
S1	26	#5	5	10'-5"	282
S2	47	#5	5	9'-0"	441
S3	73	#5	2	4'-9"	362
S4	26	#4	7	6'-6"	113
S5	1	#5	2	6'-5"	7
S6	1	#5	5	12'-1"	13
U1	64	#4	6	6'-4"	271
U2	22	#4	6	6'-10"	100
V1	128	#5	STR	7'-4"	979
V2	21	#5	STR	9'-0"	197
V3	23	#5	STR	10'-0"	240
REINFORCING STEEL				=	7938 LBS

CLASS A CONCRETE BREAKDOWN

POUR #1	
CAP & LOWER PART OF WINGS	34.2 CU. YDS.
POUR #2	
BACKWALL & UPPER PART OF WINGS	17.9 CU. YDS.
CLASS A CONCRETE TOTAL	52.1 CU. YDS.

HP 12 X 53 STEEL PILES	
NO. 13	1105 LIN. FT.
STEEL PILE POINTS	NO. 13
PILE REDRIVES	EA. 10

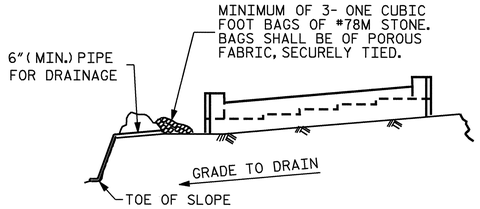

BAGGED STONE AND PIPE SHALL BE PLACED IMMEDIATELY AFTER COMPLETION OF END BENT EXCAVATION. PIPE MAY BE EITHER CONCRETE, CORRUGATED STEEL, CORRUGATED ALUMINUM ALLOY, OR CORRUGATED PLASTIC. PERFORATED PIPE WILL NOT BE ALLOWED.

BAGGED STONE SHALL REMAIN IN PLACE UNTIL THE ENGINEER DIRECTS THAT IT BE REMOVED. THE CONTRACTOR SHALL REMOVE AND DISPOSE OF SILT ACCUMULATIONS AT BAGGED STONE WHEN SO DIRECTED BY THE ENGINEER. BAGS SHALL BE REMOVED AND REPLACED WHENEVER THE ENGINEER DETERMINES THAT THEY HAVE DETERIORATED AND LOST THEIR EFFECTIVENESS.

NO SEPARATE PAYMENT WILL BE MADE FOR THIS WORK AND THE ENTIRE COST OF THIS WORK SHALL BE INCLUDED IN THE UNIT CONTRACT PRICE BID FOR THE SEVERAL PAY ITEMS.

TEMPORARY DRAINAGE AT END BENT

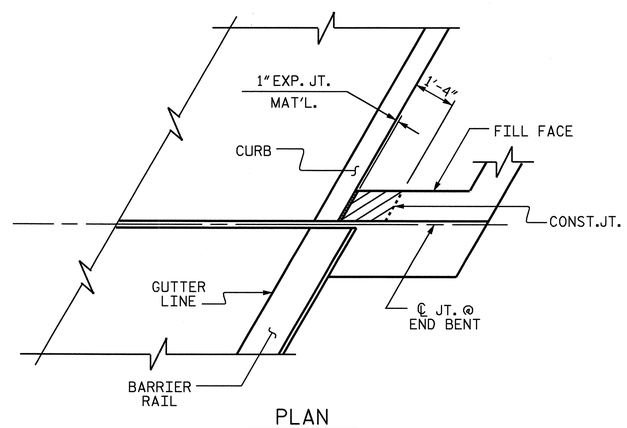

PLAN

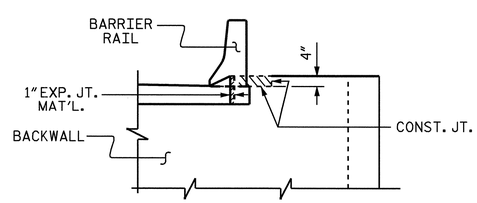

ELEVATION

BLOCKOUT IN WING WALL

NOTE: THE CONCRETE IN THE SHADED AREA OF THE WING SHALL BE POURED AFTER THE BARRIER RAIL IS CAST IF SLIP FORMING IS USED.

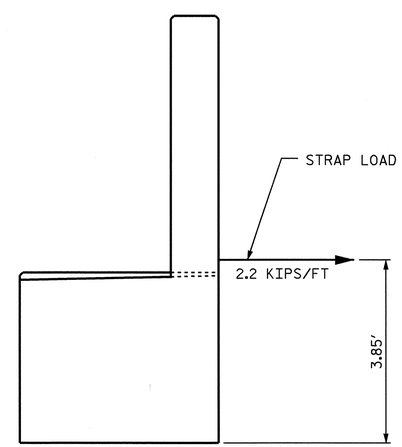

STRAP LOAD DETAIL

PROJECT NO. R-2719A
LENOIR COUNTY
STATION: 113+38.09-L-

SHEET 3 OF 3

STATE OF NORTH CAROLINA
DEPARTMENT OF TRANSPORTATION
RALEIGH

SUBSTRUCTURE
END BENT #2
(LEFT LANE)

NORTH CAROLINA PROFESSIONAL SEAL 14045 ENGINEER TIMOTHY W. COGGINS
10/11/08

REVISIONS						SHEET NO.
NO.	BY:	DATE:	NO.	BY:	DATE:	S-140
1			3			TOTAL SHEETS
2			4			340

STR. #4

DRAWN BY : S.H. SOCKWELL DATE : 6/12/08
CHECKED BY : PEGGY PARISI DATE : 6/18/08

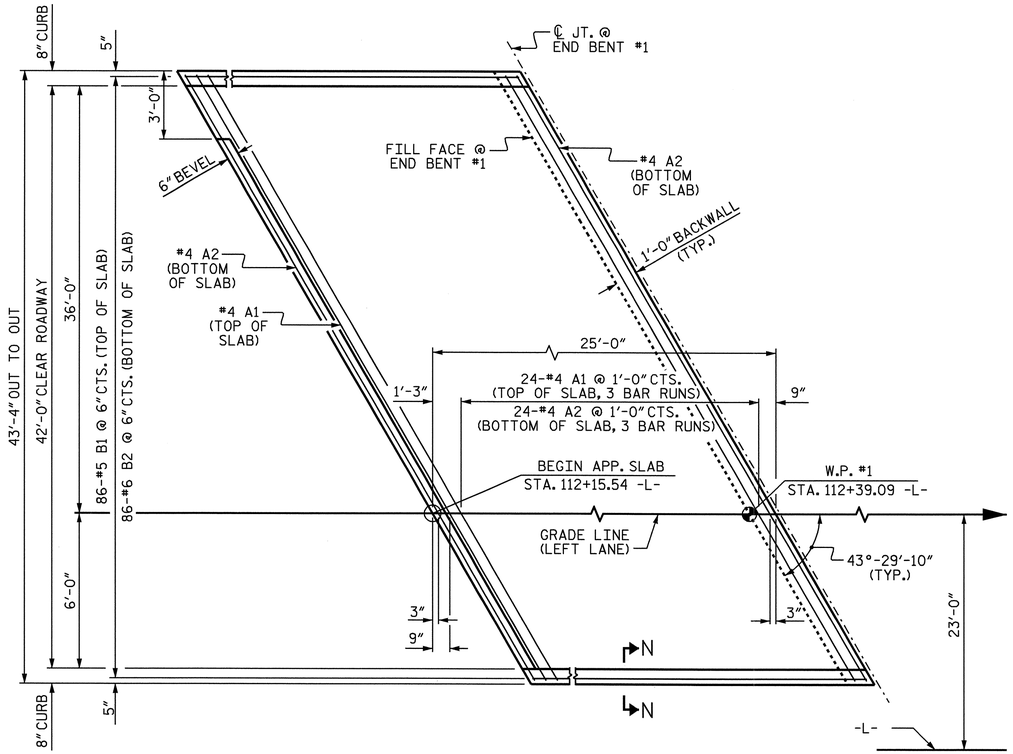

PLAN @ END BENT #1

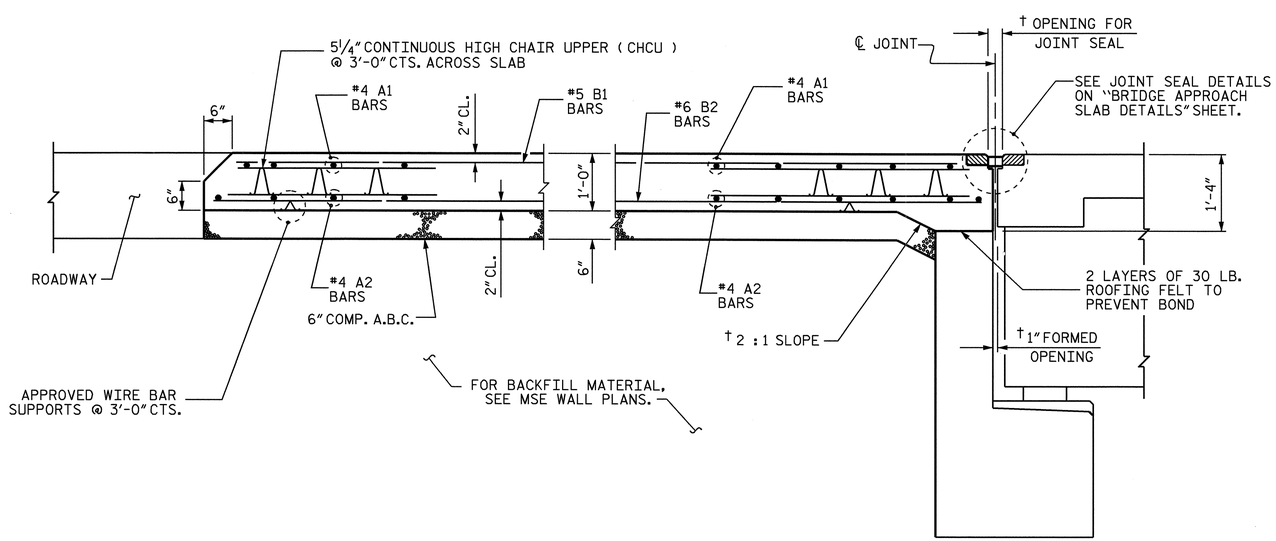

† NORMAL TO END BENT

SECTION THRU SLAB

SHOWING SECTION WITHOUT CONCRETE WEARING SURFACE

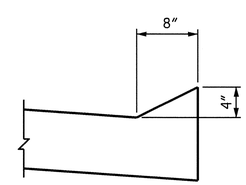

SECTION N-N

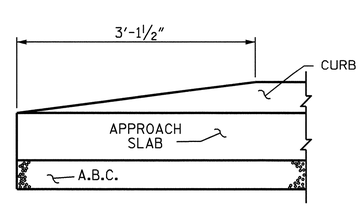

END OF CURB WITHOUT SHOULDER BERM GUTTER

NOTES

THE COST OF THE BARRIER RAIL ON THE APPROACH SLAB @ END BENT #2 SHALL BE INCLUDED IN THE LUMP SUM CONTRACT PRICE BID FOR BRIDGE APPROACH SLABS.

APPROACH SLAB SHALL NOT BE CONSTRUCTED PRIOR TO COMPLETION OF THE BRIDGE DECK.

AREA BETWEEN THE WINGWALL AND APPROACH SLAB SHALL BE GRADED TO DRAIN THE WATER AWAY FROM THE FILL FACE OF THE BRIDGE AND SHALL BE PAVED. SEE ROADWAY PLANS.

THE 6" COMP. A.B.C. SHALL BE FLUSH WITH THE ROADWAY END OF THE APPROACH SLAB AND SHALL EXTEND 1'-0" OUTSIDE OF EACH EDGE OF THE APPROACH SLAB.

THE CONTRACTOR MAY USE 4" TYPE B-25.0B ASPHALT CONCRETE BASE COURSE IN LIEU OF 6" COMP. A.B.C. IF THIS OPTION IS USED, THE BASE COURSE SHALL BE FLUSH WITH THE ROADWAY END OF THE APPROACH SLAB, AND THE WIDTH SHALL BE THE SAME AS THAT OF THE APPROACH SLAB.

THE CONTRACTOR MAY USE CLASS "A" CONCRETE BASE IN LIEU OF 6" COMP. A.B.C. IF THIS OPTION IS USE, THE CONCRETE BASE SHALL BE FLUSH WITH THE ROADWAY END OF THE APPROACH SLAB, AND THE WIDTH SHALL BE THE SAME AS THAT OF THE APPROACH SLAB. THE CONCRETE SHALL BE FINISHED TO A SMOOTH SURFACE AND A LAYER OF 30 LB ROOFING FELT SHALL BE PLACED BETWEEN THE CONCRETE BASE AND THE APPROACH SLAB TO PREVENT BOND. THE APPROACH SLAB SHALL NOT BE CAST UNTIL THE CONCRETE BASE HAS REACHED AN AGE OF THREE CURING DAYS.

TEMPORARY DRAINAGE AND TEMPORARY BERM AND SLOPE DRAINS WILL BE PAID FOR UNDER THE LUMP SUM PRICE FOR BRIDGE APPROACH SLAB.

FOR BACKFILL MATERIAL, SEE MSE RETAINING WALL SPECIAL PROVISIONS.

WITH EVAZOTE JOINT SEAL

FOR EVAZOTE JOINT SEALS, SEE SPECIAL PROVISIONS.

THE NOMINAL UNCOMPRESSED SEAL WIDTH OF THE EVAZOTE JOINT SEAL SHALL BE 2½".

FOR ELASTOMERIC CONCRETE, SEE SPECIAL PROVISIONS.

BILL OF MATERIAL
APPROACH SLAB AT EB #1

BAR	NO.	SIZE	TYPE	LENGTH	WEIGHT
✳ A1	75	#4	STR	22'-2"	1111
A2	78	#4	STR	22'-0"	1146
✳ B1	86	#5	STR	23'-8"	2123
B2	86	#6	STR	24'-8"	3186
REINFORCING STEEL				LBS.	4332
✳ EPOXY COATED REINFORCING STEEL				LBS.	3234
CLASS AA CONCRETE				C. Y.	40.9

SPLICE CHART

BAR SIZE	SPLICE LENGTH
#4 A1	2'-0"
#4 A2	1'-9"

PROJECT NO. R-2719A
LENOIR COUNTY
STATION: 113+38.09 -L-

SHEET 1 OF 3

STATE OF NORTH CAROLINA
DEPARTMENT OF TRANSPORTATION
RALEIGH

STANDARD

BRIDGE APPROACH SLAB FOR FLEXIBLE PAVEMENT (LEFT LANE)

NORTH CAROLINA PROFESSIONAL SEAL 14045 ENGINEER TIMOTHY L. COGGINS
10/1/08

REVISIONS								SHEET NO.
NO.	BY:	DATE:	NO.	BY:	DATE:			S-141
1			3					TOTAL SHEETS
2			4					340

STR. #4 STD. NO. BAS4 (SHT 6)

ASSEMBLED BY: M.GUDLAUGSSON DATE :03/2008
CHECKED BY : T.L. COGGINS DATE :09/2008

DRAWN BY :	EEM	3/95	REV. 7/10/01	LES/RDR
CHECKED BY :	VAP	3/95	REV. 5/7/03R	RWW/JTE
			REV. 5/1/06R	KMM/GM

09-OCT-2008 11:52
R:\Structures\Str#4\FinalPlans\r2719a_sd_as_04.dgn
nruffin

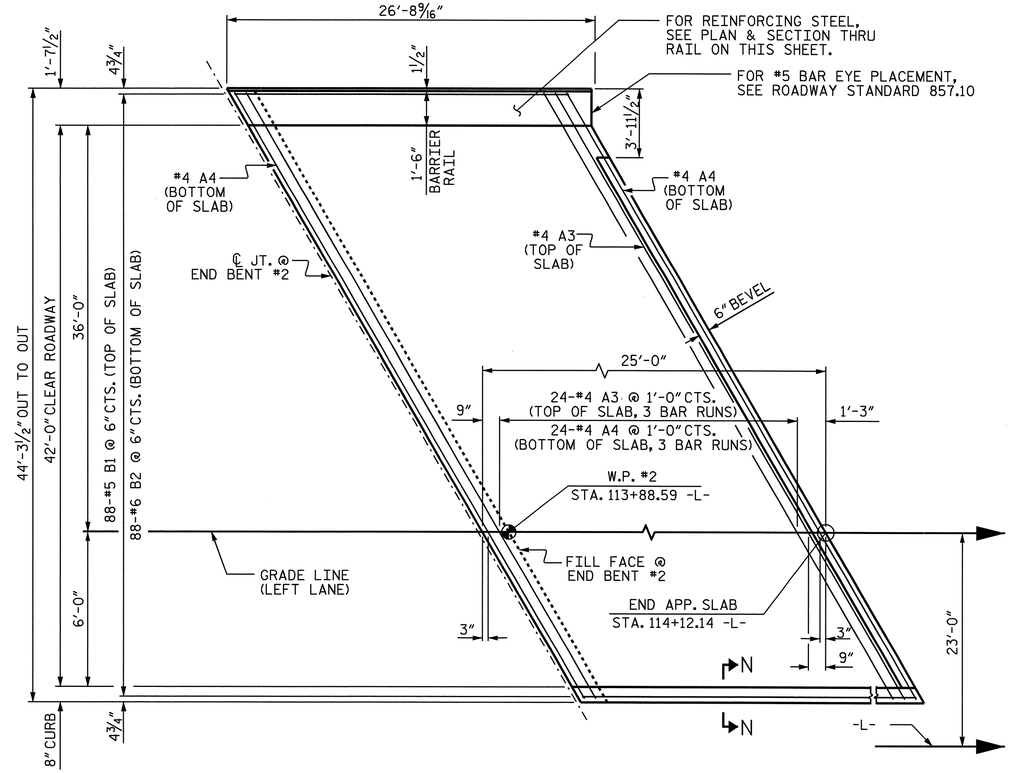

PLAN @ END BENT #2

NOTES

THE BARRIER RAIL SHALL NOT BE CAST UNTIL ALL SLAB CONCRETE IN THE APPROACH SLAB HAS BEEN CAST AND HAS REACHED A MINIMUM COMPRESSIVE STRENGTH OF 3,000 PSI.

ALL REINFORCING STEEL IN BARRIER RAILS SHALL BE EPOXY COATED.

VERTICAL GROOVED CONTRACTION JOINTS, 1/2" IN DEPTH, SHALL BE TOOLED IN ALL EXPOSED FACES OF THE BARRIER RAIL AND IN ACCORDANCE WITH ARTICLE 825-10(B) OF THE STANDARD SPECIFICATIONS. THE CONTRACTION JOINT SHALL BE LOCATED AT EACH THIRD POINT BETWEEN BARRIER RAIL EXPANSION JOINTS. ONLY ONE CONTRACTION JOINT IS REQUIRED AT MIDPOINT OF BARRIER RAIL SEGMENTS LESS THAN 20 FEET IN LENGTH AND NO CONTRACTION JOINTS ARE REQUIRED FOR THOSE SEGMENTS LESS THAN 10 FEET IN LENGTH.

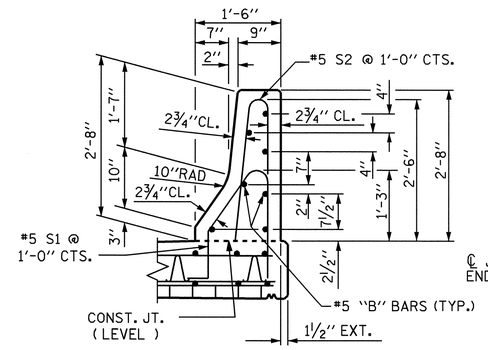

SECTION THRU RAIL

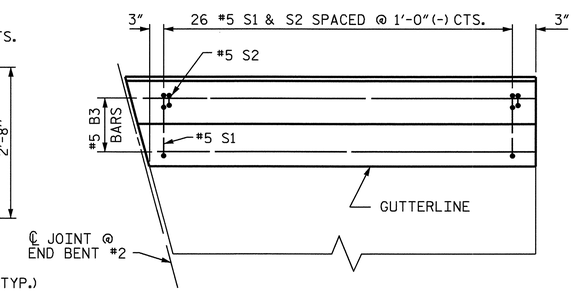

PLAN

BILL OF MATERIAL

APPROACH SLAB AT EB #2

BAR	NO.	SIZE	TYPE	LENGTH	WEIGHT
* A3	75	#4	STR	22'-8"	1136
A4	78	#4	STR	22'-6"	1172
* B1	88	#5	STR	23'-8"	2172
B2	88	#6	STR	24'-8"	3260
* B3	14	#5	STR	14'-10"	217
* S1	26	#5	1	5'-0"	136
* S2	26	#5	2	5'-2"	140
REINFORCING STEEL				LBS.	4432
* EPOXY COATED REINFORCING STEEL				LBS.	3801
CLASS AA CONCRETE BREAKDOWN					
POUR 1	SLAB AND CURB			C. Y.	41.7
POUR 2	RAIL			C. Y.	2.6
CLASS AA CONCRETE				C. Y.	44.3

BAR TYPES

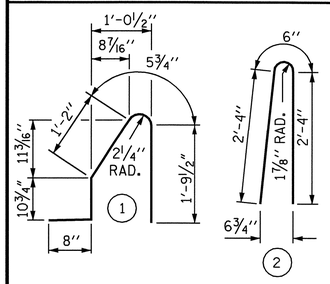

ALL BAR DIMENSIONS ARE OUT TO OUT

SPLICE CHART

BAR SIZE	SPLICE LENGTH
#4 A3	2'-0"
#4 A4	1'-9"
#5 B3	3'-5"

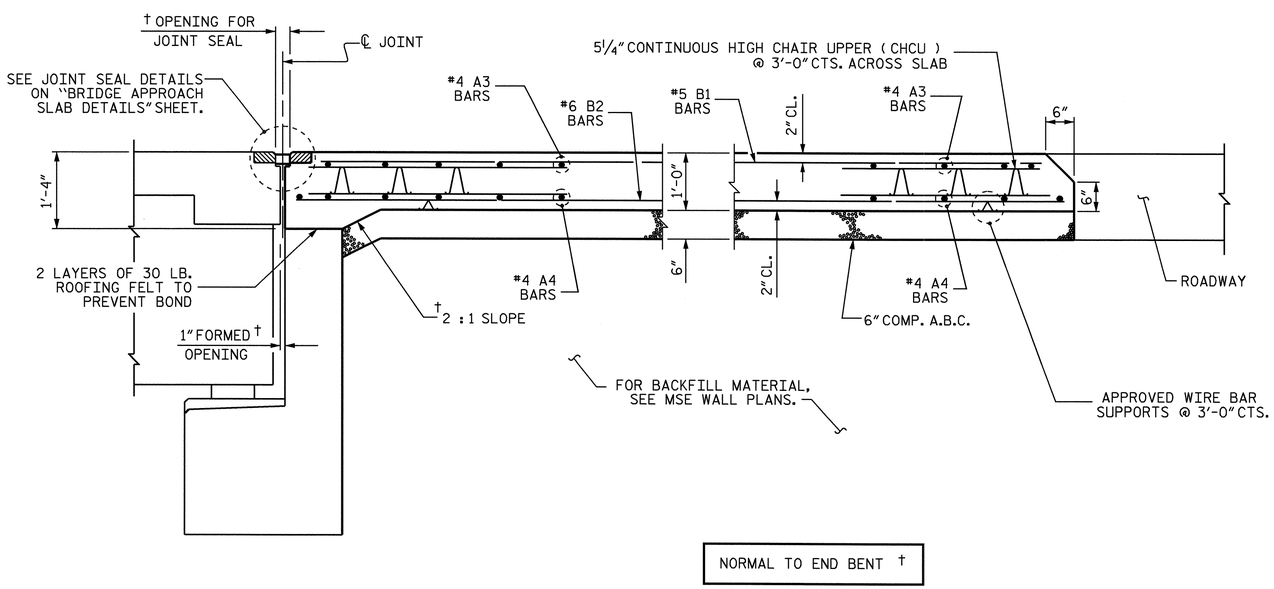

SECTION THRU SLAB

SHOWING SECTION WITHOUT CONCRETE WEARING SURFACE

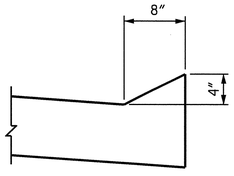

SECTION N-N

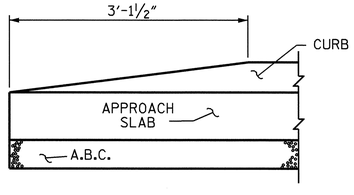

END OF CURB WITHOUT SHOULDER BERM GUTTER

PROJECT NO. R-2719A

LENOIR COUNTY

STATION: 113+38.09 -L-

SHEET 2 OF 3

STATE OF NORTH CAROLINA
DEPARTMENT OF TRANSPORTATION
RALEIGH

STANDARD

BRIDGE APPROACH SLAB FOR FLEXIBLE PAVEMENT (LEFT LANE)

NORTH CAROLINA PROFESSIONAL SEAL 14045 ENGINEER TIMOTHY L. COGGINS

10/1/08

REVISIONS						SHEET NO.
NO.	BY:	DATE:	NO.	BY:	DATE:	S-142
1			3			TOTAL SHEETS
2			4			340

ASSEMBLED BY: M.GUDLAUGSSON DATE :03/2008
CHECKED BY : T.L. COGGINS DATE :09/2008

DRAWN BY : EEM 3/95	REV. 7/10/01	LES/RDR
CHECKED BY : VAP 3/95	REV. 5/7/03R	RWW/JTE
	REV. 5/1/06R	KMM/GM

09-OCT-2008 11:52
R:\Structures\Str#4\Final Plans\r2719a_sd_as_04.dgn
nruffin

STR. #4

STD. NO. BAS4 (SHT 6)

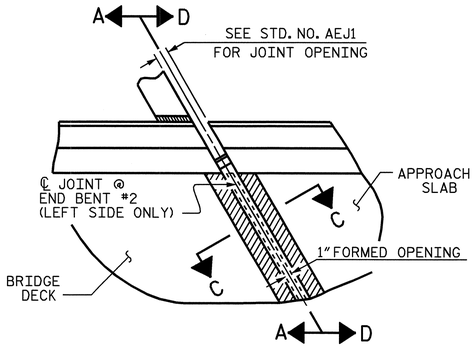

PLAN

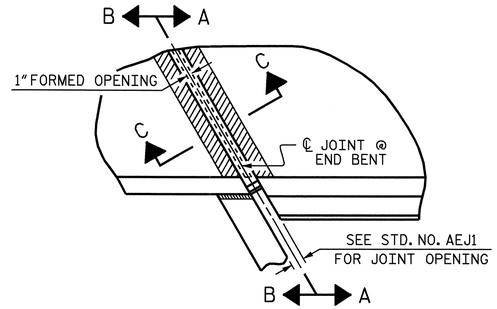

PLAN

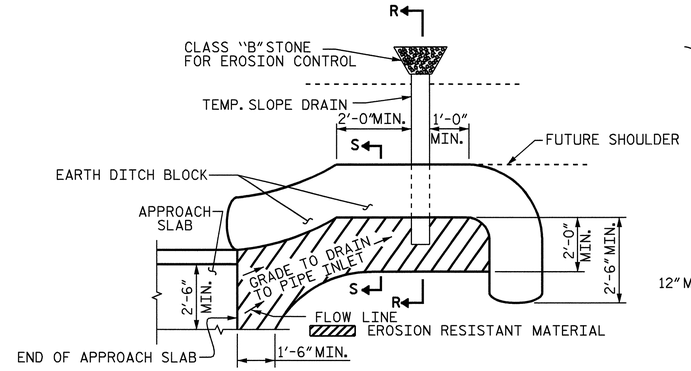

NOTE: IMMEDIATELY AFTER THE CONSTRUCTION OF THE APPROACH SLAB, THE CONTRACTOR SHALL PROVIDE TEMPORARY BERM AND SLOPE DRAIN. CONTRACTOR SHALL GRADE TO PIPE INLET AND PROVIDE EROSION RESISTANT MATERIAL AS SHOWN. THE EROSION RESISTANT MATERIAL SHALL BE EITHER 1) ASPHALT PLANT MIX, TYPE 1 OR TYPE 2, MIN. 2" DEPTH, 2) EROSION CONTROL MAT, OR 3) CONCRETE, AS DIRECTED BY THE ENGINEER. THE SLOPE DRAIN SHALL CONSIST OF A NON-PERFORATED TEMPORARY DRAINAGE PIPE, 12 INCHES IN DIAMETER.

PLAN VIEW

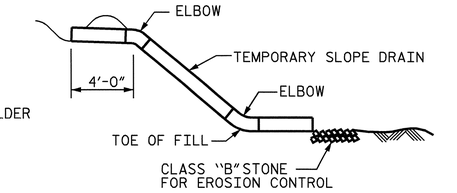

SECTION R-R

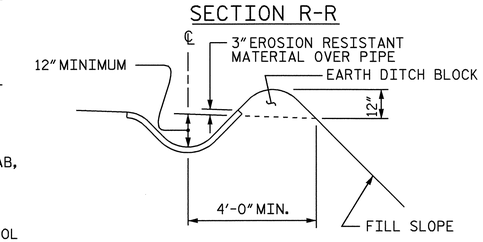

SECTION S-S

TEMPORARY BERM AND SLOPE DRAIN DETAILS

(TO BE USED WHEN SHOULDER BERM GUTTER IS REQUIRED)

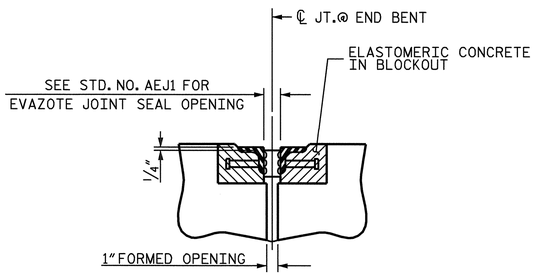

SECTION C-C

ARMORED EVAZOTE JOINT SEAL

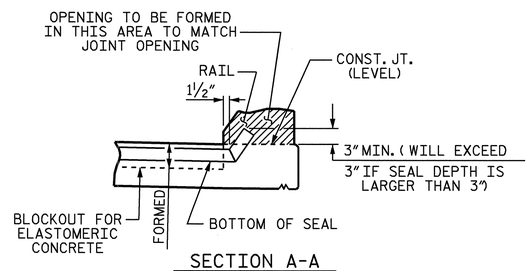

SECTION A-A

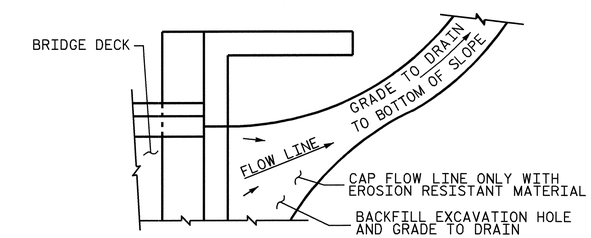

NOTE: IF THE APPROACH SLAB IS NOT CONSTRUCTED IMMEDIATELY AFTER THE BACKFILLING OF THE END BENT EXCAVATION, GRADE TO DRAIN TO THE BOTTOM OF THE SLOPE AND PROVIDE EROSION RESISTANT MATERIAL, SUCH AS FIBERGLASS ROVING OR AS DIRECTED BY THE ENGINEER TO PREVENT SOIL EROSION AND TO PROTECT THE AREA ADJACENT TO THE STRUCTURE. THE CONTRACTOR WILL BE REQUIRED TO REMOVE THESE MATERIALS PRIOR TO CONSTRUCTION OF THE APPROACH SLAB.

TEMPORARY DRAINAGE DETAIL

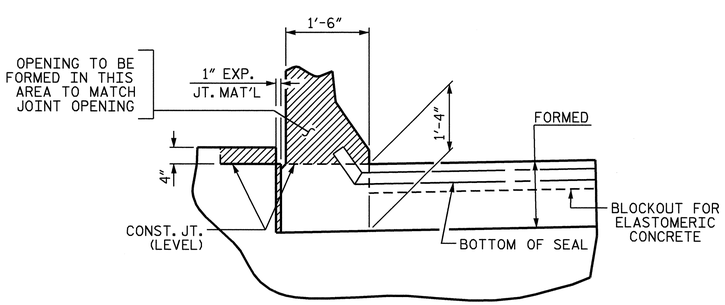

SECTION D-D

JOINT SEAL DETAILS @ END BENT

EVAZOTE JOINT SEAL TO BE CUT, HEAT WELDED AND TURNED UP PARALLEL TO SLOPED FACE OF THE BARRIER RAIL.

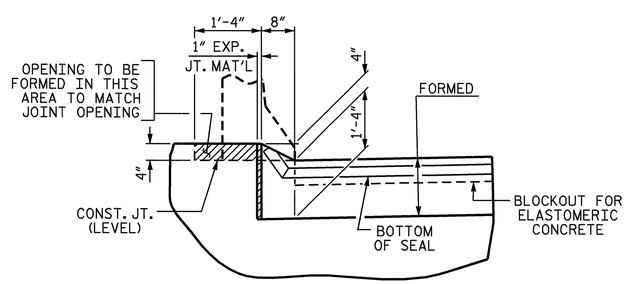

SECTION B-B

JOINT SEAL DETAILS @ END BENT

EVAZOTE JOINT SEAL TO BE CUT, HEAT WELDED AND TURNED UP PARALLEL TO SLOPED FACE OF THE BARRIER RAIL.

PROJECT NO. R-2719A

LENOIR COUNTY

STATION: 113+38.09 -L-

SHEET 3 OF 3

STATE OF NORTH CAROLINA
DEPARTMENT OF TRANSPORTATION
RALEIGH

STANDARD

BRIDGE APPROACH
SLAB DETAILS
(LEFT LANE)

NORTH CAROLINA PROFESSIONAL SEAL 14045 ENGINEER TIMOTHY L. COGGINS

Timothy L. Coggins 10/1/08

REVISIONS						SHEET NO.
NO.	BY:	DATE:	NO.	BY:	DATE:	S-143
1			3			TOTAL SHEETS
2			4			340

ASSEMBLED BY : M.GUDLAUGSSON		DATE : 03/2008	
CHECKED BY : T.L. COGGINS		DATE : 09/2008	
DRAWN BY : FCJ	11/88	REV. 10/17/00	RWW/LES
CHECKED BY : ARB	11/88	REV. 5/7/03	RWW/JTE
		REV. 5/1/06R	MAA/KMM

STR. #4

STD. NO. BAS10

09-OCT-2008 09:11
R:\Structures\Str#4\Final Plans\r2719a_sd_as_04.dgn
nruffin

F.A. PROJ. No. STP-0224(12)

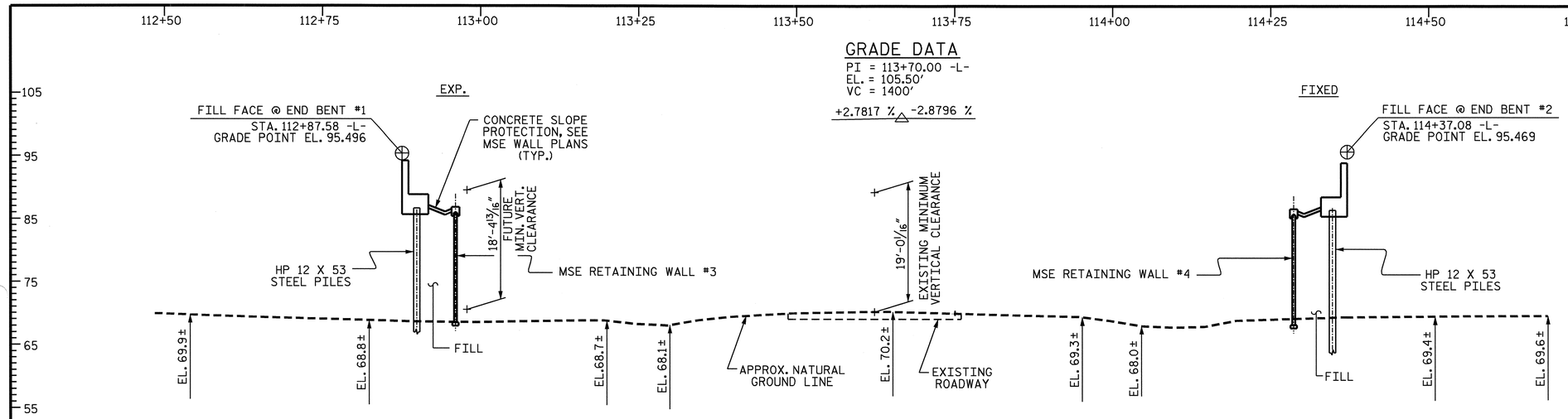

SECTION ALONG -L-

(END BENTS SHOWN @ RIGHT ANGLES)

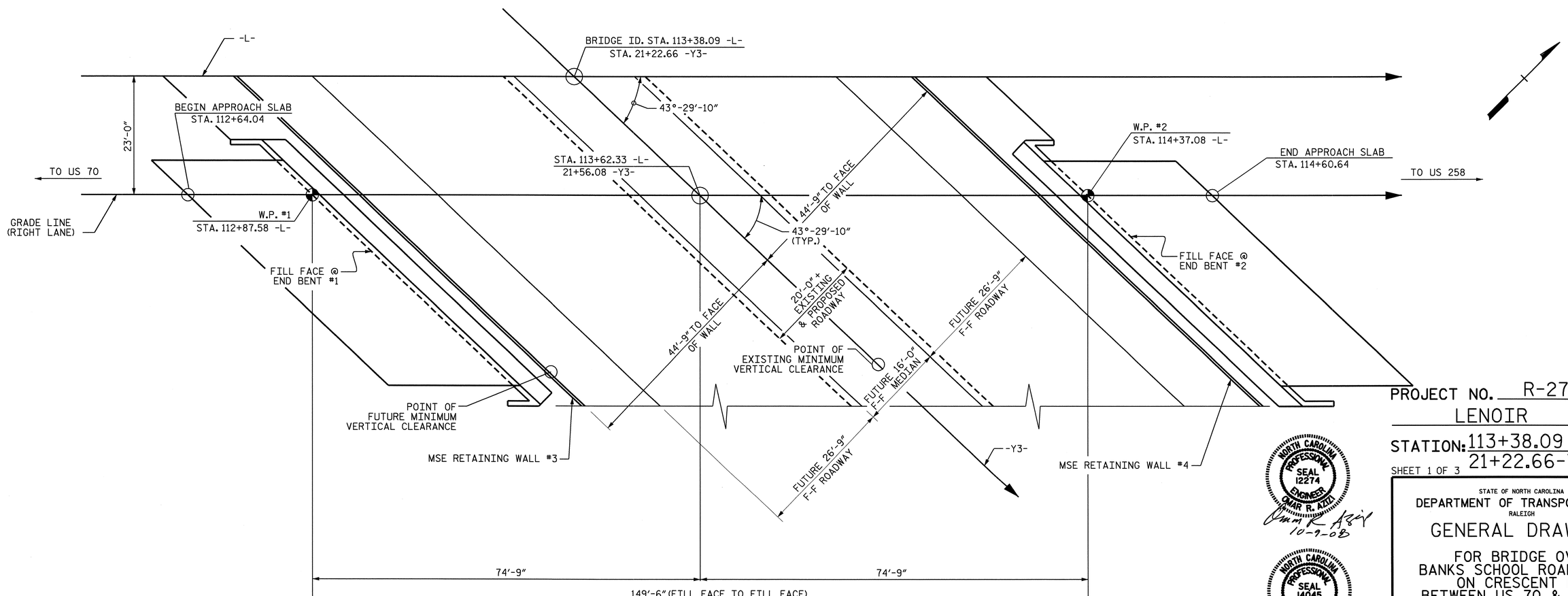

PLAN

(PILES NOT SHOWN FOR CLARITY)

PROJECT NO. R-2719A

LENOIR COUNTY

STATION: 113+38.09 -L-
21+22.66-Y3- BRIDGE #195

SHEET 1 OF 3

NORTH CAROLINA PROFESSIONAL SEAL 12274 ENGINEER OMAR R. AZIZ
Omar R. Aziz 10-9-08

NORTH CAROLINA PROFESSIONAL SEAL 14045 ENGINEER TIMOTHY L. COGGINS
Timothy L. Coggins 10/10/08

STATE OF NORTH CAROLINA
DEPARTMENT OF TRANSPORTATION
RALEIGH

GENERAL DRAWING

FOR BRIDGE OVER
BANKS SCHOOL ROAD (-Y3-)
ON CRESCENT RD.
BETWEEN US 70 & US 258
(RIGHT LANE)

REVISIONS						SHEET NO.
NO.	BY:	DATE:	NO.	BY:	DATE:	S-144
1			3			TOTAL SHEETS
2			4			340

DRAWN BY : J.B. WILSON DATE : 9/2007
CHECKED BY : B.N. BARODAWALA DATE : 10/12/07

09-OCT-2008 10:51
R:\Structures\Str*5\Final Plans\R-2719A_sd_gd_05.dgn
nruffin

STR. #5

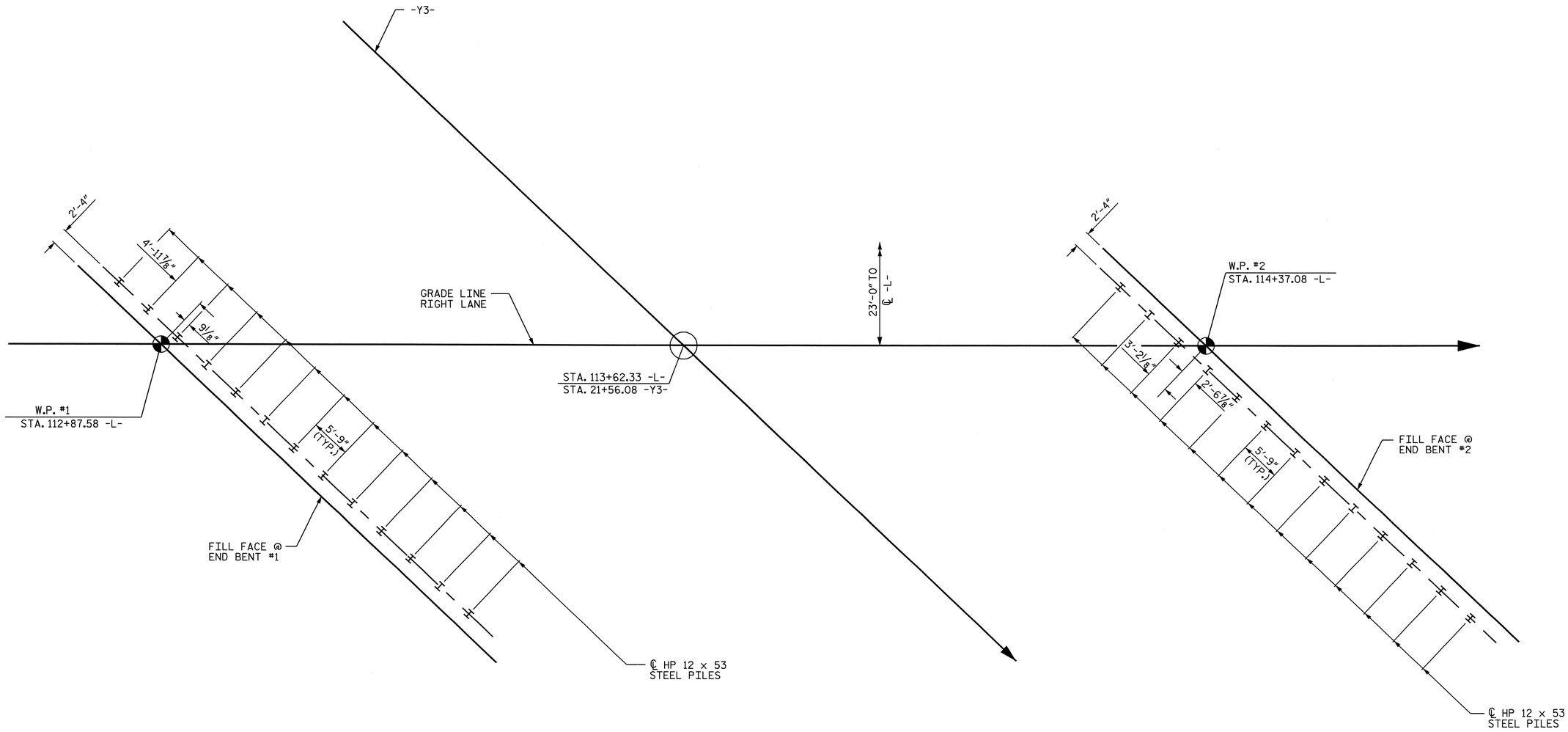

END BENT #1

END BENT #2

FOUNDATION LAYOUT

DIMENSIONS LOCATING PILES ARE SHOWN TO
PILE CENTERLINE AT BOTTOM OF CAP.
ALL PILES ARE VERTICAL.

PROJECT NO. R-2719A

LENOIR COUNTY

STATION: 113+38.09 -L-

SHEET 2 OF 3

STATE OF NORTH CAROLINA
DEPARTMENT OF TRANSPORTATION
RALEIGH

GENERAL DRAWING
FOR BRIDGE OVER
BANKS SCHOOL ROAD (-Y3-)
ON CRESCENT RD.
BETWEEN US 70 & US 258
(RIGHT LANE)

NORTH CAROLINA PROFESSIONAL SEAL 14045 ENGINEER TIMOTHY L. COGGINS

10/14/08

REVISIONS						SHEET NO.
NO.	BY:	DATE:	NO.	BY:	DATE:	S-145
1			3			TOTAL SHEETS
2			4			340

DRAWN BY : J.B. WILSON DATE : 8/20/08
CHECKED BY : T.L. COGGINS DATE : 09/2008

09-OCT-2008 10:51
R:\Structures\Str*5\Final Plans\R-2719A_sd_gd_05.dgn
nruffin

STR. #5

BM - C ELEV 62.32 RR SPIKE IN 24"PINE TREE -L- 108+99, 230' RT

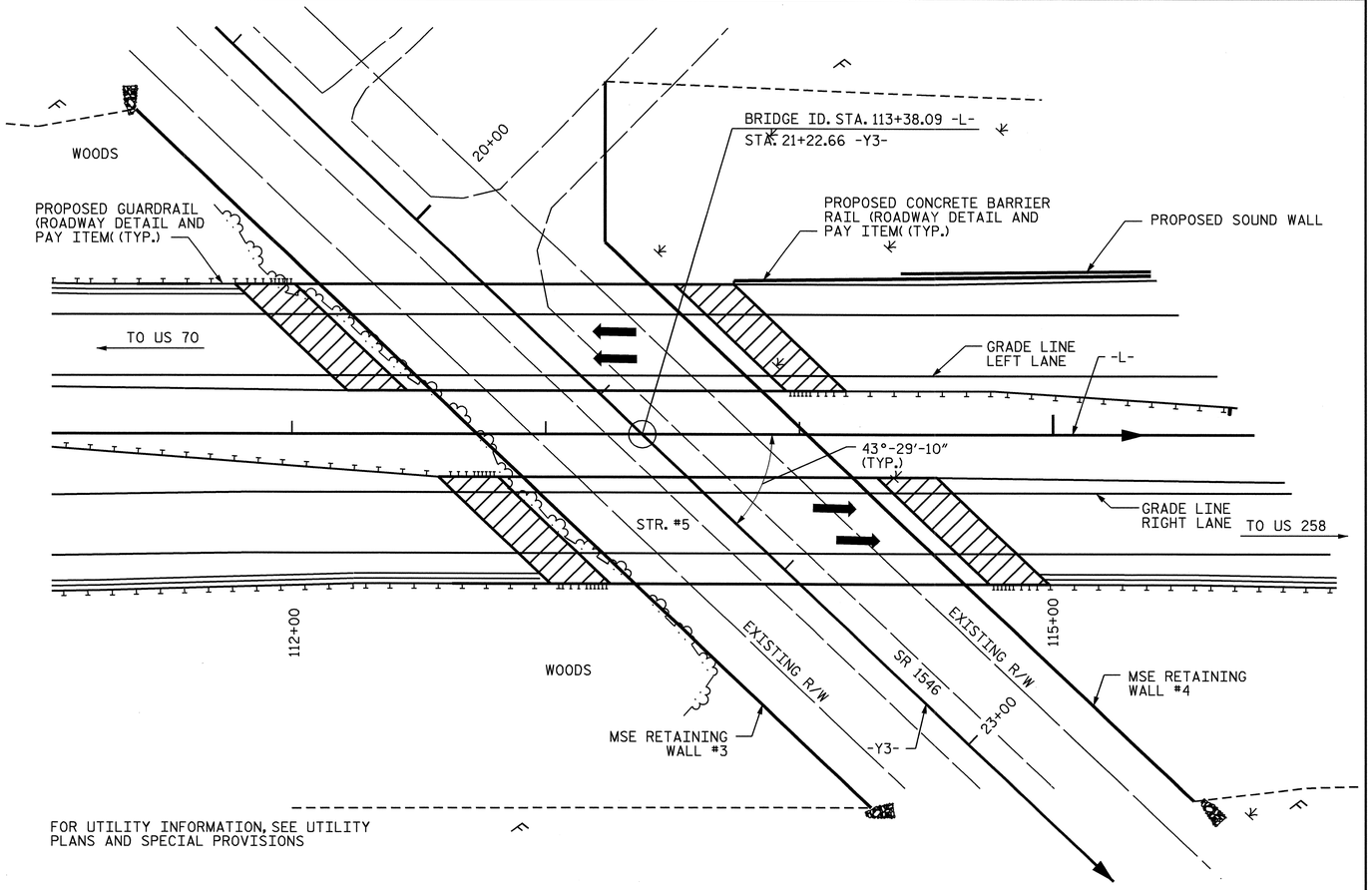

LOCATION SKETCH

NOTES

ASSUMED LIVE LOAD = HS20 OR ALTERNATE LOADING, EXCEPT THE GIRDERS HAVE BEEN DESIGNED FOR HS25.

THIS BRIDGE HAS BEEN DESIGNED BY THE STRENGTH DESIGN METHOD AS SPECIFIED IN AASHTO STANDARD SPECIFICATIONS.

THIS BRIDGE HAS BEEN DESIGNED IN ACCORDANCE WITH THE REQUIREMENTS OF THE AASHTO STANDARD SPECIFICATIONS FOR SEISMIC DESIGN OF HIGHWAY BRIDGES FOR SEISMIC PERFORMANCE CATEGORY A.

FOR OTHER DESIGN DATA AND GENERAL NOTES, SEE SHEET SN.

FOR EROSION CONTROL MEASURES SEE EROSION CONTROL PLANS.

ALL STRUCTURAL STEEL SHALL BE AASHTO M270 GRADE 50W AND PAINTED IN ACCORDANCE WITH SYSTEM 4 OF ARTICLE 442-7 OF THE STANDARD SPECIFICATIONS UNLESS OTHERWISE NOTED ON THE PLANS.

REMOVABLE FORMS MAY BE USED IN LIEU OF METAL STAY-IN-PLACE FORMS IN ACCORDANCE WITH ARTICLE 420-3 OF THE STANDARD SPECIFICATIONS.

THE CONTRACTOR SHALL PROVIDE INDEPENDENT ASSURANCE SAMPLES OF REINFORCING STEEL AS FOLLOWS: FOR PROJECTS REQUIRING UP TO 400 TONS OF REINFORCING STEEL, ONE 30 INCH SAMPLE OF EACH SIZE BAR USED, AND FOR PROJECTS REQUIRING OVER 400 TONS OF REINFORCING STEEL, TWO 30 INCH SAMPLES OF EACH SIZE BAR USED. THE BARS FROM WHICH THE SAMPLES ARE TAKEN MUST THEN BE SPLICED WITH REPLACEMENT BARS OF THE SIZE AND LENGTH OF THE SAMPLE, PLUS A MINIMUM LAP SPLICE OF THIRTY BAR DIAMETERS.

FOR MAINTENANCE AND PROTECTION OF TRAFFIC BENEATH PROPOSED STRUCTURE, SEE SPECIAL PROVISIONS.

NEEDLE BEAMS WILL NOT BE ALLOWED UNLESS OTHERWISE CALLED FOR ON THE PLANS OR APPROVED BY THE ENGINEER.

FOR SUBMITTAL OF WORKING DRAWINGS, SEE SPECIAL PROVISIONS.

FOR FALSEWORK AND FORMWORK, SEE SPECIAL PROVISIONS.

FOR CRANE SAFETY, SEE SPECIAL PROVISIONS.

FOR GROUT FOR STRUCTURES, SEE SPECIAL PROVISIONS.

FOR SHIPPING STEEL STRUCTURAL MEMBERS, SEE SPECIAL PROVISIONS.

DRIVE PILES AT END BENT NO. 1 AND END BENT NO. 2 TO A REQUIRED BEARING CAPACITY OF 120 TONS PER PILE. THE REQUIRED BEARING CAPACITY IS EQUAL TO THE ALLOWABLE BEARING CAPACITY WITH A MINIMUM FACTOR OF SAFETY OF TWO.

THE ALLOWABLE BEARING CAPACITY FOR PILES AT END BENT NO. 1 AND END BENT NO. 2 IS 60 TONS PER PILE.

INSTALL PILES AT END BENT NO. 1 AND END BENT NO. 2 TO A TIP ELEVATION NO HIGHER THAT 25 FEET.

STEEL PILE POINTS ARE REQUIRED FOR STEEL PILES AT END BENT NO. 1 AND END BENT NO. 2.

TESTING PILES WITH THE PILE DRIVING ANALYZER (PDA) DURING DRIVING, RESTRIKING OR REDRIVING MAY BE REQUIRED. THE ENGINEER WILL DETERMINE THE NEED FOR PDA TESTING.

FOR FAA REQUIREMENTS, SEE ROADWAY SPECIAL PROVISIONS.

FOR SLOPE PROTECTION DETAILS AND PAY ITEM, SEE MSE WALL #3 AND MSE WALL #4 PLANS.

TOTAL BILL OF MATERIAL

	PDA TESTING	PDA ASSISTANCE	REINFORCED CONCRETE DECK SLAB	GROOVING BRIDGE FLOORS	CLASS A CONCRETE	BRIDGE APPROACH SLABS	REINFORCING STEEL	STRUCTURAL STEEL	HP 12 X 53 STEEL PILES		STEEL PILE POINTS	PILE REDRIVES	CONCRETE BARRIER RAIL	ELASTOMERIC BEARINGS	EVAZOTE JOINT SEALS
	EA.	EA.	SQ.FT.	SQ.FT.	CU.YDS.	LUMP SUM	LBS.	APPROX.LBS.	NO.	LIN.FT.	NO.	EACH	LIN.FT.	LUMP SUM	LUMP SUM
SUPERSTRUCTURE			6628	7554		LUMP SUM		209,300					292.94	LUMP SUM	LUMP SUM
END BENT NO.1					52.0		7863		13	1040	13	10			
END BENT NO.2					52.8		8116		13	1105	13	10			
TOTAL	1	1	6628	7554	104.8	LUMP SUM	15979	209,300	26	2145	26	20	292.94	LUMP SUM	LUMP SUM

PROJECT NO. R-2719A
LENOIR COUNTY
STATION: 113+38.09 -L-

SHEET 3 OF 3

STATE OF NORTH CAROLINA
DEPARTMENT OF TRANSPORTATION
RALEIGH

GENERAL DRAWING
FOR BRIDGE OVER
BANKS SCHOOL ROAD (-Y3-)
ON CRESCENT RD.
BETWEEN US 70 & US 258
(RIGHT LANE)

NORTH CAROLINA PROFESSIONAL SEAL 14045 ENGINEER TIMOTHY L. COGGINS
Timothy L. Coggins 10/1/08

REVISIONS						SHEET NO.
NO.	BY:	DATE:	NO.	BY:	DATE:	S-146
1			3			TOTAL SHEETS
2			4			340

DRAWN BY : J. B. WILSON DATE : 08/2008
CHECKED BY : T. L. COGGINS DATE : 09/2008

09-OCT-2008 10:51
R:\Structures\Str#5\Final Plans\R-2719A_sd_gd_05.dgn
nruffin

STR. #5

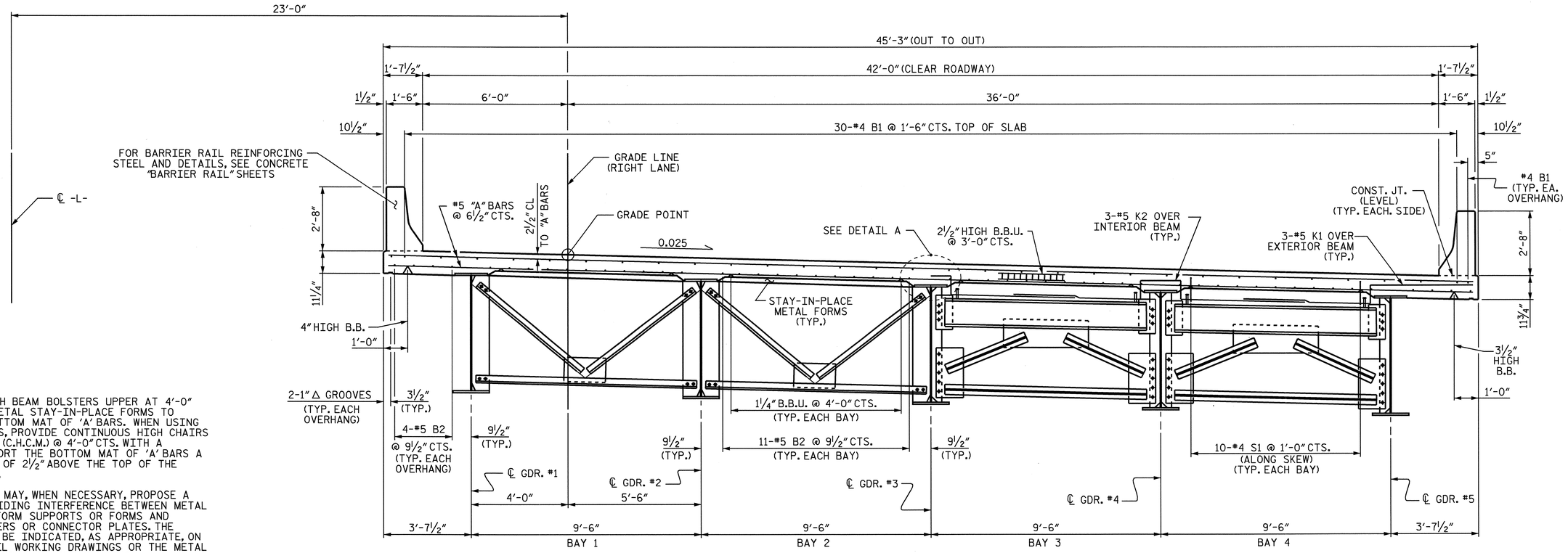

SHOWING INTERMEDIATE DIAPHRAGM

SHOWING END BENT DIAPHRAGM

TYPICAL SECTION

NOTES:

PROVIDE 1¼" HIGH BEAM BOLSTERS UPPER AT 4'-0" CTS. ATOP THE METAL STAY-IN-PLACE FORMS TO SUPPORT THE BOTTOM MAT OF 'A' BARS. WHEN USING REMOVABLE FORMS, PROVIDE CONTINUOUS HIGH CHAIRS FOR METAL DECK (C.H.C.M.) @ 4'-0" CTS. WITH A HEIGHT TO SUPPORT THE BOTTOM MAT OF 'A' BARS A CLEAR DISTANCE OF 2½" ABOVE THE TOP OF THE REMOVABLE FORM.

THE CONTRACTOR MAY, WHEN NECESSARY, PROPOSE A SCHEME FOR AVOIDING INTERFERENCE BETWEEN METAL STAY-IN-PLACE FORM SUPPORTS OR FORMS AND GIRDER STIFFENERS OR CONNECTOR PLATES. THE PROPOSAL SHALL BE INDICATED, AS APPROPRIATE, ON EITHER THE STEEL WORKING DRAWINGS OR THE METAL STAY-IN-PLACE FORM WORKING DRAWINGS.

BARRIER RAIL IN THE SPAN SHALL NOT BE CAST UNTIL ALL SLAB CONCRETE HAS BEEN CAST AND HAS REACHED A MINIMUM COMPRESSIVE STRENGTH OF 3000 PSI.

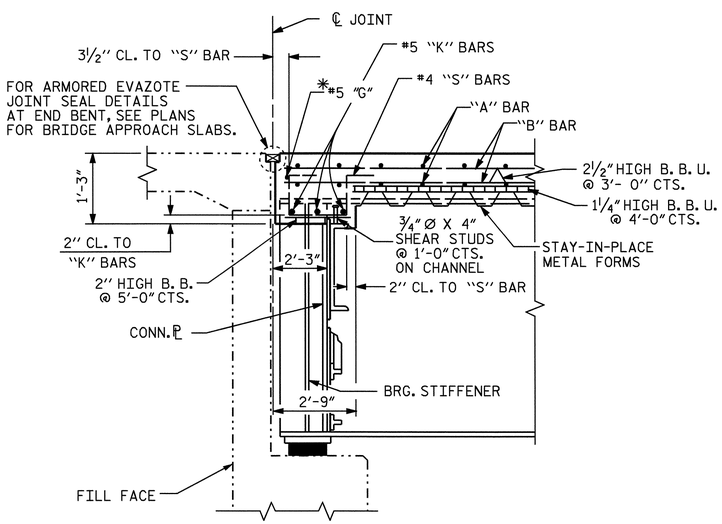

SECTION THRU END BENT DIAPHRAGM

* #5 "G" BAR MAY BE SHIFTED SLIGHTLY, AS NECESSARY, TO CLEAR REINFORCING STEEL AND STIRRUPS. PLACE #5 "G" PARALLEL TO JOINT.

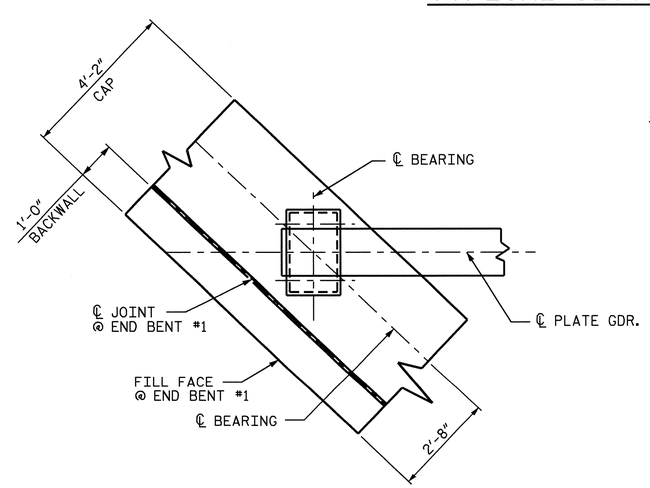

PLAN OF GIRDER @ END BENT #1

END BENT #1 SHOWN, END BENT #2 SIMILAR.

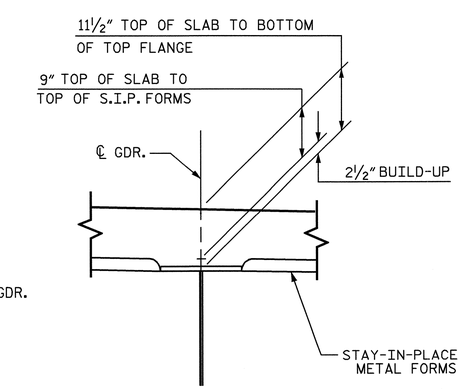

DETAIL A

PROJECT NO. R-2719A
LENOIR COUNTY
STATION: 113+38.09 -L-

STATE OF NORTH CAROLINA
DEPARTMENT OF TRANSPORTATION
RALEIGH

SUPERSTRUCTURE

TYPICAL SECTION

(RIGHT LANE)

NORTH CAROLINA PROFESSIONAL SEAL 14045 ENGINEER TIMOTHY L. COGGINS
10/1/08

REVISIONS								SHEET NO.
NO.	BY:	DATE:	NO.	BY:	DATE:			S-147
1			3					TOTAL SHEETS
2			4					340

DRAWN BY : PEGGY PARISI DATE : 4-08
CHECKED BY : B. N. BARODAWALA DATE : 5-08

09-OCT-2008 10:51
R:\Structures\Str#5\Final Plans\R-2719A_sd_ts_05.dgn
gruffin

149'-6" (WORK POINT #1 @ END BENT #1 TO WORK POINT #2 @ END BENT #2)

#5 A101 THRU #5 A141 @ 6½" CTS. TOP OF SLAB (2 BARS PER MARK)
#5 A201 THRU #5 A242 @ 6½" CTS. BOTTOM OF SLAB (2 BARS PER MARK)

183-#5 A1 @ 6½" CTS. TOP OF SLAB
183-#5 A2 @ 6½" CTS. BOTTOM OF SLAB

2" CL. TO BLOCKOUT FOR A3

6½"

41'-3" TO MAIN "A" BAR

9'-8" TO MAIN "A" BAR

SEE DETAIL B

4-#6 A3 ✳ @ 6" CTS.

5" (TYP.)

#4 B1

10½" (TYP.)

3-#5 K1 OVER EXTERIOR GDRS.

W. P. #2

12'-2 3/16"

65'-9 1/16"

53'-6 1/8"

23'-0"

℄ -L-

GRADE LINE (RIGHT LANE)

FILL FACE @ END BENT #2

3-#5 K2 OVER INTERIOR GDRS.

#5 G1 (2 BAR RUN)

2'-9" END BENT DIAPHRAGM

10-#4 S1 @ 1'-0" CTS. (ALONG SKEW) (TYP. EA. BAY)

2" CL. TO BLOCKOUT FOR A3

✳ 4-#6 A3 @ 6" CTS.

℄ JT. @ END BENT #2

#5 A101 THRU #5 A141 @ 6½" CTS. TOP OF SLAB (2 BARS PER MARK)
#5 A201 THRU #5 A242 @ 6½" CTS. BOTTOM OF SLAB (2 BARS PER MARK)

6½"

#5 A1 OR #5 A2

#5 A101 OR #5 A201

℄ GDR. 1

℄ GDR. 2

℄ GDR. 3

℄ GDR. 4

℄ GDR. 5

9½" (TYP.)

11-#5 B2 @ 9½" CTS. (BOTTOM OF SLAB) (3 BAR RUN)

30-#4 B1 @ 1'-6" CTS. (TOP OF SLAB) (6 BAR RUN)

4-#5 B2 @ 9½" CTS. (BOTTOM OF SLAB) (TYP. EACH OVERHANG) (3 BAR RUN)

W.P. #1

43°-29'-10" (TYP.)

9'-11 13/16"

FILL FACE @ END BENT #1

#5 G1 (2 BAR RUN)

10-#4 S1 @ 1'-0" CTS. (ALONG SKEW) (TYP. EA. BAY)

2'-9" END BENT DIAPHRAGM

3-#5 K2 OVER INTERIOR GDRS.

3-#5 K1 OVER EXTERIOR GDRS.

55'-9¼"

65'-9 1/16"

℄ JT. @ END BENT #1

45'-3" (OUT TO OUT)

37'-7½"

42'-0" (CLEAR ROADWAY)

36'-0"

7'-7½"

6'-0"

1'-7½"

1'-6"

½"

✳ #6 A3 BARS ARE POSITIONED ONLY AT THE ACUTE CORNERS OF DECK SLAB. PLACE BARS UNDER TOP "B" BARS.

PLAN OF SPAN

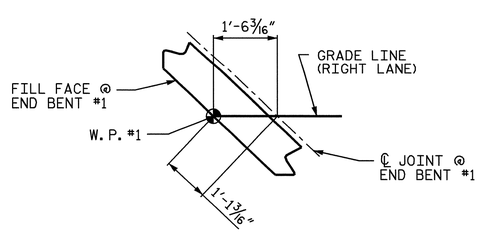

DETAIL B

(TYP. AT END BENT #2

PROJECT NO. R-2719A

LENOIR COUNTY

STATION: 113+38.09 -L-

STATE OF NORTH CAROLINA
DEPARTMENT OF TRANSPORTATION
RALEIGH

SUPERSTRUCTURE

PLAN OF SPAN

(RIGHT LANE)

NORTH CAROLINA PROFESSIONAL SEAL 14045 ENGINEER TIMOTHY L. COGGINS

Timothy L. Coggins 10/11/08

REVISIONS						SHEET NO.
NO.	BY:	DATE:	NO.	BY:	DATE:	S-148
1			3			TOTAL SHEETS
2			4			340

DRAWN BY : PEGGY PARISI DATE : 4-08
CHECKED BY : B. N. BARODAWALA DATE : 5-08

09-OCT-2008 10:51
R:\Structures\Str#5\Final Plans\R-2719A_sd_ps_05.dgn
nruffin

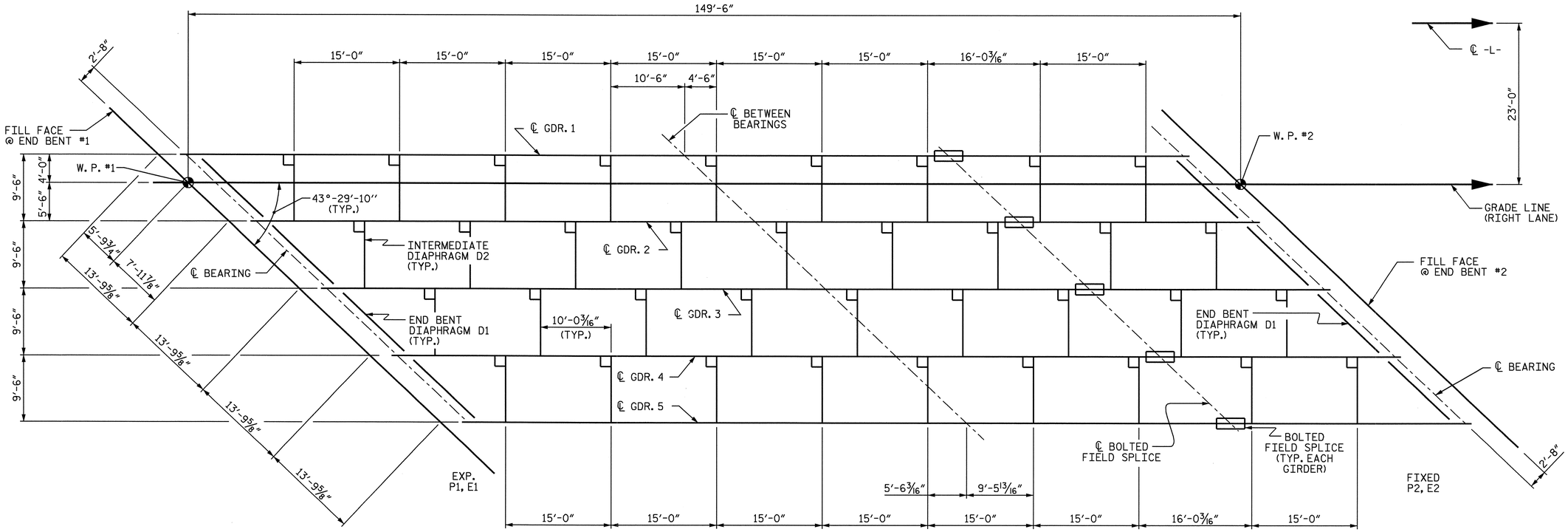

FRAMING PLAN

DIMENSIONS ARE TYPICAL FOR EACH GIRDER.

PROJECT NO. R-2719A

LENOIR COUNTY

STATION: 113+38.09 -L-

STATE OF NORTH CAROLINA
DEPARTMENT OF TRANSPORTATION
RALEIGH

SUPERSTRUCTURE

FRAMING PLAN

(RIGHT LANE)

NORTH CAROLINA PROFESSIONAL SEAL 14045 ENGINEER TIMOTHY L. COGGINS

10/11/08

REVISIONS						SHEET NO.
NO.	BY:	DATE:	NO.	BY:	DATE:	S-149
1			3			TOTAL SHEETS
2			4			340

DRAWN BY : PEGGY PARISI DATE : 4-08
CHECKED BY : B. N. BARODAWALA DATE : 5-08

09-OCT-2008 10:51
R:\Structures\Str#5\Final Plans\R-2719A_sd_fp_05.dgn
nruffin

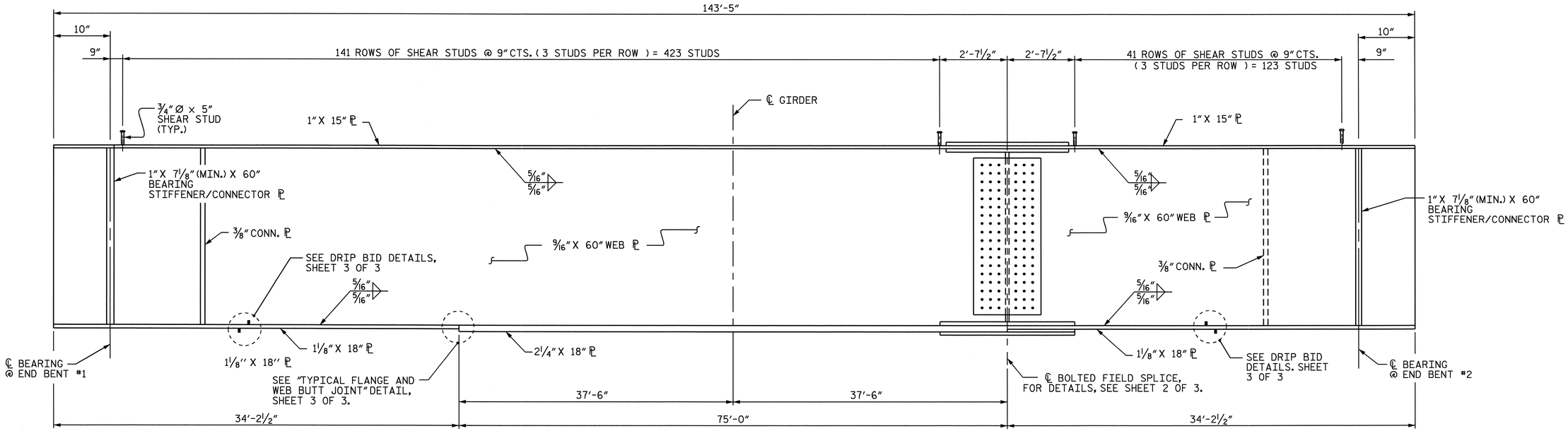

GIRDER ELEVATION

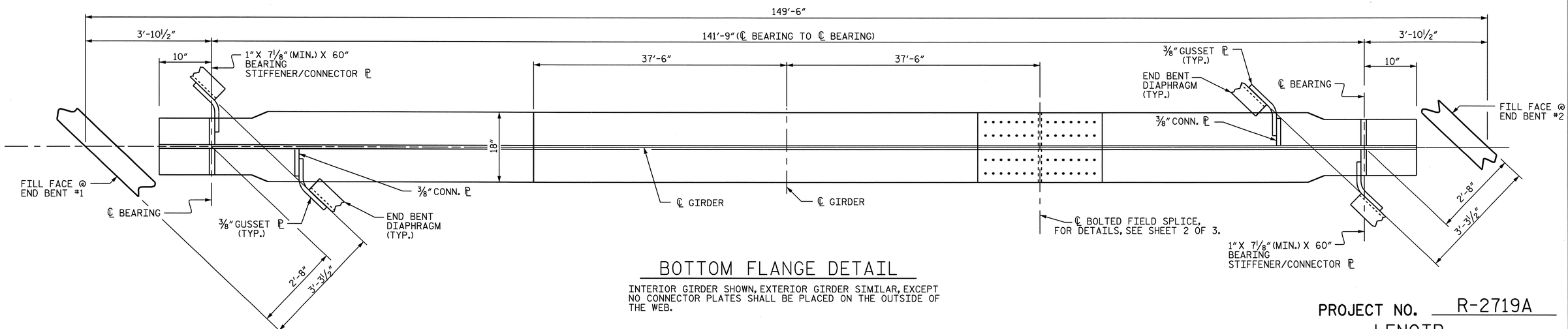

BOTTOM FLANGE DETAIL

INTERIOR GIRDER SHOWN, EXTERIOR GIRDER SIMILAR, EXCEPT NO CONNECTOR PLATES SHALL BE PLACED ON THE OUTSIDE OF THE WEB.

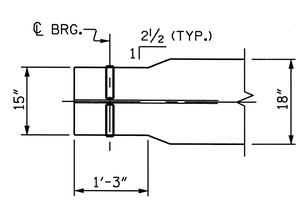

BOTTOM FLANGE TAPER DETAIL

(TYP. BOTH ENDS)

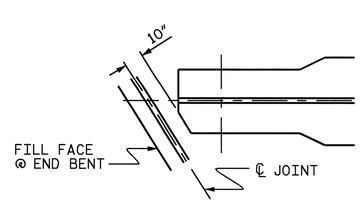

TOP FLANGE CLIP DETAIL

(TYP. AT BOTH ENDS OF GIRDER)

PROJECT NO. R-2719A

LENOIR COUNTY

STATION: 113+38.09 -L-

SHEET 1 OF 3

STATE OF NORTH CAROLINA
DEPARTMENT OF TRANSPORTATION
RALEIGH

SUPERSTRUCTURE
STRUCTURAL STEEL
DETAILS

(RIGHT LANE)

NORTH CAROLINA PROFESSIONAL SEAL 14045 ENGINEER TIMOTHY W. COGGINS

Timothy W. Coggins 10/1/08

REVISIONS						SHEET NO.
NO.	BY:	DATE:	NO.	BY:	DATE:	S-150
1			3			TOTAL SHEETS
2			4			340

DRAWN BY : PEGGY PARISI DATE : 5-08
CHECKED BY : B.N. BARODAWALA DATE : 7-08

09-OCT-2008 10:50
R:\Structures\Str#5\Final Plans\R-2719A_sd_ss_05.dgn

STR. #5

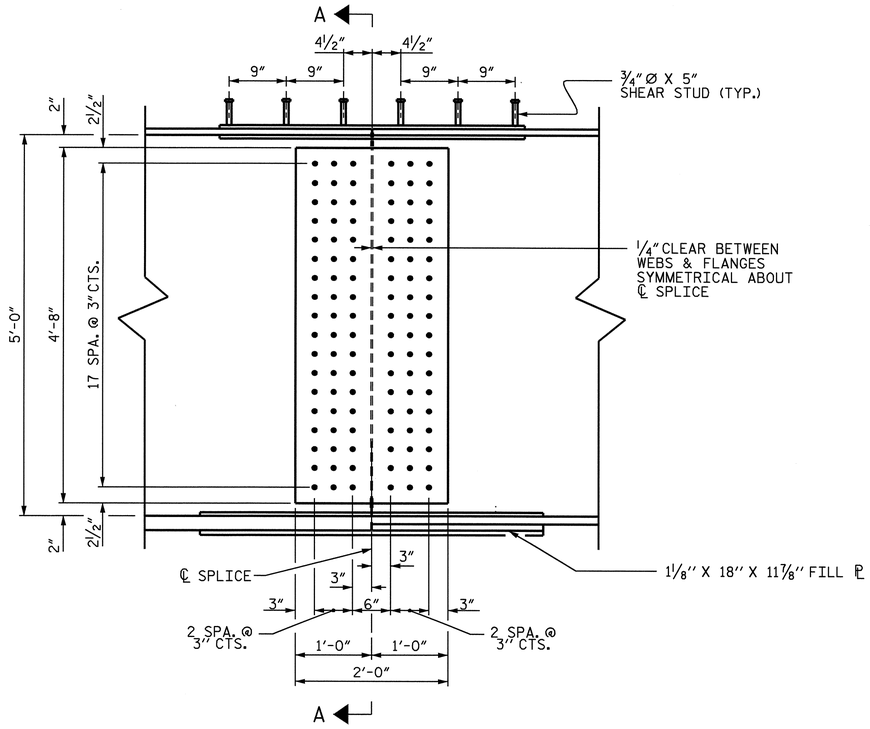

ELEVATION

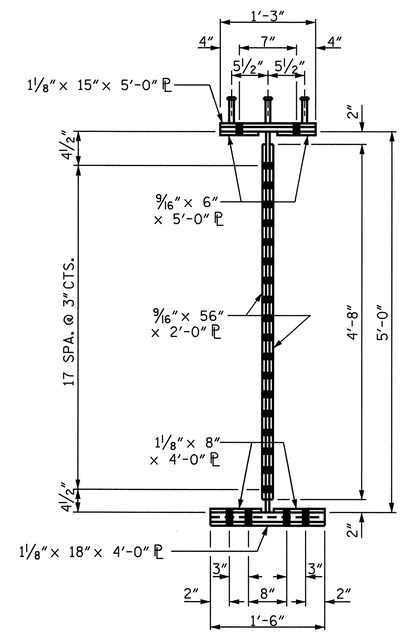

SECTION A-A

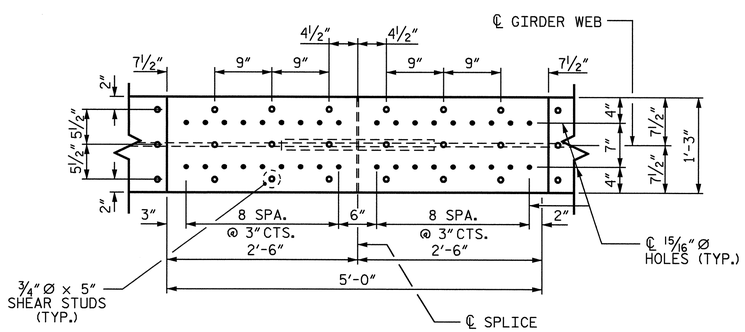

PLAN (TOP OF TOP FLANGE)

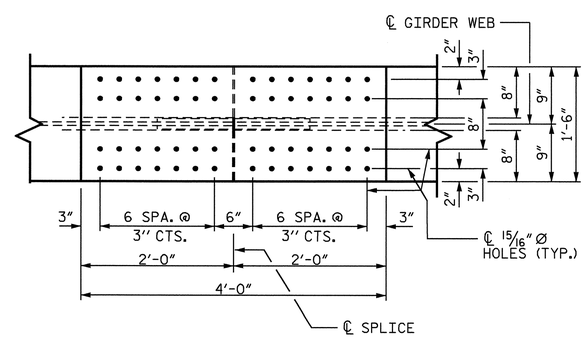

PLAN (BOTTOM OF BOTTOM FLANGE)

NOTES :

ALL STRUCTURAL STEEL SHALL BE AASHTO M270 GRADE 50W AND PAINTED IN ACCORDANCE WITH SYSTEM 4 OF ARTICLE 442-7 OF THE STANDARD SPECIFICATIONS UNLESS OTHERWISE NOTED ON THE PLANS.

ALL DIMENSIONS SHOWN ARE HORIZONTAL OR VERTICAL, UNLESS OTHERWISE NOTED.

ALL FIELD CONNECTIONS TO BE 7/8" DIA. HIGH STRENGTH BOLTS UNLESS OTHERWISE NOTED.

FOR HIGH STRENGTH BOLTS, SEE SPECIAL PROVISIONS.

BEARING STIFFENERS ARE TO BE PLACED NORMAL TO THE WEB OF THE GIRDER AND SHALL BE PLUMB.

A CHARPY V-NOTCH TEST IS REQUIRED FOR WEB PLATES, BOTTOM FLANGE PLATES, BOTTOM FLANGE SPLICE PLATES AND WEB SPLICE PLATES FOR ALL GIRDERS AND IN ACCORDANCE WITH ARTICLE 1072-9 OF THE STANDARD SPECIFICATIONS.

SHOP SPLICES ARE PERMITTED TO LIMIT THE MAXIMUM REQUIRED FLANGE PIECE LENGTHS TO 60 FEET AND WEB PIECE LENGTHS TO 45 FEET. PERMITTED FLANGE AND WEB SHOP SPLICES SHALL NOT BE LOCATED WITHIN 15 FEET OF MAXIMUM DEAD LOAD DEFLECTION NOR WITHIN 15 FEET OF INTERMEDIATE BEARINGS OF CONTINUOUS UNITS. KEEP 2 FEET MINIMUM BETWEEN WEB AND FLANGE SHOP SPLICES. KEEP 6" MINIMUM BETWEEN CONNECTOR PLATE OR TRANSVERSE STIFFENER WELDS AND WEB OR FLANGE SHOP SPLICES.

STUDS ON GIRDERS MAY BE SHIFTED UP TO 1" IF NECESSARY TO CLEAR FLANGE SPLICE WELD.

TENSION ON THE AASHTO M164 BOLTS SHALL BE CALIBRATED USING DIRECT TENSION INDICATOR WASHERS IN ACCORDANCE WITH ARTICLE 440-10 ON THE STANDARD SPECIFICATIONS.

END OF GIRDERS SHALL BE PLUMB.

✳ NOTE: SHEAR STUDS ARE TO BE SHOP WELDED ON TOP OF PLATE BEFORE FIELD ASSEMBLY

BEARING STIFFENER MAY REQUIRE COPING IF WIDER THAN BOTTOM FLANGE TO AVOID INTERFERENCE WITH THE ANCHOR BOLT.

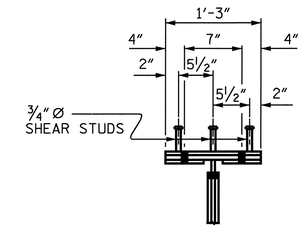

SHEAR STUD DETAIL
FOR TOP FLANGE SPLICE PLATE

PROJECT NO. R-2719A
LENOIR COUNTY
STATION: 113+38.09 -L-

SHEET 2 OF 3

BOLTED FIELD SPLICE DETAILS

(TYPICAL EACH FIELD SPLICE)

NORTH CAROLINA PROFESSIONAL SEAL 14045 ENGINEER TIMOTHY L. COGGINS
10/14/08

STATE OF NORTH CAROLINA
DEPARTMENT OF TRANSPORTATION
RALEIGH

SUPERSTRUCTURE
STRUCTURAL STEEL DETAILS
BOLTED FIELD SPLICE
(RIGHT LANE)

REVISIONS						SHEET NO.
NO.	BY:	DATE:	NO.	BY:	DATE:	S-151
1			3			TOTAL SHEETS
2			4			340

DRAWN BY : PEGGY PARISI DATE : 5-08
CHECKED BY : B.N. BARODAWALA DATE : 7-08

09-OCT-2008 10:50
R:\Structures\Str#5\Final Plans\R-2719A_sd_ss_05.dgn
gruffin

STR. #5

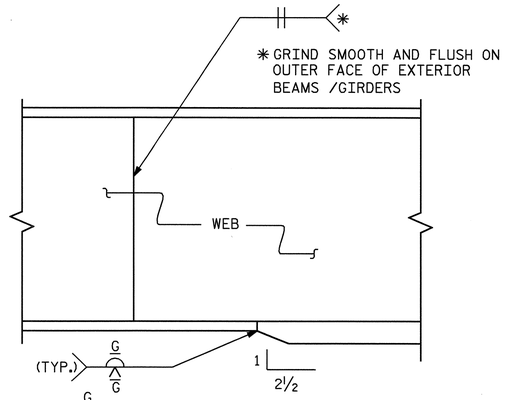

ELEVATION

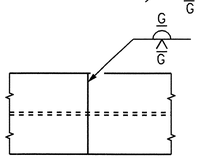

PLAN OF FLANGE

TYPICAL FLANGE AND WEB BUTT JOINT

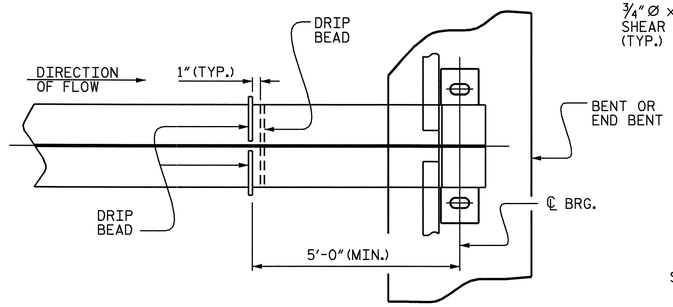

PART PLAN - BOTTOM FLANGE

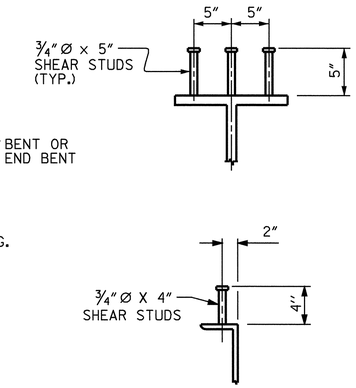

SHEAR STUD DETAILS

(TYPICAL ALL GIRDERS)

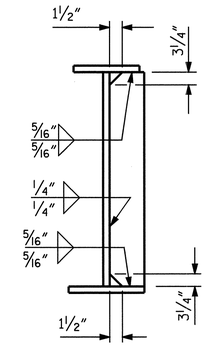

CONNECTOR PLATE DETAILS

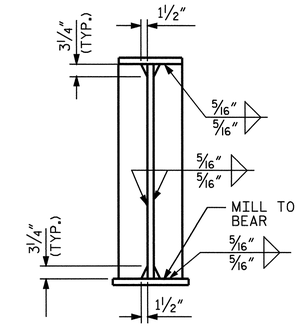

BEARING STIFFENER PLATE DETAILS

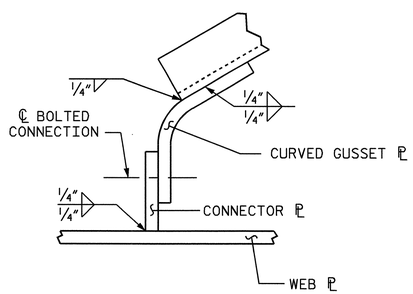

DETAIL "C"

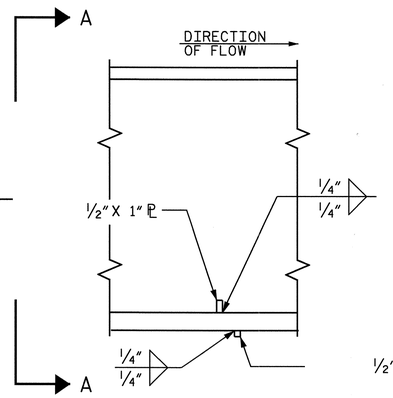

SECTION

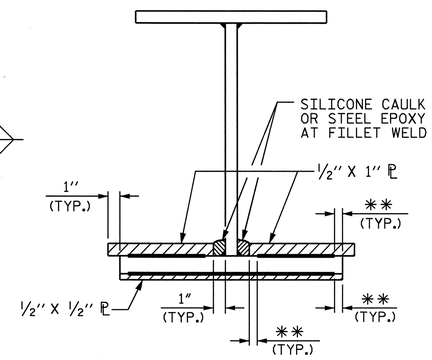

VIEW A-A

✱✱SEE "WELD TERMINATION DETAILS"

DRIP BEAD DETAILS

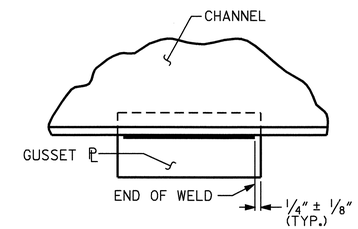

TYPICAL GUSSET PLATE CONNECTION

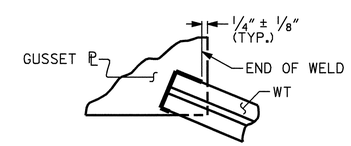

TYPICAL "TEE" TO GUSSET PLATE CONNECTION

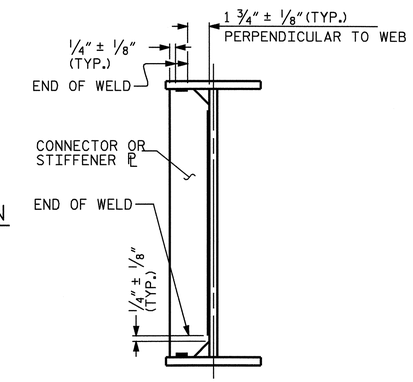

TYPICAL STIFFENER OR CONNECTOR PLATE CONNECTIONS

WELD TERMINATION DETAILS

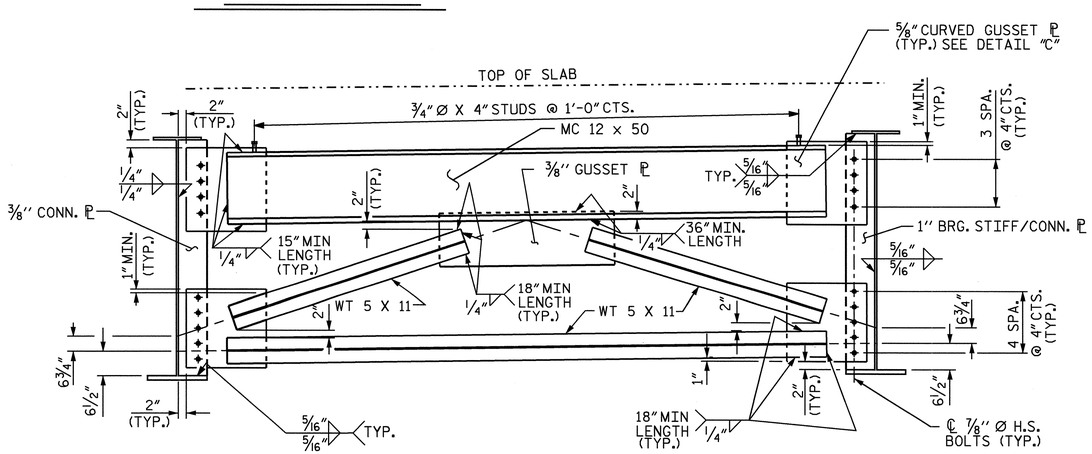

TYPICAL END BENT CROSSFRAME (D1)

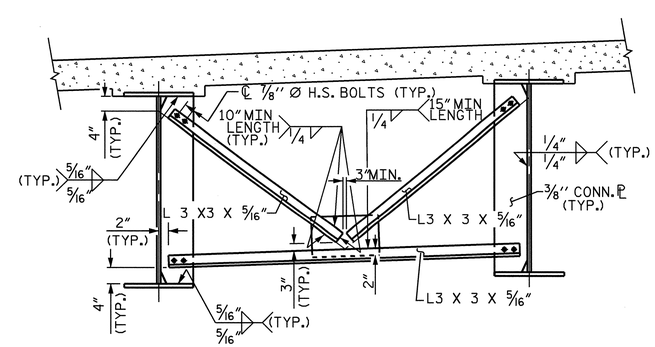

TYPICAL INTERMEDIATE DIAPHRAGM (D2)

PROJECT NO. R-2719A

LENOIR COUNTY

STATION: 113+38.09 -L-

SHEET 3 OF 3

STATE OF NORTH CAROLINA
DEPARTMENT OF TRANSPORTATION
RALEIGH

SUPERSTRUCTURE
STRUCTURAL STEEL DETAILS

(RIGHT LANE)

NORTH CAROLINA PROFESSIONAL SEAL 14045 ENGINEER TIMOTHY L. COGGINS
10/1/08

REVISIONS						SHEET NO.
NO.	BY:	DATE:	NO.	BY:	DATE:	S-152
1			3			TOTAL SHEETS
2			4			340

DRAWN BY : PEGGY PARISI DATE : 4-02
CHECKED BY : B.N. BARODAWALA DATE : 7-08

09-OCT-2008 10:50
R:\Structures\Str#5\Final Plans\R-2719A_sd_ss_05.dgn

STR. #5

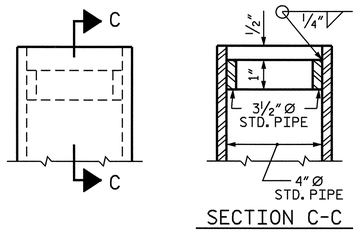

DETAIL "A"

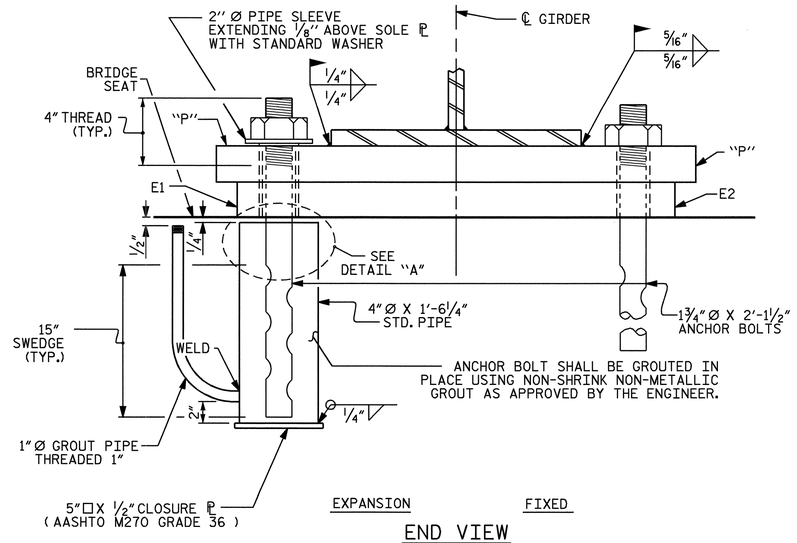

END VIEW

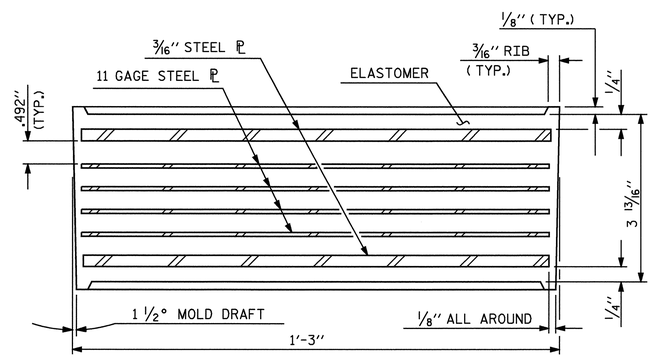

TYPICAL SECTION OF ELASTOMERIC BEARING

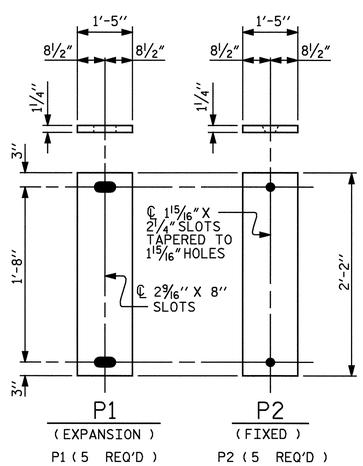

SOLE PLATE DETAILS ("P")

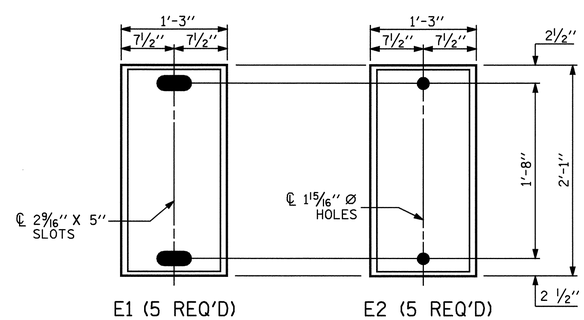

PLAN VIEW OF ELASTOMERIC BEARING

TYPE VI

NOTES

AT ALL FIXED POINTS OF SUPPORT, NUTS FOR ANCHOR BOLTS ARE TO BE TIGHTENED FINGER TIGHT AND THEN BACKED OFF 1/2 TURN. THE THREAD OF THE NUT AND BOLT SHALL THEN BE BURRED WITH A SHARP POINTED TOOL.

THE 2" Ø PIPE SLEEVE SHALL BE CUT FROM SCHEDULE 40 PVC PLASTIC PIPE. THE PVC PLASTIC PIPE SHALL MEET THE REQUIREMENTS OF ASTM D1785.

THE PAYMENT FOR THE PIPE SLEEVES SHALL BE INCLUDED IN THE SEVERAL PAY ITEMS.

FOR AASHTO M270 GRADE 50W STRUCTURAL STEEL, SOLE PLATE SHALL BE AASHTO M270 GRADE 50W AND SHALL NOT BE GALVANIZED. ANCHOR BOLTS, NUTS AND WASHERS SHALL BE GALVANIZED IN ACCORDANCE WITH THE STANDARD SPECIFICATIONS.

ANCHOR BOLTS SHALL MEET THE REQUIREMENTS OF ASTM A449. NUTS SHALL MEET THE REQUIREMENTS OF AASHTO M291-DH OR AASHTO M292-2H. WASHERS SHALL MEET THE REQUIREMENTS OF AASHTO M293. SHOP DRAWINGS ARE NOT REQUIRED FOR ANCHOR BOLTS, NUTS AND WASHERS. SHOP INSPECTION IS REQUIRED.

WHEN FIELD WELDING THE SOLE PLATE TO THE GIRDER FLANGE, USE TEMPERATURE INDICATING WAX PENS, OR OTHER SUITABLE MEANS, TO ENSURE THAT THE TEMPERATURE OF THE SOLE PLATE DOES NOT EXCEED 300°F. TEMPERATURES ABOVE THIS MAY DAMAGE THE ELASTOMER.

ALL SURFACES OF BEARING PLATES SHALL BE SMOOTH AND STRAIGHT.

THE CLOSURE PLATE, GROUT PIPE AND STANDARD PIPE FOR THE EXPANSION ASSEMBLY NEED NOT BE GALVANIZED.

THE CONTRACTOR'S ATTENTION IS CALLED TO THE FOLLOWING PROCEDURE, WHICH MAY BE REQUIRED BY THE ENGINEER, TO RESET ELASTOMERIC BEARINGS DUE TO GIRDER TRANSLATION AND END ROTATION:

1. ONCE THE DECK HAS CURED, THE GIRDERS SHALL BE JACKED THEN THE ANCHOR BOLTS AND ELASTOMERIC BEARING SLOTS CENTERED AS NEARLY AS PRACTICAL ABOUT THE BEARING STIFFENER. THIS OPERATION SHALL BE PERFORMED AT APPROXIMATELY 60° F.

2. AFTER CENTERING THE ELASTOMERIC BERARING SLOTS AND ANCHOR BOLTS, THE ANCHOR BOLTS SHALL BE GROUTED.

   THE CONTRACTOR MAY PROPOSE ALTERNATE METHODS, PROVIDED DETAILS ARE SUBMITTED TO THE ENGINEER FOR REVIEW AND APPROVAL.

—LOAD RATINGS—	
	MAX.D.L.+ L.L.
TYPE VI	262 k

PROJECT NO. R-2719A
LENOIR COUNTY
STATION: 113+38.09 -L-

STATE OF NORTH CAROLINA
DEPARTMENT OF TRANSPORTATION
RALEIGH

STANDARD

ELASTOMERIC BEARING DETAILS

(STEEL SUPERSTRUCTURE)
(RIGHT LANE)

NORTH CAROLINA PROFESSIONAL SEAL 14045 ENGINEER TIMOTHY L. COGGINS
4/6/09

REVISIONS						SHEET NO.
NO.	BY:	DATE:	NO.	BY:	DATE:	S-153
1			3			TOTAL SHEETS
2			4			340

ASSEMBLED BY : PEGGY PARISI DATE : 5-08
CHECKED BY : B. N. BARODAWALA DATE : 5-08

DRAWN BY :	EEM	10/95	REV. 10/17/00 RWW/LES
CHECKED BY :	PEK	10/95	REV. 7/10/01 LES/RDR
			REV. 5/1/06 TLA/GM

06-APR-2009 14:56
h:\structures\Str#5\Final Plans\R-2719A_sd_bg_05.dgn
tcoggins

STR. #5 STD. NO. EB2

DEAD LOAD DEFLECTION TABLE FOR GIRDERS

	GIRDERS 1 & 5																				
@ TWENTIETH POINTS BETWEEN ℄ BEARINGS	0	.05	.10	.15	.20	.25	.30	.35	.40	.45	.50	.55	.60	.65	.70	.75	.80	.85	.90	.95	0
DEFLECTION DUE TO WEIGHT OF GIRDER	0.000	0.025	0.049	0.072	0.092	0.110	0.124	0.136	0.145	0.150	0.151	0.150	0.145	0.136	0.124	0.110	0.092	0.072	0.049	0.025	0.000
DEFLECTION DUE TO WEIGHT OF SLAB ✳	0.000	0.087	0.173	0.252	0.324	0.385	0.437	0.478	0.508	0.526	0.533	0.526	0.508	0.478	0.437	0.385	0.324	0.252	0.173	0.087	0.000
DEFLECTION DUE TO WEIGHT OF BARRIER RAIL	0.000	0.007	0.014	0.020	0.025	0.030	0.034	0.037	0.039	0.041	0.041	0.041	0.039	0.037	0.034	0.030	0.025	0.020	0.014	0.007	0.000
TOTAL DEAD LOAD DEFLECTION	0.000	0.119	0.236	0.344	0.441	0.525	0.595	0.651	0.692	0.717	0.725	0.717	0.692	0.651	0.595	0.525	0.441	0.344	0.236	0.119	0.000
VERTICAL CURVE ORDINATE	0.000	0.019	0.037	0.052	0.065	0.076	0.085	0.092	0.098	0.101	0.102	0.101	0.098	0.092	0.085	0.076	0.065	0.052	0.037	0.019	0.000
REQUIRED CAMBER	0	1 5/8"	3 1/4"	4 3/4"	6 1/16"	7 3/16"	8 3/16"	8 15/16"	9 1/2"	9 13/16"	9 15/16"	9 13/16"	9 1/2"	8 15/16"	8 3/16"	7 3/16"	6 1/16"	4 3/4"	3 1/4"	1 5/8"	0

✳ INCLUDES SLAB, BUILDUPS & STAY-IN-PLACE FORMS.
ALL VALUES ARE SHOWN IN FEET EXCEPT " REQUIRED CAMBER ", WHICH IS GIVEN IN INCHES (FRACTION FORM).

DEAD LOAD DEFLECTION TABLE FOR GIRDERS

	GIRDERS 2 & 4																				
@ TWENTIETH POINTS BETWEEN ℄ BEARINGS	0	.05	.10	.15	.20	.25	.30	.35	.40	.45	.50	.55	.60	.65	.70	.75	.80	.85	.90	.95	0
DEFLECTION DUE TO WEIGHT OF GIRDER	0.000	0.025	0.049	0.072	0.092	0.110	0.124	0.136	0.145	0.150	0.151	0.150	0.145	0.136	0.124	0.110	0.092	0.072	0.049	0.025	0.000
DEFLECTION DUE TO WEIGHT OF SLAB ✳	0.000	0.085	0.169	0.247	0.317	0.377	0.428	0.468	0.497	0.515	0.521	0.515	0.497	0.468	0.428	0.377	0.317	0.247	0.169	0.085	0.000
DEFLECTION DUE TO WEIGHT OF BARRIER RAIL	0.000	0.007	0.014	0.020	0.025	0.030	0.034	0.037	0.039	0.041	0.041	0.041	0.039	0.037	0.034	0.030	0.025	0.020	0.014	0.007	0.000
TOTAL DEAD LOAD DEFLECTION	0.000	0.117	0.232	0.339	0.434	0.517	0.586	0.641	0.681	0.706	0.713	0.706	0.681	0.641	0.586	0.517	0.434	0.339	0.232	0.117	0.000
VERTICAL CURVE ORDINATE	0.000	0.019	0.037	0.052	0.065	0.076	0.085	0.092	0.098	0.101	0.102	0.101	0.098	0.092	0.085	0.076	0.065	0.052	0.037	0.019	0.000
REQUIRED CAMBER	0	1 5/8"	3 1/4"	4 11/16"	6"	7 1/8"	8 1/16"	8 13/16"	9 3/8"	9 11/16"	9 3/4"	9 11/16"	9 3/8"	8 13/16"	8 1/16"	7 1/8"	6"	4 11/16"	3 1/4"	1 5/8"	0

✳ INCLUDES SLAB, BUILDUPS & STAY-IN-PLACE FORMS.
ALL VALUES ARE SHOWN IN FEET EXCEPT " REQUIRED CAMBER ", WHICH IS GIVEN IN INCHES (FRACTION FORM).

DEAD LOAD DEFLECTION TABLE FOR GIRDERS

	GIRDER 3																				
@ TWENTIETH POINTS BETWEEN ℄ BEARINGS	0	.05	.10	.15	.20	.25	.30	.35	.40	.45	.50	.55	.60	.65	.70	.75	.80	.85	.90	.95	0
DEFLECTION DUE TO WEIGHT OF GIRDER	0.000	0.025	0.049	0.072	0.092	0.110	0.124	0.136	0.145	0.150	0.151	0.150	0.145	0.136	0.124	0.110	0.092	0.072	0.049	0.025	0.000
DEFLECTION DUE TO WEIGHT OF SLAB ✳	0.000	0.083	0.165	0.242	0.310	.0369	0.418	0.458	0.486	0.504	0.510	0.504	0.486	0.458	0.418	.0369	0.310	0.242	0.165	0.083	0.000
DEFLECTION DUE TO WEIGHT OF BARRIER RAIL	0.000	0.007	0.014	0.020	0.025	0.030	0.034	0.037	0.039	0.041	0.041	0.041	0.039	0.037	0.034	0.030	0.025	0.020	0.014	0.007	0.000
TOTAL DEAD LOAD DEFLECTION	0.000	0.115	0.228	0.334	0.427	0.509	0.576	0.631	0.670	0.695	0.702	0.695	0.670	0.631	0.576	0.509	0.427	0.334	0.228	0.115	0.000
VERTICAL CURVE ORDINATE	0.000	0.019	0.037	0.052	0.065	0.076	0.085	0.092	0.098	0.101	0.102	0.101	0.098	0.092	0.085	0.076	0.065	0.052	0.037	0.019	0.000
REQUIRED CAMBER	0	1 5/8"	3 3/16"	4 5/8"	5 7/8"	7"	7 15/16"	8 11/16"	9 3/16"	9 9/16"	9 5/8"	9 9/16"	9 3/16"	8 11/16"	7 15/16"	7"	5 7/8"	4 5/8"	3 3/16"	1 5/8"	0

✳ INCLUDES SLAB, BUILDUPS & STAY-IN-PLACE FORMS.
ALL VALUES ARE SHOWN IN FEET EXCEPT " REQUIRED CAMBER ", WHICH IS GIVEN IN INCHES (FRACTION FORM).

PROJECT NO. R-2719A
LENOIR COUNTY
STATION: 113+38.09 -L-

NORTH CAROLINA PROFESSIONAL SEAL 14045 ENGINEER TIMOTHY L. COGGINS
Timothy L. Coggins 10/11/08

STATE OF NORTH CAROLINA
DEPARTMENT OF TRANSPORTATION
RALEIGH

SUPERSTRUCTURE
DEAD LOAD DEFLECTIONS
(RIGHT LANE)

REVISIONS						SHEET NO.
NO.	BY:	DATE:	NO.	BY:	DATE:	S-154
1			3			TOTAL SHEETS
2			4			340

DRAWN BY : PEGGY PARISI DATE : 5-08
CHECKED BY : B.N. BARODAWALA DATE : 7-08

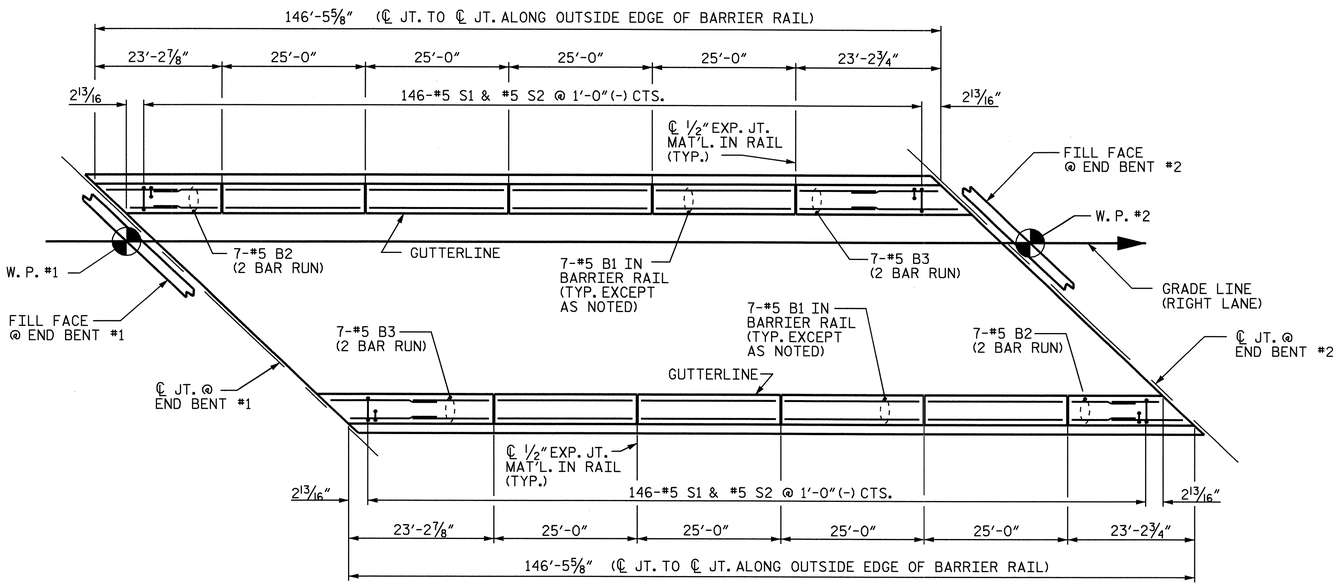

PLAN

NOTES

BARRIER RAIL IN THE SPAN SHALL NOT BE CAST UNTIL ALL SLAB CONCRETE IN THAT SPAN HAS BEEN CAST AND HAS REACHED A MINIMUM COMPRESSIVE STRENGTH OF 3,000 PSI.

ALL REINFORCING STEEL IN BARRIER RAILS SHALL BE EPOXY COATED.

VERTICAL GROOVED CONTRACTION JOINTS, ½" IN DEPTH, SHALL BE TOOLED IN ALL EXPOSED FACES OF THE BARRIER RAIL AND IN ACCORDANCE WITH ARTICLE 825-10(B) OF THE STANDARD SPECIFICATIONS. THE CONTRACTION JOINT SHALL BE LOCATED AT EACH THIRD POINT BETWEEN BARRIER RAIL EXPANSION JOINTS. ONLY ONE CONTRACTION JOINT IS REQUIRED AT MIDPOINT OF BARRIER RAIL SEGMENTS LESS THAN 20 FEET IN LENGTH AND NO CONTRACTION JOINTS ARE REQUIRED FOR THOSE SEGMENTS LESS THAN 10 FEET IN LENGTH.

BAR TYPES

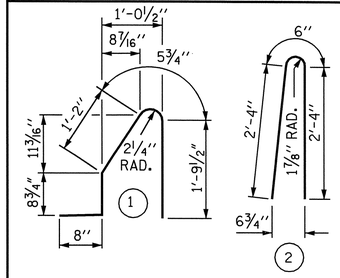

ALL BAR DIMENSIONS ARE OUT TO OUT

BILL OF MATERIAL

FOR CONCRETE BARRIER RAIL ONLY

BAR	NO.	SIZE	TYPE	LENGTH	WEIGHT
* B1	56	#5	STR	24'-7"	1436
* B2	28	#5	STR	13'-0"	380
* B3	28	#5	STR	13'-9"	402
* S1	292	#5	1	4'-10"	1472
* S2	292	#5	2	5'-2"	1574

* EPOXY COATED REINFORCING STEEL	5264 LBS.
CLASS AA CONCRETE	29.3 CU. YDS.
CONCRETE BARRIER RAIL	292.94 LIN. FT.

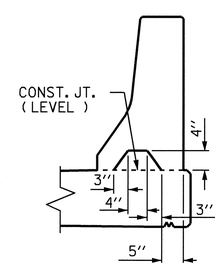

SECTION S-S
AT DAM IN OPEN JOINT
(THIS IS TO BE USED ONLY WHEN SLIP FORM IS USED)

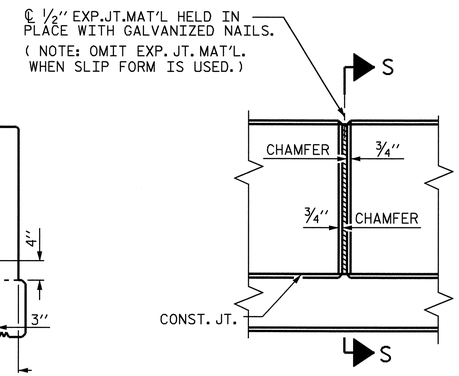

ELEVATION AT EXPANSION JOINTS

BARRIER RAIL DETAILS

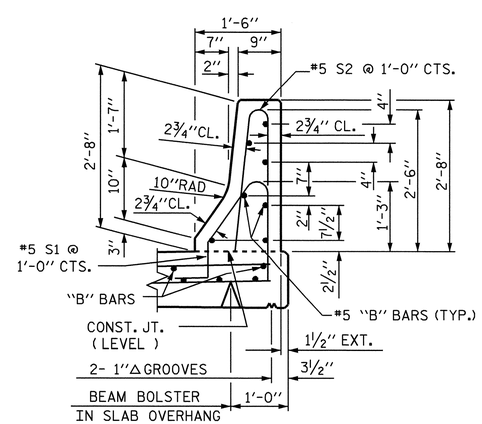

SECTION THRU RAIL

PROJECT NO. R-2719A
LENOIR COUNTY
STATION: 113+38.09 -L-

SHEET 1 OF 2

STATE OF NORTH CAROLINA
DEPARTMENT OF TRANSPORTATION
RALEIGH

STANDARD
CONCRETE BARRIER RAIL

(RIGHT LANE)

NORTH CAROLINA PROFESSIONAL SEAL 14045 ENGINEER TIMOTHY L. COCONIS
10/11/08

REVISIONS						SHEET NO.
NO.	BY:	DATE:	NO.	BY:	DATE:	S-155
1			3			TOTAL SHEETS
2			4			340

STR. #5 STD. NO. CBR1

ASSEMBLED BY : PEGGY PARISI	DATE : 5-08		
CHECKED BY : B. N. BARODAWALA	DATE : 5-08		
DRAWN BY : ARB 5/87	REV. 10/17/00	RWW/LES	
CHECKED BY : SJD 9/87	REV. 5/7/03R	RWW/JTE	
	REV. 5/1/06	TLA/GM	

09-OCT-2008 10:50
R:\Structures\Str#5\Final Plans\R-2719A_sd_br_05.dgn
nruffin

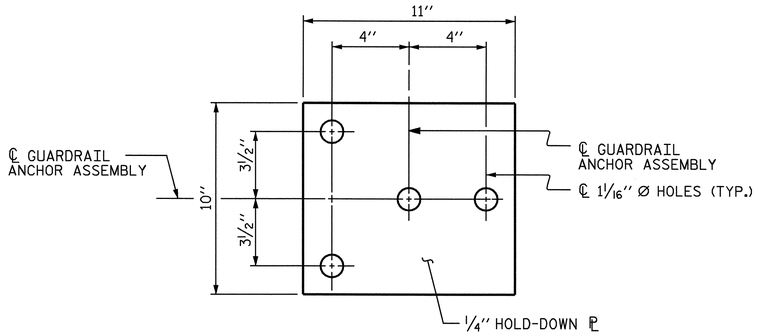

PLAN

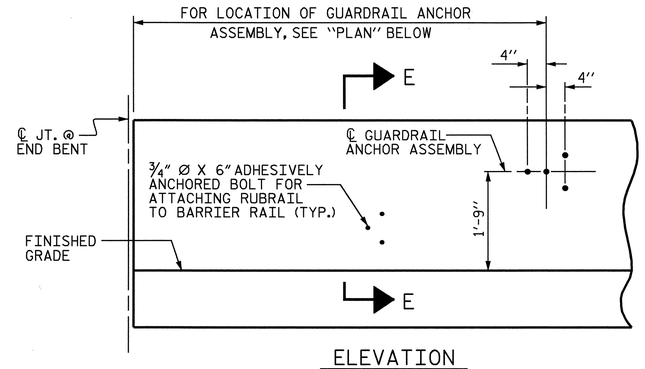

ELEVATION

FOR LOCATION OF RUBRAIL, SEE ROADWAY STD. 862.03

NOTES

THE GUARDRAIL ANCHOR ASSEMBLY SHALL CONSIST OF A 1/4" HOLD DOWN PLATE AND 4 - 7/8" Ø BOLTS WITH NUTS AND WASHERS, RUBRAIL, AND ADHESIVELY ANCHORED BOLTS.

THE HOLD-DOWN PLATE SHALL CONFORM TO AASHTO M270 GRADE 36. AFTER FABRICATION, THE HOLD-DOWN PLATE SHALL BE HOT-DIP GALVANIZED IN ACCORDANCE WITH AASHTO M111.

BOLTS SHALL CONFORM TO THE REQUIREMENTS OF ASTM A307 AND NUTS SHALL CONFORM TO THE REQUIREMENTS OF AASHTO M291. BOLTS, NUTS AND WASHERS SHALL BE GALVANIZED. (AT THE CONTRACTOR'S OPTION, STAINLESS STEEL BOLTS, NUTS AND WASHERS MAY BE USED AS AN ALTERNATE FOR THE 7/8" Ø GALVANIZED BOLTS, NUTS AND WASHERS. THEY SHALL CONFORM TO OR EXCEED THE MECHANICAL REQUIREMENTS OF ASTM A307. THE USE OF THIS ALTERNATE SHALL BE APPROVED BY THE ENGINEER.)

THE GUARDRAIL ANCHOR ASSEMBLY IS REQUIRED AT ALL POINTS WHERE APPROACH GUARDRAIL IS TO BE ATTACHED TO THE END OF BARRIER RAIL. FOR POINTS OF ATTACHMENT, SEE SKETCH.

AFTER INSTALLATION, THE EXPOSED THREAD OF THE BOLT SHALL BE BURRED WITH A SHARP POINTED TOOL.

THE COST OF THE GUARDRAIL ANCHOR ASSEMBLY SHALL BE INCLUDED IN THE UNIT CONTRACT PRICE BID FOR CONCRETE BARRIER RAIL.

THE 1 1/4" Ø HOLES SHALL BE FORMED OR DRILLED WITH A CORE BIT. IMPACT TOOLS WILL NOT BE PERMITTED. ANY CONCRETE DAMAGED BY THIS WORK SHALL BE REPAIRED TO THE SATISFACTION OF THE ENGINEER.

THE C6 X 8.2 RUBRAIL IS TO BE ADHESIVELY ANCHORED TO THE RAIL USING THREE 3/4" Ø X 6" BOLTS WITH WASHERS. LEVEL ONE FIELD TESTING IS REQUIRED, AND THE YIELD LOAD OF THE 3/4" Ø BOLT IS 12 KIPS. FOR ADHESIVELY ANCHORED ANCHOR BOLTS OR DOWELS, SEE SPECIAL PROVISIONS. SEE ROADWAY STANDARD 862.03 FOR DETAILS AND LOCATION OF THE RUBRAIL.

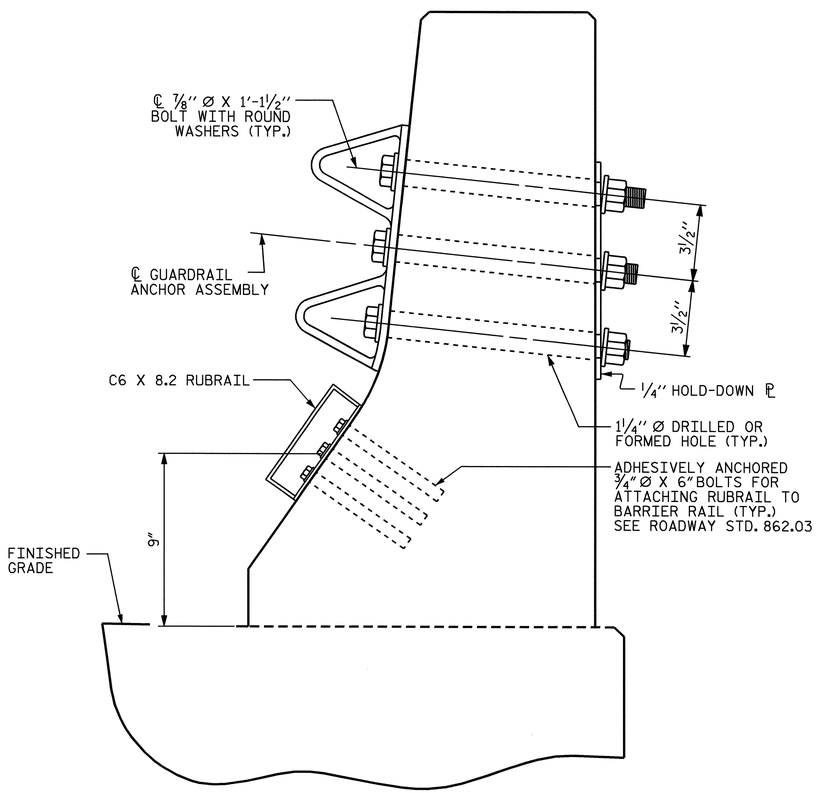

SECTION E-E

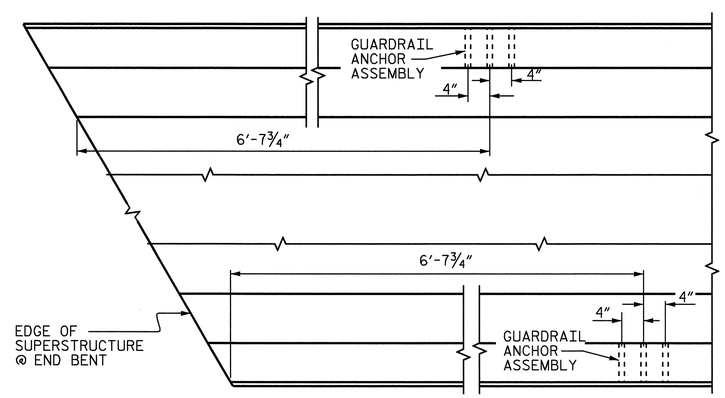

PLAN

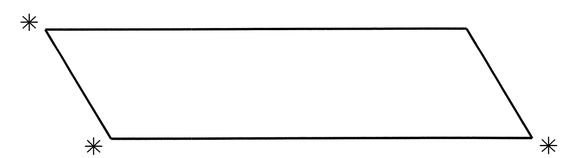

SKETCH SHOWING POINTS OF ATTACHMENTS

✳ DENOTES GUARDRAIL ANCHOR ASSEMBLY

GUARDRAIL ANCHOR ASSEMBLY DETAILS

LOCATION OF ANCHORS FOR GUARDRAIL

END BENT #1 SHOWN, END BENT #2 SIMILAR.

PROJECT NO. R-2719A
LENOIR COUNTY
STATION: 113+38.09 -L-

SHEET 2 OF 2

STATE OF NORTH CAROLINA
DEPARTMENT OF TRANSPORTATION
RALEIGH

STANDARD
GUARDRAIL ANCHORAGE FOR BARRIER RAIL
(RIGHT LANE)

NORTH CAROLINA PROFESSIONAL SEAL 14045 ENGINEER TIMOTHY L. COGGINS
10/10/08

REVISIONS						SHEET NO.
NO.	BY:	DATE:	NO.	BY:	DATE:	S-156
1			3			TOTAL SHEETS
2			4			340

STR. #5 STD. NO. GRA2

ASSEMBLED BY : PEGGY PARISI DATE : 5-08
CHECKED BY : B. N. BARODAWALA DATE : 5-08
DRAWN BY : TLA 5/06
CHECKED BY : GM 5/06
ADDED 5/1/06R KMM/GM

09-OCT-2008 10:50
R:\Structures\Str*5\Final Plans\R-2719A_sd_br_05.dgn
nruffin

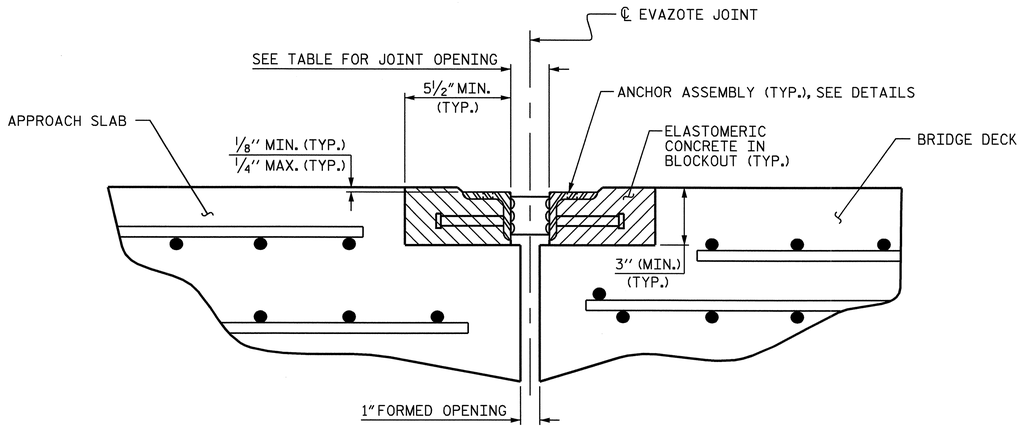

ARMORED JOINT DETAILS

SECTION NORMAL TO JOINT AT END BENT

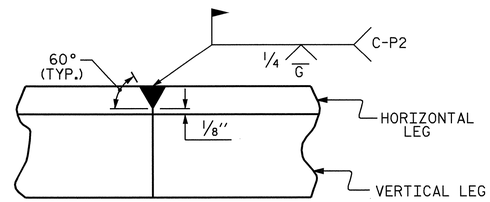

DETAIL- FIELD WELD SPLICE OF ANGLE

NOTES

ANGLES SHALL CONFORM TO AASHTO M270 GRADE 36 STEEL OR APPROVED EQUAL. ALL STUD ANCHORS SHALL CONFORM TO AASHTO M169 GRADES 1010 THRU 1020 OR APPROVED EQUAL.

STUD ANCHORS SHALL BE SHOP WELDED AND ALL HOLES SHALL BE SHOP DRILLED AS SHOWN ON THE PLANS. STUD ANCHORS SHALL BE ELECTRIC ARC END WELDED WITH COMPLETE FUSION.

UPON COMPLETION OF SHOP FABRICATION, THE ENTIRE ANCHOR ASSEMBLY SHALL BE METALLIZED. THE ½" Ø STUD ANCHORS AND ANCHOR TABS NEED NOT BE METALLIZED. SEE SPECIAL PROVISION FOR THERMAL SPRAYED COATINGS (METALLIZATION).

ANCHOR ASSEMBLY SHALL BE MADE CONTINUOUS THE LENGTH OF THE JOINT FROM GUTTER TO GUTTER. FOR FIELD SPLICES AT ALL CROWN BREAK POINTS, THE ENDS OF THE STEEL ANGLES SHALL BE CUT PARALLEL TO THE BRIDGE CENTERLINE. FINISHED FIELD WELDS SHALL BE GROUND SMOOTH AND COATED WITH A MINIMUM THICKNESS OF 4 DRY MILS OF ZINC-RICH PAINT IN ACCORDANCE WITH THE STANDARD SPECIFICATIONS.

ANCHOR ASSEMBLY SEGMENTS SHALL NOT BE LESS THAN 12 FEET NOR MORE THAN 20 FEET IN LENGTH. SHORTER SEGMENTS MAY BE USED AT THE EDGE OF ROADWAY OR AT POINTS OF STAGED CONSTRUCTION.

THE ANCHOR ASSEMBLY SHALL BE SECURED AND LEVELED AS SHOWN IN THE "ARMORED JOINT ANCHOR ASSEMBLY DETAILS". NO SUBMITTALS ARE REQUIRED FOR ⅜" Ø EXPANSION ANCHORS, NUTS OR WASHERS. THE CONTRACTOR MAY SUBMIT FOR APPROVAL AN ALTERNATE METHOD OF ALIGNING AND LEVELING THE ANGLES. THE ALTERNATE METHOD SHALL NOT INCLUDE ANY WELDING TO THE OUTSIDE FACE OF THE ANGLES.

AFTER THE ELASTOMERIC CONCRETE HAS BEEN CAST ON BOTH SIDES OF THE JOINT, REMOVE ANY EXCESS CONCRETE THAT COMES THROUGH THE WEEP HOLES AND THOROUGHLY CLEAN THE ANGLES. ANY DAMAGED STEEL SHALL BE COATED WITH A MINIMUM OF 4 MILS OF ZINC-RICH PAINT IN ACCORDANCE WITH THE STANDARD SPECIFICATIONS.

SEE SPECIAL PROVISIONS FOR EVAZOTE JOINT SEALS.

SEE SPECIAL PROVISIONS FOR ELASTOMERIC CONCRETE.

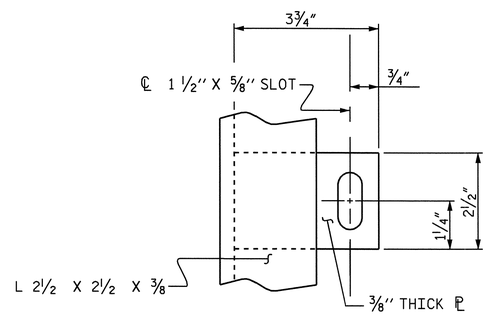

PLAN VIEW OF TAB

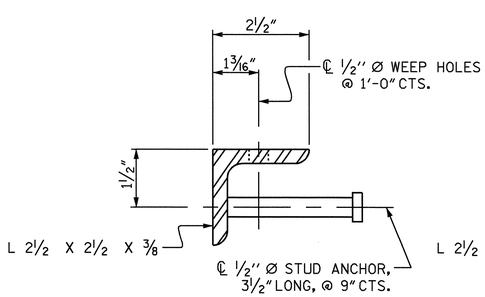

SECTION VIEW OF STUD

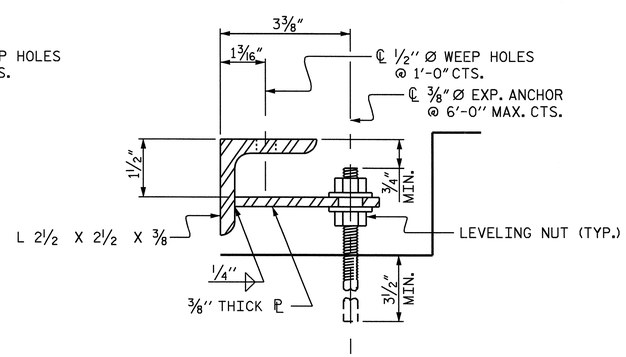

SECTION VIEW OF TAB

ARMORED JOINT ANCHOR ASSEMBLY DETAILS

MOVEMENT AND SETTING AT EVAZOTE JOINT						
END BENT NO.	SKEW ANGLE	NOMINAL UNCOMPRESSED SEAL WIDTH	TOTAL MOVEMENT (ALONG ℄ RDWY)	PERPENDICULAR JOINT OPENING AT 45° F	PERPENDICULAR JOINT OPENING AT 60° F	PERPENDICULAR JOINT OPENING AT 90° F
1	43°-29'-10"	2½"	11⅞"	2"	1⅞"	1⁹⁄₁₆"
2	43°-29'-10"	2½"	—	—	—	—

TOTAL MOVEMENT IS CALCULATED ALONG THE CENTERLINE OF ROADWAY.
JOINT OPENINGS ARE MEASURED PERPENDICULAR TO THE JOINT.

BILL OF MATERIAL		
END BENT NO.	ELASTOMERIC CONCRETE ✳ (CU. FT.)	TOTAL LENGTH OF ANGLE (FT)
1	14.0	122.09'
2	14.0	122.09'

✳ BASED ON THE MINIMUM BLOCKOUT SHOWN.

PROJECT NO. R-2719A
LENOIR COUNTY
STATION: 113+38.09 -L-

NORTH CAROLINA PROFESSIONAL SEAL 14045 ENGINEER TIMOTHY W. COGGINS
10/11/08

STATE OF NORTH CAROLINA
DEPARTMENT OF TRANSPORTATION
RALEIGH

STANDARD
ARMORED EVAZOTE JOINT DETAILS
(RIGHT LANE)

REVISIONS						SHEET NO.
NO.	BY:	DATE:	NO.	BY:	DATE:	S-157
1			3			TOTAL SHEETS
2			4			340

ASSEMBLED BY : PEGGY PARISI	DATE : 6-08		
CHECKED BY : T. COGGINS	DATE : 9-08		
DRAWN BY : EEM 1/96	REV. 7/10/01 LES/RDR		
CHECKED BY : RGW 1/96	REV. 5/7/03RR RWW/JTE		
	REV. 5/1/06 TLA/GM		

09-OCT-2008 10:50
R:\Structures\Str#5\FinalPlans\R-2719A_sd_eJ_05.dgn
nruffin

STR. #5

STD. NO. AEJ1

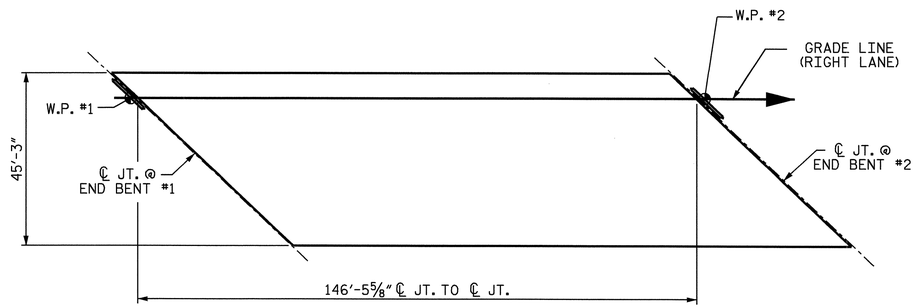

LAYOUT FOR COMPUTING AREA OF REINFORCED CONCRETE DECK SLAB
(SQ. FT. = 6628)

BILL OF MATERIAL

BAR	NO.	SIZE	TYPE	LENGTH	WEIGHT	BAR	NO.	SIZE	TYPE	LENGTH	WEIGHT
✳ A1	183	#5	STR	44'-11"	8573	A207	4	#5	STR	37'-8"	157
A2	183	#5	STR	44'-11"	8573	A208	4	#5	STR	36'-8"	153
✳ A3	8	#6	STR	22'-5"	269	A209	4	#5	STR	35'-8"	149
						A210	4	#5	STR	34'-7"	144
✳A101	4	#5	STR	43'-2"	180	A211	4	#5	STR	33'-7"	140
✳A102	4	#5	STR	42'-2"	176	A212	4	#5	STR	32'-7"	136
✳A103	4	#5	STR	41'-1"	171	A213	4	#5	STR	31'-6"	131
✳A104	4	#5	STR	40'-1"	167	A214	4	#5	STR	30'-6"	127
✳A105	4	#5	STR	39'-1"	163	A215	4	#5	STR	29'-6"	123
✳A106	4	#5	STR	38'-1"	159	A216	4	#5	STR	28'-5"	119
✳A107	4	#5	STR	37'-0"	154	A217	4	#5	STR	27'-5"	114
✳A108	4	#5	STR	36'-0"	150	A218	4	#5	STR	26'-5"	110
✳A109	4	#5	STR	34'-11"	146	A219	4	#5	STR	25'-4"	106
✳A110	4	#5	STR	33'-11"	142	A220	4	#5	STR	24'-4"	102
✳A111	4	#5	STR	32'-11"	137	A221	4	#5	STR	23'-4"	97
✳A112	4	#5	STR	31'-10"	133	A222	4	#5	STR	22'-3"	93
✳A113	4	#5	STR	30'-10"	129	A223	4	#5	STR	21'-3"	89
✳A114	4	#5	STR	29'-10"	124	A224	4	#5	STR	20'-3"	84
✳A115	4	#5	STR	28'-9"	120	A225	4	#5	STR	19'-2"	80
✳A116	4	#5	STR	27'-9"	116	A226	4	#5	STR	18'-2"	76
✳A117	4	#5	STR	26'-9"	112	A227	4	#5	STR	17'-2"	72
✳A118	4	#5	STR	25'-8"	107	A228	4	#5	STR	16'-1"	67
✳A119	4	#5	STR	24'-8"	103	A229	4	#5	STR	15'-1"	63
✳A120	4	#5	STR	23'-8"	99	A230	4	#5	STR	14'-1"	59
✳A121	4	#5	STR	22'-7"	94	A231	4	#5	STR	13'-0"	54
✳A122	4	#5	STR	21'-7"	90	A232	4	#5	STR	12'-0"	50
✳A123	4	#5	STR	20'-7"	86	A233	4	#5	STR	11'-0"	46
✳A124	4	#5	STR	19'-6"	81	A234	4	#5	STR	9'-11"	41
✳A125	4	#5	STR	18'-6"	77	A235	4	#5	STR	8'-11"	37
✳A126	4	#5	STR	17'-6"	73	A236	4	#5	STR	7'-11"	33
✳A127	4	#5	STR	16'-6"	69	A237	4	#5	STR	6'-10"	29
✳A128	4	#5	STR	15'-5"	64	A238	4	#5	STR	5'-10"	24
✳A129	4	#5	STR	14'-5"	60	A239	4	#5	STR	4'-10"	20
✳A130	4	#5	STR	13'-5"	56	A240	4	#5	STR	3'-9"	16
✳A131	4	#5	STR	12'-4"	51	A241	4	#5	STR	2'-9"	11
✳A132	4	#5	STR	11'-4"	47	A242	4	#5	STR	1'-9"	7
✳A133	4	#5	STR	10'-4"	43						
✳A134	4	#5	STR	9'-3"	39	✳ B1	192	#4	STR	26'-1"	3324
✳A135	4	#5	STR	8'-3"	34	B2	156	#5	STR	50'-2"	8163
✳A136	4	#5	STR	7'-3"	30						
✳A137	4	#5	STR	6'-2"	26	✳ G1	4	#5	STR	33'-10"	141
✳A138	4	#5	STR	5'-2"	22						
✳A139	4	#5	STR	4'-2"	17	✳ K1	12	#5	1	13'-11"	174
✳A140	4	#5	STR	3'-1"	13	✳ K2	18	#5	2	17'-10"	335
✳A141	4	#5	STR	2'-1"	9						
						✳ S1	80	#4	3	4'-9"	254
A201	4	#5	STR	43'-10"	183						
A202	4	#5	STR	42'-10"	179						
A203	4	#5	STR	41'-10"	175	REINFORCING STEEL 20,730					
A204	4	#5	STR	40'-9"	170						
A205	4	#5	STR	39'-9"	166	✳ EPOXY COATED					
A206	4	#5	STR	38'-9"	162	REINFORCING STEEL 16,939					

BAR TYPES

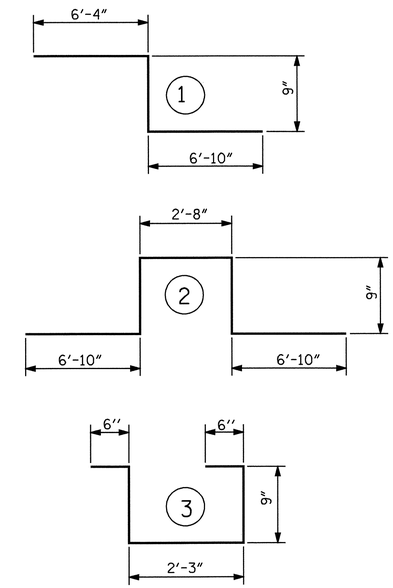

ALL BAR DIMENSIONS ARE OUT TO OUT

SUPERSTRUCTURE BILL OF MATERIAL

	CLASS AA CONCRETE	REINFORCING STEEL	EPOXY COATED REINFORCING STEEL
	(CU.YDS.)	(LBS.)	(LBS.)
SPAN "A"	245.2	20,730	16,939
TOTALS✳✳	245.2	20,730	16,939

✳✳QUANTITIES FOR BARRIER RAIL ARE NOT INCLUDED

SUPERSTRUCTURE REINFORCING STEEL LENGTHS ARE BASED ON THE FOLLOWING MINIMUM SPLICE LENGTHS

BAR SIZE	SUPERSTRUCTURE EXCEPT APPROACH SLABS, PARAPET, AND BARRIER RAIL		APPROACH SLABS		PARAPET AND BARRIER RAIL
	EPOXY COATED	UNCOATED	EPOXY COATED	UNCOATED	
#4	2'-0"	1'-9"	2'-0"	1'-9"	2'-9"
#5	2'-6"	2'-2"	2'-6"	2'-2"	3'-5"
#6	3'-0"	2'-7"	3'-10"	2'-7"	4'-4"
#7	5'-3"	3'-6"			
#8	6'-10"	4'-7"			

GROOVING BRIDGE FLOORS

APPROACH SLABS	1870	SQ.FT.
BRIDGE DECK	5684	SQ.FT.
TOTAL	7554	SQ.FT.

PROJECT NO. R-2719A
LENOIR COUNTY
STATION: 113+38.09 -L-

STATE OF NORTH CAROLINA
DEPARTMENT OF TRANSPORTATION
RALEIGH

STANDARD
SUPERSTRUCTURE BILL OF MATERIAL
(RIGHT LANE)

NORTH CAROLINA PROFESSIONAL SEAL 14045 ENGINEER TIMOTHY L. COGGINS
10/1/08

REVISIONS						SHEET NO.
NO.	BY:	DATE:	NO.	BY:	DATE:	S-158
1			3			TOTAL SHEETS
2			4			340

STR. #5 STD. NO. BOM1

ASSEMBLED BY : PEGGY PARISI DATE : 5-08			
CHECKED BY : B. N. BARODAWALA DATE : 5-08			
DRAWN BY : JMB 5/87	REV. 6/1/94	EEM/GRP	
CHECKED BY : SJD 9/87	REV. 8/16/99	RWW/LES	
	REV. 5/1/06	TLA/GM	

09-OCT-2008 10:50
R:\Structures\Str#5\FinalPlans\R-2719A_sd_bm_05.dgn
nruffin

NOTES

STIRRUPS IN CAP MAY BE SHIFTED AS NECESSARY TO CLEAR ANCHOR BOLTS.

BACKWALL SHALL BE PLACED BEFORE APPLYING THE EPOXY PROTECTIVE COATING.

THE TOP SURFACE AREAS OF THE END BENT CAP SHALL BE CURED IN ACCORDANCE WITH THE STANDARD SPECIFICATIONS EXCEPT THE MEMBRANE CURING COMPOUND METHOD SHALL NOT BE USED.

THE TOP SURFACE OF THE CAP EXCEPT THE BRIDGE SEAT BUILDUPS SHALL BE SLOPED TRANSVERSELY FROM THE FILL FACE TO THE BACK FACE AT THE RATE OF 2%.

EPOXY COAT THE END BENT CAP AFTER ADJUSTMENTS ARE MADE TO BEARINGS AND ANCHOR BOLTS ARE GROUTED.

FOR "TEMPORARY DRAINAGE AT END BENT" SEE DETAIL SHEET 3 OF 3 OF END BENT #2.

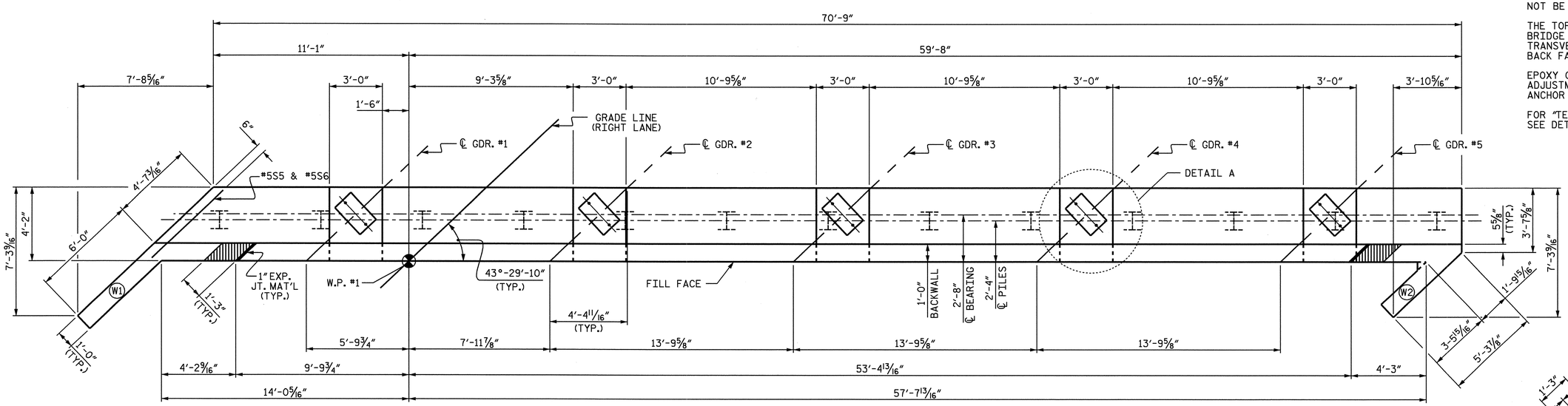

PLAN

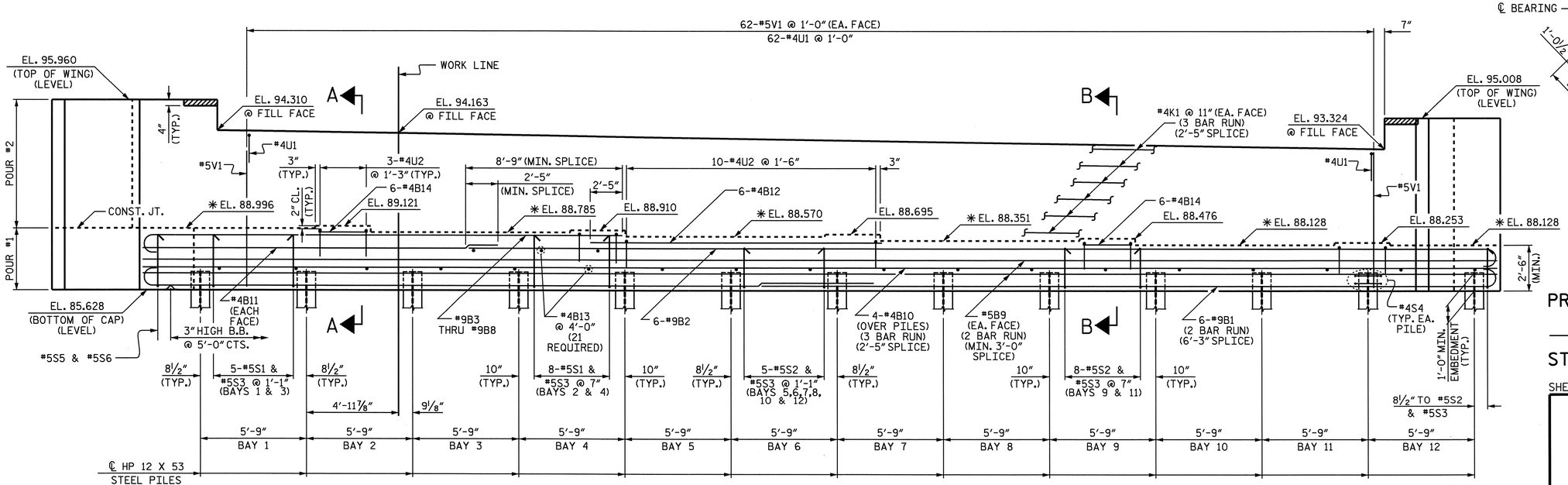

ELEVATION

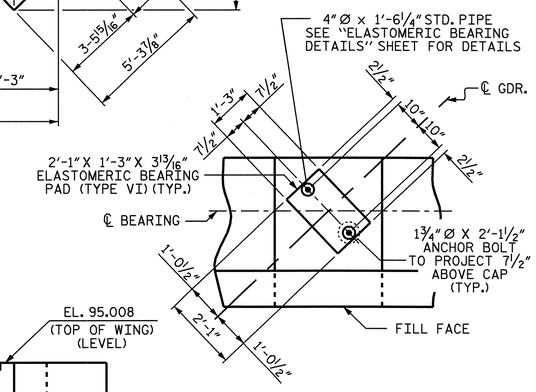

DETAIL A

(DIMENSIONS TYP. EA. BEARING)

PROJECT NO. R-2719A

LENOIR COUNTY

STATION: 113+38.09-L-

SHEET 1 OF 3

STATE OF NORTH CAROLINA
DEPARTMENT OF TRANSPORTATION
RALEIGH

SUBSTRUCTURE
END BENT #1
(RIGHT LANE)

NORTH CAROLINA PROFESSIONAL SEAL 14045 ENGINEER TIMOTHY M. COGGINS
10/1/08

REVISIONS								SHEET NO.
NO.	BY:	DATE:	NO.	BY:	DATE:			S-159
1			3					TOTAL SHEETS
2			4					340

STR. #5

DRAWN BY : S.H. SOCKWELL DATE : 6/12/08
CHECKED BY : PEGGY PARISI DATE : 6/18/08

09-OCT-2008 16:17
h:\structures\Str#5\Final Plans\R-2719A_sd_e*_05.dgn
tcoggins

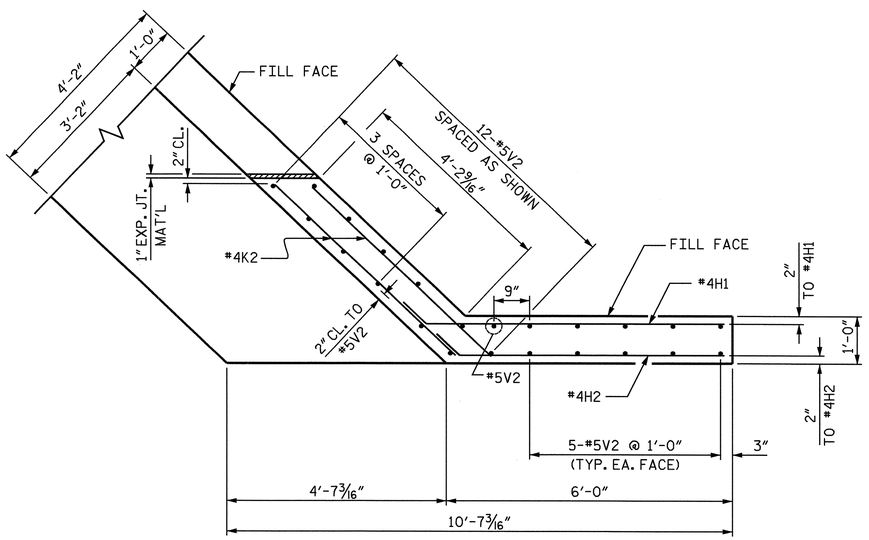

PLAN OF LEFT WING (W1)

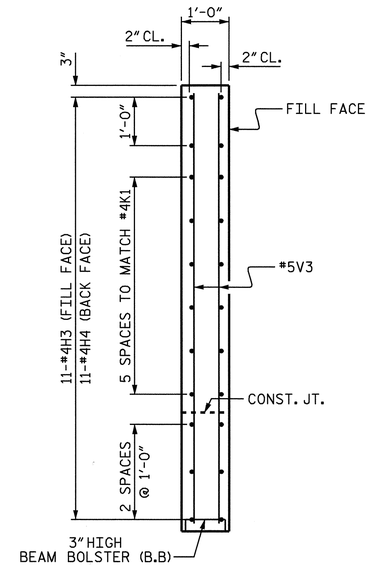

SECTION Y-Y

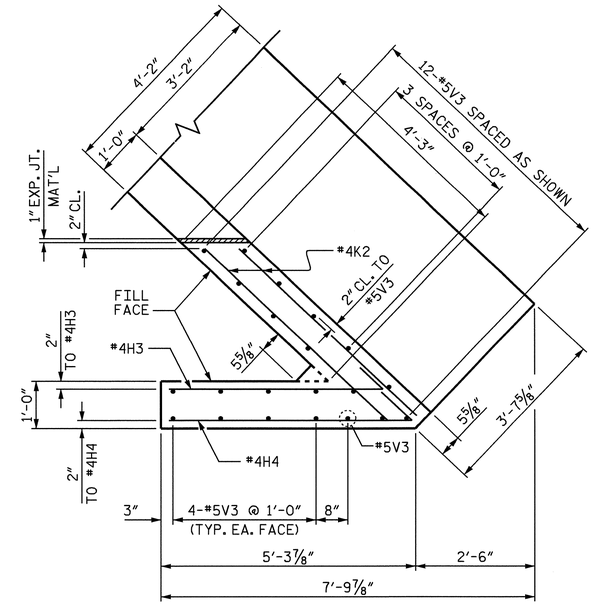

PLAN OF RIGHT WING (W2)

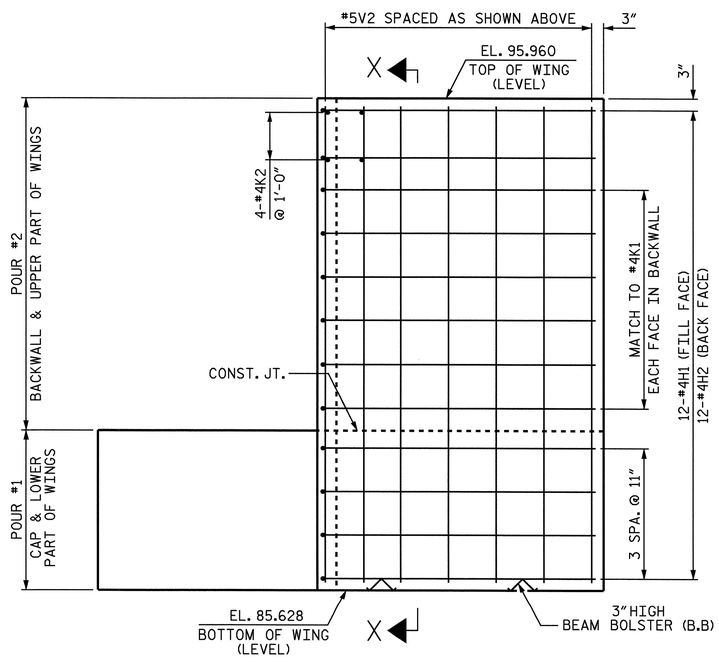

ELEVATION OF LEFT WING (W1)

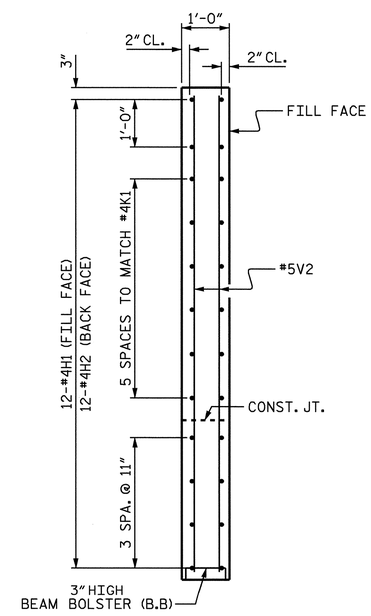

SECTION X-X

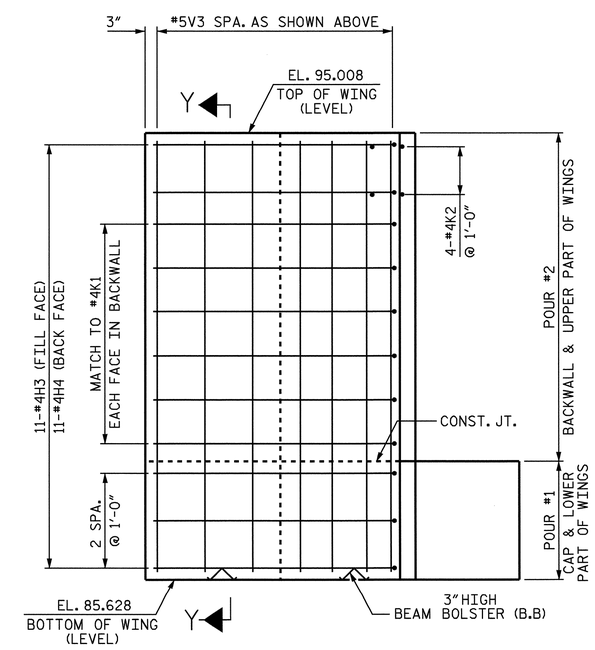

ELEVATION OF RIGHT WING (W2)

PROJECT NO. R-2719A
LENOIR COUNTY
STATION: 113+38.09-L-

SHEET 2 OF 3

STATE OF NORTH CAROLINA
DEPARTMENT OF TRANSPORTATION
RALEIGH

SUBSTRUCTURE
END BENT #1
(RIGHT LANE)

NORTH CAROLINA PROFESSIONAL SEAL 14045 ENGINEER TIMOTHY L. COGGINS
10/1/08

REVISIONS						SHEET NO.
NO.	BY:	DATE:	NO.	BY:	DATE:	S-160
1			3			TOTAL SHEETS
2			4			340

STR. #5

DRAWN BY : S.H. SOCKWELL DATE : 6/12/08
CHECKED BY : PEGGY PARISI DATE : 6/18/08

09-OCT-2008 10:50
R:\Structures\Str*5\Final Plans\R-2719A_sd_e*_05.dgn
nruffin

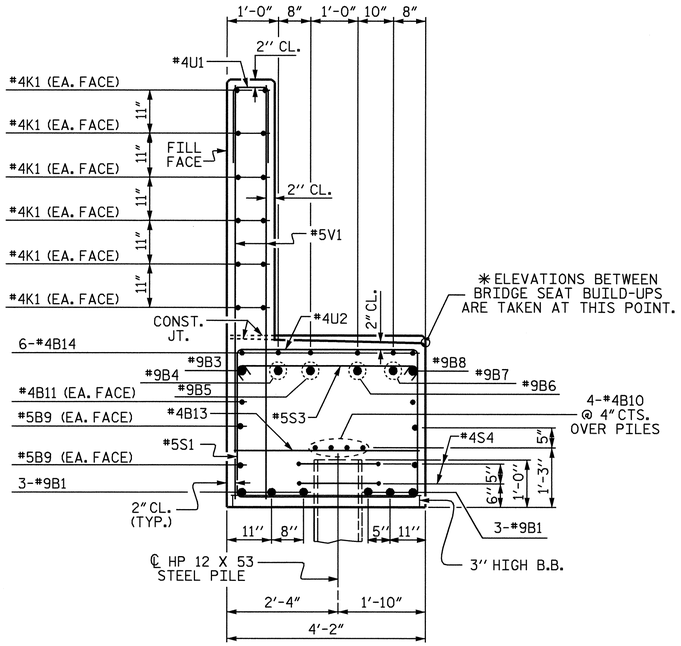

SECTION A-A

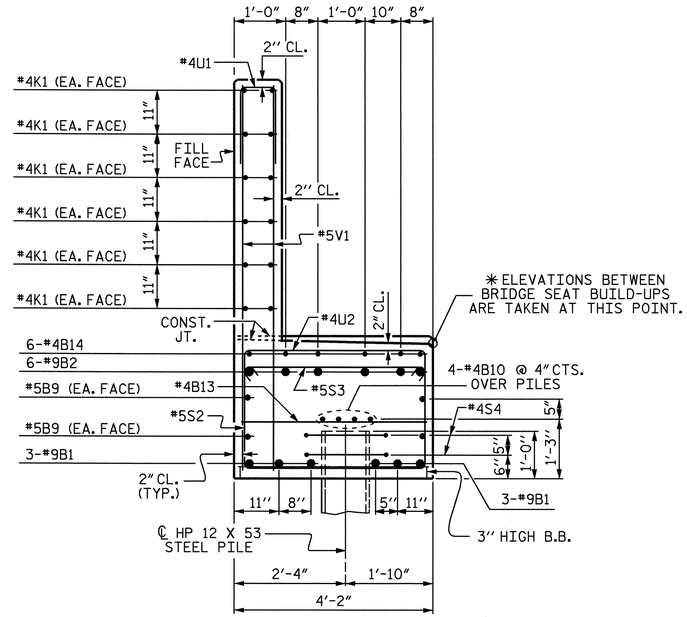

SECTION B-B

BAR TYPES

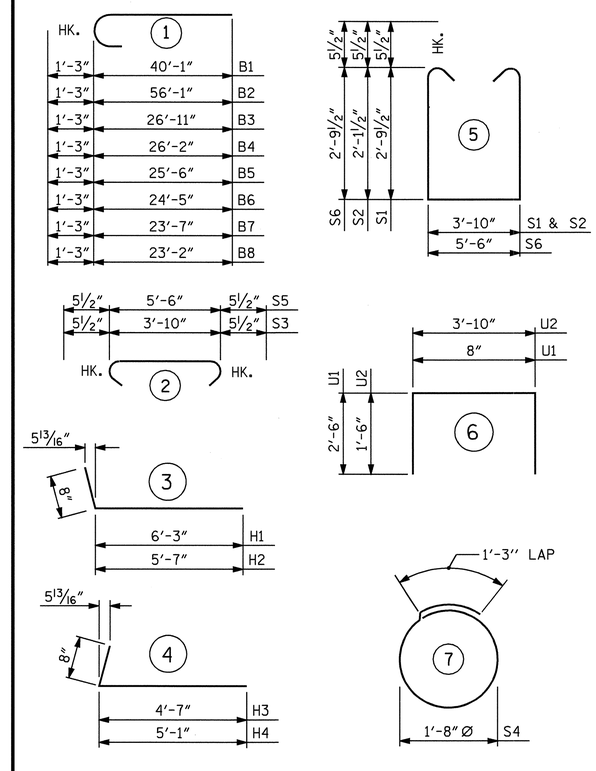

ALL BAR DIMENSIONS ARE OUT TO OUT.

BILL OF MATERIAL

END BENT #1

BAR	NO.	SIZE	TYPE	LENGTH	WEIGHT
B1	12	#9	1	41'-4"	1686
B2	6	#9	1	57'-4"	1170
B3	1	#9	1	28'-2"	96
B4	1	#9	1	27'-5"	93
B5	1	#9	1	26'-9"	91
B6	1	#9	1	25'-8"	87
B7	1	#9	1	24'-10"	84
B8	1	#9	1	24'-5"	83
B9	8	#5	STR	38'-7"	322
B10	12	#4	STR	26'-4"	211
B11	2	#4	STR	20'-7"	27
B12	6	#4	STR	16'-3"	65
B13	21	#4	STR	3'-10"	54
B14	6	#4	STR	2'-8"	11
H1	12	#4	3	6'-11"	55
H2	12	#4	3	6'-3"	50
H3	11	#4	4	5'-3"	39
H4	11	#4	4	5'-9"	42
K1	36	#4	STR	26'-4"	633
K2	8	#4	STR	5'-2"	28
S1	26	#5	5	10'-4"	280
S2	47	#5	5	9'-0"	441
S3	73	#5	2	4'-9"	362
S4	26	#4	7	6'-6"	113
S5	1	#5	2	6'-5"	7
S6	1	#5	5	12'-0"	13
U1	62	#4	6	5'-8"	235
U2	22	#4	6	6'-10"	100
V1	124	#5	STR	7'-4"	948
V2	23	#5	STR	10'-0"	240
V3	21	#5	STR	9'-0"	197
REINFORCING STEEL				=	7863 LBS

CLASS A CONCRETE BREAKDOWN

POUR #1	
CAP & LOWER PART OF WINGS	33.9 CU. YDS.
POUR #2	
BACKWALL & UPPER PART OF WINGS	18.1 CU. YDS.
CLASS A CONCRETE TOTAL	52.0 CU. YDS.

HP 12 X 53 STEEL PILES	
NO. 13	1040 LIN. FT.
STEEL PILE POINTS	NO. 13
PILE REDRIVES	EA. 10

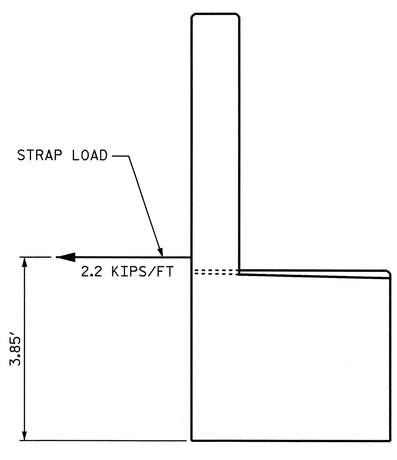

STRAP LOAD DETAIL

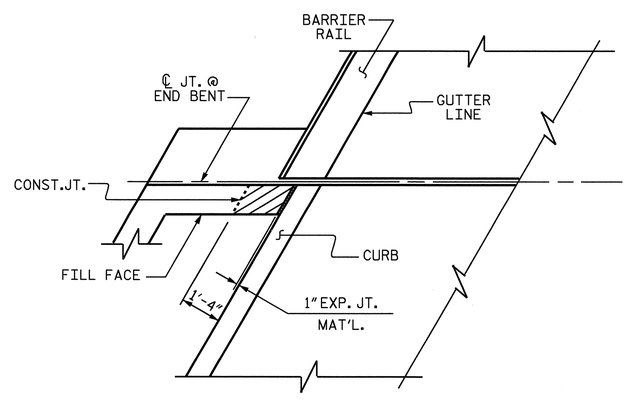

PLAN

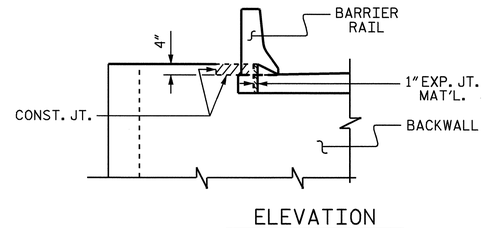

ELEVATION

BLOCKOUT IN WING WALL

NOTE: THE CONCRETE IN THE SHADED AREA OF THE WING SHALL BE POURED AFTER THE BARRIER RAIL IS CAST IF SLIP FORMING IS USED.

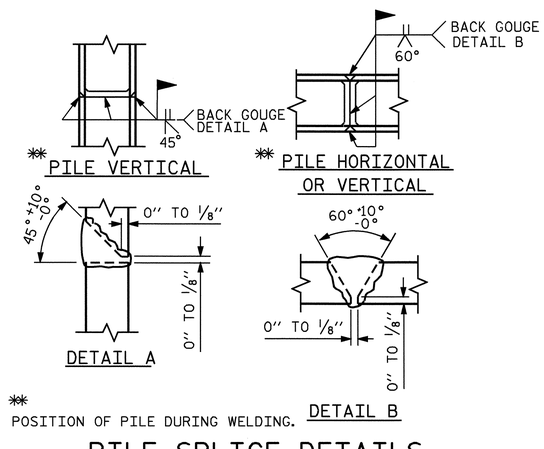

✱✱ POSITION OF PILE DURING WELDING.

PILE SPLICE DETAILS

NORTH CAROLINA PROFESSIONAL SEAL 14045 ENGINEER TIMOTHY L. COGGINS

Timothy L. Coggins 10/1/08

PROJECT NO. R-2719A

LENOIR COUNTY

STATION: 113+38.09-L-

SHEET 3 OF 3

STATE OF NORTH CAROLINA
DEPARTMENT OF TRANSPORTATION
RALEIGH

SUBSTRUCTURE
END BENT #1
(RIGHT LANE)

REVISIONS						SHEET NO.
NO.	BY:	DATE:	NO.	BY:	DATE:	S-161
1			3			TOTAL SHEETS
2			4			340

DRAWN BY : S.H. SOCKWELL DATE : 6/12/08
CHECKED BY : PEGGY PARISI DATE : 6/18/08

NOTES

STIRRUPS IN CAP MAY BE SHIFTED AS NECESSARY TO CLEAR ANCHOR BOLTS.

BACKWALL SHALL BE PLACED BEFORE APPLYING THE EPOXY PROTECTIVE COATING.

THE TOP SURFACE AREAS OF THE END BENT CAP SHALL BE CURED IN ACCORDANCE WITH THE STANDARD SPECIFICATIONS EXCEPT THE MEMBRANE CURING COMPOUND METHOD SHALL NOT BE USED.

THE TOP SURFACE OF THE CAP EXCEPT THE BRIDGE SEAT BUILDUPS SHALL BE SLOPED TRANSVERSELY FROM THE FILL FACE TO THE BACK FACE AT THE RATE OF 2%.

FOR "PILE SPLICE DETAILS" SEE SHEET 3 OF 3 OF END BENT #1.

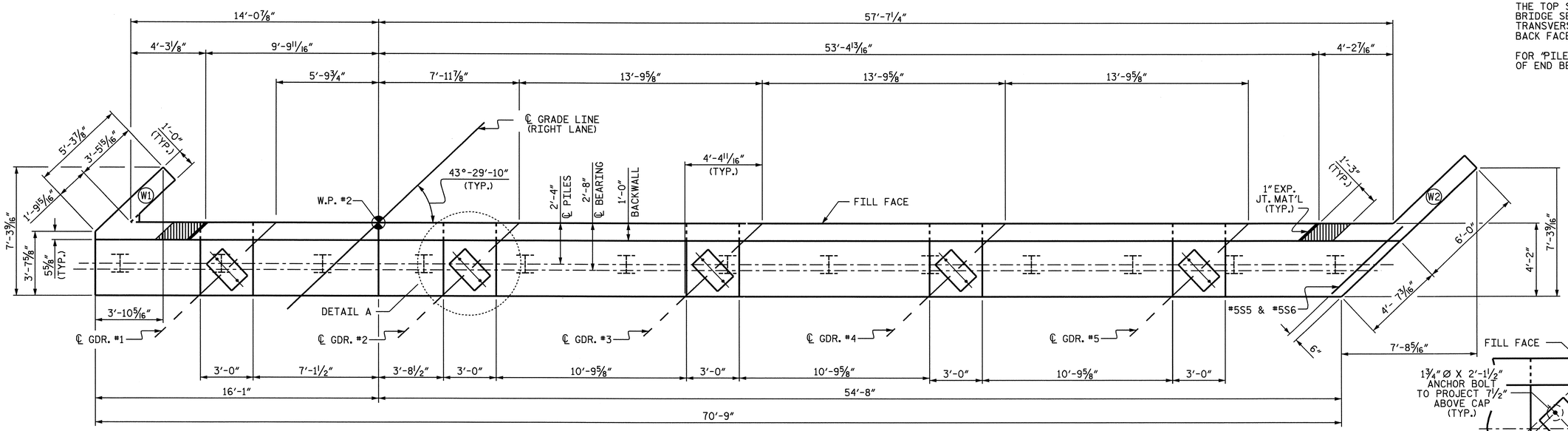

PLAN

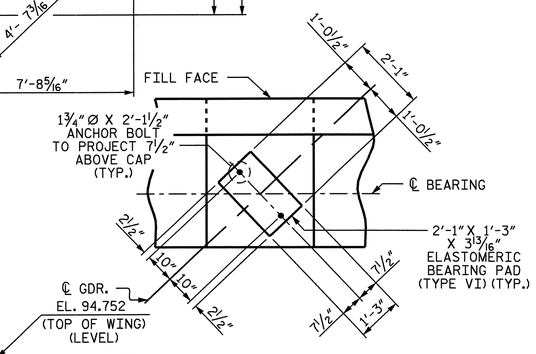

DETAIL A

(DIMENSIONS TYP. EA. BEARING)

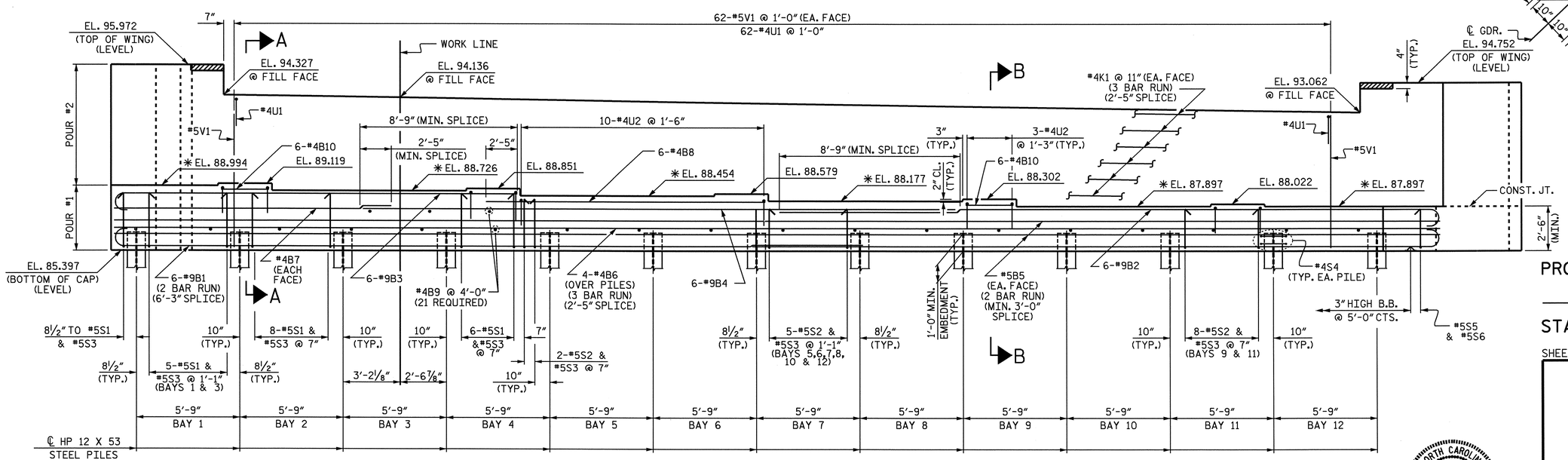

ELEVATION

PROJECT NO. R-2719A

LENOIR COUNTY

STATION: 113+38.09-L-

SHEET 1 OF 3

STATE OF NORTH CAROLINA
DEPARTMENT OF TRANSPORTATION
RALEIGH

SUBSTRUCTURE
END BENT #2
(RIGHT LANE)

NORTH CAROLINA PROFESSIONAL SEAL 14045 ENGINEER TIMOTHY L. COGGINS

Timothy L. Coggins 10/1/08

REVISIONS						SHEET NO.
NO.	BY:	DATE:	NO.	BY:	DATE:	S-162
1			3			TOTAL SHEETS
2			4			340

DRAWN BY : S.H. SOCKWELL DATE : 6/12/08
CHECKED BY : PEGGY PARISI DATE : 6/18/08

09-OCT-2008 11:53
R:\Structures\Str*5\Final Plans\R-2719A_sd_e*_05.dgn
gruffin

STR. #5

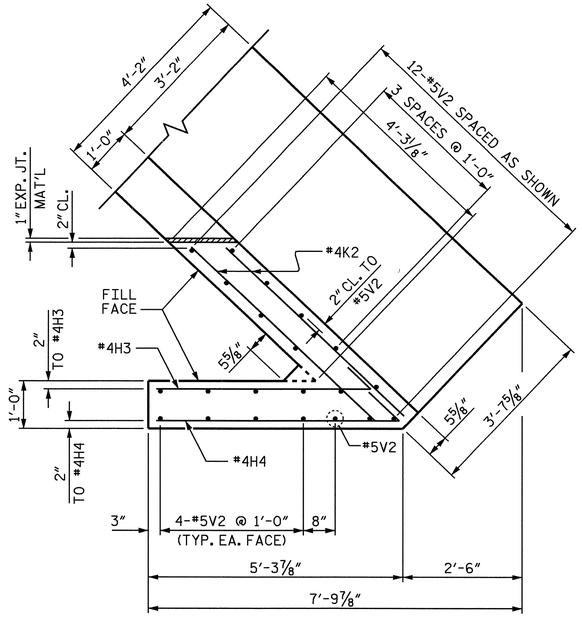

PLAN OF LEFT WING (W1)

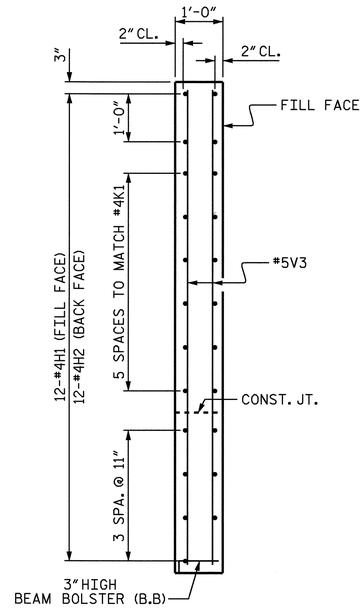

SECTION Y-Y

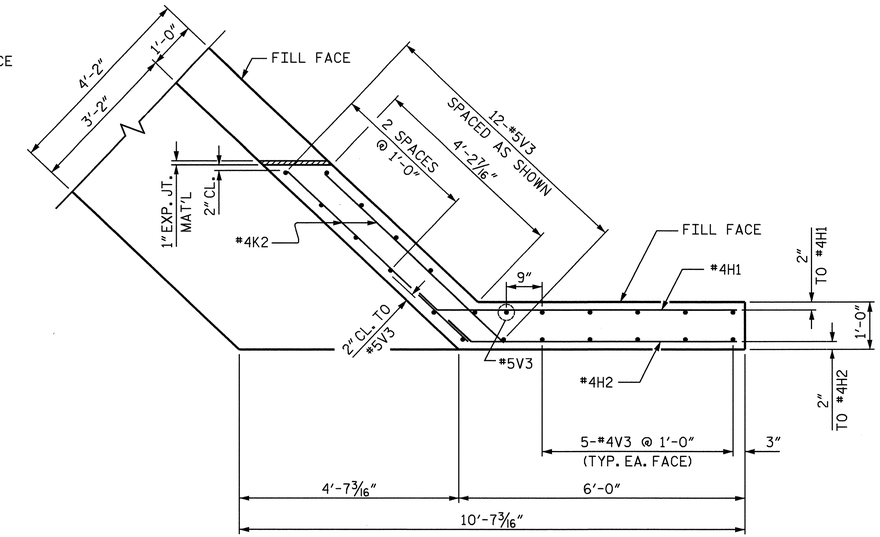

PLAN OF RIGHT WING (W2)

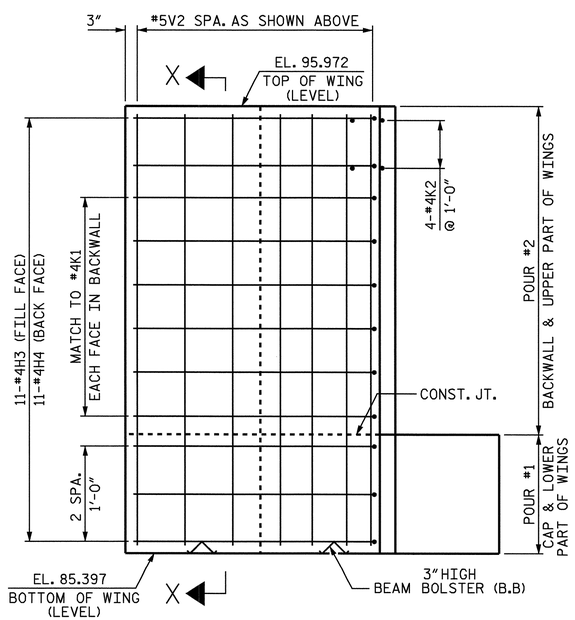

ELEVATION OF LEFT WING (W1)

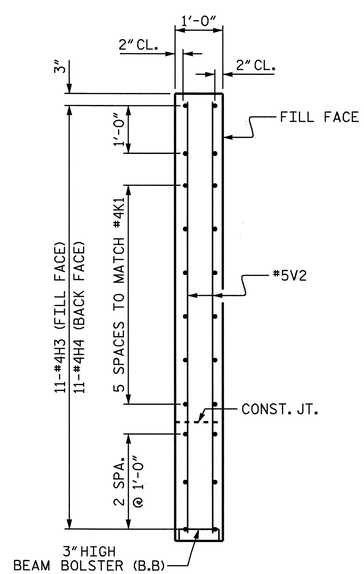

SECTION X-X

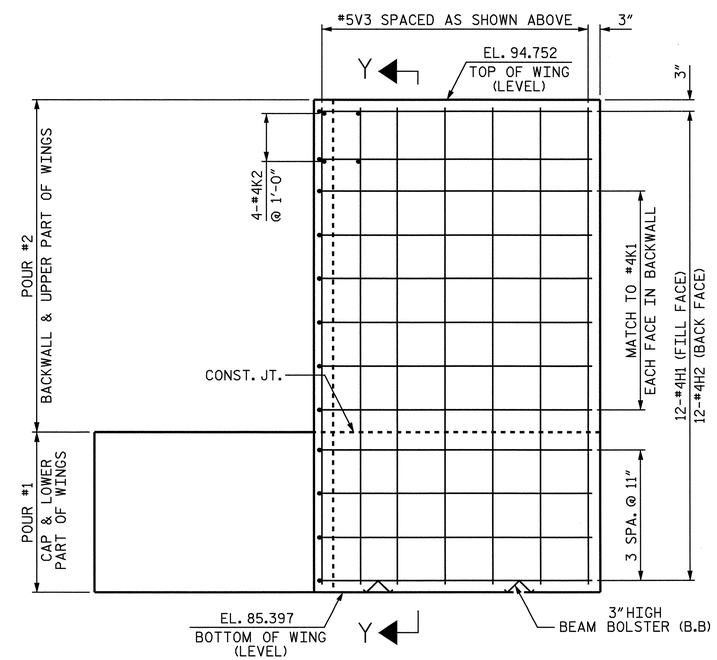

ELEVATION OF RIGHT WING (W2)

PROJECT NO. R-2719A

LENOIR COUNTY

STATION: 113+38.09-L-

SHEET 2 OF 3

STATE OF NORTH CAROLINA
DEPARTMENT OF TRANSPORTATION
RALEIGH

SUBSTRUCTURE
END BENT #2
(RIGHT LANE)

NORTH CAROLINA PROFESSIONAL SEAL 14045 ENGINEER TIMOTHY L. COGGINS

Timothy L. Coggins 10/10/08

REVISIONS						SHEET NO.
NO.	BY:	DATE:	NO.	BY:	DATE:	S-163
1			3			TOTAL SHEETS
2			4			340

STR. #5

DRAWN BY : S.H. SOCKWELL DATE : 6/12/08
CHECKED BY : PEGGY PARISI DATE : 6/18/08

09-OCT-2008 10:50
R:\Structures\Str#5\Final Plans\R-2719A_sd_e*_05.dgn
nruffin

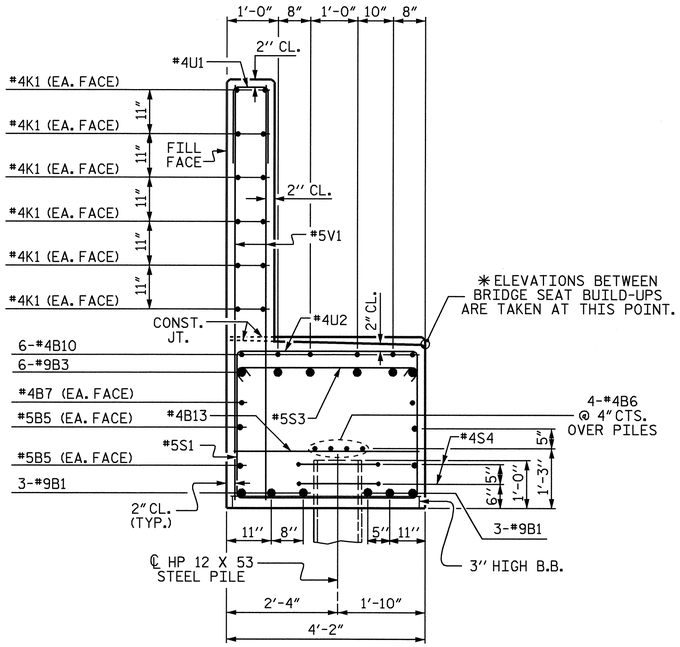

SECTION A-A

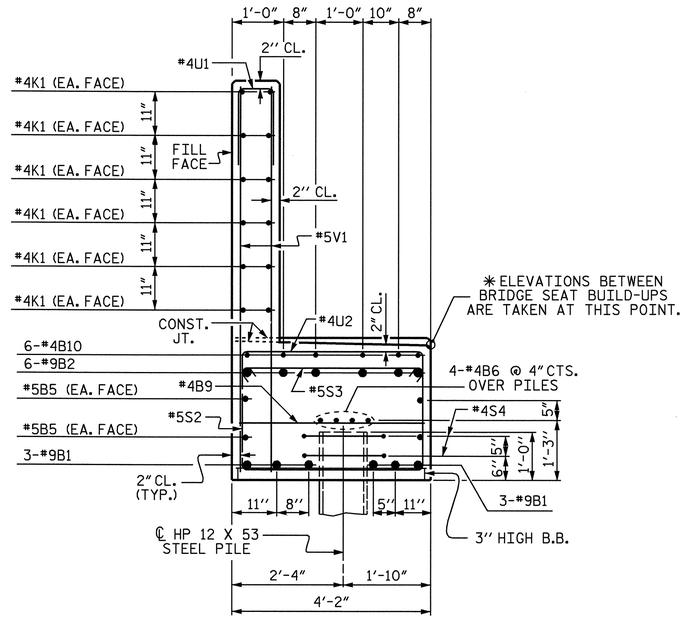

SECTION B-B

BAR TYPES

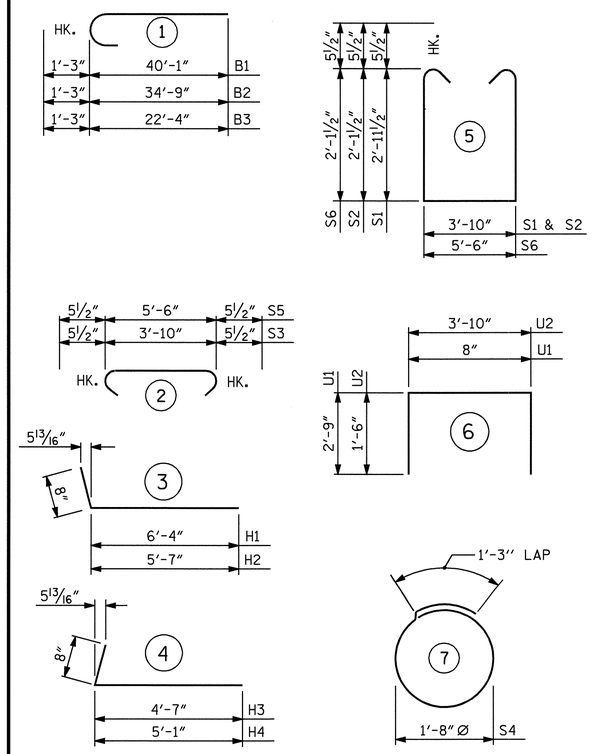

ALL BAR DIMENSIONS ARE OUT TO OUT.

BILL OF MATERIAL

END BENT #2

BAR	NO.	SIZE	TYPE	LENGTH	WEIGHT
B1	12	#9	1	41'-4"	1686
B2	6	#9	1	36'-0"	734
B3	6	#9	1	23'-7"	481
B4	6	#9	STR	34'-9"	709
B5	8	#5	STR	38'-7"	322
B6	12	#4	STR	26'-4"	211
B7	2	#4	STR	16'-1"	21
B8	6	#4	STR	16'-3"	65
B9	21	#4	STR	3'-10"	54
B10	12	#4	STR	2'-8"	21
H1	12	#4	3	7'-0"	56
H2	12	#4	3	6'-3"	50
H3	11	#4	4	5'-3"	39
H4	11	#4	4	5'-9"	42
K1	36	#4	STR	26'-4"	633
K2	8	#4	STR	5'-2"	28
S1	25	#5	5	10'-8"	278
S2	48	#5	5	9'-0"	451
S3	73	#5	2	4'-9"	362
S4	26	#4	7	6'-6"	113
S5	1	#5	2	6'-5"	7
S6	1	#5	5	10'-8"	11
U1	62	#4	6	6'-2"	255
U2	22	#4	6	6'-10"	100
V1	124	#5	STR	7'-4"	948
V2	21	#5	STR	10'-2"	223
V3	23	#5	STR	9'-0"	216

REINFORCING STEEL = 8116 LBS

CLASS A CONCRETE BREAKDOWN

POUR #1	
CAP & LOWER PART OF WINGS	34.5 CU. YDS.
POUR #2	
BACKWALL & UPPER PART OF WINGS	18.3 CU. YDS.
CLASS A CONCRETE TOTAL	52.8 CU. YDS.

HP 12 X 53 STEEL PILES	
NO. 13	1105 LIN. FT.
STEEL PILE POINTS	NO. 13
PILE REDRIVES	EA. 10

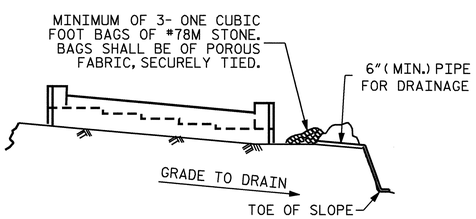

BAGGED STONE AND PIPE SHALL BE PLACED IMMEDIATELY AFTER COMPLETION OF END BENT EXCAVATION. PIPE MAY BE EITHER CONCRETE, CORRUGATED STEEL, CORRUGATED ALUMINUM ALLOY, OR CORRUGATED PLASTIC. PERFORATED PIPE WILL NOT BE ALLOWED.

BAGGED STONE SHALL REMAIN IN PLACE UNTIL THE ENGINEER DIRECTS THAT IT BE REMOVED. THE CONTRACTOR SHALL REMOVE AND DISPOSE OF SILT ACCUMULATIONS AT BAGGED STONE WHEN SO DIRECTED BY THE ENGINEER. BAGS SHALL BE REMOVED AND REPLACED WHENEVER THE ENGINEER DETERMINES THAT THEY HAVE DETERIORATED AND LOST THEIR EFFECTIVENESS.

NO SEPARATE PAYMENT WILL BE MADE FOR THIS WORK AND THE ENTIRE COST OF THIS WORK SHALL BE INCLUDED IN THE UNIT CONTRACT PRICE BID FOR THE SEVERAL PAY ITEMS.

TEMPORARY DRAINAGE AT END BENT

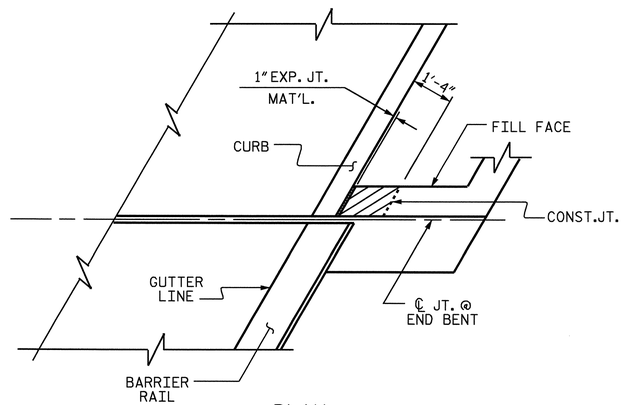

PLAN

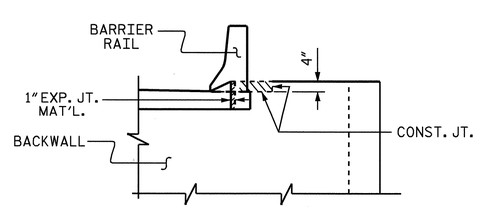

ELEVATION

BLOCKOUT IN WING WALL

NOTE: THE CONCRETE IN THE SHADED AREA OF THE WING SHALL BE POURED AFTER THE BARRIER RAIL IS CAST IF SLIP FORMING IS USED.

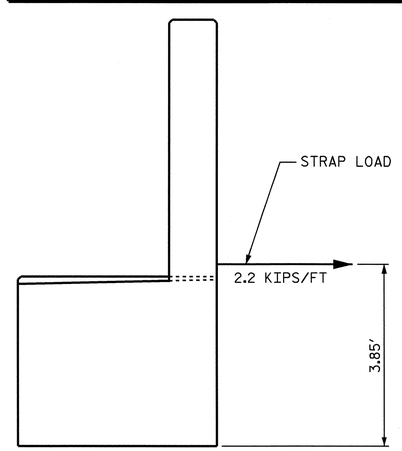

STRAP LOAD DETAIL

PROJECT NO. R-2719A
LENOIR COUNTY
STATION: 113+38.09-L-

SHEET 3 OF 3

STATE OF NORTH CAROLINA
DEPARTMENT OF TRANSPORTATION
RALEIGH

SUBSTRUCTURE
END BENT #2
(RIGHT LANE)

NORTH CAROLINA PROFESSIONAL SEAL 14045 ENGINEER TIMOTHY L. COGGINS
10/11/08

REVISIONS						SHEET NO.
NO.	BY:	DATE:	NO.	BY:	DATE:	S-164
1			3			TOTAL SHEETS
2			4			340

DRAWN BY : S.H. SOCKWELL DATE : 6/12/08
CHECKED BY : PEGGY PARISI DATE : 6/18/08

STR. #5

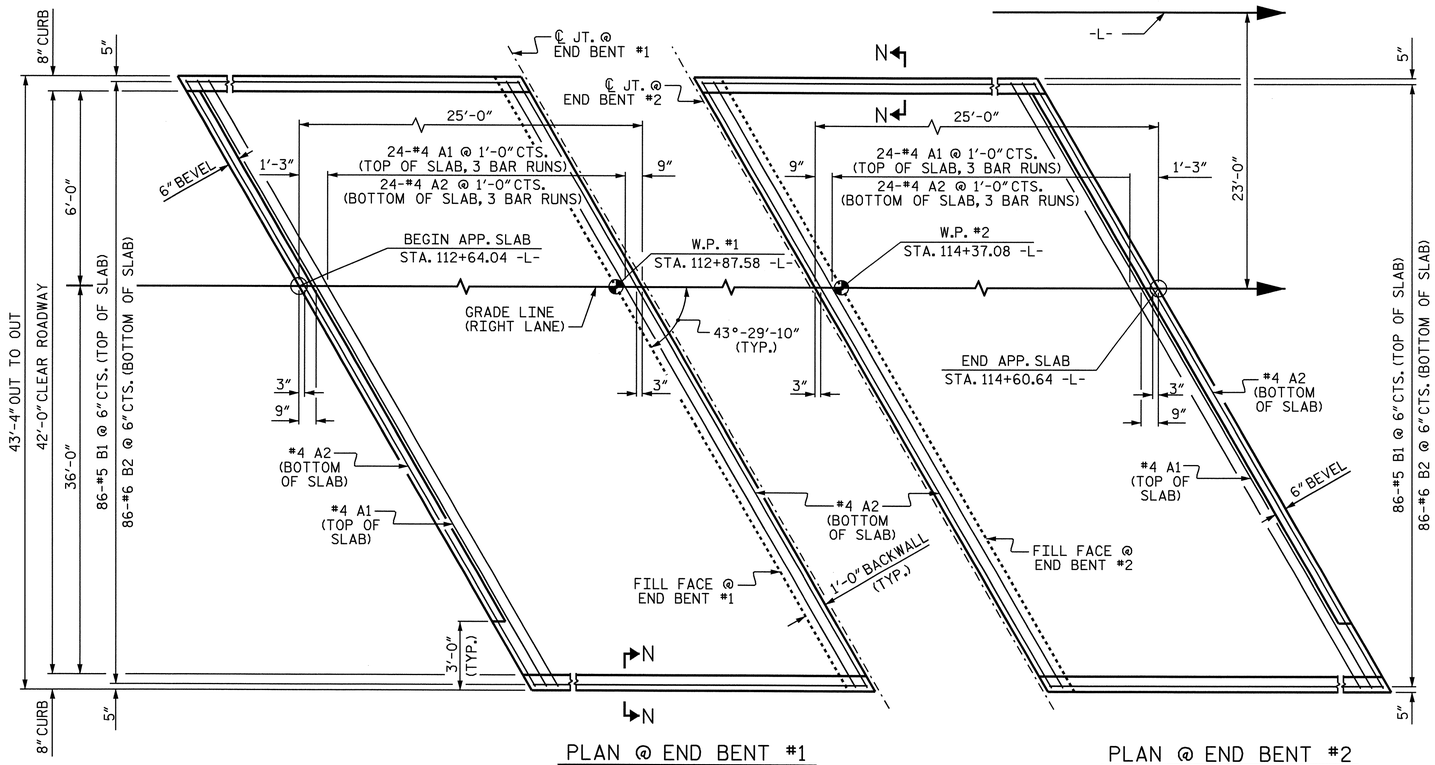

PLAN @ END BENT #1

PLAN @ END BENT #2

DIMENSIONS SHOWN ARE TYPICAL FOR BOTH APPROACH SLABS

NOTES

APPROACH SLAB SHALL NOT BE CONSTRUCTED PRIOR TO COMPLETION OF THE BRIDGE DECK.

AREA BETWEEN THE WINGWALL AND APPROACH SLAB SHALL BE GRADED TO DRAIN THE WATER AWAY FROM THE FILL FACE OF THE BRIDGE AND SHALL BE PAVED. SEE ROADWAY PLANS.

THE 6" COMP. A.B.C. SHALL BE FLUSH WITH THE ROADWAY END OF THE APPROACH SLAB AND SHALL EXTEND 1'-0" OUTSIDE EACH EDGE OF THE APPROACH SLAB.

THE CONTRACTOR MAY USE 4" TYPE B-25.0B ASPHALT CONCRETE BASE COURSE IN LIEU OF 6" COMP. A.B.C. IF THIS OPTION IS USED, THE BASE COURSE SHALL BE FLUSH WITH THE ROADWAY END OF THE APPROACH SLAB, AND THE WIDTH SHALL BE THE SAME AS THAT OF THE APPROACH SLAB.

THE CONTRACTOR MAY USE 5" CLASS "A" CONCRETE BASE IN LIEU OF 6" COMP. A.B.C. IF THIS OPTION IS USED, THE CONCRETE BASE SHALL BE FLUSH WITH THE ROADWAY END OF THE APPROACH SLAB, AND THE WIDTH SHALL BE THE SAME AS THAT OF THE APPROACH SLAB. THE CONCRETE SHALL BE FINISHED TO A SMOOTH SURFACE AND A LAYER OF 30 LB ROOFING FELT SHALL BE PLACED BETWEEN THE CONCRETE BASE AND THE APPROACH SLAB TO PREVENT BOND. THE APPROACH SLAB SHALL NOT BE CAST UNTIL THE CONCRETE BASE HAS REACHED AN AGE OF THREE CURING DAYS.

TEMPORARY DRAINAGE AND TEMPORARY BERM AND SLOPE DRAINS WILL BE PAID FOR UNDER THE LUMP SUM PRICE FOR BRIDGE APPROACH SLAB.

FOR BACKFILL MATERIAL, SEE MSE RETAINING WALL SPECIAL PROVISIONS.

WITH EVAZOTE JOINT SEAL

FOR EVAZOTE JOINT SEALS, SEE SPECIAL PROVISIONS.

THE NOMINAL UNCOMPRESSED SEAL WIDTH OF THE EVAZOTE JOINT SEAL SHALL BE 2½".

FOR ELASTOMERIC CONCRETE, SEE SPECIAL PROVISIONS.

BILL OF MATERIAL

APPROACH SLAB AT EB #1

BAR	NO.	SIZE	TYPE	LENGTH	WEIGHT
✱A1	75	#4	STR	22'-2"	1111
A2	78	#4	STR	22'-0"	1146
✱B1	86	#5	STR	23'-8"	2123
B2	86	#6	STR	24'-8"	3186
REINFORCING STEEL				LBS.	4332
✱EPOXY COATED REINFORCING STEEL				LBS.	3234
CLASS AA CONCRETE				C. Y.	40.9

APPROACH SLAB AT EB #2

BAR	NO.	SIZE	TYPE	LENGTH	WEIGHT
✱A1	75	#4	STR	22'-2"	1111
A2	78	#4	STR	22'-0"	1146
✱B1	86	#5	STR	23'-8"	2123
B2	86	#6	STR	24'-8"	3186
REINFORCING STEEL				LBS.	4332
✱EPOXY COATED REINFORCING STEEL				LBS.	3234
CLASS AA CONCRETE				C. Y.	40.9

SPLICE CHART

BAR SIZE	SPLICE LENGTH
#4 A1	2'-0"
#4 A2	1'-9"

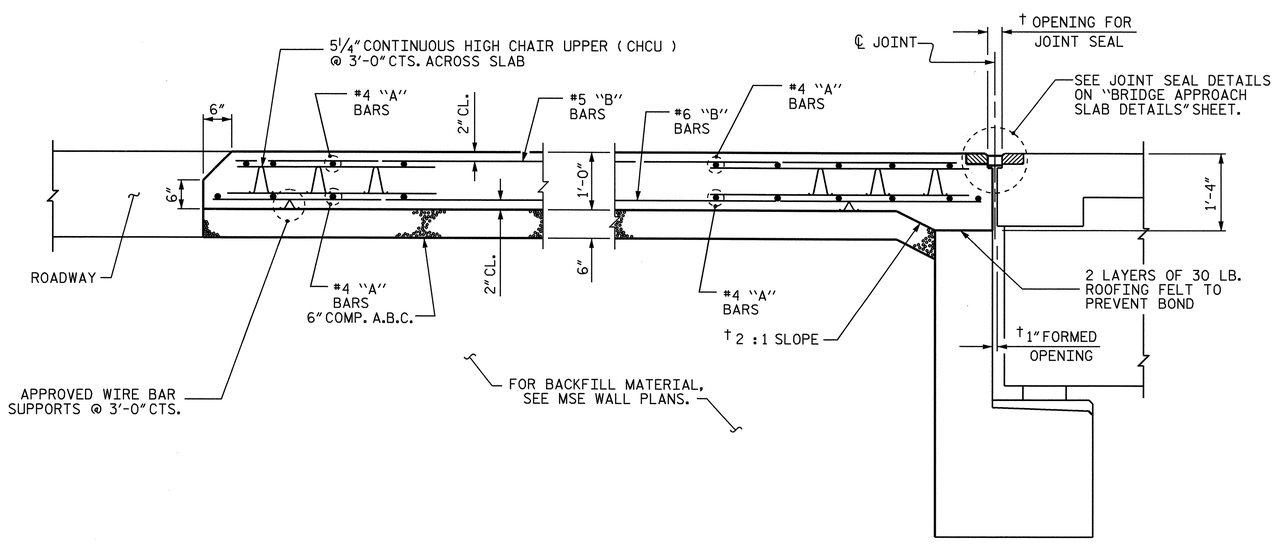

† NORMAL TO END BENT

SECTION THRU SLAB

SHOWING SECTION WITHOUT CONCRETE WEARING SURFACE

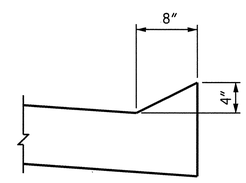

SECTION N-N

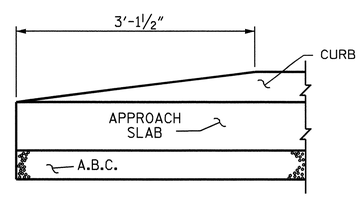

END OF CURB WITHOUT SHOULDER BERM GUTTER

PROJECT NO. R-2719A

LENOIR COUNTY

STATION: 113+38.09 -L-

SHEET 1 OF 2

STATE OF NORTH CAROLINA
DEPARTMENT OF TRANSPORTATION
RALEIGH

STANDARD

BRIDGE APPROACH SLAB FOR FLEXIBLE PAVEMENT

(RIGHT LANE)

NORTH CAROLINA PROFESSIONAL SEAL 14045 ENGINEER TIMOTHY M. COGGINS 10/11/08

REVISIONS						SHEET NO.
NO.	BY:	DATE:	NO.	BY:	DATE:	S-165
1			3			TOTAL SHEETS
2			4			340

ASSEMBLED BY: M.GUDLAUGSSON DATE : 03/2008
CHECKED BY : C.R. MCDUFFEE DATE : 05/2008

DRAWN BY : EEM 3/95
CHECKED BY : VAP 3/95

REV. 7/10/01 LES/RDR
REV. 5/7/03R RWW/JTE
REV. 5/1/06R KMM/GM

09-OCT-2008 11:53
R:\Structures\Str#5\Final Plans\R2719A_sd_as_05.dgn
druffin

STR. #5

STD. NO. BAS4 (SHT 6)

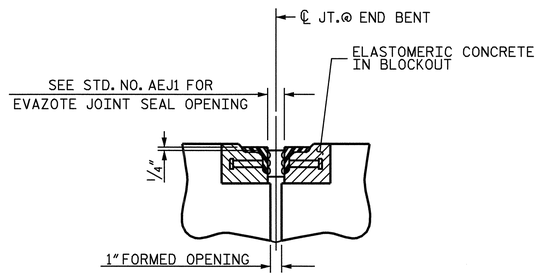

SECTION C-C
ARMORED EVAZOTE JOINT SEAL

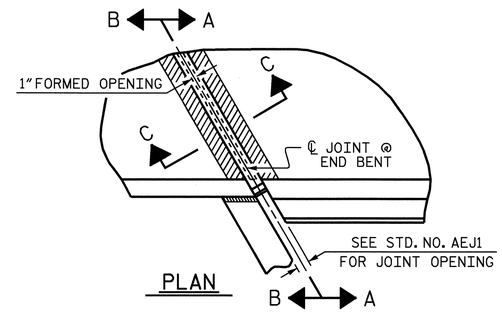

PLAN

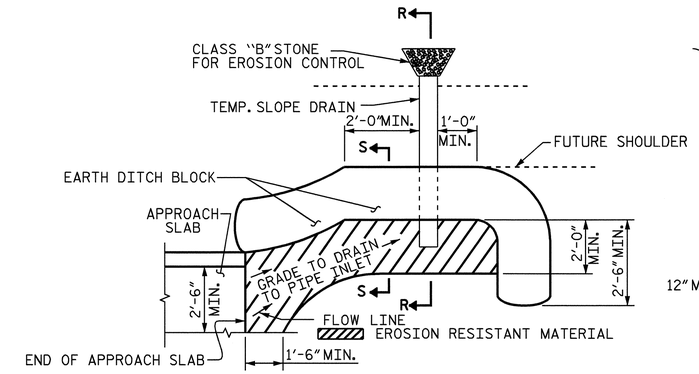

NOTE: IMMEDIATELY AFTER THE CONSTRUCTION OF THE APPROACH SLAB, THE CONTRACTOR SHALL PROVIDE TEMPORARY BERM AND SLOPE DRAIN. CONTRACTOR SHALL GRADE TO PIPE INLET AND PROVIDE EROSION RESISTANT MATERIAL AS SHOWN. THE EROSION RESISTANT MATERIAL SHALL BE EITHER 1) ASPHALT PLANT MIX, TYPE 1 OR TYPE 2, MIN. 2"DEPTH, 2) EROSION CONTROL MAT, OR 3) CONCRETE, AS DIRECTED BY THE ENGINEER. THE SLOPE DRAIN SHALL CONSIST OF A NON-PERFORATED TEMPORARY DRAINAGE PIPE, 12 INCHES IN DIAMETER.

PLAN VIEW

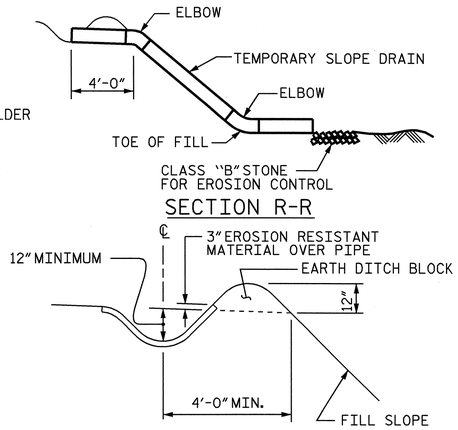

SECTION S-S

TEMPORARY BERM AND SLOPE DRAIN DETAILS

(TO BE USED WHEN SHOULDER BERM GUTTER IS REQUIRED)

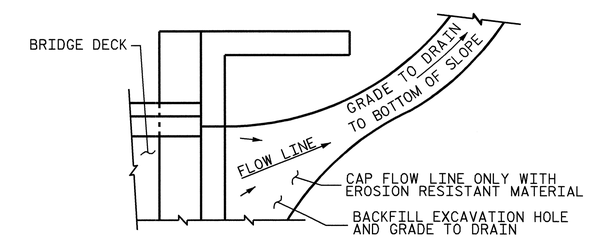

NOTE: IF THE APPROACH SLAB IS NOT CONSTRUCTED IMMEDIATELY AFTER THE BACKFILLING OF THE END BENT EXCAVATION, GRADE TO DRAIN TO THE BOTTOM OF THE SLOPE AND PROVIDE EROSION RESISTANT MATERIAL, SUCH AS FIBERGLASS ROVING OR AS DIRECTED BY THE ENGINEER TO PREVENT SOIL EROSION AND TO PROTECT THE AREA ADJACENT TO THE STRUCTURE. THE CONTRACTOR WILL BE REQUIRED TO REMOVE THESE MATERIALS PRIOR TO CONSTRUCTION OF THE APPROACH SLAB.

TEMPORARY DRAINAGE DETAIL

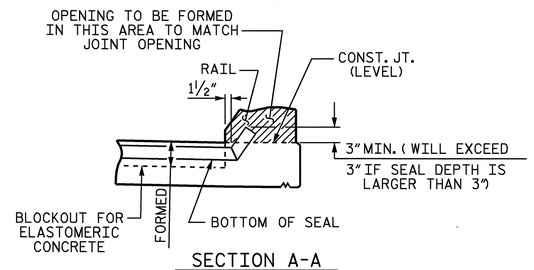

SECTION A-A

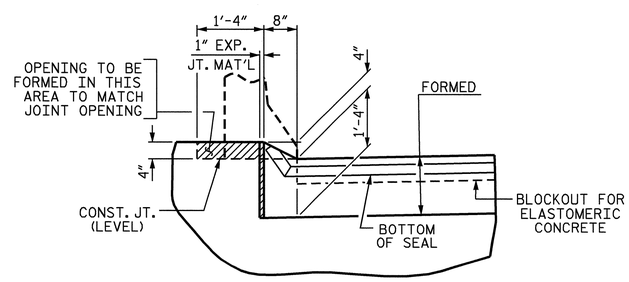

SECTION B-B

JOINT SEAL DETAILS @ END BENT

EVAZOTE JOINT SEAL TO BE CUT, HEAT WELDED AND TURNED UP PARALLEL TO SLOPED FACE OF THE BARRIER RAIL.

PROJECT NO. R-2719A
LENOIR COUNTY
STATION: 113+38.09 -L-

SHEET 2 OF 2

STATE OF NORTH CAROLINA
DEPARTMENT OF TRANSPORTATION
RALEIGH

STANDARD

BRIDGE APPROACH SLAB DETAILS

(RIGHT LANE)

NORTH CAROLINA PROFESSIONAL SEAL 14045 ENGINEER TIMOTHY L. COGGINS
10/14/08

REVISIONS						SHEET NO.
NO.	BY:	DATE:	NO.	BY:	DATE:	S-166
1			3			TOTAL SHEETS
2			4			340

ASSEMBLED BY : M.GUDLAUGSSON		DATE : 03/2008	
CHECKED BY : C.R. MCDUFFEE		DATE : 05/2008	
DRAWN BY : FCJ	11/88	REV. 10/17/00	RWW/LES
CHECKED BY : ARB	11/88	REV. 5/7/03	RWW/JTE
		REV. 5/1/06R	MAA/KMM

09-OCT-2008 10:49
R:\Structures\Str#5\Final Plans\R2719A_sd_as_05.dgn
nruffin

STR. #5 STD. NO. BAS10 (SHT 2)

F. A. PROJECT: STP-0224(12)

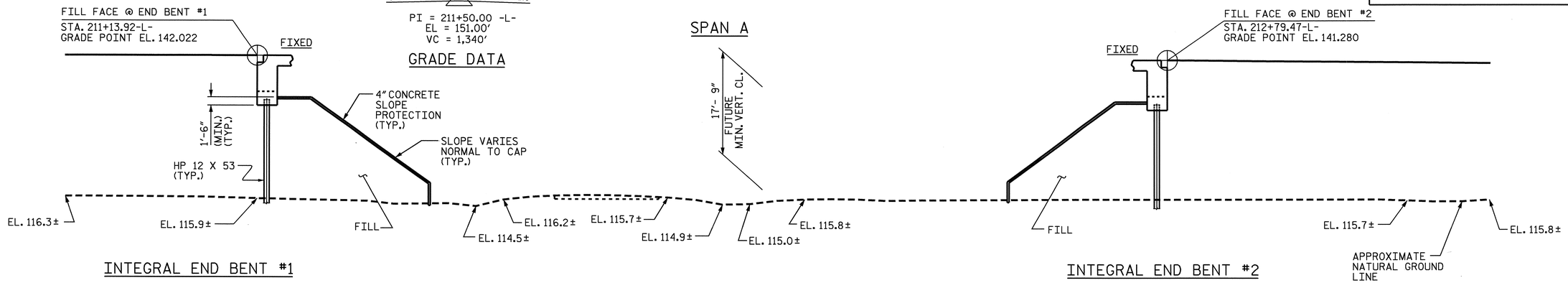

INTEGRAL END BENT #1

INTEGRAL END BENT #2

SECTION ALONG ℄ -L-

(END BENTS SHOWN AT RIGHT ANGLES)

HORIZONIAL CURVE DATA -L-

PI = 224+97.17 -L-
Δ = 61°-32'-05.9" (RT)
D = 1°-58'-32.6"
L = 3,114.556'
T = 1,726.52'
R = 2,900.00'

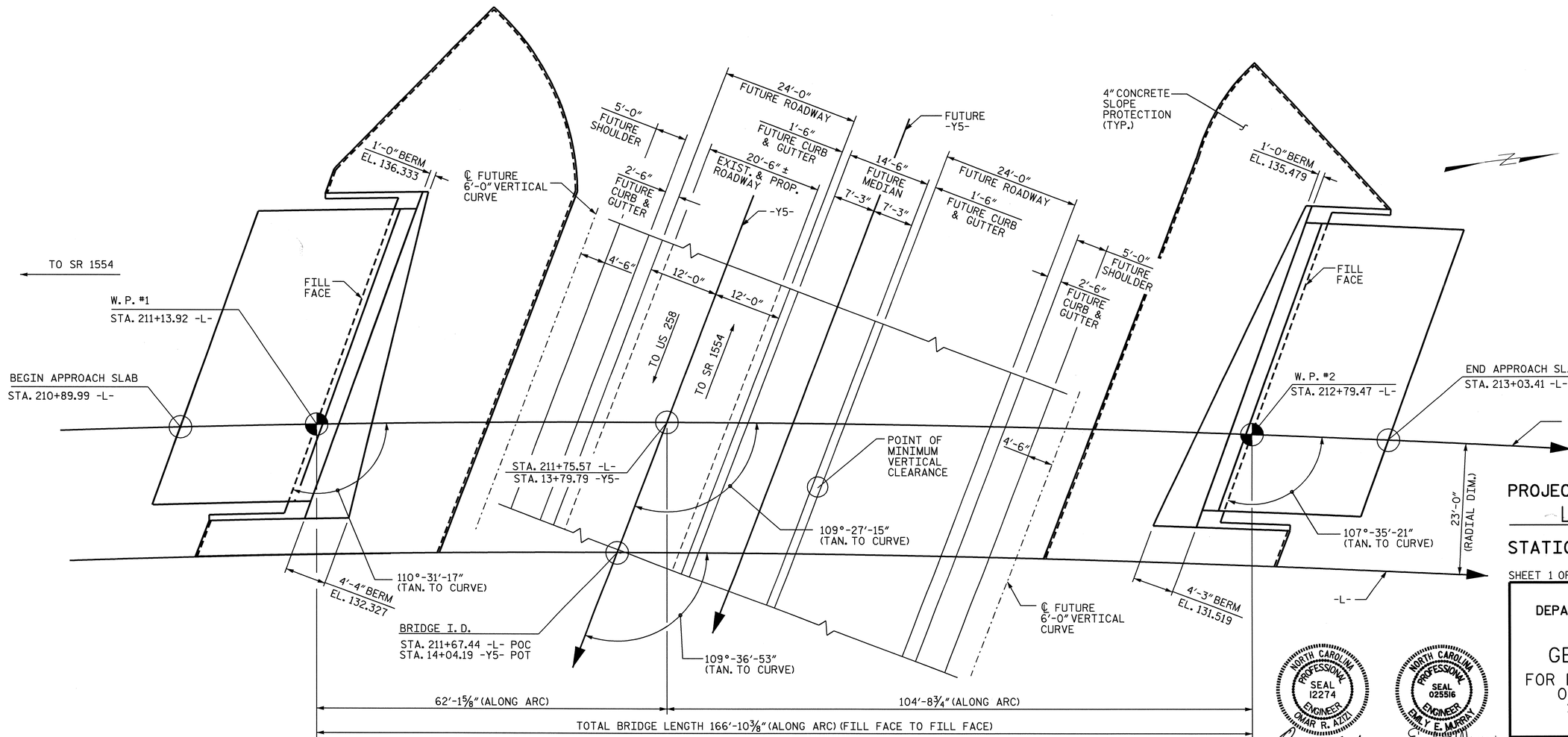

PLAN

(PILES NOT SHOWN FOR CLARITY)

PROJECT NO. R-2719A
LENOIR COUNTY
STATION: 211+67.44 -L-
14+04.19 -Y5-
SHEET 1 OF 4 BRIDGE NO. 196

STATE OF NORTH CAROLINA
DEPARTMENT OF TRANSPORTATION
RALEIGH

GENERAL DRAWING

FOR BRIDGE ON CRESCENT RD. OVER SR 1001 BETWEEN SR 1554 AND US 258 (LEFT LANE)

NORTH CAROLINA PROFESSIONAL SEAL 12274 ENGINEER OMAR R. AZIZ
Omar R Aziz 10-10-08

NORTH CAROLINA PROFESSIONAL SEAL 025516 ENGINEER EMILY E. MURRAY
Emily E Murray 10-10-08

REVISIONS							SHEET NO.
NO.	BY:	DATE:	NO.	BY:	DATE:		167
1			3				TOTAL SHEETS
2			4				340

DRAWN BY : PEGGY ADKINS DATE : 8-06
CHECKED BY : A.M. LEE DATE : 8-08

10-OCT-2008 11:19
J:\Structures\Finalplans\Str #6\R2719a_sd_Gd_06*.dgn
emurray

STR. #6

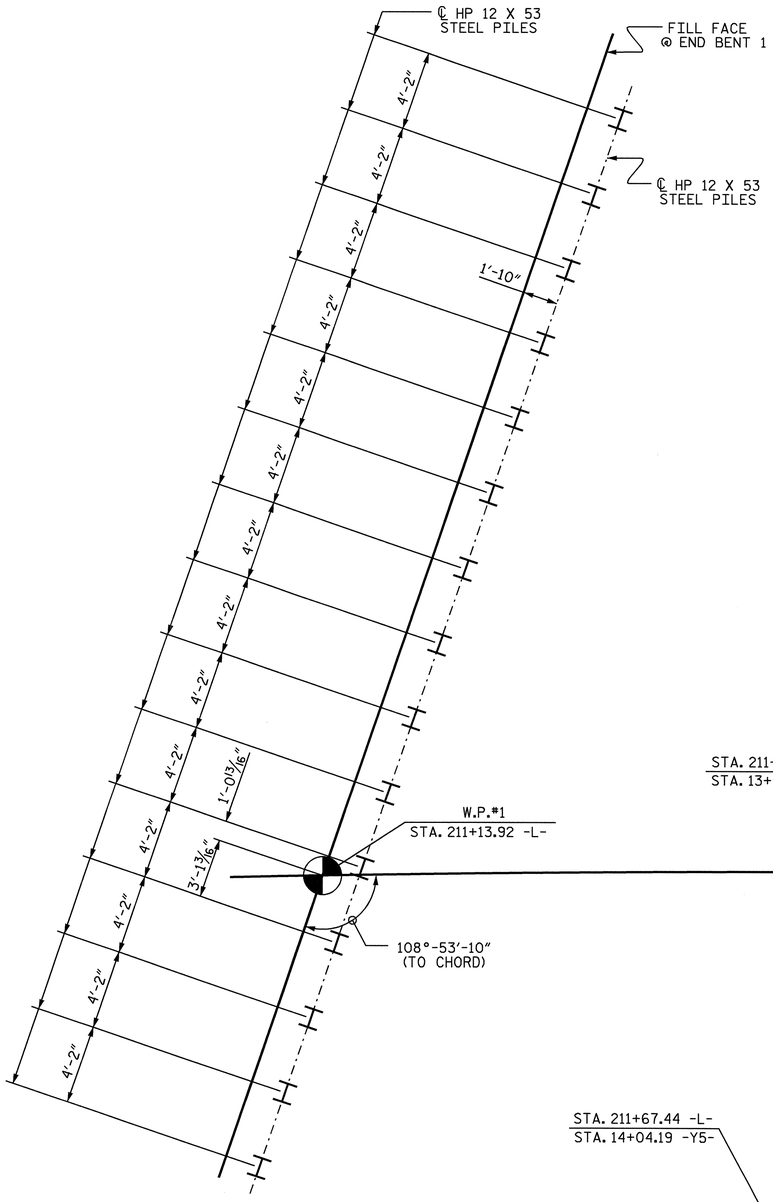

INTEGRAL
END BENT 1

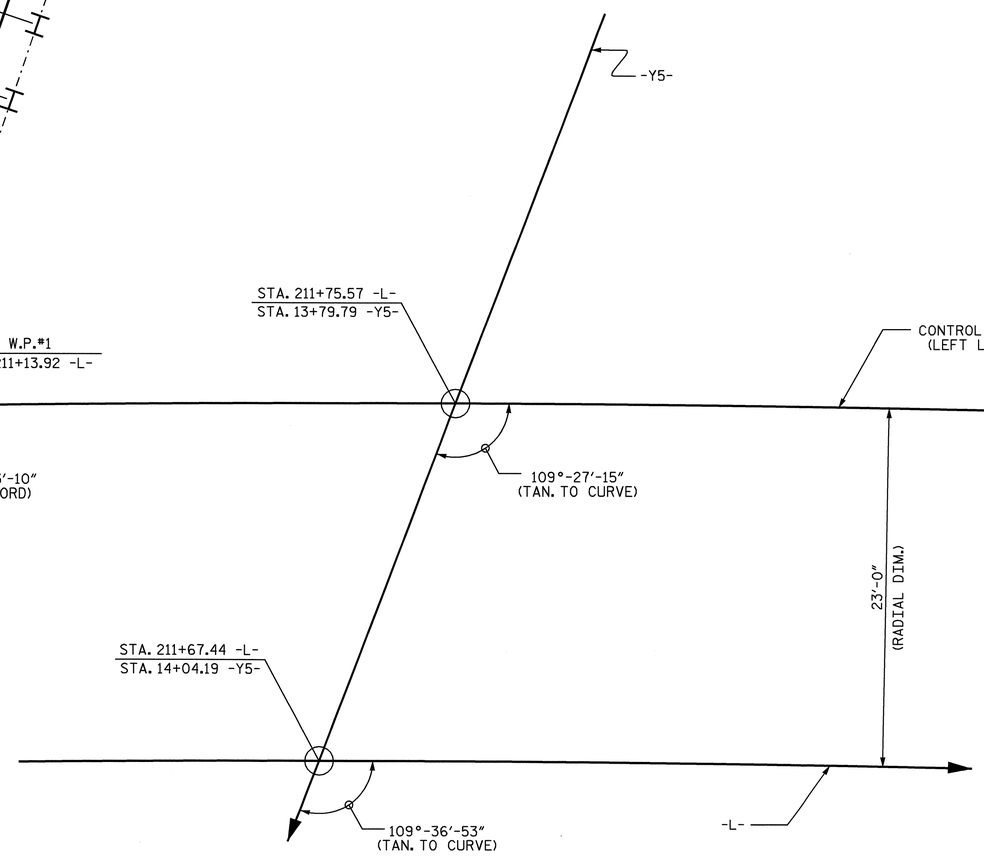

FOUNDATION LAYOUT

DIMENSIONS LOCATING PILES ARE SHOWN TO
PILE CENTERLINE AT BOTTOM OF CAP

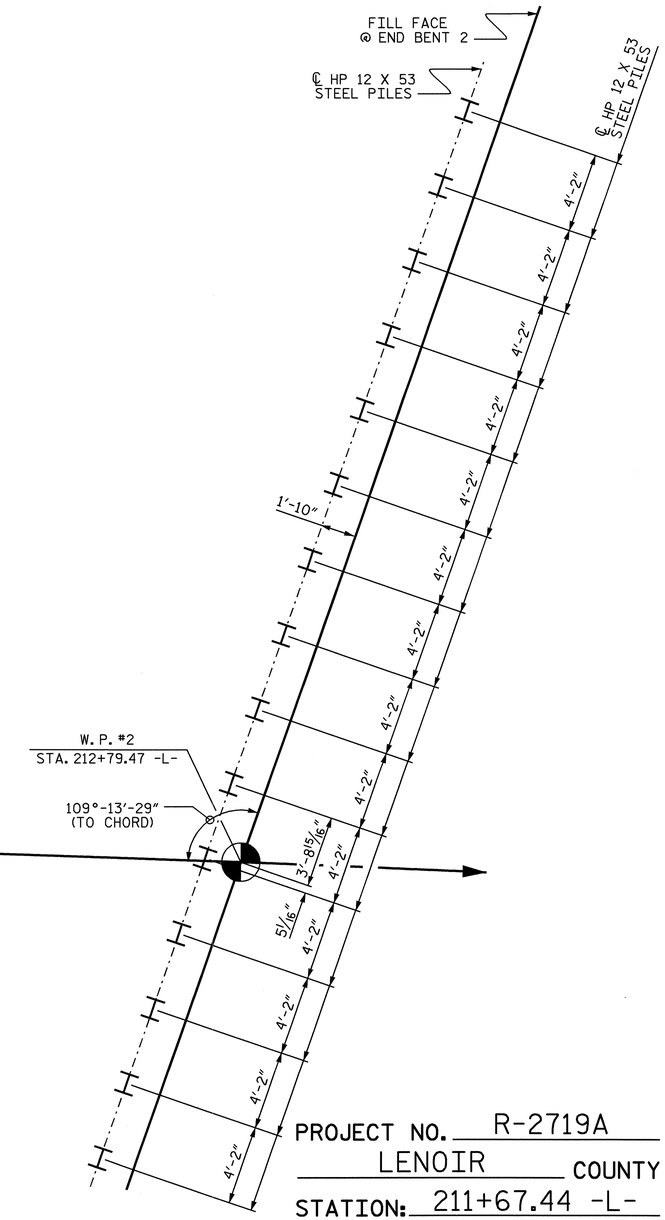

INTEGRAL
END BENT 2

PROJECT NO. R-2719A

LENOIR COUNTY

STATION: 211+67.44 -L-
14+04.19 -Y5-

SHEET 2 OF 4

STATE OF NORTH CAROLINA
DEPARTMENT OF TRANSPORTATION
RALEIGH

GENERAL DRAWING

FOR BRIDGE ON CRESCENT RD.
OVER SR 1001 BETWEEN
SR 1554 AND US 258

(LEFT LANE)

NORTH CAROLINA PROFESSIONAL SEAL 025516 ENGINEER EMILY E. MURRAY

10-10-08

REVISIONS						SHEET NO.
NO.	BY:	DATE:	NO.	BY:	DATE:	S-168
1			3			TOTAL SHEETS
2			4			346

DRAWN BY : B.N.BARODAWALA DATE : 8-12-08
CHECKED BY : A. M. LEE DATE : 9-08

08-OCT-2008 15:08
J:\Structures\Final plans\Str #6\R2719a_sd_Gd_06#.dgn
emurray

STR. #6

HORIZONIAL CURVE DATA -L-

PI = 224+97.17 -L-
Δ = 61°-32′-05.9″(RT)
D = 1°-58′-32.6″
L = 3,114.556′
T = 1,726.52′
R = 2,900.00′

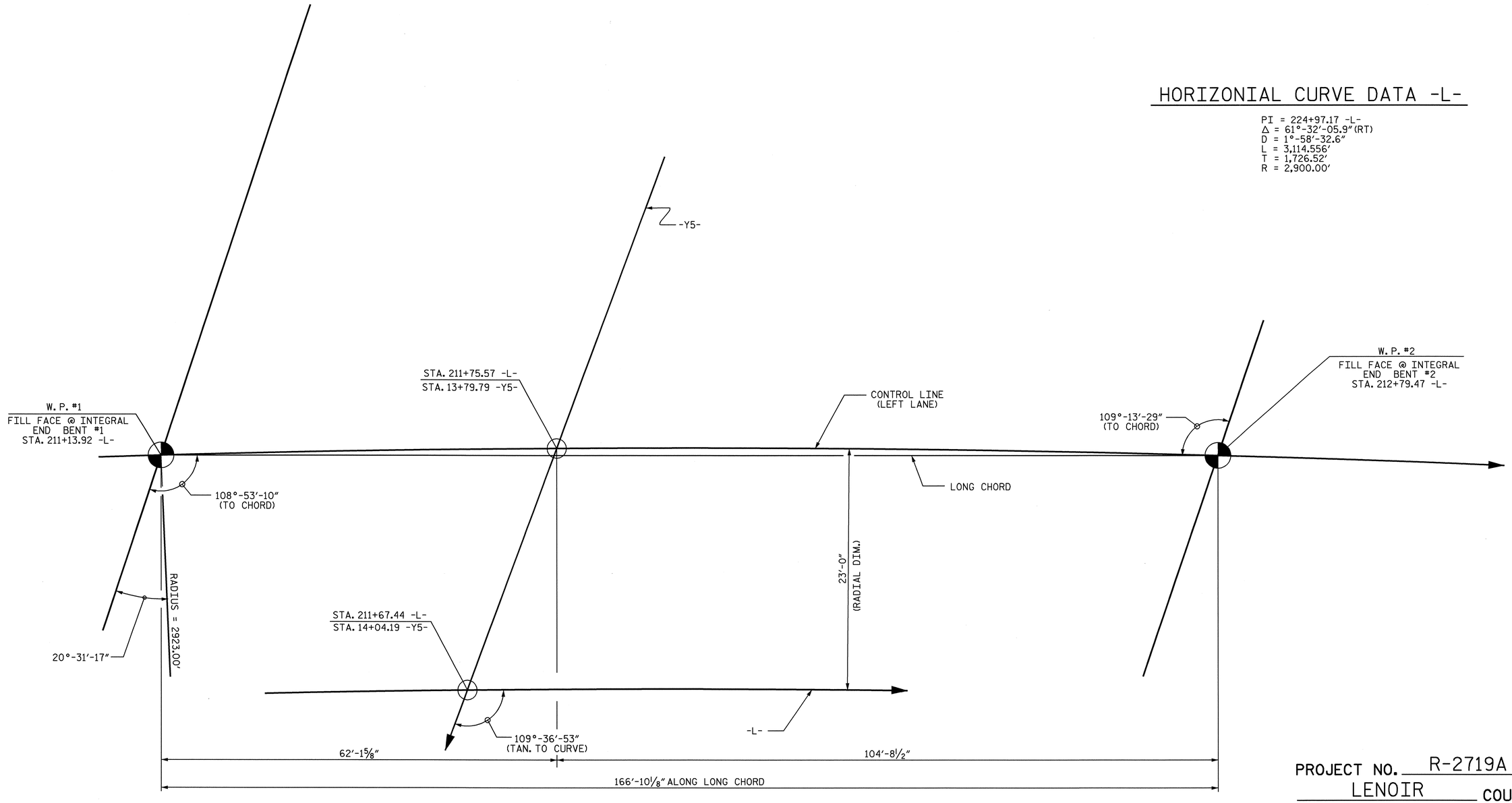

INTEGRAL
END BENT 1

INTEGRAL
END BENT 2

LONG CHORD LAYOUT

NOTE: END BENTS ARE NOT PARALLEL.

PROJECT NO. R-2719A
LENOIR COUNTY
STATION: 211+67.44 -L-
14+04.19 -Y5-
SHEET 3 OF 4

STATE OF NORTH CAROLINA
DEPARTMENT OF TRANSPORTATION
RALEIGH

GENERAL DRAWING
FOR BRIDGE ON CRESCENT RD.
OVER SR 1001 BETWEEN
SR 1554 AND US 258
(LEFT LANE)

NORTH CAROLINA PROFESSIONAL SEAL 025516 ENGINEER EMILY E. MURRAY
Emily E. Murray
10-10-08

REVISIONS						SHEET NO.
NO.	BY:	DATE:	NO.	BY:	DATE:	S-169
1			3			TOTAL SHEETS
2			4			340

DRAWN BY : B.N.BARODAWALA DATE : 8-12-08
CHECKED BY : A.M. LEE DATE : 9-08

08-OCT-2008 15:08
J:\Structures\Final plans\Str #6\R2719a_sd_Gd_06#.dgn
emurray

STR. #6

BM-H RR SPIKE IN 30" OAK TREE, STA. 200+12 -L-, 266' RT, ELEV 120.73'.

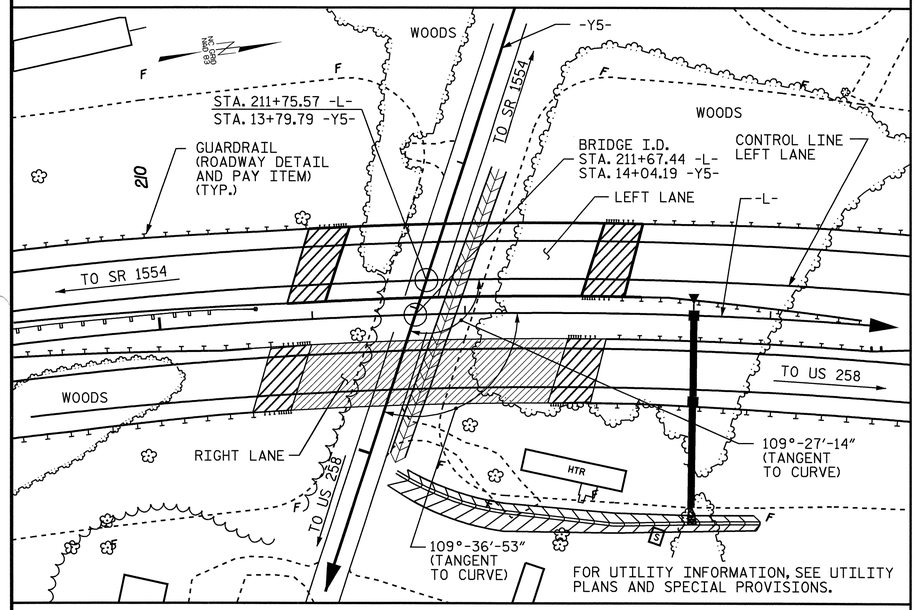

LOCATION SKETCH

NOTES:

ASSUMED LIVE LOAD = HS20 OR ALTERNATE LOADING, EXCEPT THE GIRDERS HAVE BEEN DESIGNED FOR HS25.

THIS BRIDGE HAS BEEN DESIGNED BY THE STRENGTH DESIGN METHOD AS SPECIFIED IN AASHTO STANDARD SPECIFICATIONS.

THIS BRIDGE HAS BEEN DESIGNED IN ACCORDANCE WITH THE REQUIREMENTS OF THE AASHTO STANDARD SPECIFICATIONS FOR SEISMIC DESIGN OF HIGHWAY BRIDGES FOR SEISMIC PERFORMANCE CATEGORY A.

FOR OTHER DESIGN DATA AND GENERAL NOTES, SEE SHEET SN.

FOR EROSION CONTROL MEASURES SEE EROSION CONTROL PLANS.

ALL STRUCTURAL STEEL SHALL BE AASHTO M270 GRADE 50W.

REMOVABLE FORMS MAY BE USED IN LIEU OF METAL STAY-IN-PLACE FORMS IN ACCORDANCE WITH ARTICLE 420-3 OF THE STANDARD SPECIFICATIONS.

FOR MAINTENANCE AND PROTECTION OF TRAFFIC BENEATH PROPOSED STRUCTURE, SEE SPECIAL PROVISIONS.

THE CONTRACTOR SHALL PROVIDE INDEPENDENT ASSURANCE SAMPLES OF REINFORCING STEEL AS FOLLOWS: FOR PROJECTS REQUIRING UP TO 400 TONS OF REINFORCING STEEL, ONE 30 INCH SAMPLE OF EACH SIZE BAR USED, AND FOR PROJECTS REQUIRING OVER 400 TONS OF REINFORCING STEEL, TWO 30 INCH SAMPLES OF EACH SIZE BAR USED. THE BARS FROM WHICH THE SAMPLES ARE TAKEN MUST THEN BE SPLICED WITH REPLACEMENT BARS OF THE SIZE AND LENGTH OF THE SAMPLE, PLUS A MINIMUM LAP SPLICE OF THIRTY BAR DIAMETERS.

NEEDLE BEAMS WILL NOT BE ALLOWED UNLESS OTHERWISE CALLED FOR ON THE PLANS OR APPROVED BY THE ENGINEER.

FOR SUBMITTAL OF WORKING DRAWINGS, SEE SPECIAL PROVISIONS.

FOR FALSEWORK AND FORMWORK, SEE SPECIAL PROVISIONS.

FOR CRANE SAFETY, SEE SPECIAL PROVISIONS.

FOR GROUT FOR STRUCTURES, SEE SPECIAL PROVISIONS.

FOR SHIPPING STEEL STRUCTURAL MEMBERS, SEE SPECIAL PROVISIONS.

DRIVE PILES AT END BENT NO. 1 AND END BENT NO. 2 TO A REQUIRED BEARING CAPACITY OF 140 TONS PER PILE. THE REQUIRED BEARING CAPACITY IS EQUAL TO THE ALLOWABLE BEARING CAPACITY WITH A MINIMUM FACTOR OF SAFETY OF TWO.

THE ALLOWABLE BEARING CAPACITY FOR PILES AT END BENT NO. 1 AND END BENT NO. 2 IS 70 TONS PER PILE.

OBSERVE A ONE MONTH WAITING PERIOD AFTER CONSTRUCTING THE EMBANKMENT, END BENT AND REINFORCED BRIDGE APPROACH FILL, IF APPLICABLE, BEFORE BEGINNING APPROACH SLAB CONSTRUCTION AT END BENT NO. 1 AND END BENT NO. 2.

TESTING PILES WITH THE PILE DRIVING ANALYZER (PDA) DURING DRIVING, RESTRIKING OR REDRIVING MAY BEREQUIRED. THE ENGINEER WILL DETERMINE THE NEED FOR PDA TESTING. FOR PILE DRIVING ANALYZER, SEE SPECIAL PROVISIONS.

FOR FAA REQUIREMENTS, SEE ROADWAY SPECIAL PROVISIONS.

TOTAL BILL OF MATERIAL

	PDA TESTING	PDA ASSISTANCE	REINFORCED CONCRETE DECK SLAB	GROOVING BRIDGE FLOORS	CLASS A CONCRETE	BRIDGE APPROACH SLABS	REINFORCING STEEL	STRUCTURAL STEEL	HP 12 X 53 STEEL PILES		PILE REDRIVES	CONCRETE BARRIER RAIL	4" SLOPE PROTECTION	EVAZOTE JOINT SEALS
	EACH	EACH	SQ.FT.	SQ.FT.	CU.YDS.	LUMP SUM	LBS.	APPROX. LBS.	NO.	LIN.FT.	EACH	LIN.FT.	SQ. YD.	LUMP SUM
SUPERSTRUCTURE			8552	9534		LUMP SUM		350,373				330.21		LUMP SUM
END BENT NO.1					28.4		5816		15	1200			326	
END BENT NO.2					28.4		5841		15	1200			293	
TOTAL	1	1	8552	9534	56.8	LUMP SUM	11657	350,373	30	2400	20	330.21	619	LUMP SUM

PROJECT NO. R-2719A
LENOIR COUNTY
STATION: 211+67.44 -L-
14+04.19 -Y5-
SHEET 4 OF 4

STATE OF NORTH CAROLINA
DEPARTMENT OF TRANSPORTATION
RALEIGH

GENERAL DRAWING
FOR BRIDGE ON CRESCENT RD.
OVER SR 1001 BETWEEN
SR 1554 AND US 258
(LEFT LANE)

NORTH CAROLINA PROFESSIONAL SEAL 025516 ENGINEER EMILY E. MURRAY
Emily E. Murray
10-10-08

REVISIONS						SHEET NO.
NO.	BY:	DATE:	NO.	BY:	DATE:	S-170
1			3			TOTAL SHEETS
2			4			340

DRAWN BY : B.N.BARODAWALA DATE : 8-13-08
CHECKED BY : A.M. LEE DATE : 9-08

08-OCT-2008 15:21
J:\Structures\Final plans\Str #6\R2719a_sd_Gd_06#.dgn
emurray

STR. #6

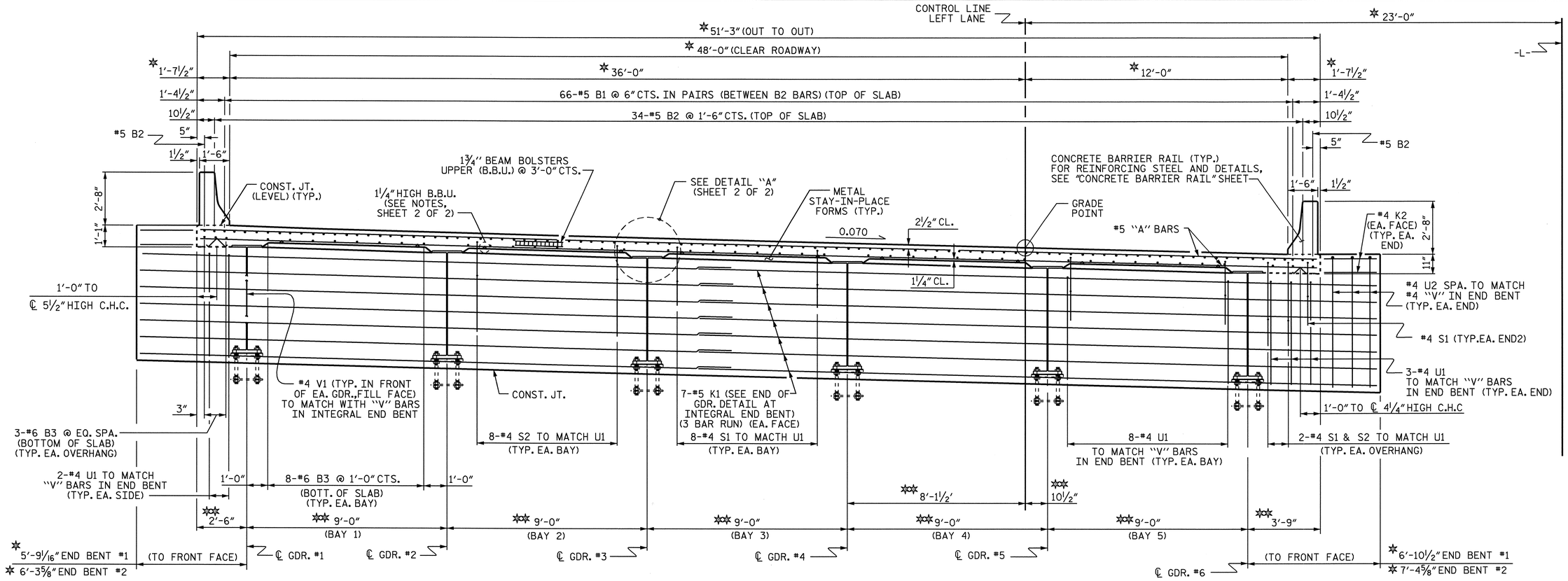

TYPICAL SECTION @ INTEGRAL END BENT

✱ RADIAL DIMENSION
✱✱ RADIAL DIMENSION THRU WORKPOINT

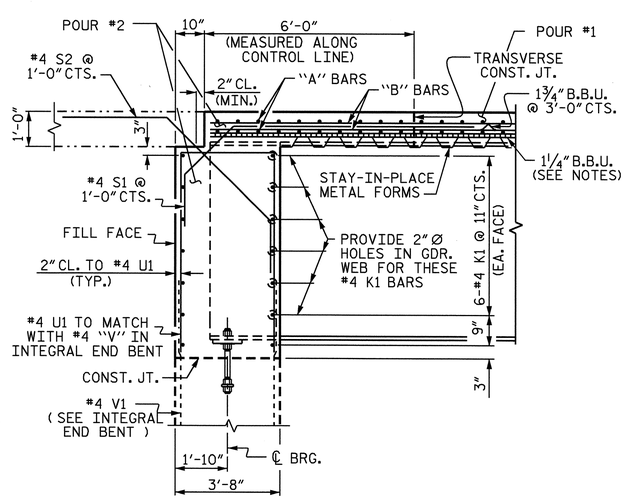

END OF GIRDER DETAIL AT INTEGRAL END BENT

✱ DIAMETER OF HOLES IN WEB MAY BE INCREASED TO ACCOMODATE SKEW

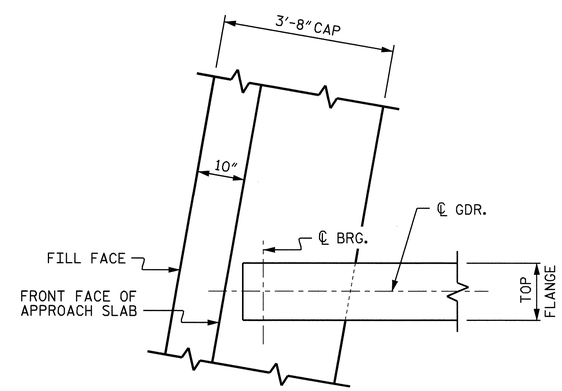

PLAN OF GIRDER AT INTEGRAL END BENT

PROJECT NO. R-2719A
LENOIR COUNTY
STATION: 211+67.44 -L-

SHEET 1 OF 2

STATE OF NORTH CAROLINA
DEPARTMENT OF TRANSPORTATION
RALEIGH

SUPERSTRUCTURE

TYPICAL SECTION

(LEFT LANE)

NORTH CAROLINA PROFESSIONAL SEAL 025516 ENGINEER EMILY E. MURRAY
Emily E. Murray 10-10-08

REVISIONS						SHEET NO.
NO.	BY:	DATE:	NO.	BY:	DATE:	S-171
1			3			TOTAL SHEETS
2			4			340

DRAWN BY : B.N.BARODAWALA DATE : 5-1-08
CHECKED BY : A SORSENGINH DATE : 6-08

10-OCT-2008 14:36
J:\Structures\Finalplans\Str #6\R2719a_sd_ts_06*.dgn
emurray

STR. #6

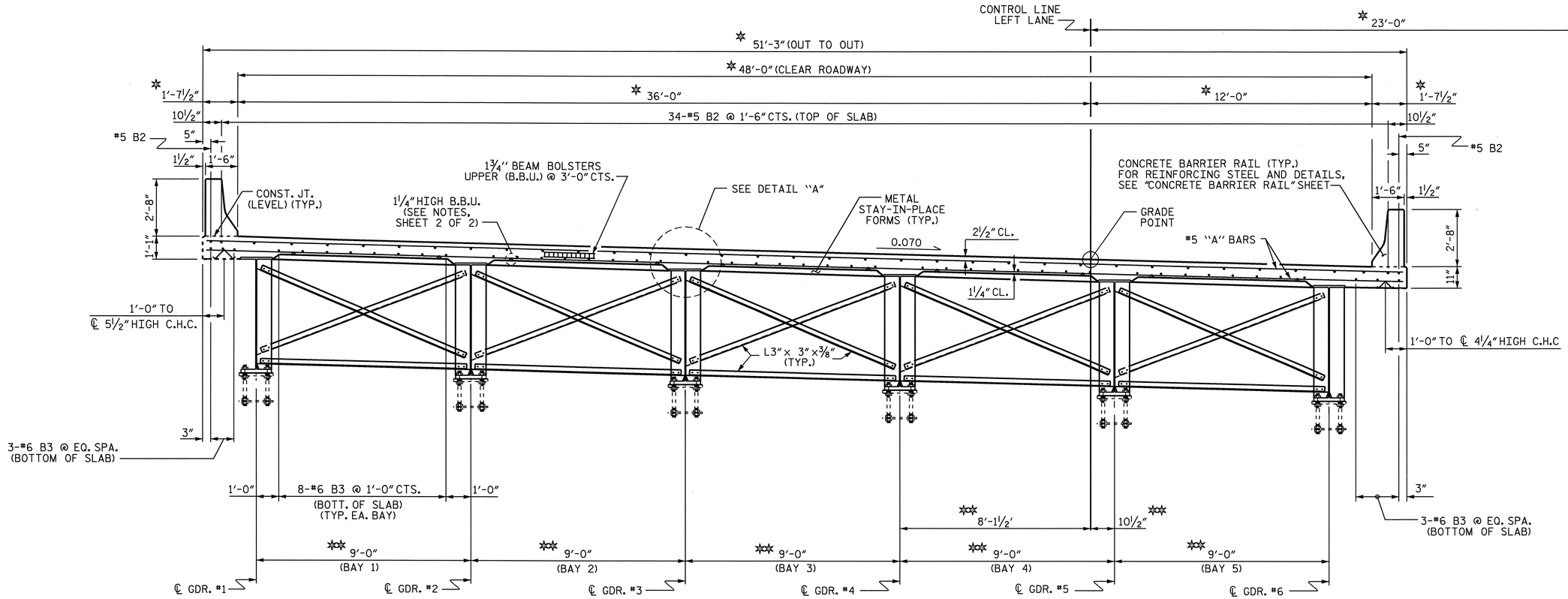

TYPICAL SECTION

(SHOWING INTERMEDIATE DIAPHRAGMS)

✲ RADIAL DIMENSION

✲✲ RADIAL DIMENSION THRU WORKPOINT

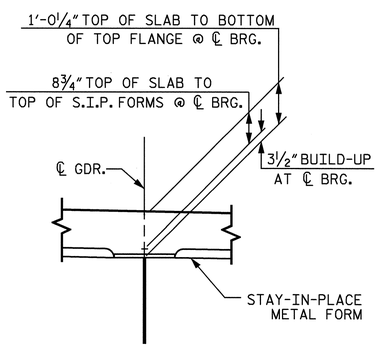

DETAIL "A"

NOTES

PROVIDE 1¼" HIGH BEAM BOLSTERS UPPER AT 4'-0" CTS. ATOP THE METAL STAY-IN-PLACE FORMS TO SUPPORT THE BOTTOM MAT OF "A" BARS. WHEN USING REMOVABLE FORMS, PROVIDE CONTINUOUS HIGH CHAIRS FOR METAL DECK (C.H.C.M.) @ 4'-0" CTS. WITH A HEIGHT TO SUPPORT THE BOTTOM MAT OF "A" BARS A CLEAR DISTANCE OF 2½" ABOVE THE TOP OF THE REMOVABLE FORM.

PREVIOUSLY CAST CONCRETE IN THE SLAB SHALL HAVE ATTAINED A MINIMUM COMPRESSIVE STRENGTH OF 3000 PSI BEFORE ADDITIONAL CONCRETE IS CAST IN THE UNIT.

BARRIER RAIL SHALL NOT BE CAST UNTIL ALL SLAB CONCRETE HAS BEEN CAST AND HAS REACHED A MINIMUM COMPRESSIVE STRENGTH OF 3000 PSI.

STRUCTURAL STEEL ERECTION IN SHALL BE COMPLETE BEFORE FALSEWORK OR FORMS ARE PLACED ON THE UNIT.

THE CONTRACTOR MAY, WHEN NECESSARY, PROPOSE A SCHEME FOR AVOIDING INTERFERENCE BETWEEN METAL STAY-IN-PLACE FORM SUPPORTS OR FORMS AND BEAM/GIRDER STIFFENERS OR CONNECTOR PLATES. THE PROPOSAL SHALL BE INDICATED, AS APPROPRIATE, ON EITHER THE STEEL WORKING DRAWINGS OR THE METAL STAY-IN-PLACE FORM WORKING DRAWINGS.

PROJECT NO. R-2719A
LENOIR COUNTY
STATION: 211+67.44 -L-

SHEET 2 OF 2

STATE OF NORTH CAROLINA
DEPARTMENT OF TRANSPORTATION
RALEIGH

SUPERSTRUCTURE

TYPICAL SECTION

(LEFT LANE)

NORTH CAROLINA PROFESSIONAL SEAL 025516 ENGINEER EMILY E. MURRAY
10-10-08

REVISIONS						SHEET NO.
NO.	BY:	DATE:	NO.	BY:	DATE:	S-172
1			3			TOTAL SHEETS
2			4			340

DRAWN BY : B.N.BARODAWALA DATE : 5-1-08
CHECKED BY : A SORSENGINH DATE : 6-08

08-OCT-2008 15:12
J:\Structures\Final plans\Str #6\R2719a_sd_ts_06*.dgn
emurray

STR. #6

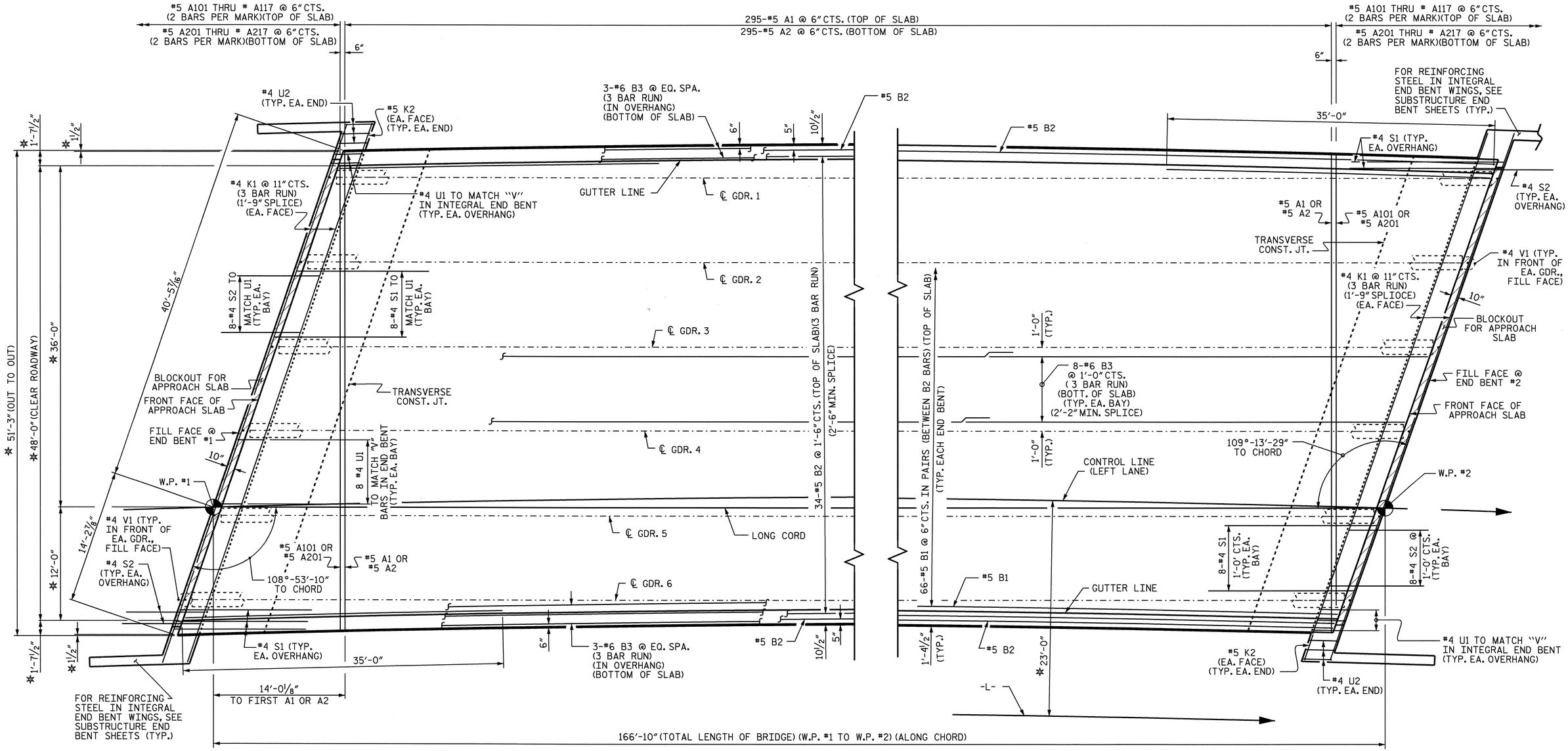

PLAN OF SPAN

✱ RADIAL DIMENSION

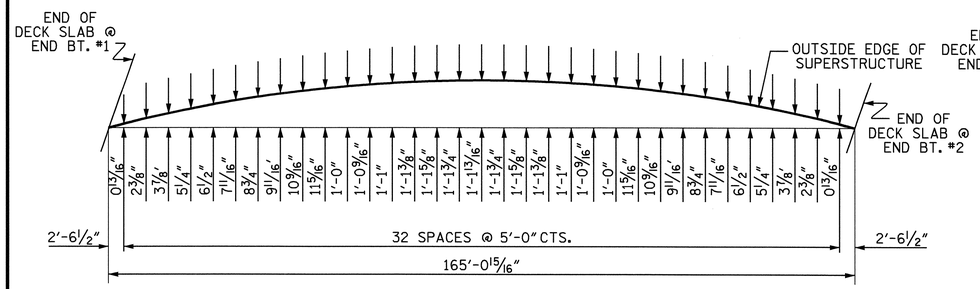

ARC OFFSET

LEFT SIDE

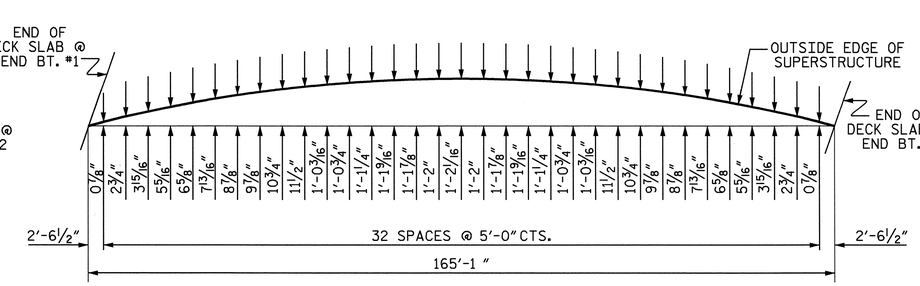

ARC OFFSET

RIGHT SIDE

NORTH CAROLINA PROFESSIONAL SEAL 025516 ENGINEER EMILY E. MURRAY

Emily E. Murray 10-10-08

PROJECT NO. R-2719A

LENOIR COUNTY

STATION: 211+67.44 -L-

STATE OF NORTH CAROLINA
DEPARTMENT OF TRANSPORTATION
RALEIGH

SUPERSTRUCTURE

PLAN OF SPAN

(LEFT LANE)

REVISIONS						SHEET NO.
NO.	BY:	DATE:	NO.	BY:	DATE:	S-173
1			3			TOTAL SHEETS
2			4			340

DRAWN BY : B.N.BARODAWALA DATE : 5-1-08
CHECKED BY : A SORSENGINH DATE : 6-08

01-OCT-2008 12:43
R:\Structures\Final plans\Str #6\R2719a_sd_S_06#.dgn
emurray

STR. #6

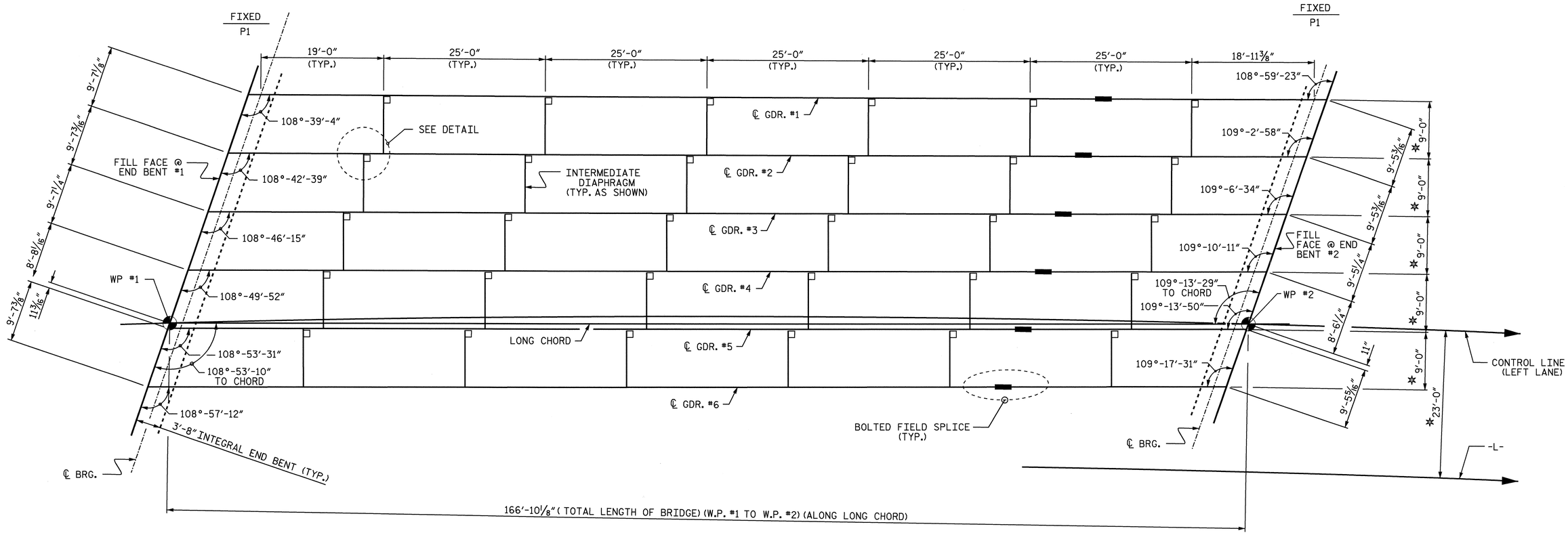

FRAMING PLAN

* RADIAL DIMENSION

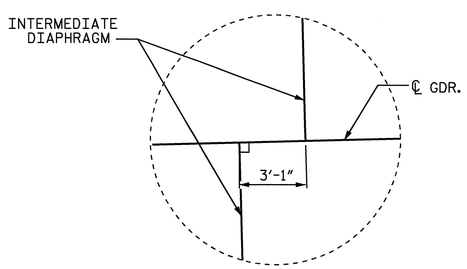

DETAIL

PROJECT NO. R-2719A

LENOIR COUNTY

STATION: 211+67.44 -L-

STATE OF NORTH CAROLINA
DEPARTMENT OF TRANSPORTATION
RALEIGH

SUPERSTRUCTURE

FRAMING PLAN

(LEFT LANE)

NORTH CAROLINA PROFESSIONAL SEAL 025516 ENGINEER EMILY E. MURRAY

Emily E. Murray 10-10-08

REVISIONS						SHEET NO.
NO.	BY:	DATE:	NO.	BY:	DATE:	S-174
1			3			TOTAL SHEETS
2			4			348

DRAWN BY : B.N.BARODAWALA DATE : 5-12-08
CHECKED BY : A SORSENGINH DATE : 6-08

01-OCT-2008 12:47
R:\Structures\Final plans\Str *6\R2719a_sd_FP_06*.dgn
emurray

STR. #6

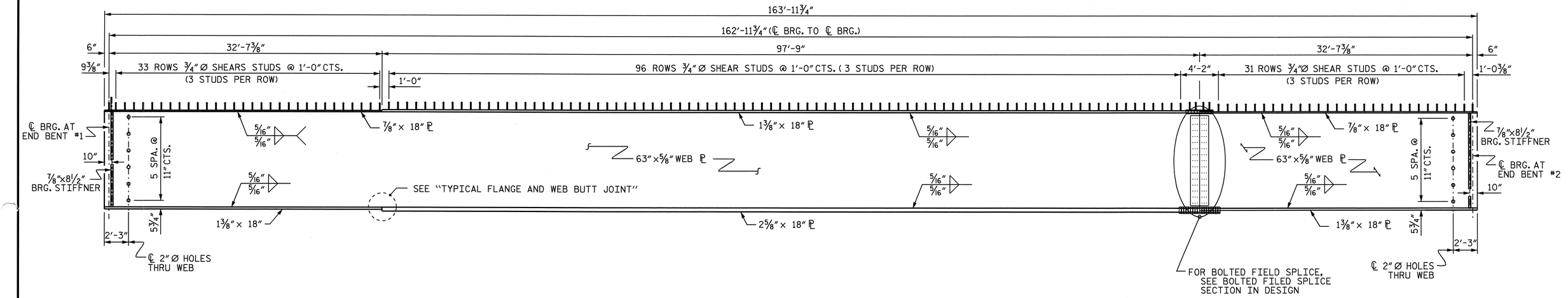

GIRDER ELEVATION

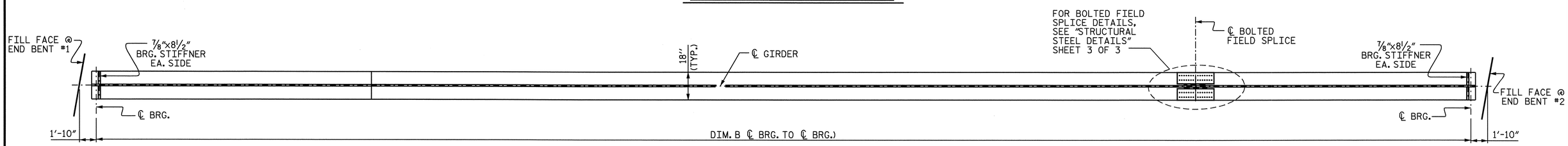

BOTTOM FLANGE DETAIL

(FOR CLARITY, INTERMEDIATE DIAPHRAGMS NOT SHOWN)
INTERIOR GIRDER SHOWN, EXTERIOR GIRDER SIMILAR,
EXCEPT NO CONNECTOR PLATES SHALL BE PLACED ON THE OUTSIDE OF THE WEB

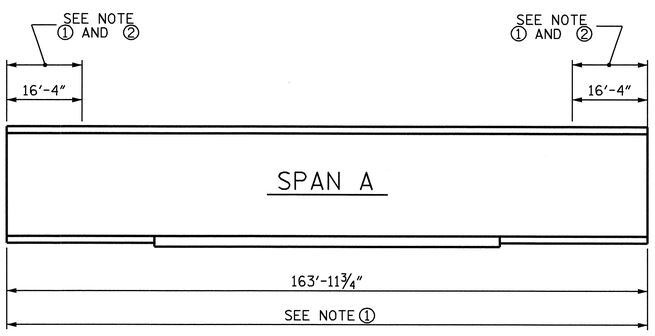

GIRDER MAKE UP

FOR CHARPY V-NOTCH TEST

NOTE ①: CHARPY V-NOTCH TESTS ARE REQUIRED FOR TOP FLANGE PLATES WHICH FALL WITHIN THE LIMITS SHOWN, ALL BOTTOM FLANGE PLATES, ALL WEB PLATES, AND SPLICE PLATES. IF A PERMITTED SHOP FLANGE SPLICE IS NOT USED, CHARPY V-NOTCH TESTS WILL BE REQUIRED FOR THE ENTIRE FLANGE PLATE. FOR CHARPY V-NOTCH TESTS, SEE ARTICLE 1072-9 OF THE STANDARD SPECIFICATIONS.

NOTE ②: NO WELDING OF FORMS OR FALSEWORK TO THE TOP FLANGE WILL BE PERMITTED IN THIS REGION.

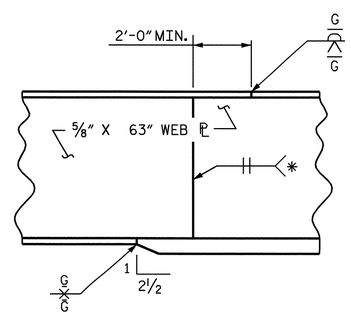

TYPICAL FLANGE AND WEB BUTT JOINT

* GRIND SMOOTH AND FLUSH ON OUTSIDE OF EXTERIOR GIRDERS

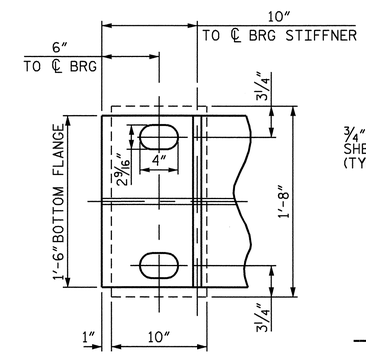

END OF GIRDER DETAIL

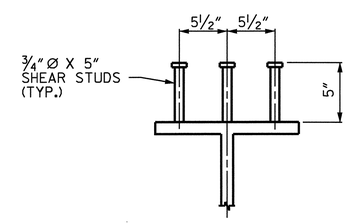

SHEAR STUD DETAIL

PROJECT NO. R-2719A
LENOIR COUNTY
STATION: 211+67.44 -L-

SHEET 1 OF 3

STATE OF NORTH CAROLINA
DEPARTMENT OF TRANSPORTATION
RALEIGH

SUPERSTRUCTURE

STRUCTURAL STEEL DETAILS

(LEFT LANE)

NORTH CAROLINA PROFESSIONAL SEAL 025516 ENGINEER EMILY E. MURRAY
10-10-08

REVISIONS						SHEET NO.
NO.	BY:	DATE:	NO.	BY:	DATE:	S-175
1			3			TOTAL SHEETS
2			4			340

DRAWN BY : B.N.BARODAWALA DATE : 5-12-08
CHECKED BY : A SORSENGINH DATE : 6-08

10-OCT-2008 10:06
J:\Structures\Final plans\Str #6\R2719a_sd_ss_06#.dgn
emurray

STR. #6

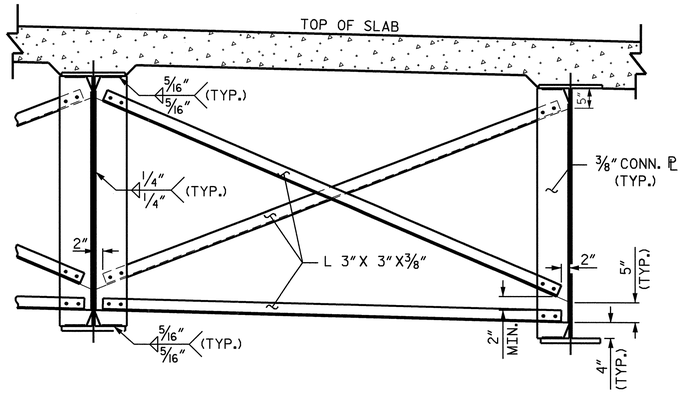

INTERMEDIATE DIAPHRAGM

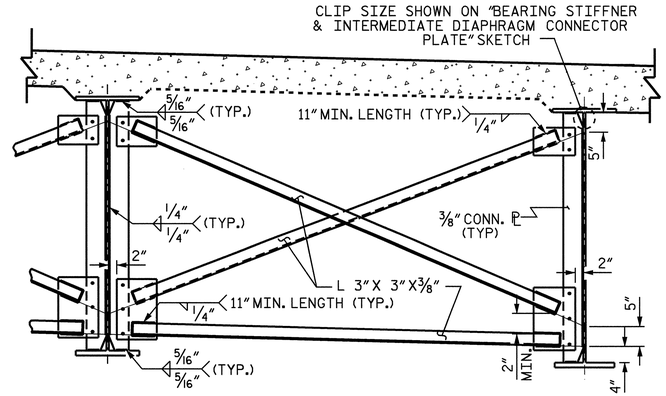

OPTIONAL INTERMEDIATE DIAPHRAGM

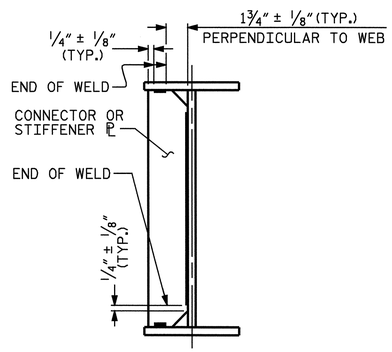

TYPICAL STIFFENER OR CONNECTOR PLATE CONNECTIONS

WELD TERMINATION DETAILS

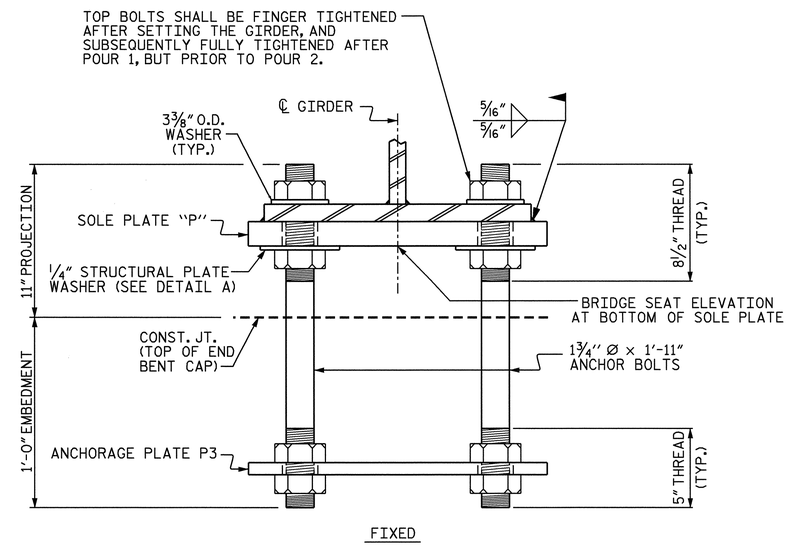

FIXED

END VIEW

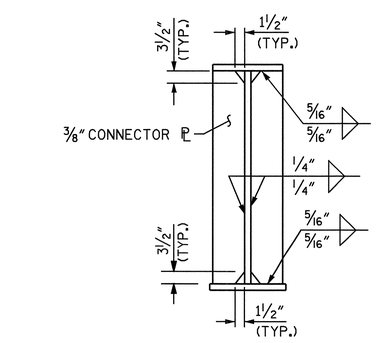

CONNECTOR PLATE DETAILS

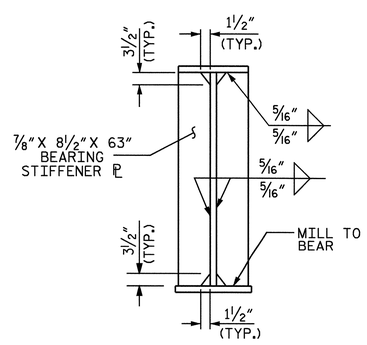

BEARING STIFFENER

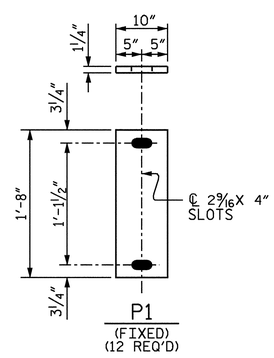

SOLE PLATE DETAILS

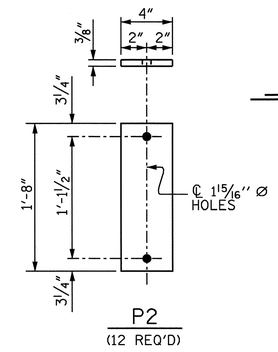

ANCHORAGE PLATE DETAILS

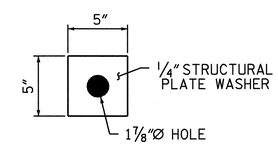

DETAIL "A"

BEARING DETAILS

NOTES:

ALL STRUCTURAL STEEL SHALL BE AASHTO M270 GRADE 50W.

ALL DIMENSIONS SHOWN ARE HORIZONTAL OR VERTICAL, UNLESS OTHERWISE NOTED.

ALL FIELD CONNECTIONS TO BE 7/8" DIA. HIGH STRENGTH BOLTS UNLESS OTHERWISE NOTED.

BEARING STIFFENERS ARE TO BE PLACED NORMAL TO THE WEB OF THE GIRDER AND SHALL BE PLUMB.

SHOP SPLICES ARE PERMITTED TO LIMIT THE MAXIMUM REQUIRED FLANGE PIECE LENGTHS TO 60 FEET AND WEB PIECE LENGTHS TO 45 FEET. PERMITTED FLANGE AND WEB SHOP SPLICES SHALL NOT BE LOCATED WITHIN 15 FEET OF MAXIMUM DEAD LOAD DEFLECTION. KEEP 2 FEET MINIMUM BETWEEN WEB AND FLANGE SHOP SPLICES. KEEP 6" MINIMUM BETWEEN CONNECTOR PLATE AND WEB OR FLANGE SHOP SPLICES.

STUDS ON GIRDERS MAY BE SHIFTED UP TO 1" IF NECESSARY TO CLEAR FLANGE SPLICE WELD.

TENSION ON THE AASHTO M164 BOLTS SHALL BE CALIBRATED USING DIRECT TENSION INDICATOR WASHERS IN ACCORDANCE WITH ARTICLE 440-8 OF THE STANDARD SPECIFICATIONS.

END OF GIRDERS SHALL BE PLUMB.

FOR SHIPPING STEEL STRUCTURAL MEMBERS, SEE SPECIAL PROVISIONS.

FOR HIGH STRENGTH BOLTS, SEE SPECIAL PROVISIONS.

FOR AASHTO M270 GRADE 50W STRUCTURAL STEEL, SOLE PLATES AND ANCHORAGE PLATES SHALL BE AASHTO M270 GRADE 50W AND SHALL NOT BE GALVANIZED. ANCHOR BOLTS, NUTS AND WASHERS SHALL BE GALVANIZED IN ACCORDANCE WITH THE STANDARD SPECIFICATIONS.

ANCHOR BOLTS SHALL MEET THE REQUIREMENTS OF ASTM A449. NUTS SHALL MEET THE REQUIREMENTS OF AASHTO M291-DH OR AASHTO M292-2H. WASHERS SHALL MEET THE REQUIREMENTS OF AASHTO M293. SHOP DRAWINGS ARE NOT REQUIRED FOR ANCHOR BOLTS, NUTS AND WASHERS. SHOP INSPECTION IS REQUIRED.

ALL SURFACES OF SOLE PLATES SHALL BE SMOOTH AND STRAIGHT.

STRUCTURAL PLATE WASHERS SHALL BE AASHTO M270 GRADE 50W.

PROJECT NO. R-2719A
LENOIR COUNTY
STATION: 211+67.44 -L-

SHEET 2 OF 3

STATE OF NORTH CAROLINA
DEPARTMENT OF TRANSPORTATION
RALEIGH

SUPERSTRUCTURE

STRUCTURAL STEEL DETAILS
(LEFT LANE)

NORTH CAROLINA PROFESSIONAL SEAL 025516 ENGINEER EMILY E. MURRAY
10-10-08

REVISIONS						SHEET NO.
NO.	BY:	DATE:	NO.	BY:	DATE:	S-176
1			3			TOTAL SHEETS
2			4			340

DRAWN BY : B.N.BARODAWALA DATE : 5-12-08
CHECKED BY : A SORSENGINH DATE : 6-08

01-OCT-2008 12:56
R:\Structures\Final plans\Str #6\R2719a_sd_ss_06*.dgn
emurray

STR. #6

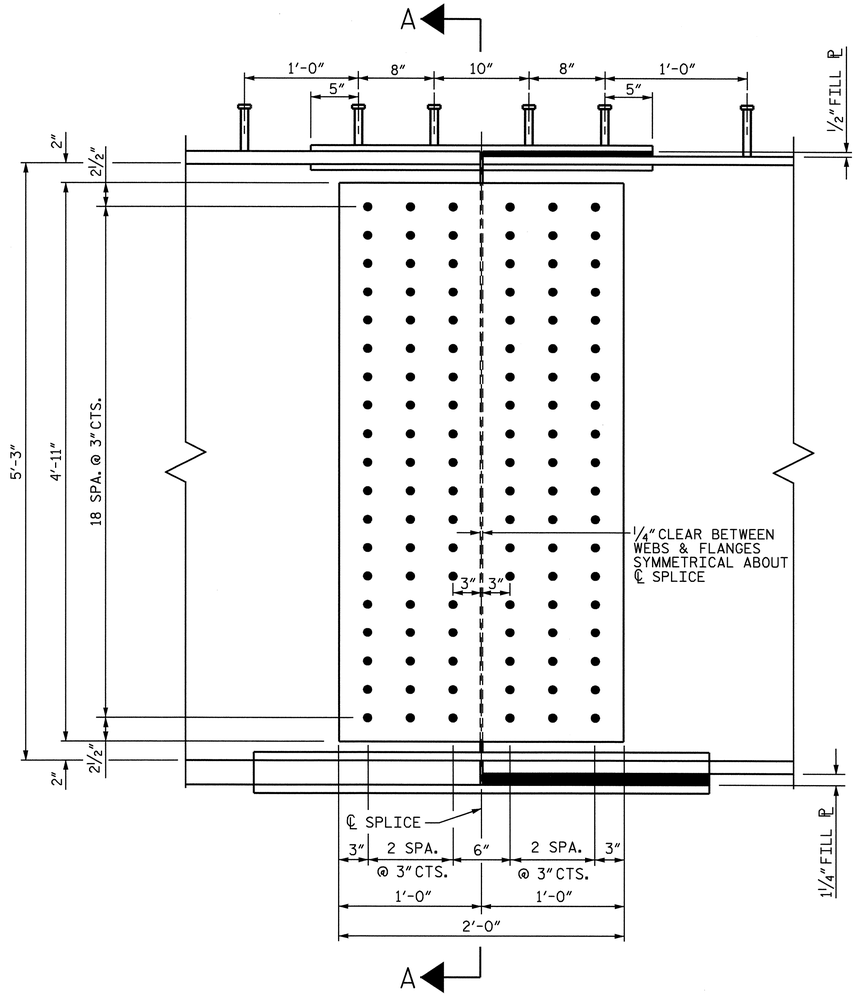

ELEVATION

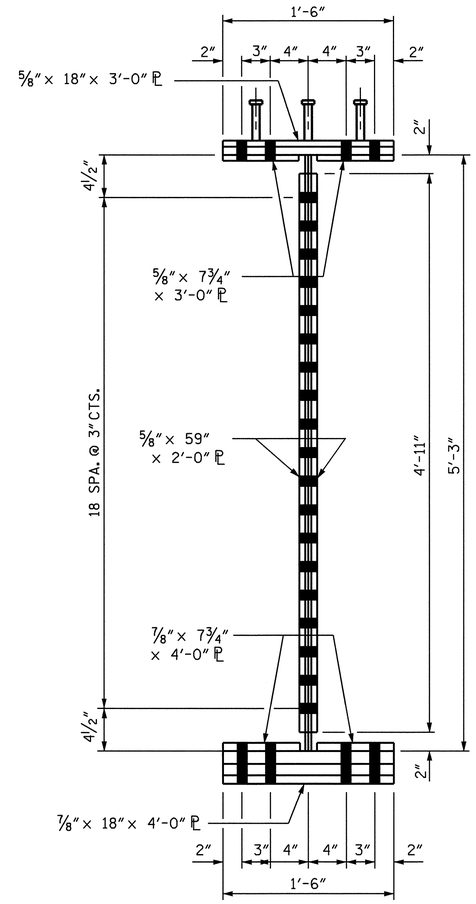

SECTION A-A

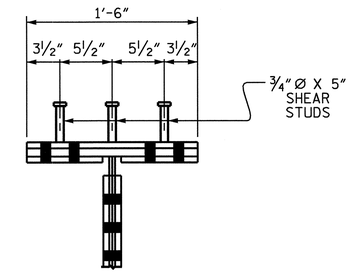

SHEAR STUD DETAIL FOR TOP FLANGE SPLICE PLATE

SHEAR STUDS ARE TO BE SHOP WELDED ON TOP OF PLATE BEFORE FIELD ASSEMBLY

BOLTED FIELD SPLICE DETAILS

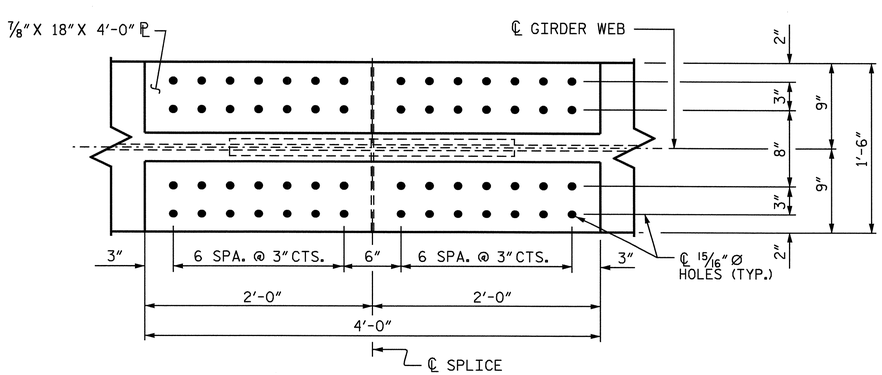

PLAN OF TOP OF BOTTOM FLANGE

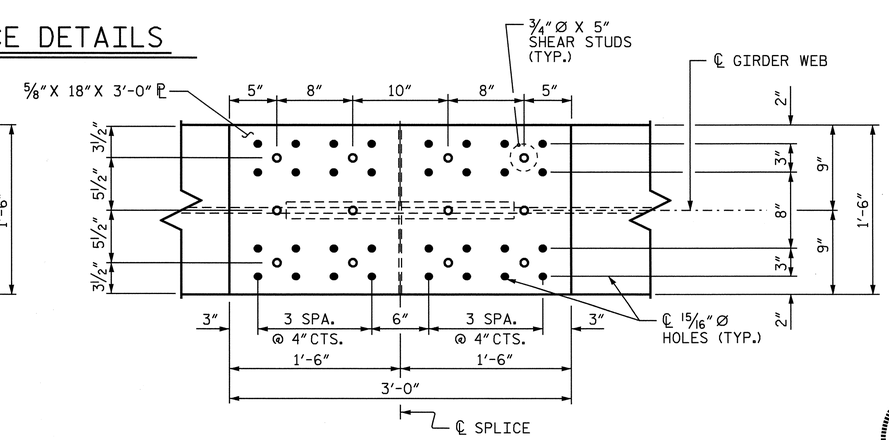

PLAN OF TOP OF TOP FLANGE

NORTH CAROLINA PROFESSIONAL SEAL 025516 ENGINEER EMILY E. MURRAY

Emily E. Murray 10-10-08

PROJECT NO. R-2719A

LENOIR COUNTY

STATION: 211+67.44 -L-

SHEET 3 OF 3

STATE OF NORTH CAROLINA
DEPARTMENT OF TRANSPORTATION
RALEIGH

SUPERSTRUCTURE

STRUCTURAL STEEL DETAILS
BOLTED FIELD SPLICE
(LEFT LANE)

REVISIONS						SHEET NO.
NO.	BY:	DATE:	NO.	BY:	DATE:	S-177
1			3			TOTAL SHEETS
2			4			340

STR. #6

DRAWN BY : B.N.BARODAWALA DATE : 5-12-08
CHECKED BY : A SORSENGINH DATE : 6-08

01-OCT-2008 12:56
R:\Structures\Finalplans\Str #6\R2719a_sd_ss_06*.dgn
emurray

NOTES

✳ INCLUDES SLAB, BUILDUPS & STAY-IN-PLACE FORMS.

ALL VALUES ARE SHOWN IN FEET EXCEPT " REQUIRED CAMBER ", WHICH IS GIVEN IN INCHES (FRACTION FORM).

DEAD LOAD DEFLECTION TABLE FOR GIRDER

	GIRDER #1 THRU GIRDER #6																				
@ TWENTIETH POINTS BETWEEN ℄ BEARINGS	0	.05	.10	.15	.20	.25	.30	.35	.40	.45	.50	.55	.60	.65	.70	.75	.80	.85	.90	.95	0
DEFLECTION DUE TO WEIGHT OF GIRDER ↓	0.000	0.032	0.063	0.092	0.117	0.138	0.157	0.171	0.182	0.188	0.190	0.188	0.182	0.171	0.157	0.138	0.117	0.092	0.063	0.032	0.000
DEFLECTION DUE TO WEIGHT OF SLAB ✳ ↓	0.000	0.090	0.197	0.296	0.383	0.458	0.521	0.572	0.609	0.632	0.639	0.632	0.609	0.572	0.521	0.458	0.383	0.296	0.197	0.090	0.000
DEFLECTION DUE TO WEIGHT OF BARRIER RAIL ↓	0.000	0.009	0.017	0.024	0.031	0.037	0.042	0.046	0.049	0.051	0.051	0.051	0.049	0.046	0.042	0.037	0.031	0.024	0.017	0.009	0.000
TOTAL DEAD LOAD DEFLECTION ↓	0.000	0.131	0.277	0.412	0.531	0.633	0.720	0.789	0.840	0.871	0.880	0.871	0.840	0.789	0.720	0.633	0.531	0.412	0.277	0.131	0.000
VERTICAL CURVE ORDINATE (FT.)	0.000	0.025	0.047	0.067	0.084	0.098	0.110	0.119	0.126	0.130	0.131	0.130	0.126	0.119	0.110	0.098	0.084	0.067	0.047	0.025	0.000
SUPERELEVATION ORDINATE (FT.)	0.000	-0.015	-0.029	-0.040	-0.051	-0.060	-0.067	-0.072	-0.076	-0.079	-0.079	-0.079	-0.076	-0.072	-0.067	-0.060	-0.051	-0.040	-0.029	-0.015	0.000
REQUIRED CAMBER (INCH) ↑	0	1 11/16"	3 9/16"	5 1/4"	6 3/4"	8 1/16"	9 3/16"	10 1/16"	10 11/16"	11 1/16"	11 3/16'	11 1/16"	10 11/16"	10 1/16"	9 3/16"	8 1/16"	6 3/4"	5 1/4"	3 9/16"	1 11/16"	0

PROJECT NO. R-2719A

LENOIR COUNTY

STATION: 211+67.44 -L-

STATE OF NORTH CAROLINA
DEPARTMENT OF TRANSPORTATION
RALEIGH

SUPERSTRUCTURE
DEAD LOAD
DEFLECTION
(LEFT LANE)

NORTH CAROLINA PROFESSIONAL SEAL 025516 ENGINEER EMILY E. MURRAY
10-10-08

REVISIONS						SHEET NO.
NO.	BY:	DATE:	NO.	BY:	DATE:	S-178
1			3			TOTAL SHEETS
2			4			340

DRAWN BY : B.N.BARODAWALA DATE : 5-12-08
CHECKED BY : A SORSENGINH DATE : 6-08

08-OCT-2008 15:13
J:\Structures\Final plans\Str #6\R2719a_sd_DL_06*.dgn
emurray

STR. #6

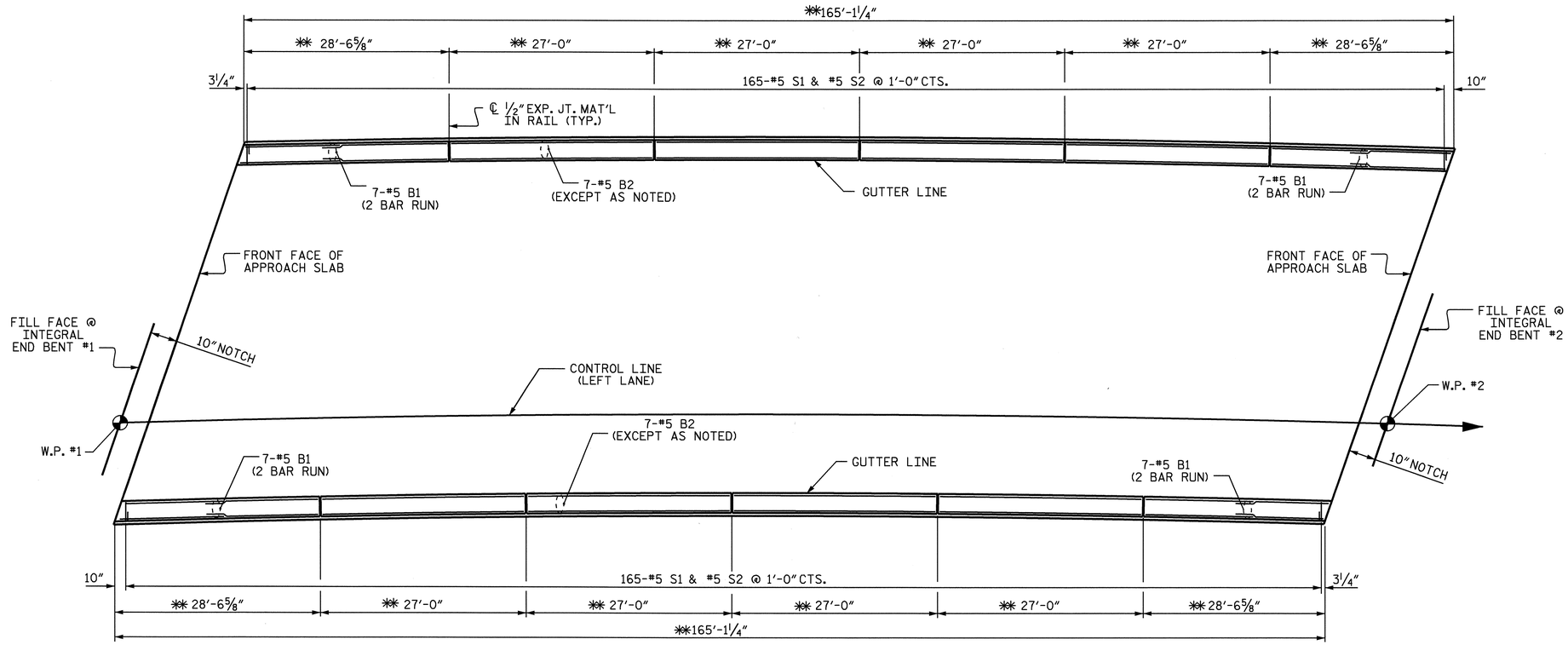

PLAN OF BARRIER RAIL

✱✱ ARC DIMENSION ALONG OUTSIDE FACE OF BARRIER RAIL

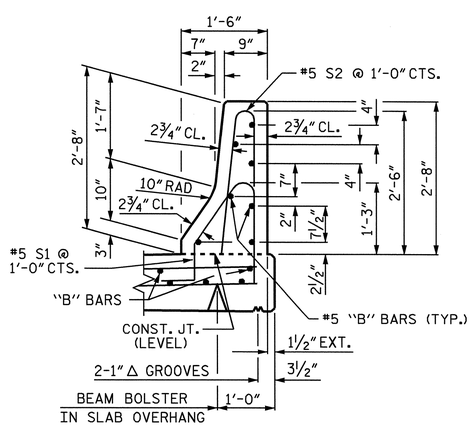

SECTION THRU RAIL

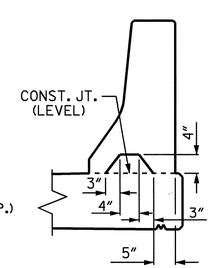

SECTION S-S

AT DAM IN OPEN JOINT (THIS IS TO BE USED ONLY WHEN SLIP FORM IS USED)

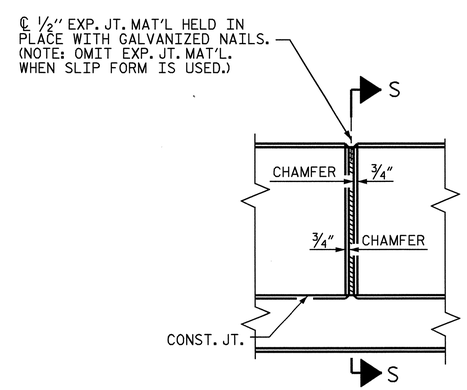

ELEVATION AT EXPANSION JOINTS

BARRIER RAIL DETAILS

BAR TYPES

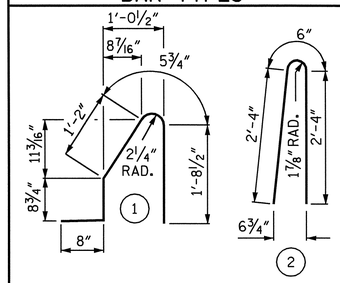

ALL BAR DIMENSIONS ARE OUT TO OUT

BILL OF MATERIAL

FOR CONCRETE BARRIER RAIL ONLY

BAR	NO.	SIZE	TYPE	LENGTH	WEIGHT
✱ B1	56	#5	STR	15'-9"	920
✱ B2	56	#5	STR	26'-8"	1558
✱ S1	165	#5	1	4'-9"	817
✱ S2	165	#5	2	5'-2"	889

✱ EPOXY COATED REINFORCING STEEL	4,184 LBS.
CLASS AA CONCRETE	33.0 CU. YDS.
CONCRETE BARRIER RAIL	330.21 LIN. FT.

NOTES:

THE BARRIER RAIL SHALL NOT BE CAST UNTIL ALL SLAB CONCRETE HAS BEEN CAST AND HAS REACHED A MINIMUM COMPRESSIVE STRENGTH OF 3,000 PSI.

ALL REINFORCING STEEL IN BARRIER RAILS SHALL BE EPOXY COATED.

THE #5 S1 AND #5 S2 BARS MAY BE SHIFTED SLIGHTLY IN ORDER TO MAINTAIN A 2" MINIMUM CLEARANCE TO ½" EXPANSION JOINT MATERIAL IN THE BARRIER RAIL.

VERTICAL GROOVED CONTRACTION JOINTS, ½" IN DEPTH, SHALL BE TOOLED IN ALL EXPOSED FACES OF THE BARRIER RAIL AND IN ACCORDANCE WITH ARTICLE 825-10(B) OF THE STANDARD SPECIFICATIONS. THE CONTRACTION JOINT SHALL BE LOCATED AT EACH THIRD POINT BETWEEN BARRIER RAIL EXPANSION JOINTS. ONLY ONE CONTRACTION JOINT IS REQUIRED AT MIDPOINT OF BARRIER RAIL SEGMENTS LESS THAN 20 FEET IN LENGTH AND NO CONTRACTION JOINTS ARE REQUIRED FOR THOSE SEGMENTS LESS THAN 10 FEET IN LENGTH.

PROJECT NO. R-2719A
LENOIR COUNTY
STATION: 211+67.44 -L-

STATE OF NORTH CAROLINA
DEPARTMENT OF TRANSPORTATION
RALEIGH

NORTH CAROLINA PROFESSIONAL SEAL 025516 ENGINEER EMILY E. MURRAY
Emily E. Murray 10-10-08

CONCRETE BARRIER RAIL
(LEFT LANE)

ASSEMBLED BY : B.N.BARODAWALA DATE : 5-8-08	
CHECKED BY : A SORSENGINH DATE : 6-08	
DRAWN BY : ARB 5/87	REV. 8/16/99 RWW/LES
CHECKED BY : SJD 9/87	REV. 10/17/00 RWW/LES
	REV. 5/7/03R RWW/JTE

REVISIONS								SHEET NO.
NO.	BY:	DATE:	NO.	BY:	DATE:			S-179
1			3					TOTAL SHEETS
2			4					340

01-OCT-2008 12:57
R:\Structures\Finalplans\Str #6\R2719a_sd_BR_06*.dgn
emurray

STR. #6

STD. NO. CBRI

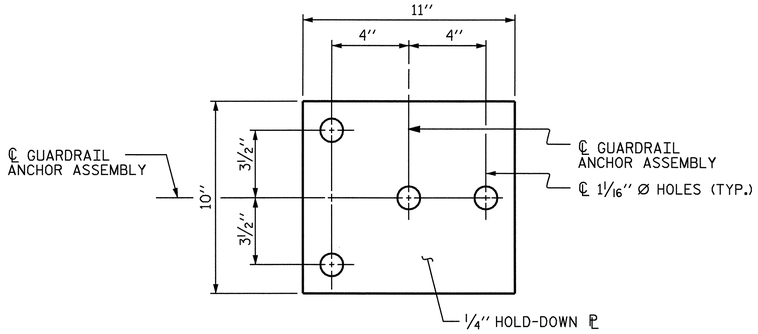

PLAN

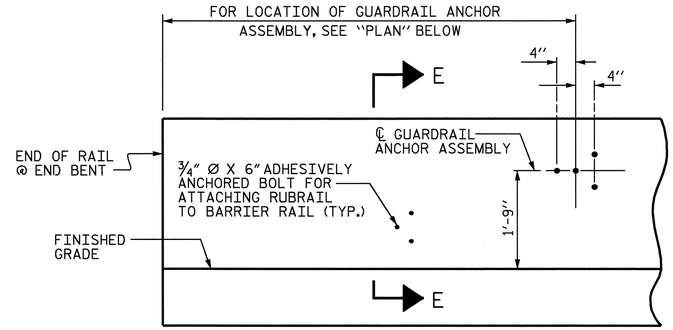

ELEVATION

FOR LOCATION OF RUBRAIL, SEE ROADWAY STD. 862.03

NOTES

THE GUARDRAIL ANCHOR ASSEMBLY SHALL CONSIST OF A 1/4'' HOLD DOWN PLATE AND 4 - 7/8'' Ø BOLTS WITH NUTS AND WASHERS, RUBRAIL, AND ADHESIVELY ANCHORED BOLTS.

THE HOLD-DOWN PLATE SHALL CONFORM TO AASHTO M270 GRADE 36. AFTER FABRICATION, THE HOLD-DOWN PLATE SHALL BE HOT-DIP GALVANIZED IN ACCORDANCE WITH AASHTO M111.

BOLTS SHALL CONFORM TO THE REQUIREMENTS OF ASTM A307 AND NUTS SHALL CONFORM TO THE REQUIREMENTS OF AASHTO M291. BOLTS, NUTS AND WASHERS SHALL BE GALVANIZED. (AT THE CONTRACTOR'S OPTION, STAINLESS STEEL BOLTS, NUTS AND WASHERS MAY BE USED AS AN ALTERNATE FOR THE 7/8'' Ø GALVANIZED BOLTS, NUTS AND WASHERS. THEY SHALL CONFORM TO OR EXCEED THE MECHANICAL REQUIREMENTS OF ASTM A307. THE USE OF THIS ALTERNATE SHALL BE APPROVED BY THE ENGINEER.)

THE GUARDRAIL ANCHOR ASSEMBLY IS REQUIRED AT ALL POINTS WHERE APPROACH GUARDRAIL IS TO BE ATTACHED TO THE END OF BARRIER RAIL. FOR POINTS OF ATTACHMENT, SEE SKETCH.

AFTER INSTALLATION, THE EXPOSED THREAD OF THE BOLT SHALL BE BURRED WITH A SHARP POINTED TOOL.

THE COST OF THE GUARDRAIL ANCHOR ASSEMBLY SHALL BE INCLUDED IN THE UNIT CONTRACT PRICE BID FOR CONCRETE BARRIER RAIL.

THE 1 1/4'' Ø HOLES SHALL BE FORMED OR DRILLED WITH A CORE BIT. IMPACT TOOLS WILL NOT BE PERMITTED. ANY CONCRETE DAMAGED BY THIS WORK SHALL BE REPAIRED TO THE SATISFACTION OF THE ENGINEER.

THE C6 X 8.2 RUBRAIL IS TO BE ADHESIVELY ANCHORED TO THE RAIL USING THREE 3/4"Ø X 6"BOLTS WITH WASHERS. LEVEL ONE FIELD TESTING IS REQUIRED, AND THE YIELD LOAD OF THE 3/4"Ø BOLT IS 12 KIPS. FOR ADHESIVELY ANCHORED ANCHOR BOLTS OR DOWELS, SEE SPECIAL PROVISIONS. SEE ROADWAY STANDARD 862.03 FOR DETAILS AND LOCATION OF THE RUBRAIL.

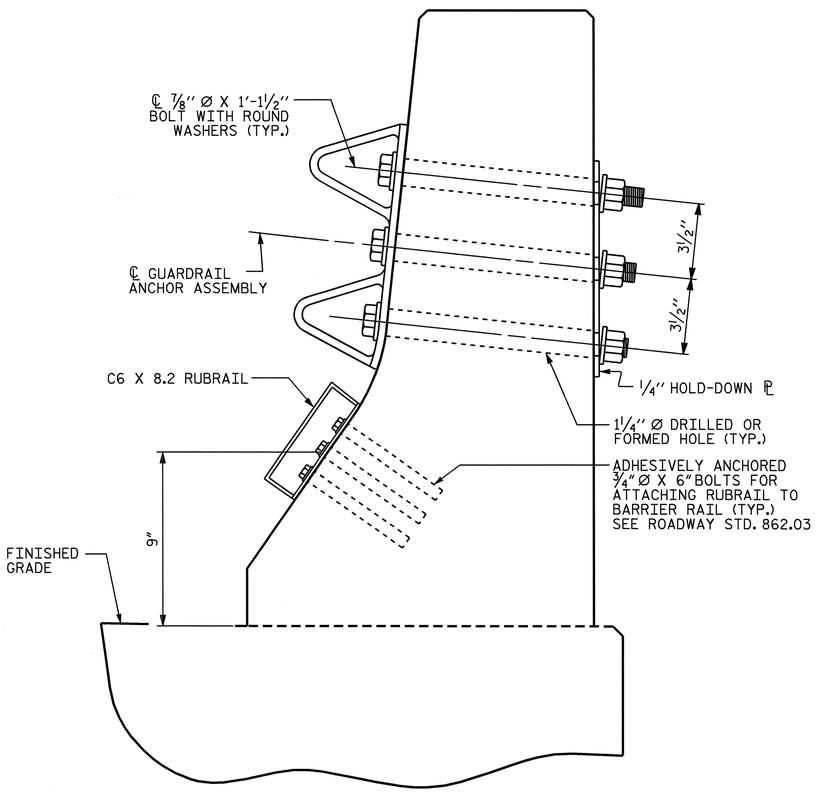

SECTION E-E

GUARDRAIL ANCHOR ASSEMBLY DETAILS

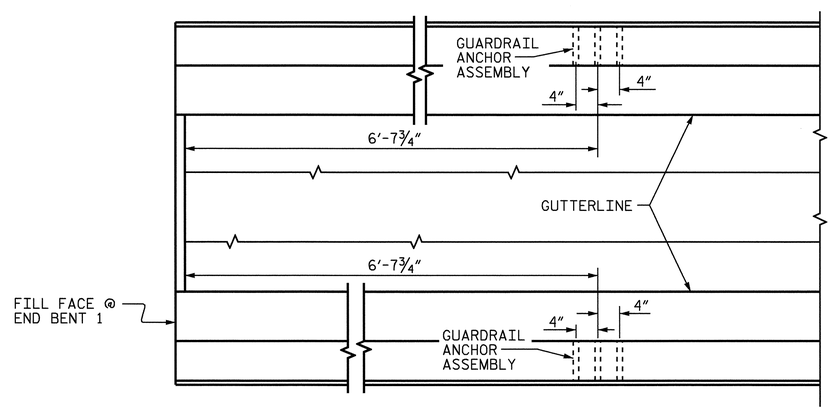

PLAN

LOCATION OF ANCHORS FOR GUARDRAIL

END BENT #1 SHOWN, END BENT #2 SIMILAR.

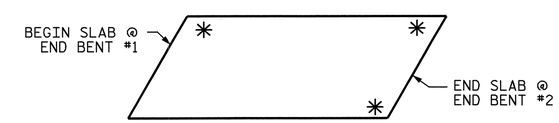

SKETCH SHOWING POINTS OF ATTACHMENTS

✳ DENOTES GUARDRAIL ANCHOR ASSEMBLY

PROJECT NO. R-2719A

LENOIR COUNTY

STATION: 211+67.44 -L-

STATE OF NORTH CAROLINA
DEPARTMENT OF TRANSPORTATION
RALEIGH

STANDARD

GUARDRAIL ANCHORAGE FOR BARRIER RAIL

(LEFT LANE)

NORTH CAROLINA PROFESSIONAL SEAL 025516 ENGINEER EMILY E. MURRAY

Emily E. Murray 10-10-08

REVISIONS							SHEET NO.
NO.	BY:	DATE:	NO.	BY:	DATE:		S-180
1			3				TOTAL SHEETS
2			4				340

ASSEMBLED BY : B.N.BARODAWALA DATE : 5-8-08
CHECKED BY : A SORSENGINH DATE : 6-08
DRAWN BY : TLA 5/06
CHECKED BY : GM 5/06
ADDED 5/1/06R KMM/GM

03-OCT-2008 11:51
r:\structures\Final plans\Str #6\R2719a_sd_BR_06*.dgn
PADKINS

STR. #6

STD. NO. GRA2

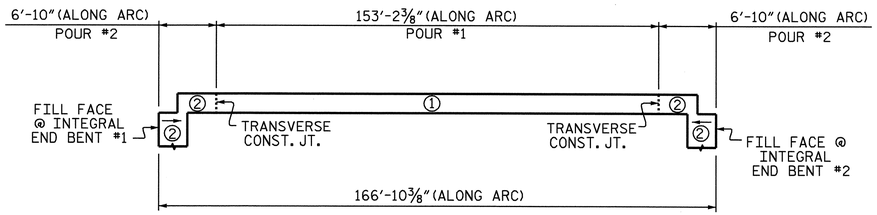

POURING SEQUENCE

SUPERSTRUCTURE REINFORCING STEEL LENGTHS ARE BASED ON THE FOLLOWING MINIMUM SPLICE LENGTHS					
BAR SIZE	SUPERSTRUCTURE EXCEPT APPROACH SLABS, PARAPET, AND BARRIER RAIL		APPROACH SLABS		PARAPET AND BARRIER RAIL
	EPOXY COATED	UNCOATED	EPOXY COATED	UNCOATED	
#4	2'-0"	1'-9"	2'-0"	1'-9"	2'-9"
#5	2'-6"	2'-2"	2'-6"	2'-2"	3'-5"
#6	3'-0"	2'-7"	3'-10"	2'-7"	4'-4"
#7	5'-3"	3'-6"			
#8	6'-10"	4'-7"			

GROOVING BRIDGE FLOORS		
APPROACH SLABS	2,170	SQ.FT.
BRIDGE DECK	7,364	SQ.FT.
TOTAL	9,534	SQ.FT.

BILL OF MATERIAL

BAR	NO.	SIZE	TYPE	LENGTH	WEIGHT
✳ A1	295	#5	STR	50'-11"	15666
A2	295	#5	STR	50'-11"	15666
✳ A101	4	#5	STR	48'-0"	200
✳ A102	4	#5	STR	45'-1"	188
✳ A103	4	#5	STR	42'-2"	176
✳ A104	4	#5	STR	39'-4"	164
✳ A105	4	#5	STR	36'-5"	152
✳ A106	4	#5	STR	33'-6"	140
✳ A107	4	#5	STR	30'-7"	128
✳ A108	4	#5	STR	27'-9"	116
✳ A109	4	#5	STR	24'-10"	104
✳ A110	4	#5	STR	21'-11"	91
✳ A111	4	#5	STR	19'-1"	80
✳ A112	4	#5	STR	16'-2"	67
✳ A113	4	#5	STR	13'-3"	55
✳ A114	4	#5	STR	10'-4"	43
✳ A115	4	#5	STR	7'-6"	31
✳ A116	4	#5	STR	4'-7"	19
✳ A117	4	#5	STR	1'-8"	7
A201	4	#5	STR	48'-0"	200
A202	4	#5	STR	45'-1"	188
A203	4	#5	STR	42'-2"	176
A204	4	#5	STR	39'-4"	164
A205	4	#5	STR	36'-5"	152

BILL OF MATERIAL

BAR	NO.	SIZE	TYPE	LENGTH	WEIGHT
A206	4	#5	STR	33'-6"	140
A207	4	#5	STR	30'-7"	128
A208	4	#5	STR	27'-9"	116
A209	4	#5	STR	24'-10"	104
A210	4	#5	STR	21'-11"	91
A211	4	#5	STR	19'-1"	80
A212	4	#5	STR	16'-2"	67
A213	4	#5	STR	13'-3"	55
A214	4	#5	STR	10'-4"	43
A215	4	#5	STR	7'-6"	31
A216	4	#5	STR	4'-7"	19
A217	4	#5	STR	1'-8"	7
✳ B1	132	#5	STR	35'-0"	4819
✳ B2	108	#5	STR	56'-7"	6374
B3	138	#6	STR	56'-7"	11728
K1	84	#4	STR	21'-7"	1211
K2	16	#4	STR	3'-0"	32
✳ S1	92	#4	1	11'-8"	717
✳ S2	88	#4	1	10'-6"	617
U1	90	#4	2	16'-0"	962
U2	14	#4	2	14'-0"	131
V1	12	#4	STR	5'-2"	41

REINFORCING STEEL 31532 LBS.

✳ EPOXY COATED REINFORCING STEEL 29954 LBS.

BAR TYPES

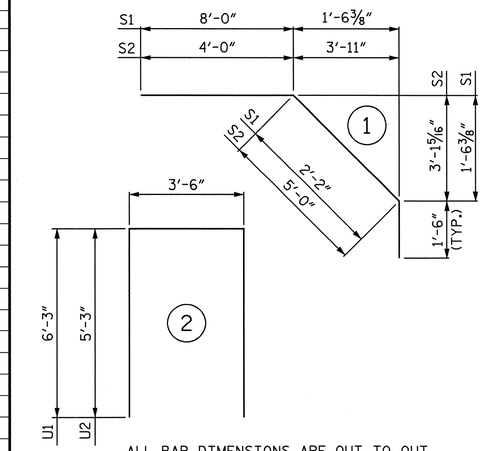

ALL BAR DIMENSIONS ARE OUT TO OUT

SUPERSTRUCTURE BILL OF MATERIAL

	CLASS AA CONCRETE	REINFORCING STEEL	EPOXY COATED REINFORCING STEEL
	(CU.YDS.)	(LBS.)	(LBS.)
POUR #1	260.7	——	——
POUR #2	84.0	——	——
TOTALS ✳✳	344.7	31532	29954

✳✳ QUANTITIES FOR BARRIER RAIL ARE NOT INCLUDED

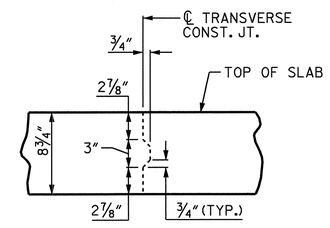

TRANSVERSE CONSTRUCTION JOINT DETAIL

NOTE:
REINFORCING STEEL IN SLAB NOT SHOWN.
LONGITUDINAL REINFORCING STEEL SHALL BE CONTINUOUS THRU JOINT

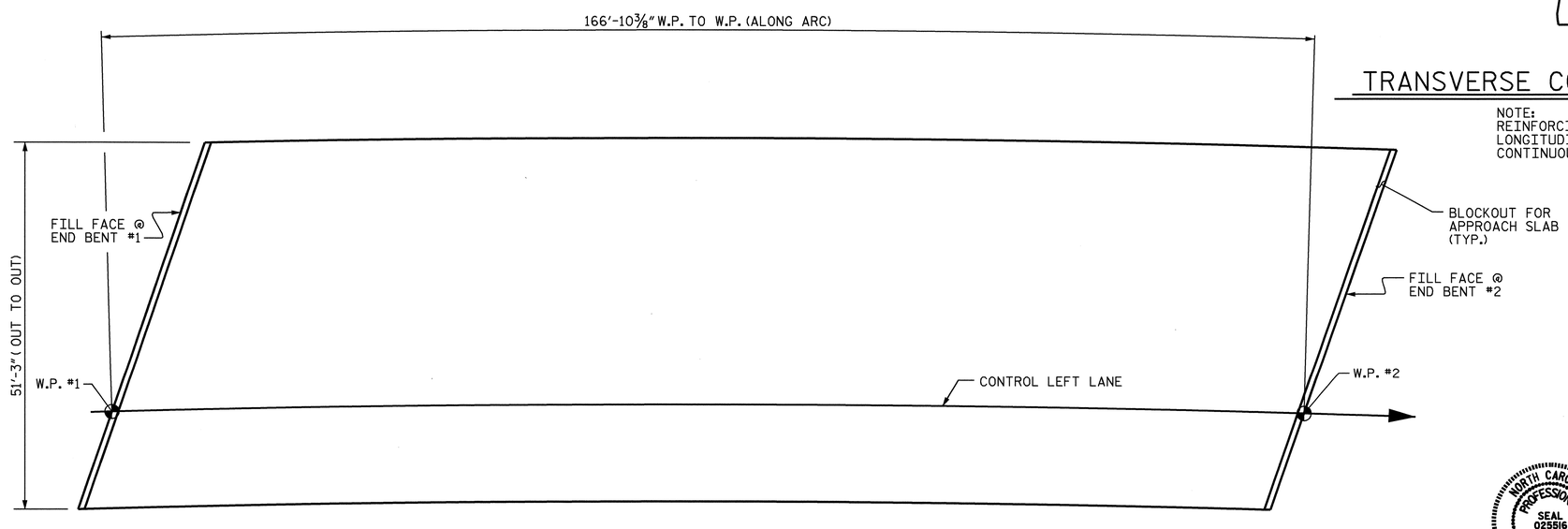

LAYOUT FOR COMPUTING AREA OF REINFORCED CONCRETE DECK SLAB (SQ. FT. = 8,552)

PROJECT NO. R-2719A
LENOIR COUNTY
STATION: 211+67.44 -L-

STATE OF NORTH CAROLINA
DEPARTMENT OF TRANSPORTATION
RALEIGH

SUPERSTRUCTURE
BILL OF MATERIAL
(LEFT LANE)

NORTH CAROLINA PROFESSIONAL SEAL 025516 ENGINEER EMILY E. MURRAY
Emily E. Murray
10-10-08

REVISIONS						SHEET NO.
NO.	BY:	DATE:	NO.	BY:	DATE:	S-181
1			3			TOTAL SHEETS
2			4			340

STR. #6

DRAWN BY : B.N.BARODAWALA DATE : 5-8-08
CHECKED BY : A SORSENGINH DATE : 6-08

10-OCT-2008 14:39
J:\Structures\Final plans\Str #6\R2719a_sd_BM_06*.dgn
emurray

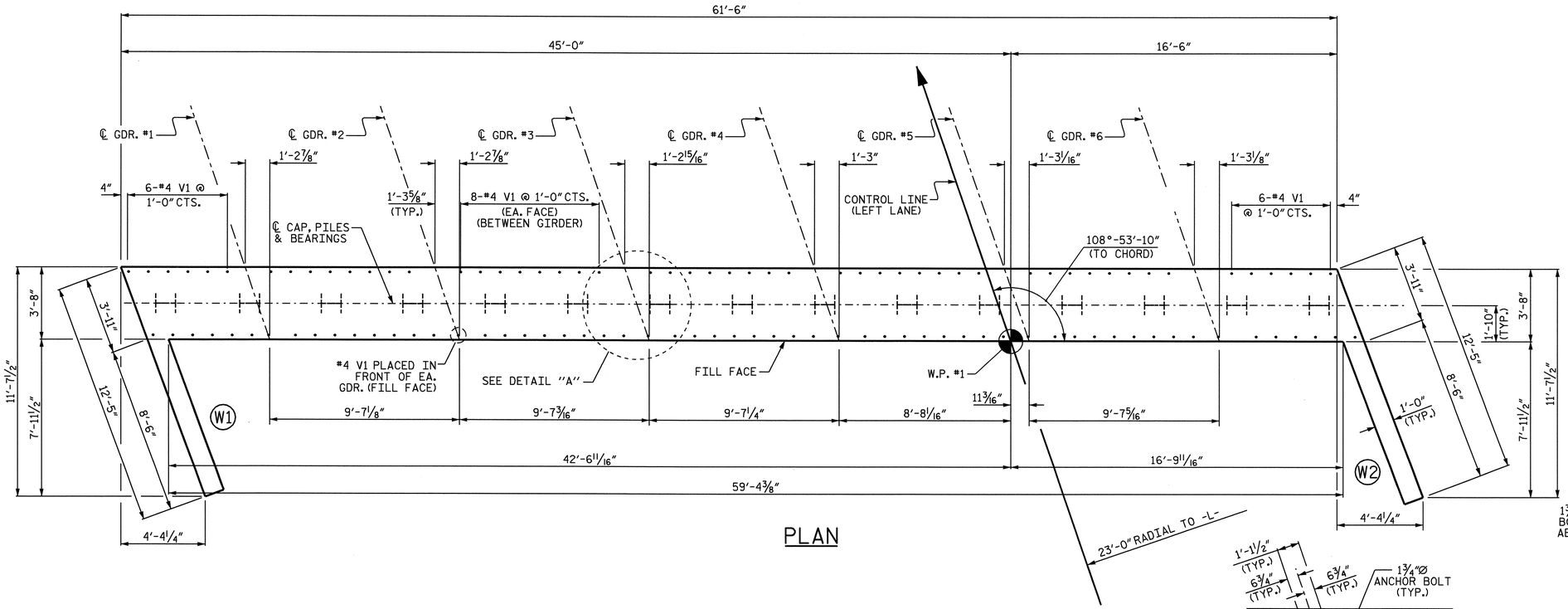

PLAN

NOTES

STIRRUPS IN CAP MAY BE SHIFTED AS NECESSARY TO CLEAR ANCHOR BOLTS.

THE CONTRACTOR SHALL PROVIDE FOR INSTALLATION OF THE 4" DIAMETER DRAIN PIPE THROUGH THE WING WALL AS REQUIRED FOR REINFORCED BRIDGE APPROACH FILLS, SEE THE ROADWAY PLANS. REINFORCING STEEL IN THE WING WALL MAY BE SHIFTED AS NECESSARY TO CLEAR THE DRAIN PIPE.

SEE SUPERSTRUCTURE SHEETS FOR UPPER PART OF INTEGRAL END BENT DETAIL.

THE CONTRACTOR'S ATTENTION IS CALLED TO THE FACT THAT UPPER PART OF WINGS ARE TO BE POURED WITH THE SUPERSTRUCTURE.

THE TOP SURFACE OF THE END BENT CAP AND WINGS, EXCLUDING THE OUTSIDE 4" AND THE BEARING AREA, SHALL BE RAKED TO A DEPTH OF 1/4".

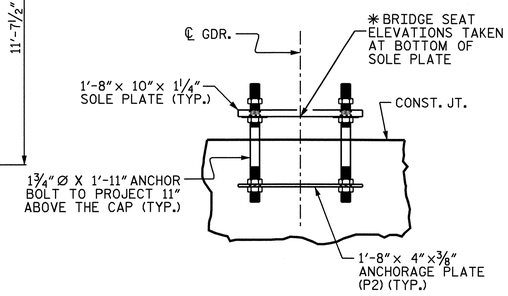

ANCHORAGE DETAILS

(FOR DETAIL SEE STRUCTURAL STEEL SHEET)

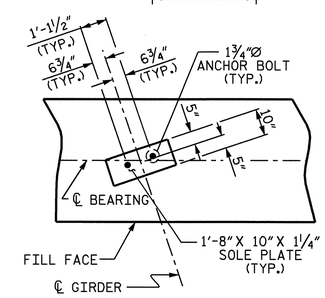

DETAIL A

(TYP. EA. GDR.)

TOP OF PILE ELEVATIONS			
P1	136.729	P9	134.559
P2	136.458	P10	134.288
P3	136.187	P11	134.017
P4	135.916	P12	133.746
P5	135.644	P13	133.474
P6	135.373	P14	133.203
P7	135.102	P15	132.932
P8	134.831		

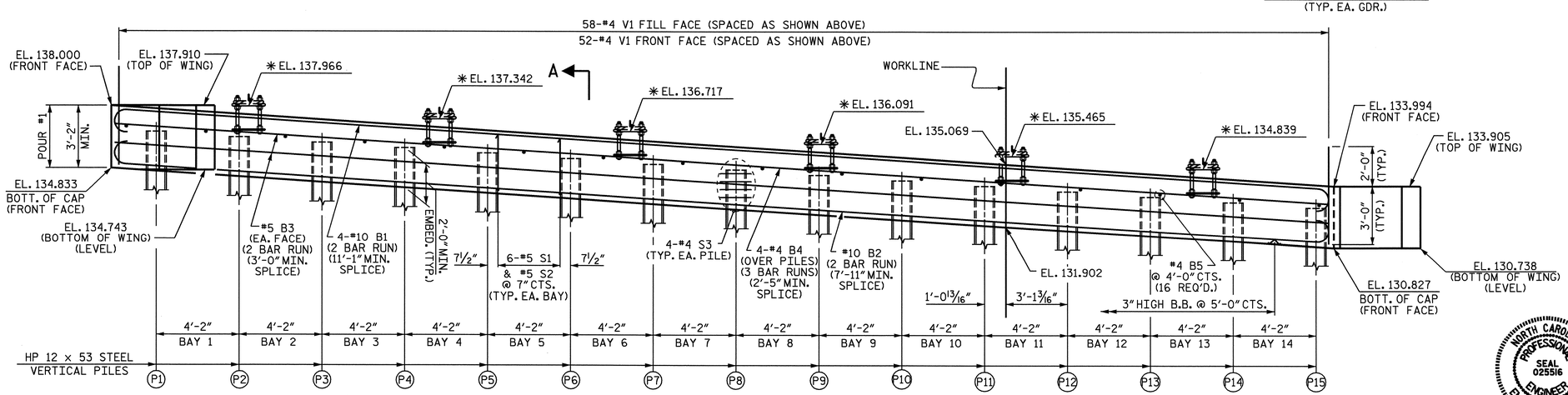

ELEVATION

(UPPER PART OF WINGS NOT SHOWN FOR CLARITY)
✱ ELEVATION GIVEN @ BOTTOM OF SOLE PLATE

PROJECT NO. R-2719A

LENOIR COUNTY

STATION: 211+67.44 -L-

SHEET 1 OF 3

STATE OF NORTH CAROLINA
DEPARTMENT OF TRANSPORTATION
RALEIGH

SUBSTRUCTURE

INTEGRAL END BENT #1

LEFT LANE

NORTH CAROLINA PROFESSIONAL SEAL 025516 ENGINEER EMILY E. MURRAY

Emily E. Murray 10-10-08

REVISIONS							SHEET NO.
NO.	BY:	DATE:	NO.	BY:	DATE:		S-182
1			3				TOTAL SHEETS
2			4				340

DRAWN BY : J.B. WILSON DATE : 6/24/08
CHECKED BY : B.N. BARODAWALA DATE : 7/2008

08-OCT-2008 15:16
J:\Structures\Final plans\Str #6\R-2719A_sd_EB.dgn
emurray

STR. #6

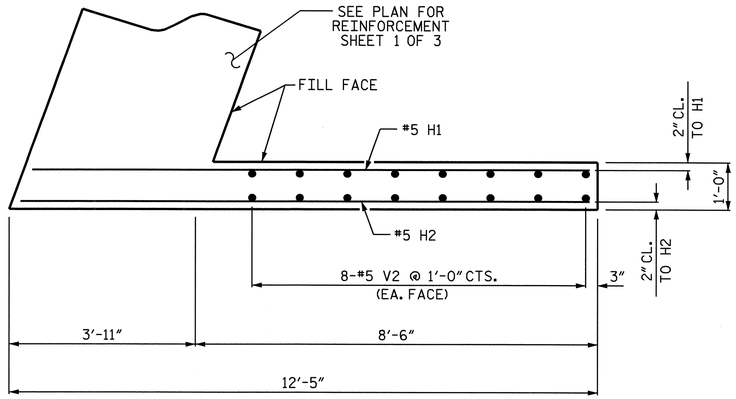

PLAN OF WING W1

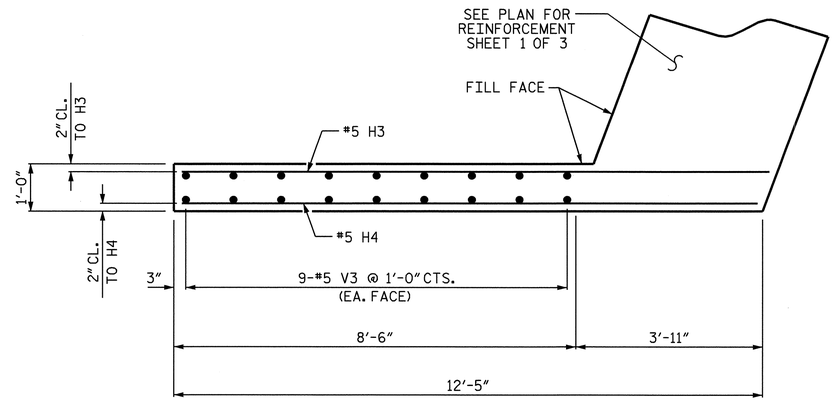

PLAN OF WING W2

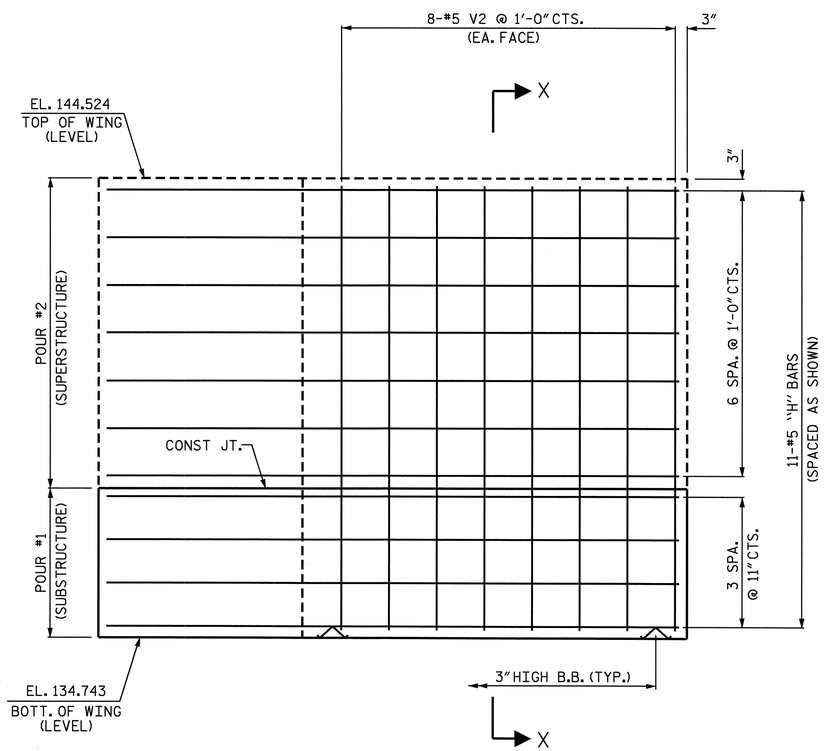

ELEVATION OF WING W1

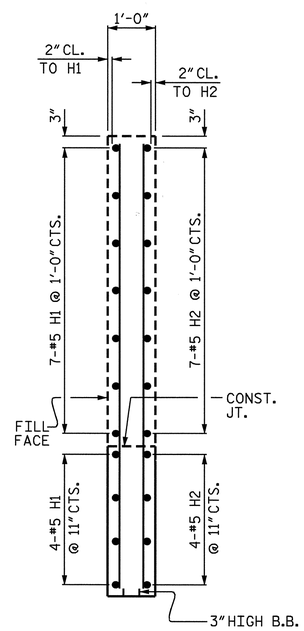

SECTION X-X

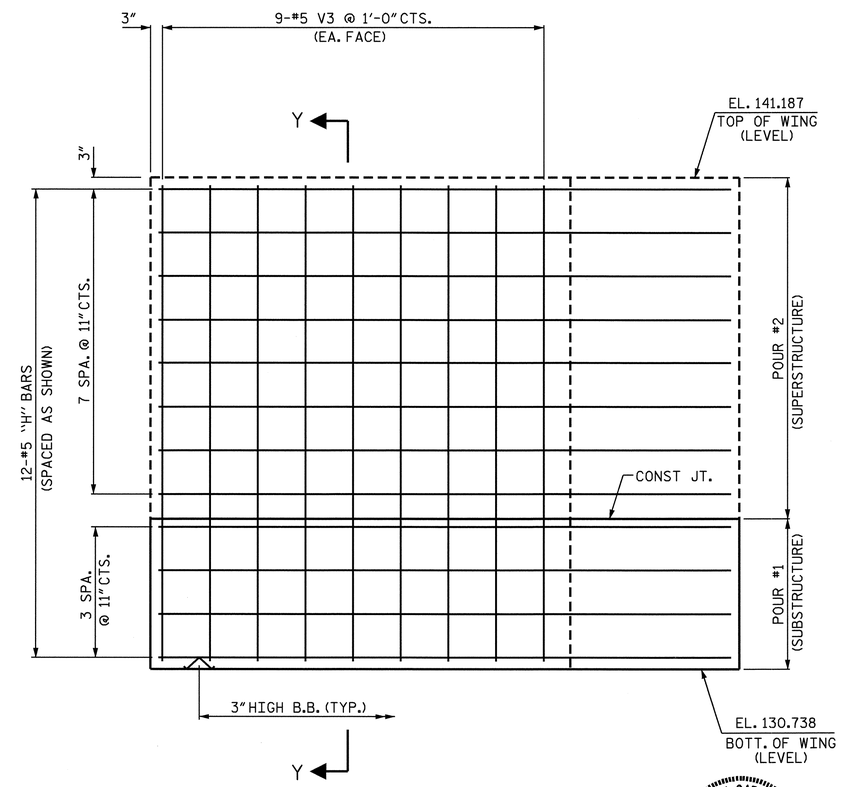

ELEVATION OF WING W2

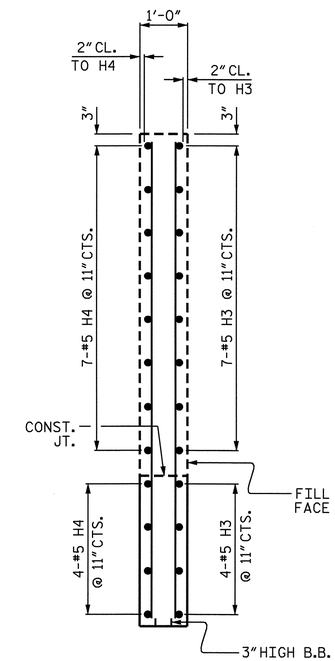

SECTION Y-Y

PROJECT NO. R-2719A
LENOIR COUNTY
STATION: 211+67.44 -L-

SHEET 2 OF 3

STATE OF NORTH CAROLINA
DEPARTMENT OF TRANSPORTATION
RALEIGH

SUBSTRUCTURE
INTEGRAL END BENT #1
LEFT LANE

NORTH CAROLINA PROFESSIONAL SEAL 025516 ENGINEER EMILY E. MURRAY
10-10-08

REVISIONS						SHEET NO.
NO.	BY:	DATE:	NO.	BY:	DATE:	S-183
1			3			TOTAL SHEETS
2			4			340

STR. #6

DRAWN BY : J.B. WILSON DATE : 6/24/08
CHECKED BY : B.N. BARODAWALA DATE : 7/2008

01-OCT-2008 10:16
R:\Structures\Final plans\Str #6\R-2719A_sd_EB.dgn
emurray

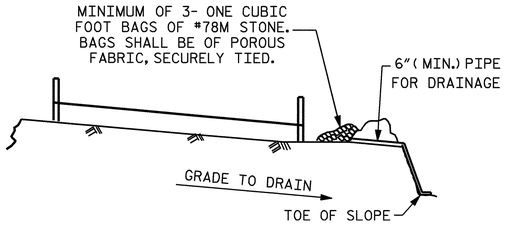

BAGGED STONE AND PIPE SHALL BE PLACED IMMEDIATELY AFTER COMPLETION OF END BENT EXCAVATION. PIPE MAY BE EITHER CONCRETE, CORRUGATED STEEL, CORRUGATED ALUMINUM ALLOY, OR CORRUGATED PLASTIC. PERFORATED PIPE WILL NOT BE ALLOWED.

BAGGED STONE SHALL REMAIN IN PLACE UNTIL THE ENGINEER DIRECTS THAT IT BE REMOVED. THE CONTRACTOR SHALL REMOVE AND DISPOSE OF SILT ACCUMULATIONS AT BAGGED STONE WHEN SO DIRECTED BY THE ENGINEER. BAGS SHALL BE REMOVED AND REPLACED WHENEVER THE ENGINEER DETERMINES THAT THEY HAVE DETERIORATED AND LOST THEIR EFFECTIVENESS.

NO SEPARATE PAYMENT WILL BE MADE FOR THIS WORK AND THE ENTIRE COST OF THIS WORK SHALL BE INCLUDED IN THE UNIT CONTRACT PRICE FOR THE SEVERAL PAY ITEMS.

TEMPORARY DRAINAGE AT END BENT

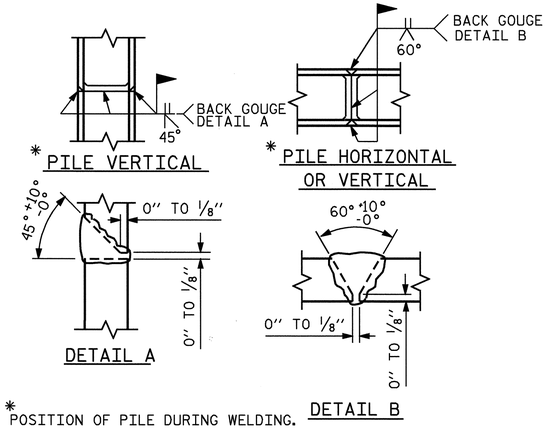

* POSITION OF PILE DURING WELDING.

PILE SPLICE DETAILS

BAR TYPES

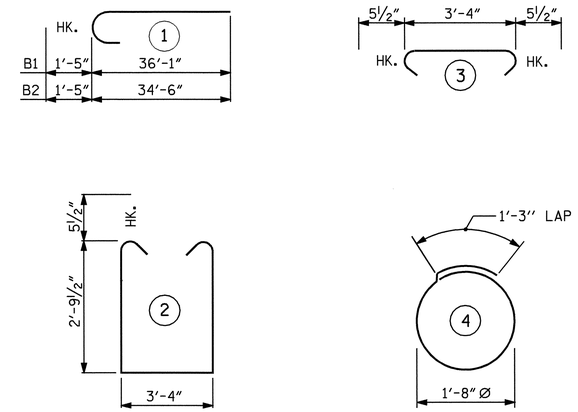

ALL BAR DIMENSIONS ARE OUT TO OUT.

BILL OF MATERIAL
END BENT #1

BAR	NO.	SIZE	TYPE	LENGTH	WEIGHT
B1	8	#10	1	37'-6"	1291
B2	8	#10	1	35'-11"	1236
B3	8	#5	STR	32'-1"	268
B4	12	#4	STR	22'-0"	176
B5	16	#4	STR	3'-4"	36
H1	11	#5	STR	11'-8"	134
H2	11	#5	STR	11'-11"	137
H3	12	#5	STR	12'-3"	153
H4	12	#5	STR	12'-0"	150
S1	86	#5	2	9'-10"	882
S2	86	#5	3	4'-3"	381
S3	60	#4	4	6'-6"	261
V1	110	#4	STR	5'-0"	367
V2	16	#5	STR	9'-4"	156
V3	18	#5	STR	10'-0"	188

REINFORCING STEEL = 5816 LBS

CLASS A CONCRETE BREAKDOWN

POUR #1
CAP AND LOWER PART OF WINGS__ __C.Y. 28.4

HP 12 x 53 STEEL PILES
NO. 15 LIN. FT. 1200

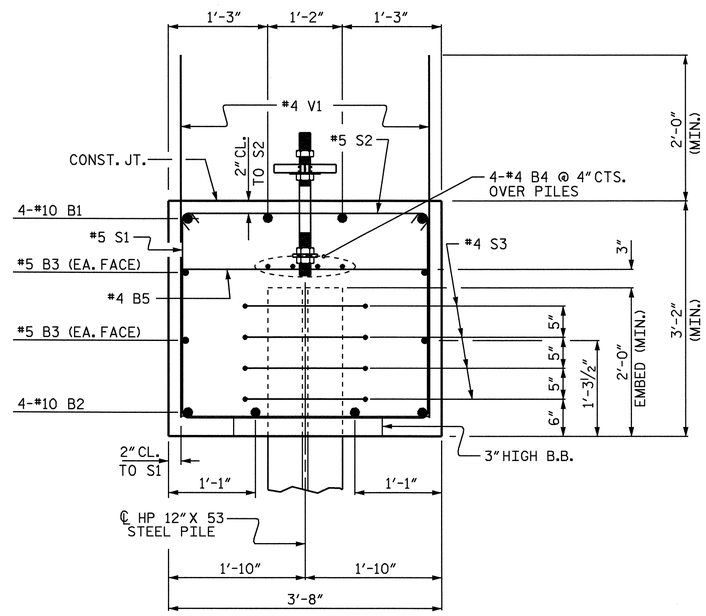

SECTION A-A

PROJECT NO. R-2719A
LENOIR COUNTY
STATION: 211+67.44 -L-

SHEET 3 OF 3

STATE OF NORTH CAROLINA
DEPARTMENT OF TRANSPORTATION
RALEIGH

SUBSTRUCTURE
INTEGRAL END BENT #1
LEFT LANE

NORTH CAROLINA PROFESSIONAL SEAL 025516 ENGINEER EMILY E. MURRAY
Emily E. Murray 10-10-08

REVISIONS						SHEET NO.
NO.	BY:	DATE:	NO.	BY:	DATE:	S-184
1			3			TOTAL SHEETS
2			4			340

DRAWN BY : J.B. WILSON DATE : 6/24/08
CHECKED BY : B.N. BARODWALA DATE : 7/2008

01-OCT-2008 10:16
R:\Structures\Final plans\Str #6\R-2719A_sd_EB.dgn
emurray

STR. #6

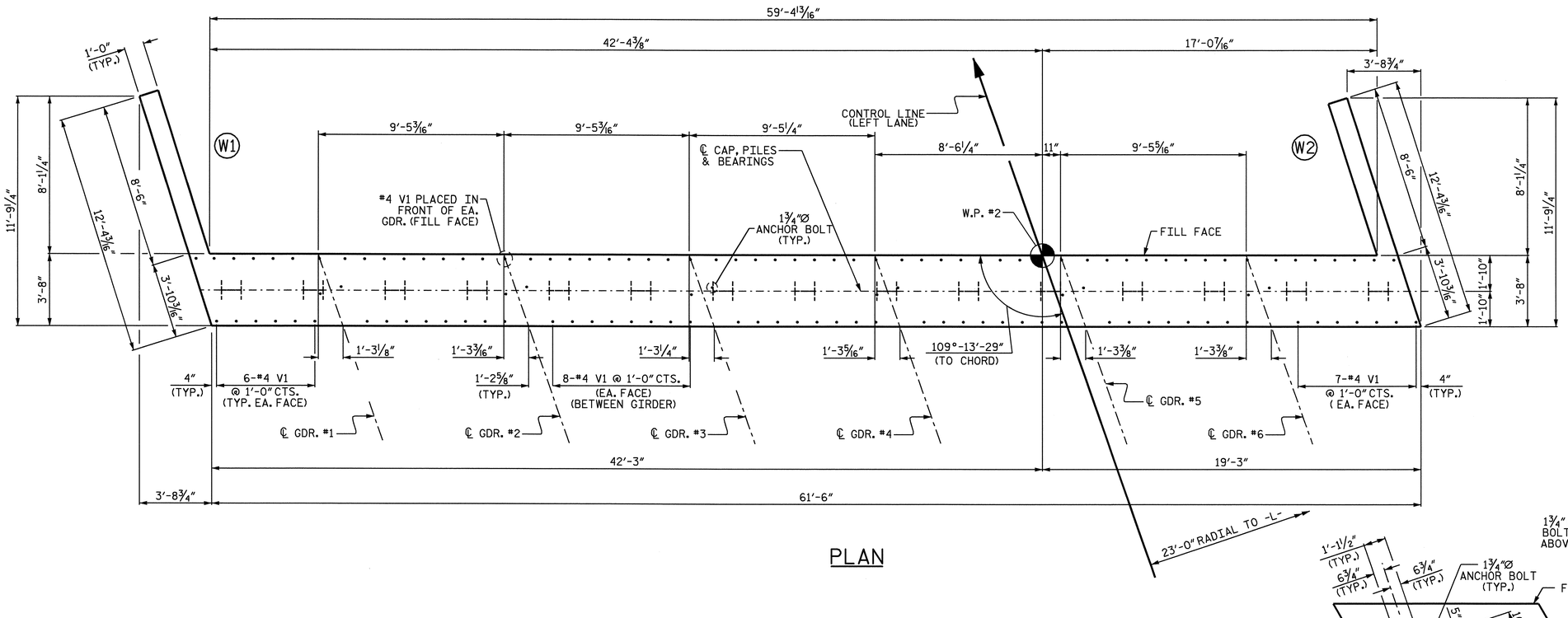

PLAN

NOTES

STIRRUPS IN CAP MAY BE SHIFTED AS NECESSARY TO CLEAR ANCHOR BOLTS.

THE CONTRACTOR SHALL PROVIDE FOR INSTALLATION OF THE 4" DIAMETER DRAIN PIPE THROUGH THE WING WALL AS REQUIRED FOR REINFORCED BRIDGE APPROACH FILLS, SEE THE ROADWAY PLANS. REINFORCING STEEL IN THE WING WALL MAY BE SHIFTED AS NECESSARY TO CLEAR THE DRAIN PIPE.

SEE SUPERSTRUCTURE SHEETS FOR UPPER PART OF INTEGRAL END BENT DETAIL.

THE CONTRACTOR'S ATTENTION IS CALLED TO THE FACT THAT UPPER PART OF WINGS ARE TO BE POURED WITH THE SUPERSTRUCTURE.

THE TOP SURFACE OF THE END BENT CAP AND WINGS, EXCLUDING THE OUTSIDE 4" AND THE BEARING AREA, SHALL BE RAKED TO A DEPTH OF 1/4".

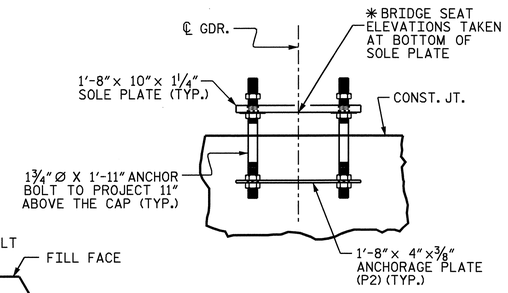

ANCHORAGE DETAILS

(FOR DETAIL SEE STRUCTURAL STEEL SHEET)

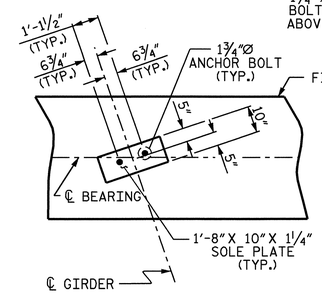

DETAIL A

(TYP. EA. GDR.)

TOP OF PILE ELEVATIONS			
P1	135.877	P9	133.731
P2	135.609	P10	133.462
P3	135.341	P11	133.194
P4	135.072	P12	132.926
P5	134.804	P13	132.657
P6	134.536	P14	132.389
P7	134.267	P15	132.121
P8	133.999		

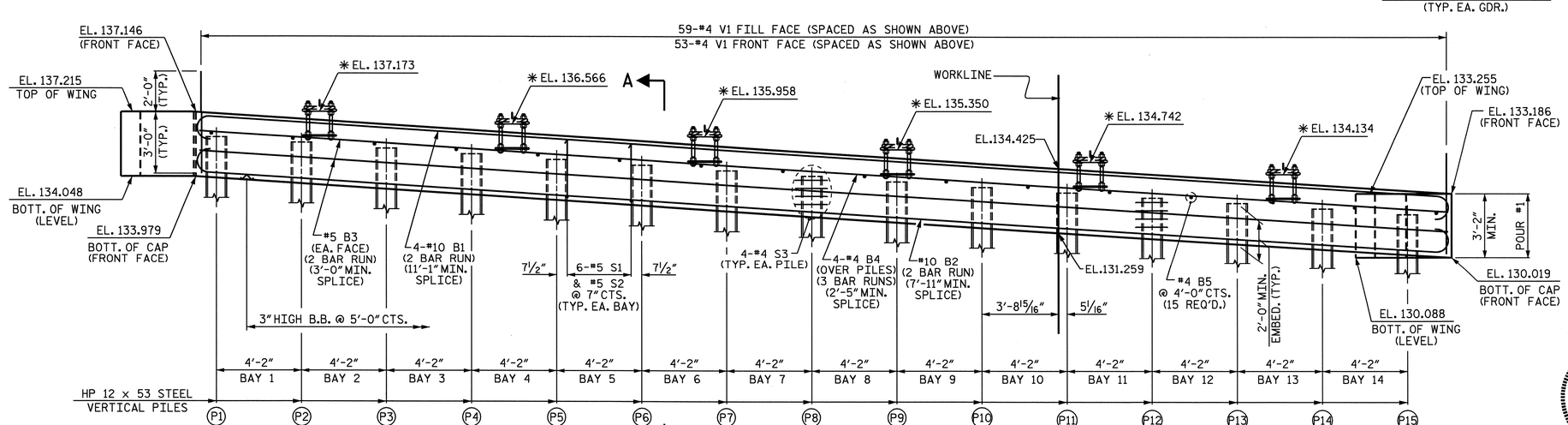

ELEVATION

(UPPER PART OF WINGS NOT SHOWN FOR CLARITY)
✱ ELEVATION GIVEN @ BOTTOM OF SOLE PLATE

PROJECT NO. R-2719A

LENOIR COUNTY

STATION: 211+67.44 -L-

SHEET 1 OF 3

STATE OF NORTH CAROLINA
DEPARTMENT OF TRANSPORTATION
RALEIGH

SUBSTRUCTURE

INTEGRAL END BENT #2

LEFT LANE

NORTH CAROLINA PROFESSIONAL SEAL 025516 ENGINEER EMILY E. MURRAY

Emily E. Murray 10-10-08

REVISIONS						SHEET NO.
NO.	BY:	DATE:	NO.	BY:	DATE:	S-185
1			3			TOTAL SHEETS
2			4			340

DRAWN BY : J.B. WILSON DATE : 7/03/08
CHECKED BY : B.N. BARODWALA DATE : 7/2008

08-OCT-2008 15:17
J:\Structures\Final plans\Str #6\R-2719A_sd_EB.dgn
emurray

STR. #6

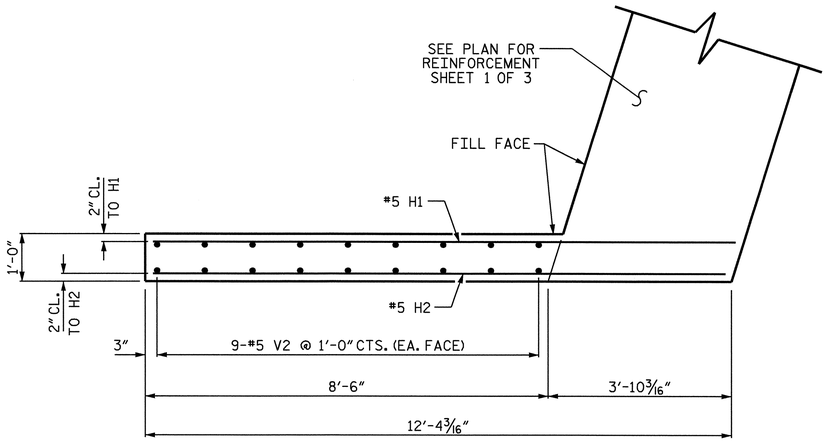

PLAN OF WING W1

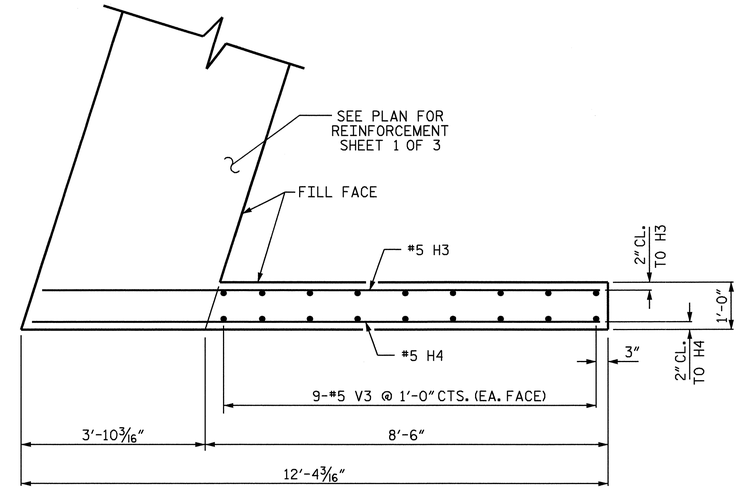

PLAN OF WING W2

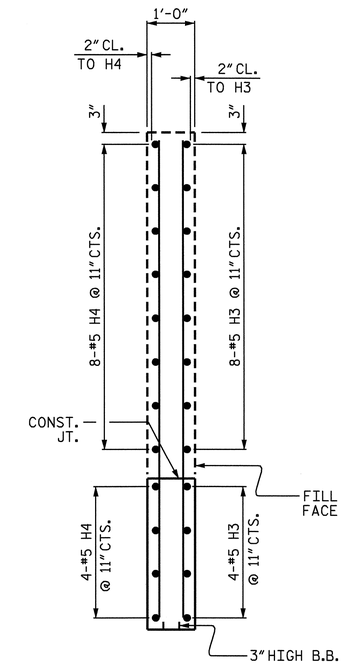

SECTION Y-Y

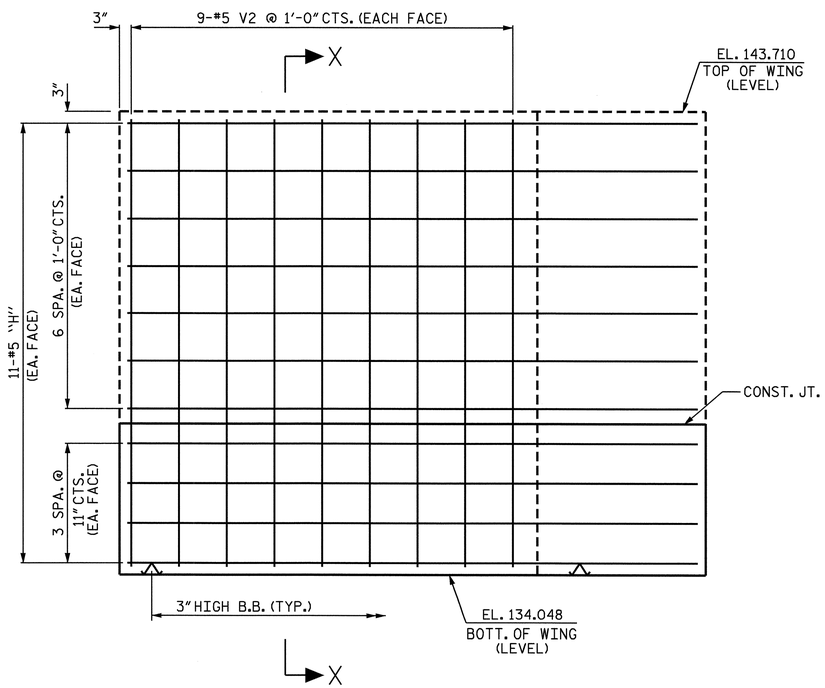

ELEVATION OF WING W1

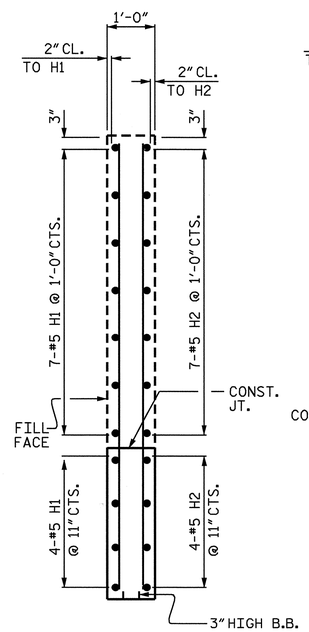

SECTION X-X

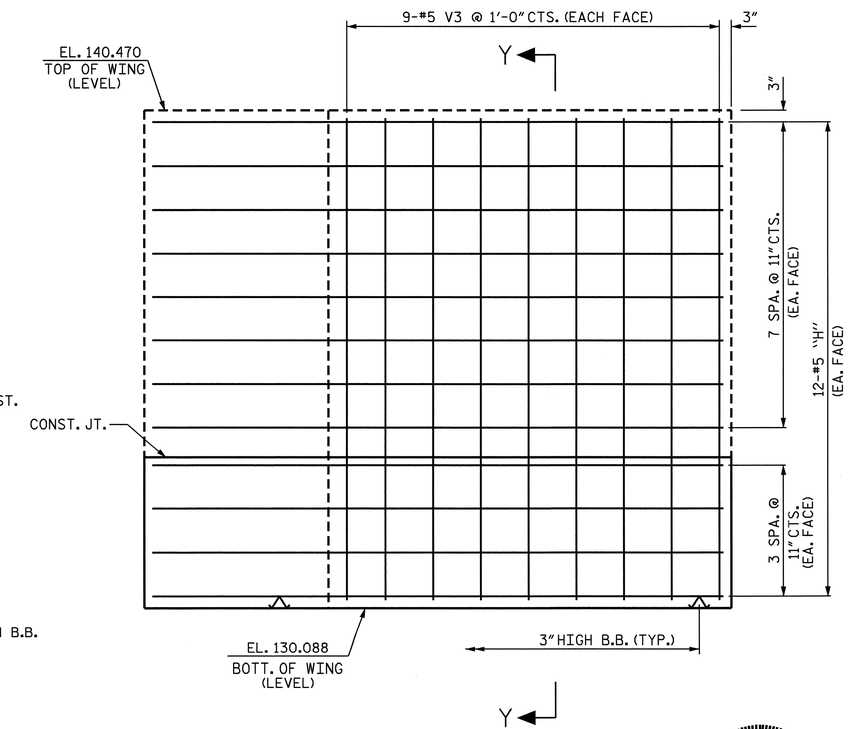

ELEVATION OF WING W2

PROJECT NO. R-2719A
LENOIR COUNTY
STATION: 211+67.44 -L-

SHEET 2 OF 3

STATE OF NORTH CAROLINA
DEPARTMENT OF TRANSPORTATION
RALEIGH

SUBSTRUCTURE

INTEGRAL END BENT #2
LEFT LANE

NORTH CAROLINA PROFESSIONAL SEAL 025516 ENGINEER EMILY E. MURRAY
Emily E. Murray 10-10-08

REVISIONS						SHEET NO.
NO.	BY:	DATE:	NO.	BY:	DATE:	S-186
1			3			TOTAL SHEETS
2			4			340

STR. #6

DRAWN BY : J.B. WILSON DATE : 6/24/08
CHECKED BY : B.N. BARODAWALA DATE : 7/2008

01-OCT-2008 13:08
R:\Structures\Final plans\Str *6\R-2719A_sd_EB.dgn
emurray

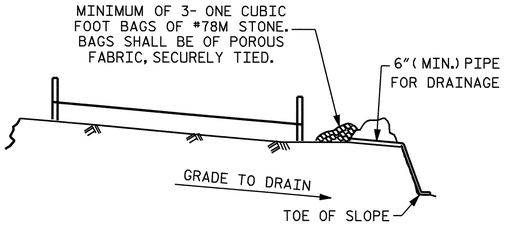

BAGGED STONE AND PIPE SHALL BE PLACED IMMEDIATELY AFTER COMPLETION OF END BENT EXCAVATION. PIPE MAY BE EITHER CONCRETE, CORRUGATED STEEL, CORRUGATED ALUMINUM ALLOY, OR CORRUGATED PLASTIC. PERFORATED PIPE WILL NOT BE ALLOWED.

BAGGED STONE SHALL REMAIN IN PLACE UNTIL THE ENGINEER DIRECTS THAT IT BE REMOVED. THE CONTRACTOR SHALL REMOVE AND DISPOSE OF SILT ACCUMULATIONS AT BAGGED STONE WHEN SO DIRECTED BY THE ENGINEER. BAGS SHALL BE REMOVED AND REPLACED WHENEVER THE ENGINEER DETERMINES THAT THEY HAVE DETERIORATED AND LOST THEIR EFFECTIVENESS.

NO SEPARATE PAYMENT WILL BE MADE FOR THIS WORK AND THE ENTIRE COST OF THIS WORK SHALL BE INCLUDED IN THE UNIT CONTRACT PRICE FOR THE SEVERAL PAY ITEMS.

TEMPORARY DRAINAGE AT END BENT

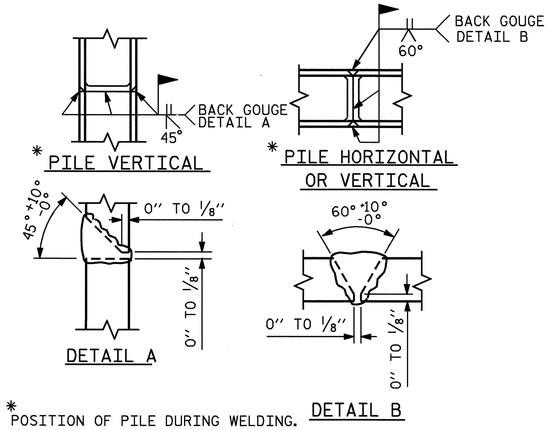

* POSITION OF PILE DURING WELDING.

PILE SPLICE DETAILS

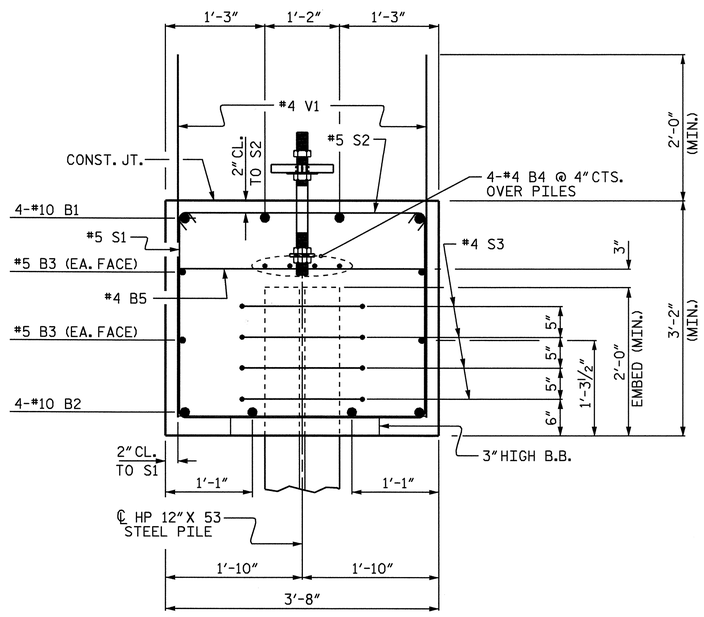

SECTION A-A

BAR TYPES

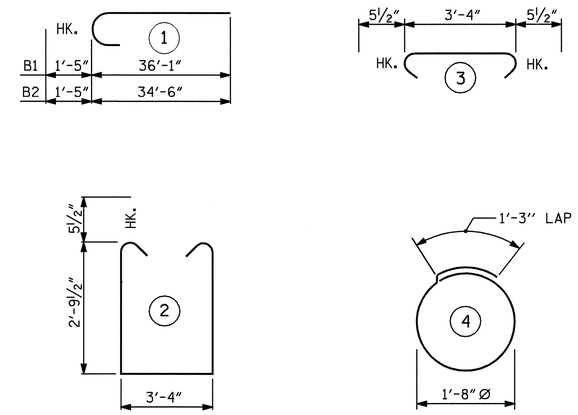

ALL BAR DIMENSIONS ARE OUT TO OUT.

BILL OF MATERIAL
END BENT #2

BAR	NO.	SIZE	TYPE	LENGTH	WEIGHT
B1	8	#10	1	37'-6"	1291
B2	8	#10	1	35'-11"	1236
B3	8	#5	STR	32'-1"	268
B4	12	#4	STR	22'-0"	176
B5	16	#4	STR	3'-4"	36
H1	11	#5	STR	12'-2"	140
H2	11	#5	STR	12'-0"	138
H3	12	#5	STR	11'-8"	146
H4	12	#5	STR	11'-11"	149
S1	86	#5	2	9'-10"	882
S2	86	#5	3	4'-3"	381
S3	60	#4	4	6'-6"	261
V1	112	#4	STR	5'-0"	374
V2	18	#5	STR	9'-4"	175
V3	18	#5	STR	10'-0"	188

REINFORCING STEEL = 5841 LBS

CLASS A CONCRETE BREAKDOWN

POUR #1
CAP AND LOWER PART OF WINGS _ _C.Y. 28.4

HP 12 x 53 STEEL PILES
NO. 15 LIN. FT. 1200

PROJECT NO. R-2719A
LENOIR COUNTY
STATION: 211+67.44 -L-

SHEET 3 OF 3

STATE OF NORTH CAROLINA
DEPARTMENT OF TRANSPORTATION
RALEIGH

SUBSTRUCTURE
INTEGRAL END BENT #2
LEFT LANE

NORTH CAROLINA PROFESSIONAL SEAL 025516 ENGINEER EMILY E. MURRAY
Emily E. Murray 10-10-08

REVISIONS						SHEET NO.
NO.	BY:	DATE:	NO.	BY:	DATE:	S-187
1			3			TOTAL SHEETS
2			4			340

DRAWN BY : J.B. WILSON DATE : 6/24/08
CHECKED BY : B.N. BARODAWALA DATE : 7/2008

01-OCT-2008 13:08
R:\Structures\Final plans\Str #6\R-2719A_sd_EB.dgn
emurray

STR. #6

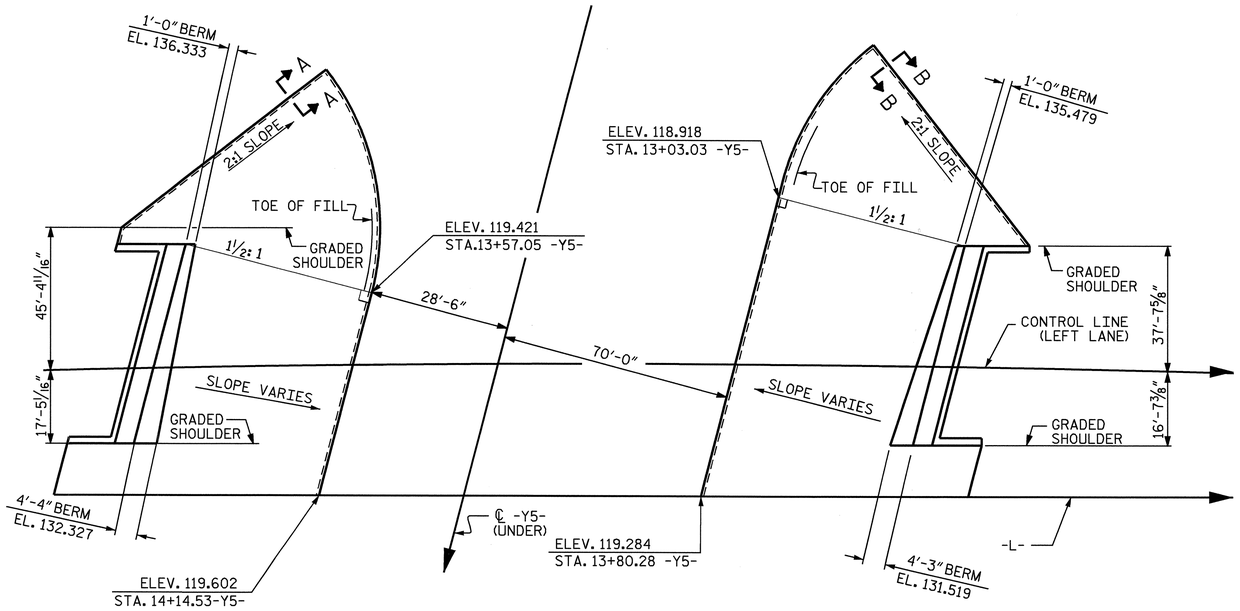

GENERAL NOTES

SLOPE PROTECTION SHALL BE PLACED UNDER THE ENDS OF THE BRIDGE AS SHOWN IN THE DETAILS. STRAIGHT EDGING WILL NOT BE REQUIRED UNLESS, IN THE OPINION OF THE ENGINEER, VISUAL INSPECTION INDICATES A NEED FOR IT. MEASUREMENT AND PAYMENT SHALL BE AS PRESCRIBED IN SECTION 462 OF THE STANDARD SPECIFICATIONS. FOR BERM WIDTH, SEE GENERAL DRAWING.

ALTERNATE "A"

ALTERNATE "A" SHALL CONSIST OF 4" POURED-IN-PLACE CONCRETE PAVING AS SHOWN IN THE DETAILS ON THIS SHEET. CONCRETE SHALL BE CLASS "B". THE CONCRETE SURFACE SHALL BE FLOATED WITH A WOODEN FLOAT AND FINISHED. WELDED WIRE FABRIC REINFORCING SHALL BE 6 X 6 - W1.4 X W1.4, 60" WIDE. SLOPE PROTECTION SHALL BE POURED IN 5' STRIPS AS SHOWN IN THE "POURING DETAIL" WITH 2'-0" LONG #4 BARS PLACED ALONG THE SLOPE BETWEEN STRIPS AT 1'-6" MAXIMUM SPACING. SLOPE PROTECTION MAY BE POURED IN ALTERNATE 4' AND 5' STRIPS AS SHOWN IN THE "OPTIONAL POURING DETAIL" WITH ADJACENT RUNS OF WELDED WIRE FABRIC LAPPING AT LEAST 6". THE COST OF THE WELDED WIRE FABRIC AND #4 BARS, IF USED, SHALL BE INCLUDED IN THE CONTRACT UNIT PRICE BID PER SQUARE YARD FOR SLOPE PROTECTION.

BRIDGE @ STA. 211+67.44 -L- (LEFT LANE)	4 INCH SLOPE PROTECTION	* WELDED WIRE FABRIC 60 INCHES WIDE
	SQUARE YARDS	APPROX. L.F.
END BENT 1	326	704
END BENT 2	293	632

* QUANTITY SHOWN IS BASED ON 5' POURS.

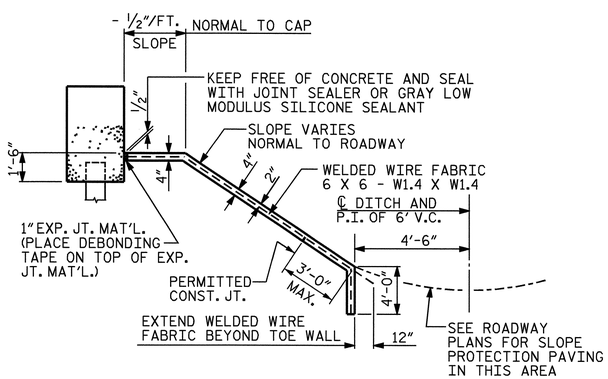

SECTION ALONG ℄ ROADWAY WHEN FILL CATCHES IN DITCH

DETAILS FOR ALTERNATE "A"

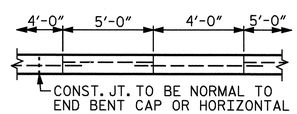

POUR A 4'-0" STRIP FIRST. STRIP WIDTHS MAY VARY IN CURVED PORTION.

OPTIONAL POURING DETAIL

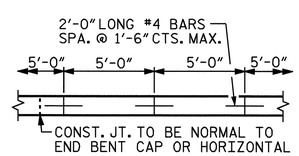

STRIP WIDTHS MAY VARY IN CURVED PORTION.

POURING DETAIL

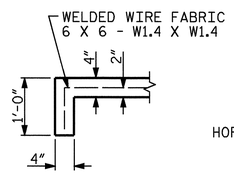

SECTION A-A

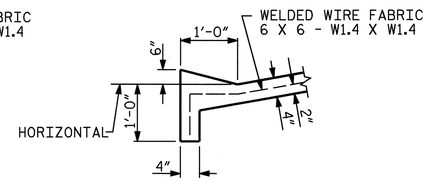

SECTION B-B

PROJECT NO. R-2719A
LENOIR COUNTY
STATION: 211+67.44 -L-

STATE OF NORTH CAROLINA
DEPARTMENT OF TRANSPORTATION
RALEIGH

STANDARD

SLOPE PROTECTION DETAILS

NORTH CAROLINA PROFESSIONAL SEAL 025516 ENGINEER EMILY E. MURRAY
10/13/08

REVISIONS						SHEET NO.
NO.	BY:	DATE:	NO.	BY:	DATE:	S-188
1			3			TOTAL SHEETS
2			4			390

ASSEMBLED BY : M.GUDLAUGSSON	DATE : 06/2008	
CHECKED BY : M. PISO	DATE : 06/2008	
DRAWN BY : ELR 5/92	REV. 7/10/01	LES/RDR
CHECKED BY : GRP 6/92	REV. 5/7/03	RWW/JTE
	REV. 5/1/06	TLA/GM

13-OCT-2008 13:59
J:\Structures\Final plans\Str #6\R2719A_sd_SP_06.dgn
emurray

STR. #6

STD. NO. SP1 (SHT 6)

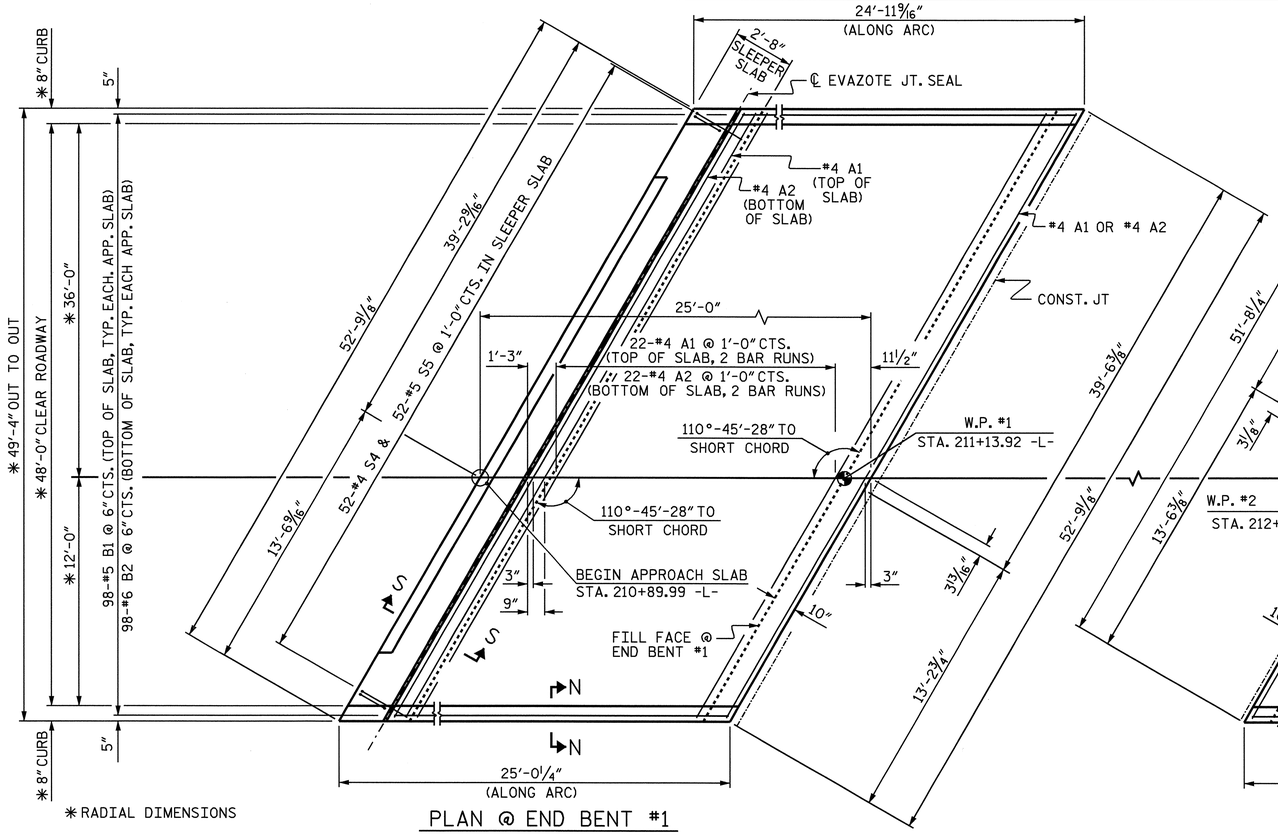

*RADIAL DIMENSIONS

PLAN @ END BENT #1

#4 A1 BARS IN SLEEPER SLAB NOT SHOWN FOR CLARITY.

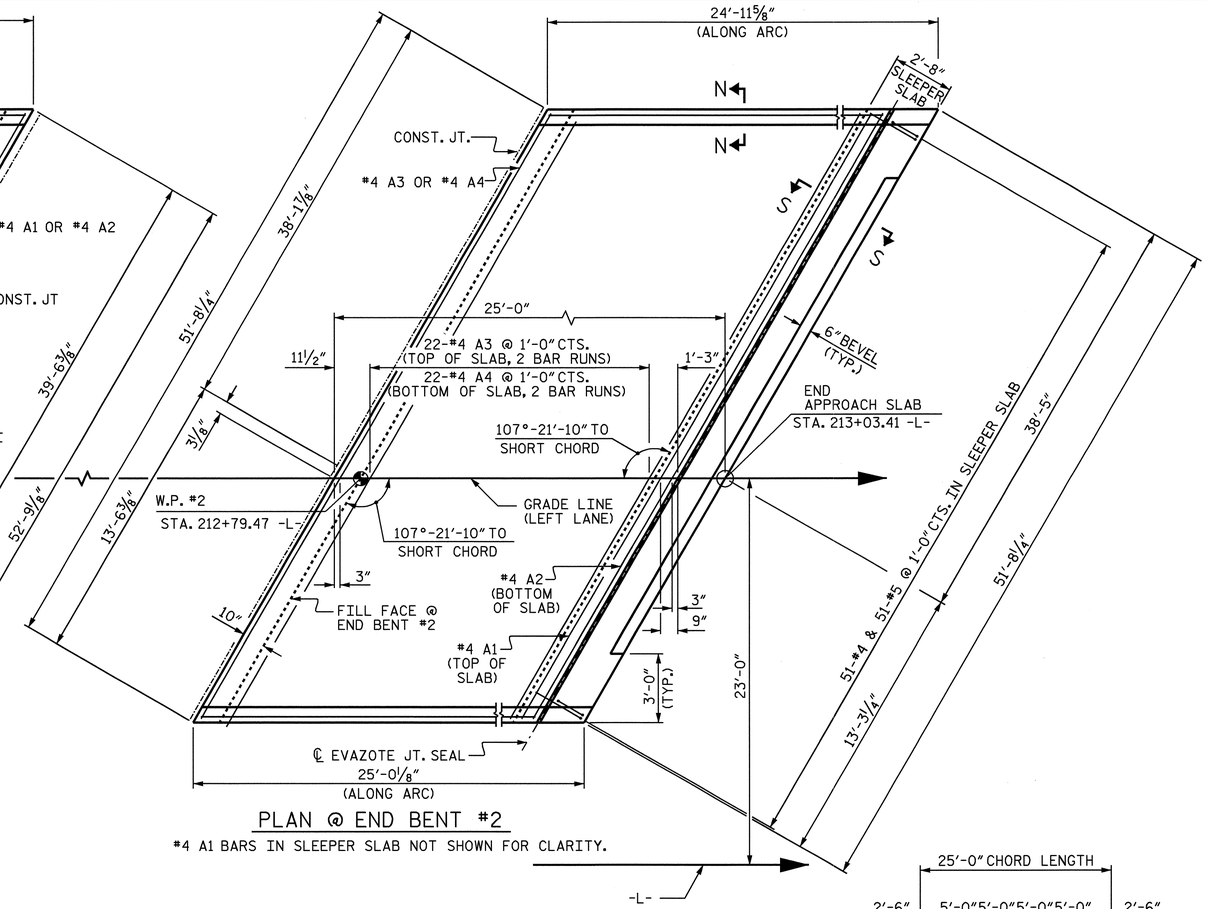

PLAN @ END BENT #2

#4 A1 BARS IN SLEEPER SLAB NOT SHOWN FOR CLARITY.

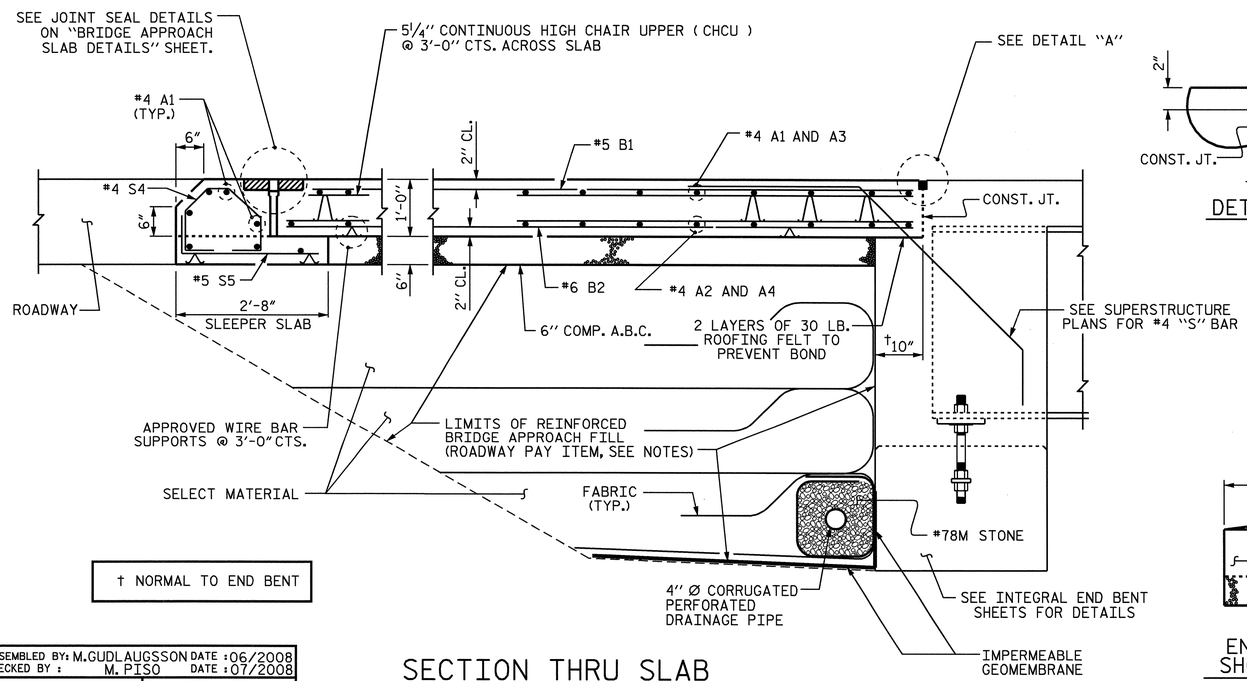

† NORMAL TO END BENT

SECTION THRU SLAB

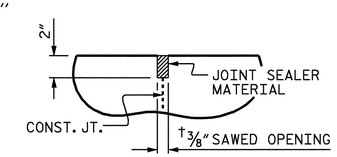

DETAIL "A"

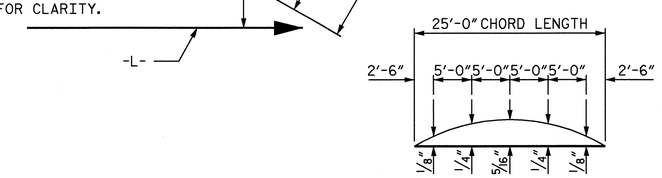

ARC OFFSET - LEFT AND RIGHT

(APPROACH SLAB @ END BENT #1 & END BENT #2)

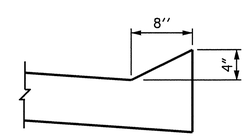

SECTION N-N

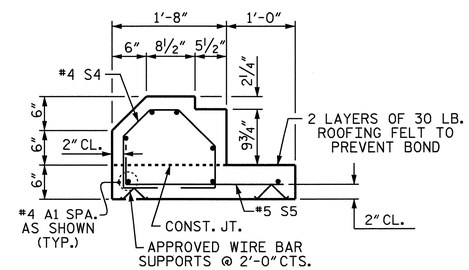

SECTION S-S

SHOWING SLEEPER SLAB

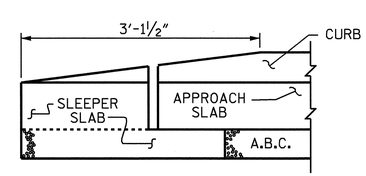

END OF CURB WITHOUT SHOULDER BERM GUTTER

PROJECT NO. R-2719A

LENOIR COUNTY

STATION: 211+67.44 -L-

SHEET 1 OF 3

STATE OF NORTH CAROLINA
DEPARTMENT OF TRANSPORTATION
RALEIGH

STANDARD

BRIDGE APPROACH SLAB FOR INTEGRAL ABUTMENT

(LEFT LANE)

NORTH CAROLINA PROFESSIONAL SEAL 025516 ENGINEER EMILY E. MURRAY

Emily E. Murray 10/10/08

REVISIONS						SHEET NO.
NO.	BY:	DATE:	NO.	BY:	DATE:	S-189
1			3			TOTAL SHEETS
2			4			340

ASSEMBLED BY: M.GUDLAUGSSON DATE :06/2008	
CHECKED BY : M. PISO DATE :07/2008	
DRAWN BY : TLA 10/05	ADDED 5/1/06R KMM/GM
CHECKED BY : GM 5/06	

STR. #6

STD. NO. BAS11 (SHT 11)

01-OCT-2008 13:10
R:\Structures\Final plans\Str *6\R2719A_sd_AS_06.dgn
emurray

NOTES

APPROACH SLAB SHALL NOT BE CONSTRUCTED PRIOR TO COMPLETION OF THE BRIDGE DECK.

FOR REINFORCED BRIDGE APPROACH FILL INCLUDING FABRIC, IMPERMEABLE GEOMEMBRANE, 4" Ø DRAINAGE PIPE, #78M STONE, AND SELECT MATERIAL, SEE ROADWAY PLANS.

AREA BETWEEN THE WINGWALL AND APPROACH SLAB SHALL BE GRADED TO DRAIN THE WATER AWAY FROM THE FILL FACE OF THE BRIDGE AND SHALL BE PAVED. SEE ROADWAY PLANS.

THE 6" COMP. A.B.C. SHALL BE FLUSH WITH THE SLEEPER SLAB AND SHALL EXTEND 1'-0" OUTSIDE OF EACH EDGE OF THE APPROACH SLAB.

THE CONTRACTOR MAY USE 4" TYPE B-25.0B ASPHALT CONCRETE BASE COURSE IN LIEU OF 6" COMP. A.B.C. IF THIS OPTION IS USED, THE BASE COURSE SHALL BE FLUSH WITH THE SLEEPER SLAB, AND THE WIDTH SHALL BE THE SAME AS THAT OF THE APPROACH SLAB.

THE CONTRACTOR MAY USE 5" CLASS "A" CONCRETE BASE IN LIEU OF 6" COMP. A.B.C. IF THIS OPTION IS USED, THE CONCRETE BASE SHALL BE FLUSH WITH THE SLEEPER SLAB, AND THE WIDTH SHALL BE THE SAME AS THAT OF THE APPROACH SLAB. THE CONCRETE SHALL BE FINISHED TO A SMOOTH SURFACE AND A LAYER OF 30 LB ROOFING FELT SHALL BE PLACED BETWEEN THE CONCRETE BASE AND THE APPROACH SLAB TO PREVENT BOND. THE APPROACH SLAB SHALL NOT BE CAST UNTIL THE CONCRETE BASE HAS REACHED AN AGE OF THREE CURING DAYS.

THE VERTICAL JOINT ON THE RIGHT AND LEFT SIDE OF THE APPROACH SLAB AT THE ENDS OF THE EVAZOTE JOINT SHALL BE FILLED WITH SILICONE OR OTHER APPROVED MATERIAL IN ORDER TO PREVENT BACKFILL FROM ENTERING THE JOINT OPENING.

THE JOINT OPENING AT THE APPROACH SLAB/DECK INTERFACE SHALL BE SAWED NO MORE THAN 12 HOURS AFTER THE APPROACH SLAB IS CAST. THE JOINT SHALL BE CLEANED OF ALL DEBRIS BEFORE THE SEALANT IS APPLIED. THE JOINT SEALER MATERIAL SHALL CONFORM TO THE REQUIREMENTS OF TYPE SL LOW MODULUS SILICONE SEALANT.

WITH EVAZOTE JOINT SEAL

FOR EVAZOTE JOINT SEALS, SEE SPECIAL PROVISIONS.

THE NOMINAL UNCOMPRESSED SEAL WIDTH OF THE EVAZOTE JOINT SEAL SHALL BE 3 1/8".

FOR ELASTOMERIC CONCRETE, SEE SPECIAL PROVISIONS.

BILL OF MATERIAL
FOR ONE APPROACH SLAB @ END BENT #1

BAR	NO.	SIZE	TYPE	LENGTH	WEIGHT
✳ A1	62	#4	STR	27'-3"	1129
A2	48	#4	STR	27'-1"	868
✳ B1	98	#5	STR	22'-1"	2257
B2	98	#6	STR	22'-8"	3336
✳ S4	52	#4	1	3'-11"	136
S5	52	#5	2	2'-11"	158
REINFORCING STEEL				LBS.	4362
✳ EPOXY COATED REINFORCING STEEL				LBS.	3522
CLASS AA CONCRETE					
POUR #1 - SLAB & CURB				C. Y.	43.5
POUR #2 - SLEEPER SLAB				C. Y.	5.3
TOTAL				C. Y.	48.8

BAR TYPES

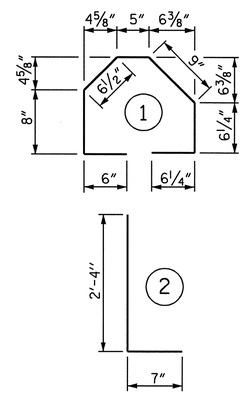

ALL BAR DIMENSIONS ARE OUT TO OUT

BILL OF MATERIAL
FOR ONE APPROACH SLAB @ END BENT #2

BAR	NO.	SIZE	TYPE	LENGTH	WEIGHT
✳ A3	62	#4	STR	26'-8"	1104
A4	48	#4	STR	26'-7"	852
✳ B1	98	#5	STR	22'-1"	2257
B2	98	#6	STR	22'-8"	3336
✳ S4	51	#4	1	3'-11"	133
S5	51	#5	2	2'-11"	155
REINFORCING STEEL				LBS.	4343
✳ EPOXY COATED REINFORCING STEEL				LBS.	3494
CLASS AA CONCRETE					
POUR #1 - SLAB & CURB				C. Y.	42.8
POUR #2 - SLEEPER SLAB				C. Y.	5.3
TOTAL				C. Y.	48.1

BAR TYPES

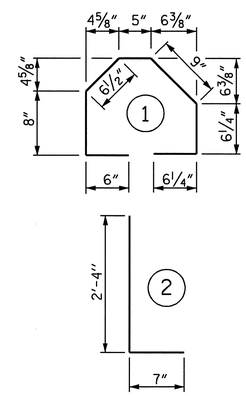

ALL BAR DIMENSIONS ARE OUT TO OUT

SPLICE CHART

BAR SIZE	SPLICE LENGTH
#4 A1	2'-0"
#4 A2	1'-9"

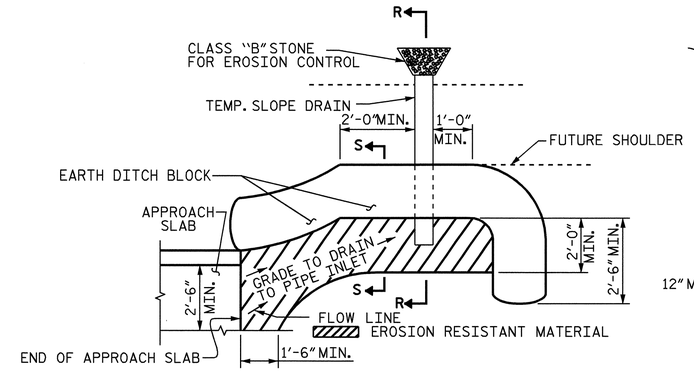

NOTE: IMMEDIATELY AFTER THE CONSTRUCTION OF THE APPROACH SLAB, THE CONTRACTOR SHALL PROVIDE TEMPORARY BERM AND SLOPE DRAIN. CONTRACTOR SHALL GRADE TO PIPE INLET AND PROVIDE EROSION RESISTANT MATERIAL AS SHOWN. THE EROSION RESISTANT MATERIAL SHALL BE EITHER 1) ASPHALT PLANT MIX, TYPE 1 OR TYPE 2, MIN. 2" DEPTH, 2) EROSION CONTROL MAT, OR 3) CONCRETE, AS DIRECTED BY THE ENGINEER. THE SLOPE DRAIN SHALL CONSIST OF A NON-PERFORATED TEMPORARY DRAINAGE PIPE, 12 INCHES IN DIAMETER.

PLAN VIEW

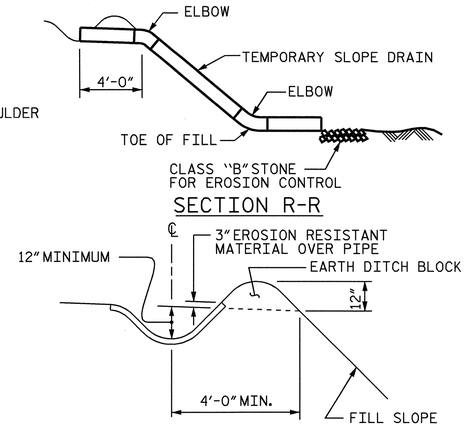

SECTION S-S

TEMPORARY BERM AND SLOPE DRAIN DETAILS

(TO BE USED WHEN SHOULDER BERM GUTTER IS REQUIRED)

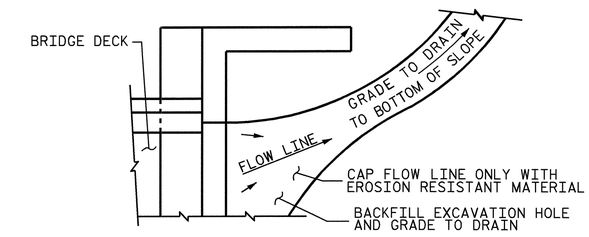

NOTE: IF THE APPROACH SLAB IS NOT CONSTRUCTED IMMEDIATELY AFTER THE BACKFILLING OF THE END BENT EXCAVATION, GRADE TO DRAIN TO THE BOTTOM OF THE SLOPE AND PROVIDE EROSION RESISTANT MATERIAL, SUCH AS FIBERGLASS ROVING OR AS DIRECTED BY THE ENGINEER TO PREVENT SOIL EROSION AND TO PROTECT THE AREA ADJACENT TO THE STRUCTURE. THE CONTRACTOR WILL BE REQUIRED TO REMOVE THESE MATERIALS PRIOR TO CONSTRUCTION OF THE APPROACH SLAB.

TEMPORARY DRAINAGE DETAIL

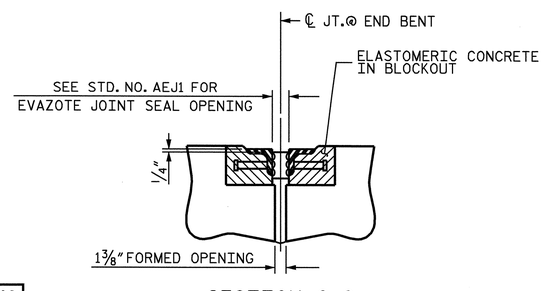

SECTION C-C
ARMORED EVAZOTE JOINT SEAL

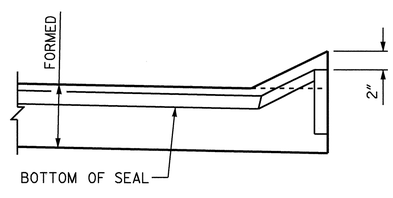

SECTION A-A

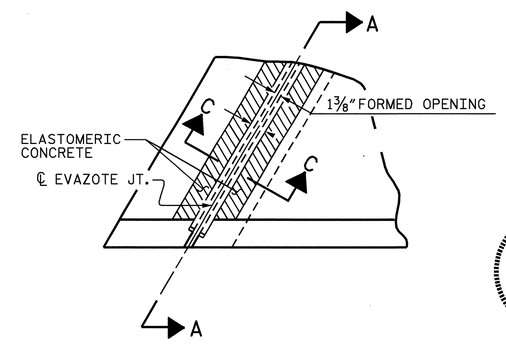

PLAN

NORTH CAROLINA PROFESSIONAL SEAL 025516 ENGINEER EMILY E. MURRAY
Emily E. Murray
10-10-08

PROJECT NO. R-2719A
LENOIR COUNTY
STATION: 211+67.44 -L-

SHEET 2 OF 3

STATE OF NORTH CAROLINA
DEPARTMENT OF TRANSPORTATION
RALEIGH

STANDARD

BRIDGE APPROACH SLAB DETAILS

(LEFT LANE)

REVISIONS						SHEET NO.
NO.	BY:	DATE:	NO.	BY:	DATE:	S-190
1			3			TOTAL SHEETS
2			4			340

ASSEMBLED BY: M.GUDLAUGSSON	DATE : 06/2008		
CHECKED BY : M.PISO	DATE : 06/2008		
DRAWN BY : FCJ 11/88	REV. 10/17/00	RWW/LES	
CHECKED BY : ARB 11/88	REV. 5/7/03	RWW/JTE	
	REV. 5/1/06R	MAA/KMM	

08-OCT-2008 15:45
J:\Structures\Final plans\Str #6\R2719A_sd_AS_06.dgn
emurray

STR. #6 STD. NO. BAS10 (SHT 7)

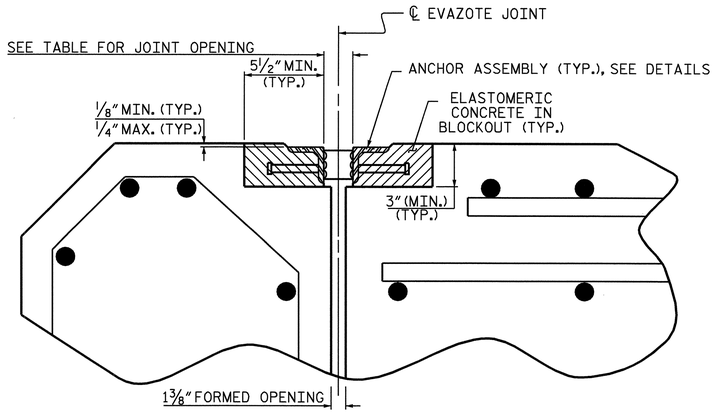

ARMORED JOINT DETAILS

SECTION NORMAL TO JOINT AT APPROACH SLAB SLEEPER SLAB

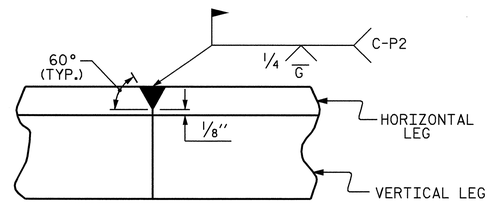

DETAIL- FIELD WELD SPLICE OF ANGLE

NOTES

ANGLES SHALL CONFORM TO AASHTO M270 GRADE 36 STEEL OR APPROVED EQUAL. ALL STUD ANCHORS SHALL CONFORM TO AASHTO M169 GRADES 1010 THRU 1020 OR APPROVED EQUAL.

STUD ANCHORS SHALL BE SHOP WELDED AND ALL HOLES SHALL BE SHOP DRILLED AS SHOWN ON THE PLANS. STUD ANCHORS SHALL BE ELECTRIC ARC END WELDED WITH COMPLETE FUSION.

UPON COMPLETION OF SHOP FABRICATION, THE ENTIRE ANCHOR ASSEMBLY SHALL BE METALLIZED. THE ½" Ø STUD ANCHORS AND ANCHOR TABS NEED NOT BE METALLIZED. SEE SPECIAL PROVISION FOR THERMAL SPRAYED COATINGS (METALLIZATION).

ANCHOR ASSEMBLY SHALL BE MADE CONTINUOUS THE LENGTH OF THE JOINT FROM GUTTER TO GUTTER. FOR FIELD SPLICES AT ALL CROWN BREAK POINTS, THE ENDS OF THE STEEL ANGLES SHALL BE CUT PARALLEL TO THE BRIDGE CENTERLINE. FINISHED FIELD WELDS SHALL BE GROUND SMOOTH AND COATED WITH A MINIMUM THICKNESS OF 4 DRY MILS OF ZINC-RICH PAINT IN ACCORDANCE WITH THE STANDARD SPECIFICATIONS.

ANCHOR ASSEMBLY SEGMENTS SHALL NOT BE LESS THAN 12 FEET NOR MORE THAN 20 FEET IN LENGTH. SHORTER SEGMENTS MAY BE USED AT THE EDGE OF ROADWAY OR AT POINTS OF STAGED CONSTRUCTION.

THE ANCHOR ASSEMBLY SHALL BE SECURED AND LEVELED AS SHOWN IN THE "ARMORED JOINT ANCHOR ASSEMBLY DETAILS". NO SUBMITTALS ARE REQUIRED FOR ⅜" Ø EXPANSION ANCHORS, NUTS OR WASHERS. THE CONTRACTOR MAY SUBMIT FOR APPROVAL AN ALTERNATE METHOD OF ALIGNING AND LEVELING THE ANGLES. THE ALTERNATE METHOD SHALL NOT INCLUDE ANY WELDING TO THE OUTSIDE FACE OF THE ANGLES.

AFTER THE ELASTOMERIC CONCRETE HAS BEEN CAST ON BOTH SIDES OF THE JOINT, REMOVE ANY EXCESS CONCRETE THAT COMES THROUGH THE WEEP HOLES AND THOROUGHLY CLEAN THE ANGLES. ANY DAMAGED STEEL SHALL BE COATED WITH A MINIMUM OF 4 MILS OF ZINC-RICH PAINT IN ACCORDANCE WITH THE STANDARD SPECIFICATIONS.

SEE SPECIAL PROVISIONS FOR EVAZOTE JOINT SEALS.

SEE SPECIAL PROVISIONS FOR ELASTOMERIC CONCRETE.

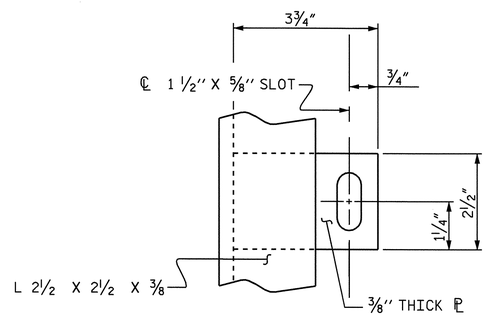

PLAN VIEW OF TAB

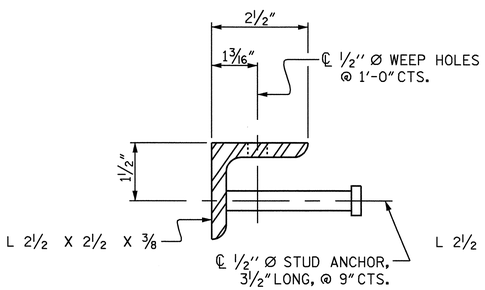

SECTION VIEW OF STUD

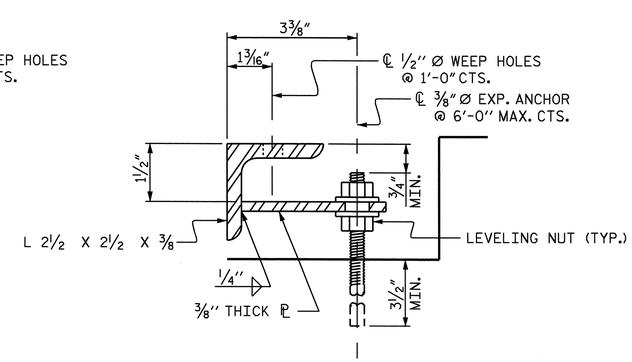

SECTION VIEW OF TAB

ARMORED JOINT ANCHOR ASSEMBLY DETAILS

MOVEMENT AND SETTING AT EVAZOTE JOINT

END BENT NO.	SKEW ANGLE	NOMINAL UNCOMPRESSED SEAL WIDTH	TOTAL MOVEMENT (ALONG ℄ RDWY)	PERPENDICULAR JOINT OPENING AT 45° F	PERPENDICULAR JOINT OPENING AT 60° F	PERPENDICULAR JOINT OPENING AT 90° F
1	110°-31'-17"	3⅛"	1⁹⁄₁₆"	2⅝"	2⅜"	1⅞"
2	107°-35'-21"	3⅛"	1⁹⁄₁₆"	2⅝"	2⅜"	1⅞"

TOTAL MOVEMENT IS CALCULATED ALONG THE CENTERLINE OF ROADWAY.
JOINT OPENINGS ARE MEASURED PERPENDICULAR TO THE JOINT.

BILL OF MATERIAL

END BENT NO.	ELASTOMERIC CONCRETE ✳ (CU. FT.)	TOTAL LENGTH OF ANGLE (FT)
1	11.7	51'-2¹¹⁄₁₆"
2	11.5	50'-4"
TOTAL	23.2	101'-6¹¹⁄₁₆"

✳ BASED ON THE MINIMUM BLOCKOUT SHOWN.

PROJECT NO. R-2719A
LENOIR COUNTY
STATION: 211+67.44 -L-

SHEET 3 OF 3

STATE OF NORTH CAROLINA
DEPARTMENT OF TRANSPORTATION
RALEIGH

STANDARD
ARMORED EVAZOTE JOINT DETAILS

(LEFT LANE)

NORTH CAROLINA PROFESSIONAL SEAL 025516 ENGINEER EMILY E. MURRAY
Emily E. Murray
10-10-08

REVISIONS						SHEET NO.
NO.	BY:	DATE:	NO.	BY:	DATE:	S-191
1			3			TOTAL SHEETS
2			4			340

ASSEMBLED BY: M.GUDLAUGSSON DATE :06/2008
CHECKED BY : M. PISO DATE :06/2008

DRAWN BY : EEM 1/96
CHECKED BY : RGW 1/96

REV. 7/10/01 LES/RDR
REV. 5/7/03RR RWW/JTE
REV. 5/1/06 TLA/GM

10-OCT-2008 14:11
J:\Structures\Finalplans\Str #6\R2719A_sd_AS_06.dgn
emurray

STR. #6

STD. NO. AEJ1

F. A. PROJECT: STP-0224(12)

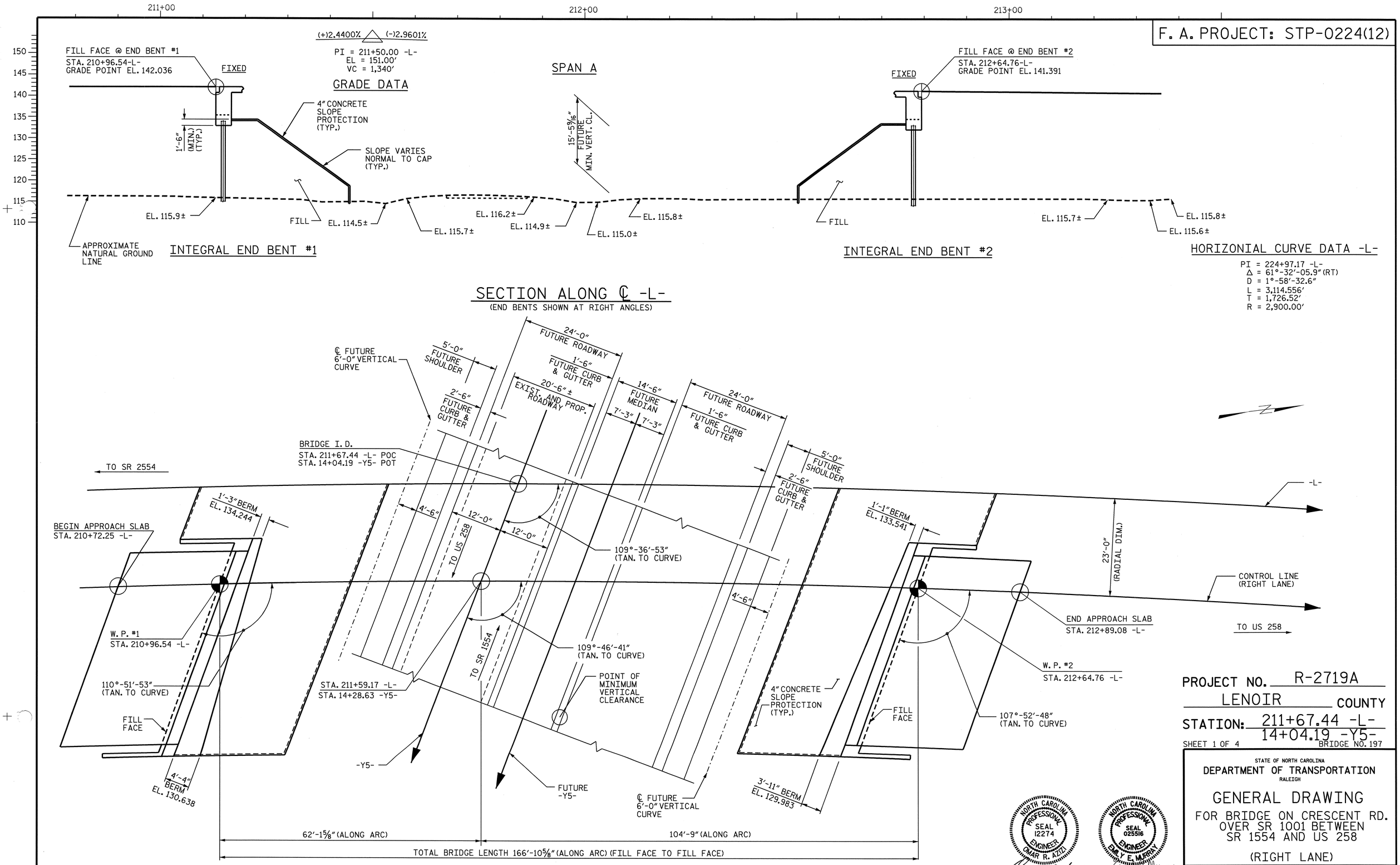

PROJECT NO. R-2719A

LENOIR COUNTY

STATION: 211+67.44 -L-
14+04.19 -Y5-

SHEET 1 OF 4 BRIDGE NO. 197

STATE OF NORTH CAROLINA
DEPARTMENT OF TRANSPORTATION
RALEIGH

GENERAL DRAWING

FOR BRIDGE ON CRESCENT RD. OVER SR 1001 BETWEEN SR 1554 AND US 258

(RIGHT LANE)

NORTH CAROLINA PROFESSIONAL SEAL 12274 ENGINEER OMAR R. AZIZ
Omar R Aziz 10-10-08

NORTH CAROLINA PROFESSIONAL SEAL 025516 ENGINEER EMILY E. MURRAY
Emily E. Murray 10-10-08

REVISIONS						SHEET NO.
NO.	BY:	DATE:	NO.	BY:	DATE:	S-192
1			3			TOTAL SHEETS
2			4			340

DRAWN BY : PEGGY ADKINS DATE : 8-06
CHECKED BY : A.M.LEE DATE : 9-08

10-OCT-2008 11:18
J:\Structures\Final plans\Str #7\r2719a_sd_gd_07*.dgn
emurray

STR. #7

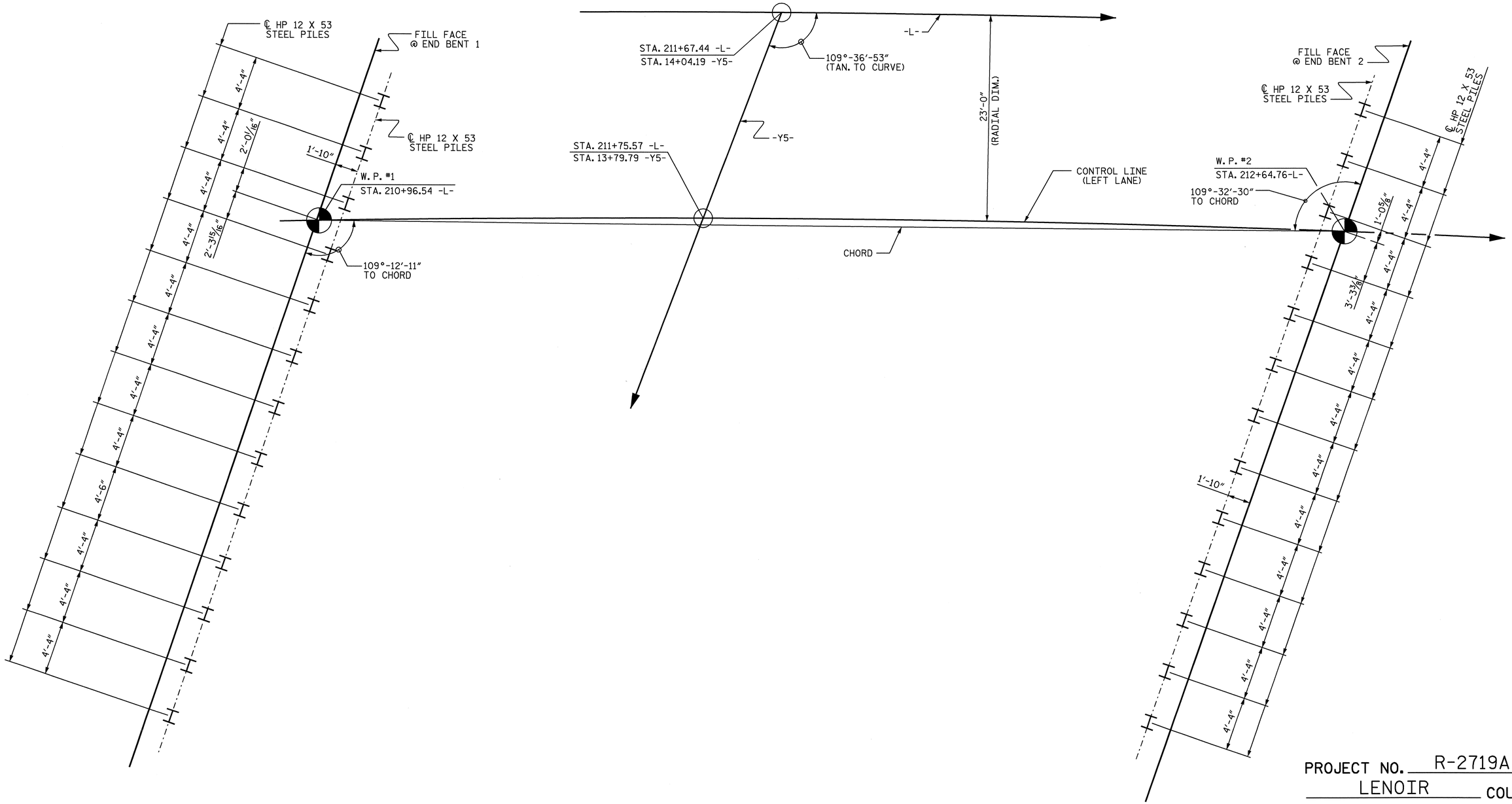

INTEGRAL
END BENT 1

INTEGRAL
END BENT 2

FOUNDATION LAYOUT

DIMENSIONS LOCATING PILES ARE SHOWN TO
PILE CENTERLINE AT BOTTOM OF CAP

PROJECT NO. R-2719A
LENOIR COUNTY
STATION: 211+67.44 -L-
14+04.19 -Y5-
SHEET 2 OF 4

STATE OF NORTH CAROLINA
DEPARTMENT OF TRANSPORTATION
RALEIGH

GENERAL DRAWING
FOR BRIDGE ON CRESCENT RD.
OVER SR 1001 BETWEEN
SR 1554 AND US 258
(RIGHT LANE)

NORTH CAROLINA PROFESSIONAL SEAL 025516 ENGINEER EMILY E. MURRAY
10-10-08

REVISIONS						SHEET NO.
NO.	BY:	DATE:	NO.	BY:	DATE:	S-193
1			3			TOTAL SHEETS
2			4			340

STR. #7

DRAWN BY : B.N.BARODAWALA DATE : 8-12-08
CHECKED BY : A.M.LEE DATE : 9-08

03-OCT-2008 11:17
J:\Structures\Final plans\Str #7\r2719a_sd_gd_07*.dgn
emurray

HORIZONIAL CURVE DATA -L-

PI = 224+97.17 -L-
Δ = 61°-32′-05.9″(RT)
D = 1°-58′-32.6″
L = 3,114.556′
T = 1,726.52′
R = 2,900.00′

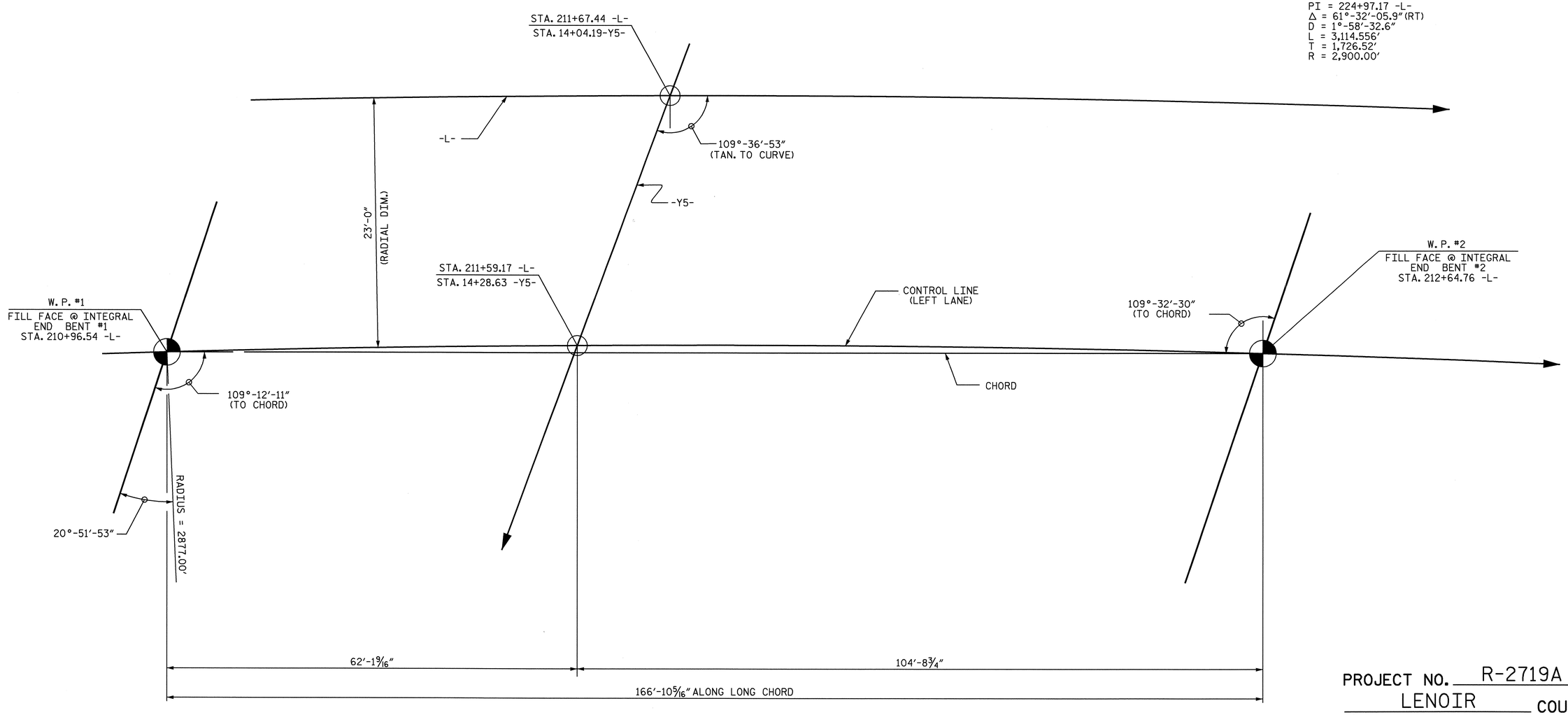

INTEGRAL
END BENT 1

INTEGRAL
END BENT 2

LONG CHORD LAYOUT

PROJECT NO. R-2719A
LENOIR COUNTY
STATION: 211+67.44 -L-
14+04.19 -Y5-

SHEET 3 OF 4

STATE OF NORTH CAROLINA
DEPARTMENT OF TRANSPORTATION
RALEIGH

GENERAL DRAWING
FOR BRIDGE ON CRESCENT RD.
OVER SR 1001 BETWEEN
SR 1554 AND US 258
(RIGHT LANE)

NORTH CAROLINA PROFESSIONAL SEAL 025516 ENGINEER EMILY E. MURRAY
Emily E. Murray
10-10-08

REVISIONS						SHEET NO.
NO.	BY:	DATE:	NO.	BY:	DATE:	S-194
1			3			TOTAL SHEETS
2			4			340

DRAWN BY : B.N.BARODAWALA DATE : 8-12-08
CHECKED BY : A.M.LEE DATE : 9-08

08-OCT-2008 15:25
J:\Structures\Finalplans\Str #7\r2719a_sd_gd_07*.dgn
emurray

STR. #7

BM-H RR SPIKE IN 30" OAK TREE, STA. 200+12 -L-, 266' RT, ELEV 120.73'.

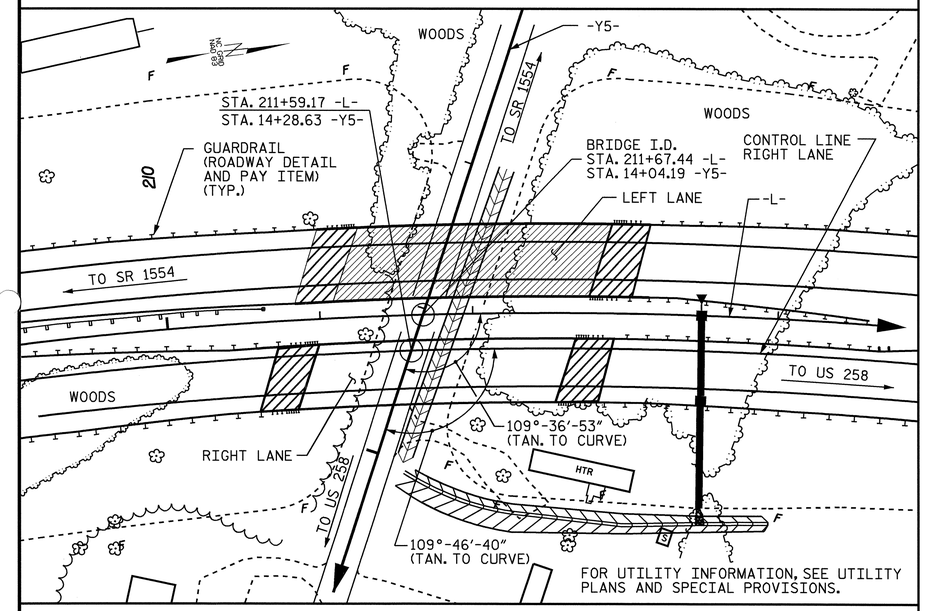

LOCATION SKETCH

NOTES:

ASSUMED LIVE LOAD = HS20 OR ALTERNATE LOADING, EXCEPT THE GIRDERS HAVE BEEN DESIGNED FOR HS25.

THIS BRIDGE HAS BEEN DESIGNED BY THE STRENGTH DESIGN METHOD AS SPECIFIED IN AASHTO STANDARD SPECIFICATIONS.

THIS BRIDGE HAS BEEN DESIGNED IN ACCORDANCE WITH THE REQUIREMENTS OF THE AASHTO STANDARD SPECIFICATIONS FOR SEISMIC DESIGN OF HIGHWAY BRIDGES FOR SEISMIC PERFORMANCE CATEGORY A.

FOR OTHER DESIGN DATA AND GENERAL NOTES, SEE SHEET SN.

FOR EROSION CONTROL MEASURES SEE EROSION CONTROL PLANS.

ALL STRUCTURAL STEEL SHALL BE AASHTO M270 GRADE 50W.

REMOVABLE FORMS MAY BE USED IN LIEU OF METAL STAY-IN-PLACE FORMS IN ACCORDANCE WITH ARTICLE 420-3 OF THE STANDARD SPECIFICATIONS.

FOR MAINTENANCE AND PROTECTION OF TRAFFIC BENEATH PROPOSED STRUCTURE, SEE SPECIAL PROVISIONS.

THE CONTRACTOR SHALL PROVIDE INDEPENDENT ASSURANCE SAMPLES OF REINFORCING STEEL AS FOLLOWS: FOR PROJECTS REQUIRING UP TO 400 TONS OF REINFORCING STEEL, ONE 30 INCH SAMPLE OF EACH SIZE BAR USED, AND FOR PROJECTS REQUIRING OVER 400 TONS OF REINFORCING STEEL, TWO 30 INCH SAMPLES OF EACH SIZE BAR USED. THE BARS FROM WHICH THE SAMPLES ARE TAKEN MUST THEN BE SPLICED WITH REPLACEMENT BARS OF THE SIZE AND LENGTH OF THE SAMPLE, PLUS A MINIMUM LAP SPLICE OF THIRTY BAR DIAMETERS.

NEEDLE BEAMS WILL NOT BE ALLOWED UNLESS OTHERWISE CALLED FOR ON THE PLANS OR APPROVED BY THE ENGINEER.

FOR SUBMITTAL OF WORKING DRAWINGS, SEE SPECIAL PROVISIONS.

FOR FALSEWORK AND FORMWORK, SEE SPECIAL PROVISIONS.

FOR CRANE SAFETY, SEE SPECIAL PROVISIONS.

FOR GROUT FOR STRUCTURES, SEE SPECIAL PROVISIONS.

FOR SHIPPING STEEL STRUCTURAL MEMBERS, SEE SPECIAL PROVISIONS.

DRIVE PILES AT END BENT NO. 1 AND END BENT NO. 2 TO A REQUIRED BEARING CAPACITY OF 140 TONS PER PILE. THE REQUIRED BEARING CAPACITY IS EQUAL TO THE ALLOWABLE BEARING CAPACITY WITH A MINIMUM FACTOR OF SAFETY OF TWO.

THE ALLOWABLE BEARING CAPACITY FOR PILES AT END BENT NO. 1 AND END BENT NO. 2 IS 70 TONS PER PILE.

OBSERVE A ONE MONTH WAITING PERIOD AFTER CONSTRUCTING THE EMBANKMENT, END BENT AND REINFORCED BRIDGE APPROACH FILL, IF APPLICABLE, BEFORE BEGINNING APPROACH SLAB CONSTRUCTION AT END BENT NO. 1 AND END BENT NO. 2.

TESTING PILES WITH THE PILE DRIVING ANALYZER (PDA) DURING DRIVING, RESTRIKING OR REDRIVING MAY BEREQUIRED. THE ENGINEER WILL DETERMINE THE NEED FOR PDA TESTING. FOR PILE DRIVING ANALYZER, SEE SPECIAL PROVISIONS.

FOR FAA REQUIREMENTS, SEE ROADWAY SPECIAL PROVISIONS.

TOTAL BILL OF MATERIAL

	PDA TESTING	PDA ASSISTANCE	REINFORCED CONCRETE DECK SLAB	GROOVING BRIDGE FLOORS	CLASS A CONCRETE	BRIDGE APPROACH SLABS	REINFORCING STEEL	STRUCTURAL STEEL	HP 12 X 53 STEEL PILES		PILE REDRIVES	CONCRETE BARRIER RAIL	4" SLOPE PROTECTION	EVAZOTE JOINT SEALS
	EACH	EACH	SQ.FT.	SQ.FT.	CU.YDS.	LUMP SUM	LBS.	APPROX. LBS.	NO.	LIN.FT.	EACH	LIN.FT.	SQ. YD.	LUMP SUM
SUPERSTRUCTURE			7550	8071		LUMP SUM		291,978				330.21		LUMP SUM
END BENT NO.1					26.1		5459		13	1040			350	
END BENT NO.2					26.1		5455		13	1040			268	
TOTAL	1	1	7550	8071	52.2	LUMP SUM	10914	291,978	26	2080	20	330.21	618	LUMP SUM

PROJECT NO. R-2719A
LENOIR COUNTY
STATION: 211+67.44 -L-
14+04.19 -Y5-
SHEET 4 OF 4

STATE OF NORTH CAROLINA
DEPARTMENT OF TRANSPORTATION
RALEIGH

GENERAL DRAWING
FOR BRIDGE ON CRESCENT RD.
OVER SR 1001 BETWEEN
SR 1554AND US 258
(RIGHT LANE)

NORTH CAROLINA PROFESSIONAL SEAL 025516 ENGINEER EMILY E. MURRAY
Emily E. Murray
10-10-08

REVISIONS						SHEET NO.
NO.	BY:	DATE:	NO.	BY:	DATE:	S-195
1			3			TOTAL SHEETS
2			4			340

DRAWN BY : B.N.BARODAWALA DATE : 8-13-08
CHECKED BY : A.M.LEE DATE : 9-08

08-OCT-2008 15:25
J:\Structures\Finalplans\Str #7\r2719a_sd_gd_07#.dgn
emurray

STR. #7

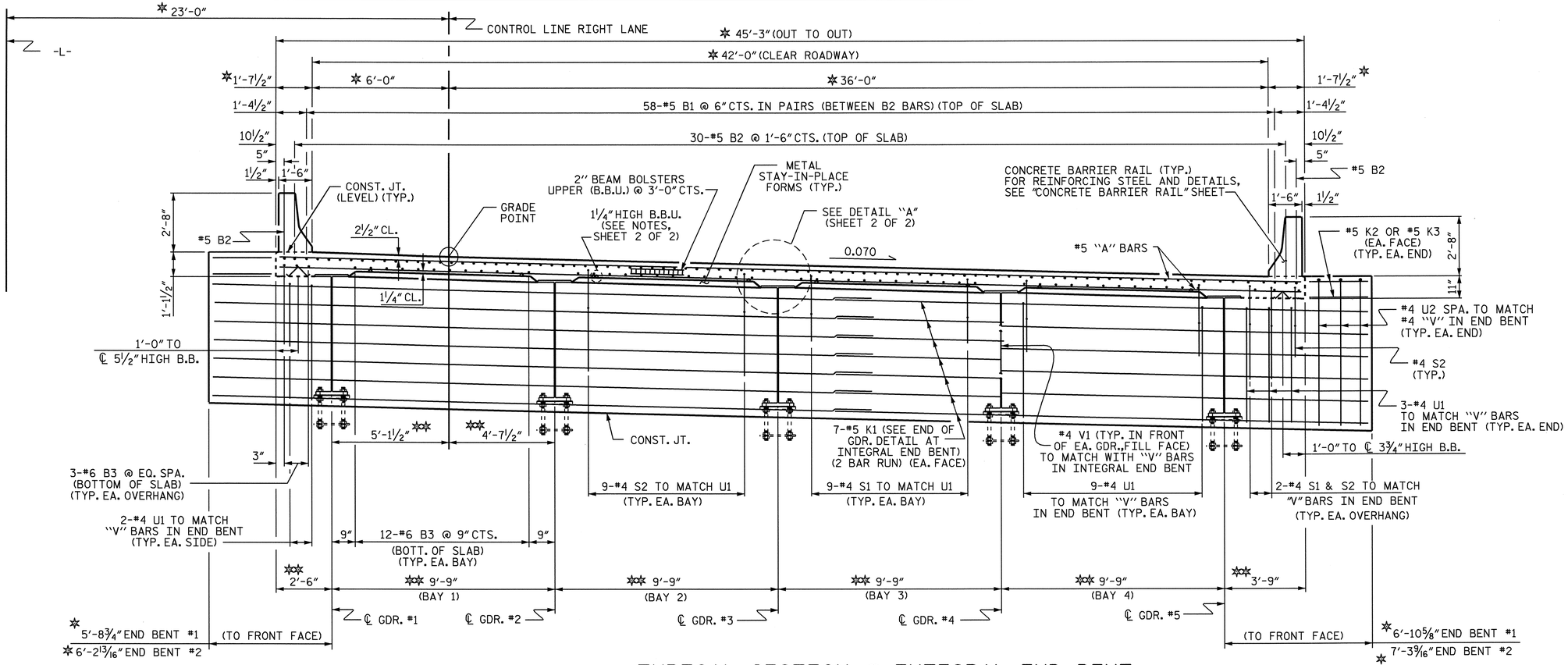

TYPICAL SECTION @ INTEGRAL END BENT

✱ RADIAL DIMENSION
✱✱ RADIAL DIMENSION THRU WORKPOINT

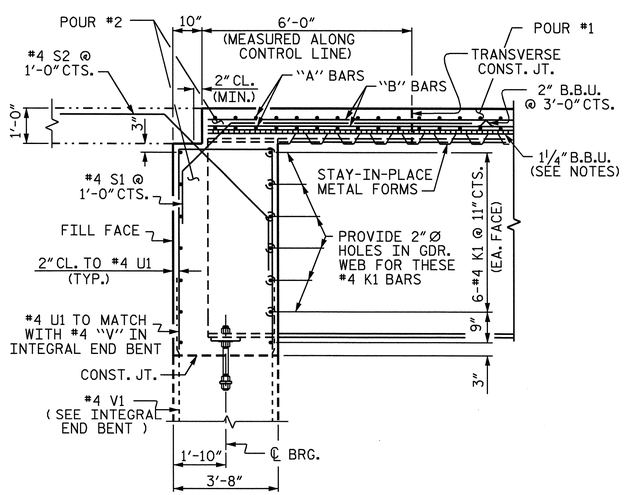

END OF GIRDER DETAIL AT INTEGRAL END BENT

✱ DIAMETER OF HOLES IN WEB MAY BE INCREASED TO ACCOMODATE SKEW

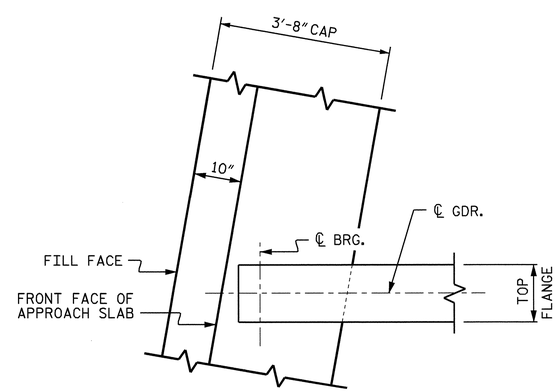

PLAN OF GIRDER AT INTEGRAL END BENT

PROJECT NO. R-2719A
LENOIR COUNTY
STATION: 211+67.44 -L-

SHEET 1 OF 2

STATE OF NORTH CAROLINA
DEPARTMENT OF TRANSPORTATION
RALEIGH

SUPERSTRUCTURE

TYPICAL SECTION
(RIGHT LANE)

NORTH CAROLINA PROFESSIONAL SEAL 025516 ENGINEER EMILY E. MURRAY
Emily E. Murray 10-10-08

REVISIONS						SHEET NO.
NO.	BY:	DATE:	NO.	BY:	DATE:	S-196
1			3			TOTAL SHEETS
2			4			340

STR. #7

DRAWN BY : B.N.BARODAWALA DATE : 5-14-08
CHECKED BY : A SORSENGINH DATE : 6-08

10-OCT-2008 14:38
J:\Structures\Final plans\Str #7\r2719a_sd_ts_07*.dgn
emurray

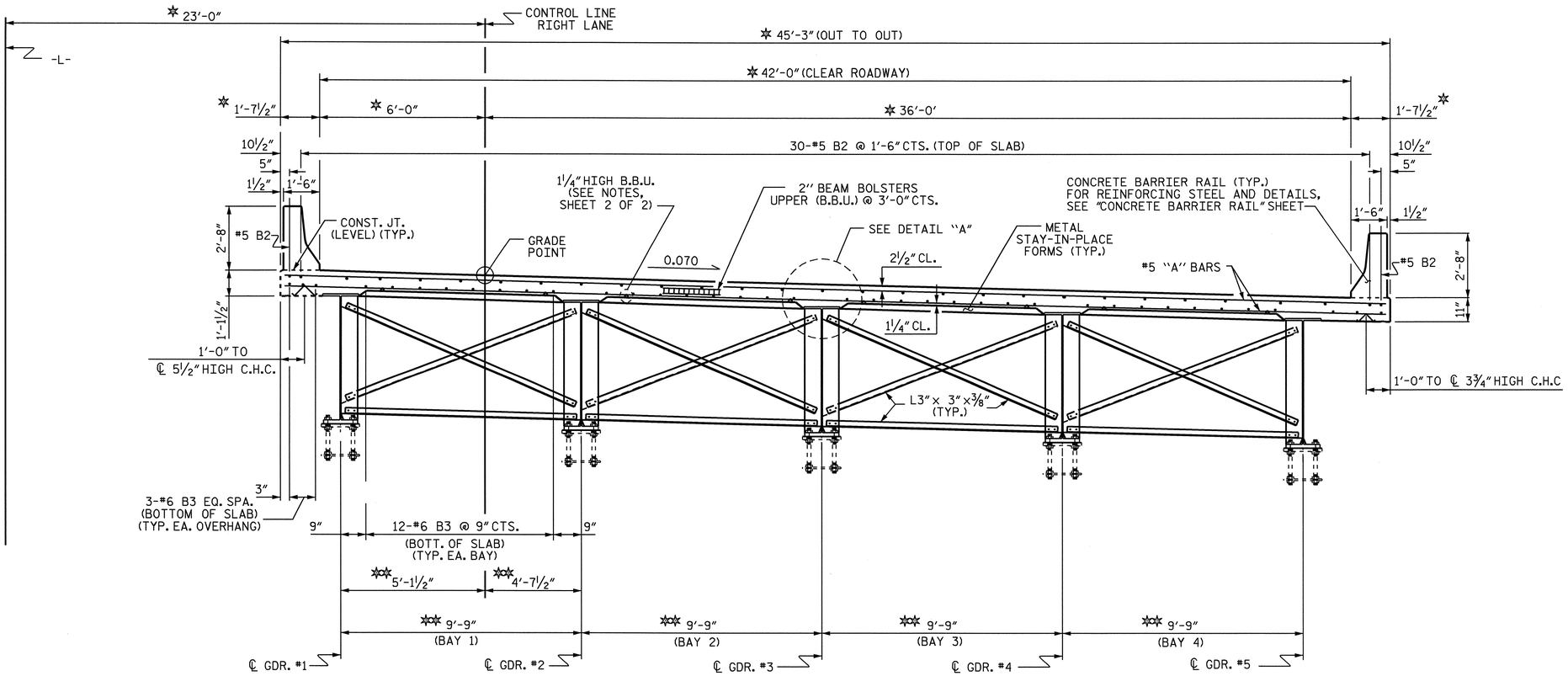

TYPICAL SECTION

(SHOWING INTERMEDIATE DIAPHRAGMS)

✲ RADIAL DIMENSION

✲✲ RADIAL DIMENSION THRU WORKPOINT

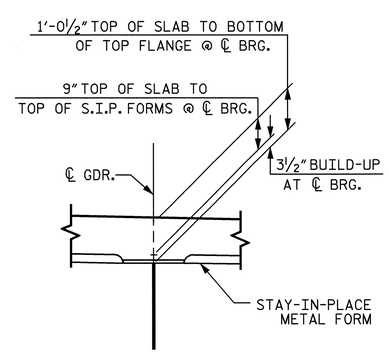

DETAIL "A"

NOTES

PROVIDE 1¼" HIGH BEAM BOLSTERS UPPER AT 4'-0" CTS. ATOP THE METAL STAY-IN-PLACE FORMS TO SUPPORT THE BOTTOM MAT OF "A" BARS. WHEN USING REMOVABLE FORMS, PROVIDE CONTINUOUS HIGH CHAIRS FOR METAL DECK (C.H.C.M.) @ 4'-0" CTS. WITH A HEIGHT TO SUPPORT THE BOTTOM MAT OF "A" BARS A CLEAR DISTANCE OF 2½" ABOVE THE TOP OF THE REMOVABLE FORM.

PREVIOUSLY CAST CONCRETE IN SLAB SHALL HAVE ATTAINED A MINIMUM COMPRESSIVE STRENGTH OF 3000 PSI BEFORE ADDITIONAL CONCRETE IS CAST.

BARRIER RAIL SHALL NOT BE CAST UNTIL ALL SLAB CONCRETE IN THE UNIT HAS BEEN CAST AND HAS REACHED A MINIMUM COMPRESSIVE STRENGTH OF 3000 PSI.

STRUCTURAL STEEL ERECTION SHALL BE COMPLETE BEFORE FALSEWORK OR FORMS ARE PLACED ON THE UNIT.

THE CONTRACTOR MAY, WHEN NECESSARY, PROPOSE A SCHEME FOR AVOIDING INTERFERENCE BETWEEN METAL STAY-IN-PLACE FORM SUPPORTS OR FORMS AND BEAM/GIRDER STIFFENERS OR CONNECTOR PLATES. THE PROPOSAL SHALL BE INDICATED, AS APPROPRIATE, ON EITHER THE STEEL WORKING DRAWINGS OR THE METAL STAY-IN-PLACE FORM WORKING DRAWINGS.

PROJECT NO. R-2719A
LENOIR COUNTY
STATION: 211+67.44 -L-

SHEET 2 OF 2

STATE OF NORTH CAROLINA
DEPARTMENT OF TRANSPORTATION
RALEIGH

SUPERSTRUCTURE

TYPICAL SECTION

(RIGHT LANE)

NORTH CAROLINA PROFESSIONAL SEAL 025516 ENGINEER EMILY E. MURRAY

Emily E. Murray 10-10-08

REVISIONS						SHEET NO.
NO.	BY:	DATE:	NO.	BY:	DATE:	S-197
1			3			TOTAL SHEETS
2			4			340

DRAWN BY : B.N.BARODAWALA DATE : 5-14-08
CHECKED BY : A SORSENGINH DATE : 6-08

08-OCT-2008 15:27
J:\Structures\Final plans\Str #7\r2719a_sd_ts_07*.dgn
emurray

STR. #7

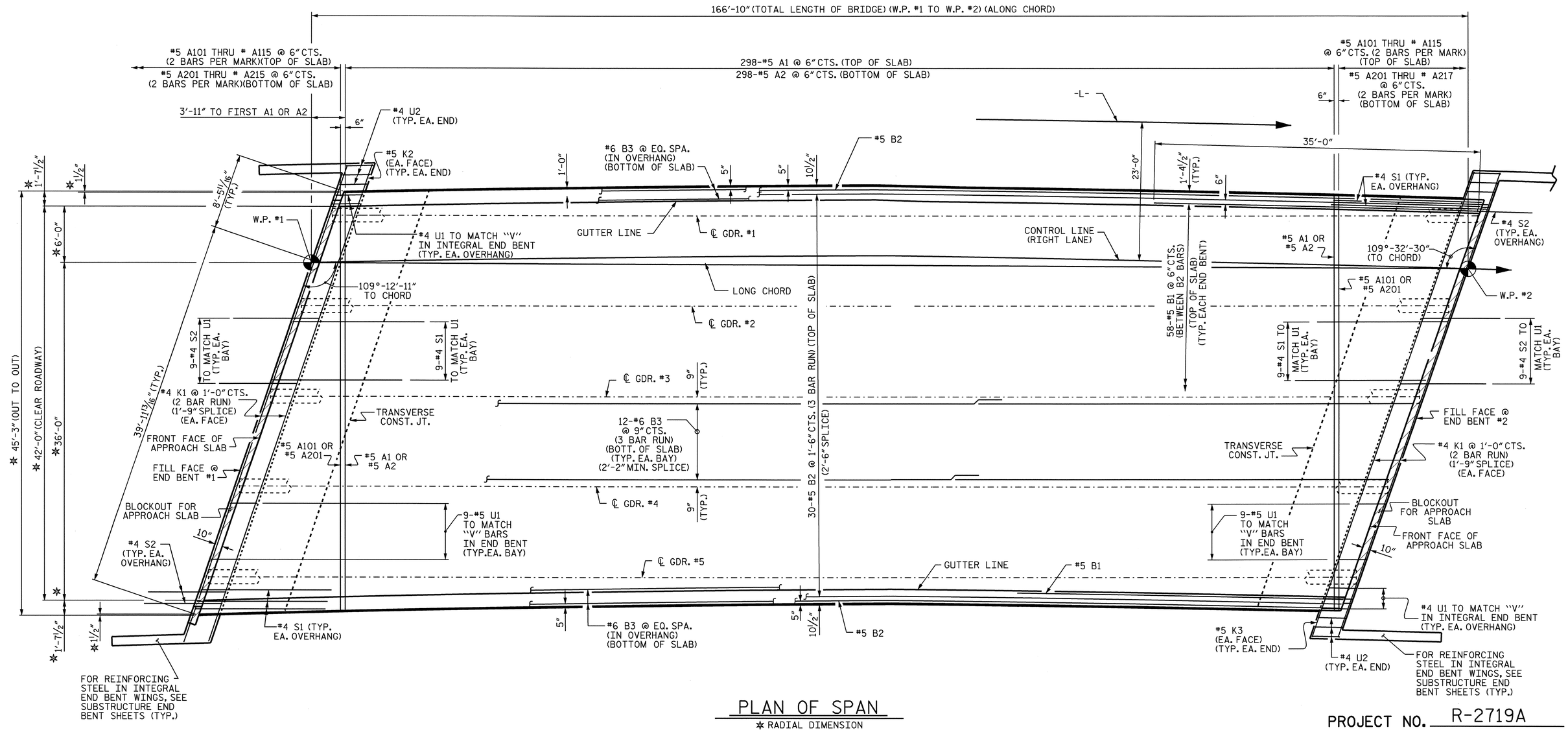

PLAN OF SPAN

✱ RADIAL DIMENSION

PROJECT NO. R-2719A

LENOIR COUNTY

STATION: 211+67.44 -L-

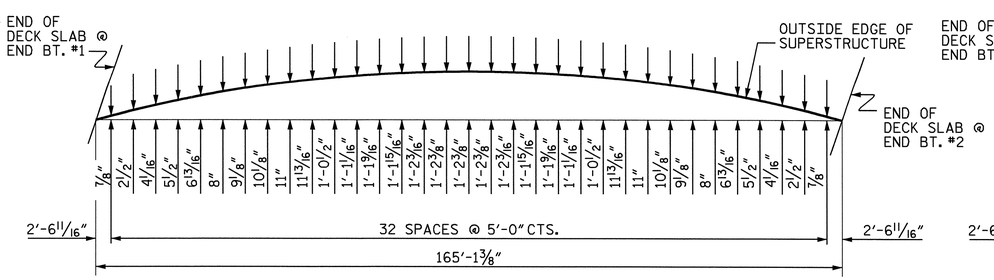

ARC OFFSET

RIGHT SIDE

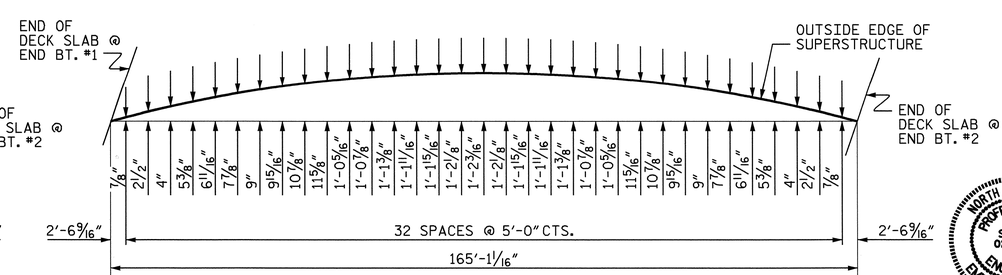

ARC OFFSET

LEFT SIDE

NORTH CAROLINA PROFESSIONAL SEAL 025516 ENGINEER EMILY E. MURRAY

Emily E. Murray 10-10-08

STATE OF NORTH CAROLINA
DEPARTMENT OF TRANSPORTATION
RALEIGH

SUPERSTRUCTURE

PLAN OF SPAN

(RIGHT LANE)

REVISIONS						SHEET NO.
NO.	BY:	DATE:	NO.	BY:	DATE:	S-198
1			3			TOTAL SHEETS
2			4			340

STR. #7

DRAWN BY : B.N.BARODAWALA DATE : 5-14-08
CHECKED BY : A SORSENGINH DATE : 6-08

08-OCT-2008 15:32
J:\Structures\Final plans\Str #7\R2719a_sd_S_07*.dgn
emurray

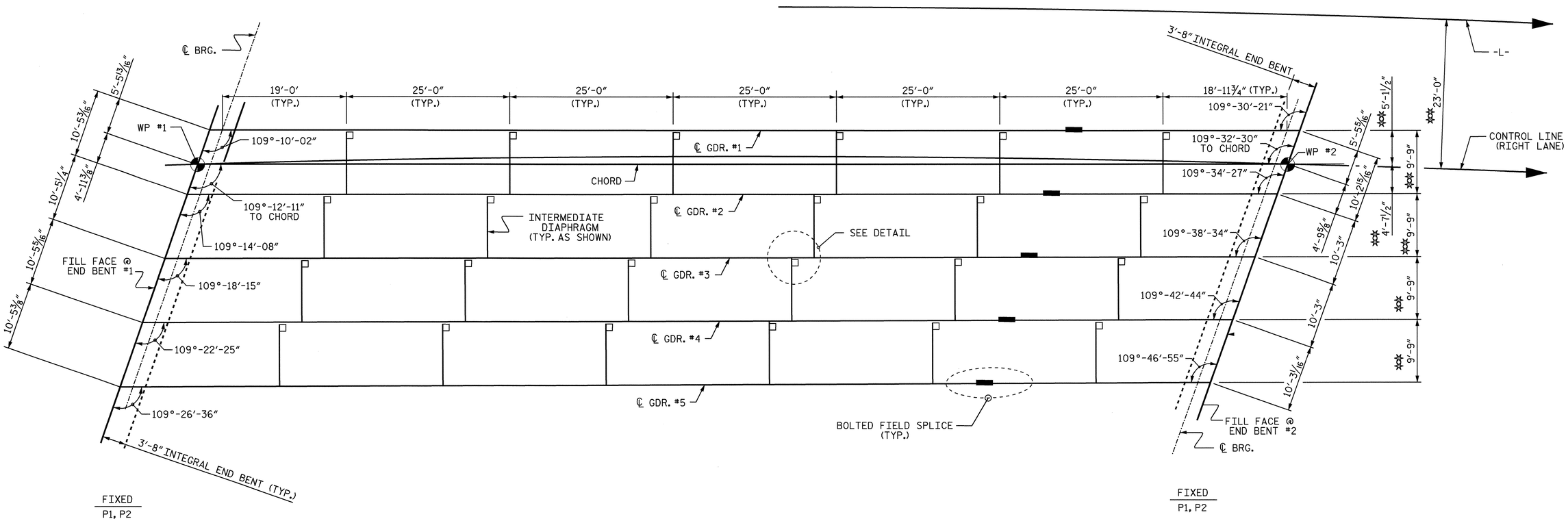

FRAMING PLAN

✲✲ RADIAL DIMENSION THRU WORKPOINT

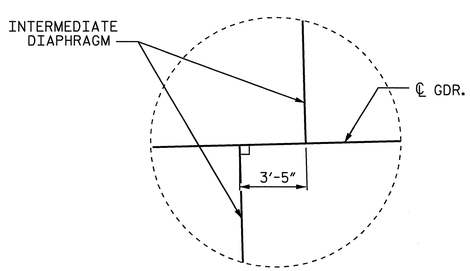

DETAIL

PROJECT NO. R-2719A

LENOIR COUNTY

STATION: 211+67.44 -L-

14+04.19 -Y5-

STATE OF NORTH CAROLINA
DEPARTMENT OF TRANSPORTATION
RALEIGH

SUPERSTRUCTURE

FRAMING PLAN

(RIGHT LANE)

NORTH CAROLINA PROFESSIONAL SEAL 025516 ENGINEER EMILY E. MURRAY

Emily E. Murray 10-10-08

REVISIONS						SHEET NO.
NO.	BY:	DATE:	NO.	BY:	DATE:	S-199
1			3			TOTAL SHEETS
2			4			340

STR. #7

DRAWN BY : B.N.BARODAWALA DATE : 5-14-08
CHECKED BY : A SORSENGINH DATE : 6-08

08-OCT-2008 15:35
J:\Structures\Finalplans\Str #7\r2719a_sd_fp_07*.dgn
emurray

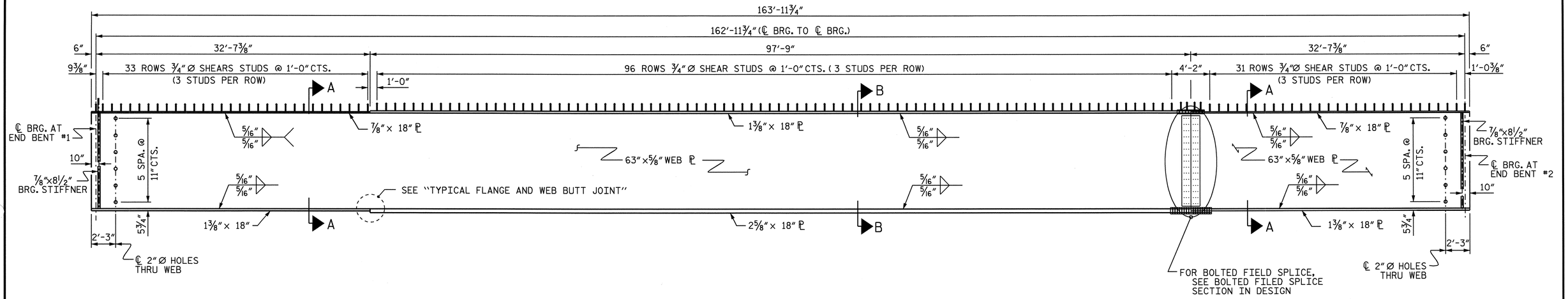

GIRDER ELEVATION

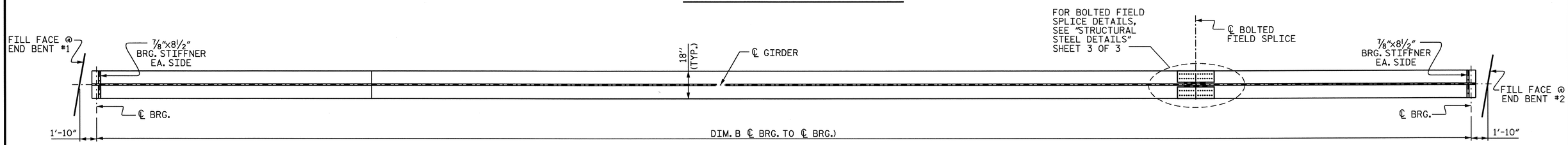

BOTTOM FLANGE DETAIL

(FOR CLARITY, INTERMEDIATE DIAPHRAGMS NOT SHOWN)
INTERIOR GIRDER SHOWN, EXTERIOR GIRDER SIMILAR,
EXCEPT NO CONNECTOR PLATES SHALL BE PLACED ON THE OUTSIDE OF THE WEB

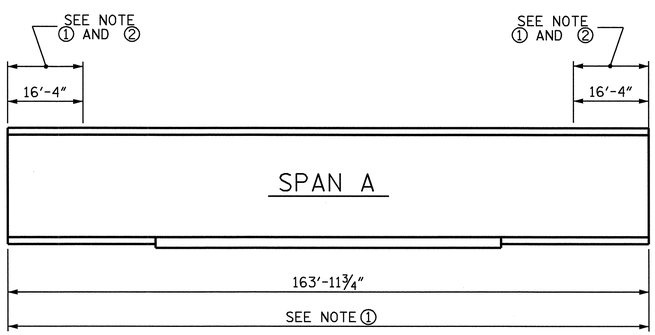

GIRDER MAKE UP

FOR CHARPY V-NOTCH TEST

NOTE ①: CHARPY V-NOTCH TESTS ARE REQUIRED FOR TOP FLANGE PLATES WHICH FALL WITHIN THE LIMITS SHOWN, ALL BOTTOM FLANGE PLATES, ALL WEB PLATES, AND SPLICE PLATES. IF A PERMITTED SHOP FLANGE SPLICE IS NOT USED, CHARPY V-NOTCH TESTS WILL BE REQUIRED FOR THE ENTIRE FLANGE PLATE. FOR CHARPY V-NOTCH TESTS, SEE ARTICLE 1072-9 OF THE STANDARD SPECIFICATIONS.

NOTE ②: NO WELDING OF FORMS OR FALSEWORK TO THE TOP FLANGE WILL BE PERMITTED IN THIS REGION.

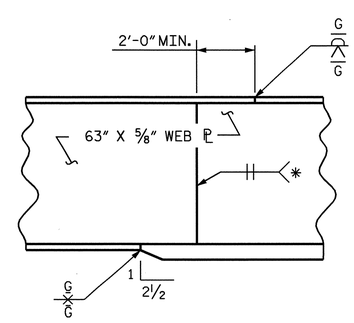

TYPICAL FLANGE AND WEB BUTT JOINT

* GRIND SMOOTH AND FLUSH ON OUTSIDE OF EXTERIOR GIRDERS

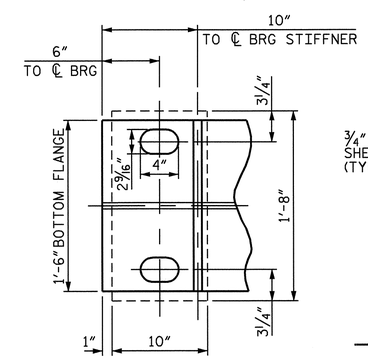

END OF GIRDER DETAIL

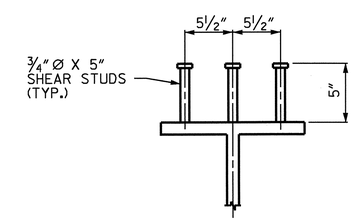

SHEAR STUD DETAIL

PROJECT NO. R-2719A
LENOIR COUNTY
STATION: 211+67.44 -L-

SHEET 1 OF 3

STATE OF NORTH CAROLINA
DEPARTMENT OF TRANSPORTATION
RALEIGH

SUPERSTRUCTURE

STRUCTURAL STEEL DETAILS

(RIGHT LANE)

NORTH CAROLINA PROFESSIONAL SEAL 025516 ENGINEER EMILY E. MURRAY
10/10/08

REVISIONS							SHEET NO.
NO.	BY:	DATE:	NO.	BY:	DATE:		S-200
1			3				TOTAL SHEETS
2			4				340

DRAWN BY : B.N.BARODAWALA DATE : 5-12-08
CHECKED BY : A SORSENGINH DATE : 6-08

03-OCT-2008 11:53
J:\Structures\Finalplans\Str #7\R2719a_sd_SS_07*.dgn
emurray

STR. #7

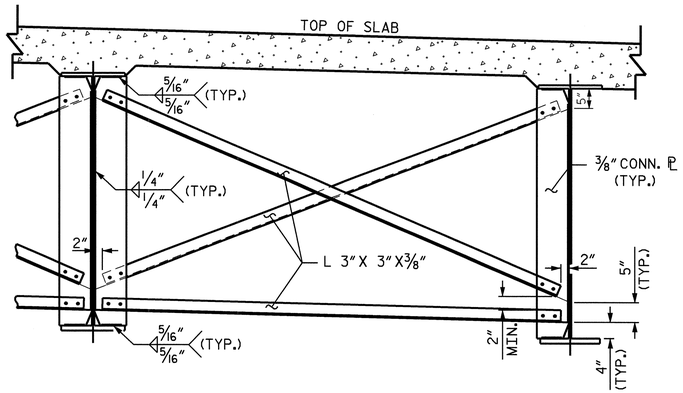

INTERMEDIATE DIAPHRAGM

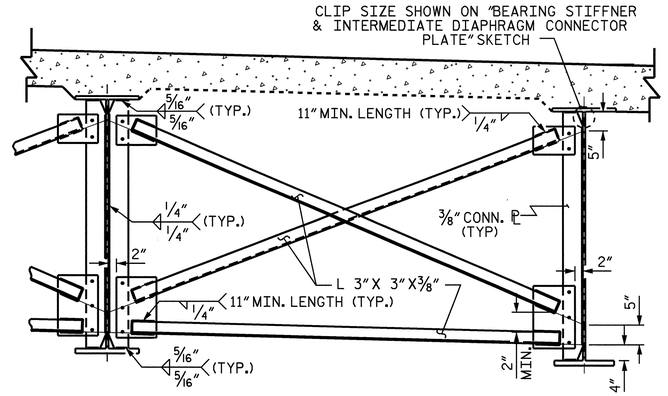

OPTIONAL INTERMEDIATE DIAPHRAGM

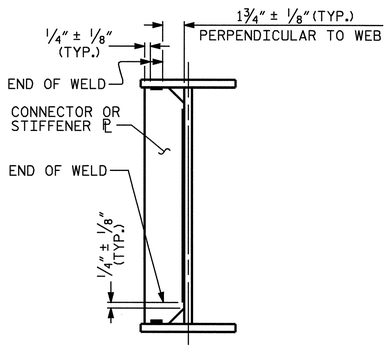

TYPICAL STIFFENER OR CONNECTOR PLATE CONNECTIONS

WELD TERMINATION DETAILS

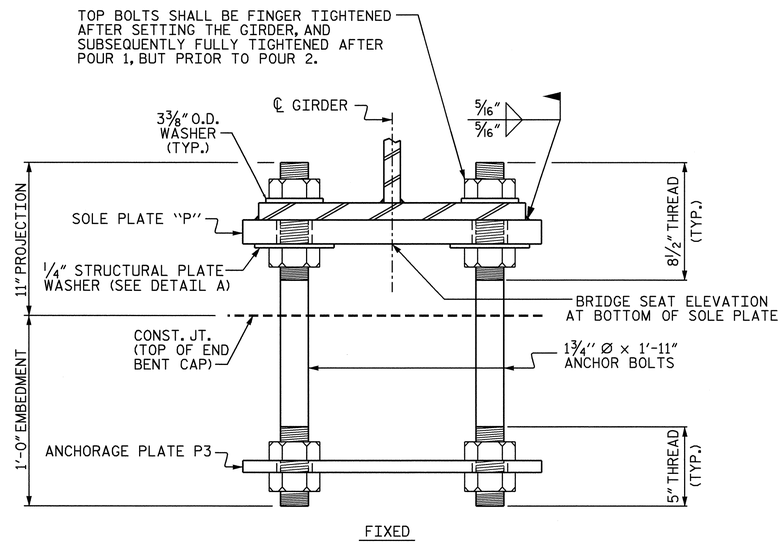

END VIEW

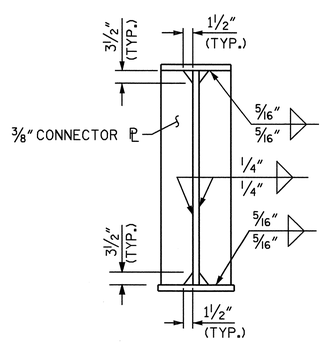

CONNECTOR PLATE DETAILS

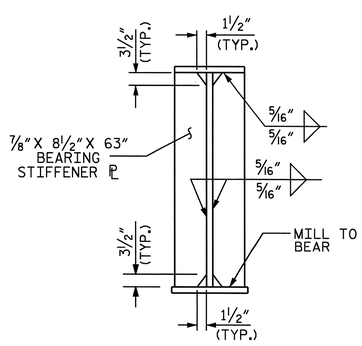

BEARING STIFFENER

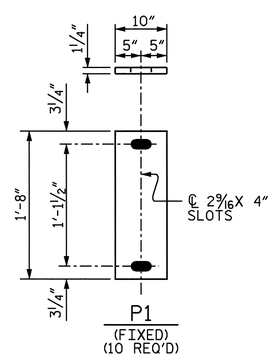

SOLE PLATE DETAILS

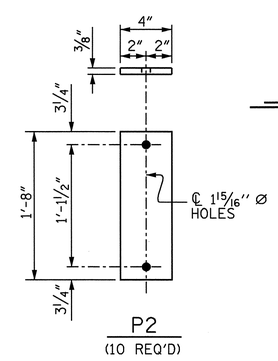

ANCHORAGE PLATE DETAILS

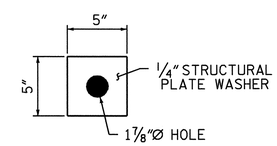

DETAIL "A"

BEARING DETAILS

NOTES:

ALL STRUCTURAL STEEL SHALL BE AASHTO M270 GRADE 50W.

ALL DIMENSIONS SHOWN ARE HORIZONTAL OR VERTICAL, UNLESS OTHERWISE NOTED.

ALL FIELD CONNECTIONS TO BE 7/8" DIA. HIGH STRENGTH BOLTS UNLESS OTHERWISE NOTED.

BEARING STIFFENERS ARE TO BE PLACED NORMAL TO THE WEB OF THE GIRDER AND SHALL BE PLUMB.

SHOP SPLICES ARE PERMITTED TO LIMIT THE MAXIMUM REQUIRED FLANGE PIECE LENGTHS TO 60 FEET AND WEB PIECE LENGTHS TO 45 FEET. PERMITTED FLANGE AND WEB SHOP SPLICES SHALL NOT BE LOCATED WITHIN 15 FEET OF MAXIMUM DEAD LOAD DEFLECTION. KEEP 2 FEET MINIMUM BETWEEN WEB AND FLANGE SHOP SPLICES. KEEP 6" MINIMUM BETWEEN CONNECTOR PLATE AND WEB OR FLANGE SHOP SPLICES.

STUDS ON GIRDERS MAY BE SHIFTED UP TO 1" IF NECESSARY TO CLEAR FLANGE SPLICE WELD.

TENSION ON THE AASHTO M164 BOLTS SHALL BE CALIBRATED USING DIRECT TENSION INDICATOR WASHERS IN ACCORDANCE WITH ARTICLE 440-8 OF THE STANDARD SPECIFICATIONS.

END OF GIRDERS SHALL BE PLUMB.

FOR SHIPPING STEEL STRUCTURAL MEMBERS, SEE SPECIAL PROVISIONS.

FOR HIGH STRENGTH BOLTS, SEE SPECIAL PROVISIONS.

FOR AASHTO M270 GRADE 50W STRUCTURAL STEEL, SOLE PLATES AND ANCHORAGE PLATES SHALL BE AASHTO M270 GRADE 50W AND SHALL NOT BE GALVANIZED. ANCHOR BOLTS, NUTS AND WASHERS SHALL BE GALVANIZED IN ACCORDANCE WITH THE STANDARD SPECIFICATIONS.

ANCHOR BOLTS SHALL MEET THE REQUIREMENTS OF ASTM A449. NUTS SHALL MEET THE REQUIREMENTS OF AASHTO M291-DH OR AASHTO M292-2H. WASHERS SHALL MEET THE REQUIREMENTS OF AASHTO M293. SHOP DRAWINGS ARE NOT REQUIRED FOR ANCHOR BOLTS, NUTS AND WASHERS. SHOP INSPECTION IS REQUIRED.

ALL SURFACES OF SOLE PLATES SHALL BE SMOOTH AND STRAIGHT.

STRUCTURAL PLATE WASHERS SHALL BE AASHTO M270 GRADE 50W.

PROJECT NO. R-2719A
LENOIR COUNTY
STATION: 211+67.44 -L-

SHEET 2 OF 3

STATE OF NORTH CAROLINA
DEPARTMENT OF TRANSPORTATION
RALEIGH

SUPERSTRUCTURE

STRUCTURAL STEEL DETAILS
(RIGHT LANE)

NORTH CAROLINA PROFESSIONAL SEAL 025516 ENGINEER EMILY E. MURRAY
10/10/08

REVISIONS						SHEET NO.
NO.	BY:	DATE:	NO.	BY:	DATE:	S-201
1			3			TOTAL SHEETS
2			4			340

DRAWN BY : B.N.BARODAWALA DATE : 5-12-08
CHECKED BY : A SORSENGINH DATE : 6-08

03-OCT-2008 11:52
J:\Structures\Final plans\Str *7\R2719a_sd_SS_07*.dgn
emurray

STR. #7

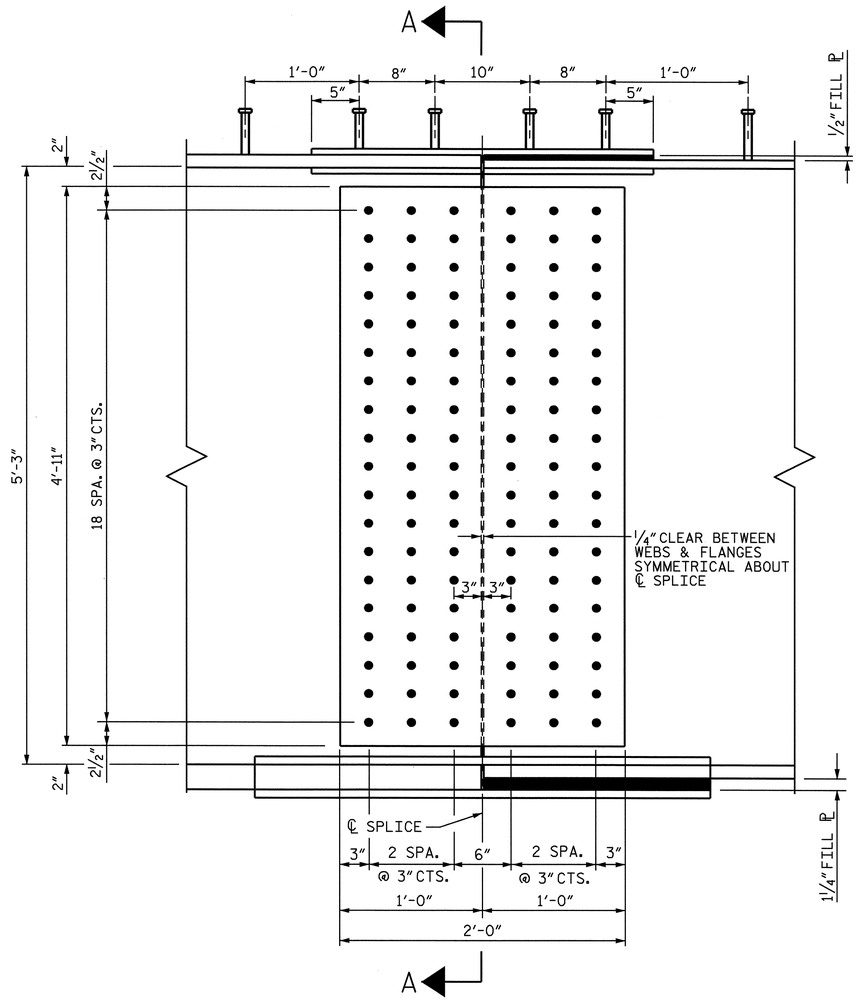

ELEVATION

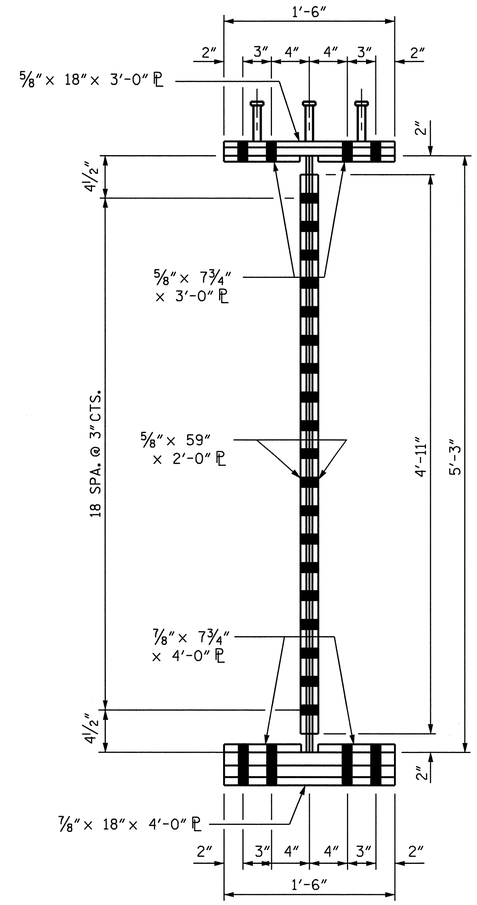

SECTION A-A

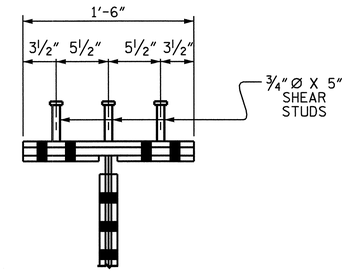

SHEAR STUD DETAIL FOR TOP FLANGE SPLICE PLATE

SHEAR STUDS ARE TO BE SHOP WELDED ON TOP OF PLATE BEFORE FIELD ASSEMBLY

BOLTED FIELD SPLICE DETAILS

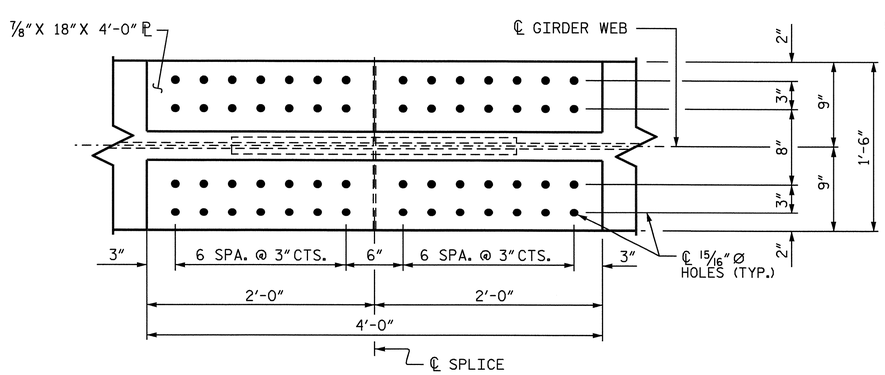

PLAN OF TOP OF BOTTOM FLANGE

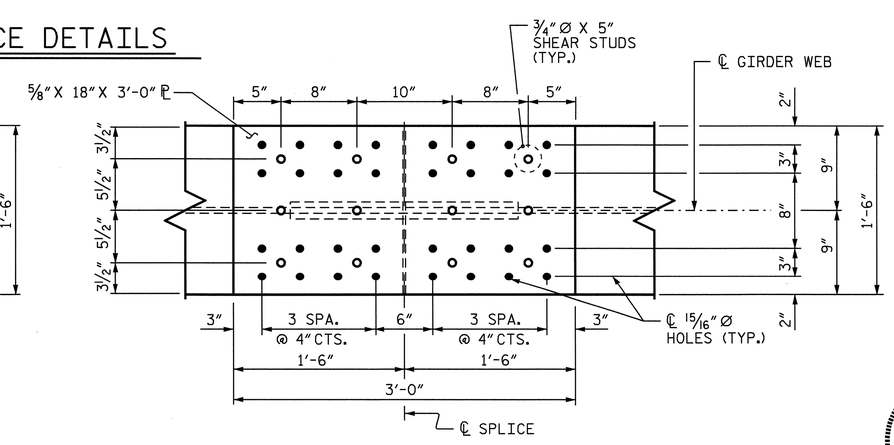

PLAN OF TOP OF TOP FLANGE

NORTH CAROLINA PROFESSIONAL SEAL 025516 ENGINEER EMILY E. MURRAY
10-10-08

PROJECT NO. R-2719A
LENOIR COUNTY
STATION: 211+67.44 -L-

SHEET 3 OF 3

STATE OF NORTH CAROLINA
DEPARTMENT OF TRANSPORTATION
RALEIGH

SUPERSTRUCTURE
STRUCTURAL STEEL DETAILS
BOLTED FIELD SPLICE
(RIGHT LANE)

REVISIONS						SHEET NO.
NO.	BY:	DATE:	NO.	BY:	DATE:	S-202
1			3			TOTAL SHEETS
2			4			340

STR. #7

DRAWN BY : B.N.BARODAWALA DATE : 5-12-08
CHECKED BY : A SORSENGINH DATE : 6-08

03-OCT-2008 11:52
J:\Structures\Final plans\Str #7\R2719a_sd_SS_07*.dgn
emurray

NOTES

* INCLUDES SLAB, BUILDUPS & STAY-IN-PLACE FORMS.

ALL VALUES ARE SHOWN IN FEET EXCEPT "REQUIRED CAMBER", WHICH IS GIVEN IN INCHES (FRACTION FORM).

DEAD LOAD DEFLECTION TABLE FOR GIRDER

	GIRDER #1 THRU GIRDER #5																				
@ TWENTIETH POINTS BETWEEN ℄ BEARINGS ↓	0	.05	.10	.15	.20	.25	.30	.35	.40	.45	.50	.55	.60	.65	.70	.75	.80	.85	.90	.95	0
DEFLECTION DUE TO WEIGHT OF GIRDER ↓	0.000	0.032	0.063	0.092	0.117	0.138	0.157	0.171	0.182	0.188	0.190	0.188	0.182	0.171	0.157	0.138	0.117	0.092	0.063	0.032	0.000
DEFLECTION DUE TO WEIGHT OF SLAB * ↓	0.000	0.104	0.223	0.333	0.429	0.511	0.581	0.637	0.678	0.703	0.711	0.703	0.678	0.637	0.581	0.511	0.429	0.333	0.223	0.104	0.000
DEFLECTION DUE TO WEIGHT OF BARRIER RAIL ↓	0.000	0.010	0.020	0.029	0.037	0.044	0.049	0.054	0.058	0.060	0.060	0.060	0.058	0.054	0.049	0.044	0.037	0.029	0.020	0.010	0.000
TOTAL DEAD LOAD DEFLECTION ↓	0.000	0.147	0.306	0.453	0.582	0.693	0.787	0.863	0.917	0.951	0.962	0.951	0.917	0.863	0.787	0.693	0.582	0.453	0.306	0.147	0.000
VERTICAL CURVE ORDINATE (FT.)	0.000	0.026	0.049	0.070	0.088	0.103	0.115	0.125	0.132	0.136	0.137	0.136	0.132	0.125	0.115	0.103	0.088	0.070	0.049	0.026	0.000
SUPERELEVATION ORDINATE (FT.)	0.000	-0.015	-0.029	-0.041	-0.052	-0.061	-0.068	-0.074	-0.078	-0.080	-0.081	-0.080	-0.078	-0.074	-0.068	-0.061	-0.052	-0.041	-0.029	-0.015	0.000
REQUIRED CAMBER (INCH) ↑	0	1 7/8"	3 15/16"	5 3/4"	7 7/16"	8 13/16"	10"	10 15/16"	11 5/8"	12 1/16"	12 3/16"	12 1/16"	11 5/8"	10 15/16"	10"	8 13/16"	7 7/16"	5 3/4"	3 15/16"	1 7/8"	0

PROJECT NO. R-2719A
LENOIR COUNTY
STATION: 211+67.44 -L-

NORTH CAROLINA PROFESSIONAL SEAL 025516 ENGINEER EMILY E. MURRAY
Emily E. Murray
10-10-08

STATE OF NORTH CAROLINA
DEPARTMENT OF TRANSPORTATION
RALEIGH

SUPERSTRUCTURE

DEAD LOAD DEFLECTION
(RIGHT LANE)

REVISIONS						SHEET NO.
NO.	BY:	DATE:	NO.	BY:	DATE:	S-203
1			3			TOTAL SHEETS
2			4			340

DRAWN BY : B.N.BARODAWALA DATE : 5-14-08
CHECKED BY : A. SORSENGINH DATE : 6-08

03-OCT-2008 11:54
J:\Structures\Final plans\Str #7\R2719a_sd_DL_07*.dgn
emurray

STR. #7

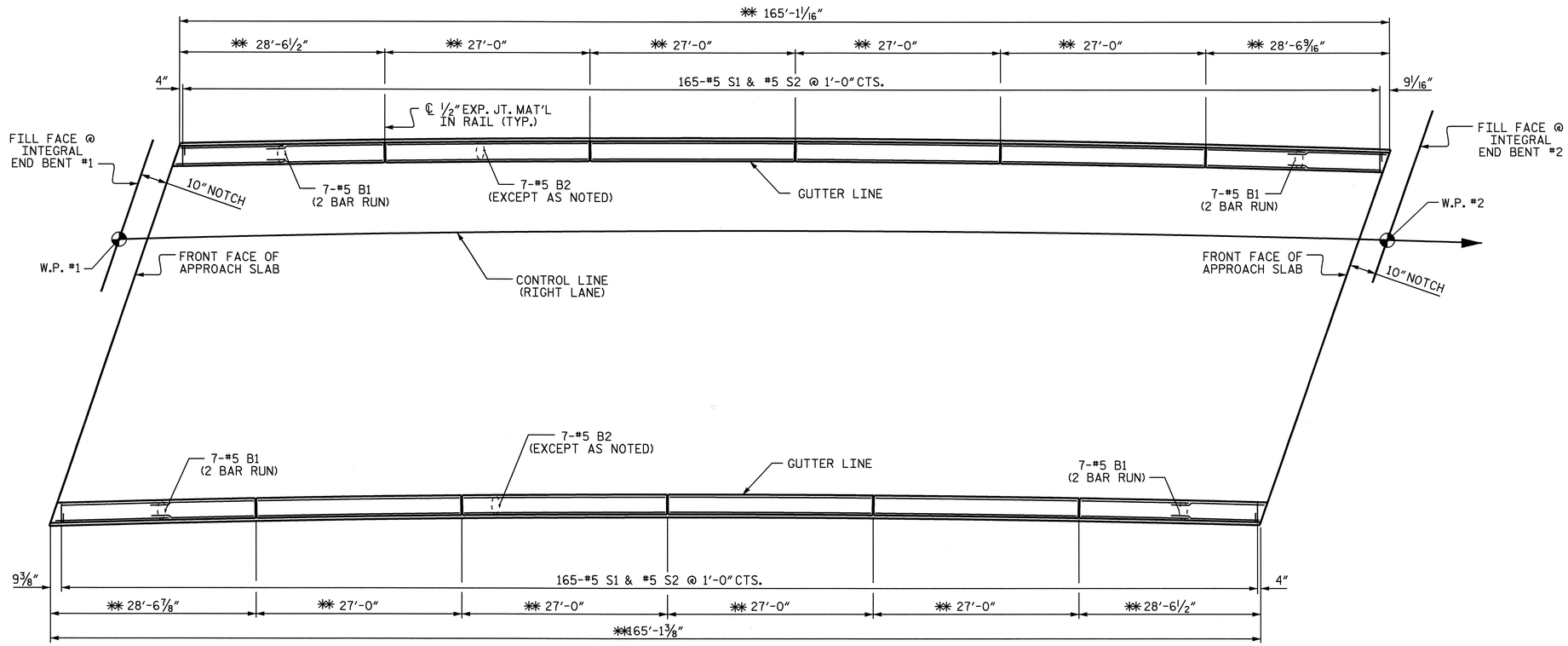

PLAN OF BARRIER RAIL

✱✱ ARC DIMENSION ALONG OUTSIDE FACE OF BARRIER RAIL

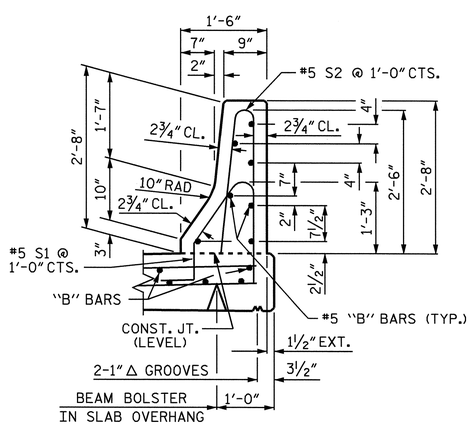

SECTION THRU RAIL

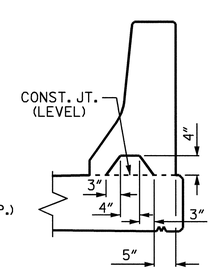

SECTION S-S

AT DAM IN OPEN JOINT (THIS IS TO BE USED ONLY WHEN SLIP FORM IS USED)

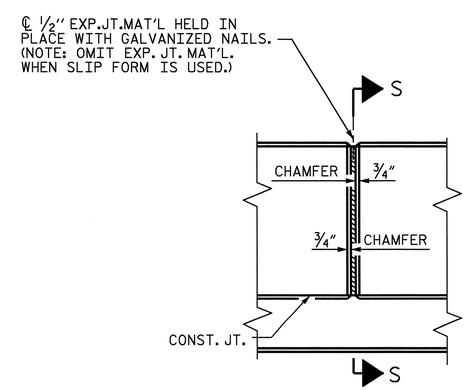

ELEVATION AT EXPANSION JOINTS

BARRIER RAIL DETAILS

BAR TYPES

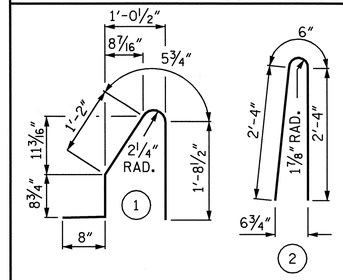

ALL BAR DIMENSIONS ARE OUT TO OUT

BILL OF MATERIAL

FOR CONCRETE BARRIER RAIL ONLY

BAR	NO.	SIZE	TYPE	LENGTH	WEIGHT
✱ B1	56	#5	STR	15'-9"	920
✱ B2	56	#5	STR	26'-8"	1558
✱ S1	165	#5	1	4'-9"	817
✱ S2	165	#5	2	5'-2"	889

✱ EPOXY COATED REINFORCING STEEL	4,184 LBS.
CLASS AA CONCRETE	33.0 CU. YDS.
CONCRETE BARRIER RAIL	330.21 LIN. FT.

NOTES:

THE BARRIER RAIL SHALL NOT BE CAST UNTIL ALL SLAB CONCRETE HAS BEEN CAST AND HAS REACHED A MINIMUM COMPRESSIVE STRENGTH OF 3,000 PSI.

ALL REINFORCING STEEL IN BARRIER RAILS SHALL BE EPOXY COATED.

THE #5 S1 AND #5 S2 BARS MAY BE SHIFTED SLIGHTLY IN ORDER TO MAINTAIN A 2" MINIMUM CLEARANCE TO 1/2" EXPANSION JOINT MATERIAL IN THE BARRIER RAIL.

VERTICAL GROOVED CONTRACTION JOINTS, 1/2" IN DEPTH, SHALL BE TOOLED IN ALL EXPOSED FACES OF THE BARRIER RAIL AND IN ACCORDANCE WITH ARTICLE 825-10(B) OF THE STANDARD SPECIFICATIONS. THE CONTRACTION JOINT SHALL BE LOCATED AT EACH THIRD POINT BETWEEN BARRIER RAIL EXPANSION JOINTS. ONLY ONE CONTRACTION JOINT IS REQUIRED AT MIDPOINT OF BARRIER RAIL SEGMENTS LESS THAN 20 FEET IN LENGTH AND NO CONTRACTION JOINTS ARE REQUIRED FOR THOSE SEGMENTS LESS THAN 10 FEET IN LENGTH.

PROJECT NO. R-2719A
LENOIR COUNTY
STATION: 211+67.44 -L-

STATE OF NORTH CAROLINA
DEPARTMENT OF TRANSPORTATION
RALEIGH

NORTH CAROLINA PROFESSIONAL SEAL 025516 ENGINEER EMILY E. MURRAY
Emily E. Murray 10/16/08

CONCRETE BARRIER RAIL
(RIGHT LANE)

REVISIONS						SHEET NO.
NO.	BY:	DATE:	NO.	BY:	DATE:	S-204
1			3			TOTAL SHEETS
2			4			340

ASSEMBLED BY : B.N.BARODAWALA	DATE : 5-14-08		
CHECKED BY : PEGGY ADKINS	DATE : 6-08		
DRAWN BY : ARB 5/87	REV. 8/16/99	RWW/LES	
CHECKED BY : SJD 9/87	REV. 10/17/00	RWW/LES	
	REV. 5/7/03R	RWW/JTE	

03-OCT-2008 11:53
J:\Structures\Final plans\Str #7\R2719a_sd_BR_07*.dgn
emurray

STR. #7

STD. NO. CBRI

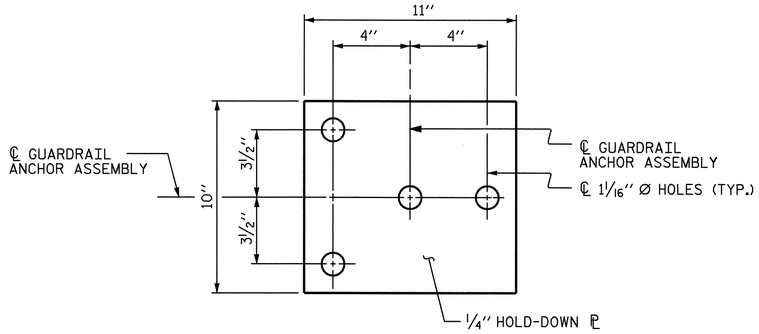

PLAN

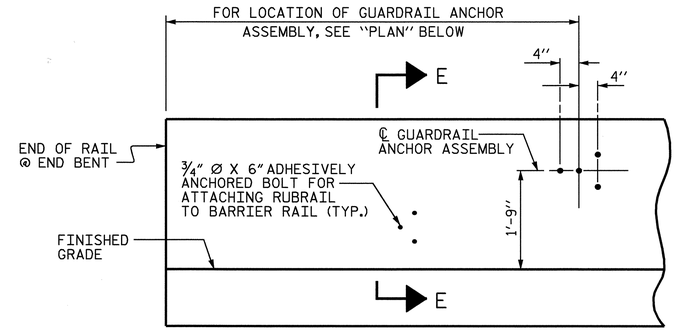

ELEVATION

FOR LOCATION OF RUBRAIL, SEE ROADWAY STD. 862.03

NOTES

THE GUARDRAIL ANCHOR ASSEMBLY SHALL CONSIST OF A 1/4'' HOLD DOWN PLATE AND 4 - 7/8'' Ø BOLTS WITH NUTS AND WASHERS, RUBRAIL, AND ADHESIVELY ANCHORED BOLTS.

THE HOLD-DOWN PLATE SHALL CONFORM TO AASHTO M270 GRADE 36. AFTER FABRICATION, THE HOLD-DOWN PLATE SHALL BE HOT-DIP GALVANIZED IN ACCORDANCE WITH AASHTO M111.

BOLTS SHALL CONFORM TO THE REQUIREMENTS OF ASTM A307 AND NUTS SHALL CONFORM TO THE REQUIREMENTS OF AASHTO M291. BOLTS, NUTS AND WASHERS SHALL BE GALVANIZED. (AT THE CONTRACTOR'S OPTION, STAINLESS STEEL BOLTS, NUTS AND WASHERS MAY BE USED AS AN ALTERNATE FOR THE 7/8'' Ø GALVANIZED BOLTS, NUTS AND WASHERS. THEY SHALL CONFORM TO OR EXCEED THE MECHANICAL REQUIREMENTS OF ASTM A307. THE USE OF THIS ALTERNATE SHALL BE APPROVED BY THE ENGINEER.)

THE GUARDRAIL ANCHOR ASSEMBLY IS REQUIRED AT ALL POINTS WHERE APPROACH GUARDRAIL IS TO BE ATTACHED TO THE END OF BARRIER RAIL. FOR POINTS OF ATTACHMENT, SEE SKETCH.

AFTER INSTALLATION, THE EXPOSED THREAD OF THE BOLT SHALL BE BURRED WITH A SHARP POINTED TOOL.

THE COST OF THE GUARDRAIL ANCHOR ASSEMBLY SHALL BE INCLUDED IN THE UNIT CONTRACT PRICE BID FOR CONCRETE BARRIER RAIL.

THE 1 1/4'' Ø HOLES SHALL BE FORMED OR DRILLED WITH A CORE BIT. IMPACT TOOLS WILL NOT BE PERMITTED. ANY CONCRETE DAMAGED BY THIS WORK SHALL BE REPAIRED TO THE SATISFACTION OF THE ENGINEER.

THE C6 X 8.2 RUBRAIL IS TO BE ADHESIVELY ANCHORED TO THE RAIL USING THREE 3/4" Ø X 6" BOLTS WITH WASHERS. LEVEL ONE FIELD TESTING IS REQUIRED, AND THE YIELD LOAD OF THE 3/4" Ø BOLT IS 12 KIPS. FOR ADHESIVELY ANCHORED ANCHOR BOLTS OR DOWELS, SEE SPECIAL PROVISIONS. SEE ROADWAY STANDARD 862.03 FOR DETAILS AND LOCATION OF THE RUBRAIL.

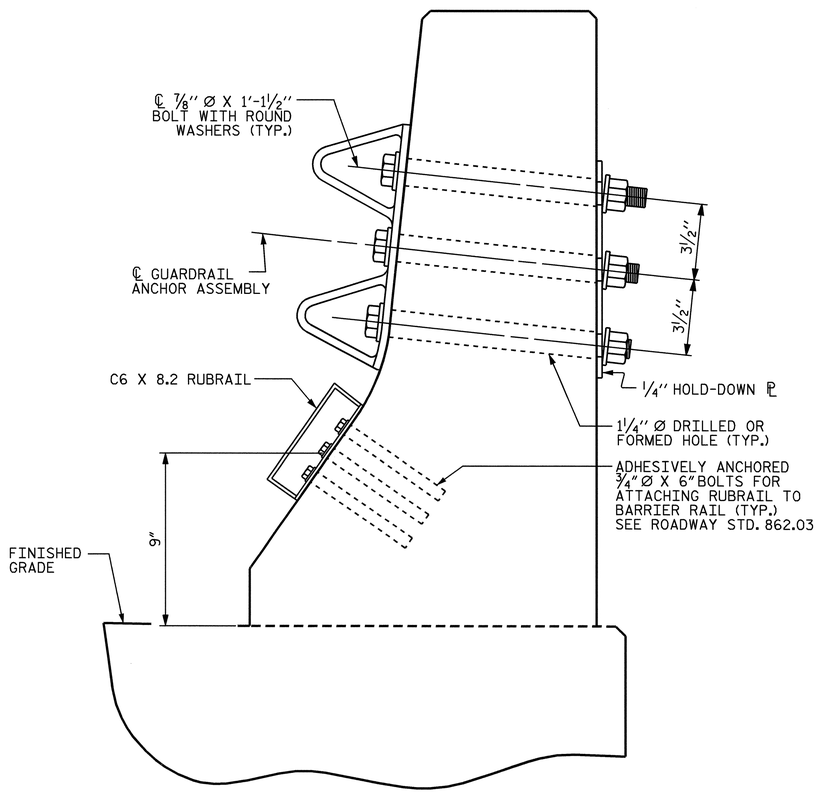

SECTION E-E

GUARDRAIL ANCHOR ASSEMBLY DETAILS

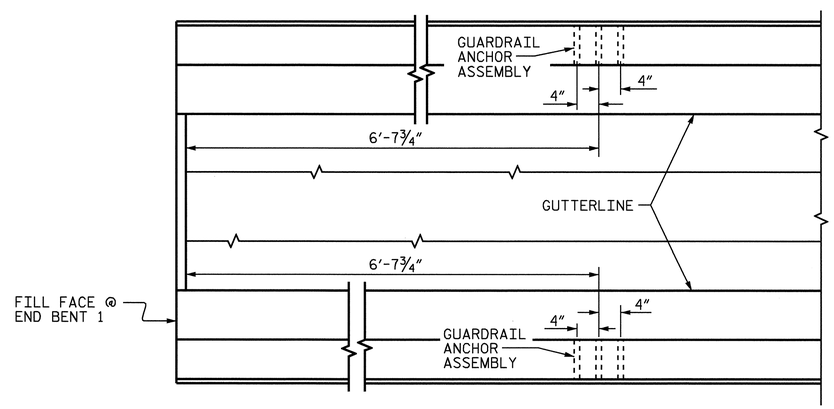

PLAN

LOCATION OF ANCHORS FOR GUARDRAIL

END BENT #1 SHOWN, END BENT #2 SIMILAR.

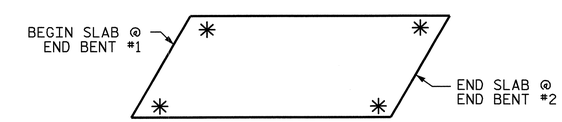

SKETCH SHOWING POINTS OF ATTACHMENTS

✳ DENOTES GUARDRAIL ANCHOR ASSEMBLY

PROJECT NO. R-2719A
LENOIR COUNTY
STATION: 211+67.44 -L-

STATE OF NORTH CAROLINA
DEPARTMENT OF TRANSPORTATION
RALEIGH

STANDARD
GUARDRAIL ANCHORAGE FOR BARRIER RAIL
(RIGHT LANE)

NORTH CAROLINA PROFESSIONAL SEAL 025516 ENGINEER EMILY E. MURRAY
Emily E. Murray 10/10/08

REVISIONS						SHEET NO.
NO.	BY:	DATE:	NO.	BY:	DATE:	S-205
1			3			TOTAL SHEETS
2			4			340

ASSEMBLED BY : B.N.BARODAWALA DATE : 5-8-08
CHECKED BY : A SORSENGINH DATE : 6-08
DRAWN BY : TLA 5/06
CHECKED BY : GM 5/06
ADDED 5/1/06R KMM/GM

03-OCT-2008 11:53
J:\Structures\Final plans\Str #7\R2719a_sd_BR_07*.dgn
emurray

STR. #7

STD. NO. GRA2

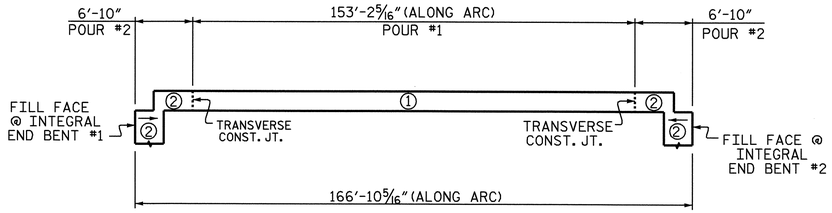

POURING SEQUENCE

BILL OF MATERIAL

BAR	NO.	SIZE	TYPE	LENGTH	WEIGHT
✳ A1	298	#5	STR	44'-11"	13961
A2	298	#5	STR	44'-11"	13961
✳ A101	4	#5	STR	42'-6"	177
✳ A102	4	#5	STR	39'-10"	166
✳ A103	4	#5	STR	37'-0"	154
✳ A104	4	#5	STR	34'-2"	143
✳ A105	4	#5	STR	31'-4"	131
✳ A106	4	#5	STR	28'-6"	119
✳ A107	4	#5	STR	25'-8"	107
✳ A108	4	#5	STR	22'-10"	95
✳ A109	4	#5	STR	20'-0"	83
✳ A110	4	#5	STR	17'-2"	72
✳ A111	4	#5	STR	14'-4"	60
✳ A112	4	#5	STR	11'-6"	48
✳ A113	4	#5	STR	8'-10"	36
✳ A114	4	#5	STR	5'-9"	24
✳ A115	4	#5	STR	3'-0"	13
A201	4	#5	STR	42'-6"	177
A202	4	#5	STR	39'-10"	166
A203	4	#5	STR	37'-0"	154
A204	4	#5	STR	34'-2"	143
A205	4	#5	STR	31'-4"	131

BILL OF MATERIAL

BAR	NO.	SIZE	TYPE	LENGTH	WEIGHT
A206	4	#5	STR	28'-6"	119
A207	4	#5	STR	25'-8"	107
A208	4	#5	STR	22'-10"	95
A209	4	#5	STR	20'-0"	83
A210	4	#5	STR	17'-2"	72
A211	4	#5	STR	14'-4"	60
A212	4	#5	STR	11'-6"	48
A213	4	#5	STR	8'-10"	36
A214	4	#5	STR	5'-9"	24
A215	4	#5	STR	3'-0"	13
✳ B1	116	#5	STR	35'-0"	4235
✳ B2	96	#5	STR	56'-7"	5666
B3	92	#6	STR	35'-0"	4836
K1	56	#4	STR	28'-3'	1047
K2	8	#4	STR	3'-0"	16
K3	8	#4	STR	3'-5"	18
✳ S1	84	#4	1	11'-8"	655
✳ S2	80	#4	1	10'-6"	840
U1	82	#4	2	16'-0"	876
U2	14	#4	2	14'-0"	131
V1	10	#4	STR	5'-2"	35

REINFORCING STEEL 22348 LBS.

✳ EPOXY COATED REINFORCING STEEL 26785 LBS.

BAR TYPES

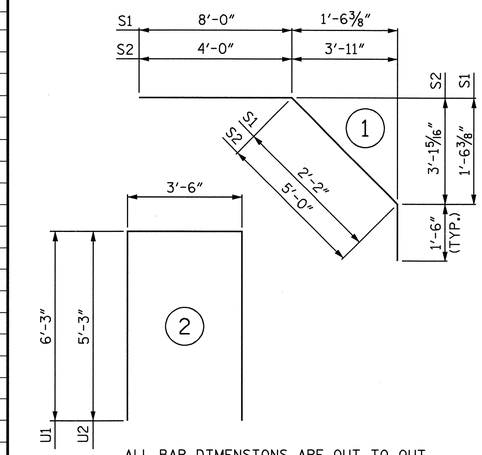

ALL BAR DIMENSIONS ARE OUT TO OUT

SUPERSTRUCTURE BILL OF MATERIAL

	CLASS AA CONCRETE	REINFORCING STEEL	EPOXY COATED REINFORCING STEEL
	(CU.YDS.)	(LBS.)	(LBS.)
POUR #1	225.3	——	——
POUR #2	77.3	——	——
TOTALS ✳✳	302.6	22348	26785

✳✳ QUANTITIES FOR BARRIER RAIL ARE NOT INCLUDED

SUPERSTRUCTURE REINFORCING STEEL LENGTHS ARE BASED ON THE FOLLOWING MINIMUM SPLICE LENGTHS

BAR SIZE	SUPERSTRUCTURE EXCEPT APPROACH SLABS, PARAPET, AND BARRIER RAIL		APPROACH SLABS		PARAPET AND BARRIER RAIL
	EPOXY COATED	UNCOATED	EPOXY COATED	UNCOATED	
#4	2'-0"	1'-9"	2'-0"	1'-9"	2'-9"
#5	2'-6"	2'-2"	2'-6"	2'-2"	3'-5"
#6	3'-0"	2'-7"	3'-10"	2'-7"	4'-4"
#7	5'-3"	3'-6"			
#8	6'-10"	4'-7"			

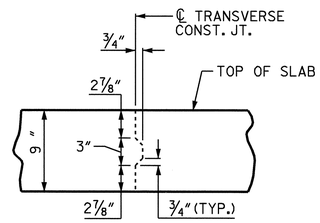

TRANSVERSE CONSTRUCTION JOINT DETAIL

NOTE:
REINFORCING STEEL IN SLAB NOT SHOWN.
LONGITUDINAL REINFORCING STEEL SHALL BE CONTINUOUS THRU JOINT

GROOVING BRIDGE FLOORS

APPROACH SLABS	1,881	SQ.FT.
BRIDGE DECK	6,190	SQ.FT.
TOTAL	8,071	SQ.FT.

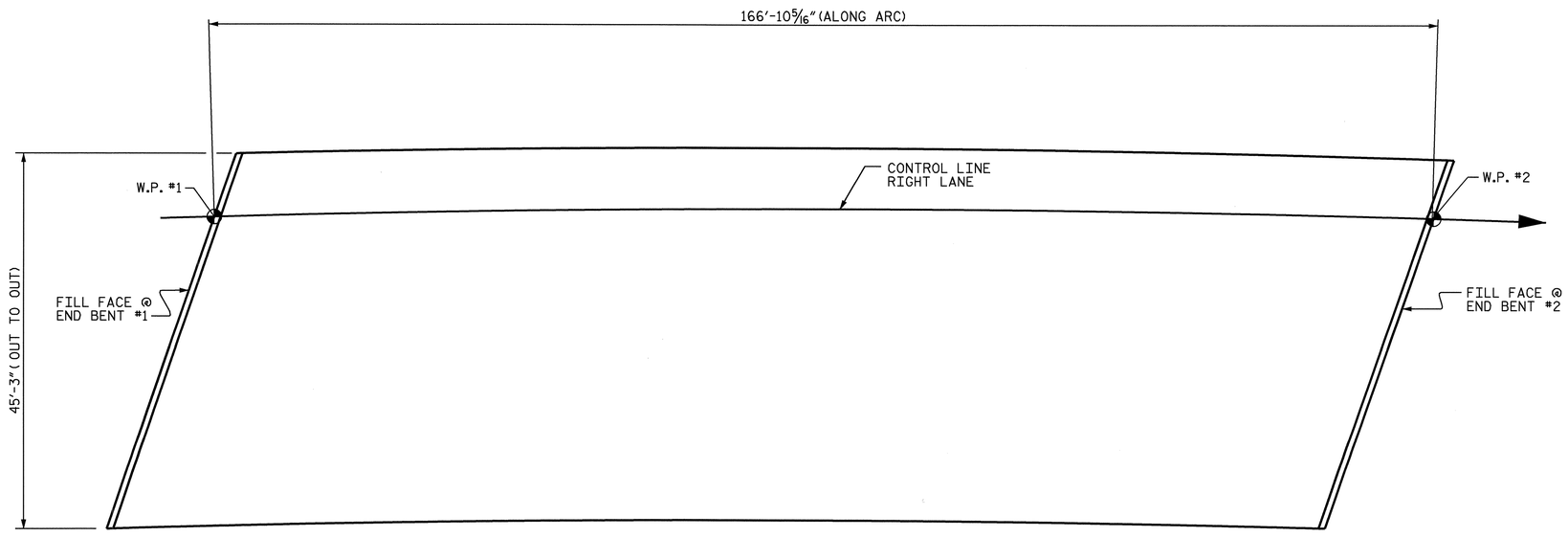

LAYOUT FOR COMPUTING AREA OF REINFORCED CONCRETE DECK SLAB (SQ. FT. = 7,550)

PROJECT NO. R-2719A
LENOIR COUNTY
STATION: 211+67.44 -L-
14+04.19 -Y5-

STATE OF NORTH CAROLINA
DEPARTMENT OF TRANSPORTATION
RALEIGH

SUPERSTRUCTURE

BILL OF MATERIAL

(RIGHT LANE)

NORTH CAROLINA PROFESSIONAL SEAL 025516 ENGINEER EMILY E. MURRAY
Emily E. Murray 10/10/08

REVISIONS						SHEET NO.
NO.	BY:	DATE:	NO.	BY:	DATE:	S-206
1			3			TOTAL SHEETS
2			4			340

STR. #7

DRAWN BY : B.N.BARODAWALA DATE : 5-14-08
CHECKED BY : A SORSENGINH DATE : 6-08

08-OCT-2008 15:37
J:\Structures\Final plans\Str #7\R2719a_sd_BM_07#.dgn
emurray

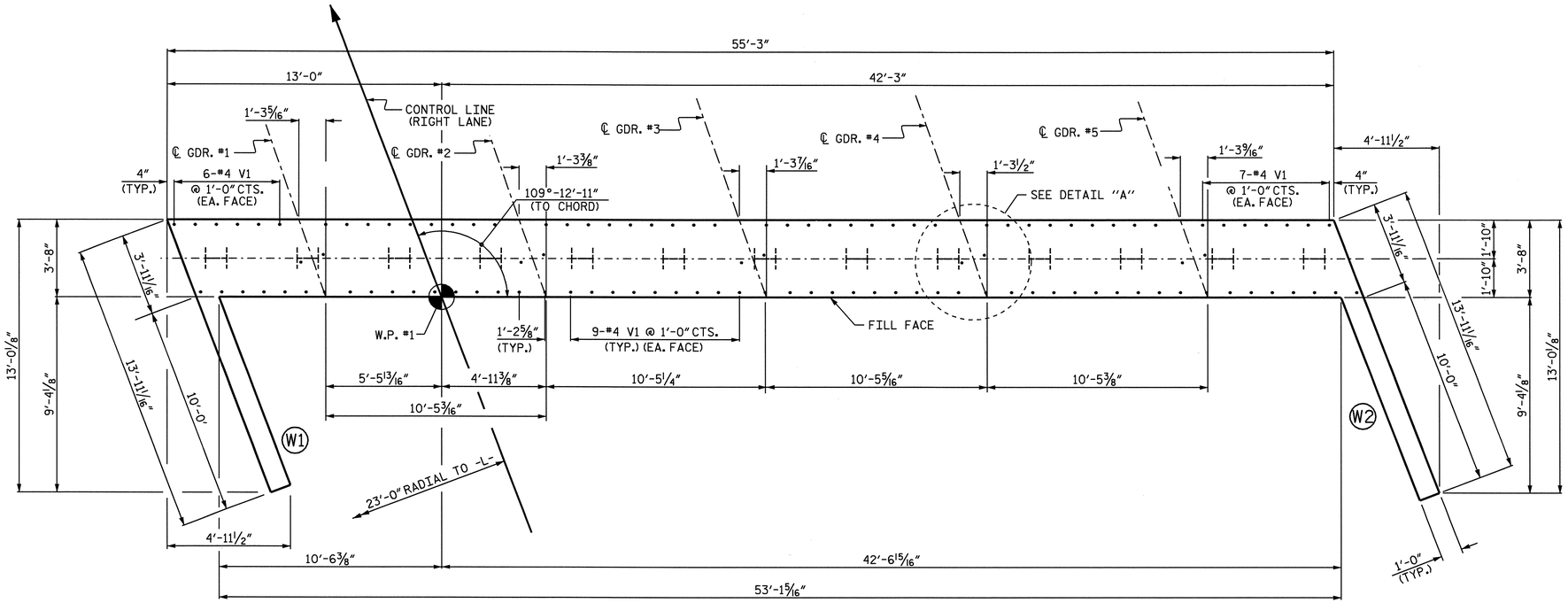

PLAN

NOTES

STIRRUPS IN CAP MAY BE SHIFTED AS NECESSARY TO CLEAR ANCHOR BOLTS.

THE CONTRACTOR SHALL PROVIDE FOR INSTALLATION OF THE 4" DIAMETER DRAIN PIPE THROUGH THE WING WALL AS REQUIRED FOR REINFORCED BRIDGE APPROACH FILLS, SEE THE ROADWAY PLANS. REINFORCING STEEL IN THE WING WALL MAY BE SHIFTED AS NECESSARY TO CLEAR THE DRAIN PIPE.

SEE SUPERSTRUCTURE SHEETS FOR UPPER PART OF INTEGRAL END BENT DETAIL.

THE CONTRACTOR'S ATTENTION IS CALLED TO THE FACT THAT UPPER PART OF WINGS ARE TO BE POURED WITH THE SUPERSTRUCTURE.

STIRRUPS IN CAP MAY BE SHIFTED AS NECESSARY TO CLEAR ANCHOR BOLT.

THE TOP SURFACE OF POUR #1 OF THE END BENT CAP AND WINGS, EXCLUDING THE OUTSIDE 4" AND THE BEARING AREA, SHALL BE RAKED TO A DEPTH OF 1/4".

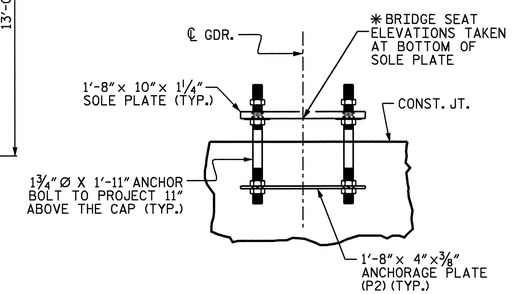

ANCHORAGE DETAILS

(FOR DETAIL SEE STRUCTURAL STEEL SHEET)

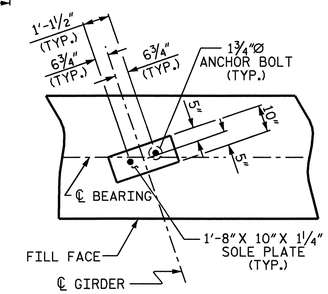

DETAIL A

(TYP. EA. GDR.)

TOP OF PILE ELEVATIONS			
P1	134.592	P8	132.611
P2	134.309	P9	132.328
P3	134.026	P10	132.045
P4	133.743	P11	131.762
P5	133.460	P12	131.479
P6	133.177	P13	131.196
P7	132.894		

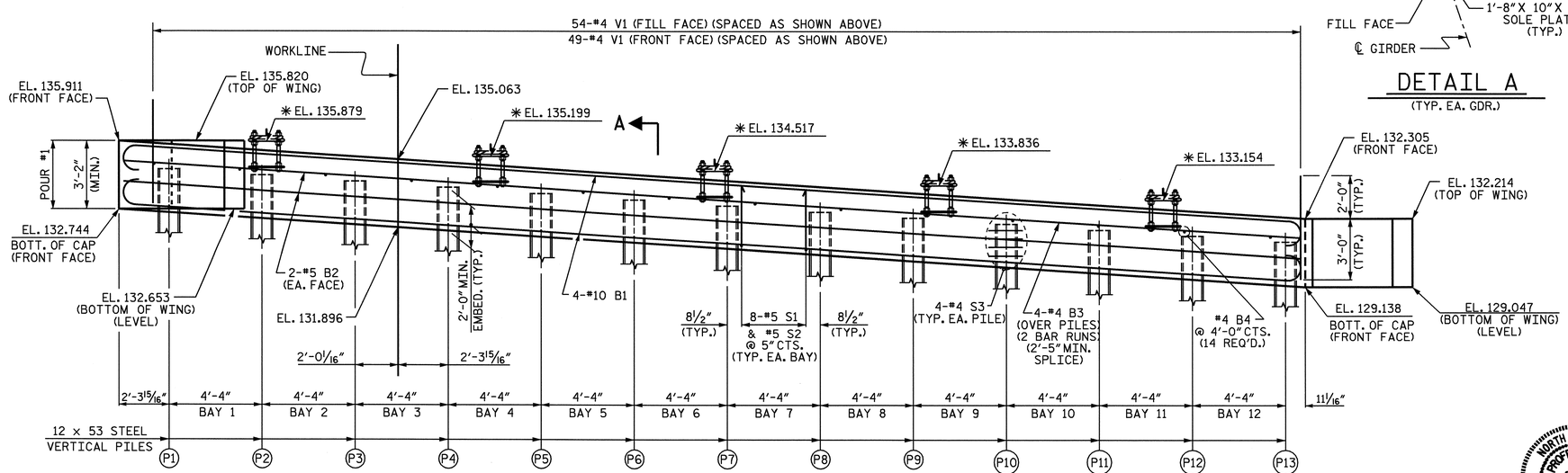

ELEVATION

(UPPER PART OF WINGS NOT SHOWN FOR CLARITY)
✱ ELEVATION GIVEN @ BOTTOM OF SOLE PLATE

PROJECT NO. R-2719A
LENOIR COUNTY
STATION: 211+67.44 -L-

SHEET 1 OF 3

STATE OF NORTH CAROLINA
DEPARTMENT OF TRANSPORTATION
RALEIGH

SUBSTRUCTURE
INTEGRAL END BENT #1
RIGHT LANE

NORTH CAROLINA PROFESSIONAL SEAL 025516 ENGINEER EMILY E. MURRAY
10/10/08

REVISIONS						SHEET NO.
NO.	BY:	DATE:	NO.	BY:	DATE:	S-207
1			3			TOTAL SHEETS
2			4			340

DRAWN BY : J.B. WILSON DATE : 7/07/08
CHECKED BY : B.N. BARODAWALA DATE : 7/31/08

02-OCT-2008 12:43
k:\structures\finalplans\str #7\r-2719a_sd_eb_07*.dgn
bbarodawala

STR. #7

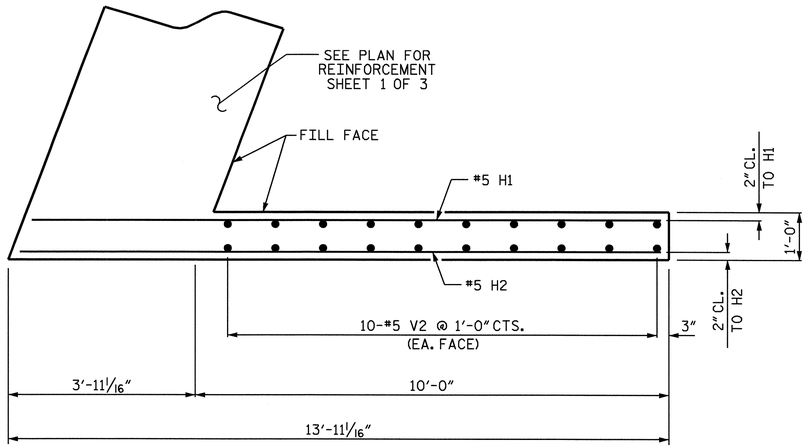

PLAN OF WING W1

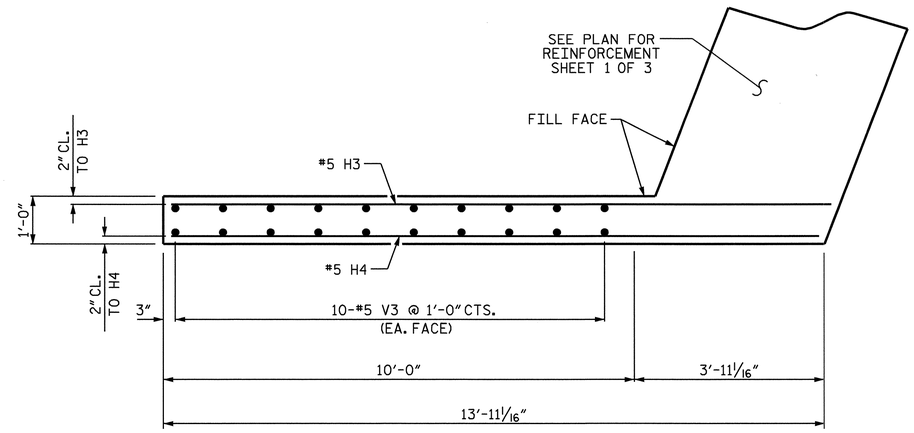

PLAN OF WING W2

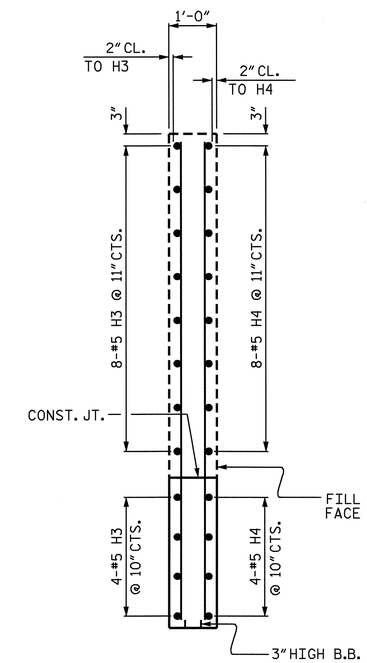

SECTION Y-Y

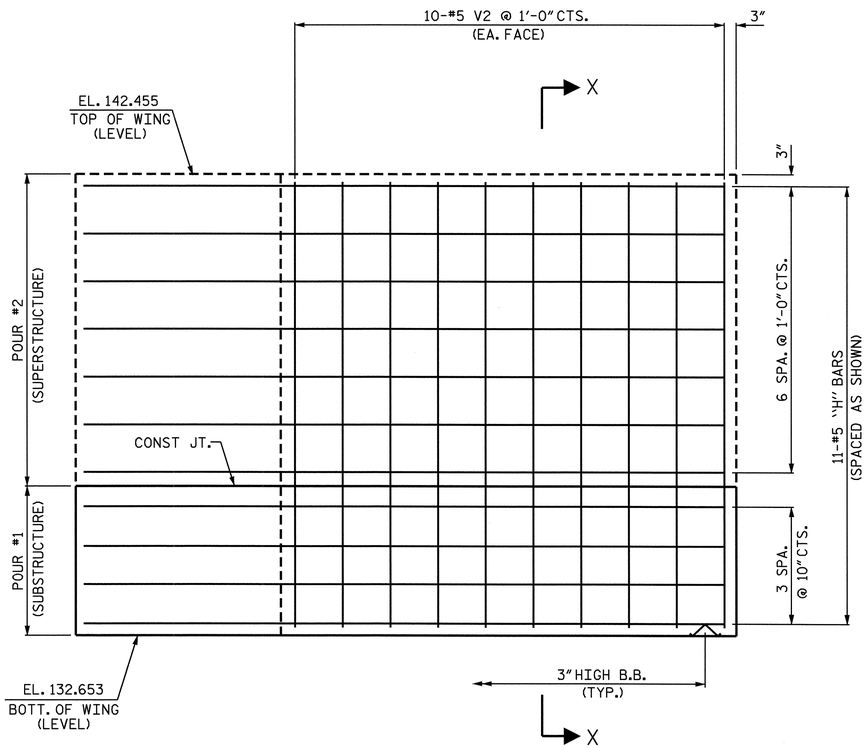

ELEVATION OF WING W1

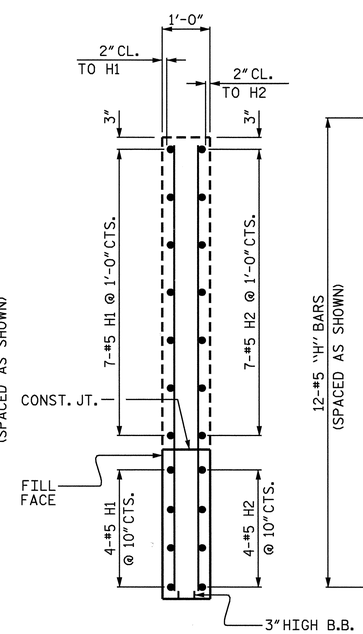

SECTION X-X

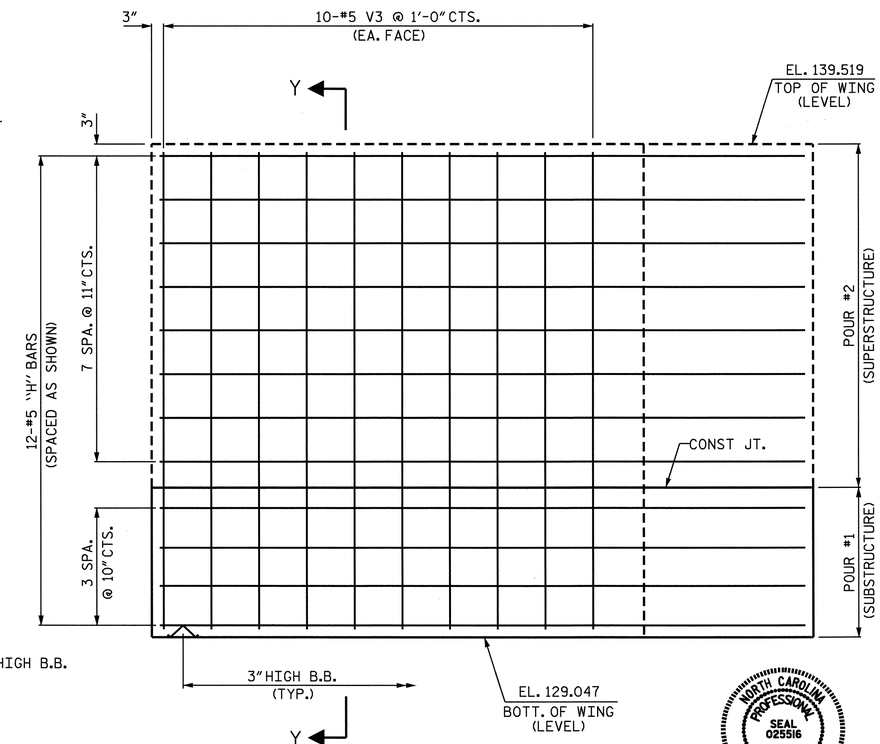

ELEVATION OF WING W2

NORTH CAROLINA PROFESSIONAL SEAL 025516 ENGINEER EMILY E. MURRAY

Emily E. Murray 8/15/08

PROJECT NO. R-2719A

LENOIR COUNTY

STATION: 211+67.44 -L-

SHEET 2 OF 3

STATE OF NORTH CAROLINA
DEPARTMENT OF TRANSPORTATION
RALEIGH

SUBSTRUCTURE

INTEGRAL END BENT #1

RIGHT LANE

REVISIONS						SHEET NO.
NO.	BY:	DATE:	NO.	BY:	DATE:	S-208
1			3			TOTAL SHEETS
2			4			340

DRAWN BY : J.B. WILSON DATE : 7/08/08
CHECKED BY : B.N. BARODAWALA DATE : 7/31/08

02-OCT-2008 12:43
ka\structure8\finalplans\str #7\r-2719a_sd_eb_07*.dgn
bbarodawala

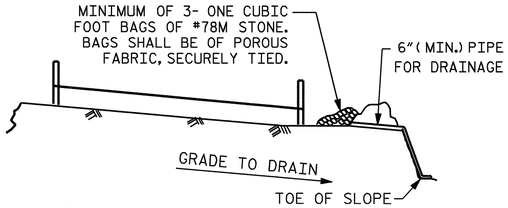

BAGGED STONE AND PIPE SHALL BE PLACED IMMEDIATELY AFTER COMPLETION OF END BENT EXCAVATION. PIPE MAY BE EITHER CONCRETE, CORRUGATED STEEL, CORRUGATED ALUMINUM ALLOY, OR CORRUGATED PLASTIC. PERFORATED PIPE WILL NOT BE ALLOWED.

BAGGED STONE SHALL REMAIN IN PLACE UNTIL THE ENGINEER DIRECTS THAT IT BE REMOVED. THE CONTRACTOR SHALL REMOVE AND DISPOSE OF SILT ACCUMULATIONS AT BAGGED STONE WHEN SO DIRECTED BY THE ENGINEER. BAGS SHALL BE REMOVED AND REPLACED WHENEVER THE ENGINEER DETERMINES THAT THEY HAVE DETERIORATED AND LOST THEIR EFFECTIVENESS.

NO SEPARATE PAYMENT WILL BE MADE FOR THIS WORK AND THE ENTIRE COST OF THIS WORK SHALL BE INCLUDED IN THE UNIT CONTRACT PRICE FOR THE SEVERAL PAY ITEMS.

TEMPORARY DRAINAGE AT END BENT

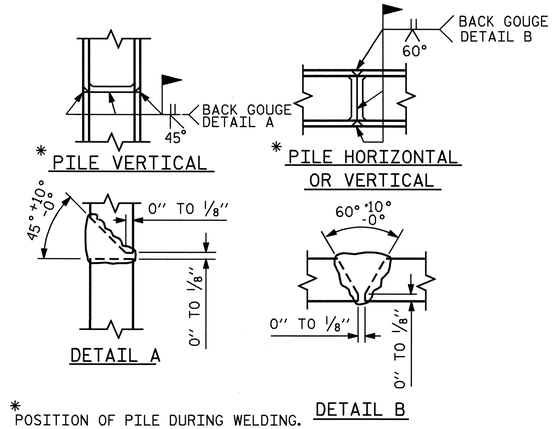

* POSITION OF PILE DURING WELDING.

PILE SPLICE DETAILS

BAR TYPES

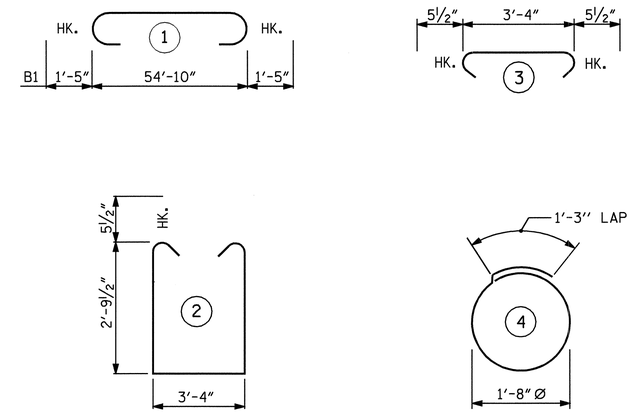

ALL BAR DIMENSIONS ARE OUT TO OUT.

BILL OF MATERIAL

END BENT #1

BAR	NO.	SIZE	TYPE	LENGTH	WEIGHT
B1	8	#10	1	57'-8"	1985
B2	4	#5	STR	54'-11"	229
B3	8	#4	STR	28'-8"	153
B4	14	#4	STR	3'-4"	31
H1	11	#5	STR	13'-2"	151
H2	11	#5	STR	13'-5"	154
H3	13	#5	STR	13'-10"	188
H4	13	#5	STR	13'-6"	183
S1	96	#5	2	9'-10"	985
S2	96	#5	3	4'-3"	426
S3	52	#4	4	6'-6"	226
V1	103	#4	STR	5'-0"	344
V2	20	#5	STR	9'-4"	195
V3	20	#5	STR	10'-0"	209

REINFORCING STEEL = 5459 LBS

CLASS A CONCRETE BREAKDOWN

POUR 1
CAP AND LOWER PART OF WINGS _ _ C.Y. 26.1

HP 12 x 53 STEEL PILES
NO. 13 LIN. FT. 1040

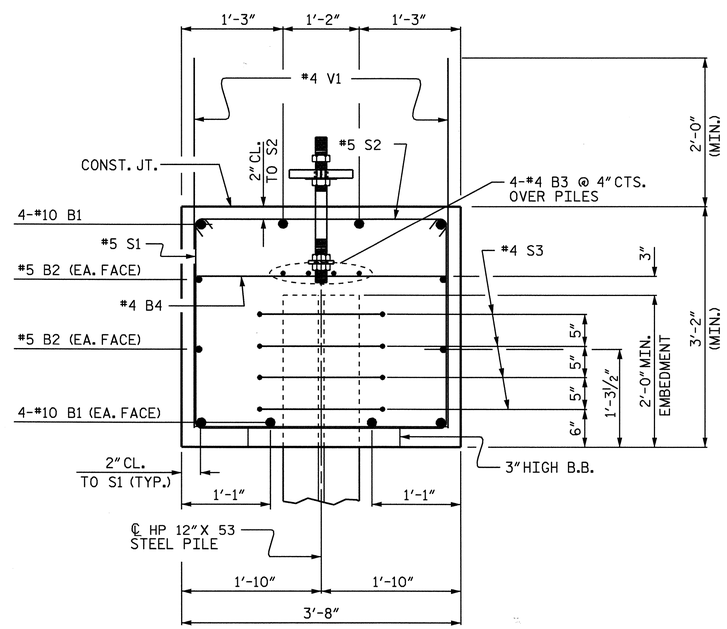

SECTION A-A

PROJECT NO. R-2719A
LENOIR COUNTY
STATION: 211+67.44 -L-

SHEET 3 OF 3

STATE OF NORTH CAROLINA
DEPARTMENT OF TRANSPORTATION
RALEIGH

SUBSTRUCTURE

INTEGRAL END BENT #1
RIGHT LANE

NORTH CAROLINA PROFESSIONAL SEAL 025516 ENGINEER EMILY E. MURRAY
10/10/08

REVISIONS						SHEET NO.
NO.	BY:	DATE:	NO.	BY:	DATE:	S-209
1			3			TOTAL SHEETS
2			4			340

DRAWN BY : J.B. WILSON DATE : 7/08/08
CHECKED BY : B.N. BARODAWALA DATE : 7/31/08

02-OCT-2008 12:43
k:\structures\finalplans\str #7\r-2719a_sd_eb_07#.dgn
bbarodawala

STR. #7

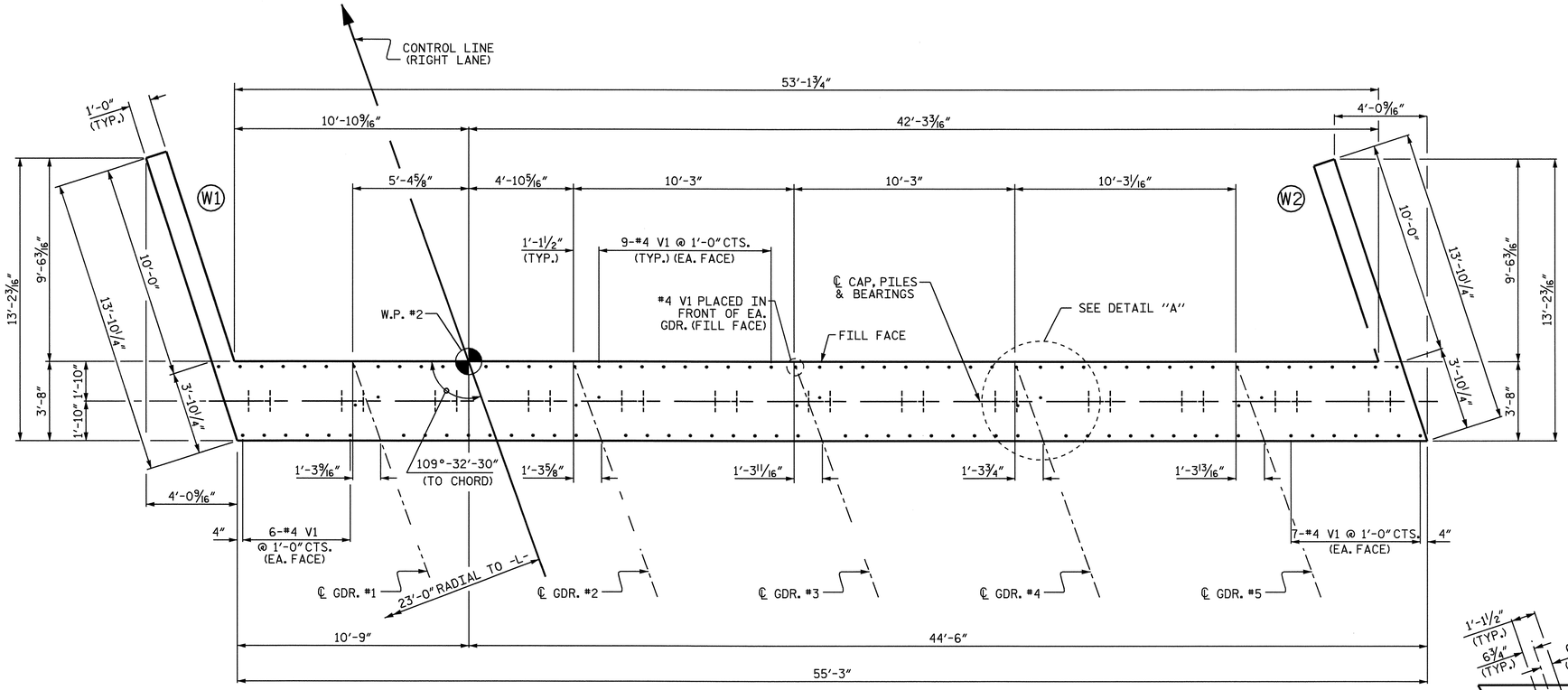

PLAN

NOTES

STIRRUPS IN CAP MAY BE SHIFTED AS NECESSARY TO CLEAR ANCHOR BOLTS.

THE CONTRACTOR SHALL PROVIDE FOR INSTALLATION OF THE 4" DIAMETER DRAIN PIPE THROUGH THE WING WALL AS REQUIRED FOR REINFORCED BRIDGE APPROACH FILLS, SEE THE ROADWAY PLANS. REINFORCING STEEL IN THE WING WALL MAY BE SHIFTED AS NECESSARY TO CLEAR THE DRAIN PIPE.

SEE SUPERSTRUCTURE SHEETS FOR UPPER PART OF INTEGRAL END BENT DETAIL.

THE CONTRACTOR'S ATTENTION IS CALLED TO THE FACT THAT UPPER PART OF WINGS ARE TO BE POURED WITH THE SUPERSTRUCTURE.

STIRRUPS IN CAP MAY BE SHIFTED AS NECESSARY TO CLEAR ANCHOR BOLT.

THE TOP SURFACE OF POUR #1 OF THE END BENT CAP AND WINGS, EXCLUDING THE OUTSIDE 4" AND THE BEARING AREA, SHALL BE RAKED TO A DEPTH OF ¼".

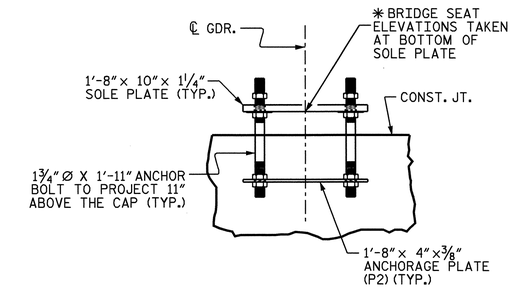

ANCHORAGE DETAILS

(FOR DETAIL SEE STRUCTURAL STEEL SHEET)

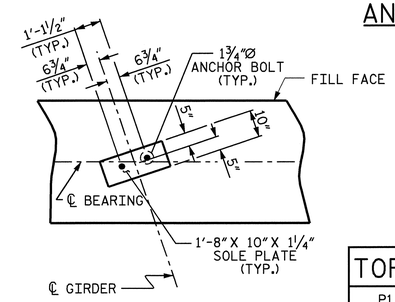

DETAIL A

(TYP. EA. GDR.)

TOP OF PILE ELEVATIONS			
P1	133.975	P8	132.021
P2	133.696	P9	131.742
P3	133.417	P10	131.463
P4	133.138	P11	131.184
P5	132.858	P12	130.905
P6	132.579	P13	130.626
P7	132.300		

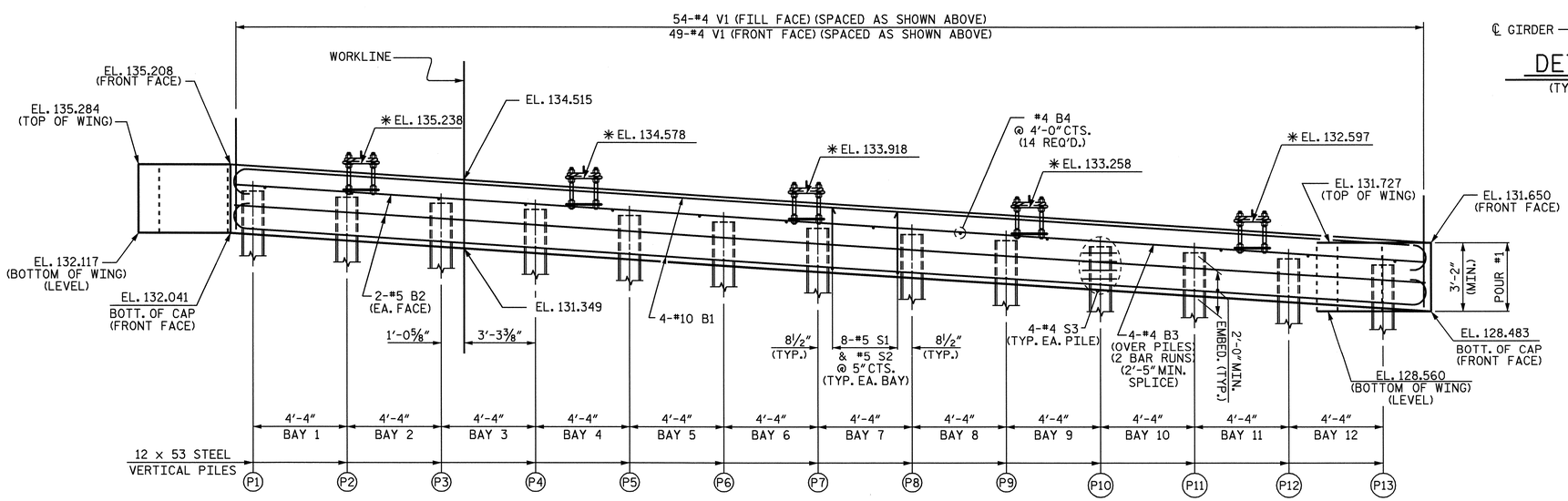

ELEVATION

(UPPER PART OF WINGS NOT SHOWN FOR CLARITY)
✱ ELEVATION GIVEN @ BOTTOM OF SOLE PLATE

PROJECT NO. R-2719A
LENOIR COUNTY
STATION: 211+67.44 -L-

SHEET 1 OF 3

STATE OF NORTH CAROLINA
DEPARTMENT OF TRANSPORTATION
RALEIGH

SUBSTRUCTURE
INTEGRAL END BENT #2
RIGHT LANE

NORTH CAROLINA PROFESSIONAL SEAL 025516 ENGINEER EMILY E. MURRAY
10/10/08

REVISIONS						SHEET NO.
NO.	BY:	DATE:	NO.	BY:	DATE:	S-210
1			3			TOTAL SHEETS
2			4			340

DRAWN BY : J.B. WILSON DATE : 7/09/08
CHECKED BY : B.N. BARODAWALA DATE : 7/31/08

08-OCT-2008 15:39
J:\Structures\Final plans\Str #7\r-2719a_sd_eb_07*.dgn
emurray

STR. #7

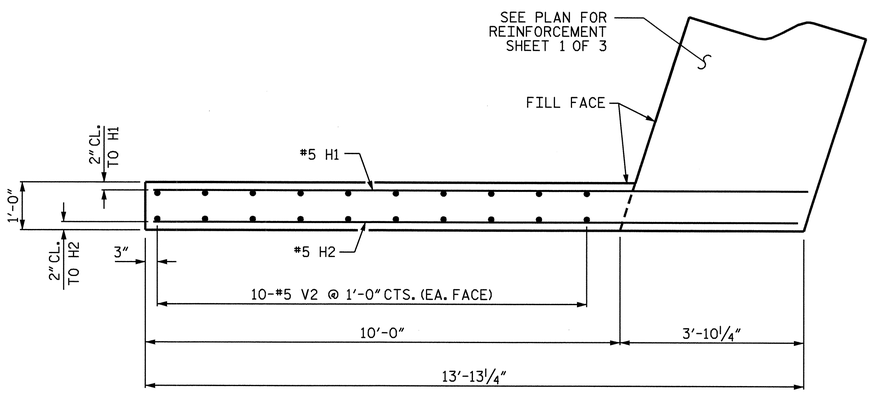

PLAN OF WING W1

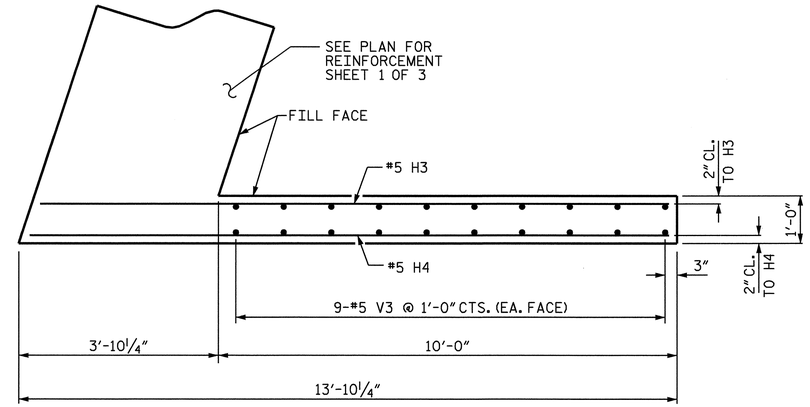

PLAN OF WING W2

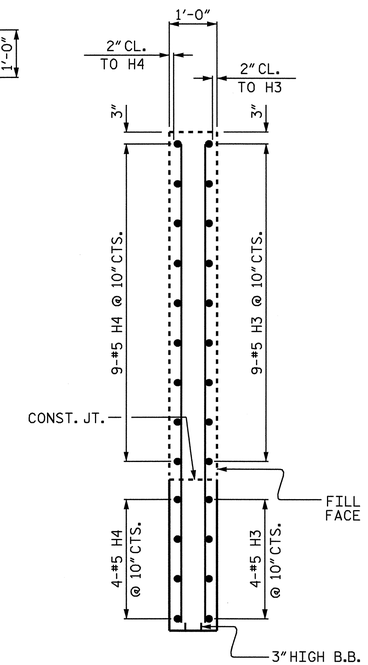

SECTION Y-Y

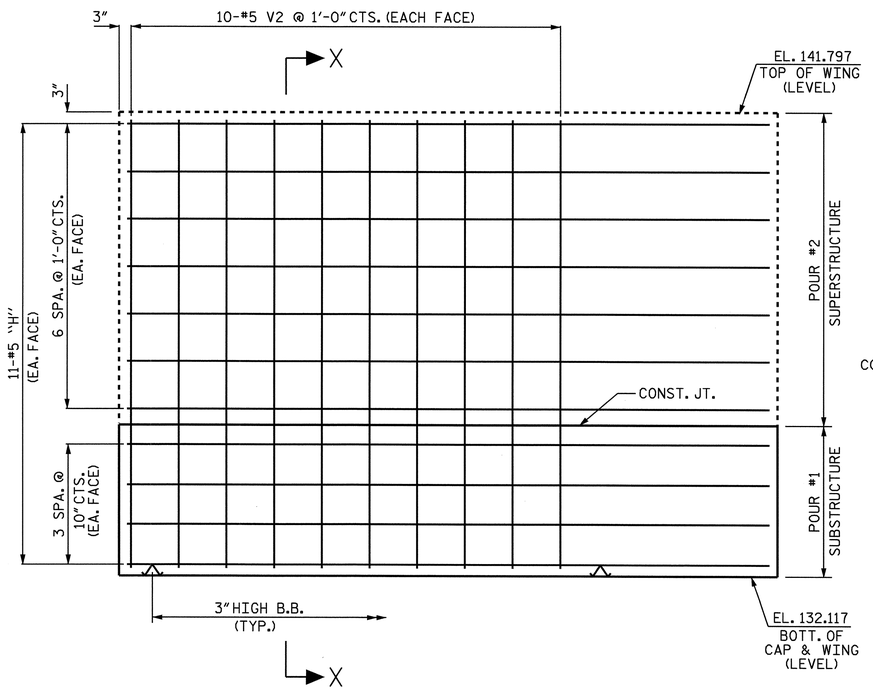

ELEVATION OF WING W1

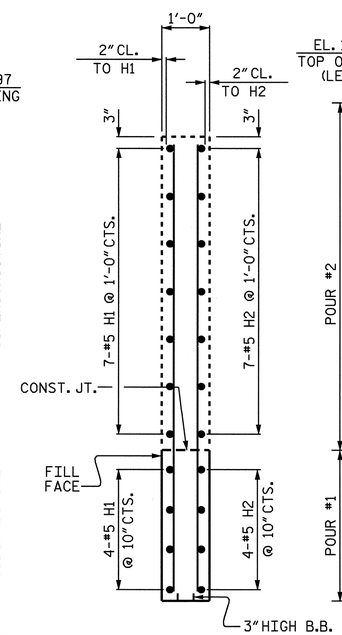

SECTION X-X

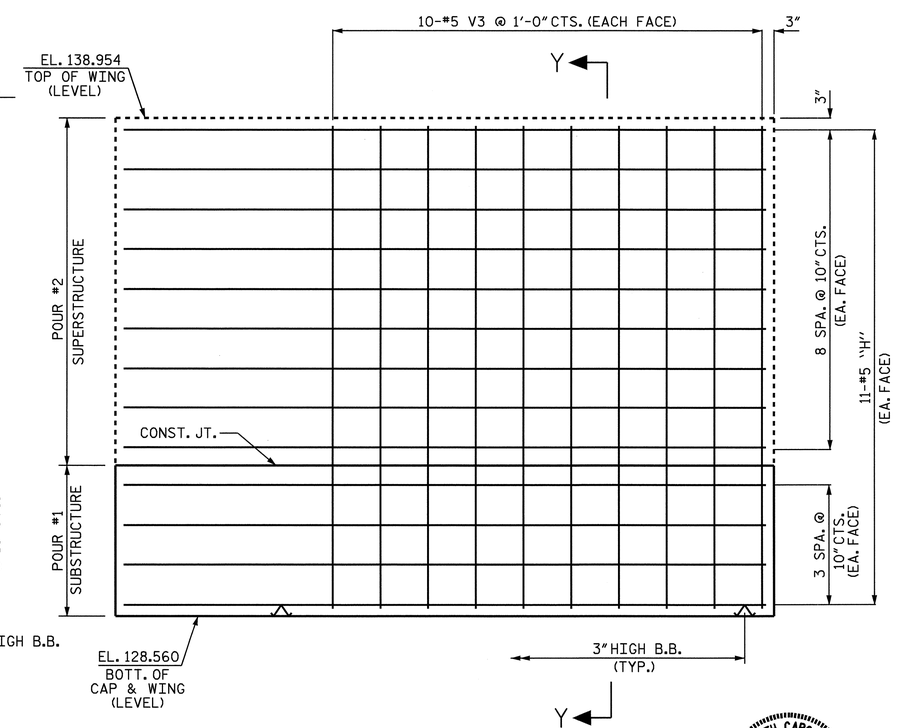

ELEVATION OF WING W2

PROJECT NO. R-2719A

LENOIR COUNTY

STATION: 211+67.44 -L-

SHEET 2 OF 3

STATE OF NORTH CAROLINA
DEPARTMENT OF TRANSPORTATION
RALEIGH

SUBSTRUCTURE

INTEGRAL END BENT #2

RIGHT LANE

NORTH CAROLINA PROFESSIONAL SEAL 025516 ENGINEER EMILY E. MURRAY
10/10/08

REVISIONS						SHEET NO.
NO.	BY:	DATE:	NO.	BY:	DATE:	S-211
1			3			TOTAL SHEETS
2			4			340

DRAWN BY : J.B. WILSON DATE : 7/09/08
CHECKED BY : B.N. BARODAWALA DATE : 7/31/08

02-OCT-2008 12:43
k:\structures\finalplans\str #7\r-2719a_sd_eb_07*.dgn
bbarodawala

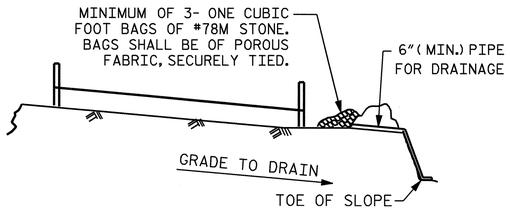

BAGGED STONE AND PIPE SHALL BE PLACED IMMEDIATELY AFTER COMPLETION OF END BENT EXCAVATION. PIPE MAY BE EITHER CONCRETE, CORRUGATED STEEL, CORRUGATED ALUMINUM ALLOY, OR CORRUGATED PLASTIC. PERFORATED PIPE WILL NOT BE ALLOWED.

BAGGED STONE SHALL REMAIN IN PLACE UNTIL THE ENGINEER DIRECTS THAT IT BE REMOVED. THE CONTRACTOR SHALL REMOVE AND DISPOSE OF SILT ACCUMULATIONS AT BAGGED STONE WHEN SO DIRECTED BY THE ENGINEER. BAGS SHALL BE REMOVED AND REPLACED WHENEVER THE ENGINEER DETERMINES THAT THEY HAVE DETERIORATED AND LOST THEIR EFFECTIVENESS.

NO SEPARATE PAYMENT WILL BE MADE FOR THIS WORK AND THE ENTIRE COST OF THIS WORK SHALL BE INCLUDED IN THE UNIT CONTRACT PRICE FOR THE SEVERAL PAY ITEMS.

TEMPORARY DRAINAGE AT END BENT

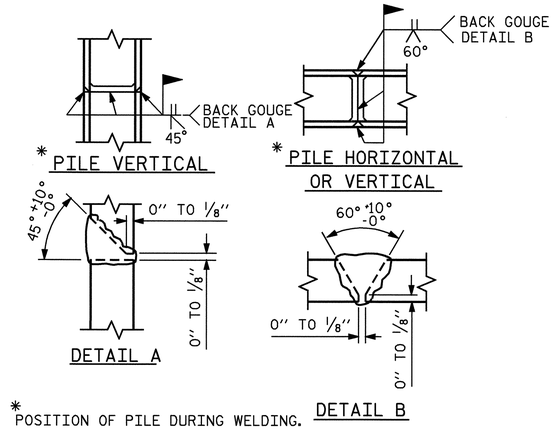

* POSITION OF PILE DURING WELDING.

PILE SPLICE DETAILS

BAR TYPES

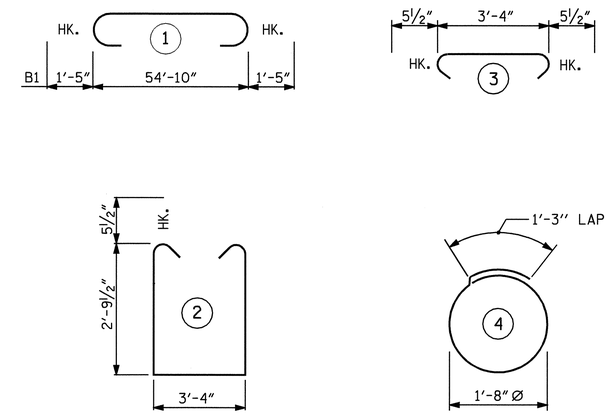

ALL BAR DIMENSIONS ARE OUT TO OUT.

BILL OF MATERIAL

END BENT #2

BAR	NO.	SIZE	TYPE	LENGTH	WEIGHT
B1	8	#10	1	57'-8"	1985
B2	4	#5	STR	54'-11"	229
B3	8	#4	STR	28'-8"	153
B4	14	#4	STR	3'-4"	31
H1	11	#5	STR	13'-8"	157
H2	11	#5	STR	13'-6"	155
H3	13	#5	STR	13'-2"	179
H4	13	#5	STR	13'-4"	181
S1	96	#5	2	9'-10"	985
S2	96	#5	3	4'-3"	426
S3	52	#4	4	6'-6"	226
V1	103	#4	STR	5'-0"	344
V2	20	#5	STR	9'-4"	195
V3	20	#5	STR	10'-0"	209

REINFORCING STEEL = 5455 LBS

CLASS A CONCRETE BREAKDOWN

POUR 1
CAP AND LOWER PART OF WINGS _ _C.Y. 26.1

HP 12 x 53 STEEL PILES

NO. 13 LIN. FT. 1040

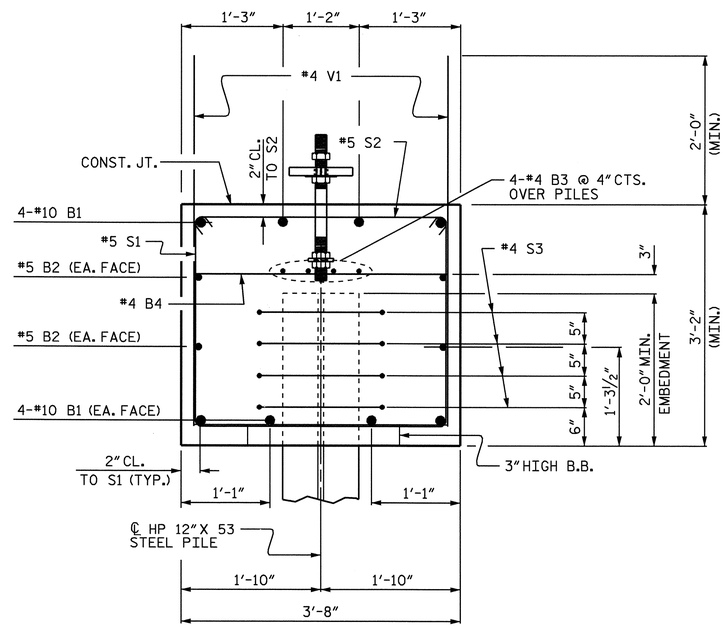

SECTION A-A

PROJECT NO. R-2719A
LENOIR COUNTY
STATION: 211+67.44 -L-

SHEET 3 OF 3

STATE OF NORTH CAROLINA
DEPARTMENT OF TRANSPORTATION
RALEIGH

SUBSTRUCTURE

INTEGRAL END BENT #2
RIGHT LANE

NORTH CAROLINA PROFESSIONAL SEAL 025516 ENGINEER EMILY E. MURRAY
10/10/08

REVISIONS						SHEET NO.
NO.	BY:	DATE:	NO.	BY:	DATE:	S-212
1			3			TOTAL SHEETS
2			4			340

DRAWN BY : J.B. WILSON DATE : 7/08/08
CHECKED BY : B.N. BARODAWALA DATE : 7/31/08

02-OCT-2008 12:43
k:\structures\finalplans\str #7\r-2719a_sd_eb_07*.dgn
bbarodawala

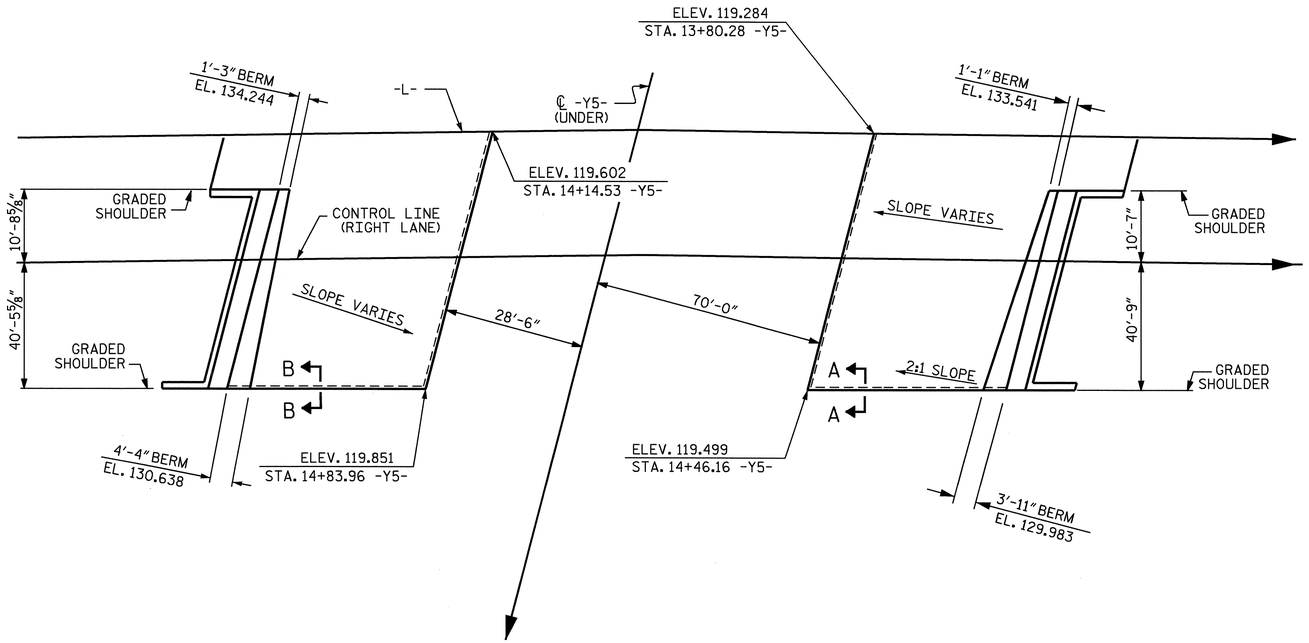

GENERAL NOTES

SLOPE PROTECTION SHALL BE PLACED UNDER THE ENDS OF THE BRIDGE AS SHOWN IN THE DETAILS. THE CONTRACTOR, AT HIS OPTION, MAY USE ALTERNATE "B" ONLY FOR HIGHWAY OVER HIGHWAY GRADE SEPARATIONS WITH 2:1 END BENT SLOPE IN RURAL, UNPOPULATED AREAS. STRAIGHT EDGING WILL NOT BE REQUIRED UNLESS, IN THE OPINION OF THE ENGINEER, VISUAL INSPECTION INDICATES A NEED FOR IT. MEASUREMENT AND PAYMENT SHALL BE AS PRESCRIBED IN SECTION 462 OF THE STANDARD SPECIFICATIONS. FOR BERM WIDTH, SEE GENERAL DRAWING.

ALTERNATE "A"

ALTERNATE "A" SHALL CONSIST OF 4" POURED-IN-PLACE CONCRETE PAVING AS SHOWN IN THE DETAILS ON THIS SHEET. CONCRETE SHALL BE CLASS "B". THE CONCRETE SURFACE SHALL BE FLOATED WITH A WOODEN FLOAT AND FINISHED. WELDED WIRE FABRIC REINFORCING SHALL BE 6 X 6 - W1.4 X W1.4, 60" WIDE. SLOPE PROTECTION SHALL BE POURED IN 5' STRIPS AS SHOWN IN THE "POURING DETAIL" WITH 2'-0" LONG #4 BARS PLACED ALONG THE SLOPE BETWEEN STRIPS AT 1'-6" MAXIMUM SPACING. SLOPE PROTECTION MAY BE POURED IN ALTERNATE 4' AND 5' STRIPS AS SHOWN IN THE "OPTIONAL POURING DETAIL" WITH ADJACENT RUNS OF WELDED WIRE FABRIC LAPPING AT LEAST 6". THE COST OF THE WELDED WIRE FABRIC AND #4 BARS, IF USED, SHALL BE INCLUDED IN THE CONTRACT UNIT PRICE BID PER SQUARE YARD FOR SLOPE PROTECTION.

BRIDGE @ STA. 211+67.44 -L- RIGHT LANE	4 INCH SLOPE PROTECTION	* WELDED WIRE FABRIC 60 INCHES WIDE
	SQUARE YARDS	APPROX. L.F.
END BENT 1	350	756
END BENT 2	268	580

* QUANTITY SHOWN IS BASED ON 5' POURS.

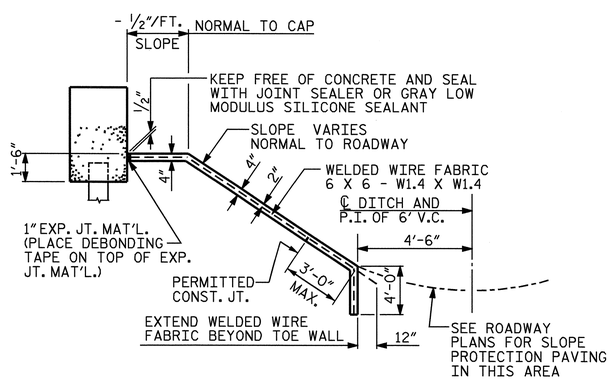

SECTION ALONG ℄ ROADWAY WHEN FILL CATCHES IN DITCH

DETAILS FOR ALTERNATE "A"

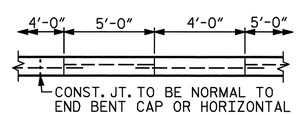

POUR A 4'-0" STRIP FIRST. STRIP WIDTHS MAY VARY IN CURVED PORTION.

OPTIONAL POURING DETAIL

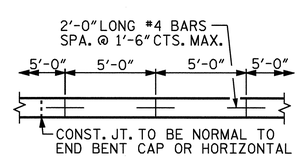

STRIP WIDTHS MAY VARY IN CURVED PORTION.

POURING DETAIL

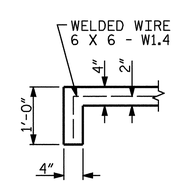

SECTION A-A

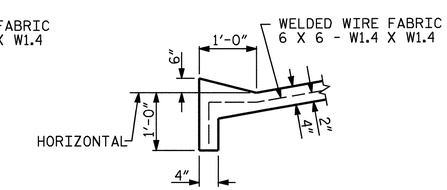

SECTION B-B

PROJECT NO. R-2719A
LENOIR COUNTY
STATION: 211+67.44 -L-

STATE OF NORTH CAROLINA
DEPARTMENT OF TRANSPORTATION
RALEIGH

STANDARD
SLOPE PROTECTION DETAILS
(RIGHT LANE)

NORTH CAROLINA PROFESSIONAL SEAL 025516 ENGINEER EMILY E. MURRAY
10/13/08

REVISIONS						SHEET NO.
NO.	BY:	DATE:	NO.	BY:	DATE:	S-213
1			3			TOTAL SHEETS
2			4			340

ASSEMBLED BY : M.GUDLAUGSSON	DATE : 06/2008	
CHECKED BY : M. PISO	DATE : 06/2008	
DRAWN BY : ELR 5/92	REV. 7/10/01	LES/RDR
CHECKED BY : GRP 6/92	REV. 5/7/03	RWW/JTE
	REV. 5/1/06	TLA/GM

13-OCT-2008 14:00
J:\Structures\Final plans\Str #7\2719A_sd_SP_07.dgn
emurray

STR. #7

STD. NO. SP1 (SHT 6)

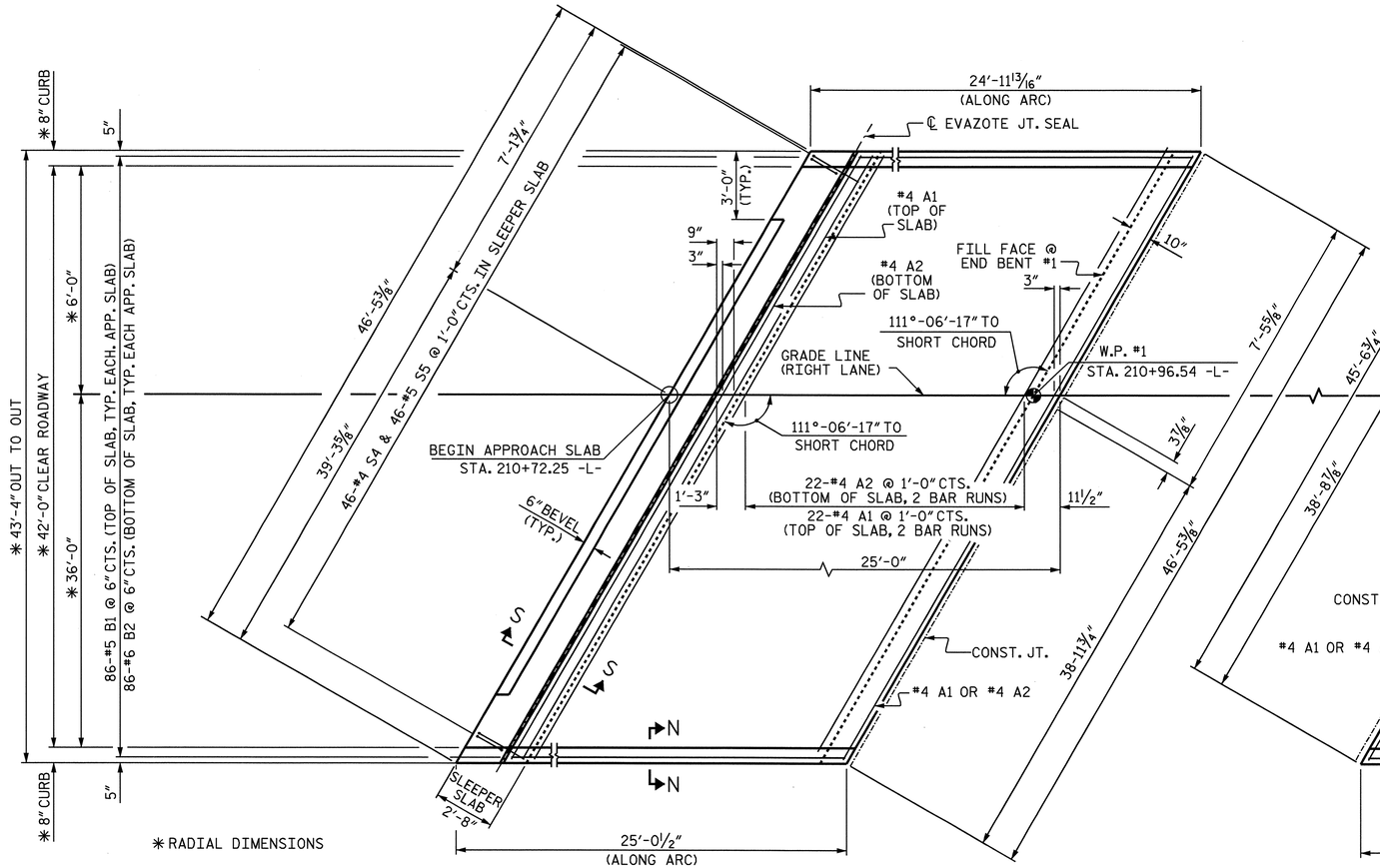

PLAN @ END BENT #1

#4 A1 BARS IN SLEEPER SLAB NOT SHOWN FOR CLARITY.

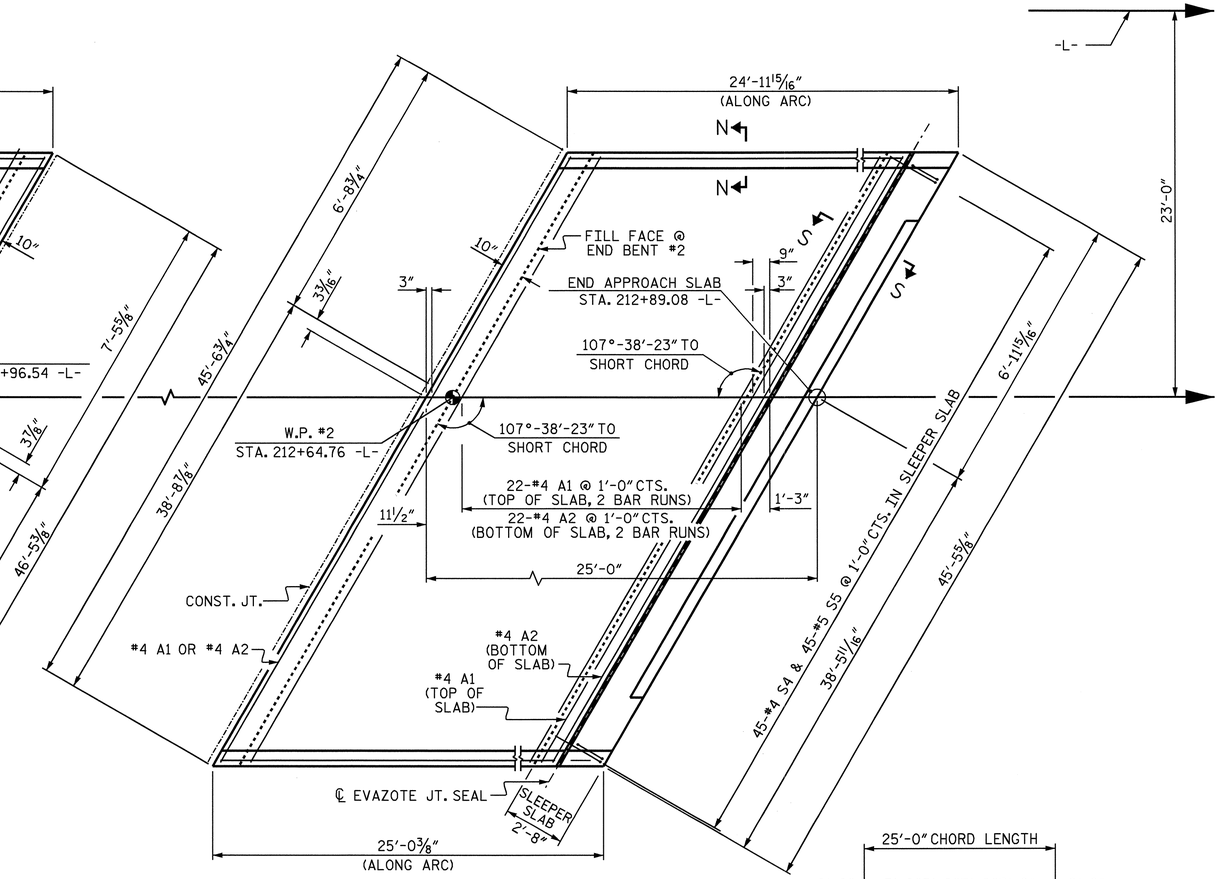

PLAN @ END BENT #2

#4 A1 BARS IN SLEEPER SLAB NOT SHOWN FOR CLARITY.

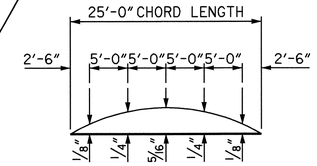

ARC OFFSET - LEFT AND RIGHT

(APPROACH SLAB @ END BENT #1 & END BENT #2)

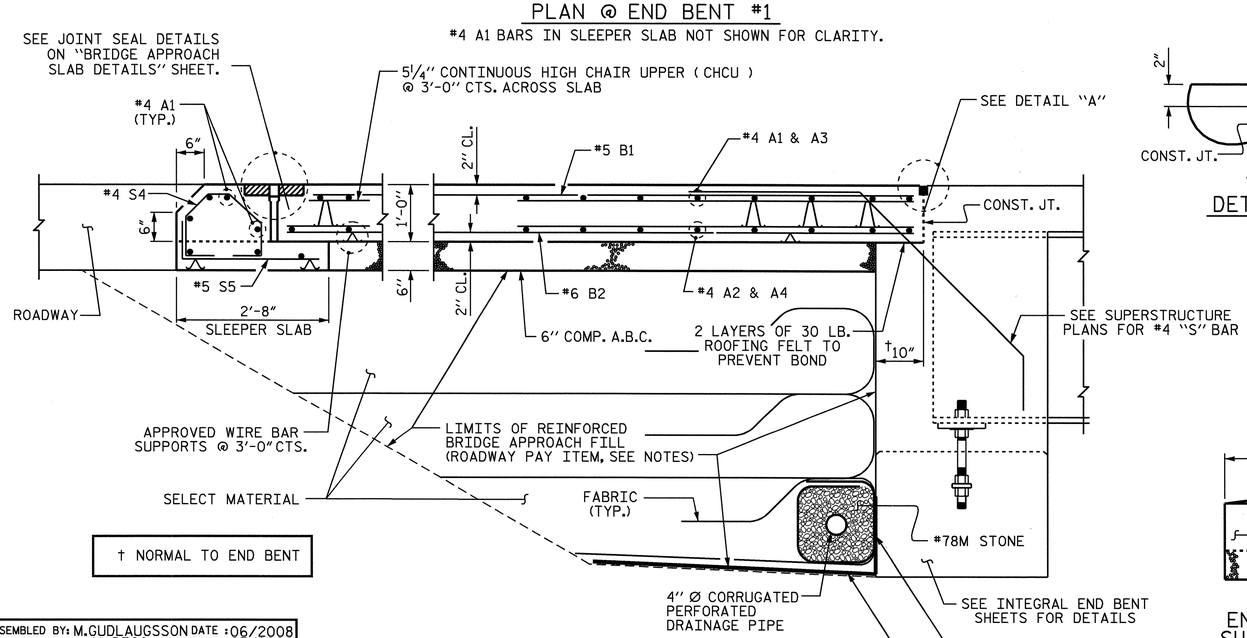

† NORMAL TO END BENT

SECTION THRU SLAB

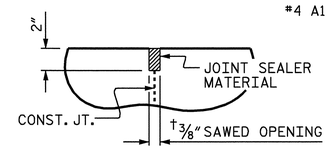

DETAIL "A"

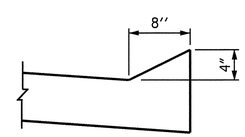

SECTION N-N

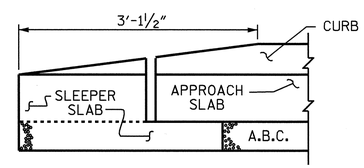

END OF CURB WITHOUT SHOULDER BERM GUTTER

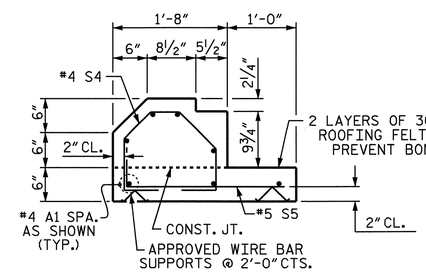

SECTION S-S

SHOWING SLEEPER SLAB

PROJECT NO. R-2719A

LENOIR COUNTY

STATION: 211+67.44 -L-

SHEET 1 OF 3

STATE OF NORTH CAROLINA
DEPARTMENT OF TRANSPORTATION
RALEIGH

STANDARD

BRIDGE APPROACH SLAB FOR INTEGRAL ABUTMENT

(RIGHT LANE)

NORTH CAROLINA PROFESSIONAL SEAL 025516 ENGINEER EMILY E. MURRAY

10/10/08

REVISIONS						SHEET NO.
NO.	BY:	DATE:	NO.	BY:	DATE:	S-214
1			3			TOTAL SHEETS
2			4			340

ASSEMBLED BY: M. GUDLAUGSSON DATE: 06/2008	
CHECKED BY: M. PISO DATE: 07/2008	
DRAWN BY: TLA 10/05	ADDED 5/1/06R KMM/GM
CHECKED BY: GM 5/06	

03-OCT-2008 11:20
J:\Structures\Final plans\Str #7\2719A_sd_AS_07.dgn
emurray

STR. #7

STD. NO. BAS11 (SHT 11)

NOTES

APPROACH SLAB SHALL NOT BE CONSTRUCTED PRIOR TO COMPLETION OF THE BRIDGE DECK.

FOR REINFORCED BRIDGE APPROACH FILL INCLUDING FABRIC, IMPERMEABLE GEOMEMBRANE, 4" Ø DRAINAGE PIPE, #78M STONE, AND SELECT MATERIAL, SEE ROADWAY PLANS.

AREA BETWEEN THE WINGWALL AND APPROACH SLAB SHALL BE GRADED TO DRAIN THE WATER AWAY FROM THE FILL FACE OF THE BRIDGE AND SHALL BE PAVED. SEE ROADWAY PLANS.

THE 6" COMP. A.B.C. SHALL BE FLUSH WITH THE SLEEPER SLAB AND SHALL EXTEND 1'-0" OUTSIDE OF EACH EDGE OF THE APPROACH SLAB.

THE CONTRACTOR MAY USE 4" TYPE B-25.0B ASPHALT CONCRETE BASE COURSE IN LIEU OF 6" COMP. A.B.C. IF THIS OPTION IS USED, THE BASE COURSE SHALL BE FLUSH WITH THE SLEEPER SLAB, AND THE WIDTH SHALL BE THE SAME AS THAT OF THE APPROACH SLAB.

THE CONTRACTOR MAY USE 5" CLASS "A" CONCRETE BASE IN LIEU OF 6" COMP. A.B.C. IF THIS OPTION IS USED, THE CONCRETE BASE SHALL BE FLUSH WITH THE SLEEPER SLAB, AND THE WIDTH SHALL BE THE SAME AS THAT OF THE APPROACH SLAB. THE CONCRETE SHALL BE FINISHED TO A SMOOTH SURFACE AND A LAYER OF 30 LB ROOFING FELT SHALL BE PLACED BETWEEN THE CONCRETE BASE AND THE APPROACH SLAB TO PREVENT BOND. THE APPROACH SLAB SHALL NOT BE CAST UNTIL THE CONCRETE BASE HAS REACHED AN AGE OF THREE CURING DAYS.

THE VERTICAL JOINT ON THE RIGHT AND LEFT SIDE OF THE APPROACH SLAB AT THE ENDS OF THE EVAZOTE JOINT SHALL BE FILLED WITH SILICONE OR OTHER APPROVED MATERIAL IN ORDER TO PREVENT BACKFILL FROM ENTERING THE JOINT OPENING.

THE JOINT OPENING AT THE APPROACH SLAB/DECK INTERFACE SHALL BE SAWED NO MORE THAN 12 HOURS AFTER THE APPROACH SLAB IS CAST. THE JOINT SHALL BE CLEANED OF ALL DEBRIS BEFORE THE SEALANT IS APPLIED. THE JOINT SEALER MATERIAL SHALL CONFORM TO THE REQUIREMENTS OF TYPE SL LOW MODULUS SILICONE SEALANT.

WITH EVAZOTE JOINT SEAL

FOR EVAZOTE JOINT SEALS, SEE SPECIAL PROVISIONS.

THE NOMINAL UNCOMPRESSED SEAL WIDTH OF THE EVAZOTE JOINT SEAL SHALL BE 3 1/8".

FOR ELASTOMERIC CONCRETE, SEE SPECIAL PROVISIONS.

SPLICE CHART

BAR SIZE	SPLICE LENGTH
#4 A1	2'-0"
#4 A2	1'-9"

BILL OF MATERIAL
FOR ONE APPROACH SLAB @ END BENT #1

BAR	NO.	SIZE	TYPE	LENGTH	WEIGHT
* A1	62	#4	STR	24'-1"	997
A2	48	#4	STR	24'-0"	770
* B1	86	#5	STR	22'-3"	1996
B2	86	#6	STR	22'-9"	2939
* S4	46	#4	1	3'-11"	120
S5	46	#5	2	2'-11"	140
REINFORCING STEEL				LBS.	3849
* EPOXY COATED REINFORCING STEEL				LBS.	3113
CLASS AA CONCRETE					
POUR #1 - SLAB & CURB				C. Y.	40.5
POUR #2 - SLEEPER SLAB				C. Y.	4.8
TOTAL				C. Y.	42.5

BAR TYPES

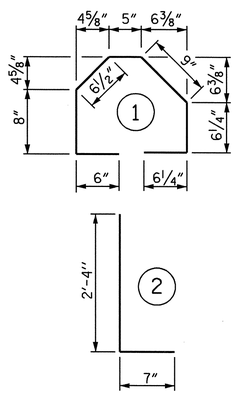

ALL BAR DIMENSIONS ARE OUT TO OUT

BILL OF MATERIAL
FOR ONE APPROACH SLAB @ END BENT #2

BAR	NO.	SIZE	TYPE	LENGTH	WEIGHT
* A3	62	#4	STR	23'-8"	980
A4	48	#4	STR	23'-6"	754
* B1	86	#5	STR	22'-3"	1996
B2	86	#6	STR	22'-9"	2939
* S4	45	#4	1	3'-11"	118
S5	45	#5	2	2'-11"	137
REINFORCING STEEL				LBS.	3830
* EPOXY COATED REINFORCING STEEL				LBS.	3094
CLASS AA CONCRETE					
POUR #1 - SLAB & CURB				C. Y.	39.3
POUR #2 - SLEEPER SLAB				C. Y.	4.7
TOTAL				C. Y.	44.0

BAR TYPES

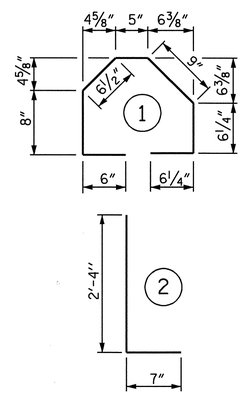

ALL BAR DIMENSIONS ARE OUT TO OUT

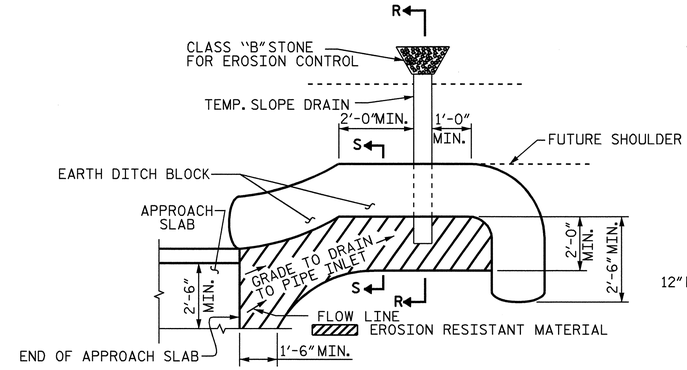

NOTE: IMMEDIATELY AFTER THE CONSTRUCTION OF THE APPROACH SLAB, THE CONTRACTOR SHALL PROVIDE TEMPORARY BERM AND SLOPE DRAIN. CONTRACTOR SHALL GRADE TO PIPE INLET AND PROVIDE EROSION RESISTANT MATERIAL AS SHOWN. THE EROSION RESISTANT MATERIAL SHALL BE EITHER 1) ASPHALT PLANT MIX, TYPE 1 OR TYPE 2, MIN. 2" DEPTH, 2) EROSION CONTROL MAT, OR 3) CONCRETE, AS DIRECTED BY THE ENGINEER. THE SLOPE DRAIN SHALL CONSIST OF A NON-PERFORATED TEMPORARY DRAINAGE PIPE, 12 INCHES IN DIAMETER.

PLAN VIEW

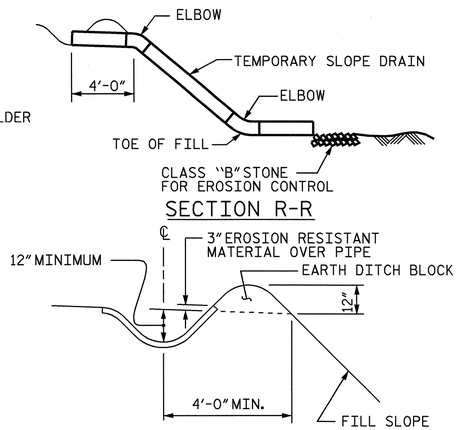

SECTION S-S

TEMPORARY BERM AND SLOPE DRAIN DETAILS

(TO BE USED WHEN SHOULDER BERM GUTTER IS REQUIRED)

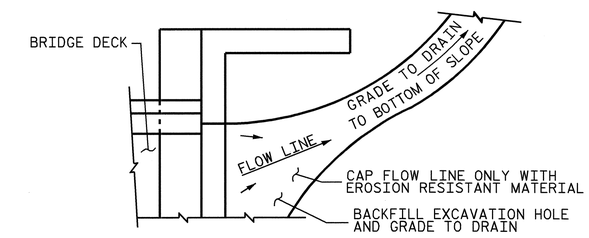

NOTE: IF THE APPROACH SLAB IS NOT CONSTRUCTED IMMEDIATELY AFTER THE BACKFILLING OF THE END BENT EXCAVATION, GRADE TO DRAIN TO THE BOTTOM OF THE SLOPE AND PROVIDE EROSION RESISTANT MATERIAL, SUCH AS FIBERGLASS ROVING OR AS DIRECTED BY THE ENGINEER TO PREVENT SOIL EROSION AND TO PROTECT THE AREA ADJACENT TO THE STRUCTURE. THE CONTRACTOR WILL BE REQUIRED TO REMOVE THESE MATERIALS PRIOR TO CONSTRUCTION OF THE APPROACH SLAB.

TEMPORARY DRAINAGE DETAIL

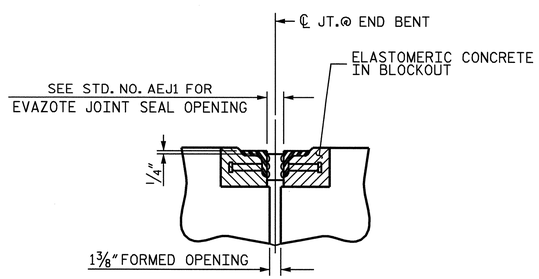

SECTION C-C
ARMORED EVAZOTE JOINT SEAL

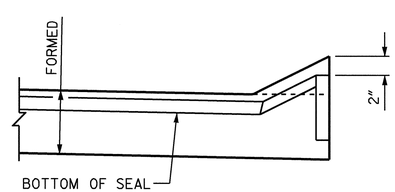

SECTION A-A

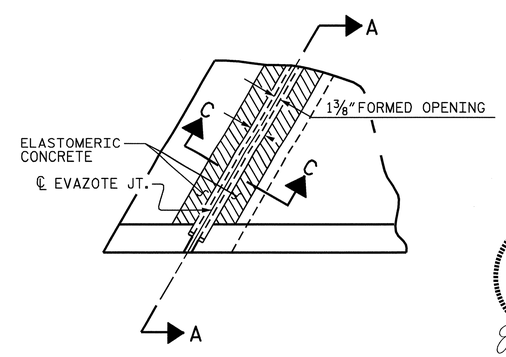

PLAN

NORTH CAROLINA PROFESSIONAL SEAL 025516 ENGINEER EMILY E. MURRAY

Emily E. Murray 10/10/08

PROJECT NO. R-2719A
LENOIR COUNTY
STATION: 211+67.44 -L-

SHEET 2 OF 3

STATE OF NORTH CAROLINA
DEPARTMENT OF TRANSPORTATION
RALEIGH

STANDARD

BRIDGE APPROACH SLAB DETAILS

(RIGHT LANE)

REVISIONS						SHEET NO.
NO.	BY:	DATE:	NO.	BY:	DATE:	S-215
1			3			TOTAL SHEETS
2			4			340

ASSEMBLED BY: M.GUDLAUGSSON DATE : 06/2008
CHECKED BY : M. PISO DATE 06/2008

DRAWN BY : FCJ 11/88
CHECKED BY : ARB 11/88

REV. 10/17/00 RWW/LES
REV. 5/7/03 RWW/JTE
REV. 5/1/06R MAA/KMM

08-OCT-2008 15:43
J:\Structures\Finalplans\Str #7\2719A_sd_AS_07.dgn
emurray

STR. #7

STD. NO. BAS10 (SHT 7)

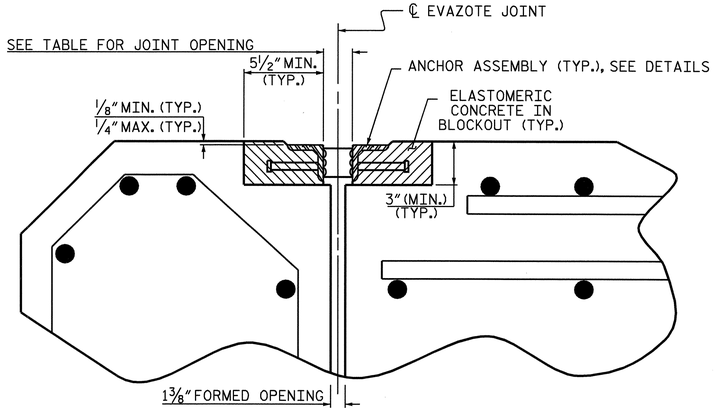

ARMORED JOINT DETAILS

SECTION NORMAL TO JOINT AT APPROACH SLAB SLEEPER SLAB

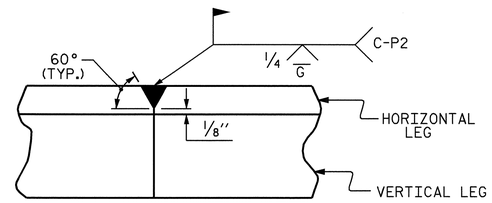

DETAIL- FIELD WELD SPLICE OF ANGLE

NOTES

ANGLES SHALL CONFORM TO AASHTO M270 GRADE 36 STEEL OR APPROVED EQUAL. ALL STUD ANCHORS SHALL CONFORM TO AASHTO M169 GRADES 1010 THRU 1020 OR APPROVED EQUAL.

STUD ANCHORS SHALL BE SHOP WELDED AND ALL HOLES SHALL BE SHOP DRILLED AS SHOWN ON THE PLANS. STUD ANCHORS SHALL BE ELECTRIC ARC END WELDED WITH COMPLETE FUSION.

UPON COMPLETION OF SHOP FABRICATION, THE ENTIRE ANCHOR ASSEMBLY SHALL BE METALLIZED. THE ½″ Ø STUD ANCHORS AND ANCHOR TABS NEED NOT BE METALLIZED. SEE SPECIAL PROVISION FOR THERMAL SPRAYED COATINGS (METALLIZATION).

ANCHOR ASSEMBLY SHALL BE MADE CONTINUOUS THE LENGTH OF THE JOINT FROM GUTTER TO GUTTER. FOR FIELD SPLICES AT ALL CROWN BREAK POINTS, THE ENDS OF THE STEEL ANGLES SHALL BE CUT PARALLEL TO THE BRIDGE CENTERLINE. FINISHED FIELD WELDS SHALL BE GROUND SMOOTH AND COATED WITH A MINIMUM THICKNESS OF 4 DRY MILS OF ZINC-RICH PAINT IN ACCORDANCE WITH THE STANDARD SPECIFICATIONS.

ANCHOR ASSEMBLY SEGMENTS SHALL NOT BE LESS THAN 12 FEET NOR MORE THAN 20 FEET IN LENGTH. SHORTER SEGMENTS MAY BE USED AT THE EDGE OF ROADWAY OR AT POINTS OF STAGED CONSTRUCTION.

THE ANCHOR ASSEMBLY SHALL BE SECURED AND LEVELED AS SHOWN IN THE "ARMORED JOINT ANCHOR ASSEMBLY DETAILS". NO SUBMITTALS ARE REQUIRED FOR ⅜″ Ø EXPANSION ANCHORS, NUTS OR WASHERS. THE CONTRACTOR MAY SUBMIT FOR APPROVAL AN ALTERNATE METHOD OF ALIGNING AND LEVELING THE ANGLES. THE ALTERNATE METHOD SHALL NOT INCLUDE ANY WELDING TO THE OUTSIDE FACE OF THE ANGLES.

AFTER THE ELASTOMERIC CONCRETE HAS BEEN CAST ON BOTH SIDES OF THE JOINT, REMOVE ANY EXCESS CONCRETE THAT COMES THROUGH THE WEEP HOLES AND THOROUGHLY CLEAN THE ANGLES. ANY DAMAGED STEEL SHALL BE COATED WITH A MINIMUM OF 4 MILS OF ZINC-RICH PAINT IN ACCORDANCE WITH THE STANDARD SPECIFICATIONS.

SEE SPECIAL PROVISIONS FOR EVAZOTE JOINT SEALS.

SEE SPECIAL PROVISIONS FOR ELASTOMERIC CONCRETE.

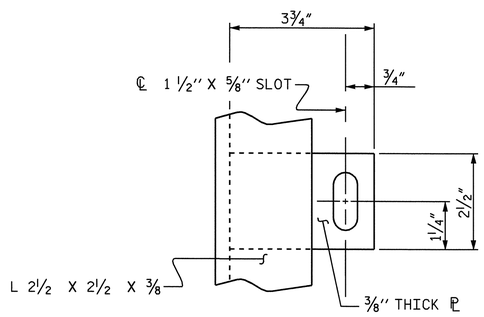

PLAN VIEW OF TAB

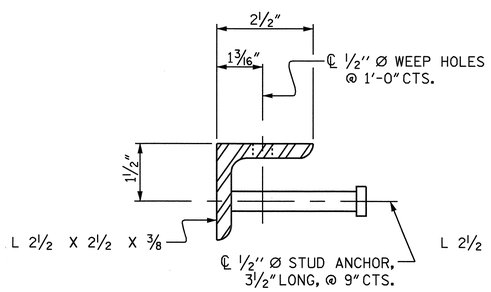

SECTION VIEW OF STUD

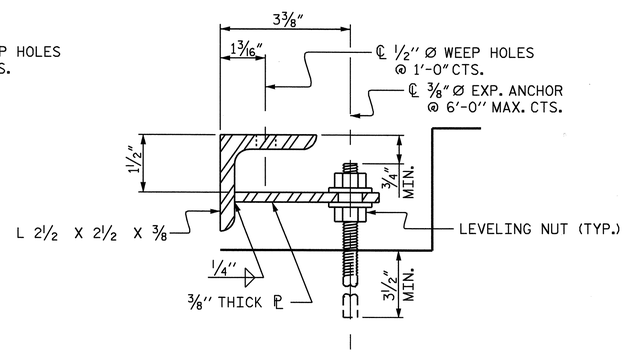

SECTION VIEW OF TAB

ARMORED JOINT ANCHOR ASSEMBLY DETAILS

MOVEMENT AND SETTING AT EVAZOTE JOINT						
END BENT NO.	SKEW ANGLE	NOMINAL UNCOMPRESSED SEAL WIDTH	TOTAL MOVEMENT (ALONG ℄ RDWY)	PERPENDICULAR JOINT OPENING AT 45° F	PERPENDICULAR JOINT OPENING AT 60° F	PERPENDICULAR JOINT OPENING AT 90° F
1	110°-51′-53″	3⅛″	1⁹⁄₁₆″	2⅝″	2⅜″	1⅞″
2	107°-52′-48″	3⅛″	1⁹⁄₁₆″	2⅝″	2⅜″	1⅞″

TOTAL MOVEMENT IS CALCULATED ALONG THE CENTERLINE OF ROADWAY.
JOINT OPENINGS ARE MEASURED PERPENDICULAR TO THE JOINT.

BILL OF MATERIAL		
END BENT NO.	ELASTOMERIC CONCRETE ✳ (CU. FT.)	TOTAL LENGTH OF ANGLE (FT)
1	10.3	44′-11¹³⁄₁₆″
2	10.1	44′-1⅞″
TOTAL	20.4	89′-1¹¹⁄₁₆″

✳ BASED ON THE MINIMUM BLOCKOUT SHOWN.

PROJECT NO. R-2719A
LENOIR COUNTY
STATION: 211+67.44 -L-

SHEET 3 OF 3

STATE OF NORTH CAROLINA
DEPARTMENT OF TRANSPORTATION
RALEIGH

STANDARD

ARMORED EVAZOTE JOINT DETAILS

(RIGHT LANE)

NORTH CAROLINA PROFESSIONAL SEAL 025516 ENGINEER EMILY E. MURRAY
Emily E. Murray 10/10/08

REVISIONS						SHEET NO.
NO.	BY:	DATE:	NO.	BY:	DATE:	S-216
1			3			TOTAL SHEETS
2			4			340

ASSEMBLED BY: M.GUDLAUGSSON DATE :06/2008	
CHECKED BY : M. PISO DATE :06/2008	
DRAWN BY : EEM 1/96	REV. 7/10/01 LES/RDR
CHECKED BY : RGW 1/96	REV. 5/7/03RR RWW/JTE
	REV. 5/1/06 TLA/GM

08-OCT-2008 15:43
J:\Structures\Finalplans\Str #7\2719A_sd_AS_07.dgn
emurray

STR. #7

STD. NO. AEJ1