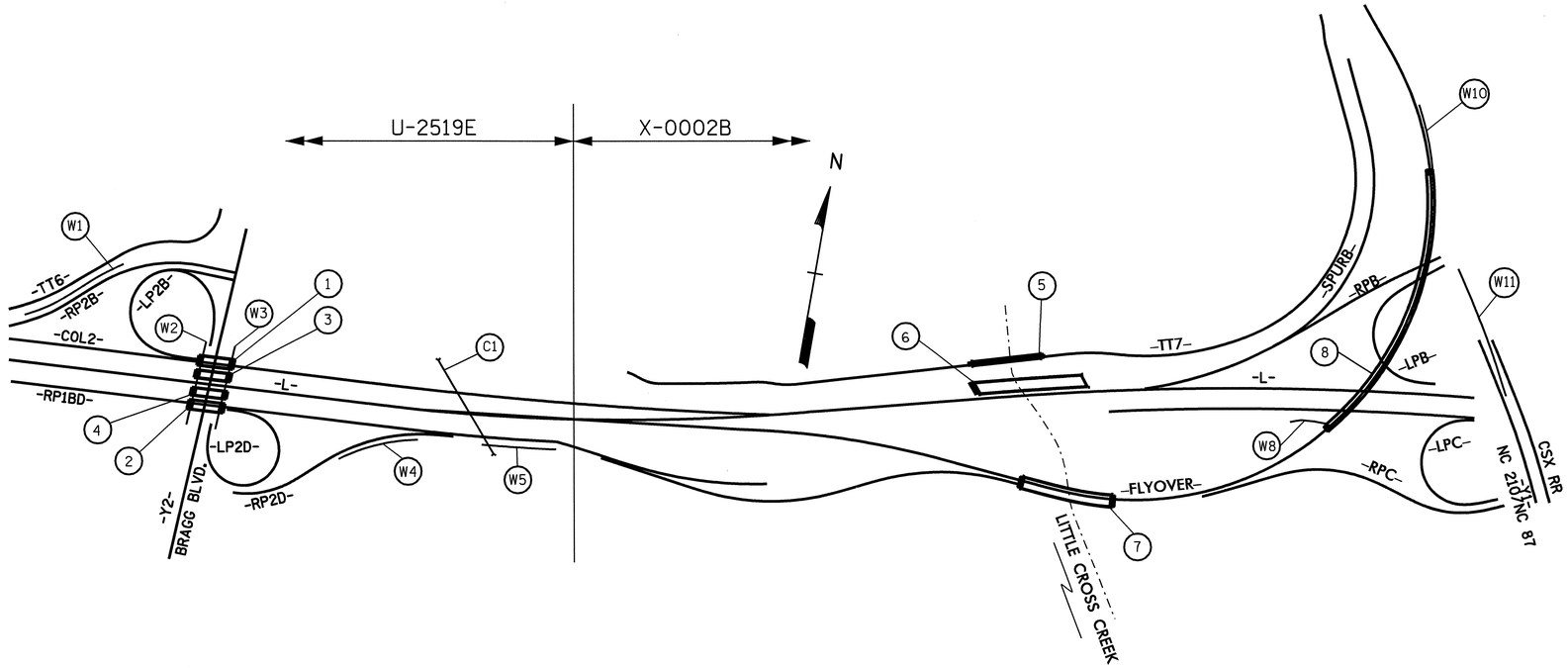

PART 2 OF 2

INDEX

	STR.	STATION	DESCRIPTION	SHEETS
PART 1 OF 2	1	41+41.155 -COL2-	BRIDGE ON -COL-2 OVER BRAGG BLVD.(-Y2-)	S-1 THRU S-24
	2	41+33.963 -RP1BD-	BRIDGE ON -RP1BD- OVER BRAGG BLVD.(-Y2-)	S-25 THRU S-34
	3	41+37.685 -L-	BRIDGE ON LT. LANE OF FAYETTEVILLE OUTER LOOP (-L-) OVER BRAGG BLVD.(-Y2-)	S-35 THRU S-44
	4	41+37.685 -L-	BRIDGE ON RT. LANE OF FAYETTEVILLE OUTER LOOP (-L-) OVER BRAGG BLVD.(-Y2-)	S-45 THRU S-54
	5	21+92.000 -TT7-	BRIDGE ON -TT7- OVER LITTLE CROSS CREEK	S-55 THRU S-84
	6	58+15.000 -L-	BRIDGE ON LT. LANE OF FAYETTEVILLE OUTER LOOP (-L-) OVER LITTLE CROSS CREEK	S-85 THRU S-132
	7	16+72.000 -FLYOVER-	BRIDGE ON -FLYOVER- OVER LITTLE CROSS CREEK	S-133 THRU S-177
PART 2 OF 2	8	63+66.830 -L-	BRIDGE ON -FLYOVER- OVER -CDR-, -L-, -LPB-, -RPB-, AND -Y1-	S-178 THRU S-253
	C1	46+47.000 -L-	SINGLE 2.400m X 2.100m REINFORCED CONCRETE BOX CULVERT	C-1 THRU C-4
	W1	13+70.000 -RP2B-	VISUAL BARRIER WALL ALONG -RP2B- (WALL #1)	W-1 THRU W-2
	W2	41+16.415 -L-	MECHANICALLY STABILIZED EARTH ALONG -Y2- (BRAGG BLVD.) (WALL #2)	W-3 THRU W-5
	W3	41+58.955 -L-	MECHANICALLY STABILIZED EARTH ALONG -Y2- (BRAGG BLVD.) (WALL #3)	W-3 THRU W-5
	W4	12+32.651 -RP2D-	MECHANICALLY STABILIZED EARTH WALL ALONG -RP2D- (WALL #4)	W-6 THRU W-8
	W5	47+74.303 -CDR-	MECHANICALLY STABILIZED EARTH WALL ALONG -CDR- (WALL #5)	W-6 THRU W-8
	W8	62+60.000 -CDR-	MECHANICALLY STABILIZED EARTH WALL ALONG -CDR- (WALL #8)	W-9
	W10	26+25.800 -FLYOVER-	VISUAL BARRIER WALL ALONG -FLYOVER- (WALL #10)	W-10 THRU W-11
	W11	25+80.000 -Y1-	VISUAL BARRIER WALL ALONG CSX RR (WALL #11)	W-12 THRU W-13

NOTE: W6, W7 AND W9 DELETED

PROJECT NO. U-2519E X-0002B

CUMBERLAND COUNTY

STATION:

STATE OF NORTH CAROLINA
DEPARTMENT OF TRANSPORTATION
RALEIGH

INDEX SHEET

REVISIONS					
NO.	BY:	DATE:	NO.	BY:	DATE:
1			3		
2			4		

DRAWN BY : B.C. HUNT DATE : 3/20/08
CHECKED BY : V.A. PATEL DATE : 7/08/08

24-FEB-2009 09:33
r:\structures\plans\u2519e_sd_ls.dgn
chunt

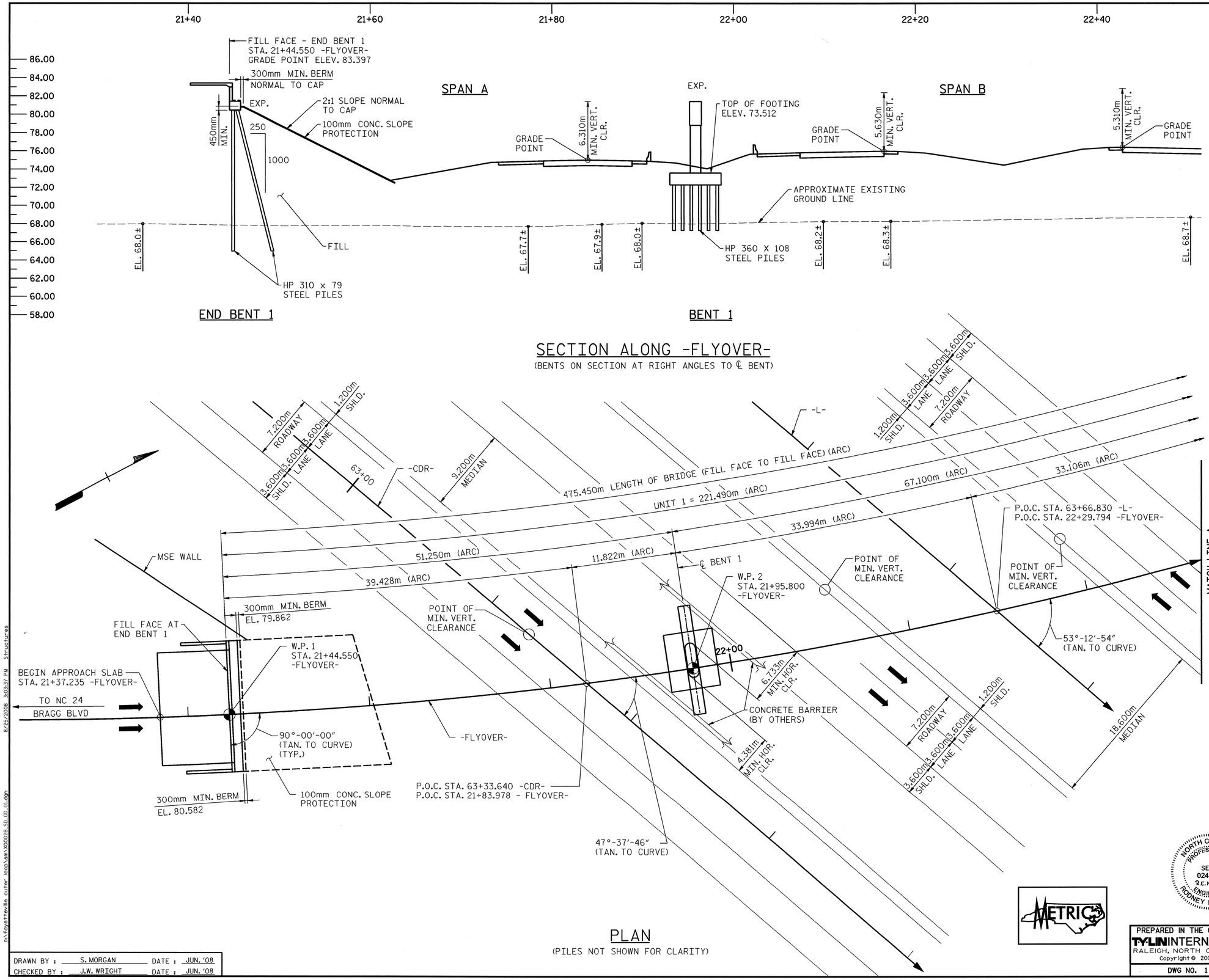

NOTES:
FOR PROFILE GRADE DATA AND HORIZONTAL CURVE DATA, SEE "LOCATION SKETCH" SHEET.

FOR GENERAL NOTES, SEE "TOTAL BILL OF MATERIALS AND GENERAL NOTES" SHEET.

SECTION ALONG -FLYOVER-
(BENTS ON SECTION AT RIGHT ANGLES TO ℄ BENT)

PLAN
(PILES NOT SHOWN FOR CLARITY)

PROJECT NO. X-0002B
CUMBERLAND COUNTY
STATION: -L- POC STA. 63+66.830=
-FLYOVER-
POC STA. 22+29.794

SHEET 1 OF 12 BRIDGE NO. 362

STATE OF NORTH CAROLINA
DEPARTMENT OF TRANSPORTATION
RALEIGH

GENERAL DRAWING

BRIDGE ON -FLYOVER- OVER -CDR-, -L-, -LPB-, -RPB- AND -Y1- BETWEEN FAYETTEVILLE OUTER LOOP (-L-) AND NC-210/NC-87 (-Y1-)

NORTH CAROLINA PROFESSIONAL SEAL 024928 ENGINEER RODNEY E. MONEY 8/26/08

METRIC

PREPARED IN THE OFFICE OF
TYLIN INTERNATIONAL
RALEIGH, NORTH CAROLINA
Copyright © 2008, TYLI
DWG NO. 1

REVISIONS						SHEET NO.
NO.	BY:	DATE:	NO.	BY:	DATE:	S-178
1			3			TOTAL SHEETS
2			4			253

DRAWN BY : S. MORGAN DATE : JUN. '08
CHECKED BY : J.W. WRIGHT DATE : JUN. '08

8/26/2008 3:03:37 PM Structures
on\fayetteville outer loop\sem\X0002B_SD_01.dgn

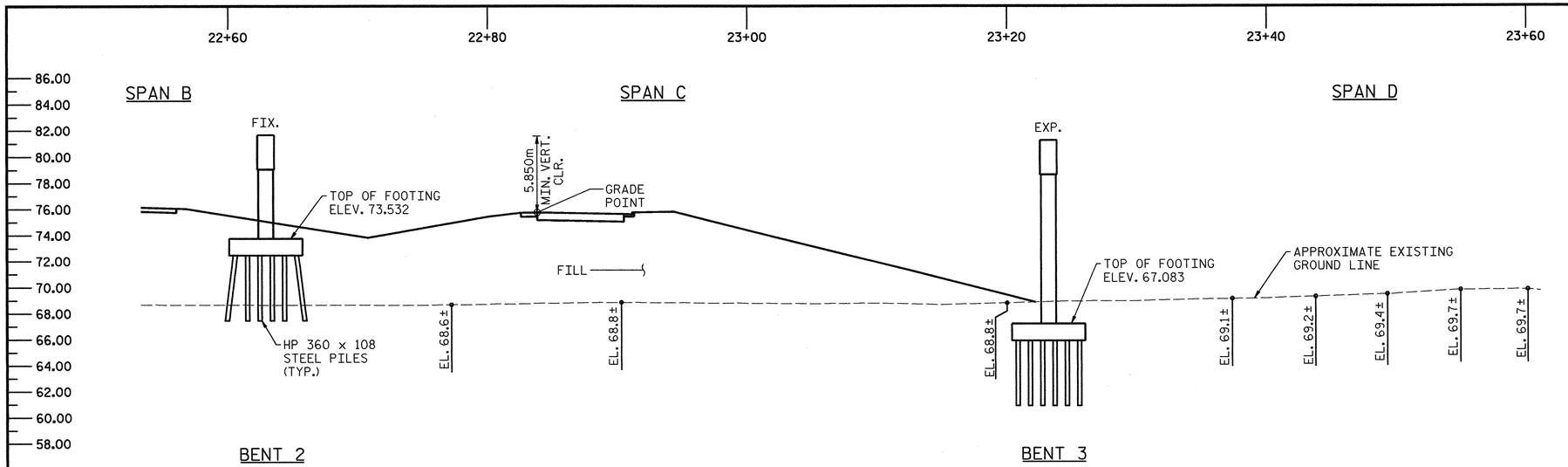

SECTION ALONG -FLYOVER-

(BENTS ON SECTION AT RIGHT ANGLES TO ℄ BENT)

NOTES:

FOR PROFILE GRADE DATA AND HORIZONTAL CURVE DATA, SEE "LOCATION SKETCH" SHEET.

FOR GENERAL NOTES, SEE "TOTAL BILL OF MATERIALS AND GENERAL NOTES" SHEET.

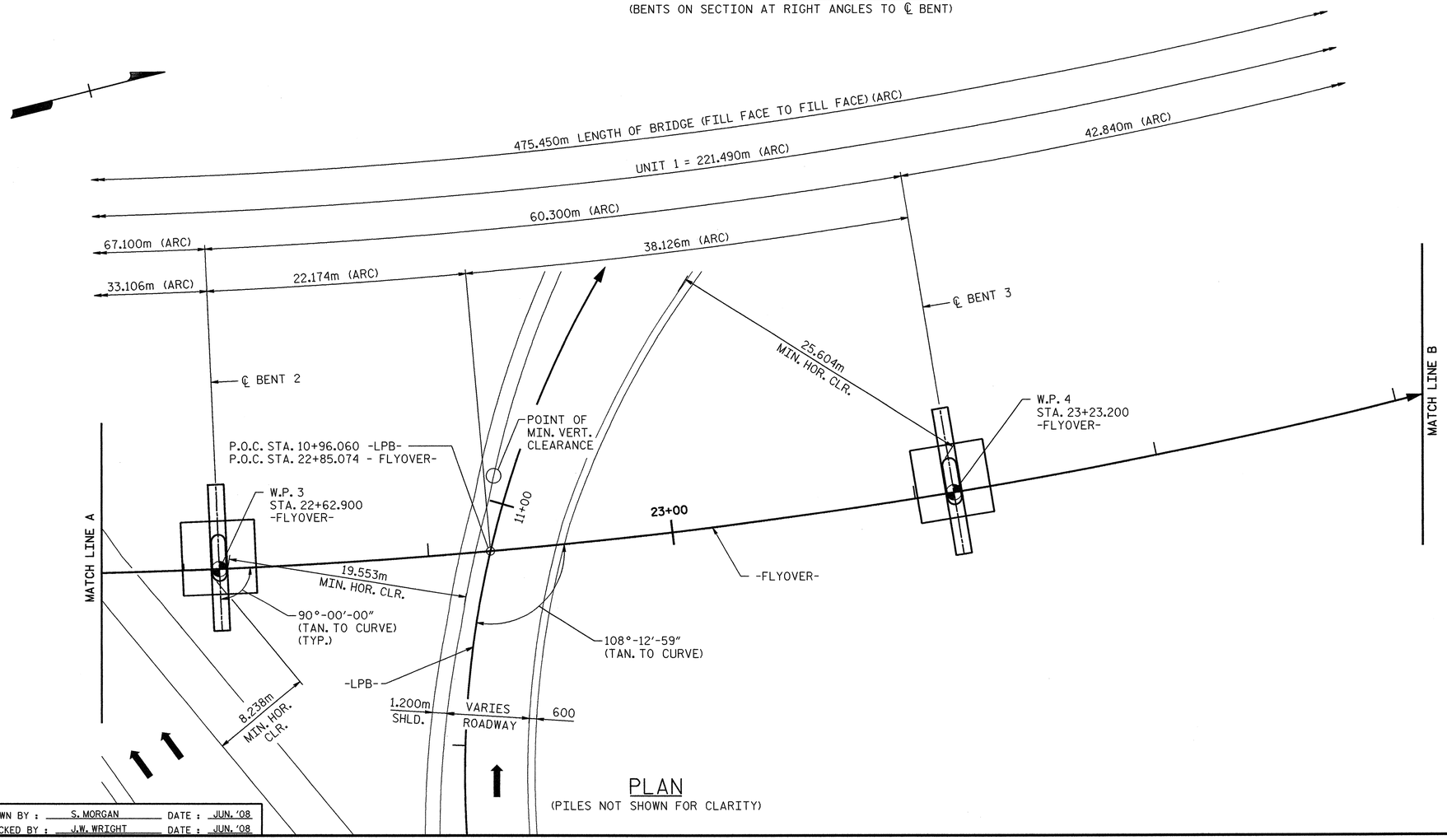

PLAN

(PILES NOT SHOWN FOR CLARITY)

PROJECT NO. X-0002B

CUMBERLAND COUNTY

STATION: -L- POC STA. 63+66.830=
-FLYOVER-
POC STA. 22+29.794

SHEET 2 OF 12

STATE OF NORTH CAROLINA
DEPARTMENT OF TRANSPORTATION
RALEIGH

GENERAL DRAWING

BRIDGE ON -FLYOVER- OVER
-CDR-, -L-, -LPB-, -RPB- AND -Y1- BETWEEN
FAYETTEVILLE OUTER LOOP (-L-)
AND NC-210/NC-87 (-Y1-)

NORTH CAROLINA PROFESSIONAL SEAL 024928 R.E. Money ENGINEER RODNEY E. MONEY 7/29/08

PREPARED IN THE OFFICE OF
TYLIN INTERNATIONAL
RALEIGH, NORTH CAROLINA
Copyright © 2008, TYLI

DWG NO. 2

REVISIONS						
NO.	BY:	DATE:	NO.	BY:	DATE:	
1			3			
2			4			

SHEET NO. S-179

TOTAL SHEETS 253

DRAWN BY : S. MORGAN DATE : JUN. '08
CHECKED BY : J.W. WRIGHT DATE : JUN. '08

o:\fayetteville outer loop\sm\X0002B_SD_GD_02.dgn 7/28/2008 9:07:10 PM Structures

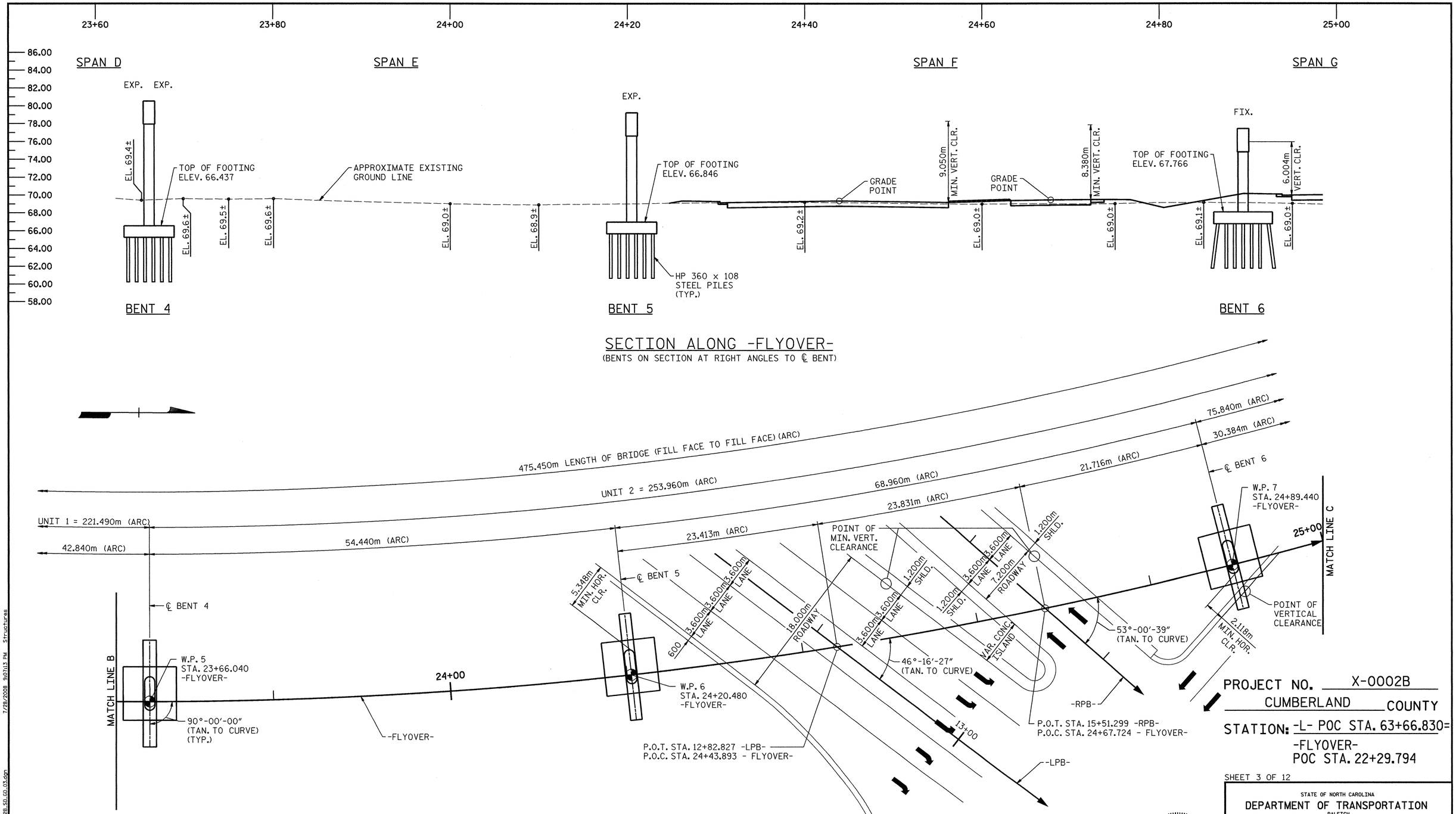

NOTES:

FOR PROFILE GRADE DATA AND HORIZONTAL CURVE DATA, SEE "LOCATION SKETCH" SHEET.

FOR GENERAL NOTES, SEE "TOTAL BILL OF MATERIALS AND GENERAL NOTES" SHEET.

PROJECT NO. X-0002B

CUMBERLAND COUNTY

STATION: -L- POC STA. 63+66.830=
-FLYOVER-
POC STA. 22+29.794

SHEET 3 OF 12

STATE OF NORTH CAROLINA
DEPARTMENT OF TRANSPORTATION
RALEIGH

GENERAL DRAWING

BRIDGE ON -FLYOVER- OVER
-CDR-, -L-, -LPB-, -RPB- AND -Y1- BETWEEN
FAYETTEVILLE OUTER LOOP (-L-)
AND NC-210/NC-87 (-Y1-)

NORTH CAROLINA PROFESSIONAL SEAL 024928 ENGINEER RODNEY E. MONEY 7/29/08

PREPARED IN THE OFFICE OF
TYLIN INTERNATIONAL
RALEIGH, NORTH CAROLINA
Copyright © 2008, TYLI

DWG NO. 3

REVISIONS						
NO.	BY:	DATE:	NO.	BY:	DATE:	
1			3			
2			4			

SHEET NO. S-180

TOTAL SHEETS 253

DRAWN BY : S. MORGAN DATE : JUN. '08
CHECKED BY : J.W. WRIGHT DATE : JUN. '08

7/28/2008 9:07:13 PM Structures

o:\fayetteville outer loop\sm\X0002B-SD-03-03.dgn

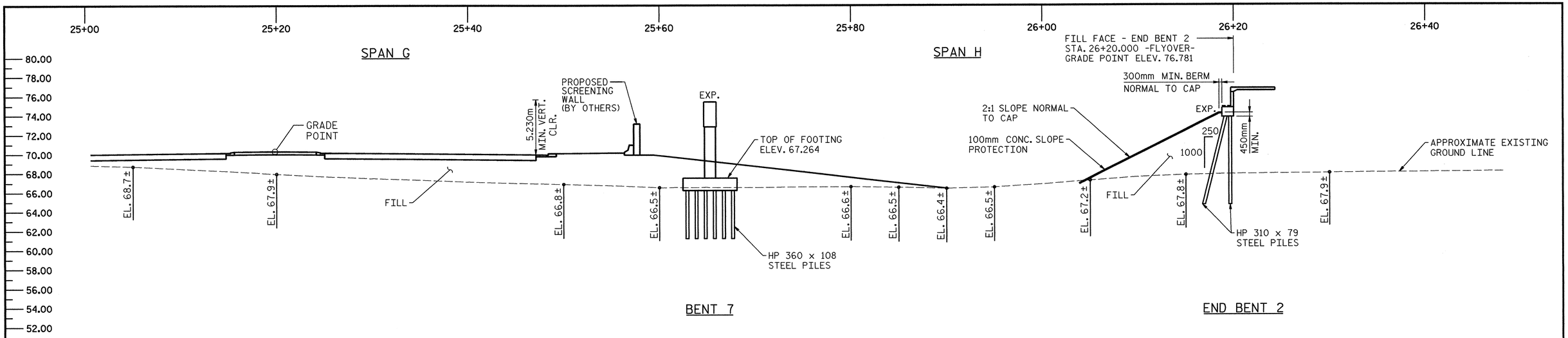

SECTION ALONG -FLYOVER-

(BENTS ON SECTION AT RIGHT ANGLES TO ℄ BENT)

NOTES:

FOR PROFILE GRADE DATA AND HORIZONTAL CURVE DATA, SEE "LOCATION SKETCH" SHEET.

FOR GENERAL NOTES, SEE "TOTAL BILL OF MATERIALS AND GENERAL NOTES" SHEET.

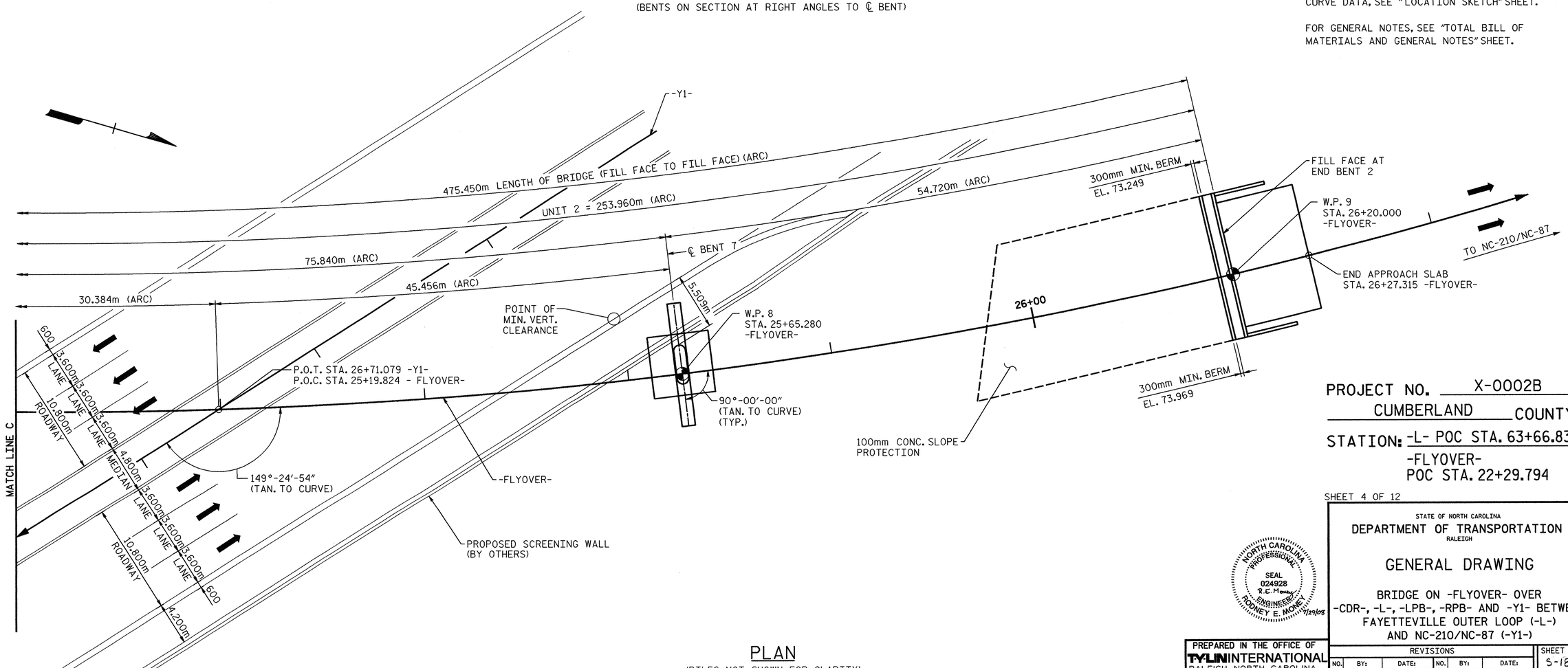

PLAN

(PILES NOT SHOWN FOR CLARITY)

PROJECT NO. X-0002B

CUMBERLAND COUNTY

STATION: -L- POC STA. 63+66.830=
-FLYOVER-
POC STA. 22+29.794

SHEET 4 OF 12

STATE OF NORTH CAROLINA
DEPARTMENT OF TRANSPORTATION
RALEIGH

GENERAL DRAWING

BRIDGE ON -FLYOVER- OVER -CDR-, -L-, -LPB-, -RPB- AND -Y1- BETWEEN FAYETTEVILLE OUTER LOOP (-L-) AND NC-210/NC-87 (-Y1-)

NORTH CAROLINA PROFESSIONAL SEAL 024928 ENGINEER RODNEY E. MONEY 7/29/08

PREPARED IN THE OFFICE OF
TYLIN INTERNATIONAL
RALEIGH, NORTH CAROLINA
Copyright © 2008, TYLI
DWG NO. 4

REVISIONS						SHEET NO.
NO.	BY:	DATE:	NO.	BY:	DATE:	S-181
1			3			TOTAL SHEETS
2			4			253

DRAWN BY : S. MORGAN DATE : JUN. '08
CHECKED BY : J.W. WRIGHT DATE : JUN. '08

ok\fayetteville outer loop\em\X0002B_SD_GD_04.dgn 7/28/2008 9:07:16 PM Structures

NOTES:

DRIVE PILES AT END BENT 1 AND END BENT 2 TO REQUIRED BEARING CAPACITY OF 900 kN PER PILE. THE REQUIRED BEARING CAPACITY IS EQUAL TO THE ALLOWABLE BEARING CAPACITY WITH A MINIMUM FACTOR OF SAFETY OF TWO.

THE ALLOWABLE BEARING CAPACITY FOR PILES AT END BENT 1 AND END BENT 2 IS 450 kN PER PILE.

DRIVE PILES AT BENT 1 THROUGH BENT 7 TO A REQUIRED BEARING CAPACITY OF 1340 kN PER PILE. THE REQUIRED BEARING CAPACITY IS EQUAL TO THE ALLOWABLE BEARING CAPACITY WITH A MINIMUM FACTOR OF SAFETY OF TWO.

THE ALLOWABLE BEARING CAPACITY FOR PILES AT BENT 1 THROUGH BENT 7 IS 670 kN PER PILE.

TESTING PILES WITH THE PILE DRIVING ANALYZER (PDA) DURING DRIVING, RESTRIKING OR REDRIVING MAY BE REQUIRED. THE ENGINEER WILL DETERMINE THE NEED FOR PDA TESTING, SEE PILE DRIVING ANALYZER SPECIAL PROVISION.

PILE RESTRIKES FOR LRFD MAY BE REQUIRED. SEE PILE RESTRIKE FOR LRFD SPECIAL PROVISION.

PILE DIMENSIONS ARE SHOWN TO THE CENTERLINE OF THE PILES AT THE BOTTOM OF THE END BENT CAPS OR THE BOTTOM OF THE INTERIOR BENT FOOTINGS.

END BENT PILES ARE HP 310 X 79 STEEL PILES.

INTERIOR BENT PILES ARE HP 360 X 108 STEEL PILES.

END BENT BRACE PILES SHALL BE BATTERED 250:1000.

INTERIOR BENT BRACE PILES SHALL BE BATTERED 125:1000.

FOR HORIZONTAL CURVE DATA, SEE "LOCATION SKETCH" SHEET.

◢ DENOTES BATTERED PILES IN DIRECTION OF ARROW.

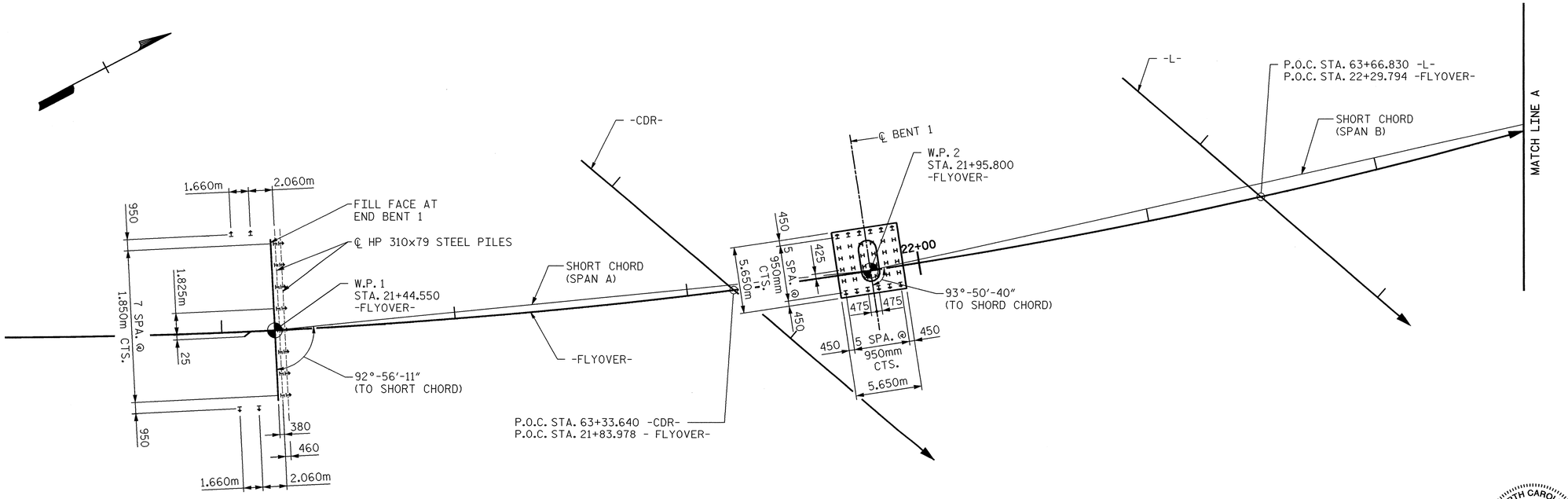

END BENT 1

BENT 1

FOUNDATION LAYOUT

PROJECT NO. X-0002B

CUMBERLAND COUNTY

STATION: -L- POC STA. 63+66.830=
-FLYOVER-
POC STA. 22+29.794

SHEET 5 OF 12

STATE OF NORTH CAROLINA
DEPARTMENT OF TRANSPORTATION
RALEIGH

GENERAL DRAWING

FOUNDATION LAYOUT

NORTH CAROLINA PROFESSIONAL SEAL 024928 ENGINEER RODNEY E. MONEY 8/26/08

PREPARED IN THE OFFICE OF
TYLIN INTERNATIONAL
RALEIGH, NORTH CAROLINA
Copyright © 2008, TYLI

DWG NO. 5

REVISIONS						SHEET NO.
NO.	BY:	DATE:	NO.	BY:	DATE:	S-182
1			3			TOTAL SHEETS
2			4			253

DRAWN BY : S. MORGAN DATE : JUN. '08
CHECKED BY : J.W. WRIGHT DATE : JUN. '08

8/25/2008 3:03:40 PM Structures

ox:\fayetteville outer loop\sm\X0002B_SD_FL_01.dgn

NOTE:
FOR NOTES, SEE "FOUNDATION LAYOUT", SHEET 5 OF 12.

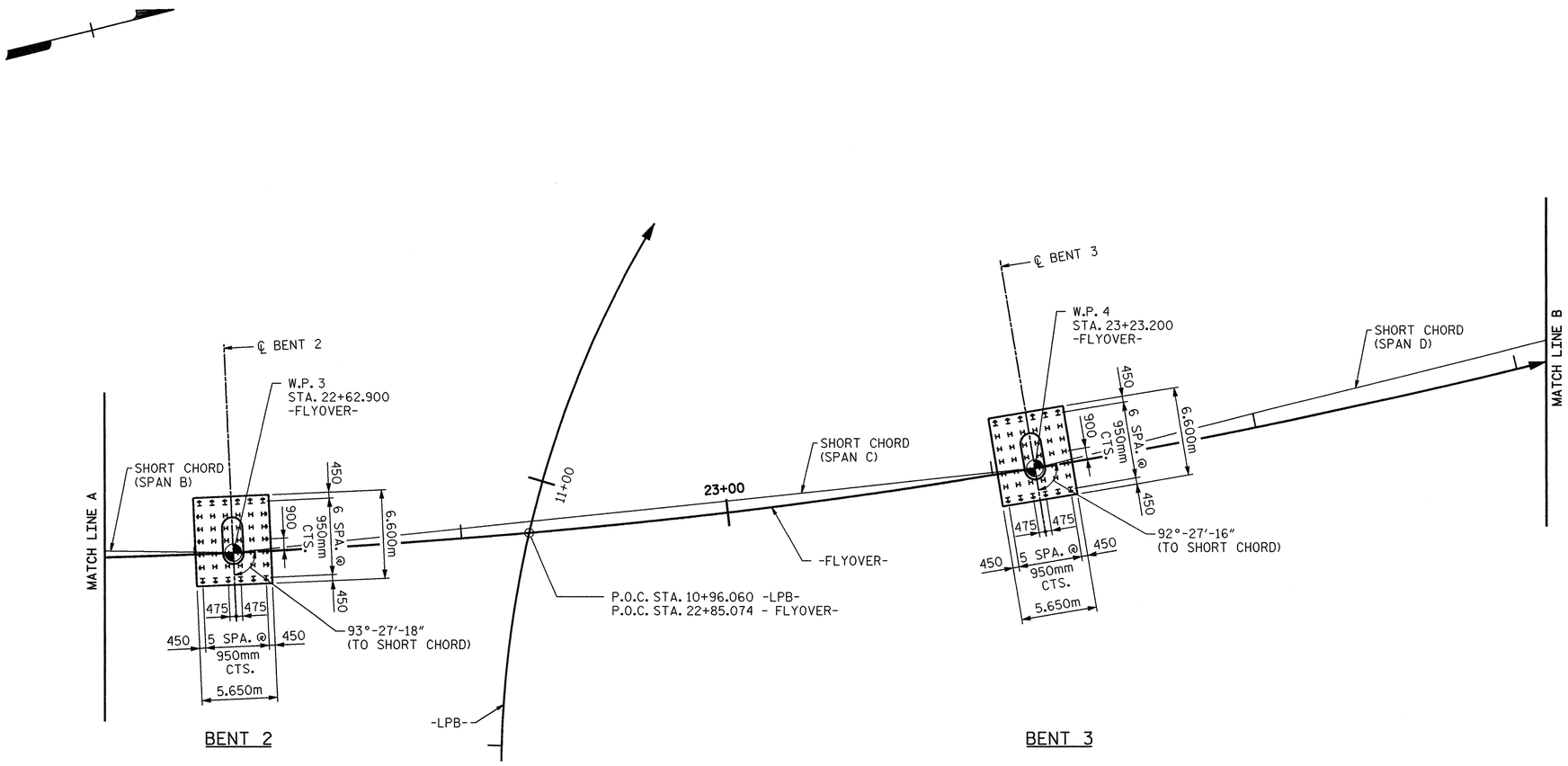

FOUNDATION LAYOUT

PROJECT NO. X-0002B
CUMBERLAND COUNTY
STATION: -L- POC STA. 63+66.830=
-FLYOVER-
POC STA. 22+29.794

SHEET 6 OF 12

STATE OF NORTH CAROLINA
DEPARTMENT OF TRANSPORTATION
RALEIGH

GENERAL DRAWING

FOUNDATION LAYOUT

NORTH CAROLINA PROFESSIONAL SEAL 024928 R.E. Money ENGINEER RODNEY E. MONEY 8/1/08

PREPARED IN THE OFFICE OF
TYLIN INTERNATIONAL
RALEIGH, NORTH CAROLINA
Copyright © 2008, TYLI
DWG NO. 6

REVISIONS						SHEET NO.
NO.	BY:	DATE:	NO.	BY:	DATE:	S-183
1			3			TOTAL SHEETS
2			4			253

DRAWN BY : S. MORGAN DATE : JUN. '08
CHECKED BY : J.W. WRIGHT DATE : JUN. '08

o:\fayetteville outer loop\sm\X0002B_SD_FL_02.dgn 8/1/2008 12:03:52 PM Structures

NOTE:
FOR NOTES, SEE "FOUNDATION LAYOUT", SHEET 5 OF 12.

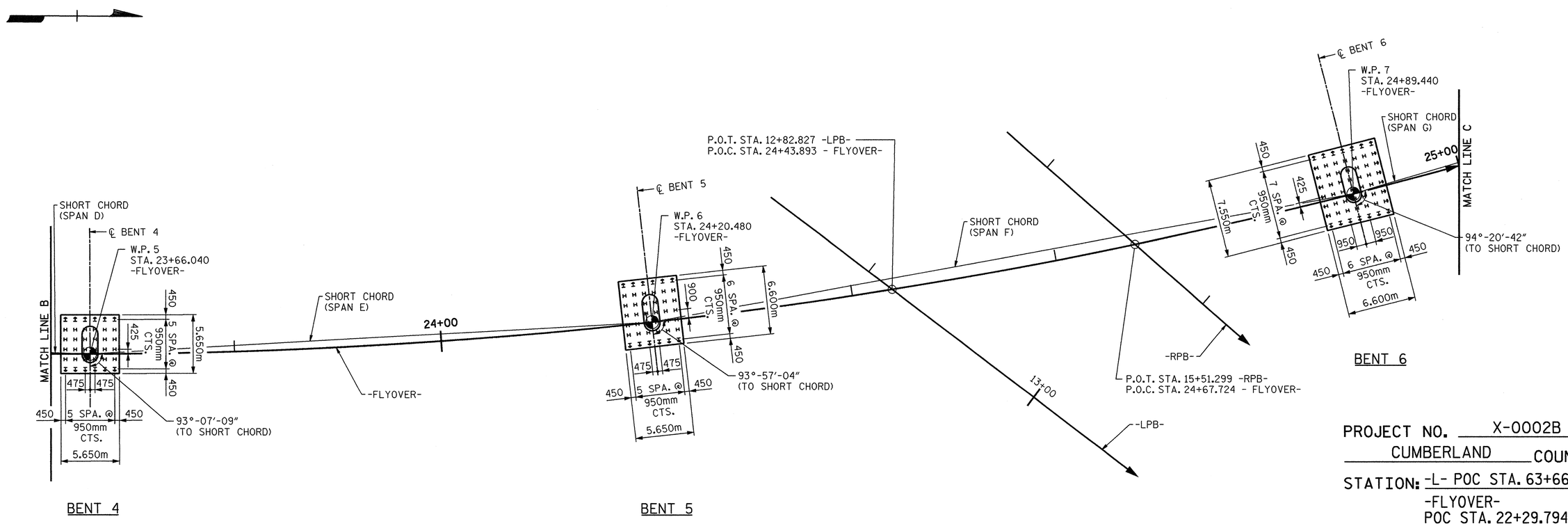

BENT 4

BENT 5

BENT 6

FOUNDATION LAYOUT

PROJECT NO. X-0002B
CUMBERLAND COUNTY
STATION: -L- POC STA. 63+66.830=
-FLYOVER-
POC STA. 22+29.794

SHEET 7 OF 12

STATE OF NORTH CAROLINA
DEPARTMENT OF TRANSPORTATION
RALEIGH

GENERAL DRAWING

FOUNDATION LAYOUT

NORTH CAROLINA PROFESSIONAL SEAL 024928 R.E. Money ENGINEER RODNEY E. MONEY 8/1/08

PREPARED IN THE OFFICE OF
TYLIN INTERNATIONAL
RALEIGH, NORTH CAROLINA
Copyright © 2008, TYLI
DWG NO. 7

REVISIONS						SHEET NO.
NO.	BY:	DATE:	NO.	BY:	DATE:	S-184
1			3			TOTAL SHEETS
2			4			253

DRAWN BY : S. MORGAN DATE : JUN. '08
CHECKED BY : J.W. WRIGHT DATE : JUN. '08

8/1/2008 12:03:56 PM Structures
o:\fayetteville outer loop\sm\X0002B_SD_FL_03.dgn

NOTE:
FOR NOTES, SEE "FOUNDATION LAYOUT", SHEET 5 OF 12.

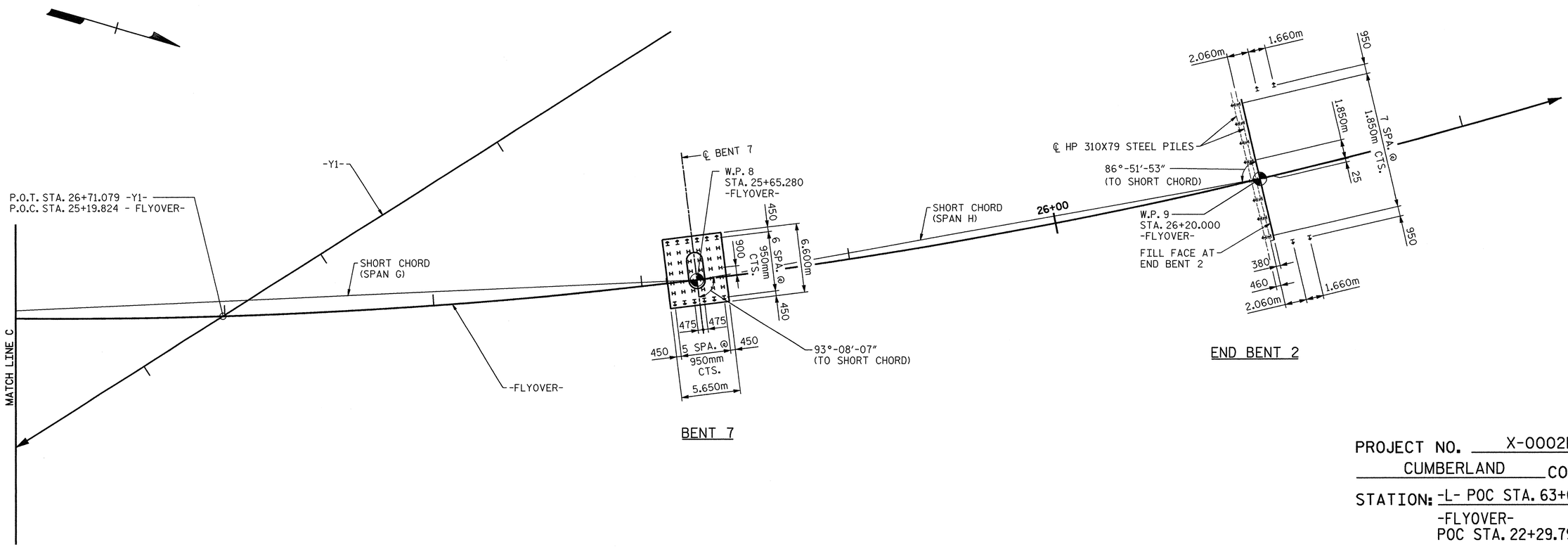

BENT 7

END BENT 2

FOUNDATION LAYOUT

PROJECT NO. X-0002B
CUMBERLAND COUNTY
STATION: -L- POC STA. 63+66.830=
-FLYOVER-
POC STA. 22+29.794

SHEET 8 OF 12

STATE OF NORTH CAROLINA
DEPARTMENT OF TRANSPORTATION
RALEIGH

GENERAL DRAWING

FOUNDATION LAYOUT

NORTH CAROLINA PROFESSIONAL SEAL 024928 ENGINEER RODNEY E. MONEY 8/1/08

PREPARED IN THE OFFICE OF
TYLIN INTERNATIONAL
RALEIGH, NORTH CAROLINA
Copyright © 2008, TYLI
DWG NO. 8

REVISIONS							SHEET NO.
NO.	BY:	DATE:	NO.	BY:	DATE:		S-185
1			3				TOTAL SHEETS
2			4				253

DRAWN BY : S. MORGAN DATE : JUN. '08
CHECKED BY : J.W. WRIGHT DATE : JUN. '08

a:\fayetteville outer loop\sam\X0002B_SD_FL_04.dgn 8/1/2008 12:03:59 PM Structures

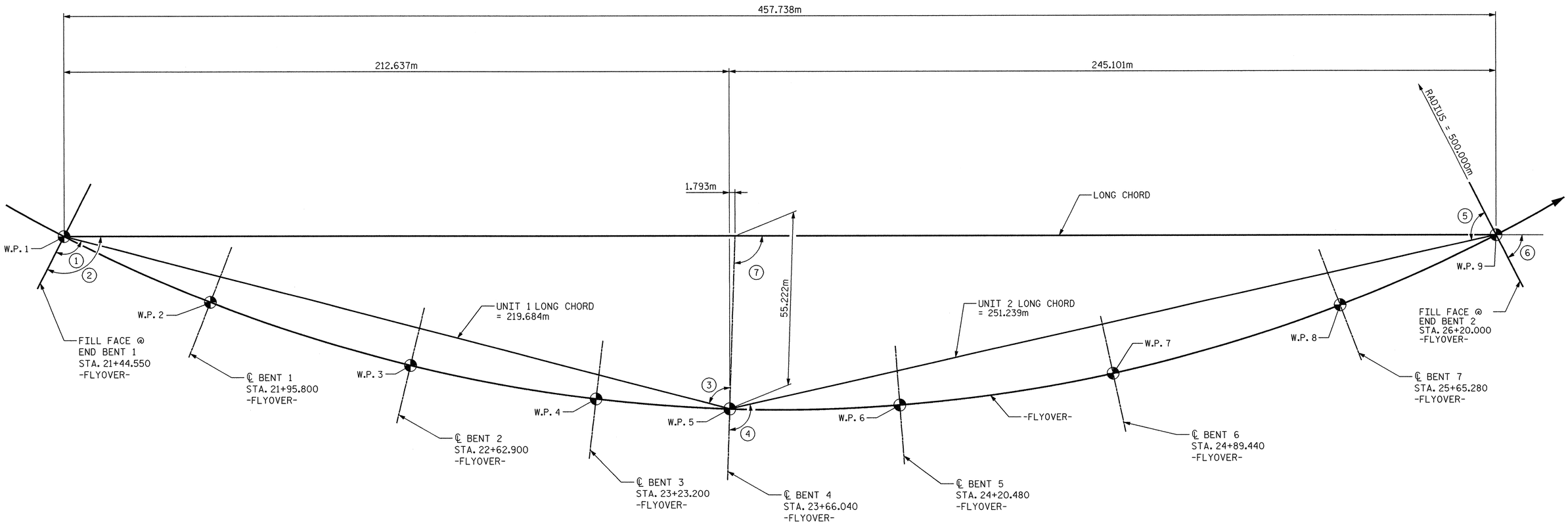

LONG CHORD LAYOUT

TABLE OF ANGLES	
1	102°-41′-26″
2	117°-14′-29″
3	77°-18′-34″
4	104°-33′-03″
5	75°-26′-57″
6	62°-45′-31″
7	91°-51′-37″

PROJECT NO. X-0002B
CUMBERLAND COUNTY
STATION: -L- POC STA. 63+66.830=
-FLYOVER-
POC STA. 22+29.794

SHEET 9 OF 12

STATE OF NORTH CAROLINA
DEPARTMENT OF TRANSPORTATION
RALEIGH

GENERAL DRAWING

LONG CHORD LAYOUT

NORTH CAROLINA PROFESSIONAL SEAL 024928 R.E. Money ENGINEER RODNEY E. MONEY 7/29/08

PREPARED IN THE OFFICE OF
TYLIN INTERNATIONAL
RALEIGH, NORTH CAROLINA
Copyright © 2008, TYLI
DWG NO. 9

REVISIONS						SHEET NO.
NO.	BY:	DATE:	NO.	BY:	DATE:	S-186
1			3			TOTAL SHEETS
2			4			253

DRAWN BY : S. MORGAN DATE : JUN. '08
CHECKED BY : J.W. WRIGHT DATE : JUN. '08

7/28/2008 9:07:36 PM Structures
ok\fayetteville outer loop\sm\X0002B_SD_LC_01.dgn

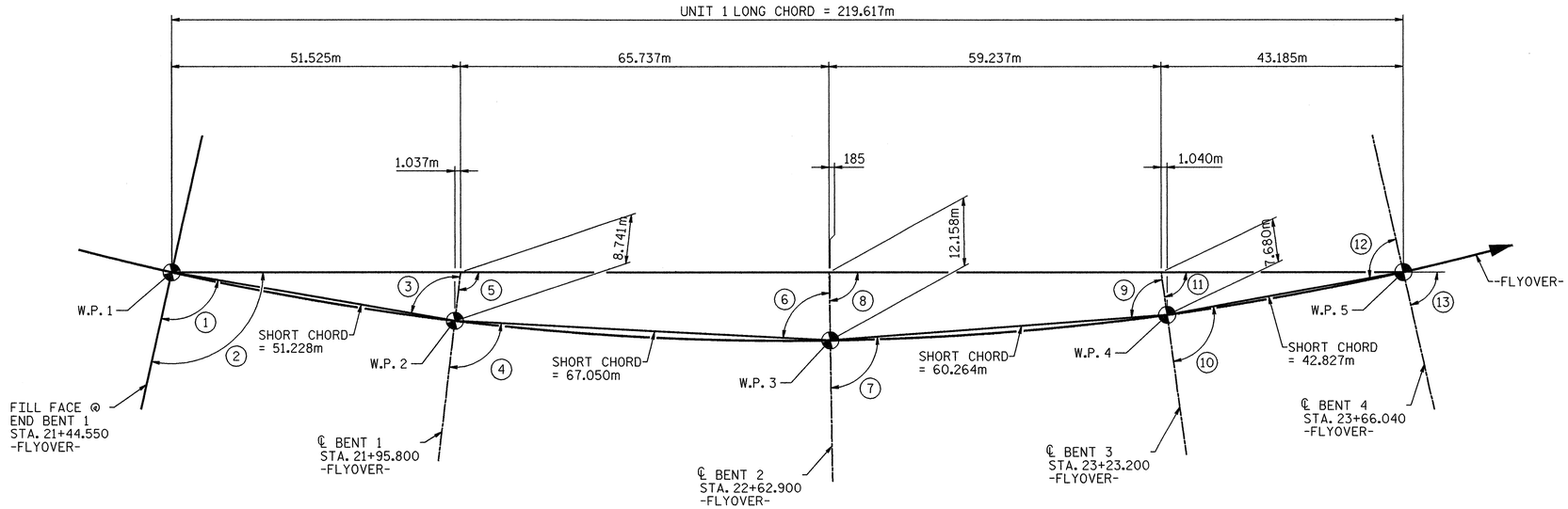

UNIT 1 LONG CHORD LAYOUT SKETCH

TABLE OF ANGLES	
1	92°-56′-11″
2	102°-41′-26″
3	87°-03′-49″
4	93°-50′-40″
5	96°-49′-03″
6	86°-09′-20″
7	93°-27′-18″
8	89°-07′-43″
9	86°-32′-42″
10	92°-27′-16″
11	82°-13′-07″
12	87°-32′-44″
13	77°-18′-34″

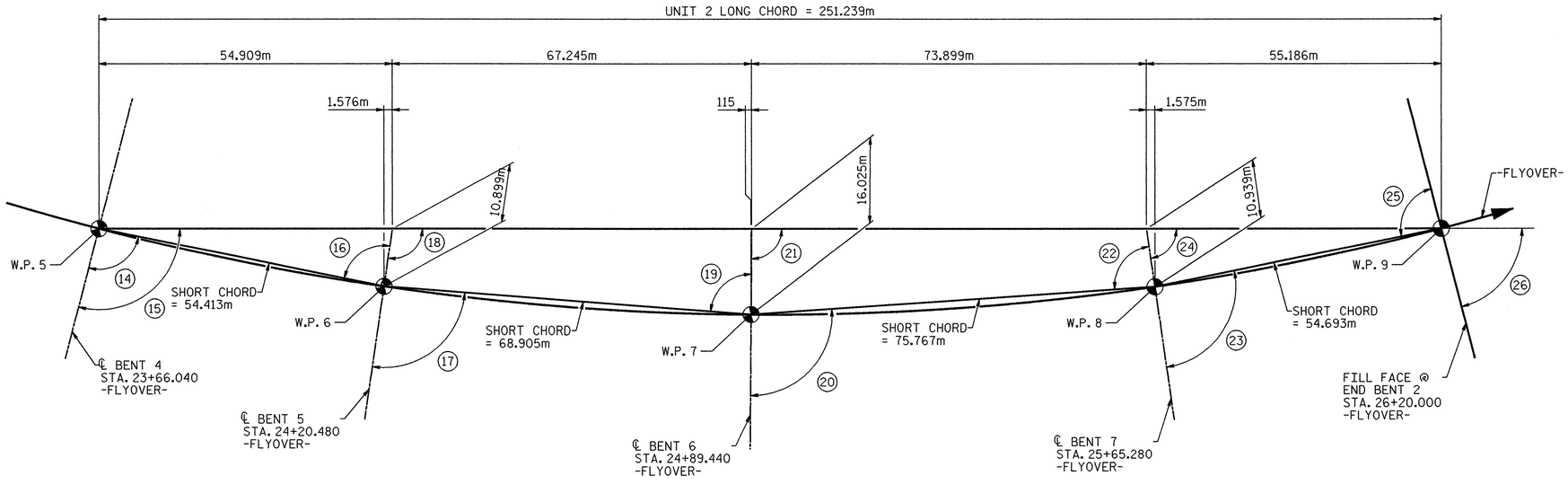

UNIT 2 LONG CHORD LAYOUT SKETCH

TABLE OF ANGLES	
14	93°-07′-09″
15	104°-33′-03″
16	86°-52′-51″
17	93°-57′-04″
18	98°-18′-45″
19	86°-02′-56″
20	94°-20′-42″
21	90°-24′-37″
22	85°-39′-16″
23	93°-08′-07″
24	81°-43′-11″
25	86°-51′-53″
26	75°-26′-57″

PROJECT NO. X-0002B
CUMBERLAND COUNTY
STATION: -L- POC STA. 63+66.830=
-FLYOVER-
POC STA. 22+29.794

SHEET 10 OF 12

STATE OF NORTH CAROLINA
DEPARTMENT OF TRANSPORTATION
RALEIGH

GENERAL DRAWING

LONG CHORD LAYOUT

NORTH CAROLINA PROFESSIONAL SEAL 024928 ENGINEER RODNEY E. MONEY 7/29/08

PREPARED IN THE OFFICE OF
TYLIN INTERNATIONAL
RALEIGH, NORTH CAROLINA
Copyright © 2008, TYLI
DWG NO. 10

REVISIONS							SHEET NO.
NO.	BY:	DATE:	NO.	BY:	DATE:		S-187
1			3				TOTAL SHEETS
2			4				253

DRAWN BY : S. MORGAN DATE : JUN. '08
CHECKED BY : J.W. WRIGHT DATE : JUN. '08

7/28/2008 9:07:39 PM Structures
ax\fayetteville outer loop\em\X0002B_SD_LC_02.dgn

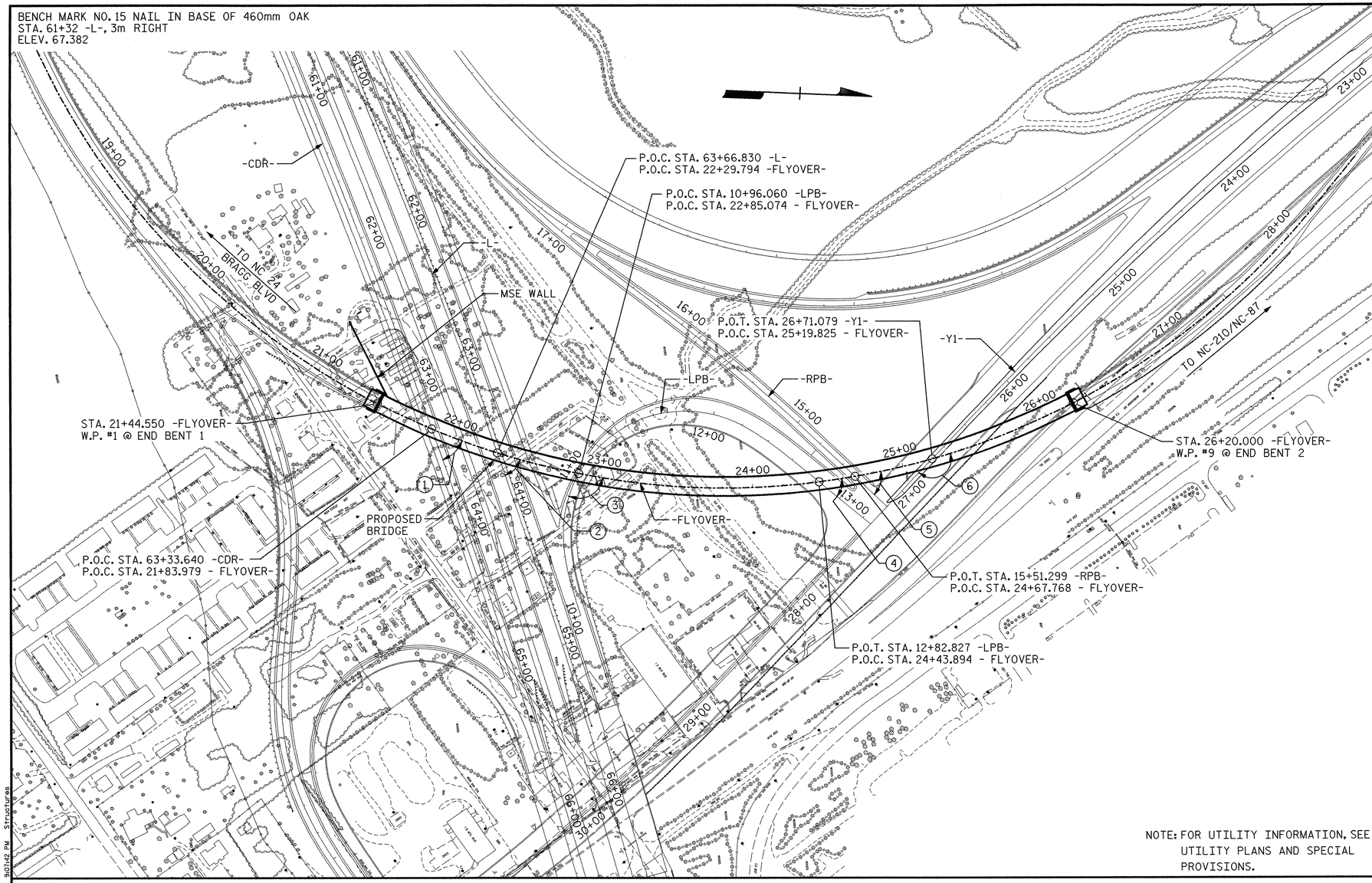

NOTE: FOR UTILITY INFORMATION, SEE UTILITY PLANS AND SPECIAL PROVISIONS.

LOCATION SKETCH

HORIZONTAL CURVE DATA

-Y1-

PI STA. 23+20.072
Δ = 13°-58'-14.3" (LT)
L = 609.584
T = 306.311
R = 2,500.000
SE = NC

PI STA. 30+13.410
Δ = 10°-22'-59.9" (RT)
L = 289.956
T = 145.376
R = 1,600.000
SE = RC

-FLYOVER-

PI STA. 26+73.787
Δ = 125°-56'-09.8" (LT)
L = 1,098.999
T = 979.953
R = 500.000
SE = 0.050

-RPB-

PI STA. 14+47.222
Δ = 2°-43'-32.4" (RT)
L = 47.572
T = 23.791
R = 1,000.000
SE = .035

PIs STA. 14+91.005
θs = 1°-43'-07.9"
Ls = 60.000
LT = 40.002
ST = 20.002

-L-

PI STA. 63+88.087
Δ = 14°-26'-05.5" (RT)
L = 1,259.679
T = 633.192
R = 5,000.000
SE = NC

-CDR-

PI STA. 63+53.718
Δ = 8°-17'-13.2" (RT)
L = 718.072
T = 359.663
R = 4,964.700
SE = NC

-LPB-

PI STA. 11+62.763
Δ = 104°-11'-56.8" (RT)
L = 145.489
T = 102.763
R = 80.000
SE = .08

PIs STA. 12+25.761
θs = 21°-29'-09.3"
Ls = 60.000
LT = 40.299
ST = 20.272

PROFILE GRADE DATA

-FLYOVER-
+4.5000% △ -2.6116%
PI STA. 22+00.000
EL = 87.750
VC = 400

-CDR-
+2.9378% △ -2.8464%
PI STA. 65+89.000
EL = 82.455
VC = 425

-L-
+2.9229% △ -2.9424%
PI STA. 66+00.000
EL = 83.000
VC = 500

-LPB-
-1.2545% △ -4.1009% △ +0.6377%
PI STA. 10+44.000
EL = 77.838
VC = 80

PI STA. 12+60.000
EL = 68.980
VC = 100

-RPB-
-2.3331% △ +0.8299%
PI STA. 15+30.000
EL = 69.180
VC = 70

-Y1-
-1.0127% ○ -1.0125%
-Y1- STA. 26+41.483
SHIFT GRADE POINT FROM EDGE OF PAVEMENT TO ℄
EL. BACK = 70.452
EL. AHEAD = 70.500

TABLE OF ANGLES	
ANGLE	MEASURED TO TANGENT
1	47°-37'-46"
2	53°-12'-54"
3	108°-12'-59"
4	46°-16'-27"
5	53°-00'-39"
6	149°-24'-54"

PROJECT NO. X-0002B
CUMBERLAND COUNTY
STATION: -L- POC STA. 63+66.830=
-FLYOVER-
POC STA. 22+29.794

SHEET 11 OF 12

STATE OF NORTH CAROLINA
DEPARTMENT OF TRANSPORTATION
RALEIGH

GENERAL DRAWING

LOCATION SKETCH

NORTH CAROLINA PROFESSIONAL SEAL 024928 R.E. Money ENGINEER RODNEY E. MONEY 7/29/08

PREPARED IN THE OFFICE OF
TYLIN INTERNATIONAL
RALEIGH, NORTH CAROLINA
Copyright © 2008, TYLI
DWG NO. 11

REVISIONS						SHEET NO.
NO.	BY:	DATE:	NO.	BY:	DATE:	S-188
1			3			TOTAL SHEETS
2			4			253

DRAWN BY : S. MORGAN DATE : JUN. '08
CHECKED BY : J.W. WRIGHT DATE : JUN. '08

7/28/2008 9:07:42 PM Structures
o:\fayetteville outer loop\sm\X0002B_SD_LS_01.dgn

TOTAL BILL OF MATERIAL

	FOUNDATION EXCAVATION	PDA TESTING	PDA ASSISTANCE	REINFORCED CONCRETE DECK SLAB	GROOVING BRIDGE FLOORS	CLASS AA CONCRETE	CLASS A CONCRETE	BRIDGE APPROACH SLABS	REINFORCING STEEL
	LUMP SUM	EACH	EACH	SQ. m	SQ. m	CU. m	CU. m	LUMP SUM	kg
SUPERSTRUCTURE				5,869.2	5,116.5			LUMP SUM	
END BENT 1							40.2		3,562
BENT 1						117.1			16,208
BENT 2						130.3			17,188
BENT 3	LUMP SUM					159.3			20,907
BENT 4	LUMP SUM					147.6			20,121
BENT 5	LUMP SUM					150.6			19,790
BENT 6	LUMP SUM					162.6			21,114
BENT 7	LUMP SUM					130.3			17,188
END BENT 2							40.2		3,562
TOTAL	LUMP SUM	1	1	5,869.2	5,116.5	997.8	80.4	LUMP SUM	139,640

TOTAL BILL OF MATERIAL CONT.

	HP 310 x 79 STEEL PILES		HP 360 x 108 STEEL PILES		PILE REDRIVES	CONCRETE BARRIER RAIL	100mm SLOPE PROTECTION	POT BEARINGS	MODULAR EXPANSION JOINT SEALS	STRUCTURAL STEEL	VISUAL BARRIER WALL ON STRUCTURE
	NO.	m	NO.	m	EACH	m	SQ. m	LUMP SUM	LUMP SUM	APPROX. kg	SQ. M
SUPERSTRUCTURE						947.808		LUMP SUM	LUMP SUM	1,542,000	1,015.3
END BENT 1	20	715.0					220				
BENT 1			36	1,165.8							
BENT 2			42	1,024.8							
BENT 3			42	896.6							
BENT 4			36	768.8							
BENT 5			42	1,401.7							
BENT 6			56	1,365.7							
BENT 7			42	938.7							
END BENT 2	20	570.0					220				
TOTAL	40	1,285.0	296	7,562.1	50	947.808	440	LUMP SUM	LUMP SUM	1,542,000	1,015.3

GENERAL NOTES

ASSUMED LIVE LOAD = MS18 OR ALTERNATE LOADING, EXCEPT THAT THE GIRDERS HAVE BEEN DESIGNED FOR MS22.5.

ALL DIMENSIONS ARE IN MILLIMETERS UNLESS OTHERWISE NOTED.

ALL ELEVATIONS ARE IN METERS.

THIS BRIDGE HAS BEEN DESIGNED BY THE STRENGTH DESIGN METHOD AS SPECIFIED IN AASHTO STANDARD SPECIFICATIONS.

THIS BRIDGE HAS BEEN DESIGNED IN ACCORDANCE WITH THE REQUIREMENTS OF THE AASHTO STANDARD SPECIFICATIONS FOR SEISMIC DESIGN OF HIGHWAY BRIDGES FOR SEISMIC PERFORMANCE CATEGORY A.

FOR ADDITIONAL NOTES, SEE SHEET 5 OF 12.

FOR OTHER DESIGN DATA AND GENERAL NOTES, SEE SHEET SNSM.

FOR METRIC STRUCTURAL STEEL, SEE SPECIAL PROVISIONS.

FOR MAINTENANCE AND PROTECTION OF TRAFFIC BENEATH PROPOSED STRUCTURE, SEE SPECIAL PROVISIONS.

FOR SUBMITTAL OF WORKING DRAWINGS, SEE SPECIAL PROVISIONS.

FOR FALSEWORK AND FORMWORK, SEE SPECIAL PROVISIONS.

FOR GROUT FOR STRUCTURES, SEE SPECIAL PROVISIONS.

FOR CRANE SAFETY, SEE SPECIAL PROVISIONS.

FOR EROSION CONTROL MEASURES SEE EROSION CONTROL PLANS.

STRUCTURAL STEEL IN FLANGES AS DESIGNATED IN THE PLANS SHALL BE AASHTO M270 GRADE HPS 485W. ALL OTHER STRUCTURAL STEEL SHALL BE AASHTO M270 GRADE 345W STEEL. ALL STRUCTURAL STEEL SHALL BE PAINTED IN ACCORDANCE WITH SYSTEM 4 OF ARTICLE 442-7 OF THE STANDARD SPECIFICATIONS UNLESS OTHERWISE NOTED ON THE PLANS.

THE CLASS AA CONCRETE IN THE BRIDGE DECK SHALL CONTAIN FLY ASH OR GROUND GRANULATED BLAST FURNACE SLAG AT THE SUBSTITUTION RATE SPECIFIED IN ARTICLE 1024-1 AND IN ACCORDANCE WITH ARTICLES 1024-5 AND 1024-6 OF THE STANDARD SPECIFICATIONS. NO PAYMENT WILL BE MADE FOR THIS SUBSTITUTION AS IT IS CONSIDERED INCIDENTAL TO THE COST OF THE REINFORCED CONCRETE DECK SLAB.

NEEDLE BEAMS WILL NOT BE ALLOWED UNLESS OTHERWISE CALLED FOR ON THE PLANS OR APPROVED BY THE ENGINEER.

WORK SHALL NOT BE STARTED ON THIS BRIDGE UNTIL ROADWAY SECTION HAS BEEN EXCAVATED.

REMOVABLE FORMS MAY BE USED IN LIEU OF METAL STAY-IN-PLACE FORMS IN ACCORDANCE WITH ARTICLE 420-3 OF THE STANDARD SPECIFICATIONS.

PROJECT NO. X-0002B
CUMBERLAND COUNTY
STATION: -L- POC STA. 63+66.830=
-FLYOVER-
POC STA. 22+29.794

SHEET 12 OF 12

NORTH CAROLINA PROFESSIONAL SEAL 024928 ENGINEER RODNEY E. MONEY 8/26/08

STATE OF NORTH CAROLINA
DEPARTMENT OF TRANSPORTATION
RALEIGH

GENERAL DRAWING

TOTAL BILL OF MATERIALS AND GENERAL NOTES

PREPARED IN THE OFFICE OF
TYLIN INTERNATIONAL
RALEIGH, NORTH CAROLINA
Copyright © 2008, TYLI
DWG NO. 12

REVISIONS						SHEET NO.
NO.	BY:	DATE:	NO.	BY:	DATE:	S-189
1			3			TOTAL SHEETS
2			4			253

DRAWN BY : S. MORGAN DATE : JUN. '08
CHECKED BY : J.W. WRIGHT DATE : JUN. '08

pw:\\fayettevilla.outer.loop\sm\X0002B_SD_BM_01.dgn 8/25/2008 3:03:42 PM Structures

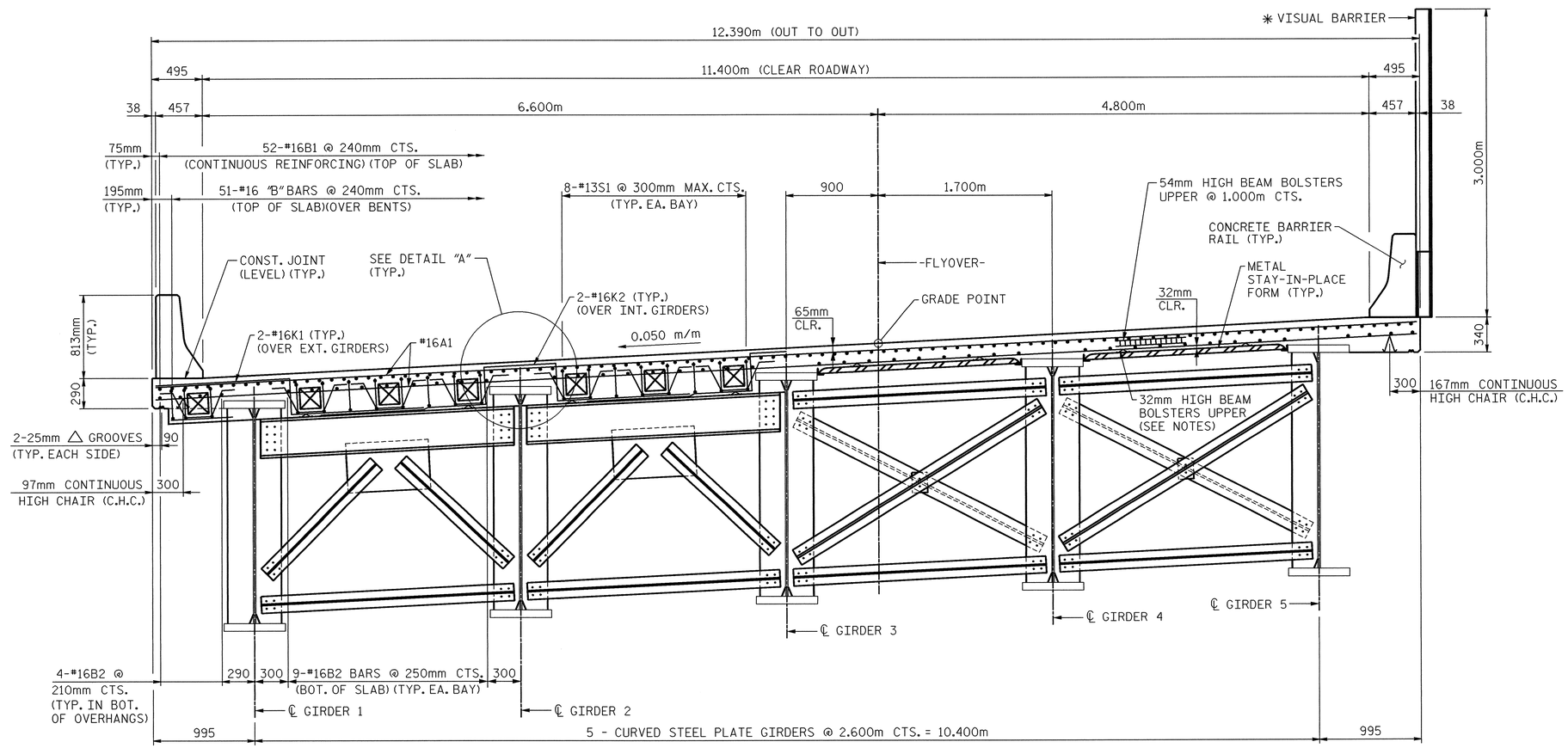

HALF SECTION AT END BENT AND BENT 4 DIAPHRAGMS
(CROSSFRAME CF-1)

HALF SECTION AT INTERMEDIATE AND BENT CROSSFRAMES
(CROSSFRAME CF-2)

TYPICAL SECTION

(ALL HORIZONTAL DIMENSIONS ARE RADIAL TO -FLYOVER-)

NOTES:

PROVIDE 32mm HIGH BEAM BOLSTERS UPPER AT 1.2m CTS. ATOP THE METAL STAY-IN-PLACE FORMS TO SUPPORT THE BOTTOM MAT OF 'A' BARS. WHEN USING REMOVABLE FORMS, PROVIDE CONTINUOUS HIGH CHAIRS FOR METAL DECK (C.H.C.M.) AT 1.2m CTS. WITH A HEIGHT TO SUPPORT THE BOTTOM MAT OF 'A' BARS A CLEAR DISTANCE OF 65mm ABOVE THE TOP OF THE REMOVABLE FORM.

METAL STAY-IN-PLACE FORMS SHALL NOT BE WELDED TO BEAM OR GIRDER FLANGES IN THE ZONES REQUIRING CHARPY V-NOTCH TEST. SEE STRUCTURAL STEEL DETAIL SHEETS.

PREVIOUSLY CAST CONCRETE IN A CONTINUOUS UNIT SHALL HAVE ATTAINED A MINIMUM COMPRESSIVE STRENGTH OF 20.7 MPa BEFORE ADDITIONALCONCRETE IS CAST IN THE UNIT.

STRUCTURAL STEEL ERECTION IN A CONTINUOUS UNIT SHALL BE COMPLETE BEFORE FALSEWORK OR FORMS ARE PLACED ON THE UNIT.

THE CONTRACTOR MAY, WHEN NECESSARY, PROPOSE A SCHEME FOR AVOIDING INTERFERENCE BETWEEN METAL STAY-IN-PLACE FORM SUPPORTS OR FORMS AND GIRDER STIFFENERS OR CONNECTOR PLATES. THE PROPOSAL SHALL BE INDICATED, AS APPROPRIATE, ON EITHER THE STEEL WORKING DRAWINGS OR THE METAL STAY-IN-PLACE FORM WORKING DRAWINGS.

THE CONTRACTOR SHALL ADJUST THE GIRDER BUILDUPS AS NECESSARY TO INCORPORATE A MAXIMUM PERMISSIBLE VARIATION IN POT BEARING DEPTH OF 13mm, SEE SPECIAL PROVISION FOR POT BEARINGS.

#16 "A" BARS IN THE SLAB ARE TO BE PLACED ON RADIAL LINES.

#16 "C" BARS MAY BE SHIFTED SLIGHTLY, AS NECESSARY, TO CLEAR REINFORCING STEEL AND STIRRUPS.

SET TOP OF MODULAR EXPANSION JOINT SEAL DEVICE A MINIMUM OF 3mm AND A MAXIMUM OF 6mm BELOW THE TOP OF SLAB.

THE "B" BARS IN THE DECK SLAB MAY BE CUT AS DIRECTED BY THE ENGINEER TO CLEAR THE MODULAR JOINT SUPPORT BOXES.

FOR BRIDGE DECK RIDEABILITY AND GROOVING, SEE SPECIAL PROVISIONS.

FOR DROP WALL DETAILS, SEE "TYPICAL SECTION DETAILS" SHEET.

FOR DETAIL "A", SEE "TYPICAL SECTION DETAILS" SHEET.

✳ VISUAL BARRIER ON THE RIGHT SIDE FROM STA. 22+89.000 TO THE END OF APPROACH SLAB.

PROJECT NO. X-0002B
CUMBERLAND COUNTY
STATION: -L- POC STA. 63+66.830=
-FLYOVER-
POC STA. 22+29.794

SHEET 1 OF 2

STATE OF NORTH CAROLINA
DEPARTMENT OF TRANSPORTATION
RALEIGH

SUPERSTRUCTURE

TYPICAL SECTION

NORTH CAROLINA PROFESSIONAL SEAL 024928 ENGINEER RODNEY E. MONEY 8/26/08

PREPARED IN THE OFFICE OF
TYLIN INTERNATIONAL
RALEIGH, NORTH CAROLINA
Copyright © 2008, TYLI
DWG NO. 13

REVISIONS						SHEET NO.
NO.	BY:	DATE:	NO.	BY:	DATE:	S-190
1			3			TOTAL SHEETS
2			4			253

DRAWN BY : S. MORGAN DATE : JUN. '08
CHECKED BY : J.W. WRIGHT DATE : JUN. '08

8/25/2008 3:03:45 PM Structures
ov:\fayetteville outer loop\sm\X0002B_SD_TS_01.DGN

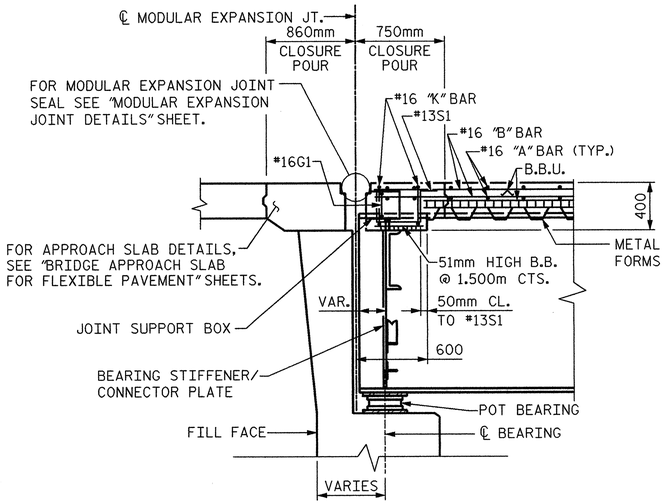

SECTION A-A

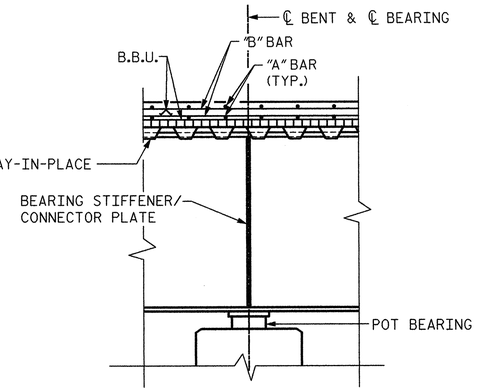

SECTION B-B

NOTE: CROSSFRAME MEMBERS NOT SHOWN FOR CLARITY.

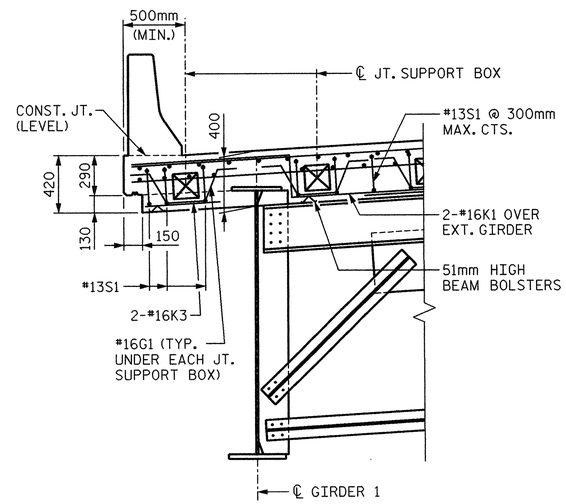

LOW SIDE

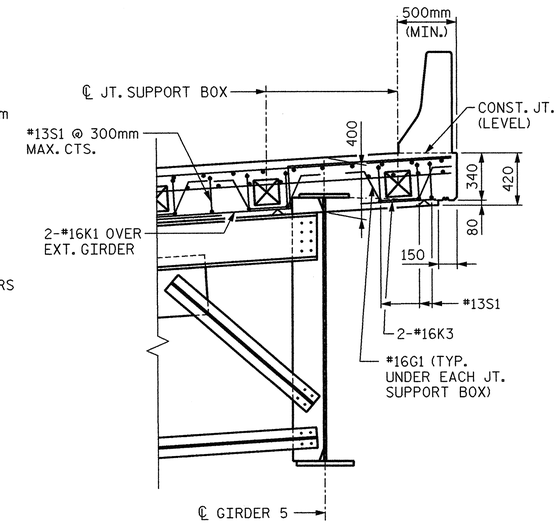

HIGH SIDE

DROP WALL DETAILS

(MODULAR EXP. JT. @ END BENTS 1 & 2 AND BENT 4)

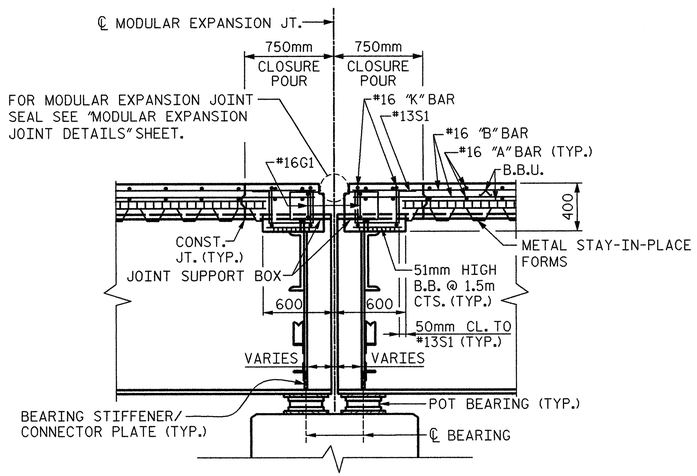

SECTION C-C

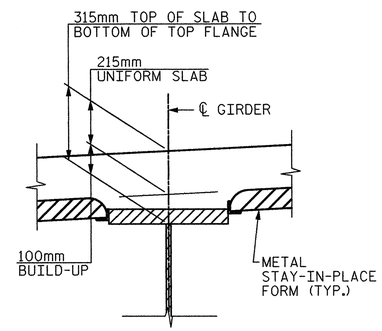

DETAIL "A"

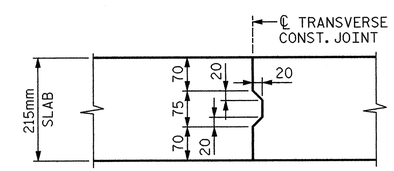

TRANSVERSE CONSTRUCTION JOINT IN DECK SLAB

NOTE: REINFORCING STEEL IN SLAB NOT SHOWN. LONGITUDINAL REINFORCING STEEL SHALL BE CONTINUOUS THROUGH JOINT.

PROJECT NO. X-0002B

CUMBERLAND COUNTY

STATION: -L- POC STA. 63+66.830=

-FLYOVER-
POC STA. 22+29.794

SHEET 2 OF 2

STATE OF NORTH CAROLINA
DEPARTMENT OF TRANSPORTATION
RALEIGH

SUPERSTRUCTURE

TYPICAL SECTION DETAILS

NORTH CAROLINA PROFESSIONAL SEAL 024928 R.E. Money ENGINEER RODNEY E. MONEY 7/29/08

PREPARED IN THE OFFICE OF
TYLIN INTERNATIONAL
RALEIGH, NORTH CAROLINA
Copyright © 2008, TYLI

DWG NO. 14

REVISIONS						SHEET NO.
NO.	BY:	DATE:	NO.	BY:	DATE:	S-191
1			3			TOTAL SHEETS
2			4			253

DRAWN BY : S. MORGAN DATE : JUN. '08
CHECKED BY : J.W. WRIGHT DATE : JUN. '08

7/28/2008 9:08:14 PM Structures
o:\fayetteville outer loop\sm\X0002B_SD_TS_02.dgn

NOTES:

FOR SECTION A-A, SEE "TYPICAL SECTION DETAILS" SHEET.

FOR SECTION B-B, SEE "TYPICAL SECTION DETAILS" SHEET.

FOR CONCRETE BARRIER RAIL DETAILS, SEE "CONCRETE BARRIER RAIL", SHEETS 1 THROUGH 5.

FOR TRANSVERSE CONSTRUCTION JOINT DETAILS, SEE "TYPICAL SECTION DETAILS" SHEET.

CLOSURE POUR ADJACENT TO MODULAR JOINT ASSEMBLY, INCLUDING DROP WALL, SHALL BE PLACED AFTER ALL SPAN POURS ARE COMPLETED.

TRANSVERSE CONSTRUCTION JOINTS MAY BE SHIFTED SLIGHTLY, IF NECESSARY, TO PROVIDE 50mm MINIMUM CLEARANCE TO "A" BARS.

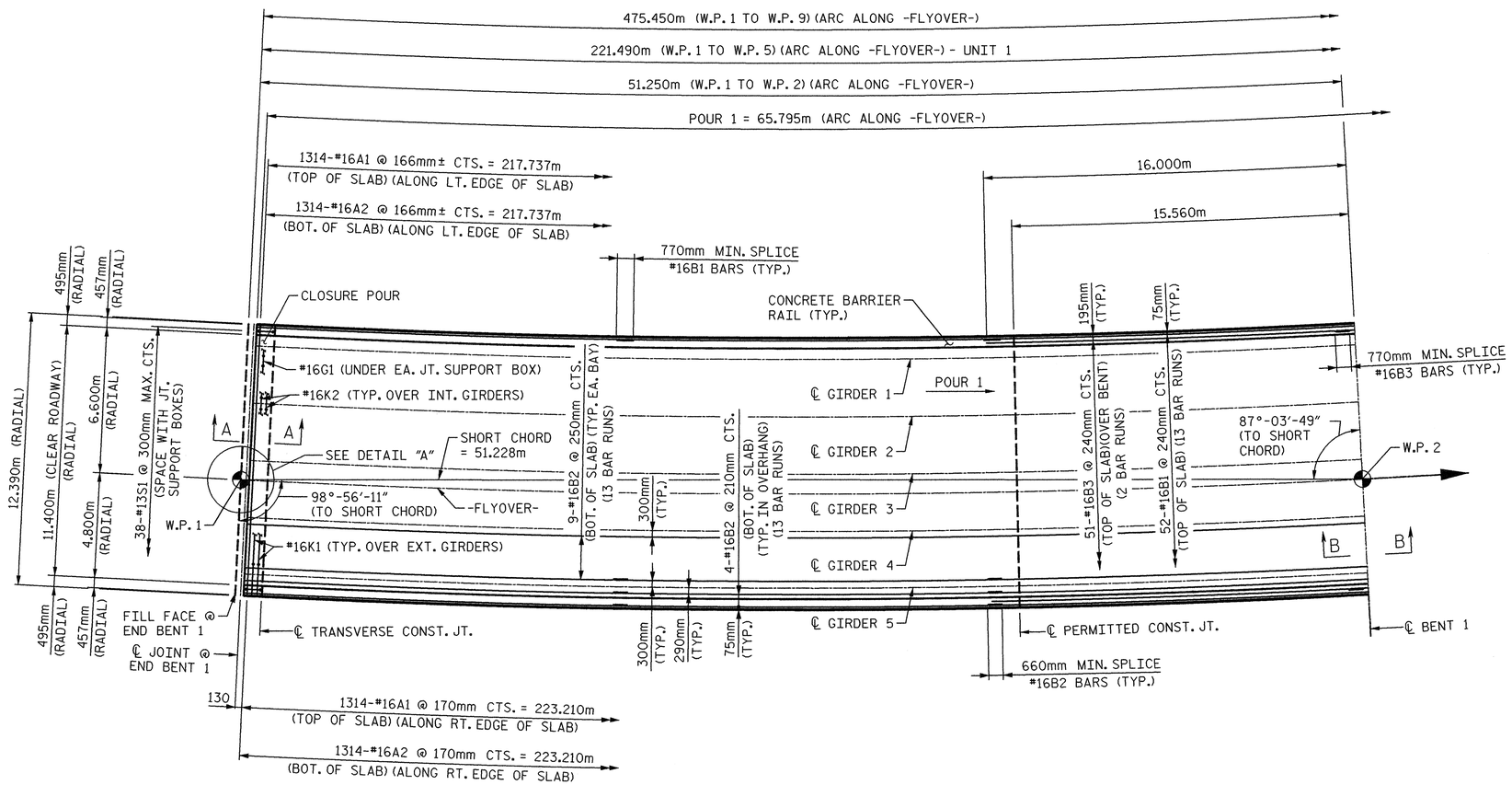

PLAN OF SPAN A

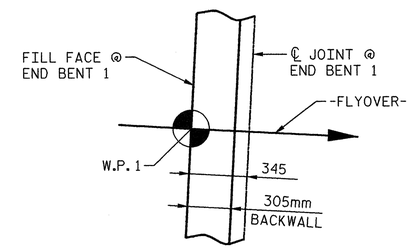

DETAIL "A"

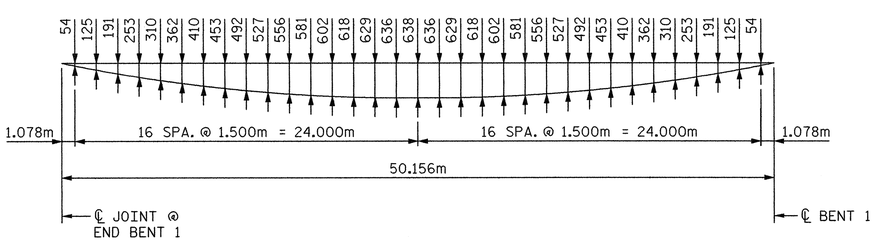

ARC OFFSETS SPAN "A" - LEFT EDGE

(7.095m LEFT OF -FLYOVER-)

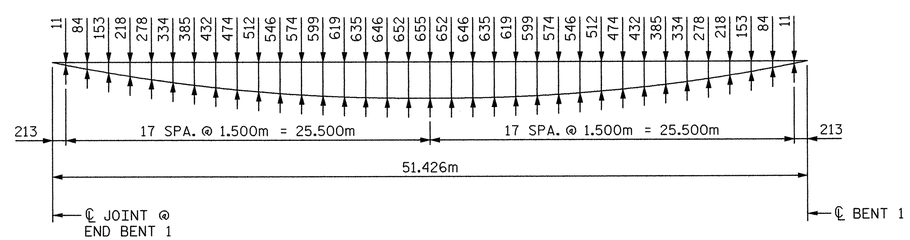

ARC OFFSETS SPAN "A" - RIGHT EDGE

(5.295m RIGHT OF -FLYOVER-)

PROJECT NO. X-0002B

CUMBERLAND COUNTY

STATION: -L- POC STA. 63+66.830=
-FLYOVER-
POC STA. 22+29.794

SHEET 1 OF 8

STATE OF NORTH CAROLINA
DEPARTMENT OF TRANSPORTATION
RALEIGH

SUPERSTRUCTURE

PLAN OF SPAN "A"

NORTH CAROLINA PROFESSIONAL SEAL 024928 ENGINEER RODNEY E. MONEY 7/29/08

PREPARED IN THE OFFICE OF
TY·LIN INTERNATIONAL
RALEIGH, NORTH CAROLINA
Copyright © 2008, TYLI

DWG NO. 15

REVISIONS						
NO.	BY:	DATE:	NO.	BY:	DATE:	
1			3			
2			4			

SHEET NO. S-192

TOTAL SHEETS 253

DRAWN BY : S. MORGAN DATE : JUN. '08
CHECKED BY : J.W. WRIGHT DATE : JUN. '08

7/28/2008 9:08:18 PM Structures
ex\fayetteville outer loop\sam\X00028_S0_S1_01.dgn

NOTES:

FOR SECTION B-B, SEE "TYPICAL SECTION DETAILS" SHEET.

FOR CONCRETE BARRIER RAIL DETAILS, SEE "CONCRETE BARRIER RAIL", SHEETS 1 THROUGH 5.

FOR TRANSVERSE CONSTRUCTION JOINT DETAILS, SEE "TYPICAL SECTION DETAILS" SHEET.

TRANSVERSE CONSTRUCTION JOINTS MAY BE SHIFTED SLIGHTLY, IF NECESSARY, TO PROVIDE 50mm MINIMUM CLEARANCE TO "A" BARS.

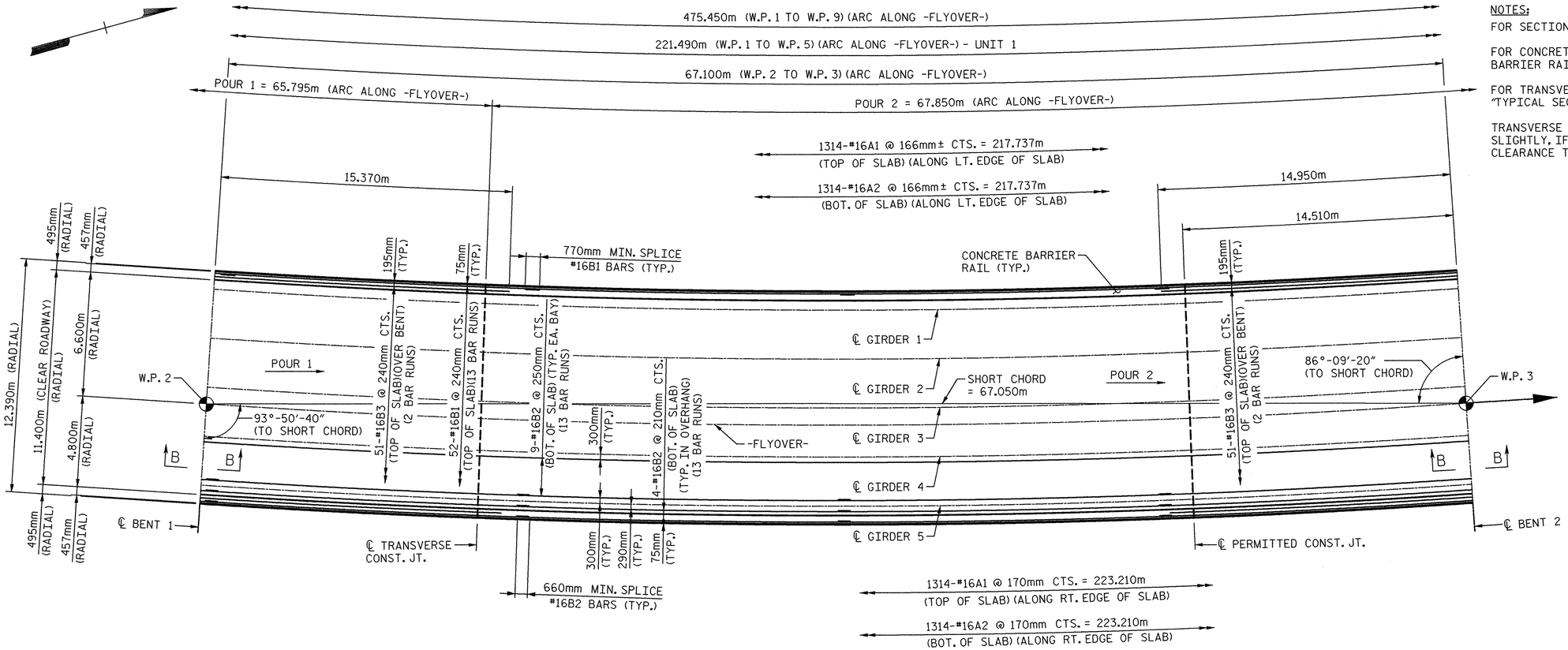

PLAN OF SPAN B

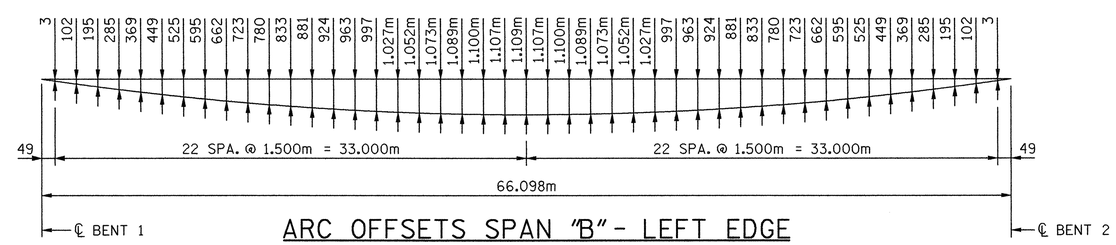

ARC OFFSETS SPAN "B" - LEFT EDGE

(7.095m LEFT OF -FLYOVER-)

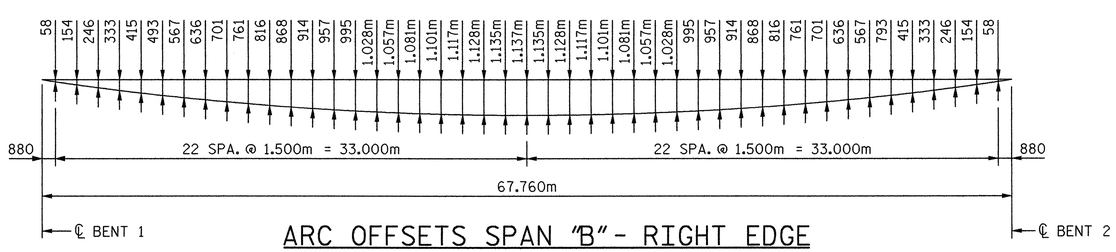

ARC OFFSETS SPAN "B" - RIGHT EDGE

(5.295m RIGHT OF -FLYOVER-)

PROJECT NO. X-0002B

CUMBERLAND COUNTY

STATION: -L- POC STA. 63+66.830=
-FLYOVER-
POC STA. 22+29.794

SHEET 2 OF 8

STATE OF NORTH CAROLINA
DEPARTMENT OF TRANSPORTATION
RALEIGH

SUPERSTRUCTURE

PLAN OF SPAN "B"

NORTH CAROLINA PROFESSIONAL SEAL 024928 ENGINEER RODNEY E. MOONEY 7/24/08

PREPARED IN THE OFFICE OF
TYLIN INTERNATIONAL
RALEIGH, NORTH CAROLINA
Copyright © 2008, TYLI

DWG NO. 16

REVISIONS						
NO.	BY:	DATE:	NO.	BY:	DATE:	
1			3			
2			4			

SHEET NO. S-193

TOTAL SHEETS 253

DRAWN BY : S. MORGAN DATE : JUN. '08
CHECKED BY : J.W. WRIGHT DATE : JUN. '08

o:\fayetteville outer loop\sm\X0002B_SD_S2_01.dgn 7/28/2008 9:08:44 PM Structures

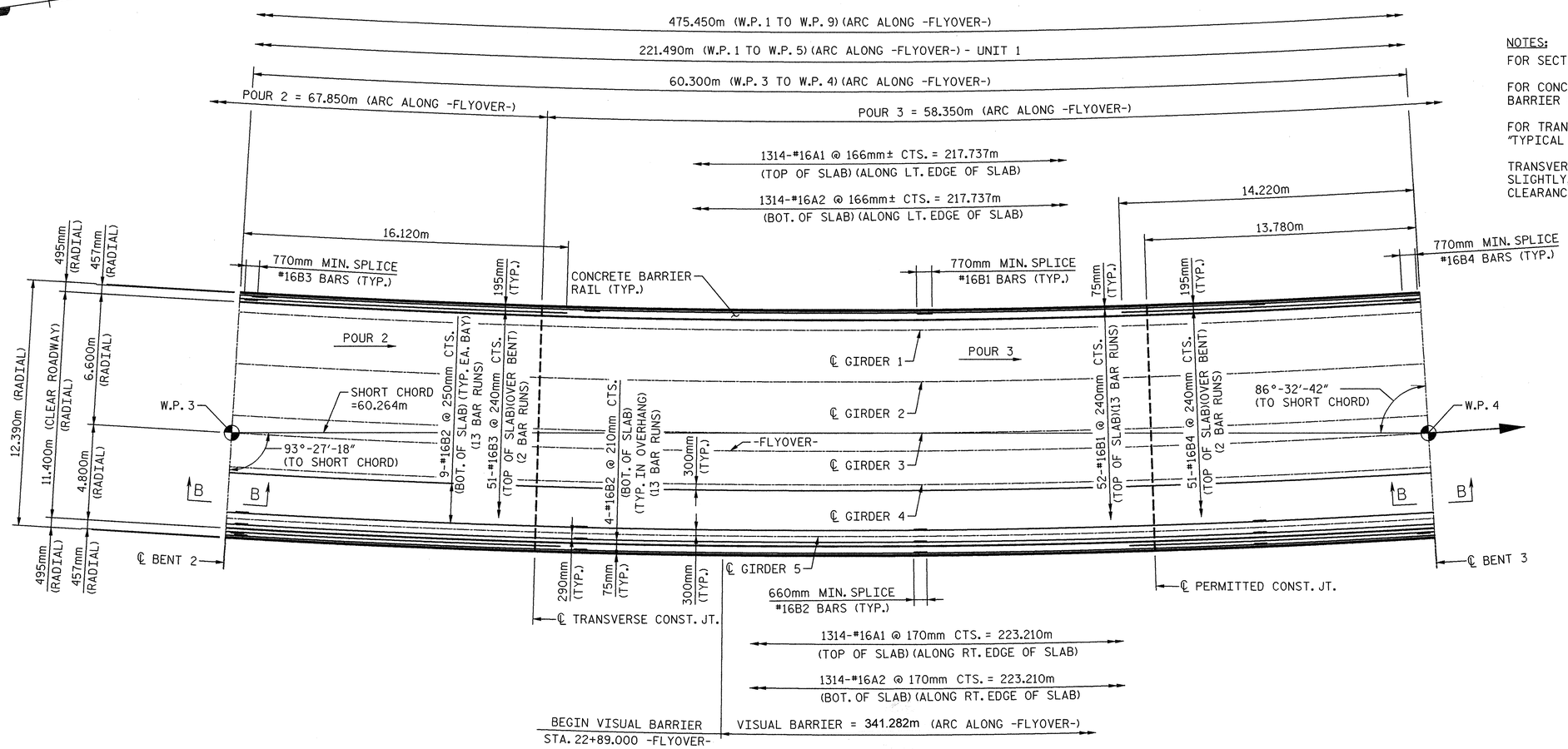

PLAN OF SPAN C

NOTES:

FOR SECTION B-B, SEE "TYPICAL SECTION DETAILS" SHEET.

FOR CONCRETE BARRIER RAIL DETAILS, SEE "CONCRETE BARRIER RAIL", SHEETS 1 THROUGH 5.

FOR TRANSVERSE CONSTRUCTION JOINT DETAILS, SEE "TYPICAL SECTION DETAILS" SHEET.

TRANSVERSE CONSTRUCTION JOINTS MAY BE SHIFTED SLIGHTLY, IF NECESSARY, TO PROVIDE 50mm MINIMUM CLEARANCE TO "A" BARS.

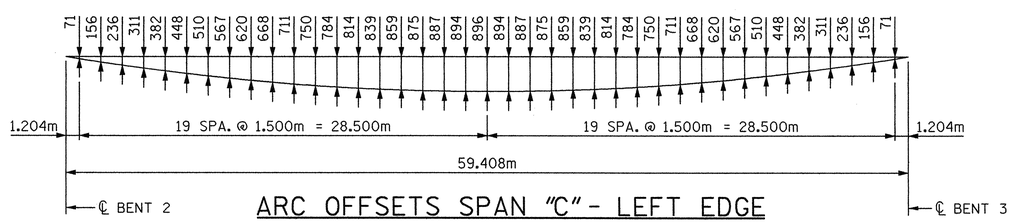

ARC OFFSETS SPAN "C" - LEFT EDGE

(7.095m LEFT OF -FLYOVER-)

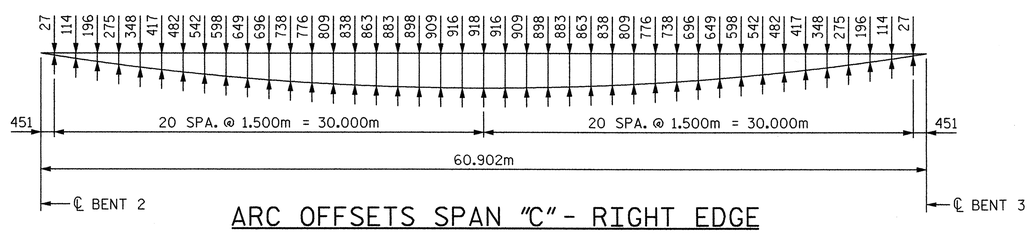

ARC OFFSETS SPAN "C" - RIGHT EDGE

(5.295m RIGHT OF -FLYOVER-)

PROJECT NO. X-0002B

CUMBERLAND COUNTY

STATION: -L- POC STA. 63+66.830=
-FLYOVER-
POC STA. 22+29.794

SHEET 3 OF 8

STATE OF NORTH CAROLINA
DEPARTMENT OF TRANSPORTATION
RALEIGH

SUPERSTRUCTURE

PLAN OF SPAN "C"

NORTH CAROLINA PROFESSIONAL SEAL 024928 ENGINEER RONEY E. MONEY 8/1/08

PREPARED IN THE OFFICE OF
TYLIN INTERNATIONAL
RALEIGH, NORTH CAROLINA
Copyright © 2008, TYLI

DWG NO. 17

REVISIONS						
NO.	BY:	DATE:	NO.	BY:	DATE:	
1			3			
2			4			

SHEET NO. S-194

TOTAL SHEETS 253

DRAWN BY : S. MORGAN DATE : JUN. '08
CHECKED BY : J.W. WRIGHT DATE : JUN. '08

8/1/2008 12:04:06 PM Structures
p:\fayetteville outer loop\en\X0002B_SD_S3_01.dgn

NOTES:

FOR SECTION A-A, SEE "TYPICAL SECTION DETAILS" SHEET.

FOR SECTION B-B, SEE "TYPICAL SECTION DETAILS" SHEET.

FOR CONCRETE BARRIER RAIL DETAILS, SEE "CONCRETE BARRIER RAIL", SHEETS 1 THROUGH 5.

FOR TRANSVERSE CONSTRUCTION JOINT DETAILS, SEE "TYPICAL SECTION DETAILS" SHEET.

CLOSURE POUR ADJACENT TO MODULAR JOINT ASSEMBLY, INCLUDING DROP WALL, SHALL BE PLACED AFTER ALL SPAN POURS ARE COMPLETED.

TRANSVERSE CONSTRUCTION JOINTS MAY BE SHIFTED SLIGHTLY, IF NECESSARY, TO PROVIDE 50mm MINIMUM CLEARANCE TO "A" BARS.

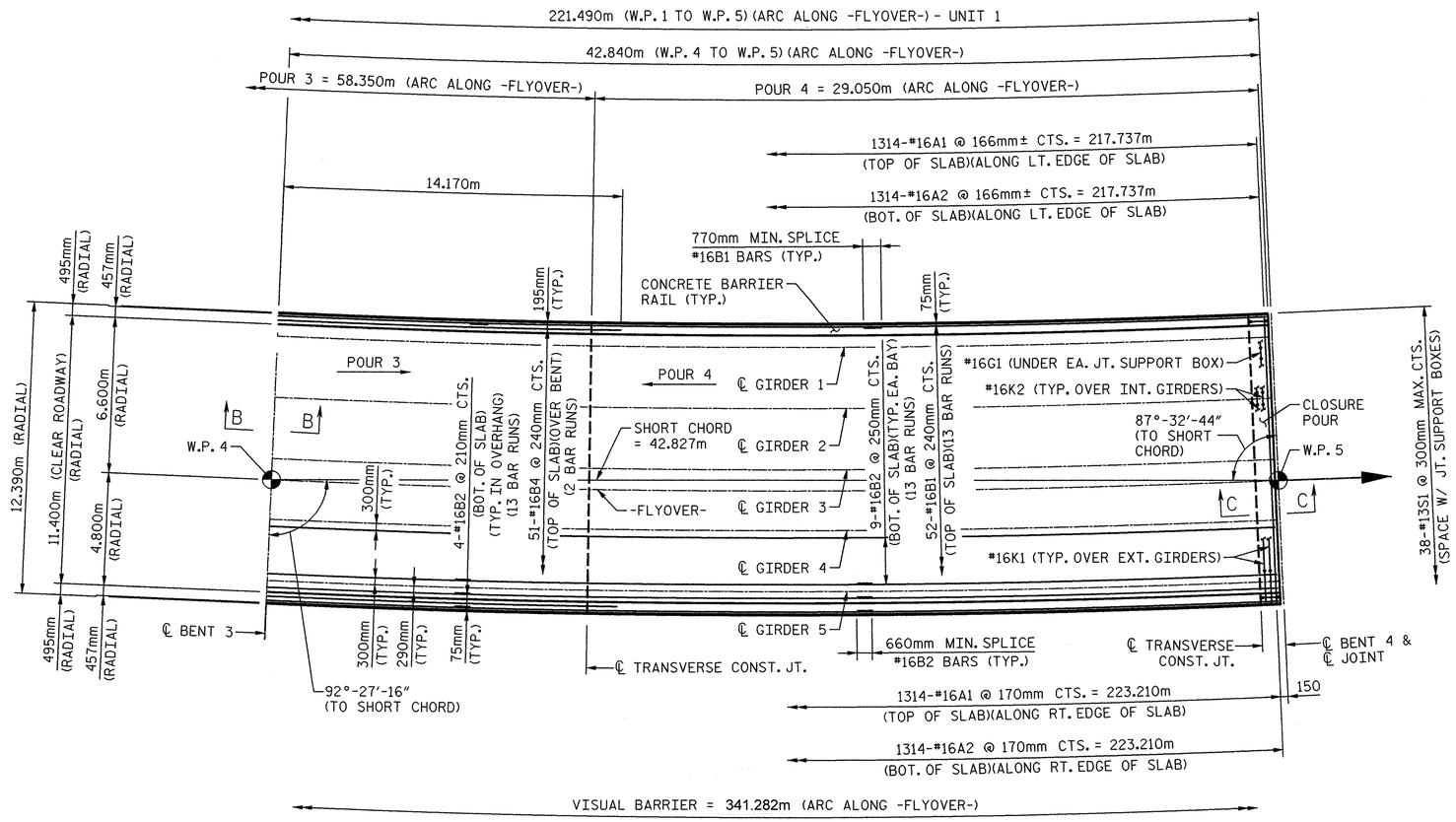

PLAN OF SPAN D

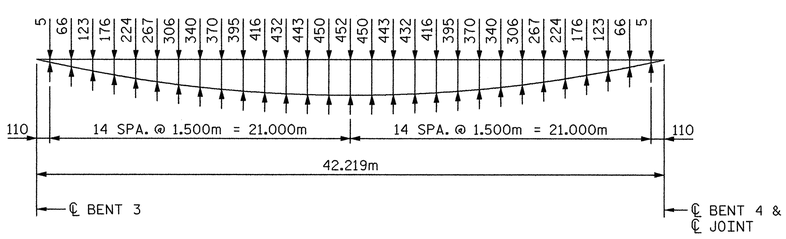

ARC OFFSETS SPAN "D" - LEFT EDGE

(7.095m LEFT OF -FLYOVER-)

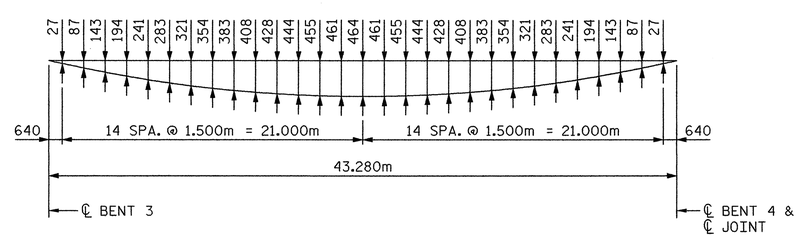

ARC OFFSETS SPAN "D" - RIGHT EDGE

(5.295m RIGHT OF -FLYOVER-)

PROJECT NO. X-0002B

CUMBERLAND COUNTY

STATION: -L- POC STA. 63+66.830=
-FLYOVER-
POC STA. 22+29.794

SHEET 4 OF 8

STATE OF NORTH CAROLINA
DEPARTMENT OF TRANSPORTATION
RALEIGH

SUPERSTRUCTURE

PLAN OF SPAN "D"

NORTH CAROLINA PROFESSIONAL SEAL 024928 ENGINEER RODNEY E. MONEY 8/1/08

PREPARED IN THE OFFICE OF
TYLIN INTERNATIONAL
RALEIGH, NORTH CAROLINA
Copyright © 2008, TYLI

DWG NO. 18

REVISIONS						
NO.	BY:	DATE:	NO.	BY:	DATE:	
1			3			
2			4			

SHEET NO. S-195

TOTAL SHEETS 253

DRAWN BY : S. MORGAN DATE : JUN. '08
CHECKED BY : J.W. WRIGHT DATE : JUN. '08

8/1/2008 12:04:09 PM Structures
o:\fayetteville outer loop\sm\X0002B_SD_S4_01.dgn

NOTES:

FOR SECTION A-A, SEE "TYPICAL SECTION DETAILS" SHEET.

FOR SECTION B-B, SEE "TYPICAL SECTION DETAILS" SHEET.

FOR CONCRETE BARRIER RAIL DETAILS, SEE "CONCRETE BARRIER RAIL", SHEETS 1 THROUGH 5.

FOR TRANSVERSE CONSTRUCTION JOINT DETAILS, SEE "TYPICAL SECTION DETAILS" SHEET.

CLOSURE POUR ADJACENT TO MODULAR JOINT ASSEMBLY, INCLUDING DROP WALL, SHALL BE PLACED AFTER ALL SPAN POURS ARE COMPLETED.

TRANSVERSE CONSTRUCTION JOINTS MAY BE SHIFTED SLIGHTLY, IF NECESSARY, TO PROVIDE 50mm MINIMUM CLEARANCE TO "A" BARS.

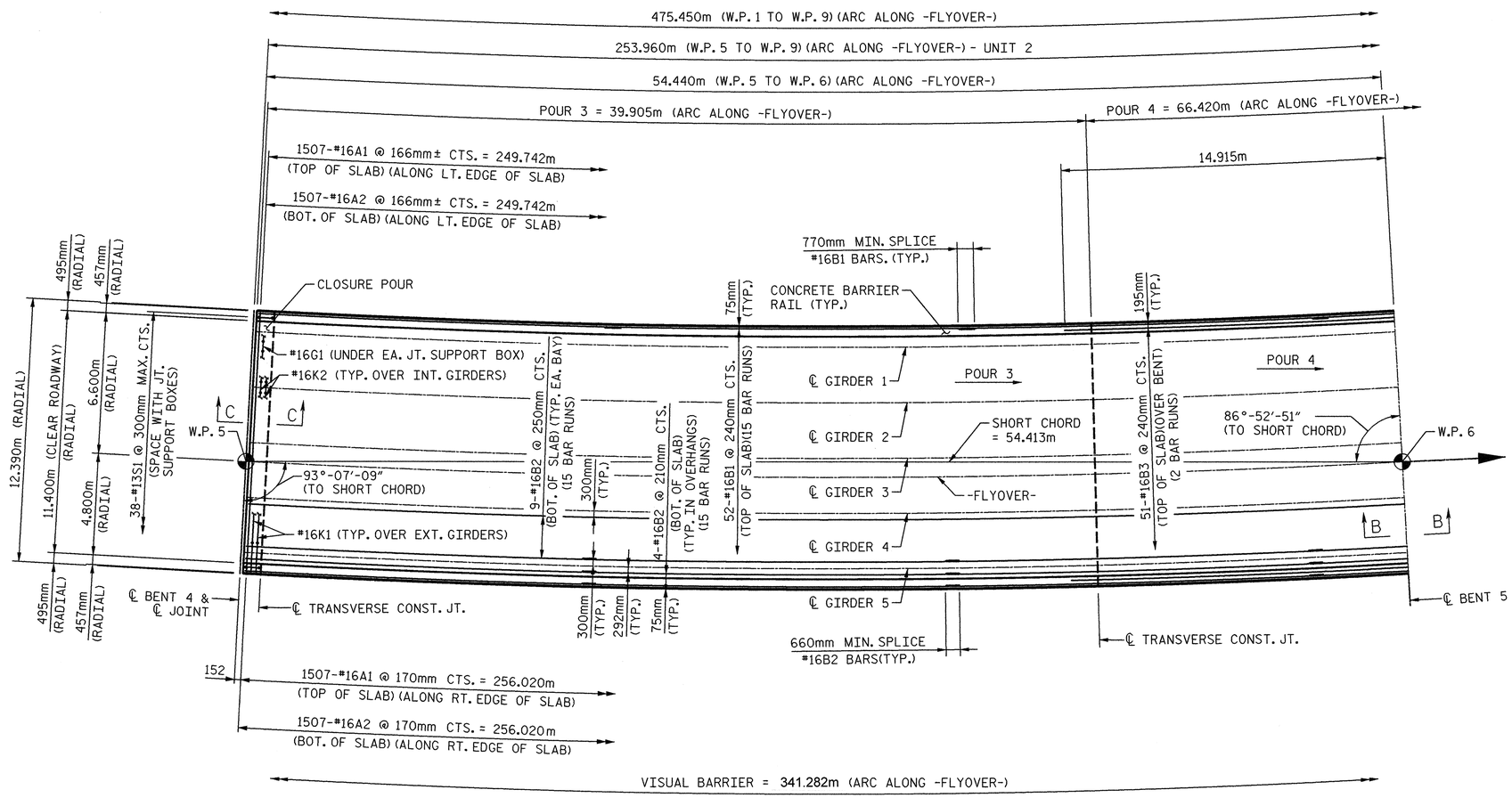

PLAN OF SPAN E

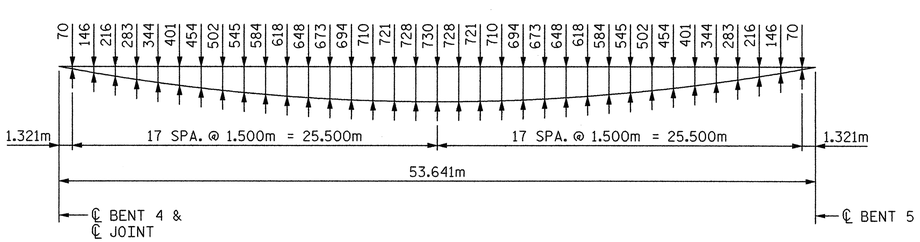

ARC OFFSETS SPAN "E" - LEFT EDGE

(7.095m LEFT OF -FLYOVER-)

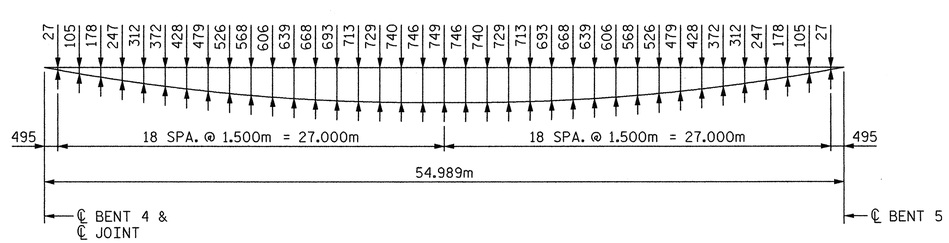

ARC OFFSETS SPAN "E" - RIGHT EDGE

(5.295m RIGHT OF -FLYOVER-)

PROJECT NO. X-0002B

CUMBERLAND COUNTY

STATION: -L- POC STA. 63+66.830=
-FLYOVER-
POC STA. 22+29.794

SHEET 5 OF 8

STATE OF NORTH CAROLINA
DEPARTMENT OF TRANSPORTATION
RALEIGH

SUPERSTRUCTURE

PLAN OF SPAN "E"

NORTH CAROLINA PROFESSIONAL SEAL 024928 ENGINEER ROONEY E. MONEY 8/1/08

PREPARED IN THE OFFICE OF
TYLIN INTERNATIONAL
RALEIGH, NORTH CAROLINA
Copyright © 2008, TYLI

DWG NO. 19

REVISIONS						
NO.	BY:	DATE:	NO.	BY:	DATE:	
1			3			
2			4			

SHEET NO. S-196

TOTAL SHEETS 253

DRAWN BY : S. MORGAN DATE : JUN. '08
CHECKED BY : J.W. WRIGHT DATE : JUN. '08

8/1/2008 12:04:13 PM Structures
ex\fayetteville outer loop\sm\X0002B_S0_S5_01.dgn

NOTES:

FOR SECTION B-B, SEE "TYPICAL SECTION DETAILS" SHEET.

FOR CONCRETE BARRIER RAIL DETAILS, SEE "CONCRETE BARRIER RAIL", SHEETS 1 THROUGH 5.

FOR TRANSVERSE CONSTRUCTION JOINT DETAILS, SEE "TYPICAL SECTION DETAILS" SHEET.

TRANSVERSE CONSTRUCTION JOINTS MAY BE SHIFTED SLIGHTLY, IF NECESSARY, TO PROVIDE 50mm MINIMUM CLEARANCE TO "A" BARS.

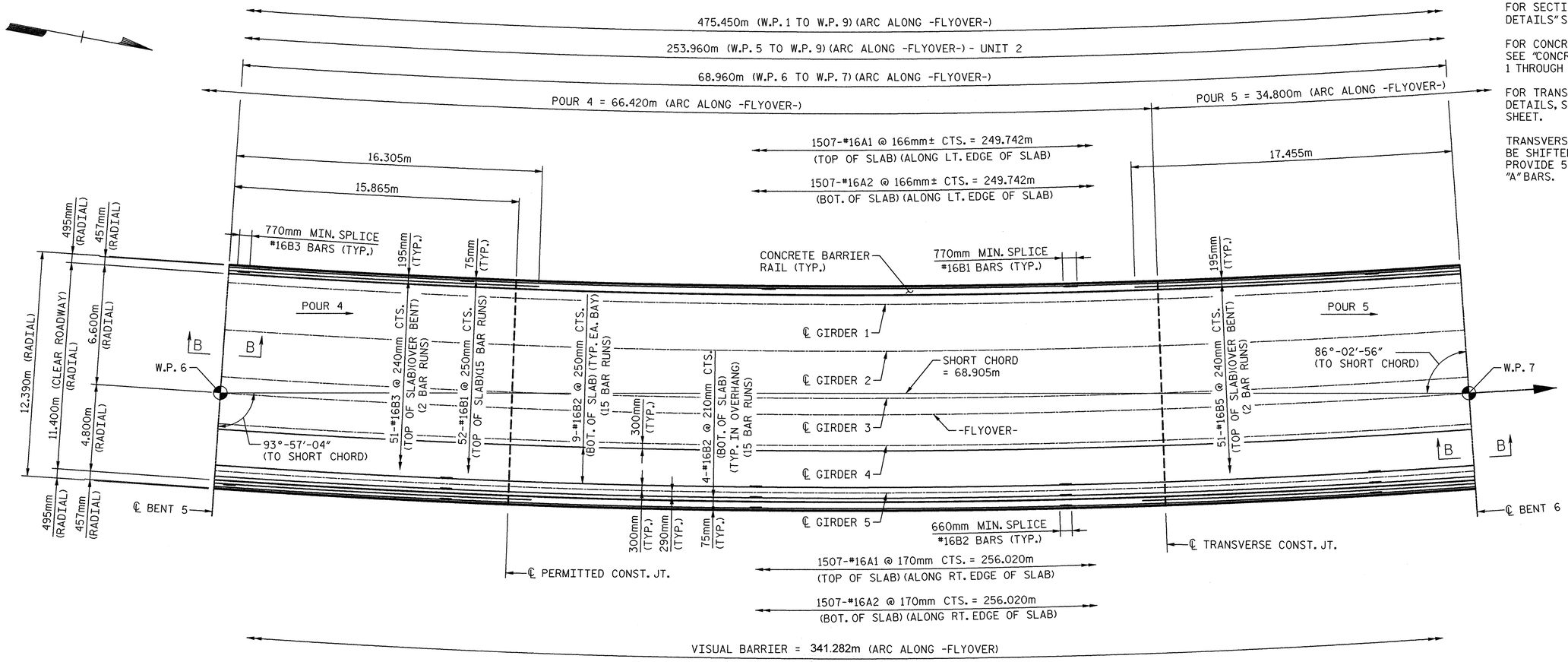

PLAN OF SPAN F

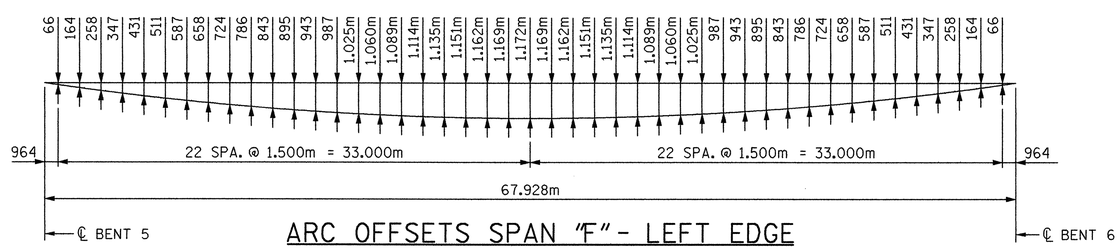

ARC OFFSETS SPAN "F" - LEFT EDGE

(7.095m LEFT OF -FLYOVER-)

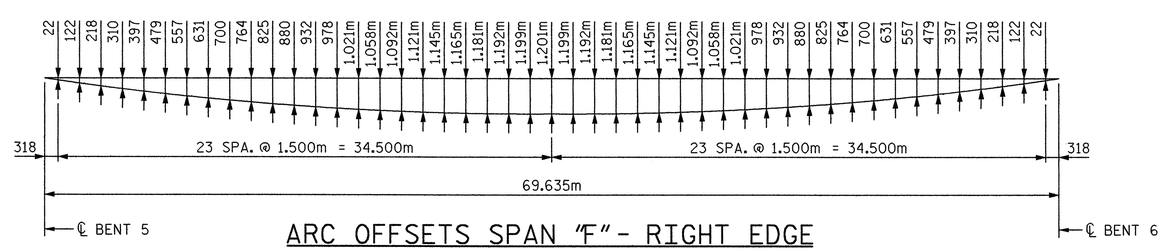

ARC OFFSETS SPAN "F" - RIGHT EDGE

(5.295m RIGHT OF -FLYOVER-)

PROJECT NO. X-0002B

CUMBERLAND COUNTY

STATION: -L- POC STA. 63+66.830=
-FLYOVER-
POC STA. 22+29.794

SHEET 6 OF 8

STATE OF NORTH CAROLINA
DEPARTMENT OF TRANSPORTATION
RALEIGH

SUPERSTRUCTURE

PLAN OF SPAN "F"

NORTH CAROLINA PROFESSIONAL SEAL 024928 ENGINEER RODNEY E. MONEY 8.1.08

PREPARED IN THE OFFICE OF
TYLIN INTERNATIONAL
RALEIGH, NORTH CAROLINA
Copyright © 2008, TYLI

DWG NO. 20

REVISIONS						
NO.	BY:	DATE:	NO.	BY:	DATE:	
1			3			
2			4			

SHEET NO. S-197

TOTAL SHEETS 253

DRAWN BY : S. MORGAN DATE : JUN. '08
CHECKED BY : J.W. WRIGHT DATE : JUN. '08

8/1/2008 12:04:16 PM Structures
q:\fayetteville outer loop\sm\X0002B_SD_S6_01.dgn

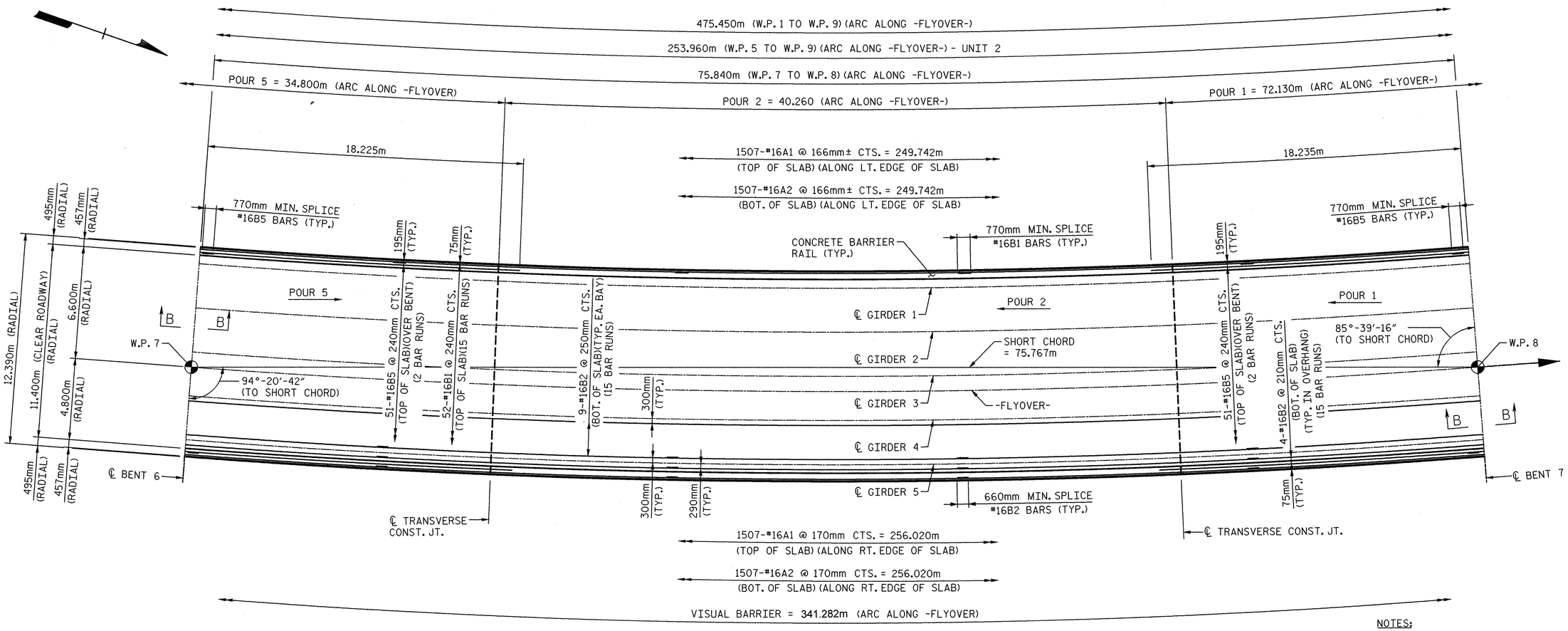

PLAN OF SPAN G

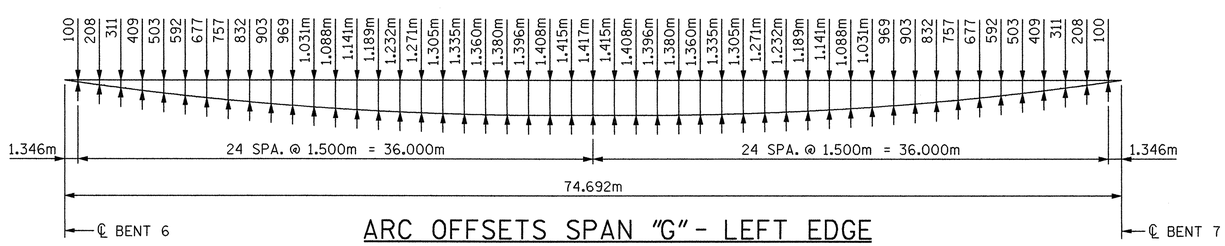

ARC OFFSETS SPAN "G" - LEFT EDGE

(7.095m LEFT OF -FLYOVER-)

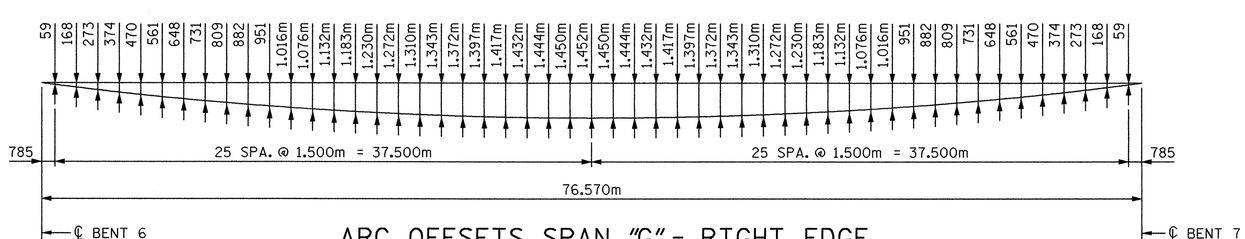

ARC OFFSETS SPAN "G" - RIGHT EDGE

(5.295m RIGHT OF -FLYOVER-)

NOTES:

FOR SECTION B-B, SEE "TYPICAL SECTION DETAILS" SHEET.

FOR CONCRETE BARRIER RAIL DETAILS, SEE "CONCRETE BARRIER RAIL", SHEETS 1 THROUGH 5.

FOR TRANSVERSE CONSTRUCTION JOINT DETAILS, SEE "TYPICAL SECTION DETAILS" SHEET.

TRANSVERSE CONSTRUCTION JOINTS MAY BE SHIFTED SLIGHTLY, IF NECESSARY, TO PROVIDE 50mm MINIMUM CLEARANCE TO "A" BARS.

PROJECT NO. X-0002B

CUMBERLAND COUNTY

STATION: -L- POC STA. 63+66.830=
-FLYOVER-
POC STA. 22+29.794

SHEET 7 OF 8

STATE OF NORTH CAROLINA
DEPARTMENT OF TRANSPORTATION
RALEIGH

SUPERSTRUCTURE

PLAN OF SPAN "G"

NORTH CAROLINA PROFESSIONAL SEAL 024928 ENGINEER RODNEY E. MONEY 8/1/08

PREPARED IN THE OFFICE OF
TYLIN INTERNATIONAL
RALEIGH, NORTH CAROLINA
Copyright © 2008, TYLI

DWG NO. 21

REVISIONS							
NO.	BY:	DATE:	NO.	BY:	DATE:	SHEET NO.	
1			3			S-198	
2			4			TOTAL SHEETS	
						253	

DRAWN BY : S. MORGAN DATE : JUN. '08
CHECKED BY : J.W. WRIGHT DATE : JUN. '08

ok\fayetteville outer loop\sm\X0002B_SD_S7_01.dgn 8/1/2008 12:04:20 PM Structures

NOTES:

FOR SECTION A-A, SEE "TYPICAL SECTION DETAILS" SHEET.

FOR SECTION B-B, SEE "TYPICAL SECTION DETAILS" SHEET.

FOR CONCRETE BARRIER RAIL DETAILS, SEE "CONCRETE BARRIER RAIL", SHEETS 1 THROUGH 5.

FOR TRANSVERSE CONSTRUCTION JOINT DETAILS, SEE "TYPICAL SECTION DETAILS" SHEET.

CLOSURE POUR ADJACENT TO MODULAR JOINT ASSEMBLY, INCLUDING DROP WALL, SHALL BE PLACED AFTER ALL SPAN POURS ARE COMPLETED.

TRANSVERSE CONSTRUCTION JOINTS MAY BE SHIFTED SLIGHTLY, IF NECESSARY, TO PROVIDE 50mm MINIMUM CLEARANCE TO "A" BARS.

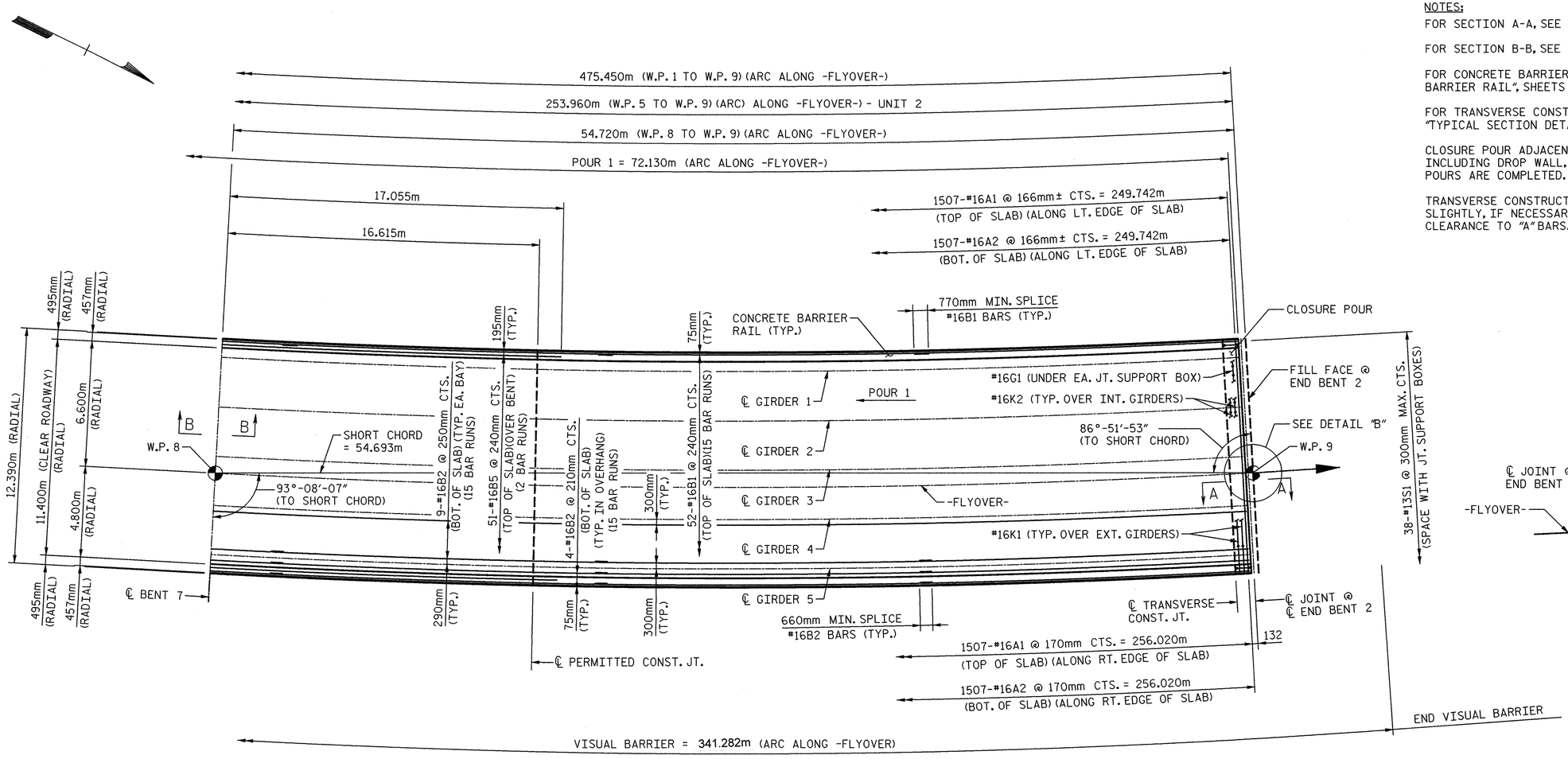

PLAN OF SPAN H

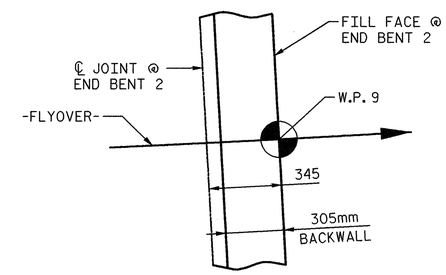

DETAIL "B"

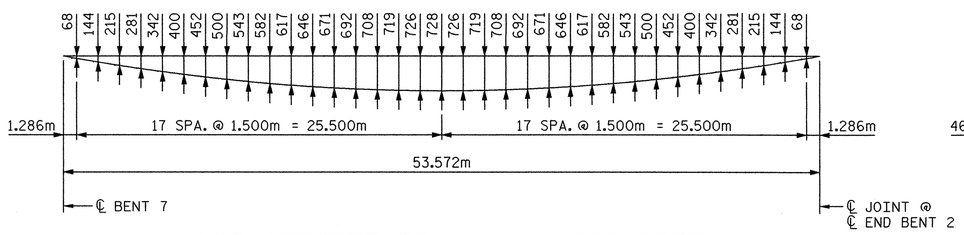

ARC OFFSETS SPAN "H" - LEFT EDGE

(7.095m LEFT OF -FLYOVER-)

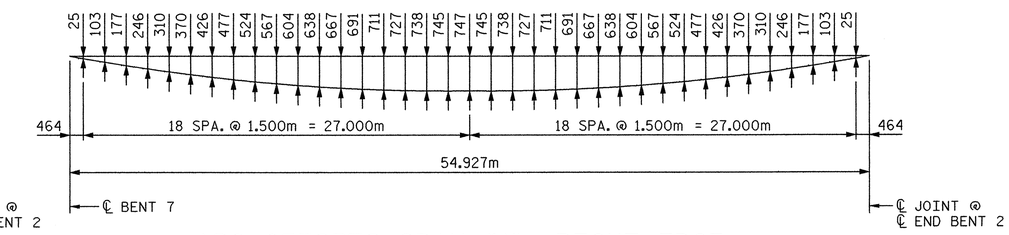

ARC OFFSETS SPAN "H" - RIGHT EDGE

(5.295m RIGHT OF -FLYOVER-)

PROJECT NO. X-0002B

CUMBERLAND COUNTY

STATION: -L- POC STA. 63+66.830=
-FLYOVER-
POC STA. 22+29.794

SHEET 8 OF 8

STATE OF NORTH CAROLINA
DEPARTMENT OF TRANSPORTATION
RALEIGH

SUPERSTRUCTURE

PLAN OF SPAN "H"

NORTH CAROLINA PROFESSIONAL SEAL 024928 ENGINEER RODNEY E. MONEY 8/1/08

PREPARED IN THE OFFICE OF
TYLIN INTERNATIONAL
RALEIGH, NORTH CAROLINA
Copyright © 2008, TYLI

DWG NO. 22

REVISIONS						
NO.	BY:	DATE:	NO.	BY:	DATE:	
1			3			
2			4			

SHEET NO. S-199

TOTAL SHEETS 253

DRAWN BY : S. MORGAN DATE : JUN. '08

CHECKED BY : J.W. WRIGHT DATE : JUN. '08

8/1/2008 12:24:23 PM Structures
a:\fayetteville outer loop\sm\X0002B_SD_S8_01.dgn

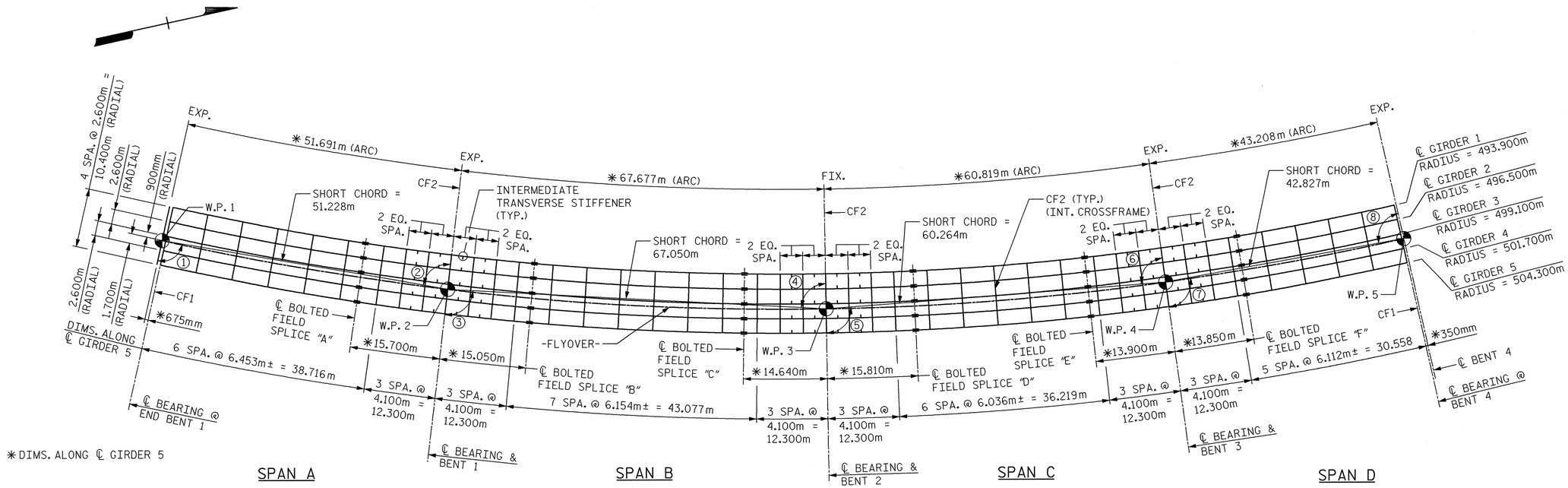

FRAMING PLAN AND INTERMEDIATE CROSSFRAME LOCATIONS

STRUCTURAL STEEL NOTES:

STRUCTURAL STEEL IN FLANGES AS DESIGNATED IN THE PLANS SHALL BE AASHTO M270 GRADE HPS 485W. ALL OTHER STRUCTURAL STEEL SHALL BE AASHTO M270 GRADE 345W STEEL. ALL STRUCTURAL STEEL SHALL BE PAINTED IN ACCORDANCE WITH SYSTEM 4 OF ARTICLE 442-7 OF THE STANDARD SPECIFICATIONS UNLESS OTHERWISE NOTED ON THE PLANS.

ALL DIMENSIONS SHOWN ARE HORIZONTAL OR VERTICAL, UNLESS OTHERWISE NOTED.

FOR H.P.S., SEE SPECIAL PROVISIONS.

FOR SHIPPING STEEL STRUCTURAL MEMBERS, SEE SPECIAL PROVISIONS.

ALL FIELD CONNECTIONS TO BE 22.23mm DIA. HIGH STRENGTH BOLTS UNLESS OTHERWISE NOTED. FOR HIGH STRENGTH BOLTS, SEE SPECIAL PROVISIONS.

INTERMEDIATE STIFFENERS ARE NOT REQUIRED ON THE OUTSIDE OF EXTERIOR BEAMS.

BEARING STIFFENERS ARE TO BE PLACED NORMAL TO THE WEB OF THE GIRDER AND SHALL BE PLUMB.

CONNECTOR PLATES SHALL BE NORMAL TO FLANGES AND WEB AT INTERMEDIATE CROSSFRAME LOCATIONS.

ENDS OF THE CONTINUOUS PLATE GIRDERS SHALL BE IN A PLUMB POSITION AFTER THE TOTAL DEAD LOAD DEFLECTION HAS OCCURRED. SHOP PLANS SHALL BE PREPARED ACCORDINGLY.

CURVATURE OF STEEL GIRDERS MAY BE ACCOMPLISHED BY CUTTING PLATES OR BY HEAT TREATING TO THE REQUIRED RADIUS. FOR HEAT CURVING OF GIRDERS, SEE **STANDARD SPECIFICATIONS**.

SHEAR STUDS ON GIRDERS MAY BE SHIFTED UP TO 25mm IF NECESSARY TO CLEAR FLANGE SPLICE WELD.

SHOP SPLICES ARE PERMITTED TO LIMIT THE MAXIMUM REQUIRED FLANGE PIECE LENGTHS TO 18 METERS AND WEB PIECE LENGTHS TO 14 METERS. PERMITTED FLANGE AND WEB SHOP SPLICES SHALL NOT BE LOCATED WITHIN 4.5 METERS OF MAXIMUM DEAD LOAD DEFLECTION (NOR WITHIN 4.5 METERS OF INTERMEDIATE BEARINGS OF CONTINUOUS UNITS). KEEP 600mm MINIMUM BETWEEN WEB AND FLANGE SHOP SPLICES. KEEP 150mm MINIMUM BETWEEN CONNECTOR PLATE OR TRANSVERSE STIFFENER WELDS AND WEB OR FLANGE SHOP SPLICES.

TENSION ON THE AASHTO M164 BOLTS SHALL BE CALIBRATED USING DIRECT TENSION INDICATOR WASHERS IN ACCORDANCE WITH ARTICLE 440-10 OF THE STANDARD SPECIFICATIONS.

MAIN TENSION MEMBERS SHALL BE CHARPY V-NOTCH (CVN) IMPACT TESTED IN ACCORDANCE WITH ARTICLE 1072-9 OF THE STANDARD SPECIFICATIONS AND THE SPECIAL PROVISIONS. FOR THE PURPOSE OF IMPACT TESTING, THE FOLLOWING PLATES AND SHAPES SHALL BE CLASSIFIED AS MAIN TENSION MEMBERS.

- ALL FLANGE PLATES WHICH FALL WITHIN THE TENSION ZONE; SEE "GIRDER DETAILS" SHEETS 1 AND 2.
- ALL WEB PLATES
- ALL GIRDER SPLICE PLATES
- ALL CROSSFRAME COMPONENTS
- ALL CROSSFRAME CONNECTOR PLATES

TABLE FOR BOLTED FIELD SPLICE TYPES

LOCATION	GIRDERS	SPLICE TYPE
SPLICE "A"	1 - 3	S4
SPLICE "A"	4 - 5	S1
SPLICE "B"	1 - 3	S4
SPLICE "B"	4 - 5	S1
SPLICE "C"	1 - 3	S4
SPLICE "C"	4 - 5	S1
SPLICE "D"	1 - 3	S4
SPLICE "D"	4 - 5	S1
SPLICE "E"	1 - 3	S4
SPLICE "E"	4 - 5	S3
SPLICE "F"	1 - 3	S4
SPLICE "F"	4 - 5	S3

NO.	ANGLE TO SHORT CHORD
1	92°-56'-11"
2	87°-03'-49"
3	93°-50'-40"
4	86°-09'-20"
5	93°-27'-18"
6	86°-32'-42"
7	92°-27'-16"
8	87°-32'-44"

NOTES:

FOR BOLTED FIELD SPLICE TYPES AND DETAILS, SEE "BOLTED FIELD SPLICE DETAILS", SHEETS 1 & 2.

FOR BEARING DETAILS, SEE "POT BEARING DETAILS", SHEETS 1 THROUGH 3.

PROJECT NO. X-0002B

CUMBERLAND COUNTY

STATION: -L- POC STA. 63+66.830=
-FLYOVER-
POC STA. 22+29.794

SHEET 1 OF 2

NORTH CAROLINA PROFESSIONAL SEAL 024928 ENGINEER RODNEY E. MONEY 8/26/08

STATE OF NORTH CAROLINA
DEPARTMENT OF TRANSPORTATION
RALEIGH

SUPERSTRUCTURE

STRUCTURAL STEEL FRAMING PLAN - UNIT 1

PREPARED IN THE OFFICE OF
TYLIN INTERNATIONAL
RALEIGH, NORTH CAROLINA
Copyright © 2008, TYLI

DWG NO. 23

REVISIONS						SHEET NO.
NO.	BY:	DATE:	NO.	BY:	DATE:	S-200
1			3			TOTAL SHEETS
2			4			253

DRAWN BY : S. MORGAN DATE : JUN. '08
CHECKED BY : J.W. WRIGHT DATE : JUN. '08

8/25/2008 3:43:35 PM Structures
ot:\fayetteville Outer Loop\SW\X0002B_SD_FP_01.dgn

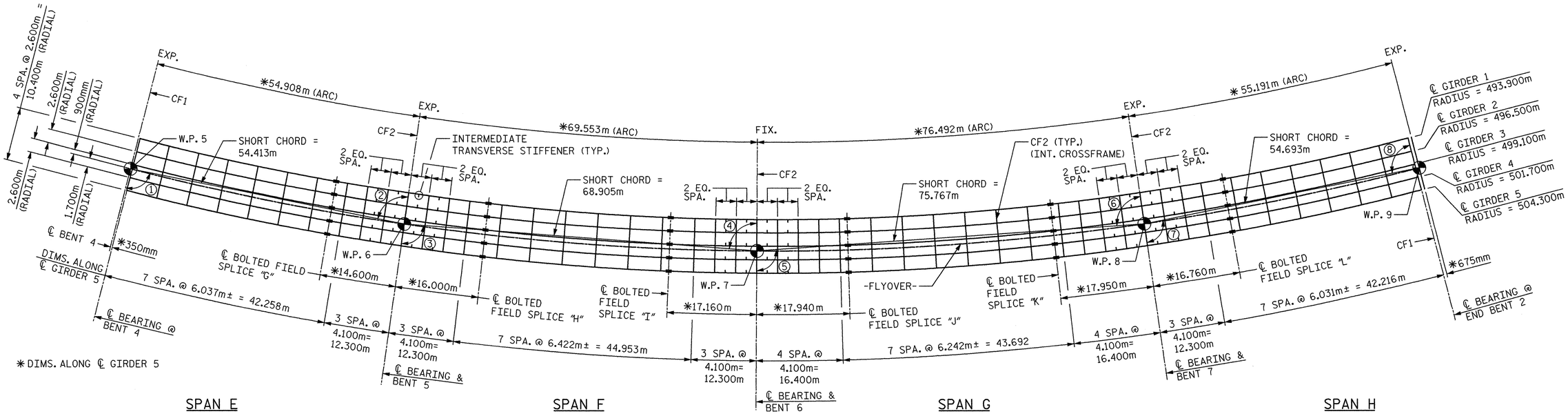

FRAMING PLAN AND INTERMEDIATE CROSSFRAME LOCATIONS

NO.	ANGLE TO SHORT CHORD
1	93°-07′-09″
2	86°-52′-51″
3	93°-57′-04″
4	86°-02′-56″
5	94°-20′-41″
6	85°-39′-16″
7	93°-08′-07″
8	86°-51′-53″

TABLE FOR BOLTED FIELD SPLICE TYPES

LOCATION	GIRDERS	SPLICE TYPE
SPLICE "G"	1 - 5	S1
SPLICE "H"	1 - 5	S1
SPLICE "I"	1 - 5	S1
SPLICE "J"	1 - 3	S1
SPLICE "J"	4 - 5	S2
SPLICE "K"	1 - 3	S3
SPLICE "K"	4 - 5	S2
SPLICE "L"	1 - 3	S3
SPLICE "L"	4 - 5	S1

NOTES:

FOR BOLTED FIELD SPLICE TYPES AND DETAILS, SEE "BOLTED FIELD SPLICE DETAILS", SHEETS 1 & 2.

FOR BEARING DETAILS, SEE "POT BEARING DETAILS", SHEETS 1 THROUGH 3.

PROJECT NO. X-0002B

CUMBERLAND COUNTY

STATION: -L- POC STA. 63+66.830=
-FLYOVER-
POC STA. 22+29.794

SHEET 2 OF 2

STATE OF NORTH CAROLINA
DEPARTMENT OF TRANSPORTATION
RALEIGH

SUPERSTRUCTURE

STRUCTURAL STEEL
FRAMING PLAN - UNIT 2

NORTH CAROLINA PROFESSIONAL SEAL 024928 ENGINEER RODNEY E. MONEY 7/29/08

PREPARED IN THE OFFICE OF
TY·LIN INTERNATIONAL
RALEIGH, NORTH CAROLINA
Copyright © 2008, TYLI

DWG NO. 24

REVISIONS						SHEET NO.
NO.	BY:	DATE:	NO.	BY:	DATE:	S-201
1			3			TOTAL SHEETS
2			4			253

DRAWN BY : S. MORGAN DATE : JUN. '08
CHECKED BY : J.W. WRIGHT DATE : JUN. '08

7/28/2008 9:09:11 PM Structures
cn:fayetteville outer loop\sm\X0002B_SD_FP_02.dgn

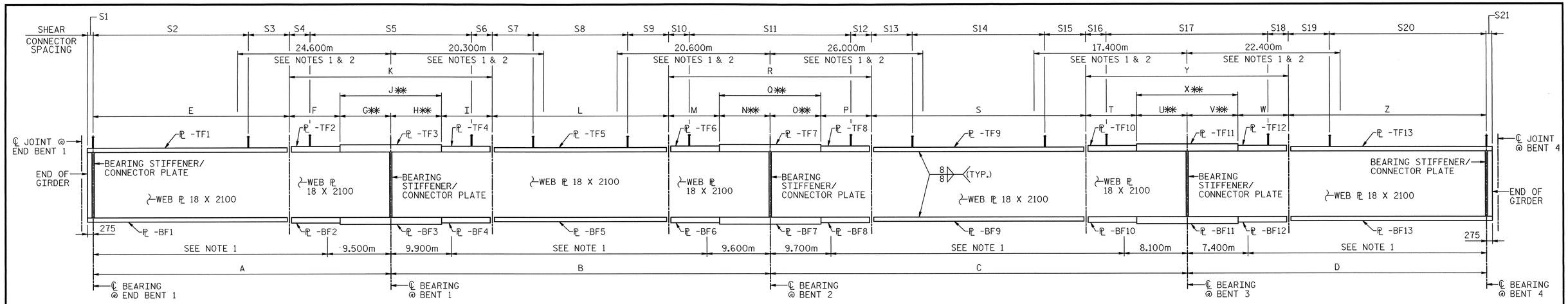

GIRDER ELEVATION

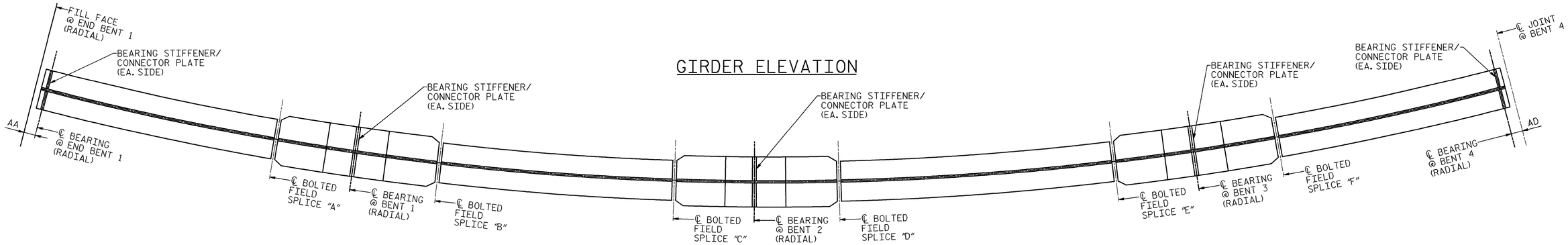

PLAN OF BOTTOM FLANGE

NOTES:

1. CHARPY V-NOTCH TESTS ARE REQUIRED FOR ALL TOP OR BOTTOM FLANGE PLATES WHICH FALL WITHIN THESE LIMITS, ALL WEB PLATES, AND ALL SPLICE PLATES. FOR CHARPY V-NOTCH TESTS, SEE ARTICLE 1072-9 OF THE STANDARD SPECIFICATIONS AND THE SPECIAL PROVISIONS.
2. NO WELDING OF FORMS OR FALSEWORK TO THE TOP FLANGE WILL BE PERMITTED IN THIS REGION.
3. FOR SHEAR CONNECTOR SPACING, SEE "GIRDER DETAILS", SHEET 3 OF 3.

✱✱ USE GRADE HPS 485W STEEL FOR FLANGES AS SHOWN IN GIRDER ELEVATION AND TABLE.

- TABLE OF GIRDER PLATE SIZES -

TOP FLANGE PLATES

GIRDER	TF1	TF2	✱✱TF3	TF4	TF5	TF6	✱✱TF7	TF8	TF9	TF10	✱✱TF11	TF12	TF13
1	25 X 425	35 X 425	50 X 425	35 X 425	25 X 425	35 X 425	50 X 425	35 X 425	25 X 425	35 X 425	50 X 425	35 X 425	25 X 425
2	25 X 425	35 X 425	50 X 425	35 X 425	25 X 425	35 X 425	50 X 425	35 X 425	25 X 425	35 X 425	50 X 425	35 X 425	25 X 425
3	25 X 425	35 X 425	50 X 425	35 X 425	25 X 425	35 X 425	50 X 425	35 X 425	25 X 425	35 X 425	50 X 425	35 X 425	25 X 425
4	25 X 425	35 X 550	50 X 550	35 X 550	25 X 425	35 X 550	50 X 550	35 X 550	25 X 425	35 X 500	50 X 500	35 X 500	25 X 425
5	25 X 425	35 X 550	50 X 550	35 X 550	25 X 425	35 X 550	50 X 550	35 X 550	25 X 425	35 X 500	50 X 500	35 X 500	25 X 425

BOTTOM FLANGE PLATES

GIRDER	BF1	BF2	✱✱BF3	BF4	BF5	BF6	✱✱BF7	BF8	BF9	BF10	✱✱BF11	BF12	BF13
1	45 X 425	35 X 425	50 X 425	35 X 425	45 X 425	35 X 425	50 X 425	35 X 425	45 X 425	35 X 425	50 X 425	35 X 425	45 X 425
2	45 X 425	35 X 425	50 X 425	35 X 425	45 X 425	35 X 425	50 X 425	35 X 425	45 X 425	35 X 425	50 X 425	35 X 425	45 X 425
3	45 X 425	35 X 425	50 X 425	35 X 425	45 X 425	35 X 425	50 X 425	35 X 425	45 X 425	35 X 425	50 X 425	35 X 425	45 X 425
4	45 X 425	35 X 550	50 X 550	35 X 550	45 X 425	35 X 550	50 X 550	35 X 550	45 X 425	35 X 500	50 X 500	35 X 500	45 X 425
5	45 X 425	35 X 550	50 X 550	35 X 550	45 X 425	35 X 550	50 X 550	35 X 550	45 X 425	35 X 500	50 X 500	35 X 500	45 X 425

- TABLE OF GIRDER DIMENSIONS -

GIRDER	A	B	C	D	E	F	G	H	I	J	K	L	M	N	O	P	Q	R	S	T	U	V	W	X	Y	Z	AA	AD
1	49.964m	66.281m	59.564m	41.975m	34.587m	10.039m	5.338m	4.701m	10.039m	10.039m	30.117m	37.202m	9.941m	4.398m	5.543m	9.941m	9.941m	29.823m	30.467m	9.059m	4.554m	4.505m	9.059m	9.059m	27.177m	28.411m	661	343
2	50.227m	66.630m	59.878m	42.196m	34.769m	10.092m	5.366m	4.726m	10.092m	10.092m	30.276m	37.399m	9.993m	4.420m	5.573m	9.993m	9.993m	29.979m	30.627m	9.107m	4.578m	4.529m	9.107m	9.107m	27.321m	28.560m	665	345
3	50.490m	66.979m	60.192m	42.417m	34.952m	10.144m	5.394m	4.750m	10.144m	10.144m	30.432m	37.597m	10.045m	4.443m	5.602m	10.045m	10.045m	30.135m	30.788m	9.155m	4.602m	4.553m	9.155m	9.155m	27.465m	28.709m	668	346
4	50.753m	67.328m	60.505m	42.637m	35.134m	10.197m	5.422m	4.775m	10.197m	10.197m	30.591m	37.791m	10.098m	4.467m	5.631m	10.098m	10.098m	30.294m	30.948m	9.202m	4.626m	4.576m	9.202m	9.202m	27.606m	28.859m	672	348
5	51.016m	67.677m	60.819m	42.858m	35.316m	10.250m	5.450m	4.800m	10.250m	10.250m	30.750m	37.987m	10.150m	4.490m	5.660m	10.150m	10.150m	30.450m	31.109m	9.250m	4.650m	4.600m	9.250m	9.250m	27.750m	29.008m	675	350

NORTH CAROLINA PROFESSIONAL SEAL 024928 ENGINEER RODNEY E. MONEY 8/26/08

PROJECT NO. X-0002B

CUMBERLAND COUNTY

STATION: -L- POC STA. 63+66.830=
-FLYOVER-
POC STA. 22+29.794

SHEET 1 OF 3

STATE OF NORTH CAROLINA
DEPARTMENT OF TRANSPORTATION
RALEIGH

SUPERSTRUCTURE

GIRDER DETAILS
UNIT 1

PREPARED IN THE OFFICE OF
TYLIN INTERNATIONAL
RALEIGH, NORTH CAROLINA
Copyright © 2008, TYLI

DWG NO. 25

REVISIONS						SHEET NO.
NO.	BY:	DATE:	NO.	BY:	DATE:	S-202
1			3			TOTAL SHEETS
2			4			253

DRAWN BY : S. MORGAN DATE : JUN. '08
CHECKED BY : J.W. WRIGHT DATE : JUN. '08

8/25/2008 3:03:49 PM Structures
on Fayetteville outer loop\sm\X0002B_SD_SS_01.dgn

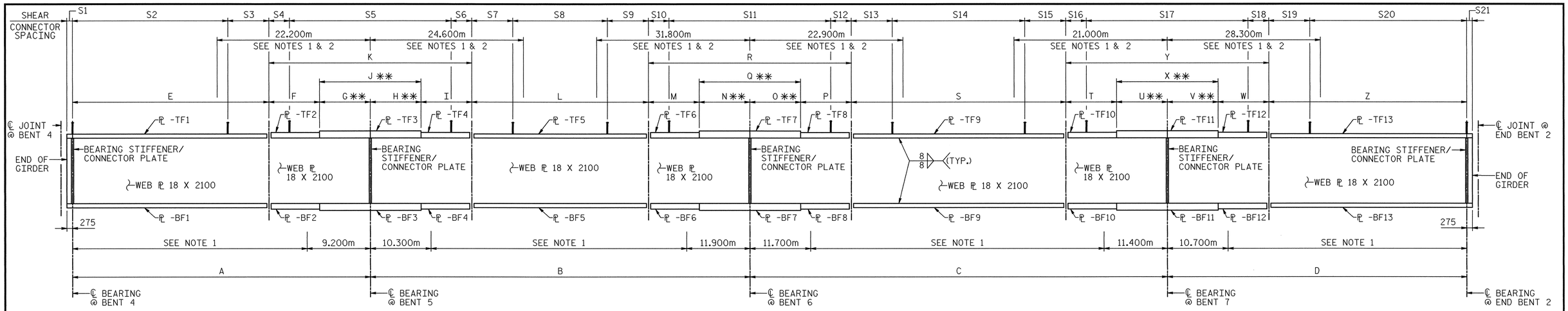

GIRDER ELEVATION

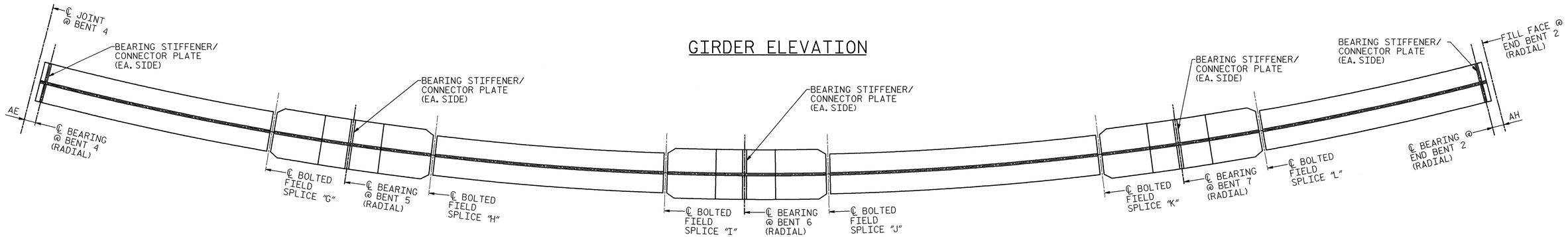

PLAN OF BOTTOM FLANGE

NOTES:

1. CHARPY V-NOTCH TESTS ARE REQUIRED FOR ALL TOP OR BOTTOM FLANGE PLATES WHICH FALL WITHIN THESE LIMITS, ALL WEB PLATES, AND ALL SPLICE PLATES. FOR CHARPY V-NOTCH TESTS, SEE ARTICLE 1072-9 OF THE STANDARD SPECIFICATIONS AND THE SPECIAL PROVISIONS.
2. NO WELDING OF FORMS OR FALSEWORK TO THE TOP FLANGE WILL BE PERMITTED IN THIS REGION.
3. FOR SHEAR CONNECTOR SPACING, SEE "GIRDER DETAILS", SHEET 3 OF 3.

✱✱ USE GRADE HPS 485W STEEL FOR FLANGES AS SHOWN IN GIRDER ELEVATION AND TABLE.

- TABLE OF GIRDER PLATE SIZES -

TOP FLANGE PLATES

GIRDER	TF1	TF2	✱✱TF3	TF4	TF5	TF6	✱✱TF7	TF8	TF9	TF10	✱✱TF11	TF12	TF13
1	25 X 425	35 X 550	50 X 550	35 X 550	25 X 425	35 X 550	50 X 550	35 X 550	25 X 425	35 X 500	50 X 500	35 X 500	25 X 425
2	25 X 425	35 X 550	50 X 550	35 X 550	25 X 425	35 X 550	50 X 550	35 X 550	25 X 425	35 X 500	50 X 500	35 X 500	25 X 425
3	25 X 425	35 X 550	50 X 550	35 X 550	25 X 425	35 X 550	50 X 550	35 X 550	25 X 425	35 X 500	50 X 500	35 X 500	25 X 425
4	25 X 425	35 X 600	50 X 600	35 X 600	25 X 425	35 X 625	50 X 625	35 X 625	25 X 425	35 X 600	50 X 600	35 X 600	25 X 425
5	25 X 425	35 X 600	50 X 600	35 X 600	25 X 425	35 X 625	50 X 625	35 X 625	25 X 425	35 X 600	50 X 600	35 X 600	25 X 425

BOTTOM FLANGE PLATES

GIRDER	BF1	BF2	✱✱BF3	BF4	BF5	BF6	✱✱BF7	BF8	BF9	BF10	✱✱BF11	BF12	BF13
1	45 X 425	35 X 550	50 X 550	35 X 550	45 X 425	35 X 550	50 X 550	35 X 550	45 X 425	35 X 500	50 X 500	35 X 500	45 X 425
2	45 X 425	35 X 550	50 X 550	35 X 550	45 X 425	35 X 550	50 X 550	35 X 550	45 X 425	35 X 500	50 X 500	35 X 500	45 X 425
3	45 X 425	35 X 550	50 X 550	35 X 550	45 X 425	35 X 550	50 X 550	35 X 550	45 X 425	35 X 500	50 X 500	35 X 500	45 X 425
4	45 X 425	35 X 600	50 X 600	35 X 600	45 X 425	35 X 625	50 X 625	35 X 625	45 X 600	35 X 600	50 X 600	35 X 600	45 X 425
5	45 X 425	35 X 600	50 X 600	35 X 600	45 X 425	35 X 625	50 X 625	35 X 625	45 X 600	35 X 600	50 X 600	35 X 600	45 X 425

- TABLE OF GIRDER DIMENSIONS -

GIRDER	A	B	C	D	E	F	G	H	I	J	K	L	M	N	O	P	Q	R	S	T	U	V	W	X	Y	Z	AE	AH
1	53.433m	68.119m	74.915m	53.391m	39.134m	9.990m	4.309m	5.681m	9.990m	9.990m	29.970m	35.642m	9.479m	7.327m	8.091m	9.479m	15.418m	34.376m	39.765m	9.352m	8.228m	7.062m	9.352m	15.290m	33.994m	36.977m	343	661
2	53.714m	68.477m	75.309m	53.672m	39.340m	10.042m	4.332m	5.710m	10.042m	10.042m	30.126m	35.830m	9.535m	7.360m	8.128m	9.535m	15.488m	34.558m	39.973m	9.407m	8.266m	7.094m	9.407m	15.360m	34.174m	37.171m	345	665
3	53.996m	68.836m	75.704m	53.954m	39.546m	10.095m	4.355m	5.740m	10.095m	10.095m	30.285m	36.017m	9.590m	7.394m	8.165m	9.590m	15.559m	34.739m	40.185m	9.461m	8.303m	7.127m	9.461m	15.430m	34.352m	37.366m	346	668
4	54.277m	69.195m	76.098m	54.235m	39.753m	10.147m	4.377m	5.770m	10.147m	10.147m	30.441m	36.206m	9.645m	7.427m	8.202m	9.645m	15.629m	34.919m	40.393m	9.516m	8.342m	7.158m	9.516m	15.500m	34.532m	37.561m	348	672
5	54.558m	69.553m	76.492m	54.516m	39.958m	10.200m	4.400m	5.800m	10.200m	10.200m	30.600m	36.393m	9.700m	7.460m	8.240m	9.700m	15.700m	35.100m	40.602m	9.570m	8.380m	7.190m	9.570m	15.570m	34.710m	37.756m	350	675

NORTH CAROLINA PROFESSIONAL SEAL 024928 ENGINEER RODNEY E. MONEY 8/26/08

PROJECT NO. X-0002B
CUMBERLAND COUNTY
STATION: -L- POC STA. 63+66.830=
-FLYOVER-
POC STA. 22+29.794

SHEET 2 OF 3

STATE OF NORTH CAROLINA
DEPARTMENT OF TRANSPORTATION
RALEIGH

SUPERSTRUCTURE

GIRDER DETAILS
UNIT 2

PREPARED IN THE OFFICE OF
TYLIN INTERNATIONAL
RALEIGH, NORTH CAROLINA
Copyright © 2008, TYLI
DWG NO. 26

REVISIONS						SHEET NO.
NO.	BY:	DATE:	NO.	BY:	DATE:	S-203
1			3			TOTAL SHEETS
2			4			253

DRAWN BY : S. MORGAN DATE : JUN. '08
CHECKED BY : J.W. WRIGHT DATE : JUN. '08

8/25/2008 3:03:53 PM Structures
s:\fayetteville outer loop\sm\X00028_SD_SS_02.dgn

SHEAR CONNECTOR SPACING - UNIT 1																					
GIRDER	S1	S2	S3	S4	S5	S6	S7	S8	S9	S10	S11	S12	S13	S14	S15	S16	S17	S18	S19	S20	S21
1	275	103 SPA. @ 330mm	597	569	84 SPA. @ 345mm	568	511	108 SPA. @ 335mm	511	631	84 SPA. @ 340mm	632	586	93 SPA. @ 315mm	586	651	75 SPA. @ 345mm	651	650	83 SPA. @ 330mm	371
2	424	103 SPA. @ 330mm	630	648	84 SPA. @ 345mm	648	609	108 SPA. @ 335mm	610	540	85 SPA. @ 340mm	539	508	94 SPA. @ 315mm	509	550	76 SPA. @ 345mm	551	565	84 SPA. @ 330mm	275
3	307	104 SPA. @ 330mm	600	553	85 SPA. @ 345mm	554	541	109 SPA. @ 335mm	541	618	85 SPA. @ 340mm	617	589	94 SPA. @ 315mm	589	622	76 SPA. @ 345mm	623	600	84 SPA. @ 330mm	389
4	439	104 SPA. @ 330mm	650	633	85 SPA. @ 345mm	633	638	109 SPA. @ 335mm	638	527	86 SPA. @ 340mm	527	512	95 SPA. @ 315mm	511	520	77 SPA. @ 345mm	521	529	85 SPA. @ 330mm	280
5	346	105 SPA. @ 330mm	595	540	86 SPA. @ 345mm	540	568	110 SPA. @ 335mm	569	605	86 SPA. @ 340mm	605	592	95 SPA. @ 315mm	592	592	77 SPA. @ 345mm	593	630	85 SPA. @ 330mm	328

SHEAR CONNECTOR SPACING - UNIT 2																					
GIRDER	S1	S2	S3	S4	S5	S6	S7	S8	S9	S10	S11	S12	S13	S14	S15	S16	S17	S18	S19	S20	S21
1	280	110 SPA. @ 350mm	629	668	83 SPA. @ 345mm	667	661	104 SPA. @ 330mm	661	528	98 SPA. @ 340mm	528	578	117 SPA. @ 330mm	577	609	95 SPA. @ 345mm	610	650	104 SPA. @ 345mm	447
2	455	110 SPA. @ 350mm	660	573	84 SPA. @ 345mm	573	590	105 SPA. @ 330mm	590	619	98 SPA. @ 340mm	619	517	118 SPA. @ 330mm	516	527	96 SPA. @ 345mm	527	600	105 SPA. @ 345mm	346
3	321	111 SPA. @ 350mm	650	653	85 SPA. @ 345mm	652	519	106 SPA. @ 330mm	518	539	99 SPA. @ 340mm	540	623	118 SPA. @ 330mm	622	616	96 SPA. @ 345mm	616	521	106 SPA. @ 345mm	275
4	275	112 SPA. @ 350mm	553	558	85 SPA. @ 345mm	558	613	106 SPA. @ 330mm	613	630	99 SPA. @ 340mm	629	561	119 SPA. @ 330mm	562	533	97 SPA. @ 345mm	534	620	106 SPA. @ 345mm	371
5	383	112 SPA. @ 350mm	650	638	86 SPA. @ 345mm	637	541	107 SPA. @ 330mm	542	550	100 SPA. @ 340mm	550	501	120 SPA. @ 330mm	501	623	97 SPA. @ 345mm	622	566	107 SPA. @ 345mm	275

NOTE:
FOR ADDITIONAL SHEAR CONNECTORS, SEE TOP FLANGE SPLICE DETAILS ON "BOLTED FIELD SPLICE DETAILS" SHEETS.

PROJECT NO. X-0002B
CUMBERLAND COUNTY
STATION: -L- POC STA. 63+66.830=
-FLYOVER-
POC STA. 22+29.794

SHEET 3 OF 3

STATE OF NORTH CAROLINA
DEPARTMENT OF TRANSPORTATION
RALEIGH

SUPERSTRUCTURE

GIRDER DETAILS

NORTH CAROLINA PROFESSIONAL SEAL 024928 ENGINEER RODNEY E. MONEY 7/29/08

PREPARED IN THE OFFICE OF
TYLIN INTERNATIONAL
RALEIGH, NORTH CAROLINA
Copyright © 2008, TYLI
DWG NO. 27

REVISIONS						
NO.	BY:	DATE:	NO.	BY:	DATE:	
1			3			
2			4			

SHEET NO. S-204
TOTAL SHEETS 253

DRAWN BY : S. MORGAN DATE : JUN. '08
CHECKED BY : J.W. WRIGHT DATE : JUN. '08

d:\foyettevilla outer loop\dgn\X0002B_SD_SS_03.dgn 7/28/2008 9:09:21 PM Structures

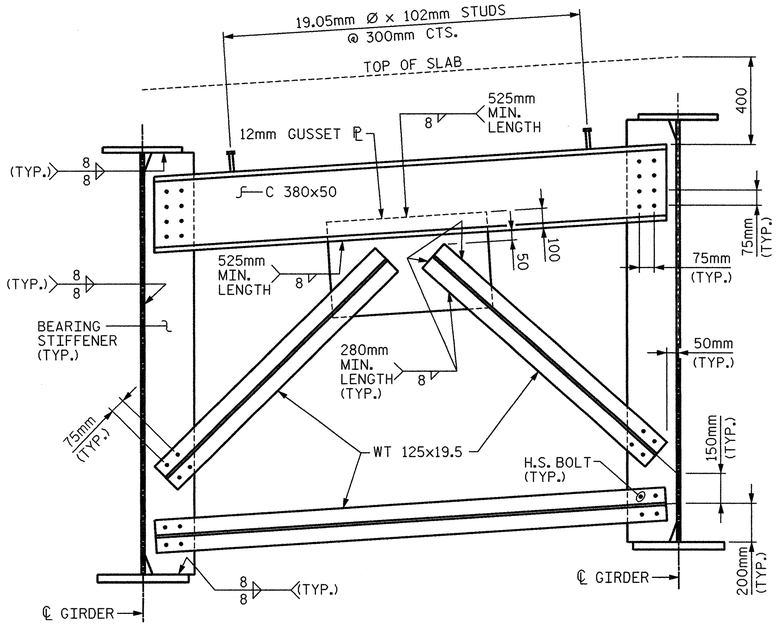

CROSSFRAME CF-1 - END BENT & BENT DIAPHRAGM

NOTE: BEARING STIFFENER SHALL BE USED WHEN CF-1 IS AT BENT 4 AND END BENTS 1 & 2.

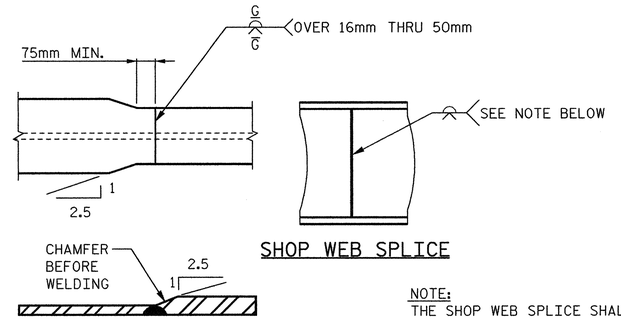

SHOP WEB SPLICE

SHOP FLANGE SPLICE DETAILS

NOTE:
THE SHOP WEB SPLICE SHALL BE GROUND SMOOTH AND FLUSH ON THE OUTER FACE OF THE EXTERIOR GIRDERS.

SHOP SPLICE DETAILS

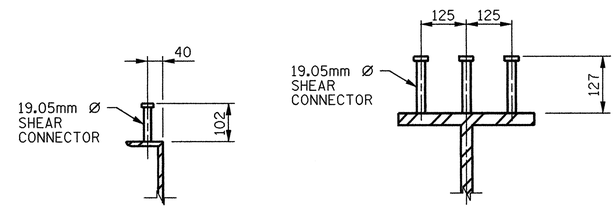

SHEAR CONNECTOR DETAILS

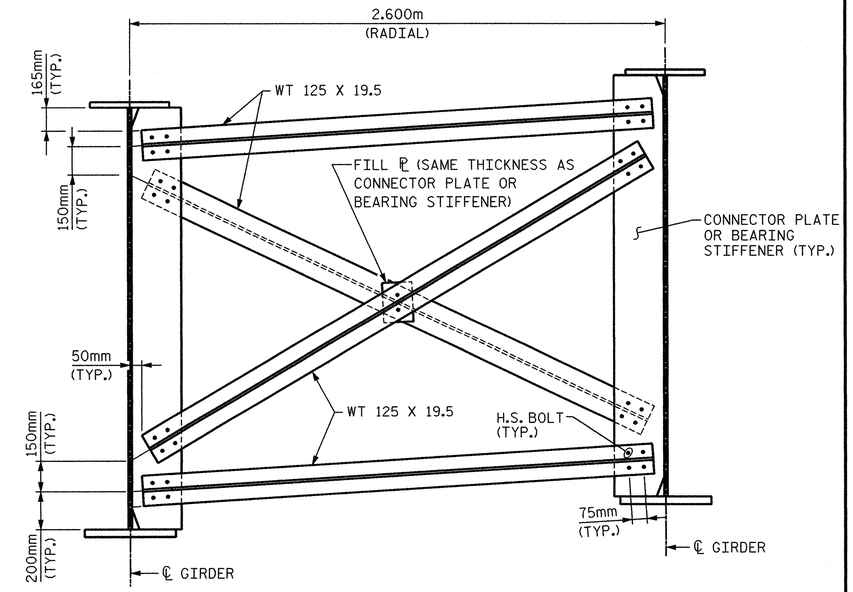

CROSSFRAME CF-2 - INTERMEDIATE & BENT CROSSFRAME

NOTE: BEARING STIFFENER SHALL BE USED WHEN CF-2 IS AT BENTS 1, 2, 3, 5, 6 & 7. USE CONNECTOR PLATES AT ALL REMAINING CF-2 LOCATIONS.

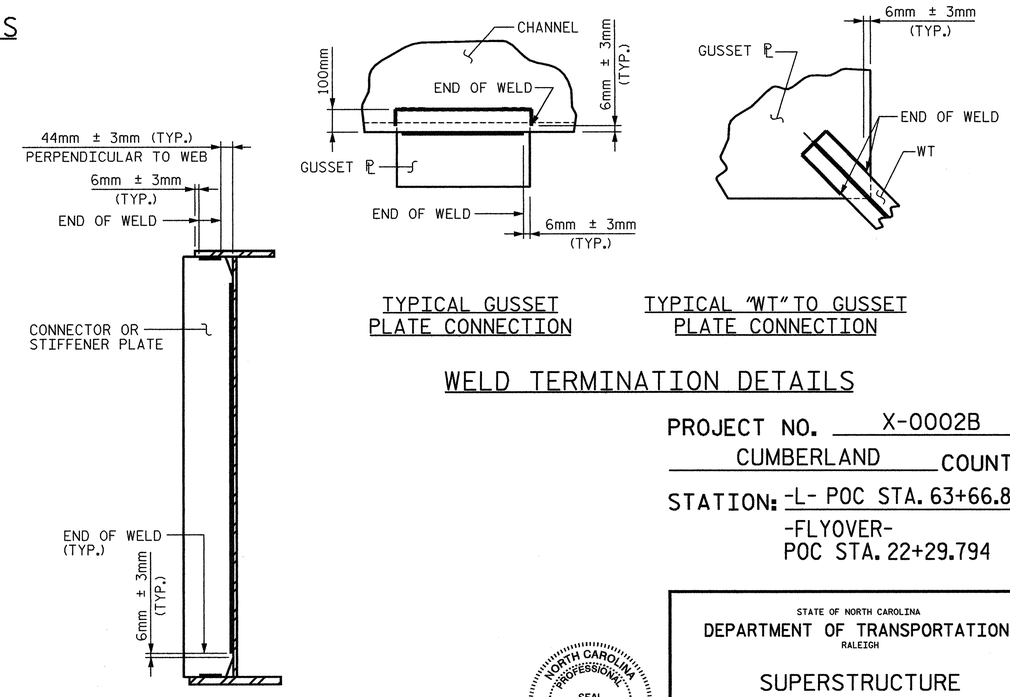

TYPICAL GUSSET PLATE CONNECTION

TYPICAL "WT" TO GUSSET PLATE CONNECTION

TYPICAL STIFFENER OR CONNECTOR PLATE CONNECTION

WELD TERMINATION DETAILS

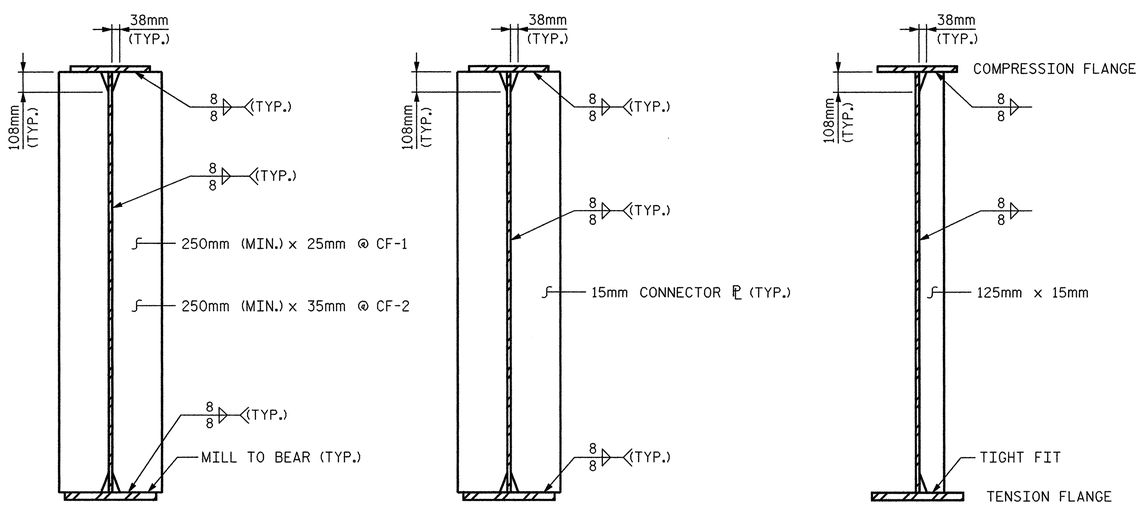

CF-1 & CF-2 BEARING STIFFENER/ CONNECTOR PLATE

CF-2 CONNECTOR PLATE

INTERMEDIATE TRANSVERSE STIFFENER

PROJECT NO. X-0002B
CUMBERLAND COUNTY
STATION: -L- POC STA. 63+66.830=
-FLYOVER-
POC STA. 22+29.794

STATE OF NORTH CAROLINA
DEPARTMENT OF TRANSPORTATION
RALEIGH

SUPERSTRUCTURE

STRUCTURAL STEEL & CROSSFRAME DETAILS

NORTH CAROLINA PROFESSIONAL SEAL 024928 ENGINEER RODNEY E. MONEY 7/28/08

PREPARED IN THE OFFICE OF
TYLIN INTERNATIONAL
RALEIGH, NORTH CAROLINA
Copyright © 2008, TYLI
DWG NO. 28

REVISIONS						
NO.	BY:	DATE:	NO.	BY:	DATE:	
1			3			
2			4			

SHEET NO. S-205
TOTAL SHEETS 253

DRAWN BY : S. MORGAN DATE : JUN. '08
CHECKED BY : J.W. WRIGHT DATE : JUN. '08

o:\fayetteville outer loop\sm\X0002B_SD_SS_06.dgn 7/28/2008 9:09:24 PM Structures

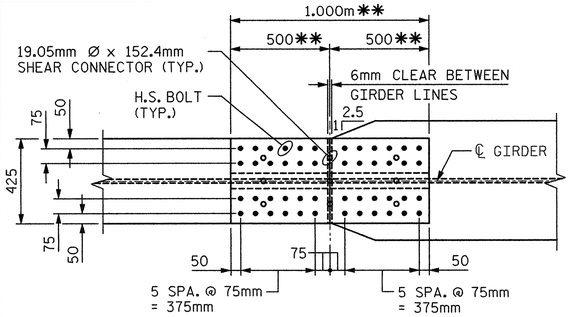

PLAN - TOP FLANGE

** ARC ALONG INSIDE EDGE OF FLANGE

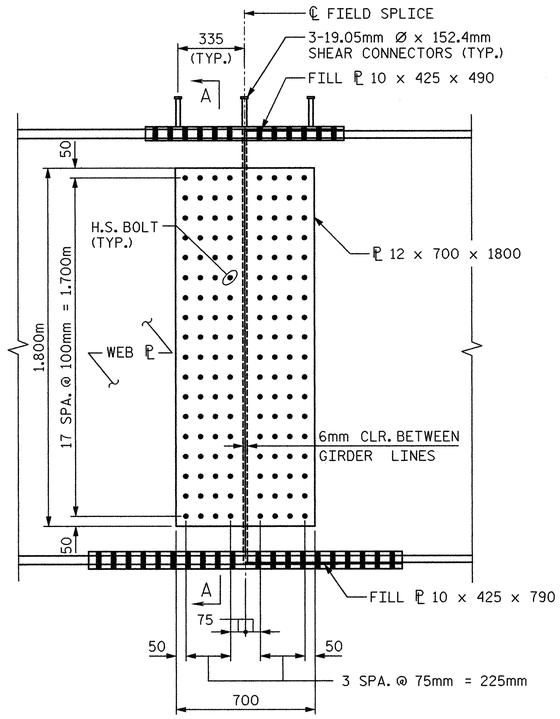

ELEVATION

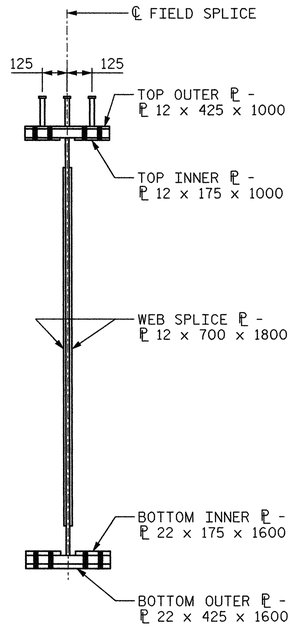

SECTION A-A

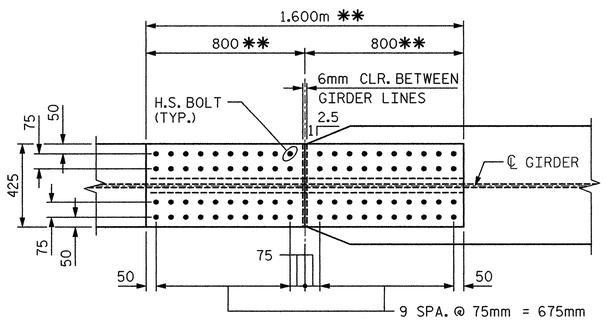

PLAN - BOTTOM FLANGE

** ARC ALONG INSIDE EDGE OF FLANGE

BOLTED FIELD SPLICE "S1" DETAILS

NUMBER OF BOLTS PER SPLICE = 272

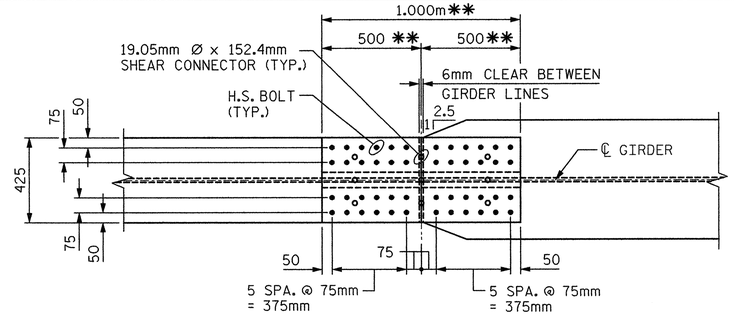

PLAN - TOP FLANGE

** ARC ALONG INSIDE EDGE OF FLANGE

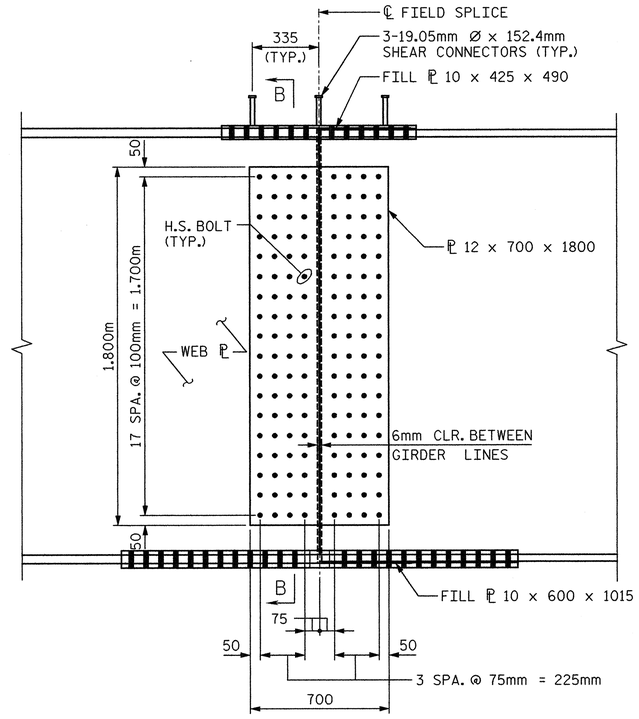

ELEVATION

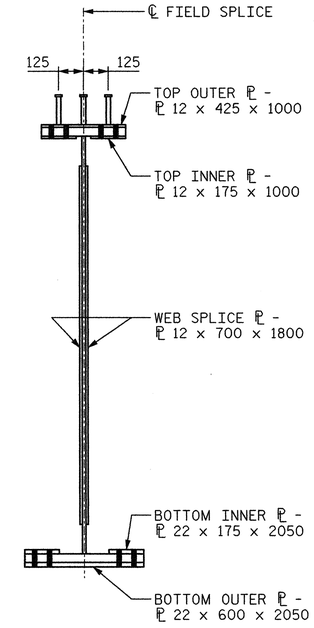

SECTION B-B

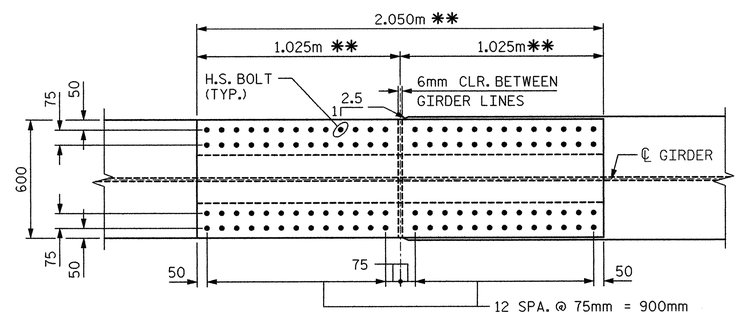

PLAN - BOTTOM FLANGE

** ARC ALONG INSIDE EDGE OF FLANGE

BOLTED FIELD SPLICE "S2" DETAILS

NUMBER OF BOLTS PER SPLICE = 296

NOTES:

SHEAR CONNECTORS ARE TO BE SHOP WELDED ON TOP PLATE BEFORE FIELD ASSEMBLY.

PROJECT NO. X-0002B

CUMBERLAND COUNTY

STATION: -L- POC STA. 63+66.830=

-FLYOVER-

POC STA. 22+29.794

SHEET 1 OF 2

STATE OF NORTH CAROLINA
DEPARTMENT OF TRANSPORTATION
RALEIGH

SUPERSTRUCTURE

BOLTED FIELD SPLICE DETAILS

NORTH CAROLINA PROFESSIONAL SEAL 024928 ENGINEER RODNEY E. MONEY 7/29/08

PREPARED IN THE OFFICE OF
TYLIN INTERNATIONAL
RALEIGH, NORTH CAROLINA
Copyright © 2008, TYLI

DWG NO. 29

REVISIONS						
NO.	BY:	DATE:	NO.	BY:	DATE:	
1			3			
2			4			

SHEET NO. S-206

TOTAL SHEETS 253

DRAWN BY : S. MORGAN DATE : JUN. '08

CHECKED BY : J.W. WRIGHT DATE : JUN. '08

o:\fayetteville outer loop\sm\X0002B_SD_SS_04.dgn 1/28/2008 9:03:27 PM Structures

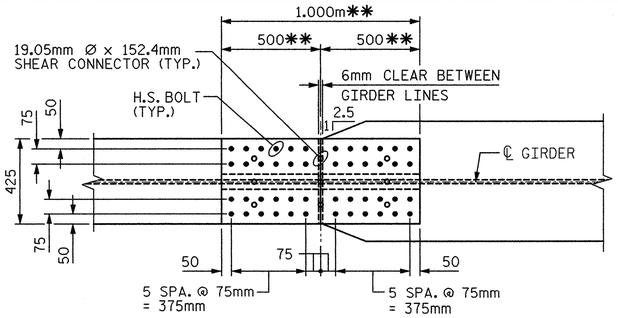

PLAN - TOP FLANGE

** ARC ALONG INSIDE EDGE OF FLANGE

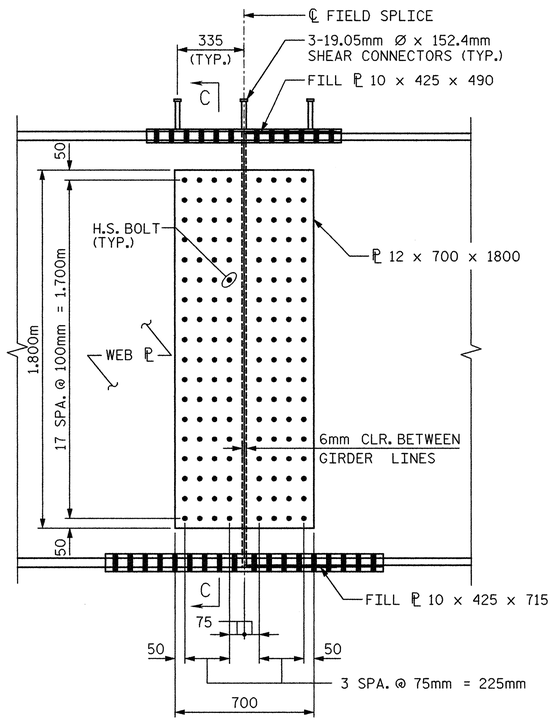

ELEVATION

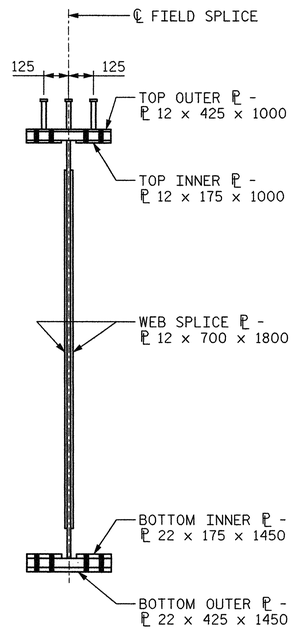

SECTION C-C

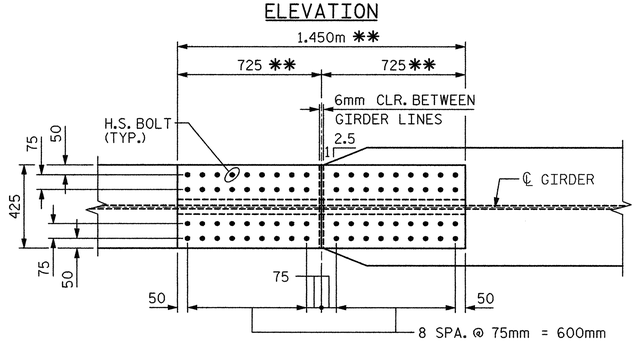

PLAN - BOTTOM FLANGE

** ARC ALONG INSIDE EDGE OF FLANGE

BOLTED FIELD SPLICE "S3" DETAILS

NUMBER OF BOLTS PER SPLICE = 264

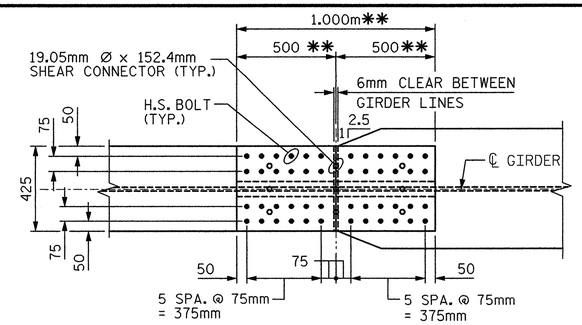

PLAN - TOP FLANGE

** ARC ALONG INSIDE EDGE OF FLANGE

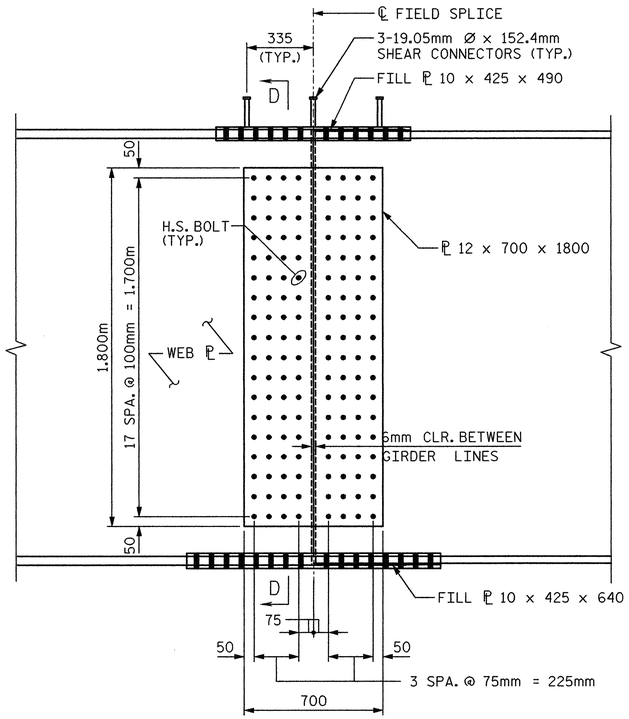

ELEVATION

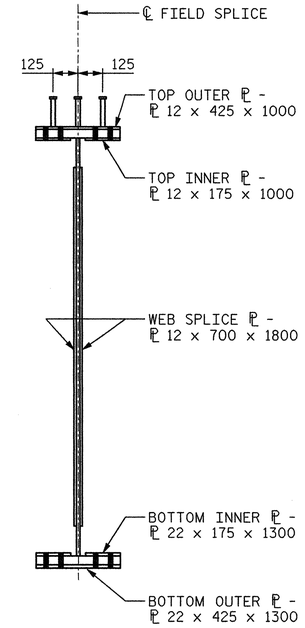

SECTION D-D

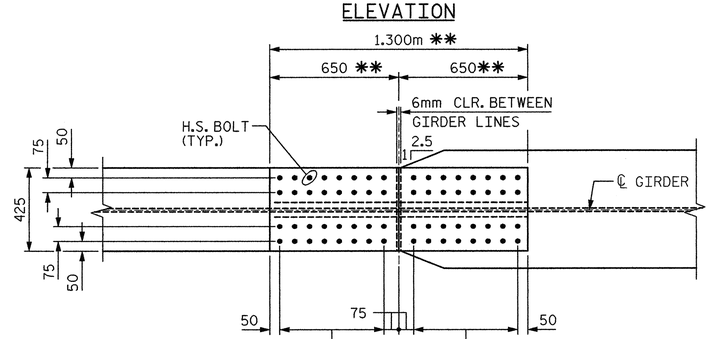

PLAN - BOTTOM FLANGE

** ARC ALONG INSIDE EDGE OF FLANGE

BOLTED FIELD SPLICE "S4" DETAILS

NUMBER OF BOLTS PER SPLICE = 256

NOTES:

SHEAR CONNECTORS ARE TO BE SHOP WELDED ON TOP PLATE BEFORE FIELD ASSEMBLY.

PROJECT NO. X-0002B

CUMBERLAND COUNTY

STATION: -L- POC STA. 63+66.830=
-FLYOVER-
POC STA. 22+29.794

SHEET 2 OF 2

STATE OF NORTH CAROLINA
DEPARTMENT OF TRANSPORTATION
RALEIGH

SUPERSTRUCTURE

BOLTED FIELD SPLICE DETAILS

NORTH CAROLINA PROFESSIONAL SEAL 024928 ENGINEER RODNEY E. MONEY 7/29/08

PREPARED IN THE OFFICE OF
TYLIN INTERNATIONAL
RALEIGH, NORTH CAROLINA
Copyright © 2008, TYLI

DWG NO. 30

REVISIONS								SHEET NO.
NO.	BY:	DATE:	NO.	BY:	DATE:			S-207
1			3					TOTAL SHEETS
2			4					253

DRAWN BY : S. MORGAN DATE : JUN. '08
CHECKED BY : J.W. WRIGHT DATE : JUN. '08

7/28/2008 9:09:50 PM Structures
ok\fayetteville outer loop\sm\X00028_SD_SS_05.dgn

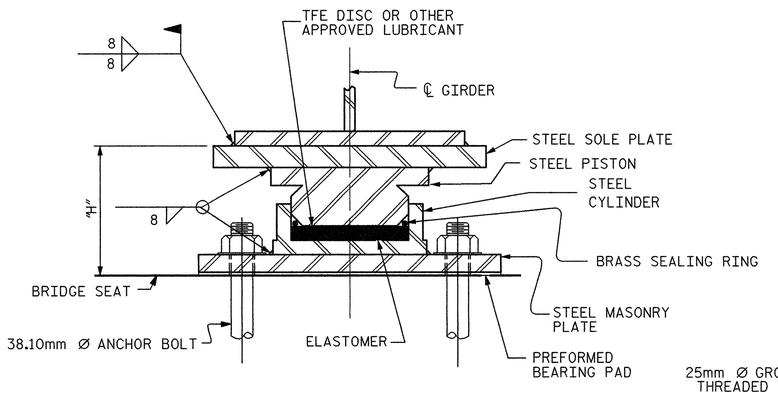

SECTION A-A

FIXED

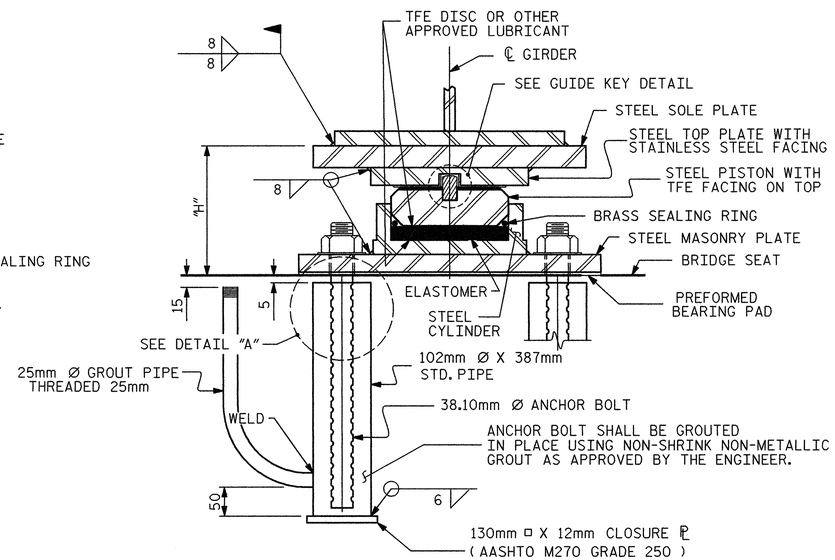

SECTION B-B

EXP.

POT BEARING DETAILS

POT BEARING DIMENSIONS							TABLE FOR LOADS AND MOVEMENTS				
BEARING	LOCATION			TYPE	NO. REQ'D	h (mm)	VERTICAL LOAD (kN)			LATERAL LOAD (kN)	TOTAL MOVEMENT (mm)
	UNIT	GIRDERS	SUBSTRUCTURE ELEMENT				DEAD (kN)	LIVE (kN)	TOTAL (kN)		
PB1	1	1 - 5	END BENT 1	EXP.	5	150	501	260	761	101	76
PB2	1	1 - 5	BENT 1	EXP.	5	219	2011	585	2596	403	44
PB3	1	1 - 5	BENT 2	FIX.	5	182	1955	591	2546	391	0
PB4	1	1 - 5	BENT 3	EXP.	5	203	1618	530	2148	324	40
PB5	1	1 - 5	BENT 4	EXP.	5	146	418	235	653	84	67
PB6	2	1 - 5	BENT 4	EXP.	5	150	583	285	868	117	80
PB7	2	1 - 5	BENT 5	EXP.	5	224	1951	581	2532	391	45
PB8	2	1 - 5	BENT 6	FIX.	5	203	2228	635	2863	446	0
PB9	2	1 - 5	BENT 7	EXP.	5	224	2229	617	2846	446	50
PB10	2	1 - 5	END BENT 2	EXP.	5	152	514	282	796	103	84

DRAWN BY : S. MORGAN DATE : JUN. '08

CHECKED BY : J.W. WRIGHT DATE : JUN. '08

NOTES

FOR POT BEARINGS, SEE SPECIAL PROVISIONS.

AT ALL POINTS OF SUPPORT, NUTS FOR ANCHOR BOLTS SHALL BE TIGHTENED FINGER TIGHT AND GIVEN AN ADDITIONAL 1/4 TURN. THE THREAD OF THE NUT AND BOLT SHALL THEN BE BURRED WITH A SHARP POINTED TOOL.

WHEN WELDING THE SOLE PLATE TO THE GIRDER, USE TEMPERATURE INDICATING WAX PENS, OR OTHER SUITABLE MEANS, TO ENSURE THAT THE TEMPERATURE OF THE BEARING DOES NOT EXCEED 121°C TEMPERATURES ABOVE THIS MAY DAMAGE THE TFE OR ELASTOMER.

AFTER BEARING ASSEMBLY IS IN PLACE AND ANCHOR BOLTS HAVE BEEN FINALLY POSITIONED. THEY SHALL BE GROUTED IN PLACE AS SHOWN.

SOLE PLATES, MASONRY PLATES, BOLTS, NUTS, AND WASHERS SHALL BE GALVANIZED IN ACCORDANCE WITH THE STANDARD SPECIFICATIONS.

THE CLOSURE PLATE, GROUT PIPE AND STANDARD PIPE FOR THIS ASSEMBLY NEED NOT BE GALVANIZED.

SOLE PLATES SHOULD BE WELDED TO BEAM FLANGES AND ANCHOR BOLTS SHOULD BE GROUTED BEFORE FALSEWORK IS PLACED.

ALL SURFACES OF BEARING PLATES SHALL BE SMOOTH AND STRAIGHT.

FOR THERMAL SPRAYED COATINGS (METALLIZATION), SEE SPECIAL PROVISIONS.

THE CONTRACTOR MAY SUBSTITUTE DISC BEARINGS FOR THE POT BEARINGS SHOWN. FOR OPTIONAL DISC BEARINGS, SEE SPECIAL PROVISIONS.

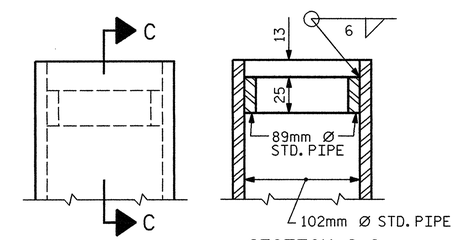

SECTION C-C

DETAIL "A"

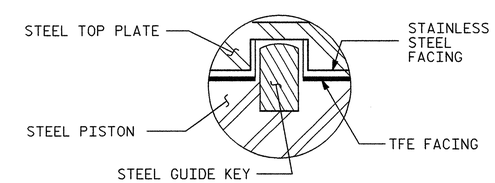

GUIDE KEY DETAIL

PROJECT NO. X-0002B

CUMBERLAND COUNTY

STATION: -L- POC STA. 63+66.830=
-FLYOVER-
POC STA. 22+29.794

SHEET 1 OF 3

STATE OF NORTH CAROLINA
DEPARTMENT OF TRANSPORTATION
RALEIGH

SUPERSTRUCTURE

POT BEARINGS DETAILS

NORTH CAROLINA PROFESSIONAL SEAL 024928 R.E. Money ENGINEER ROONEY E. MONEY 7/29/08

PREPARED IN THE OFFICE OF
TYLIN INTERNATIONAL
RALEIGH, NORTH CAROLINA
Copyright © 2008, TYLI

DWG NO. 31

REVISIONS						SHEET NO.
NO.	BY:	DATE:	NO.	BY:	DATE:	S-208
1			3			TOTAL SHEETS
2			4			253

7/28/2008 9:09:33 PM Structures
ok\fayetteville outer loop\sm\X0002B_SD_PB_01.dgn

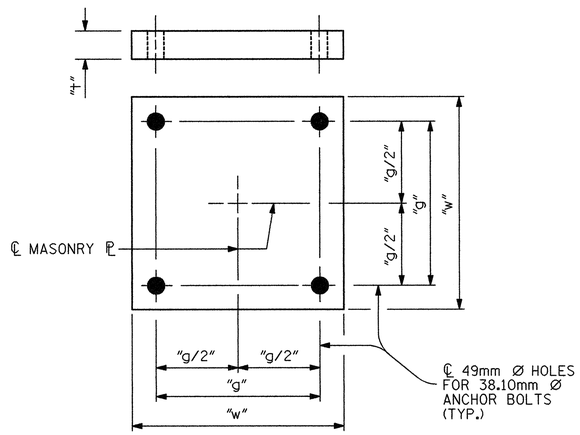

PLAN

MASONRY PLATE DETAILS

MASONRY PLATE DIMENSIONS						
LOCATION						
UNIT	GIRDERS	SUBSTRUCTURE ELEMENT	w (mm)	g (mm)	g/2 (mm)	t (mm)
1	1 - 5	END BENT 1	450	298	149	25
1	1 - 5	BENT 1	622	470	235	35
1	1 - 5	BENT 2	622	470	235	35
1	1 - 5	BENT 3	568	416	208	32
1	1 - 5	BENT 4	426	274	137	25
2	1 - 5	BENT 4	450	298	149	25
2	1 - 5	BENT 5	622	470	235	35
2	1 - 5	BENT 6	674	520	260	38
2	1 - 5	BENT 7	622	470	235	35
2	1 - 5	END BENT 2	450	298	149	25

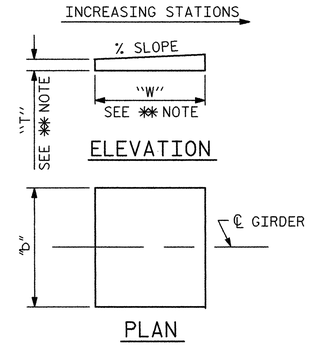

✱✱ NOTE:
DIMENSIONS "W" AND "T" ARE TO BE DETERMINED BY THE MANUFACTURER.

SOLE PLATE DETAILS

TABLE FOR SOLE PLATE DETAILS					
LOCATION					
UNIT	GIRDERS	SUBSTRUCTURE ELEMENT	NO. REQ'D	b (mm)	% SLOPE
1	1 - 5	END BENT 1	5	475	1.92
1	1, 2 & 3	BENT 1	3	475	1.02
1	4 & 5	BENT 1	2	600	1.02
1	1, 2 & 3	BENT 2	3	475	-0.17
1	4 & 5	BENT 2	2	600	-0.17
1	1, 2 & 3	BENT 3	3	475	-1.25
1	4 & 5	BENT 3	2	550	-1.25
1	1 - 5	BENT 4	5	475	-2.00
2	1 - 5	BENT 4	5	475	-2.01
2	1, 2 & 3	BENT 5	3	600	-2.61
2	4 & 5	BENT 5	2	650	-2.61
2	1, 2 & 3	BENT 6	3	600	-2.61
2	4 & 5	BENT 6	2	675	-2.61
2	1, 2 & 3	BENT 7	3	550	-2.61
2	4 & 5	BENT 7	2	650	-2.61
2	1 - 5	END BENT 2	5	475	-2.61

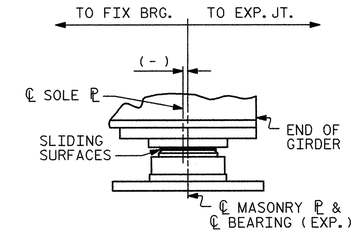

TABLE FOR PLATE SETTING DATA (EXPANSION POT BEARINGS)						
LOCATION			TEMP. AT TIME OF SETTING			
UNIT	GIRDERS	SUBSTRUCTURE ELEMENT	0 deg. C	16 deg. C	32 deg. C	✱✱✱ (mm)
1	1 - 5	END BENT 1	-23	0	23	10
1	1 - 5	BENT 1	-13	0	13	3
1	1 - 5	BENT 3	-12	0	12	0
1	1 - 5	BENT 4	-20	0	20	6
2	1 - 5	BENT 4	-24	0	24	17
2	1 - 5	BENT 5	-13	0	13	7
2	1 - 5	BENT 7	-15	0	15	5
2	1 - 5	END BENT 2	-25	0	25	10

✱✱✱ CORRECTION FOR END ROTATION DUE TO WEIGHT OF SLAB AND COMPOSITE DEAD LOAD.

PROJECT NO. X-0002B
CUMBERLAND COUNTY
STATION: -L- POC STA. 63+66.830=
-FLYOVER-
POC STA. 22+29.794

SHEET 2 OF 3

STATE OF NORTH CAROLINA
DEPARTMENT OF TRANSPORTATION
RALEIGH

SUPERSTRUCTURE

POT BEARINGS DETAILS

NORTH CAROLINA PROFESSIONAL SEAL 024928 ENGINEER RODNEY E. MONEY 7/29/08

PREPARED IN THE OFFICE OF
TY·LIN INTERNATIONAL
RALEIGH, NORTH CAROLINA
Copyright © 2008, TYLI
DWG NO. 32

REVISIONS						SHEET NO.
NO.	BY:	DATE:	NO.	BY:	DATE:	S-209
1			3			TOTAL SHEETS
2			4			253

DRAWN BY : S. MORGAN DATE : JUN. '08
CHECKED BY : J.W. WRIGHT DATE : JUN. '08

o:\fayetteville outer loop\sam\X0002B_SD_PB_02.dgn 7/28/2008 9:09:35 PM Structures

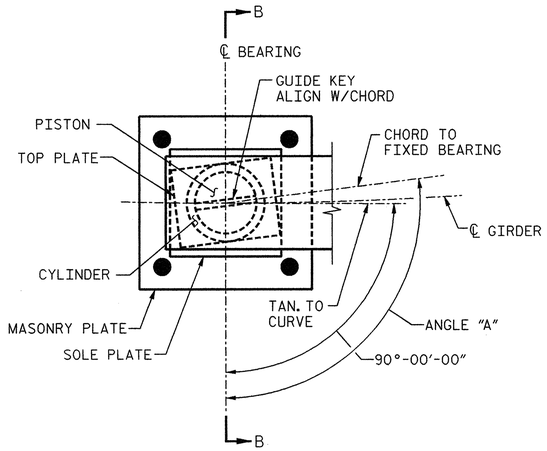

BEARINGS @
END BENT 1 - UNIT 1
BENT 4 - UNIT 2

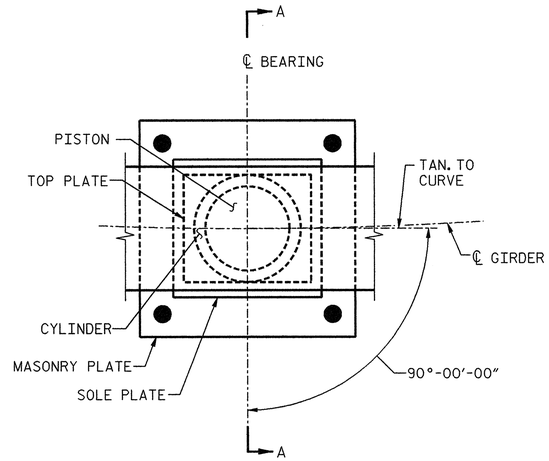

BEARINGS @
BENT 2 - UNIT 1
BENT 6 - UNIT 2

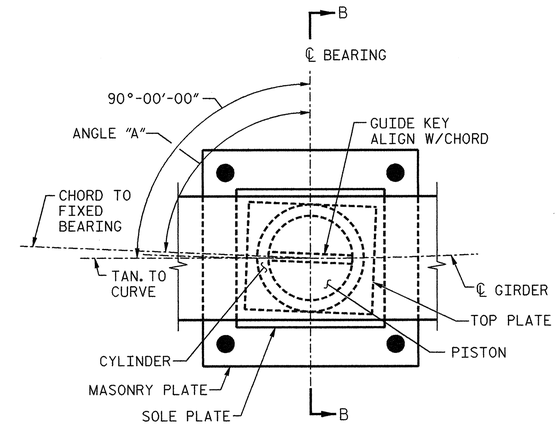

BEARINGS @
BENT 3 - UNIT 1
BENT 7 - UNIT 2

NOTES:

FOR SECTION A-A, SEE SHEET 1 OF 3.

FOR SECTION B-B, SEE SHEET 1 OF 3.

FOR LOCATION OF ANCHOR BOLT HOLES IN MASONRY PLATE, SEE SHEET 2 OF 3.

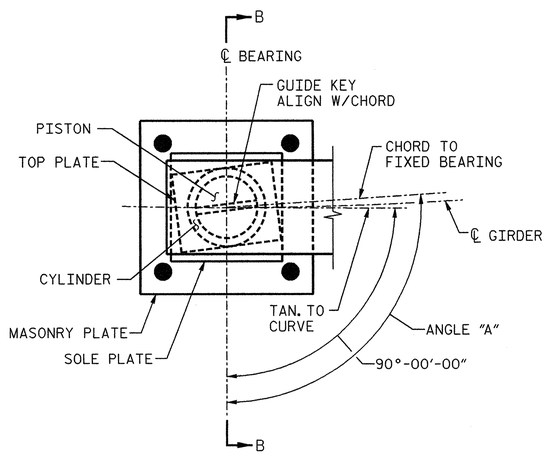

BEARINGS @
BENT 1 - UNIT 1
BENT 5 - UNIT 2

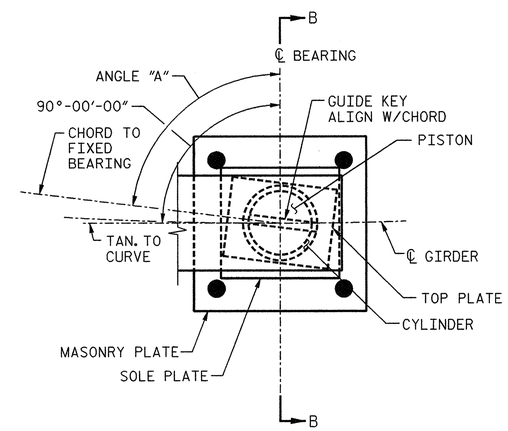

BEARINGS @
BENT 4 - UNIT 1
BENT 2 - UNIT 2

PROJECT NO. X-0002B
CUMBERLAND COUNTY
STATION: -L- POC STA. 63+66.830=
-FLYOVER-
POC STA. 22+29.794

SHEET 3 OF 3

TABLE FOR ANGLES TO FIXED BEARINGS

BEARING TYPE	LOCATION		ANGLE "A"				
	UNIT	SUBSTRUCTURE ELEMENT	GIRDER 1	GIRDER 2	GIRDER 3	GIRDER 4	GIRDER 5
EXP.	1	END BENT 1	96°-44'-33"	96°-44'-33"	96°-44'-33"	96°-44'-33"	96°-44'-33"
EXP.	1	BENT 1	93°-50'-40"	93°-50'-40"	93°-50'-40"	93°-50'-40"	93°-50'-40"
EXP.	1	BENT 3	86°-32'-42"	86°-32'-42"	86°-32'-42"	86°-32'-42"	86°-32'-42"
EXP.	1	BENT 4	84°-06'-37"	84°-06'-37"	84°-06'-37"	84°-06'-37"	84°-06'-37"
EXP.	2	BENT 4	97°-03'-32"	97°-03'-32"	97°-03'-32"	97°-03'-32"	97°-03'-32"
EXP.	2	BENT 5	93°-57'-04"	93°-57'-04"	93°-57'-04"	93°-57'-04"	93°-57'-04"
EXP.	2	BENT 7	85°-39'-17"	85°-39'-17"	85°-39'-17"	85°-39'-17"	85°-39'-17"
EXP.	2	END BENT 2	82°-33'-28"	82°-33'-28"	82°-33'-28"	82°-33'-28"	82°-33'-28"

NORTH CAROLINA PROFESSIONAL ENGINEER SEAL 024928 R.E. Money RODNEY E. MONEY 7/29/08

STATE OF NORTH CAROLINA
DEPARTMENT OF TRANSPORTATION
RALEIGH

SUPERSTRUCTURE

POT BEARINGS DETAILS

PREPARED IN THE OFFICE OF
TYLIN INTERNATIONAL
RALEIGH, NORTH CAROLINA
Copyright © 2008, TYLI
DWG NO. 33

REVISIONS						
NO.	BY:	DATE:	NO.	BY:	DATE:	
1			3			
2			4			

SHEET NO. S-210
TOTAL SHEETS 253

DRAWN BY : S. MORGAN DATE : JUN. '08
CHECKED BY : J.W. WRIGHT DATE : JUN. '08

7/28/2008 9:09:38 PM Structures
o:\fayetteville outer loop\sm\X0002B_SD_PB_03.dgn

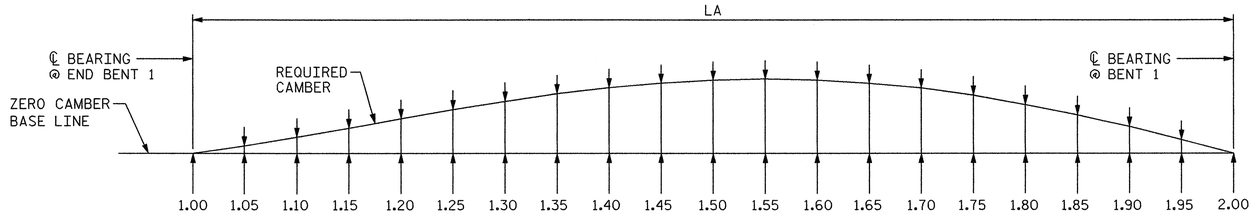

NOTES:

SLOPE FOR THE ZERO CAMBER BASE LINE VARIES.

VALUES GIVEN ARE AT TWENTIETH POINTS BETWEEN CENTERLINE OF BEARINGS.

DEFLECTIONS AND ORDINATES ARE IN METERS (DECIMAL FORM).

REQUIRED CAMBER VALUES ARE IN MILLIMETERS.

DOWNWARD DEFLECTION IS INDICATED WITH A "-" SIGN.

✱ INCLUDES SLAB, BUILD-UP AND METAL STAY-IN-PLACE FORMS.

✱✱ CAMBER DISSIPATION ORDINATE TO BE DEDUCTED IF HEAT CURVING NOT UTILIZED.

GIRDER	LA
1	49.964
2	50.227
3	50.490
4	50.753
5	51.016

NOTE:

DIMENSIONS ARE ARC DIMENSIONS IN METERS ALONG THE ℄ OF GIRDER. NO CORRECTION HAS BEEN MADE TO ADJUST FOR THE DISTANCE ALONG THE GRADE.

GIRDER 1

TWENTIETH POINTS	1.00	1.05	1.10	1.15	1.20	1.25	1.30	1.35	1.40	1.45	1.50	1.55	1.60	1.65	1.70	1.75	1.80	1.85	1.90	1.95	2.00
DEFLEC. DUE TO WEIGHT OF STEEL	0.000	-0.003	-0.006	-0.009	-0.011	-0.013	-0.014	-0.015	-0.015	-0.015	-0.014	-0.013	-0.011	-0.010	-0.008	-0.006	-0.004	-0.003	-0.001	-0.001	0.000
DEFLEC. DUE TO WEIGHT OF SLAB ✱	0.000	-0.008	-0.016	-0.023	-0.029	-0.034	-0.038	-0.040	-0.041	-0.040	-0.039	-0.035	-0.031	-0.026	-0.021	-0.016	-0.010	-0.006	-0.002	-0.001	0.000
DEFLEC. DUE TO WEIGHT OF RAIL	0.000	-0.002	-0.003	-0.005	-0.006	-0.007	-0.008	-0.009	-0.009	-0.009	-0.008	-0.008	-0.007	-0.006	-0.004	-0.003	-0.002	-0.001	0.000	0.000	0.000
TOTAL DEAD LOAD DEFLECTION	0.000	-0.013	-0.025	-0.037	-0.046	-0.054	-0.060	-0.064	-0.065	-0.064	-0.061	-0.056	-0.049	-0.042	-0.033	-0.025	-0.016	-0.010	-0.003	-0.002	0.000
VERTICAL CURVE ORDINATE	0.000	0.011	0.021	0.030	0.037	0.044	0.049	0.053	0.056	0.058	0.058	0.058	0.056	0.053	0.049	0.044	0.037	0.030	0.021	0.011	0.000
SUPERELEVATION ORDINATE	0.000	0.000	0.000	0.000	0.000	0.000	0.000	0.000	0.000	0.000	0.000	0.000	0.000	0.000	0.000	0.000	0.000	0.000	0.000	0.000	0.000
CAMBER DUE TO DISSIPATION RESULTING FROM HEAT CURVING ✱✱	0.000	0.000	0.000	0.000	0.000	0.000	0.000	0.000	0.000	0.000	0.000	0.000	0.000	0.000	0.000	0.000	0.000	0.000	0.000	0.000	0.000
REQUIRED CAMBER (mm)	0	24	46	67	83	98	109	117	121	122	119	114	105	95	82	69	53	40	24	13	0

GIRDER 2

TWENTIETH POINTS	1.00	1.05	1.10	1.15	1.20	1.25	1.30	1.35	1.40	1.45	1.50	1.55	1.60	1.65	1.70	1.75	1.80	1.85	1.90	1.95	2.00
DEFLEC. DUE TO WEIGHT OF STEEL	0.000	-0.003	-0.006	-0.009	-0.011	-0.013	-0.015	-0.016	-0.016	-0.016	-0.015	-0.014	-0.012	-0.010	-0.008	-0.006	-0.004	-0.003	-0.001	-0.001	0.000
DEFLEC. DUE TO WEIGHT OF SLAB ✱	0.000	-0.009	-0.017	-0.024	-0.031	-0.036	-0.040	-0.042	-0.043	-0.042	-0.040	-0.036	-0.032	-0.027	-0.021	-0.016	-0.010	-0.006	-0.002	-0.001	0.000
DEFLEC. DUE TO WEIGHT OF RAIL	0.000	-0.002	-0.004	-0.006	-0.007	-0.008	-0.009	-0.009	-0.009	-0.009	-0.009	-0.008	-0.007	-0.006	-0.005	-0.004	-0.002	-0.001	0.000	0.000	0.000
TOTAL DEAD LOAD DEFLECTION	0.000	-0.014	-0.027	-0.039	-0.049	-0.057	-0.064	-0.067	-0.068	-0.067	-0.064	-0.058	-0.051	-0.043	-0.034	-0.026	-0.016	-0.010	-0.003	-0.002	0.000
VERTICAL CURVE ORDINATE	0.000	0.011	0.021	0.030	0.037	0.044	0.049	0.053	0.056	0.058	0.058	0.058	0.056	0.053	0.049	0.044	0.037	0.030	0.021	0.011	0.000
SUPERELEVATION ORDINATE	0.000	0.000	0.000	0.000	0.000	0.000	0.000	0.000	0.000	0.000	0.000	0.000	0.000	0.000	0.000	0.000	0.000	0.000	0.000	0.000	0.000
CAMBER DUE TO DISSIPATION RESULTING FROM HEAT CURVING ✱✱	0.000	0.000	0.000	0.000	0.000	0.000	0.000	0.000	0.000	0.000	0.000	0.000	0.000	0.000	0.000	0.000	0.000	0.000	0.000	0.000	0.000
REQUIRED CAMBER (mm)	0	25	48	69	86	101	113	120	124	125	122	116	107	96	83	70	53	40	24	13	0

GIRDER 3

TWENTIETH POINTS	1.00	1.05	1.10	1.15	1.20	1.25	1.30	1.35	1.40	1.45	1.50	1.55	1.60	1.65	1.70	1.75	1.80	1.85	1.90	1.95	2.00
DEFLEC. DUE TO WEIGHT OF STEEL	0.000	-0.003	-0.006	-0.009	-0.012	-0.014	-0.015	-0.016	-0.016	-0.016	-0.015	-0.014	-0.012	-0.010	-0.008	-0.006	-0.004	-0.003	-0.001	-0.001	0.000
DEFLEC. DUE TO WEIGHT OF SLAB ✱	0.000	-0.009	-0.018	-0.025	-0.032	-0.037	-0.042	-0.044	-0.045	-0.043	-0.041	-0.037	-0.033	-0.028	-0.022	-0.016	-0.010	-0.006	-0.001	-0.001	0.000
DEFLEC. DUE TO WEIGHT OF RAIL	0.000	-0.002	-0.004	-0.006	-0.007	-0.008	-0.009	-0.010	-0.010	-0.010	-0.009	-0.008	-0.007	-0.006	-0.005	-0.004	-0.002	-0.001	0.000	0.000	0.000
TOTAL DEAD LOAD DEFLECTION	0.000	-0.014	-0.028	-0.040	-0.051	-0.059	-0.066	-0.070	-0.071	-0.069	-0.065	-0.059	-0.052	-0.044	-0.035	-0.026	-0.016	-0.010	-0.002	-0.002	0.000
VERTICAL CURVE ORDINATE	0.000	0.011	0.021	0.030	0.037	0.044	0.049	0.053	0.056	0.058	0.058	0.058	0.056	0.053	0.049	0.044	0.037	0.030	0.021	0.011	0.000
SUPERELEVATION ORDINATE	0.000	0.000	0.000	0.000	0.000	0.000	0.000	0.000	0.000	0.000	0.000	0.000	0.000	0.000	0.000	0.000	0.000	0.000	0.000	0.000	0.000
CAMBER DUE TO DISSIPATION RESULTING FROM HEAT CURVING ✱✱	0.000	0.000	0.000	0.000	0.000	0.000	0.000	0.000	0.000	0.000	0.000	0.000	0.000	0.000	0.000	0.000	0.000	0.000	0.000	0.000	0.000
REQUIRED CAMBER (mm)	0	25	49	70	88	103	115	123	127	127	123	117	108	97	84	70	53	40	23	13	0

GIRDER 4

TWENTIETH POINTS	1.00	1.05	1.10	1.15	1.20	1.25	1.30	1.35	1.40	1.45	1.50	1.55	1.60	1.65	1.70	1.75	1.80	1.85	1.90	1.95	2.00
DEFLEC. DUE TO WEIGHT OF STEEL	0.000	-0.004	-0.007	-0.010	-0.012	-0.014	-0.016	-0.017	-0.017	-0.017	-0.016	-0.014	-0.012	-0.010	-0.008	-0.006	-0.004	-0.003	-0.001	-0.001	0.000
DEFLEC. DUE TO WEIGHT OF SLAB ✱	0.000	-0.009	-0.018	-0.026	-0.033	-0.038	-0.043	-0.045	-0.046	-0.044	-0.042	-0.038	-0.033	-0.027	-0.021	-0.015	-0.009	-0.005	-0.001	-0.001	0.000
DEFLEC. DUE TO WEIGHT OF RAIL	0.000	-0.002	-0.004	-0.006	-0.008	-0.009	-0.010	-0.011	-0.011	-0.011	-0.010	-0.009	-0.008	-0.007	-0.005	-0.004	-0.002	-0.001	0.000	0.000	0.000
TOTAL DEAD LOAD DEFLECTION	0.000	-0.015	-0.029	-0.042	-0.053	-0.061	-0.069	-0.073	-0.074	-0.072	-0.068	-0.061	-0.053	-0.044	-0.034	-0.025	-0.015	-0.009	-0.002	-0.002	0.000
VERTICAL CURVE ORDINATE	0.000	0.011	0.021	0.030	0.037	0.044	0.049	0.053	0.056	0.058	0.058	0.058	0.056	0.053	0.049	0.044	0.037	0.030	0.021	0.011	0.000
SUPERELEVATION ORDINATE	0.000	0.000	0.000	0.000	0.000	0.000	0.000	0.000	0.000	0.000	0.000	0.000	0.000	0.000	0.000	0.000	0.000	0.000	0.000	0.000	0.000
CAMBER DUE TO DISSIPATION RESULTING FROM HEAT CURVING ✱✱	0.000	0.000	0.000	0.000	0.000	0.000	0.000	0.000	0.000	0.000	0.000	0.000	0.000	0.000	0.000	0.000	0.000	0.000	0.000	0.000	0.000
REQUIRED CAMBER (mm)	0	26	50	72	90	105	118	126	130	130	126	119	109	97	83	69	52	39	23	13	0

GIRDER 5

TWENTIETH POINTS	1.00	1.05	1.10	1.15	1.20	1.25	1.30	1.35	1.40	1.45	1.50	1.55	1.60	1.65	1.70	1.75	1.80	1.85	1.90	1.95	2.00
DEFLEC. DUE TO WEIGHT OF STEEL	0.000	-0.004	-0.007	-0.010	-0.013	-0.015	-0.016	-0.017	-0.017	-0.017	-0.016	-0.014	-0.012	-0.010	-0.008	-0.006	-0.003	-0.002	0.000	0.000	0.000
DEFLEC. DUE TO WEIGHT OF SLAB ✱	0.000	-0.010	-0.019	-0.027	-0.034	-0.039	-0.044	-0.046	-0.047	-0.045	-0.043	-0.038	-0.033	-0.027	-0.021	-0.015	-0.009	-0.005	-0.001	-0.001	0.000
DEFLEC. DUE TO WEIGHT OF RAIL	0.000	-0.003	-0.005	-0.007	-0.008	-0.010	-0.011	-0.012	-0.012	-0.012	-0.011	-0.010	-0.008	-0.007	-0.005	-0.004	-0.002	-0.001	0.000	0.000	0.000
TOTAL DEAD LOAD DEFLECTION	0.000	-0.017	-0.031	-0.044	-0.055	-0.064	-0.071	-0.075	-0.076	-0.074	-0.070	-0.062	-0.053	-0.044	-0.034	-0.025	-0.014	-0.008	-0.001	-0.001	0.000
VERTICAL CURVE ORDINATE	0.000	0.011	0.021	0.030	0.037	0.044	0.049	0.053	0.056	0.058	0.058	0.058	0.056	0.053	0.049	0.044	0.037	0.030	0.021	0.011	0.000
SUPERELEVATION ORDINATE	0.000	0.000	0.000	0.000	0.000	0.000	0.000	0.000	0.000	0.000	0.000	0.000	0.000	0.000	0.000	0.000	0.000	0.000	0.000	0.000	0.000
CAMBER DUE TO DISSIPATION RESULTING FROM HEAT CURVING ✱✱	0.000	0.000	0.000	0.000	0.000	0.000	0.000	0.000	0.000	0.000	0.000	0.000	0.000	0.000	0.000	0.000	0.000	0.000	0.000	0.000	0.000
REQUIRED CAMBER (mm)	0	28	52	74	92	108	120	128	132	132	128	120	109	97	83	69	51	38	22	12	0

SCHEMATIC CAMBER ORDINATES

PROJECT NO. X-0002B

CUMBERLAND COUNTY

STATION: -L- POC STA. 63+66.830=
-FLYOVER-
POC STA. 22+29.794

SHEET 1 OF 8

STATE OF NORTH CAROLINA
DEPARTMENT OF TRANSPORTATION
RALEIGH

SUPERSTRUCTURE
DEAD LOAD DEFLECTION
AND SCHEMATIC CAMBER
ORDINATES
SPAN "A"

NORTH CAROLINA PROFESSIONAL SEAL 024928 ENGINEER RODNEY E. MONEY 7/28/08

PREPARED IN THE OFFICE OF
TYLIN INTERNATIONAL
RALEIGH, NORTH CAROLINA
Copyright © 2008, TYLI
DWG NO. 34

REVISIONS						
NO.	BY:	DATE:	NO.	BY:	DATE:	
1			3			
2			4			

SHEET NO. S-211
TOTAL SHEETS 253

DRAWN BY : S. MORGAN DATE : JUN. '08
CHECKED BY : J.W. WRIGHT DATE : JUN. '08

7/28/2008 9:09:41 PM Structures
cn\fayetteville outer loop\sm\X0002B_SD_DL_01.dgn

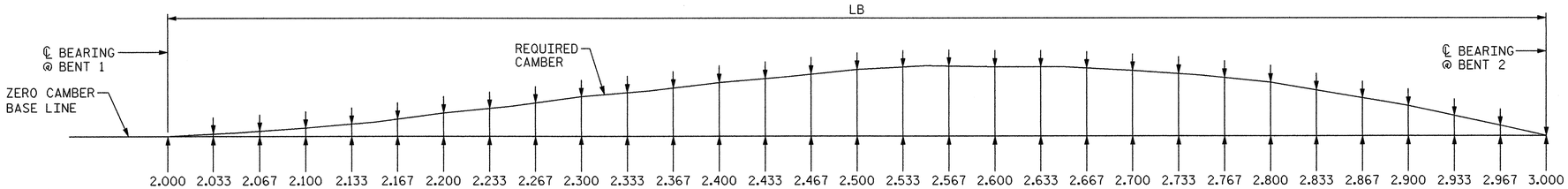

NOTES:

SLOPE FOR THE ZERO CAMBER BASE LINE VARIES.

VALUES GIVEN ARE AT THIRTIETH POINTS BETWEEN CENTERLINE OF BEARINGS.

DEFLECTIONS AND ORDINATES ARE IN METERS (DECIMAL FORM).

REQUIRED CAMBER VALUES ARE IN MILLIMETERS.

DOWNWARD DEFLECTION IS INDICATED WITH A "-" SIGN.

✱ INCLUDES SLAB, BUILD-UP AND METAL STAY-IN-PLACE FORMS.

✱✱ CAMBER DISSIPATION ORDINATE TO BE DEDUCTED IF HEAT CURVING NOT UTILIZED.

GIRDER	LB
1	66.281
2	66.630
3	66.979
4	67.328
5	67.677

NOTE:

DIMENSIONS ARE ARC DIMENSIONS IN METERS ALONG THE ℄ OF GIRDER. NO CORRECTION HAS BEEN MADE TO ADJUST FOR THE DISTANCE ALONG THE GRADE.

GIRDER 1

THIRTIETH POINTS	2.000	2.033	2.067	2.100	2.133	2.167	2.200	2.233	2.267	2.300	2.333	2.367	2.400	2.433	2.467	2.500	2.533	2.567	2.600	2.633	2.667	2.700	2.733	2.767	2.800	2.833	2.867	2.900	2.933	2.967	3.000
DEFLEC. DUE TO WEIGHT OF STEEL	0.000	-0.001	-0.003	-0.004	-0.007	-0.009	-0.012	-0.015	-0.017	-0.020	-0.022	-0.025	-0.027	-0.028	-0.028	-0.029	-0.028	-0.028	-0.027	-0.025	-0.023	-0.021	-0.018	-0.016	-0.013	-0.010	-0.008	-0.005	-0.003	-0.002	0.000
DEFLEC. DUE TO WEIGHT OF SLAB ✱	0.000	-0.004	-0.008	-0.012	-0.019	-0.027	-0.034	-0.042	-0.049	-0.057	-0.063	-0.068	-0.074	-0.076	-0.078	-0.080	-0.078	-0.077	-0.075	-0.069	-0.064	-0.058	-0.050	-0.043	-0.035	-0.028	-0.020	-0.013	-0.009	-0.004	0.000
DEFLEC. DUE TO WEIGHT OF RAIL	0.000	-0.001	-0.002	-0.003	-0.004	-0.006	-0.007	-0.009	-0.010	-0.012	-0.013	-0.015	-0.016	-0.016	-0.017	-0.017	-0.017	-0.016	-0.016	-0.015	-0.013	-0.012	-0.011	-0.009	-0.008	-0.006	-0.005	-0.003	-0.002	-0.001	0.000
TOTAL DEAD LOAD DEFLECTION	0.000	-0.006	-0.013	-0.019	-0.030	-0.042	-0.053	-0.066	-0.076	-0.089	-0.098	-0.108	-0.117	-0.120	-0.123	-0.126	-0.123	-0.121	-0.118	-0.109	-0.100	-0.091	-0.079	-0.068	-0.056	-0.044	-0.033	-0.021	-0.014	-0.007	0.000
VERTICAL CURVE ORDINATE	0.000	0.013	0.025	0.036	0.046	0.056	0.064	0.072	0.078	0.084	0.089	0.093	0.096	0.098	0.100	0.100	0.100	0.098	0.096	0.093	0.089	0.084	0.078	0.072	0.064	0.056	0.046	0.036	0.025	0.013	0.000
SUPERELEVATION ORDINATE	0.000	0.000	0.000	0.000	0.000	0.000	0.000	0.000	0.000	0.000	0.000	0.000	0.000	0.000	0.000	0.000	0.000	0.000	0.000	0.000	0.000	0.000	0.000	0.000	0.000	0.000	0.000	0.000	0.000	0.000	0.000
CAMBER DUE TO DISSIPATION RESULTING FROM HEAT CURVING ✱✱	0.000	0.000	0.000	0.000	0.000	0.000	0.000	0.000	0.000	0.000	0.000	0.000	0.000	0.000	0.000	0.000	0.000	0.000	0.000	0.000	0.000	0.000	0.000	0.000	0.000	0.000	0.000	0.000	0.000	0.000	0.000
REQUIRED CAMBER (mm)	0	19	38	55	76	98	117	138	154	173	187	201	213	218	223	226	223	219	214	202	189	175	157	140	120	100	79	57	39	20	0

GIRDER 2

THIRTIETH POINTS	2.000	2.033	2.067	2.100	2.133	2.167	2.200	2.233	2.267	2.300	2.333	2.367	2.400	2.433	2.467	2.500	2.533	2.567	2.600	2.633	2.667	2.700	2.733	2.767	2.800	2.833	2.867	2.900	2.933	2.967	3.000
DEFLEC. DUE TO WEIGHT OF STEEL	0.000	-0.001	-0.003	-0.004	-0.007	-0.010	-0.013	-0.016	-0.018	-0.021	-0.023	-0.026	-0.028	-0.029	-0.029	-0.030	-0.029	-0.029	-0.028	-0.026	-0.024	-0.022	-0.019	-0.016	-0.013	-0.010	-0.008	-0.005	-0.003	-0.002	0.000
DEFLEC. DUE TO WEIGHT OF SLAB ✱	0.000	-0.004	-0.008	-0.012	-0.020	-0.027	-0.035	-0.043	-0.052	-0.060	-0.066	-0.071	-0.077	-0.079	-0.082	-0.084	-0.082	-0.080	-0.078	-0.072	-0.067	-0.061	-0.053	-0.045	-0.037	-0.029	-0.021	-0.013	-0.009	-0.004	0.000
DEFLEC. DUE TO WEIGHT OF RAIL	0.000	-0.001	-0.002	-0.003	-0.005	-0.006	-0.008	-0.010	-0.011	-0.013	-0.014	-0.016	-0.017	-0.018	-0.018	-0.019	-0.018	-0.018	-0.017	-0.016	-0.015	-0.014	-0.012	-0.010	-0.008	-0.006	-0.005	-0.003	-0.002	-0.001	0.000
TOTAL DEAD LOAD DEFLECTION	0.000	-0.006	-0.013	-0.019	-0.032	-0.043	-0.056	-0.069	-0.081	-0.094	-0.103	-0.113	-0.122	-0.126	-0.129	-0.133	-0.129	-0.127	-0.123	-0.114	-0.106	-0.097	-0.084	-0.071	-0.058	-0.045	-0.034	-0.021	-0.014	-0.007	0.000
VERTICAL CURVE ORDINATE	0.000	0.013	0.025	0.036	0.046	0.056	0.064	0.072	0.078	0.084	0.089	0.093	0.096	0.098	0.100	0.100	0.100	0.098	0.096	0.093	0.089	0.084	0.078	0.072	0.064	0.056	0.046	0.036	0.025	0.013	0.000
SUPERELEVATION ORDINATE	0.000	0.000	0.000	0.000	0.000	0.000	0.000	0.000	0.000	0.000	0.000	0.000	0.000	0.000	0.000	0.000	0.000	0.000	0.000	0.000	0.000	0.000	0.000	0.000	0.000	0.000	0.000	0.000	0.000	0.000	0.000
CAMBER DUE TO DISSIPATION RESULTING FROM HEAT CURVING ✱✱	0.000	0.000	0.000	0.000	0.000	0.000	0.000	0.000	0.000	0.000	0.000	0.000	0.000	0.000	0.000	0.000	0.000	0.000	0.000	0.000	0.000	0.000	0.000	0.000	0.000	0.000	0.000	0.000	0.000	0.000	0.000
REQUIRED CAMBER (mm)	0	19	38	55	78	99	120	141	159	178	192	206	218	224	229	233	229	225	219	207	195	181	162	143	122	101	80	57	39	20	0

GIRDER 3

THIRTIETH POINTS	2.000	2.033	2.067	2.100	2.133	2.167	2.200	2.233	2.267	2.300	2.333	2.367	2.400	2.433	2.467	2.500	2.533	2.567	2.600	2.633	2.667	2.700	2.733	2.767	2.800	2.833	2.867	2.900	2.933	2.967	3.000
DEFLEC. DUE TO WEIGHT OF STEEL	0.000	-0.002	-0.003	-0.005	-0.008	-0.010	-0.013	-0.016	-0.019	-0.022	-0.024	-0.027	-0.029	-0.030	-0.031	-0.032	-0.031	-0.031	-0.030	-0.028	-0.025	-0.023	-0.020	-0.017	-0.014	-0.011	-0.008	-0.005	-0.003	-0.002	0.000
DEFLEC. DUE TO WEIGHT OF SLAB ✱	0.000	-0.004	-0.009	-0.013	-0.021	-0.028	-0.036	-0.045	-0.053	-0.062	-0.068	-0.075	-0.081	-0.083	-0.086	-0.088	-0.086	-0.084	-0.082	-0.076	-0.069	-0.063	-0.055	-0.046	-0.038	-0.030	-0.022	-0.014	-0.009	-0.005	0.000
DEFLEC. DUE TO WEIGHT OF RAIL	0.000	-0.001	-0.002	-0.003	-0.005	-0.007	-0.009	-0.011	-0.013	-0.015	-0.016	-0.018	-0.019	-0.020	-0.020	-0.021	-0.020	-0.020	-0.019	-0.018	-0.016	-0.015	-0.013	-0.011	-0.009	-0.007	-0.005	-0.003	-0.002	-0.001	0.000
TOTAL DEAD LOAD DEFLECTION	0.000	-0.007	-0.014	-0.021	-0.034	-0.045	-0.058	-0.072	-0.085	-0.099	-0.108	-0.120	-0.129	-0.133	-0.137	-0.141	-0.137	-0.135	-0.131	-0.122	-0.110	-0.101	-0.088	-0.074	-0.061	-0.048	-0.035	-0.022	-0.014	-0.008	0.000
VERTICAL CURVE ORDINATE	0.000	0.013	0.025	0.036	0.046	0.056	0.064	0.072	0.078	0.084	0.089	0.093	0.096	0.098	0.100	0.100	0.100	0.098	0.096	0.093	0.089	0.084	0.078	0.072	0.064	0.056	0.046	0.036	0.025	0.013	0.000
SUPERELEVATION ORDINATE	0.000	0.000	0.000	0.000	0.000	0.000	0.000	0.000	0.000	0.000	0.000	0.000	0.000	0.000	0.000	0.000	0.000	0.000	0.000	0.000	0.000	0.000	0.000	0.000	0.000	0.000	0.000	0.000	0.000	0.000	0.000
CAMBER DUE TO DISSIPATION RESULTING FROM HEAT CURVING ✱✱	0.000	0.000	0.000	0.000	0.000	0.000	0.000	0.000	0.000	0.000	0.000	0.000	0.000	0.000	0.000	0.000	0.000	0.000	0.000	0.000	0.000	0.000	0.000	0.000	0.000	0.000	0.000	0.000	0.000	0.000	0.000
REQUIRED CAMBER (mm)	0	20	39	57	80	101	122	144	163	183	197	213	225	231	237	241	237	233	227	215	199	185	166	146	125	104	81	58	39	21	0

GIRDER 4

THIRTIETH POINTS	2.000	2.033	2.067	2.100	2.133	2.167	2.200	2.233	2.267	2.300	2.333	2.367	2.400	2.433	2.467	2.500	2.533	2.567	2.600	2.633	2.667	2.700	2.733	2.767	2.800	2.833	2.867	2.900	2.933	2.967	3.000
DEFLEC. DUE TO WEIGHT OF STEEL	0.000	-0.002	-0.003	-0.005	-0.008	-0.011	-0.014	-0.017	-0.020	-0.023	-0.025	-0.028	-0.030	-0.031	-0.032	-0.033	-0.032	-0.032	-0.031	-0.029	-0.026	-0.024	-0.021	-0.017	-0.014	-0.011	-0.008	-0.005	-0.003	-0.002	0.000
DEFLEC. DUE TO WEIGHT OF SLAB ✱	0.000	-0.004	-0.009	-0.013	-0.021	-0.029	-0.037	-0.046	-0.054	-0.063	-0.070	-0.076	-0.083	-0.086	-0.088	-0.091	-0.089	-0.086	-0.084	-0.078	-0.071	-0.065	-0.056	-0.048	-0.039	-0.031	-0.022	-0.014	-0.009	-0.005	0.000
DEFLEC. DUE TO WEIGHT OF RAIL	0.000	-0.001	-0.002	-0.003	-0.005	-0.007	-0.009	-0.011	-0.014	-0.016	-0.018	-0.019	-0.021	-0.021	-0.022	-0.022	-0.022	-0.021	-0.021	-0.019	-0.018	-0.016	-0.014	-0.012	-0.010	-0.008	-0.006	-0.004	-0.003	-0.001	0.000
TOTAL DEAD LOAD DEFLECTION	0.000	-0.007	-0.014	-0.021	-0.034	-0.047	-0.060	-0.074	-0.088	-0.102	-0.113	-0.123	-0.134	-0.138	-0.142	-0.146	-0.143	-0.139	-0.136	-0.126	-0.115	-0.105	-0.091	-0.077	-0.063	-0.050	-0.036	-0.023	-0.015	-0.008	0.000
VERTICAL CURVE ORDINATE	0.000	0.013	0.025	0.036	0.046	0.056	0.064	0.072	0.078	0.084	0.089	0.093	0.096	0.098	0.100	0.100	0.100	0.098	0.096	0.093	0.089	0.084	0.078	0.072	0.064	0.056	0.046	0.036	0.025	0.013	0.000
SUPERELEVATION ORDINATE	0.000	0.000	0.000	0.000	0.000	0.000	0.000	0.000	0.000	0.000	0.000	0.000	0.000	0.000	0.000	0.000	0.000	0.000	0.000	0.000	0.000	0.000	0.000	0.000	0.000	0.000	0.000	0.000	0.000	0.000	0.000
CAMBER DUE TO DISSIPATION RESULTING FROM HEAT CURVING ✱✱	0.000	0.000	0.000	0.000	0.000	0.000	0.000	0.000	0.000	0.000	0.000	0.000	0.000	0.000	0.000	0.000	0.000	0.000	0.000	0.000	0.000	0.000	0.000	0.000	0.000	0.000	0.000	0.000	0.000	0.000	0.000
REQUIRED CAMBER (mm)	0	20	39	57	80	103	124	146	166	186	202	216	230	236	242	246	243	237	232	219	204	189	169	149	127	106	82	59	40	21	0

GIRDER 5

THIRTIETH POINTS	2.000	2.033	2.067	2.100	2.133	2.167	2.200	2.233	2.267	2.300	2.333	2.367	2.400	2.433	2.467	2.500	2.533	2.567	2.600	2.633	2.667	2.700	2.733	2.767	2.800	2.833	2.867	2.900	2.933	2.967	3.000
DEFLEC. DUE TO WEIGHT OF STEEL	0.000	-0.002	-0.003	-0.005	-0.008	-0.011	-0.014	-0.017	-0.021	-0.024	-0.027	-0.029	-0.032	-0.033	-0.034	-0.035	-0.034	-0.033	-0.032	-0.030	-0.027	-0.025	-0.022	-0.018	-0.015	-0.012	-0.008	-0.005	-0.003	-0.002	0.000
DEFLEC. DUE TO WEIGHT OF SLAB ✱	0.000	-0.004	-0.009	-0.013	-0.021	-0.030	-0.038	-0.047	-0.056	-0.065	-0.072	-0.079	-0.086	-0.089	-0.091	-0.094	-0.092	-0.089	-0.087	-0.080	-0.074	-0.067	-0.058	-0.049	-0.040	-0.032	-0.023	-0.015	-0.010	-0.005	0.000
DEFLEC. DUE TO WEIGHT OF RAIL	0.000	-0.001	-0.003	-0.004	-0.006	-0.008	-0.010	-0.012	-0.015	-0.017	-0.019	-0.020	-0.022	-0.023	-0.023	-0.024	-0.024	-0.023	-0.023	-0.021	-0.020	-0.018	-0.016	-0.013	-0.011	-0.009	-0.006	-0.004	-0.003	-0.001	0.000
TOTAL DEAD LOAD DEFLECTION	0.000	-0.007	-0.015	-0.022	-0.035	-0.049	-0.062	-0.076	-0.092	-0.106	-0.118	-0.128	-0.140	-0.145	-0.148	-0.153	-0.150	-0.145	-0.142	-0.131	-0.121	-0.110	-0.096	-0.080	-0.066	-0.053	-0.037	-0.024	-0.016	-0.008	0.000
VERTICAL CURVE ORDINATE	0.000	0.013	0.025	0.036	0.046	0.056	0.064	0.072	0.078	0.084	0.089	0.093	0.096	0.098	0.100	0.100	0.100	0.098	0.096	0.093	0.089	0.084	0.078	0.072	0.064	0.056	0.046	0.036	0.025	0.013	0.000
SUPERELEVATION ORDINATE	0.000	0.000	0.000	0.000	0.000	0.000	0.000	0.000	0.000	0.000	0.000	0.000	0.000	0.000	0.000	0.000	0.000	0.000	0.000	0.000	0.000	0.000	0.000	0.000	0.000	0.000	0.000	0.000	0.000	0.000	0.000
CAMBER DUE TO DISSIPATION RESULTING FROM HEAT CURVING ✱✱	0.000	0.000	0.000	0.000	0.000	0.000	0.000	0.000	0.000	0.000	0.000	0.000	0.000	0.000	0.000	0.000	0.000	0.000	0.000	0.000	0.000	0.000	0.000	0.000	0.000	0.000	0.000	0.000	0.000	0.000	0.000
REQUIRED CAMBER (mm)	0	20	40	58	81	105	126	148	170	190	207	221	236	243	248	253	250	243	238	224	210	194	174	152	130	109	83	60	41	21	0

SCHEMATIC CAMBER ORDINATES

NORTH CAROLINA PROFESSIONAL SEAL 024928 ENGINEER RODNEY E. MONEY 7/29/08

PROJECT NO. X-0002B

CUMBERLAND COUNTY

STATION: -L- POC STA. 63+66.830=
-FLYOVER-
POC STA. 22+29.794

SHEET 2 OF 8

STATE OF NORTH CAROLINA
DEPARTMENT OF TRANSPORTATION
RALEIGH

SUPERSTRUCTURE
DEAD LOAD DEFLECTION
AND SCHEMATIC CAMBER
ORDINATES
SPAN "B"

PREPARED IN THE OFFICE OF
TYLIN INTERNATIONAL
RALEIGH, NORTH CAROLINA
Copyright © 2008, TYLI
DWG NO. 35

REVISIONS						
NO.	BY:	DATE:	NO.	BY:	DATE:	
1			3			
2			4			

SHEET NO. S-212
TOTAL SHEETS 253

DRAWN BY : S. MORGAN DATE : JUN. '08
CHECKED BY : J.W. WRIGHT DATE : JUN. '08

7/28/2008 9:09:46 PM Structures
o:\fayetteville outer loop\sm\X0002B_SD_DL_02.dgn

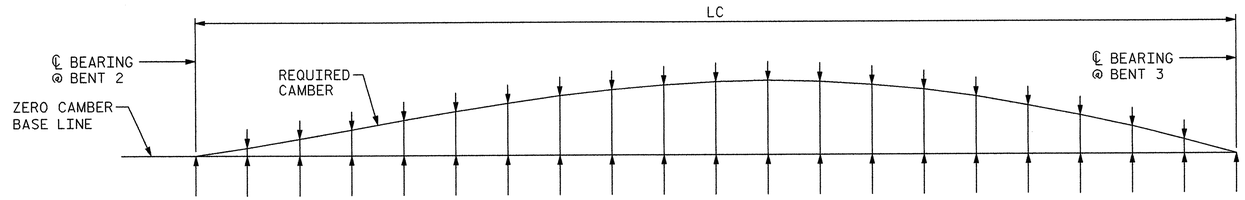

NOTES:

SLOPE FOR THE ZERO CAMBER BASE LINE VARIES.

VALUES GIVEN ARE AT TWENTIETH POINTS BETWEEN CENTERLINE OF BEARINGS.

DEFLECTIONS AND ORDINATES ARE IN METERS (DECIMAL FORM).

REQUIRED CAMBER VALUES ARE IN MILLIMETERS.

DOWNWARD DEFLECTION IS INDICATED WITH A "-" SIGN.

✱ INCLUDES SLAB, BUILD-UP AND METAL STAY-IN-PLACE FORMS.

✱✱ CAMBER DISSIPATION ORDINATE TO BE DEDUCTED IF HEAT CURVING NOT UTILIZED.

GIRDER	LC
1	59.564
2	59.878
3	60.192
4	60.505
5	60.819

NOTE:

DIMENSIONS ARE ARC DIMENSIONS IN METERS ALONG THE ℄ OF GIRDER. NO CORRECTION HAS BEEN MADE TO ADJUST FOR THE DISTANCE ALONG THE GRADE.

GIRDER 1

TWENTIETH POINTS	3.00	3.05	3.10	3.15	3.20	3.25	3.30	3.35	3.40	3.45	3.50	3.55	3.60	3.65	3.70	3.75	3.80	3.85	3.90	3.95	4.00
DEFLEC. DUE TO WEIGHT OF STEEL	0.000	-0.001	-0.001	-0.003	-0.005	-0.008	-0.010	-0.012	-0.014	-0.015	-0.016	-0.016	-0.015	-0.014	-0.012	-0.010	-0.007	-0.005	-0.003	-0.002	0.000
DEFLEC. DUE TO WEIGHT OF SLAB ✱	0.000	-0.001	-0.002	-0.008	-0.013	-0.020	-0.027	-0.033	-0.038	-0.041	-0.044	-0.043	-0.042	-0.038	-0.033	-0.027	-0.020	-0.014	-0.007	-0.004	0.000
DEFLEC. DUE TO WEIGHT OF RAIL	0.000	0.000	0.000	-0.002	-0.003	-0.005	-0.006	-0.007	-0.008	-0.009	-0.009	-0.009	-0.009	-0.008	-0.007	-0.006	-0.004	-0.003	-0.002	-0.001	0.000
TOTAL DEAD LOAD DEFLECTION	0.000	-0.002	-0.003	-0.013	-0.021	-0.033	-0.043	-0.052	-0.060	-0.065	-0.069	-0.068	-0.066	-0.060	-0.052	-0.043	-0.031	-0.022	-0.012	-0.007	0.000
VERTICAL CURVE ORDINATE	0.000	0.015	0.029	0.041	0.052	0.061	0.068	0.074	0.078	0.080	0.081	0.080	0.078	0.074	0.068	0.061	0.052	0.041	0.029	0.015	0.000
SUPERELEVATION ORDINATE	0.000	0.000	0.000	0.000	0.000	0.000	0.000	0.000	0.000	0.000	0.000	0.000	0.000	0.000	0.000	0.000	0.000	0.000	0.000	0.000	0.000
CAMBER DUE TO DISSIPATION RESULTING FROM HEAT CURVING ✱✱	0.000	0.000	0.000	0.000	0.000	0.000	0.000	0.000	0.000	0.000	0.000	0.000	0.000	0.000	0.000	0.000	0.000	0.000	0.000	0.000	0.000
REQUIRED CAMBER (mm)	0	17	32	54	73	94	111	126	138	145	150	148	144	134	120	104	83	63	41	22	0

GIRDER 2

TWENTIETH POINTS	3.00	3.05	3.10	3.15	3.20	3.25	3.30	3.35	3.40	3.45	3.50	3.55	3.60	3.65	3.70	3.75	3.80	3.85	3.90	3.95	4.00
DEFLEC. DUE TO WEIGHT OF STEEL	0.000	-0.001	-0.001	-0.003	-0.005	-0.008	-0.010	-0.012	-0.014	-0.015	-0.016	-0.016	-0.015	-0.014	-0.012	-0.010	-0.007	-0.005	-0.003	-0.002	0.000
DEFLEC. DUE TO WEIGHT OF SLAB ✱	0.000	-0.001	-0.001	-0.007	-0.013	-0.020	-0.027	-0.033	-0.039	-0.042	-0.045	-0.044	-0.043	-0.039	-0.034	-0.028	-0.021	-0.014	-0.007	-0.004	0.000
DEFLEC. DUE TO WEIGHT OF RAIL	0.000	0.000	0.000	-0.002	-0.003	-0.005	-0.006	-0.008	-0.009	-0.010	-0.010	-0.010	-0.010	-0.009	-0.008	-0.007	-0.005	-0.004	-0.002	-0.001	0.000
TOTAL DEAD LOAD DEFLECTION	0.000	-0.002	-0.002	-0.012	-0.021	-0.033	-0.043	-0.053	-0.062	-0.067	-0.071	-0.070	-0.068	-0.062	-0.054	-0.045	-0.033	-0.023	-0.012	-0.007	0.000
VERTICAL CURVE ORDINATE	0.000	0.015	0.029	0.041	0.052	0.061	0.068	0.074	0.078	0.080	0.081	0.080	0.078	0.074	0.068	0.061	0.052	0.041	0.029	0.015	0.000
SUPERELEVATION ORDINATE	0.000	0.000	0.000	0.000	0.000	0.000	0.000	0.000	0.000	0.000	0.000	0.000	0.000	0.000	0.000	0.000	0.000	0.000	0.000	0.000	0.000
CAMBER DUE TO DISSIPATION RESULTING FROM HEAT CURVING ✱✱	0.000	0.000	0.000	0.000	0.000	0.000	0.000	0.000	0.000	0.000	0.000	0.000	0.000	0.000	0.000	0.000	0.000	0.000	0.000	0.000	0.000
REQUIRED CAMBER (mm)	0	17	31	53	73	94	111	127	140	147	152	150	146	136	122	106	85	64	41	22	0

GIRDER 3

TWENTIETH POINTS	3.00	3.05	3.10	3.15	3.20	3.25	3.30	3.35	3.40	3.45	3.50	3.55	3.60	3.65	3.70	3.75	3.80	3.85	3.90	3.95	4.00
DEFLEC. DUE TO WEIGHT OF STEEL	0.000	0.000	0.000	-0.002	-0.004	-0.007	-0.010	-0.012	-0.014	-0.015	-0.016	-0.016	-0.016	-0.014	-0.012	-0.010	-0.007	-0.005	-0.003	-0.002	0.000
DEFLEC. DUE TO WEIGHT OF SLAB ✱	0.000	-0.001	-0.001	-0.007	-0.012	-0.020	-0.027	-0.033	-0.039	-0.042	-0.045	-0.044	-0.043	-0.039	-0.034	-0.028	-0.021	-0.014	-0.007	-0.004	0.000
DEFLEC. DUE TO WEIGHT OF RAIL	0.000	0.000	0.000	-0.002	-0.003	-0.005	-0.006	-0.008	-0.009	-0.010	-0.011	-0.011	-0.010	-0.009	-0.008	-0.007	-0.005	-0.004	-0.002	-0.001	0.000
TOTAL DEAD LOAD DEFLECTION	0.000	-0.001	-0.001	-0.011	-0.019	-0.032	-0.043	-0.053	-0.062	-0.067	-0.072	-0.071	-0.069	-0.062	-0.054	-0.045	-0.033	-0.023	-0.012	-0.007	0.000
VERTICAL CURVE ORDINATE	0.000	0.015	0.029	0.041	0.052	0.061	0.068	0.074	0.078	0.080	0.081	0.080	0.078	0.074	0.068	0.061	0.052	0.041	0.029	0.015	0.000
SUPERELEVATION ORDINATE	0.000	0.000	0.000	0.000	0.000	0.000	0.000	0.000	0.000	0.000	0.000	0.000	0.000	0.000	0.000	0.000	0.000	0.000	0.000	0.000	0.000
CAMBER DUE TO DISSIPATION RESULTING FROM HEAT CURVING ✱✱	0.000	0.000	0.000	0.000	0.000	0.000	0.000	0.000	0.000	0.000	0.000	0.000	0.000	0.000	0.000	0.000	0.000	0.000	0.000	0.000	0.000
REQUIRED CAMBER (mm)	0	16	30	52	71	93	111	127	140	147	153	151	147	136	122	106	85	64	41	22	0

GIRDER 4

TWENTIETH POINTS	3.00	3.05	3.10	3.15	3.20	3.25	3.30	3.35	3.40	3.45	3.50	3.55	3.60	3.65	3.70	3.75	3.80	3.85	3.90	3.95	4.00
DEFLEC. DUE TO WEIGHT OF STEEL	0.000	0.000	0.000	-0.002	-0.004	-0.007	-0.009	-0.012	-0.014	-0.015	-0.016	-0.016	-0.016	-0.014	-0.012	-0.010	-0.007	-0.005	-0.003	-0.002	0.000
DEFLEC. DUE TO WEIGHT OF SLAB ✱	0.000	-0.001	-0.001	-0.006	-0.011	-0.019	-0.026	-0.032	-0.038	-0.042	-0.045	-0.044	-0.043	-0.039	-0.034	-0.028	-0.021	-0.014	-0.007	-0.004	0.000
DEFLEC. DUE TO WEIGHT OF RAIL	0.000	0.000	0.000	-0.002	-0.003	-0.005	-0.007	-0.009	-0.010	-0.011	-0.011	-0.011	-0.011	-0.010	-0.009	-0.007	-0.005	-0.004	-0.002	-0.001	0.000
TOTAL DEAD LOAD DEFLECTION	0.000	-0.001	-0.001	-0.010	-0.018	-0.031	-0.042	-0.053	-0.062	-0.068	-0.072	-0.071	-0.070	-0.063	-0.055	-0.045	-0.033	-0.023	-0.012	-0.007	0.000
VERTICAL CURVE ORDINATE	0.000	0.015	0.029	0.041	0.052	0.061	0.068	0.074	0.078	0.080	0.081	0.080	0.078	0.074	0.068	0.061	0.052	0.041	0.029	0.015	0.000
SUPERELEVATION ORDINATE	0.000	0.000	0.000	0.000	0.000	0.000	0.000	0.000	0.000	0.000	0.000	0.000	0.000	0.000	0.000	0.000	0.000	0.000	0.000	0.000	0.000
CAMBER DUE TO DISSIPATION RESULTING FROM HEAT CURVING ✱✱	0.000	0.000	0.000	0.000	0.000	0.000	0.000	0.000	0.000	0.000	0.000	0.000	0.000	0.000	0.000	0.000	0.000	0.000	0.000	0.000	0.000
REQUIRED CAMBER (mm)	0	16	30	51	70	92	110	127	140	148	153	151	148	137	123	106	85	64	41	22	0

GIRDER 5

TWENTIETH POINTS	3.00	3.05	3.10	3.15	3.20	3.25	3.30	3.35	3.40	3.45	3.50	3.55	3.60	3.65	3.70	3.75	3.80	3.85	3.90	3.95	4.00
DEFLEC. DUE TO WEIGHT OF STEEL	0.000	0.000	0.000	-0.002	-0.004	-0.007	-0.009	-0.012	-0.014	-0.015	-0.016	-0.016	-0.016	-0.015	-0.013	-0.010	-0.007	-0.005	-0.003	-0.002	0.000
DEFLEC. DUE TO WEIGHT OF SLAB ✱	0.000	0.000	0.000	-0.005	-0.010	-0.018	-0.025	-0.032	-0.038	-0.042	-0.045	-0.044	-0.043	-0.039	-0.034	-0.027	-0.020	-0.014	-0.007	-0.004	0.000
DEFLEC. DUE TO WEIGHT OF RAIL	0.000	0.000	0.000	-0.002	-0.003	-0.005	-0.007	-0.009	-0.010	-0.011	-0.012	-0.012	-0.012	-0.011	-0.009	-0.008	-0.006	-0.004	-0.002	-0.001	0.000
TOTAL DEAD LOAD DEFLECTION	0.000	0.000	0.000	-0.009	-0.017	-0.030	-0.041	-0.053	-0.062	-0.068	-0.073	-0.072	-0.071	-0.065	-0.056	-0.045	-0.033	-0.023	-0.012	-0.007	0.000
VERTICAL CURVE ORDINATE	0.000	0.015	0.029	0.041	0.052	0.061	0.068	0.074	0.078	0.080	0.081	0.080	0.078	0.074	0.068	0.061	0.052	0.041	0.029	0.015	0.000
SUPERELEVATION ORDINATE	0.000	0.000	0.000	0.000	0.000	0.000	0.000	0.000	0.000	0.000	0.000	0.000	0.000	0.000	0.000	0.000	0.000	0.000	0.000	0.000	0.000
CAMBER DUE TO DISSIPATION RESULTING FROM HEAT CURVING ✱✱	0.000	0.000	0.000	0.000	0.000	0.000	0.000	0.000	0.000	0.000	0.000	0.000	0.000	0.000	0.000	0.000	0.000	0.000	0.000	0.000	0.000
REQUIRED CAMBER (mm)	0	15	29	50	69	91	109	127	140	148	154	152	149	139	124	106	85	64	41	22	0

SCHEMATIC CAMBER ORDINATES

PROJECT NO. X-0002B

CUMBERLAND COUNTY

STATION: -L- POC STA. 63+66.830=
-FLYOVER-
POC STA. 22+29.794

SHEET 3 OF 8

STATE OF NORTH CAROLINA
DEPARTMENT OF TRANSPORTATION
RALEIGH

SUPERSTRUCTURE
DEAD LOAD DEFLECTION
AND SCHEMATIC CAMBER
ORDINATES
SPAN "C"

NORTH CAROLINA PROFESSIONAL SEAL 024928 ENGINEER RODNEY E. MONEY 7/29/08

PREPARED IN THE OFFICE OF
TYLIN INTERNATIONAL
RALEIGH, NORTH CAROLINA
Copyright © 2008, TYLI

DWG NO. 36

REVISIONS						
NO.	BY:	DATE:	NO.	BY:	DATE:
1			3		
2			4		

SHEET NO. S-213

TOTAL SHEETS 253

DRAWN BY : S. MORGAN DATE : JUN. '08
CHECKED BY : J.W. WRIGHT DATE : JUN. '08

o:\fayetteville outer loop\sm\X0002B_SD_DL_03.dgn 7/28/2008 9:09:49 PM Structures

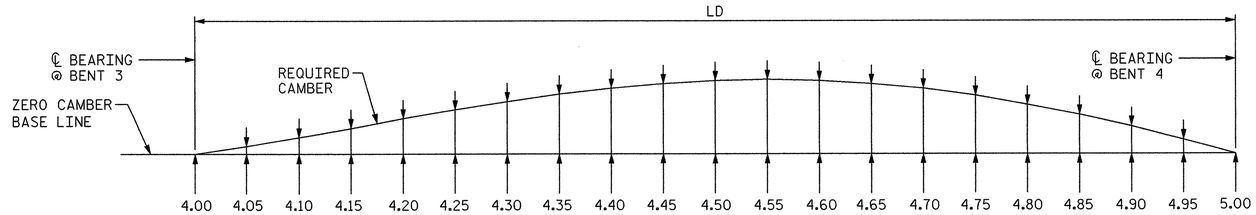

NOTES:

SLOPE FOR THE ZERO CAMBER BASE LINE VARIES.

VALUES GIVEN ARE AT TWENTIETH POINTS BETWEEN CENTERLINE OF BEARINGS.

DEFLECTIONS AND ORDINATES ARE IN METERS (DECIMAL FORM).

REQUIRED CAMBER VALUES ARE IN MILLIMETERS.

DOWNWARD DEFLECTION IS INDICATED WITH A "-" SIGN.

∗ INCLUDES SLAB, BUILD-UP AND METAL STAY-IN-PLACE FORMS.

∗∗ CAMBER DISSIPATION ORDINATE TO BE DEDUCTED IF HEAT CURVING NOT UTILIZED.

GIRDER	LD
1	41.975
2	42.196
3	42.417
4	42.637
5	42.858

NOTE:

DIMENSIONS ARE ARC DIMENSIONS IN METERS ALONG THE ℄ OF GIRDER. NO CORRECTION HAS BEEN MADE TO ADJUST FOR THE DISTANCE ALONG THE GRADE.

GIRDER 1

TWENTIETH POINTS	4.00	4.05	4.10	4.15	4.20	4.25	4.30	4.35	4.40	4.45	4.50	4.55	4.60	4.65	4.70	4.75	4.80	4.85	4.90	4.95	5.00
DEFLEC. DUE TO WEIGHT OF STEEL	0.000	0.000	0.000	-0.001	-0.001	-0.002	-0.003	-0.004	-0.005	-0.006	-0.007	-0.007	-0.007	-0.007	-0.007	-0.006	-0.005	-0.004	-0.003	-0.002	0.000
DEFLEC. DUE TO WEIGHT OF SLAB ∗	0.000	0.000	0.000	-0.002	-0.004	-0.007	-0.009	-0.012	-0.014	-0.016	-0.018	-0.019	-0.020	-0.019	-0.018	-0.016	-0.014	-0.011	-0.008	-0.004	0.000
DEFLEC. DUE TO WEIGHT OF RAIL	0.000	0.000	0.000	-0.001	-0.001	-0.002	-0.002	-0.003	-0.003	-0.004	-0.004	-0.004	-0.004	-0.004	-0.004	-0.004	-0.003	-0.003	-0.002	-0.001	0.000
TOTAL DEAD LOAD DEFLECTION	0.000	0.000	0.000	-0.004	-0.006	-0.011	-0.014	-0.019	-0.022	-0.026	-0.029	-0.030	-0.031	-0.030	-0.029	-0.026	-0.022	-0.018	-0.013	-0.007	0.000
VERTICAL CURVE ORDINATE	0.000	0.008	0.015	0.021	0.026	0.031	0.034	0.037	0.039	0.040	0.041	0.040	0.039	0.037	0.034	0.031	0.026	0.021	0.015	0.008	0.000
SUPERELEVATION ORDINATE	0.000	0.000	0.000	0.000	0.000	0.000	0.000	0.000	0.000	0.000	0.000	0.000	0.000	0.000	0.000	0.000	0.000	0.000	0.000	0.000	0.000
CAMBER DUE TO DISSIPATION RESULTING FROM HEAT CURVING ∗∗	0.000	0.000	0.000	0.000	0.000	0.000	0.000	0.000	0.000	0.000	0.000	0.000	0.000	0.000	0.000	0.000	0.000	0.000	0.000	0.000	0.000
REQUIRED CAMBER (mm)	0	8	15	25	32	42	48	56	61	66	70	70	70	67	63	57	48	39	28	15	0

GIRDER 2

TWENTIETH POINTS	4.00	4.05	4.10	4.15	4.20	4.25	4.30	4.35	4.40	4.45	4.50	4.55	4.60	4.65	4.70	4.75	4.80	4.85	4.90	4.95	5.00
DEFLEC. DUE TO WEIGHT OF STEEL	0.000	0.000	0.000	-0.001	-0.002	-0.003	-0.004	-0.005	-0.006	-0.007	-0.007	-0.008	-0.008	-0.008	-0.007	-0.007	-0.006	-0.005	-0.003	-0.002	0.000
DEFLEC. DUE TO WEIGHT OF SLAB ∗	0.000	0.000	0.000	-0.002	-0.004	-0.007	-0.010	-0.013	-0.015	-0.017	-0.019	-0.020	-0.021	-0.021	-0.020	-0.018	-0.015	-0.012	-0.009	-0.005	0.000
DEFLEC. DUE TO WEIGHT OF RAIL	0.000	0.000	0.000	-0.001	-0.001	-0.002	-0.002	-0.003	-0.003	-0.004	-0.004	-0.005	-0.005	-0.005	-0.004	-0.004	-0.003	-0.003	-0.002	-0.001	0.000
TOTAL DEAD LOAD DEFLECTION	0.000	0.000	0.000	-0.004	-0.007	-0.012	-0.016	-0.021	-0.024	-0.028	-0.030	-0.033	-0.034	-0.034	-0.031	-0.029	-0.024	-0.020	-0.014	-0.008	0.000
VERTICAL CURVE ORDINATE	0.000	0.008	0.015	0.021	0.026	0.031	0.034	0.037	0.039	0.040	0.041	0.040	0.039	0.037	0.034	0.031	0.026	0.021	0.015	0.008	0.000
SUPERELEVATION ORDINATE	0.000	0.000	0.000	0.000	0.000	0.000	0.000	0.000	0.000	0.000	0.000	0.000	0.000	0.000	0.000	0.000	0.000	0.000	0.000	0.000	0.000
CAMBER DUE TO DISSIPATION RESULTING FROM HEAT CURVING ∗∗	0.000	0.000	0.000	0.000	0.000	0.000	0.000	0.000	0.000	0.000	0.000	0.000	0.000	0.000	0.000	0.000	0.000	0.000	0.000	0.000	0.000
REQUIRED CAMBER (mm)	0	8	15	25	33	43	50	58	63	68	71	73	73	71	65	60	50	41	29	16	0

GIRDER 3

TWENTIETH POINTS	4.00	4.05	4.10	4.15	4.20	4.25	4.30	4.35	4.40	4.45	4.50	4.55	4.60	4.65	4.70	4.75	4.80	4.85	4.90	4.95	5.00
DEFLEC. DUE TO WEIGHT OF STEEL	0.000	0.000	0.000	-0.001	-0.002	-0.003	-0.004	-0.005	-0.006	-0.007	-0.007	-0.008	-0.008	-0.008	-0.008	-0.007	-0.006	-0.005	-0.003	-0.002	0.000
DEFLEC. DUE TO WEIGHT OF SLAB ∗	0.000	-0.001	-0.001	-0.003	-0.005	-0.008	-0.010	-0.013	-0.016	-0.018	-0.020	-0.021	-0.022	-0.022	-0.021	-0.019	-0.016	-0.013	-0.009	-0.005	0.000
DEFLEC. DUE TO WEIGHT OF RAIL	0.000	0.000	0.000	-0.001	-0.001	-0.002	-0.002	-0.003	-0.004	-0.005	-0.005	-0.005	-0.005	-0.005	-0.005	-0.005	-0.004	-0.003	-0.002	-0.001	0.000
TOTAL DEAD LOAD DEFLECTION	0.000	-0.001	-0.001	-0.005	-0.008	-0.013	-0.016	-0.021	-0.026	-0.030	-0.032	-0.034	-0.035	-0.035	-0.034	-0.031	-0.026	-0.021	-0.014	-0.008	0.000
VERTICAL CURVE ORDINATE	0.000	0.008	0.015	0.021	0.026	0.031	0.034	0.037	0.039	0.040	0.041	0.040	0.039	0.037	0.034	0.031	0.026	0.021	0.015	0.008	0.000
SUPERELEVATION ORDINATE	0.000	0.000	0.000	0.000	0.000	0.000	0.000	0.000	0.000	0.000	0.000	0.000	0.000	0.000	0.000	0.000	0.000	0.000	0.000	0.000	0.000
CAMBER DUE TO DISSIPATION RESULTING FROM HEAT CURVING ∗∗	0.000	0.000	0.000	0.000	0.000	0.000	0.000	0.000	0.000	0.000	0.000	0.000	0.000	0.000	0.000	0.000	0.000	0.000	0.000	0.000	0.000
REQUIRED CAMBER (mm)	0	9	16	26	34	44	50	58	65	70	73	74	74	72	68	62	52	42	29	16	0

GIRDER 4

TWENTIETH POINTS	4.00	4.05	4.10	4.15	4.20	4.25	4.30	4.35	4.40	4.45	4.50	4.55	4.60	4.65	4.70	4.75	4.80	4.85	4.90	4.95	5.00
DEFLEC. DUE TO WEIGHT OF STEEL	0.000	0.000	0.000	-0.001	-0.002	-0.003	-0.004	-0.005	-0.006	-0.007	-0.008	-0.008	-0.008	-0.008	-0.008	-0.007	-0.006	-0.005	-0.003	-0.002	0.000
DEFLEC. DUE TO WEIGHT OF SLAB ∗	0.000	-0.001	-0.001	-0.003	-0.005	-0.008	-0.010	-0.013	-0.016	-0.019	-0.021	-0.022	-0.023	-0.022	-0.021	-0.019	-0.017	-0.013	-0.009	-0.005	0.000
DEFLEC. DUE TO WEIGHT OF RAIL	0.000	0.000	0.000	-0.001	-0.001	-0.002	-0.002	-0.003	-0.004	-0.005	-0.005	-0.005	-0.005	-0.005	-0.005	-0.005	-0.004	-0.003	-0.002	-0.001	0.000
TOTAL DEAD LOAD DEFLECTION	0.000	-0.001	-0.001	-0.005	-0.008	-0.013	-0.016	-0.021	-0.026	-0.031	-0.034	-0.035	-0.036	-0.035	-0.034	-0.031	-0.027	-0.021	-0.014	-0.008	0.000
VERTICAL CURVE ORDINATE	0.000	0.008	0.015	0.021	0.026	0.031	0.034	0.037	0.039	0.040	0.041	0.040	0.039	0.037	0.034	0.031	0.026	0.021	0.015	0.008	0.000
SUPERELEVATION ORDINATE	0.000	0.000	0.000	0.000	0.000	0.000	0.000	0.000	0.000	0.000	0.000	0.000	0.000	0.000	0.000	0.000	0.000	0.000	0.000	0.000	0.000
CAMBER DUE TO DISSIPATION RESULTING FROM HEAT CURVING ∗∗	0.000	0.000	0.000	0.000	0.000	0.000	0.000	0.000	0.000	0.000	0.000	0.000	0.000	0.000	0.000	0.000	0.000	0.000	0.000	0.000	0.000
REQUIRED CAMBER (mm)	0	9	16	26	34	44	50	58	65	71	75	75	75	72	68	62	53	42	29	16	0

GIRDER 5

TWENTIETH POINTS	4.00	4.05	4.10	4.15	4.20	4.25	4.30	4.35	4.40	4.45	4.50	4.55	4.60	4.65	4.70	4.75	4.80	4.85	4.90	4.95	5.00
DEFLEC. DUE TO WEIGHT OF STEEL	0.000	0.000	0.000	-0.001	-0.002	-0.003	-0.004	-0.005	-0.006	-0.007	-0.008	-0.009	-0.009	-0.009	-0.008	-0.007	-0.006	-0.005	-0.004	-0.002	0.000
DEFLEC. DUE TO WEIGHT OF SLAB ∗	0.000	-0.001	-0.001	-0.003	-0.005	-0.008	-0.011	-0.014	-0.017	-0.019	-0.021	-0.022	-0.023	-0.023	-0.022	-0.020	-0.017	-0.014	-0.010	-0.005	0.000
DEFLEC. DUE TO WEIGHT OF RAIL	0.000	0.000	0.000	-0.001	-0.001	-0.002	-0.003	-0.004	-0.004	-0.005	-0.005	-0.006	-0.006	-0.006	-0.005	-0.005	-0.004	-0.003	-0.002	-0.001	0.000
TOTAL DEAD LOAD DEFLECTION	0.000	-0.001	-0.001	-0.005	-0.008	-0.013	-0.018	-0.023	-0.027	-0.031	-0.034	-0.037	-0.038	-0.038	-0.035	-0.032	-0.027	-0.022	-0.016	-0.008	0.000
VERTICAL CURVE ORDINATE	0.000	0.008	0.015	0.021	0.026	0.031	0.034	0.037	0.039	0.040	0.041	0.040	0.039	0.037	0.034	0.031	0.026	0.021	0.015	0.008	0.000
SUPERELEVATION ORDINATE	0.000	0.000	0.000	0.000	0.000	0.000	0.000	0.000	0.000	0.000	0.000	0.000	0.000	0.000	0.000	0.000	0.000	0.000	0.000	0.000	0.000
CAMBER DUE TO DISSIPATION RESULTING FROM HEAT CURVING ∗∗	0.000	0.000	0.000	0.000	0.000	0.000	0.000	0.000	0.000	0.000	0.000	0.000	0.000	0.000	0.000	0.000	0.000	0.000	0.000	0.000	0.000
REQUIRED CAMBER (mm)	0	9	16	26	34	44	52	60	66	71	75	77	77	75	69	63	53	43	31	16	0

SCHEMATIC CAMBER ORDINATES

PROJECT NO. X-0002B

CUMBERLAND COUNTY

STATION: -L- POC STA. 63+66.830=
-FLYOVER-
POC STA. 22+29.794

SHEET 4 OF 8

STATE OF NORTH CAROLINA
DEPARTMENT OF TRANSPORTATION
RALEIGH

SUPERSTRUCTURE
DEAD LOAD DEFLECTION
AND SCHEMATIC CAMBER
ORDINATES
SPAN "D"

NORTH CAROLINA PROFESSIONAL SEAL 024928 ENGINEER RODNEY E. MONEY 7/29/08

PREPARED IN THE OFFICE OF
TYLIN INTERNATIONAL
RALEIGH, NORTH CAROLINA
Copyright © 2008, TYLI
DWG NO. 37

REVISIONS								
NO.	BY:	DATE:	NO.	BY:	DATE:	SHEET NO. S-214
1			3			TOTAL SHEETS 253
2			4			

DRAWN BY : S. MORGAN DATE : JUN. '08
CHECKED BY : J.W. WRIGHT DATE : JUN. '08

o:\fayetteville outer loop\sm\X0002B_SD_DL_04.dgn 7/28/2008 9:09:53 PM Structures

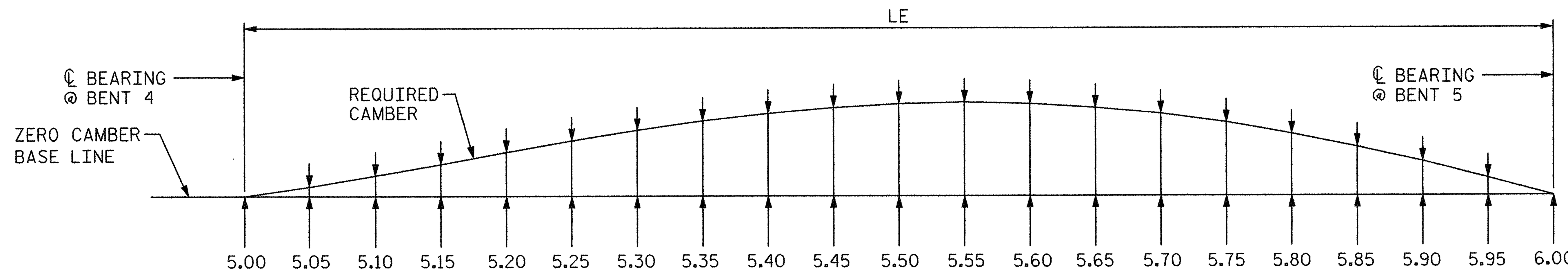

GIRDER 1

TWENTIETH POINTS	5.00	5.05	5.10	5.15	5.20	5.25	5.30	5.35	5.40	5.45	5.50	5.55	5.60	5.65	5.70	5.75	5.80	5.85	5.90	5.95	6.00
DEFLEC. DUE TO WEIGHT OF STEEL	0.000	-0.004	-0.008	-0.012	-0.015	-0.017	-0.019	-0.020	-0.021	-0.021	-0.020	-0.019	-0.017	-0.015	-0.012	-0.009	-0.006	-0.004	-0.002	-0.001	0.000
DEFLEC. DUE TO WEIGHT OF SLAB ✻	0.000	-0.011	-0.022	-0.032	-0.041	-0.047	-0.053	-0.056	-0.058	-0.057	-0.056	-0.051	-0.046	-0.039	-0.032	-0.025	-0.017	-0.011	-0.005	-0.003	0.000
DEFLEC. DUE TO WEIGHT OF RAIL	0.000	-0.003	-0.005	-0.007	-0.009	-0.011	-0.012	-0.013	-0.013	-0.013	-0.012	-0.011	-0.010	-0.009	-0.007	-0.006	-0.004	-0.003	-0.001	-0.001	0.000
TOTAL DEAD LOAD DEFLECTION	0.000	-0.018	-0.035	-0.051	-0.065	-0.075	-0.084	-0.089	-0.092	-0.091	-0.088	-0.081	-0.073	-0.063	-0.051	-0.040	-0.027	-0.018	-0.008	-0.005	0.000
VERTICAL CURVE ORDINATE	0.000	0.011	0.020	0.028	0.035	0.040	0.044	0.047	0.048	0.048	0.047	0.045	0.041	0.036	0.031	0.026	0.021	0.015	0.010	0.005	0.000
SUPERELEVATION ORDINATE	0.000	0.000	0.000	0.000	0.000	0.000	0.000	0.000	0.000	0.000	0.000	0.000	0.000	0.000	0.000	0.000	0.000	0.000	0.000	0.000	0.000
CAMBER DUE TO DISSIPATION RESULTING FROM HEAT CURVING ✻✻	0.000	0.000	0.000	0.000	0.000	0.000	0.000	0.000	0.000	0.000	0.000	0.000	0.000	0.000	0.000	0.000	0.000	0.000	0.000	0.000	0.000
REQUIRED CAMBER (mm)	0	29	55	79	100	115	128	136	140	139	135	126	114	99	82	66	48	33	18	10	0

GIRDER 2

TWENTIETH POINTS	5.00	5.05	5.10	5.15	5.20	5.25	5.30	5.35	5.40	5.45	5.50	5.55	5.60	5.65	5.70	5.75	5.80	5.85	5.90	5.95	6.00
DEFLEC. DUE TO WEIGHT OF STEEL	0.000	-0.005	-0.009	-0.013	-0.016	-0.019	-0.021	-0.022	-0.023	-0.023	-0.022	-0.021	-0.019	-0.016	-0.013	-0.010	-0.007	-0.005	-0.002	-0.001	0.000
DEFLEC. DUE TO WEIGHT OF SLAB ✻	0.000	-0.013	-0.025	-0.035	-0.045	-0.052	-0.059	-0.062	-0.065	-0.064	-0.062	-0.057	-0.052	-0.044	-0.036	-0.028	-0.020	-0.013	-0.006	-0.003	0.000
DEFLEC. DUE TO WEIGHT OF RAIL	0.000	-0.003	-0.005	-0.008	-0.010	-0.012	-0.013	-0.014	-0.015	-0.015	-0.014	-0.013	-0.012	-0.010	-0.008	-0.007	-0.005	-0.003	-0.001	-0.001	0.000
TOTAL DEAD LOAD DEFLECTION	0.000	-0.021	-0.039	-0.056	-0.071	-0.083	-0.093	-0.098	-0.103	-0.102	-0.098	-0.091	-0.083	-0.070	-0.057	-0.045	-0.032	-0.021	-0.009	-0.005	0.000
VERTICAL CURVE ORDINATE	0.000	0.011	0.020	0.028	0.035	0.040	0.044	0.047	0.048	0.048	0.047	0.045	0.041	0.036	0.031	0.026	0.021	0.015	0.010	0.005	0.000
SUPERELEVATION ORDINATE	0.000	0.000	0.000	0.000	0.000	0.000	0.000	0.000	0.000	0.000	0.000	0.000	0.000	0.000	0.000	0.000	0.000	0.000	0.000	0.000	0.000
CAMBER DUE TO DISSIPATION RESULTING FROM HEAT CURVING ✻✻	0.000	0.000	0.000	0.000	0.000	0.000	0.000	0.000	0.000	0.000	0.000	0.000	0.000	0.000	0.000	0.000	0.000	0.000	0.000	0.000	0.000
REQUIRED CAMBER (mm)	0	32	59	84	106	123	137	145	151	150	145	136	124	106	88	71	53	36	19	10	0

GIRDER 3

TWENTIETH POINTS	5.00	5.05	5.10	5.15	5.20	5.25	5.30	5.35	5.40	5.45	5.50	5.55	5.60	5.65	5.70	5.75	5.80	5.85	5.90	5.95	6.00
DEFLEC. DUE TO WEIGHT OF STEEL	0.000	-0.005	-0.010	-0.014	-0.018	-0.021	-0.023	-0.025	-0.026	-0.026	-0.025	-0.023	-0.021	-0.018	-0.015	-0.012	-0.008	-0.006	-0.003	-0.002	0.000
DEFLEC. DUE TO WEIGHT OF SLAB ✻	0.000	-0.014	-0.027	-0.038	-0.049	-0.057	-0.064	-0.067	-0.070	-0.069	-0.067	-0.062	-0.056	-0.048	-0.040	-0.031	-0.022	-0.015	-0.007	-0.004	0.000
DEFLEC. DUE TO WEIGHT OF RAIL	0.000	-0.003	-0.006	-0.009	-0.011	-0.013	-0.015	-0.016	-0.016	-0.016	-0.016	-0.015	-0.013	-0.012	-0.010	-0.008	-0.005	-0.004	-0.002	-0.001	0.000
TOTAL DEAD LOAD DEFLECTION	0.000	-0.022	-0.043	-0.061	-0.078	-0.091	-0.102	-0.108	-0.112	-0.111	-0.108	-0.100	-0.090	-0.078	-0.065	-0.051	-0.035	-0.025	-0.012	-0.007	0.000
VERTICAL CURVE ORDINATE	0.000	0.011	0.020	0.028	0.035	0.040	0.044	0.047	0.048	0.048	0.047	0.045	0.041	0.036	0.031	0.026	0.021	0.015	0.010	0.005	0.000
SUPERELEVATION ORDINATE	0.000	0.000	0.000	0.000	0.000	0.000	0.000	0.000	0.000	0.000	0.000	0.000	0.000	0.000	0.000	0.000	0.000	0.000	0.000	0.000	0.000
CAMBER DUE TO DISSIPATION RESULTING FROM HEAT CURVING ✻✻	0.000	0.000	0.000	0.000	0.000	0.000	0.000	0.000	0.000	0.000	0.000	0.000	0.000	0.000	0.000	0.000	0.000	0.000	0.000	0.000	0.000
REQUIRED CAMBER (mm)	0	33	63	89	113	131	146	155	160	159	155	145	131	114	96	77	56	40	22	12	0

GIRDER 4

TWENTIETH POINTS	5.00	5.05	5.10	5.15	5.20	5.25	5.30	5.35	5.40	5.45	5.50	5.55	5.60	5.65	5.70	5.75	5.80	5.85	5.90	5.95	6.00
DEFLEC. DUE TO WEIGHT OF STEEL	0.000	-0.006	-0.011	-0.015	-0.019	-0.023	-0.026	-0.027	-0.028	-0.028	-0.027	-0.025	-0.023	-0.020	-0.016	-0.013	-0.009	-0.006	-0.003	-0.002	0.000
DEFLEC. DUE TO WEIGHT OF SLAB ✻	0.000	-0.015	-0.029	-0.041	-0.053	-0.061	-0.069	-0.073	-0.076	-0.075	-0.073	-0.067	-0.061	-0.052	-0.043	-0.034	-0.024	-0.016	-0.008	-0.004	0.000
DEFLEC. DUE TO WEIGHT OF RAIL	0.000	-0.004	-0.007	-0.010	-0.013	-0.015	-0.017	-0.018	-0.018	-0.018	-0.018	-0.017	-0.015	-0.013	-0.011	-0.009	-0.006	-0.004	-0.002	-0.001	0.000
TOTAL DEAD LOAD DEFLECTION	0.000	-0.025	-0.047	-0.066	-0.085	-0.099	-0.112	-0.118	-0.122	-0.121	-0.118	-0.109	-0.099	-0.085	-0.070	-0.056	-0.039	-0.026	-0.013	-0.007	0.000
VERTICAL CURVE ORDINATE	0.000	0.011	0.020	0.028	0.035	0.040	0.044	0.047	0.048	0.048	0.047	0.045	0.041	0.036	0.031	0.026	0.021	0.015	0.010	0.005	0.000
SUPERELEVATION ORDINATE	0.000	0.000	0.000	0.000	0.000	0.000	0.000	0.000	0.000	0.000	0.000	0.000	0.000	0.000	0.000	0.000	0.000	0.000	0.000	0.000	0.000
CAMBER DUE TO DISSIPATION RESULTING FROM HEAT CURVING ✻✻	0.000	0.000	0.000	0.000	0.000	0.000	0.000	0.000	0.000	0.000	0.000	0.000	0.000	0.000	0.000	0.000	0.000	0.000	0.000	0.000	0.000
REQUIRED CAMBER (mm)	0	36	67	94	120	139	156	165	170	169	165	154	140	121	101	82	60	41	23	12	0

GIRDER 5

TWENTIETH POINTS	5.00	5.05	5.10	5.15	5.20	5.25	5.30	5.35	5.40	5.45	5.50	5.55	5.60	5.65	5.70	5.75	5.80	5.85	5.90	5.95	6.00
DEFLEC. DUE TO WEIGHT OF STEEL	0.000	-0.006	-0.012	-0.017	-0.021	-0.025	-0.028	-0.030	-0.031	-0.030	-0.029	-0.027	-0.025	-0.022	-0.018	-0.014	-0.010	-0.007	-0.004	-0.002	0.000
DEFLEC. DUE TO WEIGHT OF SLAB ✻	0.000	-0.016	-0.031	-0.044	-0.057	-0.066	-0.074	-0.078	-0.082	-0.080	-0.078	-0.072	-0.065	-0.056	-0.046	-0.036	-0.026	-0.018	-0.009	-0.005	0.000
DEFLEC. DUE TO WEIGHT OF RAIL	0.000	-0.004	-0.008	-0.011	-0.014	-0.017	-0.019	-0.020	-0.021	-0.021	-0.020	-0.019	-0.017	-0.015	-0.012	-0.010	-0.007	-0.005	-0.002	-0.001	0.000
TOTAL DEAD LOAD DEFLECTION	0.000	-0.026	-0.051	-0.072	-0.092	-0.108	-0.121	-0.128	-0.134	-0.131	-0.127	-0.118	-0.107	-0.093	-0.076	-0.060	-0.043	-0.030	-0.015	-0.008	0.000
VERTICAL CURVE ORDINATE	0.000	0.011	0.020	0.028	0.035	0.040	0.044	0.047	0.048	0.048	0.047	0.045	0.041	0.036	0.031	0.026	0.021	0.015	0.010	0.005	0.000
SUPERELEVATION ORDINATE	0.000	0.000	0.000	0.000	0.000	0.000	0.000	0.000	0.000	0.000	0.000	0.000	0.000	0.000	0.000	0.000	0.000	0.000	0.000	0.000	0.000
CAMBER DUE TO DISSIPATION RESULTING FROM HEAT CURVING ✻✻	0.000	0.000	0.000	0.000	0.000	0.000	0.000	0.000	0.000	0.000	0.000	0.000	0.000	0.000	0.000	0.000	0.000	0.000	0.000	0.000	0.000
REQUIRED CAMBER (mm)	0	37	71	100	127	148	165	175	182	179	174	163	148	129	107	86	64	45	25	13	0

SCHEMATIC CAMBER ORDINATES

NOTES:

SLOPE FOR THE ZERO CAMBER BASE LINE VARIES.

VALUES GIVEN ARE AT TWENTIETH POINTS BETWEEN CENTERLINE OF BEARINGS.

DEFLECTIONS AND ORDINATES ARE IN METERS (DECIMAL FORM).

REQUIRED CAMBER VALUES ARE IN MILLIMETERS.

DOWNWARD DEFLECTION IS INDICATED WITH A "-" SIGN.

✻ INCLUDES SLAB, BUILD-UP AND METAL STAY-IN-PLACE FORMS.

✻✻ CAMBER DISSIPATION ORDINATE TO BE DEDUCTED IF HEAT CURVING NOT UTILIZED.

GIRDER	LE
1	53.433
2	53.714
3	53.996
4	54.277
5	54.558

NOTE:

DIMENSIONS ARE ARC DIMENSIONS IN METERS ALONG THE ℄ OF GIRDER. NO CORRECTION HAS BEEN MADE TO ADJUST FOR THE DISTANCE ALONG THE GRADE.

o:\fayetteville outer loop\sm\X0002B_SD_DL_05.dgn 7/28/2008 11:08:49 PM Structures

DRAWN BY : S. MORGAN DATE : JUN. '08
CHECKED BY : J.W. WRIGHT DATE : JUN. '08

PROJECT NO. X-0002B
CUMBERLAND COUNTY
STATION: -L- POC STA. 63+66.830=
-FLYOVER-
POC STA. 22+29.794

SHEET 5 OF 8

NORTH CAROLINA PROFESSIONAL SEAL 024928 ENGINEER RODNEY E. MONEY R.E. Money 7/29/08

STATE OF NORTH CAROLINA
DEPARTMENT OF TRANSPORTATION
RALEIGH

SUPERSTRUCTURE
DEAD LOAD DEFLECTION
AND SCHEMATIC CAMBER
ORDINATES
SPAN "E"

PREPARED IN THE OFFICE OF
T·Y·LIN INTERNATIONAL
RALEIGH, NORTH CAROLINA
Copyright © 2008, TYLI
DWG NO. 38

REVISIONS					
NO.	BY:	DATE:	NO.	BY:	DATE:
1			3		
2			4		

SHEET NO. S-215
TOTAL SHEETS 253

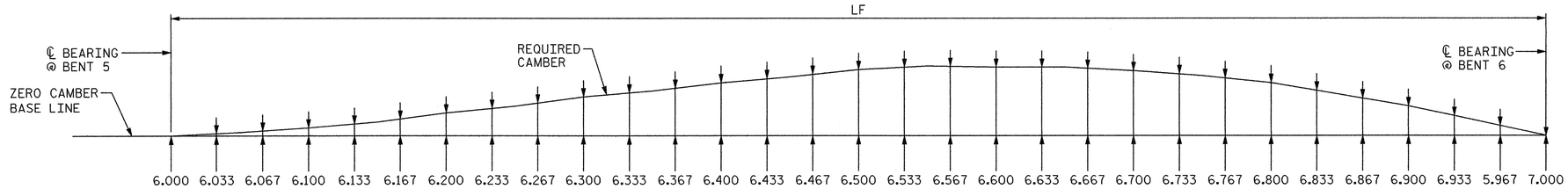

NOTES:

SLOPE FOR THE ZERO CAMBER BASE LINE VARIES.

VALUES GIVEN ARE AT THIRTIETH POINTS BETWEEN CENTERLINE OF BEARINGS.

DEFLECTIONS AND ORDINATES ARE IN METERS (DECIMAL FORM).

REQUIRED CAMBER VALUES ARE IN MILLIMETERS.

DOWNWARD DEFLECTION IS INDICATED WITH A "-" SIGN.

✱ INCLUDES SLAB, BUILD-UP AND METAL STAY-IN-PLACE FORMS.

✱✱ CAMBER DISSIPATION ORDINATE TO BE DEDUCTED IF HEAT CURVING NOT UTILIZED.

GIRDER	LF
1	68.119
2	68.477
3	68.836
4	69.195
5	69.553

NOTE:

DIMENSIONS ARE ARC DIMENSIONS IN METERS ALONG THE ℄ OF GIRDER. NO CORRECTION HAS BEEN MADE TO ADJUST FOR THE DISTANCE ALONG THE GRADE.

GIRDER 1

THIRTIETH POINTS	6.000	6.033	6.067	6.100	6.133	6.167	6.200	6.233	6.267	6.300	6.333	6.367	6.400	6.433	6.467	6.500	6.533	6.567	6.600	6.633	6.667	6.700	6.733	6.767	6.800	6.833	6.867	6.900	6.933	6.967	7.000
DEFLEC. DUE TO WEIGHT OF STEEL	0.000	-0.001	-0.002	-0.003	-0.005	-0.007	-0.009	-0.011	-0.013	-0.015	-0.017	-0.018	-0.020	-0.021	-0.021	-0.022	-0.021	-0.020	-0.019	-0.017	-0.015	-0.013	-0.011	-0.008	-0.006	-0.004	-0.003	-0.001	-0.001	0.000	0.000
DEFLEC. DUE TO WEIGHT OF SLAB ✱	0.000	-0.002	-0.004	-0.006	-0.011	-0.017	-0.022	-0.028	-0.034	-0.040	-0.044	-0.049	-0.053	-0.054	-0.056	-0.057	-0.054	-0.052	-0.049	-0.044	-0.039	-0.034	-0.028	-0.022	-0.016	-0.011	-0.007	-0.002	-0.001	-0.001	0.000
DEFLEC. DUE TO WEIGHT OF RAIL	0.000	-0.001	-0.001	-0.002	-0.003	-0.005	-0.006	-0.008	-0.009	-0.011	-0.012	-0.013	-0.014	-0.014	-0.015	-0.015	-0.014	-0.014	-0.013	-0.012	-0.010	-0.009	-0.008	-0.006	-0.005	-0.004	-0.002	-0.001	-0.001	0.000	0.000
TOTAL DEAD LOAD DEFLECTION	0.000	-0.004	-0.007	-0.011	-0.019	-0.029	-0.037	-0.047	-0.056	-0.066	-0.073	-0.080	-0.087	-0.089	-0.092	-0.094	-0.089	-0.086	-0.081	-0.073	-0.064	-0.056	-0.047	-0.036	-0.027	-0.019	-0.012	-0.004	-0.003	-0.001	0.000
VERTICAL CURVE ORDINATE	0.000	0.000	0.000	0.000	0.000	0.000	0.000	0.000	0.000	0.000	0.000	0.000	0.000	0.000	0.000	0.000	0.000	0.000	0.000	0.000	0.000	0.000	0.000	0.000	0.000	0.000	0.000	0.000	0.000	0.000	0.000
SUPERELEVATION ORDINATE	0.000	0.000	0.000	0.000	0.000	0.000	0.000	0.000	0.000	0.000	0.000	0.000	0.000	0.000	0.000	0.000	0.000	0.000	0.000	0.000	0.000	0.000	0.000	0.000	0.000	0.000	0.000	0.000	0.000	0.000	0.000
CAMBER DUE TO DISSIPATION RESULTING FROM HEAT CURVING ✱✱	0.000	0.000	0.000	0.000	0.000	0.000	0.000	0.000	0.000	0.000	0.000	0.000	0.000	0.000	0.000	0.000	0.000	0.000	0.000	0.000	0.000	0.000	0.000	0.000	0.000	0.000	0.000	0.000	0.000	0.000	0.000
REQUIRED CAMBER (mm)	0	4	7	11	19	29	37	47	56	66	73	80	87	89	92	94	89	86	81	73	64	56	47	36	27	19	12	4	3	1	0

GIRDER 2

THIRTIETH POINTS	6.000	6.033	6.067	6.100	6.133	6.167	6.200	6.233	6.267	6.300	6.333	6.367	6.400	6.433	6.467	6.500	6.533	6.567	6.600	6.633	6.667	6.700	6.733	6.767	6.800	6.833	6.867	6.900	6.933	6.967	7.000
DEFLEC. DUE TO WEIGHT OF STEEL	0.000	-0.001	-0.001	-0.002	-0.004	-0.006	-0.008	-0.010	-0.013	-0.015	-0.016	-0.018	-0.019	-0.019	-0.020	-0.020	-0.019	-0.019	-0.018	-0.016	-0.014	-0.012	-0.010	-0.007	-0.005	-0.003	-0.002	0.000	0.000	0.000	0.000
DEFLEC. DUE TO WEIGHT OF SLAB ✱	0.000	-0.002	-0.004	-0.006	-0.011	-0.017	-0.022	-0.028	-0.034	-0.040	-0.044	-0.049	-0.053	-0.054	-0.056	-0.057	-0.054	-0.052	-0.049	-0.044	-0.038	-0.033	-0.027	-0.021	-0.015	-0.010	-0.006	-0.001	-0.001	0.000	0.000
DEFLEC. DUE TO WEIGHT OF RAIL	0.000	-0.001	-0.001	-0.002	-0.004	-0.005	-0.007	-0.008	-0.010	-0.011	-0.012	-0.014	-0.015	-0.015	-0.015	-0.015	-0.014	-0.014	-0.013	-0.012	-0.010	-0.009	-0.008	-0.006	-0.005	-0.004	-0.002	-0.001	-0.001	0.000	0.000
TOTAL DEAD LOAD DEFLECTION	0.000	-0.004	-0.006	-0.010	-0.019	-0.028	-0.037	-0.046	-0.057	-0.066	-0.072	-0.081	-0.087	-0.088	-0.091	-0.092	-0.087	-0.085	-0.080	-0.072	-0.062	-0.054	-0.045	-0.034	-0.025	-0.017	-0.010	-0.002	-0.002	0.000	0.000
VERTICAL CURVE ORDINATE	0.000	0.000	0.000	0.000	0.000	0.000	0.000	0.000	0.000	0.000	0.000	0.000	0.000	0.000	0.000	0.000	0.000	0.000	0.000	0.000	0.000	0.000	0.000	0.000	0.000	0.000	0.000	0.000	0.000	0.000	0.000
SUPERELEVATION ORDINATE	0.000	0.000	0.000	0.000	0.000	0.000	0.000	0.000	0.000	0.000	0.000	0.000	0.000	0.000	0.000	0.000	0.000	0.000	0.000	0.000	0.000	0.000	0.000	0.000	0.000	0.000	0.000	0.000	0.000	0.000	0.000
CAMBER DUE TO DISSIPATION RESULTING FROM HEAT CURVING ✱✱	0.000	0.000	0.000	0.000	0.000	0.000	0.000	0.000	0.000	0.000	0.000	0.000	0.000	0.000	0.000	0.000	0.000	0.000	0.000	0.000	0.000	0.000	0.000	0.000	0.000	0.000	0.000	0.000	0.000	0.000	0.000
REQUIRED CAMBER (mm)	0	4	6	10	19	28	37	46	57	66	72	81	87	88	91	92	87	85	80	72	62	54	45	34	25	17	10	2	2	0	0

GIRDER 3

THIRTIETH POINTS	6.000	6.033	6.067	6.100	6.133	6.167	6.200	6.233	6.267	6.300	6.333	6.367	6.400	6.433	6.467	6.500	6.533	6.567	6.600	6.633	6.667	6.700	6.733	6.767	6.800	6.833	6.867	6.900	6.933	6.967	7.000
DEFLEC. DUE TO WEIGHT OF STEEL	0.000	-0.001	-0.001	-0.002	-0.004	-0.005	-0.007	-0.009	-0.012	-0.014	-0.015	-0.017	-0.018	-0.018	-0.019	-0.019	-0.018	-0.017	-0.016	-0.014	-0.012	-0.010	-0.008	-0.006	-0.004	-0.003	-0.001	0.000	0.000	0.000	0.000
DEFLEC. DUE TO WEIGHT OF SLAB ✱	0.000	-0.002	-0.003	-0.005	-0.010	-0.016	-0.021	-0.027	-0.033	-0.039	-0.044	-0.048	-0.053	-0.054	-0.055	-0.056	-0.053	-0.051	-0.048	-0.043	-0.037	-0.032	-0.026	-0.019	-0.013	-0.009	-0.004	0.000	0.000	0.000	0.000
DEFLEC. DUE TO WEIGHT OF RAIL	0.000	-0.001	-0.001	-0.002	-0.004	-0.005	-0.007	-0.009	-0.010	-0.012	-0.013	-0.014	-0.015	-0.015	-0.016	-0.016	-0.015	-0.015	-0.014	-0.013	-0.011	-0.010	-0.008	-0.006	-0.004	-0.003	-0.001	0.000	0.000	0.000	0.000
TOTAL DEAD LOAD DEFLECTION	0.000	-0.004	-0.005	-0.009	-0.018	-0.026	-0.035	-0.045	-0.055	-0.065	-0.072	-0.079	-0.086	-0.087	-0.090	-0.091	-0.086	-0.083	-0.078	-0.070	-0.060	-0.052	-0.042	-0.031	-0.021	-0.015	-0.006	0.000	0.000	0.000	0.000
VERTICAL CURVE ORDINATE	0.000	0.000	0.000	0.000	0.000	0.000	0.000	0.000	0.000	0.000	0.000	0.000	0.000	0.000	0.000	0.000	0.000	0.000	0.000	0.000	0.000	0.000	0.000	0.000	0.000	0.000	0.000	0.000	0.000	0.000	0.000
SUPERELEVATION ORDINATE	0.000	0.000	0.000	0.000	0.000	0.000	0.000	0.000	0.000	0.000	0.000	0.000	0.000	0.000	0.000	0.000	0.000	0.000	0.000	0.000	0.000	0.000	0.000	0.000	0.000	0.000	0.000	0.000	0.000	0.000	0.000
CAMBER DUE TO DISSIPATION RESULTING FROM HEAT CURVING ✱✱	0.000	0.000	0.000	0.000	0.000	0.000	0.000	0.000	0.000	0.000	0.000	0.000	0.000	0.000	0.000	0.000	0.000	0.000	0.000	0.000	0.000	0.000	0.000	0.000	0.000	0.000	0.000	0.000	0.000	0.000	0.000
REQUIRED CAMBER (mm)	0	4	5	9	18	26	35	45	55	65	72	79	86	87	90	91	86	83	78	70	60	52	42	31	21	15	6	0	0	0	0

GIRDER 4

THIRTIETH POINTS	6.000	6.033	6.067	6.100	6.133	6.167	6.200	6.233	6.267	6.300	6.333	6.367	6.400	6.433	6.467	6.500	6.533	6.567	6.600	6.633	6.667	6.700	6.733	6.767	6.800	6.833	6.867	6.900	6.933	6.967	7.000
DEFLEC. DUE TO WEIGHT OF STEEL	0.000	0.000	-0.001	-0.001	-0.003	-0.004	-0.006	-0.008	-0.011	-0.013	-0.014	-0.016	-0.017	-0.017	-0.018	-0.018	-0.017	-0.015	-0.014	-0.012	-0.010	-0.008	-0.006	-0.004	-0.002	-0.001	0.000	0.001	0.001	0.000	0.000
DEFLEC. DUE TO WEIGHT OF SLAB ✱	0.000	-0.001	-0.003	-0.004	-0.009	-0.015	-0.020	-0.026	-0.032	-0.038	-0.043	-0.047	-0.052	-0.053	-0.054	-0.055	-0.052	-0.050	-0.047	-0.041	-0.036	-0.030	-0.024	-0.018	-0.012	-0.008	-0.004	0.000	0.000	0.000	0.000
DEFLEC. DUE TO WEIGHT OF RAIL	0.000	-0.001	-0.001	-0.002	-0.004	-0.005	-0.007	-0.009	-0.010	-0.012	-0.013	-0.015	-0.016	-0.016	-0.017	-0.017	-0.016	-0.016	-0.015	-0.013	-0.012	-0.010	-0.008	-0.006	-0.004	-0.003	-0.001	0.000	0.000	0.000	0.000
TOTAL DEAD LOAD DEFLECTION	0.000	-0.002	-0.005	-0.007	-0.016	-0.024	-0.033	-0.043	-0.053	-0.063	-0.070	-0.078	-0.085	-0.086	-0.089	-0.090	-0.085	-0.081	-0.076	-0.066	-0.058	-0.048	-0.038	-0.028	-0.018	-0.012	-0.005	0.001	0.001	0.000	0.000
VERTICAL CURVE ORDINATE	0.000	0.000	0.000	0.000	0.000	0.000	0.000	0.000	0.000	0.000	0.000	0.000	0.000	0.000	0.000	0.000	0.000	0.000	0.000	0.000	0.000	0.000	0.000	0.000	0.000	0.000	0.000	0.000	0.000	0.000	0.000
SUPERELEVATION ORDINATE	0.000	0.000	0.000	0.000	0.000	0.000	0.000	0.000	0.000	0.000	0.000	0.000	0.000	0.000	0.000	0.000	0.000	0.000	0.000	0.000	0.000	0.000	0.000	0.000	0.000	0.000	0.000	0.000	0.000	0.000	0.000
CAMBER DUE TO DISSIPATION RESULTING FROM HEAT CURVING ✱✱	0.000	0.000	0.000	0.000	0.000	0.000	0.000	0.000	0.000	0.000	0.000	0.000	0.000	0.000	0.000	0.000	0.000	0.000	0.000	0.000	0.000	0.000	0.000	0.000	0.000	0.000	0.000	0.000	0.000	0.000	0.000
REQUIRED CAMBER (mm)	0	2	5	7	16	24	33	43	53	63	70	78	85	86	89	90	85	81	76	66	58	48	38	28	18	12	5	-1	-1	0	0

GIRDER 5

THIRTIETH POINTS	6.000	6.033	6.067	6.100	6.133	6.167	6.200	6.233	6.267	6.300	6.333	6.367	6.400	6.433	6.467	6.500	6.533	6.567	6.600	6.633	6.667	6.700	6.733	6.767	6.800	6.833	6.867	6.900	6.933	6.967	7.000
DEFLEC. DUE TO WEIGHT OF STEEL	0.000	0.000	-0.001	-0.001	-0.003	-0.004	-0.006	-0.008	-0.009	-0.011	-0.013	-0.014	-0.016	-0.016	-0.016	-0.016	-0.015	-0.014	-0.013	-0.011	-0.009	-0.007	-0.005	-0.003	-0.001	0.000	0.001	0.002	0.001	0.001	0.000
DEFLEC. DUE TO WEIGHT OF SLAB ✱	0.000	-0.001	-0.002	-0.003	-0.008	-0.013	-0.018	-0.024	-0.031	-0.037	-0.041	-0.046	-0.050	-0.051	-0.053	-0.054	-0.051	-0.048	-0.045	-0.039	-0.034	-0.028	-0.022	-0.016	-0.010	-0.006	-0.002	0.002	0.001	0.001	0.000
DEFLEC. DUE TO WEIGHT OF RAIL	0.000	-0.001	-0.001	-0.002	-0.004	-0.005	-0.007	-0.009	-0.011	-0.013	-0.014	-0.016	-0.017	-0.017	-0.018	-0.018	-0.017	-0.017	-0.016	-0.014	-0.012	-0.010	-0.008	-0.006	-0.004	-0.003	-0.001	0.000	0.000	0.000	0.000
TOTAL DEAD LOAD DEFLECTION	0.000	-0.002	-0.004	-0.006	-0.015	-0.022	-0.031	-0.041	-0.051	-0.061	-0.068	-0.076	-0.083	-0.084	-0.087	-0.088	-0.083	-0.079	-0.074	-0.064	-0.055	-0.045	-0.035	-0.025	-0.015	-0.009	-0.002	0.004	0.002	0.002	0.000
VERTICAL CURVE ORDINATE	0.000	0.000	0.000	0.000	0.000	0.000	0.000	0.000	0.000	0.000	0.000	0.000	0.000	0.000	0.000	0.000	0.000	0.000	0.000	0.000	0.000	0.000	0.000	0.000	0.000	0.000	0.000	0.000	0.000	0.000	0.000
SUPERELEVATION ORDINATE	0.000	0.000	0.000	0.000	0.000	0.000	0.000	0.000	0.000	0.000	0.000	0.000	0.000	0.000	0.000	0.000	0.000	0.000	0.000	0.000	0.000	0.000	0.000	0.000	0.000	0.000	0.000	0.000	0.000	0.000	0.000
CAMBER DUE TO DISSIPATION RESULTING FROM HEAT CURVING ✱✱	0.000	0.000	0.000	0.000	0.000	0.000	0.000	0.000	0.000	0.000	0.000	0.000	0.000	0.000	0.000	0.000	0.000	0.000	0.000	0.000	0.000	0.000	0.000	0.000	0.000	0.000	0.000	0.000	0.000	0.000	0.000
REQUIRED CAMBER (mm)	0	2	4	6	15	22	31	41	51	61	68	76	83	84	87	88	83	79	74	64	55	45	35	25	15	9	2	-4	-2	-2	0

SCHEMATIC CAMBER ORDINATES

PROJECT NO. X-0002B

CUMBERLAND COUNTY

STATION: -L- POC STA. 63+66.830=
-FLYOVER-
POC STA. 22+29.794

SHEET 6 OF 8

STATE OF NORTH CAROLINA
DEPARTMENT OF TRANSPORTATION
RALEIGH

SUPERSTRUCTURE
DEAD LOAD DEFLECTION
AND SCHEMATIC CAMBER
ORDINATES
SPAN "F"

NORTH CAROLINA PROFESSIONAL SEAL 024928 ENGINEER RODNEY E. MONEY 7/29/08

PREPARED IN THE OFFICE OF
TYLIN INTERNATIONAL
RALEIGH, NORTH CAROLINA
Copyright © 2008, TYLI
DWG NO. 39

REVISIONS								
NO.	BY:	DATE:	NO.	BY:	DATE:	SHEET NO. S-216
1			3			TOTAL SHEETS 253
2			4			

DRAWN BY : S. MORGAN DATE : JUN. '08
CHECKED BY : J.W. WRIGHT DATE : JUN. '08

a:\fayetteville outer loop\sem\X0002B_SD_DL_06.dgn 7/28/2008 3:10:01 PM Structures

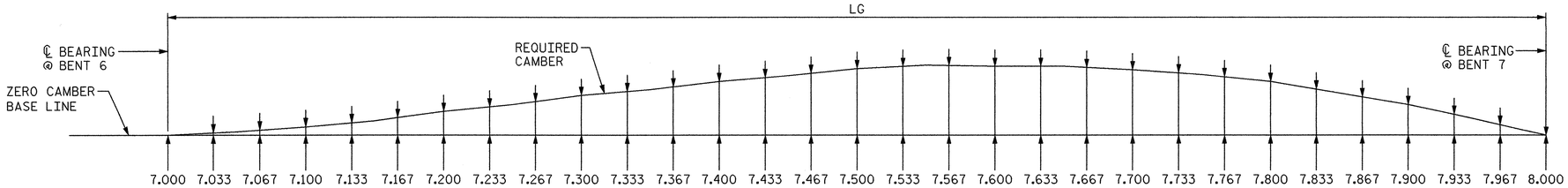

NOTES:

SLOPE FOR THE ZERO CAMBER BASE LINE VARIES.

VALUES GIVEN ARE AT THIRTIETH POINTS BETWEEN CENTERLINE OF BEARINGS.

DEFLECTIONS AND ORDINATES ARE IN METERS (DECIMAL FORM).

REQUIRED CAMBER VALUES ARE IN MILLIMETERS.

DOWNWARD DEFLECTION IS INDICATED WITH A "-" SIGN.

✱ INCLUDES SLAB, BUILD-UP AND METAL STAY-IN-PLACE FORMS.

✱✱ CAMBER DISSIPATION ORDINATE TO BE DEDUCTED IF HEAT CURVING NOT UTILIZED.

GIRDER 1

THIRTIETH POINTS	7.000	7.033	7.067	7.100	7.133	7.167	7.200	7.233	7.267	7.300	7.333	7.367	7.400	7.433	7.467	7.500	7.533	7.567	7.600	7.633	7.667	7.700	7.733	7.767	7.800	7.833	7.867	7.900	7.933	7.967	8.000
DEFLEC. DUE TO WEIGHT OF STEEL	0.000	-0.002	-0.005	-0.007	-0.011	-0.014	-0.018	-0.022	-0.026	-0.030	-0.033	-0.036	-0.039	-0.040	-0.042	-0.043	-0.042	-0.041	-0.040	-0.037	-0.034	-0.031	-0.027	-0.023	-0.019	-0.015	-0.011	-0.007	-0.005	-0.002	0.000
DEFLEC. DUE TO WEIGHT OF SLAB ✱	0.000	-0.006	-0.012	-0.018	-0.029	-0.039	-0.050	-0.061	-0.072	-0.083	-0.092	-0.100	-0.109	-0.112	-0.116	-0.119	-0.116	-0.114	-0.111	-0.103	-0.094	-0.086	-0.075	-0.063	-0.052	-0.041	-0.031	-0.020	-0.013	-0.007	0.000
DEFLEC. DUE TO WEIGHT OF RAIL	0.000	-0.002	-0.003	-0.005	-0.007	-0.010	-0.012	-0.015	-0.018	-0.021	-0.023	-0.024	-0.026	-0.027	-0.028	-0.029	-0.028	-0.028	-0.027	-0.025	-0.023	-0.021	-0.018	-0.016	-0.013	-0.010	-0.008	-0.005	-0.003	-0.002	0.000
TOTAL DEAD LOAD DEFLECTION	0.000	-0.010	-0.020	-0.030	-0.047	-0.063	-0.080	-0.098	-0.116	-0.134	-0.148	-0.160	-0.174	-0.179	-0.186	-0.191	-0.186	-0.183	-0.178	-0.165	-0.151	-0.138	-0.120	-0.102	-0.084	-0.066	-0.050	-0.032	-0.021	-0.011	0.000
VERTICAL CURVE ORDINATE	0.000	0.000	0.000	0.000	0.000	0.000	0.000	0.000	0.000	0.000	0.000	0.000	0.000	0.000	0.000	0.000	0.000	0.000	0.000	0.000	0.000	0.000	0.000	0.000	0.000	0.000	0.000	0.000	0.000	0.000	0.000
SUPERELEVATION ORDINATE	0.000	0.000	0.000	0.000	0.000	0.000	0.000	0.000	0.000	0.000	0.000	0.000	0.000	0.000	0.000	0.000	0.000	0.000	0.000	0.000	0.000	0.000	0.000	0.000	0.000	0.000	0.000	0.000	0.000	0.000	0.000
CAMBER DUE TO DISSIPATION RESULTING FROM HEAT CURVING ✱✱	0.000	0.000	0.000	0.000	0.000	0.000	0.000	0.000	0.000	0.000	0.000	0.000	0.000	0.000	0.000	0.000	0.000	0.000	0.000	0.000	0.000	0.000	0.000	0.000	0.000	0.000	0.000	0.000	0.000	0.000	0.000
REQUIRED CAMBER (mm)	0	10	20	30	47	63	80	98	116	134	148	160	174	179	186	191	186	183	178	165	151	138	120	102	84	66	50	32	21	11	0

GIRDER 2

THIRTIETH POINTS	7.000	7.033	7.067	7.100	7.133	7.167	7.200	7.233	7.267	7.300	7.333	7.367	7.400	7.433	7.467	7.500	7.533	7.567	7.600	7.633	7.667	7.700	7.733	7.767	7.800	7.833	7.867	7.900	7.933	7.967	8.000
DEFLEC. DUE TO WEIGHT OF STEEL	0.000	-0.003	-0.005	-0.008	-0.012	-0.017	-0.021	-0.025	-0.030	-0.034	-0.038	-0.041	-0.045	-0.046	-0.048	-0.049	-0.048	-0.046	-0.045	-0.042	-0.038	-0.035	-0.031	-0.026	-0.022	-0.017	-0.013	-0.008	-0.005	-0.003	0.000
DEFLEC. DUE TO WEIGHT OF SLAB ✱	0.000	-0.007	-0.013	-0.020	-0.031	-0.042	-0.053	-0.065	-0.077	-0.089	-0.098	-0.107	-0.116	-0.119	-0.123	-0.126	-0.123	-0.120	-0.117	-0.108	-0.100	-0.091	-0.079	-0.067	-0.055	-0.044	-0.032	-0.021	-0.014	-0.007	0.000
DEFLEC. DUE TO WEIGHT OF RAIL	0.000	-0.002	-0.003	-0.005	-0.008	-0.011	-0.014	-0.017	-0.020	-0.023	-0.025	-0.027	-0.029	-0.030	-0.031	-0.032	-0.031	-0.031	-0.030	-0.028	-0.026	-0.024	-0.021	-0.018	-0.015	-0.012	-0.009	-0.006	-0.004	-0.002	0.000
TOTAL DEAD LOAD DEFLECTION	0.000	-0.012	-0.021	-0.033	-0.051	-0.070	-0.088	-0.107	-0.127	-0.146	-0.161	-0.175	-0.190	-0.195	-0.202	-0.207	-0.202	-0.197	-0.192	-0.178	-0.164	-0.150	-0.131	-0.111	-0.092	-0.073	-0.054	-0.035	-0.023	-0.012	0.000
VERTICAL CURVE ORDINATE	0.000	0.000	0.000	0.000	0.000	0.000	0.000	0.000	0.000	0.000	0.000	0.000	0.000	0.000	0.000	0.000	0.000	0.000	0.000	0.000	0.000	0.000	0.000	0.000	0.000	0.000	0.000	0.000	0.000	0.000	0.000
SUPERELEVATION ORDINATE	0.000	0.000	0.000	0.000	0.000	0.000	0.000	0.000	0.000	0.000	0.000	0.000	0.000	0.000	0.000	0.000	0.000	0.000	0.000	0.000	0.000	0.000	0.000	0.000	0.000	0.000	0.000	0.000	0.000	0.000	0.000
CAMBER DUE TO DISSIPATION RESULTING FROM HEAT CURVING ✱✱	0.000	0.000	0.000	0.000	0.000	0.000	0.000	0.000	0.000	0.000	0.000	0.000	0.000	0.000	0.000	0.000	0.000	0.000	0.000	0.000	0.000	0.000	0.000	0.000	0.000	0.000	0.000	0.000	0.000	0.000	0.000
REQUIRED CAMBER (mm)	0	12	21	33	51	70	88	107	127	146	161	175	190	195	202	207	202	197	192	178	164	150	131	111	92	73	54	35	23	12	0

GIRDER 3

THIRTIETH POINTS	7.000	7.033	7.067	7.100	7.133	7.167	7.200	7.233	7.267	7.300	7.333	7.367	7.400	7.433	7.467	7.500	7.533	7.567	7.600	7.633	7.667	7.700	7.733	7.767	7.800	7.833	7.867	7.900	7.933	7.967	8.000
DEFLEC. DUE TO WEIGHT OF STEEL	0.000	-0.003	-0.006	-0.009	-0.014	-0.019	-0.024	-0.029	-0.034	-0.039	-0.043	-0.046	-0.050	-0.051	-0.053	-0.054	-0.053	-0.051	-0.050	-0.046	-0.043	-0.039	-0.034	-0.029	-0.024	-0.019	-0.015	-0.010	-0.007	-0.003	0.000
DEFLEC. DUE TO WEIGHT OF SLAB ✱	0.000	-0.007	-0.014	-0.021	-0.033	-0.044	-0.056	-0.069	-0.081	-0.094	-0.103	-0.113	-0.122	-0.126	-0.129	-0.133	-0.130	-0.126	-0.123	-0.114	-0.105	-0.096	-0.083	-0.071	-0.058	-0.046	-0.034	-0.022	-0.015	-0.007	0.000
DEFLEC. DUE TO WEIGHT OF RAIL	0.000	-0.002	-0.004	-0.006	-0.009	-0.012	-0.015	-0.018	-0.022	-0.025	-0.027	-0.030	-0.032	-0.033	-0.034	-0.035	-0.034	-0.034	-0.033	-0.031	-0.028	-0.026	-0.023	-0.019	-0.016	-0.013	-0.009	-0.006	-0.004	-0.002	0.000
TOTAL DEAD LOAD DEFLECTION	0.000	-0.012	-0.024	-0.036	-0.056	-0.075	-0.095	-0.116	-0.137	-0.158	-0.173	-0.189	-0.204	-0.210	-0.216	-0.222	-0.217	-0.211	-0.206	-0.191	-0.176	-0.161	-0.140	-0.119	-0.098	-0.078	-0.058	-0.038	-0.026	-0.012	0.000
VERTICAL CURVE ORDINATE	0.000	0.000	0.000	0.000	0.000	0.000	0.000	0.000	0.000	0.000	0.000	0.000	0.000	0.000	0.000	0.000	0.000	0.000	0.000	0.000	0.000	0.000	0.000	0.000	0.000	0.000	0.000	0.000	0.000	0.000	0.000
SUPERELEVATION ORDINATE	0.000	0.000	0.000	0.000	0.000	0.000	0.000	0.000	0.000	0.000	0.000	0.000	0.000	0.000	0.000	0.000	0.000	0.000	0.000	0.000	0.000	0.000	0.000	0.000	0.000	0.000	0.000	0.000	0.000	0.000	0.000
CAMBER DUE TO DISSIPATION RESULTING FROM HEAT CURVING ✱✱	0.000	0.000	0.000	0.000	0.000	0.000	0.000	0.000	0.000	0.000	0.000	0.000	0.000	0.000	0.000	0.000	0.000	0.000	0.000	0.000	0.000	0.000	0.000	0.000	0.000	0.000	0.000	0.000	0.000	0.000	0.000
REQUIRED CAMBER (mm)	0	12	24	36	56	75	95	116	137	158	173	189	204	210	216	222	217	211	206	191	176	161	140	119	98	78	58	38	26	12	0

GIRDER 4

THIRTIETH POINTS	7.000	7.033	7.067	7.100	7.133	7.167	7.200	7.233	7.267	7.300	7.333	7.367	7.400	7.433	7.467	7.500	7.533	7.567	7.600	7.633	7.667	7.700	7.733	7.767	7.800	7.833	7.867	7.900	7.933	7.967	8.000
DEFLEC. DUE TO WEIGHT OF STEEL	0.000	-0.004	-0.007	-0.011	-0.016	-0.021	-0.026	-0.032	-0.037	-0.043	-0.047	-0.051	-0.055	-0.057	-0.058	-0.060	-0.058	-0.057	-0.055	-0.051	-0.047	-0.043	-0.038	-0.032	-0.027	-0.022	-0.016	-0.011	-0.007	-0.004	0.000
DEFLEC. DUE TO WEIGHT OF SLAB ✱	0.000	-0.008	-0.015	-0.023	-0.035	-0.047	-0.059	-0.072	-0.085	-0.098	-0.108	-0.118	-0.128	-0.132	-0.135	-0.139	-0.136	-0.132	-0.129	-0.119	-0.110	-0.100	-0.087	-0.074	-0.061	-0.048	-0.036	-0.023	-0.015	-0.008	0.000
DEFLEC. DUE TO WEIGHT OF RAIL	0.000	-0.002	-0.005	-0.007	-0.010	-0.014	-0.017	-0.021	-0.024	-0.028	-0.031	-0.033	-0.036	-0.037	-0.038	-0.039	-0.038	-0.037	-0.036	-0.034	-0.031	-0.029	-0.025	-0.022	-0.018	-0.014	-0.011	-0.007	-0.005	-0.002	0.000
TOTAL DEAD LOAD DEFLECTION	0.000	-0.014	-0.027	-0.041	-0.061	-0.082	-0.102	-0.125	-0.146	-0.169	-0.186	-0.202	-0.219	-0.226	-0.231	-0.238	-0.232	-0.226	-0.220	-0.204	-0.188	-0.172	-0.150	-0.128	-0.106	-0.084	-0.063	-0.041	-0.027	-0.014	0.000
VERTICAL CURVE ORDINATE	0.000	0.000	0.000	0.000	0.000	0.000	0.000	0.000	0.000	0.000	0.000	0.000	0.000	0.000	0.000	0.000	0.000	0.000	0.000	0.000	0.000	0.000	0.000	0.000	0.000	0.000	0.000	0.000	0.000	0.000	0.000
SUPERELEVATION ORDINATE	0.000	0.000	0.000	0.000	0.000	0.000	0.000	0.000	0.000	0.000	0.000	0.000	0.000	0.000	0.000	0.000	0.000	0.000	0.000	0.000	0.000	0.000	0.000	0.000	0.000	0.000	0.000	0.000	0.000	0.000	0.000
CAMBER DUE TO DISSIPATION RESULTING FROM HEAT CURVING ✱✱	0.000	0.000	0.000	0.000	0.000	0.000	0.000	0.000	0.000	0.000	0.000	0.000	0.000	0.000	0.000	0.000	0.000	0.000	0.000	0.000	0.000	0.000	0.000	0.000	0.000	0.000	0.000	0.000	0.000	0.000	0.000
REQUIRED CAMBER (mm)	0	14	27	41	61	82	102	125	146	169	186	202	219	226	231	238	232	226	220	204	188	172	150	128	106	84	63	41	27	14	0

GIRDER 5

THIRTIETH POINTS	7.000	7.033	7.067	7.100	7.133	7.167	7.200	7.233	7.267	7.300	7.333	7.367	7.400	7.433	7.467	7.500	7.533	7.567	7.600	7.633	7.667	7.700	7.733	7.767	7.800	7.833	7.867	7.900	7.933	7.967	8.000
DEFLEC. DUE TO WEIGHT OF STEEL	0.000	-0.004	-0.008	-0.012	-0.018	-0.023	-0.029	-0.035	-0.041	-0.047	-0.051	-0.056	-0.060	-0.062	-0.063	-0.065	-0.064	-0.062	-0.061	-0.056	-0.052	-0.047	-0.041	-0.036	-0.030	-0.024	-0.018	-0.012	-0.008	-0.004	0.000
DEFLEC. DUE TO WEIGHT OF SLAB ✱	0.000	-0.008	-0.016	-0.024	-0.037	-0.049	-0.062	-0.076	-0.089	-0.103	-0.113	-0.123	-0.133	-0.137	-0.141	-0.145	-0.141	-0.138	-0.134	-0.124	-0.114	-0.104	-0.090	-0.077	-0.063	-0.050	-0.037	-0.024	-0.016	-0.008	0.000
DEFLEC. DUE TO WEIGHT OF RAIL	0.000	-0.002	-0.005	-0.007	-0.011	-0.015	-0.019	-0.023	-0.026	-0.030	-0.033	-0.036	-0.039	-0.040	-0.041	-0.042	-0.041	-0.040	-0.039	-0.036	-0.034	-0.031	-0.027	-0.023	-0.019	-0.015	-0.012	-0.008	-0.005	-0.003	0.000
TOTAL DEAD LOAD DEFLECTION	0.000	-0.014	-0.029	-0.043	-0.066	-0.087	-0.110	-0.134	-0.156	-0.180	-0.197	-0.215	-0.232	-0.239	-0.245	-0.252	-0.246	-0.240	-0.234	-0.216	-0.200	-0.182	-0.158	-0.136	-0.112	-0.089	-0.067	-0.044	-0.029	-0.015	0.000
VERTICAL CURVE ORDINATE	0.000	0.000	0.000	0.000	0.000	0.000	0.000	0.000	0.000	0.000	0.000	0.000	0.000	0.000	0.000	0.000	0.000	0.000	0.000	0.000	0.000	0.000	0.000	0.000	0.000	0.000	0.000	0.000	0.000	0.000	0.000
SUPERELEVATION ORDINATE	0.000	0.000	0.000	0.000	0.000	0.000	0.000	0.000	0.000	0.000	0.000	0.000	0.000	0.000	0.000	0.000	0.000	0.000	0.000	0.000	0.000	0.000	0.000	0.000	0.000	0.000	0.000	0.000	0.000	0.000	0.000
CAMBER DUE TO DISSIPATION RESULTING FROM HEAT CURVING ✱✱	0.000	0.000	0.000	0.000	0.000	0.000	0.000	0.000	0.000	0.000	0.000	0.000	0.000	0.000	0.000	0.000	0.000	0.000	0.000	0.000	0.000	0.000	0.000	0.000	0.000	0.000	0.000	0.000	0.000	0.000	0.000
REQUIRED CAMBER (mm)	0	14	29	43	66	87	110	134	156	180	197	215	232	239	245	252	246	240	234	216	200	182	158	136	112	89	67	44	29	15	0

GIRDER	LG
1	74.915
2	75.309
3	75.704
4	76.098
5	76.492

NOTE:

DIMENSIONS ARE ARC DIMENSIONS IN METERS ALONG THE ℄ OF GIRDER. NO CORRECTION HAS BEEN MADE TO ADJUST FOR THE DISTANCE ALONG THE GRADE.

NORTH CAROLINA PROFESSIONAL SEAL 024928 ENGINEER RODNEY E. MONEY 7/29/08

PROJECT NO. X-0002B

CUMBERLAND COUNTY

STATION: -L- POC STA. 63+66.830=

-FLYOVER-

POC STA. 22+29.794

SHEET 7 OF 8

STATE OF NORTH CAROLINA
DEPARTMENT OF TRANSPORTATION
RALEIGH

SUPERSTRUCTURE DEAD LOAD DEFLECTION AND SCHEMATIC CAMBER ORDINATES SPAN "G"

SCHEMATIC CAMBER ORDINATES

PREPARED IN THE OFFICE OF
TYLIN INTERNATIONAL
RALEIGH, NORTH CAROLINA
Copyright © 2008, TYLI
DWG NO. 40

REVISIONS						
NO.	BY:	DATE:	NO.	BY:	DATE:	
1			3			
2			4			

SHEET NO. S-217

TOTAL SHEETS 253

DRAWN BY : S. MORGAN DATE : JUN. '08
CHECKED BY : J.W. WRIGHT DATE : JUN. '08

7/28/2008 9:10:06 PM Structures
a:\fayetteville outer loop\sm\X0002B_SD_DL_07.dgn

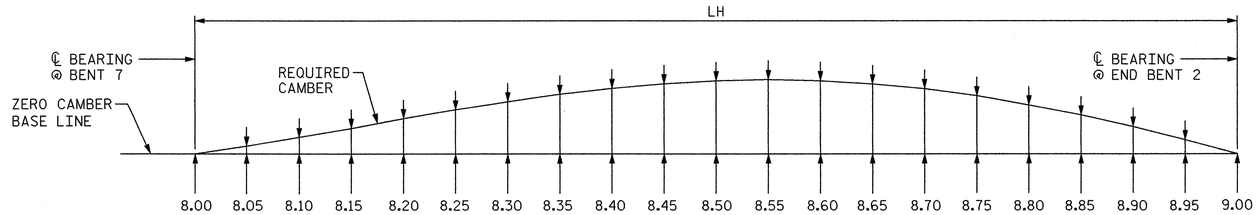

NOTES:

SLOPE FOR THE ZERO CAMBER BASE LINE VARIES.

VALUES GIVEN ARE AT TWENTIETH POINTS BETWEEN CENTERLINE OF BEARINGS.

DEFLECTIONS AND ORDINATES ARE IN METERS (DECIMAL FORM).

REQUIRED CAMBER VALUES ARE IN MILLIMETERS.

DOWNWARD DEFLECTION IS INDICATED WITH A "-" SIGN.

✱ INCLUDES SLAB, BUILD-UP AND METAL STAY-IN-PLACE FORMS.

✱✱ CAMBER DISSIPATION ORDINATE TO BE DEDUCTED IF HEAT CURVING NOT UTILIZED.

GIRDER	LH
1	53.391
2	53.672
3	53.954
4	54.235
5	54.516

NOTE:

DIMENSIONS ARE ARC DIMENSIONS IN METERS ALONG THE ℄ OF GIRDER. NO CORRECTION HAS BEEN MADE TO ADJUST FOR THE DISTANCE ALONG THE GRADE.

GIRDER 1

TWENTIETH POINTS	8.00	8.05	8.10	8.15	8.20	8.25	8.30	8.35	8.40	8.45	8.50	8.55	8.60	8.65	8.70	8.75	8.80	8.85	8.90	8.95	9.00
DEFLEC. DUE TO WEIGHT OF STEEL	0.000	0.000	0.000	-0.001	-0.002	-0.005	-0.007	-0.010	-0.012	-0.014	-0.015	-0.016	-0.017	-0.017	-0.016	-0.014	-0.012	-0.010	-0.007	-0.004	0.000
DEFLEC. DUE TO WEIGHT OF SLAB ✱	0.000	0.001	0.001	-0.003	-0.006	-0.012	-0.018	-0.025	-0.031	-0.036	-0.041	-0.043	-0.045	-0.044	-0.043	-0.039	-0.034	-0.027	-0.019	-0.010	0.000
DEFLEC. DUE TO WEIGHT OF RAIL	0.000	0.000	0.000	-0.001	-0.002	-0.003	-0.004	-0.006	-0.007	-0.008	-0.009	-0.010	-0.010	-0.010	-0.010	-0.009	-0.007	-0.006	-0.004	-0.002	0.000
TOTAL DEAD LOAD DEFLECTION	0.000	0.001	0.001	-0.005	-0.010	-0.020	-0.029	-0.041	-0.050	-0.058	-0.065	-0.069	-0.072	-0.071	-0.069	-0.062	-0.053	-0.043	-0.030	-0.016	0.000
VERTICAL CURVE ORDINATE	0.000	0.000	0.000	0.000	0.000	0.000	0.000	0.000	0.000	0.000	0.000	0.000	0.000	0.000	0.000	0.000	0.000	0.000	0.000	0.000	0.000
SUPERELEVATION ORDINATE	0.000	0.000	0.000	0.000	0.000	0.000	0.000	0.000	0.000	0.000	0.000	0.000	0.000	0.000	0.000	0.000	0.000	0.000	0.000	0.000	0.000
CAMBER DUE TO DISSIPATION RESULTING FROM HEAT CURVING ✱✱	0.000	0.000	0.000	0.000	0.000	0.000	0.000	0.000	0.000	0.000	0.000	0.000	0.000	0.000	0.000	0.000	0.000	0.000	0.000	0.000	0.000
REQUIRED CAMBER (mm)	0	-1	-1	5	10	20	29	41	50	58	65	69	72	71	69	62	53	43	30	16	0

GIRDER 2

TWENTIETH POINTS	8.00	8.05	8.10	8.15	8.20	8.25	8.30	8.35	8.40	8.45	8.50	8.55	8.60	8.65	8.70	8.75	8.80	8.85	8.90	8.95	9.00
DEFLEC. DUE TO WEIGHT OF STEEL	0.000	0.000	0.000	-0.001	-0.002	-0.004	-0.006	-0.009	-0.011	-0.013	-0.015	-0.016	-0.016	-0.016	-0.016	-0.014	-0.012	-0.010	-0.007	-0.004	0.000
DEFLEC. DUE TO WEIGHT OF SLAB ✱	0.000	0.001	0.001	-0.003	-0.006	-0.012	-0.018	-0.025	-0.032	-0.037	-0.042	-0.045	-0.047	-0.046	-0.045	-0.040	-0.035	-0.028	-0.020	-0.010	0.000
DEFLEC. DUE TO WEIGHT OF RAIL	0.000	0.000	0.000	-0.001	-0.002	-0.004	-0.005	-0.007	-0.008	-0.009	-0.010	-0.011	-0.011	-0.011	-0.010	-0.009	-0.008	-0.006	-0.004	-0.002	0.000
TOTAL DEAD LOAD DEFLECTION	0.000	0.001	0.001	-0.005	-0.010	-0.020	-0.029	-0.041	-0.051	-0.059	-0.067	-0.072	-0.074	-0.073	-0.071	-0.063	-0.055	-0.044	-0.031	-0.016	0.000
VERTICAL CURVE ORDINATE	0.000	0.000	0.000	0.000	0.000	0.000	0.000	0.000	0.000	0.000	0.000	0.000	0.000	0.000	0.000	0.000	0.000	0.000	0.000	0.000	0.000
SUPERELEVATION ORDINATE	0.000	0.000	0.000	0.000	0.000	0.000	0.000	0.000	0.000	0.000	0.000	0.000	0.000	0.000	0.000	0.000	0.000	0.000	0.000	0.000	0.000
CAMBER DUE TO DISSIPATION RESULTING FROM HEAT CURVING ✱✱	0.000	0.000	0.000	0.000	0.000	0.000	0.000	0.000	0.000	0.000	0.000	0.000	0.000	0.000	0.000	0.000	0.000	0.000	0.000	0.000	0.000
REQUIRED CAMBER (mm)	0	-1	-1	5	10	20	29	41	51	59	67	72	74	73	71	63	55	44	31	16	0

GIRDER 3

TWENTIETH POINTS	8.00	8.05	8.10	8.15	8.20	8.25	8.30	8.35	8.40	8.45	8.50	8.55	8.60	8.65	8.70	8.75	8.80	8.85	8.90	8.95	9.00
DEFLEC. DUE TO WEIGHT OF STEEL	0.000	0.001	0.001	0.000	-0.001	-0.003	-0.005	-0.008	-0.010	-0.012	-0.014	-0.015	-0.016	-0.016	-0.015	-0.014	-0.012	-0.010	-0.007	-0.004	0.000
DEFLEC. DUE TO WEIGHT OF SLAB ✱	0.000	0.001	0.001	-0.002	-0.005	-0.012	-0.018	-0.025	-0.032	-0.038	-0.043	-0.046	-0.049	-0.048	-0.046	-0.042	-0.037	-0.029	-0.020	-0.010	0.000
DEFLEC. DUE TO WEIGHT OF RAIL	0.000	0.000	0.000	-0.001	-0.001	-0.003	-0.005	-0.007	-0.008	-0.010	-0.011	-0.012	-0.012	-0.012	-0.011	-0.010	-0.009	-0.007	-0.005	-0.003	0.000
TOTAL DEAD LOAD DEFLECTION	0.000	0.002	0.002	-0.003	-0.007	-0.018	-0.028	-0.040	-0.050	-0.060	-0.068	-0.073	-0.077	-0.076	-0.072	-0.066	-0.058	-0.046	-0.032	-0.017	0.000
VERTICAL CURVE ORDINATE	0.000	0.000	0.000	0.000	0.000	0.000	0.000	0.000	0.000	0.000	0.000	0.000	0.000	0.000	0.000	0.000	0.000	0.000	0.000	0.000	0.000
SUPERELEVATION ORDINATE	0.000	0.000	0.000	0.000	0.000	0.000	0.000	0.000	0.000	0.000	0.000	0.000	0.000	0.000	0.000	0.000	0.000	0.000	0.000	0.000	0.000
CAMBER DUE TO DISSIPATION RESULTING FROM HEAT CURVING ✱✱	0.000	0.000	0.000	0.000	0.000	0.000	0.000	0.000	0.000	0.000	0.000	0.000	0.000	0.000	0.000	0.000	0.000	0.000	0.000	0.000	0.000
REQUIRED CAMBER (mm)	0	-2	-2	3	7	18	28	40	50	60	68	73	77	76	72	66	58	46	32	17	0

GIRDER 4

TWENTIETH POINTS	8.00	8.05	8.10	8.15	8.20	8.25	8.30	8.35	8.40	8.45	8.50	8.55	8.60	8.65	8.70	8.75	8.80	8.85	8.90	8.95	9.00
DEFLEC. DUE TO WEIGHT OF STEEL	0.000	0.001	0.002	0.001	0.000	-0.002	-0.004	-0.007	-0.009	-0.011	-0.013	-0.014	-0.015	-0.015	-0.015	-0.014	-0.012	-0.010	-0.007	-0.004	0.000
DEFLEC. DUE TO WEIGHT OF SLAB ✱	0.000	0.001	0.002	-0.001	-0.004	-0.011	-0.017	-0.024	-0.031	-0.037	-0.043	-0.046	-0.049	-0.049	-0.048	-0.043	-0.038	-0.030	-0.021	-0.011	0.000
DEFLEC. DUE TO WEIGHT OF RAIL	0.000	0.000	0.000	-0.001	-0.001	-0.003	-0.005	-0.007	-0.008	-0.010	-0.011	-0.012	-0.013	-0.013	-0.012	-0.011	-0.009	-0.007	-0.005	-0.003	0.000
TOTAL DEAD LOAD DEFLECTION	0.000	0.002	0.004	-0.001	-0.005	-0.016	-0.026	-0.038	-0.048	-0.058	-0.067	-0.072	-0.077	-0.077	-0.075	-0.068	-0.059	-0.047	-0.033	-0.018	0.000
VERTICAL CURVE ORDINATE	0.000	0.000	0.000	0.000	0.000	0.000	0.000	0.000	0.000	0.000	0.000	0.000	0.000	0.000	0.000	0.000	0.000	0.000	0.000	0.000	0.000
SUPERELEVATION ORDINATE	0.000	0.000	0.000	0.000	0.000	0.000	0.000	0.000	0.000	0.000	0.000	0.000	0.000	0.000	0.000	0.000	0.000	0.000	0.000	0.000	0.000
CAMBER DUE TO DISSIPATION RESULTING FROM HEAT CURVING ✱✱	0.000	0.000	0.000	0.000	0.000	0.000	0.000	0.000	0.000	0.000	0.000	0.000	0.000	0.000	0.000	0.000	0.000	0.000	0.000	0.000	0.000
REQUIRED CAMBER (mm)	0	-2	-4	1	5	16	26	38	48	58	67	72	77	77	75	68	59	47	33	18	0

GIRDER 5

TWENTIETH POINTS	8.00	8.05	8.10	8.15	8.20	8.25	8.30	8.35	8.40	8.45	8.50	8.55	8.60	8.65	8.70	8.75	8.80	8.85	8.90	8.95	9.00
DEFLEC. DUE TO WEIGHT OF STEEL	0.000	0.001	0.002	0.002	0.001	-0.001	-0.002	-0.005	-0.007	-0.010	-0.012	-0.014	-0.015	-0.015	-0.015	-0.014	-0.012	-0.010	-0.007	-0.004	0.000
DEFLEC. DUE TO WEIGHT OF SLAB ✱	0.000	0.002	0.003	0.000	-0.003	-0.010	-0.016	-0.024	-0.031	-0.038	-0.044	-0.047	-0.050	-0.050	-0.049	-0.044	-0.039	-0.031	-0.022	-0.011	0.000
DEFLEC. DUE TO WEIGHT OF RAIL	0.000	0.000	0.000	-0.001	-0.001	-0.003	-0.005	-0.007	-0.009	-0.011	-0.012	-0.013	-0.014	-0.014	-0.013	-0.012	-0.010	-0.008	-0.006	-0.003	0.000
TOTAL DEAD LOAD DEFLECTION	0.000	0.003	0.005	0.001	-0.003	-0.014	-0.023	-0.036	-0.047	-0.059	-0.068	-0.074	-0.079	-0.079	-0.077	-0.070	-0.061	-0.049	-0.035	-0.018	0.000
VERTICAL CURVE ORDINATE	0.000	0.000	0.000	0.000	0.000	0.000	0.000	0.000	0.000	0.000	0.000	0.000	0.000	0.000	0.000	0.000	0.000	0.000	0.000	0.000	0.000
SUPERELEVATION ORDINATE	0.000	0.000	0.000	0.000	0.000	0.000	0.000	0.000	0.000	0.000	0.000	0.000	0.000	0.000	0.000	0.000	0.000	0.000	0.000	0.000	0.000
CAMBER DUE TO DISSIPATION RESULTING FROM HEAT CURVING ✱✱	0.000	0.000	0.000	0.000	0.000	0.000	0.000	0.000	0.000	0.000	0.000	0.000	0.000	0.000	0.000	0.000	0.000	0.000	0.000	0.000	0.000
REQUIRED CAMBER (mm)	0	-3	-5	-1	3	14	23	36	47	59	68	74	79	79	77	70	61	49	35	18	0

SCHEMATIC CAMBER ORDINATES

PROJECT NO. X-0002B

CUMBERLAND COUNTY

STATION: -L- POC STA. 63+66.830=
-FLYOVER-
POC STA. 22+29.794

SHEET 8 OF 8

STATE OF NORTH CAROLINA
DEPARTMENT OF TRANSPORTATION
RALEIGH

SUPERSTRUCTURE
DEAD LOAD DEFLECTION
AND SCHEMATIC CAMBER
ORDINATES
SPAN "H"

NORTH CAROLINA PROFESSIONAL SEAL 024928 ENGINEER RODNEY E. MOORE 7/29/08

PREPARED IN THE OFFICE OF
TYLIN INTERNATIONAL
RALEIGH, NORTH CAROLINA
Copyright © 2008, TYLI
DWG NO. 41

REVISIONS						SHEET NO.
NO.	BY:	DATE:	NO.	BY:	DATE:	8-218
1			3			TOTAL SHEETS
2			4			253

DRAWN BY : S. MORGAN DATE : JUN. '08
CHECKED BY : J.W. WRIGHT DATE : JUN. '08

G:\Fayetteville outer loop\sm\X0002B_SD_DL_08.dgn 7/28/2008 9:10:09 PM Structures

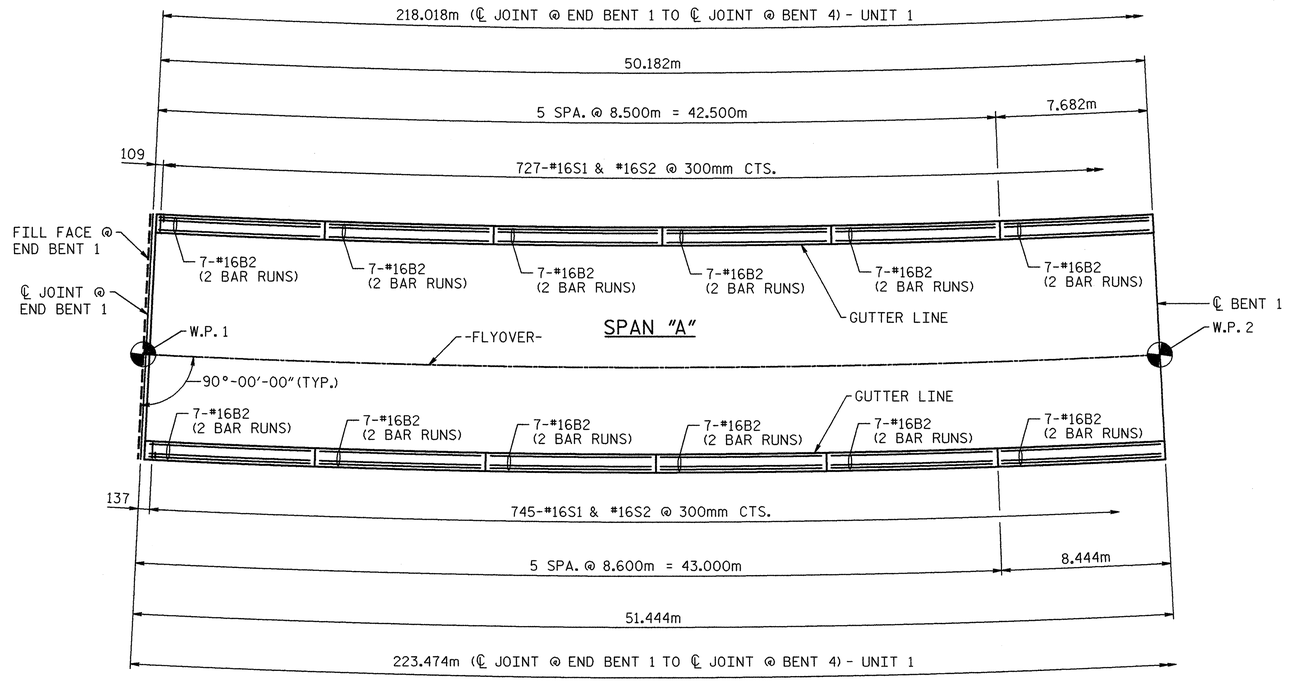

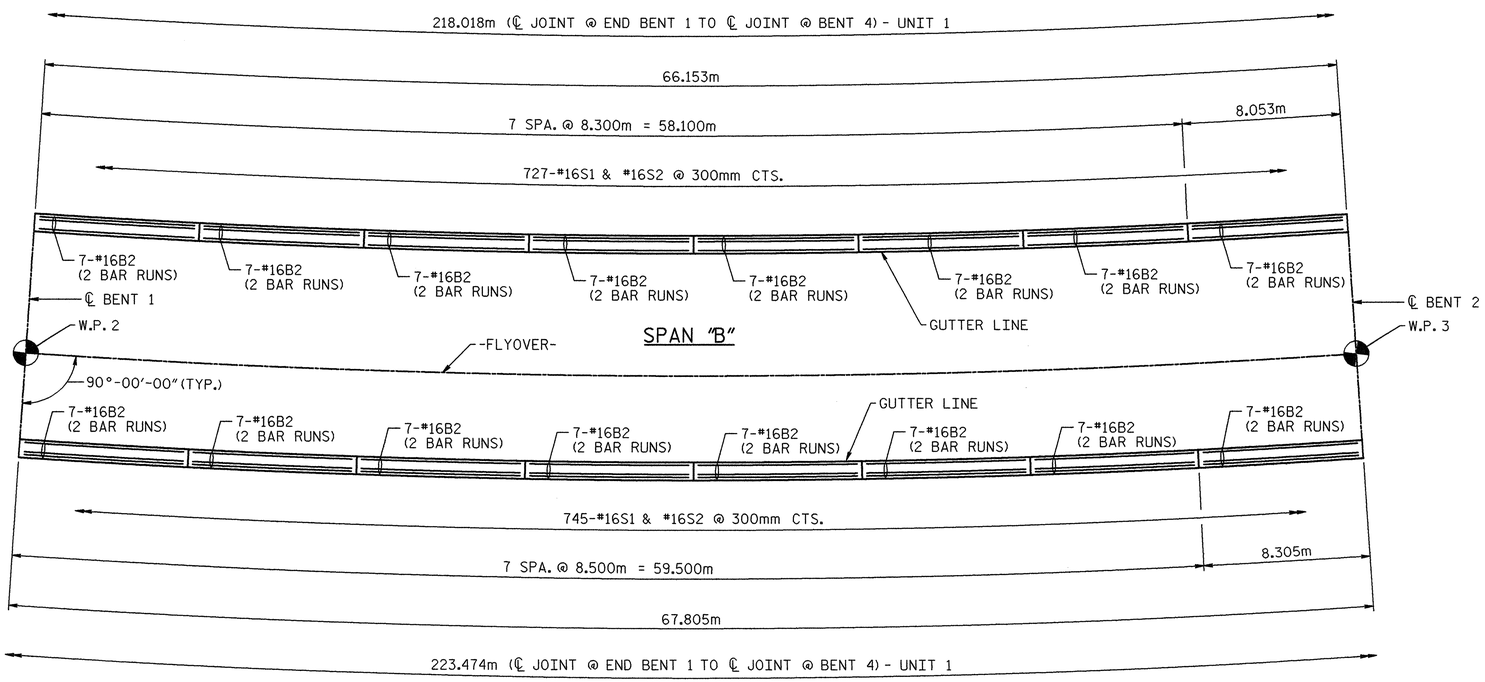

PLAN OF BARRIER RAIL

NOTE: ANGLES ARE TO TANGENT OF CURVE

NOTES:

ALL REINFORCING STEEL IN BARRIER RAILS SHALL BE EPOXY COATED.

ALL DIMENSIONS ARE ARC DIMENSIONS GIVEN ALONG OUTSIDE FACE OF RAIL.

#16S1 & #16S2 BARS MAY BE SHIFTED AS NECESSARY TO CLEAR EXPANSION JOINTS IN BARRIER RAILS.

PROJECT NO. X-0002B

CUMBERLAND COUNTY

STATION: -L- POC STA. 63+66.830=
-FLYOVER-
POC STA. 22+29.794

SHEET 1 OF 5

STATE OF NORTH CAROLINA
DEPARTMENT OF TRANSPORTATION
RALEIGH

SUPERSTRUCTURE

BARRIER RAIL
SPANS "A" & "B"

NORTH CAROLINA PROFESSIONAL SEAL 024928 ENGINEER RODNEY E. MONEY 8/1/08

PREPARED IN THE OFFICE OF
TYLIN INTERNATIONAL
RALEIGH, NORTH CAROLINA
Copyright © 2008, TYLI

DWG NO. 42

REVISIONS						
NO.	BY:	DATE:	NO.	BY:	DATE:	
1			3			
2			4			

SHEET NO. S-219

TOTAL SHEETS 253

DRAWN BY : S. MORGAN DATE : JUN. '08
CHECKED BY : J.W. WRIGHT DATE : JUN. '08

a:\foyetteville outer loop\sm\X0002B_SD_BR_01.dgn 8/1/2008 12:04:27 PM Structures

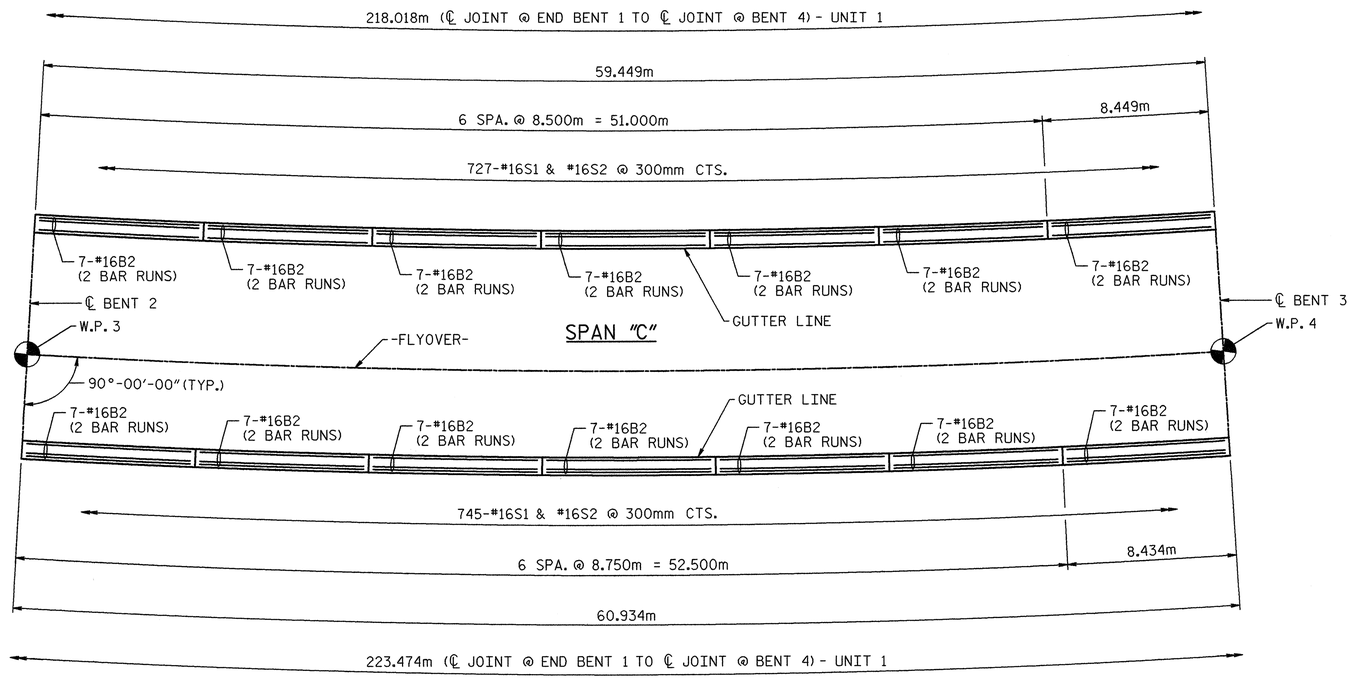

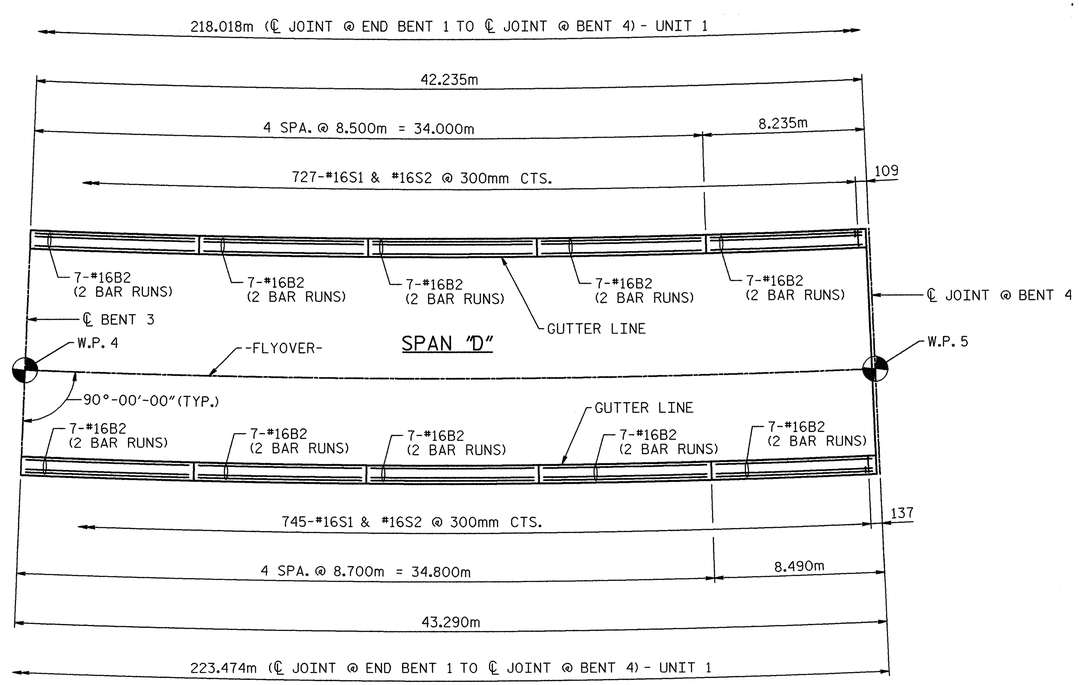

PLAN OF BARRIER RAIL

NOTE: ANGLES ARE TO TANGENT OF CURVE

NOTES:

ALL REINFORCING STEEL IN BARRIER RAILS SHALL BE EPOXY COATED.

ALL DIMENSIONS ARE ARC DIMENSIONS GIVEN ALONG OUTSIDE FACE OF RAIL.

#16S1 & #16S2 BARS MAY BE SHIFTED AS NECESSARY TO CLEAR EXPANSION JOINTS IN BARRIER RAILS.

FOR LOCATION OF ADDITIONAL #16S3 BARS, SEE "VISUAL BARRIER WALL DETAILS" SHEETS.

PROJECT NO. X-0002B

CUMBERLAND COUNTY

STATION: -L- POC STA. 63+66.830=
-FLYOVER-
POC STA. 22+29.794

SHEET 2 OF 5

STATE OF NORTH CAROLINA
DEPARTMENT OF TRANSPORTATION
RALEIGH

SUPERSTRUCTURE

BARRIER RAIL
SPANS "C" & "D"

NORTH CAROLINA PROFESSIONAL SEAL 024928 ENGINEER RODNEY E. MONEY 8/6/08

PREPARED IN THE OFFICE OF
TYLIN INTERNATIONAL
RALEIGH, NORTH CAROLINA
Copyright © 2008, TYLI

DWG NO. 43

REVISIONS						
NO.	BY:	DATE:	NO.	BY:	DATE:	
1			3			
2			4			

SHEET NO. S-220

TOTAL SHEETS 253

DRAWN BY : S. MORGAN DATE : JUN. '08
CHECKED BY : J.W. WRIGHT DATE : JUN. '08

08/06/2008 04:04:55 PM Structures
o:\fayetteville outer loop\sm\X0002B_SD_BR_02.dgn

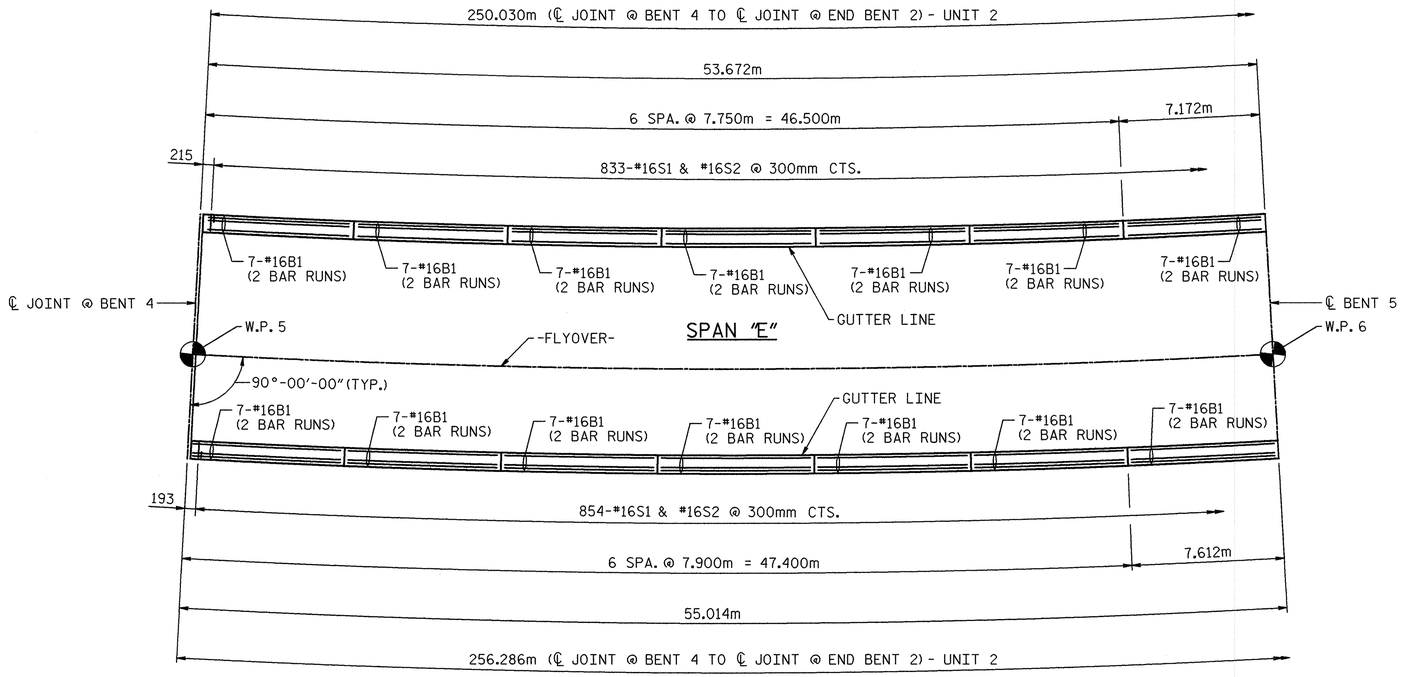

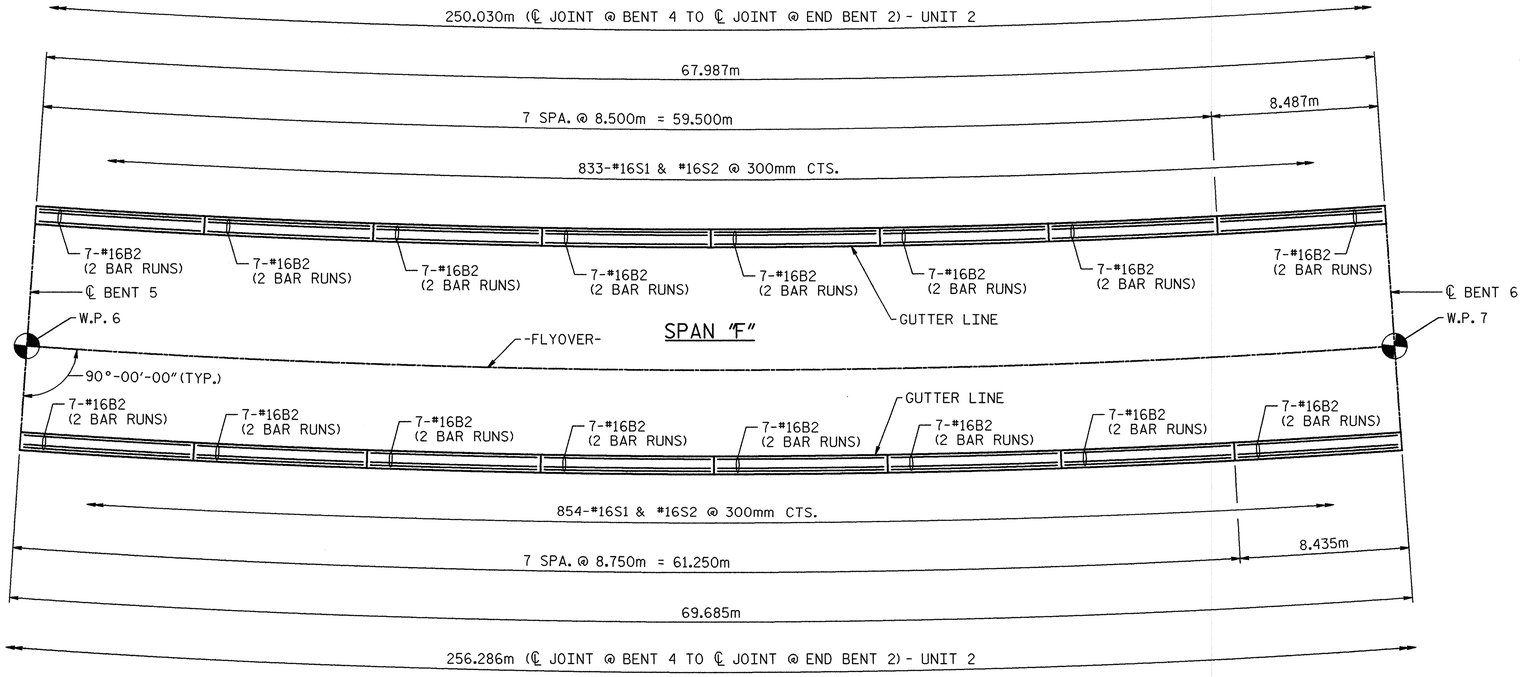

PLAN OF BARRIER RAIL

NOTE: ANGLES ARE TO TANGENT OF CURVE

NOTES:

ALL REINFORCING STEEL IN BARRIER RAILS SHALL BE EPOXY COATED.

ALL DIMENSIONS ARE ARC DIMENSIONS GIVEN ALONG OUTSIDE FACE OF RAIL.

#16S1 & #16S2 BARS MAY BE SHIFTED AS NECESSARY TO CLEAR EXPANSION JOINTS IN BARRIER RAILS.

FOR LOCATION OF ADDITIONAL #16S3 BARS, SEE "VISUAL BARRIER WALL DETAILS" SHEETS.

PROJECT NO. X-0002B

CUMBERLAND COUNTY

STATION: -L- POC STA. 63+66.830=
-FLYOVER-
POC STA. 22+29.794

SHEET 3 OF 5

STATE OF NORTH CAROLINA
DEPARTMENT OF TRANSPORTATION
RALEIGH

SUPERSTRUCTURE

BARRIER RAIL
SPANS "E" & "F"

NORTH CAROLINA PROFESSIONAL SEAL 024928 ENGINEER RODNEY E. MONEY 8/6/08

PREPARED IN THE OFFICE OF
TYLIN INTERNATIONAL
RALEIGH, NORTH CAROLINA
Copyright © 2008, TYLI

DWG NO. 44

REVISIONS						
NO.	BY:	DATE:	NO.	BY:	DATE:	
1			3			
2			4			

SHEET NO. S-221

TOTAL SHEETS 253

DRAWN BY : S. MORGAN DATE : JUN. '08
CHECKED BY : J.W. WRIGHT DATE : JUN. '08

08/06/2008 04:04:59 PM Structures
a:\fayetteville outer loop\en\X0002B_SD_BR_03.dgn

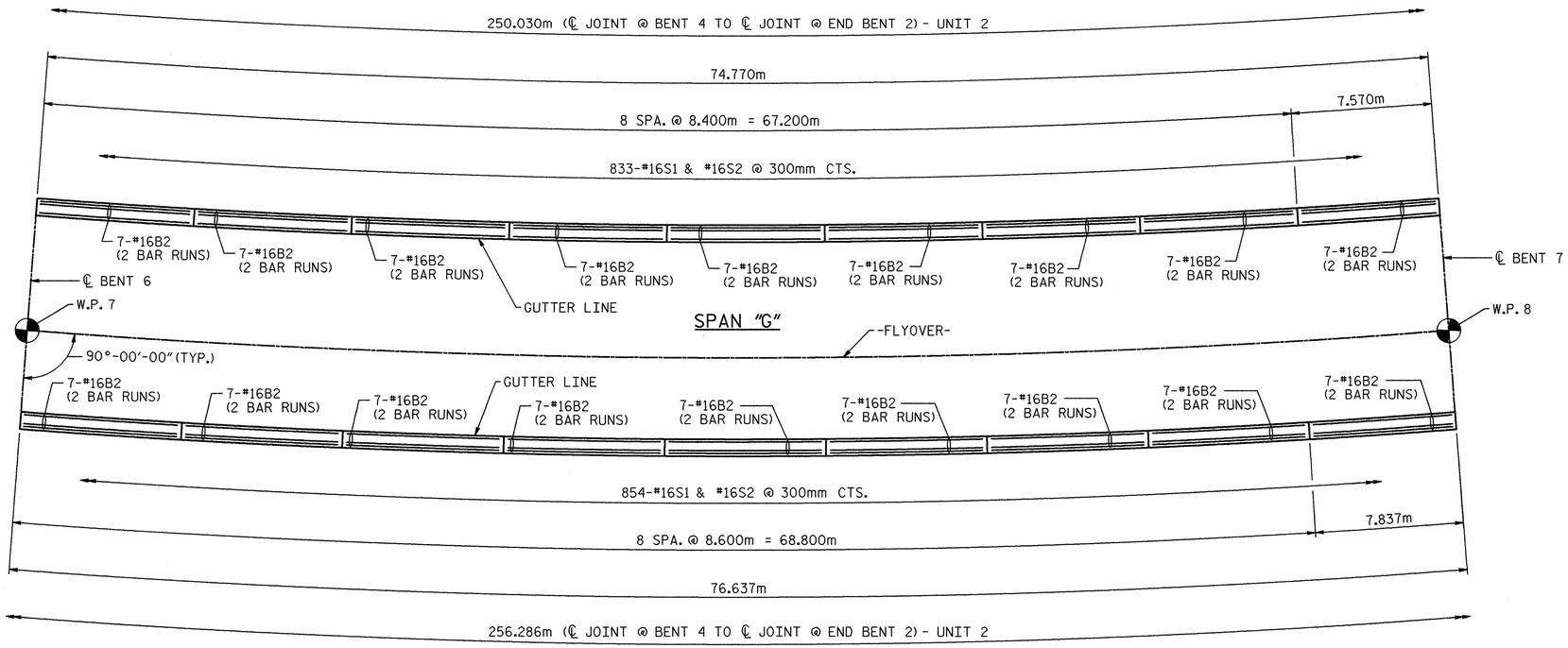

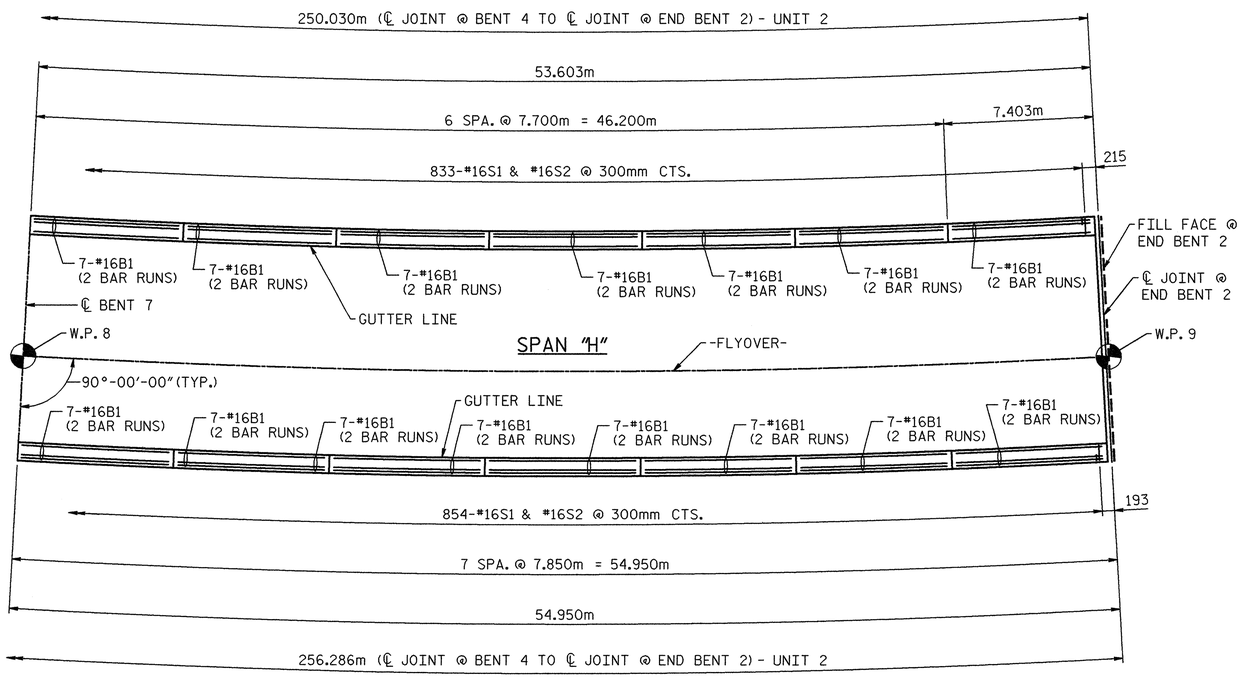

PLAN OF BARRIER RAIL

NOTE: ANGLES ARE TO TANGENT OF CURVE

NOTES:

ALL REINFORCING STEEL IN BARRIER RAILS SHALL BE EPOXY COATED.

ALL DIMENSIONS ARE ARC DIMENSIONS GIVEN ALONG OUTSIDE FACE OF RAIL.

#16S1 & #16S2 BARS MAY BE SHIFTED AS NECESSARY TO CLEAR EXPANSION JOINTS IN BARRIER RAILS.

FOR LOCATION OF ADDITIONAL #16S3 BARS, SEE "VISUAL BARRIER WALL DETAILS" SHEETS.

PROJECT NO. X-0002B

CUMBERLAND COUNTY

STATION: -L- POC STA. 63+66.830=
-FLYOVER-
POC STA. 22+29.794

SHEET 4 OF 5

STATE OF NORTH CAROLINA
DEPARTMENT OF TRANSPORTATION
RALEIGH

SUPERSTRUCTURE

BARRIER RAIL
SPANS "G" & "H"

NORTH CAROLINA PROFESSIONAL SEAL 024928 ENGINEER RODNEY E. MOONEY 8/6/08

PREPARED IN THE OFFICE OF
TYLIN INTERNATIONAL
RALEIGH, NORTH CAROLINA
Copyright © 2008, TYLI
DWG NO. 45

REVISIONS						
NO.	BY:	DATE:	NO.	BY:	DATE:	
1			3			
2			4			

SHEET NO. S-222
TOTAL SHEETS 253

DRAWN BY : S. MORGAN DATE : JUN. '08
CHECKED BY : J.W. WRIGHT DATE : JUN. '08

08/06/2008 04:05:04 PM Structures
o:\fayetteville outer loop\sm\X0002B_SD_BR_04.dgn

NOTES

THE BARRIER RAIL IN EACH SPAN SHALL NOT BE CAST UNTIL ALL SLAB CONCRETE IN THAT SPAN HAS BEEN CAST AND HAS REACHED A MINIMUM COMPRESSIVE STRENGTH OF 20.7 MPa.

ALL REINFORCING STEEL IN BARRIER RAILS SHALL BE EPOXY COATED.

VERTICAL GROOVED CONTRACTION JOINTS, 12mm IN DEPTH, SHALL BE TOOLED IN ALL EXPOSED FACES OF THE BARRIER RAIL AND IN ACCORDANCE WITH ARTICLE 825-10(B) OF THE STANDARD SPECIFICATIONS. THE CONTRACTION JOINT SHALL BE LOCATED AT EACH THIRD POINT BETWEEN BARRIER RAIL EXPANSION JOINTS. ONLY ONE CONTRACTION JOINT IS REQUIRED AT MIDPOINT OF BARRIER RAIL SEGMENTS LESS THAN 6.1m IN LENGTH AND NO CONTRACTION JOINTS ARE REQUIRED FOR THOSE SEGMENTS LESS THAN 3.5m IN LENGTH.

FOR LOCATION OF ADDITIONAL #16S3 BARS, SEE "VISUAL BARRIER WALL DETAILS" SHEETS.

BAR TYPES

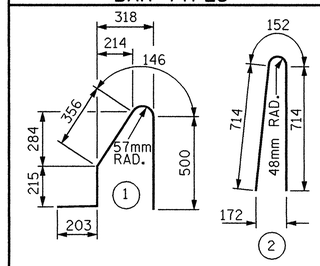

ALL BAR DIMENSIONS ARE OUT TO OUT

BILL OF MATERIAL

FOR CONCRETE BARRIER RAIL ONLY

BAR	NO.	SIZE	TYPE	LENGTH	WEIGHT
UNIT 1					
* B2	728	#16	STR	4,840	5,469
* S1	1,472	#16	1	1,420	3,244
* S2	1,472	#16	2	1,580	3,610
* S3	27	#16	STR	840	35
* EPOXY COATED REINFORCING STEEL					12,358 kg
CLASS AA CONCRETE					107.7 CU. METER
CONCRETE BARRIER RAIL					441.492 METERS
UNIT 2					
* B1	392	#16	STR	4,400	2,677
* B2	476	#16	STR	4,840	3,576
* S1	1,687	#16	1	1,420	3,718
* S2	1,687	#16	2	1,580	4,137
* S3	83	#16	STR	840	108
* EPOXY COATED REINFORCING STEEL					14,216 kg
CLASS AA CONCRETE					123.5 CU. METER
CONCRETE BARRIER RAIL					506.316 METERS
*TOTAL EPOXY COATED REINFORCING STEEL					26,574 kg
TOTAL CLASS AA CONCRETE					231.2 CU. METER
TOTAL CONCRETE BARRIER RAIL					947.808 METERS

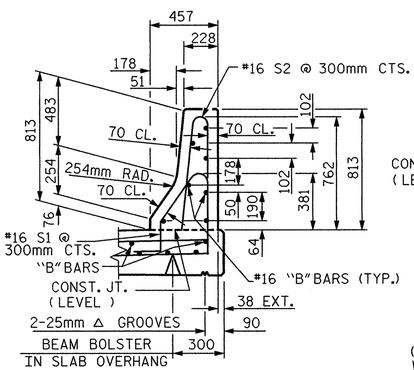

SECTION THRU RAIL

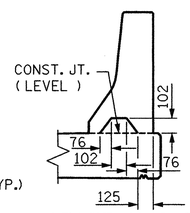

SECTION S-S

AT DAM IN OPEN JOINT
(THIS IS TO BE USED ONLY WHEN SLIP FORM IS USED)

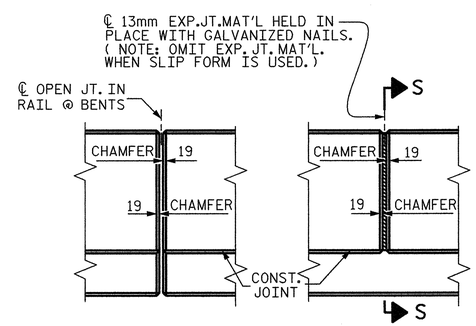

ELEVATION AT EXPANSION JOINTS

BARRIER RAIL DETAILS

PROJECT NO. X-0002B

CUMBERLAND COUNTY

STATION: -L- POC STA. 63+66.830=
-FLYOVER-
POC STA. 22+29.794

SHEET 5 OF 5

STATE OF NORTH CAROLINA
DEPARTMENT OF TRANSPORTATION
RALEIGH

STANDARD

CONCRETE BARRIER RAIL

NORTH CAROLINA PROFESSIONAL SEAL 024928 ENGINEER RODNEY E. MOREY 5/6/08

REVISIONS						
NO.	BY:	DATE:	NO.	BY:	DATE:	
1			3			
2			4			

SHEET NO. S-223

TOTAL SHEETS 253

DWG NO. 46

ASSEMBLED BY : S. MORGAN DATE : JUN. '08
CHECKED BY : J. W. WRIGHT DATE : JUN. '08

DRAWN BY : ARB 5/87
CHECKED BY : SJD 9/87

REV. 10/17/00 RWW/LES
REV. 5/7/03R RWW/JTE
REV. 5/1/06 TLA/GM

08/06/2008 04:05:07 PM Structures

ok\fayetteville outer loop\sam\X0002B_SD_BR_05.dgn

STD. No. SDP16H

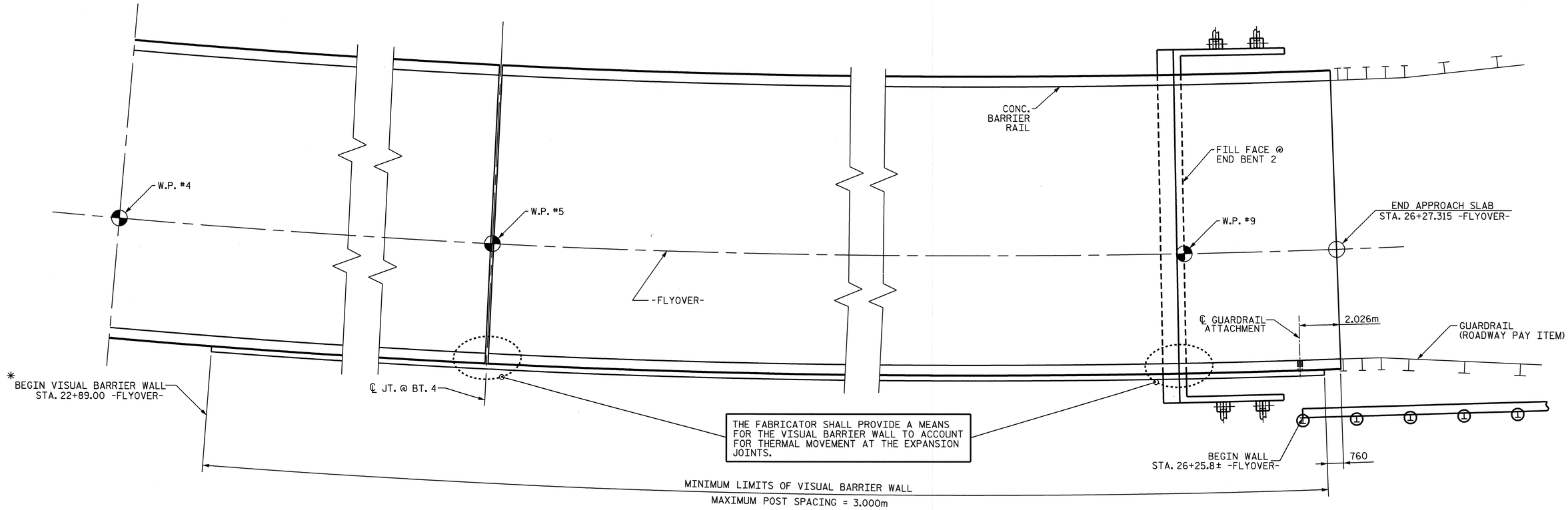

PLAN OF VISUAL BARRIER WALL LAYOUT

* VISUAL BARRIER WALL MAY BEGIN PRIOR TO STA. 22+89.00 -FLYOVER-

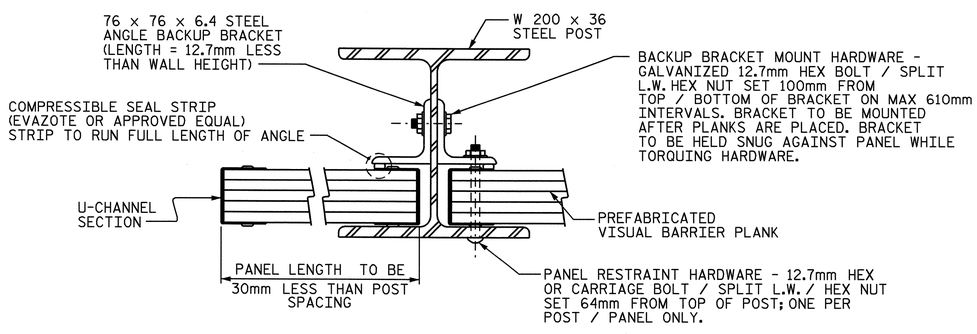

MOUNTING DETAIL

PROJECT NO. X-0002B
CUMBERLAND COUNTY
STATION: -L- POC 63+66.830=
-FLYOVER-
POC STA. 22+29.794

SHEET 1 OF 2

STATE OF NORTH CAROLINA
DEPARTMENT OF TRANSPORTATION
RALEIGH

SUPERSTRUCTURE
VISUAL BARRIER WALL DETAILS

NORTH CAROLINA PROFESSIONAL SEAL 12960 ENGINEER PAUL STEPHEN ERVIN
8-12-08

REVISIONS							SHEET NO.
NO.	BY:	DATE:	NO.	BY:	DATE:		S-224
1			3				TOTAL SHEETS
2			4				253

DRAWN BY : R.D. MARTIN DATE : 7/17/08
CHECKED BY : P.S. ERVIN DATE : 8/8/08

12-AUG-2008 10:25
U:\rory\metric\X0002B_SD_03_VB.dgn

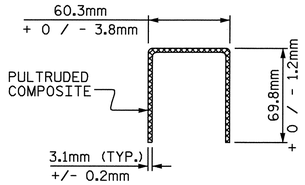

U-CHANNEL SECTION

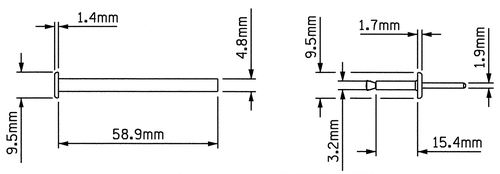

RIVET DETAIL

RIVET SPECIFICATIONS

MATERIAL CONSTRUCTION
BODY : ALUMINUM
MANDREL : STEEL

TUBULAR COMPONENTS : ALUMINUM
TENSILE STRENGTH : 2.068MPa
GRIP RANGE : 60.3mm TO 66.7mm

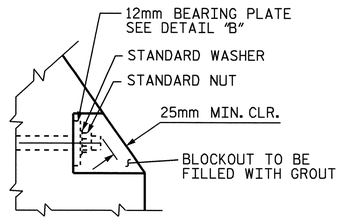

DETAIL A

GROUT SHALL BE IN ACCORDANCE WITH STANDARD SPECIFICATIONS.

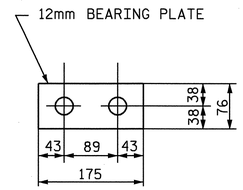

DETAIL B

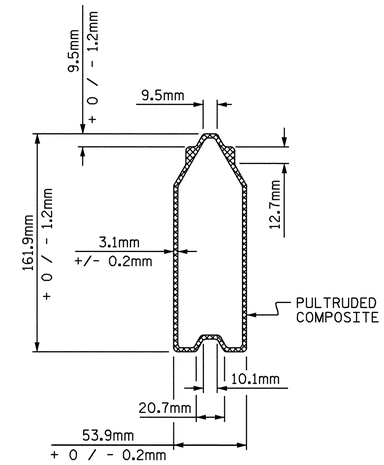

PLANK SECTION

NOTES

WALL SUPPORT SYSTEM:

POSTS AND BACKUP BRACKET SHALL BE AASHTO M270 GRADE 36 STRUCTURAL STEEL - GALVANIZED TO AASHTO M111 AND IN ACCORDANCE TO SECTION 1076 OF THE STANDARD SPECIFICATIONS.

BOLTS, NUTS AND WASHERS (EXCLUDING 22.23mm Ø BOLTS) SHALL CONFORM TO THE REQUIREMENTS OF ASTM A307 AND SHALL BE GALVANIZED IN ACCORDANCE TO AASHTO M111.

RIVETS SHALL MEET THE REQUIREMENTS OF ASTM A502 FOR GRADE 1 RIVETS.

ALL POSTS SHALL BE PLUMB.

VISUAL BARRIER WALL:

VISUAL BARRIER WALL SHALL BE DESIGNED TO WITHSTAND A MINIMUM WIND VELOCITY OF 80mph AND A MINIMUM WIND PRESSURE OF .0018 MPa.

WEIGHT OF VISUAL BARRIER WALL SHALL NOT EXCEED 36.6 KG / SQ. METER.

VISUAL BARRIER WALL SHALL CONSIST OF STACKED TONGUE AND GROOVE STRUCTURAL PLANKS AS DETAILED ON PLANS. THE PLANKS SHALL BE COMPRISED OF A PULTRUDED GLASS REINFORCED THERMOSET COMPOSITE STRUCTURAL BOX FILLED WITH RECYCLED TIRE RUBBER OR ANOTHER SUBSTANCE OF COMPARABLE DENSITY. ENDS SHALL BE CAPPED SO NOT TO ALLOW FILL MATERIAL TO FALL OUT.

LENGTH OF PLANKS SHALL BE CUT TO A LENGTH NO LESS THAN 30mm LESS THAN THE CLEAR SPACING PROVIDED BETWEEN SUPPORT POSTS, NOR SHALL THE LENGTH BE GREATER THAN 15mm LESS THAN THE CLEAR SPACING PROVIDED BETWEEN SUPPORT POSTS.

THE FABRICATOR SHALL PROVIDE A MEANS FOR THE VISUAL BARRIER WALL TO ACCOUNT FOR THERMAL MOVEMENT AT THE EXPANSION JOINTS.

PLANKS SHALL BE CUT SO THAT THE ENDS ARE SMOOTH AND PERPENDICULAR TO EACH PLANKS BASE AND SHALL BE APPROVED BY THE ENGINEER.

EACH PANEL SHALL BE PLACED SO THAT THE TOP OF THE FINISHED PANEL MEETS FLUSH WITH THE TOP OF EACH SUPPORT POST.

FOR VISUAL BARRIER WALL ON STRUCTURE, SEE SPECIAL PROVISION.

THE CONTRACTOR IS TO PROVIDE 3 PAINT COLOR SAMPLES FOR APPROVAL BY THE ENGINEER.

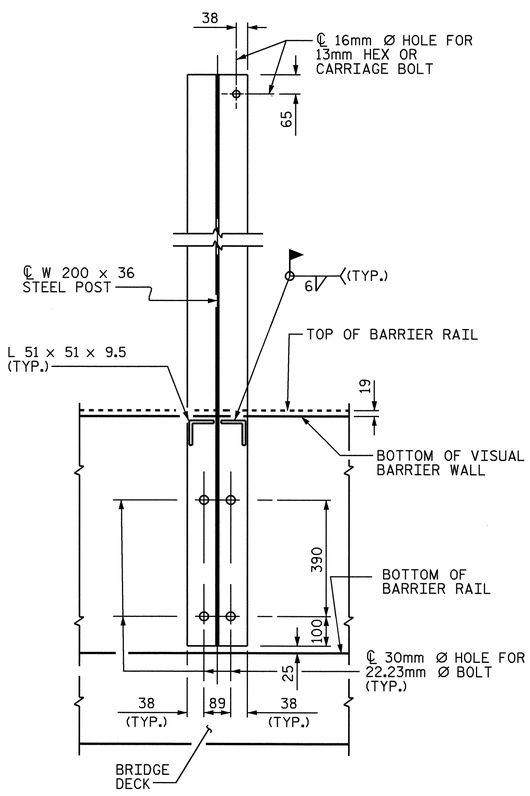

SECTION THRU POST

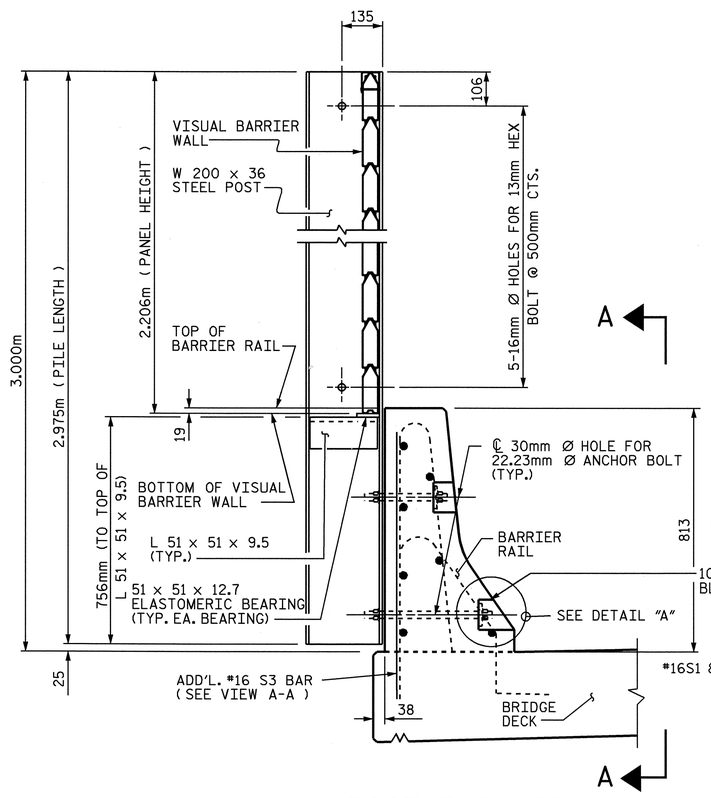

POST ELEVATION

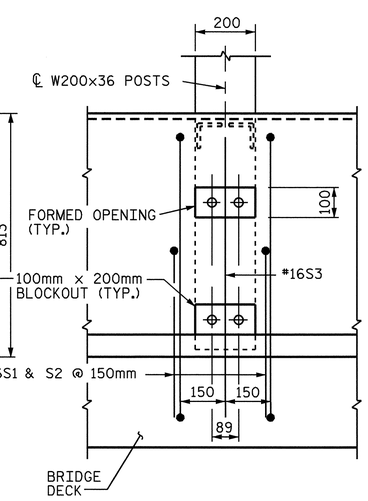

VIEW A-A

ADJUST #16S1 & S2 BAR SPACING AS NECESSARY TO ACCOMMODATE POSTS

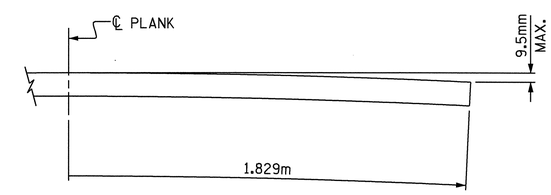

PLANK BOW TOLERANCE

PROJECT NO. X-0002B
CUMBERLAND COUNTY
STATION: -L- POC 63+66.830=
-FLYOVER-
POC STA. 22+29.794

SHEET 2 OF 2

STATE OF NORTH CAROLINA
DEPARTMENT OF TRANSPORTATION
RALEIGH

SUPERSTRUCTURE

VISUAL BARRIER WALL DETAILS

NORTH CAROLINA PROFESSIONAL SEAL 12960 ENGINEER PAUL STEPHEN ERVIN
8-12-08

REVISIONS						SHEET NO.
NO.	BY:	DATE:	NO.	BY:	DATE:	S-225
1			3			TOTAL SHEETS
2			4			253

DRAWN BY : R.D. MARTIN DATE : 7/17/08
CHECKED BY : P.S. ERVIN DATE : 8/8/08

12-AUG-2008 10:24
U:\rory\metric\X0002B_SD_03_VB.dgn

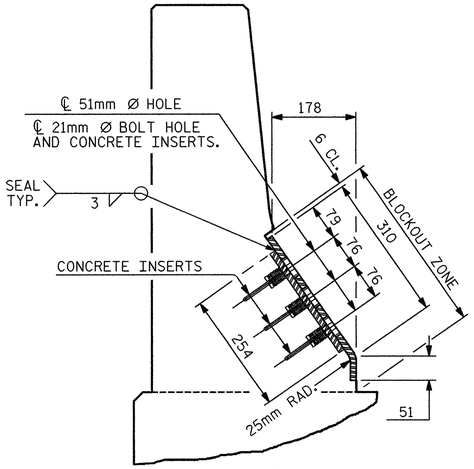

END VIEW

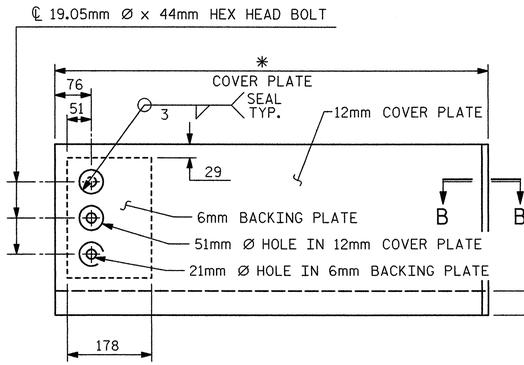

TYPE I - ELEVATION VIEW

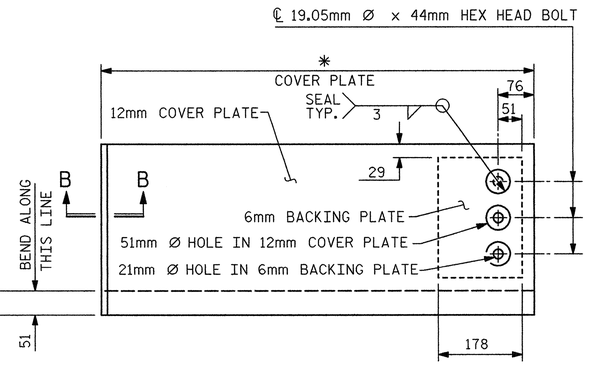

TYPE II - ELEVATION VIEW

COVER PLATE DETAILS

*DETAILS OF COVER PLATES ARE SUBJECT TO CHANGE DEPENDING ON THE DETAILS OF THE MODULAR EXPANSION JOINT SEALS FURNISHED.

NOTES

FOR MODULAR EXPANSION JOINT SEALS, SEE SPECIAL PROVISIONS.

THE STEEL PLATES SHALL CONFORM TO AASHTO M270 GRADE 250 OR APPROVED EQUAL. AFTER FABRICATION, THE PLATES SHALL BE COMMERCIALLY BLAST CLEANED AND COATED WITH A MINIMUM THICKNESS OF 0.100mm (DRY) OF ZINC-RICH PAINT IN ACCORDANCE WITH THE STANDARD SPECIFICATIONS. AT THE CONTRACTORS OPTION, THESE SURFACES MAY BE METALLIZED TO A MINIMUM THICKNESS OF 0.150mm MILS. SEE SPECIAL PROVISIONS FOR THERMAL SPRAYED COATINGS (METALLIZATION).

THE 19.05mm Ø HEX HEAD BOLTS SHALL CONFORM TO ASTM F593 ALLOY 304 STAINLESS STEEL.

THE 19.05mm CONCRETE INSERTS SHALL BE CLOSED-END FERRULES WITH LOOPED WIRE STRUTS ATTACHED TO THEM. THE INSERTS SHALL CONFORM TO AASHTO M169, GRADE 12L14 AND SHALL HAVE A TENSILE WORKING LOAD CAPACITY OF 13.3 kN.

NO SEPARATE PAYMENT WILL BE MADE FOR FURNISHING AND INSTALLING THE COVER PLATE. THE ENTIRE COST OF THIS WORK SHALL BE INCLUDED IN THE LUMP SUM PRICE FOR "MODULAR EXPANSION JOINT SEALS."

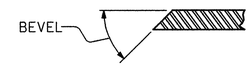

SECTION B-B

	SKEW ANGLE	TOTAL MOVEMENT ALONG ℄ ROADWAY
END BENT 1	90°-00'-00"	100mm
BENT 1	90°-00'-00"	189mm
END BENT 2	90°-00'-00"	108mm

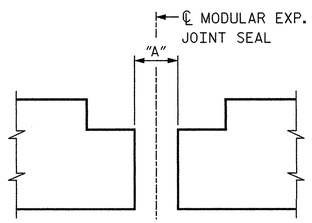

SECTION A-A

TABLE OF JOINT OPENINGS			
LOCATION	"A" (mm)		
	0°C	16°C	32°C
END BENT 1	105	75	45
BENT 4	177	120	63
END BENT 2	112	80	47

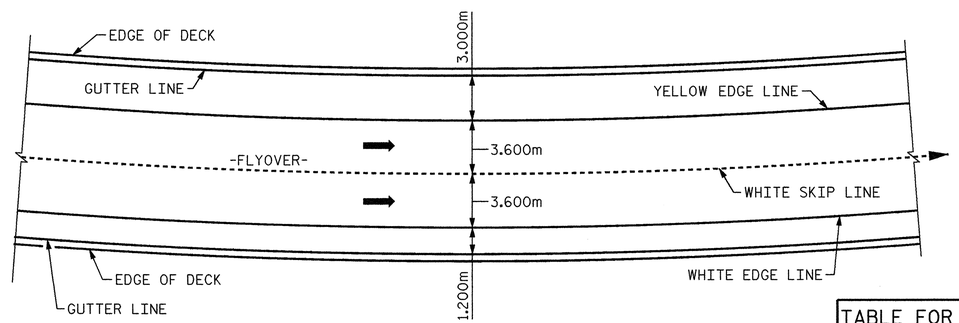

PAVEMENT MARKING SKETCH

NOTE: DIMENSIONS ARE NORMAL TO -FLYOVER-.

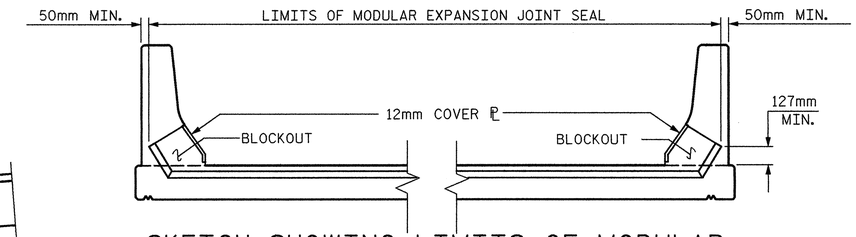

SKETCH SHOWING LIMITS OF MODULAR EXPANSION JOINT SEAL-BARRIER RAIL

TABLE FOR BARRIER RAIL RECESS			
LOCATION	"B" (mm)		
	0°C	16°C	32°C
END BENT 1	111	81	51
BENT 4	183	126	69
END BENT 2	118	86	53

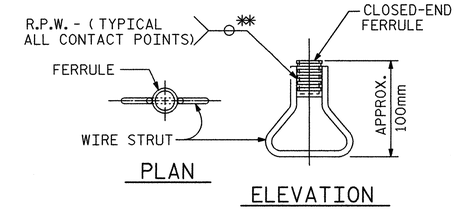

CONCRETE INSERT

** EACH WELDED ATTACHMENT OF WIRE TO FERRULE SHALL DEVELOP THE TENSILE STRENGTH OF THE WIRE.

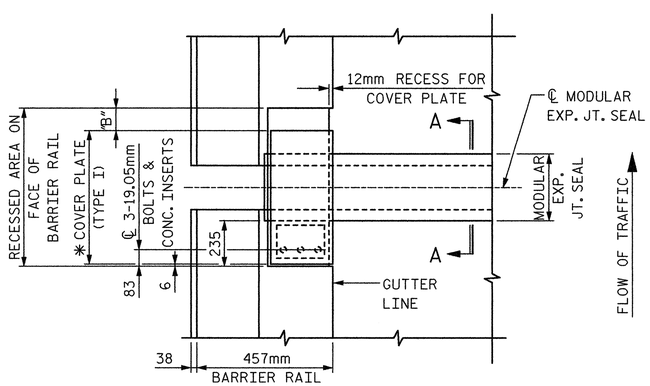

PLAN OF MODULAR EXPANSION JOINT SEAL - LEFT SIDE

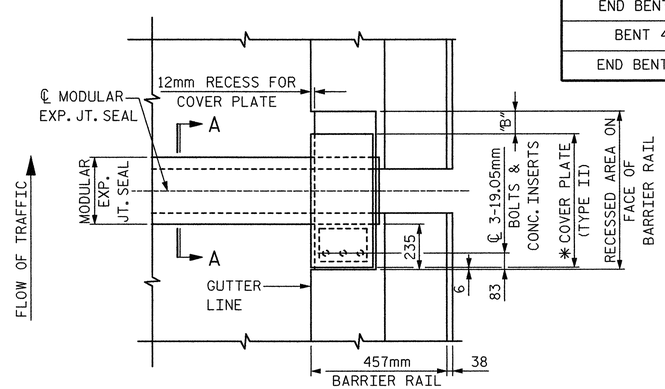

PLAN OF MODULAR EXPANSION JOINT SEAL - RIGHT SIDE

PROJECT NO. X-0002B

CUMBERLAND COUNTY

STATION: -L- POC STA. 63+66.830=
-FLYOVER-
POC STA. 22+29.794

NORTH CAROLINA PROFESSIONAL SEAL 024928 ENGINEER RODNEY E. MOONEY 8/1/08

STATE OF NORTH CAROLINA
DEPARTMENT OF TRANSPORTATION
RALEIGH

STANDARD

MODULAR EXPANSION JOINT SEAL DETAILS FOR BARRIER RAIL

PREPARED IN THE OFFICE OF
TYLIN INTERNATIONAL
RALEIGH, NORTH CAROLINA
Copyright © 2008, TYLI
DWG NO. 47

REVISIONS							
NO.	BY:	DATE:	NO.	BY:	DATE:	SHEET NO. S-226
1			3			TOTAL SHEETS 253
2			4			

DRAWN BY : S. MORGAN	DATE : JUN. '08		
CHECKED BY : J.W. WRIGHT	DATE : JUN. '08		
DRAWN BY : EEM 7/96	REV. 8/16/99	RAL/LES	
CHECKED BY : VAP 7/96	REV. 10/17/00R	RWW/LES	
	REV. 5/1/06	TLA/GM	

ds1fayettevilla outer loop\sm\X00028_SD_SD_01.dgn 8/1/2008 12:47:31 PM Structures

BILL OF MATERIAL

UNIT 1 - SPANS A, B, C & D

BAR	NO.	SIZE	TYPE	LENGTH	WEIGHT
REINFORCING STEEL					
✳ A1	1,314	16	STR.	12,300	25,084
A2	1,314	16	STR.	12,300	25,084
✳ B1	676	16	STR.	17,900	18,780
B2	572	16	STR.	17,800	15,802
✳ B3	204	16	STR.	16,080	5,091
✳ B4	102	16	STR.	14,580	2,308
✳ G1	28	16	4	1,100	48
✳ K1	8	16	1	2,920	36
✳ K2	12	16	2	3,960	74
✳ K3	8	16	STR.	500	6
✳ S1	76	13	3	1,100	83
✳ EPOXY COATED REINFORCING STEEL					kg 51,510
REINFORCING STEEL					kg 40,886

UNIT 2 - SPANS E, F, G & H

BAR	NO.	SIZE	TYPE	LENGTH	WEIGHT
REINFORCING STEEL					
✳ A1	1,507	16	STR.	12,300	28,768
A2	1,507	16	STR.	12,300	28,768
✳ B1	780	16	STR.	17,900	21,669
B2	660	16	STR.	17,800	18,233
✳ B3	102	16	STR.	16,080	2,546
✳ B5	204	16	STR.	18,240	5,775
✳ G1	28	16	4	1,100	48
✳ K1	8	16	1	2,920	36
✳ K2	12	16	2	3,960	74
✳ K3	8	16	STR.	500	6
✳ S1	76	13	3	1,100	83
✳ EPOXY COATED REINFORCING STEEL					kg 59,005
REINFORCING STEEL					kg 47,001

✳ DENOTES EPOXY COATED REINFORCING STEEL

BAR TYPES

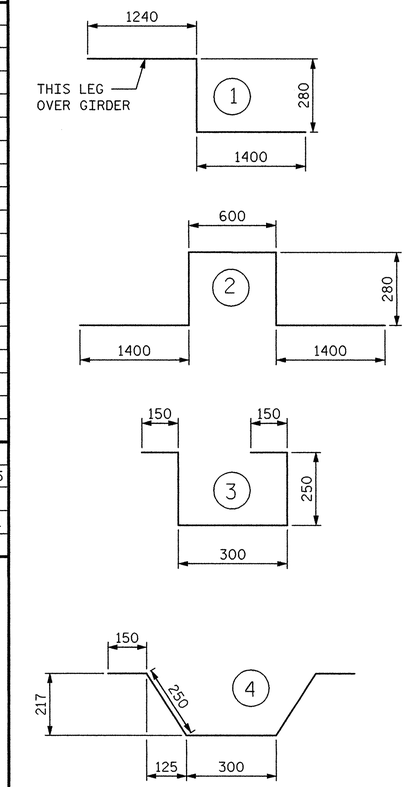

ALL BAR DIMENSIONS ARE OUT TO OUT

SUPERSTRUCTURE BILL OF MATERIAL

	CLASS AA CONCRETE	REINFORCING STEEL	EPOXY COATED REINFORCING STEEL
	(CU.METER)	(kg)	(kg)
UNIT 1	657.3	40,886	51,510
UNIT 2	753.6	47,001	59,005
TOTALS✳✳	1410.9	87,887	110,515

✳✳ QUANTITIES FOR BARRIER RAIL ARE NOT INCLUDED

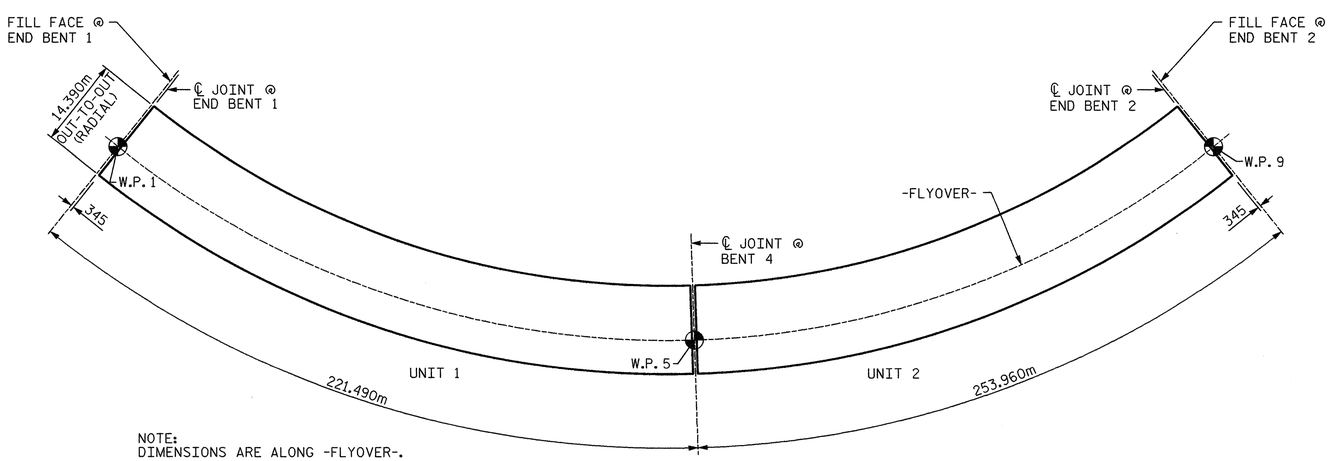

NOTE:
DIMENSIONS ARE ALONG -FLYOVER-.

LAYOUT FOR COMPUTING AREA OF REINFORCED CONCRETE DECK SLAB (SQ. METER = 5869.2)

CONCRETE BREAKDOWN

POUR	UNIT 1	UNIT 2
1	196.1	214.9
2	201.1	119.3
3	172.9	119.4
4	87.2	196.9
5	——	103.1
TOTAL	657.3	753.6

SUPERSTRUCTURE REINFORCING STEEL LENGTHS ARE BASED ON THE FOLLOWING MINIMUM SPLICE LENGTHS

BAR SIZE	SUPERSTRUCTURE EXCEPT APPROACH SLABS, PARAPET, AND BARRIER RAIL		APPROACH SLABS		PARAPET AND BARRIER RAIL
	EPOXY COATED	UNCOATED	EPOXY COATED	UNCOATED	
#13	610	540	610	540	840
#16	770	660	770	660	1050
#19	920	790	1190	790	1330
#22	1580	1060			
#25	2080	1390			

GROOVING BRIDGE FLOORS

✳ APPROACH SLABS	154.2	SQ.METER
UNIT 1	2311.3	SQ.METER
UNIT 2	2651.0	SQ.METER
TOTAL	5116.5	SQ.METER

✳ QUANTITY IS FOR BOTH APPROACH SLABS

PROJECT NO. X-0002B
CUMBERLAND COUNTY
STATION: -L- POC STA. 63+66.830=
-FLYOVER-
POC STA. 22+29.794

NORTH CAROLINA PROFESSIONAL SEAL 024928 ENGINEER RODNEY E. MONEY 8/1/08

STATE OF NORTH CAROLINA
DEPARTMENT OF TRANSPORTATION
RALEIGH

SUPERSTRUCTURE
BILL OF MATERIAL

PREPARED IN THE OFFICE OF
TYLIN INTERNATIONAL
RALEIGH, NORTH CAROLINA
Copyright © 2008, TYLI
DWG NO. 48

REVISIONS								
NO.	BY:	DATE:	NO.	BY:	DATE:			
1			3					
2			4					

SHEET NO. S-227
TOTAL SHEETS 253

DRAWN BY : S. MORGAN DATE : JUN. '08
CHECKED BY : J.W. WRIGHT DATE : JUN. '08

a:\fayetteville outer loop\sm\X00028_SD_BM_02.dgn 8/1/2008 12:47:34 PM Structures

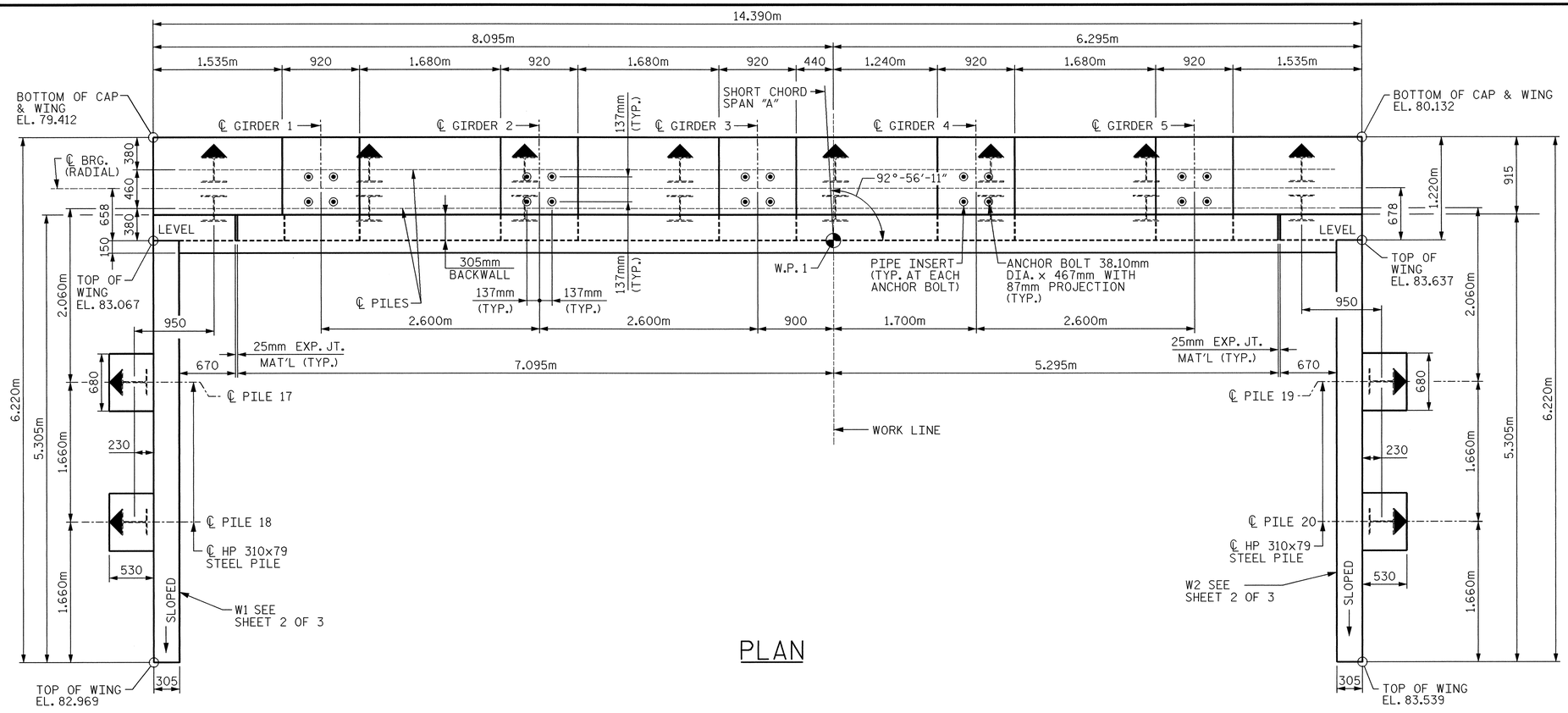

PLAN

NOTES:

FOR PIPE INSERT DETAILS, SEE "POT BEARING DETAILS" SHEET.

BACKWALL SHALL BE PLACED BEFORE APPLYING THE EPOXY PROTECTIVE COATING.

THE TOP SURFACE AREAS OF THE END BENT CAP SHALL BE CURED IN ACCORDANCE WITH STANDARD SPECIFICATIONS EXCEPT THE MEMBRANE CURING COMPOUND METHOD SHALL NOT BE USED.

FOR TEMPORARY DRAINAGE AT END BENT, SEE "END BENT 1 DETAILS" SHEET.

STIRRUPS IN CAP MAY BE SHIFTED AS NECESSARY TO CLEAR ANCHOR BOLTS AND PIPE INSERTS.

THE TOP SURFACE OF THE CAP EXCEPT THE BRIDGE SEAT BUILDUPS SHALL BE SLOPED TRANSVERSELY FROM THE FILL FACE TO THE BACK FACE AT THE RATE OF 2%.

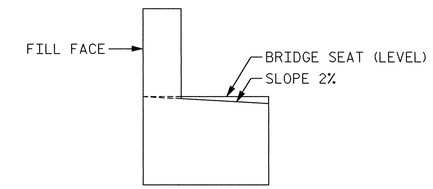

FOR SECTION A-A, SEE "END BENT 1 DETAILS" SHEET.

FOR PILE SPLICE DETAILS, SEE "END BENT 1 DETAILS" SHEET.

▲ DENOTES BATTER PILES 250:1000 IN DIRECTION OF ARROW.

FOR LOCATION OF ELEVATIONS BETWEEN BRIDGE SEAT BUILD UPS, SEE SECTION A-A.

✱✱ ELEVATION ALONG FILL FACE.

THE CONTRACTOR SHALL PROVIDE FOR INSTALLATION OF THE 102mm DIAMETER DRAIN PIPE THROUGH THE WINGWALL AS REQUIRED FOR REINFORCED BRIDGE APPROACH FILLS, SEE THE ROADWAY PLANS. REINFORCING STEEL IN THE WINGWALL MAY BE SHIFTED AS NECESSARY TO CLEAR THE DRAIN PIPE.

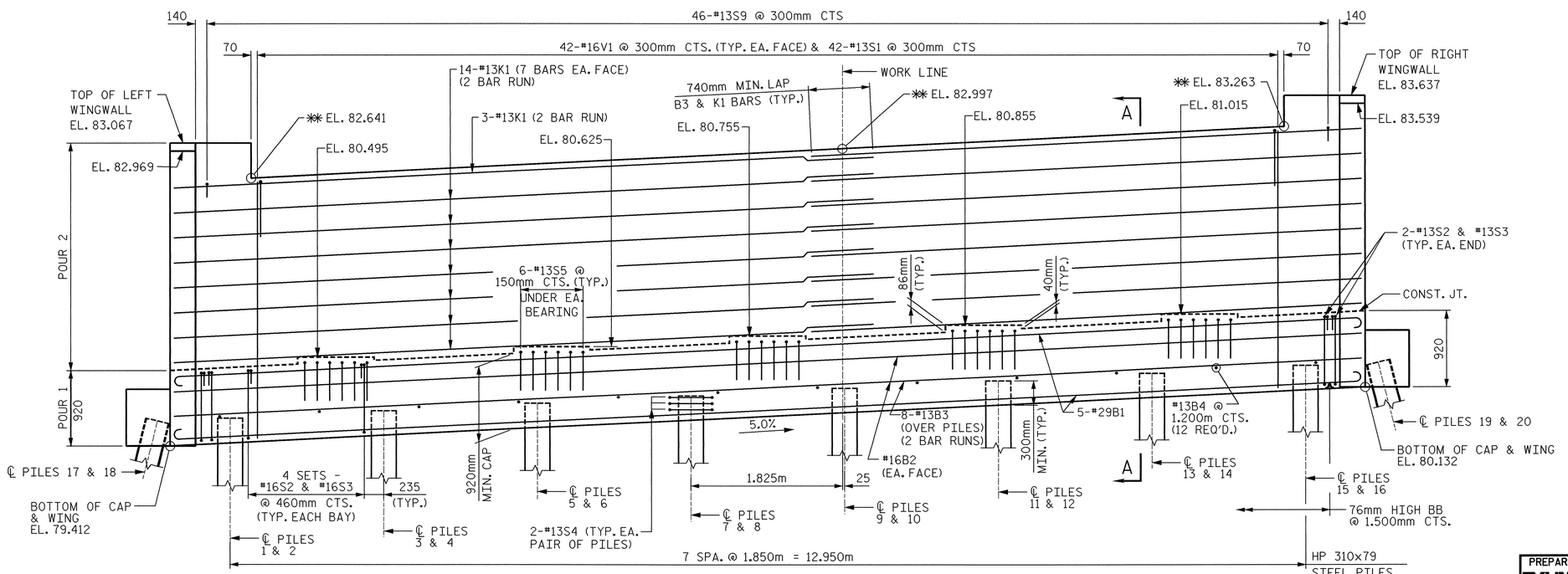

ELEVATION

PILE CUT-OFF TABLE	
PILE NO.	ELEVATION
1 & 2	79.748
3 & 4	79.841
5 & 6	79.933
7 & 8	80.026
9 & 10	80.118
11 & 12	80.211
13 & 14	80.303
15 & 16	80.396
17 & 18	79.712
19 & 20	80.432

PROJECT NO. X-0002B

CUMBERLAND COUNTY

STATION: -L- POC STA. 63+66.830=
-FLYOVER-
POC STA. 22+29.794

SHEET 1 OF 3

STATE OF NORTH CAROLINA
DEPARTMENT OF TRANSPORTATION
RALEIGH

SUBSTRUCTURE

END BENT 1

NORTH CAROLINA PROFESSIONAL SEAL 024928 ENGINEER RODNEY E. MONEY 8/26/08

PREPARED IN THE OFFICE OF
TYLIN INTERNATIONAL
RALEIGH, NORTH CAROLINA
Copyright © 2008, TYLI
DWG NO. 49

REVISIONS						SHEET NO.
NO.	BY:	DATE:	NO.	BY:	DATE:	S-228
1			3			TOTAL SHEETS
2			4			253

DRAWN BY : S. MORGAN DATE : JUN. '08
CHECKED BY : J.W. WRIGHT DATE : JUN. '08

8/25/2008 3:03:56 PM Structures
o:\fayetteville outer loop\sm\X0002B_S0_E1_01.dgn

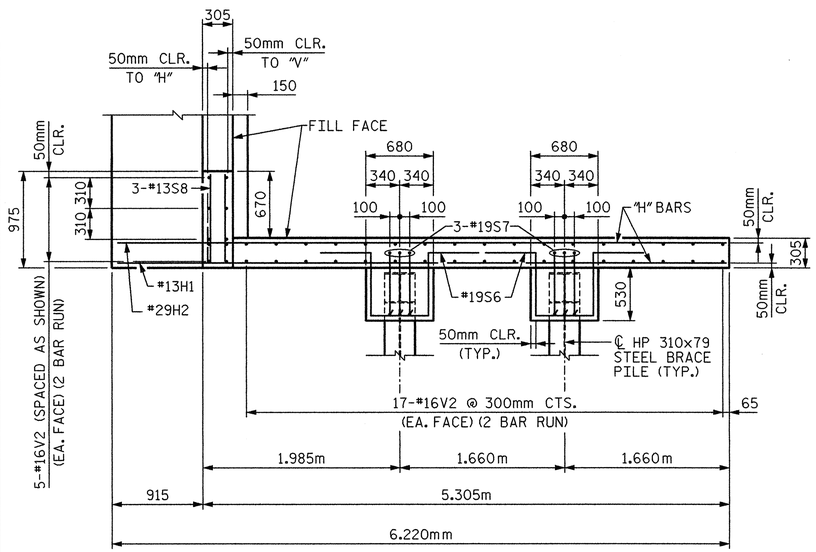

PLAN - W1

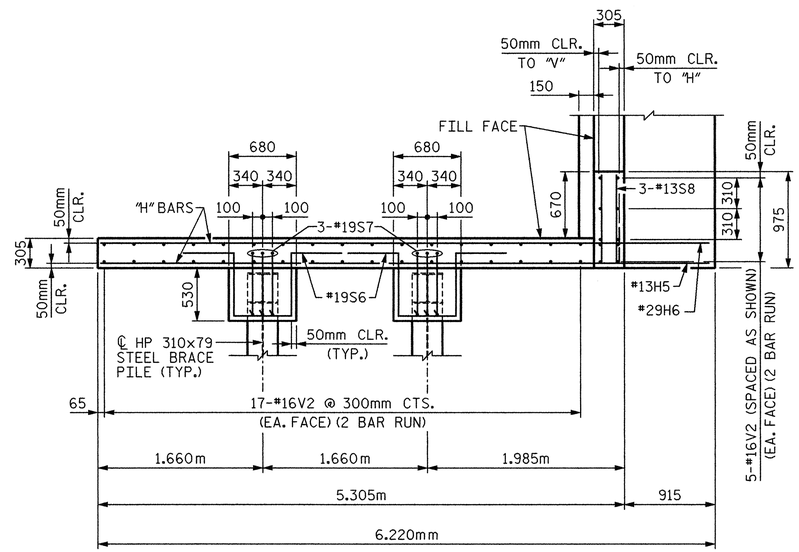

PLAN - W2

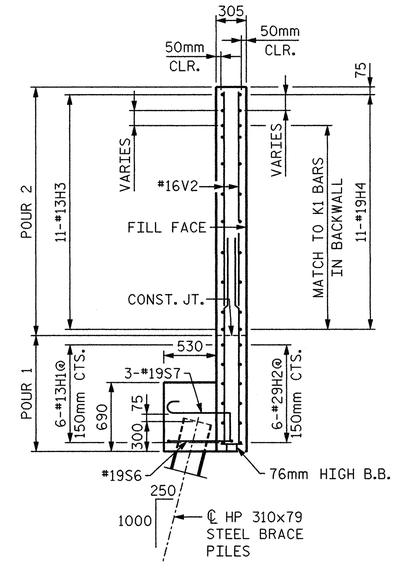

SECTION B-B

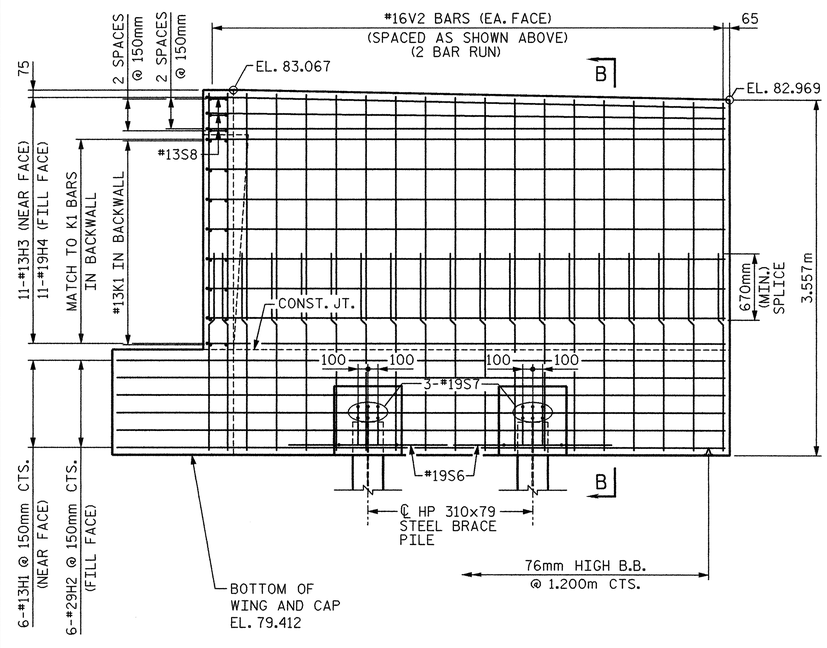

ELEVATION - W1

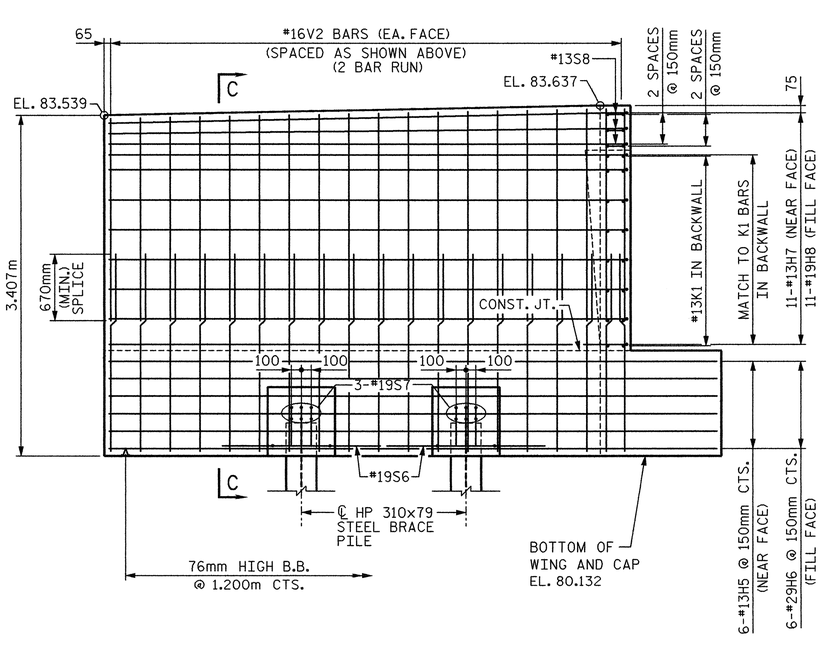

ELEVATION - W2

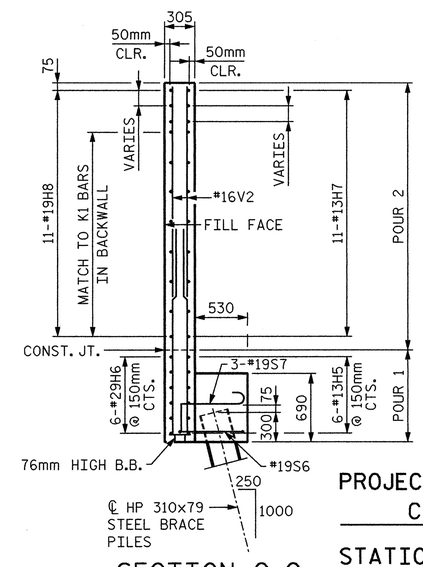

SECTION C-C

PROJECT NO. X-0002B

CUMBERLAND COUNTY

STATION: -L- POC STA. 63+66.830=
-FLYOVER-
POC STA. 22+29.794

SHEET 2 OF 3

STATE OF NORTH CAROLINA
DEPARTMENT OF TRANSPORTATION
RALEIGH

SUBSTRUCTURE

END BENT 1

NORTH CAROLINA PROFESSIONAL SEAL 024928 ENGINEER RODNEY E. MONEY 8/1/08

PREPARED IN THE OFFICE OF
TYLIN INTERNATIONAL
RALEIGH, NORTH CAROLINA
Copyright © 2008, TYLI

DWG NO. 50

REVISIONS								
NO.	BY:	DATE:	NO.	BY:	DATE:			
1			3					
2			4					

SHEET NO. S-229

TOTAL SHEETS 253

DRAWN BY : S. MORGAN DATE : JUN. '08
CHECKED BY : J.W. WRIGHT DATE : JUN. '08

8/1/2008 12:47:41 PM Structures
d:\flyover\tavilla outer loop\sm\X0002B_SD_EL_02.dgn

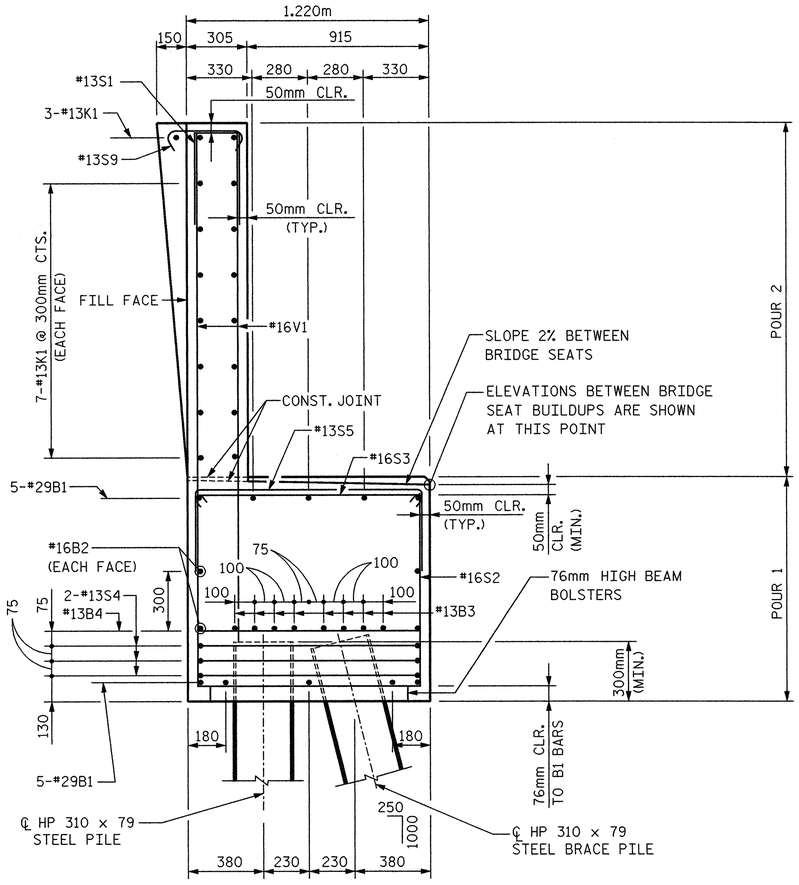

SECTION A-A

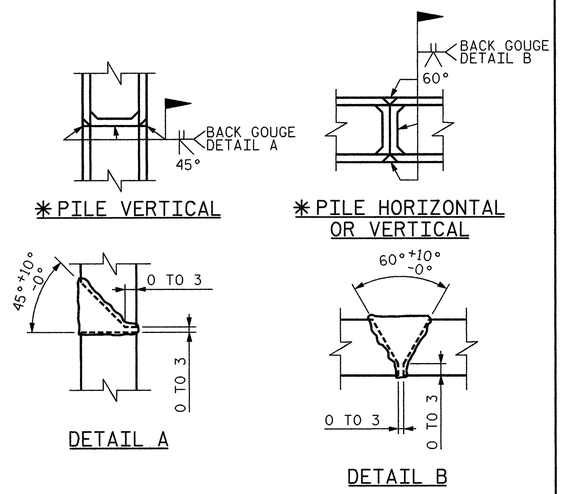

PILE SPLICE DETAILS

✱POSITION OF PILE DURING WELDING.

BAR TYPES

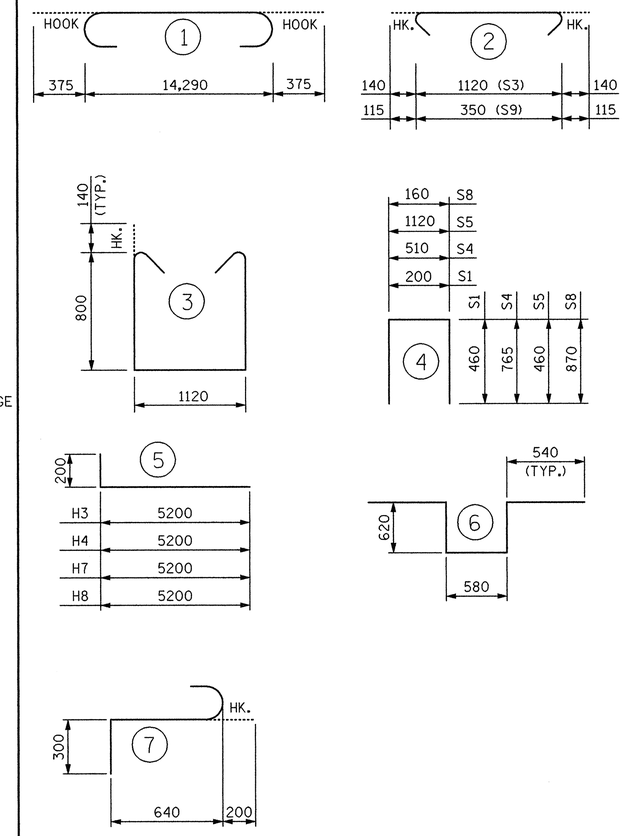

ALL BAR DIMENSIONS ARE OUT TO OUT.

BILL OF MATERIAL

END BENT 1

BAR	NO.	SIZE	TYPE	LENGTH	WEIGHT
B1	10	#29	1	15,040	761
B2	4	#16	STR.	14,300	89
B3	16	#13	STR.	7,520	120
B4	12	#13	STR.	1,120	13
H1	6	#13	STR.	6,120	36
H2	6	#29	STR.	6,120	186
H3	11	#13	5	5,400	59
H4	11	#19	5	5,400	133
H5	6	#13	STR.	6,120	36
H6	6	#29	STR.	6,120	186
H7	11	#13	5	5,400	59
H8	11	#19	5	5,400	133
K1	34	#13	STR.	7,520	254
S1	42	#13	4	1,120	47
S2	32	#16	3	3,000	149
S3	32	#16	2	1,400	70
S4	48	#13	4	2,040	97
S5	30	#13	4	2,040	61
S6	4	#19	6	2,900	26
S7	12	#19	7	1,140	31
S8	6	#13	4	1,900	11
S9	46	#13	2	580	27
V1	84	#16	STR.	3,060	399
V2	176	#16	STR.	2,120	579
TOTAL REINFORCING STEEL				kg	3,562
CLASS A CONCRETE					
POUR 1 - CAP & LOWER WINGS				CU. m	20.0
POUR 2 - BACKWALL & UPPER WINGS				CU. m	20.2
TOTAL				CU. m	40.2
HP 310x79 STEEL PILES					
20 PILES REQUIRED				LIN. m	715

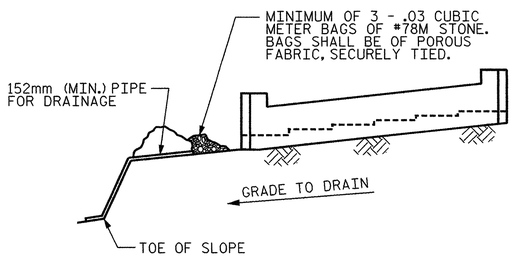

BAGGED STONE AND PIPE SHALL BE PLACED IMMEDIATELY AFTER COMPLETION OF END BENT EXCAVATION. PIPE MAY BE EITHER CONCRETE, CORRUGATED STEEL, CORRUGATED ALUMINUM ALLOY, OR CORRUGATED PLASTIC. PERFORATED PIPE WILL NOT BE ALLOWED.

BAGGED STONE SHALL REMAIN IN PLACE UNTIL THE ENGINEER DIRECTS THAT IT BE REMOVED. THE CONTRACTOR SHALL REMOVE AND DISPOSE OF SILT ACCUMULATIONS AT BAGGED STONE WHEN SO DIRECTED BY THE ENGINEER. BAGS SHALL BE REMOVED AND REPLACED WHENEVER THE ENGINEER DETERMINES THAT THEY HAVE DETERIORATED AND LOST THEIR EFFECTIVENESS.

NO SEPARATE PAYMENT WILL BE MADE FOR THIS WORK AND THE ENTIRE COST OF THIS WORK SHALL BE INCLUDED IN THE UNIT CONTRACT PRICE BID FOR THE SEVERAL PAY ITEMS.

TEMPORARY DRAINAGE AT END BENT

PROJECT NO. X-0002B
CUMBERLAND COUNTY
STATION: -L- POC STA. 63+66.830=
-FLYOVER-
POC STA. 22+29.794

SHEET 3 OF 3

STATE OF NORTH CAROLINA
DEPARTMENT OF TRANSPORTATION
RALEIGH

SUBSTRUCTURE

END BENT 1
DETAILS

NORTH CAROLINA PROFESSIONAL SEAL 024928 ENGINEER RODNEY E. MONEY 8/1/08

PREPARED IN THE OFFICE OF
TYLIN INTERNATIONAL
RALEIGH, NORTH CAROLINA
Copyright © 2008, TYLI
DWG NO. 51

REVISIONS							SHEET NO.
NO.	BY:	DATE:	NO.	BY:	DATE:		S-230
1			3				TOTAL SHEETS
2			4				253

DRAWN BY : S. MORGAN DATE : JUN. '08
CHECKED BY : J.W. WRIGHT DATE : JUN. '08

ex:\fayetteville outer loop\sm\X0002B_SD_E1_03.dgn 8/1/2008 12:47:44 PM Structures

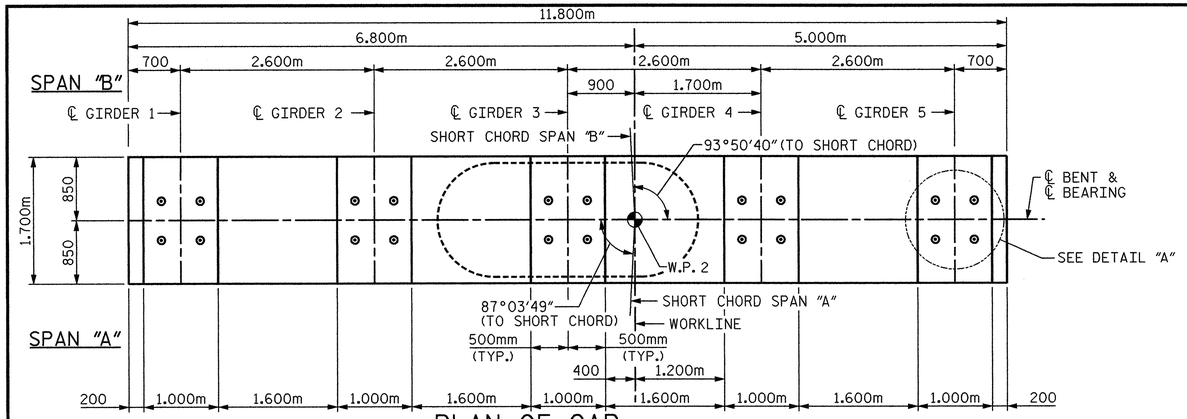

PLAN OF CAP

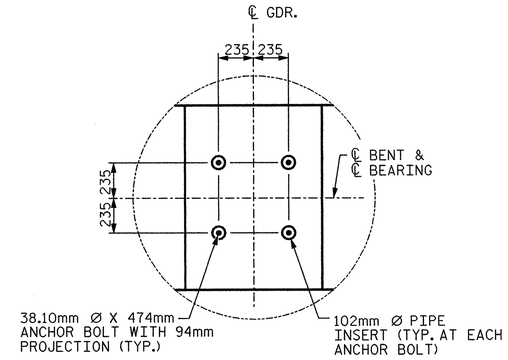

DETAIL "A"
(TYP. EA. BRG.)

NOTES:

STIRRUPS AND "U" BARS IN CAP MAY BE SHIFTED AS NECESSARY TO CLEAR ANCHOR BOLTS AND PIPE INSERTS.

HOOKS ON M1 BARS MAY BE TURNED AS NECESSARY FOR PLACING REINFORCING STEEL.

DETAILED DRAWINGS FOR FALSEWORK AND FORMS FOR THIS HAMMERHEAD BENT SHALL BE SUBMITTED. SEE SHEET SNSM.

T1 & T2 BARS IN TOP OF FOOTING MAY BE SHIFTED AS NECESSARY TO CLEAR M1 BARS IN FOOTING.

FOR SECTION A-A, SECTION B-B AND SECTION C-C, SEE SHEET 2 OF 2.

CLASS AA CONCRETE SHALL BE USED FOR THE CAP, COLUMN AND FOOTING.

FOR PIPE INSERT DETAILS, SEE "POT BEARING" SHEETS.

FOR PILE SPLICE DETAILS, SEE "END BENT 1 DETAILS AND BOM" SHEET.

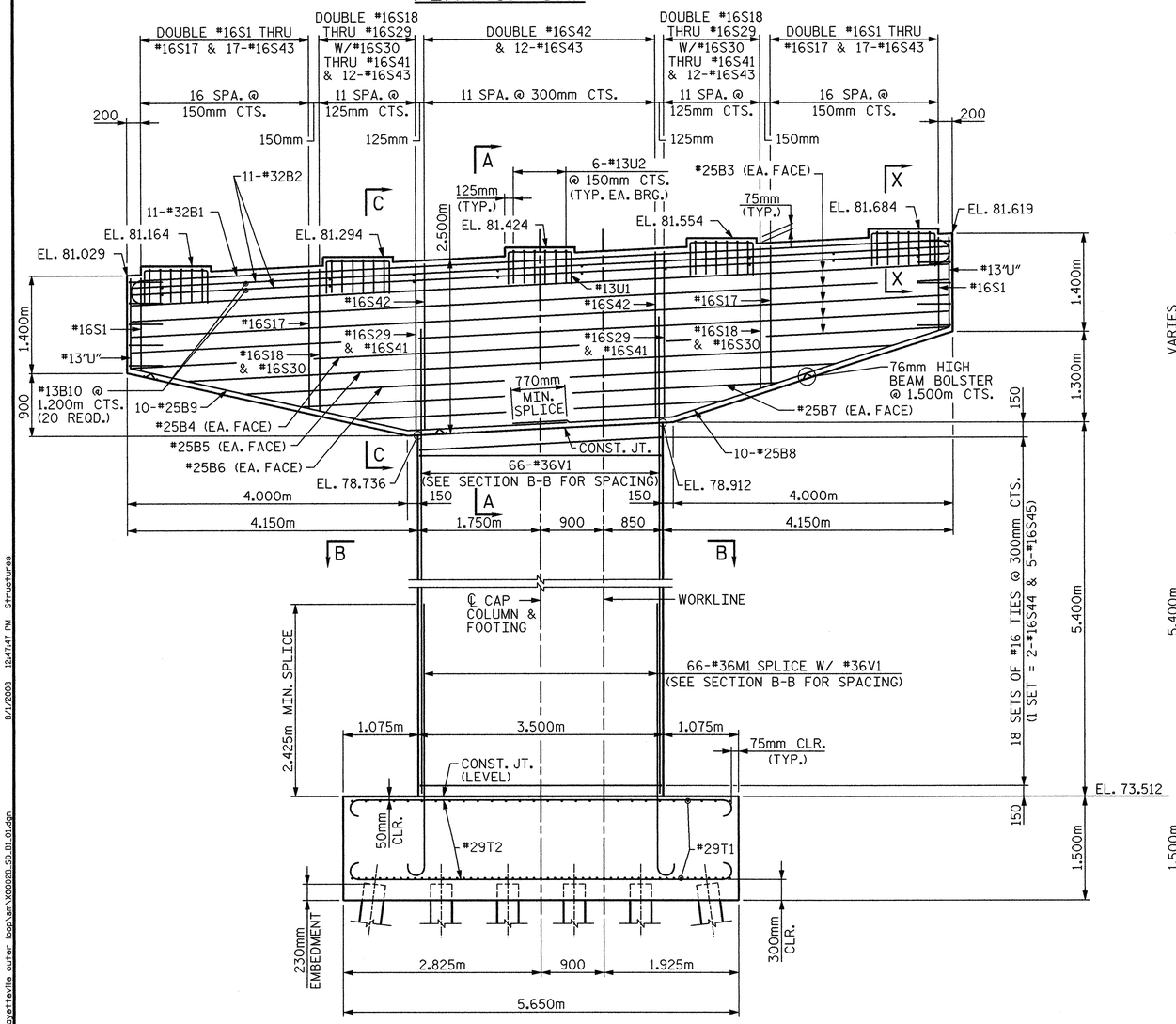

ELEVATION

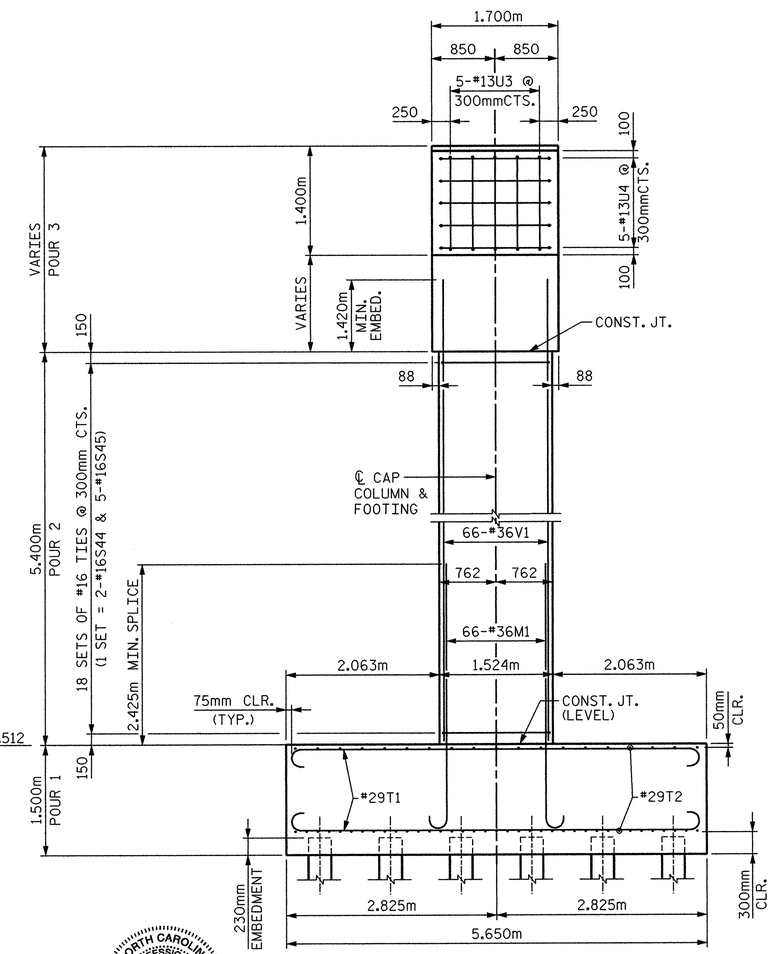

END VIEW

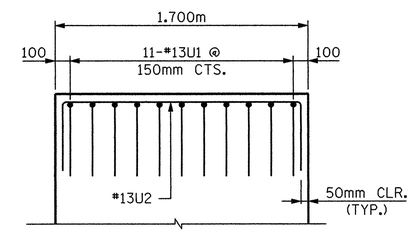

SECTION X-X

PROJECT NO. X-0002B
CUMBERLAND COUNTY
STATION: -L- POC STA. 63+66.830=
-FLYOVER-
POC STA. 22+29.794

SHEET 1 OF 2

STATE OF NORTH CAROLINA
DEPARTMENT OF TRANSPORTATION
RALEIGH

SUBSTRUCTURE
BENT 1

NORTH CAROLINA PROFESSIONAL SEAL 024928 ENGINEER ROGNEY E. MONEY 8/1/08

PREPARED IN THE OFFICE OF
TYLIN INTERNATIONAL
RALEIGH, NORTH CAROLINA
Copyright © 2008, TYLI
DWG NO. 52

REVISIONS						
NO.	BY:	DATE:	NO.	BY:	DATE:	
1			3			
2			4			

SHEET NO. S-231
TOTAL SHEETS 253

DRAWN BY : S. MORGAN DATE : JUN. '08
CHECKED BY : J.W. WRIGHT DATE : JUN. '08

8/1/2008 12:41:47 PM Structures
ox:fayetteville outer loop\sm\X0002B_SD_B1_01.dgn

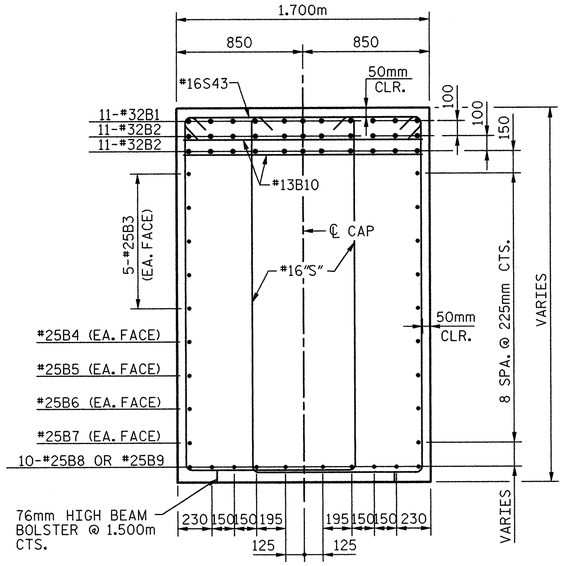

SECTION A-A

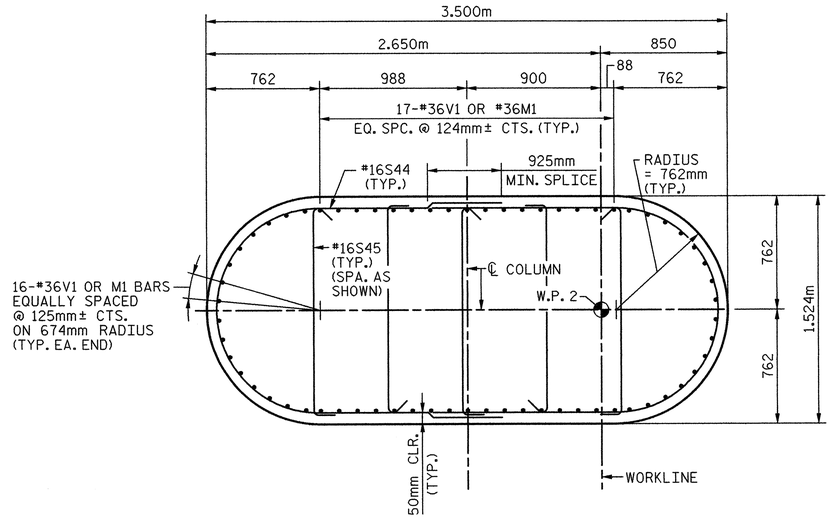

SECTION B-B

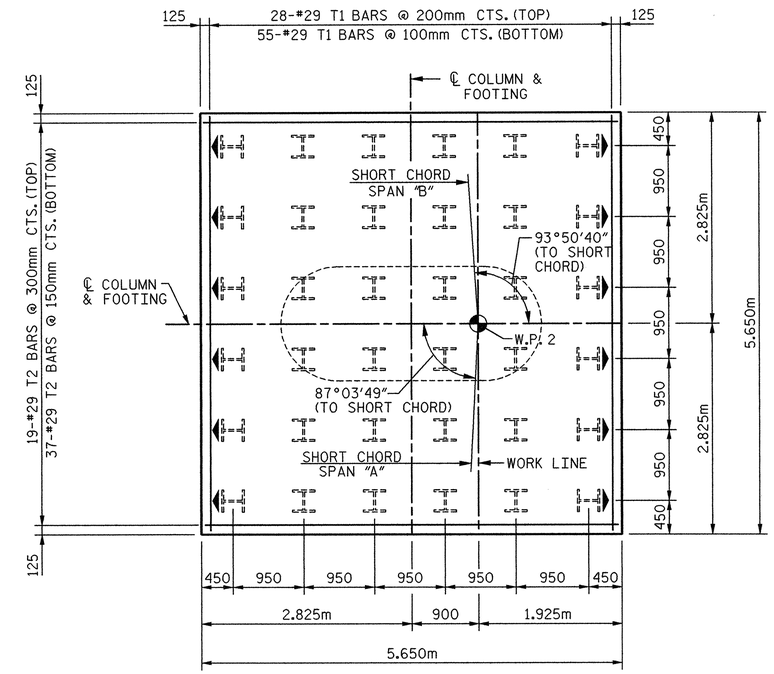

PLAN OF FOOTING

NOTE:

▲ DENOTES BATTER PILES 125:1000 IN DIRECTION OF ARROW.

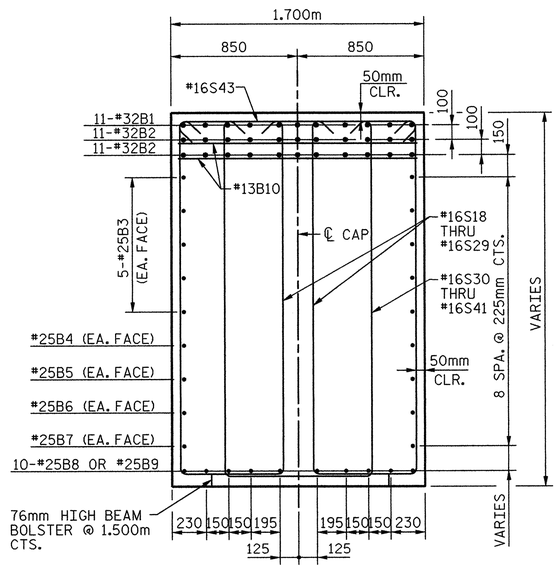

SECTION C-C

BILL OF MATERIAL

BENT 1

BAR	NO.	SIZE	TYPE	DIM.A	LENGTH	WEIGHT
B1	11	32	1	-	12,560	885
B2	22	32	STR.	-	11,700	1,648
B3	10	25	STR.	-	11,700	465
B4	2	25	STR.	-	10100	80
B5	2	25	STR.	-	8460	67
B6	2	25	STR.	-	6820	54
B7	2	25	STR.	-	5180	41
B8	10	25	7	-	6660	265
B9	10	25	7	-	6,540	260
B10	20	13	STR.	-	1,600	32
M1	66	36	2	-	4,100	2,140
S1	4	16	3	1,330	4,100	25
S2	4	16	3	1,380	4,200	26
S3	4	16	3	1,420	4,280	27
S4	4	16	3	1,460	4,360	27
S5	4	16	3	1,500	4,440	28
S6	4	16	3	1,540	4,520	28
S7	4	16	3	1,580	4,600	29
S8	4	16	3	1,620	4,680	29
S9	4	16	3	1,660	4,760	30
S10	4	16	3	1,710	4,860	30
S11	4	16	3	1,750	4,940	31
S12	4	16	3	1,790	5,020	31
S13	4	16	3	1,830	5,100	32
S14	4	16	3	1,870	5,180	32
S15	4	16	3	1,910	5,260	33
S16	4	16	3	1,950	5,340	33
S17	4	16	3	1,990	5,420	34
S18	4	16	3	2,030	5,060	31
S19	4	16	3	2,070	5,140	32
S20	4	16	3	2,100	5,200	32
S21	4	16	3	2,140	5,280	33
S22	4	16	3	2,170	5,340	33
S23	4	16	3	2,200	5,400	34
S24	4	16	3	2,240	5,480	34
S25	4	16	3	2,270	5,540	34
S26	4	16	3	2,310	5,620	35
S27	4	16	3	2,340	5,680	35
S28	4	16	3	2,370	5,740	36
S29	4	16	3	2,380	5,760	36
S30	2	16	3	2,030	5,340	17
S31	2	16	3	2,070	5,420	17
S32	2	16	3	2,100	5,480	17
S33	2	16	3	2,140	5,560	17
S34	2	16	3	2,170	5,620	18
S35	2	16	3	2,200	5,680	18
S36	2	16	3	2,240	5,760	18
S37	2	16	3	2,270	5,820	18
S38	2	16	3	2,310	5,900	18
S39	2	16	3	2,340	5,960	19
S40	2	16	3	2,370	6,020	19
S41	2	16	3	2,380	6,040	19
S42	24	16	3	2,380	6,200	231
S43	70	16	5	-	1,880	204
S44	36	16	6	-	5,160	288
S45	90	16	8	-	1,720	240
T1	83	29	1	-	6,260	2,629
T2	56	29	1	-	6,260	1,774
U1	55	13	4	-	1,820	99
U2	30	13	4	-	2,520	75
U3	10	13	4	-	2,220	22
U4	10	13	4	-	2,480	25
V1	66	36	STR.	-	6,820	3,559

BAR TYPES

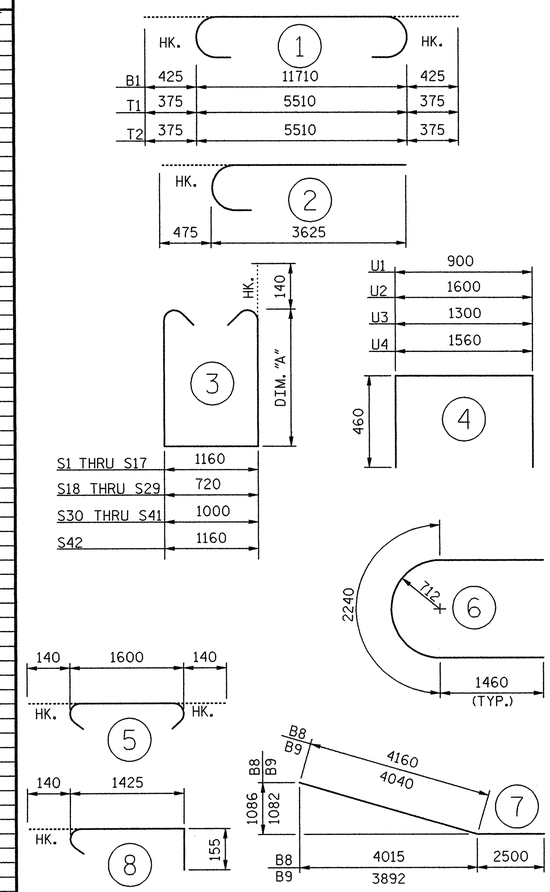

ALL BAR DIMENSIONS ARE OUT TO OUT.

TOTAL REINFORCING STEEL	kg	16,208
CLASS "AA" CONC. BREAKDOWN		
POUR #1 FOOTINGS	CU.M.	47.9
POUR #2 COLUMNS	CU.M.	25.7
POUR #3 CAP	CU.M.	43.5
TOTAL	CU.M.	117.1
HP 360X108 STEEL PILES 36 PILES REQUIRED	LIN. M.	1,165.8

PROJECT NO. X-0002B

CUMBERLAND COUNTY

STATION: -L- POC STA. 63+66.830=
-FLYOVER-
POC STA. 22+29.794

SHEET 2 OF 2

STATE OF NORTH CAROLINA
DEPARTMENT OF TRANSPORTATION
RALEIGH

SUBSTRUCTURE

BENT 1 DETAILS

NORTH CAROLINA PROFESSIONAL SEAL 024928 ENGINEER RODNEY E. MONEY 8/1/08

PREPARED IN THE OFFICE OF
TYLIN INTERNATIONAL
RALEIGH, NORTH CAROLINA
Copyright © 2008, TYLI
DWG NO. 53

REVISIONS						
NO.	BY:	DATE:	NO.	BY:	DATE:	
1			3			
2			4			

SHEET NO. S-232
TOTAL SHEETS 253

DRAWN BY : S. MORGAN DATE : JUN. '08
CHECKED BY : J.W. WRIGHT DATE : JUN. '08

8/1/2008 12:47:51 PM Structures
ex:\fayetteville outer loop\sm\X0002B_SD_B1_02.dgn

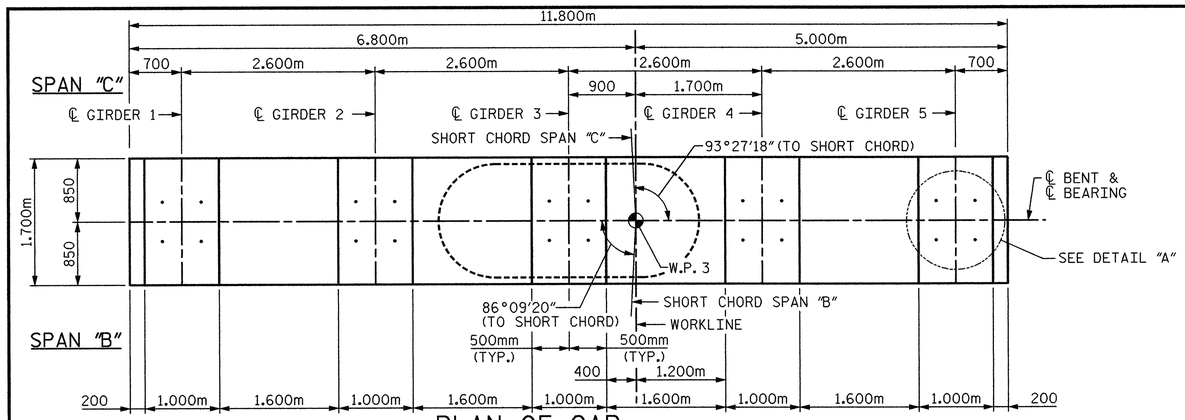

PLAN OF CAP

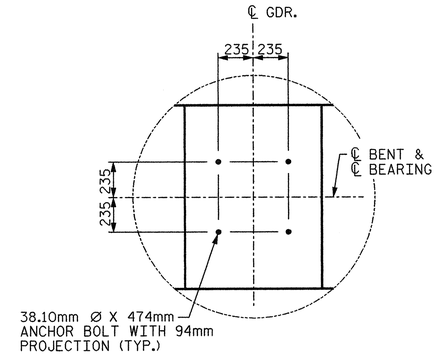

DETAIL "A"
(TYP. EA. BRG.)

NOTES:

STIRRUPS AND "U" BARS IN CAP MAY BE SHIFTED AS NECESSARY TO CLEAR ANCHOR BOLTS.

HOOKS ON M1 BARS MAY BE TURNED AS NECESSARY FOR PLACING REINFORCING STEEL.

DETAILED DRAWINGS FOR FALSEWORK AND FORMS FOR THIS HAMMERHEAD BENT SHALL BE SUBMITTED. SEE SHEET SNSM.

T1 & T2 BARS IN TOP OF FOOTING MAY BE SHIFTED AS NECESSARY TO CLEAR M1 BARS IN FOOTING.

FOR SECTION A-A, SECTION B-B AND SECTION C-C, SEE SHEET 2 OF 2.

CLASS AA CONCRETE SHALL BE USED FOR THE CAP, COLUMN AND FOOTING.

FOR PILE SPLICE DETAILS, SEE "END BENT 1 DETAILS AND BOM" SHEET.

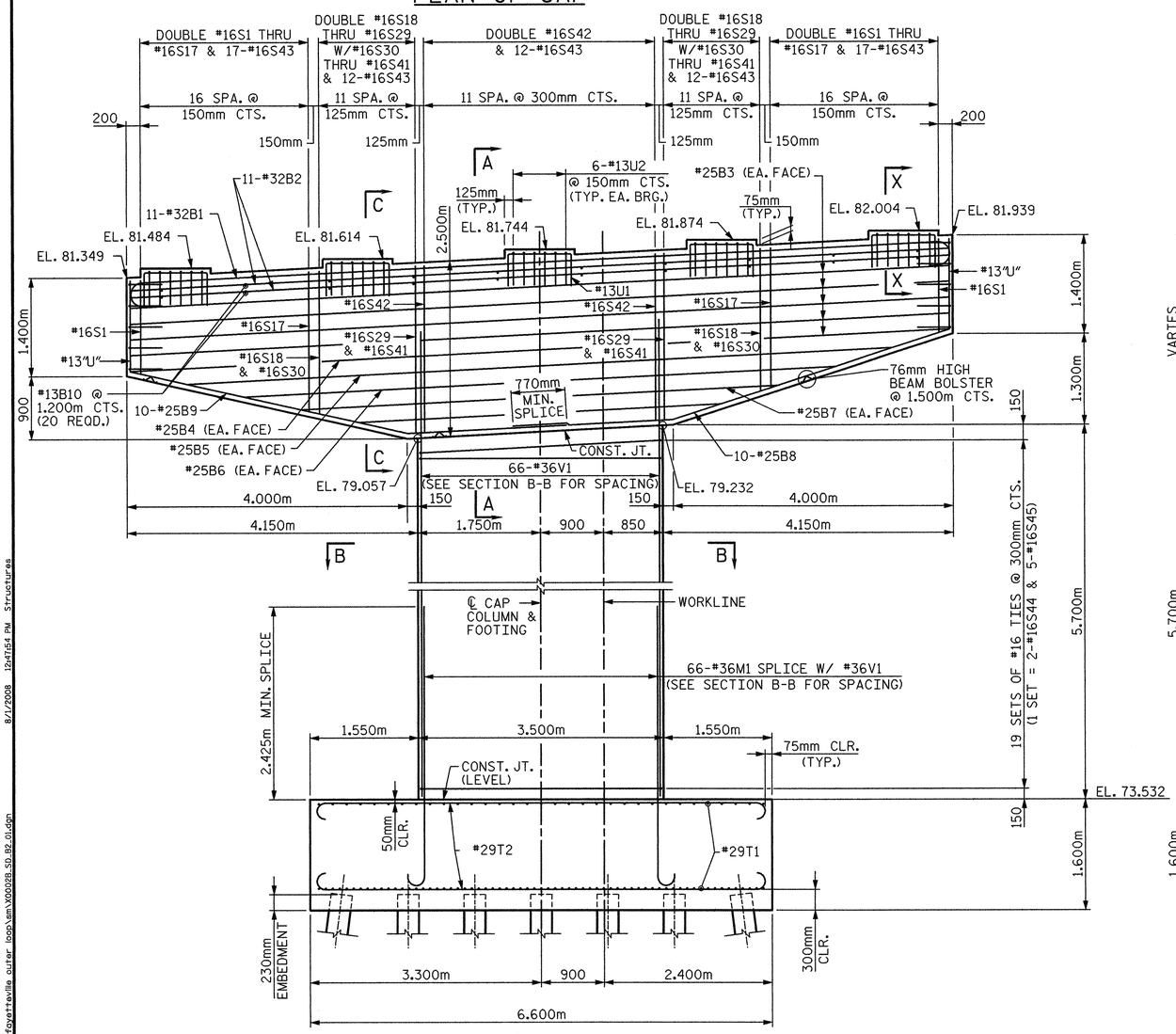

ELEVATION

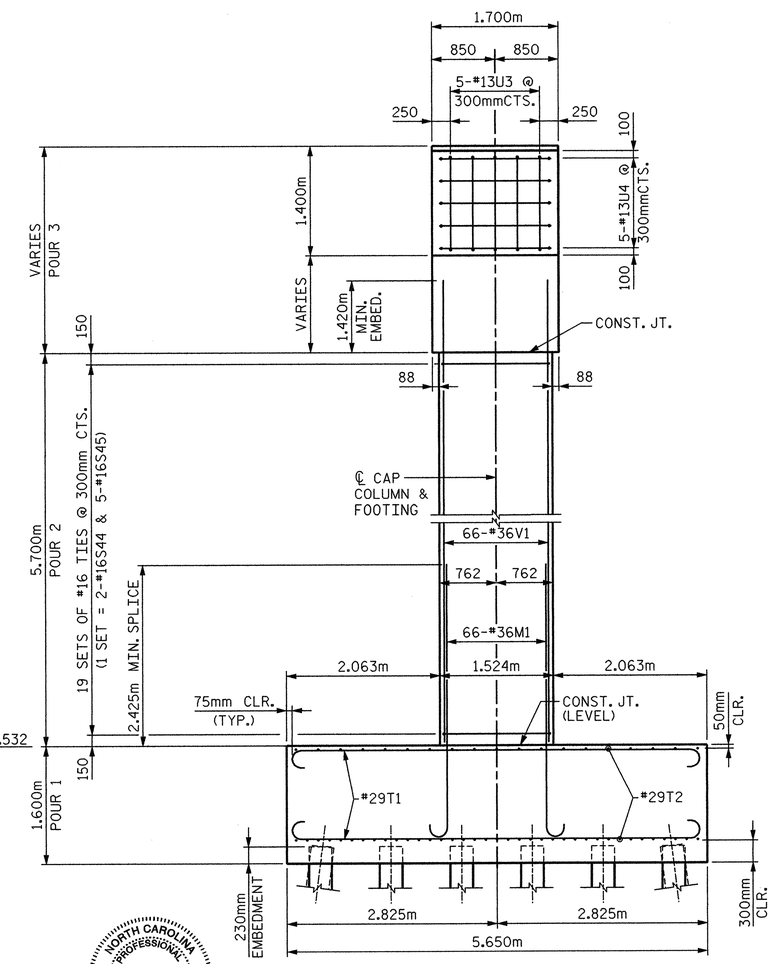

END VIEW

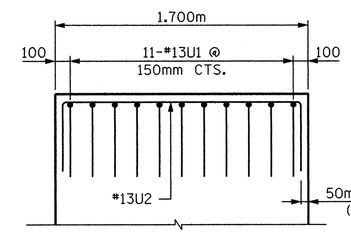

SECTION X-X

PROJECT NO. X-0002B
CUMBERLAND COUNTY
STATION: -L- POC STA. 63+66.830=
-FLYOVER-
POC STA. 22+29.794

SHEET 1 OF 2

STATE OF NORTH CAROLINA
DEPARTMENT OF TRANSPORTATION
RALEIGH

SUBSTRUCTURE
BENT 2

NORTH CAROLINA PROFESSIONAL SEAL 024928 ENGINEER RODNEY E. MONEY 8/1/08

PREPARED IN THE OFFICE OF
TYLIN INTERNATIONAL
RALEIGH, NORTH CAROLINA
Copyright © 2008, TYLI
DWG NO. 54

REVISIONS						
NO.	BY:	DATE:	NO.	BY:	DATE:	
1			3			
2			4			

SHEET NO. S-233
TOTAL SHEETS 253

DRAWN BY : S. MORGAN DATE : JUN. '08
CHECKED BY : J.W. WRIGHT DATE : JUN. '08

8/1/2008 12:47:54 PM Structures
ox:fayetteville outer loop\sm\X0002B_SD_B2_01.dgn

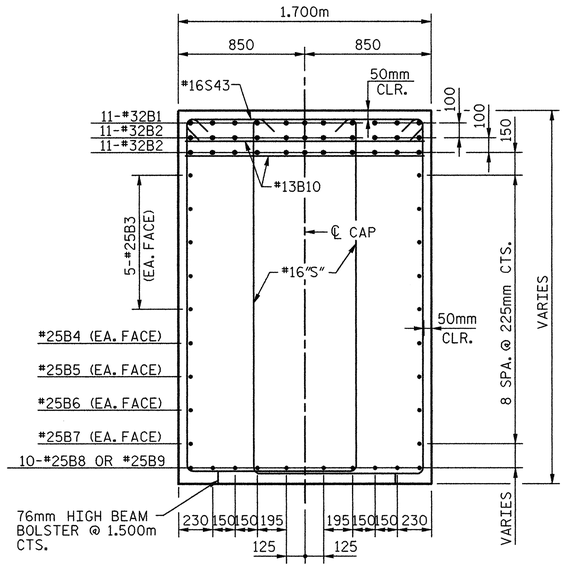

SECTION A-A

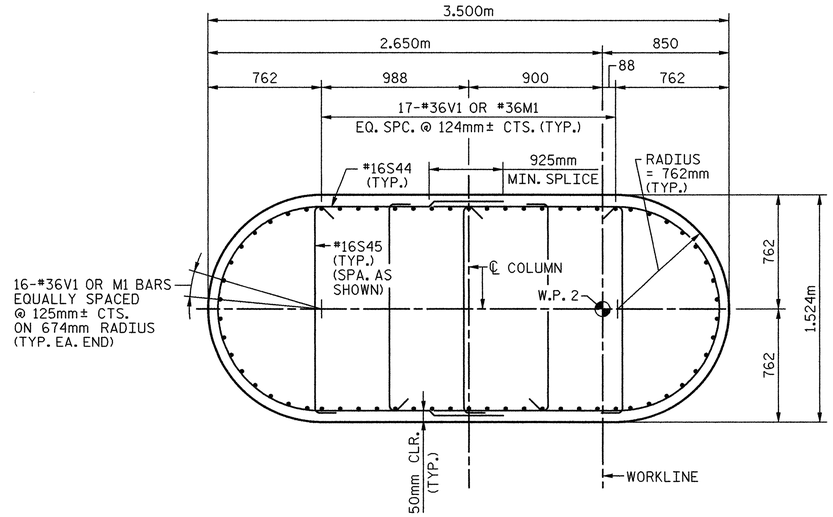

SECTION B-B

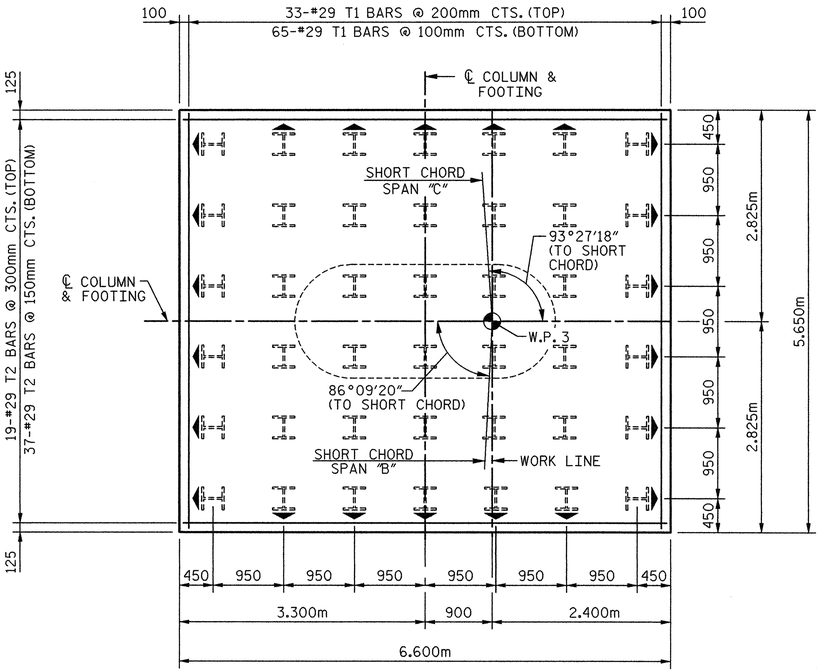

PLAN OF FOOTING

NOTE:

▲ DENOTES BATTER PILES 125:1000 IN DIRECTION OF ARROW.

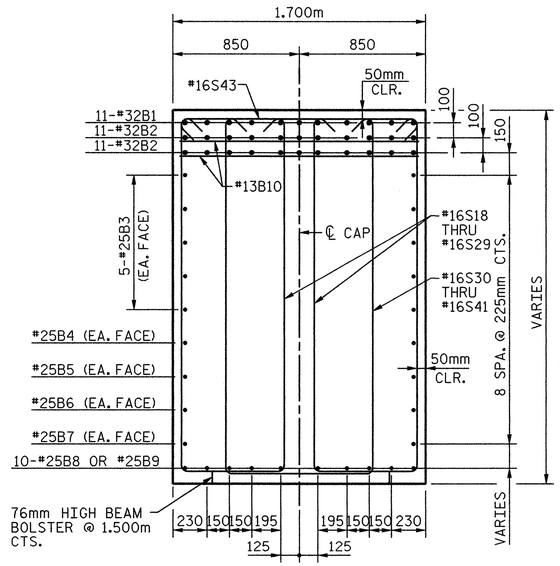

SECTION C-C

BILL OF MATERIAL

BENT 2

BAR	NO.	SIZE	TYPE	DIM.A	LENGTH	WEIGHT
B1	11	32	1	-	12,560	885
B2	22	32	STR.	-	11,700	1,648
B3	10	25	STR.	-	11,700	465
B4	2	25	STR.	-	10100	80
B5	2	25	STR.	-	8460	67
B6	2	25	STR.	-	6820	54
B7	2	25	STR.	-	5180	41
B8	10	25	7	-	6660	265
B9	10	25	7	-	6,540	260
B10	20	13	STR.	-	1,600	32
M1	66	36	2	-	4,200	2,192
S1	4	16	3	1,330	4,100	25
S2	4	16	3	1,380	4,200	26
S3	4	16	3	1,420	4,280	27
S4	4	16	3	1,460	4,360	27
S5	4	16	3	1,500	4,440	28
S6	4	16	3	1,540	4,520	28
S7	4	16	3	1,580	4,600	29
S8	4	16	3	1,620	4,680	29
S9	4	16	3	1,660	4,760	30
S10	4	16	3	1,710	4,860	30
S11	4	16	3	1,750	4,940	31
S12	4	16	3	1,790	5,020	31
S13	4	16	3	1,830	5,100	32
S14	4	16	3	1,870	5,180	32
S15	4	16	3	1,910	5,260	33
S16	4	16	3	1,950	5,340	33
S17	4	16	3	1,990	5,420	34
S18	4	16	3	2,030	5,060	31
S19	4	16	3	2,070	5,140	32
S20	4	16	3	2,100	5,200	32
S21	4	16	3	2,140	5,280	33
S22	4	16	3	2,170	5,340	33
S23	4	16	3	2,200	5,400	34
S24	4	16	3	2,240	5,480	34
S25	4	16	3	2,270	5,540	34
S26	4	16	3	2,310	5,620	35
S27	4	16	3	2,340	5,680	35
S28	4	16	3	2,370	5,740	36
S29	4	16	3	2,380	5,760	36
S30	2	16	3	2,030	5,340	17
S31	2	16	3	2,070	5,420	17
S32	2	16	3	2,100	5,480	17
S33	2	16	3	2,140	5,560	17
S34	2	16	3	2,170	5,620	18
S35	2	16	3	2,200	5,680	18
S36	2	16	3	2,240	5,760	18
S37	2	16	3	2,270	5,820	18
S38	2	16	3	2,310	5,900	18
S39	2	16	3	2,340	5,960	19
S40	2	16	3	2,370	6,020	19
S41	2	16	3	2,380	6,040	19
S42	24	16	3	2,380	6,200	231
S43	70	16	5	-	1,880	204
S44	38	16	6	-	5,160	304
S45	95	16	8	-	1,720	254
T1	98	29	1	-	6,260	3,104
T2	56	29	1	-	7,200	2,040
U1	55	13	4	-	1,820	99
U2	30	13	4	-	2,520	75
U3	10	13	4	-	2,220	22
U4	10	13	4	-	2,480	25
V1	66	36	STR.	-	7,120	3,716

BAR TYPES

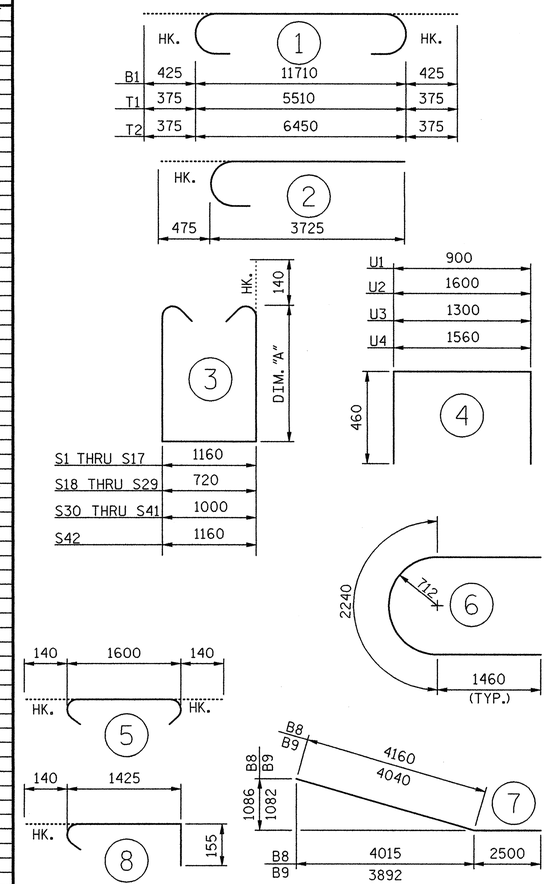

ALL BAR DIMENSIONS ARE OUT TO OUT.

TOTAL REINFORCING STEEL	Kg	17,188
CLASS "AA" CONC. BREAKDOWN		
POUR #1 FOOTINGS	CU.M.	59.7
POUR #2 COLUMNS	CU.M.	27.1
POUR #3 CAP	CU.M.	43.5
TOTAL	CU.M.	130.3
HP 360X108 STEEL PILES 42 PILES REQUIRED	LIN. M.	1,024.8

PROJECT NO. X-0002B

CUMBERLAND COUNTY

STATION: -L- POC STA. 63+66.830=
-FLYOVER-
POC STA. 22+29.794

SHEET 2 OF 2

STATE OF NORTH CAROLINA
DEPARTMENT OF TRANSPORTATION
RALEIGH

SUBSTRUCTURE

BENT 2 DETAILS

NORTH CAROLINA PROFESSIONAL SEAL 024928 ENGINEER RODNEY E. MONEY 8/1/08

PREPARED IN THE OFFICE OF
TY·LIN INTERNATIONAL
RALEIGH, NORTH CAROLINA
Copyright © 2008, TYLI

DWG NO. 55

REVISIONS								SHEET NO.
NO.	BY:	DATE:	NO.	BY:	DATE:			S-234
1			3					TOTAL SHEETS
2			4					253

DRAWN BY : S. MORGAN DATE : JUN. '08
CHECKED BY : J.W. WRIGHT DATE : JUN. '08

8/1/2008 12:41:59 PM Structures

ex:fayetteville outer loop\sm\X0002B_SD_B2_02.dgn

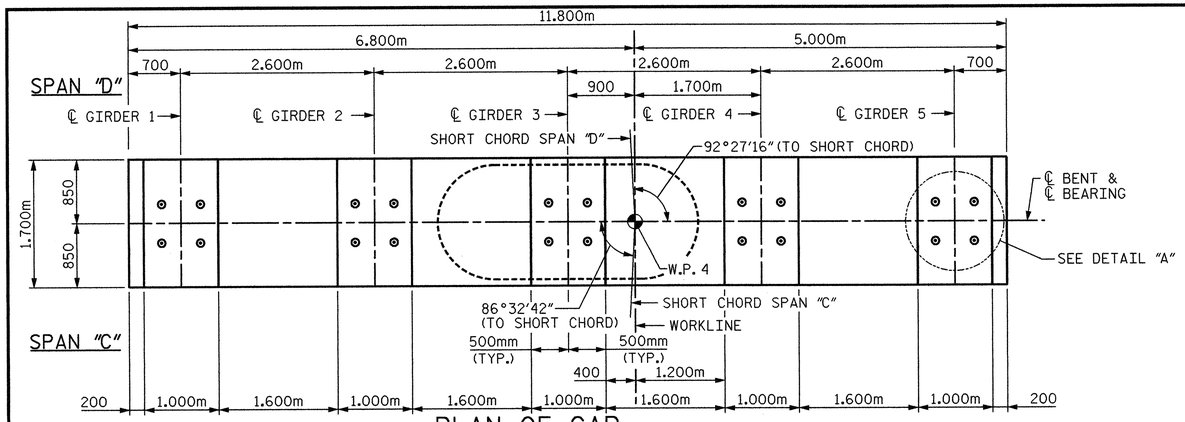

PLAN OF CAP

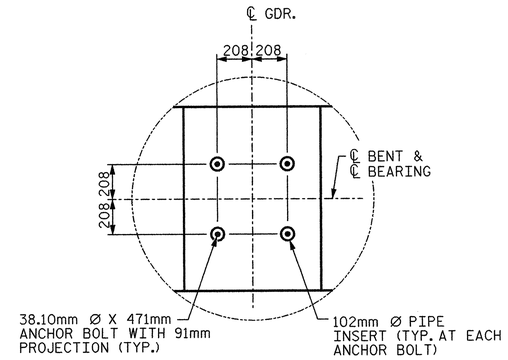

DETAIL "A"
(TYP. EA. BRG.)

NOTES:

STIRRUPS AND "U" BARS IN CAP MAY BE SHIFTED AS NECESSARY TO CLEAR ANCHOR BOLTS AND PIPE INSERTS.

HOOKS ON M1 BARS MAY BE TURNED AS NECESSARY FOR PLACING REINFORCING STEEL.

DETAILED DRAWINGS FOR FALSEWORK AND FORMS FOR THIS HAMMERHEAD BENT SHALL BE SUBMITTED. SEE SHEET SNSM.

T1 & T2 BARS IN TOP OF FOOTING MAY BE SHIFTED AS NECESSARY TO CLEAR M1 BARS IN FOOTING.

FOR SECTION A-A, SECTION B-B AND SECTION C-C, SEE SHEET 2 OF 2.

CLASS AA CONCRETE SHALL BE USED FOR THE CAP, COLUMN AND FOOTING.

FOR PIPE INSERT DETAILS, SEE "POT BEARING" SHEETS.

FOR PILE SPLICE DETAILS, SEE "END BENT 1 DETAILS AND BOM" SHEET.

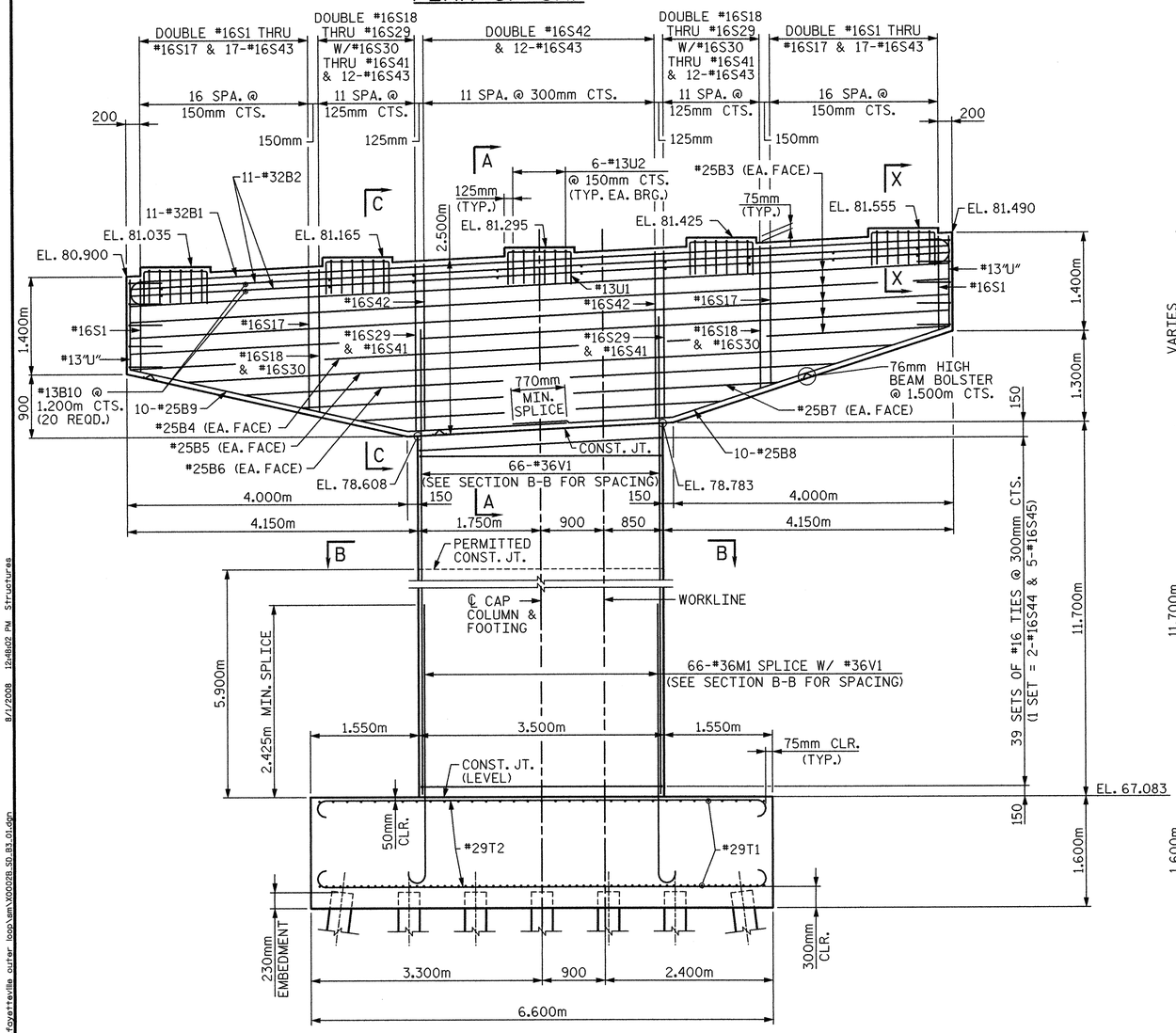

ELEVATION

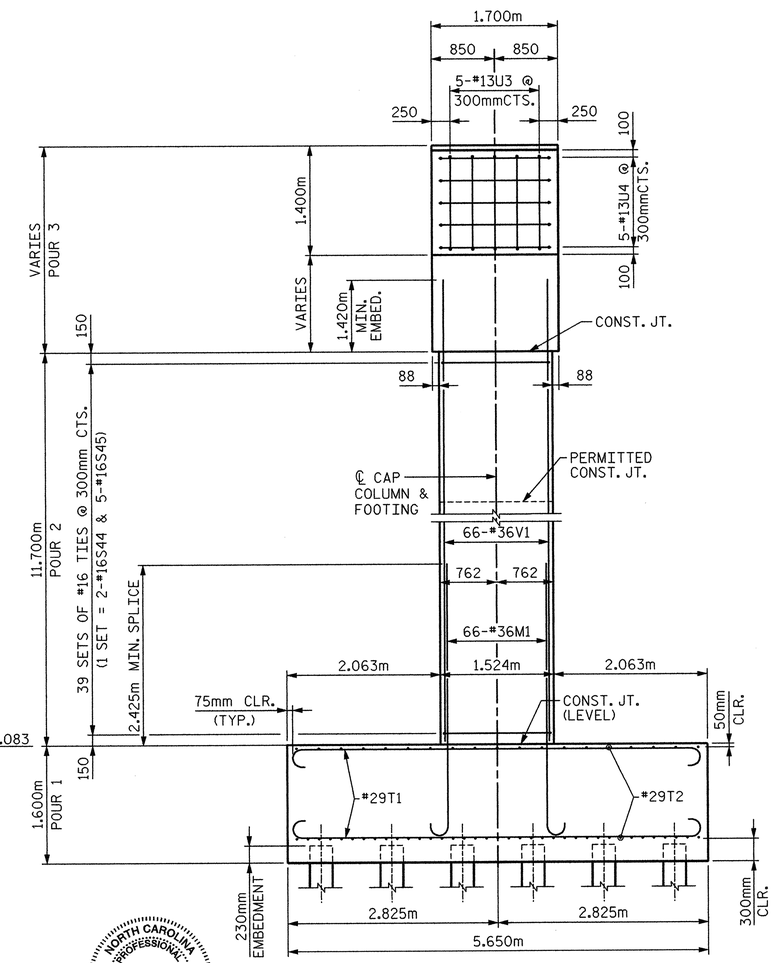

END VIEW

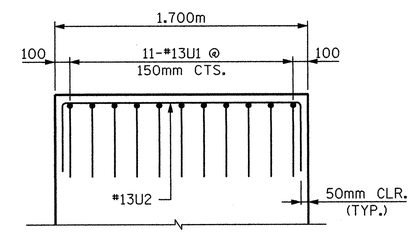

SECTION X-X

PROJECT NO. X-0002B
CUMBERLAND COUNTY
STATION: -L- POC STA. 63+66.830=
-FLYOVER-
POC STA. 22+29.794

SHEET 1 OF 2

STATE OF NORTH CAROLINA
DEPARTMENT OF TRANSPORTATION
RALEIGH

SUBSTRUCTURE
BENT 3

NORTH CAROLINA PROFESSIONAL SEAL 024928 ENGINEER ROBNEY E. MONEY 8/8/08

PREPARED IN THE OFFICE OF
TYLIN INTERNATIONAL
RALEIGH, NORTH CAROLINA
Copyright © 2008, TYLI
DWG NO. 56

REVISIONS						
NO.	BY:	DATE:	NO.	BY:	DATE:	
1			3			
2			4			

SHEET NO. S-235
TOTAL SHEETS 253

DRAWN BY : S. MORGAN DATE : JUN. '08
CHECKED BY : J.W. WRIGHT DATE : JUN. '08

8/1/2008 12:48:02 PM Structures
on\fayetteville outer loop\sm\X0002B_SD_B3_01.dgn

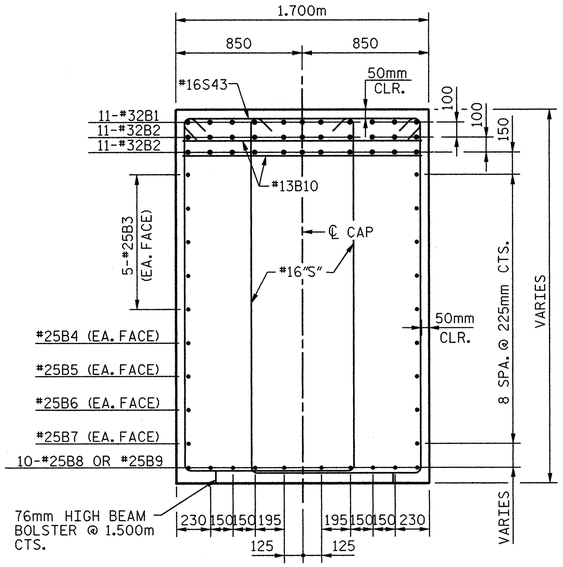

SECTION A-A

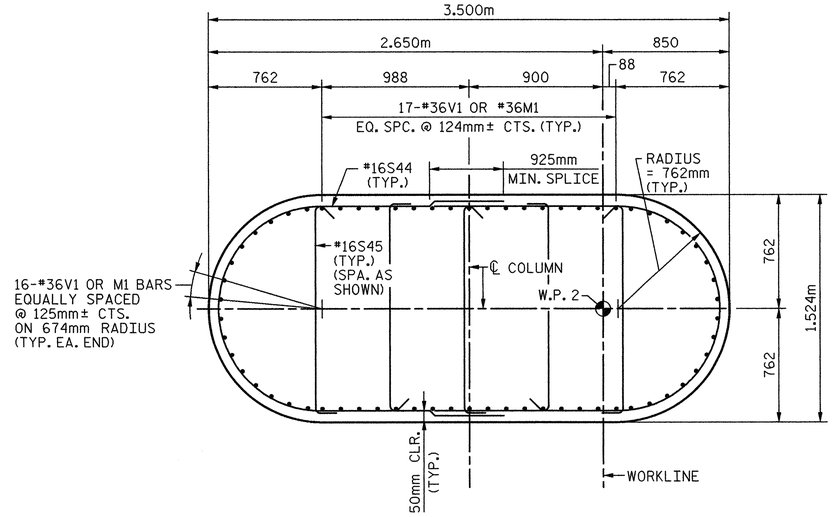

SECTION B-B

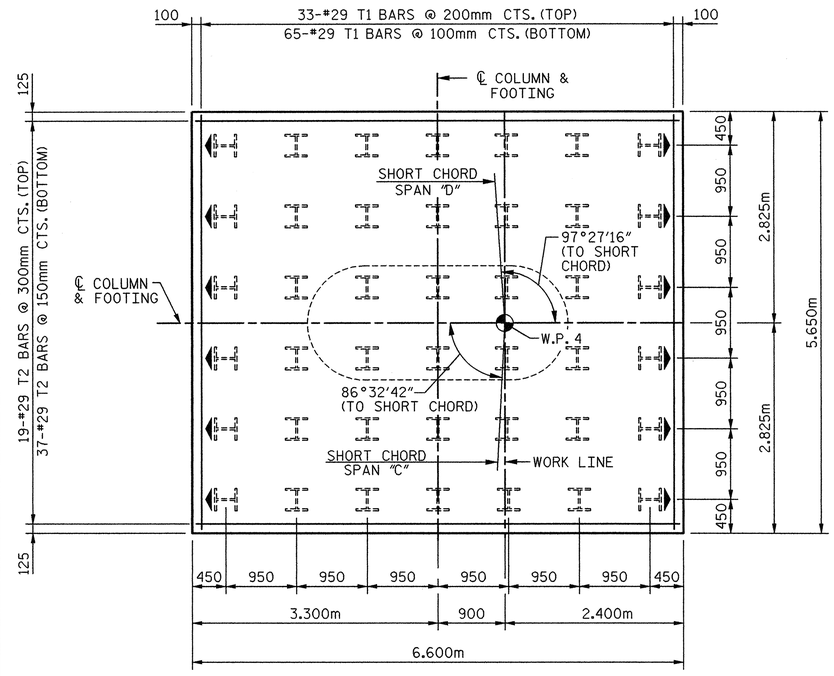

PLAN OF FOOTING

NOTE:

DENOTES BATTER PILES 125:1000 IN DIRECTION OF ARROW.

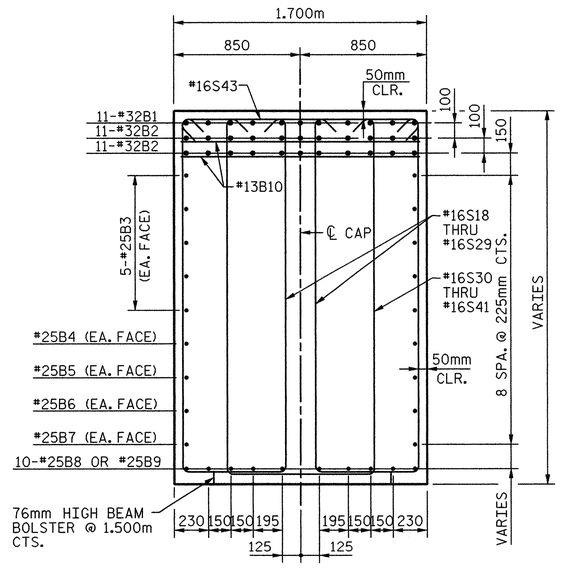

SECTION C-C

BILL OF MATERIAL

BENT 3

BAR	NO.	SIZE	TYPE	DIM.A	LENGTH	WEIGHT
B1	11	32	1	-	12,560	885
B2	22	32	STR.	-	11,700	1,648
B3	10	25	STR.	-	11,700	465
B4	2	25	STR.	-	10100	80
B5	2	25	STR.	-	8460	67
B6	2	25	STR.	-	6820	54
B7	2	25	STR.	-	5180	41
B8	10	25	7	-	6660	265
B9	10	25	7	-	6,540	260
B10	20	13	STR.	-	1,600	32
M1	66	36	2	-	4,200	2,192
S1	4	16	3	1,330	4,100	25
S2	4	16	3	1,380	4,200	26
S3	4	16	3	1,420	4,280	27
S4	4	16	3	1,460	4,360	27
S5	4	16	3	1,500	4,440	28
S6	4	16	3	1,540	4,520	28
S7	4	16	3	1,580	4,600	29
S8	4	16	3	1,620	4,680	29
S9	4	16	3	1,660	4,760	30
S10	4	16	3	1,710	4,860	30
S11	4	16	3	1,750	4,940	31
S12	4	16	3	1,790	5,020	31
S13	4	16	3	1,830	5,100	32
S14	4	16	3	1,870	5,180	32
S15	4	16	3	1,910	5,260	33
S16	4	16	3	1,950	5,340	33
S17	4	16	3	1,990	5,420	34
S18	4	16	3	2,030	5,060	31
S19	4	16	3	2,070	5,140	32
S20	4	16	3	2,100	5,200	32
S21	4	16	3	2,140	5,280	33
S22	4	16	3	2,170	5,340	33
S23	4	16	3	2,200	5,400	34
S24	4	16	3	2,240	5,480	34
S25	4	16	3	2,270	5,540	34
S26	4	16	3	2,310	5,620	35
S27	4	16	3	2,340	5,680	35
S28	4	16	3	2,370	5,740	36
S29	4	16	3	2,380	5,760	36
S30	2	16	3	2,030	5,340	17
S31	2	16	3	2,070	5,420	17
S32	2	16	3	2,100	5,480	17
S33	2	16	3	2,140	5,560	17
S34	2	16	3	2,170	5,620	18
S35	2	16	3	2,200	5,680	18
S36	2	16	3	2,240	5,760	18
S37	2	16	3	2,270	5,820	18
S38	2	16	3	2,310	5,900	18
S39	2	16	3	2,340	5,960	19
S40	2	16	3	2,370	6,020	19
S41	2	16	3	2,380	6,040	19
S42	24	16	3	2,380	6,200	231
S43	70	16	5	-	1,880	204
S44	78	16	6	-	5,160	625
S45	195	16	8	-	1,720	521
T1	98	29	1	-	6,260	3,104
T2	56	29	1	-	7,200	2,040
U1	55	13	4	-	1,820	99
U2	30	13	4	-	2,520	75
U3	10	13	4	-	2,220	22
U4	10	13	4	-	2,480	25
V1	66	36	STR.	-	13,120	6,847

BAR TYPES

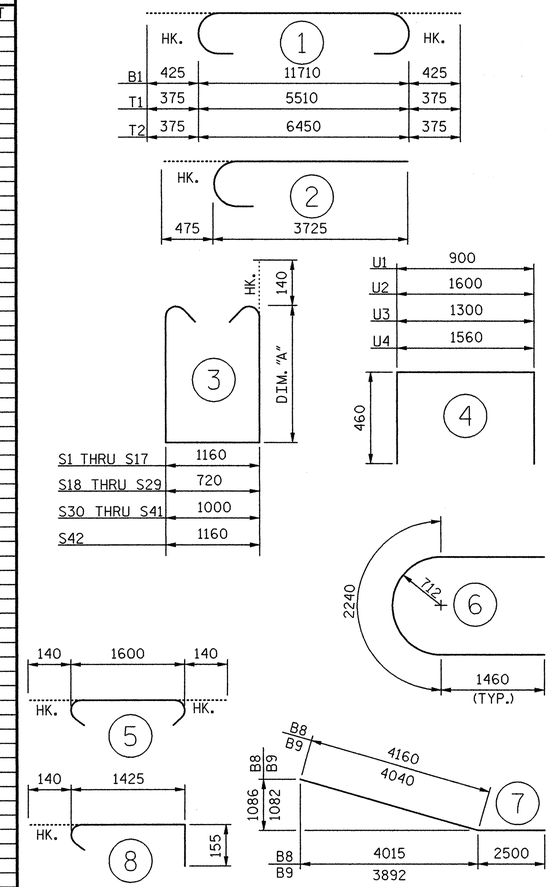

ALL BAR DIMENSIONS ARE OUT TO OUT.

TOTAL REINFORCING STEEL	kg	20,907
CLASS "AA" CONC. BREAKDOWN		
POUR #1 FOOTINGS	CU.M.	59.7
POUR #2 COLUMNS	CU.M.	56.2
POUR #3 CAP	CU.M.	43.5
TOTAL	CU.M.	159.3
HP 360X108 STEEL PILES		
42 PILES REQUIRED	LIN. M.	896.6

PROJECT NO. X-0002B

CUMBERLAND COUNTY

STATION: -L- POC STA. 63+66.830=
-FLYOVER-
POC STA. 22+29.794

SHEET 2 OF 2

STATE OF NORTH CAROLINA
DEPARTMENT OF TRANSPORTATION
RALEIGH

SUBSTRUCTURE
BENT 3 DETAILS

NORTH CAROLINA PROFESSIONAL SEAL 024928 ENGINEER RODNEY E. MONEY 8/1/08

PREPARED IN THE OFFICE OF
TY·LIN INTERNATIONAL
RALEIGH, NORTH CAROLINA
Copyright © 2008, TYLI
DWG NO. 57

REVISIONS								SHEET NO.
NO.	BY:	DATE:	NO.	BY:	DATE:			S-236
1			3					TOTAL SHEETS
2			4					253

DRAWN BY : S. MORGAN DATE : JUN. '08
CHECKED BY : J.W. WRIGHT DATE : JUN. '08

8/1/2008 12:48:05 PM Structures
c:\fayetteville outer loop\sm\X0002B_SD_B3_02.dgn

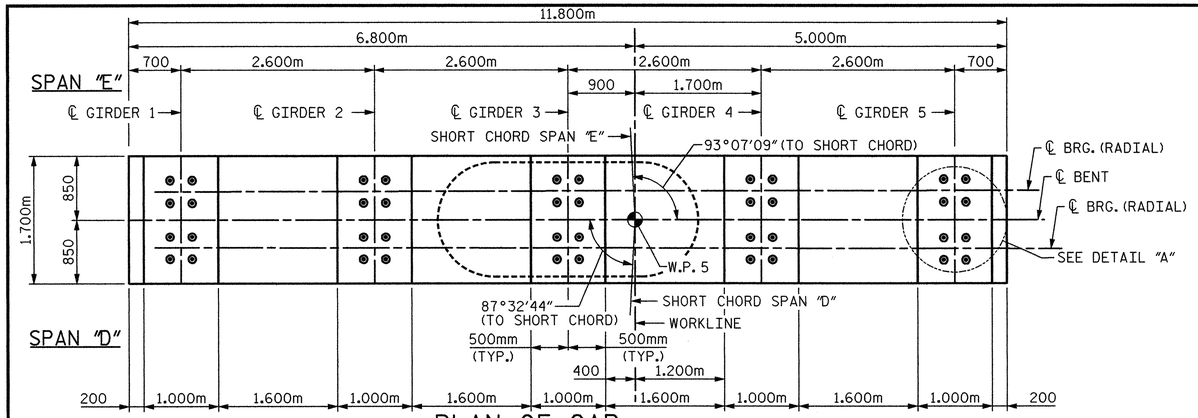

PLAN OF CAP

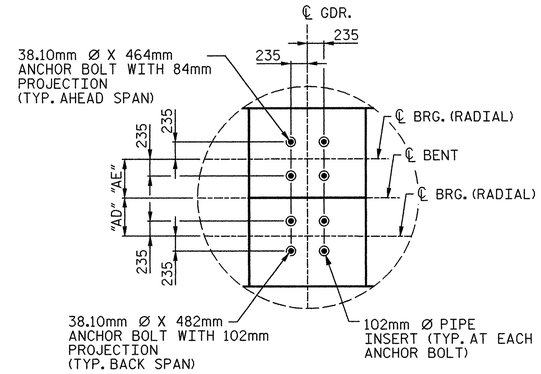

DETAIL "A"
(TYP. EA. BRG.)

NOTES:

STIRRUPS AND "U" BARS IN CAP MAY BE SHIFTED AS NECESSARY TO CLEAR ANCHOR BOLTS AND PIPE INSERTS.

HOOKS ON M1 BARS MAY BE TURNED AS NECESSARY FOR PLACING REINFORCING STEEL.

DETAILED DRAWINGS FOR FALSEWORK AND FORMS FOR THIS HAMMERHEAD BENT SHALL BE SUBMITTED. SEE SHEET SNSM.

T1 & T2 BARS IN TOP OF FOOTING MAY BE SHIFTED AS NECESSARY TO CLEAR M1 BARS IN FOOTING.

FOR SECTION A-A, SECTION B-B AND SECTION C-C, SEE SHEET 2 OF 2.

CLASS AA CONCRETE SHALL BE USED FOR THE CAP, COLUMN AND FOOTING.

FOR PIPE INSERT DETAILS, SEE "POT BEARING" SHEETS.

FOR PILE SPLICE DETAILS, SEE "END BENT 1 DETAILS AND BOM" SHEET.

LOCATION	"AD"	"AE"
GIRDER 1	343	343
GIRDER 2	345	345
GIRDER 3	346	346
GIRDER 4	348	348
GIRDER 5	350	350

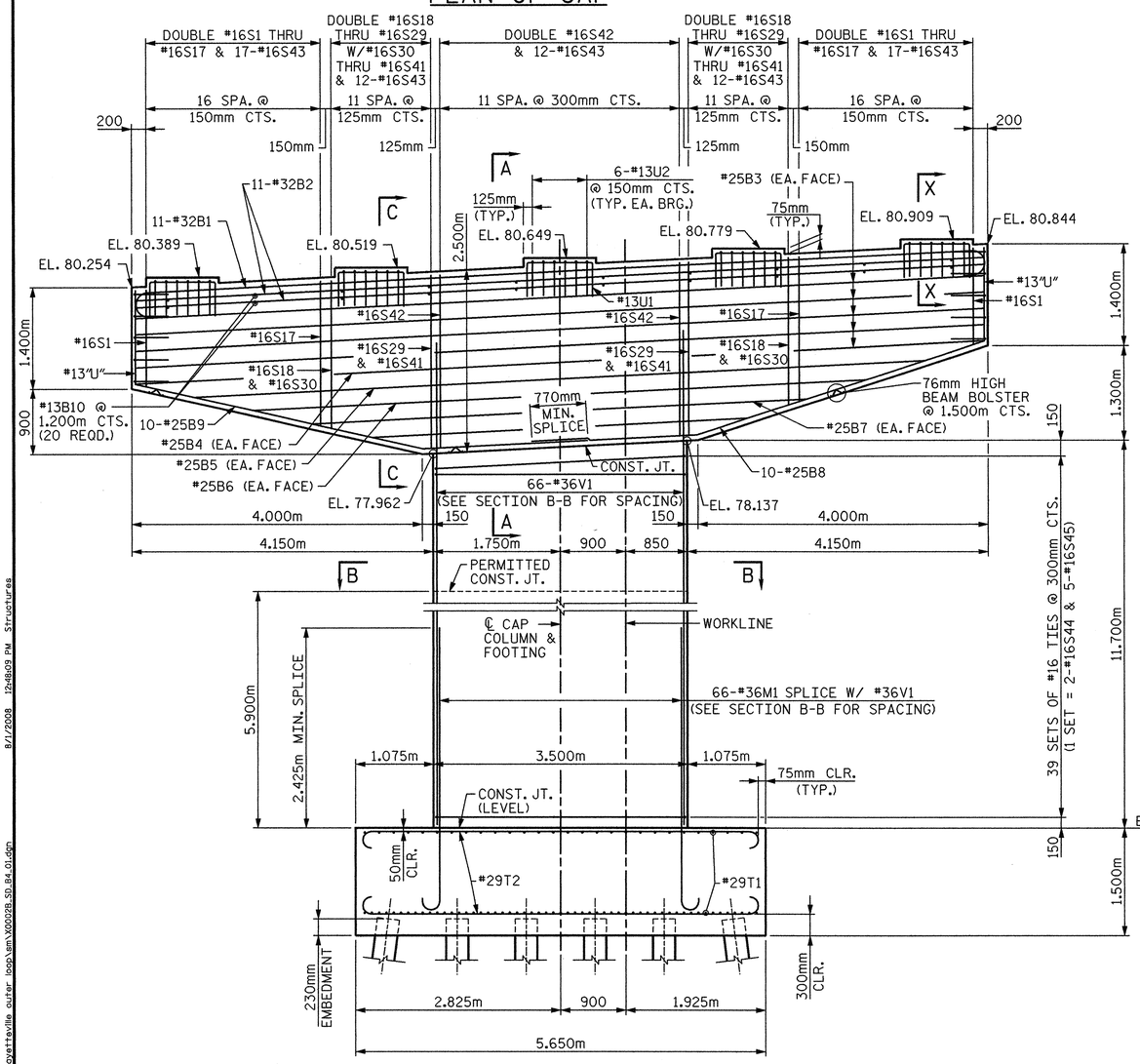

ELEVATION

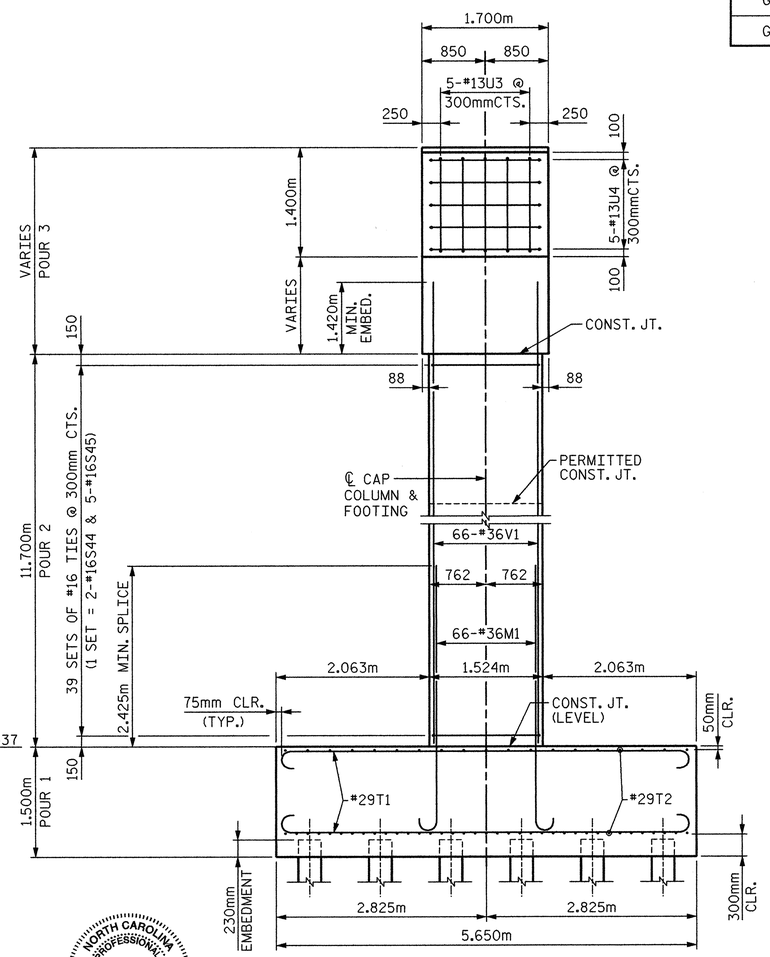

END VIEW

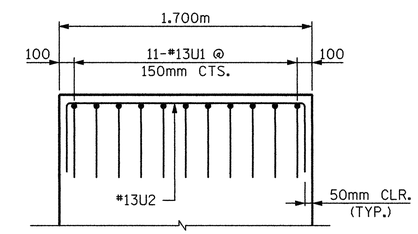

SECTION X-X

PROJECT NO. X-0002B
CUMBERLAND COUNTY
STATION: -L- POC STA. 63+66.830=
-FLYOVER-
POC STA. 22+29.794

SHEET 1 OF 2

STATE OF NORTH CAROLINA
DEPARTMENT OF TRANSPORTATION
RALEIGH

SUBSTRUCTURE
BENT 4

NORTH CAROLINA PROFESSIONAL SEAL 024928 ENGINEER RODNEY E. MONEY 8/1/08

PREPARED IN THE OFFICE OF
TYLIN INTERNATIONAL
RALEIGH, NORTH CAROLINA
Copyright © 2008, TYLI
DWG NO. 58

REVISIONS								
NO.	BY:	DATE:	NO.	BY:	DATE:		SHEET NO. S-237
1			3				TOTAL SHEETS 253
2			4				

DRAWN BY : S. MORGAN DATE : JUN. '08
CHECKED BY : J.W. WRIGHT DATE : JUN. '08

8/1/2008 12:48:09 PM Structures
ox:fayetteville outer loop\sm\X0002B_SD_B4_01.dgn

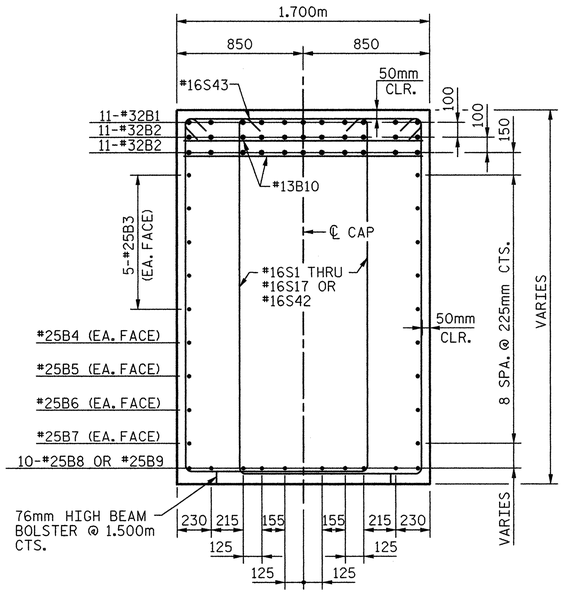

SECTION A-A

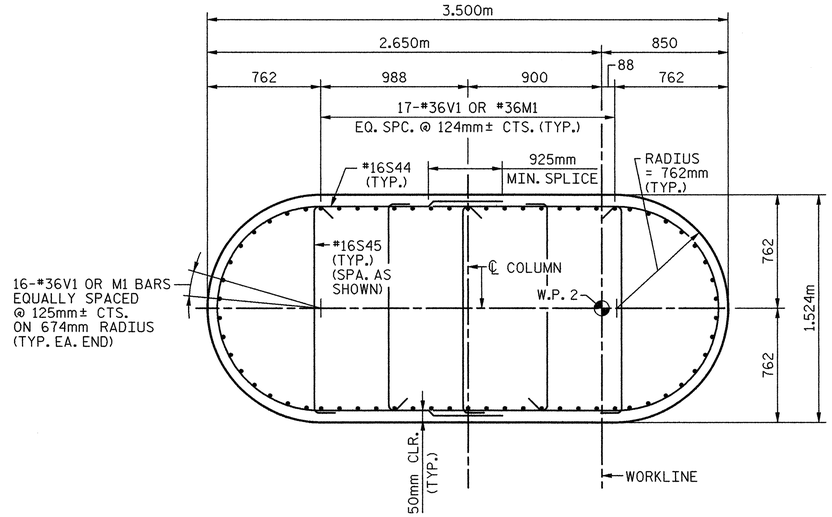

SECTION B-B

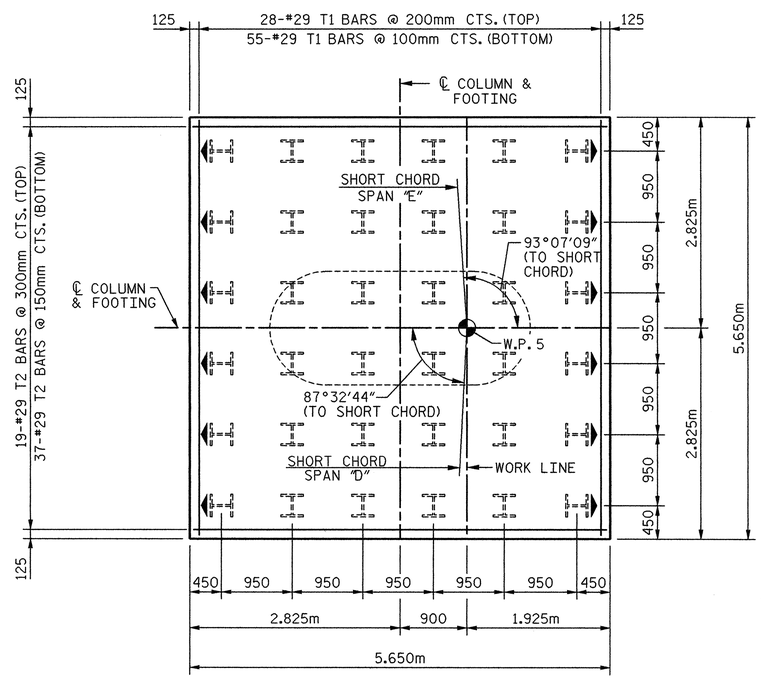

PLAN OF FOOTING

NOTE:

DENOTES BATTER PILES 125:1000 IN DIRECTION OF ARROW.

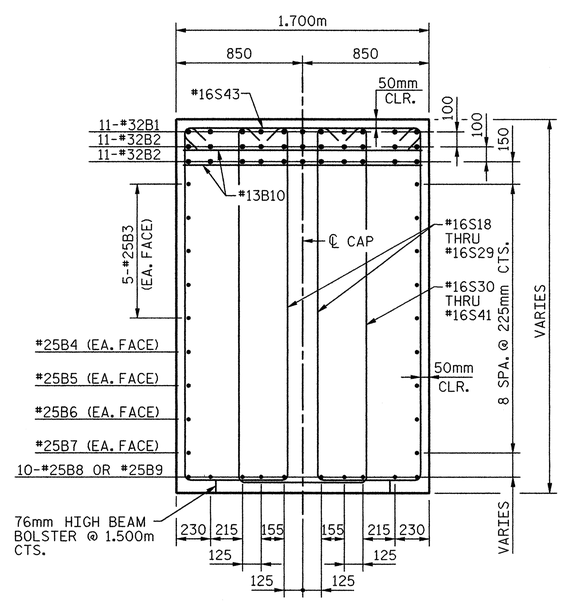

SECTION C-C

BILL OF MATERIAL

BENT 4

BAR	NO.	SIZE	TYPE	DIM.A	LENGTH	WEIGHT
B1	11	32	1	-	12,560	885
B2	22	32	STR.	-	11,700	1,648
B3	10	25	STR.	-	11,700	465
B4	2	25	STR.	-	10100	80
B5	2	25	STR.	-	8460	67
B6	2	25	STR.	-	6820	54
B7	2	25	STR.	-	5180	41
B8	10	25	7	-	6660	265
B9	10	25	7	-	6,540	260
B10	20	13	STR.	-	1,600	32
M1	66	36	2	-	4,100	2,140
S1	4	16	3	1,330	4,180	26
S2	4	16	3	1,380	4,280	27
S3	4	16	3	1,420	4,360	27
S4	4	16	3	1,460	4,440	28
S5	4	16	3	1,500	4,520	28
S6	4	16	3	1,540	4,600	29
S7	4	16	3	1,580	4,680	29
S8	4	16	3	1,620	4,760	30
S9	4	16	3	1,660	4,840	30
S10	4	16	3	1,710	4,940	31
S11	4	16	3	1,750	5,020	31
S12	4	16	3	1,790	5,100	32
S13	4	16	3	1,830	5,180	32
S14	4	16	3	1,870	5,260	33
S15	4	16	3	1,910	5,340	33
S16	4	16	3	1,950	5,420	34
S17	4	16	3	1,990	5,500	34
S18	4	16	3	2,030	5,060	31
S19	4	16	3	2,070	5,140	32
S20	4	16	3	2,100	5,200	32
S21	4	16	3	2,140	5,280	33
S22	4	16	3	2,170	5,340	33
S23	4	16	3	2,200	5,400	34
S24	4	16	3	2,240	5,480	34
S25	4	16	3	2,270	5,540	34
S26	4	16	3	2,310	5,620	35
S27	4	16	3	2,340	5,680	35
S28	4	16	3	2,370	5,740	36
S29	4	16	3	2,380	5,760	36
S30	2	16	3	2,030	5,220	16
S31	2	16	3	2,070	5,300	17
S32	2	16	3	2,100	5,360	17
S33	2	16	3	2,140	5,440	17
S34	2	16	3	2,170	5,500	17
S35	2	16	3	2,200	5,560	18
S36	2	16	3	2,240	5,640	18
S37	2	16	3	2,270	5,700	18
S38	2	16	3	2,310	5,780	18
S39	2	16	3	2,340	5,840	18
S40	2	16	3	2,370	5,900	18
S41	2	16	3	2,380	5,920	18
S42	24	16	3	2,380	6,280	234
S43	70	16	5	-	1,880	204
S44	78	16	6	-	5,160	625
S45	195	16	8	-	1,720	521
T1	83	29	1	-	6,260	2,629
T2	56	29	1	-	6,260	1,774
U1	55	13	4	-	1,820	99
U2	30	13	4	-	2,520	75
U3	10	13	4	-	2,220	22
U4	10	13	4	-	2,480	25
V1	66	36	STR.	-	13,120	6,847

BAR TYPES

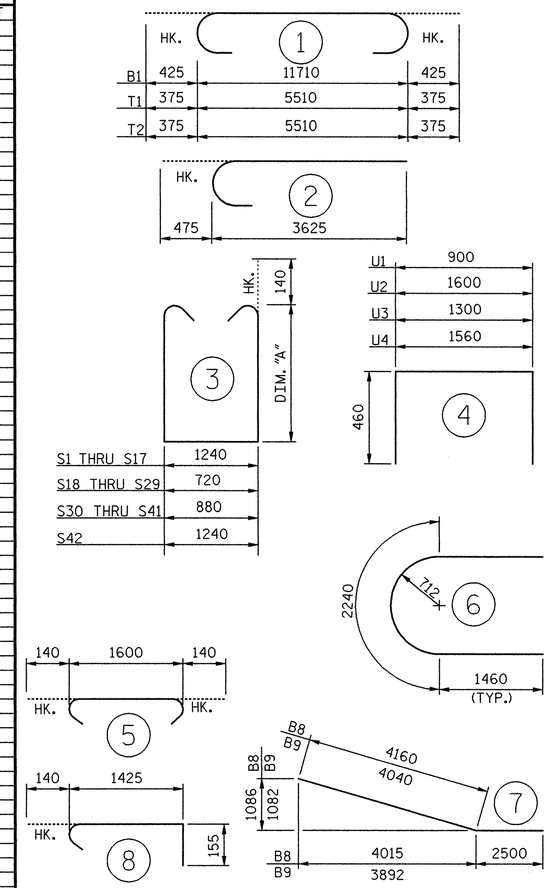

ALL BAR DIMENSIONS ARE OUT TO OUT.

TOTAL REINFORCING STEEL	Kg	20,121
CLASS "AA" CONC. BREAKDOWN		
POUR #1 FOOTINGS	CU.M.	47.9
POUR #2 COLUMNS	CU.M.	56.2
POUR #3 CAP	CU.M.	43.5
TOTAL	CU.M.	147.6
HP 360X108 STEEL PILES		
36 PILES REQUIRED	LIN. M.	768.8

PROJECT NO. X-0002B

CUMBERLAND COUNTY

STATION: -L- POC STA. 63+66.830=

-FLYOVER-

POC STA. 22+29.794

SHEET 2 OF 2

STATE OF NORTH CAROLINA
DEPARTMENT OF TRANSPORTATION
RALEIGH

SUBSTRUCTURE

BENT 4 DETAILS

NORTH CAROLINA PROFESSIONAL SEAL 024928 ENGINEER RODNEY E. MONEY 8/1/08

PREPARED IN THE OFFICE OF
TYLIN INTERNATIONAL
RALEIGH, NORTH CAROLINA
Copyright © 2008, TYLI

DWG NO. 59

REVISIONS						
NO.	BY:	DATE:	NO.	BY:	DATE:	
1			3			
2			4			

SHEET NO. S-238

TOTAL SHEETS 253

DRAWN BY : S. MORGAN DATE : JUN. '08

CHECKED BY : J.W. WRIGHT DATE : JUN. '08

8/1/2008 12:48:13 PM Structures
o:\fayetteville outer loop\sm\X0002B_SD_B4_02.dgn

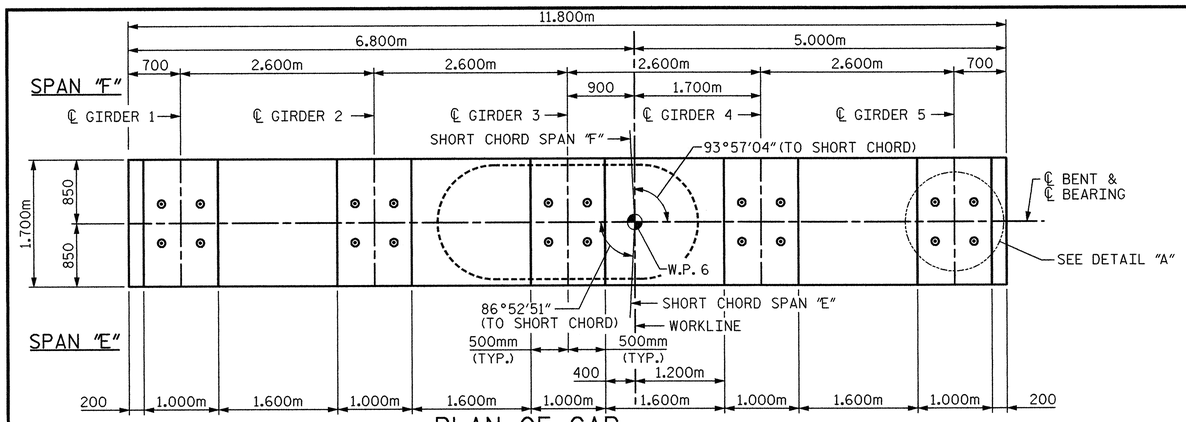

PLAN OF CAP

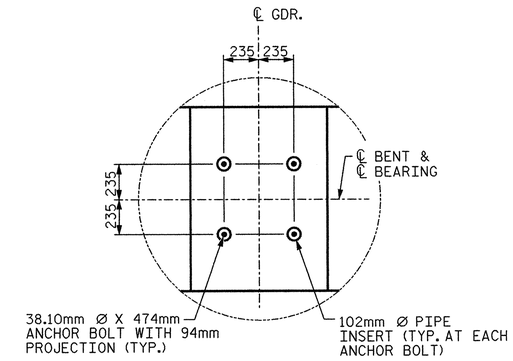

DETAIL "A"
(TYP. EA. BRG.)

NOTES:

STIRRUPS AND "U" BARS IN CAP MAY BE SHIFTED AS NECESSARY TO CLEAR ANCHOR BOLTS AND PIPE INSERTS.

HOOKS ON M1 BARS MAY BE TURNED AS NECESSARY FOR PLACING REINFORCING STEEL.

DETAILED DRAWINGS FOR FALSEWORK AND FORMS FOR THIS HAMMERHEAD BENT SHALL BE SUBMITTED. SEE SHEET SNSM.

T1 & T2 BARS IN TOP OF FOOTING MAY BE SHIFTED AS NECESSARY TO CLEAR M1 BARS IN FOOTING.

FOR SECTION A-A, SECTION B-B AND SECTION C-C, SEE SHEET 2 OF 2.

CLASS AA CONCRETE SHALL BE USED FOR THE CAP, COLUMN AND FOOTING.

FOR PIPE INSERT DETAILS, SEE "POT BEARING" SHEETS.

FOR PILE SPLICE DETAILS, SEE "END BENT 1 DETAILS AND BOM" SHEET.

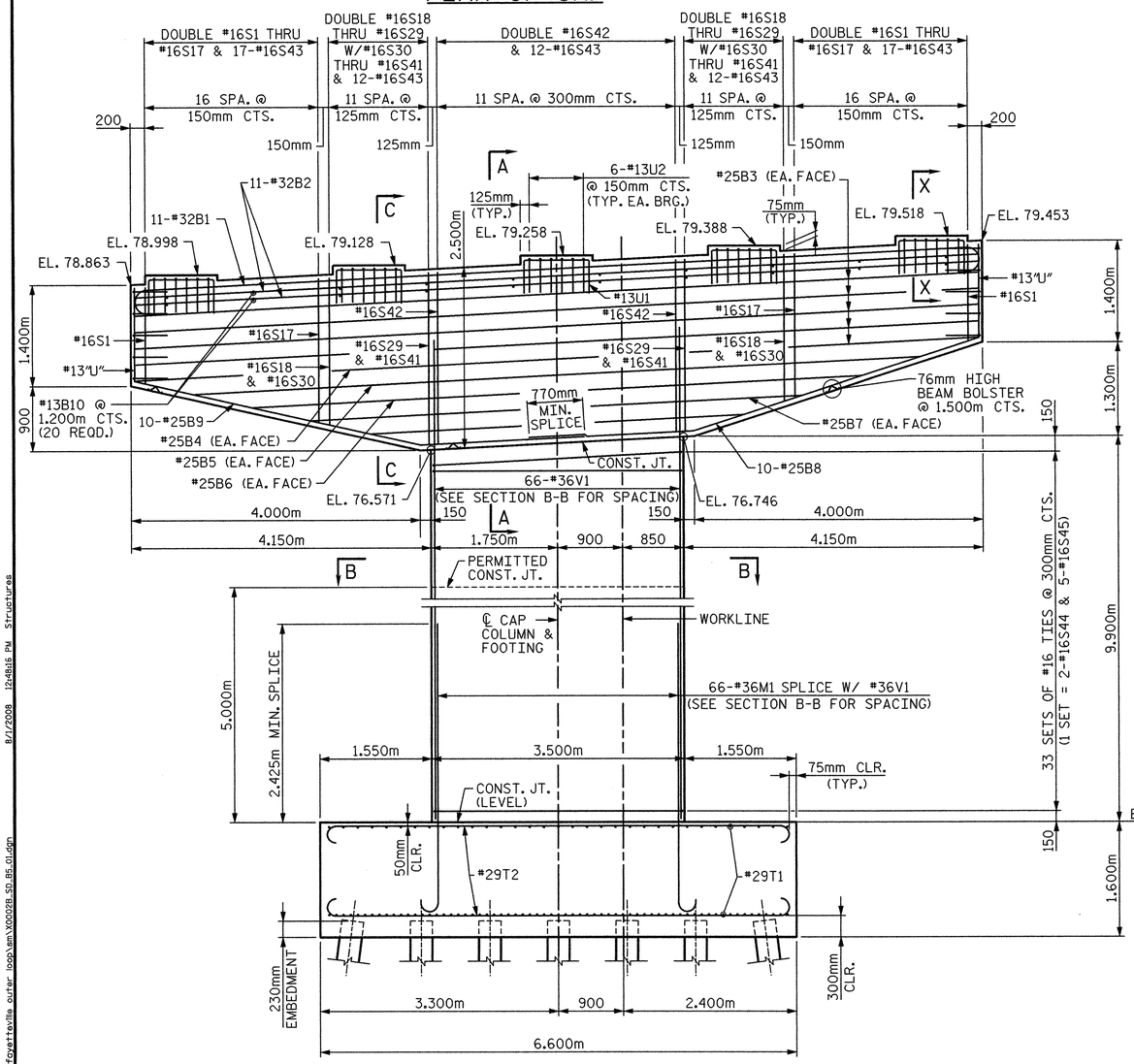

ELEVATION

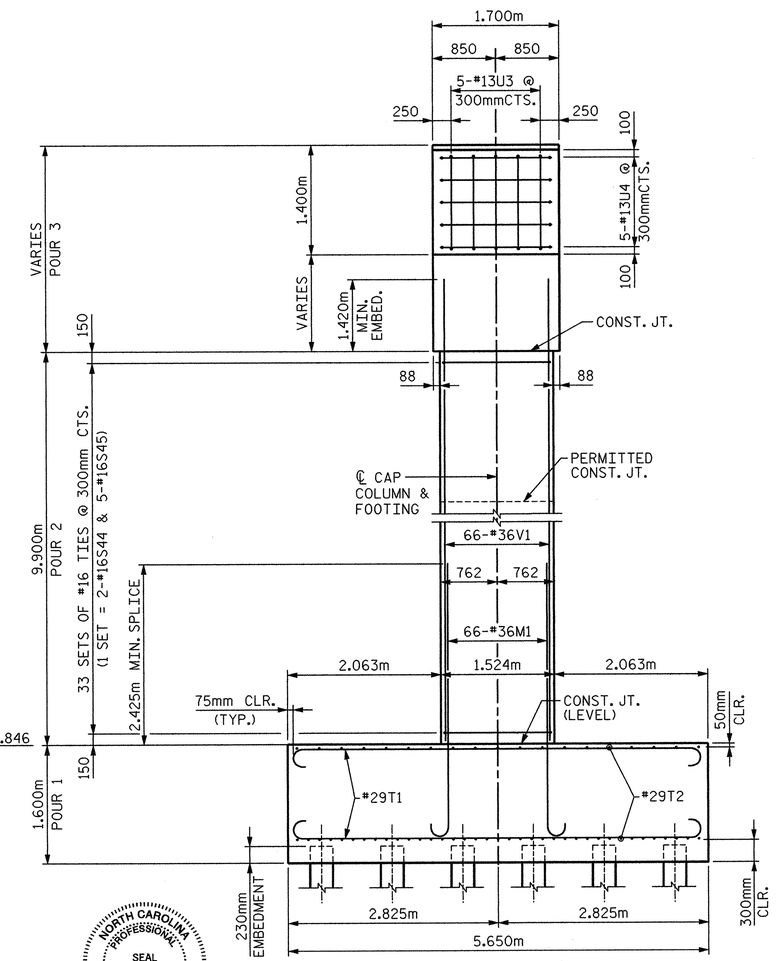

END VIEW

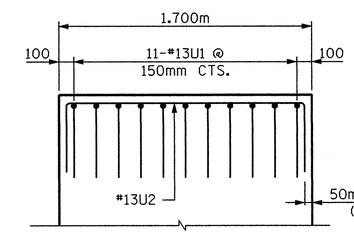

SECTION X-X

PROJECT NO. X-0002B
CUMBERLAND COUNTY
STATION: -L- POC STA. 63+66.830=
-FLYOVER-
POC STA. 22+29.794

SHEET 1 OF 2

STATE OF NORTH CAROLINA
DEPARTMENT OF TRANSPORTATION
RALEIGH

SUBSTRUCTURE
BENT 5

NORTH CAROLINA PROFESSIONAL SEAL 024928 ENGINEER RODNEY E. MOREL 8/1/08

PREPARED IN THE OFFICE OF
TYLIN INTERNATIONAL
RALEIGH, NORTH CAROLINA
Copyright © 2008, TYLI

DWG NO. 60

REVISIONS							SHEET NO.
NO.	BY:	DATE:	NO.	BY:	DATE:		9-239
1			3				TOTAL SHEETS
2			4				253

DRAWN BY : S. MORGAN DATE : JUN. '08
CHECKED BY : J.W. WRIGHT DATE : JUN. '08

8/1/2008 12:48:16 PM Structures

o:\fayetteville outer loop\sm\X0002B_SD_B5_01.dgn

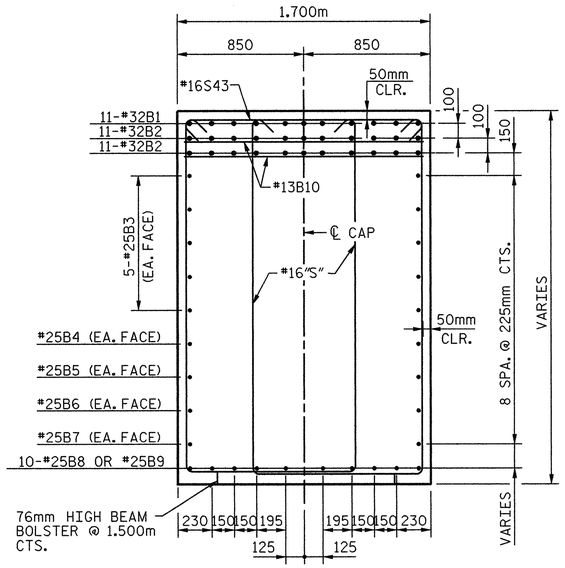

SECTION A-A

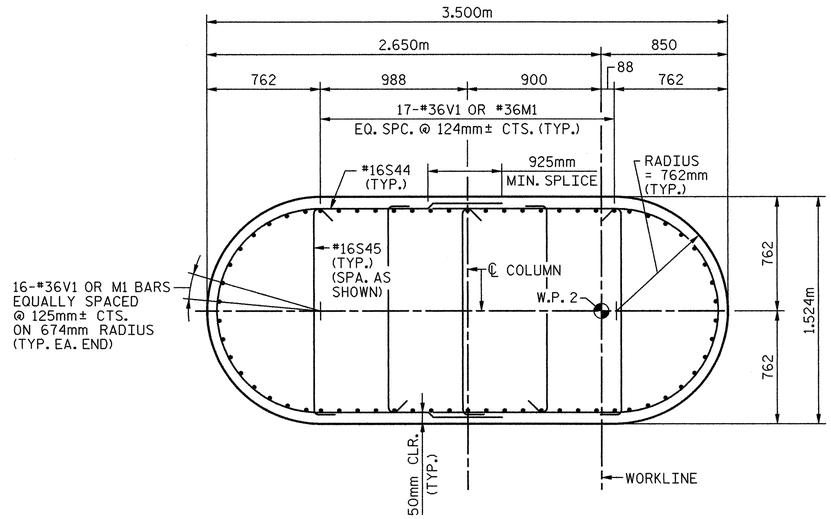

SECTION B-B

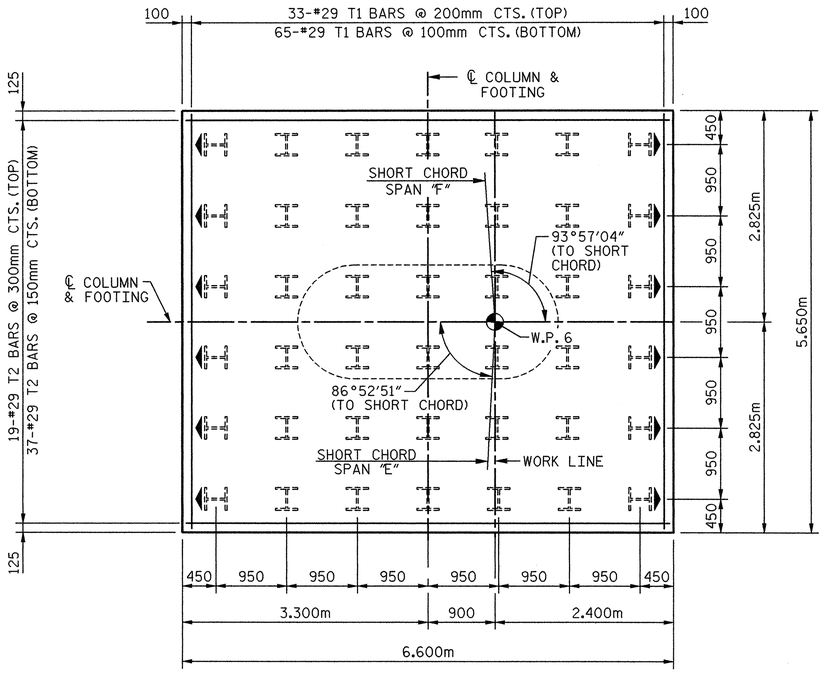

PLAN OF FOOTING

NOTE:

▲ DENOTES BATTER PILES 125:1000 IN DIRECTION OF ARROW.

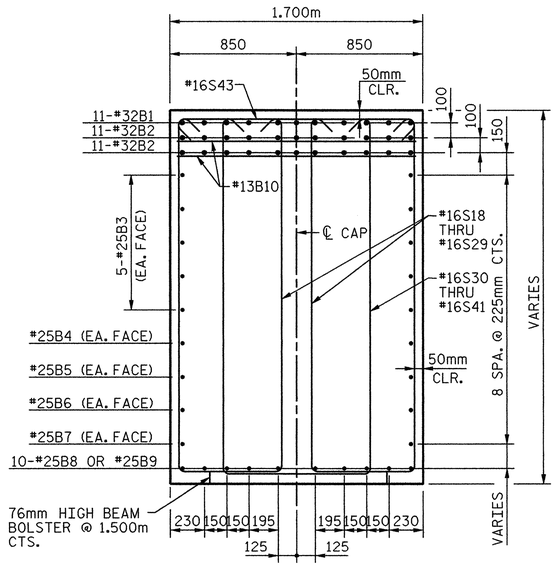

SECTION C-C

BILL OF MATERIAL

BENT 5

BAR	NO.	SIZE	TYPE	DIM.A	LENGTH	WEIGHT
B1	11	32	1	-	12,560	885
B2	22	32	STR.	-	11,700	1,648
B3	10	25	STR.	-	11,700	465
B4	2	25	STR.	-	10100	80
B5	2	25	STR.	-	8460	67
B6	2	25	STR.	-	6820	54
B7	2	25	STR.	-	5180	41
B8	10	25	7	-	6660	265
B9	10	25	7	-	6,540	260
B10	20	13	STR.	-	1,600	32
M1	66	36	2	-	4,200	2,192
S1	4	16	3	1,330	4,100	25
S2	4	16	3	1,380	4,200	26
S3	4	16	3	1,420	4,280	27
S4	4	16	3	1,460	4,360	27
S5	4	16	3	1,500	4,440	28
S6	4	16	3	1,540	4,520	28
S7	4	16	3	1,580	4,600	29
S8	4	16	3	1,620	4,680	29
S9	4	16	3	1,660	4,760	30
S10	4	16	3	1,710	4,860	30
S11	4	16	3	1,750	4,940	31
S12	4	16	3	1,790	5,020	31
S13	4	16	3	1,830	5,100	32
S14	4	16	3	1,870	5,180	32
S15	4	16	3	1,910	5,260	33
S16	4	16	3	1,950	5,340	33
S17	4	16	3	1,990	5,420	34
S18	4	16	3	2,030	5,060	31
S19	4	16	3	2,070	5,140	32
S20	4	16	3	2,100	5,200	32
S21	4	16	3	2,140	5,280	33
S22	4	16	3	2,170	5,340	33
S23	4	16	3	2,200	5,400	34
S24	4	16	3	2,240	5,480	34
S25	4	16	3	2,270	5,540	34
S26	4	16	3	2,310	5,620	35
S27	4	16	3	2,340	5,680	35
S28	4	16	3	2,370	5,740	36
S29	4	16	3	2,380	5,760	36
S30	2	16	3	2,030	5,340	17
S31	2	16	3	2,070	5,420	17
S32	2	16	3	2,100	5,480	17
S33	2	16	3	2,140	5,560	17
S34	2	16	3	2,170	5,620	18
S35	2	16	3	2,200	5,680	18
S36	2	16	3	2,240	5,760	18
S37	2	16	3	2,270	5,820	18
S38	2	16	3	2,310	5,900	18
S39	2	16	3	2,340	5,960	19
S40	2	16	3	2,370	6,020	19
S41	2	16	3	2,380	6,040	19
S42	24	16	3	2,380	6,200	231
S43	70	16	5	-	1,880	204
S44	66	16	6	-	5,160	529
S45	165	16	8	-	1,720	440
T1	98	29	1	-	6,260	3,104
T2	56	29	1	-	7,200	2,040
U1	55	13	4	-	1,820	99
U2	30	13	4	-	2,520	75
U3	10	13	4	-	2,220	22
U4	10	13	4	-	2,480	25
V1	66	36	STR.	-	11,320	5,907

BAR TYPES

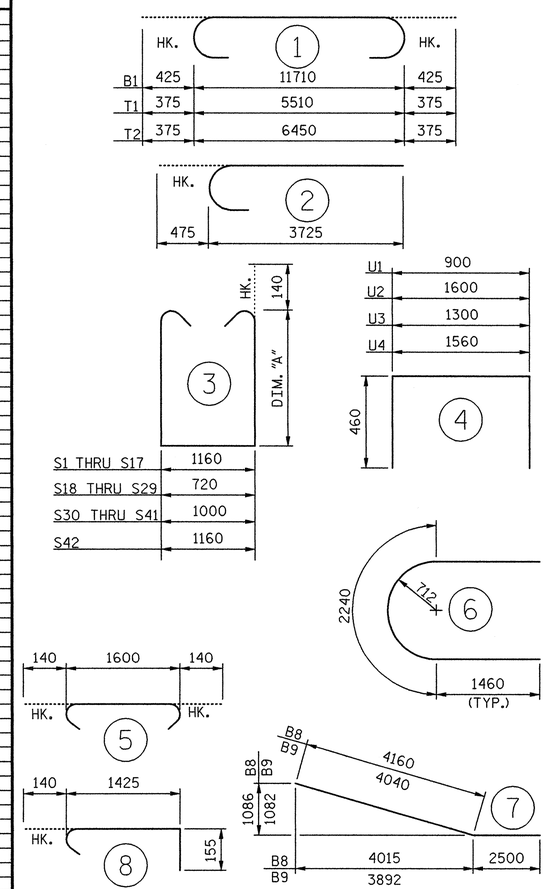

ALL BAR DIMENSIONS ARE OUT TO OUT.

TOTAL REINFORCING STEEL	Kg	19,790
CLASS "AA" CONC. BREAKDOWN		
POUR #1 FOOTINGS	CU.M.	59.7
POUR #2 COLUMNS	CU.M.	47.5
POUR #3 CAP	CU.M.	43.5
TOTAL	CU.M.	150.6
HP 360X108 STEEL PILES		
42 PILES REQUIRED	LIN. M.	1,401.7

PROJECT NO. X-0002B

CUMBERLAND COUNTY

STATION: -L- POC STA. 63+66.830=
-FLYOVER-
POC STA. 22+29.794

SHEET 2 OF 2

STATE OF NORTH CAROLINA
DEPARTMENT OF TRANSPORTATION
RALEIGH

SUBSTRUCTURE

BENT 5 DETAILS

NORTH CAROLINA PROFESSIONAL SEAL 024928 ENGINEER RODNEY E. MONEY 8/1/08

PREPARED IN THE OFFICE OF
TY·LIN INTERNATIONAL
RALEIGH, NORTH CAROLINA
Copyright © 2008, TYLI
DWG NO. 61

REVISIONS								SHEET NO.
NO.	BY:	DATE:	NO.	BY:	DATE:			S-240
1			3					TOTAL SHEETS
2			4					253

DRAWN BY : S. MORGAN DATE : JUN. '08
CHECKED BY : J.W. WRIGHT DATE : JUN. '08

8/1/2008 12:48:20 PM Structures
ot\fayetteville outer loop\sm\X0002B_SD_B5_02.dgn

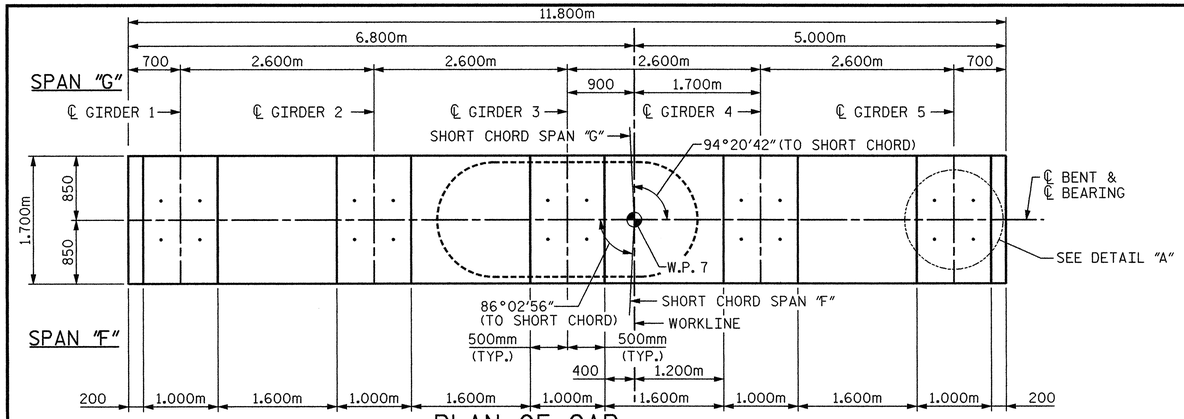

PLAN OF CAP

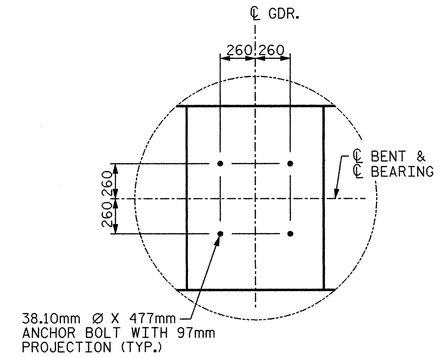

DETAIL "A"
(TYP. EA. BRG.)

NOTES:

STIRRUPS AND "U" BARS IN CAP MAY BE SHIFTED AS NECESSARY TO CLEAR ANCHOR BOLTS.

HOOKS ON M1 BARS MAY BE TURNED AS NECESSARY FOR PLACING REINFORCING STEEL.

DETAILED DRAWINGS FOR FALSEWORK AND FORMS FOR THIS HAMMERHEAD BENT SHALL BE SUBMITTED. SEE SHEET SNSM.

T1 & T2 BARS IN TOP OF FOOTING MAY BE SHIFTED AS NECESSARY TO CLEAR M1 BARS IN FOOTING.

FOR SECTION A-A, SECTION B-B AND SECTION C-C, SEE SHEET 2 OF 2.

CLASS AA CONCRETE SHALL BE USED FOR THE CAP, COLUMN AND FOOTING.

FOR PILE SPLICE DETAILS, SEE "END BENT 1 DETAILS AND BOM" SHEET.

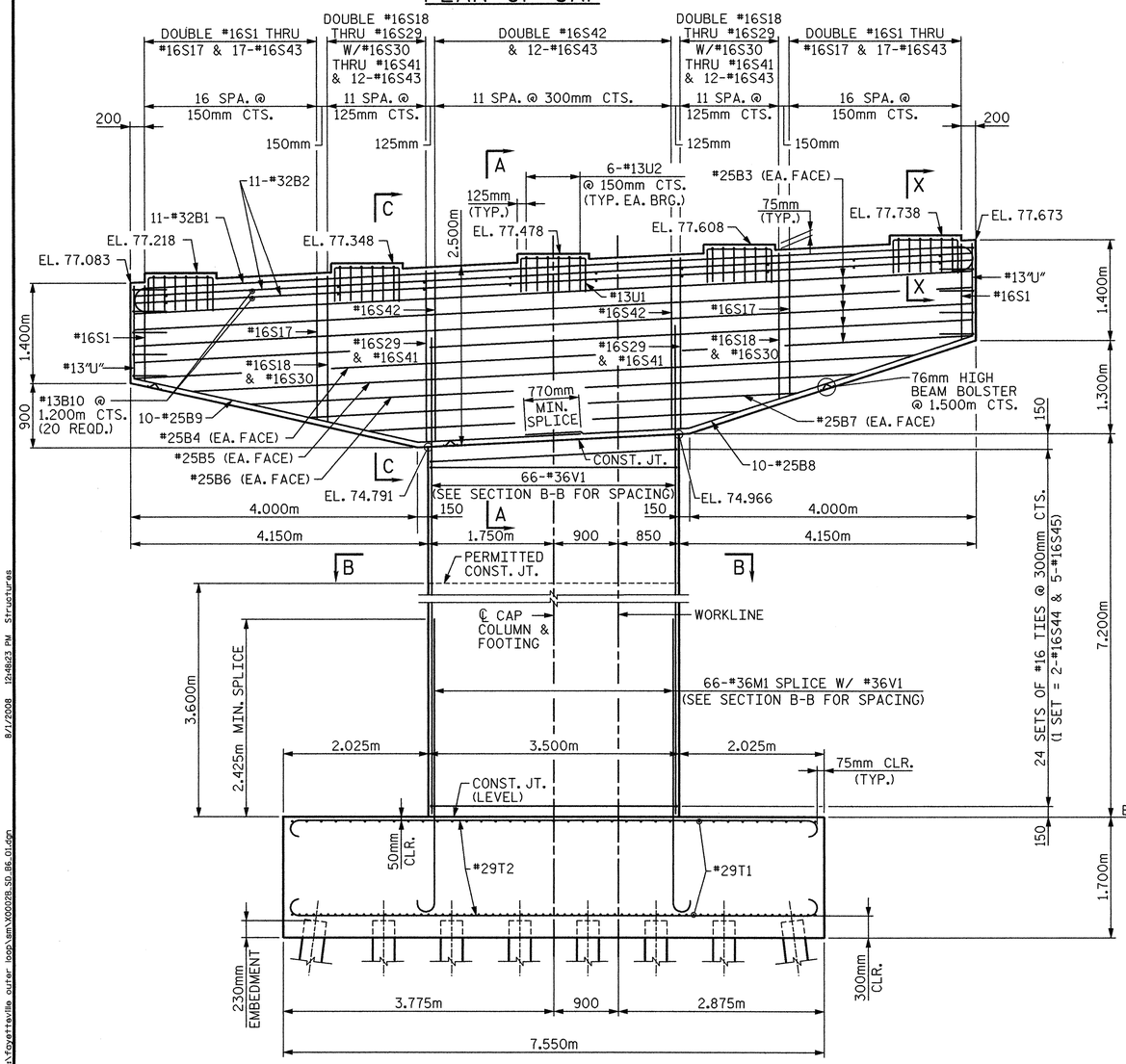

ELEVATION

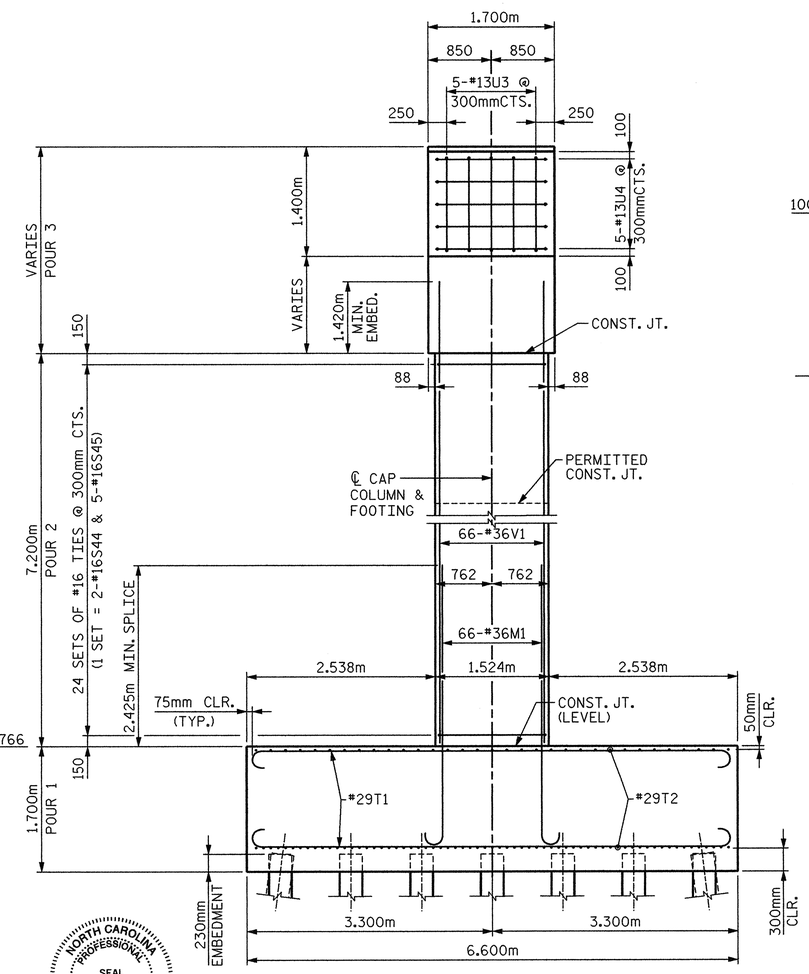

END VIEW

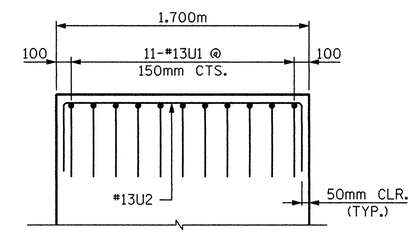

SECTION X-X

PROJECT NO. X-0002B
CUMBERLAND COUNTY
STATION: -L- POC STA. 63+66.830=
-FLYOVER-
POC STA. 22+29.794

SHEET 1 OF 2

STATE OF NORTH CAROLINA
DEPARTMENT OF TRANSPORTATION
RALEIGH

SUBSTRUCTURE
BENT 6

NORTH CAROLINA PROFESSIONAL SEAL 024928 ENGINEER RODNEY E. MOONEY 8/1/08

PREPARED IN THE OFFICE OF
TYLIN INTERNATIONAL
RALEIGH, NORTH CAROLINA
Copyright © 2008, TYLI
DWG NO. 62

REVISIONS								SHEET NO.
NO.	BY:	DATE:	NO.	BY:	DATE:			S-241
1			3					TOTAL SHEETS
2			4					253

DRAWN BY : S. MORGAN DATE : JUN. '08
CHECKED BY : J.W. WRIGHT DATE : JUN. '08

8/1/2008 12:48:23 PM Structures
ox:fayetteville outer loop\sm\X0002B_SD_B6_01.dgn

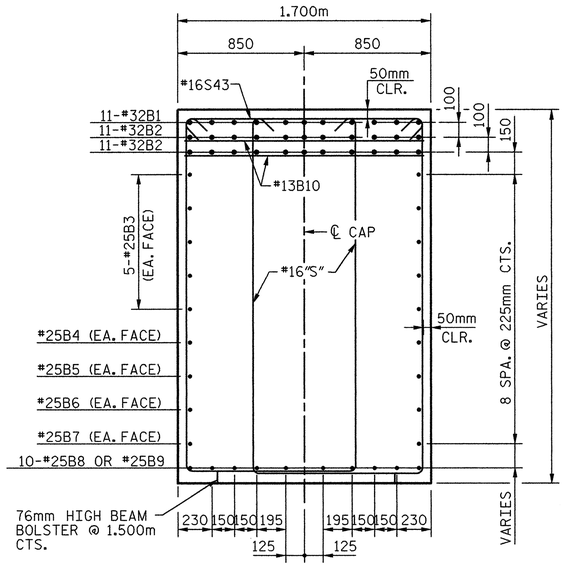

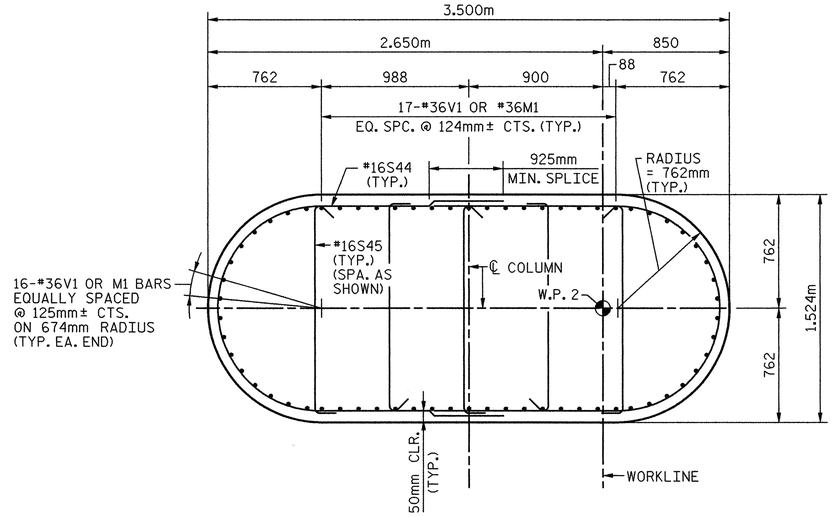

SECTION B-B

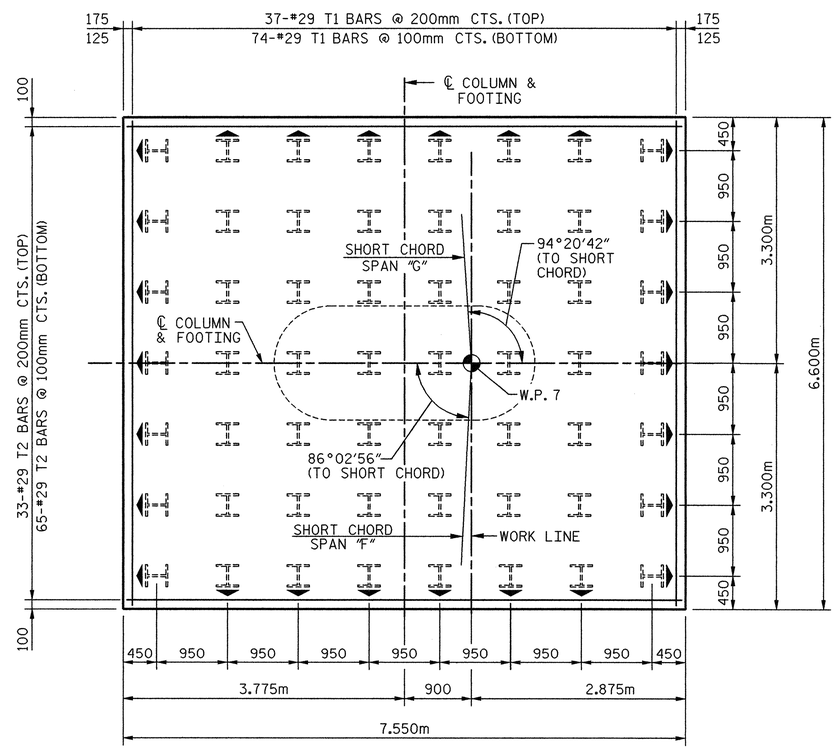

PLAN OF FOOTING

NOTE:

▲ DENOTES BATTER PILES 125:1000 IN DIRECTION OF ARROW.

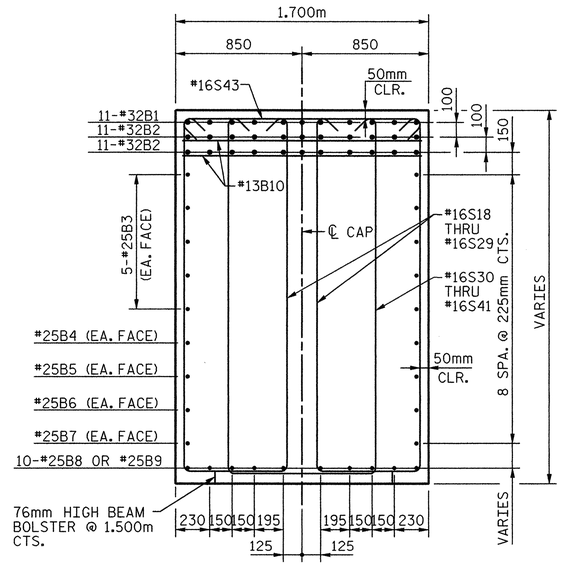

SECTION C-C

BILL OF MATERIAL

BENT 6

BAR	NO.	SIZE	TYPE	DIM.A	LENGTH	WEIGHT
B1	11	32	1	-	12,560	885
B2	22	32	STR.	-	11,700	1,648
B3	10	25	STR.	-	11,700	465
B4	2	25	STR.	-	10100	80
B5	2	25	STR.	-	8460	67
B6	2	25	STR.	-	6820	54
B7	2	25	STR.	-	5180	41
B8	10	25	7	-	6660	265
B9	10	25	7	-	6,540	260
B10	20	13	STR.	-	1,600	32
M1	66	36	2	-	4,300	2,244
S1	4	16	3	1,330	4,100	25
S2	4	16	3	1,380	4,200	26
S3	4	16	3	1,420	4,280	27
S4	4	16	3	1,460	4,360	27
S5	4	16	3	1,500	4,440	28
S6	4	16	3	1,540	4,520	28
S7	4	16	3	1,580	4,600	29
S8	4	16	3	1,620	4,680	29
S9	4	16	3	1,660	4,760	30
S10	4	16	3	1,710	4,860	30
S11	4	16	3	1,750	4,940	31
S12	4	16	3	1,790	5,020	31
S13	4	16	3	1,830	5,100	32
S14	4	16	3	1,870	5,180	32
S15	4	16	3	1,910	5,260	33
S16	4	16	3	1,950	5,340	33
S17	4	16	3	1,990	5,420	34
S18	4	16	3	2,030	5,060	31
S19	4	16	3	2,070	5,140	32
S20	4	16	3	2,100	5,200	32
S21	4	16	3	2,140	5,280	33
S22	4	16	3	2,170	5,340	33
S23	4	16	3	2,200	5,400	34
S24	4	16	3	2,240	5,480	34
S25	4	16	3	2,270	5,540	34
S26	4	16	3	2,310	5,620	35
S27	4	16	3	2,340	5,680	35
S28	4	16	3	2,370	5,740	36
S29	4	16	3	2,380	5,760	36
S30	2	16	3	2,030	5,340	17
S31	2	16	3	2,070	5,420	17
S32	2	16	3	2,100	5,480	17
S33	2	16	3	2,140	5,560	17
S34	2	16	3	2,170	5,620	18
S35	2	16	3	2,200	5,680	18
S36	2	16	3	2,240	5,760	18
S37	2	16	3	2,270	5,820	18
S38	2	16	3	2,310	5,900	18
S39	2	16	3	2,340	5,960	19
S40	2	16	3	2,370	6,020	19
S41	2	16	3	2,380	6,040	19
S42	24	16	3	2,380	6,200	231
S43	70	16	5	-	1,880	204
S44	48	16	6	-	5,160	384
S45	120	16	8	-	1,720	320
T1	111	29	1	-	7,200	4,044
T2	98	29	1	-	8,160	4,046
U1	55	13	4	-	1,820	99
U2	30	13	4	-	2,520	75
U3	10	13	4	-	2,220	22
U4	10	13	4	-	2,480	25
V1	66	36	STR.	-	8,620	4,498

BAR TYPES

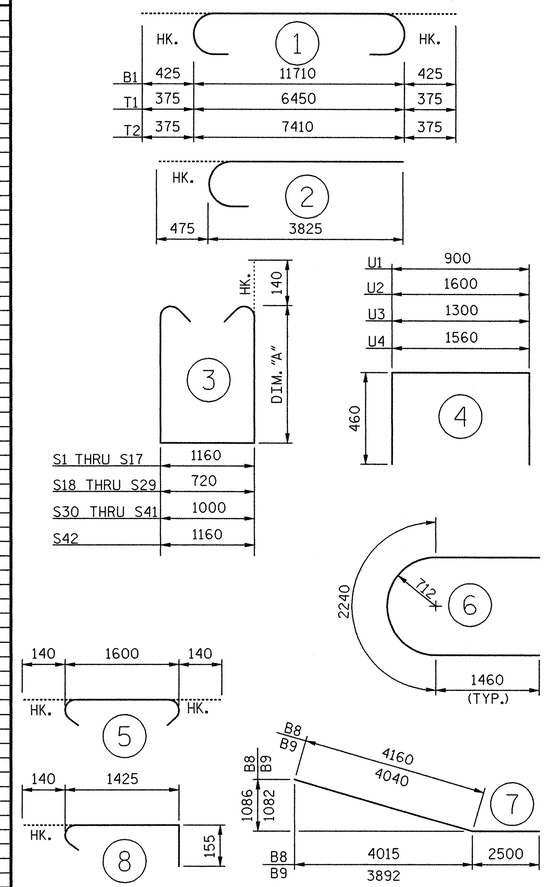

ALL BAR DIMENSIONS ARE OUT TO OUT.

TOTAL REINFORCING STEEL	kg	21,114
CLASS "AA" CONC. BREAKDOWN		
POUR #1 FOOTINGS	CU.M.	84.7
POUR #2 COLUMNS	CU.M.	34.4
POUR #3 CAP	CU.M.	43.5
TOTAL	CU.M.	162.6
HP 360X108 STEEL PILES		
56 PILES REQUIRED	LIN. M.	1,365.7

PROJECT NO. X-0002B

CUMBERLAND COUNTY

STATION: -L- POC STA. 63+66.830=

-FLYOVER-

POC STA. 22+29.794

SHEET 2 OF 2

STATE OF NORTH CAROLINA
DEPARTMENT OF TRANSPORTATION
RALEIGH

SUBSTRUCTURE

BENT 6 DETAILS

NORTH CAROLINA PROFESSIONAL SEAL 024928 ENGINEER RODNEY E. MONEY 8/1/08

PREPARED IN THE OFFICE OF
TYLIN INTERNATIONAL
RALEIGH, NORTH CAROLINA
Copyright © 2008, TYLI

DWG NO. 63

REVISIONS								SHEET NO.
NO.	BY:	DATE:	NO.	BY:	DATE:			S-242
1			3					TOTAL SHEETS
2			4					253

DRAWN BY : S. MORGAN DATE : JUN. '08

CHECKED BY : J.W. WRIGHT DATE : JUN. '08

8/1/2008 12:48:27 PM Structures
ev:Fayetteville outer loop\sm\X0002B_SD_B6_02.dgn

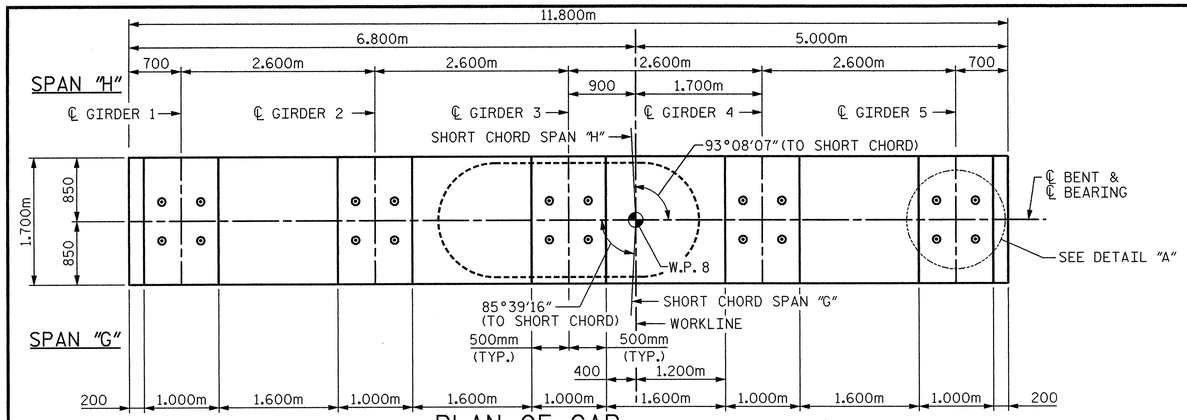

PLAN OF CAP

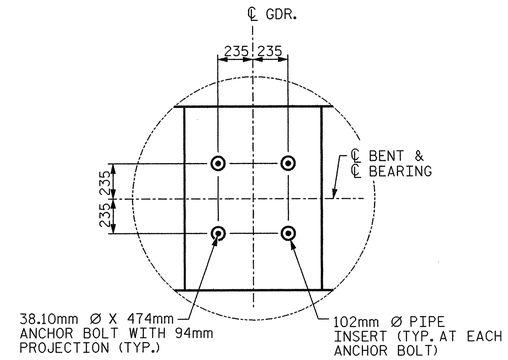

DETAIL "A"
(TYP. EA. BRG.)

NOTES:

STIRRUPS AND "U" BARS IN CAP MAY BE SHIFTED AS NECESSARY TO CLEAR ANCHOR BOLTS AND PIPE INSERTS.

HOOKS ON M1 BARS MAY BE TURNED AS NECESSARY FOR PLACING REINFORCING STEEL.

DETAILED DRAWINGS FOR FALSEWORK AND FORMS FOR THIS HAMMERHEAD BENT SHALL BE SUBMITTED. SEE SHEET SNSM.

T1 & T2 BARS IN TOP OF FOOTING MAY BE SHIFTED AS NECESSARY TO CLEAR M1 BARS IN FOOTING.

FOR SECTION A-A, SECTION B-B AND SECTION C-C, SEE SHEET 2 OF 2.

CLASS AA CONCRETE SHALL BE USED FOR THE CAP, COLUMN AND FOOTING.

FOR PIPE INSERT DETAILS, SEE "POT BEARING" SHEETS.

FOR PILE SPLICE DETAILS, SEE "END BENT 1 DETAILS AND BOM" SHEET.

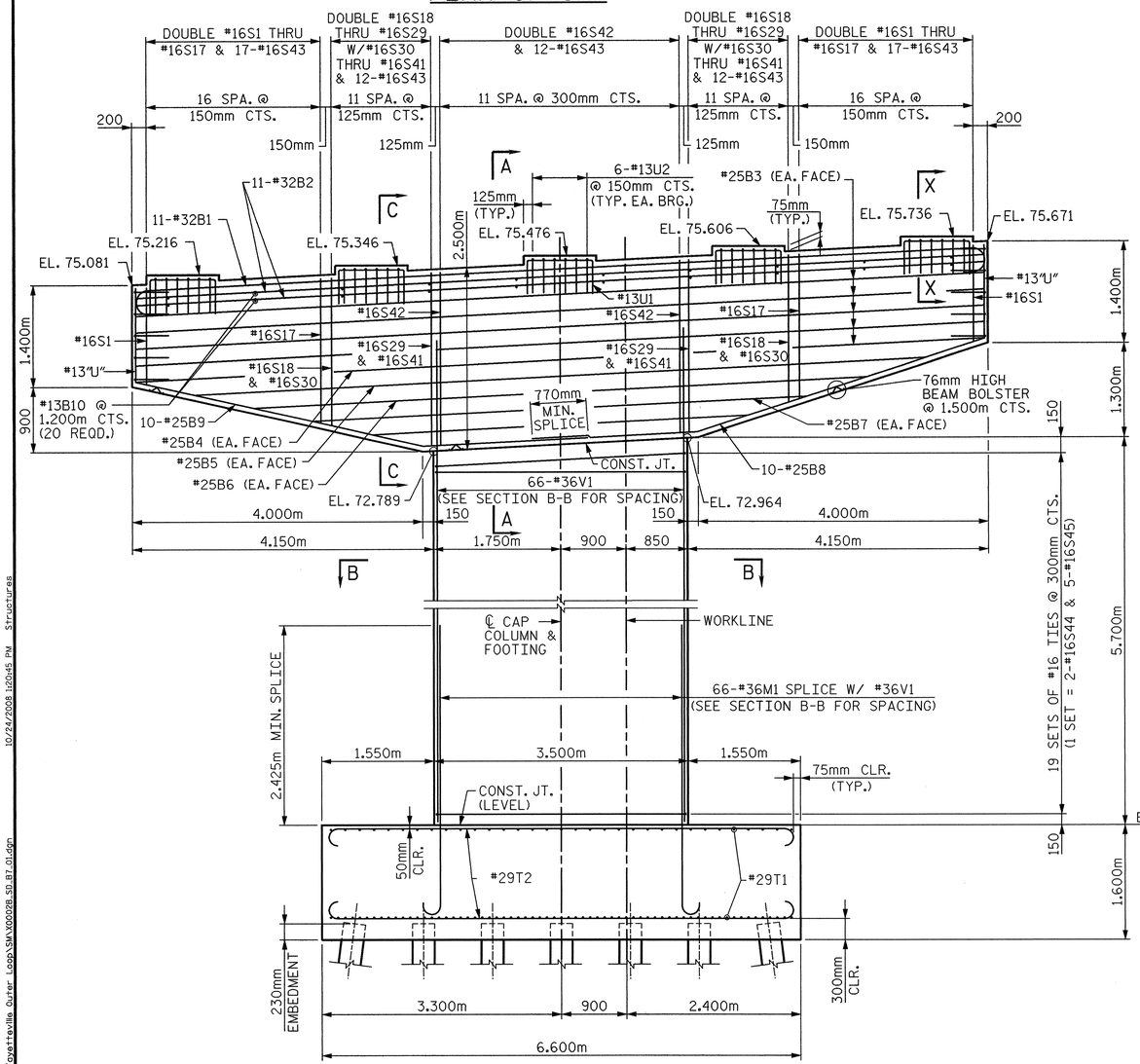

ELEVATION

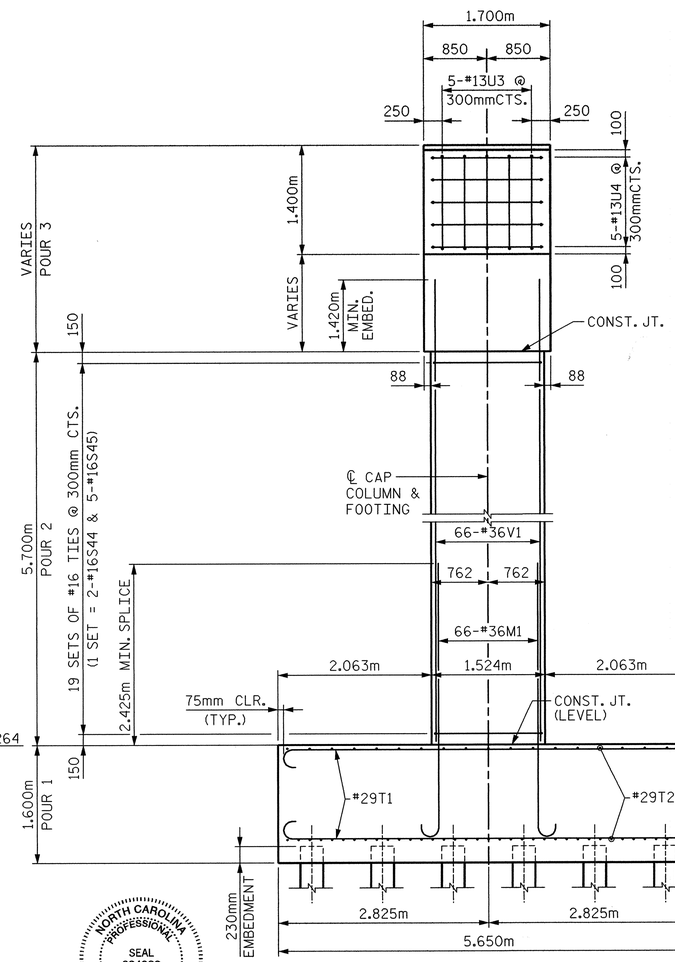

END VIEW

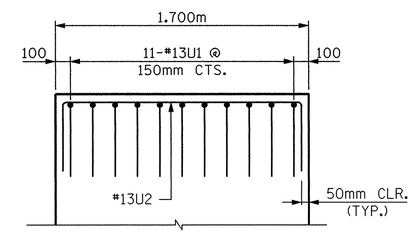

SECTION X-X

PROJECT NO. X-0002B

CUMBERLAND COUNTY

STATION: -L- POC STA. 63+66.830=
-FLYOVER-
POC STA. 22+29.794

SHEET 1 OF 2

STATE OF NORTH CAROLINA
DEPARTMENT OF TRANSPORTATION
RALEIGH

SUBSTRUCTURE

BENT 7

NORTH CAROLINA PROFESSIONAL SEAL 024928 ENGINEER RODNEY E. MONEY 10/24/08

PREPARED IN THE OFFICE OF
TYLIN INTERNATIONAL
RALEIGH, NORTH CAROLINA
Copyright © 2008, TYLI

DWG NO. 65

REVISIONS						
NO.	BY:	DATE:	NO.	BY:	DATE:
1			3		
2			4		

SHEET NO. S-243
TOTAL SHEETS 253

DRAWN BY : S. MORGAN DATE : JUN. '08
CHECKED BY : J.W. WRIGHT DATE : JUN. '08

10/24/2008 12:04:45 PM Structures

ad\Fayetteville Outer Loop\SNV\X0002B_SD_B7_01.dgn

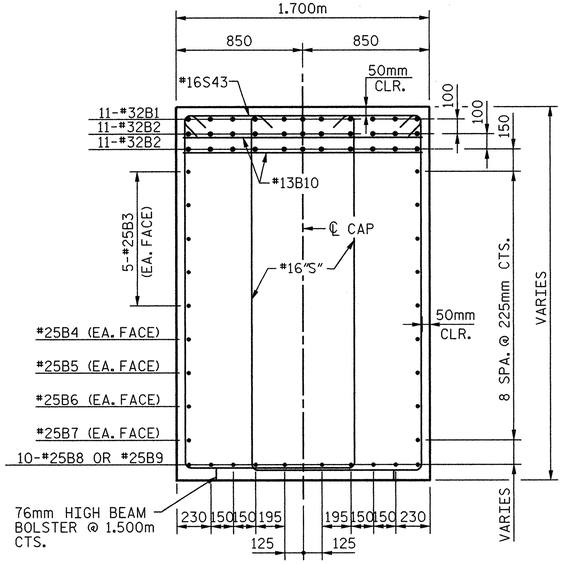

SECTION A-A

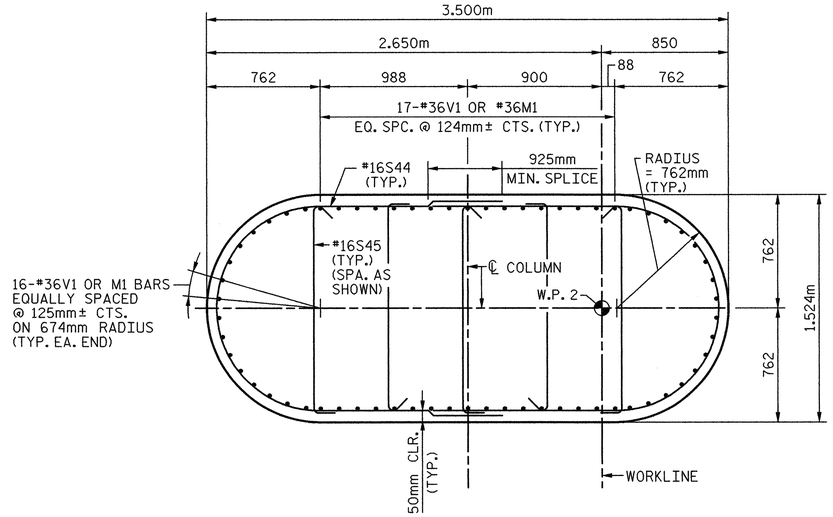

SECTION B-B

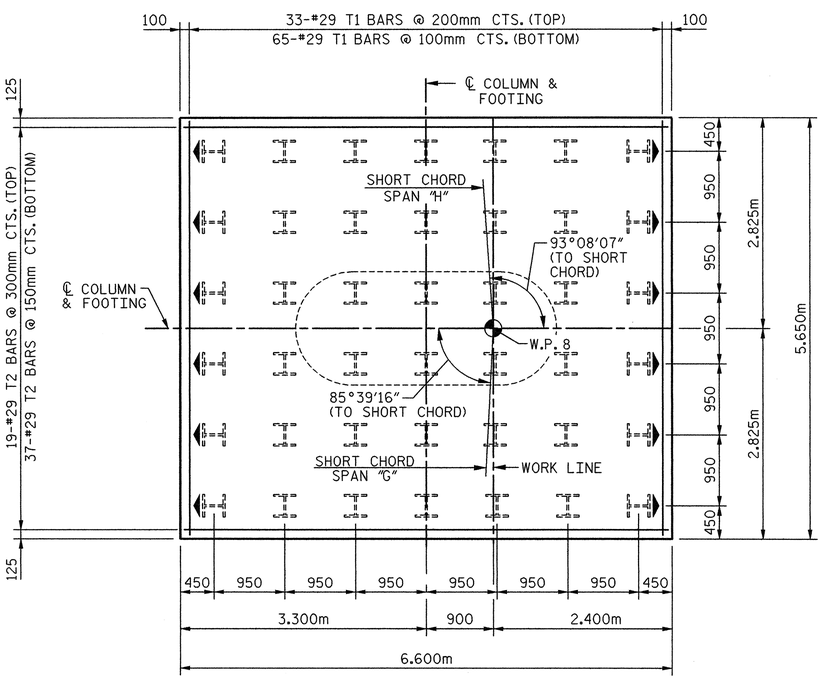

PLAN OF FOOTING

NOTE:

▲ DENOTES BATTER PILES 125:1000 IN DIRECTION OF ARROW.

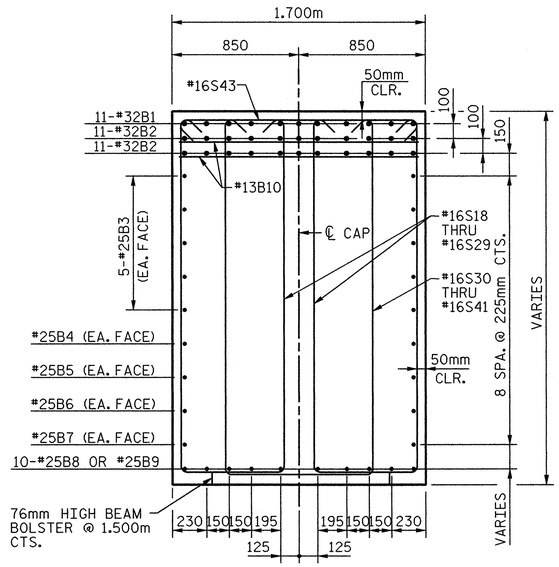

SECTION C-C

BILL OF MATERIAL

BENT 7

BAR	NO.	SIZE	TYPE	DIM.A	LENGTH	WEIGHT
B1	11	32	1	-	12,560	885
B2	22	32	STR.	-	11,700	1,648
B3	10	25	STR.	-	11,700	465
B4	2	25	STR.	-	10100	80
B5	2	25	STR.	-	8460	67
B6	2	25	STR.	-	6820	54
B7	2	25	STR.	-	5180	41
B8	10	25	7	-	6660	265
B9	10	25	7	-	6,540	260
B10	20	13	STR.	-	1,600	32
M1	66	36	2	-	4,200	2,192
S1	4	16	3	1,330	4,100	25
S2	4	16	3	1,380	4,200	26
S3	4	16	3	1,420	4,280	27
S4	4	16	3	1,460	4,360	27
S5	4	16	3	1,500	4,440	28
S6	4	16	3	1,540	4,520	28
S7	4	16	3	1,580	4,600	29
S8	4	16	3	1,620	4,680	29
S9	4	16	3	1,660	4,760	30
S10	4	16	3	1,710	4,860	30
S11	4	16	3	1,750	4,940	31
S12	4	16	3	1,790	5,020	31
S13	4	16	3	1,830	5,100	32
S14	4	16	3	1,870	5,180	32
S15	4	16	3	1,910	5,260	33
S16	4	16	3	1,950	5,340	33
S17	4	16	3	1,990	5,420	34
S18	4	16	3	2,030	5,060	31
S19	4	16	3	2,070	5,140	32
S20	4	16	3	2,100	5,200	32
S21	4	16	3	2,140	5,280	33
S22	4	16	3	2,170	5,340	33
S23	4	16	3	2,200	5,400	34
S24	4	16	3	2,240	5,480	34
S25	4	16	3	2,270	5,540	34
S26	4	16	3	2,310	5,620	35
S27	4	16	3	2,340	5,680	35
S28	4	16	3	2,370	5,740	36
S29	4	16	3	2,380	5,760	36
S30	2	16	3	2,030	5,340	17
S31	2	16	3	2,070	5,420	17
S32	2	16	3	2,100	5,480	17
S33	2	16	3	2,140	5,560	17
S34	2	16	3	2,170	5,620	18
S35	2	16	3	2,200	5,680	18
S36	2	16	3	2,240	5,760	18
S37	2	16	3	2,270	5,820	18
S38	2	16	3	2,310	5,900	18
S39	2	16	3	2,340	5,960	19
S40	2	16	3	2,370	6,020	19
S41	2	16	3	2,380	6,040	19
S42	24	16	3	2,380	6,200	231
S43	70	16	5	-	1,880	204
S44	38	16	6	-	5,160	304
S45	95	16	8	-	1,720	254
T1	98	29	1	-	6,260	3,104
T2	56	29	1	-	7,200	2,040
U1	55	13	4	-	1,820	99
U2	30	13	4	-	2,520	75
U3	10	13	4	-	2,220	22
U4	10	13	4	-	2,480	25
V1	66	36	STR.	-	7,120	3,716

BAR TYPES

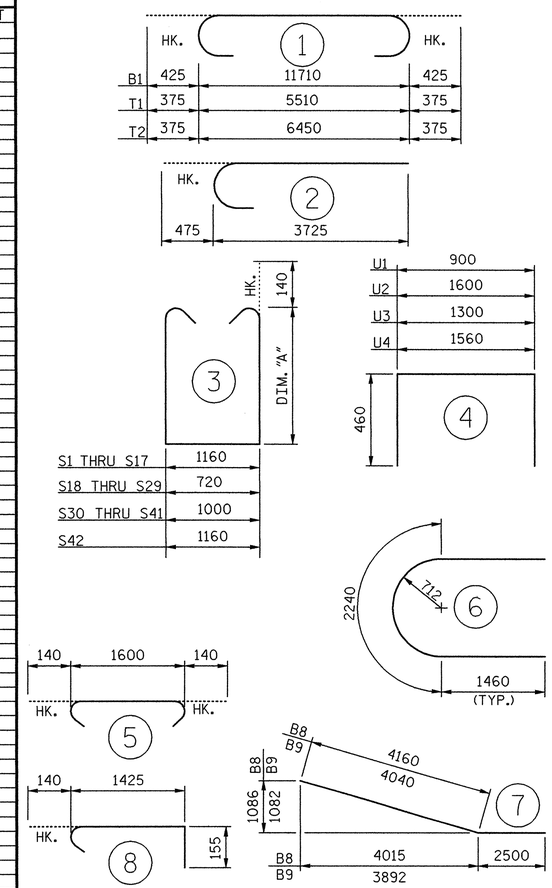

ALL BAR DIMENSIONS ARE OUT TO OUT.

TOTAL REINFORCING STEEL	Kg	17,188
CLASS "AA" CONC. BREAKDOWN		
POUR #1 FOOTINGS	CU.M.	59.7
POUR #2 COLUMNS	CU.M.	27.1
POUR #3 CAP	CU.M.	43.5
TOTAL	CU.M.	130.3
HP 360X108 STEEL PILES 42 PILES REQUIRED	LIN. M.	938.7

PROJECT NO. X-0002B

CUMBERLAND COUNTY

STATION: -L- POC STA. 63+66.830=
-FLYOVER-
POC STA. 22+29.794

SHEET 2 OF 2

STATE OF NORTH CAROLINA
DEPARTMENT OF TRANSPORTATION
RALEIGH

SUBSTRUCTURE
BENT 7 DETAILS

NORTH CAROLINA PROFESSIONAL SEAL 024928 R.E. Money ENGINEER RODNEY E. MONEY 8/1/08

PREPARED IN THE OFFICE OF
TYLIN INTERNATIONAL
RALEIGH, NORTH CAROLINA
Copyright © 2008, TYLI
DWG NO. 65

REVISIONS								SHEET NO.
NO.	BY:	DATE:	NO.	BY:	DATE:			S-244
1			3					TOTAL SHEETS
2			4					253

DRAWN BY : S. MORGAN DATE : JUN. '08
CHECKED BY : J.W. WRIGHT DATE : JUN. '08

ca-fayetteville outer loop\sm\X0002B_SD_B7_02.dgn 8/1/2008 12:48:34 PM Structures

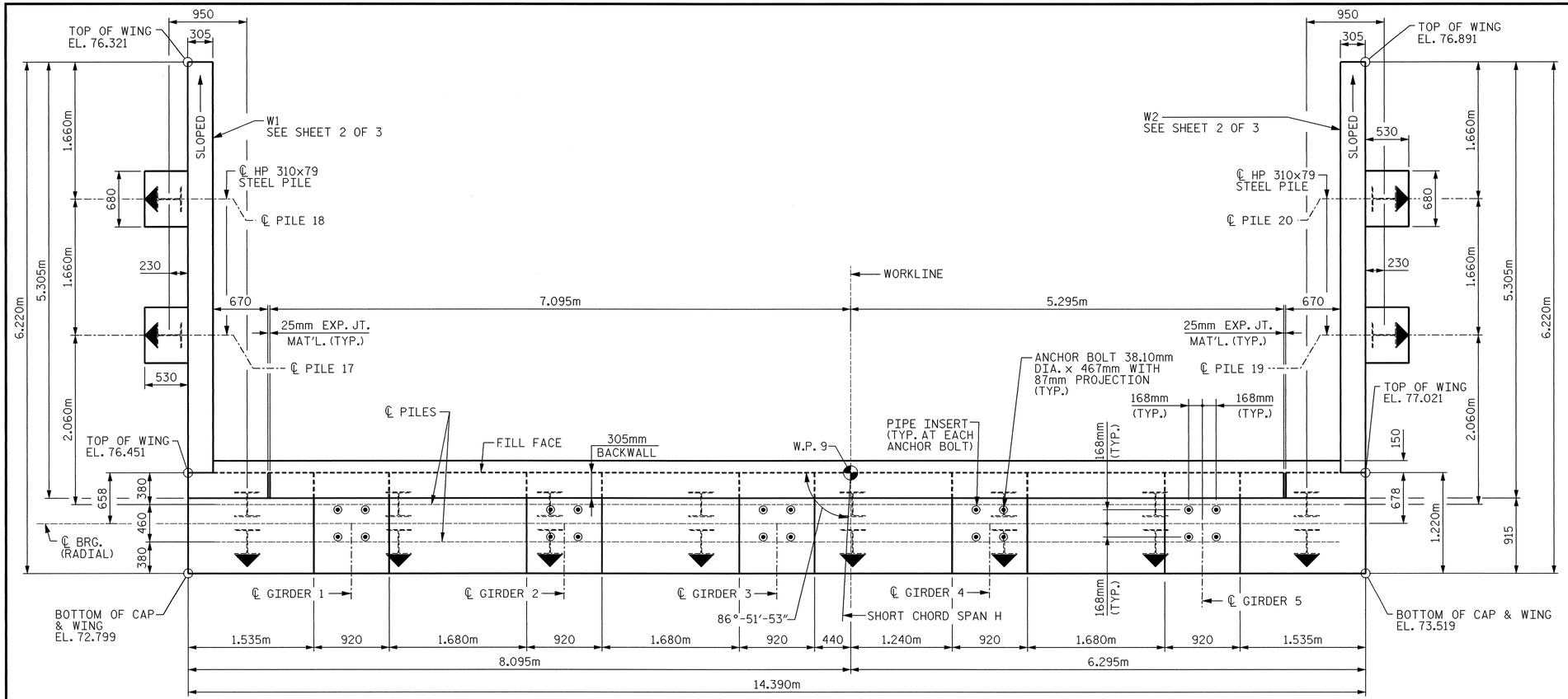

PLAN

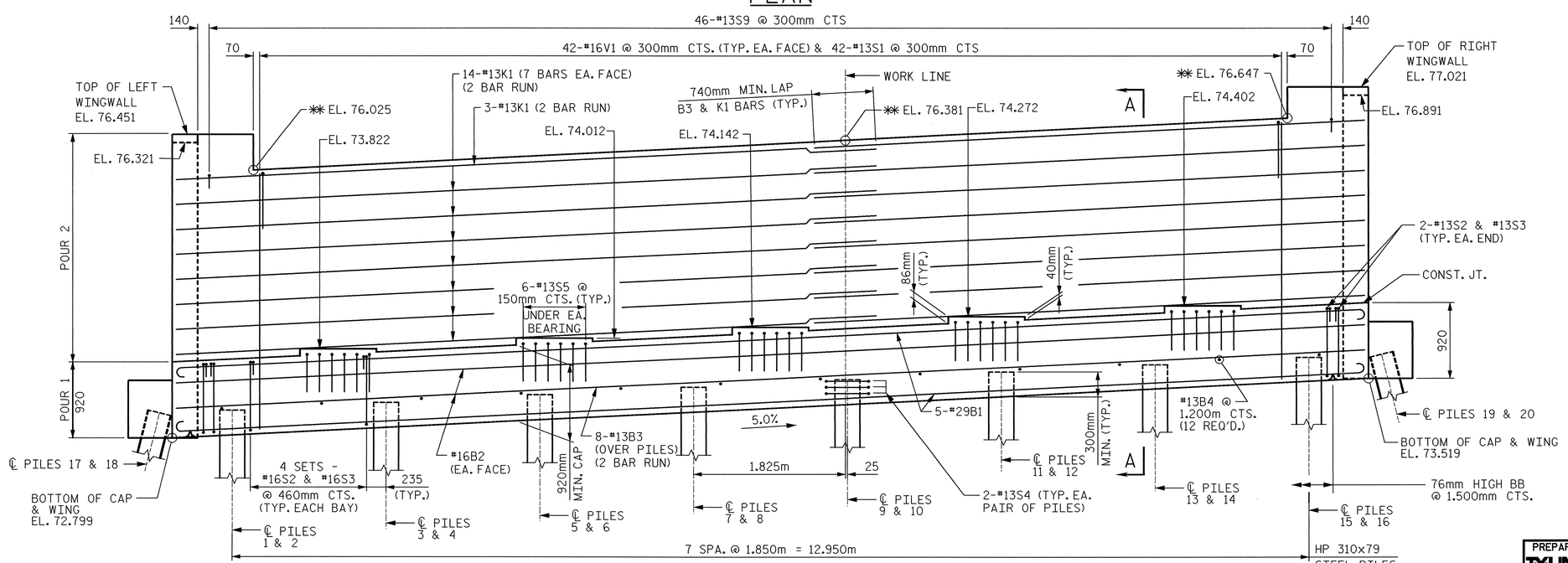

ELEVATION

NOTES:

FOR PIPE INSERT DETAILS, SEE "POT BEARING DETAILS" SHEET.

BACKWALL SHALL BE PLACED BEFORE APPLYING THE EPOXY PROTECTIVE COATING.

THE TOP SURFACE AREAS OF THE END BENT CAP SHALL BE CURED IN ACCORDANCE WITH STANDARD SPECIFICATIONS EXCEPT THE MEMBRANE CURING COMPOUND METHOD SHALL NOT BE USED.

FOR TEMPORARY DRAINAGE AT END BENT, SEE "END BENT 2 DETAILS" SHEET.

STIRRUPS IN CAP MAY BE SHIFTED AS NECESSARY TO CLEAR ANCHOR BOLTS AND PIPE INSERTS.

THE TOP SURFACE OF THE CAP EXCEPT THE BRIDGE SEAT BUILDUPS SHALL BE SLOPED TRANSVERSELY FROM THE FILL FACE TO THE BACK FACE AT THE RATE OF 2%.

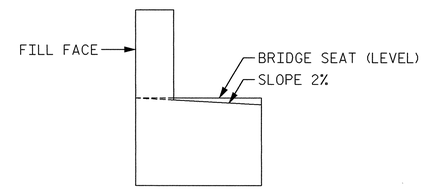

FOR SECTION A-A, SEE "END BENT 2 DETAILS" SHEET.

FOR PILE SPLICE DETAILS, SEE "END BENT 2 DETAILS" SHEET.

▲ DENOTES BATTER PILES 250:1000 IN DIRECTION OF ARROW.

FOR LOCATION OF ELEVATIONS BETWEEN BRIDGE SEAT BUILD UPS, SEE SECTION A-A.

✱✱ ELEVATION ALONG FILL FACE.
THE CONTRACTOR SHALL PROVIDE FOR INSTALLATION OF THE 102mm DIAMETER DRAIN PIPE THROUGH THE WINGWALL AS REQUIRED FOR REINFORCED BRIDGE APPROACH FILLS, SEE THE ROADWAY PLANS. REINFORCING STEEL IN THE WINGWALL MAY BE SHIFTED AS NECESSARY TO CLEAR THE DRAIN PIPE.

PILE CUT-OFF TABLE

PILE NO.	ELEVATION
1 & 2	73.135
3 & 4	73.228
5 & 6	73.320
7 & 8	73.413
9 & 10	73.505
11 & 12	73.598
13 & 14	73.690
15 & 16	73.783
17 & 18	73.099
19 & 20	73.819

PROJECT NO. X-0002B

CUMBERLAND COUNTY

STATION: -L- POC STA. 63+66.830=
-FLYOVER-
POC STA. 22+29.794

SHEET 1 OF 3

STATE OF NORTH CAROLINA
DEPARTMENT OF TRANSPORTATION
RALEIGH

SUBSTRUCTURE

END BENT 2

NORTH CAROLINA PROFESSIONAL SEAL 024928 ENGINEER RODNEY E. MONEY 8/26/08

PREPARED IN THE OFFICE OF
TYLIN INTERNATIONAL
RALEIGH, NORTH CAROLINA
Copyright © 2008, TYLI
DWG NO. 66

REVISIONS						
NO.	BY:	DATE:	NO.	BY:	DATE:
1			3		
2			4		

SHEET NO. S-245
TOTAL SHEETS 253

DRAWN BY : S. MORGAN DATE : JUN. '08
CHECKED BY : J.W. WRIGHT DATE : JUN. '08

8/25/2008 3:03:59 PM Structures
pw:\\fayetteville outer loop\sm\X0002B_SD_E2_01.dgn

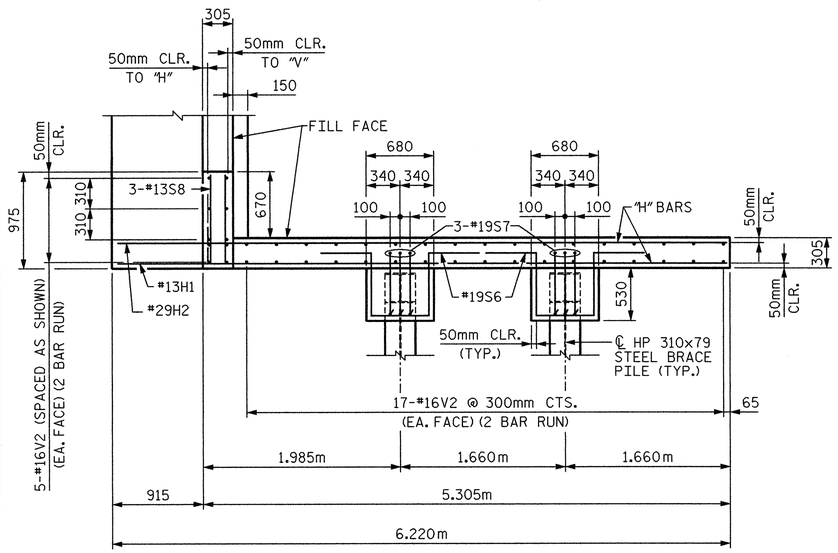

PLAN - W2

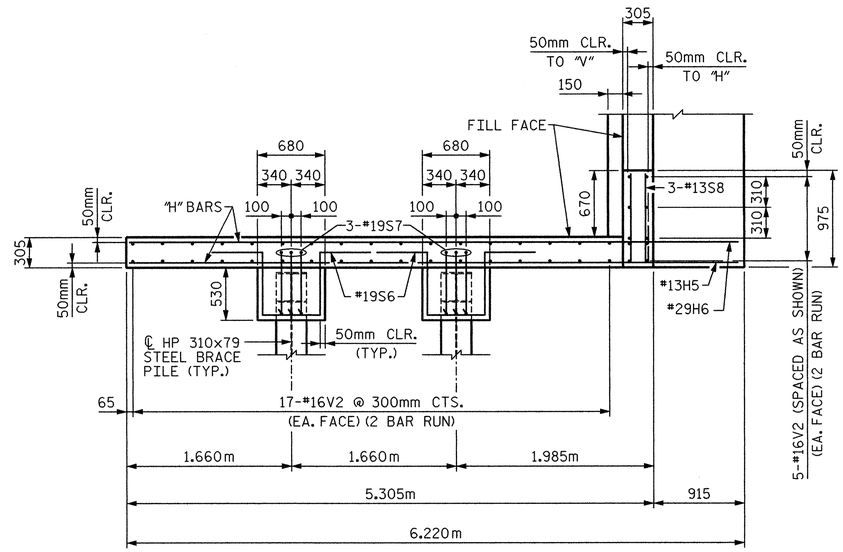

PLAN - W1

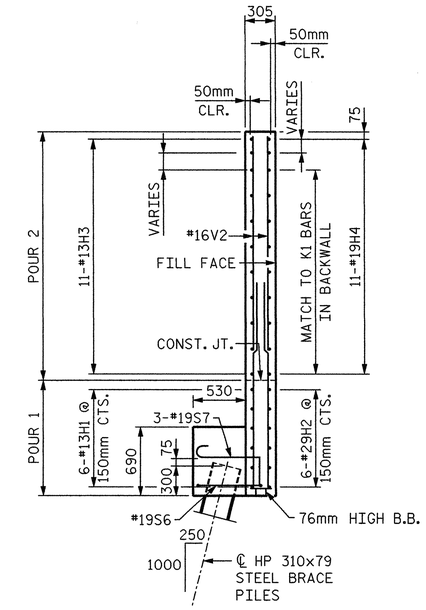

SECTION B-B

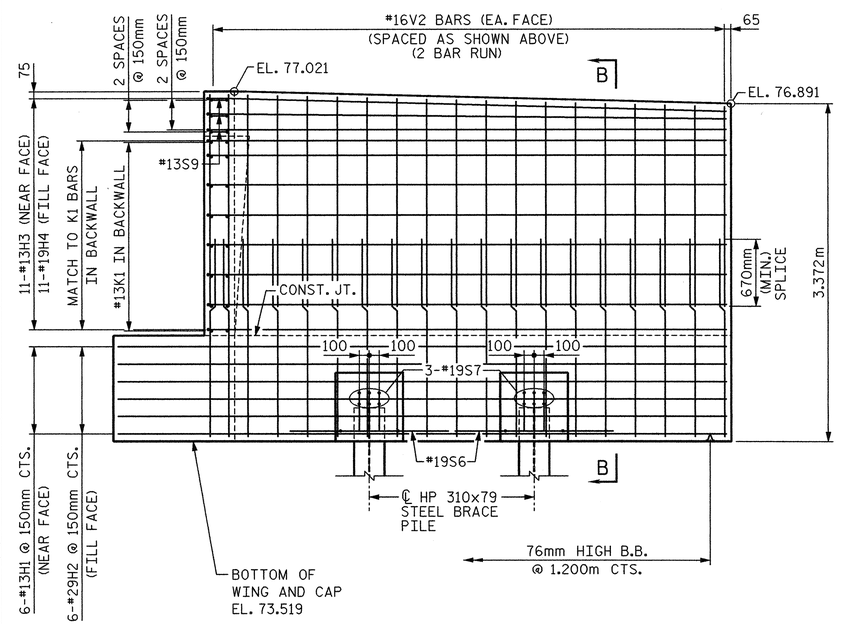

ELEVATION - W2

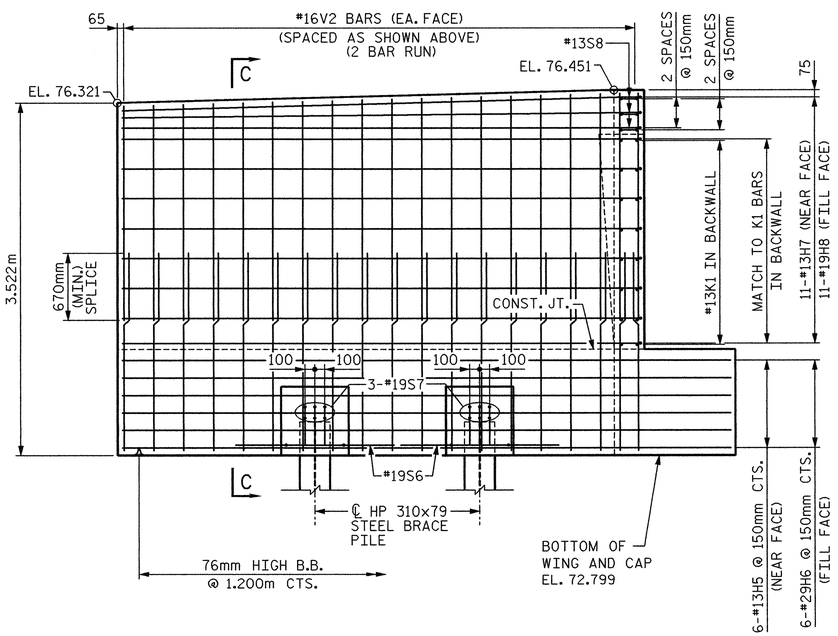

ELEVATION - W1

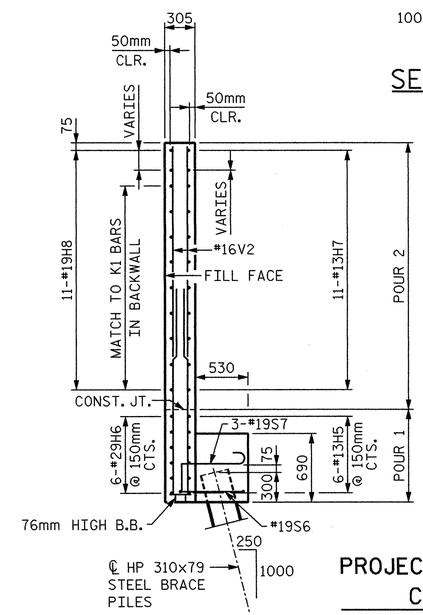

SECTION C-C

PROJECT NO. X-0002B

CUMBERLAND COUNTY

STATION: -L- POC STA. 63+66.830=

-FLYOVER-

POC STA. 22+29.794

SHEET 2 OF 3

STATE OF NORTH CAROLINA
DEPARTMENT OF TRANSPORTATION
RALEIGH

SUBSTRUCTURE

END BENT 2

NORTH CAROLINA PROFESSIONAL SEAL 024928 ENGINEER RODNEY E. MONEY 8/1/08

PREPARED IN THE OFFICE OF
TYLIN INTERNATIONAL
RALEIGH, NORTH CAROLINA
Copyright © 2008, TYLI

DWG NO. 67

REVISIONS						SHEET NO.
NO.	BY:	DATE:	NO.	BY:	DATE:	5-246
1			3			TOTAL SHEETS
2			4			253

DRAWN BY : S. MORGAN DATE : JUN. '08

CHECKED BY : J.W. WRIGHT DATE : JUN. '08

8/1/2008 12:48:40 PM Structures
G:\Fayetteville outer loop\sm\X0002B_SD_E2_02.dgn

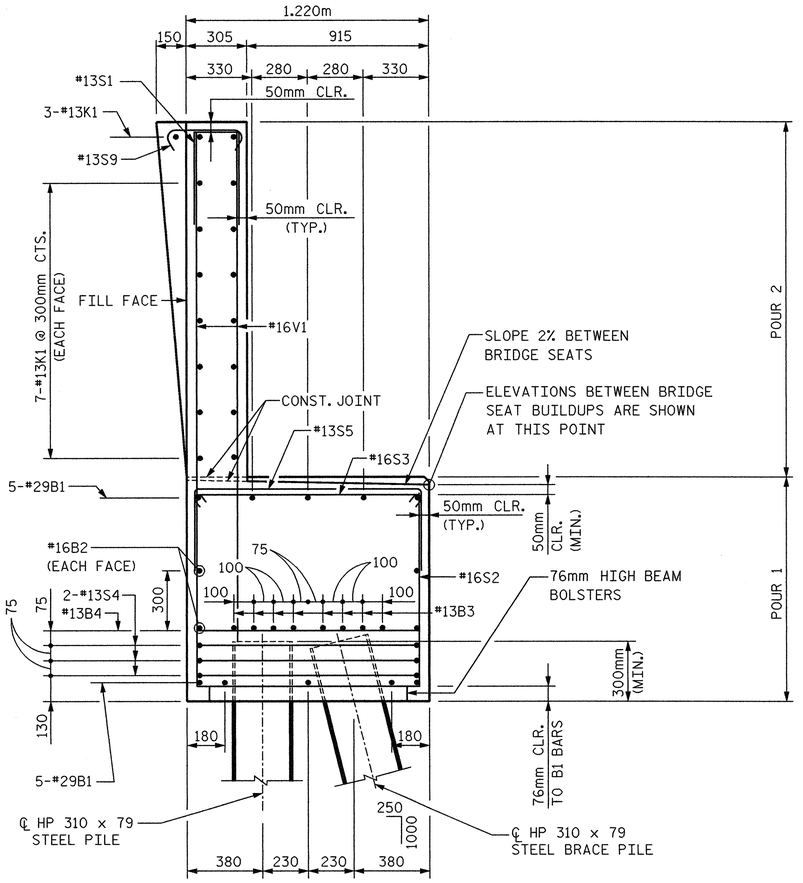

SECTION A-A

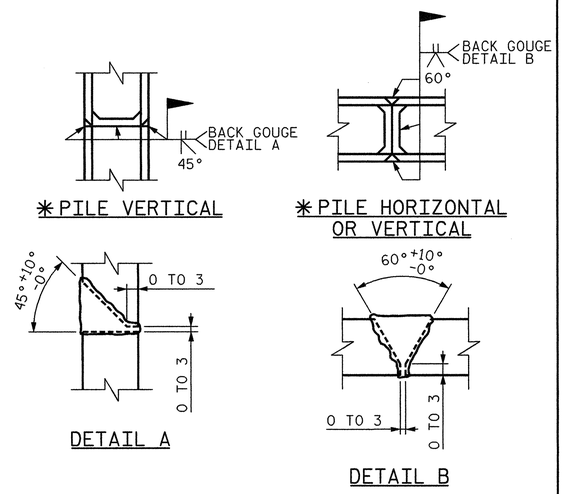

PILE SPLICE DETAILS

✱ POSITION OF PILE DURING WELDING.

BAR TYPES

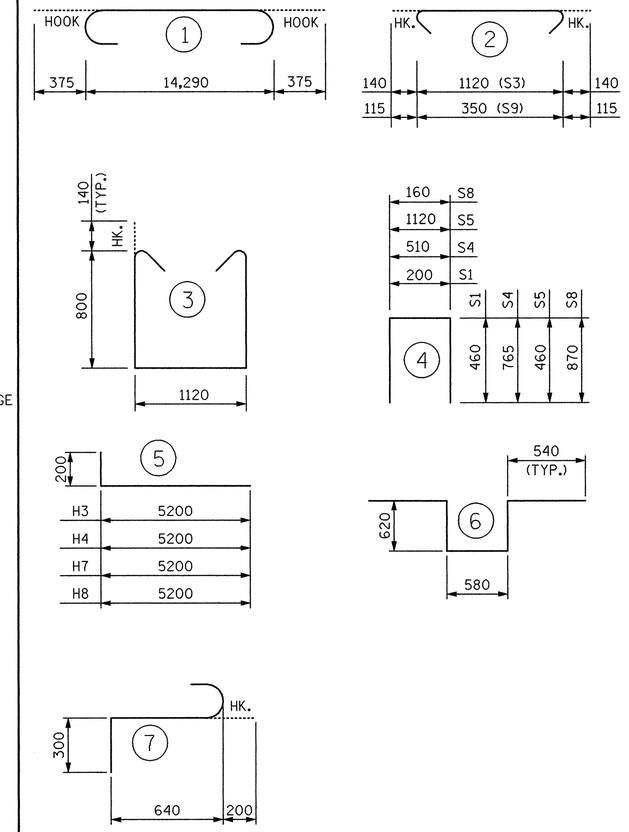

ALL BAR DIMENSIONS ARE OUT TO OUT.

BILL OF MATERIAL

END BENT 2

BAR	NO.	SIZE	TYPE	LENGTH	WEIGHT
B1	10	#29	1	15,040	761
B2	4	#16	STR.	14,300	89
B3	16	#13	STR.	7,520	120
B4	12	#13	STR.	1,120	13
H1	6	#13	STR.	6,120	36
H2	6	#29	STR.	6,120	186
H3	11	#13	5	5,400	59
H4	11	#19	5	5,400	133
H5	6	#13	STR.	6,120	36
H6	6	#29	STR.	6,120	186
H7	11	#13	5	5,400	59
H8	11	#19	5	5,400	133
K1	34	#13	STR.	7,520	254
S1	42	#13	4	1,120	47
S2	32	#16	3	3,000	149
S3	32	#16	2	1,400	70
S4	48	#13	4	2,040	97
S5	30	#13	4	2,040	61
S6	4	#19	6	2,900	26
S7	12	#19	7	1,140	31
S8	6	#13	4	1,900	11
S9	46	#13	2	580	27
V1	84	#16	STR.	3,060	399
V2	176	#16	STR.	2,120	579
TOTAL REINFORCING STEEL				kg	3,562
CLASS A CONCRETE					
POUR 1 - CAP & LOWER WINGS				CU. m	20.0
POUR 2 - BACKWALL & UPPER WINGS				CU. m	20.2
TOTAL				CU. m	40.2
HP 310x79 STEEL PILES					
20 PILES REQUIRED				LIN. m	570

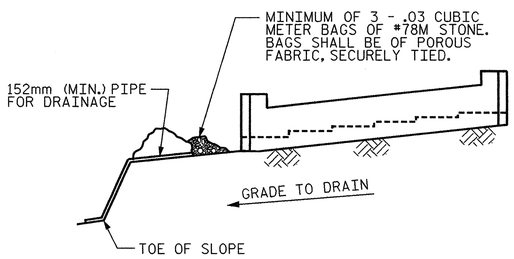

BAGGED STONE AND PIPE SHALL BE PLACED IMMEDIATELY AFTER COMPLETION OF END BENT EXCAVATION. PIPE MAY BE EITHER CONCRETE, CORRUGATED STEEL, CORRUGATED ALUMINUM ALLOY, OR CORRUGATED PLASTIC. PERFORATED PIPE WILL NOT BE ALLOWED.

BAGGED STONE SHALL REMAIN IN PLACE UNTIL THE ENGINEER DIRECTS THAT IT BE REMOVED. THE CONTRACTOR SHALL REMOVE AND DISPOSE OF SILT ACCUMULATIONS AT BAGGED STONE WHEN SO DIRECTED BY THE ENGINEER. BAGS SHALL BE REMOVED AND REPLACED WHENEVER THE ENGINEER DETERMINES THAT THEY HAVE DETERIORATED AND LOST THEIR EFFECTIVENESS.

NO SEPARATE PAYMENT WILL BE MADE FOR THIS WORK AND THE ENTIRE COST OF THIS WORK SHALL BE INCLUDED IN THE UNIT CONTRACT PRICE BID FOR THE SEVERAL PAY ITEMS.

TEMPORARY DRAINAGE AT END BENT

PROJECT NO. X-0002B
CUMBERLAND COUNTY
STATION: -L- POC STA. 63+66.830=
-FLYOVER-
POC STA. 22+29.794

SHEET 3 OF 3

STATE OF NORTH CAROLINA
DEPARTMENT OF TRANSPORTATION
RALEIGH

SUBSTRUCTURE

END BENT 2
DETAILS

NORTH CAROLINA PROFESSIONAL SEAL 024928 ENGINEER RODNEY E. MONEY 8/1/08

PREPARED IN THE OFFICE OF
TYLIN INTERNATIONAL
RALEIGH, NORTH CAROLINA
Copyright © 2008, TYLI
DWG NO. 68

REVISIONS							SHEET NO.
NO.	BY:	DATE:	NO.	BY:	DATE:		S-247
1			3				TOTAL SHEETS
2			4				253

DRAWN BY : S. MORGAN DATE : JUN. '08
CHECKED BY : J.W. WRIGHT DATE : JUN. '08

8/1/2008 12:48:44 PM Structures
o:\fayetteville outer loop\sm\X0002B.Sb.E2.03.dgn

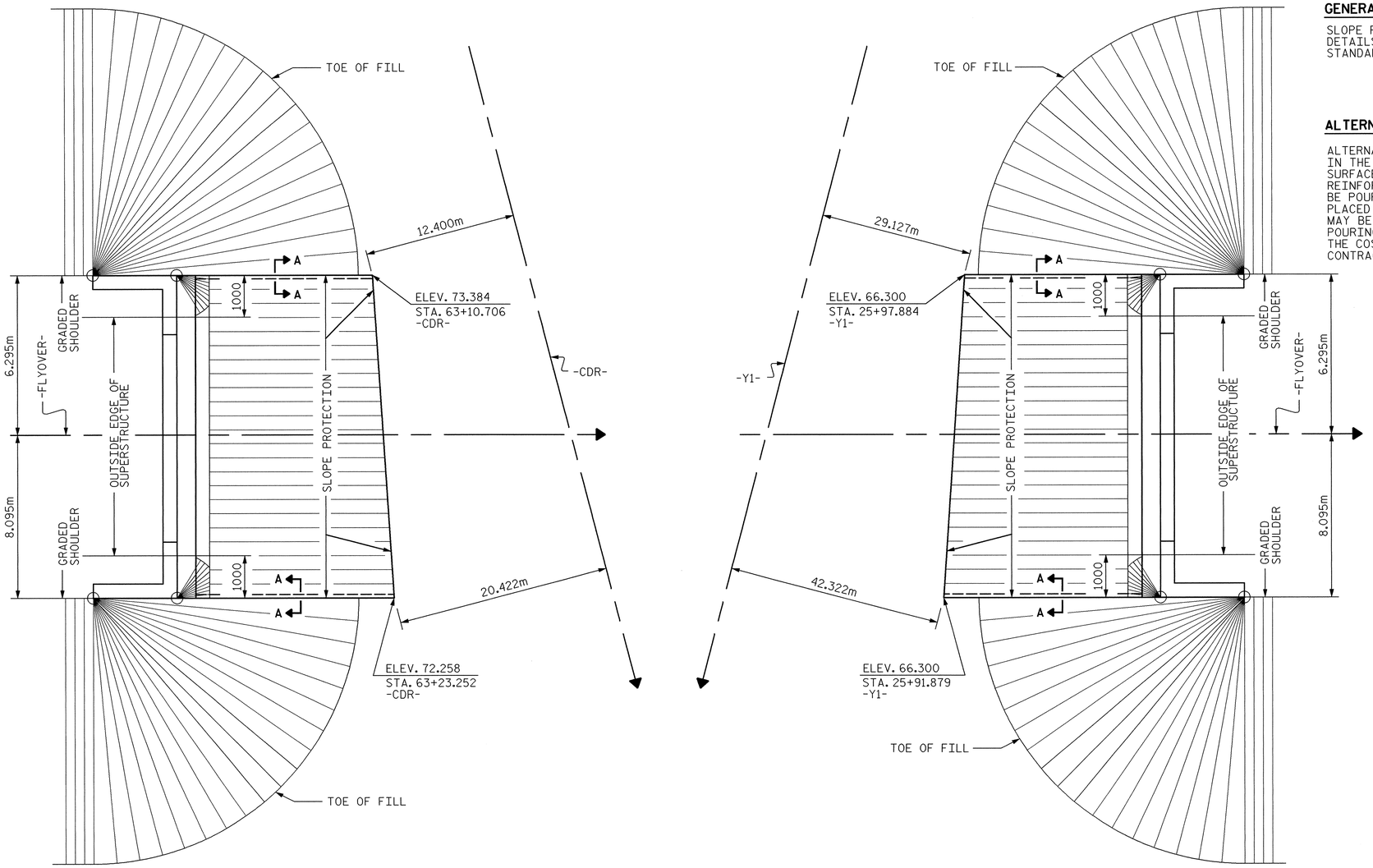

END BENT 1

END BENT 2

PLAN - END BENT WITH SWEPT BACK WINGS - 90°

(2:1 SLOPE)

GENERAL NOTE

SLOPE PROTECTION SHALL BE PLACED UNDER THE ENDS OF THE BRIDGE AS SHOWN IN THE DETAILS. MEASUREMENT AND PAYMENT SHALL BE AS PRESCRIBED IN SECTION 462 OF THE STANDARD SPECIFICATIONS. FOR BERM WIDTH, SEE GENERAL DRAWING.

ALTERNATE "A"

ALTERNATE "A" SHALL CONSIST OF 100mm POURED-IN-PLACE CONCRETE PAVING AS SHOWN IN THE DETAILS ON THIS SHEET. CONCRETE SHALL BE CLASS "B". THE CONCRETE SURFACE SHALL BE FLOATED WITH A WOODEN FLOAT AND FINISHED. WELDED WIRE FABRIC REINFORCING SHALL BE 152 X 152 - W9.1 X W9.1, 1520mm WIDE. SLOPE PROTECTION SHALL BE POURED IN 1520mm STRIPS AS SHOWN IN THE "POURING DETAIL" WITH 600mm LONG #13 BARS PLACED ALONG THE SLOPE BETWEEN STRIPS AT 450mm MAXIMUM SPACING. SLOPE PROTECTION MAY BE POURED IN ALTERNATE 1220mm AND 1520mm STRIPS AS SHOWN IN THE "OPTIONAL POURING DETAIL" WITH ADJACENT RUNS OF WELDED WIRE FABRIC LAPPING AT LEAST 152mm. THE COST OF THE WELDED WIRE FABRIC AND #13 BARS, IF USED, SHALL BE INCLUDED IN THE CONTRACT UNIT PRICE BID PER SQUARE METER FOR SLOPE PROTECTION.

BRIDGE @ STA. 22+29.794 -FLYOVER-	100 mm SLOPE PROTECTION	* WELDED WIRE FABRIC 1520mm WIDE
	SQUARE METERS	APPROX. METERS
END BENT 1	220	150
END BENT 2	220	150

* QUANTITY SHOWN IS BASED ON 1520mm POURS.

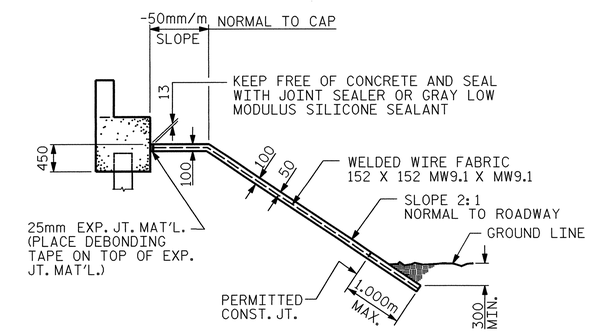

SECTION ALONG -FLYOVER-

END BENT 1 SHOWN, END BENT 2 SIMILAR.

DETAILS FOR ALTERNATE "A"

PROJECT NO. X-0002B

CUMBERLAND COUNTY

STATION: -L- POC STA. 63+66.830=
-FLYOVER-
POC STA. 22+29.794

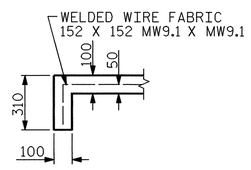

SECTION A-A

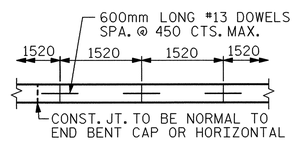

STRIP WIDTHS MAY VARY IN CURVED PORTION.

POURING DETAIL

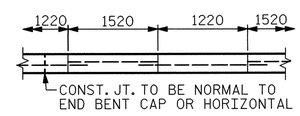

POUR A 1220mm STRIP FIRST. STRIP WIDTHS MAY VARY IN CURVED PORTION.

OPTIONAL POURING DETAIL

NORTH CAROLINA PROFESSIONAL SEAL 024928 ENGINEER RODNEY E. MONEY 8/26/08

STATE OF NORTH CAROLINA
DEPARTMENT OF TRANSPORTATION
RALEIGH

SLOPE PROTECTION DETAILS

PREPARED IN THE OFFICE OF
TYLIN INTERNATIONAL
RALEIGH, NORTH CAROLINA
Copyright © 2008, TYLI

DWG NO. 69

REVISIONS						SHEET NO.
NO.	BY:	DATE:	NO.	BY:	DATE:	S-248
1			3			TOTAL SHEETS
2			4			253

DRAWN BY : S. MORGAN DATE : JUN. '08
CHECKED BY : J.W. WRIGHT DATE : JUN. '08

8/25/2008 3:04:03 PM Structures
ga:\fayetteville outer loop\sm\X0002B_SD_SP_01.dgn

NOTES:

FOR ADDITIONAL NOTES, SEE "BRIDGE APPROACH SLAB FOR FLEXIBLE PAVEMENT WITH BARRIER RAIL" SHEET 2 OF 5.

FOR MINIMUM REINFORCING STEEL SPLICE LENGTHS, SEE "SUPERSTRUCTURE BILL OF MATERIAL" SHEET.

FOR BARRIER RAIL DETAILS, SEE "BRIDGE APPROACH SLAB FOR FLEXIBLE PAVEMENT WITH BARRIER RAIL" SHEET 3 OF 5.

FOR LOCATION OF ADDITIONAL #16S3 BARS, SEE "VISUAL BARRIER WALL DETAILS" SHEETS.

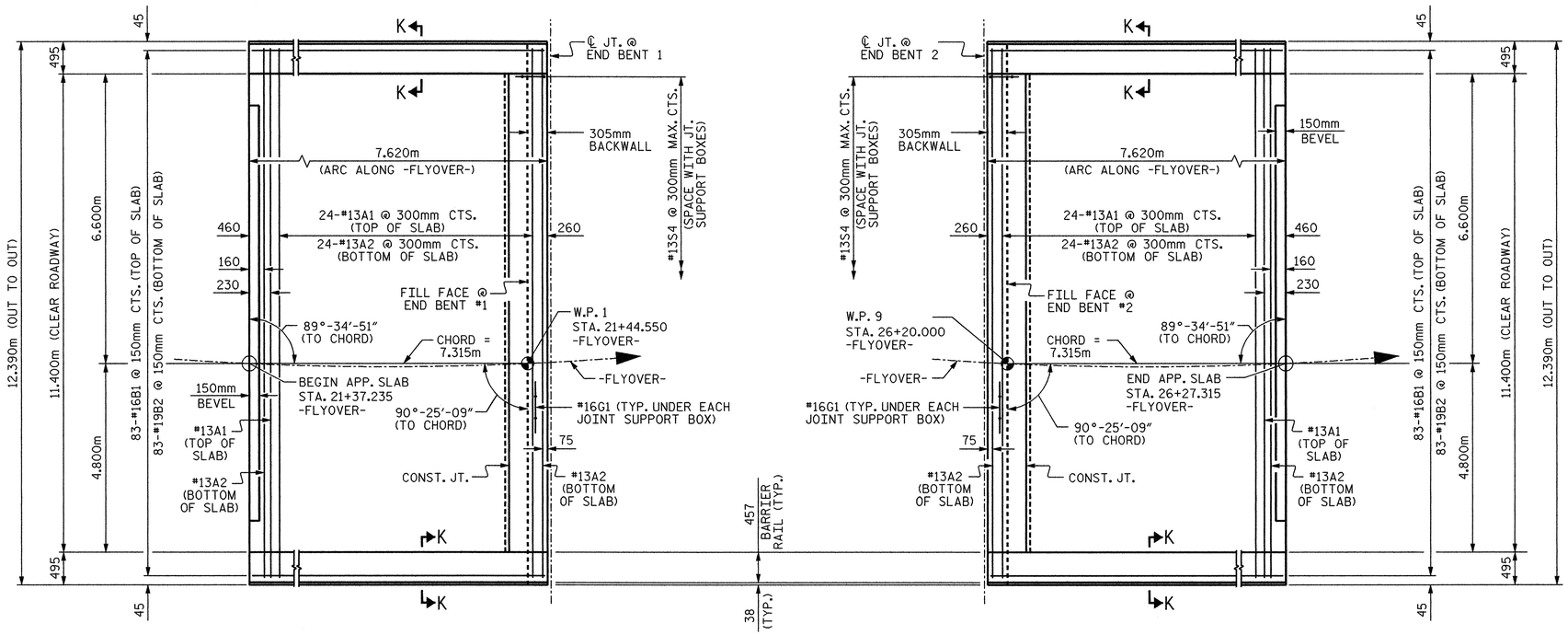

PLAN @ END BENT 1

PLAN @ END BENT 2

NOTES: ALL TRANSVERSE DIMENSIONS ARE RADIAL TO -FLYOVER-

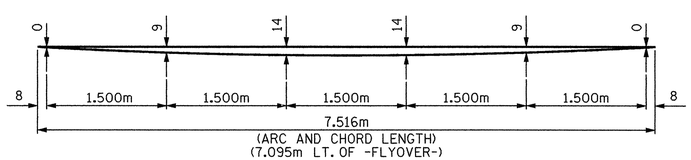

LEFT EDGE

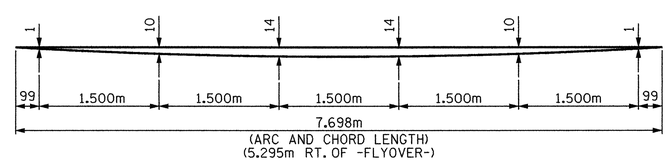

RIGHT EDGE

ARC OFFSETS - APPROACH SLABS AT END BENT 1

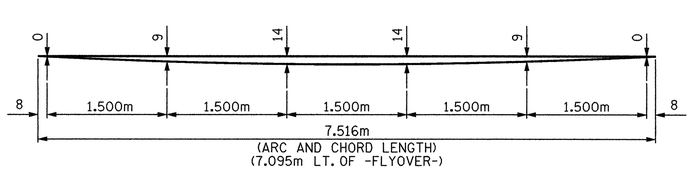

LEFT EDGE

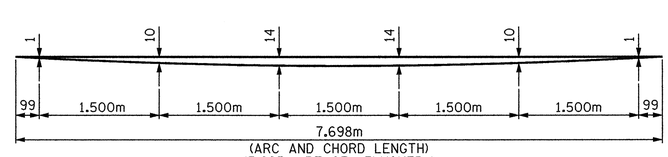

RIGHT EDGE

ARC OFFSETS - APPROACH SLABS AT END BENT 2

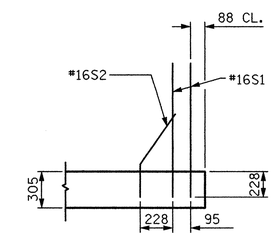

SECTION K-K

PROJECT NO. X-0002B

CUMBERLAND COUNTY

STATION: -L- POC STA. 63+66.830=
-FLYOVER-
POC STA. 22+29.794

SHEET 1 OF 5

STATE OF NORTH CAROLINA
DEPARTMENT OF TRANSPORTATION
RALEIGH

BRIDGE APPROACH SLAB FOR FLEXIBLE PAVEMENT WITH BARRIER RAIL

NORTH CAROLINA PROFESSIONAL SEAL 024928 ENGINEER RODNEY E. MONEY 8/6/08

PREPARED IN THE OFFICE OF
TYLIN INTERNATIONAL
RALEIGH, NORTH CAROLINA
Copyright © 2008, TYLI

DWG NO. 70

REVISIONS						
NO.	BY:	DATE:	NO.	BY:	DATE:	
1			3			
2			4			

SHEET NO. S-249
TOTAL SHEETS 255

DRAWN BY : S. MORGAN DATE : JUN. '08
CHECKED BY : J.W. WRIGHT DATE : JUN. '08

08/06/2008 04:05:28 PM Structures
ox:fayetteville outer loop\sm\X0002B_SD_A5_01.dgn

NOTES

THE COST OF THE BARRIER RAIL ON THE APPROACH SLAB SHALL BE INCLUDED IN THE LUMP SUM CONTRACT PRICE BID FOR BRIDGE APPROACH SLABS.

APPROACH SLAB SHALL NOT BE CONSTRUCTED PRIOR TO COMPLETION OF THE BRIDGE DECK.

FOR REINFORCED BRIDGE APPROACH FILL INCLUDING FABRIC, IMPERMEABLE GEOMEMBRANE, 102mm Ø DRAINAGE PIPE, #78M STONE, AND SELECT MATERIAL, SEE ROADWAY PLANS.

TEMPORARY DRAINAGE AND TEMPORARY BERM AND SLOPE DRAINS WILL BE PAID FOR UNDER THE LUMP SUM PRICE FOR BRIDGE APPROACH SLAB.

AREA BETWEEN THE WINGWALL AND APPROACH SLAB SHALL BE GRADED TO DRAIN THE WATER AWAY FROM THE FILL FACE OF THE BRIDGE AND SHALL BE PAVED. SEE ROADWAY PLANS.

THE 150mm COMP. A.B.C. SHALL BE FLUSH WITH THE ROADWAY END OF THE APPROACH SLAB AND SHALL EXTEND 300mm OUTSIDE OF EACH SIDE OF THE APPROACH SLAB.

THE CONTRACTOR MAY USE 100mm TYPE B-25.0B ASPHALT CONCRETE COURSE IN LIEU OF 150mm COMP. A.B.C. IF THIS OPTION IS USED, THE BASE COURSE SHALL BE FLUSH WITH THE ROADWAY END OF THE APPROACH SLAB, AND THE WIDTH SHALL BE THE SAME AS THAT OF THE APPROACH SLAB.

THE CONTRACTOR MAY USE 125mm CLASS "A" CONCRETE BASE IN LIEU OF 150mm COMP. A.B.C. IF THIS OPTION IS USED, THE CONCRETE BASE SHALL BE FLUSH WITH THE ROADWAY END OF THE APPROACH SLAB, AND THE WIDTH SHALL BE THE SAME AS THAT OF THE APPROACH SLAB. THE CONCRETE SHALL BE FINISHED TO A SMOOTH SURFACE AND A LAYER OF 13.6 kg. ROOFING FELT SHALL BE PLACED BETWEEN THE CONCRETE BASE AND THE APPROACH SLAB TO PREVENT BOND. THE APPROACH SLAB SHALL NOT BE CAST UNTIL THE CONCRETE BASE HAS REACHED AN AGE OF THREE CURING DAYS.

PAYMENT FOR MODULAR EXPANSION JOINT SHALL BE INCLUDED IN THE LUMP SUM PRICE FOR "MODULAR EXPANSION JOINT SEALS".

FOR BLOCKOUT IN BARRIER RAIL AT THE MODULAR JOINTS, SEE "MODULAR EXPANSION JOINT DETAILS" SHEET.

THE #19 "B" BARS IN THE APPRAOCH SLAB MAY BE CUT AS DIRECTED BY THE ENGINEER TO CLEAR THE MODULAR JOINT SUPPORT BOX.

TRANSVERSE CONSTRUCTION JOINTS MAY BE SHIFTED SLIGHTLY, IF NECESSARY, TO PROVIDE 50mm MINIMUM CLEARANCE TO "A" BARS.

BILL OF MATERIAL — END BENT 1 APPROACH SLAB

BAR	NO.	SIZE	TYPE	LENGTH	WEIGHT
* A1	50	#13	STR	6,500	323
A2	56	#13	STR	6,500	362
* B1	83	#16	STR	7,260	935
B2	83	#19	STR	7,420	1,376
* B3	8	#16	STR	7,420	92
* B4	8	#16	STR	7,600	94
* G1	14	#16	3	1,100	24
* S1	102	#16	STR	980	155
* S2	51	#16	1	680	54
* S4	38	#13	2	1,100	42
REINFORCING STEEL				kg.	1,738
* EPOXY COATED REINFORCING STEEL				kg.	1,719
CLASS AA CONCRETE BREAKDOWN					
POUR 1 SLAB AND CURB				C. M.	29.4
POUR 2 RAIL				C. M.	3.8
CLASS AA CONCRETE				C. M.	33.2

BILL OF MATERIAL — END BENT 2 APPROACH SLAB

BAR	NO.	SIZE	TYPE	LENGTH	WEIGHT
* A1	50	#13	STR	6,500	323
A2	56	#13	STR	6,500	362
* B1	83	#16	STR	7,260	935
B2	83	#19	STR	7,420	1,376
* B3	8	#16	STR	7,420	92
* B4	8	#16	STR	7,600	94
* G1	14	#16	3	1,100	24
* S1	102	#16	STR	980	155
* S2	51	#16	1	680	54
* S3	3	#16	STR	840	4
* S4	38	#13	2	1,100	42
REINFORCING STEEL				kg.	1,738
* EPOXY COATED REINFORCING STEEL				kg.	1,723
CLASS AA CONCRETE BREAKDOWN					
POUR 1 SLAB AND CURB				C. M.	29.4
POUR 2 RAIL				C. M.	3.8
CLASS AA CONCRETE				C. M.	33.2

* DENOTES EPOXY COATED REINFORCING STEEL

BAR TYPES

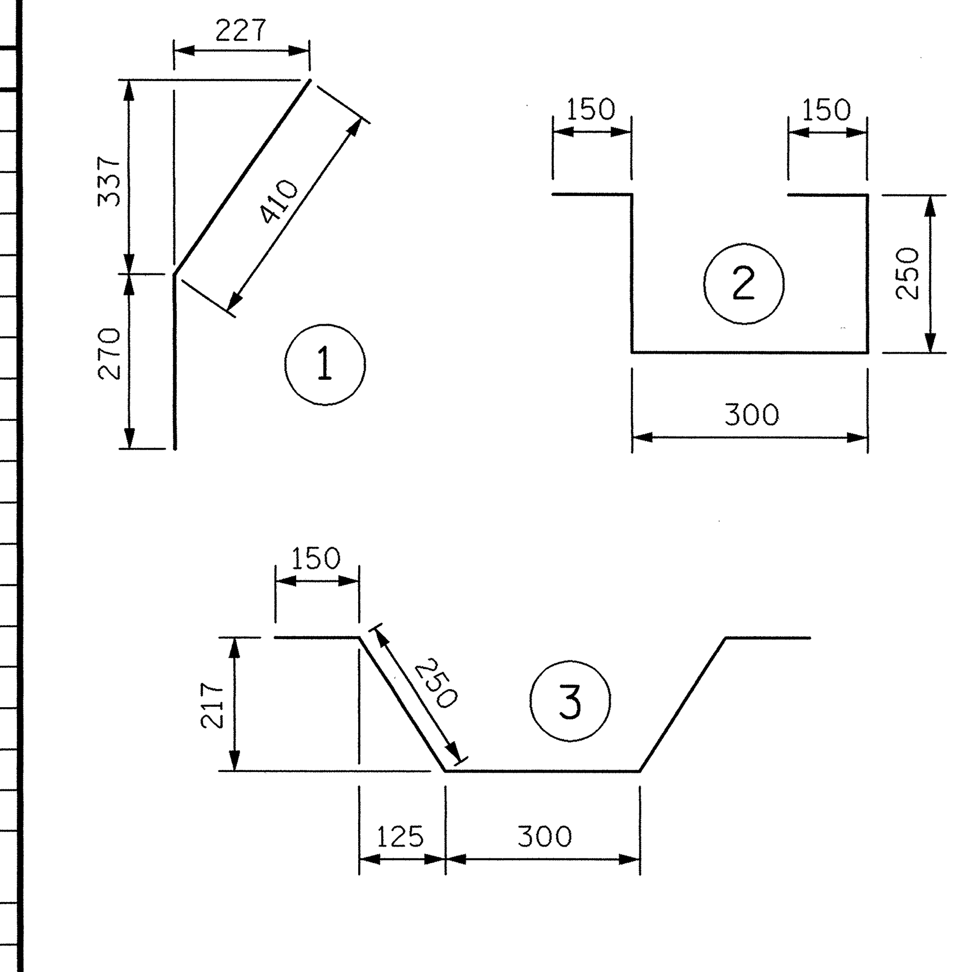

ALL BAR DIMENSIONS ARE OUT TO OUT

APPROACH SLAB BILL OF MATERIAL

	CLASS AA CONCRETE	REINFORCING STEEL	EPOXY COATED REINFORCING STEEL
	(CU.METER)	(kg)	(kg)
END BENT 1	33.2	1,738	1,719
END BENT 2	33.2	1,738	1,723
TOTALS	66.4	3,476	3,442

NOTE:
FOR LOCATION OF ADDITIONAL #16S3 BARS, SEE "VISUAL BARRIER WALL DETAILS" SHEETS.

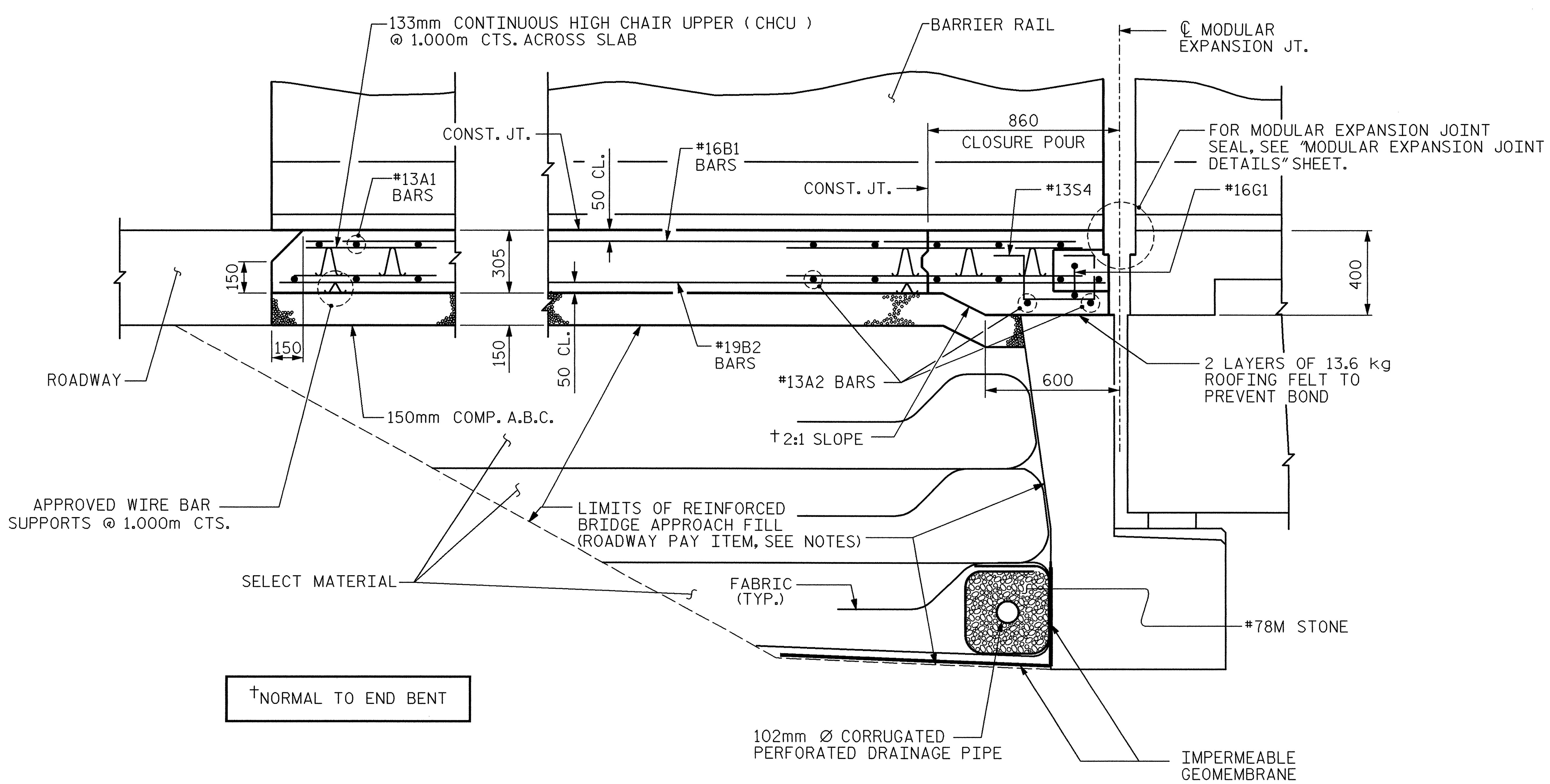

SECTION THRU SLAB

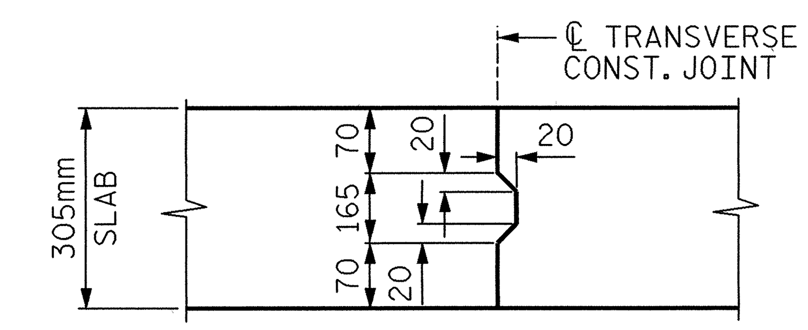

TRANSVERSE CONSTRUCTION JOINT IN APPROACH SLAB

NOTE: REINFORCING STEEL IN SLAB NOT SHOWN. LONGITUDINAL REINFORCING STEEL SHALL BE CONTINUOUS THROUGH JOINT.

PROJECT NO. X-0002B

CUMBERLAND COUNTY

STATION: -L- POC STA. 63+66.830= -FLYOVER- POC STA. 22+29.794

SHEET 2 OF 5

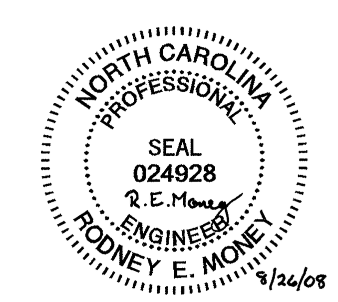

STATE OF NORTH CAROLINA
DEPARTMENT OF TRANSPORTATION
RALEIGH

STANDARD

BRIDGE APPROACH SLAB FOR FLEXIBLE PAVEMENT WITH BARRIER RAIL

REVISIONS						SHEET NO.
NO.	BY:	DATE:	NO.	BY:	DATE:	S-250
1			3			TOTAL SHEETS
2			4			253

DWG NO. 71

STD. NO. BAS5SM

ASSEMBLED BY : S. MORGAN	DATE : JUN. '08
CHECKED BY : J.W. WRIGHT	DATE : JUN. '08
DRAWN BY : RWW 8/01	ADDED 12/01
CHECKED BY : LES 8/01	REV. 5/7/03R RWW/JTE
	REV. 5/1/06R KMM/GM

o:\fayetteville outer loop\sm\X0002B_SD_AS_02.dgn 8/25/2008 3:04:04 PM Structures

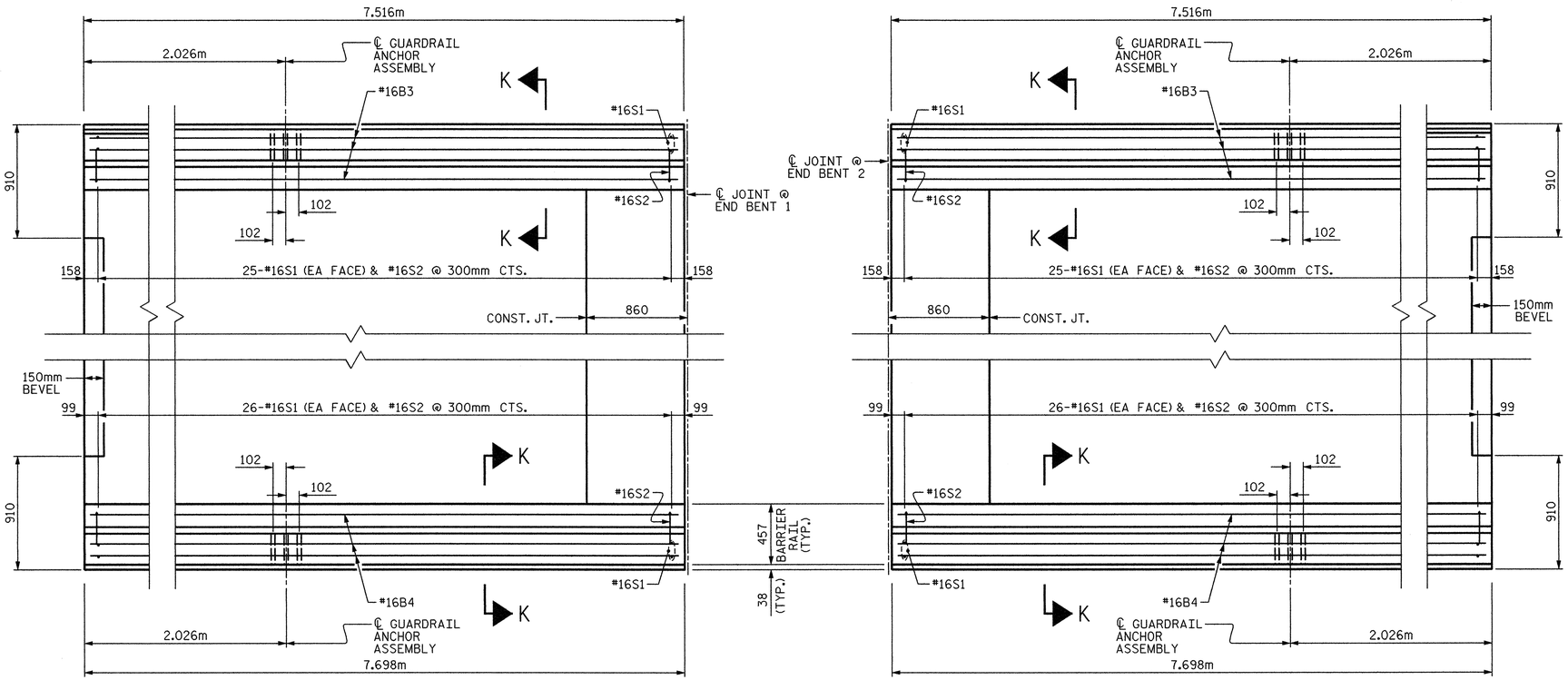

PLAN @ END BENT 1

PLAN @ END BENT 2

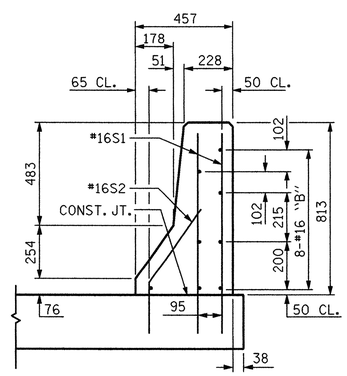

SECTION K-K

NOTES:

FOR GUARDRAIL ACHORAGE DETAILS, SEE "GUARDRAIL ANCHORAGE FOR BARRIER RAIL" SHEET 5 OF 5.

FOR LIMITS OF VISUAL BARRIER, SEE "PLAN OF SPAN" SHEETS.

FOR LOCATION OF ADDITIONAL #16S3 BARS, SEE "VISUAL BARRIER WALL DETAILS" SHEETS.

PROJECT NO. X-0002B

CUMBERLAND COUNTY

STATION: -L- POC STA. 63+66.830=
-FLYOVER-
POC STA. 22+29.794

SHEET 3 OF 5

STATE OF NORTH CAROLINA
DEPARTMENT OF TRANSPORTATION
RALEIGH

BRIDGE APPROACH SLAB FOR FLEXIBLE PAVEMENT WITH BARRIER RAIL

NORTH CAROLINA PROFESSIONAL SEAL 024928 ENGINEER RODNEY E. MONEY 8/6/08

PREPARED IN THE OFFICE OF
TYLIN INTERNATIONAL
RALEIGH, NORTH CAROLINA
Copyright © 2008, TYLI
DWG NO. 72

REVISIONS						SHEET NO.
NO.	BY:	DATE:	NO.	BY:	DATE:	S-251
1			3			TOTAL SHEETS
2			4			253

DRAWN BY : S. MORGAN DATE : JUN. '08
CHECKED BY : J.W. WRIGHT DATE : JUN. '08

o:\foyetteville outer loop\sm\X0002B_SD_AS_03.dgn 08/06/2008 04:05:37 PM Structures

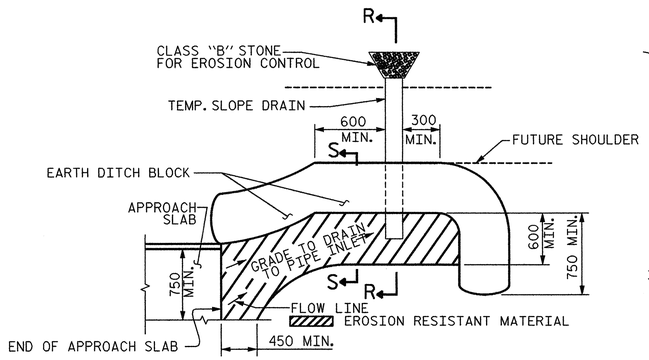

NOTE: IMMEDIATELY AFTER THE CONSTRUCTION OF THE APPROACH SLAB, THE CONTRACTOR SHALL PROVIDE TEMPORARY BERM AND SLOPE DRAIN. CONTRACTOR SHALL GRADE TO PIPE INLET AND PROVIDE EROSION RESISTANT MATERIAL AS SHOWN. THE EROSION RESISTANT MATERIAL SHALL BE EITHER 1) ASPHALT PLANT MIX, TYPE 1 OR TYPE 2, MIN. 50mm DEPTH, 2) EROSION CONTROL MAT, OR 3) CONCRETE, AS DIRECTED BY THE ENGINEER. THE SLOPE DRAIN SHALL CONSIST OF A NON-PERFORATED TEMPORARY DRAINAGE PIPE, 305mm IN DIAMETER.

PLAN VIEW

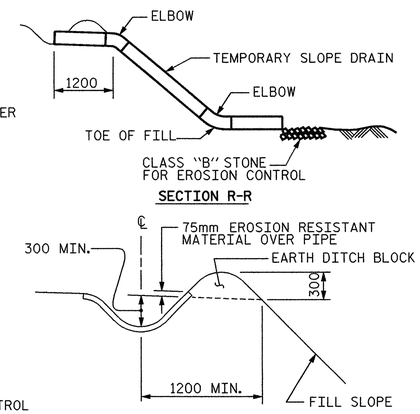

SECTION S-S

TEMPORARY BERM AND SLOPE DRAIN DETAILS

(TO BE USED WHEN SHOULDER BERM GUTTER IS REQUIRED)

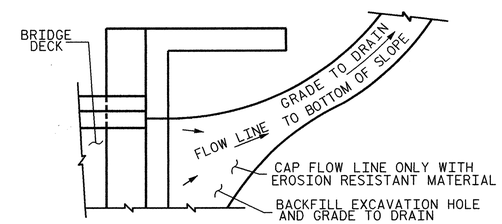

NOTE: IF THE APPROACH SLAB IS NOT CONSTRUCTED IMMEDIATELY AFTER THE BACKFILLING OF THE END BENT EXCAVATION, GRADE TO DRAIN TO THE BOTTOM OF THE SLOPE AND PROVIDE EROSION RESISTANT MATERIAL, SUCH AS FIBERGLASS ROVING OR AS DIRECTED BY THE ENGINEER TO PREVENT SOIL EROSION AND TO PROTECT THE AREA ADJACENT TO THE STRUCTURE. THE CONTRACTOR WILL BE REQUIRED TO REMOVE THESE MATERIALS PRIOR TO CONSTRUCTION OF THE APPROACH SLAB.

TEMPORARY DRAINAGE DETAIL

PROJECT NO. X-0002B

CUMBERLAND COUNTY

STATION: -L- POC STA. 63+66.830=
-FLYOVER-
POC STA. 22+29.794

SHEET 4 OF 5

STATE OF NORTH CAROLINA
DEPARTMENT OF TRANSPORTATION
RALEIGH

BRIDGE APPROACH SLAB DETAILS

NORTH CAROLINA PROFESSIONAL SEAL 024928 ENGINEER RODNEY E. MOONEY 8/1/08

PREPARED IN THE OFFICE OF
TYLIN INTERNATIONAL
RALEIGH, NORTH CAROLINA
Copyright © 2008, TYLI
DWG NO. 73

REVISIONS						SHEET NO.
NO.	BY:	DATE:	NO.	BY:	DATE:	S-252
1			3			TOTAL SHEETS
2			4			253

DRAWN BY : S. MORGAN DATE : JUN. '08
CHECKED BY : J.W. WRIGHT DATE : JUN. '08

o:\Fayetteville outer loop\sm\X0002B_SD_AS_04.dgn 8/1/2008 12:48:59 PM Structures

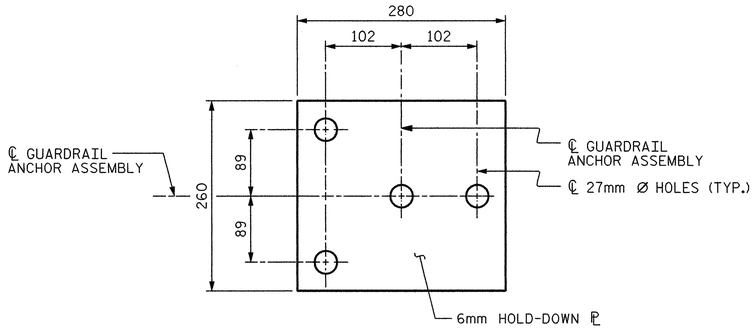

PLAN

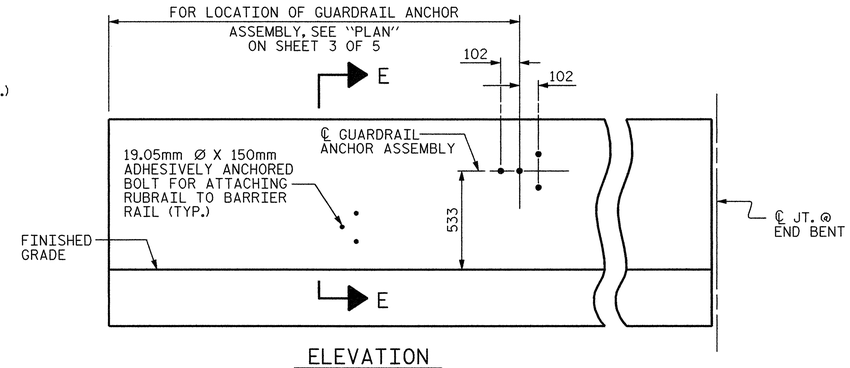

ELEVATION

FOR LOCATION OF RUBRAIL, SEE ROADWAY STD. 862.03

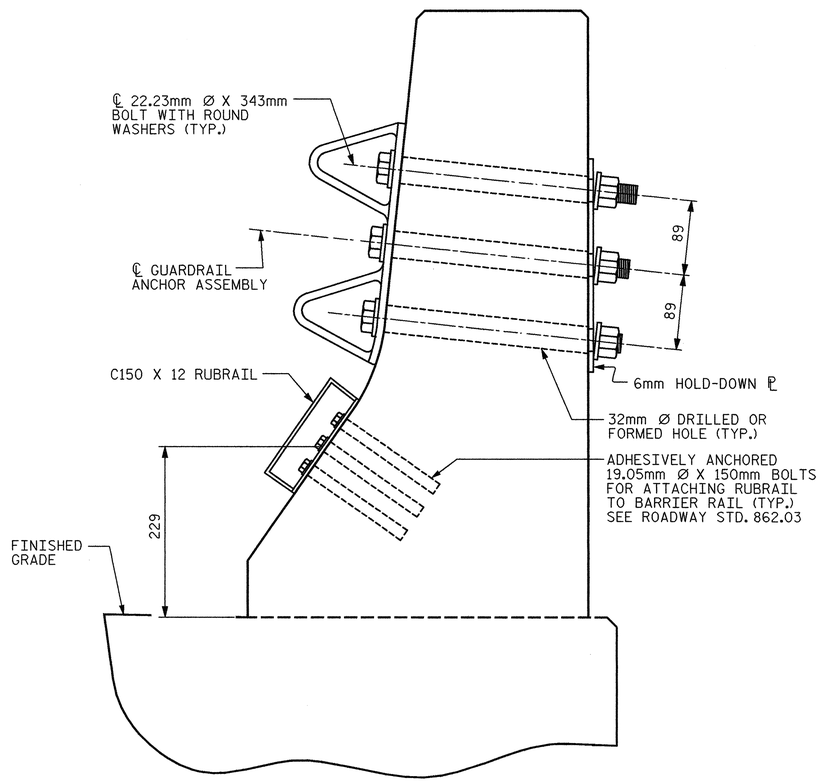

SECTION K-K

GUARDRAIL ANCHOR ASSEMBLY DETAILS

NOTES

THE GUARDRAIL ANCHOR ASSEMBLY SHALL CONSIST OF A 6mm HOLD DOWN PLATE AND 4 - 22.23mm Ø BOLTS WITH NUTS AND WASHERS, RUBRAIL, AND ADHESIVELY ANCHORED BOLTS.

THE HOLD-DOWN PLATE SHALL CONFORM TO AASHTO M270 GRADE 36. AFTER FABRICATION, THE HOLD-DOWN PLATE SHALL BE HOT-DIP GALVANIZED IN ACCORDANCE WITH AASHTO M111.

BOLTS SHALL CONFORM TO THE REQUIREMENTS OF ASTM A307 AND NUTS SHALL CONFORM TO THE REQUIREMENTS OF AASHTO M291. BOLTS, NUTS AND WASHERS SHALL BE GALVANIZED. (AT THE CONTRACTOR'S OPTION, STAINLESS STEEL BOLTS, NUTS AND WASHERS MAY BE USED AS AN ALTERNATE FOR THE 22.23mm Ø GALVANIZED BOLTS, NUTS AND WASHERS. THEY SHALL CONFORM TO OR EXCEED THE MECHANICAL REQUIREMENTS OF ASTM A307. THE USE OF THIS ALTERNATE SHALL BE APPROVED BY THE ENGINEER.)

THE GUARDRAIL ANCHOR ASSEMBLY IS REQUIRED AT ALL POINTS WHERE APPROACH GUARDRAIL IS TO BE ATTACHED TO THE END OF BARRIER RAIL. FOR POINTS OF ATTACHMENT, SEE SKETCH.

AFTER INSTALLATION, THE EXPOSED THREAD OF THE BOLT SHALL BE BURRED WITH A SHARP POINTED TOOL.

THE COST OF THE GUARDRAIL ANCHOR ASSEMBLY SHALL BE INCLUDED IN THE UNIT CONTRACT PRICE BID FOR CONCRETE BARRIER RAIL.

THE 32mm Ø HOLES SHALL BE FORMED OR DRILLED WITH A CORE BIT. IMPACT TOOLS WILL NOT BE PERMITTED. ANY CONCRETE DAMAGED BY THIS WORK SHALL BE REPAIRED TO THE SATISFACTION OF THE ENGINEER.

THE C150 X 12 RUBRAIL IS TO BE ADHESIVELY ANCHORED TO THE RAIL USING THREE 19.05mm Ø X 150mm BOLTS WITH WASHERS. LEVEL ONE FIELD TESTING IF REQUIRED, AND THE YIELD LOAD OF THE 19.05mm Ø BOLTS IS 53.4kN. FOR ADHESIVELY ANCHORED ANCHOR BOLTS OR DOWELS, SEE SPECIAL PROVISIONS. SEE ROADWAY STANDARD 862.03 FOR DETAILS AND LOCATION OF THE RUBRAIL.

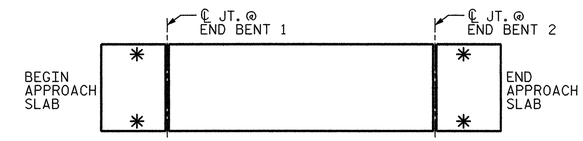

SKETCH SHOWING POINTS OF ATTACHMENT

✱ INDICATES POINTS OF ATTACHMENT

PROJECT NO. X-0002B

CUMBERLAND COUNTY

STATION: -L- POC STA. 63+66.830=
-FLYOVER-
POC STA. 22+29.794

SHEET 5 OF 5

STATE OF NORTH CAROLINA
DEPARTMENT OF TRANSPORTATION
RALEIGH

STANDARD

GUARDRAIL ANCHORAGE FOR BARRIER RAIL

NORTH CAROLINA PROFESSIONAL SEAL 024928 ENGINEER RODNEY E. MONEY 8/1/08

REVISIONS						SHEET NO.
NO.	BY:	DATE:	NO.	BY:	DATE:	S-253
1			3			TOTAL SHEETS
2			4			253

DWG NO. 74

STD. NO. GRA2

ASSEMBLED BY : S. MORGAN CHECKED BY : J.W. WRIGHT	DATE : JUN. '08 DATE : JUN. '08
DRAWN BY : TLA 5/06 CHECKED BY : GM 5/06	ADDED 5/1/06R KMM/GM

8/1/2008 12:49:02 PM Structures
o:\fayetteville outer loop\sm\X0002B_SD_A5_05.dgn
SYSTIME DGN

BL-26 ALUMINUM DISK AT STA. 44+04.866 -L-, 57.169m RIGHT EL. 68.602 NGVD 1929

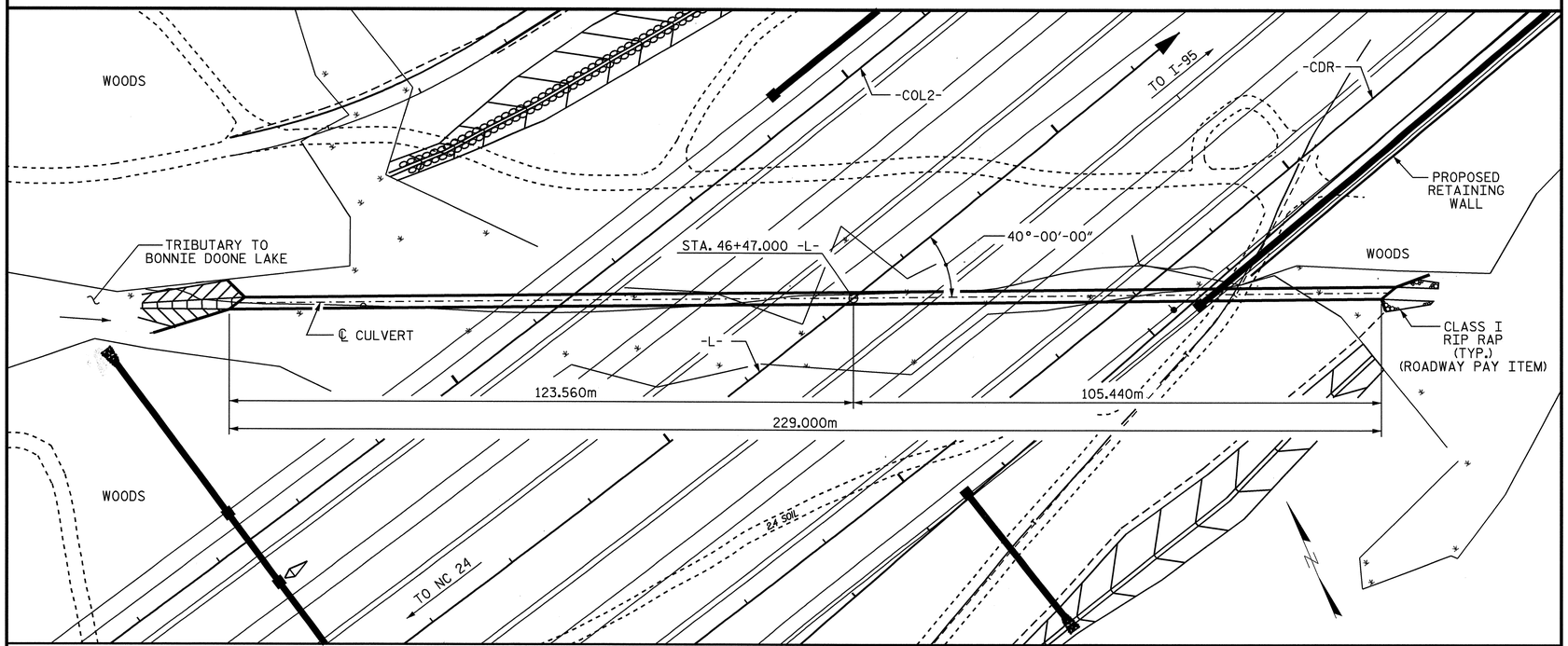

LOCATION SKETCH

FOR UTILITY INFORMATION SEE UTILITY PLANS AND SPECIAL PROVISIONS

NOTES

ASSUMED LIVE LOAD ----------MS22.5 OR ALTERNATE LOADING.

DESIGN FILL----------11.200m

FOR OTHER DESIGN DATA AND NOTES SEE STANDARD NOTE SHEET, SNSM.

76mm Ø WEEP HOLES INDICATED TO BE IN ACCORDANCE WITH THE SPECIFICATIONS.

CONCRETE IN CULVERTS TO BE POURED IN THE FOLLOWING ORDER:

1. WING FOOTINGS AND FLOOR SLAB INCLUDING 100mm OF ALL VERTICAL WALLS.
2. THE REMAINING PORTIONS OF THE WALLS AND WINGS FULL HEIGHT FOLLOWED BY ROOF SLAB AND HEADWALLS.

THE RESIDENT ENGINEER SHALL CHECK THE LENGTH OF CULVERT BEFORE STAKING IT OUT TO MAKE CERTAIN THAT IT WILL PROPERLY TAKE CARE OF THE FILL.

DIMENSIONS FOR WING LAYOUT AS WELL AS ADDITIONAL REINFORCING STEEL EMBEDDED IN BARREL ARE SHOWN ON WING SHEET.

TRANSVERSE CONSTRUCTION JOINTS SHALL BE USED IN THE BARREL, SPACED TO LIMIT THE POURS TO A MAXIMUM OF 21.0m. LOCATION OF JOINTS SHALL BE SUBJECT TO APPROVAL OF THE ENGINEER.

AT THE CONTRACTOR'S OPTION, HE MAY SPLICE THE VERTICAL REINFORCING STEEL IN THE INTERIOR FACE OF EXTERIOR WALL ABOVE LOWER WALL CONSTRUCTION JOINT. THE SPLICE LENGTH SHALL BE AS PROVIDED IN THE SPLICE LENGTH CHART SHOWN ON THE PLANS. EXTRA WEIGHT OF STEEL DUE TO THE SPLICES SHALL BE PAID FOR BY THE CONTRACTOR.

FOR SUBMITTAL OF WORKING DRAWINGS, SEE SPECIAL PROVISIONS.

FOR FALSEWORK AND FORMWORK, SEE SPECIAL PROVISIONS.

FOR GROUT FOR STRUCTURES, SEE SPECIAL PROVISIONS.

FOR CRANE SAFETY, SEE SPECIAL PROVISIONS.

FOR CULVERT DIVERSION DETAILS AND PAY ITEM, SEE EROSION CONTROL PLANS.

A 900mm STRIP OF FILTER FABRIC SHALL BE ATTACHED TO THE FILL FACE OF THE WING COVERING THE ENTIRE LENGTH OF THE EXPANSION JOINT.

ALL DIMENSIONS ARE IN MILLIMETERS UNLESS OTHERWISE NOTED.

ALL ELEVATION ARE IN METERS.

NO PRECAST REINFORCED BOX CULVERT OPTION WILL BE ALLOWED.

HYDRAULIC DATA

DESIGN DISCHARGE	= 10.190 cms
FREQUENCY OF DESIGN FLOOD	= 50 YR
DESIGN HIGH WATER ELEVATION	= 61.210
DRAINAGE AREA	= 1.300 SQ. km.
BASIC DISCHARGE (Q100)	= 11.330 cms
BASIC HIGH WATER ELEVATION	= 61.350

OVERTOPPING FLOOD DATA

OVERTOPPING DISCHARGE	= >18.13 cms
FREQUENCY OF OVERTOPPING FLOOD	= >500 YR
OVERTOPPING FLOOD ELEVATION	= 67.400

ROADWAY DATA

GRADE POINT ELEVATION @ STA.46+47.000 -L-	= 71.040
BED ELEVATION @ STA. 46+47.000 -L-	= 57.930
ROADWAY SLOPES	= 3:1

GRADE DATA

PI = 46+30.000 -L-

EL. = 70.945

VC = 120.000m

(-) 2.5133% (-) 0.4000%

TOTAL STRUCTURE QUANTITIES

CLASS A CONCRETE		
BARREL @	2.90 m^3/m	664.1 m^3
WINGS ETC.		24.4 m^3
TOTAL		688.5 m^3
REINFORCING STEEL		
BARREL		60,881 kgs
WINGS ETC.		830 kgs
TOTAL		61,711 kgs
CULVERT EXCAVATION ---------- LUMP SUM		
FOUNDATION COND. MAT'L ---- 436 METRIC TONS		

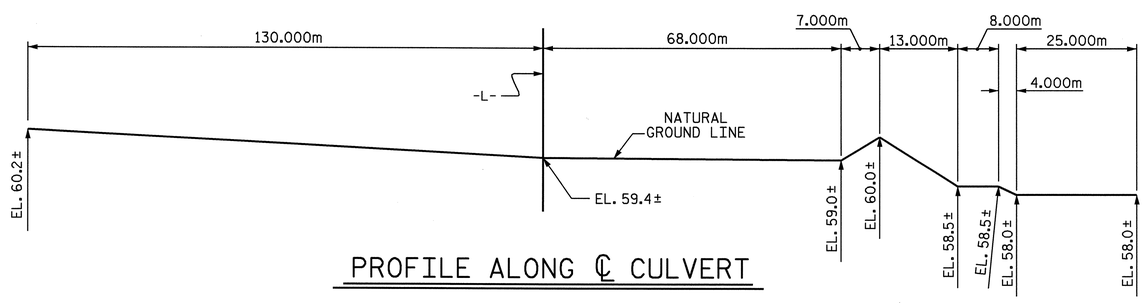

PROFILE ALONG ℄ CULVERT

PROJECT NO. U-2519E

CUMBERLAND COUNTY

STATION: 46+47.000 -L-

SHEET 1 OF 4

STATE OF NORTH CAROLINA
DEPARTMENT OF TRANSPORTATION
RALEIGH

SINGLE
2.400m X 2.100m
CONCRETE BOX CULVERT
40° SKEW

NORTH CAROLINA PROFESSIONAL SEAL 14091 ENGINEER BUCK CHARLES HUNT 8/28/08

NORTH CAROLINA PROFESSIONAL SEAL 20211 ENGINEER THOMAS G. PAYNE 8/28/08

REVISIONS						SHEET NO.
NO.	BY:	DATE:	NO.	BY:	DATE:	C-1
1			3			TOTAL SHEETS
2			4			4

ASSEMBLED BY : M. K. BEARD	DATE : 4/25/08
CHECKED BY : T.G. PAYNE	DATE : 5/15/08
DRAWN BY : EEM 6/97	
CHECKED BY : ARB 7/97	

STD. No. CBI45SM

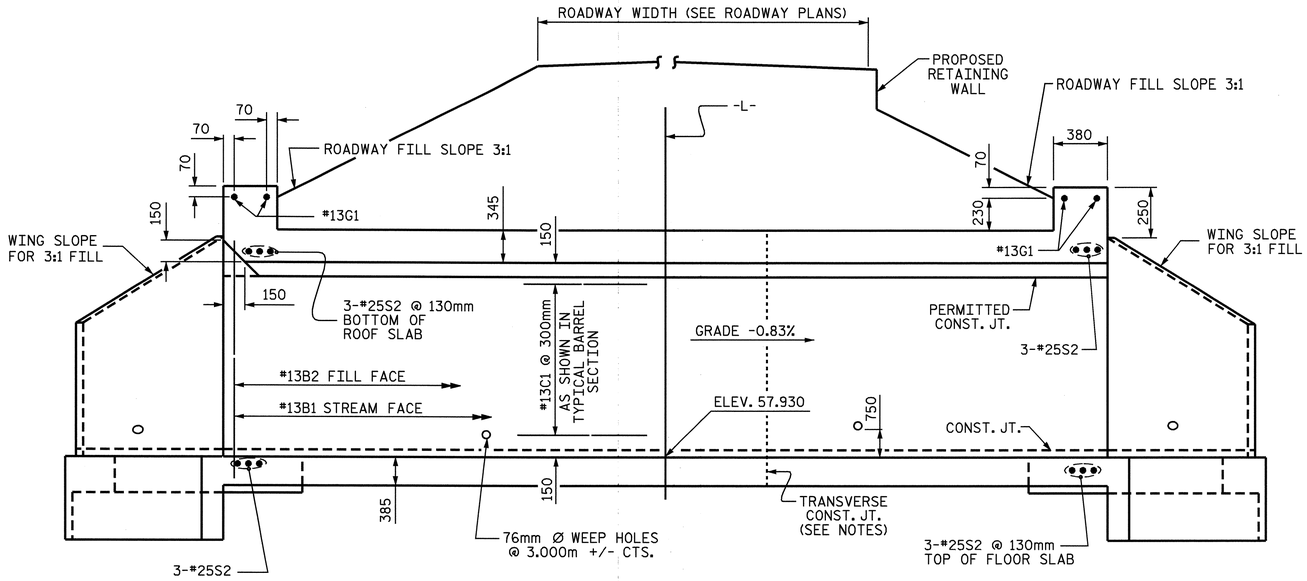

CULVERT SECTION NORMAL TO ROADWAY

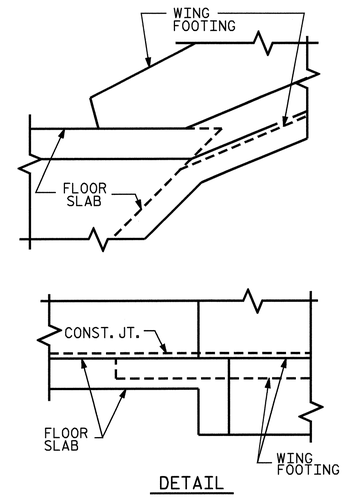

CONNECTION OF WING FOOTING AND FLOOR SLAB WHEN SLAB IS THICKER THAN FOOTING

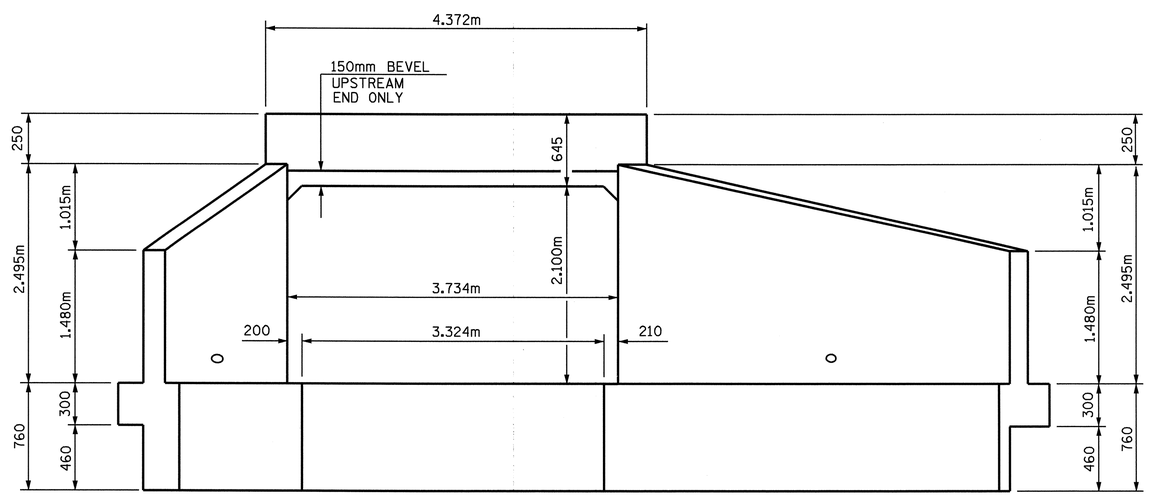

END ELEVATION NORMAL TO SKEW

PROJECT NO. U-2519E
CUMBERLAND COUNTY
STATION: 46+47.000 -L-

SHEET 2 OF 4

NORTH CAROLINA PROFESSIONAL SEAL 20211 ENGINEER THOMAS G. PAYNE
5/28/08

STATE OF NORTH CAROLINA
DEPARTMENT OF TRANSPORTATION
RALEIGH

SINGLE
2.400m X 2.100m
CONCRETE BOX CULVERT
40° SKEW

REVISIONS						SHEET NO.
NO.	BY:	DATE:	NO.	BY:	DATE:	C-2
1			3			TOTAL SHEETS
2			4			4

ASSEMBLED BY : M. K. BEARD	DATE : 4/25/08
CHECKED BY : T.G. PAYNE	DATE : 5/12/08
DRAWN BY : EEM 6/97	
CHECKED BY : ARB 7/97	

STD. No. CBI45SM

BAR TYPE

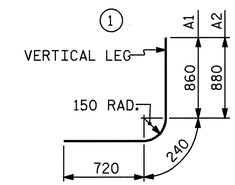

SPLICE LENGTHS CHART

BAR	SIZE	SPLICE LENGTH
B1	13	540
C1	13	590

BILL OF MATERIAL

BAR	NO.	SIZE	TYPE	LENGTH	WEIGHT
A100	1411	22	STR	2660	11417
A101	6	22	STR	2260	41
A102	6	22	STR	1860	34
A103	6	22	STR	1440	26
A104	6	22	STR	1040	19
A105	6	22	STR	660	12
A200	1736	19	STR	2660	10321
A201	8	19	STR	2240	40
A202	8	19	STR	1800	32
A203	8	19	STR	1340	24
A204	8	19	STR	920	16
A1	2290	19	1	1820	9315
A2	2290	19	1	1840	9417
B1	1528	13	STR	2660	4040
B2	2290	13	STR	1880	4279
C1	1269	13	STR	9040	11403
G1	4	13	STR	4200	17
S2	12	25	STR	4200	200
F1	149	13	STR	1540	228

TOTAL = 60,881 Kgs

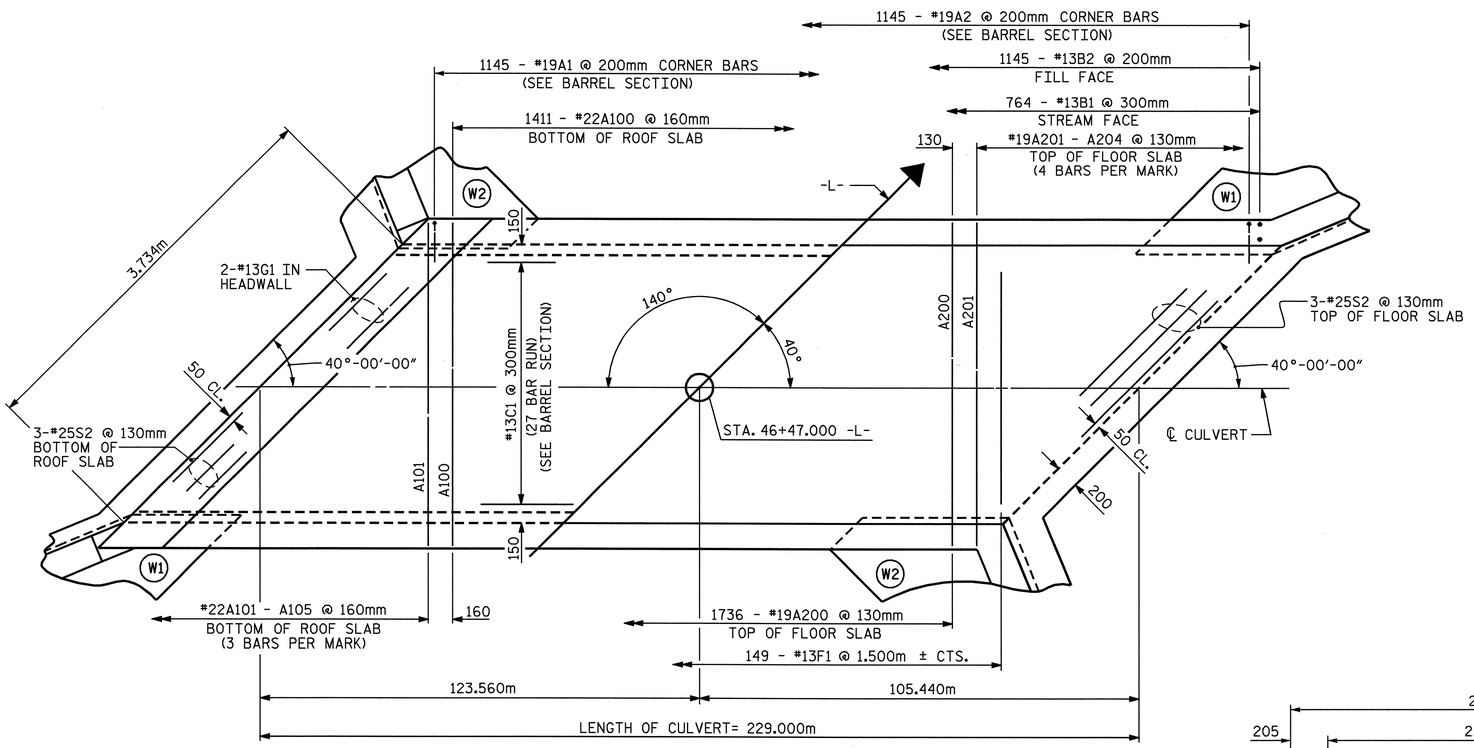

PART PLAN - ROOF SLAB

PART PLAN - FLOOR SLAB

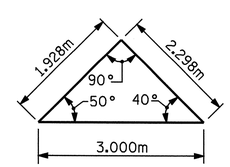

SKEW TRIANGLE

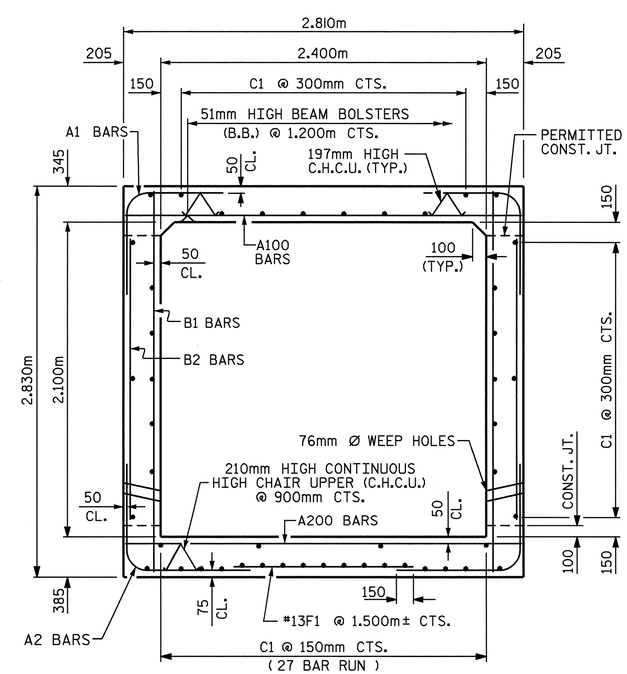

RIGHT ANGLE SECTION OF BARREL

THERE ARE 47 "C" BARS IN SECTION OF BARREL

PROJECT NO. U-2519E

CUMBERLAND COUNTY

STATION: 46+47.000 -L-

SHEET 3 OF 4

STATE OF NORTH CAROLINA
DEPARTMENT OF TRANSPORTATION
RALEIGH

SINGLE
2.400m X 2.100m
CONCRETE BOX CULVERT
40° SKEW

NORTH CAROLINA PROFESSIONAL SEAL 20211 ENGINEER THOMAS G. PAYNE
8/28/08

REVISIONS						SHEET NO.
NO.	BY:	DATE:	NO.	BY:	DATE:	C-3
1			3			TOTAL SHEETS
2			4			4

ASSEMBLED BY : M. K. BEARD DATE : 4/25/08
CHECKED BY : T.G. PAYNE DATE : 5/12/08

DRAWN BY : EEM 6/97
CHECKED BY : ARB 7/97

STD. No. CBI45SM

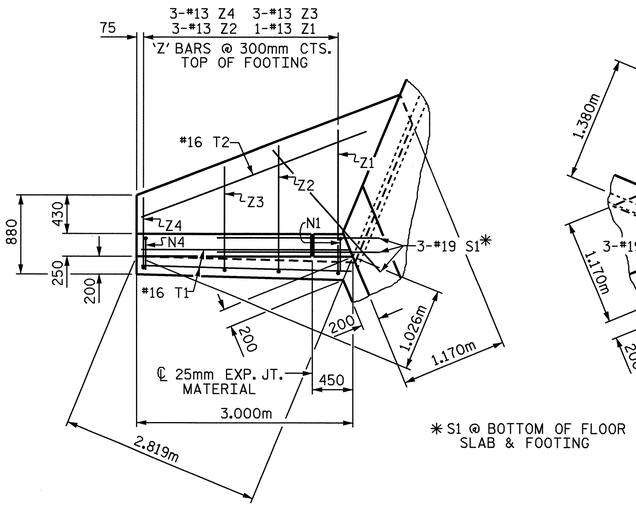

PLAN W2

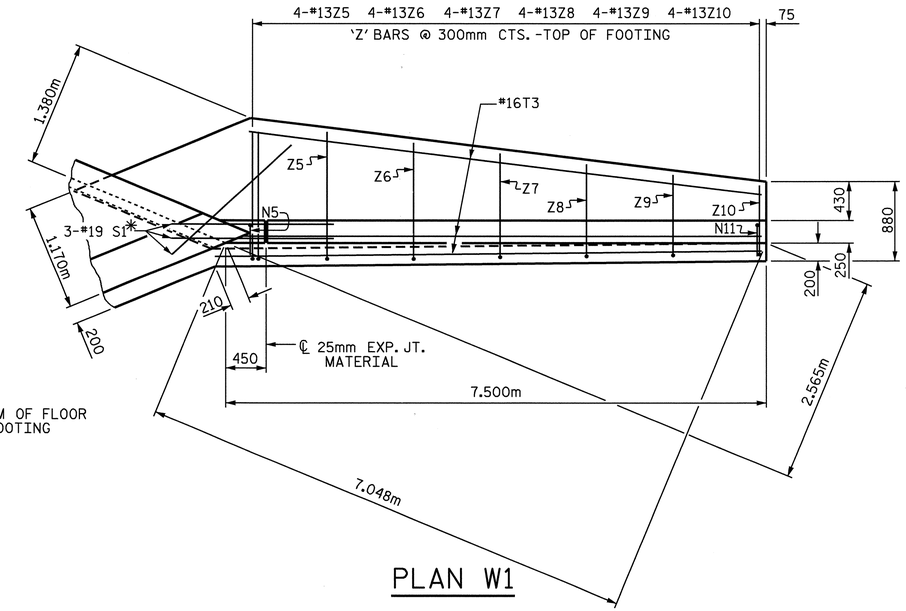

PLAN W1

✱ S1 @ BOTTOM OF FLOOR SLAB & FOOTING

BAR TYPES

ALL BAR DIMENSIONS ARE OUT TO OUT.

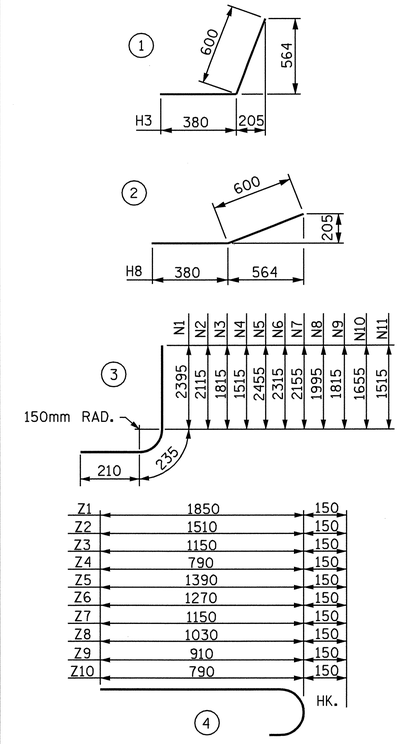

BILL OF MATERIAL

BAR	NO.	SIZE	TYPE	LENGTH	WEIGHT
H1	16	13	STR	2440	39
H2	4	13	STR	1220	5
H3	24	13	1	980	23
H4	4	13	STR	2460	10
H5	16	13	STR	6940	110
H6	4	13	STR	3360	13
H7	24	13	2	980	23
H8	4	13	STR	6580	26
N1	4	16	3	2840	18
N2	6	16	3	2560	24
N3	6	13	3	2260	13
N4	6	13	3	1960	12
N5	4	16	3	2900	18
N6	8	16	3	2760	34
N7	8	16	3	2600	32
N8	8	13	3	2440	19
N9	8	13	3	2260	18
N10	8	13	3	2100	17
N11	8	13	3	1960	16
S1	12	19	STR	1800	48
T1	4	16	STR	2880	18
T2	2	16	STR	3560	11
T3	6	16	STR	7180	67
V1	4	13	STR	2220	9
V2	6	13	STR	1940	12
V3	6	13	STR	1640	10
V4	6	13	STR	1340	8
V5	4	13	STR	2280	9
V6	8	13	STR	2140	17
V7	8	13	STR	1980	16
V8	8	13	STR	1820	14
V9	8	13	STR	1640	13
V10	8	13	STR	1480	12
V11	8	13	STR	1340	11
Z1	2	13	4	2000	4
Z2	6	13	4	1660	10
Z3	6	13	4	1300	8
Z4	6	13	4	940	6
Z5	8	13	4	1540	12
Z6	8	13	4	1420	11
Z7	8	13	4	1300	10
Z8	8	13	4	1180	9
Z9	8	13	4	1060	8
Z10	8	13	4	940	7

REINFORCING STEEL FOR 4 WINGS 830 kgs

CLASS A CONCRETE

4	WINGS	$22.4 m^3$
2	HEADWALLS	$1.0 m^3$
2	END CURTAIN WALLS	$1.0 m^3$
	TOTAL	$24.4 m^3$

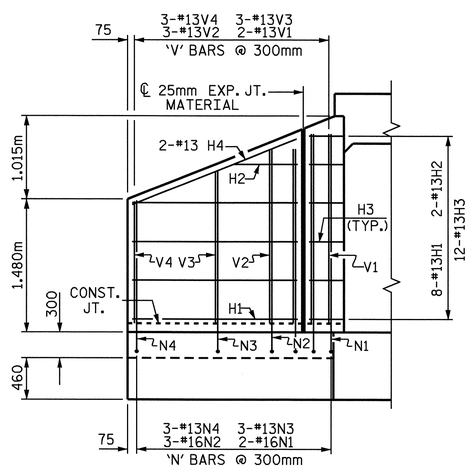

ELEVATION W2

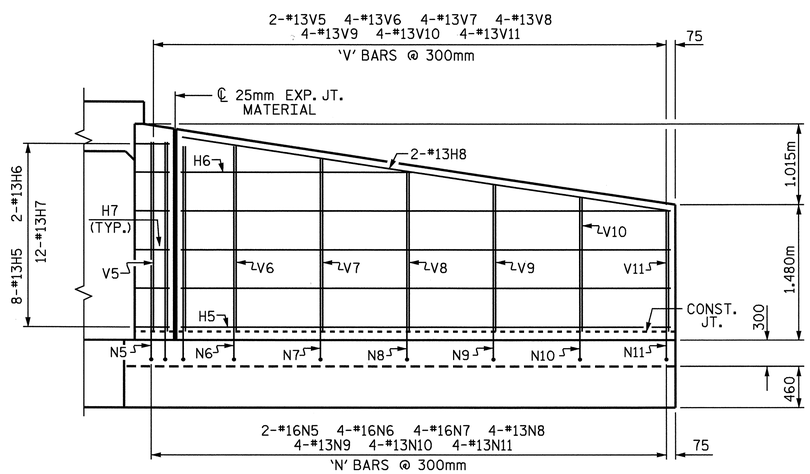

ELEVATION W1

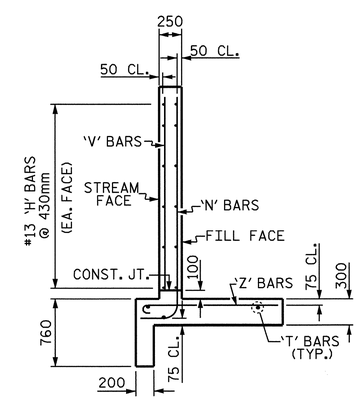

TYPICAL WING SECTION

FOR WING ORIENTATION, SEE BARREL STANDARD SHEET.

PROJECT NO. U-2519E
CUMBERLAND COUNTY
STATION: 46+47.000 -L-

SHEET 4 OF 4

STATE OF NORTH CAROLINA
DEPARTMENT OF TRANSPORTATION
RALEIGH

WINGS FOR CONCRETE BOX CULVERT H=2.100m SLOPE 3:1 40° SKEW

NORTH CAROLINA PROFESSIONAL SEAL 20211 ENGINEER THOMAS G. PAYNE
6/13/08

REVISIONS						SHEET NO.
NO.	BY:	DATE:	NO.	BY:	DATE:	C-4
1			3			TOTAL SHEETS
2			4			4

DRAWN BY : M. K. BEARD DATE : 4/25/08
CHECKED BY : T.G. PAYNE DATE : 5/8/08

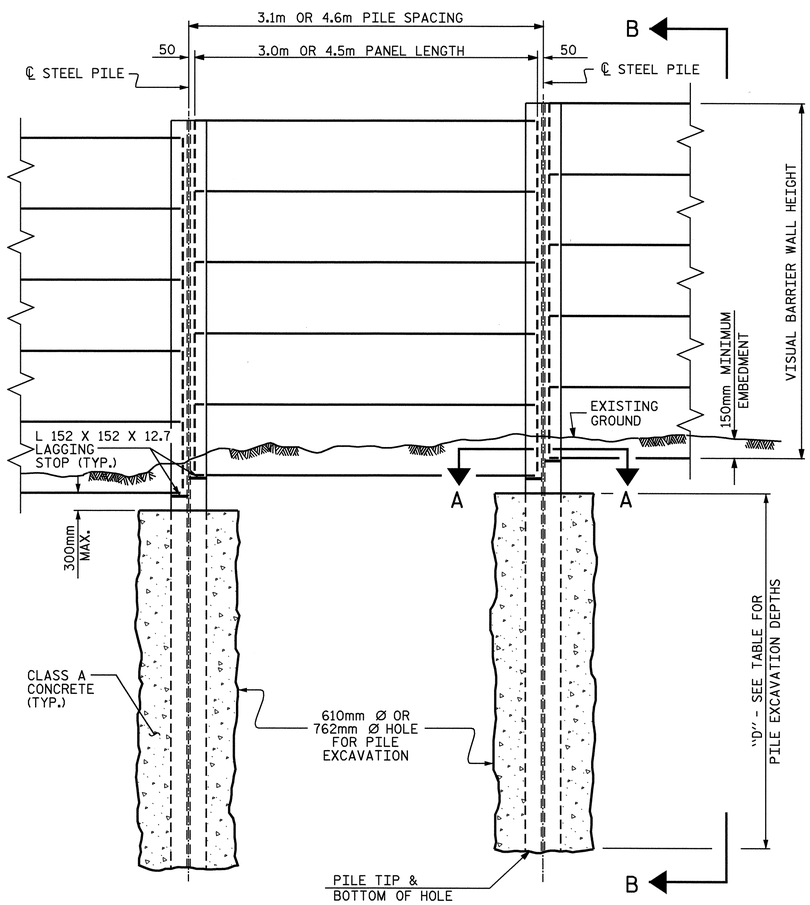

ELEVATION

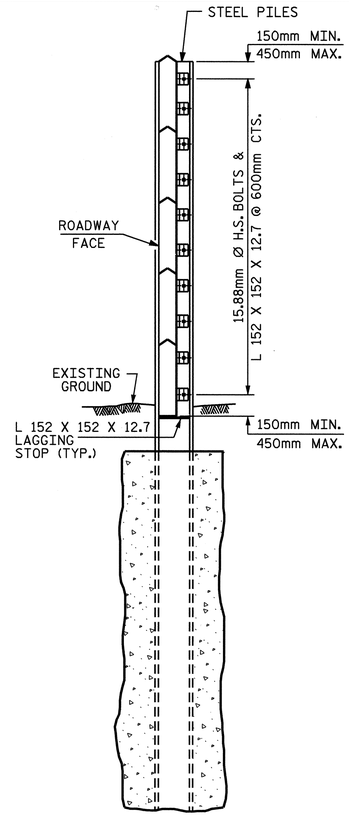

SECTION B-B

PILE EXCAVATION		
	WALL STATIONS FROM : STA. 12+80.000 RP2B TO : STA. 14+60.000 RP2B	
PILE SPACING	HOLE Ø	DEPTH "D"
3.1m	610mm	4.000m
	762mm	3.600m
4.6m	610mm	4.700m
	762mm	4.300m

FOR STATIONS, OFFSETS, AND WALL ENVELOPE, SEE ROADWAY PLANS.

NOTES

FOR VISUAL BARRIER WALL, SEE SPECIAL PROVISIONS.

CONSTRUCT VISUAL BARRIER WALL TO LINES AND GRADES SHOWN ON THE ROADWAY PLANS.

PROVIDE PANELS WITH A FLAT BOTTOM.

USE STEEL PILES, ANGLES, AND LAGGING STOPS MEETING THE REQUIREMENTS OF AASHTO M270, GRADE 345. GALVANIZE ALL STEEL COMPONENTS INCLUDING PILES, ANGLES, LAGGING STOPS, BOLTS, NUTS, AND WASHERS IN ACCORDANCE WITH SECTION 1076 OF THE STANDARD SPECIFICATIONS. REPAIR ANY DAMAGED GALVANIZATION IN ACCORDANCE WITH ARTICLE 1076-6 OF THE STANDARD SPECIFICATIONS.

VERIFY THE LOCATION OF UNDERGROUND UTILITIES BEFORE DRILLING HOLES TO ENSURE SUFFICIENT CLEARANCE IS AVAILABLE.

AT THE CONTRACTOR'S OPTION, USE AN APPROVED NON-SHRINK NON-METALLIC GROUT BETWEEN THE FLANGES OF THE STEEL PILES TO SUPPORT THE BOTTOM PANEL IN LIEU OF LAGGING STOPS.

ADJUST PILE EXCAVATION ELEVATIONS TO MAINTAIN 150mm MINIMUM EMBEDMENT OF THE BOTTOM PANEL.

USE CLASS AA AND CLASS A CONCRETE FOR PANELS AND PILES EXCAVATION, RESPECTIVELY, IN ACCORDANCE WITH ARTICLE 1000-4 OF THE STANDARD SPECIFICATIONS.

PROVIDE PLATES AND ANGLES TO SECURE PANELS 150mm LONG AS MEASURED ALONG THE STEEL PILE.

AT THE CONTRACTOR'S OPTION, USE EITHER 'W' OR 'HP' PILES THAT SATISFY THE MINIMUM PILE SIZE REQUIRED IN THE "EXPOSURE CATEGORY" TABLE. PILES SMALLER THAN W310 OR HP310 ARE NOT PERMITTED. AT TURNS WITH A 914mm DIAMETER HOLE FOR PILE EXCAVATION, USE ONLY W310 OR HP310 PILES, AS SHOWN.

AT THE CONTRACTOR'S OPTION, USE EITHER 3.1m OR 4.6m PILE SPACINGS, AND EITHER 610mm FOOT OR 762mm DIAMETER HOLES FOR PILE EXCAVATION EXCEPT FOR WALL TURNS.

FOR WALL TURNS, PROVIDE HOLES FOR PILE EXCAVATION AS SHOWN ON THE PLANS. A 610mm DIAMETER HOLE FOR PILE EXCAVATION IS NOT AN OPTION. FOR 914mm DIAMETER HOLES AT TURNS, USE DEPTHS DESIGNATED FOR 762mm DIAMETER HOLES.

DO NOT SPLICE STEEL PILES.

AT THE CONTRACTOR'S OPTION, USE CONTINUOUS FLIGHT AUGER PILES IN LIEU OF PILE EXCAVATION FOR VISUAL BARRIER WALL FOUNDATION. SEE CONTINUOUS FLIGHT AUGER PILES FOR VISUAL BARRIER WALLS SPECIAL PROVISION.

EXPOSURE CATEGORY C

DESIGN WIND PRESSURE =
1.628 kpa (0m < H ≤ 4.27m); 2.011 kpa (4.27m < H ≤ 8.84m)

PILE SPACING	MAXIMUM WALL HEIGHT (H)	MINIMUM W SIZE STEEL PILES	MINIMUM HP SIZE STEEL PILES
3.1m	H ≤ 7.62m	W 310 X 60 W 360 X 72	HP 310 X 79 HP 360 X 108
	7.62m < H ≤ 8.84m	W 310 X 79 W 360 X 72	HP 310 X 79 HP 360 X 108
4.6m	H ≤ 6.10m	W 310 X 60 W 360 X 72	HP 310 X 79 HP 360 X 108
	6.10m < H ≤ 7.62m	W 310 X 86 W 360 X 79	HP 310 X 79 HP 360 X 108
	7.62m < H ≤ 8.84m	W 310 X 107 W 360 X 101	HP 310 X 125 HP 360 X 108

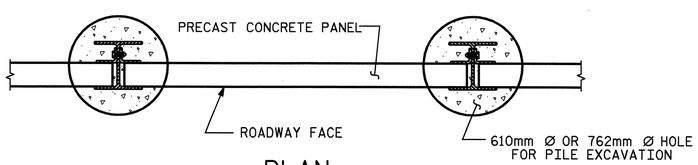

PLAN

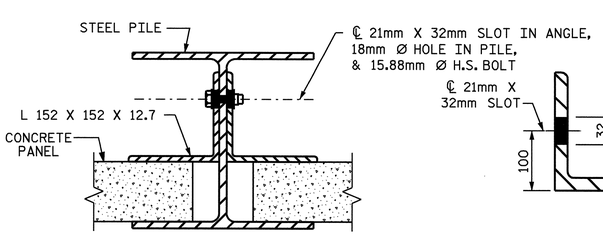

CONNECTION DETAIL

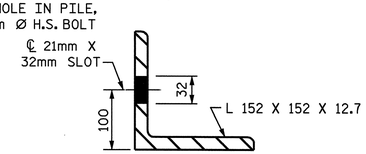

ANGLE DETAIL

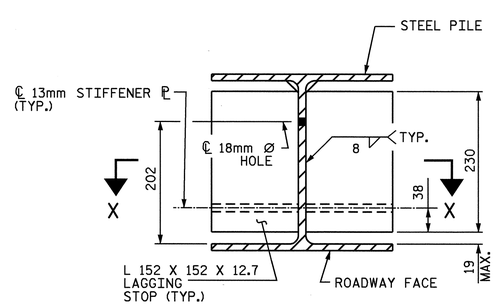

SECTION A-A

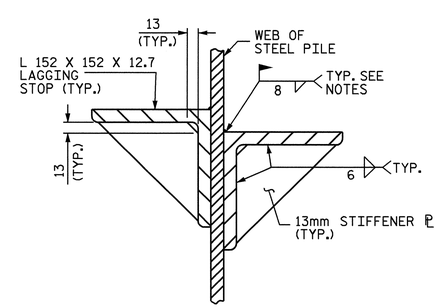

SECTION X-X

PROJECT NO. U-2519E
CUMBERLAND COUNTY
STATION: STA. 13+70.000 -RP2B-

SHEET 1 OF 2

STATE OF NORTH CAROLINA
DEPARTMENT OF TRANSPORTATION
RALEIGH

VISUAL BARRIER WALL

NORTH CAROLINA PROFESSIONAL SEAL ENGINEER BUCK CHARLES HUNT
8/28/08

REVISIONS						SHEET NO.
NO.	BY:	DATE:	NO.	BY:	DATE:	W-1
1			3			TOTAL SHEETS
2			4			13

ASSEMBLED BY : B. C. HUNT		DATE : 3/19/08	
CHECKED BY : T. G. PAYNE		DATE : 4/16/08	
DRAWN BY : JAD 5/01	REV. 2/4/03	RWW/CVC	
CHECKED BY : RDR 5/01	REV. 5/7/03	RWW/JTE	
	REV. 5/1/06R	KMM/GM	

11-JUL-2008 10:30
r:\structures\plans\Visual Barrier\U2519E_visual barrier wall.dgn
chunt

SBW1SM

BILL OF MATERIAL	
VISUAL BARRIER WALL	540.0 SQ. M.
QUANTITIES PROVIDED ARE APPROXIMATE AND ARE FOR BID PURPOSES ONLY.	

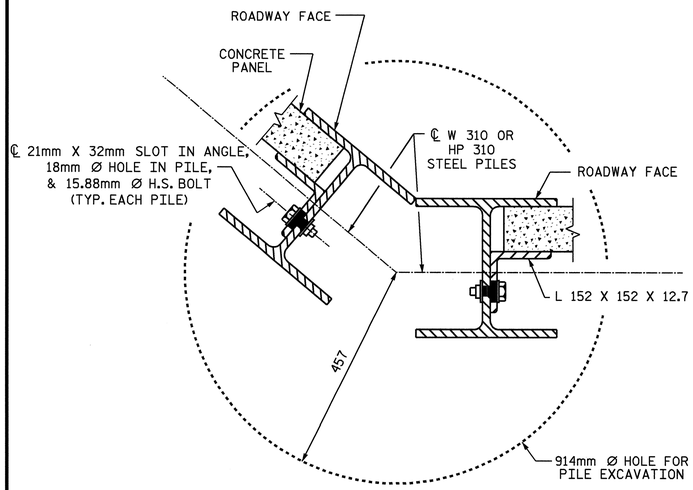

TYPICAL WALL TURN DETAIL

(FOR GREATER THAN 15° TURNS, CONCAVE TOWARD ROADWAY)

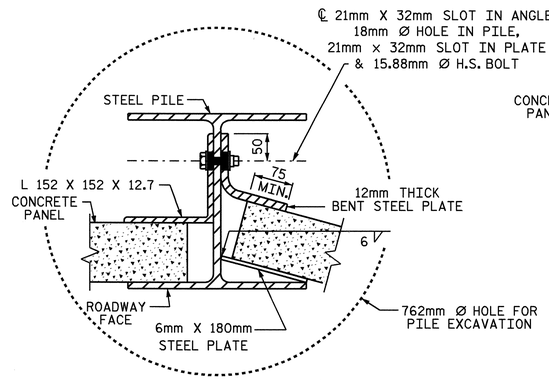

TYPICAL WALL TURN DETAIL

(USE ONLY FOR TURNS 15° OR LESS, CONCAVE TOWARD ROADWAY)

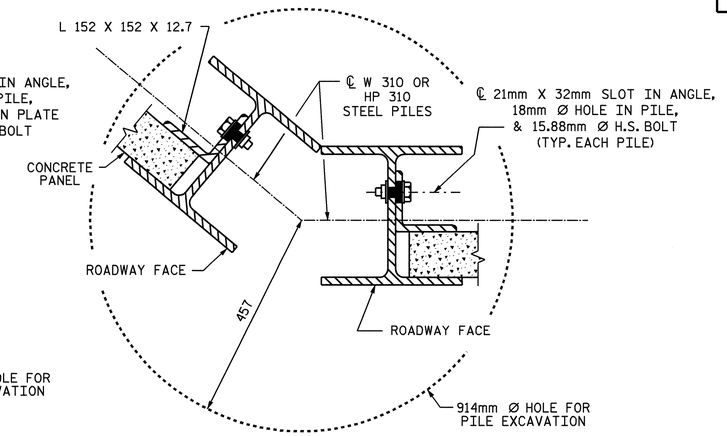

TYPICAL WALL TURN DETAIL

(FOR GREATER THAN 15° TURNS, CONVEX TOWARD ROADWAY)

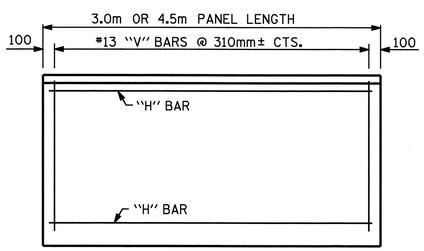

FRONT ELEVATION OF UPPER PRECAST PANELS

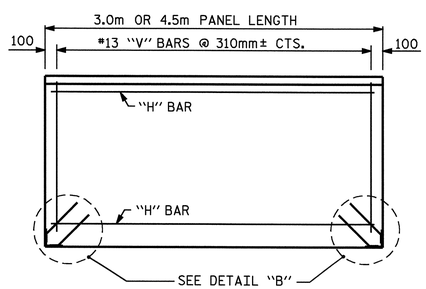

FRONT ELEVATION OF BOTTOM PRECAST PANEL

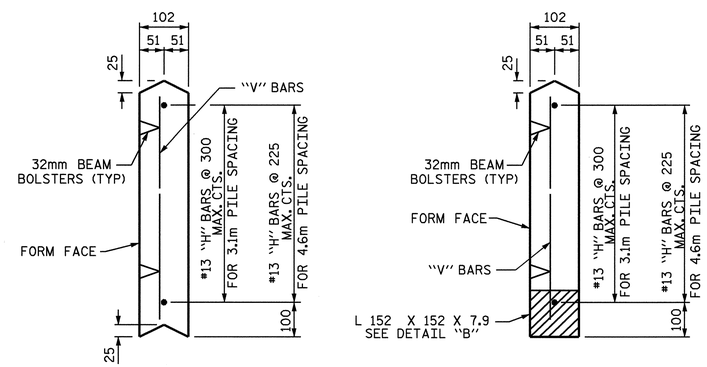

UPPER PANEL

BOTTOM PANEL

SECTION THROUGH PRECAST PANELS

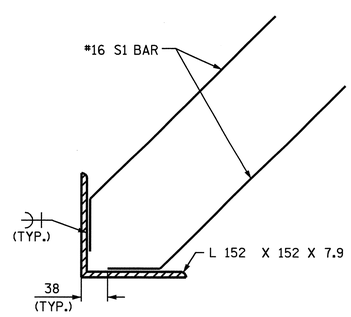

DETAIL "B"

ADDITIONAL BARS FOR ONE BOTTOM PANEL					
NO.	BAR	SIZE	TYPE	LENGTH	WEIGHT (kg)
4	S1	#16	1	460	3

BAR TYPE

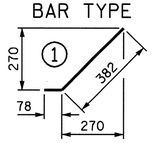

QUANTITIES FOR ONE PRECAST PANEL (FOR 3.1m PILE SPACING)													
PANEL HEIGHT	CLASS AA CONCRETE	BAR TYPES											
		HORIZONTAL						VERTICAL					
	C.M.	NO.	BAR	SIZE	TYPE	LENGTH	WEIGHT (kg)	NO.	BAR	SIZE	TYPE	LENGTH	WEIGHT (kg)
610	0.19	3	H1	#13	STR	2900	9	10	V1	#13	STR	500	5
910	0.28	4	H2	#13	STR	2900	12	10	V2	#13	STR	800	8
1220	0.37	5	H3	#13	STR	2900	14	10	V3	#13	STR	1120	11

QUANTITIES FOR ONE PRECAST PANEL (FOR 4.6m PILE SPACING)													
PANEL HEIGHT	CLASS AA CONCRETE	BAR TYPES											
		HORIZONTAL						VERTICAL					
	C.M.	NO.	BAR	SIZE	TYPE	LENGTH	WEIGHT (kg)	NO.	BAR	SIZE	TYPE	LENGTH	WEIGHT (kg)
910	0.42	4	H1	#13	STR	4400	17	15	V1	#13	STR	800	12
1220	0.56	5	H2	#13	STR	4400	22	15	V2	#13	STR	1120	17
1520	0.70	7	H3	#13	STR	4400	31	15	V3	#13	STR	1420	21
1830	0.84	8	H4	#13	STR	4400	35	15	V4	#13	STR	1720	26

ASSEMBLED BY : B. C. HUNT	DATE : 3/19/08		
CHECKED BY : T. G. PAYNE	DATE : 4/16/08		
DRAWN BY : JAD 5/01	REV. 7/10/01	RWW/LES	
CHECKED BY : RDR 5/01	REV. 5/7/03	RWW/JTE	
	REV. 5/1/06R	KMM/GM	

PROJECT NO. U-2519E

CUMBERLAND COUNTY

STATION: STA. 13+70.000 -RP2B-

SHEET 2 OF 2

STATE OF NORTH CAROLINA
DEPARTMENT OF TRANSPORTATION
RALEIGH

VISUAL BARRIER WALL

NORTH CAROLINA PROFESSIONAL SEAL 24091 ENGINEER JACK CHARLES HUNT
5/28/08

REVISIONS						SHEET NO.
NO.	BY:	DATE:	NO.	BY:	DATE:	W-2
1			3			TOTAL SHEETS
2			4			13

SBW2SM

11-JUL-2008 10:30
r:\structures\plans\Visual Barrier\U2519E_visual barrier wall.dgn
chunt

GEOTECHNICAL ENGINEER	ENGINEER
NORTH CAROLINA PROFESSIONAL SEAL 18899 ENGINEER JAMES R. BATTS, JR.	
James R. Batts Jr. 7/7/08 (SIGNATURE / DATE)	SIGNATURE / DATE

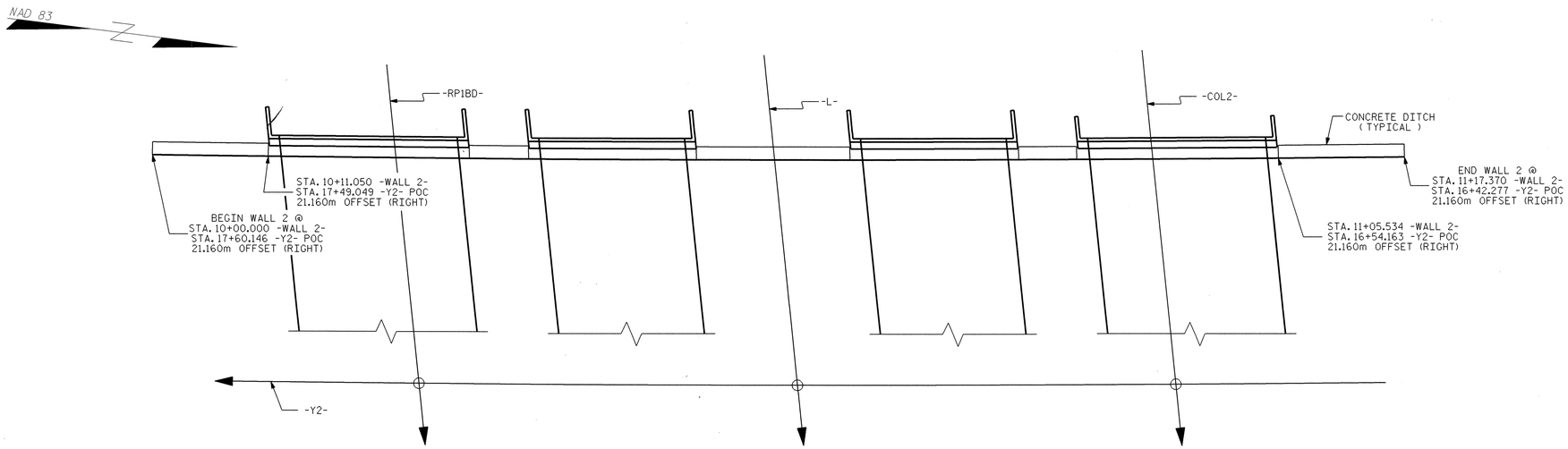

PLAN

RETAINING WALL NO. 2

N.T.S.

NOTES:

1. WALL ELEVATION IS SHOWN LOOKING AT EXPOSED FACE OF WALL.
2. OFFSET FROM -Y2- REMAINS CONSTANT ACROSS ENTIRE WALL.

WALL NO.	ESTIMATED AVERAGE AREA (SQ. M.)
2	513

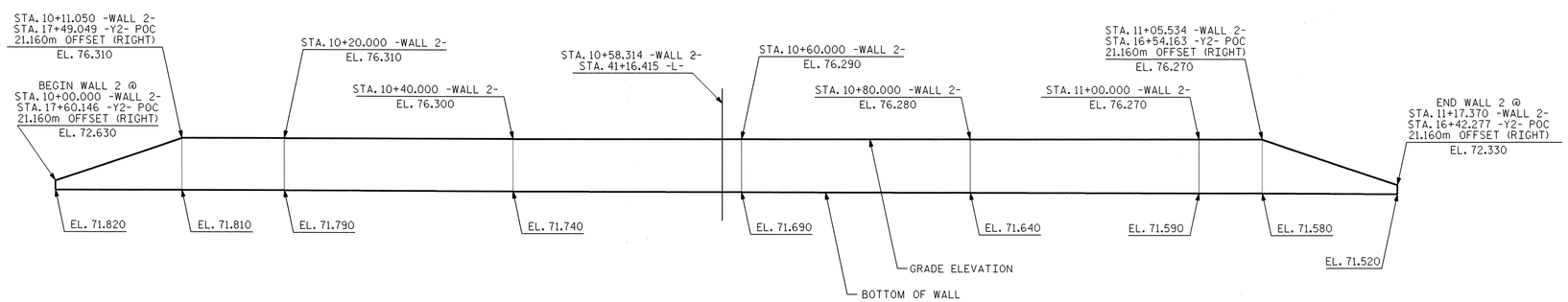

ELEVATION

RETAINING WALL NO. 2

N.T.S.

PROJECT NO.: U-2519E

CUMBERLAND ***COUNTY***

STATION: 41+16.415 -L-

SHEET 1 OF 6

GEOTECHNICAL ENGINEERING UNIT

■ ***EASTERN REGIONAL OFFICE***
☐ ***WESTERN REGIONAL OFFICE***
☐ ***CONTRACT OFFICE***

STATE OF NORTH CAROLINA
DEPARTMENT OF TRANSPORTATION
RALEIGH

RETAINING WALL NO. 2
PLAN AND ELEVATION

REVISIONS							SHEET NO.
NO.	BY	DATE	NO.	BY	DATE		W-3
1			3				TOTAL SHEETS
2			4				13

PREPARED BY: T.T. WALKER	DATE: 7/08
REVIEWED BY: G.M. GILLAND	DATE: 7/08

GEOTECHNICAL ENGINEER	ENGINEER
NORTH CAROLINA PROFESSIONAL SEAL 18899 ENGINEER JAMES R. BATTS, JR.	
James R. Batts Jr. 7/7/08 (SIGNATURE, DATE)	(SIGNATURE, DATE)

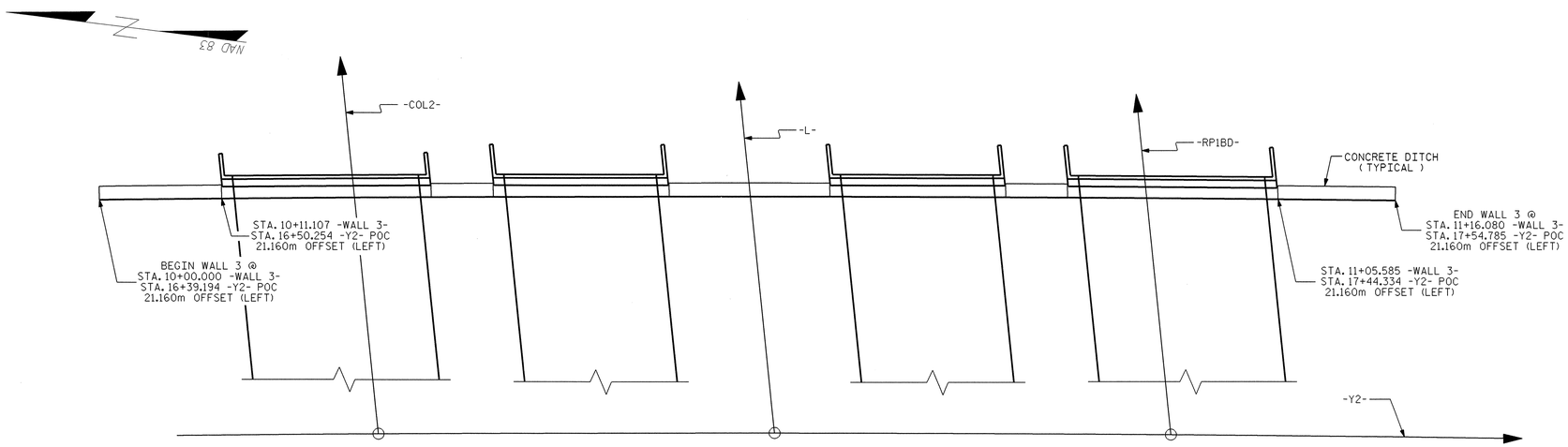

PLAN

RETAINING WALL NO. 3

N.T.S.

NOTES:

1. WALL ELEVATION IS SHOWN LOOKING AT EXPOSED FACE OF WALL.
2. OFFSET FROM -Y2- REMAINS CONSTANT ACROSS ENTIRE WALL.

WALL NO.	ESTIMATED AVERAGE AREA (SQ. M.)
3	487

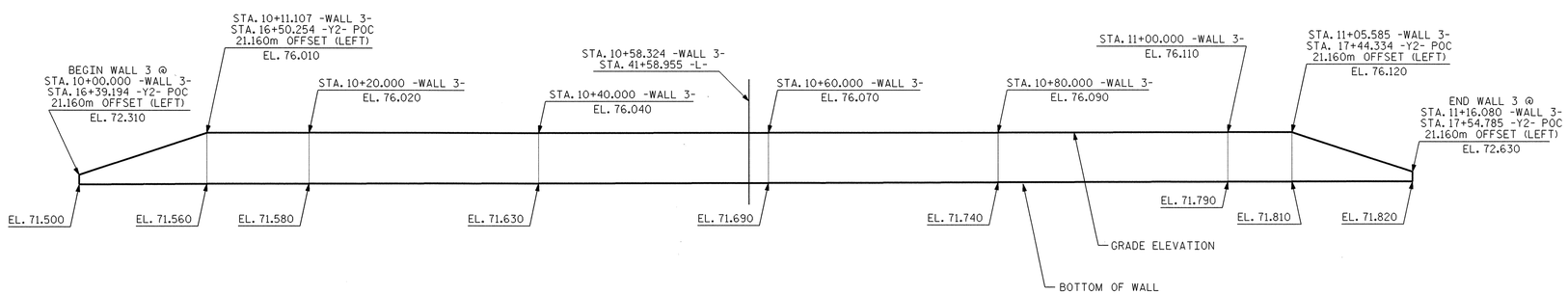

ELEVATION

RETAINING WALL NO. 3

N.T.S.

PROJECT NO.: U-2519E

CUMBERLAND ***COUNTY***

STATION: 41+58.955 -L-

SHEET 2 OF 6

PREPARED BY: T.T. WALKER	DATE: 7/08
REVIEWED BY: G.M. GILLAND	DATE: 7/08

GEOTECHNICAL ENGINEERING UNIT

■ ***EASTERN REGIONAL OFFICE***

☐ ***WESTERN REGIONAL OFFICE***

☐ ***CONTRACT OFFICE***

STATE OF NORTH CAROLINA
DEPARTMENT OF TRANSPORTATION
RALEIGH

RETAINING WALL NO. 3
PLAN AND ELEVATION

REVISIONS								SHEET NO.
NO.	BY	DATE	NO.	BY	DATE			W-4
1			3					TOTAL SHEETS
2			4					13

GEOTECHNICAL ENGINEER	ENGINEER
NORTH CAROLINA PROFESSIONAL SEAL 18899 ENGINEER JAMES R. BATTS, JR. — James R. Batts Jr. 2/18/09	
SIGNATURE DATE	SIGNATURE DATE

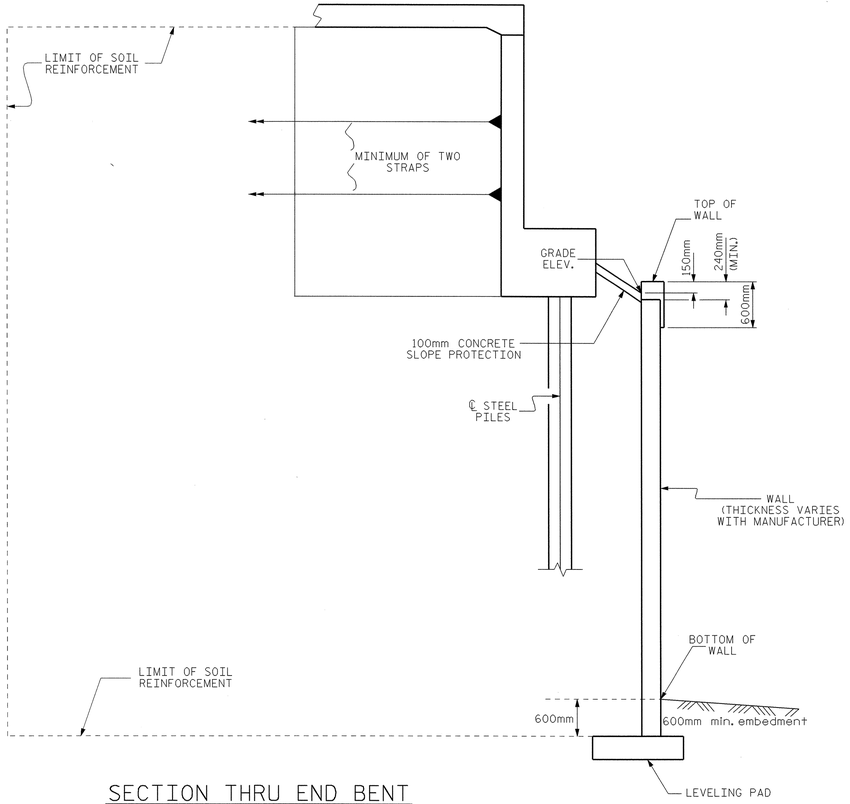

SECTION THRU END BENT

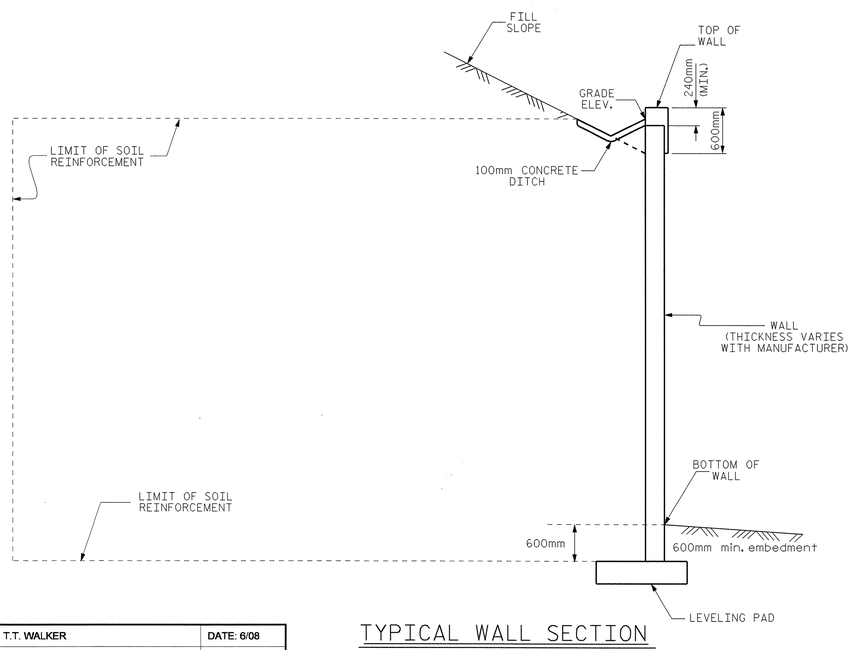

TYPICAL WALL SECTION

MSE RETAINING WALL NOTES

FOR MECHANICALLY STABILIZED EARTH (MSE) RETAINING WALLS, SEE MECHANICALLY STABILIZED EARTH RETAINING WALLS SPECIAL PROVISION.

FOR GUARDRAIL, SEE ROADWAY PLANS AND SECTION 862 OF THE STANDARD SPECIFICATIONS.

FOR SINGLE FACED PRECAST CONCRETE BARRIER, SEE ROADWAY PLANS AND SECTION 857 OF THE STANDARD SPECIFICATIONS.

DO NOT USE STANDARD SIZE NO.2S OR 2MS FOR WALL BACKFILL FOR RETAINING WALL NO.2 AND RETAINING WALL NO.3.

DO NOT USE AN MSE WALL SYSTEM WITH SEGMENTAL RETAINING WALL UNITS FOR RETAINING WALL NO.2 AND RETAINING WALL NO.3.

BEFORE BEGINNING MSE WALL DESIGN FOR RETAINING WALL NO.2 AND RETAINING WALL NO.3, SURVEY ALL EXISTING GROUND ELEVATIONS SHOWN ON THE PLANS AND SUBMIT A REVISED WALL ENVELOPE FOR REVIEW. DO NOT START WALL DESIGN OR CONSTRUCTION UNTIL THIS ENVELOPE IS ACCEPTED.

A PLAIN SURFACE FINISH IS REQUIRED ON THE FRONT FACE OF THE PRECAST CONCRETE PANELS FOR RETAINING WALL NO.2 AND RETAINING WALL NO.3.

DESIGN RETAINING WALL NO.2 AND RETAINING WALL NO.3 FOR A WALL HEIGHT EQUAL TO THE DESIGN HEIGHT (DIFFERENCE BETWEEN GRADE ELEVATION AND BOTTOM OF WALL ELEVATION) PLUS EMBEDMENT (DIFFERENCE BETWEEN BOTTOM OF WALL ELEVATION AND TOP OF LEVELING PAD ELEVATION).

DESIGN RETAINING WALL NO.2 AND RETAINING WALL NO.3 FOR THE FOLLOWING:

1) MINIMUM SERVICE LIFE = 100 YEARS
2) ALLOWABLE BEARING CAPACITY = 225 kPa
3) WALL BACKFILL MATERIAL PARAMETERS:

MATERIAL STANDARD SIZE NO. (IN ACCORDANCE WITH SECTIONS 1005 AND 1014 OF THE STANDARD SPECIFICATIONS)	UNIT WEIGHT (γ) (kN/m^3)	FRICTION ANGLE (ϕ) DEGREES	COHESION (c) PSF
57,67 AND 78M	17.2	38	0

4) IN-SITU ASSUMED MATERIAL PARAMETERS:

MATERIAL TYPE	UNIT WEIGHT (γ) (kN/m^3)	FRICTION ANGLE (ϕ) DEGREES	COHESION (c) PSF
RETAINED AND RANDOM BACKFILL	18.8	30	0
FOUNDATION	18.8	30	0

DESIGN RETAINING WALL NO.2 AND RETAINING WALL NO.3 FOR A LIVE LOAD (TRAFFIC) SURCHARGE.

DESIGN REINFORCEMENT CONNECTED TO END BENT CAPS FOR THE SPECIFIED SERVICE LOAD AND CAST THE REINFORCEMENT CONNECTION HARDWARE INTO THE CAP BACKWALL FOR EACH OF THE LOCATIONS SHOWN IN THE SUMMARY TABLE. MAINTAIN A MINIMUM CLEARANCE OF 75mm BETWEEN THE HARDWARE AND REINFORCING STEEL IN THE CAP

A MINIMUM OF TWO LAYERS OF MSE STRAPS ARE REQUIRED BEHIND END BENT BACKWALLS AT EACH OF THE LOCATIONS SHOWN IN THE SUMMARY TABLE. THE MSE STRAPS ARE REQUIRED TO RESIST A SERVICE LOAD NO LESS THAN 45 KILONEWTONS PER LINEAR METER APPLIED TO THE END BENT CAP 900 MILILIMETERS FROM THE BOTTOM OF THE CAP.

EXISTING OR FUTURE STRUCTURES SUCH AS FOUNDATIONS, GUARDRAIL POSTS, PAVEMENTS, PIPES, INLETS OR UTILITIES MAY INTERFERE WITH REINFORCEMENT FOR RETAINING WALL NO. 2 AND RETAINING WALL NO. 3.

FOUNDATIONS FOR EACH OF THE LOCATIONS SHOWN IN THE SUMMARY TABLE. MAY INTERFERE WITH REINFORCEMENT FOR RETAINING WALL NO. 2. SEE "FOUNDATION LAYOUT" SHEET FOR FOUNDATION LOCATIONS.

DO NOT PLACE LEVELING PAD CONCRETE, WALL BACKFILL OR FIRST REINFORCEMENT LAYER FOR RETAINING WALL NO. 2 AND RETAINING WALL NO. 3 UNTIL OBTAINING APPROVAL OF THE EXCAVATION DEPTH AND FOUNDATION MATERIAL.

A MINIMUM PANEL EMBEDMENT OF 600 MILLIMETERS BELOW THE BOTTOM OF WALL IS REQUIRED.

DO NOT BEGIN CONSTRUCTION OF MSE RETAINING WALL NO. 2 OR MSE RETAINING WALL NO. 3 UNTIL END BENT PILES HAVE BEEN DRIVEN.

SUMMARY TABLE

BRIDGE NO.	EB1	EB2
377	41+15.343 -L-	41+61.923 -L-
378	41+13.204 -L-	41+59.784 -L-
379	41+17.871 -COL2-	41+64.451 -COL2-
380	41+10.679 -RP1BD-	41+57.259 -RP1BD

PROJECT NO.: U-2519E
CUMBERLAND **COUNTY**
STATION: WALL 2 : 41+16.415 -L- , WALL 3 : 41+58.955 -L-

SHEET 3 OF 6

PREPARED BY: T.T. WALKER	DATE: 6/08
REVIEWED BY: G.M. GILLAND	DATE: 6/08

GEOTECHNICAL ENGINEERING UNIT

- ■ EASTERN REGIONAL OFFICE
- ☐ WESTERN REGIONAL OFFICE
- ☐ CONTRACT OFFICE

STATE OF NORTH CAROLINA DEPARTMENT OF TRANSPORTATION RALEIGH

RETAINING WALL NO. 2 AND NO. 3 DETAILS

REVISIONS						SHEET NO.
NO.	BY	DATE	NO.	BY	DATE	W-5
1			3			TOTAL SHEETS
2			4			13

GEOTECHNICAL ENGINEER	ENGINEER
NORTH CAROLINA PROFESSIONAL SEAL 18899 ENGINEER JAMES R. BATTS, JR.	
James R. Batts Jr. 7-7-08 (SIGNATURE / DATE)	SIGNATURE / DATE

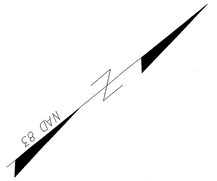

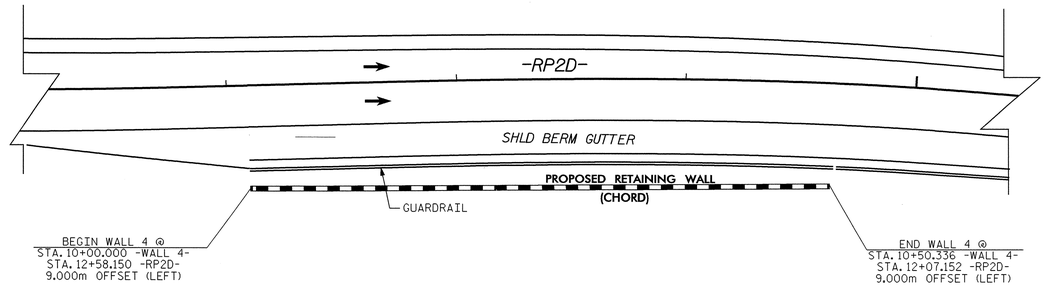

PLAN

RETAINING WALL NO. 4

N.T.S.

NOTE:

WALL ELEVATION IS SHOWN LOOKING AT EXPOSED FACE OF WALL.

WALL NO.	ESTIMATED AVERAGE AREA (SQ. M.)
4	152

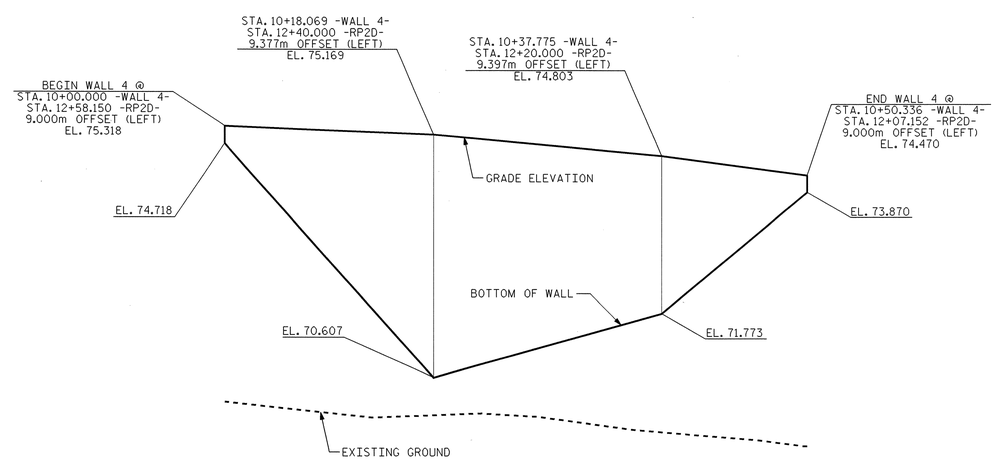

ELEVATION

RETAINING WALL NO. 4

N.T.S.

PROJECT NO.: U-2519E

CUMBERLAND **COUNTY**

STATION: 12+32.651 -RP2D-

SHEET 4 OF 6

PREPARED BY: T.T. WALKER	DATE: 7/08
REVIEWED BY: G.M. GILLAND	DATE: 7/08

GEOTECHNICAL ENGINEERING UNIT

- ■ EASTERN REGIONAL OFFICE
- ☐ WESTERN REGIONAL OFFICE
- ☐ CONTRACT OFFICE

STATE OF NORTH CAROLINA
DEPARTMENT OF TRANSPORTATION
RALEIGH

RETAINING WALL NO. 4
PLAN AND ELEVATION

REVISIONS						SHEET NO.
NO.	BY	DATE	NO.	BY	DATE	W-6
1			3			TOTAL SHEETS
2			4			13

GEOTECHNICAL ENGINEER	ENGINEER
NORTH CAROLINA PROFESSIONAL SEAL 18899 ENGINEER JAMES R. BATTS, JR.	
James R. Batts Jr. 7-7-08 (SIGNATURE / DATE)	(SIGNATURE / DATE)

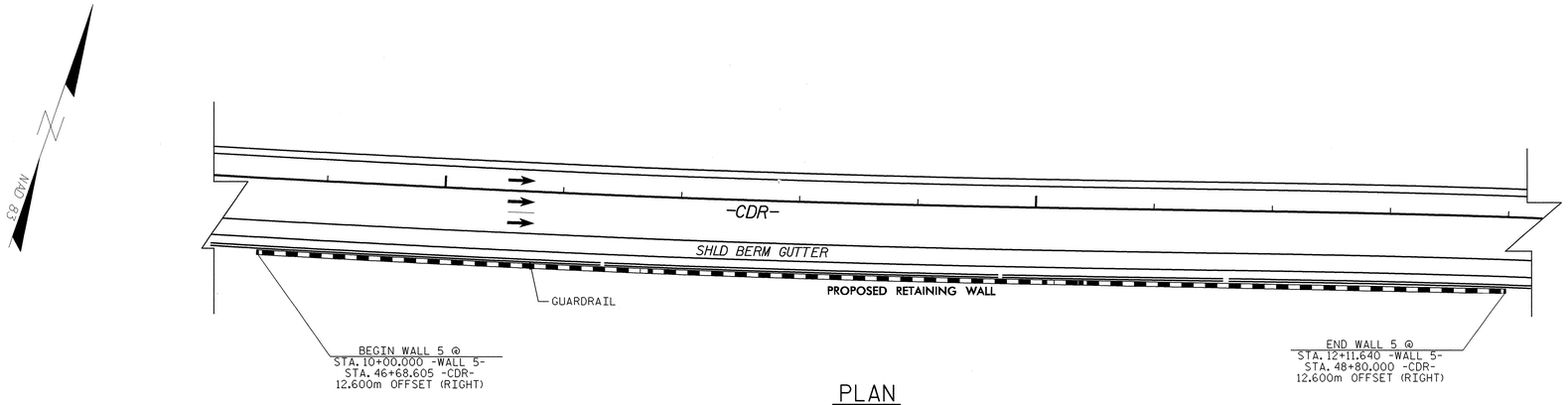

PLAN

RETAINING WALL NO. 5

N.T.S.

NOTES:

1. WALL ELEVATION IS SHOWN LOOKING AT EXPOSED FACE OF WALL.
2. WRAP FILL SLOPE AROUND END OF WALL NO STEEPER THAN 3:1.

WALL NO.	ESTIMATED AVERAGE AREA (SQ. M.)
5	701

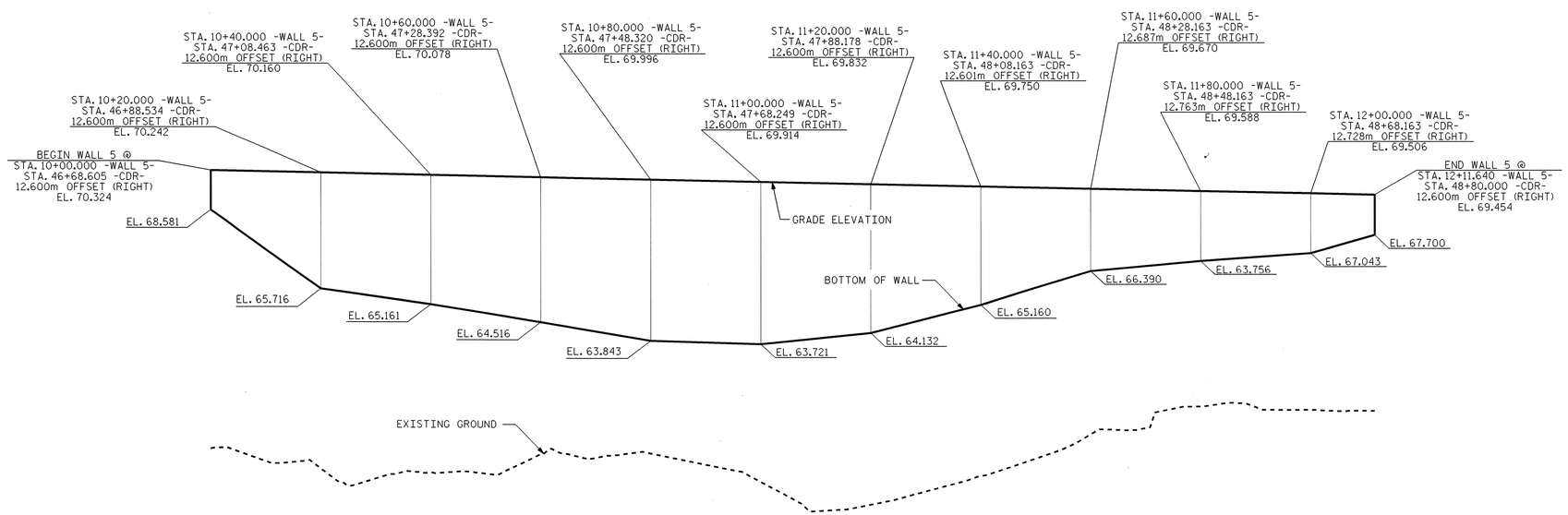

ELEVATION

RETAINING WALL NO. 5

N.T.S.

PROJECT NO.: U-2519E

CUMBERLAND COUNTY

STATION: 47+74.303 -CDR-

SHEET 5 OF 6

GEOTECHNICAL ENGINEERING UNIT

- ■ EASTERN REGIONAL OFFICE
- ☐ WESTERN REGIONAL OFFICE
- ☐ CONTRACT OFFICE

STATE OF NORTH CAROLINA DEPARTMENT OF TRANSPORTATION RALEIGH

RETAINING WALL NO. 5 PLAN AND ELEVATION

REVISIONS						SHEET NO.
NO.	BY	DATE	NO.	BY	DATE	W-7
1			3			TOTAL SHEETS
2			4			13

PREPARED BY: T.T. WALKER	DATE: 7/08
REVIEWED BY: G.M. GILLAND	DATE: 7/08

GEJ221423 7/7/2008 u2519e_geo_rwall gmgilland RD-Oce34

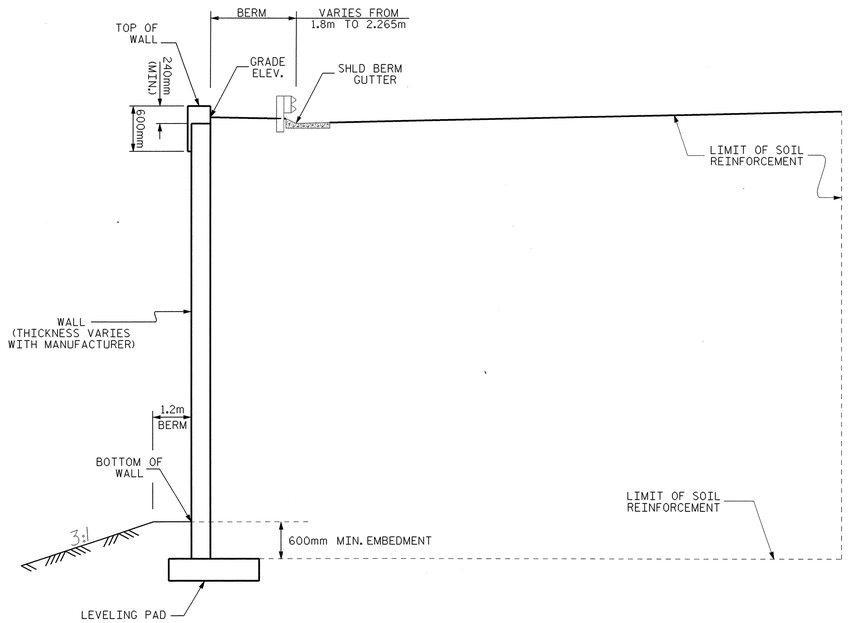

RETAINING WALL NO. 4: TYPICAL SECTION

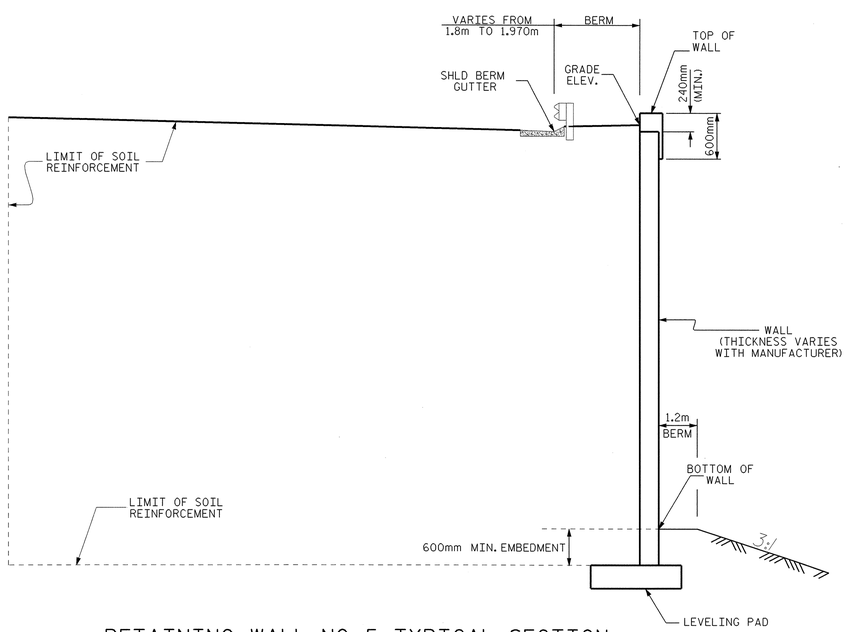

RETAINING WALL NO. 5: TYPICAL SECTION

PREPARED BY: T.T. WALKER	DATE: 6/08
REVIEWED BY: G.M. GILLAND	DATE: 6/08

GEOTECHNICAL ENGINEER

NORTH CAROLINA PROFESSIONAL SEAL 18899 ENGINEER JAMES R. BATTS, JR.

11/18/08

James R. Batts Jr.

SIGNATURE DATE

ENGINEER

SIGNATURE DATE

MSE RETAINING WALL NOTES

FOR MECHANICALLY STABILIZED EARTH (MSE) RETAINING WALLS, SEE MECHANICALLY STABILIZED EARTH RETAINING WALLS SPECIAL PROVISION.

FOR GUARDRAIL, SEE ROADWAY PLANS AND SECTION 862 OF THE STANDARD SPECIFICATIONS.

DO NOT USE STANDARD SIZE NO.2S OR 2MS FOR WALL BACKFILL FOR RETAINING WALL NO.4 AND RETAINING WALL NO.5.

DO NOT USE AN MSE WALL SYSTEM WITH SEGMENTAL RETAINING WALL UNITS FOR RETAINING WALL NO.4 AND RETAINING WALL NO.5.

BEFORE BEGINNING MSE WALL DESIGN FOR RETAINING WALL NO.4 AND RETAINING WALL NO.5, SURVEY ALL EXISTING GROUND ELEVATIONS SHOWN ON THE PLANS AND SUBMIT A REVISED WALL ENVELOPE FOR REVIEW. DO NOT START WALL DESIGN OR CONSTRUCTION UNTIL THIS ENVELOPE IS ACCEPTED.

A PLAIN SURFACE FINISH IS REQUIRED ON THE FRONT FACE OF THE PRECAST CONCRETE PANELS FOR RETAINING WALL NO.4 AND RETAINING WALL NO.5.

DESIGN RETAINING WALL NO.4 AND RETAINING WALL NO.5 FOR A WALL HEIGHT EQUAL TO THE DESIGN HEIGHT (DIFFERENCE BETWEEN GRADE ELEVATION AND BOTTOM OF WALL ELEVATION) PLUS EMBEDMENT (DIFFERENCE BETWEEN BOTTOM OF WALL ELEVATION AND TOP OF LEVELING PAD ELEVATION).

DESIGN RETAINING WALL NO.4 AND RETAINING WALL NO.5 FOR THE FOLLOWING:

1) MINIMUM SERVICE LIFE = 100 YEARS
2) ALLOWABLE BEARING CAPACITY = 250 kPa (WALL NO.4)
270 kPa (WALL NO.5)
3) WALL BACKFILL MATERIAL PARAMETERS:

MATERIAL STANDARD SIZE NO. (IN ACCORDANCE WITH SECTIONS 1005 AND 1014 OF THE STANDARD SPECIFICATIONS)	UNIT WEIGHT (γ) (kN/m³)	FRICTION ANGLE (φ) DEGREES	COHESION (c) PSF
57,67 AND 78M	17.2	38	0

4) IN-SITU ASSUMED MATERIAL PARAMETERS:

MATERIAL TYPE	UNIT WEIGHT (γ) (kN/m³)	FRICTION ANGLE (φ) DEGREES	COHESION (c) PSF
RETAINED AND RANDOM BACKFILL	18.8	30	0
FOUNDATION	18.8	30	0

DESIGN RETAINING WALL NO.4 AND RETAINING WALL NO.5 FOR A LIVE LOAD (TRAFFIC) SURCHARGE.

EXISTING OR FUTURE STRUCTURES SUCH AS FOUNDATIONS, GUARDRAIL POSTS, PAVEMENTS, PIPES, INLETS OR UTILITIES MAY INTERFERE WITH REINFORCEMENT FOR RETAINING WALL NO.4 AND RETAINING WALL NO.5.

DO NOT PLACE LEVELING PAD CONCRETE, WALL BACKFILL OR FIRST REINFORCEMENT LAYER FOR RETAINING WALL NO. 4 AND RETAINING WALL NO. 5 UNTIL OBTAINING APPROVAL OF THE EXCAVATION DEPTH AND FOUNDATION MATERIAL.

A MINIMUM PANEL EMBEDMENT OF 600 MILLIMETERS BELOW THE BOTTOM OF WALL IS REQUIRED.

PROJECT NO.: U-2519E

CUMBERLAND **COUNTY**

STATION: WALL 4 : 12+32.651 -RP2D-, WALL 5 : 47+74.303 -CDR-

SHEET 6 OF 6

GEOTECHNICAL ENGINEERING UNIT

■ EASTERN REGIONAL OFFICE
☐ WESTERN REGIONAL OFFICE
☐ CONTRACT OFFICE

STATE OF NORTH CAROLINA DEPARTMENT OF TRANSPORTATION RALEIGH

RETAINING WALL NO. 4 AND NO. 5 DETAILS

REVISIONS

NO.	BY	DATE	NO.	BY	DATE
1			3		
2			4		

SHEET NO. W-8

TOTAL SHEETS 13

GEOTECHNICAL ENGINEER	ENGINEER
NORTH CAROLINA PROFESSIONAL SEAL 30943 ENGINEER THIN TUN ZAN — SIGNATURE — DATE 11/18/08	SIGNATURE — DATE

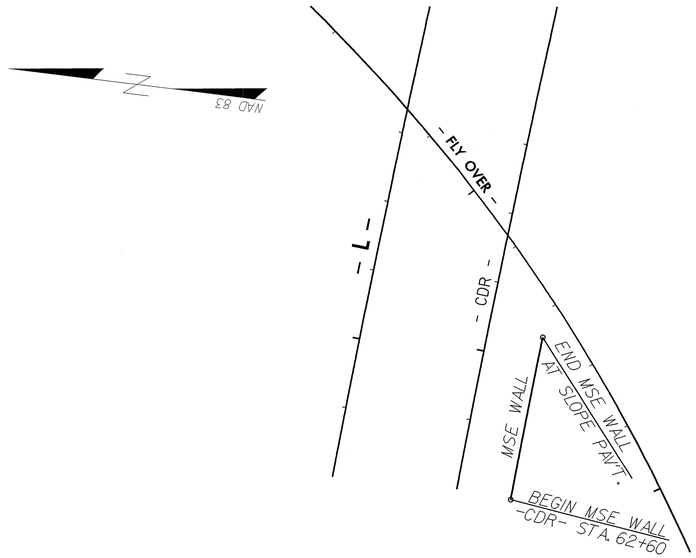

PLAN
RETAINING WALL NO 8.
N.T.S.

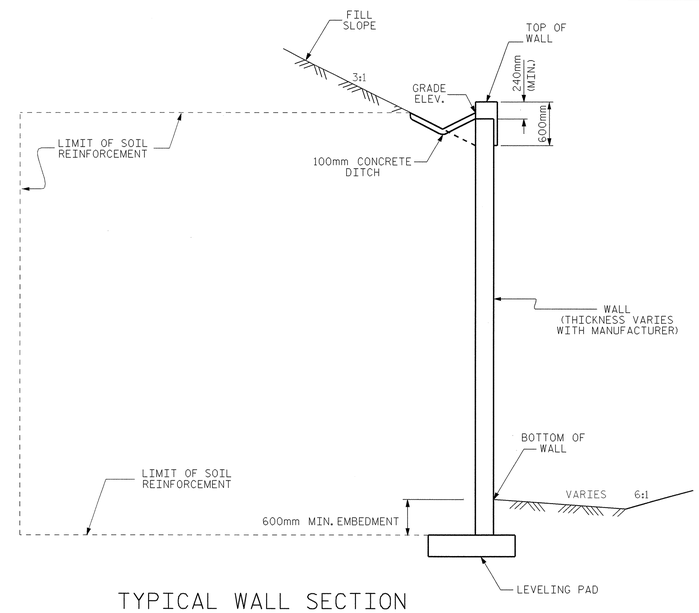

TYPICAL WALL SECTION
RETAINING WALL NO. 8
N.T.S.

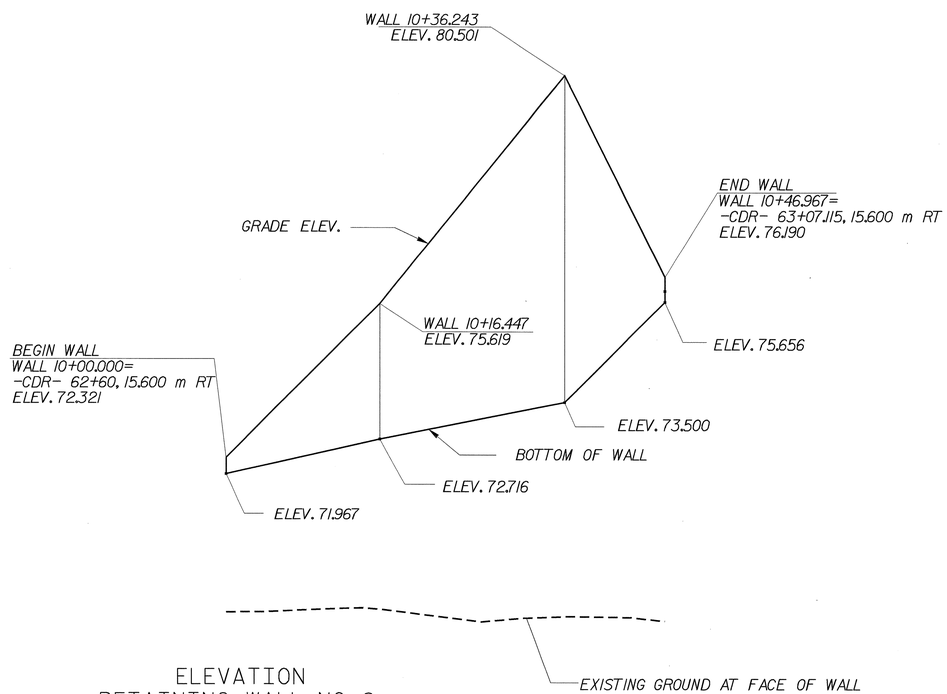

ELEVATION
RETAINING WALL NO 8.
N.T.S.

X-0002B RETAINING WALL NO. 8

FOR MECHANICALLY STABILIZED EARTH (MSE) RETAINING WALLS, SEE MECHANICALLY STABILIZED EARTH RETAINING WALLS SPECIAL PROVISION.

FOR SINGLE FACED PRECAST CONCRETE BARRIER, SEE ROADWAY PLANS AND SECTION 857 OF THE STANDARD SPECIFICATIONS.

DO NOT USE STANDARD SIZE NO.2S OR 2MS FOR WALL BACKFILL FOR RETAINING WALL NO.8.

DO NOT USE AN MSE WALL SYSTEM WITH SEGMENTAL RETAINING WALL UNITS FOR RETAINING WALL NO.8.

BEFORE BEGINNING MSE WALL DESIGN FOR RETAINING WALL NO.8 , SURVEY ALL EXISTING GROUND ELEVATIONS SHOWN ON THE PLANS AND SUBMIT A REVISED WALL ENVELOPE FOR REVIEW.

A PLAIN SURFACE FINISH IS REQUIRED ON THE FRONT FACE OF THE PRECAST CONCRETE PANELS FOR RETAINING WALL NO.8.

DESIGN RETAINING WALL NO.8 FOR A WALL HEIGHT EQUAL TO THE DESIGN HEIGHT (DIFFERENCE BETWEEN GRADE ELEVATION AND BOTTOM OF WALL ELEVATION) PLUS EMBEDMENT (DIFFERENCE BETWEEN BOTTOM OF WALL ELEVATION AND TOP OF LEVELING PAD ELEVATION).

DESIGN RETAINING WALL NO.8 FOR THE FOLLOWING:

1) MINIMUM SERVICE LIFE = 100 YEARS
2) ALLOWABLE BEARING CAPACITY = 220 kPa
3) WALL BACKFILL MATERIAL PARAMETERS:

MATERIAL STANDARD SIZE NO. (IN ACCORDANCE WITH SECTIONS 1005 AND 1014 OF THE STANDARD SPECIFICATIONS)	UNIT WEIGHT (γ) (kN/m^3)	FRICTION ANGLE (ϕ) DEGREES	COHESION (c) kPa
57,67 AND 78M	17.2	38	0

4) IN-SITU ASSUMED MATERIAL PARAMETERS:

MATERIAL TYPE	UNIT WEIGHT (γ) (kN/m^3)	FRICTION ANGLE (ϕ) DEGREES	COHESION (c) kPa
RETAINED AND RANDOM BACKFILL	18.8	30	0
FOUNDATION	18.8	30	0

DESIGN RETAINING WALL NO.8 FOR A LIVE LOAD (TRAFFIC) SURCHARGE.

EXISTING OR FUTURE STRUCTURES SUCH AS FOUNDATIONS, GUARDRAIL POSTS, PAVEMENTS, PIPES, INLETS OR UTILITIES MAY INTERFERE WITH REINFORCEMENT FOR RETAINING WALL NO.8.

DO NOT PLACE LEVELING PAD CONCRETE, WALL BACKFILL OR FIRST REINFORCEMENT LAYER FOR RETAINING WALL NO.8 UNTIL OBTAINING APPROVAL OF THE EXCAVATION DEPTH AND FOUNDATION MATERIAL.

A MINIMUM PANEL EMBEDMENT OF 600 MILLIMETERS BELOW THE BOTTOM OF WALL IS REQUIRED.

WALL NO.	ESTIMATED AVERAGE AREA (sq.meter)
8	165

PROJECT NO.: X-0002B
CUMBERLAND **COUNTY**
STATION: 62+60.000 -CDR-
SHEET 4 OF 6

PREPARED BY: T.T. ZAN	DATE: 7/08
REVIEWED BY: G.M.G.	DATE: 7/08

GEOTECHNICAL ENGINEERING UNIT
■ EASTERN REGIONAL OFFICE
☐ WESTERN REGIONAL OFFICE
☐ CONTRACT OFFICE

STATE OF NORTH CAROLINA DEPARTMENT OF TRANSPORTATION RALEIGH

RETAINING WALL NO. 8 PLAN AND DETAILS

REVISIONS							SHEET NO.
NO.	BY	DATE	NO.	BY	DATE		W-9
1			3				TOTAL SHEETS
2			4				13

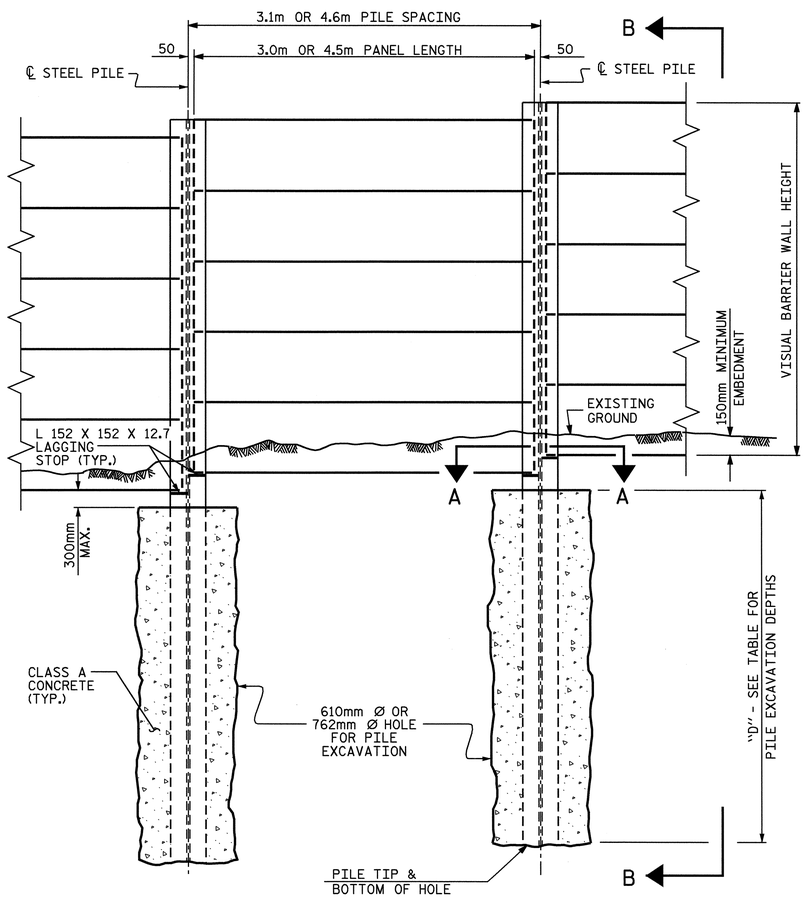

ELEVATION

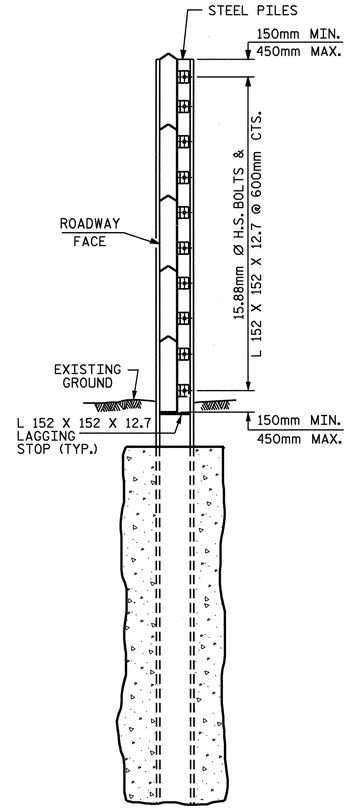

SECTION B-B

PILE EXCAVATION

	WALL STATIONS
	FROM : STA. 26+25.800 -FLYOVER- TO : STA. 27+92.833 -FLYOVER-

PILE SPACING	HOLE Ø	DEPTH "D"
3.1m	610mm	5.200m
	762mm	4.700m
4.6m	610mm	6.200m
	762mm	5.600m

FOR STATIONS, OFFSETS, AND WALL ENVELOPE, SEE ROADWAY PLANS.

NOTES

FOR VISUAL BARRIER WALL, SEE SPECIAL PROVISIONS.

CONSTRUCT VISUAL BARRIER WALL TO LINES AND GRADES SHOWN ON THE ROADWAY PLANS.

PROVIDE PANELS WITH A FLAT BOTTOM.

USE STEEL PILES, ANGLES, AND LAGGING STOPS MEETING THE REQUIREMENTS OF AASHTO M270, GRADE 345. GALVANIZE ALL STEEL COMPONENTS INCLUDING PILES, ANGLES, LAGGING STOPS, BOLTS, NUTS, AND WASHERS IN ACCORDANCE WITH SECTION 1076 OF THE STANDARD SPECIFICATIONS. REPAIR ANY DAMAGED GALVANIZATION IN ACCORDANCE WITH ARTICLE 1076-6 OF THE STANDARD SPECIFICATIONS.

VERIFY THE LOCATION OF UNDERGROUND UTILITIES BEFORE DRILLING HOLES TO ENSURE SUFFICIENT CLEARANCE IS AVAILABLE.

AT THE CONTRACTOR'S OPTION, USE AN APPROVED NON-SHRINK NON-METALLIC GROUT BETWEEN THE FLANGES OF THE STEEL PILES TO SUPPORT THE BOTTOM PANEL IN LIEU OF LAGGING STOPS.

ADJUST PILE EXCAVATION ELEVATIONS TO MAINTAIN 150mm MINIMUM EMBEDMENT OF THE BOTTOM PANEL.

USE CLASS AA AND CLASS A CONCRETE FOR PANELS AND PILES EXCAVATION, RESPECTIVELY, IN ACCORDANCE WITH ARTICLE 1000-4 OF THE STANDARD SPECIFICATIONS.

PROVIDE PLATES AND ANGLES TO SECURE PANELS 150mm LONG AS MEASURED ALONG THE STEEL PILE.

AT THE CONTRACTOR'S OPTION, USE EITHER 'W' OR 'HP' PILES THAT SATISFY THE MINIMUM PILE SIZE REQUIRED IN THE "EXPOSURE CATEGORY" TABLE. PILES SMALLER THAN W310 OR HP310 ARE NOT PERMITTED. AT TURNS WITH A 914mm DIAMETER HOLE FOR PILE EXCAVATION, USE ONLY W310 OR HP310 PILES, AS SHOWN.

AT THE CONTRACTOR'S OPTION, USE EITHER 3.1m OR 4.6m PILE SPACINGS, AND EITHER 610mm FOOT OR 762mm DIAMETER HOLES FOR PILE EXCAVATION EXCEPT FOR WALL TURNS.

FOR WALL TURNS, PROVIDE HOLES FOR PILE EXCAVATION AS SHOWN ON THE PLANS. A 610mm DIAMETER HOLE FOR PILE EXCAVATION IS NOT AN OPTION. FOR 914mm DIAMETER HOLES AT TURNS, USE DEPTHS DESIGNATED FOR 762mm DIAMETER HOLES.

DO NOT SPLICE STEEL PILES.

AT THE CONTRACTOR'S OPTION, USE CONTINUOUS FLIGHT AUGER PILES IN LIEU OF PILE EXCAVATION FOR VISUAL BARRIER WALL FOUNDATION. SEE "CONTINUOUS FLIGHT AUGER PILES FOR SOUND BARRIER AND VISUAL BARRIER WALLS" SPECIAL PROVISION.

EXPOSURE CATEGORY C

DESIGN WIND PRESSURE =
1.628 kpa (0m < H ≤ 4.27m); 2.011 kpa (4.27m < H ≤ 8.84m)

PILE SPACING	MAXIMUM WALL HEIGHT (H)	MINIMUM W SIZE STEEL PILES	MINIMUM HP SIZE STEEL PILES
3.1m	H ≤ 7.62m	W 310 X 60 W 360 X 72	HP 310 X 79 HP 360 X 108
	7.62m < H ≤ 8.84m	W 310 X 79 W 360 X 72	HP 310 X 79 HP 360 X 108
4.6m	H ≤ 6.10m	W 310 X 60 W 360 X 72	HP 310 X 79 HP 360 X 108
	6.10m < H ≤ 7.62m	W 310 X 86 W 360 X 79	HP 310 X 79 HP 360 X 108
	7.62m < H ≤ 8.84m	W 310 X 107 W 360 X 101	HP 310 X 125 HP 360 X 108

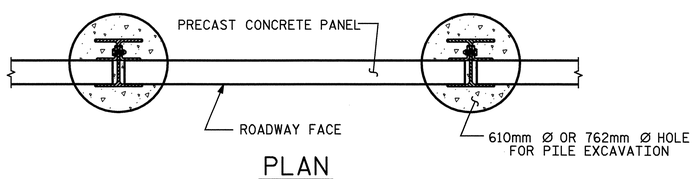

PLAN

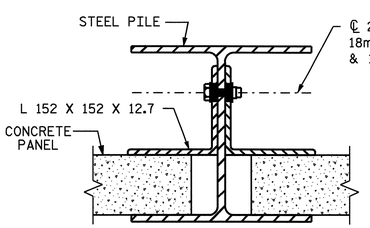

CONNECTION DETAIL

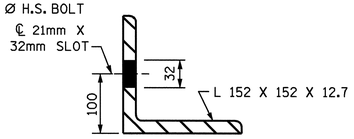

ANGLE DETAIL

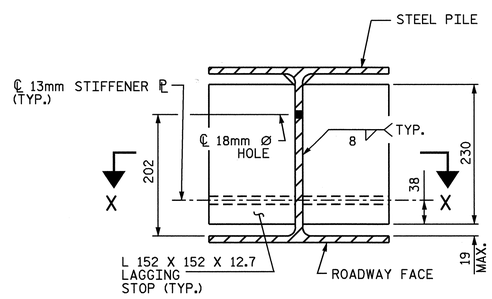

SECTION A-A

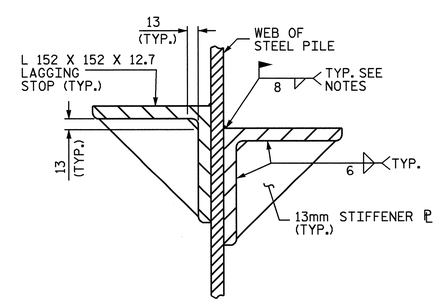

SECTION X-X

NORTH CAROLINA PROFESSIONAL SEAL 11259 ENGINEER DAVID R. ANDERSON
8/28/08

PROJECT NO. X-0002B
CUMBERLAND COUNTY
STATION: STA. 26+25.800 -FLYOVER-

SHEET 1 OF 2

STATE OF NORTH CAROLINA
DEPARTMENT OF TRANSPORTATION
RALEIGH

VISUAL BARRIER WALL

REVISIONS						SHEET NO.
NO.	BY:	DATE:	NO.	BY:	DATE:	W-10
1			3			TOTAL SHEETS
2			4			13

ASSEMBLED BY : JAT DATE : 6/20/08
CHECKED BY : S.L. WANCE DATE : 6/23/08

21-JUL-2008 13:47
R:\Structures\glrolaml\FinalPlans\FINAL PLANS WALLS\X0002B_visual_barrier_walls.dgn
DANDERSON

BILL OF MATERIAL	
VISUAL BARRIER WALL	501.100 SQ. M.
QUANTITIES PROVIDED ARE APPROXIMATE AND ARE FOR BID PURPOSES ONLY.	

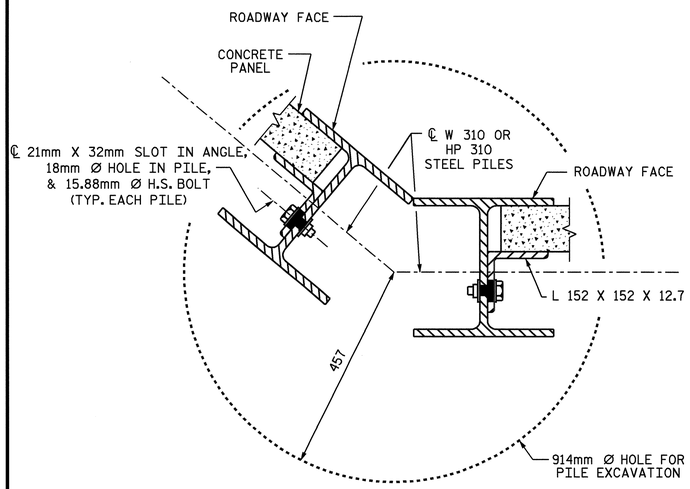

TYPICAL WALL TURN DETAIL

(FOR GREATER THAN 15° TURNS, CONCAVE TOWARD ROADWAY)

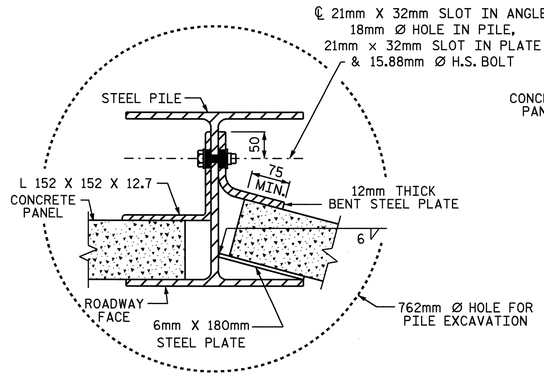

TYPICAL WALL TURN DETAIL

(USE ONLY FOR TURNS 15° OR LESS, CONCAVE TOWARD ROADWAY)

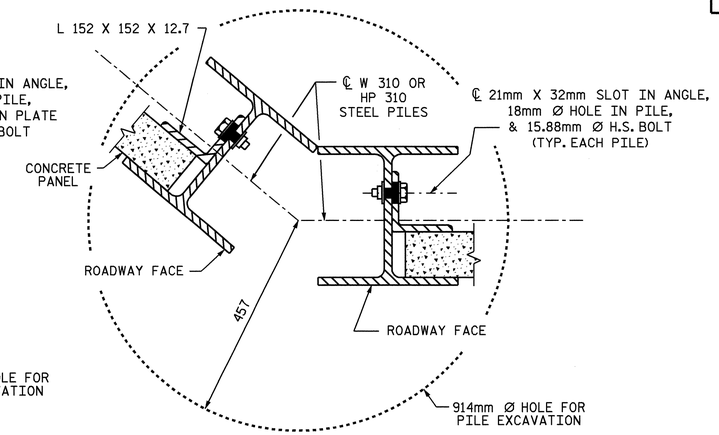

TYPICAL WALL TURN DETAIL

(FOR GREATER THAN 15° TURNS, CONVEX TOWARD ROADWAY)

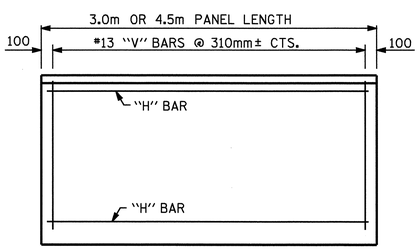

FRONT ELEVATION OF UPPER PRECAST PANELS

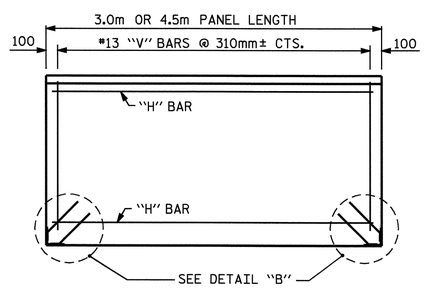

FRONT ELEVATION OF BOTTOM PRECAST PANEL

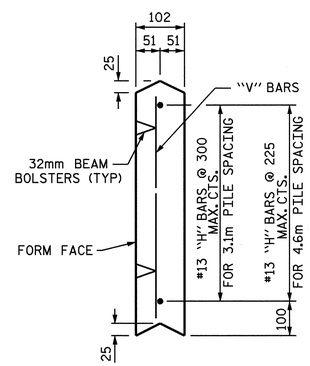

UPPER PANEL

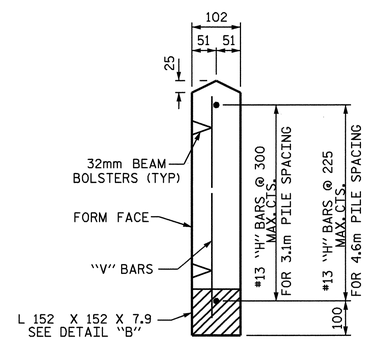

BOTTOM PANEL

SECTION THROUGH PRECAST PANELS

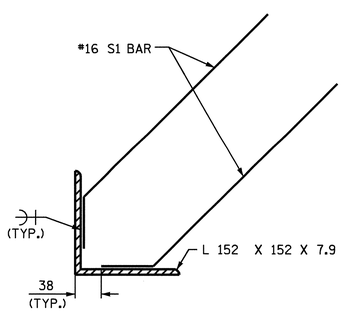

DETAIL "B"

ADDITIONAL BARS FOR ONE BOTTOM PANEL					
NO.	BAR	SIZE	TYPE	LENGTH	WEIGHT (kg)
4	S1	#16	1	460	3

BAR TYPE

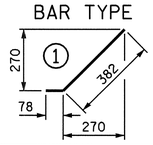

QUANTITIES FOR ONE PRECAST PANEL (FOR 3.1m PILE SPACING)														
PANEL HEIGHT	CLASS AA CONCRETE	BAR TYPES												
		HORIZONTAL							VERTICAL					
	C.M.	NO.	BAR	SIZE	TYPE	LENGTH	WEIGHT (kg)		NO.	BAR	SIZE	TYPE	LENGTH	WEIGHT (kg)
610	0.19	3	H1	#13	STR	2900	9		10	V1	#13	STR	500	5
910	0.28	4	H2	#13	STR	2900	12		10	V2	#13	STR	800	8
1220	0.37	5	H3	#13	STR	2900	14		10	V3	#13	STR	1120	11

QUANTITIES FOR ONE PRECAST PANEL (FOR 4.6m PILE SPACING)														
PANEL HEIGHT	CLASS AA CONCRETE	BAR TYPES												
		HORIZONTAL							VERTICAL					
	C.M.	NO.	BAR	SIZE	TYPE	LENGTH	WEIGHT (kg)		NO.	BAR	SIZE	TYPE	LENGTH	WEIGHT (kg)
910	0.42	4	H1	#13	STR	4400	17		15	V1	#13	STR	800	12
1220	0.56	5	H2	#13	STR	4400	22		15	V2	#13	STR	1120	17
1520	0.70	7	H3	#13	STR	4400	31		15	V3	#13	STR	1420	21
1830	0.84	8	H4	#13	STR	4400	35		15	V4	#13	STR	1720	26

NORTH CAROLINA PROFESSIONAL SEAL 11259 ENGINEER DAVID R. ANDERSON

8/28/08

PROJECT NO. X-0002B

CUMBERLAND COUNTY

STATION: STA. 26+25.800 -FLYOVER-

SHEET 2 OF 2

STATE OF NORTH CAROLINA
DEPARTMENT OF TRANSPORTATION
RALEIGH

VISUAL BARRIER WALL

REVISIONS						SHEET NO.
NO.	BY:	DATE:	NO.	BY:	DATE:	W-11
1			3			TOTAL SHEETS
2			4			13

ASSEMBLED BY : JAT DATE : 6/20/08
CHECKED BY : S.L. WANCE DATE : 6/23/08

21-JUL-2008 13:47
R:\Structures\glrolaml\FinalPlans\FINAL PLANS WALLS\X0002B_visual_barrier_walls.dgn
DANDERSON

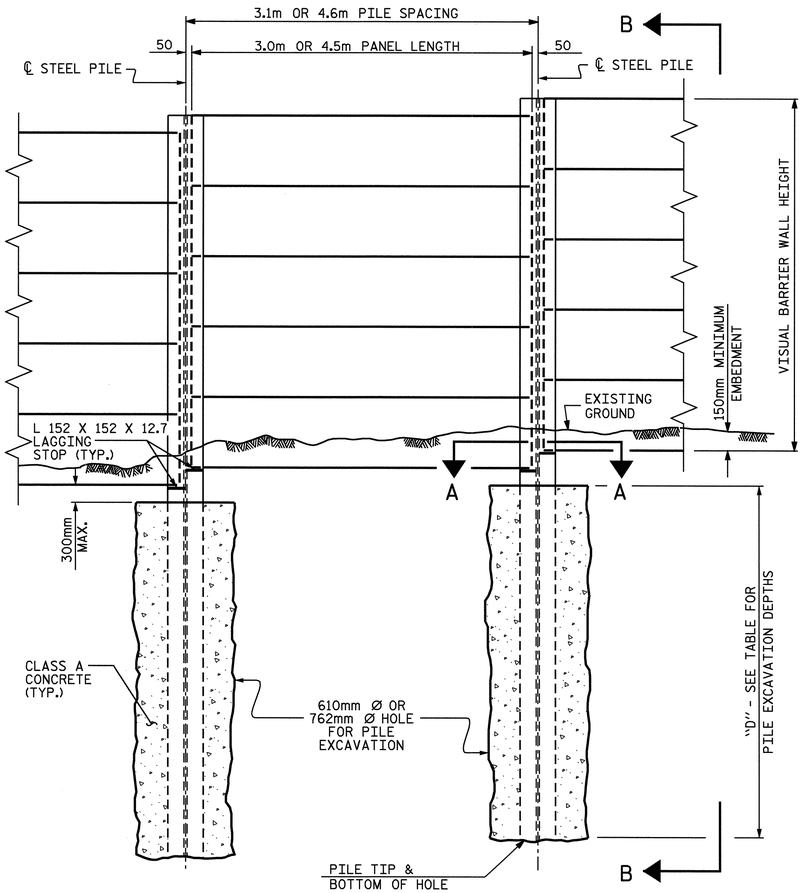

ELEVATION

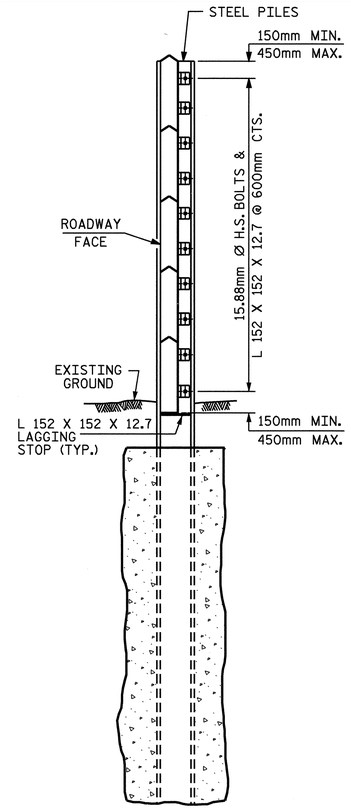

SECTION B-B

PILE EXCAVATION		
	WALL STATIONS FROM : STA. 25+80.000 -Y1- TO : STA. 29+59.636 -Y1-	
PILE SPACING	HOLE Ø	DEPTH "D"
3.1m	610mm	5.200m
	762mm	4.700m
4.6m	610mm	6.200m
	762mm	5.600m

FOR STATIONS, OFFSETS, AND WALL ENVELOPE, SEE ROADWAY PLANS.

NOTES

FOR VISUAL BARRIER WALL, SEE SPECIAL PROVISIONS.

CONSTRUCT VISUAL BARRIER WALL TO LINES AND GRADES SHOWN ON THE ROADWAY PLANS.

PROVIDE PANELS WITH A FLAT BOTTOM.

USE STEEL PILES, ANGLES, AND LAGGING STOPS MEETING THE REQUIREMENTS OF AASHTO M270, GRADE 345. GALVANIZE ALL STEEL COMPONENTS INCLUDING PILES, ANGLES, LAGGING STOPS, BOLTS, NUTS, AND WASHERS IN ACCORDANCE WITH SECTION 1076 OF THE STANDARD SPECIFICATIONS. REPAIR ANY DAMAGED GALVANIZATION IN ACCORDANCE WITH ARTICLE 1076-6 OF THE STANDARD SPECIFICATIONS.

VERIFY THE LOCATION OF UNDERGROUND UTILITIES BEFORE DRILLING HOLES TO ENSURE SUFFICIENT CLEARANCE IS AVAILABLE.

AT THE CONTRACTOR'S OPTION, USE AN APPROVED NON-SHRINK NON-METALLIC GROUT BETWEEN THE FLANGES OF THE STEEL PILES TO SUPPORT THE BOTTOM PANEL IN LIEU OF LAGGING STOPS.

ADJUST PILE EXCAVATION ELEVATIONS TO MAINTAIN 150mm MINIMUM EMBEDMENT OF THE BOTTOM PANEL.

USE CLASS AA AND CLASS A CONCRETE FOR PANELS AND PILES EXCAVATION, RESPECTIVELY, IN ACCORDANCE WITH ARTICLE 1000-4 OF THE STANDARD SPECIFICATIONS.

PROVIDE PLATES AND ANGLES TO SECURE PANELS 150mm LONG AS MEASURED ALONG THE STEEL PILE.

AT THE CONTRACTOR'S OPTION, USE EITHER 'W' OR 'HP' PILES THAT SATISFY THE MINIMUM PILE SIZE REQUIRED IN THE "EXPOSURE CATEGORY" TABLE. PILES SMALLER THAN W310 OR HP310 ARE NOT PERMITTED. AT TURNS WITH A 914mm DIAMETER HOLE FOR PILE EXCAVATION, USE ONLY W310 OR HP310 PILES, AS SHOWN.

AT THE CONTRACTOR'S OPTION, USE EITHER 3.1m OR 4.6m PILE SPACINGS, AND EITHER 610mm FOOT OR 762mm DIAMETER HOLES FOR PILE EXCAVATION EXCEPT FOR WALL TURNS.

FOR WALL TURNS, PROVIDE HOLES FOR PILE EXCAVATION AS SHOWN ON THE PLANS. A 610mm DIAMETER HOLE FOR PILE EXCAVATION IS NOT AN OPTION. FOR 914mm DIAMETER HOLES AT TURNS, USE DEPTHS DESIGNATED FOR 762mm DIAMETER HOLES.

DO NOT SPLICE STEEL PILES.

AT THE CONTRACTOR'S OPTION, USE CONTINUOUS FLIGHT AUGER PILES IN LIEU OF PILE EXCAVATION FOR VISUAL BARRIER WALL FOUNDATION. SEE "CONTINUOUS FLIGHT AUGER PILES FOR SOUND BARRIER AND VISUAL BARRIER WALLS" SPECIAL PROVISION.

EXPOSURE CATEGORY C

DESIGN WIND PRESSURE =
1.628 kpa (0m < H ≤ 4.27m); 2.011 kpa (4.27m < H ≤ 8.84m)

PILE SPACING	MAXIMUM WALL HEIGHT (H)	MINIMUM W SIZE STEEL PILES	MINIMUM HP SIZE STEEL PILES
3.1m	H ≤ 7.62m	W 310 X 60 W 360 X 72	HP 310 X 79 HP 360 X 108
	7.62m < H ≤ 8.84m	W 310 X 79 W 360 X 72	HP 310 X 79 HP 360 X 108
4.6m	H ≤ 6.10m	W 310 X 60 W 360 X 72	HP 310 X 79 HP 360 X 108
	6.10m < H ≤ 7.62m	W 310 X 86 W 360 X 79	HP 310 X 79 HP 360 X 108
	7.62m < H ≤ 8.84m	W 310 X 107 W 360 X 101	HP 310 X 125 HP 360 X 108

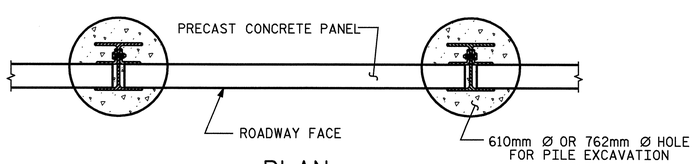

PLAN

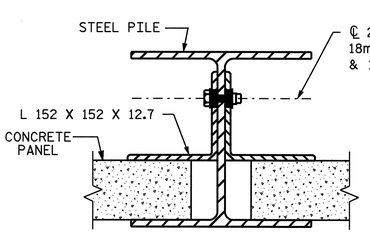

CONNECTION DETAIL

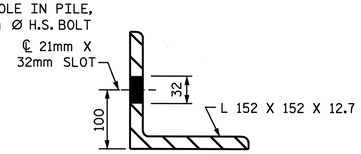

ANGLE DETAIL

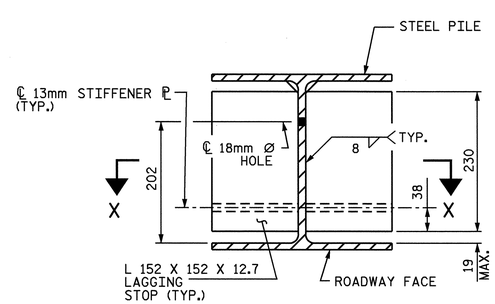

SECTION A-A

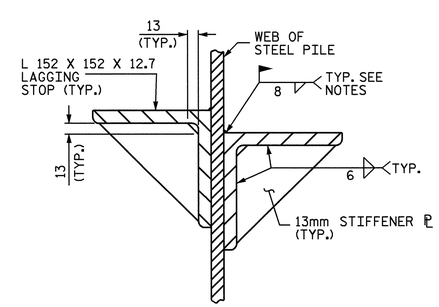

SECTION X-X

PROJECT NO. X-0002B
CUMBERLAND COUNTY
STATION: STA. 25+80.000 -Y1-

SHEET 1 OF 2

STATE OF NORTH CAROLINA
DEPARTMENT OF TRANSPORTATION
RALEIGH

VISUAL BARRIER WALL

NORTH CAROLINA PROFESSIONAL SEAL 11259 ENGINEER DAVID R. ANDERSON
8/28/08

REVISIONS						SHEET NO.
NO.	BY:	DATE:	NO.	BY:	DATE:	W-12
1			3			TOTAL SHEETS
2			4			13

ASSEMBLED BY : JAT DATE : 5/07/08
CHECKED BY : S.L. WANCE DATE : 6/02/08

21-JUL-2008 13:46
R:\Structures\glrolaml\FinalPlans\FINAL PLANS WALLS\X0002B_visual_barrier_walls.dgn
DANDERSON

BILL OF MATERIAL	
VISUAL BARRIER WALL	1,138.908 SQ. M.

QUANTITIES PROVIDED ARE APPROXIMATE AND ARE FOR BID PURPOSES ONLY.

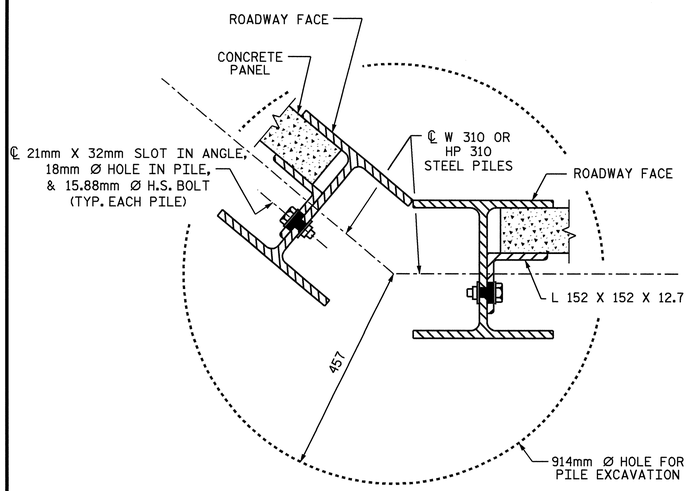

TYPICAL WALL TURN DETAIL

(FOR GREATER THAN 15° TURNS, CONCAVE TOWARD ROADWAY)

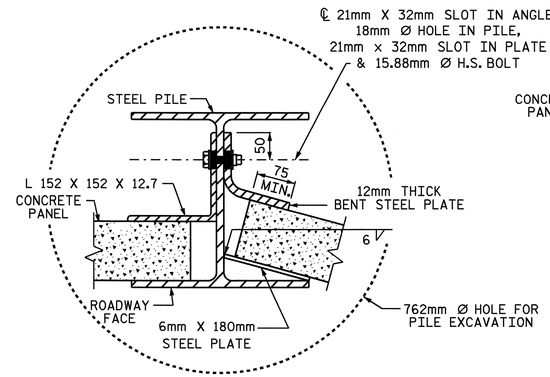

TYPICAL WALL TURN DETAIL

(USE ONLY FOR TURNS 15° OR LESS, CONCAVE TOWARD ROADWAY)

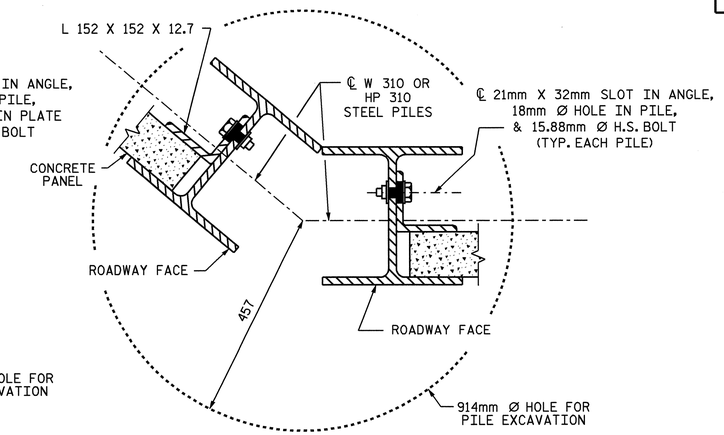

TYPICAL WALL TURN DETAIL

(FOR GREATER THAN 15° TURNS, CONVEX TOWARD ROADWAY)

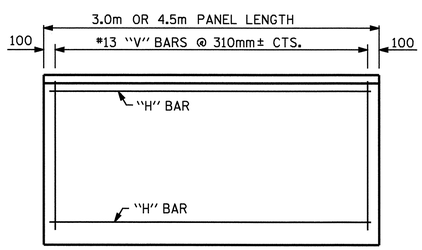

FRONT ELEVATION OF UPPER PRECAST PANELS

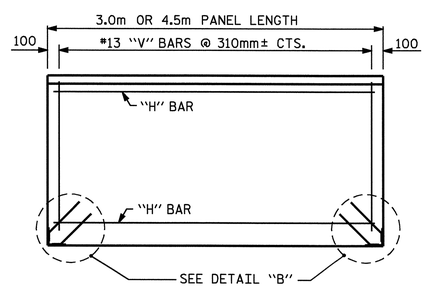

FRONT ELEVATION OF BOTTOM PRECAST PANEL

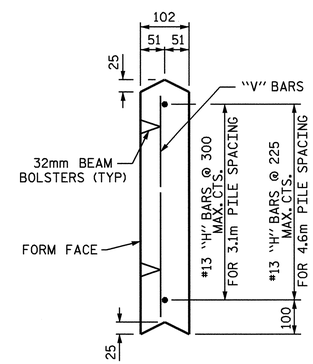

UPPER PANEL

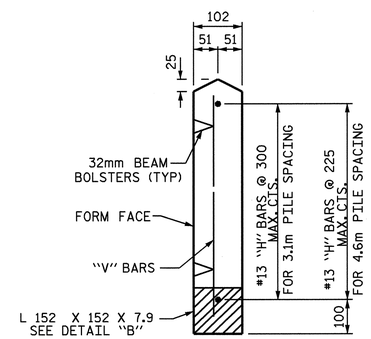

BOTTOM PANEL

SECTION THROUGH PRECAST PANELS

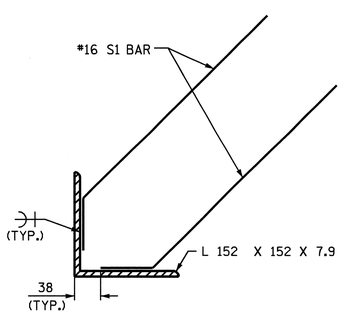

DETAIL "B"

ADDITIONAL BARS FOR ONE BOTTOM PANEL					
NO.	BAR	SIZE	TYPE	LENGTH	WEIGHT (kg)
4	S1	#16	1	460	3

BAR TYPE

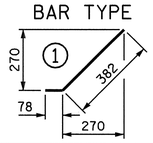

QUANTITIES FOR ONE PRECAST PANEL (FOR 3.1m PILE SPACING)													
PANEL HEIGHT	CLASS AA CONCRETE	BAR TYPES											
		HORIZONTAL						VERTICAL					
	C.M.	NO.	BAR	SIZE	TYPE	LENGTH	WEIGHT (kg)	NO.	BAR	SIZE	TYPE	LENGTH	WEIGHT (kg)
610	0.19	3	H1	#13	STR	2900	9	10	V1	#13	STR	500	5
910	0.28	4	H2	#13	STR	2900	12	10	V2	#13	STR	800	8
1220	0.37	5	H3	#13	STR	2900	14	10	V3	#13	STR	1120	11

QUANTITIES FOR ONE PRECAST PANEL (FOR 4.6m PILE SPACING)													
PANEL HEIGHT	CLASS AA CONCRETE	BAR TYPES											
		HORIZONTAL						VERTICAL					
	C.M.	NO.	BAR	SIZE	TYPE	LENGTH	WEIGHT (kg)	NO.	BAR	SIZE	TYPE	LENGTH	WEIGHT (kg)
910	0.42	4	H1	#13	STR	4400	17	15	V1	#13	STR	800	12
1220	0.56	5	H2	#13	STR	4400	22	15	V2	#13	STR	1120	17
1520	0.70	7	H3	#13	STR	4400	31	15	V3	#13	STR	1420	21
1830	0.84	8	H4	#13	STR	4400	35	15	V4	#13	STR	1720	26

PROJECT NO. X-0002B
CUMBERLAND COUNTY
STATION: STA. 25+80.000 -Y1-

SHEET 2 OF 2

STATE OF NORTH CAROLINA
DEPARTMENT OF TRANSPORTATION
RALEIGH

VISUAL BARRIER WALL

NORTH CAROLINA PROFESSIONAL SEAL 11259 ENGINEER DAVID R. ANDERSON
8/28/08

REVISIONS						SHEET NO.
NO.	BY:	DATE:	NO.	BY:	DATE:	W-13
1			3			TOTAL SHEETS
2			4			13

ASSEMBLED BY : JAT DATE : 5/07/08
CHECKED BY : S.L. WANCE DATE : 6/02/08

21-JUL-2008 13:46
R:\Structures\gjrolaml\FinalPlans\FINAL PLANS WALLS\X0002B_visual_barrier_walls.dgn
DANDERSON

STANDARD NOTES

DESIGN DATA:

SPECIFICATIONS	A.A.S.H.T.O. (CURRENT)
LIVE LOAD	SEE PLANS
IMPACT ALLOWANCE	SEE A.A.S.H.T.O.
STRESS IN EXTREME FIBER OF	
STRUCTURAL STEEL - AASHTO M270 GRADE 250	140 MPa
- AASHTO M270 GRADE 345W	190 MPa
- AASHTO M270 GRADE 345	190 MPa
REINFORCING STEEL IN TENSION	
GRADE 420	165 MPa
CONCRETE IN COMPRESSION	8.3 MPa
CONCRETE IN SHEAR	SEE A.A.S.H.T.O.
STRUCTURAL TIMBER - TREATED OR	
UNTREATED - EXTREME FIBER STRESS	12 MPa
COMPRESSION PERPENDICULAR TO GRAIN OF TIMBER	2.6 MPa
EQUIVALENT FLUID PRESSURE OF EARTH	480 kg/m^3 (MINIMUM)

MATERIAL AND WORKMANSHIP:

EXCEPT AS MAY OTHERWISE BE SPECIFIED ON PLANS OR IN THE SPECIAL PROVISIONS, ALL MATERIAL AND WORKMANSHIP SHALL BE IN ACCORDANCE WITH THE 2006 "STANDARD SPECIFICATIONS FOR ROADS AND STRUCTURES" OF THE N. C. DEPARTMENT OF TRANSPORTATION.

STEEL SHEET PILING FOR PERMANENT OR TEMPORARY APPLICATIONS SHALL BE HOT ROLLED.

CONCRETE:

UNLESS OTHERWISE REQUIRED ON PLANS, CLASS A CONCRETE SHALL BE USED FOR ALL PORTIONS OF ALL STRUCTURES WITH THE EXCEPTION THAT: CLASS AA CONCRETE SHALL BE USED IN BRIDGE SUPERSTRUCTURES, ABUTMENT BACKWALLS, AND APPROACH SLABS; CLASS B CONCRETE SHALL BE USED FOR SLOPE PROTECTION AND RIP RAP; AND CLASS S SHALL BE USED FOR UNDERWATER FOOTING SEALS.

CONCRETE CHAMFERS:

UNLESS OTHERWISE NOTED ON THE PLANS, ALL EXPOSED CORNERS ON STRUCTURES SHALL BE CHAMFERED 19mm WITH THE FOLLOWING EXCEPTIONS: TOP CORNERS OF CURBS MAY BE ROUNDED TO 38mm RADIUS WHICH IS BUILT INTO CURB FORMS; CORNERS OF TRANSVERSE FLOOR EXPANSION JOINTS SHALL BE ROUNDED WITH A 6mm FINISHING TOOL UNLESS OTHERWISE REQUIRED ON PLANS; AND CORNERS OF EXPANSION JOINTS IN THE ROADWAY FACES AND TOPS OF CURBS AND SIDEWALKS SHALL BE ROUNDED TO A 6mm RADIUS WITH A FINISHING STONE OR TOOL UNLESS OTHERWISE REQUIRED ON PLANS.

DOWELS:

DOWELS WHEN INDICATED ON PLANS AS FOR CULVERT EXTENSIONS, SHALL BE EMBEDDED AT LEAST 300mm INTO THE OLD CONCRETE AND GROUTED INTO PLACE WITH 1 :2 CEMENT MORTAR.

ALLOWANCE FOR DEAD LOAD DEFLECTION, SETTLEMENT, ETC. IN CASTING SUPERSTRUCTURES:

BRIDGES SHALL BE BUILT ON THE GRADE OR VERTICAL CURVE SHOWN ON PLANS. SLABS, CURBS AND PARAPETS SHALL CONFORM TO THE GRADE OR CURVE.

ALL DIMENSIONS WHICH ARE GIVEN IN SECTION AND ARE AFFECTED BY DEAD LOAD DEFLECTIONS ARE DIMENSIONS AT CENTER LINE OF BEARING UNLESS OTHERWISE NOTED ON PLANS. IN SETTING FORMS FOR STEEL BEAM BRIDGES AND PRESTRESSED CONCRETE GIRDER BRIDGES, ADJUSTMENTS SHALL BE MADE DUE TO THE DEAD LOAD DEFLECTIONS FOR THE ELEVATIONS SHOWN. WHERE BLOCKS ARE SHOWN OVER BEAMS FOR BUILDING UP TO THE SLAB, THE VERTICAL DIMENSIONS OF THE BLOCKS SHALL BE ADJUSTED BETWEEN BEARINGS TO COMPENSATE FOR DEAD LOAD DEFLECTIONS, VERTICAL CURVE ORDINATE, AND ACTUAL BEAM CAMBER. WHERE BOTTOM OF SLAB IS IN LINE WITH BOTTOM OF TOP FLANGES, DEPTH OF SLAB BETWEEN BEARINGS SHALL BE ADJUSTED TO COMPENSATE FOR DEAD LOAD DEFLECTION, VERTICAL CURVE ORDINATE, AND ACTUAL BEAM CAMBER.

IN SETTING FALSEWORK AND FORMS FOR REINFORCED CONCRETE SPANS, AN ALLOWANCE SHALL BE MADE FOR DEAD LOAD DEFLECTIONS, SETTLEMENT OF FALSEWORK, AND PERMANENT CAMBER WHICH SHALL BE PROVIDED FOR IN ADDITION TO THE ELEVATIONS SHOWN. AFTER REMOVAL OF THE FALSEWORK, THE FINISHED STRUCTURES SHALL CONFORM TO THE PROFILE AND ELEVATIONS SHOWN ON THE PLANS AND CONSTRUCTION ELEVATIONS FURNISHED BY THE ENGINEER.

DETAILED DRAWINGS FOR FALSEWORK OR FORMS FOR BRIDGE SUPERSTRUCTURE AND ANY STRUCTURE OR PARTS OF A STRUCTURE AS NOTED ON THE PLANS SHALL BE SUBMITTED TO THE ENGINEER FOR APPROVAL BEFORE CONSTRUCTION OF THE FALSEWORK OR FORMS IS STARTED.

REINFORCING STEEL:

ALL REINFORCING STEEL SHALL BE DEFORMED. DIMENSIONS RELATIVE TO PLACEMENT OF REINFORCING ARE TO CENTERS OF BARS UNLESS OTHERWISE INDICATED IN THE PLANS. DIMENSIONS ON BAR DETAILS ARE TO CENTERS OF BARS OR ARE OUT TO OUT AS INDICATED ON PLANS.

WIRE BAR SUPPORTS SHALL BE PROVIDED FOR REINFORCING STEEL WHERE INDICATED ON THE PLANS. WHEN BAR SUPPORT PIECES ARE PLACED IN CONTINUOUS LINES, THEY SHALL BE SO PLACED THAT THE ENDS OF THE SUPPORTING WIRES SHALL BE LAPPED TO LOCK LEGS ON ADJOINING PIECES.

STRUCTURAL STEEL:

AT THE CONTRACTOR'S OPTION, HE MAY SUBSTITUTE 22.23mm Ø SHEAR STUDS FOR THE 19.05mm Ø STUDS SPECIFIED ON THE PLANS. THIS SUBSTITUTION SHALL BE MADE AT THE RATE OF 3 -22.23mm Ø STUDS FOR 4 - 19.05mm Ø STUDS, AND STUD SPACING CHANGES SHALL BE MADE AS NECESSARY TO PROVIDE THE SAME EQUIVALENT NUMBER OF 22.23mm Ø STUDS ALONG THE BEAM AS SHOWN FOR 19.05mm Ø STUDS BASED ON THE RATIO OF 3 - 22.23mm Ø STUDS FOR 4 - 19.05mm Ø STUDS. STUDS OF THE LENGTH SPECIFIED ON THE PLANS MUST BE PROVIDED. THE MAXIMUM SPACING SHALL BE 610mm.

EXCEPT AT THE INTERIOR SUPPORTS OF CONTINUOUS BEAMS WHERE THE COVER PLATE IS IN CONTACT WITH BEARING PLATE, THE CONTRACTOR MAY, AT HIS OPTION, SUBSTITUTE FOR THE COVER PLATES DESIGNATED ON THE PLANS COVER PLATES OF THE EQUIVALENT AREA PROVIDED THESE PLATES ARE AT LEAST 8mm IN THICKNESS AND DO NOT EXCEED A WIDTH EQUAL TO THE FLANGE WIDTH LESS 50mm OR A THICKNESS EQUAL TO 2 TIMES THE FLANGE THICKNESS. THE SIZE OF FILLET WELDS SHALL CONFORM TO THE REQUIREMENTS OF THE CURRENT ANSI/AASHTO/AWS "BRIDGE WELDING CODE". ELECTROSLAG WELDING WILL NOT BE PERMITTED.

PLACEMENT OF BEAM OR GIRDER MEMBERS ON TRUCKS FOR HAULING SHALL BE DONE IN COMPLIANCE WITH LIMITS SHOWN ON SKETCHES PROVIDED TO THE MATERIALS AND TEST UNIT APPROVED BY THE STRUCTURE DESIGN UNIT DATED MAY 8, 1991. THESE SKETCHES PRIMARILY LIMIT THE UNSUPPORTED CANTILEVER LENGTH OF MEMBERS. WHEN THE CONTRACTOR WISHES TO PLACE MEMBERS ON TRUCKS NOT IN ACCORDANCE WITH THESE LIMITS, TO SHIP BY RAIL, TO ATTACH SHIPPING RESTRAINTS TO THE MEMBERS OR TO INVERT MEMBERS, HE SHALL SUBMIT A SKETCH FOR APPROVAL PRIOR TO SHIPPING. SEE ALSO ARTICLE 1072-11.

WITH THE SOLE EXCEPTION OF EDGES AT SURFACES WHICH BEAR ON OTHER SURFACES, ALL SHARP EDGES AND ENDS OF SHAPES AND PLATES SHALL BE SLIGHTLY ROUNDED BY SUITABLE MEANS TO A RADIUS OF APPROXIMATELY 2mm OR EQUIVALENT FLAT SURFACE AT A SUITABLE ANGLE PRIOR TO PAINTING, GALVANIZING, OR METALLIZING.

HANDRAILS AND POSTS:

METAL STANDARDS AND FACES OF THE CONCRETE END POSTS FOR THE METAL RAIL SHALL BE SET NORMAL TO THE GRADE OF THE CURB, UNLESS OTHERWISE SHOWN ON PLANS. THE METAL RAIL AND TOPS OF CONCRETE POSTS USED WITH THE ALUMINUM RAIL SHALL BE BUILT PARALLEL TO THE GRADE OF THE CURB.

METAL HANDRAILS SHALL BE IN ACCORDANCE WITH THE PLANS. RAILS SHALL BE AS MANUFACTURED FOR BRIDGE RAILING. CASTINGS SHALL BE OF A UNIFORM APPEARANCE. FINS AND OTHER DEFORMATIONS RESULTING FROM CASTING OR OTHERWISE SHALL BE REMOVED IN A MANNER SO THAT A UNIFORM COLORING OF THE COMPLETED CASTING SHALL BE OBTAINED. CASTINGS WITH DISCOLORATIONS OR OF NON-UNIFORM COLORING WILL NOT BE ACCEPTED. CERTIFIED MILL REPORTS ARE REQUIRED FOR METAL RAILS AND POSTS.

SPECIAL NOTES:

GENERALLY, IN CASE OF DISCREPANCY, THIS STANDARD SHEET OF NOTES SHALL GOVERN OVER THE SPECIFICATIONS, BUT THE REMAINDER OF THE PLANS SHALL GOVERN OVER NOTES HEREON, AND SPECIAL PROVISIONS SHALL GOVERN OVER ALL. SEE SPECIFICATIONS ARTICLE 105-4.

METRIC

JANUARY, 1990