T.I.P PROJECT R-2201

CONTRACT: C202042

See Sheet 1-A For Index of Sheets

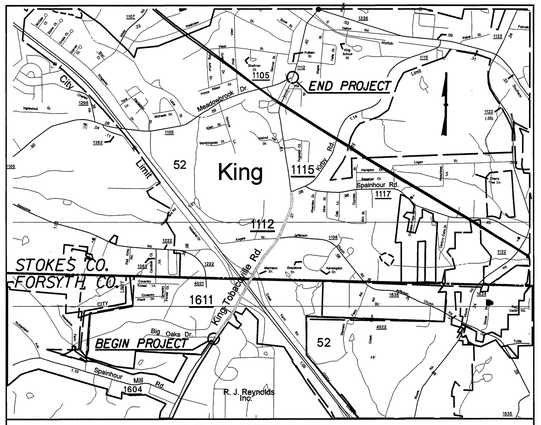

VICINITY MAP

STATE OF NORTH CAROLINA
DIVISION OF HIGHWAYS

UTILITY CONSTRUCTION PLANS
FORSYTH / STOKES COUNTY

T.I.P. NO.	SHEET NO.
R - 2201	UC-1

METRIC
ALL DIMENSIONS IN THESE PLANS ARE IN METERS

LOCATION: SR 1611–SR 1112 TOBACCOVILLE ROAD FROM RJR ENTRANCE IN FORSYTH COUNTY TO SR 1115 (KIRBY ROAD) IN KING IN STOKES COUNTY

TYPE OF WORK: UTILITY CONSTRUCTION

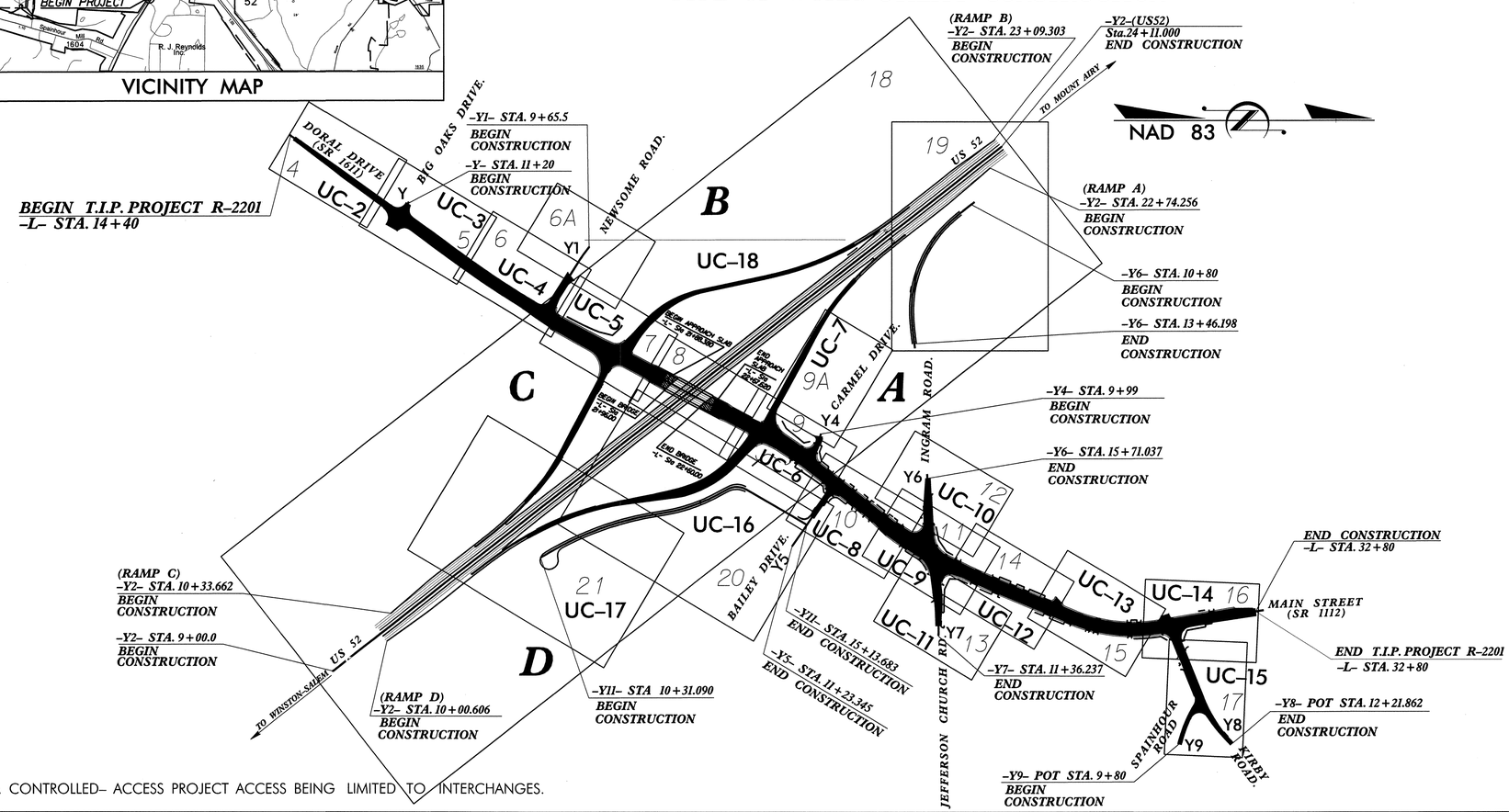

THIS IS A CONTROLLED– ACCESS PROJECT ACCESS BEING LIMITED TO INTERCHANGES.

PREPARED IN THE OFFICE OF:
DAVIS–MARTIN–POWELL AND ASSOCIATES, INC.
6415 OLD PLANK ROAD
HIGH POINT, NC 27265
PHONE (336) 886–4821
FAX (336) 886–4458

Randy McNeill, P.E.	UTILITIES PROJECT MANAGER
Andy Larrick, P.E.	UTILITIES PROJECT ENGINEER
Andy Larrick, P.E.	UTILITIES PROJECT DESIGNER

INDEX OF SHEETS

SHEET NO.	DESCRIPTION
UC–1	TITLE SHEET
UC–2 THRU UC–18	UTILITY CONSTRUCTION PLAN SHEETS
UC–19 THRU UC–21	UTILITY CONSTRUCTION PROFILE SHEETS
UC–22 THRU UC–24	PUMP STATION DETAIL SHEETS
UC–25 THRU UC–26	UTILITY CONSTRUCTION DETAIL SHEET

WATER AND SEWER OWNERS ON PROJECT

WATER – CITY OF KING,
WINSTON–SALEM / FORSYTH COUNTY UTILITIES
SEWER – CITY OF KING

SEAL

NORTH CAROLINA PROFESSIONAL SEAL 019177 ENGINEER RANDY L. MCNEILL 10/14/98

STATE OF NORTH CAROLINA DEPARTMENT OF TRANSPORTATION
DIVISION OF HIGHWAYS
PROJECT SERVICES
UTILITY SECTION
1591 MAIL SERVICES CENTER
RALEIGH NC 27699–1591
PHONE (919) 250–4128
FAX (919) 250–4119

Roger Worthington, P.E.	UTILITIES SECTION ENGINEER
Ronald B. Wilkins, P.E.	UTILITIES SQUAD LEADER PROJECT ENGINEER
Michael Bright	UTILITIES PROJECT DESIGNER

9/09/99
$$$$SYSTIME$$$$ $$$$SCALE$$$$ $$$$SCALEMAP$$$$

PROJECT REFERENCE NO.	SHEET NO.
R-2201	UC-2

DESIGNED BY: DMP
DRAWN BY: DMP
CHECKED BY: DMP
APPROVED BY:
REVISED:

NORTH CAROLINA DEPARTMENT OF TRANSPORTATION

PROJECT SERVICES UNIT
PHONE:(919)250-4128
FAX:(919)250-4119

NORTH CAROLINA PROFESSIONAL ENGINEER SEAL 19401 RANDY L. McNEILL
10/14/00

UTILITY CONSTRUCTION PLANS ONLY

METRIC 2.5 0 5

UTILITY CONSTRUCTION

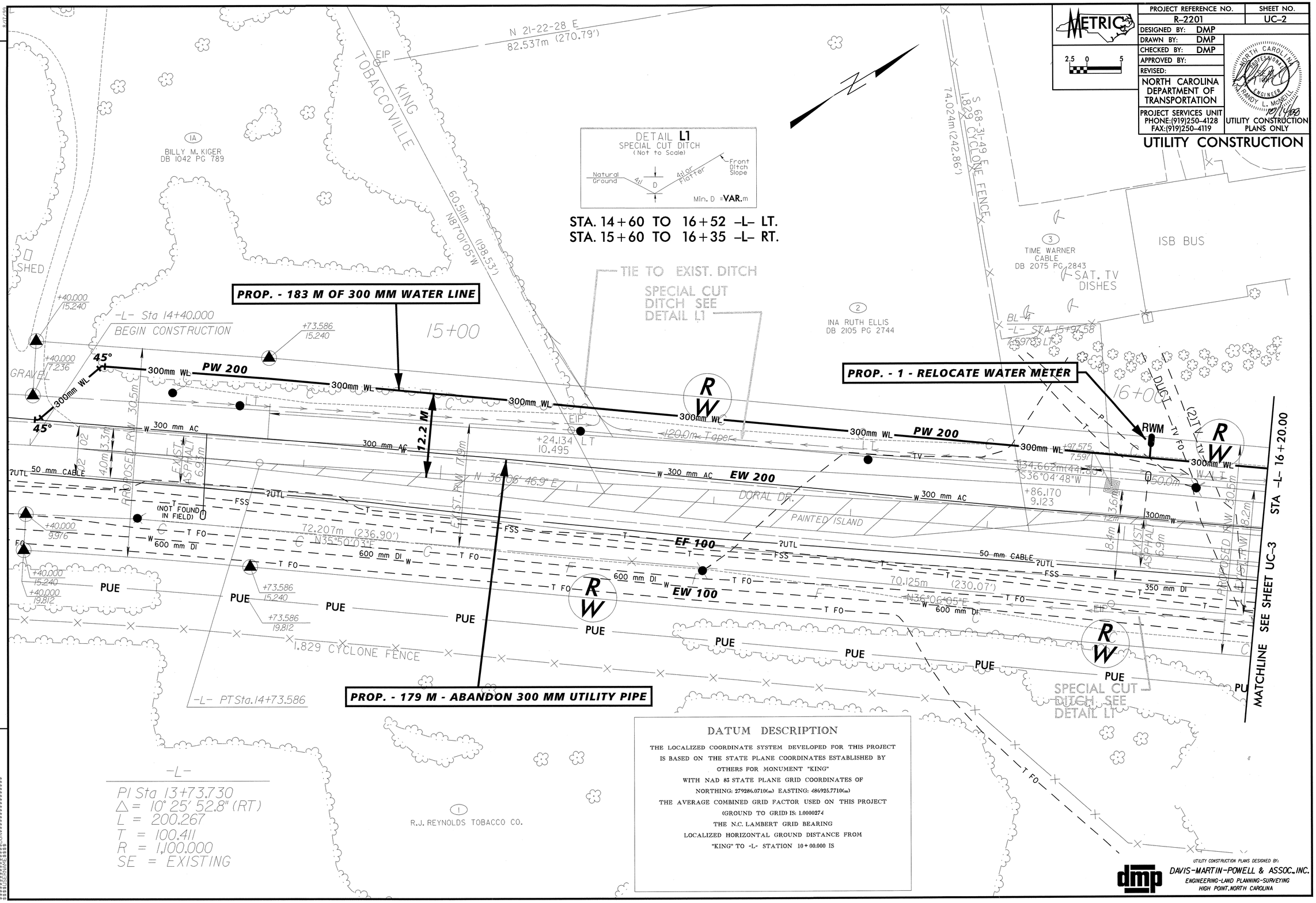

-L-

PI Sta 13+73.730
△ = 10° 25' 52.8" (RT)
L = 200.267
T = 100.411
R = 1,100.000
SE = EXISTING

DATUM DESCRIPTION

THE LOCALIZED COORDINATE SYSTEM DEVELOPED FOR THIS PROJECT IS BASED ON THE STATE PLANE COORDINATES ESTABLISHED BY OTHERS FOR MONUMENT "KING" WITH NAD 83 STATE PLANE GRID COORDINATES OF NORTHING: 279286.0710(m) EASTING: 486925.7710(m)
THE AVERAGE COMBINED GRID FACTOR USED ON THIS PROJECT (GROUND TO GRID) IS: 1.0000274
THE N.C. LAMBERT GRID BEARING LOCALIZED HORIZONTAL GROUND DISTANCE FROM "KING" TO -L- STATION 10+00.000 IS

REVISIONS

UTILITY CONSTRUCTION PLANS DESIGNED BY:
DAVIS-MARTIN-POWELL & ASSOC., INC.
ENGINEERING-LAND PLANNING-SURVEYING
HIGH POINT, NORTH CAROLINA

PROJECT REFERENCE NO.	SHEET NO.
R-2201	UC-3

DESIGNED BY: DMP
DRAWN BY: DMP
CHECKED BY: DMP
APPROVED BY:
REVISED:

NORTH CAROLINA DEPARTMENT OF TRANSPORTATION

PROJECT SERVICES UNIT
PHONE:(919)250-4128
FAX:(919)250-4119

UTILITY CONSTRUCTION PLANS ONLY

UTILITY CONSTRUCTION

METRIC

2.5 0 5

NORTH CAROLINA PROFESSIONAL ENGINEER SEAL RANDY L. MOSELLE 10/14/08

REVISIONS

8/17/99

DETAIL L1
SPECIAL CUT DITCH
(Not to Scale)
Natural Ground, 4:1, D, 4:1 or Flatter, Front Ditch Slope
Min. D = VAR.m

STA. 14+60 TO 16+52 -L- LT.
STA. 15+60 TO 16+35 -L- RT.

PI Sta 10+53.871
D = 14°57'45.33"(RT)
L = 41.000
T = 20.617
R = 157.000
S = EXIST

PI Sta 10+91.438
D = 18°04'55.7"(RT)
L = 34.084
T = 17.185
R = 108.000
S = EXIST

STANDARD 0.6m BASE TAIL DITCH SEE DETAIL L2 DDE = 113 cu. m.

PROP. - 180 M OF 300 MM WATER LINE

DETAIL L2
STANDARD BASE TAIL DITCH
(Not to Scale)
Natural Ground, 4:1, D, B, 4:1, Natural Ground
Min. D = 0.3 m
B = 0.6 m

STA. 17+00 +/- -L- LT.
DDE + 113 cu. m

PROP. - 6 M OF 300 MM WATER LINE

PROP. - 6 M OF 350 MM FORCE MAIN SEWER

PROP. - 1 - REMOVE WATER METER

PROP. - 180 M - ABANDON 300 MM UTILITY PIPE

MATCHLINE SEE SHEET UC-2 STA -L- 16+20.00

MATCHLINE SEE SHEET UC-4 STA -L- 18+00.00

UTILITY CONSTRUCTION PLANS DESIGNED BY:
DAVIS-MARTIN-POWELL & ASSOC., INC.
ENGINEERING-LAND PLANNING-SURVEYING
HIGH POINT, NORTH CAROLINA

PROJECT REFERENCE NO.	SHEET NO.
R-2201	UC-4

DESIGNED BY: DMP
DRAWN BY: DMP
CHECKED BY: DMP
APPROVED BY:
REVISED:

NORTH CAROLINA DEPARTMENT OF TRANSPORTATION

PROJECT SERVICES UNIT
PHONE:(919)250-4128
FAX:(919)250-4119

UTILITY CONSTRUCTION PLANS ONLY

UTILITY CONSTRUCTION

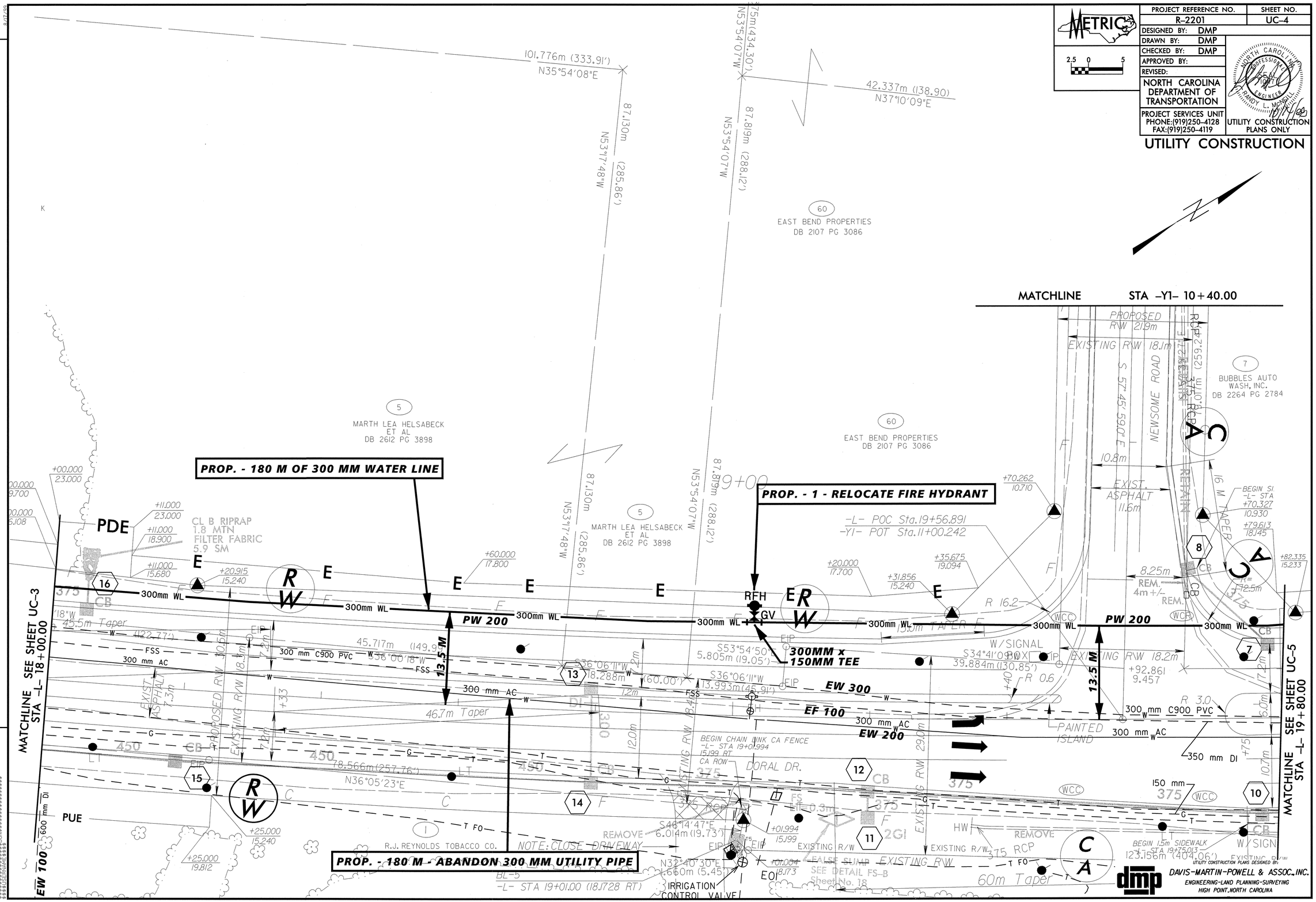

REVISIONS

PROJECT REFERENCE NO.	SHEET NO.
R-2201	UC-5

DESIGNED BY: DMP
DRAWN BY: DMP
CHECKED BY: DMP
APPROVED BY:
REVISED:

NORTH CAROLINA DEPARTMENT OF TRANSPORTATION

PROJECT SERVICES UNIT
PHONE:(919)250-4128
FAX:(919)250-4119

UTILITY CONSTRUCTION PLANS ONLY

UTILITY CONSTRUCTION

METRIC 2.5 0 5

MATCHLINE SEE SHEET UC-18
RAMP B STA. 4+80.00

DETAIL B6
SPECIAL CUT GRASSED SWALE
(Not to Scale)
Natural Ground, 6:1, D, B, 6:1, Fill Slope, Hinge Point, Front Ditch Slope
Min. D = VAR. m
B = 0.6 m

DETAIL B5
TOE PROTECTION
(Not to Scale)
Natural Ground, d, 2:1 or Flatter, Fill Slope, Filter Fabric
d = 0.2 m
Type of Liner = CLASS B RIP RAP

STA. 5+20 TO 5+40 RAMP B RT.
DDE = 40 cu. m.

STA. 4+89 TO 5+20 –RAMP B– RT.

PROP. - 247 M OF 300 MM WATER LINE

PROP. - 102 M OF 350 MM FORCE MAIN SEWER

PROP. - 1 - RELOCATE WATER METER
1 - RELOCATE 50MM DCV BACKFLOW PREVENTER

PROP. - 178 M - ABANDON 350 MM UTILITY PIPE

DETAIL C
STANDARD GRASSED SWALE
(Not to Scale)
Natural Ground, 12:1, D, B, 12:1, Natural Ground
Min. D = VAR. m
B = 0.9 m

DETAIL I
0.9m BASE TAIL DITCH
(Not to Scale)
Natural Ground, 6:1, D, 6:1, Natural Ground, 0.9m
MIN. D = 0.3 m

STA. 21+40 +/– –L– RT.
DDE=320 cu. m.
STA. 21+70 +/– –L– LT.
DDE=145 cu. m.

STA 4+80+/– –RPB– LT.
DDE= 105 cu. m.

PROP. - 1 - RELOCATE FIRE HYDRANT

PROP. - 320 M - ABANDON 300 MM UTILITY PIPE

PROP. - 1 - 100 MM AIR RELEASE VALVE

PROP. - 2 - ABANDON UTILITY MANHOLE

PROP. - 1 - RELOCATE WATER METER

300MM x 150MM TEE

MATCHLINE SEE SHEET UC-4
STA –L– 19+80.00

MATCHLINE STA –L– 21+60.00

MATCHLINE
RAMP C STA. 3+60.00

PAVEMENT REMOVAL

NO ASSOCIATED PIPING FOUND FOR THIS WM.

RAMP B POT Sta.5+57.433
RAMP C POT Sta.4+00.704
-L- Sta.20+92.895

TYPE 350 GRAU
BEGIN GR
-L- STA 21+43.560

END GR
-L- STA. 21+20.859

END C&G/SW
-L- STA. 20+94.846

0.9m BASE GRASSED SWALE TAIL DITCH SEE DETAIL C
DDE=320 cu.m

UTILITY CONSTRUCTION PLANS DESIGNED BY:
DAVIS-MARTIN-POWELL & ASSOC., INC.
ENGINEERING-LAND PLANNING-SURVEYING
HIGH POINT, NORTH CAROLINA

REVISIONS

8/17/98

PROJECT REFERENCE NO.	SHEET NO.
R-2201	UC-6

DESIGNED BY: DMP
DRAWN BY: DMP
CHECKED BY: DMP
APPROVED BY:
REVISED:

NORTH CAROLINA DEPARTMENT OF TRANSPORTATION

PROJECT SERVICES UNIT
PHONE:(919)250-4128
FAX:(919)250-4119

METRIC 2.5 0 5

NORTH CAROLINA PROFESSIONAL ENGINEER SEAL — RANDY L. MCNEILL — 10/17/08

UTILITY CONSTRUCTION PLANS ONLY

UTILITY CONSTRUCTION

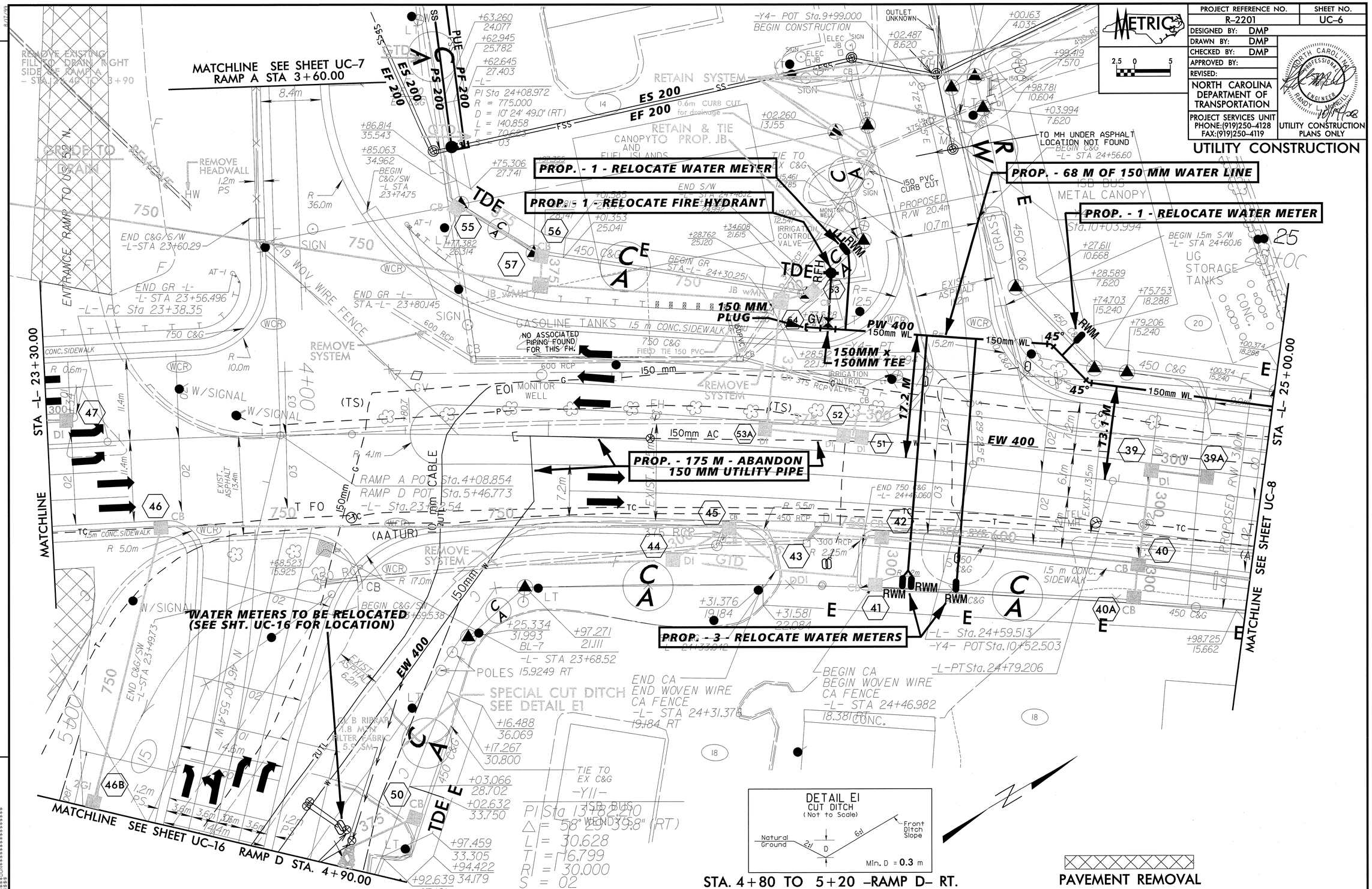

UTILITY CONSTRUCTION PLANS DESIGNED BY:
DAVIS-MARTIN-POWELL & ASSOC., INC.
ENGINEERING-LAND PLANNING-SURVEYING
HIGH POINT, NORTH CAROLINA

REVISIONS

8/17/08

PROJECT REFERENCE NO.	SHEET NO.
R-2201	UC-7

DESIGNED BY: DMP
DRAWN BY: DMP
CHECKED BY: DMP
APPROVED BY:
REVISED:

NORTH CAROLINA DEPARTMENT OF TRANSPORTATION

PROJECT SERVICES UNIT
PHONE:(919)250-4128
FAX:(919)250-4119

UTILITY CONSTRUCTION PLANS ONLY

UTILITY CONSTRUCTION

METRIC 2.5 0 5

NORTH CAROLINA PROFESSIONAL SEAL ENGINEER RANDY L. MORRIS 10/24/08

DETAIL H
BERM DITCH
(Not to Scale)
2.1m
1.5m
1.5m
CLEARING LIMITS
D VAR.
Min. D = 0.6m

TO -RPA- LT.

PROP. MH 4
STA. 1+16, LINE PS300
-RAMP A- STA. 2+00.2, 35.7 M LT.

PROP. MH 3
STA. 0+51, LINE PS300
-RAMP A- STA. 2+68.2, 35.7 M LT.

PROP. - 1 - 20 MM WATER METER
25 MM RPZ BACKFLOW PREVENTER

PROP. - 58 M OF 25 MM
WATER LINE

PROP. - 1 - ABANDON
UTILITY MANHOLE

PROP. - 64 M OF 65 MM
FORCE MAIN SEWER

PROP. - 7 M OF 200 MM
SANITARY GRAVITY SEWER

PROP. SAN. SEWER PUMP STA.
STA. 0+00, LINE PS300
(SEE SHEETS UC-22 THRU UC-24
FOR DETAILS
-RAMP A- STA. 3+07.4, 26 M LT.

PROP. - 40 M OF 200 MM
SANITARY GRAVITY SEWER

PROP. - 65 M OF 200 MM
SANITARY GRAVITY SEWER

PROP. - 37 M OF 200 MM
SANITARY GRAVITY SEWER

PROP. MH 5
STA. 1+56, LINE PS300
-RAMP A- STA. 1+57, 35.7 M LT.

PROP. - 260 M - ABANDON
200 MM UTILITY PIPE

PROP. - 1 - ABANDON
UTILITY MANHOLE

PROP. MH 2
STA. 0+14, LINE PS300
-RAMP A- STA. 3+01.3, 18.7 M LT.

PROP. - 1 - ABANDON
EX. PUMP STATION

PROP. - 1 - ABANDON
UTILITY MANHOLE

PROP. - 7 M OF 200 MM
SANITARY GRAVITY SEWER

PROP. - 62 M OF 200 MM
SANITARY GRAVITY SEWER

PROP. - 1 - ABANDON
UTILITY MANHOLE
(JUST SOUTH OF
SHEET BORDER)

PROP. MH 1
STA. 0+07, LINE PS300 =
STA. 0+00, LINE 200
-RAMP A- STA. 3+08.1, 19.3 M LT.

PROP. MH 6
STA. 0+62, LINE PS200
-RAMP A- STA. 3+69.3, 25.3 M LT.

MATCHLINE SEE SHT UC-6
RAMP A STA 3+60.00

REMOVE EXISTING FILL TO DRAIN RIGHT SIDE OF RAMP A STA. 2+40 TO 3+90

PLACE BERM BEHIND MCDONALD IN ORDER TO DRAIN LEFT SIDE OF RAMP A STA. 3+00 TO 3+80

UTILITY CONSTRUCTION PLANS DESIGNED BY:
DAVIS-MARTIN-POWELL & ASSOC., INC.
ENGINEERING-LAND PLANNING-SURVEYING
HIGH POINT, NORTH CAROLINA

PROJECT REFERENCE NO.	SHEET NO.
R-2201	UC-8

DESIGNED BY: DMP
DRAWN BY: DMP
CHECKED BY: DMP
APPROVED BY:
REVISED:

NORTH CAROLINA DEPARTMENT OF TRANSPORTATION

PROJECT SERVICES UNIT
PHONE:(919)250-4128
FAX:(919)250-4119

METRIC 2.5 0 5

NORTH CAROLINA PROFESSIONAL SEAL 019117 ENGINEER RANDY L. MENGILL 10/17/08

UTILITY CONSTRUCTION PLANS ONLY

UTILITY CONSTRUCTION

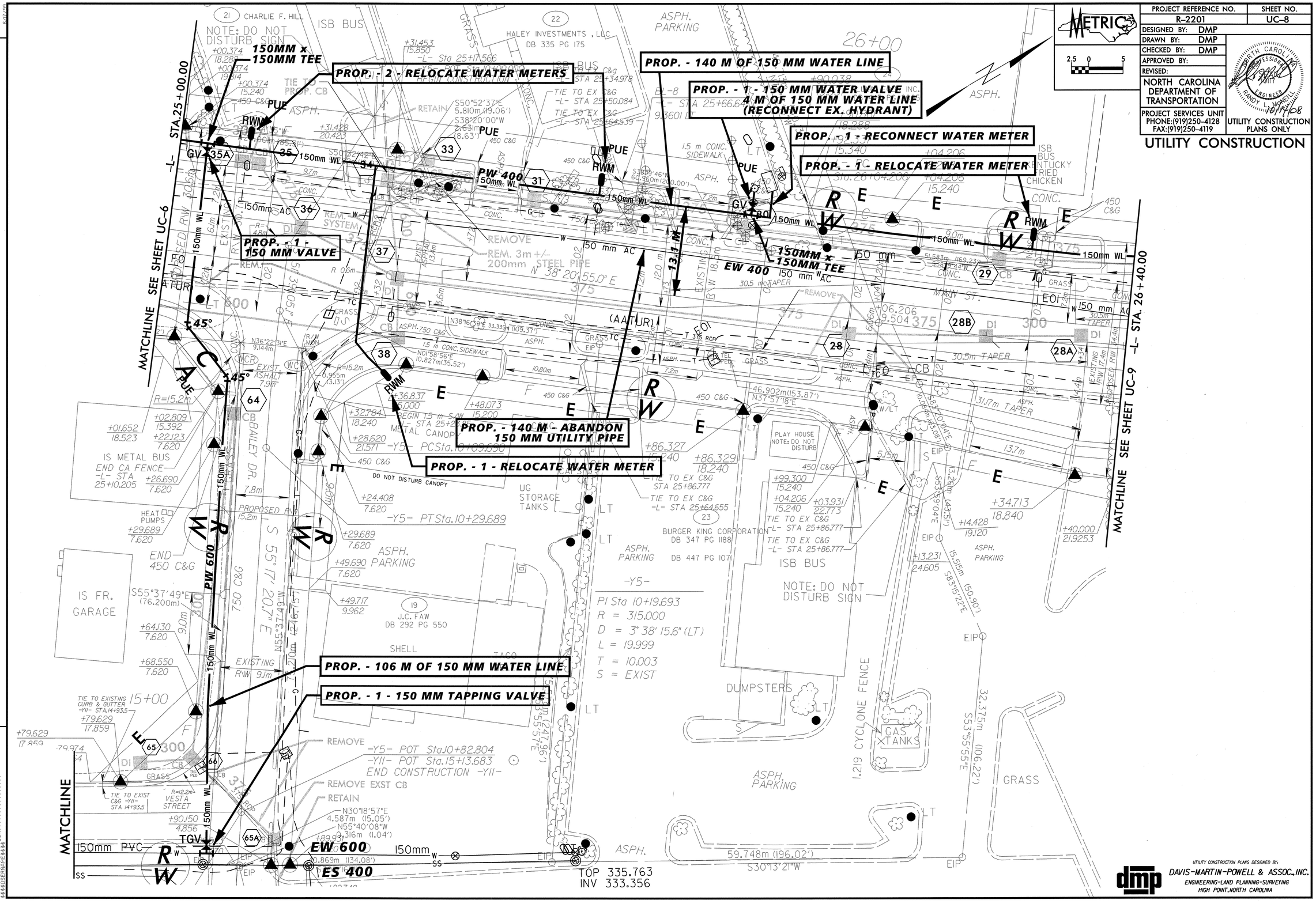

UTILITY CONSTRUCTION PLANS DESIGNED BY:
DAVIS-MARTIN-POWELL & ASSOC., INC.
ENGINEERING-LAND PLANNING-SURVEYING
HIGH POINT, NORTH CAROLINA

REVISIONS

8/17/08

PROJECT REFERENCE NO.	SHEET NO.
R-2201	UC-9
DESIGNED BY: DMP	
DRAWN BY: DMP	
CHECKED BY: DMP	
APPROVED BY:	
REVISED:	
NORTH CAROLINA DEPARTMENT OF TRANSPORTATION	
PROJECT SERVICES UNIT PHONE:(919)250-4128 FAX:(919)250-4119	UTILITY CONSTRUCTION PLANS ONLY

METRIC 2.5 0 5

NORTH CAROLINA PROFESSIONAL SEAL ENGINEER SANDY L. WERNILL 12/19/08

UTILITY CONSTRUCTION

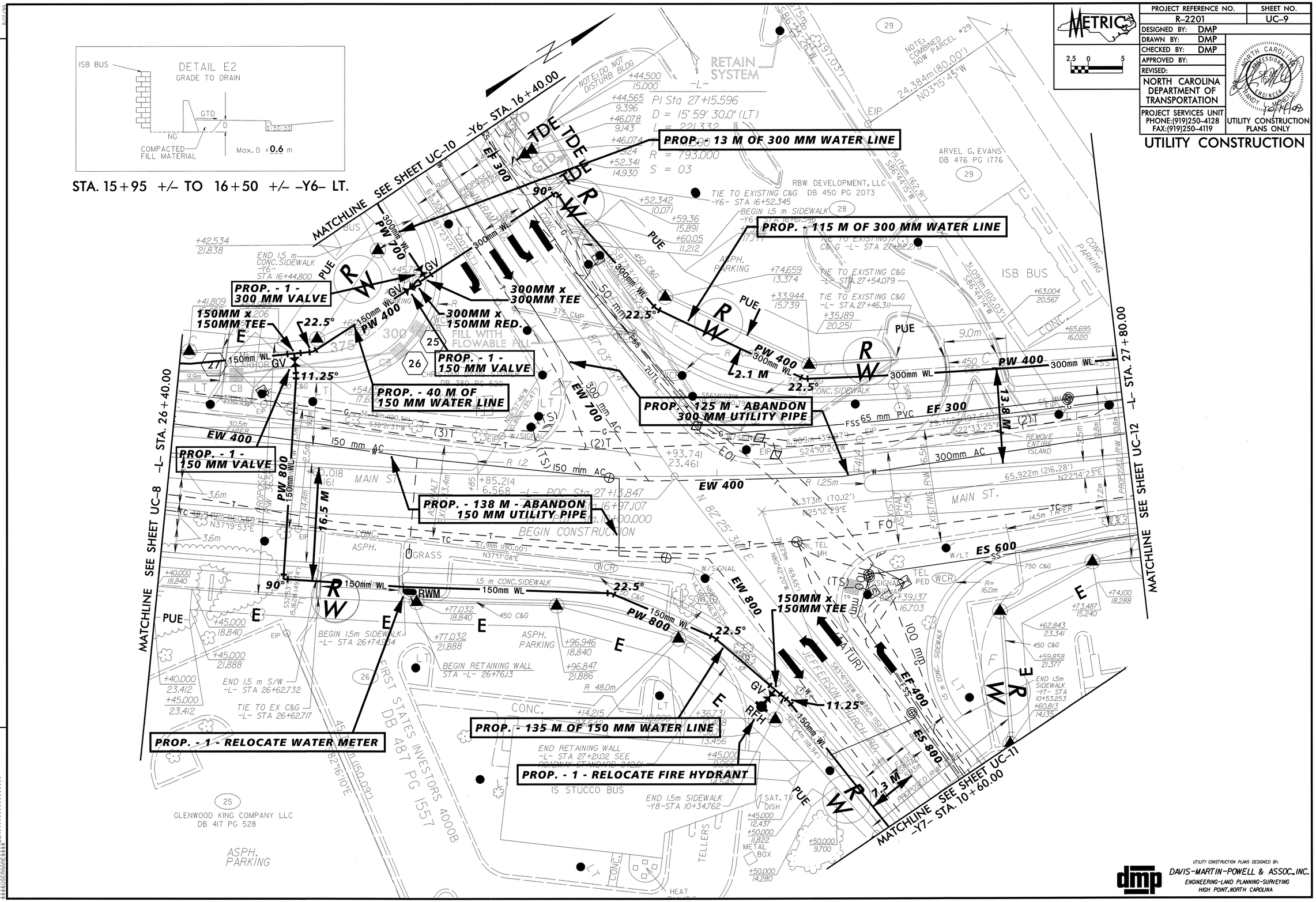

UTILITY CONSTRUCTION PLANS DESIGNED BY:
DAVIS-MARTIN-POWELL & ASSOC., INC.
ENGINEERING-LAND PLANNING-SURVEYING
HIGH POINT, NORTH CAROLINA

REVISIONS

8/27/08

PROJECT REFERENCE NO.	SHEET NO.
R-2201	UC-10

DESIGNED BY: DMP
DRAWN BY: DMP
CHECKED BY: DMP
APPROVED BY:
REVISED:

NORTH CAROLINA DEPARTMENT OF TRANSPORTATION

PROJECT SERVICES UNIT
PHONE:(919)250-4128
FAX:(919)250-4119

UTILITY CONSTRUCTION PLANS ONLY

UTILITY CONSTRUCTION

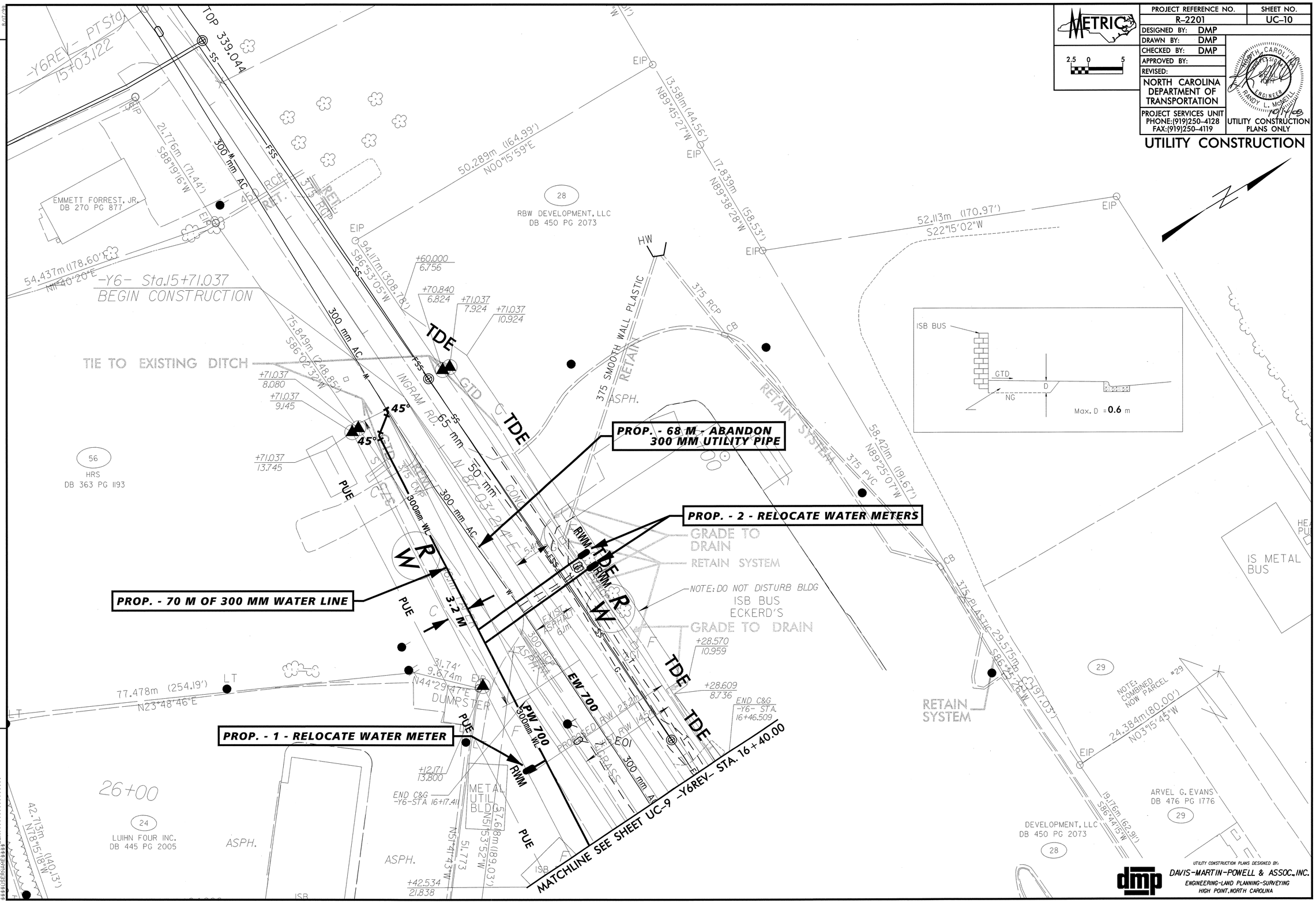

UTILITY CONSTRUCTION PLANS DESIGNED BY:
DAVIS-MARTIN-POWELL & ASSOC., INC.
ENGINEERING-LAND PLANNING-SURVEYING
HIGH POINT, NORTH CAROLINA

REVISIONS

PROJECT REFERENCE NO.	SHEET NO.
R-2201	UC-11

DESIGNED BY: DMP
DRAWN BY: DMP
CHECKED BY: DMP
APPROVED BY:
REVISED:

NORTH CAROLINA DEPARTMENT OF TRANSPORTATION

PROJECT SERVICES UNIT
PHONE:(919)250-4128
FAX:(919)250-4119

NORTH CAROLINA PROFESSIONAL ENGINEER SEAL — RANDY L. MCNEILL — 10/14/08

UTILITY CONSTRUCTION PLANS ONLY

UTILITY CONSTRUCTION

METRIC 2.5 0 5

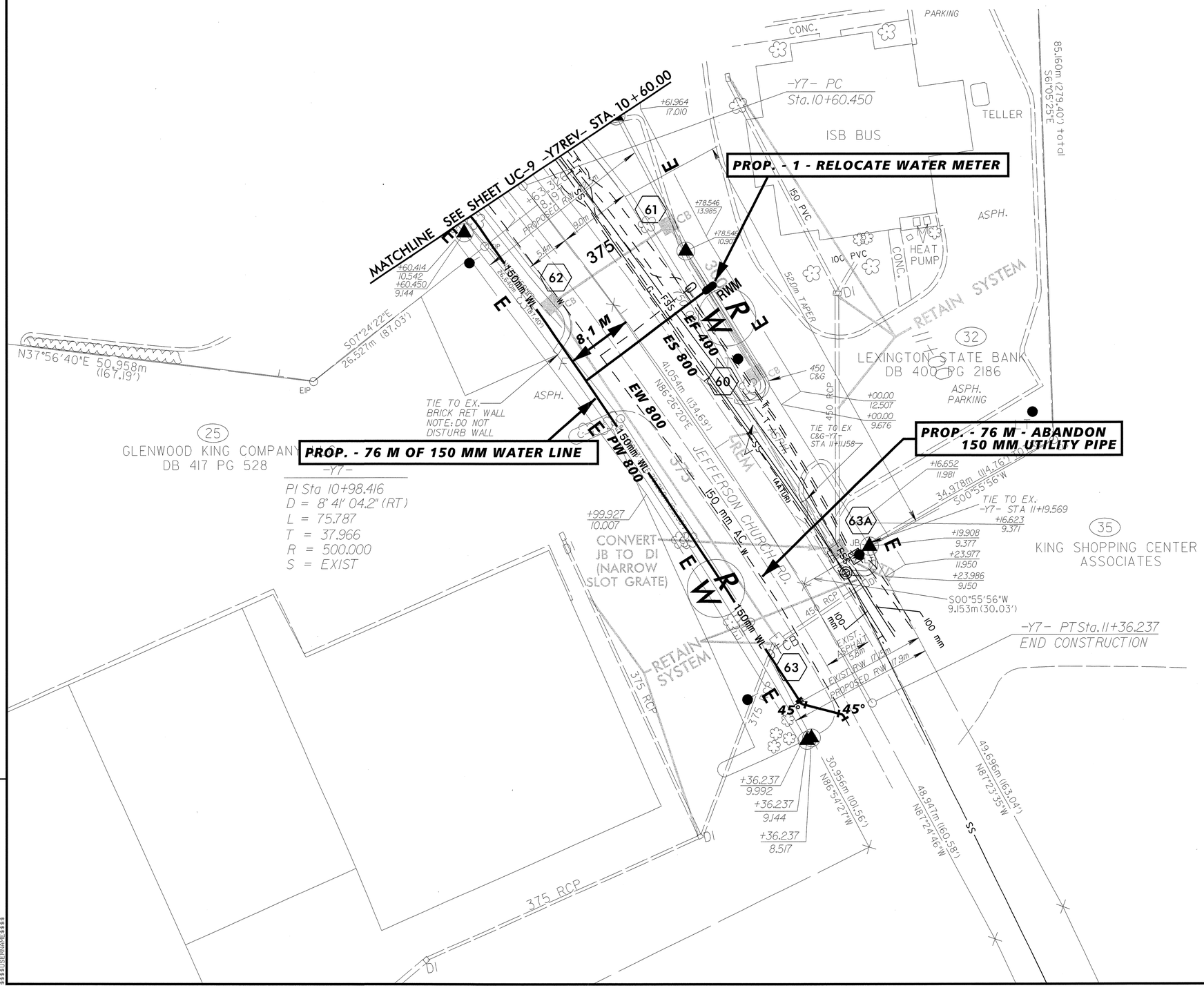

UTILITY CONSTRUCTION PLANS DESIGNED BY:
DAVIS-MARTIN-POWELL & ASSOC., INC.
ENGINEERING-LAND PLANNING-SURVEYING
HIGH POINT, NORTH CAROLINA

REVISIONS

8/17/99

PROJECT REFERENCE NO.	SHEET NO.
R-2201	UC-12

DESIGNED BY: DMP
DRAWN BY: DMP
CHECKED BY: DMP
APPROVED BY:
REVISED:

NORTH CAROLINA DEPARTMENT OF TRANSPORTATION

PROJECT SERVICES UNIT
PHONE:(919)250-4128
FAX:(919)250-4119

UTILITY CONSTRUCTION PLANS ONLY

UTILITY CONSTRUCTION

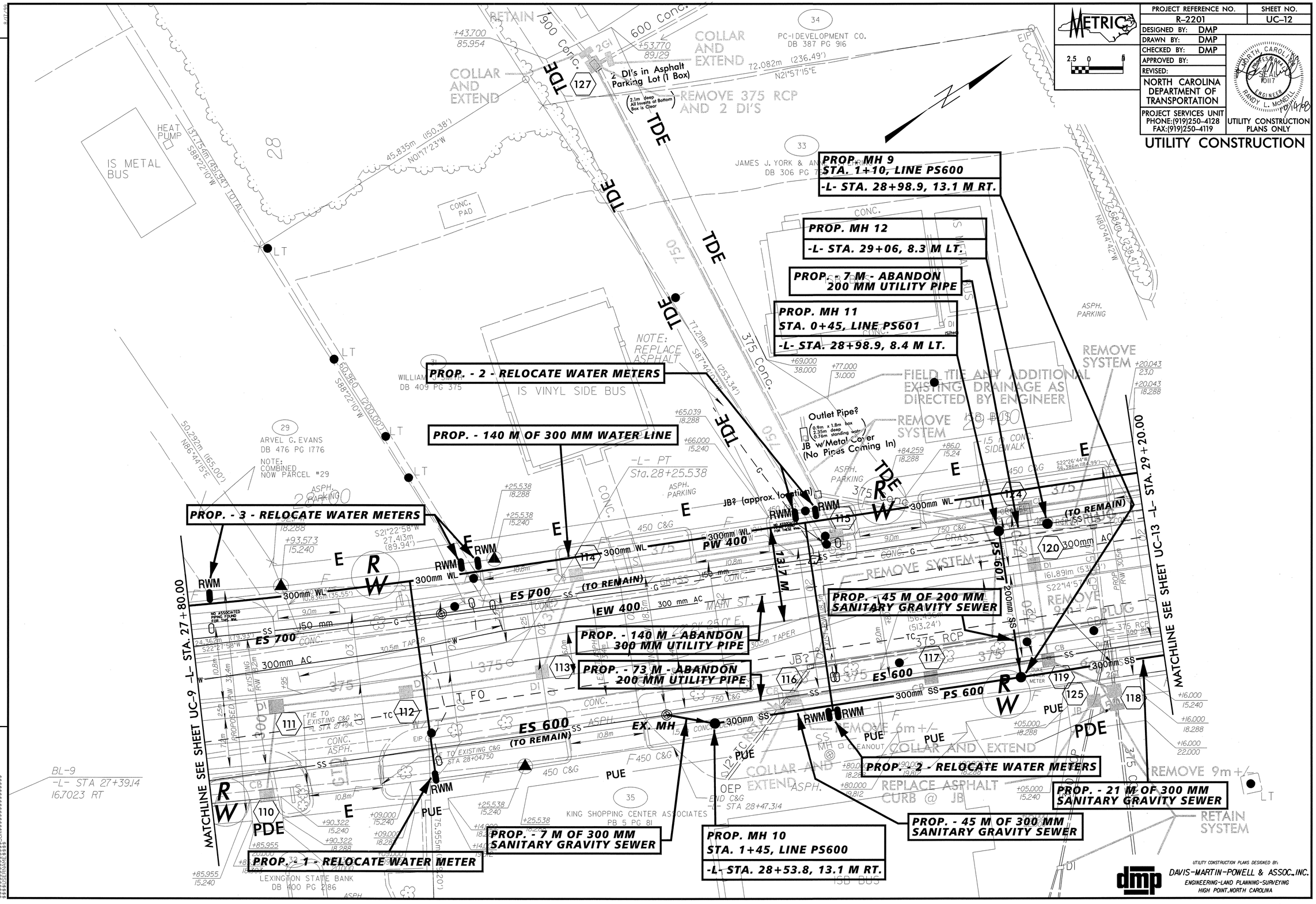

UTILITY CONSTRUCTION PLANS DESIGNED BY:
DAVIS-MARTIN-POWELL & ASSOC., INC.
ENGINEERING-LAND PLANNING-SURVEYING
HIGH POINT, NORTH CAROLINA

REVISIONS

8/17/99

PROJECT REFERENCE NO.	SHEET NO.
R-2201	UC-13

DESIGNED BY: DMP
DRAWN BY: DMP
CHECKED BY: DMP
APPROVED BY:
REVISED:

NORTH CAROLINA DEPARTMENT OF TRANSPORTATION

PROJECT SERVICES UNIT
PHONE:(919)250-4128
FAX:(919)250-4119

NORTH CAROLINA PROFESSIONAL ENGINEER SEAL 019 RANDY L. MCNEILL 12/11/08

UTILITY CONSTRUCTION PLANS ONLY

UTILITY CONSTRUCTION

METRIC 2.5 0 5

PC-1 DEVELOPMENT CO.
DB 387 PG 916

ISB BUS
LITTLE ITALY

LOOZ PASQUALE
DB 466 PG 2043

DONALD HAMPTON
DB 401 PG 1355

FIRST CITIZENS BANK & TRUST CO.
DB 401 PG 1355

UNITED STATES POSTAL SERVICE
DB 300 PG 880

KING SHOPPING CENTER ASSOCIATES
MB 5 PG 81

ISB&STUCCO BUS

POST OFFICE

MATCHLINE SEE SHEET UC-12 -L- STA. 29+20.00

MATCHLINE SEE SHEET UC-14 -L- STA. 31+00.00

PROP. - 180 M OF 300 MM WATER LINE

PROP. - 1 - 50 MM VALVE

PROP. - 1 - 300 MM VALVE

PROP. - 180 M - ABANDON 300 MM UTILITY PIPE

PROP. - 2 - RELOCATE WATER METERS

300MM x 150MM TEE

PROP. - 29 M OF 50 MM WATER LINE

PROP. - 86 M - ABANDON 200 MM UTILITY PIPE

PROP. - 1 - ABANDON UTILITY MANHOLE

PROP. - 7 M OF 300 MM SANITARY GRAVITY SEWER

PROP. - 54 M OF 300 MM SANITARY GRAVITY SEWER

PROP. - 28 M OF 300 MM SANITARY GRAVITY SEWER

PROP. MH 8
STA. 0+61, LINE PS600
-L- STA. 29+48, 13.0 M RT.

PROP. MH 7
STA. 0+07, LINE PS600
-L- STA. 30+00.8, 14.1 M RT.

PROP. - 1 - RELOCATE FIRE HYDRANT

REMOVE 4 TREES AND GRIND STUMPS AT POST OFFICE

UTILITY CONSTRUCTION PLANS DESIGNED BY:
DAVIS-MARTIN-POWELL & ASSOC., INC.
ENGINEERING-LAND PLANNING-SURVEYING
HIGH POINT, NORTH CAROLINA

REVISIONS

8/27/08

PROJECT REFERENCE NO.	SHEET NO.
R-2201	UC-14

DESIGNED BY: DMP
DRAWN BY: DMP
CHECKED BY: DMP
APPROVED BY:
REVISED:

NORTH CAROLINA DEPARTMENT OF TRANSPORTATION

PROJECT SERVICES UNIT
PHONE:(919)250-4128
FAX:(919)250-4119

UTILITY CONSTRUCTION PLANS ONLY

UTILITY CONSTRUCTION

PROP. - 1 - RELOCATE WATER METER
PROP. - 1 - RELOCATE FIRE HYDRANT
PROP. - 1 - RELOCATE WATER METER
PROP. - 1 - RECONNECT WATER METER
PROP. - 180 M OF 300 MM WATER LINE
PROP. - 12 M OF 200 MM SANITARY GRAVITY SEWER
PROP. - 2 - RECONNECT WATER METERS
PROP. - 1 - RELOCATE FIRE HYDRANT
PROP. - 1 - REMOVE WATER METER
PROP. - 1 - 200 MM VALVE
PROP. - 2 - 300 MM VALVES
300MM x 200MM TEE
300MM x 300MM TEE
22.5° & 11.25°
45°
300MM x 150MM TEE
PROP. - 180 M - ABANDON 300 MM UTILITY PIPE
PROP. MH 15 STA. 0+23, LINE PS900 -L- STA. 31+67.41, 9.3 M RT.
PROP. MH 13 STA. 0+00, LINE PS900 -L- STA. 31+89.02, 6.9 M RT.
PROP. - 3 M OF 200 MM SANITARY GRAVITY SEWER
PROP. MH 14 STA. 0+03, LINE PS900 -L- STA. 31+87.26, 9.6 M RT.
PROP. - 2 - RECONNECT WATER METERS
PROP. - 27 M OF 200 MM SANITARY GRAVITY SEWER
PROP. MH 16 STA. 0+30, LINE PS900 -L- STA. 31+61.4, 13.2 M RT.
PROP. - 14 M OF 200 MM SANITARY GRAVITY SEWER
PROP. - 1 - ABANDON UTILITY MANHOLE
56 M - ABANDON 200 MM UTILITY PIPE
PROP. MH 17 STA. 0+44, LINE PS900 -Y8- STA. 10+27.2, 7.7 M LT.
PROP. - 62 M OF 300 MM WATER LINE
PROP. - 54 M - ABANDON 300 MM UTILITY PIPE
56 M - ABANDON 200 MM UTILITY PIPE
PROP. - 70 M OF 200 MM WATER LINE
PROP. - 1 - RELOCATE WATER METER
MATCHLINE SEE SHEET UC-13 -L- STA. 31+00.00
MATCHLINE SEE SHEET UC-15 STA. -Y8- 10+50.00

UTILITY CONSTRUCTION PLANS DESIGNED BY:
DAVIS-MARTIN-POWELL & ASSOC., INC.
ENGINEERING-LAND PLANNING-SURVEYING
HIGH POINT, NORTH CAROLINA

REVISIONS

PROJECT REFERENCE NO.	SHEET NO.
R-2201	UC-15

DESIGNED BY: DMP
DRAWN BY: DMP
CHECKED BY: DMP
APPROVED BY:
REVISED:

NORTH CAROLINA DEPARTMENT OF TRANSPORTATION

PROJECT SERVICES UNIT
PHONE:(919)250-4128
FAX:(919)250-4119

NORTH CAROLINA PROFESSIONAL ENGINEER SEAL — RANDY L. MORRELL — 12/14/22

UTILITY CONSTRUCTION PLANS ONLY

UTILITY CONSTRUCTION

METRIC 2.5 0 5

DETAIL E1
CUT DITCH
(Not to Scale)

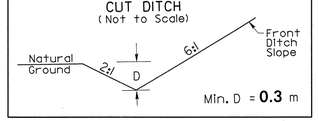

STA. 10+00 TO 10+65 -Y9- LT.

-Y8-
PI Sta 11+69.192
D = 21° 05' 50.0" (LT)
L = 80.606
T = 40.765
R = 218.910
S = EXIST

PROP. - 168 M OF 300 MM WATER LINE
PROP. - 1 - RECONNECT WATER METER
PROP. - 168 M - ABANDON 300 MM UTILITY PIPE
170 M - ABANDON 200 MM UTILITY PIPE
PROP. - 175 M OF 200 MM WATER LINE
PROP. - 2 - RECONNECT WATER METERS
PROP. - 1 - 200 MM VALVE
PROP. - 98 M - ABANDON 150 MM UTILITY PIPE
PROP. - 78 M OF 150 MM WATER LINE
PROP. - 1 - 150 MM VALVE
PROP. - 1 - RELOCATE FIRE HYDRANT
PROP. - 4 M OF 150 MM WATER LINE
1 - 150 MM VALVE
PROP. - 2 - RECONNECT WATER METERS

-Y9- PT Sta.10+80.256
-Y8- POC STA 11+34.951
-Y8- PC Sta.11+28.427
-Y8- PT Sta.12+09.034
-Y8- POT Sta.12+21.862
END CONSTRUCTION
-Y9- POT Sta.9+80.000
BEGIN CONSTRUCTION
-Y9- PC Sta.10+02.213
-Y9- Sta.10+52.213
END 750 C&G -Y8- STA.11+88
END 750 C&G -Y8- STA 11+62.909
END 750 C&G -Y8- STA.10+74.139
END 750 C&G -Y8- STA.10+66.799
END 750 C&G -Y8- STA.10+55.312
BEGIN 750 C&G -Y9- STA 10+45.208
TIE TO EXIST C&G -Y9- STA.10+51.042

-Y9-
PI Sta 10+27.288
D = 10° 53' 33.8" (RT)
L = 50.000
T = 25.076
R = 263.000
S = EXIST

PI Sta 10+66.494
D = 26° 46' 34.42" (RT)
L = 28.040
T = 14.281
R = 60.000
S = EXIST

STANDARD CUT DITCH
SEE DETAIL E1

300 mm COLLAR AND EXTEND

NO ASSOCIATED PIPING FOUND FOR THIS WM.

200MM x 150MM TEE

MATCHLINE SEE SHEET UC-14 STA -Y8- 10+50.00

ISB BLDG
SUPERIOR COURT
JUSTICE OFFICE

ISF BLDG

MARGARET MONTEITH
DBA MAGPIEHAIG PROPERTIES,LLC
DB 411 PG 731

MARY VIRGINIA LOFTIN
DB 406 PG 399

TAYLOR OIL COMPANY
DB 263 PG 165

SOUTHERN NATIONAL BANK
DB 369 PG 2273

UNITED STATES POSTAL SERVICE
DB 300 PG 880

DAVID A. HAUSER & WIFE
JEAN P. HAUSER
DB 316 PG 1601

KIRBY RD.
SPANHOUR RD.

REVISIONS

UTILITY CONSTRUCTION PLANS DESIGNED BY:
DAVIS-MARTIN-POWELL & ASSOC., INC.
ENGINEERING-LAND PLANNING-SURVEYING
HIGH POINT, NORTH CAROLINA

PROJECT REFERENCE NO.	SHEET NO.
R-2201	UC-16

DESIGNED BY: DMP
DRAWN BY: DMP
CHECKED BY: DMP
APPROVED BY:
REVISED:

NORTH CAROLINA DEPARTMENT OF TRANSPORTATION

PROJECT SERVICES UNIT
PHONE:(919)250-4128
FAX:(919)250-4119

NORTH CAROLINA PROFESSIONAL ENGINEER SEAL 19401 RANDY L. MCNEILL 2/14/08

UTILITY CONSTRUCTION PLANS ONLY

UTILITY CONSTRUCTION

METRIC 5 0 10

REVISIONS

MATCHLINE SEE SHEET UC-6 RAMP D STA. 4+90.00

FALSE SUMP SEE DETAIL FS-B

IRRIGATION CONTROL VALVE

SPECIAL CUT DITCH SEE DETAIL E1

RICHARD TIMME DB 2?? PG 667

RAMP D PTSta.4+76.380

LATERAL BASE DITCH SEE DETAIL D2

STANDARD BASE DITCH W/PSRM SEE DETAIL D1 DDE=45 cu.m PSRM=185 SM CLASS B RIP RAP= 105 MTN

PROP. - 2 - RELOCATE WATER METERS

PROP. - 1 - 150 MM VALVE

PROP. - 1 - RELOCATE WATER METER

PROP. - 1 - RELOCATE FIRE HYDRANT

PROP. - 272 M OF 150 MM WATER LINE

150MM x 150MM TEE

22.5° & 11.25°

-5.8 M

EW 400 50mm PVC

EW 600 150mm

ES 400

ES 500

PW 400 150mm WL

(ABANDON) 150mm PVC

-Y5- POT Sta.10+82.804
-Y11- POT Sta.15+13.683
END CONSTRUCTION -Y11-

-Y5- POT Sta.11+23.345
END CONSTRUCTION

UMIYA PROPERTIES INC. DB 443 PG 175

DARA CORPORATION DB 307 PG 920

GLENWOOD KING COMPANY-TCC DB 417 PG 528

MILLSPEAKS PROPERTIES, LLC DB 2100 PG 753-755

-Y11-
PI Sta 11+18.688
D = 25° 04' 05.8" (RT)
L = 218.762
T = 111.160
R = 500.000
S = 02

-Y11-
PI Sta 12+39.682
Δ = 18° 21' 02.7" (LT)
L = 87.384
T = 44.070
R = 272.837
S = 02

MATCHLINE SEE SHEET UC-17 -Y1- STA. 11+20.00 -RAMPD- STA. 2+06.00

DETAIL D1
STANDARD BASE DITCH W/ PSRM
(Not to Scale)
MIN. D = 0.3 m
B = 0.6 m
MAX. d = 0.30 m
STA 3+11 TO 3+52 -RPD- LT.
DDE= 45 cu. m.

DETAIL D2
LATERAL BASE DITCH
(Not to Scale)
Min. D = 0.3 m
B = 0.9 m
b = VAR.m
STA. 4+40 TO 4+81.5 -RAMP D- LT.

DETAIL E1
CUT DITCH
(Not to Scale)
Min. D = 0.3 m
STA. 4+80 TO 5+20 -RAMP D- RT.

DETAIL FS-B
FALSE SUMP
(Not to Scale)
S=Ditch Slope
STA 4+77-RAMPD- RT
STA 0+80 -RAMPD- RT

DETAIL FS
MEDIAN FALSE SUMP
(Not to Scale)
S=Ditch Slope
STA 14+75 -Y2- MEDIAN

PAVEMENT REMOVAL

UTILITY CONSTRUCTION PLANS DESIGNED BY:
DAVIS-MARTIN-POWELL & ASSOC., INC.
ENGINEERING-LAND PLANNING-SURVEYING
HIGH POINT, NORTH CAROLINA

PROJECT REFERENCE NO.	SHEET NO.
R-2201	UC-17

DESIGNED BY: DMP
DRAWN BY: DMP
CHECKED BY: DMP
APPROVED BY:
REVISED:

NORTH CAROLINA DEPARTMENT OF TRANSPORTATION

PROJECT SERVICES UNIT
PHONE:(919)250-4128
FAX:(919)250-4119

UTILITY CONSTRUCTION PLANS ONLY

UTILITY CONSTRUCTION

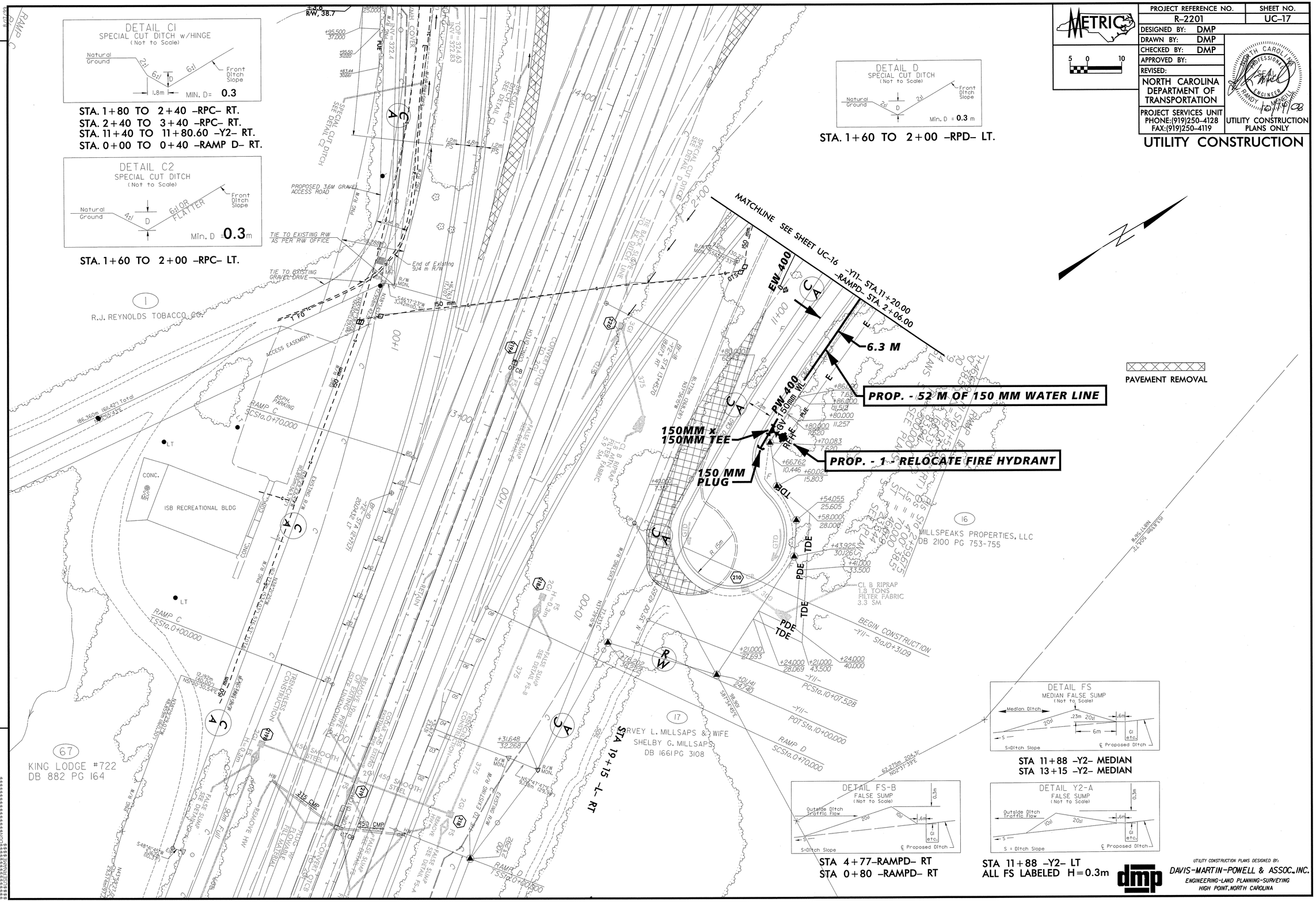

UTILITY CONSTRUCTION PLANS DESIGNED BY:
DAVIS-MARTIN-POWELL & ASSOC., INC.
ENGINEERING-LAND PLANNING-SURVEYING
HIGH POINT, NORTH CAROLINA

REVISIONS

PROJECT REFERENCE NO.	SHEET NO.
R-2201	UC-18

DESIGNED BY: DMP
DRAWN BY: DMP
CHECKED BY: DMP
APPROVED BY:
REVISED:

NORTH CAROLINA DEPARTMENT OF TRANSPORTATION

PROJECT SERVICES UNIT
PHONE:(919)250-4128
FAX:(919)250-4119

NORTH CAROLINA PROFESSIONAL ENGINEER SEAL — RANDY L. MORRILL

UTILITY CONSTRUCTION PLANS ONLY

UTILITY CONSTRUCTION

PROP. - 420 M OF 350 MM FORCE MAIN SEWER

PROP. - 417 M - ABANDON 350 MM UTILITY PIPE

PROP. - 812 M - ABANDON 300 MM UTILITY PIPE

PROP. - 842 M OF 300 MM WATER LINE

22.5° & 11.25° BENDS

11.25° BENDS

EW 300
EF 100
EW 200
PF100
PW 300
PW 200

SEE SHEET UC-5 FOR CONTINUATION

DETAIL B
SPECIAL CUT BASE DITCH
(Not to Scale)
Min. D = 0.6 m
B = 0.9 m
Min. d = 0.3 m

STA 2+50 TO 3+40 -RPB- LT.

DETAIL BI
LATERAL BASE DITCH
(Not to Scale)
Min. D = 0.6 m
B = 0.9 m
b = 1.5 m
Min. d = 0.3 m

STA 3+40 TO 5+20 -RPB- LT.

DETAIL B2
LATERAL BASE DITCH
(Not to Scale)
Min. D = 0.3 m
b = 1.5 m

STA. 2+60 TO 3+50 -RPB- RT.

DETAIL B3
SPECIAL LATERAL BASE DITCH W/ PSRM
(Not to Scale)
Min. D = 0.3 m
Max. d = 0.3 m
b = 1.5 m

STA. 3+50 TO 4+80 -RPB- RT.

DETAIL I
0.9m BASE TAIL DITCH
(Not to Scale)

DETAIL B4
BASE GRASSED SWALE W/ PSRM
(Not to Scale)

UTILITY CONSTRUCTION PLANS DESIGNED BY:
DAVIS-MARTIN-POWELL & ASSOC., INC.
ENGINEERING-LAND PLANNING-SURVEYING
HIGH POINT, NORTH CAROLINA

PROJECT REFERENCE NO.	SHEET NO.
R-2201	UC-19

DESIGNED BY: DMP
DRAWN BY: DMP
CHECKED BY: DMP
APPROVED BY:
REVISED:

5 0 10 HORIZONTAL
0.5 0 1 VERTICAL

NORTH CAROLINA DEPARTMENT OF TRANSPORTATION

PROJECT SERVICES UNIT
PHONE:(919)250-4128
FAX:(919)250-4119

NORTH CAROLINA PROFESSIONAL ENGINEER SEAL 10012 RANDY L. MCNEILL 10/24/08

UTILITY CONSTRUCTION PLANS ONLY

UTILITY CONSTRUCTION

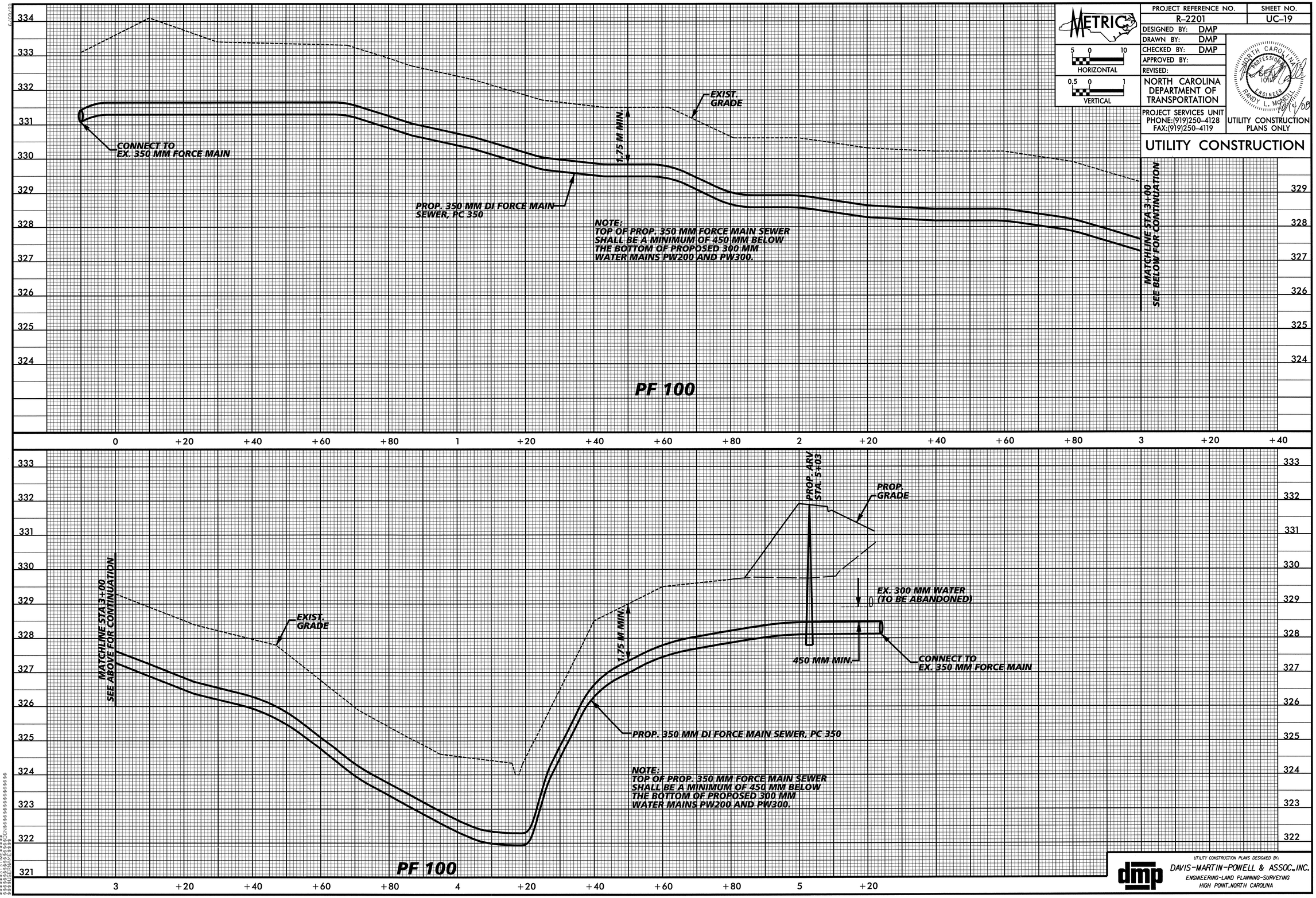

UTILITY CONSTRUCTION PLANS DESIGNED BY:
DAVIS-MARTIN-POWELL & ASSOC., INC.
ENGINEERING-LAND PLANNING-SURVEYING
HIGH POINT, NORTH CAROLINA

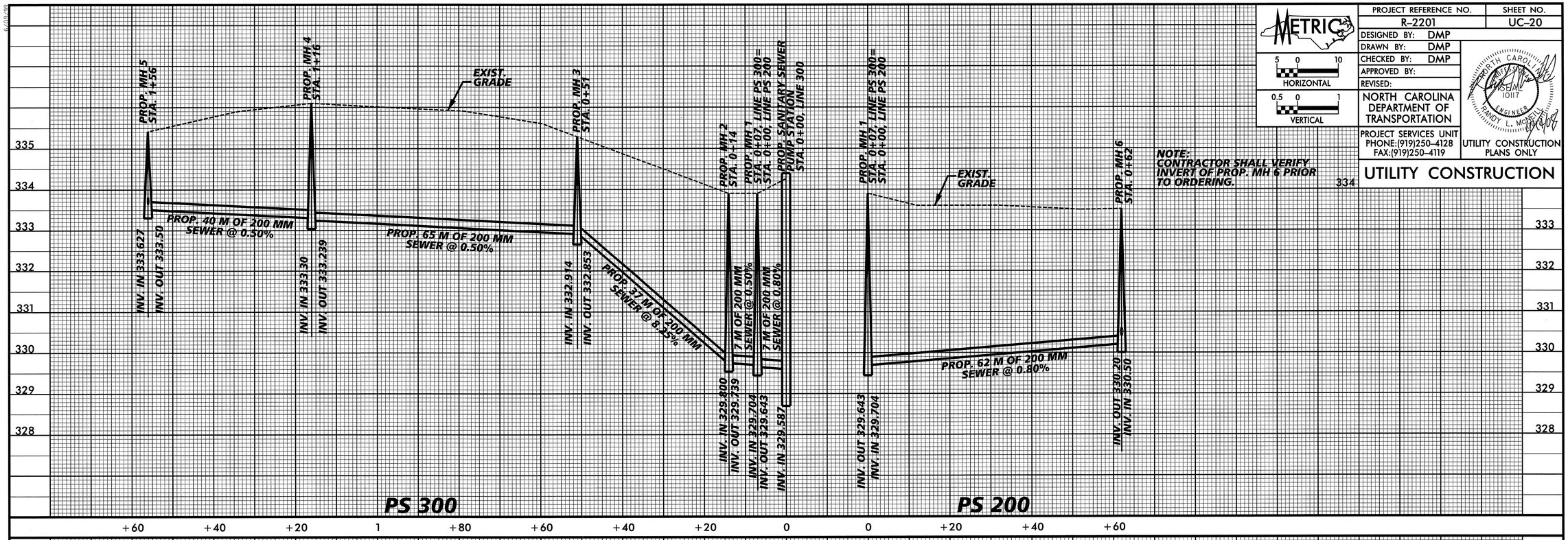

METRIC

5 0 10
HORIZONTAL

0.5 0 1
VERTICAL

PROJECT REFERENCE NO.	SHEET NO.
R-2201	UC-20

DESIGNED BY: DMP
DRAWN BY: DMP
CHECKED BY: DMP
APPROVED BY:
REVISED:

NORTH CAROLINA DEPARTMENT OF TRANSPORTATION

PROJECT SERVICES UNIT
PHONE:(919)250-4128
FAX:(919)250-4119

NORTH CAROLINA PROFESSIONAL SEAL 10117 ENGINEER TANDY L. MOWELL

UTILITY CONSTRUCTION PLANS ONLY

UTILITY CONSTRUCTION

UTILITY CONSTRUCTION PLANS DESIGNED BY:
DAVIS-MARTIN-POWELL & ASSOC., INC.
ENGINEERING-LAND PLANNING-SURVEYING
HIGH POINT, NORTH CAROLINA

8/19/99

PROJECT REFERENCE NO.	SHEET NO.
R-2201	UC-21

DESIGNED BY: DMP
DRAWN BY: DMP
CHECKED BY: DMP
APPROVED BY:
REVISED:

5 0 10 HORIZONTAL
0.5 0 1 VERTICAL

NORTH CAROLINA DEPARTMENT OF TRANSPORTATION

PROJECT SERVICES UNIT
PHONE:(919)250-4128
FAX:(919)250-4119

UTILITY CONSTRUCTION PLANS ONLY

UTILITY CONSTRUCTION

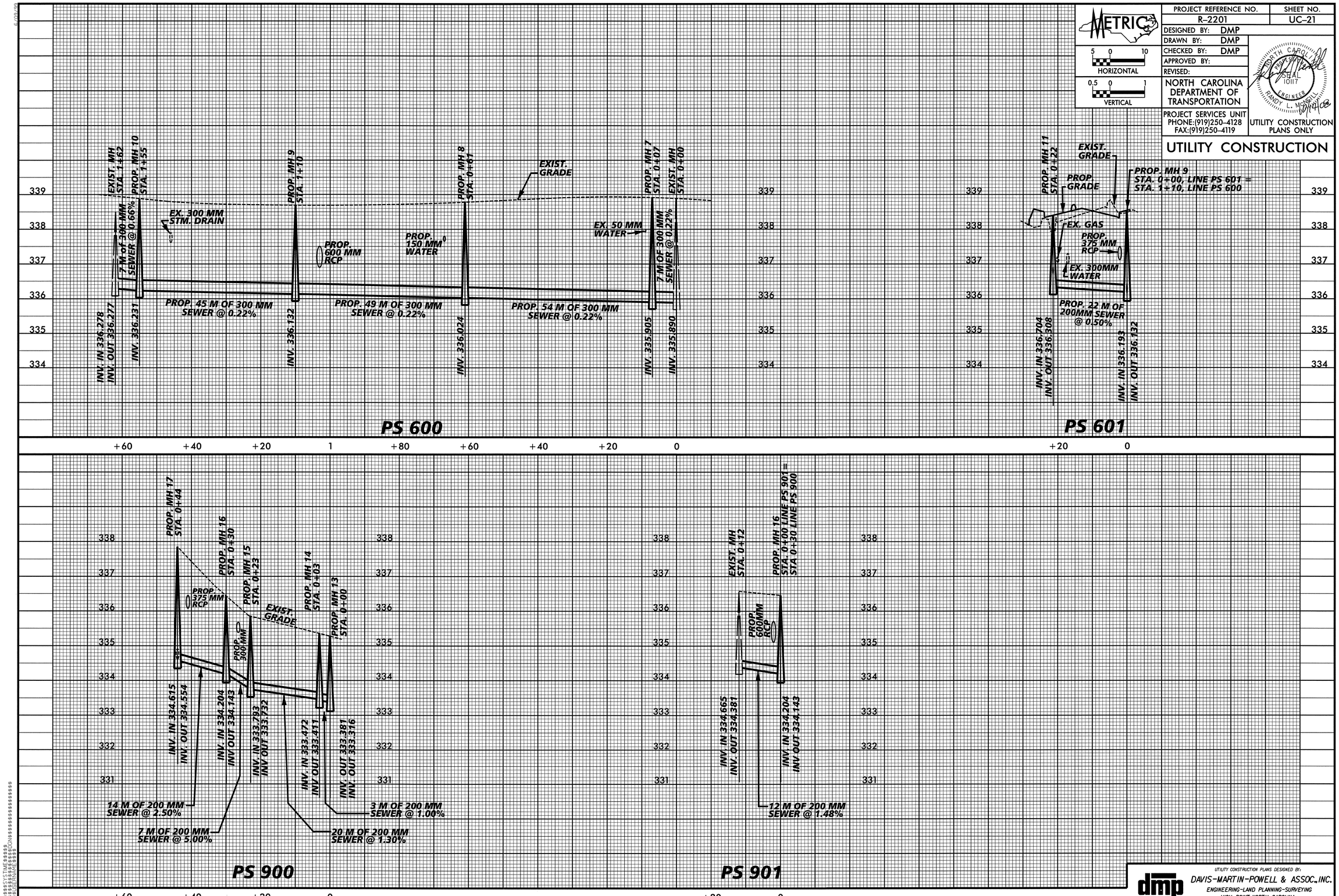

UTILITY CONSTRUCTION PLANS DESIGNED BY:
DAVIS-MARTIN-POWELL & ASSOC., INC.
ENGINEERING-LAND PLANNING-SURVEYING
HIGH POINT, NORTH CAROLINA

PROJECT REFERENCE NO.	SHEET NO.
R-2201	UC-22

DESIGNED BY: DMP
DRAWN BY: DMP
CHECKED BY: DMP
APPROVED BY:
REVISED:

SCALE: AS NOTED

NORTH CAROLINA DEPARTMENT OF TRANSPORTATION

PROJECT SERVICES UNIT
PHONE:(919)250-4128
FAX:(919)250-4119

NORTH CAROLINA PROFESSIONAL ENGINEER SEAL 19031 — RANDY V. BOWELL — 10/14/08

UTILITY CONSTRUCTION PLANS ONLY

UTILITY CONSTRUCTION

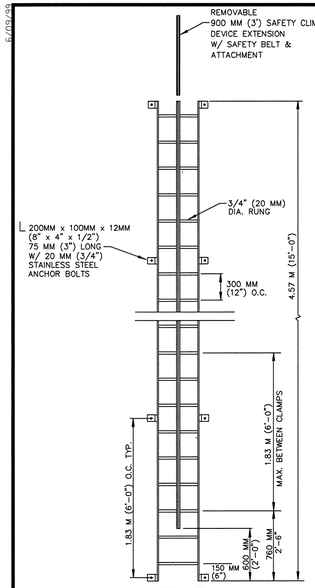

WET WELL ACCESS LADDER
NTS

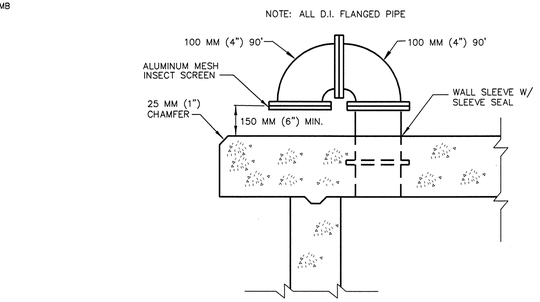

DETAIL – WET WELL VENT
NTS

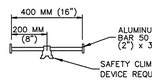

WET WELL LADDER DETAIL
NTS

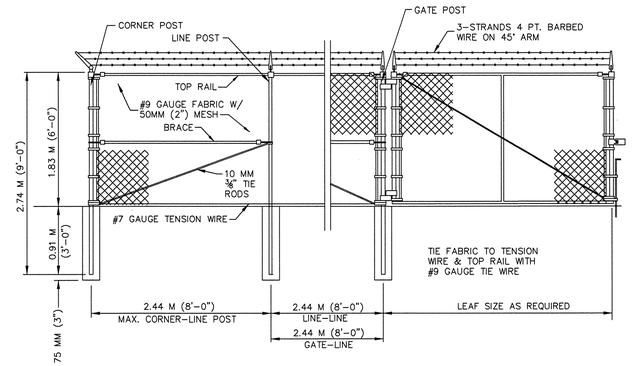

FRAME WORK CHART			
FABRIC HEIGHT	LINE POST	TOP RAIL	END/CORNER POST
1.22M – 1.83M (4'–6')	50MM O.D. (2") O.D.	40MM O.D. (1 5/8") O.D.	65MM O.D. (2 1/2") O.D.
2.13M – 2.74M (7'–9')	65MM O.D. (2 1/2") O.D.	40MM O.D. (1 5/8") O.D.	75MM O.D. (3") O.D.
3.05M – 3.66M (10'–12')	75MM O.D. (3") O.D.	50MM O.D. (2") O.D.	100MM O.D. (4") O.D.
OVER 3.66M (12')	100MM O.D. (4") O.D.	50MM O.D. (2") O.D.	100MM O.D. (4") O.D.

GATE POST SIZE	
GATE LEAF SIZE	GATE POST
1.83M (6') OR LESS	75MM (3") O.D.
1.83M – 3.66M (6'–12')	75MM (3") O.D.
3.66M – 6.10M (12'–20')	100MM (4") O.D.
6.10M – 7.32M (20'–24')	168MM (6 5/8") O.D.
OVER 7.32M (24')	219MM (8 5/8") O.D.

DETAIL – CHAIN LINK FENCE
NTS

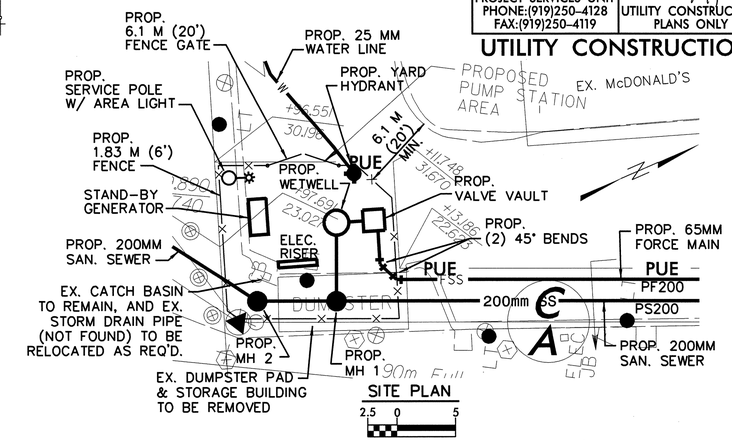

SITE PLAN

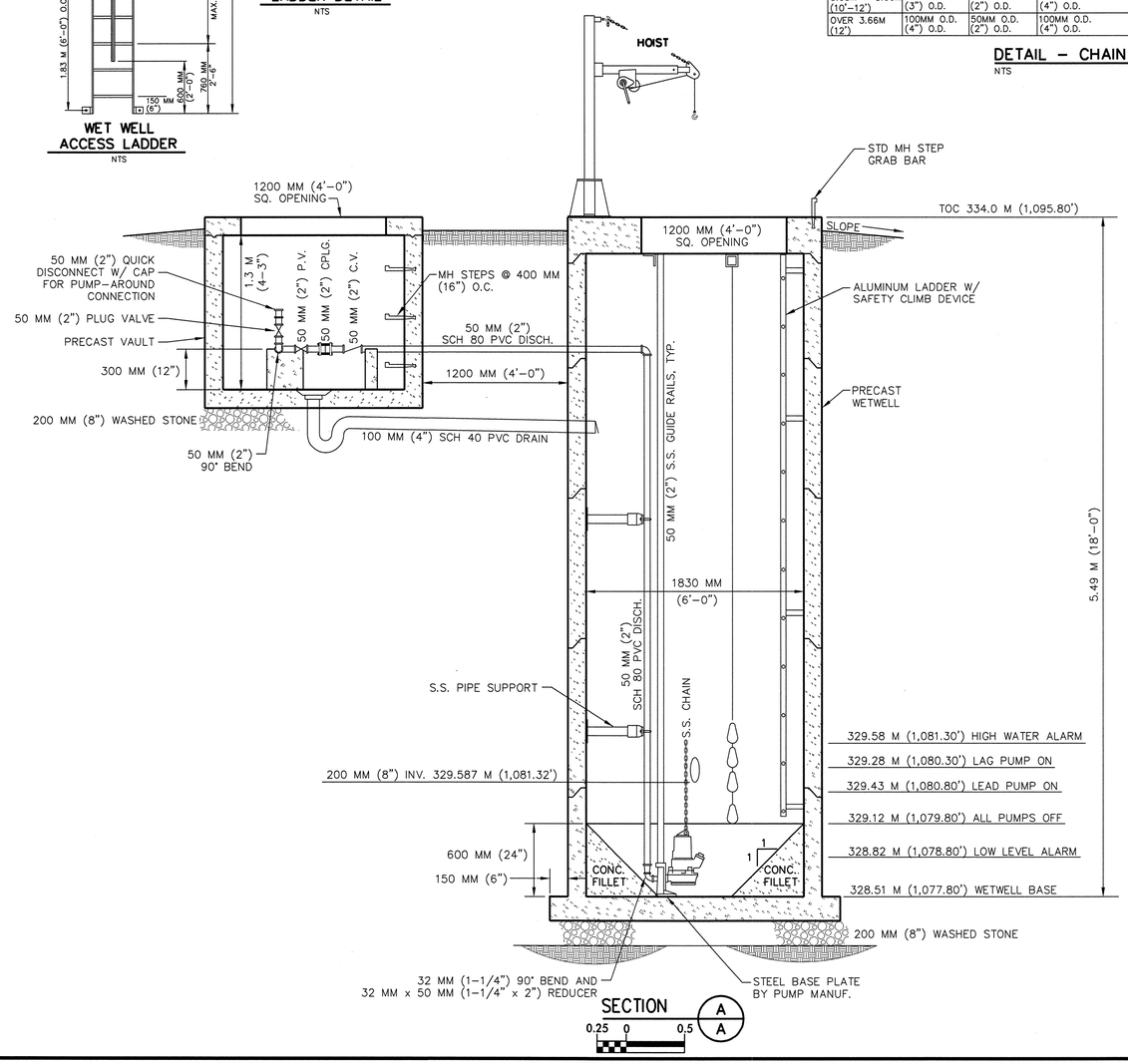

SECTION A A

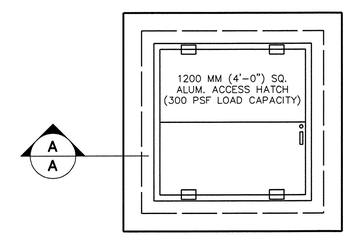

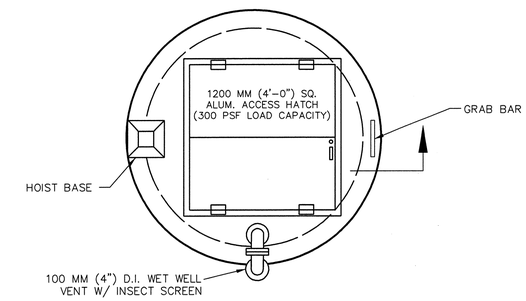

TOP PLAN
0.25 0 0.5

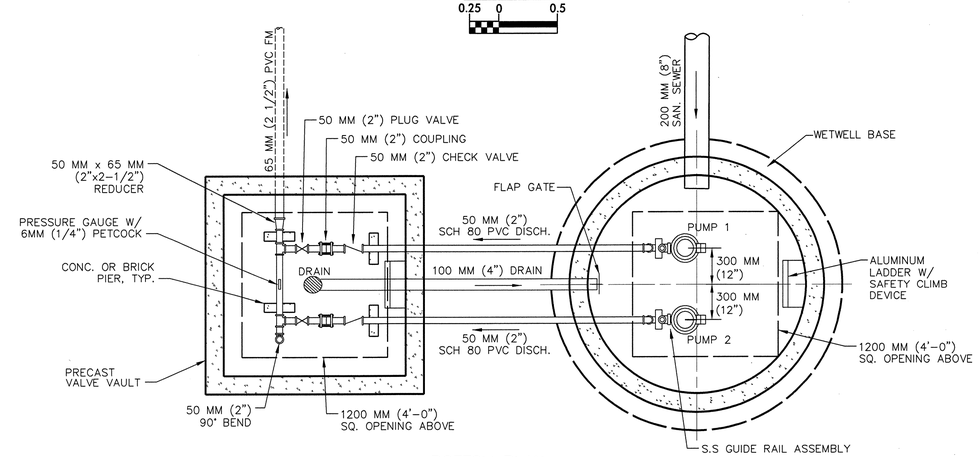

BOTTOM PLAN
0.25 0 0.5

UTILITY CONSTRUCTION PLANS DESIGNED BY:
DAVIS-MARTIN-POWELL & ASSOC., INC.
ENGINEERING-LAND PLANNING-SURVEYING
HIGH POINT, NORTH CAROLINA

PROJECT REFERENCE NO.	SHEET NO.
R-2201	UC-23

DESIGNED BY: DMP
DRAWN BY: DMP
CHECKED BY: DMP
APPROVED BY:
REVISED:

NORTH CAROLINA DEPARTMENT OF TRANSPORTATION

PROJECT SERVICES UNIT
PHONE:(919)250-4128
FAX:(919)250-4119

UTILITY CONSTRUCTION PLANS ONLY

UTILITY CONSTRUCTION

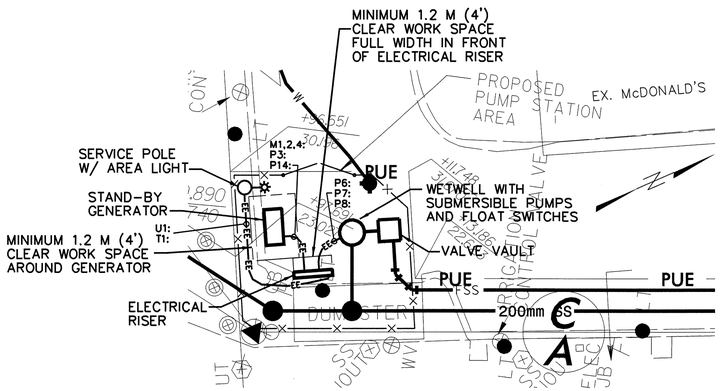

ELECTRICAL SITE PLAN

2.5 0 5

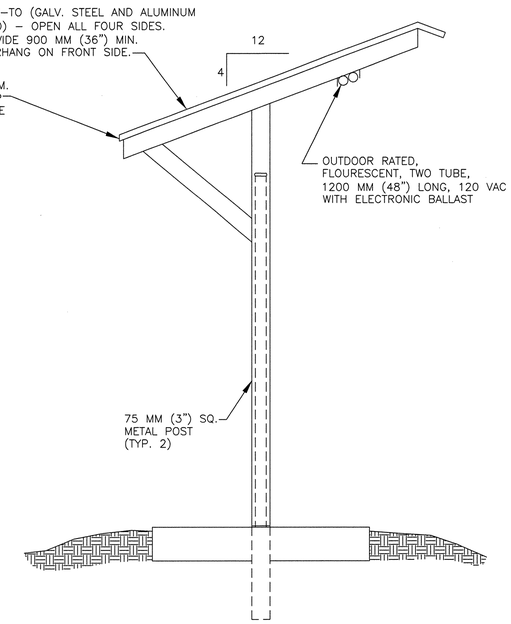

WEATHER HOOD DETAIL

NOT TO SCALE

PLANS

- HEAVY LINES INDICATE NEW WORK
- LIGHT LINES INDICATE EXISTING EQUIPMENT
- CONDUIT EXPOSED
- CONDUIT CONCEALED
- CONDUIT TURNING UP, CONDUIT TURNING DOWN
- LP-2 — TYPICAL HOMERUN TO BE ROUTED TO LIGHTING PANEL "LP" CIRCUIT NUMBER 2. SHORT DASH INDICATES PHASE CONDUCTOR, LONG DASH INDICATES NEUTRAL CONDUCTOR, CIRCULAR DASH INDICATES GROUND WIRE.
- 1 — FLUORESCENT LIGHTING FIXTURE, SEE LIGHTING SCHEDULE
- 3 — LIGHTING FIXTURE, SEE LIGHTING SCHEDULE
- E — E — UNDERGROUND CONCRETE ENCASED DUCT BANK
- EE — EE — UNDERGROUND DIRECT BURIED CONDUITS
- GROUND CONDUCTOR
- $ — SINGLE POLE SWITCH
- $3 — THREE WAY SWITCH
- $WP — WEATHERPROOF SWITCH
- DUPLEX RECEPTACLE, 120 VOLT
- GFI — GROUND FAULT CIRCUIT INTERRUPTER
- WP — WEATHERPROOF RECEPTACLE
- TELEPHONE OUTLET
- JB — JUNCTION BOX
- LIGHTING PANEL
- MISCELLANEOUS PANEL
- COMBINATION MOTOR STARTER
- DISCONNECT SWITCH
- GROUND ROD

ELECTRICAL LEGEND AND ABBREVIATIONS

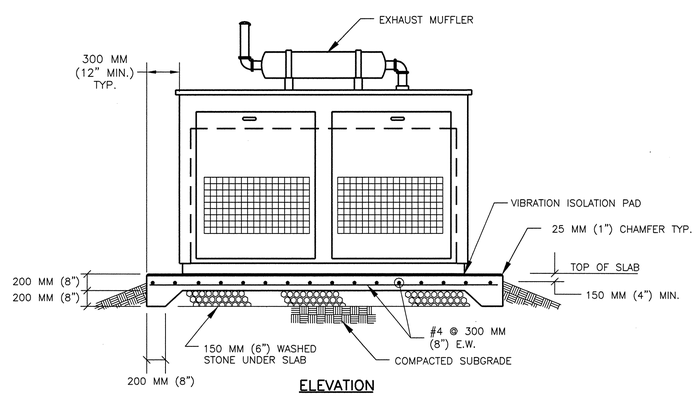

ELEVATION

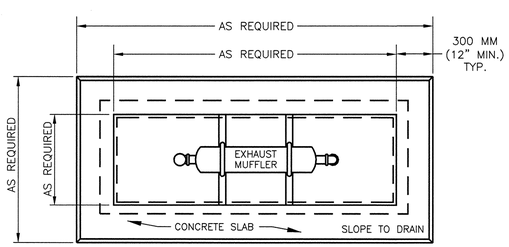

PLAN VIEW

GENERATOR NOTES:

1. THE SYSTEM SHALL BE COMPLETELY SELF CONTAINED. COMPLETE WITH GENERATOR SET, SUB-BASE FUEL TANK, FUEL FEED LINES, STARTING BATTERIES, CHARGER, AND ALL OTHER MISC. ITEMS TO FORM A COMPLETE AND OPERABLE SYSTEM.
2. DIMENSIONS MAY VARY DEPENDING UPON THE ACTUAL GENERATOR UNIT SUPPLIED.
3. GENERATOR TO BE ANCHOR BOLTED TO SLAB PER MANUFACTURER'S INSTRUCTIONS. VIBRATION ISOLATION PADS TO BE INSTALLED BETWEEN CONCRETE PAD & GENERATOR.

GENERATOR DETAIL

NOT TO SCALE

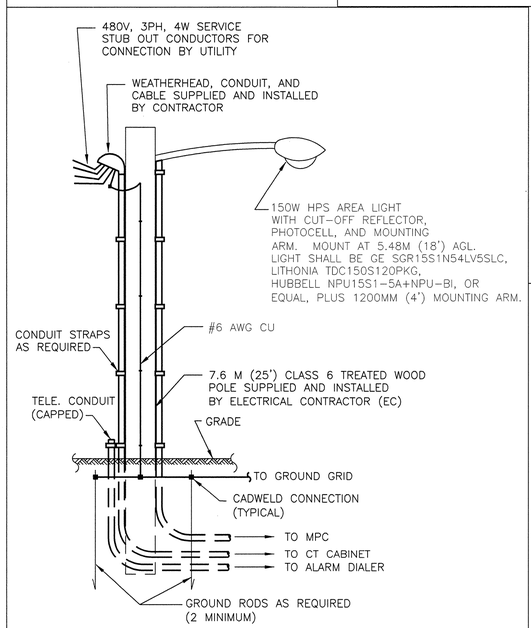

SERVICE/LIGHT POLE DETAIL

NOT TO SCALE

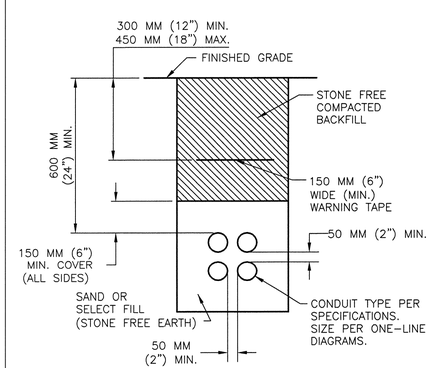

DIRECT BURIED CONDUIT DETAIL

NOT TO SCALE

GENERAL NOTES:

1. CONTRACTOR SHALL PROVIDE ALL LABOR, MATERIALS, TOOLS, EQUIPMENT, PERMITS, AND OPERATIONS NECESSARY FOR THE PROPER EXECUTION AND COMPLETION OF ALL ELECTRICAL WORK INDICATED ON THE DRAWINGS.
2. ALL ELECTRICAL WORK AND MATERIALS SHALL COMPLY WITH THE NEC AND OTHER APPLICABLE FEDERAL, STATE, AND LOCAL CODES. ALL ELECTRICAL EQUIPMENT SHALL BE UL LISTED OR LABELED.
3. ALL DISCONNECT SWITCHES, JUNCTION BOXES, MOTOR CONTROLLERS, AND OTHER EQUIPMENT REQUIRING ELECTRICAL POWER CONNECTION SHALL BE MARKED WITH VOLTAGE PRESENT, AS APPROPRIATE TO DESIGNATE 120, 208, 240, 277, 480, 12,470 VOLTS AND SINGLE OR THREE PHASE, AS APPLICABLE.
4. WIRE SHALL BE STRANDED COPPER WITH TYPE THHN/THWN 600V INSULATION. CONDUCTORS SHALL BE COLOR CODED BLACK, RED, WHITE, AND GREEN ON 120/240 VOLT SYSTEMS AND BROWN, ORANGE, YELLOW, GRAY, AND GREEN ON 480Y/277 VOLT SYSTEMS. A GROUNDING CONDUCTOR SHALL BE INSTALLED IN EACH CONDUIT.
5. CONTRACTOR SHALL BE RESPONSIBLE FOR ROUTING ALL CONDUITS. ALL CONDUIT SHALL BE CONCEALED WHERE POSSIBLE.
6. CONTRACTOR SHALL VERIFY ALL EQUIPMENT LOCATIONS AND CONNECTION POINTS PRIOR TO INSTALLATION.
7. SERVICE LATERAL PROVIDED BY DUKE POWER. CONTRACTOR SHALL COORDINATE INSTALLATION WITH DUKE POWER.

UTILITY CONSTRUCTION PLANS DESIGNED BY:
DAVIS-MARTIN-POWELL & ASSOC., INC.
ENGINEERING-LAND PLANNING-SURVEYING
HIGH POINT, NORTH CAROLINA

PROJECT REFERENCE NO.	SHEET NO.
R-2201	UC-24

DESIGNED BY: DMP
DRAWN BY: DMP
CHECKED BY: DMP
APPROVED BY:
REVISED:

NORTH CAROLINA DEPARTMENT OF TRANSPORTATION

PROJECT SERVICES UNIT
PHONE:(919)250-4128
FAX:(919)250-4119

NORTH CAROLINA PROFESSIONAL ENGINEER SEAL — RANDY L. McNEILL — 07/14/20

UTILITY CONSTRUCTION PLANS ONLY

UTILITY CONSTRUCTION

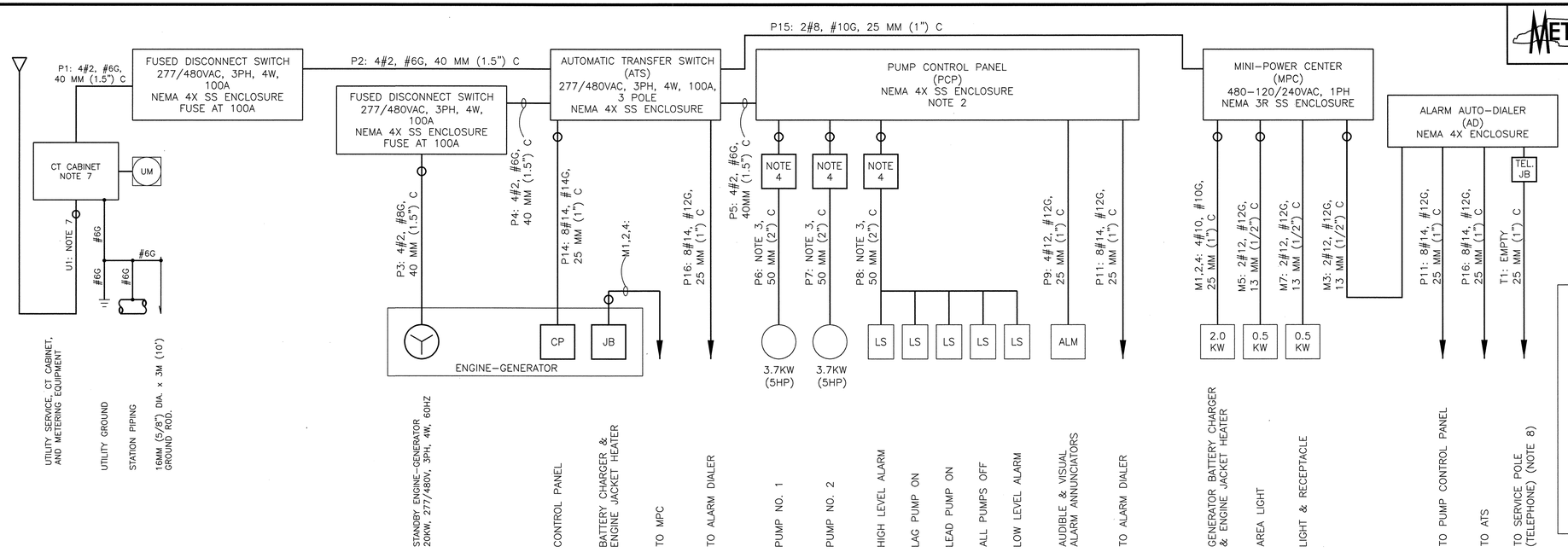

SYSTEM ONE-LINE DIAGRAM

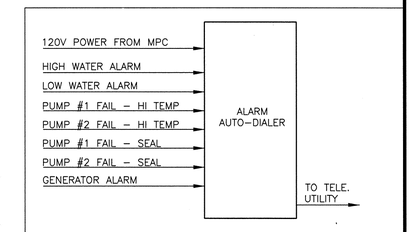

ALARM AUTO-DIALER BLOCK DIAGRAM

NOT TO SCALE

PANELBOARD: MPC								BUS: AS REQ'D RATING: 7.5 KVA	MAIN CB: 30A-2P XFMR PRIMARY MAIN CB: 40A-2P XFMR SECONDARY LOCATION: PUMP STATION
SERVICE: 480 - 120/240 VAC, 1PH									
MOUNTING: POST, NEMA 3R SS									
LOAD	AMP	POLE	CKT#		POLE	AMP	LOAD		
ENGINE BATTERY CHARGER	20	1P	1	2	2P	20	ENGINE JACKET HEATER		
ALARM DIALER	20	1P	3	4	|	|	|		
AREA LIGHT	20	1P	5	6	1P	20	SPARE		
LIGHT & RECEPTACLE	20	1P	7	8	1P	20	SPARE		
SPARE	20	1P	9	10	|	|	|		
SPARE	20	1P	11	12	|	|	|		

NOTES:

1. CONTRACTOR IS RESPONSIBLE FOR ROUTING ALL CONDUITS. THIS SHALL INCLUDE ALL CONDUITS INDICATED ON THE ONE-LINES, PLANS, AND PANEL SCHEDULES.
2. EQUIPMENT PROVIDED BY PUMP SUPPLIER, INSTALLED & WIRED BY THE ELECTRICAL CONTRACTOR.
3. CABLE PROVIDED WITH PUMP. CONDUIT AND INSTALLATION BY ELECTRICAL CONTRACTOR.
4. WETWELL IS CLASSIFIED HAZARDOUS, CLASS I, DIVISION 1, GROUP D BY THE NFPA 820. ALL CONDUITS ENTERING THIS AREA SHALL BE PROVIDED WITH SUITABLE SEALOFFS.
5. CONTRACTOR SHALL FIELD VERIFY EQUIPMENT LOCATIONS PRIOR TO INSTALLATION OF CABLE AND CONDUIT.
6. ELECTRICAL EQUIPMENT RACK SHALL BE PROVIDED WITH A WEATHER HOOD. SEE HOOD DETAIL. LUMINARY IN WEATHER HOOD SHALL BE 1.2M (4') FLUORESCENT WITH ENCLOSED FIBERGLASS HOUSING, WET LABEL LISTED, TWO 32WT8 TUBES, AND ZERO DEGREE ELECTRONIC BALLAST. COLUMBIA LUN4-232-EB8Z120, LITHONIA DM232-120GEB10IS, METALUX VT2-232DR-120EB81Z-WL OR EQUAL.
7. SERVICE LATERAL (U1), CURRENT TRANSFORMERS, METER SOCKET, AND METER PROVIDED BY DUKE POWER. CT CABINET AND METER SOCKET INSTALLED BY CONTRACTOR PER DUKE POWER SPECIFICATIONS. DUKE POWER WILL INSTALL SERVICE LATERAL TO CT CABINET, CURRENT TRANSFORMERS, AND METER.
8. CONTRACTOR SHALL COORDINATE TELEPHONE SERVICE FOR ALARM DIALER WITH LOCAL TELEPHONE UTILITY.
9. AUTOMATIC TRANSFER SWITCH SHALL BE PROVIDED WITH DUAL LUGS ON THE LOAD SIDE FOR CONNECTION OF THE CONDUCTORS INDICATED.
10. WIDTH OF EQUIPMENT RACK TO BE DETERMINED BY EQUIPMENT SUPPLIED. CONTRACTOR TO PROVIDE RACK FABRICATION DETAILS WITH EQUIPMENT SUBMITTALS.
11. ALL CORNERS AND EDGES OF EQUIPMENT RACK SHALL BE ROUNDED AND SMOOTH.
12. ZINC-RICH PAINT SHALL BE FIELD APPLIED TO ALL SAW CUTS, PIPE THREADS, FASTENER HARDWARE, AND DAMAGED FINISHES OF GALVANIZED MATERIALS.
13. CORROSION-RESISTANT COATING OF COAL TAR PAINT SHALL BE APPLIED TO ALL CONDUITS AND SUPPORT POSTS THAT TURN OUT OF CONCRETE, MASONRY, OR SOIL. THE COATING SHALL CONSIST OF A HEAVY COAT OF COAL TAR PAINT EXTENDING SIX INCHES ON EACH SIDE OF THE POINT OF TURN-OUT.

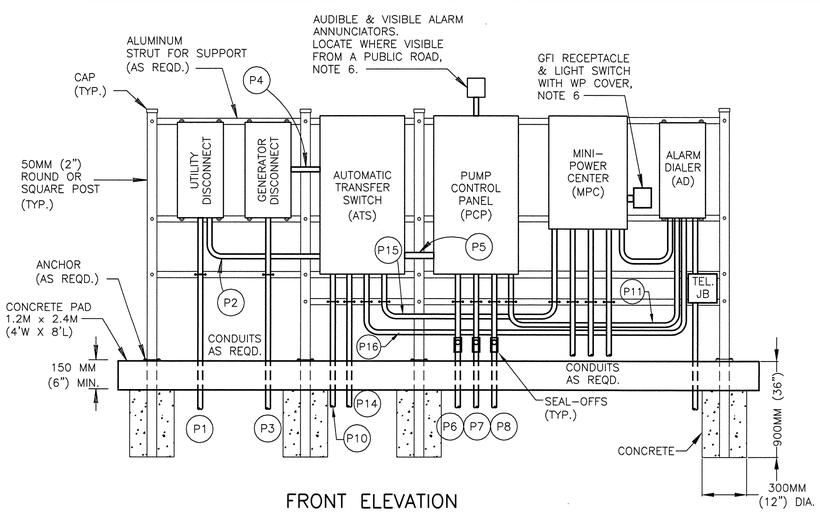

FRONT ELEVATION

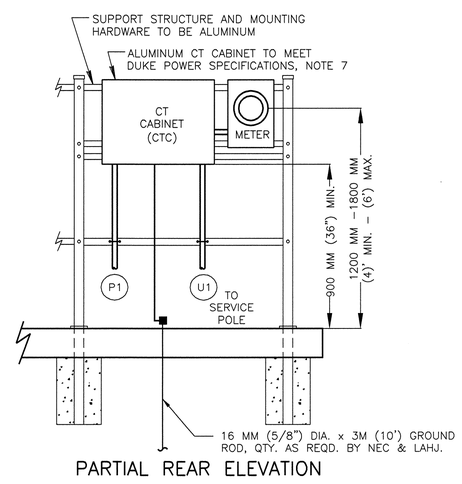

PARTIAL REAR ELEVATION

ELECTRICAL EQUIPMENT RACK DETAIL

NOT TO SCALE

ONE - LINES

150 KVA 12.47 KV-480/277V 3PH,60HZ	TRANSFORMER WITH PRIMARY AND SECONDARY VOLTAGE, KVA RATING AND CONNECTION INDICATED.
MCC-3:3#6, #6G, 40MM (1.5") 20	ONE-LINE SHOWING POWER, CONTROL CABLE AND CONDUIT CIRCUIT NO. MCC-3 WITH THREE (3) #6AWG, FOUR #12AWG, AND A #6 EQUIPMENT GROUND IN A 40MM (1 1/2") CONDUIT TO A 15KW (20HP) LOAD.
	DENOTES ALL OR PART OF CONDUIT IS UNDERGROUND
3P-50	LOW VOLTAGE AIR CIRCUIT BREAKER, 3 POLE, 50 AMPERE
3P-30	FUSE AND DISCONNECT SWITCH
S3	SIZE 3 COMBINATION MAGNETIC MOTOR STARTER
1-2PR#16STP	ONE CABLE WITH TWO PAIRS OF #16AWG SHIELDED TWISTED PAIRS

ELECTRICAL LEGEND AND ABBREVIATIONS

UTILITY CONSTRUCTION PLANS DESIGNED BY:
DAVIS-MARTIN-POWELL & ASSOC., INC.
ENGINEERING-LAND PLANNING-SURVEYING
HIGH POINT, NORTH CAROLINA

PROJECT REFERENCE NO.	SHEET NO.
R-2201	UC-25

DESIGNED BY: DMP
DRAWN BY: DMP
CHECKED BY: DMP
APPROVED BY:
REVISED:

NORTH CAROLINA DEPARTMENT OF TRANSPORTATION

PROJECT SERVICES UNIT
PHONE:(919)250-4128
FAX:(919)250-4119

UTILITY CONSTRUCTION PLANS ONLY

UTILITY CONSTRUCTION

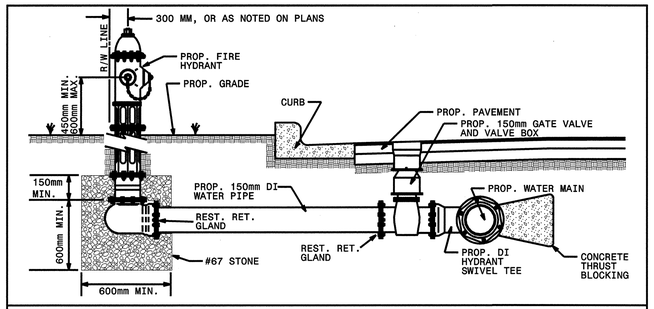

FIRE HYDRANT INSTALLATION DETAIL
(PAVED AREAS)

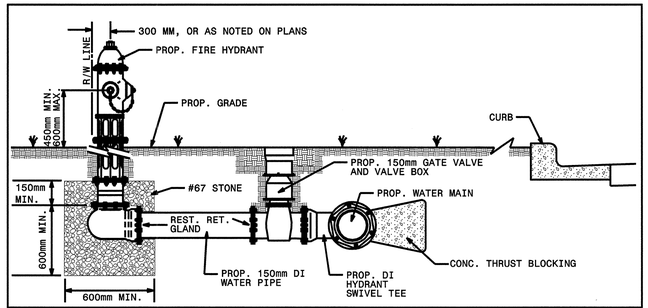

FIRE HYDRANT INSTALLATION DETAIL
(UNPAVED AREAS)

SANITARY SEWER CLEANOUT

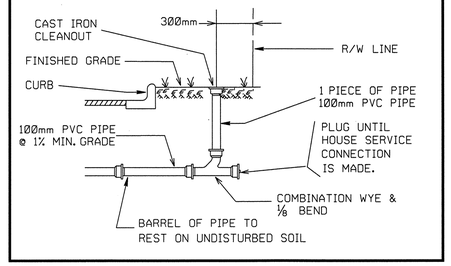

THE CONTRACTOR SHALL REPLACE ANY DAMAGED SEWER LATERALS AND/OR CLEANOUTS AS DIRECTED BY THE ENGINEER. THE NECESSARY QUANTITIES HAVE BEEN ADDED TO THE CONTRACT TO FACILITATE THIS PROCEDURE.

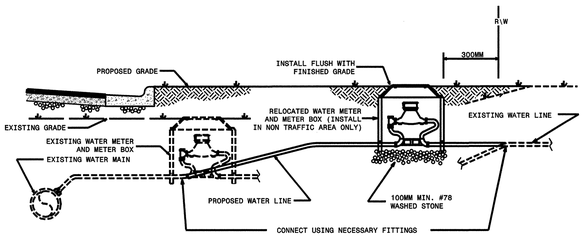

NOTES:

1. RELOCATION SHALL INCLUDE THE REMOVAL AND INSTALLATION AT THE APPROPRIATE LOCATION OF THE WATER METER, METER SETTER AND YOKE, METER VALVES, AND METER BOX WITH LID.
2. THE NEW WATER SERVICE LINE SHALL BE OF THE SAME TYPE AND GRADE AS THE EXISTING WATER SERVICE LINE UNLESS OTHERWISE SHOWN ON THE PLANS OR DIRECTED BY THE ENGINEER.
3. THE NEW WATER SERVICE LINE SHALL BE INSTALLED WITH A MINIMUN OF 900MM COVER BELOW FINISHED GRADE.

WATER METER RELOCATION DETAIL

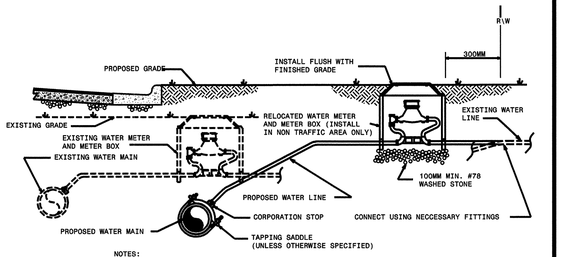

NOTES:

1. RELOCATION SHALL INCLUDE THE REMOVAL AND INSTALLATION AT THE APPROPRIATE LOCATION OF THE WATER METER, METER SETTER AND YOKE, METER VALVES, AND METER BOX WITH LID.
2. THE NEW WATER SERVICE LINE SHALL BE OF THE SAME TYPE AND GRADE AS THE EXISTING WATER SERVICE LINE UNLESS OTHERWISE SHOWN ON THE PLANS OR DIRECTED BY THE ENGINEER.
3. THE NEW WATER SERVICE LINE SHALL BE INSTALLED WITH A MINIMUN OF 900MM COVER BELOW FINISHED GRADE.

WATER METER RELOCATION DETAIL

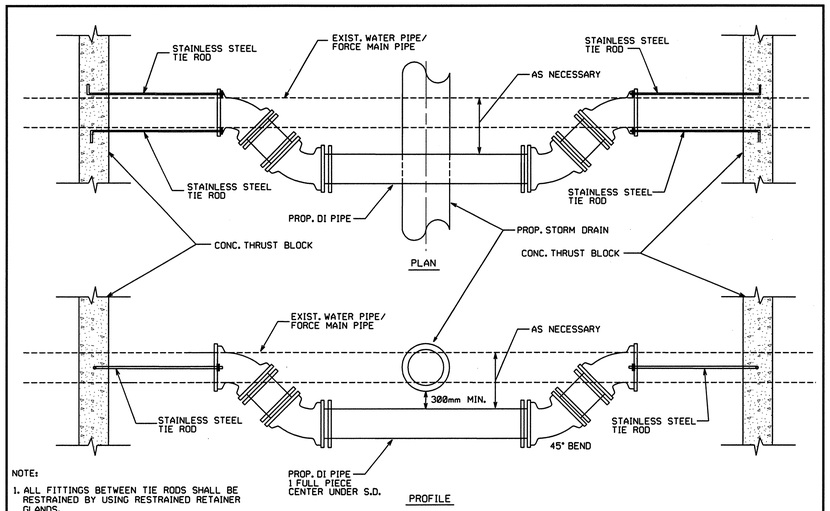

NOTE:

1. ALL FITTINGS BETWEEN TIE RODS SHALL BE RESTRAINED BY USING RESTRAINED RETAINER GLANDS.
2. CONC. THRUST BLOCK SHALL BE PLACED AND CURED THREE DAYS PRIOR TO CUTTING EXISTING PIPE.

•NTS

RELOCATION OF WATER PIPE OR FORCE MAIN PIPE AT PROPOSED STORM DRAINAGE AS SHOWN ON PLANS

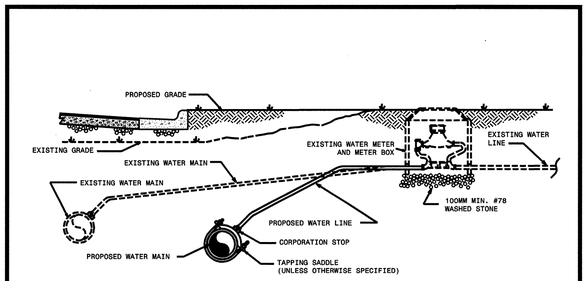

NOTES:

1. THE NEW WATER SERVICE LINE SHALL BE OF THE SAME TYPE AND GRADE AS THE EXISTING WATER SERVICE LINE UNLESS OTHERWISE SHOWN ON THE PLANS OR DIRECTED BY THE ENGINEER.
2. THE NEW WATER SERVICE LINE SHALL BE INSTALLED WITH A MINIMUM OF 900MM COVER BELOW FINISHED GRADE.

RECONNECT EXISTING WATER METER DETAIL

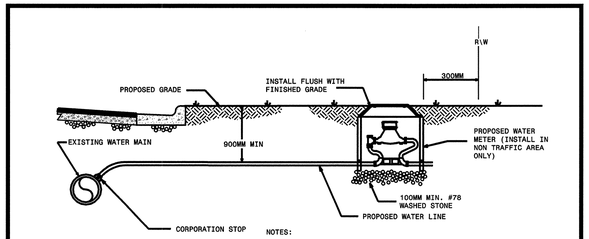

NOTES:

1. INSTALLATION SHALL INCLUDE THE APPROPRIATE LOCATION OF THE WATER METER, METER SETTER AND YOKE,METER VALVES, AND METER BOX WITH LID.
2. THE NEW WATER SERVICE LINE SHALL BE INSTALLED WITH A MINIMUN OF 900MM COVER BELOW FINISHED GRADE.

WATER METER INSTALLATION DETAIL

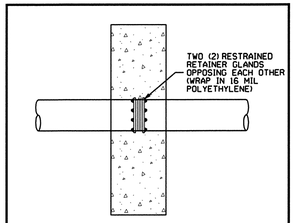

THRUST COLLAR ANCHOR

MAXIMUM TRENCH WIDTH AT TOP OF PIPE

NOMINAL PIPE SIZE (mm)	TRENCH WIDTH (meters)	NOMINAL PIPE SIZE (mm)	TRENCH WIDTH (meters)
100	0.71	500	1.12
150	0.76	600	1.22
200	0.81	750	1.37
250	0.86	900	1.57
300	0.91	1050	1.68
350	0.97	1200	1.83
400	1.02	1350	1.98
450	1.07		

TYPE "3"
(BEDDING FOR D.I. PIPE)

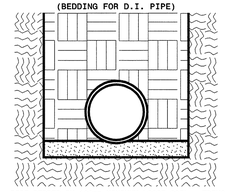

PIPE BEDDED IN 100mm MINIMUM LOOSE SOIL. TRENCH BACKFILLED IN LOOSE 150mm LAYERS COMPACTED TO TOP OF TRENCH USING LOCAL EXCAVATED MATERIAL, IF APPROVED BY THE ENGINEER, OR SELECT MATERIAL. ALL MATERIAL SHALL BE FREE OF ROCKS, FOREIGN MATERIAL, AND FROZEN EARTH. COMPACTION SHALL BE TO APPROX. 95% DENSITY IN ACCORDANCE WITH AASHTO T-99 AS MODIFIED BY THE DEPARTMENT OF TRANSPORTATION.

CLASS "C"
(BEDDING FOR P.V.C. PIPE)

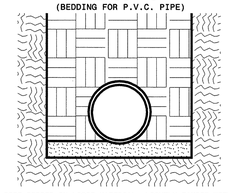

PIPE BEDDED IN LOOSE MATERIAL, LIGHTLY TAMPED WITH A MINIMUM OF 150mm UNDER PIPE. TRENCH BACKFILLED IN LOOSE 150mm LAYERS COMPACTED TO TOP OF TRENCH USING LOCAL EXCAVATED MATERIAL, IF APPROVED BY THE ENGINEER, OR SELECT MATERIAL. ALL MATERIAL SHALL BE FREE OF ROCKS, FOREIGN MATERIAL, AND FROZEN EARTH. COMPACTION SHALL BE TO APPROX. 95% DENSITY IN ACCORDANCE WITH AASHTO T-99 AS MODIFIED BY THE DEPARTMENT OF TRANSPORTATION.

REVISIONS

UTILITY CONSTRUCTION PLANS DESIGNED BY:
DAVIS-MARTIN-POWELL & ASSOC., INC.
ENGINEERING-LAND PLANNING-SURVEYING
HIGH POINT, NORTH CAROLINA

PROJECT REFERENCE NO.	SHEET NO.
R-2201	UC-26

DESIGNED BY: DMP
DRAWN BY: DMP
CHECKED BY: DMP
APPROVED BY:
REVISED:

NORTH CAROLINA DEPARTMENT OF TRANSPORTATION

PROJECT SERVICES UNIT
PHONE:(919)250-4128
FAX:(919)250-4119

NORTH CAROLINA PROFESSIONAL SEAL 017 ENGINEER RANDY L. MONELL 10/14/08

UTILITY CONSTRUCTION PLANS ONLY

UTILITY CONSTRUCTION

BASED ON TEST PRESSURE OF 200 P.S.I. (1.38 MPa)

HORIZONTAL RESTRAINT

BEARING AREAS GIVEN ARE IN SQUARE FEET (S.F.) AND SQUARE METERS (S.M.)

PIPE SIZE	DEGREE OF BEND	STATIC THRUST* LBS.	STATIC THRUST* KG	ALLOWABLE SOIL BEARING 1000 PSF 48 KPa S.F.	S.M.	2000 PSF 96 KPa S.F.	S.M.	3000 PSF 144 KPa S.F.	S.M.	4000 PSF 192 KPa S.F.	S.M.	5000 PSF 239 KPa S.F.	S.M.	6000 PSF 287 KPa S.F.	S.M.	7000 PSF 335 KPa S.F.	S.M.	8000 PSF 383 KPa S.F.	S.M.
4" (100 MM)	11/4 °	516	273	1	0.09	1	0.09	1	0.09	1	0.09	1	0.09	1	0.09	1	0.09	1	0.09
	22 1/2 °*	1,226	556	1	0.09	1	0.09	1	0.09	1	0.09	1	0.09	1	0.09	1	0.09	1	0.09
	45°	2,405	1,091	2	0.18	1	0.09	1	0.09	1	0.09	1	0.09	1	0.09	1	0.09	1	0.09
	90°	4,444	2,016	4	0.37	2	0.18	1	0.09	1	0.09	1	0.09	1	0.09	1	0.09	1	0.09
	TEE/PLUG	3,143	1,426	3	0.28	2	0.18	1	0.09	1	0.09	1	0.09	1	0.09	1	0.09	1	0.09
6" (150 MM)	11/4 °	1,385	628	2	0.18	1	0.09	1	0.09	1	0.09	1	0.09	1	0.09	1	0.09	1	0.09
	22 1/2 °*	2,758	1,251	3	0.28	2	0.18	1	0.09	1	0.09	1	0.09	1	0.09	1	0.09	1	0.09
	45°	5,409	2,453	5	0.46	3	0.28	2	0.18	2	0.18	1	0.09	1	0.09	1	0.09	1	0.09
	90°	9,999	4,535	10	0.93	5	0.46	3	0.28	3	0.28	2	0.18	2	0.18	2	0.18	1	0.09
	TEE/PLUG	7,068	3,206	7	0.65	4	0.37	3	0.28	2	0.18	2	0.18	1	0.09	1	0.09	1	0.09
8" (200 MM)	11/4°	2,424	1,100	3	0.28	1	0.09	1	0.09	1	0.09	1	0.09	1	0.09	1	0.09	1	0.09
	22 1/2°	4,904	2,224	5	0.46	3	0.28	2	0.18	1	0.09	1	0.09	1	0.09	1	0.09	1	0.09
	45°	9,619	4,363	10	0.93	5	0.46	3	0.28	2	0.18	2	0.18	2	0.18	2	0.18	1	0.09
	90°	17,773	8,062	18	1.67	9	0.84	6	0.56	4	0.37	4	0.37	3	0.28	3	0.28	2	0.18
	TEE/PLUG	12,568	5,701	13	1.21	6	0.56	4	0.37	3	0.28	3	0.28	2	0.18	2	0.18	2	0.18
10" (250 MM)	11/4°	3,846	1,745	4	0.37	2	0.18	2	0.18	1	0.09	1	0.09	1	0.09	1	0.09	1	0.09
	22 1/2°	7,661	3,475	8	0.74	4	0.37	3	0.28	2	0.18	2	0.18	2	0.18	1	0.09	1	0.09
	45°	15,028	6,817	15	1.39	8	0.74	5	0.46	4	0.37	3	0.28	3	0.28	2	0.18	2	0.18
	90°	27,768	12,595	28	2.60	14	1.30	9	0.84	7	0.65	6	0.56	5	0.46	4	0.37	3	0.28
	TEE/PLUG	19,635	8,906	20	1.86	10	0.93	7	0.65	5	0.46	4	0.37	3	0.28	3	0.28	2	0.18
12" (300 MM)	11/4°	5,543	2,514	6	0.56	3	0.28	2	0.18	2	0.18	1	0.09	1	0.09	1	0.09	1	0.09
	22 1/2°	11,035	5,004	11	1.02	6	0.56	4	0.37	3	0.28	2	0.18	2	0.18	2	0.18	2	0.18
	45°	21,641	9,816	22	2.04	11	1.02	7	0.65	5	0.46	4	0.37	4	0.37	3	0.28	3	0.28
	90°	39,987	18,138	40	3.72	20	1.86	13	1.21	10	0.93	8	0.74	7	0.65	6	0.56	5	0.46
	TEE/PLUG	28,274	12,825	28	2.60	14	1.30	9	0.84	7	0.65	6	0.56	5	0.46	4	0.37	4	0.37
14" (350 MM)	11/2°	7,544	3,422	8	0.74	4	0.37	3	0.28	2	0.18	2	0.18	2	0.18	1	0.09	1	0.09
	22 1/2°	15,016	6,811	15	1.39	8	0.74	5	0.46	4	0.37	3	0.28	3	0.28	2	0.18	2	0.18
	45°	29,455	13,361	29	2.69	15	1.39	10	0.93	7	0.65	6	0.56	5	0.46	4	0.37	4	0.37
	90°	54,426	24,687	54	5.02	27	2.51	18	1.67	14	1.30	11	1.02	9	0.84	8	0.74	7	0.65
	TEE/PLUG	38,485	17,456	38	3.53	19	1.76	13	1.21	10	0.93	8	0.74	6	0.56	5	0.46	5	0.46
16" (400 MM)	11/4°	9,854	4,470	10	0.93	5	0.46	3	0.28	3	0.28	2	0.18	2	0.18	2	0.18	2	0.18
	22 1/2°	19,612	8,896	20	1.86	10	0.93	7	0.65	5	0.46	4	0.37	3	0.28	3	0.28	3	0.28
	45°	38,471	17,450	38	3.53	17	1.58	13	1.21	10	0.93	8	0.74	6	0.56	5	0.46	5	0.46
	90°	71,085	32,244	71	6.60	36	3.34	24	2.23	18	1.67	14	1.30	12	1.11	10	0.93	9	0.84
	TEE/PLUG	50,265	22,800	50	4.64	25	2.32	17	1.58	13	1.21	10	0.93	8	0.74	7	0.65	6	0.56

* INCLUDES 1.25 SAFETY FACTOR

VERTICAL RESTRAINT

VOLUMES GIVEN ARE IN CUBIC YARDS (C.Y.) AND CUBIC METERS (C.M.)**

PIPE SIZE	RESTR. RODS NO. REQ'D	DIAMETER INCH	DIAMETER MM	DEGREE OF BEND 11-1/4° C.Y.	C.M.	22-1/2° C.Y.	C.M.	45° C.Y.	C.M.
4" (100 MM)	2	1/2"	13	0.25	0.19	0.50	0.38	0.75	0.57
6" (150 MM)	2	1/2"	13	0.50	0.38	1.0	0.76	1.75	1.34
8" (200 MM)	2	5/8"	16	0.75	0.57	1.50	1.15	3.0	2.29
10" (250 MM)	2	3/4"	19	1.25	0.96	2.25	1.72	4.50	3.44
12" (300 MM)	2	7/8"	22	1.75	1.34	3.25	2.48	6.50	4.97
14" (350 MM)	4	5/8"	16	2.25	1.72	4.50	3.44	8.75	6.69
16" (400 MM)	4	3/4"	19	3.0	2.29	6.0	4.59	11.50	8.79

**INCLUDES 1.50 SAFETY FACTOR

GENERAL NOTES:

1. CONCRETE SHALL BE CLASS "B".
2. CONCRETE SHALL NOT CONTACT BOLTS ENDS OF MECHANICAL JOINT FITTINGS.
3. CONSULT WITH ENGINEER FOR CONCRETE REQUIREMENTS ON MAINS LARGER THAN 16" (400 MM). (FOR VERTICAL & HORIZONTAL BENDS)
4. ALLOWABLE SOIL BEARING SHALL BE DETERMINED BY THE ENGINEER.

REVISIONS		
NO.	DATE	DESCRIPTION

THRUST RESTRAINT FOR PIPE LINES

STATE OF NORTH CAROLINA
DIVISION OF HIGHWAYS
RALEIGH, N.C.

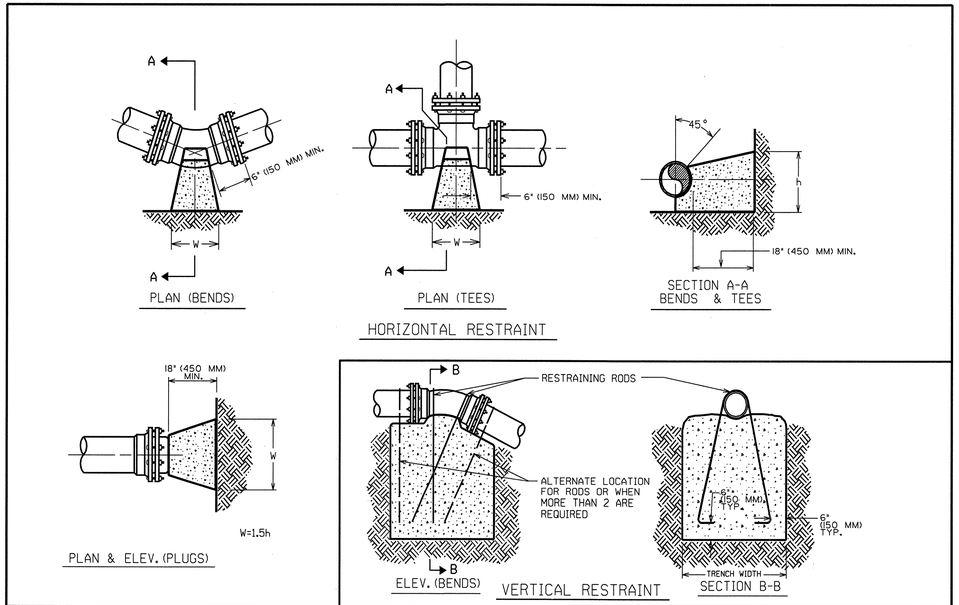

THRUST RESTRAINT FOR PIPE LINES

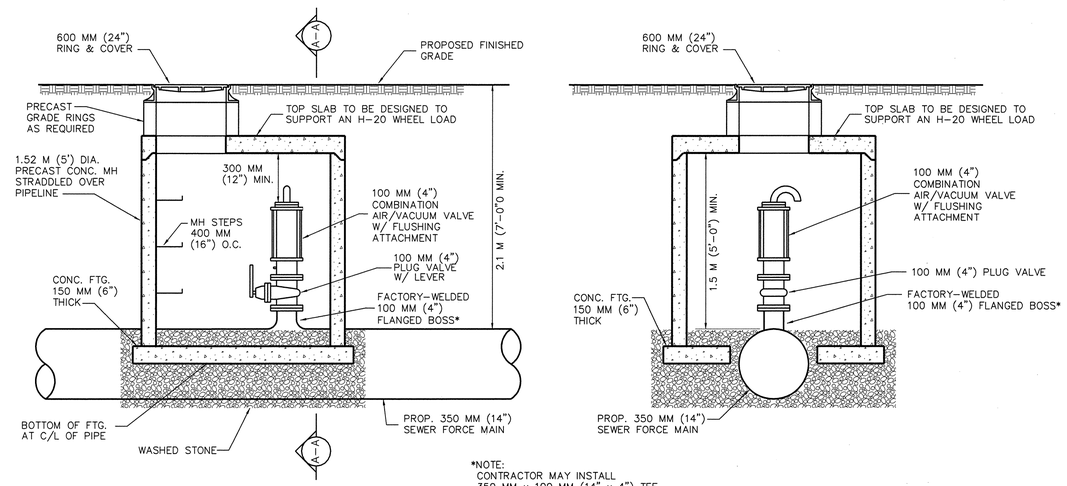

AIR RELEASE VALVE

NOT TO SCALE

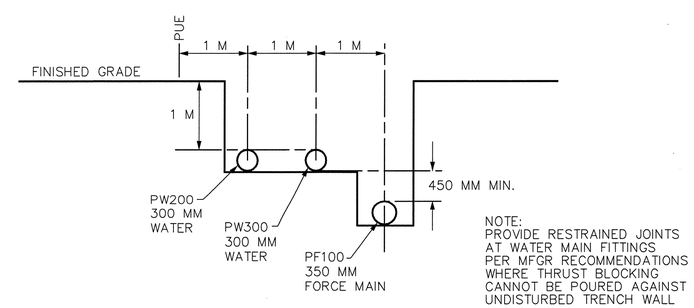

NOTE:
PROVIDE RESTRAINED JOINTS AT WATER MAIN FITTINGS PER MFGR RECOMMENDATIONS WHERE THRUST BLOCKING CANNOT BE POURED AGAINST UNDISTURBED TRENCH WALL

TYPICAL TRENCH SECTION
FOR PF100, PW200, & PW300
PARALLEL TO PUE ALONG RAMP B

NOT TO SCALE

UTILITY CONSTRUCTION PLANS DESIGNED BY:
DAVIS-MARTIN-POWELL & ASSOC., INC.
ENGINEERING-LAND PLANNING-SURVEYING
HIGH POINT, NORTH CAROLINA

REVISIONS

9/17/99

PROJECT: R-2201

CONTRACT: C202042

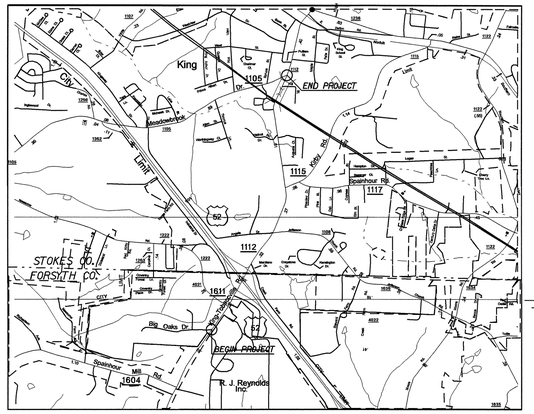

STATE OF NORTH CAROLINA
DIVISION OF HIGHWAYS

METRIC

ALL DIMENSIONS IN THESE PLANS ARE IN METERS AND/OR MILLIMETERS UNLESS OTHERWISE SHOWN

T.I.P. NO.	SHEET NO.
R-2201	UO-1

UTILITY BY OTHERS PLANS
FORSYTH/STOKES COUNTY

LOCATION: SR 1611/SR 1112 (DORAL DRIVE/MAIN STREET) FROM RJR ENTRANCE IN FORSYTH CO. TO SR 1105 (MEADOWBROOK DRIVE) IN KING, STOKES CO.

TYPE OF WORK: UTILITIES BY OTHERS

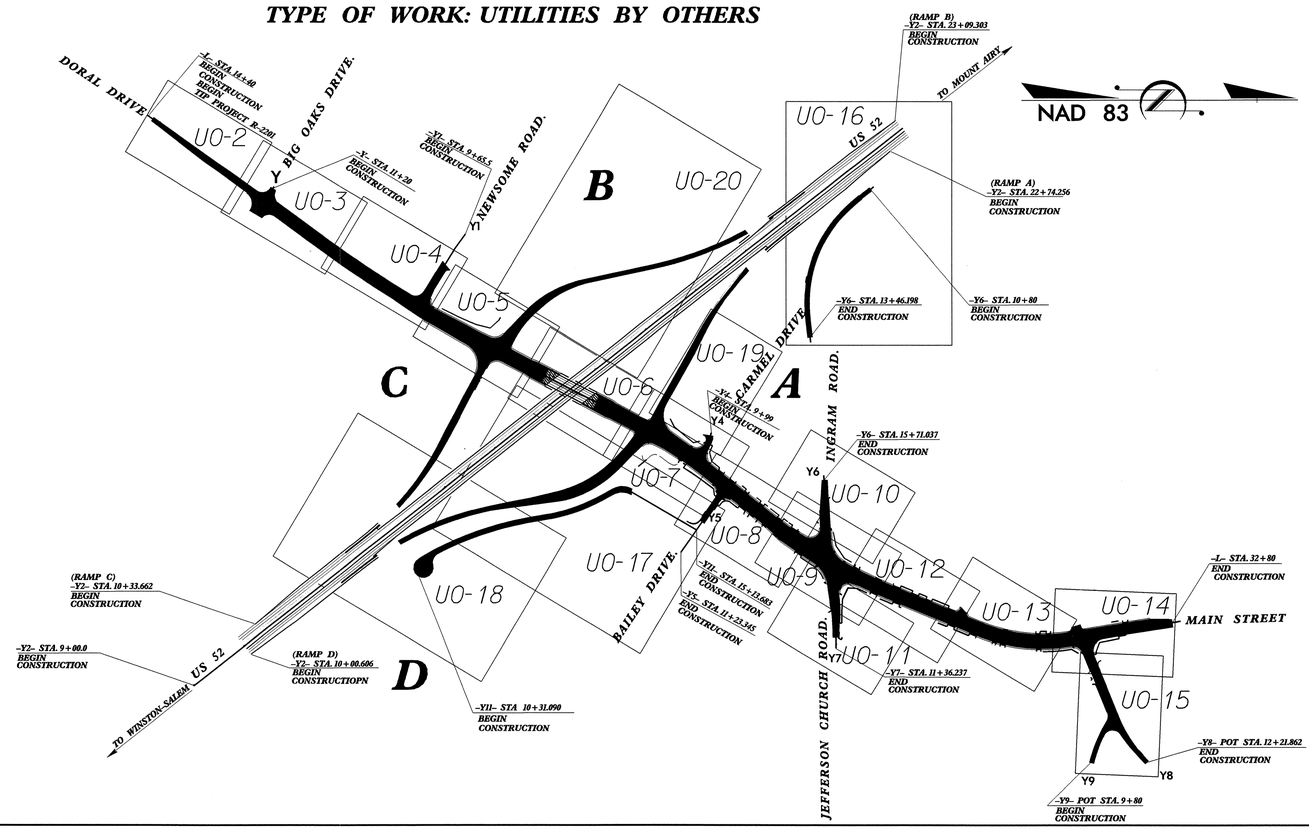

GRAPHIC SCALES

0 PLANS

0 PROFILE (HORIZONTAL)

0 PROFILE (VERTICAL)

INDEX OF SHEETS

SHEET NO.	DESCRIPTION
UO-1	TITLE SHEET
UO-2 THRU UO-20	UTILITY BY OTHERS PLAN SHEETS

UTILITY OWNERS ON PROJECT

(1) DUKE ENERGY - POWER (DISTRIBUTION)
(2) WINDSTREAM COMMUNICATIONS - TELEPHONE
(3) PIEDMONT NATURAL GAS
(4) TIME WARNER CABLE - CATV

PREPARED IN THE OFFICE OF:
DIVISION OF HIGHWAYS
DESIGN SERVICES
UTILITY SECTION
1591 MAIL SERVICES CENTER
RALEIGH NC 27699-1591
PHONE (919) 250-4128
FAX (919) 250-4119

Roger Worthington, P.E. UTILITIES SECTION ENGINEER
R. B. WILKINS, P.E. UTILITIES SQUAD LEADER PROJECT ENGINEER
MICHAEL R. BRIGHT UTILITIES PROJECT DESIGNER

9/09/99
09-OCT-2008 09:34
s:\specdes\utilities\tbw\mrb\projects\r2201\R-2201_Ut_Title_U01.pshdgn
mbright

PROJECT REFERENCE NO.	SHEET NO.
R-2201	U0-2

UTILITIES BY OTHERS

METRIC
2.5 0 5
SCALE

NOTE:
ALL PROPOSED UTILITY WORK SHOWN ON THIS SHEET WILL BE DONE BY OTHERS

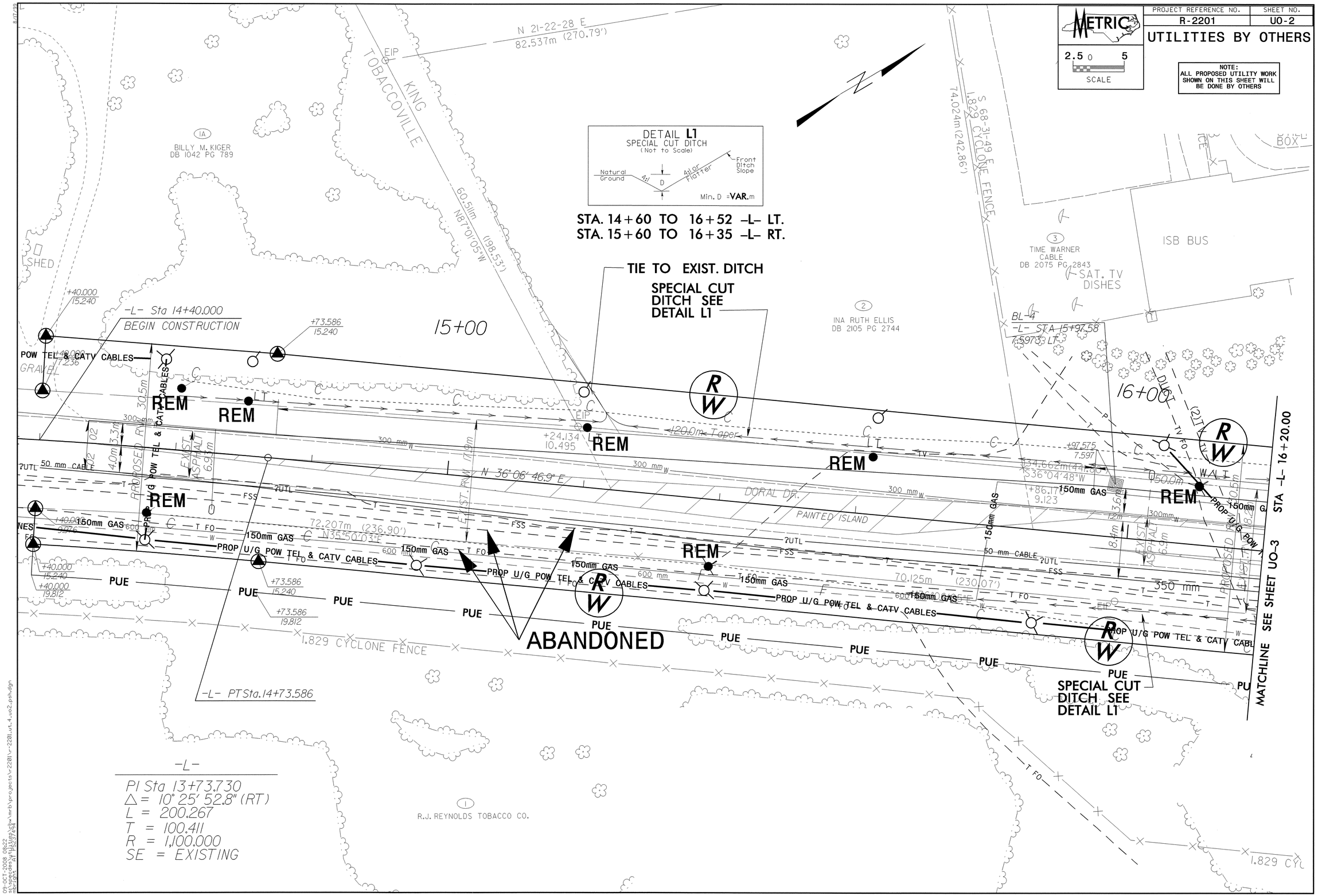

03-OCT-2008 08:22
s:\proposal\pdt\cba\mrth\projects\r2201\r-2201_ut_4_uo2_psh.dgn
mbright AT 1825374494

PROJECT REFERENCE NO.	SHEET NO.
R-2201	U0-3

UTILITIES BY OTHERS

METRIC
2.5 0 5
SCALE

NOTE:
ALL PROPOSED UTILITY WORK SHOWN ON THIS SHEET WILL BE DONE BY OTHERS

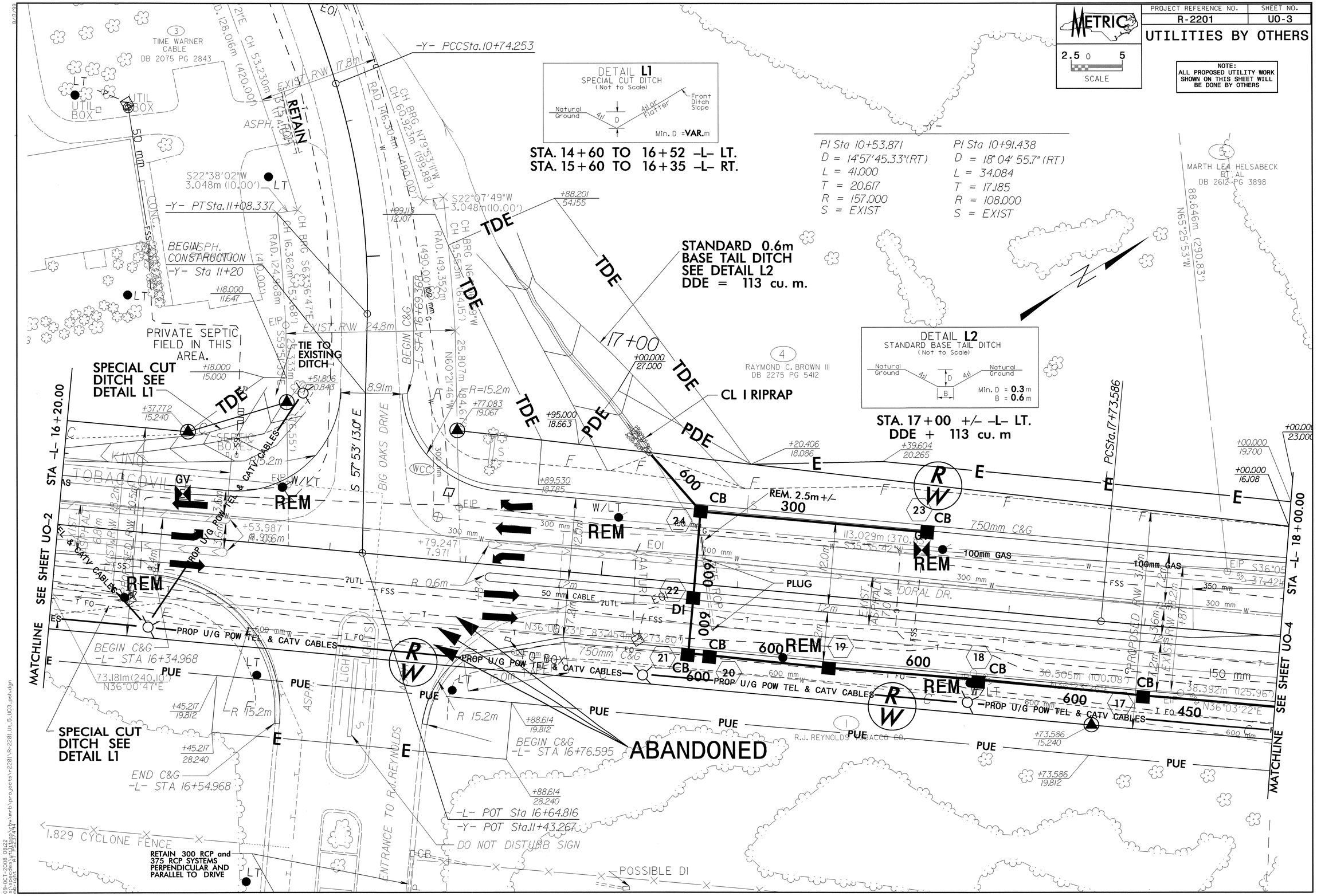

PROJECT REFERENCE NO.	SHEET NO.
R-2201	U0-4

UTILITIES BY OTHERS

METRIC

2.5 0 5

SCALE

NOTE:
ALL PROPOSED UTILITY WORK SHOWN ON THIS SHEET WILL BE DONE BY OTHERS

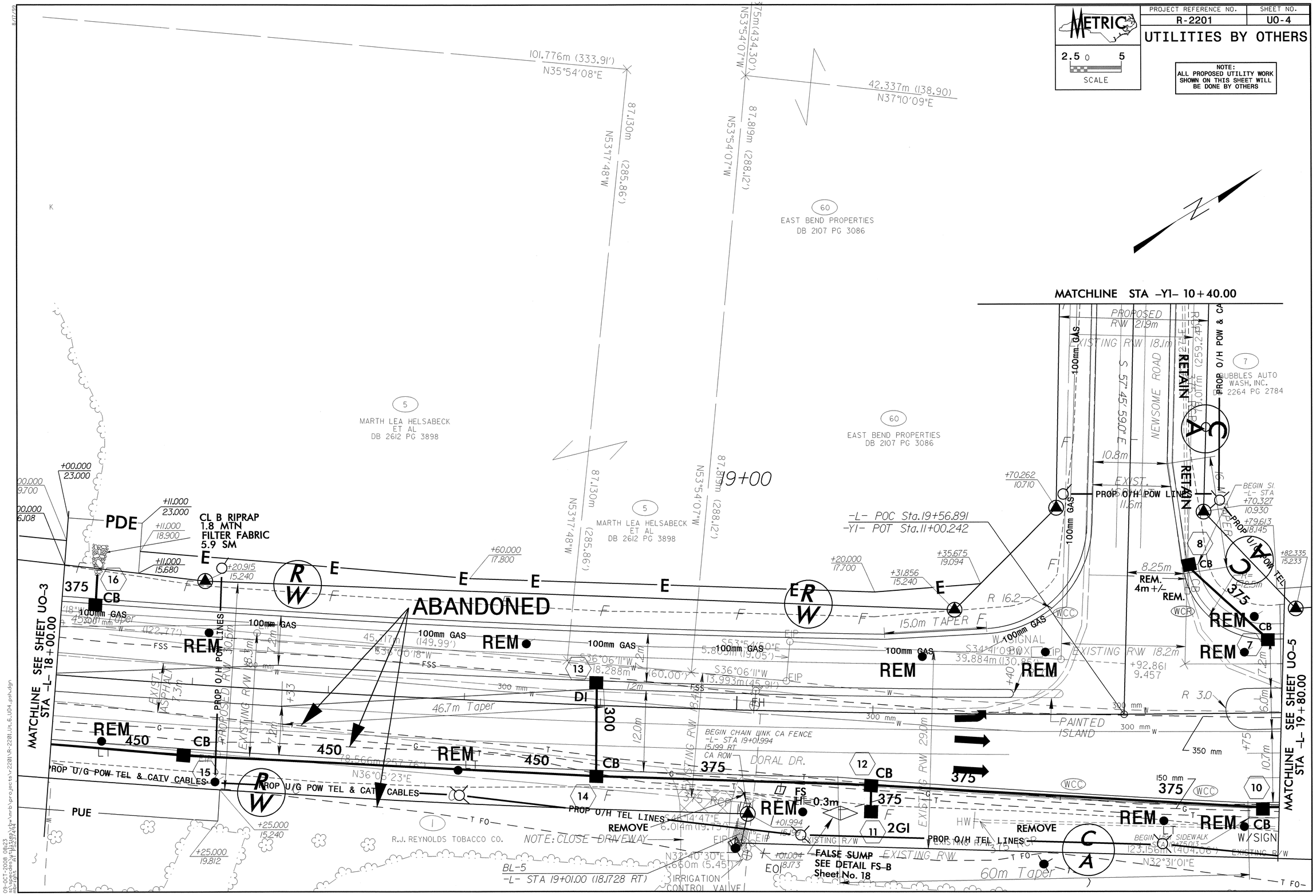

PROJECT REFERENCE NO.	SHEET NO.
R-2201	U0-5

UTILITIES BY OTHERS

METRIC
2.5 0 5
SCALE

NOTE:
ALL PROPOSED UTILITY WORK SHOWN ON THIS SHEET WILL BE DONE BY OTHERS

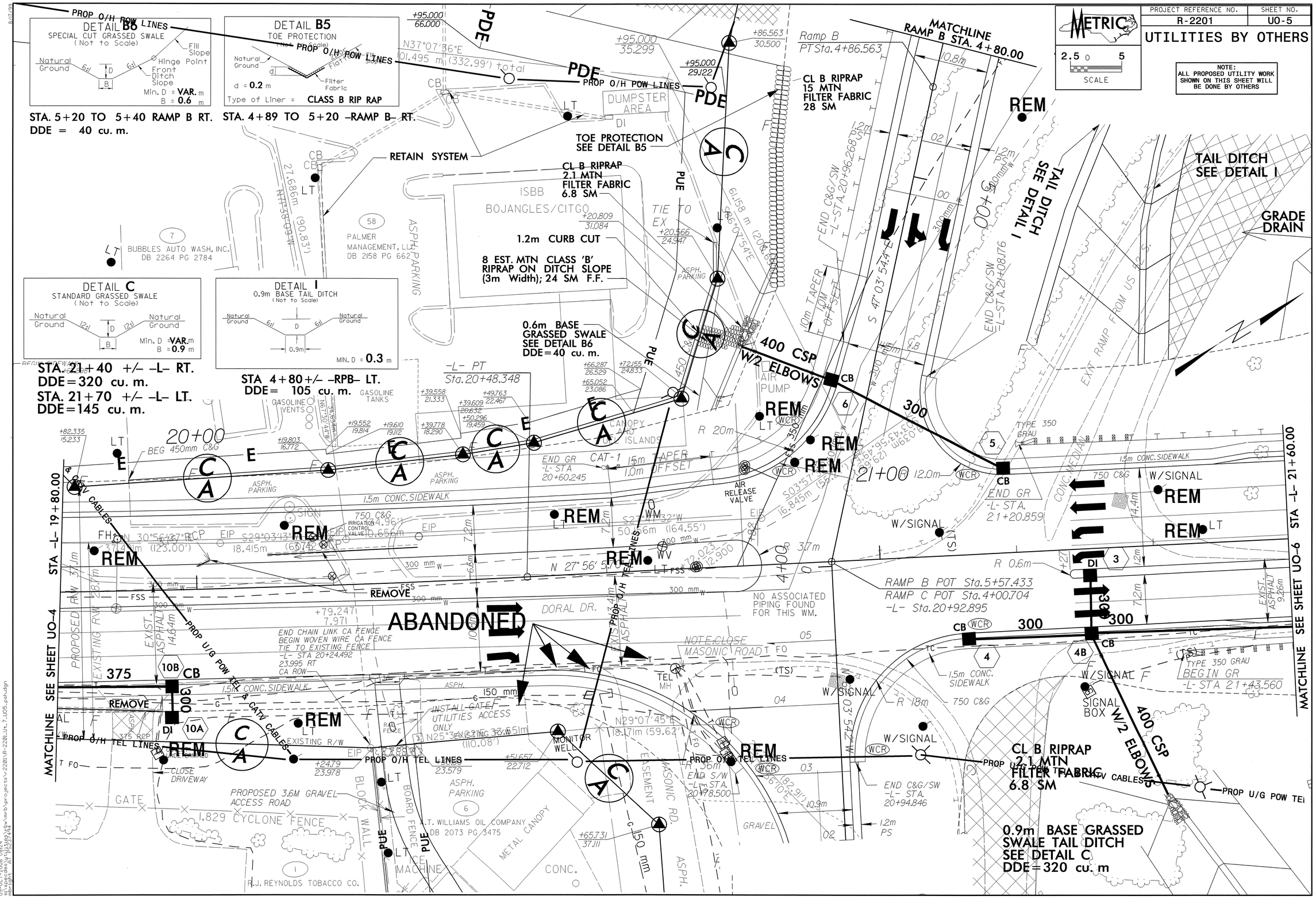

09-OCT-2008 08:24
s:\roadway\proj\rb\mrb\projects\r2201\R-2201_Ut_7_U05_psh.dgn
mbright

PROJECT REFERENCE NO.	SHEET NO.
R-2201	U0-6

UTILITIES BY OTHERS

METRIC 2.5 0 5 SCALE

NOTE: ALL PROPOSED UTILITY WORK SHOWN ON THIS SHEET WILL BE DONE BY OTHERS

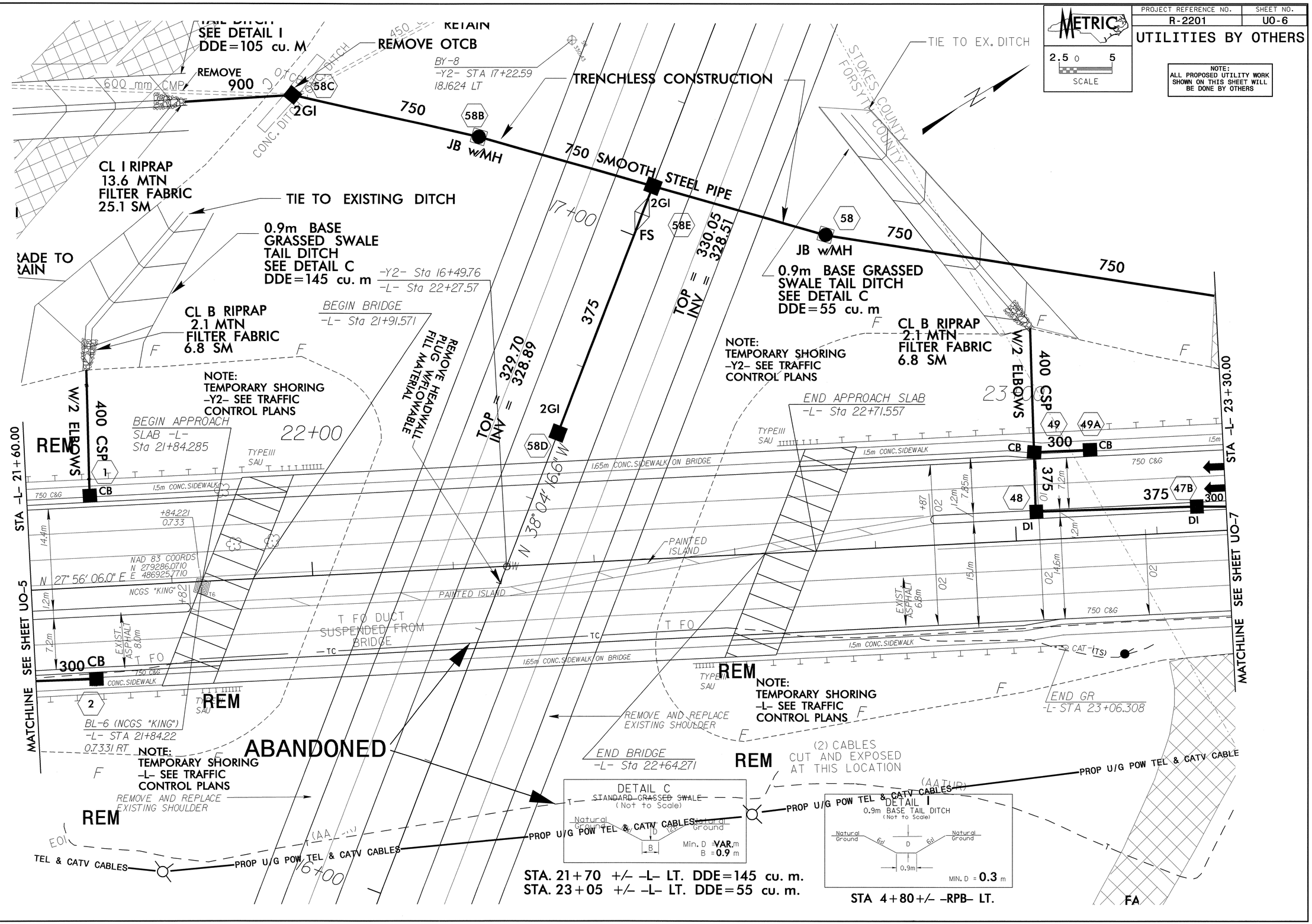

09-OCT-2008 08:24
s:\roadway\proj\mrb\projects\r2201\R-2201_Uti_8_U06_psh.dgn
dbrooks

PROJECT REFERENCE NO.	SHEET NO.
R-2201	U0-7

UTILITIES BY OTHERS

METRIC
2.5 0 5
SCALE

NOTE:
ALL PROPOSED UTILITY WORK SHOWN ON THIS SHEET WILL BE DONE BY OTHERS

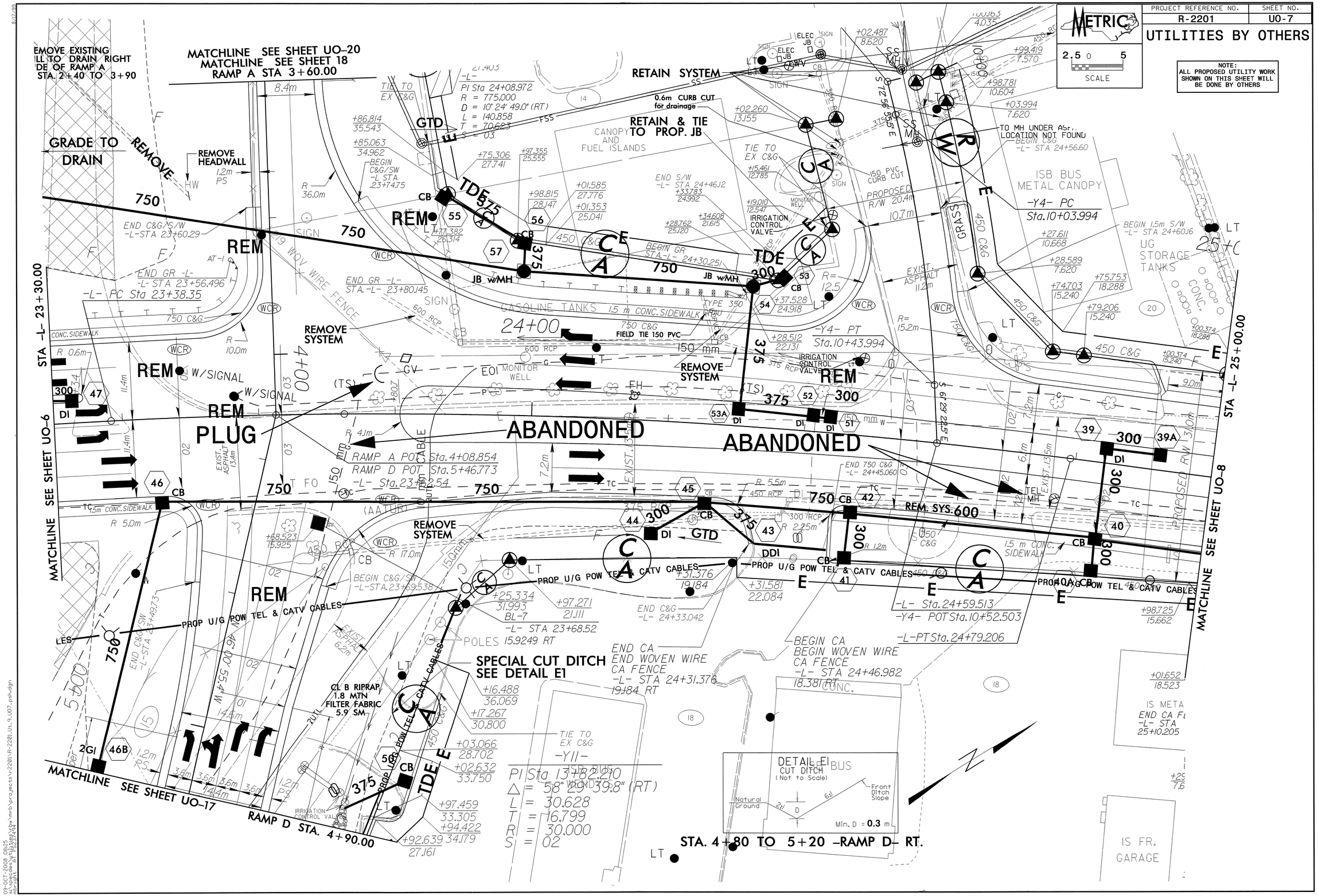

PROJECT REFERENCE NO.	SHEET NO.
R-2201	UO-8

UTILITIES BY OTHERS

METRIC
2.5 0 5
SCALE

NOTE:
ALL PROPOSED UTILITY WORK SHOWN ON THIS SHEET WILL BE DONE BY OTHERS

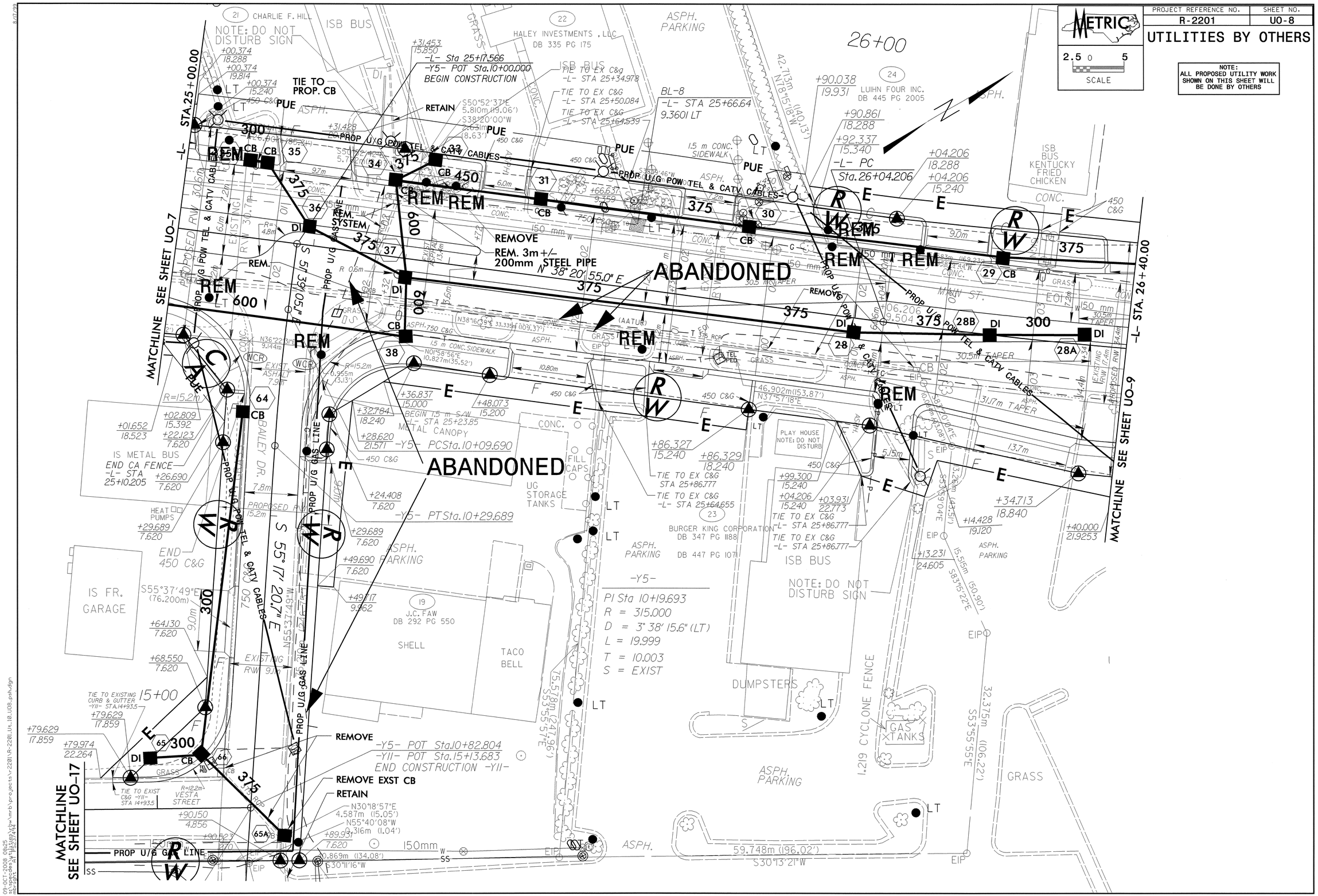

PROJECT REFERENCE NO.	SHEET NO.
R-2201	U0-9

UTILITIES BY OTHERS

METRIC
2.5 0 5
SCALE

NOTE:
ALL PROPOSED UTILITY WORK SHOWN ON THIS SHEET WILL BE DONE BY OTHERS

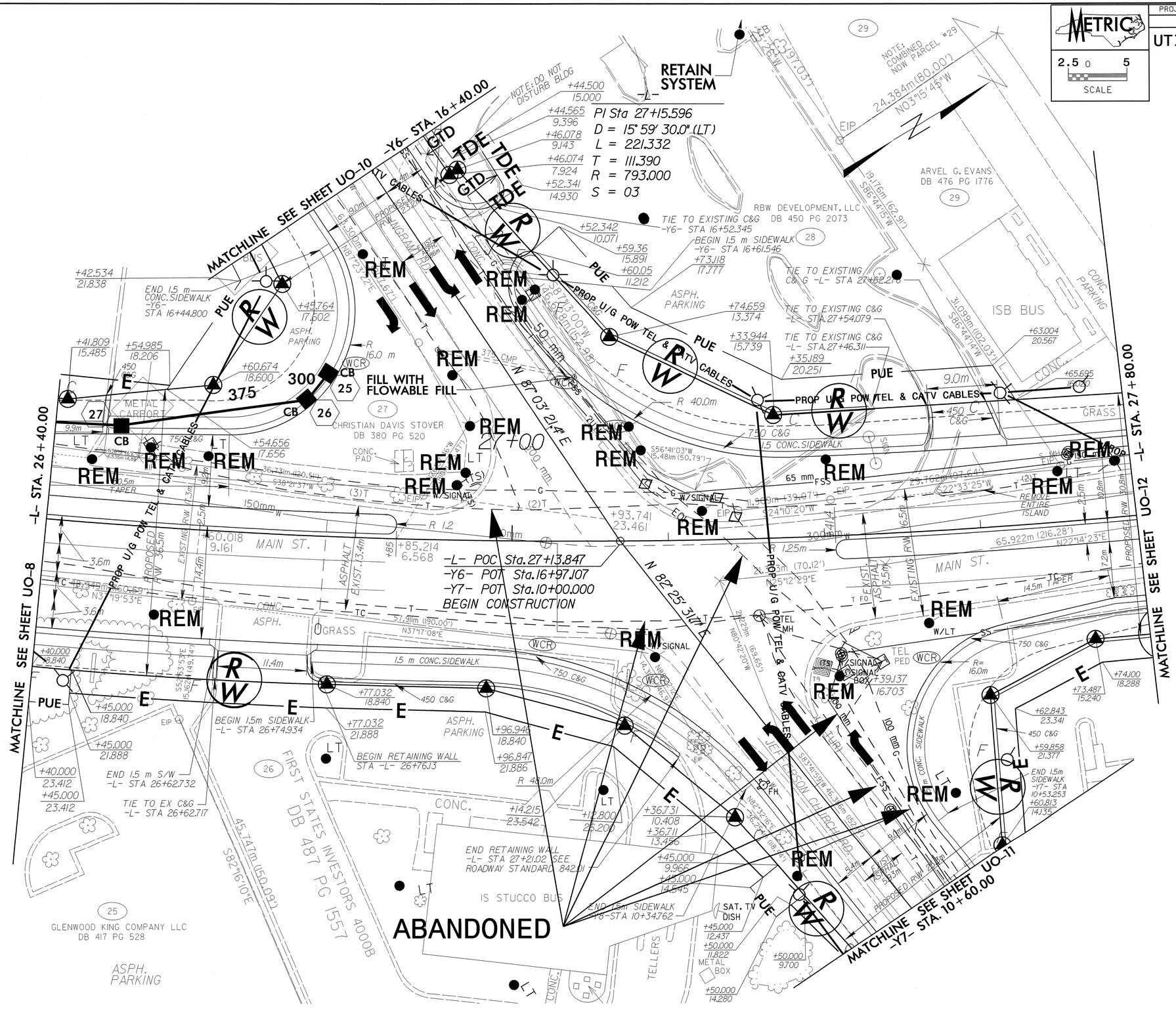

09-OCT-2008 08:26
s:\design\bridge\mnb\projects\r2201\R-2201_U1_LU09_psh.dgn
mbright
A1 1:537.494

PROJECT REFERENCE NO.	SHEET NO.
R-2201	U0-10

UTILITIES BY OTHERS

METRIC

2.5 0 5

SCALE

NOTE:
ALL PROPOSED UTILITY WORK SHOWN ON THIS SHEET WILL BE DONE BY OTHERS

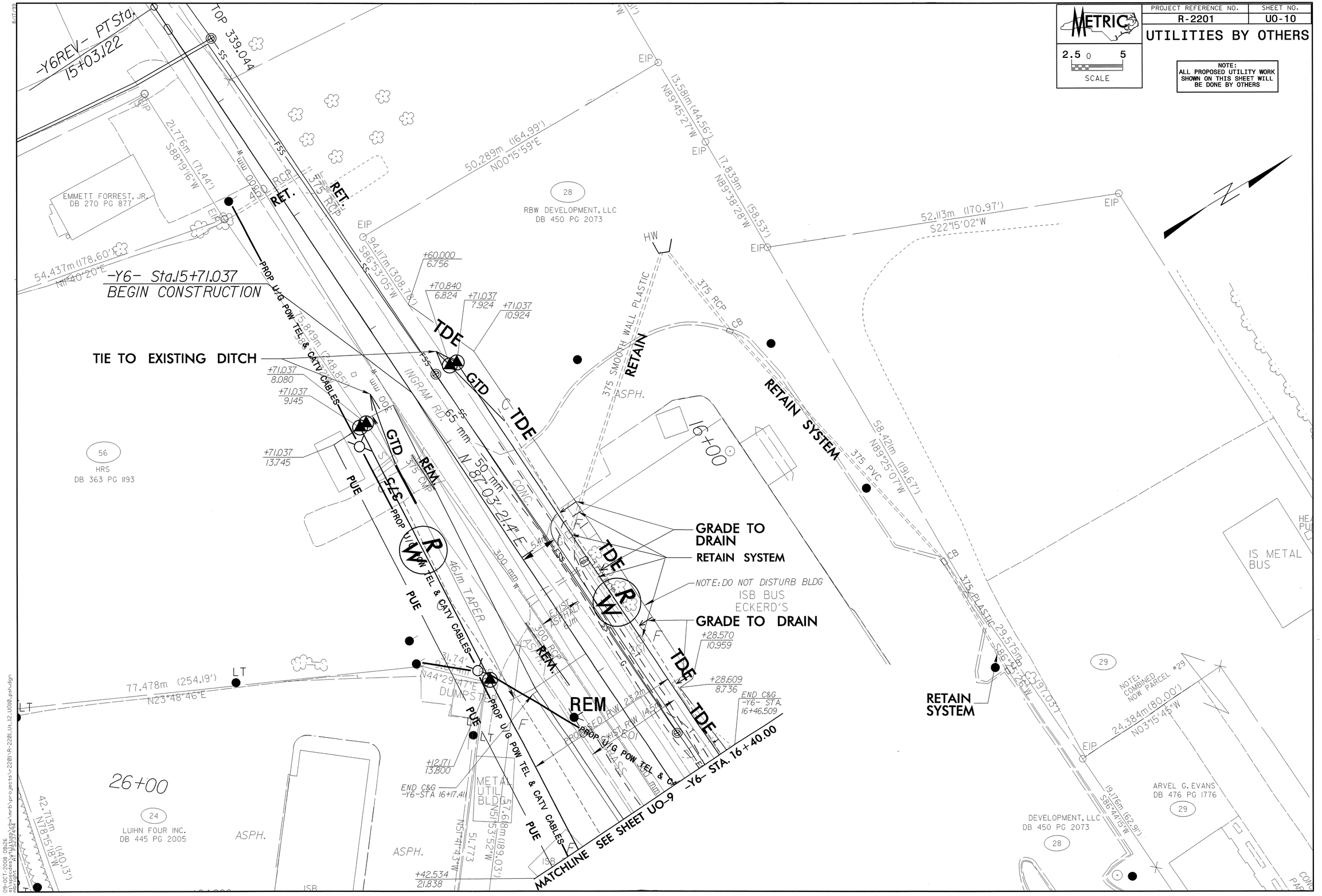

8/17/99

09-OCT-2008 08:26
s:\contracts\r2201\dgn\mrb\projects\r2201\R-2201_Ut_12_U010.pshdgn
mbergin "AT 1425397494"

PROJECT REFERENCE NO.	SHEET NO.
R-2201	U0-11

UTILITIES BY OTHERS

METRIC

2.5 0 5

SCALE

NOTE:
ALL PROPOSED UTILITY WORK SHOWN ON THIS SHEET WILL BE DONE BY OTHERS

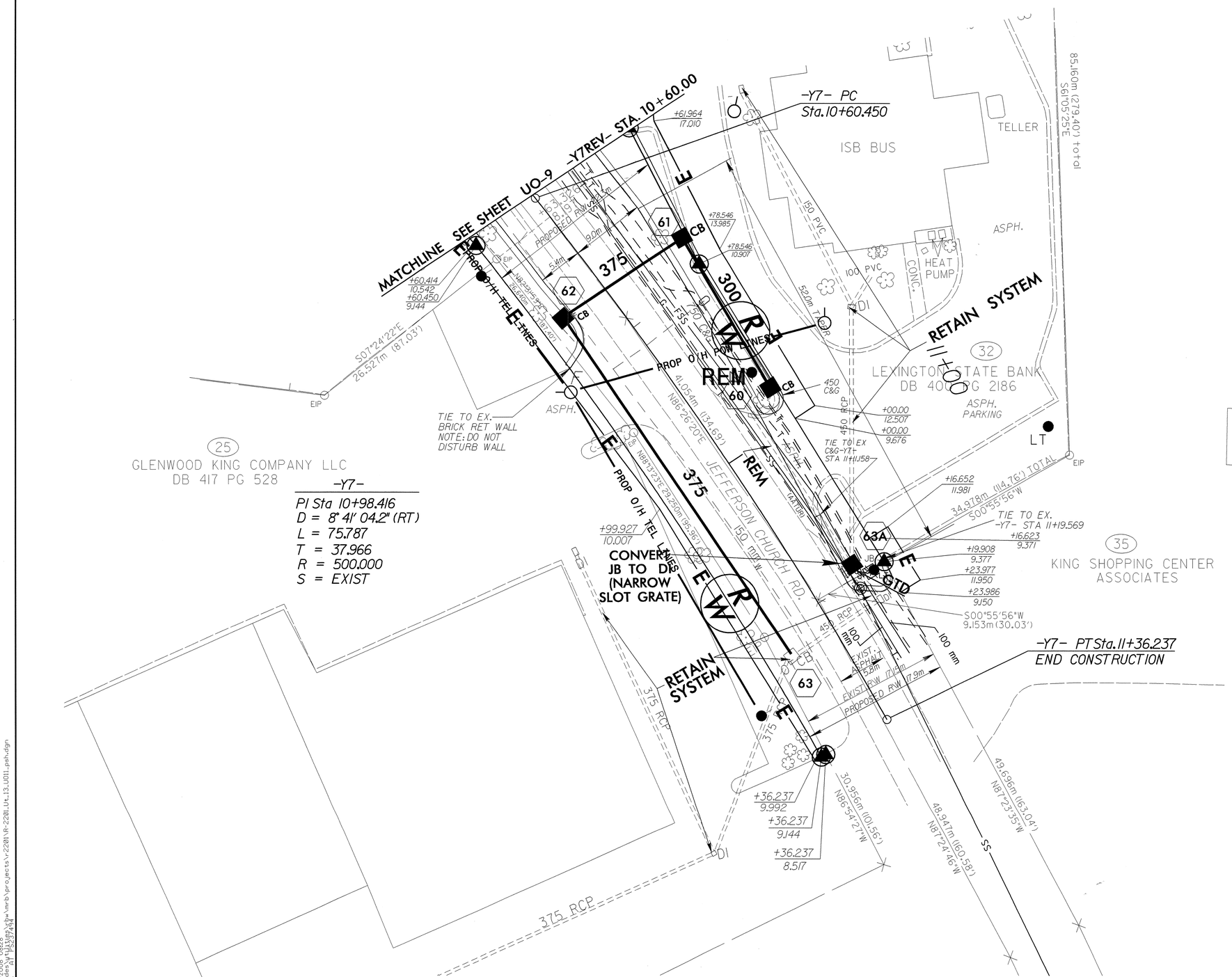

09-OCT-2008 08:28
s:\contracts\r-2201\r-2201_ut_13_u011_psh.dgn
mbrights

PROJECT REFERENCE NO.	SHEET NO.
R-2201	U0-12

UTILITIES BY OTHERS

METRIC
2.5 0 5
SCALE

NOTE:
ALL PROPOSED UTILITY WORK SHOWN ON THIS SHEET WILL BE DONE BY OTHERS

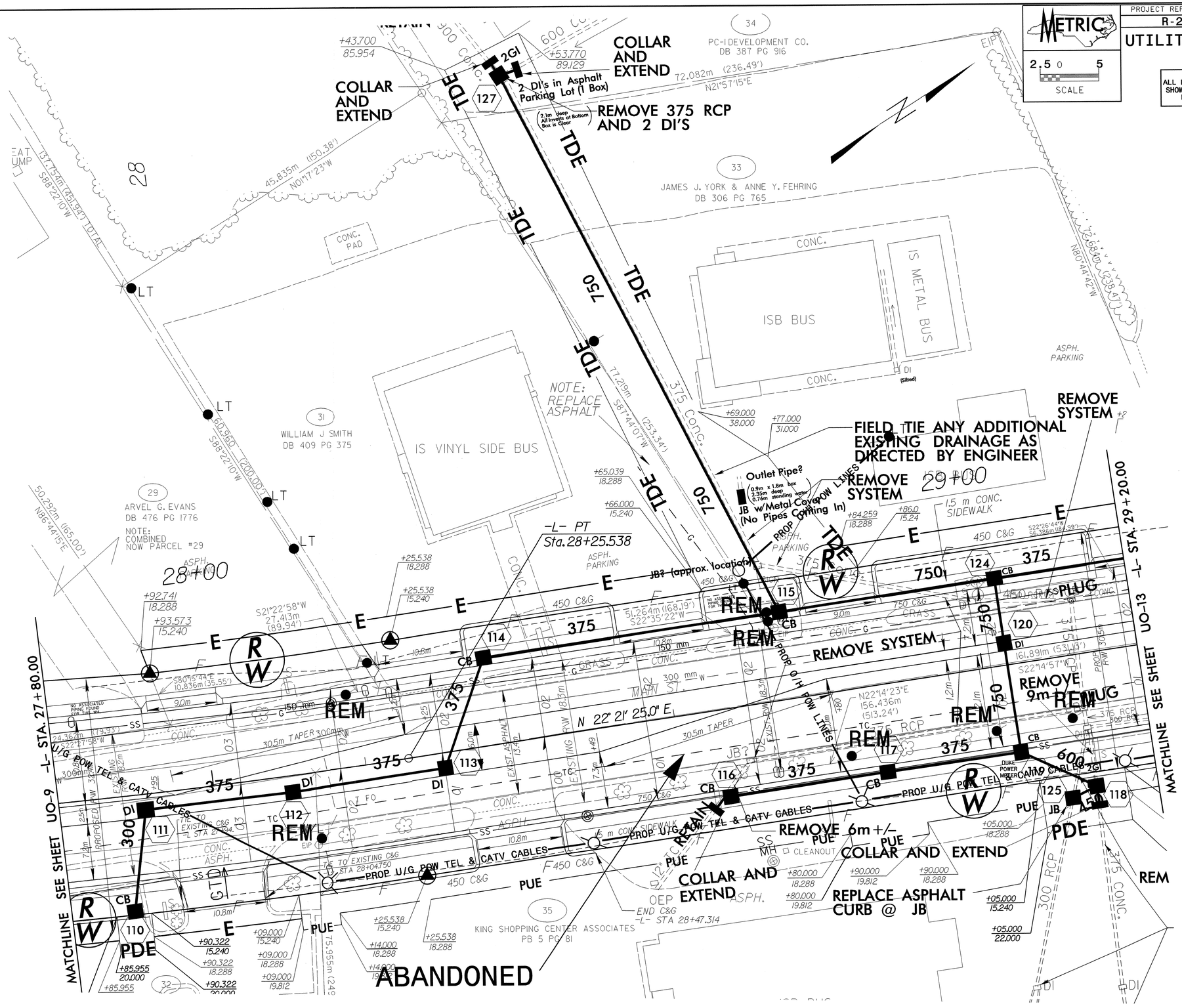

PROJECT REFERENCE NO.	SHEET NO.
R-2201	U0-13

UTILITIES BY OTHERS

METRIC
2.5 0 5
SCALE

NOTE:
ALL PROPOSED UTILITY WORK SHOWN ON THIS SHEET WILL BE DONE BY OTHERS

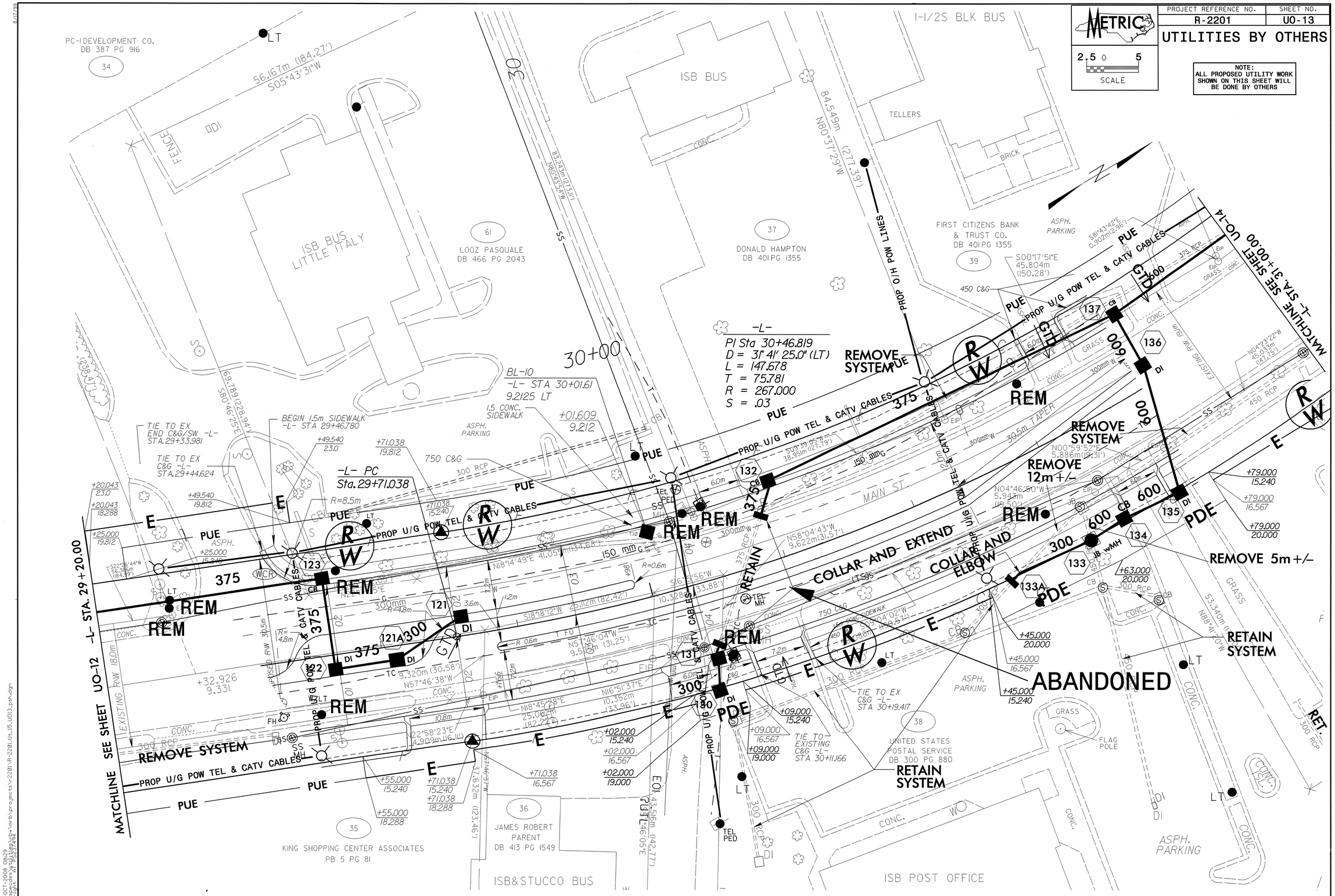

09-OCT-2008 08:29
R:\Roadway\Proj\arb\arb\proj\arb\R-2201\R-2201_UO_15_U013.psh dgn
mbrright

PROJECT REFERENCE NO.	SHEET NO.
R-2201	U0-14

UTILITIES BY OTHERS

METRIC
2.5 0 5
SCALE

NOTE:
ALL PROPOSED UTILITY WORK SHOWN ON THIS SHEET WILL BE DONE BY OTHERS

T = 75.051
R = 8,000.000

-L- Sta 31+39.544
-Y8- POT Sta.10+00.0
BEGIN CONSTRUCTION

-L- PT
Sta.31+18.716

-L- PC
Sta.32+18.716

-L- Sta 32+80.000
END CONSTRUCTION

ABANDONED

ISBLK BUS
CVS PHARMACY

CVS 7354 NC LLC
DB 490 PG 1279

ISBLK BUS

FRANK W. FOWLER
DB 378 PG 63

CALVARY BAPTIST
CHURCH OF KING
DB 440 PG 2306

TRUEWOOD AND CHARLES, INC
DB 375 PG 1260

TAYLOR OIL COMPANY
DB 263 PG 155

SAM LANHAM SIMMONS, JR.
DB 219 PG 376

STOKES TIRE AND
AUTOMOTIVE, INC.
DB 361 PG 1959

SOUTHERN NATIONAL BANK
B 369 PG 2273

MATCHLINE SEE SHEET UO-13

MATCHLINE SEE SHEET UO-15
STA. -Y8- 10+50.00

09-OCT-2008 08:29
R:\Roadway\Proj\R2201_Lit_16_U014_psh.dgn

PROJECT REFERENCE NO.	SHEET NO.
R-2201	U0-15

UTILITIES BY OTHERS

METRIC
2.5 0 5
SCALE

NOTE:
ALL PROPOSED UTILITY WORK SHOWN ON THIS SHEET WILL BE DONE BY OTHERS

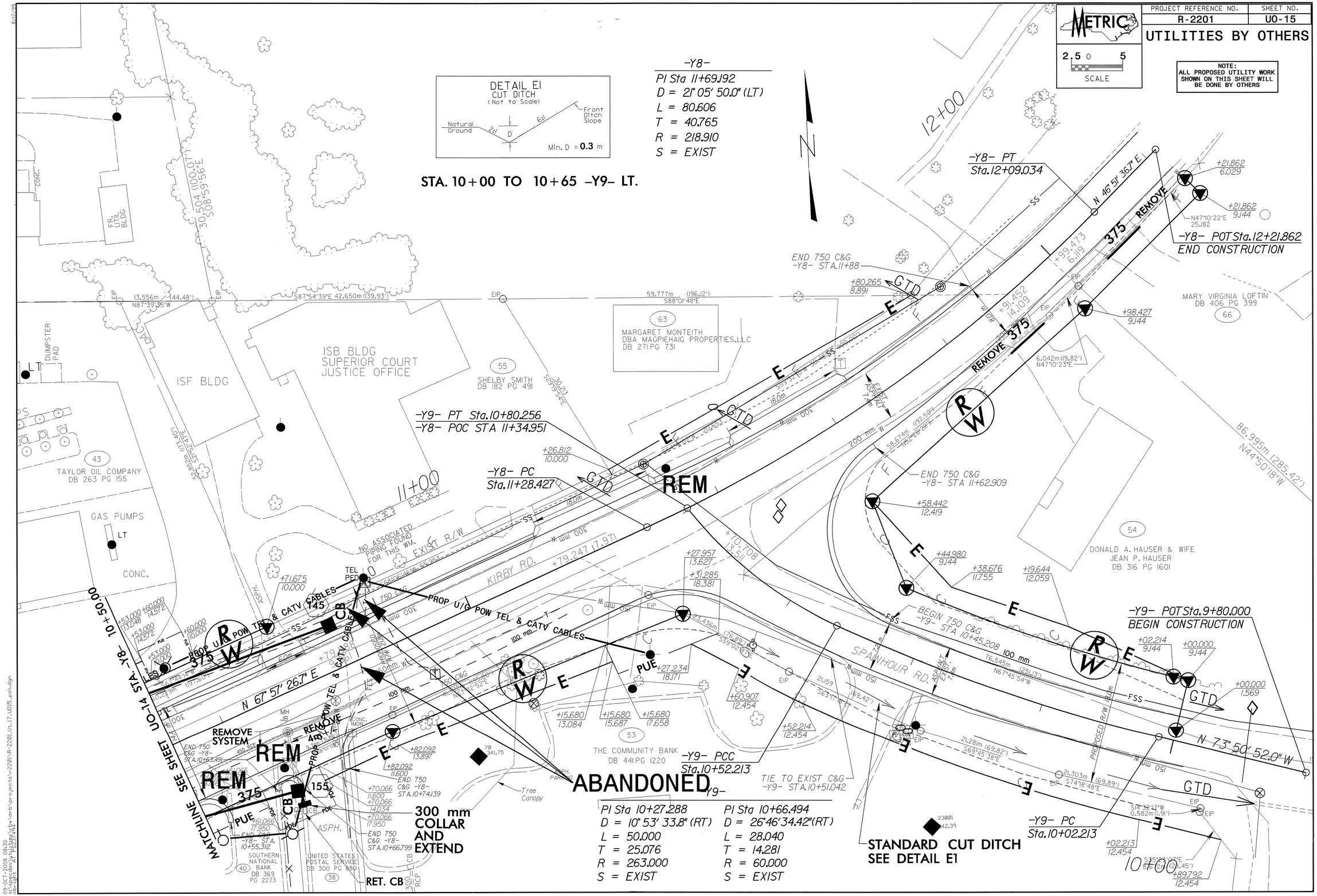

8/17/99

09-OCT-2008 08:30
s:\roadway\proj\hw\work\projects\r2201\R-2201_Ut_17_U0115_psh.dgn

PROJECT REFERENCE NO.	SHEET NO.
R-2201	U0-16

UTILITIES BY OTHERS

METRIC

5 0 10
SCALE

NOTE:
ALL PROPOSED UTILITY WORK SHOWN ON THIS SHEET WILL BE DONE BY OTHERS

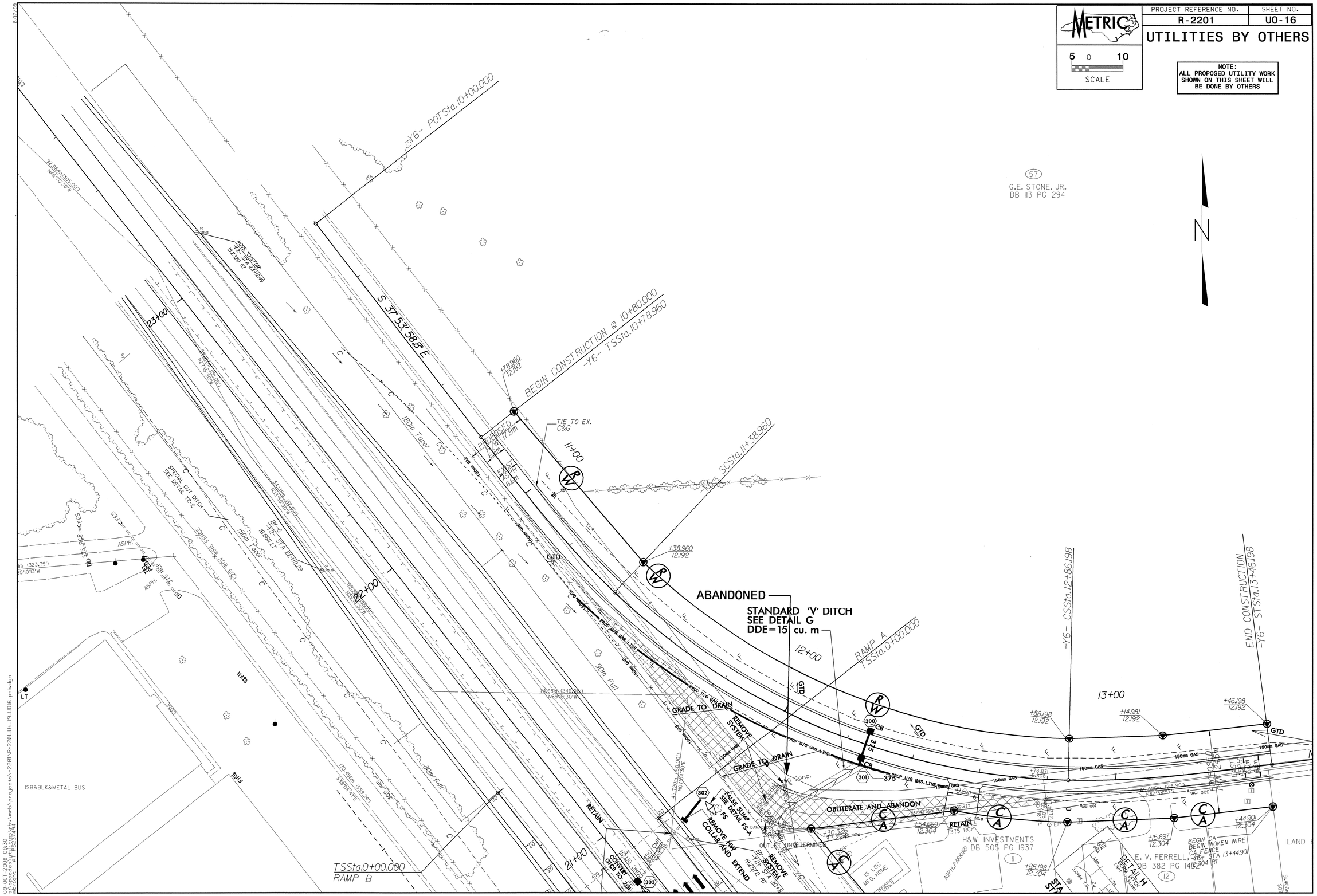

PROJECT REFERENCE NO.	SHEET NO.
R-2201	U0-17

UTILITIES BY OTHERS

METRIC
5 0 10
SCALE

NOTE:
ALL PROPOSED UTILITY WORK SHOWN ON THIS SHEET WILL BE DONE BY OTHERS

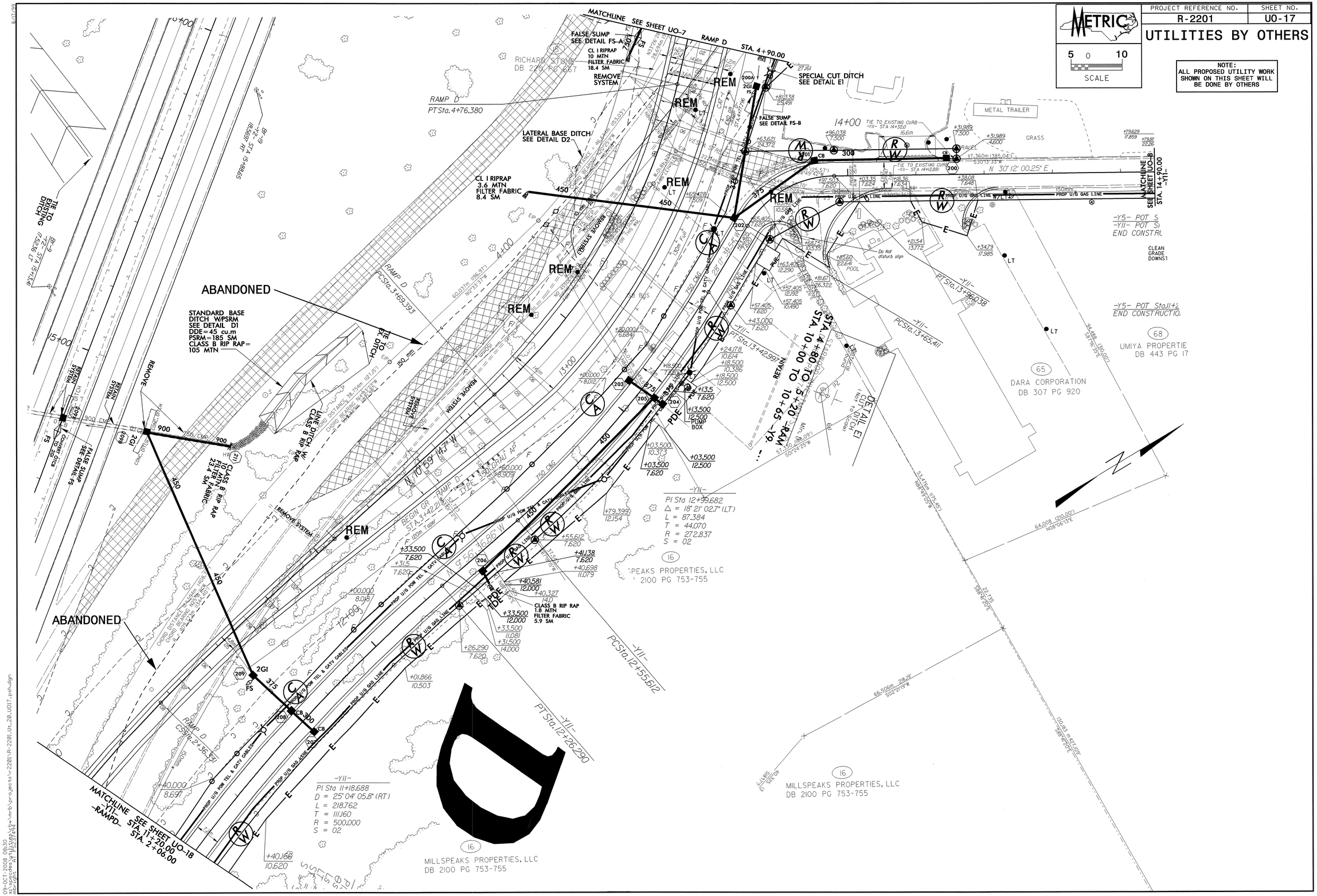

09-OCT-2008 08:30
s:\contracts\r2201_ut_20_u017_path.dgn
mbrights

PROJECT REFERENCE NO.	SHEET NO.
R-2201	U0-18

UTILITIES BY OTHERS

METRIC

5 0 10
SCALE

NOTE:
ALL PROPOSED UTILITY WORK SHOWN ON THIS SHEET WILL BE DONE BY OTHERS

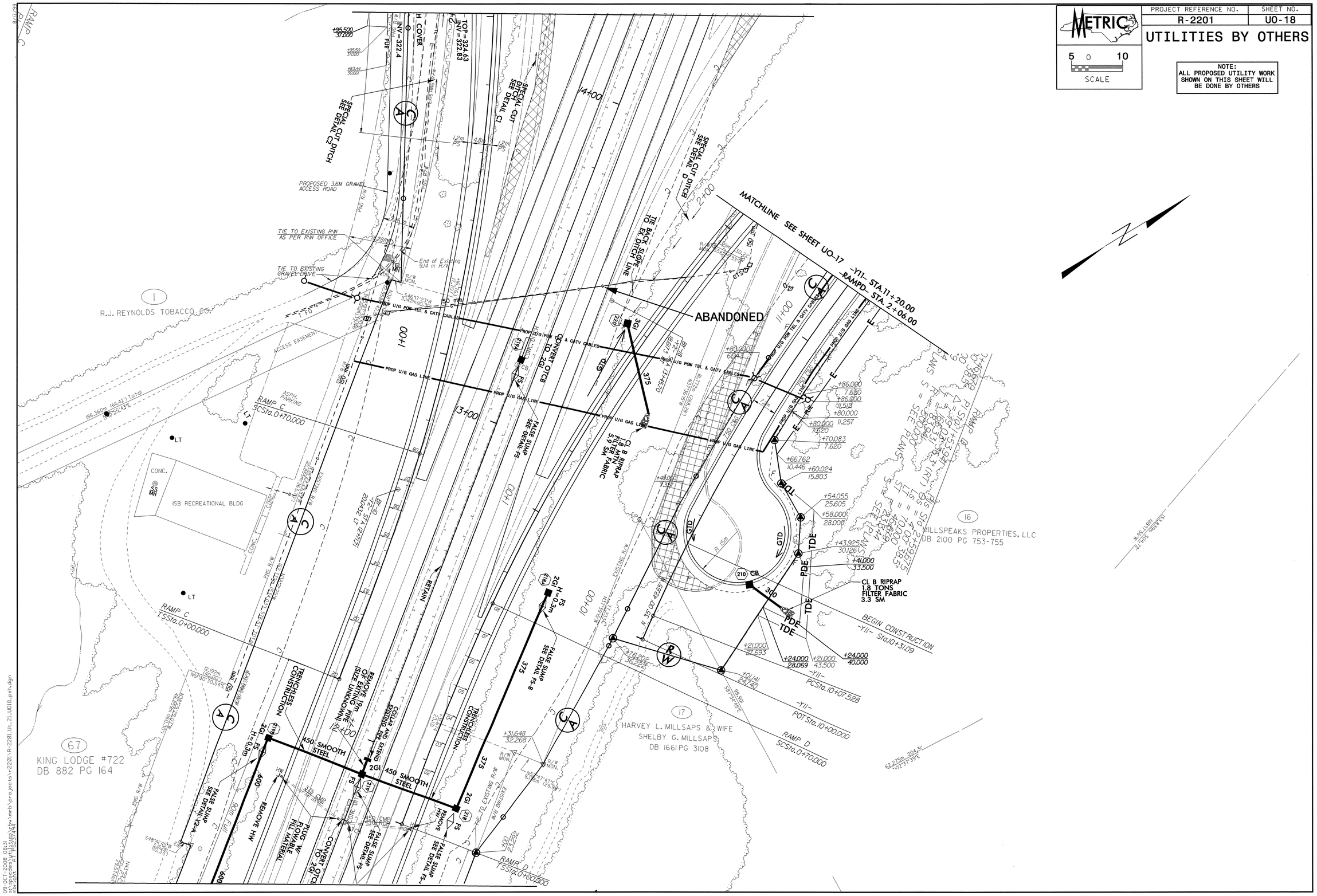

PROJECT REFERENCE NO.	SHEET NO.
R-2201	U0-19

UTILITIES BY OTHERS

METRIC
2.5 0 5
SCALE

NOTE:
ALL PROPOSED UTILITY WORK SHOWN ON THIS SHEET WILL BE DONE BY OTHERS

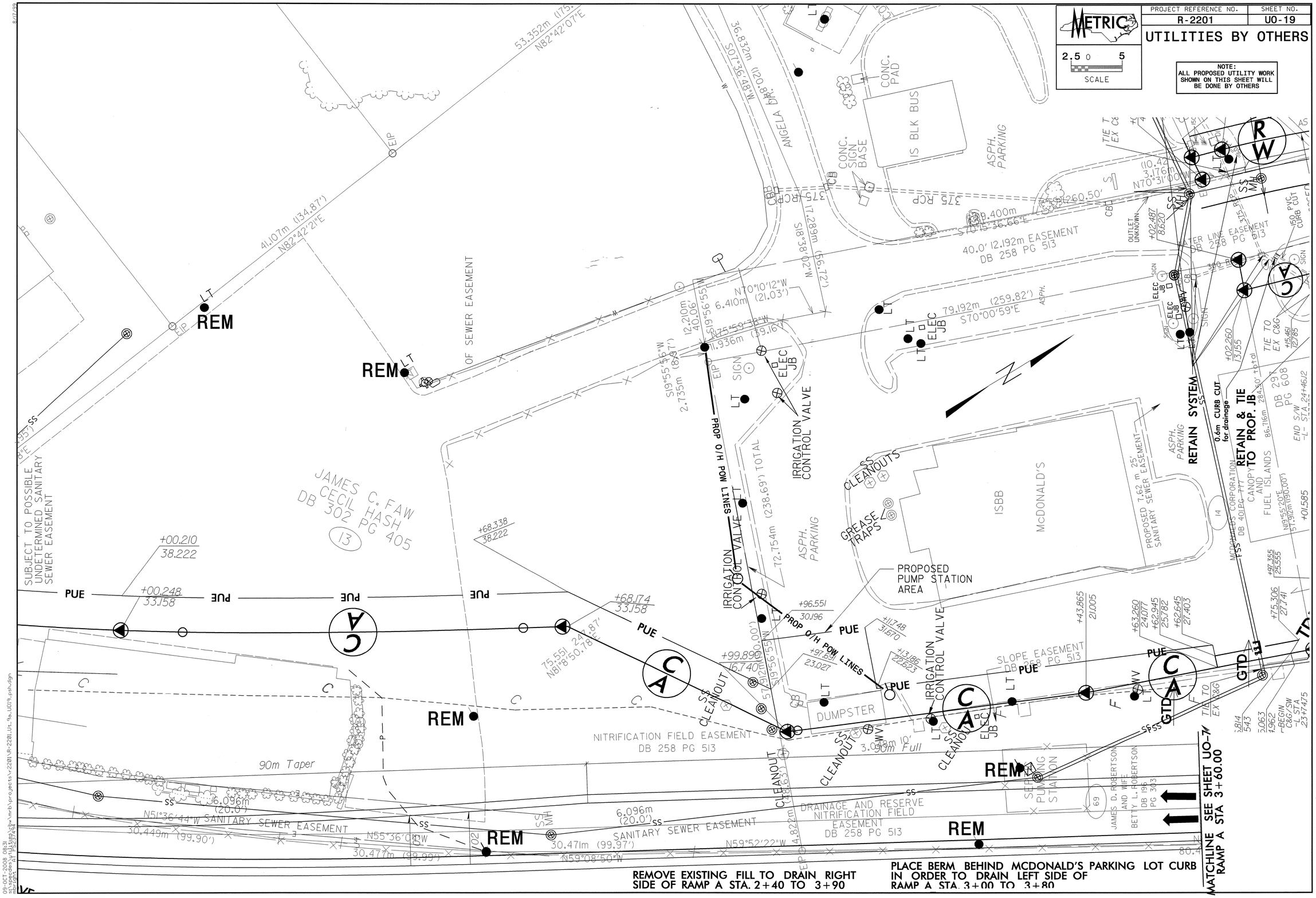

PROJECT REFERENCE NO.	SHEET NO.
R-2201	U0-20

UTILITIES BY OTHERS

METRIC
5 0 10
SCALE

NOTE:
ALL PROPOSED UTILITY WORK SHOWN ON THIS SHEET WILL BE DONE BY OTHERS

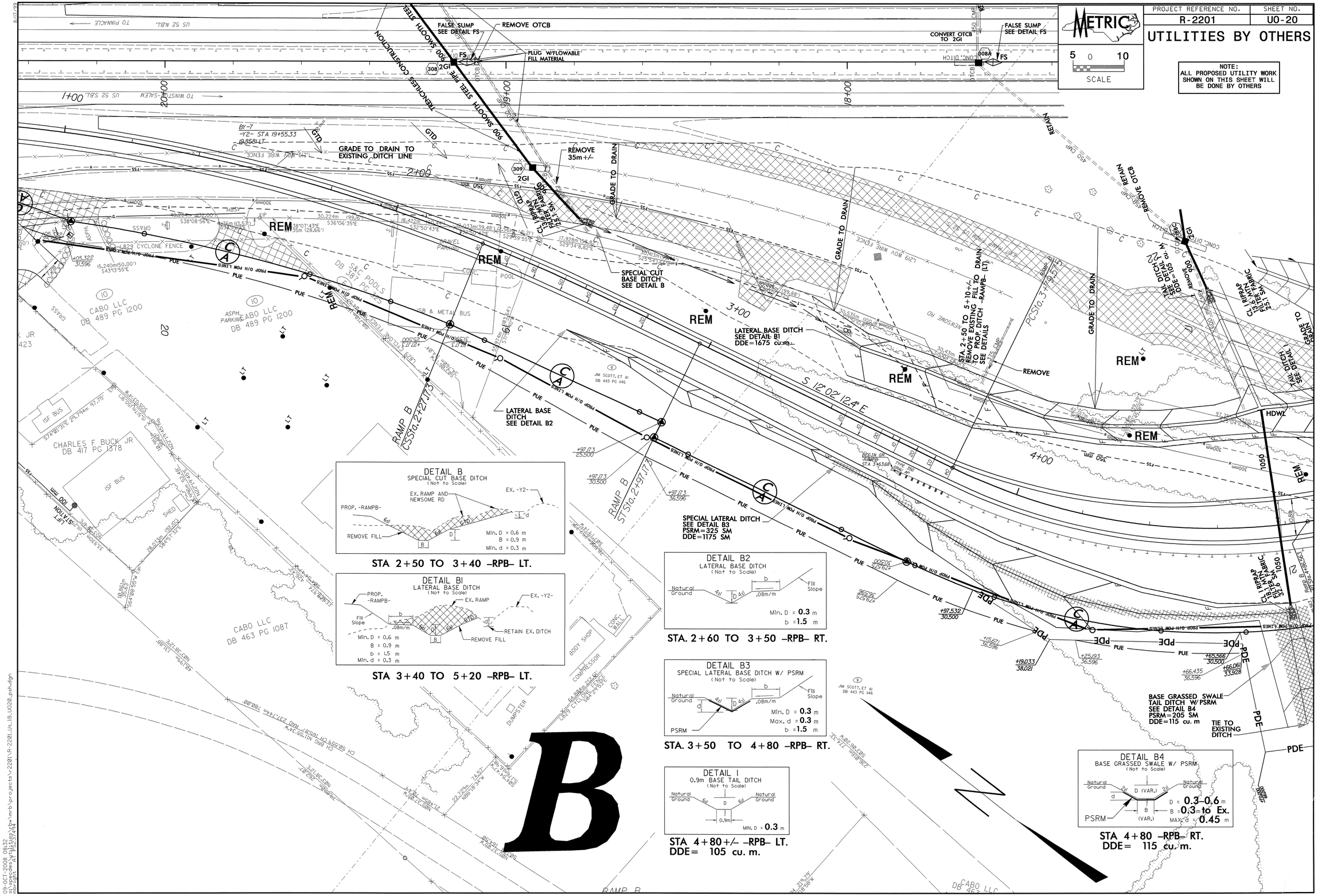

STA 2+50 TO 3+40 –RPB– LT.

STA 3+40 TO 5+20 –RPB– LT.

STA. 2+60 TO 3+50 –RPB– RT.

STA. 3+50 TO 4+80 –RPB– RT.

STA 4+80+/- –RPB– LT.
DDE= 105 cu. m.

STA 4+80 –RPB– RT.
DDE= 115 cu. m.

09-OCT-2008 08:32
s:\proedes\hilisdg\pw\mrb\projects\r-2201\r-2201_ut_18_u020_psh.dgn
pw:gtc_ar1:PS237A04