TIP PROJECT: A-0011BB

CONTRACT: C201963

See Sheet 1-A For Index of Sheets

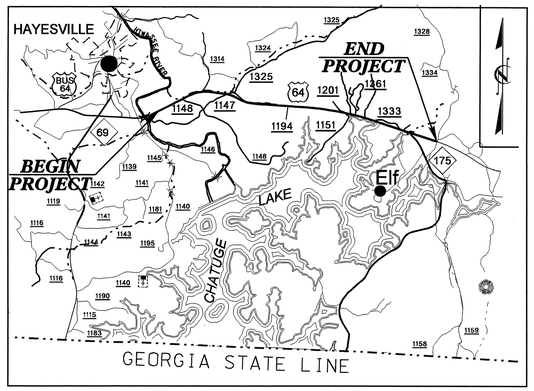

VICINITY MAP

STATE OF NORTH CAROLINA
DIVISION OF HIGHWAYS

CLAY COUNTY

LOCATION: US 64 FROM EAST OF THE HIWASSEE RIVER TO EAST OF NC 175.

TYPE OF WORK: GRADING, PAVING, DRAINAGE, GUARDRAIL, AND CULVERTS.

STATE	STATE PROJECT REFERENCE NO.	SHEET NO.	TOTAL SHEETS
N.C.	A-0011BB	1	

STATE PROJ. NO.	F.A. PROJ. NO.	DESCRIPTION
32574.1.4	APD-16-1(20)	P. E.
32574.2.3	APD-16-1(22)	R/W & UTILITIES
32574.3.7	APD-0064(97)	CONST.

NAD 83 /95

END STATE PROJECT A-0011BB
END F.A. PROJECT APD-0064(97)
-L- STA. 282+00.00

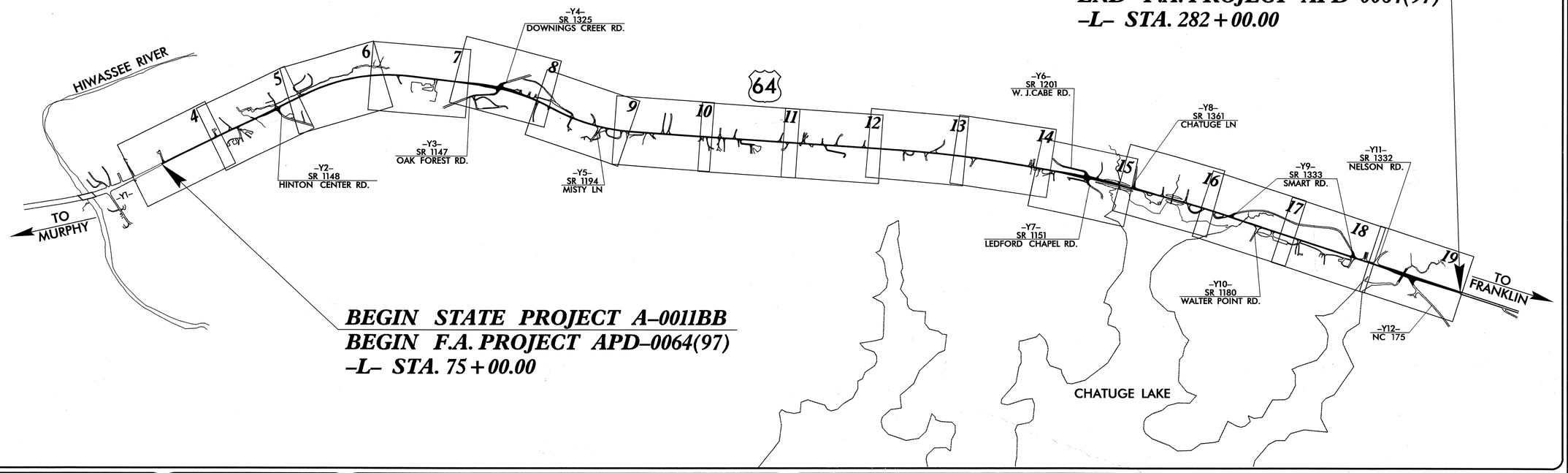

BEGIN STATE PROJECT A-0011BB
BEGIN F.A. PROJECT APD-0064(97)
-L- STA. 75+00.00

GRAPHIC SCALES

50 25 0 50 100
PLANS

50 25 0 50 100
PROFILE (HORIZONTAL)

10 5 0 10 20
PROFILE (VERTICAL)

DESIGN DATA

ADT 2006 = 6,100 – 8,200
ADT 2030 = 6,800 – 18,400
DHV = 12%
D = 60%
T = 8% *
V = 60 MPH

* TTST = 2%
DUAL = 6%

PROJECT LENGTH

LENGTH ROADWAY F.A. PROJECT APD-0064(97) = 3.920 MILES
TOTAL LENGTH STATE PROJECT 32574.3.7 = 3.920 MILES

Prepared In the Office of:
DIVISION OF HIGHWAYS
1000 Birch Ridge Dr., Raleigh NC, 27610

2006 STANDARD SPECIFICATIONS

RIGHT OF WAY DATE:
DECEMBER 21,2006

LETTING DATE:
OCTOBER 21, 2008

J. S. GOODNIGHT, PE
PROJECT ENGINEER

S. D. KENDALL, PE
PROJECT DESIGN ENGINEER

HYDRAULICS ENGINEER
NORTH CAROLINA PROFESSIONAL SEAL 20870 ENGINEER MARK K. BROWN
SIGNATURE: 8-7-08 P.E.

ROADWAY DESIGN ENGINEER
NORTH CAROLINA PROFESSIONAL SEAL 33296 ENGINEER STEVEN D. KENDALL
S. D. Kendall 8-6-08 P.E.
SIGNATURE:

DIVISION OF HIGHWAYS
STATE OF NORTH CAROLINA

STATE OF NORTH CAROLINA DEPARTMENT OF TRANSPORTATION

Art McMillan P.E.
STATE HIGHWAY DESIGN ENGINEER

25-JUL-2008 08:30
f:\projects\a0011bb_rdy_tsh.dgn
$$$$USERNAME$$$$

STATE OF NORTH CAROLINA
DIVISION OF HIGHWAYS

PROJECT REFERENCE NO.	SHEET NO.
A-0011BB	1-A

ROADWAY DESIGN ENGINEER

NORTH CAROLINA PROFESSIONAL SEAL 33296 ENGINEER STEVEN D. KENDALL

S.D. Kendall 8-14-08

2006 ROADWAY ENGLISH STANDARD DRAWINGS

EFF. 07-18-06
REV. 01-02-07

N. C. Department of Transportation – Raleigh, N. C., Dated July 18, 2006 are applicable to this project and by reference hereby are considered part of these plans. The following Roadway Standards as appear in "Roadway Standard Drawings" Highway Design Branch –

STD.NO.	TITLE
DIVISION 2 – EARTHWORK	
200.02	Method of Clearing – Method II
225.02	Guide for Grading Subgrade – Secondary and Local
225.04	Method of Obtaining Superelevation – Two Lane Pavement
225.06	Method of Obtaining Sight Distance at Intersections
240.01	Guide for Berm Ditch Construction
DIVISION 3 – PIPE CULVERTS	
300.01	Method of Pipe Installation – Method 'A'
310.02	Parallel Pipe End Section – Precast Concrete Section for 15" to 24" Pipe
310.04	Parallel Pipe End Section – Prefabricated Steel Section for 15" to 24" Pipe
310.10	Driveway Pipe Construction
DIVISION 5 – SUBGRADE, BASES AND SHOULDERS	
560.01	Method of Shoulder Construction – High Side of Superelevated Curve – Method I
DIVISION 6 – SUBGRADE, BASES AND SHOULDERS	
654.01	Pavement Repair
DIVISION 8 – INCIDENTALS	
838.01	Concrete Endwall for Single and Double Pipe Culverts – 15" thru 48" Pipe, 90 Skew
838.11	Brick Endwall for Single & Double Pipe Culv. – 15" thru 48" Pipe 90 Skew
838.21	Reinforced Concrete Endwall – for Single 54" Pipe 90 Skew
838.27	Reinforced Concrete Endwall – for Single 60" Pipe 90 Skew
838.33	Reinforced Concrete Endwall – for Single 66" Pipe 90 Skew
838.45	Notes for Reinforced Concrete Endwall – Std. 838.21 thru 838.40
838.51	Reinforced Brick Endwall – for Single 54" Pipe 90 Skew
838.57	Reinforced Brick Endwalls – for Single 60" Pipe 90 Skew
838.63	Reinforced Brick Endwalls – for Single 66" Pipe 90 Skew
838.75	Notes for Reinforced Brick Endwall – Std. 838.51 thru 838.70
838.80	Precast Endwalls – 12" thru 72" Pipe 90 Skew
840.04	Concrete Open Throat Catch Basin – 12" thru 48" Pipe
840.05	Brick Open Throat Catch Basin – 12" thru 48" Pipe
840.17	Concrete Grated Drop Inlet Type 'A' – 12" thru 72" Pipe
840.18	Concrete Grated Drop Inlet Type 'B' – 12" thru 36" Pipe
840.19	Concrete Grated Drop Inlet Type 'D' – 12" thru 36" Pipe
840.24	Frames and Narrow Slot Sag Grates
840.26	Brick Grated Drop Inlet Type 'A' – 12" thru 72" Pipe
840.27	Brick Grated Drop Inlet Type 'B' – 12" thru 36" Pipe
840.28	Brick Grated Drop Inlet Type 'D' – 12" thru 36" Pipe
840.29	Frames and Narrow Slot Flat Grates
840.34	Traffic Bearing Junction Box – for Use with Pipes 42" and Under
840.35	Traffic Bearing Grated Drop Inlet – for Cast Iron Double Frame and Grates
840.41	Spring Box – Concrete or Brick
840.45	Precast Drainage Structure
840.46	Traffic Bearing Precast Drainage Structure
840.54	Manhole Frame and Cover
840.66	Drainage Structure Steps
840.71	Concrete and Brick Pipe Plug
840.72	Pipe Collar
846.01	Concrete Curb, Gutter and Curb & Gutter
846.04	Drop Inlet Installation in Shoulder Berm Gutter
850.10	Guide for Berm Drainage Outlet – 15" and 18" Pipe
850.11	Guide for Berm Drainage Outlet – 24" and 30" Pipe
862.01	Guardrail Placement
862.02	Guardrail Installation
866.04	Barbed Wire Fence
876.01	Rip Rap in Channels
876.02	Guide for Rip Rap at Pipe Outlets
876.04	Drainage Ditches with Class 'B' Rip Rap

GENERAL NOTES

2006 SPECIFICATIONS
EFFECTIVE: 07-18-06
REVISED: 07-18-06

GRADE LINE:

GRADING AND SURFACING:
THE GRADE LINES SHOWN DENOTE THE FINISHED ELEVATION OF THE PROPOSED SURFACING AT GRADE POINTS SHOWN ON THE TYPICAL SECTIONS. GRADE LINES MAY BE ADJUSTED AT THEIR BEGINNING AND ENDING AND AT STRUCTURES AS DIRECTED BY THE ENGINEER IN ORDER TO SECURE A PROPER TIE-IN.

CLEARING:
CLEARING ON THIS PROJECT SHALL BE PERFORMED TO THE LIMITS ESTABLISHED BY METHOD II.

SUPERELEVATION:
ALL CURVES ON THIS PROJECT SHALL BE SUPERELEVATED IN ACCORDANCE WITH STD. NO. 225.04 USING THE RATE OF SUPERELEVATION AND RUNOFF SHOWN ON THE PLANS. SUPERELEVATION IS TO BE REVOLVED ABOUT THE GRADE POINTS SHOWN ON THE TYPICAL SECTIONS.

SHOULDER CONSTRUCTION:
ASPHALT, EARTH, AND CONCRETE SHOULDER CONSTRUCTION ON THE HIGH SIDE OF SUPERELEVATED CURVES SHALL BE IN ACCORDANCE WITH STD. NO. 560.01.

SIDE ROADS:
THE CONTRACTOR WILL BE REQUIRED TO DO ALL NECESSARY WORK TO PROVIDE SUITABLE CONNECTIONS WITH ALL ROADS, STREETS, AND DRIVES ENTERING THIS PROJECT. THIS WORK WILL BE PAID FOR AT THE CONTRACT UNIT PRICE FOR THE PARTICULAR ITEMS INVOLVED.

BERM DITCHES:
BERM DITCHES SHALL BE CONSTRUCTED IN ACCORDANCE WITH STD. NO. 240.01 AT LOCATIONS SHOWN ON THE PLANS OR AS DIRECTED BY THE ENGINEER.

GUARDRAIL:
THE GUARDRAIL LOCATIONS SHOWN ON THE PLANS MAY BE ADJUSTED DURING CONSTRUCTION AS DIRECTED BY THE ENGINEER.
THE CONTRACTOR SHOULD CONSULT WITH THE ENGINEER PRIOR TO ORDERING GUARDRAIL MATERIAL.

TEMPORARY SHORING:
SHORING REQUIRED FOR THE MAINTENANCE OF TRAFFIC NOT SHOWN ON THE PLANS WILL BE PAID FOR AT THE CONTRACT PRICE FOR "TEMPORY SHORING" OR "TEMPORARY SHORING-BARRIER SUPPORTED" DEPENDING UPON THE LOCATION OF THE SHORING.

UTILITIES:
UTILITY OWNERS ON THIS PROJECT ARE:
Verizon Telephone – Brian Engellau 828-631-4009
Clay County Water & Sewer District – Layton Schue 828-389-1361
Blue Ridge Mountain EMC – Chris Busby 706-379-3121, ext. 179
Teleview – Bill McLees, 706-896-5642.

ANY RELOCATION OF EXISTING UTILITIES WILL BE ACCOMPLISHED OTHERS, EXCEPT AS SHOWN ON THE PLANS.

RIGHT-OF-WAY MARKERS:
ALL RIGHT-OF-WAY MARKERS ON THIS PROJECT SHALL BE PLACED BY OTHERS.

INDEX OF SHEETS

SHEET No.	SHEET
1	TITLE SHEET
1-A	INDEX OF SHEETS, GENERAL NOTES AND LIST OF STANDARD DRAWINGS
1-B	CONVENTIONAL SYMBOLS
1-C THRU 1-D	SURVEY CONTROL SHEET
1-E	CENTERLINE COORDINATION LIST
2 THRU 2-B	TYPICAL SECTIONS, PAVEMENT SCHEDULE, AND WEDGING DETAILS
2-C	TRAFFIC BEARING DROP INLET "TYPE A"
2-D	DETAIL OF JB CONNECTING EXIST. 5' x 3' RCBC TO 60" RCP w/ MH
2-E	DETAIL OF JB CONNECTING EXIST. 4' x 8' RCBC TO 66" RCP W/ MH
2-F	DETAIL OF JB CONNECTING EXIST. 4' x 3' RCBC TO 54" RCP W/ MH
2-G	DETAIL OF JB CONNECTING EXIST. 5' x 4' RCBC TO 54" RCP W/ MH
2-H	DETAIL OF JB CONNECTING EXIST. RCBC TO 48" RCP W/ MH
2-I	COLLAR CONNECTING EXIST. 3' x 3' RCBC TO 42" RCP W/ MH
2-J	ANCHORAGE FOR FRAMES: BRICK OR CONCRETE
2-K THRU 2-V	TEMPORARY SHORING DETAILS
2-W	ROCK PLATING DETAILS
2-X	SOIL NAIL SLOPE STABILIZATION
3	SUMMARY OF QUANTITIES
3-A THRU 3-F	DRAINAGE SUMMARY SHEETS (48" & UNDER)
3-G	DRAINAGE SUMMARY SHEETS (54" & OVER), REMOVAL OF EXISTING ASPHALT PAVEMENT
3-H	SUMMARY OF EARTHWORK
3-I	GUARDRAIL SUMMARY
3-J	PARCEL INDEX
4 THRU 19	PLAN SHEETS
20 THRU 29	PROFILE SHEETS
TCP-1 THRU TCP-12	TRAFFIC CONTROL PLANS
PM-1 THRU PM-4	PAVEMENT MARKING PLANS
EC-1 THRU EC-36	EROSION CONTROL PLANS
SIGN-1 THRU SIGN-12	SIGNING PLANS
UC-1 THRU UC-12	UTILITIES CONSTRUCTION PLANS
UO-1 THRU UO-17	UTILITIES BY OTHERS PLANS
X-1	CROSS-SECTION INDEX OF SHEETS
X-1A THRU X-1C	CROSS-SECTION SUMMARY SHEETS
X-2 THRU X-297	CROSS-SECTIONS
C-1 THRU C-10	CULVERT STRUCTURE PLANS

5/28/99
14-AUG-2008 11:02
r:\roadway\proj\a0011bb_rdy_tsh.dgn
$$$$USERNAME$$$$

3/15/06

PROJECT REFERENCE NO.	SHEET NO.
A-0011BB	1-B

Note: Not to Scale

S.U.E. = Subsurface Utility Engineering

STATE OF NORTH CAROLINA
DIVISION OF HIGHWAYS

CONVENTIONAL PLAN SHEET SYMBOLS

BOUNDARIES AND PROPERTY:

- State Line
- County Line
- Township Line
- City Line
- Reservation Line
- Property Line
- Existing Iron Pin — EIP
- Property Corner
- Property Monument — ECM
- Parcel/Sequence Number — 23
- Existing Fence Line
- Proposed Woven Wire Fence
- Proposed Chain Link Fence
- Proposed Barbed Wire Fence
- Existing Wetland Boundary — WLB
- Proposed Wetland Boundary — WLB
- Existing Endangered Animal Boundary — EAB
- Existing Endangered Plant Boundary — EPB

BUILDINGS AND OTHER CULTURE:

- Gas Pump Vent or U/G Tank Cap
- Sign — S
- Well — W
- Small Mine
- Foundation
- Area Outline
- Cemetery
- Building
- School
- Church
- Dam

HYDROLOGY:

- Stream or Body of Water
- Hydro, Pool or Reservoir
- Jurisdictional Stream — JS
- Buffer Zone 1 — BZ 1
- Buffer Zone 2 — BZ 2
- Flow Arrow
- Disappearing Stream
- Spring
- Wetland
- Proposed Lateral, Tail, Head Ditch — FLOW
- False Sump

RAILROADS:

- Standard Gauge — CSX TRANSPORTATION
- RR Signal Milepost — MILEPOST 35
- Switch — SWITCH
- RR Abandoned
- RR Dismantled

RIGHT OF WAY:

- Baseline Control Point
- Existing Right of Way Marker
- Existing Right of Way Line
- Proposed Right of Way Line — RW
- Proposed Right of Way Line with Iron Pin and Cap Marker — RW
- Proposed Right of Way Line with Concrete or Granite Marker — RW
- Existing Control of Access — CA
- Proposed Control of Access — CA
- Existing Easement Line — E
- Proposed Temporary Construction Easement — E
- Proposed Temporary Drainage Easement — TDE
- Proposed Permanent Drainage Easement — PDE
- Proposed Permanent Utility Easement — PUE

ROADS AND RELATED FEATURES:

- Existing Edge of Pavement
- Existing Curb
- Proposed Slope Stakes Cut — C
- Proposed Slope Stakes Fill — F
- Proposed Wheel Chair Ramp — WCR
- Proposed Wheel Chair Ramp Curb Cut — WCC
- Curb Cut for Future Wheel Chair Ramp — CCFR
- Existing Metal Guardrail
- Proposed Guardrail
- Existing Cable Guiderail
- Proposed Cable Guiderail
- Equality Symbol
- Pavement Removal

VEGETATION:

- Single Tree
- Single Shrub
- Hedge
- Woods Line
- Orchard
- Vineyard — Vineyard

EXISTING STRUCTURES:

MAJOR:

- Bridge, Tunnel or Box Culvert — CONC
- Bridge Wing Wall, Head Wall and End Wall — CONC WW

MINOR:

- Head and End Wall — CONC HW
- Pipe Culvert
- Footbridge
- Drainage Box: Catch Basin, DI or JB — CB
- Paved Ditch Gutter
- Storm Sewer Manhole — S
- Storm Sewer — S

UTILITIES:

POWER:

- Existing Power Pole
- Proposed Power Pole
- Existing Joint Use Pole
- Proposed Joint Use Pole
- Power Manhole — P
- Power Line Tower
- Power Transformer
- U/G Power Cable Hand Hole — HH
- H-Frame Pole
- Recorded U/G Power Line — P
- Designated U/G Power Line (S.U.E.*) — P

TELEPHONE:

- Existing Telephone Pole
- Proposed Telephone Pole
- Telephone Manhole — T
- Telephone Booth
- Telephone Pedestal — T
- Telephone Cell Tower
- U/G Telephone Cable Hand Hole — HH
- Recorded U/G Telephone Cable — T
- Designated U/G Telephone Cable (S.U.E.*) — T
- Recorded U/G Telephone Conduit — TC
- Designated U/G Telephone Conduit (S.U.E.*) — TC
- Recorded U/G Fiber Optics Cable — T FO
- Designated U/G Fiber Optics Cable (S.U.E.*) — T FO

WATER:

- Water Manhole — W
- Water Meter
- Water Valve
- Water Hydrant
- Recorded U/G Water Line — W
- Designated U/G Water Line (S.U.E.*) — W
- Above Ground Water Line — A/G Water

TV:

- TV Satellite Dish
- TV Pedestal — C
- TV Tower
- U/G TV Cable Hand Hole — HH
- Recorded U/G TV Cable — TV
- Designated U/G TV Cable (S.U.E.*) — TV
- Recorded U/G Fiber Optic Cable — TV FO
- Designated U/G Fiber Optic Cable (S.U.E.*) — TV FO

GAS:

- Gas Valve
- Gas Meter
- Recorded U/G Gas Line — G
- Designated U/G Gas Line (S.U.E.*) — G
- Above Ground Gas Line — A/G Gas

SANITARY SEWER:

- Sanitary Sewer Manhole
- Sanitary Sewer Cleanout
- U/G Sanitary Sewer Line — SS
- Above Ground Sanitary Sewer — A/G Sanitary Sewer
- Recorded SS Forced Main Line — FSS
- Designated SS Forced Main Line (S.U.E.*) — FSS

MISCELLANEOUS:

- Utility Pole
- Utility Pole with Base
- Utility Located Object
- Utility Traffic Signal Box — S
- Utility Unknown U/G Line — ?UTL
- U/G Tank; Water, Gas, Oil
- A/G Tank; Water, Gas, Oil
- U/G Test Hole (S.U.E.*)
- Abandoned According to Utility Records — AATUR
- End of Information — E.O.I.

32574.1.1	1C
Location and Surveys	

SURVEY CONTROL SHEET A-0011BB

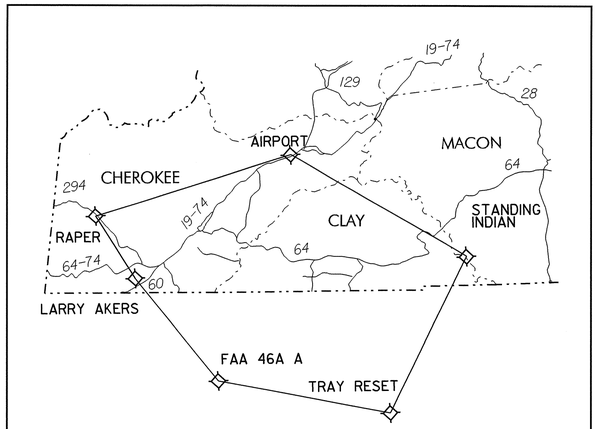

GPS CONTROL NETWORK

NOT TO SCALE

NC GRID
NAD 83/95

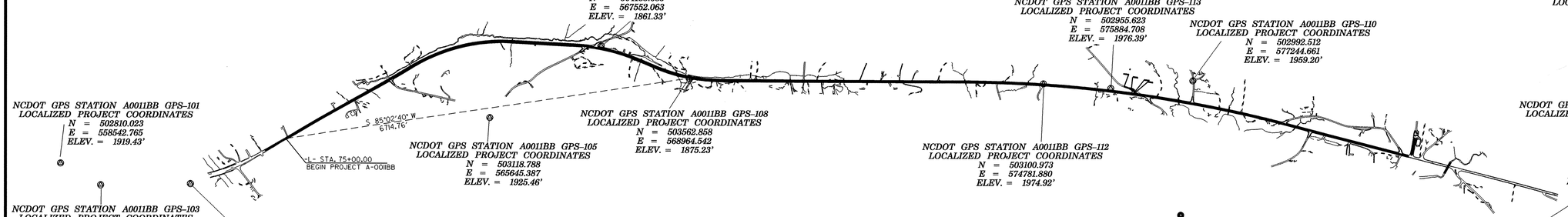

NCDOT GPS STATION A0011BB GPS-106
LOCALIZED PROJECT COORDINATES
N = 505738.840
E = 566822.533
ELEV. = 1880.51'

NCDOT GPS STATION A0011BB GPS-107
LOCALIZED PROJECT COORDINATES
N = 504183.685
E = 567552.063
ELEV. = 1861.33'

NCDOT GPS STATION A0011BB GPS-111
LOCALIZED PROJECT COORDINATES
N = 504458.973
E = 577053.180
ELEV. = 2015.21'

NCDOT GPS STATION A0011BB GPS-113
LOCALIZED PROJECT COORDINATES
N = 502955.623
E = 575894.708
ELEV. = 1976.39'

NCDOT GPS STATION A0011BB GPS-110
LOCALIZED PROJECT COORDINATES
N = 502992.512
E = 577244.661
ELEV. = 1959.20'

NCDOT GPS STATION A0011BB GPS-121
LOCALIZED PROJECT COORDINATES
N = 502996.109
E = 584560.378
ELEV. = 2011.10'

NCDOT GPS STATION A0011BB GPS-101
LOCALIZED PROJECT COORDINATES
N = 502810.023
E = 558542.765
ELEV. = 1919.43'

NCDOT GPS STATION A0011BB GPS-105
LOCALIZED PROJECT COORDINATES
N = 503118.788
E = 565645.387
ELEV. = 1925.46'

NCDOT GPS STATION A0011BB GPS-108
LOCALIZED PROJECT COORDINATES
N = 503562.858
E = 568964.542
ELEV. = 1875.23'

NCDOT GPS STATION A0011BB GPS-112
LOCALIZED PROJECT COORDINATES
N = 503100.973
E = 574781.880
ELEV. = 1974.92'

NCDOT GPS STATION A0011BB GPS-119
LOCALIZED PROJECT COORDINATES
N = 501086.981
E = 584021.780
ELEV. = 2059.56'

NCDOT GPS STATION A0011BB GPS-120
LOCALIZED PROJECT COORDINATES
N = 501002.498
E = 584931.306
ELEV. = 2074.37'

NCDOT GPS STATION A0011BB GPS-103
LOCALIZED PROJECT COORDINATES
N = 502403.705
E = 559175.126
ELEV. = 1870.25'

NCDOT GPS STATION A0011BB GPS-104
LOCALIZED PROJECT COORDINATES
N = 502335.140
E = 560655.008
ELEV. = 1822.28'

NCDOT GPS STATION A0011BB GPS-117
LOCALIZED PROJECT COORDINATES
N = 500668.972
E = 583480.550
ELEV. = 2001.37'

NCDOT GPS STATION A0011BB GPS-109
LOCALIZED PROJECT COORDINATES
N = 500802.788
E = 576904.936
ELEV. = 1925.59'

NCDOT GPS STATION A0011BB GPS-118
LOCALIZED PROJECT COORDINATES
N = 499666.319
E = 585668.167
ELEV. = 2059.27

NCDOT GPS STATION A0011BB GPS-114
LOCALIZED PROJECT COORDINATES
N = 499403.032
E = 582588.566
ELEV. = 1952.31'

NCDOT GPS STATION A0011BB GPS-102
LOCALIZED PROJECT COORDINATES
N = 500677.077
E = 559975.719
ELEV. 1834.01'

NCDOT GPS STATION A0011BB GPS-115
LOCALIZED PROJECT COORDINATES
N = 498266.960
E = 583166.955
ELEV. = 1936.18'

NCDOT GPS STATION A0011BB GPS-116
LOCALIZED PROJECT COORDINATES
N = 497617.755
E = 584211.383
ELEV. = 1939.75'

DATUM DESCRIPTION

THE LOCALIZED COORDINATE SYSTEM DEVELOPED FOR THIS PROJECT IS BASED ON THE STATE PLANE COORDINATES ESTABLISHED BY NCDOT FOR MONUMENT "A-0011BB (GPS-108)
WITH NAD 1983/95 STATE PLANE GRID COORDINATES OF
NORTHING: 503562.858(ft) EASTING: 568964.542(ft)
THE AVERAGE COMBINED GRID FACTOR USED ON THIS PROJECT (GROUND TO GRID) IS: 0.99999996
THE N.C. LAMBERT GRID BEARING AND LOCALIZED HORIZONTAL GROUND DISTANCE FROM "A-0011BB GPS-108" TO -L- STATION 75+00.00 IS
S 85°02'40" W 6714.76'
ALL LINEAR DIMENSIONS ARE LOCALIZED HORIZONTAL DISTANCES
VERTICAL DATUM USED IS NAVD 88

NOTES:

1. THE SITE CALIBRATION SHOWN IS BASED UPON A NETWORK TIED TO THE HARN (HIGH ACCURACY REFERENCE NETWORK) NAD 83/95 ADJUSTMENT. THIS CALIBRATION WILL ALLOW THE END USER TO WORKWITHIN THE SAME COORDINATE SYSTEM WHEN USING RTK (REAL TIME KINEMATIC) GPS AND A LOCAL BASE STATION. IF ANOTHER SYSTEM SUCH AS VRS (VIRTUAL REFERENCE STATION) IS USED, ADDITIONAL FIELD TIES MAY BE NEEDED TO REDUCE POSSIBLE ERRORS, OR BIASES.

2. THE CONTROL DATA FOR THIS PROJECT CAN BE FOUND ELECTRONICALLY BY SELECTING PROJECT CONTROL DATA AT:
HTTP:/WWW.DOH.DOT.STATE.NC.US/PRECONSTRUCT/HIGHWAY/LOCATION/PROJECT/

THE FILES TO BE FOUND ARE AS FOLLOWS:
A-0011BB_LS_GPSCALIB_060503.HTML
A-0011BB_LS_WGS84_060503.TXT
A-0011BB_LS_LOCAL_060503.TXT
A-0011BB_LS_CONTROL_060503.TXT

THE WGS84 AND LOCAL FILES ARE COMMA DELIMITED AND CAN BE USED TO REPRODUCE THE SITE CALIBRATION FOR THE END USER'S GPS EQUIPMENT. IF FURTHER INFORMATION IS NEEDED, PLEASE CONTACT THE LOCATION AND SURVEYS UNIT.

⊗ INDICATES GEODETIC CONTROL MONUMENTS USED OR SET FOR HORIZONTAL PROJECT CONTROL BY THE NCDOT LOCATION AND SURVEYS UNIT.
PROJECT CONTROL ESTABLISHED USING GLOBAL POSITIONING SYSTEM.
NETWORK ESTABLISHED FROM EXISTING HARN MONUMENTATION
SEE GPS CALIBRATION SHEET FOR HORIZONTAL AND VERTICAL COORDINATE VALUES.

NOTE: DRAWING NOT TO SCALE

6/2/99
17-APR-2008 15:44
r:\roadway\proj\a0011bb_ls_1c_060503.dgn
$$$$USERNAME$$$$

6/2/99

32574.1.1	1D

Location and Surveys

SURVEY CONTROL SHEET A-0011BB

GPS CALIBRATION REPORT

PROJECT : A0011BBSITECALIBRATIONUSE

TIP NUMBER	A0011BB		
USER NAME	RMCDONALD	DATE & TIME	1:47:23 PM 12/12/2005
COORDINATE SYSTEM	US STATE PLANE 1983(AT GROUND)	ZONE	NORTH CAROLINA 3200
HORIZONTAL DATUM	NAD 1983 (CONUS)		
VERTICAL DATUM	NAVD 88	GEOID MODEL	GEOID99 NC SUB GRID
COORDINATE UNITS	US SURVEY FEET		
DISTANCE UNITS	US SURVEY FEET		
HEIGHT UNITS	US SURVEY FEET		

LOCAL SITE INFORMATION

LOCALIZED AROUND	GPS108
LATITUDE	35°02'20.01114"N
LONGITUDE	83°46'57.90283"W
SITE SCALE FACTOR	1.0001772510
HEIGHT	1781.827SFT

THE NORTH CAROLINA DEPARTMENT OF TRANSPORTATION USES A LOCALIZED COORDINATE SYSTEM
WHICH IS VERY SIMILAR TO NORTH CAROLINA ZONE 3200 FROM WHICH IT IS DERIVED.
PLEASE TAKE CARE IN UTILIZING THESE COORDINATES TO ELIMINATE CONFUSION OF THE TWO SYSTEMS.
THIS FILE IS TO AID IN THE USE OF REAL TIME KINEMATIC (RTK) GPS DURING CONSTRUCTION LAYOUT.

DATUM TRANSFORMATION PARAMETERS

DATUM TRANSFORMATION COMPUTATION NOT REQUESTED

UPDATED DEFAULT PROJECTION (TRANSVERSE MERCATOR) DEFINITION

UPDATED DEFAULT PROJECTION NOT REQUESTED

HORIZONTAL ADJUSTMENT PARAMETERS

NORTHING COORDINATE OF ROTATION CENTER	499362.072SFT
EASTING COORDINATE OF ROTATION CENTER	564327.859SFT
ROTATION ABOUT THE CENTER POINT	0°00'00"
TRANSLATION NORTH	-0.008SFT
TRANSLATION EAST	0.006SFT
SCALE FACTOR	0.99999996

VERTICAL ADJUSTMENT PARAMETERS

NORTHING COORDINATE OF ORIGIN POINT	561901.863SFT
EASTING COORDINATE OF ORIGIN POINT	547896.399SFT
VERTICAL SEPARATION AT ORIGIN	-0.035SFT
SLOPE NORTH	-0.832PPM
SLOPE EAST	1.147PPM

GEOID MODEL DEFINITION

GEOID99 NC SUB GRID

RESIDUAL DIFFERENCES BETWEEN GPS (WGS84) AND LOCAL COORDINATES

SUMMARY

	MAXIMUM ERROR	ROOT MEAN SQUARE ERROR	POINT
HORIZONTAL	0.029SFT	0.002	FAA 46A A WGS84
VERTICAL	0.079SFT	0.011	GPS103 WGS84
THREE-DIMENSIONAL	0.079SFT	0.011	GPS103 WGS84

POINT RESIDUALS

WGS84 COORDINATES		CALCULATED POINT FOR DISPLAY ONLY		LOCAL COORDINATES
POINT	AIRPORT WGS84	NORTHING	561901.863SFT	POINT AIRPORT LOCAL
LATITUDE	35°11'46.18493"N	EASTING	547896.399SFT	NORTHING 561901.876SFT
LONGITUDE	83°51'45.29266"W	ELEVATION	1695.723SFT	EASTING 547896.388SFT
HEIGHT	1602.313SFT	HORZ ERROR	0.017SFT	ELEVATION 1695.758SFT
		VERT ERROR	0.035SFT	UTILIZED HORZ AND VERT
		3D ERROR	0.039SFT	QUALITY SURVEY QUALITY
POINT	FAA 46A A WGS84	NORTHING	439383.502SFT	POINT FAA 46A A LOCAL
LATITUDE	34°51'12.42406"N	EASTING	499977.563SFT	NORTHING 439383.476SFT
LONGITUDE	84°00'07.54713"W	ELEVATION	1898.506SFT	EASTING 499977.575SFT
HEIGHT	1804.225SFT	HORZ ERROR	0.029SFT	ELEVATION 1898.488SFT
		VERT ERROR	0.018SFT	UTILIZED HORZ AND VERT
		3D ERROR	0.034SFT	QUALITY SURVEY QUALITY
POINT	LARRYAKERS WGS84	NORTHING	492179.476SFT	POINT
LATITUDE	34°59'30.19138"N	EASTING	453151.969SFT	LARRYAKERS LOCAL
LONGITUDE	84°10'01.54388"W	ELEVATION	1611.869SFT	NORTHING 492179.492SFT
HEIGHT	1517.399SFT	HORZ ERROR	0.017SFT	EASTING 453151.975SFT
		VERT ERROR	0.018SFT	ELEVATION 1611.851SFT
		3D ERROR	0.024SFT	UTILIZED HORZ AND VERT
				QUALITY SURVEY QUALITY
POINT	RAPER WGS84	NORTHING	534815.451SFT	POINT RAPER LOCAL
LATITUDE	35°06'23.16536"N	EASTING	437458.771SFT	NORTHING 534815.454SFT
LONGITUDE	84°13'36.85137"W	ELEVATION	1680.811SFT	EASTING 437458.779SFT
HEIGHT	1586.070SFT	HORZ ERROR	0.009SFT	ELEVATION 1680.814SFT
		VERT ERROR	0.003SFT	UTILIZED HORZ AND VERT
		3D ERROR	0.009SFT	QUALITY SURVEY QUALITY
POINT	STANINDIAN WGS84	NORTHING	498855.763SFT	POINT
LATITUDE	35°02'07.45357"N	EASTING	642100.253SFT	STANINDIAN LOCAL
LONGITUDE	83°32'16.77757"W	ELEVATION	5499.720SFT	NORTHING 498855.757SFT
HEIGHT	5407.430SFT	HORZ ERROR	0.007SFT	EASTING 642100.257SFT
		VERT ERROR	0.013SFT	ELEVATION 5499.707SFT
		3D ERROR	0.015SFT	UTILIZED HORZ AND VERT
				QUALITY SURVEY QUALITY
POINT	TRAY RESET WGS84	NORTHING	415790.064SFT	POINT TRAY
LATITUDE	34°48'04.91549"N	EASTING	594435.778SFT	RESET LOCAL
LONGITUDE	83°41'02.16970"W	ELEVATION	4422.201SFT	NORTHING 415790.064SFT
HEIGHT	4327.662SFT	HORZ ERROR	0.002SFT	EASTING 594435.776SFT
		VERT ERROR	0.035SFT	ELEVATION 4422.236SFT
		3D ERROR	0.035SFT	UTILIZED HORZ AND VERT
				QUALITY SURVEY QUALITY
POINT	GPS101 WGS84	NORTHING	502810.021SFT	POINT GPS101 LOCAL
LATITUDE	35°02'07.59221"N	EASTING	558542.764SFT	NORTHING 502810.023SFT
LONGITUDE	83°49'02.63795"W	ELEVATION	1919.367SFT	EASTING 558542.765SFT
HEIGHT	1825.780SFT	HORZ ERROR	0.002SFT	ELEVATION 1919.429SFT
		VERT ERROR	0.062SFT	UTILIZED HORZ AND VERT
		3D ERROR	0.063SFT	QUALITY SURVEY QUALITY
POINT	GPS102 WGS84	NORTHING	500677.079SFT	POINT GPS102 LOCAL
LATITUDE	35°01'47.20911"N	EASTING	559975.719SFT	NORTHING 500677.077SFT
LONGITUDE	83°48'44.18483"W	ELEVATION	1834.005SFT	EASTING 559975.719SFT
HEIGHT	1740.416SFT	HORZ ERROR	0.002SFT	ELEVATION 1834.006SFT
		VERT ERROR	0.001SFT	UTILIZED HORZ AND VERT
		3D ERROR	0.002SFT	QUALITY SURVEY QUALITY
POINT	GPS103 WGS84	NORTHING	502403.707SFT	POINT GPS103 LOCAL
LATITUDE	35°02'03.88176"N	EASTING	559175.126SFT	NORTHING 502403.705SFT
LONGITUDE	83°48'54.80618"W	ELEVATION	1870.170SFT	EASTING 559175.126SFT
HEIGHT	1776.588SFT	HORZ ERROR	0.002SFT	ELEVATION 1870.249SFT
		VERT ERROR	0.079SFT	UTILIZED HORZ AND VERT
		3D ERROR	0.079SFT	QUALITY SURVEY QUALITY
POINT	GPS104 WGS84	NORTHING	502335.138SFT	POINT GPS104 LOCAL
LATITUDE	35°02'03.91371"N	EASTING	560655.008SFT	NORTHING 502335.140SFT
LONGITUDE	83°48'36.99253"W	ELEVATION	1822.229SFT	EASTING 560655.008SFT
HEIGHT	1728.665SFT	HORZ ERROR	0.002SFT	ELEVATION 1822.277SFT
		VERT ERROR	0.048SFT	UTILIZED HORZ AND VERT
		3D ERROR	0.048SFT	QUALITY SURVEY QUALITY
POINT	GPS105 WGS84	NORTHING	503118.789SFT	POINT GPS105 LOCAL
LATITUDE	35°02'14.04158"N	EASTING	565645.386SFT	NORTHING 503118.788SFT
LONGITUDE	83°47'37.51135"W	ELEVATION	1925.483SFT	EASTING 565645.387SFT
HEIGHT	1831.998SFT	HORZ ERROR	0.001SFT	ELEVATION 1925.456SFT
		VERT ERROR	0.027SFT	UTILIZED HORZ AND VERT
		3D ERROR	0.027SFT	QUALITY SURVEY QUALITY
POINT	GPS106 WGS84	NORTHING	505738.841SFT	POINT GPS106 LOCAL
LATITUDE	35°02'40.48573"N	EASTING	566822.536SFT	NORTHING 505738.840SFT
LONGITUDE	83°47'24.89260"W	ELEVATION	1880.507SFT	EASTING 566822.533SFT
HEIGHT	1787.076SFT	HORZ ERROR	0.003SFT	ELEVATION 1880.509SFT
		VERT ERROR	0.002SFT	UTILIZED HORZ AND VERT
		3D ERROR	0.004SFT	QUALITY SURVEY QUALITY
POINT	GPS107 WGS84	NORTHING	504183.686SFT	POINT GPS107 LOCAL
LATITUDE	35°02'25.47093"N	EASTING	567552.062SFT	NORTHING 504183.685SFT
LONGITUDE	83°47'15.22803"W	ELEVATION	1861.365SFT	EASTING 567552.063SFT
HEIGHT	1767.926SFT	HORZ ERROR	0.001SFT	ELEVATION 1861.332SFT
		VERT ERROR	0.033SFT	UTILIZED HORZ AND VERT
		3D ERROR	0.034SFT	QUALITY SURVEY QUALITY
POINT	GPS108 WGS84	NORTHING	503562.859SFT	POINT GPS108 LOCAL
LATITUDE	35°02'20.01114"N	EASTING	568964.541SFT	NORTHING 503562.858SFT
LONGITUDE	83°46'57.90283"W	ELEVATION	1875.250SFT	EASTING 568964.542SFT
HEIGHT	1781.827SFT	HORZ ERROR	0.001SFT	ELEVATION 1875.226SFT
		VERT ERROR	0.024SFT	UTILIZED HORZ AND VERT
		3D ERROR	0.024SFT	QUALITY SURVEY QUALITY
POINT	GPS109 WGS84	NORTHING	500802.789SFT	POINT GPS109 LOCAL
LATITUDE	35°01'56.51674"N	EASTING	576904.938SFT	NORTHING 500802.788SFT
LONGITUDE	83°45'20.93971"W	ELEVATION	1925.654SFT	EASTING 576904.936SFT
HEIGHT	1832.336SFT	HORZ ERROR	0.002SFT	ELEVATION 1925.587SFT
		VERT ERROR	0.067SFT	UTILIZED HORZ AND VERT
		3D ERROR	0.067SFT	QUALITY SURVEY QUALITY
POINT	GPS110 WGS84	NORTHING	502992.513SFT	POINT GPS110 LOCAL
LATITUDE	35°02'18.30938"N	EASTING	577244.660SFT	NORTHING 502992.512SFT
LONGITUDE	83°45'18.12026"W	ELEVATION	1959.233SFT	EASTING 577244.661SFT
HEIGHT	1865.954SFT	HORZ ERROR	0.002SFT	ELEVATION 1959.196SFT
		VERT ERROR	0.037SFT	UTILIZED HORZ AND VERT
		3D ERROR	0.037SFT	QUALITY SURVEY QUALITY
POINT	GPS111 WGS84	NORTHING	504458.973SFT	POINT GPS111 LOCAL
LATITUDE	35°02'32.70549"N	EASTING	577053.183SFT	NORTHING 504458.973SFT
LONGITUDE	83°45'21.26462"W	ELEVATION	2015.242SFT	EASTING 577053.180SFT
HEIGHT	1921.984SFT	HORZ ERROR	0.003SFT	ELEVATION 2015.206SFT
		VERT ERROR	0.036SFT	UTILIZED HORZ AND VERT
		3D ERROR	0.036SFT	QUALITY SURVEY QUALITY
POINT	GPS112 WGS84	NORTHING	503100.973SFT	POINT GPS112 LOCAL
LATITUDE	35°02'18.21356"N	EASTING	574781.882SFT	NORTHING 503100.973SFT
LONGITUDE	83°45'47.76345"W	ELEVATION	1974.951SFT	EASTING 574781.880SFT
HEIGHT	1881.627SFT	HORZ ERROR	0.002SFT	ELEVATION 1974.921SFT
		VERT ERROR	0.030SFT	UTILIZED HORZ AND VERT
		3D ERROR	0.030SFT	QUALITY SURVEY QUALITY
POINT	GPS113 WGS84	NORTHING	502955.620SFT	POINT GPS113 LOCAL
LATITUDE	35°02'17.30060"N	EASTING	575884.707SFT	NORTHING 502955.623SFT
LONGITUDE	83°45'34.43354"W	ELEVATION	1976.434SFT	EASTING 575884.708SFT
HEIGHT	1883.129SFT	HORZ ERROR	0.004SFT	ELEVATION 1976.391SFT
		VERT ERROR	0.043SFT	UTILIZED HORZ AND VERT
		3D ERROR	0.044SFT	QUALITY SURVEY QUALITY
POINT	GPS114 WGS84	NORTHING	499403.032SFT	POINT GPS114 LOCAL
LATITUDE	35°01'45.37535"N	EASTING	582588.568SFT	NORTHING 499403.032SFT
LONGITUDE	83°44'11.87457"W	ELEVATION	1952.285SFT	EASTING 582588.566SFT
HEIGHT	1859.058SFT	HORZ ERROR	0.002SFT	ELEVATION 1952.306SFT
		VERT ERROR	0.021SFT	UTILIZED HORZ AND VERT
		3D ERROR	0.021SFT	QUALITY SURVEY QUALITY
POINT	GPS115 WGS84	NORTHING	498266.961SFT	POINT GPS115 LOCAL
LATITUDE	35°01'34.42504"N	EASTING	583166.956SFT	NORTHING 498266.960SFT
LONGITUDE	83°44'04.27695"W	ELEVATION	1936.152SFT	EASTING 583166.955SFT
HEIGHT	1842.920SFT	HORZ ERROR	0.001SFT	ELEVATION 1936.178SFT
		VERT ERROR	0.026SFT	UTILIZED HORZ AND VERT
		3D ERROR	0.026SFT	QUALITY SURVEY QUALITY
POINT	GPS116 WGS84	NORTHING	497617.755SFT	POINT GPS116 LOCAL
LATITUDE	35°01'28.50390"N	EASTING	584211.385SFT	NORTHING 497617.755SFT
LONGITUDE	83°43'51.36206"W	ELEVATION	1939.722SFT	EASTING 584211.383SFT
HEIGHT	1846.499SFT	HORZ ERROR	0.002SFT	ELEVATION 1939.751SFT
		VERT ERROR	0.029SFT	UTILIZED HORZ AND VERT
		3D ERROR	0.029SFT	QUALITY SURVEY QUALITY
POINT	GPS117 WGS84	NORTHING	500668.972SFT	POINT GPS117 LOCAL
LATITUDE	35°01'58.30203"N	EASTING	583480.551SFT	NORTHING 500668.972SFT
LONGITUDE	83°44'01.88750"W	ELEVATION	2001.343SFT	EASTING 583480.550SFT
HEIGHT	1908.156SFT	HORZ ERROR	0.001SFT	ELEVATION 2001.365SFT
		VERT ERROR	0.022SFT	UTILIZED HORZ AND VERT
		3D ERROR	0.022SFT	QUALITY SURVEY QUALITY
POINT	GPS118 WGS84	NORTHING	499666.319SFT	POINT GPS118 LOCAL
LATITUDE	35°01'49.42748"N	EASTING	585668.169SFT	NORTHING 499666.319SFT
LONGITUDE	83°43'35.03937"W	ELEVATION	2059.269SFT	EASTING 585668.167SFT
HEIGHT	1966.112SFT	HORZ ERROR	0.002SFT	ELEVATION 2059.265SFT
		VERT ERROR	0.004SFT	UTILIZED HORZ AND VERT
		3D ERROR	0.005SFT	QUALITY SURVEY QUALITY
POINT	GPS119 WGS84	NORTHING	501086.978SFT	POINT GPS119 LOCAL
LATITUDE	35°02'02.68657"N	EASTING	584021.782SFT	NORTHING 501086.981SFT
LONGITUDE	83°43'55.62658"W	ELEVATION	2059.546SFT	EASTING 584021.780SFT
HEIGHT	1966.377SFT	HORZ ERROR	0.004SFT	ELEVATION 2059.560SFT
		VERT ERROR	0.014SFT	UTILIZED HORZ AND VERT
		3D ERROR	0.014SFT	QUALITY SURVEY QUALITY
POINT	GPS120 WGS84	NORTHING	501002.498SFT	POINT GPS120 LOCAL
LATITUDE	35°02'02.28050"N	EASTING	584931.307SFT	NORTHING 501002.498SFT
LONGITUDE	83°43'44.65422"W	ELEVATION	2074.344SFT	EASTING 584931.306SFT
HEIGHT	1981.194SFT	HORZ ERROR	0.001SFT	ELEVATION 2074.366SFT
		VERT ERROR	0.022SFT	UTILIZED HORZ AND VERT
		3D ERROR	0.022SFT	QUALITY SURVEY QUALITY
POINT	GPS121 WGS84	NORTHING	502996.109SFT	POINT GPS121 LOCAL
LATITUDE	35°02'21.80041"N	EASTING	584560.380SFT	NORTHING 502996.109SFT
LONGITUDE	83°43'50.25120"W	ELEVATION	2011.144SFT	EASTING 584560.378SFT
HEIGHT	1918.021SFT	HORZ ERROR	0.002SFT	ELEVATION 2011.096SFT
		VERT ERROR	0.048SFT	UTILIZED HORZ AND VERT
		3D ERROR	0.048SFT	QUALITY SURVEY QUALITY

BL

POINT	DESC.	NORTH	EAST	ELEVATION	L STATION	OFFSET
1	BL-1	502402.2920	560958.5320	1818.48	OUTSIDE PROJECT LIMITS	
2	BL-2	502564.7990	561505.7420	1821.56	OUTSIDE PROJECT LIMITS	
3	BL-3	502987.5370	562322.0370	1854.37	75+44.35	16.72 RT
4	BL-4	503249.0970	562851.4200	1849.05	81+34.82	17.54 RT
5	BL-5	503562.1900	563479.0220	1818.70	88+36.48	8.91 RT
6	BL-6	503850.3900	563987.8660	1805.99	94+20.20	32.36 LT
7	BL-7	504089.1210	564470.8200	1816.65	99+58.79	31.86 LT
8	BL-8	504317.4570	565106.5020	1837.41	106+28.48	32.23 LT
9	BL-9	504399.4240	565560.9730	1845.17	110+84.24	46.71 LT
10	BL-10	504371.8050	566092.9350	1844.30	116+10.41	32.19 LT
11	BL-11	504286.3470	566850.4990	1843.98	123+72.56	35.63 LT
12	BL-12	504213.5210	567404.1160	1859.40	129+27.80	39.46 LT
13	BL-13	504067.3610	567896.0660	1867.93	134+34.76	40.17 LT
14	BL-14	503732.7560	568599.3640	1869.32	142+13.24	34.49 LT
15	BL-15	503547.6520	569022.3620	1876.21	146+74.48	13.86 RT
16	BL-16	503470.9120	569678.9820	1890.38	153+34.72	5.40 RT
17	BL-17	503405.0770	570609.8790	1910.38	162+67.94	7.11 RT
18	BL-18	503337.3210	571495.1710	1929.59	171+55.80	13.87 RT
19	BL-19	503282.3220	572329.7000	1963.22	179+92.13	11.39 RT
20	BL-20	503245.5060	572857.1480	1972.11	185+20.86	11.87 RT
21	BL-21	503187.8100	573617.0620	1957.74	192+83.07	16.65 RT
22	BL-22	503100.6640	574531.3800	1971.00	202+02.26	14.39 RT
23	BL-23	503004.2410	575233.4980	1975.77	209+11.49	15.13 RT
24	BL-24	502892.2650	575891.0510	1961.25	215+79.02	15.90 RT
25	BL-25	502788.7050	576415.2390	1942.94	221+13.75	15.63 RT
26	BL-26	502603.5380	577221.5530	1933.82	229+41.68	14.32 RT
27	BL-27	502383.7120	578015.9220	1937.74	237+66.56	17.72 RT
28	BL-28	502189.4750	578647.3350	1941.11	244+27.72	16.37 RT
29	BL-29	502015.8670	579142.6960	1944.13	249+52.53	27.03 RT
30	BL-30	501792.6970	579864.4090	1956.57	257+07.86	14.27 RT
31	BL-31	501541.6210	580614.5050	1953.19	264+98.84	19.18 RT
32	BL-32	501277.0000	581399.4420	1956.94	OUTSIDE PROJECT LIMITS	
33	BL-33	500951.6740	582414.3250	1975.30	OUTSIDE PROJECT LIMITS	
34	BL-34	500753.4560	583015.7060	1990.29	OUTSIDE PROJECT LIMITS	

BY1

POINT	DESC.	NORTH	EAST	ELEVATION	EY1 STATION	OFFSET
2222	BL-2	502564.7990	561505.7420	1821.52	10+55.38	49.27 LT
35	BY1-35	502095.7540	561747.6560	1816.08	OUTSIDE PROJECT LIMITS	

BY2

POINT	DESC.	NORTH	EAST	ELEVATION	Y2 STATION	OFFSET
6666	BL-6	503850.3900	563987.8660	1805.94	OUTSIDE PROJECT LIMITS	
36	BY2-36	503651.9370	564282.1190	1828.95	13+10.48	12.73 RT
37	BY2-37	503495.3340	564827.9040	1876.69	18+78.28	13.67 RT

BY3

POINT	DESC.	NORTH	EAST	ELEVATION	EY3 STATION	OFFSET
4900	BL-12	504213.5210	567404.1160	1859.40	OUTSIDE PROJECT LIMITS	
38	BY3-38	504020.3570	567039.2150	1869.91	13+38.38	12.58 LT
39	BY3-39	503838.1710	566549.7750	1894.05	18+59.19	11.03 RT
40	BY3-40	503672.6660	566360.6580	1903.61	21+07.16	15.84 LT
41	BY3-41	503617.8200	566096.9100	1904.26	23+70.48	12.61 RT

BY4

POINT	DESC.	NORTH	EAST	ELEVATION	EY4 STATION	OFFSET
42	BY4-42	504398.7700	568052.1510	1847.58	11+50.28	17.51 LT
4901	BL-12	504213.5210	567404.1160	1859.40	17+74.81	63.40 RT

BY5

POINT	DESC.	NORTH	EAST	ELEVATION	EY5 STATION	OFFSET
4902	BL-15	503547.6520	569022.3620	1876.21	10+26.86	23.77 LT
43	BY5-43	503276.0150	568834.8220	1879.49	13+48.38	14.34 RT

BY6

POINT	DESC.	NORTH	EAST	ELEVATION	Y6 STATION	OFFSET
44	BY6-44	503583.8070	575565.6130	2006.10	OUTSIDE PROJECT LIMITS	
45	BY6-45	503251.9410	575810.9340	1993.95	OUTSIDE PROJECT LIMITS	
46	BY6-46	503011.8760	576014.7230	1973.92	OUTSIDE PROJECT LIMITS	
4903	BL-25	502788.7050	576415.2390	1942.88	OUTSIDE PROJECT LIMITS	

BY7

POINT	DESC.	NORTH	EAST	ELEVATION	EY7 STATION	OFFSET
4904	BL-25	502788.7050	576415.2390	1942.88	10+12.87	83.41 RT
47	BY7-47	502537.4690	576734.4280	1935.81	13+58.95	15.59 LT
48	BY7-48	502311.9300	576646.7210	1930.97	OUTSIDE PROJECT LIMITS	

BY8

POINT	DESC.	NORTH	EAST	ELEVATION	EY8 STATION	OFFSET
49	BY8-49	502987.0400	577284.5570	1960.19	10+99.93	27.02 LT
4905	BL-26	502603.5380	577221.5530	1933.79	OUTSIDE PROJECT LIMITS	

BY8A

POINT	DESC.	NORTH	EAST	ELEVATION	EY8A STATION	OFFSET
50	BY8A-50	503094.6520	577455.1080	1978.44	OUTSIDE PROJECT LIMITS	
4906	BY8-49	502987.0400	577284.5570	1960.14	11+89.43	20.68 LT

BY9

POINT	DESC.	NORTH	EAST	ELEVATION	EY9 STATION	OFFSET
4907	BL-28	502189.4750	578647.3350	1941.12	31+88.24	2023.89 RT
51	BY9-51	502274.8660	578847.1480	1939.07	11+71.50	14.43 LT
52	BY9-52	502292.1200	579222.5740	1933.14	15+44.36	11.66 LT
53	BY9-53	502053.7150	579786.5620	1957.21	21+51.86	18.66 RT
54	BY9-54	502042.3620	580215.2780	1986.46	25+79.18	13.03 LT
55	BY9-55	501952.9790	580412.1460	1974.05	27+90.77	12.85 LT
4910	BL-31	501541.6210	580614.5050	1953.19	10+45.40	2003.58 LT

BY10

POINT	DESC.	NORTH	EAST	ELEVATION	EY10 STATION	OFFSET
4908	BL-29	502015.8670	579142.6960	1944.12	10+23.30	19.14 LT
56	BY10-56	501688.8350	578916.3240	1963.83	14+18.75	11.15 LT
57	BY10-57	501551.6090	578654.4990	1972.24	17+11.99	9.83 LT

BY11

POINT	DESC.	NORTH	EAST	ELEVATION	EY11 STATION	OFFSET
58	BY11-58	501804.2850	581297.0810	1946.11	10+18.87	12.15 LT
59	BY11-59	501658.6590	581060.1140	1943.95	12+96.16	11.42 RT
60	BY11-60	501501.8090	580890.7540	1953.41	15+11.90	41.43 RT

BY12

POINT	DESC.	NORTH	EAST	ELEVATION	EY12 STATION	OFFSET
4909	BL-32	501277.0000	581399.4420	1956.94	OUTSIDE PROJECT LIMITS	
61	BY12-61	500911.3990	581755.1140	1954.79	14+86.63	19.31 LT
62	BY12-62	500546.9580	582049.6290	1967.52	19+53.07	12.99 LT

****
BM3 ELEVATION = 1819.59
N 502425 E 561055
L STATION 88+77 2718 LEFT
CHISELED SQUARE ON SW END OF BRIDGE IN HEADWALL
****
****
BM4 ELEVATION = 1854.88
N 503054 E 562470
L STATION 77+07 23 RIGHT
USGS MONUMENT (CRAWFORD)
****
****
BM5 ELEVATION = 1821.12
N 503468 E 563586
L STATION 88+95 139 RIGHT
8' SPIKE SET IN BASE OF THREE PRONG MAPLE TREE
****
****
BM6 ELEVATION = 1886.00
N 503521 E 569634
L STATION 152+87 42 LEFT
8' SPIKE SET IN BASE OF PERSIMMON TREE
****
****
BM7 ELEVATION = 1967.85
N 503275 E 573085
L STATION 187+46 33 LEFT
8' INCH SPIKE SET IN BASE OF 19' POPLAR TREE
****
****
BM8 ELEVATION = 1953.13
N 502578 E 577544
L STATION 232+60 42 LEFT
NCGS MONUMENT (2EG8)
****
****
BM9 ELEVATION = 1949.06
N 501962 E 579534
L STATION 253+41 43 LEFT
8" SPIKE SET IN BASE OF 17" MAPLE TREE
****
****
BM10 ELEVATION = 1953.82
N 501544 E 580790
L STATION 266+65 38 LEFT
CHISELED SQUARE ON CURB
****
****
BM11 ELEVATION = 1978.81
N 500995 E 582572
L STATION 88+77 19236 LEFT
8' SPIKE SET IN BASE OF 11' PINE
****
****
TVA7 ELEVATION = 1803.32
N 503673 E 563726
L STATION 91+07 13 RIGHT
TVA MONUMENT IN TOP OF CONCRETE HEADWALL
****
****
TVA8 ELEVATION = 1827.56
N 504201 E 564832
L STATION 103+34 5 RIGHT
TVA MONUMENT IN TOP OF CONCRETE HEADWALL
****
****
TVA9 ELEVATION = 1841.83
N 504332 E 566096
L STATION 116+18 7 RIGHT
TVA MONUMENT IN TOP OF CONCRETE HEADWALL
****
****
TVA10 ELEVATION = 1842.85
N 504201 E 567143
L STATION 126+73 15 RIGHT
TVA MONUMENT IN TOP OF CONCRETE HEADWALL
****
****
TVA14 ELEVATION = 1909.72
N 503404 E 570624
L STATION 162+82 8 RIGHT
TVA MONUMENT SET IN TOP OF CONCRETE HEADWALL
****
****
TVA15 ELEVATION = 1929.21
N 503337 E 571501
L STATION 171+62 13 RIGHT
TVA MONUMENT IN TOP OF CONCRETE HEADWALL
****
****
TVA17 ELEVATION = 1943.57
N 503258 E 573492
L STATION 191+54 44 LEFT
TVA MONUMENT SET IN TOP OF CONCRETE HEADWALL
****
****
TVA18 ELEVATION = 1961.81
N 503146 E 574539
L STATION 202+05 32 LEFT
TVA MONUMENT SET IN TOP OF CONCRETE HEADWALL
****
****
TVA19 ELEVATION = 1967.07
N 503008 E 575480
L STATION 211+54 27 LEFT
TVA MONUMENT SET IN TOP OF CONCRETE HEADWALL
****
****
TVA20 ELEVATION = 1936.21
N 502795 E 576578
L STATION 222+72 24 LEFT
TVA MONUMENT SET IN TO OF CONCRETE HEADWALL
****
****
TVA21 ELEVATION = 1935.81
N 502308 E 578411
L STATION 241+66 25 LEFT
TVA MONUMENT SET IN TOP OF CONCRETE HEADWALL
****
****
TVA24 ELEVATION = 1953.76
N 500846 E 581769
L STATION 88+77 18462 RIGHT
TVA MONUMENT SET IN TOP OF CONCRETE HEADWALL
****

NOTE: DRAWING NOT TO SCALE

17-APR-2008 15:45
r:\roadway\proj\a0011bb_ls_1d_060503.dgn
$$$$USERNAME$$$$

PROJ. REFERENCE NO.	SHEET NO.
A-1100BB	1-E

STATE OF NORTH CAROLINA
DIVISION OF HIGHWAYS

CENTERLINE COORDINATE LIST

Point #	Chain	Station	Northing (Y)	Easting (X)
1	L	71+00.00	502805.1400	561916.5083
2	L	72+00.00	502849.5601	562006.1010
3	L	73+00.00	502893.9802	562095.6937
4	L	74+00.00	502938.4003	562185.2865
5	L	75+00.00	502982.8203	562274.8792
6	L	76+00.00	503027.2404	562364.4719
7	L	77+00.00	503071.6605	562454.0646
8	L	78+00.00	503116.0806	562543.6574
9	L	79+00.00	503160.5007	562633.2501
10	L	80+00.00	503204.9208	562722.8428
11	L	81+00.00	503249.3409	562812.4355
12	L	82+00.00	503293.7609	562902.0283
13	L	83+00.00	503338.1810	562991.6210
14	L	84+00.00	503382.4243	563081.3010
15	L	85+00.00	503426.2214	563171.1998
16	L	86+00.00	503469.5685	563261.3165
17	L	87+00.00	503512.4644	563351.6487
18	L	88+00.00	503554.9081	563442.1944
19	L	89+00.00	503596.9228	563532.9396
20	L	90+00.00	503639.1230	563623.5990
21	L	91+00.00	503681.7760	563714.0463
22	L	92+00.00	503724.8806	563804.2791
23	L	93+00.00	503768.4359	563894.2953
24	L	94+00.00	503812.4407	563984.0926
25	L	95+00.00	503856.8202	564073.7054
26	L	96+00.00	503901.2403	564163.2982
27	L	97+00.00	503945.6604	564252.8909
28	L	98+00.00	503990.0804	564342.4836
29	L	99+00.00	504034.5001	564432.0766
30	L	100+00.00	504078.4424	564521.9036
31	L	101+00.00	504120.1173	564612.8005
32	L	102+00.00	504158.5991	564705.0941
33	L	103+00.00	504193.8195	564798.6810
34	L	104+00.00	504225.7351	564893.4458
35	L	105+00.00	504254.3068	564989.2718
36	L	106+00.00	504279.4992	565086.0413
37	L	107+00.00	504301.2813	565183.6349
38	L	108+00.00	504319.6265	565281.9325
39	L	109+00.00	504334.5120	565380.8132
40	L	110+00.00	504345.9196	565480.1553
41	L	111+00.00	504353.8351	565579.8364
42	L	112+00.00	504358.2490	565679.7338
43	L	113+00.00	504359.1556	565779.7245
44	L	114+00.00	504356.5540	565879.6855
45	L	115+00.00	504350.4473	565979.4938
46	L	116+00.00	504340.9522	566079.0380
47	L	117+00.00	504329.5065	566178.3805
48	L	118+00.00	504317.8274	566277.6962
49	L	119+00.00	504306.1484	566377.0118
50	L	120+00.00	504294.4694	566476.3275
51	L	121+00.00	504282.7904	566575.6432
52	L	122+00.00	504271.1114	566674.9588
53	L	123+00.00	504259.4324	566774.2745
54	L	124+00.00	504247.7533	566873.5901
55	L	125+00.00	504236.0743	566972.9058
56	L	126+00.00	504224.3953	567072.2215
57	L	127+00.00	504212.3214	567171.4893
58	L	128+00.00	504198.0104	567270.4556
59	L	129+00.00	504180.3774	567368.8838
60	L	130+00.00	504159.4006	567466.6540
61	L	131+00.00	504135.1043	567563.6525
62	L	132+00.00	504107.5167	567659.7668
63	L	133+00.00	504076.6699	567754.8852
64	L	134+00.00	504042.5998	567848.8972
65	L	135+00.00	504005.3458	567941.6936
66	L	136+00.00	503964.9512	568033.1666
67	L	137+00.00	503921.6552	568123.3046
68	L	138+00.00	503876.9743	568212.7675
69	L	139+00.00	503832.1902	568302.1788
70	L	140+00.00	503787.7426	568391.7572
71	L	141+00.00	503745.2645	568482.2823
72	L	142+00.00	503705.7858	568574.1545
73	L	143+00.00	503669.3908	568667.2914
74	L	144+00.00	503636.1201	568761.5895
75	L	145+00.00	503606.0106	568856.9441
76	L	146+00.00	503579.0956	568953.2491
77	L	147+00.00	503555.4052	569050.3977
78	L	148+00.00	503534.9657	569148.2818
79	L	149+00.00	503517.7996	569246.7927
80	L	150+00.00	503503.9263	569345.8210
81	L	151+00.00	503493.3600	569445.2565
82	L	152+00.00	503485.5716	569544.9512
83	L	153+00.00	503478.6822	569644.7136
84	L	154+00.00	503471.8105	569744.4772
85	L	155+00.00	503464.9387	569844.2408
86	L	156+00.00	503458.0669	569944.0045
87	L	157+00.00	503451.1952	570043.7681
88	L	158+00.00	503444.3234	570143.5317
89	L	159+00.00	503437.4517	570243.2953
90	L	160+00.00	503430.5799	570343.0589
91	L	161+00.00	503423.7081	570442.8225
92	L	162+00.00	503416.8364	570542.5861
93	L	163+00.00	503409.9646	570642.3498
94	L	164+00.00	503403.0929	570742.1134
95	L	165+00.00	503396.2211	570841.8770
96	L	166+00.00	503389.3493	570941.6406
97	L	167+00.00	503382.4776	571041.4042
98	L	168+00.00	503375.6058	571141.1678
99	L	169+00.00	503368.7341	571240.9315
100	L	170+00.00	503361.8623	571340.6951
101	L	171+00.00	503354.9905	571440.4587
102	L	172+00.00	503348.1188	571540.2223
103	L	173+00.00	503341.2470	571639.9859
104	L	174+00.00	503334.3753	571739.7495
105	L	175+00.00	503327.5035	571839.5131
106	L	176+00.00	503320.6317	571939.2768
107	L	177+00.00	503313.7600	572039.0404
108	L	178+00.00	503306.8882	572138.8040
109	L	179+00.00	503300.0165	572238.5676
110	L	180+00.00	503293.1447	572338.3312
111	L	181+00.00	503286.2729	572438.0948
112	L	182+00.00	503279.4012	572537.8585
113	L	183+00.00	503272.5294	572637.6221
114	L	184+00.00	503265.6577	572737.3857
115	L	185+00.00	503258.7859	572837.1493
116	L	186+00.00	503251.9141	572936.9129
117	L	187+00.00	503245.0424	573036.6765
118	L	188+00.00	503238.1706	573136.4401
119	L	189+00.00	503231.2989	573236.2038
120	L	190+00.00	503224.4271	573335.9674
121	L	191+00.00	503217.5553	573435.7310
122	L	192+00.00	503210.5594	573535.4859
123	L	193+00.00	503203.1153	573635.2084
124	L	194+00.00	503195.2064	573734.8950
125	L	195+00.00	503186.8328	573834.5437
126	L	196+00.00	503177.9948	573934.1523
127	L	197+00.00	503168.6925	574033.7186
128	L	198+00.00	503158.9261	574133.2405
129	L	199+00.00	503148.6959	574232.7157
130	L	200+00.00	503138.0020	574332.1422
131	L	201+00.00	503126.8447	574431.5177
132	L	202+00.00	503115.2242	574530.8402
133	L	203+00.00	503103.1408	574630.1073
134	L	204+00.00	503090.5948	574729.3171
135	L	205+00.00	503077.5864	574828.4673
136	L	206+00.00	503064.1159	574927.5558
137	L	207+00.00	503050.1836	575026.5804
138	L	208+00.00	503035.7898	575125.5390
139	L	209+00.00	503020.9348	575224.4294
140	L	210+00.00	503005.6189	575323.2495
141	L	211+00.00	502989.8425	575421.9971
142	L	212+00.00	502973.6060	575520.6700
143	L	213+00.00	502956.9096	575619.2662
144	L	214+00.00	502939.7537	575717.7835
145	L	215+00.00	502922.1387	575816.2198
146	L	216+00.00	502904.0650	575914.5728
147	L	217+00.00	502885.5329	576012.8406
148	L	218+00.00	502866.5430	576111.0208
149	L	219+00.00	502847.0955	576209.1115
150	L	220+00.00	502827.1910	576307.1104
151	L	221+00.00	502806.8298	576405.0155
152	L	222+00.00	502786.0124	576502.8246
153	L	223+00.00	502764.7392	576600.5355
154	L	224+00.00	502743.0108	576698.1463
155	L	225+00.00	502720.8275	576795.6547
156	L	226+00.00	502698.1898	576893.0586
157	L	227+00.00	502675.0984	576990.3559
158	L	228+00.00	502651.5535	577087.5445
159	L	229+00.00	502627.5559	577184.6222
160	L	230+00.00	502603.1059	577281.5871
161	L	231+00.00	502578.2041	577378.4369
162	L	232+00.00	502552.8511	577475.1695
163	L	233+00.00	502527.0474	577571.7829
164	L	234+00.00	502500.7936	577668.2750
165	L	235+00.00	502474.0902	577764.6436
166	L	236+00.00	502446.9379	577860.8867
167	L	237+00.00	502419.3371	577957.0022
168	L	238+00.00	502391.2886	578052.9879
169	L	239+00.00	502362.7929	578148.8418
170	L	240+00.00	502333.8506	578244.5619
171	L	241+00.00	502304.4624	578340.1459
172	L	242+00.00	502274.6289	578435.5920
173	L	243+00.00	502244.3507	578530.8979
174	L	244+00.00	502213.6286	578626.0616
175	L	245+00.00	502182.5255	578721.1015
176	L	246+00.00	502151.3736	578816.1255
177	L	247+00.00	502120.2217	578911.1495
178	L	248+00.00	502089.0698	579006.1735
179	L	249+00.00	502057.9180	579101.1975
180	L	250+00.00	502026.7661	579196.2215
181	L	251+00.00	501995.6142	579291.2455
182	L	252+00.00	501964.4623	579386.2695
183	L	253+00.00	501933.3104	579481.2935
184	L	254+00.00	501902.1585	579576.3175
185	L	255+00.00	501871.0066	579671.3415
186	L	256+00.00	501839.8548	579766.3655
187	L	257+00.00	501808.7029	579861.3895
188	L	258+00.00	501777.5510	579956.4135
189	L	259+00.00	501746.3991	580051.4375
190	L	260+00.00	501715.2472	580146.4615
191	L	261+00.00	501684.0953	580241.4855
192	L	262+00.00	501652.9435	580336.5095
193	L	263+00.00	501621.7916	580431.5335
194	L	264+00.00	501590.6397	580526.5575
195	L	265+00.00	501559.4878	580621.5815
196	L	266+00.00	501528.3359	580716.6055
197	L	267+00.00	501497.1840	580811.6295
198	L	268+00.00	501466.0322	580906.6535
199	L	269+00.00	501434.8803	581001.6775
200	L	270+00.00	501403.7284	581096.7015
201	L	271+00.00	501372.5765	581191.7255
202	L	272+00.00	501341.4246	581286.7495
203	L	273+00.00	501310.2727	581381.7735
204	L	274+00.00	501279.1209	581476.7975
205	L	275+00.00	501247.9690	581571.8215
206	L	276+00.00	501216.8171	581666.8455
207	L	277+00.00	501185.6652	581761.8695
208	L	278+00.00	501154.5133	581856.8935
209	L	279+00.00	501123.3614	581951.9175
210	L	280+00.00	501092.2096	582046.9415
211	L	281+00.00	501061.0577	582141.9655
212	L	282+00.00	501029.9058	582236.9895
213	L	283+00.00	500998.7539	582332.0135
214	L	284+00.00	500967.6020	582427.0375
215	L	285+00.00	500936.4501	582522.0615
216	L	286+00.00	500905.2983	582617.0855
217	L	287+00.00	500874.1464	582712.1095
218	L	288+00.00	500842.9945	582807.1334
219	L	289+00.00	500811.8426	582902.1574
220	L	290+00.00	500780.6907	582997.1814
221	L	291+00.00	500749.5388	583092.2054
222	L	291+21.93	500742.7071	583113.0446
223	Y3	10+00.00	504161.7016	567456.6758
224	Y3	10+50.00	504113.9650	567442.4139
225	Y3	11+00.00	504077.1861	567409.3132
226	Y3	11+50.00	504060.7788	567362.6318
227	Y3	12+00.00	504058.0111	567312.7090
228	Y3	12+50.00	504055.3002	567262.7826
229	Y3	13+00.00	504052.5893	567212.8561
230	Y3	13+50.00	504049.8785	567162.9297
231	Y3	14+00.00	504047.0980	567113.0075
232	Y3	14+50.00	504039.4047	567063.6560
233	Y3	15+00.00	504024.0074	567016.1410
234	Y3	15+50.00	504004.8799	566969.9442
235	Y3	16+00.00	503985.7525	566923.7475
236	Y3	16+50.00	503966.6250	566877.5507
237	Y3	17+00.00	503947.4976	566831.3539
238	Y3	17+33.96	503934.5068	566799.9785
239	Y6	10+00.00	503118.5877	575941.0041
240	Y6	10+50.00	503079.0164	575971.5673
241	Y6	11+00.00	503040.7103	576003.6472
242	Y6	11+50.00	503007.7922	576041.2102
243	Y6	12+00.00	502981.3337	576083.5721
244	Y6	12+50.00	502962.0215	576129.6332
245	Y6	13+00.00	502949.7418	576178.0747
246	Y6	13+50.00	502938.8937	576226.8838
247	Y6	14+00.00	502928.0456	576275.6928
248	Y6	14+50.00	502917.1975	576324.5018
249	Y6	15+00.00	502906.3495	576373.3108
250	Y6	15+50.00	502895.5014	576422.1198
251	Y6	16+00.00	502876.2607	576467.6926
252	Y6	16+50.00	502836.2603	576496.6118
253	Y6	17+00.00	502787.0231	576500.0850
254	Y6	17+00.41	502786.6204	576499.9993

PROJECT REFERENCE NO.	SHEET NO.
A-0011BB	2

ROADWAY DESIGN ENGINEER
NORTH CAROLINA PROFESSIONAL SEAL 33296 ENGINEER STEVEN D. KENDALL
S.D. Kendall 8-6-08

PAVEMENT DESIGN ENGINEER
NORTH CAROLINA PROFESSIONAL SEAL 13368 ENGINEER DAVID CHI CHEN
8/13/08

PAVEMENT SCHEDULE

(FINAL PAVEMENT DESIGN)

C1	PROP. APPROX. 3" ASPHALT CONCRETE SURFACE COURSE, TYPE S9.5B, AT AN AVERAGE RATE OF 168 LBS. PER SQ. YD.IN EACH OF TWO LAYERS.	J1	PROP. 6" AGGREGATE BASE COURSE.
C2	PROP. VAR. DEPTH ASPHALT CONCRETE SURFACE COURSE, TYPE S9.5B, AT AN AVERAGE RATE OF 112 LBS. PER SQ. YD. PER 1" DEPTH. TO BE PLACED IN LAYERS NOT LESS THAN 1½" IN DEPTH OR GREATER THAN 2" IN DEPTH.	J2	PROP. 10" AGGREGATE BASE COURSE.
C3	PROP. APPROX. 2½" ASPHALT CONCRETE SURFACE COURSE TYPE SF9.5A, AT AN AVERAGE RATE OF 137.5 LBS. PER SQ. YD. IN EACH OF TWO LAYERS.	P	PRIME COAT AT THE RATE OF 0.35 GAL PER SQ. YDS.
C4	PROP. VAR. DEPTH ASPHALT CONCRETE SURFACE COURSE, TYPE SF9.5A, AT AN AVERAGE RATE OF 110 LBS. PER SQ. YD. PER 1" DEPTH. TO BE PLACED IN LAYERS NOT TO EXCEED 1½" IN DEPTH.	T	EARTH MATERIAL.
D1	PROP. APPROX. 4" ASPHALT CONCRETE INTERMEDIATE COURSE, TYPE I19.0B, AT AN AVERAGE RATE OF 456 LBS. PER SQ. YD.	U	EXISTING PAVEMENT.
D2	PROP. VAR. DEPTH ASPHALT CONCRETE INTERMEDIATE COURSE, TYPE I19.0B, AT AN AVERAGE RATE OF 114 LBS. PER SQ. YD. PER 1" DEPTH, TO BE PLACED IN LAYERS NOT LESS THAN 2½" IN DEPTH OR GREATER THAN 4" IN DEPTH.	W1	VARIABLE DEPTH ASPHALT PAVEMENT (SEE 2-B FOR -L- WEDGING DETAILS).
E1	PROP. VAR. DEPTH ASPHALT CONCRETE BASE COURSE, TYPE B25.0B, AT AN AVERAGE RATE OF 114 LBS. PER SQ. YD. PER 1" DEPTH. TO BE PLACED IN LAYERS NOT LESS THAN 3" IN DEPTH OR GREATER GREATER THAN 5½" IN DEPTH.	W2	VARIABLE DEPTH ASPHALT PAVEMENT (SEE 2-B FOR -Y- WEDGING DETAILS).

NOTE: PAVEMENT EDGE SLOPES ARE 1:1 UNLESS SHOWN OTHERWISE.

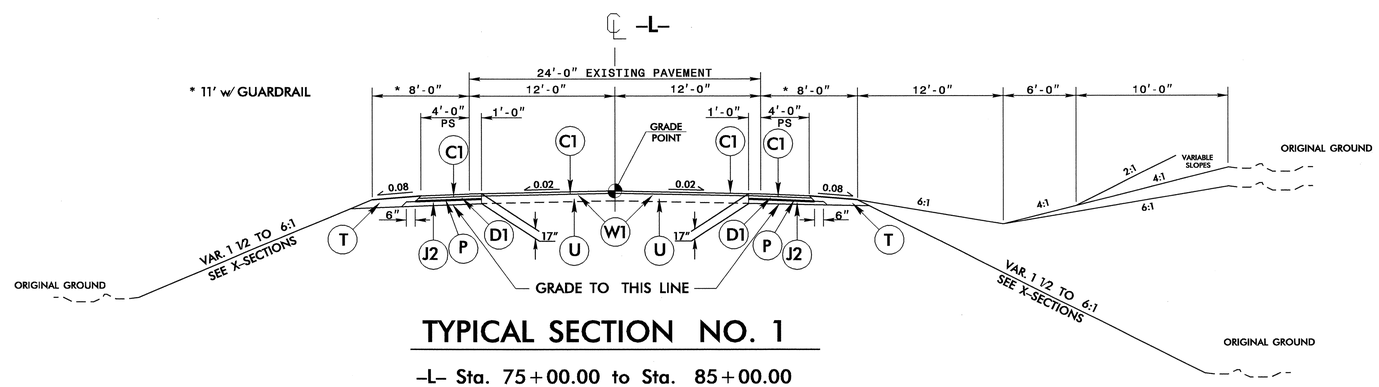

TYPICAL SECTION NO. 1

-L- Sta. 75+00.00 to Sta. 85+00.00
-L- Sta. 190+00.00 to Sta. 266+00.00

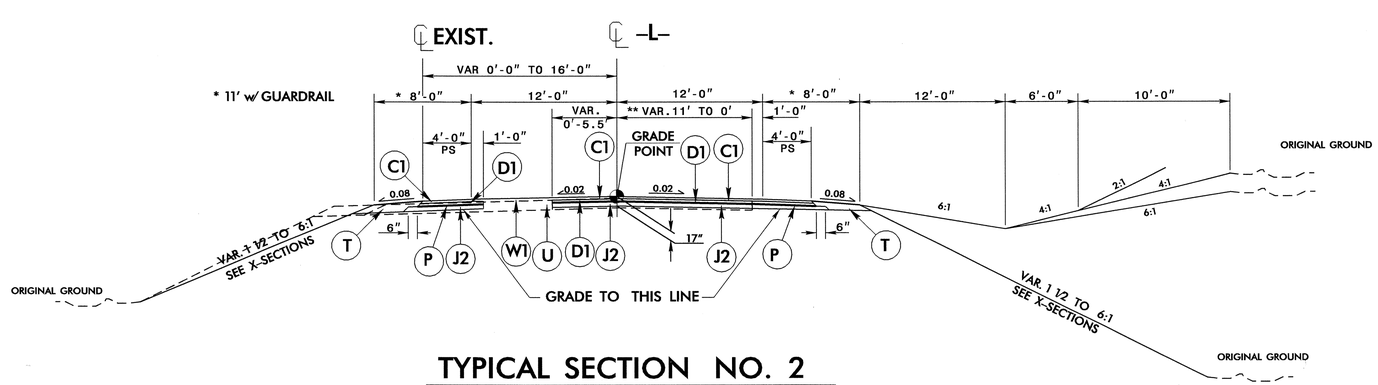

TYPICAL SECTION NO. 2

-L- Sta. 85+00.00 to Sta. 160+00.00
** -L- Trans. Sta. 160+00.00 to Sta. 190+00.00

EXPRESSWAY GUTTER DETAIL

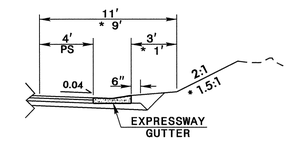

USE WITH TYPICAL SECTION NO. 1 & 2

-L- Sta. 83+00 to Sta. 87+77 +/- RT.
-L- Sta. 151+00 to Sta. 153+30 +/- RT.
-L- Sta. 179+41 to Sta. 181+25 +/- RT.
* -L- Sta. 181+25 to Sta. 186+00 +/- RT.
-L- Sta. 216+85 to Sta. 221+67 +/- RT.
-L- Sta. 256+09 to Sta. 262+50 +/- RT.

PAVEMENT REMOVAL DETAIL

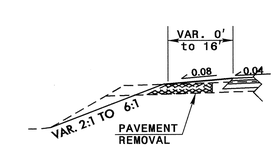

USE WITH TYPICAL SECTION NO. 2

-L- Sta. 85+00.00 to Sta. 129+90.00 LT.
-L- Sta. 132+15.00 to Sta. 190+00.00 LT.

6/2/99
11-AUG-2008 11:44
\\CO-DGN\PROJECTS\a0011bb_rdy_typ.dgn

PROJECT REFERENCE NO.	SHEET NO.
A-0011BB	2-A

ROADWAY DESIGN ENGINEER
NORTH CAROLINA PROFESSIONAL SEAL 33296 ENGINEER STEPHEN D. KENDALL
S. D. Kendall 8-6-08

PAVEMENT DESIGN ENGINEER
NORTH CAROLINA PROFESSIONAL SEAL 13368 ENGINEER DIAN-CHI CHEN
8/13/08

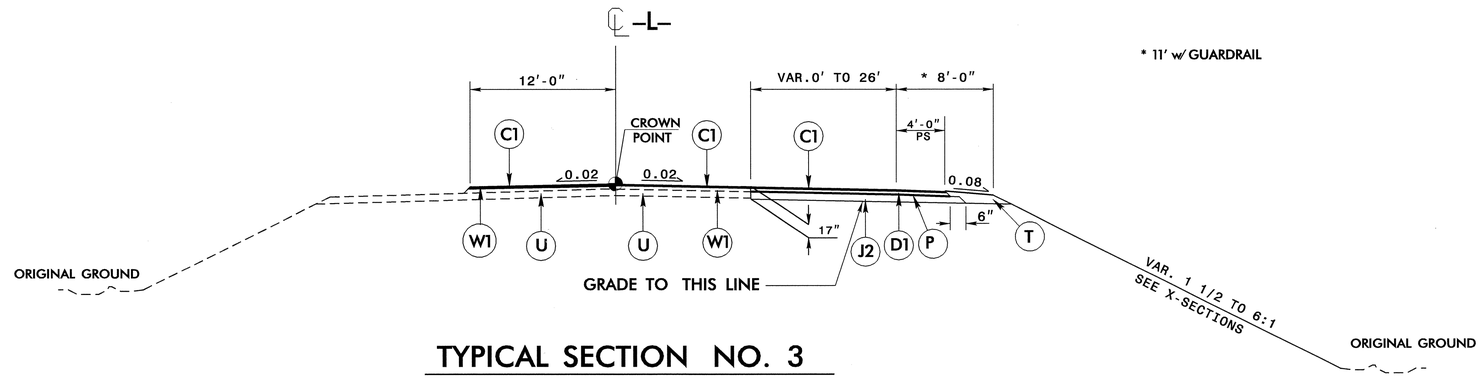

TYPICAL SECTION NO. 3

*-L- Sta. 266+00.00 to Sta. 282+00.00

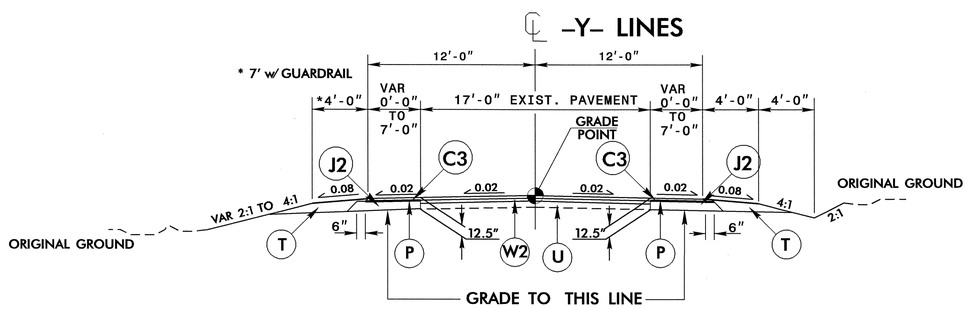

TYPICAL SECTION NO. 4

-Y3- Sta. 14+50.00 to Sta. 15+50.00
-Y6- Sta. 12+00.00 to Sta. 13+25.00

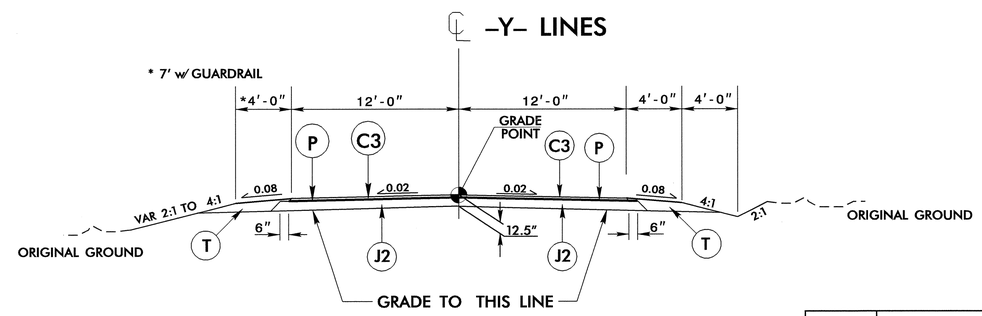

TYPICAL SECTION NO. 5

-Y3- Sta. 10+29.03 to Sta. 14+50.00
-Y6- Sta. 13+25.00 to Sta. 16+60.47

*Note: All other -Y- lines use -L- line pavement design.

C1	3 " ACSC TYPE S9.5B
C3	2½" ACSC TYPE SF9.5A
D1	3" ACIC TYPE I19.0B
J1	ABC 6"
J2	ABC 10"
P	PRIME COAT
T	EARTH MATERIAL
U	EXISTING PAVEMENT
W1	WEDGING -L- LINE
W2	WEDGING -Y- LINE

6/2/99

24-JUL-2008 15:26
E:\rdwy\rdwy\a0011bb_rdy_typ.dgn
$$$$USERNAME$$$$

PROJECT REFERENCE NO.	SHEET NO.
A-0011BB	2-B

ROADWAY DESIGN ENGINEER

NORTH CAROLINA PROFESSIONAL SEAL 33296 ENGINEER STEVEN D. KENDALL

D. D. Kendall 8-6-08

PAVEMENT DESIGN ENGINEER

NORTH CAROLINA PROFESSIONAL SEAL 13368 ENGINEER DONGSHI CHEN

8/13/08

C1	3 " ACSC TYPE S9.5B
C2	VAR. ACSC TYPE S9.5B
C3	2½" ACSC TYPE SF9.5A
C4	VAR. ACSC TYPE SF9.5A
D1	3" ACIC TYPE I19.0B
D2	VAR. ACIC TYPE I19.0B
E1	VAR. ACBC TYPE B25.0B
J1	ABC 6"
J2	ABC 10"
P	PRIME COAT
T	EARTH MATERIAL
U	EXISTING PAVEMENT

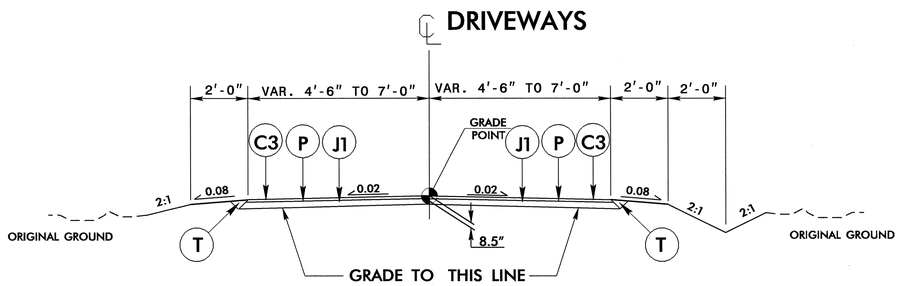

TYPICAL SECTION NO. 6

–DR1LT– Sta. 10+00.00 to Sta.11+66.73
–DR1RT– Sta. 10+12.04 to Sta. 11+84.01
–DR2RT– Sta. 10+12.00 to Sta. 12+48.17

NOTE: ALL EXISTING GRAVEL DRIVEWAYS TO BE PAVED TO THE PROPOSED R/W LINE OR AS DIRECTED BY THE ENGINEER.

SHALLOW UNDERCUT DETAIL

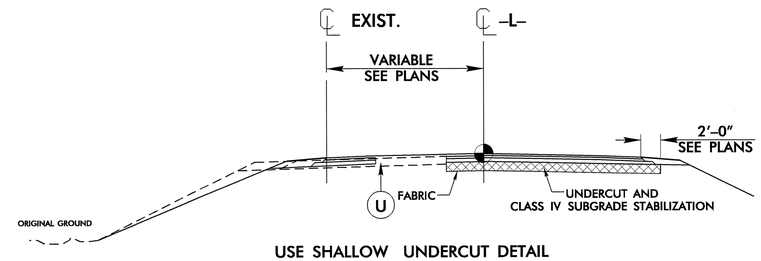

USE SHALLOW UNDERCUT DETAIL
–L– Sta. 88+50 TO Sta. 185+00

Undercut to a depth of 8 inches and to two feet beyond the paved shoulder. Place fabric for soil stabilization and Class IV Subgrade Stabilization.

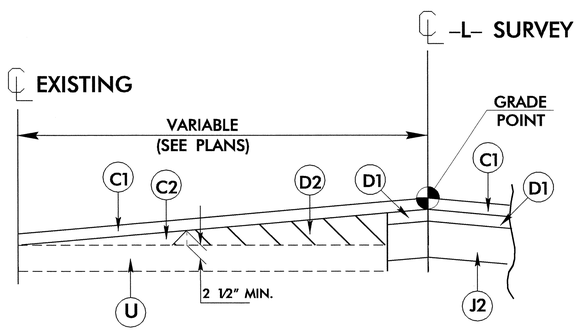

–L– DETAIL SHOWING METHOD OF WEDGING

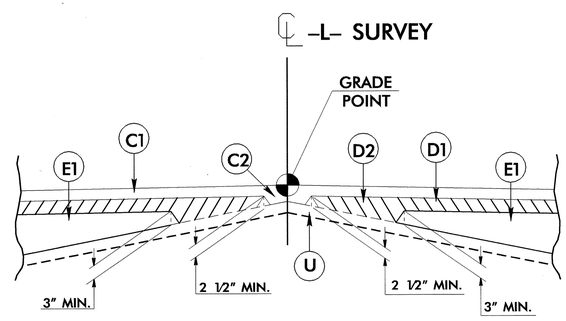

–L– DETAIL SHOWING METHOD OF WEDGING

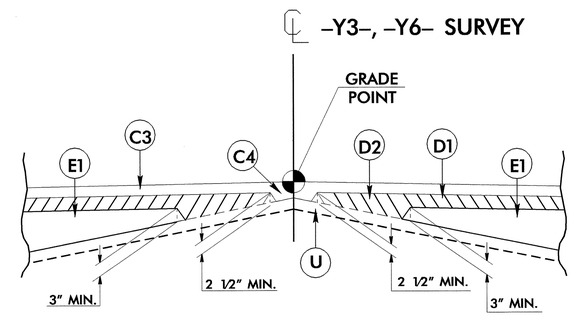

–Y3–, –Y6– DETAIL SHOWING METHOD OF WEDGING

6/2/99
24-JUL-2008 15:26
c:\pw_work\pw_d0\a0011bb_rdy_typ.dgn

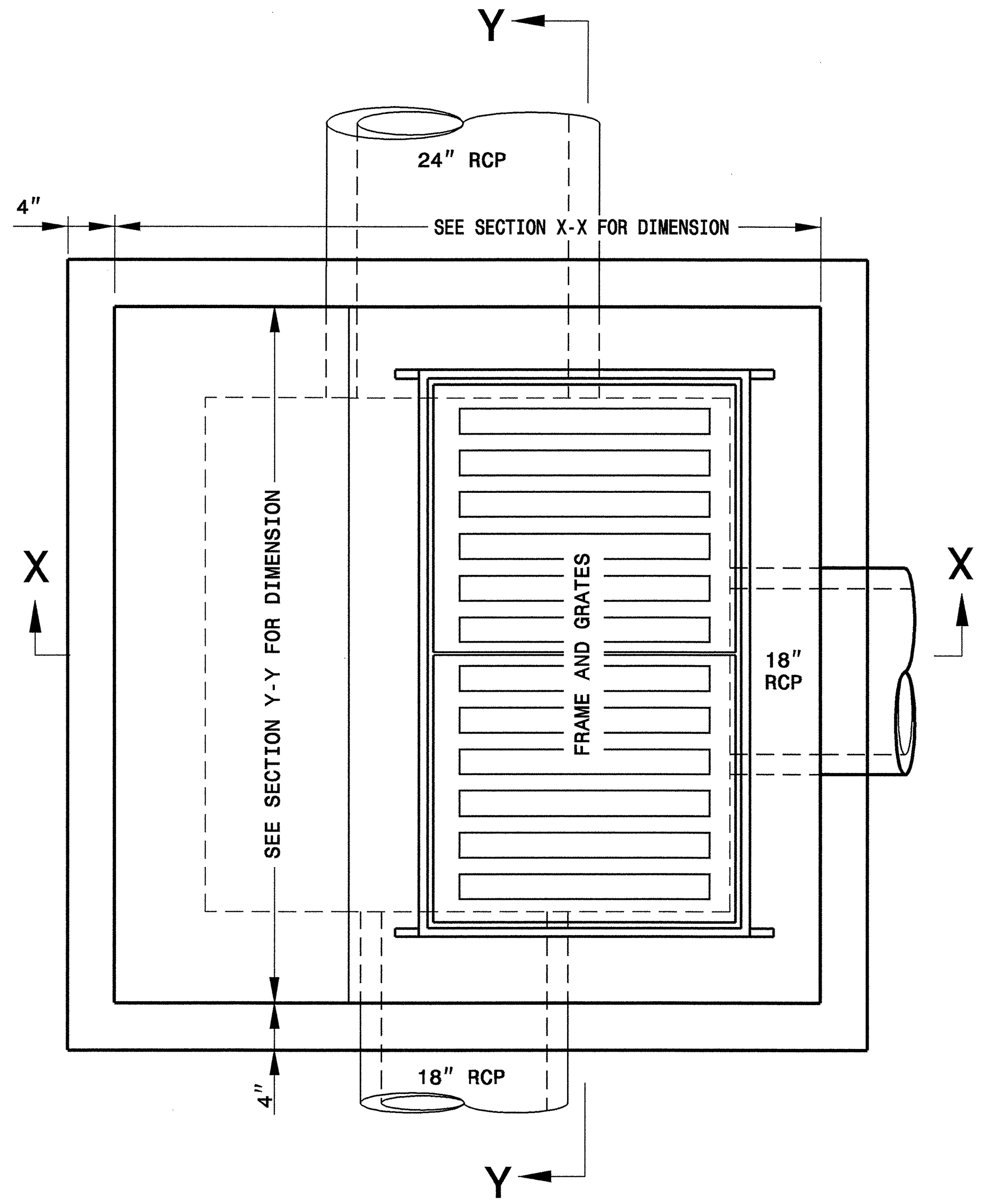

PLAN

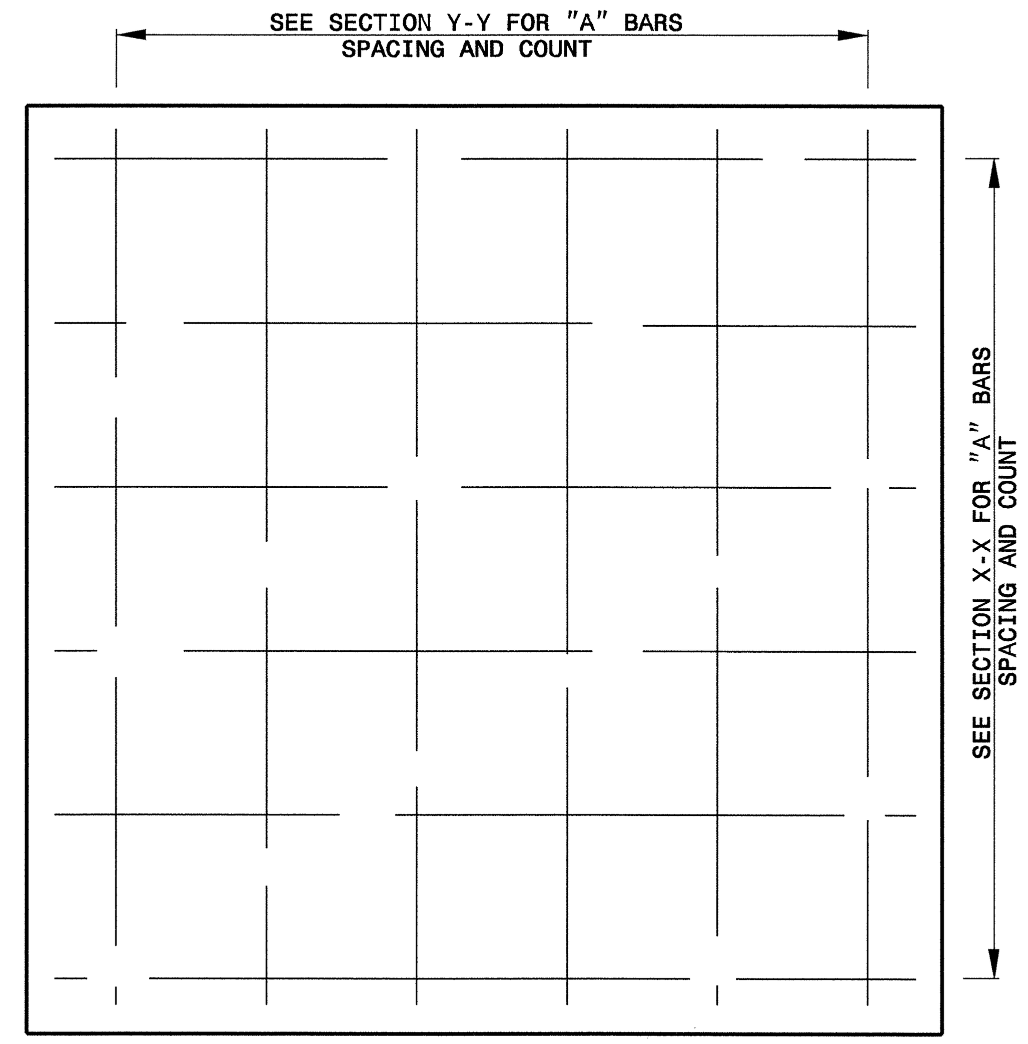

PLAN OF BASE

GENERAL NOTES:
- USE CLASS 'AA' CONCRETE FOR CAST IN PLACE CONCRETE BOX.
- USE CLASS 'M' CONCRETE IN THE WALL CAVITY FOR REINFORCED BRICK CONSTRUCTION AND CLASS 'AA' FOR THE FOOTING BASE.
- CHAMFER ALL EXPOSED CONCRETE CORNERS 1".
- USE FORMS TO CONSTRUCT THE BOTTOM SLAB.
- IF PIPES ARE SET IN THE BASE FOLLOW CONSTRUCTION PROCEDURES SHOWN BY STD. DWG. 840.00.
- PRECAST UNITS MADE OF CLASS 'AA' CONCRETE MAY BE USED IN LIEU OF BRICK MASONRY CONSTRUCTION.
- INCLUDE REINFORCING STEEL COST IN THE UNIT OR LINEAR FOOT BID PRICE FOR "MASONRY DRAINAGE STRUCTURE".
- REFERENCE STD. DWG. 840.25 FOR FRAME ANCHORAGE.
- CONCRETE BRICK, JUMBO BRICK AND 4" SOLID CONCRETE BLOCK WILL BE PERMITTED.
- CONCRETE FOR BRICK BOX REFER TO SECTION 832 OF THE STANDARD SPECIFICATIONS.
- PROVIDE GRATED DROP INLETS OVER 3'-6" DEEP WITH STEPS SPACED 12" ON CENTER AS DIRECTED BY STD. DWG. 840.66.
- FRAME AND GRATES ARE SEPARATE CONTRACT ITEMS.

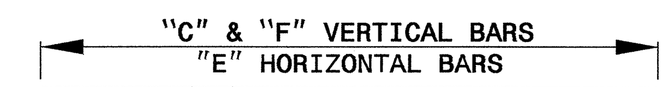

STRAIGHT BARS

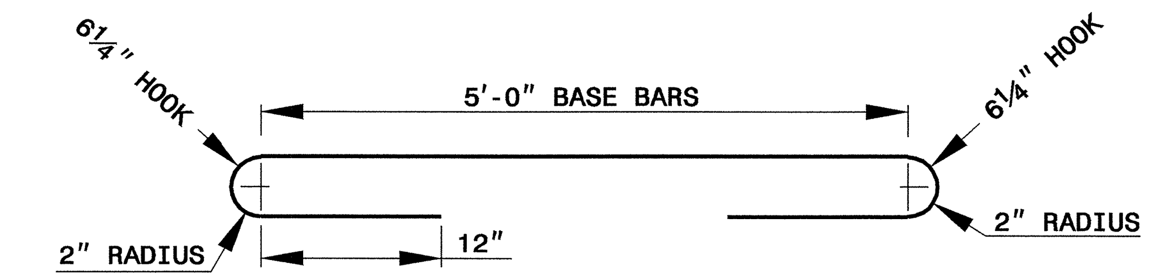

BASE BARS

"A" BARS

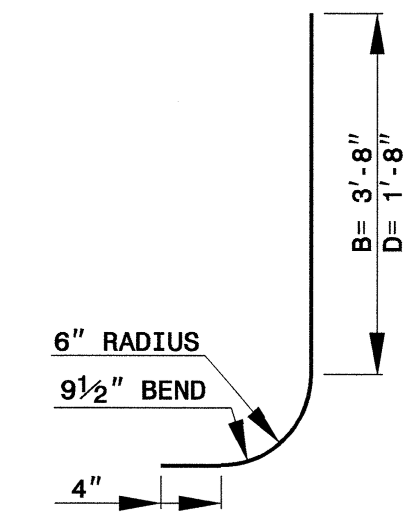

CORNER BARS

BILL OF MATERIALS				
BAR	SIZE	LENGTH	QUANTITY	WEIGHT
A	#5	8'-0½"	12	100.6
B	#5	4'-9½"	20	99.6
C	#5	5'-6"	20	114.7
D	#5	2'-9½"	16	46.6
E	#5	4'-8"	68	331.0
F	#5	2'-0"	44	91.8
REINF. STEEL (TOTAL WEIGHT LBS.)				784.3
CONCRETE IN BASE CLASS 'AA' (CUBIC YARDS)				0.79
CONCRETE IN WALLS CLASS 'AA' (CUBIC YARDS)				2.30
CONCRETE TOTAL (CUBIC YARDS)				3.09
CONC. CUBIC YARDS IN WALL/FOOT OF HEIGHT				0.46
LBS. OF REINF. STEEL IN WALL/FOOT OF HEIGHT				128.9

* PIPE DEDUCTIONS AND INLET OPENING DEDUCTION HAVE BEEN MADE.

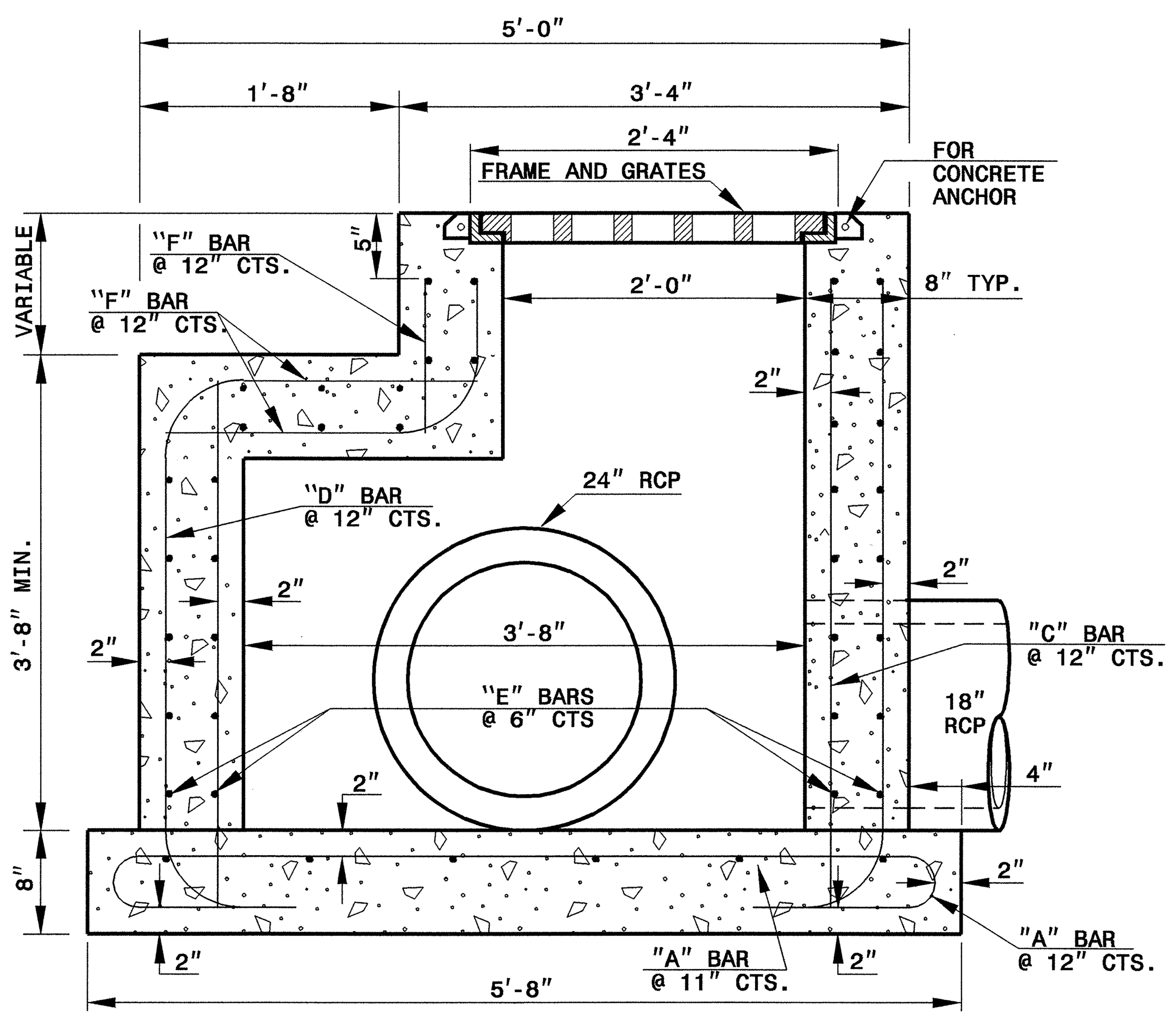

SECTION X-X

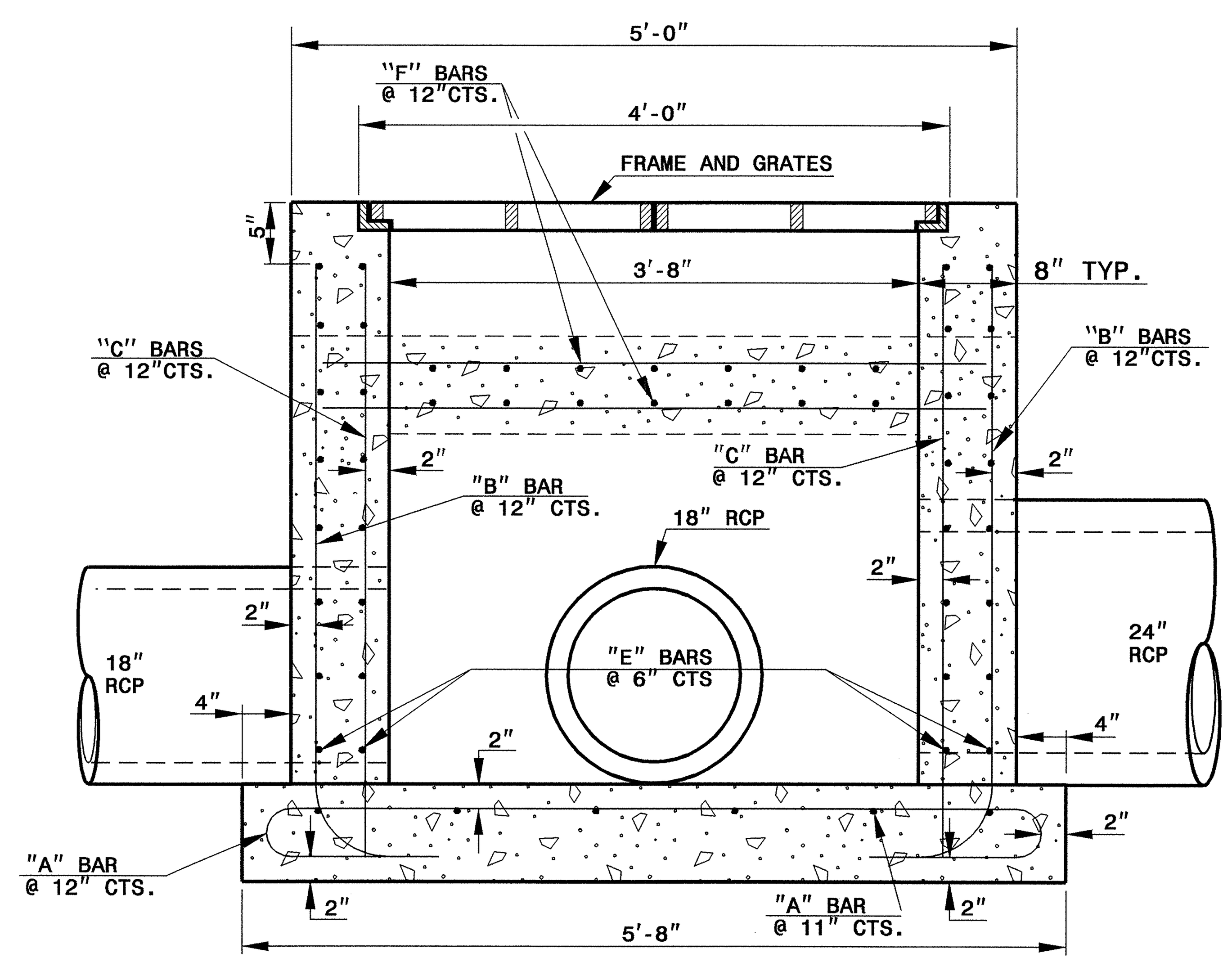

SECTION Y-Y

NOTES:
- HORIZONTAL AND VERTICAL DIMENSIONS MAY BE ADJUSTED AS THE FIELD CONDITIONS AND/OR ALTERNATE DESIGN REQUIRE.
- MAXIMUM HEIGHT FOR THIS STRUCTURE SHALL BE 14'-0".
- ALL ADJUSTMENTS ARE TO BE MADE AS DIRECTED BY THE ENGINEER.
- DEPTH OF STEEL GRATE WILL REQIURE DEEPER SEAT ALONG SHORT WALLS.

STR.#12 STA.87+70-L- RT.

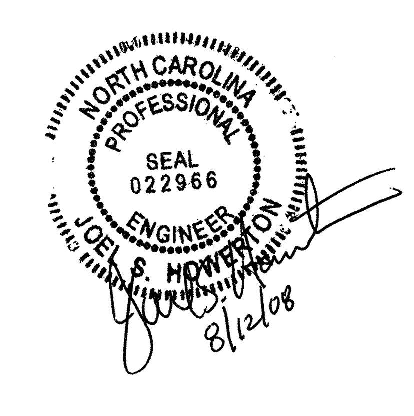

PROJECT SERVICES UNIT
STANDARDS AND SPECIAL DESIGN
Office 919-250-4128 FAX 919-250-4119

TRAFFIC BEARING DROP INLET TYPE "A"

ORIGINAL BY: TSpell DATE: 7-15-08
MODIFIED BY: DATE:
CHECKED BY: [signature] DATE: 7/31/08
FILE SPEC.: s:tspell/details/840d35_a0011bb.dgn

$$$$$$SYSTIME$$$$$
$$$$$$$$$DGN$$$$$$$$$$$$$$$$$
$$$$$$USERNAME$$$$$

PROJECT REFERENCE NO.	SHEET NO.
A-0011BB	2-D

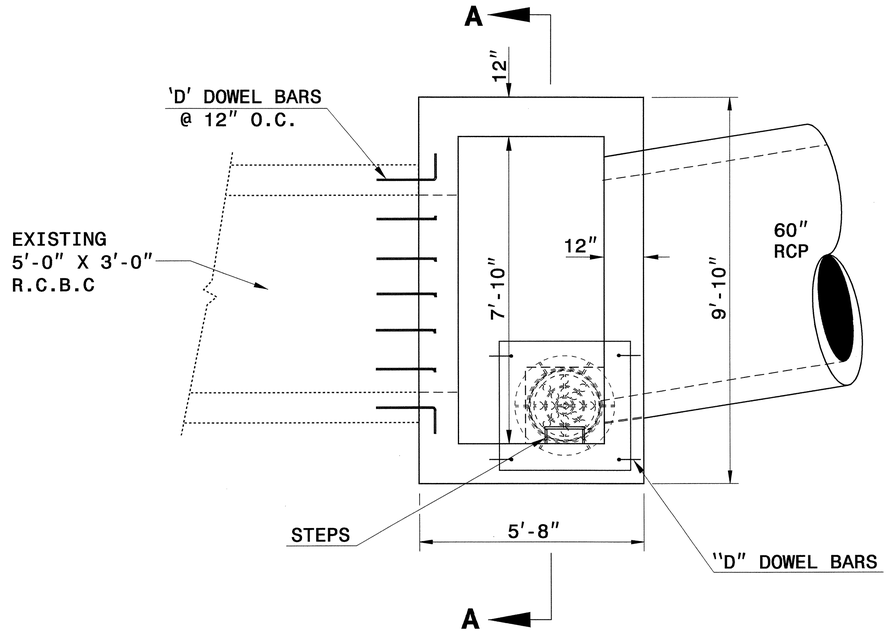

PLAN VIEW

GENERAL NOTES:

-CONSTRUCT THE JUNCTION BOX WITH CLASS "B" OR BETTER CONCRETE.

-CHAMFER ALL EXPOSED CORNERS 1".

-DOWEL 'D' BARS SHALL BE IMBEDDED 1'-0" MINIMUM INTO THE CULVERT WALLS, TOP AND BOTTOM SLABS. DOWELS SHALL BE CHEMICALLY ANCHORED IN ACCORDANCE WITH STRUCTURE SPECIAL PROVISION "ADHESIVELY ANCHORED ANCHOR BOLTS OR DOWELS". DOWEL 'D' BARS SHALL BE ROTATED TO VARIOUS ANGLES WHEN BEING ANCHORED TO OBTAIN GOOD ATTACHMENT BETWEEN THE CULVERT AND COLLAR.

-ALL DIMENSIONS SHOULD BE FIELD VERIFIED.

-CONSTRUCT CONCRETE BOX IN ACCORDANCE WITH SECTION 825 OF THE STANDARD SPECIFICATIONS.

-ADJUST LENGTH OF STEEL BARS AS NEEDED TO COMPENSATE FOR PIPES AND MANHOLE OPENINGS.

-REINFORCING STEEL SHALL CONFORM TO AASHTO M31 FOR GRADE 60.

-CUT OR BEND STEEL BARS AS NEEDED TO PROVIDE 2" CLEARANCE.

-PLACE STEPS 12" ON CENTERS IN ACCORDANCE WITH STD. 840.66.

BILL OF MATERIAL

BAR	NO.	SIZE	LENGTH	WEIGHT
A	65	#5	5'-4"	362
B	47	#5	9'-6"	466
C	40	#5	6'-6"	271
D	30	#5	2'-6"	79
TOTAL REINF. STEEL (LBS.)				1178
CLASS "B" CONC. (C.Y.)				11.7

* NO DEDUCTIONS MADE FOR 5'X 3' RCBC OR 60" RCP.

CONCRETE DEDUCTION

5'X 3' RCBC = 1.6 CU.YDS.
60" RCP = 0.8 CU.YDS.

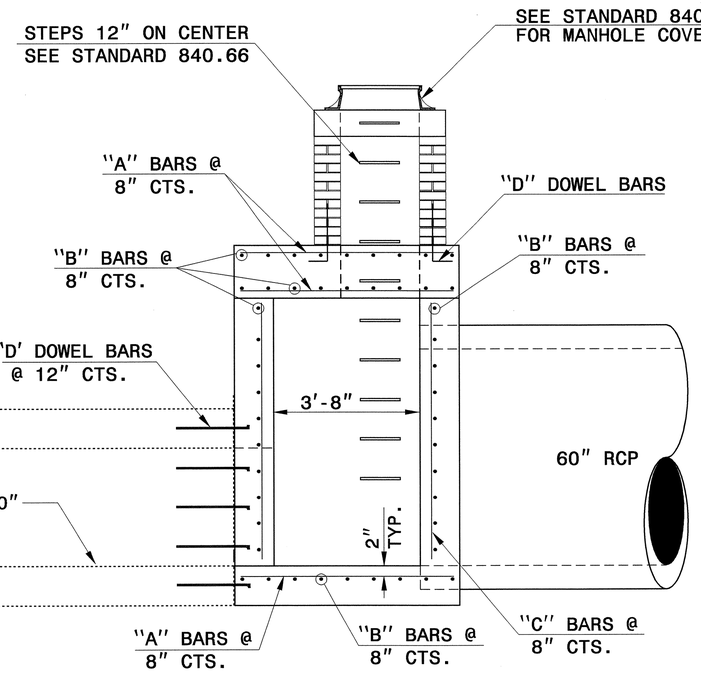

ELEVATION

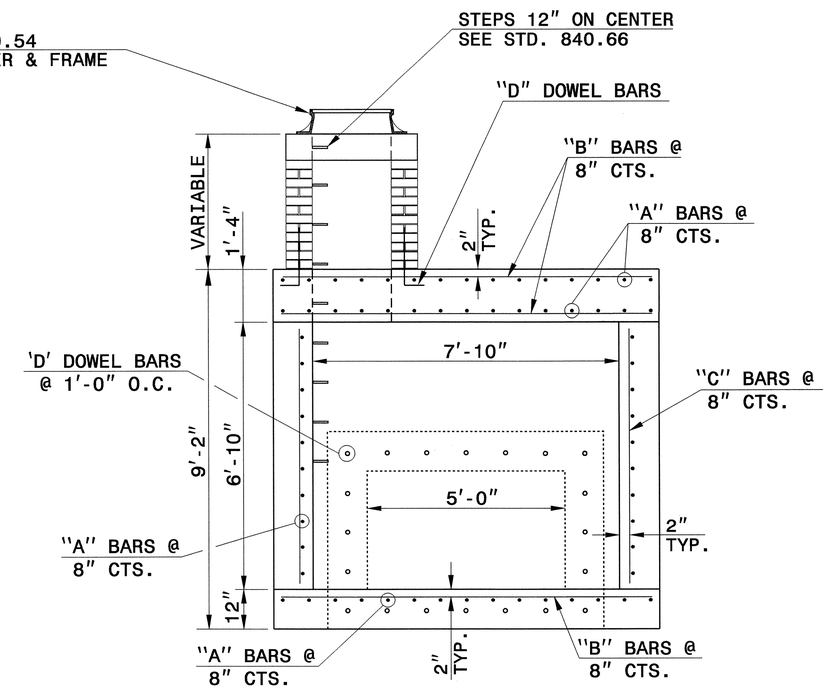

SECTION A-A

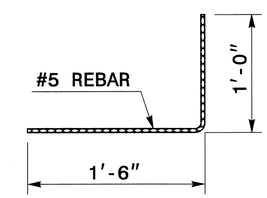

DOWEL 'D'

STR.#16 | STA. 91+08-L-(RT.)

PROJECT SERVICES UNIT
STANDARDS AND SPECIAL DESIGN
Office 919-250-4128 FAX 919-250-4119

DETAIL OF JUNCTION BOX CONNECTING EXISTING 5' x 3' RCBC TO 60"RCP W/MANHOLE

ORIGINAL BY: T.Spell DATE: 7-8-04
MODIFIED BY: DATE:
CHECKED BY: DATE: 7/31/08
FILE SPEC.: s:\tspell\stand\col&jboxes_a0011bb.dgn

PROJECT REFERENCE NO.	SHEET NO.
A-0011BB	2-E

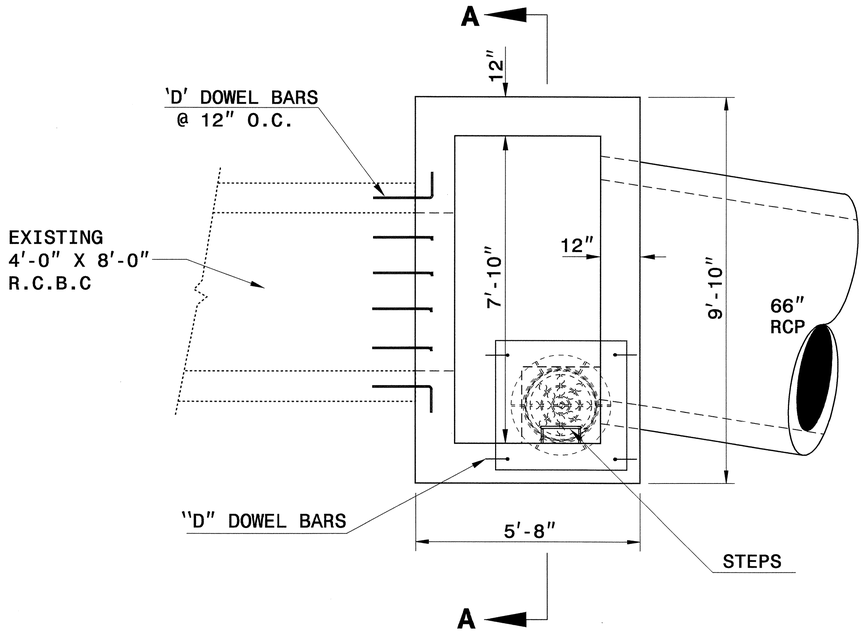

PLAN VIEW

GENERAL NOTES:

-CONSTRUCT THE JUNCTION BOX WITH CLASS "B" OR BETTER CONCRETE.

-CHAMFER ALL EXPOSED CORNERS 1".

-DOWEL 'D' BARS SHALL BE IMBEDDED 1'-0" MINIMUM INTO THE CULVERT WALLS, TOP AND BOTTOM SLABS. DOWELS SHALL BE CHEMICALLY ANCHORED IN ACCORDANCE WITH STRUCTURE SPECIAL PROVISION "ADHESIVELY ANCHORED ANCHOR BOLTS OR DOWELS". DOWEL 'D' BARS SHALL BE ROTATED TO VARIOUS ANGLES WHEN BEING ANCHORED TO OBTAIN GOOD ATTACHMENT BETWEEN THE CULVERT AND COLLAR.

-ALL DIMENSIONS SHOULD BE FIELD VERIFIED.

-CONSTRUCT CONCRETE BOX IN ACCORDANCE WITH SECTION 825 OF THE STANDARD SPECIFICATIONS.

-ADJUST LENGTH OF STEEL BARS AS NEEDED TO COMPENSATE FOR PIPES AND MANHOLE OPENINGS.

-REINFORCING STEEL SHALL CONFORM TO AASHTO M31 FOR GRADE 60.

-CUT OR BEND STEEL BARS AS NEEDED TO PROVIDE 2" CLEARANCE.

-PLACE STEPS 12" ON CENTERS IN ACCORDANCE WITH STD. 840.66.

BILL OF MATERIAL

BAR	NO.	SIZE	LENGTH	WEIGHT
A	69	#5	5'-4"	384
B	51	#5	9'-6"	505
C	44	#5	7'-8"	352
D	36	#5	2'-6"	94
TOTAL REINF. STEEL (LBS.)				1335
CLASS "B" CONC. (C.Y.)				12.8

* NO DEDUCTIONS MADE FOR 4'X 8' RCBC OR 66" RCP.

CONCRETE DEDUCTION

4' X 8' RCBC = 2.2 CU.YDS.
66" RCP = 1.3 CU.YDS.

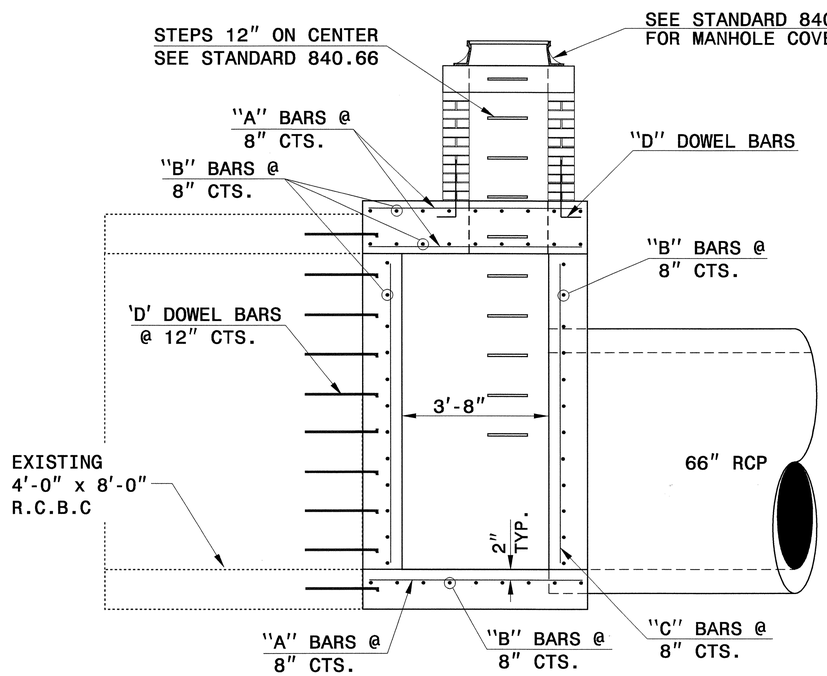

ELEVATION

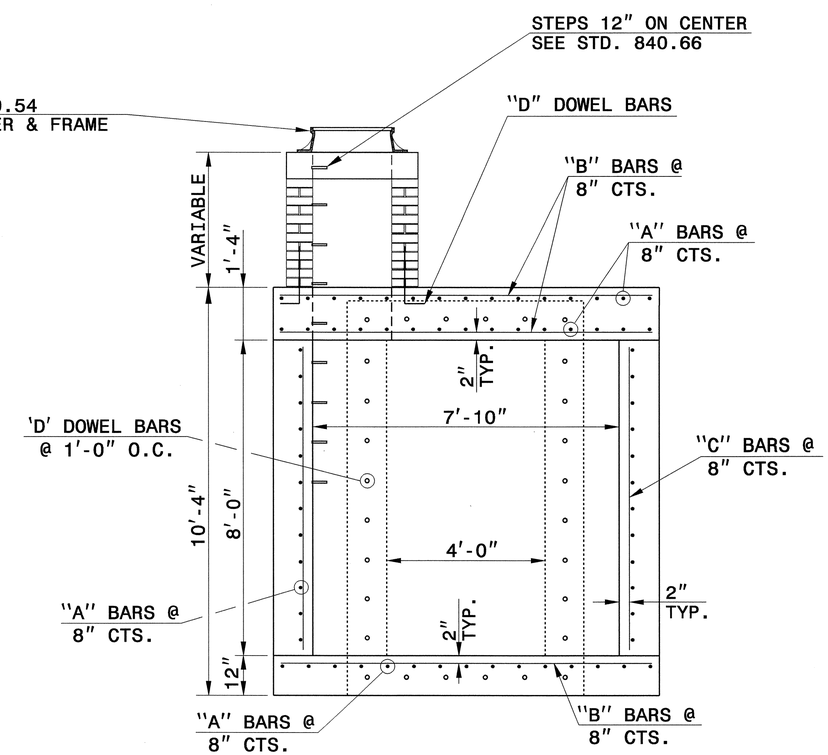

SECTION A-A

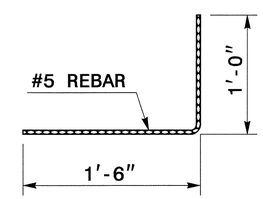

DOWEL 'D'

STR.#39 STA. 116+20-L-(RT.)

PROJECT SERVICES UNIT
STANDARDS AND SPECIAL DESIGN
Office 919-250-4128 FAX 919-250-4119

DETAIL OF JUNCTION BOX CONNECTING EXISTING 4' x 8' RCBC TO 66"RCP W/MANHOLE

ORIGINAL BY: T.Spell DATE: 7-8-04
MODIFIED BY: DATE:
CHECKED BY: DATE: 7/31/08
FILE SPEC.: s:\tspell\stand\col&iboxes_a0011bb.dgn

$$$$SYSTIME$$$$
$$$$USERNAME$$$$
$$$$DGNFILE$$$$

PROJECT REFERENCE NO.	SHEET NO.
A-0011BB	2-F

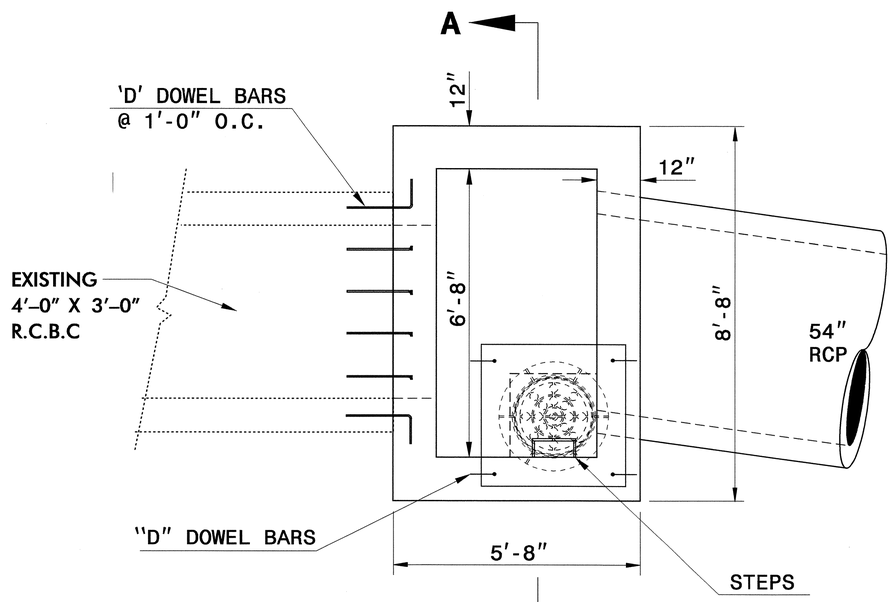

PLAN VIEW

GENERAL NOTES:

-CONSTRUCT THE JUNCTION BOX WITH CLASS "B" OR BETTER CONCRETE.

-CHAMFER ALL EXPOSED CORNERS 1".

-DOWEL 'D' BARS SHALL BE IMBEDDED 1'-0" MINIMUM INTO THE CULVERT WALLS, TOP AND BOTTOM SLABS. DOWELS SHALL BE CHEMICALLY ANCHORED IN ACCORDANCE WITH STRUCTURE SPECIAL PROVISION "ADHESIVELY ANCHORED ANCHOR BOLTS OR DOWELS". DOWEL 'D' BARS SHALL BE ROTATED TO VARIOUS ANGLES WHEN BEING ANCHORED TO OBTAIN GOOD ATTACHMENT BETWEEN THE CULVERT AND COLLAR.

-ALL DIMENSIONS SHOULD BE FIELD VERIFIED.

-CONSTRUCT CONCRETE BOX IN ACCORDANCE WITH SECTION 825 OF THE STANDARD SPECIFICATIONS.

-ADJUST LENGTH OF STEEL BARS AS NEEDED TO COMPENSATE FOR PIPES AND MANHOLE OPENINGS.

-REINFORCING STEEL SHALL CONFORM TO AASHTO M31 FOR GRADE 60.

-CUT OR BEND STEEL BARS AS NEEDED TO PROVIDE 2" CLEARANCE.

-PLACE STEPS 12" ON CENTERS IN ACCORDANCE WITH STD. 840.66.

BILL OF MATERIAL

BAR	NO.	SIZE	LENGTH	WEIGHT
A	57	#5	5'-4"	317
B	45	#5	8'-4"	391
C	40	#5	5'-4"	223
D	24	#5	2'-6"	63
TOTAL REINF. STEEL (LBS.)				944
CLASS "B" CONC. (C.Y.)				9.4

* NO DEDUCTIONS MADE FOR 4'X 3' RCBC OR 54" RCP.

CONCRETE DEDUCTION

3'X 3' RCBC = 1.1 CU.YDS.
48" RCP = 0.7 CU.YDS.

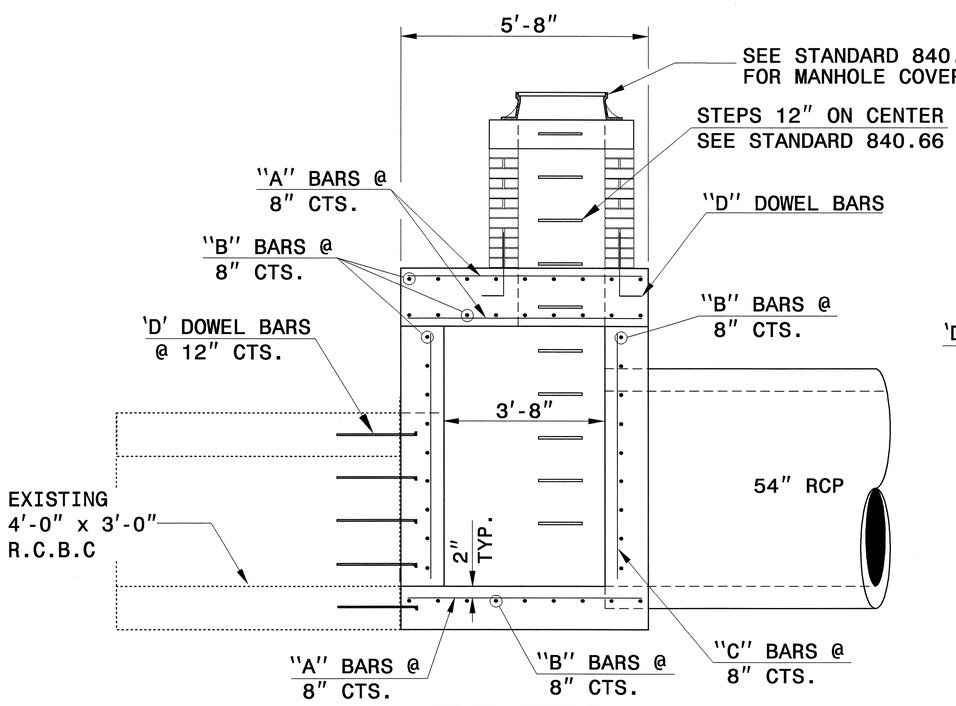

ELEVATION

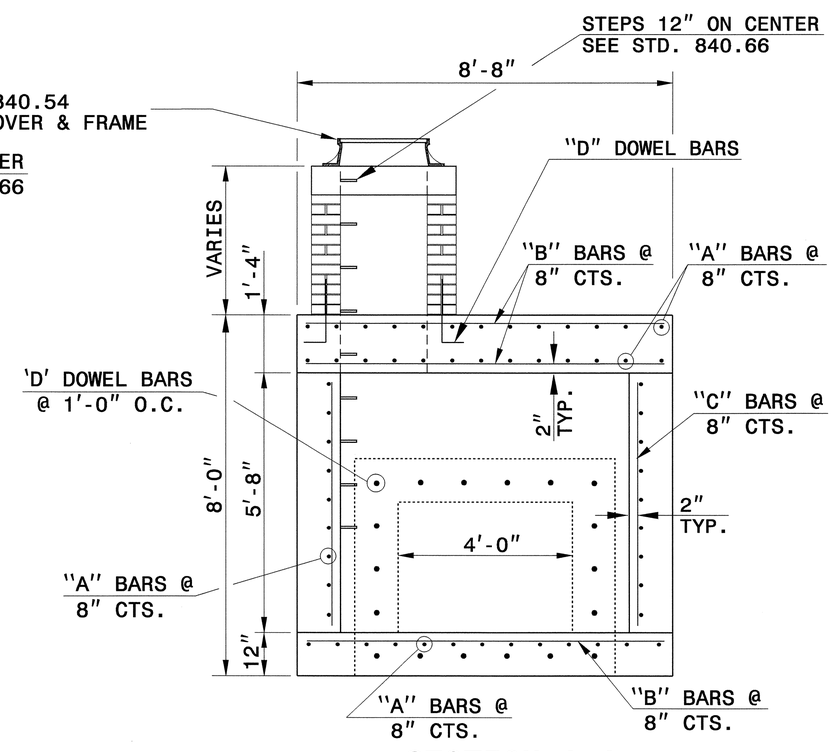

SECTION A-A

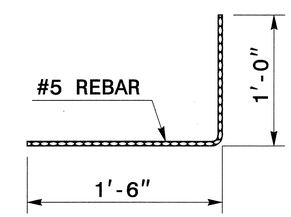

DOWEL 'D'

NORTH CAROLINA PROFESSIONAL SEAL 022966 ENGINEER JOEL S. HOWERTON
8/12/08

STR.#64	STA. 137+65 RT.-L-
STR.#91	STA. 162+82 RT.-L-

PROJECT SERVICES UNIT
STANDARDS AND SPECIAL DESIGN
Office 919-250-4128 FAX 919-250-4119

DETAIL OF JUNCTION BOX CONNECTING EXISTING 4'x 3' RCBC TO 54"RCP W/MANHOLE

ORIGINAL BY: T.Spell DATE: 1-16-03
MODIFIED BY: DATE:
CHECKED BY: DATE: 7/31/08
FILE SPEC.: w:tspell/stand/col&boxes_r3415.dgn

$$$$$$EXTNAME$$$$
$$$$$$ZONE$$$$
$$$$$$DESCRIPTION$$$$$$$$$$$$$$$$
$$$$$$DSCRNAME$$$$

PROJECT REFERENCE NO.	SHEET NO.
A-0011BB	2-G

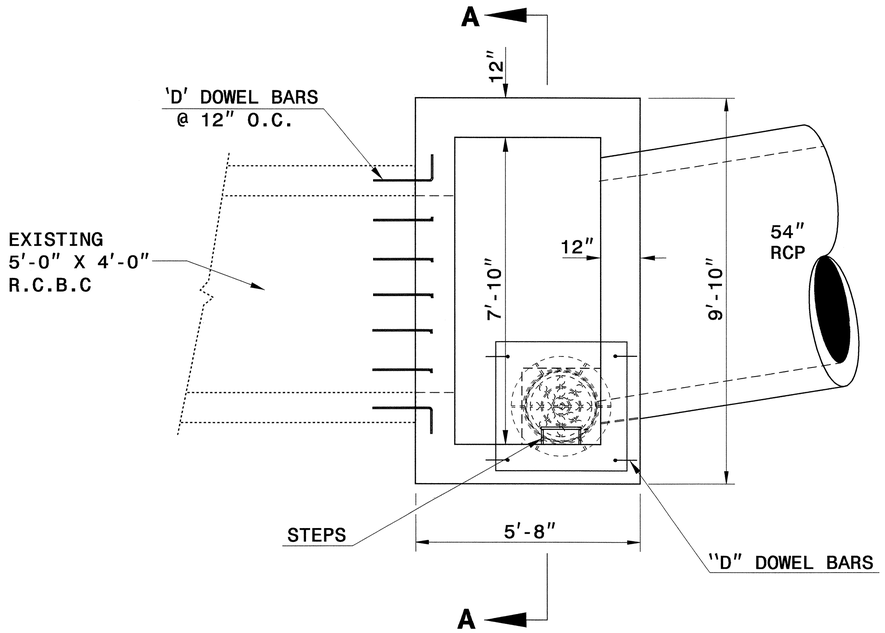

PLAN VIEW

GENERAL NOTES:

-CONSTRUCT THE JUNCTION BOX WITH CLASS "B" OR BETTER CONCRETE.

-CHAMFER ALL EXPOSED CORNERS 1".

-DOWEL 'D' BARS SHALL BE IMBEDDED 1'-0" MINIMUM INTO THE CULVERT WALLS, TOP AND BOTTOM SLABS. DOWELS SHALL BE CHEMICALLY ANCHORED IN ACCORDANCE WITH STRUCTURE SPECIAL PROVISION "ADHESIVELY ANCHORED ANCHOR BOLTS OR DOWELS". DOWEL 'D' BARS SHALL BE ROTATED TO VARIOUS ANGLES WHEN BEING ANCHORED TO OBTAIN GOOD ATTACHMENT BETWEEN THE CULVERT AND COLLAR.

-ALL DIMENSIONS SHOULD BE FIELD VERIFIED.

-CONSTRUCT CONCRETE BOX IN ACCORDANCE WITH SECTION 825 OF THE STANDARD SPECIFICATIONS.

-ADJUST LENGTH OF STEEL BARS AS NEEDED TO COMPENSATE FOR PIPES AND MANHOLE OPENINGS.

-REINFORCING STEEL SHALL CONFORM TO AASHTO M31 FOR GRADE 60.

-CUT OR BEND STEEL BARS AS NEEDED TO PROVIDE 2" CLEARANCE.

-PLACE STEPS 12" ON CENTERS IN ACCORDANCE WITH STD. 840.66.

BILL OF MATERIAL

BAR	NO.	SIZE	LENGTH	WEIGHT
A	65	#5	5'-4"	362
B	47	#5	9'-6"	466
C	40	#5	6'-6"	271
D	30	#5	2'-6"	79
TOTAL REINF. STEEL (LBS.)				1178
CLASS "B" CONC.(C.Y.)				11.7

* NO DEDUCTIONS MADE FOR 5'X 4' RCBC OR 54" RCP.

CONCRETE DEDUCTION

5'X 4' RCBC = 1.6 CU.YDS.
54" RCP = 0.8 CU.YDS.

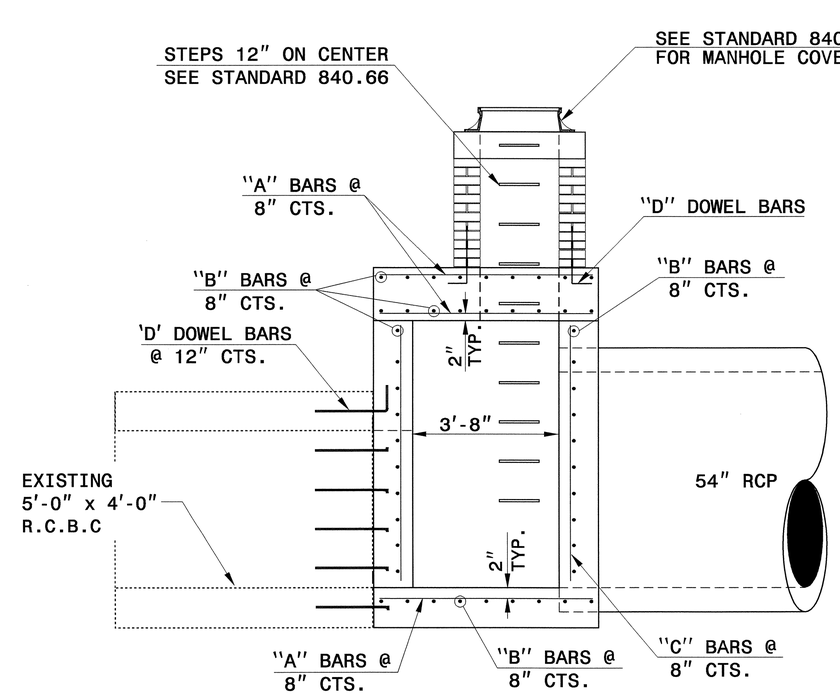

ELEVATION

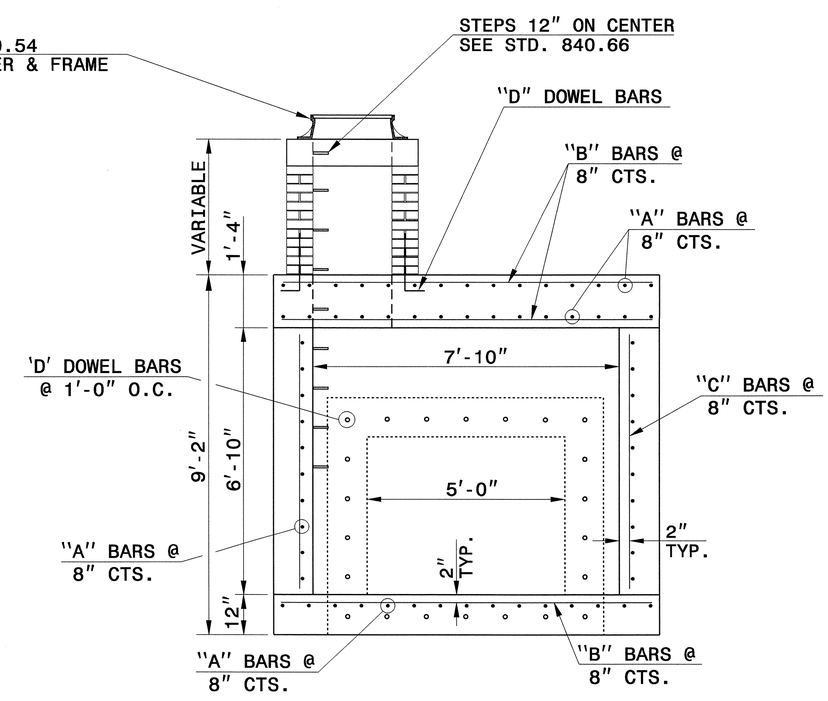

SECTION A-A

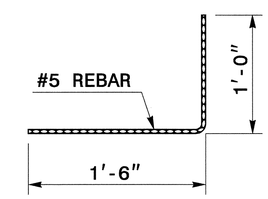

DOWEL 'D'

NORTH CAROLINA PROFESSIONAL SEAL 022966 ENGINEER JOEL S. HOWERTON
8/12/08

STR.#70 STA. 144+10-L-(RT.)

PROJECT SERVICES UNIT
STANDARDS AND SPECIAL DESIGN
Office 919-250-4128 FAX 919-250-4119

DETAIL OF JUNCTION BOX CONNECTING EXISTING 5' x 4' RCBC TO 54"RCP W/MANHOLE

ORIGINAL BY: T.Spell DATE: 7-8-04
MODIFIED BY: DATE:
CHECKED BY: DATE: 7/31/08
FILE SPEC.: /sttspell/stand/col&jboxes_a0011bb.dgn

$$$$SYSTEM$$$$
$$$$ZONE$$$$
$$$$DGN$$$$
$$$$DERIVE$$$$

PROJECT REFERENCE NO.	SHEET NO.
A-0011BB	2-H

GENERAL NOTES:

- CONSTRUCT THE JUNCTION BOX WITH CLASS "B" OR BETTER CONCRETE.
- CHAMFER ALL EXPOSED CORNERS 1".
- DOWEL 'D' BARS SHALL BE IMBEDDED 1'-0" MINIMUM INTO THE CULVERT WALLS, TOP AND BOTTOM SLABS. DOWELS SHALL BE CHEMICALLY ANCHORED IN ACCORDANCE WITH STRUCTURE SPECIAL PROVISION "ADHESIVELY ANCHORED ANCHOR BOLTS OR DOWELS". DOWEL 'D' BARS SHALL BE ROTATED TO VARIOUS ANGLES WHEN BEING ANCHORED TO OBTAIN GOOD ATTACHMENT BETWEEN THE CULVERT AND COLLAR.
- ALL DIMENSIONS SHOULD BE FIELD VERIFIED.
- CONSTRUCT CONCRETE BOX IN ACCORDANCE WITH SECTION 825 OF THE STANDARD SPECIFICATIONS.
- ADJUST LENGTH OF STEEL BARS AS NEEDED TO COMPENSATE FOR PIPES AND MANHOLE OPENINGS.
- REINFORCING STEEL SHALL CONFORM TO AASHTO M31 FOR GRADE 60.
- CUT OR BEND STEEL BARS AS NEEDED TO PROVIDE 2" CLEARANCE.
- PLACE STEPS 12" ON CENTERS IN ACCORDANCE WITH STD. 840.66.

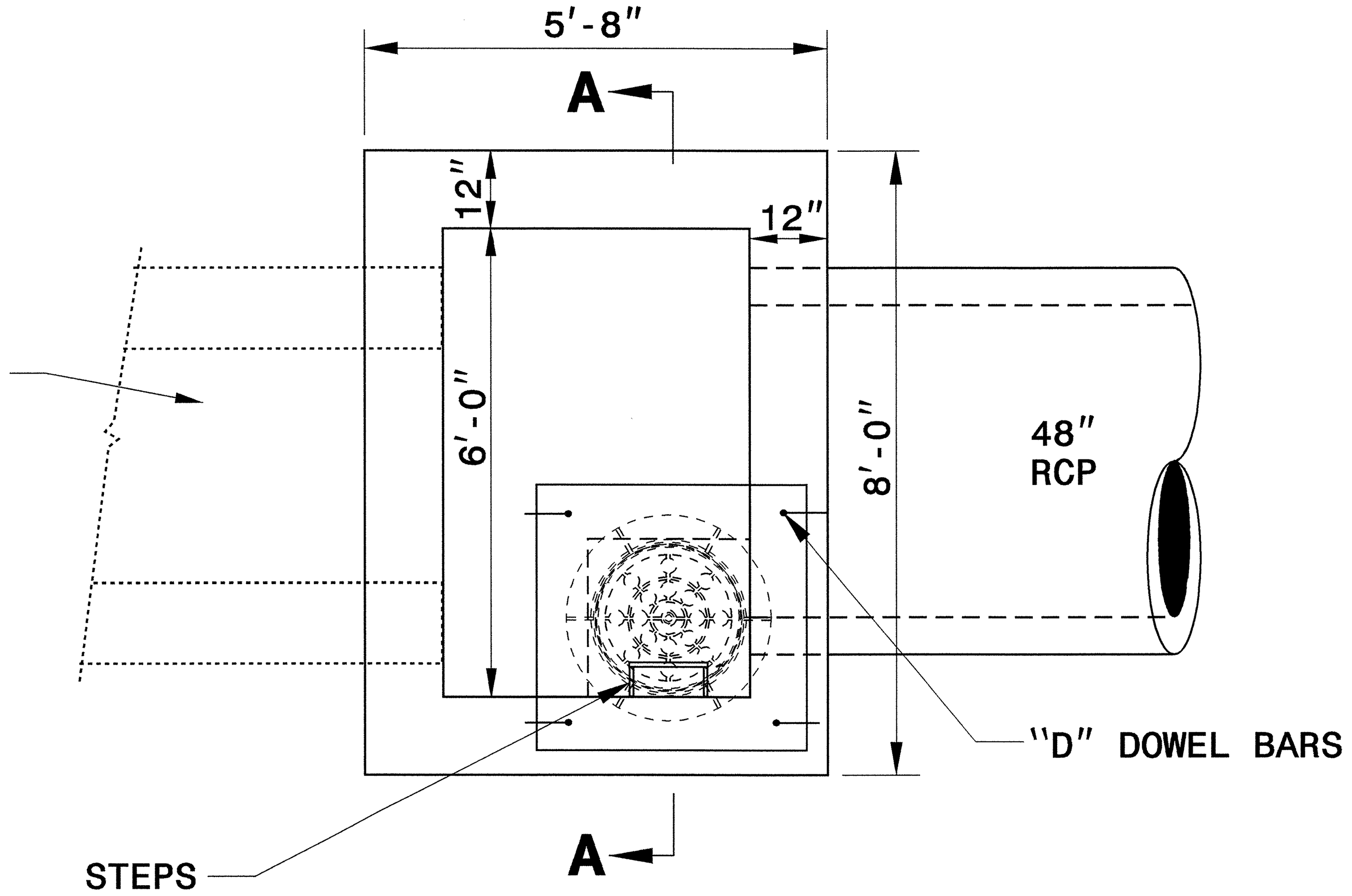

PLAN VIEW

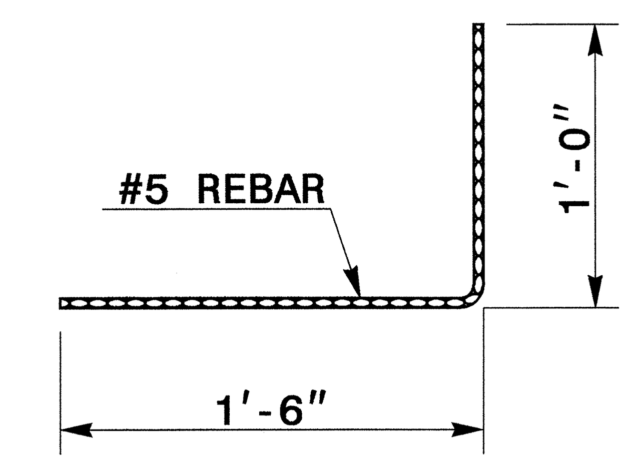

DOWEL 'D'

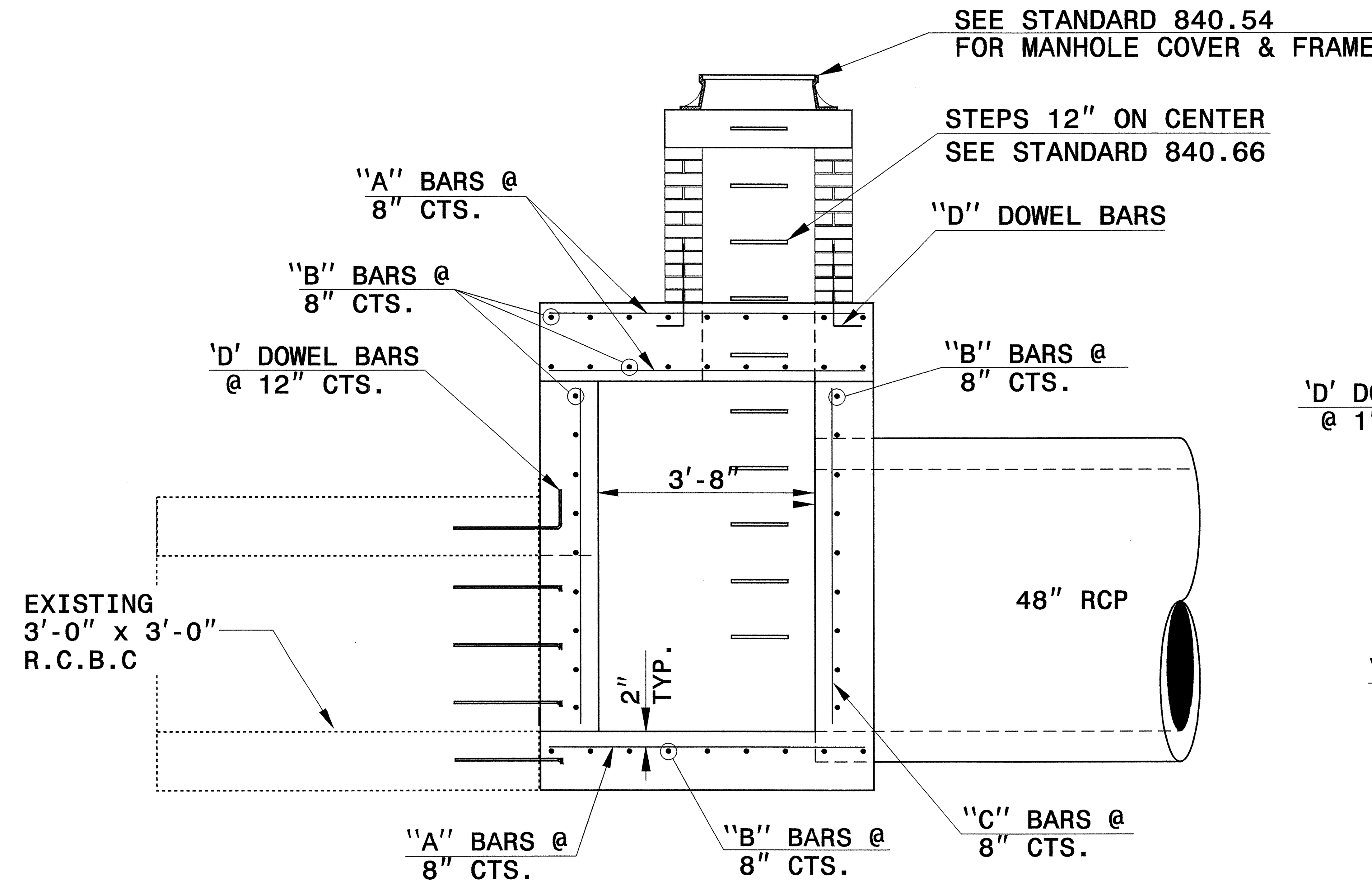

ELEVATION

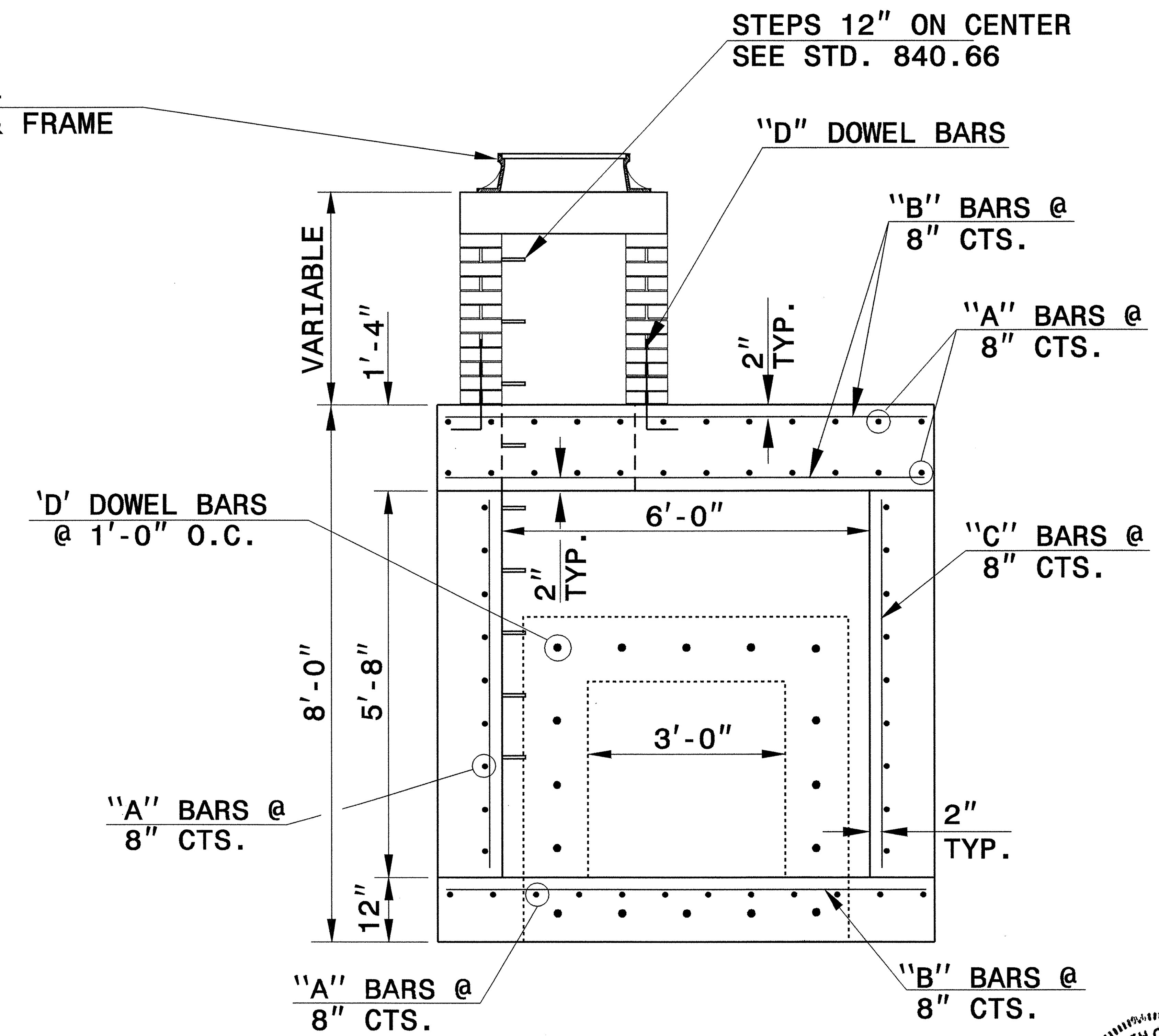

SECTION A-A

BILL OF MATERIAL

BAR	NO.	SIZE	LENGTH	WEIGHT
A	57	#5	5'-4"	317
B	45	#5	7'-8"	360
C	36	#5	8'-0"	301
D	20	#5	2'-6"	52
TOTAL REINF. STEEL (LBS.)				1030
CLASS "B" CONC.(C.Y.)				8.8

* NO DEDUCTION MADE FOR 3'X 3' RCBC OR 48" RCP.

CONCRETE DEDUCTION

3' X 3' RCBC = 0.8 CU.YDS.
48" RCP = 0.7 CU.YDS.

STR.#101 STA. 171+02-L- RT.

NORTH CAROLINA PROFESSIONAL SEAL 022966 ENGINEER JOEL S. HOWERTON 8/12/08

PROJECT SERVICES UNIT
STANDARDS AND SPECIAL DESIGN
Office 919-250-4128 FAX 919-250-4119

DETAIL OF JUNCTION BOX CONNECTING EXIST. 3' X 3' RCBC TO 48"RCP W/MANHOLE

ORIGINAL BY: T.Spell DATE: 6-19-08
MODIFIED BY: DATE:
CHECKED BY: [signature] DATE: 7/31/08
FILE SPEC.: s:tspell/stand/col&boxes A0011BB.dgn

$$$$$$SYSTIME$$$$$ $$$$$$$$$$DGN$$$$$$$$$$$$$$$$ $$$$USERNAME$$$$

PROJECT REFERENCE NO.	SHEET NO.
A-0011BB	2-1

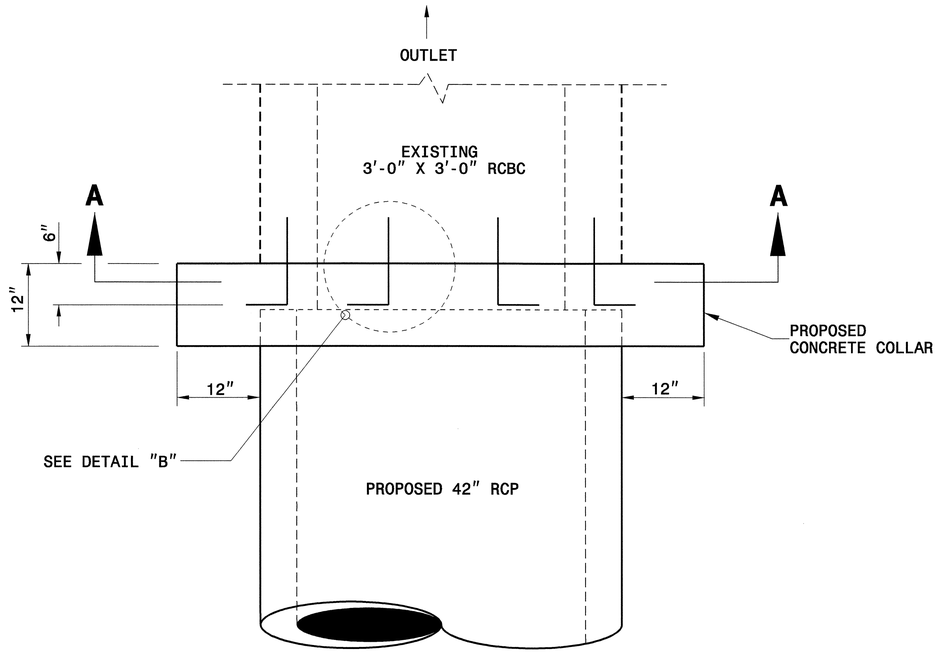

PLAN

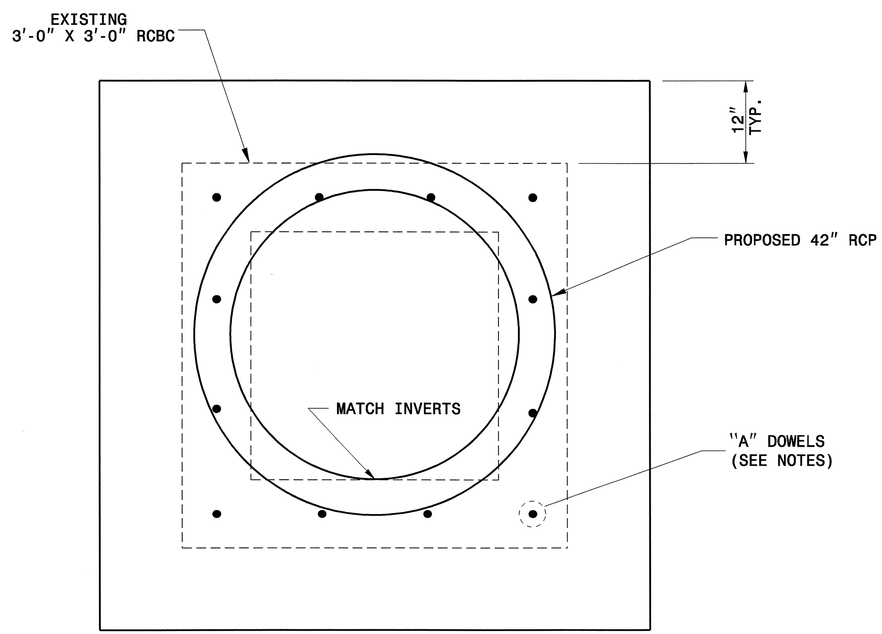

SECTION A-A

NOTES:

INSTALL EPOXY BONDING SYSTEM IN ACCORDANCE WITH THE MANUFACTURERS RECOMMENDATIONS AND THE REQUIREMENTS OF SCT 1081 OF THE STANDARD SPECIFICATIONS.

CLASS 'B' CONCRETE REQUIRED.

VERIFY ALL DIMENSIONS IN THE FIELD AND MAY BE ADJUSTED AS DIRECTED BY THE ENGINEER.

CHAMFER ALL EXPOSED CORNERS 1".

INSTALL DOWEL BARS AS DIRECTED BY THE ENGINEER.

BILL OF MATERIAL

BAR	NO.	SIZE	LENGTH	WEIGHT
A	12	5	2'-6"	31.3
TOTAL REINF. STEEL (lbs)				31.3
CLASS "B" CONC. (yds.^{3})				1.5

*PIPE DEDUCTION
1 @ 42" = 0.4 CU.YDS.

**ESTIMATED LENGTH. ACTUAL LENGTH TO BE DETERMINED BASED ON REQUIREMENTS FOR THE EPOXY ANCHOR.

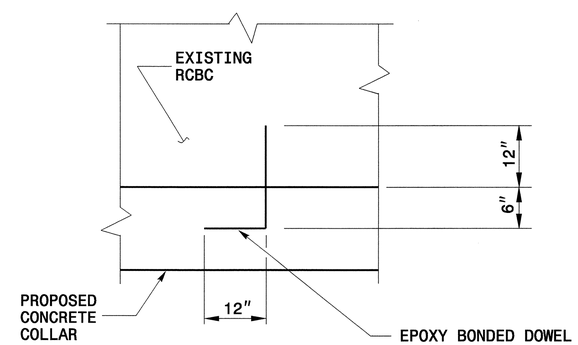

DETAIL 'B'

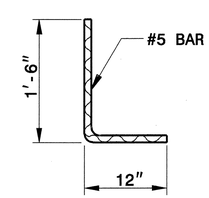

DOWEL 'A'

STR.#150	STA. 222+71-L- LT.
STR.#151	STA. 222+71-L- RT.

NORTH CAROLINA PROFESSIONAL SEAL 022966 ENGINEER DEL S. HOWERTON 8/21/08

PROJECT SERVICES UNIT
STANDARDS AND SPECIAL DESIGN
Office 919-250-4128 FAX 919-250-4119

COLLAR CONNECTING EXIST. 3'X3' RCBC TO PROPOSED 42" RCP

ORIGINAL BY: T.S.Spell DATE: 4-4-00
MODIFIED BY: DATE:
CHECKED BY: DATE: 7/31/08
FILE SPEC.: s:tspell/stand/col&boxes_A0011BB.dgn

PROJECT REFERENCE NO.	SHEET NO.
A-0011BB	2-J

STATE OF
NORTH CAROLINA
DEPT. OF TRANSPORTATION
DIVISION OF HIGHWAYS
RALEIGH, N.C.

ENGLISH DETAIL DRAWING FOR
ANCHORAGE FOR FRAMES
BRICK/CONCRETE/PRECAST CONCRETE

SHEET 1 OF 1
840D25

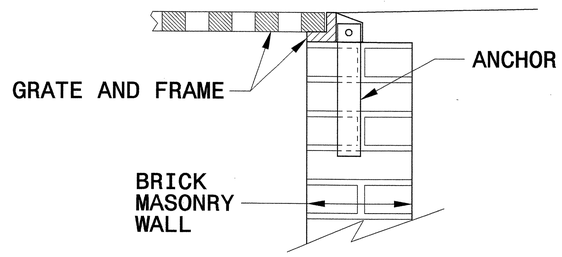

BRICK MASONRY CONSTRUCTION

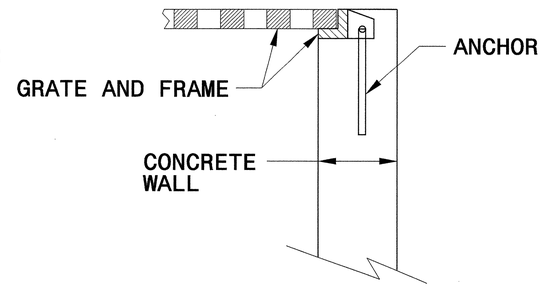

CONCRETE CONSTRUCTION

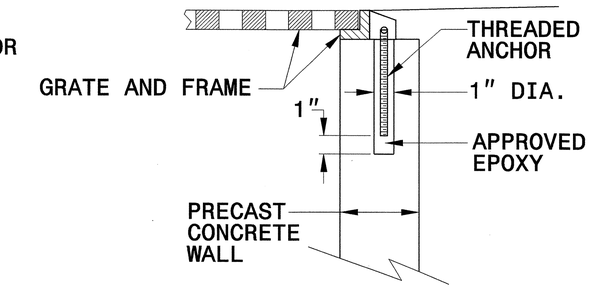

PRECAST CONCRETE CONSTRUCTION

DETAIL SHOWING ANCHORAGE OF FRAME FOR GRATED DROP INLET

NOTE:
CONSTRUCT GRATED DROP INLET TO COINCIDE WITH NORMAL OR SUPERELEVATED SHOULDER OR PAVEMENT SLOPE.

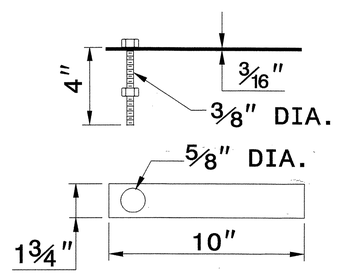

MASONRY ANCHOR
3/8" DIA. BOLT WITH PLATE

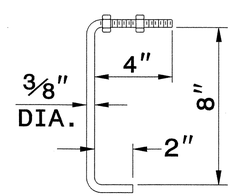

CONCRETE ANCHOR
3/8" DIA. BENT BAR

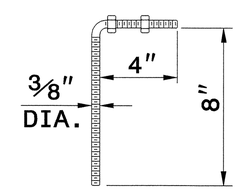

PRECAST CONCRETE ANCHOR
3/8" DIA. BENT BAR

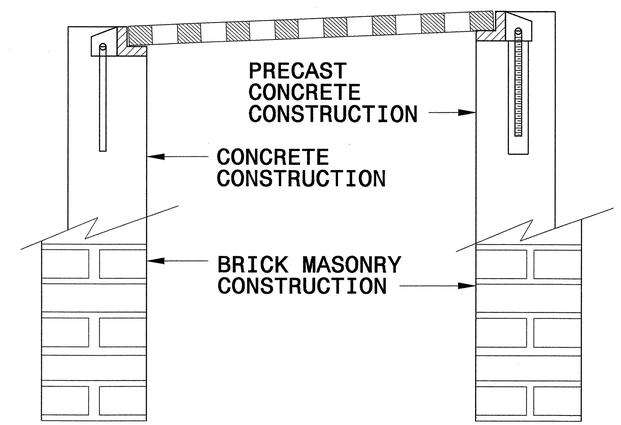

FRAME AND GRATE INSTALLATION FOR NORMAL CROWN AND SUPERELEVATED SECTIONS

STATE OF
NORTH CAROLINA
DEPT. OF TRANSPORTATION
DIVISION OF HIGHWAYS
RALEIGH, N.C.

ENGLISH DETAIL DRAWING FOR
ANCHORAGE FOR FRAMES
BRICK/CONCRETE/PRECAST CONCRETE

SHEET 1 OF 1
840D25

NORTH CAROLINA PROFESSIONAL SEAL 022966 ENGINEER JOEL B. HOWERTON
8/12/08

PROJECT SERVICES UNIT
STANDARDS AND SPECIAL DESIGN
Office 919-250-4128 FAX 919-250-4119

SEE PLATE FOR TITLE

ORIGINAL BY:	2006 STD 840.25	DATE:	07/18/06
MODIFIED BY:	E.E. WARD	DATE:	9/25/06
CHECKED BY:		DATE:	
FILE SPEC.:			

$$$$$SYSTIME$$$$
$$$$$$$$$$$$$$DGN$$$$$$$$$$$$$$$$
$$$$$USERNAME$$$$

PROJECT REFERENCE NO.	SHEET
A-0011BB	2-K

GEOTECHNICAL ENGINEER

NORTH CAROLINA PROFESSIONAL SEAL 022246 ENGINEER SCOTT A. HIDDEN

Scott A. Hidden 3/29/07

SIGNATURE DATE

ENGINEER

SIGNATURE DATE

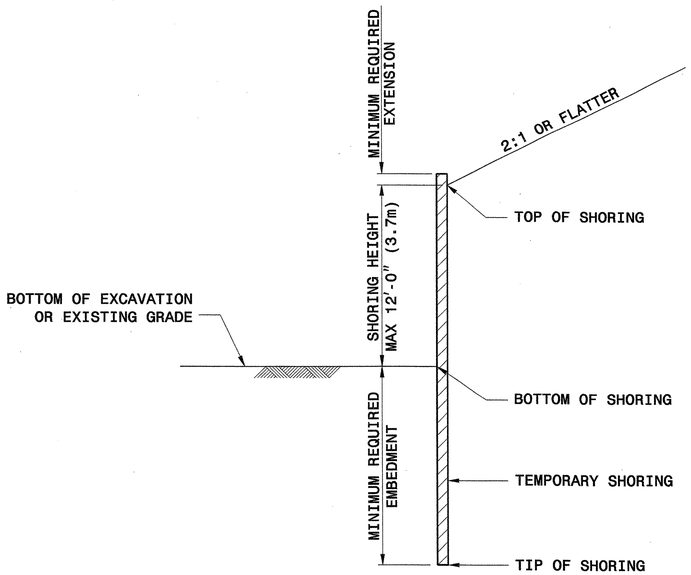

SLOPE CASE

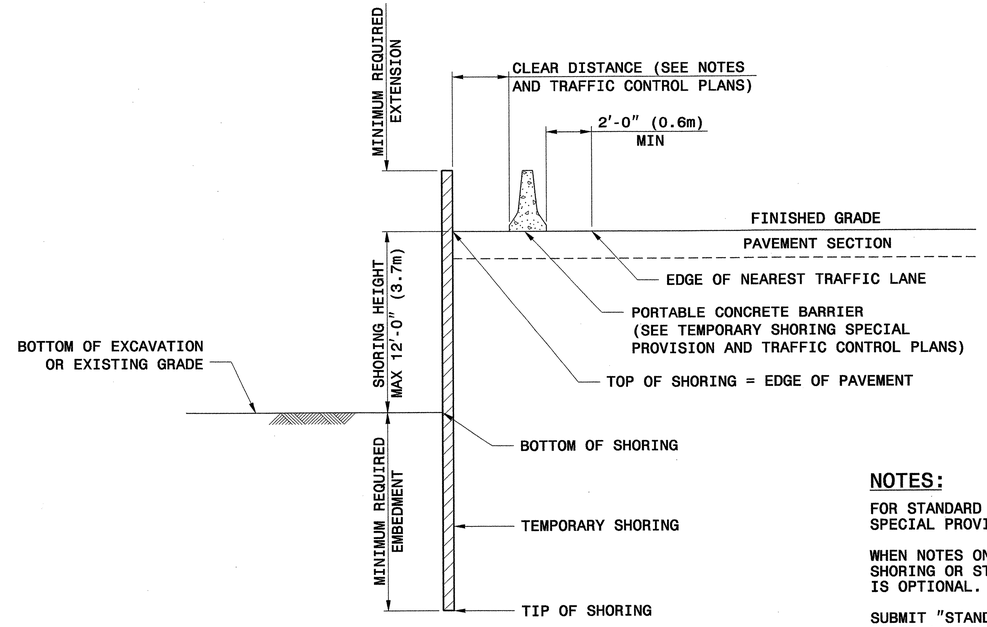

SURCHARGE CASE

		SLOPE OR SURCHARGE CASE WITH NO TRAFFIC IMPACT					SURCHARGE CASE WITH TRAFFIC IMPACT				
		SHEET PILES		H PILES WITH TIMBER LAGGING			SHEET PILES		H PILES WITH TIMBER LAGGING		
				MINIMUM REQUIRED EMBEDMENT FT (m)					MINIMUM REQUIRED EMBEDMENT FT (m)		
GROUNDWATER CONDITION	SHORING HEIGHT FT (m)	MINIMUM REQUIRED EMBEDMENT FT (m)	MINIMUM REQUIRED SECTION MODULUS IN^3/FT (cm^3/m)	HP 10x42 (HP 250x62)	HP 12x53 (HP 310x79)	HP 14x73 (HP 360x108)	MINIMUM REQUIRED EMBEDMENT FT (m)	MINIMUM REQUIRED SECTION MODULUS IN^3/FT (cm^3/m)	HP 10x42 (HP 250x62)	HP 12x53 (HP 310x79)	HP 14x73 (HP 360x108)
GROUNDWATER ELEVATION BELOW TIP OF SHORING	< 6 (1.8)	7.5 (2.3)	3.0 (161)	8.0 (2.4)	8.0 (2.4)	8.0 (2.4)	11.0 (3.4)	10.0 (538)	9.5 (2.9)	9.5 (2.9)	9.5 (2.9)
	7 (2.1)	8.5 (2.6)	4.5 (242)	9.5 (2.9)	9.5 (2.9)	9.5 (2.9)	12.0 (3.7)	12.0 (645)	10.5 (3.2)	10.5 (3.2)	10.5 (3.2)
	8 (2.4)	10.0 (3.0)	6.5 (349)	10.5 (3.2)	10.5 (3.2)	10.5 (3.2)	12.5 (3.8)	14.0 (753)	11.5 (3.5)	11.5 (3.5)	11.5 (3.5)
	9 (2.7)	11.0 (3.4)	9.5 (511)	--	12.0 (3.7)	12.0 (3.7)	13.5 (4.1)	16.5 (887)	--	12.5 (3.8)	12.5 (3.8)
	10 (3.0)	12.5 (3.8)	13.0 (699)	--	--	13.5 (4.1)	14.0 (4.3)	19.5 (1048)	--	13.5 (4.1)	13.5 (4.1)
	11 (3.4)	13.5 (4.1)	17.0 (914)	--	--	14.5 (4.4)	15.0 (4.6)	22.5 (1210)	--	--	14.5 (4.4)
	12 (3.7)	15.0 (4.6)	21.5 (1156)	--	--	16.0 (4.9)	16.0 (4.9)	25.5 (1371)	--	--	15.5 (4.7)
GROUNDWATER ELEVATION BEWTEEN BOTTOM OF SHORING AND TIP OF SHORING	< 6 (1.8)	11.5 (3.5)	4.5 (242)	11.5 (3.5)	11.5 (3.5)	11.5 (3.5)	16.0 (4.9)	12.0 (645)	13.0 (4.0)	13.0 (4.0)	13.0 (4.0)
	7 (2.1)	13.0 (4.0)	7.0 (376)	13.0 (4.0)	13.0 (4.0)	13.0 (4.0)	17.0 (5.2)	14.5 (780)	14.5 (4.4)	14.5 (4.4)	14.5 (4.4)
	8 (2.4)	15.0 (4.6)	10.0 (538)	--	15.0 (4.6)	15.0 (4.6)	18.0 (5.5)	17.0 (914)	--	15.5 (4.7)	15.5 (4.7)
	9 (2.7)	17.0 (5.2)	14.0 (753)	--	17.0 (5.2)	17.0 (5.2)	19.0 (5.8)	20.0 (1075)	--	17.0 (5.2)	17.0 (5.2)
	10 (3.0)	18.5 (5.6)	19.5 (1048)	--	--	18.5 (5.6)	20.0 (6.1)	23.5 (1263)	--	--	18.5 (5.6)
	11 (3.4)	20.5 (6.3)	26.0 (1398)	--	--	--	21.0 (6.4)	28.0 (1505)	--	--	20.0 (6.1)
	12 (3.7)	22.5 (6.9)	33.0 (1774)	--	--	--	22.0 (6.7)	33.0 (1774)	--	--	21.5 (6.6)

NOTE: MINIMUM REQUIRED EXTENSION IS 6" (150mm) FOR "SLOPE OR SURCHARGE CASE WITH NO TRAFFIC IMPACT" AND 32" (800 mm) FOR "SURCHARGE CASE WITH TRAFFFIC IMPACT".

NOTES:

FOR STANDARD TEMPORARY SHORING, SEE TEMPORARY SHORING SPECIAL PROVISION.

WHEN NOTES ON PLANS DO NOT PROHIBIT STANDARD TEMPORARY SHORING OR STANDARD SHORING, STANDARD TEMPORARY SHORING IS OPTIONAL.

SUBMIT "STANDARD TEMPORARY SHORING SELECTION FORM" AT LEAST 14 DAYS BEFORE BEGINNING SHORING CONSTRUCTION. UP TO THREE LOCATIONS MAY BE INCLUDED ON EACH SELECTION FORM.

STANDARD TEMPORARY SHORING IS BASED ON THE FOLLOWING CONDITIONS:
1) MAXIMUM SHORING HEIGHT IS 12'-0" (3.7m).
2) TRAFFIC SURCHARGE IS 240 PSF (11.5 KPA) MAXIMUM OR BACKSLOPE IS 2:1 (H:V) OR FLATTER.
3) BOTTOM OF EXCAVATION OR EXISTING GRADE IN FRONT OF SHORING IS 6:1 (H:V) SLOPE OR FLATTER.
4) H PILE SPACING IS 6'-0" (1.8m).
5) H PILE EMBEDMENT DEPTHS ARE FOR DRIVEN PILES.
6) TIMBER LAGGING IS A MINIMUM OF 3" (75mm) THICK.

STANDARD TEMPORARY SHORING IS BASED ON THE FOLLOWING IN-SITU ASSUMED SOIL PARAMETERS:
TOTAL UNIT WEIGHT = 120 PCF (18.8 KN/M^3)
FRICTION ANGLE = 30 DEGREES
COHESION = 0 PSF (0 KPA)
GROUNDWATER IS ASSUMED TO BE BELOW BOTTOM OF SHORING.

DO NOT USE STANDARD TEMPORARY SHORING WHEN THE ASSUMED SOIL PARAMETERS ARE NOT APPLICABLE OR GROUNDWATER IS ABOVE THE BOTTOM OF SHORING.

DO NOT USE STANDARD TEMPORARY SHORING WHEN VERY LOOSE OR SOFT SOIL OR MUCK IS PRESENT WITHIN THE EMBEDMENT DEPTH.

VERIFY GROUNDWATER ELEVATION BEFORE BEGINNING SHORING CONSTRUCTION.

IF THE CLEAR DISTANCE AVAILABLE IS LESS THAN THE MINIMUM REQUIRED IN ACCORDANCE WITH THE TRAFFIC CONTROL PLANS, SET THE BARRIER AGAINST THE TRAFFIC SIDE OF THE SHORING AND USE THE "SURCHARGE CASE WITH TRAFFIC IMPACT".

AT THE CONTRACTOR'S OPTION, H PILE EMBEDMENT DEPTHS FOR PILES SET IN DRILLED HOLES MAY BE REDUCED BY 25%. FOR PILE EXCAVATION, SEE TEMPORARY SHORING SPECIAL PROVISION.

CONTROL DRAINAGE DURING CONSTRUCTION IN THE VICINITY OF THE SHORING. COLLECT AND DIRECT RUNOFF AWAY FROM SHORING.

CONTACT THE ENGINEER IF MINIMUM REQUIRED EMBEDMENT IS NOT ACHIEVED.

STATE OF NORTH CAROLINA DEPARTMENT OF TRANSPORTATION

GEOTECHNICAL ENGINEERING UNIT

STATE OF NORTH CAROLINA DEPARTMENT OF TRANSPORTATION RALEIGH

STANDARD DRAWING NO. 1801.01

STANDARD TEMPORARY SHORING

DATE: 2-20-07

PROJECT REFERENCE NO.	SHEET
A-0011BB	2-L

GEOTECHNICAL ENGINEER

NORTH CAROLINA PROFESSIONAL SEAL 022246 ENGINEER SCOTT A. HIDDEN

Scott A. Hidden 3/29/07

SIGNATURE DATE

ENGINEER

SIGNATURE DATE

STANDARD TEMPORARY MSE WALL OPTIONS

TEMPORARY MSE WALL OPTION	VENDOR	CONTACT INFORMATION	REINFORCEMENT TYPE	SHEETS
TEMPORARY FABRIC WALL	N/A	N/A	POLYESTER OR POLYPROPYLENE FABRIC	3
HILFIKER TEMPORARY WALL	HILFIKER RETAINING WALLS	1902 HILFIKER LANE, EUREKA, CA 95503-5711 707-443-5093 WWW.HILFIKER.COM	WELDED WIRE MAT	4
SIERRASCAPE TEMPORARY WALL	TENSAR EARTH TECHNOLOGIES, INC	5883 GLENRIDGE DRIVE, SUITE 200 ATLANTA, GA 30328-5363 404-250-1290 WWW.TENSARCORP.COM	GEOGRID	5
RETAINED EARTH TEMPORARY WALL	THE REINFORCED EARTH COMPANY	8614 WESTWOOD CENTER DRIVE, SUITE 1100 VIENNA, VA 22182-2233 703-749-4325 WWW.REINFORCEDEARTH.COM	WELDED WIRE MESH	6-8
TERRATREL TEMPORARY WALL	THE REINFORCED EARTH COMPANY	8614 WESTWOOD CENTER DRIVE, SUITE 1100 VIENNA, VA 22182-2233 703-749-4325 WWW.REINFORCEDEARTH.COM	RIBBED STEEL STRIPS	9-11

FOR STANDARD TEMPORARY MSE WALLS, SEE TEMPORARY SHORING SPECIAL PROVISION.

WHEN NOTES ON PLANS DO NOT PROHIBIT TEMPORARY MSE WALLS OR STANDARD SHORING, STANDARD TEMPORARY MSE WALLS ARE OPTIONAL.

WHEN NOTES ON PLANS REQUIRE TEMPORARY MSE WALLS, USE STANDARD TEMPORARY MSE WALLS OR CONTRACTOR DESIGNED TEMPORARY MSE WALLS.

WHEN THE ALIGNMENT OF STANDARD TEMPORARY MSE WALLS RESULTS IN AN INTERIOR ANGLE LESS THAN 90 DEGREES, SUBMIT AN ACUTE CORNER DETAIL FOR THE SPECIFIC SITUATION IN ACCORDANCE WITH THE WALL VENDOR RECOMMENDATIONS. ALSO, SUBMIT A "STANDARD TEMPORARY MSE WALL SELECTION FORM" FOR EACH TEMPORARY MSE WALL LOCATION. SUBMIT THESE ITEMS AT LEAST 14 DAYS BEFORE BEGINNING WALL CONSTRUCTION.

STANDARD TEMPORARY MSE WALLS ARE BASED ON THE FOLLOWING CONDITIONS:
1) MAXIMUM WALL HEIGHT IS 28'-0" (8.5m).
2) TRAFFIC SURCHARGE IS 240 PSF (11.5 KPA) MAXIMUM OR BACKSLOPE IS 2:1 (H:V) OR FLATTER.
3) EXISTING OR FINISHED GRADE IN FRONT OF WALL IS 6:1 (H:V) SLOPE OR FLATTER.
4) THE GRADE OF THE TOP OF WALL IS LESS THAN 4% FOR RETAINED EARTH AND TERRATREL TEMPORARY WALLS.
5) DESIGN SERVICE LIFE IS 3 YEARS.
6) MATERIAL IN REINFORCED ZONE IS SHORING BACKFILL.
7) MAXIMUM APPLIED BEARING PRESSURE IS 1 TSF (100 KPA) FOR WALL HEIGHTS UP TO 8'-0" (2.4m), 2 TSF (195 KPA) FOR WALL HEIGHTS BETWEEN 8'-0" AND 18'-0" (2.4m AND 5.5m) AND 3 TSF (290 KPA) FOR WALL HEIGHTS OVER 18'-0" (5.5m).

STANDARD TEMPORARY MSE WALLS ARE BASED ON THE FOLLOWING IN-SITU ASSUMMED SOIL PARAMETERS:
TOTAL UNIT WEIGHT = 120 PCF (18.8 KN/M^3)
FRICTION ANGLE = 30 DEGREES
COHESION = 0 PSF (0 KPA)
GROUNDWATER IS ASSUMED TO BE BELOW BOTTOM OF REINFORCED ZONE.

DO NOT USE STANDARD TEMPORARY MSE WALLS WHEN THE ASSUMED SOIL PARAMETERS ARE NOT APPLICABLE OR VERY LOOSE OR SOFT SOIL OR MUCK IS PRESENT BELOW THE BOTTOM OF REINFORCED ZONE.

CONTROL DRAINAGE DURING CONSTRUCTION IN THE VICINITY OF STANDARD TEMPORARY MSE WALLS. COLLECT AND DIRECT RUNOFF AWAY FROM WALLS AND SHORING BACKFILL.

EXCAVATE AS NECESSARY FOR STANDARD TEMPORARY MSE WALLS IN ACCORDANCE WITH THE FOLLOWING FOR THE WALL OPTION CHOSEN:
1) MINIMUM EMBEDMENT OF 18" (450mm) UNLESS WALL BEARS ON ROCK, CONCRETE OR PAVEMENT AS DETERMINED BY THE ENGINEER
2) VERTICAL STEPS IN INCREMENTS EQUAL TO THE VERTICAL REINFORCEMENT SPACING
3) WITH THE EXCEPTION OF EITHER THE FIRST OR LAST SECTION OF WALL, HORIZONTAL SECTION LENGTHS IN INCREMENTS EQUAL TO THE FOLLOWING:

STANDARD TEMPORARY MSE WALL OPTION	INCREMENT
TEMPORARY FABRIC WALL	9'-0" (2.7m) MIN (VARIES)
HILFIKER TEMPORARY WALL	10'-0" (3.0m) MIN (VARIES)
SIERRASCAPE TEMPORARY WALL	18'-7¼" (5.7m)
RETAINED EARTH TEMPORARY WALL	24'-0" (7.3m)
TERRATREL TEMPORARY WALL	19'-8" (6.0m)

DO NOT PLACE SHORING BACKFILL OR FIRST REINFORCEMENT LAYER UNTIL OBTAINING APPROVAL OF THE EXCAVATION DEPTH AND FOUNDATION MATERIAL.

IF APPLICABLE, INSTALL FOUNDATIONS LOCATED WITHIN THE REINFORCED ZONE BEFORE BEGINNING WALL CONSTRUCTION UNLESS DIRECTED OTHERWISE BY THE ENGINEER.

ERECT AND MAINTAIN FACINGS AND FORMS AS SHOWN ON THE STANDARD TEMPORARY MSE WALL DETAILS. STAGGER VERTICAL JOINTS OF FACINGS AND FORMS TO CREATE A RUNNING BOND WHEN POSSIBLE UNLESS SHOWN OTHERWISE ON THESE DETAILS.

PLACE FACINGS AND FORMS AS NEAR TO VERTICAL AS POSSIBLE WITH NO NEGATIVE BATTER. CONSTRUCT STANDARD TEMPORARY MSE WALLS WITH A VERTICAL AND HORIZONTAL TOLERANCE OF 3" (75mm) WHEN MEASURED WITH A 10'-0" (3m) STRAIGHT EDGE AND AN OVERALL VERTICAL PLUMBNESS (BATTER) AND HORIZONTAL ALIGNMENT OF LESS THAN 6" (150mm).

PLACE REINFORCEMENT AT LOCATIONS AND ELEVATIONS SHOWN ON THE STANDARD TEMPORARY MSE WALL DETAILS AND IN SLIGHT TENSION FREE OF KINKS, FOLDS, WRINKLES OR CREASES.

DO NOT SPLICE REINFORCEMENT IN THE REINFORCEMENT DIRECTION (RD), i.e., PARALLEL TO THE WALL FACE. SEAMS ARE ALLOWED IN THE CROSS-REINFORCEMENT DIRECTION (CRD).

CONTACT THE ENGINEER WHEN EXISTING OR FUTURE STRUCTURES SUCH AS FOUNDATIONS, PAVEMENTS, PIPES, INLETS OR UTILITIES WILL INTERFERE WITH REINFORCEMENT. TO AVOID STRUCTURES, DELFECT, SKEW AND MODIFY REINFORCEMENT.

PLACE SHORING BACKFILL IN 8" TO 10" (200mm to 250mm) THICK LIFTS AND COMPACT IN ACCORDANCE WITH SUBARTICLE 235-4(C) OF THE STANDARD SPECIFICATIONS. USE ONLY HAND OPERATED COMPACTION EQUIPMENT WITHIN 3'-0" (1m) OF THE WALL FACE.

DO NOT DAMAGE REINFORCEMENT WHEN PLACING AND COMPACTING SHORING BACKFILL. DO NOT OPERATE HEAVY EQUIPMENT ON REINFORCEMENT UNTIL IT IS COVERED WITH AT LEAST 10" (250mm) OF SHORING BACKFILL. DO NOT USE SHEEPSFOOT, GRID ROLLERS OR OTHER TYPES OF COMPACTION EQUIPMENT WITH FEET.

COVER REINFORCING AND RETENTION FABRIC WITH AT LEAST 3" (75mm) OF SHORING BACKFILL. PLACE TOP REINFORCEMENT LAYER BETWEEN 4" AND 24" (100mm and 600mm) BELOW TOP OF WALL DEPENDING ON WALL OPTION.

BENCH STANDARD TEMPORARY MSE WALLS INTO THE SIDES OF EXCAVATIONS WHERE APPLICABLE.

IF THE TOP OF WALL IS WITHIN 5'-0" (1.5m) OF FINISHED GRADE, REMOVE TOP FORM OR FACING AND INCORPORATE THE TOP REINFORCEMENT LAYER INTO THE FILL WHEN PLACING FILL IN FRONT OF THE WALL. STANDARD TEMPORARY MSE WALLS REMAIN IN PLACE PERMANENTLY UNLESS REQUIRED OTHERWISE.

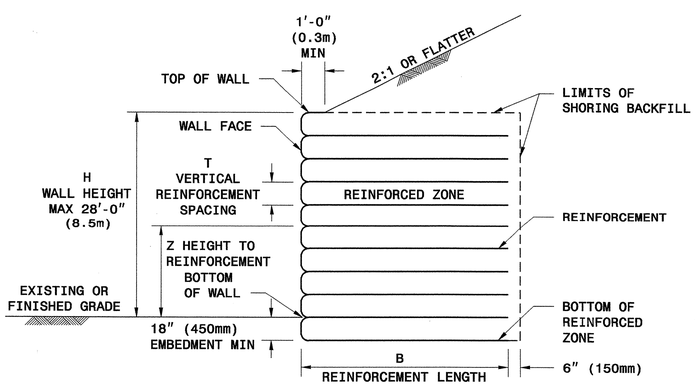

SLOPE CASE

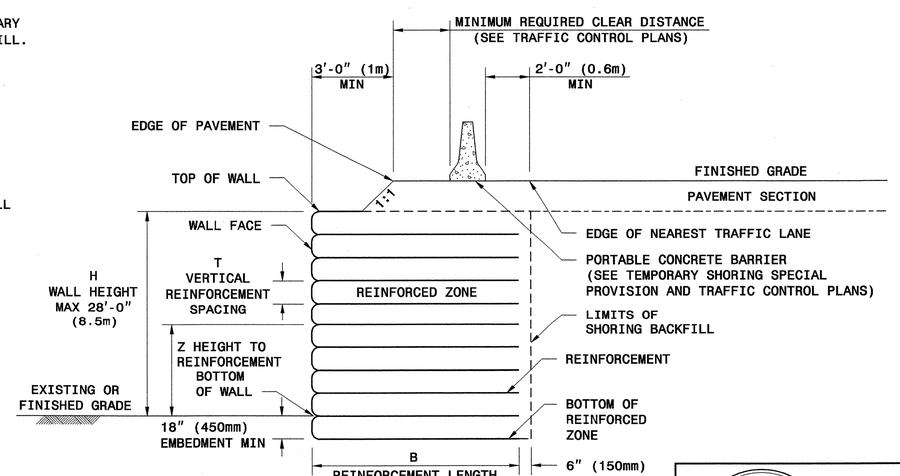

SURCHARGE CASE

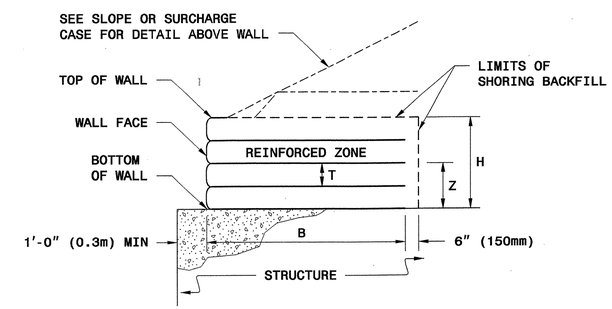

TEMPORARY MSE WALL ON STRUCTURE

STATE OF NORTH CAROLINA DEPARTMENT OF TRANSPORTATION

GEOTECHNICAL ENGINEERING UNIT

STATE OF NORTH CAROLINA DEPARTMENT OF TRANSPORTATION RALEIGH

STANDARD DRAWING NO. 1801.02

STANDARD TEMPORARY MECHANICALLY STABILIZED EARTH (MSE) WALLS

SHEET 1 OF 11 DATE: 2-20-07

PROJECT REFERENCE NO.	SHEET
A-0011BB	2-M

GEOTECHNICAL ENGINEER

NORTH CAROLINA PROFESSIONAL SEAL 022246 ENGINEER SCOTT A. HIDDEN

Scott A. Hidden 3/29/07

SIGNATURE DATE

ENGINEER

SIGNATURE DATE

HOW TO USE THIS SHEET:

- FOR ALL WALL OPTIONS, DETERMINE MINIMUM REQUIRED REINFORCEMENT LENGTH (B) FROM TABLE AT RIGHT BASED ON WALL HEIGHT (H) AND SLOPE OR SURCHARGE CASE
- FOR STANDARD TEMPORARY FABRIC WALL, SEE SHEET 3 FOR FABRIC STRENGTH REQUIREMENTS BASED ON WALL HEIGHT (H)
- FOR ALL OTHER WALL OPTIONS, DETERMINE REINFORCEMENT TYPE FROM TABLES BELOW FOR EACH HEIGHT TO REINFORCEMENT (Z) BASED ON WALL HEIGHT (H) AND SLOPE OR SURCHARGE CASE

MINIMUM REQUIRED REINFORCEMENT LENGTH B (FT)

(FOR ALL WALL OPTIONS)

WALL HEIGHT H (FT)	<8	8 TO 10	10 TO 12	12 TO 14	14 TO 16	16 TO 18	18 TO 20	20 TO 22	22 TO 24	24 TO 26	26 TO 28
SLOPE CASE	8	11	13	14	16	18	20	22	24	25	27
SURCHARGE CASE	8	9	11	12	14	15	16	18	19	21	22

TERRATREL TEMPORARY WALL (STRIPS PER LEVEL PER PANEL)

H (FT)

<4	4 TO 6	6 TO 8	8 TO 10	10 TO 12	12 TO 14	14 TO 16	16 TO 18	18 TO 20	20 TO 22	22 TO 24	24 TO 26	26 TO 28	Z (FT-INCHES)
												3	27 - 8
											3	3	26 -10
											3	3	25 - 2
										3	3	3	23 - 6
									3	3	3	3	21 -10
								3	3	3	3	3	20 - 2
							3	3	3	3	3	3	18 - 6
						3	3	3	3	3	3	3	16 -10
						3	3	3	3	3	3	3	15 - 2
					4	3	3	3	3	3	3	3	13 - 6
				4	4	3	3	3	3	3	3	3	11 -10
			5	4	4	3	3	3	3	3	3	3	10 - 2
		5	5	4	4	3	3	3	3	3	3	3	8 - 6
	5	5	5	4	4	3	3	3	3	3	3	3	6 -10
	5	5	5	4	4	3	3	3	3	3	3	3	5 - 2
5	5	5	5	4	4	3	3	3	3	3	3	3	3 - 6
5	5	5	5	4	4	3	3	3	3	3	3	3	1 -10
5	5	5	5	4	4	3	3	3	3	3	3	3	0 - 2
5	5	5	5	4	4	3	3	3	3	3	3	3	-0 - 8

SLOPE AND SURCHARGE CASES

SIERRASCAPE TEMPORARY WALL (GEOGRID TYPE)

11 = UX1100MSE
14 = UX1400MSE
15 = UX1500MSE
16 = UX1600MSE
17 = UX1700MSE

H (FT)

<4	4 TO 6	6 TO 8	8 TO 10	10 TO 12	12 TO 14	14 TO 16	16 TO 18	18 TO 20	20 TO 22	22 TO 24	24 TO 26	26 TO 28	Z (FT)
												11	26.5
											11	11	25.5
											11	11	24
										11	11	11	22.5
									11	11	11	15	21
								11	11	11	14	15	19.5
								11	11	11	14	15	18
							11	11	11	14	15	15	16.5
						11	11	11	14	15	15	15	15
					11	11	11	11	15	15	15	15	13.5
					11	11	11	15	15	15	15	15	12
				11	11	11	11	15	15	15	15	16	10.5
			11	11	11	11	15	15	15	15	15	16	9
		11	11	11	11	14	15	15	15	15	16	16	7.5
		11	11	11	11	14	15	15	15	16	16	16	6
	11	11	11	11	15	15	15	15	15	16	16	17	4.5
11	11	11	11	14	15	15	15	15	16	16	16	17	3
11	11	11	11	14	15	15	15	16	16	16	17	17	1.5
11	11	11	14	15	15	15	15	16	16	17	17	17	0
11	11	11	14	15	15	15	15	16	16	17	17	17	-1.5

SLOPE CASE

H (FT)

<4	4 TO 6	6 TO 8	8 TO 10	10 TO 12	12 TO 14	14 TO 16	16 TO 18	18 TO 20	20 TO 22	22 TO 24	24 TO 26	26 TO 28	Z (FT)
												11	26.5
											11	11	25.5
										11	11	11	24
									11	11	11	22.5
								11	11	11	15	15	21
							11	11	11	11	15	15	19.5
						11	11	11	11	15	15	15	18
					11	11	11	11	15	15	15	15	16.5
				11	11	11	11	15	15	15	15	15	15
			11	11	11	11	15	15	15	15	15	15	13.5
		11	11	11	11	15	15	15	15	15	15	15	12
	11	11	11	11	15	15	15	15	15	15	15	16	10.5
11	11	11	11	15	15	15	15	15	15	15	15	16	9
11	11	11	11	15	15	15	15	15	15	15	16	16	7.5
11	11	11	11	15	15	15	15	15	15	16	16	16	6
11	11	11	11	15	15	15	15	15	15	16	16	17	4.5
11	11	11	11	15	15	15	15	15	16	16	16	17	3
11	11	11	11	15	15	15	15	16	16	16	17	17	1.5
11	11	11	11	15	15	15	15	16	16	17	17	17	0
11	11	11	11	15	15	15	15	16	16	17	17	17	-1.5

SURCHARGE CASE

HILFIKER TEMPORARY WALL (WELDED WIRE MAT TYPE)

4.5 = W4.5 x W3.5
7.0 = W7.0 x W3.5
9.5 = W9.5 x W4.0

H (FT)

<4	4 TO 6	6 TO 8	8 TO 10	10 TO 12	12 TO 14	14 TO 16	16 TO 18	18 TO 20	20 TO 22	22 TO 24	24 TO 26	26 TO 28	Z (FT)
												4.5	26
											4.5	7.0	24
										4.5	7.0	7.0	22
									4.5	7.0	7.0	7.0	20
								4.5	7.0	7.0	7.0	7.0	18
							4.5	7.0	7.0	7.0	7.0	7.0	16
						4.5	7.0	7.0	7.0	7.0	7.0	9.5	14
					4.5	7.0	7.0	7.0	7.0	9.5	9.5	9.5	12
				4.5	7.0	7.0	7.0	7.0	9.5	9.5	9.5	9.5	10
			4.5	7.0	7.0	7.0	7.0	9.5	9.5	9.5	9.5	9.5	8
		4.5	7.0	7.0	7.0	7.0	9.5	9.5	9.5	9.5	9.5	9.5	6
	4.5	7.0	7.0	7.0	7.0	9.5	9.5	9.5	9.5	9.5	9.5	9.5	4
	N/A	N/A	N/A	N/A	N/A	N/A	N/A	N/A	N/A	N/A	N/A	N/A	7.0
4.5	7.0	7.0	7.0	7.0	7.0	9.5	9.5	9.5	9.5	9.5	9.5	9.5	7.0
N/A	N/A	N/A	N/A	N/A	N/A	N/A	N/A	N/A	N/A	N/A	N/A	7.0	7.0
7.0	7.0	7.0	7.0	7.0	9.5	9.5	9.5	9.5	9.5	9.5	9.5	7.0	7.0
7.0	7.0	7.0	7.0	7.0	9.5	9.5	9.5	9.5	9.5	9.5	9.5	9.5	-1.5

SLOPE CASE

H (FT)

<4	4 TO 6	6 TO 8	8 TO 10	10 TO 12	12 TO 14	14 TO 16	16 TO 18	18 TO 20	20 TO 22	22 TO 24	24 TO 26	26 TO 28	Z (FT)
												4.5	26
											4.5	7.0	24
										4.5	7.0	7.0	22
									4.5	7.0	7.0	7.0	20
								4.5	7.0	7.0	7.0	7.0	18
							4.5	7.0	7.0	7.0	7.0	7.0	16
						4.5	7.0	7.0	7.0	7.0	7.0	7.0	14
					4.5	7.0	7.0	7.0	7.0	7.0	7.0	9.5	12
				4.5	7.0	7.0	7.0	7.0	7.0	7.0	9.5	9.5	10
			4.5	7.0	7.0	7.0	7.0	7.0	7.0	9.5	9.5	9.5	8
		4.5	7.0	7.0	7.0	7.0	7.0	9.5	9.5	9.5	9.5	9.5	6
	4.5	7.0	7.0	7.0	7.0	7.0	9.5	9.5	9.5	9.5	9.5	9.5	4
4.5	7.0	7.0	7.0	7.0	7.0	9.5	9.5	9.5	9.5	9.5	9.5	9.5	2
N/A	N/A	N/A	N/A	N/A	N/A	N/A	N/A	N/A	N/A	N/A	N/A	7.0	1
7.0	7.0	7.0	7.0	7.0	7.0	9.5	9.5	9.5	9.5	9.5	9.5	7.0	0
7.0	7.0	7.0	7.0	7.0	7.0	9.5	9.5	9.5	9.5	9.5	9.5	9.5	-1.5

SURCHARGE CASE

RETAINED EARTH TEMPORARY WALL (WELDED WIRE MESH TYPE)

3X1 = 3W8 x W8 x 1.0′
3X2 = 3W8 x W8 x 2.0′

H (FT)

<4	4 TO 6	6 TO 8	8 TO 10	10 TO 12	12 TO 14	14 TO 16	16 TO 18	18 TO 20	20 TO 22	22 TO 24	24 TO 26	26 TO 28	Z (FT-INCHES)
												3X1	27 - 6
												3X1	26 -10
											3X1	3X2	25 - 2
										3X1	3X1	3X2	23 - 6
									3X1	3X1	3X2	3X2	21 -10
								3X1	3X1	3X2	3X2	3X2	20 - 2
							3X1	3X1	3X2	3X2	3X2	3X2	18 - 6
						3X1	3X2	3X2	3X2	3X2	3X2	3X2	16 -10
					3X1	3X2	3X2	3X2	3X2	3X2	3X2	3X2	15 - 2
				3X1	3X1	3X2	3X2	3X2	3X2	3X2	3X2	3X2	13 - 6
			3X1	3X1	3X2	3X2	3X2	3X2	3X2	3X2	3X2	3X2	11 -10
		3X1	3X1	3X2	3X2	3X2	3X2	3X2	3X2	3X2	3X2	3X2	10 - 2
	3X1	3X1	3X2	3X2	3X2	3X2	3X2	3X2	3X2	3X2	3X2	3X2	8 - 6
	3X1	3X2	3X2	3X2	3X2	3X2	3X2	3X2	3X2	3X2	3X2	3X2	6 -10
3X1	3X2	3X2	3X2	3X2	3X2	3X2	3X2	3X2	3X2	3X2	3X2	3X2	5 - 2
3X1	3X1	3X2	3X2	3X2	3X2	3X2	3X2	3X2	3X2	3X2	3X2	3X2	3 - 6
3X1	3X2	3X2	3X2	3X2	3X2	3X2	3X2	3X2	3X2	3X2	3X2	3X2	1 -10
3X2	3X2	3X2	3X2	3X2	3X2	3X2	3X2	3X2	3X2	3X2	3X2	3X2	0 - 2
3X2	3X2	3X2	3X2	3X2	3X2	3X2	3X2	3X2	3X2	3X2	3X2	3X2	-1 - 6

SLOPE AND SURCHARGE CASES

NOTES FOR HILFIKER TEMPORARY WALL

1) CAP MAT AT TOP OF WALL IS NOT INCLUDED IN TABLES.
2) REINFORCEMENT IS NOT REQUIRED AT 1′ LEVEL FOR SLOPE CASE UNTIL WALL HEIGHT (H) IS GREATER THAN 24′.
3) REINFORCEMENT IS NOT REQUIRED AT 3′ LEVEL FOR SLOPE CASE UNTIL WALL HEIGHT (H) IS GREATER THAN 26′.
4) REINFORCEMENT IS NOT REQUIRED AT 1′ LEVEL FOR SURCHARGE CASE UNTIL WALL HEIGHT (H) IS GREATER THAN 26′.

STATE OF NORTH CAROLINA DEPARTMENT OF TRANSPORTATION

GEOTECHNICAL ENGINEERING UNIT

STATE OF NORTH CAROLINA DEPARTMENT OF TRANSPORTATION RALEIGH

STANDARD DRAWING NO. 1801.02

STANDARD TEMPORARY MSE WALL REINFORCEMENT TABLES - ENGLISH UNITS

SHEET 2 OF 11 DATE: 2-20-07

PROJECT REFERENCE NO.	SHEET
A-0011BB	2-N

GEOTECHNICAL ENGINEER

NORTH CAROLINA PROFESSIONAL SEAL 022246 ENGINEER SCOTT A. HIDDEN

Scott A. Hidden 3/29/07

SIGNATURE DATE

ENGINEER

SIGNATURE DATE

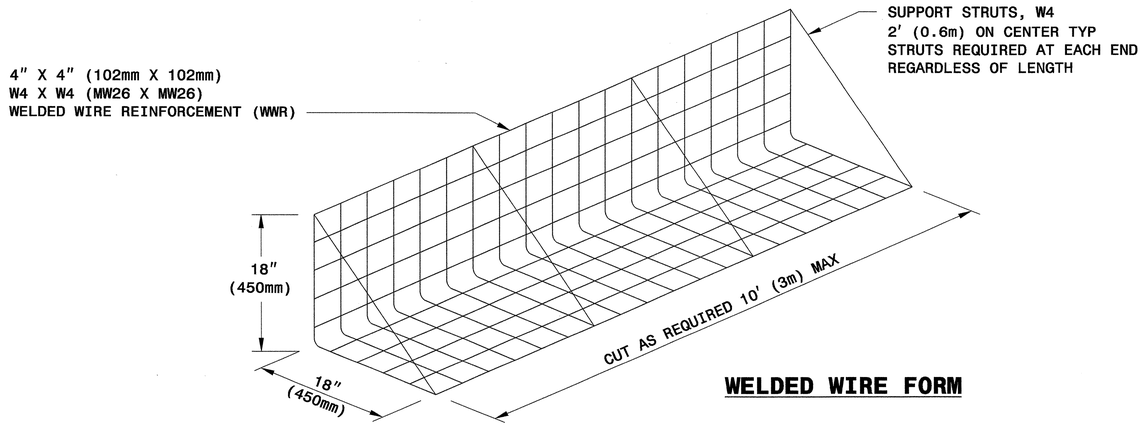

WELDED WIRE FORM

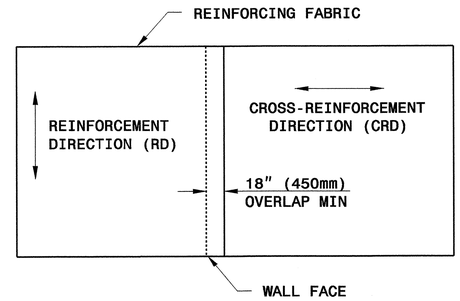

PLAN VIEW OF FABRIC OVERLAP

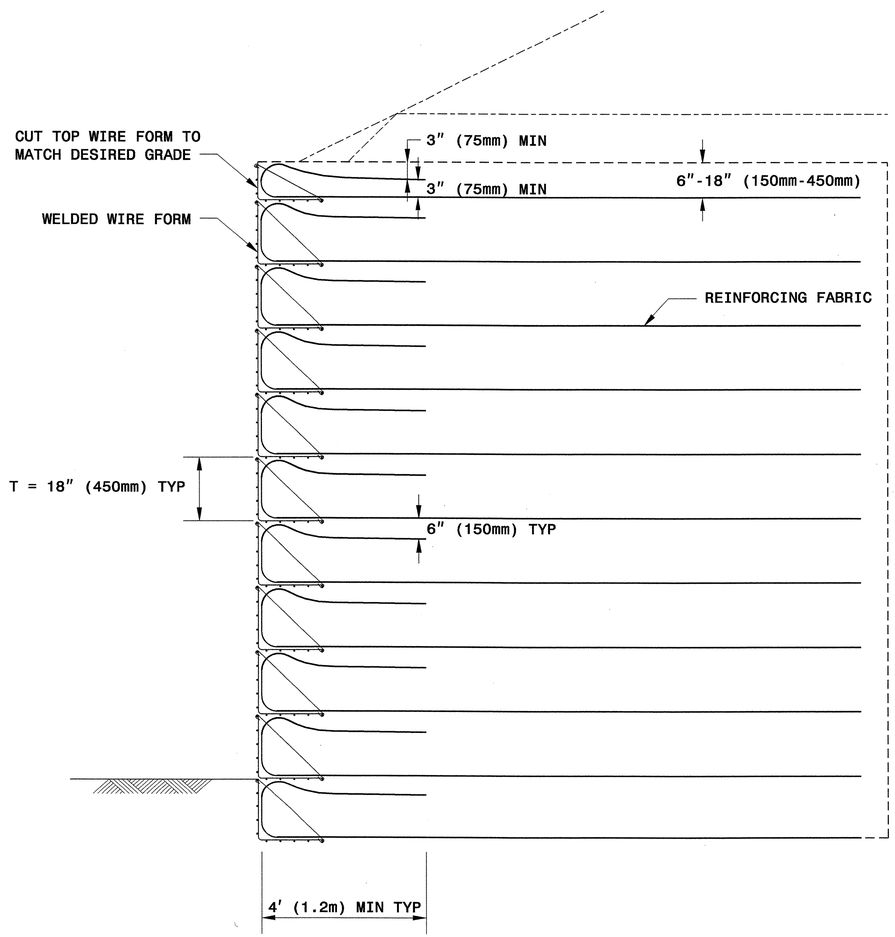

TYPICAL SECTION

MINIMUM REQUIRED REINFORCING FABRIC STRENGTH FOR RD*
(SLOPE AND SURCHARGE CASES)

WALL HEIGHT H FEET (M)	POLYESTER WIDE WIDTH TENSILE STRENGTH @ ULTIMATE LB/INCH (KN/M)	POLYPROPYLENE WIDE WIDTH TENSILE STRENGTH @ ULTIMATE LB/INCH (KN/M)
4 (1.2)	200 (35)	200 (35)
6 (1.8)	200 (35)	200 (35)
8 (2.4)	200 (35)	200 (35)
10 (3.0)	200 (35)	230 (40)
12 (3.7)	220 (39)	264 (46)
14 (4.3)	248 (43)	297 (52)
16 (4.9)	276 (48)	330 (58)
18 (5.5)	304 (53)	364 (64)
20 (6.1)	332 (58)	397 (70)
22 (6.7)	359 (63)	431 (76)
24 (7.3)	387 (68)	464 (81)
26 (7.9)	415 (73)	497 (87)
28 (8.5)	443 (78)	531 (93)

*RD = REINFORCEMENT DIRECTION

STATE OF NORTH CAROLINA DEPARTMENT OF TRANSPORTATION

GEOTECHNICAL ENGINEERING UNIT

STATE OF NORTH CAROLINA
DEPARTMENT OF TRANSPORTATION
RALEIGH

STANDARD DRAWING NO. 1801.02

TEMPORARY FABRIC WALL

SHEET 3 OF 11 DATE: 12-19-06

PROJECT REFERENCE NO.	SHEET
A-0011BB	2-0

GEOTECHNICAL ENGINEER	ENGINEER
NORTH CAROLINA PROFESSIONAL SEAL 022246 ENGINEER SCOTT A. HIDDEN Scott A. Hidden 3/29/07 SIGNATURE DATE	SIGNATURE DATE

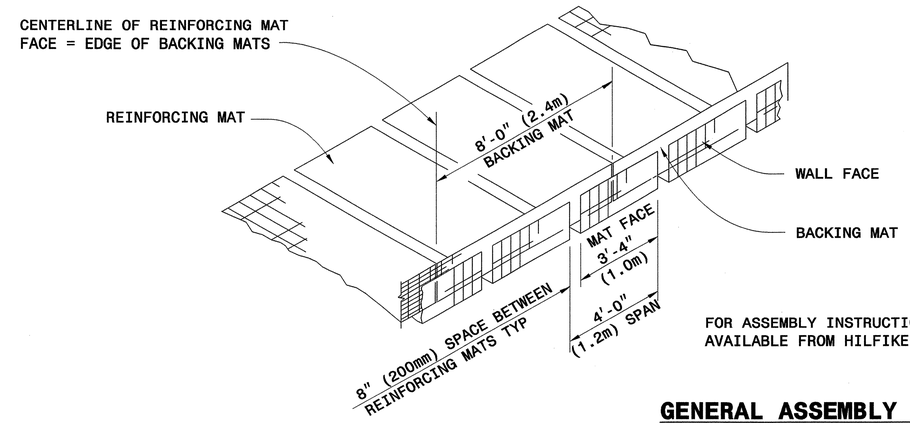

FOR ASSEMBLY INSTRUCTIONS, SEE WELDED WIRE WALL CONSTRUCTION GUIDE AVAILABLE FROM HILFIKER WEBSITE AT WWW.HILFIKER.COM/WWW

GENERAL ASSEMBLY DETAIL

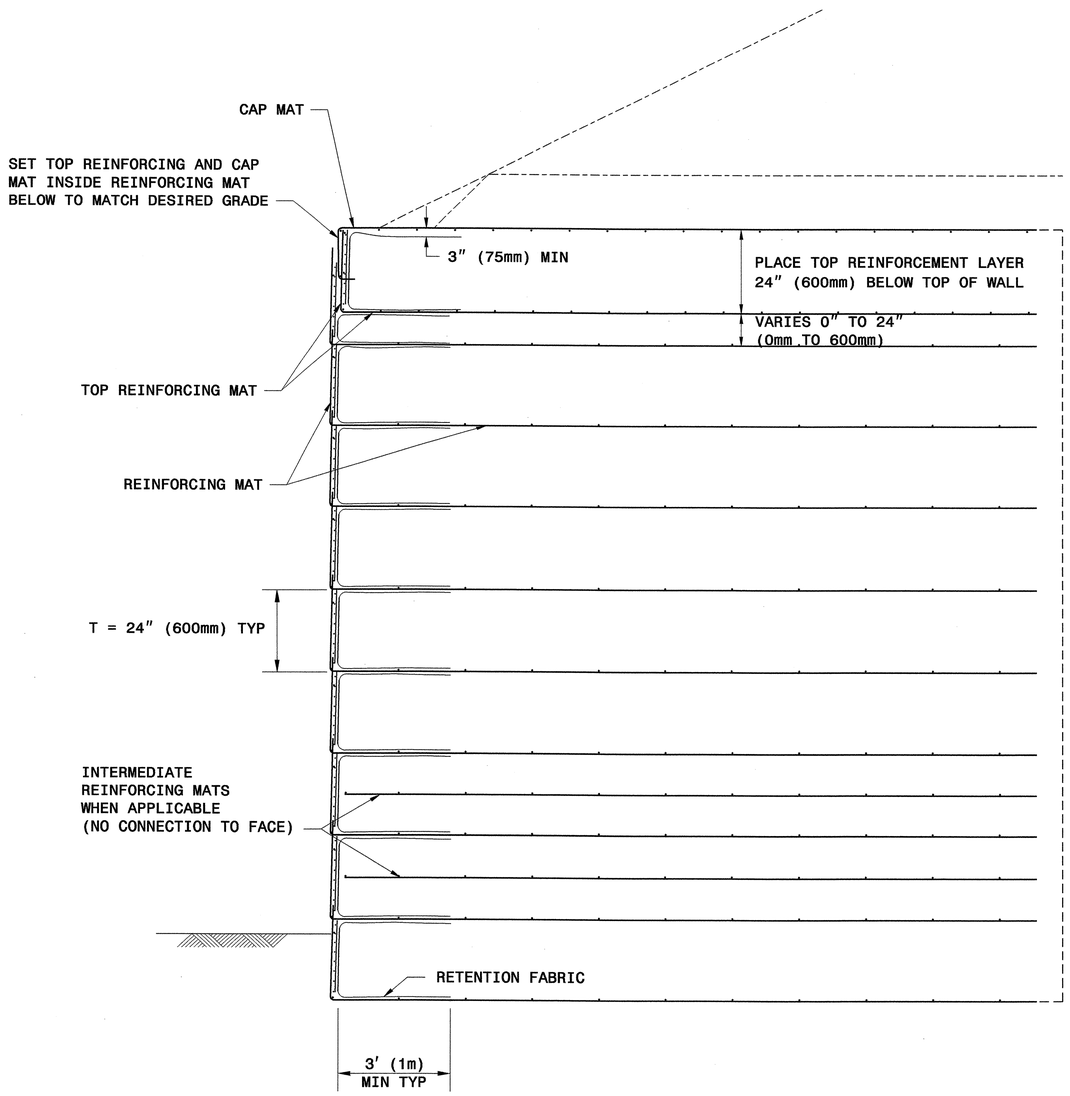

TYPICAL SECTION

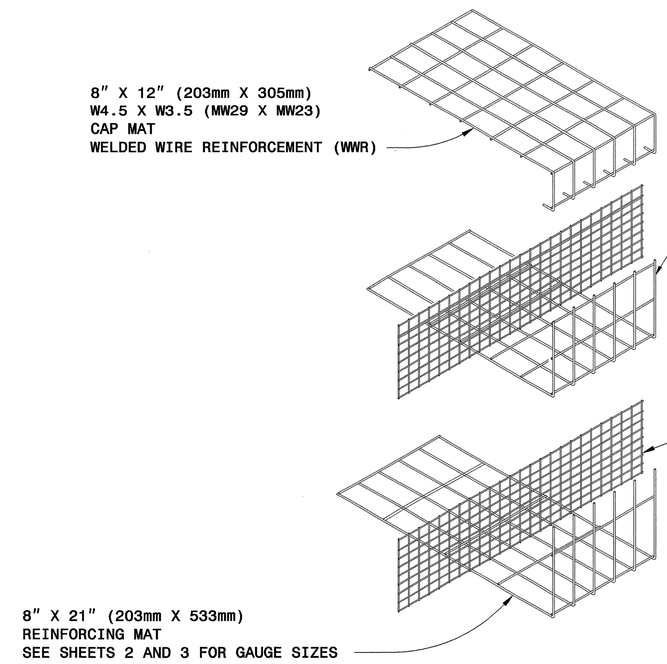

WALL COMPONENTS

HILFIKER RETAINING WALLS

GEOTECHNICAL ENGINEERING UNIT

STATE OF NORTH CAROLINA DEPARTMENT OF TRANSPORTATION RALEIGH

STANDARD DRAWING NO. 1801.02

HILFIKER TEMPORARY WALL

SHEET 4 OF 11 DATE: 12-19-06

PROJECT REFERENCE NO.	SHEET
A-0011BB	2-P

GEOTECHNICAL ENGINEER

NORTH CAROLINA PROFESSIONAL SEAL 022246 ENGINEER SCOTT A. HIDDEN

Scott A. Hidden 3/29/07
SIGNATURE DATE

ENGINEER

SIGNATURE DATE

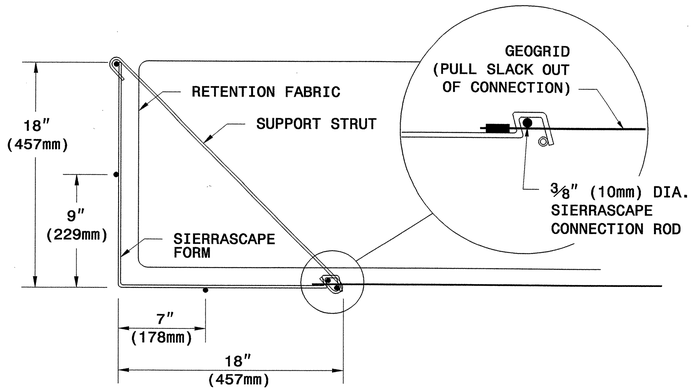

WALL FACE DETAIL

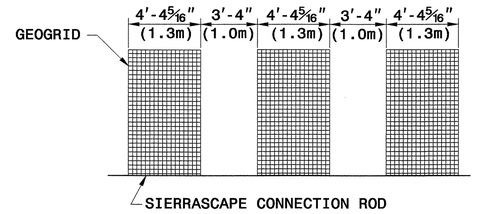

PLACE ALTERNATE LAYERS OF GEOGRID IN STAGGERED PATTERN SUCH THAT THE LAYER ABOVE IS CENTERED OVER SPACE BELOW

TYPICAL GEOGRID COVERAGE

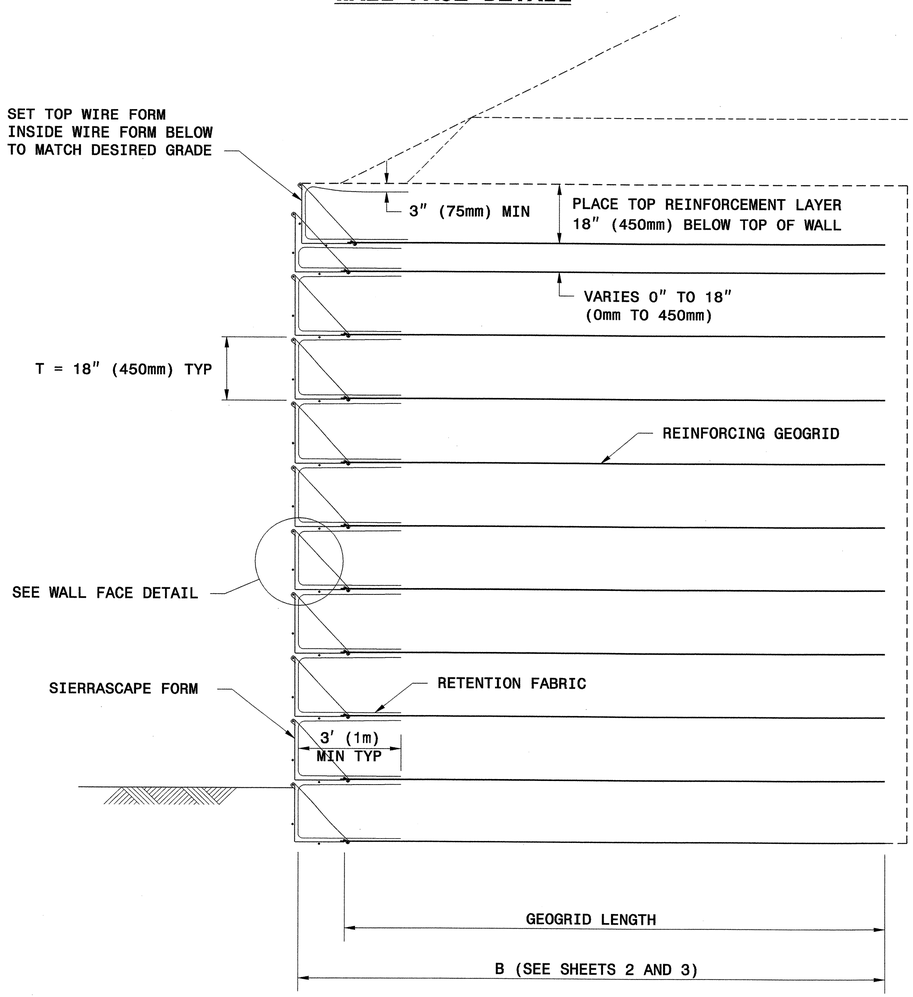

TYPICAL SECTION

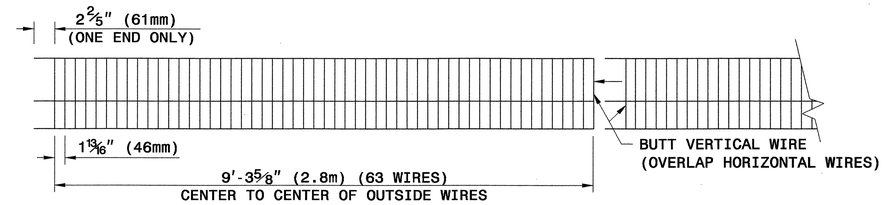

ELEVATION VIEW

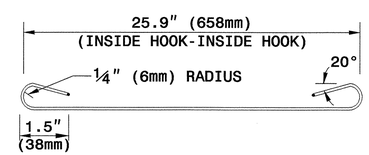

SUPPORT STRUT

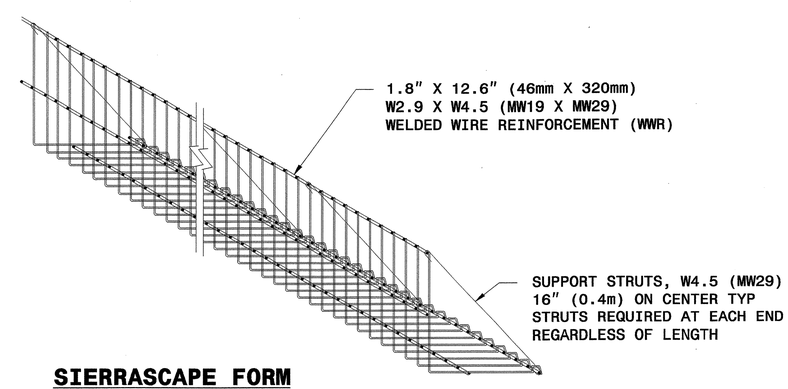

SIERRASCAPE FORM

WALL COMPONENTS

TENSAR®
TENSAR EARTH TECHNOLOGIES, INC.

STATE OF NORTH CAROLINA DEPARTMENT OF TRANSPORTATION

GEOTECHNICAL ENGINEERING UNIT

STATE OF NORTH CAROLINA
DEPARTMENT OF TRANSPORTATION
RALEIGH

STANDARD DRAWING NO. 1801.02

SIERRASCAPE
TEMPORARY WALL

SHEET 5 OF 11 DATE: 12-19-06

PROJECT REFERENCE NO.	SHEET
A-0011BB	2-Q

GEOTECHNICAL ENGINEER

NORTH CAROLINA PROFESSIONAL SEAL 022246 ENGINEER SCOTT A. HIDDEN

Scott A. Hidden 3/29/07

SIGNATURE DATE

ENGINEER

SIGNATURE DATE

PANEL LAYOUTS

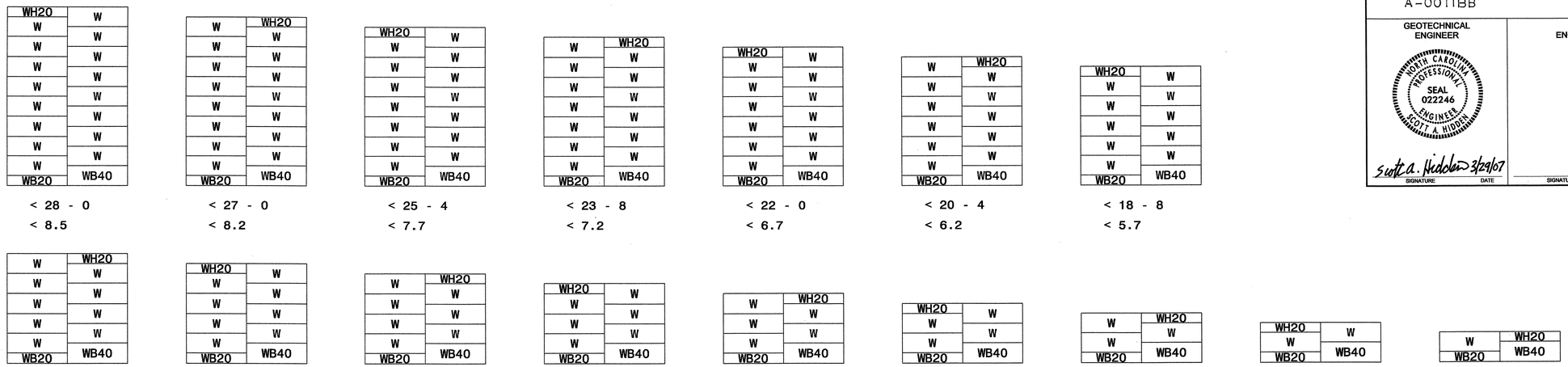

H - WALL HEIGHT																	
(FEET-INCHES)	< 28 - 0	< 27 - 0	< 25 - 4	< 23 - 8	< 22 - 0	< 20 - 4	< 18 - 8	< 17 - 0	< 15 - 4	< 13 - 8	< 12 - 0	< 10 - 4	< 8 - 8	< 7 - 0	< 5 - 4	< 3 - 8
(METER)	< 8.5	< 8.2	< 7.7	< 7.2	< 6.7	< 6.2	< 5.7	< 5.2	< 4.7	< 4.2	< 3.7	< 3.2	< 2.6	< 2.1	< 1.6	< 1.1

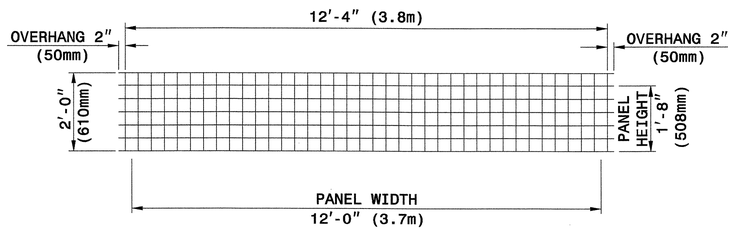

TYPE WH20

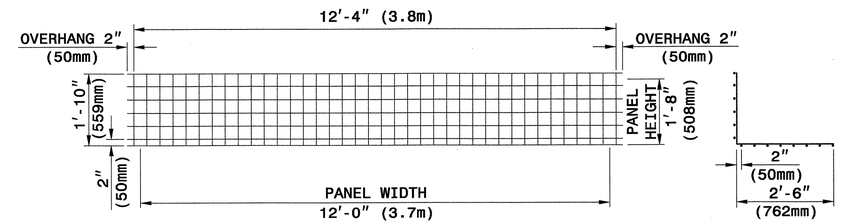

TYPE WB20 **SECTION**

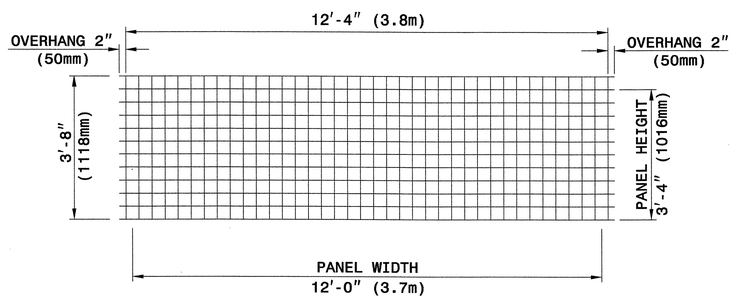

TYPE W

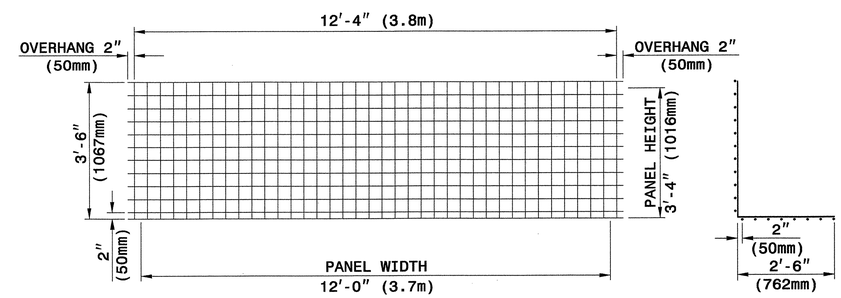

TYPE WB40 **SECTION**

WELDED WIRE FACINGS **WELDED WIRE FORMS**

PANEL TYPES (WELDED WIRE FACINGS AND FORMS)

4" X 4" (100mm X 100mm), W8 X W8 (MW52 X MW52) WELDED WIRE REINFORCEMENT (WWR)

The Reinforced Earth Company

STATE OF NORTH CAROLINA DEPARTMENT OF TRANSPORTATION

GEOTECHNICAL ENGINEERING UNIT

STATE OF NORTH CAROLINA DEPARTMENT OF TRANSPORTATION RALEIGH

STANDARD DRAWING NO. 1801.02

RETAINED EARTH TEMPORARY WALL

SHEET 6 OF 11 DATE: 12-19-06

PROJECT REFERENCE NO.	SHEET
A-0011BB	2-R

GEOTECHNICAL ENGINEER

NORTH CAROLINA PROFESSIONAL SEAL 022246 ENGINEER SCOTT A. HIDDEN

Scott A. Hidden 3/29/07
SIGNATURE DATE

ENGINEER

SIGNATURE DATE

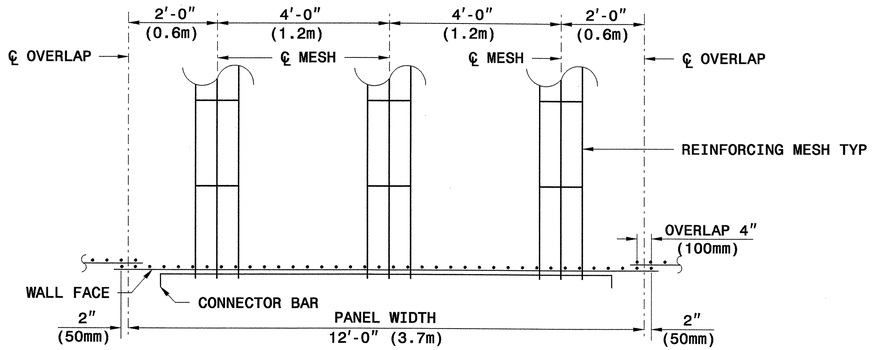

REINFORCING MESH PLACEMENT DETAIL
(PLAN VIEW)

½" (13mm) DIA. BAR

CONNECTOR BAR

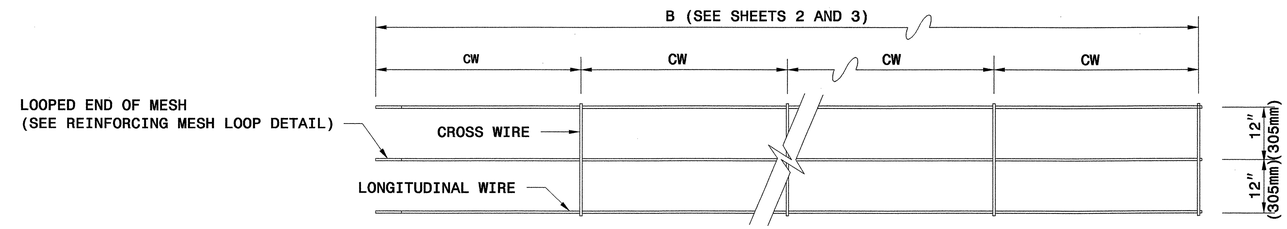

IF REINFORCEMENT LENGTH IS NOT AN INCREMENT OF 2'-0" (610mm) MAKE CW EQUAL TO 12" (305mm) AT THE END OF THE REINFORCING MESH OPPOSITE THE LOOPED END

3W8 X W8 x 2.0' (3MW52 X MW52 X 610mm)

NO. OF LONGITUDINAL WIRES
GAUGE OF LONGITUDINAL WIRES
GAUGE OF CROSS WIRES
SPACING OF CROSS WIRES IN FT (mm), CW

REINFORCING MESH DESIGNATION

REINFORCING MESH

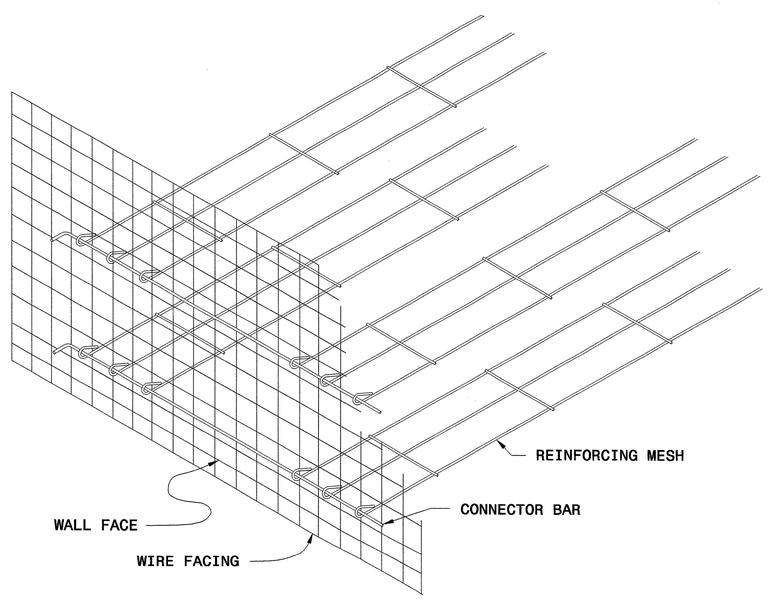

GENERAL ASSEMBLY DETAIL

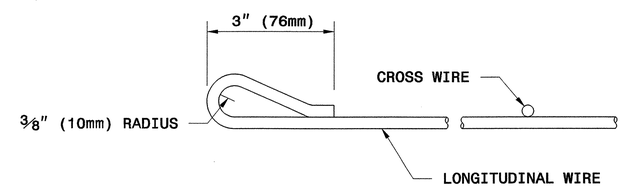

REINFORCING MESH LOOP DETAIL

The Reinforced Earth Company

STATE OF NORTH CAROLINA DEPARTMENT OF TRANSPORTATION

GEOTECHNICAL ENGINEERING UNIT

STATE OF NORTH CAROLINA DEPARTMENT OF TRANSPORTATION RALEIGH

STANDARD DRAWING NO. 1801.02

RETAINED EARTH TEMPORARY WALL

SHEET 7 OF 11 DATE: 12-19-06

PROJECT REFERENCE NO.	SHEET
A-0011BB	2-S

GEOTECHNICAL ENGINEER

NORTH CAROLINA PROFESSIONAL SEAL 022246 ENGINEER SCOTT A. HIDDEN

Scott A. Hidden 3/29/07
SIGNATURE DATE

ENGINEER

SIGNATURE DATE

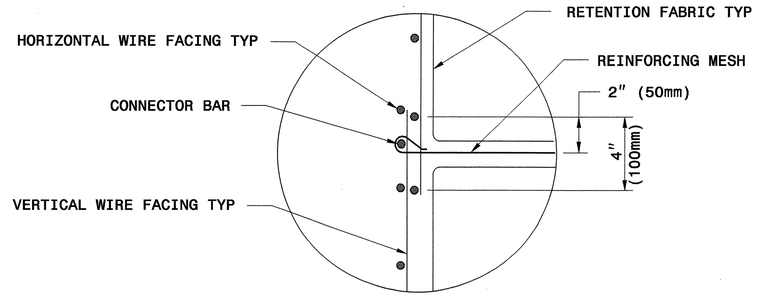

OVERLAP DETAIL

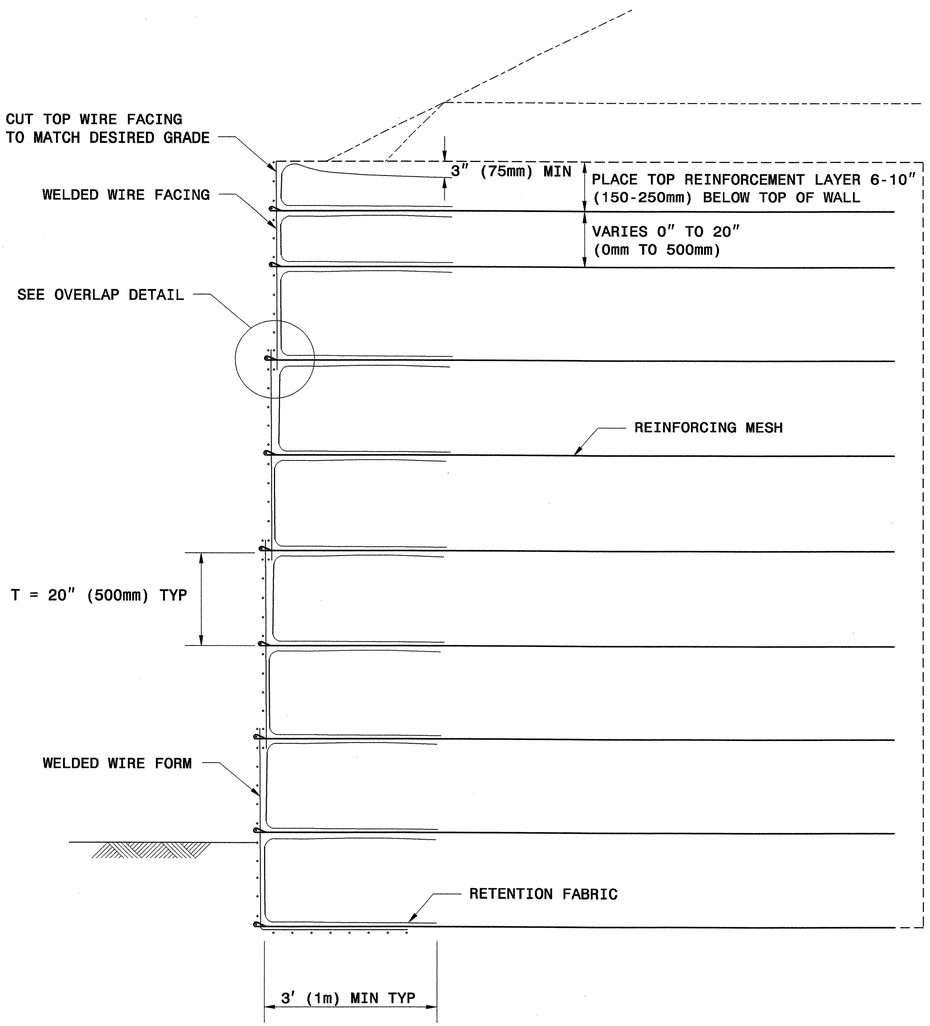

TYPICAL SECTION

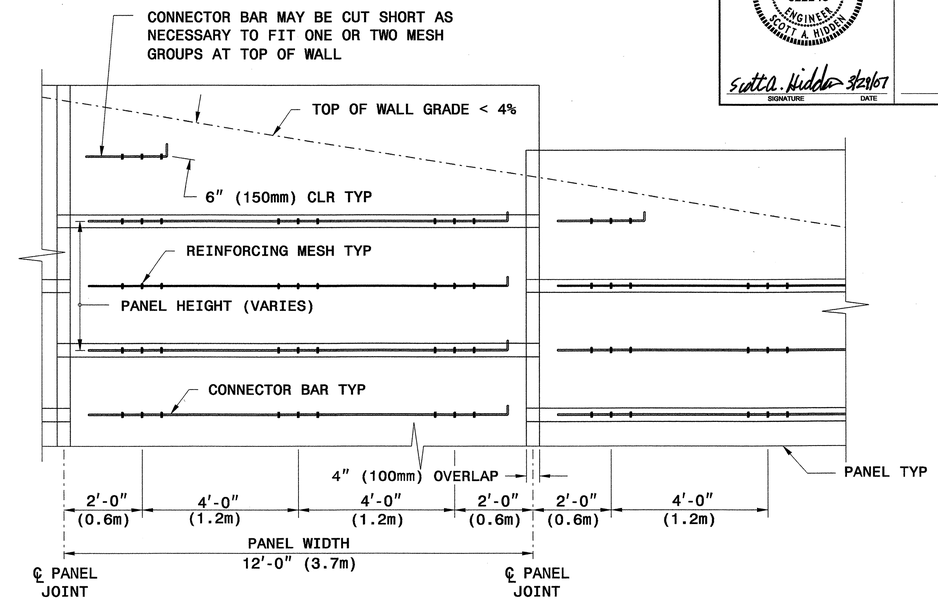

TYPICAL ELEVATION @ TOP OF WALL
(WIRES NOT SHOWN FOR CLARITY)

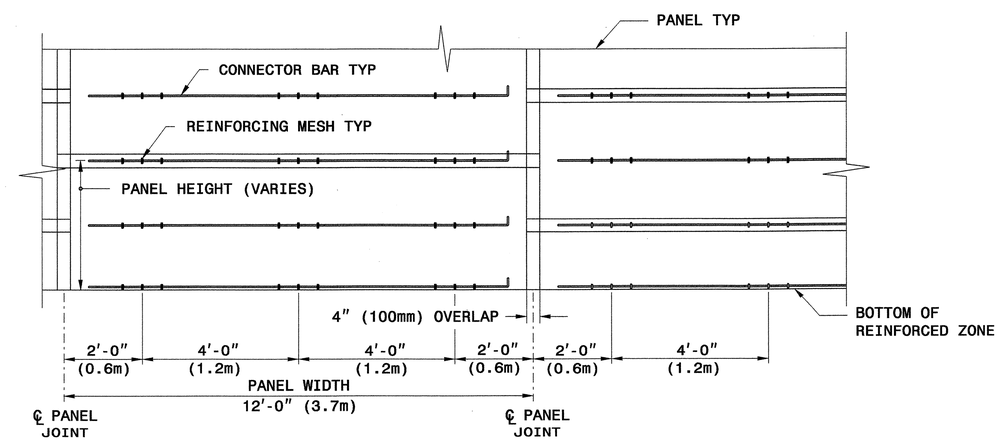

TYPICAL ELEVATION @ BOTTOM OF WALL
(WIRES NOT SHOWN FOR CLARITY)

The Reinforced Earth Company

STATE OF NORTH CAROLINA DEPARTMENT OF TRANSPORTATION

GEOTECHNICAL ENGINEERING UNIT

STATE OF NORTH CAROLINA
DEPARTMENT OF TRANSPORTATION
RALEIGH

STANDARD DRAWING NO. 1801.02

RETAINED EARTH
TEMPORARY WALL

SHEET 8 OF 11 DATE: 12-19-06

PROJECT REFERENCE NO.	SHEET
A-0011BB	2-T

GEOTECHNICAL ENGINEER

NORTH CAROLINA PROFESSIONAL SEAL 022246 ENGINEER SCOTT A. HIDDEN

Scott A. Hidden 3/29/07

SIGNATURE DATE

ENGINEER

SIGNATURE DATE

PANEL LAYOUTS

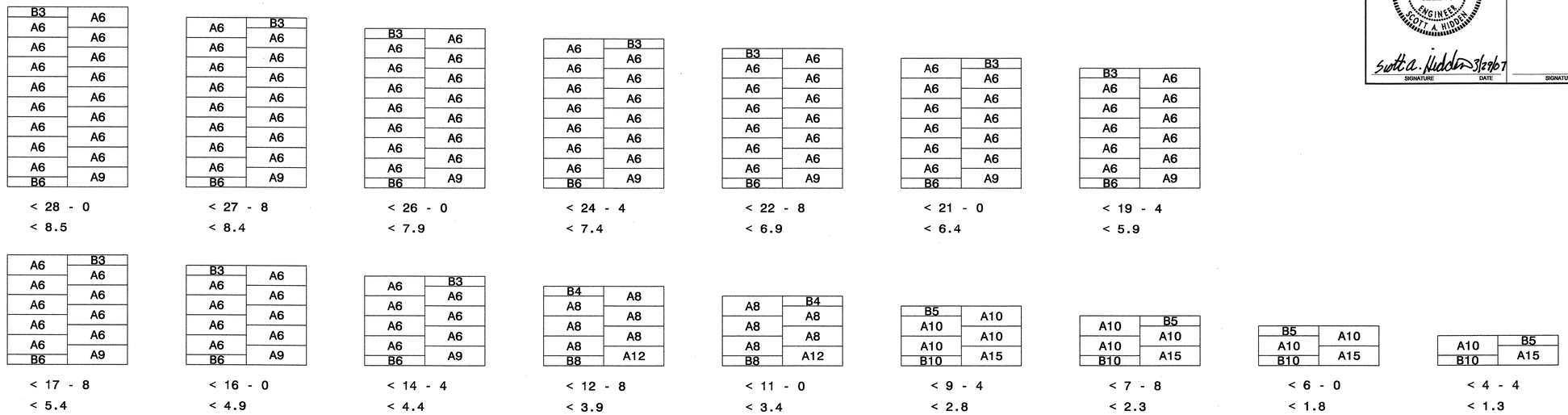

H - WALL HEIGHT											
(FEET-INCHES)	< 28 - 0	< 27 - 8	< 26 - 0	< 24 - 4	< 22 - 8	< 21 - 0	< 19 - 4				
(METER)	< 8.5	< 8.4	< 7.9	< 7.4	< 6.9	< 6.4	< 5.9				
(FEET-INCHES)	< 17 - 8	< 16 - 0	< 14 - 4	< 12 - 8	< 11 - 0	< 9 - 4	< 7 - 8	< 6 - 0	< 4 - 4		
(METER)	< 5.4	< 4.9	< 4.4	< 3.9	< 3.4	< 2.8	< 2.3	< 1.8	< 1.3		

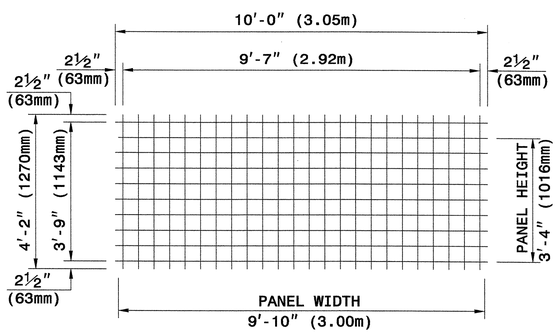

TYPE A

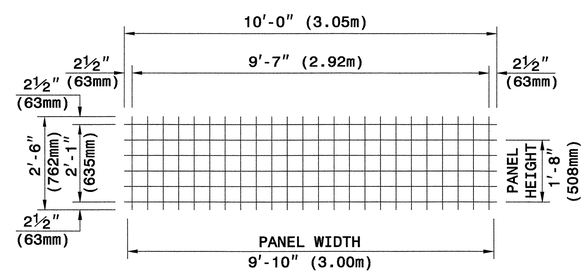

TYPE B

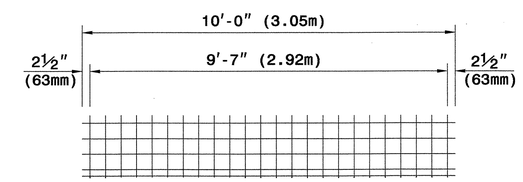

WELDED WIRE FORM

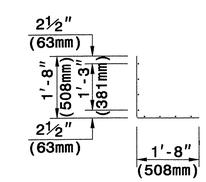

SECTION

WELDED WIRE FACINGS

PANEL TYPES (WELDED WIRE FACINGS AND FORM

5" X 5" (125mm X 125mm), W5 X W5 (MW32 X MW32) WELDED WIRE REINFORCEMENT (WWR)

The Reinforced Earth Company

STATE OF NORTH CAROLINA DEPARTMENT OF TRANSPORTATION

GEOTECHNICAL ENGINEERING UNIT

STATE OF NORTH CAROLINA DEPARTMENT OF TRANSPORTATION RALEIGH

STANDARD DRAWING NO. 1801.02

TERRATREL TEMPORARY WALL

SHEET 9 OF 11 DATE: 12-19-06

PROJECT REFERENCE NO.	SHEET
A-0011BB	2-U

GEOTECHNICAL ENGINEER

NORTH CAROLINA PROFESSIONAL SEAL 022246 ENGINEER SCOTT A. HIDDEN

Scott A. Hidden 3/29/07
SIGNATURE DATE

ENGINEER

SIGNATURE DATE

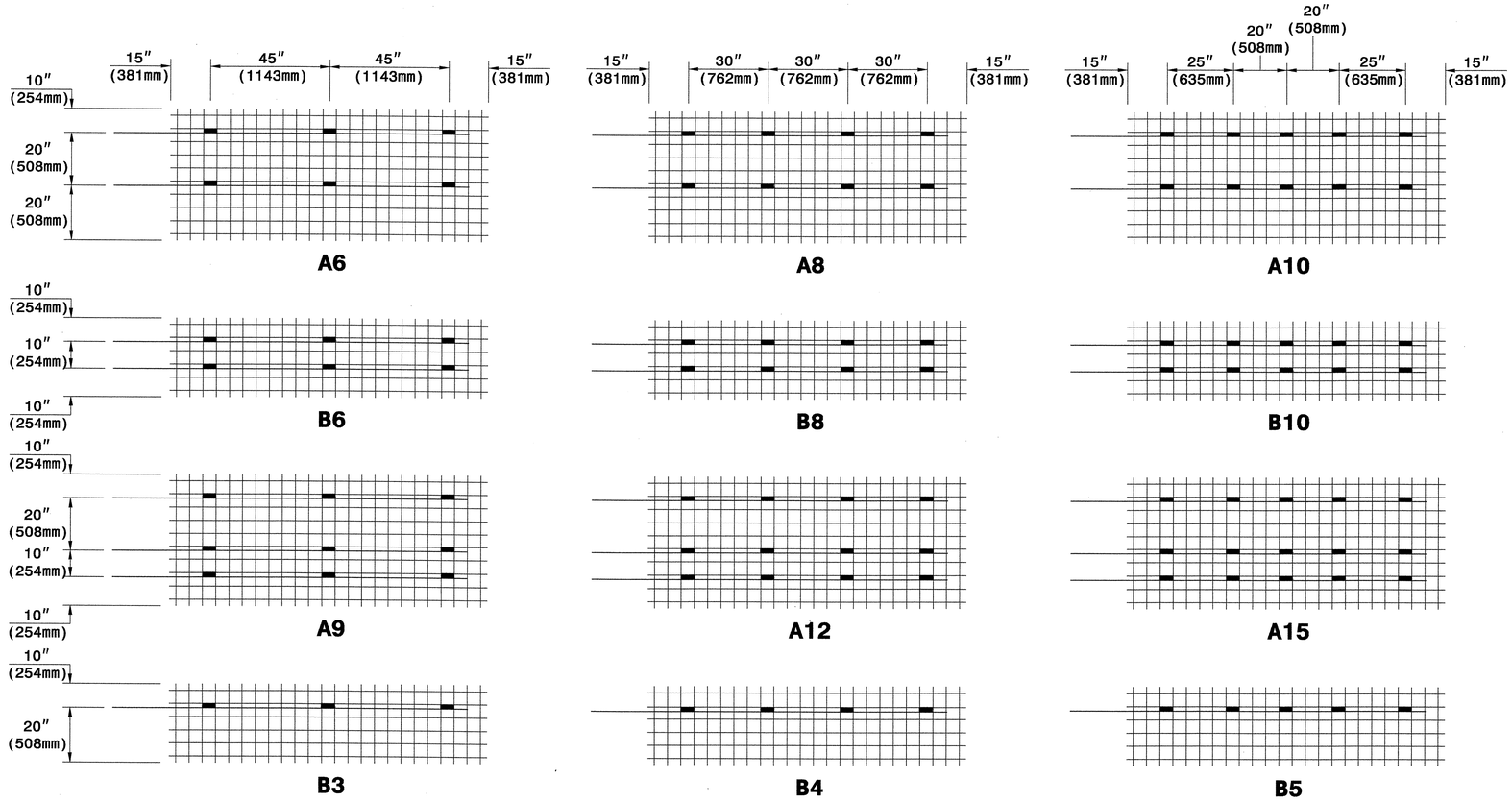

KEY: A8

NUMBER OF REINFORCING STRIPS

PANEL TYPE

CONNECTOR ROD AND REINFORCING STRIP PLACEMENT DIAGRAMS

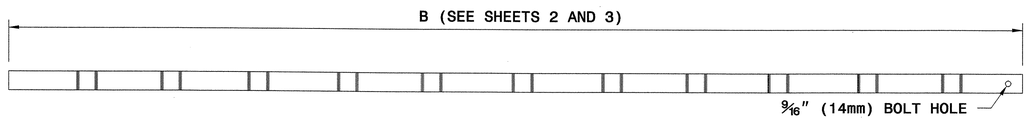

REINFORCING STRIP - 2″ X 5/32″ (50mm X 4mm)

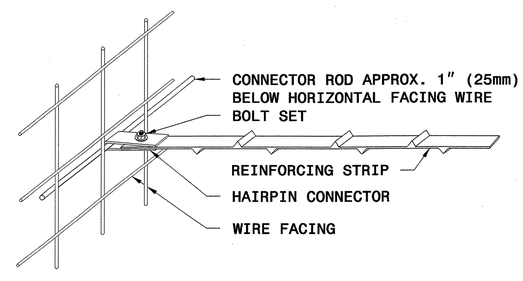

STRIP TO FACING CONNECTION

½″ (13mm) DIA. ROD

CONNECTOR ROD

½″ (13mm) BOLT WITH NUT AND WASHER

BOLT SET

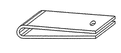

HAIRPIN CONNECTOR

WALL COMPONENTS

The Reinforced Earth Company

GEOTECHNICAL ENGINEERING UNIT

STATE OF NORTH CAROLINA DEPARTMENT OF TRANSPORTATION RALEIGH

STANDARD DRAWING NO. 1801.02

TERRATREL TEMPORARY WALL

SHEET 10 OF 11 DATE: 12-19-06

PROJECT REFERENCE NO.	SHEET
A-0011BB	2-V

GEOTECHNICAL ENGINEER — NORTH CAROLINA PROFESSIONAL SEAL 022246 ENGINEER SCOTT A. HIDDEN — Scott A. Hidden 3/29/07 — SIGNATURE DATE

ENGINEER — SIGNATURE DATE

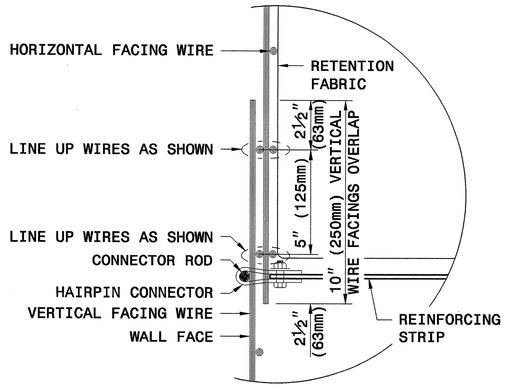

OVERLAP FACINGS VERTICALLY ONE FULL 5" (125mm) WIRE SQUARE DISREGARDING HALF SQUARES AT EDGES

VERTICAL OVERLAP DETAIL

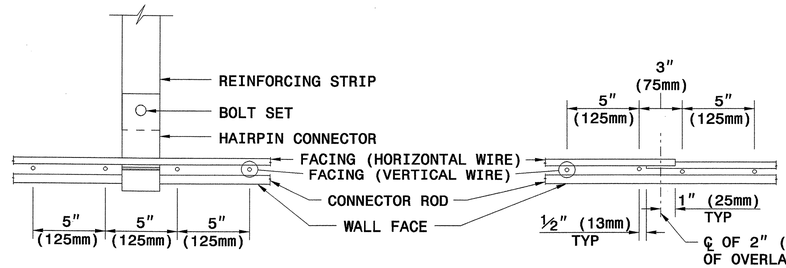

PLAN DETAIL 'A'

STRIP CONNECTION

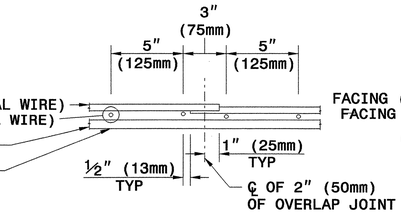

PLAN DETAIL 'B'

HORIZONTAL OVERLAP DETAIL

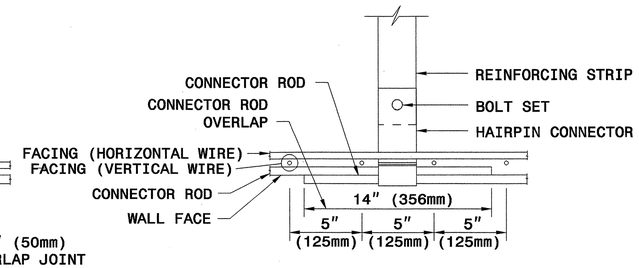

PLAN DETAIL 'C'

STRIP CONNECTION WITH HORIZONTAL OVERLAP DETAIL

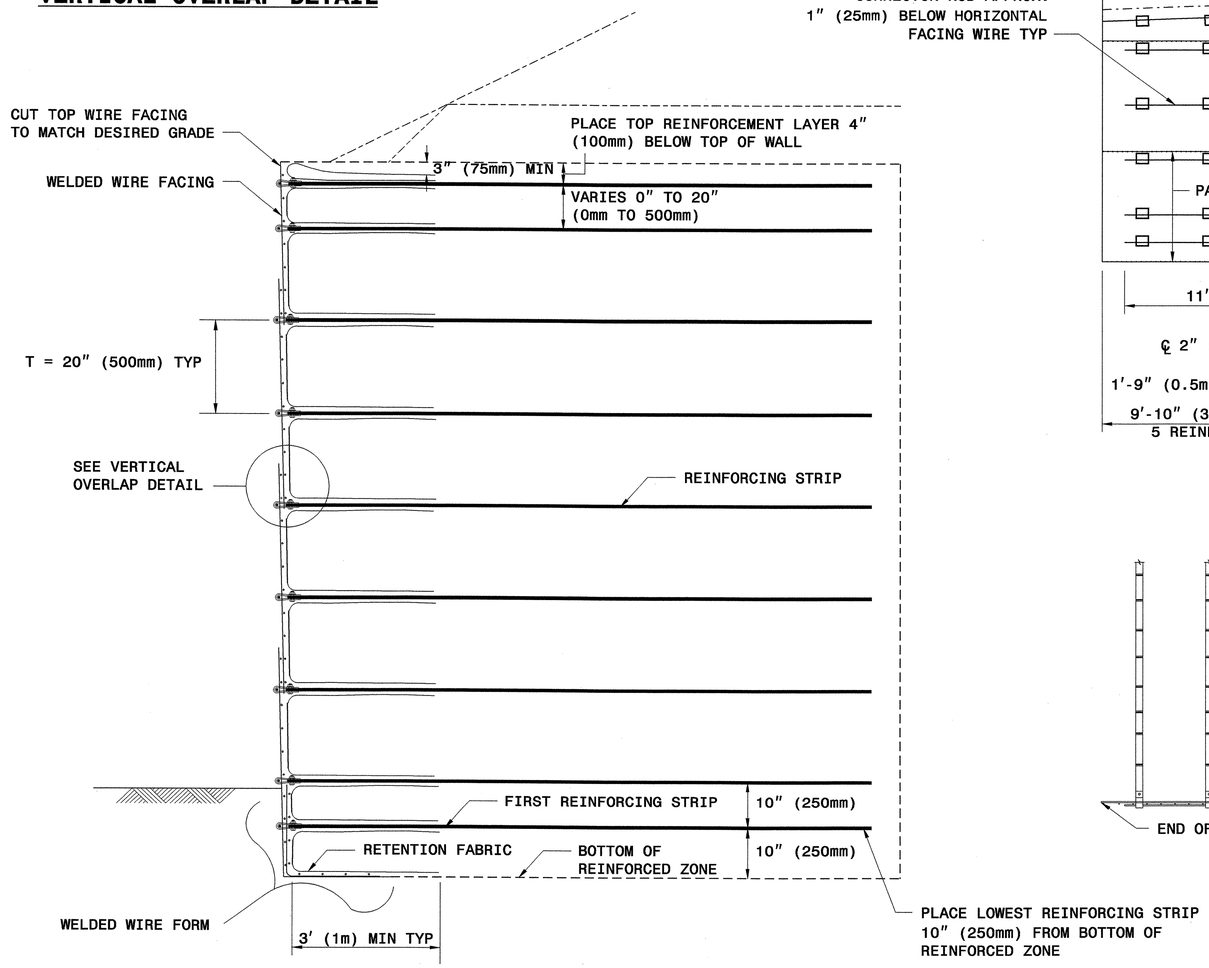

TYPICAL SECTION

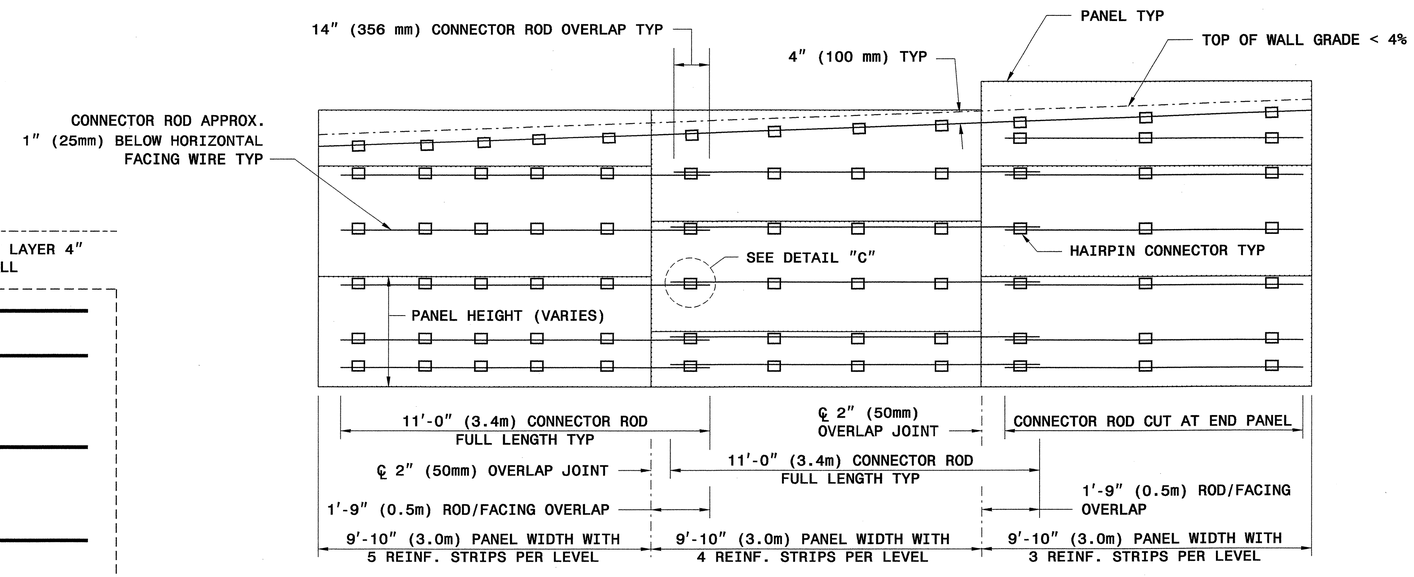

TYPICAL ELEVATION

(WIRES NOT SHOWN FOR CLARITY)

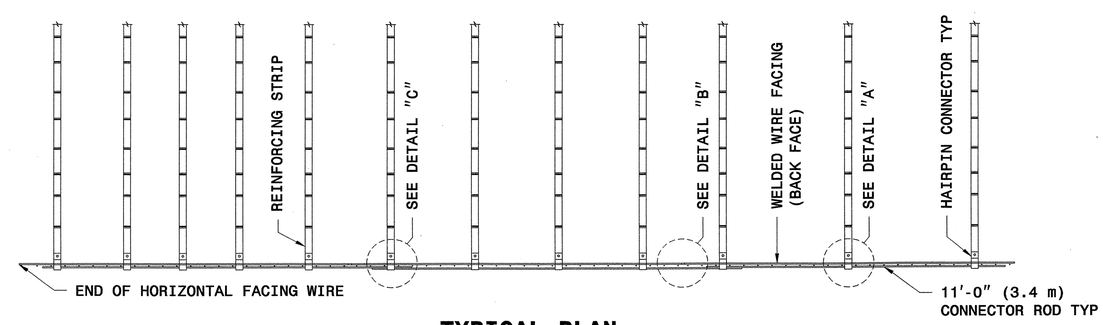

TYPICAL PLAN

The Reinforced Earth Company

STATE OF NORTH CAROLINA DEPARTMENT OF TRANSPORTATION

GEOTECHNICAL ENGINEERING UNIT

STATE OF NORTH CAROLINA DEPARTMENT OF TRANSPORTATION RALEIGH

STANDARD DRAWING NO. 1801.02

TERRATREL TEMPORARY WALL

SHEET 11 OF 11 — DATE: 12-19-06

PROJECT REFERENCE NO.	SHEET NO.
A-0011BB	2-W

GEOTECHNICAL ENGINEER

NORTH CAROLINA PROFESSIONAL SEAL 26962 ENGINEER ERIC N. WILLIAMS

9/8/08

STATE OF NORTH CAROLINA
DIVISION OF HIGHWAYS

ROCK PLATING DETAILS

6,405 Sq. Yds. TOTAL ROCK PLATING

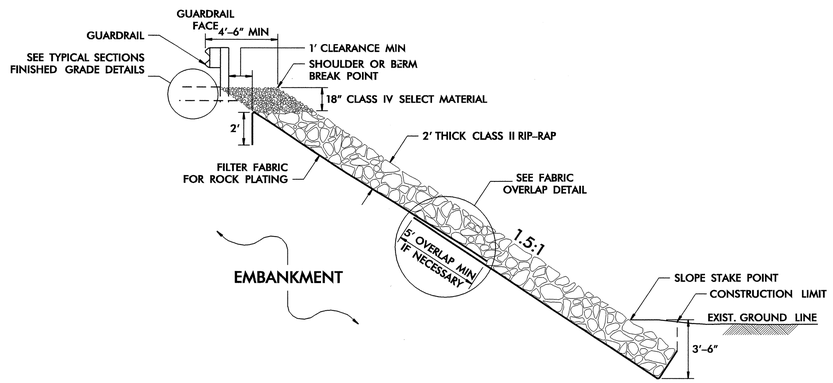

ROCK PLATING DETAIL NO. 1

-L-	Sta. 245+25	to	Sta. 245+75	RT.	35 Sq. Yds.
-L-	Sta. 246+75	to	Sta. 247+75	RT.	145 Sq. Yds.
-L-	Sta. 245+75	to	Sta. 249+25	LT.	600 Sq. Yds.
-L-	Sta. 267+25	to	Sta. 267+75	RT.	50 Sq. Yds.
-L-	Sta. 268+25	to	Sta. 269+25	RT.	50 Sq. Yds.
-L-	Sta. 275+75	to	Sta. 279+75	RT.	1,820 Sq. Yds.

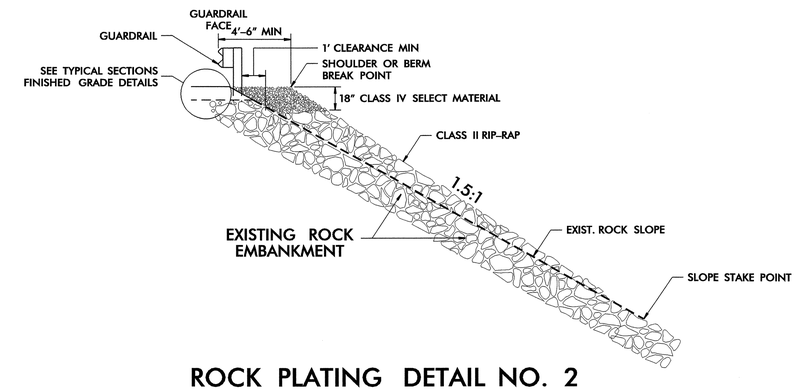

ROCK PLATING DETAIL NO. 2

-L-	Sta. 223+25	to	Sta. 228+75	RT.	470 Sq. Yds.
-L-	Sta. 224+25	to	Sta. 228+75	LT.	1,195 Sq. Yds.
-L-	Sta. 234+25	to	Sta. 237+25	LT.	470 Sq. Yds.
-L-	Sta. 234+25	to	Sta. 237+25	RT.	320 Sq. Yds.
-L-	Sta. 269+25	to	Sta. 271+75	RT.	1,250 Sq. Yds.

EXTEND ROCK PLATING LIMITS TO EXISTING ROCK SLOPES.

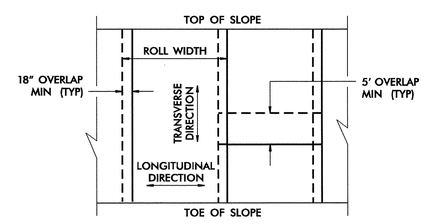

FABRIC OVERLAP DETAIL
(PLAN VIEW)

6/2/99
03-SEP-2008 09:06
r:\roadway\proj\rock_plating_detail.dgn
$$$$USER NAME$$$$

GEOTECHNICAL ENGINEER

NORTH CAROLINA PROFESSIONAL SEAL 29869 ENGINEER SHANE C. CLARK

SIGNATURE S. Clark DATE 8/26/8

Sheet No. 2-X

SIGNATURE DATE

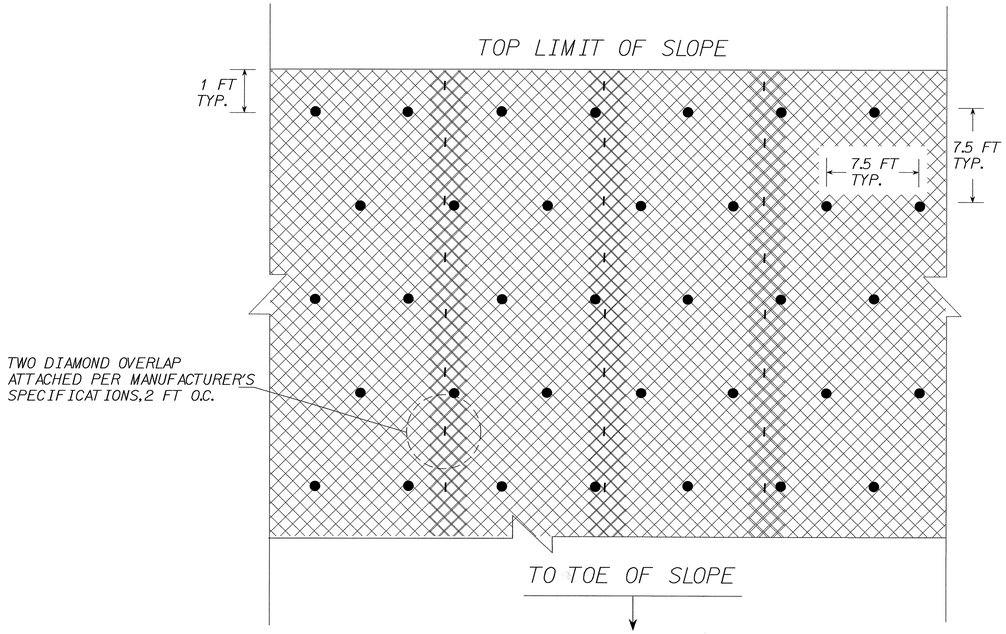

FACE DETAIL

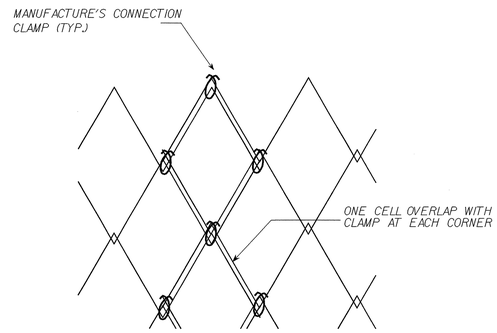

MESH OVERLAP & CONNECTION DETAIL

NOTES:

1) WIRE MESH SHALL BE INSTALLED ON 1.5:1 (H:V) SOIL CUT SLOPES AT THE FOLLOWING LOCATIONS OR AS DIRECTED BY THE ENGINEER.

   99+00 to 100+50 -L-
   106+00 to 107+50 -L-
   111+50 to 113+50 -L-
   182+00 to 186+50 -L-
   257+50 to 261+00 -L-

2) SOIL NAIL LENGTH = 20 FT (TYP)

3) DESIGN TEST LOAD (DTL) = 10 KIPS

4) INSTALL NAILS INTO SLOPE WITH AN INCLINATION OF 15 DEGREES (+/- 2) TO THE HORIZONTAL

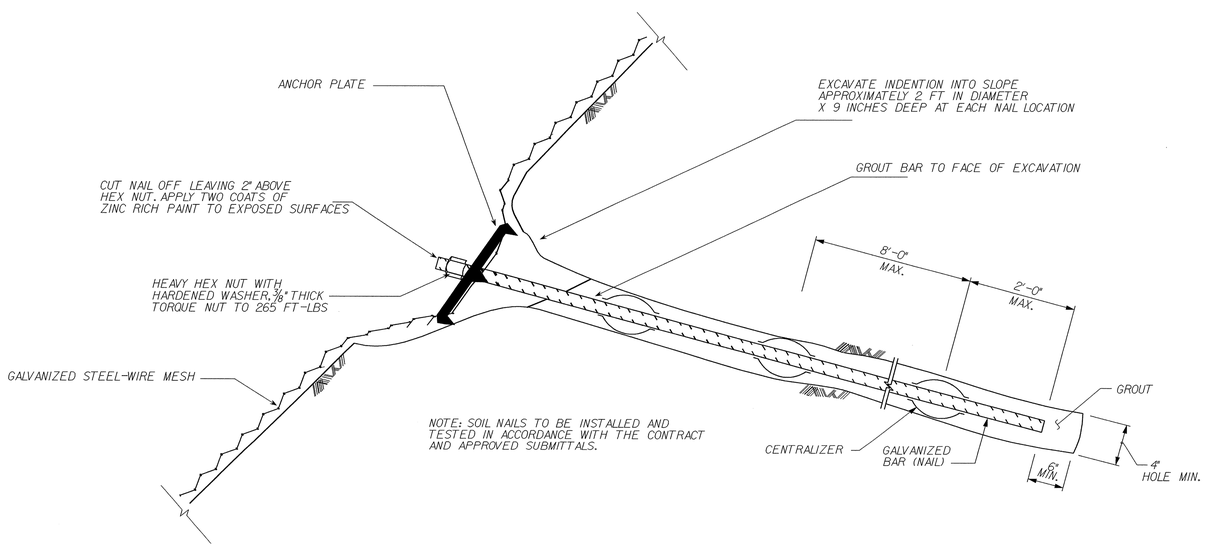

TYPICAL SECTION

TOTAL BILL OF MATERIAL	
SOIL NAIL SLOPE STABILIZATION	5100 SQ. YDS.

PROJECT NO.: A-0011BB

CLAY **COUNTY**

STATION: VARIIES, SEE NOTES ABOVE

SHEET 1 OF 1

GEOTECHNICAL ENGINEERING UNIT

☐ EASTERN REGIONAL OFFICE

☒ WESTERN REGIONAL OFFICE

STATE OF NORTH CAROLINA DEPARTMENT OF TRANSPORTATION RALEIGH

SOIL NAIL SLOPE STABILIZATION

REVISIONS						SHEET NO.
NO.	BY	DATE	NO.	BY	DATE	-
1	-	-	3	-	-	TOTAL SHEETS
2	-	-	4	-	-	-

PREPARED BY: J.C.K.	DATE: 8/08
REVIEWED BY: S.C.C.	DATE: 8/08

8/17/99

PROJECT REFERENCE NO.	SHEET NO.
A-0011BB	3

ROADWAY DESIGN ENGINEER

NORTH CAROLINA PROFESSIONAL SEAL 33296 ENGINEER STEVEN D. KENDALL
S.D. Kendall 8-6-08

STATE OF NORTH CAROLINA
DIVISION OF HIGHWAYS
ROADWAY SUMMARY OF QUANTITIES FOR CONTRACT - C201963

ItemNumber	Sec #	Quantity	Unit	Description
0000100000-N	800	Lump Sum		MOBILIZATION
0001000000-E	200	Lump Sum		CLEARING & GRUBBING .. ACRE(S)
0008000000-E	200	2	ACR	SUPPLEMENTARY CLEARING & GRUB-BING
0022000000-E	225	208,000	CY	UNCLASSIFIED EXCAVATION
0036000000-E	225	5,250	CY	UNDERCUT EXCAVATION
0080000000-E	SP	10,300	TON	CLASS IV SUBGRADE STABILIZA-TION
0098000000-E	SP	3,050	SY	PRE-SPLITTING OF ROCK
0134000000-E	240	3,920	CY	DRAINAGE DITCH EXCAVATION
0141000000-E	240	2,600	LF	BERM DITCH CONSTRUCTION
0156000000-E	250	12,570	SY	REMOVAL OF EXISTING ASPHALT PAVEMENT
0192000000-N	260	6	HR	PROOF ROLLING
0195000000-E	265	1,000	CY	SELECT GRANULAR MATERIAL
0196000000-E	270	23,600	SY	FABRIC FOR SOIL STABILIZATION
0199000000-E	SP	911	SF	TEMPORARY SHORING
0241000000-E	SP	6,405	SY	GENERIC GRADING ITEM ROCK PLATING
0318000000-E	300	1,217	TON	FOUNDATION CONDITIONING MATE-RIAL, MINOR STRS
0343000000-E	310	56	LF	15" SIDE DRAIN PIPE
0396000000-E	310	148	LF	42" RC PIPE CULVERTS, CLASS III
0402000000-E	310	24	LF	48" RC PIPE CULVERTS, CLASS III
0408000000-E	310	44	LF	54" RC PIPE CULVERTS, CLASS III
0414000000-E	310	28	LF	60" RC PIPE CULVERTS, CLASS III
0420000000-E	310	84	LF	66" RC PIPE CULVERTS, CLASS III
0453000000-E	310	18	EA	**" PIPE END SECTION (15")
0453000000-E	310	2	EA	**" PIPE END SECTION (18")
0453000000-E	310	5	EA	**" PIPE END SECTION (24")
0582000000-E	310	92	LF	15" CS PIPE CULVERTS, 0.064" THICK
0588000000-E	310	60	LF	18" CS PIPE CULVERTS, 0.064" THICK
0600000000-E	310	24	LF	30" CS PIPE CULVERTS, 0.079" THICK
0636000000-E	310	6	EA	**" CS PIPE ELBOWS, *****" THICK (15", 0.064")
0708000000-E	310	332	LF	15" BIT COAT CS PIPE CULVERTS, TYPE B 0.064" THICK
0714000000-E	310	152	LF	18" BIT COAT CS PIPE CULVERTS, TYPE B 0.064" THICK
0720000000-E	310	276	LF	24" BIT COAT CS PIPE CULVERTS, TYPE B 0.064" THICK
0726000000-E	310	152	LF	30" BIT COAT CS PIPE CULVERTS, TYPE B 0.079" THICK
0806000000-E	310	16	EA	15" BIT COAT CS PIPE ELBOWS, TYPE B 0.064" THICK
0807000000-E	310	4	EA	18" BIT COAT CS PIPE ELBOWS, T YPE B 0.064" THICK
0808000000-E	310	6	EA	24" BIT COAT CS PIPE ELBOWS, T YPE B 0.064" THICK
0809000000-E	310	4	EA	30" BIT COAT CS PIPE ELBOWS, T YPE B 0.079" THICK
0973100000-E	330	80	LF	**" WELDED STEEL PIPE IN SOIL (42")
0973300000-E	330	80	LF	**" WELDED STEEL PIPE NOT IN SOIL (42")
0995000000-E	340	1,400	LF	PIPE REMOVAL
1011000000-N	500	Lump Sum		FINE GRADING
1110000000-E	510	2,000	TON	STABILIZER AGGREGATE
1121000000-E	520	30,100	TON	AGGREGATE BASE COURSE
1220000000-E	545	10,000	TON	INCIDENTAL STONE BASE
1231000000-E	560	14,000	CY	SHOULDER BORROW
1275000000-E	600	17,500	GAL	PRIME COAT

ItemNumber	Sec #	Quantity	Unit	Description
1489000000-E	610	1,000	TON	ASPHALT CONC BASE COURSE, TYPE B25.0B
1498000000-E	610	13,300	TON	ASPHALT CONC INTERMEDIATE COURSE, TYPE I19.0B
1519000000-E	610	14,925	TON	ASPHALT CONC SURFACE COURSE, TYPE S9.5B
1525000000-E	610	1,700	TON	ASPHALT CONC SURFACE COURSE, TYPE SF9.5A
1560000000-E	620	1,675	TON	ASPHALT BINDER FOR PLANT MIX, GRADE PG 64-22
1693000000-E	654	500	TON	ASPHALT PLANT MIX, PAVEMENT REPAIR
2209000000-E	838	14	CY	ENDWALLS
2220000000-E	838	30	CY	REINFORCED ENDWALLS
2253000000-E	840	2	CY	PIPE COLLARS
2264000000-E	840	0.3	CY	PIPE PLUGS
2275000000-E	SP	120	CY	FLOWABLE FILL
2286000000-N	840	79	EA	MASONRY DRAINAGE STRUCTURES
2297000000-E	840	50	CY	MASONRY DRAINAGE STRUCTURES
2308000000-E	840	5	LF	MASONRY DRAINAGE STRUCTURES
2366000000-N	840	48	EA	FRAME WITH TWO GRATES, STD 840.24
2367000000-N	840	27	EA	FRAME WITH TWO GRATES, STD 840.29
2396000000-N	840	7	EA	FRAME WITH COVER, STD 840.54
2556000000-E	846	2,150	LF	SHOULDER BERM GUTTER
2577000000-E	846	2,500	LF	CONCRETE EXPRESSWAY GUTTER
2612000000-E	848	340	SY	6" CONCRETE DRIVEWAY
2619000000-E	850	117	SY	4" CONCRETE PAVED DITCH
3030000000-E	862	12,025	LF	STEEL BM GUARDRAIL
3045000000-E	862	1,450	LF	STEEL BM GUARDRAIL, SHOP CURVED
3150000000-N	862	10	EA	ADDITIONAL GUARDRAIL POSTS
3195000000-N	862	32	EA	GUARDRAIL ANCHOR UNITS, TYPE AT-1
3270000000-N	SP	25	EA	GUARDRAIL ANCHOR UNITS, TYPE 350
3360000000-E	863	4,725	LF	REMOVE EXISTING GUARDRAIL
3559000000-E	866	950	LF	** STRAND BARBED WIRE FENCE WITH POSTS (2)
3565000000-E	866	1	EA	DOUBLE GATES, **" HIGH, **' WIDE, **' OPENING (48", 10', 20')
3574000000-E	867	600	LF	GENERIC FENCING ITEM REMOVE & RESET 48" WOOD FENCE
3628000000-E	876	210	TON	RIP RAP, CLASS I
3649000000-E	876	585	TON	RIP RAP, CLASS B
3656000000-E	876	4,550	SY	FILTER FABRIC FOR DRAINAGE
4072000000-E	903	1,656	LF	SUPPORTS, 3-LB STEEL U-CHANNEL
4096000000-N	904	4	EA	SIGN ERECTION, TYPE D
4102000000-N	904	53	EA	SIGN ERECTION, TYPE E
4108000000-N	904	12	EA	SIGN ERECTION, TYPE F
4116100000-N	904	11	EA	SIGN ERECTION, RELOCATE, TYPE **** (GROUND MOUNTED) (D)
4155000000-N	907	44	EA	DISPOSAL OF SIGN SYSTEM, U-CHANNEL
4238000000-N	907	1	EA	DISPOSAL OF SIGN, D, E OR F
4400000000-E	1110	300	SF	WORK ZONE SIGNS (STATIONARY)
4405000000-E	1110	200	SF	WORK ZONE SIGNS (PORTABLE)
4410000000-E	1110	100	SF	WORK ZONE SIGNS (BARRICADE MOUNTED)
4415000000-N	1115	1	EA	FLASHING ARROW PANELS, TYPE C
4422000000-N	1120	8	DAY	CHANGEABLE MESSAGE SIGN (SHORT TERM)
4430000000-N	1130	300	EA	DRUMS
4435000000-N	1135	100	EA	CONES
4445000000-E	1145	120	LF	BARRICADES (TYPE III)
4455000000-N	1150	1,100	MD	FLAGGER

ItemNumber	Sec #	Quantity	Unit	Description
4507000000-E	SP	600	LF	WATER FILLED BARRIER
4650000000-N	1251	285	EA	TEMPORARY RAISED PAVEMENT MARKERS
4725000000-E	1205	33	EA	THERMOPLASTIC PAVEMENT MARKING SYMBOL (90 MILS)
4810000000-E	1205	270,210	LF	PAINT PAVEMENT MARKING LINES (4")
4835000000-E	1205	1,050	LF	PAINT PAVEMENT MARKING LINES (24")
4845000000-N	1205	10	EA	PAINT PAVEMENT MARKING SYMBOL
4847000000-E	1205	90,070	LF	POLYUREA PAVEMENT MARKING LINES (4", **********) (STANDARD GLASS BEADS)
4847110000-E	1205	600	LF	POLYUREA PAVEMENT MARKING LINES (8", **********) (STANDARD GLASS BEADS)
4847140000-E	1205	350	LF	POLYUREA PAVEMENT MARKING LINES (24", **********) (STANDARD GLASS BEADS)
4850000000-E	1205	82,800	LF	REMOVAL OF PAVEMENT MARKING LINES (4")
4905000000-N	1253	330	EA	SNOWPLOWABLE PAVEMENT MARKERS
5538000000-E	1515	1	EA	4" VALVE
5546000000-E	1515	2	EA	8" VALVE
5709000000-E	1520	198	LF	**" FORCE MAIN SEWER (2.5")
5709100000-E	1520	120	LF	2" FORCE MAIN SEWER
5709400000-E	1520	3,151	LF	8" FORCE MAIN SEWER
5801000000-E	1530	3,223	LF	ABANDON 8" UTILITY PIPE
6000000000-E	1605	20,000	LF	TEMPORARY SILT FENCE
6006000000-E	1610	2,700	TON	STONE FOR EROSION CONTROL, CLASS A
6009000000-E	1610	4,925	TON	STONE FOR EROSION CONTROL, CLASS B
6012000000-E	1610	4,900	TON	SEDIMENT CONTROL STONE
6015000000-E	1615	49.5	ACR	TEMPORARY MULCHING
6018000000-E	1620	2,100	LB	SEED FOR TEMPORARY SEEDING
6021000000-E	1620	10	TON	FERTILIZER FOR TEMPORARY SEED-ING
6024000000-E	1622	825	LF	TEMPORARY SLOPE DRAINS
6027000000-N	1622	22	EA	INLET PROTECTION AT TEMPORARY SLOPE DRAINS
6029000000-E	SP	1,950	LF	SAFETY FENCE
6030000000-E	1630	31,275	CY	SILT EXCAVATION
6036000000-E	1631	34,000	SY	MATTING FOR EROSION CONTROL
6037000000-E	SP	130	SY	COIR FIBER MAT
6038000000-E	SP	11,355	SY	PERMANENT SOIL REINFORCEMENT MAT
6042000000-E	1632	4,550	LF	1/4" HARDWARE CLOTH
6045000000-E	SP	150	LF	**" TEMPORARY PIPE (15")
6070000000-N	SP	4	EA	SPECIAL STILLING BASINS
6071010000-E	SP	950	LF	WATTLE
6071020000-E	SP	520	LB	POLYACRYLAMIDE (PAM)
6071030000-E	SP	3,800	LF	COIR FIBER BAFFLES
6071050000-E	SP	7	EA	**" SKIMMER (1-1/2")
6071050000-E	SP	13	EA	**" SKIMMER (2")
6071050000-E	SP	1	EA	**" SKIMMER (2-1/2")
6084000000-E	1660	65.5	ACR	SEEDING & MULCHING
6087000000-E	1660	36	ACR	MOWING
6090000000-E	1661	450	LB	SEED FOR REPAIR SEEDING
6093000000-E	1661	1.25	TON	FERTILIZER FOR REPAIR SEEDING
6096000000-E	1662	1,425	LB	SEED FOR SUPPLEMENTAL SEEDING
6108000000-E	1665	42.75	TON	FERTILIZER TOPDRESSING
6111000000-E	SP	100	LF	IMPERVIOUS DIKE
6114000000-N	SP	30.5	HR	SPECIALIZED HAND MOWING
6117000000-N	SP	45	EA	RESPONSE FOR EROSION CONTROL

ItemNumber	Sec #	Quantity	Unit	Description
8802015100-N	SP	3	EA	SOIL NAIL VERIFICATION TESTS
8802015110-N	SP	40	EA	SOIL NAIL PROOF TESTS
8834000000-N	SP	40	EA	GENERIC RETAINING WALL ITEM SUPPLEMENTAL SOIL NAILS
8848000000-E	SP	5,100	SY	GENERIC RETAINING WALL ITEM SOIL NAIL SLOPE STABILIZATION
******* BEGIN SCHEDULE AA ******* ******* (3 ALTERNATES) *******				
0366000000-E AA1	310	4,692	LF	15" RC PIPE CULVERTS, CLASS III
0372000000-E AA1	310	1,148	LF	18" RC PIPE CULVERTS, CLASS III
0378000000-E AA1	310	1,512	LF	24" RC PIPE CULVERTS, CLASS III
0384000000-E AA1	310	1,116	LF	30" RC PIPE CULVERTS, CLASS III
*** OR ***				
0366000000-E AA2	310	1,540	LF	15" RC PIPE CULVERTS, CLASS III
0372000000-E AA2	310	500	LF	18" RC PIPE CULVERTS, CLASS III
0378000000-E AA2	310	1,248	LF	24" RC PIPE CULVERTS, CLASS III
0384000000-E AA2	310	672	LF	30" RC PIPE CULVERTS, CLASS III
0536000000-E AA2	SP	3,152	LF	***" HDPE PIPE CULVERTS (15")
0536000000-E AA2	SP	648	LF	***" HDPE PIPE CULVERTS (18")
0536000000-E AA2	SP	264	LF	***" HDPE PIPE CULVERTS (24")
0536000000-E AA2	SP	444	LF	***" HDPE PIPE CULVERTS (30")
*** OR ***				
0366000000-E AA3	310	1,540	LF	15" RC PIPE CULVERTS, CLASS III
0372000000-E AA3	310	500	LF	18" RC PIPE CULVERTS, CLASS III
0378000000-E AA3	310	1,248	LF	24" RC PIPE CULVERTS, CLASS III
0384000000-E AA3	310	672	LF	30" RC PIPE CULVERTS, CLASS III
0540000000-E AA3	SP	3,152	LF	***" ALUMINIZED CORRUGATED STEEL PIPE CULVERTS, ****" THICK (15", 0.064")
0540000000-E AA3	SP	648	LF	***" ALUMINIZED CORRUGATED STEEL PIPE CULVERTS, ****" THICK (18", 0.064")
0540000000-E AA3	SP	264	LF	***" ALUMINIZED CORRUGATED STEEL PIPE CULVERTS, ****" THICK (24", 0.064")
0540000000-E AA3	SP	444	LF	***" ALUMINIZED CORRUGATED STEEL PIPE CULVERTS, ****" THICK (30", 0.079")
******* END SCHEDULE AA *******				

09-JUL-2008 11:01
r:\roadway\proj\a0011bb_rdy_tsh.dgn
$$$$USERNAME$$$$

COMPUTED BY: FAT & SEM DATE: FEB. – 2008
CHECKED BY: SDK & TMB DATE: APRIL – 2008

PROJECT REFERENCE NO.	SHEET NO.
A-0011BB	3-A

STATE OF NORTH CAROLINA
DIVISION OF HIGHWAYS

LIST OF PIPES, ENDWALLS, ETC. (FOR PIPES 48" & UNDER)

STATION	LOCATION (LT, RT, OR CL)	STRUCTURE NO. FROM	STRUCTURE NO. TO	TOP ELEVATION	INVERT ELEVATION	INVERT ELEVATION	CLASS III R.C. PIPE (UNLESS NOTED OTHERWISE) 15"	18"	24"	30"	42"	48"	BITUMINOUS COATED C.S. PIPE TYPE 'B' 15" .064	18" .064	24" .064	30" .079	UNCOATED C.S. PIPE TYPE 'B' 15" .064	18" .064	30" .079	CLASS III R.C. PIPE OR C.S.PIPE, TYPE III ALUMINIZED OR HDPE PIPE 'S' OR 'D' 15"	18"	24"	30"	15" SIDE DRAIN PIPE	18" SIDE DRAIN PIPE	24" SIDE DRAIN PIPE	30" SIDE DRAIN PIPE	PARALLEL PIPE END SECTION, NO. & SIZE STD. 310.02 or .04	42" WELDED STEE PIPE (TRENCHLESS)	ENDWALLS STD. 838.01, STD. 838.11 OR STD. 838.80 (UNLESS NOTED OTHERWISE) CU. YDS. R.C.P.	C.S.P.	QUANTITIES FOR DRAINAGE STRUCTURES + TOTAL L.F. FOR PAY QUANTITY SHALL BE COL. 'A' + (1.3 X COL. 'B') PER EACH (0' THRU 5.0')	LIN. FT. A 5.0' THRU 10.0'	LIN. FT. B 10.0' AND ABOVE	BITUMNOUS COATED CORR. STEEL ELBOWS No. & SIZE	G.D.I. TYPE "A" STD. 840.17 OR 840.26	G.D.I. TYPE "B" STD. 840.18 OR 840.27	G.D.I. TYPE "D" STD. 840.19 OR 840.28	G.D.I. FRAME WITH TWO GRATES STD. 840.24	T.B.D.I. TYPE "A" (SEE DETAIL 2-C)	T.B.D.I. STD. 840.35	G.D.I. FRAME WITH TWO GRATES STD. 840.29	T.B.J.B. (SEE DETAIL 2-H)	OPEN THROAT C.B. STD. 840.04	SPRING BOX – Concrete or Brick Cu.Yds. STD. 840.41	MANHOLE FRAME AND COVER Std. 840.54	TBJB STD. 840.34	CORR. STEEL ELBOWS NO. & SIZE	BERM DITCH OUTLET STD. 850.10 & 850.11	FLOWABLE FILL Cu. Yds.	CONC. COLLARS CL. "B" Cu.Yds. (SEE DETAIL 2-1)	CONC. & BRICK PIPE PLUG, Cu.Yds. STD. 840.71	PIPE REMOVAL LIN.FT.	REMARKS
81+00	RT.	1		1848.7																											1					1		1														
82+00	RT.	2		1845.2																											1						1	1													
		1	2		1845.9	1843.3														100																															
81+85	CL.	2	3		1843.0	1842.5		68																																												
		4																																																6.3				REMOVE HEADWALLS
83+03	RT.	5		1843.2																											1							1	1													
		5	6		1840.0	1842.0															32																															
83+70	RT.	7		1840.2																											1							1	1													
		5	7		1840.0	1837.0		68																																												
84+40	LT.	8																		32							2@ 15"																									
84+40	RT.	9		1837.1																											1							1	1													
		7	9		1837.0	1834.0	68																																													
85+09	RT.	10		1834.1																											1							1	1													
		9	10		1834.0	1830.9	72																																													
87+00	RT.	11		1825.5																											1							1	1													
		10	11		1830.7	1822.1		188																																												
87+70	RT.	12		1822.6																											1	0.8						1		1												SPECIAL DETAIL
		11	12		1822.1	1818.3		68																																												
87+70	RT.	13		1820.0																											1					1		1													69'
		12	13		1816.8	1817.0															12																															
88+50	RT.	14		1816.8																											1			1				1													
		12	14		1816.8	1812.1			80																																											
		14	15		1812.1	1808.8																56																														
94+34	CL.	18																																															5.6				REMOVE HEADWALLS
94+72	RT.	19																																																.232		REMOVE HEADWALLS
		20	21		1802.5	1804.0			148																																											
99+50	RT.	22		1815.4																											1					1		1													
		22	23		1811.9	1811.3			72																																											
99+50	RT.	24																																														11				
		22	24		1812.6	1841.5							48																													2@ 15"											ROD & LUG
100+32	LT.	23A																																															3.8				
103+32	CL.	25																																															3.1				REMOVE HEADWALLS
103+50	RT.	26		1827.3																											1					1		1													
		22	26		1812.6	1824.5														392																															
103+50	RT.	27																																														11				
		26	27		1824.5	1877.0							80																													2@ 15"											ROD & LUG
106+40	RT.	28		1835.4																											1					1		1													
		28	29		1831.4	1828.0			80																																											
106+40	RT.	30																																														31				
		28	30		1831.9	1857.0									40																											2@ 24"											ROD & LUG
SHEET TOTAL																																										4@ 15"											
							140		380				128		40					524		56					2@ 15"				13		2@ 24"	1		1			1		6						53			.232		SHEET TOTAL
								392													44										0.8				5		7				5								18.8			69'	

ABBREVIATIONS

C.B.	CATCH BASIN
N.D.I.	NARROW DROP INLET
D.I.	DROP INLET
G.D.I.	GRATED DROP INLET
G.D.I. (N.S.)	GRATED DROP INLET (NARROW SLOT)
J.B.	JUNCTION BOX
M.H.	MANHOLE
T.B.D.I.	TRAFFIC BEARING DROP INLET
T.B.J.B.	TRAFFIC BEARING JUNCTION BOX
F. E. S.	FLARIED END SEVTION

COMPUTED BY: FAT & SEM DATE: FEB. – 2008
CHECKED BY: SDK & TMB DATE: APRIL – 2008

STATE OF NORTH CAROLINA
DIVISION OF HIGHWAYS

PROJECT REFERENCE NO.	SHEET NO.
A-0011BB	3-B

LIST OF PIPES, ENDWALLS, ETC. (FOR PIPES 48" & UNDER)

STATION	LOCATION (LT,RT, OR CL)	STRUCTURE NO. FROM	STRUCTURE NO. TO	TOP ELEVATION	INVERT ELEVATION	INVERT ELEVATION	CLASS III R.C. PIPE (UNLESS NOTED OTHERWISE) 15"	18"	24"	30"	42"	48"	BITUMINOUS COATED C.S. PIPE TYPE 'B' 15" .064	18" .064	24" .064	30" .079	UNCOATED C.S. PIPE TYPE 'B' 15" .064	18" .064	30" .079	CLASS III R.C. PIPE OR C.S.PIPE, TYPE III ALUMINIZED OR HDPE PIPE 'S' OR 'D' 15"	18"	24"	30"	15" SIDE DRAIN PIPE	18" SIDE DRAIN PIPE	24" SIDE DRAIN PIPE	30" SIDE DRAIN PIPE	PARALLEL PIPE END SECTION, NO. & SIZE STD. 310.02 or .04	42" WELDED STEE PIPE (TRENCHLESS)	ENDWALLS STD. 838.01, STD. 838.11 OR STD. 838.80 (UNLESS NOTED OTHERWISE) CU. YDS. R.C.P.	C.S.P.	QUANTITIES FOR DRAINAGE STRUCTURES PER EACH (0' THRU 5.0')	LIN. *FT. A 5.0' THRU 10.0' (* TOTAL L.F. FOR PAY QUANTITY SHALL BE COL. 'A' + (1.3 X COL.'B'))	B 10.0' AND ABOVE	BITUMNOUS COATED CORR. STEEL ELBOWS No. & SIZE	G.D.I. TYPE "A" STD. 840.17 OR 840.26	G.D.I. TYPE "B" STD. 840.18 OR 840.27	G.D.I. TYPE "D" STD. 840.19 OR 840.28	G.D.I. FRAME WITH TWO GRATES STD. 840.24		T.B.D.I. TYPE "A" (SEE DETAIL 2-C)	T.B.D.I. STD. 840.35	G.D.I. FRAME WITH TWO GRATES STD. 840.29	T.B.J.B. (SEE DETAIL 2-H)	OPEN THROAT C.B. STD. 840.04	SPRING BOX – Concrete or Brick Cu.Yds. STD. 840.41	MANHOLE FRAME AND COVER Std. 840.54	TBJB STD. 840.34	CORR. STEEL ELBOWS NO. & SIZE	BERM DITCH OUTLET STD. 850.10 & 850.11	FLOWABLE FILL Cu. Yds.	CONC. COLLARS CL. "B" Cu.Yds. (SEE DETAIL 2-I)	CONC. & BRICK PIPE PLUG, Cu.Yds. STD. 840.71	PIPE REMOVAL LIN.FT.	REMARKS
106+52	RT.	31																																																	5.6				REMOVE HEADWALLS
111+40	RT.	32																																																	4.6				REMOVE HEADWALLS
111+35	RT.	33		1843.3																												1					1		1																
		33	34		1840.6	1834.2	88																																																
114+00	RT.	35		1844.1																												1					1		1																
		33	35		1839.5	1841.3														244																																			
114+00	RT.	36																																																11					
114+00	RT.	35	36		1841.3	1865.9							40																						2@ 15"																				ROD & LUG
115+00	RT.	37		1843.6																												1					1		1																
		37	38		1840.9	1837.0														100																																			
123+22	RT.	41	42			1836.7										40																			2@ 30"																				REMOVE HW /METAL BAND
126+66	CL.	43	44		1842.9	1837.0					108																				3.91																				12.7				REMOVE HW, ROD & LUG
127+60	RT.	45		1850.6																												1	0.2			1			1																
		45	46		1845.4	1844.7																	52																																
128+85	LT.	47																																																	3.5				REMOVE HEADWALLS
130+30	RT.	48		1858.5																												1	0.3			1			1																
		45	48		1845.4	1853.2				276																																													
		45A																																																				36′	
-Y3-11+16	LT.	49		1861.6																												1	0.2			1			1																
		48	49		1853.2	1856.4				108																																													
-Y3-12+25	LT.	50		1862.5																												1	0.2			1			1																
		49	50		1856.4	1857.3				116																																													
-Y3-12+13	CL.	51																																																11					
		50	51		1858.3	1874.5								40																					2@ 18"																				ROD & LUG
-Y3-12+25	CL.	52																														1														1									
		50	52		1857.3									12																																									
-Y3-14+20	LT.	53		1866.6																												1				1			1																
		50	53		1857.8	1861.8			196																																														
		53	54		1862.6	1868.5							20																						2@ 15"																				ROD & LUG
		53	55		1861.8	1869.0									52													1@ 24"																										32′	
130+99	LT.	56		1858.0																												1					1		1																
		56	57		1855.3	1847.0							44																						2@ 15"																				ROD & LUG
132+38	CL.	58																																																	2.9				REMOVE HEADWALLS
132+01	LT.	59		1861.6																												1					1		1																
131+28	RT.	48	59		1855.7	1858.8														164																																			
134+00	RT.	60		1864.5																												1					1		1																
		59	60		1858.8	1861.7														196																																			
134+00	RT.	61																																																11					
		60	61		1861.7	1884.5							48																						2@ 15"																				ROD & LUG
		62 OUT																		52								2@ 15"																											
SHEET TOTAL																																			8@ 15"																				
							88		196		108		152		52					756			52					2@ 15"				12			2@ 18"	5			11							1				33				68′	SHEET TOTAL
										500				52		40												1@ 24"			3.91		0.9		2@ 30"		6													29.3				

ABBREVIATIONS

- C.B. CATCH BASIN
- N.D.I. NARROW DROP INLET
- D.I. DROP INLET
- G.D.I. GRATED DROP INLET
- G.D.I. (N.S.) GRATED DROP INLET (NARROW SLOT)
- J.B. JUNCTION BOX
- M.H. MANHOLE
- T.B.D.I. TRAFFIC BEARING DROP INLET
- T.B.J.B. TRAFFIC BEARING JUNCTION BOX
- F. E. S. FLARIED END SEVTION

COMPUTED BY: FAT & SEM	DATE: FEB. – 2008
CHECKED BY: SDK & TMB	DATE: APRIL – 2008

PROJECT REFERENCE NO.	SHEET NO.
A-0011BB	3-C

STATE OF NORTH CAROLINA
DIVISION OF HIGHWAYS

LIST OF PIPES, ENDWALLS, ETC. (FOR PIPES 48" & UNDER)

STATION / SIZE / THICKNESS OR GAUGE	LOCATION (LT,RT, OR CL)	STRUCTURE NO. FROM	STRUCTURE NO. TO	TOP ELEVATION	INVERT ELEVATION	INVERT ELEVATION	CLASS III R.C. PIPE (UNLESS NOTED OTHERWISE) 15"	18"	24"	30"	42"	48"	BITUMINOUS COATED C.S. PIPE TYPE 'B' 15" .064	18" .064	24" .064	30" .079	UNCOATED C.S. PIPE TYPE 'B' 15" .064	18" .064	30" .079	CLASS III R.C. PIPE OR C.S.PIPE, TYPE III ALUMINIZED OR HDPE PIPE 'S' OR 'D' 15"	18"	24"	30"	15" SIDE DRAIN PIPE	18" SIDE DRAIN PIPE	24" SIDE DRAIN PIPE	30" SIDE DRAIN PIPE	PARALLEL PIPE END SECTION, NO. & SIZE STD. 310.02 or .04	42" WELDED STEE PIPE (TRENCHLESS)	ENDWALLS STD. 838.01, STD. 838.11 OR STD. 838.80 (UNLESS NOTED OTHERWISE) CU. YDS. R.C.P.	C.S.P.	QUANTITIES FOR DRAINAGE STRUCTURES PER EACH (0' THRU 5.0')	LIN. *FT. A 5.0' THRU 10.0' (* TOTAL L.F. FOR PAY QUANTITY SHALL BE COL. 'A' + (1.3 X COL.'B'))	B 10.0' AND ABOVE	BITUMNOUS COATED CORR. STEEL ELBOWS No. & SIZE	G.D.I. TYPE "A" STD. 840.17 OR 840.26	G.D.I. TYPE "B" STD. 840.18 OR 840.27	G.D.I. TYPE "D" STD. 840.19 OR 840.28	G.D.I. FRAME WITH TWO GRATES STD. 840.24		T.B.D.I. TYPE "A" (SEE DETAIL 2-C)	T.B.D.I. STD. 840.35	G.D.I. FRAME WITH TWO GRATES STD. 840.29	T.B.J.B. (SEE DETAIL 2-H)	OPEN THROAT C.B. STD. 840.04	SPRING BOX – Concrete or Brick Cu.Yds. STD. 840.41	MANHOLE FRAME AND COVER Std. 840.54	TBJB STD. 840.34	CORR. STEEL ELBOWS NO. & SIZE	BERM DITCH OUTLET STD. 850.10 & 850.11	FLOWABLE FILL Cu. Yds.	CONC. COLLARS CL. "B" Cu.Yds. (SEE DETAIL 2-I)	CONC. & BRICK PIPE PLUG, Cu.Yds. STD. 840.71	PIPE REMOVAL LIN.FT.	REMARKS
		63	OUT																	72								2@ 15"																											
		66	OUT																	28								2@ 15"																											
140+82	RT.	67		1871.1																												1	1	0.6													1	1							
140+71	RT.	68		1869.0																												1													1										
		67	68		1860.5	1864.3																44																																25'	
		69	OUT																					56																															
146+99	RT.	72		1876.5																												1				1			1																
		72	73		1872.5	1867.3				100																																													
		72	74		1872.5	1875.1																	104																																
146+50	RT.	74A							48																																													190'	
150+00	RT.	75	OUT																			56																																130'	
151+01	RT.	76		1887.3																	44											1										1	1												
		76	77		1883.9	1883.6																																																40'	
151+51	RT.	78		1888.0																												1										1	1												
		76	78		1884.1	1884.9	52																																																
152+50	RT.	79		1889.6																												1										1	1												
		78	79		1884.9	1886.4	100																																																
153+27	RT.	80		1890.8																												1										1	1												
152+90	RT.	79	80		1886.4	1887.6	72																																																
		80	81		1887.6	1889.3														56																																		40'	
154+50	RT.	82																																																				56'	
154+56	RT.	83																																																	7.0				
155+00	RT.	84		1892.4																												1				1			1																
		84	85		1888.4	1886.9				72																																													
																																1				1			1																
155+00	RT.	86		1896.4																												1				1			1																
		84	86		1888.4	1892.4																	188																																
156+88	RT.	87																																																31					
		86	87		1892.4	1918.0										52																			2@ 30"																				ROD & LUG
156+87	LT.	88																																																	9.1				REMOVE HEADWALL
158+50	RT.	89		1899.8																												1					1		1																
		86	89		1893.4	1896.8															160																																		
158+50	CL.	90																																																	5.0				REMOVE HEADWALL
163+50	RT.	93		1910.0																												1					1		1																
		93	94		1907.3	1906.5														64																																			
164+49	RT.	95		1912.4																												1				1			1																
		95	96		1908.9	1908.3			68																																														
165+20	LT.	96A																																																	5.0				REMOVE HEADWALLS
165+20	RT.	97		1913.8																												1					1		1																
		95	97		1908.9	1910.3																68																																	
																																			2@ 30"																				
SHEET							224		116							52				220		168		56				4@ 15"				14		0.6		5						4					1	1		31				481'	SHEET
TOTAL										172											204		292										1				3		8				4		1						26.1				TOTAL

ABBREVIATIONS

- C.B. CATCH BASIN
- N.D.I. NARROW DROP INLET
- D.I. DROP INLET
- G.D.I. GRATED DROP INLET
- G.D.I. (N.S.) GRATED DROP INLET (NARROW SLOT)
- J.B. JUNCTION BOX
- M.H. MANHOLE
- T.B.D.I. TRAFFIC BEARING DROP INLET
- T.B.J.B. TRAFFIC BEARING JUNCTION BOX
- F. E. S. FLARIED END SEVTION

COMPUTED BY: FAT & SEM DATE: FEB. – 2008
CHECKED BY: SDK & TMB DATE: APRIL – 2008

PROJECT REFERENCE NO.	SHEET NO.
A-0011BB	3-D

STATE OF NORTH CAROLINA
DIVISION OF HIGHWAYS

LIST OF PIPES, ENDWALLS, ETC. (FOR PIPES 48" & UNDER)

STATION / SIZE / THICKNESS OR GAUGE	LOCATION (LT,RT, OR CL)	STRUCTURE NO. FROM	STRUCTURE NO. TO	TOP ELEVATION	INVERT ELEVATION	INVERT ELEVATION	CLASS III R.C. PIPE (UNLESS NOTED OTHERWISE) 15"	18"	24"	30"	42"	48"	BITUMINOUS COATED C.S. PIPE TYPE 'B' 15" .064	18" .064	24" .064	30" .079	UNCOATED C.S. PIPE TYPE 'B' 15" .064	18" .064	30" .079	CLASS III R.C. PIPE OR C.S.PIPE, TYPE III ALUMINIZED OR HDPE PIPE 'S' OR 'D' 15"	18"	24"	30"	15" SIDE DRAIN PIPE	18" SIDE DRAIN PIPE	24" SIDE DRAIN PIPE	30" SIDE DRAIN PIPE	PARALLEL PIPE END SECTION, NO. & SIZE STD. 310.02 or .04	42" WELDED STEE PIPE (TRENCHLESS)	ENDWALLS STD. 838.01, STD. 838.11 OR STD. 838.80 (UNLESS NOTED OTHERWISE) CU. YDS. R.C.P.	C.S.P.	QUANTITIES FOR DRAINAGE STRUCTURES * TOTAL L.F. FOR PAY QUANTITY SHALL BE COL. 'A' + (1.3 X COL. 'B') PER EACH (0' THRU 5.0')	UN. *FT. A 5.0' THRU 10.0'	B 10.0' AND ABOVE	BITUMINOUS COATED CORR. STEEL ELBOWS No. & SIZE	G.D.I. TYPE "A" STD. 840.17 OR 840.26	G.D.I. TYPE "B" STD. 840.18 OR 840.27	G.D.I. TYPE "D" STD. 840.19 OR 840.28	G.D.I. FRAME WITH TWO GRATES STD. 840.24	T.B.D.I. TYPE "A" (SEE DETAIL 2-C)	T.B.D.I. STD. 840.35	G.D.I. FRAME WITH TWO GRATES STD. 840.29	T.B.J.B. (SEE DETAIL 2-H)	OPEN THROAT C.B. STD. 840.04	SPRING BOX – Concrete or Brick Cu.Yds. STD. 840.41	MANHOLE FRAME AND COVER Std. 840.54	TBJB STD. 840.34	CORR. STEEL ELBOWS NO. & SIZE	BERM DITCH OUTLET STD. 850.10 & 850.11	FLOWABLE FILL Cu. Yds.	CONC. COLLARS CL. "B" Cu.Yds. (SEE DETAIL 2-I)	CONC. & BRICK PIPE PLUG, Cu.Yds. STD. 840.71	PIPE REMOVAL LIN.FT.	REMARKS
166+00	RT.	98		1915.5																											1				1		1															
		97	98		1910.3	1912.0			76																																										30'	
168+10	RT.	99		1919.9																											1				1		1															
		98	99		1912.7	1917.2														208																														54'	
168+50	RT.	100		1920.7																											1				1		1															
		99	100		1917.2	1918.0	40																																												
171+02	RT.	101		1929.3																											1	0.8						1			1									SPECIAL DETAIL
		101	102		1923.5	1926.4						24																	5.4																					
175+71	RT.	103																																												3.5					REMOVE HEADWALLS
176+00	RT.	104		1944.9																											1				1		1															
		104	105		1941.4	1941.1			64																																										
177+00	RT.	106		1949.1																											1				1		1															
		104	106		1942.2	1946.4														96																															
177+50	RT.	107																		32							2@ 15"																								
178+15	RT.	108		1954.0																											1				1		1															
		108	110		1950.5	1947.0			104																																										
177+75	LT.	109	OUT																			64																													52'	
178+35	RT.	111																																												6.3					
179+49	RT.	112		1961.9																											1							1	1												
		108	112		1951.2	1958.7														132																														135'	
181+18	RT.	113		1968.0																											1							1	1												
		112	113		1958.7	1964.8	164																																												
181+29	RT.	114		1969.3																											1				1		1															
181+25	RT.	113	114		1964.8	1966.6														16																															
181+60	RT.	115		1969.3																											1							1	1												
		113	115		1964.8	1966.1	44																																												
183+20	RT.		115A	1972.4																											1							1	1												36'	
		115	115A		1966.1	1969.3	160																																												
185+95	LT.	115B		1972.9																											1							1	1												
		115B	/OUT		1969.7	1969.5														64																															
180+82	LT.	116																			40																													24'	
183+00	LT.	117																		24							2@ 24"																							32'	
187+25	LT.	118																			52						1@ 18"																								
183+00	LT.	119		1959.3																											1							1	1												
		119	120		1956.1	1953.5													28																										2@15"						ROD & LUG
193+00	LT.	121		1959.3																											1							1	1												41'	
		121	122		1956.1	1953.8							16																				2@ 15"																		ROD & LUG
194+00	RT.	123																													1				1		1															
SHEET TOTAL																											2@ 15"						2@ 15"																		SHEET TOTAL
							408		244				16							572		40					1@ 18"		5.4		16				8		8			7		1				2@15"		9.8			404'	
												24					28				52		64				2@ 24"					0.8									7				1						

ABBREVIATIONS

C.B.	CATCH BASIN
N.D.I.	NARROW DROP INLET
D.I.	DROP INLET
G.D.I.	GRATED DROP INLET
G.D.I. (N.S.)	GRATED DROP INLET (NARROW SLOT)
J.B.	JUNCTION BOX
M.H.	MANHOLE
T.B.D.I.	TRAFFIC BEARING DROP INLET
T.B.J.B.	TRAFFIC BEARING JUNCTION BOX
F. E. S.	FLARIED END SEVTION

COMPUTED BY: FAT & SEM DATE: FEB. – 2008
CHECKED BY: SDK & TMB DATE: APRIL – 2008

PROJECT REFERENCE NO.	SHEET NO.
A-0011BB	3-E

STATE OF NORTH CAROLINA
DIVISION OF HIGHWAYS

LIST OF PIPES, ENDWALLS, ETC. (FOR PIPES 48" & UNDER)

STATION / SIZE / THICKNESS OR GAUGE	LOCATION (LT,RT, OR CL)	STRUCTURE NO. FROM	STRUCTURE NO. TO	TOP ELEVATION	INVERT ELEVATION	INVERT ELEVATION	CLASS III R.C. PIPE (UNLESS NOTED OTHERWISE) 15"	18"	24"	30"	42"	48"	BITUMINOUS COATED C.S. PIPE TYPE 'B' 15" (.064)	18" (.064)	24" (.064)	30" (.079)	UNCOATED C.S. PIPE TYPE 'B' 15" (.064)	18" (.064)	30" (.079)	CLASS III R.C. PIPE OR C.S.PIPE, TYPE III ALUMINIZED OR HDPE PIPE 'S' OR 'D' 15"	18"	24"	30"	15" SIDE DRAIN PIPE	18" SIDE DRAIN PIPE	24" SIDE DRAIN PIPE	30" SIDE DRAIN PIPE	PARALLEL PIPE END SECTION, NO. & SIZE STD. 310.02 or .04	42" WELDED STEE PIPE (TRENCHLESS)	ENDWALLS STD. 838.01, STD. 838.11 OR STD. 838.80 (UNLESS NOTED OTHERWISE) CU. YDS. R.C.P.	C.S.P.	QUANTITIES FOR DRAINAGE STRUCTURES * TOTAL L.F. FOR PAY QUANTITY SHALL BE COL. 'A' + (1.3 X COL. 'B') PER EACH (0' THRU 5.0')	LIN. *FT. A 5.0' THRU 10.0'	B 10.0' AND ABOVE	BITUMINOUS COATED CORR. STEEL ELBOWS No. & SIZE	G.D.I. TYPE "A" STD. 840.17 OR 840.26	G.D.I. TYPE "B" STD. 840.18 OR 840.27	G.D.I. TYPE "D" STD. 840.19 OR 840.28	G.D.I. FRAME WITH TWO GRATES STD. 840.24		T.B.D.I. TYPE "A" (SEE DETAIL 2-C)	T.B.D.I. STD. 840.35	G.D.I. FRAME WITH TWO GRATES STD. 840.29	T.B.J.B. (SEE DETAIL 2-H)	OPEN THROAT C.B. STD. 840.04	SPRING BOX – Concrete or Brick Cu.Yds. STD. 840.41	MANHOLE FRAME AND COVER Std. 840.54		TBJB STD. 840.34	CORR. STEEL ELBOWS NO. & SIZE	BERM DITCH OUTLET STD. 850.10 & 850.11	FLOWABLE FILL Cu. Yds.	CONC. COLLARS CL. "B" Cu.Yds. (SEE DETAIL 2-I)	CONC. & BRICK PIPE PLUG, Cu.Yds. STD. 840.71	PIPE REMOVAL LIN.FT.	REMARKS
194+00	LT.	124		1957.6																												1					1		1																
		123	124		1954.8	1954.5	64																																															
		124	125		1954.5	1953.5															80																																	
196+00	LT.	126		1960.4																												1					1		1																
		124	126		1954.8	1957.7														200																																		
		126A /OUT																		24								2@ 15"																									42'
198+00	RT.	127		1965.6																												1							1	1														
		127	128		1962.4	1952.0											32																																2@15"						ROD & LUG
198+70	LT.	129		1966.7																												1							1	1														
		129	130		1963.5	1960.7	32																																															
199+22	LT.	131													20																					2@ 24"																		REMOVE HEADWALLS
199+22	RT.	132													24																					2@ 24"																		METAL BAND
204+15	RT.	133																		80								2@ 15"																										
205+35	LT.	134																		32								2@ 15"																										
211+54	LT.	135														32																																						REMOVE HW, EXTEND,
211+70	RT.	136														28																																						METAL BAND, ROD & LUG
212+80	RT.	136A		1971.5																												1							1	1														
		136A /OUT			1968.4	1960.8											32																																2@15"						ROD & LUG
213+40	LT.	137																		36								2@ 15"																										
214+40	CL.	138																																																	2.6					REMOVE HEADWALLS & DI
216+00	LT.	139		1959.7																												1					1		1																
218+00	LT.	140		1952.7																												1					1		1																
		139	140		1957.0	1950.1														200																																		
218+00	LT.	141		1962.5																												1					1		1																
		140	141		1950.1	1959.8							36																							2@ 15"																		ROD & LUG
220+00	LT.	142		1945.9																												1					1		1																
		140	142		1949.8	1942.9															200																																	44'
221+00	LT.	143		1938.7																												1					1		1																
		142	143		1942.9	1934.4								100																				2@	18"																		
		143	144		1933.9	1932.0			144																																													ROD & LUG
216+92	RT.	145		1958.6																72												1							1	1														40'
		145	146		1955.4	1958.9																																																
–Y6–15+38	LT.	144A																				36																																
219+40	RT.	147		1949.9																												1							1	1														
		145	147		1955.4	1946.8	248																																															
221+20	RT.	148		1944.1																												1							1	1														
		147	148		1946.8	1940.9	180																																															
221+55	RT.	149		1943.0																												1							1	1														REMOVE HEADWALL
		148	149		1940.9	1939.8	36																																															
222+71	LT.	150									28																			4.5																						.886				SPECIAL DETAIL / REMOVE HW
SHEET TOTAL																																				2@ 15"														4@15"						
							560		144		28		36		44		64			644												14			2@ 18"		7		7			7									2.6			126'	SHEET TOTAL
														100		60					280		36					8@ 15"		4.5					4@ 24"								7									.886			

ABBREVIATIONS

C.B.	CATCH BASIN
N.D.I.	NARROW DROP INLET
D.I.	DROP INLET
G.D.I.	GRATED DROP INLET
G.D.I. (N.S.)	GRATED DROP INLET (NARROW SLOT)
J.B.	JUNCTION BOX
M.H.	MANHOLE
T.B.D.I.	TRAFFIC BEARING DROP INLET
T.B.J.B.	TRAFFIC BEARING JUNCTION BOX
F. E. S.	FLARED END SEVTION

COMPUTED BY: FAT & SEM DATE: FEB. – 2008
CHECKED BY: SDK & TMB DATE: APRIL – 2008

STATE OF NORTH CAROLINA
DIVISION OF HIGHWAYS

PROJECT REFERENCE NO.	SHEET NO.
A-0011BB	3-F

LIST OF PIPES, ENDWALLS, ETC. (FOR PIPES 48" & UNDER)

Pipes (part 1 of 3)

STATION	LOCATION (LT, RT, OR CL)	STRUCTURE NO. FROM	STRUCTURE NO. TO	TOP ELEVATION	INVERT ELEVATION	INVERT ELEVATION	CLASS III R.C. PIPE (UNLESS NOTED OTHERWISE) 15"	18"	24"	30"	42"	48"	BITUMINOUS COATED C.S. PIPE TYPE 'B' 15" .064	18" .064	24" .064	30" .079	UNCOATED C.S. PIPE TYPE 'B' 15" .064	18" .064	30" .079	CLASS III R.C. PIPE OR C.S.PIPE, TYPE III ALUMINIZED OR HDPE PIPE 'S' OR 'D' 15"	18"	24"	30"
222+71	RT.	151									12												
222+50	RT.	152																32					
229+10	LT.	153			1930.5	1928.0			100														
229+10	CL.	153A																					
233+77	LT.	154																					
237+41	LT.	155																			68		
241+65	LT.	156																	24				
		157 OUT			1941.8	1933.5		108															
251+96	LT.	158																12					
251+96	LT.	159		1944.8																			
		159	160		1942.7													16					
254+99	LT.	161		1950.9																			
		161	162		1948.2	1943.5														68			
254+45	RT.	163		1949.4																			
		163	164		1945.9	1943.5			68														
254+55	CL.	165																					
256+25	RT.	166		1955.9																			
		163	166		1946.7	1952.7														196			
256+25	LT.	166A		1957.5																			
		166	166A		1952.7	1954.3														12			
264+07	RT.	167																					
262+45	RT.	168		1956.0																			
		167	168		1953.1	1952.8	20																
263+00	RT.	169		1952.9																			
		168	169		1952.8	1950.2														56			
264+50	RT.	170		1951.0																			
		169	170		1950.2	1948.3														104			
		170	171		1948.3	1945.0	100																
		172	173		1948.5	1939.5									140								
		174 OUT			1930.5	1927.0																	
275+40	CL.	175																					
SHEET TOTAL																							
							120		168		12				140			60		436			
								108											24		68		
GRAND TOTAL																							
							1,540		1,248		148		332		276		92		24		648		444
								500		672		24		152		152		60		3,152		264	

Pipes (part 2 of 3)

STATION	LOCATION	FROM	TO	15" SIDE DRAIN PIPE	18" SIDE DRAIN PIPE	24" SIDE DRAIN PIPE	30" SIDE DRAIN PIPE	PARALLEL PIPE END SECTION, NO. & SIZE STD. 310.02 or .04	42" WELDED STEE PIPE (TRENCHLESS)	ENDWALLS STD. 838.01, STD. 838.11 OR STD. 838.80 (UNLESS NOTED OTHERWISE) CU. YDS. R.C.P.	C.S.P.	QUANTITIES FOR DRAINAGE STRUCTURES PER EACH (0' THRU 5.0')	LIN. *FT. A 5.0' THRU 10.0'	B 10.0' AND ABOVE	BITUMNOUS COATED CORR. STEEL ELBOWS No. & SIZE
222+71	RT.	151													
222+50	RT.	152													
229+10	LT.	153						2@ 24"							
229+10	CL.	153A													
233+77	LT.	154													
237+41	LT.	155						1@ 18"							
241+65	LT.	156													
		157 OUT													
251+96	LT.	158													
251+96	LT.	159										1			
		159	160												
254+99	LT.	161										1			
		161	162												
254+45	RT.	163										1			
		163	164												
254+55	CL.	165													
256+25	RT.	166										1			
		163	166												
256+25	LT.	166A										1			
		166	166A												
264+07	RT.	167										1			
262+45	RT.	168										1			
		167	168												
263+00	RT.	169										1			
		168	169												
264+50	RT.	170										1			
		169	170												
		170	171									1			
		172	173												
		174 OUT							160						
275+40	CL.	175													
SHEET TOTAL								1@ 18"							
								2@ 24"				10			
									160						
GRAND TOTAL									160		3.91		3.5	.6	16@15"
								18@ 15"		9.9	SAY		4.28		4@18"
				56				2@ 18"		SAY	4	79	SAY		6@24"
								5@ 24"		10			5		4@30"

Pipes (part 3 of 3)

STATION	LOCATION	FROM	TO	G.D.I. TYPE "A" STD. 840.17 OR 840.26	G.D.I. TYPE "B" STD. 840.18 OR 840.27	G.D.I. TYPE "D" STD. 840.19 OR 840.28	G.D.I. FRAME WITH TWO GRATES STD. 840.24		T.B.D.I. TYPE "A" (SEE DETAIL 2-C)	T.B.D.I. STD. 840.35	G.D.I. FRAME WITH TWO GRATES STD. 840.29	T.B.J.B. (SEE DETAIL 2-H)	OPEN THROAT C.B. STD. 840.04	SPRING BOX – Concrete or Brick Cu.Yds. STD. 840.41	MANHOLE FRAME AND COVER Std. 840.54	TBJB STD. 840.34	CORR. STEEL ELBOWS NO. & SIZE	BERM DITCH OUTLET STD. 850.10 & 850.11 SY	FLOWABLE FILL Cu. Yds.	CONC. COLLARS CL. "B" Cu.Yds. (SEE DETAIL 2-I)	CONC. & BRICK PIPE PLUG, Cu.Yds. STD. 840.71	PIPE REMOVAL LIN.FT.	REMARKS
222+71	RT.	151																		.886			SPECIAL DETAIL /REM. HW
222+50	RT.	152																					EXTEND & METAL BAND
229+10	LT.	153																					
229+10	CL.	153A																	7.2				
233+77	LT.	154																				32'	
237+41	LT.	155																					
241+65	LT.	156																					EXTEND, METAL BAND, REM. HW
		157 OUT																				68'	
251+96	LT.	158																					EXTEND, METAL BAND, REM. HW
251+96	LT.	159			1		1																
		159	160																				EXTEND, METAL BAND, REM. HW
254+99	LT.	161			1		1																
		161	162																				
254+45	RT.	163			1		1																
		163	164																				
254+55	CL.	165																	3.6				
256+25	RT.	166								1	1												
		163	166																			48'	
256+25	LT.	166A			1		1																
		166	166A																				
264+07	RT.	167								1	1												
262+45	RT.	168								1	1												
		167	168																				
263+00	RT.	169			1		1																
		168	169																				
264+50	RT.	170			1		1																
		169	170																				
		170	171		1		1															40'	
		172	173																			64'	
		174 OUT																					
275+40	CL.	175																	18.6				
SHEET TOTAL																							
					7		7			3									29.4	.886		252'	SHEET TOTAL
											3												
GRAND TOTAL																							
					36		48		1		27		1		2		6@15"		116	1.77	.232	1,400'	GRAND TOTAL
				11		1				26		1		1		1		117	SAY	SAY	SAY		
																			120	2	0.30		

ABBREVIATIONS

- C.B. CATCH BASIN
- N.D.I. NARROW DROP INLET
- D.I. DROP INLET
- G.D.I. GRATED DROP INLET
- G.D.I. (N.S.) GRATED DROP INLET (NARROW SLOT)
- J.B. JUNCTION BOX
- M.H. MANHOLE
- T.B.D.I. TRAFFIC BEARING DROP INLET
- T.B.J.B. TRAFFIC BEARING JUNCTION BOX
- F. E. S. FLARIED END SEVTION

CHECKED BY: SDK & TMB DATE: APRIL – 2008

STATE OF NORTH CAROLINA
DIVISION OF HIGHWAYS

PROJECT REFERENCE NO.	SHEET NO.
A-0011BB	3-G

LIST OF PIPES, ENDWALLS, ETC. (FOR PIPES 54" & OVER)

STATION / SIZE / THICKNESS OR GAUGE	LOCATION (LT,RT, OR CL)	STRUCTURE NO. FROM	STRUCTURE NO. TO	TOP ELEVATION	INVERT ELEVATION	INVERT ELEVATION	SLOPE CRITICAL	CLASS III R.C. PIPE (UNLESS NOTED OTHERWISE) 54"	60"	66"	72"	78"	84"
91+08	RT.	16		1804.6									
		16	17		1797.8	1797.8			28				
116+20	CL.	39		1839.9									
		39	40		1832.6	1833.6				32			
137+65	RT.	64		1865.7									
		64	65		1859.5	1861.0		24					
144+10	RT.	70		1867.3									
		70	71		1860.0	1860.0				52			
162+82	RT.	91		1909.4									
		91	92		1903.2	1905.6		20					
					GRAND TOTAL			44	28	84			

STATION	BITUMINOUS COATED C.S. PIPE TYPE B 54" .109	54" .138	54" .168	54" SHOP ELONGATED .138	54" SHOP ELONGATED .168	60" .138	60" .168	66" .138	66" .168	72" .138	72" .168	STRUCTURAL PLATE PIPE 60" 12	60" 10	66" 12	66" 10	72" 12	72" 10
91+08																	
116+20																	
137+65																	
144+10																	
162+82																	

STATION	REINFORCED ENDWALLS WITH R.C. – Cu.Yds.	WITH C.S. – Cu.Yds.	MASONARY DRAINAGE STRUCTURES Cu. Yds.	C.B. STD. 840.01 OR STD. 840.02	FRAME, GRATES AND HOOD STANDARD 840.03 TYPE OF GRATE E	F	G	T. B. J. B. (SEE DETAIL 2-D)	T. B. J. B. (SEE DETAIL 2-E)	T. B. J. B. (SEE DETAIL 2-F)	T. B. J. B. (SEE DETAIL 2-G)	MANHOLE FRAME AND COVER Std. 840.54	REINF. CONC. FLARED END SECTIONS NO. & SIZE	CORR. STEEL FLARED END SECTIONS NO. & SIZE	REINF. CONC. ELBOWS NO. & SIZE	CORR. STEEL ELBOWS NO. & SIZE	CONC. COLLARS CL. "B" C.Y. STD 840.72	PIPE REMOVAL LIN.FT.	REMARKS
91+08			9.6					1				1							SPECIAL DETAIL
	5.9																		
116+20			10.8						1			1							SPECIAL DETAIL
	6.3																		
137+65			8.4							1		1							SPECIAL DETAIL
	5.2																		
144+10			10.0								1	1							SPECIAL DETAIL
	6.6																		
162+82			8.4							1		1							SPECIAL DETAIL
	5.3																		
TOTAL	29.3		47.2					1	1	2	1	5							
SAY	30		50																

ABBREVIATIONS

C.B.	CATCH BASIN
N.D.I.	NARROW DROP INLET
D.I.	DROP INLET
G.D.I.	GRATED DROP INLET
G.D.I. (N.S.)	GRATED DROP INLET (NARROW SLOT)
J.B.	JUNCTION BOX
M.H.	MANHOLE
T.B.D.I.	TRAFFIC BEARING DROP INLET
T.B.J.B.	TRAFFIC BEARING JUNCTION BOX

REMOVAL OF EXISTING ASPHALT PAVEMENT

LOCATION	SQ. YARDS
–L– Sta. 85+35 to Sta. 129+85 LT.	6,371.62
–L– Sta. 132+14 to Sta. 156+17.13 LT.	3,708.55
–L– Sta. 156+33 to Sta. 190+00 LT.	2,211.44
–Y3– Sta. 12+49 to Sta. 14+05 LT.	272.99
TOTAL	12,564.59
SAY	12,570

COMPUTED BY: L. CHAROVA DATE: JUNE 2008
CHECKED BY: S. KENDALL DATE: JUNE 2008

PROJECT REFERENCE NO.	SHEET NO.
A-0011BB	3-H

DIVISION OF HIGHWAYS
STATE OF NORTH CAROLINA

SUMMARY OF EARTHWORK

IN CUBIC YARDS

NOTE:

Earthwork quantities are calculated by the Roadway Design Unit. These earthwork quantities are based in part on subsurface data provided by the Geotechnical Engineering Unit.

LOCATION	UNCLASSIFIED EXCAVATION	UNDERCUT	EMBT+%	BORROW	WASTE
SUMMARY No. 1 LT					
-L- Sta. 75+00 to Sta. 105+00 LT.	4,646		551	0	4,095
SUMMARY No. 1 LT TOTAL	4,646		551	0	4,095
SUMMARY No. 2 LT					
-L- Sta. 105+00 to Sta. 135+00	5,628		118	0	5,510
SUMMARY No. 2 LT TOTAL	5,628		118	0	5,510
SUMMARY No. 3 LT					
-L- Sta. 135+00 to Sta. 165+00 LT.	1,521		5	0	1,516
-DR1LT- Sta. 10+00 to Sta. 11+84.01	51		8	0	43
SUMMARY No. 3 LT TOTAL	1,572		13	0	1,559
SUMMARY No. 4 LT					
-L- Sta. 165+00 to Sta. 195+00 LT.	9,532		2,371	0	7,161
SUMMARY No. 4 LT TOTAL	9,532		2,371	0	7,161
SUMMARY No. 5 LT					
-L- Sta. 195+00 to Sta. 225+00 LT.	18,868		3,246	0	15,622
-Y6- Sta. 12+00 to Sta. 16+76.12	811		4,476	3,665	0
SUMMARY No. 5 LT TOTAL	19,679		7,722	3,665	15,622
SUMMARY No. 6 LT					
-L- Sta. 225+00 to Sta. 255+00 LT.	11,362		1,685	0	9,677
SUMMARY No. 6 LT TOTAL	11,362		1,685	0	9,677
SUMMARY No. 7 LT					
-L- Sta. 225+00 to Sta. 282+00 LT.	14,034		48	0	13,986
SUMMARY No. 7 LT TOTAL	14,034		48	0	13,986
SUMMARY No. 8 RT					
-L- Sta. 75+00 to Sta. 105+00 LT.	30,324		2,642	0	27,682
SUMMARY No. 8 RT TOTAL	30,324		2,642	0	27,682
SUMMARY No. 9 RT					
-L- Sta. 105+00 to Sta. 135+00 RT.	55,892		2,392	0	53,500
-Y3- Sta. 10+18 to Sta. 15+75	17,542		575	0	16,967
SUMMARY No. 9 RT TOTAL	73,434		2,967	0	70,467

LOCATION	UNCLASSIFIED EXCAVATION	UNDERCUT	EMBT+%	BORROW	WASTE
SUMMARY No. 10 RT					
-L- Sta. 135+00 to Sta. 165+00 RT.	20,864		5,413	0	15,451
-DR1RT- Sta. 10+12.03 to Sta. 11+84.01	22		673	651	0
-Y5- Sta. 10+26.20 to Sta. 11+70	9		258	249	0
SUMMARY No. 10 RT TOTAL	20,895		6,344	900	15,451
SUMMARY No. 11 RT					
-L- Sta. 165+00 to Sta. 195+00 RT.	10,083		2,847	0	7,236
DR2 RT- Sta. 10+12.50 to Sta. 12+56.29	1,854		0	0	1,854
SUMMARY No. 11 RT TOTAL	11,937		2,847	0	9,090
SUMMARY No. 12 RT					
-L- Sta. 195+00 to Sta. 225+00 RT.	5,593		3,246	0	2,347
SUMMARY No. 12 RT TOTAL	5,593		3,246	0	2,347
SUMMARY No. 13 RT					
-L- Sta. 225+00 to Sta. 255+00 RT.	1,157		1,071	0	86
SUMMARY No. 13 RT TOTAL	1,157		1,071	0	86
SUMMARY No. 14 RT					
-L- Sta. 255+00 to Sta. 282+00 RT.	1,439		5,985	4,546	0
SUMMARY No. 14 RT TOTAL	1,439		5,985	4,546	0
SUMMARIES TOTAL	211,232		37,609	9,111	182,733
LOSS DUE TO CLEARING AND GRUBBING	-3,600		0	0	-3,600
Rock Waste to Repl Borrow			0	-6,602	-6,602
Adjustment for Rock Swell			-1,320	-1,320	0
Earth Waste to Repl Borr			0	0	0
ADJUSTMENT FOR UNCOMPACTED ROCK WASTE			-1,189	-1,189	0
PROJECT GRAND TOTAL	207,632		35,100	0	172,531
SAY	208,000				
PAVEMENT STRUCTURE VOLUME	16,550				
DRAINAGE DITCH EXCAVATION	3,920				
SHOULDER BORROW	14,000				

5/9/06
07-OCT-2008 14:45
R:\Roadway\Proj\a_0011bb_rdy_sum.dgn
$$$$USERNAME$$$$

6/16/99

COMPUTED BY: FAT DATE: 4-10-2008
CHECKED BY: SDK DATE: 4-17-2008

PROJECT REFERENCE NO.	SHEET NO.
A-0011BB	3-1

STATE OF NORTH CAROLINA
DIVISION OF HIGHWAYS

"N" = DISTANCE FROM EDGE OF LANE TO FACE OF GUARDRAIL.
TOTAL SHOULDER WIDTH = DISTANCE FROM EDGE OF TRAVEL LANE TO SHOULDER BREAK POINT.
FLARE LENGTH = DISTANCE FROM LAST SECTION OF PARALLEL GUARDRAIL TO END OF GUARDRAIL.
W = TOTAL WIDTH OF FLARE FROM BEGINNING OF TAPER TO END OF GUARDRAIL.
G = GATING IMPACT ATTENUATOR TYPE 350
NG = NON-GATING IMPACT ATTENUATOR TYPE 350

GUARDRAIL SUMMARY

SURVEY LINE	BEG. STA.	END STA.	LOCATION	LENGTH			WARRANT POINT		"N" DIST. FROM E.O.L.	TOTAL SHOULDER WIDTH	FLARE LENGTH		W		ANCHORS								IMPACT ATTENUATOR TYPE 350					REMOVE EXISTING GUARDRAIL	REMARKS
				STRAIGHT	SHOP CURVED	REMOVE GUARDRAIL	APPROACH END	TRAILING END			APPROACH END	TRAILING END	APPROACH END	TRAILING END	GRAU 350	AT-1							NO.	PERMITTED G	PERMITTED NG				
-L-	87+00.00	92+75.00	LT	575'	25'		90+53.97	88+00.00	8'	11'	50'				1	1													
-L-	88+75.00	93+75.00	RT	500'			90+00.00	92+50.00	8'	11'	50'	50'			2														
-L-	99+00.00	107+75.00	LT	875'	25'		106+50.00	100+00.00	8'	11'	50'				1	1													
-L-	114+00.00	118+50.00	LT	450'			116+18.88	116+18.00	8'	11'	50'	50'			2														
-L-	114+50.00	118+00.00	RT	350'	25'		116+08.00	116+08.00	8'	11'		50'			1	1													
-L-	136+10.00	139+60.00	LT	350'	25'		137+66.00	137+66.00	8'	11'	50'				1	1													
-L-	136+50.00	138+00.00	RT	150'	50'		137+72.00	137+72.00	8'	11'						2													
-L-																													
-L-																													
-L-	142+25.00	145+25.00	LT	300'	50'		143+87.00	143+87.00	8'	11'						2													
-L-	142+25.00	11+70 Y5	RT	375'	75'		144+00.00	144+00.00	8'	11'					1	1													
-L-	146+00.00	152+75.00	LT	675'	50'		151+50.00	146+00.00	8'	11'	50'				1	1													
-L-	161+13.00	164+63.00	LT	350'			162+81.00	162+81.00	8'	11'	50'	50'			2														
-L-	169+75.00	173+25.00	RT	350'			171+61.40	171+61.40	8'	11'	50'	50'			2														
-L-	169+75.00	173+25.00	LT	350'			171+61.40	171+61.40	8'	11'	50'	50'			2														
-L-	175+25.00	177+75.00	LT	225'			176+50.00	176+50.00	8'	11'		50'			1	1													
-L-	186+25.00	193+25.00	RT	675'	50'		187+50.00	191+75.00	8'	11'					1	1													
-L-	187+25.00	193+25.00	LT	575'	50'		192+00.00	188+00.00	8'	11'	50'				1	1													
-L-	197+00.00	204+00.00	RT	625'	100'		198+00.00	203+00.00	8'	11'						2													
-L-	198+50.00	204+75.00	LT	600'	50'		203+50.00	199+00.00	8'	11'	50'				1	1													
-L-	209+75.00	213+15.00	RT	325'	25'		211+00.00	212+50.00	8'	11'	50'				1	1													
-Y6-	12+00.00	-L- 223+00.00	LT	300'	187.5'		16+84.21	12+00.00	8'	11'	50'					2													
-L-	-Y7- 11+00.00	230+25.00	RT	750'	75'		223+00.00	229+00.00	8'	11'		50'			1	1													
-L-	223+75.00	229+00.00	LT	475'	100'		228+50.00	224+50.00	8'	11'						2													
-L-	232+25.00	238+00.00	RT	525'	25'		235+25.00	237+00.00	8'	11'	50'				1	1													
-L-	233+90.00	237+25.00	LT	300'	100'		237+00.00	234+50.00	8'	11'						2													
-L-	244+00.00	249+00.00	RT	412.5'	125'		245+00.00	248+50.00	8'	11'						2													
-L-	245+25.00	250+75.00	LT	512.5'	50'		249+50.00	245+50.00	8'	11'	50'				1	1													
-L-	264+75.00	266+00.00	LT	50'	125'		265+50.00	265+50.00	8'	11'						2													
-L-	264+82.00	273+32.00	RT	850'	43.75		265+50.00	273+50.00	8'	11'						1													
-L-	273+32.00	NC 175	RT	187.5'	100'				8'	11'						1													END AT DRIVEWAY ON NC 175 RT.
-L-	NC 175	282+00.00	RT	112.5'	100'			282+00.00	8'	11'					1														END AT DRIVEWAY ON NC 175 LT.
-L-	222+45.73	229+51.02	RT																									712.5'	
-L-	223+59.52	228+82.11	LT																									525'	
-L-	234+22.80	237+52.12	RT																									337.5'	
-L-	234+01.67	237+17.11	RT																									325'	
-L-	244+43.43	248+85.10	RT																									450'	
-L-	246+26.65	250+19.08	LT																									500'	
-L-	264+62.07	265+88.95	LT																									150'	
-L-	264+86.71	275+25.06	RT																									775'	
-L-	276+64.01	282+00.00	RT																									600'	
	NC-175		LT																									162.50'	
	NC-175		RT																									162.50'	
																											TOTAL	4,700'	
	SUB-TOTAL			13,150'	1,631.25																						SAY	4,725'	
		ANCHOR	DEDUCTIONS	-1,250'	-200'																								
			TOTAL	11,900'	1,431.25										25	32													
			SAY	12,025'	1,450'																								

ADDITIONAL GUARDRAIL POSTS = 10 EACH

ANCHOR DEDUCTIONS

25	GRAU-350	@	50' =	1,250'
32	AT-1	@	6.25' =	200'

STATE OF NORTH CAROLINA

PARCEL INDEX

PARCEL No.	SHEET No.	PROPERTY OWNER NAME	PARCEL No.	SHEET No.	PROPERTY OWNER NAME
1	5	THE EPISCOPAL CHURCH OF THE GOOD SHEPHERD	19	11	TOM S. WITCHER
			20	11	H. C. WRIGHT
2	5	DAVID A. DAVIES	21	11	ALENE PHILLIPS
3	5	IONE HOGSED	22	11	FAITH TABERNACLE CHURCH
4	5	ERIC W. RODGERS	23	11, 12	CLEO SIMS HEIRS JACK HENKLE, SHELLY HENKLE
5	6	BENGY RODGERS			
6	6, 7	JENNY LOU LONG	24	12	DAVID K. MYERS
7	7	LIVING WORD CHRISTEN FELLOWSHIP, INC	25	12	TILMON J. FORTNER
			26	12	CYNTHA LYNN GAEDE
8	7, 8	DENNIS McCARTHY	27	12	WOLFGANG HORN
9	8	WALLACE A. SMITH	28	12	GEORGE CONSTANTINE, Jr.
9A	8	EDWIN C. & DONNA C. REAMS	29	12, 13	SMITH DANIELSON
9B	8	DENNIS M. McCARTHY	30	12, 13	H. C. WRIGHT
10	8, 9	WILLIAM H. CURNS	31	13	L. H. GLASGOW
11	6, 7	D. PASCHAL HOYLE	32	13, 14	NELSON J. HENDRIKSE
11A	9	ANTHONY H. LEDFORD	33	13, 14	PATT J. MILLER
12	9	MEREDITH MELTON, ET ALS.	34	14	CHARLES E. MILLER
13	9	HOWARD KITCHENS	35	14, 15	LEDFORD'S CHAPLE METHODIST CHURCH
14	9	FRANK STROUD			
15	9, 10	JACK SHOOK	37	15	NATIONAL INVESTMENTS, LLC
15A	10	L. H. GLASGOW	38	15	CLARA CHAMBERS
16	10	MARICH DEVELOPMENT, LLC	39	15	LEDFORD'S CHAPEL METHODIST CHURCH
17	10	CARL KENNETH MATERSON			
18	10, 11	DOUGLAS HAROLD MOSS	42	18	NATIONAL INVESTMENTS, LLC

5/9/06
10-JUL-2008 07:48
r:\roadway\proj\a0011bb_rw_index.dgn
$$$$USERNAME$$$$

PROJECT REFERENCE NO.	SHEET NO.
A-0011BB	4
R/W SHEET NO.	
ROADWAY DESIGN ENGINEER	HYDRAULICS ENGINEER

NORTH CAROLINA PROFESSIONAL SEAL 33296 ENGINEER STEVEN D. KENDALL
S. D. Kendall 8-25-08

NORTH CAROLINA PROFESSIONAL SEAL 20870 ENGINEER MARC T. SHOWN
8-25-08

SEE SHEET 20 FOR -L- PROFILE

-L-
PI Sta 85+94.05
Δ = 1° 37' 14.2" (RT)
D = 0° 17' 11.3"
L = 565.70'
T = 282.87'
R = 20,000.00'

NAD 83/95

BEGIN PROJECT A-0011BB
-L- POT Sta.75+00.00

75+00

80+00

WALLACE K. CRAWFORD
D.B.53 PG.505

CHARLES RUMPLIK, TRUSTEE
D.B.215 PG.199
TRACT 2

FRANK HERBERT, JR.
D.B.81 PG.81

PC Sta. 83+11.18

2 Tons CLASS 'B' RIP-RAP
w/7 Sq. Yds. Filter Fabric

R.L. McGLAMERY HEIRS
D.B.53 PG.43

SANITARY SEWER
AIR RELEASE VALVE

TOP = 1855.89'
INV = 1853.09'

TEST HOLE #1
-BL- 26+05.27
48.05' LT.
ELEV.= 1842.22'
FORCE MAIN SEWER

FLOWABLE FILL
& REM. HW's

N 63° 37' 40.0" E

-L-

US 64 22' BST

BM #4
-BL- STA 21+52.49
6.23 RIGHT
ELEV. 1854.88

TEST
HOLE #1
-BL- 22+08.96
3.91' LT.
EL. 1853.69'
TELE. FIBER OPTIC

TOE PROTECTION
w/400 Sq. Yds. PSRM
SEE DETAIL 'V'

TYPE 'D'

BEGIN PROPOSED
EXPRESSWAY GUTTER +00

-BL4- PINC Sta. 25+80.57 =
-L- POT Sta. 81+34.85
(17.54' LT.)

-BL3- PINC Sta. 19+90.09 =
-L- POT Sta. 75+44.05
(16.72' LT.)

VIRGINIA PENLAND CRAWFORD
CHARLES LEE PENLAND
WILLS & ESTATE FILE No: 01-E-24

POT Sta. 71+00.00

LESLIE R. CARTER
D.B.184 PG.61

CLARA HOGAN
D.B.81 PG.82

MATCHLINE -L- STA. 84+00 SEE SHEET 5

DETAIL V
TOE PROTECTION
(Not to Scale)

Natural Ground
d
2:1 OR FLATTER
Fill Slope

d=1.5 Ft.

Type of Liner= PSRM

FROM -L- STA. 79+00 TO STA. 81+00 RT.

DETAIL BB
FALSE SUMP
(Not to Scale)

Outside Ditch Traffic Flow
20'
10'
2'
0.5' Min.
1.0' Max.
Gl etc.
S
S=Ditch Slope
℄ Proposed Ditch

-L- STA. 81+10 RT.
-L- STA. 82+15 RT.

8/17/99

25-AUG-2008 10:55
R:\Roadway\Proj\a0011bb_rdy_psh04.dgn
$$$$USERNAME$$$$

PROJECT REFERENCE NO.	SHEET NO.
A-0011BB	5
R/W SHEET NO.	
ROADWAY DESIGN ENGINEER	HYDRAULICS ENGINEER

NORTH CAROLINA PROFESSIONAL SEAL 33296 ENGINEER HELEN D. KENDALL — P. D. Kendall 8-25-08

NORTH CARROLINA PROFESSIONAL SEAL 20870 ENGINEER MARC T. SHOWN — 8-25-08

SEE SHEET 20 FOR -L- PROFILE

ADT. 2006
ADT. 2030

8,623 / 16,800 -L- US-64 7,934 / 15,400
445 / 800 100- / 100-
SR 1148 -Y2-
889 / 1,600

NOTE: PAVEMENT REMOVAL Sta.85+00 TO 98+00 LT.
SEE TYPICAL SECTION FOR DETAIL OF LOCATION

-L-
PI Sta 85+94.05
Δ = 1° 37' 14.2" (RT)
D = 0° 17' 11.3"
L = 565.70'
T = 282.87'
R = 20,000.00'

PI Sta 91+59.75
Δ = 1° 37' 14.2" (LT)
D = 0° 17' 11.3"
L = 565.70'
T = 282.87'
R = 20,000.00'

-Y2-
PI Sta 11+62.05
Δ = 41° 57' 59.3" (LT)
D = 23° 52' 23.7"
L = 175.79'
T = 92.05'
R = 240.00'

NAD 83 / 95

MATCHLINE -L- STA. 84+00 — SEE SHEET 4

MATCHLINE -L- STA. 98+00 — SEE SHEET 6

R.L. McGLAMERY HEIRS D.B.53 PG.43
R.L. McGLAMERY HEIRS D.B.43 PG.295
R.L. McGLAMERY HEIRS D.B.49 PG.105
R.L. McGLAMERY HEIRS D.B.37 PG.544

PRC Sta. 88+76.88

-BL5- PINC Sta. 32+81.93 =
-L- POC Sta. 88+36.22
(8.92' LT.)

PT Sta. 94+42.58

-BL-6 38+66.72 PINC =
-BY2- 5+00.00 POT =
-L- STA. 94+22.02
(32.41' RT.)

-L- POT Sta.94+72.169 =
-Y2- POT Sta. 10+00.00

-Y2- PC Sta. 10+70.00

END CONST.
-Y2- POC Sta. 11+18.57

-Y2- PT Sta. 12+45.79

8+54.92 PINC
-BY2- 36

S 65°14' 54.2" W

N 63° 37' 40.0" E

S 32° 07' 07.9" E

S 74° 05' 07.9" E

100' TAPER
150' FULL LANE

END PROPOSED EXPRESSWAY GUTTER +77

5 Tons CLASS 'B' RIP-RAP w/14 Sq. Yds. Filter Fabric

ROCK CHECK DAM 2 Tons CLASS 'B' RIP-RAP

3' LATERAL BASE DITCH w/297 Sq. Yds. PSRM DDE =253 Cu. Yds. SEE DETAIL 'B'

3' LATERAL BASE DITCH w/83 Tons CLASS 'B' RIP-RAP w/176 Sq. Yds. Filter Fabric DDE =149 Cu. Yds. SEE DETAIL 'A'

5 Tons CLASS 'B' RIP-RAP w/14 Sq. Yds. Filter Fabric

SPECIAL CUT DITCH SEE DETAIL 'G'

BM #5
-BL- STA 33+29.06
134.56 RIGHT
ELEV. 1821.12

TVA #7
-BL- STA 35+51.77
25.44 RIGHT
ELEV. 1803.32

CLARA HOGAN D.B.81 PG.82

1 THE EPISCOPAL CHURCH OF THE GOOD SHEPHERD D.B.95 PG.35

2 DAVID A. DAVIES D.B.140 PG.50

3 IONE HOGSED D.B.81 PG.80

4 ERIC W. RODGERS D.B.207 PG.259

MICHELE D. ROGERS D.B.240 PG.249 P.C. #4 - SL. #99

BENGY RODGERS D.B.228 PG.217

DETAIL CC
FALSE SUMP
(Not to Scale)
Outside Ditch Traffic Flow; 10d; 20d; 2.0; 0.5' Min. 1.0' Max.; CI etc.; S = Ditch Slope; ℄ Proposed Ditch
-L- STA. 88+65 RT.

DETAIL A
LATERAL BASE DITCH
(Not to Scale)
Natural Ground; 2d; d; D; 2d; b; 1'/Ft.; Fill Slope; R; Filter Fabric
Min. D= 1.5 Ft.
Max. d= 1.5 Ft.
B= 3.0 Ft.
b= 5.0 Ft.
*When B is < 6.0'
Type of Liner= Class B Rip-Rap
FROM -L- STA. 89+00 TO STA. 90+50 RT.

DETAIL B
LATERAL BASE DITCH
(Not to Scale)
Natural Ground; 2d; d; D; 2d; b; 1'/Ft.; Fill Slope; R
Min. D=1.5 Ft.
Max. d=1.5 Ft.
B=3.0 Ft.
b=5.0 Ft.
*When B is < 6.0'
Type of Liner= PSRM
FROM -L- STA. 91+25 TO STA. 94+00 RT.

DETAIL G
SPECIAL CUT DITCH
(Not to Scale)
Natural Ground; 2d; D; 4d or Flatter; Front Ditch Slope
Min. D=1.5 Ft.
FROM -L- STA. 95+50 TO STA. 97+00 RT.

8/17/99

25-AUG-2008 10:55
R:\Roadway\Proj\a0011bb_rdy_psh05.dgn
$$$$USERNAME$$$$

PROJECT REFERENCE NO.	SHEET NO.
A-0011BB	6
R/W SHEET NO.	
ROADWAY DESIGN ENGINEER	HYDRAULICS ENGINEER

NORTH CAROLINA PROFESSIONAL SEAL 33296 ENGINEER STEVEN D. KENDALL 9-4-08

NORTH CAROLINA PROFESSIONAL SEAL 20670 ENGINEER MARC T. SHOWN 9-4-08

SEE SHTS. 20 & 21 FOR -L- PROFILE

NAD 83 / 95

-L-

Pls Sta 99+89.04	PI Sta 108+04.39
θs = 1° 30' 28.0"	Δ = 30° 03' 48.8" (RT)
Ls = 150.00'	D = 2° 00' 37.4"
LT = 100.00'	L = 1,495.42
ST = 50.00'	T = 765.35'
INC = 30.0'	R = 2,850.00'
	SE = 0.05

NOTE: PAVEMENT REMOVAL Sta.98+00 TO Sta.111+00 LT.
SEE TYPICAL FOR DETAIL OF LOCATION

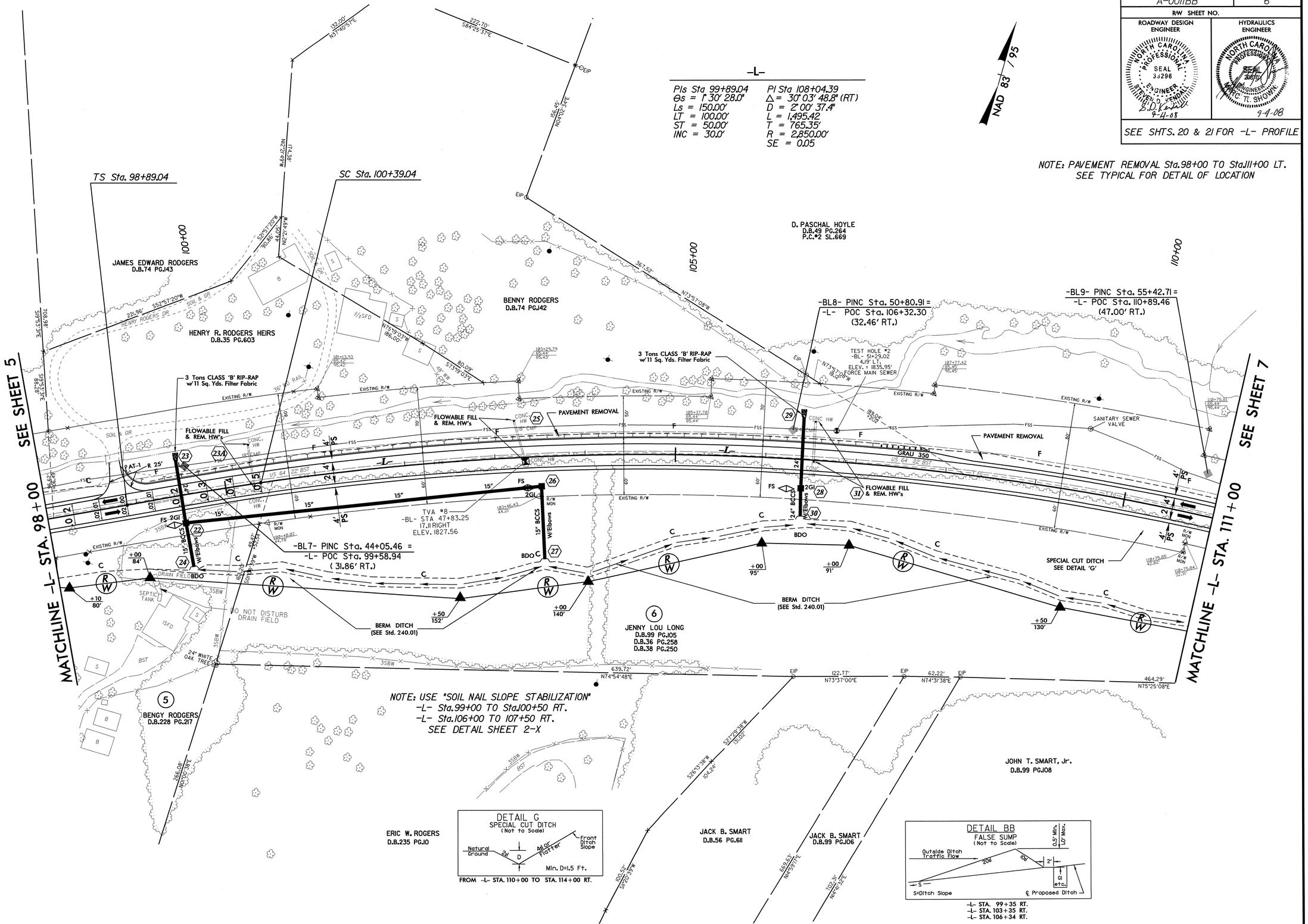

8/17/99

04-SEP-2008 14:41
R:\Roadway\Proj\a0011bb_rdy_psh06.dgn
$$$$USERNAME$$$$

PROJECT REFERENCE NO.	SHEET NO.
A-0011BB	7
R/W SHEET NO.	
ROADWAY DESIGN ENGINEER	HYDRAULICS ENGINEER

SEE SHTS. 21 & 22 FOR -L- PROFILE

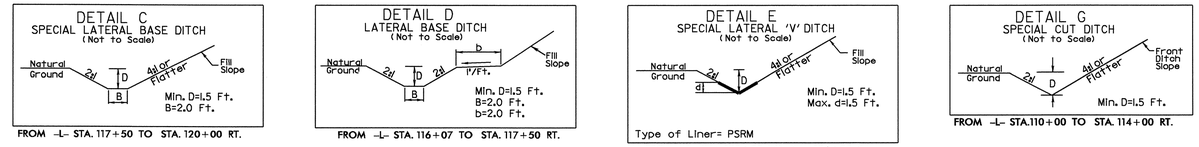

NOTE: PAVEMENT REMOVAL Sta.111+00 TO Sta.124+00 LT.
SEE TYPICAL FOR DETAIL OF LOCATION

-L-

PI Sta 108+04.39
Δ = 30° 03' 48.8" (RT)
D = 2° 00' 37.4"
L = 1,495.42
T = 765.35'
R = 2,850.00'
SE = 0.05

PIs Sta 115+84.46
Θs = 1° 30' 28.0"
Ls = 150.00'
LT = 100.00'
ST = 50.00'
INC = 30.0'

-Y3-

PI Sta 14+47.17
Δ = 19° 23' 01.3" (LT)
D = 18° 11' 20.9"
L = 106.57'
T = 53.80'
R = 315.00'

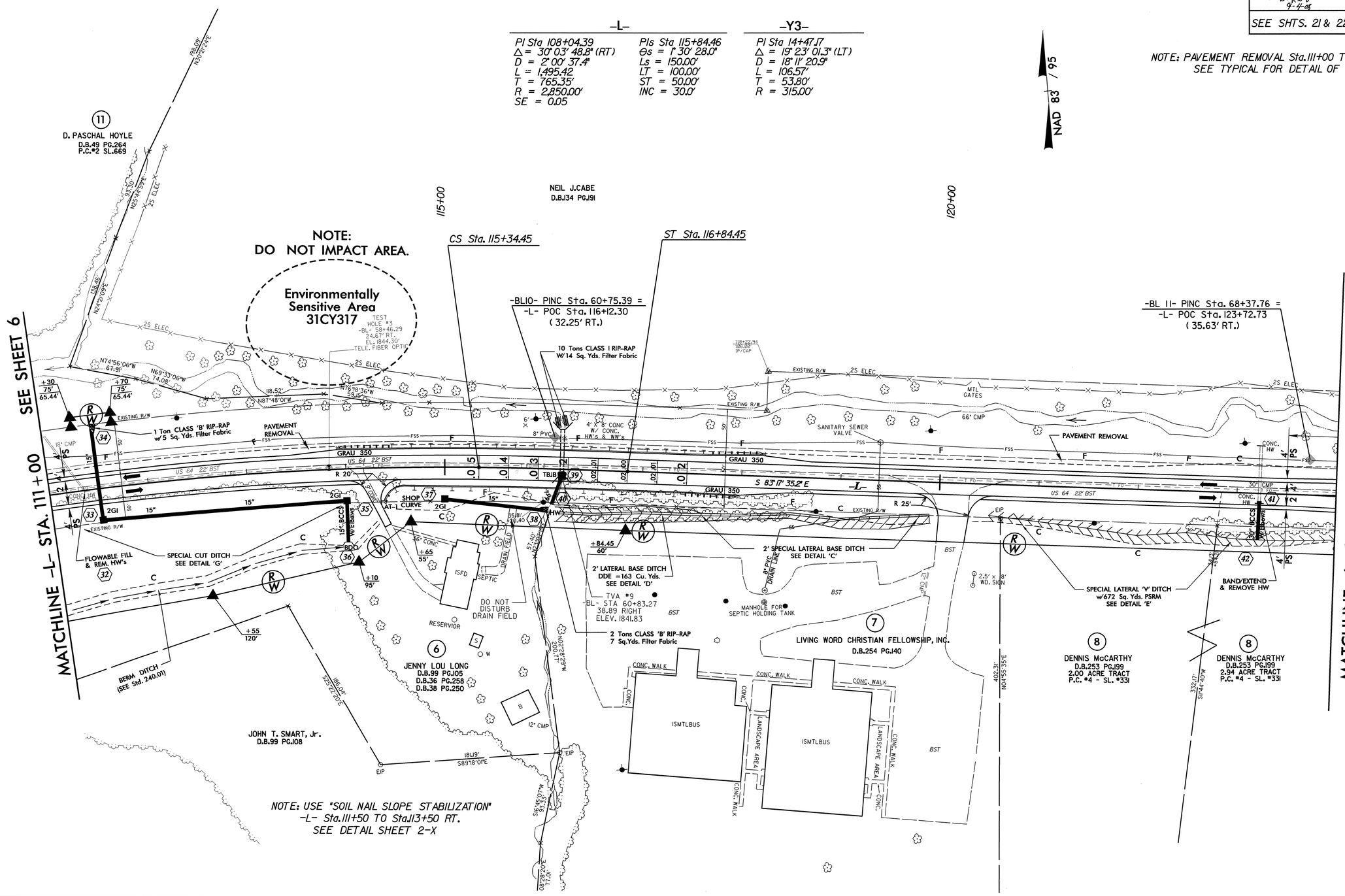

8/17/99

04-SEP-2008 14:41
R:\Roadway\Proj\a0011bb_rdy_psh07.dgn
$$$$USERNAME$$$$

PROJECT REFERENCE NO.	SHEET NO.
A-0011BB	8
R/W SHEET NO.	

ROADWAY DESIGN ENGINEER: NORTH CAROLINA PROFESSIONAL SEAL 33296 ENGINEER STEVEN D. KENDALL — S. D. Kendall 8-25-08

HYDRAULICS ENGINEER: NORTH CAROLINA PROFESSIONAL SEAL 20870 ENGINEER MARC T. SHOWN — M. T. Shown 8-25-08

SEE SHEET 22 FOR -L- PROFILE
SEE SHEET 28 FOR -Y3- PROFILE

ADT. 2006
ADT. 2030

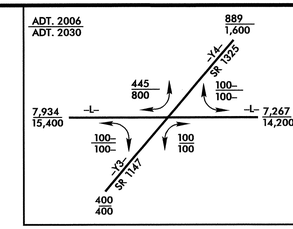

NOTE: PAVEMENT REMOVAL Sta.124+00 TO Sta.137+00 LT.
SEE TYPICAL FOR DETAIL OF LOCATION

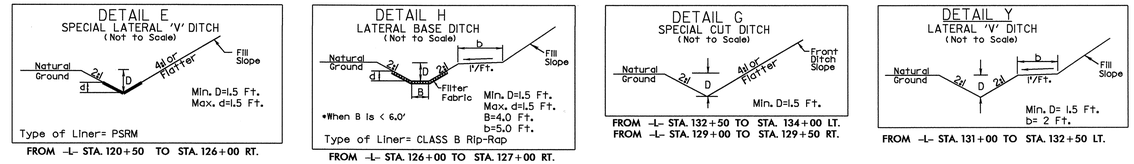

NAD 83

-L-

Pls Sta 126+98.35
Θs = 1° 27' 52.6"
Ls = 150.00'
LT = 100.00'
ST = 50.00'
INC = 30.0'

PI Sta 131+86.03
Δ = 16° 58' 08.9" (RT)
D = 1° 57' 10.2"
L = 868.96
T = 437.68'
R = 2,934.00'
SE = 0.05

Pls Sta 136+67.31
Θs = 1° 27' 52.6"
Ls = 150.00'
LT = 100.00'
ST = 50.00'
INC = 30.0'

-Y3-

PI Sta 10+99.53
Δ = 74° 07' 33.5" (RT)
D = 57° 17' 44.8"
L = 129.37'
T = 75.53'
R = 100.00'

PI Sta 14+47.17
Δ = 19° 23' 01.3" (LT)
D = 18° 11' 20.9"
L = 106.57'
T = 53.80'
R = 315.00'

-Y4-

PI Sta 17+56.67
Δ = 60° 33' 49.4" (LT)
D = 114° 35' 29.6"
L = 52.85'
T = 29.20'
R = 50.00'

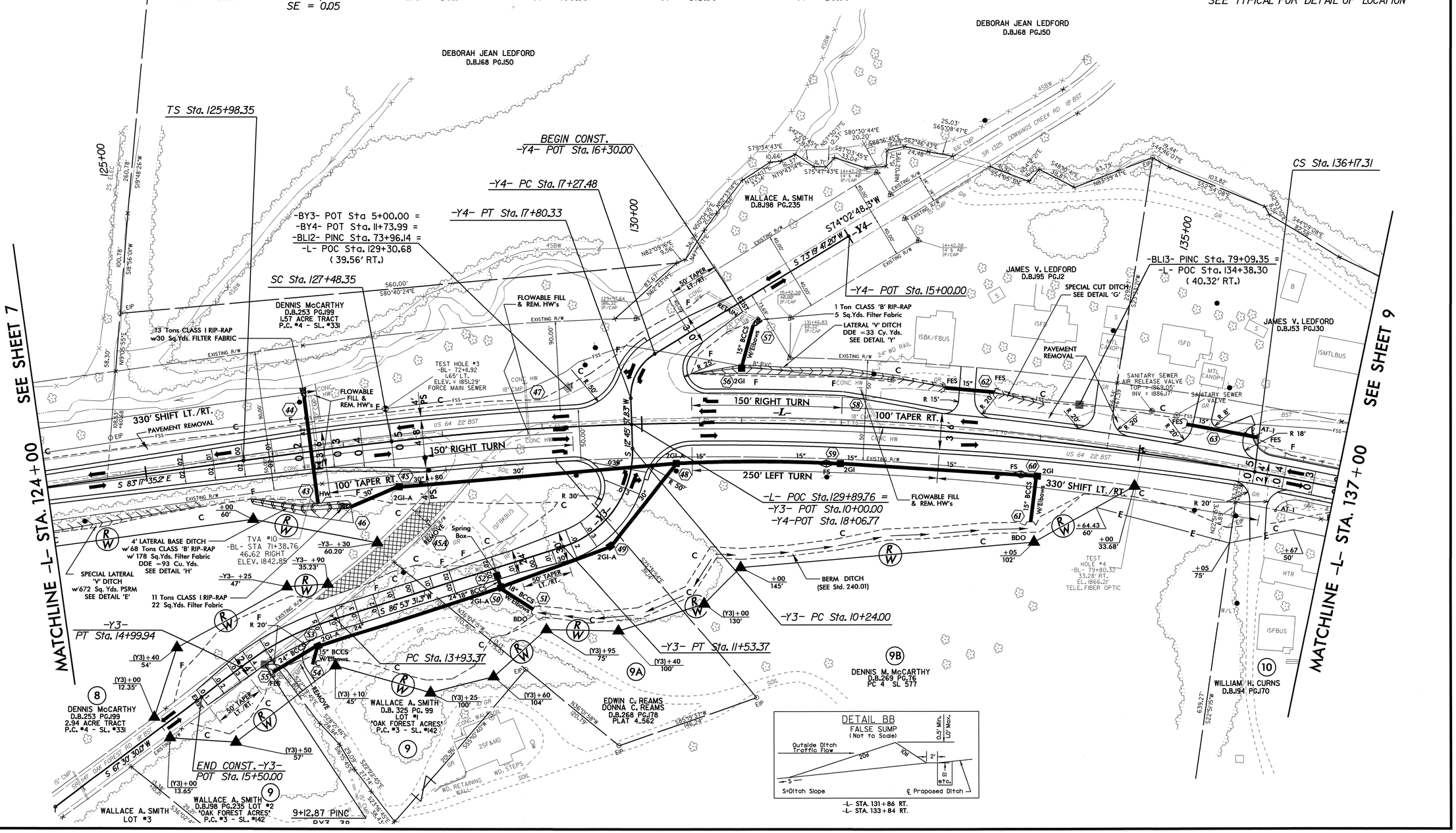

8/17/99

25-AUG-2008 10:55
R:\Roadway\Proj\a0011bb_rdy_psh08.dgn

PROJECT REFERENCE NO.	SHEET NO.
A-0011BB	9
R/W SHEET NO.	
ROADWAY DESIGN ENGINEER	HYDRAULICS ENGINEER

NORTH CAROLINA PROFESSIONAL SEAL 33296 ENGINEER STEPHEN D. KENDALL
S.D. Kendall 8-6-08

NORTH CAROLINA PROFESSIONAL SEAL 20870 ENGINEER MARC T. SHOWN
8-7-08

SEE SHTS. 22 & 23 FOR -L- PFL.
SEE SHT. 28 FOR -Y5- PROFILE
SEE SHT. 29 FOR -DRILT- PROFILE
SEE SHT. 29 FOR -DRIRT- PROFILE

NOTE: PAVEMENT REMOVAL Sta. 137+00 TO Sta. 150+00 LT.
SEE TYPICAL FOR DETAIL OF LOCATION

-L-

PIs Sta 136+67.31
Θs = 1° 27' 52.6"
Ls = 150.00'
LT = 100.00'
ST = 50.00'
INC = 30.0'

PIs Sta 139+99.52
Θs = 1° 25' 56.6"
Ls = 150.00'
LT = 100.00'
ST = 50.00'
INC = 30.0'

PI Sta 145+73.11
Δ = 19° 48' 00.5" (LT)
D = 1° 54' 35.5"
L = 1,036.73
T = 523.59'
R = 3,000.00'
SE = 0.05

-Y5-

PI Sta 10+64.34
Δ = 22° 40' 51.7" (RT)
D = 22° 55' 05.9"
L = 98.96'
T = 50.14'
R = 250.00'

-DRILT-

PI Sta 11+40.17
Δ = 83° 30' 49.0" (RT)
D = 127° 19' 26.2"
L = 65.59'
T = 40.17'
R = 45.00'

-DRIRT-

PI Sta 11+46.90
Δ = 62° 33' 33.1" (LT)
D = 229° 10' 59.2"
L = 27.30'
T = 15.19'
R = 25.00'

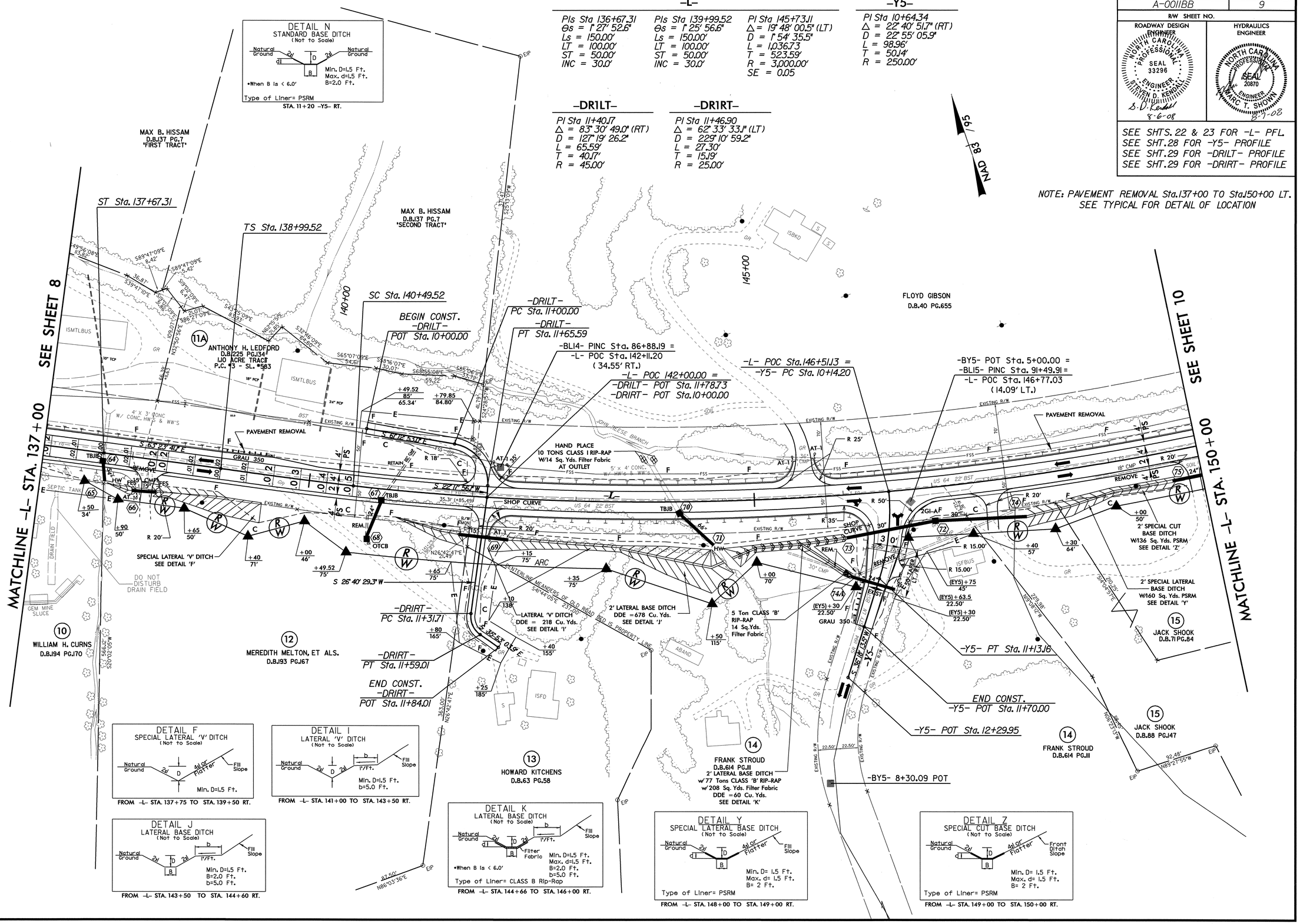

8/17/99

26-JUL-2008 07:15
R:\Roadway\Proj\a0011bb_rdy_psh09.dgn
$$$$USER NAME = s$$$$

PROJECT REFERENCE NO.	SHEET NO.
A-0011BB	10
R/W SHEET NO.	
ROADWAY DESIGN ENGINEER	HYDRAULICS ENGINEER

NORTH CAROLINA PROFESSIONAL SEAL 33296 ENGINEER STEVEN D. KENDALL 8-25-08

NORTH CAROLINA PROFESSIONAL SEAL 20870 ENGINEER MARC T. SHOWN 8-25-08

SEE SHEET 23 FOR -L- PROFILE

NOTE: PAVEMENT REMOVAL Sta.150+00 TO Sta.163+00 LT. SEE TYPICAL FOR DETAIL OF LOCATION

DETAIL L
STANDARD BASE DITCH
(Not to Scale)

Natural Ground, 2d, d, D, B, 2d, Natural Ground
Filter Fabric
Min. D=1.5 Ft.
Max. d=1.5 Ft.
B=3.0 Ft.
*When B is < 6.0'
Type of Liner= CLASS B Rip-Rap

-L- STA. 155+00 LT.

-L-

PI Sta 145+73.11	PIs Sta 151+36.26
Δ = 19° 48' 00.5" (LT)	Θs = 1° 25' 56.6"
D = 1° 54' 35.5"	Ls = 150.00'
L = 1,036.73	LT = 100.00'
T = 523.59'	ST = 50.00'
R = 3,000.00'	INC = 30.0'
SE = 0.05	

NAD 83 / 95

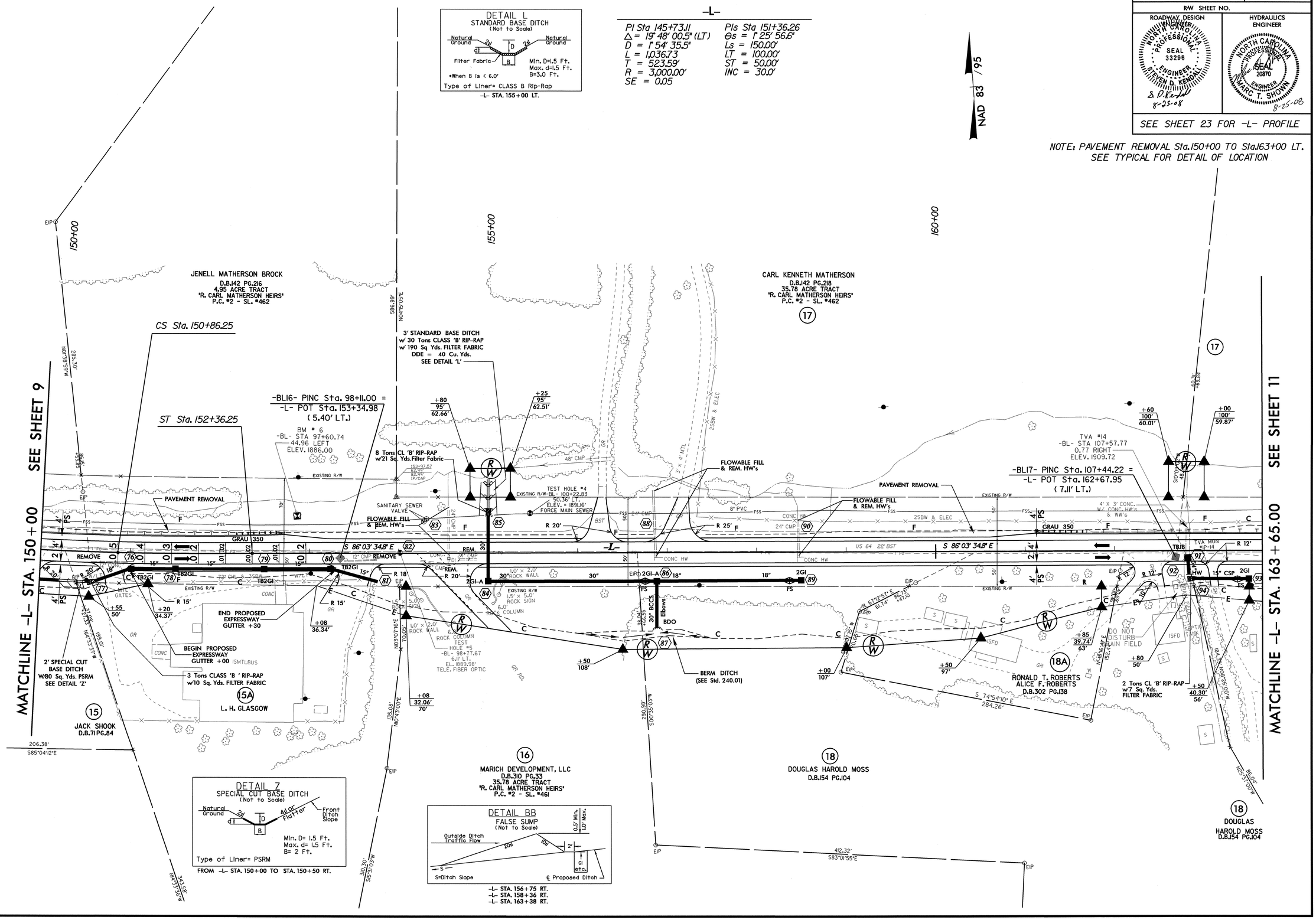

DETAIL Z
SPECIAL CUT BASE DITCH
(Not to Scale)

Natural Ground, 2d, d, D, B, 4:1 or Flatter, Front Ditch Slope
Min. D= 1.5 Ft.
Max. d= 1.5 Ft.
B= 2 Ft.
Type of Liner= PSRM

FROM -L- STA. 150+00 TO STA. 150+50 RT.

DETAIL BB
FALSE SUMP
(Not to Scale)

Outside Ditch Traffic Flow, 20d, 10d, 2', 0.5' Min., 1.0' Max., d, etc.
S=Ditch Slope
℄ Proposed Ditch

-L- STA. 156+75 RT.
-L- STA. 158+36 RT.
-L- STA. 163+38 RT.

8/17/99

25-AUG-2008 10:55
R:\Roadway\Proj\a0011bb_rdy_psh10.dgn
PROPERTY OF DOT

PROJECT REFERENCE NO.	SHEET NO.
A-0011BB	11
R/W SHEET NO.	
ROADWAY DESIGN ENGINEER	HYDRAULICS ENGINEER

NORTH CAROLINA PROFESSIONAL SEAL 33296 ENGINEER STEVEN D. KENDALL — S.D. Kendall 8-25-08

NORTH CAROLINA PROFESSIONAL SEAL 20870 ENGINEER MARC T. SHOWN — 8-25-08

SEE SHTS. 23 & 24 FOR -L- PFL.
SEE SHT. 29 FOR -DR2RT- PROFILE

NOTE: PAVEMENT REMOVAL Sta.150+00 TO Sta.163+00 LT.
SEE TYPICAL FOR DETAIL OF LOCATION

NAD 83 /95

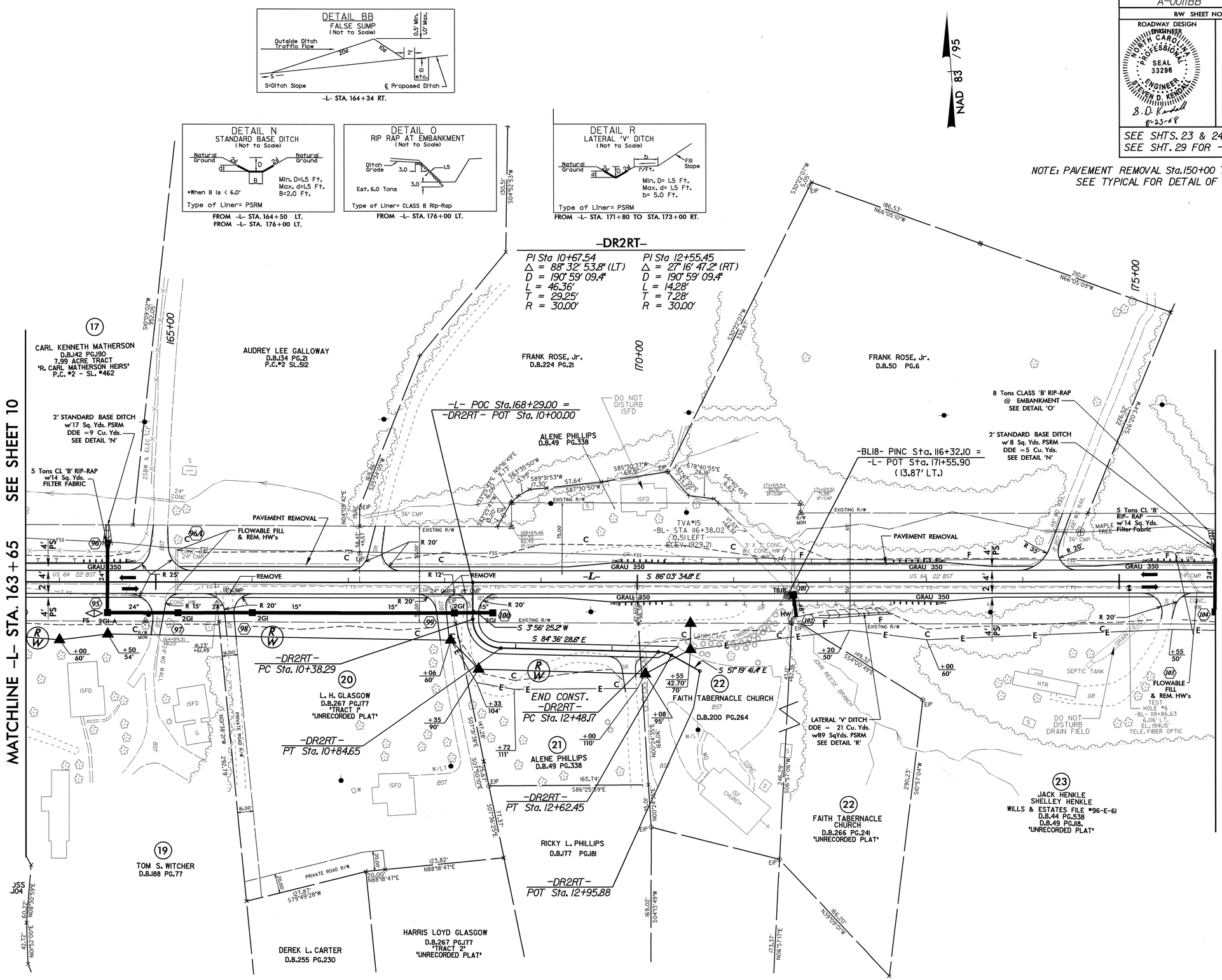

25-AUG-2008 10:55
R:\Roadway\Proj\a0011bb_rdy_pshll.dgn
$$$$USERNAME$$$$

PROJECT REFERENCE NO.	SHEET NO.
A-0011BB	12
R/W SHEET NO.	
ROADWAY DESIGN ENGINEER	HYDRAULICS ENGINEER

NORTH CAROLINA PROFESSIONAL SEAL 33296 ENGINEER STEVEN D. KENDALL — 9-4-08

NORTH CAROLINA PROFESSIONAL SEAL 20870 ENGINEER MARC T. SHOWN — 9-4-08

SEE SHEET 24 FOR -L- PROFILE
SEE SHEET 29 FOR -DR3RT- PFL.

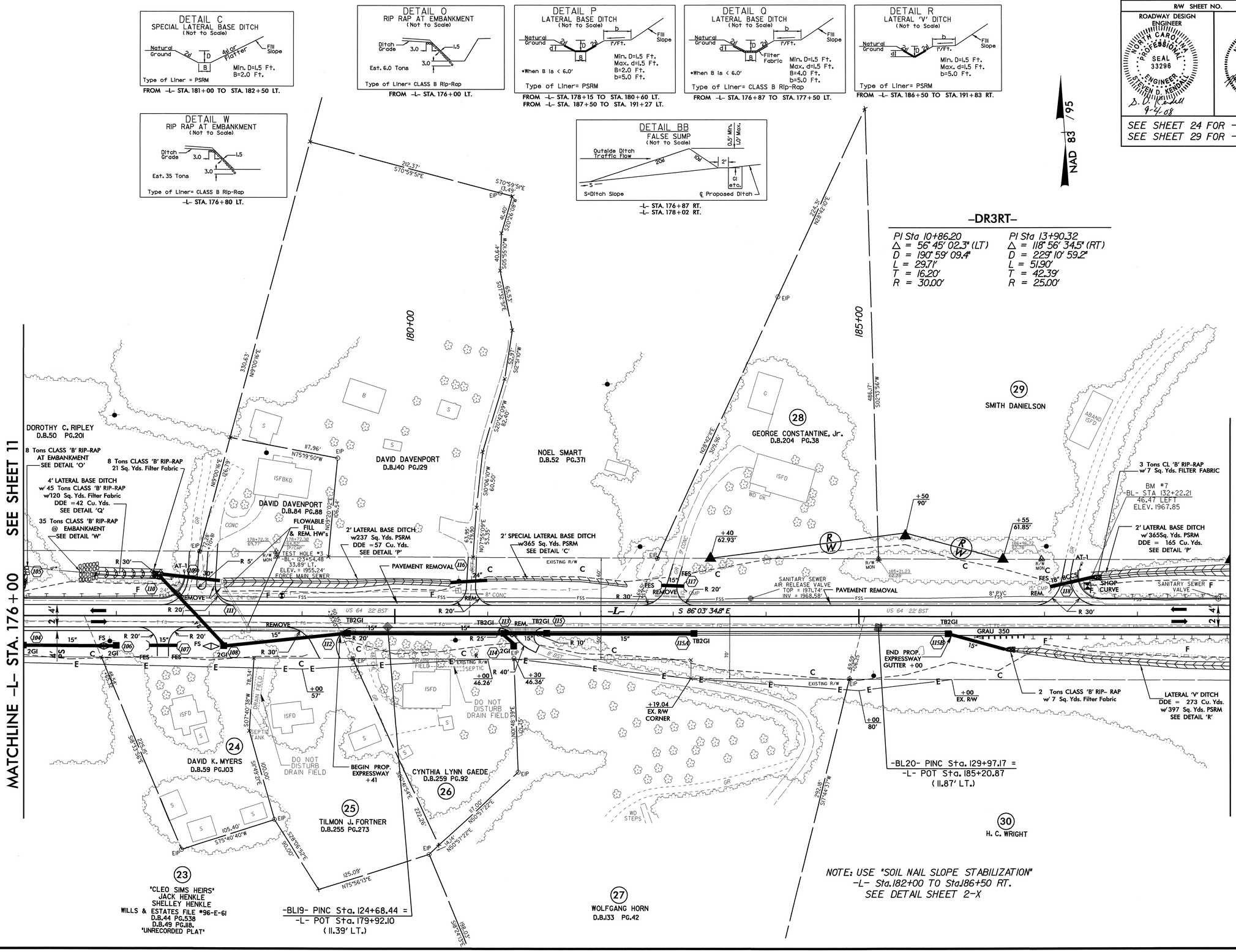

8/17/99

04-SEP-2008 14:41
R:\Roadway\Proj\a0011bb_rdy_psh12.dgn
$$$$USERNAME$$$$

PROJECT REFERENCE NO.	SHEET NO.
A-0011BB	13
R/W SHEET NO.	
ROADWAY DESIGN ENGINEER	HYDRAULICS ENGINEER

NORTH CAROLINA PROFESSIONAL SEAL 33296 ENGINEER STEVEN D. KENDALL 8-25-08

NORTH CAROLINA PROFESSIONAL SEAL 20870 ENGINEER RAMARC T. SHOWN 8-25-08

SEE SHTS. 24 & 25 FOR -L- PFL.

SEE SHTS. C1 - C10 FOR -L- CULVERTS.

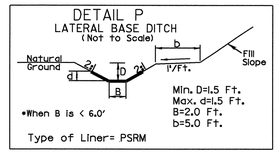

FROM -L- STA. 187+50 TO STA.1 91+27 LT.
FROM -L- STA. 191+41 TO STA. 193+10 LT.
FROM -L- STA. 198+50 TO STA. 200+00 LT.
FROM -L- STA. 200+00 TO STA. 202+10 LT.

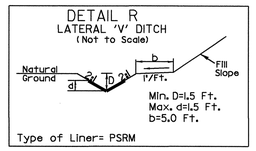

FROM -L- STA. 186+50 TO STA. 191+83 RT.
FROM -L- STA. 201+73 TO STA. 204+00 RT.

-L-

PI Sta 218+00.64
Δ = 14° 12' 37.6" (RT)
D = 0° 16' 01.6"
L = 5,320.01'
T = 2,673.73'
R = 21,450.00'

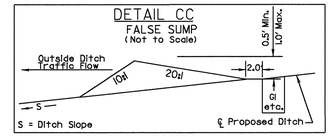

-L- STA. 193+85 LT.
-L- STA. 195+87 LT.

NAD 83 / 95

MATCHLINE -L- STA. 189+00 SEE SHEET 12

MATCHLINE -L- STA. 202+25 SEE SHEET 14

190+00

195+00

200+00

29
SMITH DANIELSON

PC Sta. 191+26.92

END SHOULDER BERM GUTTER -L- Sta. 193+00.00 LT.

2' LATERAL BASE DITCH w/ 164 Sq. Yds. PSRM DDE =314 Cu.Yds. SEE DETAIL 'P'

TVA # 17 -BL- STA 136+29.68 60.31 LEFT ELEV. 1943.57

24" CONC

2' LATERAL BASE DITCH w365 Sq. Yds. PSRM DDE =165 Cu. Yds. SEE DETAIL 'P'

4 Tons CLASS 'B' RIP-RAP

EXTEND 5'x3' w/5'x4' RCBC

BEGIN SHOULDER BERM GUTTER -L- Sta. 189+00.00LT.

TEST HOLE #6 -BL- 137+59.28 33.16' LT. ELEV. = 1955.38' FORCE MAIN SEWER

5' X 3' CONC. W/ CONC. HW's

2 Tons CLASS 'B' RIP-RAP
7 SY FILTER FABRIC

3 Tons CLASS 'B' RIP-RAP
10 SY FILTER FABRIC

BERM DITCH (SEE Std. 240.01)

ISFD

33
PATT J. MILLER
D.B.73 PG.55
3.525 ACRE TRACT
'MILLER & CABE PLAT'
UNRECORDED

BEGIN SHOULDER BERM GUTTER -L- Sta. +70

TIE PROP. 2 SBW TO EXIST. @ RW

2 Tons CL 'B' RIP-RAP w/ 7 Sq. Yds. FILTER FABRIC

PROP. 2 SBW

33
PATT J. MILLER
D.B.297 PG.81
UNRECORDED

2' LATERAL BASE DITCH w348 Sq. Yds. PSRM DDE =410 Cu. Yds. SEE DETAIL 'P'

TVA # 18 -BL- STA 146+79.49 46.17 LEFT ELEV. 1961.81

REMOVE EXIST. 2 SBW

4 Tons CLASS 'B' RIP-RAP

EXTEND 4'x6' WITH 4'x7' RCBC

24" BCCS Elbows

EXTEND/BAND & REMOVE HW's

EXTEND W/4'x6' RCBC

4' X 6' CONC. W/ CONC. HW's & WW's

EXISTING R/W

US 64 22' BST

S 86°03' 34.8" E

TB2GI

GRAU 350

REM. 15" CMP

SHOP CURVE

TEST HOLE #7 -BL- 140+78.89 7.95' LT. EL. 1960.22' TELE. FIBER OPTIC

WD OK

ISFBUS

PRIVATE ROAD R/W

BEGIN SHOULDER BERM GUTTER -L- Sta. 198+00.00 RT.

1 Ton CLASS 'B' RIP-RAP
5 Sq. Yds. Filter Fabric

3 Tons CLASS 'B' RIP-RAP
11 Sq.Yds. Filter Fabric

6 Tons CLASS I RIP-RAP
14 Sq.Yds. Filter Fabric

DO NOT PLACE RIP RAP IN THE DEEPEST PART OF NATURAL STREAM FLOW

SANITARY SEWER LIFT STATION

LATERAL 'V' DITCH DDE = 247 Cu. Yds. w/169 Sq. Yds. PSRM SEE DETAIL 'R'

BEGIN SHOULDER BERM GUTTER -L- Sta. 189+00.00 RT.

LATERAL 'V' DITCH DDE = 273 Cu. Yds. w/397 Sq.Yds. PSRM SEE DETAIL 'R'

EXTEND 5'x3' W/5'x3' RCBC

CLASS I RIP-RAP (EST. 6 TONS)
14 Sq. Yds. Filter Fabric

1 Tons CLASS 'B' RIP-RAP
5 Sq.Yds Filter Fabric

END SHOULDER BERM GUTTER -L- Sta. 193+00.00 RT.

-BL21- PINC Sta. 137+59.28 = -L- POC Sta. 192+83.07 (16.65' LT.)

-BL22- PINC Sta. 146+77.74 = -L- POC Sta. 202+01.92 (14.40' LT.)

31
L.H. GLASGOW
D.B.185 PG.271
'TRACT 1'

30
H. C. WRIGHT

HARRIS L. GLASGOW, Sr.
MARIE BELOTE
D.B.185 PG.271
'TRACT 2'

JAMES B. ROPER
D.B.77 PG.22

'UNKNOWN OWNER'

32
NELSON J. HENDRIKSE
D.B.283 PG.247
2.54 ACRE TRACT
'MARTIN & COTTON PROPERTY'
P.C. #3 - SL.#489

25-AUG-2008 10:55
R:\Roadway\Proj\a0011bb_rdy_psh13.dgn
$$$$USERNAME$$$$

PROJECT REFERENCE NO.	SHEET NO.
A-0011BB	14
R/W SHEET NO.	
ROADWAY DESIGN ENGINEER	HYDRAULICS ENGINEER

NORTH CAROLINA PROFESSIONAL SEAL 33296 ENGINEER STEVEN D. KENDALL
S. D. Kendall 8-6-08

NORTH CAROLINA PROFESSIONAL SEAL 20870 ENGINEER MARC T. SHOWN
8-7-08

SEE SHEET 25 FOR -L- PROFILE

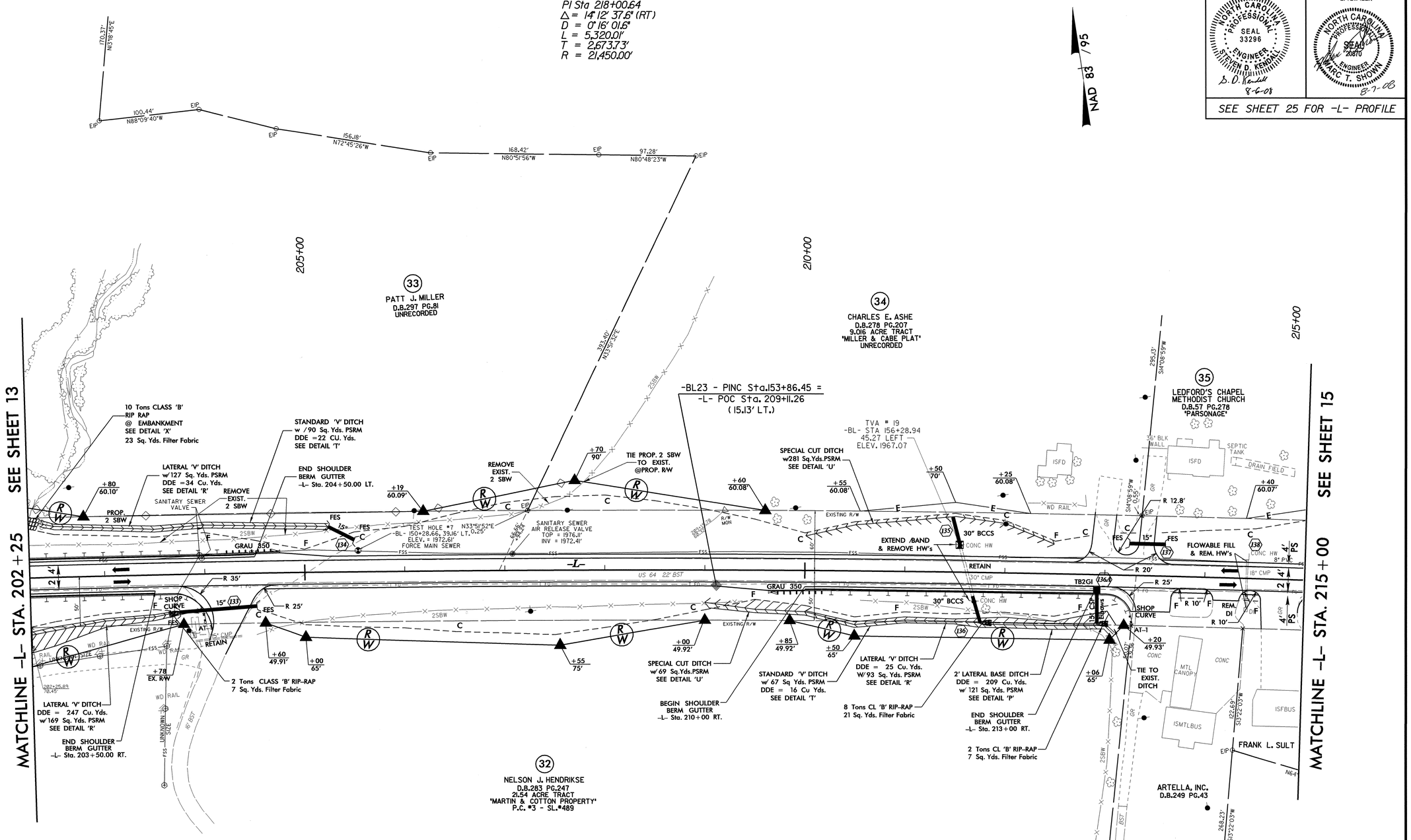

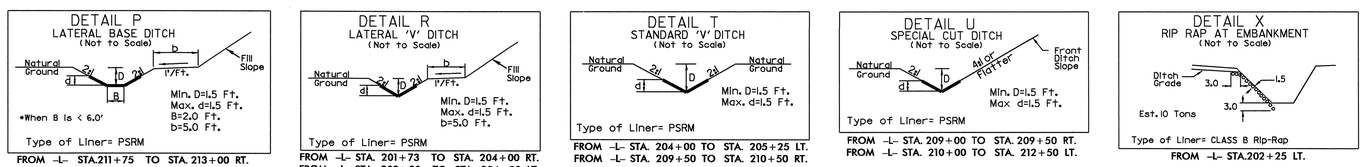

FROM -L- STA.211+75 TO STA. 213+00 RT.

FROM -L- STA. 201+73 TO STA. 204+00 RT.
FROM -L- STA. 202+30 TO STA. 204+00 LT.
FROM -L- STA. 210+50 TO STA. 211+75 RT.

FROM -L- STA. 204+00 TO STA. 205+25 LT.
FROM -L- STA. 209+50 TO STA. 210+50 RT.

FROM -L- STA. 209+00 TO STA. 209+50 RT.
FROM -L- STA. 210+00 TO STA. 212+50 LT.

FROM -L- STA.202+25 LT.

8/17/99

28-JUL-2008 07:15
R:\Roadway\Proj\a0011bb_rdy_psh14.dgn
$$$$USERNAME$$$$

PROJECT REFERENCE NO.	SHEET NO.
A-0011BB	15
R/W SHEET NO.	
ROADWAY DESIGN ENGINEER: STEVEN D. KENDAL, SEAL 33296, 8-25-08	HYDRAULICS ENGINEER: MARC T. SHOWN, SEAL 20870, 8-25-08

SEE SHTS. 25 & 26 FOR -L- PFL.
SEE SHEET 28 FOR -Y6- PROFILE

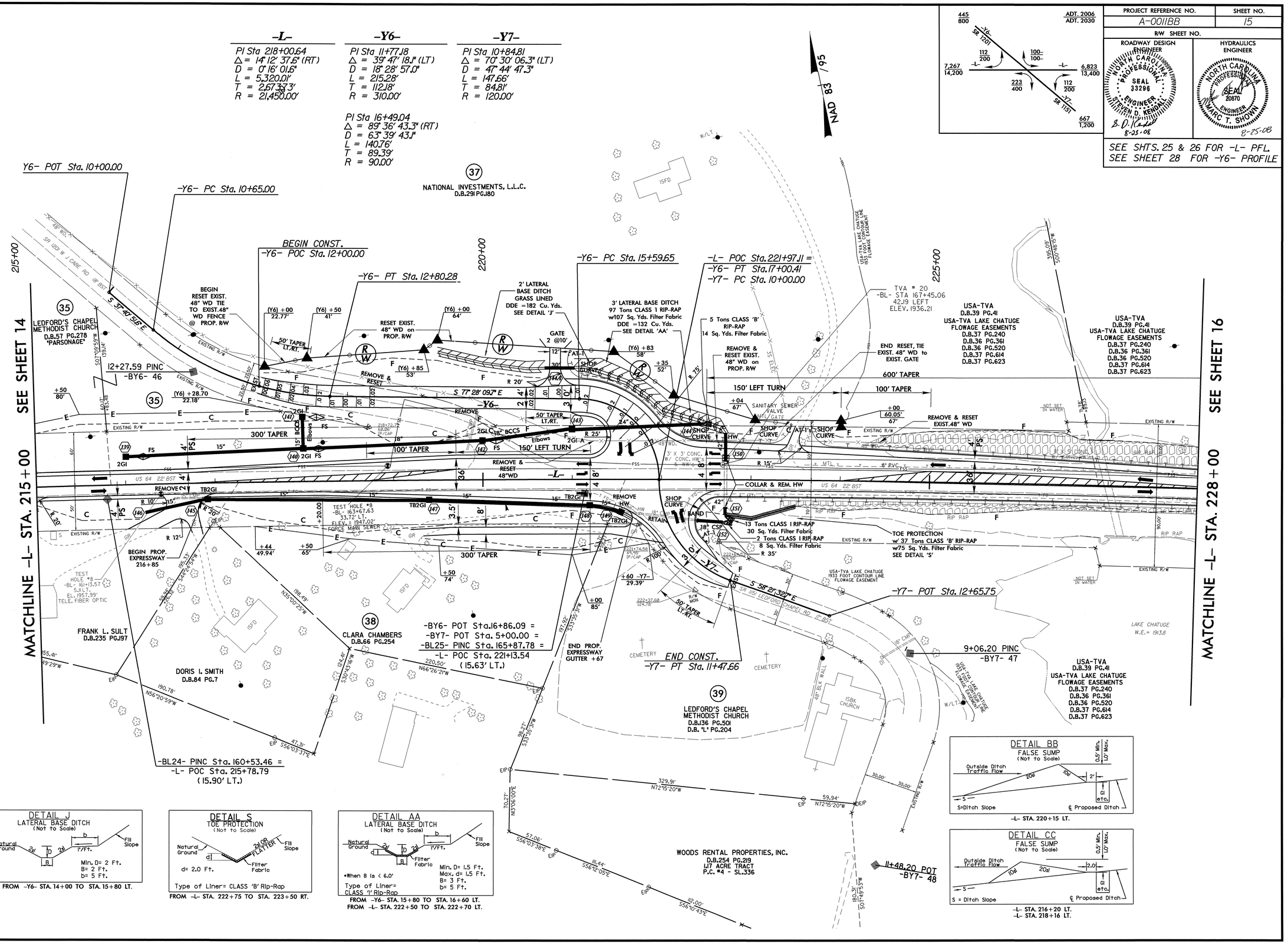

25-AUG-2008 10:55
R:\Roadway\Proj\a0011bb_rdy_psh15.dgn

PROJECT REFERENCE NO.	SHEET NO.
A-0011BB	16
R/W SHEET NO.	
ROADWAY DESIGN ENGINEER	HYDRAULICS ENGINEER

NORTH CAROLINA PROFESSIONAL SEAL 33296 ENGINEER STEVEN D. KENDALL 8-20-08

NORTH CAROLINA PROFESSIONAL SEAL 20870 ENGINEER MARC T. SHOWN 8-19-08

SEE SHEET 26 FOR -L- PROFILE

ROCK PLATING (SEE DETAIL SHT.2-W)

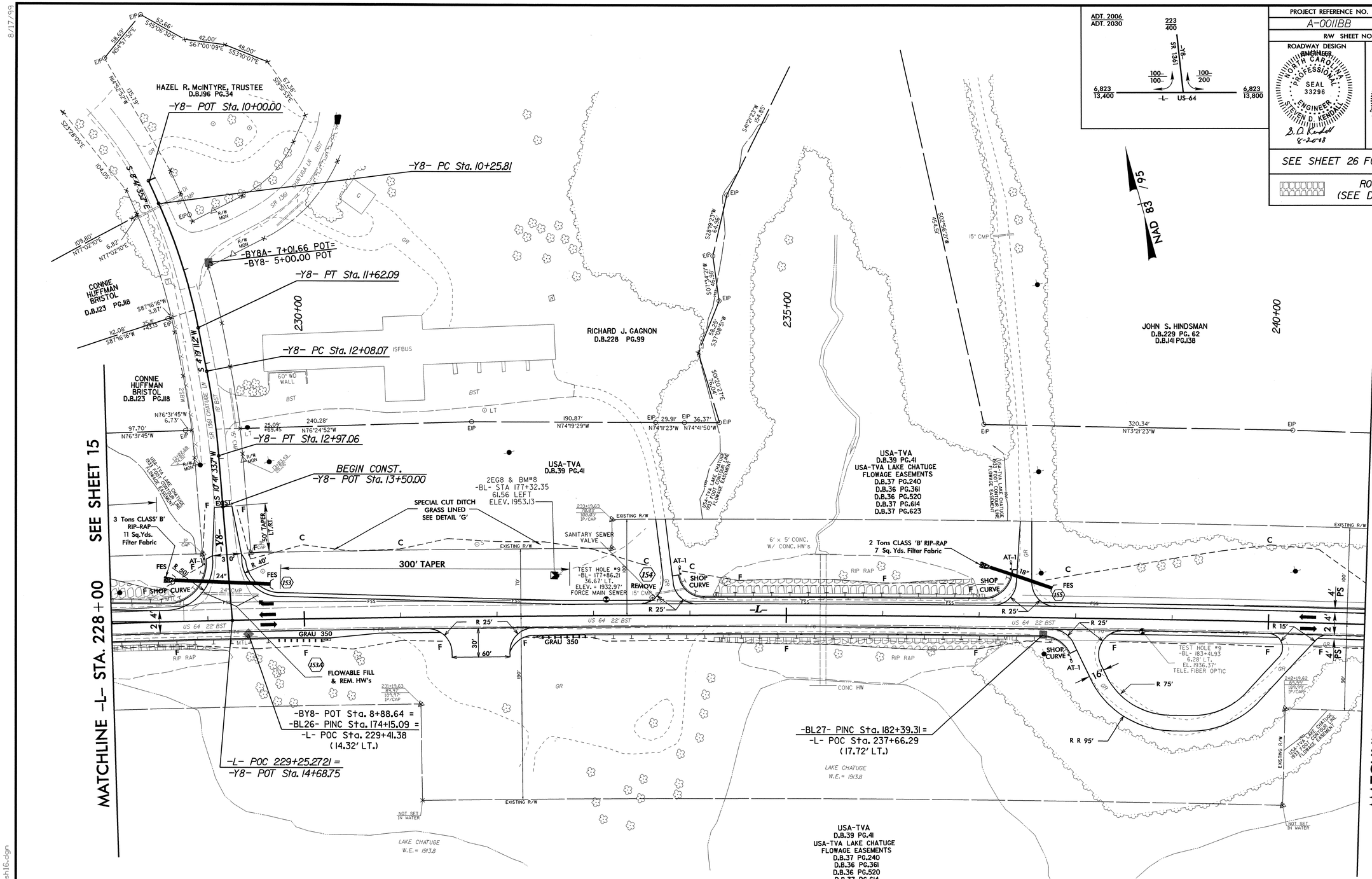

DETAIL G
SPECIAL CUT DITCH
(Not to Scale)

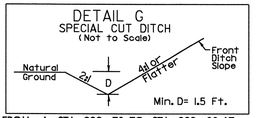

FROM -L- STA. 229+70 TO STA. 232+00 LT.

-L-	-Y8-	
PI Sta 218+00.64	PI Sta 10+94.24	PI Sta 12+52.61
Δ = 14° 12' 37.6" (RT)	Δ = 13° 00' 46.9" (RT)	Δ = 6° 22' 22.5" (RT)
D = 0° 16' 01.6"	D = 9° 32' 57.5"	D = 7° 09' 43.1"
L = 5,320.01'	L = 136.27'	L = 88.98'
T = 2,673.73'	T = 68.43'	T = 44.54'
R = 21,450.00'	R = 600.00'	R = 800.00'

8/17/99

19-AUG-2008 13:35
R:\Roadway\Proj\a0011bb_rdy_psh16.dgn
$$$$USERNAME$$$$

PROJECT REFERENCE NO.	SHEET NO.
A-0011BB	17
R/W SHEET NO.	

ROADWAY DESIGN ENGINEER — NORTH CAROLINA PROFESSIONAL SEAL 33296 ENGINEER STEVEN D. KENDALL — 8-20-08

HYDRAULICS ENGINEER — NORTH CAROLINA PROFESSIONAL SEAL 20870 ENGINEER MARC T. SHOWN — 8-19-08

SEE SHTS. 26 & 27 FOR -L- PFL.

ROCK PLATING (SEE DETAIL SHT.2-W)

ADT. 2006 / ADT. 2030 — 445 / 800 — -Y9A- SR 1333 — 100/200 — 100/100 — 6,867 / 13,800 — -L- US-64 — 6,823 / 13,400 — 100/100 — 100/100 — -Y10- SR 1180 — 223 / 400

-L-

PI Sta 218+00.64
Δ = 14° 12' 37.6" (RT)
D = 0° 16' 01.6"
L = 5,320.01'
T = 2,673.73'
R = 21,450.00'

-Y9A-

PI Sta 10+26.63
Δ = 45° 34' 33.1" (RT)
D = 114° 35' 29.6"
L = 39.77'
T = 21.01'
R = 50.00'

PI Sta 10+84.75
Δ = 12° 05' 15.4" (RT)
D = 28° 38' 52.4"
L = 42.19'
T = 21.18'
R = 200.00'

PI Sta 12+45.61
Δ = 11° 41' 27.2" (RT)
D = 4° 46' 28.1"
L = 244.85'
T = 122.85'
R = 1,200.00'

-Y10-

PI Sta 14+27.84
Δ = 32° 10' 12.1" (RT)
D = 13° 10' 17.2"
L = 244.24'
T = 125.43'
R = 435.00'

NAD 83 / 95

MATCHLINE -L- STA. 241+00 — SEE SHEET 16

MATCHLINE -L- STA. 254+00 — SEE SHEET 18

-Y9A- POT Sta. 14+00.00

-Y9A- PT Sta. 13+67.61

10+93.12 PINC -BY9- 52

7+17.29 PINC -BY9- 51

END CONST. -Y9A- PC Sta. 11+22.75

-Y9A- PC Sta. 10+63.58

-Y9A- PT Sta. 10+45.40

-Y9A- PT Sta. 11+05.77

N 87° 30' 15.60" E

N 75° 48' 43" E

N 63° 43' 33.01" E

R 90'

N 18° 08' 59.96" E

S 71° 50' 57.2" E

-Y9A- PC Sta. 10+05.63

PT Sta. 244+46.93

-L- POT 244+81.18 = -Y9A- POT Sta. 10+00.00

-BY9- POT Sta. 5+00.00 = -BL28- PINC Sta. 188+99.93 = -L- POC Sta. 244+27.44 (16.37' LT.)

-L- POT Sta.249+39.69 = -Y10- POT Sta. 10+00.00

END CONST. -Y10- PC Sta. 11+30.00

-Y10- PC Sta. 13+02.41

-BY10- POT Sta. 5+00.00 = -BL29- PINC Sta. 194+24.83 = -L- POT Sta. 249+53.08 (27.04' LT.)

JUDY S. GILES
CHARLES SMART
D.B.120 PG.38

USA-TVA LAKE CHATUGE FLOWAGE EASEMENTS
D.B.37 PG.240
D.B.36 PG.361
D.B.36 PG.520
D.B.37 PG.614
D.B.37 PG.623

JOHN S. HINDSMAN
D.B.170 PG.9

WALTER LEE WOODY
D.B.50 PG.587

ELLEN T. CHASTAIN
MARSHA D. LOCKARD
D.B.203 PG.76
"SECOND TRACT"

ELLEN T. CHASTAIN
MARSHA D. LOCKARD
D.B.203 PG.76
"THIRD TRACT"

USA-TVA
D.B.39 PG.41

USA-TVA LAKE CHATUGE FLOWAGE EASEMENTS
D.B.37 PG.240, D.B.36 PG.361
D.B.36 PG.520, D.B.37 PG.614
D.B.37 PG.623

SPECIAL LATERAL 'V' DITCH GRASS LINED SEE DETAIL 'F'

SPECIAL LATERAL 'V' DITCH w/100 Sq. Yds. PSRM SEE DETAIL 'E'

TVA #21 -BL- STA 186+38.91 43.99 LEFT ELEV. 1935.81

EXTEND /EXTEND & REMOVE HW

2' BASE DITCH GRASS LINED DDE =30 Cu.Yds. SEE DETAIL 'M'

BM #9 -BL- STA 198+14.65 63.85 LEFT ELEV. 1949.02

2 Tons CLASS 'B' RIP-RAP 7 Sq.Yds. Filter Fabric

EXTEND /BAND & REMOVE HW's

3' LATERAL BASE DITCH w/65 Tons CLASS 'B' RIP RAP w/172 Sq. Yds. Filter Fabric DDE =38 CuYds. SEE DETAIL 'A'

3 Tons CLASS 'B' RIP-RAP 10 Sq. Yds. Filter Fabric

LAKE CHATUGE W.E.= 1913.8

LOIS LEDFORD
D.B.166 PG.228
'FIFTH TRACT'
P.C.#2 SL.338

CHAD DECKER
D.B.245 PG.236
P.C.#2 SL.338

CHARLOTTE LEDFORD
D.B.192 PG.262
P.C.#2 SL.338

ROBERT W. PAICE
D.B.200 PG.186
P.C.#2 SL.338

JOHN PATRICK LIST
D.B.203 PG.194
P.C.#2 SL.338

"UNKNOWN OWNER"

DETAIL A
LATERAL BASE DITCH
(Not to Scale)

Natural Ground — 2d — d1 — D — 4d — b — 1'/Ft. — Fill Slope — B — Filter Fabric

Min. D= 1.5 Ft.
Max. d= 1.5 Ft.
B= 3 Ft.
b= 5 Ft.

*When B is < 6.0'

Type of Liner= Class 'B' Rip-Rap

FROM -L- STA. 247+60 TO STA. 248+65 RT.

DETAIL E
SPECIAL LATERAL 'V' DITCH
(Not to Scale)

Natural Ground — 2d — d1 — D — 4d or Flatter — Fill Slope

Min. D= 1.5 Ft.
Max. d= 1.5 Ft.

Type of Liner= PSRM

FROM -L- STA. 241+68 TO STA. 242+50 LT.

DETAIL F
SPECIAL LATERAL 'V' DITCH
(Not to Scale)

Natural Ground — D — 4d or Flatter — Fill Slope

Min. D= 1.5 Ft.

FROM -L- STA. 241+00 TO STA. 241+68 LT

19-AUG-2008 13:34
R:\Roadway\Proj\a0011bb_rdy_psh17.dgn
$$$$USERNAME$$$$

PROJECT REFERENCE NO.	SHEET NO.
A-0011BB	18
R/W SHEET NO.	
ROADWAY DESIGN ENGINEER	HYDRAULICS ENGINEER

NORTH CAROLINA PROFESSIONAL SEAL 33296 ENGINEER LEVEN D. KENDALL — 9-4-08

NORTH CAROLINA PROFESSIONAL SEAL 20970 ENGINEER MARC T. SHOWN — 9-4-08

ADT. 2006
ADT. 2030

445
800

SR 1533 -Y9B-

100-200 100-100-

6,823 13,400 -L- US-64 6,867 13,800

SEE SHEET 27 FOR -L- PROFILE

ROCK PLATING (SEE DETAIL SHT.2-W)

NOTE: USE "SOIL NAIL SLOPE STABILIZATION" -L- Sta. 257+50 TO Sta.261+000 RT. SEE DETAIL SHEET 2-X

NAD 83/95

SEE SHEET 17

MATCHLINE -L- STA. 254+00

SEE SHEET 19

MATCHLINE -L- STA. 268+00

ELLEN T. CHASTAIN
MARSHA D. LOCKARD
D.B.203 PG.76
"FIRST TRACT"

ELLEN T. CHASTAIN
MARSHA D. LOCKARD
D.B.203 PG.76
"SECOND TRACT"

ELLEN T. CHASTAIN
MARSHA D. LOCKARD
D.B.203 PG.76
"THIRD TRACT"

NETTIE GIBBY
D.B.498 PG.202

NETTIE GIBBY
D.B.49 PG.202

GWENDOLYN SMART
D.B.50 PG.607

JOHN S. HINDSMAN
D.B.170 PG.9

21+34.29 PINC
-BY9- 54

23+50.50 PINC
-BY9- 55

17+05.42 PINC
-BY9- 53

BEGIN CONST. -Y9B-
POT Sta. 30+80.00

-Y9B-
PC Sta. 30+88.11

-Y9B-
POT Sta. 30+00.00

-Y9B-
PT Sta. 31+33.17

-Y9B-
PC Sta. 31+49.28

-Y9B- PT Sta. 31+88.24

10+08.97 POT
-BY11- 60

-BL30- PINC Sta. 201+80.26 =
-L- POT Sta. 257+07.62
(14.27' LT.)

-BY9- POT Sta. 28+08.94 =
-BL31PINC Sta. 209+71.26 =
-L- POT Sta.264+98.96
(19.18' LT.)

-BY11- POT Sta. 10+66.50 =
-BL67- PINC Sta. 212+18.24 =
-L- POT Sta. 267+45.99
(21.25' LT.)

-L- POT Sta.264+51.22 =
-Y9B- POT Sta. 32+12.65

NATIONAL INVESTMENTS, LLC
D.B.261 PG.1
P.C.#2 SL.790

NATIONAL INVESTMENTS, LLC
D.B.261 PG.1
P.C.#2 SL.791

RONALD J. TWIST
D.B.240 PG.186
'TRACT No.1'
P.C.#2 SL.333

RONALD J. TWIST
D.B.240 PG.186
'TRACT No.2'
P.C.#2 SL.335

RONALD J. TWIST
D.B.240 PG.186
'TRACT No.3'
P.C.#2 SL.343

RONALD J. TWIST
D.B.240 PG.186
'ADD. AC.'
P.C.#2 SL.335

ROBERT W. PAICE
D.B.200 PG.186
P.C.#2 SL.338

JAMES R. EDDY
D.B.96 PG.146

CAROLYN GREGORY
D.B.191 PG.202
P.C.#2 SL.337

CAROLYN GREGORY
WILLS & ESTATES
FILE No. 96-E-15

EDWARD P. MOSES
D.B.200 PG.199

CHATUGE VILLAGE
COMMUNITY ASSOCIATION
"SALEM SQUARE SUBDIVISION"
D.B.126 PG.111
D.B. 93 PG. 80
P.C.#4 SL.277

THOMAS L. BOYLAND
D.B.239 PG.208
P.C.#1 SL.81

WAYNE PONTIOUS
D.B.180 PG.212

KITTREDGE
INVESTMENTS, LLP
D.B.262 PG.130

USA-TVA
USA-TVA LAKE CHATUGE
FLOWAGE EASEMENTS
D.B.37 PG.614
D.B.37 PG.623

2' BASE DITCH
GRASS LINED
DDE =30 Cu.Yds.
SEE DETAIL 'M'

7 Tons CLASS 'B'
RIP-RAP
21 Sq.Yds.
Filter Fabric

3 Tons
CLASS 'B'
RIP-RAP
11 Sq. Yds.
Filter Fabric

1 Ton
CLASS 'B'
RIP-RAP
5 Sq. Yds.
Filter Fabric

SPECIAL CUT DITCH
GRASS LINED
SEE DETAIL 'G'

FLOWABLE FILL
& REM. HW's

BEGIN PROP.
EXPRESSWAY
GUTTER +09

END PROP.
EXPRESSWAY
GUTTER +50

600' LANE
SHIFT

SANITARY SEWER
LIFT STATION

SANITARY SEWER
VALVE

SANITARY SEWER
AIR RELEASE VALVE
TOP = 1956.76'
INV = 1953.11'

TEST HOLE #10
-BL- 207+82.79
1.94' LT.
EL. 1952.16
TELE. FIBER OPTIC

BM #10
-BL- STA. 211+36.56
58.38 LEFT
ELEV. 1953.79

TEST HOLE #11
-BL- 204+81.01
33.03' LT.
ELEV. = 1964.35'
FORCE MAIN SEWER

SYCAMORE TREE
& EIP WITNESS

DETAIL BB
FALSE SUMP
(Not to Scale)

Outside Ditch Traffic Flow — 20H — 10H — 2' — 0.5' Min. 1.0' Max. — Gi etc.

S=Ditch Slope — ℄ Proposed Ditch

-L- STA. 254+12 RT.

DETAIL G
SPECIAL CUT DITCH
(Not to Scale)

Natural Ground — 2H — D — 4H or Flatter — Front Ditch Slope

Min. D= 1.5 Ft.

FROM -L- STA. 262+00 TO STA. 264+00 LT.
FROM -L- STA. 263+00 TO STA. 264+00 RT.

DETAIL M
STANDARD BASE DITCH
(Not to Scale)

Natural Ground — 2H — D — B — 2H — Natural Ground

Min. D= 1.5 Ft.
B= 2 Ft.

FROM -L- STA. 254+00 LT.

PI Sta 31+10.68
Δ = 8° 36' 21.9" (RT)
D = 19° 05' 54.9"
L = 45.06'
T = 22.57'
R = 300.00'

PI Sta 31+69.62
Δ = 40° 34' 51.2" (RT)
D = 104° 10' 26.9"
L = 38.95'
T = 20.33'
R = 55.00'

-Y9B-

8/17/99

04-SEP-2008 14:40
R:\Roadway\Proj\a0011bb_rdy_psh18.dgn
$$$$USERNAME$$$$

PROJECT REFERENCE NO.	SHEET NO.
A-0011BB	19
R/W SHEET NO.	
ROADWAY DESIGN ENGINEER	HYDRAULICS ENGINEER

NORTH CAROLINA PROFESSIONAL SEAL 33296 ENGINEER STEVEN D. KENDALL 8-20-08

NORTH CAROLINA PROFESSIONAL SEAL 20870 ENGINEER MARC T. SHOWN 8-19-08

SEE SHEET 27 FOR -L- PROFILE

PROP. PAINT STRIPING

ROCK PLATING (SEE DETAIL SHT.2-W)

ADT. 2006
ADT. 2030

6,823 / 13400 -L- US-64 4,778 / 9,400

1,134 / 2,200 100- / 200 NC 175

2,312 / 4,800

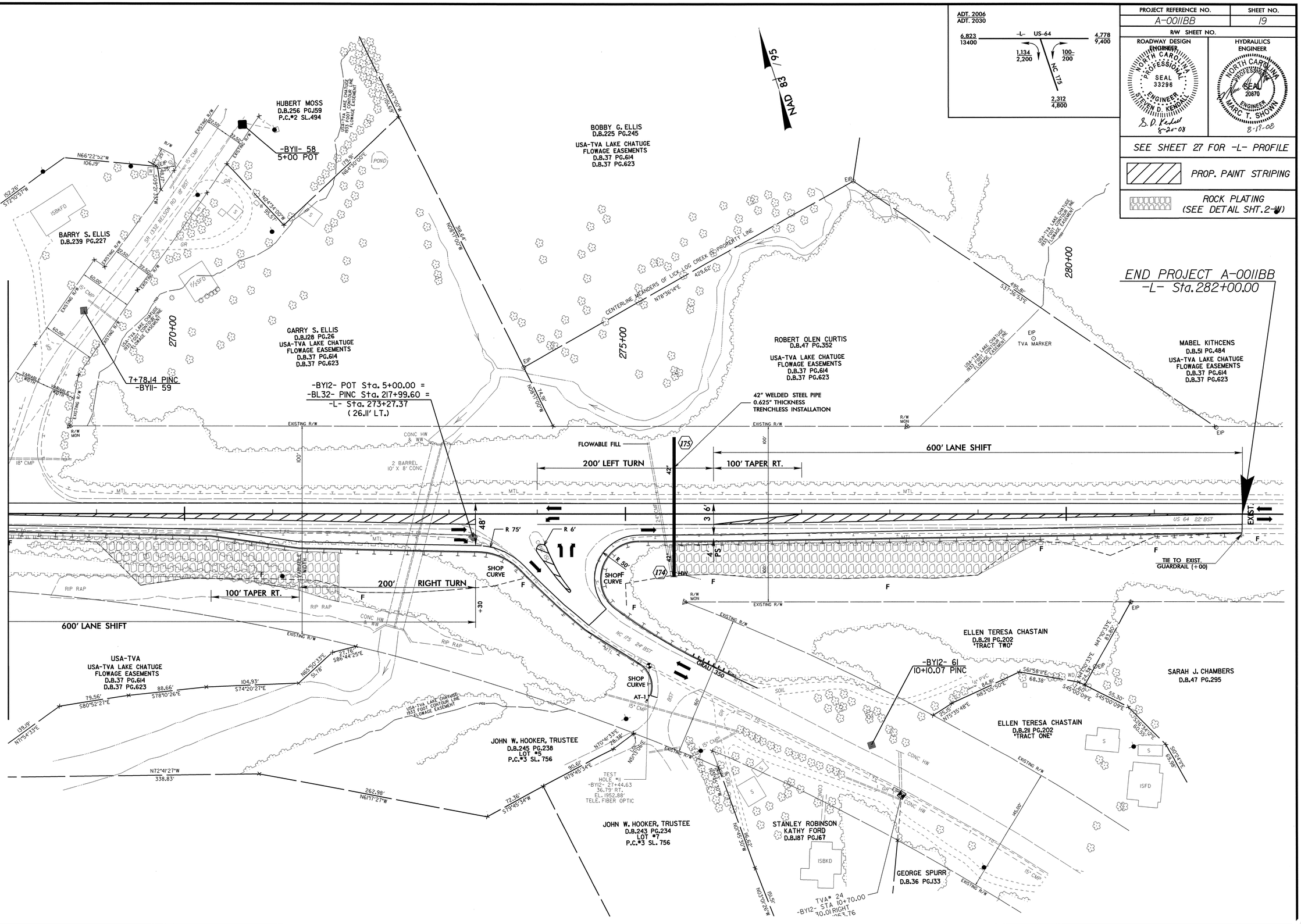

19-AUG-2008 13:34
R:\Roadway\Proj\a0011bb_rdy_psh19.dgn
$$$$USERNAME$$$$

PROJECT REFERENCE NO.	SHEET NO.
A-0011BB	20

ROADWAY DESIGN ENGINEER
NORTH CAROLINA PROFESSIONAL SEAL 33296 ENGINEER STEVEN D. KENDALL
S.D. Kendall 8-6-08

HYDRAULICS ENGINEER
NORTH CAROLINA PROFESSIONAL SEAL 20870 ENGINEER MARC T. SHOWN
8-7-08

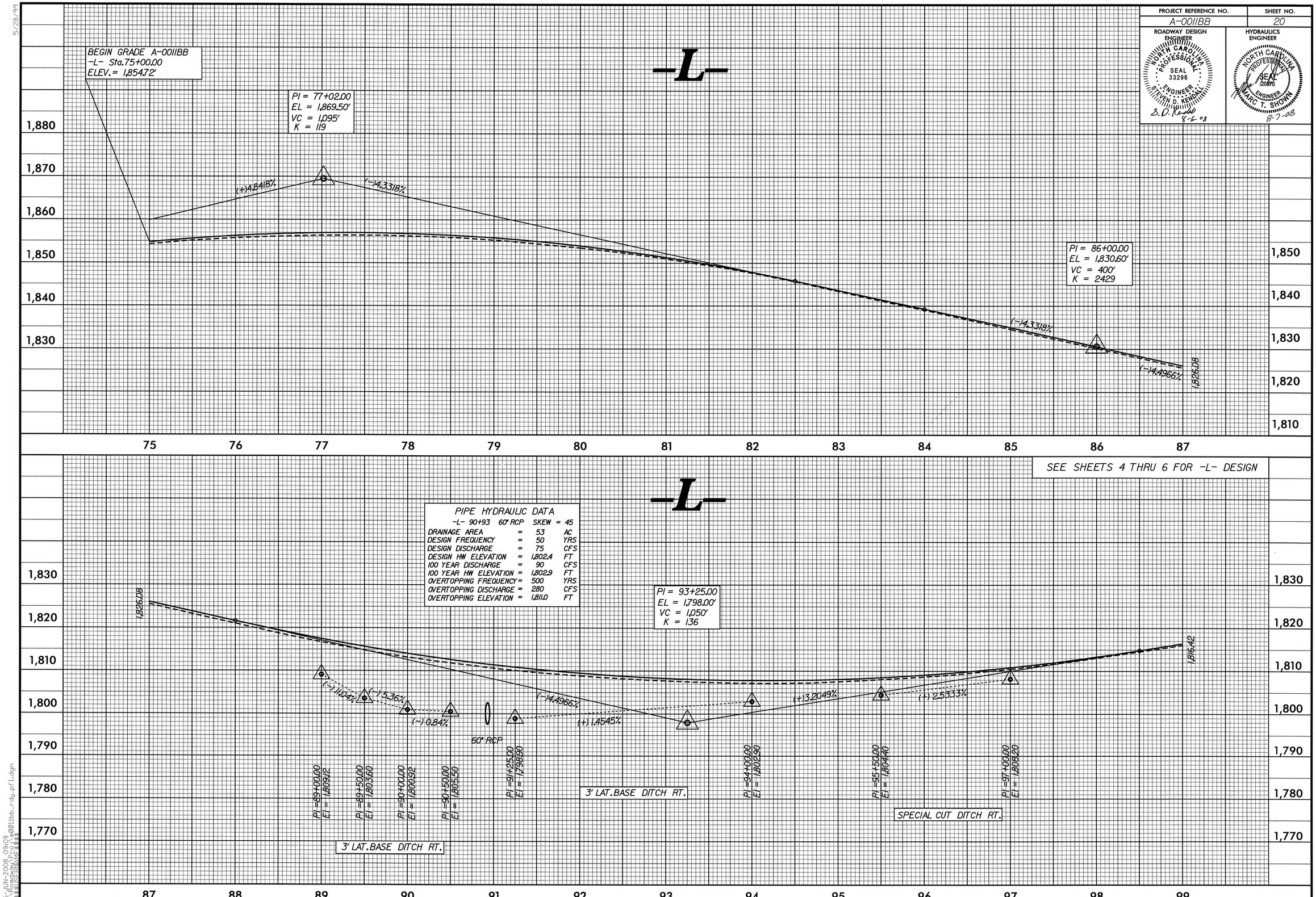

5/28/99

26-JUN-2008 09:09
R:\Roadway\Proj\a0011bb_rdy_prf1.dgn
$$$$USERNAME$$$$

PROJECT REFERENCE NO.	SHEET NO.
A-0011BB	21

ROADWAY DESIGN ENGINEER
NORTH CAROLINA PROFESSIONAL SEAL 33296 ENGINEER STEVEN D. KENDALL
S. D. Kendall 8-6-08

HYDRAULICS ENGINEER
NORTH CAROLINA PROFESSIONAL SEAL 20870 ENGINEER MARC T. SHOWN
8-7-08

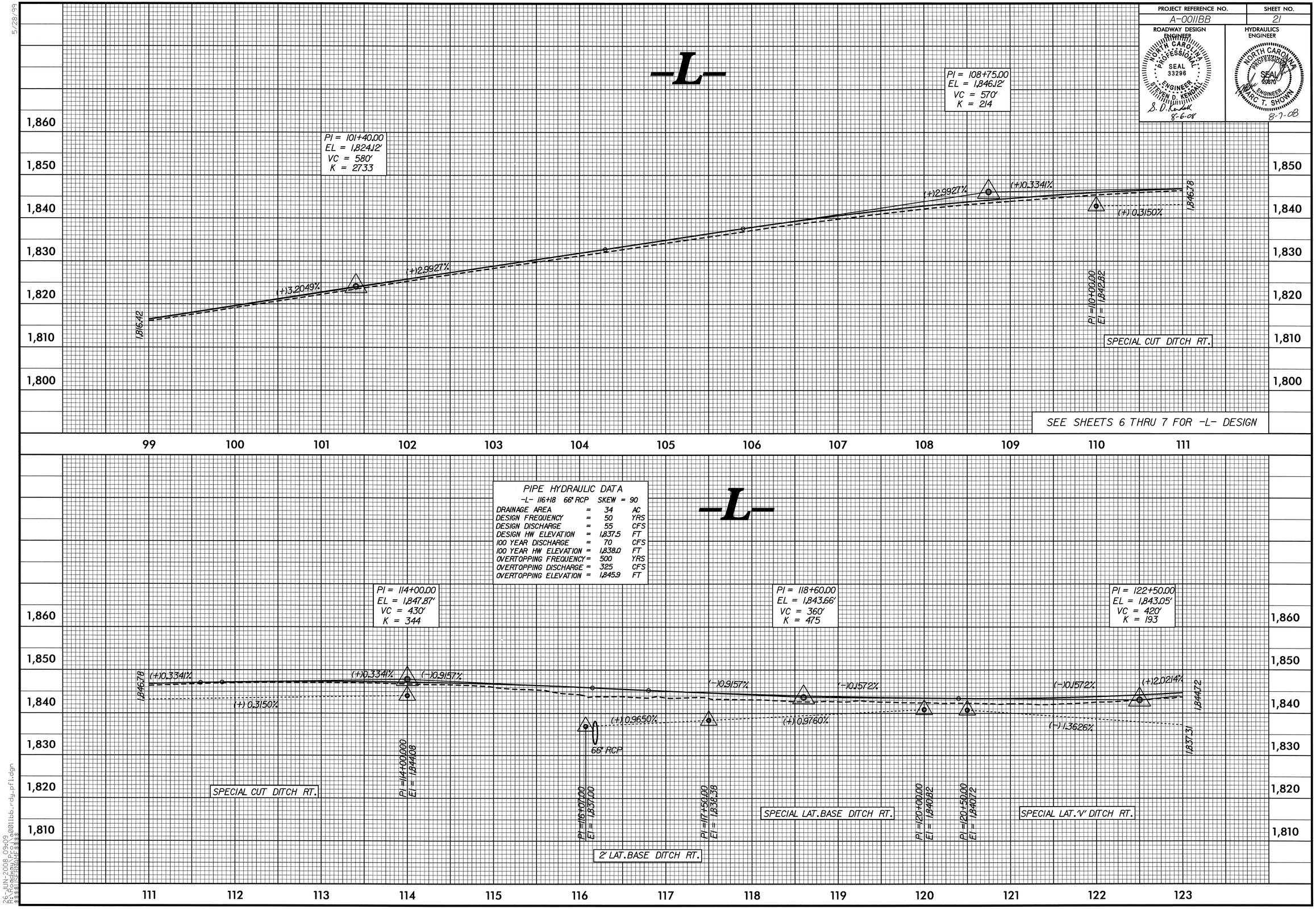

5/28/99

26-JUN-2008 09:09
R:\Roadway\Proj\a0011bb_rdy_pfl.dgn
$$$$USERNAME$$$$

PROJECT REFERENCE NO.	SHEET NO.
A-0011BB	22

ROADWAY DESIGN ENGINEER
NORTH CAROLINA PROFESSIONAL SEAL 33296 ENGINEER STEVEN D. KENDALL
S.D. Kendall 8-6-08

HYDRAULICS ENGINEER
NORTH CAROLINA PROFESSIONAL SEAL 20870 ENGINEER MARC T. SHOWN
8-7-08

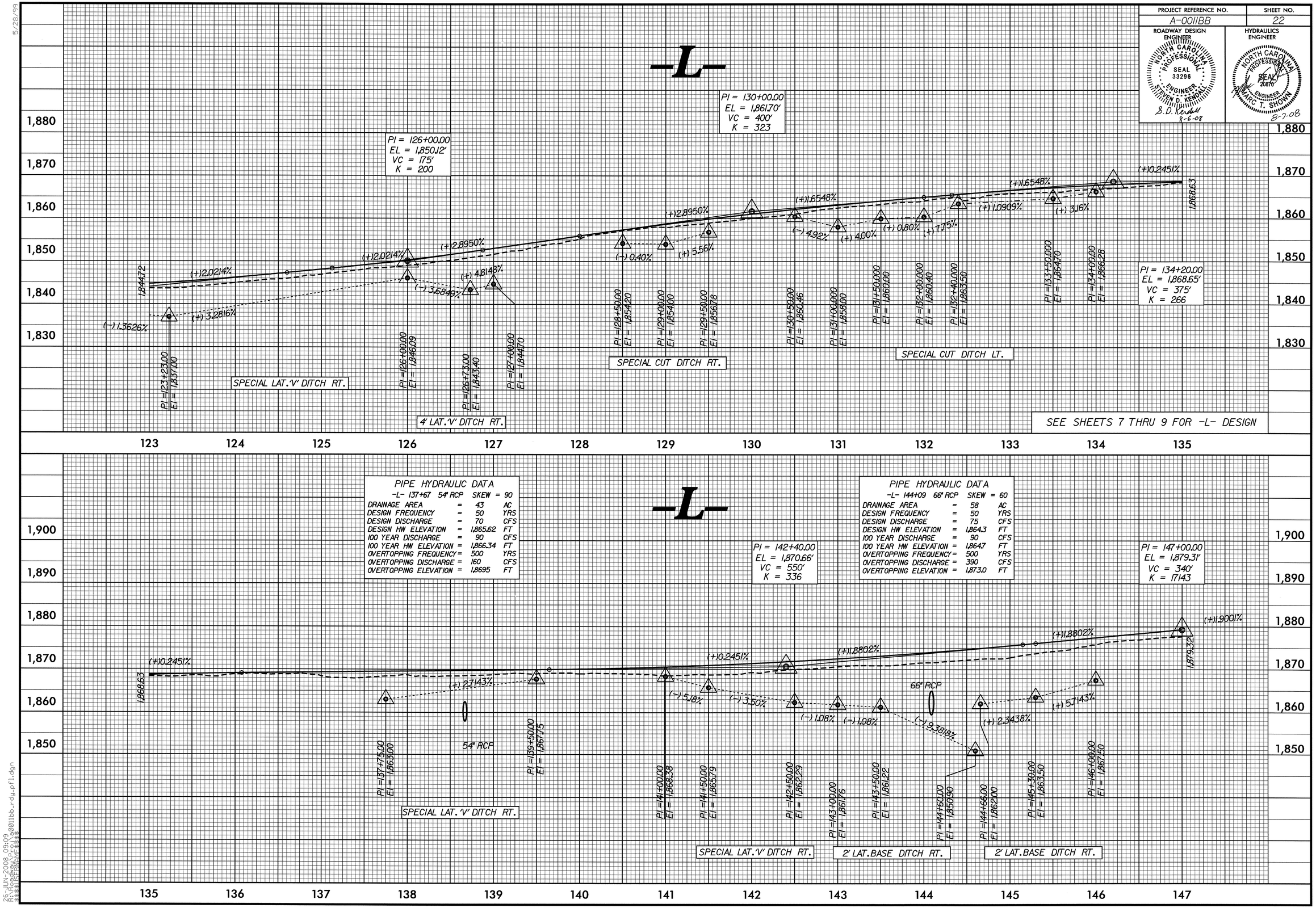

5/28/99

26-JUN-2008 09:09
R:\Roadway\Proj\a0011bb_rdy_pfl.dgn
$$$$USERNAME$$$$

5/28/99

PROJECT REFERENCE NO.	SHEET NO.
A-0011BB	23

ROADWAY DESIGN ENGINEER
NORTH CAROLINA PROFESSIONAL SEAL 33296 ENGINEER STEVEN D. KENDALL
B.D. Kendall 8-6-08

HYDRAULICS ENGINEER
NORTH CAROLINA PROFESSIONAL SEAL 20870 ENGINEER MARC T. SHOWN
8-7-08

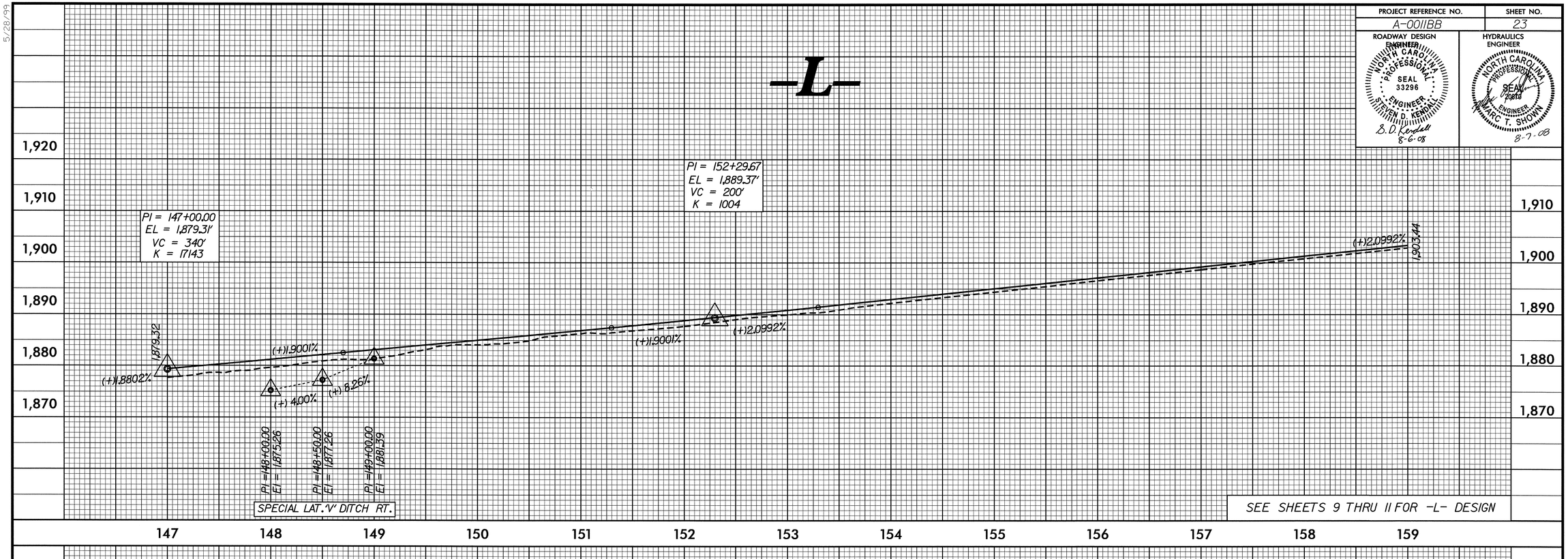

PIPE HYDRAULIC DATA

-L- 162+81 54" RCP SKEW = 90

DRAINAGE AREA	=	31	AC
DESIGN FREQUENCY	=	50	YRS
DESIGN DISCHARGE	=	48	CFS
DESIGN HW ELEVATION	=	1,909.6	FT
100 YEAR DISCHARGE	=	60	CFS
100 YEAR HW ELEVATION	=	1,910.0	FT
OVERTOPPING FREQUENCY	=	500	YRS
OVERTOPPING DISCHARGE	=	100	CFS
OVERTOPPING ELEVATION	=	1,911.4	FT

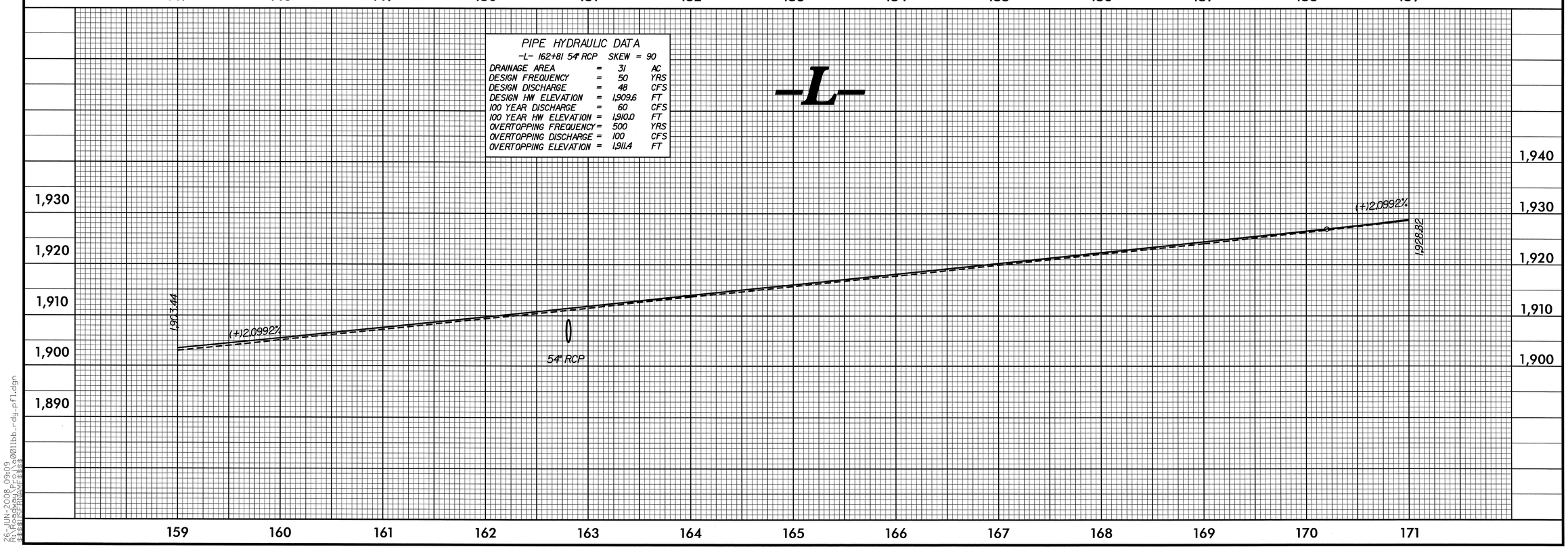

26-JUN-2008 09:09
R:\Roadway\Proj\a0011bb_rdy_pfl.dgn
$$$$USERNAME$$$$

PROJECT REFERENCE NO.	SHEET NO.
A-0011BB	24

ROADWAY DESIGN ENGINEER
NORTH CAROLINA PROFESSIONAL SEAL 33296 ENGINEER STEVEN D. KENDALL
S. D. Kendall 8-6-08

HYDRAULICS ENGINEER
NORTH CAROLINA PROFESSIONAL SEAL 20870 ENGINEER MARC T. SHOWNY
8-7-08

PIPE HYDRAULIC DATA

-L- 171+62 48 "RCP SKEW = 90

DRAINAGE AREA	=	29	AC
DESIGN FREQUENCY	=	50	YRS
DESIGN DISCHARGE	=	50	CFS
DESIGN HW ELEVATION	=	1,929.1	FT
100 YEAR DISCHARGE	=	60	CFS
100 YEAR HW ELEVATION	=	1,929.5	FT
OVERTOPPING FREQUENCY	=	200	YRS
OVERTOPPING DISCHARGE	=	90	CFS
OVERTOPPING ELEVATION	=	1,930.5	FT

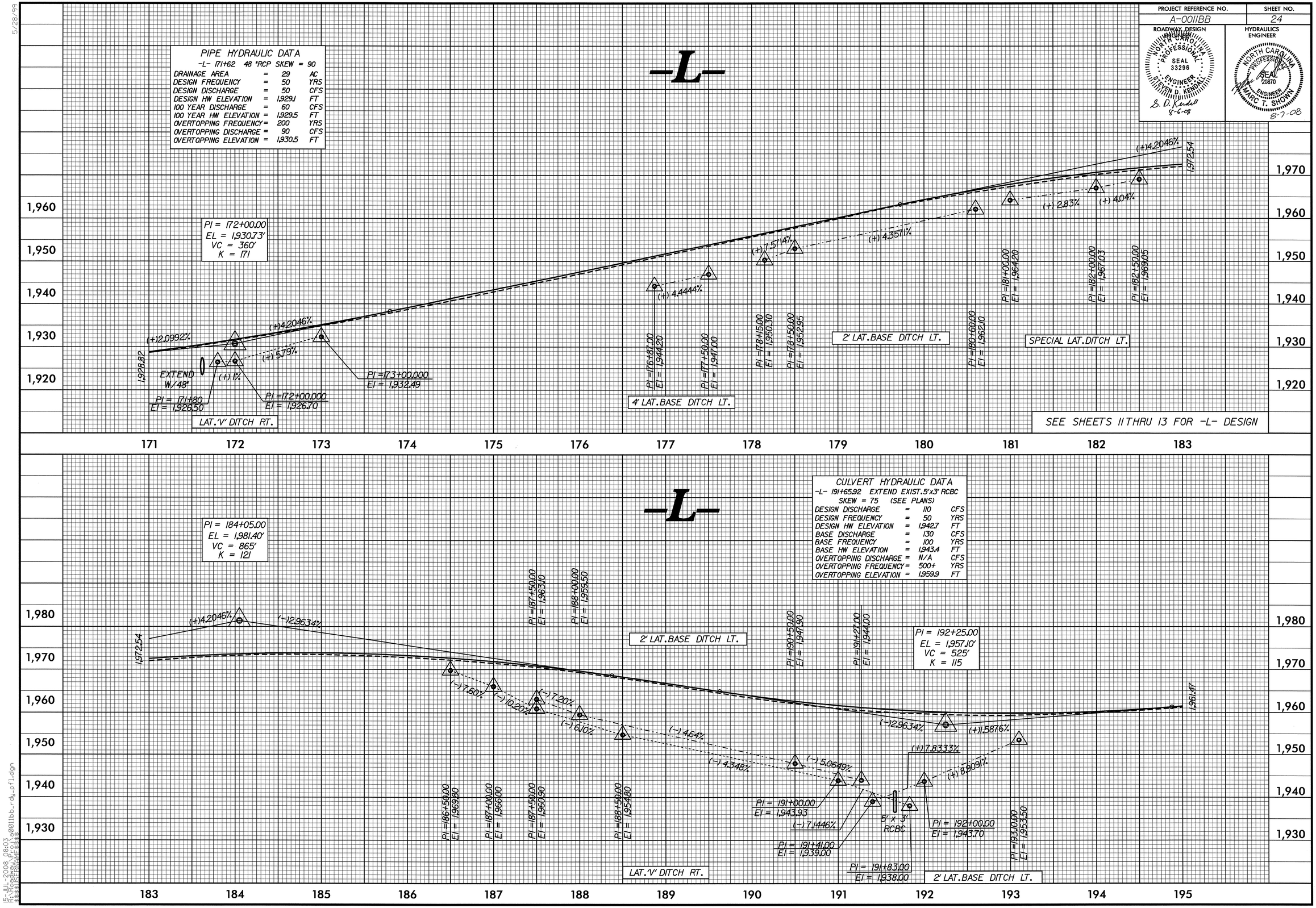

CULVERT HYDRAULIC DATA

-L- 191+65.92 EXTEND EXIST. 5'x3' RCBC SKEW = 75 (SEE PLANS)

DESIGN DISCHARGE	=	110	CFS
DESIGN FREQUENCY	=	50	YRS
DESIGN HW ELEVATION	=	1,942.7	FT
BASE DISCHARGE	=	130	CFS
BASE FREQUENCY	=	100	YRS
BASE HW ELEVATION	=	1,943.4	FT
OVERTOPPING DISCHARGE	=	N/A	CFS
OVERTOPPING FREQUENCY	=	500+	YRS
OVERTOPPING ELEVATION	=	1,959.9	FT

5/28/99
15-JUL-2008 08:03
R:\Roadway\Proj\a0011bb_rdy_pfl.dgn
$$$$USERNAME$$$$

PROJECT REFERENCE NO.	SHEET NO.
A-0011BB	25

ROADWAY DESIGN ENGINEER
NORTH CAROLINA PROFESSIONAL SEAL 33296 ENGINEER STEVEN D. KENDALL
S.D. Kendall 8-6-08

HYDRAULICS ENGINEER
NORTH CAROLINA PROFESSIONAL SEAL 20870 ENGINEER MARC T. SHOWN
8-7-08

CULVERT HYDRAULIC DATA

-L- 201+86 EXTEND EXIST. 4'x6' RCBC
w/ 4'x1' RCBC SKEW = 120 (SEE PLANS)

DESIGN DISCHARGE	=	100	CFS
DESIGN FREQUENCY	=	50	YRS
DESIGN HW ELEVATION	=	1,957.7	FT
BASE DISCHARGE	=	120	CFS
BASE FREQUENCY	=	100	YRS
BASE HW ELEVATION	=	1,958.2	FT
OVERTOPPING DISCHARGE	=	380	CFS
OVERTOPPING FREQUENCY	=	500+	YRS
OVERTOPPING ELEVATION	=	1,965.0	FT

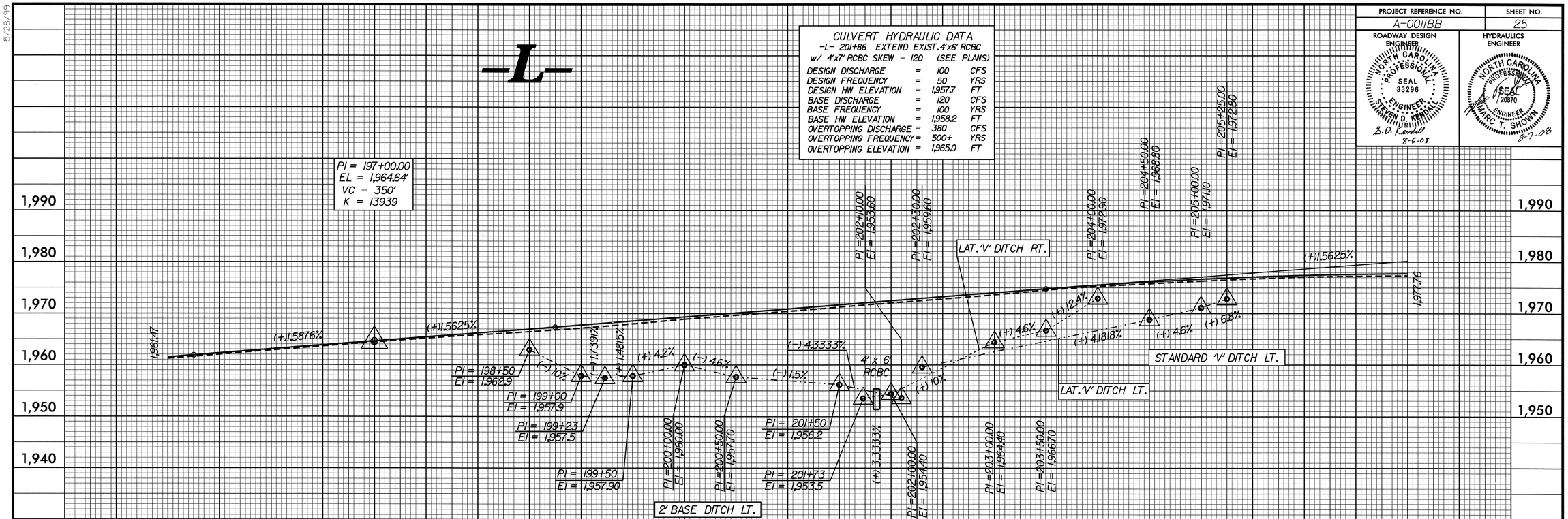

SEE SHEETS 13 THRU 15 FOR -L- DESIGN

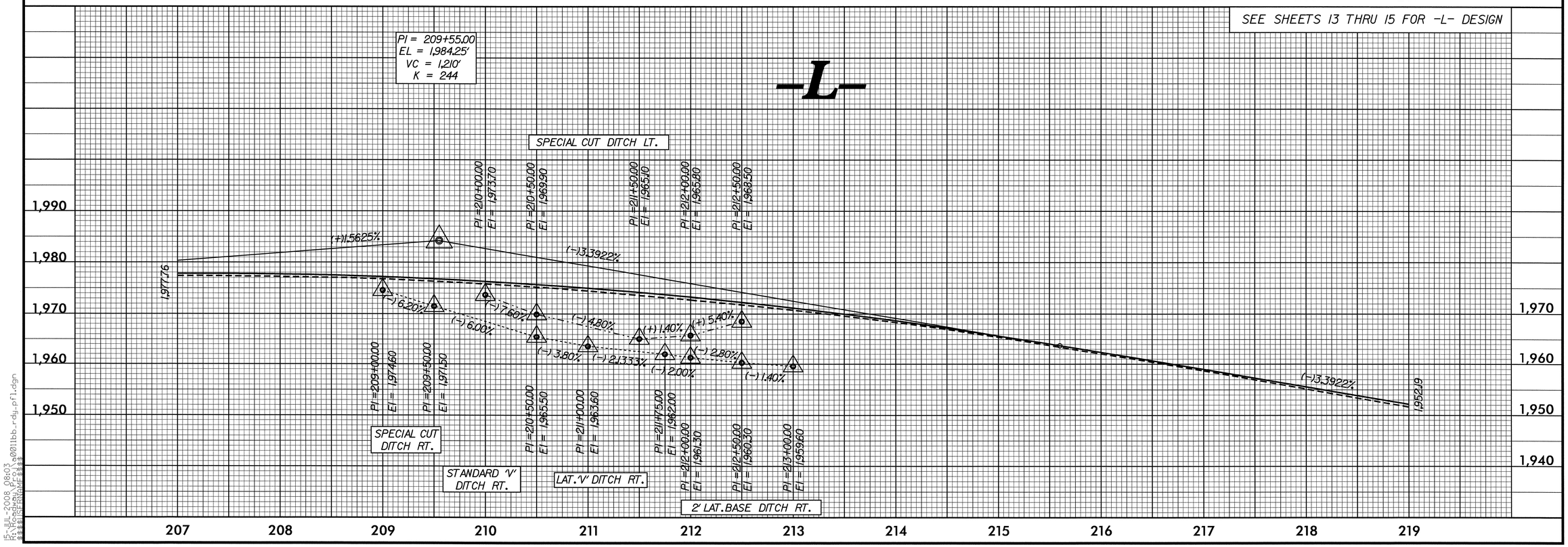

5/28/99

15-JUL-2008 08:03
R:\Roadway\Proj\a0011bb_rdy_pfl.dgn
$$$$USERNAME$$$$

PROJECT REFERENCE NO.	SHEET NO.
A-0011BB	26

ROADWAY DESIGN ENGINEER
NORTH CAROLINA PROFESSIONAL SEAL 33296 ENGINEER STEVEN D. KENDALL
S. D. Kendall 8-6-08

HYDRAULICS ENGINEER
NORTH CAROLINA PROFESSIONAL SEAL 20870 ENGINEER MARC T. SHOWN
8-7-08

PIPE HYDRAULIC DATA

-L- 222+72 42" RCP SKEW = 90

DRAINAGE AREA	=	15.3	AC
DESIGN FREQUENCY	=	50	YRS
DESIGN DISCHARGE	=	46	CFS
DESIGN HW ELEVATION	=	N/A	FT
100 YEAR DISCHARGE	=	49	CFS
100 YEAR HW ELEVATION	=	N/A	FT
OVERTOPPING FREQUENCY	=	500	YRS
OVERTOPPING DISCHARGE	=	N/A	CFS
OVERTOPPING ELEVATION	=	N/A	FT

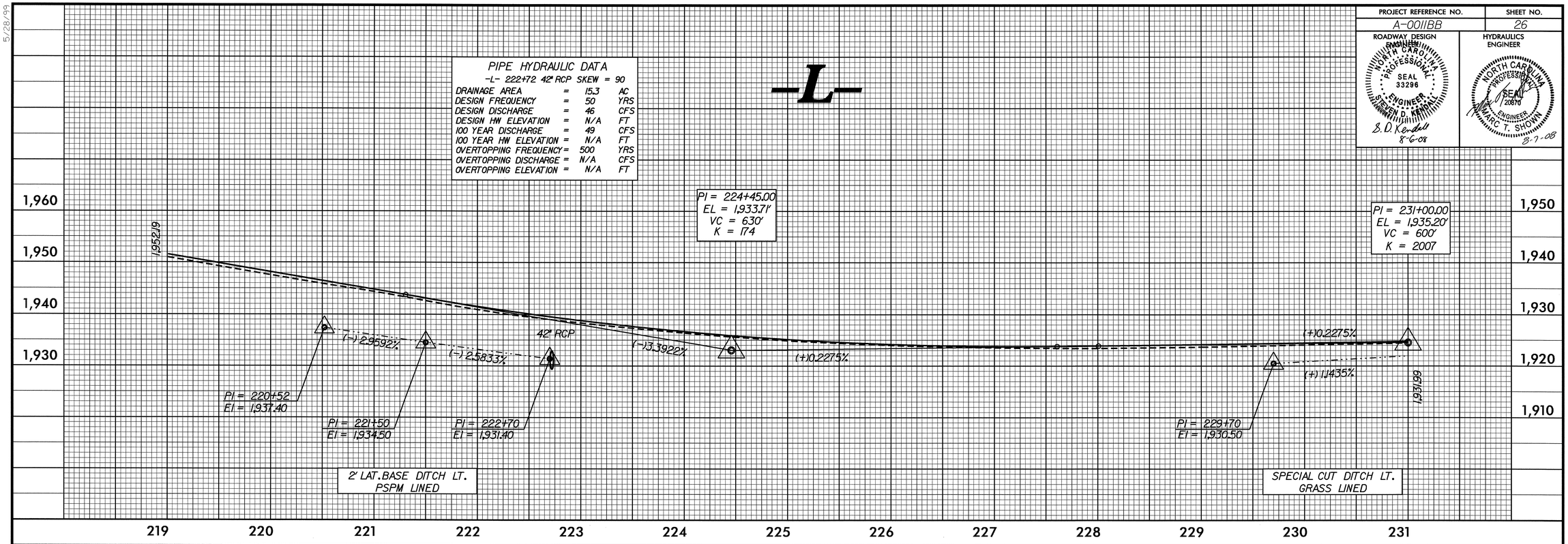

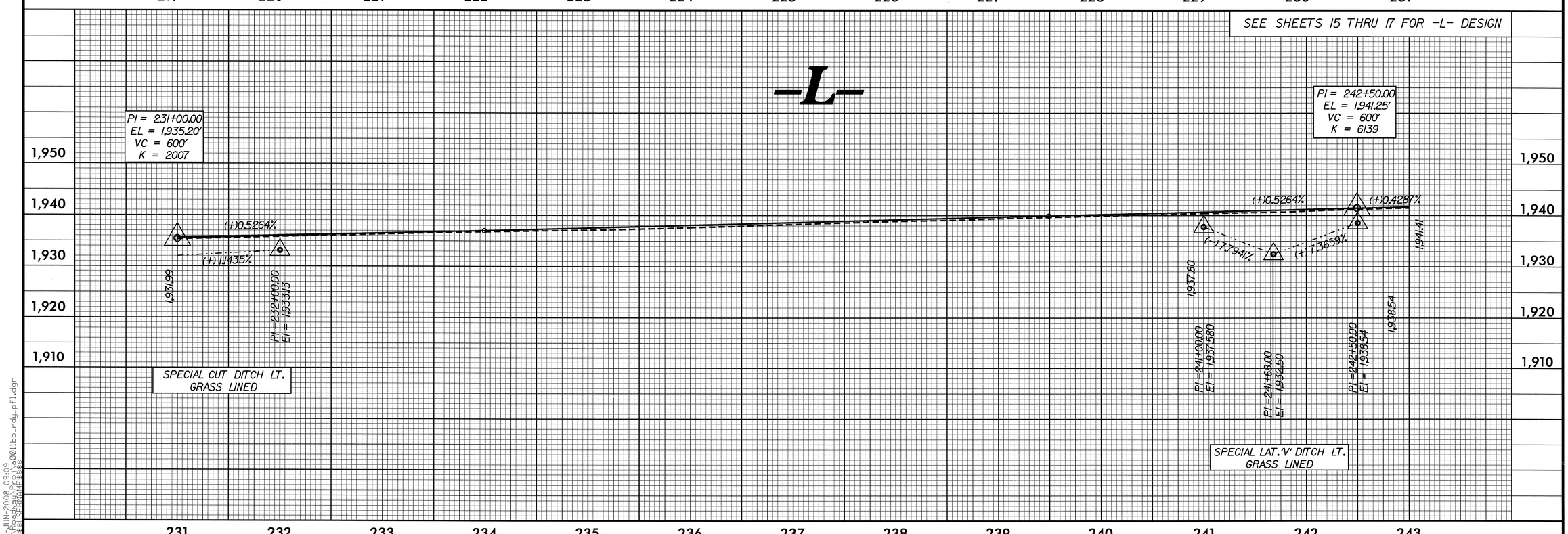

5/28/99

26-JUN-2008 09:09
R:\Roadway\Proj\a0011bb_rdy_pfl.dgn
$$$$USERNAME$$$$

PROJECT REFERENCE NO.	SHEET NO.
A-0011BB	27

ROADWAY DESIGN ENGINEER
NORTH CAROLINA PROFESSIONAL SEAL 33296 ENGINEER STEVEN D. KENDALL
B. D. Kendall 8-6-08

HYDRAULICS ENGINEER
NORTH CAROLINA PROFESSIONAL SEAL 026870 ENGINEER MARC T. SHOWN
8-7-08

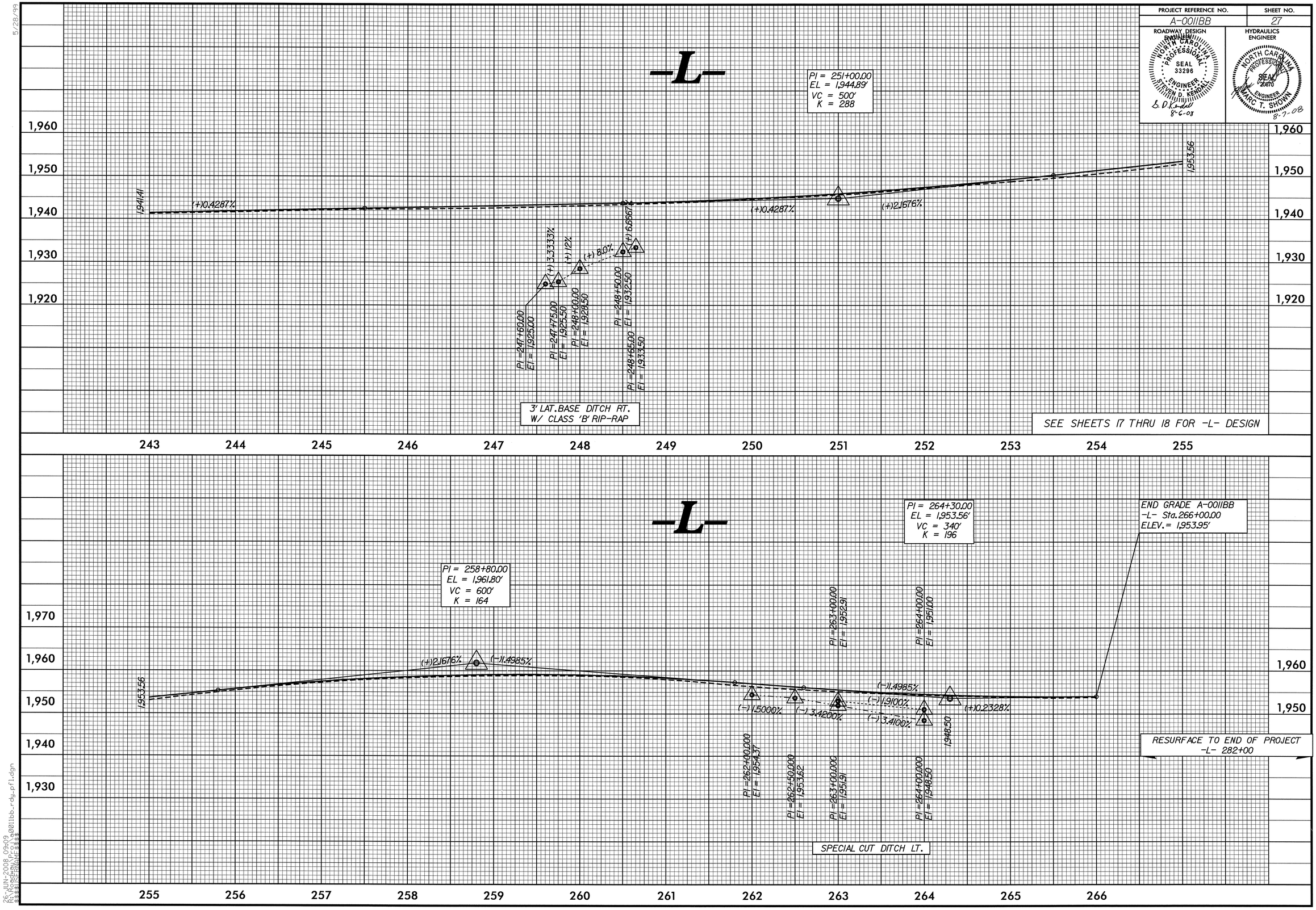

5/28/99

26-JUN-2008 09:09
R:\Roadway\Proj\a0011bb_rdy_pfl.dgn
$$$$USERNAME$$$$

PROJECT REFERENCE NO.	SHEET NO.
A-0011BB	28

ROADWAY DESIGN ENGINEER
NORTH CAROLINA PROFESSIONAL SEAL 33296 ENGINEER STEVEN D. KENDALL
S.D. Kendall 8-6-08

HYDRAULICS ENGINEER
NORTH CAROLINA PROFESSIONAL SEAL 29870 ENGINEER MARC T. SHOWN
8-7-08

-Y3-

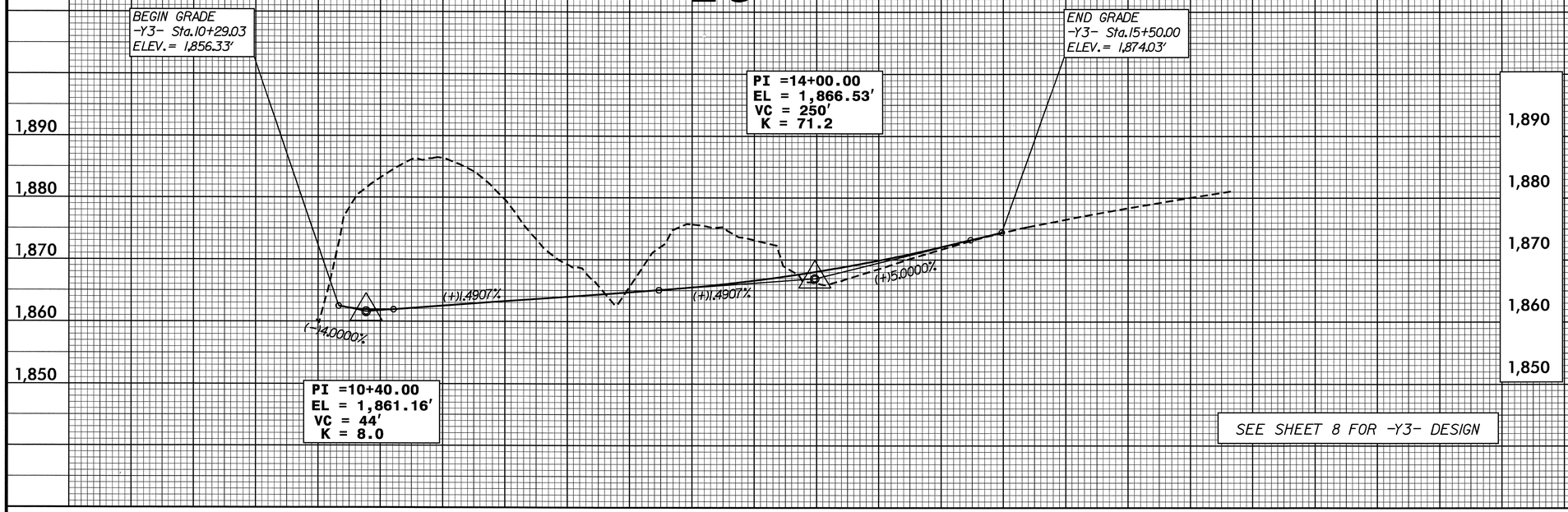

SEE SHEET 8 FOR -Y3- DESIGN

-Y5-

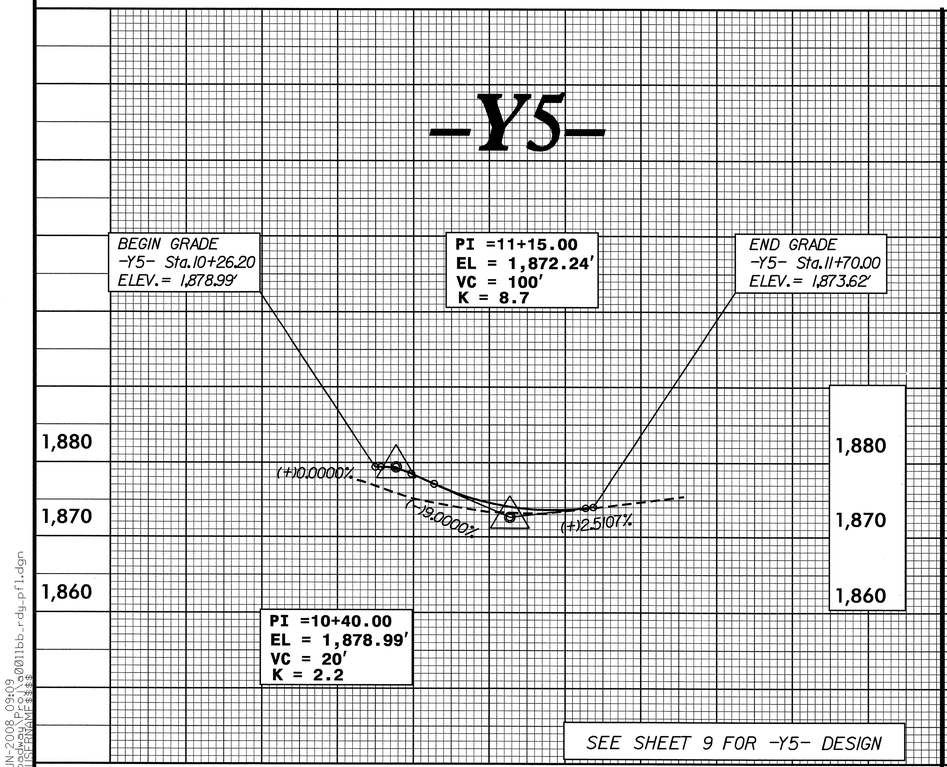

SEE SHEET 9 FOR -Y5- DESIGN

-Y6-

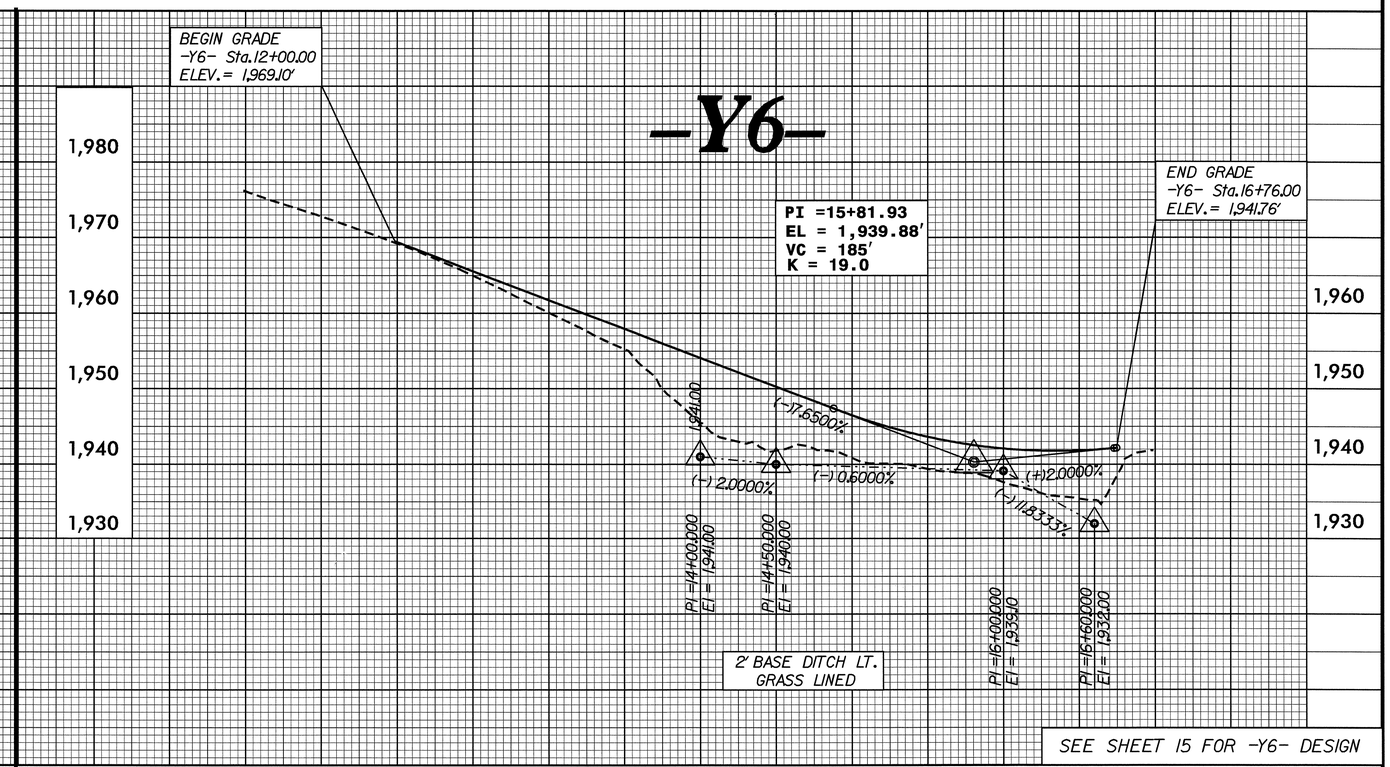

SEE SHEET 15 FOR -Y6- DESIGN

5/28/99
26-JUN-2008 09:09
R:\Roadway\Proj\a0011bb_rdy_pfl.dgn
$$$$USERNAME$$$$

PROJECT REFERENCE NO.	SHEET NO.
A-0011BB	29

ROADWAY DESIGN ENGINEER
NORTH CAROLINA PROFESSIONAL SEAL 33296 ENGINEER STEVEN D. KENDALL
S. D. Kendall 8-6-08

HYDRAULICS ENGINEER
NORTH CAROLINA PROFESSIONAL SEAL 20870 ENGINEER MARC T. SHOWN
8-7-08

-DR1LT-

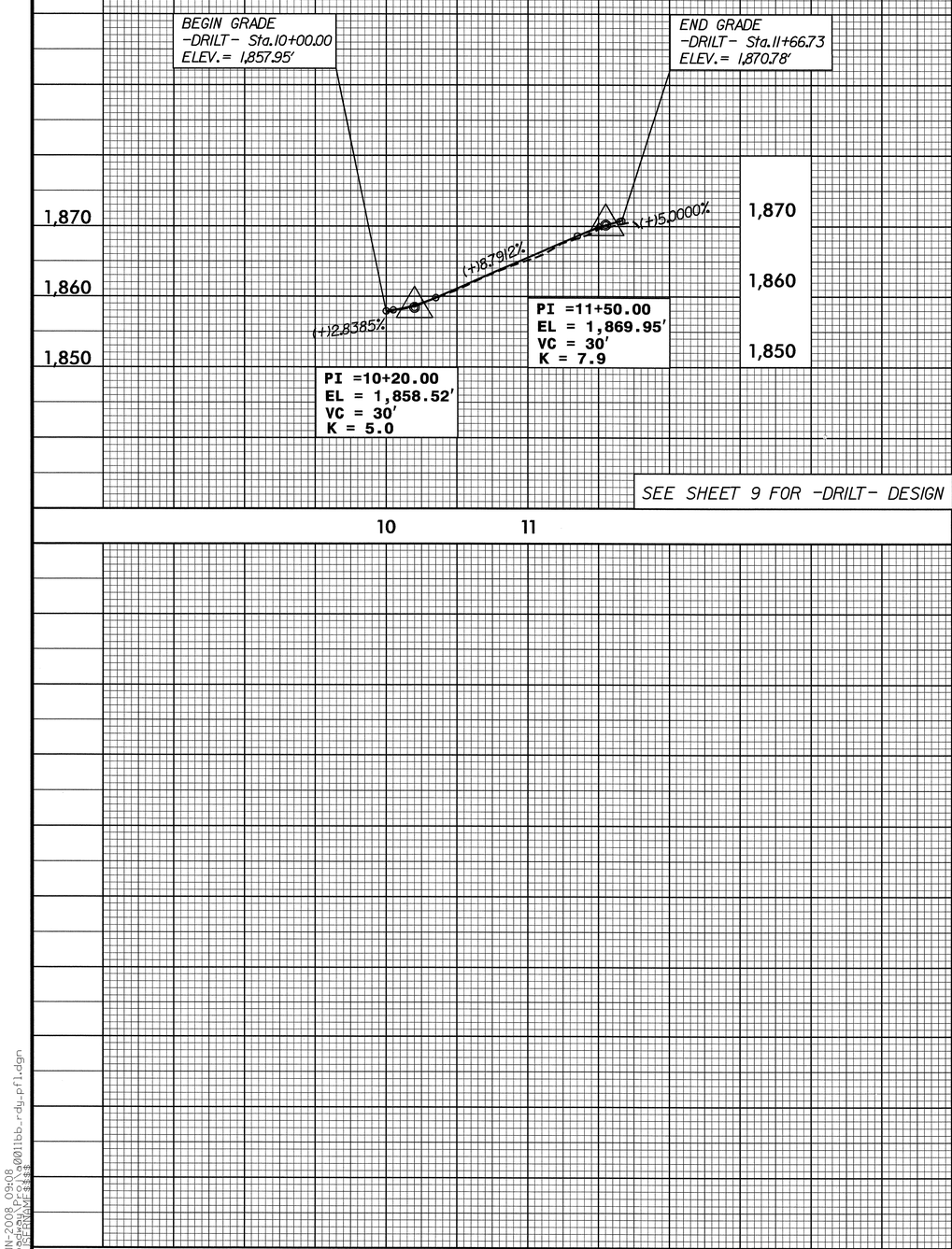

-DR1RT-

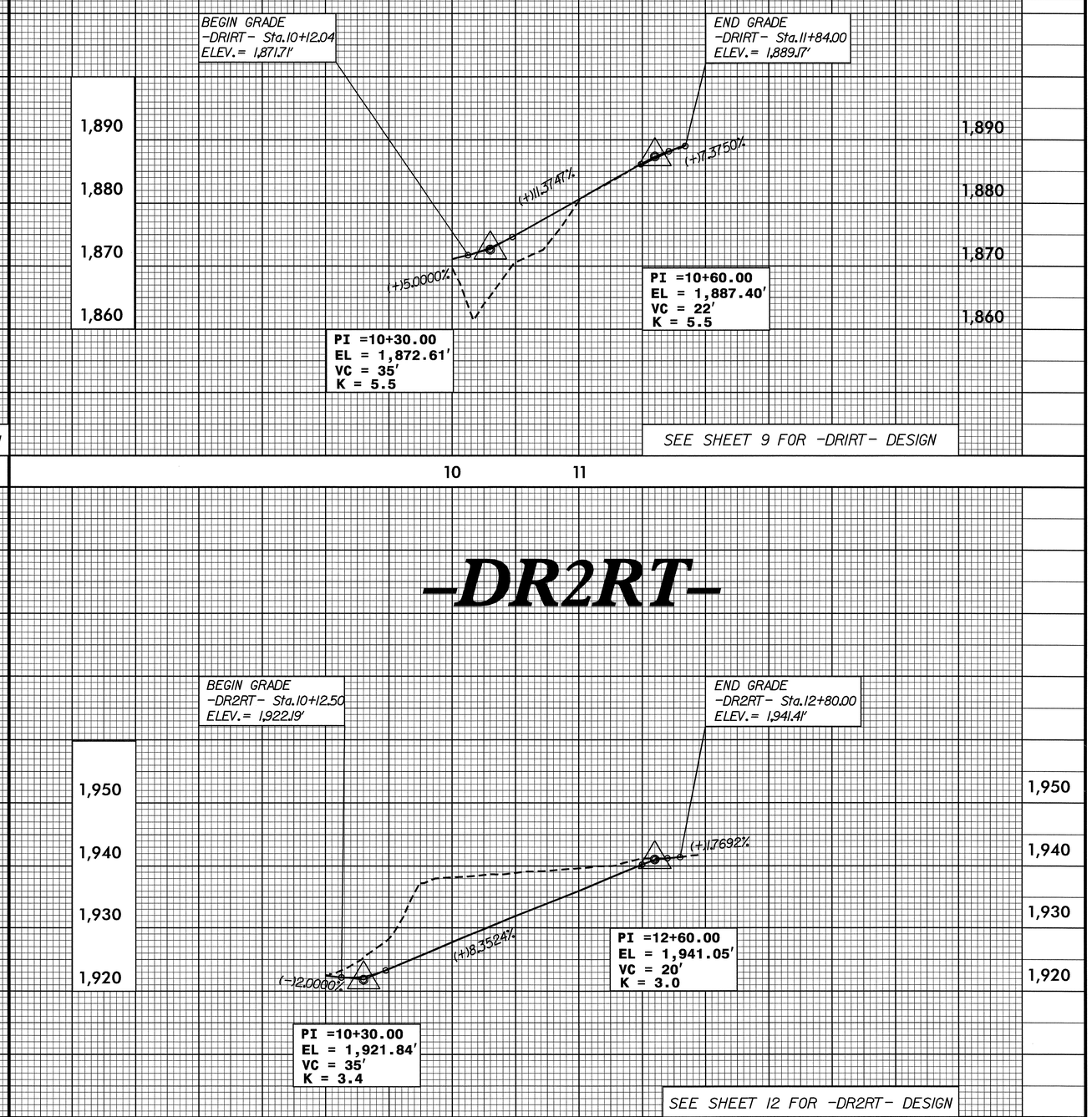

-DR2RT-

5/28/99

26-JUN-2008 09:08
R:\Roadway\Proj\a0011bb_rdy_prf1.dgn
$$$$USERNAME$$$$