CONTRACT:C201818 T.I.P. PROJ: R-2554BA

STRUCTURES & CULVERTS

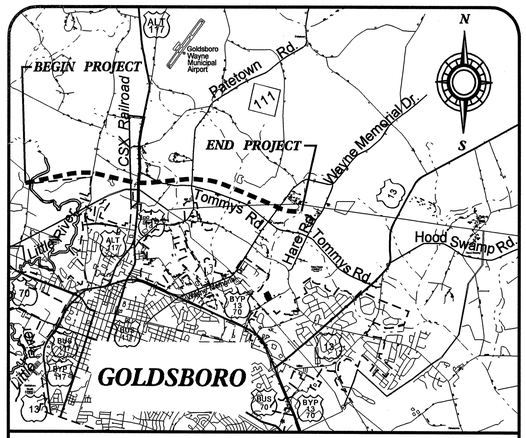

VICINITY MAP

STATE OF NORTH CAROLINA

DIVISION OF HIGHWAYS

WAYNE COUNTY

STATE	STATE PROJECT REFERENCE NO.	SHEET NO.	TOTAL SHEETS
N.C.	R-2554BA		

STATE PROJ. NO.	F. A. PROJ. NO.	DESCRIPTION
34461.1.3	NHF-70(30)	PE
34461.2.7		R/W & UTIL.
34461.3.GV1	NHS-70(106)	CONST.

LOCATION: US 70 (GOLDSBORO BYPASS)
FROM EAST OF SR 1300 (SALEM CHURCH ROAD)
TO EAST OF SR 1556 (WAYNE MEMORIAL DRIVE)

TYPE OF WORK: GRADING, PAVING, DRAINAGE,
STRUCTURES, CULVERTS, SIGNING, AND SIGNALS

STA. 90+00.000 –L– BEGIN TIP PROJECT R-2554BA
END FUTURE PROJECT TIP R-2554A

STA. 96+87.357 –L– BEGIN RIGHT-OF-WAY ACQUISITION

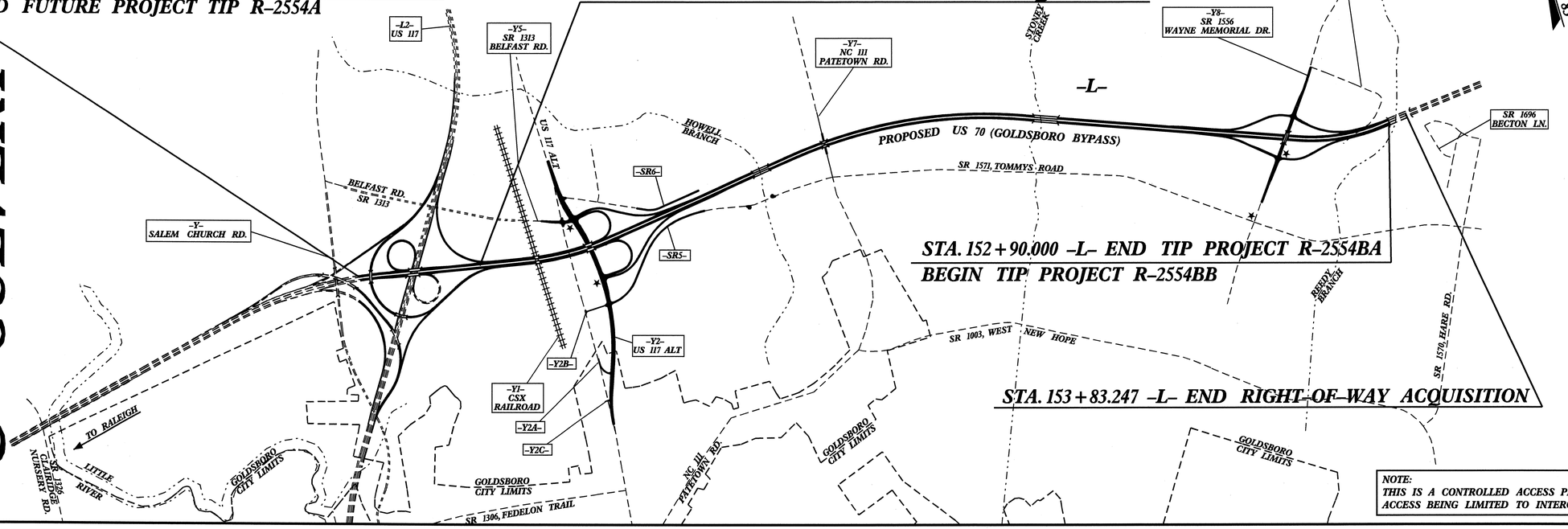

STA. 152+90.000 –L– END TIP PROJECT R-2554BA
BEGIN TIP PROJECT R-2554BB

STA. 153+83.247 –L– END RIGHT-OF-WAY ACQUISITION

NOTE:
THIS IS A CONTROLLED ACCESS PROJECT WITH ACCESS BEING LIMITED TO INTERCHANGES.

DESIGN DATA

ADT 2008 = 20,728
ADT 2028 = 41,480
DHV = 10 %
D = 55 %
T = 10 % *
V = 110 km/h

FUNCTIONAL CLASSIFICATION: FREEWAY

* TTST 6% DUAL 4%

PROJECT LENGTH

Length Roadway TIP Project R-2445BA ..... 5.809 km

****Length Structure TIP Project R-2445BA ..... 0.481 km***

TOTAL LENGTH TIP Project R-2445BA ..... 6.290 km (3.91 MILES)

****USED EBL –L– STATIONS FOR STRUCTURE LENGTHS***

Prepared In the Office of:

DEPARTMENT OF TRANSPORTATION
DIVISION OF HIGHWAYS
1000 Birch Ridge Drive, Raleigh, N. C. 27610

2006 STANDARD SPECIFICATIONS

LETTING DATE :
AUGUST 19, 2008

O. R. AZIZI, PE
PROJECT ENGINEER

T. L. COGGINS, PE
PROJECT DESIGN ENGINEER

STRUCTURE DESIGN UNIT

DIVISION OF HIGHWAYS
STATE OF NORTH CAROLINA

P.E.
STATE DESIGN ENGINEER

DEPARTMENT OF TRANSPORTATION
FEDERAL HIGHWAY ADMINISTRATION

APPROVED
DIVISION ADMINISTRATOR *DATE*

24-APR-2008 11:53
pedkins

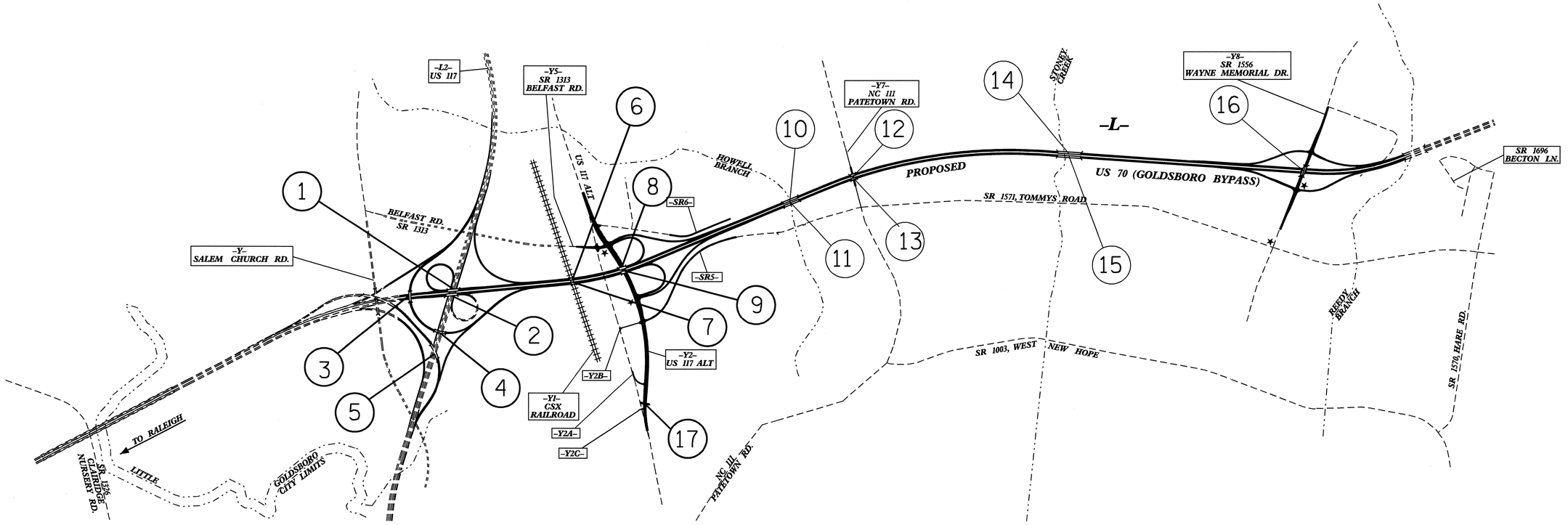

INDEX			
STR. No.	STATION	DESCRIPTION	SHEETS
1	93+23.591 -L- LT	BRIDGE ON PROPOSED US 70 BYPASS OVER US 117 (LEFT LANE)	S-1 THRU S-26
2	93+23.591 -L- RT	BRIDGE ON PROPOSED US 70 BYPASS OVER US 117 (RIGHT LANE)	S-27 THRU S-52
3	8+00.816 -L2RPBD-	BRIDGE ON RAMP BD OVER PROPOSED US 70 BYPASS	S-53 THRU S-83
4	11+09.326 -L2RPBD-	BRIDGE ON RAMP BD OVER US 117	S-84 THRU S-119
5	5+63.595 -L2RPDB-	BRIDGE ON RAMP DB OVER US 117	S-120 THRU S-154
6	100+61.488 -L- LT	BRIDGE ON PROPOSED US 70 BYPASS OVER CSX RAILROAD (LEFT LANE)	S-155 THRU S-191
7	100+61.488 -L- RT	BRIDGE ON PROPOSED US 70 BYPASS OVER CSX RAILROAD (RIGHT LANE)	S-192 THRU S-228
8	103+80.709 -L- LT	BRIDGE ON PROPOSED US 70 BYPASS OVER US 117 ALT (LEFT LANE)	S-229 THRU S-249
9	103+80.709 -L- RT	BRIDGE ON PROPOSED US 70 BYPASS OVER US 117 ALT (RIGHT LANE)	S-250 THRU S-270
10	114+74.700 -L- LT	BRIDGE ON PROPOSED US 70 BYPASS OVER HOWELL BRANCH (LEFT LANE)	S-271 THRU S-297
11	114+74.700 -L-RT	BRIDGE ON PROPOSED US 70 BYPASS OVER HOWELL BRANCH (RIGHT LANE)	S-298 THRU S-324
12	118+92.556 -L- LT	BRIDGE ON PROPOSED US 70 BYPASS OVER NC 111 (LEFT LANE)	S-325 THRU S-353
13	118+92.556 -L- RT	BRIDGE ON PROPOSED US 70 BYPASS OVER NC 111 (RIGHT LANE)	S-354 THRU S-382
14	132+37.000 -L- LT	BRIDGE ON PROPOSED US 70 BYPASS OVER STONEY CREEK (LEFT LANE)	S-383 THRU S-416
15	132+37.000 -L- RT	BRIDGE ON PROPOSED US 70 BYPASS OVER STONEY CREEK (RIGHT LANE)	S-417 THRU S-450
16	15+85.032 -Y8-	BRIDGE ON SR 1556 OVER PROPOSED US 70 BYPASS	S-451 THRU S-478
17	12+60.000 -Y2-	SINGLE 2.400m X 1.800m RCBC	C1 THRU C3

PART 1

PART 2

PART 1 OF 2

PROJECT NO. R-2554BA

WAYNE COUNTY

STATE OF NORTH CAROLINA
DEPARTMENT OF TRANSPORTATION
RALEIGH

INDEX

REVISIONS					
NO.	BY:	DATE:	NO.	BY:	DATE:
1			3		
2			4		

F.A. PROJECT NO.: NHS-70(106)

92+70 92+80 92+90 93+00 93+10 93+20 93+30 93+40 93+50 93+60 93+70 93+80 93+90

+1.8000% -0.5000%

P.I. STA. = 92+90.000 -L-
P.I. EL. = 47.320m
V.C. = 200.000m

GRADE DATA -L-

50 45 40 35 30

SPAN A SPAN B

FILL FACE @ END BENT 1
STA. 92+91.964 -L-
GRADE POINT EL. 46.758

FIX. FIX. FIX. FIX.

FILL FACE @ END BENT 2
STA. 93+60.964 -L-
GRADE POINT EL. 46.917

1½:1 SLOPE (NORMAL TO ROADWAY) (TYP.)

FILL

450

360 x 108 STEEL PILES

5.423m MIN. VERTICAL CLEARANCE

5.433m MIN. VERTICAL CLEARANCE

EL. 39.1 ±

.02 .02

GRADE POINT GRADE POINT

100mm CONCRETE SLOPE PROTECTION (TYP.)

FILL

450

360 x 108 STEEL PILES

EL. 38.9 ± EL. 38.0 ± EL. 39.0 ± EL. 39.1 ± EL. 39.1 ± EL. 39.0 ± EL. 38.1 ± EL. 38.8 ±

PAVED DITCH (ROADWAY DETAIL & PAY ITEM TYP.)

TOP OF FOOTING EL. 37.534

EXISTING NATURAL GROUND

END BENT 1 BENT 1 END BENT 2

SECTION ALONG GRADE LINE (LEFT LANE)

(SECTION AT END BENTS & BENTS ARE SHOWN AT RIGHT ANGLES)

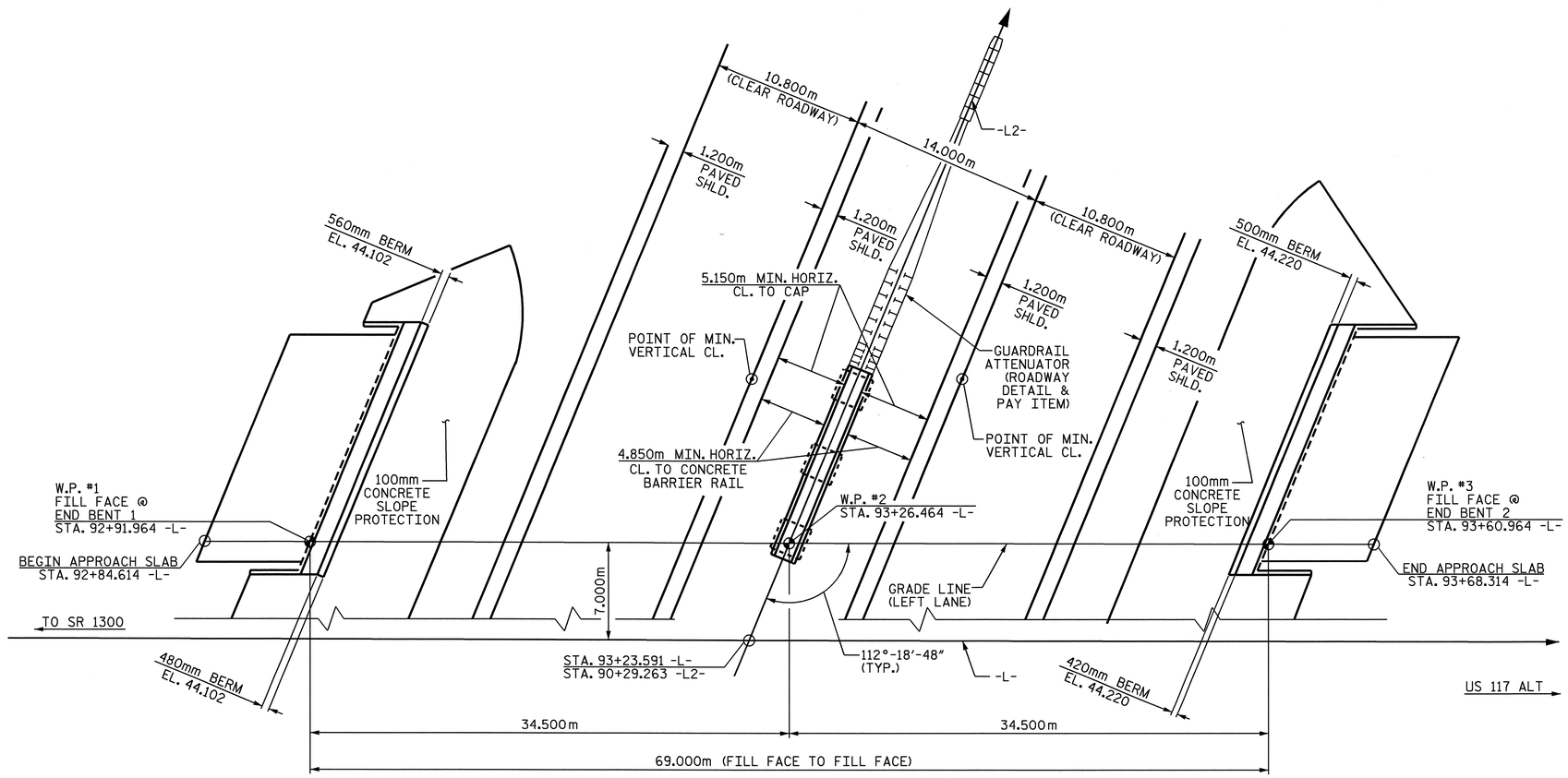

PLAN

(PILES NOT SHOWN FOR CLARITY)

PROJECT NO. R-2554BA

WAYNE COUNTY

STATION: 93+23.591 -L-
90+29.263 -L2-

SHEET 1 OF 3

STATE OF NORTH CAROLINA
DEPARTMENT OF TRANSPORTATION
RALEIGH

GENERAL DRAWING

FOR BRIDGE OVER US 117
ON US 70 BYPASS
BETWEEN SR 1300
AND US 117 ALT.
(LEFT LANE)

REVISIONS						SHEET NO.
NO.	BY:	DATE:	NO.	BY:	DATE:	S-1
1			3			TOTAL SHEETS
2			4			478

NORTH CAROLINA PROFESSIONAL SEAL 12929 ENGINEER NORMAN MABLETT BULLOCK, JR.
6/9/2008

NORTH CAROLINA PROFESSIONAL SEAL 22005 ENGINEER J. KEITH PASCHAL
6/9/08

DRAWN BY : J.D. HAWK DATE : 2/15/07
CHECKED BY : J.G. KHARVA DATE : 2/28/07

06-JUN-2008 15:05
R:\Structures\BULLOCK\Str#1\FINAL PLANS\r2554ba_sd_gd_01.dgn
JDHAWK

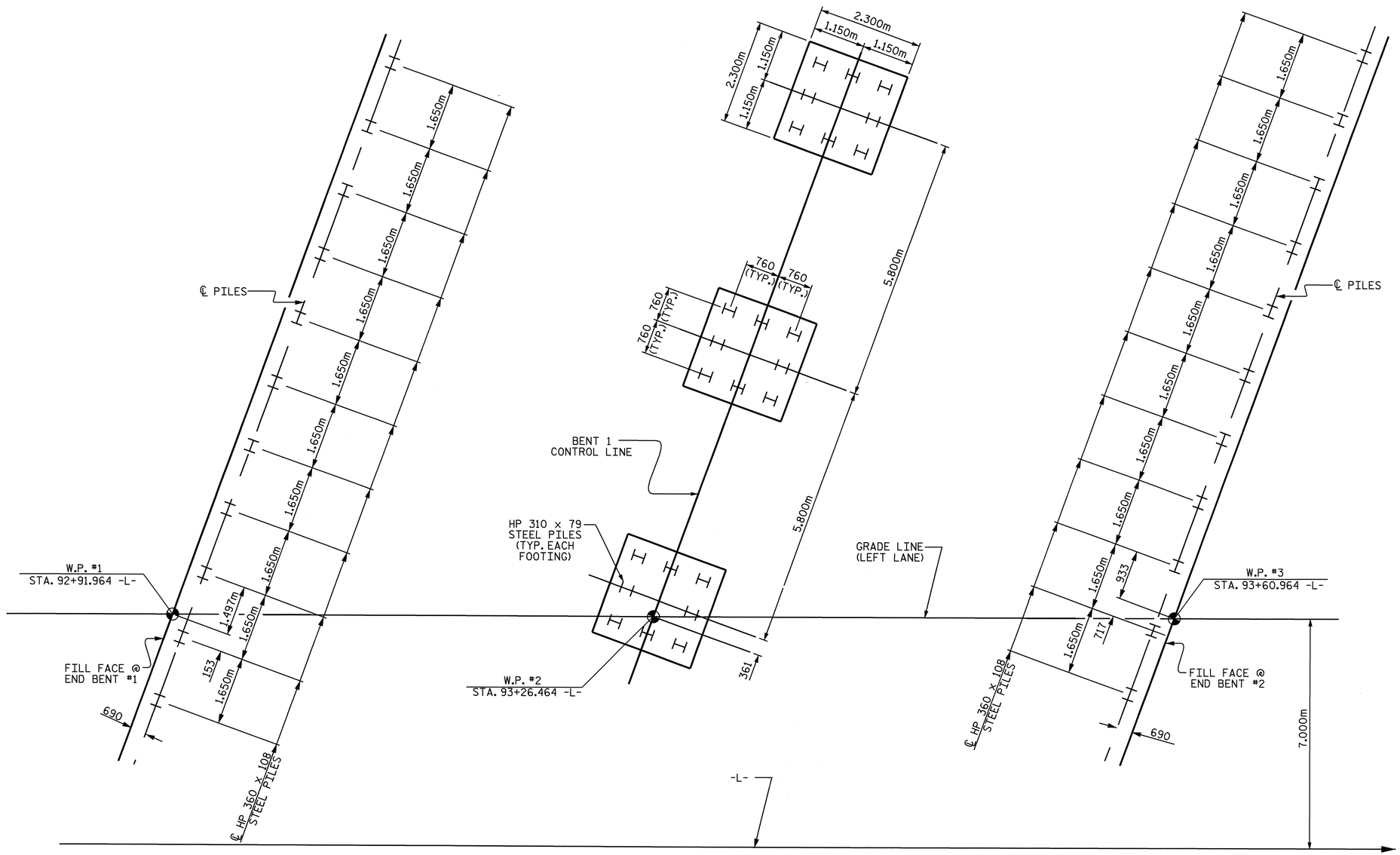

END BENT 1 BENT 1 END BENT 2

FOUNDATION LAYOUT

(DIMENSIONS LOCATING PILES ARE SHOWN TO THE CENTERLINE OF PILES)

NOTES:

DRIVE PILES AT END BENT NO. 1 AND END BENT NO. 2 TO A REQUIRE BEARING CAPACITY OF 1340 KN PER PILE. THE REQUIRED BEARING CAPACITY IS EQUAL TO THE ALLOWABLE BEARING CAPACITY WITH A MINIMUM FACTOR OF SAFETY OF TWO.

DRIVE PILES AT BENT NO. 1 TO A REQUIRE BEARING CAPACITY OF 1060 KN PER PILE. THE REQUIRED BEARING CAPACITY IS EQUAL TO THE ALLOWABLE BEARING CAPACITY WITH A MINIMUM FACTOR OF SAFETY OF TWO.

THE ALLOWABLE BEARING CAPACITY FOR PILES AT END BENT NO. 1 AND END BENT NO. 2 IS 670 KN PER PILE.

THE ALLOWABLE BEARING CAPACITY FOR PILES AT BENT NO. 1 IS 530 KN PER PILE.

TESTING PILES WITH THE PILE DRIVING ANALYZER (PDA) DURING DRIVING, RESTRIKING, OR REDRIVING MAY BE REQUIRED. THE ENGINEER WILL DETERMINE THE NEED FOR PDA TESTING. SEE PILE DRIVING ANALYZER SPECIAL PROVISIONS.

PILE RESTRIKES FOR LRFD MAY BE REQUIRED. SEE PILE PILE RESTRIKES FOR LRFD SPECIAL PROVISION.

FOR EMBANKMENT MONITORING DETAILS, SEE ROADWAY PLANS.

OBSERVE A FOUR MONTH WAITING PERIOD AFTER CONSTRUCTING THE EMBANKMENT TO THE BOTTOM OF CAP ELEVATION BEFORE BEGINNING END BENT CONSTRUCTION AT END BENT NO. 1 AND END BENT NO. 2.

NORTH CAROLINA PROFESSIONAL SEAL 22005 ENGINEER JOHN KEITH PASCHAL

6/9/08

PROJECT NO. R-2554BA

WAYNE COUNTY

STATION: 93+23.591 -L-

90+29.263 -L2-

SHEET 2 OF 3

STATE OF NORTH CAROLINA
DEPARTMENT OF TRANSPORTATION
RALEIGH

GENERAL DRAWING
FOR BRIDGE OVER US 117
ON US 70 BYPASS
BETWEEN SR 1300
AND US 117 ALT.
(LEFT LANE)

REVISIONS						SHEET NO.
NO.	BY:	DATE:	NO.	BY:	DATE:	S-2
1			3			TOTAL SHEETS
2			4			478

DRAWN BY : J.D. HAWK DATE : 10/02/07
CHECKED BY : J.G. KHARVA DATE : 10/20/07

06-JUN-2008 15:05
R:\Structures\BULLOCK\Str#1\FINAL PLANS\r2554ba_sd_gd_01.dgn
JDHAWK

STR. 1

B.M.- #1 RR SPIKE IN BASE OF 460mm (18") PINE 72.717m LT OF -BL- STA. 8+14.282 EL. 40.614m

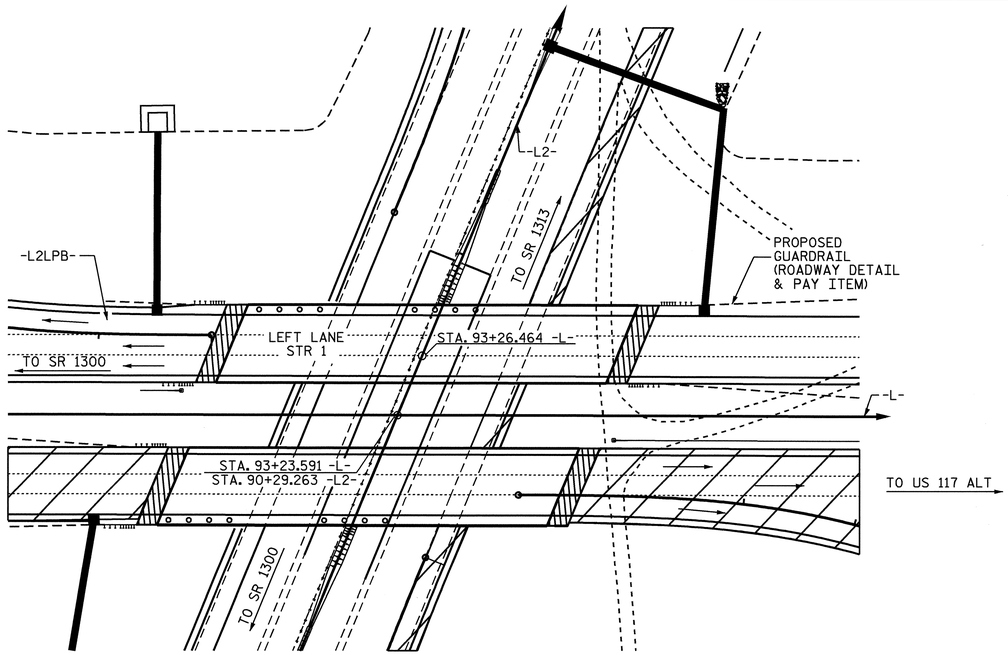

FOR UTILITY INFORMATION, SEE UTILITY PLANS AND SPECIAL PROVISIONS.

LOCATION SKETCH

NOTES:

ALL DIMENSIONS ARE IN MILLIMETERS UNLESS OTHERWISE NOTED.

ALL ELEVATIONS ARE IN METERS.

ASSUMED LIVE LOAD = MS18 OR ALTERNATE LOADING, EXCEPT THAT THE GIRDERS HAVE BEEN DESIGNED FOR MS22.5.

FOR OTHER DESIGN DATA AND GENERAL NOTES, SEE SHEET SNSM.

FOR EROSION CONTROL MEASURES SEE EROSION CONTROL PLANS.

THIS BRIDGE HAS BEEN DESIGNED BY THE STRENGTH DESIGN METHOD AS SPECIFIED IN AASHTO STANDARD SPECIFICATIONS.

THIS BRIDGE HAS BEEN DESIGNED IN ACCORDANCE WITH THE REQUIREMENTS OF THE AASHTO STANDARD SPECIFICATIONS FOR SEISMIC DESIGN OF HIGHWAY BRIDGES FOR SEISMIC PERFORMANCE CATEGORY A.

PRESTRESSED CONCRETE DECK PANELS MAY BE USED IN LIEU OF METAL STAY-IN-PLACE FORMS IN ACCORDANCE WITH ARTICLE 420-3 OF THE STANDARD SPECIFICATIONS. (PLANS WITH PANELS)

REMOVABLE FORMS MAY BE USED IN LIEU OF METAL STAY-IN-PLACE FORMS IN ACCORDANCE WITH ARTICLE 420-3 OF THE STANDARD SPECIFICATIONS.

FOR MAINTENANCE AND PROTECTION OF TRAFFIC BENEATH PROPOSED STRUCTURE, SEE SPECIAL PROVISIONS.

THE CONTRACTOR SHALL PROVIDE INDEPENDENT ASSURANCE SAMPLES OF REINFORCING STEEL AS FOLLOWS: FOR PROJECTS REQUIRING UP TO 360,000 kg OF REINFORCING STEEL, ONE 760mm SAMPLE OF EACH SIZE BAR USED, AND FOR PROJECTS REQUIRING OVER 360,000 kg OF REINFORCING STEEL, TWO 760mm SAMPLES OF EACH SIZE BAR USED. THE BARS FROM WHICH THE SAMPLES ARE TAKEN MUST THEN BE SPLICED WITH REPLACEMENT BARS OF THE SIZE AND LENGTH OF THE SAMPLE PLUS A MINIMUM LAP SPLICE OF THIRTY BAR DIAMETERS.

FOR FALSEWORK AND FORMS OVER OR ADJACENT TO TRAFFIC, SEE SPECIAL PROVISIONS .

NEEDLE BEAMS WILL NOT BE ALLOWED UNLESS OTHERWISE CALLED FOR ON THE PLANS OR APPROVED BY THE ENGINEER.

FOR SUBMITTAL OF WORKING DRAWINGS, SEE SPECIAL PROVISIONS.

FOR METRIC STRUCTURAL STEEL, SEE SPECIAL PROVISIONS.

FOR FALSEWORK AND FORMWORK, SEE SPECIAL PROVISIONS.

FOR CRANE SAFETY, SEE SPECIAL PROVISIONS.

FOR GROUT FOR STRUCTURES, SEE SPECIAL PROVISIONS.

TOTAL BILL OF MATERIAL

	FOUNDATION EXCAVATION FOR BENT	PDA TESTING	PDA ASSISTANCE	REINFORCED CONCRETE DECK SLAB	GROOVING BRIDGE FLOORS	CLASS A CONCRETE	BRIDGE APPROACH SLABS	REINFORCING STEEL	SPIRAL COLUMN REINFORCING STEEL	MODIFIED 1600mm PRESTRESSED CONCRETE GIRDERS	HP 310 X 79 STEEL PILES		HP 360 X 108 STEEL PILES		PILE REDRIVES	CONCRETE BARRIER RAIL	100mm SLOPE PROTECTION	ELASTOMERIC BEARINGS	EVAZOTE JOINT SEALS
	LUMP SUM	EACH	EACH	SQ. METERS	SQ. METERS	CU. METERS	LUMP SUM	Kg.	Kg.	METERS	NO.	METERS	NO.	METERS	EACH	METERS	SQ. M.	LUMP SUM	LUMP SUM
SUPERSTRUCTURE				1020.5	1055.9		LUMP SUM			406.128						136.92		LUMP SUM	LUMP SUM
END BENT 1						28.2		2709					11	275.0	5		270.0		
BENT 1	LUMP SUM					54.2		6056	607		24	336.0			9				
END BENT 2						31.7		2696					11	242.0	5		318.0		
TOTAL	LUMP SUM	1	1	1020.5	1055.9	114.1	LUMP SUM	11461	607	406.128	24	336.0	22	517.0	19	136.92	588.0	LUMP SUM	LUMP SUM

PROJECT NO. R-2554BA

WAYNE COUNTY

STATION: 93+23.591 -L-
90+29.263 -L2-

SHEET 3 OF 3

STATE OF NORTH CAROLINA
DEPARTMENT OF TRANSPORTATION
RALEIGH

GENERAL DRAWING
FOR BRIDGE OVER US 117
ON US 70 BYPASS
BETWEEN SR 1300
AND US 117 ALT.
(LEFT LANE)

NORTH CAROLINA PROFESSIONAL SEAL 030221 ENGINEER A. KEITH PASCHAL
6/9/08

REVISIONS						SHEET NO.
NO.	BY:	DATE:	NO.	BY:	DATE:	S-3
1			3			TOTAL SHEETS
2			4			478

DRAWN BY : J.D. HAWK DATE : 2/15/07
CHECKED BY : J.G. KHARVA DATE : 2/28/07

06-JUN-2008 15:05
R:\Structures\BULLOCK\Str#1\FINAL PLANS\r2554ba_sd_gd_01.dgn
JDHAWK

STR. #1

R:\Structures\BULLOCK\Str#1\FINAL PLANS\R2554BA_sd_TS_01
JDHAWK

FOR NOTES, SEE SHEET 2 OF 2.

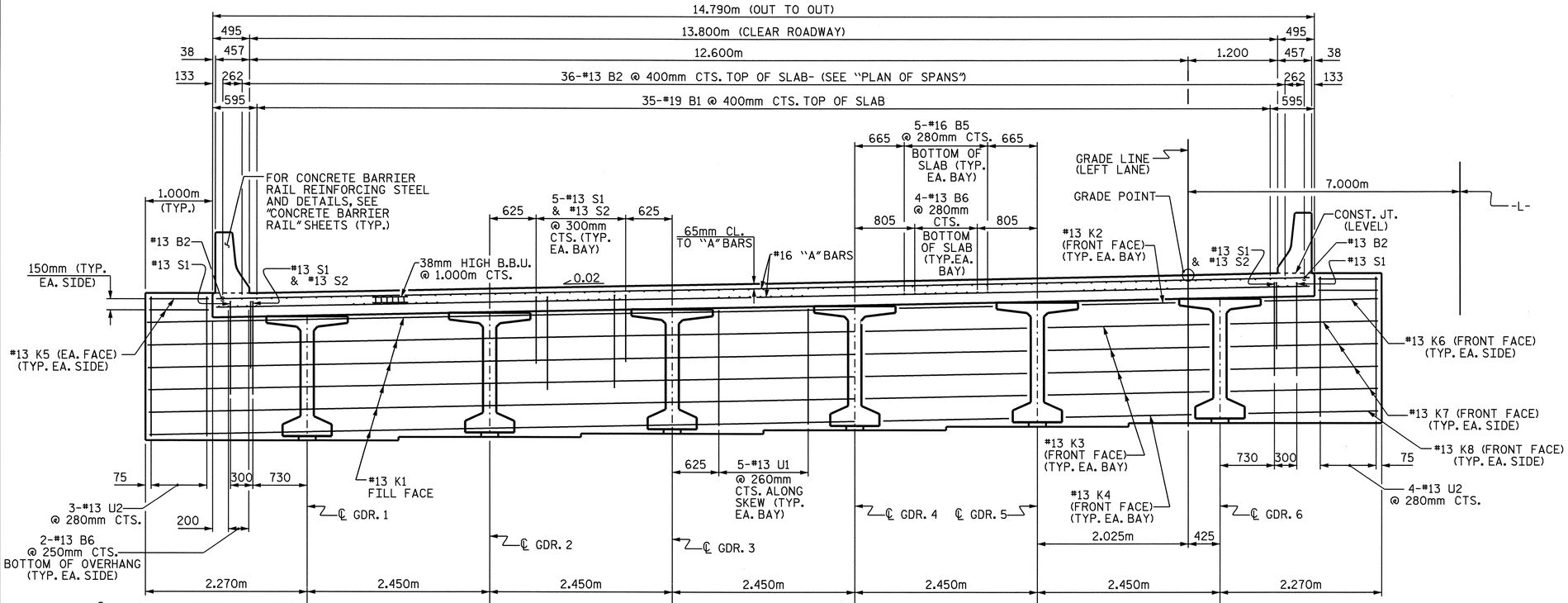

TYPICAL SECTION @ INTEGRAL END BENT

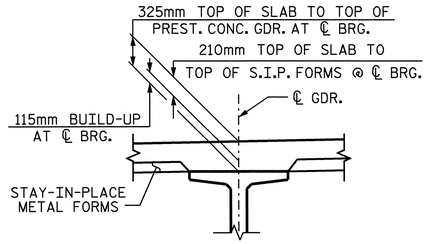

DETAIL 'A'

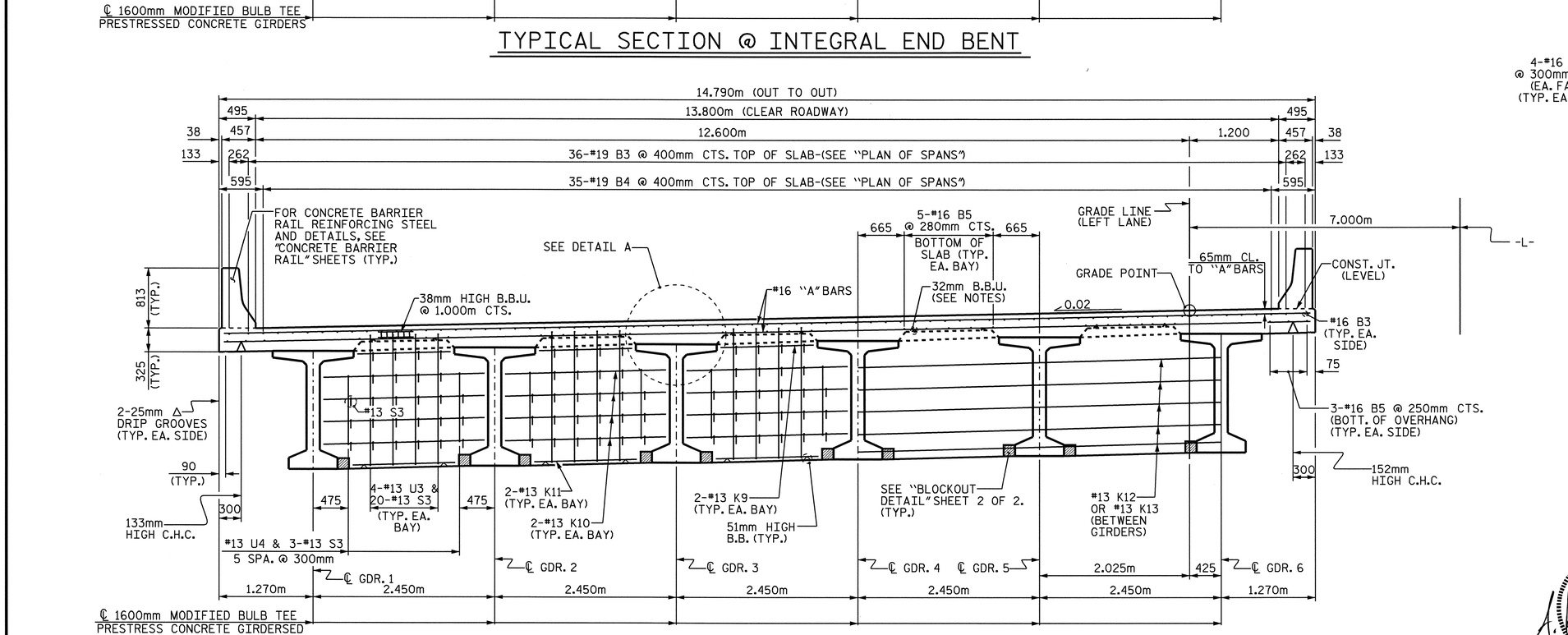

TYPICAL SECTION AT BENT DIAPHRAGM

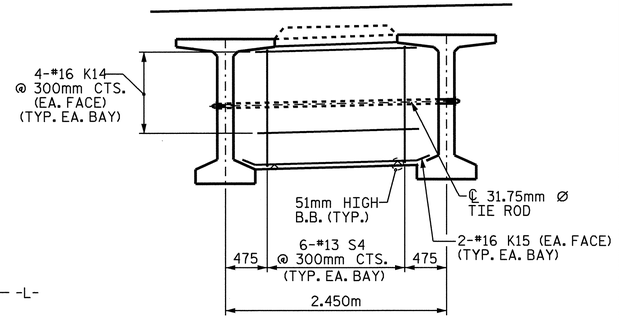

TYPICAL SECTION

SHOWING INTERMEDIATE DIAPHRAGM

PROJECT NO. R-2554BA
WAYNE COUNTY
STATION: 93+23.591 -L-

SHEET 1 OF 2

STATE OF NORTH CAROLINA
DEPARTMENT OF TRANSPORTATION
RALEIGH

SUPERSTRUCTURE

TYPICAL SECTION

(LEFT LANE)

NORTH CAROLINA PROFESSIONAL SEAL 22008 ENGINEER A. KEITH PASCHAL
6/9/08

REVISIONS						SHEET NO.
NO.	BY:	DATE:	NO.	BY:	DATE:	S-4
1			3			TOTAL SHEETS
2			4			478

DRAWN BY : J.D. HAWK DATE : 6/1/2007
CHECKED BY : J.G. KHARVA DATE : 7/1/2007

STR 1

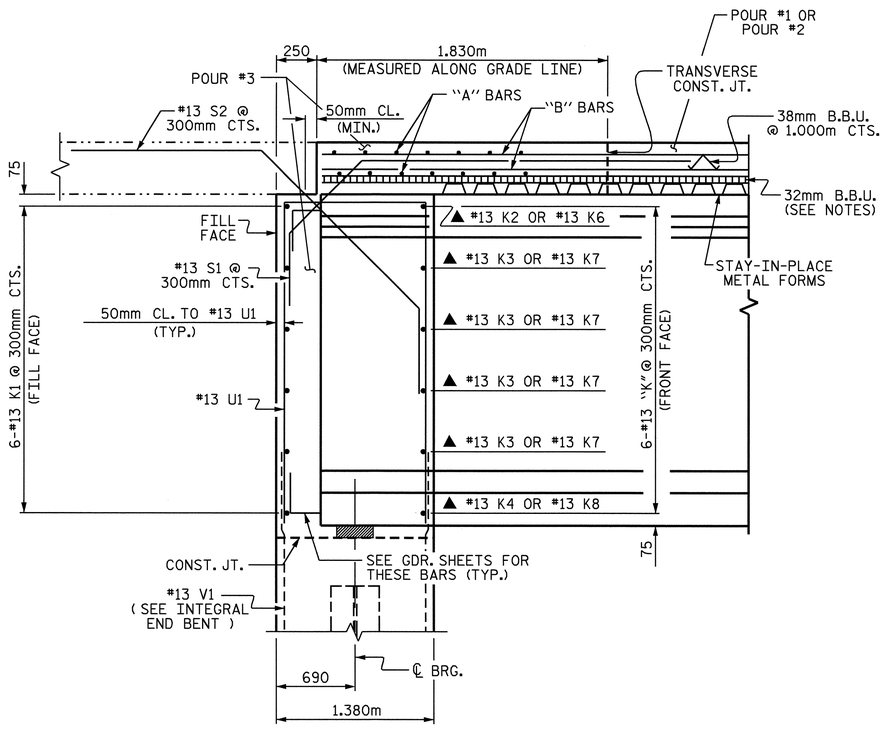

SECTION A-A

▲ (#13 K2 THRU #13 K4 TYP. EA. BAY /
#13 K6 THRU #13 K8 TYP. EA. SIDE)
(INTEGRAL END BENT DIAPHRAGM)

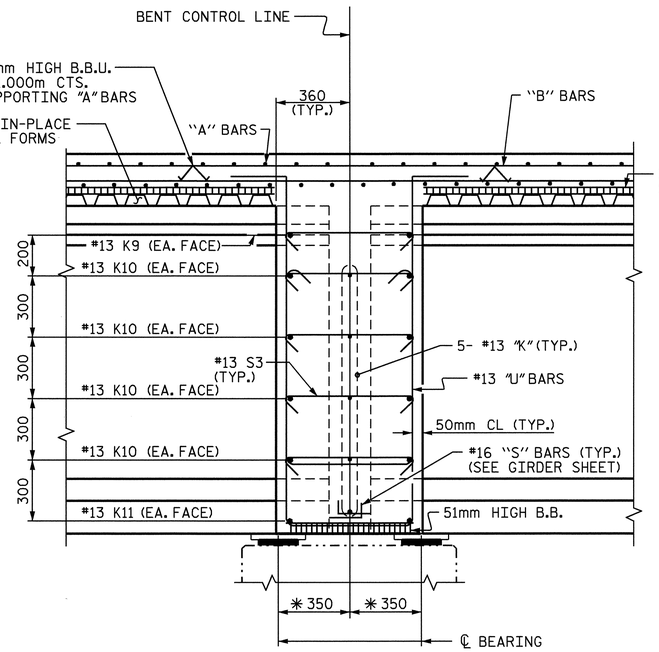

SECTION B-B

✳ MEASURED ALONG ℄ GIRDER
(BENT DIAPHRAGM)

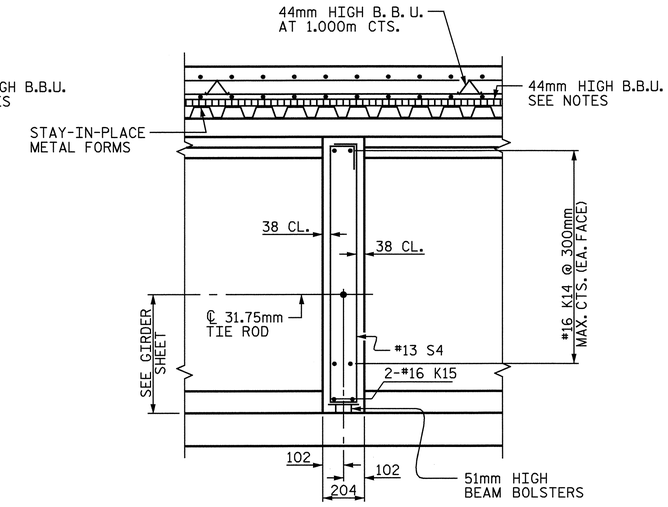

SECTION C-C

(INTERMEDIATE DIAPHRAGM)

NOTES

PROVIDE 32mm HIGH BEAM BOLSTERS UPPER AT 1.2m CTS. ATOP THE METAL STAY-IN-PLACE FORMS TO SUPPORT THE BOTTOM MAT OF 'A' BARS. WHEN USING REMOVABLE FORMS, PROVIDE CONTINUOUS HIGH CHAIRS FOR METAL DECK (C.H.C.M.) @ 1.2m CTS. WITH A HEIGHT TO SUPPORT THE BOTTOM MAT OF 'A' BARS A CLEAR DISTANCE OF 65mm ABOVE THE TOP OF THE REMOVABLE FORM.

LONGITUDINAL STEEL MAY BE SHIFTED SLIGHTLY, AS NECESSARY, TO AVOID INTERFERENCE WITH STIRRUPS IN PRESTRESSED CONCRETE GIRDERS.

CONCRETE IN END BENTS AND INTERMEDIATE DIAPHRAGMS MAY BE CLASS A IN LIEU OF CLASS AA. PAYMENT SHALL BE MADE UNDER THE UNIT CONTRACT PRICE FOR REINFORCED CONCRETE DECK SLAB.

TEMPORARY STRUTS SHALL BE PLACED BETWEEN PRESTRESSED GIRDERS ADJACENT TO THE DIAPHRAGMS, AND THE NUTS ON THE 31.75mm DIA. TIE RODS SHALL BE FULLY TIGHTENED BEFORE THE DIAPHRAGMS ARE CAST. STRUTS SHALL REMAIN IN PLACE 3 DAYS AFTER CONCRETE IS PLACED. THE TIE RODS SHALL BE RE-TIGHTENED AFTER THE STRUTS HAVE BEEN REMOVED.

PREVIOUSLY CAST CONCRETE IN A CONTINUOUS UNIT SHALL HAVE ATTAINED A MINIMUM COMPRESSIVE STRENGTH OF 20.7 MPa BEFORE ADDITIONAL CONCRETE IS CAST IN THE UNIT.

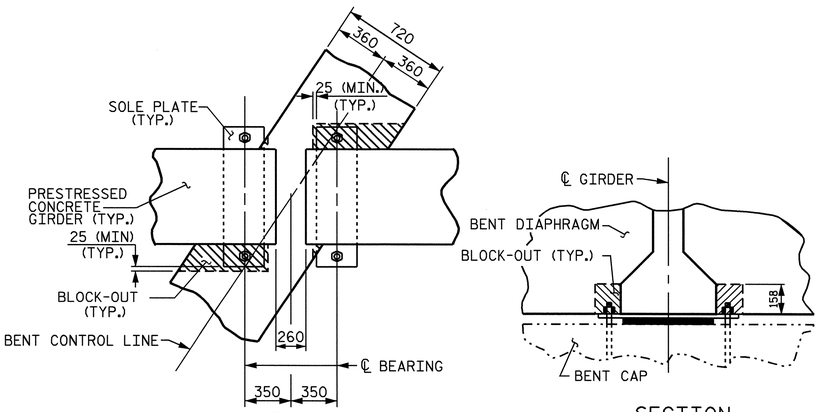

PLAN

SECTION

BENT DIAPHRAGM BLOCK-OUT DETAIL

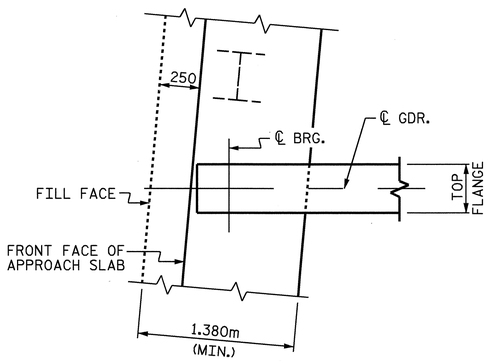

PLAN OF GIRDER AT INTEGRAL END BENT

PROJECT NO. R-2554BA
WAYNE COUNTY
STATION: 93+23.591 -L-

SHEET 2 OF 2

STATE OF NORTH CAROLINA
DEPARTMENT OF TRANSPORTATION
RALEIGH

SUPERSTRUCTURE
TYPICAL SECTION
DETAILS
(LEFT LANE)

REVISIONS						SHEET NO.
NO.	BY:	DATE:	NO.	BY:	DATE:	S-5
1			3			TOTAL SHEETS
2			4			478

NORTH CAROLINA PROFESSIONAL SEAL 20005 ENGINEER A. KEITH PASCHAL
6/9/08

DRAWN BY : J.D. HAWK DATE : 6/1/2007
CHECKED BY : J.G. KHARVA DATE : 7/1/2007

06-JUN-2008 15:04
R:\Structures\BULLOCK\Str#1\FINAL PLANS\R2554BA_sd_TS_01.dgn
JDHAWK

STR. 1

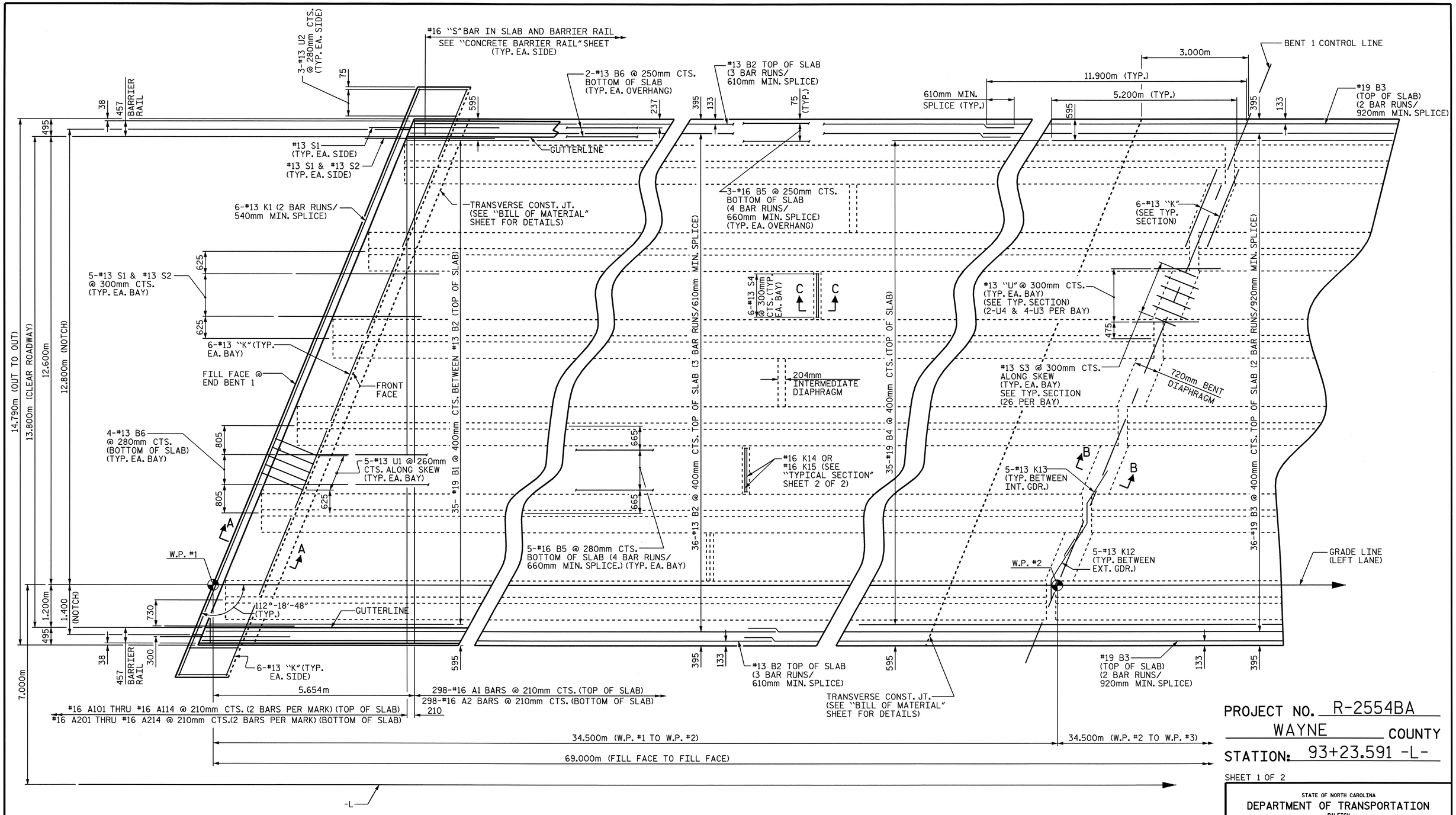

PLAN OF SPAN A

FOR SECTION VIEWS, SEE "TYPICAL SECTION" SHEET 2 OF 2

PROJECT NO. R-2554BA

WAYNE COUNTY

STATION: 93+23.591 -L-

SHEET 1 OF 2

STATE OF NORTH CAROLINA
DEPARTMENT OF TRANSPORTATION
RALEIGH

SUPERSTRUCTURE

PLAN OF SPAN A

(LEFT LANE)

REVISIONS						SHEET NO.
NO.	BY:	DATE:	NO.	BY:	DATE:	S-6
1			3			TOTAL SHEETS
2			4			478

NORTH CAROLINA PROFESSIONAL SEAL 22008 ENGINEER KEITH PASCHAL

6/9/08

DRAWN BY : J.D. HAWK DATE : 6/1/2007
CHECKED BY : J.G. KHARVA DATE : 7/1/2007

06-JUN-2008 15:04
R:\Structures\BULLOCK\Str#1\FINAL PLANS\R2554BA_sd_S_01.dgn
JDHAWK

STR. 1

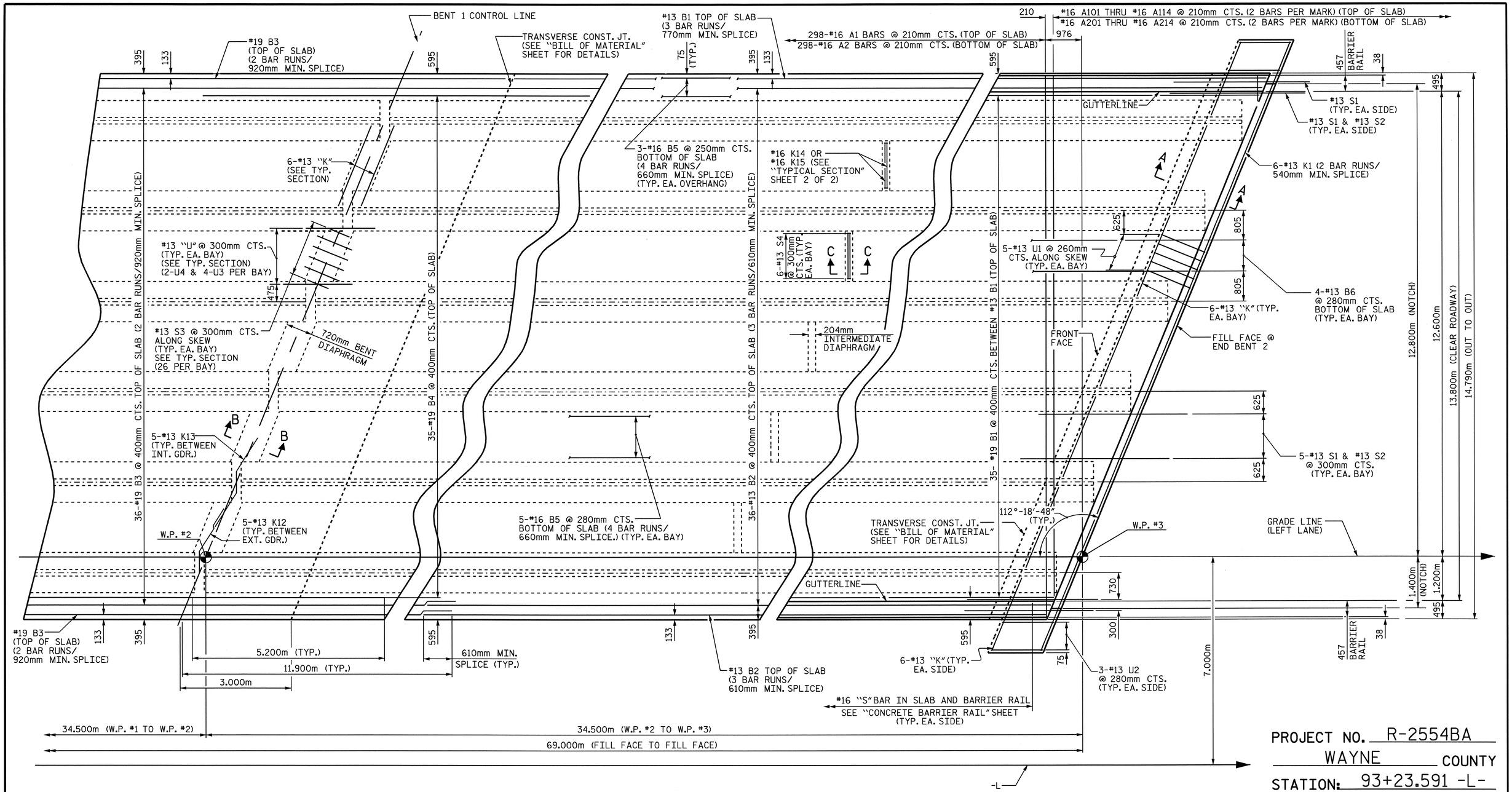

PLAN OF SPAN B

FOR SECTION VIEWS, SEE "TYPICAL SECTION" SHEET 2 OF 2

PROJECT NO. R-2554BA

WAYNE COUNTY

STATION: 93+23.591 -L-

SHEET 2 OF 2

STATE OF NORTH CAROLINA
DEPARTMENT OF TRANSPORTATION
RALEIGH

SUPERSTRUCTURE

PLAN OF SPAN B

(LEFT LANE)

REVISIONS						SHEET NO.
NO.	BY:	DATE:	NO.	BY:	DATE:	S-7
1			3			TOTAL SHEETS
2			4			478

NORTH CAROLINA PROFESSIONAL SEAL 030054 ENGINEER A. KEITH PASCHAL
6/9/08

DRAWN BY : J.D. HAWK DATE : 6/1/2007
CHECKED BY : J.G. KHARVA DATE : 7/1/2007

06-JUN-2008 15:04
R:\Structures\BULLOCK\Str#1\FINAL PLANS\R2554BA_sd_S_01.dgn
JDHAWK

STR. 1

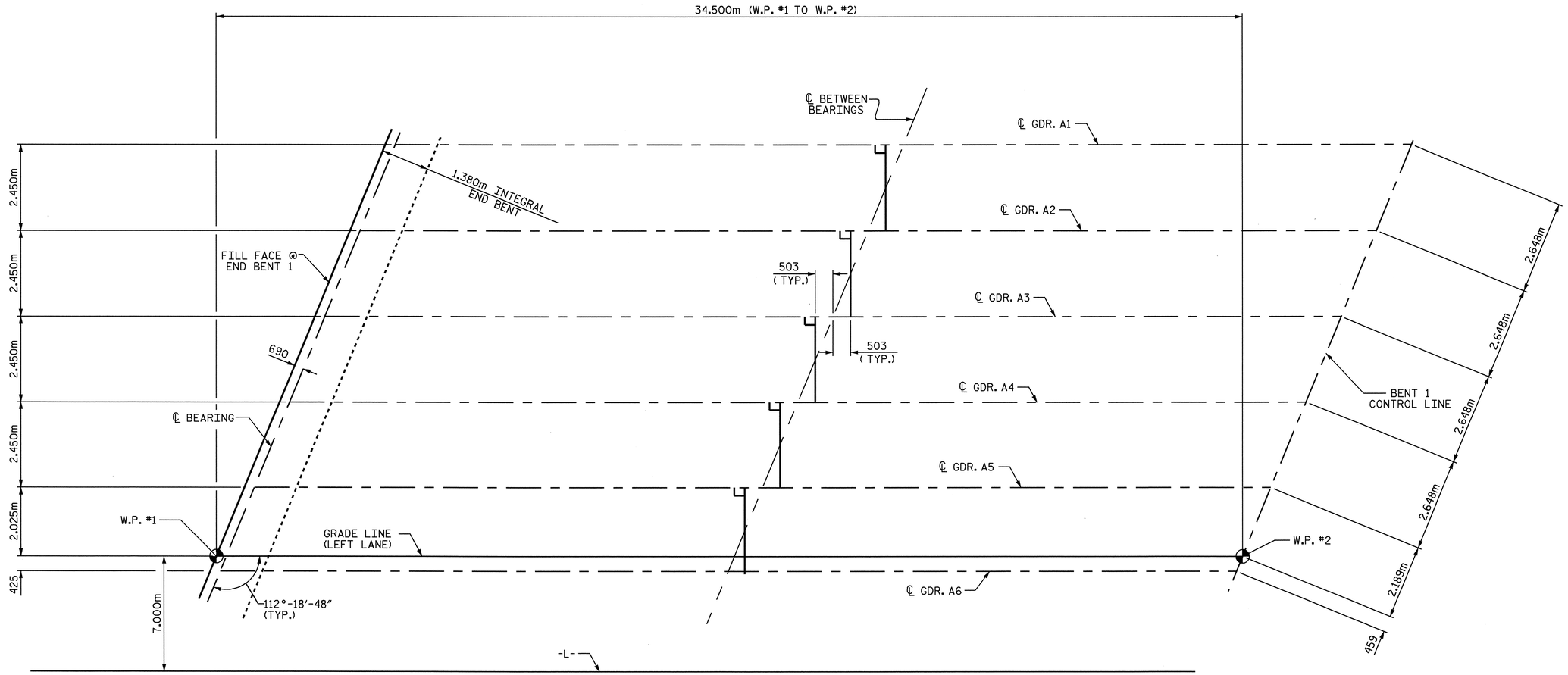

FRAMING PLAN

PROJECT NO. R-2554BA

WAYNE COUNTY

STATION: 93+23.591 -L-

SHEET 1 OF 2

STATE OF NORTH CAROLINA
DEPARTMENT OF TRANSPORTATION
RALEIGH

SUPERSTRUCTURE
FRAMING PLAN
SPAN A
(LEFT LANE)

NORTH CAROLINA PROFESSIONAL SEAL 22005 ENGINEER J. KEITH PASCHAL
6/9/08

REVISIONS						SHEET NO.
NO.	BY:	DATE:	NO.	BY:	DATE:	S-8
1			3			TOTAL SHEETS
2			4			478

DRAWN BY : J.D. HAWK DATE : 6/07
CHECKED BY : J.G. KHARVA DATE : 7/07

06-JUN-2008 15:04
R:\Structures\BULLOCK\Str#1\FINAL PLANS\R2554BA_sd_FP_01.dgn
JDHAWK

STR. #1

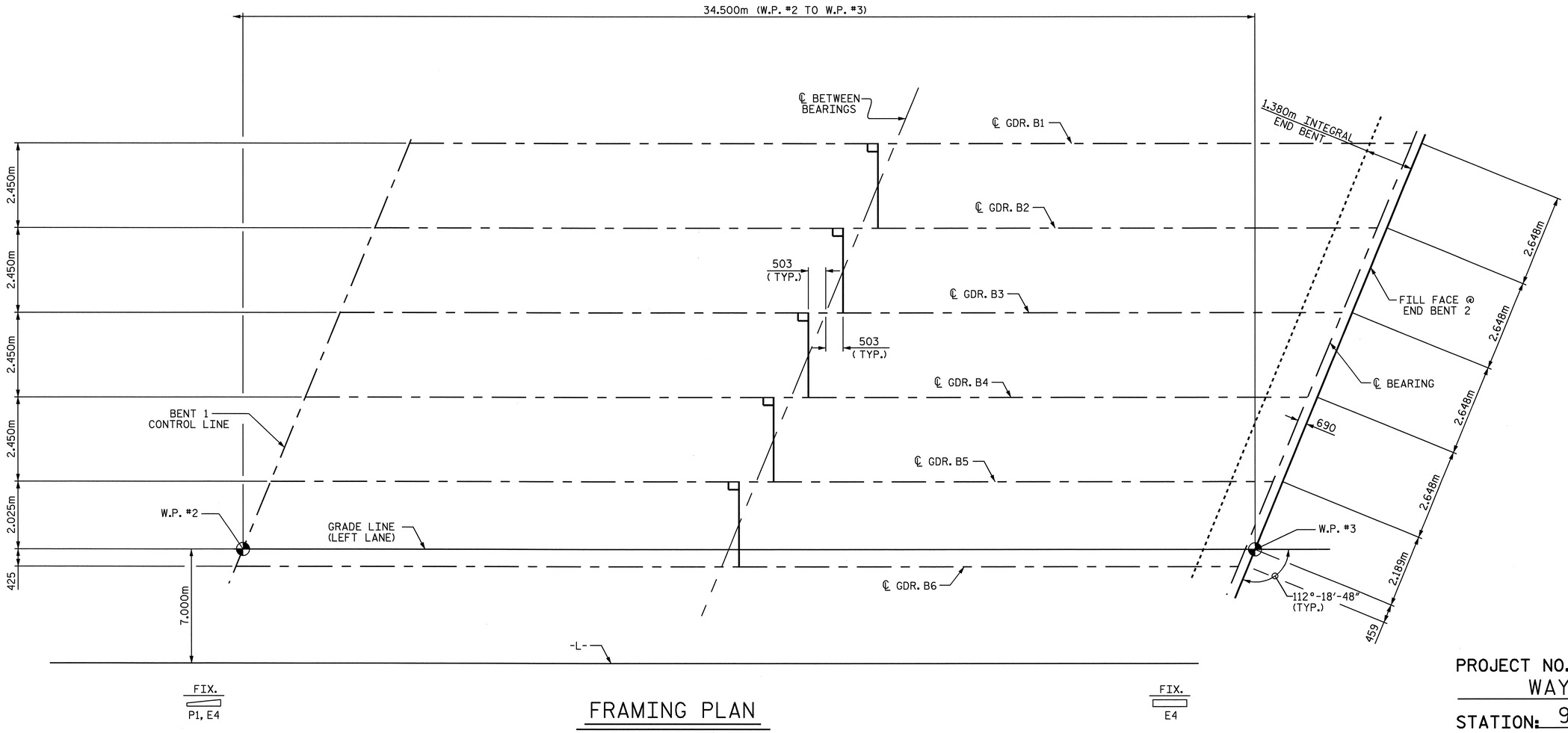

FRAMING PLAN

PROJECT NO. R-2554BA

WAYNE COUNTY

STATION: 93+23.591 -L-

SHEET 2 OF 2

STATE OF NORTH CAROLINA
DEPARTMENT OF TRANSPORTATION
RALEIGH

SUPERSTRUCTURE

FRAMING PLAN
SPAN B
(LEFT LANE)

NORTH CAROLINA PROFESSIONAL SEAL 22006 ENGINEER A. KEITH PASCHAL
6/9/08

REVISIONS						SHEET NO.
NO.	BY:	DATE:	NO.	BY:	DATE:	S-9
1			3			TOTAL SHEETS
2			4			478

STR. #1

DRAWN BY : J.D. HAWK DATE : 6/07
CHECKED BY : J.G. KHARVA DATE : 7/07

06-JUN-2008 15:04
R:\Structures\BULLOCK\Str#1\FINAL PLANS\R2554BA_sd_FP_01.dgn
JDHAWK

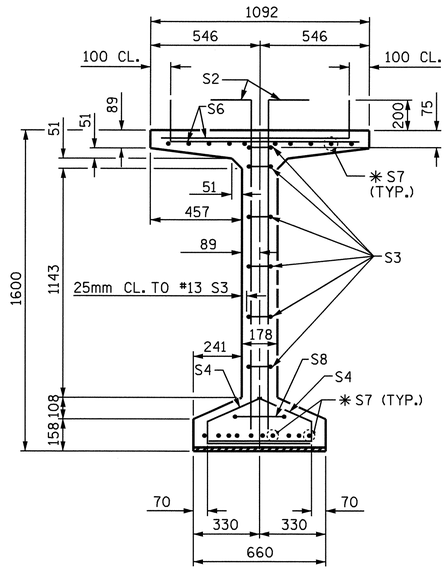

SECTION A-A

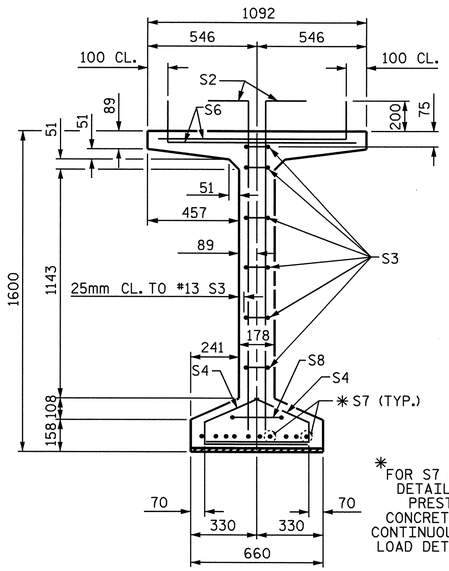

SECTION B-B

✱FOR S7 BARS, SEE DETAIL "C" OF PRESTRESSED CONCRETE GIRDER CONTINUOUS FOR LIVE LOAD DETAILS SHEET

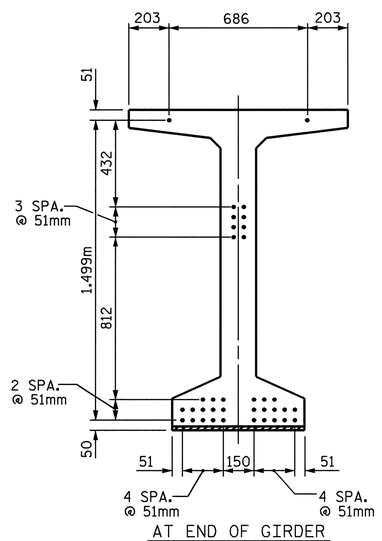

AT END OF GIRDER

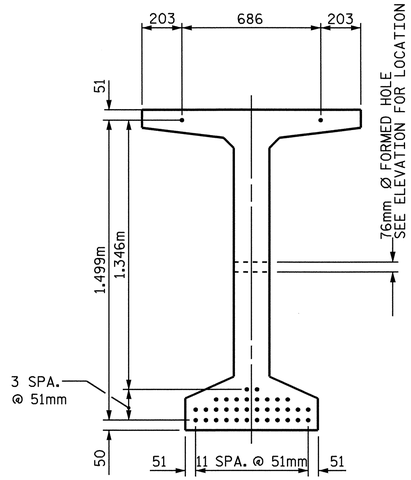

AT ℄ OF GIRDER

15.24mm Ø LOW RELAXATION STRAND LAYOUT

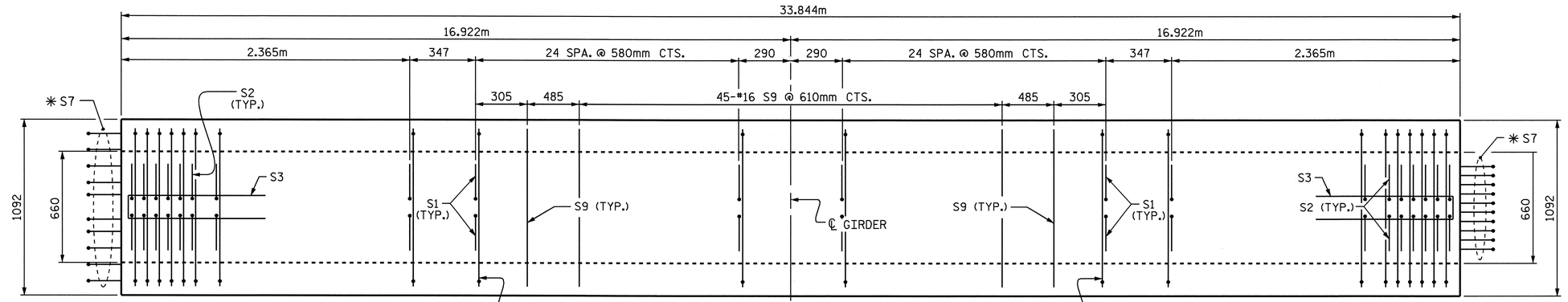

PLAN OF GIRDER

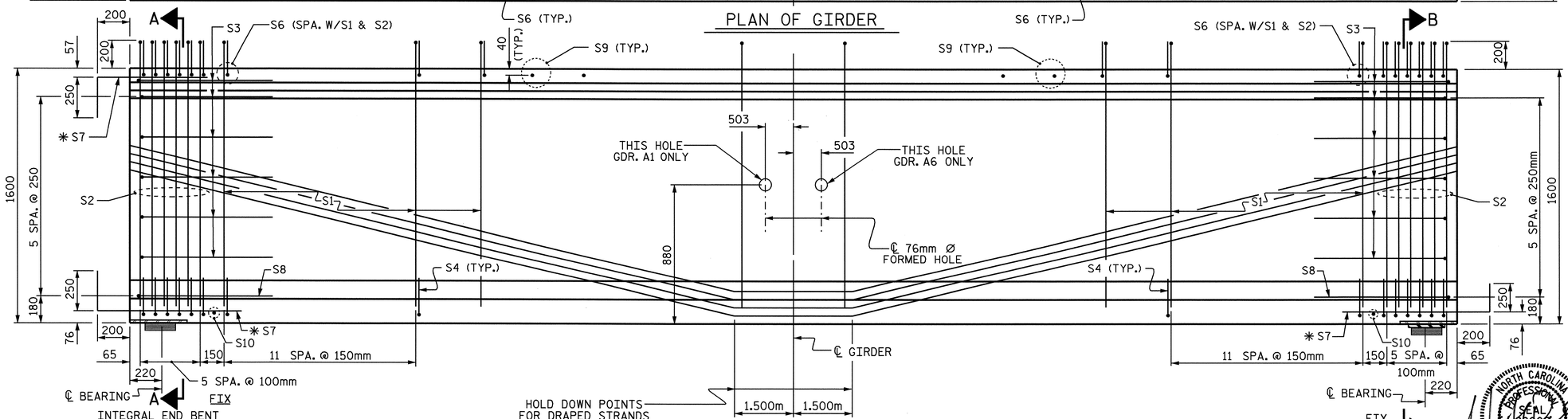

ELEVATION OF GIRDER

INTEGRAL END BENT

ASSEMBLED BY : J.D. HAWK	DATE : 6/2007	
CHECKED BY : J.G. KHARVA	DATE : 7/2007	
DRAWN BY : EEM 2/6/97	REV. 8/16/99	RWW/LES
CHECKED BY : VAP 2/6/97	REV. 10/17/00	RWW/LES
	REV. 5/1/06	TLA/GM

06-JUN-2008 15:04
R:\Structures\BULLOCK\Str#1\FINAL PLANS\R2554BA_sd_G_01.dgn
JDHAWK

15.24mm Ø L. R. GRADE 270 STRANDS

AREA (mm^2)	ULTIMATE STRENGTH (kN PER STRAND)	APPLIED PRESTRESS (kN PER STRAND)
140.0	260.4	195.3

REINFORCING STEEL FOR ONE GIRDER

BAR	NUMBER	SIZE	TYPE	LENGTH	WEIGHT
S1	148	#13	1	1900	280
S2	24	#16	1	1900	71
S3	12	#13	2	2560	31
S4	72	#13	3	920	66
S6	172	#16	1	1120	299
✱S7	30	#16	STR	1120	52
S8	2	#16	2	2740	9
S9	47	#16	STR	980	71
S10	2	#10	STR	560	1

✱NOTE: S7 BARS SHALL BE BENT BEFORE SHIPMENT. HEAT BENDING SHALL NOT BE ALLOWED.

BAR TYPES

ALL BAR DIMENSIONS ARE OUT-TO-OUT

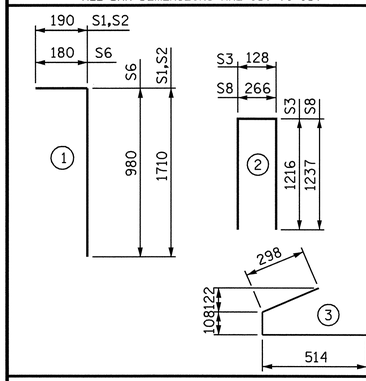

QUANTITIES FOR ONE GIRDER

	REINFORCING STEEL	55.0 MPa CONCRETE	15.24mm Ø L.R. STRANDS
	kg	m^3	No.
	880	16.8	36

GIRDERS REQUIRED

SPAN	NUMBER	LENGTH	TOTAL LENGTH
A	6	33.844m	203.064m
B	6	33.844m	203.064m
TOTAL	12	33.844m	406.128m

PROJECT NO. R-2554BA

WAYNE COUNTY

STATION: 93+23.591 -L-

SHEET 1 OF 3

STATE OF NORTH CAROLINA
DEPARTMENT OF TRANSPORTATION
RALEIGH

STANDARD
1600mm PRESTRESSED CONCRETE MODIFIED BULB TEE CONTINUOUS FOR LIVE LOAD SPAN A & B (LEFT LANE)

NORTH CAROLINA PROFESSIONAL SEAL 14222 ENGINEER A. KEITH PASCHAL
6/9/08

REVISIONS						SHEET NO.
NO.	BY:	DATE:	NO.	BY:	DATE:	S-10
1			3			TOTAL SHEETS
2			4			478

STR. 1 STD. NO. PCG9SM

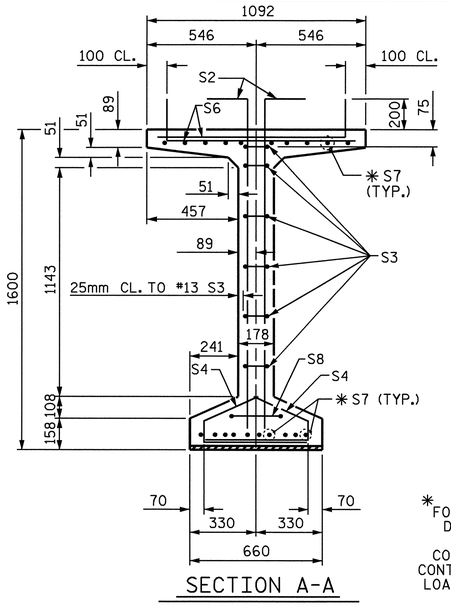

SECTION A-A

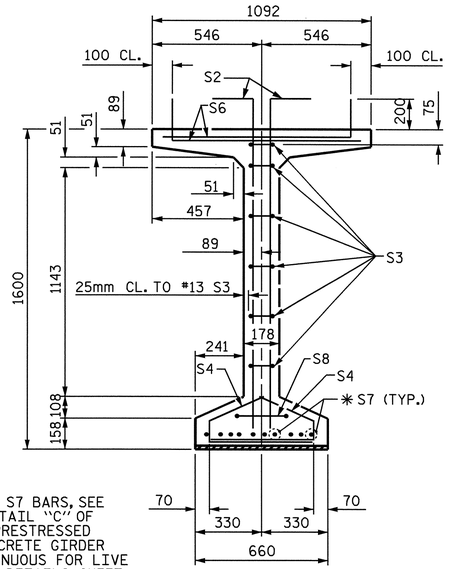

✱FOR S7 BARS, SEE DETAIL "C" OF PRESTRESSED CONCRETE GIRDER CONTINUOUS FOR LIVE LOAD DETAILS SHEET

SECTION B-B

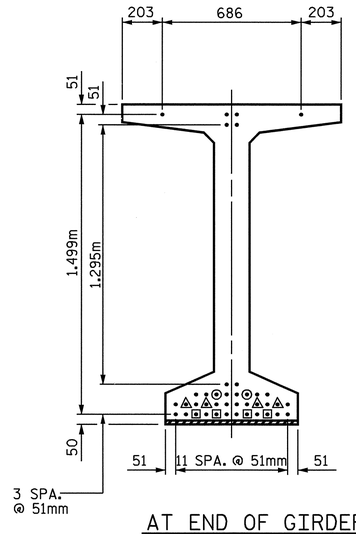

AT END OF GIRDERS

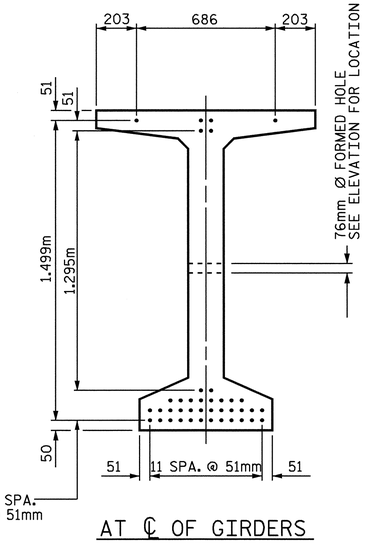

AT ℄ OF GIRDERS

15.24mm Ø LOW RELAXATION STRAND LAYOUT

DEBONDING LEGEND

- • FULLY BONDED STRANDS
- ▣ STRANDS DEBONDED FOR 1.220m FROM END OF GIRDER
- ▲ STRANDS DEBONDED FOR 1.830m FROM END OF GIRDER
- ⊙ STRANDS DEBONDED FOR 2.440m FROM END OF GIRDER

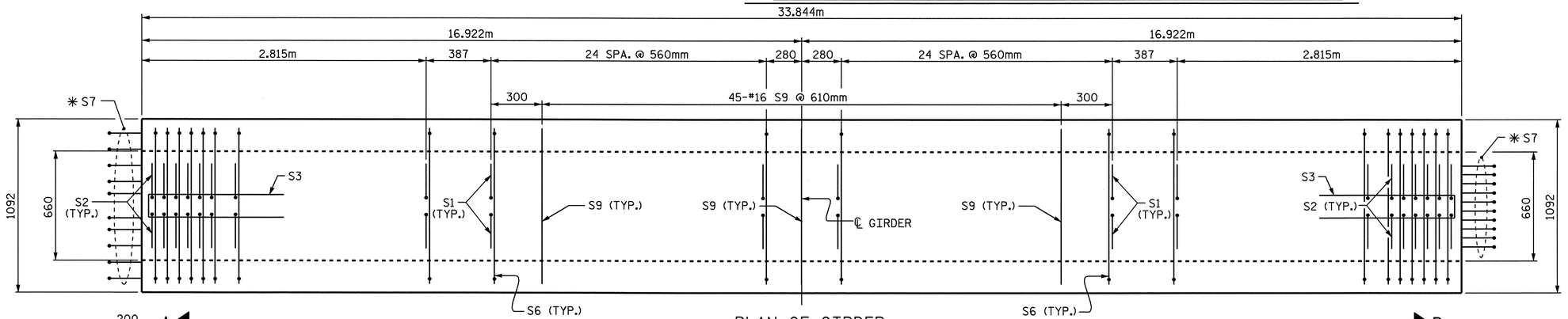

PLAN OF GIRDER

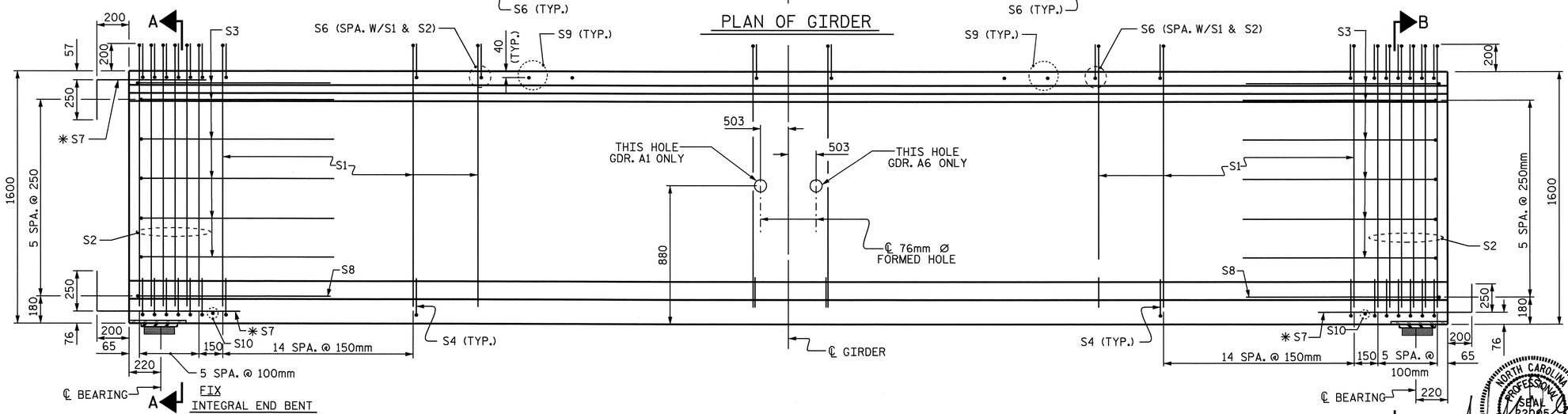

ELEVATION OF GIRDER

ASSEMBLED BY : J.D. HAWK	DATE : 6/2007
CHECKED BY : J.G. KHARVA	DATE : 7/2007
DRAWN BY : RWW 9/19/02	ADDED 9/19/02
CHECKED BY : GM 9/19/02	REV. 5/1/06 TLA/GM

06-JUN-2008 15:04
R:\Structures\BULLOCK\Str#1\FINAL PLANS\R2554BA_sd_G_01.dgn
JDHAWK

15.24mm Ø L.R. GRADE 270 STRANDS

AREA (mm^2)	ULTIMATE STRENGTH (kN PER STRAND)	APPLIED PRESTRESS (kN PER STRAND)
140.0	260.4	195.3

REINFORCING STEEL FOR ONE GIRDER

BAR	NUMBER	SIZE	TYPE	LENGTH	WEIGHT
S1	184	#13	1	1900	280
S2	24	#16	1	1900	71
S3	12	#13	2	2560	31
S4	84	#13	3	920	77
S6	184	#16	1	1120	320
✱S7	30	#16	STR	1120	52
S8	2	#16	2	2740	9
S9	45	#16	STR	980	68
S10	2	#10	STR	560	1

✱NOTE: S7 BARS SHALL BE BENT BEFORE SHIPMENT. HEAT BENDING SHALL NOT BE ALLOWED.

BAR TYPES

ALL BAR DIMENSIONS ARE OUT-TO-OUT

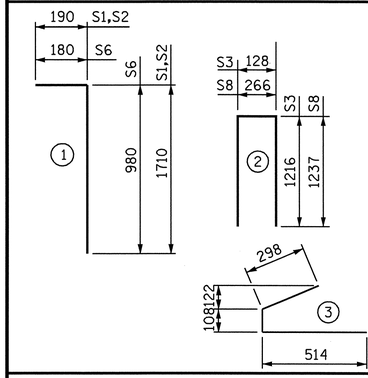

QUANTITIES FOR ONE GIRDER

	REINFORCING STEEL	55.0 MPa CONCRETE	15.24mm Ø L.R. STRANDS
	kg	m^3	No.
	909	16.8	40

GIRDERS REQUIRED

SPAN	NUMBER	LENGTH	TOTAL LENGTH
A	6	33.844m	203.064m
B	6	33.844m	203.064m
TOTAL	12	33.844m	406.128m

PROJECT NO. R-2554BA

WAYNE COUNTY

STATION: 93+23.591 -L-

SHEET 2 OF 3

STATE OF NORTH CAROLINA
DEPARTMENT OF TRANSPORTATION
RALEIGH

OPTIONAL
1600mm PRESTRESSED CONCRETE MODIFIED BULB TEE CONTINUOUS FOR LIVE LOAD (WITH 15.24mm Ø PARTIALLY DEBONDED STRANDS)
SPAN A & B
(LEFT LANE)

NORTH CAROLINA PROFESSIONAL SEAL 22005 ENGINEER A. KEITH PASCHAL
6/9/08

REVISIONS						SHEET NO.
NO.	BY:	DATE:	NO.	BY:	DATE:	S-11
1			3			TOTAL SHEETS
2			4			478

STR. 1 STD. NO. PCGD9SM

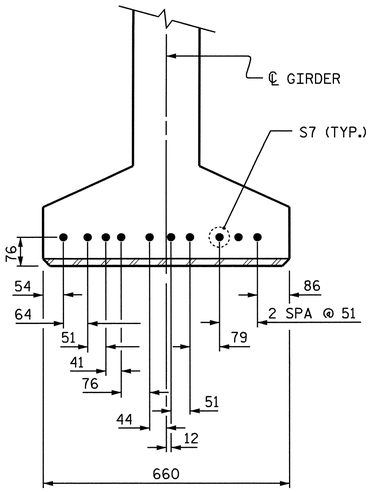

DETAIL "C"

(FOR 1600mm MODIFIED BULB TEES)
(AT BENT & INTEGRAL END BENT)

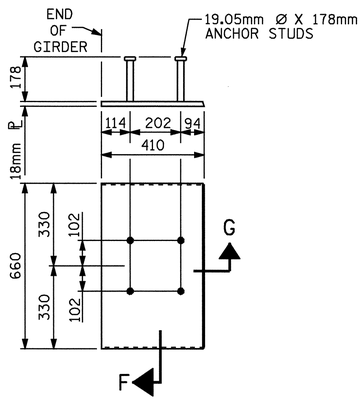

EMBEDDED PLATE "B-1" DETAILS FOR AASHTO TYPE IV GIRDER 1600mm MODIFIED BULB TEES

(2 REQ'D PER GIRDER)

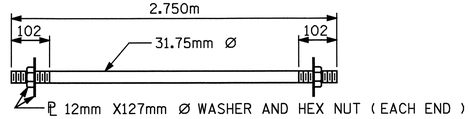

31.75mm Ø TIE ROD ASSEMBLY

(10 COMPLETE ASSEMBLIES REQUIRED)

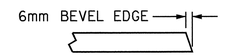

SECTION "G"

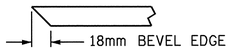

SECTION "F"

(SEE NOTES)

NOTES

ALL PRESTRESSING STRANDS SHALL BE 7-WIRE LOW-RELAXATION GRADE 270 STRANDS AND SHALL CONFORM TO AASHTO M203M EXCEPT FOR SAMPLING REQUIREMENTS WHICH SHALL BE IN ACCORDANCE WITH THE STANDARD SPECIFICATIONS.

TIE ROD ASSEMBLY SHALL BE AASHTO M270 GRADE 250 STRUCTURAL STEEL.

ALL REINFORCING STEEL SHALL BE GRADE 420.

EMBEDDED PLATE "B-1" SHALL BE GALVANIZED IN ACCORDANCE WITH THE SPECIFICATIONS. BEVEL EDGES OF PLATE "B-1" TO GIVE CLOSE FIT BUT NOT TIGHT FIT TO STEEL CASTING FORM.

ANCHOR STUDS SHALL CONFORM TO AASHTO M169 GRADES 1010 THROUGH 1020 OR APPROVED EQUAL, AND SHALL MEET THE TYPE "B" REQUIREMENTS OF SUBSECTION 7.3 OF THE ANSI/AASHTO/AWS D1.5 BRIDGE WELDING CODE.

AT ENDS OF GIRDERS TO BE EMBEDDED IN CONCRETE DIAPHRAGMS OR END WALLS, PRESTRESSING STRANDS MAY EXTEND A MAXIMUM OF 50mm BEYOND THE GIRDER ENDS. OTHERWISE, PRESTRESSING STRANDS SHALL BE CUT FLUSH WITH THE GIRDER ENDS.

THE TRANSFER OF LOAD FROM THE ANCHORAGES TO THE GIRDER SHALL BE DONE WHEN CONCRETE HAS REACHED A COMPRESSIVE STRENGTH OF NOT LESS THAN 44 MPa. OR 52 MPa. FOR OPTIONAL DEBONDED STRANDS.

DEPENDING ON THE TYPE OF SYSTEM USED TO SUPPORT THE DECK SLAB FORMS, PRESET ANCHORS MAY BE NECESSARY IN THE PRESTRESSED CONCRETE GIRDER.

THE TOP SURFACE OF THE GIRDER, EXCLUDING THE OUTSIDE 100mm, SHALL BE RAKED TO A DEPTH OF 6mm.

WHEN DRAPED STRANDS ARE DETAILED, THE LONGITUDINAL LOCATION OF THE HOLD DOWN DEVICES SHALL BE WITHIN 150mm OF THE LOCATION SHOWN AND THE CENTER OF GRAVITY OF THE GROUP OF DRAPED STRANDS SHALL BE LOCATED WITHIN 13mm OF THE THEORETICAL LOCATION SHOWN.

A 50mm x 50mm CHAMFER IS ALLOWED AT THE INTERSECTION OF THE WEB AND THE BOTTOM FLANGE OF THE 1600mm AND 1829mm MODIFIED BULB TEES ONLY.

THE CONTRACTOR HAS THE OPTION TO PROVIDE, AT NO ADDITIONAL COST TO THE DEPARTMENT, 2 ADDITIONAL STRANDS AT THE TOP OF THE GIRDER TO FACILITATE TYING OF THE REINFORCING STEEL. THESE STRANDS SHALL BE PULLED TO A LOAD OF 20 Kn.

FOR CRACK REPAIR OF PRESTRESSED CONCRETE GIRDERS, SEE SPECIAL PROVISIONS.

FOR PRESTRESSED CONCRETE MEMBERS, SEE SPECIAL PROVISIONS.

DEAD LOAD DEFLECTION TABLE FOR SPANS A & B

15.24mm LOW RELAXATION	GIRDER 1											GIRDERS 2 THRU 5											GIRDER 6										
TENTH POINTS	0	.1	.2	.3	.4	.5	.6	.7	.8	.9	0	0	.1	.2	.3	.4	.5	.6	.7	.8	.9	0	0	.1	.2	.3	.4	.5	.6	.7	.8	.9	0
CAMBER (GIRDER ALONE IN PLACE)	0.0	0.044	0.082	0.113	0.132	0.139	0.132	0.113	0.082	0.044	0.0	0.0	0.044	0.082	0.113	0.132	0.139	0.132	0.113	0.082	0.044	0.0	0.0	0.044	0.082	0.113	0.132	0.139	0.132	0.113	0.082	0.044	0.0
✳DEFLECTION DUE TO SUPERIMPOSED D.L.	0.0	0.015	0.028	0.039	0.046	0.049	0.046	0.039	0.028	0.015	0.0	0.0	0.014	0.027	0.037	0.043	0.046	0.043	0.037	0.027	0.014	0.0	0.0	0.015	0.028	0.039	0.046	0.049	0.046	0.039	0.029	0.015	0.0
FINAL CAMBER	0.0	29	54	74	86	90	86	74	54	29	0.0	0.0	30	55	76	89	93	89	76	55	30	0.0	0.0	29	54	74	86	90	86	74	53	29	0.0

✳INCLUDES SLAB, BUILD UPS, AND STAY-IN-PLACE FORMS
ALL VALUES ARE SHOWN IN METERS, EXCEPT "FINAL CAMBER", WHICH IS SHOWN IN MILLIMETERS

DEAD LOAD DEFLECTION TABLE FOR SPANS A & B (OPTIONAL)

15.24mm LOW RELAXATION	GIRDER 1											GIRDERS 2 THRU 5											GIRDER 6										
TENTH POINTS	0	.1	.2	.3	.4	.5	.6	.7	.8	.9	0	0	.1	.2	.3	.4	.5	.6	.7	.8	.9	0	0	.1	.2	.3	.4	.5	.6	.7	.8	.9	0
CAMBER (GIRDER ALONE IN PLACE)	0.0	0.039	0.073	0.100	0.117	0.123	0.117	0.100	0.073	0.039	0.0	0.0	0.039	0.073	0.100	0.117	0.123	0.117	0.100	0.073	0.039	0.0	0.0	0.039	0.073	0.100	0.117	0.123	0.117	0.100	0.073	0.039	0.0
✳DEFLECTION DUE TO SUPERIMPOSED D.L.	0.0	0.014	0.026	0.036	0.043	0.045	0.043	0.036	0.026	0.014	0.0	0.0	0.013	0.025	0.034	0.040	0.042	0.040	0.034	0.025	0.013	0.0	0.0	0.014	0.026	0.036	0.043	0.045	0.043	0.036	0.026	0.014	0.0
FINAL CAMBER	0.0	25	47	64	74	78	74	64	47	25	0.0	0.0	26	48	66	77	81	77	66	48	26	0.0	0.0	24	47	64	74	78	74	64	47	25	0.0

✳INCLUDES SLAB, BUILD UPS, AND STAY-IN-PLACE FORMS
ALL VALUES ARE SHOWN IN METERS, EXCEPT "FINAL CAMBER", WHICH IS SHOWN IN MILLIMETERS

PROJECT NO. R-2554BA
WAYNE COUNTY
STATION: 93+23.591 -L-

SHEET 3 OF 3

STATE OF NORTH CAROLINA
DEPARTMENT OF TRANSPORTATION
RALEIGH

STANDARD
PRESTRESSED CONCRETE GIRDER
CONTINUOUS FOR LIVE LOAD
DETAILS AND
DEAD LOAD DEFLECTIONS
SPAN A & B
(LEFT LANE)

NORTH CAROLINA PROFESSIONAL SEAL 22005 ENGINEER TIMOTHY KEITH PASCHAL
6/9/08

REVISIONS						SHEET NO.
NO.	BY:	DATE:	NO.	BY:	DATE:	S-12
1			3			TOTAL SHEETS
2			4			478

ASSEMBLED BY : J.D. HAWK DATE : 6/2007
CHECKED BY : J.G. KHARVA DATE : 7/2007

DRAWN BY : ELR 11/91
CHECKED BY : GRP 11/91

REV. 10/17/00 RWW/LES
REV. 7/10/01RR LES/RDR
REV. 5/1/06 TLA/GM

06-JUN-2008 15:04
R:\Structures\BULLOCK\Str#1\FINAL PLANS\R2554BA_sd_G_01.dgn
JDHAWK

STR. 1 STD. NO. PCG11SM

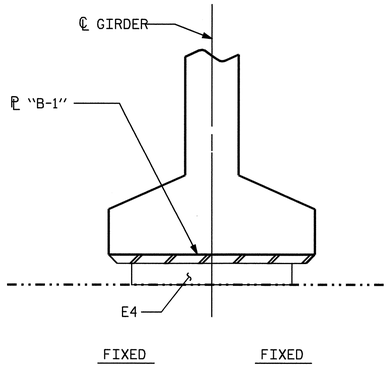

SECTION D-D

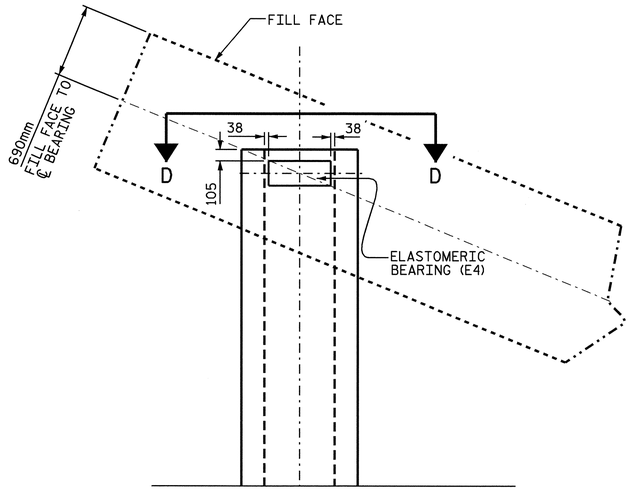

PLAN VIEW AT INTEGRAL END BENTS

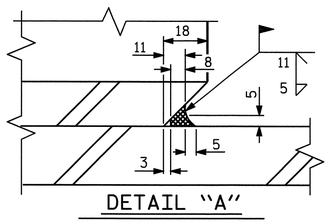

DETAIL "A"

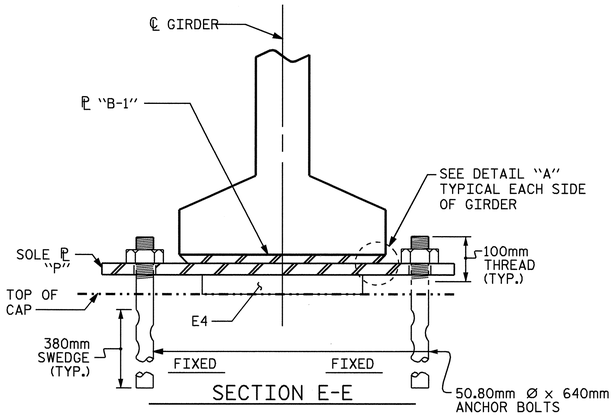

SECTION E-E

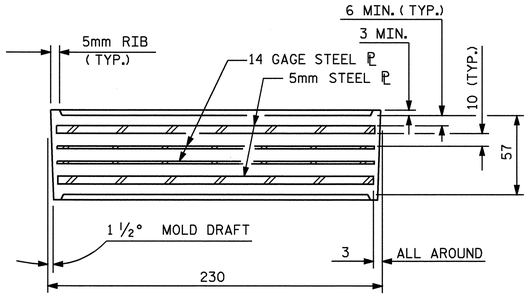

TYPICAL SECTION OF ELASTOMERIC BEARINGS

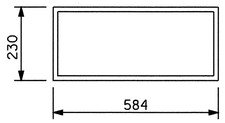

E4 (24 REQ'D)

PLAN VIEW OF ELASTOMERIC BEARING

TYPE V

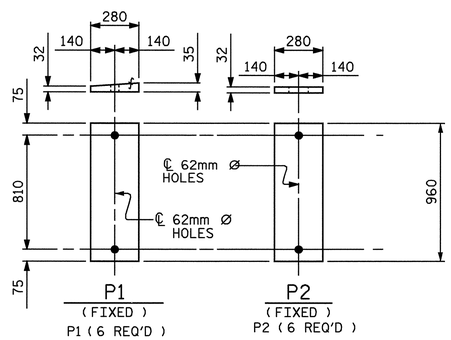

SOLE PLATE DETAILS ("P")

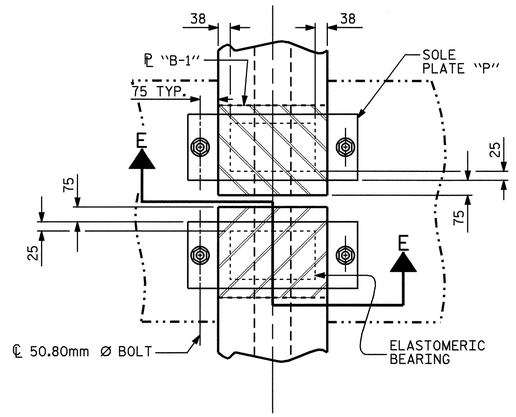

PLAN VIEW @ BENT

SHOWING CONTINOUS BENT
(TOP FLANGE NOT SHOWN)

NOTES

AT ALL FIXED POINTS OF SUPPORT, NUTS FOR ANCHOR BOLTS ARE TO BE TIGHTENED FINGER TIGHT AND THEN BACKED OFF ½ TURN. THE THREAD OF THE NUT AND BOLT SHALL THEN BE BURRED WITH A SHARP POINTED TOOL.

THE 51mm Ø PIPE SLEEVE SHALL BE CUT FROM SCHEDULE 40 PVC PLASTIC PIPE. THE PVC PLASTIC PIPE SHALL MEET THE REQUIREMENTS OF ASTM D1785.

STEEL SOLE PLATES, ANCHOR BOLTS, NUTS, AND WASHERS SHALL BE GALVANIZED IN ACCORDANCE WITH THE STANDARD SPECIFICATIONS.

PRIOR TO WELDING, GRIND THE GALVANIZED SURFACE OF THE PORTION OF THE EMBEDDED PLATE AND SOLE PLATE THAT ARE TO BE WELDED. AFTER WELDING, DAMAGED GALVANIZED SURFACES SHALL BE REPAIRED IN ACCORDANCE WITH THE STANDARD SPECIFICATIONS.

WHEN WELDING THE SOLE PLATE TO THE EMBEDDED PLATE IN THE GIRDER, USE TEMPERATURE INDICATING WAX PENS, OR OTHER SUITABLE MEANS, TO ENSURE THAT THE TEMPERATURE OF THE SOLE PLATE DOES NOT EXCEED 149°C. TEMPERATURES ABOVE THIS MAY DAMAGE THE ELASTOMER.

SOLE PLATE "P", BOLTS, NUTS, WASHERS, AND PIPE SLEEVE SHALL BE INCLUDED IN THE PAY ITEM FOR PRESTRESSED CONCRETE GIRDERS.

ANCHOR BOLTS SHALL MEET THE REQUIREMENTS OF ASTM A449. NUTS SHALL MEET THE REQUIREMENTS OF AASHTO M291M-12 OR AASHTO M292M-2H. WASHERS SHALL MEET THE REQUIREMENTS OF AASHTO M293M. SHOP DRAWINGS ARE NOT REQUIRED FOR ANCHOR BOLTS, NUTS AND WASHERS. SHOP INSPECTION IS REQUIRED.

ALL SURFACES OF BEARING PLATES SHALL BE SMOOTH AND STRAIGHT.

ELASTOMER IN ALL BEARINGS SHALL BE 60 DUROMETER HARDNESS

— LOAD RATINGS —	
	MAX.D.L.+L.L.
1600mm PCG -TYPE V	801 kN

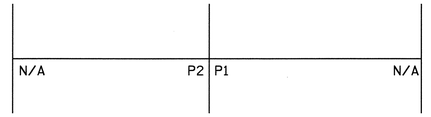

SPAN A
(TYP. EA. GIRDER)

SPAN B
(TYP. EA. GIRDER)

SOLE ℄ LAYOUT

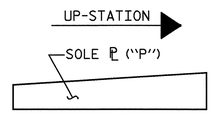

SOLE ℄ PLACEMENT DETAIL

PROJECT NO. R-2554BA

WAYNE COUNTY

STATION: 93+23.591 -L-

STATE OF NORTH CAROLINA
DEPARTMENT OF TRANSPORTATION
RALEIGH

STANDARD ELASTOMERIC BEARING DETAILS

PRESTRESSED CONCRETE GIRDER
SUPERSTRUCTURE
(LEFT LANE)

NORTH CAROLINA PROFESSIONAL SEAL 022005 ENGINEER KEITH PASCHAL

6/9/08

REVISIONS						SHEET NO.
NO.	BY:	DATE:	NO.	BY:	DATE:	S-13
1			3			TOTAL SHEETS
2			4			478

ASSEMBLED BY : J.D. HAWK	DATE : 6/2007
CHECKED BY : J.G. KHARVA	DATE : 7/2007
DRAWN BY : EEM 2/97	REV. 8/16/99 RWW/LES
CHECKED BY : VAP 2/97	REV. 10/17/00 RWW/LES
	REV. 5/1/06 TLA/GM

06-JUN-2008 15:04
R:\Structures\BULLOCK\Str#1\FINAL PLANS\R2554BA_sd_BG_01.dgn
JDHAWK

STD.No.EB4 STR. 1

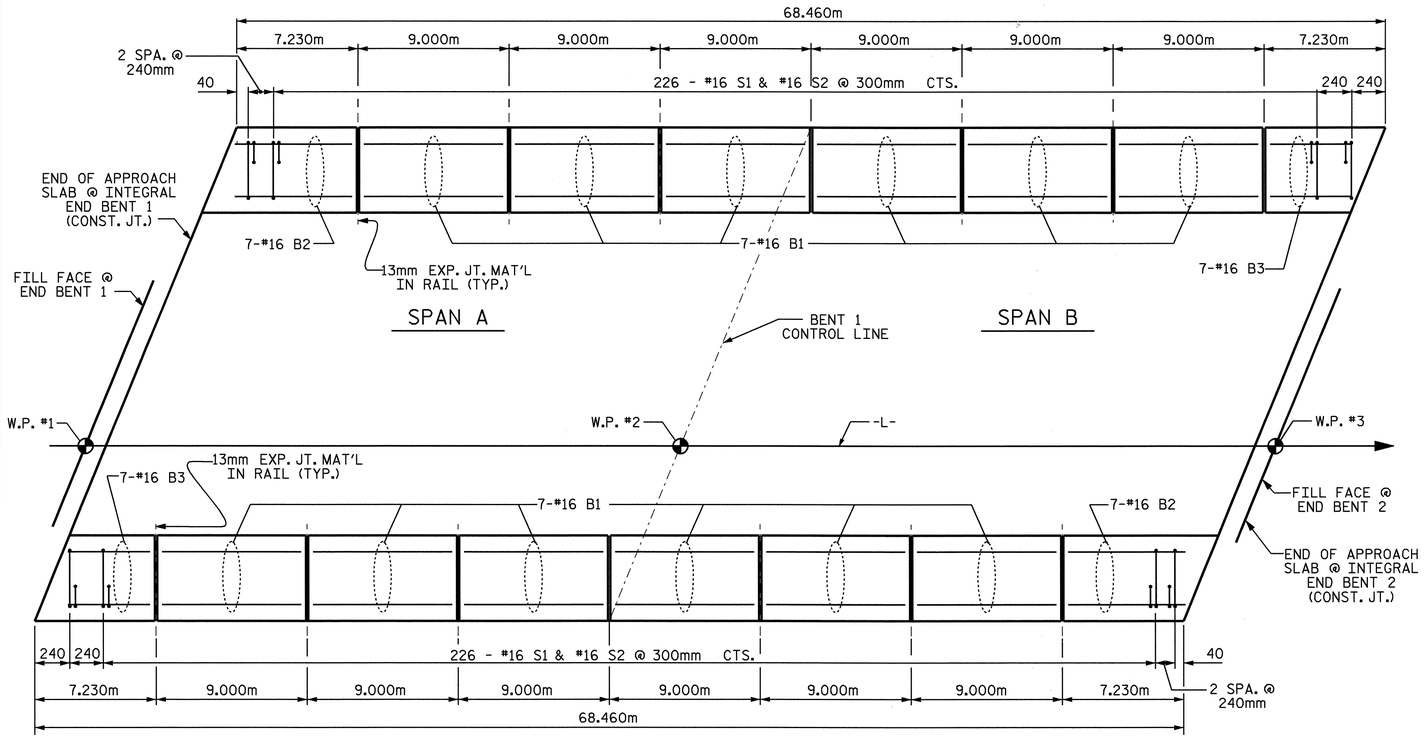

PLAN OF BARRIER RAIL

NOTES

ALL REINFORCING STEEL IN BARRIER RAILS SHALL BE EPOXY COATED.

VERTICAL GROOVED CONTRACTION JOINTS, 12mm IN DEPTH, SHALL BE TOOLED IN ALL EXPOSED FACES OF THE BARRIER RAIL AND IN ACCORDANCE WITH ARTICLE 825-10(B) OF THE STANDARD SPECIFICATIONS. THE CONTRACTION JOINT SHALL BE LOCATED AT EACH THIRD POINT BETWEEN BARRIER RAIL EXPANSION JOINTS. ONLY ONE CONTRACTION JOINT IS REQUIRED AT MIDPOINT OF BARRIER RAIL SEGMENTS LESS THAN 6.1m IN LENGTH AND NO CONTRACTION JOINTS ARE REQUIRED FOR THOSE SEGMENTS LESS THAN 3.5m IN LENGTH.

BAR TYPES

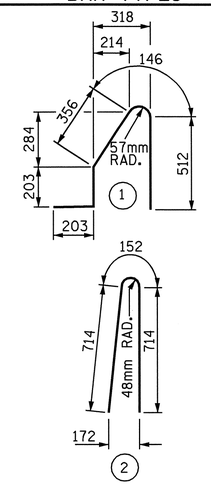

ALL BAR DIMENSIONS ARE OUT TO OUT

BILL OF MATERIAL

FOR CONCRETE BARRIER RAIL ONLY

BAR	NO.	SIZE	TYPE	LENGTH	WEIGHT
* B1	84	#16	STR	8860	1155
* B2	14	#16	STR	7140	155
* B3	14	#16	STR	6960	151
* S1	458	#16	1	1420	1009
* S2	458	#16	2	1580	1123

* EPOXY COATED

REINFORCING STEEL 3584 kg

CLASS AA CONCRETE 34.4 CU. METER

CONCRETE BARRIER RAIL 136.920 METERS

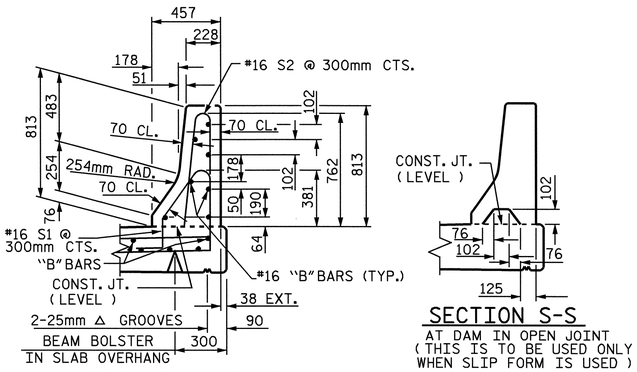

SECTION THRU RAIL

SECTION S-S

AT DAM IN OPEN JOINT (THIS IS TO BE USED ONLY WHEN SLIP FORM IS USED)

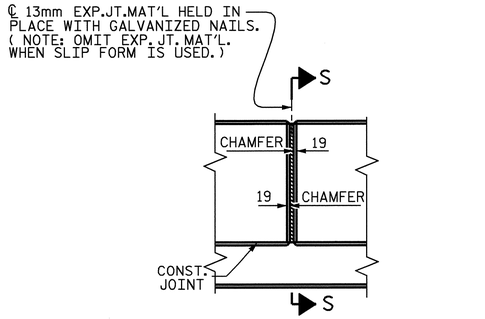

ELEVATION AT EXPANSION JOINTS

BARRIER RAIL DETAILS

PROJECT NO. R-2554BA

WAYNE COUNTY

STATION: 93+23.591 -L-

SHEET 1 OF 2

STATE OF NORTH CAROLINA
DEPARTMENT OF TRANSPORTATION
RALEIGH

STANDARD

CONCRETE BARRIER RAIL

(LEFT LANE)

REVISIONS						SHEET NO.
NO.	BY:	DATE:	NO.	BY:	DATE:	S-14
1			3			TOTAL SHEETS
2			4			478

ASSEMBLED BY : J.D. HAWK	DATE : 6/2007	
CHECKED BY : J.G. KHARVA	DATE : 7/2007	
DRAWN BY : ARB 5/87	REV. 10/17/00	RWW/LES
CHECKED BY : SJD 9/87	REV. 5/7/03R	RWW/JTE
	REV. 5/1/06	TLA/GM

NORTH CAROLINA PROFESSIONAL SEAL 22005 ENGINEER A. KEITH PASCHAL

6/9/08

09-JUN-2008 13:49
r:\structures\bullock\Str#1\FINAL PLANS\R2554BA_sd_BR_01.dgn
ldhaWK

STR. 1 STD. No. CBR1SM

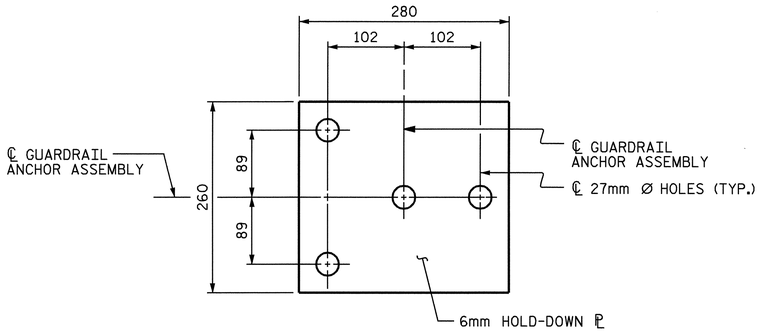

PLAN

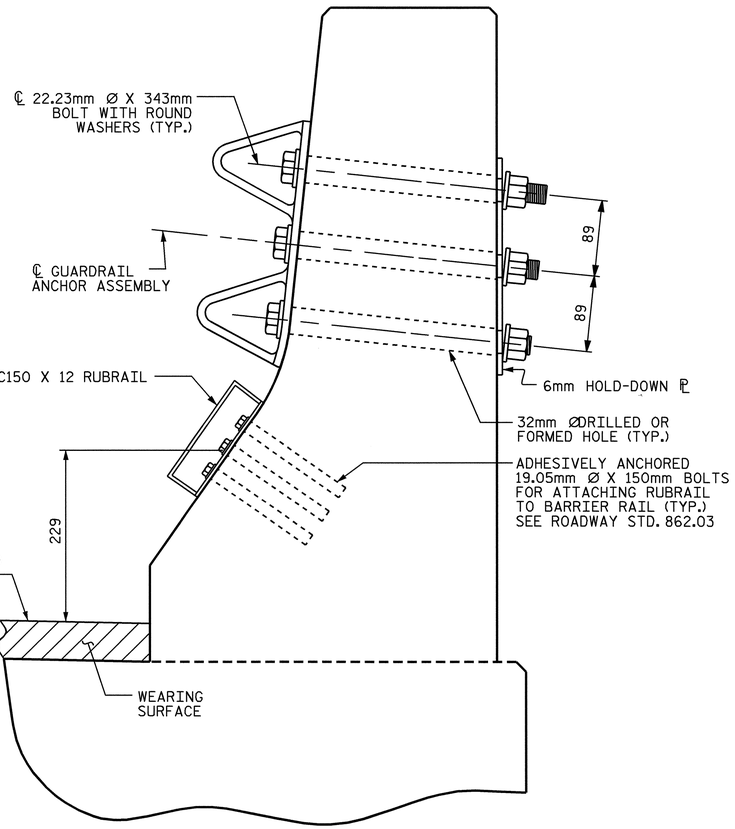

SECTION E-E

GUARDRAIL ANCHOR ASSEMBLY DETAILS

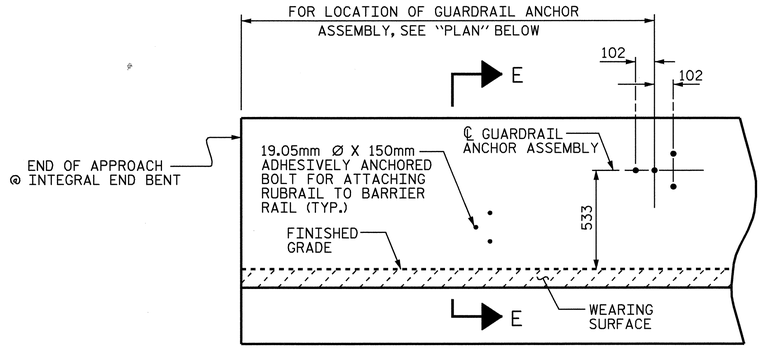

ELEVATION

FOR LOCATION OF RUBRAIL, SEE ROADWAY STD. 862.03

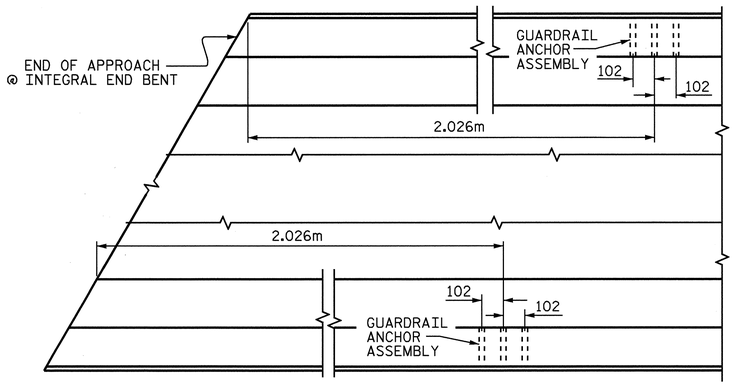

PLAN

LOCATION OF ANCHORS FOR GUARDRAIL

END BENT 1 SHOWN, END BENT 2 SIMILAR.

NOTES

THE GUARDRAIL ANCHOR ASSEMBLY SHALL CONSIST OF A 6mm HOLD DOWN PLATE AND 4 - 22.23mm Ø BOLTS WITH NUTS AND WASHERS, RUBRAIL, AND ADHESIVELY ANCHORED BOLTS.

THE HOLD-DOWN PLATE SHALL CONFORM TO AASHTO M270 GRADE 36. AFTER FABRICATION, THE HOLD-DOWN PLATE SHALL BE HOT-DIP GALVANIZED IN ACCORDANCE WITH AASHTO M111.

BOLTS SHALL CONFORM TO THE REQUIREMENTS OF ASTM A307 AND NUTS SHALL CONFORM TO THE REQUIREMENTS OF AASHTO M291. BOLTS, NUTS AND WASHERS SHALL BE GALVANIZED. (AT THE CONTRACTOR'S OPTION, STAINLESS STEEL BOLTS, NUTS AND WASHERS MAY BE USED AS AN ALTERNATE FOR THE 22.23mm Ø GALVANIZED BOLTS, NUTS AND WASHERS. THEY SHALL CONFORM TO OR EXCEED THE MECHANICAL REQUIREMENTS OF ASTM A307. THE USE OF THIS ALTERNATE SHALL BE APPROVED BY THE ENGINEER.)

THE GUARDRAIL ANCHOR ASSEMBLY IS REQUIRED AT ALL POINTS WHERE APPROACH GUARDRAIL IS TO BE ATTACHED TO THE END OF BARRIER RAIL. FOR POINTS OF ATTACHMENT, SEE SKETCH.

AFTER INSTALLATION, THE EXPOSED THREAD OF THE BOLT SHALL BE BURRED WITH A SHARP POINTED TOOL.

THE COST OF THE GUARDRAIL ANCHOR ASSEMBLY SHALL BE INCLUDED IN THE UNIT CONTRACT PRICE BID FOR CONCRETE BARRIER RAIL.

THE 32mm Ø HOLES SHALL BE FORMED OR DRILLED WITH A CORE BIT. IMPACT TOOLS WILL NOT BE PERMITTED. ANY CONCRETE DAMAGED BY THIS WORK SHALL BE REPAIRED TO THE SATISFACTION OF THE ENGINEER.

THE C150 X 12 RUBRAIL IS TO BE ADHESIVELY ANCHORED TO THE RAIL USING THREE 19.05mm Ø X 150mm BOLTS WITH WASHERS. LEVEL ONE FIELD TESTING IF REQUIRED, AND THE YIELD LOAD OF THE 19.05mm Ø BOLTS IS 53.4kN. FOR ADHESIVELY ANCHORED ANCHOR BOLTS OR DOWELS, SEE SPECIAL PROVISIONS. SEE ROADWAY STANDARD 862.03 FOR DETAILS AND LOCATION OF THE RUBRAIL.

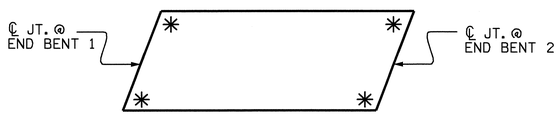

SKETCH SHOWING POINTS OF ATTACHMENTS

✳ DENOTES GUARDRAIL ANCHOR ASSEMBLY

PROJECT NO. R-2554BA

WAYNE COUNTY

STATION: 93+23.591 -L-

SHEET 2 OF 2

STATE OF NORTH CAROLINA
DEPARTMENT OF TRANSPORTATION
RALEIGH

STANDARD

GUARDRAIL ANCHORAGE FOR BARRIER RAIL

(LEFT LANE)

NORTH CAROLINA PROFESSIONAL SEAL 22005 ENGINEER A. KEITH PASCHAL

6/9/08

REVISIONS						SHEET NO.
NO.	BY:	DATE:	NO.	BY:	DATE:	S-15
1			3			TOTAL SHEETS
2			4			478

ASSEMBLED BY : J.D. HAWK	DATE : 6/2007
CHECKED BY : J.G. KHARVA	DATE : 7/2007
DRAWN BY : TLA 5/06	ADDED 5/1/06R KMM/GM
CHECKED BY : GM 5/06	

09-JUN-2008 09:13
r:\structures\bullock\Str#1\FINAL PLANS\R2554BA_sd_BR_01.dgn
jdhawk

STD. NO. GRA2 STR. 1

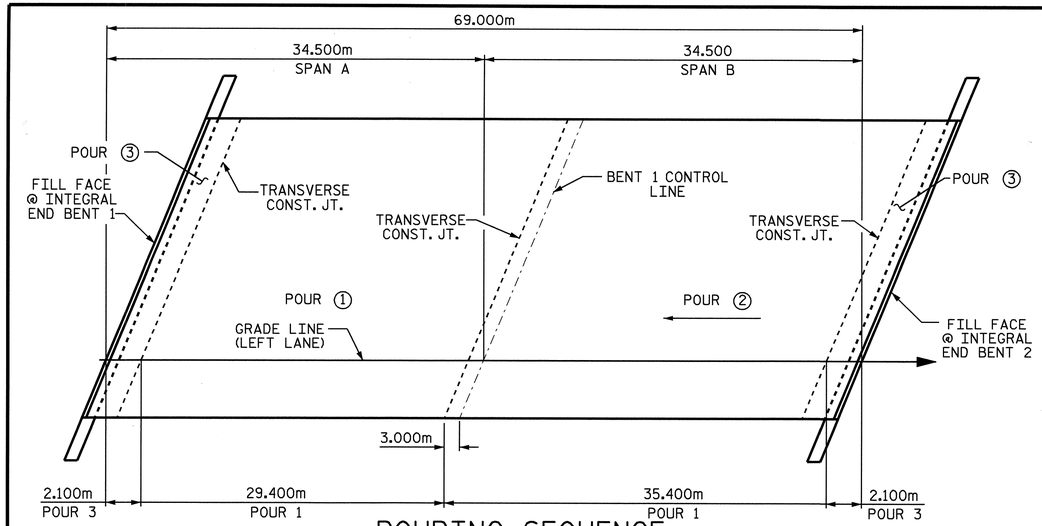

POURING SEQUENCE

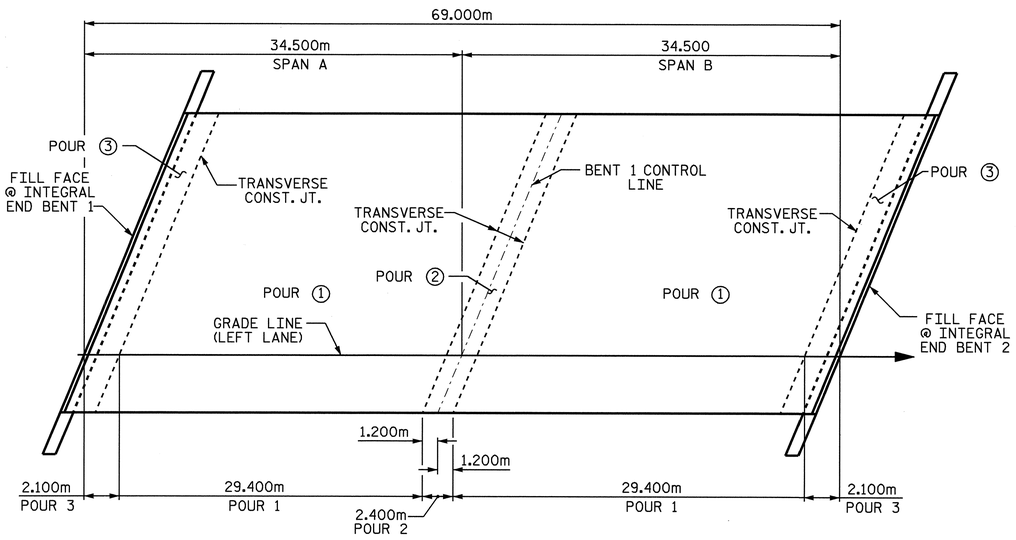

OPTIONAL POURING SEQUENCE

POUR 2 CAN NOT BE STARTED UNTIL BOTH ADJACENT POUR 1'S REACH A MINIMUM OF 20.7 MPa.

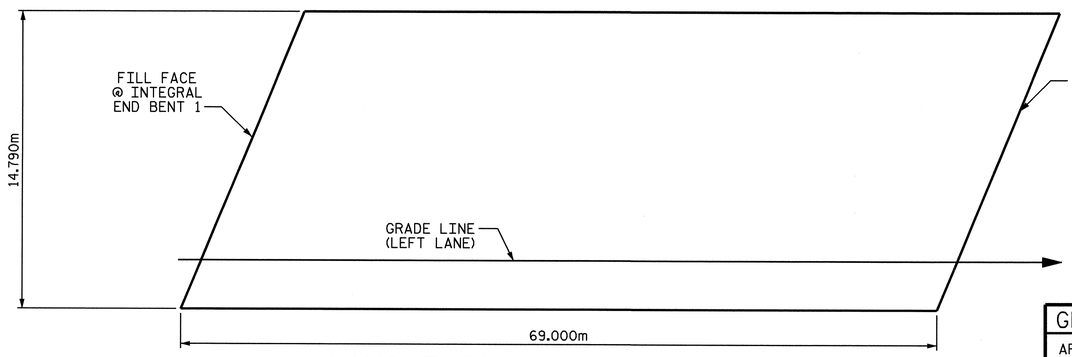

LAYOUT FOR COMPUTING AREA REINFORCED CONCRETE DECK SLAB

(1020.5 SQ. METERS)

REINFORCING BAR SCHEDULE

SPANS A & B

BAR	NO.	SIZE	TYPE	LENGTH	WEIGHT
✳ A1	298	#16	STR	14680	6789
A2	298	#16	STR	14680	6789
✳ A101	4	#16	STR	13600	84
✳ A102	4	#16	STR	12580	78
✳ A103	4	#16	STR	11560	72
✳ A104	4	#16	STR	10520	65
✳ A105	4	#16	STR	9500	59
✳ A106	4	#16	STR	8480	53
✳ A107	4	#16	STR	7460	46
✳ A108	4	#16	STR	6440	40
✳ A109	4	#16	STR	5420	34
✳ A110	4	#16	STR	4400	27
✳ A111	4	#16	STR	3360	21
✳ A112	4	#16	STR	2340	15
✳ A113	4	#16	STR	1320	8
✳ A114	4	#16	STR	300	2
A201	4	#16	STR	13600	84
A202	4	#16	STR	12580	78
A203	4	#16	STR	11560	72
A204	4	#16	STR	10520	65
A205	4	#16	STR	9500	59
A206	4	#16	STR	8480	53
A207	4	#16	STR	7460	46
A208	4	#16	STR	6440	40
A209	4	#16	STR	5420	34
A210	4	#16	STR	4400	27
A211	4	#16	STR	3360	21
A212	4	#16	STR	2340	15
A213	4	#16	STR	1320	8
A214	4	#16	STR	300	2

BAR	NO.	SIZE	TYPE	LENGTH	WEIGHT
✳ B1	70	#19	STR	6900	1080
✳ B2	228	#13	STR	8040	1822
✳ B3	76	#19	STR	12360	2099
✳ B4	35	#19	STR	10400	814
B5	124	#16	STR	17580	3383
B6	48	#13	STR	6900	329
K1	24	#13	STR	8620	206
K2	10	#13	STR	1360	14
K3	40	#13	STR	2340	93
K4	10	#13	STR	1820	18
K5	16	#13	STR	960	15
K6	4	#13	STR	1740	7
K7	16	#13	STR	2240	36
K8	4	#13	STR	1980	8
K9	10	#13	STR	1360	14
K10	40	#13	STR	2340	93
K11	10	#13	STR	1820	18
K12	10	#13	5	1660	17
K13	20	#13	6	3260	65
K14	80	#16	STR	2220	276
K15	20	#16	7	2200	68
✳ S1	58	#13	3	3560	205
✳ S2	54	#13	3	3500	188
S3	130	#13	2	980	127
S4	60	#13	8	2980	178
U1	50	#13	4	4360	217
U2	12	#13	4	5000	60
✳ U3	20	#13	1	5360	107
U4	10	#13	4	2500	25

REINFORCING STEEL = LBS 12460

EPOXY COATED REINF. STEEL = LBS 13708

SUPERSTRUCTURE REINFORCING STEEL LENGTHS ARE BASED ON THE FOLLOWING MINIMUM SPLICE LENGTHS

BAR SIZE	SUPERSTRUCTURE EXCEPT APPROACH SLABS, PARAPET, AND BARRIER RAIL		APPROACH SLABS		PARAPET AND BARRIER RAIL
	EPOXY COATED	UNCOATED	EPOXY COATED	UNCOATED	
#13	610	540	610	540	840
#16	770	660	770	660	1050
#19	920	790	1190	790	1330
#22	1580	1060			
#25	2080	1390			

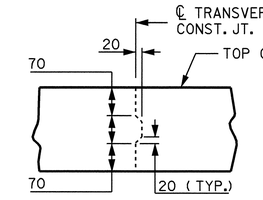

TRANSVERSE CONSTRUCTION JOINT DETAIL

NOTE: REINFORCING STEEL IN SLAB NOT SHOWN. LONGITUDINAL REINFORCING STEEL SHALL BE CONTINUOUS THRU JOINT.

GROOVING BRIDGE FLOORS

APPROACH SLABS	174.9 SQ.METER
BRIDGE DECK	881.0 SQ.METER
TOTAL	1055.9 SQ.METER

BAR TYPES

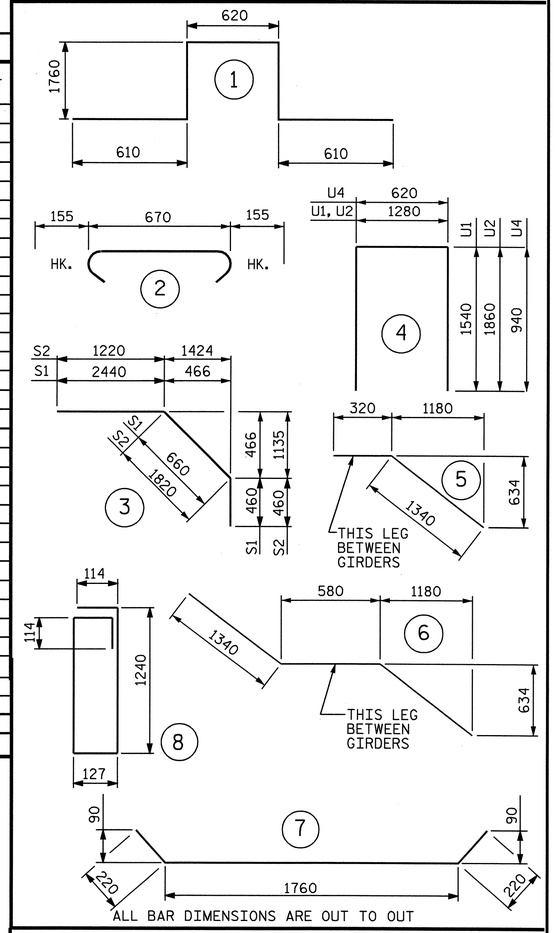

SUPERSTRUCTURE BILL OF MATERIAL

	CLASS AA CONCRETE	REINFORCING STEEL	EPOXY COATED REINFORCING STEEL
	(CU. METER)	(kg)	(kg)
POUR 1	127.7	12460	13708
POUR 2	165.2		
POUR 3	⚠1 100.8		
TOTALS✳✳	393.7	12460	13708

✳✳ QUANTITIES FOR BARRIER RAIL ARE NOT INCLUDED

⚠1 REV. #1: CHANGED CLASS AA CONCRETE POUR 3 FROM 12.6 CU. METERS TO 100.8 CU. METERS
BY: J.D. HAWK 8/8/08
CHECKED BY: A.K. PASCHAL 8/8/08

PROJECT NO. R-2554BA

WAYNE COUNTY

STATION: 93+23.591 -L-

STATE OF NORTH CAROLINA
DEPARTMENT OF TRANSPORTATION
RALEIGH

SUPERSTRUCTURE
BILL OF MATERIAL
(LEFT LANE)

REVISIONS						SHEET NO.
NO.	BY:	DATE:	NO.	BY:	DATE:	S-16
1	JDH	8/8/08	3			TOTAL SHEETS
2			4			478

NORTH CAROLINA PROFESSIONAL SEAL 22005 ENGINEER A. KEITH PASCHAL
8/11/08

DRAWN BY : J.D. HAWK DATE : 6/2007
CHECKED BY : J.G. KHARVA DATE : 7/2007

11-AUG-2008 11:41
R:\Structures\BULLOCK\Str#1\FINAL PLANS\R2554BA_sd_BM_01.dgn
kpaschal

STR. #1

NOTES:

THE CONTRACTOR SHALL PROVIDE FOR INSTALLATION OF THE 100mm DIAMETER DRAIN PIPE THROUGH THE WING WALL AS REQUIRED FOR REINFORCED BRIDGE APPROACH FILLS. SEE THE ROADWAY PLANS. REINFORCING STEEL IN THE WING WALL MAY BE SHIFTED AS NECESSARY TO CLEAR THE DRAIN PIPE.

THE CONTRACTOR'S ATTENTION IS CALLED TO THE FACT THAT THE UPPER PART OF WING IS TO BE POURED WITH SUPERSTRUCTURE.

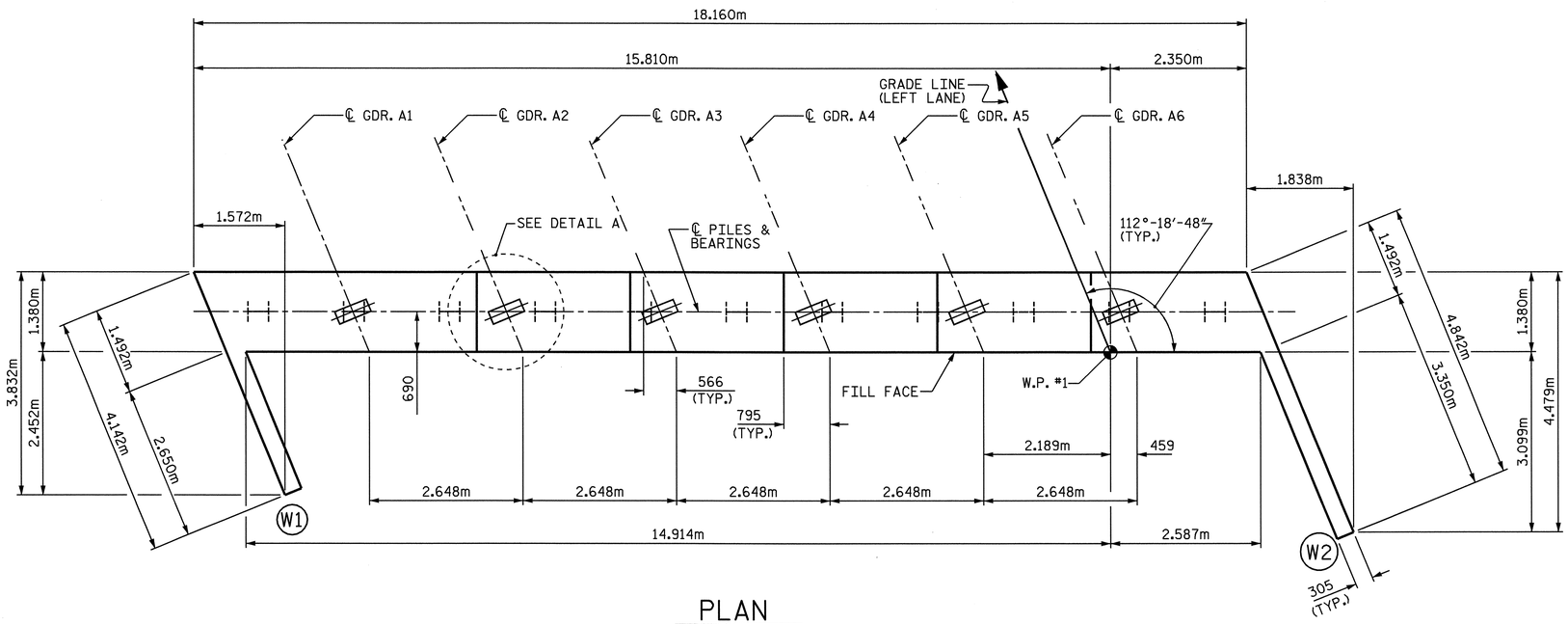

PLAN

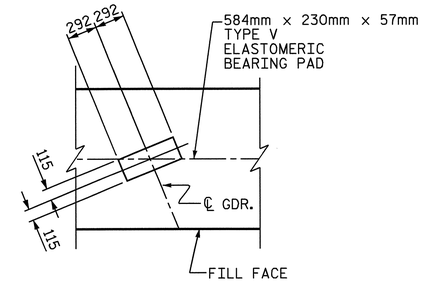

DETAIL A
(TYP. EA. GIRDER)

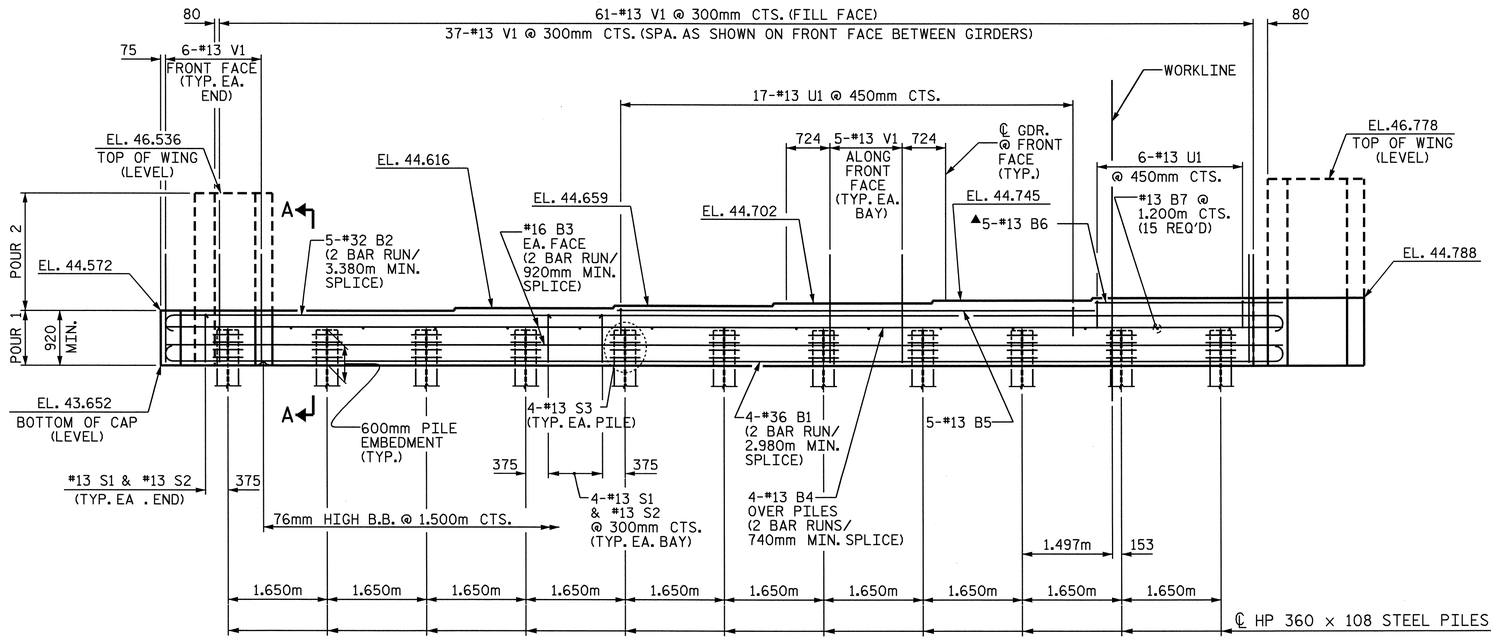

ELEVATION

▲#13 B6 MAY BE CUT AS NECESSARY FOR SKEWED END

PROJECT NO. R-2554BA

WAYNE COUNTY

STATION: 93+23.591 -L-

SHEET 1 OF 2

STATE OF NORTH CAROLINA
DEPARTMENT OF TRANSPORTATION
RALEIGH

SUBSTRUCTURE

INTEGRAL END BENT 1

(LEFT LANE)

REVISIONS						SHEET NO.
NO.	BY:	DATE:	NO.	BY:	DATE:	S-17
1			3			TOTAL SHEETS
2			4			478

STR. #1

DRAWN BY : J.D. HAWK DATE : 8/15/07
CHECKED BY : O. PUIGCERVER DATE : 3/15/08

06-JUN-2008 15:08
k:\struct~1\bullock\Str#1\FINAL PLANS\R2554BA_sd_El&E2_01.dgn
jkharva

NORTH CAROLINA PROFESSIONAL SEAL 20057 ENGINEER A. KEITH PASCHAL

6/9/08

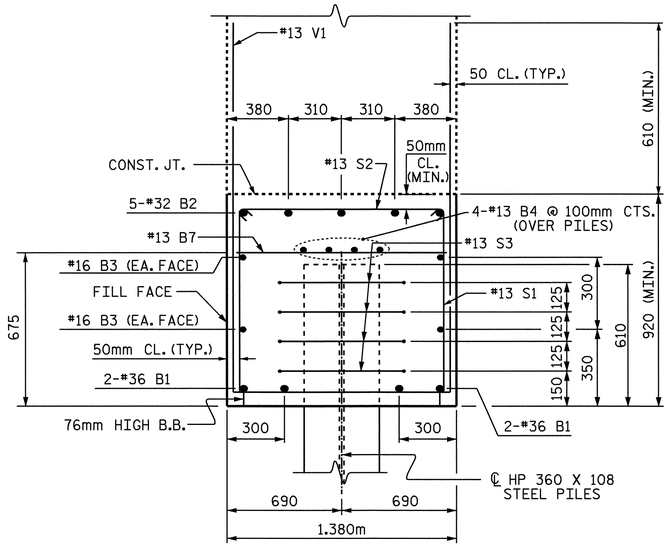

SECTION A-A

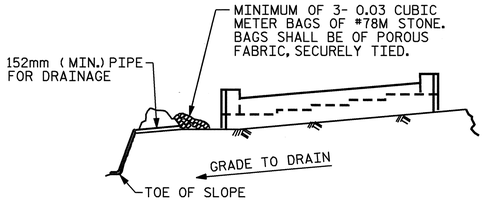

BAGGED STONE AND PIPE SHALL BE PLACED IMMEDIATELY AFTER COMPLETION OF END BENT EXCAVATION. PIPE MAY BE EITHER CONCRETE, CORRUGATED STEEL,CORRUGATED ALUMINUM ALLOY, OR CORRUGATED PLASTIC. PERFORATED PIPE WILL NOT BE ALLOWED.

BAGGED STONE SHALL REMAIN IN PLACE UNTIL THE ENGINEER DIRECTS THAT IT BE REMOVED. THE CONTRACTOR SHALL REMOVE AND DISPOSE OF SILT ACCUMULATIONS AT BAGGED STONE WHEN SO DIRECTED BY THE ENGINEER. BAGS SHALL BE REMOVED AND REPLACED WHENEVER THE ENGINEER DETERMINES THAT THEY HAVE DETERIORATED AND LOST THEIR EFFECTIVENESS.

NO SEPARATE PAYMENT WILL BE MADE FOR THIS WORK AND THE ENTIRE COST OF THIS WORK SHALL BE INCLUDED IN THE UNIT CONTRACT PRICE BID FOR THE SEVERAL PAY ITEMS.

TEMPORARY DRAINAGE AT END BENT

BAR TYPES

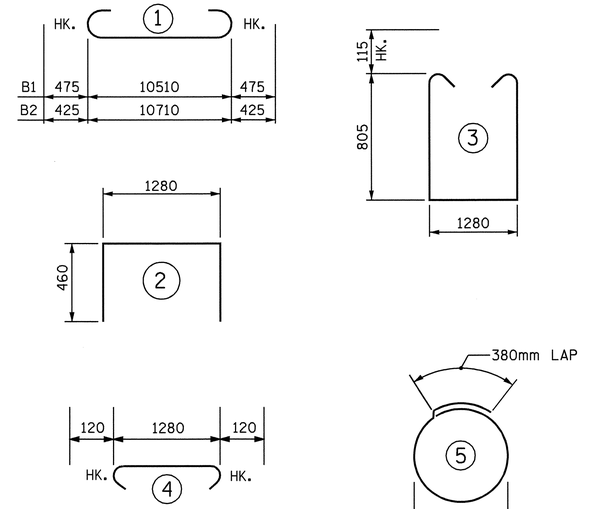

ALL BAR DIMENSIONS ARE OUT TO OUT.

BILL OF MATERIAL
END BENT 1

BAR	NO.	SIZE	TYPE	LENGTH	WEIGHT
B1	8	36	1	11460	725
B2	10	32	1	11560	740
B3	8	16	STR	9500	118
B4	8	13	STR	9400	75
B5	5	13	STR	7940	39
B6	5	13	STR	3120	16
B7	15	13	STR	1280	19
H1	10	16	STR	3920	61
H2	10	16	STR	4000	62
H3	11	16	STR	4840	83
H4	11	16	STR	4760	81
S1	42	13	3	3120	130
S2	42	13	4	1520	63
S3	44	13	5	2300	100
U1	23	13	2	2200	50
V1	98	13	STR	1700	166
V2	18	16	STR	2780	78
V3	22	16	STR	3020	103

REINFORCING STEEL Kg. 2709

CLASS A CONCRETE BREAKDOWN

✳POUR 1 (CAP AND LOWER PART OF WINGS)	28.2 m3
TOTAL	28.2 m3

HP 360 x 108 STEEL PILES

NO.: 11 275.0 LIN. M.

PILE REDRIVES NO.: 5

✳UPPER WINGS (POUR 2) TO BE POURED WITH SUPERSTRUCTURE

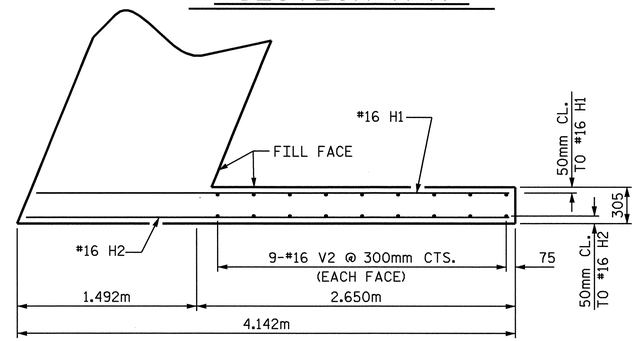

PLAN W1

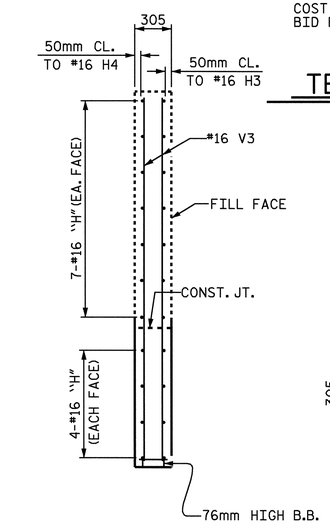

SECTION Y-Y

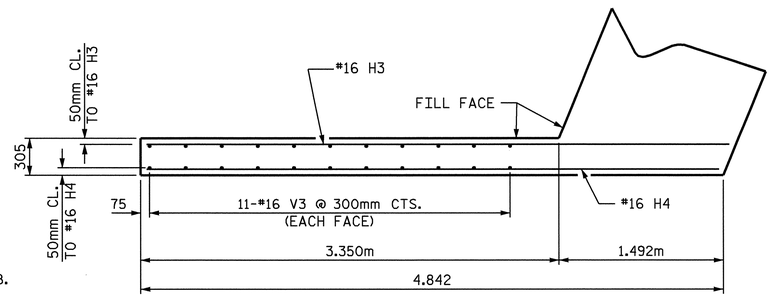

PLAN W2

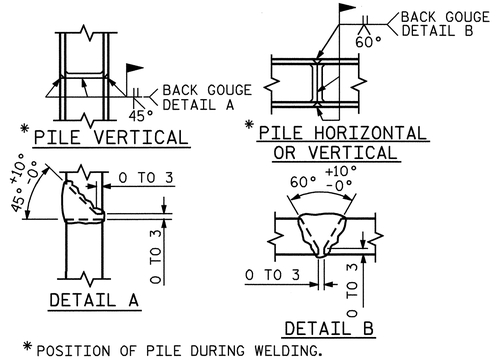

✳POSITION OF PILE DURING WELDING.

PILE SPLICE DETAILS

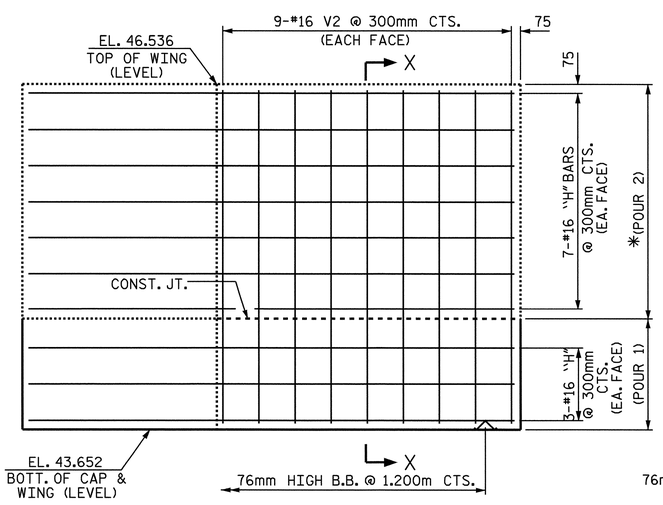

ELEVATION W1

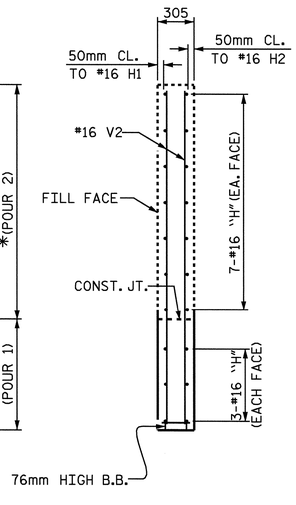

SECTION X-X

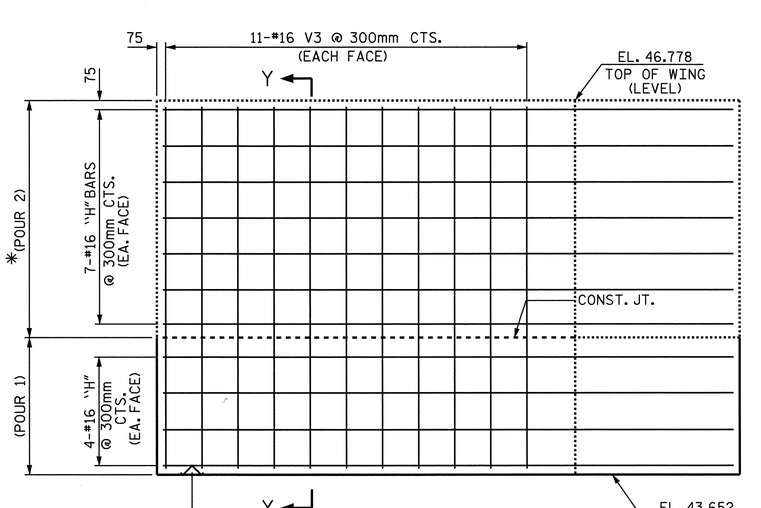

ELEVATION W2

PROJECT NO. R-2554BA

WAYNE COUNTY

STATION: 93+23.591 -L-

SHEET 2 OF 2

STATE OF NORTH CAROLINA
DEPARTMENT OF TRANSPORTATION
RALEIGH

SUBSTRUCTURE

INTEGRAL END BENT 1
(LEFT LANE)

REVISIONS						SHEET NO.
NO.	BY:	DATE:	NO.	BY:	DATE:	S-18
1			3			TOTAL SHEETS
2			4			478

NORTH CAROLINA PROFESSIONAL SEAL 22005 ENGINEER A. KEITH PASCHAL

6/9/08

DRAWN BY : J.D. HAWK DATE : 8/15/07
CHECKED BY : O. PUIGCERVER DATE : 3/15/08

06-JUN-2008 15:34
k:\struct~1\bullock\Str#1\FINAL PLANS\R2554BA_sd_El&E2_01.dgn
jkharva

STR. #1

NOTES

STIRRUPS IN CAP MAY BE SHIFTED AS NECESSARY TO CLEAR ANCHOR BOLTS.

HOOKS ON "V" BARS MAY BE TURNED AS NECESSARY FOR PLACING REINFORCING STEEL.

FOR PILE SPLICE DETAILS, SEE END BENT 1.

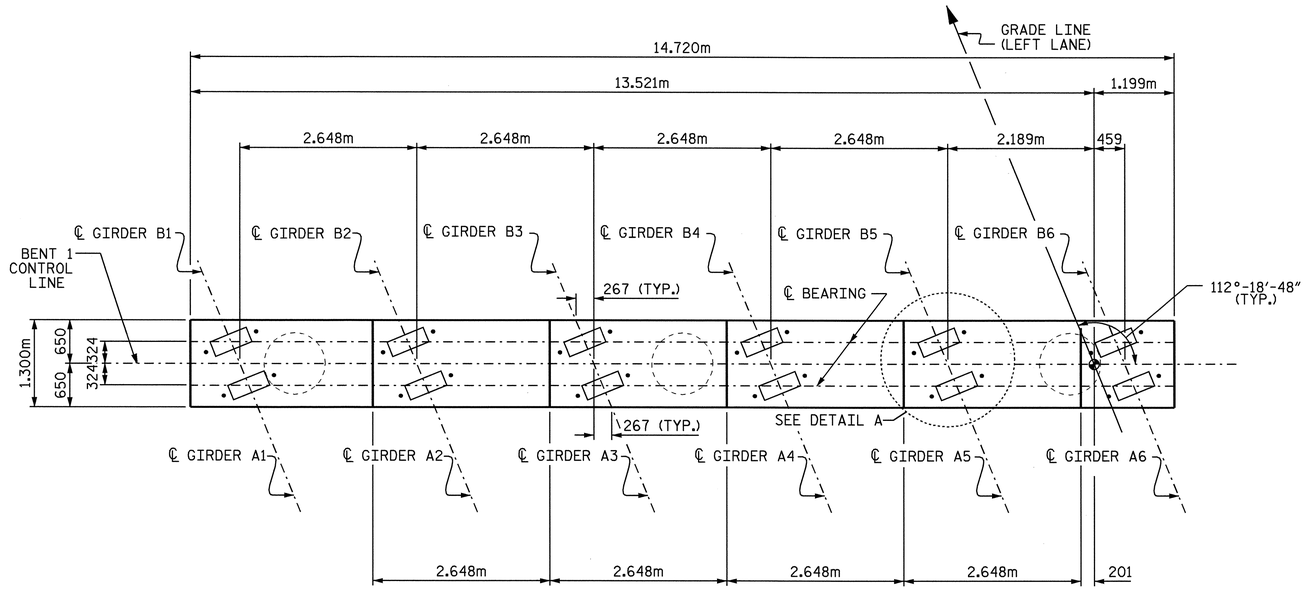

PLAN

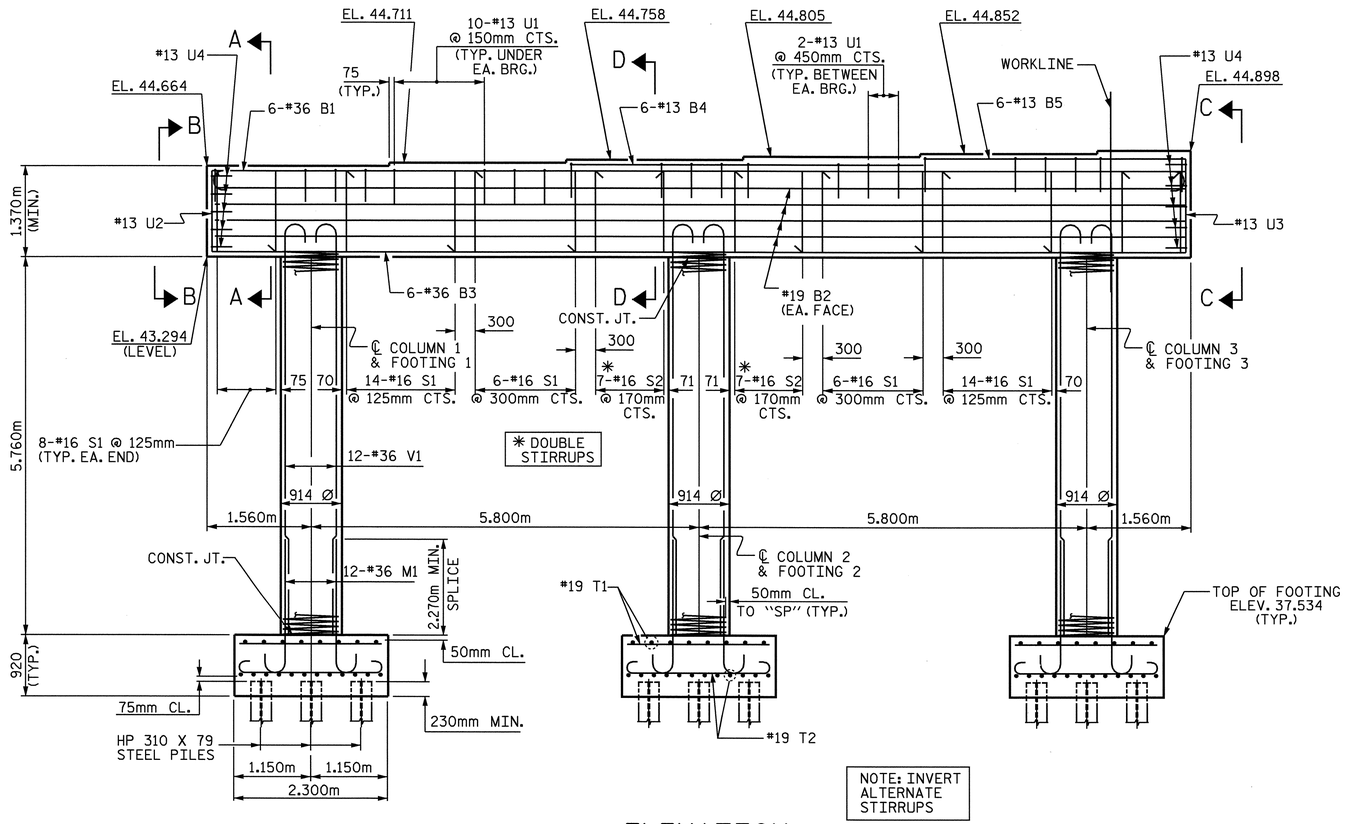

ELEVATION

(DIMENSIONS AND REINFORCING STEEL ARE TYPICAL FOR EACH COLUMN & FOOTING)

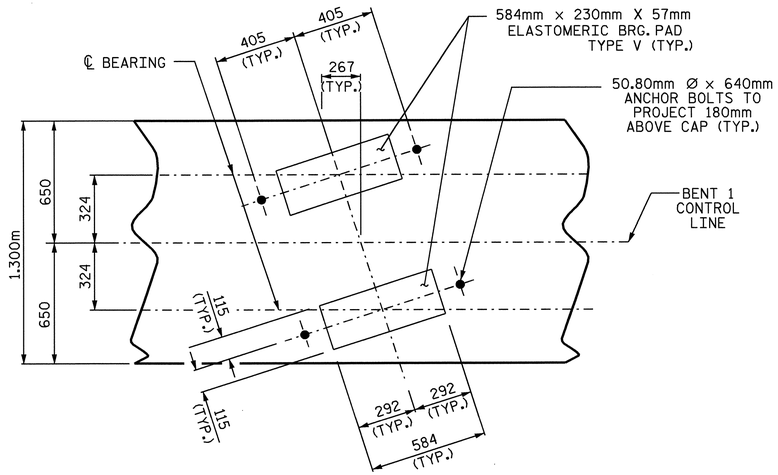

DETAIL A

(TYP. EA. GIRDER)

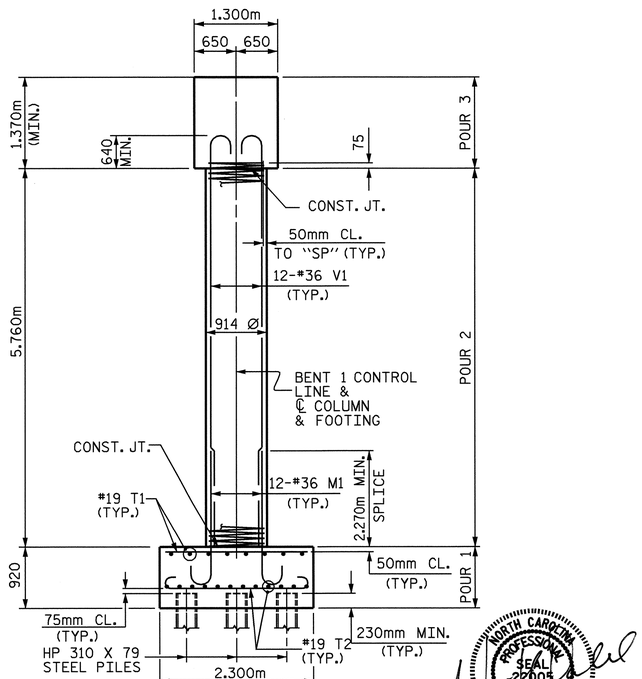

END ELEVATION

NORTH CAROLINA PROFESSIONAL SEAL 22005 ENGINEER A. KEITH PASCHAL

6/9/08

DRAWN BY : J.D. HAWK DATE : 11/15/07
CHECKED BY : O. PUIGCERVER DATE : 3/15/08

06-JUN-2008 15:04
R:\Structures\BULLOCK\Str#1\FINAL PLANS\R2554BA_sd_B1_01.dgn
JDHAWK

PROJECT NO. R-2554BA
WAYNE COUNTY
STATION: 93+23.591 -L-

SHEET 1 OF 2

STATE OF NORTH CAROLINA
DEPARTMENT OF TRANSPORTATION
RALEIGH

SUBSTRUCTURE

BENT 1

(LEFT LANE)

REVISIONS						SHEET NO.
NO.	BY:	DATE:	NO.	BY:	DATE:	S-19
1			3			TOTAL SHEETS
2			4			478

STR. #1

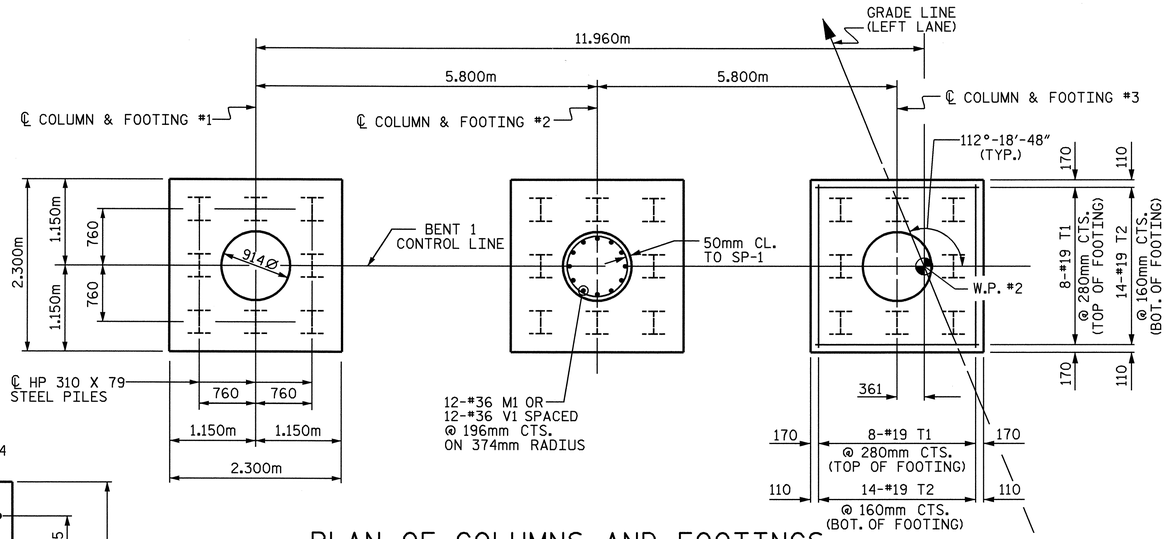

PLAN OF COLUMNS AND FOOTINGS

(DIMENSIONS AND REINFORCING STEEL ARE TYPICAL FOR EACH COLUMN & FOOTING)

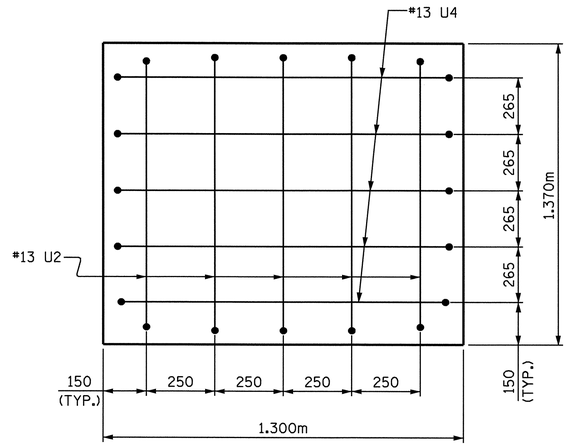

VIEW B-B

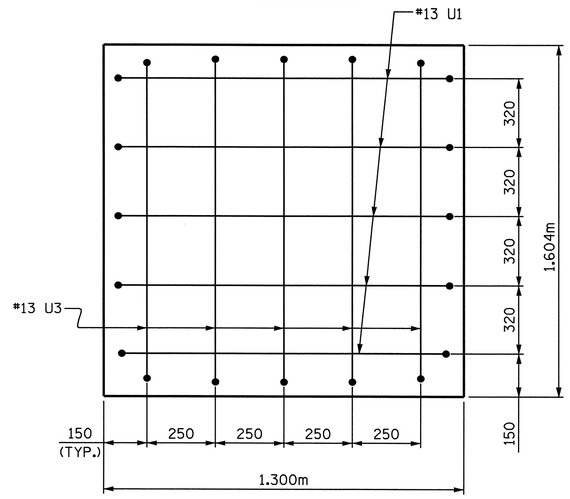

VIEW C-C

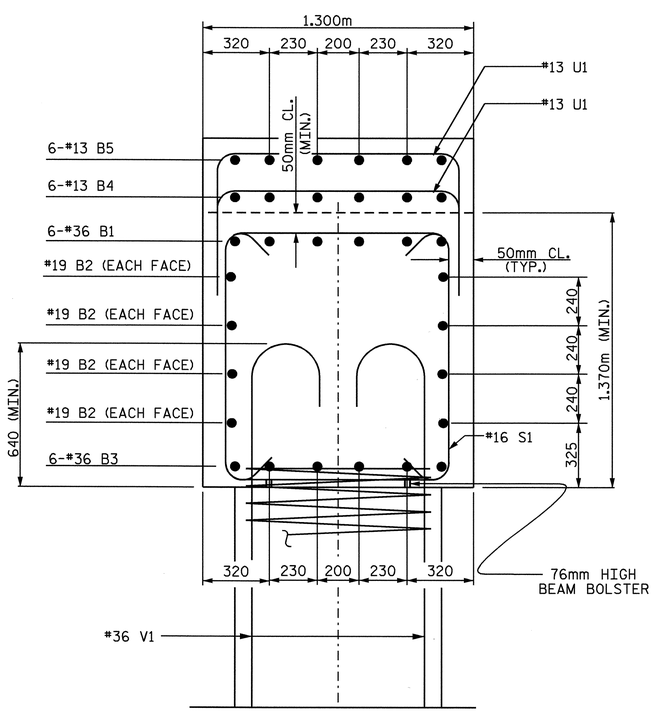

SECTION A-A

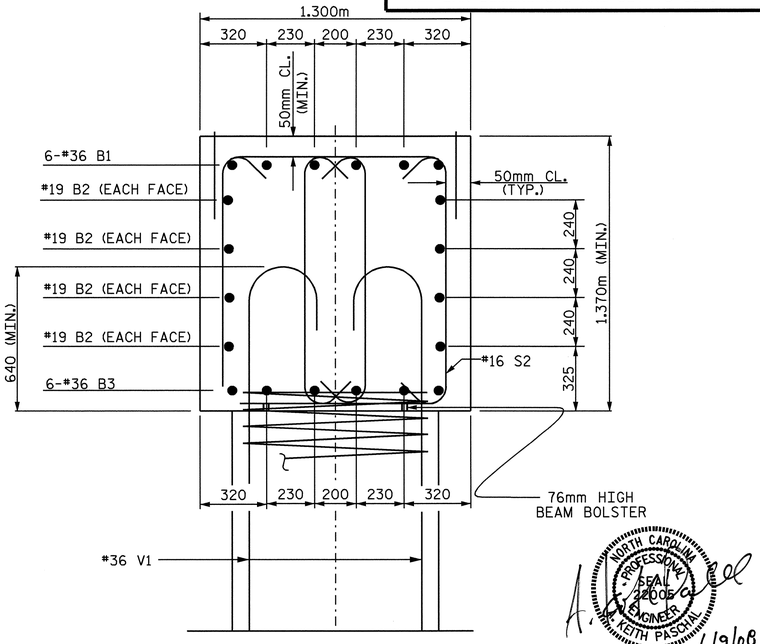

SECTION D-D

BAR TYPES

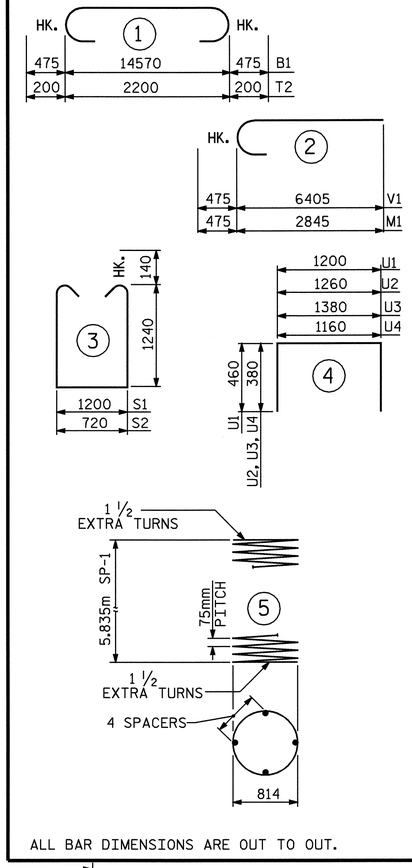

ALL BAR DIMENSIONS ARE OUT TO OUT.

BILL OF MATERIAL

BENT 1

BAR	NO.	SIZE	TYPE	LENGTH	WEIGHT
B1	6	36	1	15520	736
B2	8	19	STR	14620	261
B3	6	36	STR	14620	694
B4	6	13	STR	5300	32
B5	6	13	STR	3920	23
M1	36	36	2	3320	945
T1	48	19	STR	2200	236
T2	84	19	1	2600	488
V1	36	36	2	6880	1958
S1	56	16	3	3960	344
S2	28	16	3	3480	151
U1	70	13	4	2120	148
U2	5	13	4	2020	10
U3	5	13	4	2140	11
U4	10	13	4	1920	19

REINFORCING STEEL 6056 kg.

SP-1	3	***	5	203600	607

SPIRAL COLUMN REINFORCING STEEL 607 kg.

CLASS A CONCRETE BREAKDOWN	m3
POUR 1 (FOOTINGS)	14.6 C.Y.
POUR 2 (COLUMNS)	11.3 C.Y.
POUR 3 (CAP)	28.3 C.Y.
TOTAL CLASS A CONCRETE	54.2 C.Y.

℄ HP 310 X 79 STEEL PILES

NO. = 24 LINEAR METERS = 336.0

PILE REDRIVES EA. 9

FOUNDATION EXCAVATION = LUMP SUM

*** THE "SP" SPIRAL REINFORCING STEEL SHALL BE W20 OR D-20 COLD DRAWN WIRE OR #13 PLAIN OR DEFORMED BAR.

PROJECT NO. R-2554BA

WAYNE COUNTY

STATION: 93+23.591 -L-

SHEET 2 OF 2

STATE OF NORTH CAROLINA
DEPARTMENT OF TRANSPORTATION
RALEIGH

SUBSTRUCTURE

BENT 1

(LEFT LANE)

REVISIONS						SHEET NO.
NO.	BY:	DATE:	NO.	BY:	DATE:	S-20
1			3			TOTAL SHEETS
2			4			478

NORTH CAROLINA PROFESSIONAL SEAL 22005 ENGINEER KEITH PASCHAL

6/9/08

DRAWN BY : J.D. HAWK DATE : 11/15/07
CHECKED BY : O. PUIGCERVER DATE : 3/15/08

06-JUN-2008 15:04
R:\Structures\BULLOCK\Str*I\FINAL PLANS\R2554BA_sd_BI_01.dgn
JDHAWK

str. 1

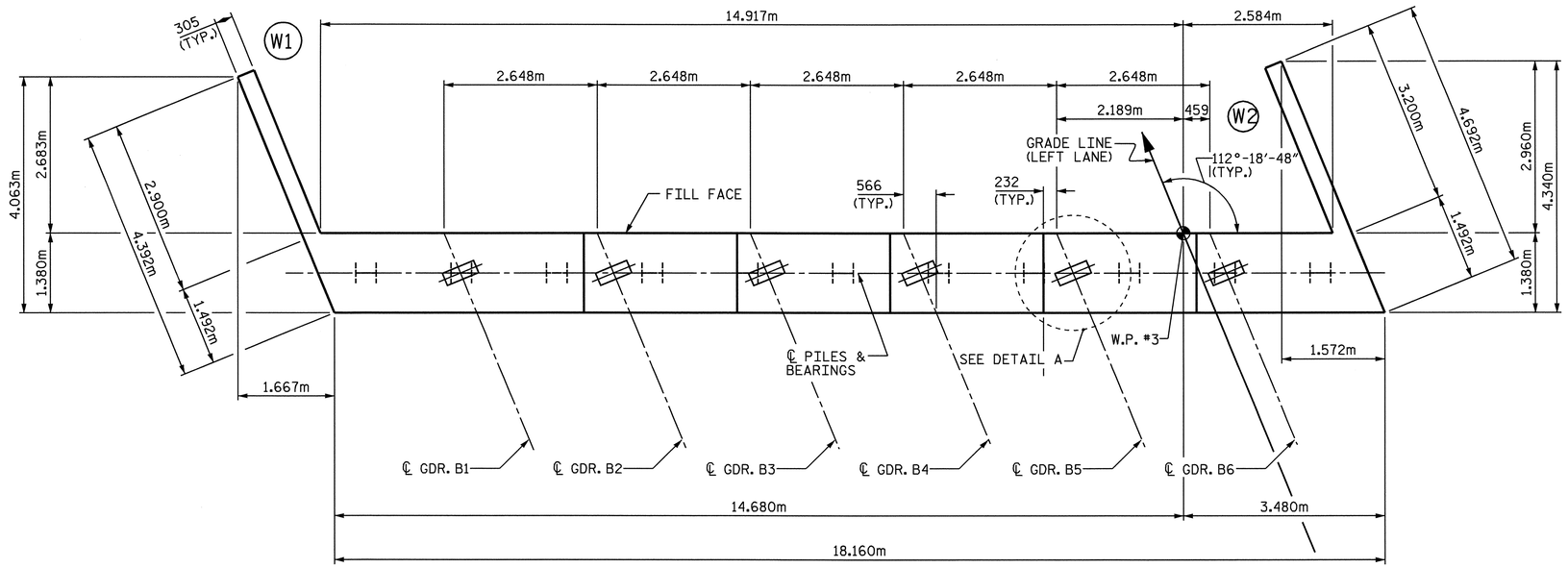

PLAN

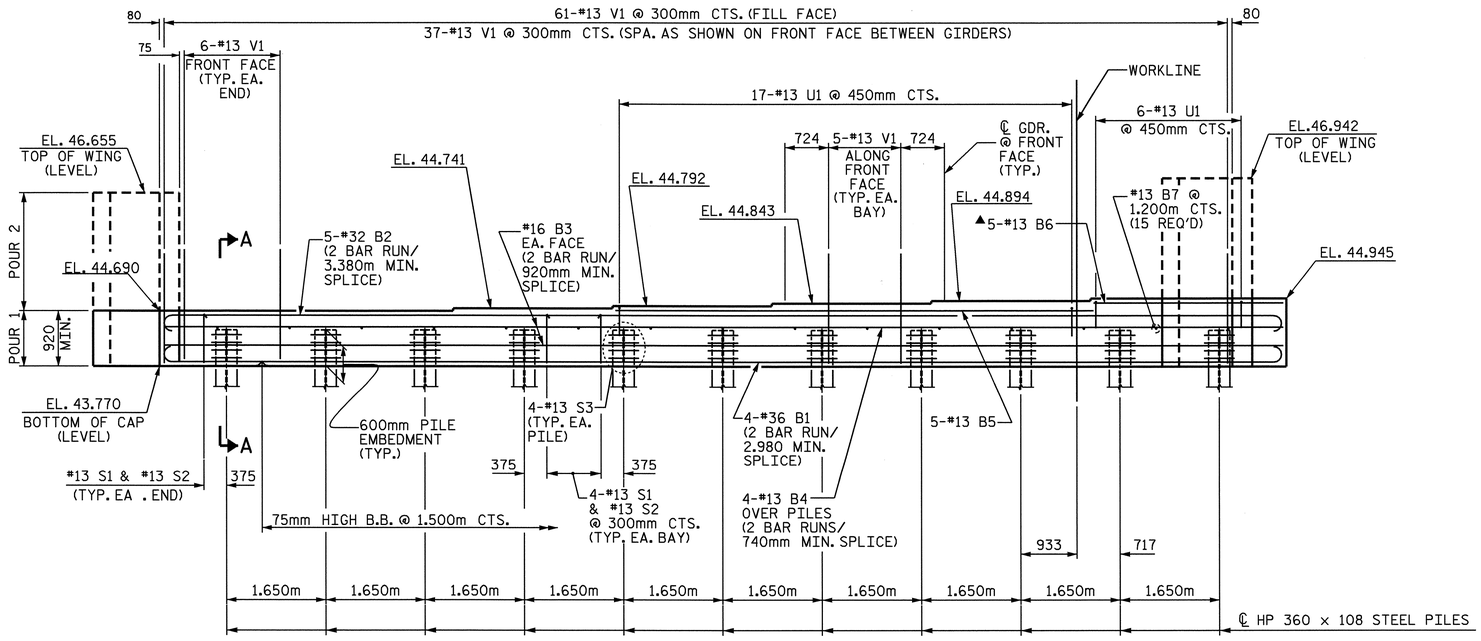

ELEVATION

▲#13 B6 MAY BE CUT AS NECESSARY FOR SKEWED END

NOTES:

THE CONTRACTOR SHALL PROVIDE FOR INSTALLATION OF THE 100mm DIAMETER DRAIN PIPE THROUGH THE WING WALL AS REQUIRED FOR REINFORCED BRIDGE APPROACH FILLS, SEE THE ROADWAY PLANS. REINFORCING STEEL IN THE WING WALL MAY BE SHIFTED AS NECESSARY TO CLEAR THE DRAIN PIPE.

THE CONTRACTOR'S ATTENTION IS CALLED TO THE FACT THAT THE UPPER PART OF WING IS TO BE POURED WITH SUPERSTRUCTURE.

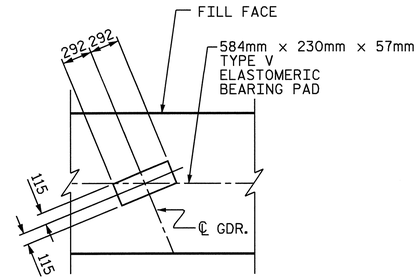

DETAIL A
(TYP. EA. GIRDER)

PROJECT NO. R-2554BA
WAYNE COUNTY
STATION: 93+23.591 -L-

SHEET 1 OF 2

STATE OF NORTH CAROLINA
DEPARTMENT OF TRANSPORTATION
RALEIGH

SUBSTRUCTURE
INTEGRAL END BENT 2
(LEFT LANE)

NORTH CAROLINA PROFESSIONAL SEAL 22008 ENGINEER K. KEITH PASCHAL
6/9/08

REVISIONS						SHEET NO.
NO.	BY:	DATE:	NO.	BY:	DATE:	S-21
1			3			TOTAL SHEETS
2			4			478

STR. #1

DRAWN BY : J.D. HAWK DATE : 8/15/07
CHECKED BY : O. PUIGCERVER DATE : 3/15/08

06-JUN-2008 15:09
k:\struct~1\bullock\Str#1\FINAL PLANS\R2554BA_sd_El&E2_01.dgn
lkharvo

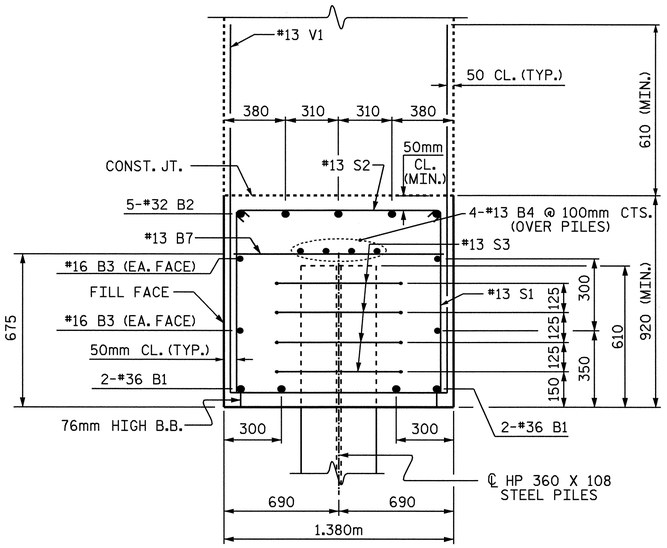

SECTION A-A

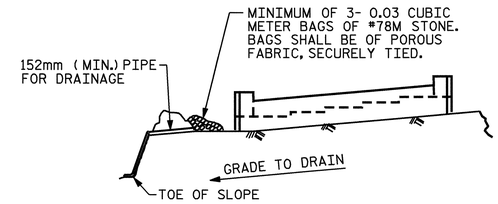

BAGGED STONE AND PIPE SHALL BE PLACED IMMEDIATELY AFTER COMPLETION OF END BENT EXCAVATION. PIPE MAY BE EITHER CONCRETE, CORRUGATED STEEL, CORRUGATED ALUMINUM ALLOY, OR CORRUGATED PLASTIC. PERFORATED PIPE WILL NOT BE ALLOWED.

BAGGED STONE SHALL REMAIN IN PLACE UNTIL THE ENGINEER DIRECTS THAT IT BE REMOVED. THE CONTRACTOR SHALL REMOVE AND DISPOSE OF SILT ACCUMULATIONS AT BAGGED STONE WHEN SO DIRECTED BY THE ENGINEER. BAGS SHALL BE REMOVED AND REPLACED WHENEVER THE ENGINEER DETERMINES THAT THEY HAVE DETERIORATED AND LOST THEIR EFFECTIVENESS.

NO SEPARATE PAYMENT WILL BE MADE FOR THIS WORK AND THE ENTIRE COST OF THIS WORK SHALL BE INCLUDED IN THE UNIT CONTRACT PRICE BID FOR THE SEVERAL PAY ITEMS.

TEMPORARY DRAINAGE AT END BENT

BAR TYPES

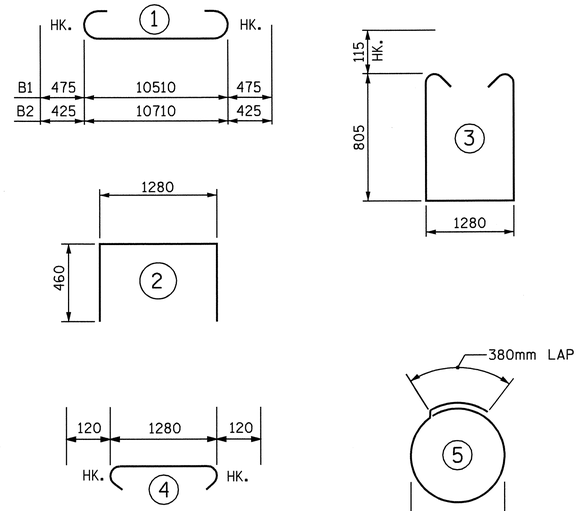

ALL BAR DIMENSIONS ARE OUT TO OUT.

BILL OF MATERIAL

END BENT 2

BAR NO.	SIZE	TYPE	LENGTH	WEIGHT
B1	8	36	1	11460	725
B2	10	32	1	11560	740
B3	8	16	STR	9500	118
B4	8	13	STR	9400	75
B5	5	13	STR	7940	39
B6	5	13	STR	3120	16
B7	15	13	STR	1280	19
H1	10	16	STR	4380	68
H2	10	16	STR	4300	67
H3	10	16	STR	4440	69
H4	10	16	STR	4540	70
S1	42	13	3	3120	130
S2	42	13	4	1520	63
S3	44	13	5	2300	100
U1	23	13	2	2200	50
V1	98	13	STR	1700	166
V2	18	16	STR	2780	78
V3	22	16	STR	3020	103

REINFORCING STEEL Kg. 2696

CLASS A CONCRETE BREAKDOWN

* POUR 1 (CAP AND LOWER PART OF WINGS) 31.7 m3

TOTAL 31.7 m3

HP 12 x 53 STEEL PILES

NO.: 11 242.0 LIN. M.

PILE REDRIVES NO.: 5

* UPPER WINGS (POUR 2) TO BE POURED WITH SUPERSTRUCTURE

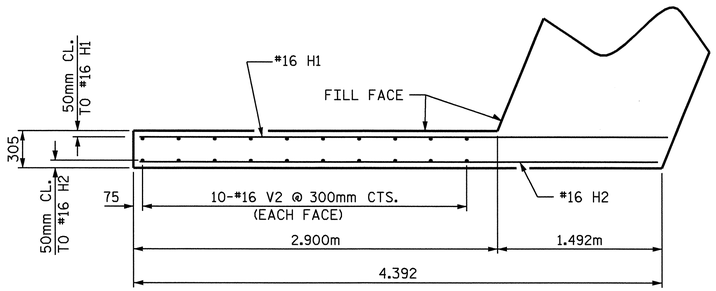

PLAN W1

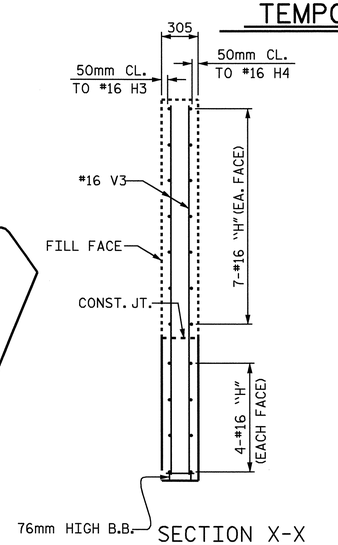

SECTION X-X

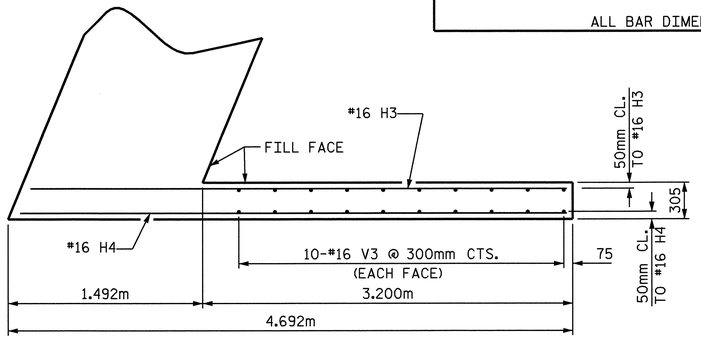

PLAN W2

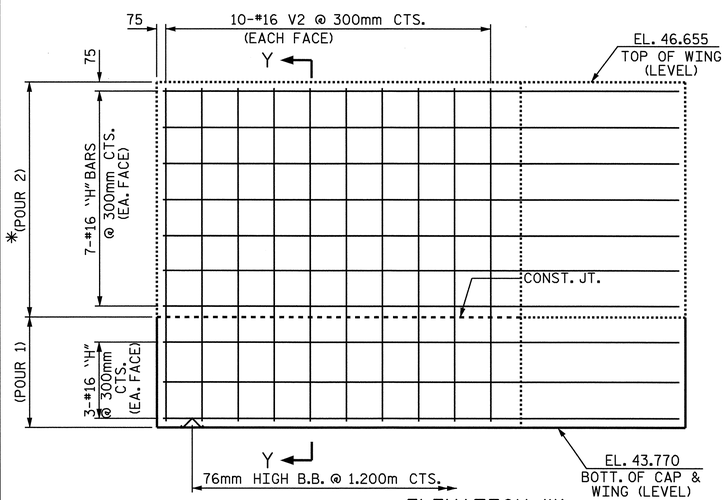

ELEVATION W1

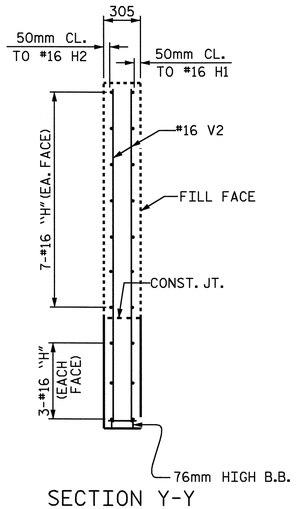

SECTION Y-Y

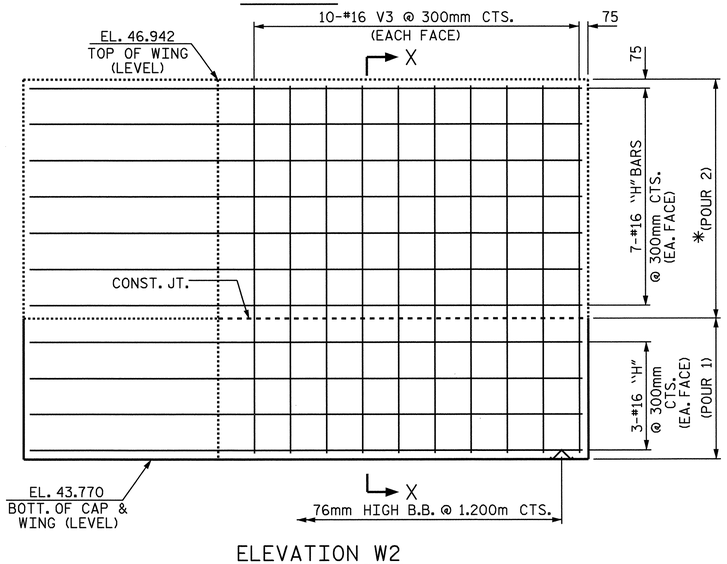

ELEVATION W2

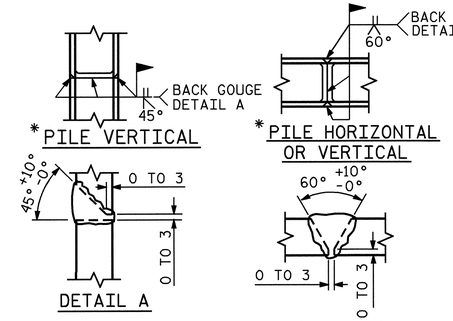

* POSITION OF PILE DURING WELDING.

PILE SPLICE DETAILS

PROJECT NO. R-2554BA

WAYNE COUNTY

STATION: 93+23.591 -L-

SHEET 2 OF 2

STATE OF NORTH CAROLINA
DEPARTMENT OF TRANSPORTATION
RALEIGH

SUBSTRUCTURE

INTEGRAL END BENT 2
(LEFT LANE)

NORTH CAROLINA PROFESSIONAL SEAL 2005 ENGINEER KEITH PASCHAL

6/9/08

REVISIONS						SHEET NO.
NO.	BY:	DATE:	NO.	BY:	DATE:	S-22
1			3			TOTAL SHEETS
2			4			478

DRAWN BY : J.D. HAWK DATE : 8/15/07
CHECKED BY : O. PUTIGCERVER DATE : 3/15/08

06-JUN-2008 15:08
k:\struct~1\bullock\Str#1\FINAL PLANS\R2554BA_sd_El&E2_01.dgn
lkharva

STR. #1

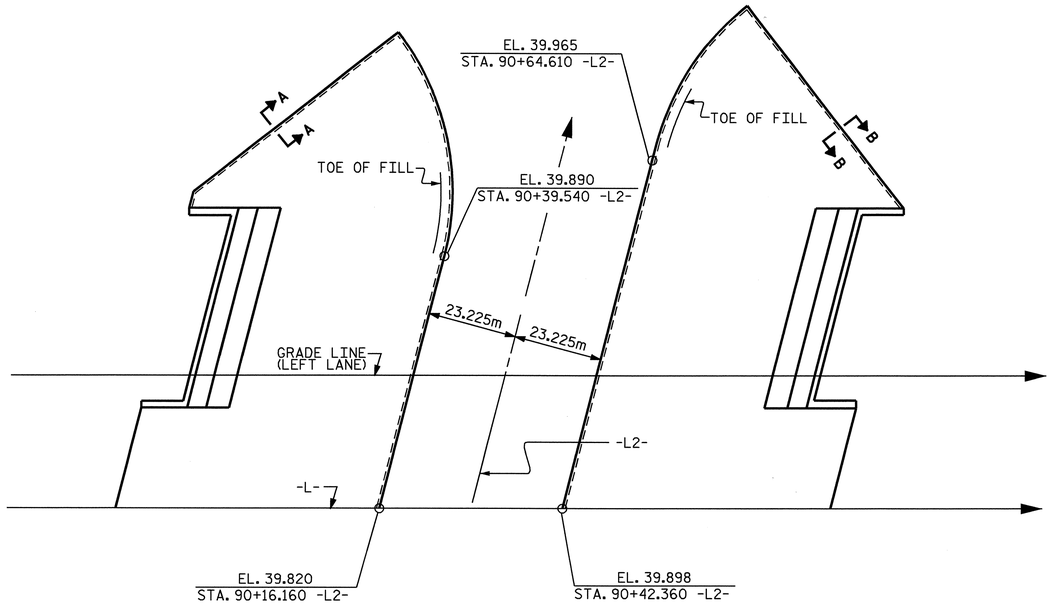

GENERAL NOTES

SLOPE PROTECTION SHALL BE PLACED UNDER THE ENDS OF THE BRIDGE AS SHOWN IN THE DETAILS. STRAIGHT EDGING WILL NOT BE REQUIRED UNLESS, IN THE OPINION OF THE ENGINEER, VISUAL INSPECTION INDICATES A NEED FOR IT. MEASUREMENT AND PAYMENT SHALL BE AS PRESCRIBED IN SECTION 462 OF THE STANDARD SPECIFICATIONS. FOR BERM WIDTH, SEE GENERAL DRAWING.

ALTERNATE "A"

ALTERNATE "A" SHALL CONSIST OF 100mm POURED-IN-PLACE CONCRETE PAVING AS SHOWN IN THE DETAILS ON THIS SHEET. CONCRETE SHALL BE CLASS "B". THE CONCRETE SURFACE SHALL BE FLOATED WITH A WOODEN FLOAT AND FINISHED. WELDED WIRE FABRIC REINFORCING SHALL BE 152 X 152 - W9.1 X W9.1, 1520mm WIDE. SLOPE PROTECTION SHALL BE POURED IN 1520mm STRIPS AS SHOWN IN THE "POURING DETAIL" WITH 600mm LONG #13 BARS PLACED ALONG THE SLOPE BETWEEN STRIPS AT 450mm MAXIMUM SPACING. SLOPE PROTECTION MAY BE POURED IN ALTERNATE 1220mm AND 1520mm STRIPS AS SHOWN IN THE "OPTIONAL POURING DETAIL" WITH ADJACENT RUNS OF WELDED WIRE FABRIC LAPPING AT LEAST 152mm. THE COST OF THE WELDED WIRE FABRIC AND #13 BARS, IF USED, SHALL BE INCLUDED IN THE CONTRACT UNIT PRICE BID PER SQUARE METER FOR SLOPE PROTECTION.

BRIDGE @ STA. 93+23.591 -L-	100mm SLOPE PROTECTION	* WELDED WIRE FABRIC 1520mm WIDE
	SQUARE METERS	APPROX. METERS
END BENT 1	270.0	197.0
END BENT 2	318.0	232

* QUANTITY SHOWN IS BASED ON 1520mm POURS.

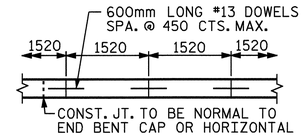

STRIP WIDTHS MAY VARY IN CURVED PORTION.

POURING DETAIL

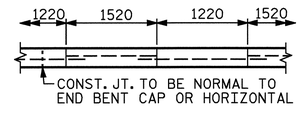

POUR A 1220mm STRIP FIRST. STRIP WIDTHS MAY VARY IN CURVED PORTION.

OPTIONAL POURING DETAIL

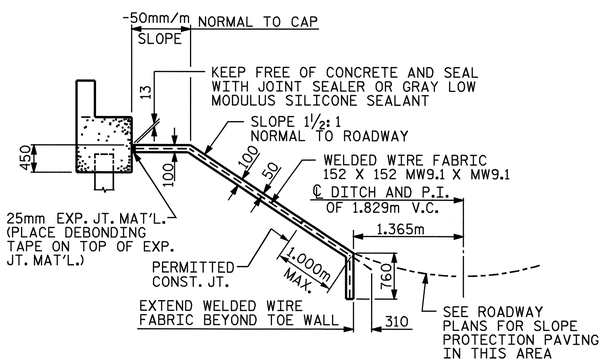

SECTION ALONG ℄ ROADWAY WHEN FILL CATCHES IN DITCH

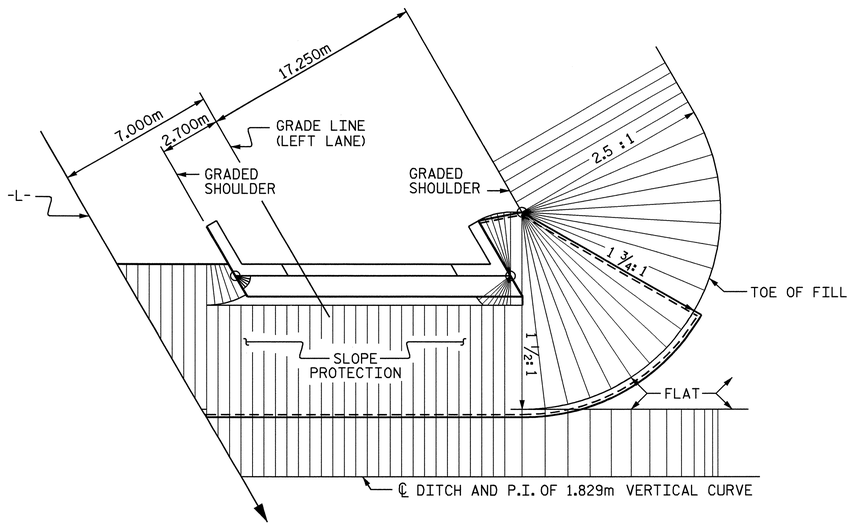

PLAN - END BENT WITH SWEPT BACK WINGS - SKEWED

(1 1/2:1 SLOPE)

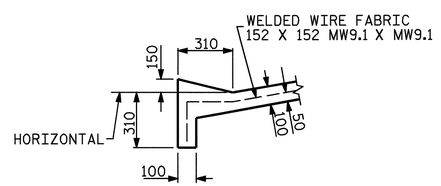

SECTION B-B

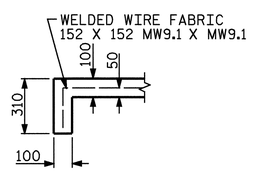

SECTION A-A

PROJECT NO. R-2554BA

WAYNE COUNTY

STATION: 93+23.591 -L-

NORTH CAROLINA PROFESSIONAL SEAL 32005 ENGINEER KEITH PASCHAL

6/9/08

STATE OF NORTH CAROLINA
DEPARTMENT OF TRANSPORTATION
RALEIGH

STANDARD
SLOPE PROTECTION
DETAILS
(LEFT LANE)

REVISIONS						SHEET NO.
NO.	BY:	DATE:	NO.	BY:	DATE:	S-23
1			3			TOTAL SHEETS
2			4			478

ASSEMBLED BY : J.D. HAWK	DATE : 3/06/08	
CHECKED BY : J.G. KHARVA	DATE : 3/09/08	
DRAWN BY : ELR 5/92	REV. 7/10/01	LES/RDR
CHECKED BY : GRP 6/92	REV. 5/7/03	RWW/JTE
	REV. 5/1/06	TLA/GM

06-JUN-2008 15:04
R:\Structures\BULLOCK\Str#1\FINAL PLANS\R-2554BA_sd_SP_01.dgn
JDHAWK

STR. #1

STD. NO. SP1SM

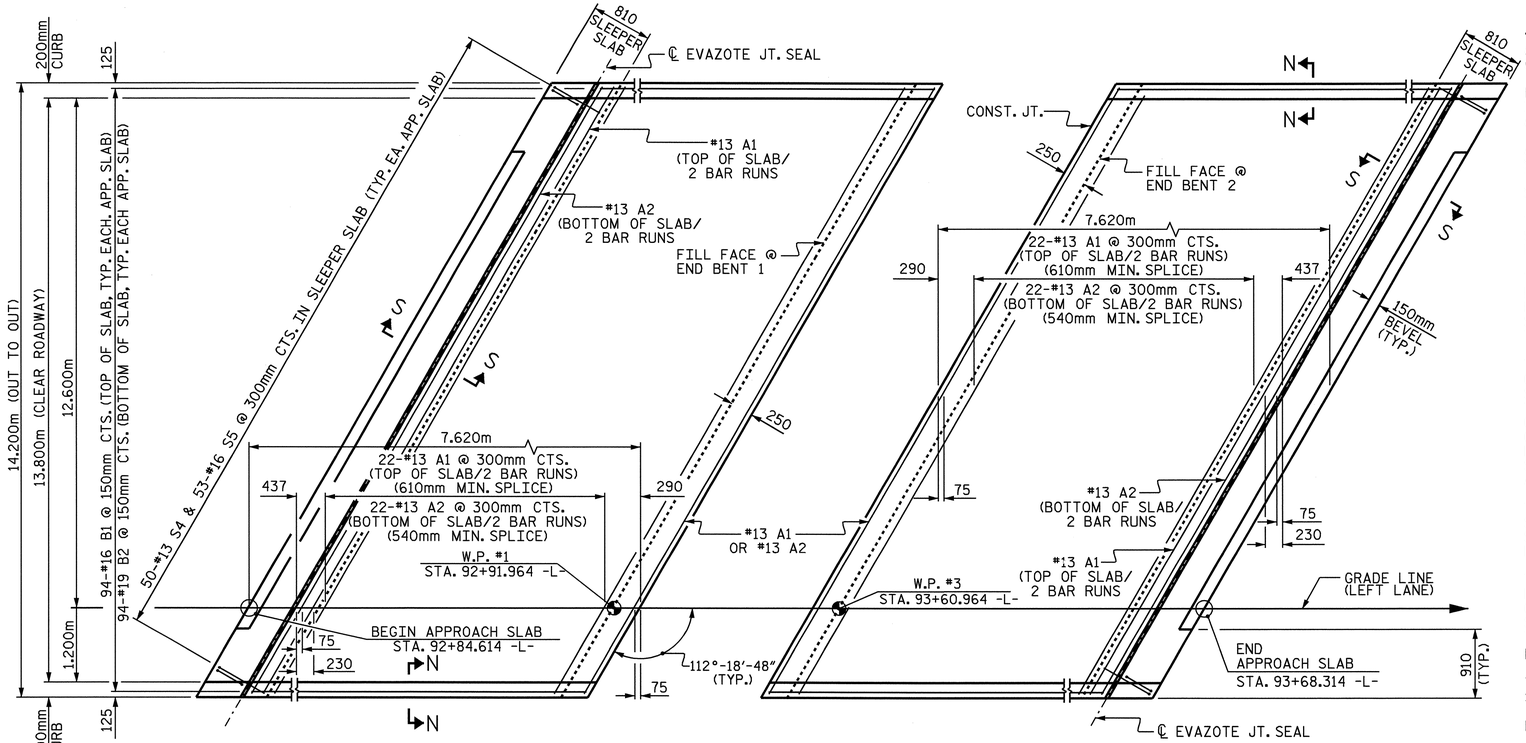

PLAN @ END BENT 1

PLAN @ END BENT 2

DIMENSIONS SHOWN ARE TYPICAL FOR BOTH APPROACH SLABS. #13 A1 BARS IN SLEEPER SLAB NOT SHOWN FOR CLARITY.

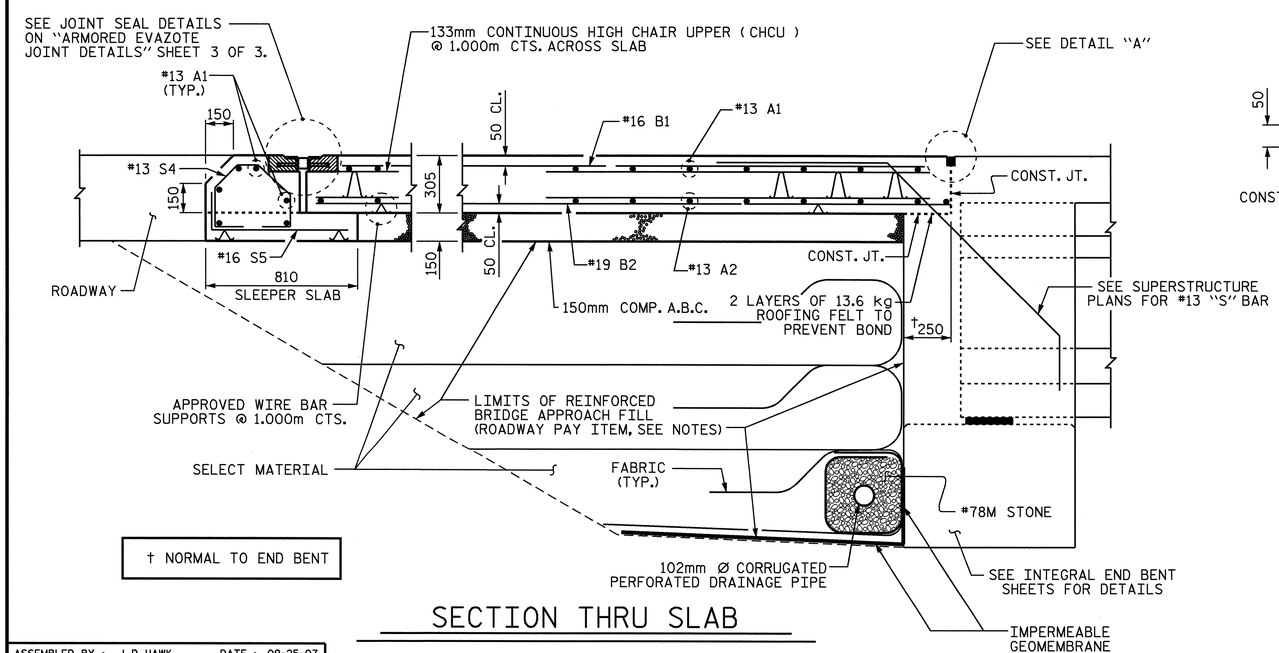

SECTION THRU SLAB

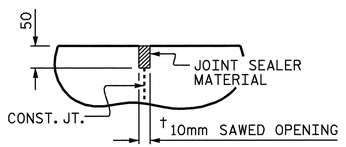

DETAIL "A"

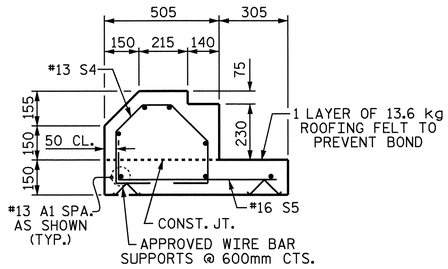

SECTION S-S

SHOWING SLEEPER SLAB

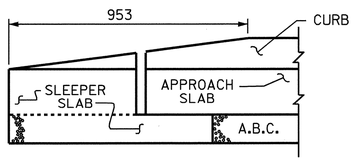

END OF CURB WITHOUT SHOULDER BERM GUTTER

(OMIT TAPER WHEN SHOULDER BERM GUTTER IS REQUIRED)

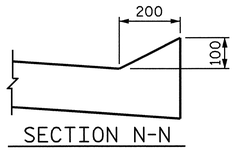

SECTION N-N

NOTES

APPROACH SLAB SHALL NOT BE CONSTRUCTED PRIOR TO COMPLETION OF THE BRIDGE DECK.

FOR REINFORCED BRIDGE APPROACH FILL INCLUDING FABRIC, IMPERMEABLE GEOMEMBRANE, 102mm Ø DRAINAGE PIPE, #78M STONE, AND SELECT MATERIAL, SEE ROADWAY PLANS.

AREA BETWEEN THE WINGWALL AND APPROACH SLAB SHALL BE GRADED TO DRAIN THE WATER AWAY FROM THE FILL FACE OF THE BRIDGE AND SHALL BE PAVED. SEE ROADWAY PLANS.

THE 150mm COMP. A.B.C. SHALL BE FLUSH WITH THE SLEEPER SLAB AND SHALL EXTEND 300mm OUTSIDE OF EACH EDGE OF THE APPROACH SLAB.

THE CONTRACTOR MAY USE 100mm TYPE B-25.0B ASPHALT CONCRETE BASE COURSE IN LIEU OF 150mm COMP. A.B.C. IF THIS OPTION IS USED, THE BASE COURSE SHALL BE FLUSH WITH THE ROADWAY SLEEPER SLAB, AND THE WIDTH SHALL BE THE SAME AS THAT OF THE APPROACH SLAB.

THE CONTRACTOR MAY USE 125mm CLASS "A" CONCRETE BASE IN LIEU OF 150mm COMP. A.B.C. IF THIS OPTION IS USED, THE CONCRETE BASE SHALL BE FLUSH WITH THE ROADWAY END OF THE SLEEPER SLAB, AND THE WIDTH SHALL BE THE SAME AS THAT OF THE APPROACH SLAB. THE CONCRETE SHALL BE FINISHED TO A SMOOTH SURFACE AND A LAYER OF 13.6 kg ROOFING FELT SHALL BE PLACED BETWEEN THE CONCRETE BASE AND THE APPROACH SLAB TO PREVENT BOND. THE APPROACH SLAB SHALL NOT BE CAST UNTIL THE CONCRETE BASE HAS REACHED AN AGE OF THREE CURING DAYS.

THE VERTICAL JOINT ON THE RIGHT AND LEFT SIDE OF THE APPROACH SLAB AT THE ENDS OF THE EVAZOTE JOINT SHALL BE FILLED WITH SILICONE OR OTHER APPROVED MATERIAL IN ORDER TO PREVENT BACKFILL FROM ENTERING THE JOINT OPENING.

THE JOINT OPENING AT THE APPROACH SLAB/DECK INTERFACE SHALL BE SAWED NO MORE THAN 12 HOURS AFTER THE APPROACH SLAB IS CAST. THE JOINT SHALL BE CLEANED OF ALL DEBRIS BEFORE THE SEALANT IS APPLIED. THE JOINT SEALER MATERIAL SHALL CONFORM TO THE REQUIREMENTS OF TYPE SL LOW MODULUS SILICONE SEALANT. FOR EVAZOTE JOINT SEALS, SEE SPECIAL PROVISIONS.

THE NOMINAL UNCOMPRESSED SEAL WIDTH OF THE EVAZOTE JOINT SEAL SHALL BE 64mm.

FOR ELASTOMERIC CONCRETE, SEE SPECIAL PROVISIONS.

BILL OF MATERIAL

FOR ONE APPROACH SLAB (2 REQ'D)

BAR	NO.	SIZE	TYPE	LENGTH	WEIGHT
✱ A1	62	#13	STR	7940	489
A2	48	#13	STR	7900	377
✱ B1	94	#16	STR	6720	980
B2	94	#19	STR	6940	1458
✱ S4	50	#13	1	1200	60
S5	50	#16	2	880	68
REINFORCING STEEL				Kg.	1903
✱ EPOXY COATED REINFORCING STEEL				Kg.	1529
CLASS AA CONCRETE					
POUR 1 - SLAB & CURB				C.M.	33.1
POUR 2 - SLEEPER SLAB				C.M.	3.7
TOTAL				C.M.	36.8

BAR TYPES

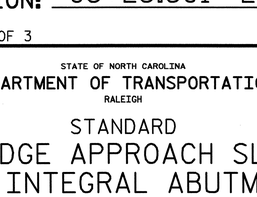

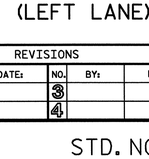

ALL BAR DIMENSIONS ARE OUT TO OUT

PROJECT NO. R-2554BA

WAYNE COUNTY

STATION: 93+23.591 -L-

SHEET 1 OF 3

STATE OF NORTH CAROLINA
DEPARTMENT OF TRANSPORTATION
RALEIGH

STANDARD
BRIDGE APPROACH SLAB FOR INTEGRAL ABUTMENT
(LEFT LANE)

REVISIONS						SHEET NO.
NO.	BY:	DATE:	NO.	BY:	DATE:	S-24
1			3			TOTAL SHEETS
2			4			478

NORTH CAROLINA PROFESSIONAL SEAL 024005 ENGINEER KEITH PASCAL

6/9/08

ASSEMBLED BY : J. D. HAWK	DATE : 09-25-07
CHECKED BY : J.G. KHARVA	DATE : 10-10-07
DRAWN BY : TLA 6/06	ADDED 5/1/06R KMM/GM
CHECKED BY : GM 6/06	

06-JUN-2008 15:04
R:\Structures\BULLOCK\Str#1\FINAL PLANS\R2554BA_sd_AS_01.dgn
JDHAWK

STR. #1

STD. NO. BAS11SM

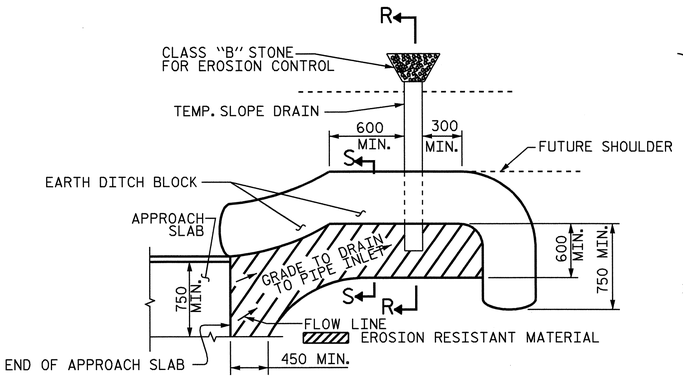

NOTE: IMMEDIATELY AFTER THE CONSTRUCTION OF THE APPROACH SLAB, THE CONTRACTOR SHALL PROVIDE TEMPORARY BERM AND SLOPE DRAIN. CONTRACTOR SHALL GRADE TO PIPE INLET AND PROVIDE EROSION RESISTANT MATERIAL AS SHOWN. THE EROSION RESISTANT MATERIAL SHALL BE EITHER 1) ASPHALT PLANT MIX, TYPE 1 OR TYPE 2, MIN. 50mm DEPTH, 2) EROSION CONTROL MAT, OR 3) CONCRETE, AS DIRECTED BY THE ENGINEER. THE SLOPE DRAIN SHALL CONSIST OF A NON-PERFORATED TEMPORARY DRAINAGE PIPE, 305mm IN DIAMETER.

PLAN VIEW

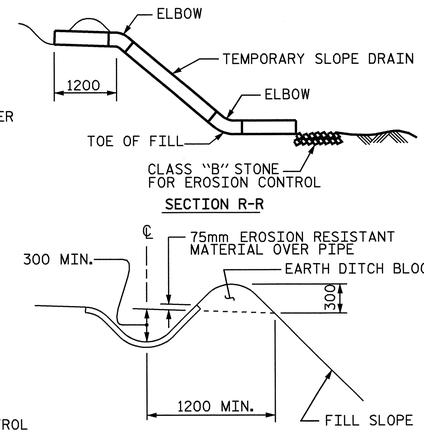

SECTION R-R

SECTION S-S

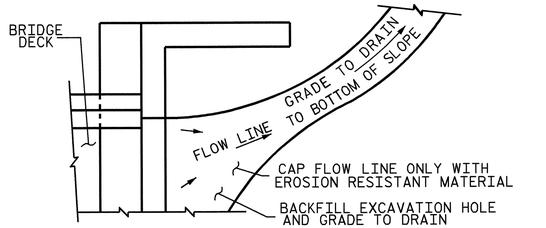

NOTE: IF THE APPROACH SLAB IS NOT CONSTRUCTED IMMEDIATELY AFTER THE BACKFILLING OF THE END BENT EXCAVATION, GRADE TO DRAIN TO THE BOTTOM OF THE SLOPE AND PROVIDE EROSION RESISTANT MATERIAL, SUCH AS FIBERGLASS ROVING OR AS DIRECTED BY THE ENGINEER TO PREVENT SOIL EROSION AND TO PROTECT THE AREA ADJACENT TO THE STRUCTURE. THE CONTRACTOR WILL BE REQUIRED TO REMOVE THESE MATERIALS PRIOR TO CONSTRUCTION OF THE APPROACH SLAB.

TEMPORARY DRAINAGE DETAIL

TEMPORARY DRAINAGE DETAIL

TEMPORARY BERM AND SLOPE DRAIN DETAILS

(TO BE USED WHEN SHOULDER BERM GUTTER IS REQUIRED)

ASSEMBLED BY : J. D. HAWK	DATE : 09/26/07		
CHECKED BY : J.G. KHARVA	DATE : 10/10/07		
DRAWN BY : FCJ 11/88	REV. 10/17/00	RWW/LES	
CHECKED BY : ARB 11/88	REV. 5/1/03	RWW/JTE	
	REV. 5/1/06R	MAA/KMM	

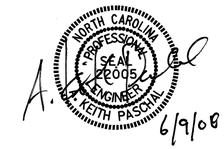

PROJECT NO. R-2554BA

WAYNE COUNTY

STATION: 93+23.591 -L-

SHEET 2 OF 3

STATE OF NORTH CAROLINA
DEPARTMENT OF TRANSPORTATION
RALEIGH

STANDARD

BRIDGE APPROACH SLAB DETAILS

(LEFT LANE)

REVISIONS						SHEET NO.
NO.	BY:	DATE:	NO.	BY:	DATE:	S-25
1			3			TOTAL SHEETS
2			4			478

06-JUN-2008 15:04
R:\Structures\BULLOCK\Str#1\FINAL PLANS\R2554BA_sd_AS_01.dgn
JDHAWK

STR. #1

STD. NO. BAS10SM

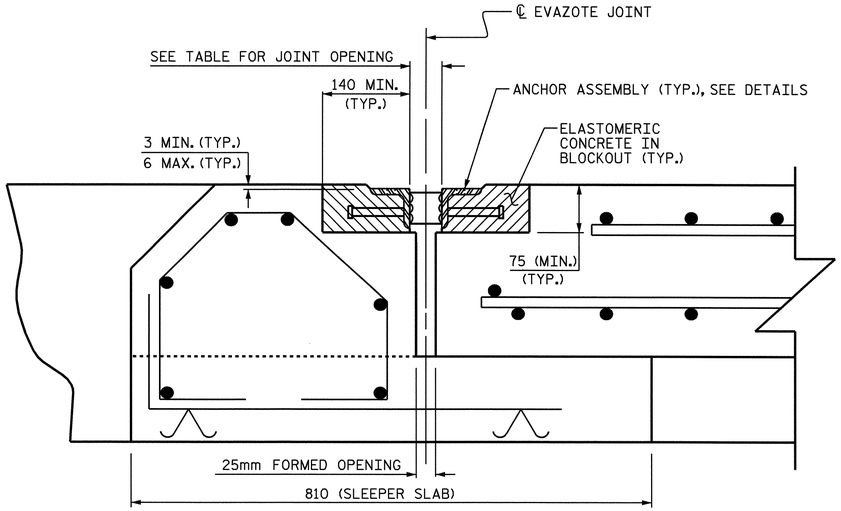

ARMORED JOINT DETAILS

SECTION NORMAL TO JOINT

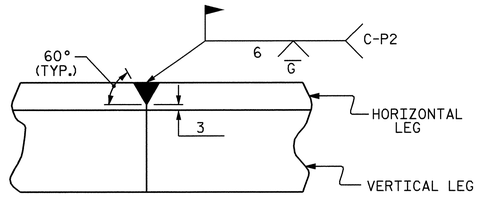

DETAIL- FIELD WELD SPLICE OF ANGLE

NOTES

ANGLES SHALL CONFORM TO AASHTO M270 GRADE 250 STEEL OR APPROVED EQUAL. ALL STUD ANCHORS SHALL CONFORM TO AASHTO M169 GRADES 1010 THRU 1020 OR APPROVED EQUAL.

STUD ANCHORS SHALL BE SHOP WELDED AND ALL HOLES SHALL BE SHOP DRILLED AS SHOWN ON THE PLANS. STUD ANCHORS SHALL BE ELECTRIC ARC END WELDED WITH COMPLETE FUSION.

UPON COMPLETION OF SHOP FABRICATION, THE ENTIRE ANCHOR ASSEMBLY SHALL BE METALLIZED. THE 12.70mm Ø STUD ANCHORS AND ANCHOR TABS NEED NOT BE METALLIZED. SEE SPECIAL PROVISION FOR THERMAL SPRAYED COATINGS (METALLIZATION).

ANCHOR ASSEMBLY SHALL BE MADE CONTINUOUS THE LENGTH OF THE JOINT FROM GUTTER TO GUTTER. FOR FIELD SPLICES AT ALL CROWN BREAK POINTS, THE ENDS OF THE STEEL ANGLES SHALL BE CUT PARALLEL TO THE BRIDGE CENTERLINE. FINISHED FIELD WELDS SHALL BE GROUND SMOOTH AND COATED WITH A MINIMUM THICKNESS OF 0.100mm OF ZINC-RICH PAINT IN ACCORDANCE WITH THE STANDARD SPECIFICATIONS.

ANCHOR ASSEMBLY SEGMENTS SHALL NOT BE LESS 3.6m NOR MORE THAN 6.1m IN LENGTH. SHORTER SEGMENTS MAY BE USED AT THE EDGE OF ROADWAY OR AT POINTS OF STAGED CONSTRUCTION.

THE ANCHOR ASSEMBLY SHALL BE SECURED AND LEVELED AS SHOWN IN THE "ARMORED JOINT ANCHOR ASSEMBLY DETAILS". NO SUBMITTALS ARE REQUIRED FOR 9.53mm Ø EXPANSION ANCHORS, NUTS OR WASHERS. THE CONTRACTOR MAY SUBMIT FOR APPROVAL AN ALTERNATE METHOD OF ALIGNING AND LEVELING THE ANGLES. THE ALTERNATE METHOD SHALL NOT INCLUDE ANY WELDING TO THE OUTSIDE FACE OF THE ANGLES.

AFTER THE ELASTOMERIC CONCRETE HAS BEEN CAST ON BOTH SIDES OF THE JOINT, REMOVE ANY EXCESS CONCRETE THAT COMES THROUGH THE WEEP HOLES AND THOROUGHLY CLEAN THE ANGLES. ANY DAMAGED STEEL SHALL BE COATED WITH A MINIMUM OF 0.100mm OF ZINC-RICH PAINT IN ACCORDANCE WITH THE STANDARD SPECIFICATIONS.

SEE SPECIAL PROVISIONS FOR EVAZOTE JOINT SEALS.

SEE SPECIAL PROVISIONS FOR ELASTOMERIC CONCRETE.

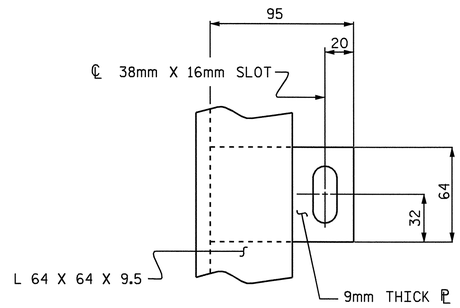

PLAN VIEW OF TAB

MOVEMENT AND SETTING AT EVAZOTE JOINT						
END BENT NO.	SKEW ANGLE	NOMINAL UNCOMPRESSED SEAL WIDTH	TOTAL MOVEMENT (ALONG ℄ RDWY)	PERPENDICULAR JOINT OPENING AT 7° C	PERPENDICULAR JOINT OPENING AT 16° C	PERPENDICULAR JOINT OPENING AT 32° C
1	112°-18'-48"	64mm	27mm	56mm	51mm	42mm
2	112°-18'-48"	64mm	27mm	56mm	51mm	42mm

TOTAL MOVEMENT IS CALCULATED ALONG THE CENTERLINE OF ROADWAY.
JOINT OPENINGS ARE MEASURED PERPENDICULAR TO THE JOINT.

BILL OF MATERIAL		
END BENT NO.	ELASTOMERIC CONCRETE * (CU. m)	TOTAL LENGTH OF ANGLE (m)
1	0.3	29.834
2	0.3	29.834

* BASED ON THE MINIMUM BLOCKOUT SHOWN.

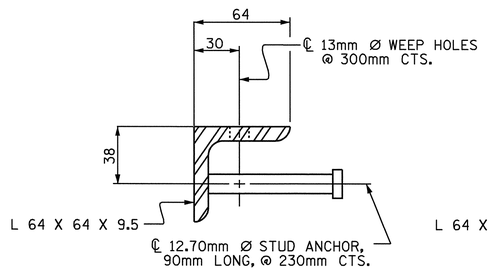

SECTION VIEW OF STUD

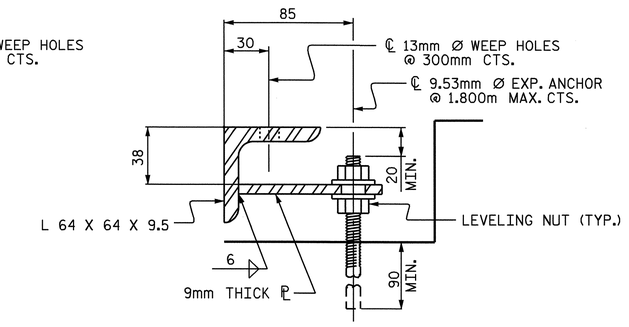

SECTION VIEW OF TAB

ARMORED JOINT ANCHOR ASSEMBLY DETAILS

PROJECT NO. R-2554BA
WAYNE COUNTY
STATION: 93+23.591 -L-

SHEET 3 OF 3

STATE OF NORTH CAROLINA
DEPARTMENT OF TRANSPORTATION
RALEIGH

STANDARD
ARMORED EVAZOTE JOINT DETAILS FOR SLEEPER SLAB
(LEFT LANE)

REVISIONS						SHEET NO.
NO.	BY:	DATE:	NO.	BY:	DATE:	S-26
1			3			TOTAL SHEETS 478
2			4			

STD. NO. AEJ1SM

NORTH CAROLINA PROFESSIONAL SEAL 022005 ENGINEER KEITH PASCHAL
6/9/08

ASSEMBLED BY : J. D. HAWK	DATE : 10/25/07		
CHECKED BY : J.G. KHARVA	DATE : 1/25/08		
DRAWN BY : EEM 1/96	REV. 7/10/01	LES/RDR	
CHECKED BY : RGW 1/96	REV. 5/7/03RR	RWW/JTE	
	REV. 5/1/06	TLA/GM	

06-JUN-2008 15:04
R:\Structures\BULLOCK\Str#1\FINAL PLANS\R2554BA_sd_AEJ_01.dgn
JDHAWK

STR. #1

F.A. PROJECT NO.: NHS-70(106)

92+70 92+80 92+90 93+00 93+10 93+20 93+30 93+40 93+50 93+60 93+70 93+80 93+90

+1.8000% △ -0.5000%

P.I. STA. = 92+90.000 -L-
P.I. EL. = 47.320m
V.C. = 200.000m

GRADE DATA -L-

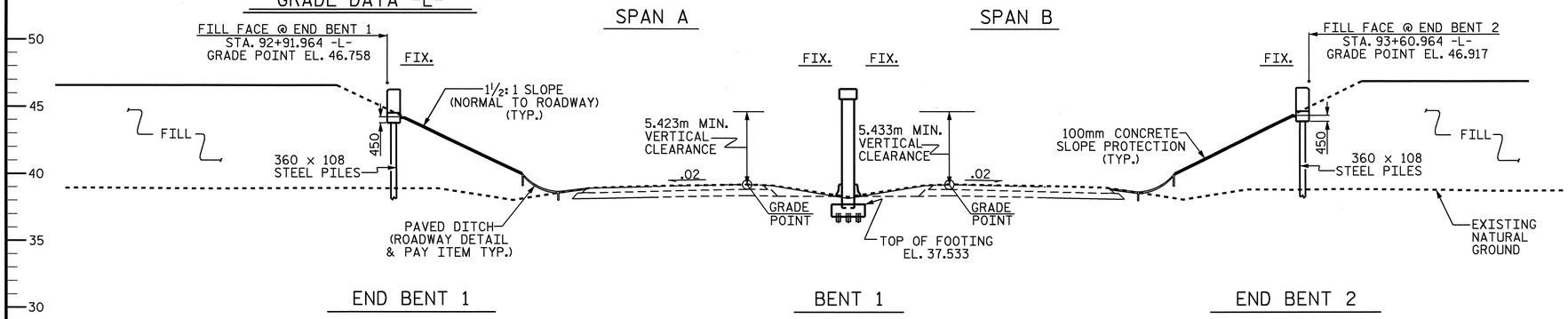

SECTION ALONG GRADE LINE (RIGHT LANE)

(SECTION AT END BENTS & BENTS ARE SHOWN AT RIGHT ANGLES)

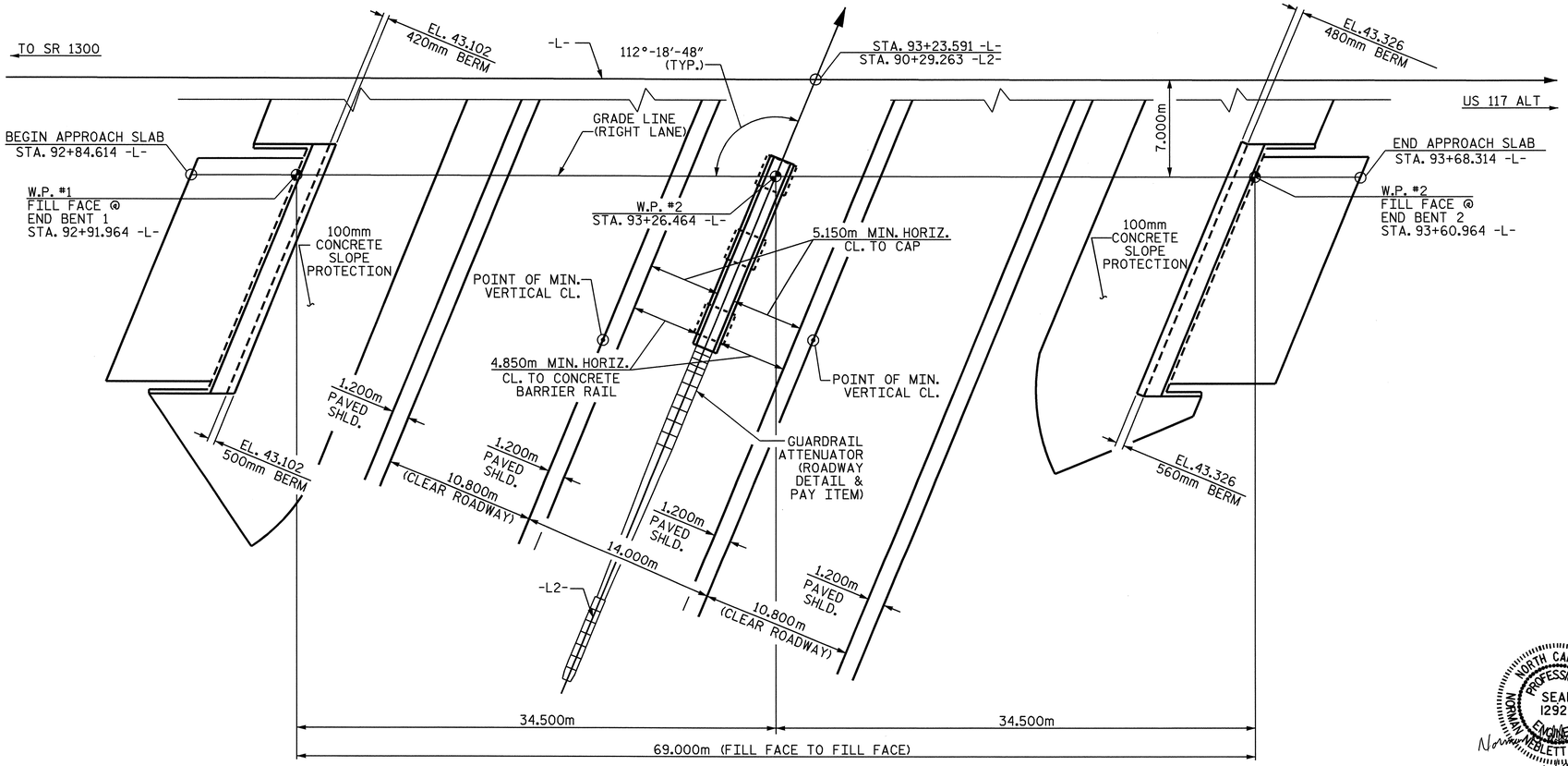

PLAN

(PILES NOT SHOWN FOR CLARITY)

METRIC

PROJECT NO. R-2554BA

WAYNE COUNTY

STATION: 93+23.591 -L-
90+29.263 -L2-

SHEET 1 OF 3

STATE OF NORTH CAROLINA
DEPARTMENT OF TRANSPORTATION
RALEIGH

GENERAL DRAWING

FOR BRIDGE OVER US 117
ON US 70 BYPASS
BETWEEN SR 1300
AND US 117 ALT.
(RIGHT LANE)

NORTH CAROLINA PROFESSIONAL SEAL 12929 ENGINEER NORMAN MEBLETT BULLOCK
6/9/08

NORTH CAROLINA PROFESSIONAL SEAL 22005 ENGINEER H. KEITH PASCHAL
6/9/08

REVISIONS						SHEET NO.
NO.	BY:	DATE:	NO.	BY:	DATE:	S-27
1			3			TOTAL SHEETS
2			4			478

DRAWN BY : J.D. HAWK DATE : 2/15/07
CHECKED BY : J.G. KHARVA DATE : 2/28/07

06-JUN-2008 15:07
R:\Structures\BULLOCK\Str#2\FINAL PLANS\R2554BA_sd_GD_02.dgn
JDHAWK

STR. 2

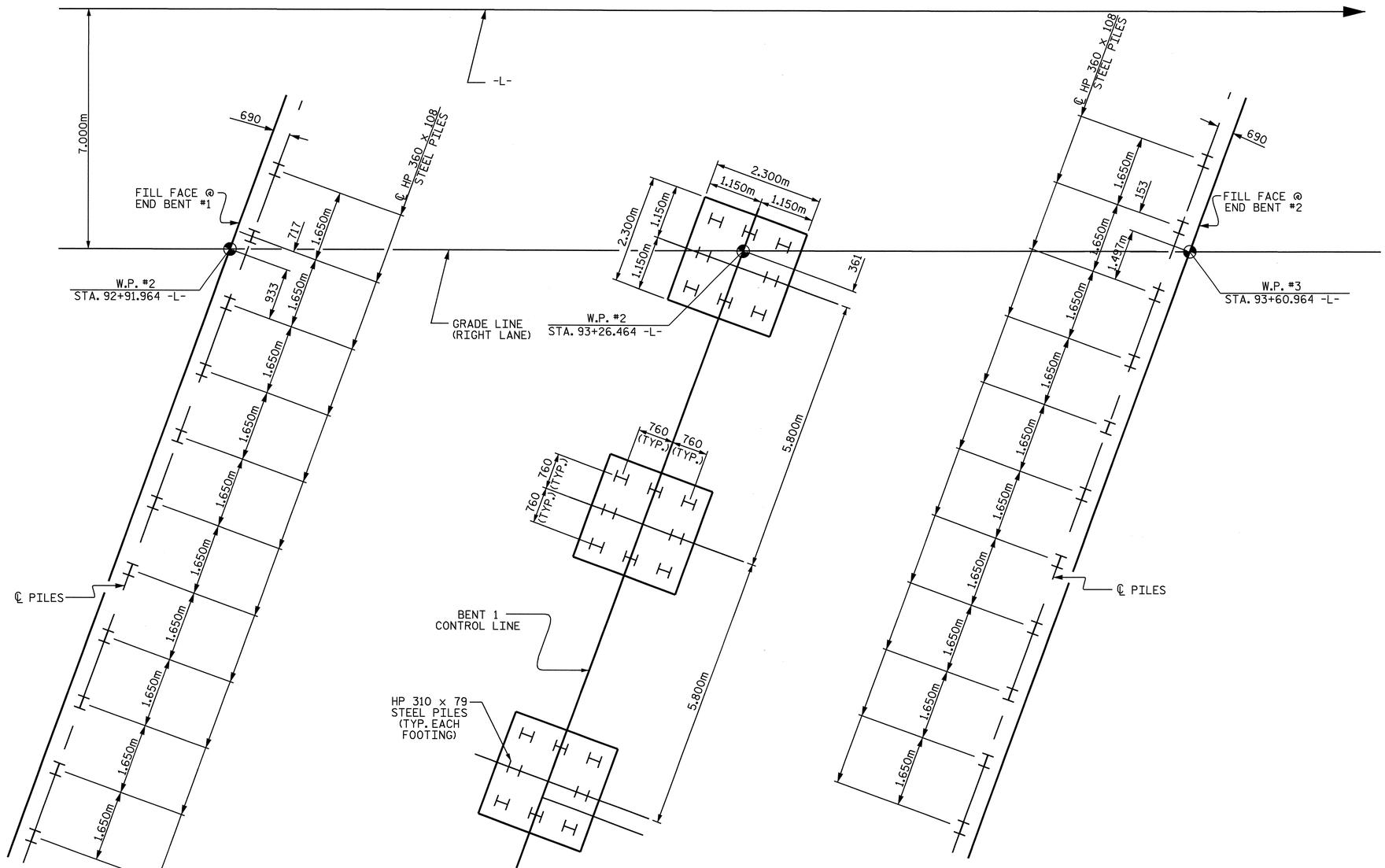

END BENT 1 | BENT 1 | END BENT 2

FOUNDATION LAYOUT

(DIMENSIONS LOCATING PILES ARE SHOWN TO THE CENTERLINE PILES)

NOTES:

DRIVE PILES AT END BENT NO. 1 AND END BENT NO. 2 TO A REQUIRE BEARING CAPACITY OF 1340 KN PER PILE. THE REQUIRED BEARING CAPACITY IS EQUAL TO THE ALLOWABLE BEARING CAPACITY WITH A MINIMUM FACTOR OF SAFETY OF TWO.

DRIVE PILES AT BENT NO. 1 TO A REQUIRE BEARING CAPACITY OF 1060 KN PER PILE. THE REQUIRED BEARING CAPACITY IS EQUAL TO THE ALLOWABLE BEARING CAPACITY WITH A MINIMUM FACTOR OF SAFETY OF TWO.

THE ALLOWABLE BEARING CAPACITY FOR PILES AT END BENT NO. 1 AND END BENT NO. 2 IS 670 KN PER PILE.

THE ALLOWABLE BEARING CAPACITY FOR PILES AT BENT NO. 1 IS 530 KN PER PILE.

TESTING PILES WITH THE PILE DRIVING ANALYZER (PDA) DURING DRIVING, RESTRIKING, OR REDRIVING MAY BE REQUIRED. THE ENGINEER WILL DETERMINE THE NEED FOR PDA TESTING. SEE PILE DRIVING ANALYZER SPECIAL PROVISIONS.

OBSERVE A FOUR MONTH WAITING PERIOD AFTER CONSTRUCTING THE EMBANKMENT TO THE BOTTOM OF CAP ELEVATION BEFORE BEGINNING END BENT CONSTRUCTION AT END BENT NO. 1 AND END BENT NO. 2.

PILE RESTRIKES FOR LRFD MAY BE REQUIRED. SEE PILE PILE RESTRIKES FOR LRFD SPECIAL PROVISION.

FOR EMBANKMENT MONITORING DETAILS, SEE ROADWAY PLANS.

PROJECT NO. R-2554BA

WAYNE COUNTY

STATION: 93+23.591 -L-
90+29.263 -L2-

SHEET 2 OF 3

STATE OF NORTH CAROLINA
DEPARTMENT OF TRANSPORTATION
RALEIGH

GENERAL DRAWING
FOR BRIDGE OVER US 117
ON US 70 BYPASS
BETWEEN SR 1300
AND US 117 ALT.
(RIGHT LANE)

NORTH CAROLINA PROFESSIONAL SEAL 22005 ENGINEER A. KEITH PASCHAL

6/9/08

REVISIONS						SHEET NO.
NO.	BY:	DATE:	NO.	BY:	DATE:	S-28
1			3			TOTAL SHEETS
2			4			478

DRAWN BY : J.D. HAWK DATE : 10/02/07
CHECKED BY : J.G. KHARVA DATE : 10/20/07

06-JUN-2008 15:07
R:\Structures\BULLOCK\Str#2\FINAL PLANS\R2554BA_sd_GD_02.dgn
JDHAWK

STR. 2

B.M.- #1 RR SPIKE IN BASE OF 460mm (18") PINE 72.717m LT OF -BL- STA. 8+14.282 EL. 40.614m

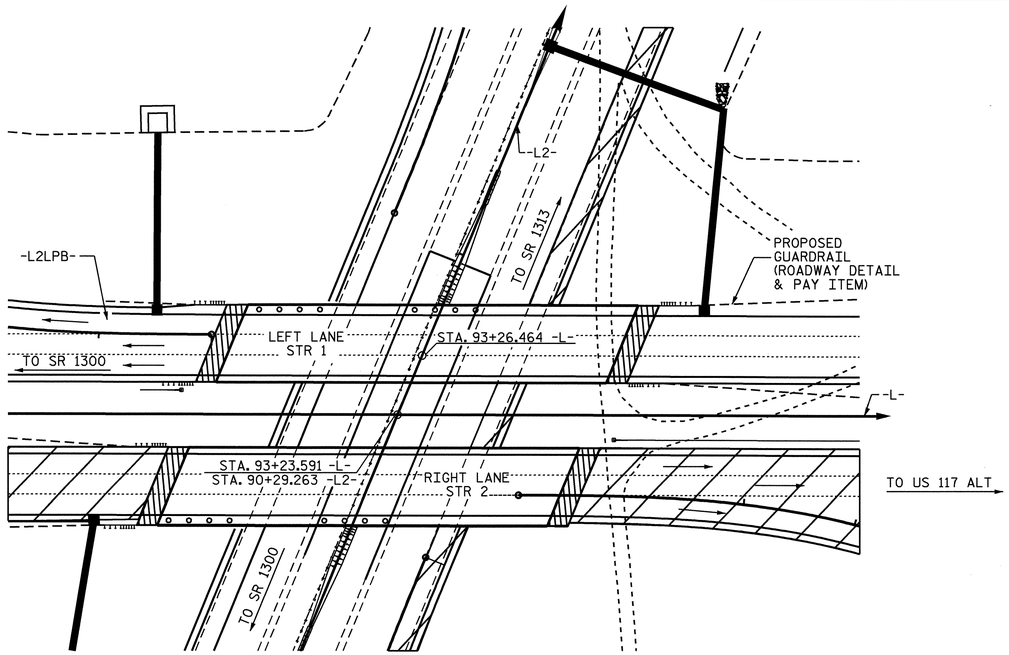

FOR UTILITY INFORMATION, SEE UTILITY PLANS AND SPECIAL PROVISIONS.

LOCATION SKETCH

NOTES:

ALL DIMENSIONS ARE IN MILLIMETERS UNLESS OTHERWISE NOTED.

ALL ELEVATIONS ARE IN METERS.

ASSUMED LIVE LOAD = MS18 OR ALTERNATE LOADING, EXCEPT THAT THE GIRDERS HAVE BEEN DESIGNED FOR MS22.5.

FOR OTHER DESIGN DATA AND GENERAL NOTES, SEE SHEET SNSM.

FOR EROSION CONTROL MEASURES SEE EROSION CONTROL PLANS.

THIS BRIDGE HAS BEEN DESIGNED BY THE STRENGTH DESIGN METHOD AS SPECIFIED IN AASHTO STANDARD SPECIFICATIONS.

THIS BRIDGE HAS BEEN DESIGNED IN ACCORDANCE WITH THE REQUIREMENTS OF THE AASHTO STANDARD SPECIFICATIONS FOR SEISMIC DESIGN OF HIGHWAY BRIDGES FOR SEISMIC PERFORMANCE CATEGORY A.

PRESTRESSED CONCRETE DECK PANELS MAY BE USED IN LIEU OF METAL STAY-IN-PLACE FORMS IN ACCORDANCE WITH ARTICLE 420-3 OF THE STANDARD SPECIFICATIONS. (PLANS WITH PANELS)

REMOVABLE FORMS MAY BE USED IN LIEU OF METAL STAY-IN-PLACE FORMS IN ACCORDANCE WITH ARTICLE 420-3 OF THE STANDARD SPECIFICATIONS.

FOR MAINTENANCE AND PROTECTION OF TRAFFIC BENEATH PROPOSED STRUCTURE, SEE SPECIAL PROVISIONS.

THE CONTRACTOR SHALL PROVIDE INDEPENDENT ASSURANCE SAMPLES OF REINFORCING STEEL AS FOLLOWS: FOR PROJECTS REQUIRING UP TO 360,000 kg OF REINFORCING STEEL, ONE 760mm SAMPLE OF EACH SIZE BAR USED, AND FOR PROJECTS REQUIRING OVER 360,000 kg OF REINFORCING STEEL, TWO 760mm SAMPLES OF EACH SIZE BAR USED. THE BARS FROM WHICH THE SAMPLES ARE TAKEN MUST THEN BE SPLICED WITH REPLACEMENT BARS OF THE SIZE AND LENGTH OF THE SAMPLE PLUS A MINIMUM LAP SPLICE OF THIRTY BAR DIAMETERS.

FOR FALSEWORK AND FORMS OVER OR ADJACENT TO TRAFFIC, SEE SPECIAL PROVISIONS .

NEEDLE BEAMS WILL NOT BE ALLOWED UNLESS OTHERWISE CALLED FOR ON THE PLANS OR APPROVED BY THE ENGINEER.

FOR SUBMITTAL OF WORKING DRAWINGS, SEE SPECIAL PROVISIONS.

FOR METRIC STRUCTURAL STEEL, SEE SPECIAL PROVISIONS.

FOR FALSEWORK AND FORMWORK, SEE SPECIAL PROVISIONS.

FOR CRANE SAFETY, SEE SPECIAL PROVISIONS.

FOR GROUT FOR STRUCTURES, SEE SPECIAL PROVISIONS.

TOTAL BILL OF MATERIAL

	FOUNDATION EXCAVATION FOR BENT	PDA TESTING	PDA ASSISTANCE	REINFORCED CONCRETE DECK SLAB	GROOVING BRIDGE FLOORS	CLASS A CONCRETE	BRIDGE APPROACH SLABS	REINFORCING STEEL	SPIRAL COLUMN REINFORCING STEEL	MODIFIED 1600mm PRESTRESSED CONCRETE GIRDERS	HP 310 X 79 STEEL PILES		HP 360 X 108 STEEL PILES		PILE REDRIVES	CONCRETE BARRIER RAIL	100mm SLOPE PROTECTION	ELASTOMERIC BEARINGS	EVAZOTE JOINT SEALS
	LUMP SUM	EACH	EACH	SQ. METERS	SQ. METERS	CU. METERS	LUMP SUM	Kg.	Kg.	METERS	NO.	METERS	NO.	METERS	EACH	METERS	SQ. M.	LUMP SUM	LUMP SUM
SUPERSTRUCTURE				1020.5	1055.9		LUMP SUM			406.128						136.92		LUMP SUM	LUMP SUM
END BENT 1						32.0		2703					11	253.0	5		270.0		
BENT 1	LUMP SUM					53.9		6045	603		24	408.0			9				
END BENT 2						32.1		2742					11	242.0	5		318.0		
TOTAL	LUMP SUM	1	1	1020.5	1055.9	118.0	LUMP SUM	11490	603	406.128	24	408.0	22	495.0	19	136.92	588.0	LUMP SUM	LUMP SUM

PROJECT NO. R-2554BA

WAYNE COUNTY

STATION: 93+23.591 -L-
90+29.263 -L2-

SHEET 3 OF 3

STATE OF NORTH CAROLINA
DEPARTMENT OF TRANSPORTATION
RALEIGH

GENERAL DRAWING
FOR BRIDGE OVER US 117
ON US 70 BYPASS
BETWEEN SR 1300
AND US 117 ALT.
(RIGHT LANE)

NORTH CAROLINA PROFESSIONAL SEAL 22005 ENGINEER J. KEITH PASCHAL
6/9/08

REVISIONS						SHEET NO.
NO.	BY:	DATE:	NO.	BY:	DATE:	S-29
1			3			TOTAL SHEETS
2			4			478

DRAWN BY : J.D. HAWK DATE : 2/15/07
CHECKED BY : J.G. KHARVA DATE : 2/28/07

06-JUN-2008 15:07
R:\Structures\BULLOCK\Str#2\FINAL PLANS\R2554BA_sd_GD_02.dgn
JDHAWK

STR. #2

R:\Structures\BULLOCK\Str#2\FINAL PLANS\R2554BA_sd_TS_0
JDHAWK

FOR NOTES, SEE SHEET 2 OF 2.

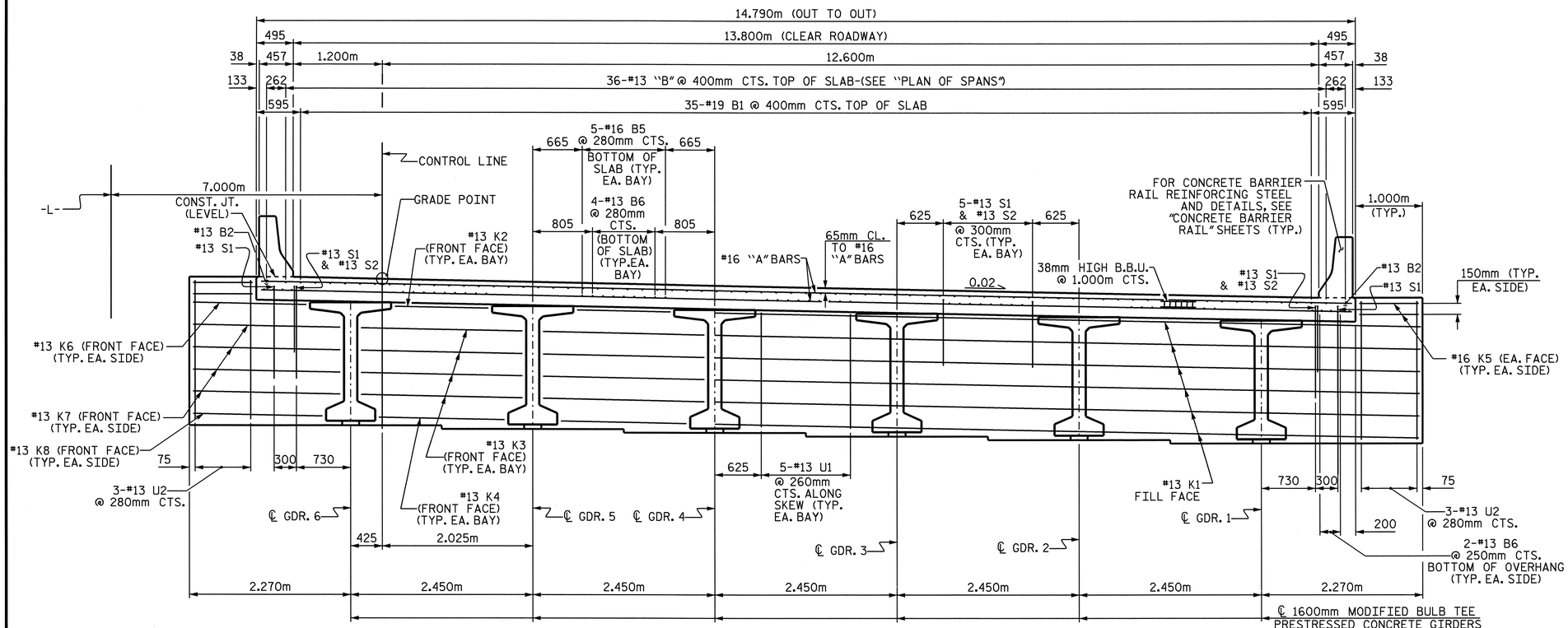

TYPICAL SECTION @ INTEGRAL END BENT

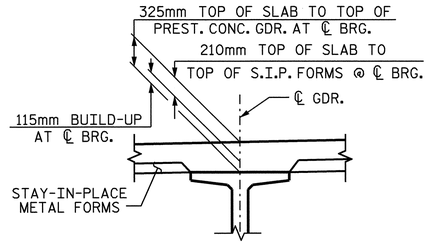

DETAIL 'A'

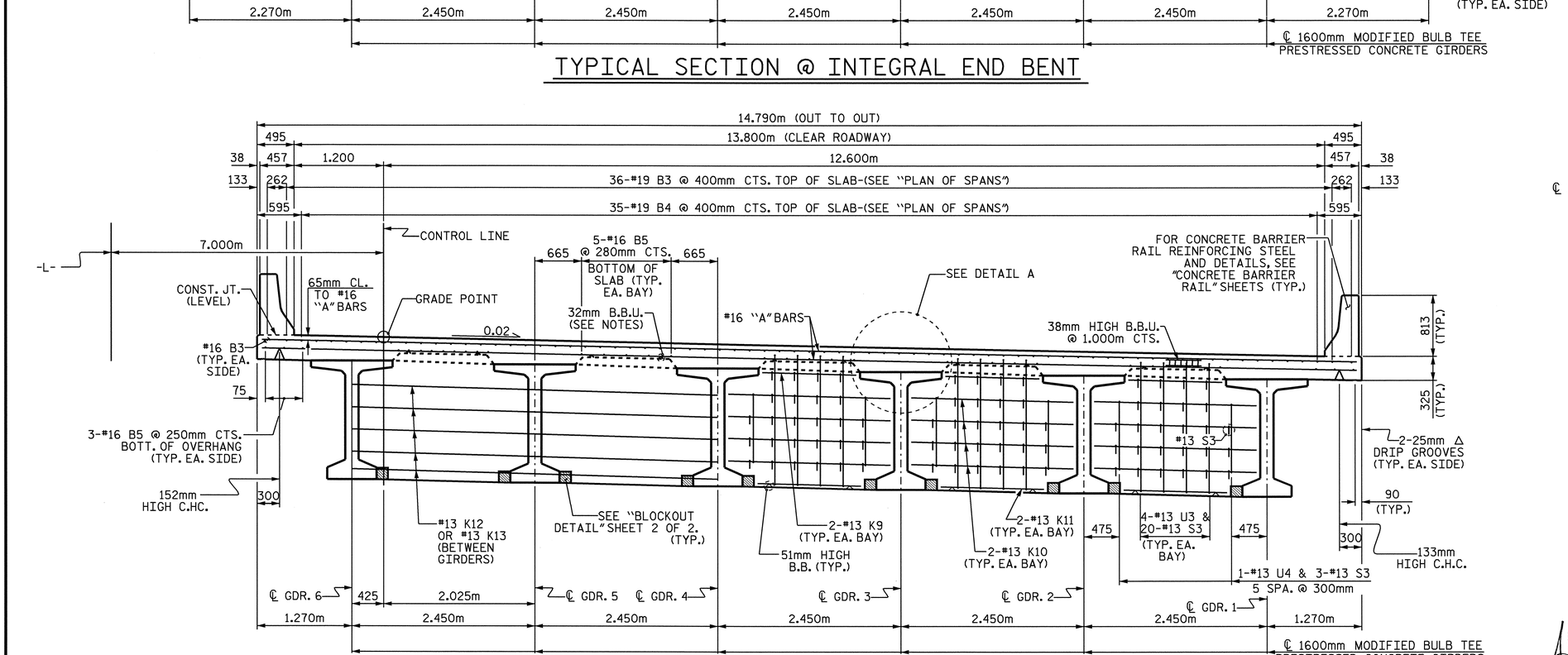

TYPICAL SECTION AT BENT DIAPHRAGM

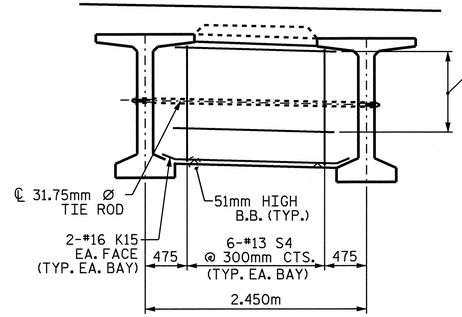

TYPICAL SECTION

SHOWING INTERMEDIATE DIAPHRAGM

PROJECT NO. R-2554BA

WAYNE COUNTY

STATION: 93+23.591 -L-

SHEET 1 OF 2

STATE OF NORTH CAROLINA
DEPARTMENT OF TRANSPORTATION
RALEIGH

SUPERSTRUCTURE

TYPICAL SECTION

(RIGHT LANE)

REVISIONS						SHEET NO.
NO.	BY:	DATE:	NO.	BY:	DATE:	S-30
1			3			TOTAL SHEETS
2			4			478

DRAWN BY : J.D. HAWK DATE : 6/1/2007
CHECKED BY : J.C. KHARVA DATE : 7/1/2007

NORTH CAROLINA PROFESSIONAL SEAL 022005 ENGINEER A. KEITH PASCHAL

6/9/08

STR. 2

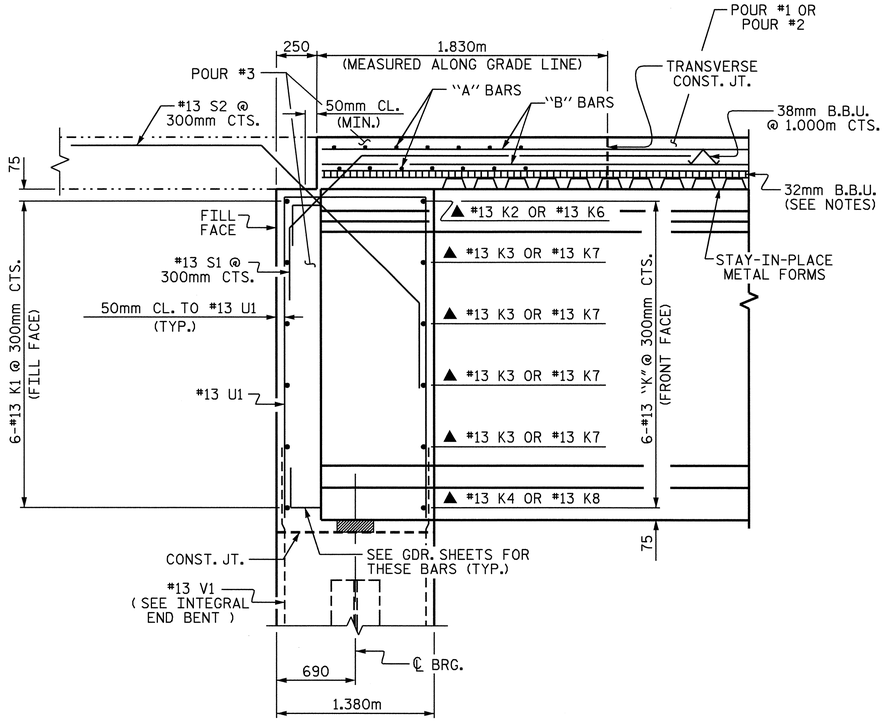

SECTION A-A

▲ (#13 K2 THRU #13 K4 TYP. EA. BAY / #13 K6 THRU #13 K8 TYP. EA. SIDE)
(INTEGRAL END BENT DIAPHRAGM)

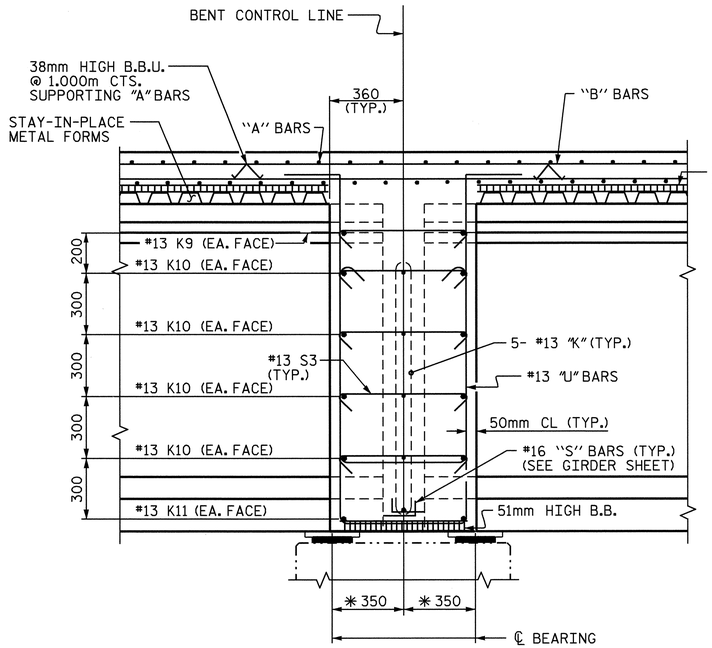

SECTION B-B

✱ MEASURED ALONG ℄ GIRDER (BENT DIAPHRAGM)

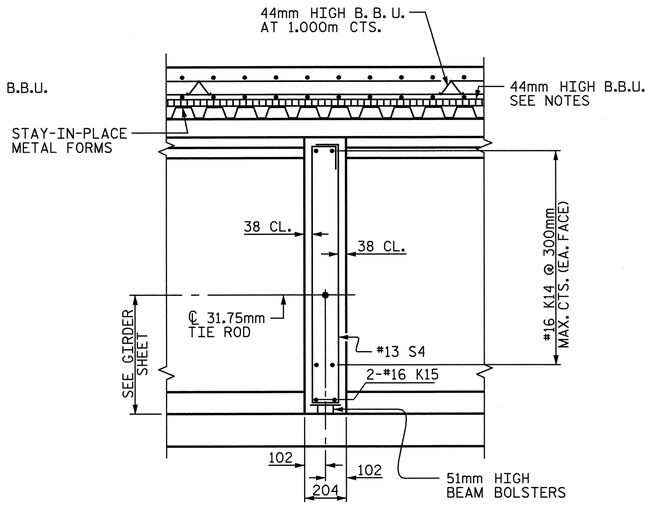

SECTION C-C

(INTERMEDIATE DIAPHRAGM)

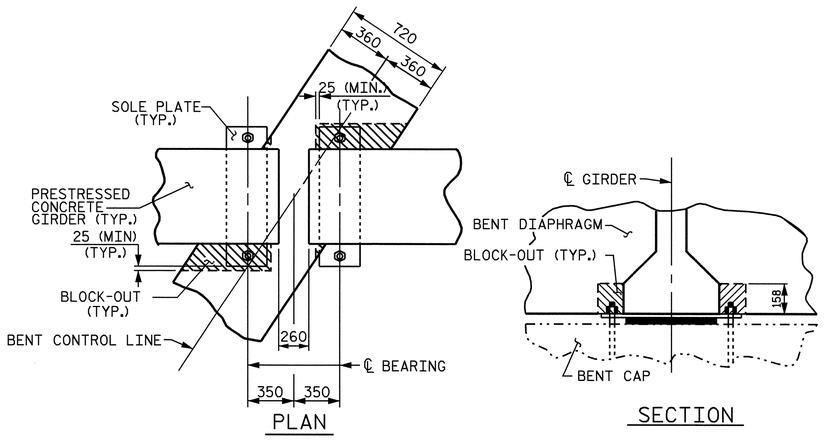

BENT DIAPHRAGM BLOCK-OUT DETAIL

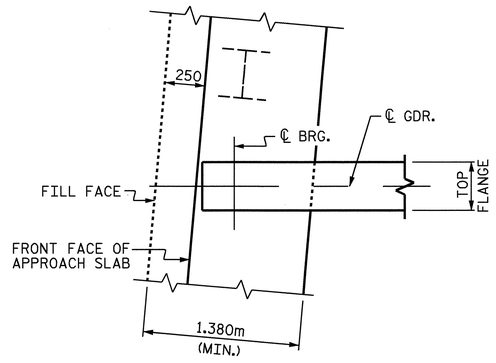

PLAN OF GIRDER AT INTEGRAL END BENT

NOTES

PROVIDE 32mm HIGH BEAM BOLSTERS UPPER AT 1.2m CTS. ATOP THE METAL STAY-IN-PLACE FORMS TO SUPPORT THE BOTTOM MAT OF 'A' BARS. WHEN USING REMOVABLE FORMS, PROVIDE CONTINUOUS HIGH CHAIRS FOR METAL DECK (C.H.C.M.) @ 1.2m CTS. WITH A HEIGHT TO SUPPORT THE BOTTOM MAT OF 'A' BARS A CLEAR DISTANCE OF 65mm ABOVE THE TOP OF THE REMOVABLE FORM.

LONGITUDINAL STEEL MAY BE SHIFTED SLIGHTLY, AS NECESSARY, TO AVOID INTERFERENCE WITH STIRRUPS IN PRESTRESSED CONCRETE GIRDERS.

CONCRETE IN END BENTS AND INTERMEDIATE DIAPHRAGMS MAY BE CLASS A IN LIEU OF CLASS AA. PAYMENT SHALL BE MADE UNDER THE UNIT CONTRACT PRICE FOR REINFORCED CONCRETE DECK SLAB.

TEMPORARY STRUTS SHALL BE PLACED BETWEEN PRESTRESSED GIRDERS ADJACENT TO THE DIAPHRAGMS, AND THE NUTS ON THE 31.75mm DIA. TIE RODS SHALL BE FULLY TIGHTENED BEFORE THE DIAPHRAGMS ARE CAST. STRUTS SHALL REMAIN IN PLACE 3 DAYS AFTER CONCRETE IS PLACED. THE TIE RODS SHALL BE RE-TIGHTENED AFTER THE STRUTS HAVE BEEN REMOVED.

PREVIOUSLY CAST CONCRETE IN A CONTINUOUS UNIT SHALL HAVE ATTAINED A MINIMUM COMPRESSIVE STRENGTH OF 20.7 MPa BEFORE ADDITIONAL CONCRETE IS CAST IN THE UNIT.

PROJECT NO. R-2554BA

WAYNE COUNTY

STATION: 93+23.591 -L-

SHEET 2 OF 2

STATE OF NORTH CAROLINA
DEPARTMENT OF TRANSPORTATION
RALEIGH

SUPERSTRUCTURE

TYPICAL SECTION DETAILS

(RIGHT LANE)

NORTH CAROLINA PROFESSIONAL SEAL 18200 ENGINEER J. KEITH PASCHAL
6/9/08

REVISIONS						SHEET NO.
NO.	BY:	DATE:	NO.	BY:	DATE:	S-31
1			3			TOTAL SHEETS
2			4			478

DRAWN BY : J.D. HAWK DATE : 6/1/2007
CHECKED BY : J.G. KHARVA DATE : 7/1/2007

06-JUN-2008 15:07
R:\Structures\BULLOCK\Str#2\FINAL PLANS\R2554BA_sd_TS_02.dgn
JDHAWK

STR. 2

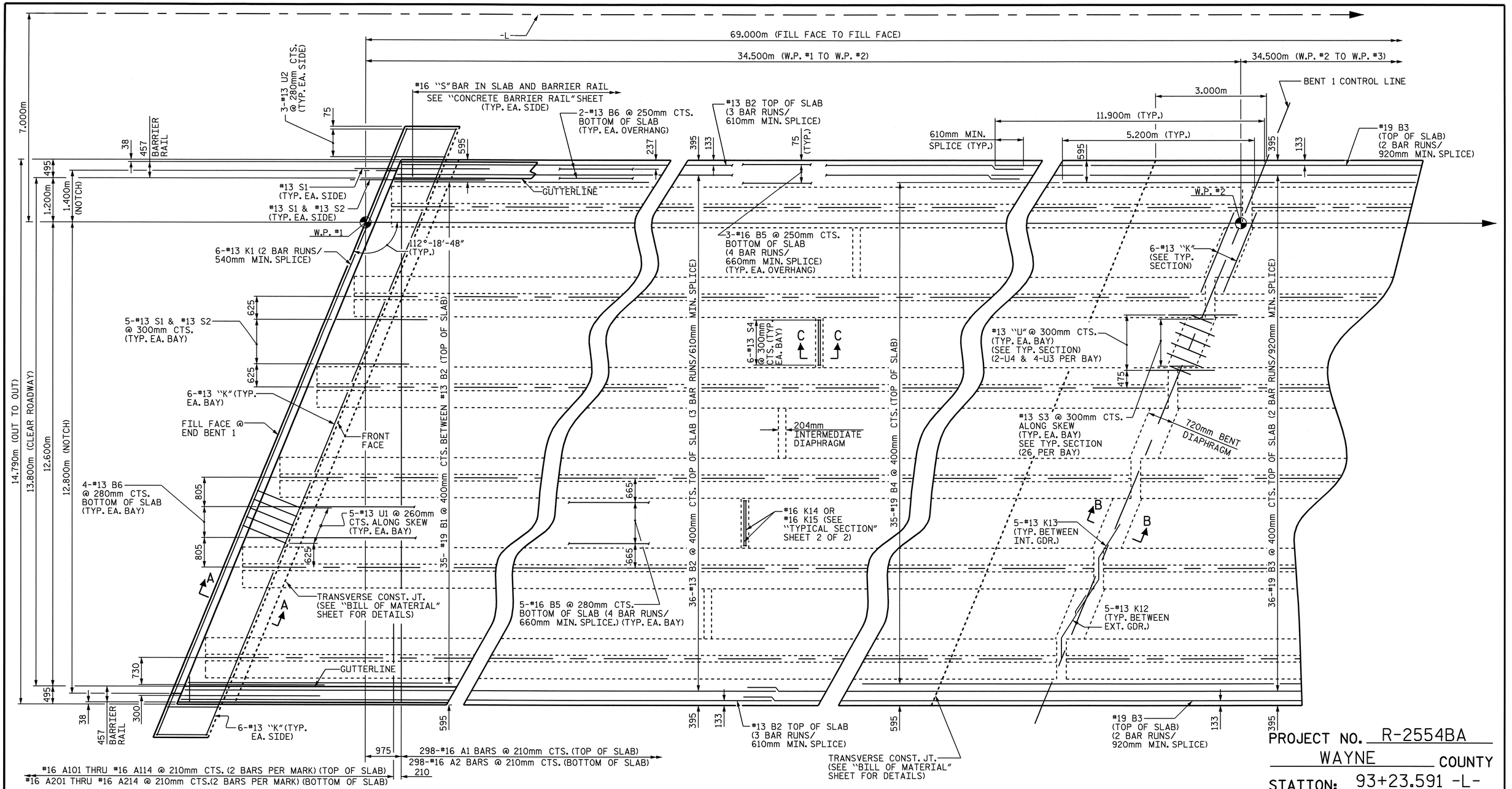

PLAN OF SPAN A

FOR SECTION VIEWS, SEE "TYPICAL SECTION" SHEET 2 OF 2

PROJECT NO. R-2554BA

WAYNE COUNTY

STATION: 93+23.591 -L-

SHEET 1 OF 2

STATE OF NORTH CAROLINA
DEPARTMENT OF TRANSPORTATION
RALEIGH

SUPERSTRUCTURE

PLAN OF SPAN A

(RIGHT LANE)

NORTH CAROLINA PROFESSIONAL SEAL 22005 ENGINEER JOHN KEITH PASCHAL

6/9/08

REVISIONS						SHEET NO.
NO.	BY:	DATE:	NO.	BY:	DATE:	S-32
1			3			TOTAL SHEETS
2			4			478

DRAWN BY : J.D. HAWK DATE : 6/1/2007
CHECKED BY : J.G. KHARVA DATE : 7/1/2007

06-JUN-2008 15:07
R:\Structures\BULLOCK\Str#2\FINAL PLANS\R2554BA_sd_S_02.dgn
JDHAWK

STR. 2

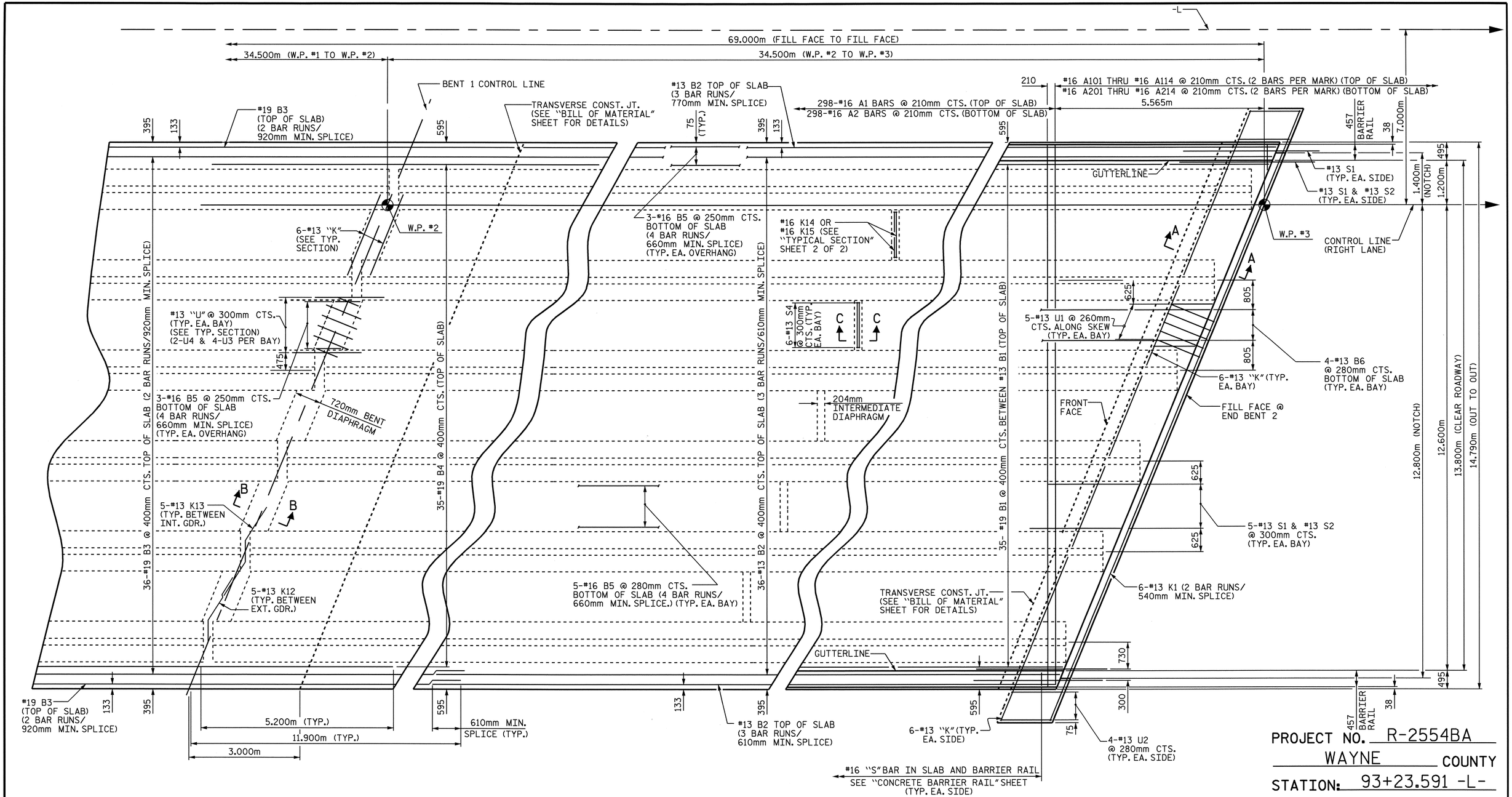

PLAN OF SPAN B

FOR SECTION VIEWS, SEE "TYPICAL SECTION" SHEET 2 OF 2

PROJECT NO. R-2554BA

WAYNE COUNTY

STATION: 93+23.591 -L-

SHEET 12 OF 2

STATE OF NORTH CAROLINA
DEPARTMENT OF TRANSPORTATION
RALEIGH

SUPERSTRUCTURE

PLAN OF SPAN B

(RIGHT LANE)

NORTH CAROLINA PROFESSIONAL SEAL 24005 ENGINEER JOHN KEITH PASCHAL

6/9/08

REVISIONS						SHEET NO.
NO.	BY:	DATE:	NO.	BY:	DATE:	S-33
1			3			TOTAL SHEETS
2			4			478

DRAWN BY : J.D. HAWK DATE : 6/1/2007
CHECKED BY : J.G. KHARVA DATE : 7/1/2007

06-JUN-2008 15:07
R:\Structures\BULLOCK\Str#2\FINAL PLANS\R2554BA_sd_S_02.dgn
JDHAWK

STR. 2

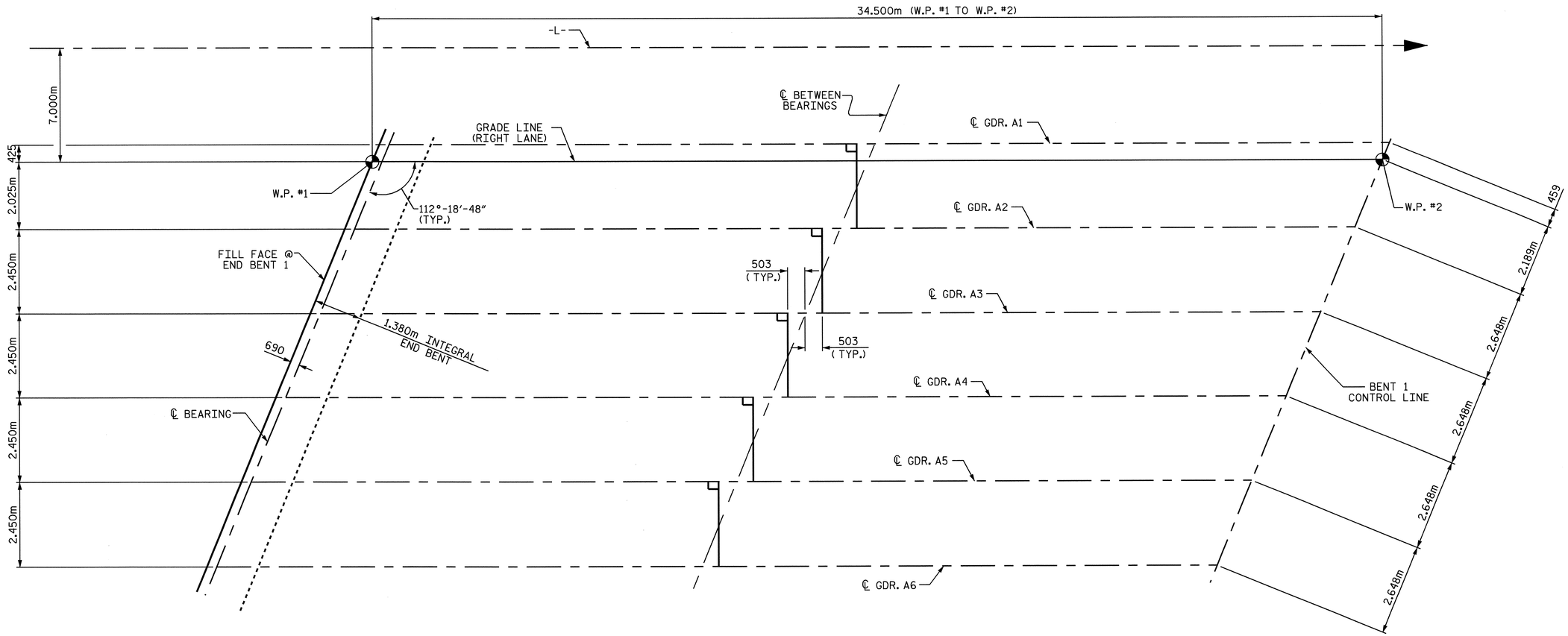

FIX. E4

FIX. P2, E4

FRAMING PLAN

PROJECT NO. R-2554BA

WAYNE COUNTY

STATION: 93+23.591 -L-

SHEET 1 OF 2

STATE OF NORTH CAROLINA
DEPARTMENT OF TRANSPORTATION
RALEIGH

SUPERSTRUCTURE

FRAMING PLAN
SPAN A
(RIGHT LANE)

NORTH CAROLINA PROFESSIONAL SEAL 22005 ENGINEER A. KEITH PASCHAL
6/9/08

REVISIONS						SHEET NO.
NO.	BY:	DATE:	NO.	BY:	DATE:	S-34
1			3			TOTAL SHEETS
2			4			478

DRAWN BY : J.D. HAWK DATE : 6/07
CHECKED BY : J.G. KHARVA DATE : 7/07

06-JUN-2008 15:06
R:\Structures\BULLOCK\Str#2\FINAL PLANS\R2554BA_sd_FP_02.dgn
JDHAWK

STR. #2

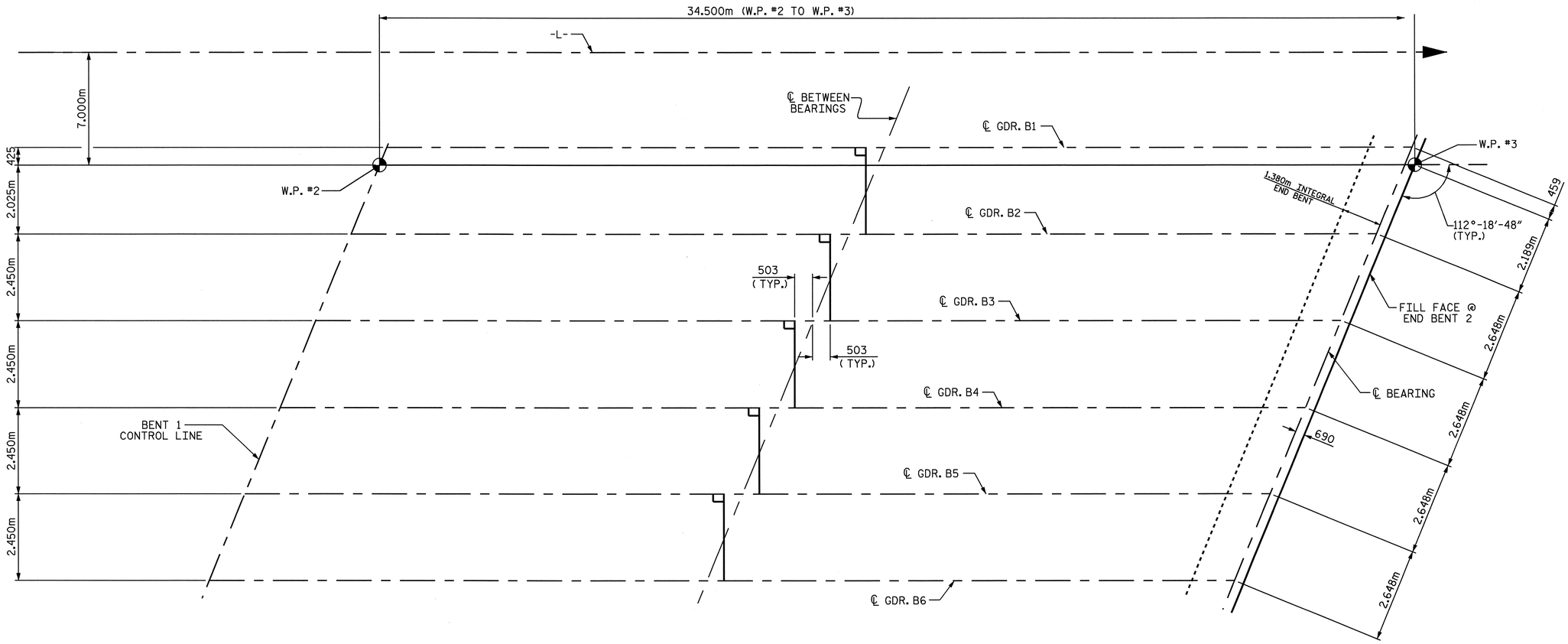

FRAMING PLAN

PROJECT NO. R-2554BA

WAYNE COUNTY

STATION: 93+23.591 -L-

SHEET 2 OF 2

STATE OF NORTH CAROLINA
DEPARTMENT OF TRANSPORTATION
RALEIGH

SUPERSTRUCTURE

FRAMING PLAN
SPAN B
(RIGHT LANE)

NORTH CAROLINA PROFESSIONAL SEAL 020054 ENGINEER A. KEITH PASCHAL
6/9/08

REVISIONS						SHEET NO.
NO.	BY:	DATE:	NO.	BY:	DATE:	S-35
1			3			TOTAL SHEETS
2			4			478

DRAWN BY : J.D. HAWK DATE : 6/07
CHECKED BY : J.C. KHARVA DATE : 7/07

06-JUN-2008 15:06
R:\Structures\BULLOCK\Str#2\FINAL PLANS\R2554BA_sd_FP_02.dgn
JDHAWK

STR. #2

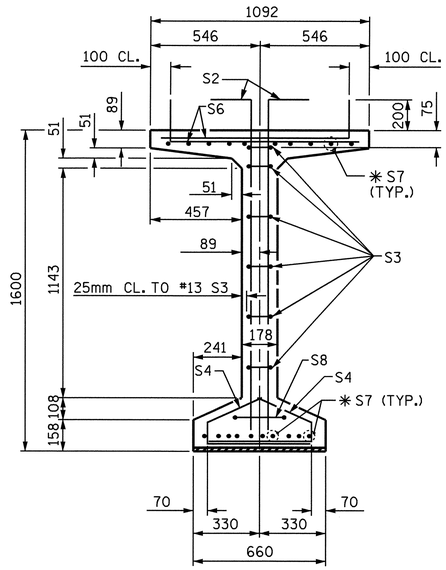

SECTION A-A

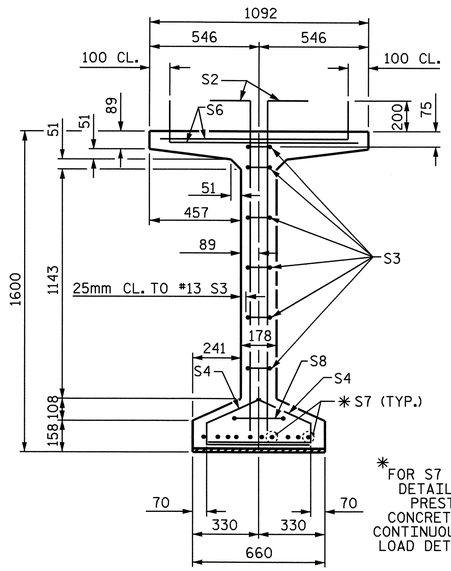

SECTION B-B

* FOR S7 BARS, SEE DETAIL "C" OF PRESTRESSED CONCRETE GIRDER CONTINUOUS FOR LIVE LOAD DETAILS SHEET

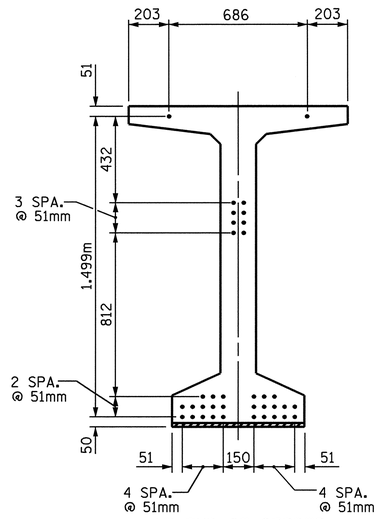

AT END OF GIRDER

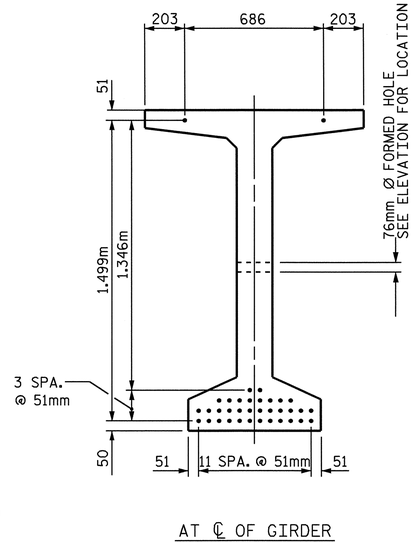

AT ℄ OF GIRDER

15.24mm Ø LOW RELAXATION STRAND LAYOUT

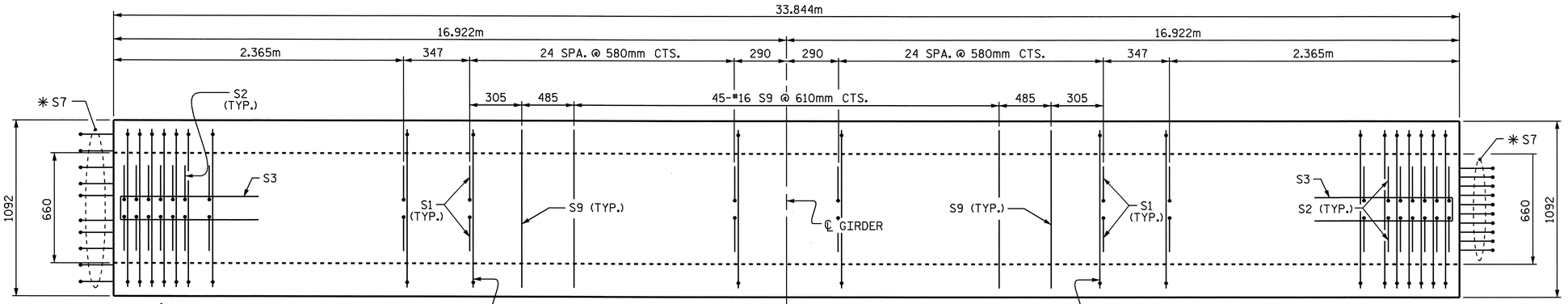

PLAN OF GIRDER

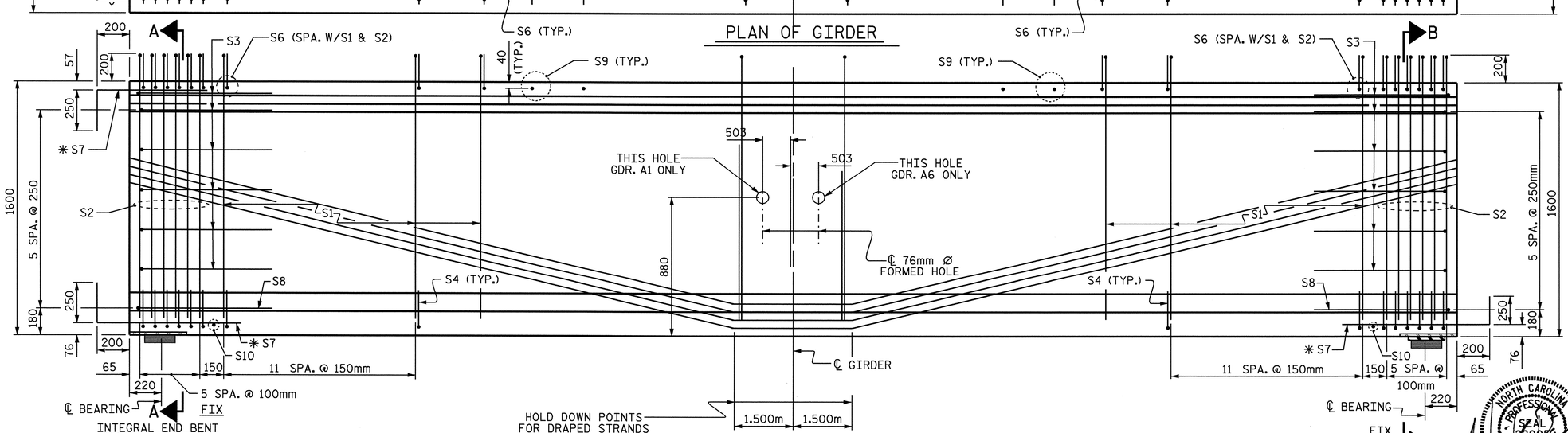

ELEVATION OF GIRDER

15.24mm Ø L. R. GRADE 270 STRANDS		
AREA (mm^2)	ULTIMATE STRENGTH (kN PER STRAND)	APPLIED PRESTRESS (kN PER STRAND)
140.0	260.4	195.3

REINFORCING STEEL FOR ONE GIRDER

BAR	NUMBER	SIZE	TYPE	LENGTH	WEIGHT
S1	148	#13	1	1900	280
S2	24	#16	1	1900	71
S3	12	#13	2	2560	31
S4	72	#13	3	920	66
S6	172	#16	1	1120	299
* S7	30	#16	STR	1120	52
S8	2	#16	2	2740	9
S9	47	#16	STR	980	71
S10	2	#10	STR	560	1

* NOTE: S7 BARS SHALL BE BENT BEFORE SHIPMENT. HEAT BENDING SHALL NOT BE ALLOWED.

BAR TYPES

ALL BAR DIMENSIONS ARE OUT-TO-OUT

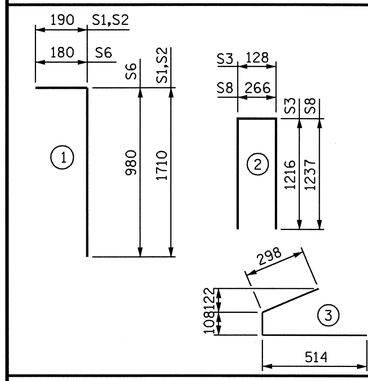

QUANTITIES FOR ONE GIRDER

REINFORCING STEEL	55.0 MPa CONCRETE	15.24mm Ø L.R. STRANDS
kg	m^3	No.
880	16.8	36

GIRDERS REQUIRED

SPAN	NUMBER	LENGTH	TOTAL LENGTH
A	6	33.844m	203.064m
B	6	33.844m	203.064m
TOTAL	12	33.844m	406.128m

PROJECT NO. R-2554BA

WAYNE COUNTY

STATION: 93+23.591 -L-

SHEET 1 OF 3

STATE OF NORTH CAROLINA
DEPARTMENT OF TRANSPORTATION
RALEIGH

STANDARD
1600mm PRESTRESSED CONCRETE
MODIFIED BULB TEE
CONTINUOUS FOR LIVE LOAD
SPAN A & B
(RIGHT LANE)

ASSEMBLED BY : J.D. HAWK	DATE : 6/2007
CHECKED BY : J.G. KHARVA	DATE : 7/2007
DRAWN BY : EEM 2/6/97	REV. 8/16/99 RWW/LES
CHECKED BY : VAP 2/6/97	REV. 10/17/00 RWW/LES
	REV. 5/1/06 TLA/GM

NORTH CAROLINA PROFESSIONAL SEAL 022004 ENGINEER KEITH PASCHAL

6/9/08

REVISIONS						SHEET NO.
NO.	BY:	DATE:	NO.	BY:	DATE:	S-36
1			3			TOTAL SHEETS
2			4			478

STR. 2 STD. NO. PCG9SM

06-JUN-2008 15:06
R:\Structures\BULLOCK\Str#2\FINAL PLANS\R2554BA_sd_G_02.dgn
JDHAWK

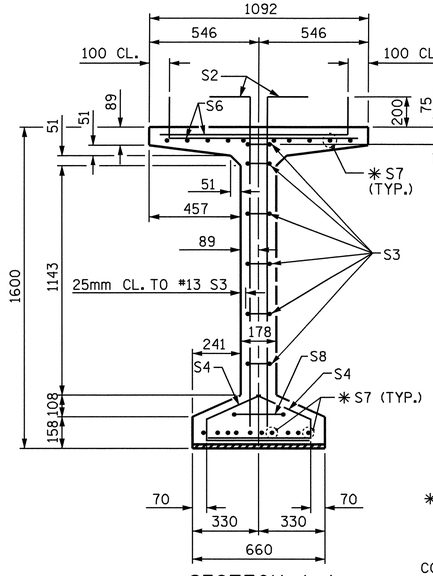

SECTION A-A

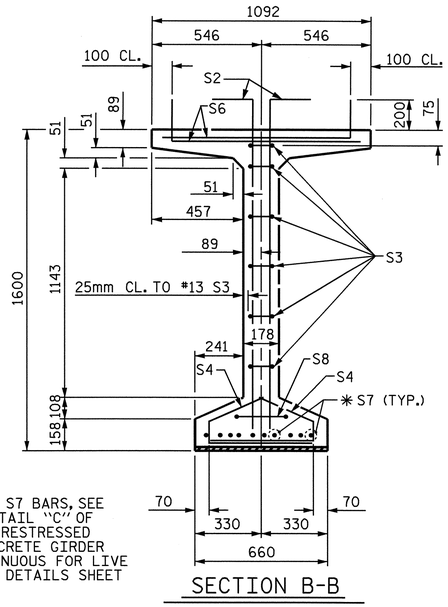

✱FOR S7 BARS, SEE DETAIL "C" OF PRESTRESSED CONCRETE GIRDER CONTINUOUS FOR LIVE LOAD DETAILS SHEET

SECTION B-B

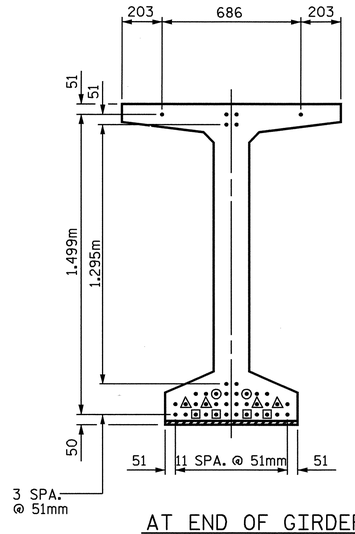

AT END OF GIRDERS

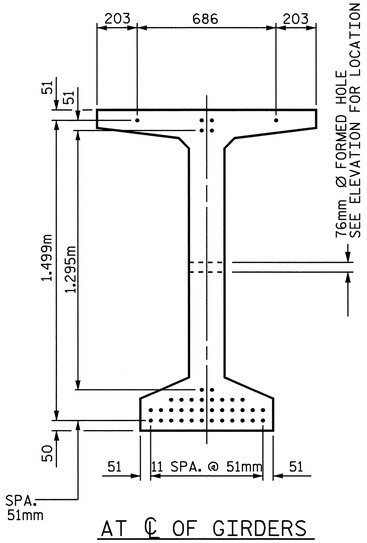

AT ℄ OF GIRDERS

DEBONDING LEGEND

- • FULLY BONDED STRANDS
- ▣ STRANDS DEBONDED FOR 1.220m FROM END OF GIRDER
- ▲ STRANDS DEBONDED FOR 1.830m FROM END OF GIRDER
- ⊙ STRANDS DEBONDED FOR 2.440m FROM END OF GIRDER

15.24mm Ø LOW RELAXATION STRAND LAYOUT

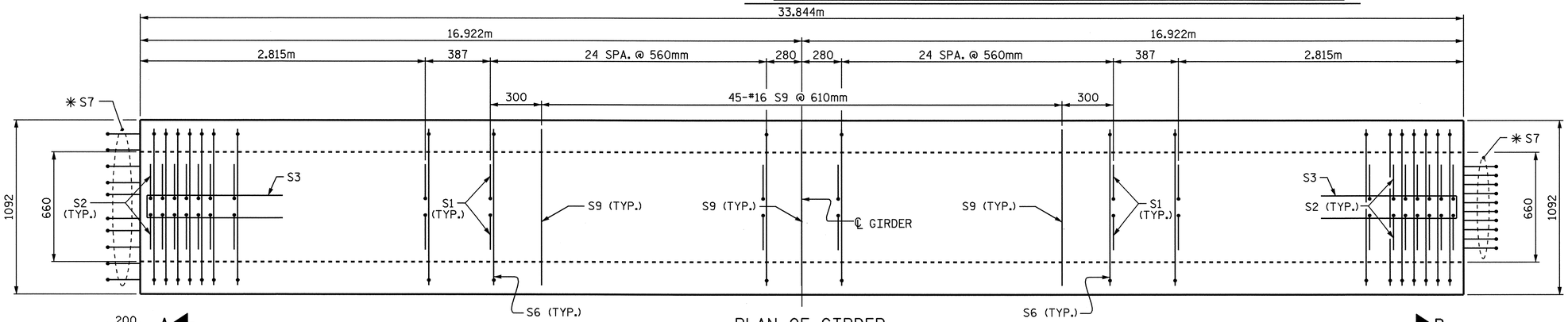

PLAN OF GIRDER

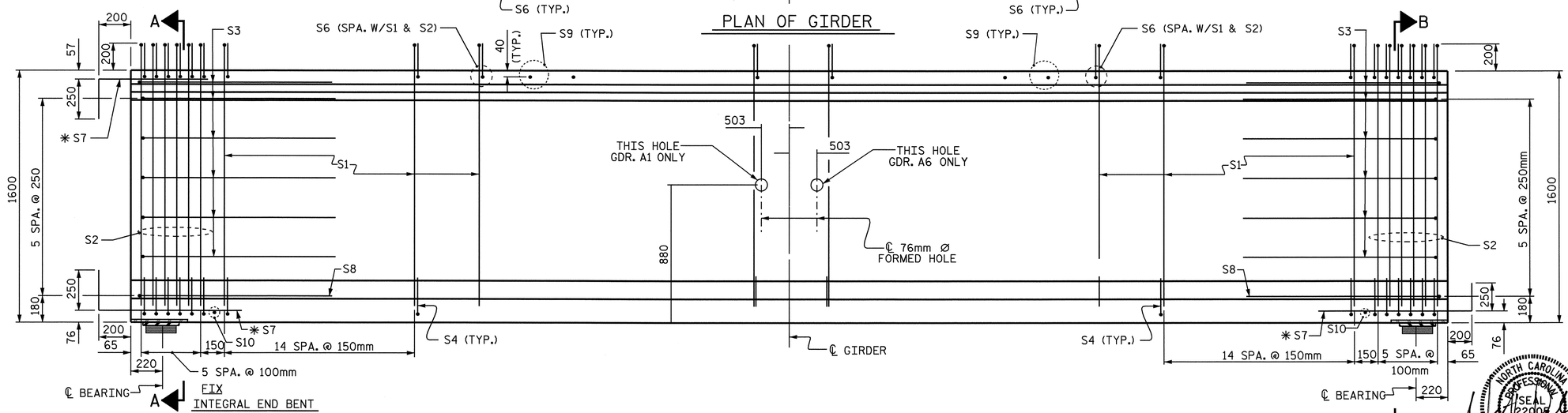

ELEVATION OF GIRDER

FOR LOCATION OF 76mm Ø FORMED HOLES, SEE FRAMING PLAN

15.24mm Ø L.R. GRADE 270 STRANDS		
AREA (mm^2)	ULTIMATE STRENGTH (kN PER STRAND)	APPLIED PRESTRESS (kN PER STRAND)
140.0	260.4	195.3

REINFORCING STEEL FOR ONE GIRDER

BAR	NUMBER	SIZE	TYPE	LENGTH	WEIGHT
S1	184	#13	1	1900	280
S2	24	#16	1	1900	71
S3	12	#13	2	2560	31
S4	84	#13	3	920	77
S6	184	#16	1	1120	320
✱S7	30	#16	STR	1120	52
S8	2	#16	2	2740	9
S9	45	#16	STR	980	68
S10	2	#10	STR	560	1

✱NOTE: S7 BARS SHALL BE BENT BEFORE SHIPMENT. HEAT BENDING SHALL NOT BE ALLOWED.

BAR TYPES

ALL BAR DIMENSIONS ARE OUT-TO-OUT

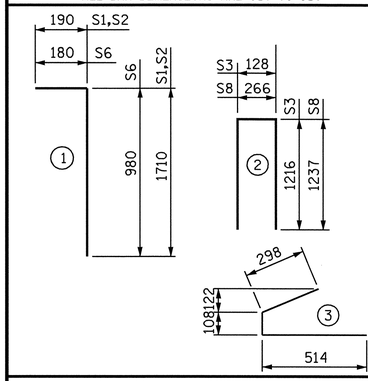

QUANTITIES FOR ONE GIRDER

	REINFORCING STEEL	55.0 MPa CONCRETE	15.24mm Ø L.R. STRANDS
	kg	m^3	No.
	909	16.8	40

GIRDERS REQUIRED

SPAN	NUMBER	LENGTH	TOTAL LENGTH
A	6	33.844m	203.064m
B	6	33.844m	203.064m
TOTAL	12	33.844m	406.128m

PROJECT NO. R-2554BA

WAYNE COUNTY

STATION: 93+23.591 -L-

SHEET 2 OF 3

STATE OF NORTH CAROLINA
DEPARTMENT OF TRANSPORTATION
RALEIGH

OPTIONAL
1600mm PRESTRESSED CONCRETE MODIFIED BULB TEE CONTINUOUS FOR LIVE LOAD (WITH 15.24mm Ø PARTIALLY DEBONDED STRANDS)
SPAN A & B
(RIGHT LANE)

NORTH CAROLINA PROFESSIONAL SEAL 22006 ENGINEER JAMES KEITH PASCHAL
6/9/08

ASSEMBLED BY : J.D. HAWK	DATE : 6/2007
CHECKED BY : J.G. KHARVA	DATE : 7/2007
DRAWN BY : RWW 9/19/02	ADDED 9/19/02
CHECKED BY : GM 9/19/02	REV. 5/1/06 TLA/GM

REVISIONS						SHEET NO.
NO.	BY:	DATE:	NO.	BY:	DATE:	S-37
1			3			TOTAL SHEETS
2			4			478

06-JUN-2008 15:37
k:\struct~1\bullock\Str#2\FINAL PLANS\R2554BA_sd_G_02.dgn
jkharva

STR. 2 STD. NO. PCGD9SM

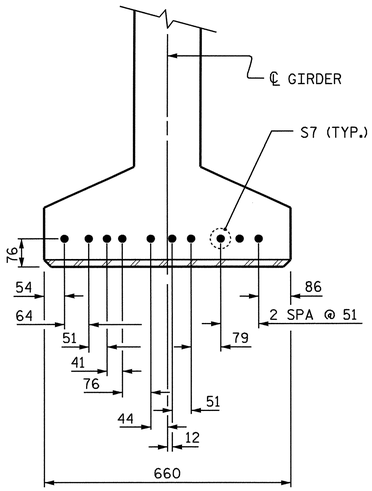

DETAIL "C"

(FOR 1600mm MODIFIED BULB TEES)
(AT BENT & INTEGRAL END BENT)

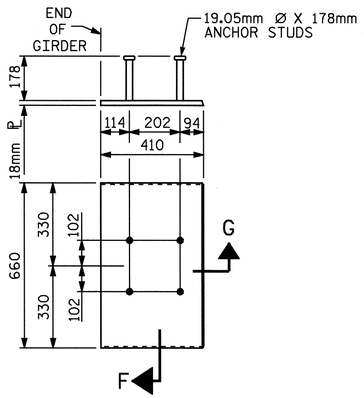

EMBEDDED PLATE "B-1" DETAILS FOR AASHTO TYPE IV GIRDER 1600mm MODIFIED BULB TEES

(2 REQ'D PER GIRDER)

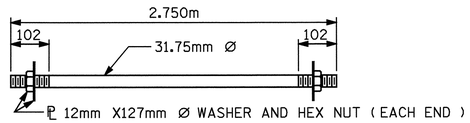

31.75mm Ø TIE ROD ASSEMBLY

(10 COMPLETE ASSEMBLIES REQUIRED)

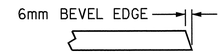

SECTION "G"

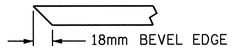

SECTION "F"

(SEE NOTES)

NOTES

ALL PRESTRESSING STRANDS SHALL BE 7-WIRE LOW-RELAXATION GRADE 270 STRANDS AND SHALL CONFORM TO AASHTO M203M EXCEPT FOR SAMPLING REQUIREMENTS WHICH SHALL BE IN ACCORDANCE WITH THE STANDARD SPECIFICATIONS.

TIE ROD ASSEMBLY SHALL BE AASHTO M270 GRADE 250 STRUCTURAL STEEL.

ALL REINFORCING STEEL SHALL BE GRADE 420.

EMBEDDED PLATE "B-1" SHALL BE GALVANIZED IN ACCORDANCE WITH THE SPECIFICATIONS. BEVEL EDGES OF PLATE "B-1" TO GIVE CLOSE FIT BUT NOT TIGHT FIT TO STEEL CASTING FORM.

ANCHOR STUDS SHALL CONFORM TO AASHTO M169 GRADES 1010 THROUGH 1020 OR APPROVED EQUAL, AND SHALL MEET THE TYPE "B" REQUIREMENTS OF SUBSECTION 7.3 OF THE ANSI/AASHTO/AWS D1.5 BRIDGE WELDING CODE.

AT ENDS OF GIRDERS TO BE EMBEDDED IN CONCRETE DIAPHRAGMS OR END WALLS, PRESTRESSING STRANDS MAY EXTEND A MAXIMUM OF 50mm BEYOND THE GIRDER ENDS. OTHERWISE, PRESTRESSING STRANDS SHALL BE CUT FLUSH WITH THE GIRDER ENDS.

THE TRANSFER OF LOAD FROM THE ANCHORAGES TO THE GIRDER SHALL BE DONE WHEN CONCRETE HAS REACHED A COMPRESSIVE STRENGTH OF NOT LESS THAN 44 MPa. OR 52 MPa. FOR OPTIONAL DEBONDED STRANDS.

DEPENDING ON THE TYPE OF SYSTEM USED TO SUPPORT THE DECK SLAB FORMS, PRESET ANCHORS MAY BE NECESSARY IN THE PRESTRESSED CONCRETE GIRDER.

THE TOP SURFACE OF THE GIRDER, EXCLUDING THE OUTSIDE 100mm, SHALL BE RAKED TO A DEPTH OF 6mm.

WHEN DRAPED STRANDS ARE DETAILED, THE LONGITUDINAL LOCATION OF THE HOLD DOWN DEVICES SHALL BE WITHIN 150mm OF THE LOCATION SHOWN AND THE CENTER OF GRAVITY OF THE GROUP OF DRAPED STRANDS SHALL BE LOCATED WITHIN 13mm OF THE THEORETICAL LOCATION SHOWN.

A 50mm x 50mm CHAMFER IS ALLOWED AT THE INTERSECTION OF THE WEB AND THE BOTTOM FLANGE OF THE 1600mm AND 1829mm MODIFIED BULB TEES ONLY.

THE CONTRACTOR HAS THE OPTION TO PROVIDE, AT NO ADDITIONAL COST TO THE DEPARTMENT, 2 ADDITIONAL STRANDS AT THE TOP OF THE GIRDER TO FACILITATE TYING OF THE REINFORCING STEEL. THESE STRANDS SHALL BE PULLED TO A LOAD OF 20 Kn.

FOR CRACK REPAIR OF PRESTRESSED CONCRETE GIRDERS, SEE SPECIAL PROVISIONS.

FOR PRESTRESSED CONCRETE MEMBERS, SEE SPECIAL PROVISIONS.

DEAD LOAD DEFLECTION TABLE FOR SPANS A & B

15.24mm LOW RELAXATION	GIRDER 1											GIRDERS 2 THRU 5											GIRDER 6										
TENTH POINTS	0	.1	.2	.3	.4	.5	.6	.7	.8	.9	0	0	.1	.2	.3	.4	.5	.6	.7	.8	.9	0	0	.1	.2	.3	.4	.5	.6	.7	.8	.9	0
CAMBER (GIRDER ALONE IN PLACE)	0.0	0.044	0.082	0.113	0.132	0.139	0.132	0.113	0.082	0.044	0.0	0.0	0.044	0.082	0.113	0.132	0.139	0.132	0.113	0.082	0.044	0.0	0.0	0.044	0.082	0.113	0.132	0.139	0.132	0.113	0.082	0.044	0.0
✳DEFLECTION DUE TO SUPERIMPOSED D.L.	0.0	0.015	0.028	0.039	0.046	0.049	0.046	0.039	0.028	0.015	0.0	0.0	0.014	0.027	0.037	0.043	0.046	0.043	0.037	0.027	0.014	0.0	0.0	0.015	0.028	0.039	0.046	0.049	0.046	0.039	0.029	0.015	0.0
FINAL CAMBER	0.0	29	54	74	86	90	86	74	54	29	0.0	0.0	30	55	76	89	93	89	76	55	30	0.0	0.0	29	54	74	86	90	86	74	53	29	0.0

✳INCLUDES SLAB, BUILD UPS, AND STAY-IN-PLACE FORMS
ALL VALUES ARE SHOWN IN METERS, EXCEPT "FINAL CAMBER", WHICH IS SHOWN IN MILLIMETERS

DEAD LOAD DEFLECTION TABLE FOR SPANS A & B (OPTIONAL)

15.24mm LOW RELAXATION	GIRDER 1											GIRDERS 2 THRU 5											GIRDER 6										
TENTH POINTS	0	.1	.2	.3	.4	.5	.6	.7	.8	.9	0	0	.1	.2	.3	.4	.5	.6	.7	.8	.9	0	0	.1	.2	.3	.4	.5	.6	.7	.8	.9	0
CAMBER (GIRDER ALONE IN PLACE)	0.0	0.039	0.073	0.100	0.117	0.123	0.117	0.100	0.073	0.039	0.0	0.0	0.039	0.073	0.100	0.117	0.123	0.117	0.100	0.073	0.039	0.0	0.0	0.039	0.073	0.100	0.117	0.123	0.117	0.100	0.073	0.039	0.0
✳DEFLECTION DUE TO SUPERIMPOSED D.L.	0.0	0.014	0.026	0.036	0.043	0.045	0.043	0.036	0.026	0.014	0.0	0.0	0.013	0.025	0.034	0.040	0.042	0.040	0.034	0.025	0.013	0.0	0.0	0.014	0.026	0.036	0.043	0.045	0.043	0.036	0.026	0.014	0.0
FINAL CAMBER	0.0	25	47	64	74	78	74	64	47	25	0.0	0.0	26	48	66	77	81	77	66	48	26	0.0	0.0	24	47	64	74	78	74	64	47	25	0.0

✳INCLUDES SLAB, BUILD UPS, AND STAY-IN-PLACE FORMS
ALL VALUES ARE SHOWN IN METERS, EXCEPT "FINAL CAMBER", WHICH IS SHOWN IN MILLIMETERS

PROJECT NO. R-2554BA
WAYNE COUNTY
STATION: 93+23.591 -L-

SHEET 3 OF 3

STATE OF NORTH CAROLINA
DEPARTMENT OF TRANSPORTATION
RALEIGH

STANDARD
PRESTRESSED CONCRETE GIRDER
CONTINUOUS FOR LIVE LOAD
DETAILS AND
DEAD LOAD DEFLECTIONS
SPAN A & B
(RIGHT LANE)

REVISIONS						SHEET NO.
NO.	BY:	DATE:	NO.	BY:	DATE:	S-38
1			3			TOTAL SHEETS
2			4			478

ASSEMBLED BY : J.D. HAWK DATE : 6/2007	
CHECKED BY : J.G. KHARVA DATE : 7/2007	
DRAWN BY : ELR 11/91	REV. 10/17/00 RWW/LES
CHECKED BY : GRP 11/91	REV. 7/10/01RR LES/RDR
	REV. 5/1/06 TLA/GM

06-JUN-2008 15:37
k:\struct~1\bullock\Str*2\FINAL PLANS\R2554BA_sd_G_02.dgn
jkharva

STR. 2 STD. NO. PCG11SM

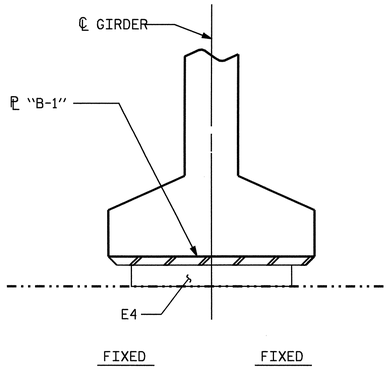

SECTION D-D

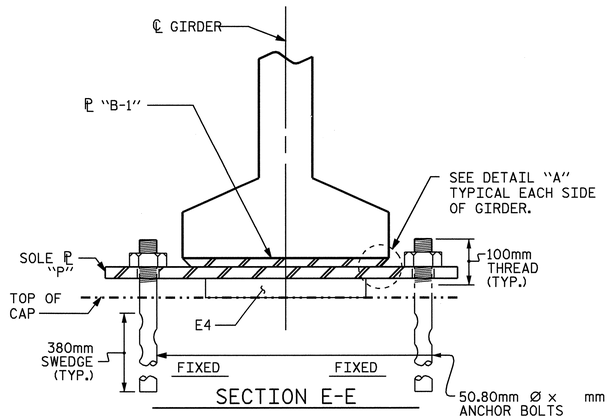

SECTION E-E

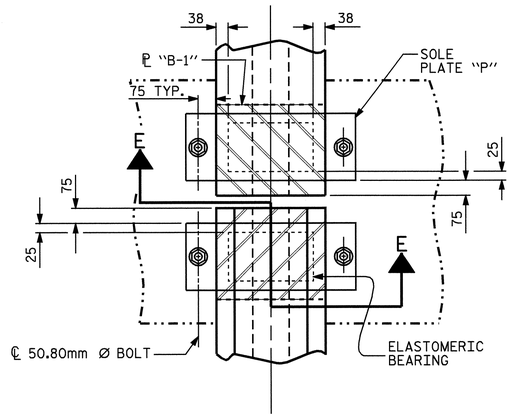

PLAN VIEW @ BENT

SHOWING CONTINOUS BENT
(TOP FLANGE NOT SHOWN)

NOTES

AT ALL FIXED POINTS OF SUPPORT, NUTS FOR ANCHOR BOLTS ARE TO BE TIGHTENED FINGER TIGHT AND THEN BACKED OFF ½ TURN. THE THREAD OF THE NUT AND BOLT SHALL THEN BE BURRED WITH A SHARP POINTED TOOL.

THE 51mm Ø PIPE SLEEVE SHALL BE CUT FROM SCHEDULE 40 PVC PLASTIC PIPE. THE PVC PLASTIC PIPE SHALL MEET THE REQUIREMENTS OF ASTM D1785.

STEEL SOLE PLATES, ANCHOR BOLTS, NUTS, AND WASHERS SHALL BE GALVANIZED IN ACCORDANCE WITH THE STANDARD SPECIFICATIONS.

PRIOR TO WELDING, GRIND THE GALVANIZED SURFACE OF THE PORTION OF THE EMBEDDED PLATE AND SOLE PLATE THAT ARE TO BE WELDED. AFTER WELDING, DAMAGED GALVANIZED SURFACES SHALL BE REPAIRED IN ACCORDANCE WITH THE STANDARD SPECIFICATIONS.

WHEN WELDING THE SOLE PLATE TO THE EMBEDDED PLATE IN THE GIRDER, USE TEMPERATURE INDICATING WAX PENS, OR OTHER SUITABLE MEANS, TO ENSURE THAT THE TEMPERATURE OF THE SOLE PLATE DOES NOT EXCEED 149°C. TEMPERATURES ABOVE THIS MAY DAMAGE THE ELASTOMER.

SOLE PLATE "P", BOLTS, NUTS, WASHERS, AND PIPE SLEEVE SHALL BE INCLUDED IN THE PAY ITEM FOR PRESTRESSED CONCRETE GIRDERS.

ANCHOR BOLTS SHALL MEET THE REQUIREMENTS OF ASTM A449. NUTS SHALL MEET THE REQUIREMENTS OF AASHTO M291M-12 OR AASHTO M292M-2H. WASHERS SHALL MEET THE REQUIREMENTS OF AASHTO M293M. SHOP DRAWINGS ARE NOT REQUIRED FOR ANCHOR BOLTS, NUTS AND WASHERS. SHOP INSPECTION IS REQUIRED.

ALL SURFACES OF BEARING PLATES SHALL BE SMOOTH AND STRAIGHT.

ELASTOMER IN ALL BEARINGS SHALL BE 60 DUROMETER HARDNESS

— LOAD RATINGS —	
	MAX.D.L.+L.L.
54"PCG -TYPE IV	137 K

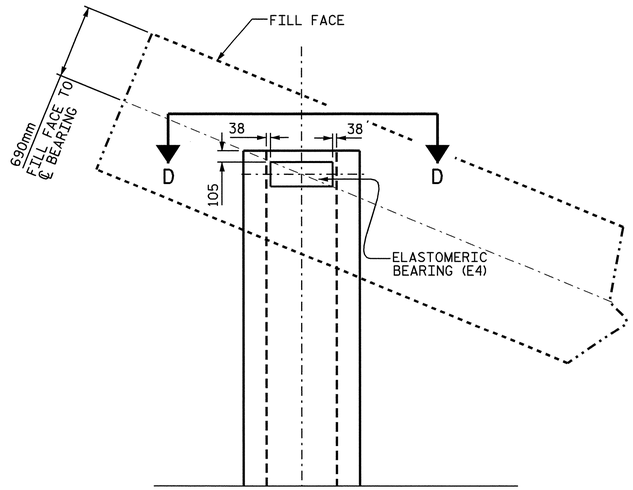

PLAN VIEW AT INTEGRAL END BENTS

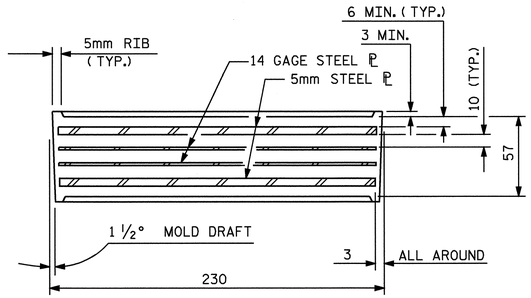

TYPICAL SECTION OF ELASTOMERIC BEARINGS

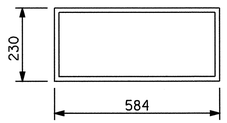

E4 (24 REQ'D)

PLAN VIEW OF ELASTOMERIC BEARING

TYPE V

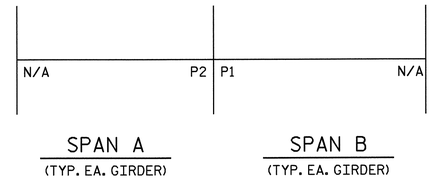

SPAN A
(TYP. EA. GIRDER)

SPAN B
(TYP. EA. GIRDER)

SOLE ℄ LAYOUT

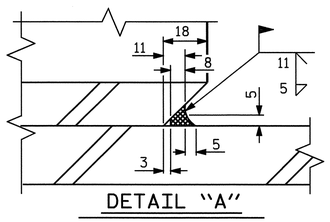

DETAIL "A"

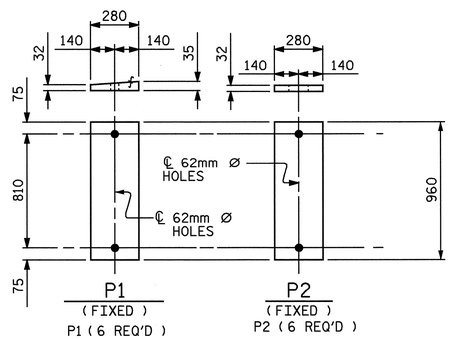

SOLE PLATE DETAILS ("P")

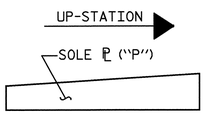

SOLE ℄ PLACEMENT DETAIL

PROJECT NO. R-2554BA

WAYNE COUNTY

STATION: 93+23.591 -L-

STATE OF NORTH CAROLINA
DEPARTMENT OF TRANSPORTATION
RALEIGH

STANDARD ELASTOMERIC BEARING DETAILS

PRESTRESSED CONCRETE GIRDER SUPERSTRUCTURE
(RIGHT LANE)

NORTH CAROLINA PROFESSIONAL SEAL 22005 ENGINEER A. KEITH PASCHAL

6/9/08

REVISIONS						SHEET NO.
NO.	BY:	DATE:	NO.	BY:	DATE:	S-39
1			3			TOTAL SHEETS
2			4			478

ASSEMBLED BY : J.D. HAWK	DATE : 6/2007
CHECKED BY : J.G. KHARVA	DATE : 7/2007
DRAWN BY : EEM 2/97	REV. 8/16/99 RWW/LES
CHECKED BY : VAP 2/97	REV. 10/17/00 RWW/LES
	REV. 5/1/06 TLA/GM

06-JUN-2008 15:06
R:\Structures\BULLOCK\Str#2\FINAL PLANS\R2554BA_sd_BG_02.dgn
JDHAWK

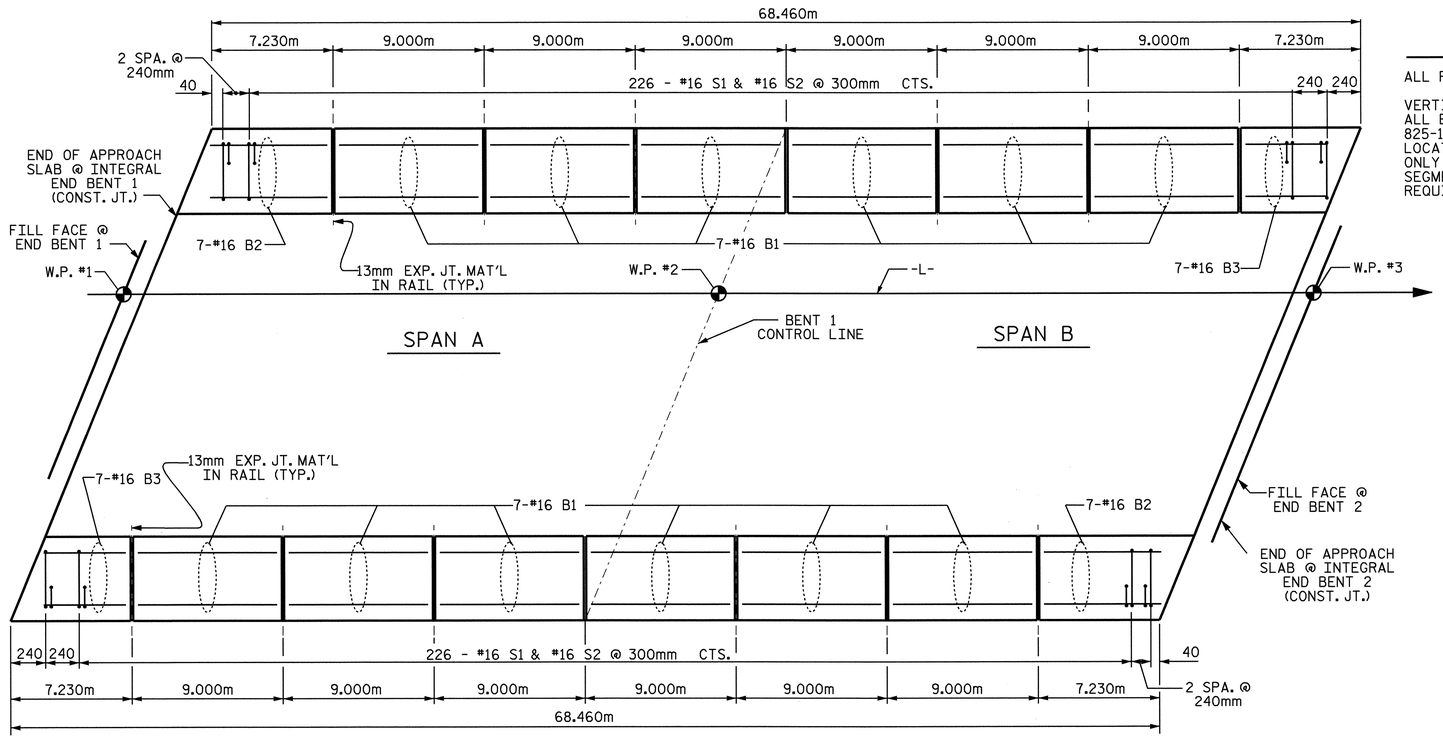

PLAN OF BARRIER RAIL

NOTES

ALL REINFORCING STEEL IN BARRIER RAILS SHALL BE EPOXY COATED.

VERTICAL GROOVED CONTRACTION JOINTS, 12mm IN DEPTH, SHALL BE TOOLED IN ALL EXPOSED FACES OF THE BARRIER RAIL AND IN ACCORDANCE WITH ARTICLE 825-10(B) OF THE STANDARD SPECIFICATIONS. THE CONTRACTION JOINT SHALL BE LOCATED AT EACH THIRD POINT BETWEEN BARRIER RAIL EXPANSION JOINTS. ONLY ONE CONTRACTION JOINT IS REQUIRED AT MIDPOINT OF BARRIER RAIL SEGMENTS LESS THAN 6.1m IN LENGTH AND NO CONTRACTION JOINTS ARE REQUIRED FOR THOSE SEGMENTS LESS THAN 3.5m IN LENGTH.

BAR TYPES

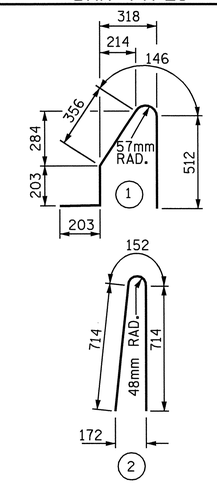

ALL BAR DIMENSIONS ARE OUT TO OUT

BILL OF MATERIAL

FOR CONCRETE BARRIER RAIL ONLY

BAR	NO.	SIZE	TYPE	LENGTH	WEIGHT
✳ B1	84	#16	STR	8860	1155
✳ B2	14	#16	STR	7140	155
✳ B3	14	#16	STR	6960	151
✳ S1	458	#16	1	1420	1009
✳ S2	458	#16	2	1580	1123

✳ EPOXY COATED
REINFORCING STEEL Kg

CLASS AA CONCRETE CU. METER

CONCRETE BARRIER RAIL 136.920 METERS

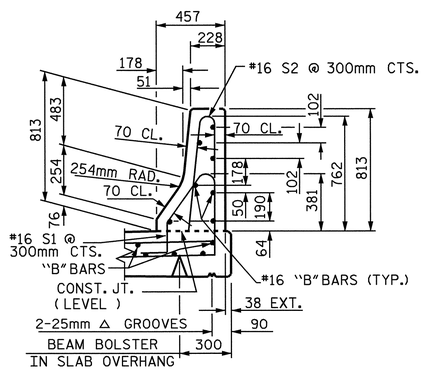

SECTION THRU RAIL

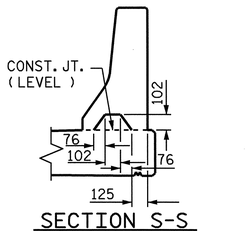

SECTION S-S
AT DAM IN OPEN JOINT
(THIS IS TO BE USED ONLY WHEN SLIP FORM IS USED)

℄ 13mm EXP.JT.MAT'L HELD IN PLACE WITH GALVANIZED NAILS.
(NOTE: OMIT EXP. JT. MAT'L. WHEN SLIP FORM IS USED.)

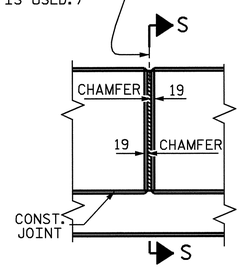

ELEVATION AT EXPANSION JOINTS

BARRIER RAIL DETAILS

PROJECT NO. R-2554BA
WAYNE COUNTY
STATION: 93+23.591 -L-

SHEET 1 OF 2

STATE OF NORTH CAROLINA
DEPARTMENT OF TRANSPORTATION
RALEIGH

STANDARD
CONCRETE
BARRIER RAIL
(RIGHT LANE)

REVISIONS						SHEET NO.
NO.	BY:	DATE:	NO.	BY:	DATE:	S-40
1			3			TOTAL SHEETS
2			4			478

STR. 2 STD. No. CBR1SM

ASSEMBLED BY : J.D. HAWK	DATE : 6/2007
CHECKED BY : J.G. KHARVA	DATE : 7/2007
DRAWN BY : ARB 5/87	REV. 10/17/00 RWW/LES
CHECKED BY : SJD 9/87	REV. 5/7/03R RWW/JTE
	REV. 5/1/06 TLA/GM

09-JUN-2008 13:43
r:\structures\bullock\Str#2\FINAL PLANS\R2554BA_sd_BR_02.dgn
jdhawk

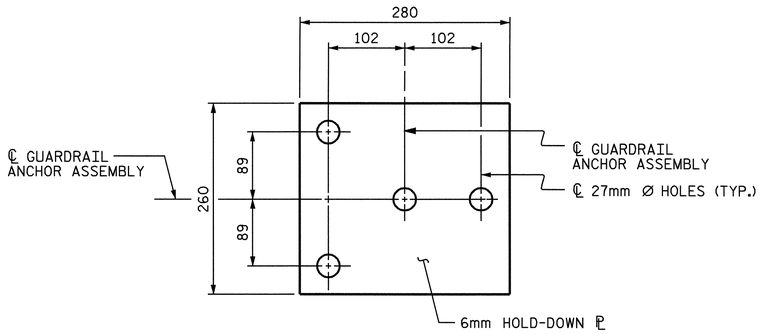

PLAN

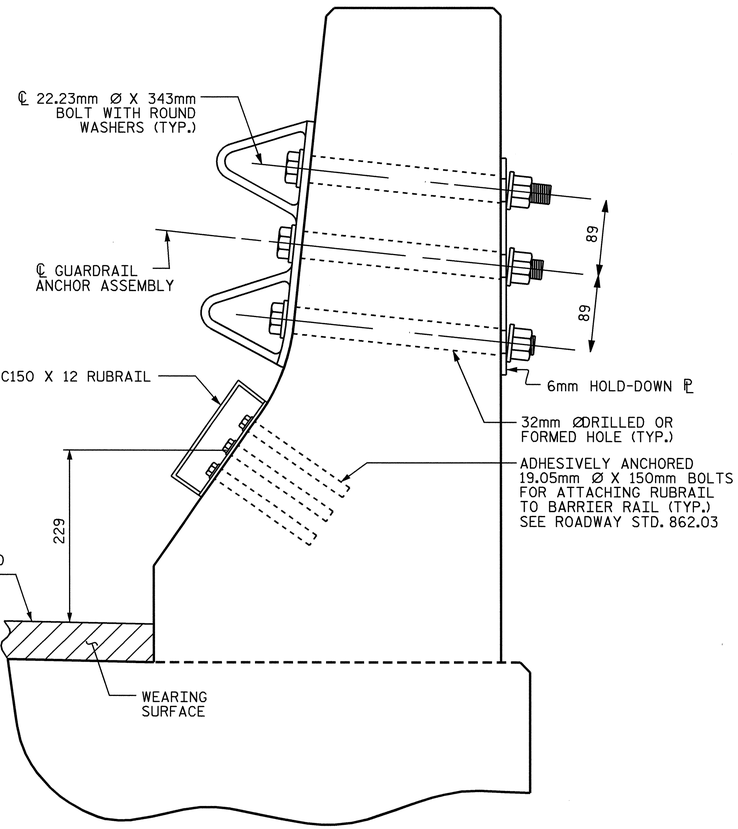

SECTION E-E

GUARDRAIL ANCHOR ASSEMBLY DETAILS

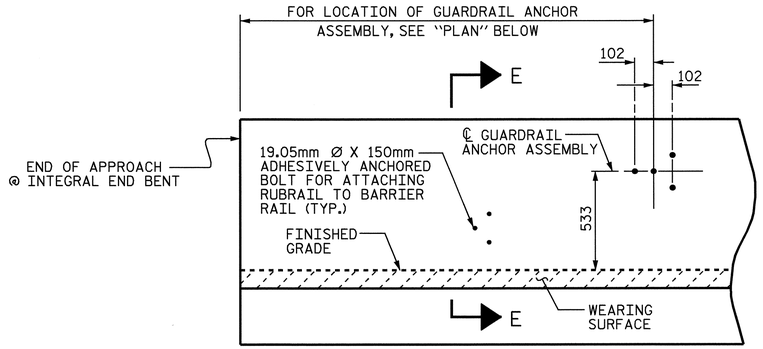

ELEVATION

FOR LOCATION OF RUBRAIL, SEE ROADWAY STD. 862.03

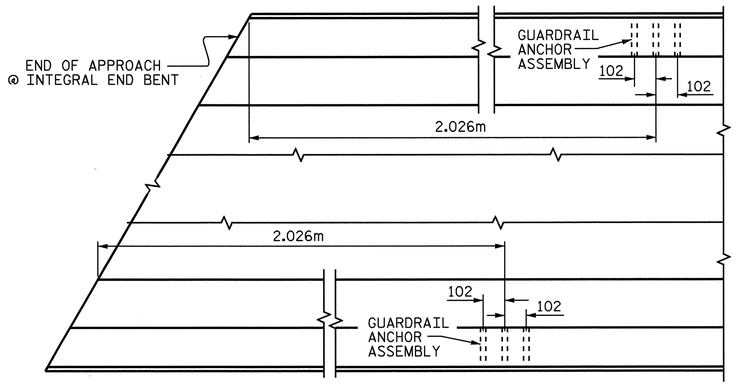

PLAN

LOCATION OF ANCHORS FOR GUARDRAIL

END BENT 1 SHOWN, END BENT 2 SIMILAR.

NOTES

THE GUARDRAIL ANCHOR ASSEMBLY SHALL CONSIST OF A 6mm HOLD DOWN PLATE AND 4 - 22.23mm Ø BOLTS WITH NUTS AND WASHERS, RUBRAIL, AND ADHESIVELY ANCHORED BOLTS.

THE HOLD-DOWN PLATE SHALL CONFORM TO AASHTO M270 GRADE 36. AFTER FABRICATION, THE HOLD-DOWN PLATE SHALL BE HOT-DIP GALVANIZED IN ACCORDANCE WITH AASHTO M111.

BOLTS SHALL CONFORM TO THE REQUIREMENTS OF ASTM A307 AND NUTS SHALL CONFORM TO THE REQUIREMENTS OF AASHTO M291. BOLTS, NUTS AND WASHERS SHALL BE GALVANIZED. (AT THE CONTRACTOR'S OPTION, STAINLESS STEEL BOLTS, NUTS AND WASHERS MAY BE USED AS AN ALTERNATE FOR THE 22.23mm Ø GALVANIZED BOLTS, NUTS AND WASHERS. THEY SHALL CONFORM TO OR EXCEED THE MECHANICAL REQUIREMENTS OF ASTM A307. THE USE OF THIS ALTERNATE SHALL BE APPROVED BY THE ENGINEER.)

THE GUARDRAIL ANCHOR ASSEMBLY IS REQUIRED AT ALL POINTS WHERE APPROACH GUARDRAIL IS TO BE ATTACHED TO THE END OF BARRIER RAIL. FOR POINTS OF ATTACHMENT, SEE SKETCH.

AFTER INSTALLATION, THE EXPOSED THREAD OF THE BOLT SHALL BE BURRED WITH A SHARP POINTED TOOL.

THE COST OF THE GUARDRAIL ANCHOR ASSEMBLY SHALL BE INCLUDED IN THE UNIT CONTRACT PRICE BID FOR CONCRETE BARRIER RAIL.

THE 32mm Ø HOLES SHALL BE FORMED OR DRILLED WITH A CORE BIT. IMPACT TOOLS WILL NOT BE PERMITTED. ANY CONCRETE DAMAGED BY THIS WORK SHALL BE REPAIRED TO THE SATISFACTION OF THE ENGINEER.

THE C150 X 12 RUBRAIL IS TO BE ADHESIVELY ANCHORED TO THE RAIL USING THREE 19.05mm Ø X 150mm BOLTS WITH WASHERS. LEVEL ONE FIELD TESTING IF REQUIRED, AND THE YIELD LOAD OF THE 19.05mm Ø BOLTS IS 53.4kN. FOR ADHESIVELY ANCHORED ANCHOR BOLTS OR DOWELS, SEE SPECIAL PROVISIONS. SEE ROADWAY STANDARD 862.03 FOR DETAILS AND LOCATION OF THE RUBRAIL.

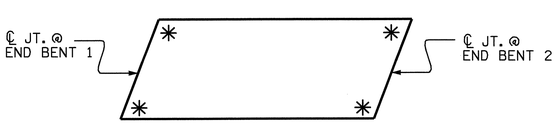

SKETCH SHOWING POINTS OF ATTACHMENTS

✳ DENOTES GUARDRAIL ANCHOR ASSEMBLY

PROJECT NO. R-2554BA

WAYNE COUNTY

STATION: 93+23.591 -L-

SHEET 2 OF 2

STATE OF NORTH CAROLINA
DEPARTMENT OF TRANSPORTATION
RALEIGH

STANDARD

GUARDRAIL ANCHORAGE FOR BARRIER RAIL

(RIGHT LANE)

NORTH CAROLINA PROFESSIONAL SEAL 2005 ENGINEER J. KEITH PASCHAL

6/9/08

REVISIONS						SHEET NO.
NO.	BY:	DATE:	NO.	BY:	DATE:	S-41
1			3			TOTAL SHEETS
2			4			478

ASSEMBLED BY : J.D. HAWK	DATE : 6/2007
CHECKED BY : J.G. KHARVA	DATE : 7/2007
DRAWN BY : TLA 5/06	ADDED 5/1/06R KMM/GM
CHECKED BY : GM 5/06	

06-JUN-2008 15:06
R:\Structures\BULLOCK\Str#2\FINAL PLANS\R2554BA_sd_BR_02.dgn
JDHAWK

STD. NO. GRA2SM STR. 2

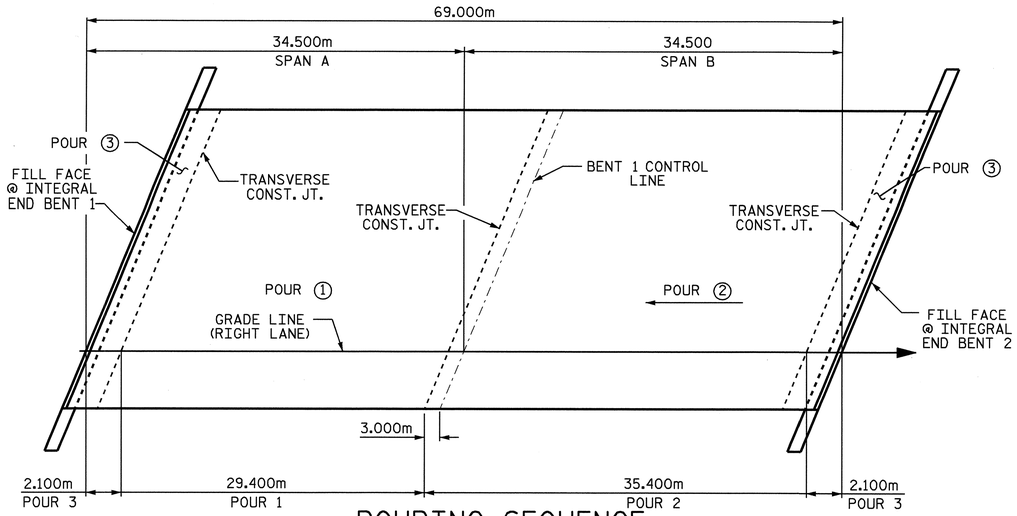

POURING SEQUENCE

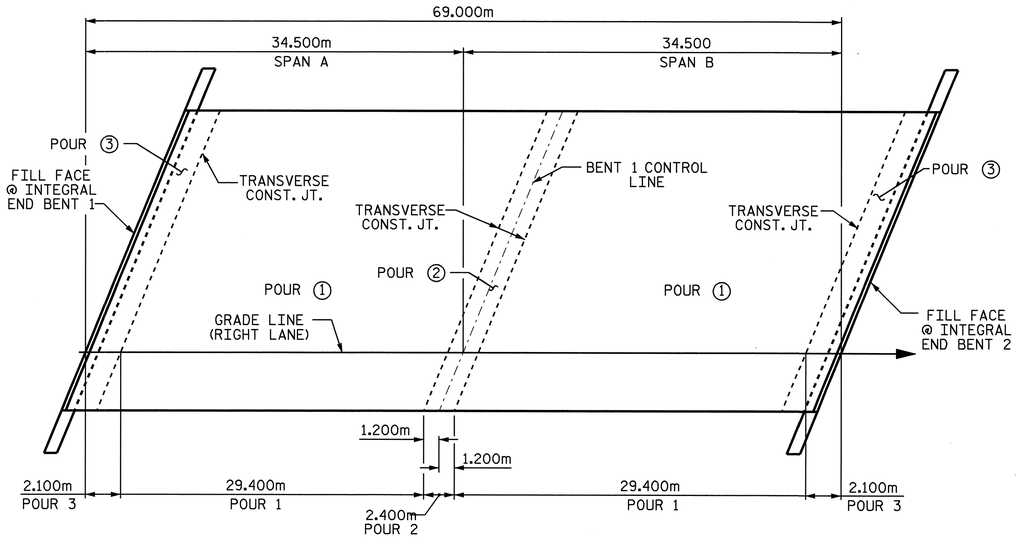

OPTIONAL POURING SEQUENCE

POUR 2 CAN NOT BE STARTED UNTIL BOTH ADJACENT POUR 1'S REACH A MINIMUM OF 20.7 MPa.

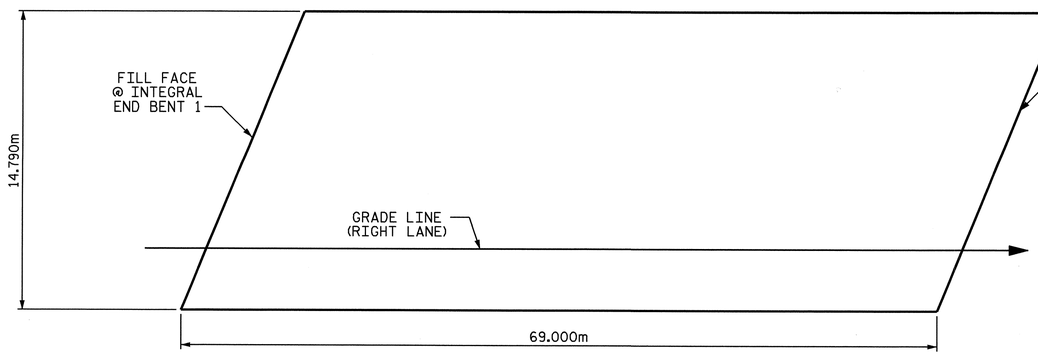

LAYOUT FOR COMPUTING AREA REINFORCED CONCRETE DECK SLAB

(1020.5 SQ. METERS)

REINFORCING BAR SCHEDULE

SPANS A & B

BAR	NO.	SIZE	TYPE	LENGTH	WEIGHT
✳ A1	298	#16	STR	14680	6789
A2	298	#16	STR	14680	6789
✳ A101	4	#16	STR	13600	84
✳ A102	4	#16	STR	12580	78
✳ A103	4	#16	STR	11560	72
✳ A104	4	#16	STR	10520	65
✳ A105	4	#16	STR	9500	59
✳ A106	4	#16	STR	8480	53
✳ A107	4	#16	STR	7460	46
✳ A108	4	#16	STR	6440	40
✳ A109	4	#16	STR	5420	34
✳ A110	4	#16	STR	4400	27
✳ A111	4	#16	STR	3360	21
✳ A112	4	#16	STR	2340	15
✳ A113	4	#16	STR	1320	8
✳ A114	4	#16	STR	300	2
A201	4	#16	STR	13600	84
A202	4	#16	STR	12580	78
A203	4	#16	STR	11560	72
A204	4	#16	STR	10520	65
A205	4	#16	STR	9500	59
A206	4	#16	STR	8480	53
A207	4	#16	STR	7460	46
A208	4	#16	STR	6440	40
A209	4	#16	STR	5420	34
A210	4	#16	STR	4400	27
A211	4	#16	STR	3360	21
A212	4	#16	STR	2340	15
A213	4	#16	STR	1320	8
A214	4	#16	STR	300	2

BAR	NO.	SIZE	TYPE	LENGTH	WEIGHT
✳ B1	70	#19	STR	6900	1080
✳ B2	228	#13	STR	8040	1822
✳ B3	76	#19	STR	12360	2099
✳ B4	35	#19	STR	10400	814
B5	124	#16	STR	17580	3383
B6	48	#13	STR	6900	329
K1	24	#13	STR	8620	206
K2	10	#13	STR	1360	14
K3	40	#13	STR	2340	93
K4	10	#13	STR	1820	18
K5	16	#13	STR	960	15
K6	4	#13	STR	1740	7
K7	16	#13	STR	2240	36
K8	4	#13	STR	1980	8
K9	10	#13	STR	1360	14
K10	40	#13	STR	2340	93
K11	10	#13	STR	1820	18
K12	10	#13	5	1660	17
K13	20	#13	6	3260	65
K14	80	#16	STR	2220	276
K15	20	#16	7	2200	68
✳ S1	58	#13	3	3560	205
✳ S2	54	#13	3	3500	188
S3	130	#13	2	980	127
S4	60	#13	8	2980	178
U1	50	#13	4	4360	217
U2	12	#13	4	5000	60
✳ U3	20	#13	1	5360	107
U4	10	#13	4	2500	25
REINFORCING STEEL = LBS					12460
EPOXY COATED REINF. STEEL = LBS					13708

SUPERSTRUCTURE REINFORCING STEEL LENGTHS ARE BASED ON THE FOLLOWING MINIMUM SPLICE LENGTHS

BAR SIZE	SUPERSTRUCTURE EXCEPT APPROACH SLABS, PARAPET, AND BARRIER RAIL		APPROACH SLABS		PARAPET AND BARRIER RAIL
	EPOXY COATED	UNCOATED	EPOXY COATED	UNCOATED	
#13	610	540	610	540	840
#16	770	660	770	660	1050
#19	920	790	1190	790	1330
#22	1580	1060			
#25	2080	1390			

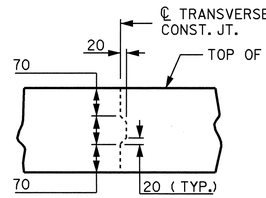

TRANSVERSE CONSTRUCTION JOINT DETAIL

NOTE: REINFORCING STEEL IN SLAB NOT SHOWN. LONGITUDINAL REINFORCING STEEL SHALL BE CONTINUOUS THRU JOINT.

GROOVING BRIDGE FLOORS

APPROACH SLABS	174.9 SQ.METER
BRIDGE DECK	881.0 SQ.METER
TOTAL	1055.9 SQ.METER

BAR TYPES

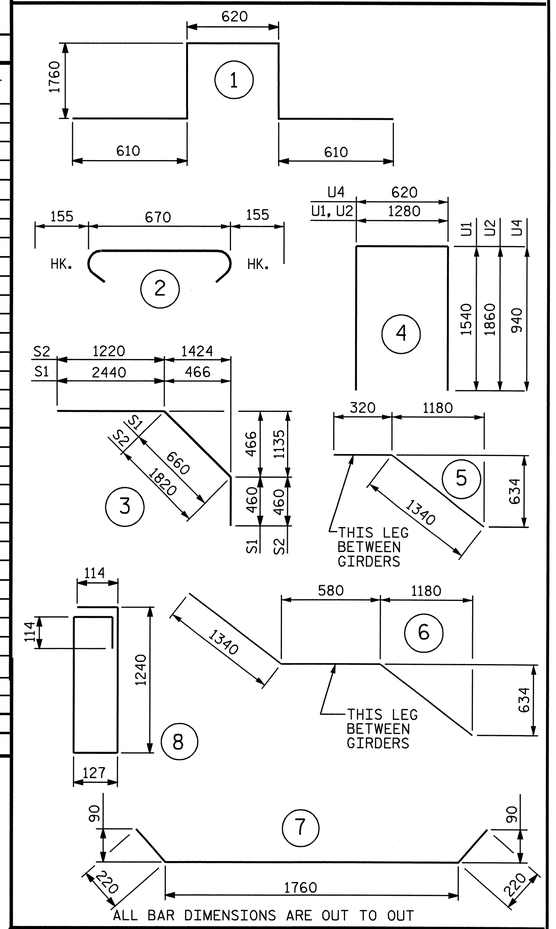

SUPERSTRUCTURE BILL OF MATERIAL

	CLASS AA CONCRETE	REINFORCING STEEL	EPOXY COATED REINFORCING STEEL
	(CU. METER)	(kg)	(kg)
POUR 1	127.7	12460	13708
POUR 2	165.2		
POUR 3	⚠1 100.8		
TOTALS✳✳	393.7	12460	13708

✳✳ QUANTITIES FOR BARRIER RAIL ARE NOT INCLUDED

⚠1 REV. #1: CHANGED CLASS AA CONCRETE POUR 3 FROM 12.6 CU. METERS TO 100.8 CU. METERS
BY: J.D. HAWK 8/8/08
CHECKED BY: A.K. PASCHAL 8/8/08

PROJECT NO. R-2554BA

WAYNE COUNTY

STATION: 93+23.591 -L-

STATE OF NORTH CAROLINA
DEPARTMENT OF TRANSPORTATION
RALEIGH

SUPERSTRUCTURE
BILL OF MATERIAL
(RIGHT LANE)

NORTH CAROLINA PROFESSIONAL SEAL 22005 ENGINEER A. KEITH PASCHAL

8/11/08

REVISIONS						SHEET NO.
NO.	BY:	DATE:	NO.	BY:	DATE:	S-42
1	JDH	8/8/08	3			TOTAL SHEETS
2			4			478

DRAWN BY : J.D. HAWK DATE : 6/2007
CHECKED BY : J.G. KHARVA DATE : 7/2007

11-AUG-2008 11:28
R:\Structures\BULLOCK\Str#2\FINAL PLANS\R2554BA_sd_BM_02.dgn
kpaschal

STR. #2

NOTES:

THE CONTRACTOR SHALL PROVIDE FOR INSTALLATION OF THE 100mm DIAMETER DRAIN PIPE THROUGH THE WING WALL AS REQUIRED FOR REINFORCED BRIDGE APPROACH FILLS, SEE THE ROADWAY PLANS. REINFORCING STEEL IN THE WING WALL MAY BE SHIFTED AS NECESSARY TO CLEAR THE DRAIN PIPE.

THE CONTRACTOR'S ATTENTION IS CALLED TO THE FACT THAT THE UPPER PART OF WING IS TO BE POURED WITH SUPERSTRUCTURE.

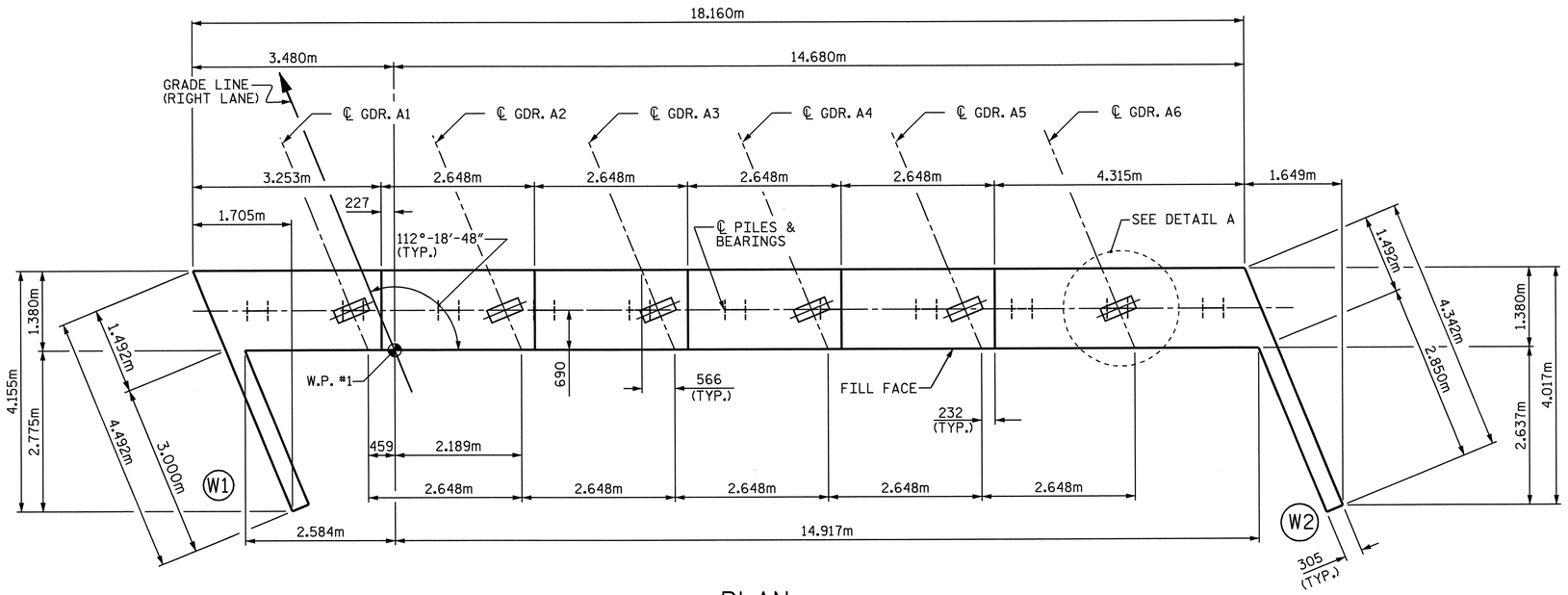

PLAN

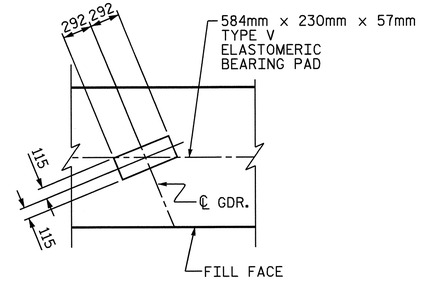

DETAIL A

(TYP. EA. GIRDER)

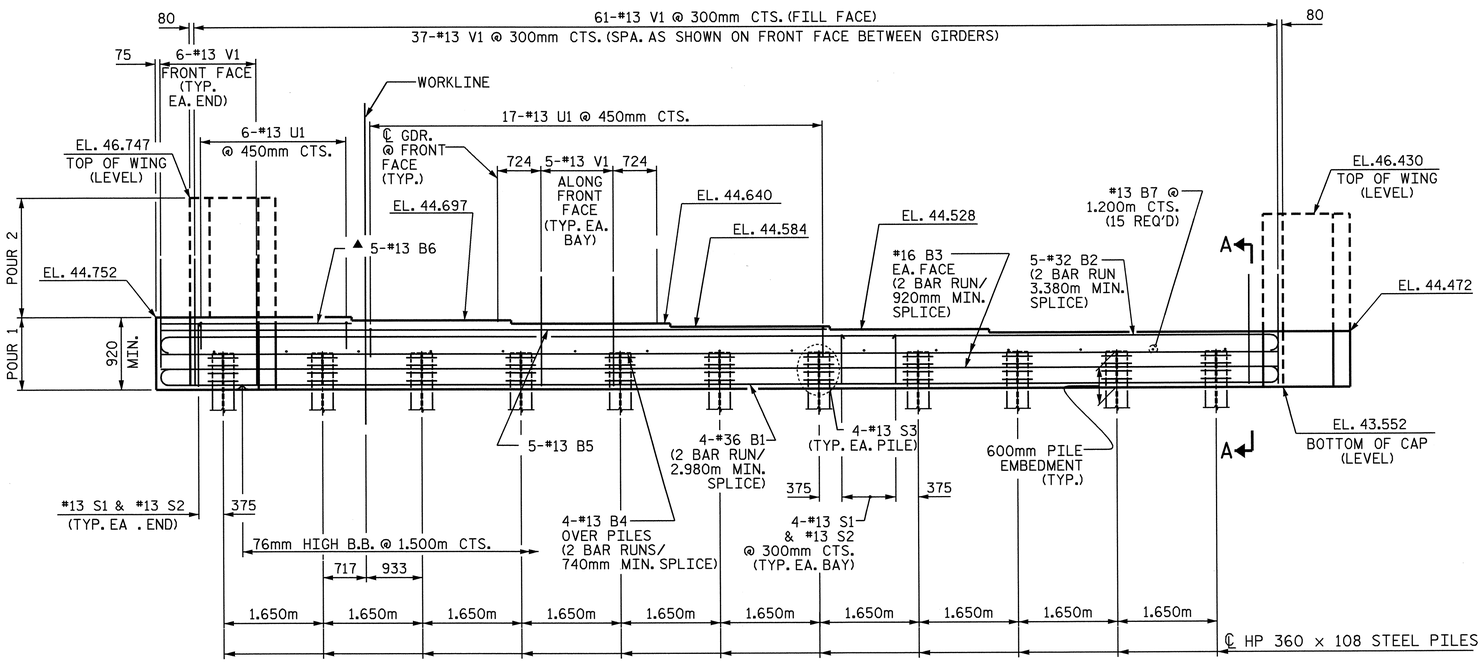

ELEVATION

▲#13 B6 MAY BE CUT AS NECESSARY FOR SKEWED END

PROJECT NO. R-2554BA

WAYNE COUNTY

STATION: 93+23.591 -L-

SHEET 1 OF 2

STATE OF NORTH CAROLINA
DEPARTMENT OF TRANSPORTATION
RALEIGH

SUBSTRUCTURE

INTEGRAL END BENT 1

(RIGHT LANE)

REVISIONS						SHEET NO.
NO.	BY:	DATE:	NO.	BY:	DATE:	S-43
1			3			TOTAL SHEETS
2			4			478

STR. #2

NORTH CAROLINA PROFESSIONAL SEAL 030056 ENGINEER KEITH PASCHAL

6/9/08

DRAWN BY : J.D. HAWK DATE : 8/07
CHECKED BY : O. PUIGCERVER DATE : 3/15/08

06-JUN-2008 15:07
k:\struct~1\bullock\str#2\finalp~1\R2554BA_sd_El&E2_02.dgn
jkharva

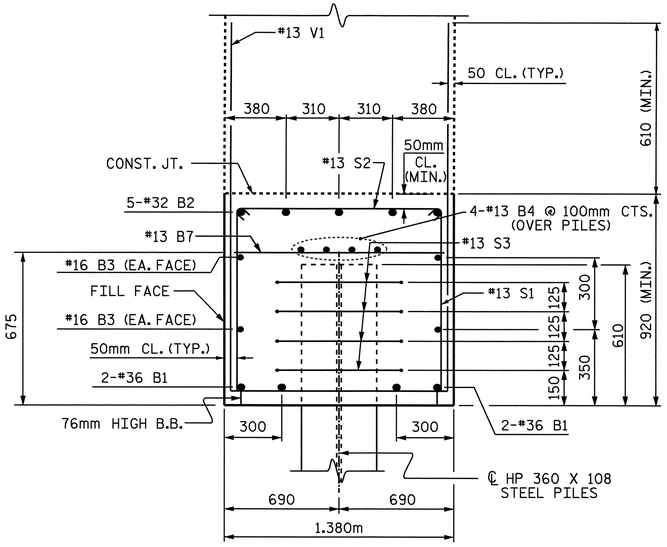

SECTION A-A

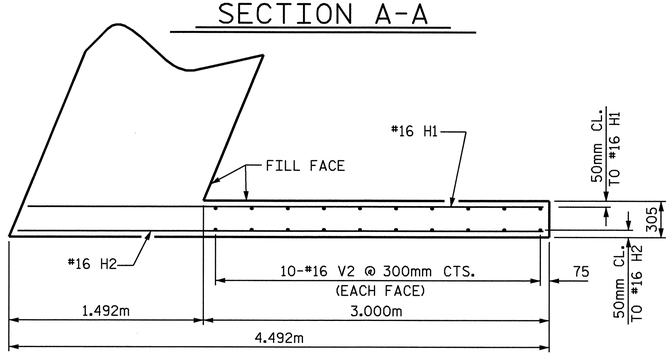

PLAN W1

SECTION Y-Y

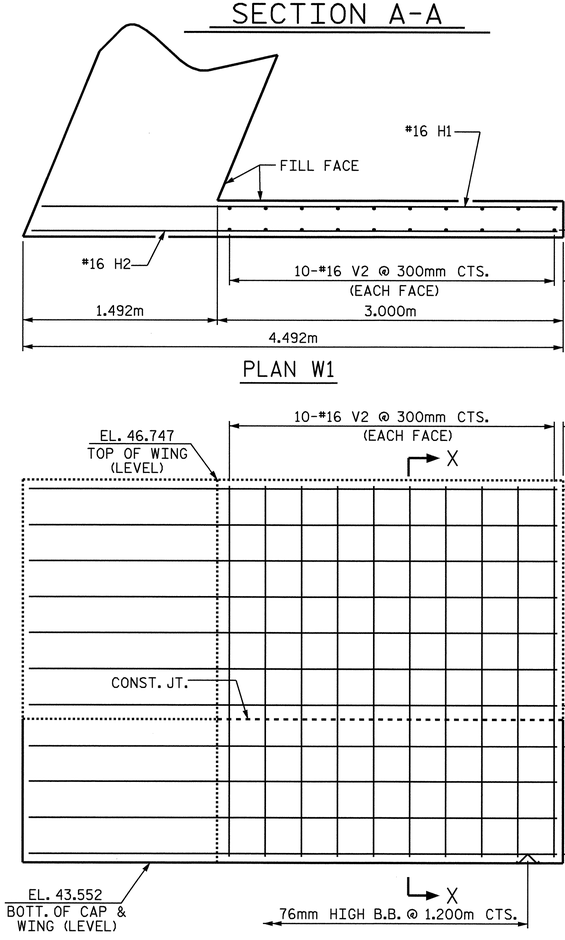

ELEVATION W1

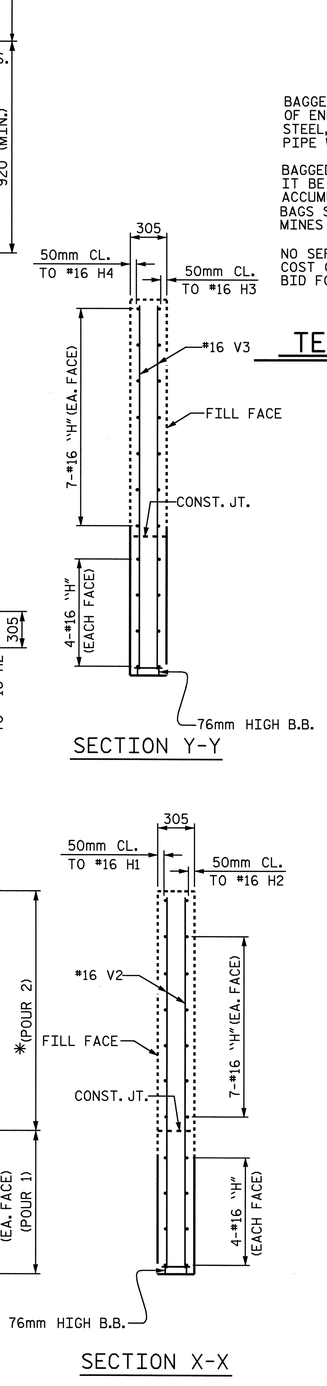

SECTION X-X

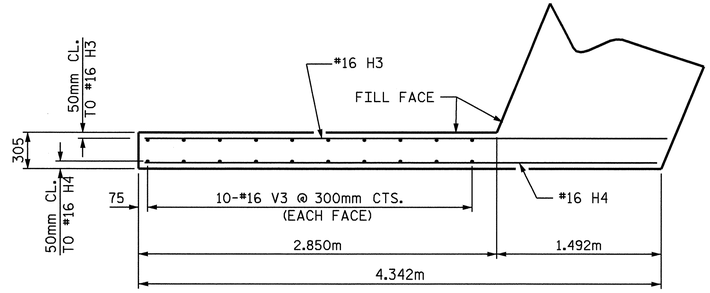

PLAN W2

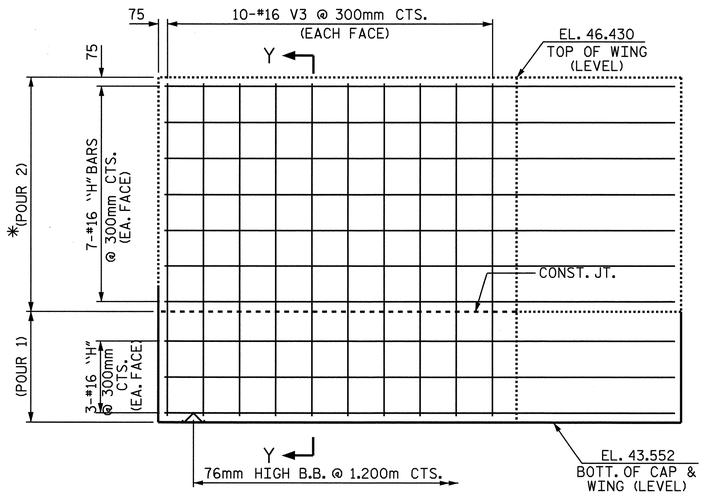

ELEVATION W2

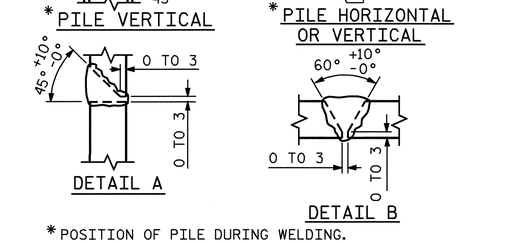

* POSITION OF PILE DURING WELDING.

PILE SPLICE DETAILS

MINIMUM OF 3- 0.03 CUBIC METER BAGS OF #78M STONE. BAGS SHALL BE OF POROUS FABRIC, SECURELY TIED.

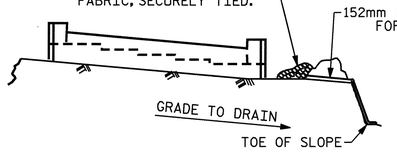

BAGGED STONE AND PIPE SHALL BE PLACED IMMEDIATELY AFTER COMPLETION OF END BENT EXCAVATION. PIPE MAY BE EITHER CONCRETE, CORRUGATED STEEL, CORRUGATED ALUMINUM ALLOY, OR CORRUGATED PLASTIC. PERFORATED PIPE WILL NOT BE ALLOWED.

BAGGED STONE SHALL REMAIN IN PLACE UNTIL THE ENGINEER DIRECTS THAT IT BE REMOVED. THE CONTRACTOR SHALL REMOVE AND DISPOSE OF SILT ACCUMULATIONS AT BAGGED STONE WHEN SO DIRECTED BY THE ENGINEER. BAGS SHALL BE REMOVED AND REPLACED WHENEVER THE ENGINEER DETERMINES THAT THEY HAVE DETERIORATED AND LOST THEIR EFFECTIVENESS.

NO SEPARATE PAYMENT WILL BE MADE FOR THIS WORK AND THE ENTIRE COST OF THIS WORK SHALL BE INCLUDED IN THE UNIT CONTRACT PRICE BID FOR THE SEVERAL PAY ITEMS.

TEMPORARY DRAINAGE AT END BENT

BAR TYPES

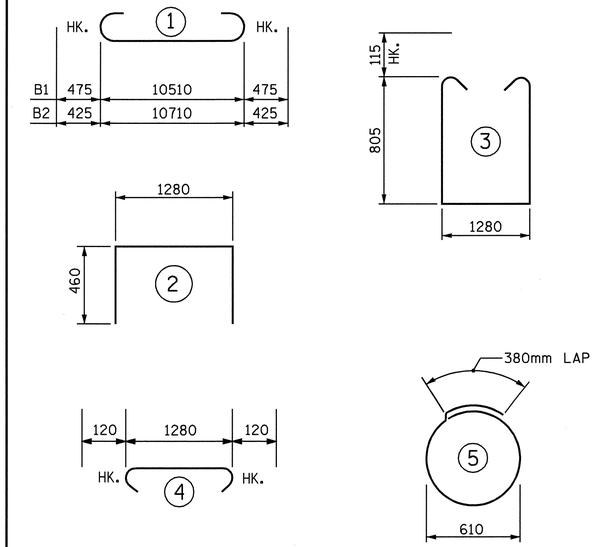

ALL BAR DIMENSIONS ARE OUT TO OUT.

BILL OF MATERIAL

END BENT 1

BAR	NO.	SIZE	TYPE	LENGTH	WEIGHT
B1	8	36	1	11460	725
B2	10	32	1	11560	740
B3	8	16	STR	9500	118
B4	8	13	STR	9400	75
B5	5	13	STR	7940	39
B6	5	13	STR	3120	16
B7	15	13	STR	1280	19
H1	11	16	STR	4280	73
H2	11	16	STR	4360	74
H3	10	16	STR	4340	67
H4	10	16	STR	4240	66
S1	42	13	3	3120	130
S2	42	13	4	1520	63
S3	44	13	5	2300	100
U1	23	13	2	2200	50
V1	98	13	STR	1700	166
V2	20	16	STR	3080	96
V3	20	16	STR	2760	86

REINFORCING STEEL Kg. 2703

CLASS A CONCRETE BREAKDOWN

* POUR 1 (CAP AND LOWER PART OF WINGS) 32.0 m³

TOTAL 32.0 m³

HP 12 x 53 STEEL PILES

NO. 11 253.0 LIN. M.

PILE REDRIVES NO.: 5

* UPPER WINGS (POUR 2) TO BE POURED WITH SUPERSTRUCTURE

PROJECT NO. R-2554BA

WAYNE COUNTY

STATION: 93+29.591 -L-

SHEET 2 OF 2

STATE OF NORTH CAROLINA
DEPARTMENT OF TRANSPORTATION
RALEIGH

SUBSTRUCTURE

INTEGRAL END BENT 1

(RIGHT LANE)

NORTH CAROLINA PROFESSIONAL SEAL 030005 ENGINEER KEITH PASCHAL

6/9/08

REVISIONS						SHEET NO.
NO.	BY:	DATE:	NO.	BY:	DATE:	S-44
1			3			TOTAL SHEETS
2			4			478

DRAWN BY : J. D. HAWK DATE : 8/07
CHECKED BY : Q. PUIGCERVER DATE : 3/15/08

06-JUN-2008 15:07
k:\struct~1\bullock\str#2\finalp~1\R2554BA_sd_EI&E2_02.dgn
jkharva

STR. #2

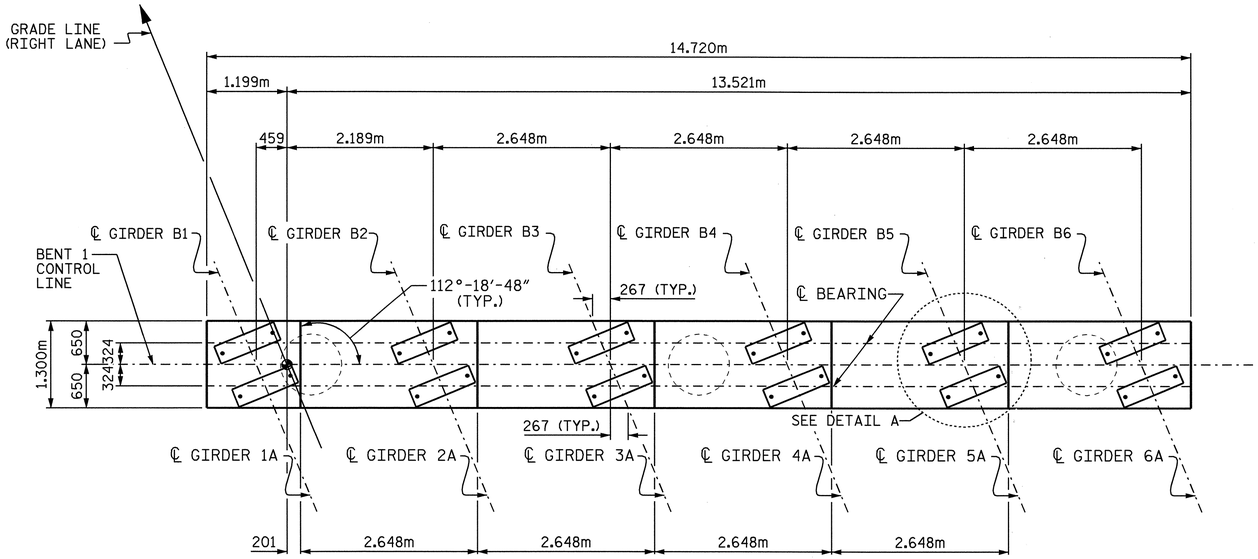

PLAN

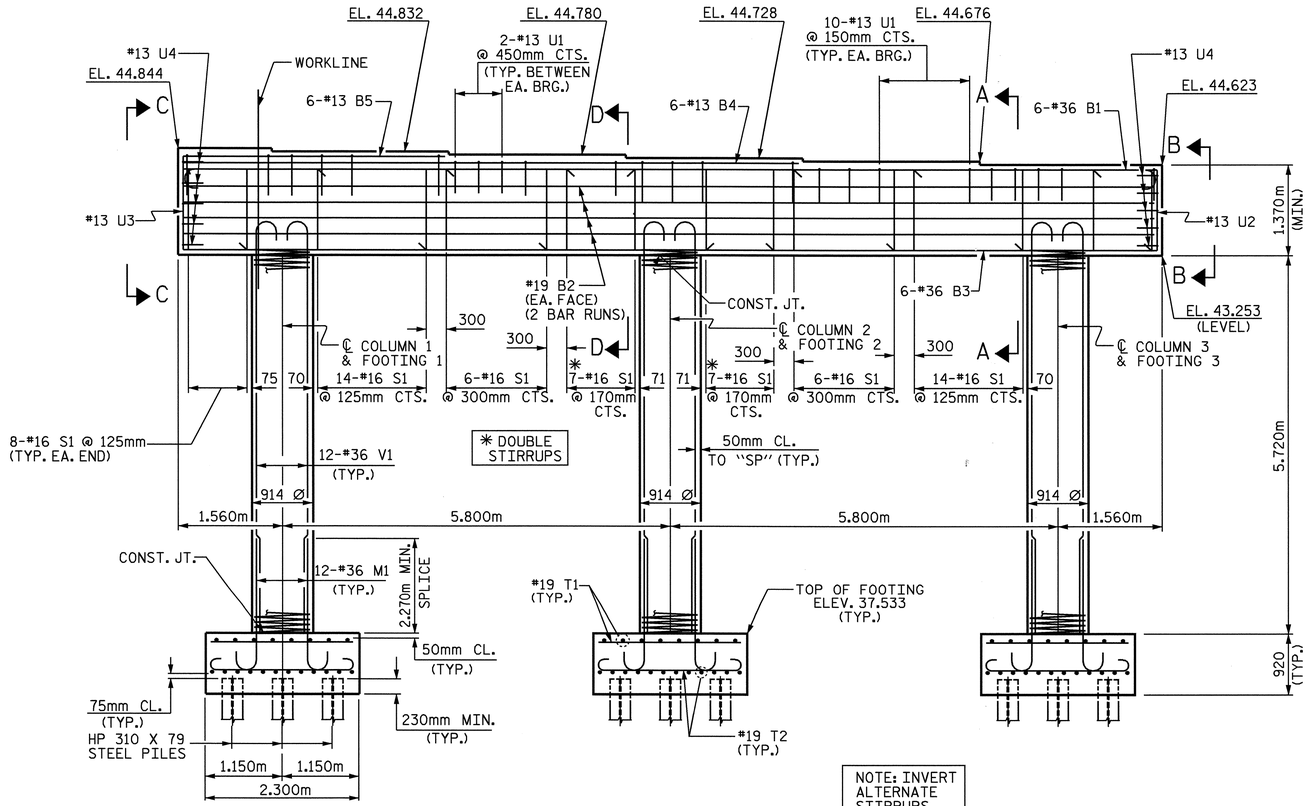

ELEVATION

(DIMENSIONS AND REINFORCING STEEL ARE TYPICAL FOR EACH COLUMN & FOOTING)

NOTES

STIRRUPS IN CAP MAY BE SHIFTED AS NECESSARY TO CLEAR ANCHOR BOLTS.

HOOKS ON "V" BARS MAY BE TURNED AS NECESSARY FOR PLACING REINFORCING STEEL.

FOR PILE SPLICE DETAILS, SEE END BENT 1.

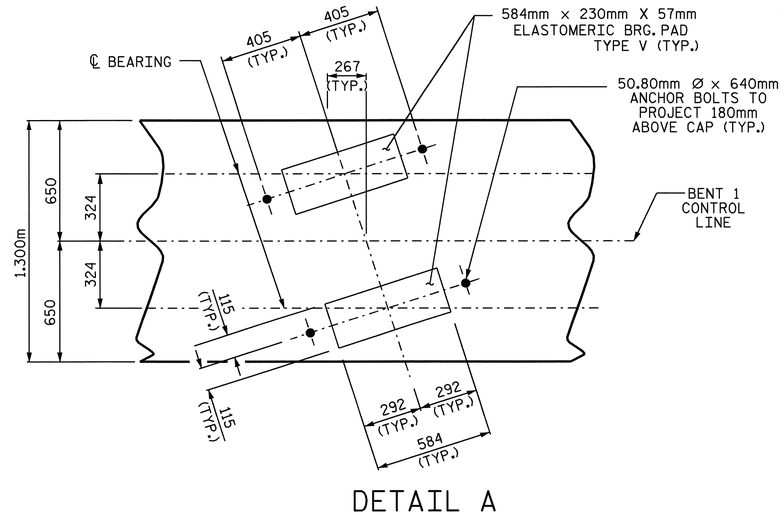

DETAIL A

(TYP. EA. GIRDER)

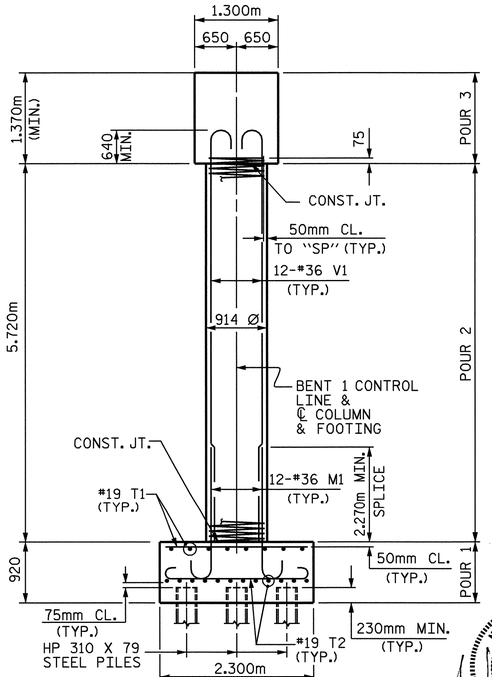

END ELEVATION

NORTH CAROLINA PROFESSIONAL SEAL 24005 ENGINEER A. KEITH PASCHAL

6/9/08

PROJECT NO. R-2554BA

WAYNE COUNTY

STATION: 93+23.591 -L-

SHEET 1 OF 2

STATE OF NORTH CAROLINA
DEPARTMENT OF TRANSPORTATION
RALEIGH

SUBSTRUCTURE

BENT 1

(RIGHT LANE)

REVISIONS						SHEET NO.
NO.	BY:	DATE:	NO.	BY:	DATE:	S-45
1			3			TOTAL SHEETS
2			4			478

DRAWN BY : J.D. HAWK DATE : 11/07
CHECKED BY : O. PUIGCERVER DATE : 3/15/08

09-JUN-2008 13:41
r:\structures\bullock\Str#2\FINAL PLANS\R2554BA_sd_Bl_02.dgn
jdhawk

STR. #2

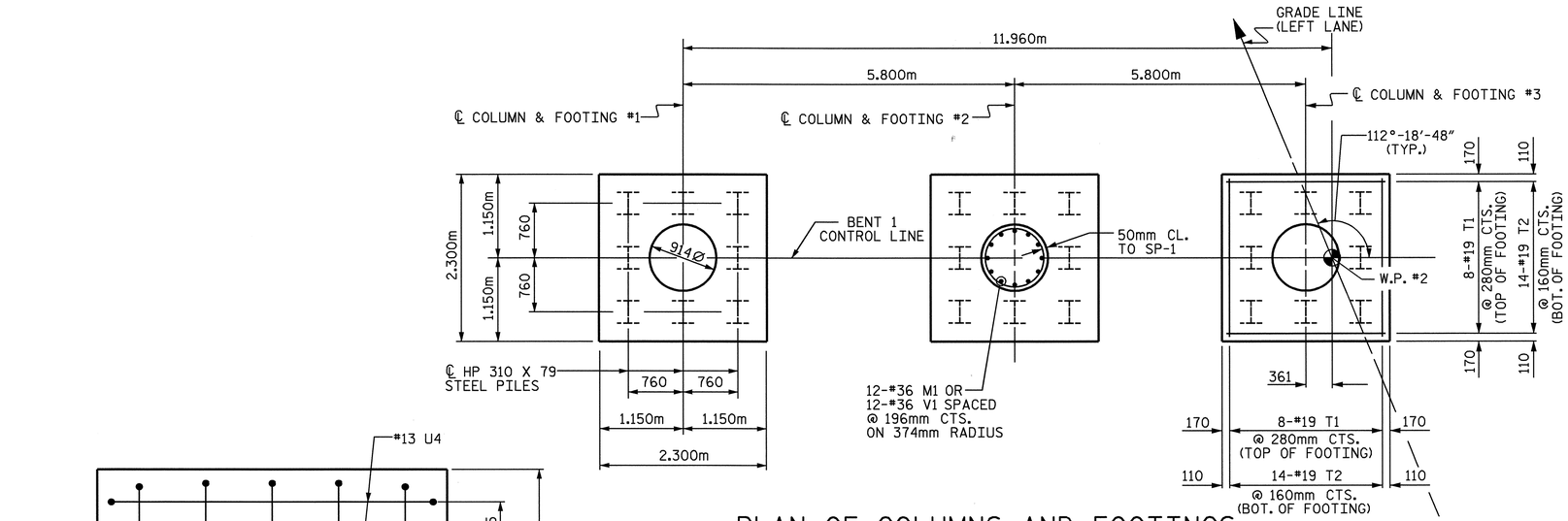

PLAN OF COLUMNS AND FOOTINGS

(DIMENSIONS AND REINFORCING STEEL ARE TYPICAL FOR EACH COLUMN & FOOTING)

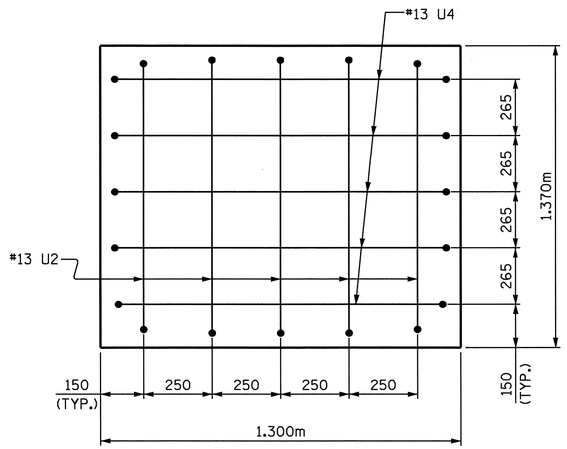

VIEW B-B

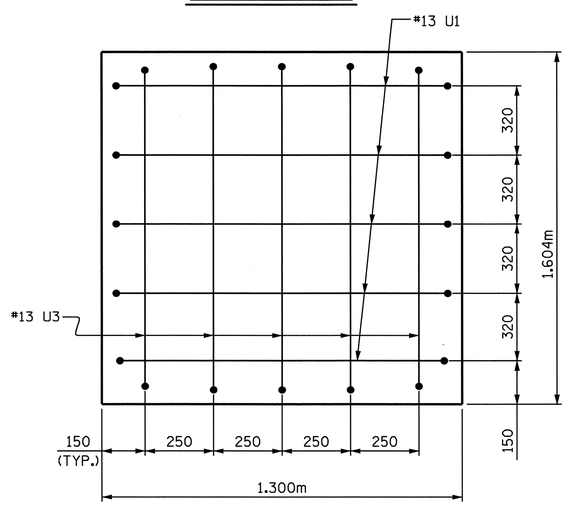

VIEW C-C

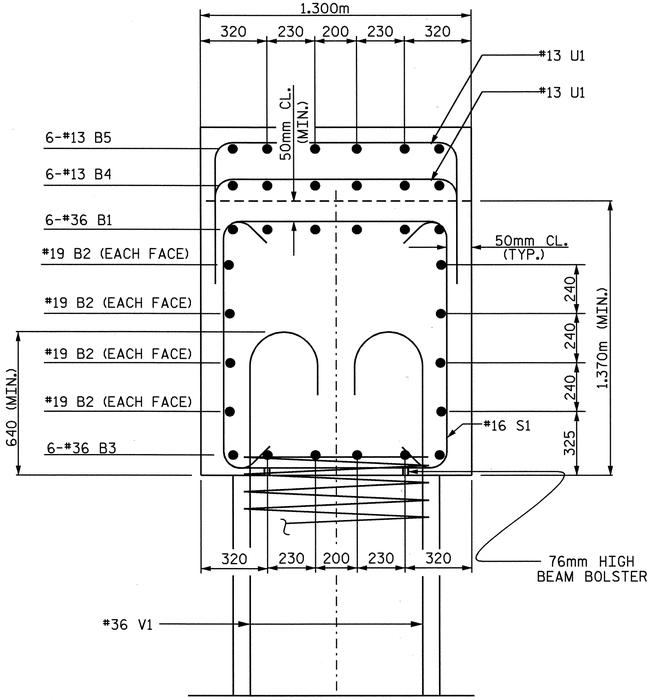

SECTION A-A

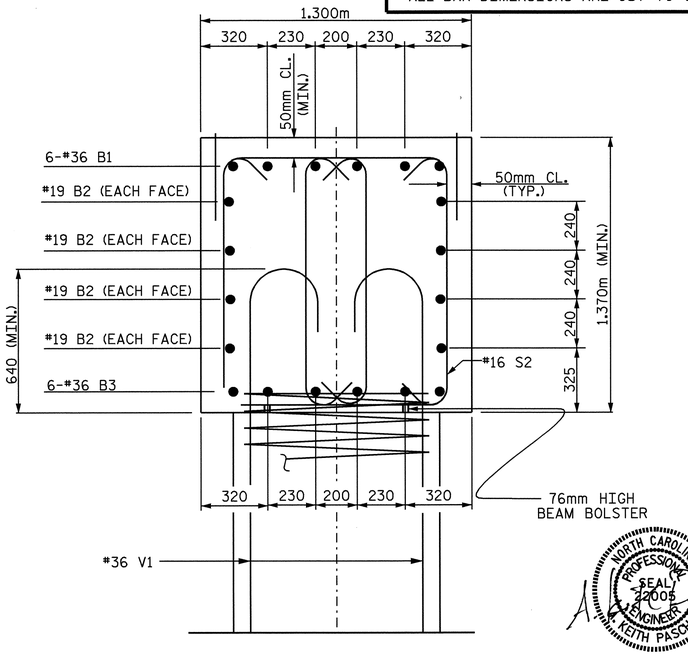

SECTION D-D

BAR TYPES

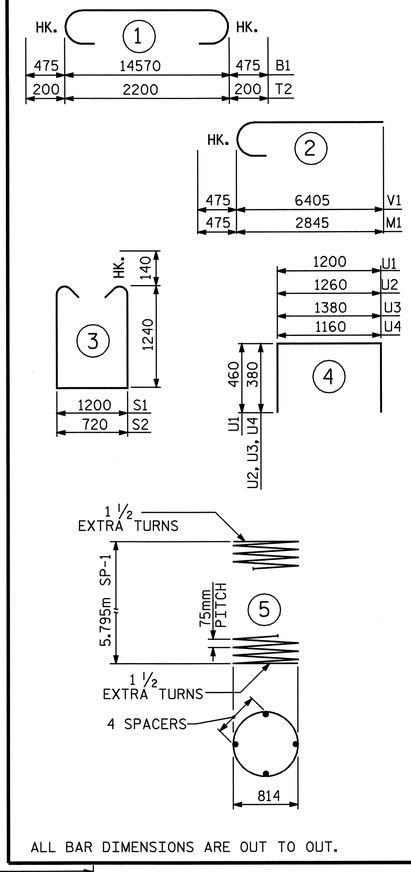

ALL BAR DIMENSIONS ARE OUT TO OUT.

BILL OF MATERIAL

BENT 1

BAR	NO.	SIZE	TYPE	LENGTH	WEIGHT
B1	6	36	1	15520	736
B2	8	19	STR	14620	261
B3	6	36	STR	14620	694
B4	6	13	STR	5300	32
B5	6	13	STR	3920	23
M1	36	36	2	3320	945
T1	48	19	STR	2200	236
T2	84	19	1	2600	488
V1	36	36	2	6840	1947
S1	56	16	3	3960	344
S2	28	16	3	3480	151
U1	70	13	4	2120	148
U2	5	13	4	2020	10
U3	5	13	4	2140	11
U4	10	13	4	1920	19

REINFORCING STEEL 6045 kg.

SP-1	3	***	5	203600	603

SPIRAL COLUMN REINFORCING STEEL 603 kg.

CLASS A CONCRETE BREAKDOWN	m3
POUR 1 (FOOTINGS)	14.6 C.Y.
POUR 2 (COLUMNS)	11.0 C.Y.
POUR 3 (CAP)	28.3 C.Y.
TOTAL CLASS A CONCRETE	53.9 C.Y.

℄ HP 310 X 79 STEEL PILES

NO. = 24 LINEAR METERS = 408.0

PILE REDRIVES EA. 9

FOUNDATION EXCAVATION = LUMP SUM

*** THE "SP" SPIRAL REINFORCING STEEL SHALL BE W20 OR D-20 COLD DRAWN WIRE OR #13 PLAIN OR DEFORMED BAR.

PROJECT NO. R-2554BA

WAYNE COUNTY

STATION: 93+23.591 -L-

SHEET 2 OF 2

STATE OF NORTH CAROLINA
DEPARTMENT OF TRANSPORTATION
RALEIGH

SUBSTRUCTURE

BENT 1

(RIGHT LANE)

REVISIONS						SHEET NO.
NO.	BY:	DATE:	NO.	BY:	DATE:	S-46
1			3			TOTAL SHEETS
2			4			478

NORTH CAROLINA PROFESSIONAL SEAL 22005 ENGINEER KEITH PASCHAL

6/9/08

DRAWN BY : J.D. HAWK DATE : 11/15/07
CHECKED BY : O. PUIGCERVER DATE : 3/15/08

09-JUN-2008 13:41
r:\structures\bullock\Str#2\FINAL PLANS\R2554BA_sd_BI_02.dgn
jdhawk

NOTES:

THE CONTRACTOR SHALL PROVIDE FOR INSTALLATION OF THE 100mm DIAMETER DRAIN PIPE THROUGH THE WING WALL AS REQUIRED FOR REINFORCED BRIDGE APPROACH FILLS, SEE THE ROADWAY PLANS. REINFORCING STEEL IN THE WING WALL MAY BE SHIFTED AS NECESSARY TO CLEAR THE DRAIN PIPE.

THE CONTRACTOR'S ATTENTION IS CALLED TO THE FACT THAT THE UPPER PART OF WING IS TO BE POURED WITH SUPERSTRUCTURE.

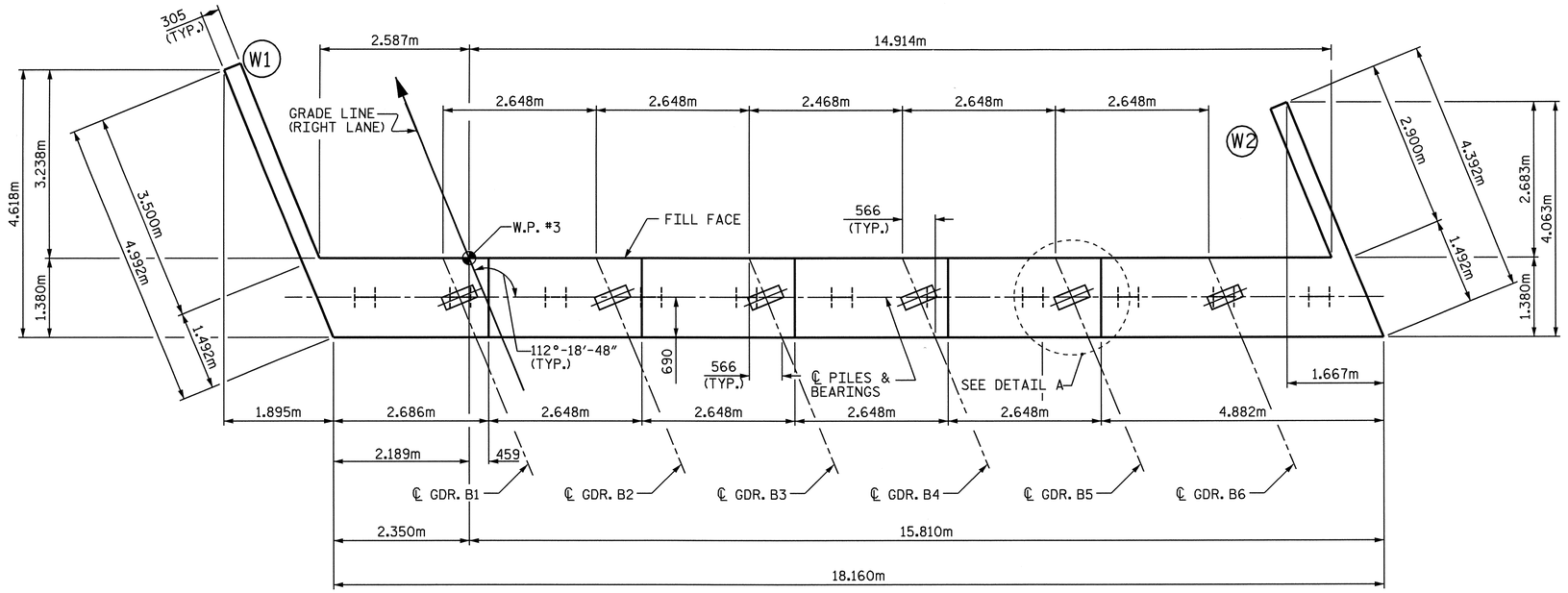

PLAN

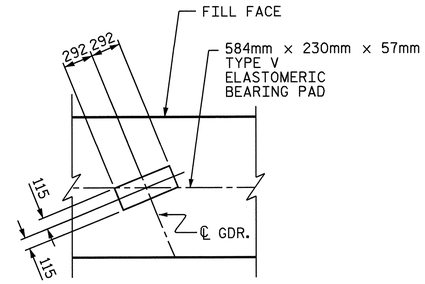

DETAIL A

(TYP. EA. GIRDER)

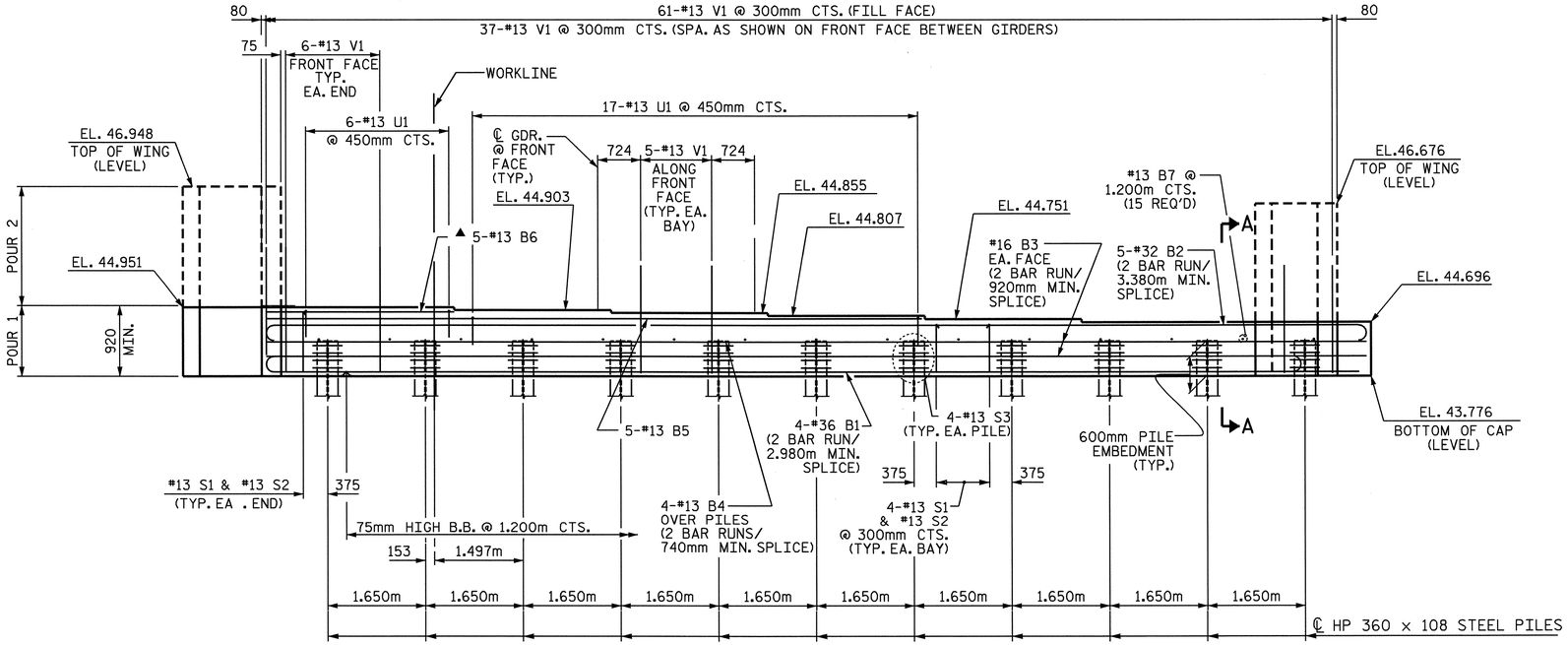

ELEVATION

#13 B6 MAY BE CUT AS NECESSARY FOR SKEWED END

PROJECT NO. R-2554BA

WAYNE COUNTY

STATION: 93+23.591 -L-

SHEET 1 OF 2

STATE OF NORTH CAROLINA
DEPARTMENT OF TRANSPORTATION
RALEIGH

SUBSTRUCTURE

INTEGRAL END BENT 2

(RIGHT LANE)

REVISIONS						SHEET NO.
NO.	BY:	DATE:	NO.	BY:	DATE:	S-47
1			3			TOTAL SHEETS
2			4			478

STR. #2

NORTH CAROLINA PROFESSIONAL SEAL 22005 ENGINEER KEITH PASCHAL

6/9/08

DRAWN BY : J.D. HAWK DATE : 8/07
CHECKED BY : O. PUIGCERVER DATE : 3/15/08

06-JUN-2008 15:07
k:\struct~1\bullock\str#2\finalp~1\R2554BA_sd_El&E2_02.dgn
jkharva

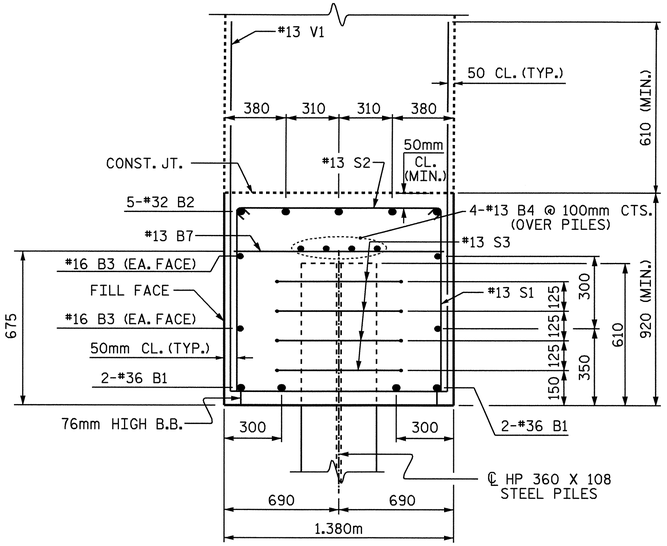

SECTION A-A

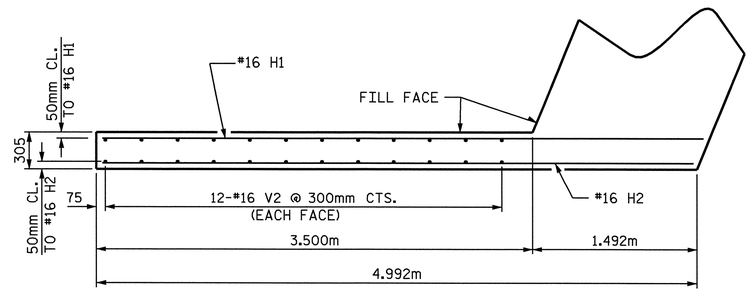

PLAN W1

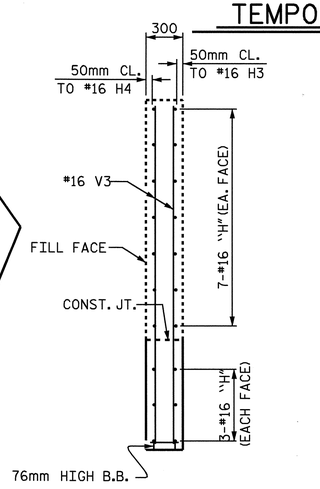

SECTION X-X

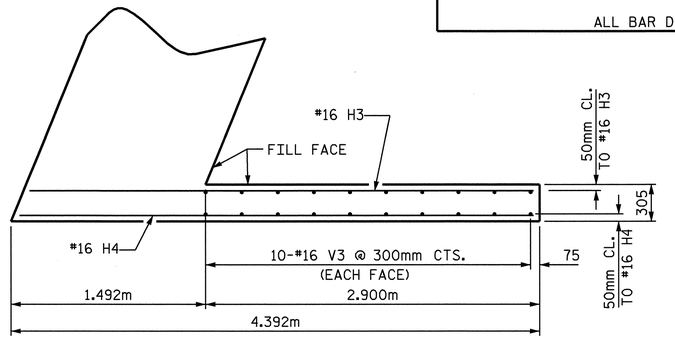

PLAN W2

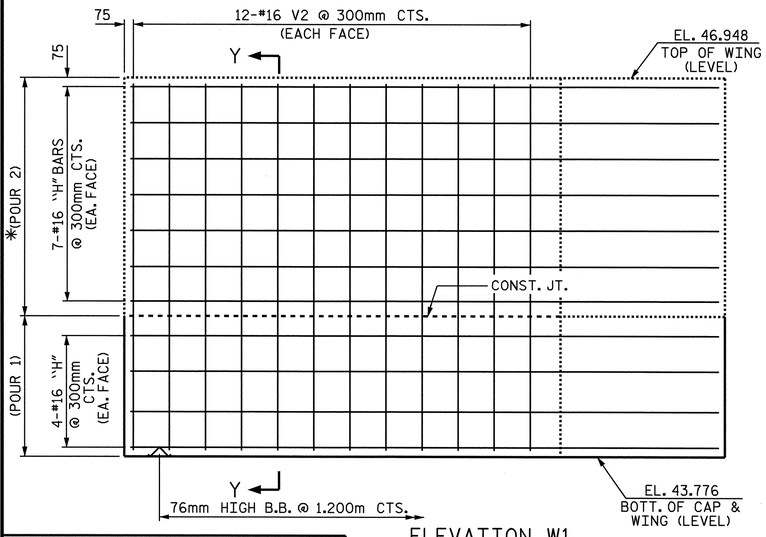

ELEVATION W1

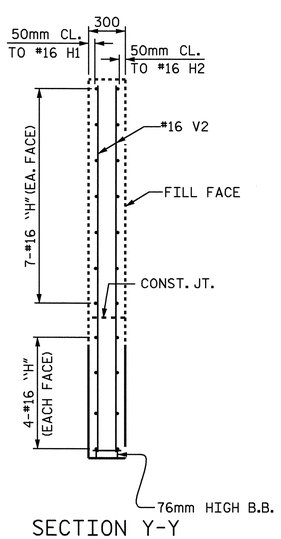

SECTION Y-Y

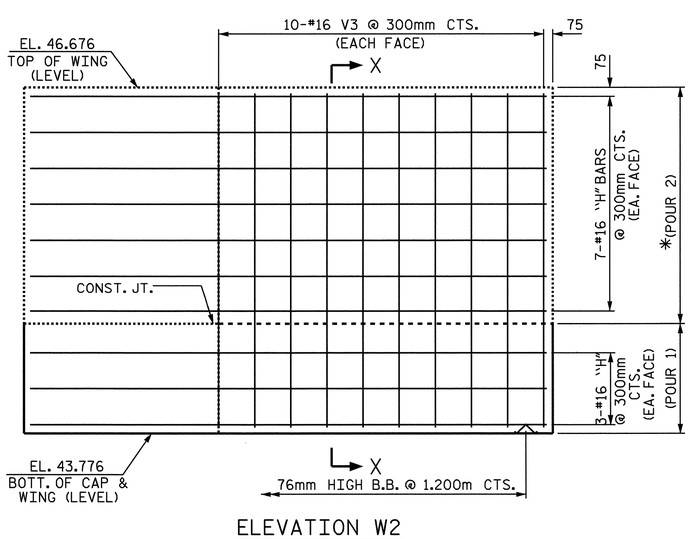

ELEVATION W2

TEMPORARY DRAINAGE AT END BENT

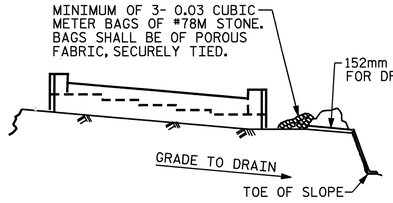

BAGGED STONE AND PIPE SHALL BE PLACED IMMEDIATELY AFTER COMPLETION OF END BENT EXCAVATION. PIPE MAY BE EITHER CONCRETE, CORRUGATED STEEL, CORRUGATED ALUMINUM ALLOY, OR CORRUGATED PLASTIC. PERFORATED PIPE WILL NOT BE ALLOWED.

BAGGED STONE SHALL REMAIN IN PLACE UNTIL THE ENGINEER DIRECTS THAT IT BE REMOVED. THE CONTRACTOR SHALL REMOVE AND DISPOSE OF SILT ACCUMULATIONS AT BAGGED STONE WHEN SO DIRECTED BY THE ENGINEER. BAGS SHALL BE REMOVED AND REPLACED WHENEVER THE ENGINEER DETERMINES THAT THEY HAVE DETERIORATED AND LOST THEIR EFFECTIVENESS.

NO SEPARATE PAYMENT WILL BE MADE FOR THIS WORK AND THE ENTIRE COST OF THIS WORK SHALL BE INCLUDED IN THE UNIT CONTRACT PRICE BID FOR THE SEVERAL PAY ITEMS.

BAR TYPES

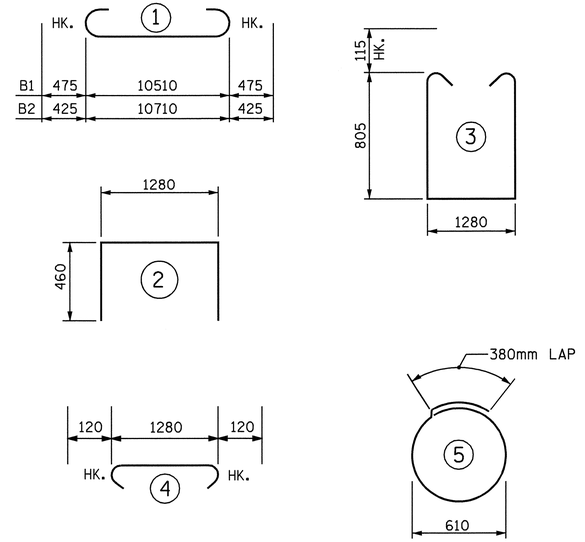

ALL BAR DIMENSIONS ARE OUT TO OUT.

BILL OF MATERIAL
END BENT 2

BAR NO.	SIZE	TYPE	LENGTH	WEIGHT
B1	8	36	1	11460	725
B2	10	32	1	11560	740
B3	8	16	STR	9500	118
B4	8	13	STR	9400	75
B5	5	13	STR	7940	39
B6	5	13	STR	3120	16
B7	15	13	STR	1280	19
H1	11	16	STR	4980	85
H2	11	16	STR	4900	84
H3	10	16	STR	4180	65
H4	10	16	STR	4260	66
S1	42	13	3	3120	130
S2	42	13	4	1520	63
S3	44	13	5	2300	100
U1	23	13	2	2200	50
V1	98	13	STR	1700	166
V2	24	16	STR	3060	114
V3	20	16	STR	2800	87

REINFORCING STEEL Kg. 2742

CLASS A CONCRETE BREAKDOWN

*POUR 1 (CAP AND LOWER PART OF WINGS)	32.1 m3
TOTAL	32.1 m3

HP 12 x 53 STEEL PILES

NO. 11	242.0 METERS
PILE REDRIVES	NO.: 5

*UPPER WINGS (POUR 2) TO BE POURED WITH SUPERSTRUCTURE

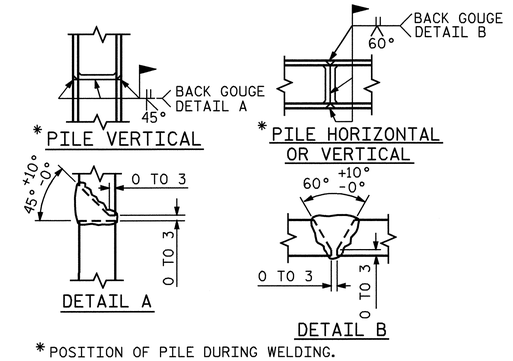

*POSITION OF PILE DURING WELDING.

PILE SPLICE DETAILS

PROJECT NO. R-2554BA

WAYNE COUNTY

STATION: 93+23.591 -L-

SHEET 2 OF 2

STATE OF NORTH CAROLINA
DEPARTMENT OF TRANSPORTATION
RALEIGH

SUBSTRUCTURE

INTEGRAL END BENT 2

(RIGHT LANE)

NORTH CAROLINA PROFESSIONAL SEAL 029054 ENGINEER KEITH PASCHAL

6/9/08

REVISIONS						SHEET NO.
NO.	BY:	DATE:	NO.	BY:	DATE:	S-48
1			3			TOTAL SHEETS 478
2			4			

DRAWN BY : J.D. HAWK DATE : 8/15/07
CHECKED BY : O. PUIGCERVER DATE : 3/15/08

06-JUN-2008 15:07
k:\struct~1\bullock\str*2\finalp~1\R2554BA_sd_El&E2_02.dgn
jkharva

STR. *2

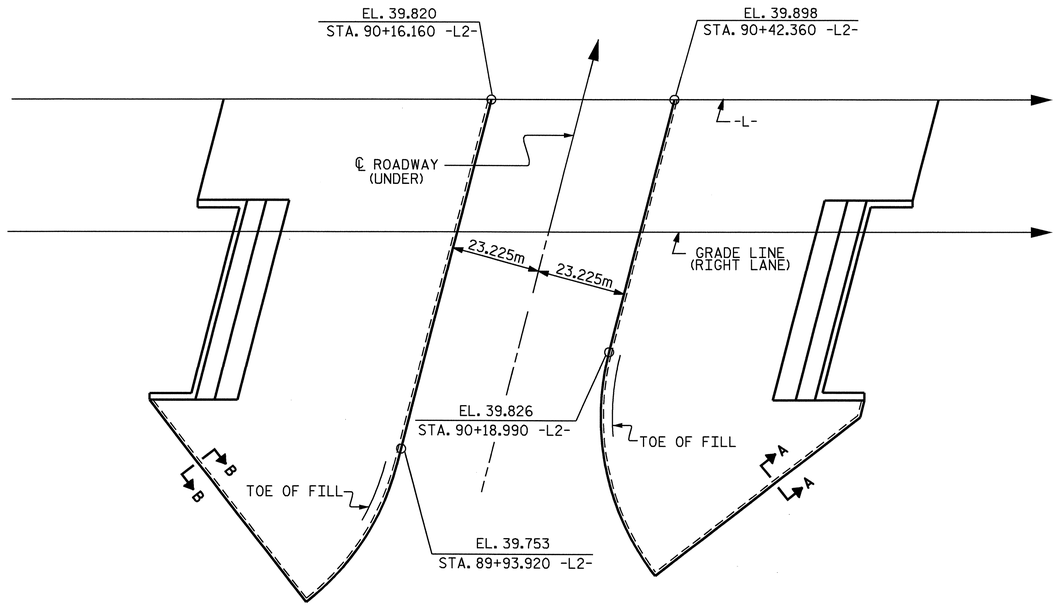

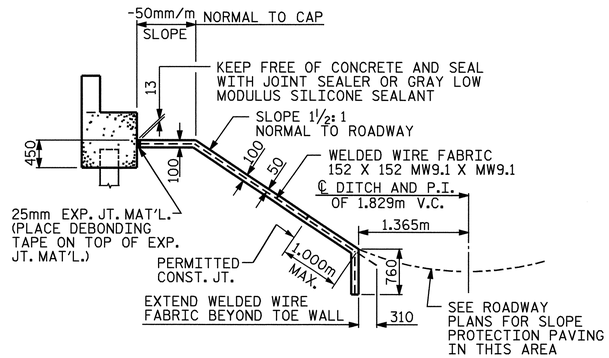

SECTION ALONG ℄ ROADWAY WHEN FILL CATCHES IN DITCH

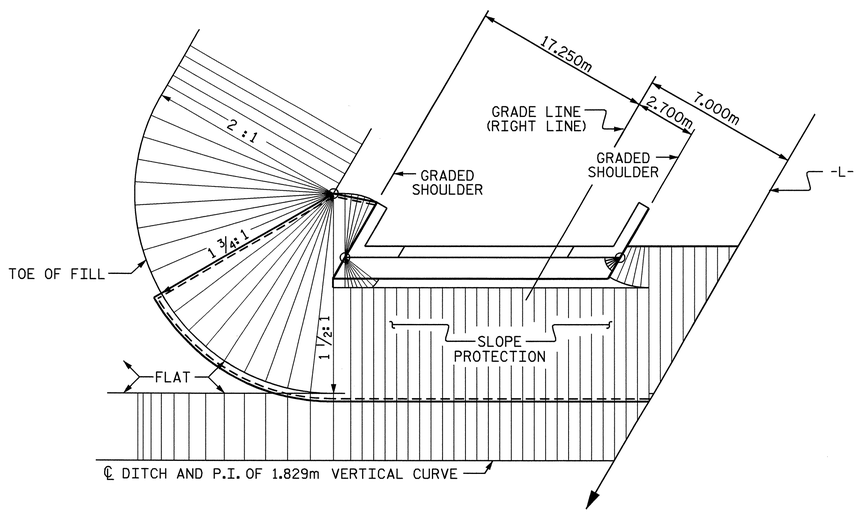

PLAN - END BENT WITH SWEPT BACK WINGS - SKEWED

(1 ½:1 SLOPE)

GENERAL NOTES

SLOPE PROTECTION SHALL BE PLACED UNDER THE ENDS OF THE BRIDGE AS SHOWN IN THE DETAILS. STRAIGHT EDGING WILL NOT BE REQUIRED UNLESS, IN THE OPINION OF THE ENGINEER, VISUAL INSPECTION INDICATES A NEED FOR IT. MEASUREMENT AND PAYMENT SHALL BE AS PRESCRIBED IN SECTION 462 OF THE STANDARD SPECIFICATIONS. FOR BERM WIDTH, SEE GENERAL DRAWING.

ALTERNATE "A"

ALTERNATE "A" SHALL CONSIST OF 100mm POURED-IN-PLACE CONCRETE PAVING AS SHOWN IN THE DETAILS ON THIS SHEET. CONCRETE SHALL BE CLASS "B". THE CONCRETE SURFACE SHALL BE FLOATED WITH A WOODEN FLOAT AND FINISHED. WELDED WIRE FABRIC REINFORCING SHALL BE 152 X 152 - W9.1 X W9.1, 1520mm WIDE. SLOPE PROTECTION SHALL BE POURED IN 1520mm STRIPS AS SHOWN IN THE "POURING DETAIL" WITH 600mm LONG #13 BARS PLACED ALONG THE SLOPE BETWEEN STRIPS AT 450mm MAXIMUM SPACING. SLOPE PROTECTION MAY BE POURED IN ALTERNATE 1220mm AND 1520mm STRIPS AS SHOWN IN THE "OPTIONAL POURING DETAIL" WITH ADJACENT RUNS OF WELDED WIRE FABRIC LAPPING AT LEAST 152mm. THE COST OF THE WELDED WIRE FABRIC AND #13 BARS, IF USED, SHALL BE INCLUDED IN THE CONTRACT UNIT PRICE BID PER SQUARE METER FOR SLOPE PROTECTION.

BRIDGE @ STA. 93+23.591 -L-	100mm SLOPE PROTECTION	* WELDED WIRE FABRIC 1520mm WIDE
	SQUARE METERS	APPROX. METERS
END BENT 1	270.0	197.0
END BENT 2	318.0	232

*QUANTITY SHOWN IS BASED ON 1520mm POURS.

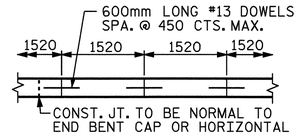

STRIP WIDTHS MAY VARY IN CURVED PORTION.

POURING DETAIL

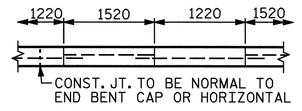

POUR A 1220mm STRIP FIRST. STRIP WIDTHS MAY VARY IN CURVED PORTION.

OPTIONAL POURING DETAIL

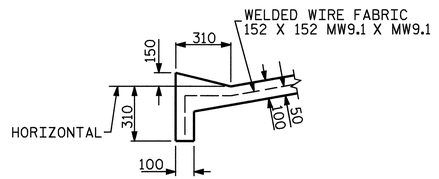

SECTION B-B

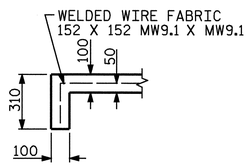

SECTION A-A

PROJECT NO. R-2554BA

WAYNE COUNTY

STATION: 93+23.591 -L-

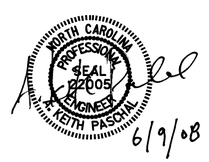

STATE OF NORTH CAROLINA
DEPARTMENT OF TRANSPORTATION
RALEIGH

STANDARD
SLOPE PROTECTION
DETAILS
(RIGHT LANE)

REVISIONS						SHEET NO.
NO.	BY:	DATE:	NO.	BY:	DATE:	S-49
1			3			TOTAL SHEETS
2			4			478

ASSEMBLED BY : J.D. HAWK	DATE : 3/06/08	
CHECKED BY : J.G. KHARVA	DATE : 3/09/08	
DRAWN BY : ELR 5/92	REV. 7/10/01	LES/RDR
CHECKED BY : GRP 6/92	REV. 5/7/03	RWW/JTE
	REV. 5/1/06	TLA/GM

06-JUN-2008 15:41
k:\struct~1\bullock\Str#2\FINAL PLANS\R-2554BA_sd_SP_02.dgn
jkharva

STR. #2

STD. NO. SP1SM

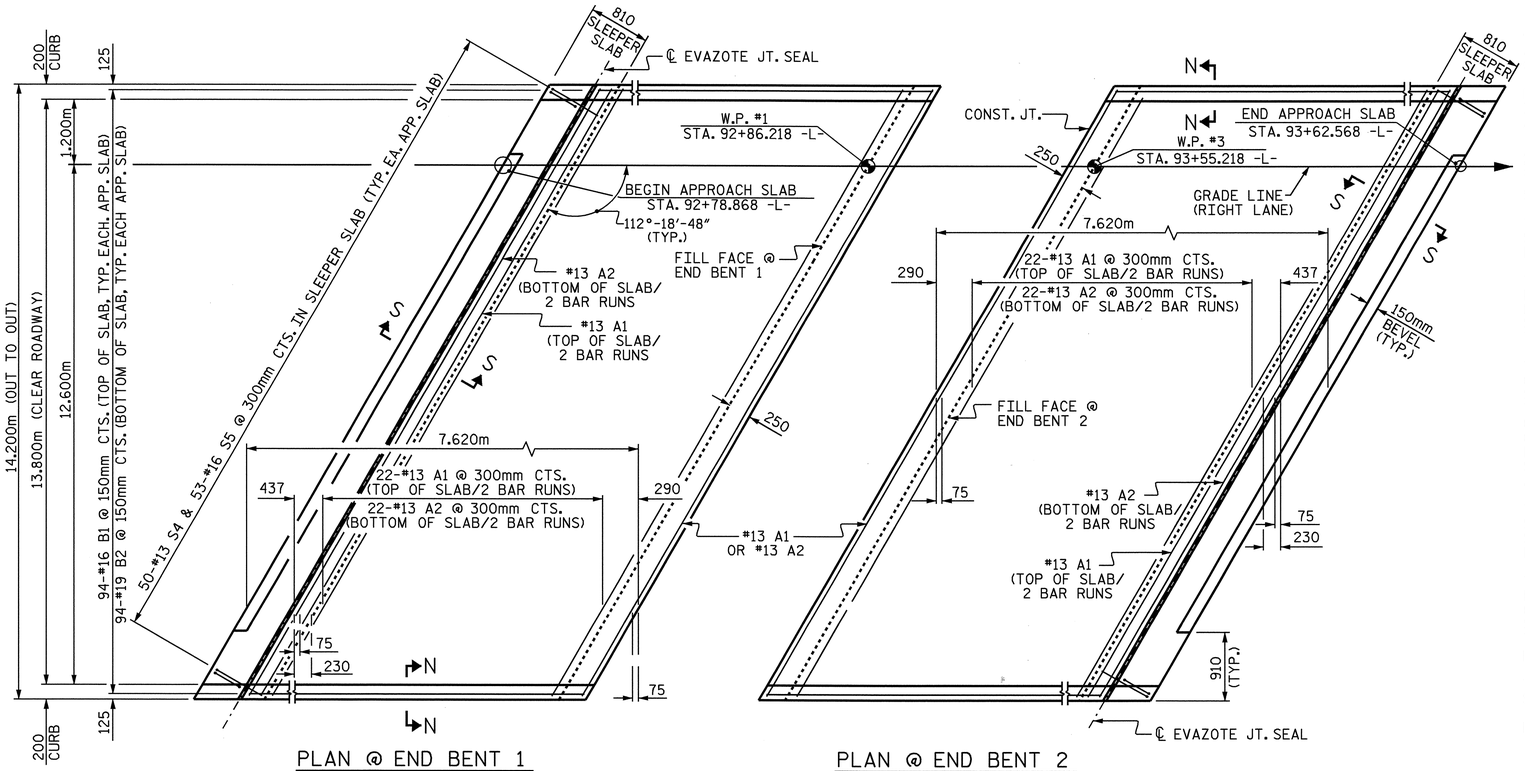

PLAN @ END BENT 1

PLAN @ END BENT 2

DIMENSIONS SHOWN ARE TYPICAL FOR BOTH APPROACH SLABS. #13 A1 BARS IN SLEEPER SLAB NOT SHOWN FOR CLARITY.

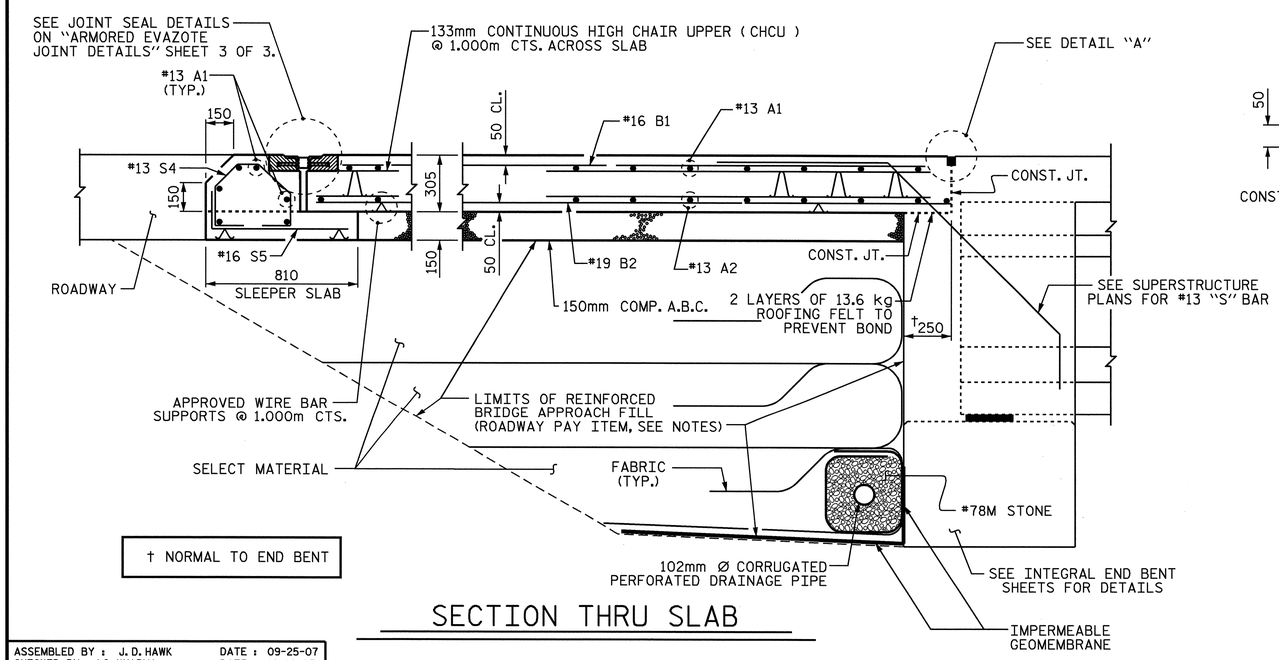

SECTION THRU SLAB

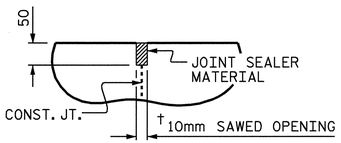

DETAIL "A"

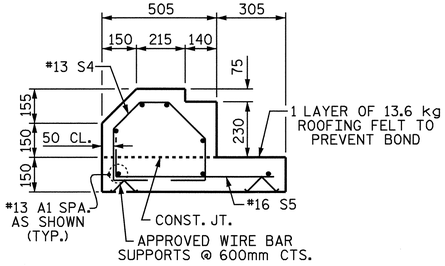

SECTION S-S

SHOWING SLEEPER SLAB

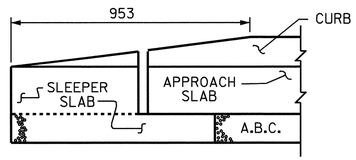

END OF CURB WITHOUT SHOULDER BERM GUTTER

(OMIT TAPER WHEN SHOULDER BERM GUTTER IS REQUIRED)

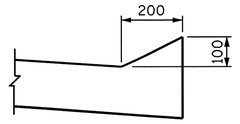

SECTION N-N

NOTES

APPROACH SLAB SHALL NOT BE CONSTRUCTED PRIOR TO COMPLETION OF THE BRIDGE DECK.

FOR REINFORCED BRIDGE APPROACH FILL INCLUDING FABRIC, IMPERMEABLE GEOMEMBRANE, 102mm Ø DRAINAGE PIPE, #78M STONE, AND SELECT MATERIAL, SEE ROADWAY PLANS.

AREA BETWEEN THE WINGWALL AND APPROACH SLAB SHALL BE GRADED TO DRAIN THE WATER AWAY FROM THE FILL FACE OF THE BRIDGE AND SHALL BE PAVED. SEE ROADWAY PLANS.

THE 150mm COMP. A.B.C. SHALL BE FLUSH WITH THE SLEEPER SLAB AND SHALL EXTEND 300mm OUTSIDE OF EACH EDGE OF THE APPROACH SLAB.

THE CONTRACTOR MAY USE 100mm TYPE B-25.0B ASPHALT CONCRETE BASE COURSE IN LIEU OF 150mm COMP. A.B.C. IF THIS OPTION IS USED, THE BASE COURSE SHALL BE FLUSH WITH THE ROADWAY SLEEPER SLAB, AND THE WIDTH SHALL BE THE SAME AS THAT OF THE APPROACH SLAB.

THE CONTRACTOR MAY USE 125mm CLASS "A" CONCRETE BASE IN LIEU OF 150mm COMP. A.B.C. IF THIS OPTION IS USED, THE CONCRETE BASE SHALL BE FLUSH WITH THE ROADWAY END OF THE SLEEPER SLAB, AND THE WIDTH SHALL BE THE SAME AS THAT OF THE APPROACH SLAB. THE CONCRETE SHALL BE FINISHED TO A SMOOTH SURFACE AND A LAYER OF 13.6 kg ROOFING FELT SHALL BE PLACED BETWEEN THE CONCRETE BASE AND THE APPROACH SLAB TO PREVENT BOND. THE APPROACH SLAB SHALL NOT BE CAST UNTIL THE CONCRETE BASE HAS REACHED AN AGE OF THREE CURING DAYS.

THE VERTICAL JOINT ON THE RIGHT AND LEFT SIDE OF THE APPROACH SLAB AT THE ENDS OF THE EVAZOTE JOINT SHALL BE FILLED WITH SILICONE OR OTHER APPROVED MATERIAL IN ORDER TO PREVENT BACKFILL FROM ENTERING THE JOINT OPENING.

THE JOINT OPENING AT THE APPROACH SLAB/DECK INTERFACE SHALL BE SAWED NO MORE THAN 12 HOURS AFTER THE APPROACH SLAB IS CAST. THE JOINT SHALL BE CLEANED OF ALL DEBRIS BEFORE THE SEALANT IS APPLIED. THE JOINT SEALER MATERIAL SHALL CONFORM TO THE REQUIREMENTS OF TYPE SL LOW MODULUS SILICONE SEALANT. FOR EVAZOTE JOINT SEALS, SEE SPECIAL PROVISIONS.

THE NOMINAL UNCOMPRESSED SEAL WIDTH OF THE EVAZOTE JOINT SEAL SHALL BE 64mm.

FOR ELASTOMERIC CONCRETE, SEE SPECIAL PROVISIONS.

(BILL OF MATERIAL)

FOR ONE APPROACH SLAB (2 REQ'D)

BAR	NO.	SIZE	TYPE	LENGTH	WEIGHT
* A1	62	#13	STR	7940	489
A2	48	#13	STR	7900	377
* B1	94	#16	STR	6720	980
B2	94	#19	STR	6940	1458
* S4	50	#13	1	1200	60
S5	50	#16	2	880	68
REINFORCING STEEL				kg.	1903
* EPOXY COATED REINFORCING STEEL				kg.	1529
CLASS AA CONCRETE					
POUR 1 - SLAB & CURB				C.M.	33.1
POUR 2 - SLEEPER SLAB				C.M.	3.7
TOTAL				C.M.	36.8

BAR TYPES

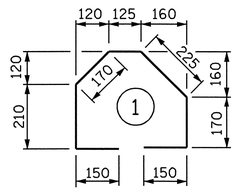

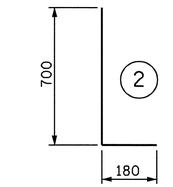

ALL BAR DIMENSIONS ARE OUT TO OUT

PROJECT NO. R-2554BA

WAYNE COUNTY

STATION: 93+23.591 -L-

SHEET 1 OF 3

STATE OF NORTH CAROLINA
DEPARTMENT OF TRANSPORTATION
RALEIGH

STANDARD

BRIDGE APPROACH SLAB FOR INTEGRAL ABUTMENT

(RIGHT LANE)

REVISIONS						SHEET NO.
NO.	BY:	DATE:	NO.	BY:	DATE:	S-50
1			3			TOTAL SHEETS
2			4			478

NORTH CAROLINA PROFESSIONAL SEAL 22006 ENGINEER J. KEITH PASCHAL

6/9/08

ASSEMBLED BY : J. D. HAWK	DATE : 09-25-07
CHECKED BY : J.G. KHARVA	DATE : 10-10-07
DRAWN BY : TLA 6/06	ADDED 5/1/06R KMM/GM
CHECKED BY : GM 6/06	

09-JUN-2008 13:40
r:\structures\bullock\Str#2\FINAL PLANS\R2554BA_sd_AS_02.dgn

STR #2 STD. NO. BAS11SM

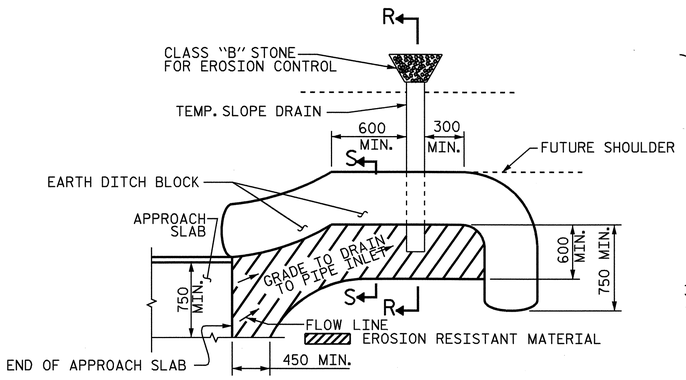

NOTE: IMMEDIATELY AFTER THE CONSTRUCTION OF THE APPROACH SLAB, THE CONTRACTOR SHALL PROVIDE TEMPORARY BERM AND SLOPE DRAIN. CONTRACTOR SHALL GRADE TO PIPE INLET AND PROVIDE EROSION RESISTANT MATERIAL AS SHOWN. THE EROSION RESISTANT MATERIAL SHALL BE EITHER 1) ASPHALT PLANT MIX, TYPE 1 OR TYPE 2, MIN. 50mm DEPTH, 2) EROSION CONTROL MAT, OR 3) CONCRETE, AS DIRECTED BY THE ENGINEER. THE SLOPE DRAIN SHALL CONSIST OF A NON-PERFORATED TEMPORARY DRAINAGE PIPE, 305mm IN DIAMETER.

PLAN VIEW

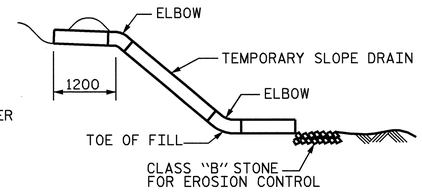

SECTION R-R

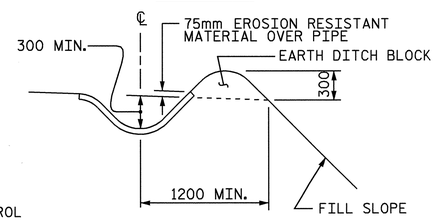

SECTION S-S

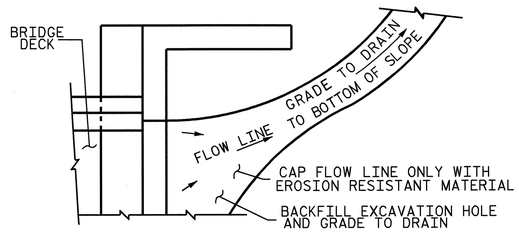

NOTE: IF THE APPROACH SLAB IS NOT CONSTRUCTED IMMEDIATELY AFTER THE BACKFILLING OF THE END BENT EXCAVATION, GRADE TO DRAIN TO THE BOTTOM OF THE SLOPE AND PROVIDE EROSION RESISTANT MATERIAL, SUCH AS FIBERGLASS ROVING OR AS DIRECTED BY THE ENGINEER TO PREVENT SOIL EROSION AND TO PROTECT THE AREA ADJACENT TO THE STRUCTURE. THE CONTRACTOR WILL BE REQUIRED TO REMOVE THESE MATERIALS PRIOR TO CONSTRUCTION OF THE APPROACH SLAB.

TEMPORARY DRAINAGE DETAIL

TEMPORARY BERM AND SLOPE DRAIN DETAILS

(TO BE USED WHEN SHOULDER BERM GUTTER IS REQUIRED)

ASSEMBLED BY : J. D. HAWK		DATE : 09/26/07	
CHECKED BY : J.G. KHARVA		DATE : 10/10/07	
DRAWN BY : FCJ 11/88	REV. 10/17/00	RWW/LES	
CHECKED BY : ARB 11/88	REV. 5/7/03	RWW/JTE	
	REV. 5/1/06R	MAA/KMM	

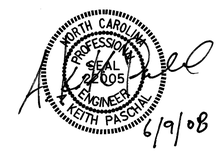

PROJECT NO. R-2554BA

WAYNE COUNTY

STATION: 93+23.591 -L-

SHEET 2 OF 3

STATE OF NORTH CAROLINA
DEPARTMENT OF TRANSPORTATION
RALEIGH

STANDARD
BRIDGE APPROACH SLAB DETAILS
(RIGHT LANE)

REVISIONS						SHEET NO.
NO.	BY:	DATE:	NO.	BY:	DATE:	S-5I
1			3			TOTAL SHEETS
2			4			478

06-JUN-2008 15:06
R:\Structures\BULLOCK\Str#2\FINAL PLANS\R2554BA_sd_AS_02.dgn
JDHAWK

STR. #2

STD. NO. BAS10SM

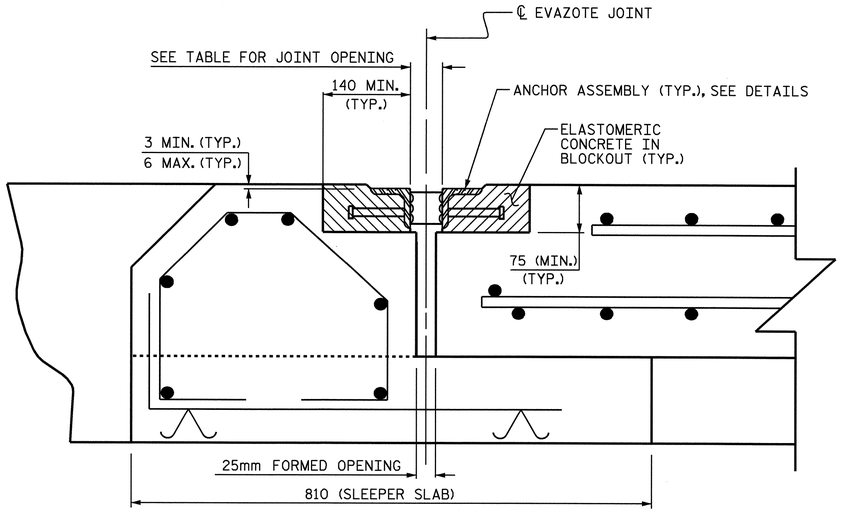

ARMORED JOINT DETAILS

SECTION NORMAL TO JOINT

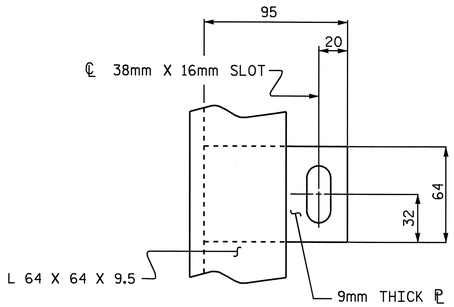

PLAN VIEW OF TAB

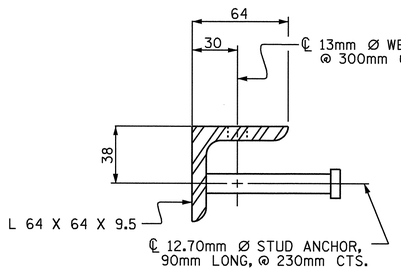

SECTION VIEW OF STUD

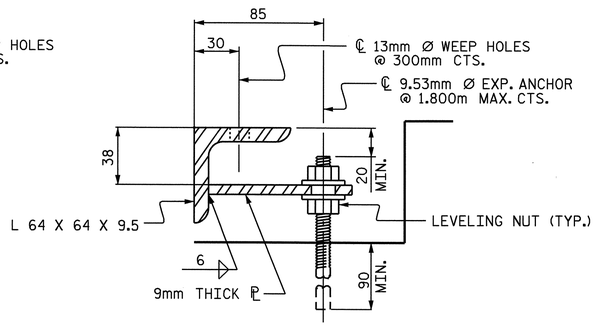

SECTION VIEW OF TAB

ARMORED JOINT ANCHOR ASSEMBLY DETAILS

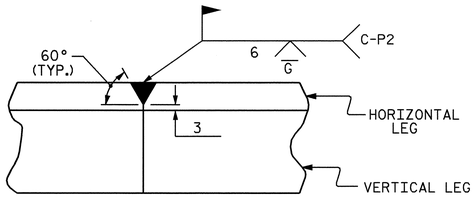

DETAIL- FIELD WELD SPLICE OF ANGLE

NOTES

ANGLES SHALL CONFORM TO AASHTO M270 GRADE 250 STEEL OR APPROVED EQUAL. ALL STUD ANCHORS SHALL CONFORM TO AASHTO M169 GRADES 1010 THRU 1020 OR APPROVED EQUAL.

STUD ANCHORS SHALL BE SHOP WELDED AND ALL HOLES SHALL BE SHOP DRILLED AS SHOWN ON THE PLANS. STUD ANCHORS SHALL BE ELECTRIC ARC END WELDED WITH COMPLETE FUSION.

UPON COMPLETION OF SHOP FABRICATION, THE ENTIRE ANCHOR ASSEMBLY SHALL BE METALLIZED. THE 12.70mm Ø STUD ANCHORS AND ANCHOR TABS NEED NOT BE METALLIZED. SEE SPECIAL PROVISION FOR THERMAL SPRAYED COATINGS (METALLIZATION).

ANCHOR ASSEMBLY SHALL BE MADE CONTINUOUS THE LENGTH OF THE JOINT FROM GUTTER TO GUTTER. FOR FIELD SPLICES AT ALL CROWN BREAK POINTS, THE ENDS OF THE STEEL ANGLES SHALL BE CUT PARALLEL TO THE BRIDGE CENTERLINE. FINISHED FIELD WELDS SHALL BE GROUND SMOOTH AND COATED WITH A MINIMUM THICKNESS OF 0.100mm OF ZINC-RICH PAINT IN ACCORDANCE WITH THE STANDARD SPECIFICATIONS.

ANCHOR ASSEMBLY SEGMENTS SHALL NOT BE LESS 3.6m NOR MORE THAN 6.1m IN LENGTH. SHORTER SEGMENTS MAY BE USED AT THE EDGE OF ROADWAY OR AT POINTS OF STAGED CONSTRUCTION.

THE ANCHOR ASSEMBLY SHALL BE SECURED AND LEVELED AS SHOWN IN THE "ARMORED JOINT ANCHOR ASSEMBLY DETAILS". NO SUBMITTALS ARE REQUIRED FOR 9.53mm Ø EXPANSION ANCHORS, NUTS OR WASHERS. THE CONTRACTOR MAY SUBMIT FOR APPROVAL AN ALTERNATE METHOD OF ALIGNING AND LEVELING THE ANGLES. THE ALTERNATE METHOD SHALL NOT INCLUDE ANY WELDING TO THE OUTSIDE FACE OF THE ANGLES.

AFTER THE ELASTOMERIC CONCRETE HAS BEEN CAST ON BOTH SIDES OF THE JOINT, REMOVE ANY EXCESS CONCRETE THAT COMES THROUGH THE WEEP HOLES AND THOROUGHLY CLEAN THE ANGLES. ANY DAMAGED STEEL SHALL BE COATED WITH A MINIMUM OF 0.100mm OF ZINC-RICH PAINT IN ACCORDANCE WITH THE STANDARD SPECIFICATIONS.

SEE SPECIAL PROVISIONS FOR EVAZOTE JOINT SEALS.

SEE SPECIAL PROVISIONS FOR ELASTOMERIC CONCRETE.

MOVEMENT AND SETTING AT EVAZOTE JOINT

END BENT NO.	SKEW ANGLE	NOMINAL UNCOMPRESSED SEAL WIDTH	TOTAL MOVEMENT (ALONG ℄ RDWY)	PERPENDICULAR JOINT OPENING AT 7° C	PERPENDICULAR JOINT OPENING AT 16° C	PERPENDICULAR JOINT OPENING AT 32° C
1	112°-18'-48"	64mm	27mm	56mm	51mm	42mm
2	112°-18'-48"	64mm	27mm	56mm	51mm	42mm

TOTAL MOVEMENT IS CALCULATED ALONG THE CENTERLINE OF ROADWAY.
JOINT OPENINGS ARE MEASURED PERPENDICULAR TO THE JOINT.

BILL OF MATERIAL

END BENT NO.	ELASTOMERIC CONCRETE * (CU. m)	TOTAL LENGTH OF ANGLE (m)
1	0.3	29.834
2	0.3	29.834

* BASED ON THE MINIMUM BLOCKOUT SHOWN.

6/9/08

PROJECT NO. R-2554BA
WAYNE COUNTY
STATION: 93+23.591 -L-
90+29.263 -L2-

SHEET 3 OF 3

STATE OF NORTH CAROLINA
DEPARTMENT OF TRANSPORTATION
RALEIGH

STANDARD
ARMORED EVAZOTE JOINT DETAILS FOR SLEEPER SLAB
(RIGHT LANE)

REVISIONS						SHEET NO.
NO.	BY:	DATE:	NO.	BY:	DATE:	S-52
1			3			TOTAL SHEETS
2			4			478

STD. NO. AEJ1SM

ASSEMBLED BY : J. D. HAWK	DATE : 10/25/07
CHECKED BY : J. G. KHARVA	DATE : 1/25/08
DRAWN BY : EEM 1/96	REV. 7/10/01 LES/RDR
CHECKED BY : RGW 1/96	REV. 5/7/03RR RWW/JTE
	REV. 5/1/06 TLA/GM

06-JUN-2008 15:06
R:\Structures\BULLOCK\Str#2\FINAL PLANS\R2554BA_sd_AEJ_02.dgn
JDHAWK

STR. #2

F. A. PROJECT No. NHS-70 (106)

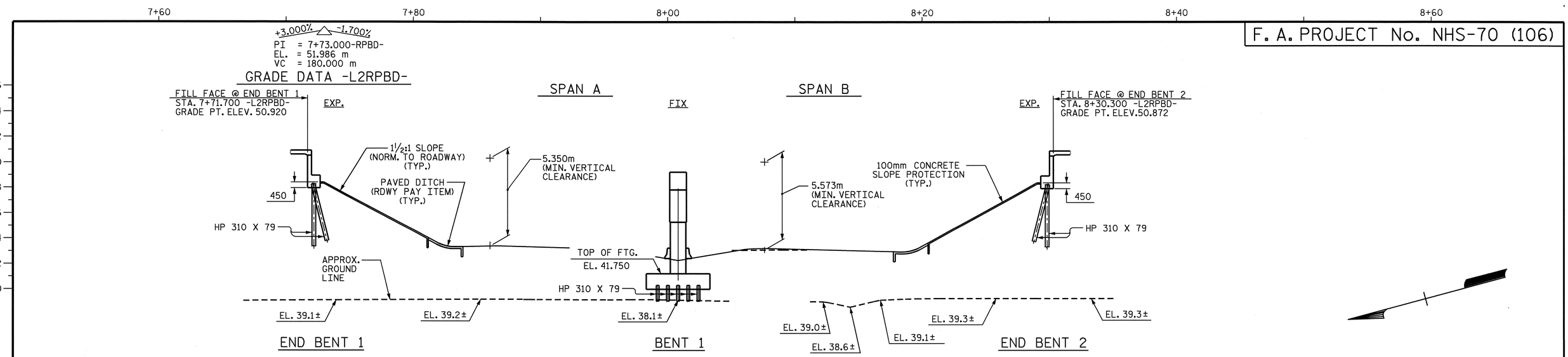

SECTION ALONG ℄ -L2RPBD-

(BENTS AND END BENTS ON SECTION ARE AT RIGHT ANGLES TO BENTS.)

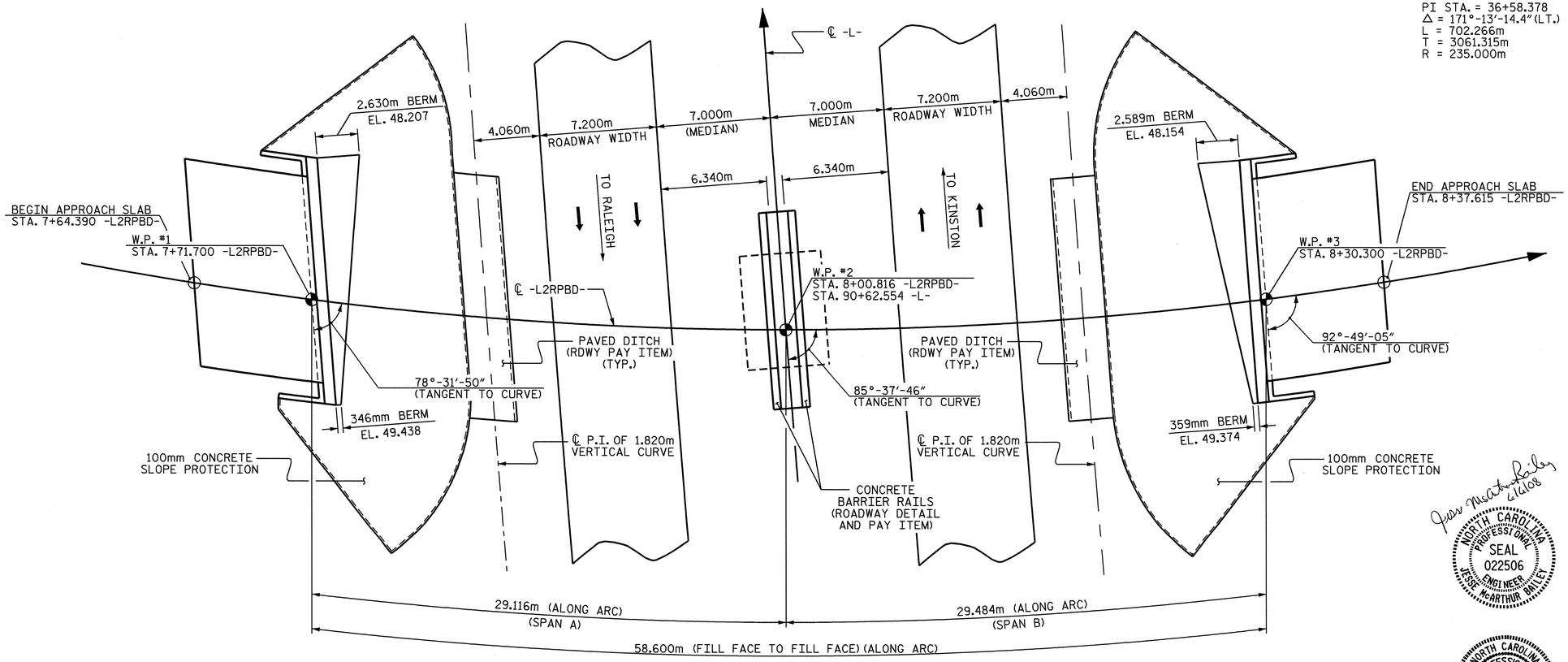

PLAN

(PILES NOT SHOWN FOR CLARITY)

HORIZONTAL CURVE DATA

-L2RPBD-

PI STA. = 36+58.378
△ = 171°-13′-14.4″(LT.)
L = 702.266m
T = 3061.315m
R = 235.000m

-L-

PI STA. = 86+56.056
△ = 20°-45′-49.6″(RT.)
L = 905.991m
T = 458.019m
R = 2500.000m

PIs STA. = 91+24.028
θs = 0°-41′-15.2″
Ls = 60.000m
LT = 40.000m
ST = 20.000m

PROJECT NO. R-2554BA

WAYNE COUNTY

STATION: 90+62.554 -L-
8+00.816 -L2RPBD-

SHEET 1 OF 4 BRIDGE NO. 355

STATE OF NORTH CAROLINA
DEPARTMENT OF TRANSPORTATION
RALEIGH

GENERAL DRAWING

FOR BRIDGE ON -L2RPBD-
OVER US 70 BYPASS

REVISIONS						SHEET NO.
NO.	BY:	DATE:	NO.	BY:	DATE:	S-53
1			3			TOTAL SHEETS
2			4			478

NORTH CAROLINA PROFESSIONAL SEAL 022506 ENGINEER JESSE McARTHUR BAILEY — 6/6/08

NORTH CAROLINA PROFESSIONAL SEAL 15825 ENGINEER BRUCE D. KLAPPENBACH — 6-6-08

DRAWN BY : D. A. GLADDEN DATE : 12-5-07
CHECKED BY : B. D. KLAPPENBACH DATE : 3/19/08

06-JUN-2008 15:31
R:\Structures\BAILEY\Str#3\dgladden\Microstation\R2554BA\R2554B_sd_GD.dgn
bklappenbach

STR. #3

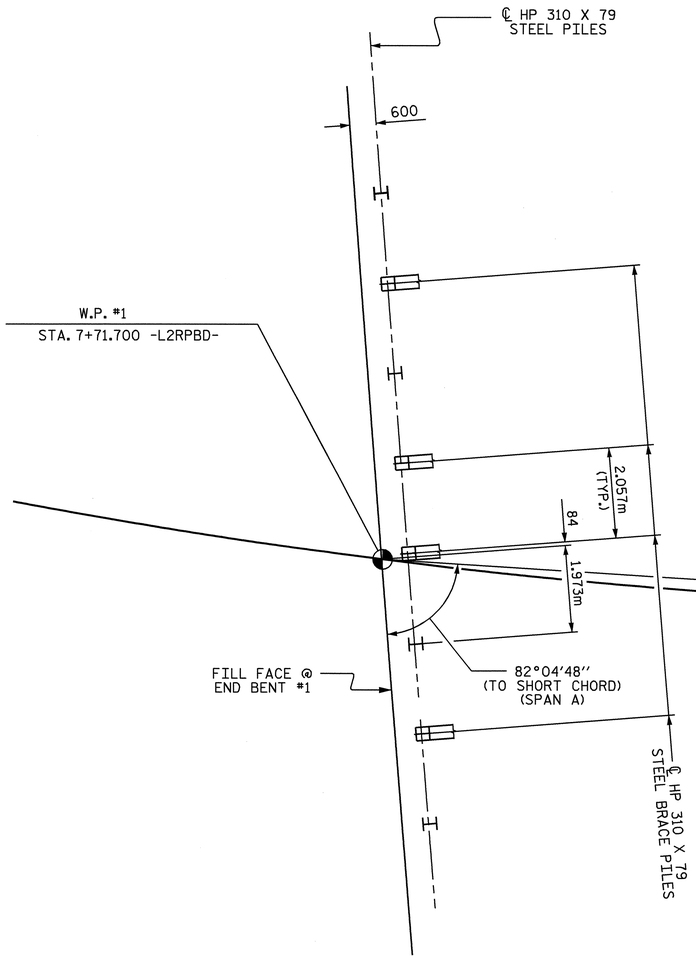

END BENT 1

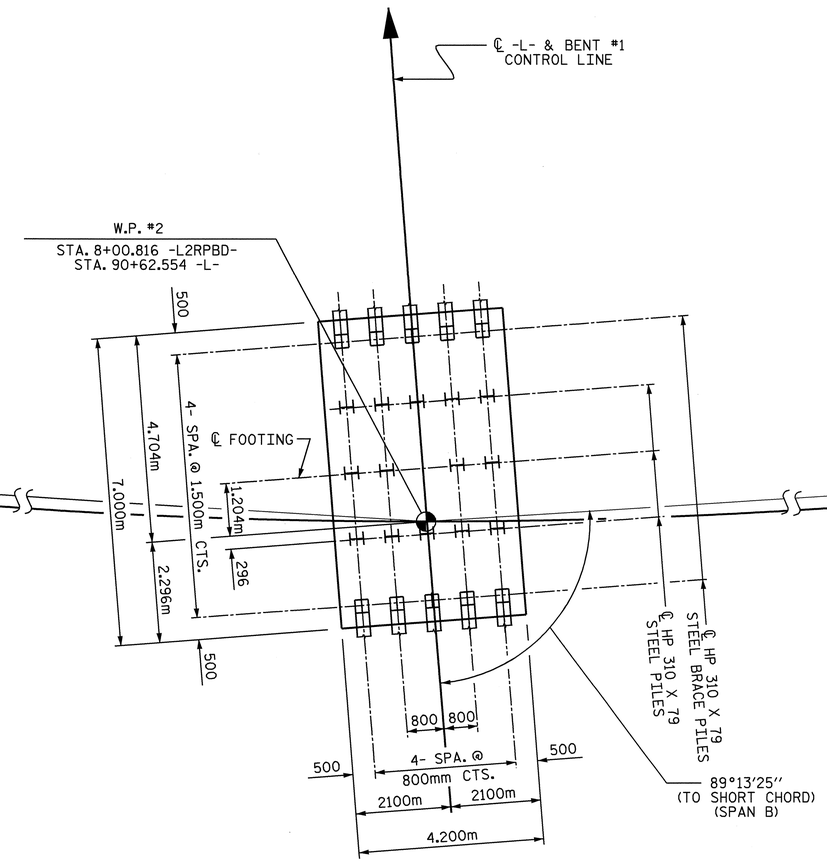

BENT 1

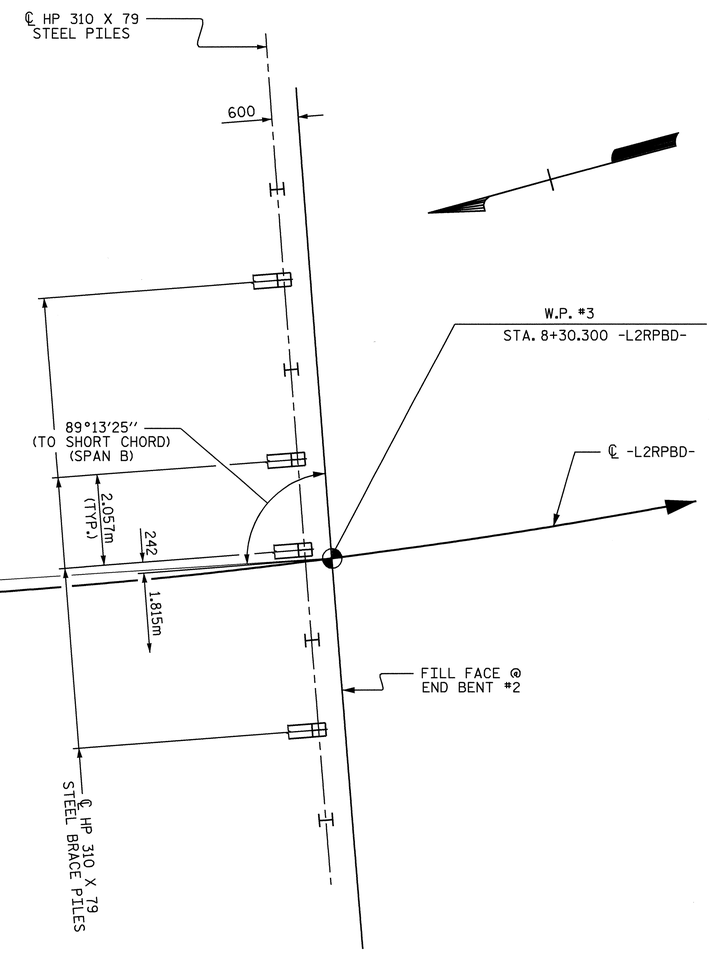

END BENT 2

FOUNDATION LAYOUT

(DIMENSIONS LOCATING PILES ARE SHOWN TO PILE CENTERLINE)
BRACE PILES AT END BENTS ARE BATTERED 250:1000
BRACE PILES AT BENT ARE BATTERED 125:1000

PROJECT NO. R-2554BA
WAYNE COUNTY
STATION: 90+62.554 -L-
8+00.816 -L2RPBD-
SHEET 2 OF 4

STATE OF NORTH CAROLINA
DEPARTMENT OF TRANSPORTATION
RALEIGH

GENERAL DRAWING
FOR BRIDGE ON -L2RPBD-
OVER US 70 BYPASS

NORTH CAROLINA PROFESSIONAL SEAL 15825 ENGINEER BRUCE D. KLAPPENBACH
6-6-08

REVISIONS						SHEET NO.
NO.	BY:	DATE:	NO.	BY:	DATE:	S-54
1			3			TOTAL SHEETS
2			4			478

DRAWN BY : D. A. GLADDEN DATE : 12-5-07
CHECKED BY : B. D. KLAPPENBACH DATE : 3/19/08

05-JUN-2008 16:05
r:\structures\bailey\str#3\dgladden\microstation\r2554ba\r2554b_sd_gd.dgn
dgladden

STR. #3

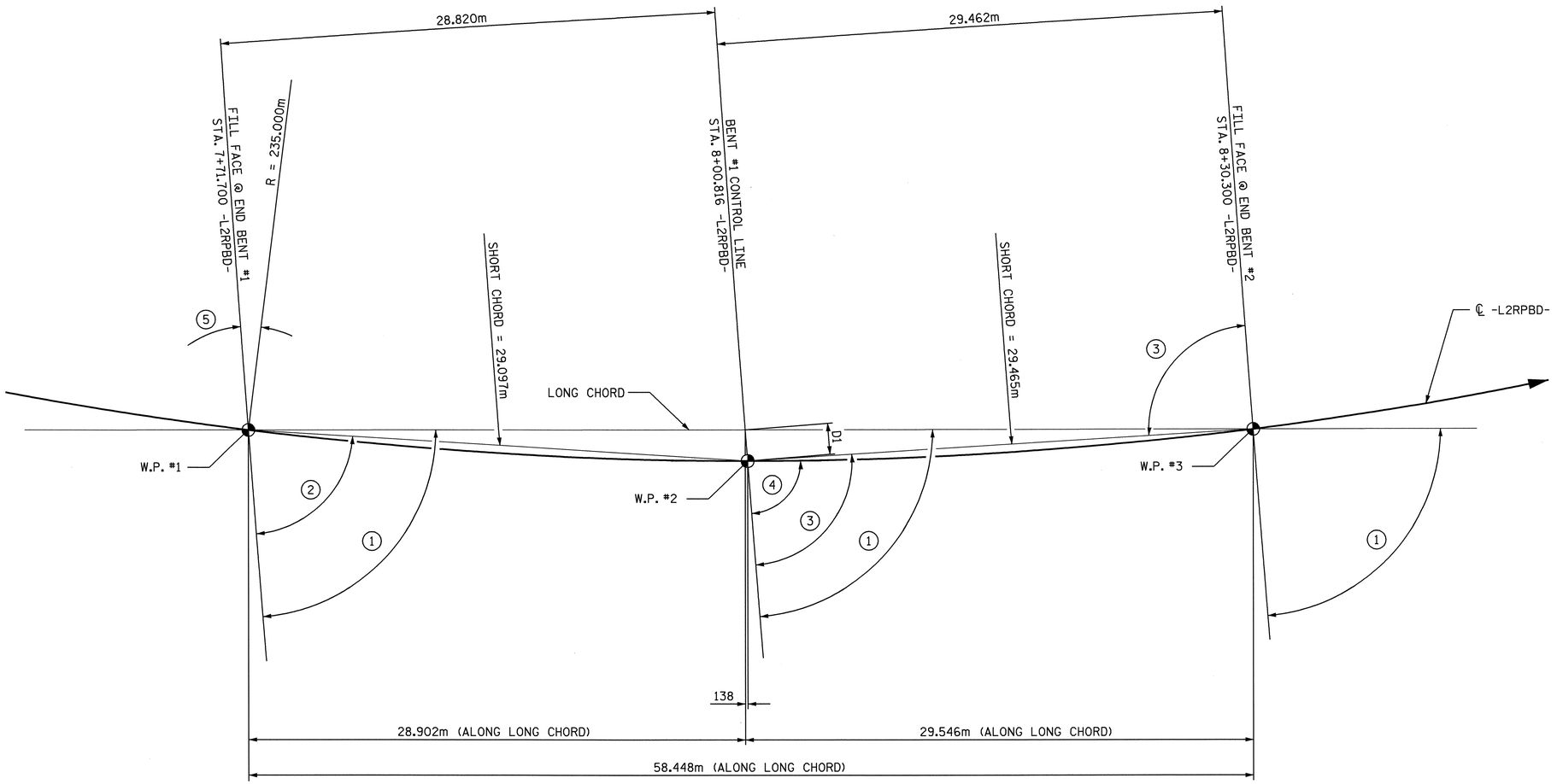

LONG CHORD LAYOUT

(ALL BENTS ARE PARALLEL)

HORIZONTAL CURVE DATA

-L2RPBD-

PI STA. = 36+58.378
△ = 171°-13′-14.4″(LT.)
L = 702.266m
T = 3061.315m
R = 235.000m

OFFSET

D1 = 1.829m

ANGLES

(1) 85°40′27″
(2) 82°04′48″
(3) 89°13′25″
(4) 85°37′46″ (TAN. TO CURVE)
(5) 11°28′10″

NORTH CAROLINA PROFESSIONAL SEAL 15825 ENGINEER BRADLEY D. KLAPPENBACH
6-6-08

PROJECT NO. R-2554BA
WAYNE COUNTY
STATION: 90+62.554 -L-
8+00.816 -L2RPBD-
SHEET 3 OF 4

STATE OF NORTH CAROLINA
DEPARTMENT OF TRANSPORTATION
RALEIGH

GENERAL DRAWING

FOR BRIDGE ON -L2RPBD-
OVER US 70 BYPASS

REVISIONS						SHEET NO.
NO.	BY:	DATE:	NO.	BY:	DATE:	S-55
1			3			TOTAL SHEETS
2			4			478

DRAWN BY : D. A. GLADDEN DATE : 12-5-07
CHECKED BY : B. D. KLAPPENBACH DATE : 3/19/08

05-JUN-2008 16:05
r:\structures\bailey\str#3\dgladden\microstation\r2554ba\r2554b_sd_gd.dgn
dgladden

STR. #3

BM #1 : RR SPIKE IN BASE OF 460mm PINE 72.717m LT OF -BL-STA. 8+14.282, EL. 40.6140

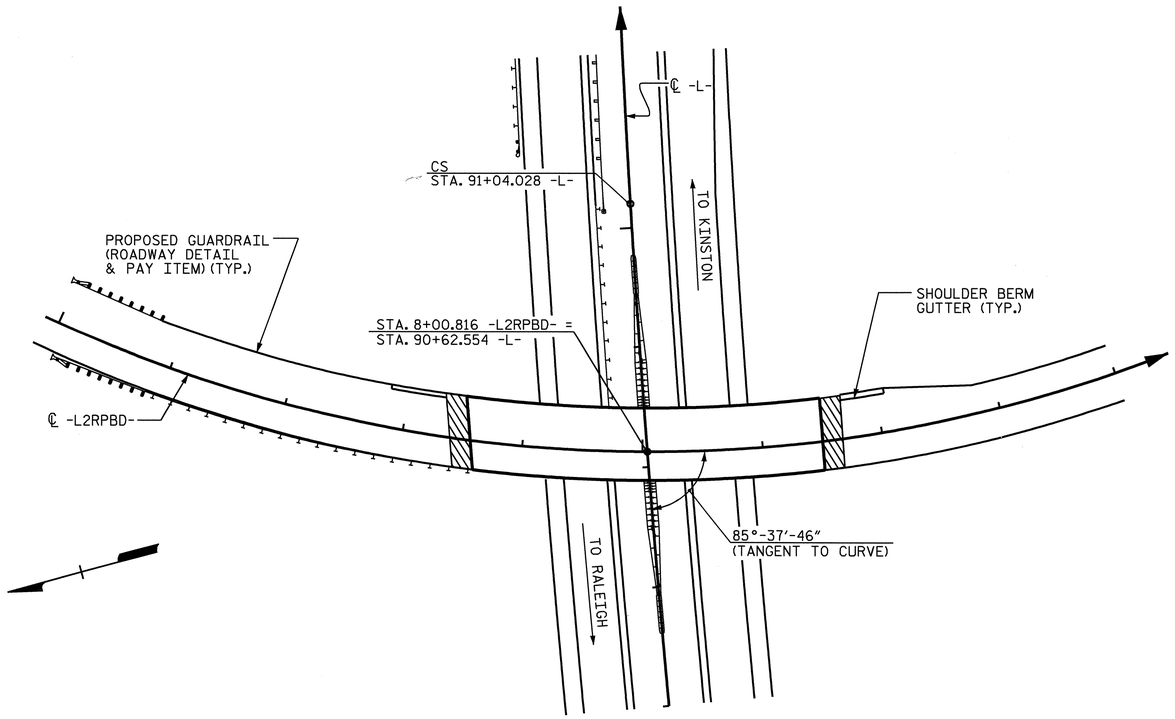

LOCATION SKETCH

FOR UTILITY INFORMATION, SEE UTILITY PLANS AND SPECIAL PROVISIONS.

NOTES

ALL DIMENSIONS ARE IN MILLIMETERS UNLESS OTHERWISE NOTED.

ALL ELEVATIONS ARE IN METERS.

ASSUMED LIVE LOAD = MS 18 OR ALTERNATE LOADING, EXCEPT THAT PLATE GIRDERS HAVE BEEN DESIGNED FOR MS 22.5.

FOR OTHER DESIGN DATA AND GENERAL NOTES, SEE SHEET SNSM.

FOR EROSION CONTROL MEASURES, SEE EROSION CONTROL PLANS.

THIS BRIDGE HAS BEEN DESIGNED BY THE STRENGTH DESIGN METHOD AS SPECIFIED IN AASHTO STANDARD SPECIFICATIONS.

ALL STRUCTURAL STEEL SHALL BE AASHTO M270 GRADE 345W AND PAINTED IN ACCORDANCE WITH SYSTEM 4 OF ARTICLE 442-7 OF THE STANDARD SPECIFICATIONS UNLESS OTHERWISE NOTED ON THE PLANS.

REMOVABLE FORMS MAY BE USED IN LIEU OF METAL STAY-IN-PLACE FORMS IN ACCORDANCE WITH ARTICLE 420-3 OF THE STANDARD SPECIFICATIONS.

THIS BRIDGE HAS BEEN DESIGNED IN ACCORDANCE WITH THE REQUIREMENTS OF THE AASHTO STANDARD SPECIFICATIONS FOR SEISMIC DESIGN OF HIGHWAY BRIDGES FOR SEISMIC PERFORMANCE CATEGORY A.

THE CONTRACTOR SHALL PROVIDE INDEPENDENT ASSURANCE SAMPLES OF REINFORCING STEEL AS FOLLOWS: FOR PROJECTS REQUIRING UP TO 360,000 kg OF REINFORCING STEEL, ONE 760mm SAMPLE OF EACH SIZE BAR USED, AND FOR PROJECTS REQUIRING OVER 360,000 kg OF REINFORCING STEEL, TWO 760mm SAMPLES OF EACH SIZE BAR USED. THE BARS FROM WHICH THE SAMPLES ARE TAKEN MUST THEN BE SPLICED WITH REPLACEMENT BARS OF THE SIZE AND LENGTH OF THE SAMPLE PLUS A MINIMUM LAP SPLICE OF THIRTY BAR DIAMETERS.

NEEDLE BEAMS WILL NOT BE ALLOWED UNLESS OTHERWISE CALLED FOR ON THE PLANS OR APPROVED BY THE ENGINEER.

DRIVE PILES AT END BENT NO. 1, BENT NO. 1, AND END BENT NO. 2 TO A REQUIRED BEARING CAPACITY OF 1060 kN PER PILE. THE REQUIRED BEARING CAPACITY IS EQUAL TO THE ALLOWABLE BEARING CAPACITY WITH A MINIMUM FACTOR OF SAFETY OF TWO.

THE ALLOWABLE BEARING CAPACITY FOR PILES AT END BENT NO. 1, BENT NO. 1, AND END BENT NO. 2 IS 530 kN PER PILE.

FOR SUBMITTAL OF WORKING DRAWINGS, SEE SPECIAL PROVISIONS.

FOR METRIC STRUCTURAL STEEL, SEE SPECIAL PROVISIONS.

FOR FALSEWORK AND FORMWORK, SEE SPECIAL PROVISIONS.

FOR CRANE SAFETY, SEE SPECIAL PROVISIONS.

FOR GROUT FOR STRUCTURES, SEE SPECIAL PROVISIONS.

THE CONTRACTOR MAY CHOOSE TO CONSTRUCT BENT NO. 1 PRIOR TO PLACING FILL. PLACE FILL IN ACCORDANCE WITH ARTICLE 410-9 OF THE STANDARD SPECIFICATIONS.

TOTAL BILL OF MATERIAL

	FOUNDATION EXCAVATION	REINFORCED CONCRETE DECK SLAB	GROOVING BRIDGE FLOORS	CLASS A CONCRETE	BRIDGE APPROACH SLABS	REINFORCING STEEL	STRUCTURAL STEEL	HP 310 X 79 STEEL PILES		PILE REDRIVES	CONCRETE BARRIER RAIL	100mm SLOPE PROTECTION	POT BEARINGS	ELASTOMERIC BEARINGS	EVAZOTE JOINT SEALS
	LUMP SUM	SQ. METERS	SQ. METERS	CU. METERS	LUMP SUM	kg	kg	NO.	kg	PER EACH	METERS	SQ. METERS	LUMP SUM	LUMP SUM	LUMP SUM
SUPERSTRUCTURE		752.9	804.3		LUMP SUM		153870				115.924		LUMP SUM	LUMP SUM	LUMP SUM
END BENT 1				21.4		2059		8	232.0	4		400			
BENT 1	LUMP SUM			91.0		9276		24	516.0	12					
END BENT 2				21.1		1975		8	208.0	4		390			
TOTAL	LUMP SUM	752.9	804.3	133.5	LUMP SUM	13310	153870	40	956.0	20	115.924	790	LUMP SUM	LUMP SUM	LUMP SUM

PROJECT NO. R-2554BA
WAYNE COUNTY
STATION: 90+62.554 -L-
8+00.816 -L2RPBD-
SHEET 4 OF 4

STATE OF NORTH CAROLINA
DEPARTMENT OF TRANSPORTATION
RALEIGH

GENERAL DRAWING

FOR BRIDGE ON -L2RPBD-
OVER US 70 BYPASS

NORTH CAROLINA PROFESSIONAL SEAL 15825 ENGINEER BRUCE D. KLAPPENBACH
6-6-08

REVISIONS						SHEET NO.
NO.	BY:	DATE:	NO.	BY:	DATE:	S-56
1			3			TOTAL SHEETS
2			4			478

DRAWN BY : D. A. GLADDEN DATE : 12-5-07
CHECKED BY : B. D. KLAPPENBACH DATE : 3/19/08

05-JUN-2008 16:06
r:\structures\bailey\str#3\dgladden\microstation\r2554ba\r2554b_sd_gd.dgn
dgladden

STR. #3

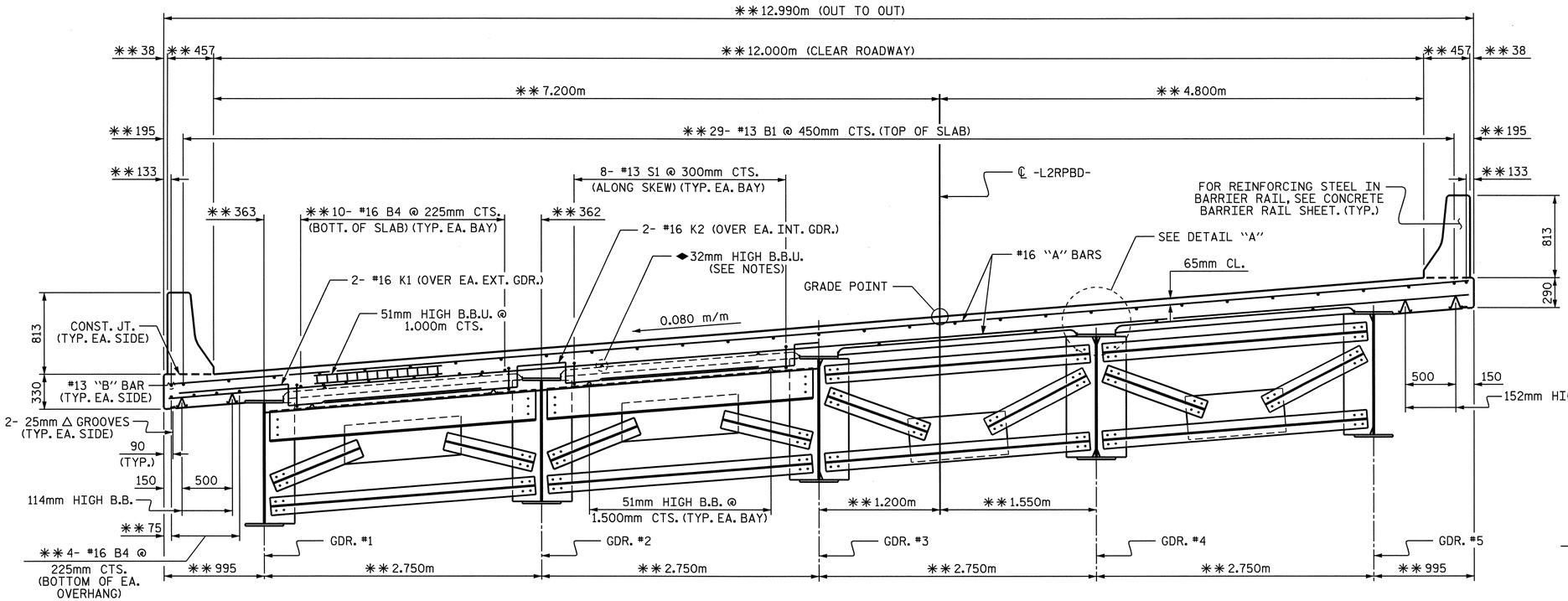

TYPICAL SECTION AT END BENT DIAPHRAGM

TYPICAL SECTION AT INTERMEDIATE DIAPHRAGM

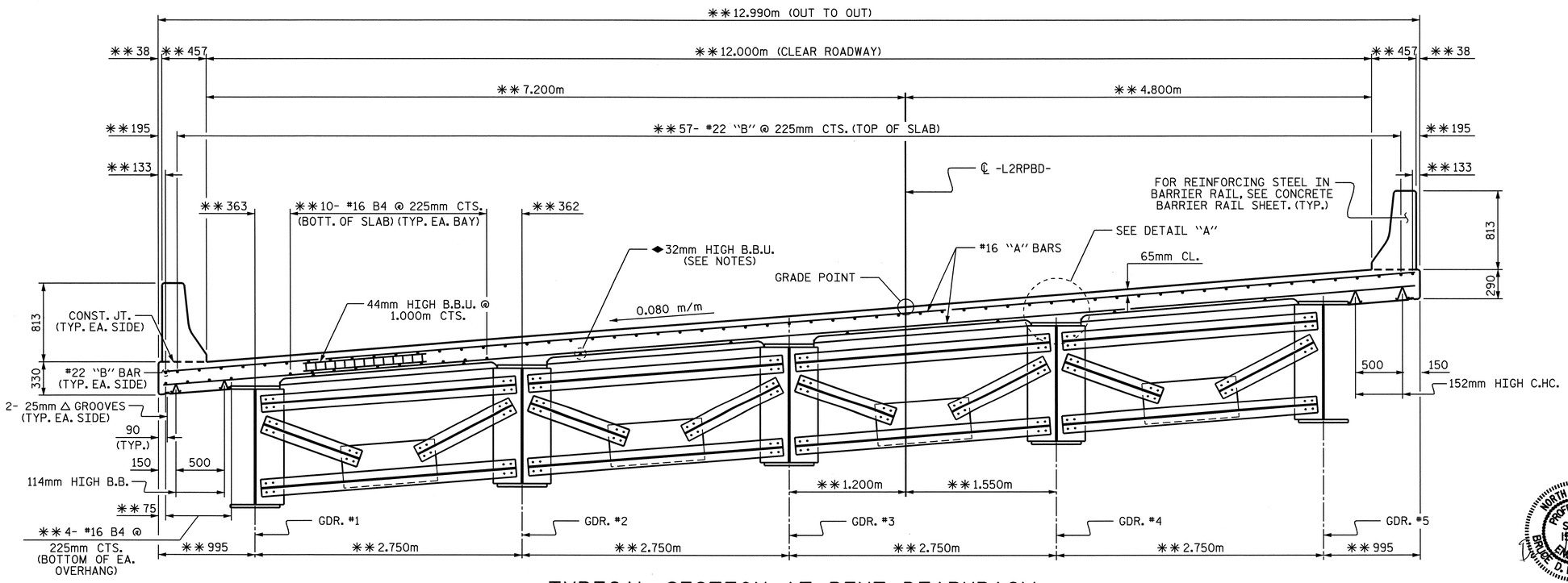

TYPICAL SECTION AT BENT DIAPHRAGM

NOTES

◆ PROVIDE 32mm HIGH BEAM BOLSTERS UPPER AT 1.2m CTS. ATOP THE METAL STAY-IN-PLACE FORMS TO SUPPORT THE BOTTOM MAT OF 'A' BARS. WHEN USING REMOVABLE FORMS, PROVIDE CONTINUOUS HIGH CHAIRS FOR METAL DECK (C.H.C.M.) @ 1.2m CTS. WITH A HEIGHT TO SUPPORT THE BOTTOM MAT OF 'A' BARS A CLEAR DISTANCE OF 65mm ABOVE THE TOP OF THE REMOVABLE FORM.

METAL STAY-IN-PLACE FORMS SHALL NOT BE WELDED TO BEAM OR GIRDER FLANGES IN THE ZONES REQUIRING CHARPY V-NOTCH TEST. SEE STRUCTURAL STEEL DETAIL SHEETS.

PREVIOUSLY CAST CONCRETE IN A CONTINUOUS UNIT SHALL HAVE ATTAINED A MINIMUM COMPRESSIVE STRENGTH OF 20.7 MPa BEFORE ADDITIONAL CONCRETE IS CAST IN THE UNIT.

BARRIER RAIL IN A CONTINUOUS UNIT SHALL NOT BE CAST UNTIL ALL SLAB CONCRETE IN THE UNIT HAS BEEN CAST AND HAS REACHED A MINIMUM COMPRESSIVE STRENGTH OF 20.7 MPa.

STRUCTURAL STEEL ERECTION IN A CONTINUOUS UNIT SHALL BE COMPLETE BEFORE FALSEWORK OR FORMS ARE PLACED ON THE UNIT.

#16 "C" BAR MAY BE SHIFTED SLIGHTLY, AS NECESSARY, TO CLEAR REINFORCING STEEL AND STIRRUPS.

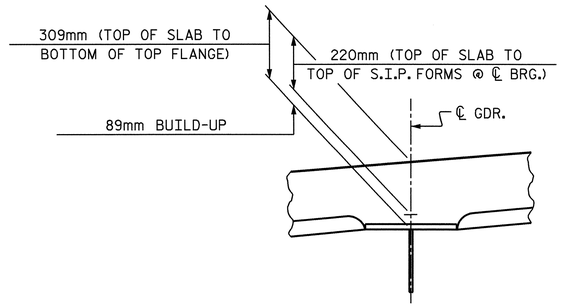

DETAIL "A"

** THESE ARE RADIAL DIMENSIONS AND SPACES.

PROJECT NO. R-2554BA

WAYNE COUNTY

STATION: 90+62.554 -L-

SHEET 1 OF 2

STATE OF NORTH CAROLINA
DEPARTMENT OF TRANSPORTATION
RALEIGH

SUPERSTRUCTURE TYPICAL SECTION

REVISIONS						SHEET NO.
NO.	BY:	DATE:	NO.	BY:	DATE:	S-57
1			3			TOTAL SHEETS
2			4			478

NORTH CAROLINA PROFESSIONAL SEAL 15825 ENGINEER BRUCE D. KLAPPENBACH
6-6-08

DRAWN BY : D. A. GLADDEN DATE : 12-8-05
CHECKED BY : M. G. SHAIKH DATE : 3-20-07

05-JUN-2008 15:12
r:\structures\balley\str#3\dgladden\microstation\r2554ba\mr2554ba_sd_ts.dgn
dgladden

STR. #3

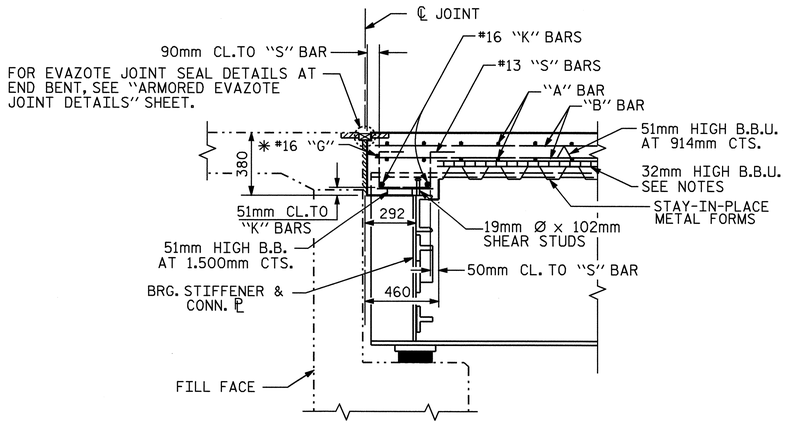

SECTION AT END BENT

*#16 "G" BAR MAY BE SHIFTED SLIGHTLY, AS NECESSARY, TO CLEAR DIAPHRAGM AND REINFORCING STEEL.

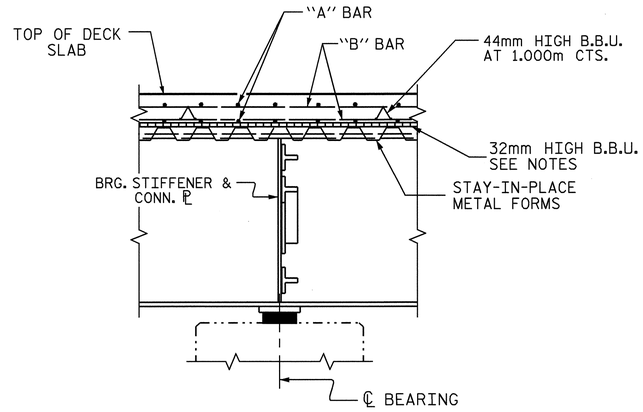

SECTION AT BENT

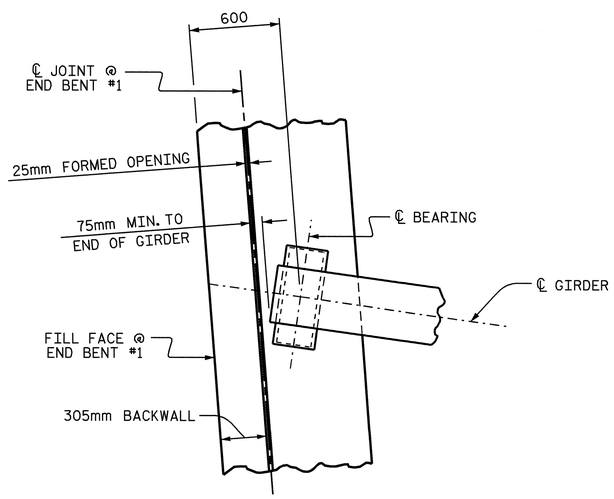

PLAN AT END BENT #1

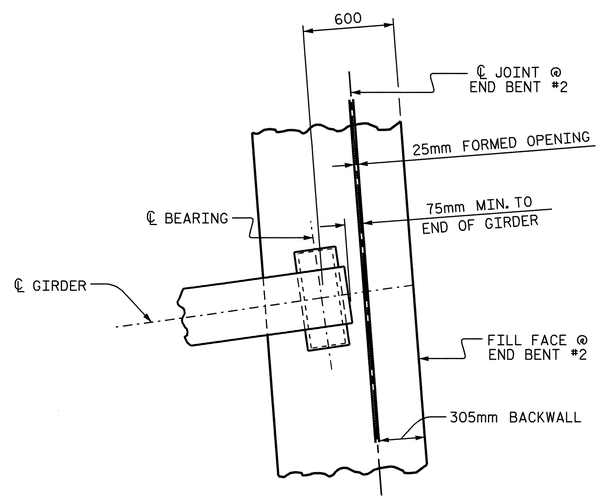

PLAN AT END BENT #2

PROJECT NO. R-2554BA

WAYNE COUNTY

STATION: 90+62.554 -L-

SHEET 2 OF 2

STATE OF NORTH CAROLINA
DEPARTMENT OF TRANSPORTATION
RALEIGH

SUPERSTRUCTURE TYPICAL SECTION

NORTH CAROLINA PROFESSIONAL SEAL 15825 ENGINEER BRUCE D. KLAPPENBACH
6-6-08

REVISIONS						SHEET NO.
NO.	BY:	DATE:	NO.	BY:	DATE:	S-58
1			3			TOTAL SHEETS
2			4			478

DRAWN BY : D. A. GLADDEN DATE : 12-8-05
CHECKED BY : M. G. SHAIKH DATE : 3-20-07

29-APR-2008 12:24
r:\structures\balley\str#3\dgladden\microstation\r2554ba\MR2554BA_sd_TS.dgn
dgladden

STR. #3

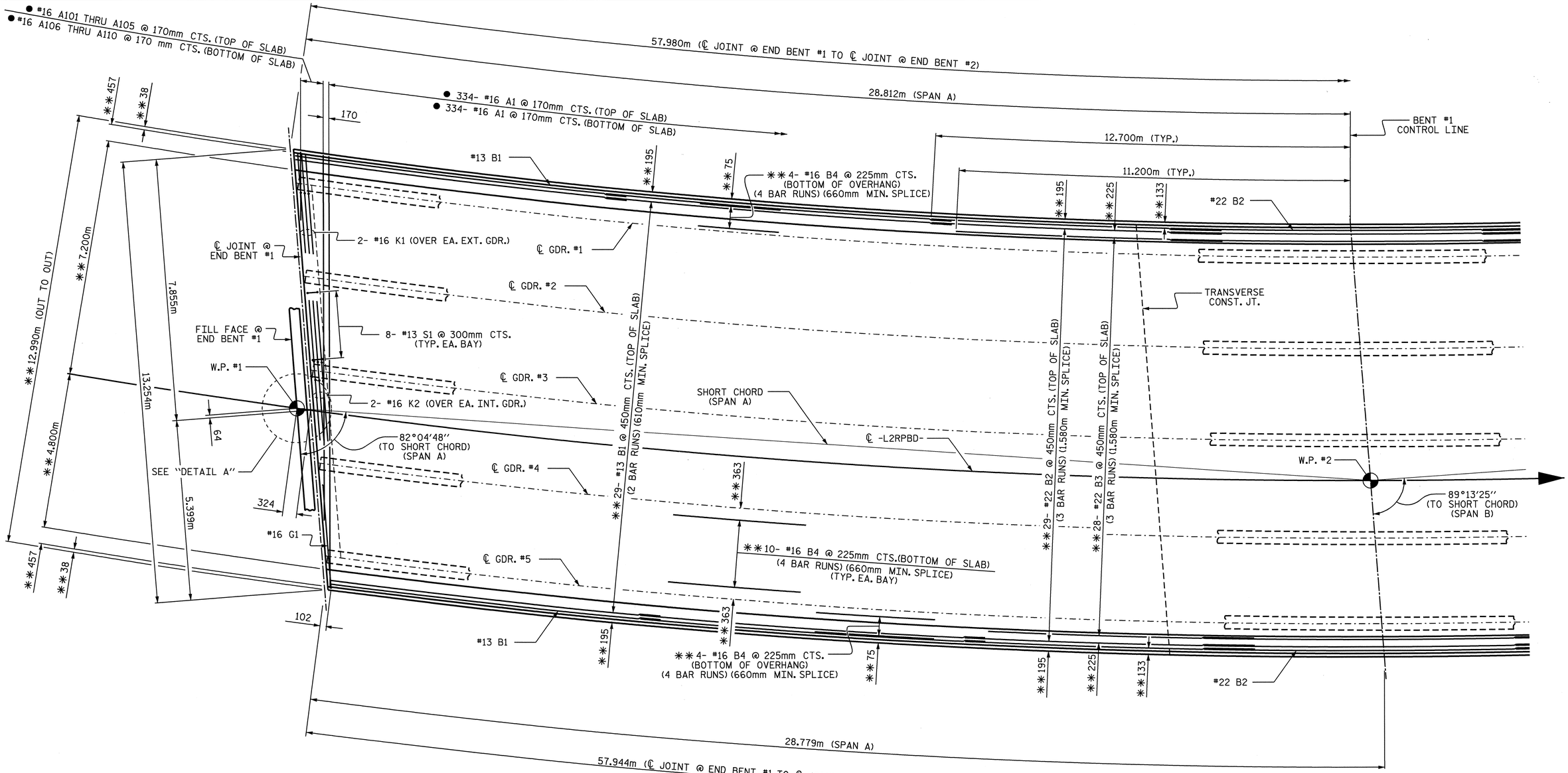

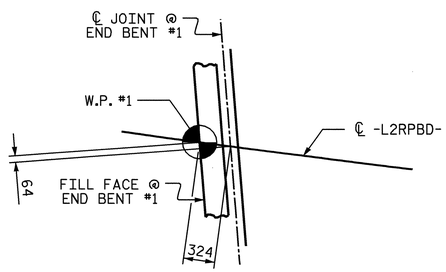

DETAIL A

PLAN OF SPAN A

✱✱ THESE ARE RADIAL DIMENSIONS AND SPACES.

● "A" BARS IN SLAB ARE SPACED PERPENDICULAR TO LONG CHORD.

PROJECT NO. R-2554BA

WAYNE COUNTY

STATION: 90+62.554 -L-

SHEET 1 OF 2

STATE OF NORTH CAROLINA
DEPARTMENT OF TRANSPORTATION
RALEIGH

SUPERSTRUCTURE PLAN OF SPAN A

NORTH CAROLINA PROFESSIONAL SEAL 15825 ENGINEER BRUCE D. KLAPPENBACH
6-6-08

REVISIONS						SHEET NO.
NO.	BY:	DATE:	NO.	BY:	DATE:	S-59
1			3			TOTAL SHEETS 478
2			4			

DRAWN BY : D. A. GLADDEN DATE : 12-15-05
CHECKED BY : M. G. SHAIKH DATE : 3-20-07

05-JUN-2008 15:12
r:\structures\balley\str#3\dgladden\microstation\r2554ba\mr2554ba_sd_ts.dgn
dgladden

STR. 3

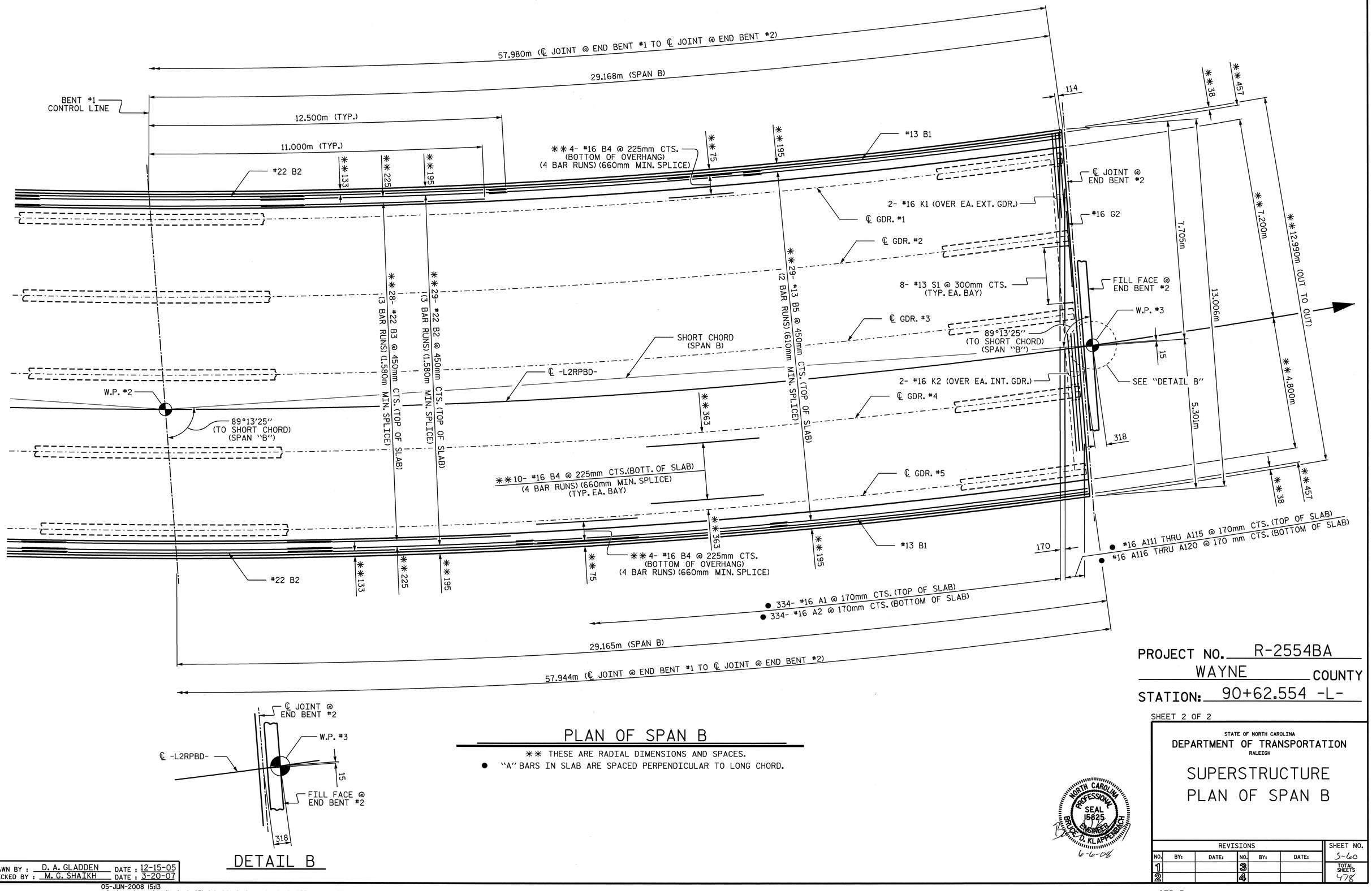

DETAIL B

PLAN OF SPAN B

** THESE ARE RADIAL DIMENSIONS AND SPACES.

● "A" BARS IN SLAB ARE SPACED PERPENDICULAR TO LONG CHORD.

PROJECT NO. R-2554BA

WAYNE COUNTY

STATION: 90+62.554 -L-

SHEET 2 OF 2

STATE OF NORTH CAROLINA
DEPARTMENT OF TRANSPORTATION
RALEIGH

SUPERSTRUCTURE PLAN OF SPAN B

NORTH CAROLINA PROFESSIONAL SEAL 15825 ENGINEER BRUCE D. KLAPPENBACH
6-6-08

REVISIONS						SHEET NO.
NO.	BY:	DATE:	NO.	BY:	DATE:	S-60
1			3			TOTAL SHEETS
2			4			478

DRAWN BY : D. A. GLADDEN DATE : 12-15-05
CHECKED BY : M. G. SHAIKH DATE : 3-20-07

05-JUN-2008 15:13
r:\structures\bailey\str#3\dgladden\microstation\r2554ba\mr2554ba_sd_ts.dgn
dgladden

STR. 3

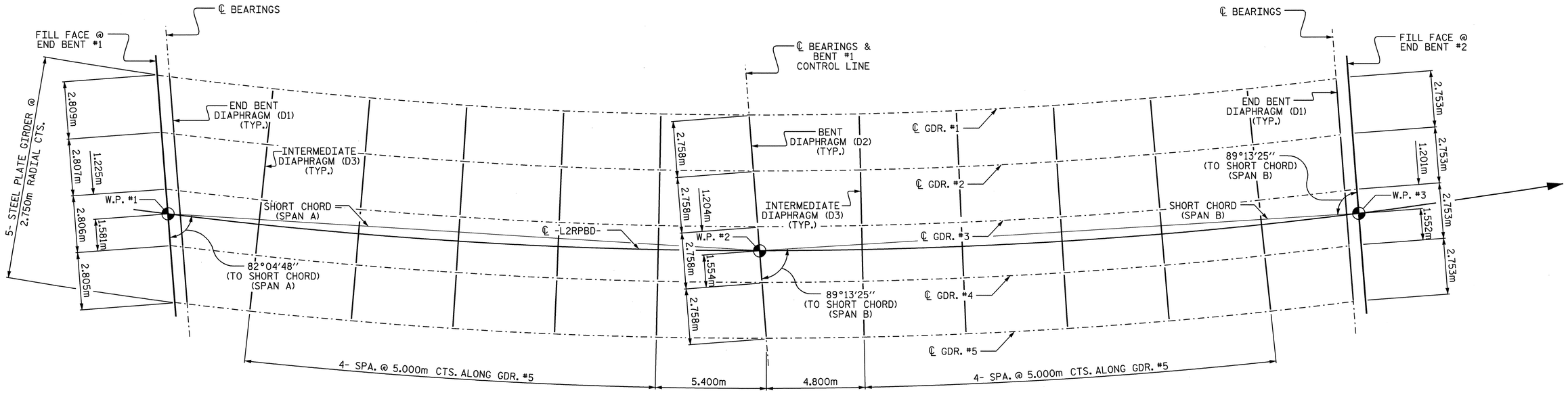

FRAMING PLAN

PROJECT NO. R-2554BA

WAYNE COUNTY

STATION: 90+62.554 -L-

STATE OF NORTH CAROLINA
DEPARTMENT OF TRANSPORTATION
RALEIGH

SUPERSTRUCTURE FRAMING PLAN

NORTH CAROLINA PROFESSIONAL SEAL 15826 ENGINEER BRADLEE D. KLAPPENBACH
6-6-08

REVISIONS						SHEET NO.
NO.	BY:	DATE:	NO.	BY:	DATE:	S-61
1			3			TOTAL SHEETS
2			4			478

DRAWN BY : D. A. GLADDEN DATE : 1-3-06
CHECKED BY : M. G. SHAIKH DATE : 3-20-07

05-JUN-2008 15:31
r:\structures\bailey\str#3\dgladden\microstation\r2554ba\r2554b_sd_ss.dgn
dgladden

STR. #3

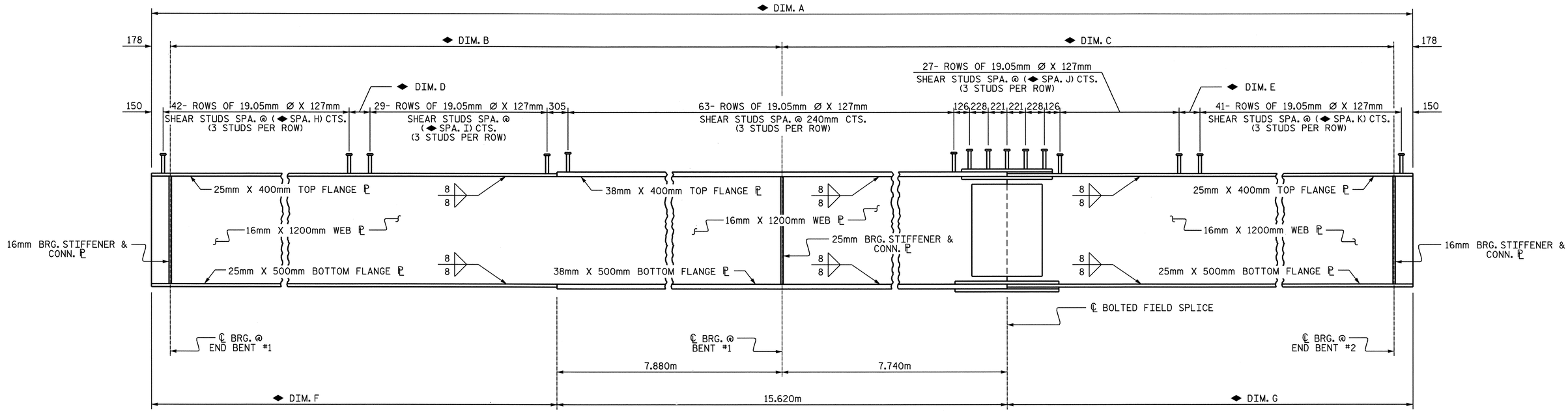

GIRDER ELEVATION

◆ FOR DIMENSIONS SEE "GIRDER TABLE" BELOW.

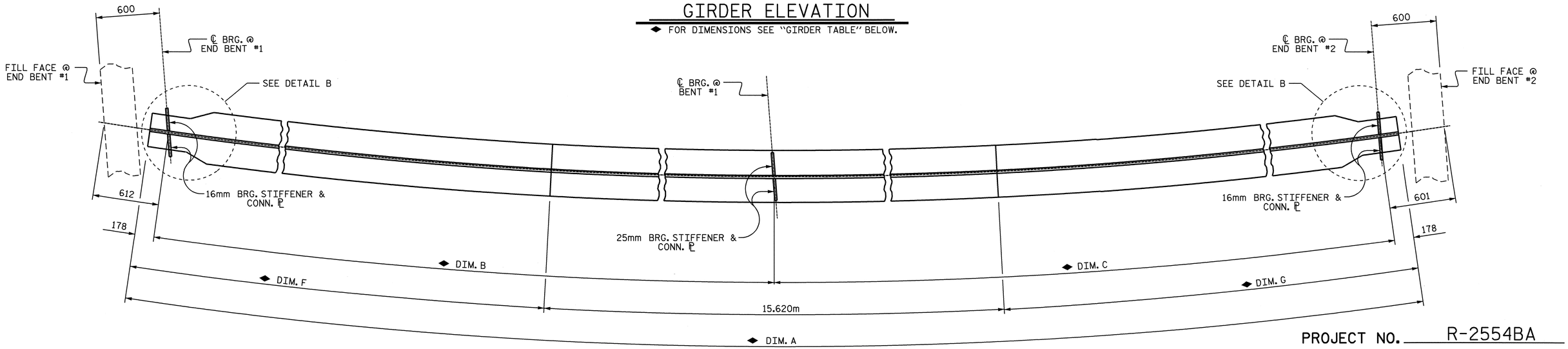

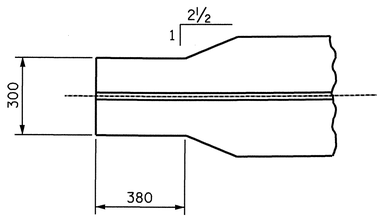

DETAIL B

BOTTOM FLANGE DETAIL

GIRDER TABLE												
	RADIUS	DIM. A	DIM. B	DIM. C	DIM. D	DIM. E	DIM. F	DIM. G	SPA. H	SPA. I	SPA. J	SPA. K
GDR. #1	228.300m	57.762m	28.521m	28.885m	374	338	20.819m	21.323m	355	200	250	344
GDR. #2	231.050m	57.754m	28.514m	28.884m	273	337	20.812m	21.322m	345	218	250	344
GDR. #3	233.800m	57.747m	28.507m	28.884m	284	337	20.805m	21.322m	335	232	250	344
GDR. #4	236.550m	57.739m	28.500m	28.883m	282	306	20.798m	21.321m	326	245	245	348
GDR. #5	239.300m	57.733m	28.494m	28.883m	266	292	20.792m	21.321m	316	260	244	349

NORTH CAROLINA PROFESSIONAL SEAL 15825 ENGINEER BRUCE D. KLAPPENBACH
6-6-08

PROJECT NO. R-2554BA

WAYNE COUNTY

STATION: 90+62.554 -L-

SHEET 1 OF 4

STATE OF NORTH CAROLINA
DEPARTMENT OF TRANSPORTATION
RALEIGH

SUPERSTRUCTURE STRUCTURAL STEEL DETAILS

REVISIONS						SHEET NO.
NO.	BY:	DATE:	NO.	BY:	DATE:	S-62
1			3			TOTAL SHEETS
2			4			478

DRAWN BY : D. A. GLADDEN DATE : 1-9-06
CHECKED BY : M. G. SHAIKH DATE : 3-20-07

24-APR-2008 09:46
r:\structures\bailey\str#3\dgladden\microstation\r2554ba\r2554b_sd_ss.dgn
dgladden

STR. #3

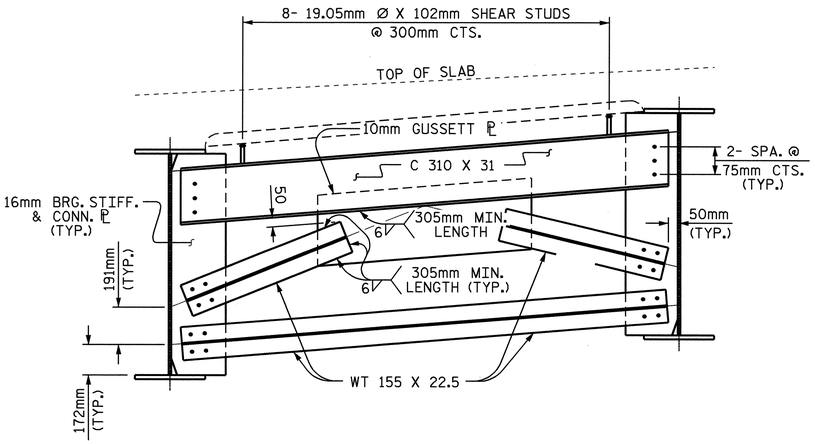

END BENT DIAPHRAGM (D1)

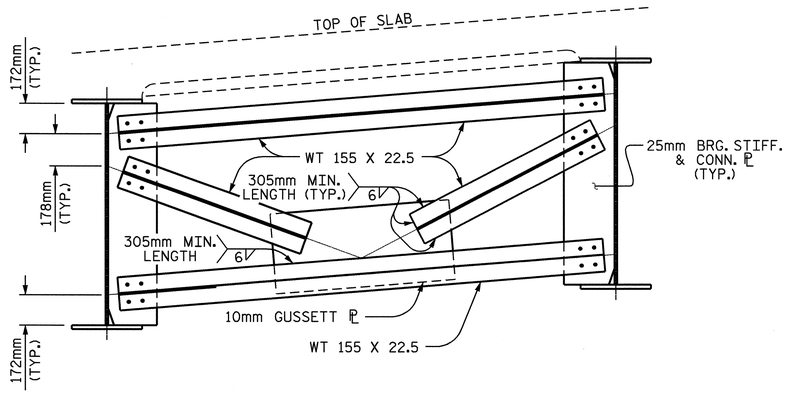

BENT DIAPHRAGM (D2)

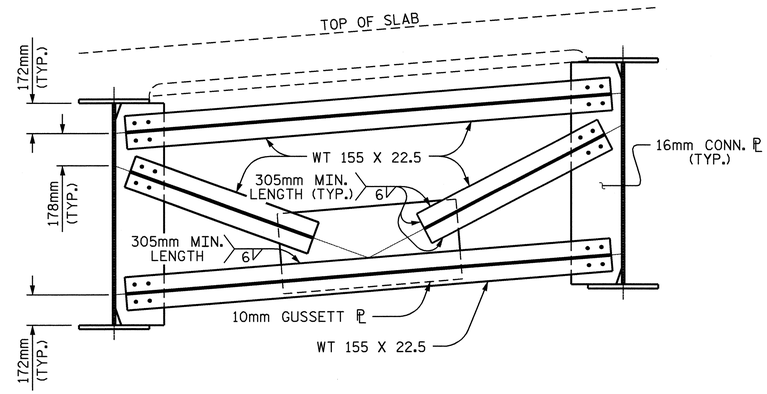

INTERMEDIATE DIAPHRAGM (D3)

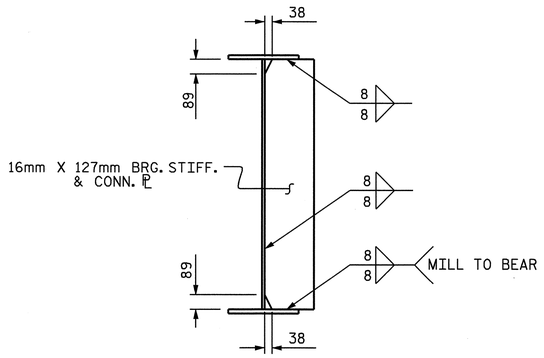

BEARING STIFFENER/CONNECTOR PLATE AT END BENT DIAPHRAGMS

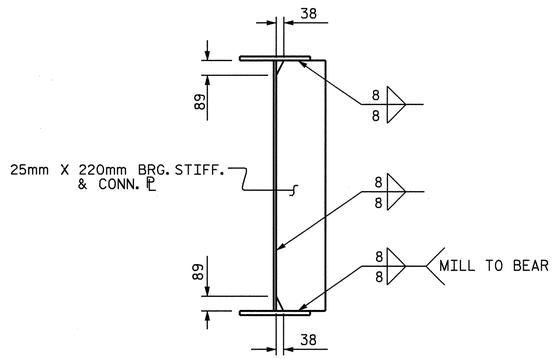

BEARING STIFFENER/CONNECTOR PLATE AT BENT DIAPHRAGMS

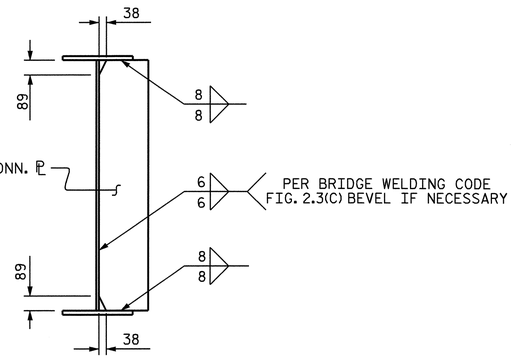

CONNECTOR PLATE AT INTERMEDIATE DIAPHRAGMS

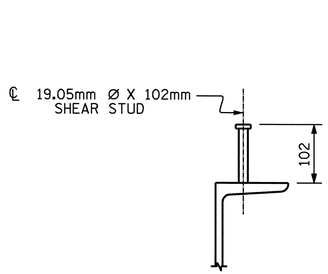

DIAPHRAGM

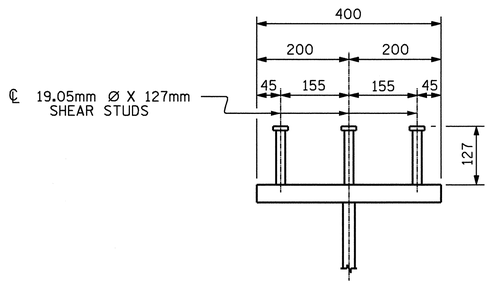

GIRDER

SHEAR STUD DETAILS

PROJECT NO. R-2554BA

WAYNE COUNTY

STATION: 90+62.554 -L-

SHEET 2 OF 4

STATE OF NORTH CAROLINA
DEPARTMENT OF TRANSPORTATION
RALEIGH

SUPERSTRUCTURE STRUCTURAL STEEL DETAILS

REVISIONS						SHEET NO.
NO.	BY:	DATE:	NO.	BY:	DATE:	S-63
1			3			TOTAL SHEETS
2			4			478

NORTH CAROLINA PROFESSIONAL SEAL 19825 ENGINEER BRUCE D. KLAPPENBACH

6-6-08

DRAWN BY : D. A. GLADDEN DATE : 1-19-06
CHECKED BY : M. G. SHAIKH DATE : 3-20-07

24-APR-2008 09:46
r:\structures\bailey\str#3\dgladden\microstation\r2554ba\r2554b_sd_ss.dgn
dgladden

STR. #3

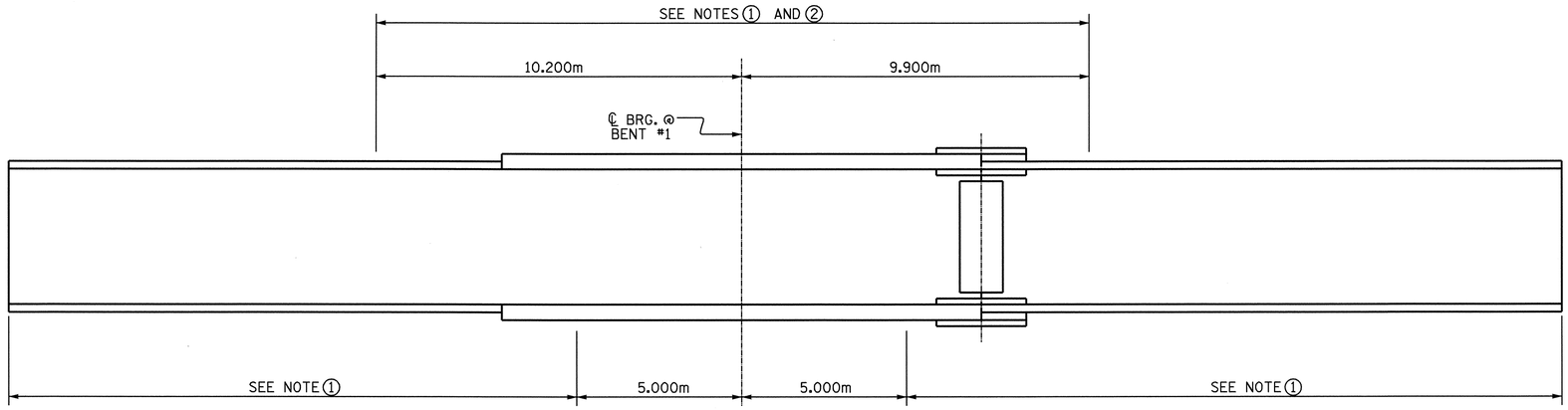

NOTE ① : CHARPY V-NOTCH TESTS ARE REQUIRED FOR ALL TOP OR BOTTOM FLANGE PLATE WHICH FALLS WITHIN THESE LIMITS, ALL WEB PLATES, ALL MEMBERS IN THE DIAPHRAGMS AND ALL SPLICE PLATES. IF A PREMITTED SHOP FLANGE SPLICE IS NOT USED, CHARPY V-NOTCH TESTS WILL BE REQUIRED FOR THE ENTIRE FLANGE PLATE. FOR CHARPY V-NOTCH TESTS, SEE ARTICLE 1072-9 OF THE STANDARD SPECIFICATIONS.

NOTE ② : NO WELDING OF FORM OR FALSEWORK TO THE TOP FLANGE WILL BE PERMITTED IN THIS REGION.

CHARPY V-NOTCH TEST FOR GIRDERS

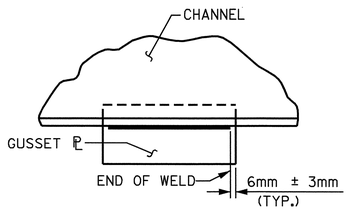

TYPICAL GUSSET PLATE CONNECTION

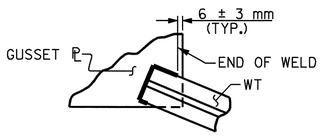

TYPICAL "TEE" TO GUSSET PLATE CONNECTION

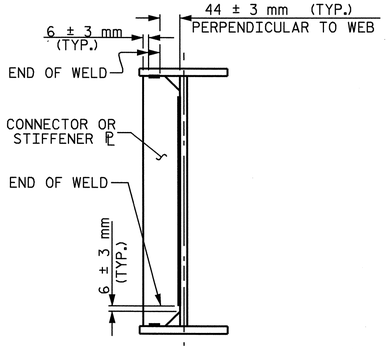

TYPICAL STIFFENER OR CONNECTOR PLATE CONNECTIONS

WELD TERMINATION DETAILS

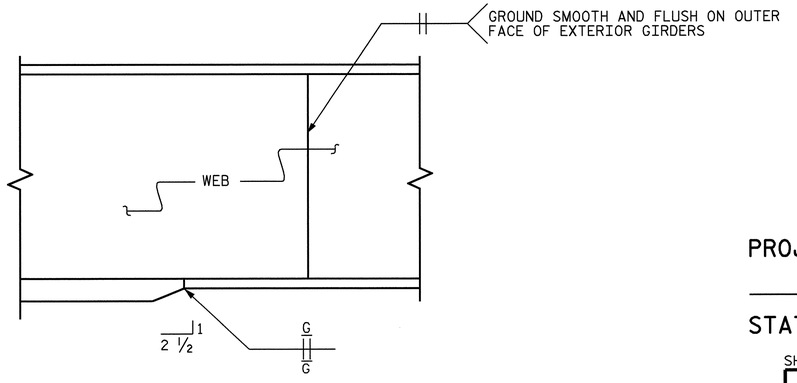

ELEVATION

TYPICAL FLANGE AND WEB BUTT JOINTS

PROJECT NO. R-2554BA

WAYNE COUNTY

STATION: 90+62.554 -L-

SHEET 3 OF 4

STATE OF NORTH CAROLINA
DEPARTMENT OF TRANSPORTATION
RALEIGH

SUPERSTRUCTURE STRUCTURAL STEEL DETAILS

REVISIONS						SHEET NO.
NO.	BY:	DATE:	NO.	BY:	DATE:	S-64
1			3			TOTAL SHEETS
2			4			478

NORTH CAROLINA PROFESSIONAL SEAL 15825 ENGINEER BRUCE D. KLAPPENBERGER
6-6-08

DRAWN BY : D. A. GLADDEN DATE : 1-19-06
CHECKED BY : M. G. SHAIKH DATE : 3-20-07

05-JUN-2008 15:31
r:\structures\bailey\str#3\dgladden\microstation\r2554ba\r2554b_sd_ss.dgn
dgladden

STR. #3

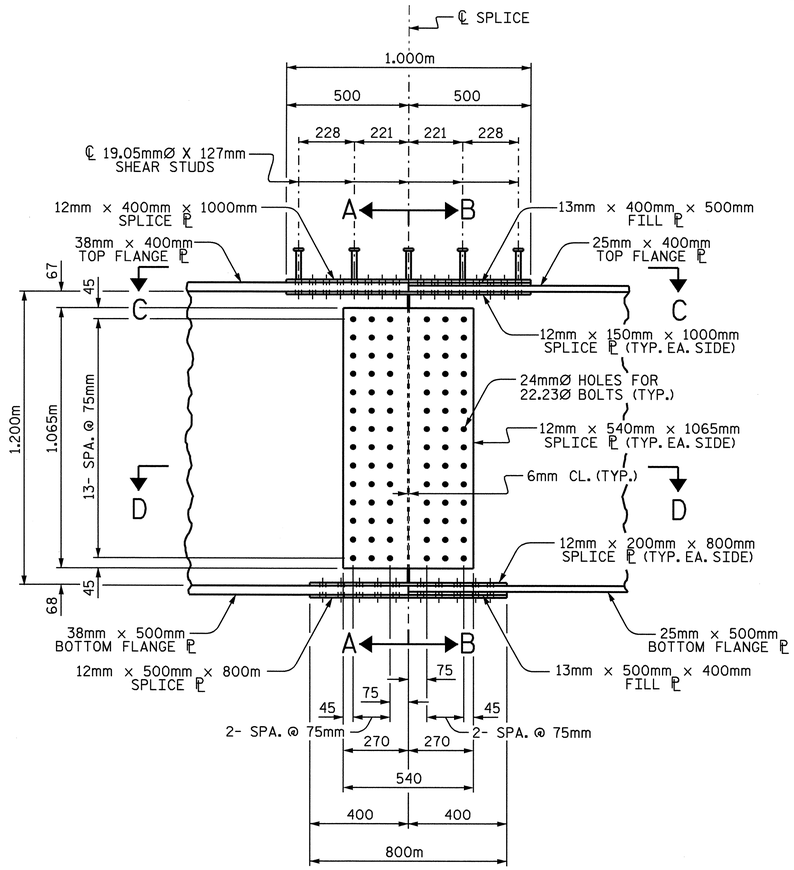

ELEVATION

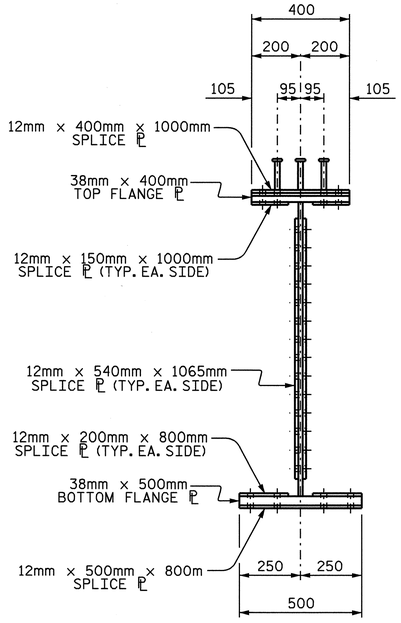

SECTION "A-A"

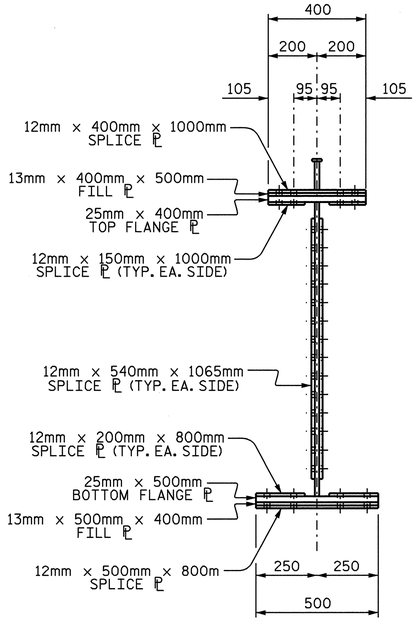

SECTION "B-B"

NOTES

ALL STRUCTURAL STEEL SHALL BE AASHTO M270 GRADE 345W AND PAINTED IN ACCORDANCE WITH SYSTEM 4 OF ARTICLE 442-7 OF THE STANDARD SPECIFICATIONS UNLESS OTHERWISE NOTED ON THE PLANS.

ALL DIMENSIONS SHOWN ARE HORIZONTAL OR VERTICAL, UNLESS OTHERWISE NOTED.

ALL FIELD CONNECTIONS TO BE 22.23mm DIA. HIGH STRENGTH BOLTS UNLESS OTHERWISE NOTED.

FOR HIGH STRENGTH BOLTS, SEE SPECIAL PROVISIONS.

BEARING STIFFENERS SHALL BE PLUMB.

SHOP SPLICES ARE PERMITTED TO LIMIT THE MAXIMUM REQUIRED FLANGE PIECE LENGTHS TO 18 METERS AND WEB PIECE LENGTHS TO 14 METERS. PERMITTED FLANGE AND WEB SHOP SPLICES SHALL NOT BE LOCATED WITHIN 4.5 METERS OF MAXIMUM DEAD LOAD DEFLECTION (NOR WITHIN 4.5 METERS OF INTERMEDIATE BEARINGS OF CONTINUOUS UNITS). KEEP 600mm MINIMUM BETWEEN WEB AND FLANGE SHOP SPLICES. KEEP 150mm MINIMUM BETWEEN CONNECTOR PLATE OR TRANSVERSE STIFFENER WELDS AND WEB OR FLANGE SHOP SPLICES.

STUDS ON GIRDERS MAY BE SHIFTED UP TO 25mm IF NECESSARY TO CLEAR FLANGE SPLICE WELD.

ENDS OF GIRDERS SHALL BE PLUMB.

HEAT CURVING OF STEEL GIRDERS IS ALLOWED. SEE SPECIAL PROVISIONS.

THE CONTRACTOR SHALL MAINTAIN STABILITY OF THE CURVED GIRDERS UNTIL ALL BOLTED FIELD SPLICES AND DIAPHRAGM CONNECTIONS HAVE BEEN COMPLETED.

TENSION ON THE AASHTO M164 BOLTS SHALL BE CALIBRATED USING DIRECT TENSION INDICATOR WASHERS IN ACCORDANCE WITH ARTICLE 442-10 OF THE STANDARD SPECIFICATIONS.

BEARING STIFFENER MAY REQUIRE COPING IF WIDER THAN BOTTOM FLANGE TO AVOID INTERFERENCE WITH THE ANCHOR BOLT.

FOR SHIPPING STEEL STRUCTURAL MEMBERS, SEE SPECIAL PROVISIONS.

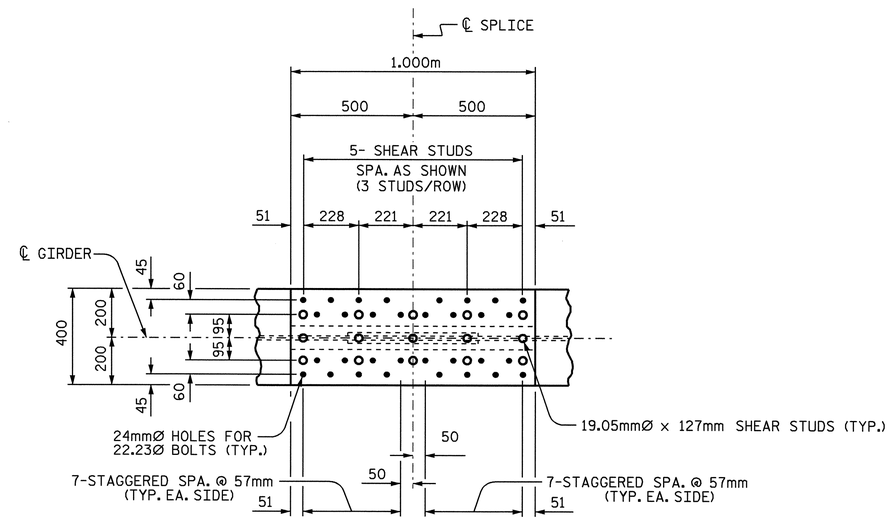

VIEW "C-C"

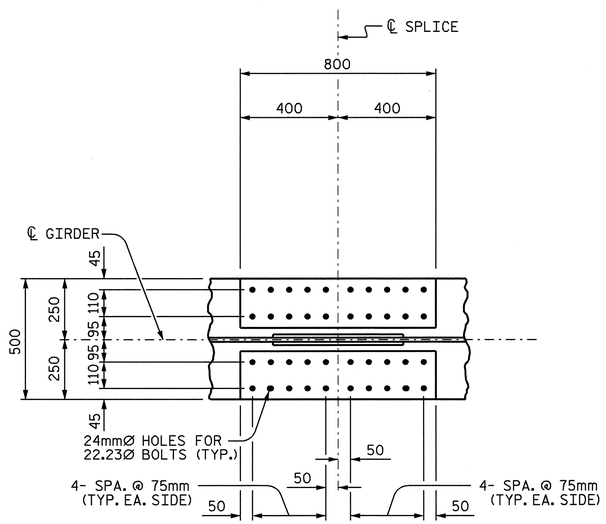

VIEW "D-D"

BOLTED FIELD SPLICE

PROJECT NO. R-2554BA

WAYNE COUNTY

STATION: 90+62.554 -L-

SHEET 4 OF 4

STATE OF NORTH CAROLINA
DEPARTMENT OF TRANSPORTATION
RALEIGH

SUPERSTRUCTURE
STRUCTURAL STEEL
DETAILS

REVISIONS						SHEET NO.
NO.	BY:	DATE:	NO.	BY:	DATE:	S-65
1			3			TOTAL SHEETS
2			4			478

DRAWN BY : D. A. GLADDEN DATE : 1-17-06
CHECKED BY : M. G. SHAIKH DATE : 3-20-07

24-APR-2008 09:47
r:\structures\bailey\str#3\dgladden\microstation\r2554ba\r2554b_sd_ss.dgn
dgladden

STR. #3

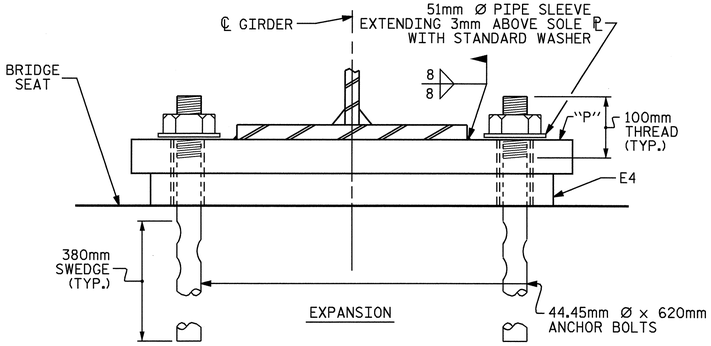

END VIEW

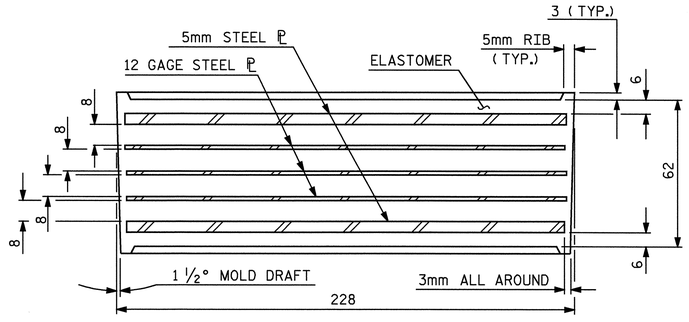

TYPICAL SECTION OF ELASTOMERIC BEARINGS

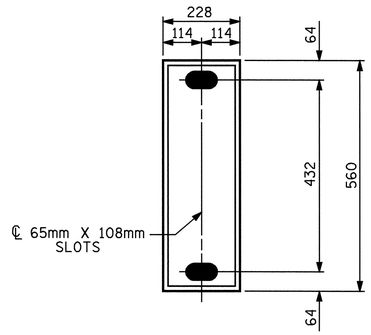

E4 (10 REQ'D)

PLAN VIEW OF ELASTOMERIC BEARING

TYPE II

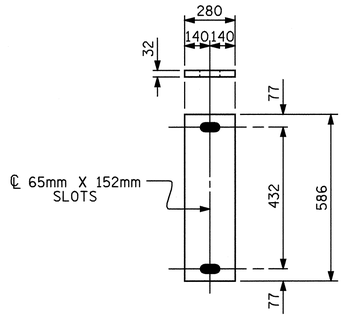

P1
(EXPANSION)
P1 (10 REQ'D)

SOLE PLATE DETAILS

NOTES

THE 51mm Ø PIPE SLEEVE SHALL BE CUT FROM SCHEDULE 40 PVC PLASTIC PIPE. THE PVC PLASTIC PIPE SHALL MEET THE REQUIREMENTS OF ASTM D1785.

THE PAYMENT FOR THE PIPE SLEEVES SHALL BE INCLUDED IN THE SEVERAL PAY ITEMS.

FOR AASHTO M270 GRADE 345W STRUCTURAL STEEL, SOLE PLATE SHALL BE AASHTO M270 GRADE 345W AND SHALL NOT BE GALVANIZED, ANCHOR BOLTS AND NUTS SHALL BE GALVANIZED IN ACCORDANCE WITH THE STANDARD SPECIFICATIONS.

ANCHOR BOLTS SHALL MEET THE REQUIREMENTS OF ASTM A449. NUTS SHALL MEET THE REQUIREMENTS OF AASHTO M291M-12 OR AASHTO M292M-2H. WASHERS SHALL MEET THE REQUIREMENTS OF AASHTO M293M. SHOP DRAWINGS ARE NOT REQUIRED FOR ANCHOR BOLTS, NUTS AND WASHERS. SHOP INSPECTION IS REQUIRED.

WHEN FIELD WELDING THE SOLE PLATE TO THE GIRDER FLANGE, USE TEMPERATURE INDICATING WAX PENS, OR OTHER SUITABLE MEANS, TO ENSURE THAT THE TEMPERATURE OF THE SOLE PLATE DOES NOT EXCEED 149°C. TEMPERATURES ABOVE THIS MAY DAMAGE THE ELASTOMER.

ALL SURFACES OF BEARING PLATES SHALL BE SMOOTH AND STRAIGHT.

—LOAD RATINGS—

	MAX.D.L.+ L.L.
TYPE II	557 kN

PROJECT NO. R-2554BA

WAYNE COUNTY

STATION: 90+62.554 -L-

STATE OF NORTH CAROLINA
DEPARTMENT OF TRANSPORTATION
RALEIGH

ELASTOMERIC BEARING DETAILS
(STEEL SUPERSTRUCTURE)

REVISIONS						SHEET NO.
NO.	BY:	DATE:	NO.	BY:	DATE:	S-66
1			3			TOTAL SHEETS
2			4			478

NORTH CAROLINA PROFESSIONAL SEAL 15825 ENGINEER BRUCE D. KLAPPENBACH
6-6-08

ASSEMBLED BY : D.A. GLADDEN	DATE : 1-26-06		
CHECKED BY : M. G. SHAIKH	DATE : 3-20-07		
DRAWN BY : JMB 11/87		REV. 7/17/98	RWW/LES
CHECKED BY : ARB 11/87		REV. 8/16/99	MAB/LES
		REV. 10/17/00	RWW/LES

24-APR-2008 09:43
r:\structures\bailey\str#3\dgladden\microstation\r2554ba\mr2554ba_sd_ts.dgn
dgladden

STR. #3

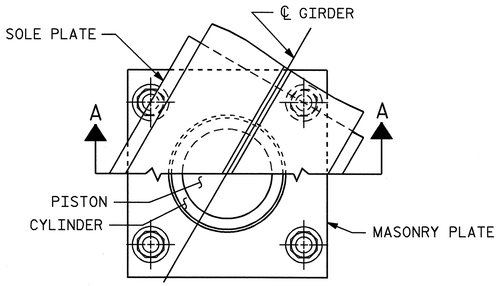

CUT-AWAY PLAN

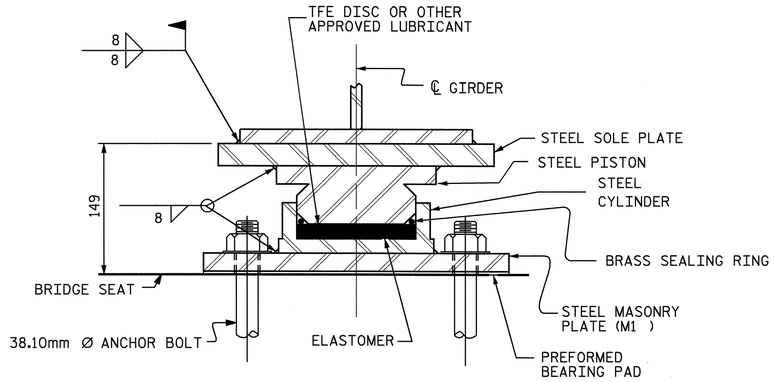

SECTION A-A

PB1, FIXED

(5 REQ'D.)

POT BEARING DETAILS

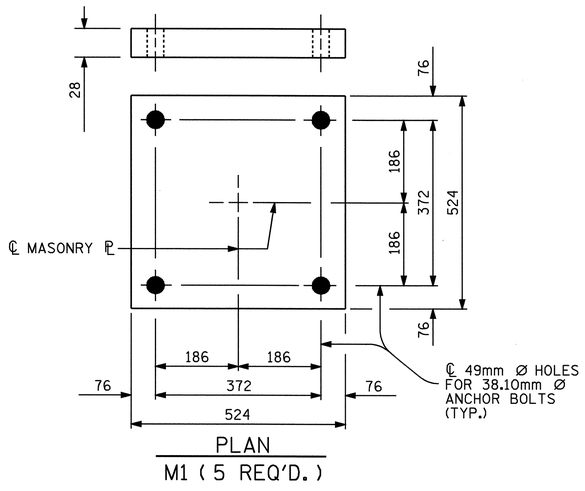

PLAN

M1 (5 REQ'D.)

MASONRY PLATE DETAILS

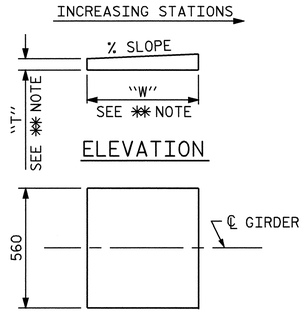

PLAN

✳✳ NOTE:
DIMENSIONS "W" AND "T" ARE TO BE DETERMINED BY THE MANUFACTURER.

SOLE PLATE DETAILS

NOTES

FOR POT BEARINGS, SEE SPECIAL PROVISIONS.

AT ALL POINTS OF SUPPORT AT BENT 1, NUTS FOR ANCHOR BOLTS SHALL BE TIGHTENED FINGER TIGHT AND GIVEN AN ADDITIONAL 1/4 TURN. THE THREAD OF THE NUT AND BOLT SHALL THEN BE BURRED WITH A SHARP POINTED TOOL.

WHEN WELDING THE SOLE PLATE TO THE GIRDER, USE TEMPERATURE INDICATING WAX PENS, OR OTHER SUITABLE MEANS, TO ENSURE THAT THE TEMPERATURE OF THE BEARING DOES NOT EXCEED 121°C TEMPERATURES ABOVE THIS MAY DAMAGE THE TFE OR ELASTOMER.

SOLE PLATES SHOULD BE WELDED TO BEAM FLANGES BEFORE FALSEWORK IS PLACED.

ALL SURFACES OF BEARING PLATES SHALL BE SMOOTH AND STRAIGHT.

FOR THERMAL SPRAYED COATINGS (METALLIZATION), SEE SPECIAL PROVISIONS.

THE CONTRACTOR MAY SUBSTITUTE DISC BEARINGS FOR THE POT BEARINGS SHOWN. FOR OPTIONAL DISC BEARINGS, SEE SPECIAL PROVISIONS.

THE CONTRACTOR SHALL ADJUST THE GIRDER BUILDUPS AS NECESSARY TO INCORPORATE A MAXIMUM PERMISSIBLE VARIATION IN POT BEARING DEPTH OF 13mm, SEE SPECIAL PROVISION FOR POT BEARINGS.

TABLE FOR LOADS AND MOVEMENTS

BEARING	LOCATION	VERTICAL LOAD (kN)			LATERAL LOAD (kN)	TOTAL MOVEMENT (mm)
		DEAD	LIVE	TOTAL		
PB1 (FIXED)	BENT #1	964.00	320.70	1284.70	192.80	0

PROJECT NO. R-2554BA

WAYNE COUNTY

STATION: 90+62.554 -L-

STATE OF NORTH CAROLINA
DEPARTMENT OF TRANSPORTATION
RALEIGH

STANDARD

POT BEARING DETAILS

REVISIONS						SHEET NO.
NO.	BY:	DATE:	NO.	BY:	DATE:	S-67
1			3			TOTAL SHEETS
2			4			478

NORTH CAROLINA PROFESSIONAL SEAL 15825 ENGINEER BRUCE D. KLAPPENBACH
6-6-08

ASSEMBLED BY : D. A. GLADDEN DATE : 1-26-06
CHECKED BY : M. G. SHAIKH DATE : 3-20-07

DRAWN BY : RWW 8/99
CHECKED BY : LES 8/99

REV. 10/17/00 RWW/LES
REV. 7/10/01 LES/RWW
REV. 5/7/03 RWW/JTE

05-JUN-2008 15:14
r:\structures\bailey\str#3\dgladden\microstation\r2554ba\mr2554ba_sd_ts.dgn
dgladden

STR. #3

PB1SM.STD

DEAD LOAD DEFLECTION TABLE FOR GIRDERS

	SPAN "A" GIRDERS 1 THRU 5																				
TWENTIETH POINTS	0	.05	.10	.15	.20	.25	.30	.35	.40	.45	.50	.55	.60	.65	.70	.75	.80	.85	.90	.95	0
DEFLECTION DUE TO WEIGHT OF GIRDER ↓	0.000	0.001	0.002	0.003	0.004	0.004	0.005	0.005	0.005	0.005	0.005	0.005	0.004	0.004	0.003	0.002	0.002	0.001	0.001	0.000	0.000
DEFLECTION DUE TO WEIGHT OF SLAB * ↓	0.000	0.005	0.009	0.013	0.017	0.020	0.022	0.024	0.024	0.024	0.023	0.021	0.019	0.016	0.013	0.010	0.007	0.004	0.002	0.001	0.000
DEFLECTION DUE TO WEIGHT OF RAIL ↓	0.000	0.001	0.001	0.002	0.002	0.002	0.002	0.002	0.002	0.002	0.002	0.002	0.002	0.002	0.001	0.001	0.001	0.001	0.000	0.000	0.000
TOTAL DEAD LOAD DEFLECTION ↓	0.000	0.007	0.012	0.018	0.023	0.026	0.029	0.031	0.031	0.031	0.030	0.028	0.025	0.022	0.017	0.013	0.010	0.006	0.003	0.001	0.000
VERTICAL CURVE ORDINATE ↓	0.000	0.005	0.010	0.014	0.017	0.020	0.022	0.024	0.026	0.027	0.027	0.027	0.026	0.024	0.023	0.020	0.017	0.014	0.010	0.005	0.000
ORDINATE DUE TO SUPERELEVATION	0.000	0.000	0.000	0.000	0.000	0.000	0.000	0.000	0.000	0.000	0.000	0.000	0.000	0.000	0.000	0.000	0.000	0.000	0.000	0.001	0.000
CAMBER FROM HEAT CURVING ↓	0.000	0.001	0.002	0.003	0.004	0.005	0.006	0.006	0.006	0.006	0.006	0.005	0.005	0.004	0.003	0.003	0.002	0.001	0.001	0.000	0.000
REQUIRED CAMBER	0	13	24	35	44	51	57	61	63	64	63	60	56	50	43	36	29	21	14	7	0

* INCLUDES SLAB, BUILDUPS & STAY-IN-PLACE FORMS.
ALL VALUES ARE SHOWN IN METERS, EXCEPT "FINAL CAMBER" WHICH IS SHOWN IN MILLIMETERS.

EFFECT OF CAMBER DISSIPATION ARE NEGLIGIBLE.

DEAD LOAD DEFLECTION TABLE FOR GIRDERS

	SPAN "B" GIRDERS 1 THRU 5																				
TWENTIETH POINTS	0	.05	.10	.15	.20	.25	.30	.35	.40	.45	.50	.55	.60	.65	.70	.75	.80	.85	.90	.95	0
DEFLECTION DUE TO WEIGHT OF GIRDER ↓	0.000	0.000	0.001	0.001	0.002	0.003	0.003	0.004	0.005	0.005	0.005	0.006	0.006	0.006	0.005	0.005	0.004	0.003	0.002	0.001	0.000
DEFLECTION DUE TO WEIGHT OF SLAB * ↓	0.000	0.002	0.003	0.005	0.008	0.011	0.015	0.019	0.021	0.024	0.026	0.027	0.027	0.026	0.025	0.022	0.019	0.015	0.010	0.005	0.000
DEFLECTION DUE TO WEIGHT OF RAIL ↓	0.000	0.000	0.000	0.001	0.001	0.001	0.002	0.001	0.002	0.002	0.002	0.002	0.002	0.002	0.002	0.002	0.002	0.001	0.001	0.001	0.000
TOTAL DEAD LOAD DEFLECTION ↓	0.000	0.002	0.004	0.007	0.011	0.015	0.020	0.024	0.028	0.031	0.033	0.035	0.035	0.034	0.032	0.029	0.025	0.019	0.013	0.007	0.000
VERTICAL CURVE ORDINATE ↓	0.000	0.005	0.010	0.014	0.018	0.021	0.023	0.025	0.026	0.027	0.028	0.027	0.026	0.025	0.023	0.021	0.017	0.014	0.010	0.005	0.000
ORDINATE DUE TO SUPERELEVATION	0.000	0.000	0.000	0.000	0.000	0.000	0.000	0.000	0.000	0.000	0.000	0.000	0.000	0.000	0.000	0.000	0.000	0.000	0.000	0.000	0.000
CAMBER FROM HEAT CURVING ↓	0.000	0.000	0.001	0.002	0.002	0.003	0.004	0.005	0.005	0.006	0.006	0.006	0.006	0.006	0.006	0.005	0.005	0.004	0.003	0.002	0.000
REQUIRED CAMBER	0	7	15	23	31	39	47	54	59	64	67	68	67	65	61	55	47	37	26	14	0

* INCLUDES SLAB, BUILDUPS & STAY-IN-PLACE FORMS.
ALL VALUES ARE SHOWN IN METERS, EXCEPT "FINAL CAMBER" WHICH IS SHOWN IN MILLIMETERS.

EFFECT OF CAMBER DISSIPATION ARE NEGLIGIBLE.

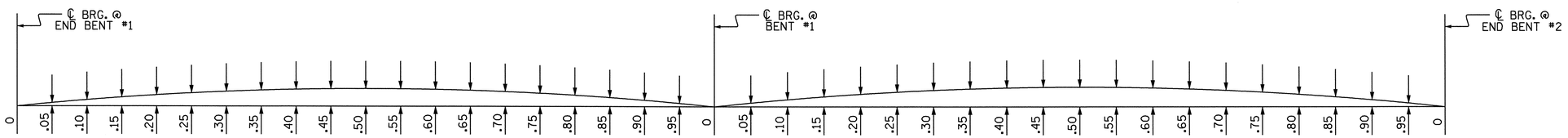

SPAN "A" SPAN "B"

SCHEMATIC CAMBER ORDINATES

SLOPE FOR THE ZERO CAMBER BASE LINE VARIES.

PROJECT NO. R-2554BA
WAYNE COUNTY
STATION: 90+62.554 -L-

STATE OF NORTH CAROLINA
DEPARTMENT OF TRANSPORTATION
RALEIGH

SUPERSTRUCTURE DEAD LOAD DEFLECTIONS

NORTH CAROLINA PROFESSIONAL SEAL 15825 ENGINEER BRUCE D. KLAPPENBACH
6-6-08

REVISIONS						SHEET NO.
NO.	BY:	DATE:	NO.	BY:	DATE:	S-68
1			3			TOTAL SHEETS
2			4			478

DRAWN BY : D. A. GLADDEN DATE : 1-23-06
CHECKED BY : M. G. SHAIKH DATE : 3-20-07

05-JUN-2008 15:32
r:\structures\bailey\str#3\dgladden\microstation\r2554ba\r2554b_sd_ss.dgn
dgladden

STR. #3

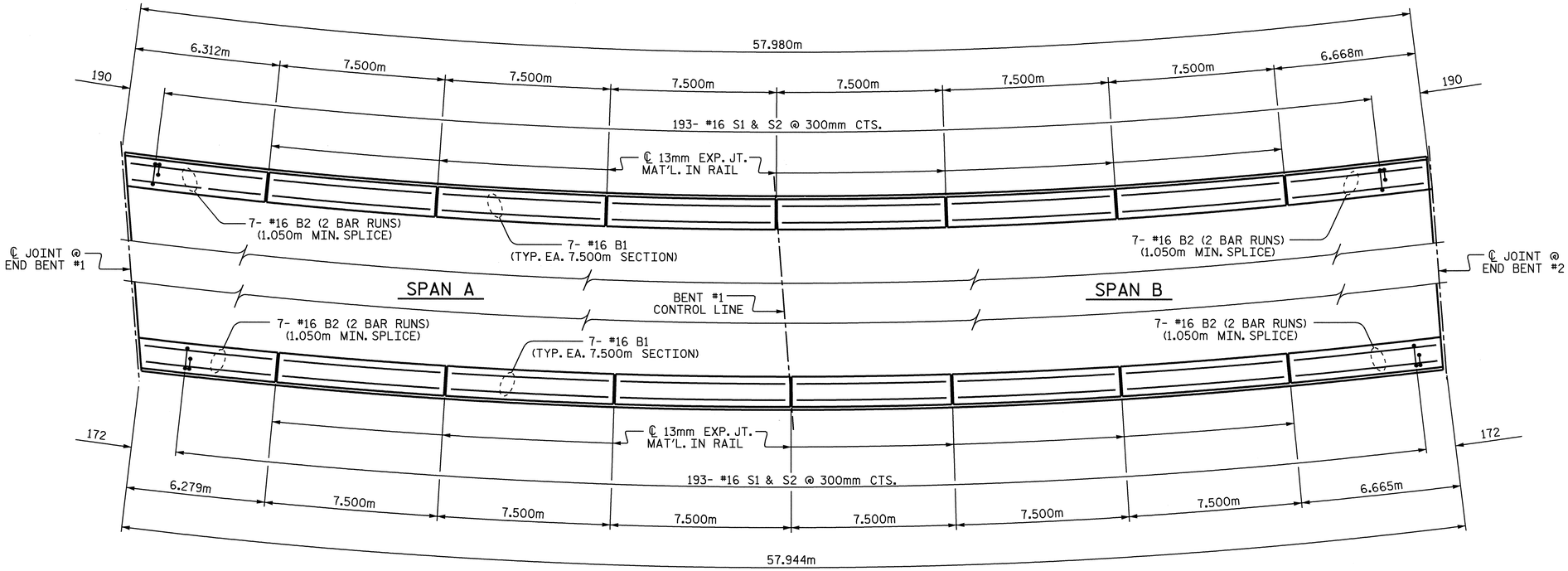

PLAN OF BARRIER RAIL

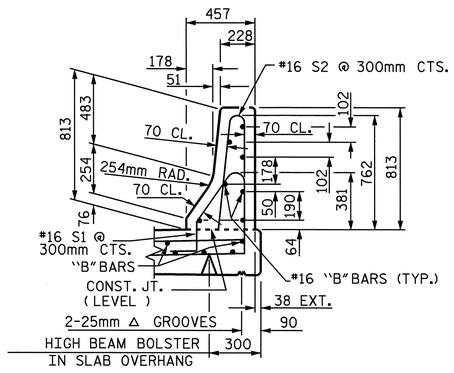

SECTION THRU RAIL

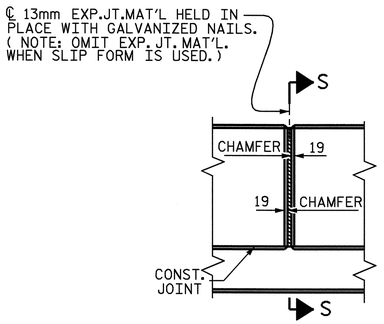

ELEVATION AT EXPANSION JOINTS

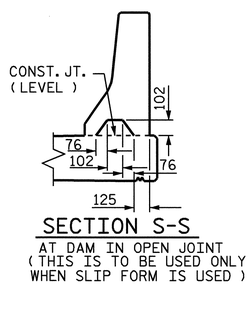

SECTION S-S

AT DAM IN OPEN JOINT
(THIS IS TO BE USED ONLY WHEN SLIP FORM IS USED)

BAR TYPES

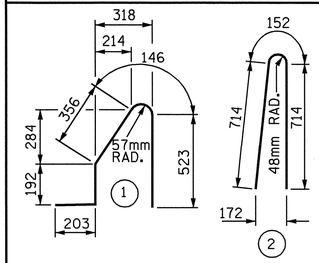

ALL BAR DIMENSIONS ARE OUT TO OUT

BILL OF MATERIAL

FOR CONCRETE BARRIER RAIL ONLY

BAR	NO.	SIZE	TYPE	LENGTH	WEIGHT
✳ S1	386	#16	1	1420	851
✳ S2	386	#16	2	1580	947
✳ B1	84	#16	STR	7380	962
✳ B2	56	#16	STR	3840	334

✳ EPOXY COATED REINFORCING STEEL	3094 kg
CLASS AA CONCRETE	29.1 CU. METERS
CONCRETE BARRIER RAIL	115.924 METERS

NOTES

THE BARRIER RAIL IN A CONTINUOUS UNIT SHALL NOT BE CAST UNTIL ALL SLAB CONCRETE IN THAT CONTINUOUS UNIT HAS BEEN CAST AND HAS REACHED A MINIMUM COMPRESSIVE STRENGTH OF 20.7 MPa.

WHEN COMPRESSION JOINT SEAL OR EVAZOTE JOINT SEAL IS REQUIRED, THE JOINT IN THE DECK SHALL BE SAWED PRIOR TO THE CASTING OF BARRIER RAIL.

ALL REINFORCING STEEL IN BARRIER RAILS SHALL BE EPOXY COATED.

VERTICAL GROOVED CONTRACTION JOINTS, 12mm IN DEPTH, SHALL BE TOOLED IN ALL EXPOSED FACES OF THE BARRIER RAIL AND IN ACCORDANCE WITH ARTICLE 825-10(B) OF THE STANDARD SPECIFICATIONS. THE CONTRACTION JOINT SHALL BE LOCATED AT EACH THIRD POINT BETWEEN BARRIER RAIL EXPANSION JOINTS. ONLY ONE CONTRACTION JOINT IS REQUIRED AT MIDPOINT OF BARRIER RAIL SEGMENTS LESS THAN 6.1m IN LENGTH AND NO CONTRACTION JOINTS ARE REQUIRED FOR THOSE SEGMENTS LESS THAN 3.5m IN LENGTH.

PROJECT NO. R-2554BA

WAYNE COUNTY

STATION: 90+62.554 -L-

BARRIER RAIL DETAILS

ASSEMBLED BY : D. A. GLADDEN	DATE : 1-31-06	
CHECKED BY : M. G. SHAIKH	DATE : 3-20-07	
DRAWN BY : ARB 5/87	REV. 8/16/99	RWW/LES
CHECKED BY : SJD 9/87	REV. 10/17/00	RWW/LES
	REV. 5/7/03R	RWW/JTE

STATE OF NORTH CAROLINA
DEPARTMENT OF TRANSPORTATION
RALEIGH

STANDARD

CONCRETE BARRIER RAIL

NORTH CAROLINA PROFESSIONAL SEAL 15825 ENGINEER BRUCE D. KLAPPENBERG
6-6-08

REVISIONS						SHEET NO.
NO.	BY:	DATE:	NO.	BY:	DATE:	
1			3			TOTAL SHEETS
2			4			

06-JUN-2008 15:57
r:\structures\balley\Str#3\dgladden\Microstation\R2554BA\MR2554BA_sd_TS.dgn
tbarbour

STR. #3

STD. No. CBR1SM

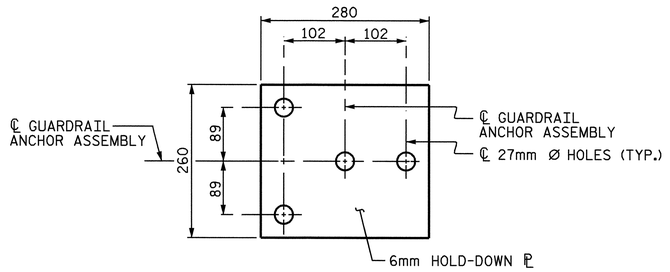

PLAN

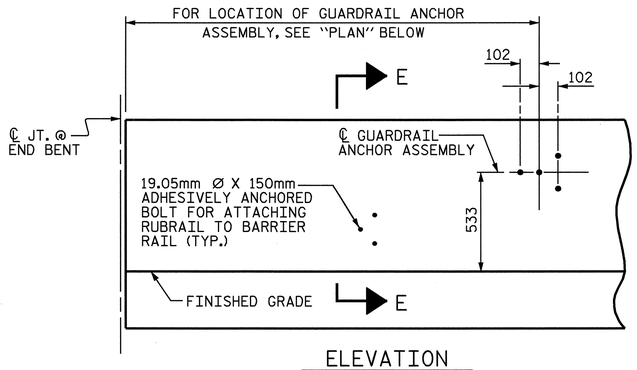

ELEVATION

FOR LOCATION OF RUBRAIL, SEE ROADWAY STD. 862.03

NOTES

THE GUARDRAIL ANCHOR ASSEMBLY SHALL CONSIST OF A 6mm HOLD DOWN PLATE AND 4 - 22.23mm Ø BOLTS WITH NUTS AND WASHERS, RUBRAIL, AND ADHESIVELY ANCHORED BOLTS.

THE HOLD-DOWN PLATE SHALL CONFORM TO AASHTO M270 GRADE 36. AFTER FABRICATION, THE HOLD-DOWN PLATE SHALL BE HOT-DIP GALVANIZED IN ACCORDANCE WITH AASHTO M111.

BOLTS SHALL CONFORM TO THE REQUIREMENTS OF ASTM A307 AND NUTS SHALL CONFORM TO THE REQUIREMENTS OF AASHTO M291. BOLTS, NUTS AND WASHERS SHALL BE GALVANIZED. (AT THE CONTRACTOR'S OPTION, STAINLESS STEEL BOLTS, NUTS AND WASHERS MAY BE USED AS AN ALTERNATE FOR THE 22.23mm Ø GALVANIZED BOLTS, NUTS AND WASHERS. THEY SHALL CONFORM TO OR EXCEED THE MECHANICAL REQUIREMENTS OF ASTM A307. THE USE OF THIS ALTERNATE SHALL BE APPROVED BY THE ENGINEER.)

THE GUARDRAIL ANCHOR ASSEMBLY IS REQUIRED AT ALL POINTS WHERE APPROACH GUARDRAIL IS TO BE ATTACHED TO THE END OF BARRIER RAIL. FOR POINTS OF ATTACHMENT, SEE SKETCH.

AFTER INSTALLATION, THE EXPOSED THREAD OF THE BOLT SHALL BE BURRED WITH A SHARP POINTED TOOL.

THE COST OF THE GUARDRAIL ANCHOR ASSEMBLY SHALL BE INCLUDED IN THE UNIT CONTRACT PRICE BID FOR CONCRETE BARRIER RAIL.

THE 32mm Ø HOLES SHALL BE FORMED OR DRILLED WITH A CORE BIT. IMPACT TOOLS WILL NOT BE PERMITTED. ANY CONCRETE DAMAGED BY THIS WORK SHALL BE REPAIRED TO THE SATISFACTION OF THE ENGINEER.

THE C150 X 12 RUBRAIL IS TO BE ADHESIVELY ANCHORED TO THE RAIL USING THREE 19.05mm Ø X 150mm BOLTS WITH WASHERS. LEVEL ONE FIELD TESTING IF REQUIRED, AND THE YIELD LOAD OF THE 19.05mm Ø BOLTS IS 53.4kN. FOR ADHESIVELY ANCHORED ANCHOR BOLTS OR DOWELS, SEE SPECIAL PROVISIONS. SEE ROADWAY STANDARD 862.03 FOR DETAILS AND LOCATION OF THE RUBRAIL.

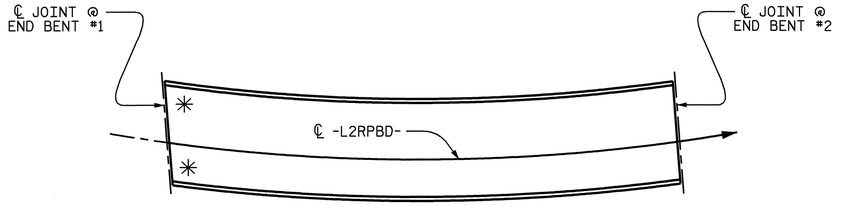

SKETCH SHOWING POINTS OF ATTACHMENTS

✳ DENOTES GUARDRAIL ANCHOR ASSEMBLY

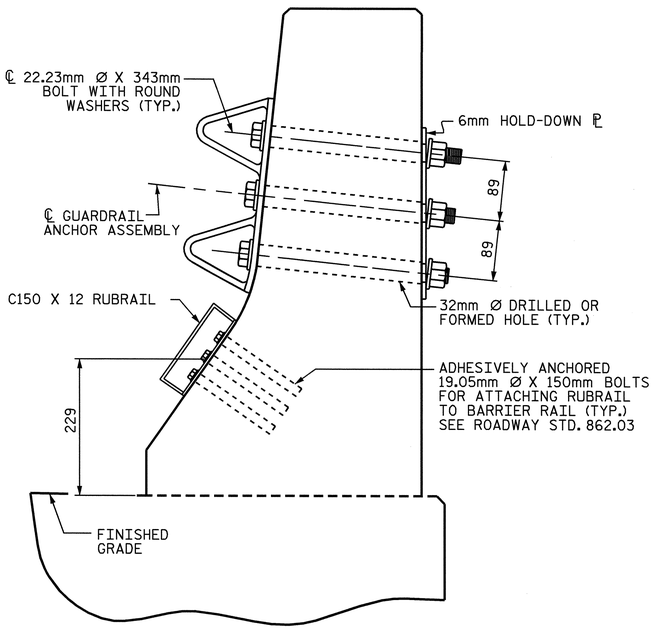

SECTION E-E

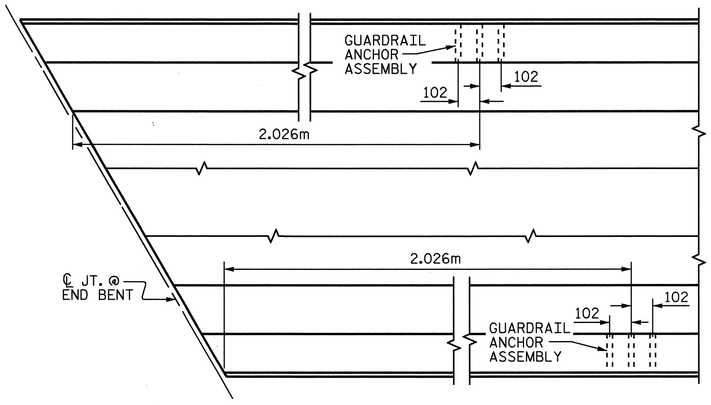

PLAN

GUARDRAIL ANCHOR ASSEMBLY DETAILS

LOCATION OF ANCHORS FOR GUARDRAIL

END BENT #1 SHOWN, END BENT #2 SIMILAR.

PROJECT NO. R-2554BA

WAYNE COUNTY

STATION: 90+62.554 -L-

STATE OF NORTH CAROLINA
DEPARTMENT OF TRANSPORTATION
RALEIGH

STANDARD

GUARDRAIL ANCHORAGE FOR BARRIER RAIL

NORTH CAROLINA PROFESSIONAL SEAL 15825 ENGINEER BRUCE D. KLAPPENBACH
6-6-08

REVISIONS						SHEET NO.
NO.	BY:	DATE:	NO.	BY:	DATE:	S-70
1			3			TOTAL SHEETS
2			4			#78

ASSEMBLED BY : D. A. GLADDEN	DATE : 1-31-06
CHECKED BY : M. G. SHAIKH	DATE : 3-20-07
DRAWN BY : TLA 5/06	ADDED 5/1/06R KMM/GM
CHECKED BY : GM 5/06	

29-APR-2008 12:27
r:\structures\bailey\str#3\dgladden\microstation\r2554ba\MR2554BA_sd_TS.dgn
dgladden

STR. #3 STD. NO. GRA2SM

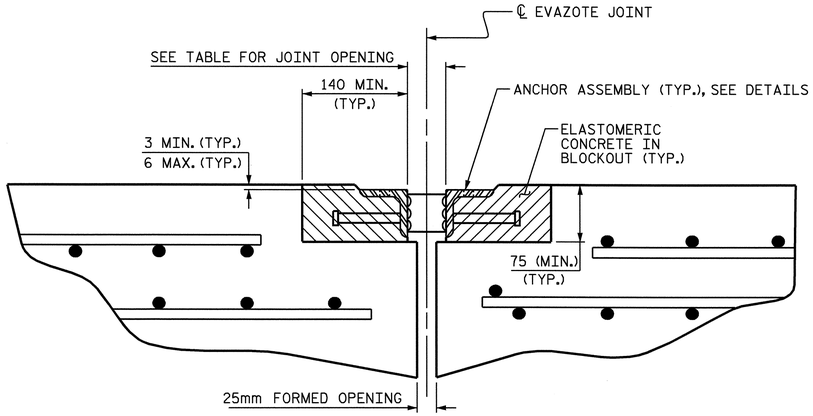

ARMORED JOINT DETAILS

SECTION NORMAL TO JOINT AT END BENT

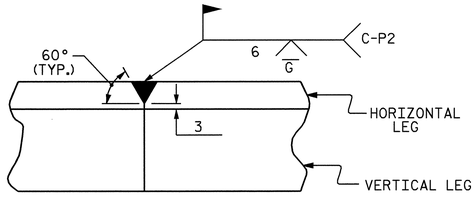

DETAIL- FIELD WELD SPLICE OF ANGLE

NOTES

ANGLES SHALL CONFORM TO AASHTO M270 GRADE 250 STEEL OR APPROVED EQUAL. ALL STUD ANCHORS SHALL CONFORM TO AASHTO M169 GRADES 1010 THRU 1020 OR APPROVED EQUAL.

STUD ANCHORS SHALL BE SHOP WELDED AND ALL HOLES SHALL BE SHOP DRILLED AS SHOWN ON THE PLANS. STUD ANCHORS SHALL BE ELECTRIC ARC END WELDED WITH COMPLETE FUSION.

UPON COMPLETION OF SHOP FABRICATION, THE ENTIRE ANCHOR ASSEMBLY SHALL BE METALLIZED. THE 12.70mm Ø STUD ANCHORS AND ANCHOR TABS NEED NOT BE METALLIZED. SEE SPECIAL PROVISION FOR THERMAL SPRAYED COATINGS (METALLIZATION).

ANCHOR ASSEMBLY SHALL BE MADE CONTINUOUS THE LENGTH OF THE JOINT FROM GUTTER TO GUTTER. FOR FIELD SPLICES AT ALL CROWN BREAK POINTS, THE ENDS OF THE STEEL ANGLES SHALL BE CUT PARALLEL TO THE BRIDGE CENTERLINE. FINISHED FIELD WELDS SHALL BE GROUND SMOOTH AND COATED WITH A MINIMUM THICKNESS OF 0.100mm OF ZINC-RICH PAINT IN ACCORDANCE WITH THE STANDARD SPECIFICATIONS.

ANCHOR ASSEMBLY SEGMENTS SHALL NOT BE LESS 3.6m NOR MORE THAN 6.1m IN LENGTH. SHORTER SEGMENTS MAY BE USED AT THE EDGE OF ROADWAY OR AT POINTS OF STAGED CONSTRUCTION.

THE ANCHOR ASSEMBLY SHALL BE SECURED AND LEVELED AS SHOWN IN THE "ARMORED JOINT ANCHOR ASSEMBLY DETAILS". NO SUBMITTALS ARE REQUIRED FOR 9.53mm Ø EXPANSION ANCHORS, NUTS OR WASHERS. THE CONTRACTOR MAY SUBMIT FOR APPROVAL AN ALTERNATE METHOD OF ALIGNING AND LEVELING THE ANGLES. THE ALTERNATE METHOD SHALL NOT INCLUDE ANY WELDING TO THE OUTSIDE FACE OF THE ANGLES.

AFTER THE ELASTOMERIC CONCRETE HAS BEEN CAST ON BOTH SIDES OF THE JOINT, REMOVE ANY EXCESS CONCRETE THAT COMES THROUGH THE WEEP HOLES AND THOROUGHLY CLEAN THE ANGLES. ANY DAMAGED STEEL SHALL BE COATED WITH A MINIMUM OF 0.100mm OF ZINC-RICH PAINT IN ACCORDANCE WITH THE STANDARD SPECIFICATIONS.

SEE SPECIAL PROVISIONS FOR EVAZOTE JOINT SEALS.

SEE SPECIAL PROVISIONS FOR ELASTOMERIC CONCRETE.

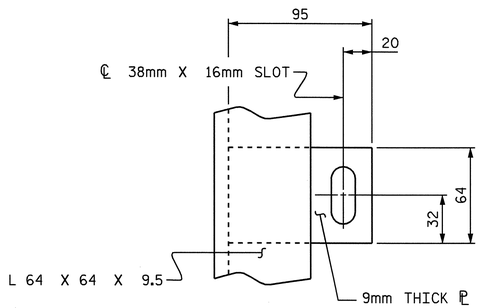

PLAN VIEW OF TAB

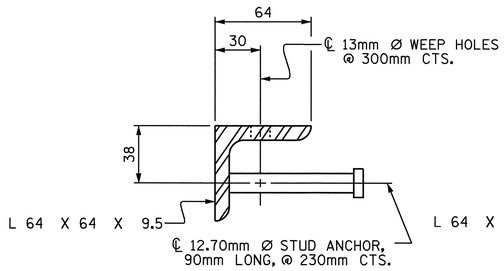

SECTION VIEW OF STUD

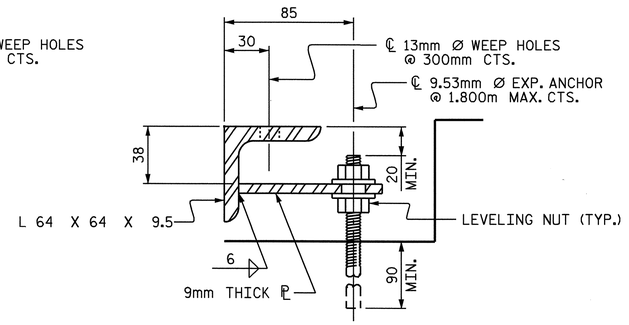

SECTION VIEW OF TAB

ARMORED JOINT ANCHOR ASSEMBLY DETAILS

MOVEMENT AND SETTING AT EVAZOTE JOINT						
END BENT NO.	SKEW ANGLE	NOMINAL UNCOMPRESSED SEAL WIDTH	TOTAL MOVEMENT (ALONG ℄ RDWY)	PERPENDICULAR JOINT OPENING AT 7° C	PERPENDICULAR JOINT OPENING AT 16° C	PERPENDICULAR JOINT OPENING AT 32° C
1	78°31'50"	64mm	24mm	52.0mm	48.0mm	41.0mm
2	92°49'05"	64mm	24mm	52.0mm	48.0mm	41.0mm

TOTAL MOVEMENT IS CALCULATED ALONG THE CENTERLINE OF ROADWAY.
JOINT OPENINGS ARE MEASURED PERPENDICULAR TO THE JOINT.

BILL OF MATERIAL		
END BENT NO.	ELASTOMERIC CONCRETE * (CU. m)	TOTAL LENGTH OF ANGLE (m)
1	0.3	24.490
2	0.3	24.030

* BASED ON THE MINIMUM BLOCKOUT SHOWN.

PROJECT NO. R-2554BA

WAYNE COUNTY

STATION: 90+62.554 -L-

STATE OF NORTH CAROLINA
DEPARTMENT OF TRANSPORTATION
RALEIGH

STANDARD ARMORED EVAZOTE JOINT DETAILS

NORTH CAROLINA PROFESSIONAL SEAL 15825 ENGINEER BRUCE D. KLAPPENBACH
6-6-08

REVISIONS						SHEET NO.
NO.	BY:	DATE:	NO.	BY:	DATE:	S-71
1			3			TOTAL SHEETS
2			4			478

ASSEMBLED BY : D. A. GLADDEN	DATE : 11-26-07		
CHECKED BY : M. G. SHAIKH	DATE : 3-20-07		
DRAWN BY : EEM 1/96	REV. 7/10/01	LES/RDR	
CHECKED BY : RGW 1/96	REV. 5/7/03RR	RWW/JTE	
	REV. 5/1/06	TLA/GM	

05-JUN-2008 15:26
r:\structures\bailey\str#3\dgladden\microstation\r2554ba\mr2554ba_sd_ts.dgn
dgladden

STR. #3

STD. NO. AEJ1SM

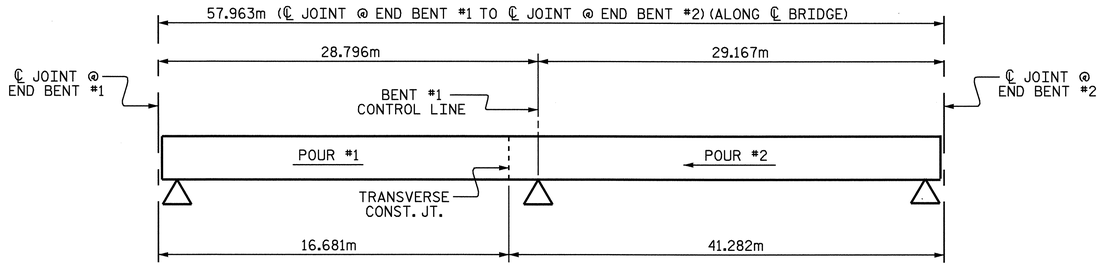

LAYOUT FOR POURING SEQUENCE OF REINFORCED CONCRETE DECK SLAB

BILL OF MATERIAL

BAR	NO.	SIZE	TYPE	LENGTH	WEIGHT
✳A1	334	#16	STR	12880	6677
A2	334	#16	STR	12880	6677
✳A101	1	#16	STR	11380	18
✳A102	1	#16	STR	9140	14
✳A103	1	#16	STR	6920	11
✳A104	1	#16	STR	4700	7
✳A105	1	#16	STR	2460	4
A106	1	#16	STR	11380	18
A107	1	#16	STR	9140	14
A108	1	#16	STR	6920	11
A109	1	#16	STR	4700	7
A110	1	#16	STR	2460	4
✳A111	1	#16	STR	11380	18
✳A112	1	#16	STR	9320	14
✳A113	1	#16	STR	6880	11
✳A114	1	#16	STR	4620	7
✳A115	1	#16	STR	2380	4
A116	1	#16	STR	11380	18
A117	1	#16	STR	9320	14
A118	1	#16	STR	6880	11
A119	1	#16	STR	4620	7
A120	1	#16	STR	2380	4
✳B1	62	#13	STR	8640	532
✳B2	93	#22	STR	9460	2676
✳B3	84	#22	STR	8460	2162
B4	192	#16	STR	14980	4464
✳B5	62	#13	STR	8940	551
✳G1	1	#16	STR	13140	20
✳G2	1	#16	STR	12900	20
✳K1	8	#16	1	2980	37
✳K2	12	#16	2	4080	76
✳S1	64	#13	3	1080	69

REINFORCING STEEL = 11249 KG
✳EPOXY COATED REINF. STEEL = 12928 KG

BAR TYPES

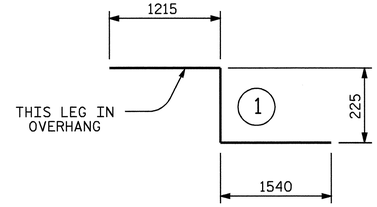

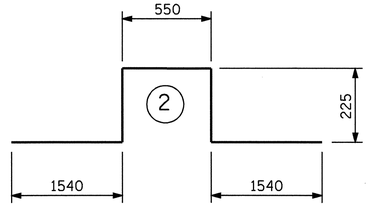

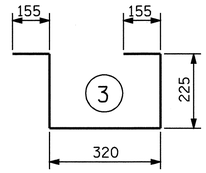

ALL BAR DIMENSIONS ARE OUT TO OUT

SUPERSTRUCTURE BILL OF MATERIAL

	CONCRETE CLASS AA	REINFORCING STEEL	EPOXY COATED REINFORCING STEEL
	m3	(kg)	(kg)
POUR #1	59.3	11249	12928
POUR #2	147.5		
✳✳ TOTALS	206.8		

✳✳ QUANTITIES FOR BARRIER RAILS ARE NOT INCLUDED

SUPERSTRUCTURE REINFORCING STEEL LENGTHS ARE BASED ON THE FOLLOWING MINIMUM SPLICE LENGTHS

BAR SIZE	SUPERSTRUCTURE EXCEPT APPROACH SLABS, PARAPET, AND BARRIER RAIL		APPROACH SLABS		PARAPET AND BARRIER RAIL
	EPOXY COATED	UNCOATED	EPOXY COATED	UNCOATED	
#13	610	540	610	540	840
#16	770	660	770	660	1050
#19	920	790	1190	790	1330
#22	1580	1060			
#25	2080	1390			

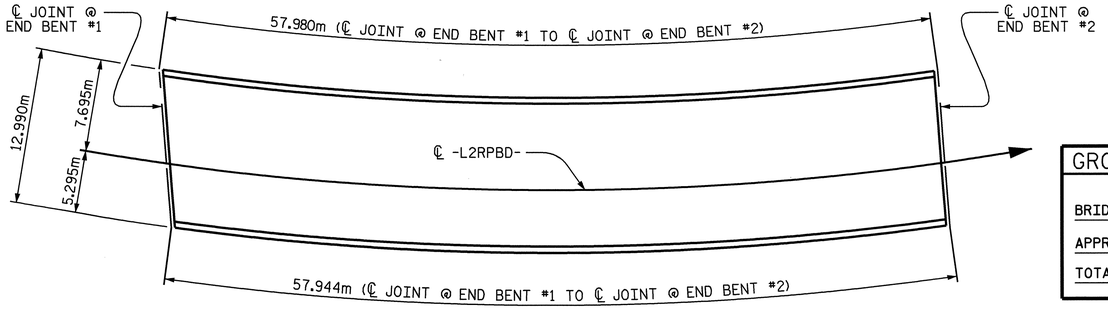

LAYOUT FOR COMPUTING AREA OF REINFORCED CONCRETE DECK SLAB (SQ. METER = 752.9)

GROOVING BRIDGE FLOORS

BRIDGE DECK	637.7	SQ.METER
APPROACH SLAB	166.6	SQ.METER
TOTAL	804.3	SQ.METER

NORTH CAROLINA PROFESSIONAL SEAL 15825 ENGINEER BRUCE D. KLAPPERICH
6-6-08

PROJECT NO. R-2554BA
WAYNE COUNTY
STATION: 90+62.554 -L-

STATE OF NORTH CAROLINA
DEPARTMENT OF TRANSPORTATION
RALEIGH

SUPERSTRUCTURE BILL OF MATERIAL

REVISIONS						SHEET NO.
NO.	BY:	DATE:	NO.	BY:	DATE:	S-72
1			3			TOTAL SHEETS
2			4			478

DRAWN BY : D. A. GLADDEN DATE : 12-8-05
CHECKED BY : M. G. SHAIKH DATE : 3-20-07

25-APR-2008 09:51
R:\Structures\BAILEY\Str#3\dgladden\Microstation\R2554BA\MR2554BA_sd_TS.dgn

STR. #3

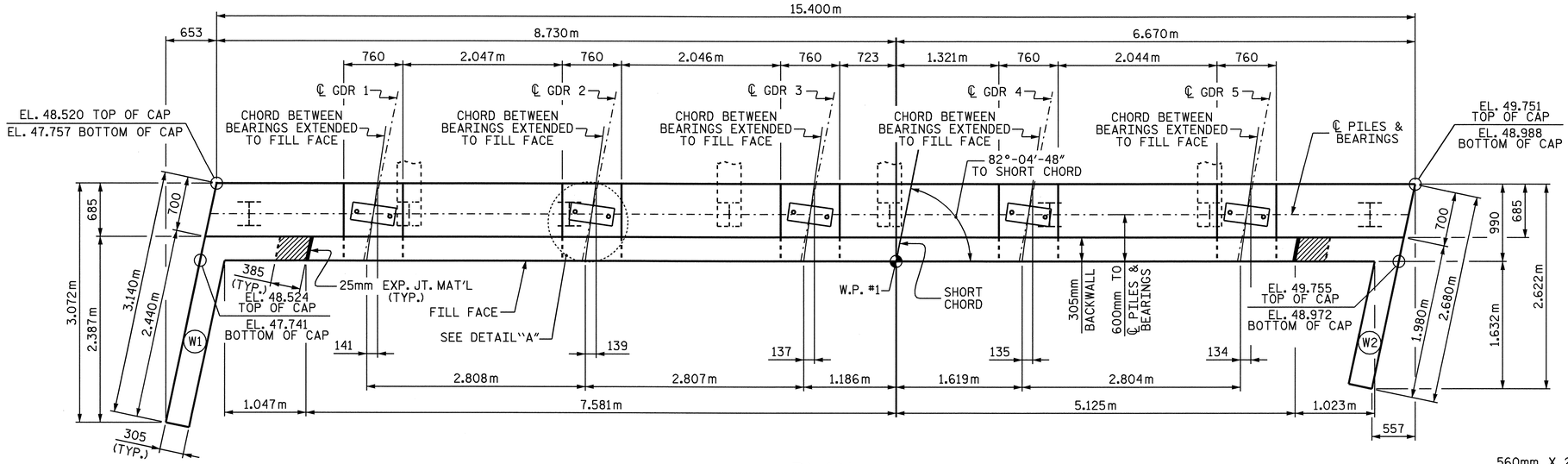

PLAN

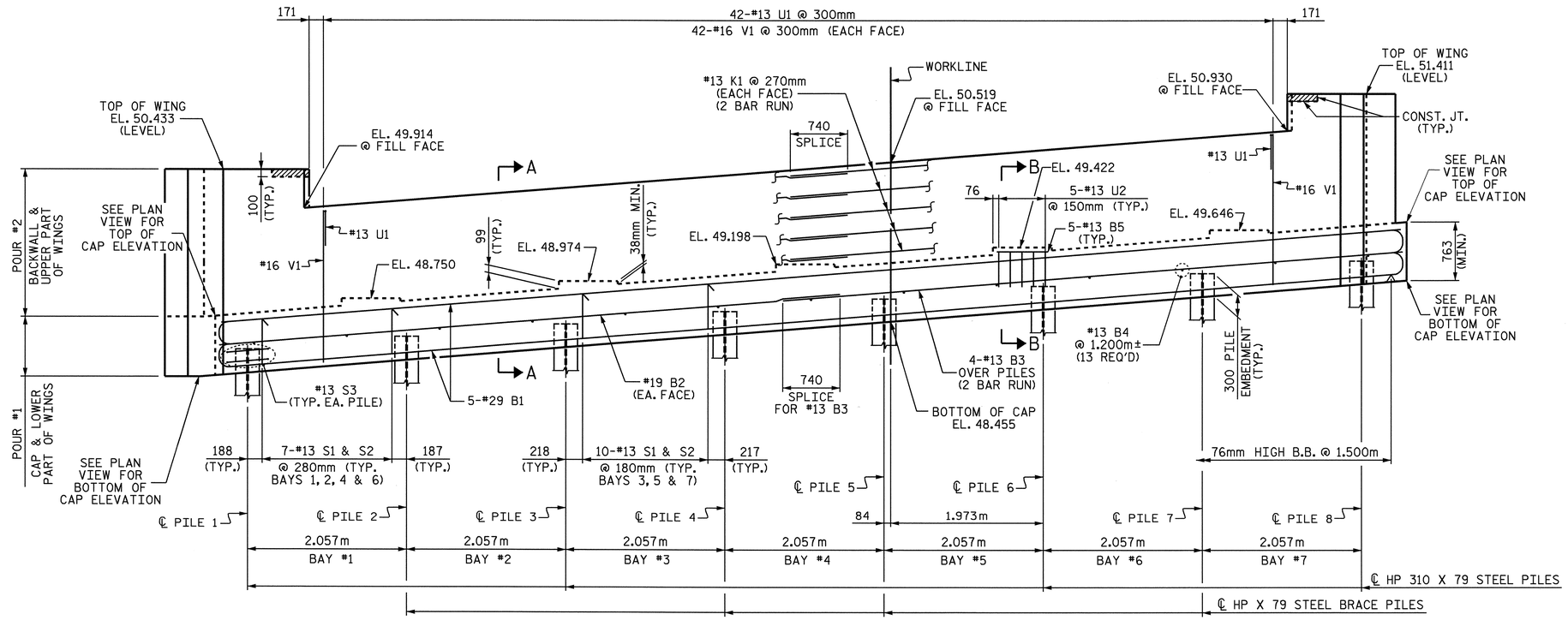

ELEVATION

NOTES

STIRRUPS IN CAP MAY BE SHIFTED AS NECESSARY TO CLEAR ANCHOR BOLTS.

BACKWALL SHALL BE PLACED BEFORE APPLYING THE EPOXY PROTECTIVE COATING.

THE TOP SURFACE OF THE CAP EXCEPT THE BRIDGE SEAT BUILDUPS SHALL BE SLOPED TRANSVERSELY FROM THE FILL FACE TO THE BACK FACE AT THE RATE OF 2%.

THE TOP SURFACE AREAS OF THE END BENT CAPS SHALL BE CURED IN ACCORDANCE WITH THE STANDARD SPECIFICATIONS EXCEPT THAT THE MEMBRANE CURING COMPOUND METHOD SHALL NOT BE USED.

THE CONTRACTOR SHALL PROVIDE FOR INSTALLATION OF THE 102mm DIAMETER DRAIN PIPE THROUGH THE WING WALL AS REQUIRED FOR REINFORCED BRIDGE APPROACH FILLS, SEE THE ROADWAY PLANS. REINFORCING STEEL IN THE WING WALL MAY BE SHIFTED AS NECESSARY TO CLEAR THE DRAIN PIPE.

THE CONCRETE IN THE SHADED AREA OF THE WING SHALL BE POURED AFTER THE BARRIER RAIL HAS BEEN CAST IF SLIP FORMING IS USED.

THE CENTERLINE OF THE ANCHOR BOLTS, ELASTOMERIC BEARINGS, AND SOLE PLATES ARE TO BE PERPENDICULAR TO THE CHORDS BETWEEN BEARINGS.

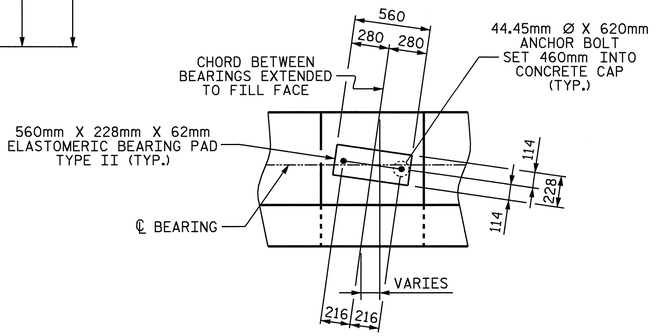

DETAIL "A"

TOP OF PILE ELEVATIONS	
PILE	ELEVATION
1	48.103
2	48.267
3	48.432
4	48.596
5	48.761
6	48.925
7	49.090
8	49.254

PROJECT NO. R-2554BA

WAYNE COUNTY

STATION: 90+62.554 -L-

SHEET 1 OF 3

STATE OF NORTH CAROLINA
DEPARTMENT OF TRANSPORTATION
RALEIGH

SUBSTRUCTURE END BENT #1

NORTH CAROLINA PROFESSIONAL SEAL 15825 ENGINEER TIMOTHY BRUCE D. KLAPPENBACH
6-6-08

REVISIONS						SHEET NO.
NO.	BY:	DATE:	NO.	BY:	DATE:	S-73
1			3			TOTAL SHEETS
2			4			478

STR #3

DRAWN BY : A. SORSENGINH DATE : 1/17/07
CHECKED BY : C. R. YARBROUGH DATE : 12/14/07

05-JUN-2008 16:09
r:\structures\bailey\str#3\asorsenginh\r-2554ba_sd_e*.dgn
dgladden

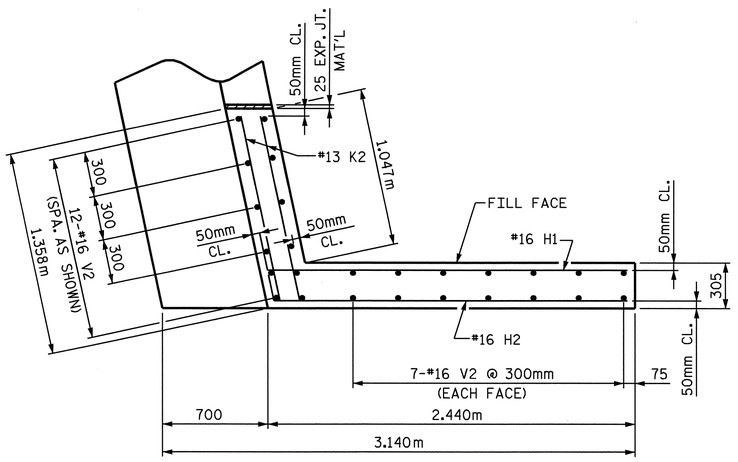

PLAN OF LEFT WING (W1)

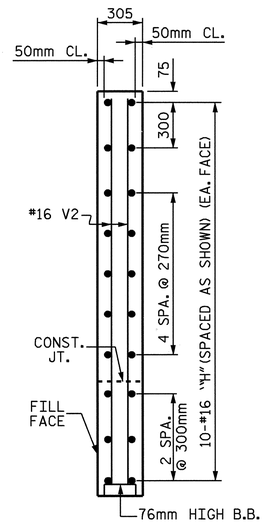

SECTION X-X

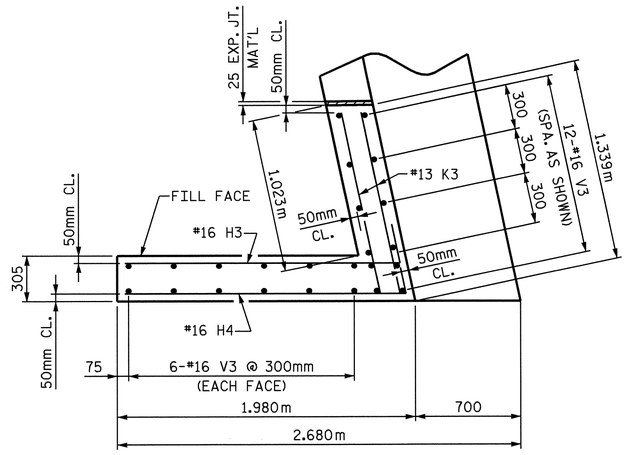

PLAN OF RIGHT RIGHT (W2)

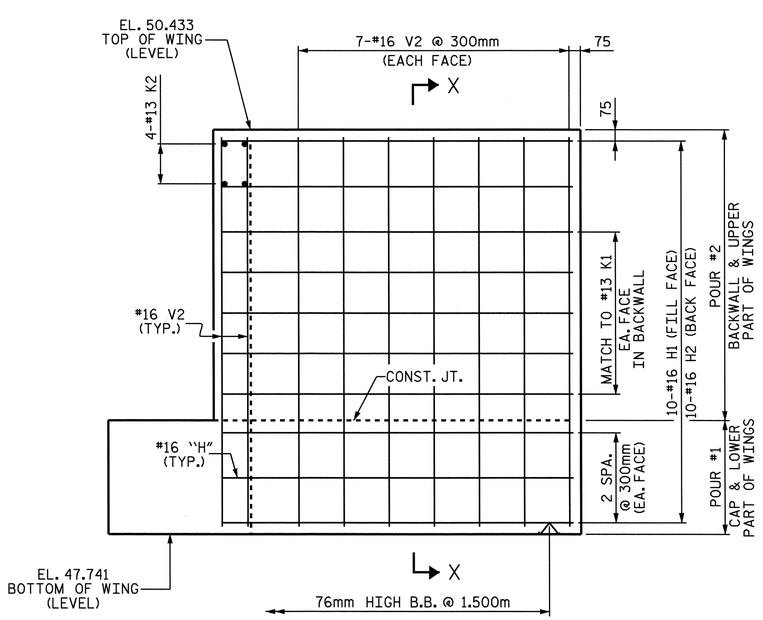

ELEVATION OF LEFT WING (W1)

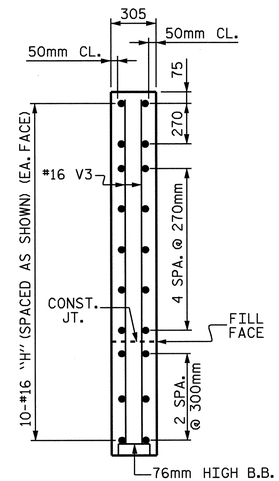

SECTION Y-Y

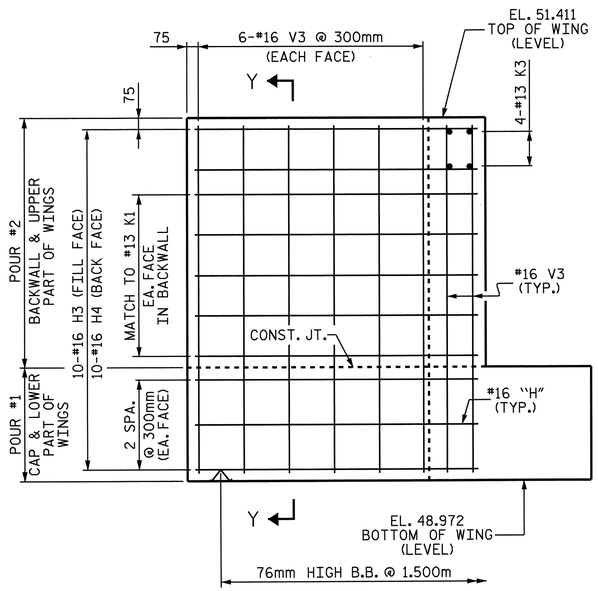

ELEVATION OF RIGHT WING (W2)

NORTH CAROLINA PROFESSIONAL SEAL 15825 ENGINEER BRIAN D. KLAPPENBACH
6-6-08

PROJECT NO. R-2554BA
WAYNE COUNTY
STATION: 90+62.554 -L-

SHEET 2 OF 3

STATE OF NORTH CAROLINA
DEPARTMENT OF TRANSPORTATION
RALEIGH

SUBSTRUCTURE END BENT #1

REVISIONS						SHEET NO.
NO.	BY:	DATE:	NO.	BY:	DATE:	S-74
1			3			TOTAL SHEETS
2			4			478

DRAWN BY : A. SORSENGINH DATE : 1/19/07
CHECKED BY : C.R. YARBROUGH DATE : 12/14/07

STR #3

R:\Structures\BAILEY\Str#3\dsorsenginh\R-2554BA_sd_E*.dg
bklappenbach

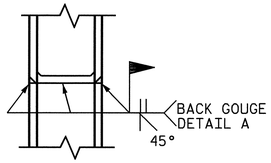

** PILE VERTICAL

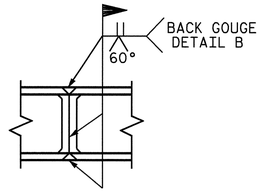

** PILE HORIZONTAL OR VERTICAL

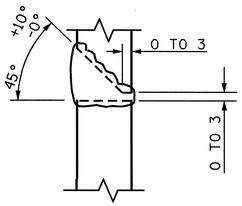

DETAIL A

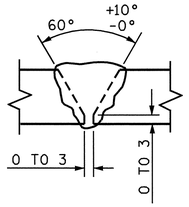

DETAIL B

** POSITION OF PILE DURING WELDING.

PILE SPLICE DETAILS

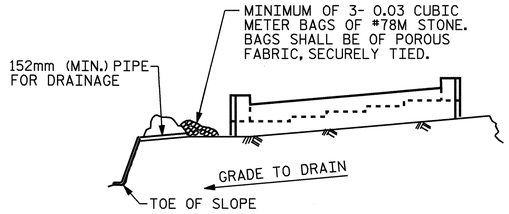

BAGGED STONE AND PIPE SHALL BE PLACED IMMEDIATELY AFTER COMPLETION OF END BENT EXCAVATION. PIPE MAY BE EITHER CONCRETE, CORRUGATED STEEL, CORRUGATED ALUMINUM ALLOY, OR CORRUGATED PLASTIC. PERFORATED PIPE WILL NOT BE ALLOWED.

BAGGED STONE SHALL REMAIN IN PLACE UNTIL THE ENGINEER DIRECTS THAT IT BE REMOVED. THE CONTRACTOR SHALL REMOVE AND DISPOSE OF SILT ACCUMULATIONS AT BAGGED STONE WHEN SO DIRECTED BY THE ENGINEER. BAGS SHALL BE REMOVED AND REPLACED WHENEVER THE ENGINEER DETERMINES THAT THEY HAVE DETERIORATED AND LOST THEIR EFFECTIVENESS.

NO SEPARATE PAYMENT WILL BE MADE FOR THIS WORK AND THE ENTIRE COST OF THIS WORK SHALL BE INCLUDED IN THE UNIT CONTRACT PRICE BID FOR THE SEVERAL PAY ITEMS.

TEMPORARY DRAINAGE AT END BENT

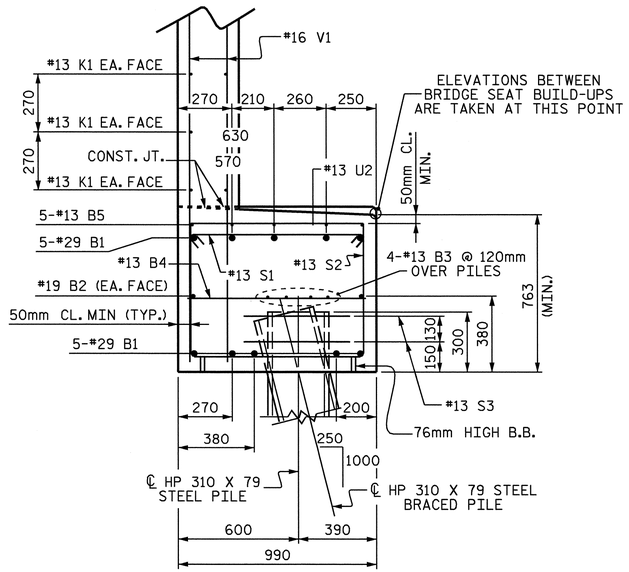

SECTION B-B

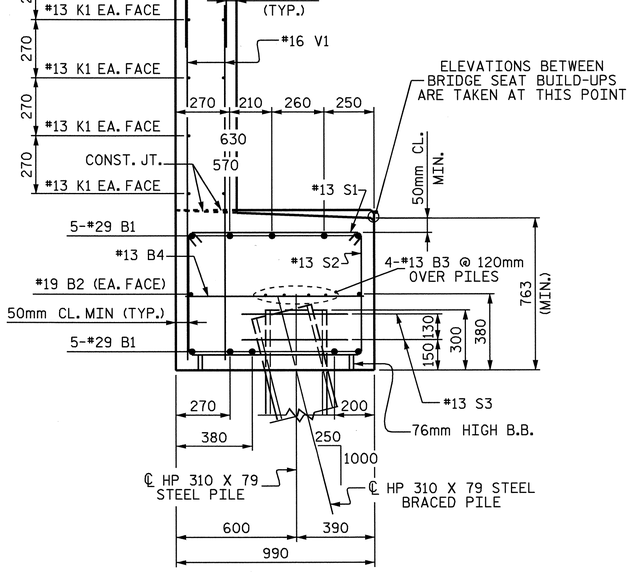

SECTION A-A

BAR TYPES

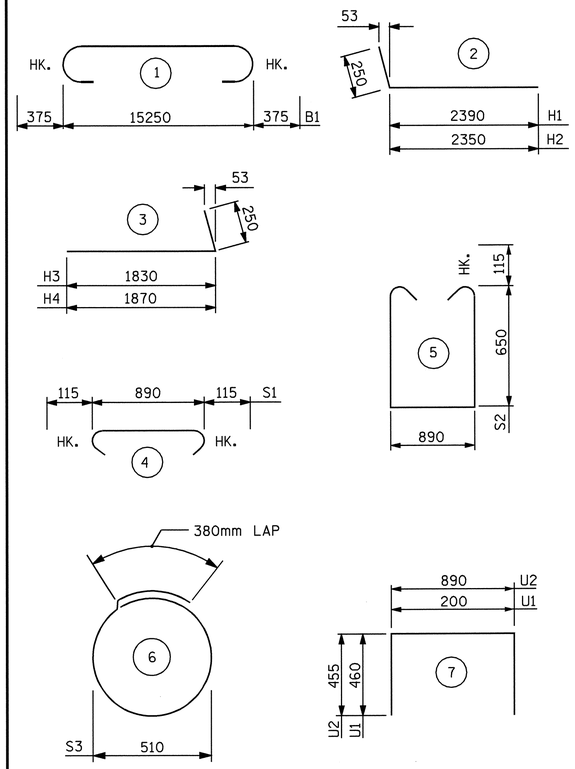

ALL BAR DIMENSIONS ARE OUT TO OUT.

BILL OF MATERIAL

END BENT #1

BAR	NO.	SIZE	TYPE	LENGTH	WEIGHT
B1	10	#29	1	16000	810
B2	2	#19	STR	15300	68
B3	8	#13	STR	8040	64
B4	13	#13	STR	880	11
B5	25	#13	STR	660	16
H1	10	#16	2	2640	41
H2	10	#16	2	2600	40
H3	10	#16	3	2080	32
H4	10	#16	3	2120	33
K1	20	#13	STR	8020	159
K2	4	#13	STR	1240	5
K3	4	#13	STR	1220	5
S1	58	#13	4	1120	65
S2	58	#13	5	2420	140
S3	16	#13	6	1980	31
U1	42	#13	7	1120	47
U2	25	#13	7	1800	45
V1	84	#16	STR	1960	256
V2	26	#16	STR	2580	104
V3	24	#16	STR	2340	87

REINFORCING STEEL = 2059 KG

CLASS A CONCRETE BREAKDOWN:

POUR #1
(CAP & LOWER PART OF WINGS)
CU. METERS 12.8

POUR #2
(BACK WALL & UPPER PART OF WINGS)
CU. METERS 8.6

TOTAL CU. METERS 21.4

HP 310 X 79 STEEL PILES
NO. 8 METERS 232.0

PROJECT NO. R-2554BA
WAYNE COUNTY
STATION: 90+62.554 -L-

SHEET 3 OF 3

STATE OF NORTH CAROLINA
DEPARTMENT OF TRANSPORTATION
RALEIGH

SUBSTRUCTURE END BENT #1

NORTH CAROLINA PROFESSIONAL SEAL 15826 ENGINEER BRADLEY D. KLAPPENBACH
6-6-08

REVISIONS						SHEET NO.
NO.	BY:	DATE:	NO.	BY:	DATE:	S-75
1			3			TOTAL SHEETS
2			4			478

STR #3

DRAWN BY : A. SORSENGINH DATE : 1/23/07
CHECKED BY : C.R. YARBROUGH DATE : 12/14/07

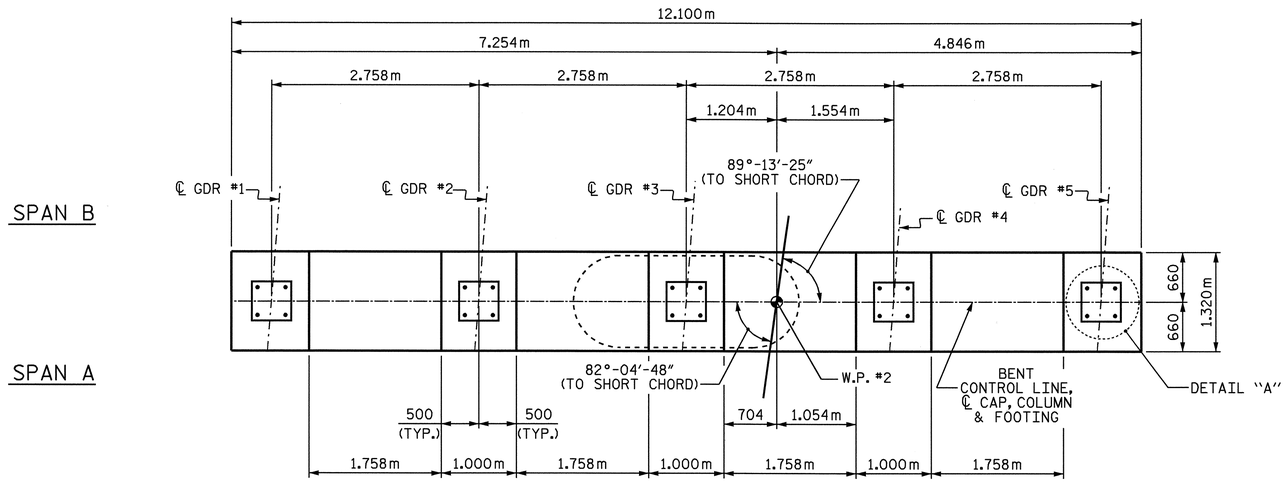

PLAN

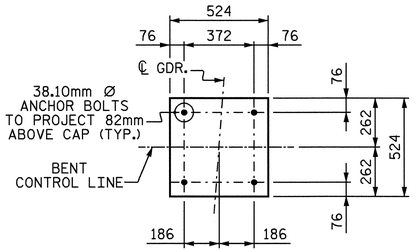

DETAIL "A"

NOTES

STIRRUPS IN CAP MAY BE SHIFTED AS NECESSARY TO CLEAR ANCHOR BOLTS.

HOOKS ON M1 BARS MAY BE TURNED AS NECESSARY FOR PLACING REINFORCING STEEL.

DETAILED DRAWINGS FOR FALSEWORK AND FORMS FOR THIS HAMMERHEAD BENT SHALL BE SUBMITTED. SEE SHEET SNSM.

T1 AND T2 BARS IN TOP OF FOOTING MAY BE SHIFTED AS NECESSARY TO CLEAR M1 BARS IN FOOTING.

FOR PILE SPLICE DETAILS, SEE "END BENT 1 DETAILS AND BOM" SHEET.

THE TOP SURFACE OF THE BENT CAP SHALL BE CURED IN ACCORDANCE WITH THE STANDARD SPECIFICATIONS EXCEPT THE MEMBRANE CURING METHOD SHALL NOT BE USED.

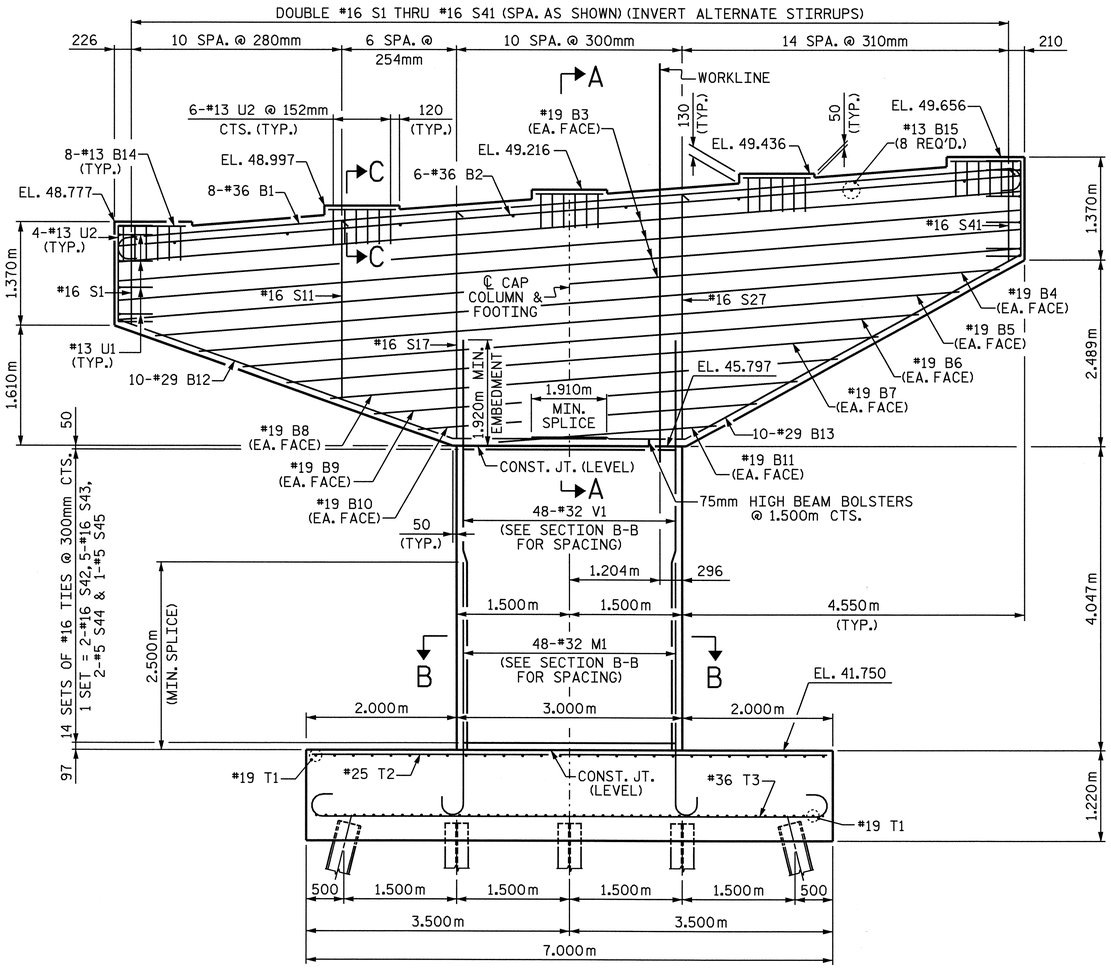

ELEVATION

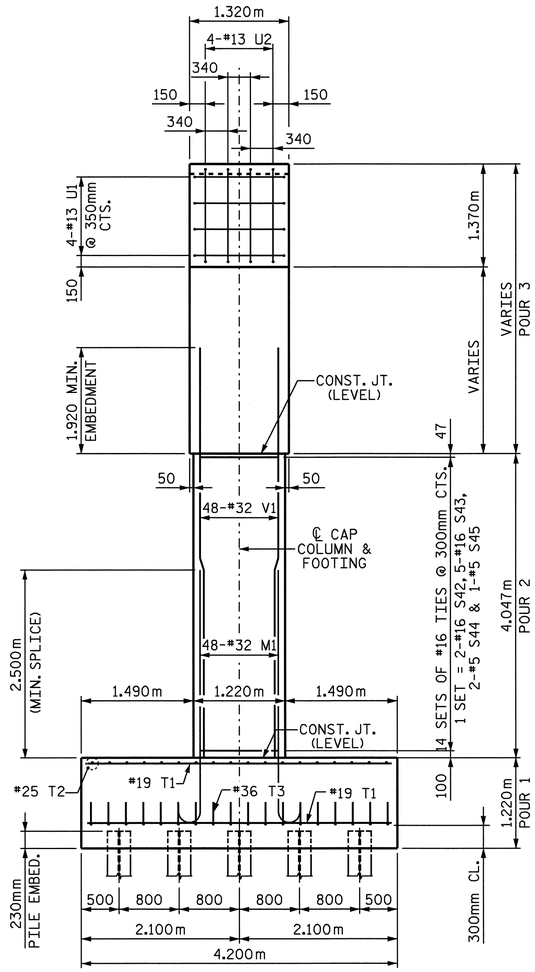

END VIEW

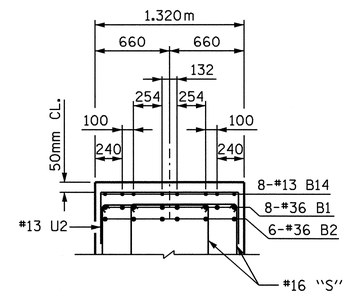

SECTION C-C

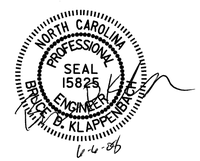

PROJECT NO. R-2554BA

WAYNE COUNTY

STATION: 90+62.554 -L-

SHEET 1 OF 2

STATE OF NORTH CAROLINA
DEPARTMENT OF TRANSPORTATION
RALEIGH

SUBSTRUCTURE
BENT #1

REVISIONS						SHEET NO.
NO.	BY:	DATE:	NO.	BY:	DATE:	
1			3			TOTAL SHEETS
2			4			

DRAWN BY : A. SORSENGINH DATE : 8/9/07
CHECKED BY : SH. SOCKWELL DATE : 11/16/07

06-JUN-2008 16:10
r:\structures\bailey\Str#3\asorsenginh\R-2554BA_sd_B*.dgn
tbarbour

STR. #3

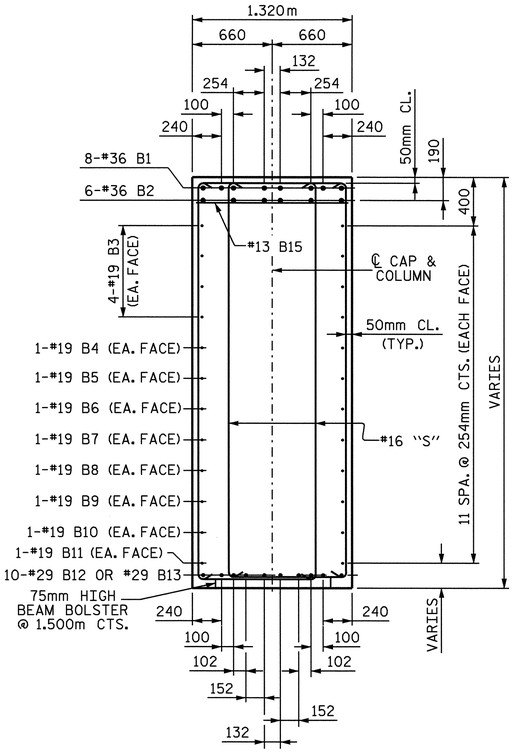

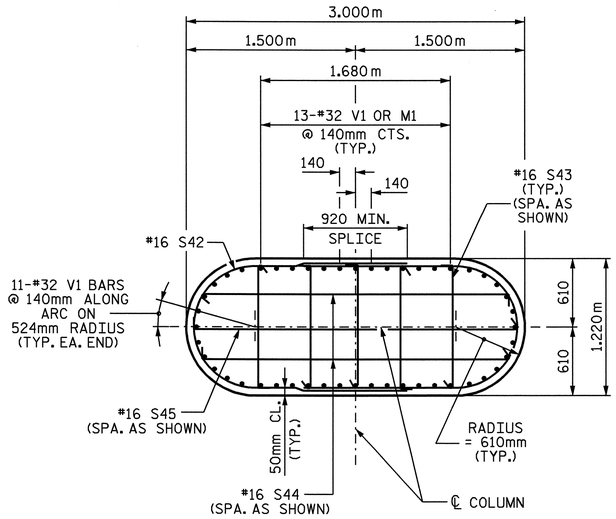

SECTION B-B

SECTION A-A

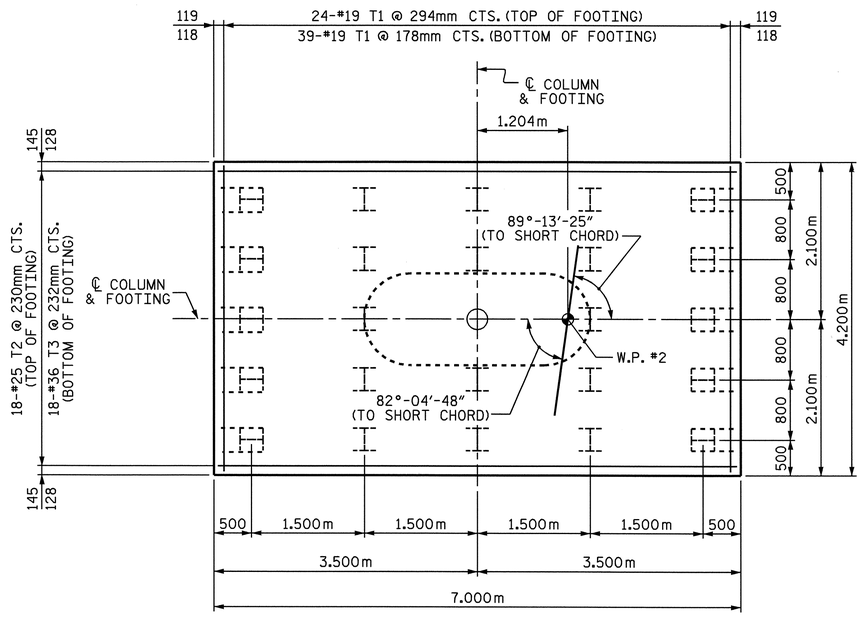

PLAN OF FOOTING

BATTER PILES 125:1000
PILES ARE ROTATED 90°

BILL OF MATERIAL

BAR	NO	SIZE	TYPE	DIM. A	LENGTH	WEIGHT
B1	8	36	1	-	12920	817
B2	6	36	STR	-	12020	570
B3	8	19	STR	-	12020	215
B4	2	19	STR	-	11260	50
B5	2	19	STR	-	10140	45
B6	2	19	STR	-	9020	40
B7	2	19	STR	-	7880	35
B8	2	19	STR	-	6760	30
B9	2	19	STR	-	5640	25
B10	2	19	STR	-	4520	20
B11	2	19	STR	-	2900	13
B12	10	29	6	-	7220	365
B13	10	29	6	-	7560	383
B14	40	13	STR	-	900	36
B15	8	13	STR	-	1220	10
M1	48	32	2	-	3800	1168
S1	2	16	3	1220	3700	11
S2	2	16	3	1320	3900	12
S3	2	16	3	1420	4100	13
S4	2	16	3	1590	4440	14
S5	2	16	3	1710	4680	15
S6	2	16	3	1830	4920	15
S7	2	16	3	1960	5180	16
S8	2	16	3	2080	5420	17
S9	2	16	3	2200	5660	18
S10	2	16	3	2320	5900	18
S11	2	16	3	2440	6140	19
S12	2	16	3	2550	6380	20
S13	2	16	3	2670	6600	20
S14	2	16	3	2780	6820	21
S15	2	16	3	2890	7040	22
S16	2	16	3	3000	7260	23
S17	2	16	3	3100	7460	23
S18	2	16	3	3120	7500	23
S19	2	16	3	3150	7560	23
S20	2	16	3	3170	7600	24
S21	2	16	3	3190	7640	24
S22	2	16	3	3220	7700	24
S23	2	16	3	3250	7760	24
S24	2	16	3	3270	7800	24
S25	2	16	3	3290	7840	24
S26	2	16	3	3310	7880	24
S27	2	16	3	3340	7940	25
S28	2	16	3	3220	7700	24
S29	2	16	3	3070	7400	23
S30	2	16	3	2920	7100	22
S31	2	16	3	2780	6820	21
S32	2	16	3	2630	6520	20
S33	2	16	3	2480	6220	19
S34	2	16	3	2340	5940	18
S35	2	16	3	2180	5620	17
S36	2	16	3	2030	5320	17
S37	2	16	3	1890	5040	16
S38	2	16	3	1740	4740	15
S39	2	16	3	1590	4440	14
S40	2	16	3	1450	4160	13
S41	2	16	3	1300	3860	12
S42	28	16	5	-	4460	194
S43	70	16	7	-	1420	154
S44	28	16	7	-	3060	133
S45	14	16	7	-	3200	70
T1	63	19	STR	-	4100	577
T2	18	25	STR	-	6900	493
T3	18	36	1	-	7800	1110
U1	8	13	4	-	2080	17
U2	38	13	4	-	2140	81
V1	48	32	STR	-	5980	1838
TOTAL REINFORCING STEEL					Kg.	9,276

BAR TYPES

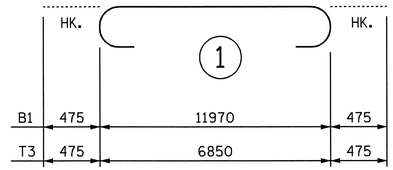

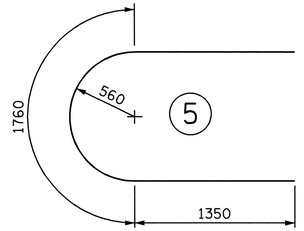

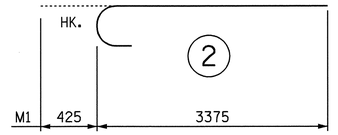

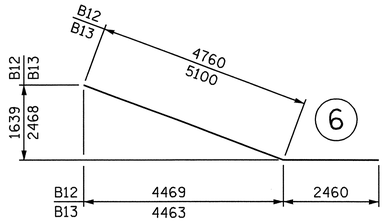

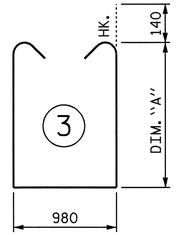

ALL BAR DIMENSIONS ARE OUT TO OUT.

CLASS "A" CONC. BREAKDOWN		
POUR #1 FOOTING	CU.M.	35.9
POUR #2 COLUMN	CU.M.	13.5
POUR #3 CAP	CU.M.	41.6
TOTAL	CU.M.	91.0
HP 310 X 79 STEEL PILES		
24 PILES REQUIRED	LIN. M.	516.0
FOUNDATION EXCAVATION	LUMP SUM	

PROJECT NO. R-2554BA

WAYNE COUNTY

STATION: 90+62.554 -L-

SHEET 2 OF 2

STATE OF NORTH CAROLINA
DEPARTMENT OF TRANSPORTATION
RALEIGH

SUBSTRUCTURE
BENT #1 DETAILS

NORTH CAROLINA PROFESSIONAL SEAL L5825 ENGINEER BRUCE D. KLAPPENBACH
6-6-08

REVISIONS						SHEET NO.
NO.	BY:	DATE:	NO.	BY:	DATE:	S-77
1			3			TOTAL SHEETS
2			4			478

DRAWN BY : A. SORSENGINH DATE : 8/10/07
CHECKED BY : SH. SOCKWELL DATE : 11/16/07

05-JUN-2008 16:14
r:\structures\balley\str#3\asorsenginh\r-2554ba_sd_b*.dgn
dgladden

STR. #3

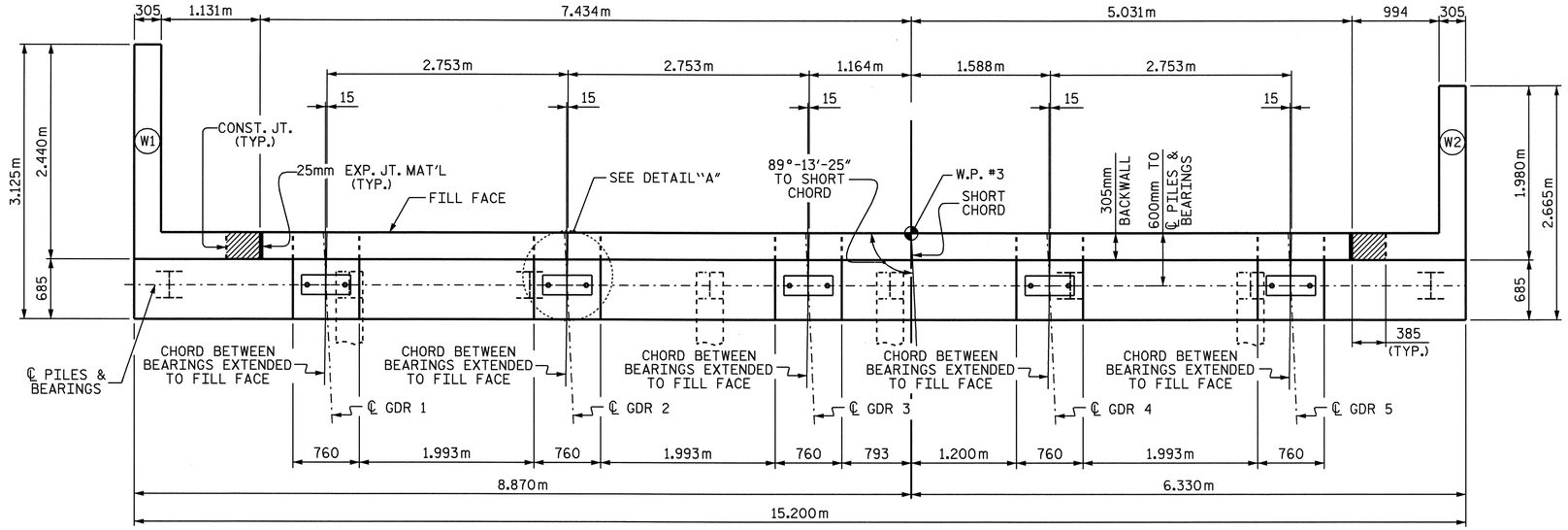

PLAN

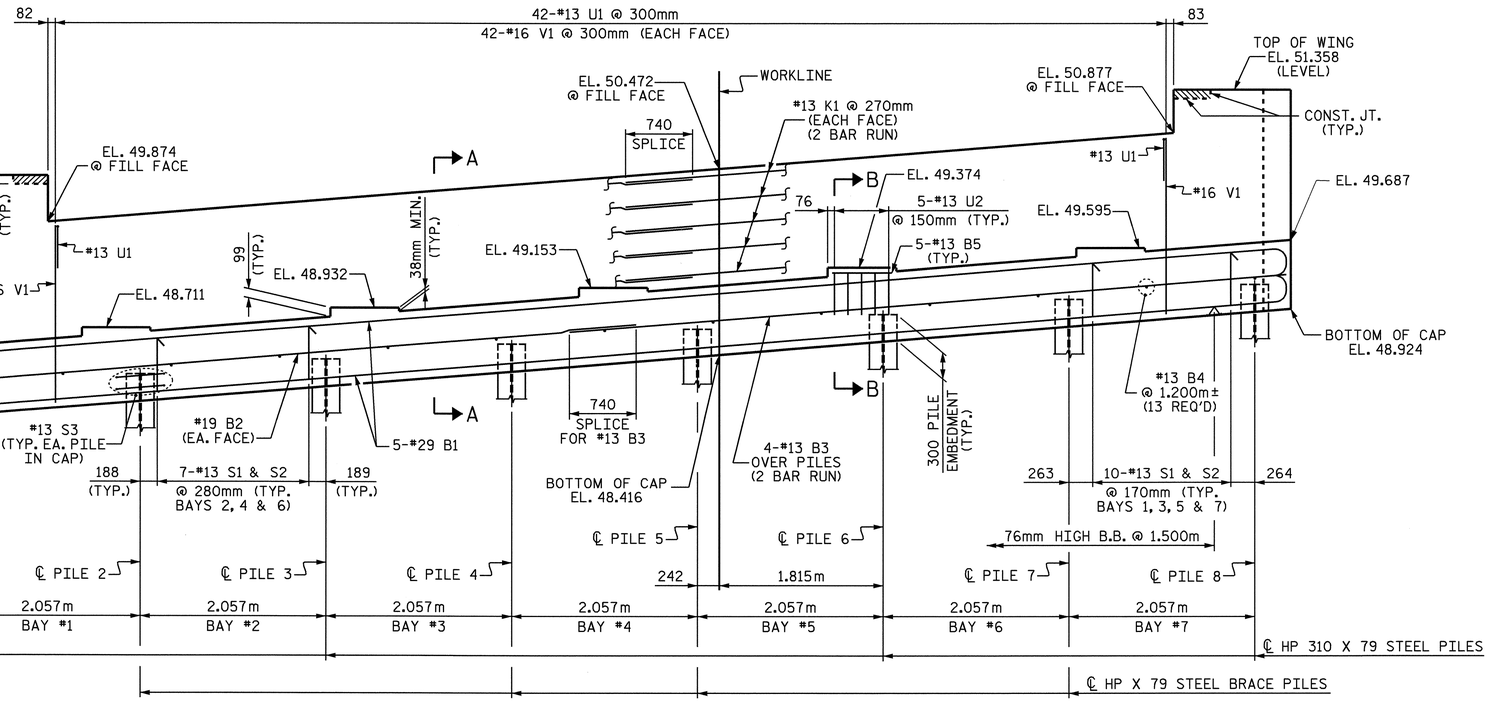

ELEVATION

NOTES

STIRRUPS IN CAP MAY BE SHIFTED AS NECESSARY TO CLEAR ANCHOR BOLTS.

BACKWALL SHALL BE PLACED BEFORE APPLYING THE EPOXY PROTECTIVE COATING.

THE TOP SURFACE OF THE CAP EXCEPT THE BRIDGE SEAT BUILDUPS SHALL BE SLOPED TRANSVERSELY FROM THE FILL FACE TO THE BACK FACE AT THE RATE OF 2%.

THE TOP SURFACE AREAS OF THE END BENT CAPS SHALL BE CURED IN ACCORDANCE WITH THE STANDARD SPECIFICATIONS EXCEPT THAT THE MEMBRANE CURING COMPOUND METHOD SHALL NOT BE USED.

THE CONTRACTOR SHALL PROVIDE FOR INSTALLATION OF THE 102mm DIAMETER DRAIN PIPE THROUGH THE WING WALL AS REQUIRED FOR REINFORCED BRIDGE APPROACH FILLS, SEE THE ROADWAY PLANS. REINFORCING STEEL IN THE WING WALL MAY BE SHIFTED AS NECESSARY TO CLEAR THE DRAIN PIPE.

THE CONCRETE IN THE SHADED AREA OF THE WING SHALL BE POURED AFTER THE BARRIER RAIL HAS BEEN CAST IF SLIP FORMING IS USED.

THE CENTERLINE OF THE ANCHOR BOLTS, ELASTOMERIC BEARINGS, AND SOLE PLATES ARE TO BE PERPENDICULAR TO THE CHORDS BETWEEN BEARINGS.

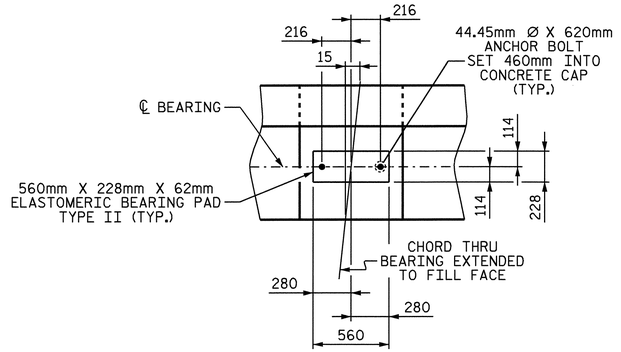

DETAIL "A"

(TYP. EACH GIRDER)

TOP OF PILE ELEVATIONS	
PILE	ELEVATION
1	48.048
2	48.213
3	48.378
4	48.543
5	48.709
6	48.874
7	49.039
8	49.204

PROJECT NO. R-2554BA

WAYNE COUNTY

STATION: 90+62.554 -L-

SHEET 1 OF 3

STATE OF NORTH CAROLINA
DEPARTMENT OF TRANSPORTATION
RALEIGH

SUBSTRUCTURE END BENT #2

NORTH CAROLINA PROFESSIONAL SEAL 15825 ENGINEER BRUCE D. KLAPPENBACH
6-6-08

REVISIONS						SHEET NO.
NO.	BY:	DATE:	NO.	BY:	DATE:	S-78
1			3			TOTAL SHEETS
2			4			478

STR #3

DRAWN BY : A. SORSENGINH DATE : 1/24/07
CHECKED BY : C. R. YARBROUGH DATE : 12/14/07

05-JUN-2008 16:10
r:\structures\balley\str#3\asorsenginh\r-2554ba_sd_e*.dgn
dgladden

R:\Structures\BAILEY\Str#3\asorsenginh\R-2554BA_sd_E*.dgn
bklappenbach

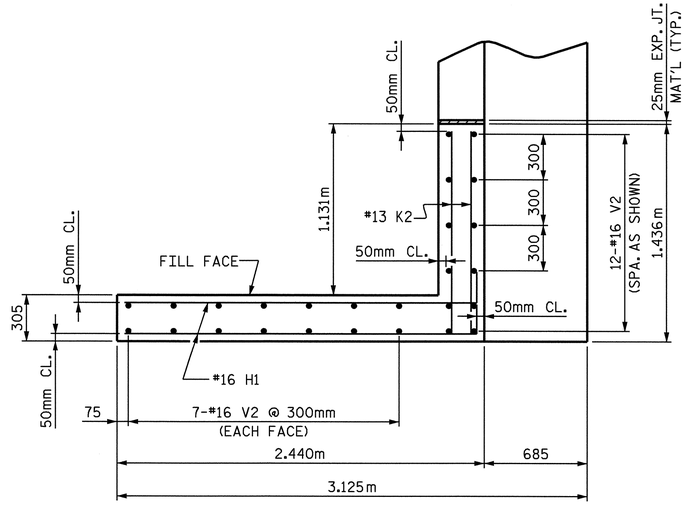

PLAN OF LEFT WING (W1)

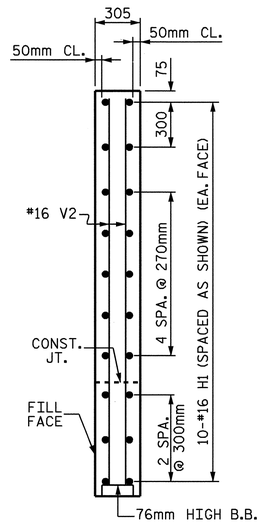

SECTION X-X

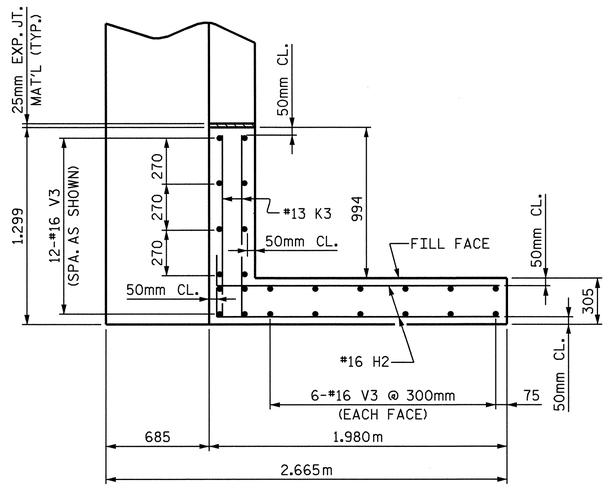

PLAN OF RIGHT RIGHT (W2)

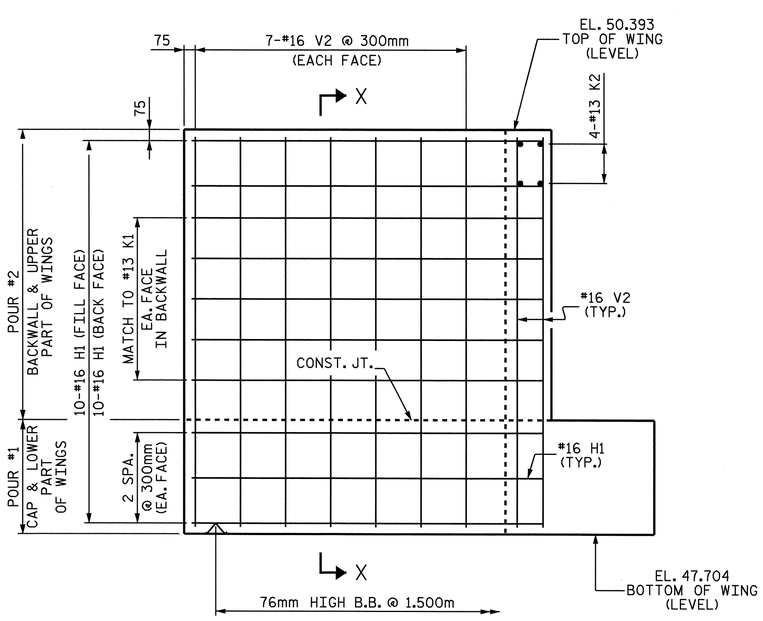

ELEVATION OF LEFT WING (W1)

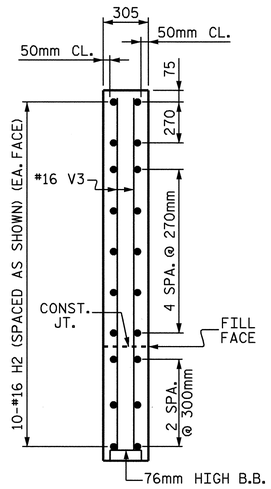

SECTION Y-Y

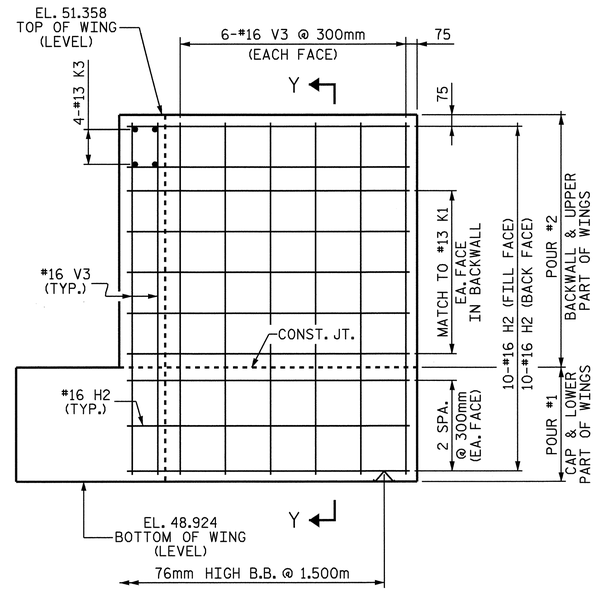

ELEVATION OF RIGHT WING (W2)

PROJECT NO. R-2554BA
WAYNE COUNTY
STATION: 90+62.554 -L-

SHEET 2 OF 3

STATE OF NORTH CAROLINA
DEPARTMENT OF TRANSPORTATION
RALEIGH

SUBSTRUCTURE END BENT #2

REVISIONS						SHEET NO.
NO.	BY:	DATE:	NO.	BY:	DATE:	S-79
1			3			TOTAL SHEETS
2			4			478

STR #3

DRAWN BY : A. SORSENGINH DATE : 1/24/07
CHECKED BY : C.R. YARBROUGH DATE : 12/14/07

R:\Structures\BAILEY\Str#3\asorsenginh\R-2554BA_sd_E#.dg
bklappenbach

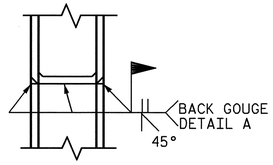

** PILE VERTICAL

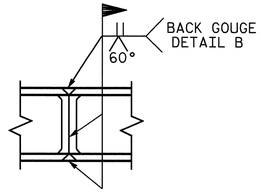

** PILE HORIZONTAL OR VERTICAL

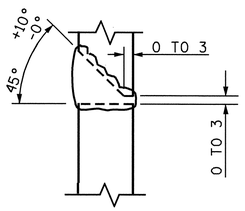

DETAIL A

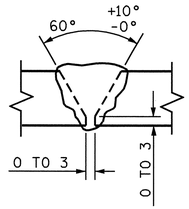

DETAIL B

** POSITION OF PILE DURING WELDING.

PILE SPLICE DETAILS

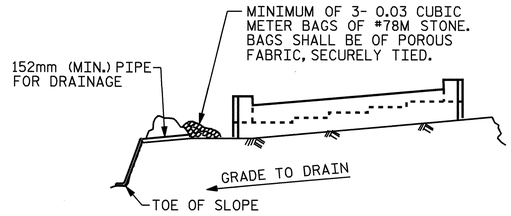

BAGGED STONE AND PIPE SHALL BE PLACED IMMEDIATELY AFTER COMPLETION OF END BENT EXCAVATION. PIPE MAY BE EITHER CONCRETE, CORRUGATED STEEL, CORRUGATED ALUMINUM ALLOY, OR CORRUGATED PLASTIC. PERFORATED PIPE WILL NOT BE ALLOWED.

BAGGED STONE SHALL REMAIN IN PLACE UNTIL THE ENGINEER DIRECTS THAT IT BE REMOVED. THE CONTRACTOR SHALL REMOVE AND DISPOSE OF SILT ACCUMULATIONS AT BAGGED STONE WHEN SO DIRECTED BY THE ENGINEER. BAGS SHALL BE REMOVED AND REPLACED WHENEVER THE ENGINEER DETERMINES THAT THEY HAVE DETERIORATED AND LOST THEIR EFFECTIVENESS.

NO SEPARATE PAYMENT WILL BE MADE FOR THIS WORK AND THE ENTIRE COST OF THIS WORK SHALL BE INCLUDED IN THE UNIT CONTRACT PRICE BID FOR THE SEVERAL PAY ITEMS.

TEMPORARY DRAINAGE AT END BENT

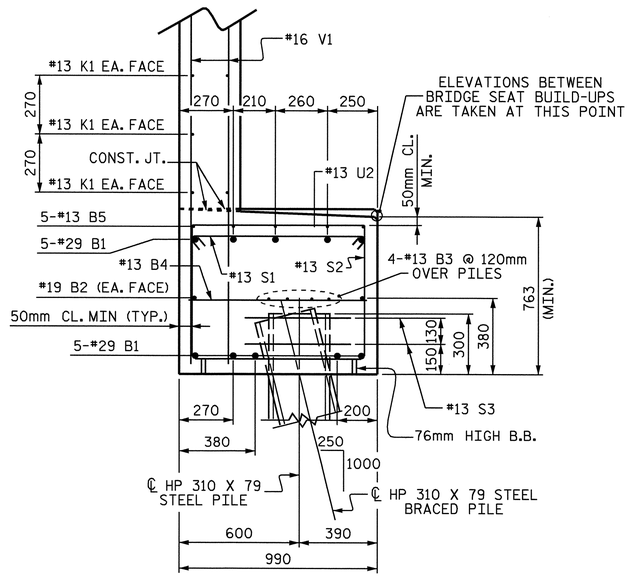

SECTION B-B

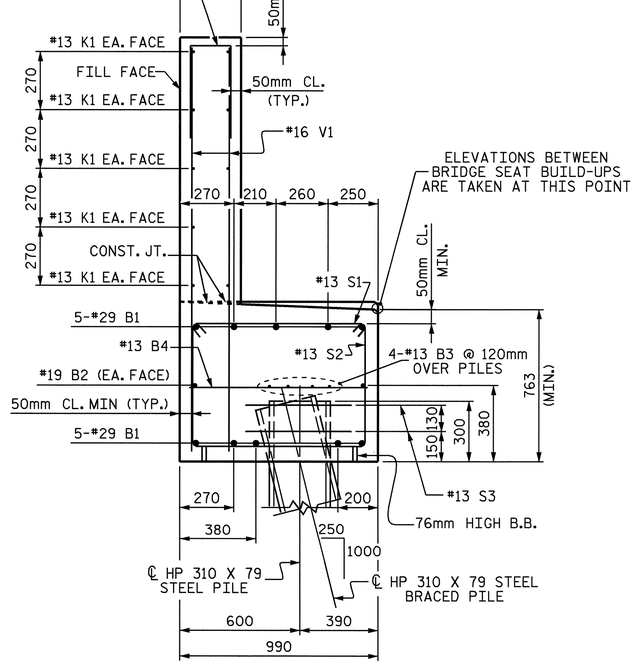

SECTION A-A

BAR TYPES

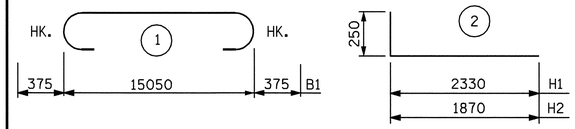

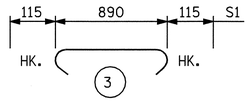

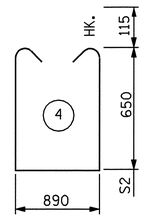

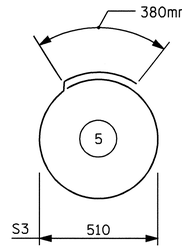

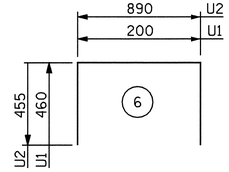

ALL BAR DIMENSIONS ARE OUT TO OUT.

BILL OF MATERIAL

END BENT #2

BAR	NO.	SIZE	TYPE	LENGTH	WEIGHT
B1	10	#29	1	15800	799
B2	2	#19	STR	15100	67
B3	8	#13	STR	7940	63
B4	13	#13	STR	880	11
B5	25	#13	STR	660	16
H1	20	#16	2	2580	80
H2	20	#16	2	2120	66
K1	10	#13	STR	7920	79
K2	4	#13	STR	1320	5
K3	4	#13	STR	1200	5
S1	61	#13	3	1120	68
S2	61	#13	4	2420	147
S3	16	#13	5	1980	31
U1	42	#13	6	1120	47
U2	25	#13	6	1800	45
V1	84	#16	STR	1960	256
V2	26	#16	STR	2580	104
V3	24	#16	STR	2320	86

REINFORCING STEEL = 1975 KG

CLASS A CONCRETE BREAKDOWN:

POUR #1
(CAP & LOWER PART OF WINGS)
CU. METERS 12.6

POUR #2
(BACK WALL & UPPER PART OF WINGS)
CU. METERS 8.5

TOTAL CU. METERS 21.1

HP 310 X 79 STEEL PILES
NO. 8 METERS 208.0

DRAWN BY : A. SORSENGINH DATE : 1/25/07
CHECKED BY : C.R. YARBROUGH DATE : 12/14/07

PROJECT NO. R-2554BA
WAYNE COUNTY
STATION: 90+62.554 -L-

SHEET 3 OF 3

STATE OF NORTH CAROLINA
DEPARTMENT OF TRANSPORTATION
RALEIGH

SUBSTRUCTURE
END BENT #2

NORTH CAROLINA PROFESSIONAL SEAL 15825 ENGINEER BRADLEY D. KLAPPENBACH
6-6-08

REVISIONS						SHEET NO.
NO.	BY:	DATE:	NO.	BY:	DATE:	S-30
1			3			TOTAL SHEETS
2			4			478

STR #3

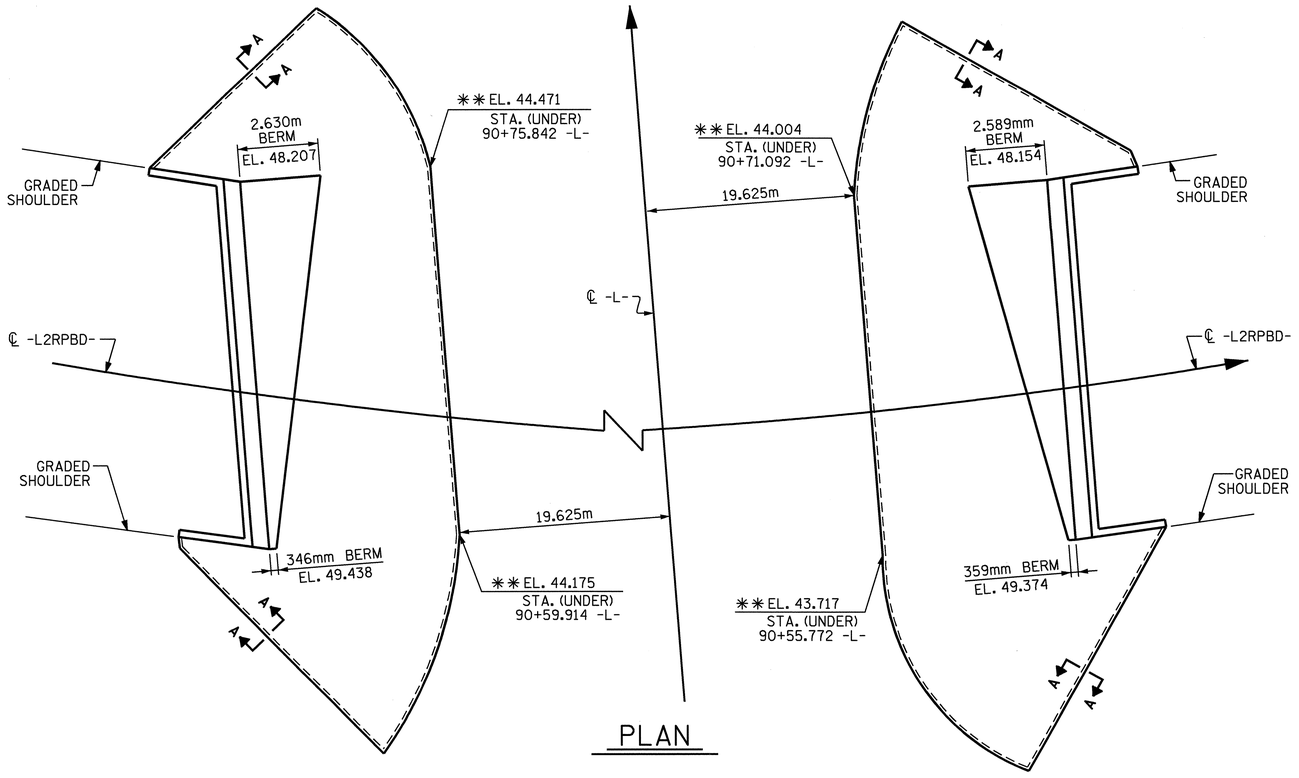

PLAN

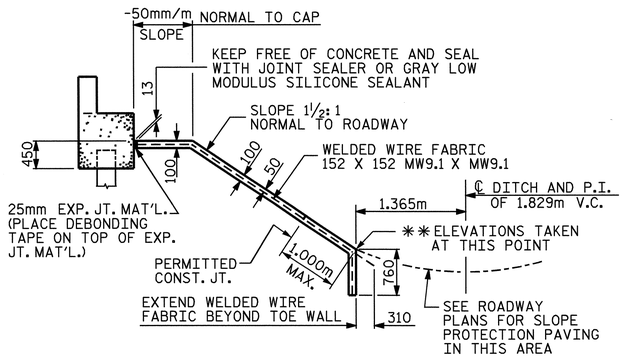

SECTION ALONG ℄ ROADWAY WHEN FILL CATCHES IN DITCH

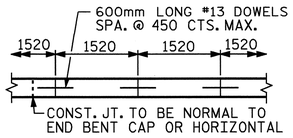

STRIP WIDTHS MAY VARY IN CURVED PORTION.

POURING DETAIL

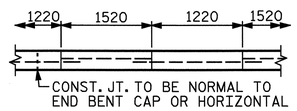

POUR A 1220mm STRIP FIRST. STRIP WIDTHS MAY VARY IN CURVED PORTION.

OPTIONAL POURING DETAIL

GENERAL NOTES

SLOPE PROTECTION SHALL BE PLACED UNDER THE ENDS OF THE BRIDGE AS SHOWN IN THE DETAILS. THE CONTRACTOR, AT HIS OPTION, MAY USE ALTERNATE "B" ONLY FOR HIGHWAY OVER HIGHWAY GRADE SEPARATIONS WITH 2:1 END BENT SLOPE IN RURAL, UNPOPULATED AREAS. STRAIGHT EDGING WILL NOT BE REQUIRED UNLESS, IN THE OPINION OF THE ENGINEER, VISUAL INSPECTION INDICATES A NEED FOR IT. MEASUREMENT AND PAYMENT SHALL BE AS PRESCRIBED IN SECTION 462 OF THE STANDARD SPECIFICATIONS. FOR BERM WIDTH, SEE GENERAL DRAWING.

ALTERNATE "A"

ALTERNATE "A" SHALL CONSIST OF 100mm POURED-IN-PLACE CONCRETE PAVING AS SHOWN IN THE DETAILS ON THIS SHEET. CONCRETE SHALL BE CLASS "B". THE CONCRETE SURFACE SHALL BE FLOATED WITH A WOODEN FLOAT AND FINISHED. WELDED WIRE FABRIC REINFORCING SHALL BE 152 X 152 - W9.1 X W9.1, 1520mm WIDE. SLOPE PROTECTION SHALL BE POURED IN 1520mm STRIPS AS SHOWN IN THE "POURING DETAIL" WITH 600mm LONG #13 BARS PLACED ALONG THE SLOPE BETWEEN STRIPS AT 450mm MAXIMUM SPACING. SLOPE PROTECTION MAY BE POURED IN ALTERNATE 1220mm AND 1520mm STRIPS AS SHOWN IN THE "OPTIONAL POURING DETAIL" WITH ADJACENT RUNS OF WELDED WIRE FABRIC LAPPING AT LEAST 152mm. THE COST OF THE WELDED WIRE FABRIC AND #13 BARS, IF USED, SHALL BE INCLUDED IN THE CONTRACT UNIT PRICE BID PER SQUARE METER FOR SLOPE PROTECTION.

BRIDGE @ STA. 8+00.816 -L2RPBD-	100mm SLOPE PROTECTION	* WELDED WIRE FABRIC 1520mm WIDE
	SQUARE METERS	APPROX. METERS
END BENT 1	400	291
END BENT 2	390	284

* QUANTITY SHOWN IS BASED ON 1520mm POURS.

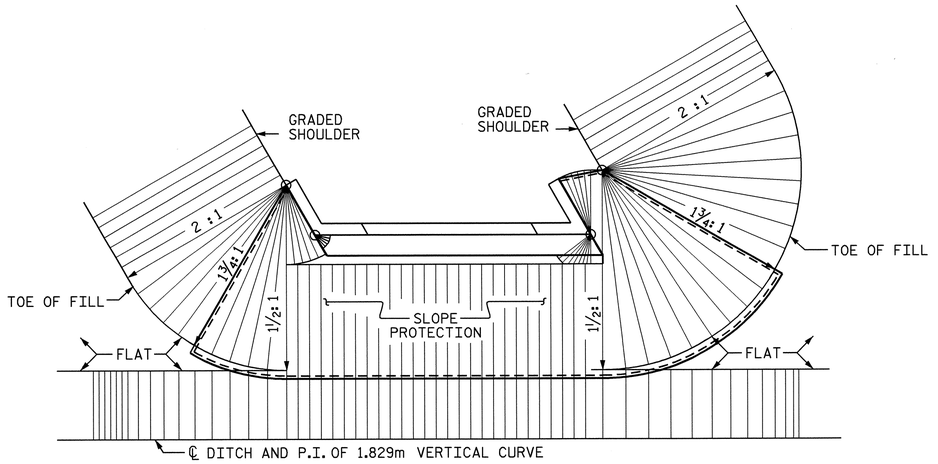

PLAN - END BENT WITH SWEPT BACK WINGS - SKEWED
(1½:1 SLOPE)

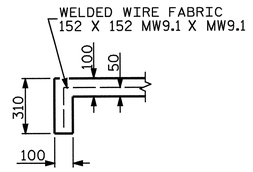

SECTION A-A

PROJECT NO. R-2554BA
WAYNE COUNTY
STATION: 90+62.554 -L-

STATE OF NORTH CAROLINA
DEPARTMENT OF TRANSPORTATION
RALEIGH

SLOPE PROTECTION DETAILS

ASSEMBLED BY : A. SORSENGINH	DATE : 1/5/06
CHECKED BY : B.D. KLAPPENBACH	DATE : 3/6/08
DRAWN BY : ELR 5/92	REV. 7/10/01 LES/RDR
CHECKED BY : GRP 6/92	REV. 5/7/03 RWW/JTE
	REV. 5/1/06 TLA/GM

REVISIONS						SHEET NO.
NO.	BY:	DATE:	NO.	BY:	DATE:	S-81
1			3			TOTAL SHEETS
2			4			478

06-JUN-2008 14:42
R:\Structures\BAILEY\Str#3\asorsenginh\R-2554BA_sd_SP.dgn
bklappenbach

STR #3

STD. NO. SP1SM

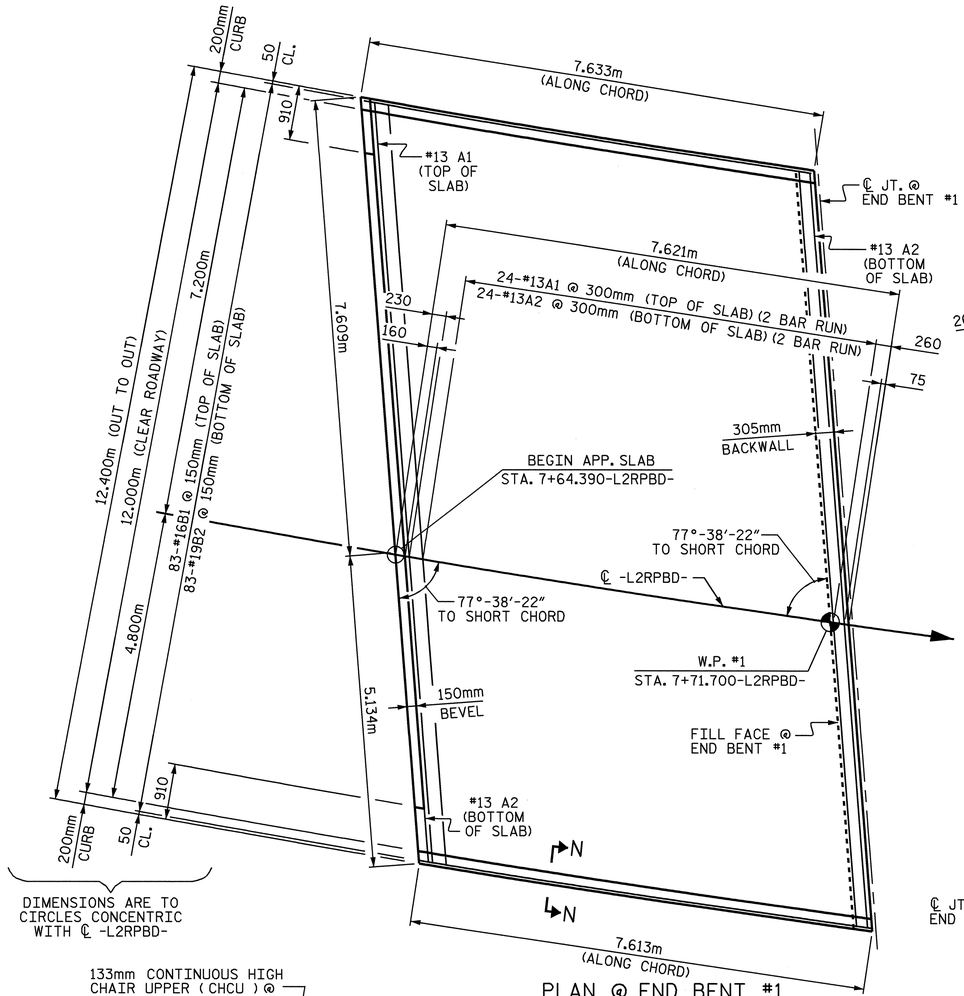

PLAN @ END BENT #1

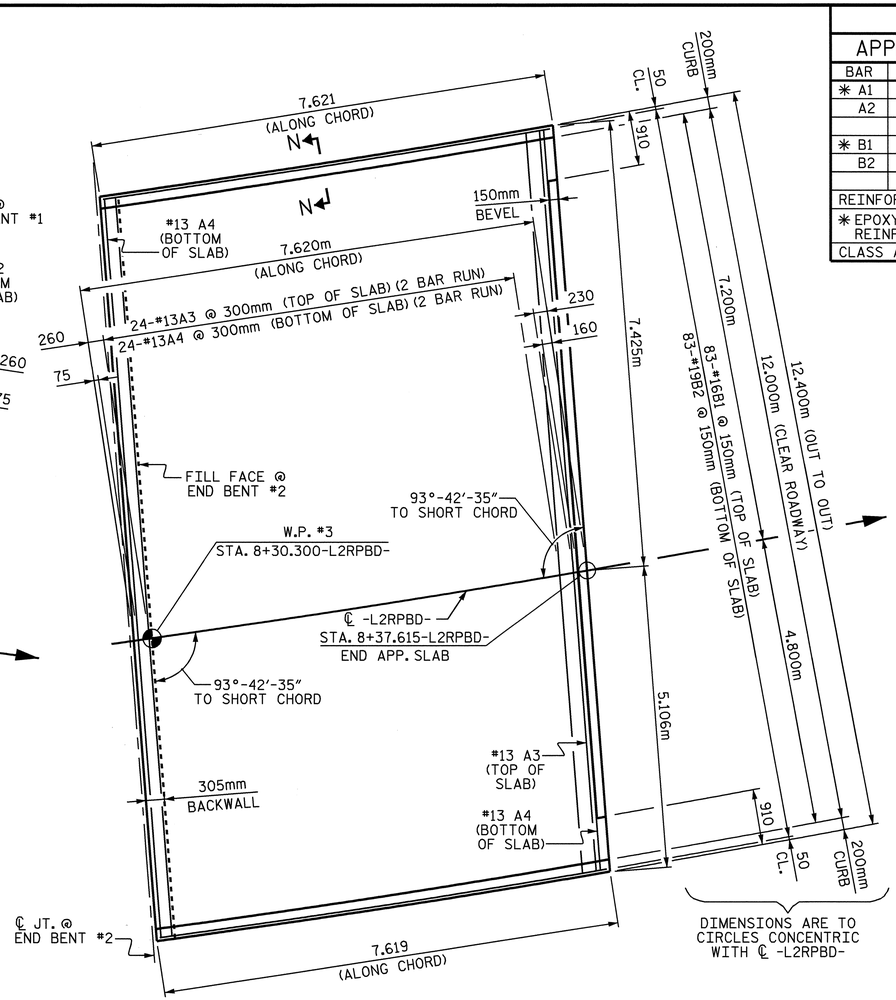

PLAN @ END BENT #2

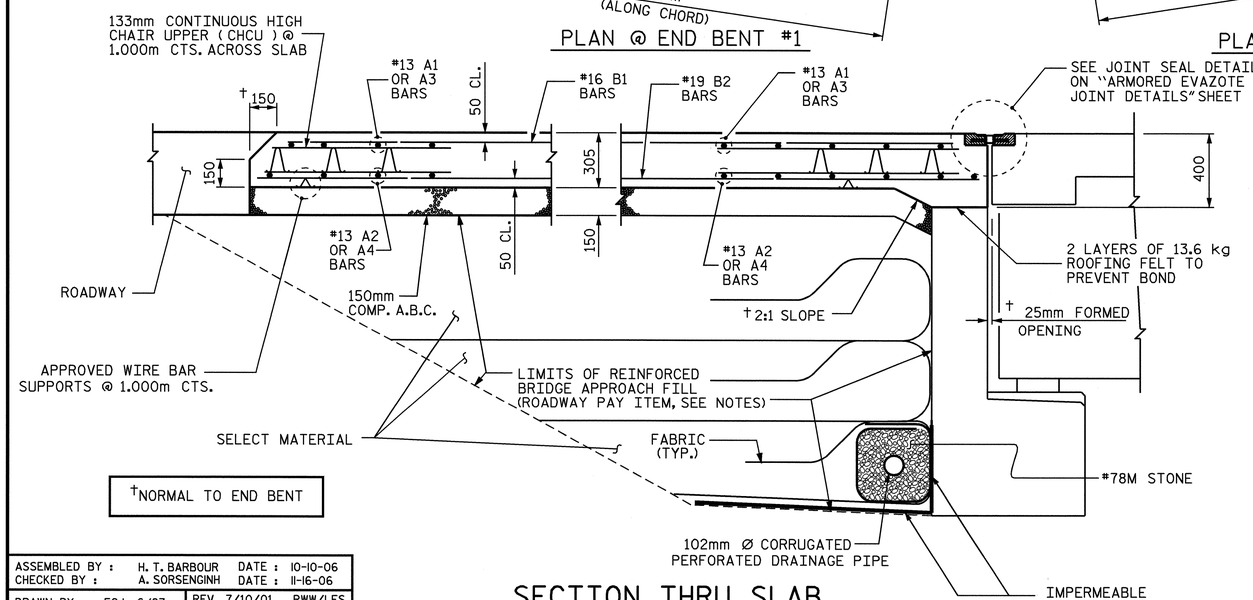

†NORMAL TO END BENT

SECTION THRU SLAB

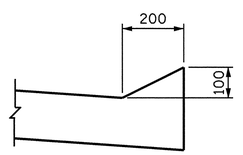

SECTION N-N

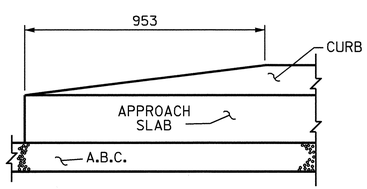

END OF CURB WITHOUT SHOULDER BERM GUTTER

CURB DETAILS

BILL OF MATERIAL

APPROACH SLAB AT EB #1

BAR	NO.	SIZE	TYPE	LENGTH	WEIGHT
✳ A1	50	#13	STR	6620	329
A2	52	#13	STR	6580	340
✳ B1	83	#16	STR	7240	933
B2	83	#19	STR	7500	1391
REINFORCING STEEL				kg.	1731
✳ EPOXY COATED REINFORCING STEEL				kg.	1262
CLASS AA CONCRETE				C.M.	29.4

APPROACH SLAB AT EB #2

BAR	NO.	SIZE	TYPE	LENGTH	WEIGHT
✳ A3	50	#13	STR	6460	321
A4	52	#13	STR	6500	336
✳ B1	83	#16	STR	7240	933
B2	83	#19	STR	7500	1391
REINFORCING STEEL				kg.	1727
✳ EPOXY COATED REINFORCING STEEL				kg.	1254
CLASS AA CONCRETE				C.M.	29.4

NOTES

APPROACH SLAB SHALL NOT BE CONSTRUCTED PRIOR TO COMPLETION OF THE BRIDGE DECK.

FOR REINFORCED BRIDGE APPROACH FILL INCLUDING FABRIC, IMPERMEABLE GEOMEMBRANE, 102mm Ø DRAINAGE PIPE, #78M STONE, AND SELECT MATERIAL, SEE ROADWAY PLANS.

AREA BETWEEN THE WINGWALL AND APPROACH SLAB SHALL BE GRADED TO DRAIN THE WATER AWAY FROM THE FILL FACE OF THE BRIDGE AND SHALL BE PAVED. SEE ROADWAY PLANS.

THE 150mm COMP. A.B.C. SHALL BE FLUSH WITH THE ROADWAY END OF THE APPROACH SLAB AND SHALL EXTEND 300mm OUTSIDE OF EACH EDGE OF THE APPROACH SLAB.

THE CONTRACTOR MAY USE 100mm TYPE B-25.0B ASPHALT CONCRETE COURSE IN LIEU OF 150mm COMP. A.B.C. IF THIS OPTION IS USED, THE BASE COURSE SHALL BE FLUSH WITH THE ROADWAY END OF THE APPROACH SLAB, AND THE WIDTH SHALL BE THE SAME AS THAT OF THE APPROACH SLAB.

THE CONTRACTOR MAY USE 125mm CLASS "A" CONCRETE BASE IN LIEU OF 150mm COMP. A.B.C. IF THIS OPTION IS USED, THE CONCRETE BASE SHALL BE FLUSH WITH THE ROADWAY END OF THE APPROACH SLAB, AND THE WIDTH SHALL BE THE SAME AS THAT OF THE APPROACH SLAB. THE CONCRETE SHALL BE FINISHED TO A SMOOTH SURFACE AND A LAYER OF 13.6 kg ROOFING FELT SHALL BE PLACED BETWEEN THE CONCRETE BASE AND THE APPROACH SLAB TO PREVENT BOND. THE APPROACH SLAB SHALL NOT BE CAST UNTIL THE CONCRETE BASE HAS REACHED AN AGE OF THREE CURING DAYS.

PROJECT NO. R-2554BA

WAYNE COUNTY

STATION: 90+62.554-L-

SHEET 1 OF 2

STATE OF NORTH CAROLINA
DEPARTMENT OF TRANSPORTATION
RALEIGH

STANDARD

BRIDGE APPROACH SLAB FOR FLEXIBLE PAVEMENT

REVISIONS						SHEET NO.
NO.	BY:	DATE:	NO.	BY:	DATE:	S-82
1			3			TOTAL SHEETS
2			4			478

NORTH CAROLINA PROFESSIONAL SEAL 15625 ENGINEER BRUCE D. KLAPPENBACH 6-6-08

STR. #3 STD. NO. BAS4SM

ASSEMBLED BY :	H. T. BARBOUR	DATE :	10-10-06
CHECKED BY :	A. SORSENGINH	DATE :	11-16-06
DRAWN BY : FCJ 6/87	REV. 7/10/01		RWW/LES
CHECKED BY : EGA 6/87	REV. 5/7/03R		RWW/JTE
	REV. 5/1/06		TLA/GM

05-JUN-2008 16:33
r:\structures\balley\str#3\tbarbour\r-2554ba_sd_as.dgn
dgladden

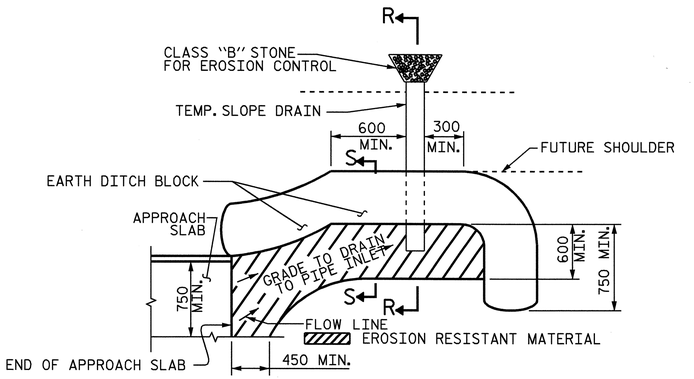

NOTE: IMMEDIATELY AFTER THE CONSTRUCTION OF THE APPROACH SLAB, THE CONTRACTOR SHALL PROVIDE TEMPORARY BERM AND SLOPE DRAIN. CONTRACTOR SHALL GRADE TO PIPE INLET AND PROVIDE EROSION RESISTANT MATERIAL AS SHOWN. THE EROSION RESISTANT MATERIAL SHALL BE EITHER 1) ASPHALT PLANT MIX, TYPE 1 OR TYPE 2, MIN. 50mm DEPTH, 2) EROSION CONTROL MAT, OR 3) CONCRETE, AS DIRECTED BY THE ENGINEER. THE SLOPE DRAIN SHALL CONSIST OF A NON-PERFORATED TEMPORARY DRAINAGE PIPE, 305mm IN DIAMETER.

PLAN VIEW

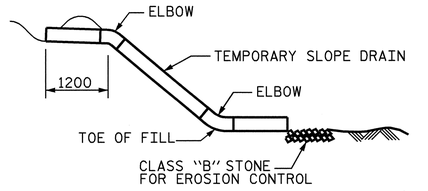

SECTION R-R

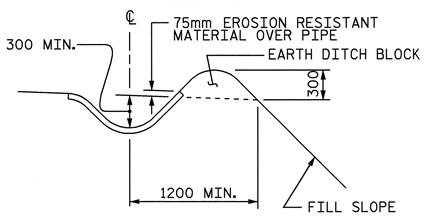

SECTION S-S

TEMPORARY BERM AND SLOPE DRAIN DETAILS

(TO BE USED WHEN SHOULDER BERM GUTTER IS REQUIRED)

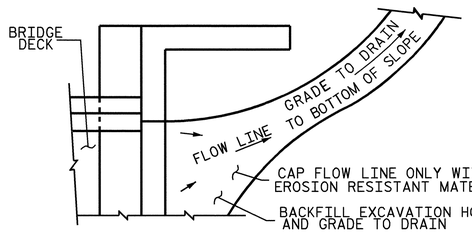

NOTE: IF THE APPROACH SLAB IS NOT CONSTRUCTED IMMEDIATELY AFTER THE BACKFILLING OF THE END BENT EXCAVATION, GRADE TO DRAIN TO THE BOTTOM OF THE SLOPE AND PROVIDE EROSION RESISTANT MATERIAL, SUCH AS FIBERGLASS ROVING OR AS DIRECTED BY THE ENGINEER TO PREVENT SOIL EROSION AND TO PROTECT THE AREA ADJACENT TO THE STRUCTURE. THE CONTRACTOR WILL BE REQUIRED TO REMOVE THESE MATERIALS PRIOR TO CONSTRUCTION OF THE APPROACH SLAB.

TEMPORARY DRAINAGE DETAIL

ASSEMBLED BY :	H. T. BARBOUR	DATE :	10-10-06
CHECKED BY :	A. SORSENGINH	DATE :	11-16-06
DRAWN BY : FCJ 11/88	REV. 10/17/00		RWW/LES
CHECKED BY : ARB 11/88	REV. 5/1/03		RWW/JTE
	REV. 5/1/06		TLA/GM

25-APR-2008 08:26
R:\Structures\BAILEY\Str#3\tbarbour\R-2554BA_sd_AS.dgn
bklappenbach

PROJECT NO. R-2554BA
WAYNE COUNTY
STATION: 90+62.554-L-
SHEET 2 OF 2

STATE OF NORTH CAROLINA
DEPARTMENT OF TRANSPORTATION
RALEIGH

STANDARD
BRIDGE APPROACH SLAB DETAILS

NORTH CAROLINA PROFESSIONAL SEAL 15825 ENGINEER BRUCE D. KLAPPENBACH
6-6-08

REVISIONS						SHEET NO.
NO.	BY:	DATE:	NO.	BY:	DATE:	S-83
1			3			TOTAL SHEETS
2			4			478

STR. #3

STD. NO. BAS10SM

F. A. PROJECT No. NHS-70 (106)

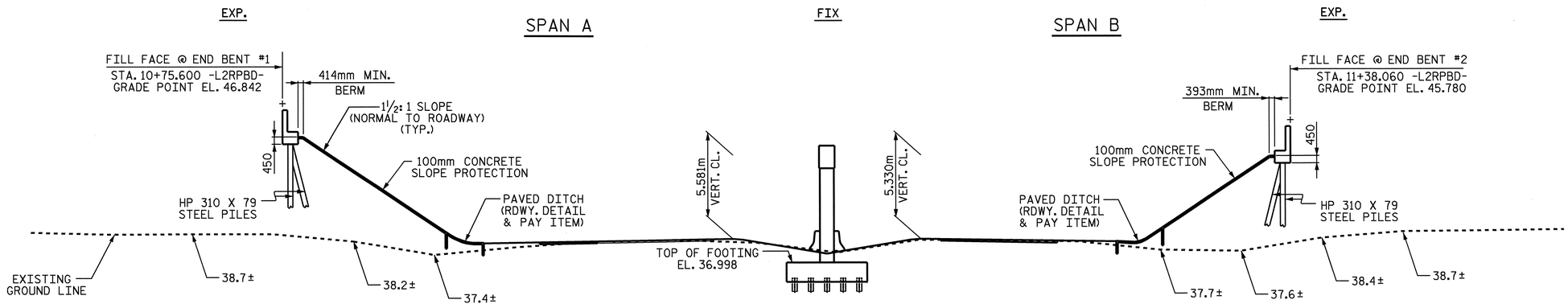

SECTION ALONG ℄ -L2RPBD-

(BENT AND END BENTS ON SECTION ARE AT RIGHT ANGLES TO BENT.)

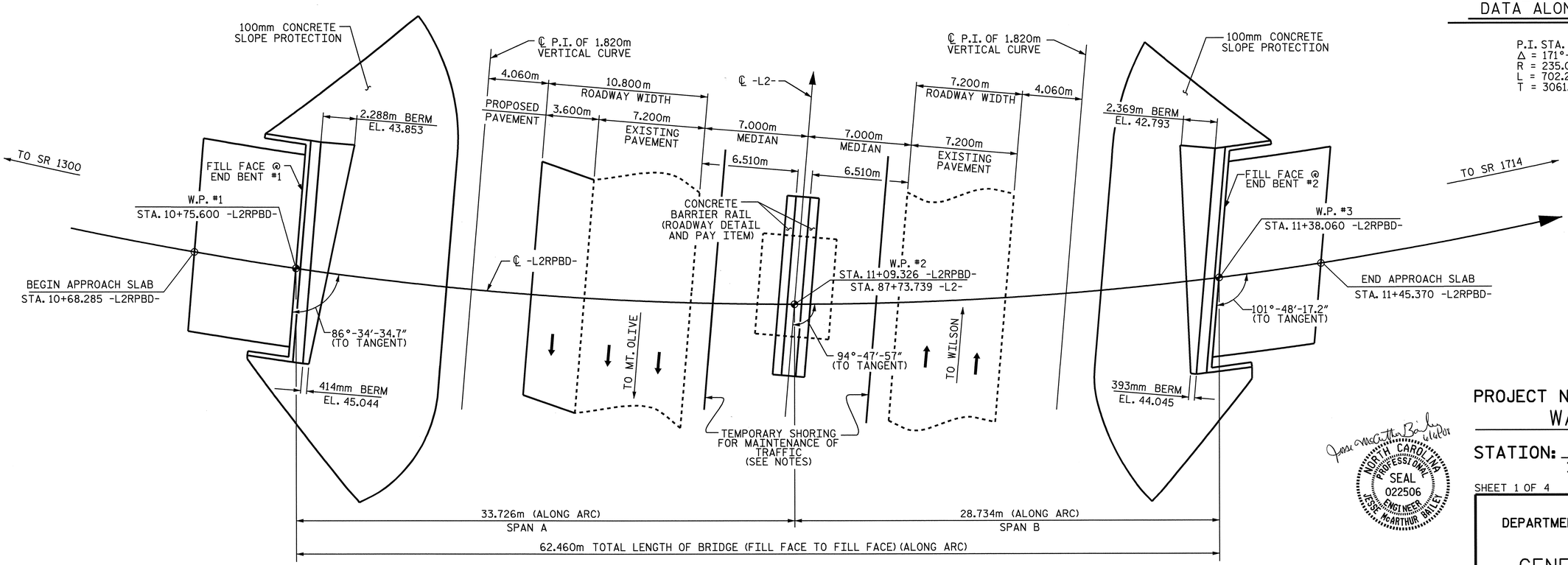

PLAN

(PILES NOT SHOWN FOR CLARITY)

P.I. STA. = 7+73.000 -L2RPBD-
P.I. EL. = 51.986m
V.C. = 180.000m

GRADE DATA -L2RPBD-

HORIZONTAL CURVE DATA ALONG -L2RPBD-

P.I. STA. 36+58.378
Δ = 171°-13'-14.4"(LT.)
R = 235.000m
L = 702.266m
T = 3061.315m

PROJECT NO. R-2554BA

WAYNE COUNTY

STATION: 87+73.739 -L2-
11+09.326 -L2RPBD-

SHEET 1 OF 4 BRIDGE NO. 356

STATE OF NORTH CAROLINA
DEPARTMENT OF TRANSPORTATION
RALEIGH

GENERAL DRAWING FOR BRIDGE ON -L2RPBD- OVER US 117 BYPASS

REVISIONS						SHEET NO.
NO.	BY:	DATE:	NO.	BY:	DATE:	S-84
1			3			TOTAL SHEETS
2			4			478

NORTH CAROLINA PROFESSIONAL SEAL 022506 ENGINEER JESSE McARTHUR BAILEY

NORTH CAROLINA PROFESSIONAL SEAL 15825 ENGINEER BRUCE D. KLAPPENBACH 6-6-08

DRAWN BY : M. G. SHAIKH DATE : 07-24-07
CHECKED BY : B. D. KLAPPENBACH DATE : 03-14-08

06-JUN-2008 15:32
R:\Structures\BAILEY\Str#4\mshaikh\Microstation\R-2554BA_sd_PGD.dgn
bklappenbach

STR. #4

j:\structures\balley\str#4\mshaikh\microstation\R-2554BA.
mshaikh

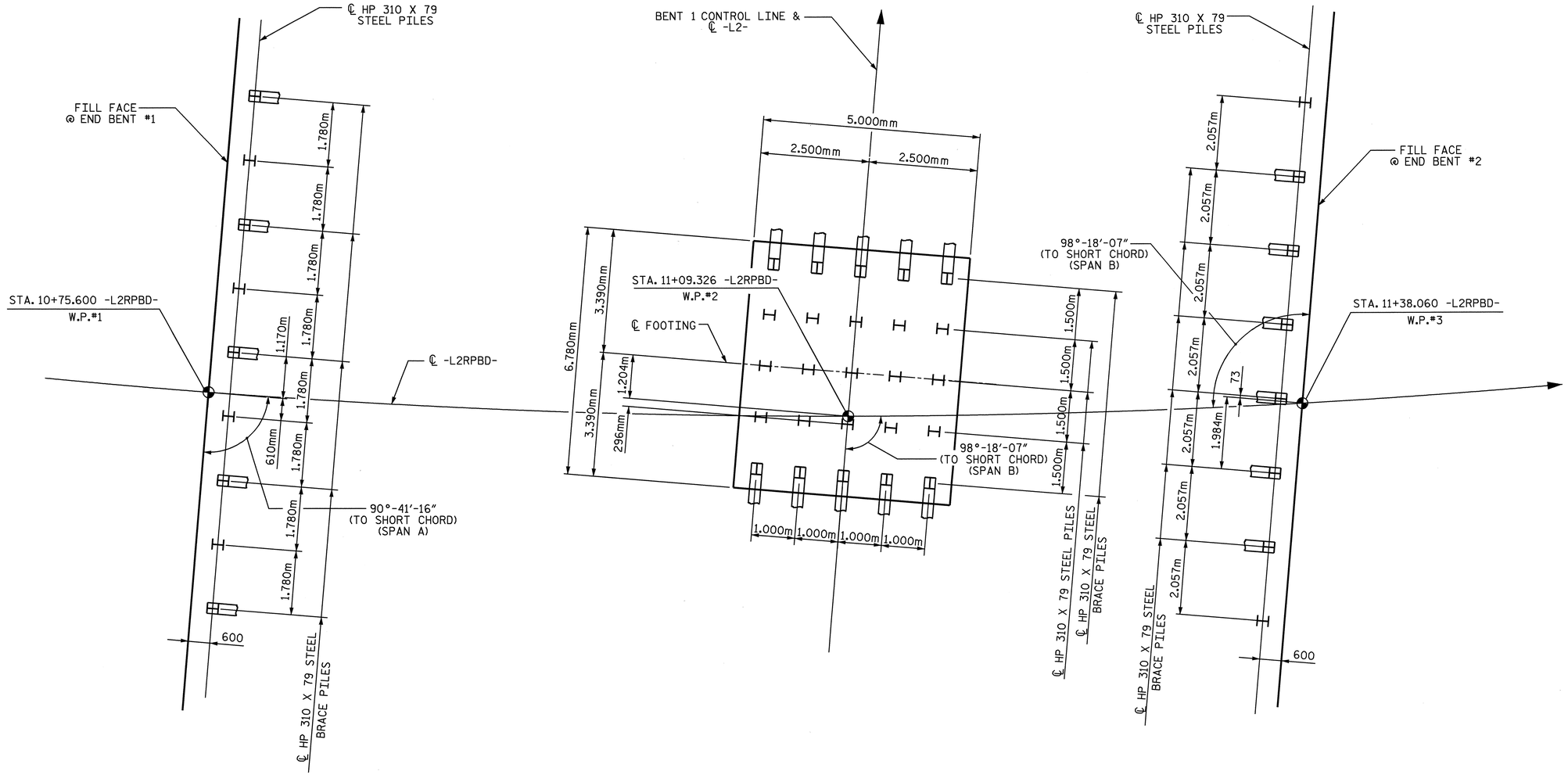

END BENT #1 BENT #1 END BENT #2

FOUNDATION LAYOUT

DIMENSIONS LOCATING PILES ARE SHOWN TO THE PILE CENTERLINE.

BRACE PILES AT THE END BENTS AND WINGS ARE BATTERED 250:1000.

BRACE PILES AT BENT #1 ARE BATTERED 125:1000.

ALL PILES ARE HP 310 X 79 STEEL PILES.

DRAWN BY : M. G. SHAIKH DATE : 07-30-07
CHECKED BY : B. D. KLAPPENBACH DATE : 03-14-08

NORTH CAROLINA PROFESSIONAL SEAL 15825 ENGINEER B. D. KLAPPENBACH
6-6-08

PROJECT NO. R-2554BA
WAYNE COUNTY
STATION: 87+73.739 -L2-
11+09.326 -L2RPBD-
SHEET 2 OF 4

STATE OF NORTH CAROLINA
DEPARTMENT OF TRANSPORTATION
RALEIGH

GENERAL DRAWING FOR BRIDGE ON -L2RPBD- OVER US 117 BYPASS

REVISIONS						SHEET NO.
NO.	BY:	DATE:	NO.	BY:	DATE:	S-85
1			3			TOTAL SHEETS
2			4			478

STR #4

js\structures\balley\str#4\mshaikh\microstation\R-2554BA.
mshaikh

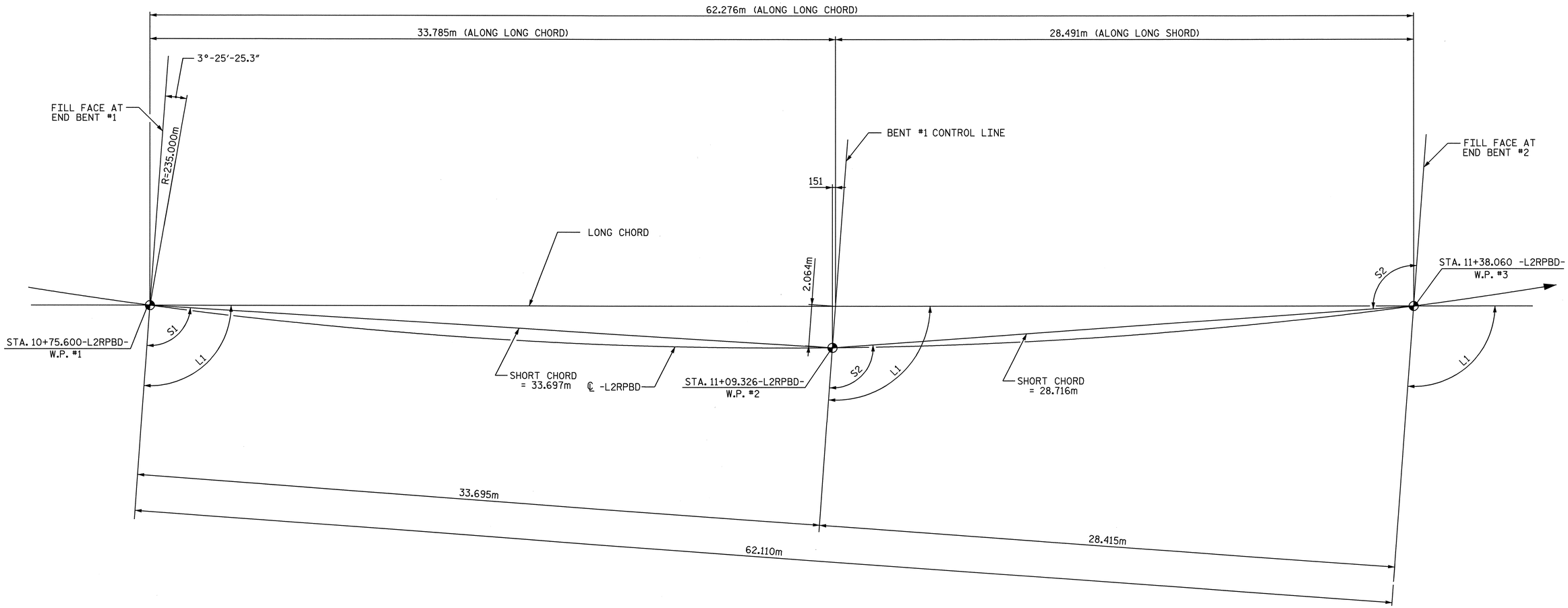

ANGLES			
LONG CHORD		SHORT CHORD	
L1	94°11'26"	S1	90°41'16"
		S2	98°18' 07"

HORIZONTAL CURVE DATA

P.I. = 36+58.378
Δ = 171°-13'-14.4"
T = 3061.315
L = 702.266
R = 235.000

LONG CHORD LAYOUT

(ALL BENTS ARE PARALLEL)

PROJECT NO. R-2554BA
WAYNE COUNTY
STATION: 87+73.739 -L2-
11+09.326 -L2RPBD-
SHEET 3 OF 4

STATE OF NORTH CAROLINA
DEPARTMENT OF TRANSPORTATION
RALEIGH

GENERAL DRAWING FOR BRIDGE ON -L2RPBD- OVER US 117 BYPASS

NORTH CAROLINA PROFESSIONAL SEAL 15825 ENGINEER BRUCE D. KLAPPENBACH
6-6-08

REVISIONS						SHEET NO.
NO.	BY:	DATE:	NO.	BY:	DATE:	S-86
1			3			TOTAL SHEETS
2			4			478

DRAWN BY : M. G. SHAIKH DATE : 07-27-07
CHECKED BY : B. D. KLAPPENBACH DATE : 03-14-08

BM #1 RR SPIKE IN BASE OF 460mm (18") PINE 72.7170m LT OF -BL- STA. 8+14.282 EL. 40.614m

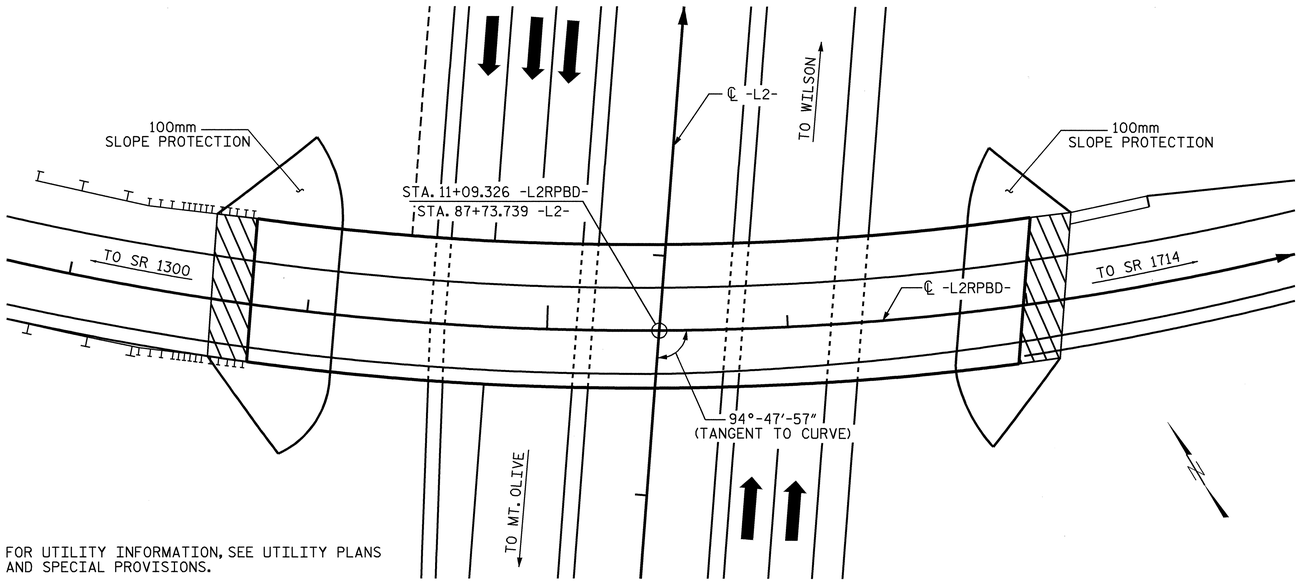

FOR UTILITY INFORMATION, SEE UTILITY PLANS AND SPECIAL PROVISIONS.

LOCATION SKETCH

NOTES

ALL DIMENSIONS ARE IN MILLIMETERS UNLESS OTHERWISE NOTED.

ALL ELEVATIONS ARE IN METERS.

ASSUMED LIVE LOAD = MS18 OR ALTERNATE LOADING, EXCEPT THE PLATE GIRDERS HAVE BEEN DESIGNED FOR M22.5.

FOR OTHER DESIGN DATA AND GENERAL NOTES, SEE SHEET SNSM.

FOR EROSION CONTROL MEASURES, SEE EROSION CONTROL PLANS.

REMOVABLE FORMS MAY BE USED IN LIEU OF METAL STAY-IN-PLACE FORMS IN ACCORDANCE WITH ARTICLE 420-3 OF THE STANDARD SPECIFICATIONS.

THIS BRIDGE HAS BEEN DESIGNED BY THE STRENGTH DESIGN METHOD AS SPECIFIED IN AASHTO STANDARD SPECIFICATIONS.

ALL STRUCTURAL STEEL SHALL BE AASHTO M270 GRADE 345W AND PAINTED IN ACCORDANCE WITH SYSTEM 4 OF ARTICLE 442-7 OF THE STANDARD SPECIFICATIONS UNLESS OTHERWISE NOTED ON THE PLANS.

FOR MAINTENANCE AND PROTECTION OF TRAFFIC BENEATH PROPOSED STRUCTURE, SEE SPECIAL PROVISIONS.

THIS BRIDGE HAS BEEN DESIGNED IN ACCORDANCE WITH THE REQUIREMENTS OF THE STANDARD SPECIFICATIONS FOR SEISMIC DESIGN OF HIGHWAY BRIDGES FOR SEISMIC PERFORMANCE CATEGORY A.

FOR LIMITS OF TEMPORARY SHORING FOR MAINTENANCE OF TRAFFIC, SEE TRAFFIC CONTROL PLANS. FOR PAY ITEM FOR TEMPORARY SHORING FOR MAINTENANCE OF TRAFFIC, SEE ROADWAY PLANS.

THE CONTRACTOR SHALL PROVIDE INDEPENDENT ASSURANCE SAMPLES OF REINFORCING STEEL AS FOLLOWS: FOR PROJECTS REQUIRING UP TO 360,000 kg OF REINFORCING STEEL, ONE 760mm SAMPLE OF EACH SIZE BAR USED, AND FOR PROJECTS REQUIRING OVER 360,000 kg OF REINFORCING STEEL, TWO 760mm SAMPLES OF EACH SIZE BAR USED. THE BARS FROM WHICH THE SAMPLES ARE TAKEN MUST THEN BE SPLICED WITH REPLACEMENT BARS OF THE SIZE AND LENGTH OF THE SAMPLE, PLUS A MINIMUM LAP SPLICE OF THIRTY BAR DIAMETERS.

FOR FALSEWORK AND FORMWORK, SEE SPECIAL PROVISIONS.

NEEDLE BEAMS WILL NOT BE ALLOWED UNLESS OTHERWISE CALLED FOR ON THE PLANS OR APPROVED BY THE ENGINEER.

FOR SUBMITTAL OF WORKING DRAWINGS, SEE SPECIAL PROVISIONS.

DRIVE PILES AT END BENT #1, BENT #1 AND END BENT#2 TO A REQUIRED BEARING CAPACITY OF 1060kN PER PILE. THE REQUIRED BEARING CAPACITY IS EQUAL TO THE ALLOWABLE BEARING CAPACITY WITH A MINIMUM FACTOR OF SAFETY OF TWO.

THE ALLOWABLE BEARING CAPACITY FOR PILES AT END BENT #1, BENT #1 AND END BENT #2 IS 530 kN PER PILE.

FOR METRIC STRUCTURAL STEEL, SEE SPECIAL PROVISIONS.

FOR CRANE SAFETY, SEE SPECIAL PROVISIONS.

FOR GROUT FOR STRUCTURES, SEE SPECIAL PROVISIONS.

TOTAL BILL OF MATERIAL

	FOUNDATION EXCAVATION	REINFORCED CONCRETE DECK SLAB	GROOVING BRIDGE FLOORS	CLASS A CONCRETE	BRIDGE APPROACH SLABS	REINFORCING STEEL	STRUCTURAL STEEL	HP 310 X 79 STEEL PILES		PILE REDRIVES	CONCRETE BARRIER RAIL	100mm SLOPE PROTECTION	POT BEARINGS	ELASTOMERIC BEARINGS	EVAZOTE JOINT SEALS
	LUMP SUM	SQ. METERS	SQ. METERS	CU. METERS	LUMP SUM	kg	APPROX. kg	NO.	METERS	EACH	METERS	SQ. METERS	LUMP SUM	LUMP SUM	LUMP SUM
SUPERSTRUCTURE		803.1	848.1		LUMP SUM		174216				123.645		LUMP SUM	LUMP SUM	LUMP SUM
END BENT 1				23.2		1967		9	211.5	4		437			
BENT 1	LUMP SUM			95.3		9209		25	262.5	12					
END BENT 2				23.7		2015		8	192.0	4		326			
TOTAL	LUMP SUM	803.1	848.1	142.2	LUMP SUM	13191	174216	42	666.0	20	123.645	763	LUMP SUM	LUMP SUM	LUMP SUM

PROJECT NO. R-2554BA

WAYNE COUNTY

STATION: 87+73.739 -L2-
11+09.326 -L2RPBD-

SHEET 4 OF 4

STATE OF NORTH CAROLINA
DEPARTMENT OF TRANSPORTATION
RALEIGH

GENERAL DRAWING FOR BRIDGE ON -L2RPBD- OVER US 117 BYPASS

NORTH CAROLINA PROFESSIONAL SEAL 15825 ENGINEER BRUCE D. KLAPPENBACH
6-6-08

REVISIONS						SHEET NO.
NO.	BY:	DATE:	NO.	BY:	DATE:	S-87
1			3			TOTAL SHEETS
2			4			478

STR. #4

DRAWN BY : M. G. SHAIKH DATE : 07-26-07
CHECKED BY : B. D. KLAPPENBACH DATE : 03-14-08

05-JUN-2008 17:07
j:\structures\bailey\str#4\mshaikh\microstation\R-2554BA_sd_PGD.dgn
mshaikh

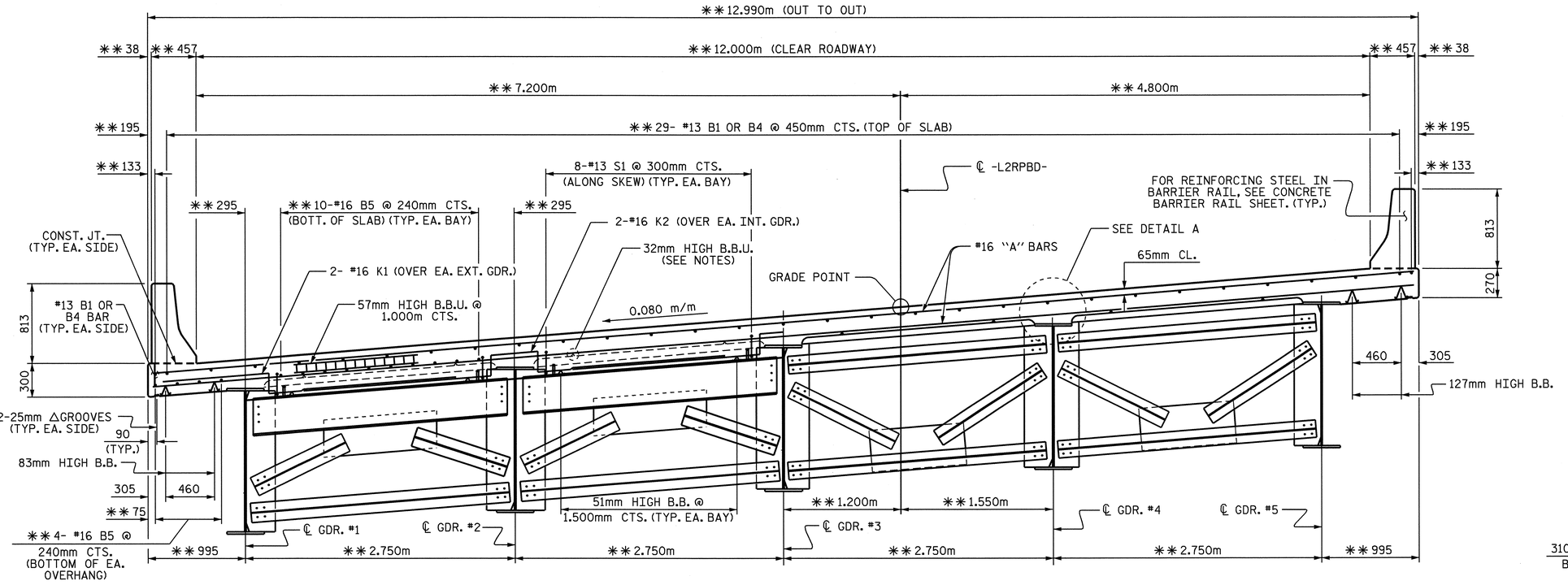

TYPICAL SECTION AT END BENT DIAPHRAGM

TYPICAL SECTION AT INTERMEDIATE DIAPHRAGM

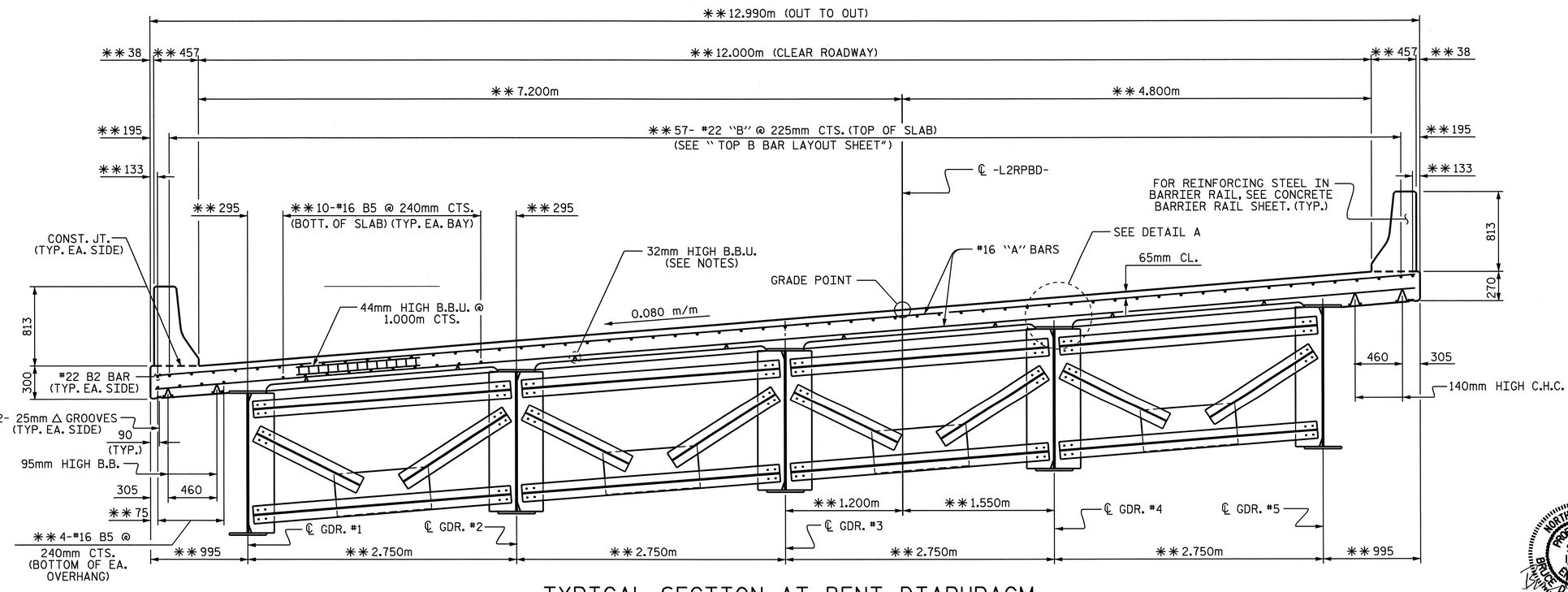

TYPICAL SECTION AT BENT DIAPHRAGM

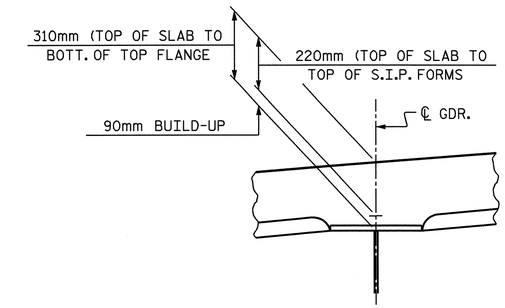

DETAIL A

** THESE ARE RADIAL DIMENSIONS AND SPACES.

NOTES

PROVIDE 32mm HIGH BEAM BOLSTERS UPPER AT 1.2m CTS. ATOP THE METAL STAY-IN-PLACE FORMS TO SUPPORT THE BOTTOM MAT OF 'A' BARS. WHEN USING REMOVABLE FORMS, PROVIDE CONTINUOUS HIGH CHAIRS FOR METAL DECK (C.H.C.M.) @ 1.2m CTS. WITH A HEIGHT TO SUPPORT THE BOTTOM MAT OF 'A' BARS A CLEAR DISTANCE OF 65mm ABOVE THE TOP OF THE REMOVABLE FORM.

METAL STAY-IN-PLACE FORMS SHALL NOT BE WELDED TO BEAM OR GIRDER FLANGES IN THE ZONES REQUIRING CHARPY V-NOTCH TEST. SEE STRUCTURAL STEEL DETAIL SHEETS.

PREVIOUSLY CAST CONCRETE IN A CONTINUOUS UNIT SHALL HAVE ATTAINED A MINIMUM COMPRESSIVE STRENGTH OF 20.7 MPa BEFORE ADDITIONAL CONCRETE IS CAST IN THE UNIT.

BARRIER RAIL IN A CONTINUOUS UNIT SHALL NOT BE CAST UNTIL ALL SLAB CONCRETE IN THE UNIT HAS BEEN CAST AND HAS REACHED A MINIMUM COMPRESSIVE STRENGTH OF 20.7 MPa.

STRUCTURAL STEEL ERECTION IN A CONTINUOUS UNIT SHALL BE COMPLETE BEFORE FALSEWORK OR FORMS ARE PLACED ON THE UNIT.

#16 "G" BAR MAY BE SHIFTED SLIGHTLY, AS NECESSARY, TO CLEAR REINFORCING STEEL AND STIRRUPS.

AT THE CONTRACTOR'S OPTION, THE DIAPHRAGM WITH THE WELDED GUSSET PLATES MAY BE USED IN LIEU OF THE DIAPHRAGM WITH BOLTED ANGLES AT NO ADDITIONAL COST TO THE DEPARTMENT.

PROJECT NO. R-2554BA

WAYNE COUNTY

STATION: 87+73.739 -L2-

SHEET 1 OF 2

STATE OF NORTH CAROLINA
DEPARTMENT OF TRANSPORTATION
RALEIGH

SUPERSTRUCTURE TYPICAL SECTION

REVISIONS						SHEET NO.
NO.	BY:	DATE:	NO.	BY:	DATE:	S-88
1			3			TOTAL SHEETS
2			4			478

NORTH CAROLINA PROFESSIONAL SEAL 15825 ENGINEER BRUCE D. KLAPPENBACH
6-6-08

DRAWN BY : M. G. SHAIKH DATE : 6-12-06
CHECKED BY : D. A. GLADDEN DATE : 8-29-07

05-JUN-2008 17:10
j:\structures\bailey\str#4\mshaikh\microstation\R-2554BA_sd_TS.dgn
mshaikh

STR #4

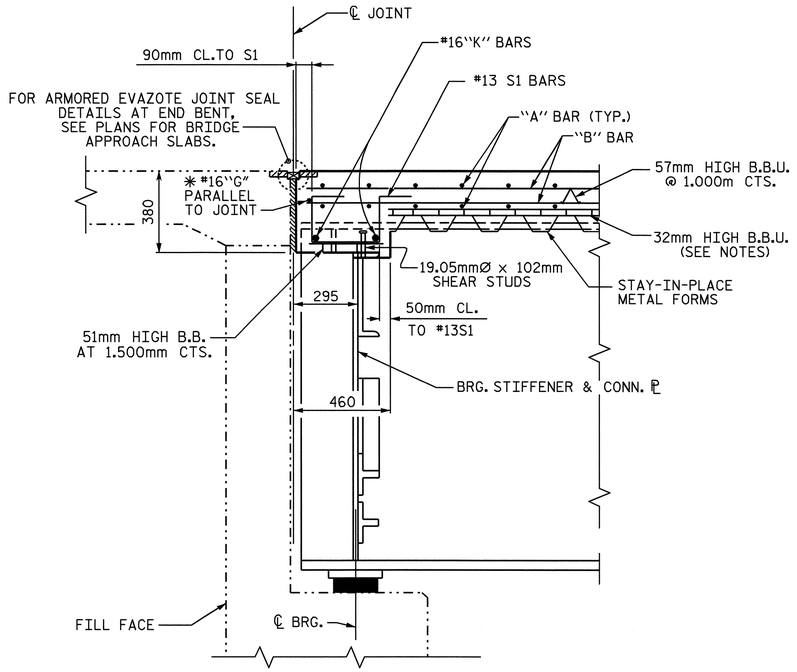

SECTION AT END BENT

✳#16 "G" BAR MAY BE SHIFTED SLIGHTLY, AS NECESSARY, TO CLEAR DIAPHRAGM AND REINFORCING STEEL.

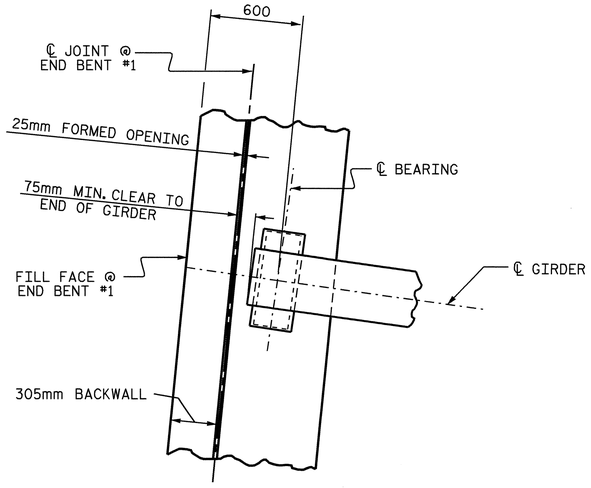

PLAN AT END BENT #1

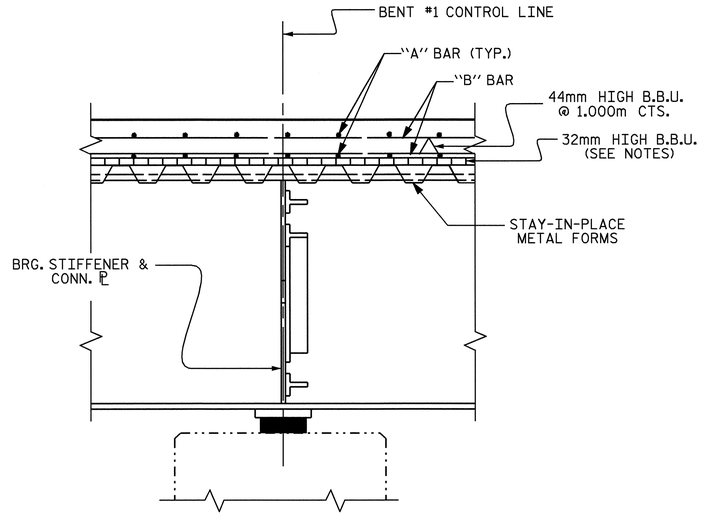

SECTION AT BENT

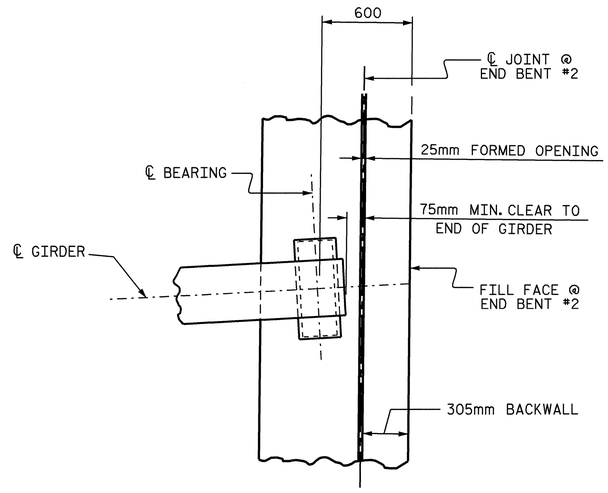

PLAN AT END BENT #2

PROJECT NO. R-2554BA

WAYNE COUNTY

STATION: 87+73.739 -L2-

SHEET 2 OF 2

STATE OF NORTH CAROLINA
DEPARTMENT OF TRANSPORTATION
RALEIGH

SUPERSTRUCTURE TYPICAL SECTION

REVISIONS						SHEET NO.
NO.	BY:	DATE:	NO.	BY:	DATE:	S-89
1			3			TOTAL SHEETS
2			4			478

NORTH CAROLINA PROFESSIONAL SEAL 15825 ENGINEER BRUCE D. KLAPPENBACH 6-6-08

DRAWN BY : M. G. SHAIKH DATE : 6-13-06
CHECKED BY : D. A. GLADDEN DATE : 8-29-08

05-JUN-2008 17:09
j:\structures\bailey\str#4\mshaikh\microstation\R-2554BA_sd_TS.dgn
mshaikh

STR #4

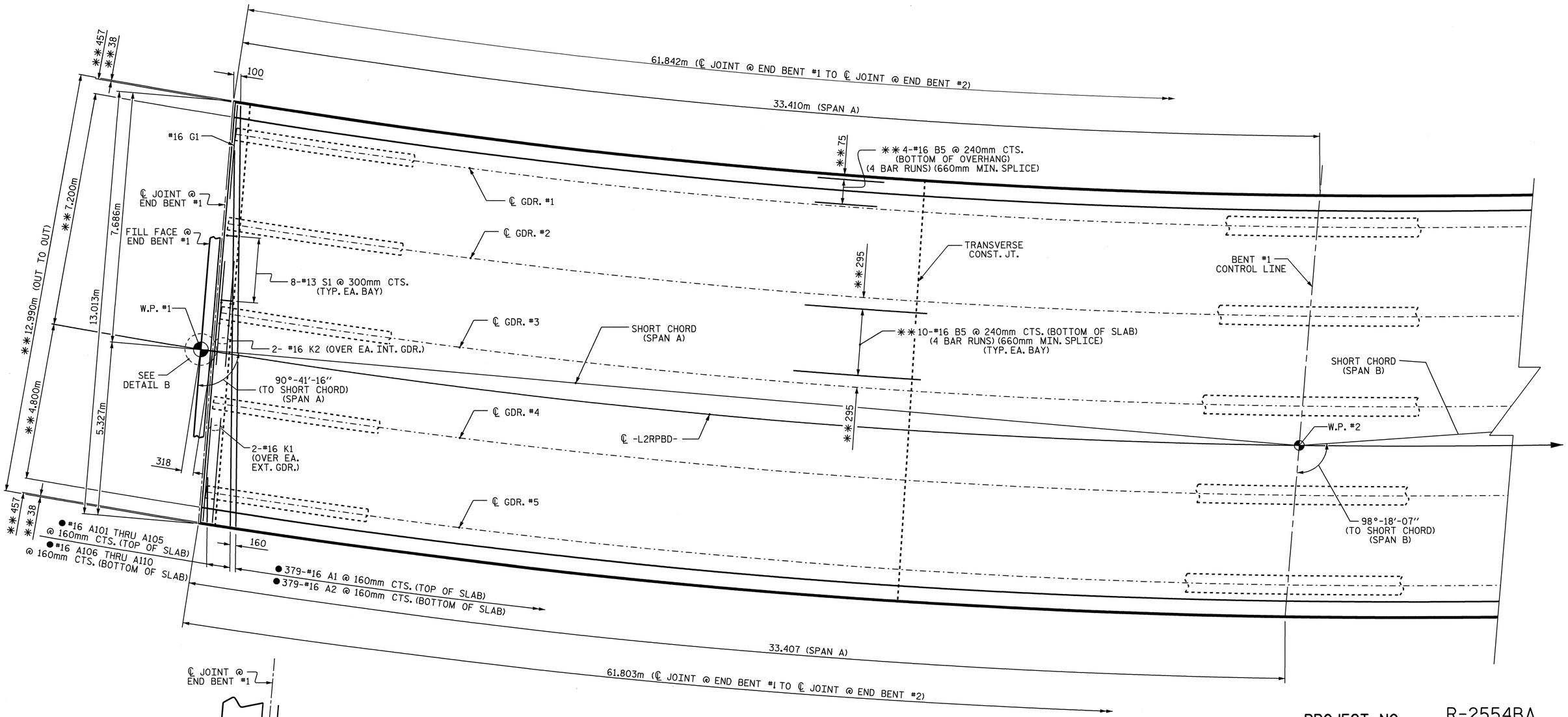

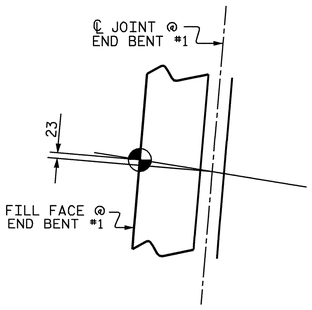

DETAIL B

PLAN OF SPAN A

● "A" BARS IN SLAB ARE SPACED PERPENDICULAR TO LONG CHORD.
FOR TOP "B" BARS SEE "SUPERSTRUCTURE TOP "B" BAR LAYOUT" SHEET.

** THESE ARE RADIAL DIMENSIONS AND SPACES.

PROJECT NO. R-2554BA

WAYNE COUNTY

STATION: 87+73.739 -L2-

SHEET 1 OF 2

STATE OF NORTH CAROLINA
DEPARTMENT OF TRANSPORTATION
RALEIGH

SUPERSTRUCTURE
PLAN OF SPAN A

REVISIONS						SHEET NO.
NO.	BY:	DATE:	NO.	BY:	DATE:	S-90
1			3			TOTAL SHEETS
2			4			478

STR #4

NORTH CAROLINA PROFESSIONAL SEAL 15825 ENGINEER BRUCE D. KLAPPENBACH
6-6-08

DRAWN BY : M. G. SHAIKH DATE : 6-16-06
CHECKED BY : D. A. GLADDEN DATE : 08-29-07

05-JUN-2008 17:12
j:\structures\balley\str#4\mshaikh\microstation\B-2554BA_sd_S*.dgn
mshaikh

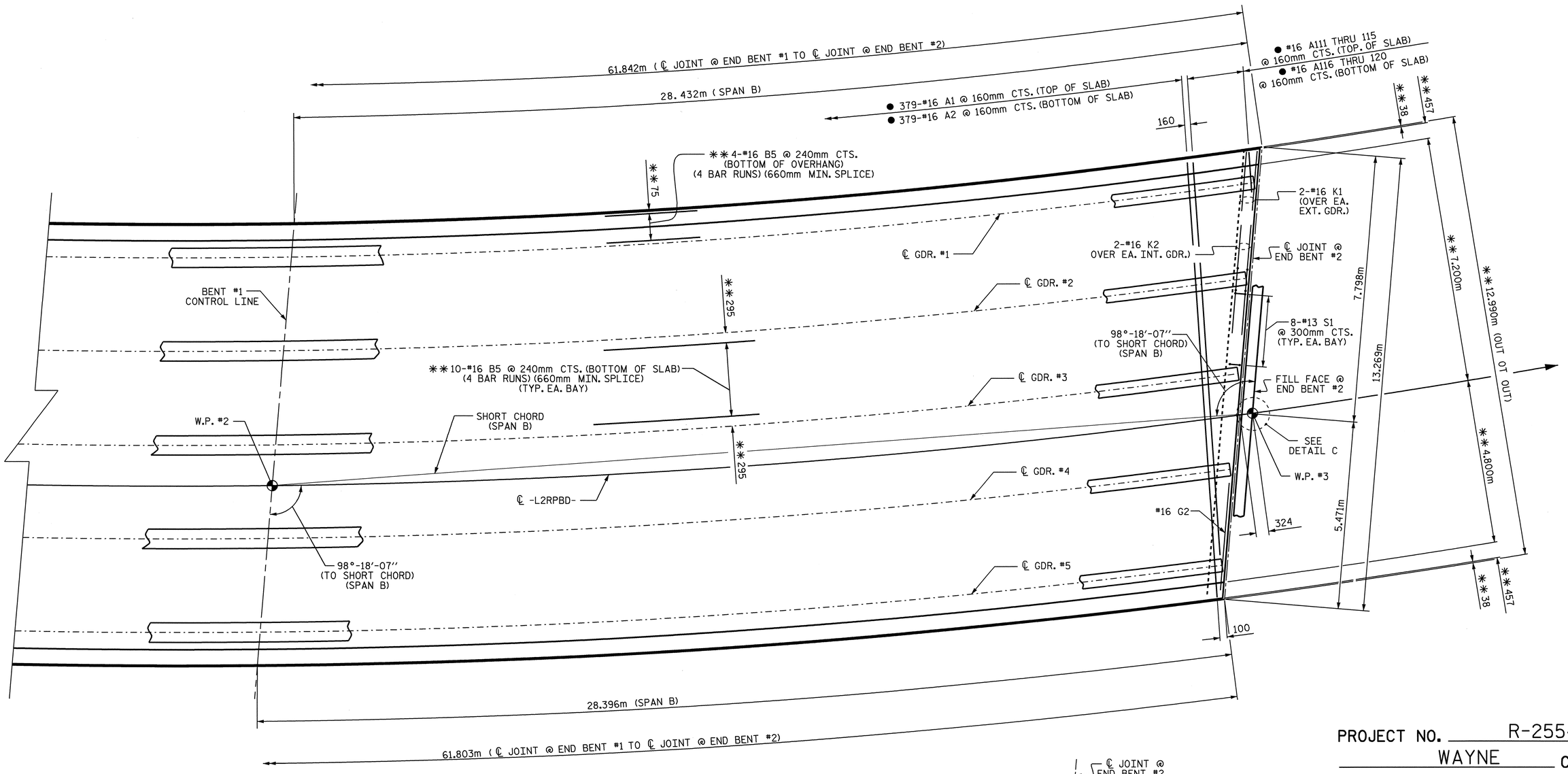

✱✱ THESE ARE RADIAL DIMENSIONS AND SPACES.

PLAN OF SPAN B

● "A" BARS IN SLAB ARE SPACED PERPENDICULAR TO LONG CHORD.
FOR TOP "B" BARS SEE "SUPERSTRUCTURE TOP "B" BAR LAYOUT" SHEET.

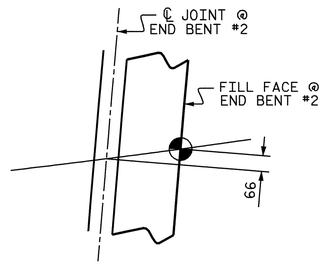

DETAIL C

PROJECT NO. R-2554BA
WAYNE COUNTY
STATION: 87+73.739 -L2-

SHEET 2 OF 2

STATE OF NORTH CAROLINA
DEPARTMENT OF TRANSPORTATION
RALEIGH

SUPERSTRUCTURE PLAN OF SPAN B

REVISIONS						SHEET NO.
NO.	BY:	DATE:	NO.	BY:	DATE:	S-91
1			3			TOTAL SHEETS
2			4			478

DRAWN BY : M. G. SHAIKH DATE : 6-16-06
CHECKED BY : D. A. GLADDEN DATE : 08-29-07

05-JUN-2008 17:12
j:\structures\bailey\str#4\mshaikh\microstation\B-2554BA_sd_S*.dgn
mshaikh

STR #4

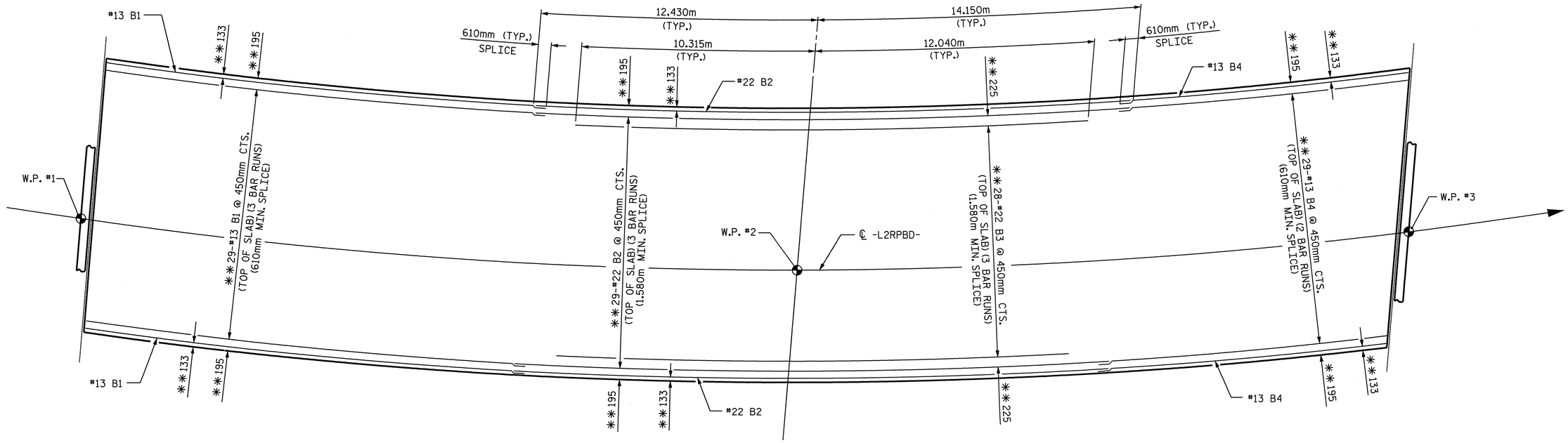

PLAN

PROJECT NO. R-2554BA

WAYNE COUNTY

STATION: 87+73.739 -L2-

STATE OF NORTH CAROLINA
DEPARTMENT OF TRANSPORTATION
RALEIGH

SUPERSTRUCTURE TOP "B" BAR LAYOUT

NORTH CAROLINA PROFESSIONAL SEAL 15625 ENGINEER BRUCE D. KLAPPENBACH

REVISIONS						SHEET NO.
NO.	BY:	DATE:	NO.	BY:	DATE:	S-92
1			3			TOTAL SHEETS
2			4			478

DRAWN BY : M. G. SHAIKH DATE : 6-16-06
CHECKED BY : D. A. GLADDEN DATE : 08-29-07

05-JUN-2008 17:12
j:\structures\bailey\str#4\mshaikh\microstation\B-2554BA_sd_S#.dgn
mshaikh

STR #4

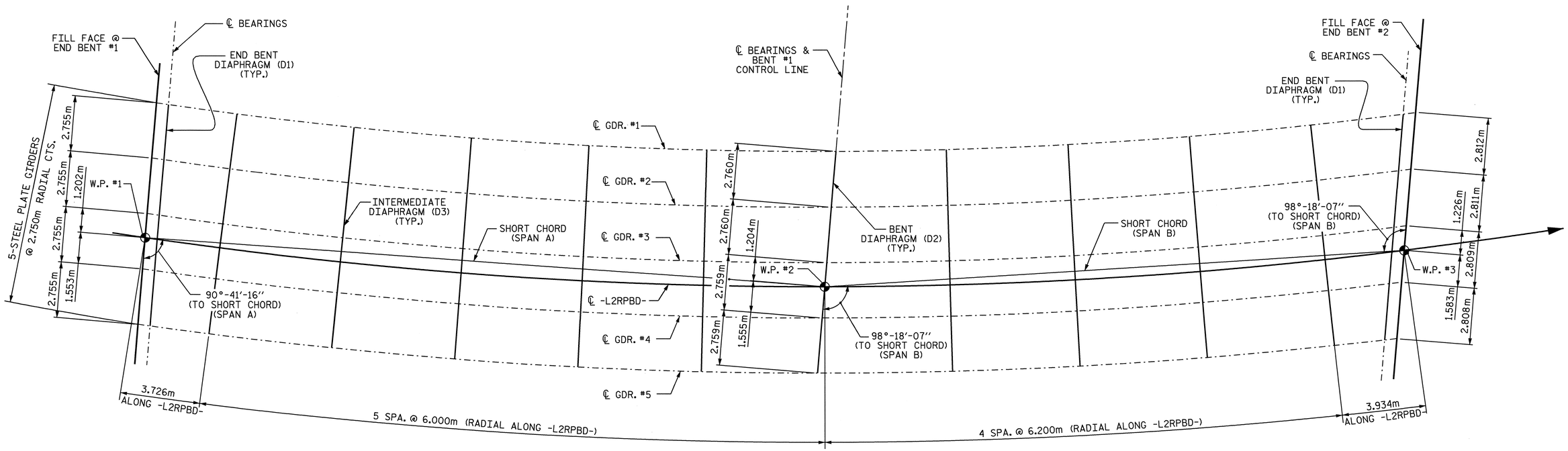

EXP.
E6, P1

SPAN A

FIX
PB1, M1

SPAN B

EXP.
E6, P1

FRAMING PLAN

PROJECT NO. R-2554BA
WAYNE COUNTY
STATION: 87+73.739 -L2-

STATE OF NORTH CAROLINA
DEPARTMENT OF TRANSPORTATION
RALEIGH

SUPERSTRUCTURE
FRAMING PLAN

NORTH CAROLINA PROFESSIONAL SEAL 15625 ENGINEER BRUCE D. KLAPPENBACH
6-6-08

REVISIONS						SHEET NO.
NO.	BY:	DATE:	NO.	BY:	DATE:	S-93
1			3			TOTAL SHEETS
2			4			478

DRAWN BY : M. G. SHAIKH DATE : 6-21-06
CHECKED BY : D. A. GLADDEN DATE : 8-29-07

05-JUN-2008 17:13
j:\structures\bailey\str#4\mshaikh\microstation\B-2554BA_sd_FP.dgn
mshaikh

STR #4

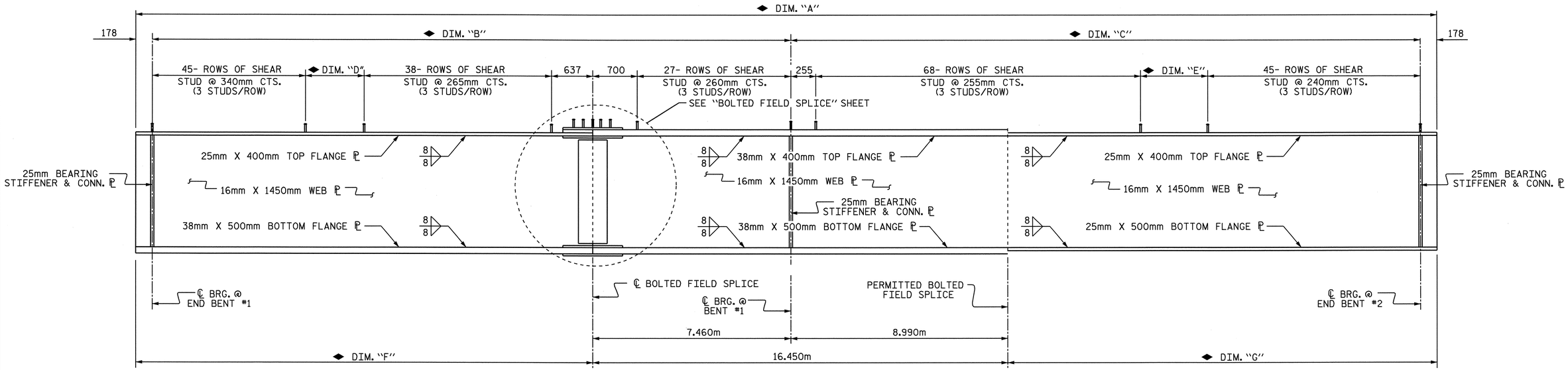

GIRDER ELEVATION

◆ FOR DIMENSIONS SEE "GIRDER TABLE" BELOW.

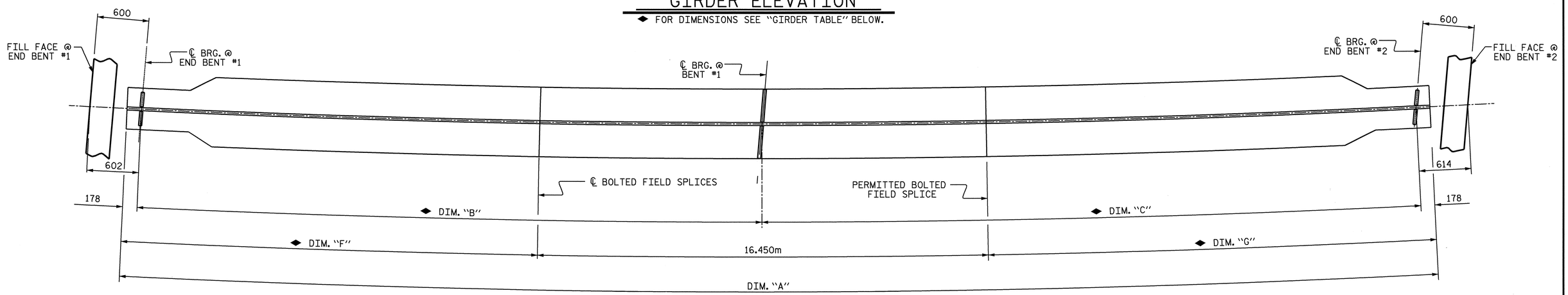

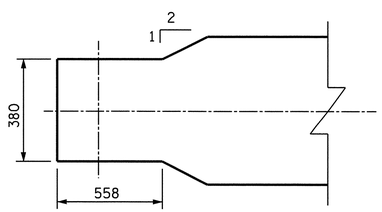

BOTTOM FLANGE DETAIL

@ END BENTS

BOTTOM FLANGE DETAIL

◆ FOR DIMENSIONS SEE "GIRDER TABLE" BELOW.

GIRDER TABLE

	RADIUS	DIM. "A"	DIM. "B"	DIM. "C"	DIM. "D"	DIM. "E"	DIM. "F"	DIM. "G"
GDR. #1	228.300m	61.623m	33.127m	28.140m	265	240	25.845m	19.328m
GDR. #2	231.050m	61.614m	33.126m	28.132m	264	232	25.844m	19.320m
GDR. #3	233.800m	61.605m	33.125m	28.124m	263	224	25.843m	19.312m
GDR. #4	236.550m	61.598m	33.125m	28.117m	263	217	25.843m	19.305m
GDR. #5	239.300m	61.590m	33.124m	28.110m	262	210	25.842m	19.298m

PROJECT NO. R-2554BA

WAYNE COUNTY

STATION: 87+73.739 -L2-

SHEET 1 OF 4

STATE OF NORTH CAROLINA
DEPARTMENT OF TRANSPORTATION
RALEIGH

SUPERSTRUCTURE STRUCTURAL STEEL DETAILS

NORTH CAROLINA PROFESSIONAL SEAL 15825 ENGINEER BRADLEY D. KLAPPENBACH
6-7-08

REVISIONS						SHEET NO.
NO.	BY:	DATE:	NO.	BY:	DATE:	S-94
1			3			TOTAL SHEETS
2			4			478

DRAWN BY : M. G. SHAIKH DATE : 6-26-07
CHECKED BY : D. A. GLADDEN DATE : 8-29-07

05-JUN-2008 17:21
j:\structures\bailey\str#4\mshaikh\microstation\B-2554BA_sd_SS.dgn
mshaikh

STR. #4

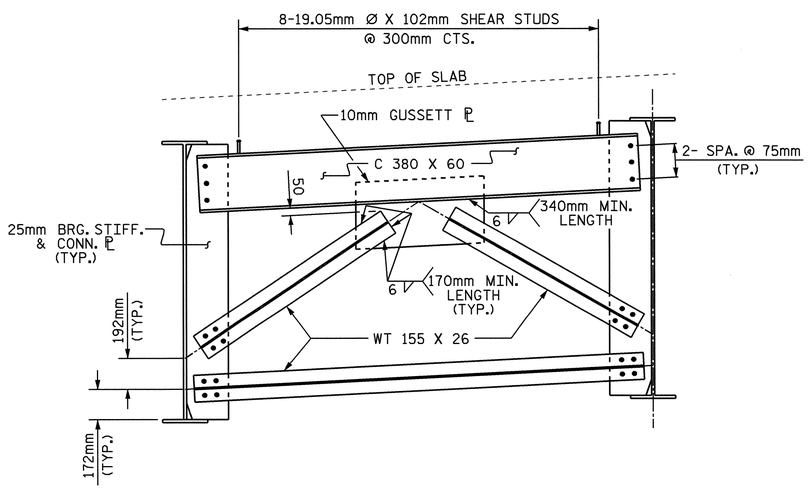

END BENT DIAPHRAGM (D1)

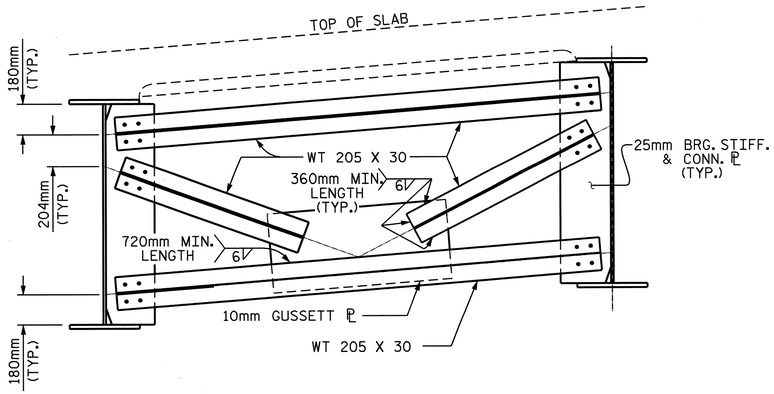

BENT DIAPHRAGM (D2)

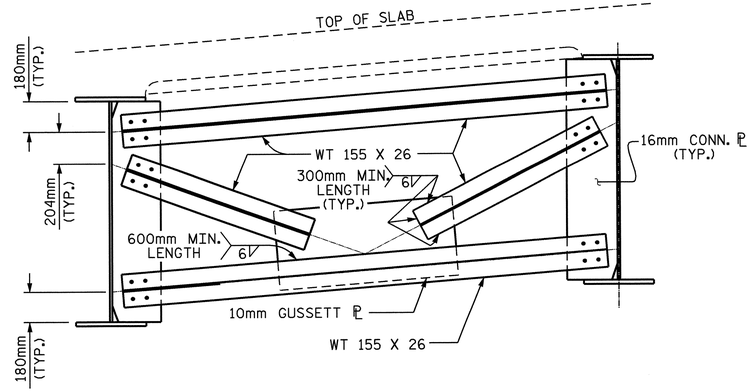

INTERMEDIATE DIAPHRAGM (D3)

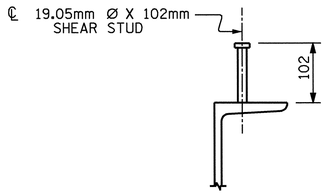

DIAPHRAGM

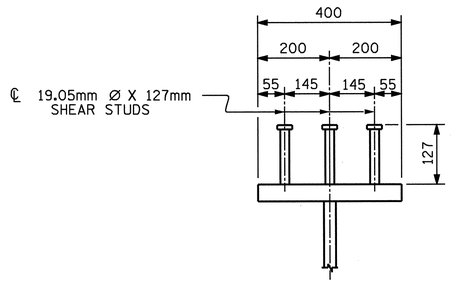

GIRDER

SHEAR STUD DETAILS

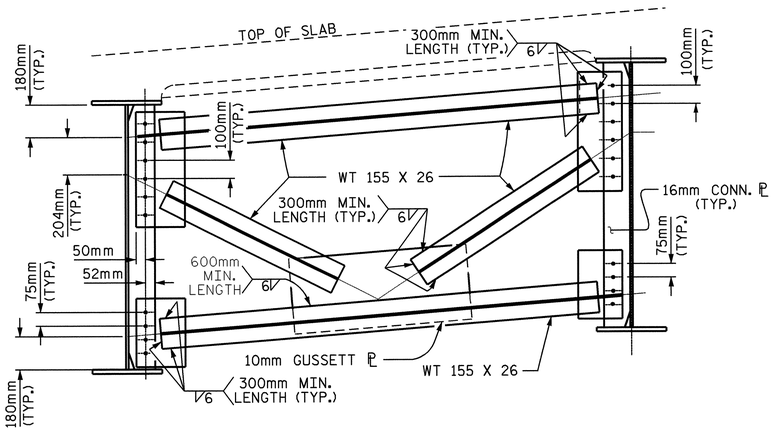

OPTIONAL INTERMEDIATE DIAPHRAGM

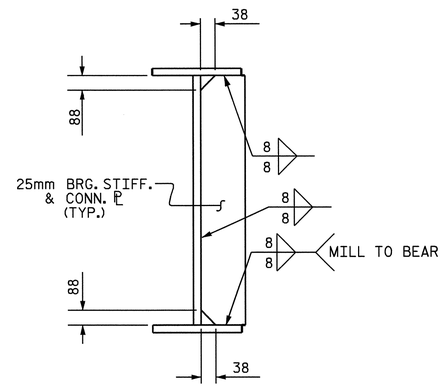

BEARING STIFFENER/CONNECTOR PLATE AT END BENT DIAPHRAGMS

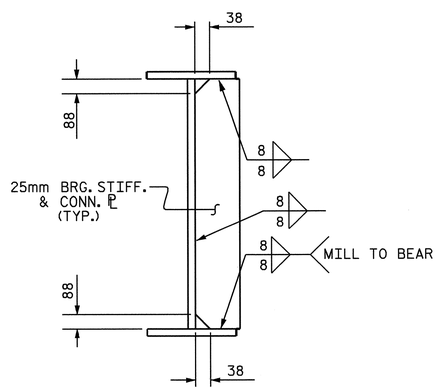

BEARING STIFFENER/CONNECTOR PLATE AT BENT DIAPHRAGMS

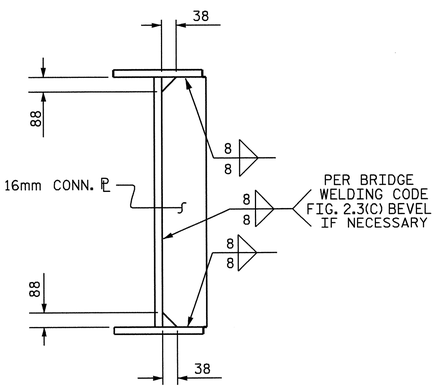

CONNECTOR PLATE AT INTERMEDIATE DIAPHRAGMS

NORTH CAROLINA PROFESSIONAL SEAL 15825 ENGINEER BRUCE D. KLAPPENBACH
6-6-08

PROJECT NO. R-2554BA
WAYNE COUNTY
STATION: 87+73.739 -L2-

SHEET 2 OF 4

STATE OF NORTH CAROLINA
DEPARTMENT OF TRANSPORTATION
RALEIGH

SUPERSTRUCTURE STRUCTURAL STEEL DETAILS

REVISIONS						SHEET NO.
NO.	BY:	DATE:	NO.	BY:	DATE:	S-95
1			3			TOTAL SHEETS
2			4			478

DRAWN BY : M. G. SHAIKH DATE : 6-26-07
CHECKED BY : D. A. GLADDEN DATE : 8-29-07

05-JUN-2008 17:20
j:\structures\bailey\str#4\mshaikh\microstation\B-2554BA_sd_SS.dgn
mshaikh

STR. #4

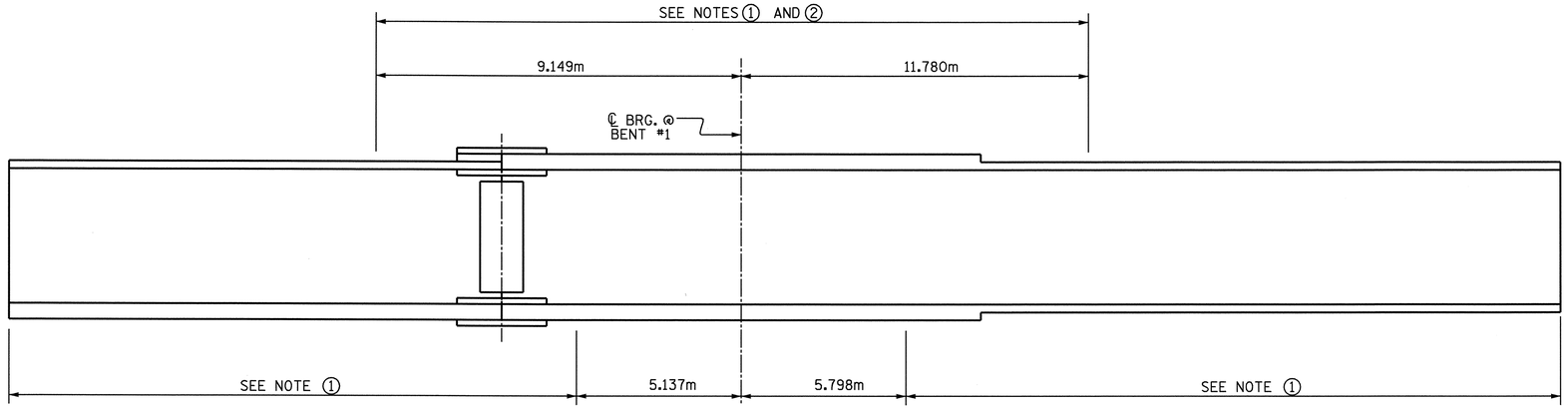

NOTE ① : CHARPY V-NOTCH TESTS ARE REQUIRED FOR ALL TOP OR BOTTOM FLANGE PLATE WHICH FALLS WITHIN THESE LIMITS, ALL WEB PLATES, AND ALL SPLICE PLATES. IF A PREMITTED SHOP FLANGE SPLICE IS NOT USED, CHARPY V-NOTCH TESTS WILL BE REQUIRED FOR THE ENTIRE FLANGE PLATE. FOR CHARPY V-NOTCH TESTS, SEE ARTICLE 1072-9 OF THE STANDARD SPECIFICATIONS.

NOTE ② : NO WELDING OF FORM OR FALSEWORK TO THE TOP FLANGE WILL BE PERMITTED IN THIS REGION.

CHARPY V-NOTCH TEST FOR GIRDERS

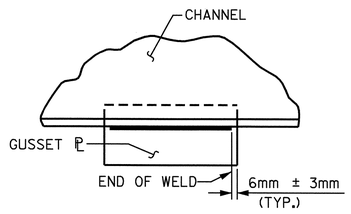

TYPICAL GUSSET PLATE CONNECTION

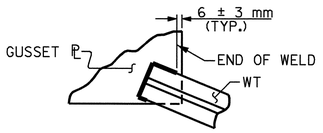

TYPICAL "TEE" TO GUSSET PLATE CONNECTION

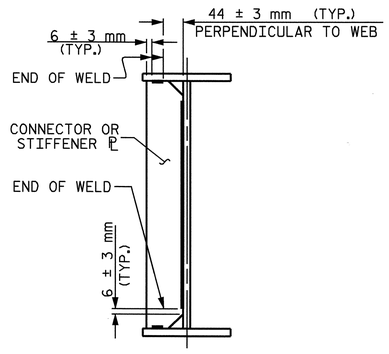

TYPICAL STIFFENER OR CONNECTOR PLATE CONNECTIONS

WELD TERMINATION DETAILS

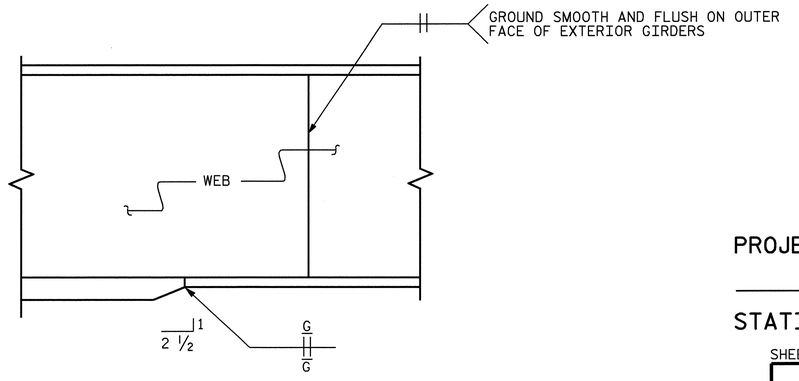

ELEVATION

TYPICAL FLANGE AND WEB BUTT JOINTS

PROJECT NO. R-2554BA
WAYNE COUNTY
STATION: 87+73.739 -L2-

SHEET 3 OF 4

STATE OF NORTH CAROLINA
DEPARTMENT OF TRANSPORTATION
RALEIGH

SUPERSTRUCTURE STRUCTURAL STEEL DETAILS

REVISIONS						SHEET NO.
NO.	BY:	DATE:	NO.	BY:	DATE:	S-96
1			3			TOTAL SHEETS
2			4			478

NORTH CAROLINA PROFESSIONAL SEAL 15825 ENGINEER BRUCE D. KLAPPERICH
6-6-08

DRAWN BY : M. G. SHAIKH DATE : 6-28-07
CHECKED BY : D. A. GLADDEN DATE : 8-29-07

05-JUN-2008 17:20
j:\structures\balley\str#4\mshaikh\microstation\B-2554BA_sd_SS.dgn
mshaikh

STR. #4

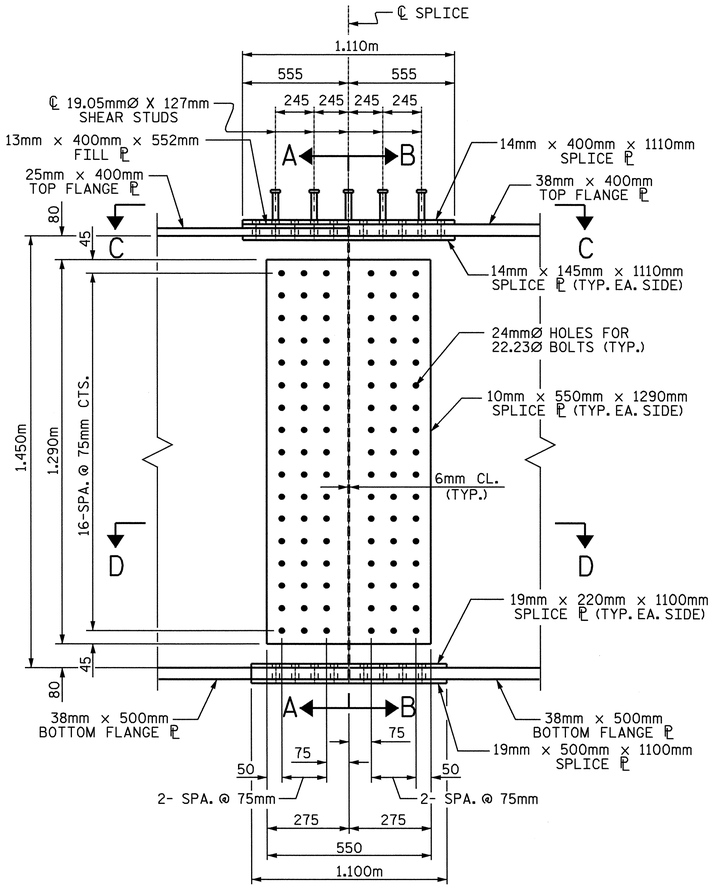

ELEVATION

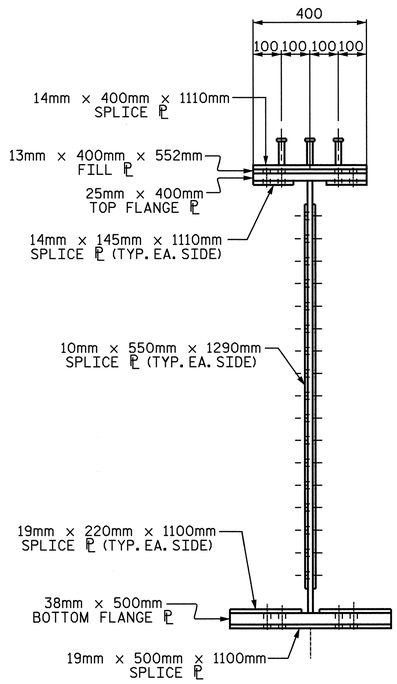

SECTION "A-A"

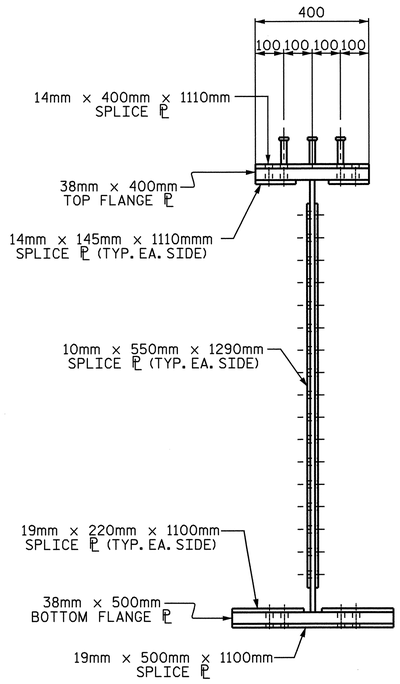

SECTION "B-B"

NOTES

ALL STRUCTURAL STEEL SHALL BE AASHTO M270 GRADE 345W AND PAINTED IN ACCORDANCE WITH SYSTEM 4 OF ARTICLE 442-7 OF THE STANDARD SPECIFICATIONS UNLESS OTHERWISE NOTED ON THE PLANS.

ALL DIMENSIONS SHOWN ARE HORIZONTAL OR VERTICAL, UNLESS OTHERWISE NOTED.

ALL FIELD CONNECTIONS TO BE 22.23mm DIA. HIGH STRENGTH BOLTS UNLESS OTHERWISE NOTED.

FOR HIGH STRENGTH BOLTS, SEE SPECIAL PROVISIONS.

BEARING STIFFENERS ARE TO BE PLACED NORMAL TO THE WEB OF THE GIRDER AND SHALL BE PLUMB.

BEARING STIFFENER MAY REQUIRE COPING IF WIDER THAN BOTTOM FLANGE TO AVOID INTERFERENCE WITH THE ANCHOR BOLT.

SHOP SPLICES ARE PERMITTED TO LIMIT THE MAXIMUM REQUIRED FLANGE PIECE LENGTHS TO 18 METERS AND WEB PIECE LENGTHS TO 14 METERS. PERMITTED FLANGE AND WEB SHOP SPLICES SHALL NOT BE LOCATED WITHIN 4.5 METERS OF MAXIMUM DEAD LOAD DEFLECTION (NOR WITHIN 4.5 METERS OF INTERMEDIATE BEARINGS OF CONTINUOUS UNITS). KEEP 600mm MINIMUM BETWEEN WEB AND FLANGE SHOP SPLICES. KEEP 150mm MINIMUM BETWEEN CONNECTOR PLATE OR TRANSVERSE STIFFENER WELDS AND WEB OR FLANGE SHOP SPLICES.

STUDS ON GIRDERS MAY BE SHIFTED UP TO 25mm IF NECESSARY TO CLEAR FLANGE SPLICE WELD.

ENDS OF BEAMS AND GIRDERS SHALL BE PLUMB.

HEAT CURVING OF STEEL GIRDERS IS ALLOWED. SEE SPECIAL PROVISIONS.

THE CONTRACTOR SHALL MAINTAIN STABILITY OF THE CURVED GIRDERS UNTIL ALL BOLTED FIELD SPLICES AND DIAPHRAGM CONNECTIONS HAVE BEEN COMPLETED.

TENSION ON THE AASHTO M164 BOLTS SHALL BE CALIBRATED USING DIRECT TENSION INDICATOR WASHERS IN ACCORDANCE WITH ARTICLE 442-10 OF THE STANDARD SPECIFICATIONS.

A BOLTED FIELD SPLICE WILL BE PERMITTED IN THE GIRDERS IN SPAN B. IF A FIELD SPLICE IS USED, IT SHALL BE MADE ENTIRELY AT THE CONTRACTOR'S EXPENSE AND NO ADDITIONAL MEASUREMENT OR PAYMENT WILL BE MADE FOR THE ADDITIONAL MATERIALS REQUIRED. THE LOCATION, DETAILS, AND SPLICE MATERIAL WILL BE SUBJECT TO THE APPROVAL OF THE ENGINEER.

FOR SHIPPING STEEL STRUCTURAL MEMBERS, SEE SPECIAL PROVISIONS.

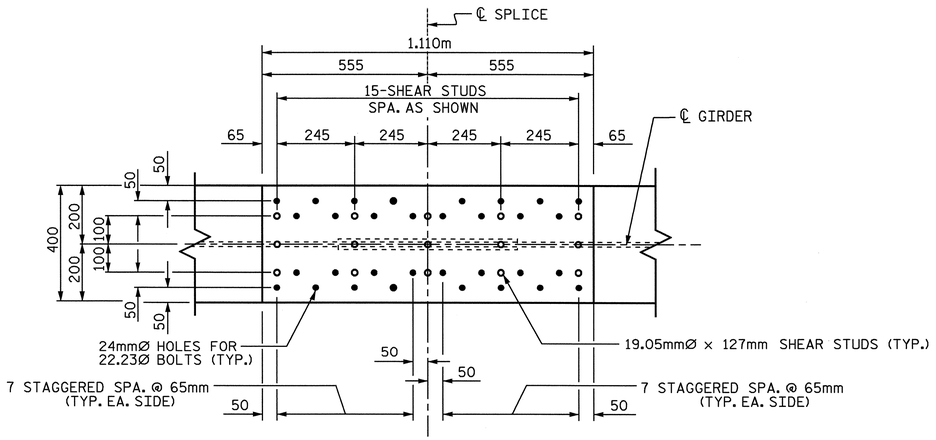

VIEW "C-C"

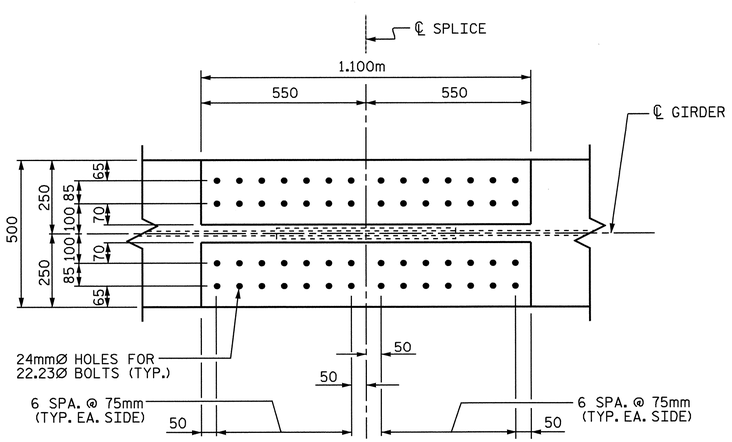

VIEW "D-D"

BOLTED FIELD SPLICE

PROJECT NO. R-2554BA

WAYNE COUNTY

STATION: 87+73.739 -L2-

SHEET 4 OF 4

STATE OF NORTH CAROLINA
DEPARTMENT OF TRANSPORTATION
RALEIGH

STRUCTURAL STEEL BOLTED FIELD SPLICE SPAN A

REVISIONS						SHEET NO.
NO.	BY:	DATE:	NO.	BY:	DATE:	S-97
1			3			TOTAL SHEETS
2			4			478

STR. #4

NORTH CAROLINA PROFESSIONAL SEAL 15825 ENGINEER BRADLEY D. KLAPPENBACH

DRAWN BY : M. G. SHAIKH DATE : 6-27-07
CHECKED BY : D. A. GLADDEN DATE : 8-29-07

05-JUN-2008 17:20
j:\structures\balley\str#4\mshaikh\microstation\B-2554BA_sd_SS.dgn
mshaikh

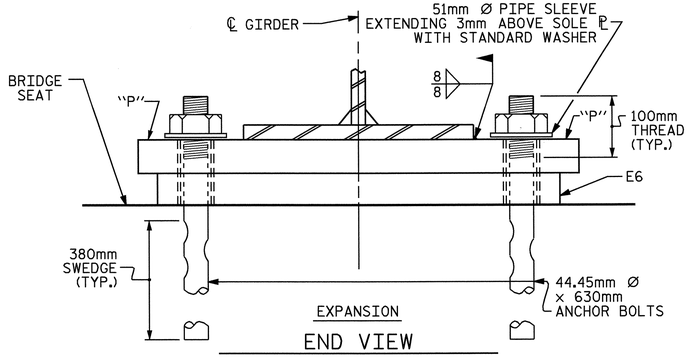

END VIEW

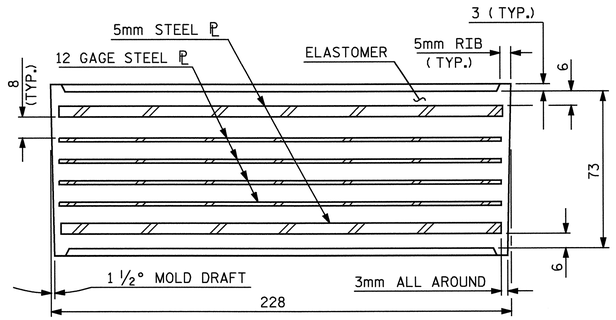

TYPICAL SECTION OF ELASTOMERIC BEARINGS

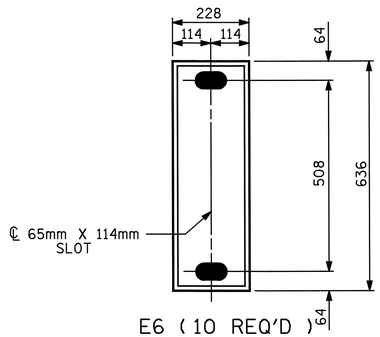

PLAN VIEW OF ELASTOMERIC BEARING

TYPE III

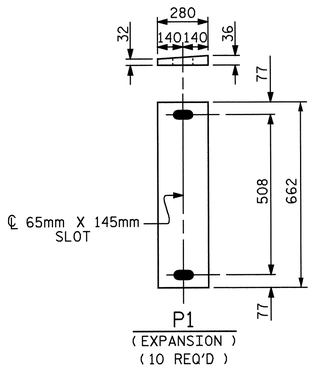

SOLE PLATE DETAILS (P1)

NOTES

THE 51mm Ø PIPE SLEEVE SHALL BE CUT FROM SCHEDULE 40 PVC PLASTIC PIPE. THE PVC PLASTIC PIPE SHALL MEET THE REQUIREMENTS OF ASTM D1785.

THE PAYMENT FOR THE PIPE SLEEVES SHALL BE INCLUDED IN THE SEVERAL PAY ITEMS.

FOR AASHTO M270 GRADE 345W STRUCTURAL STEEL, SOLE PLATE SHALL BE AASHTO M270 GRADE 345W AND SHALL NOT BE GALVANIZED, ANCHOR BOLTS AND NUTS SHALL BE GALVANIZED IN ACCORDANCE WITH THE STANDARD SPECIFICATIONS.

ANCHOR BOLTS SHALL MEET THE REQUIREMENTS OF ASTM A449. NUTS SHALL MEET THE REQUIREMENTS OF AASHTO M291M-12 OR AASHTO M292M-2H. WASHERS SHALL MEET THE REQUIREMENTS OF AASHTO M293M. SHOP DRAWINGS ARE NOT REQUIRED FOR ANCHOR BOLTS, NUTS AND WASHERS. SHOP INSPECTION IS REQUIRED.

WHEN FIELD WELDING THE SOLE PLATE TO THE GIRDER FLANGE, USE TEMPERATURE INDICATING WAX PENS, OR OTHER SUITABLE MEANS, TO ENSURE THAT THE TEMPERATURE OF THE SOLE PLATE DOES NOT EXCEED 149°C. TEMPERATURES ABOVE THIS MAY DAMAGE THE ELASTOMER.

ALL SURFACES OF BEARING PLATES SHALL BE SMOOTH AND STRAIGHT.

—LOAD RATINGS—

	MAX.D.L.+ L.L.
TYPE III	674 kN

PROJECT NO. R-2554BA

WAYNE COUNTY

STATION: 87+73.739 -L2-

ASSEMBLED BY : M. G. SHAIKH	DATE : 6-29-07		
CHECKED BY : D. A. GLADDEN	DATE : 8-29-07		
DRAWN BY : JMB 11/87	REV. 8/16/99	MAB/LES	
CHECKED BY : ARB 11/87	REV. 10/17/00	RWW/LES	
	REV. 5/1/06	TLA/GM	

STATE OF NORTH CAROLINA
DEPARTMENT OF TRANSPORTATION
RALEIGH

STANDARD ELASTOMERIC BEARING DETAILS

(STEEL SUPERSTRUCTURE)

REVISIONS						SHEET NO.
NO.	BY:	DATE:	NO.	BY:	DATE:	S-98
1			3			TOTAL SHEETS
2			4			478

NORTH CAROLINA PROFESSIONAL SEAL 15825 ENGINEER BRUCE D. KLAPPENBACH 6-6-08

STR #4

STD. NO. EB1SM

05-JUN-2008 17:23
j:\structures\balley\str#4\mshaikh\microstation\B-2554BA_sd_BG.dgn
mshaikh

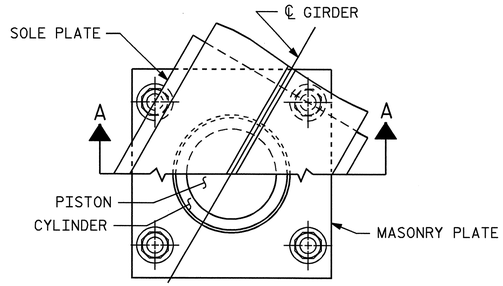

CUT-AWAY PLAN

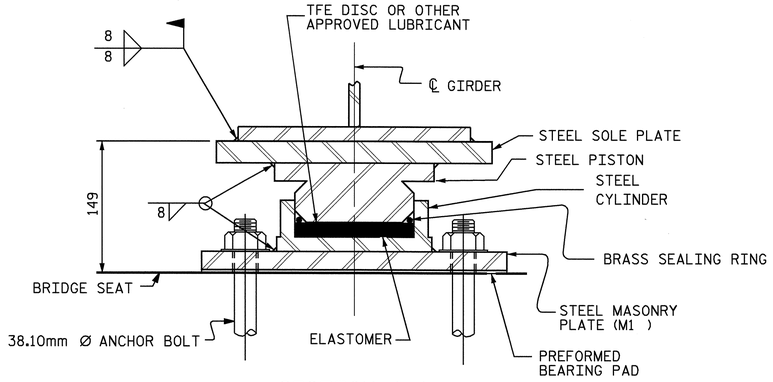

SECTION A-A

PB1, FIXED

(5 REQ'D.)

POT BEARING DETAILS

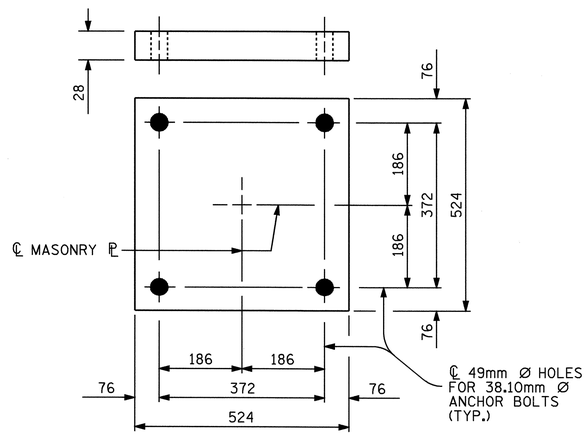

PLAN

M1 (5 REQ'D.)

MASONRY PLATE DETAILS

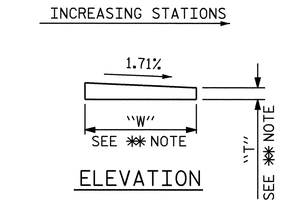

ELEVATION

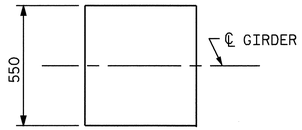

PLAN

✱✱ NOTE:
DIMENSIONS "W" AND "T" ARE TO BE DETERMINED BY THE MANUFACTURER.

SOLE PLATE DETAILS

NOTES

FOR POT BEARINGS, SEE SPECIAL PROVISIONS.

AT ALL POINTS OF SUPPORT AT BENT 1, NUTS FOR ANCHOR BOLTS SHALL BE TIGHTENED FINGER TIGHT AND GIVEN AN ADDITIONAL 1/4 TURN. THE THREAD OF THE NUT AND BOLT SHALL THEN BE BURRED WITH A SHARP POINTED TOOL.

WHEN WELDING THE SOLE PLATE TO THE GIRDER, USE TEMPERATURE INDICATING WAX PENS, OR OTHER SUITABLE MEANS, TO ENSURE THAT THE TEMPERATURE OF THE BEARING DOES NOT EXCEED 121°C TEMPERATURES ABOVE THIS MAY DAMAGE THE TFE OR ELASTOMER.

SOLE PLATES SHOULD BE WELDED TO BEAM FLANGES BEFORE FALSEWORK IS PLACED.

ALL SURFACES OF BEARING PLATES SHALL BE SMOOTH AND STRAIGHT.

FOR THERMAL SPRAYED COATINGS (METALLIZATION), SEE SPECIAL PROVISIONS.

THE CONTRACTOR MAY SUBSTITUTE DISC BEARINGS FOR THE POT BEARINGS SHOWN. FOR OPTIONAL DISC BEARINGS, SEE SPECIAL PROVISIONS.

THE CONTRACTOR SHALL ADJUST THE GIRDER BUILDUPS AS NECESSARY TO INCORPORATE A MAXIMUM PERMISSIBLE VARIATION IN POT BEARING DEPTH OF 13mm, SEE SPECIAL PROVISION FOR POT BEARINGS.

TABLE FOR LOADS AND MOVEMENTS

BEARING	LOCATION	VERTICAL LOAD (kN)			LATERAL LOAD (kN)	TOTAL MOVEMENT (mm)
		DEAD	LIVE	TOTAL		
PB1 (FIXED)	BENT #1	1098.70	305.90	1404.60	219.74	0

PROJECT NO. R-2554BA

WAYNE COUNTY

STATION: 87+73.739 -L2-

STATE OF NORTH CAROLINA
DEPARTMENT OF TRANSPORTATION
RALEIGH

STANDARD

POT BEARING DETAILS

REVISIONS						SHEET NO.
NO.	BY:	DATE:	NO.	BY:	DATE:	S-99
1			3			TOTAL SHEETS
2			4			478

NORTH CAROLINA PROFESSIONAL SEAL 15825 ENGINEER BRUCE D. KLAPPENBACH 6-6-08

ASSEMBLED BY : M. G. SHAIKH DATE : 6-29-07		
CHECKED BY : D. A. GLADDEN DATE : 8-29-07		
DRAWN BY : RWW 8/99	REV. 10/17/00	RWW/LES
CHECKED BY : LES 8/99	REV. 7/10/01	LES/RWW
	REV. 5/7/03	RWW/JTE

05-JUN-2008 17:23
j:\structures\bailey\str#4\mshaikh\microstation\B-2554BA_sd_BG.dgn
mshaikh

STR #4

PB1SM.STD

DEAD LOAD DEFLECTION TABLE FOR GIRDERS

	SPAN "A" GIRDER 1																				
TWENTIETH POINTS	0	.05	.10	.15	.20	.25	.30	.35	.40	.45	.50	.55	.60	.65	.70	.75	.80	.85	.90	.95	0
DEFLECTION DUE TO WEIGHT OF GIRDER ↓	0.000	0.001	0.003	0.005	0.006	0.007	0.008	0.008	0.008	0.008	0.008	0.008	0.007	0.006	0.005	0.004	0.003	0.002	0.001	0.001	0.000
DEFLECTION DUE TO WEIGHT OF SLAB * ↓	0.000	0.005	0.010	0.015	0.019	0.022	0.025	0.027	0.028	0.028	0.028	0.026	0.024	0.021	0.018	0.015	0.011	0.007	0.004	0.002	0.000
DEFLECTION DUE TO WEIGHT OF RAIL ↓	0.000	0.001	0.001	0.001	0.002	0.002	0.002	0.002	0.002	0.003	0.002	0.002	0.002	0.002	0.002	0.001	0.001	0.001	0.001	0.000	0.000
TOTAL DEAD LOAD DEFLECTION ↓	0.000	0.007	0.014	0.021	0.027	0.031	0.035	0.037	0.038	0.039	0.038	0.036	0.033	0.029	0.025	0.020	0.015	0.010	0.006	0.003	0.000
VERTICAL CURVE ORDINATE ↓	0.000	0.000	0.000	0.000	0.000	0.000	0.000	0.000	0.000	0.000	0.000	0.000	0.000	0.000	0.000	0.000	0.000	0.000	0.000	0.000	0.000
ORDINATE DUE TO SUPERELEVATION	0.000	0.000	0.000	0.000	0.000	0.000	0.000	0.000	0.000	0.000	0.000	0.000	0.000	0.000	0.000	0.000	0.000	0.000	0.000	0.000	0.000
CAMBER FROM HEAT CURVING ↓	0.000	0.001	0.003	0.004	0.005	0.006	0.007	0.008	0.008	0.008	0.008	0.007	0.007	0.006	0.005	0.003	0.002	0.002	0.001	0.000	0.000
REQUIRED CAMBER	0	9	17	25	32	37	42	45	46	47	46	43	40	35	30	23	17	12	7	3	0

* INCLUDES SLAB, BUILDUPS & STAY-IN-PLACE FORMS.
ALL VALUES ARE SHOWN IN METERS, EXCEPT "FINAL CAMBER" WHICH IS SHOWN IN MILLIMETERS.

EFFECT OF CAMBER DISSIPATION ARE NEGLIGIBLE.

DEAD LOAD DEFLECTION TABLE FOR GIRDERS

	SPAN "B" GIRDER 1																				
TWENTIETH POINTS	0	.05	.10	.15	.20	.25	.30	.35	.40	.45	.50	.55	.60	.65	.70	.75	.80	.85	.90	.95	0
DEFLECTION DUE TO WEIGHT OF GIRDER ↓	0.000	0.000	0.000	0.000	0.000	0.001	0.001	0.001	0.002	0.002	0.003	0.002	0.003	0.003	0.003	0.002	0.002	0.002	0.001	0.001	0.000
DEFLECTION DUE TO WEIGHT OF SLAB * ↓	0.000	0.000	0.000	0.001	0.002	0.003	0.005	0.007	0.008	0.009	0.010	0.011	0.011	0.011	0.010	0.010	0.008	0.006	0.005	0.002	0.000
DEFLECTION DUE TO WEIGHT OF RAIL ↓	0.000	0.000	0.000	0.000	0.000	0.001	0.001	0.001	0.001	0.001	0.001	0.001	0.001	0.001	0.001	0.001	0.001	0.001	0.000	0.000	0.000
TOTAL DEAD LOAD DEFLECTION ↓	0.000	0.000	0.000	0.001	0.002	0.005	0.007	0.009	0.011	0.012	0.014	0.014	0.015	0.015	0.014	0.013	0.011	0.009	0.006	0.003	0.000
VERTICAL CURVE ORDINATE ↓	0.000	0.000	0.000	0.000	0.000	0.000	0.000	0.000	0.000	0.000	0.000	0.000	0.000	0.000	0.000	0.000	0.000	0.000	0.000	0.000	0.000
ORDINATE DUE TO SUPERELEVATION	0.000	0.000	0.000	0.000	0.000	0.000	0.000	0.000	0.000	0.000	0.000	0.000	0.000	0.000	0.000	0.000	0.000	0.000	0.000	0.000	0.000
CAMBER FROM HEAT CURVING ↓	0.000	0.000	0.000	0.001	0.000	0.001	0.002	0.003	0.003	0.004	0.004	0.005	0.005	0.005	0.005	0.004	0.004	0.003	0.002	0.001	0.000
REQUIRED CAMBER	0	0	0	2	3	6	9	12	14	16	18	19	20	20	19	17	14	12	8	4	0

* INCLUDES SLAB, BUILDUPS & STAY-IN-PLACE FORMS.
ALL VALUES ARE SHOWN IN METERS, EXCEPT "FINAL CAMBER" WHICH IS SHOWN IN MILLIMETERS.

EFFECT OF CAMBER DISSIPATION ARE NEGLIGIBLE.

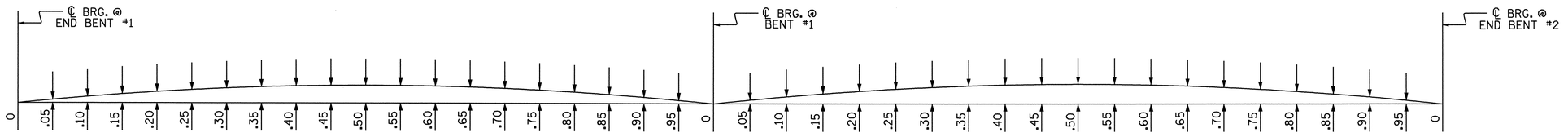

SCHEMATIC CAMBER ORDINATES

SLOPE FOR THE ZERO CAMBER BASE LINE VARIES.

PROJECT NO. R-2554BA

WAYNE COUNTY

STATION: 87+73.739 -L2-

SHEET 1 OF 5

STATE OF NORTH CAROLINA
DEPARTMENT OF TRANSPORTATION
RALEIGH

SUPERSTRUCTURE DEAD LOAD DEFLECTIONS

REVISIONS						SHEET NO.
NO.	BY:	DATE:	NO.	BY:	DATE:	S-100
1			3			TOTAL SHEETS
2			4			478

NORTH CAROLINA PROFESSIONAL SEAL 15825 ENGINEER BRUCE D. KLAFFENBACH
6-6-08

DRAWN BY : M. G. SHAIKH DATE : 10-01-07
CHECKED BY : D. A. GLADDEN DATE : 6-29-07

05-JUN-2008 17:20
j:\structures\balley\str#4\mshaikh\microstation\B-2554BA_sd_SS.dgn
mshaikh

STR. #4

DEAD LOAD DEFLECTION TABLE FOR GIRDERS

	SPAN "A" GIRDER 2																				
TWENTIETH POINTS	0	.05	.10	.15	.20	.25	.30	.35	.40	.45	.50	.55	.60	.65	.70	.75	.80	.85	.90	.95	0
DEFLECTION DUE TO WEIGHT OF GIRDER ↓	0.000	0.002	0.003	0.005	0.006	0.007	0.008	0.009	0.009	0.009	0.009	0.008	0.008	0.007	0.006	0.005	0.004	0.002	0.001	0.001	0.000
DEFLECTION DUE TO WEIGHT OF SLAB * ↓	0.000	0.006	0.011	0.017	0.021	0.025	0.027	0.029	0.031	0.030	0.030	0.028	0.026	0.023	0.020	0.016	0.012	0.008	0.005	0.002	0.000
DEFLECTION DUE TO WEIGHT OF RAIL ↓	0.000	0.001	0.001	0.001	0.002	0.002	0.002	0.003	0.002	0.003	0.003	0.003	0.002	0.002	0.001	0.001	0.001	0.001	0.001	0.000	0.000
TOTAL DEAD LOAD DEFLECTION ↓	0.000	0.009	0.015	0.023	0.029	0.034	0.037	0.041	0.042	0.042	0.042	0.039	0.036	0.032	0.027	0.022	0.017	0.011	0.007	0.003	0.000
VERTICAL CURVE ORDINATE ↓	0.000	0.000	0.000	0.000	0.000	0.000	0.000	0.000	0.000	0.000	0.000	0.000	0.000	0.000	0.000	0.000	0.000	0.000	0.000	0.000	0.000
ORDINATE DUE TO SUPERELEVATION	0.000	0.000	0.000	0.000	0.000	0.000	0.000	0.000	0.000	0.000	0.000	0.000	0.000	0.000	0.000	0.000	0.000	0.000	0.000	0.000	0.000
CAMBER FROM HEAT CURVING ↓	0.000	0.001	0.003	0.004	0.005	0.006	0.007	0.007	0.007	0.008	0.007	0.007	0.006	0.005	0.005	0.003	0.002	0.002	0.001	0.000	0.000
REQUIRED CAMBER	0	10	18	27	34	40	44	48	50	50	49	46	42	37	32	25	19	13	8	3	0

* INCLUDES SLAB, BUILDUPS & STAY-IN-PLACE FORMS.
ALL VALUES ARE SHOWN IN METERS, EXCEPT "FINAL CAMBER" WHICH IS SHOWN IN MILLIMETERS.

EFFECT OF CAMBER DISSIPATION ARE NEGLIGIBLE.

DEAD LOAD DEFLECTION TABLE FOR GIRDERS

	SPAN "B" GIRDER 2																				
TWENTIETH POINTS	0	.05	.10	.15	.20	.25	.30	.35	.40	.45	.50	.55	.60	.65	.70	.75	.80	.85	.90	.95	0
DEFLECTION DUE TO WEIGHT OF GIRDER ↓	0.000	0.000	0.000	0.000	0.000	0.001	0.001	0.001	0.002	0.002	0.002	0.003	0.003	0.003	0.003	0.002	0.002	0.002	0.001	0.001	0.000
DEFLECTION DUE TO WEIGHT OF SLAB * ↓	0.000	0.000	0.000	0.001	0.002	0.003	0.005	0.007	0.008	0.009	0.011	0.011	0.012	0.012	0.011	0.010	0.008	0.007	0.005	0.002	0.000
DEFLECTION DUE TO WEIGHT OF RAIL ↓	0.000	0.000	0.000	0.000	0.000	0.000	0.001	0.001	0.001	0.001	0.001	0.001	0.001	0.001	0.001	0.001	0.001	0.000	0.000	0.000	0.000
TOTAL DEAD LOAD DEFLECTION ↓	0.000	0.000	0.000	0.001	0.002	0.004	0.007	0.009	0.011	0.012	0.014	0.015	0.016	0.016	0.015	0.013	0.011	0.009	0.006	0.003	0.000
VERTICAL CURVE ORDINATE ↓	0.000	0.000	0.000	0.000	0.000	0.000	0.000	0.000	0.000	0.000	0.000	0.000	0.000	0.000	0.000	0.000	0.000	0.000	0.000	0.000	0.000
ORDINATE DUE TO SUPERELEVATION	0.000	0.000	0.000	0.000	0.000	0.000	0.000	0.000	0.000	0.000	0.000	0.000	0.000	0.000	0.000	0.000	0.000	0.000	0.000	0.000	0.000
CAMBER FROM HEAT CURVING ↓	0.000	0.000	0.000	0.000	0.001	0.001	0.002	0.003	0.003	0.004	0.004	0.004	0.005	0.005	0.004	0.004	0.004	0.003	0.002	0.001	0.000
REQUIRED CAMBER	0	0	0	1	3	5	9	12	14	16	18	19	20	20	19	17	15	12	8	4	0

* INCLUDES SLAB, BUILDUPS & STAY-IN-PLACE FORMS.
ALL VALUES ARE SHOWN IN METERS, EXCEPT "FINAL CAMBER" WHICH IS SHOWN IN MILLIMETERS.

EFFECT OF CAMBER DISSIPATION ARE NEGLIGIBLE.

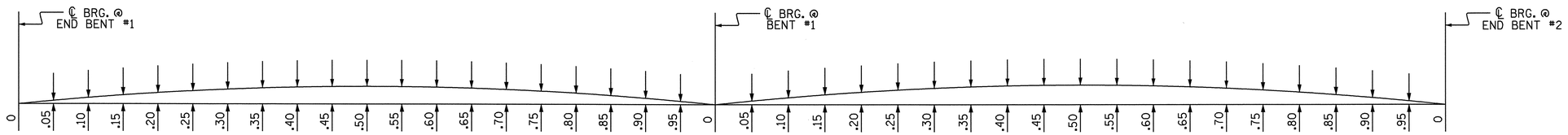

SCHEMATIC CAMBER ORDINATES

SLOPE FOR THE ZERO CAMBER BASE LINE VARIES.

NORTH CAROLINA PROFESSIONAL SEAL 15825 ENGINEER BRUCE D. KLAPPENBACH 6-6-08

PROJECT NO. R-2554BA
WAYNE COUNTY
STATION: 87+73.739 -L2-

SHEET 2 OF 5

STATE OF NORTH CAROLINA
DEPARTMENT OF TRANSPORTATION
RALEIGH

SUPERSTRUCTURE DEAD LOAD DEFLECTIONS

REVISIONS						SHEET NO.
NO.	BY:	DATE:	NO.	BY:	DATE:	S-101
1			3			TOTAL SHEETS
2			4			478

DRAWN BY : M. G. SHAIKH DATE : 10-01-07
CHECKED BY : D. A. GLADDEN DATE : 6-29-07

05-JUN-2008 17:20
j:\structures\bailey\str#4\mshaikh\microstation\B-2554BA_sd_SS.dgn
mshaikh

STR. #4

DEAD LOAD DEFLECTION TABLE FOR GIRDERS

	SPAN "A" GIRDER 3																				
TWENTIETH POINTS	0	.05	.10	.15	.20	.25	.30	.35	.40	.45	.50	.55	.60	.65	.70	.75	.80	.85	.90	.95	0
DEFLECTION DUE TO WEIGHT OF GIRDER ↓	0.000	0.002	0.003	0.005	0.007	0.008	0.008	0.009	0.009	0.009	0.009	0.009	0.008	0.007	0.006	0.005	0.004	0.002	0.001	0.001	0.000
DEFLECTION DUE TO WEIGHT OF SLAB * ↓	0.000	0.006	0.012	0.018	0.022	0.026	0.030	0.031	0.033	0.033	0.032	0.030	0.028	0.025	0.021	0.017	0.013	0.009	0.005	0.002	0.000
DEFLECTION DUE TO WEIGHT OF RAIL ↓	0.000	0.001	0.001	0.001	0.002	0.002	0.002	0.003	0.003	0.003	0.003	0.003	0.003	0.002	0.002	0.001	0.001	0.001	0.001	0.000	0.000
TOTAL DEAD LOAD DEFLECTION ↓	0.000	0.009	0.016	0.024	0.031	0.036	0.040	0.043	0.045	0.045	0.044	0.042	0.039	0.034	0.029	0.023	0.018	0.012	0.007	0.003	0.000
VERTICAL CURVE ORDINATE ↓	0.000	0.000	0.000	0.000	0.000	0.000	0.000	0.000	0.000	0.000	0.000	0.000	0.000	0.000	0.000	0.000	0.000	0.000	0.000	0.000	0.000
ORDINATE DUE TO SUPERELEVATION	0.000	0.000	0.000	0.000	0.000	0.000	0.000	0.000	0.000	0.000	0.000	0.000	0.000	0.000	0.000	0.000	0.000	0.000	0.000	0.001	0.000
CAMBER FROM HEAT CURVING ↓	0.000	0.001	0.003	0.004	0.005	0.006	0.006	0.007	0.007	0.007	0.007	0.007	0.006	0.005	0.005	0.003	0.002	0.002	0.001	0.000	0.000
REQUIRED CAMBER	0	10	19	28	36	42	46	50	52	52	51	49	45	39	34	26	20	14	8	4	0

* INCLUDES SLAB, BUILDUPS & STAY-IN-PLACE FORMS.
ALL VALUES ARE SHOWN IN METERS, EXCEPT "FINAL CAMBER" WHICH IS SHOWN IN MILLIMETERS.

EFFECT OF CAMBER DISSIPATION ARE NEGLIGIBLE.

DEAD LOAD DEFLECTION TABLE FOR GIRDERS

	SPAN "B" GIRDER 3																				
TWENTIETH POINTS	0	.05	.10	.15	.20	.25	.30	.35	.40	.45	.50	.55	.60	.65	.70	.75	.80	.85	.90	.95	0
DEFLECTION DUE TO WEIGHT OF GIRDER ↓	0.000	0.000	0.000	0.000	0.000	0.001	0.001	0.001	0.002	0.002	0.002	0.003	0.003	0.003	0.002	0.002	0.002	0.002	0.001	0.001	0.000
DEFLECTION DUE TO WEIGHT OF SLAB * ↓	0.000	0.000	0.000	0.001	0.002	0.003	0.005	0.007	0.008	0.010	0.011	0.011	0.012	0.012	0.012	0.010	0.009	0.007	0.005	0.002	0.000
DEFLECTION DUE TO WEIGHT OF RAIL ↓	0.000	0.000	0.000	0.000	0.000	0.000	0.000	0.001	0.001	0.001	0.001	0.001	0.001	0.001	0.001	0.001	0.001	0.000	0.000	0.000	0.000
TOTAL DEAD LOAD DEFLECTION ↓	0.000	0.000	0.000	0.001	0.002	0.004	0.006	0.009	0.011	0.013	0.014	0.015	0.016	0.016	0.015	0.013	0.012	0.009	0.006	0.003	0.000
VERTICAL CURVE ORDINATE ↓	0.000	0.000	0.000	0.000	0.000	0.000	0.000	0.000	0.000	0.000	0.000	0.000	0.000	0.000	0.000	0.000	0.000	0.000	0.000	0.000	0.000
ORDINATE DUE TO SUPERELEVATION	0.000	0.000	0.000	0.000	0.000	0.000	0.000	0.000	0.000	0.000	0.000	0.000	0.000	0.000	0.000	0.000	0.000	0.000	0.000	0.000	0.000
CAMBER FROM HEAT CURVING ↓	0.000	0.000	0.000	0.000	0.000	0.001	0.002	0.002	0.003	0.003	0.004	0.004	0.004	0.004	0.004	0.004	0.003	0.003	0.002	0.001	0.000
REQUIRED CAMBER	0	0	0	1	2	5	8	11	14	16	18	19	20	20	19	17	15	12	8	4	0

* INCLUDES SLAB, BUILDUPS & STAY-IN-PLACE FORMS.
ALL VALUES ARE SHOWN IN METERS, EXCEPT "FINAL CAMBER" WHICH IS SHOWN IN MILLIMETERS.

EFFECT OF CAMBER DISSIPATION ARE NEGLIGIBLE.

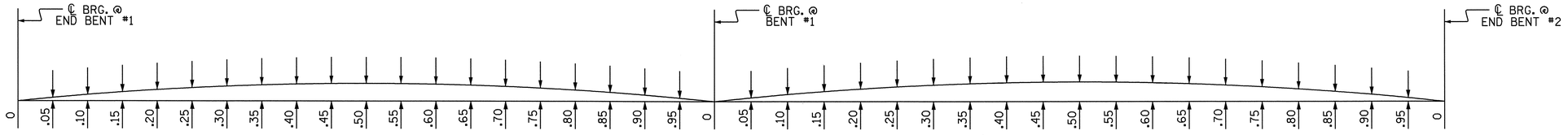

SPAN "A" SPAN "B"

SCHEMATIC CAMBER ORDINATES

SLOPE FOR THE ZERO CAMBER BASE LINE VARIES.

PROJECT NO. R-2554BA
WAYNE COUNTY
STATION: 87+73.739 -L2-

SHEET 3 OF 5

STATE OF NORTH CAROLINA
DEPARTMENT OF TRANSPORTATION
RALEIGH

SUPERSTRUCTURE DEAD LOAD DEFLECTIONS

NORTH CAROLINA PROFESSIONAL SEAL 15625 ENGINEER BRUCE D. KLAPPROTH
6-6-08

REVISIONS						SHEET NO.
NO.	BY:	DATE:	NO.	BY:	DATE:	S-102
1			3			TOTAL SHEETS
2			4			478

DRAWN BY : M. G. SHAIKH DATE : 10-01-07
CHECKED BY : D. A. GLADDEN DATE : 6-29-07

05-JUN-2008 17:20
j:\structures\bailey\str#4\mshaikh\microstation\B-2554BA_sd_SS.dgn
mshaikh

STR. #4

DEAD LOAD DEFLECTION TABLE FOR GIRDERS

	SPAN "A" GIRDER 4																				
TWENTIETH POINTS	0	.05	.10	.15	.20	.25	.30	.35	.40	.45	.50	.55	.60	.65	.70	.75	.80	.85	.90	.95	0
DEFLECTION DUE TO WEIGHT OF GIRDER ↓	0.000	0.002	0.004	0.005	0.007	0.008	0.009	0.009	0.010	0.010	0.010	0.010	0.009	0.008	0.006	0.005	0.004	0.002	0.002	0.001	0.000
DEFLECTION DUE TO WEIGHT OF SLAB * ↓	0.000	0.006	0.012	0.019	0.023	0.027	0.031	0.033	0.034	0.034	0.034	0.032	0.030	0.026	0.022	0.018	0.014	0.009	0.005	0.003	0.000
DEFLECTION DUE TO WEIGHT OF RAIL ↓	0.000	0.001	0.001	0.001	0.002	0.002	0.002	0.003	0.003	0.003	0.002	0.003	0.002	0.002	0.002	0.002	0.001	0.001	0.001	0.000	0.000
TOTAL DEAD LOAD DEFLECTION ↓	0.000	0.009	0.017	0.025	0.032	0.037	0.042	0.045	0.047	0.047	0.046	0.045	0.041	0.036	0.030	0.025	0.019	0.012	0.008	0.004	0.000
VERTICAL CURVE ORDINATE ↓	0.000	0.000	0.000	0.000	0.000	0.000	0.000	0.000	0.000	0.000	0.000	0.000	0.000	0.000	0.000	0.000	0.000	0.000	0.000	0.000	0.000
ORDINATE DUE TO SUPERELEVATION	0.000	0.000	0.000	0.000	0.000	0.000	0.000	0.000	0.000	0.000	0.000	0.000	0.000	0.000	0.000	0.000	0.000	0.000	0.000	0.000	0.000
CAMBER FROM HEAT CURVING ↓	0.000	0.001	0.003	0.004	0.005	0.006	0.006	0.007	0.007	0.007	0.007	0.006	0.006	0.005	0.005	0.003	0.002	0.002	0.001	0.000	0.000
REQUIRED CAMBER	0	10	20	29	37	43	48	52	54	54	53	51	47	41	35	28	21	14	9	4	0

* INCLUDES SLAB, BUILDUPS & STAY-IN-PLACE FORMS.
ALL VALUES ARE SHOWN IN METERS, EXCEPT "FINAL CAMBER" WHICH IS SHOWN IN MILLIMETERS.

EFFECT OF CAMBER DISSIPATION ARE NEGLIGIBLE.

DEAD LOAD DEFLECTION TABLE FOR GIRDERS

	SPAN "B" GIRDER 4																				
TWENTIETH POINTS	0	.05	.10	.15	.20	.25	.30	.35	.40	.45	.50	.55	.60	.65	.70	.75	.80	.85	.90	.95	0
DEFLECTION DUE TO WEIGHT OF GIRDER ↓	0.000	0.000	0.000	0.000	0.000	0.000	0.001	0.001	0.001	0.002	0.002	0.002	0.002	0.002	0.002	0.002	0.002	0.001	0.001	0.001	0.000
DEFLECTION DUE TO WEIGHT OF SLAB * ↓	0.000	0.000	0.000	0.001	0.001	0.003	0.004	0.006	0.008	0.009	0.010	0.011	0.012	0.012	0.012	0.010	0.009	0.007	0.005	0.002	0.000
DEFLECTION DUE TO WEIGHT OF RAIL ↓	0.000	0.000	0.000	0.000	0.001	0.001	0.001	0.001	0.001	0.001	0.001	0.001	0.001	0.001	0.001	0.001	0.001	0.001	0.000	0.000	0.000
TOTAL DEAD LOAD DEFLECTION ↓	0.000	0.000	0.000	0.001	0.002	0.004	0.006	0.008	0.010	0.012	0.013	0.014	0.015	0.015	0.015	0.013	0.012	0.009	0.006	0.003	0.000
VERTICAL CURVE ORDINATE ↓	0.000	0.000	0.000	0.000	0.000	0.000	0.000	0.000	0.000	0.000	0.000	0.000	0.000	0.000	0.000	0.000	0.000	0.000	0.000	0.000	0.000
ORDINATE DUE TO SUPERELEVATION	0.000	0.000	0.000	0.000	0.000	0.000	0.000	0.000	0.000	0.000	0.000	0.000	0.000	0.000	0.000	0.000	0.000	0.000	0.000	0.000	0.000
CAMBER FROM HEAT CURVING ↓	0.000	0.000	0.000	0.000	0.000	0.000	0.002	0.002	0.003	0.003	0.004	0.004	0.004	0.004	0.004	0.004	0.003	0.003	0.002	0.001	0.000
REQUIRED CAMBER	0	0	0	1	2	4	7	10	13	15	17	18	19	19	19	17	15	12	8	4	0

* INCLUDES SLAB, BUILDUPS & STAY-IN-PLACE FORMS.
ALL VALUES ARE SHOWN IN METERS, EXCEPT "FINAL CAMBER" WHICH IS SHOWN IN MILLIMETERS.

EFFECT OF CAMBER DISSIPATION ARE NEGLIGIBLE.

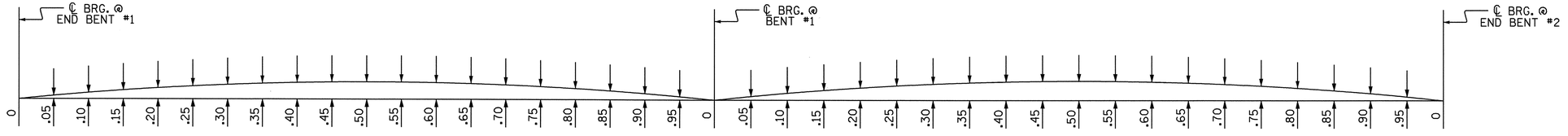

SPAN "A" SPAN "B"

SCHEMATIC CAMBER ORDINATES

SLOPE FOR THE ZERO CAMBER BASE LINE VARIES.

NORTH CAROLINA PROFESSIONAL SEAL 15825 ENGINEER BRUCE D. KLAPPENBACH 6-6-08

PROJECT NO. R-2554BA

WAYNE COUNTY

STATION: 87+73.739 -L2-

SHEET 4 OF 5

STATE OF NORTH CAROLINA
DEPARTMENT OF TRANSPORTATION
RALEIGH

SUPERSTRUCTURE DEAD LOAD DEFLECTIONS

REVISIONS						SHEET NO.
NO.	BY:	DATE:	NO.	BY:	DATE:	S-103
1			3			TOTAL SHEETS
2			4			478

DRAWN BY : M. G. SHAIKH DATE : 10-02-07
CHECKED BY : D. A. GLADDEN DATE : 6-29-07

05-JUN-2008 17:20
j:\structures\balley\str#4\mshaikh\microstation\B-2554BA_sd_SS.dgn
mshaikh

STR. #4

DEAD LOAD DEFLECTION TABLE FOR GIRDERS

	SPAN "A" GIRDER 5																				
TWENTIETH POINTS	0	.05	.10	.15	.20	.25	.30	.35	.40	.45	.50	.55	.60	.65	.70	.75	.80	.85	.90	.95	0
DEFLECTION DUE TO WEIGHT OF GIRDER ↓	0.000	0.002	0.004	0.005	0.007	0.008	0.009	0.010	0.010	0.011	0.010	0.010	0.009	0.008	0.007	0.005	0.005	0.003	0.002	0.001	0.000
DEFLECTION DUE TO WEIGHT OF SLAB * ↓	0.000	0.007	0.013	0.019	0.025	0.029	0.033	0.035	0.036	0.036	0.036	0.034	0.031	0.027	0.024	0.019	0.014	0.010	0.006	0.003	0.000
DEFLECTION DUE TO WEIGHT OF RAIL ↓	0.000	0.001	0.002	0.002	0.002	0.003	0.003	0.003	0.003	0.003	0.003	0.003	0.003	0.003	0.002	0.002	0.001	0.001	0.000	0.000	0.000
TOTAL DEAD LOAD DEFLECTION ↓	0.000	0.010	0.019	0.026	0.034	0.040	0.045	0.048	0.049	0.050	0.049	0.047	0.043	0.038	0.033	0.026	0.020	0.014	0.008	0.004	0.000
VERTICAL CURVE ORDINATE ↓	0.000	0.000	0.000	0.000	0.000	0.000	0.000	0.000	0.000	0.000	0.000	0.000	0.000	0.000	0.000	0.000	0.000	0.000	0.000	0.000	0.000
ORDINATE DUE TO SUPERELEVATION	0.000	0.000	0.000	0.000	0.000	0.000	0.000	0.000	0.000	0.000	0.000	0.000	0.000	0.000	0.000	0.000	0.000	0.000	0.000	0.000	0.000
CAMBER FROM HEAT CURVING ↓	0.000	0.001	0.002	0.004	0.005	0.005	0.006	0.006	0.007	0.007	0.007	0.006	0.006	0.005	0.004	0.003	0.002	0.002	0.001	0.000	0.000
REQUIRED CAMBER	0	11	21	30	39	45	51	54	56	57	56	53	49	43	37	29	22	15	9	4	0

* INCLUDES SLAB, BUILDUPS & STAY-IN-PLACE FORMS.
ALL VALUES ARE SHOWN IN METERS, EXCEPT "FINAL CAMBER" WHICH IS SHOWN IN MILLIMETERS.

EFFECT OF CAMBER DISSIPATION ARE NEGLIGIBLE.

DEAD LOAD DEFLECTION TABLE FOR GIRDERS

	SPAN "B" GIRDER 5																				
TWENTIETH POINTS	0	.05	.10	.15	.20	.25	.30	.35	.40	.45	.50	.55	.60	.65	.70	.75	.80	.85	.90	.95	0
DEFLECTION DUE TO WEIGHT OF GIRDER ↓	0.000	0.000	0.000	0.000	0.000	0.000	0.001	0.001	0.001	0.002	0.002	0.002	0.002	0.002	0.002	0.002	0.002	0.001	0.001	0.001	0.000
DEFLECTION DUE TO WEIGHT OF SLAB * ↓	0.000	0.000	0.000	0.000	0.001	0.003	0.004	0.006	0.007	0.009	0.009	0.011	0.011	0.011	0.011	0.010	0.008	0.007	0.005	0.002	0.000
DEFLECTION DUE TO WEIGHT OF RAIL ↓	0.000	0.000	0.000	0.000	0.000	0.000	0.001	0.001	0.001	0.001	0.001	0.001	0.001	0.002	0.001	0.001	0.001	0.001	0.000	0.000	0.000
TOTAL DEAD LOAD DEFLECTION ↓	0.000	0.000	0.000	0.000	0.001	0.003	0.006	0.008	0.009	0.012	0.012	0.014	0.014	0.015	0.014	0.013	0.011	0.009	0.006	0.003	0.000
VERTICAL CURVE ORDINATE ↓	0.000	0.000	0.000	0.000	0.000	0.000	0.000	0.000	0.000	0.000	0.000	0.000	0.000	0.000	0.000	0.000	0.000	0.000	0.010	0.000	0.000
ORDINATE DUE TO SUPERELEVATION	0.000	0.000	0.000	0.000	0.000	0.000	0.000	0.000	0.000	0.000	0.000	0.000	0.000	0.000	0.000	0.000	0.000	0.000	0.000	0.000	0.000
CAMBER FROM HEAT CURVING ↓	0.000	0.000	0.000	0.000	0.000	0.000	0.001	0.002	0.003	0.003	0.004	0.004	0.004	0.004	0.004	0.004	0.003	0.003	0.002	0.001	0.000
REQUIRED CAMBER	0	0	0	0	1	3	7	10	12	15	16	18	18	19	18	17	14	12	8	4	0

* INCLUDES SLAB, BUILDUPS & STAY-IN-PLACE FORMS.
ALL VALUES ARE SHOWN IN METERS, EXCEPT "FINAL CAMBER" WHICH IS SHOWN IN MILLIMETERS.

EFFECT OF CAMBER DISSIPATION ARE NEGLIGIBLE.

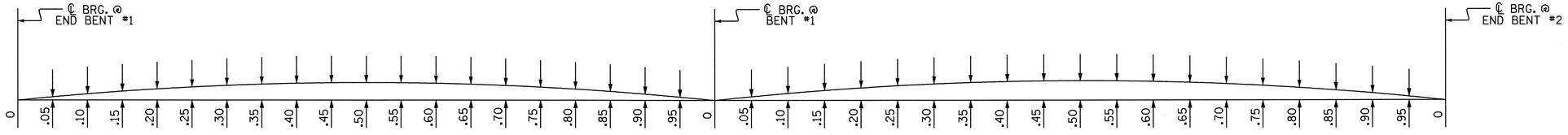

SPAN "A" SPAN "B"

SCHEMATIC CAMBER ORDINATES

SLOPE FOR THE ZERO CAMBER BASE LINE VARIES.

PROJECT NO. R-2554BA

WAYNE COUNTY

STATION: 87+73.739 -L2-

SHEET 5 OF 5

STATE OF NORTH CAROLINA
DEPARTMENT OF TRANSPORTATION
RALEIGH

SUPERSTRUCTURE DEAD LOAD DEFLECTIONS

REVISIONS						SHEET NO.
NO.	BY:	DATE:	NO.	BY:	DATE:	S-104
1			3			TOTAL SHEETS
2			4			478

NORTH CAROLINA PROFESSIONAL SEAL 15825 ENGINEER BRUCE D. KLAPPENBACH 6-6-08

DRAWN BY : M. G. SHAIKH DATE : 10-02-07
CHECKED BY : D. A. GLADDEN DATE : 6-29-07

05-JUN-2008 17:19
j:\structures\balley\str#4\mshaikh\microstation\B-2554BA_sd_SS.dgn
mshaikh

STR. #4

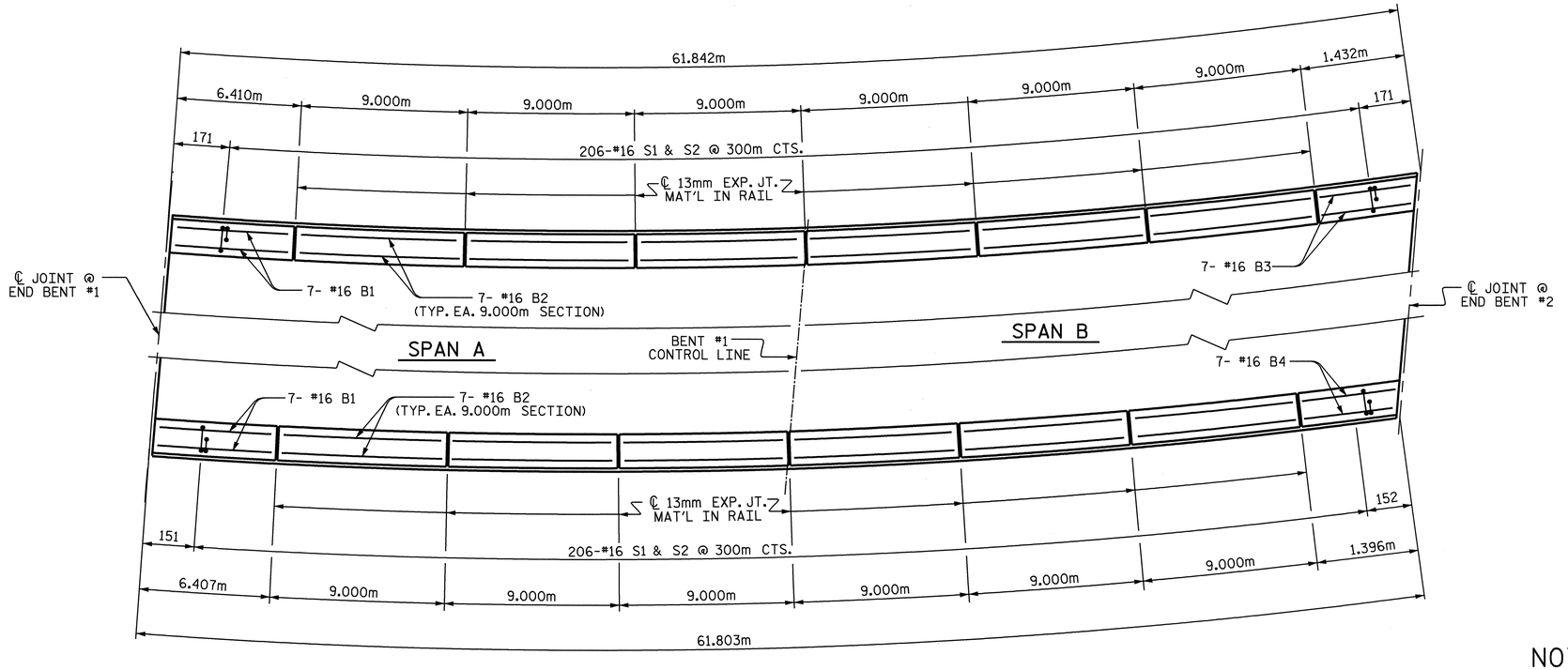

PLAN OF BARRIER RAIL

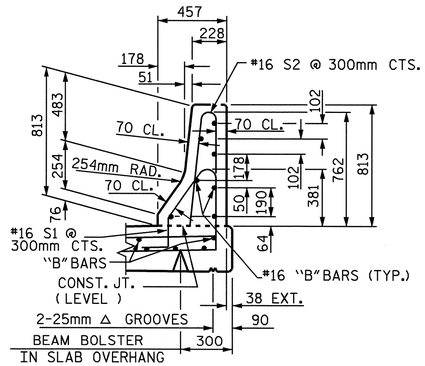

SECTION THRU RAIL

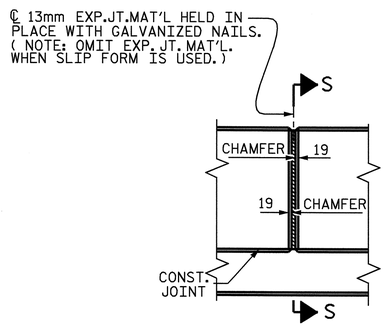

ELEVATION AT EXPANSION JOINTS

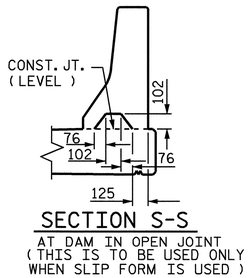

SECTION S-S
AT DAM IN OPEN JOINT
(THIS IS TO BE USED ONLY WHEN SLIP FORM IS USED)

BAR TYPES

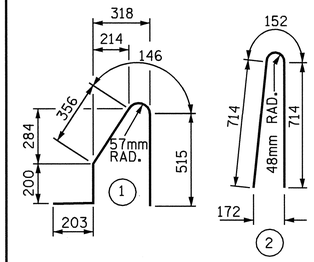

ALL BAR DIMENSIONS ARE OUT TO OUT

BILL OF MATERIAL

FOR CONCRETE BARRIER RAIL ONLY

BAR	NO.	SIZE	TYPE	LENGTH	WEIGHT
✳ S1	412	#16	1	1420	908
✳ S2	412	#16	2	1580	1010
✳ B1	14	#16	STR	6280	136
✳ B2	84	#16	STR	8900	1160
✳ B3	7	#16	STR	1220	13
✳ B4	7	#16	STR	1280	14

✳ EPOXY COATED REINFORCING STEEL	3241 kg
CLASS AA CONCRETE	31.0 CU. METERS
CONCRETE BARRIER RAIL	123.645 METERS

NOTES

THE BARRIER RAIL IN A CONTINUOUS UNIT SHALL NOT BE CAST UNTIL ALL SLAB CONCRETE IN THAT CONTINUOUS UNIT HAS BEEN CAST AND HAS REACHED A MINIMUM COMPRESSIVE STRENGTH OF 20.7 MPa.

WHEN COMPRESSION JOINT SEAL OR EVAZOTE JOINT SEAL IS REQUIRED, THE JOINT IN THE DECK SHALL BE SAWED PRIOR TO THE CASTING OF BARRIER RAIL.

ALL REINFORCING STEEL IN BARRIER RAILS SHALL BE EPOXY COATED.

VERTICAL GROOVED CONTRACTION JOINTS, 12mm IN DEPTH, SHALL BE TOOLED IN ALL EXPOSED FACES OF THE BARRIER RAIL AND IN ACCORDANCE WITH ARTICLE 825-10(B) OF THE STANDARD SPECIFICATIONS. THE CONTRACTION JOINT SHALL BE LOCATED AT EACH THIRD POINT BETWEEN BARRIER RAIL EXPANSION JOINTS. ONLY ONE CONTRACTION JOINT IS REQUIRED AT MIDPOINT OF BARRIER RAIL SEGMENTS LESS THAN 6.1m IN LENGTH AND NO CONTRACTION JOINTS ARE REQUIRED FOR THOSE SEGMENTS LESS THAN 3.5m IN LENGTH.

PROJECT NO. R-2554BA

WAYNE COUNTY

STATION: 87+73.739 -L2-

STATE OF NORTH CAROLINA
DEPARTMENT OF TRANSPORTATION
RALEIGH

STANDARD

CONCRETE BARRIER RAIL

BARRIER RAIL DETAILS

ASSEMBLED BY : M. G. SHAIKH	DATE : 6-27-06	
CHECKED BY : D. A. GLADDEN	DATE : 8-29-07	
DRAWN BY : ARB 5/87	REV. 8/16/99	RWW/LES
CHECKED BY : SJD 9/87	REV. 10/17/00	RWW/LES
	REV. 5/7/03R	RWW/JTE

REVISIONS						SHEET NO.
NO.	BY:	DATE:	NO.	BY:	DATE:	S-105
1			3			TOTAL SHEETS
2			4			478

STR #4

STD. No. CBR1SM

05-JUN-2008 17:24
j:\structures\bailey\str#4\mshaikh\microstation\B-2554BA_sd_BR.dgn
mshaikh

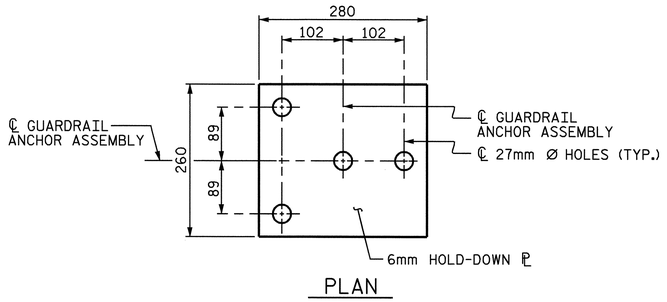

PLAN

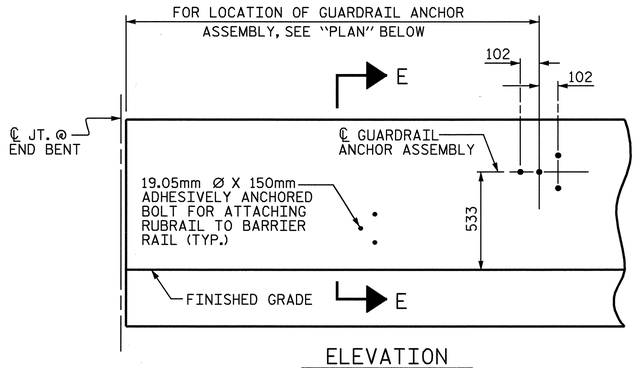

ELEVATION

FOR LOCATION OF RUBRAIL, SEE ROADWAY STD. 862.03

NOTES

THE GUARDRAIL ANCHOR ASSEMBLY SHALL CONSIST OF A 6mm HOLD DOWN PLATE AND 4 - 22.23mm Ø BOLTS WITH NUTS AND WASHERS, RUBRAIL, AND ADHESIVELY ANCHORED BOLTS.

THE HOLD-DOWN PLATE SHALL CONFORM TO AASHTO M270 GRADE 36. AFTER FABRICATION, THE HOLD-DOWN PLATE SHALL BE HOT-DIP GALVANIZED IN ACCORDANCE WITH AASHTO M111.

BOLTS SHALL CONFORM TO THE REQUIREMENTS OF ASTM A307 AND NUTS SHALL CONFORM TO THE REQUIREMENTS OF AASHTO M291. BOLTS, NUTS AND WASHERS SHALL BE GALVANIZED. (AT THE CONTRACTOR'S OPTION, STAINLESS STEEL BOLTS, NUTS AND WASHERS MAY BE USED AS AN ALTERNATE FOR THE 22.23mm Ø GALVANIZED BOLTS, NUTS AND WASHERS. THEY SHALL CONFORM TO OR EXCEED THE MECHANICAL REQUIREMENTS OF ASTM A307. THE USE OF THIS ALTERNATE SHALL BE APPROVED BY THE ENGINEER.)

THE GUARDRAIL ANCHOR ASSEMBLY IS REQUIRED AT ALL POINTS WHERE APPROACH GUARDRAIL IS TO BE ATTACHED TO THE END OF BARRIER RAIL. FOR POINTS OF ATTACHMENT, SEE SKETCH.

AFTER INSTALLATION, THE EXPOSED THREAD OF THE BOLT SHALL BE BURRED WITH A SHARP POINTED TOOL.

THE COST OF THE GUARDRAIL ANCHOR ASSEMBLY SHALL BE INCLUDED IN THE UNIT CONTRACT PRICE BID FOR CONCRETE BARRIER RAIL.

THE 32mm Ø HOLES SHALL BE FORMED OR DRILLED WITH A CORE BIT. IMPACT TOOLS WILL NOT BE PERMITTED. ANY CONCRETE DAMAGED BY THIS WORK SHALL BE REPAIRED TO THE SATISFACTION OF THE ENGINEER.

THE C150 X 12 RUBRAIL IS TO BE ADHESIVELY ANCHORED TO THE RAIL USING THREE 19.05mm Ø X 150mm BOLTS WITH WASHERS. LEVEL ONE FIELD TESTING IF REQUIRED, AND THE YIELD LOAD OF THE 19.05mm Ø BOLTS IS 53.4KN. FOR ADHESIVELY ANCHORED ANCHOR BOLTS OR DOWELS, SEE SPECIAL PROVISIONS. SEE ROADWAY STANDARD 862.03 FOR DETAILS AND LOCATION OF THE RUBRAIL.

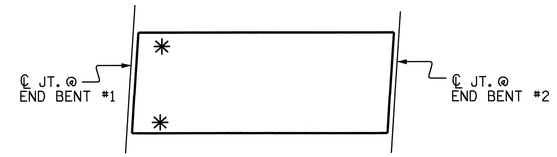

SKETCH SHOWING POINTS OF ATTACHMENTS

✳ DENOTES GUARDRAIL ANCHOR ASSEMBLY

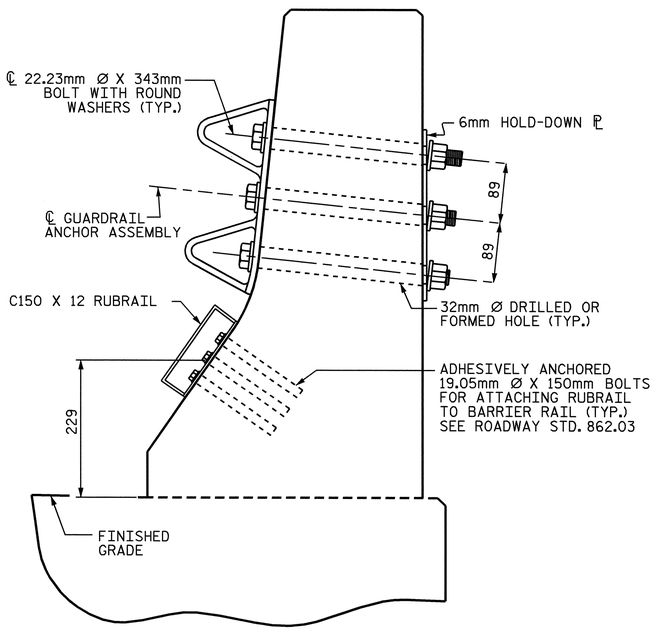

SECTION E-E

GUARDRAIL ANCHOR ASSEMBLY DETAILS

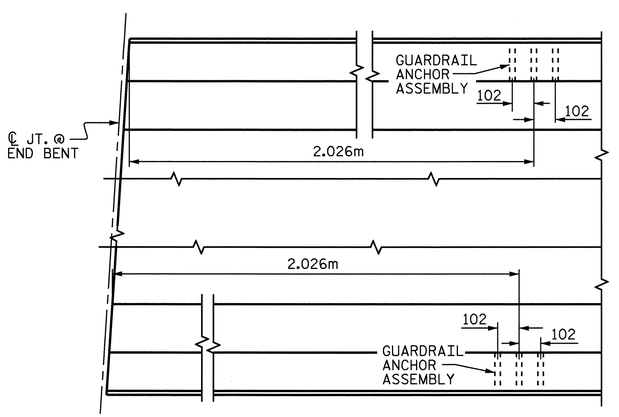

PLAN

LOCATION OF ANCHORS FOR GUARDRAIL

END BENT #1 SHOWN, END BENT #2 SIMILAR.

PROJECT NO. R-2554BA

WAYNE COUNTY

STATION: 87+73.739 -L2-

STATE OF NORTH CAROLINA
DEPARTMENT OF TRANSPORTATION
RALEIGH

STANDARD

GUARDRAIL ANCHORAGE FOR BARRIER RAIL

NORTH CAROLINA PROFESSIONAL SEAL 5825 ENGINEER BRUCE D. KLAPPENBERGER
6-6-08

REVISIONS						SHEET NO.
NO.	BY:	DATE:	NO.	BY:	DATE:	S-106
1			3			TOTAL SHEETS
2			4			478

ASSEMBLED BY : M. G. SHAIKH	DATE : 11-26-07
CHECKED BY : D. A. GLADDEN	DATE : 11-29-07
DRAWN BY : TLA 5/06	ADDED 5/1/06R KMM/GM
CHECKED BY : GM 5/06	

05-JUN-2008 17:25
j:\structures\bailey\str#4\mshaikh\microstation\R-2554BA_sd_GR.dgn
mshaikh

STR. #4 STD. NO. GRA2SM

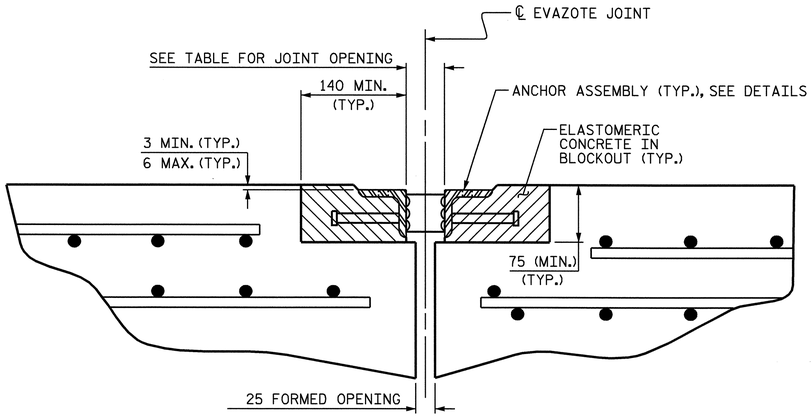

ARMORED JOINT DETAILS

SECTION NORMAL TO JOINT AT END BENT

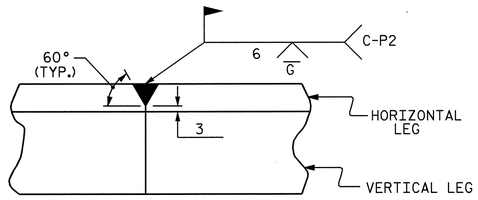

DETAIL- FIELD WELD SPLICE OF ANGLE

NOTES

ANGLES SHALL CONFORM TO AASHTO M270 GRADE 250 STEEL OR APPROVED EQUAL. ALL STUD ANCHORS SHALL CONFORM TO AASHTO M169 GRADES 1010 THRU 1020 OR APPROVED EQUAL.

STUD ANCHORS SHALL BE SHOP WELDED AND ALL HOLES SHALL BE SHOP DRILLED AS SHOWN ON THE PLANS. STUD ANCHORS SHALL BE ELECTRIC ARC END WELDED WITH COMPLETE FUSION.

UPON COMPLETION OF SHOP FABRICATION, THE ENTIRE ANCHOR ASSEMBLY SHALL BE METALLIZED. THE 12.70mm Ø STUD ANCHORS AND ANCHOR TABS NEED NOT BE METALLIZED. SEE SPECIAL PROVISION FOR THERMAL SPRAYED COATINGS (METALLIZATION).

ANCHOR ASSEMBLY SHALL BE MADE CONTINUOUS THE LENGTH OF THE JOINT FROM GUTTER TO GUTTER. FOR FIELD SPLICES AT ALL CROWN BREAK POINTS, THE ENDS OF THE STEEL ANGLES SHALL BE CUT PARALLEL TO THE BRIDGE CENTERLINE. FINISHED FIELD WELDS SHALL BE GROUND SMOOTH AND COATED WITH A MINIMUM THICKNESS OF 0.100mm OF ZINC-RICH PAINT IN ACCORDANCE WITH THE STANDARD SPECIFICATIONS.

ANCHOR ASSEMBLY SEGMENTS SHALL NOT BE LESS 3.6m NOR MORE THAN 6.1m IN LENGTH. SHORTER SEGMENTS MAY BE USED AT THE EDGE OF ROADWAY OR AT POINTS OF STAGED CONSTRUCTION.

THE ANCHOR ASSEMBLY SHALL BE SECURED AND LEVELED AS SHOWN IN THE "ARMORED JOINT ANCHOR ASSEMBLY DETAILS". NO SUBMITTALS ARE REQUIRED FOR 9.53mm Ø EXPANSION ANCHORS, NUTS OR WASHERS. THE CONTRACTOR MAY SUBMIT FOR APPROVAL AN ALTERNATE METHOD OF ALIGNING AND LEVELING THE ANGLES. THE ALTERNATE METHOD SHALL NOT INCLUDE ANY WELDING TO THE OUTSIDE FACE OF THE ANGLES.

AFTER THE ELASTOMERIC CONCRETE HAS BEEN CAST ON BOTH SIDES OF THE JOINT, REMOVE ANY EXCESS CONCRETE THAT COMES THROUGH THE WEEP HOLES AND THOROUGHLY CLEAN THE ANGLES. ANY DAMAGED STEEL SHALL BE COATED WITH A MINIMUM OF 0.100mm OF ZINC-RICH PAINT IN ACCORDANCE WITH THE STANDARD SPECIFICATIONS.

SEE SPECIAL PROVISIONS FOR EVAZOTE JOINT SEALS.

SEE SPECIAL PROVISIONS FOR ELASTOMERIC CONCRETE.

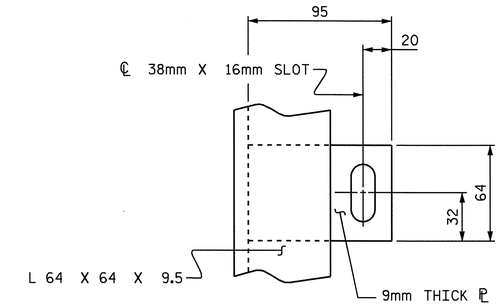

PLAN VIEW OF TAB

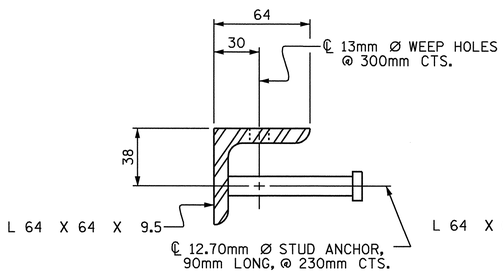

SECTION VIEW OF STUD

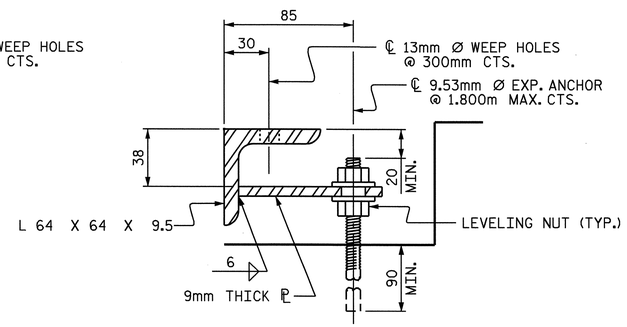

SECTION VIEW OF TAB

ARMORED JOINT ANCHOR ASSEMBLY DETAILS

MOVEMENT AND SETTING AT EVAZOTE JOINT						
END BENT NO.	SKEW ANGLE	NOMINAL UNCOMPRESSED SEAL WIDTH	TOTAL MOVEMENT (ALONG ℄ RDWY)	PERPENDICULAR JOINT OPENING AT 7° C	PERPENDICULAR JOINT OPENING AT 16° C	PERPENDICULAR JOINT OPENING AT 32° C
1	86°-43'-23"	64mm	26mm	52mm	48mm	41mm
2	101°-39'-19"	64mm	26mm	52mm	48mm	41mm

TOTAL MOVEMENT IS CALCULATED ALONG THE CENTERLINE OF ROADWAY.
JOINT OPENINGS ARE MEASURED PERPENDICULAR TO THE JOINT.

BILL OF MATERIAL		
END BENT NO.	ELASTOMERIC CONCRETE * (CU. m)	TOTAL LENGTH OF ANGLE (m)
1	0.3	30.633mm
2	0.3	30.633mm

* BASED ON THE MINIMUM BLOCKOUT SHOWN.

PROJECT NO. R-2554BA

WAYNE COUNTY

STATION: 87+73.739 -L2-

STATE OF NORTH CAROLINA
DEPARTMENT OF TRANSPORTATION
RALEIGH

STANDARD ARMORED EVAZOTE JOINT DETAILS

NORTH CAROLINA PROFESSIONAL SEAL 19625 ENGINEER BRUCE D. KLAPPENBACH
6-7-08

REVISIONS						SHEET NO.
NO.	BY:	DATE:	NO.	BY:	DATE:	S-107
1			3			TOTAL SHEETS
2			4			478

STD. NO. AEJ1SM

ASSEMBLED BY : M. G. SHAIKH	DATE : 11-21-07	
CHECKED BY : D. A. GLADDEN	DATE : 11-28-07	
DRAWN BY : EEM 1/96	REV. 7/10/01	LES/RDR
CHECKED BY : RGW 1/96	REV. 5/7/03RR	RWW/JTE
	REV. 5/1/06	TLA/GM

05-JUN-2008 17:26
j:\structures\bailey\str#4\mshaikh\microstation\R-2554BA_sd_JS.dgn
mshaikh

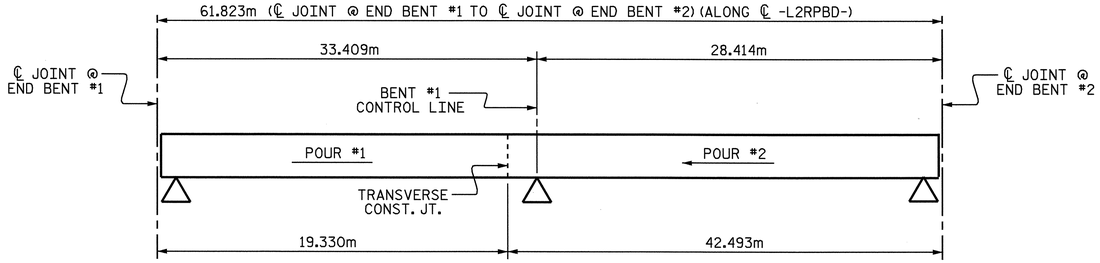

LAYOUT FOR POURING SEQUENCE OF REINFORCED CONCRETE DECK SLAB

SUPERSTRUCTURE REINFORCING STEEL LENGTHS ARE BASED ON THE FOLLOWING MINIMUM SPLICE LENGTHS					
BAR SIZE	SUPERSTRUCTURE EXCEPT APPROACH SLABS, PARAPET, AND BARRIER RAIL		APPROACH SLABS		PARAPET AND BARRIER RAIL
	EPOXY COATED	UNCOATED	EPOXY COATED	UNCOATED	
#13	610	540	610	540	840
#16	770	660	770	660	1050
#19	920	790	1190	790	1330
#22	1580	1060			
#25	2080	1390			

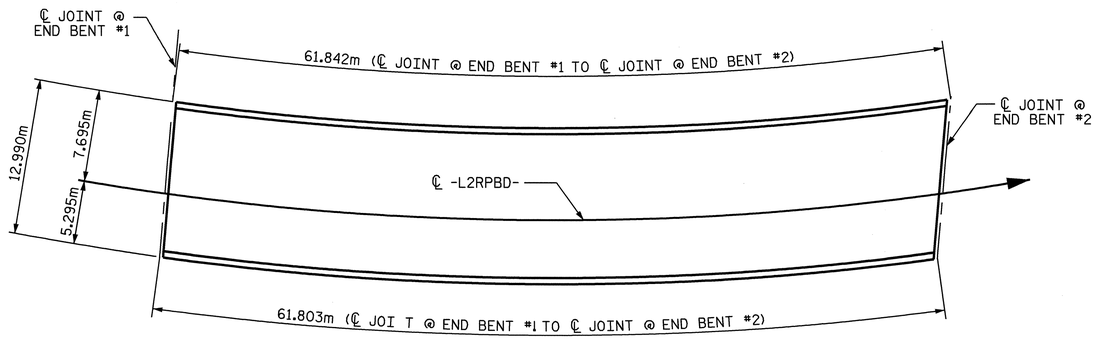

LAYOUT FOR COMPUTING AREA OF REINFORCED CONCRETE DECK SLAB (SQ. METER = 803.1)

BILL OF MATERIAL

BAR	NO.	SIZE	TYPE	LENGTH	WEIGHT
✳ A1	379	#16	STR	12880	7576
A2	379	#16	STR	12880	7576
✳ A101	1	#16	STR	11360	18
✳ A102	1	#16	STR	9160	14
✳ A103	1	#16	STR	6960	11
✳ A104	1	#16	STR	4760	7
✳ A105	1	#16	STR	2540	4
A106	1	#16	STR	11360	18
A107	1	#16	STR	9160	14
A108	1	#16	STR	6960	11
A109	1	#16	STR	4760	7
A110	1	#16	STR	2540	4
✳ A111	1	#16	STR	11380	18
✳ A112	1	#16	STR	9220	14
✳ A113	1	#16	STR	7060	11
✳ A114	1	#16	STR	4900	8
✳ A115	1	#16	STR	2740	4
A116	1	#16	STR	11380	18
A117	1	#16	STR	9220	14
A118	1	#16	STR	7060	11
A119	1	#16	STR	4900	8
A120	1	#16	STR	2740	4
✳ B1	93	#13	STR	7600	703
✳ B2	93	#22	STR	9920	2806
✳ B3	84	#22	STR	8520	2177
✳ B4	62	#13	STR	7740	477
B5	192	#16	STR	15940	4750
✳ G1	1	#16	STR	12900	20
✳ G2	1	#16	STR	13160	20
✳ K1	8	#16	1	2940	37
✳ K2	12	#16	2	4020	75
✳ S1	64	#13	3	1080	69

REINFORCING STEEL = 12435 KG
EPOXY COATED REINF. STEEL = 14069 KG

GROOVING BRIDGE FLOORS

BRIDGE DECK	680.4	SQ.METER
APPROACH SLAB	167.7	SQ.METER
TOTAL	848.1	SQ.METER

BAR TYPES

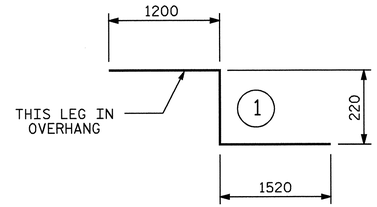

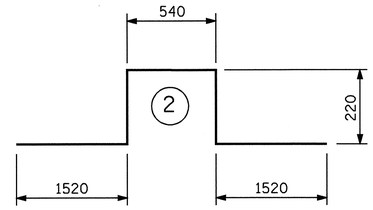

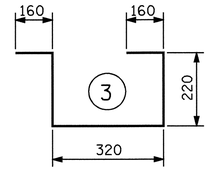

ALL BAR DIMENSIONS ARE OUT TO OUT

SUPERSTRUCTURE BILL OF MATERIAL

	CONCRETE CLASS AA	REINFORCING STEEL	EPOXY COATED REINFORCING STEEL
	m3	(kg)	(kg)
POUR #1	66.7	12435	14069
POUR #2	146.4		
✳ ✳ TOTALS	213.1		

✳ ✳ QUANTITIES FOR BARRIER RAILS ARE NOT INCLUDED

PROJECT NO. R-2554BA
WAYNE COUNTY
STATION: 87+73.739 -L2-

STATE OF NORTH CAROLINA
DEPARTMENT OF TRANSPORTATION
RALEIGH

SUPERSTRUCTURE BILL OF MATERIAL

NORTH CAROLINA PROFESSIONAL SEAL 15825 ENGINEER D. KLAPPERICH BRIDGE

REVISIONS						SHEET NO.
NO.	BY:	DATE:	NO.	BY:	DATE:	S-108
1			3			TOTAL SHEETS
2			4			478

DRAWN BY : M. G. SHAIKH DATE : 6-30-06
CHECKED BY : D. A. GLADDEN DATE : 8-29-07

05-JUN-2008 17:27
j:\structures\balley\str#4\mshaikh\microstation\B-2554BA_sd_BM.dgn
mshaikh

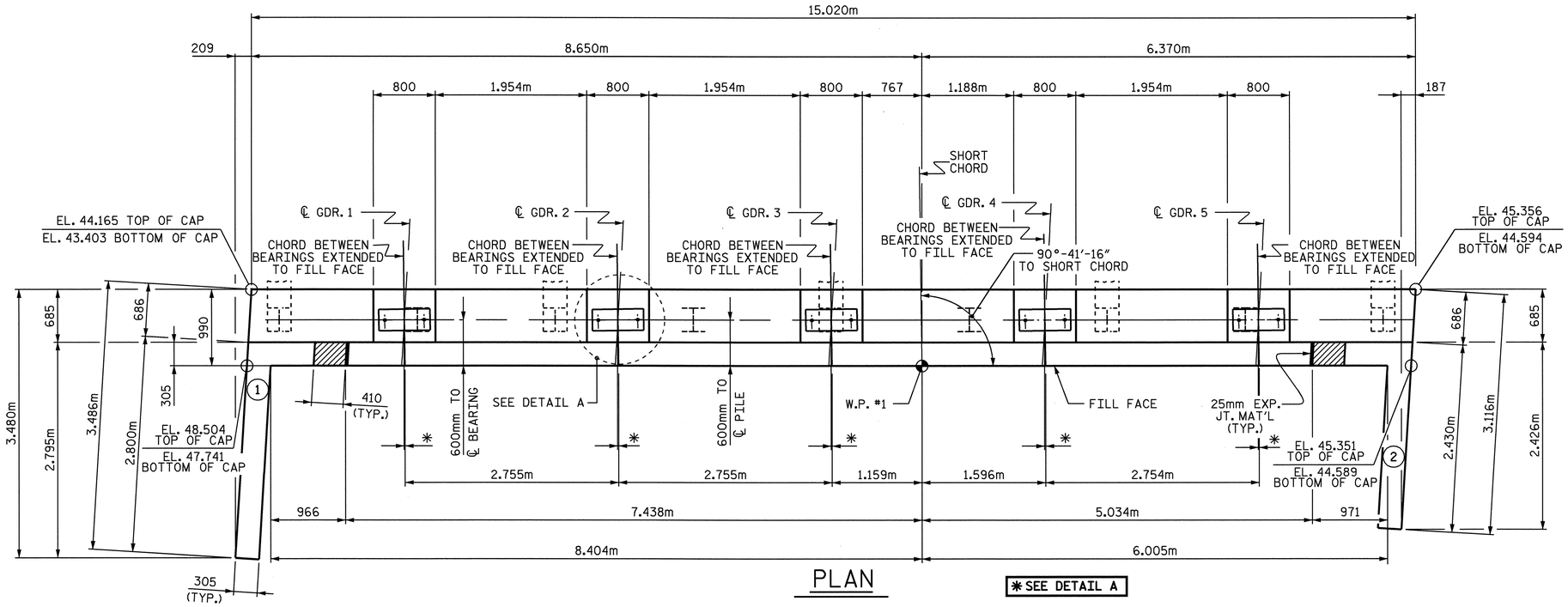

PLAN

✱SEE DETAIL A

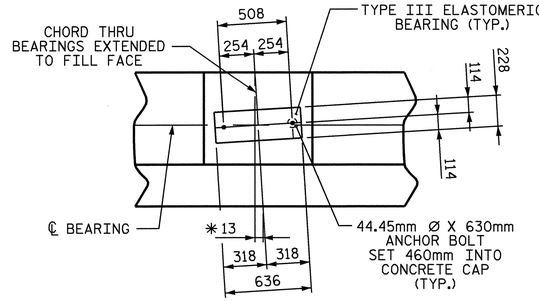

DETAIL A

TYP. EACH GIRDER

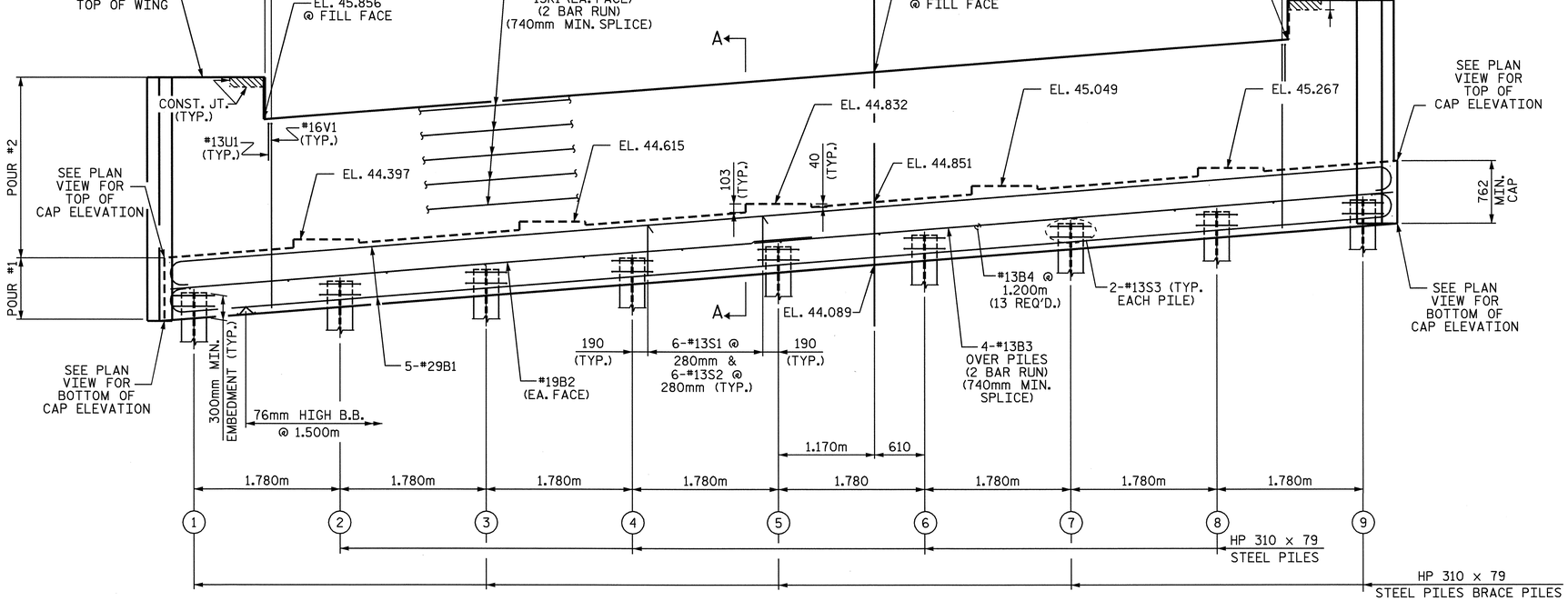

ELEVATION

NOTES

STIRRUPS IN CAP MAY BE SHIFTED AS NECESSARY TO CLEAR ANCHOR BOLTS.

BACKWALL SHALL BE PLACED BEFORE APPLYING THE EPOXY PROTECTIVE COATING.

THE TOP SURFACE OF THE CAP EXCEPT THE BRIDGE SEAT BUILDUPS SHALL BE SLOPED TRANSVERSELY FROM THE FILL FACE TO THE BACK FACE AT THE RATE OF 2 %.

THE CONCRETE IN THE SHADED AREA OF THE WING SHALL BE POURED AFTER THE BARRIER RAILS ARE CAST IF SLIP FORMING IS USED.

THE TOP SURFACE AREAS OF THE END BENT CAPS SHALL BE CURED IN ACCORDANCE WITH THE STANDARD SPECIFICATIONS EXCEPT THE MEMBRANE CURING COMPOUND METHOD SHALL NOT BE USED.

THE CONTRACTOR SHALL PROVIDE FOR INSTALLATION OF THE 102mm DIAMETER DRAIN PIPE THROUGH THE WING WALL AS REQUIRED FOR REINFORCED BRIDGE APPROACH FILLS, SEE THE ROADWAY PLANS. REINFORCING STEEL IN THE WING WALL MAY BE SHIFTED AS NECESSARY TO CLEAR.

THE ℄ OF THE ANCHOR BOLTS, ELASTOMERIC BEARINGS AND SOLE PLATES ARE TO BE PERPENDICULAR TO THE CHORDS BETWEEN BEARINGS.

TOP OF PILE ELEVATIONS

PILE #	ELEVATION
1	EL. 43.749
2	EL. 43.890
3	EL. 44.030
4	EL. 44.170
5	EL. 44.310
6	EL. 44.451
7	EL. 44.591
8	EL. 44.731
9	EL. 44.872

PROJECT NO. R-2554BA

WAYNE COUNTY

STATION: 87+73.739-L2-

SHEET 1 OF 3

STATE OF NORTH CAROLINA
DEPARTMENT OF TRANSPORTATION
RALEIGH

SUBSTRUCTURE END BENT #1

NORTH CAROLINA PROFESSIONAL SEAL 15825 ENGINEER BRADLEY D. KLAPPENBACH
6-6-08

REVISIONS						SHEET NO.
NO.	BY:	DATE:	NO.	BY:	DATE:	S-109
1			3			TOTAL SHEETS
2			4			487

DRAWN BY : H. T. BARBOUR DATE : 7-30-07
CHECKED BY : C. R. YARBROUGH DATE : 11-07

05-JUN-2008 15:40
r:\structures\balley\Str#4\tbarbour\R-2554BA_sd_E*.dgn
tbarbour

str. #4

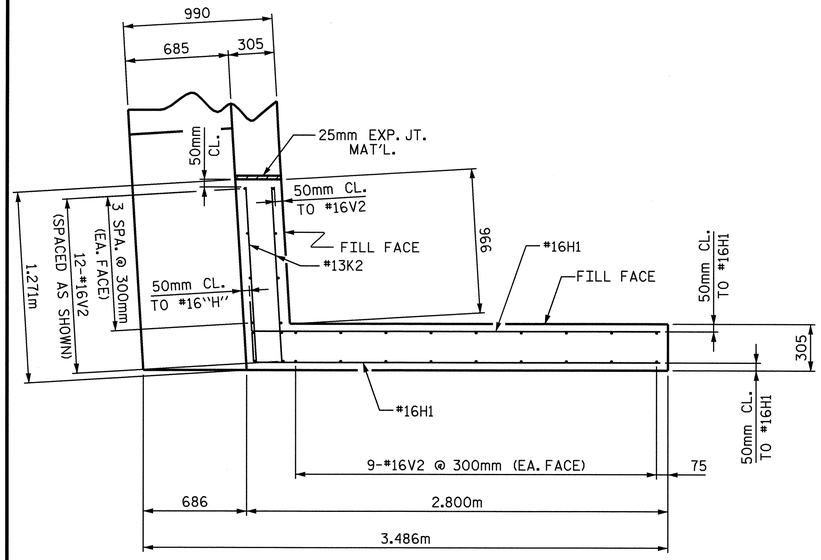

PLAN OF LEFT WING - (1)

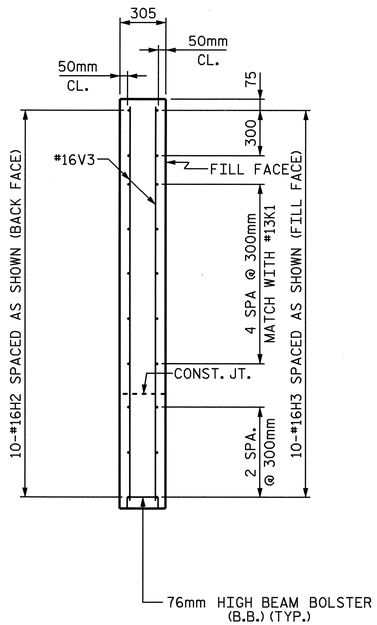

SECTION Y-Y

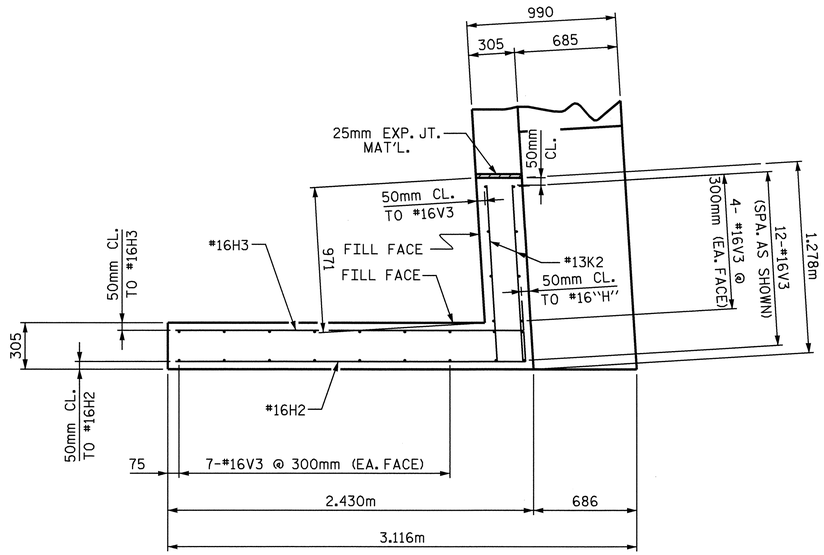

PLAN OF RIGHT WING - (2)

ELEVATION OF LEFT WING - (1)

SECTION X-X

ELEVATION OF RIGHT WING - (2)

PROJECT NO. R-2554BA
WAYNE COUNTY
STATION: 87+73.739-L2-

SHEET 2 OF 3

STATE OF NORTH CAROLINA
DEPARTMENT OF TRANSPORTATION
RALEIGH

SUBSTRUCTURE END BENT #1 WING DETAILS

REVISIONS						SHEET NO.
NO.	BY:	DATE:	NO.	BY:	DATE:	S-110
1			3			TOTAL SHEETS
2			4			487

NORTH CAROLINA PROFESSIONAL SEAL 15825 ENGINEER BRUCE D. KLAPPENBACH
6-6-08

DRAWN BY : H. T. BARBOUR DATE : 7-31-07
CHECKED BY : C. R. YARBROUGH DATE : 11-07

05-JUN-2008 15:41
r:\structures\balley\Str#4\tbarbour\R-2554BA_sd_E*.dgn
tbarbour

str. #4

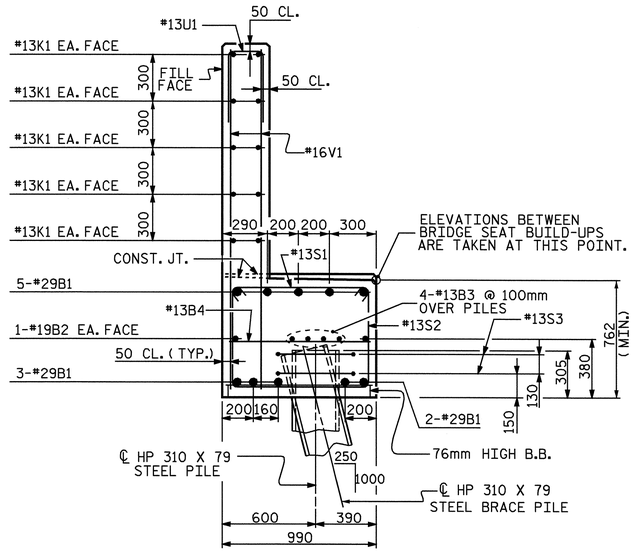

SECTION A-A

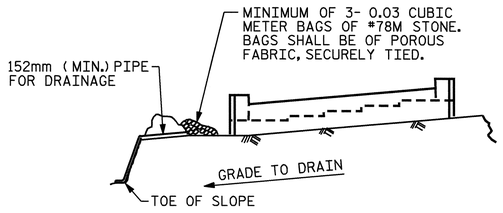

BAGGED STONE AND PIPE SHALL BE PLACED IMMEDIATELY AFTER COMPLETION OF END BENT EXCAVATION. PIPE MAY BE EITHER CONCRETE, CORRUGATED STEEL, CORRUGATED ALUMINUM ALLOY, OR CORRUGATED PLASTIC. PERFORATED PIPE WILL NOT BE ALLOWED.

BAGGED STONE SHALL REMAIN IN PLACE UNTIL THE ENGINEER DIRECTS THAT IT BE REMOVED. THE CONTRACTOR SHALL REMOVE AND DISPOSE OF SILT ACCUMULATIONS AT BAGGED STONE WHEN SO DIRECTED BY THE ENGINEER. BAGS SHALL BE REMOVED AND REPLACED WHENEVER THE ENGINEER DETERMINES THAT THEY HAVE DETERIORATED AND LOST THEIR EFFECTIVENESS.

NO SEPARATE PAYMENT WILL BE MADE FOR THIS WORK AND THE ENTIRE COST OF THIS WORK SHALL BE INCLUDED IN THE UNIT CONTRACT PRICE BID FOR THE SEVERAL PAY ITEMS.

TEMPORARY DRAINAGE AT END BENT

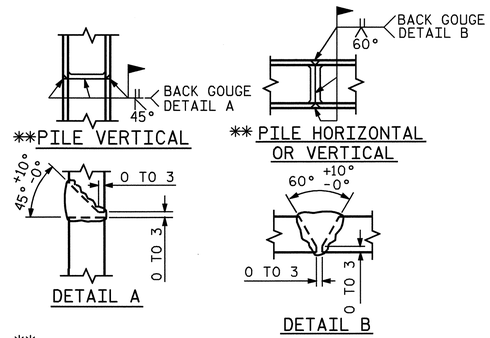

**POSITION OF PILE DURING WELDING.

PILE SPLICE DETAILS

BAR TYPES

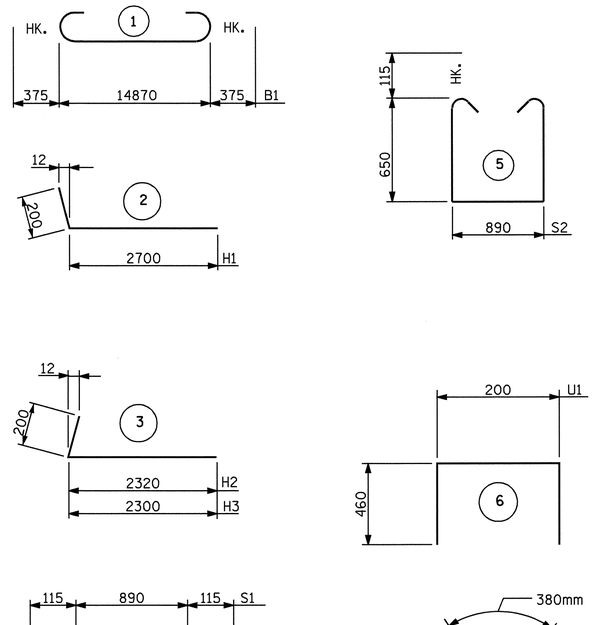

ALL BAR DIMENSIONS ARE OUT TO OUT.

BILL OF MATERIAL

END BENT NO. 1

BAR	NO.	SIZE	TYPE	LENGTH	WEIGHT
B1	10	#29	1	15620	790
B2	2	#19	STR.	14900	67
B3	8	#13	STR.	7820	62
B4	13	#13	STR.	880	11
H1	20	#16	2	2900	90
H2	10	#16	3	2520	39
H3	10	#16	3	2500	39
K1	10	#13	STR.	7820	78
K2	8	#13	STR.	1160	9
S1	48	#13	4	1120	53
S2	48	#13	5	2420	115
S3	18	#13	7	2000	36
U1	42	#13	6	1120	47
V1	84	#16	STR.	2240	292
V2	30	#16	STR.	2860	133
V3	26	#16	STR.	2620	106

REINFORCING STEEL = 1967 kg

CLASS A CONCRETE BREAKDOWN

POUR #1 CAP LOWER PART OF WINGS
CUBIC METERS 12.7

POUR #2 UPPER PART OF WINGS & BACKWALL
CUBIC METERS 10.5

TOTAL CLASS A CONCRETE
CUBIC METERS 23.2

HP 310 X 79 STEEL PILES
NO. 9 LIN. METERS = 211.5

PROJECT NO. R-2554BA

WAYNE COUNTY

STATION: 87+73.739-L2-

SHEET 3 OF 3

STATE OF NORTH CAROLINA
DEPARTMENT OF TRANSPORTATION
RALEIGH

SUBSTRUCTURE END BENT #1

REVISIONS						SHEET NO.
NO.	BY:	DATE:	NO.	BY:	DATE:	S-111
1			3			TOTAL SHEETS
2			4			487

NORTH CAROLINA PROFESSIONAL SEAL 15825 ENGINEER BRUCE D. KLAPPENBACH
6-6-08

DRAWN BY : H. T. BARBOUR DATE : 7-30-07
CHECKED BY : C. R. YARBROUGH DATE : 11-07

str. #4

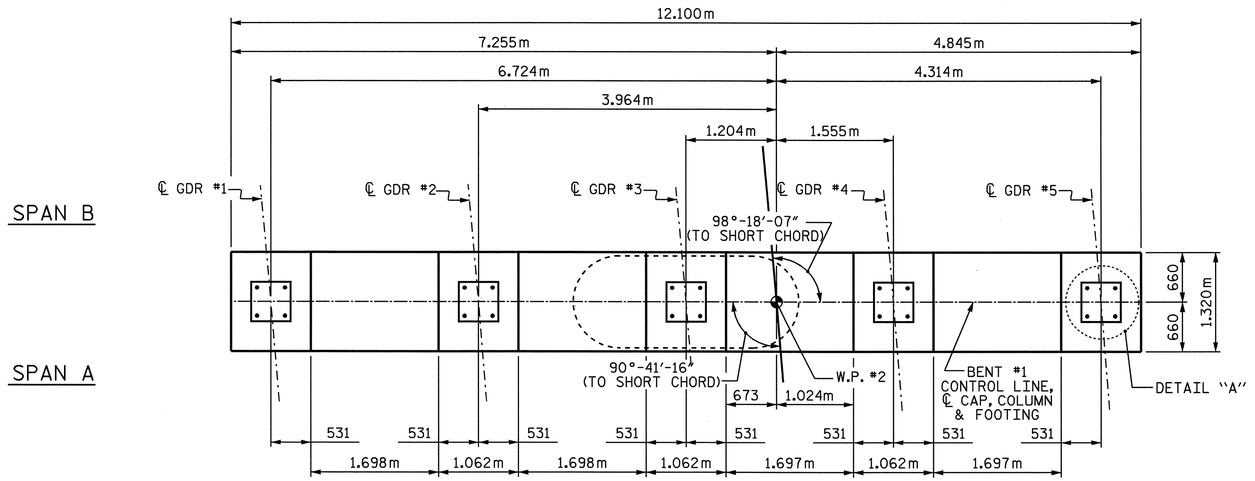

PLAN

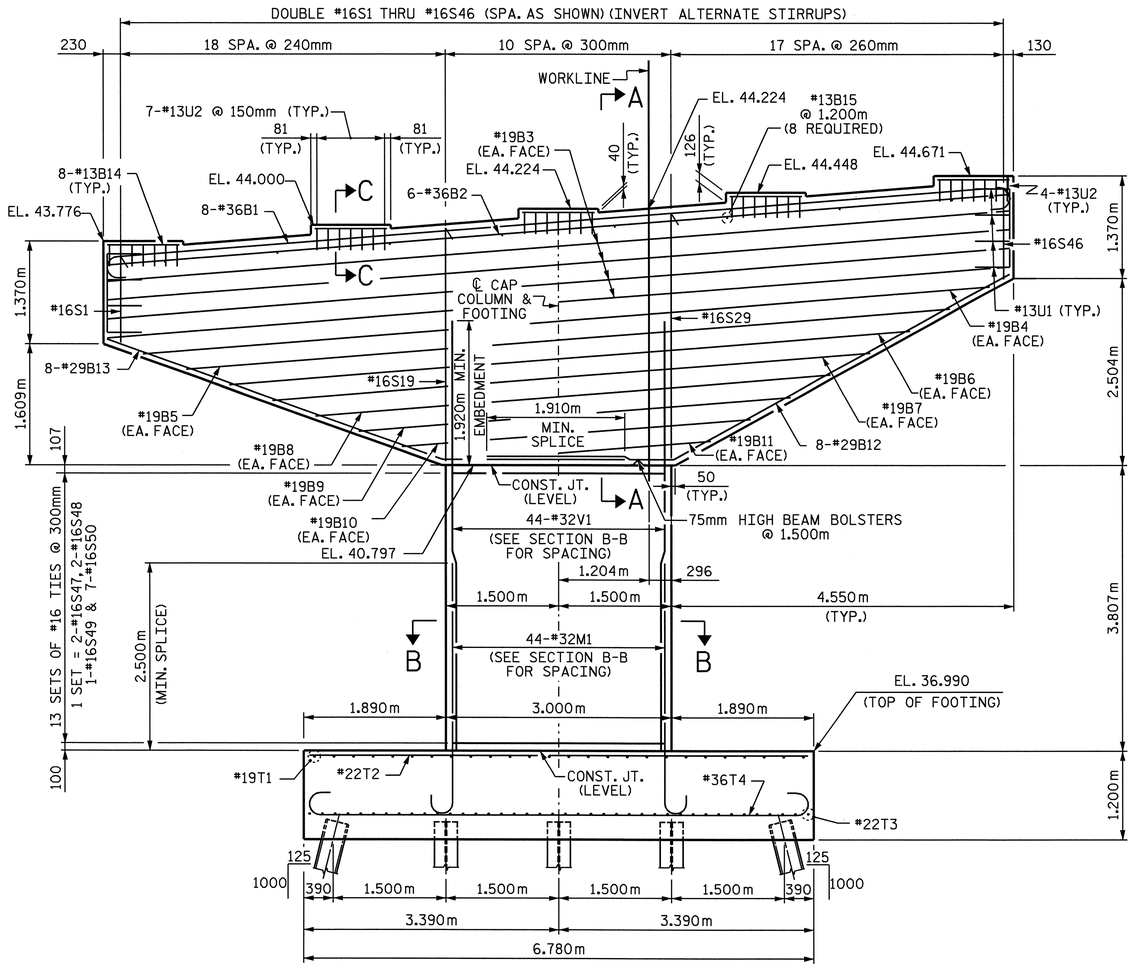

ELEVATION

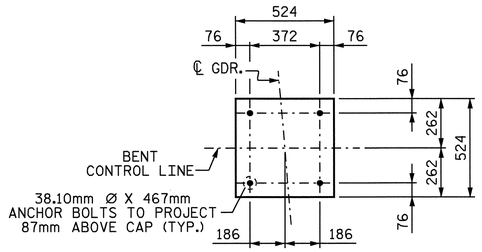

DETAIL "A"

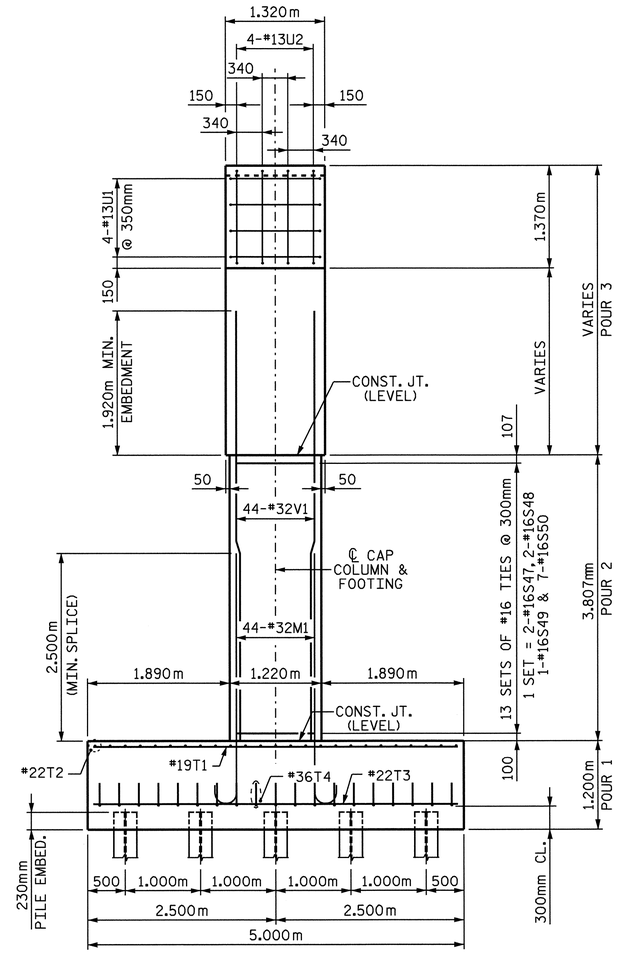

END VIEW

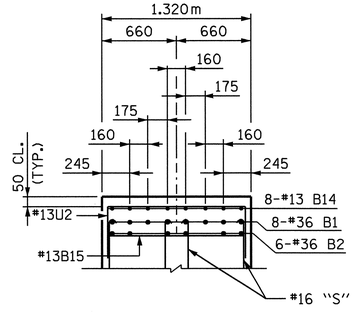

SECTION C-C

NOTES

STIRRUPS IN CAP MAY BE SHIFTED AS NECESSARY TO CLEAR ANCHOR BOLTS.

HOOKS ON M1 BARS MAY BE TURNED AS NECESSARY FOR PLACING REINFORCING STEEL.

DETAILED DRAWINGS FOR FALSEWORK AND FORMS FOR THIS HAMMERHEAD BENT SHALL BE SUBMITTED. SEE SHEET SNSM.

T1 AND T2 BARS IN TOP OF FOOTING MAY BE SHIFTED AS NECESSARY TO CLEAR M1 BARS IN FOOTING.

FOR PILE SPLICE DETAILS, SEE "END BENT 1 DETAILS AND BOM" SHEET.

THE TOP SURFACE OF THE BENT CAP SHALL BE CURED IN ACCORDANCE WITH STANDARD SPECIFICATIONS EXCEPT THE MEMBRANE CURING COMPOUND METHOD SHALL NOT BE USED.

NORTH CAROLINA PROFESSIONAL SEAL 15825 ENGINEER BRUCE B. KLAPPENBACH 6-6-08

PROJECT NO. R-2554BA

WAYNE COUNTY

STATION: 87+73.739-L2-

SHEET 1 OF 2

STATE OF NORTH CAROLINA
DEPARTMENT OF TRANSPORTATION
RALEIGH

SUBSTRUCTURE
BENT #1

REVISIONS						SHEET NO.
NO.	BY:	DATE:	NO.	BY:	DATE:	S-112
1			3			TOTAL SHEETS 478
2			4			

DRAWN BY : H. T. BARBOUR DATE : 9/8/07
CHECKED BY : AMPH SORSENGINH DATE : 11/07

06-JUN-2008 16:12
r:\structures\balley\Str#4\tbarbour\R2554BA_sd_B*.dgn
tbarbour

STR. #4

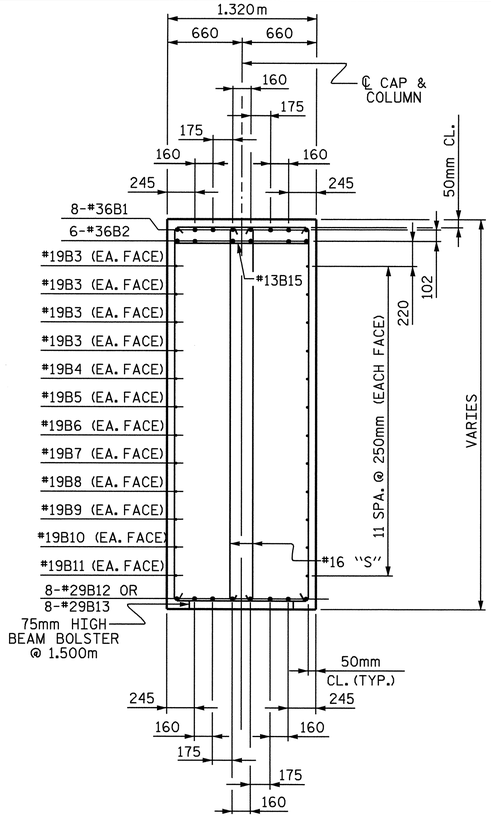

SECTION A-A

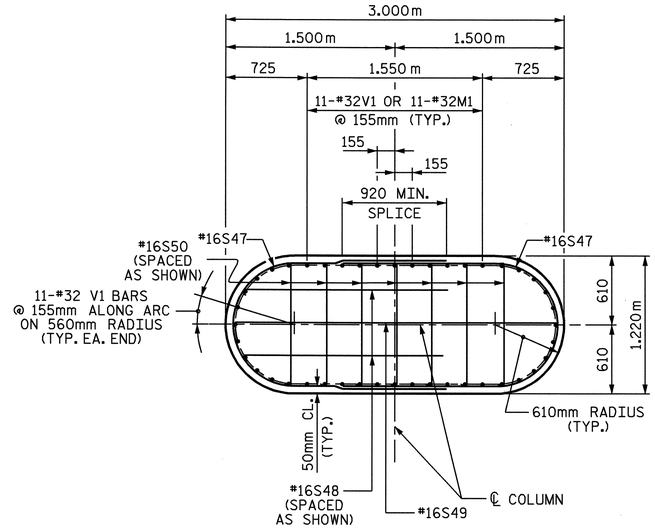

SECTION B-B

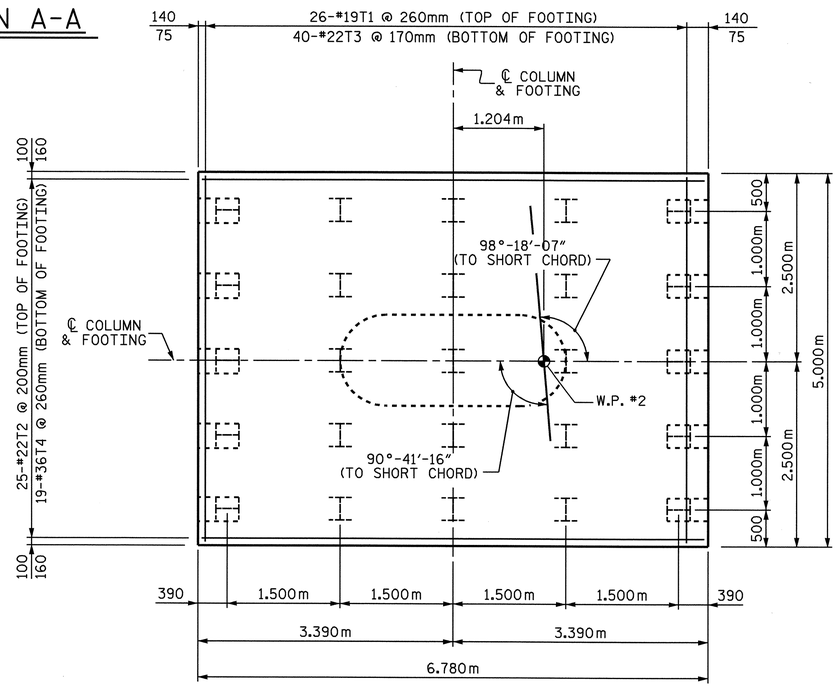

PLAN OF FOOTING

BATTER PILES 125:1000
PILES ARE ROTATED 90°

BILL OF MATERIAL

BAR	NO	SIZE	TYPE	DIM. A	LENGTH	WEIGHT
B1	8	36	1	-	12940	819
B2	6	36	STR	-	12020	570
B3	8	19	STR	-	12020	215
B4	2	19	STR	-	11180	50
B5	2	19	STR	-	10080	45
B6	2	19	STR	-	8980	40
B7	2	19	STR	-	7880	35
B8	2	19	STR	-	6760	30
B9	2	19	STR	-	5780	26
B10	2	19	STR	-	4580	20
B11	2	19	STR	-	1640	7
B12	8	29	6	-	7560	306
B13	8	29	6	-	7200	291
B14	40	13	STR	-	960	38
B15	8	13	STR	-	1220	10
M1	44	32	2	-	3760	1059
S1	2	16	3	1225	3460	11
S2	2	16	3	1335	3680	11
S3	2	16	3	1435	3880	12
S4	2	16	3	1545	4100	13
S5	2	16	3	1655	4320	13
S6	2	16	3	1755	4520	14
S7	2	16	3	1865	4740	15
S8	2	16	3	1965	4940	15
S9	2	16	3	2075	5160	16
S10	2	16	3	2175	5360	17
S11	2	16	3	2285	5580	17
S12	2	16	3	2385	5780	18
S13	2	16	3	2495	6000	19
S14	2	16	3	2595	6200	19
S15	2	16	3	2705	6420	20
S16	2	16	3	2805	6620	21
S17	2	16	3	2915	6840	21
S18	2	16	3	3015	7040	22
S19	2	16	3	3115	7240	22
S20	2	16	3	3135	7280	23
S21	2	16	3	3155	7320	23
S22	2	16	3	3185	7380	23
S23	2	16	3	3205	7420	23
S24	2	16	3	3235	7480	23
S25	2	16	3	3255	7520	23
S26	2	16	3	3285	7580	24
S27	2	16	3	3305	7620	24
S28	2	16	3	3335	7680	24
S29	2	16	3	3355	7720	24
S30	2	16	3	3255	7520	23
S31	2	16	3	3125	7260	23
S32	2	16	3	3005	7020	22
S33	2	16	3	2875	6760	21
S34	2	16	3	2755	6520	20
S35	2	16	3	2635	6280	19
S36	2	16	3	2505	6020	19
S37	2	16	3	2385	5780	18
S38	2	16	3	2265	5540	17
S39	2	16	3	2135	5280	16
S40	2	16	3	2015	5040	16
S41	2	16	3	1895	4800	15
S42	2	16	3	1765	4540	14
S43	2	16	3	1645	4300	13
S44	2	16	3	1515	4040	13
S45	2	16	3	1395	3800	12
S46	2	16	3	1275	3560	11
S47	26	16	5	-	4460	180
S48	26	16	7	-	3040	123
S49	13	16	7	-	3200	65
S50	91	16	7	-	1420	201

BAR TYPES

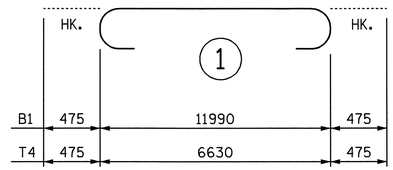

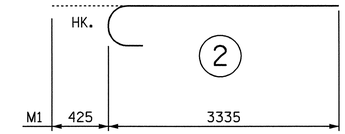

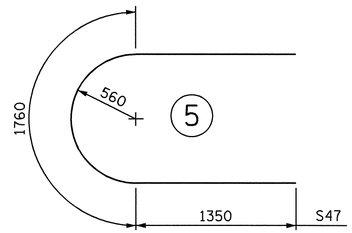

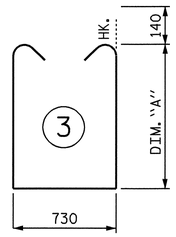

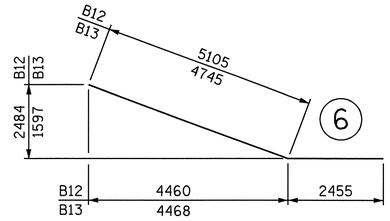

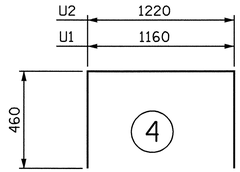

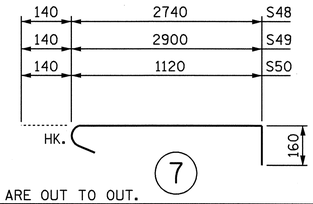

ALL BAR DIMENSIONS ARE OUT TO OUT.

BAR	NO	SIZE	TYPE	DIM. A	LENGTH	WEIGHT
T1	26	19	STR	-	4840	281
T2	25	22	STR	-	6620	503
T3	40	22	STR	-	4840	589
T4	19	36	1	-	7580	1139
U1	8	13	4	-	2080	17
U2	43	13	4	-	2140	91
				-		
V1	44	32	STR	-	5740	1617
TOTAL REINFORCING STEEL					Kg.	9209

CLASS "A" CONC. BREAKDOWN		
POUR #1 FOOTING	CU.M.	40.7
POUR #2 COLUMN	CU.M.	12.7
POUR #3 CAP	CU.M.	41.9
TOTAL	CU.M.	95.3
HP 310 X 79 STEEL PILES		
25 PILES REQUIRED	LIN. M.	262.5
FOUNDATION EXCAVATION	LUMP SUM	

PROJECT NO. R-2554BA

WAYNE COUNTY

STATION: 87+73.739-L2-

SHEET 2 OF 2

STATE OF NORTH CAROLINA
DEPARTMENT OF TRANSPORTATION
RALEIGH

SUBSTRUCTURE
BENT #1 DETAILS

NORTH CAROLINA PROFESSIONAL SEAL 5825 ENGINEER BRUCE D. KLAPPENBACH
6-L-08

REVISIONS						SHEET NO.
NO.	BY:	DATE:	NO.	BY:	DATE:	S-113
1			3			TOTAL SHEETS 478
2			4			

DRAWN BY : H. T. BARBOUR DATE : 9-13-07
CHECKED BY : AMPH SORSENGINH DATE : 11/07

05-JUN-2008 15:49
r:\structures\balley\Str#4\tbarbour\R2554BA_sd_B#.dgn
tbarbour

STR. #4

NOTES

STIRRUPS IN CAP MAY BE SHIFTED AS NECESSARY TO CLEAR ANCHOR BOLTS.

BACKWALL SHALL BE PLACED BEFORE APPLYING THE EPOXY PROTECTIVE COATING.

THE TOP SURFACE OF THE CAP EXCEPT THE BRIDGE SEAT BUILDUPS SHALL BE SLOPED TRANSVERSELY FROM THE FILL FACE TO THE BACK FACE AT THE RATE OF 2 %.

THE CONCRETE IN THE SHADED AREA OF THE WING SHALL BE POURED AFTER THE BARRIER RAILS ARE CAST IF SLIP FORMING IS USED.

THE TOP SURFACE AREAS OF THE END BENT CAPS SHALL BE CURED IN ACCORDANCE WITH THE STANDARD SPECIFICATIONS EXCEPT THE MEMBRANE CURING COMPOUND METHOD SHALL NOT BE USED.

THE CONTRACTOR SHALL PROVIDE FOR INSTALLATION OF THE 102mm DIAMETER DRAIN PIPE THROUGH THE WING WALL AS REQUIRED FOR REINFORCED BRIDGE APPROACH FILLS, SEE THE ROADWAY PLANS. REINFORCING STEEL IN THE WING WALL MAY BE SHIFTED AS NECESSARY TO CLEAR.

THE ℄ OF THE ANCHOR BOLTS, ELASTOMERIC BEARINGS AND SOLE PLATES ARE TO BE PERPENDICULAR TO THE CHORDS BETWEEN BEARINGS.

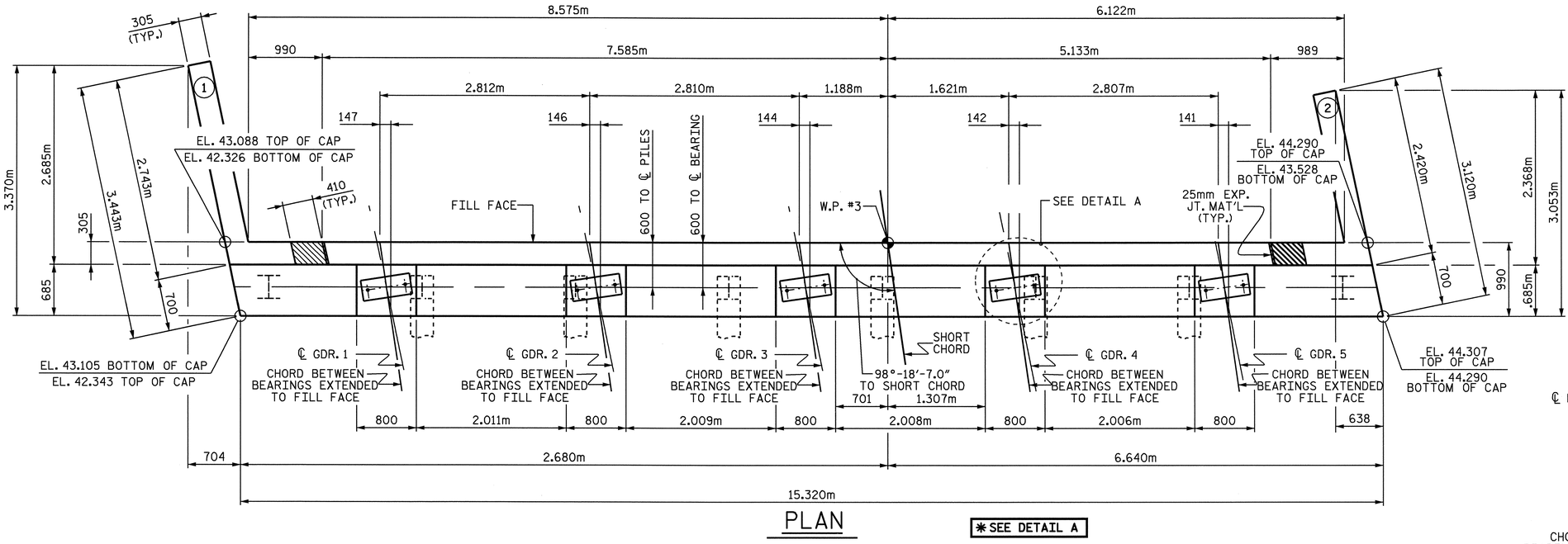

PLAN

✱SEE DETAIL A

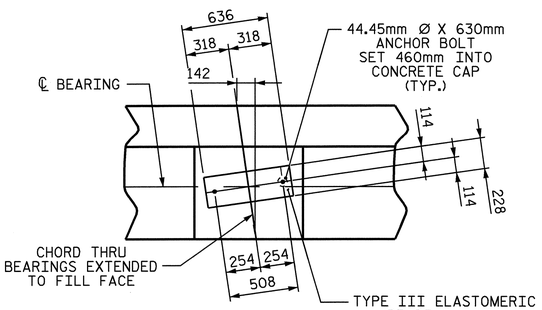

DETAIL A

PILE NOT SHOWN FOR CLARITY
TYP. EACH GIRDER

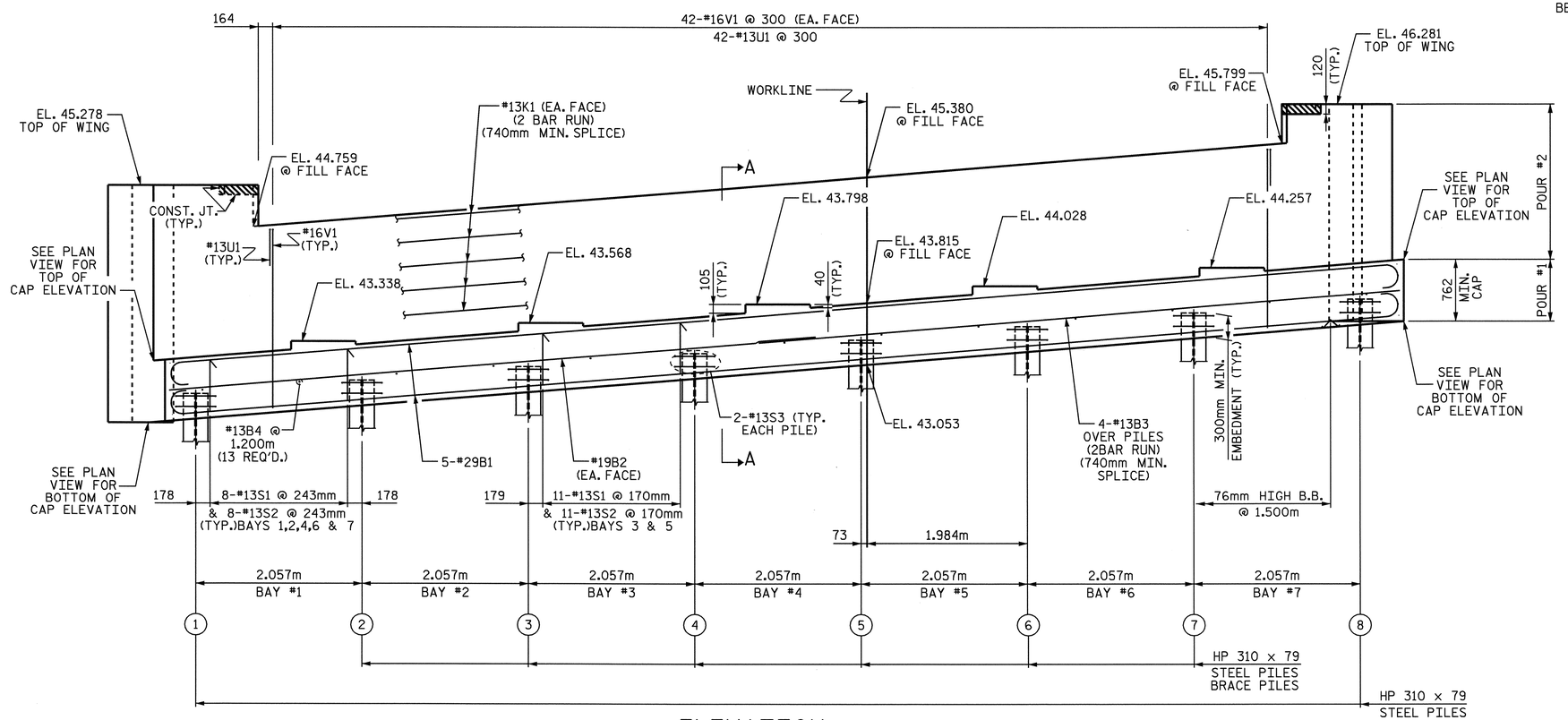

ELEVATION

TOP OF PILE ELEVATIONS

PILE #	ELEVATION
1	EL.42.685
2	EL. 42.854
3	EL. 43.022
4	EL. 43.190
5	EL. 43.359
6	EL. 43.527
7	EL. 43.695
8	EL. 43.863

PROJECT NO. R-2554BA

WAYNE COUNTY

STATION: 87+73.739-L2-

SHEET 1 OF 3

STATE OF NORTH CAROLINA
DEPARTMENT OF TRANSPORTATION
RALEIGH

SUBSTRUCTURE END BENT #2

NORTH CAROLINA PROFESSIONAL SEAL 15825 ENGINEER BRYAN D. KLAPPENBACH
6-6-08

REVISIONS						SHEET NO.
NO.	BY:	DATE:	NO.	BY:	DATE:	S-114
1			3			TOTAL SHEETS
2			4			487

DRAWN BY : H. T. BARBOUR DATE : 7-30-07
CHECKED BY : C. R. YARBROUGH DATE : 11-07

05-JUN-2008 15:41
r:\structures\bailey\Str#4\tbarbour\R-2554BA_sd_E*.dgn
tbarbour

str. #4

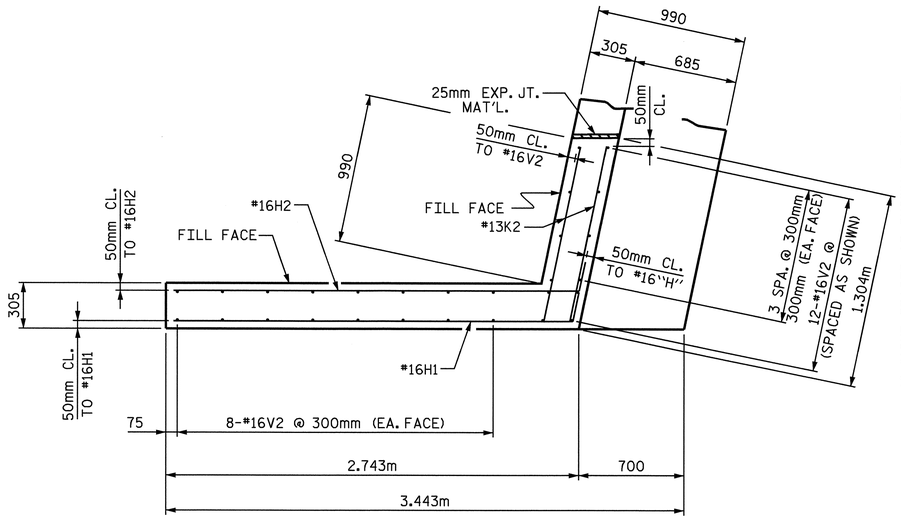

PLAN OF LEFT WING -(1)

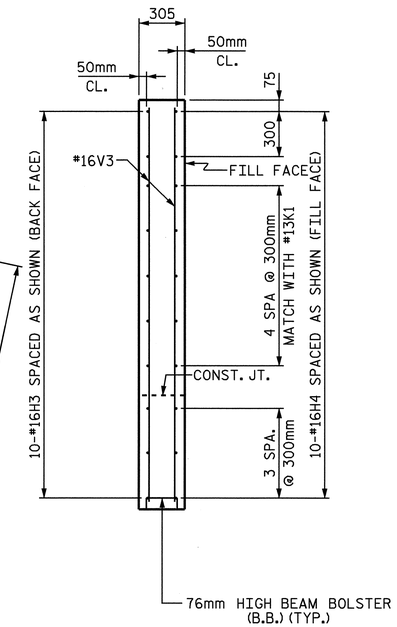

SECTION Y-Y

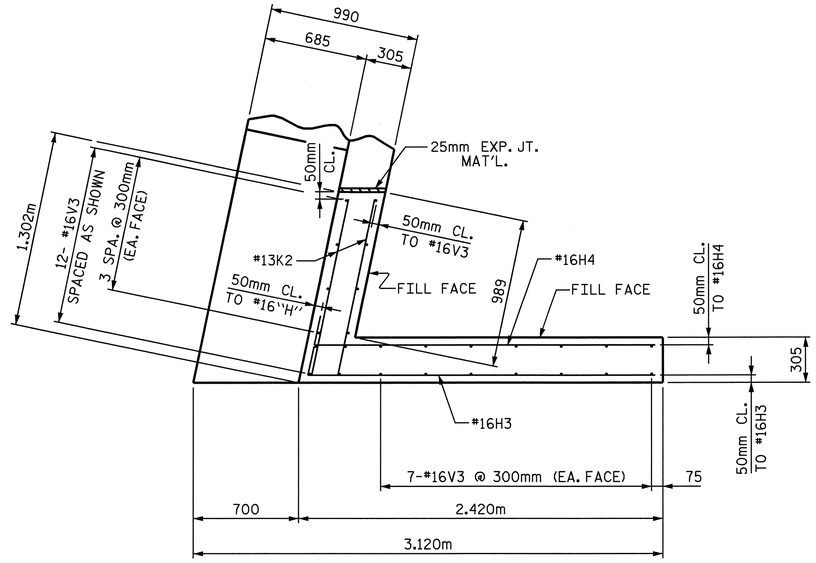

PLAN OF RIGHT WING -(2)

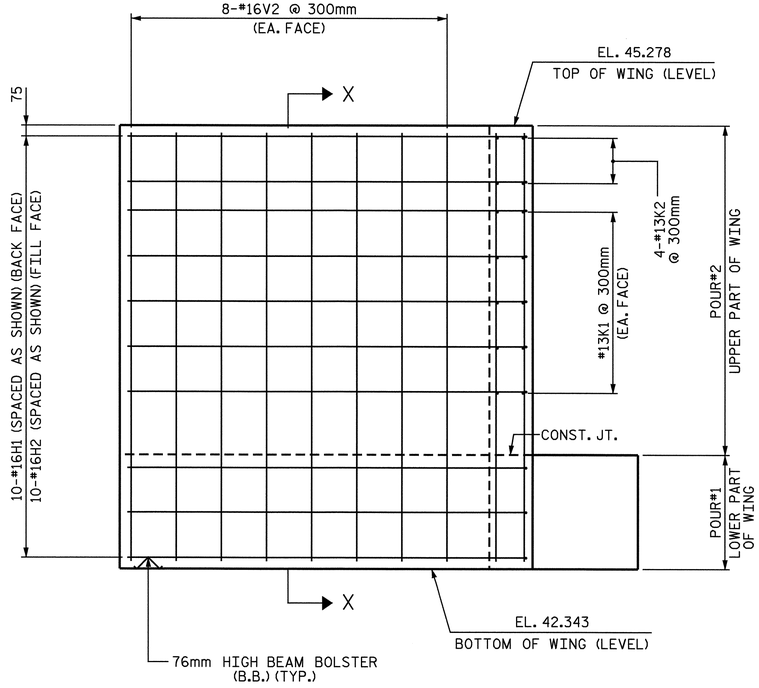

ELEVATION OF LEFT WING -(1)

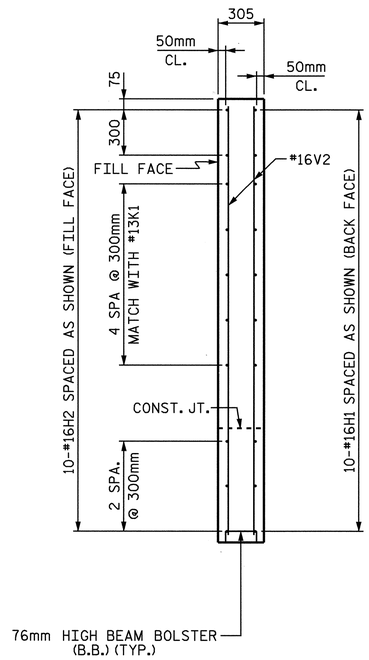

SECTION X-X

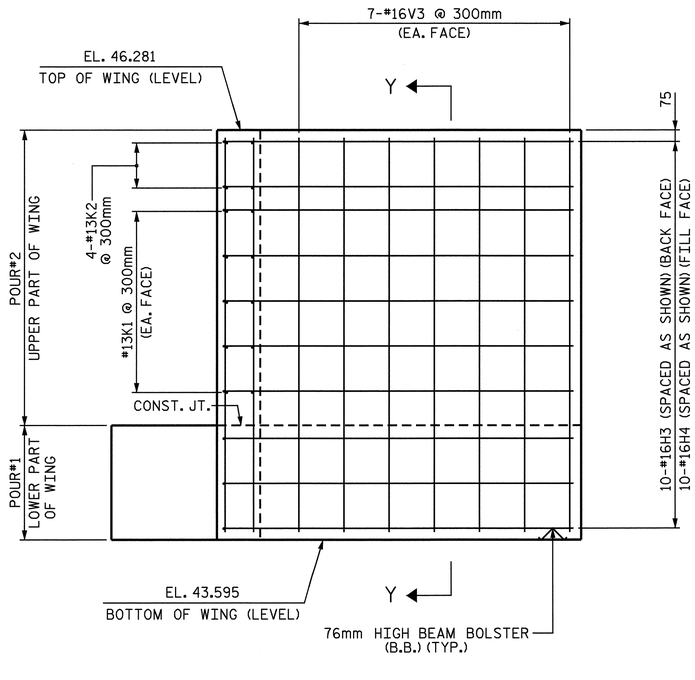

ELEVATION OF RIGHT WING -(2)

PROJECT NO. R-2554BA

WAYNE COUNTY

STATION: 87+73.739-L2-

SHEET 2 OF 3

STATE OF NORTH CAROLINA
DEPARTMENT OF TRANSPORTATION
RALEIGH

SUBSTRUCTURE END BENT #2 WING DETAILS

REVISIONS						SHEET NO.
NO.	BY:	DATE:	NO.	BY:	DATE:	S-115
1			3			TOTAL SHEETS
2			4			487

NORTH CAROLINA PROFESSIONAL SEAL 15825 ENGINEER BRUCE D. KLAPPENBACH
6-6-08

DRAWN BY : H. T. BARBOUR DATE : 7-31-07
CHECKED BY : C. R. YARBROUGH DATE : 11-07

05-JUN-2008 15:41
r:\structures\balley\Str#4\tbarbour\R-2554BA_sd_E*.dgn
tbarbour

str. #4

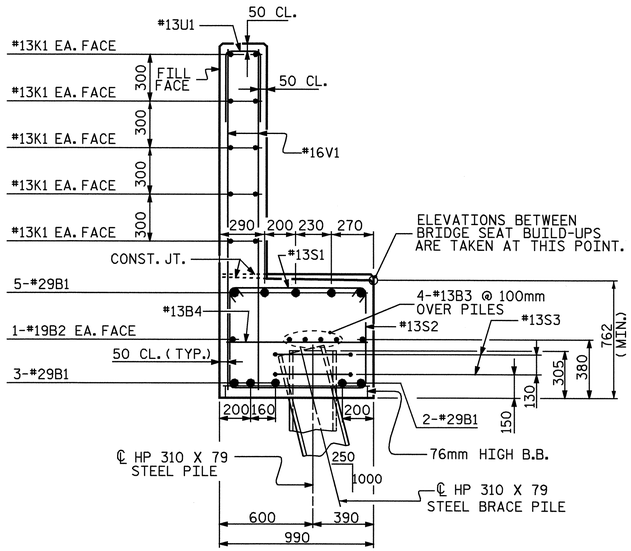

SECTION A-A

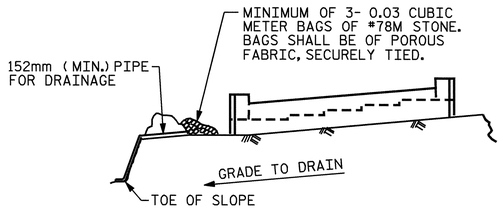

BAGGED STONE AND PIPE SHALL BE PLACED IMMEDIATELY AFTER COMPLETION OF END BENT EXCAVATION. PIPE MAY BE EITHER CONCRETE, CORRUGATED STEEL, CORRUGATED ALUMINUM ALLOY, OR CORRUGATED PLASTIC. PERFORATED PIPE WILL NOT BE ALLOWED.

BAGGED STONE SHALL REMAIN IN PLACE UNTIL THE ENGINEER DIRECTS THAT IT BE REMOVED. THE CONTRACTOR SHALL REMOVE AND DISPOSE OF SILT ACCUMULATIONS AT BAGGED STONE WHEN SO DIRECTED BY THE ENGINEER. BAGS SHALL BE REMOVED AND REPLACED WHENEVER THE ENGINEER DETERMINES THAT THEY HAVE DETERIORATED AND LOST THEIR EFFECTIVENESS.

NO SEPARATE PAYMENT WILL BE MADE FOR THIS WORK AND THE ENTIRE COST OF THIS WORK SHALL BE INCLUDED IN THE UNIT CONTRACT PRICE BID FOR THE SEVERAL PAY ITEMS.

TEMPORARY DRAINAGE AT END BENT

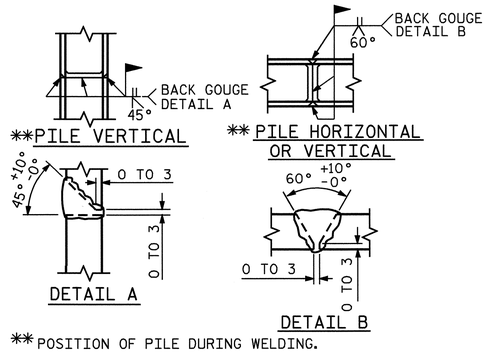

** POSITION OF PILE DURING WELDING.

PILE SPLICE DETAILS

BAR TYPES

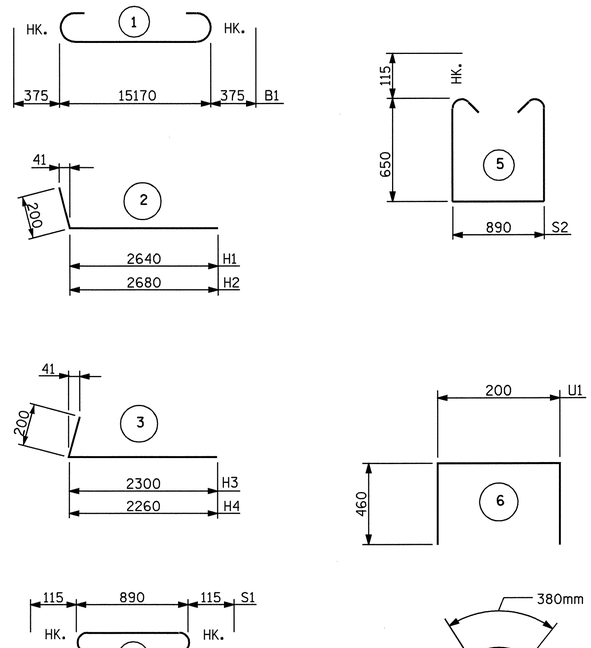

ALL BAR DIMENSIONS ARE OUT TO OUT.

BILL OF MATERIAL

END BENT NO. 2

BAR	NO.	SIZE	TYPE	LENGTH	WEIGHT
B1	10	#29	1	15920	806
B2	2	#19	STR.	15200	68
B3	8	#13	STR.	7980	63
B4	13	#13	STR.	880	11
H1	10	#16	2	2840	44
H2	10	#16	2	2880	45
H3	10	#16	3	2500	39
H4	10	#16	3	2460	38
K1	10	#13	STR.	7980	79
K2	8	#13	STR.	1180	9
S1	62	#13	4	1120	69
S2	62	#13	5	2420	149
S3	16	#13	7	2000	32
U1	42	#13	6	1120	47
V1	84	#16	STR.	2220	289
V2	28	#16	STR.	2820	123
V3	26	#16	STR.	2580	104

REINFORCING STEEL = 2015 kg

CLASS A CONCRETE BREAKDOWN

POUR #1 CAP LOWER PART OF WINGS
CUBIC METERS 13.0

POUR #2 UPPER PART OF WINGS & BACKWALL
CUBIC METERS 10.7

TOTAL CLASS A CONCRETE
CUBIC METERS 23.7

HP 310 X 79 STEEL PILES
NO. 8 LIN. METERS = 192.0

PROJECT NO. R-2554BA
WAYNE COUNTY
STATION: 87+73.739-L2-

SHEET 3 OF 3

STATE OF NORTH CAROLINA
DEPARTMENT OF TRANSPORTATION
RALEIGH

SUBSTRUCTURE END BENT #2

REVISIONS						SHEET NO.
NO.	BY:	DATE:	NO.	BY:	DATE:	S-116
1			3			TOTAL SHEETS
2			4			487

NORTH CAROLINA PROFESSIONAL SEAL 15825 ENGINEER BRUCE D. KLAPPENBERGER
6-6-08

DRAWN BY : H. T. BARBOUR DATE : 7-30-07
CHECKED BY : C. R. YARBROUGH DATE : 11-07

str. #4

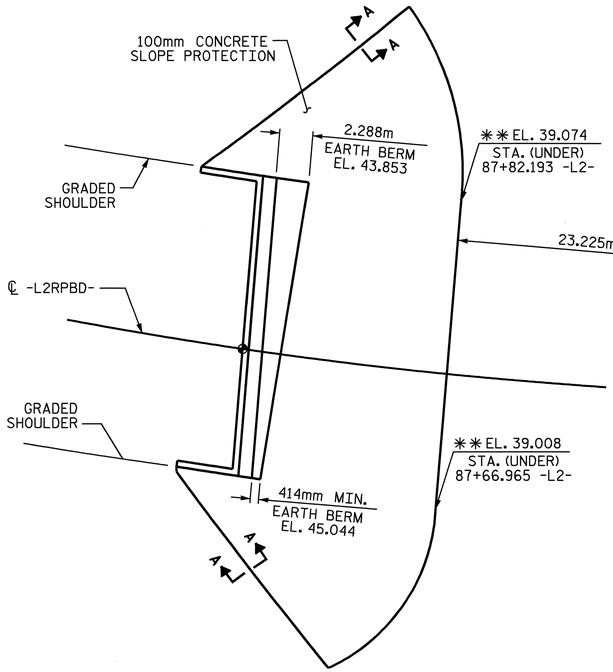

END BENT #1

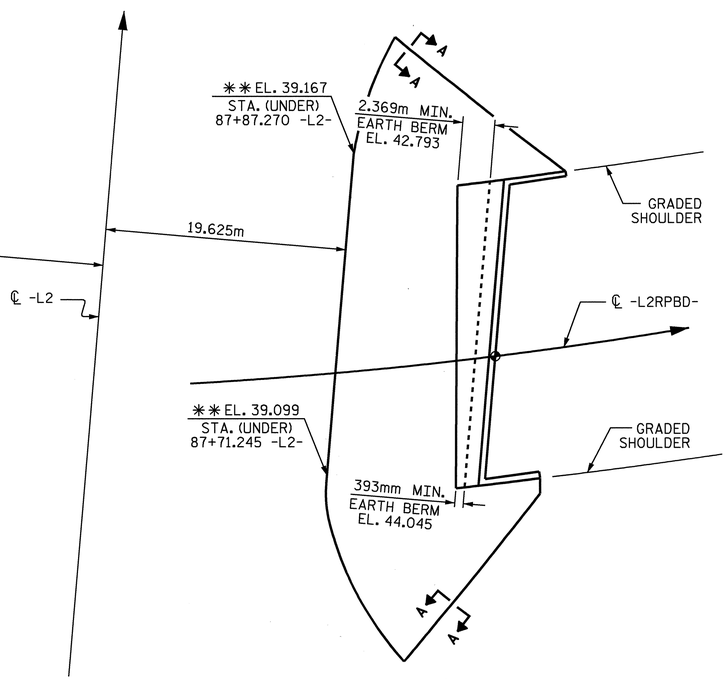

END BENT #2

PLAN

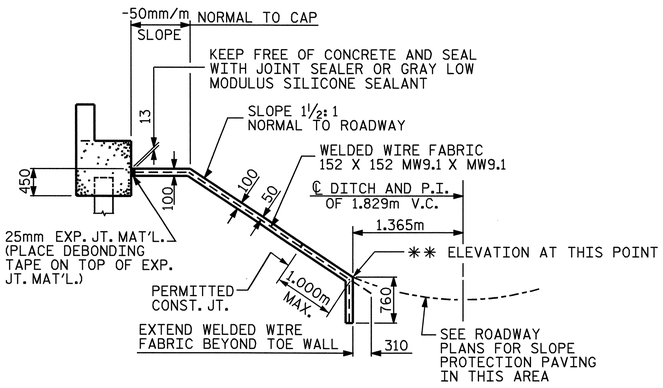

SECTION ALONG ℄ ROADWAY WHEN FILL CATCHES IN DITCH

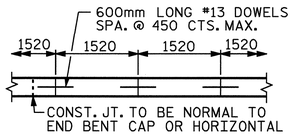

STRIP WIDTHS MAY VARY IN CURVED PORTION.

POURING DETAIL

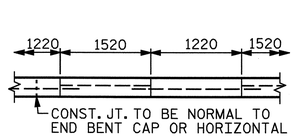

POUR A 1220mm STRIP FIRST. STRIP WIDTHS MAY VARY IN CURVED PORTION.

OPTIONAL POURING DETAIL

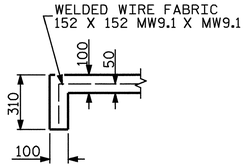

SECTION A-A

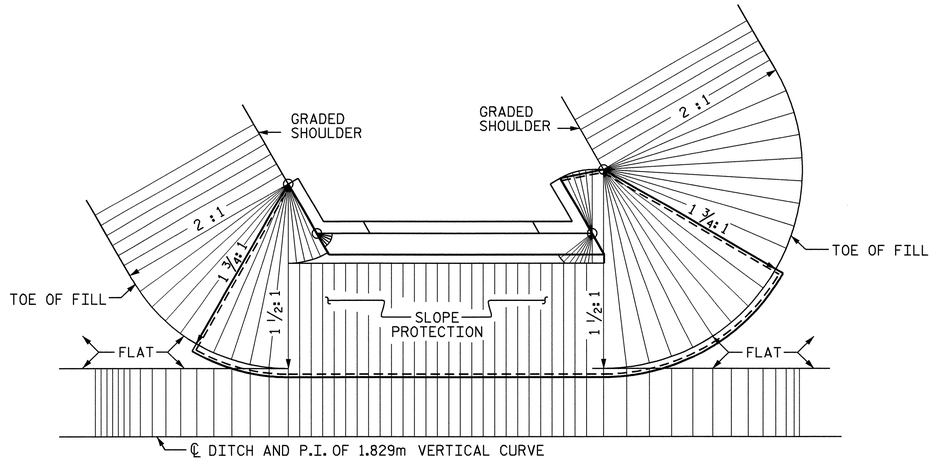

PLAN - END BENT WITH SWEPT BACK WINGS - SKEWED

(1 ½:1 SLOPE)

GENERAL NOTES

SLOPE PROTECTION SHALL BE PLACED UNDER THE ENDS OF THE BRIDGE AS SHOWN IN THE DETAILS. THE CONTRACTOR, AT HIS OPTION, MAY USE ALTERNATE "B" ONLY FOR HIGHWAY OVER HIGHWAY GRADE SEPARATIONS WITH 2:1 END BENT SLOPE IN RURAL, UNPOPULATED AREAS. STRAIGHT EDGING WILL NOT BE REQUIRED UNLESS, IN THE OPINION OF THE ENGINEER, VISUAL INSPECTION INDICATES A NEED FOR IT. MEASUREMENT AND PAYMENT SHALL BE AS PRESCRIBED IN SECTION 462 OF THE STANDARD SPECIFICATIONS. FOR BERM WIDTH, SEE GENERAL DRAWING.

ALTERNATE "A"

ALTERNATE "A" SHALL CONSIST OF 100mm POURED-IN-PLACE CONCRETE PAVING AS SHOWN IN THE DETAILS ON THIS SHEET. CONCRETE SHALL BE CLASS "B". THE CONCRETE SURFACE SHALL BE FLOATED WITH A WOODEN FLOAT AND FINISHED. WELDED WIRE FABRIC REINFORCING SHALL BE 152 X 152 - W9.1 X W9.1, 1520mm WIDE. SLOPE PROTECTION SHALL BE POURED IN 1520mm STRIPS AS SHOWN IN THE "POURING DETAIL" WITH 600mm LONG #13 BARS PLACED ALONG THE SLOPE BETWEEN STRIPS AT 450mm MAXIMUM SPACING. SLOPE PROTECTION MAY BE POURED IN ALTERNATE 1220mm AND 1520mm STRIPS AS SHOWN IN THE "OPTIONAL POURING DETAIL" WITH ADJACENT RUNS OF WELDED WIRE FABRIC LAPPING AT LEAST 152mm. THE COST OF THE WELDED WIRE FABRIC AND #13 BARS, IF USED, SHALL BE INCLUDED IN THE CONTRACT UNIT PRICE BID PER SQUARE METER FOR SLOPE PROTECTION.

BRIDGE @ STA. 11+09.326 -L2RPBD-	100mm SLOPE PROTECTION	* WELDED WIRE FABRIC 1520mm WIDE
	SQUARE METERS	APPROX. METERS
END BENT 1	437	319
END BENT 2	326	238

* QUANTITY SHOWN IS BASED ON 1520mm POURS.

PROJECT NO. R-2554BA

WAYNE COUNTY

STATION: 87+73.739 -L2-

STATE OF NORTH CAROLINA
DEPARTMENT OF TRANSPORTATION
RALEIGH

STANDARD SLOPE PROTECTION DETAILS

REVISIONS						SHEET NO.
NO.	BY:	DATE:	NO.	BY:	DATE:	S-117
1			3			TOTAL SHEETS
2			4			478

ASSEMBLED BY : M. G. SHAIKH	DATE : 07/23/07		
CHECKED BY : B. D. KLAPPENBACH	DATE : 04/23/08		
DRAWN BY : ELR 5/92	REV. 7/10/01	LES/RDR	
CHECKED BY : GRP 6/92	REV. 5/7/03	RWW/JTE	
	REV. 5/1/06	TLA/GM	

NORTH CAROLINA PROFESSIONAL SEAL 15825 ENGINEER BRUCE D. KLAPPENBACH

6-6-08

STR. #4

STD. NO. SP1SM

06-JUN-2008 14:14
R:\Structures\BAILEY\Str#4\mshaikh\Microstation\R-2554BA_sd_SP.dgn
bklappenbach

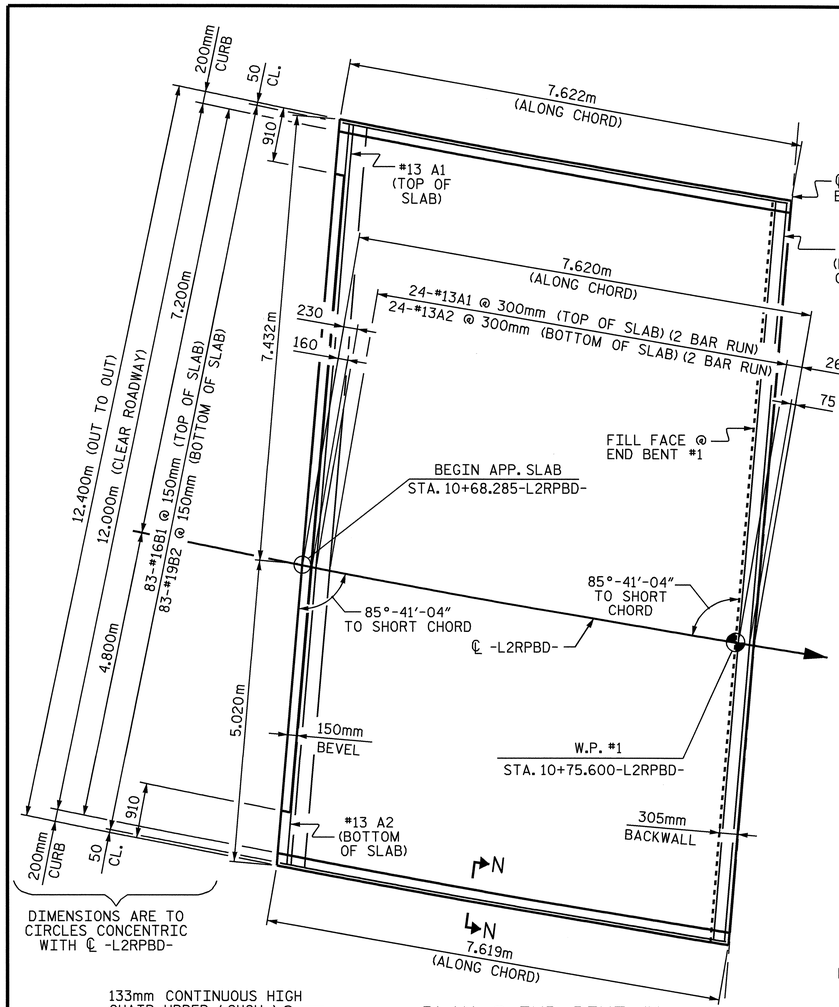

PLAN @ END BENT #1

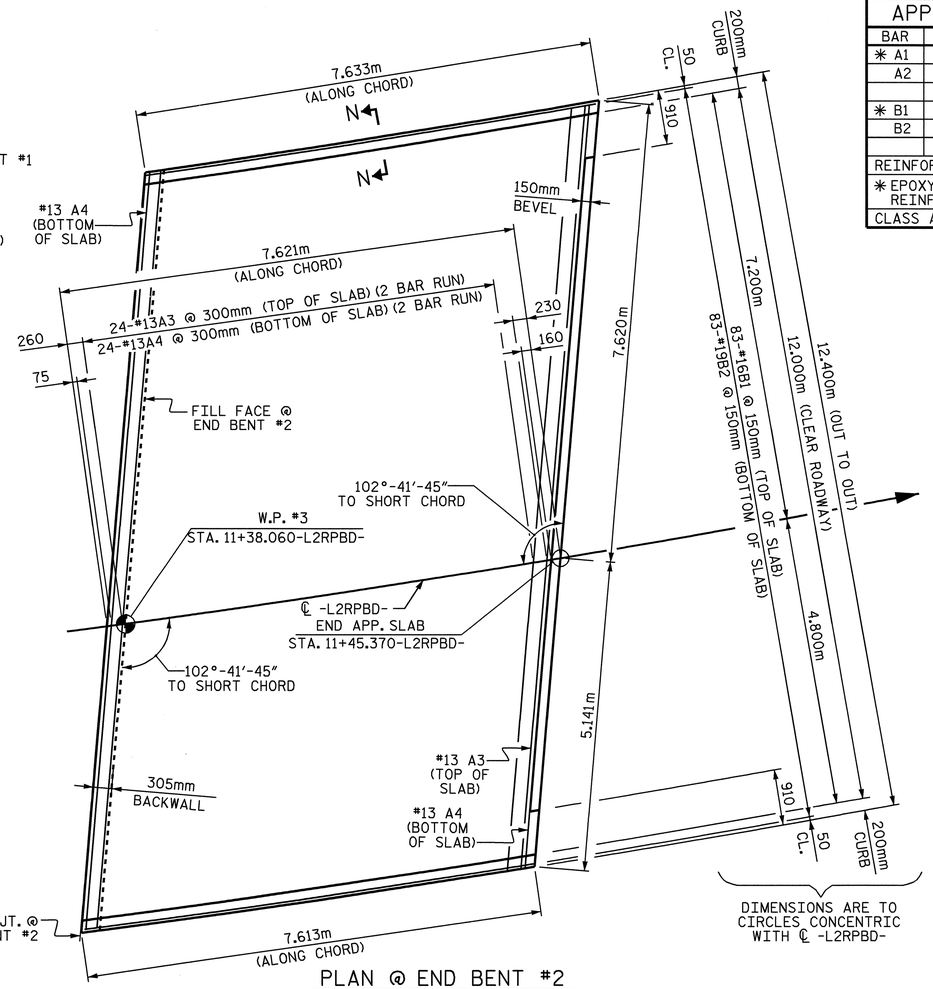

PLAN @ END BENT #2

BILL OF MATERIAL

APPROACH SLAB AT EB #1						APPROACH SLAB AT EB #2					
BAR	NO.	SIZE	TYPE	LENGTH	WEIGHT	BAR	NO.	SIZE	TYPE	LENGTH	WEIGHT
✳ A1	50	#13	STR	6480	322	✳ A3	50	#13	STR	6640	330
A2	52	#13	STR	6460	334	A4	52	#13	STR	6600	341
✳ B1	83	#16	STR	7240	933	✳ B1	83	#16	STR	7240	933
B2	83	#19	STR	7500	1391	B2	83	#19	STR	7500	1391
REINFORCING STEEL				kg.	1725	REINFORCING STEEL				kg.	1732
✳ EPOXY COATED REINFORCING STEEL				kg.	1255	✳ EPOXY COATED REINFORCING STEEL				kg.	1263
CLASS AA CONCRETE				C.M.	29.4	CLASS AA CONCRETE				C.M.	29.4

NOTES

APPROACH SLAB SHALL NOT BE CONSTRUCTED PRIOR TO COMPLETION OF THE BRIDGE DECK.

FOR REINFORCED BRIDGE APPROACH FILL INCLUDING FABRIC, IMPERMEABLE GEOMEMBRANE, 102mm Ø DRAINAGE PIPE, #78M STONE, AND SELECT MATERIAL, SEE ROADWAY PLANS.

AREA BETWEEN THE WINGWALL AND APPROACH SLAB SHALL BE GRADED TO DRAIN THE WATER AWAY FROM THE FILL FACE OF THE BRIDGE AND SHALL BE PAVED. SEE ROADWAY PLANS.

THE 150mm COMP. A.B.C. SHALL BE FLUSH WITH THE ROADWAY END OF THE APPROACH SLAB AND SHALL EXTEND 300mm OUTSIDE OF EACH EDGE OF THE APPROACH SLAB.

THE CONTRACTOR MAY USE 100mm TYPE B-25.0B ASPHALT CONCRETE COURSE IN LIEU OF 150mm COMP. A.B.C. IF THIS OPTION IS USED, THE BASE COURSE SHALL BE FLUSH WITH THE ROADWAY END OF THE APPROACH SLAB, AND THE WIDTH SHALL BE THE SAME AS THAT OF THE APPROACH SLAB.

THE CONTRACTOR MAY USE 125mm CLASS "A" CONCRETE BASE IN LIEU OF 150mm COMP. A.B.C. IF THIS OPTION IS USED, THE CONCRETE BASE SHALL BE FLUSH WITH THE ROADWAY END OF THE APPROACH SLAB, AND THE WIDTH SHALL BE THE SAME AS THAT OF THE APPROACH SLAB. THE CONCRETE SHALL BE FINISHED TO A SMOOTH SURFACE AND A LAYER OF 13.6 kg ROOFING FELT SHALL BE PLACED BETWEEN THE CONCRETE BASE AND THE APPROACH SLAB TO PREVENT BOND. THE APPROACH SLAB SHALL NOT BE CAST UNTIL THE CONCRETE BASE HAS REACHED AN AGE OF THREE CURING DAYS.

FOR ARMORED EVAZOTE JOINT SEALS, SEE ARMORED EVAZOTE JOINT DETAILS SHEET.

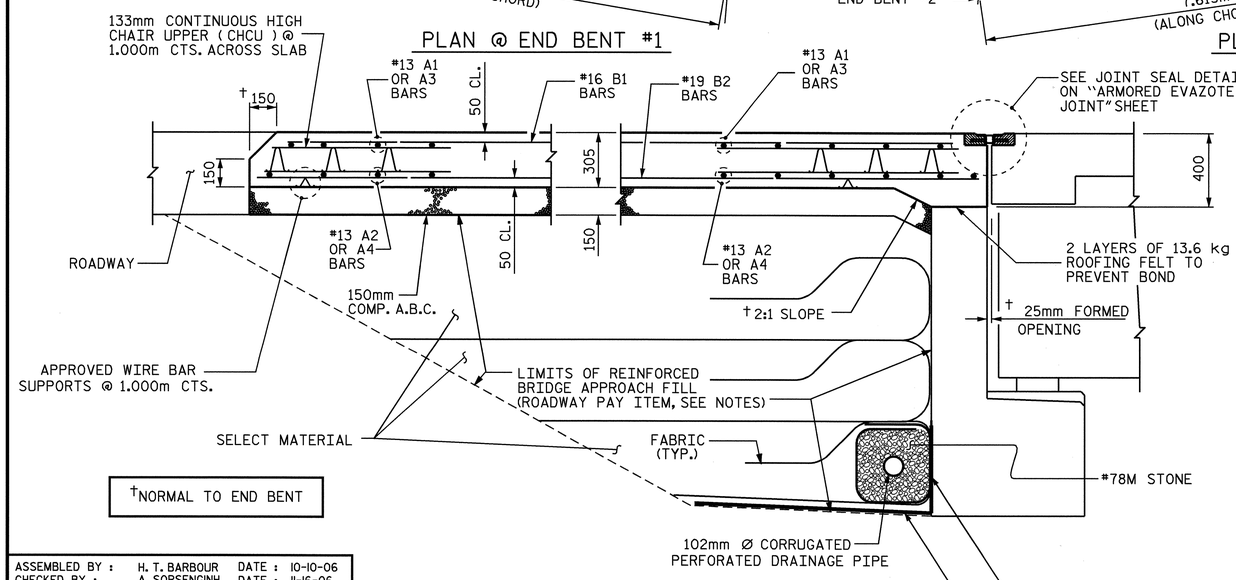

†NORMAL TO END BENT

SECTION THRU SLAB

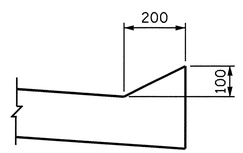

SECTION N-N

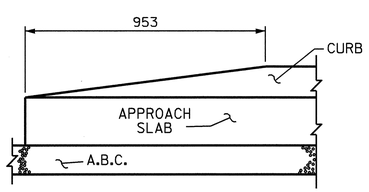

END OF CURB WITHOUT SHOULDER BERM GUTTER

CURB DETAILS

ASSEMBLED BY :	H. T. BARBOUR	DATE :	10-10-06
CHECKED BY :	A. SORSENGINH	DATE :	11-16-06
DRAWN BY : FCJ 6/87	REV. 7/10/01		RWW/LES
CHECKED BY : EGA 6/87	REV. 5/7/03R		RWW/JTE
	REV. 5/1/06		TLA/GM

06-JUN-2008 13:48
r:\structures\bailey\str#4\tbarbour\r-2554ba_sd_as.dgn
tbarbour

PROJECT NO. R-2554BA

WAYNE COUNTY

STATION: 87+73.739-L2-

SHEET 1 OF 2

STATE OF NORTH CAROLINA
DEPARTMENT OF TRANSPORTATION
RALEIGH

STANDARD

BRIDGE APPROACH SLAB FOR FLEXIBLE PAVEMENT

REVISIONS						SHEET NO.
NO.	BY:	DATE:	NO.	BY:	DATE:	S-118
1			3			TOTAL SHEETS 478
2			4			

NORTH CAROLINA PROFESSIONAL SEAL 15825 ENGINEER BRUCE O. KLAPPENBACH

STR. #4 STD. NO. BAS4SM

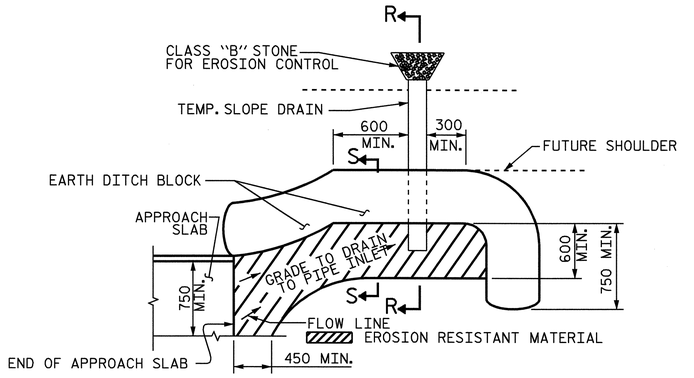

NOTE: IMMEDIATELY AFTER THE CONSTRUCTION OF THE APPROACH SLAB, THE CONTRACTOR SHALL PROVIDE TEMPORARY BERM AND SLOPE DRAIN. CONTRACTOR SHALL GRADE TO PIPE INLET AND PROVIDE EROSION RESISTANT MATERIAL AS SHOWN. THE EROSION RESISTANT MATERIAL SHALL BE EITHER 1) ASPHALT PLANT MIX, TYPE 1 OR TYPE 2, MIN. 50mm DEPTH, 2) EROSION CONTROL MAT, OR 3) CONCRETE, AS DIRECTED BY THE ENGINEER. THE SLOPE DRAIN SHALL CONSIST OF A NON-PERFORATED TEMPORARY DRAINAGE PIPE, 305mm IN DIAMETER.

PLAN VIEW

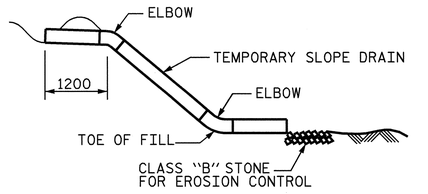

SECTION R-R

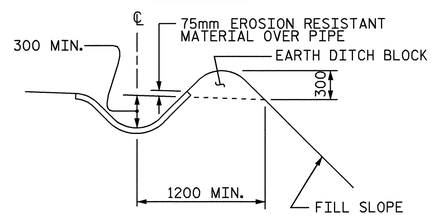

SECTION S-S

TEMPORARY BERM AND SLOPE DRAIN DETAILS

(TO BE USED WHEN SHOULDER BERM GUTTER IS REQUIRED)

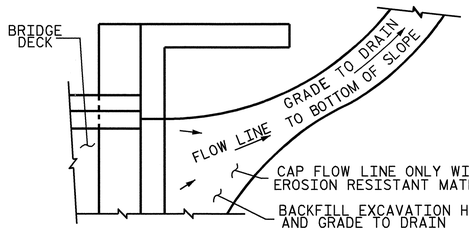

NOTE: IF THE APPROACH SLAB IS NOT CONSTRUCTED IMMEDIATELY AFTER THE BACKFILLING OF THE END BENT EXCAVATION, GRADE TO DRAIN TO THE BOTTOM OF THE SLOPE AND PROVIDE EROSION RESISTANT MATERIAL, SUCH AS FIBERGLASS ROVING OR AS DIRECTED BY THE ENGINEER TO PREVENT SOIL EROSION AND TO PROTECT THE AREA ADJACENT TO THE STRUCTURE. THE CONTRACTOR WILL BE REQUIRED TO REMOVE THESE MATERIALS PRIOR TO CONSTRUCTION OF THE APPROACH SLAB.

TEMPORARY DRAINAGE DETAIL

ASSEMBLED BY :	H. T. BARBOUR	DATE :	10-10-06
CHECKED BY :	A. SORSENGINH	DATE :	11-16-06
DRAWN BY : FCJ 11/88	REV. 10/17/00		RWW/LES
CHECKED BY : ARB 11/88	REV. 5/7/03		RWW/JTE
	REV. 5/1/06		TLA/GM

05-JUN-2008 16:01
r:\structures\balley\Str#4\tbarbour\R-2554BA_sd_AS.dgn
tbarbour

PROJECT NO. R-2554BA

WAYNE COUNTY

STATION: 87+73.739-L2-

SHEET 2 OF 2

STATE OF NORTH CAROLINA
DEPARTMENT OF TRANSPORTATION
RALEIGH

STANDARD
BRIDGE APPROACH SLAB DETAILS

NORTH CAROLINA PROFESSIONAL SEAL 15825 ENGINEER BRADLEY D. KLAPPENBACH
6-6-08

REVISIONS						SHEET NO.
NO.	BY:	DATE:	NO.	BY:	DATE:	S-119
1			3			TOTAL SHEETS
2			4			478

STR. #4

STD. NO. BAS10SM

F.A. PROJ. NO. NHS-70(106)

5+00 6+00

+0.8271% +0.300%

PVI STA. 87+00.000 -L2-
PVI EL. = 38.255
V.C. = 300.000m

GRADE DATA -L2-

+3.500% +2.700%

PVI STA. 5+00.000 -L2RPDB-
PVI EL. = 44.840
V.C. = 280.000m

GRADE DATA -L2RPDB-

SPAN "A" SPAN "B"

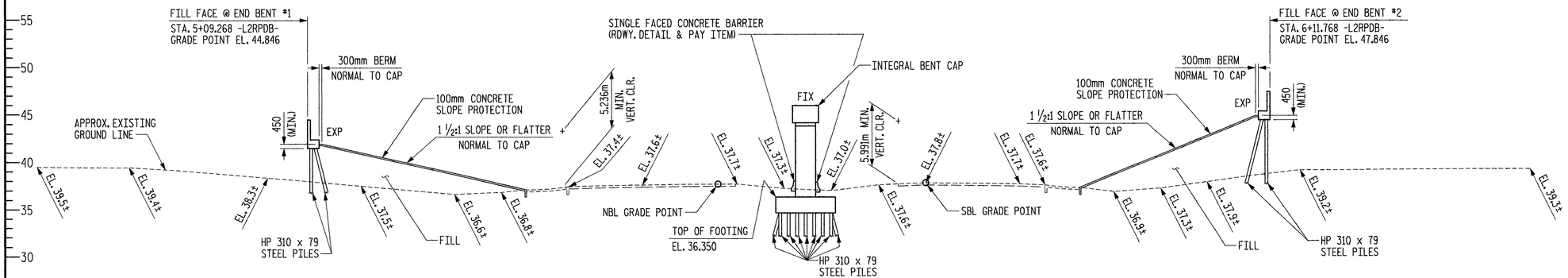

SECTION ALONG ℄ SURVEY -L2RPDB-

(BENTS ON SECTION AT RIGHT ANGLES TO BENTS)

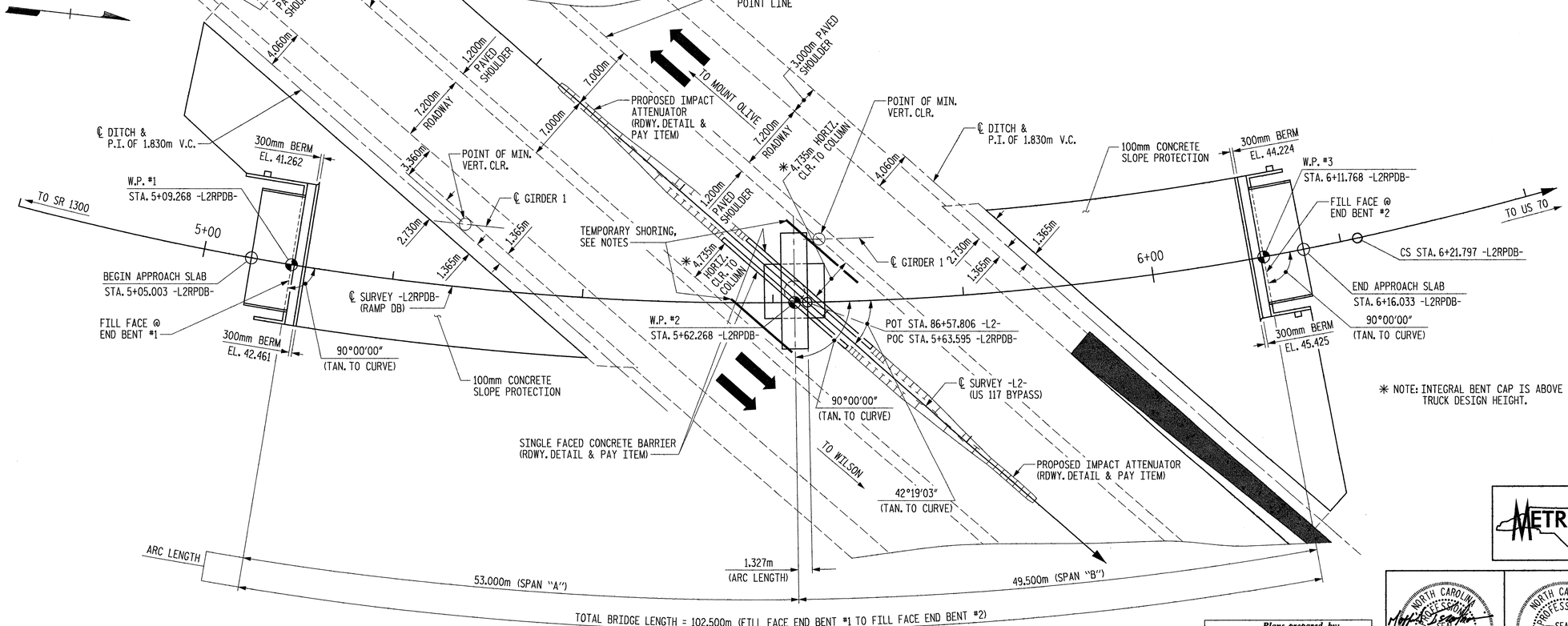

PLAN

(PIELS NOT SHOWN FOR CLARITY)

HORIZ. CURVE DATA -L2RPDB-

PI STA. 4+69.669 -L2RPDB-
△ = 66°55'13.0"(LT.)
L = 350.394m
T = 198.266m
R = 300.000m

✳ NOTE: INTEGRAL BENT CAP IS ABOVE TRUCK DESIGN HEIGHT.

PROJECT NO. R-2554BA

WAYNE COUNTY

STATION: POT 86+57.806 -L2- =
POC 5+63.595 -L2RPDB-

SHEET 1 OF 4 BRIDGE NO. 357

METRIC

STATE OF NORTH CAROLINA
DEPARTMENT OF TRANSPORTATION
RALEIGH

GENERAL DRAWING
FOR BRIDGE ON RAMP DB
OVER US 117 BYPASS
BETWEEN EXISTING US 117
AND SR 1300 (SALEM CHURCH ROAD)

REVISIONS						SHEET NO.
NO.	BY:	DATE:	NO.	BY:	DATE:	S-120
1			3			TOTAL SHEETS
2			4			478

NORTH CAROLINA PROFESSIONAL SEAL 12323 ENGINEER MORRIS ISRAELNAM 06/06/08

NORTH CAROLINA PROFESSIONAL SEAL 34601 ENGINEER CHIH KUO KO 06/06/08

DWG. NO. 1

Plans prepared by:
KO & ASSOCIATES, P.C.
Consulting Engineers
5121 KINGDOM WAY, SUITE #100
RALEIGH, N.C. 27607
(919)-851-6066

DRAWN BY B.E. LANNING DATE JAN. 2007
CHECKED BY A.K. ORR / J.C. KO DATE JAN. 2007

PLOT: 6/4/2008 3:02:36 PM Ko & Associates, P.C.
FILE NAME: R:\SI-pictures\r-2554ba_sd_gd_18.dgn

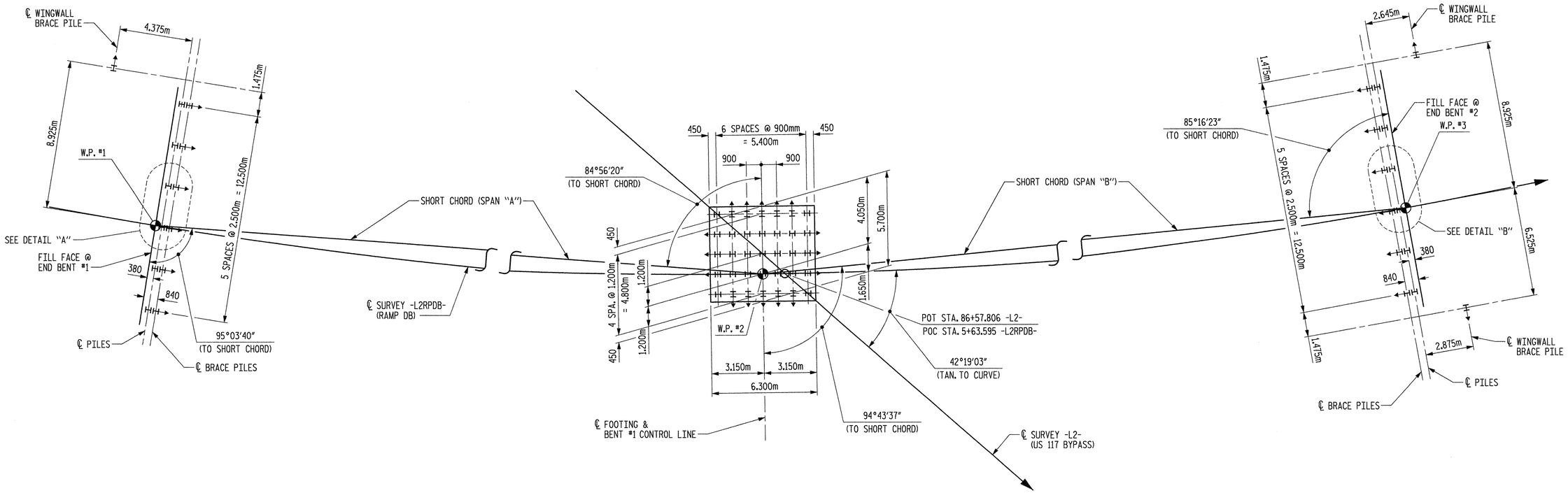

END BENT #1 — BENT #1 — END BENT #2

FOUNDATION PLAN

BRACE PILES @ END BENTS ARE TO BE BATTERED @ 250mm PER METER.

BRACE PILES @ INTERIOR BENTS ARE TO BE BATTERED @ 125mm PER METER.

DIMENSIONS LOCATING PILES ARE TO PILE CENTERLINES.

ALL PILES ARE HP 310 x 79 STEEL PILES.

↑ INDICATES BATTER DIRECTION.

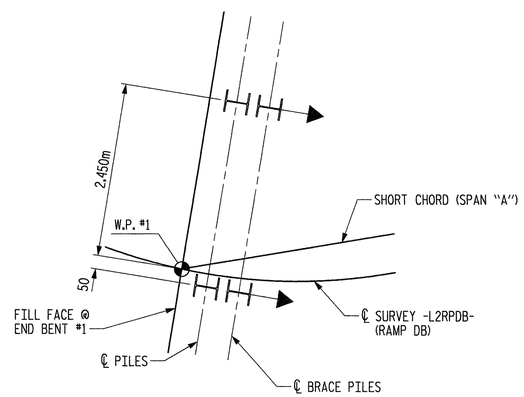

DETAIL "A"

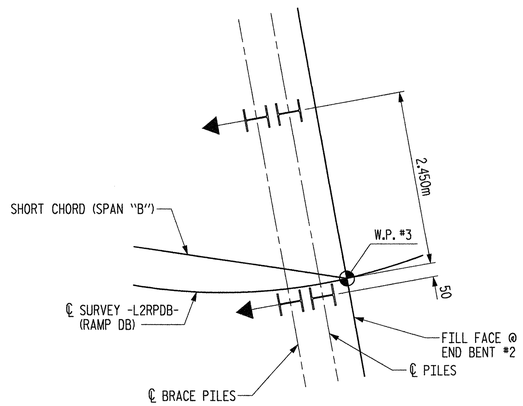

DETAIL "B"

PROJECT NO. R-2554BA

WAYNE COUNTY

STATION: 86+57.806 -L2-

SHEET 2 OF 4

STATE OF NORTH CAROLINA
DEPARTMENT OF TRANSPORTATION
RALEIGH

GENERAL DRAWING
FOUNDATION LAYOUT

METRIC

Plans prepared by:
KO & ASSOCIATES, P.C.
Consulting Engineers
1011 SCHAUB DR. SUITE #202
RALEIGH, N.C. 27606
For Division of Highways

NORTH CAROLINA PROFESSIONAL SEAL 9601 ENGINEER CHIH KUO KO 11-07

DWG. NO. 2

REVISIONS						SHEET NO.
NO.	BY:	DATE:	NO.	BY:	DATE:	S-121
1			3			TOTAL SHEETS
2			4			478

DRAWN BY B.E. LANNING DATE JAN. 2007
CHECKED BY A.K. ORR / J.C. KO DATE JAN. 2007

PLOT: 1/18/2007 2:10:54 PM Ko & Associates, P.C.
FILE NAME: R:\Structures\r-2554ba_sd_fl_18.dgn

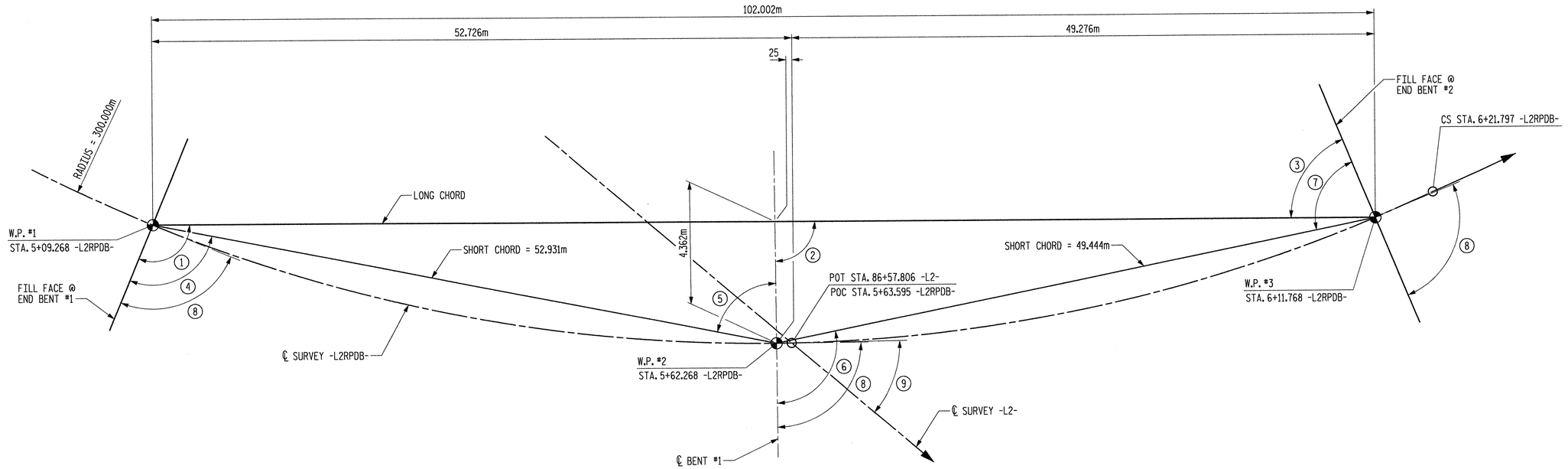

LONG CHORD LAYOUT

ALL BENTS ARE RADIAL TO ℄ SURVEY -L2RPDB-

ANGLES

1. 99°47'17"
2. 89°39'57"
3. 80°12'43"
4. 95°03'40"
5. 84°56'20"
6. 94°43'37"
7. 85°16'23"
8. 90°00'00" (TAN. TO CURVE)
9. 42°19'03" (TAN. TO CURVE)

PROJECT NO. R-2554BA

WAYNE COUNTY

STATION: 86+57.806 -L2-

SHEET 3 OF 4

STATE OF NORTH CAROLINA
DEPARTMENT OF TRANSPORTATION
RALEIGH

GENERAL DRAWING
LONG CHORD LAYOUT

METRIC

Plans prepared by:
KO & ASSOCIATES, P.C.
Consulting Engineers
1011 SCHAUB DR. SUITE #202
RALEIGH, N.C. 27606
For Division of Highways

NORTH CAROLINA PROFESSIONAL SEAL 5604 ENGINEER CHIH KUO KO
1/31/07

DWG. NO. 3

REVISIONS						SHEET NO.
NO.	BY:	DATE:	NO.	BY:	DATE:	S-122
1			3			TOTAL SHEETS
2			4			478

DRAWN BY B.E. LANNING DATE JAN. 2007
CHECKED BY A.K. ORR / J.C. KO DATE JAN. 2007

PLOT: 1/18/2007 3:18:52 PM Ko & Associates, P.C.
FILE NAME: R:\Structures\r-2554ba_sd_1a_l2.dgn

B.M. #1: RAILROAD SPIKE IN BASE OF 18" PINE, 77' LEFT OF STA. 91+67.00 -L-; EL. 40.614.

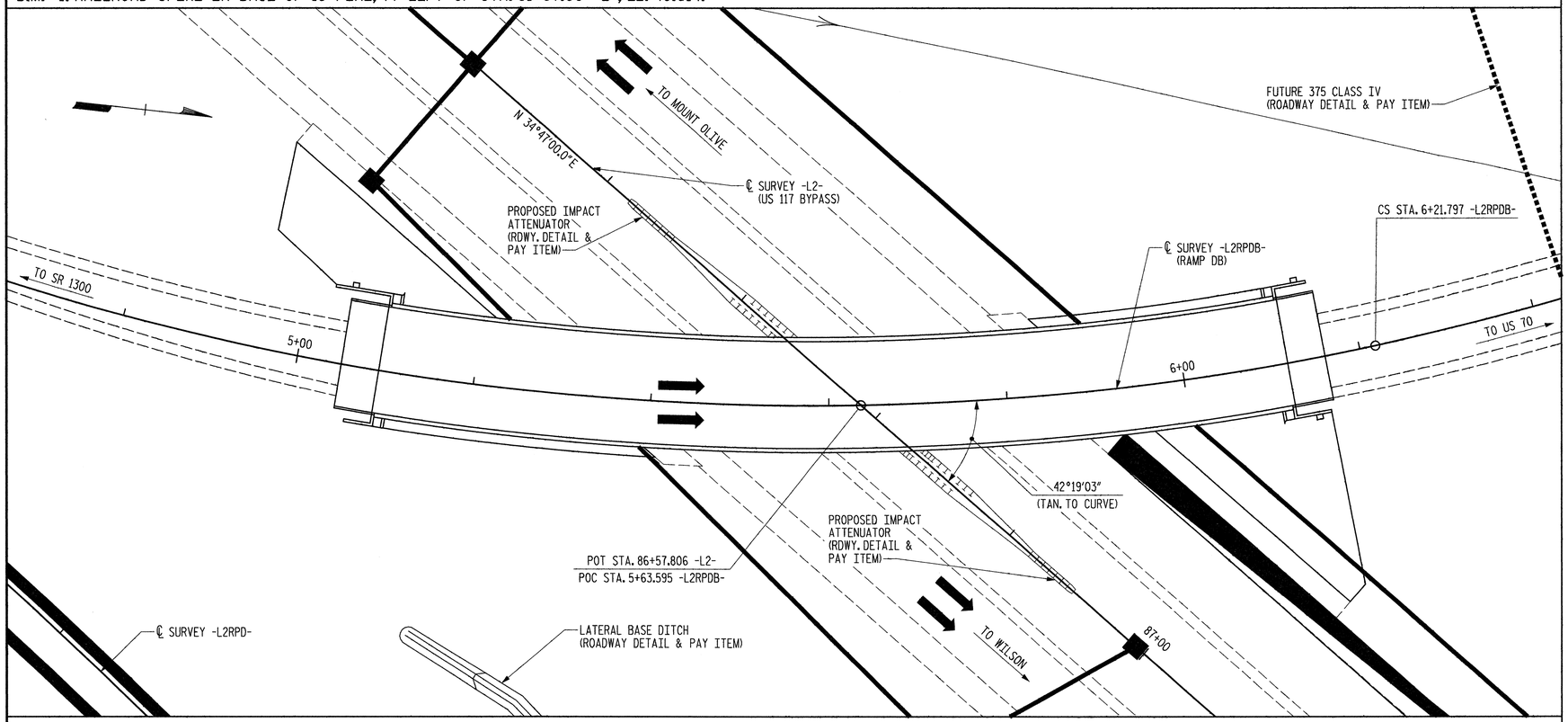

LOCATION SKETCH

NOTE: NO KNOWN UTILITY CONFLICTS.

NOTES

ALL DIMENSIONS ARE IN MILLIMETERS UNLESS OTHERWISE NOTED.

ALL ELEVATIONS ARE IN METERS.

ASSUMED LIVE LOAD = MS 18 OR ALTERNATE LOADING, EXCEPT THAT THE GIRDERS HAVE BEEN DESIGNED FOR MS22.

FOR OTHER DESIGN DATA AND GENERAL NOTES, SEE SHEET SNSM.

THIS BRIDGE HAS BEEN DESIGNED BY THE STRENGTH DESIGN METHOD AS SPECIFIED IN AASHTO SPECIFICATIONS.

THIS BRIDGE HAS BEEN DESIGNED IN ACCORDANCE WITH THE REQUIREMENTS OF THE "STANDARD SPECIFICATIONS FOR SEISMIC DESIGN OF HIGHWAY BRIDGES FOR SEISMIC PERFORMANCE CATEGORY A".

THE CONTRACTOR SHALL PROVIDE INDEPENDENT ASSURANCE SAMPLES OF REINFORCING STEEL AS FOLLOWS: FOR PROJECTS REQUIRING UP TO 360,000 kg OF REINFORCING STEEL, ONE 760mm SAMPLE OF EACH SIZE BAR USED, AND FOR PROJECTS REQUIRING OVER 360,000 kg OF REINFORCING STEEL, TWO 760mm SAMPLES OF EACH SIZE BAR USED. THE BARS FROM WHICH THE SAMPLES ARE TAKEN MUST THEN BE SPLICED WITH REPLACEMENT BARS OF THE SIZE AND LENGTH OF THE SAMPLE, PLUS A MINIMUM LAP SPLICE OF THIRTY BAR DIAMETERS.

ALL STRUCTURAL STEEL SHALL BE AASHTO M270 GRADE 345W AND PAINTED IN ACCORDANCE WITH SYSTEM 4 OF ARTICLE 442-7 OF THE STANDARD SPECIFICATIONS UNLESS OTHERWISE NOTED ON THE PLANS.

FOR FALSEWORK AND FORMWORK, SEE SPECIAL PROVISIONS.

FOR EROSION CONTROL MEASURES, SEE EROSION CONTROL PLANS.

FOR SUBMITTAL OF WORKING DRAWING, SEE SPECIAL PROVISIONS.

FOR METRIC STRUCTURAL STEEL, SEE SPECIAL PROVISIONS.

NEEDLE BEAMS WILL NOT BE ALLOWED UNLESS OTHERWISE CALLED FOR ON THE PLANS OR APPROVED BY THE ENGINEER.

DRIVE PILES AT END BENT #1, BENT #1 AND END BENT #2 TO A REQUIRED BEARING CAPACITY OF 1060 kN PER PILE. THE REQUIRED BEARING CAPACITY IS EQUAL TO THE ALLOWABLE BEARING CAPACITY WITH A MINIMUM FACTOR OF SAFETY OF TWO.

THE ALLOWABLE BEARING CAPACITY FOR PILES AT END BENT #1, BENT #1 AND END BENT #2 IS 530 kN PER PILE.

REMOVABLE FORMS MAY BE USED IN LIEU OF METAL STAY-IN-PLACE FORMS IN ACCORDANCE WITH ARTICLES 420-3 OF THE STANDARD SPECIFICATIONS.

FOR LIMITS OF TEMPORARY SHORING, SEE TRAFFIC CONTROL PLANS. FOR TEMPORARY SHORING PAY ITEM, SEE ROADWAY PLANS.

FOR CRANE SAFETY, SEE SPECIAL PROVISIONS.

FOR GROUT FOR STRUCTURES, SEE SPECIAL PROVISIONS.

TOTAL BILL OF MATERIAL

	FOUNDATION EXCAVATION	REINFORCED CONCRETE DECK SLAB	GROOVING BRIDGE FLOORS	41.4 Mpa CONCRETE	CLASS "A" CONCRETE	BRIDGE APPROACH SLABS	REINFORCING STEEL	SPIRAL COLUMN REINFORCING STEEL	STRUCTURAL STEEL	HP 310 X 79 STEEL PILES		CONCRETE BARRIER RAIL	100mm SLOPE PROTECTION	POT BEARINGS	EVAZOTE JOINT SEALS	POST-TENSIONING TENDONS
	LUMP SUM	SQ. M	SQ. M	CU. M	CU. M	LUMP SUM	kg	kg	APPROX. kg	NO.	M	M	SQ. M.	LUMP SUM	LUMP SUM	LUMP SUM
SUPERSTRUCTURE		1317.7	1218.2						303450			202.884		LUMP SUM	LUMP SUM	
END BENT #1					36.2	LUMP SUM	3270			13	247.0		570			
BENT #1	LUMP SUM			55.8	86.7		11476	699		35	385.0					LUMP SUM
END BENT #2					38.9	LUMP SUM	3159			14	294.0		730			
TOTAL	LUMP SUM	1317.7	1218.2	55.8	161.8	LUMP SUM	17905	699	303450	62	926.0	202.884	1300	LUMP SUM	LUMP SUM	LUMP SUM

PROJECT NO. R-2554BA

WAYNE COUNTY

STATION: 86+57.806 -L2-

SHEET 4 OF 4

METRIC

STATE OF NORTH CAROLINA
DEPARTMENT OF TRANSPORTATION
RALEIGH

GENERAL DRAWING
FOR BRIDGE ON RAMP DB
OVER US 117 BYPASS
BETWEEN EXISTING US 117
AND SR 1300 (SALEM CHURCH ROAD)

Plans prepared by:
KO & ASSOCIATES, P.C.
Consulting Engineers
5121 KINGDOM WAY, SUITE #100
RALEIGH, N.C. 27607
(919)-851-6066

NORTH CAROLINA PROFESSIONAL SEAL 26607 ENGINEER CHIH KUO KO 2/06/08

DWG. NO. 4

REVISIONS						SHEET NO.
NO.	BY:	DATE:	NO.	BY:	DATE:	S-123
1			3			TOTAL SHEETS
2			4			478

DRAWN BY B.E. LANNING DATE JAN. 2007
CHECKED BY A.K. ORR / J.C. KO DATE JAN. 2007

PLOT: 6/6/2008 11:08:39 AM Ko & Associates, P.C.
FILE NAME: R:\Structures\r2554ba_sd_ts_18.dgn

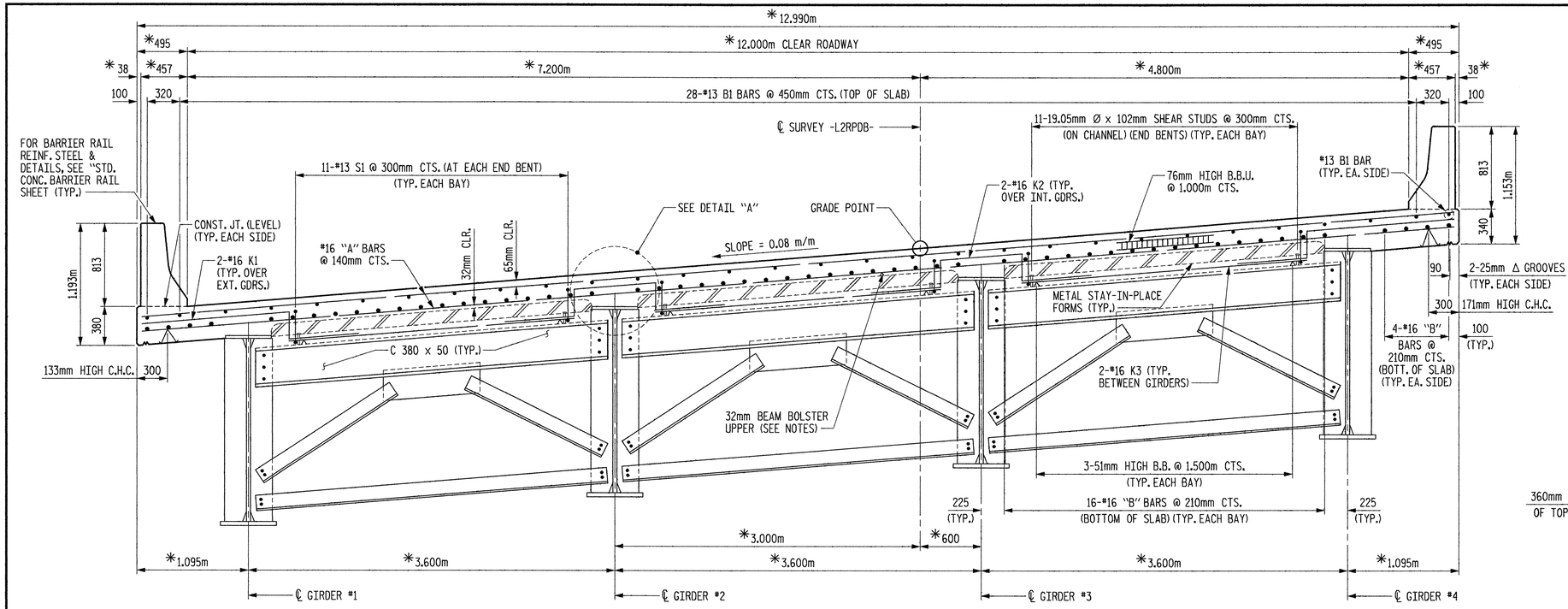

SECTION SHOWING END BENT CROSS FRAMES

* NORMAL OR RADIAL TO ℄ SURVEY -L2RPDB-

TYPICAL SECTION

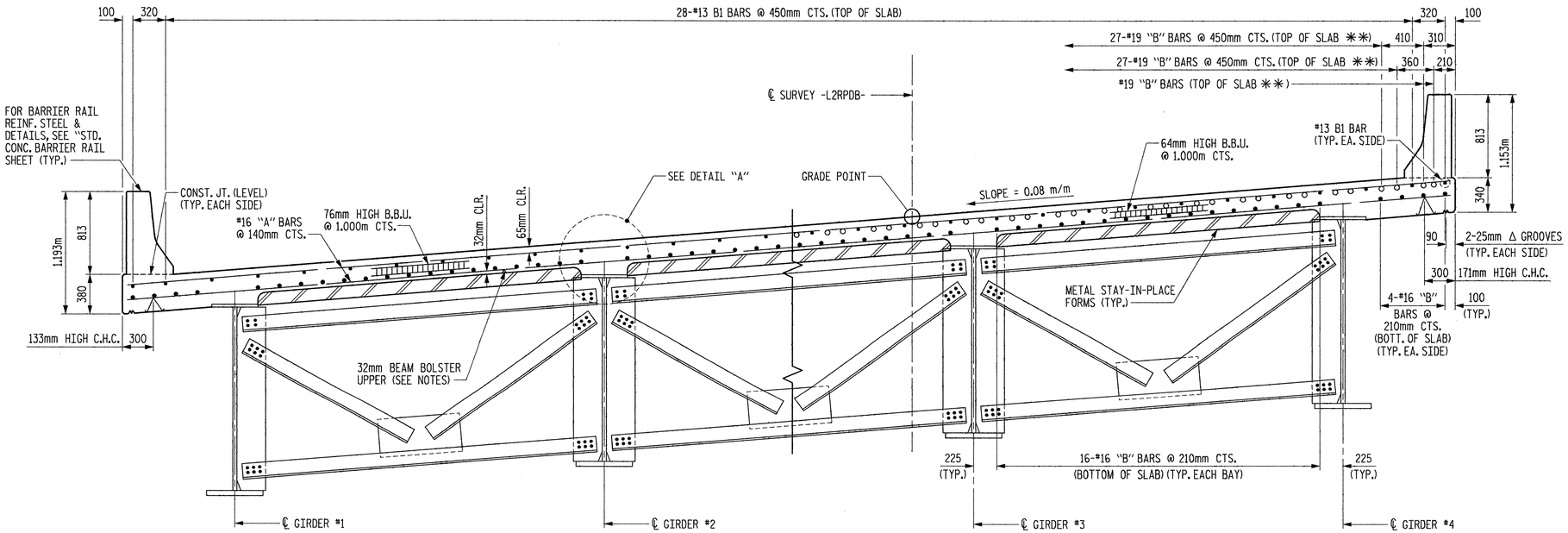

HALF SECTION SHOWING INTERMEDIATE CROSS FRAMES

HALF SECTION SHOWING INTERMEDIATE CROSS FRAMES ADJACENT TO INTERIOR BENT #1

TYPICAL SECTION

FOR DIMENSIONS NOT SHOWN, SEE TYPICAL SECTION ABOVE

** SEE SUPERSTRUCTURE "B" BAR LAYOUT FOR LOCATIONS.

NOTES

PROVIDE 32mm HIGH BEAM BOLSTERS UPPER AT 1.2m CTS. ATOP THE METAL STAY-IN-PLACE FORMS TO SUPPORT THE BOTTOM MAT OF "A" BARS. WHEN USING REMOVABLE FORMS, PROVIDE CONTINUOUS HIGH CHAIRS FOR METAL DECK (C.H.C.M.) @ 1.2m CTS. WITH A HEIGHT TO SUPPORT THE BOTTOM MAT OF "A" BARS A CLEAR DISTANCE OF 65mm ABOVE THE TOP OF THE REMOVABLE FORM.

BARRIER RAIL IN A CONTINUOUS UNIT SHALL NOT BE CAST UNTIL ALL SLAB CONCRETE IN THAT UNIT HAS BEEN CAST AND HAS REACHED A MINIMUM COMPRESSIVE STRENGTH OF 20.7 MPa.

METAL STAY-IN-PLACE FORMS SHALL NOT BE WELDED TO GIRDER FLANGES IN THE ZONES REQUIRING CHARPY V-NOTCH TEST. SEE STRUCTURAL STEEL DETAIL SHEETS.

PREVIOUSLY CAST CONCRETE IN A CONTINUOUS UNIT SHALL HAVE ATTAINED A MINIMUM COMPRESSIVE STRENGTH OF 20.7 MPa BEFORE ADDITIONAL CONCRETE IS CAST IN THE UNIT.

STRUCTURAL STEEL ERECTION IN A CONTINUOUS UNIT SHALL BE COMPLETE BEFORE FALSEWORK OR FORMS ARE PLACED ON THE UNIT.

THE CONTRACTOR MAY, WHEN NECESSARY, PROPOSE A SCHEME FOR AVOIDING INTERFERENCE BETWEEN METAL STAY-IN-PLACE FORM SUPPORTS OR FORMS AND GIRDER STIFFENERS OR CONNECTOR PLATES. THE PROPOSAL SHALL BE INDICATED, AS APPROPRIATE, ON EITHER THE STEEL WORKING DRAWINGS OR THE METAL STAY-IN-PLACE FORM WORKING DRAWINGS.

THE CONTRACTOR SHALL ADJUST THE GIRDER BUILDUPS AS NECESSARY TO INCORPORATE A MAXIMUM PERMISSIBLE VARIATION IN POT BEARING DEPTH OF 13mm, SEE SPECIAL PROVISION FOR POT BEARINGS.

FOR BARS INDICATED AND NO MARKS SHOWN, SEE PLAN OF SPANS.

SEE BENT #1 PLANS FOR TYPICAL SECTION DETAILS AT INTEGRAL BENT.

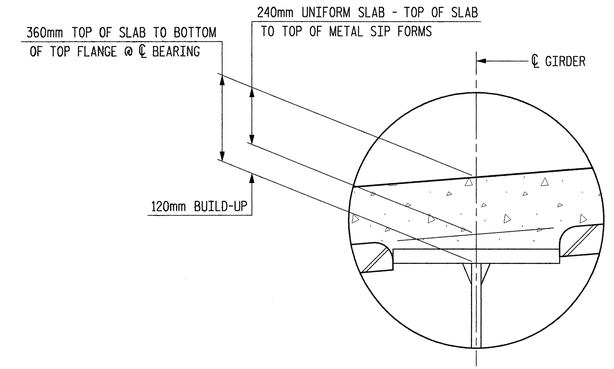

DETAIL "A"

PROJECT NO. R-2554BA

WAYNE COUNTY

STATION: 86+57.806 -L2-

SHEET 1 OF 2

STATE OF NORTH CAROLINA
DEPARTMENT OF TRANSPORTATION
RALEIGH

SUPERSTRUCTURE
TYPICAL SECTION AND DETAILS

METRIC

Plans prepared by:
KO & ASSOCIATES, P.C.
Consulting Engineers
5121 KINGDOM WAY, SUITE #100
RALEIGH, N.C. 27607
(919)-851-6066

NORTH CAROLINA PROFESSIONAL SEAL 5601 ENGINEER CHIH KUO KO
26/06/08

REVISIONS						SHEET NO.
NO.	BY:	DATE:	NO.	BY:	DATE:	S-124
1			3			TOTAL SHEETS
2			4			478

DWG. NO. 5

DRAWN BY B.E. LANNING DATE JAN. 2007
CHECKED BY A.K. ORR / J.C. KO DATE JAN. 2007

PLOT: 6/4/2008 3:09:09 PM Ko & Associates, P.C.
FILE NAME: R:\Structures\r2554ba_sd_sd_sht1.dgn

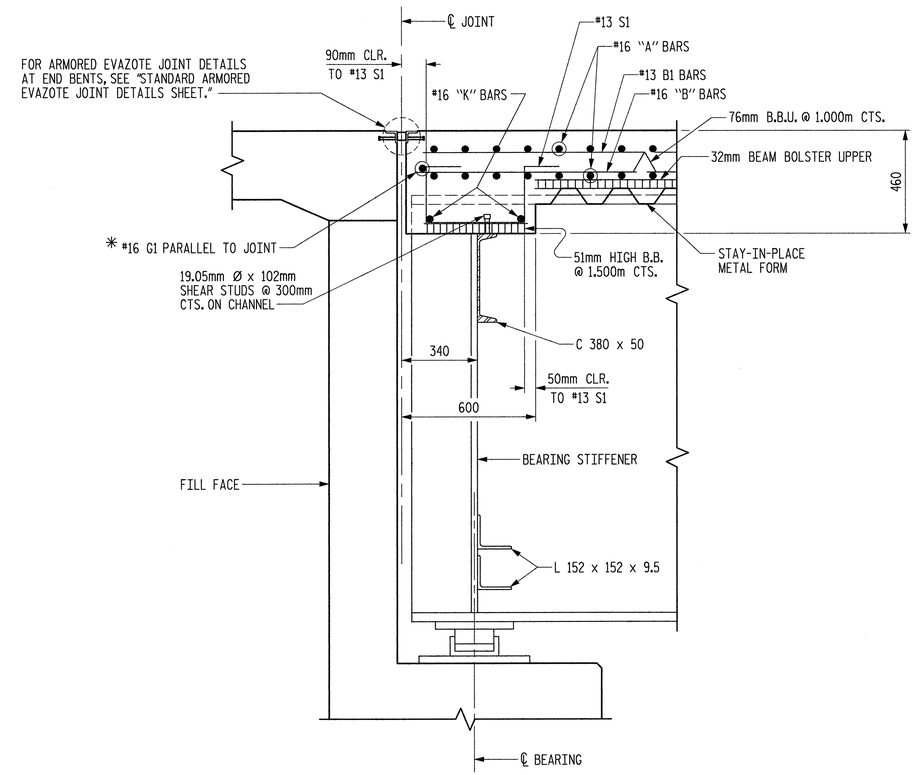

END OF GIRDER DETAIL AT END BENT #1

END BENT #2 SIMILAR BY ROTATION

* #16 G1 BAR MAY BE SHIFTED SLIGHTLY AS NECESSARY, TO CLEAR REINFORCING STEEL AND STIRRUPS.

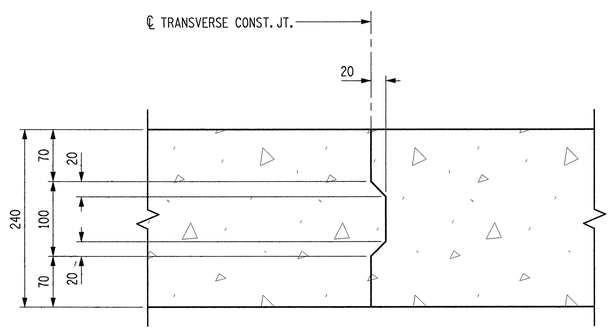

TRANSVERSE CONSTRUCTION JOINT IN DECK SLAB

NOTE:
REINFORCING STEEL IN SLAB NOT SHOWN.
LONGITUDINAL REINFORCING STEEL SHALL BE CONTINUOUS THROUGH JOINT.

PROJECT NO. R-2554BA

WAYNE COUNTY

STATION: 86+57.806 -L2-

SHEET 2 OF 2

METRIC

STATE OF NORTH CAROLINA
DEPARTMENT OF TRANSPORTATION
RALEIGH

SUPERSTRUCTURE
TYPICAL SECTION AND DETAILS

Plans prepared by:
KO & ASSOCIATES, P.C.
Consulting Engineers
5121 KINGDOM WAY, SUITE #100
RALEIGH, N.C. 27607
(919)-851-6066

NORTH CAROLINA PROFESSIONAL SEAL 5601 ENGINEER CHIH KUO KO 06/06/08

DWG. NO. 6

REVISIONS						SHEET NO.
NO.	BY:	DATE:	NO.	BY:	DATE:	S-125
1			3			TOTAL SHEETS
2			4			478

DRAWN BY B.E. LANNING DATE JAN. 2007
CHECKED BY A.K. ORR / J.C. KO DATE JAN. 2007

PLOT: 6/6/2008 12:37:28 PM Ko & Associates, P.C.
FILE NAME: R:\Structures\r2554ba_sd_ts2_10.dgn

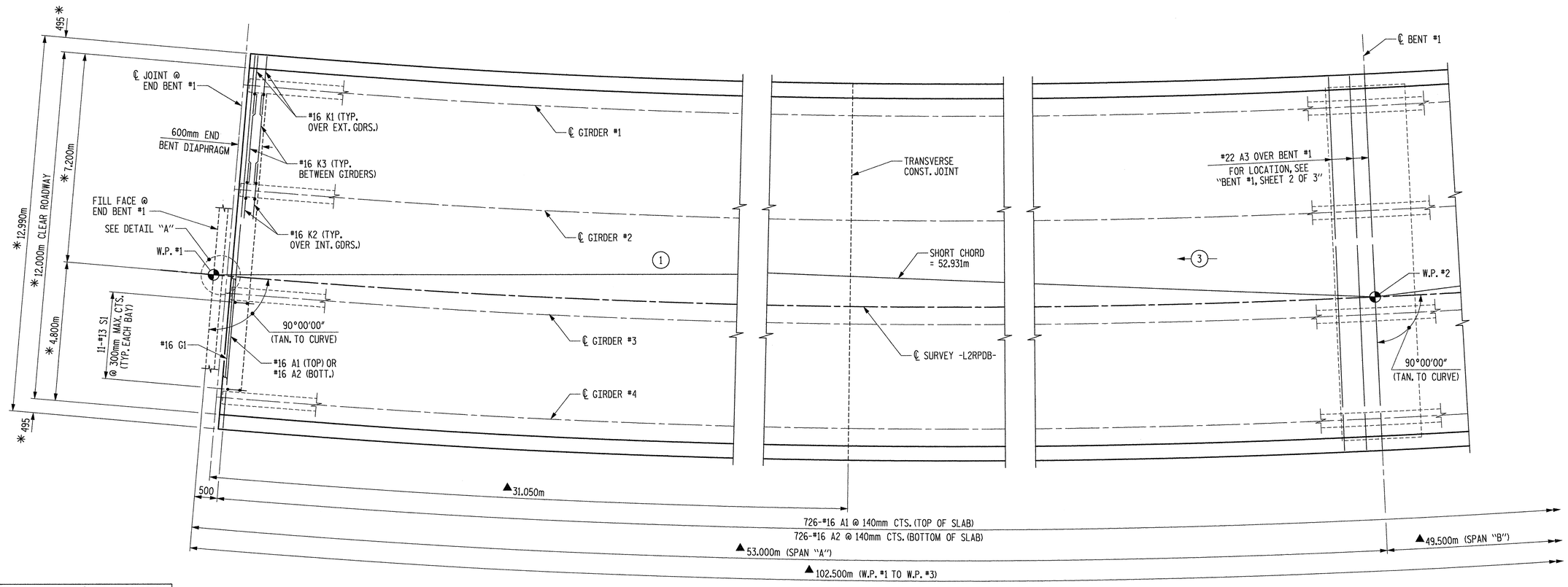

✳ DIMENSIONS ARE NORMAL OR RADIAL TO ℄ SURVEY -L2RPDB-

—(#)→ INDICATES POUR NUMBER AND DIRECTION OF POUR

PLAN OF SPAN "A"

▲ ARC LENGTH MEASURED ALONG ℄ SURVEY -L2RPDB-

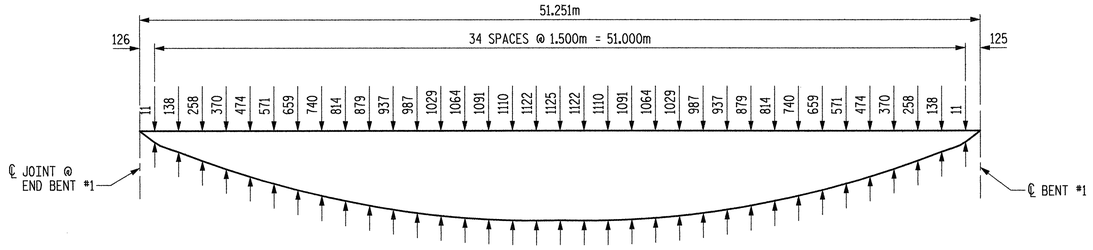

SPAN "A" - LEFT SIDE

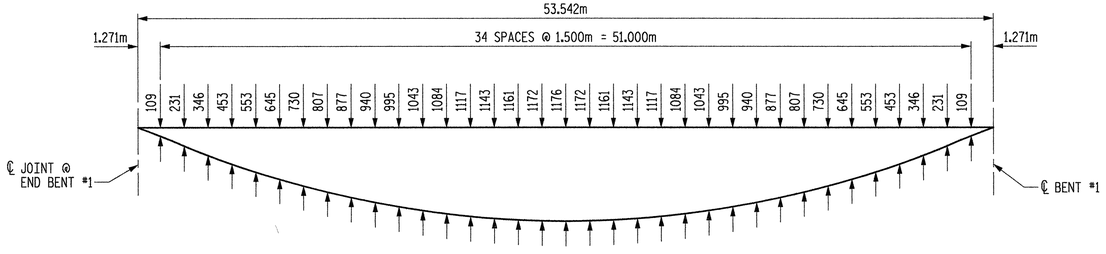

SPAN "A" - RIGHT SIDE

ARC OFFSETS - OUTSIDE EDGE OF DECK

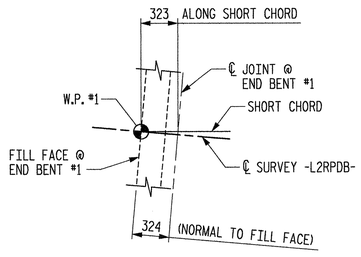

DETAIL "A"

NOTES

TRANSVERSE REINFORCING STEEL SHALL BE PLACED RADIALLY AND SPACED ALONG ℄ SURVEY -L2RPDB-, UNLESS OTHERWISE NOTED.

FOR REINFORCING STEEL IN BARRIER RAIL NOT SHOWN, SEE "STANDARD CONCRETE BARRIER RAIL" SHEETS.

FOR CONTINUATION OF REINFORCING STEEL, SEE SUPERSTRUCTURE PLAN OF SPAN "B".

FOR TRANSVERSE CONSTRUCTION JOINT IN DECK SLAB DETAIL, SEE SUPERSTRUCTURE "TYPICAL SECTION AND DETAILS", SHEET 2 OF 2.

FOR TOP AND BOTTOM "B" BARS NOT SHOWN, SEE SUPERSTRUCTURE "B" BAR LAYOUT SHEET.

PROJECT NO. R-2554BA

WAYNE COUNTY

STATION: 86+57.806 -L2-

SHEET 1 OF 2

METRIC

STATE OF NORTH CAROLINA
DEPARTMENT OF TRANSPORTATION
RALEIGH

SUPERSTRUCTURE
PLAN OF SPAN "A"

Plans prepared by:
KO & ASSOCIATES, P.C.
Consulting Engineers
1011 SCHAUB DR. SUITE #202
RALEIGH, N.C. 27606
For Division of Highways

NORTH CAROLINA PROFESSIONAL SEAL 5604 ENGINEER CHIH KUO KO

DWG. NO. 7

REVISIONS						SHEET NO.
NO.	BY:	DATE:	NO.	BY:	DATE:	S-126
1			3			TOTAL SHEETS
2			4			476

DRAWN BY B.E. LANNING DATE JAN. 2007

CHECKED BY A.K. ORR / J.C. KO DATE JAN. 2007

PLOT: 1/10/2007 3:29:13 PM Ko & Associates, P.C.
FILE NAME: R:\Structures\r2554ba_sd_s1_10.dgn

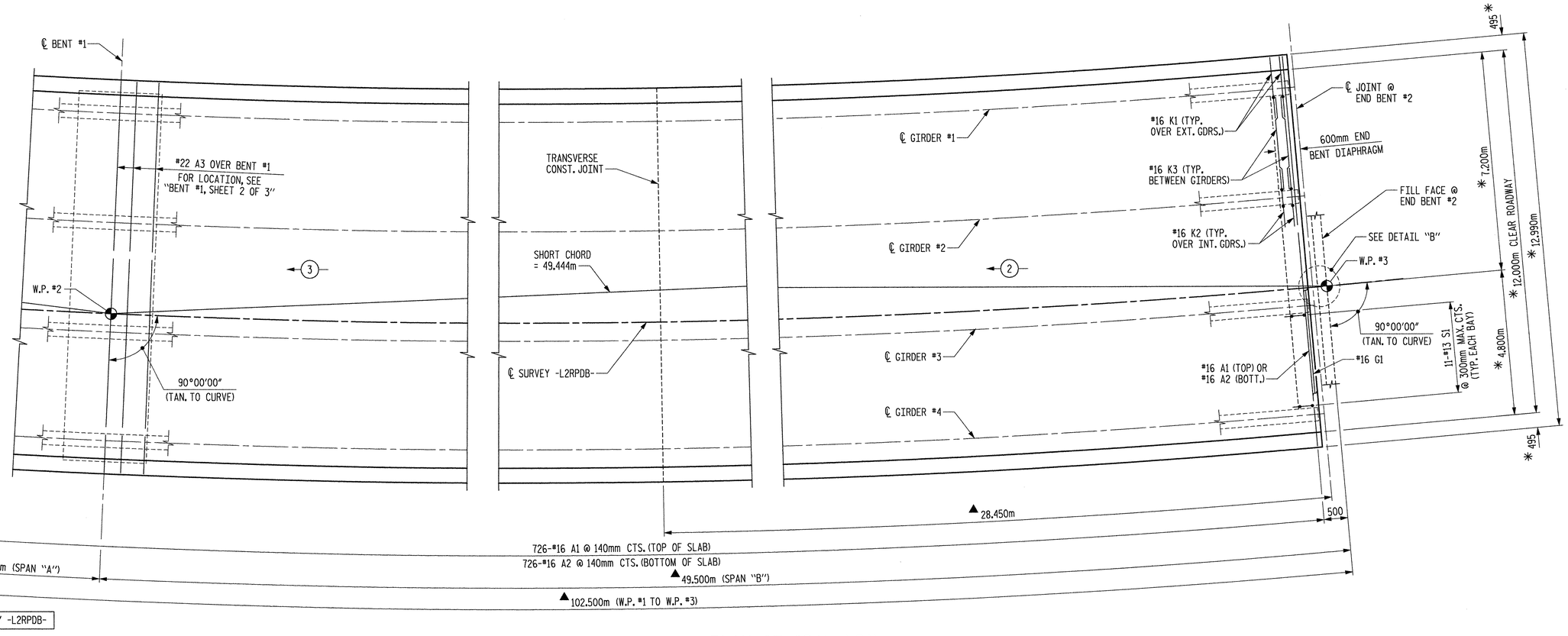

PLAN OF SPAN "B"

▲ ARC LENGTH MEASURED ALONG ℄ SURVEY -L2RPDB-

✳ DIMENSIONS ARE NORMAL OR RADIAL TO ℄ SURVEY -L2RPDB-

—(#)→ INDICATES POUR NUMBER AND DIRECTION OF POUR

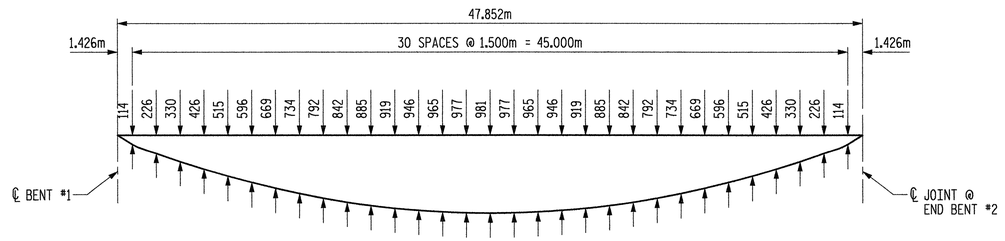

SPAN "B" - LEFT SIDE

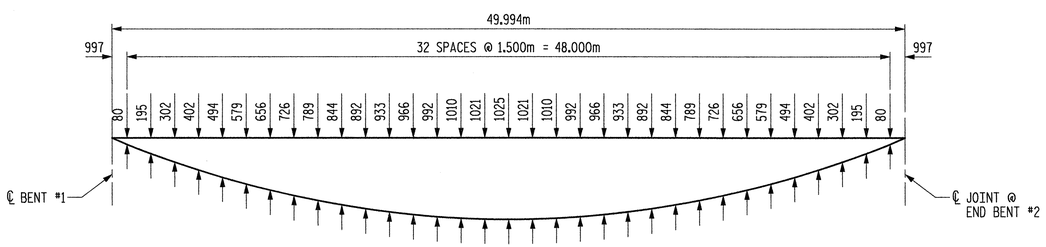

SPAN "B" - RIGHT SIDE

ARC OFFSETS - OUTSIDE EDGE OF DECK

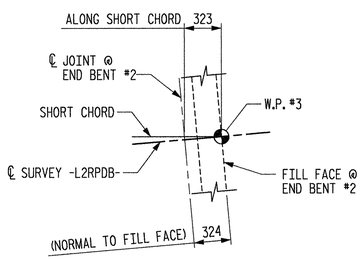

DETAIL "B"

NOTES

TRANSVERSE REINFORCING STEEL SHALL BE PLACED RADIALLY AND SPACED ALONG ℄ SURVEY -L2RPDB-, UNLESS OTHERWISE NOTED.

FOR REINFORCING STEEL IN BARRIER RAIL NOT SHOWN, SEE "STANDARD CONCRETE BARRIER RAIL" SHEETS.

FOR CONTINUATION OF REINFORCING STEEL, SEE SUPERSTRUCTURE PLAN OF SPAN "A".

FOR TRANSVERSE CONSTRUCTION JOINT IN DECK SLAB DETAIL, SEE SUPERSTRUCTURE "TYPICAL SECTION AND DETAILS", SHEET 2 OF 2.

FOR TOP AND BOTTOM "B" BARS NOT SHOWN, SEE SUPERSTRUCTURE "B" BAR LAYOUT SHEET.

PROJECT NO. R-2554BA

WAYNE COUNTY

STATION: 86+57.806 -L2-

SHEET 2 OF 2

STATE OF NORTH CAROLINA
DEPARTMENT OF TRANSPORTATION
RALEIGH

SUPERSTRUCTURE
PLAN OF SPAN "B"

METRIC

Plans prepared by:
KO & ASSOCIATES, P.C.
Consulting Engineers
1011 SCHAUB DR. SUITE #202
RALEIGH, N.C. 27606
For Division of Highways

NORTH CAROLINA PROFESSIONAL SEAL 5601 ENGINEER CHIH KUO KO

DWG. NO. 8

REVISIONS						SHEET NO.
NO.	BY:	DATE:	NO.	BY:	DATE:	S-127
1			3			TOTAL SHEETS
2			4			478

DRAWN BY B.E. LANNING DATE JAN. 2007
CHECKED BY A.K. ORR / J.C. KO DATE JAN. 2007

PLOT: 1/10/2007 3:38:03 PM Ko & Associates, P.C.
FILE NAME: R:\Structure\r-2554ba_sd_s2_18.dgn

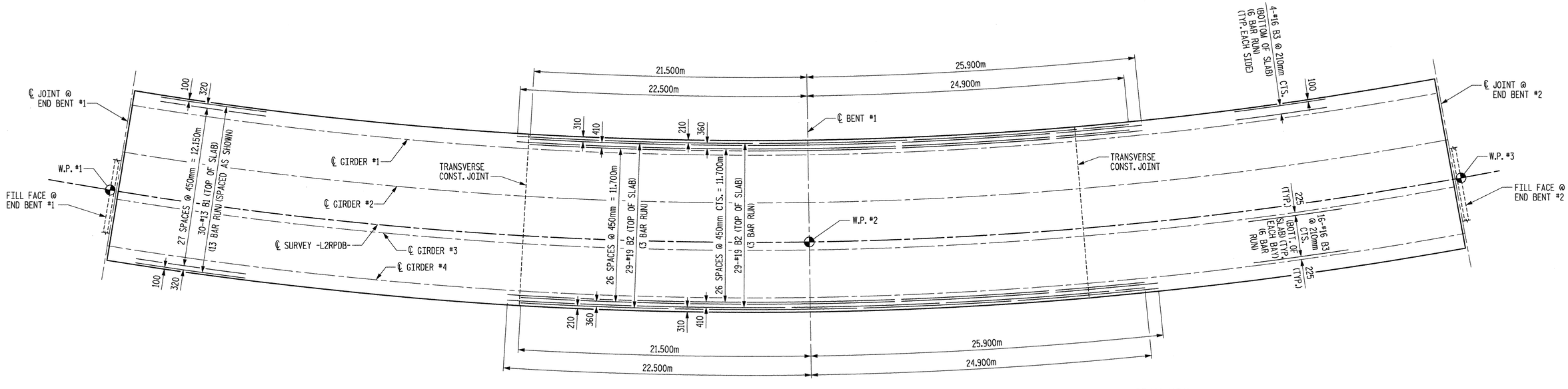

SPAN "A" SPAN "B"

PLAN - "B" BAR LAYOUT

PROJECT NO. R-2554BA

WAYNE COUNTY

STATION: 86+57.806 -L2-

METRIC

STATE OF NORTH CAROLINA
DEPARTMENT OF TRANSPORTATION
RALEIGH

SUPERSTRUCTURE
"B" BAR LAYOUT

Plans prepared by:
KO & ASSOCIATES, P.C.
Consulting Engineers
1011 SCHAUB DR. SUITE #202
RALEIGH, N.C. 27606
For Division of Highways

NORTH CAROLINA PROFESSIONAL SEAL 5601 ENGINEER CHIN KUO KO 1-18-07

DWG. NO. 9

REVISIONS						SHEET NO.
NO.	BY:	DATE:	NO.	BY:	DATE:	S-128
1			3			TOTAL SHEETS
2			4			478

DRAWN BY B.E. LANNING DATE JAN. 2007
CHECKED BY A.K. ORR / J.C. KO DATE JAN. 2007

PLOT: 1/18/2007 3:28:48 PM Ko & Associates, P.C.
FILE NAME: R:\Structures\r-2554ba_sd_s3_18.dgn

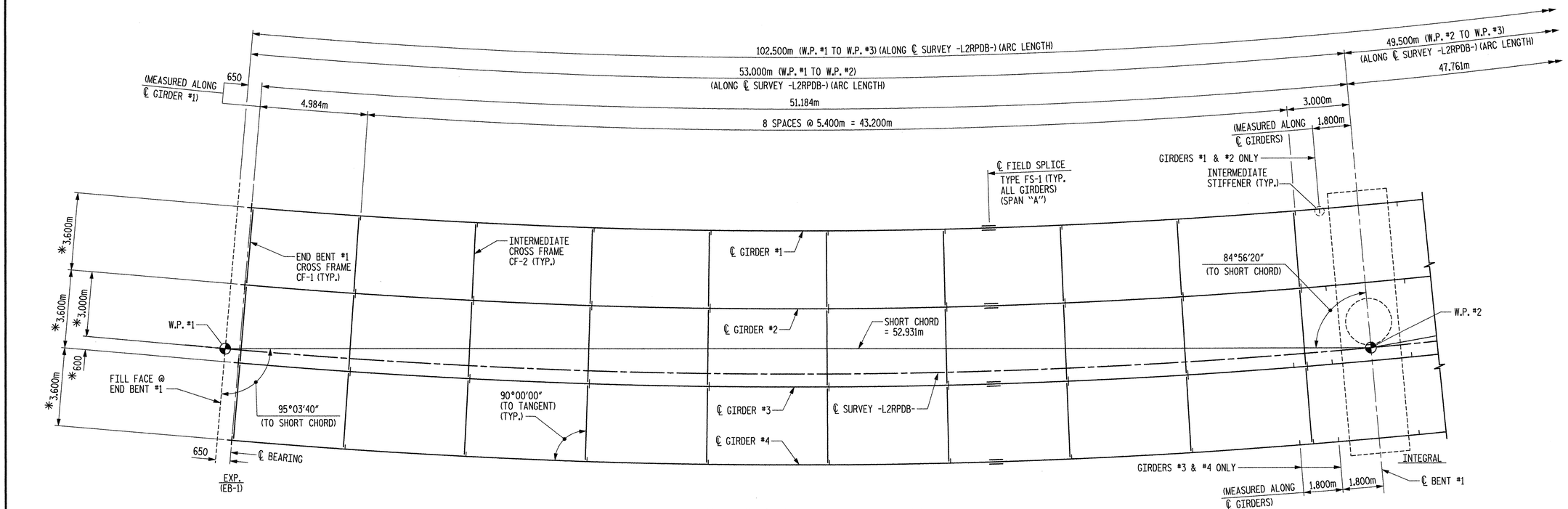

FRAMING PLAN - SPAN "A"

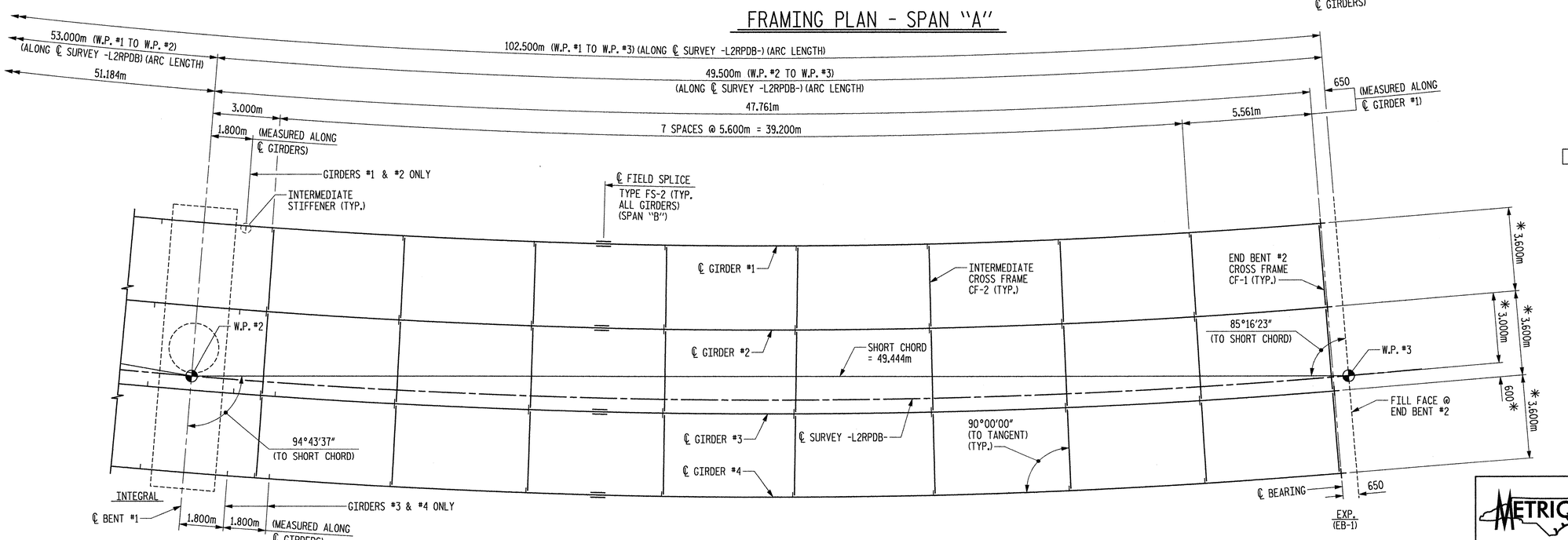

FRAMING PLAN - SPAN "B"

✳ DIMENSIONS ARE NORMAL OR RADIAL TO ℄ SURVEY -L2RPDB-

PROJECT NO. R-2554BA

WAYNE COUNTY

STATION: 86+57.806 -L2-

STATE OF NORTH CAROLINA
DEPARTMENT OF TRANSPORTATION
RALEIGH

SUPERSTRUCTURE
FRAMING PLAN

Plans prepared by:
KO & ASSOCIATES, P.C.
Consulting Engineers
1011 SCHAUB DR. SUITE #202
RALEIGH, N.C. 27606
For Division of Highways

NORTH CAROLINA PROFESSIONAL SEAL 5601 ENGINEER CHIH KUO KO 1-1-07

DRAWN BY B.E. LANNING DATE JAN. 2007
CHECKED BY A.K. ORR / J.C. KO DATE JAN. 2007

REVISIONS						SHEET NO.
NO.	BY:	DATE:	NO.	BY:	DATE:	S-129
1			3			TOTAL SHEETS
2			4			478

DWG. NO. 10

PLOT: 1/18/2007 4:03:52 PM Ko & Associates, P.C.
FILE NAME: R:\Structures\r2554ba_sd_fp_18.dgn

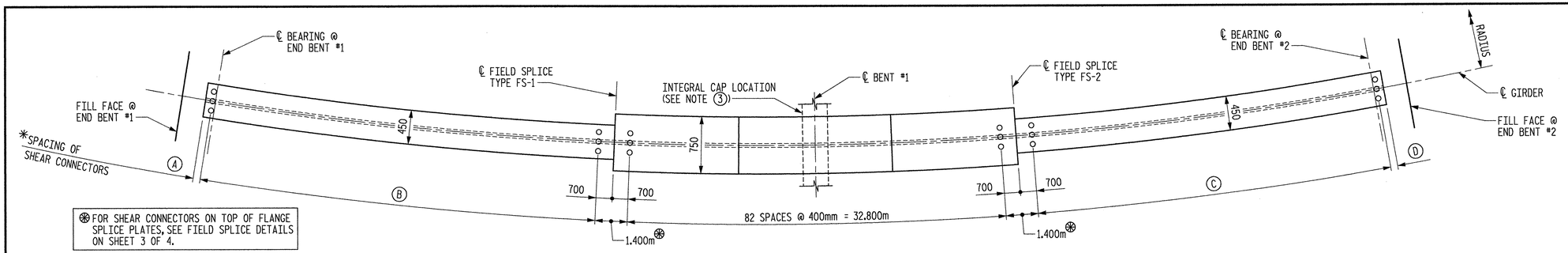

*FOR SHEAR CONNECTORS ON TOP OF FLANGE SPLICE PLATES, SEE FIELD SPLICE DETAILS ON SHEET 3 OF 4.

PLAN OF TOP FLANGE

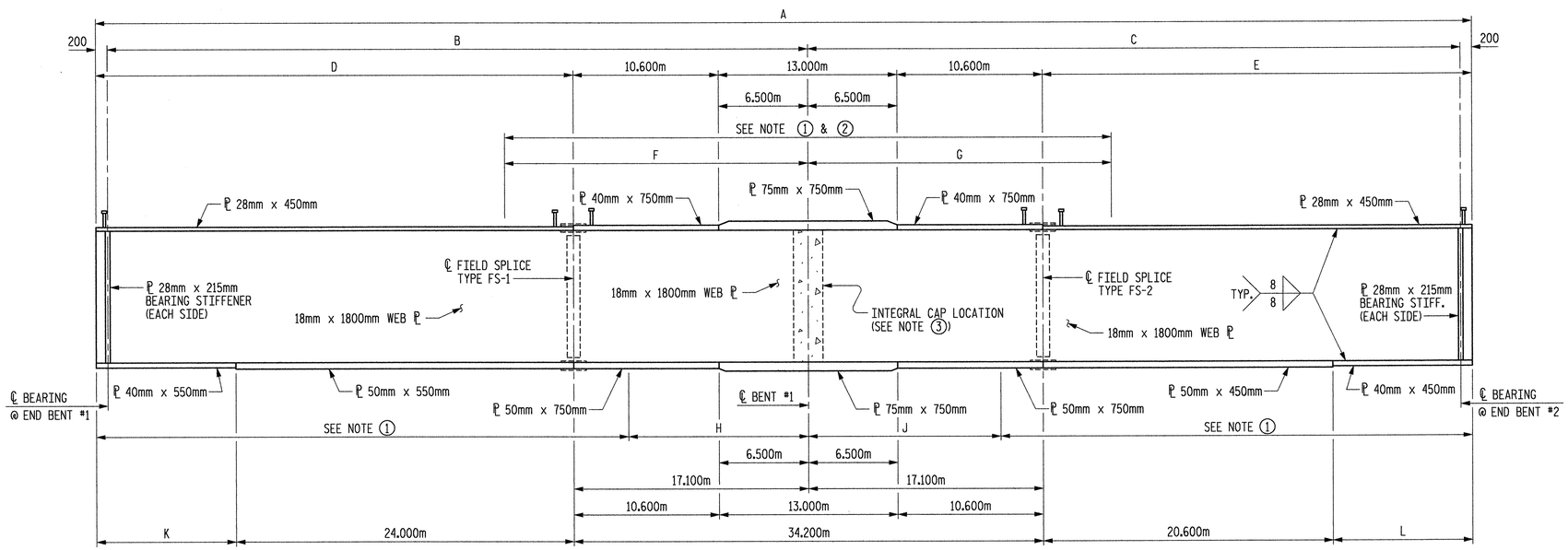

NOTE: SEE FRAMING PLAN FOR INTERMEDIATE TRANSVERSE STIFFENER LOCATIONS.

GIRDER ELEVATION

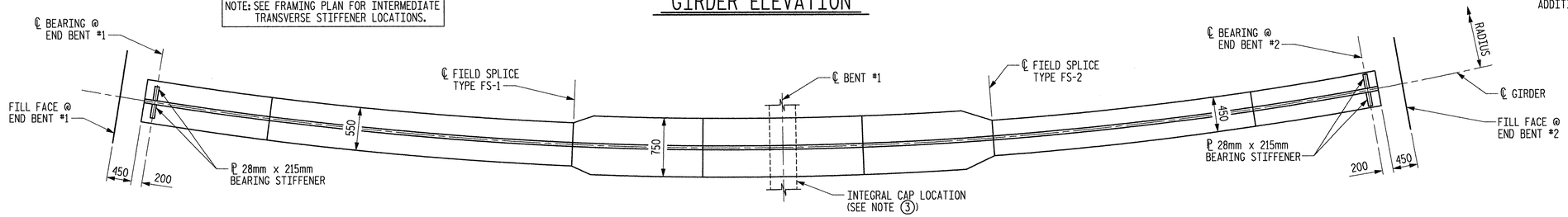

PLAN OF BOTTOM FLANGE

*GIRDER DIMENSIONS												
GIRDER NO.	A	B	C	D	E	F	G	H	J	K	L	RADIUS
1	99.345m	51.184m	47.761m	34.284m	30.861m	20.000m	22.000m	11.000m	12.000m	10.284m	10.261m	293.400m
2	100.575m	51.820m	48.355m	34.920m	31.455m	20.000m	22.000m	11.000m	12.000m	10.920m	10.855m	297.000m
3	101.805m	52.456m	48.949m	35.556m	32.049m	20.000m	23.000m	11.000m	12.000m	11.556m	11.449m	300.600m
4	103.035m	53.092m	49.543m	36.192m	32.643m	21.500m	25.000m	11.500m	12.500m	12.192m	12.043m	304.200m

*GIRDER DIMENSIONS AND SHEAR STUD SPACING ARE ALONG GIRDER CENTERLINE.

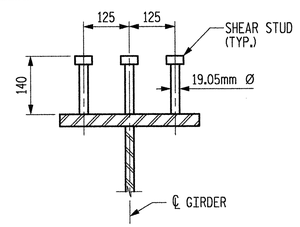

ON PLATE GIRDERS
SHEAR CONNECTORS

STUDS ON GIRDERS MAY BE SHIFTED SLIGHTLY, IF NECESSARY, TO CLEAR FLANGE SPLICE WELD.

*SHEAR CONNECTOR SPACING

(A) 284 FOR GIRDER #1
320 FOR GIRDER #2
356 FOR GIRDER #3
392 FOR GIRDER #4

(B) 111 SPACES @ 300mm FOR GIRDER #1
113 SPACES @ 300mm FOR GIRDER #2
115 SPACES @ 300mm FOR GIRDER #3
117 SPACES @ 300mm FOR GIRDER #4

(C) 100 SPACES @ 300mm FOR GIRDER #1
102 SPACES @ 300mm FOR GIRDER #2
104 SPACES @ 300mm FOR GIRDER #3
106 SPACES @ 300mm FOR GIRDER #4

(D) 161 FOR GIRDER #1
155 FOR GIRDER #2
149 FOR GIRDER #3
143 FOR GIRDER #4

TOTAL NUMBER OF STUDS	
GIRDER NO.	NUMBER
1	906
2	918
3	930
4	942

NOTE: TOTAL NUMBER OF STUDS INCLUDES THE STUDS ON THE TOP OF FLANGE SPLICE PLATES.

NOTE①: CHARPY V-NOTCH TESTS ARE REQUIRED FOR ALL TOP OR BOTTOM FLANGE PLATES WHICH FALL WITHIN THESE LIMITS, ALL WEB PLATES, ALL SPLICE PLATES AND DIAPHRAGMS. IF A PERMITTED SHOP FLANGE SPLICE IS NOT USED, CHARPY V-NOTCH TESTS WILL BE REQUIRED FOR THE ENTIRE FLANGE PLATE.

NOTE②: NO WELDING OF FORMS OR FALSEWORK TO THE TOP FLANGE WILL BE PERMITTED IN THIS REGION.

NOTE③: SEE "STRUCTURAL STEEL DETAILS, SHEET 4 OF 4" FOR ADDITIONAL REQUIREMENTS.

PROJECT NO. R-2554BA

WAYNE COUNTY

STATION: 86+57.806 -L2-

SHEET 1 OF 4

METRIC

STATE OF NORTH CAROLINA
DEPARTMENT OF TRANSPORTATION
RALEIGH

SUPERSTRUCTURE
STRUCTURAL STEEL DETAILS

Plans prepared by:
KO & ASSOCIATES, P.C.
Consulting Engineers
1011 SCHAUB DR. SUITE #202
RALEIGH, N.C. 27606
For Division of Highways

NORTH CAROLINA PROFESSIONAL SEAL 5602 ENGINEER CHIH KUO KO 1-31-07

DWG. NO. 11

REVISIONS							SHEET NO.
NO.	BY:	DATE:	NO.	BY:	DATE:		S-130
1			3				TOTAL SHEETS
2			4				478

DRAWN BY B.E. LANNING DATE JAN. 2007
CHECKED BY A.K. ORR / J.C. KO DATE JAN. 2007

PLOT: 1/18/2007 3:32:52 PM Ko & Associates, P.C.
FILE NAME: R:\Structures\r2554ba_sd_sd_l8.dgn

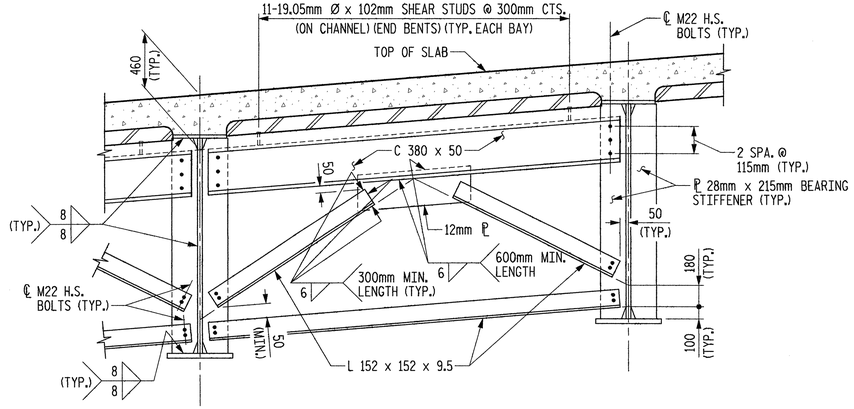

END BENT CROSS FRAME CF-1

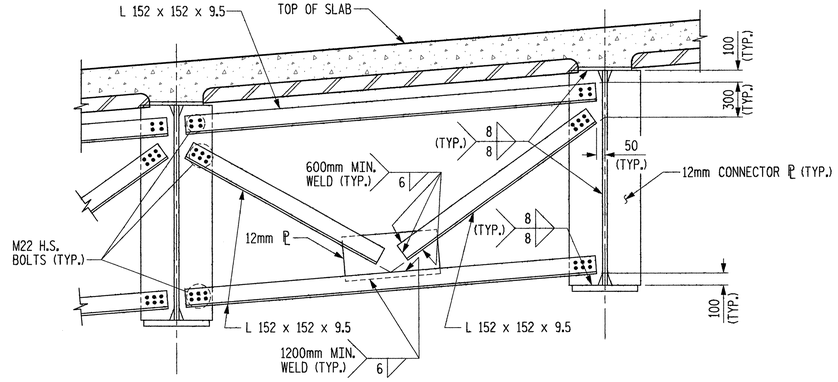

INTERMEDIATE CROSS FRAME CF-2

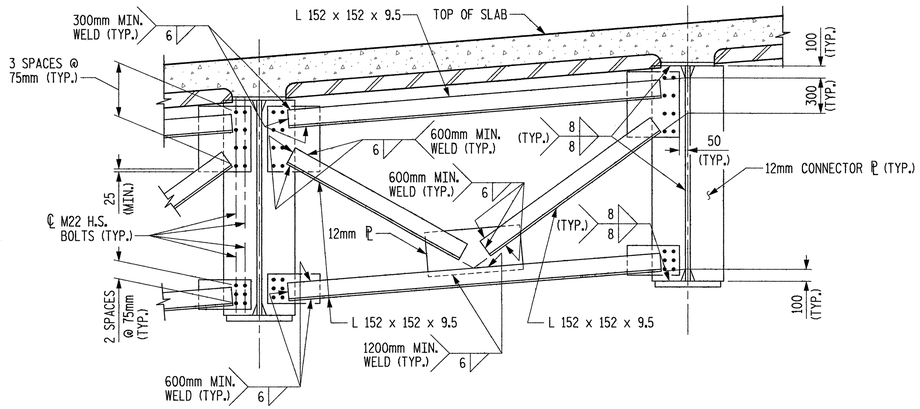

OPTIONAL INTERMEDIATE CROSS FRAME CF-2

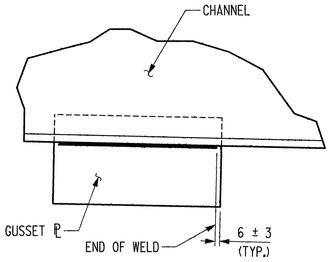

TYPICAL GUSSET PLATE CONNECTION

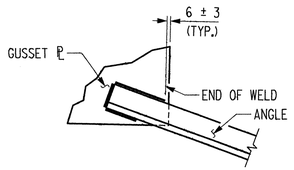

TYPICAL "ANGLE" TO GUSSET PLATE CONNECTION

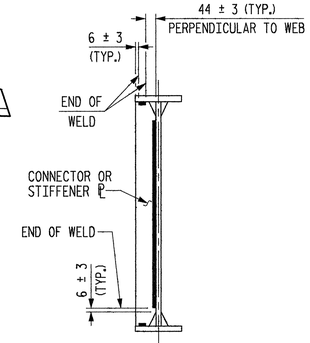

TYPICAL STIFFNER OR CONNECTOR PLATE CONNECTIONS

WELD TERMINATION DETAILS

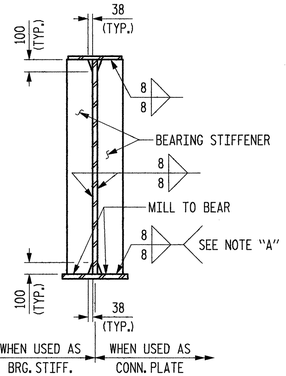

BEARING STIFFENER

NOTE "A":
ONLY WELD BEARING STIFFENER TO BOTTOM FLANGE IF CROSSFRAME IS ATTACHED TO BEARING STIFFENER.

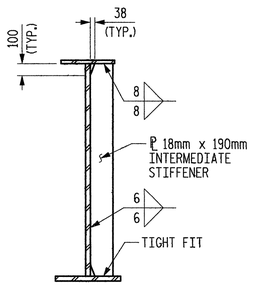

INTERMEDIATE STIFFENER

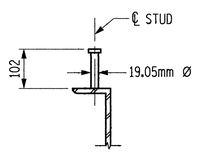

ON CHANNEL

SHEAR STUD DETAILS

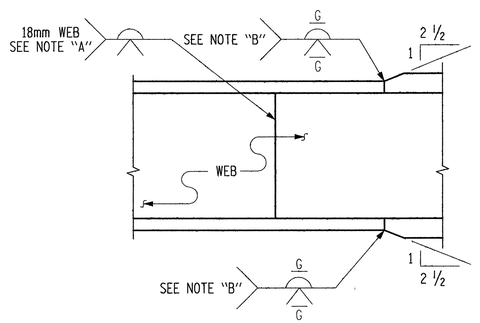

ELEVATION

TYPICAL FLANGE & WEB BUTT JOINT

NOTE "A": GRIND SMOOTH AND FLUSH ON OUTER FACE OF EXTERIOR GIRDERS.

NOTE "B": TYP. TOP AND BOTTOM FLANGE FOR PLATE THICKNESS OVER 16mm THRU 50mm.

STRUCTURAL STEEL NOTES

ALL STRUCTURAL STEEL SHALL BE AASHTO M270 GRADE 345W AND PAINTED IN ACCORDANCE WITH SYSTEM 4 OF ARTICLE 442-7 OF THE STANDARD SPECIFICATIONS UNLESS OTHERWISE NOTED ON THE PLANS.

ALL DIMENSIONS SHOWN ARE HORIZONTAL OR VERTICAL, UNLESS OTHERWISE NOTED.

ALL FIELD CONNECTIONS TO BE 22.23mm DIA. HIGH STRENGTH BOLTS UNLESS OTHERWISE NOTED.

BEARING STIFFENERS ARE TO BE PLACED NORMAL TO THE WEB OF THE GIRDER AND SHALL BE PLUMB.

SHOP SPLICES ARE PERMITTED TO LIMIT THE MAXIMUM REQUIRED FLANGE PIECE LENGTHS TO 18 METERS AND WEB PIECE LENGTHS TO 14 METERS. PERMITTED FLANGE AND WEB SHOP SPLICES SHALL NOT BE LOCATED WITHIN 4.5 METERS OF MAXIMUM DEAD LOAD DEFLECTION. KEEP 600mm MINIMUM BETWEEN WEB AND FLANGE SHOP SPLICES. KEEP 150mm MINIMUM BETWEEN CONNECTOR PLATE OR TRANSVERSE STIFFENER WELDS AND WEB OR FLANGE SHOP SPLICES.

STUDS ON GIRDERS MAY BE SHIFTED UP TO 25mm IF NECESSARY TO CLEAR FLANGE SPLICE WELD.

TENSION ON THE AASHTO M164 BOLTS SHALL BE CALIBRATED USING DIRECT TENSION INDICATOR WASHERS IN ACCORDANCE WITH ARTICLE 440-10 OF THE STANDARD SPECIFICATIONS.

ENDS OF CONTINUOUS PLATE GIRDERS SHALL BE IN A PLUMB POSITION AFTER THE TOTAL DEAD LOAD DEFLECTION HAS OCCURED.

INTERMEDIATE CROSSFRAME CONNECTOR PLATES SHALL BE RADIAL TO THE GIRDER FLANGES AND WEB.

THE CONTRACTOR SHALL MAINTAIN STABILITY OF THE CURVED GIRDERS UNTIL ALL FIELD SPLICES, CROSSFRAME CONNECTIONS AND INTEGRAL BENTS HAVE BEEN COMPLETED. STRUCTURAL STEEL ERECTION IN A CONTINUOUS UNIT SHALL BE COMPLETE BEFORE FALSEWORK OR FORMS ARE PLACED ON THE UNIT.

CURVATURE OF STEEL GIRDERS MAY BE ACCOMPLISHED BY CUTTING PLATES TO THE REQUIRED CURVATURE OR BY HEAT TREATMENT.

HEAT CURVING OF STEEL GIRDERS IS ALLOWED, SEE SPECIAL PROVISION.

ALL INTERMEDIATE STIFFENERS SHALL BE PLACED ON ONE SIDE ONLY. STIFFENERS ON EXTERIOR GIRDERS SHALL BE PLACED ON THE INSIDE FACE.

FOR HIGH STRENGTH BOLTS, SEE SPECIAL PROVISIONS.

FOR SHIPPING STRUCTURAL STEEL MEMBERS, SEE SPECIAL PROVISIONS.

PROJECT NO. R-2554BA

WAYNE COUNTY

STATION: 86+57.806 -L2-

SHEET 2 OF 4

STATE OF NORTH CAROLINA
DEPARTMENT OF TRANSPORTATION
RALEIGH

SUPERSTRUCTURE
STRUCTURAL STEEL DETAILS

Plans prepared by:
KO & ASSOCIATES, P.C.
Consulting Engineers
5121 KINGDOM WAY, SUITE #100
RALEIGH, N.C. 27607
(919)-851-6066

NORTH CAROLINA PROFESSIONAL SEAL 5601 ENGINEER CHIH KUO KO 2/26/08

DWG. NO. 12

REVISIONS						SHEET NO.
NO.	BY:	DATE:	NO.	BY:	DATE:	S-131
1			3			TOTAL SHEETS
2			4			478

DRAWN BY B.E. LANNING DATE JAN. 2007
CHECKED BY A.K. ORR / J.C. KO DATE JAN. 2007

PLOT: 6/4/2008 3:49:55 PM Ko & Associates, P.C.
FILE NAME: R:\Structural\r2554ba_sd_sm2_18.dgn

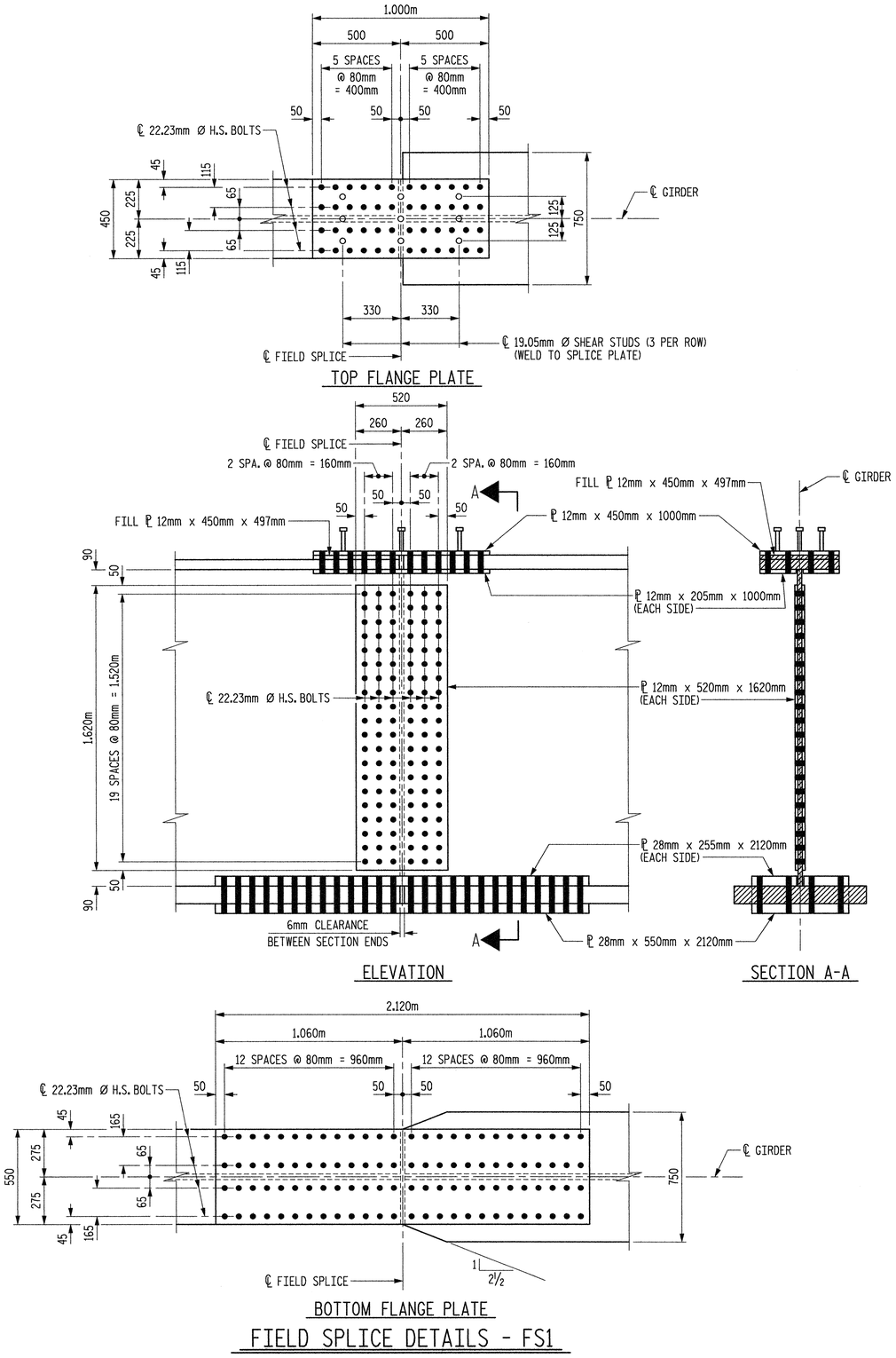

FIELD SPLICE DETAILS - FS1

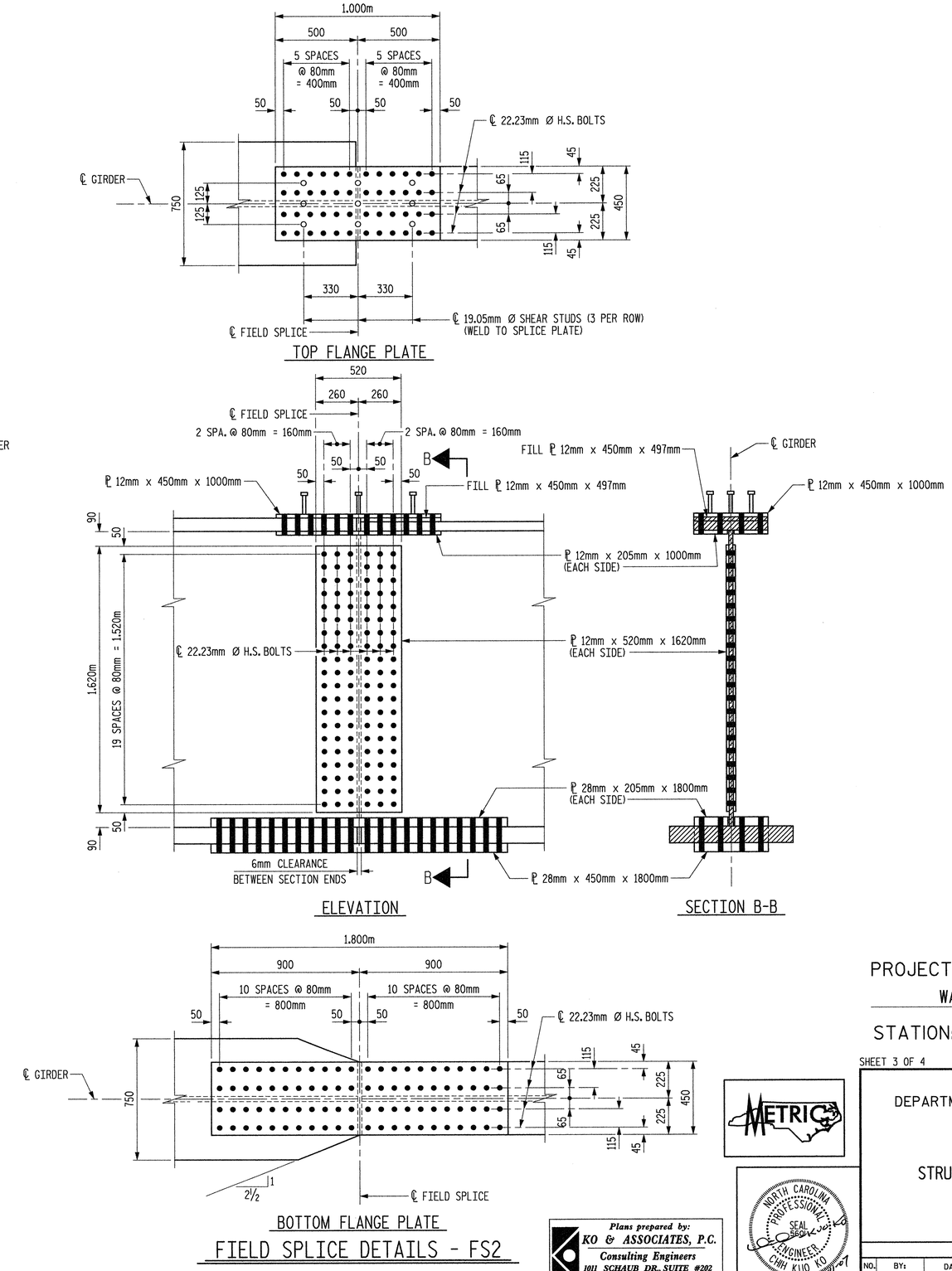

FIELD SPLICE DETAILS - FS2

PROJECT NO. R-2554BA

WAYNE COUNTY

STATION: 86+57.806 -L2-

SHEET 3 OF 4

STATE OF NORTH CAROLINA
DEPARTMENT OF TRANSPORTATION
RALEIGH

SUPERSTRUCTURE
STRUCTURAL STEEL DETAILS

METRIC

Plans prepared by:
KO & ASSOCIATES, P.C.
Consulting Engineers
1011 SCHAUB DR., SUITE #202
RALEIGH, N.C. 27606
For Division of Highways

NORTH CAROLINA PROFESSIONAL SEAL 5601 ENGINEER CHIH KUO KO

DWG. NO. 13

REVISIONS						SHEET NO.
NO.	BY:	DATE:	NO.	BY:	DATE:	S-132
1			3			TOTAL SHEETS
2			4			478

DRAWN BY B.E. LANNING DATE JAN. 2007
CHECKED BY A.K. ORR / J.C. KO DATE JAN. 2007

PLOT: 1/10/2007 3:37:27 PM Ko & Associates, P.C.
FILE NAME: R:\Structures\r2554ba_sd_ss3_10.dgn

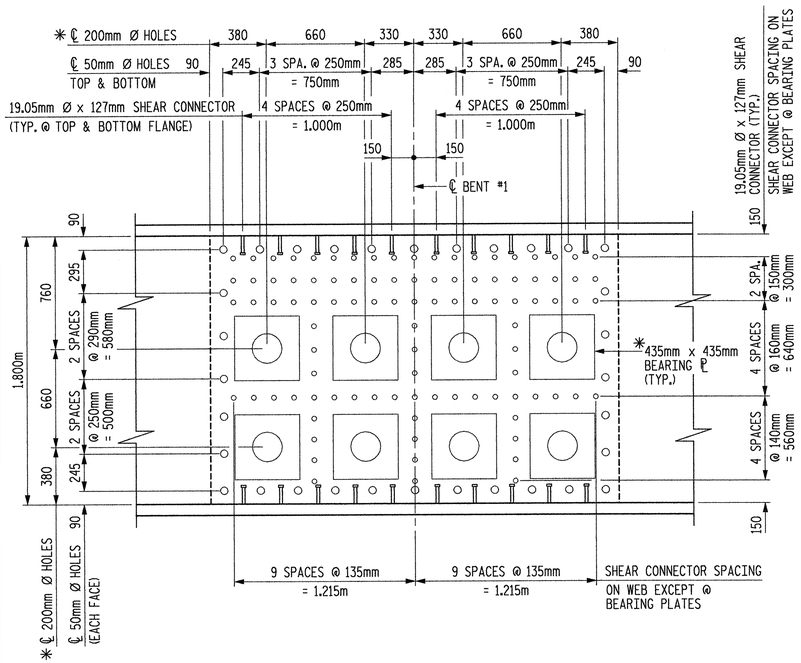

GIRDERS #1 AND #4 - EXTERIOR FACE

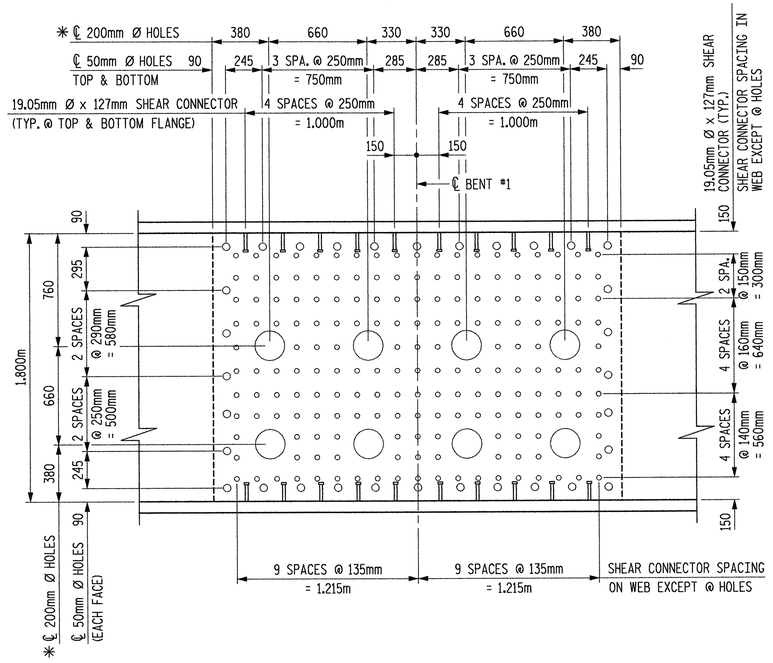

GIRDERS #1 AND #4 - INTERIOR FACE

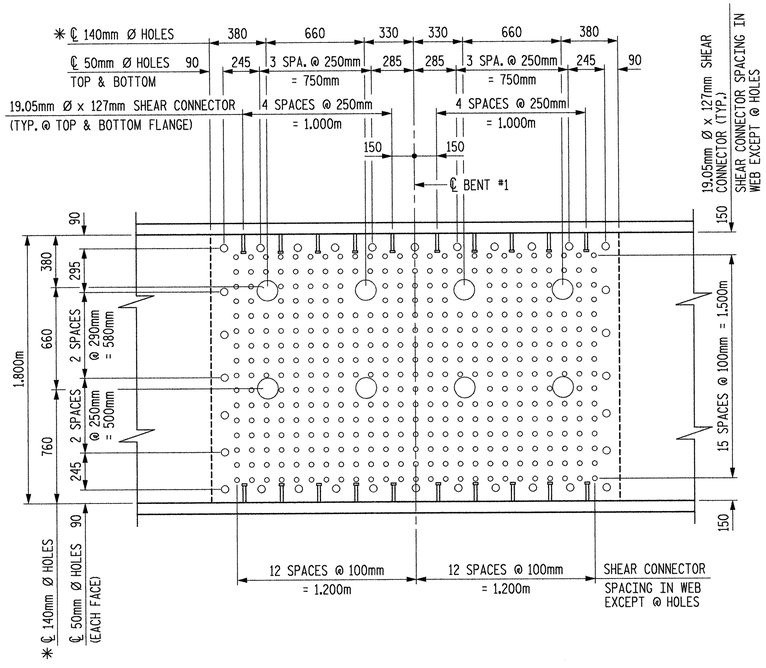

GIRDERS #2 AND #3 - BOTH FACES

ELEVATION AT INTEGRAL CAP - BENT #1

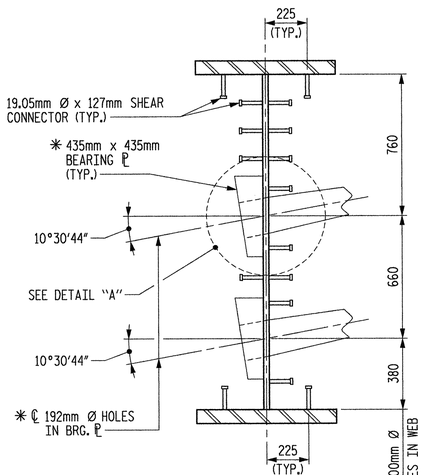

GIRDER #1

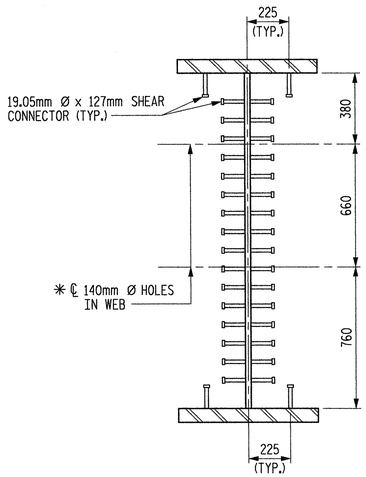

GIRDERS #2 & #3

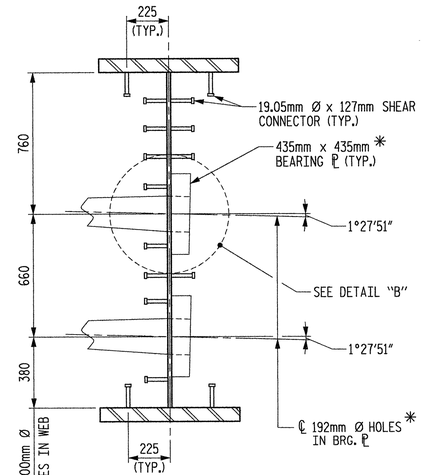

GIRDER #4

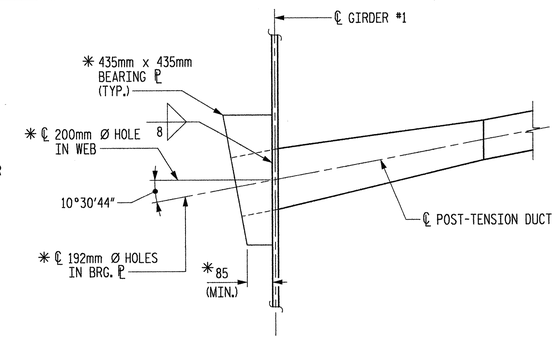

DETAIL "A"

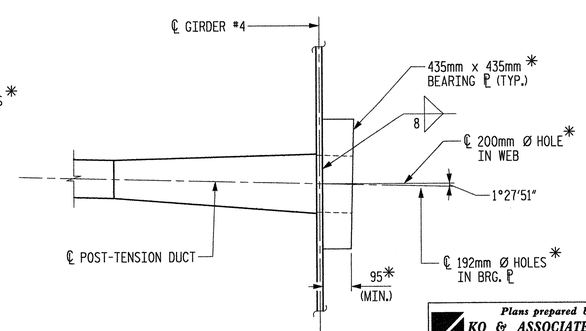

DETAIL "B"

SECTIONS AT INTEGRAL CAP - BENT #1

NOTES

* THE ITEMS LISTED BELOW SHALL BE VERIFIED BY THE POST-TENSIONING SUPPLIER PRIOR TO FABRICATION:

1. SIZE, SHAPE AND THICKNESS OF BEARING PLATE.
2. DIAMETER OF BEARING PLATE HOLES.
3. DIAMETER OF WEB HOLES.

LOCATIONS OF SHEAR CONNECTORS ON THE WEB MAY BE SHIFTED SLIGHTLY TO PROVIDE ADEQUATE CLEARANCE TO BEARING PLATES AND WEB HOLES.

SEE SHEET 1 OF 4 FOR SPACING OF SHEAR CONNECTORS ON TOP OF TOP FLANGE.

FOR ADDITIONAL NOTES ON POST-TENSIONING AND ANCHORAGE, SEE "SCHEMATIC SEQUENCE OF CONSTRUCTION AND NOTES AT BENT #1" SHEET.

PROJECT NO. R-2554BA

WAYNE COUNTY

STATION: 86+57.806 -L2-

SHEET 4 OF 4

METRIC

STATE OF NORTH CAROLINA
DEPARTMENT OF TRANSPORTATION
RALEIGH

SUPERSTRUCTURE
STRUCTURAL STEEL DETAILS

Plans prepared by:
KO & ASSOCIATES, P.C.
Consulting Engineers
1011 SCHAUB DR. SUITE #202
RALEIGH, N.C. 27606
For Division of Highways

NORTH CAROLINA PROFESSIONAL SEAL 5601 ENGINEER CHIH KUO KO 1-31-07

DWG. NO. 14

REVISIONS						SHEET NO.
NO.	BY:	DATE:	NO.	BY:	DATE:	S-133
1			3			TOTAL SHEETS
2			4			478

DRAWN BY B.E. LANNING DATE JAN. 2007
CHECKED BY A.K. ORR / J.C. KO DATE JAN. 2007

PLOT: 1/10/2007 3:38:08 PM Ko & Associates, P.C.
FILE NAME: R:\Structures\r2554ba_sd_se4.18.dgn

DEAD LOAD DEFLECTION AND CAMBER

GIRDER		SPAN "A"																				
	TWENTIETH POINTS	0	1	2	3	4	5	6	7	8	9	10	11	12	13	14	15	16	17	18	19	20
1	DEFLECTION DUE TO WT. OF STEEL	0	.004	.008	.011	.014	.017	.019	.020	.021	.020	.020	.018	.016	.014	.011	.009	.006	.004	.002	.001	0
	DEFLECTION DUE TO WT. OF SLAB	0	.014	.028	.040	.050	.059	.065	.069	.070	.069	.066	.060	.053	.045	.037	.028	.020	.013	.007	.003	0
	DEFLECTION DUE TO WT. OF RAIL	0	.001	.002	.003	.004	.005	.005	.006	.006	.006	.005	.005	.004	.004	.003	.002	.002	.001	.000	.000	0
	TOTAL DEAD LOAD DEFLECTION	0	.019	.038	.054	.068	.081	.089	.095	.097	.095	.091	.083	.073	.063	.051	.039	.028	.018	.009	.004	0
	CAMBER DISSIPATION	0	.000	.001	.001	.001	.002	.002	.002	.002	.002	.002	.002	.002	.001	.001	.001	.001	.000	.000	.000	0
	VERTICAL CURVE ORDINATE	0	.002	.004	.005	.006	.007	.008	.009	.009	.010	.010	.010	.009	.009	.008	.007	.006	.005	.004	.002	0
	SUPERELEVATION ORDINATE	0	.000	.000	.000	.000	.000	.000	.000	.000	.000	.000	.000	.000	.000	.000	.000	.000	.000	.000	.000	0
	REQUIRED CAMBER	0	21	43	60	75	90	99	106	108	107	103	95	84	73	60	47	35	23	13	6	0
2	DEFLECTION DUE TO WT. OF STEEL	0	.005	.009	.014	.017	.020	.022	.024	.024	.024	.023	.021	.019	.016	.014	.010	.008	.005	.003	.001	0
	DEFLECTION DUE TO WT. OF SLAB	0	.018	.034	.049	.061	.071	.078	.083	.085	.083	.079	.072	.064	.054	.044	.034	.024	.016	.009	.003	0
	DEFLECTION DUE TO WT. OF RAIL	0	.001	.002	.004	.005	.005	.006	.006	.007	.007	.006	.006	.005	.004	.004	.003	.002	.001	.000	.000	0
	TOTAL DEAD LOAD DEFLECTION	0	.024	.045	.067	.083	.096	.106	.113	.116	.114	.108	.099	.088	.074	.062	.047	.034	.022	.012	.004	0
	CAMBER DISSIPATION	0	.000	.000	.001	.001	.001	.001	.001	.001	.001	.001	.001	.001	.001	.001	.000	.000	.000	.000	.000	0
	VERTICAL CURVE ORDINATE	0	.002	.004	.005	.006	.007	.008	.009	.009	.010	.010	.010	.009	.009	.008	.007	.006	.005	.004	.002	0
	SUPERELEVATION ORDINATE	0	.000	.000	.000	.000	.000	.000	.000	.000	.000	.000	.000	.000	.000	.000	.000	.000	.000	.000	.000	0
	REQUIRED CAMBER	0	26	49	73	90	104	115	123	126	125	119	110	98	84	71	54	40	27	16	6	0
3	DEFLECTION DUE TO WT. OF STEEL	0	.006	.011	.016	.020	.023	.026	.027	.028	.028	.027	.025	.022	.019	.016	.012	.009	.006	.003	.001	0
	DEFLECTION DUE TO WT. OF SLAB	0	.020	.039	.056	.070	.082	.090	.096	.097	.096	.091	.083	.074	.063	.051	.039	.028	.018	.010	.004	0
	DEFLECTION DUE TO WT. OF RAIL	0	.001	.003	.004	.005	.006	.007	.007	.008	.007	.007	.007	.006	.005	.004	.003	.002	.001	.001	.000	0
	TOTAL DEAD LOAD DEFLECTION	0	.027	.053	.076	.095	.111	.123	.130	.133	.131	.125	.115	.102	.087	.071	.054	.039	.025	.014	.005	0
	CAMBER DISSIPATION	0	.000	.000	.001	.001	.001	.001	.001	.001	.001	.001	.001	.001	.001	.001	.000	.000	.000	.000	.000	0
	VERTICAL CURVE ORDINATE	0	.002	.004	.005	.006	.007	.008	.009	.009	.010	.010	.010	.009	.009	.008	.007	.006	.005	.004	.002	0
	SUPERELEVATION ORDINATE	0	.000	.000	.000	.000	.000	.000	.000	.000	.000	.000	.000	.000	.000	.000	.000	.000	.000	.000	.000	0
	REQUIRED CAMBER	0	29	57	82	102	119	132	140	143	142	136	126	112	97	80	61	45	30	18	7	0
4	DEFLECTION DUE TO WT. OF STEEL	0	.006	.012	.018	.023	.027	.029	.031	.032	.032	.030	.028	.025	.021	.018	.014	.010	.007	.004	.002	0
	DEFLECTION DUE TO WT. OF SLAB	0	.023	.044	.064	.080	.093	.103	.109	.111	.108	.103	.094	.084	.071	.058	.044	.032	.021	.012	.005	0
	DEFLECTION DUE TO WT. OF RAIL	0	.002	.003	.005	.006	.007	.008	.009	.009	.009	.008	.008	.007	.006	.005	.004	.003	.002	.001	.000	0
	TOTAL DEAD LOAD DEFLECTION	0	.031	.059	.087	.109	.127	.140	.149	.152	.149	.141	.130	.116	.098	.081	.062	.045	.030	.017	.007	0
	CAMBER DISSIPATION	0	.000	.000	.000	.000	.000	.000	.000	.000	.000	.000	.000	.000	.000	.000	.000	.000	.000	.000	.000	0
	VERTICAL CURVE ORDINATE	0	.002	.004	.005	.006	.007	.008	.009	.009	.010	.010	.010	.009	.009	.008	.007	.006	.005	.004	.002	0
	SUPERELEVATION ORDINATE	0	.000	.000	.000	.000	.000	.000	.000	.000	.000	.000	.000	.000	.000	.000	.000	.000	.000	.000	.000	0
	REQUIRED CAMBER	0	33	63	92	115	134	148	158	161	159	151	140	125	107	89	69	51	35	21	9	0

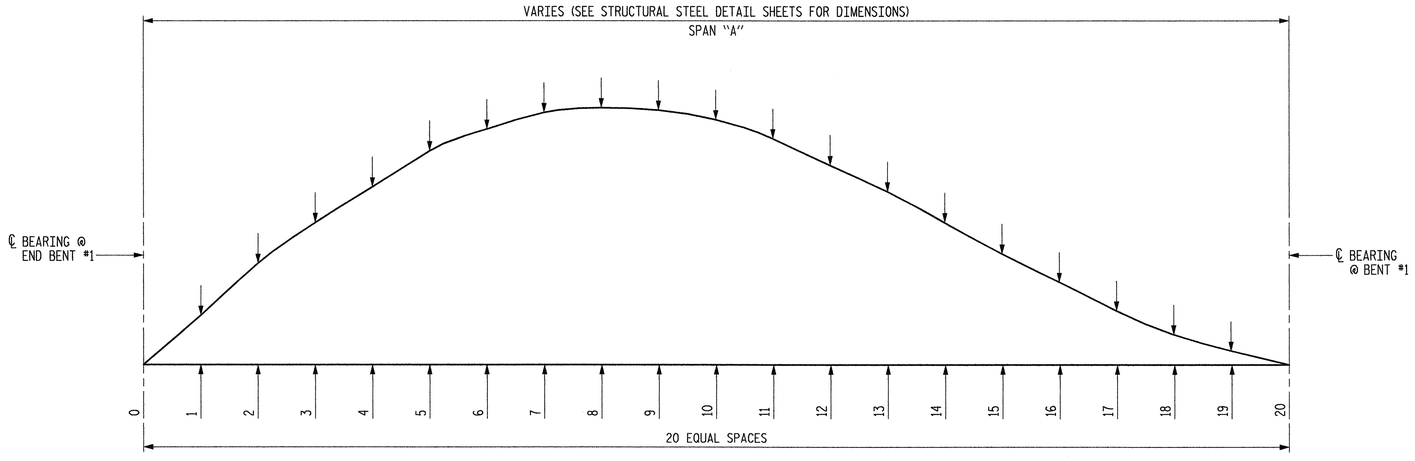

SCHEMATIC OF CAMBER ORDINATES - SPAN "A"

FOR CAMBER VALUES AT TWENTIETH POINTS, SEE TABLES.

SLOPE FOR ZERO CAMBER LINE VARIES.

NOTES:

VALUES GIVEN IN TABLE ARE AT TWENTIETH POINTS BETWEEN ℄ BEARINGS.

DEFLECTION AND ORDINATE VALUES ARE GIVEN IN METERS (DECIMAL FORM).

REQUIRED CAMBER VALUES GIVEN IN MILLIMETERS.

DRAWN BY B.E. LANNING DATE JAN. 2007

CHECKED BY A.K. ORR / J.C. KO DATE JAN. 2007

PROJECT NO. R-2554BA

WAYNE COUNTY

STATION: 86+57.806 -L2-

SHEET 1 OF 2

METRIC

STATE OF NORTH CAROLINA
DEPARTMENT OF TRANSPORTATION
RALEIGH

SUPERSTRUCTURE
CAMBER AND DEAD LOAD DEFLECTIONS

Plans prepared by:
KO & ASSOCIATES, P.C.
Consulting Engineers
1011 SCHAUB DR. SUITE #202
RALEIGH, N.C. 27606
For Division of Highways

NORTH CAROLINA PROFESSIONAL SEAL 029322 ENGINEER CHIH KUO KO 1/19/07

DWG. NO. 15

REVISIONS						SHEET NO.
NO.	BY:	DATE:	NO.	BY:	DATE:	S-134
1			3			TOTAL SHEETS
2			4			478

PLOT: 1/19/2007 3:38:38 PM KO & Associates, P.C.
FILE NAME: R:\Structures\R-2554ba_sd_dla_tlb.dgn

DEAD LOAD DEFLECTION AND CAMBER

GIRDER		SPAN "B"																				
	TWENTIETH POINTS	20	21	22	23	24	25	26	27	28	29	30	31	32	33	34	35	36	37	38	39	40
1	DEFLECTION DUE TO WT. OF STEEL	0	.001	.000	.001	.002	.003	.005	.007	.008	.010	.011	.012	.012	.012	.012	.011	.009	.007	.005	.003	0
	DEFLECTION DUE TO WT. OF SLAB	0	-.001	.002	.005	.009	.015	.021	.027	.033	.039	.043	.047	.049	.048	.046	.043	.037	.030	.021	.011	0
	DEFLECTION DUE TO WT. OF RAIL	0	.000	.000	.000	.001	.001	.002	.002	.003	.003	.004	.004	.004	.004	.004	.003	.003	.002	.001	.001	0
	TOTAL DEAD LOAD DEFLECTION	0	.000	.002	.006	.012	.019	.028	.036	.044	.052	.058	.063	.065	.064	.062	.057	.049	.039	.027	.015	0
	CAMBER DISSIPATION	0	.000	.000	.000	.000	.000	.000	.001	.001	.001	.001	.001	.001	.001	.001	.001	.001	.001	.000	.000	0
	VERTICAL CURVE ORDINATE	0	.002	.003	.004	.005	.006	.007	.008	.008	.008	.009	.008	.008	.008	.007	.006	.005	.004	.003	.002	0
	SUPERELEVATION ORDINATE	0	.000	.000	.000	.000	.000	.000	.000	.000	.000	.000	.000	.000	.000	.000	.000	.000	.000	.000	.000	0
	REQUIRED CAMBER	0	2	5	10	17	25	35	45	53	61	68	72	74	73	70	64	55	44	30	17	0
2	DEFLECTION DUE TO WT. OF STEEL	0	.001	.000	.001	.002	.003	.005	.007	.008	.010	.011	.012	.013	.013	.012	.011	.010	.008	.006	.003	0
	DEFLECTION DUE TO WT. OF SLAB	0	-.001	.001	.004	.009	.015	.022	.029	.036	.042	.048	.052	.054	.054	.052	.048	.042	.033	.023	.012	0
	DEFLECTION DUE TO WT. OF RAIL	0	.000	.000	.000	.001	.001	.002	.002	.003	.003	.004	.004	.004	.004	.004	.004	.003	.002	.002	.001	0
	TOTAL DEAD LOAD DEFLECTION	0	.000	.001	.005	.012	.019	.029	.038	.047	.055	.063	.068	.071	.071	.068	.063	.055	.043	.031	.016	0
	CAMBER DISSIPATION	0	.000	.000	.000	.000	.000	.000	.001	.001	.001	.001	.001	.001	.001	.001	.001	.001	.001	.000	.000	0
	VERTICAL CURVE ORDINATE	0	.002	.003	.004	.005	.006	.007	.008	.008	.008	.009	.008	.008	.008	.007	.006	.005	.004	.003	.002	0
	SUPERELEVATION ORDINATE	0	.000	.000	.000	.000	.000	.000	.000	.000	.000	.000	.000	.000	.000	.000	.000	.000	.000	.000	.000	0
	REQUIRED CAMBER	0	2	4	9	17	25	36	47	56	64	73	77	80	80	76	70	61	48	34	18	0
3	DEFLECTION DUE TO WT. OF STEEL	0	.001	.000	.000	.002	.003	.005	.007	.008	.010	.012	.013	.013	.014	.013	.012	.011	.008	.006	.003	0
	DEFLECTION DUE TO WT. OF SLAB	0	-.002	.001	.004	.009	.015	.022	.030	.038	.044	.051	.055	.058	.058	.056	.052	.045	.036	.025	.013	0
	DEFLECTION DUE TO WT. OF RAIL	0	.000	.000	.000	.001	.001	.002	.003	.003	.004	.004	.004	.005	.005	.004	.004	.003	.003	.002	.001	0
	TOTAL DEAD LOAD DEFLECTION	0	-.001	.001	.004	.012	.019	.029	.040	.049	.058	.067	.072	.076	.077	.073	.068	.059	.047	.033	.017	0
	CAMBER DISSIPATION	0	.000	.000	.000	.000	.000	.000	.001	.001	.001	.001	.001	.001	.001	.001	.001	.001	.001	.000	.000	0
	VERTICAL CURVE ORDINATE	0	.002	.003	.004	.005	.006	.007	.008	.008	.008	.009	.008	.008	.008	.007	.006	.005	.004	.003	.002	0
	SUPERELEVATION ORDINATE	0	.000	.000	.000	.000	.000	.000	.000	.000	.000	.000	.000	.000	.000	.000	.000	.000	.000	.000	.000	0
	REQUIRED CAMBER	0	1	4	8	17	25	36	49	58	67	77	81	85	86	81	75	65	52	36	19	0
4	DEFLECTION DUE TO WT. OF STEEL	0	.000	.000	.000	.001	.003	.004	.006	.008	.010	.012	.013	.014	.014	.014	.013	.011	.009	.006	.003	0
	DEFLECTION DUE TO WT. OF SLAB	0	-.002	.000	.003	.008	.014	.022	.030	.038	.046	.053	.058	.061	.062	.060	.055	.048	.039	.027	.014	0
	DEFLECTION DUE TO WT. OF RAIL	0	.000	.000	.000	.001	.001	.002	.003	.003	.004	.005	.005	.005	.005	.005	.004	.004	.003	.002	.001	0
	TOTAL DEAD LOAD DEFLECTION	0	-.002	.000	.003	.010	.018	.028	.039	.049	.060	.070	.076	.080	.081	.079	.072	.063	.051	.035	.018	0
	CAMBER DISSIPATION	0	.000	.000	.000	.000	.000	.000	.000	.000	.000	.000	.000	.000	.000	.000	.000	.000	.000	.000	.000	0
	VERTICAL CURVE ORDINATE	0	.002	.003	.004	.005	.006	.007	.008	.008	.008	.009	.008	.008	.008	.007	.006	.005	.004	.003	.002	0
	SUPERELEVATION ORDINATE	0	.000	.000	.000	.000	.000	.000	.000	.000	.000	.000	.000	.000	.000	.000	.000	.000	.000	.000	.000	0
	REQUIRED CAMBER	0	0	3	7	15	24	35	47	57	68	79	84	88	89	86	78	68	55	38	20	0

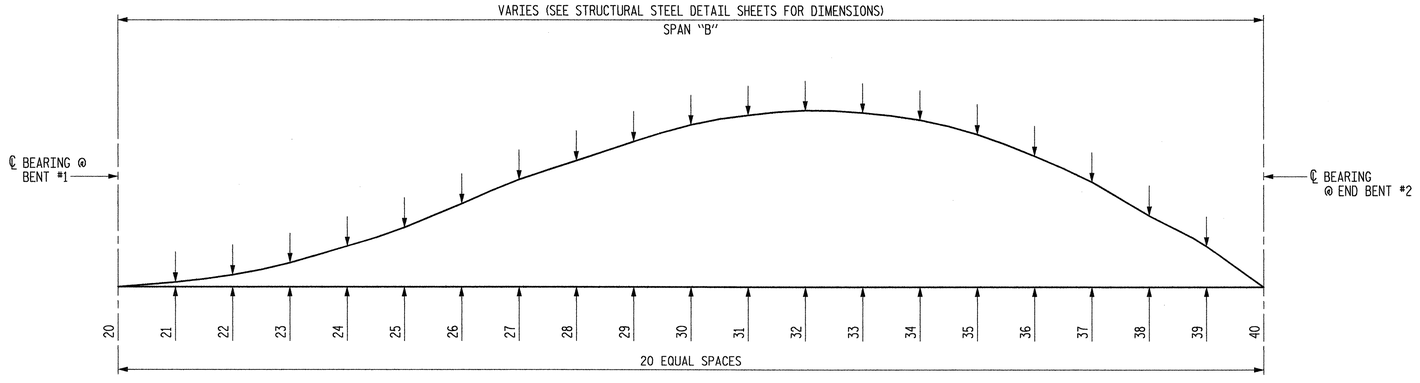

SCHEMATIC OF CAMBER ORDINATES - SPAN "B"

FOR CAMBER VALUES AT TWENTIETH POINTS, SEE TABLES.

SLOPE FOR ZERO CAMBER LINE VARIES.

NOTES:

VALUES GIVEN IN TABLE ARE AT TWENTIETH POINTS BETWEEN ℄ BEARINGS.

DEFLECTION AND ORDINATE VALUES ARE GIVEN IN METERS (DECIMAL FORM).

REQUIRED CAMBER VALUES GIVEN IN MILLIMETERS.

DRAWN BY B.E. LANNING DATE JAN. 2007

CHECKED BY A.K. ORR / J.C. KO DATE JAN. 2007

PLOT: 1/18/2007 3:48:25 PM Ko & Associates, P.C.

FILE NAME: R:\Structures\r2554ba_sd_dlb_18.dgn

Plans prepared by:
KO & ASSOCIATES, P.C.
Consulting Engineers
1011 SCHAUB DR. SUITE #202
RALEIGH, N.C. 27606
For Division of Highways

NORTH CAROLINA PROFESSIONAL SEAL 5681 ENGINEER CHIH KUO KO

DWG. NO. 16

METRIC

PROJECT NO. R-2554BA

WAYNE COUNTY

STATION: 86+57.806 -L2-

SHEET 2 OF 2

STATE OF NORTH CAROLINA
DEPARTMENT OF TRANSPORTATION
RALEIGH

SUPERSTRUCTURE
CAMBER AND DEAD LOAD DEFLECTIONS

REVISIONS						SHEET NO.
NO.	BY:	DATE:	NO.	BY:	DATE:	S-135
1			3			TOTAL SHEETS
2			4			478

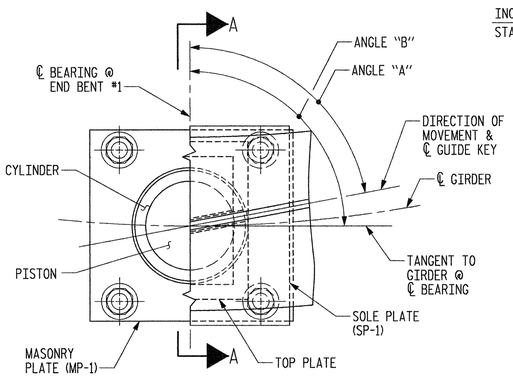

CUT-AWAY PLAN - END BENT #1

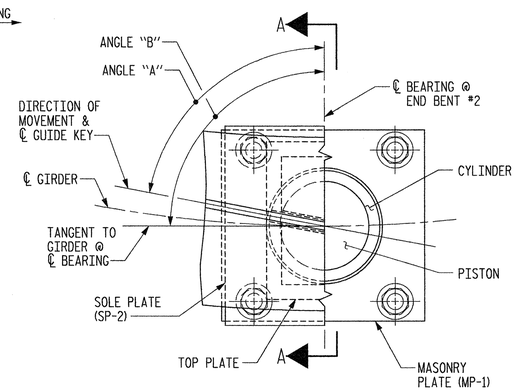

CUT-AWAY PLAN - END BENT #2

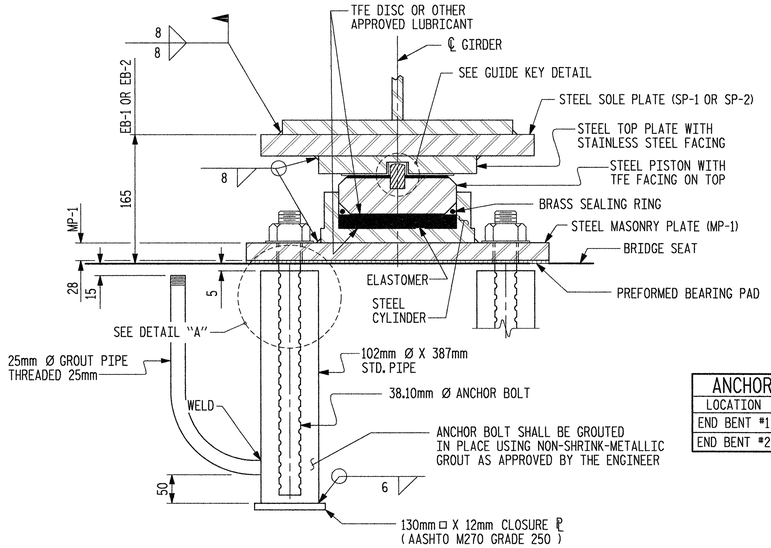

SECTION A-A

EXPANSION POT BEARING DETAILS

ANCHOR BOLT LENGTH		
LOCATION	LENGTH	PROJECTION
END BENT #1	470mm	90mm
END BENT #2	470mm	90mm

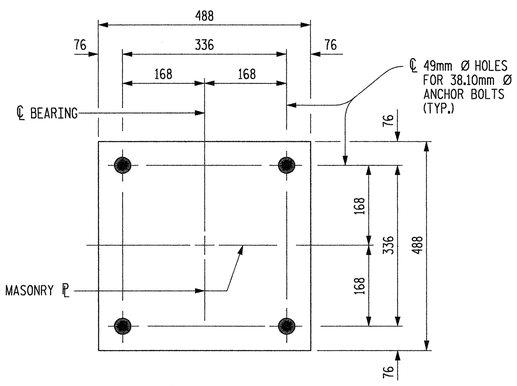

MASONRY PLATE MP-1

MASONRY PLATE DETAILS

(4 REQUIRED @ END BENT #1)
(4 REQUIRED @ END BENT #2)

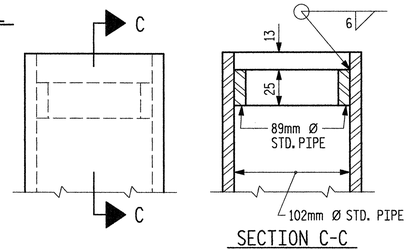

SECTION C-C

DETAIL "A"

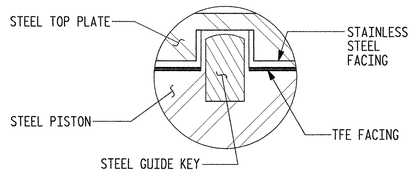

GUIDE KEY DETAIL

TABLE OF ANGLES				
GIRDER	ANGLE "A"		ANGLE "B"	
	END BENT #1	END BENT #2	END BENT #1	END BENT #2
1	84°52'32"	85°00'08"	89°52'23"	89°52'23"
2	84°52'34"	85°00'06"	89°52'29"	89°52'29"
3	84°52'37"	85°00'03"	89°52'34"	89°52'34"
4	84°52'40"	85°00'00"	89°52'39"	89°52'39"

TABLE FOR LOADS AND MOVEMENTS FOR EB-1 AT END BENT #1					
GIRDER	VERTICAL LOAD (kN)			LATERAL LOAD (kN)	⊛TOTAL MOVEMENT (mm)
	DEAD	LIVE	TOTAL		
1	534	409	943	107	45
2	622	511	1133	124	45
3	672	528	1200	134	45
4	715	504	1219	143	45

TABLE FOR LOADS AND MOVEMENTS FOR EB-2 AT END BENT #2					
GIRDER	VERTICAL LOAD (kN)			LATERAL LOAD (kN)	⊛TOTAL MOVEMENT (mm)
	DEAD	LIVE	TOTAL		
1	482	404	886	97	42
2	546	509	1055	109	42
3	572	526	1098	114	42
4	588	483	1071	118	42

⊛NOTE: TOTAL MOVEMENT VALUES ARE BASED UPON ΔT=72°C.

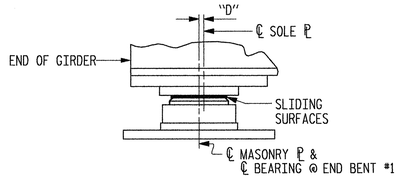

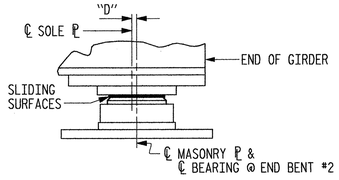

TEMPERATURE SETTING DETAIL

TABLE FOR PLATE SETTING DATA FOR COMPUTING DIMENSION "D" (EXPANSION POT BEARINGS)				
TEMPERATURE AT TIME OF SETTING	0° C	16° C	32° C	✳
END BENT #1	10mm	0	-10mm	9mm
END BENT #2	9mm	0	-9mm	6mm

✳CORRECTION FOR END ROTATION DUE TO WEIGHT OF SLAB AND COMPOSITE DEAD LOAD (BARRIER ONLY).

NOTES

FOR POT BEARINGS, SEE SPECIAL PROVISIONS.

AT ALL POINTS OF SUPPORT IN SPANS A AND B, NUTS FOR ANCHOR BOLTS SHALL BE TIGHTENED FINGER TIGHT AND GIVEN AN ADDITIONAL $\frac{1}{4}$ TURN. THE THREAD OF THE NUT AND BOLT SHALL THEN BE BURRED WITH A SHARP POINTED TOOL

WHEN WELDING THE SOLE PLATE TO THE GIRDER, USE TEMPERATURE INDICATING WAX PENS, OR OTHER SUITABLE MEANS, TO ENSURE THAT THE TEMPERATURE OF THE BEARING DOES NOT EXCEED 121°C TEMPERATURES ABOVE THIS MAY DAMAGE THE TFE OR ELASTOMER.

AFTER BEARING ASSEMBLY IS IN PLACE AND ANCHOR BOLTS HAVE BEEN FINALLY POSITIONED. THEY SHALL BE GROUTED IN PLACE AS SHOWN.

THE CLOSURE PLATE, GROUT PIPE AND STANDARD PIPE FOR THIS ASSEMBLY NEED NOT BE GALVANIZED.

SOLE PLATES SHOULD BE WELDED TO GIRDER FLANGES AND ANCHOR BOLTS SHOULD BE GROUTED BEFORE FALSEWORK IS PLACED.

ALL SURFACES OF BEARING PLATES SHALL BE SMOOTH AND STRAIGHT.

FOR THERMAL SPRAYED COATINGS (METALLIZATION), SEE SPECIAL PROVISIONS.

THE CONTRACTOR MAY SUBSTITUTE DISC BEARINGS FOR THE POT BEARINGS SHOWN. FOR OPTIONAL DISC BEARINGS, SEE SPECIAL PROVISIONS.

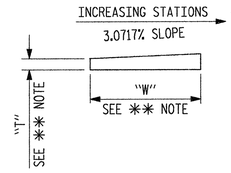

ELEVATION

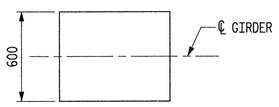

PLAN

SP-1 (AT END BENT #1)
(4 REQUIRED)

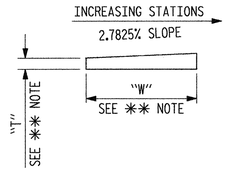

ELEVATION

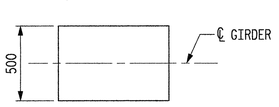

PLAN

SP-2 (AT END BENT #2)
(4 REQUIRED)

SOLE PLATE DETAILS

✳✳ NOTE: DIMENSIONS "W" AND "T" ARE TO BE DETERMINED BY THE MANUFACTURER.

PROJECT NO. R-2554BA

WAYNE COUNTY

STATION: 86+57.806 -L2-

METRIC

STATE OF NORTH CAROLINA
DEPARTMENT OF TRANSPORTATION
RALEIGH

SUPERSTRUCTURE
POT BEARING DETAILS

Plans prepared by:
KO & ASSOCIATES, P.C.
Consulting Engineers
1011 SCHAUB DR. SUITE #202
RALEIGH, N.C. 27606
For Division of Highways

NORTH CAROLINA PROFESSIONAL SEAL 5601 ENGINEER CHIH KUO KO

DWG. NO. 17

REVISIONS						SHEET NO.
NO.	BY:	DATE:	NO.	BY:	DATE:	S-136
1			3			TOTAL SHEETS
2			4			478

DRAWN BY B.E. LANNING DATE JAN. 2007
CHECKED BY A.K. ORR / J.C. KO DATE JAN. 2007

PLOT: 1/18/2007 3:45:59 PM Ko & Associates, P.C.
FILE NAME: R:\Structures\r2554ba_sd_bg_18.dgn

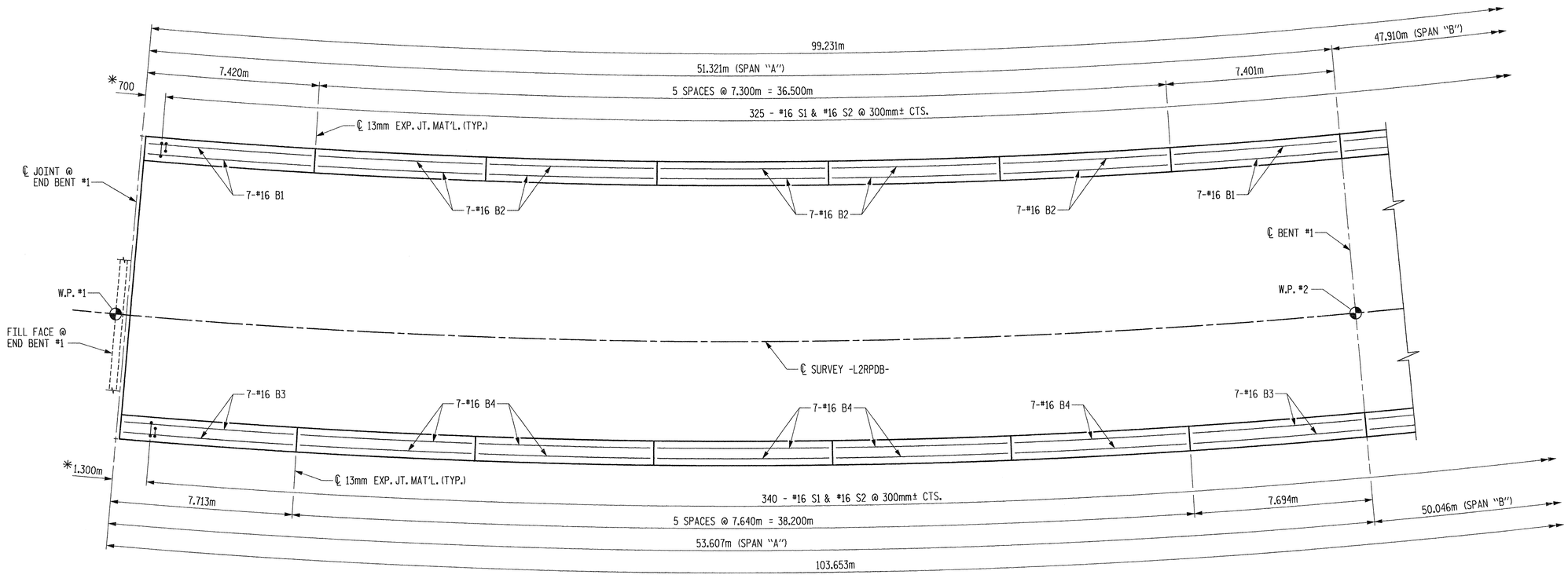

PART PLAN - SPAN "A"

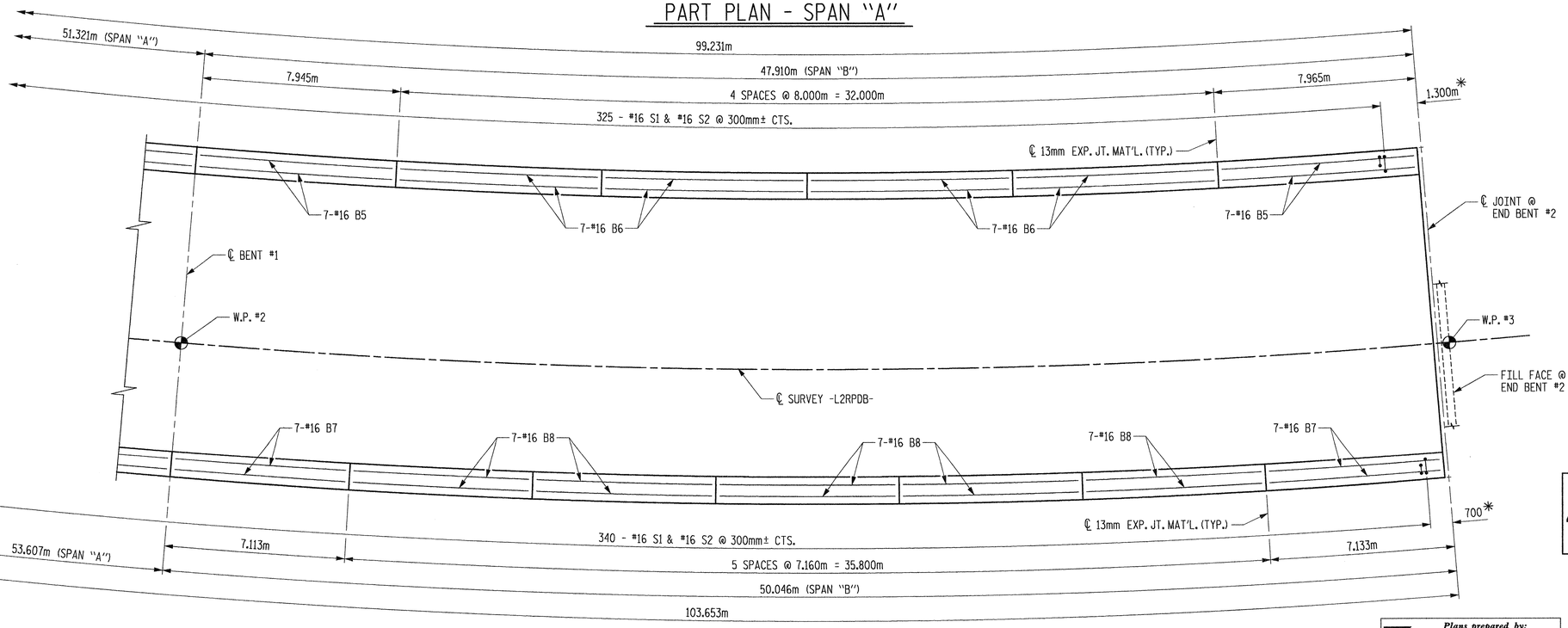

PART PLAN - SPAN "B"

NOTES

RAILS SECTIONS AND SPAN LENGTHS ARE MEASURED ALONG OUTSIDE EDGE OF BARRIER RAIL.

* FOR ADDITIONAL REINFORCING, SEE "END OF RAIL DETAILS" ON SHEET 2 OF 2.

PROJECT NO. R-2554BA

WAYNE COUNTY

STATION: 86+57.806 -L2-

SHEET 1 OF 2

STATE OF NORTH CAROLINA
DEPARTMENT OF TRANSPORTATION
RALEIGH

SUPERSTRUCTURE
CONCRETE BARRIER RAIL

METRIC

NORTH CAROLINA PROFESSIONAL SEAL 6691 ENGINEER CHIH KUO KO

DWG. NO. 18

REVISIONS						SHEET NO.
NO.	BY:	DATE:	NO.	BY:	DATE:	S-137
1			3			TOTAL SHEETS
2			4			478

Plans prepared by:
KO & ASSOCIATES, P.C.
Consulting Engineers
1011 SCHAUB DR. SUITE #202
RALEIGH, N.C. 27606
For Division of Highways

DRAWN BY B.E. LANNING DATE JAN. 2007
CHECKED BY A.K. ORR / J.C. KO DATE JAN. 2007

P.OT: 1/18/2007 3:46:40 PM Ko & Associates, P.C.
FILE NAME: R:\Structures\r-2554ba_sd_bri_18.dgn

NOTES

THE BARRIER RAIL IN CONTINUOUS UNIT SHALL NOT BE CAST UNTIL ALL SLAB CONCRETE IN THAT UNIT HAS BEEN CAST AND HAS REACHED A MINIMUM COMPRESSIVE STRENGTH OF 20.7 MPa.

WHEN EVAZOTE JOINT SEAL IS REQUIRED, THE JOINT IN THE DECK SHALL BE SAWED PRIOR TO THE CASTING OF BARRIER RAIL.

ALL REINFORCING STEEL IN BARRIER RAILS SHALL BE EPOXY COATED.

THE #16 S3 AND #16 S4 BARS SHALL BE INSTALLED, USING AN ADHESIVE ANCHORING SYSTEM, AFTER SAWING THE JOINT. THE YIELD LOAD FOR THE #16 S3 AND #16 S4 BARS IS 82.7 kN. FIELD TESTING FOR THE ADHESIVE BONDING SYSTEM IS NOT REQUIRED.

VERTICAL GROOVED CONTRACTION JOINTS, 12mm IN DEPTH, SHALL BE TOOLED IN ALL EXPOSED FACES OF THE BARRIER RAIL AND IN ACCORDANCE WITH ARTICLE 825-10(B) OF THE STANDARD SPECIFICATIONS. THE CONTRACTION JOINT SHALL BE LOCATED AT EACH THIRD POINT BETWEEN BARRIER RAIL EXPANSION JOINTS. ONLY ONE CONTRACTION JOINT IS REQUIRED AT MIDPOINT OF BARRIER RAIL SEGMENTS LESS THAN 6.1m IN LENGTH AND NO CONTRACTION JOINTS ARE REQUIRED FOR THOSE SEGMENTS LESS THAN 3.5m IN LENGTH.

THE #16 S1 AND #16 S2 BARS MAY BE SHIFTED SLIGHTLY AS NECESSARY IN ORDER TO MAINTAIN A 50mm CLEARANCE TO THE 13mm EXPANSION JOINT MATERIAL IN THE RAIL.

BAR TYPES

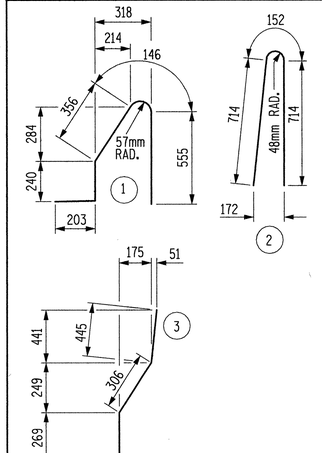

ALL BAR DIMENSIONS ARE OUT TO OUT.

BILL OF MATERIAL

FOR CONCRETE BARRIER RAIL ONLY

BAR	NO.	SIZE	TYPE	LENGTH	WEIGHT
✳ S1	665	16	1	1500	1548
✳ S2	665	16	2	1580	1631
✳ S3	12	16	3	1020	19
✳ S4	12	16	STR	960	18
✳ B1	14	16	STR	7300	159
✳ B2	35	16	STR	7200	391
✳ B3	14	16	STR	7580	165
✳ B4	35	16	STR	7540	410
✳ B5	14	16	STR	7840	170
✳ B6	28	16	STR	7900	343
✳ B7	14	16	STR	7000	152
✳ B8	35	16	STR	7060	383

✳ EPOXY COATED REINFORCING STEEL	5389 kg
CLASS AA CONCRETE	50.9 CU. METER
CONCRETE BARRIER RAIL	202.884 METERS

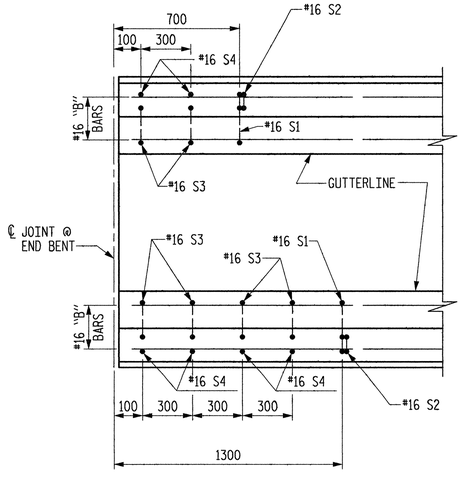

PLAN

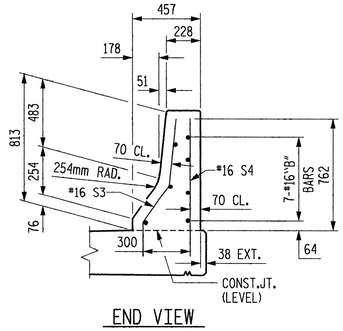

END VIEW

END OF RAIL DETAILS

FOR ADHESIVE ANCHORING AT SAWED JOINTS

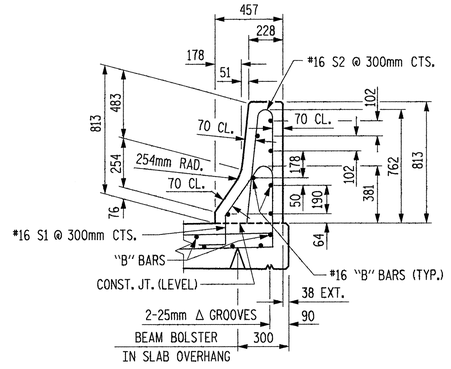

SECTION THRU RAIL

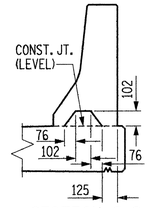

SECTION S-S

AT DAM IN OPEN JOINT (THIS IS TO BE USED ONLY WHEN SLIP FORM IS USED)

℄ 13mm EXP. JT. MAT'L. HELD IN PLACE WITH GALVANIZED NAILS. (NOTE: OMIT EXP. JT. MAT'L. WHEN SLIP FORM IS USED.)

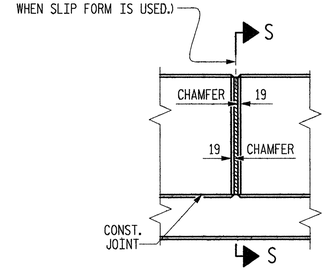

ELEVATION AT EXPANSION JOINTS

BARRIER RAIL DETAILS

PROJECT NO. R-2554BA

WAYNE COUNTY

STATION: 86+57.806 -L2-

SHEET 2 OF 2

STATE OF NORTH CAROLINA
DEPARTMENT OF TRANSPORTATION
RALEIGH

STANDARD
CONCRETE
BARRIER RAIL

METRIC

Plans prepared by:
KO & ASSOCIATES, P.C.
Consulting Engineers
5121 KINGDOM WAY, SUITE #100
RALEIGH, N.C. 27607
(919)-851-6066

NORTH CAROLINA PROFESSIONAL SEAL 030601 ENGINEER CHIH KUO KO 8/16/08

DWG. NO. 19

REVISIONS						SHEET NO.
NO.	BY:	DATE:	NO.	BY:	DATE:	S-138
1			3			TOTAL SHEETS
2			4			478

ASSEMBLED BY : B.E. LANNING DATE : NOV. 2006
CHECKED BY : A.K. ORR / J.C. KO DATE : NOV. 2006

DRAWN BY : ARB 5/87
CHECKED BY : SJD 9/87

REV. 10/17/00 RWW/LES
REV. 5/7/03R RWW/JTE
REV. 5/1/06 TLA/GM

STD. No. CBR1SM

PLOT: 6/4/2009 3:23:24 PM Ko & Associates, P.C.
FILE NAME: R:\Structures\r2554ba_sd_br-2_18.dgn

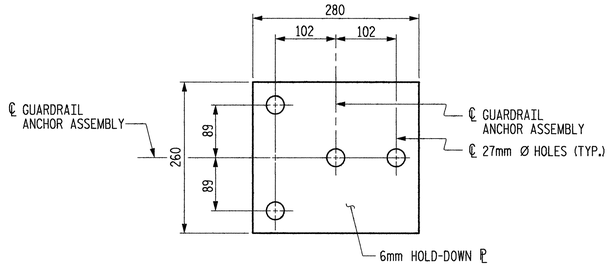

PLAN

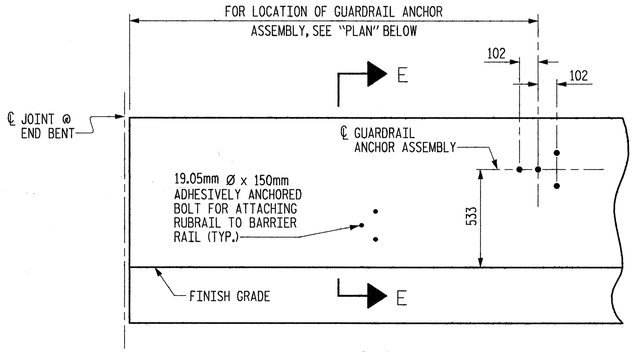

ELEVATION

FOR LOCATION OF RUBRAIL, SEE ROADWAY STD. 862.03

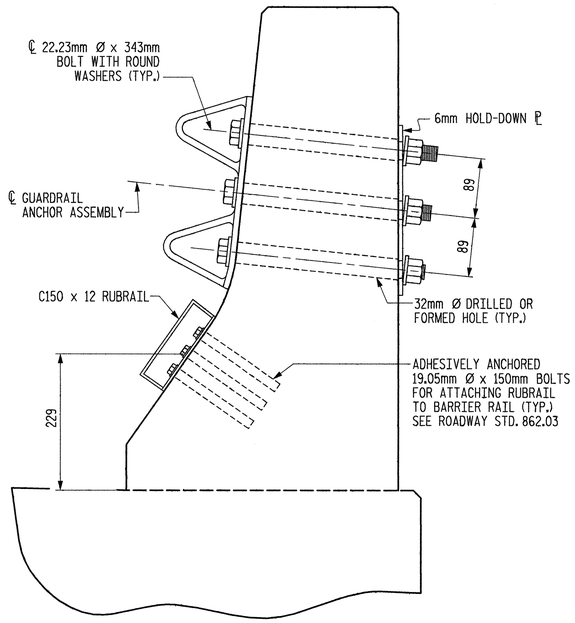

SECTION E-E

GUARDRAIL ANCHOR ASSEMBLY DETAILS

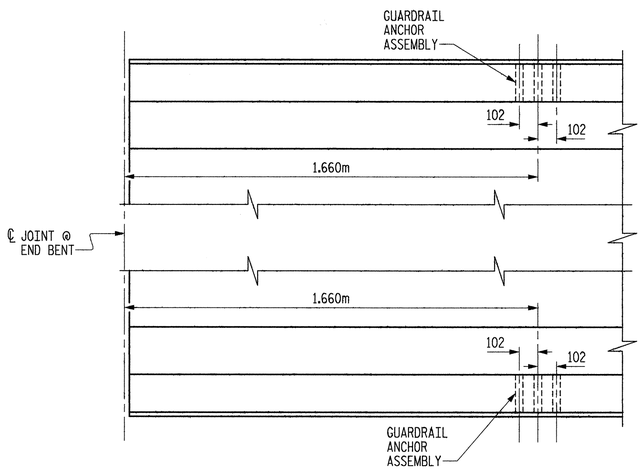

PLAN

LOCATION OF ANCHORS FOR GUARDRAIL

END BENT #1 SHOWN, END BENT #2 SIMILAR

NOTES

THE GUARDRAIL ANCHOR ASSEMBLY SHALL CONSIST OF A 6mm HOLD DOWN PLATE AND 4 - 22.23mm Ø BOLTS WITH NUTS AND WASHERS, RUBRAIL, AND ADHESIVELY ANCHORED BOLTS.

THE HOLD-DOWN PLATE SHALL CONFORM TO AASHTO M270 GRADE 36. AFTER FABRICATION, THE HOLD-DOWN PLATE SHALL BE HOT-DIP GALVANIZED IN ACCORDANCE WITH AASHTO M111.

BOLTS SHALL CONFORM TO THE REQUIREMENTS OF ASTM A307 AND NUTS SHALL CONFORM TO THE REQUIREMENTS OF AASHTO M291. BOLTS, NUTS AND WASHERS SHALL BE GALVANIZED. (AT THE CONTRACTOR'S OPTION, STAINLESS STEEL BOLTS, NUTS AND WASHERS MAY BE USED AS AN ALTERNATE FOR THE 22.23mm Ø GALVANIZED BOLTS, NUTS AND WASHERS. THEY SHALL CONFORM TO OR EXCEED THE MECHANICAL REQUIREMENTS OF ASTM A307. THE USE OF THIS ALTERNATE SHALL BE APPROVED BY THE ENGINEER.)

THE GUARDRAIL ANCHOR ASSEMBLY IS REQUIRED AT ALL POINTS WHERE APPROACH GUARDRAIL IS TO BE ATTACHED TO THE END OF BARRIER RAIL. FOR POINTS OF ATTACHMENT, SEE SKETCH.

AFTER INSTALLATION, THE EXPOSED THREAD OF THE BOLT SHALL BE BURRED WITH A SHARP POINTED TOOL.

THE COST OF THE GUARDRAIL ANCHOR ASSEMBLY SHALL BE INCLUDED IN THE UNIT CONTRACT PRICE BID FOR CONCRETE BARRIER RAIL.

THE 32mm Ø HOLES SHALL BE FORMED OR DRILLED WITH A CORE BIT. IMPACT TOOLS WILL NOT BE PERMITTED. ANY CONCRETE DAMAGED BY THIS WORK SHALL BE REPAIRED TO THE SATISFACTION OF THE ENGINEER.

THE C150 x 12 RUBRAIL IS TO BE ADHESIVELY ANCHORED TO THE RAIL USING THREE 19.05mm Ø x 150mm BOLTS WITH WASHERS. LEVEL ONE FIELD TESTING IF REQUIRED, AND THE YIELD LOAD OF THE 19.05mm Ø BOLTS IS 53.4 kN. FOR ADHESIVELY ANCHORED ANCHOR BOLTS OR DOWELS, SEE SPECIAL PROVISIONS. SEE ROADWAY STANDARD 862.03 FOR DETAILS AND LOCATION OF THE RUBRAIL.

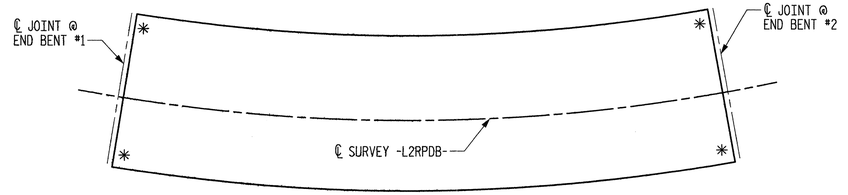

SKETCH SHOWING POINTS OF ATTACHMENTS

✳ DENOTES GUARDRAIL ANCHOR ASSEMBLY

PROJECT NO. R-2554BA

WAYNE COUNTY

STATION: 86+57.806 -L2-

METRIC

STATE OF NORTH CAROLINA
DEPARTMENT OF TRANSPORTATION
RALEIGH

STANDARD
GUARDRAIL ANCHORAGE FOR BARRIER RAIL

Plans prepared by:
KO & ASSOCIATES, P.C.
Consulting Engineers
5121 KINGDOM WAY, SUITE #100
RALEIGH, N.C. 27607
(919)-851-6066

NORTH CAROLINA PROFESSIONAL SEAL 030001 ENGINEER CHIH KUO KO 5/06/08

DWG. NO. 20

REVISIONS						SHEET NO.
NO.	BY:	DATE:	NO.	BY:	DATE:	S-139
1			3			TOTAL SHEETS
2			4			478

ASSEMBLED BY : B.E. LANNING	DATE : NOV. 2006
CHECKED BY : J.C. KO	DATE : NOV. 2006
DRAWN BY : TLA 5/06	ADDED 5/1/06R KMM/GM
CHECKED BY : GM 5/06	

STD. No. GRA2SM

PLOT: 6/4/2008 3:37:47 PM Ko & Associates,P.C.
FILE NAME: R:\Structures\r2554ba_std_gr_18.dgn

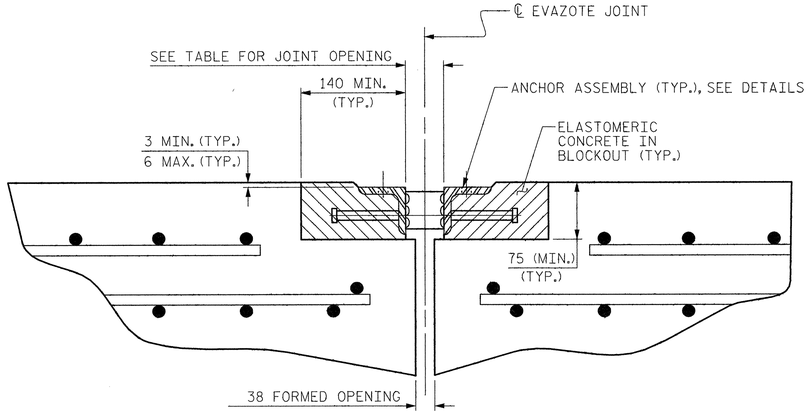

ARMORED JOINT DETAILS

SECTION NORMAL TO JOINT AT BENT

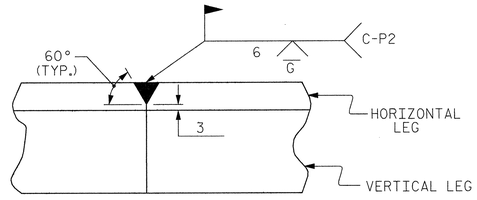

DETAIL- FIELD WELD SPLICE OF ANGLE

NOTES

ANGLES SHALL CONFORM TO AASHTO M270 GRADE 250 STEEL OR APPROVED EQUAL. ALL STUD ANCHORS SHALL CONFORM TO AASHTO M169 GRADES 1010 THRU 1020 OR APPROVED EQUAL.

STUD ANCHORS SHALL BE SHOP WELDED AND ALL HOLES SHALL BE SHOP DRILLED AS SHOWN ON THE PLANS. STUD ANCHORS SHALL BE ELECTRIC ARC END WELDED WITH COMPLETE FUSION.

UPON COMPLETION OF SHOP FABRICATION, THE ENTIRE ANCHOR ASSEMBLY SHALL BE METALLIZED. THE 12.70mm Ø STUD ANCHORS AND ANCHOR TABS NEED NOT BE METALLIZED. SEE SPECIAL PROVISION FOR THERMAL SPRAYED COATINGS (METALLIZATION).

ANCHOR ASSEMBLY SHALL BE MADE CONTINUOUS THE LENGTH OF THE JOINT FROM GUTTER TO GUTTER. FOR FIELD SPLICES AT ALL CROWN BREAK POINTS, THE ENDS OF THE STEEL ANGLES SHALL BE CUT PARALLEL TO THE BRIDGE CENTERLINE. FINISHED FIELD WELDS SHALL BE GROUND SMOOTH AND COATED WITH A MINIMUM THICKNESS OF 0.100mm OF ZINC-RICH PAINT IN ACCORDANCE WITH THE STANDARD SPECIFICATIONS.

ANCHOR ASSEMBLY SEGMENTS SHALL NOT BE LESS 3.6m NOR MORE THAN 6.1m IN LENGTH. SHORTER SEGMENTS MAY BE USED AT THE EDGE OF ROADWAY OR AT POINTS OF STAGED CONSTRUCTION.

THE ANCHOR ASSEMBLY SHALL BE SECURED AND LEVELED AS SHOWN IN THE "ARMORED JOINT ANCHOR ASSEMBLY DETAILS". NO SUBMITTALS ARE REQUIRED FOR 9.53mm Ø EXPANSION ANCHORS, NUTS OR WASHERS. THE CONTRACTOR MAY SUBMIT FOR APPROVAL AN ALTERNATE METHOD OF ALIGNING AND LEVELING THE ANGLES. THE ALTERNATE METHOD SHALL NOT INCLUDE ANY WELDING TO THE OUTSIDE FACE OF THE ANGLES.

AFTER THE ELASTOMERIC CONCRETE HAS BEEN CAST ON BOTH SIDES OF THE JOINT, REMOVE ANY EXCESS CONCRETE THAT COMES THROUGH THE WEEP HOLES AND THOROUGHLY CLEAN THE ANGLES. ANY DAMAGED STEEL SHALL BE COATED WITH A MINIMUM OF 0.100mm OF ZINC-RICH PAINT IN ACCORDANCE WITH THE STANDARD SPECIFICATIONS.

SEE SPECIAL PROVISIONS FOR EVAZOTE JOINT SEALS.

SEE SPECIAL PROVISIONS FOR ELASTOMERIC CONCRETE.

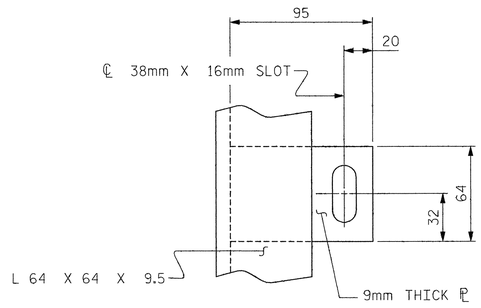

PLAN VIEW OF TAB

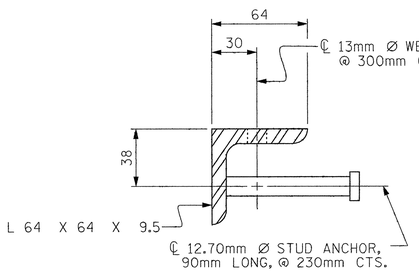

SECTION VIEW OF STUD

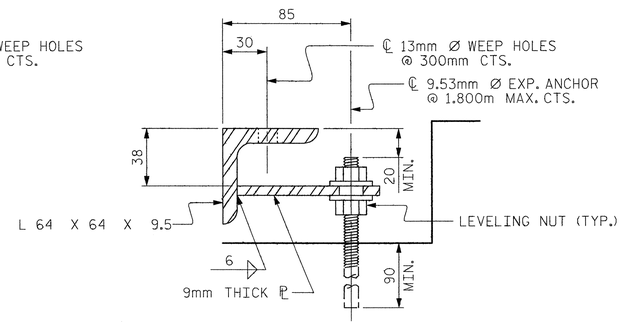

SECTION VIEW OF TAB

ARMORED JOINT ANCHOR ASSEMBLY DETAILS

MOVEMENT AND SETTING AT EVAZOTE JOINT						
END BENT NO.	SKEW ANGLE	NOMINAL UNCOMPRESSED SEAL WIDTH	TOTAL MOVEMENT (ALONG CHORD)	PERPENDICULAR JOINT OPENING AT 7° C	PERPENDICULAR JOINT OPENING AT 16° C	PERPENDICULAR JOINT OPENING AT 32° C
EB1	84° 54′	87 mm	44 mm	72 mm	65 mm	52 mm
EB2	85° 12′	87 mm	41 mm	72 mm	65 mm	53 mm

TOTAL MOVEMENT IS CALCULATED ALONG THE CHORD BETWEEN THE END BENT AND THE INTERIOR BENT.
JOINT OPENINGS ARE MEASURED PERPENDICULAR TO THE JOINT.

BILL OF MATERIAL		
BENT NO.	ELASTOMERIC CONCRETE * (CU. m)	TOTAL LENGTH OF ANGLE (m)
EB1	0.2	24.0
EB2	0.2	24.0
TOTAL	0.4	48.0

* BASED ON THE MINIMUM BLOCKOUT SHOWN.

PROJECT NO. R-2554BA

WAYNE COUNTY

STATION: 86+57.806 -L2-

BRIDGE NO. 357

STATE OF NORTH CAROLINA
DEPARTMENT OF TRANSPORTATION
RALEIGH

STANDARD ARMORED EVAZOTE JOINT DETAILS

Plans prepared by:
KO & ASSOCIATES, P.C.
Consulting Engineers
5121 KINGDOM WAY, SUITE #100
RALEIGH, N.C. 27607
(919)-851-6066

NORTH CAROLINA PROFESSIONAL SEAL 5601 ENGINEER CHIH KUO KO 2/26/08

DWG. NO. 20A

REVISIONS						SHEET NO.
NO.	BY:	DATE:	NO.	BY:	DATE:	S-139A
1			3			TOTAL SHEETS
2			4			478

ASSEMBLED BY : M.J. MOYER		DATE : JUNE 2008
CHECKED BY : A.K. ORR		DATE : JUNE 2008
DRAWN BY : EEM 1/96	REV. 7/10/01	LES/RDR
CHECKED BY : RGW 1/96	REV. 5/7/03RR	RWW/JTE
	REV. 5/1/06	TLA/GM

PLOT: 6/6/2008 1:48:11 PM Ko & Associates, P.C.
FILE NAME: R:\Structures\dwg\jtanudgn

SID NO. AE.J1SM

REINFORCING BAR SCHEDULE

SPANS "A" AND "B"

BAR	NO.	SIZE	TYPE	LENGTH	WEIGHT
✳ A1	726	16	STR	12880	14513
A2	726	16	STR	12880	14513
✳ A3	5	22	STR	12880	196
✳ B1	390	13	STR	8540	3311
✳ B2	174	19	STR	16420	6386
B3	336	16	STR	17800	9282
✳ G1	2	16	STR	12880	40
✳ K1	8	16	1	2420	30
✳ K2	8	16	2	2760	34
✳ K3	12	16	STR	3140	58
✳ S1	66	13	3	1300	85
✳EPOXY COATED REINFORCING STEEL				kg	24653
REINFORCING STEEL				kg	23795

SUPERSTRUCTURE REINFORCING STEEL LENGTHS ARE BASED ON THE FOLLOWING MINIMUM SPLICE LENGTHS

BAR SIZE	SUPERSTRUCTURE EXCEPT APPROACH SLABS, PARAPET, AND BARRIER RAIL		APPROACH SLABS		PARAPET AND BARRIER RAIL
	EPOXY COATED	UNCOATED	EPOXY COATED	UNCOATED	
#13	610	540	610	540	840
#16	770	660	770	660	1050
#19	920	790	1190	790	1330
#22	1580	1060			
#25	2080	1390			

GROOVING BRIDGE FLOORS

APPROACH SLABS	95.8	SQ. METER
BRIDGE DECK	1122.4	SQ. METER
TOTAL	1218.2	SQ. METER

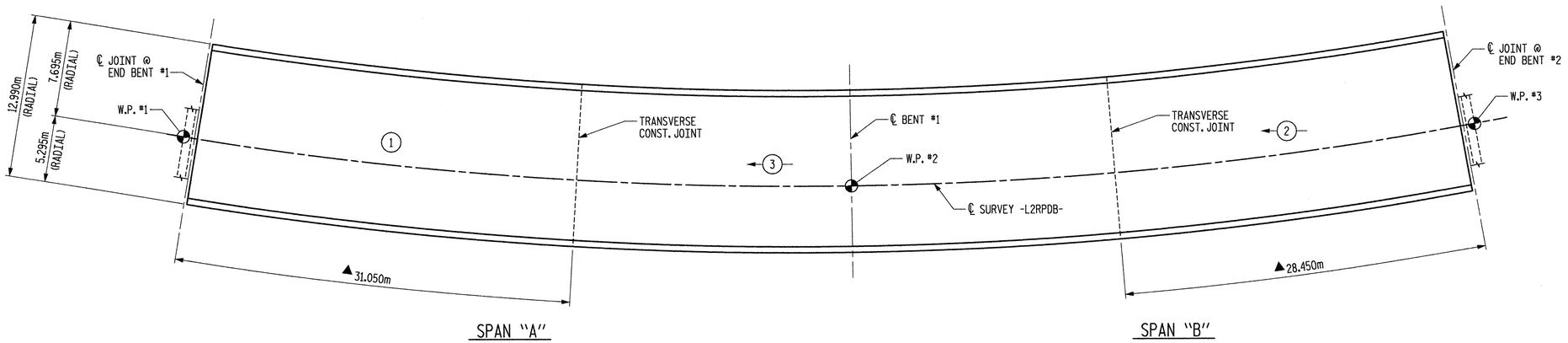

PLAN - POURING SEQUENCE

(#) → INDICATES POUR NUMBER AND DIRECTION OF POUR

▲ DIMENSIONS MEASURED ALONG ℄ SURVEY -L2RPDB-.

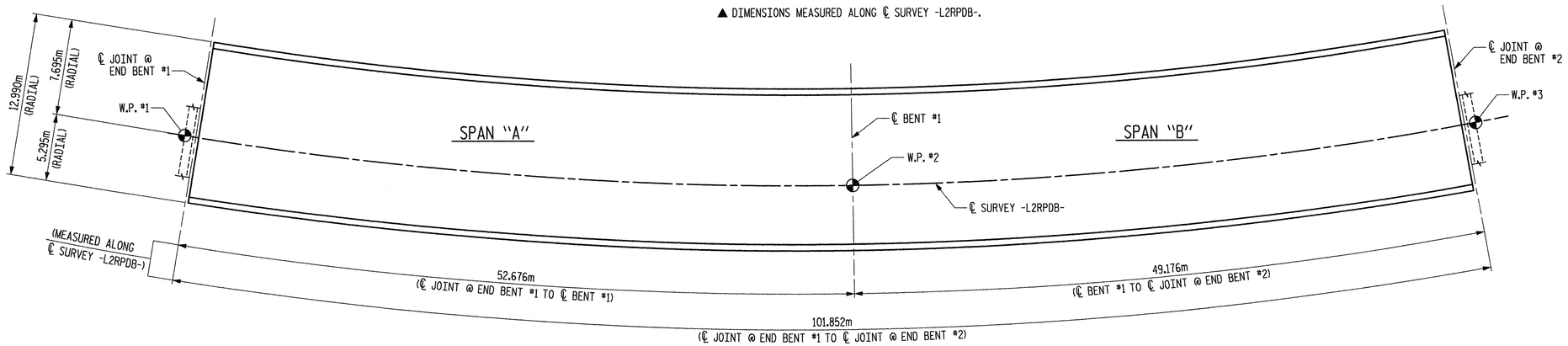

LAYOUT FOR COMPUTING AREA OF REINFORCED CONCRETE DECK SLAB (SQ. METER = 1317.7)

BAR TYPES

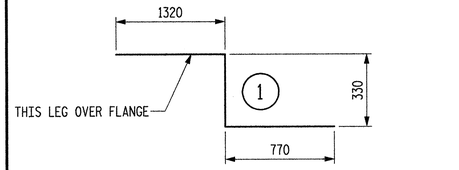

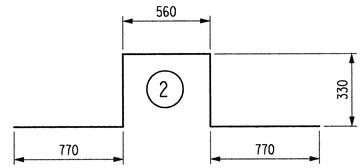

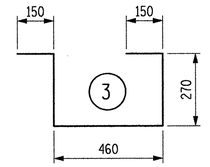

ALL BAR DIMENSIONS ARE OUT TO OUT.

SUPERSTRUCTURE BILL OF MATERIAL

	CLASS AA CONCRETE	REINFORCING STEEL	EPOXY COATED REINFORCING STEEL
	(CU. METER)	(kg)	(kg)
SPANS "A" & "B"		23795	24653
POUR #1	119.0		
POUR #2	109.2		
POUR #3	166.9		
TOTALS✳✳✳	395.1	23795	24653

✳✳✳QUANTITIES FOR BARRIER RAIL ARE NOT INCLUDED.

PROJECT NO. R-2554BA

WAYNE COUNTY

STATION: 86+57.806 -L2-

METRIC

STATE OF NORTH CAROLINA
DEPARTMENT OF TRANSPORTATION
RALEIGH

STANDARD
SUPERSTRUCTURE BILL OF MATERIAL

ASSEMBLED BY : B.E. LANNING	DATE : NOV. 2006
CHECKED BY : A.K. ORR / J.C. KO	DATE : NOV. 2006
DRAWN BY : JMB 5/87	REV. 5/16/97 EEM/RGW
CHECKED BY : SJD 5/87	REV. 5/1/06 TLA/GM

Plans prepared by:
KO & ASSOCIATES, P.C.
Consulting Engineers
1011 SCHAUB DR., SUITE #202
RALEIGH, N.C. 27606
For Division of Highways

NORTH CAROLINA PROFESSIONAL SEAL 36611 ENGINEER CHIH KUO KO 11-01

DWG. NO. 21

REVISIONS						SHEET NO.
NO.	BY:	DATE:	NO.	BY:	DATE:	S-140
1			3			TOTAL SHEETS
2			4			478

STD. No. BOM1SM

PLOT: 1/18/2007 5:08:48 PM Ko & Associates, P.C.
FILE NAME: R:\Structure\r2554ba_sd_bm_l8.dgn

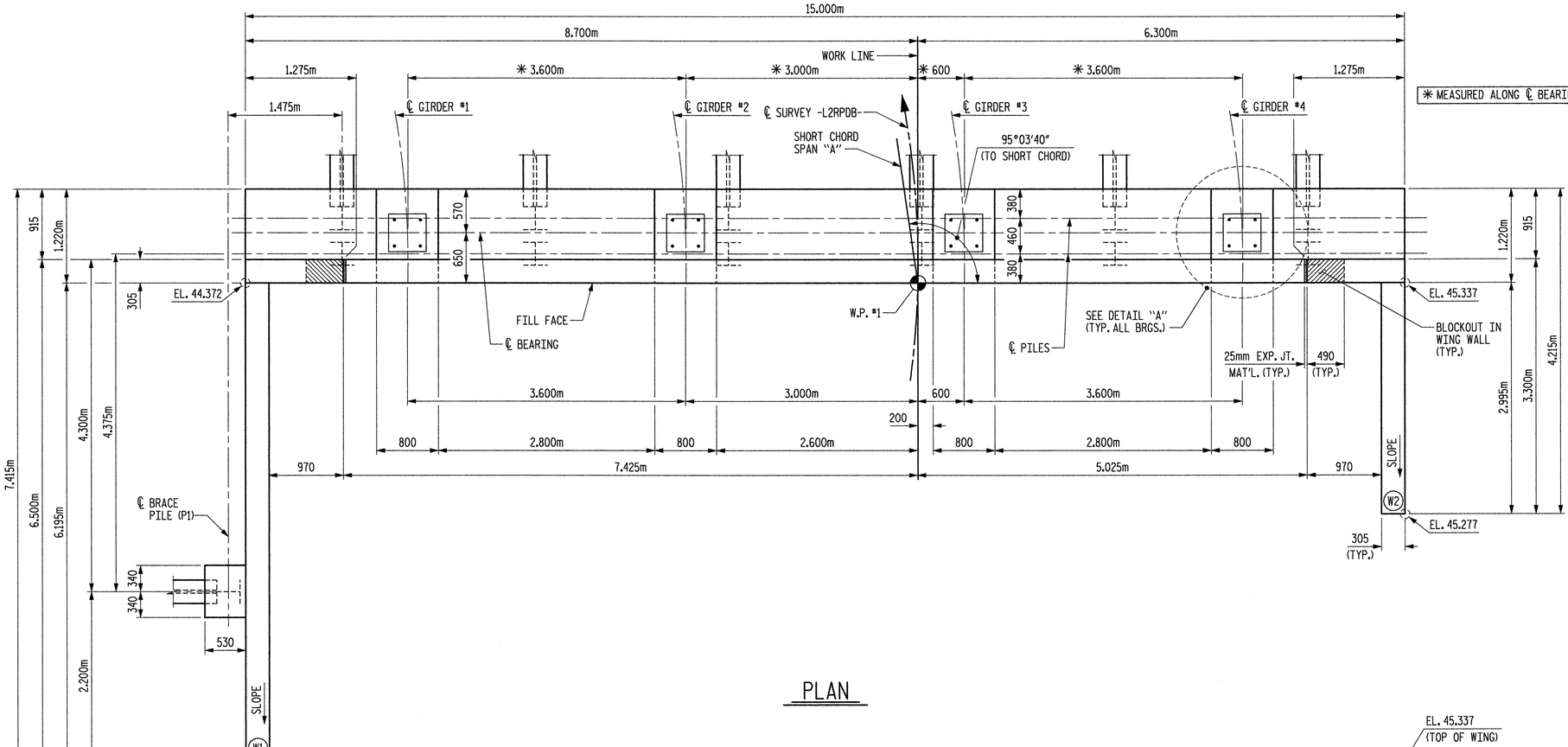

PLAN

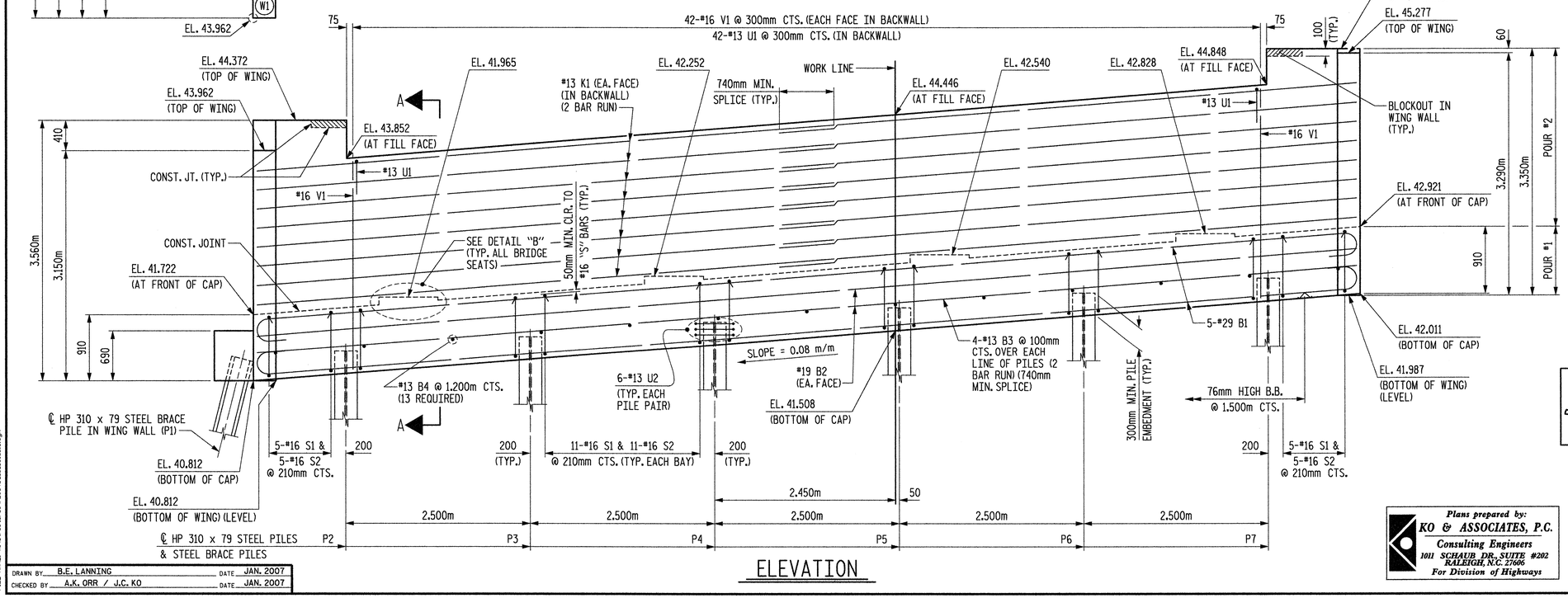

ELEVATION

NOTES:

STIRRUPS IN CAP MAY BE SHIFTED AS NECESSARY TO CLEAR PIPE INSERTS.

FOR POT BEARING AND PIPE INSERT DETAILS, SEE "SUPERSTRUCTURE EXPANSION POT BEARING DETAILS" SHEET.

✳ MEASURED ALONG ℄ BEARING.

BACKWALL SHALL BE PLACED BEFORE APPLYING THE EPOXY PROTECTIVE COATING.

THE TOP SURFACE AREAS OF THE END BENT CAP SHALL BE CURED IN ACCORDANCE WITH THE STANDARD SPECIFICATIONS EXCEPT THAT THE MEMBRANE CURING COMPOUND METHOD SHALL NOT BE USED.

THE TOP SURFACE OF THE CAP EXCEPT THE BRIDGE SEAT BUILDUPS SHALL BE SLOPED TRANSVERSELY FROM THE FILL FACE TO THE BACK FACE AT THE RATE OF 2%.

FOR SECTION A-A, PILE SPLICE DETAILS, DETAIL "B", BLOCKOUT IN WING WALL DETAILS AND TEMPORARY DRAINAGE DETAILS, SEE SHEET 3 OF 3.

THE CONTRACTOR SHALL PROVIDE FOR INSTALLATION OF THE 102mm Ø DRAIN PIPE THROUGH THE WING WALL AS REQUIRED FOR REINFORCED BRIDGE APPROACH FILLS, SEE THE ROADWAY PLANS. REINFORCING STEEL IN THE WING WALL MAY BE SHIFTED AS NECESSARY TO CLEAR THE DRAIN PIPE.

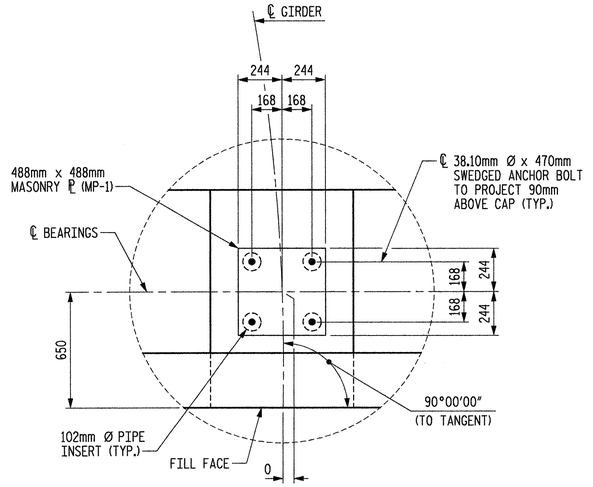

DETAIL "A"

TOP OF PILE ELEVATIONS	
PILE	ELEVATION
P1	41.112
P2	41.224
P3	41.424
P4	41.624
P5	41.824
P6	42.024
P7	42.224

PROJECT NO. R-2554BA

WAYNE COUNTY

STATION: 86+57.806 -L2-

SHEET 1 OF 3

STATE OF NORTH CAROLINA
DEPARTMENT OF TRANSPORTATION
RALEIGH

SUBSTRUCTURE
END BENT #1

METRIC

NORTH CAROLINA PROFESSIONAL SEAL 6601 ENGINEER CHIN KUO KO 1-16-07

DRAWN BY: B.E. LANNING DATE: JAN. 2007
CHECKED BY: A.K. ORR / J.C. KO DATE: JAN. 2007

Plans prepared by:
KO & ASSOCIATES, P.C.
Consulting Engineers
1011 SCHAUB DR. SUITE #202
RALEIGH, N.C. 27606
For Division of Highways

DWG. NO. 22

REVISIONS						SHEET NO.
NO.	BY:	DATE:	NO.	BY:	DATE:	S-141
1			3			TOTAL SHEETS
2			4			478

PLOT: 1/18/2007 5:29:23 PM Ko & Associates, P.C.
FILE NAME: R:\Structures\r2554ba_sd_eb_1b.dgn

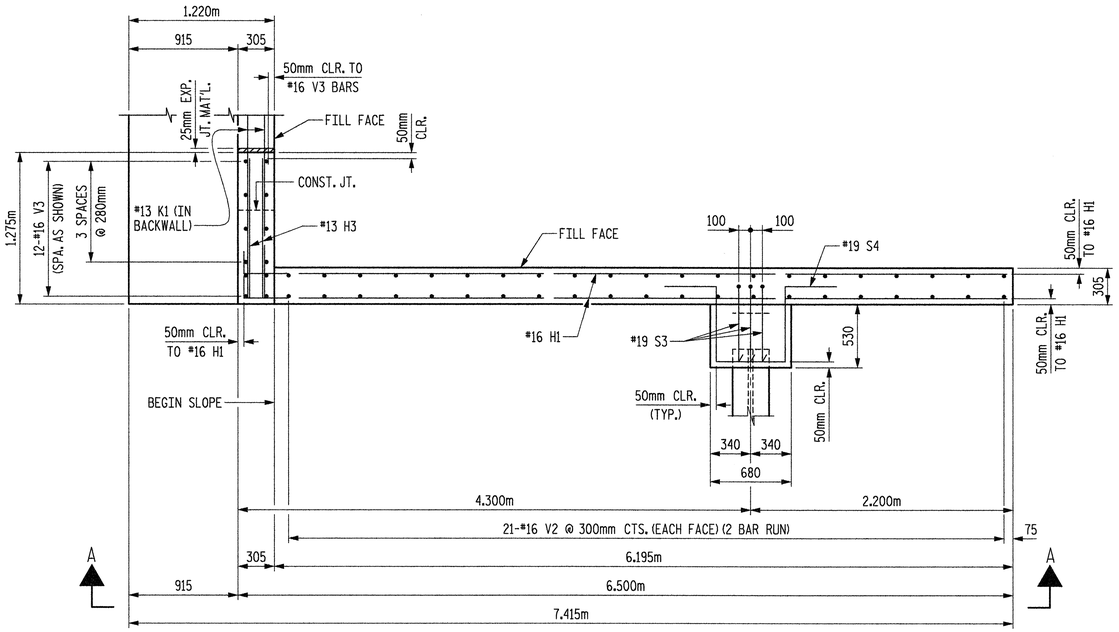

PLAN OF LEFT WING - W1

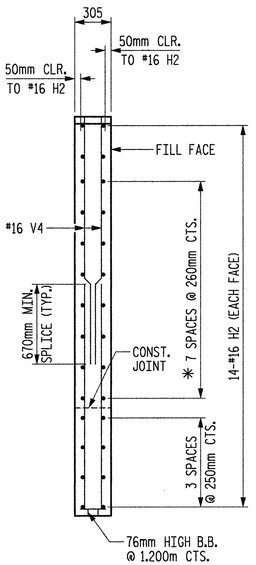

SECTION D-D

* NOTE: MATCH "H" BARS IN THE WING TO THE #13 K1 BARS IN THE BACKWALL. "K" BARS SHOULD EXTEND FROM WING TO WING.

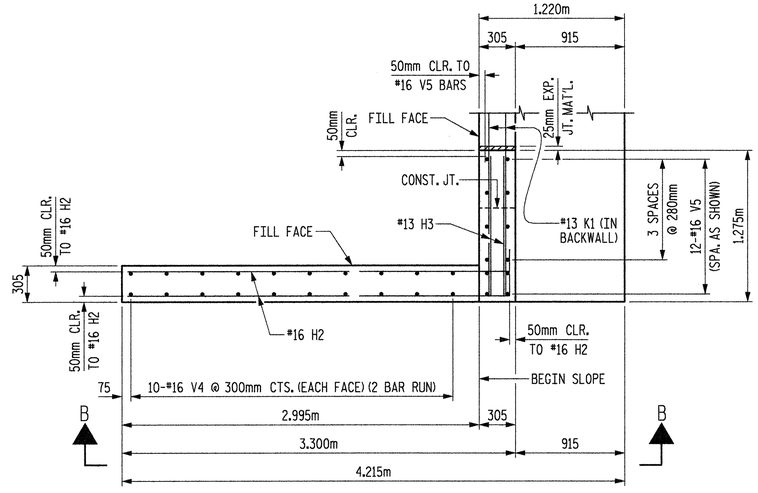

PLAN OF RIGHT WING - W2

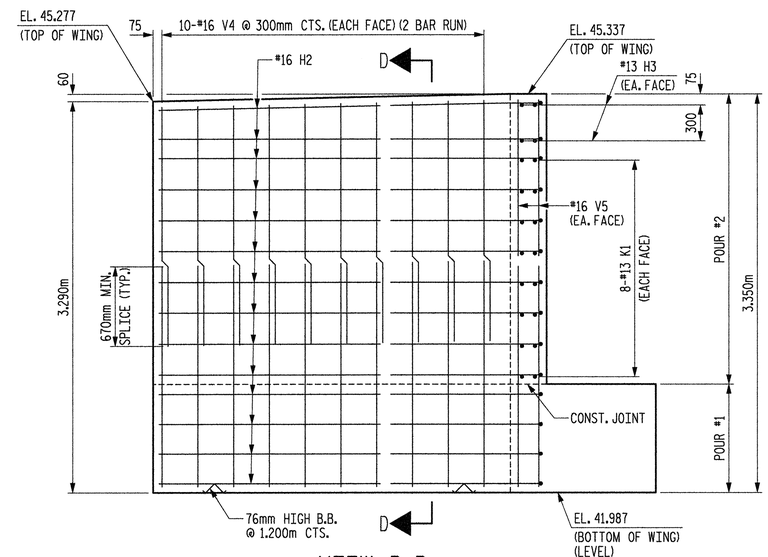

VIEW B-B

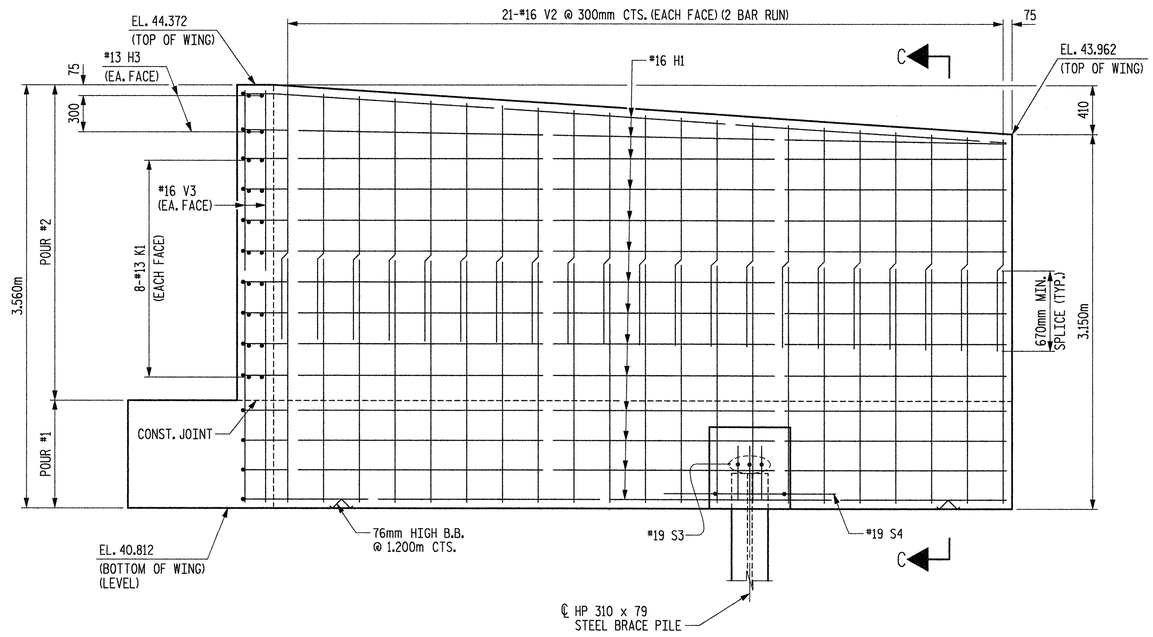

VIEW A-A

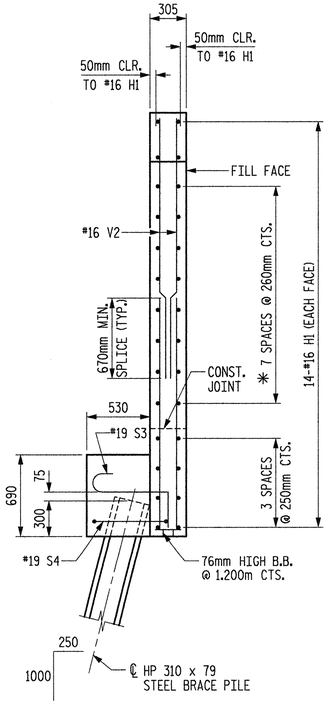

SECTION C-C

PROJECT NO. R-2554BA

WAYNE COUNTY

STATION: 86+57.806 -L2-

SHEET 2 OF 3

METRIC

STATE OF NORTH CAROLINA
DEPARTMENT OF TRANSPORTATION
RALEIGH

SUBSTRUCTURE
END BENT #1

Plans prepared by:
KO & ASSOCIATES, P.C.
Consulting Engineers
1011 SCHAUB DR., SUITE #202
RALEIGH, N.C. 27606
For Division of Highways

NORTH CAROLINA PROFESSIONAL SEAL 5604 ENGINEER CHIH KUO KO 1-11-07

DWG. NO. 23

REVISIONS						SHEET NO.
NO.	BY:	DATE:	NO.	BY:	DATE:	S-142
1			3			TOTAL SHEETS
2			4			478

DRAWN BY B.E. LANNING DATE JAN. 2007
CHECKED BY A.K. ORR / J.C. KO DATE JAN. 2007

PLOT: 1/10/2007 3:57:19 PM Ko & Associates, P.C.
FILE NAME: R:\Structures\r2554ba_sd_elb_10.dgn

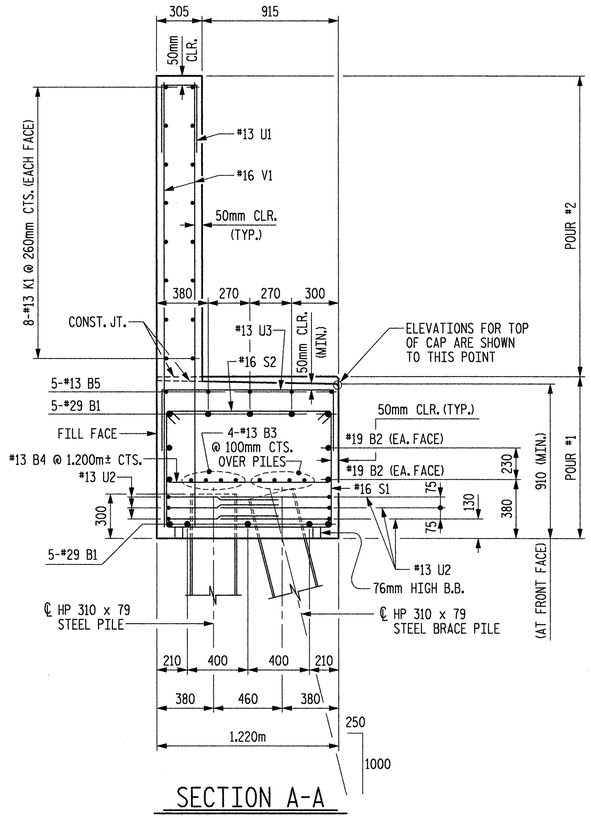

SECTION A-A

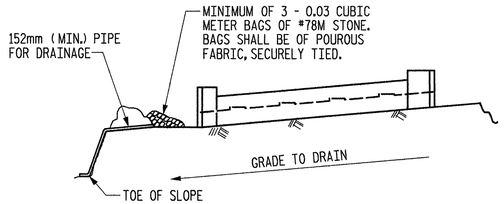

BAGGED STONE AND PIPE SHALL BE PLACED IMMEDIATELY AFTER COMPLETION OF END BENT EXCAVATION. PIPE MAY BE EITHER CONCRETE, CORRUGATED STEEL, CORRUGATED ALUMINUM ALLOY, OR CORRUGATED PLASTIC. PERFORATED PIPE WILL NOT BE ALLOWED.

BAGGED STONE SHALL REMAIN IN PLACE UNTIL THE ENGINEER DIRECTS THAT IT BE REMOVED. THE CONTRACTOR SHALL REMOVE AND DISPOSE OF SILT ACCUMULATIONS AT BAGGED STONE WHEN SO DIRECTED BY THE ENGINEER. BAGS SHALL BE REMOVED AND REPLACED WHENEVER THE ENGINEER DETERMINES THAT THEY HAVE DETERIORATED AND LOST THEIR EFFECTIVENESS.

NO SEPARATE PAYMENT WILL BE MADE FOR THIS WORK AND THE ENTIRE COST OF THIS WORK SHALL BE INCLUDED IN THE UNIT CONTRACT PRICE BID FOR THE SEVERAL PAY ITEMS.

TEMPORARY DRAINAGE AT END BENT

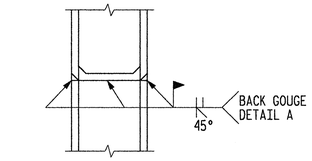

** PILE VERTICAL

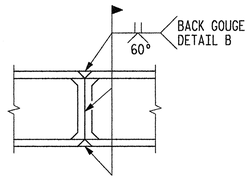

PILE HORIZONTAL OR VERTICAL

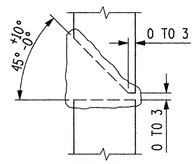

** DETAIL A

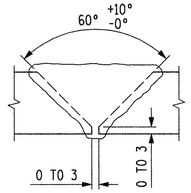

DETAIL B

** POSITION OF PILE DURING WELDING

PILE SPLICE DETAILS

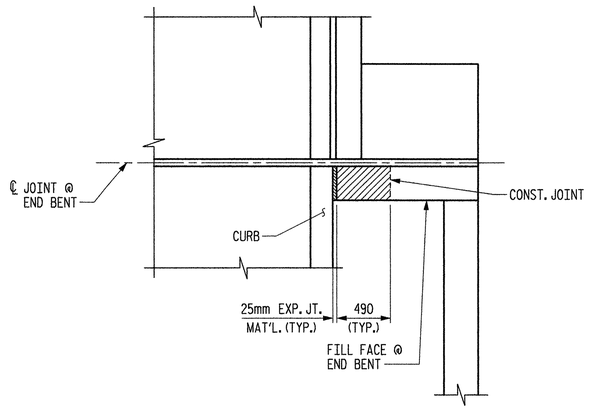

PLAN

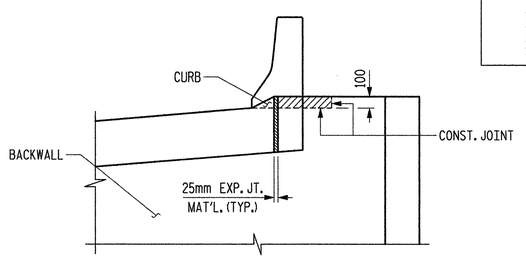

ELEVATION

BLOCKOUT IN WING WALL FOR FITTING EVAZOTE JOINT SEAL

NOTE:
THE CONCRETE IN THE SHADED AREA OF THE WING WALL SHALL BE POURED AFTER THE JOINT BETWEEN THE DECK AND APPROACH SLAB HAS BEEN FORMED AND THE BARRIER RAIL IS CAST IF SLIP FORMING IS USED.

BAR TYPES

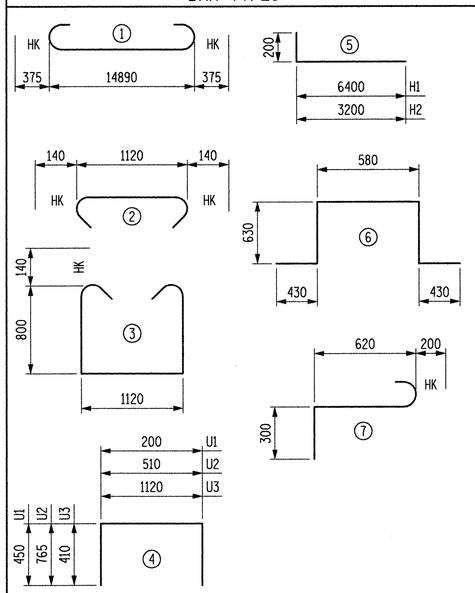

ALL BAR DIMENSIONS ARE OUT TO OUT.

BILL OF MATERIAL

END BENT #1

BAR	NO.	SIZE	TYPE	LENGTH	WEIGHT
B1	10	29	1	15640	791
B2	4	19	STR	14900	133
B3	16	13	STR	7820	124
B4	13	13	STR	1120	14
B5	20	13	STR	700	14
H1	28	16	5	6600	287
H2	28	16	5	3400	148
H3	8	13	STR	1160	9
K1	32	13	STR	7820	249
S1	65	16	3	3000	303
S2	65	16	2	1400	141
S3	3	19	7	1120	8
S4	1	19	6	2700	6
U1	42	13	4	1100	46
U2	36	13	4	2040	73
U3	20	13	4	1940	39
V1	84	16	STR	2820	368
V2	84	16	STR	2080	271
V3	12	16	STR	3460	64
V4	40	16	STR	1960	122
V5	12	16	STR	3240	60

REINFORCING STEEL 3270 kg

CLASS A CONCRETE BREAKDOWN
POUR #1 (CAP & WING) 19.9 CU. METERS
POUR #2 (BACKWALL & WING) 16.3 CU. METERS
TOTAL CLASS A CONCRETE 36.2 CU. METERS

HP 310 x 79 STEEL PILES
NO. 13 247.0 LIN. METERS

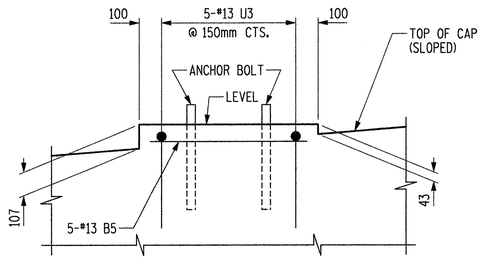

DETAIL "B"

PROJECT NO. R-2554BA
WAYNE COUNTY
STATION: 86+57.806 -L2-

SHEET 3 OF 3

METRIC

STATE OF NORTH CAROLINA
DEPARTMENT OF TRANSPORTATION
RALEIGH

SUBSTRUCTURE
END BENT #1

Plans prepared by:
KO & ASSOCIATES, P.C.
Consulting Engineers
1011 SCHAUB DR. SUITE #202
RALEIGH, N.C. 27606
For Division of Highways

NORTH CAROLINA PROFESSIONAL SEAL 5601 ENGINEER CHIN KUO KO 1-10-07

DWG. NO. 24

REVISIONS						SHEET NO.
NO.	BY:	DATE:	NO.	BY:	DATE:	S-143
1			3			TOTAL SHEETS
2			4			478

DRAWN BY B.E. LANNING DATE JAN. 2007
CHECKED BY A.K. ORR / J.C. KO DATE JAN. 2007

PLOT: 1/10/2007 3:57:58 PM Ko & Associates, P.C.
FILE NAME: R:\Structures\r2554ba_ed_elc_1R.dgn

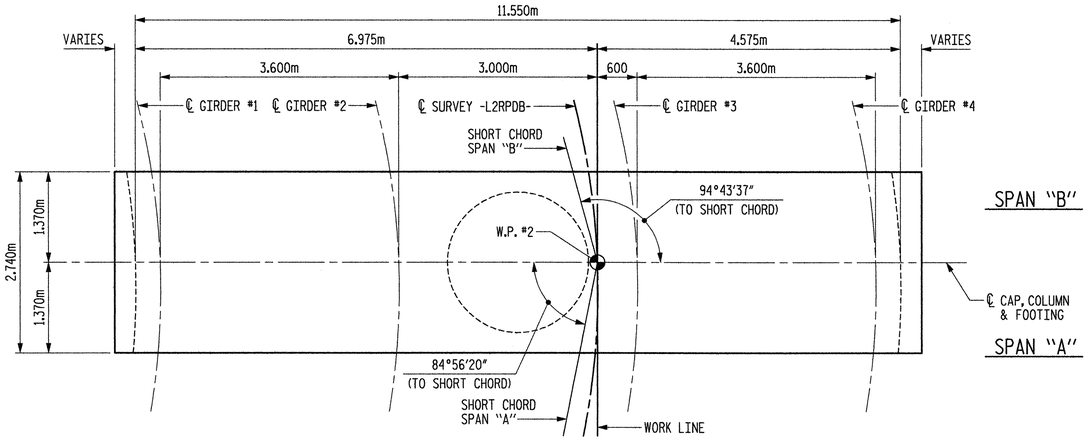

PLAN

(DECK SLAB NOT SHOWN FOR CLARITY)

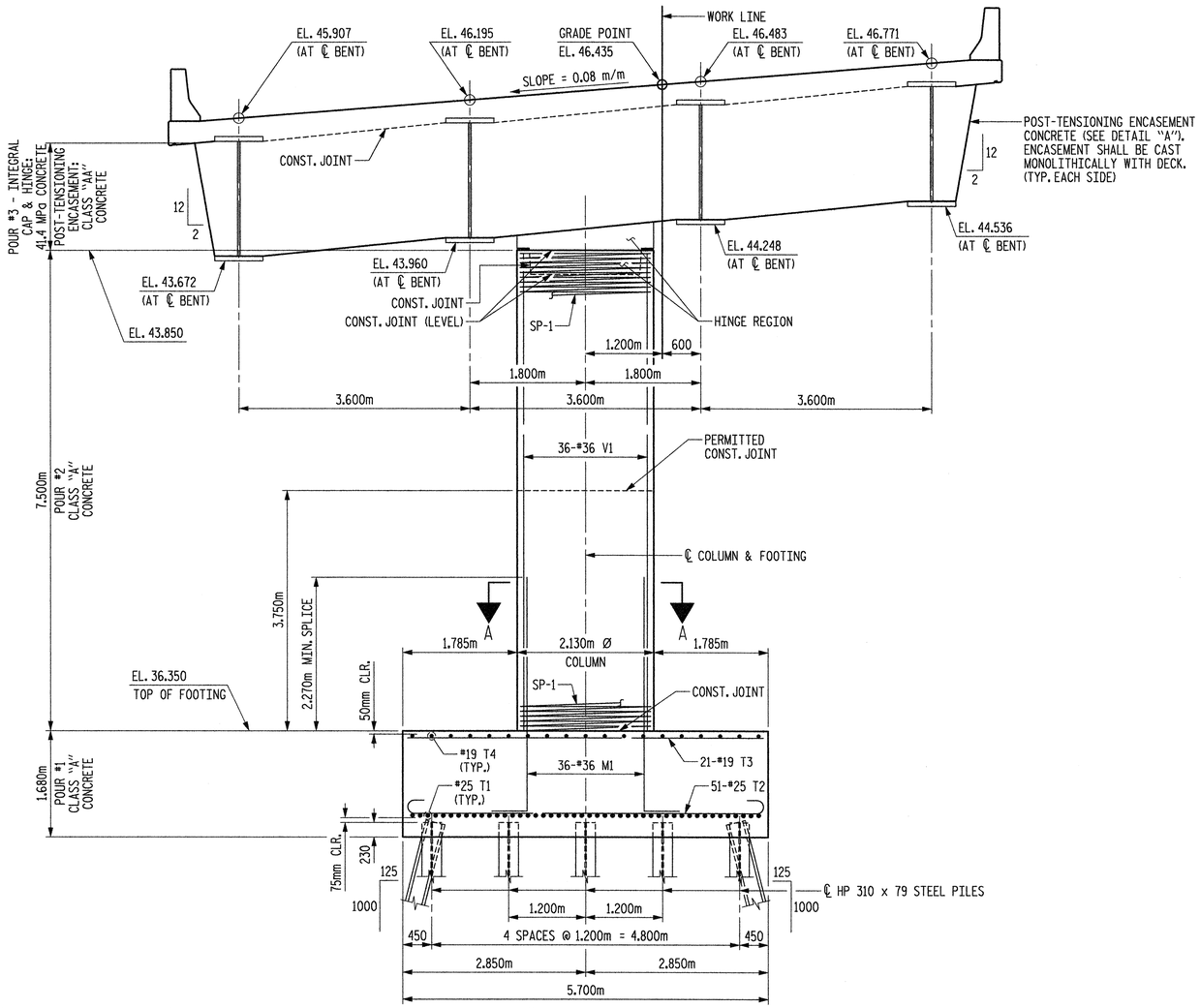

ELEVATION

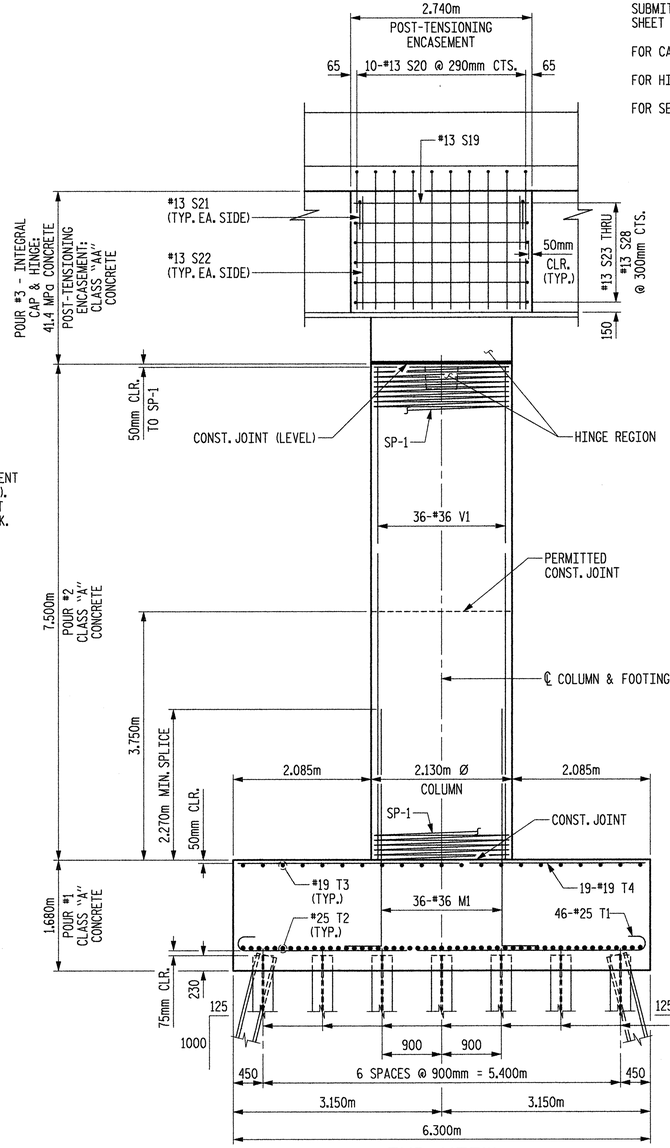

END VIEW

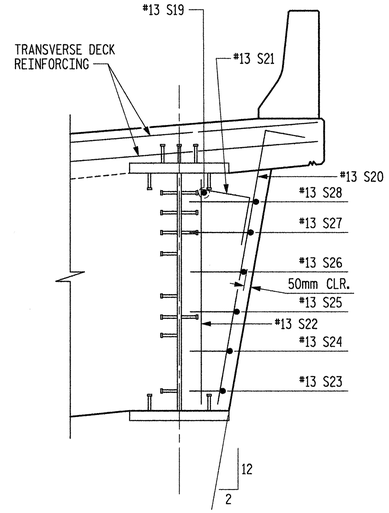

DETAIL "A"

NOTES:

FOR ADDITIONAL INFORMATION ABOUT STEEL GIRDERS IN THIS LOCATION, SEE "SUPERSTRUCTURE STRUCTURAL STEEL DETAILS" SHEET 4 OF 4.

FOR PILE SPLICE DETAILS, SEE END BENT #1 SHEET 3 OF 3.

DETAILED DRAWINGS FOR FALSEWORK AND FORMS FOR THE INTEGRAL BENT SHALL BE SUBMITTED. SEE "SCHEMATIC SEQUENCE OF CONSTRUCTION AND NOTES AT BENT #1" SHEET AND SHEET SNSM.

FOR CAP REINFORCING, INCLUDING POST-TENSIONING ARRANGEMENT, SEE SHEET 2 OF 4.

FOR HINGE REINFORCING, SEE SHEET 3 OF 4.

FOR SECTION A-A THROUGH COLUMN, SEE SHEET 4 OF 4.

PROJECT NO. R-2554BA

WAYNE COUNTY

STATION: 86+57.806 -L2-

SHEET 1 OF 4

METRIC

STATE OF NORTH CAROLINA
DEPARTMENT OF TRANSPORTATION
RALEIGH

SUBSTRUCTURE
BENT #1

Plans prepared by:
KO & ASSOCIATES, P.C.
Consulting Engineers
1011 SCHAUB DR., SUITE #202
RALEIGH, N.C. 27606
For Division of Highways

NORTH CAROLINA PROFESSIONAL SEAL 5691 ENGINEER CHIN KUO KO

DWG. NO. 25

REVISIONS						SHEET NO.
NO.	BY:	DATE:	NO.	BY:	DATE:	S-144
1			3			TOTAL SHEETS
2			4			478

DRAWN BY B.E. LANNING DATE JAN. 2007
CHECKED BY A.K. ORR / J.C. KO DATE JAN. 2007

PLOT: 1/18/2007 4:08:55 PM Ko & Associates, P.C.
FILE NAME: R:\Structures\r2554ba_sd_bia_18.dgn

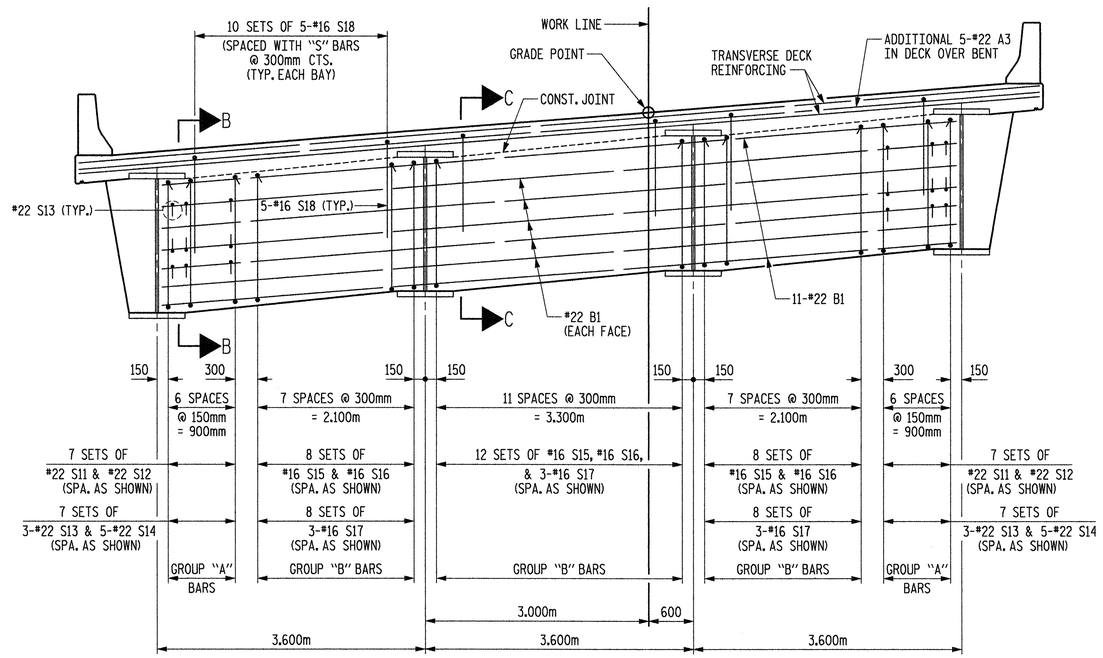

BENT CAP ELEVATION
(SHOWING REINFORCING STEEL)

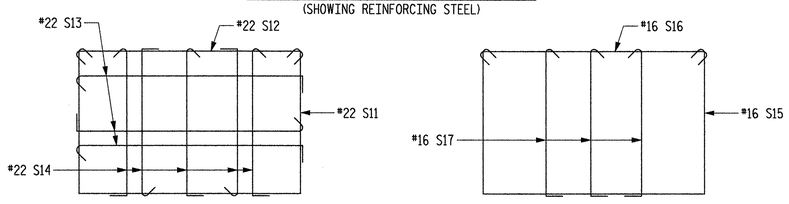

GROUP "A" BARS
SEE SECTION B-B FOR BAR LOCATIONS.

GROUP "B" BARS
SEE SECTION C-C FOR BAR LOCATIONS.

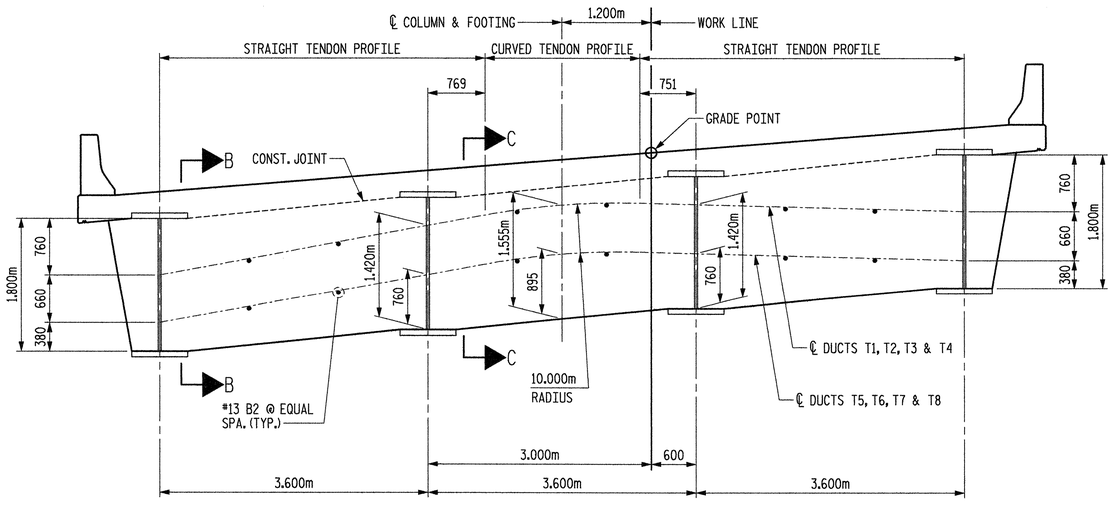

BENT CAP ELEVATION
(SHOWING POST-TENSIONING)

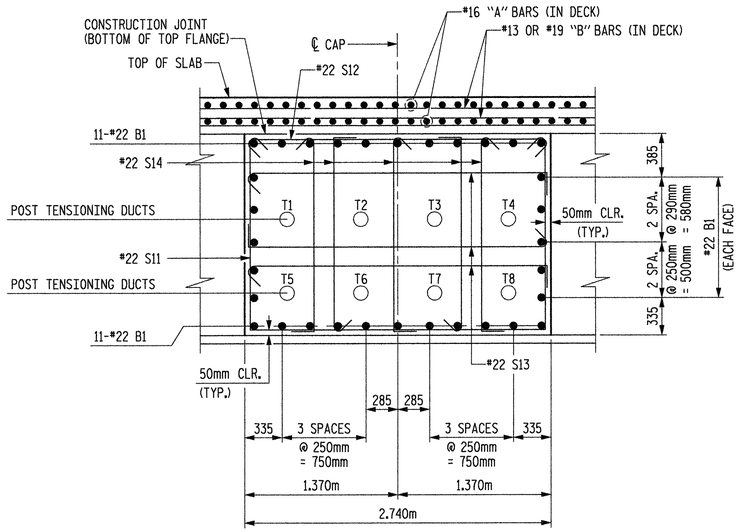

SECTION B-B

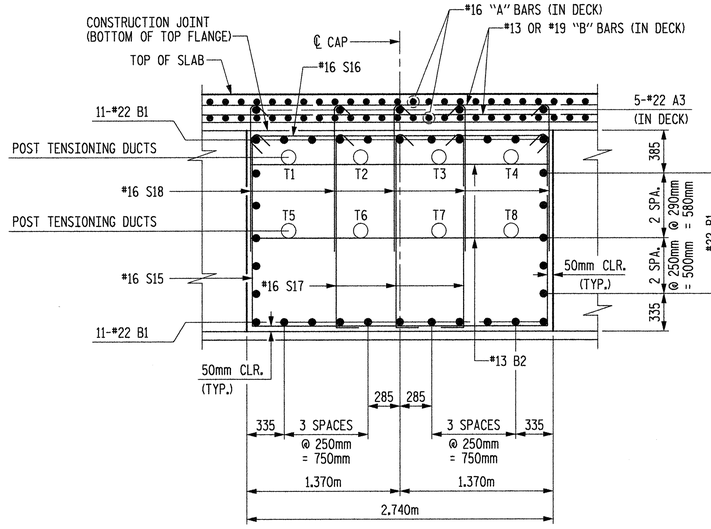

SECTION C-C

PROJECT NO. R-2554BA

WAYNE COUNTY

STATION: 86+57.806 -L2-

SHEET 2 OF 4

STATE OF NORTH CAROLINA
DEPARTMENT OF TRANSPORTATION
RALEIGH

SUBSTRUCTURE
BENT #1

Plans prepared by:
KO & ASSOCIATES, P.C.
Consulting Engineers
1011 SCHAUB DR., SUITE #202
RALEIGH, N.C. 27606
For Division of Highways

NORTH CAROLINA PROFESSIONAL SEAL 5601 ENGINEER CHIH KUO KO

DWG. NO. 26

REVISIONS						SHEET NO.
NO.	BY:	DATE:	NO.	BY:	DATE:	S-145
1			3			TOTAL SHEETS
2			4			478

DRAWN BY B.E. LANNING DATE JAN. 2007
CHECKED BY A.K. ORR / J.C. KO DATE JAN. 2007

PLOT: 1/18/2007 4:01:54 PM Ko & Associates, P.C.
FILE NAME: N:\Structure\r2554ba_sd_bib_10.dgn

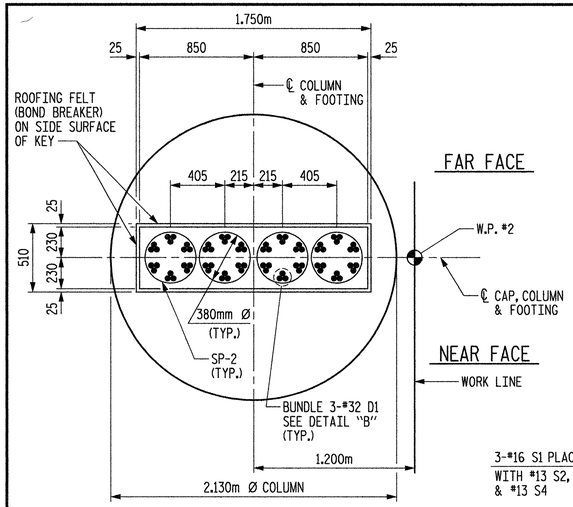

SECTION D-D

(#32 D1 BAR BUNDLES TO BE PLACED AS SHOWN)

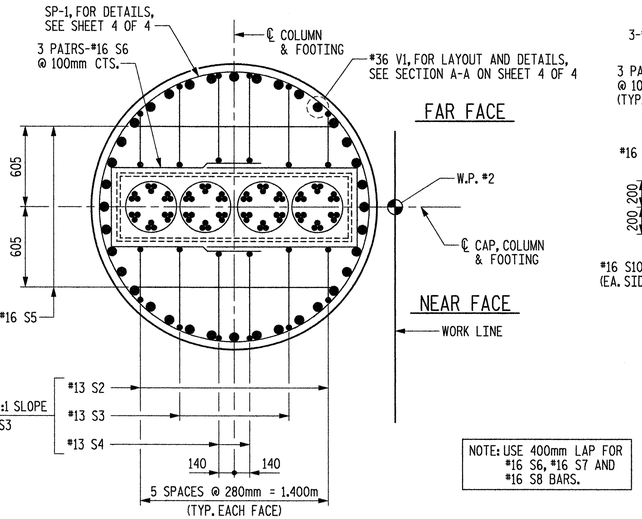

SECTION E-E

(#32 D1 BAR BUNDLES TO BE PLACED AS SHOWN)

NOTE: USE 400mm LAP FOR #16 S6, #16 S7 AND #16 S8 BARS.

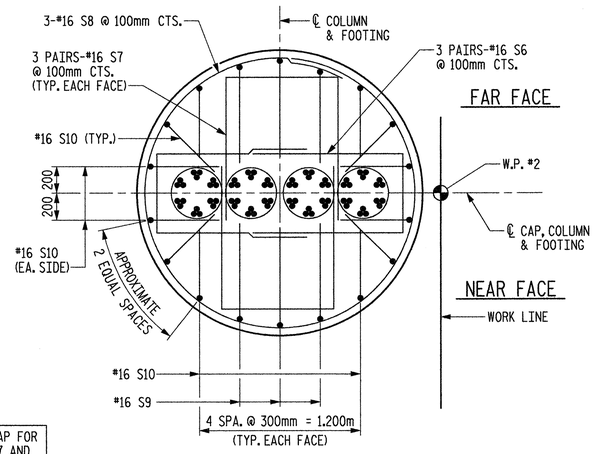

SECTION F-F

(#32 D1 BAR BUNDLES TO BE PLACED AS SHOWN)

NOTES:

1. THE HINGE REGION SHALL BE PORED MONOLITHICALLY WITH THE INTEGRAL CAP (CONCRETE WITH f'c = 41.4 MPa.)
2. THE 35mm EXPANSION JOINT MATERIAL AND LOW MODULES SILICONE SHALL BE IN ACCORDANCE WITH THE STANDARD SPECIFICATIONS.
3. REINFORCING IN THE HINGE REGION MAY BE SHIFTED SLIGHTLY AS DIRECTED BY THE ENGINEER.
4. SEE DRAWING "SCHEMATIC SEQUENCE OF CONSTRUCTION AND NOTES FOR BENT #1".
5. TOP OF COLUMN SHALL RECEIVE A TROWELLED FINISH AND BE THOROUGHLY CLEANED PRIOR TO PLACEMENT OF EXPANSION JOINT MATERIAL AND HINGE CONCRETE.
6. SIDE SURFACE OF KEY SHALL BE SMOOTH AND SHALL BE THOROUGHLY CLEANED PRIOR TO PLACEMENT OF ROOFING FELT (BOND BREAKER) AND HINGE CONCRETE.
7. BOTTOM SURFACE OF KEY SHALL BE SMOOTH AND SHALL BE THOROUGHLY CLEANED AND FREE FROM STANDING WATER PRIOR TO PLACEMENT OF HINGE CONCRETE.

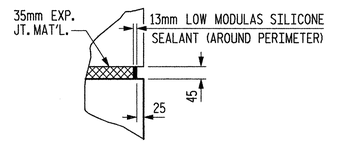

RUSTICATION DETAIL

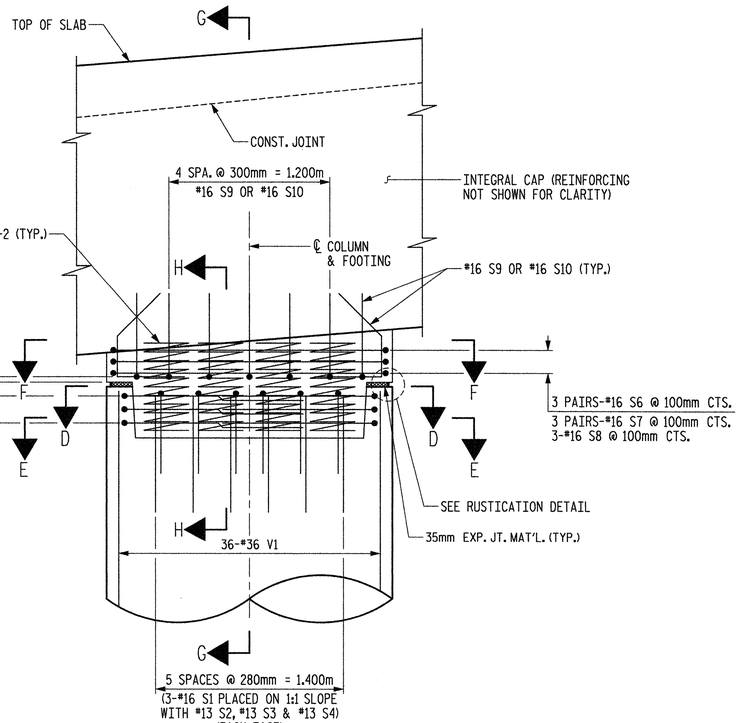

HINGE REGION DETAIL

(#32 D1 BAR BUNDLES NOT SHOWN FOR CLARITY)
(SP-1 SPIRAL IN COLUMN NOT SHOWN FOR CLARITY)

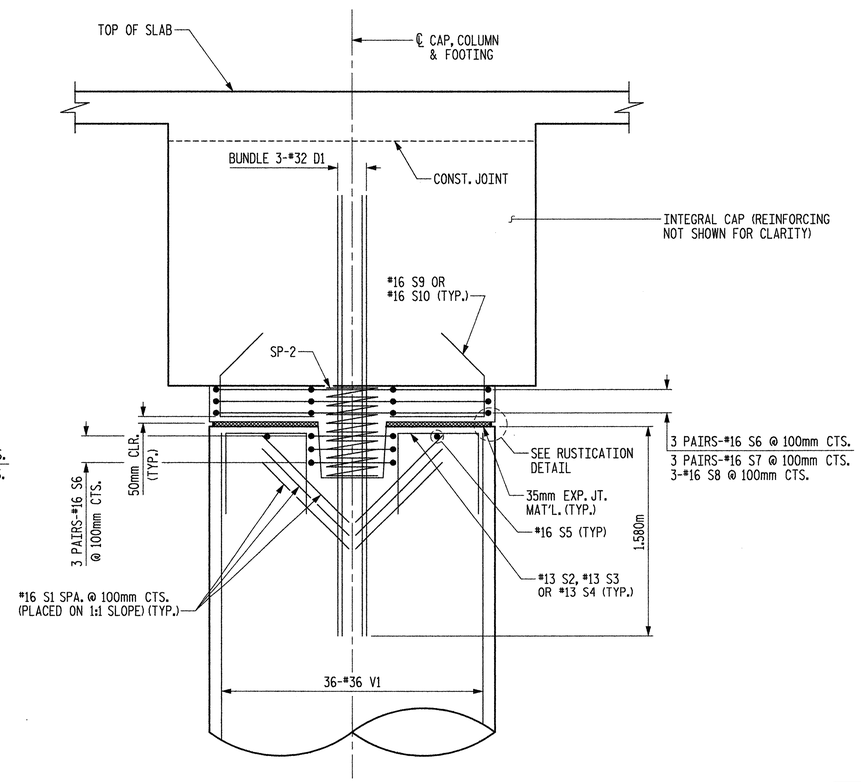

SECTION G-G

(SP-1 SPIRAL IN COLUMN NOT SHOWN FOR CLARITY)

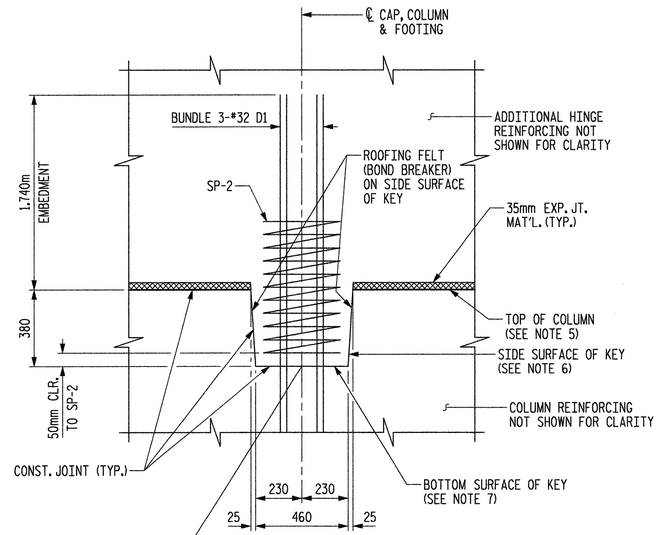

SECTION H-H

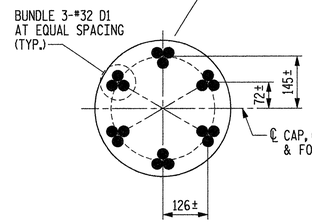

DETAIL "B"

PROJECT NO. R-2554BA

WAYNE COUNTY

STATION: 86+57.806 -L2-

SHEET 3 OF 4

METRIC

STATE OF NORTH CAROLINA
DEPARTMENT OF TRANSPORTATION
RALEIGH

SUBSTRUCTURE
BENT #1

NORTH CAROLINA PROFESSIONAL SEAL 5604 ENGINEER CHIH KUO KO 1-11-07

Plans prepared by:
KO & ASSOCIATES, P.C.
Consulting Engineers
1011 SCHAUB DR., SUITE #202
RALEIGH, N.C. 27606
For Division of Highways

DWG. NO. 27

REVISIONS						SHEET NO.
NO.	BY:	DATE:	NO.	BY:	DATE:	S-146
1			3			TOTAL SHEETS
2			4			478

DRAWN BY B.E. LANNING DATE JAN. 2007
CHECKED BY A.K. ORR / J.C. KO DATE JAN. 2007

PLOT: 1/18/2007 4:02:03 PM Ko & Associates, P.C.
FILE NAME: R:\Structures\r2554ba_substructure.dgn

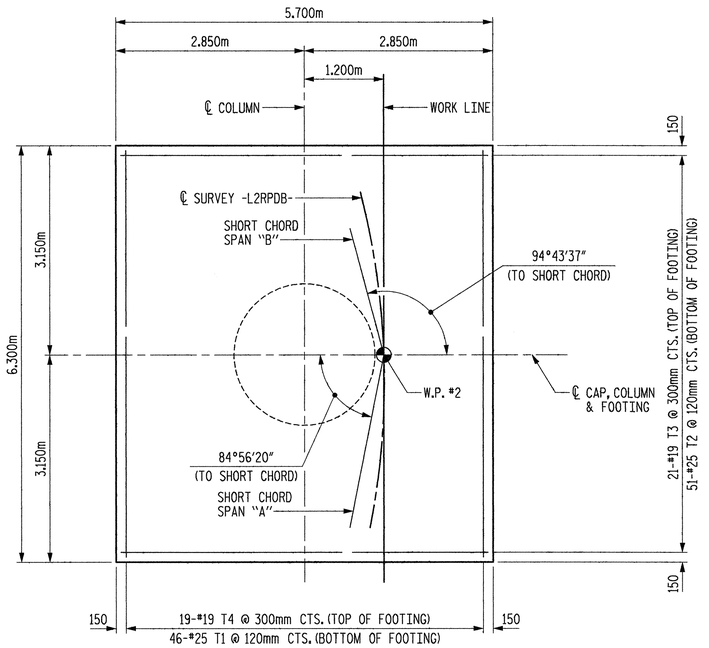

PLAN OF FOOTING

SHOWING REINFORCING BARS

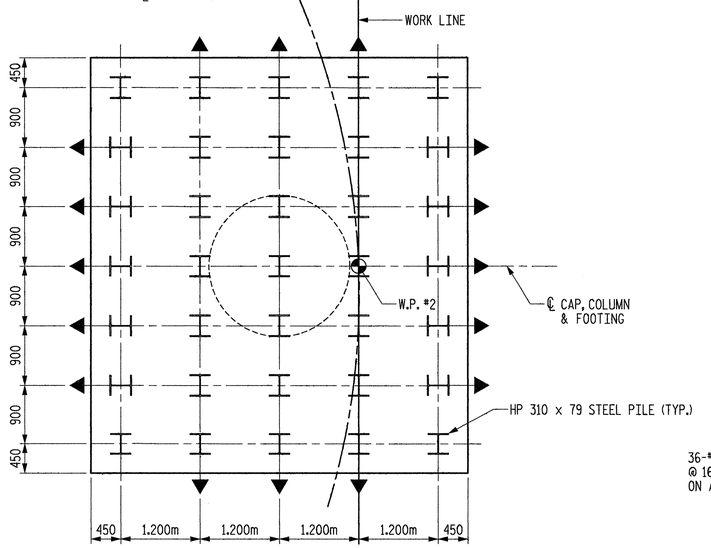

PLAN OF FOOTING

SHOWING PILES

NOTE: FOR DIMENSIONS NOT SHOWN, SEE PLAN OF FOOTING ABOVE.

▲ INDICATES DIRECTION OF 125:1000 BATTER.

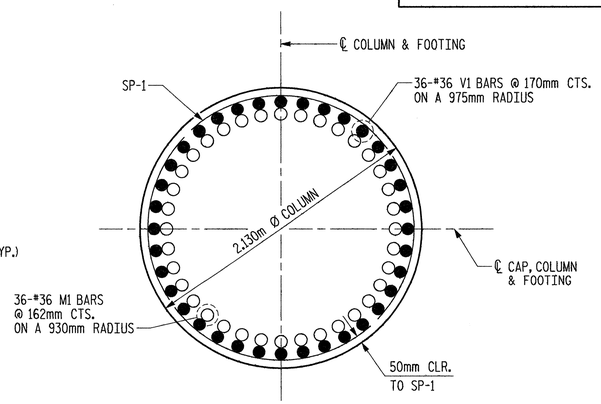

SECTION A-A

BAR TYPES

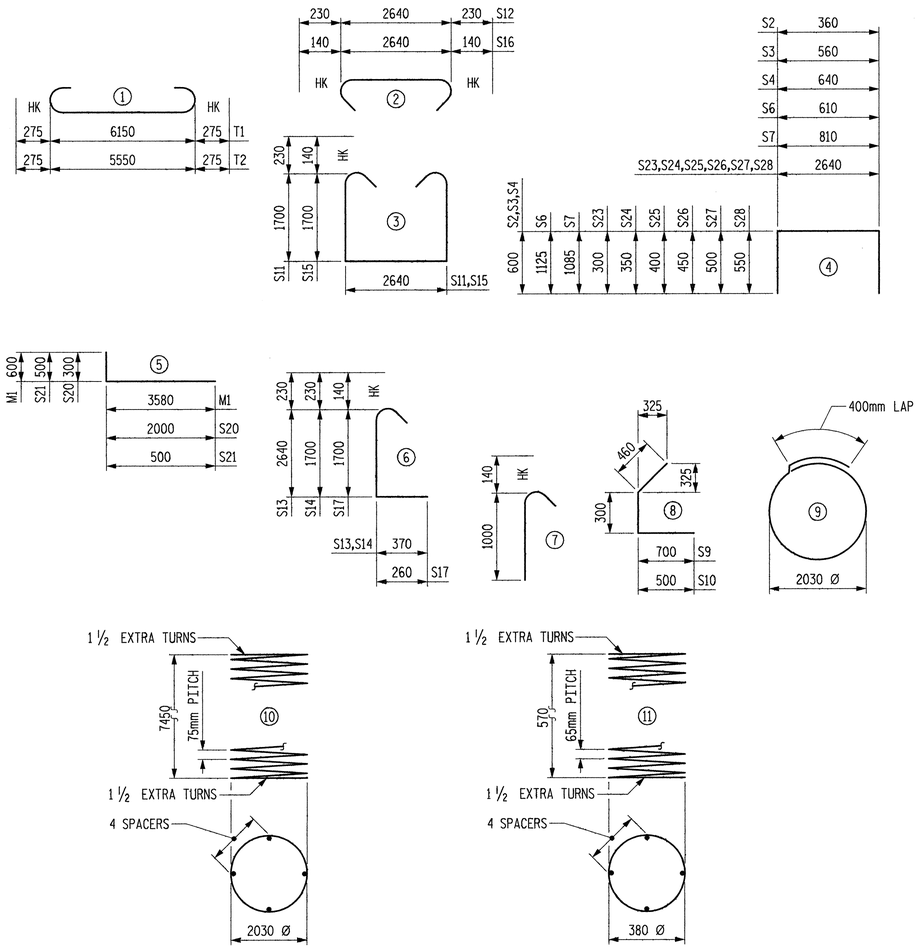

ALL BAR DIMENSIONS ARE OUT TO OUT.

BILL OF MATERIAL

BENT #1

BAR	NO.	SIZE	TYPE	LENGTH	WEIGHT
B1	32	22	STR	10680	1040
B2	12	13	STR	2640	31
D1	72	32	STR	3320	1531
M1	36	36	5	4180	1190
S1	36	16	STR	960	54
S2	4	13	4	1560	6
S3	4	13	4	1760	7
S4	4	13	4	1840	7
S5	2	16	STR	1500	5
S6	12	16	4	2860	53
S7	6	16	4	2980	28
S8	3	16	9	6740	31
S9	6	16	8	1460	14
S10	12	16	8	1260	23
S11	14	22	3	6500	277
S12	14	22	2	3100	132
S13	42	22	6	3240	414
S14	70	22	6	2300	490
S15	28	16	3	6320	275
S16	28	16	2	2920	127
S17	84	16	6	2100	274
S18	150	16	7	1140	265
S19	2	13	STR	2640	5
S20	20	13	5	2300	46
S21	4	13	5	1000	4
S22	4	13	STR	1700	7
S23	2	13	4	3240	6
S24	2	13	4	3340	7
S25	2	13	4	3440	7
S26	2	13	4	3540	7
S27	2	13	4	3640	7
S28	2	13	4	3740	7
T1	46	25	1	6700	1224
T2	51	25	1	6100	1236
T3	21	19	STR	5540	260
T4	19	19	STR	6140	261
V1	36	36	STR	7440	2118

REINFORCING STEEL 11476 kg

BAR	NO.	SIZE	TYPE	LENGTH	WEIGHT
SP-1	1	✱✱	10	648440	645
SP-2	4	✱✱	11	13560	54

SPIRAL REINFORCING STEEL 699 kg

CLASS "A" CONCRETE BREAKDOWN
- POUR #1 (FOOTING) 60.3 CU. METERS
- POUR #2 (COLUMN) 26.4 CU. METERS
- TOTAL CLASS "A" CONCRETE 86.7 CU. METERS

41.4 MPa CONCRETE
- POUR #4 (INTEGRAL CAP & HINGE) 55.8 CU. METERS
- P-T TENDONS APPROX. WT.⊛ 2967 kg

HP 310 x 79 STEEL PILES
- NO. 35 385.0 LIN. METERS

✱✱ THE "SP" SPIRAL REINFORCING STEEL SHALL BE W20 OR D-20 COLD DRAWN WIRE OR #13 PLAIN OR DEFORMED BAR.

NOTE: CLASS "AA" CONCRETE FOR POST-TENSIONING ENCASEMENT IS INCLUDED IN THE DECK CONCRETE QUANTITY.

⊛ POST-TENSIONING TENDONS WILL BE PAID ON A LUMP SUM BASIS. APPROXIMATE WEIGHT OF THE TENDONS IS PROVIDED FOR ESTIMATING PURPOSES ONLY.

PROJECT NO. R-2554BA

WAYNE COUNTY

STATION: 86+57.806 -L2-

SHEET 4 OF 4

METRIC

STATE OF NORTH CAROLINA
DEPARTMENT OF TRANSPORTATION
RALEIGH

SUBSTRUCTURE
BENT #1

Plans prepared by:
KO & ASSOCIATES, P.C.
Consulting Engineers
5121 KINGDOM WAY, SUITE #100
RALEIGH, N.C. 27607
(919)-851-6066

NORTH CAROLINA PROFESSIONAL SEAL 5601 ENGINEER CHIH KUO KO

DWG. NO. 28

REVISIONS						SHEET NO.
NO.	BY:	DATE:	NO.	BY:	DATE:	S-147
1			3			TOTAL SHEETS
2			4			478

DRAWN BY B.E. LANNING DATE JAN. 2007
CHECKED BY A.K. ORR / J.C. KO DATE JAN. 2007

PLOT: 6/4/2008 3:15:16 PM Ko & Associates, P.C.
FILE NAME: R:\Structures\r-2554ba_sub1.10.dgn

SPAN "A" SPAN "B"

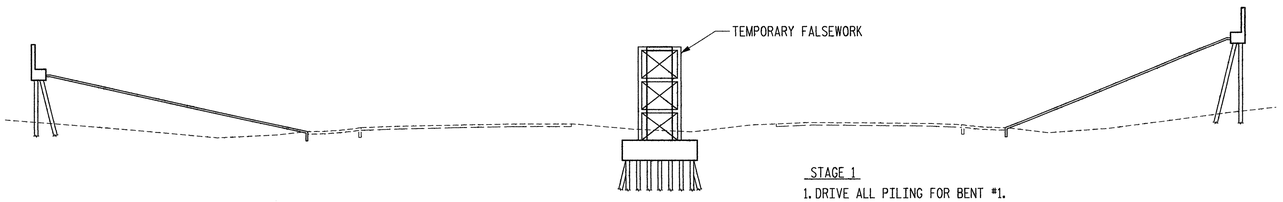

END BENT #1 BENT #1 END BENT #2

STAGE 1

1. DRIVE ALL PILING FOR BENT #1.
2. CONSTRUCT FOOTING AND COLUMN FOR BENT #1.
3. ERECT TEMPORARY FALSEWORK AT BENT #1.

STAGE 1

SPAN "A" SPAN "B"

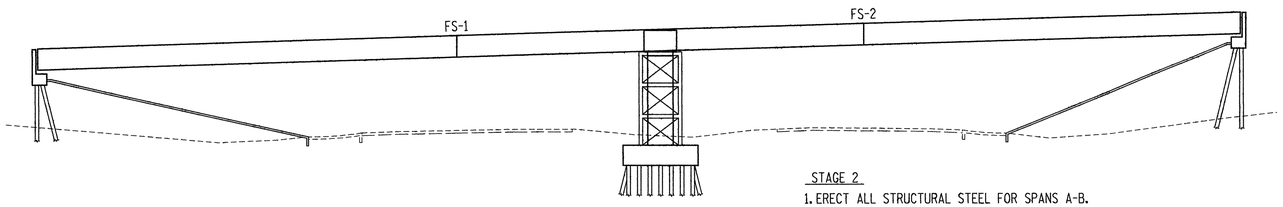

END BENT #1 BENT #1 END BENT #2

STAGE 2

1. ERECT ALL STRUCTURAL STEEL FOR SPANS A-B.
2. TIGHTEN ALL HIGH STRENGTH BOLTS.

STAGE 2

SPAN "A" SPAN "B"

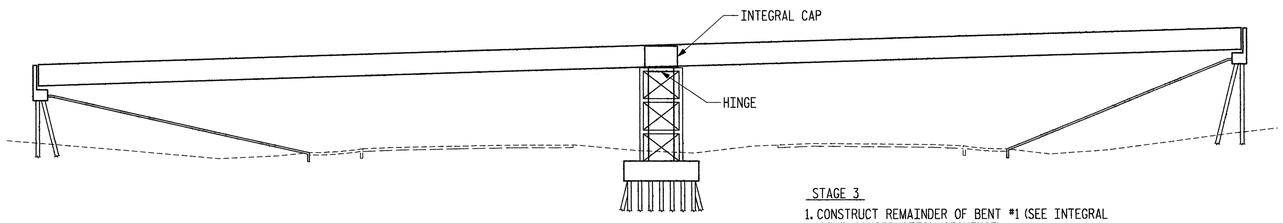

END BENT #1 BENT #1 END BENT #2

STAGE 3

1. CONSTRUCT REMAINDER OF BENT #1 (SEE INTEGRAL BENT CONSTRUCTION SEQUENCE).

STAGE 3

SPAN "A" SPAN "B"

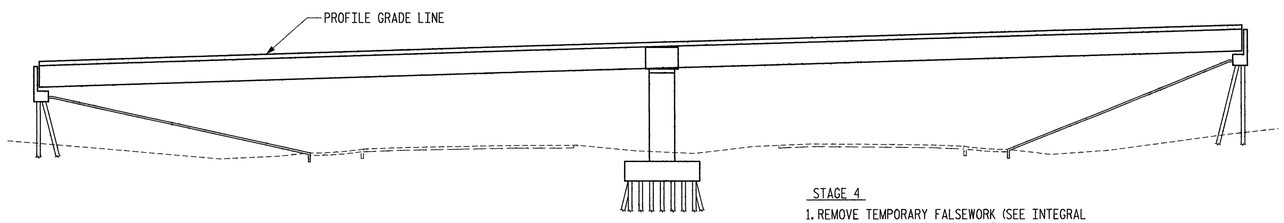

END BENT #1 BENT #1 END BENT #2

STAGE 4

1. REMOVE TEMPORARY FALSEWORK (SEE INTEGRAL BENT CONSTRUCTION SEQUENCE).
2. POUR DECK IN SPECIFIED SEQUENCE (POUR DIAGRAM).
3. CONTINUE WITH CONSTRUCTION.

STAGE 4

INTEGRAL BENT CONSTRUCTION SEQUENCE:

THE FOLLOWING CONSTRUCTION SEQUENCE SHALL APPLY UNLESS OTHERWISE APPROVED IN WRITING BY THE ENGINEER.

1. CONSTRUCT FOOTING IN ACCORDANCE WITH THE PLANS.
2. CONSTRUCT COLUMN IN ACCORDANCE WITH THE PLANS.
3. ERECT TEMPORARY FALSEWORK. TEMPORARY FALSEWORK SHALL SUPPORT GIRDERS ON BOTH SIDES OF INTEGRAL CAP. (WITHIN 2.000m OF CENTERLINE BENT).
4. ERECT ALL STRUCTURAL STEEL. STRUCTURAL STEEL SHALL BE SUPPORTED BY TEMPORARY FALSEWORK AT BENT #1. SEE CONSTRUCTION STAGE DIAGRAMS ON THIS DRAWING.
5. WHEN FOOTING AND COLUMN CONCRETE HAS ATTAINED THE SPECIFIED COMPRESSIVE STRENGTH (f'c), CONSTRUCT INTEGRAL CAP, INCLUDING POST-TENSIONING DUCTS. GROUT TUBES AND ANCHORAGES REQUIRED FOR CAP, IN ACCORDANCE WITH THE PLANS.
6. WHEN CAP CONCRETE HAS ATTAINED THE SPECIFIED INITIAL COMPRESSIVE STRENGTH (f'ci), INSTALL POST-TENSIONING TENDONS IN THE CAP AND TENSION IN THE ORDER SHOWN BELOW. FALSEWORK SUPPORTING THE CAP SHALL NOT BE REMOVED UNTIL POST-TENSIONING IS COMPLETE.
7. WHEN TENSIONING OF CAP TENDONS IS COMPLETE, TENDONS SHALL BE GROUTED AND ANCHORAGES SHALL BE EPOXY COATED. SEE SPECIAL PROVISIONS.
8. REMOVE TEMPORARY FALSEWORK.
9. POUR DECK IN SPECIFIED SEQUENCE (POUR DIAGRAM).

POST-TENSIONING DATA:

CONCRETE: CONCRETE IN CAP AND HINGE

STRENGTH AT 28 DAYS (f'c)	= 41.4 MPa
STRENGTH AT POST-TENSIONING (f'ci)	= 31.0 MPa

CONCRETE IN FOOTING AND COLUMN (CLASS "A" CONCRETE)

STRENGTH AT 28 DAYS (f'c)	= 20.7 MPa

TENDONS: 31-15.24mm DIA., GRADE 270, SEVEN WIRE, LOW RELAXATION STRANDS PER TENDON

FRICTION (U)	= 0.2
WOBBLE (K)	= 0.00066 /m
ANCHOR SET	= 5mm
MODULES OF ELASTICITY (Es)	= 193,000 MPa
JACKING FORCE BEFORE ANCHOR SET	= 0.70 f's

DUCTS: 125mm I.D. GALVANIZED RIGID OR SEMI-RIGID DUCTS

TENDON STRESSING DATA:

TENDON	LOCATION	STRESSING SEQUENCE	JACKING FORCE BEFORE ANCHOR SET	ELONGATION BEFORE ANCHOR SET	ELONGATION AFTER ANCHOR SET
			KN	mm	mm
T1	CAP	1	5650	72	67
T2	CAP	7	5650	72	67
T3	CAP	5	5650	72	67
T4	CAP	3	5650	72	67
T5	CAP	4	5650	72	67
T6	CAP	6	5650	72	67
T7	CAP	8	5650	72	67
T8	CAP	2	5650	72	67

TENDON STRESSING NOTES:

STRESS ALL CAP TENDONS FROM GIRDER #1 END.

DURING STRESSING NO PERSONS SHALL BE DIRECTLY BEHIND EITHER END OF TENDONS.

INTEGRAL BENT NOTES:

NO CONCRETE SHALL BE PLACED IN ANY PORTION OF THE BENT UNTIL REVIEW OF THE POST-TENSIONING SYSTEM SUBMITTED BY THE CONTRACTOR HAS BEEN COMPLETED.

CONTRACTOR SHALL SUBMIT DRAWINGS AND CALCULATIONS OF ERECTION PROCEDURES/EQUIPMENT, INCLUDING DETAILS OF THE TEMPORARY FALSEWORK, TO THE ENGINEER FOR APPROVAL. SEE SPECIAL PROVISIONS FOR "POST-TENSIONING TENDONS".

POST-TENSIONING BEARING PLATES FOR CAP TENDONS SHALL BE FABRICATED OF HOT-ROLLED STEEL CONFORMING TO ASTM A588 AND APPROVED BY THE ENGINEER. BEARING PLATES SHALL FIT FLAT AGAINST THE GIRDER WEB AND RECEIVE AN ANSI 500 FINISH ON THE SURFACE IN CONTACT WITH THE WEB. CENTERLINE OF THE TENDONS IS TO BE NORMAL TO OUTSIDE FACE OF THE BEARING PLATE.

POST-TENSIONING ANCHORAGE DETAILS SHALL BE DETERMINED BY THE POST-TENSIONING MATERIALS SUPPLIER. DETAILS SHALL BE SHOWN ON THE SHOP DRAWINGS AND SUBMITTED TO THE ENGINEER FOR APPROVAL, SEE SPECIAL PROVISIONS.

BAR REINFORCEMENT INTERFERING WITH DUCT ALIGNMENT (IF ANY) SHALL BE ADJUSTED BY THE ENGINEER IN THE FIELD.

SPECIAL CARE SHALL BE TAKEN TO ENSURE PROPER CONSOLIDATION OF CONCRETE UNDER THE TOP FLANGE OF THE GIRDERS DURING PLACEMENT OF CONCRETE FOR INTEGRAL CAPS AND ANCHORAGE ENCASEMENTS TO ELIMINATE FORMATION OF VOIDS BENEATH TOP FLANGE.

AFTER CASTING CAP BUT PRIOR TO TENSIONING OF THE CAP, THE ENGINEER SHALL THOROUGHLY INSPECT THE INTERFACE BETWEEN THE GIRDER FLANGES AND CONCRETE TO LOCATE ANY VOIDS DUE TO INCOMPLETE CONSOLIDATION DURING PLACEMENT OF CONCRETE. IF VOIDS ARE DETECTED OR AS DIRECTED BY THE ENGINEER, THE CONTRACTOR SHALL REMOVE A SUFFICIENT VOLUME OF CONCRETE AND REPLACE WITH NON-SHRINK GROUT.

ENCASEMENT OF THE POST-TENSIONING ANCHORAGES SHALL BE SUBJECT TO THE SAME INSPECTION AND REPAIR CRITERIA AS SPECIFIED FOR THE CAP ABOVE.

TOP SURFACE OF CAP SHALL BE ROUGHENED WITH A WIRE BRUSH WHEN CAST AND THOROUGHLY CLEANED PRIOR TO PLACING DECK CONCRETE.

THE DUCTS AND STRANDS SHALL BE FREE OF DIRT, LOOSE RUST, AND OTHER DELETERIOUS SUBSTANCE BEFORE GROUTING DUCTS. POST-TENSIONING DUCTS SHALL BE FILLED WITH GROUT AFTER STRESSING HAS BEEN COMPLETED, SEE SPECIAL PROVISIONS.

PROJECT NO. R-2554BA

WAYNE COUNTY

STATION: 86+57.806 -L2-

METRIC

STATE OF NORTH CAROLINA
DEPARTMENT OF TRANSPORTATION
RALEIGH

SCHEMATIC SEQUENCE OF CONSTRUCTION AND NOTES BENT #1

Plans prepared by:
KO & ASSOCIATES, P.C.
Consulting Engineers
5121 KINGDOM WAY, SUITE #100
RALEIGH, N.C. 27607
(919)-851-6066

NORTH CAROLINA PROFESSIONAL SEAL 030081 ENGINEER CHIH KUO KO

DWG. NO. 29

REVISIONS						SHEET NO.
NO.	BY:	DATE:	NO.	BY:	DATE:	S-148
1			3			TOTAL SHEETS
2			4			478

DRAWN BY B.E. LANNING DATE JAN. 2007
CHECKED BY A.K. ORR / J.C. KO DATE JAN. 2007

PLOT: 6/4/2008 3:16:43 PM Ko & Associates, P.C.
FILE NAME: R:\Structures\r-2554ba_std_pc_18.dgn

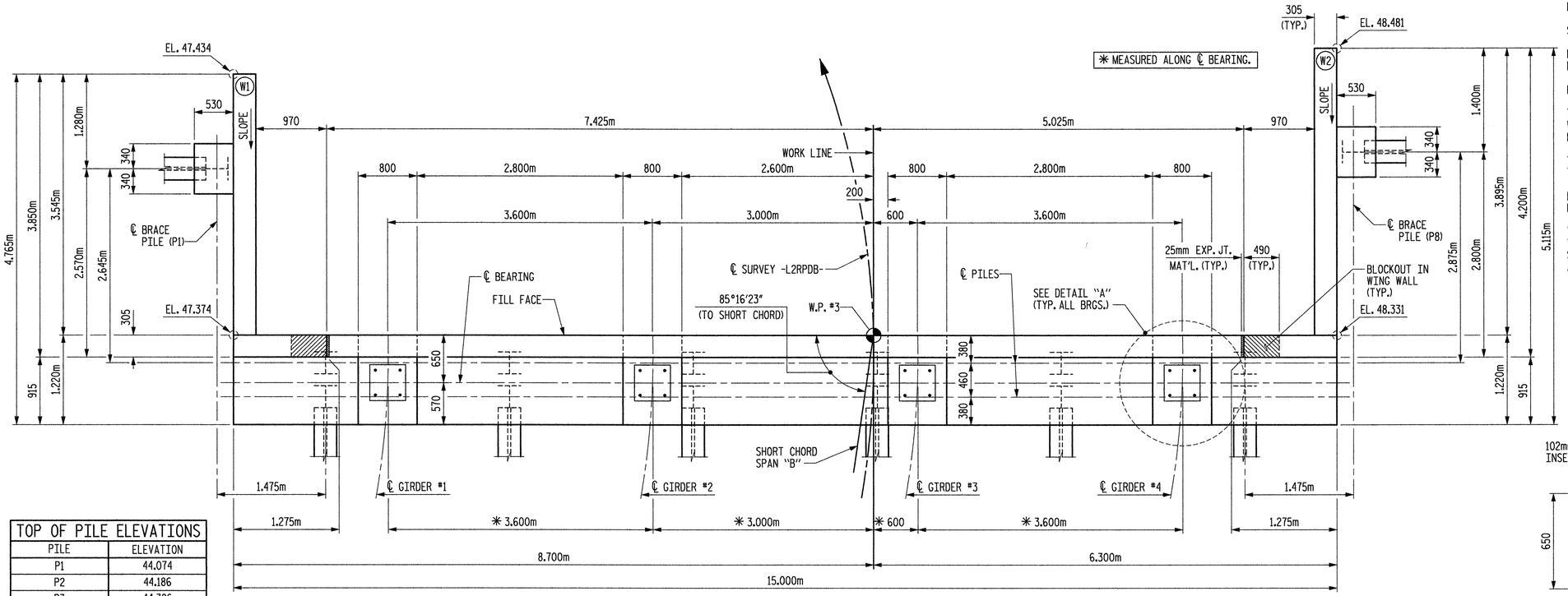

PLAN

TOP OF PILE ELEVATIONS	
PILE	ELEVATION
P1	44.074
P2	44.186
P3	44.386
P4	44.586
P5	44.786
P6	44.986
P7	45.186
P8	45.251

NOTES:

STIRRUPS IN CAP MAY BE SHIFTED AS NECESSARY TO CLEAR PIPE INSERTS.

FOR POT BEARING AND PIPE INSERT DETAILS, SEE "SUPERSTRUCTURE EXPANSION POT BEARING DETAILS" SHEET.

BACKWALL SHALL BE PLACED BEFORE APPLYING THE EPOXY PROTECTIVE COATING.

THE TOP SURFACE AREAS OF THE END BENT CAP SHALL BE CURED IN ACCORDANCE WITH THE STANDARD SPECIFICATIONS EXCEPT THAT THE MEMBRANE CURING COMPOUND METHOD SHALL NOT BE USED.

THE TOP SURFACE OF THE CAP EXCEPT THE BRIDGE SEAT BUILDUPS SHALL BE SLOPED TRANSVERSELY FROM THE FILL FACE TO THE BACK FACE AT THE RATE OF 2%.

FOR SECTION A-A, PILE SPLICE DETAILS, DETAIL "B", BLOCKOUT IN WING WALL DETAILS AND TEMPORARY DRAINAGE DETAILS, SEE SHEET 3 OF 3.

THE CONTRACTOR SHALL PROVIDE FOR INSTALLATION OF THE 102mm Ø DRAIN PIPE THROUGH THE WING WALL AS REQUIRED FOR REINFORCED BRIDGE APPROACH FILLS, SEE THE ROADWAY PLANS. REINFORCING STEEL IN THE WING WALL MAY BE SHIFTED AS NECESSARY TO CLEAR THE DRAIN PIPE.

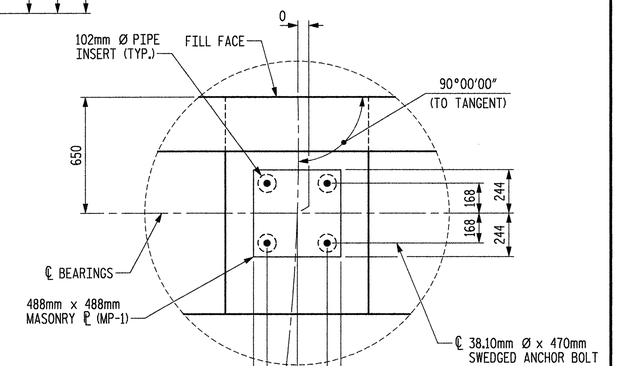

DETAIL "A"

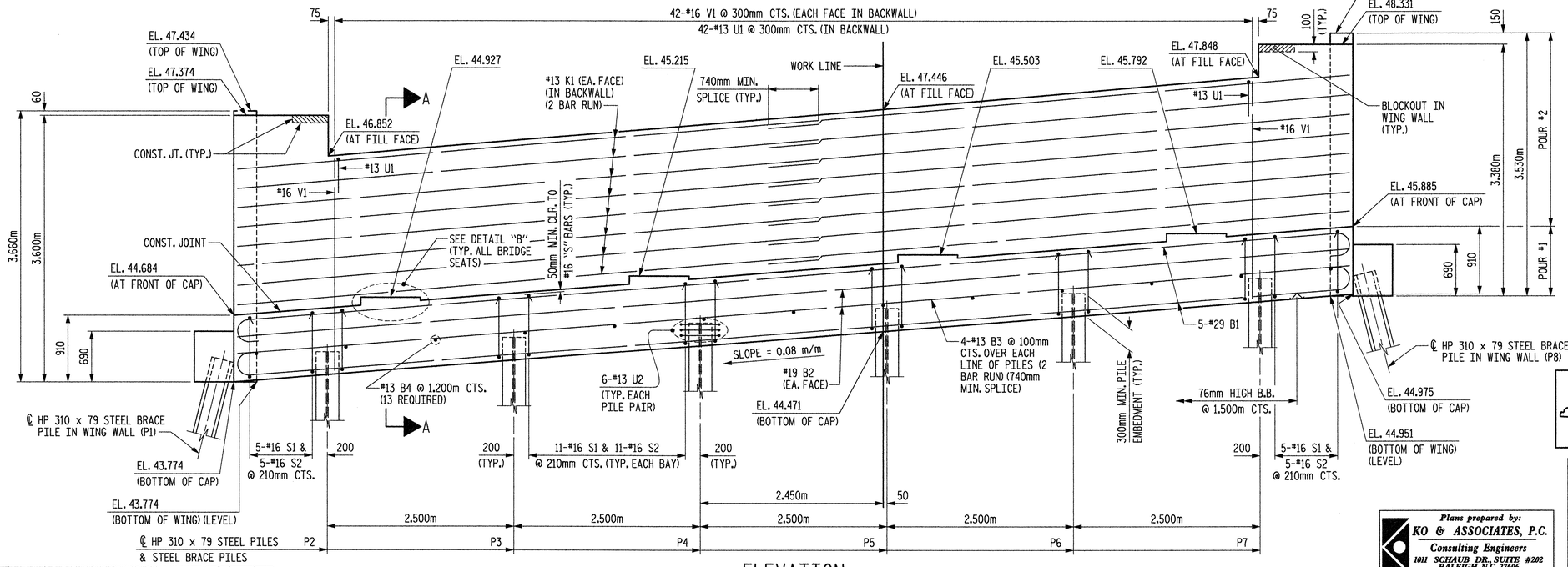

ELEVATION

PROJECT NO. R-2554BA

WAYNE COUNTY

STATION: 86+57.806 -L2-

SHEET 1 OF 3

STATE OF NORTH CAROLINA
DEPARTMENT OF TRANSPORTATION
RALEIGH

SUBSTRUCTURE
END BENT #2

METRIC

Plans prepared by:
KO & ASSOCIATES, P.C.
Consulting Engineers
1011 SCHAUB DR. SUITE #202
RALEIGH, N.C. 27606
For Division of Highways

NORTH CAROLINA PROFESSIONAL SEAL 6601 ENGINEER CHAH KUO KO
11-07

DWG. NO. 30

REVISIONS						SHEET NO.
NO.	BY:	DATE:	NO.	BY:	DATE:	S-199
1			3			TOTAL SHEETS
2			4			478

DRAWN BY B.E. LANNING DATE JAN. 2007
CHECKED BY A.K. ORR / J.C. KO DATE JAN. 2007

PLOT: 1/18/2007 4:08:26 PM Ko & Associates, P.C.
FILE NAME: R:\Structures\r2554ba_sd_e2a_18.dgn

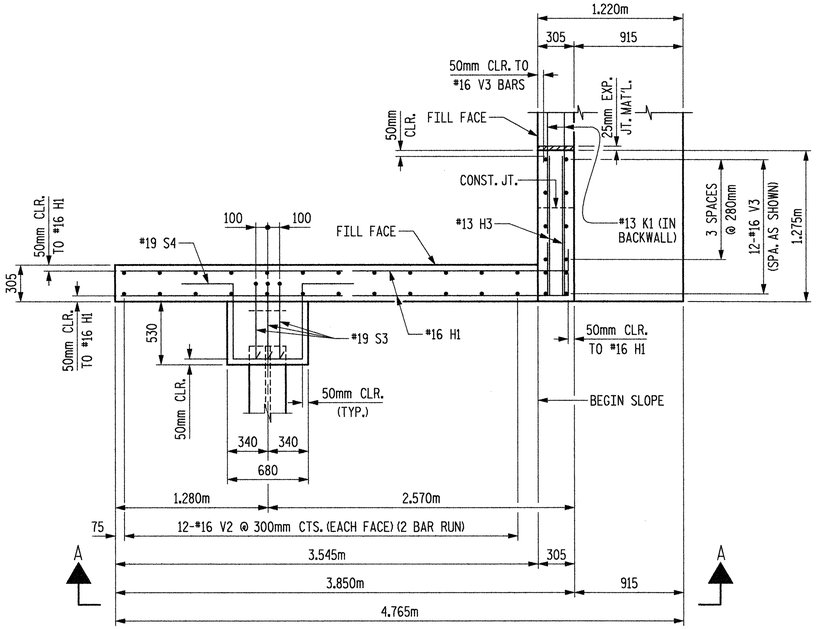

PLAN OF LEFT WING - W1

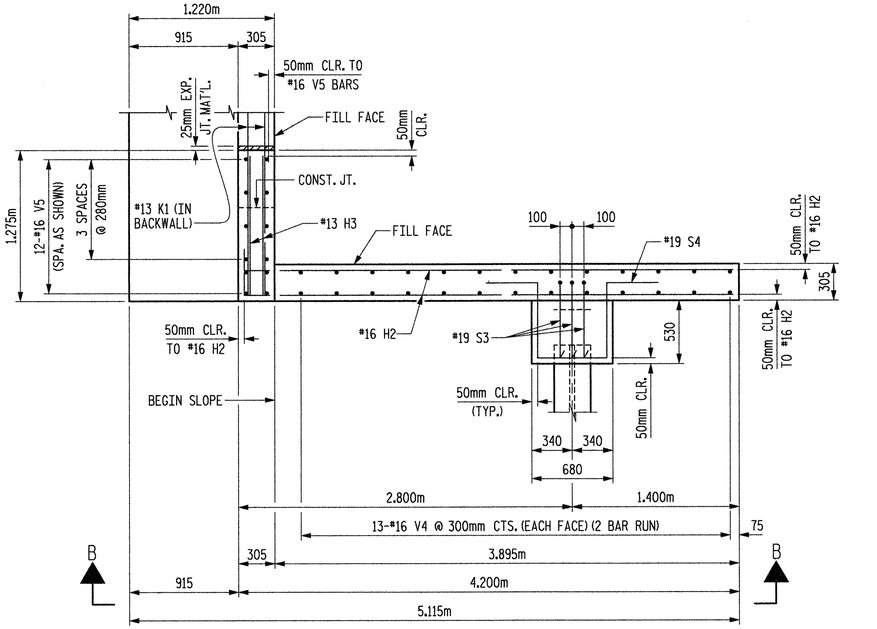

PLAN OF RIGHT WING - W2

* NOTE: MATCH "H" BARS IN THE WING TO THE #13 K1 BARS IN THE BACKWALL. "K" BARS SHOULD EXTEND FROM WING TO WING.

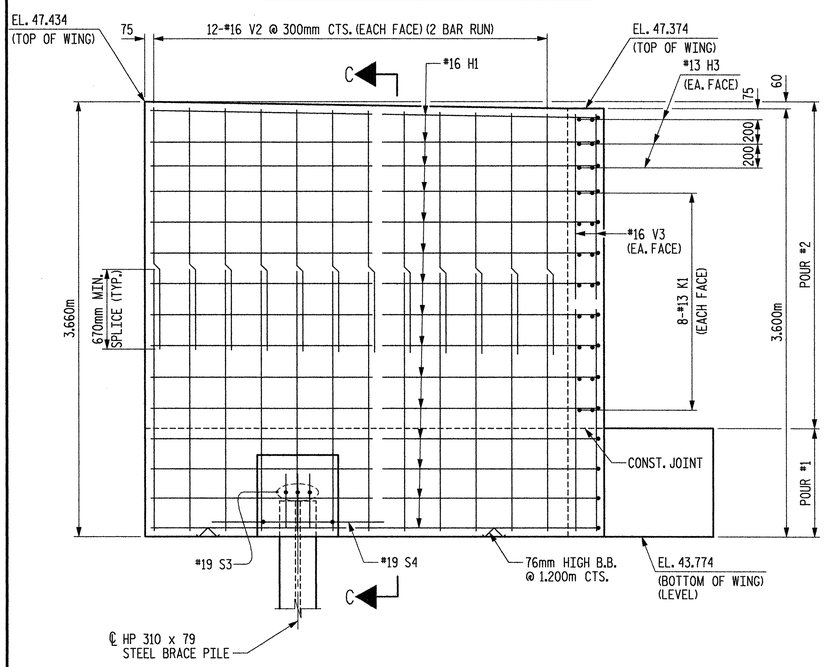

VIEW A-A

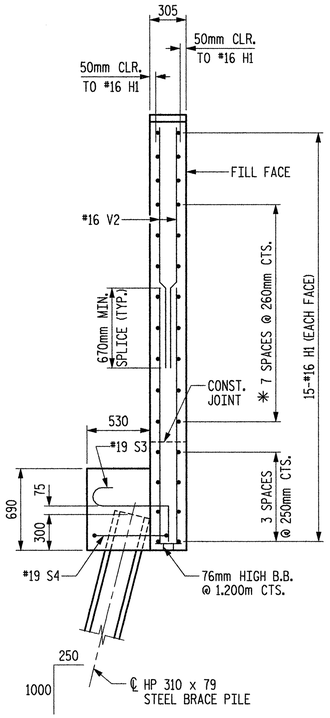

SECTION C-C

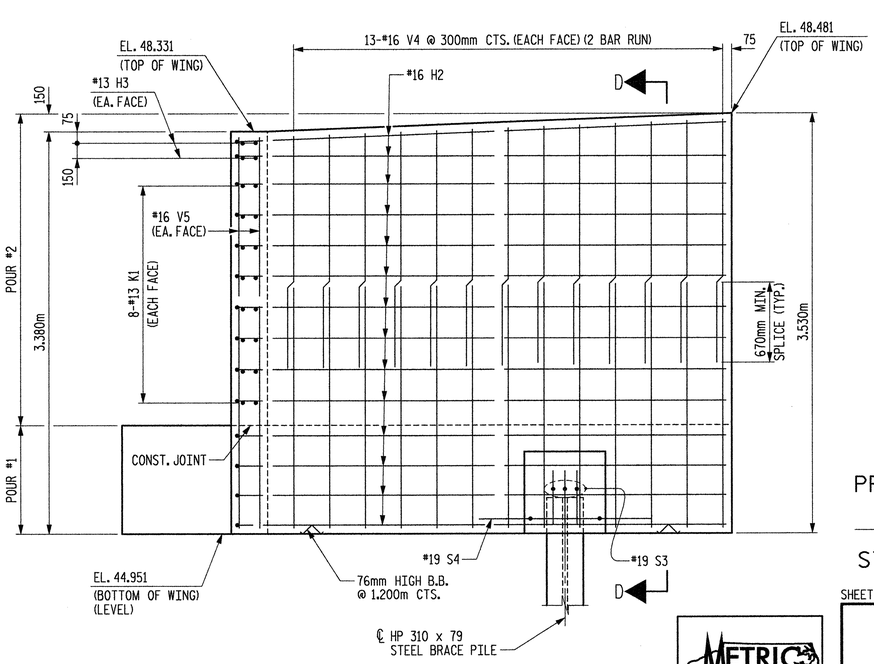

VIEW B-B

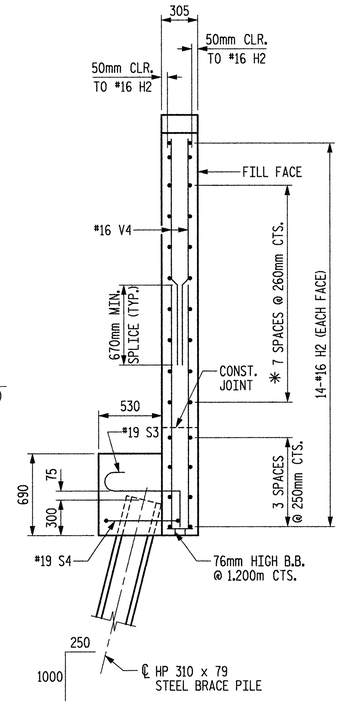

SECTION D-D

PROJECT NO. R-2554BA

WAYNE COUNTY

STATION: 86+57.806 -L2-

SHEET 2 OF 3

STATE OF NORTH CAROLINA
DEPARTMENT OF TRANSPORTATION
RALEIGH

SUBSTRUCTURE
END BENT #2

METRIC

NORTH CAROLINA PROFESSIONAL SEAL 5601 ENGINEER CHIH KUO KO 1/10/07

Plans prepared by:
KO & ASSOCIATES, P.C.
Consulting Engineers
1011 SCHAUB DR. SUITE #202
RALEIGH, N.C. 27606
For Division of Highways

REVISIONS						SHEET NO.
NO.	BY:	DATE:	NO.	BY:	DATE:	S-150
1			3			TOTAL SHEETS
2			4			478

DWG. NO. 31

DRAWN BY B.E. LANNING DATE JAN. 2007
CHECKED BY A.K. ORR / J.C. KO DATE JAN. 2007

PLOT: 1/10/2007 4:09:07 PM Ko & Associates, P.C.
FILE NAME: R:\Structures\r2554ba_sd_e2b_10.dgn

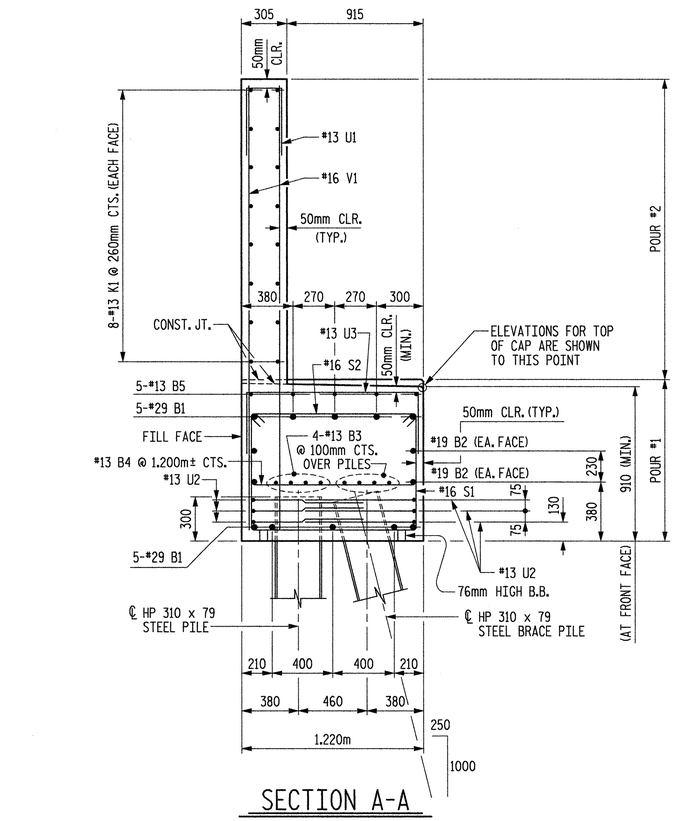

SECTION A-A

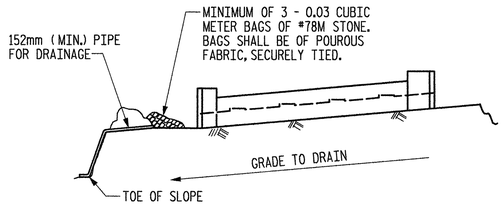

BAGGED STONE AND PIPE SHALL BE PLACED IMMEDIATELY AFTER COMPLETION OF END BENT EXCAVATION. PIPE MAY BE EITHER CONCRETE, CORRUGATED STEEL, CORRUGATED ALUMINUM ALLOY, OR CORRUGATED PLASTIC. PERFORATED PIPE WILL NOT BE ALLOWED.

BAGGED STONE SHALL REMAIN IN PLACE UNTIL THE ENGINEER DIRECTS THAT IT BE REMOVED. THE CONTRACTOR SHALL REMOVE AND DISPOSE OF SILT ACCUMULATIONS AT BAGGED STONE WHEN SO DIRECTED BY THE ENGINEER. BAGS SHALL BE REMOVED AND REPLACED WHENEVER THE ENGINEER DETERMINES THAT THEY HAVE DETERIORATED AND LOST THEIR EFFECTIVENESS.

NO SEPARATE PAYMENT WILL BE MADE FOR THIS WORK AND THE ENTIRE COST OF THIS WORK SHALL BE INCLUDED IN THE UNIT CONTRACT PRICE BID FOR THE SEVERAL PAY ITEMS.

TEMPORARY DRAINAGE AT END BENT

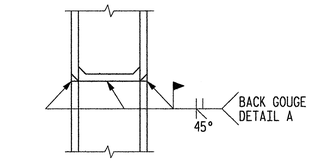

** PILE VERTICAL

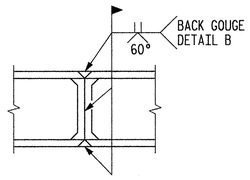

PILE HORIZONTAL OR VERTICAL

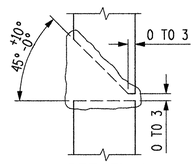

** DETAIL A

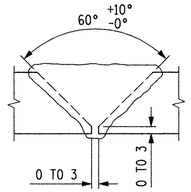

DETAIL B

** POSITION OF PILE DURING WELDING

PILE SPLICE DETAILS

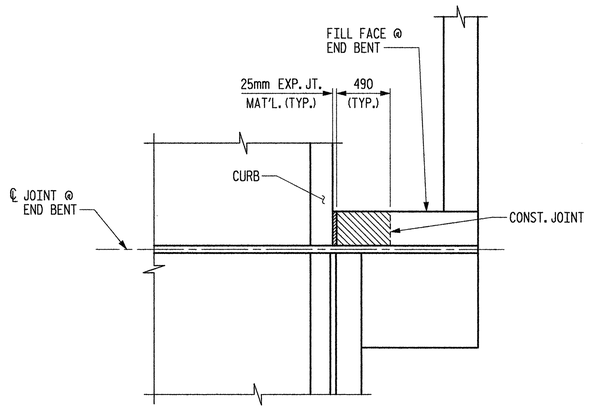

PLAN

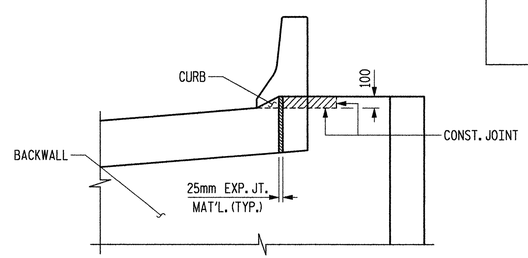

ELEVATION

BLOCKOUT IN WING WALL FOR FITTING EVAZOTE JOINT SEAL

NOTE:
THE CONCRETE IN THE SHADED AREA OF THE WING WALL SHALL BE POURED AFTER THE JOINT BETWEEN THE DECK AND APPROACH SLAB HAS BEEN FORMED AND THE BARRIER RAIL IS CAST IF SLIP FORMING IS USED.

BAR TYPES

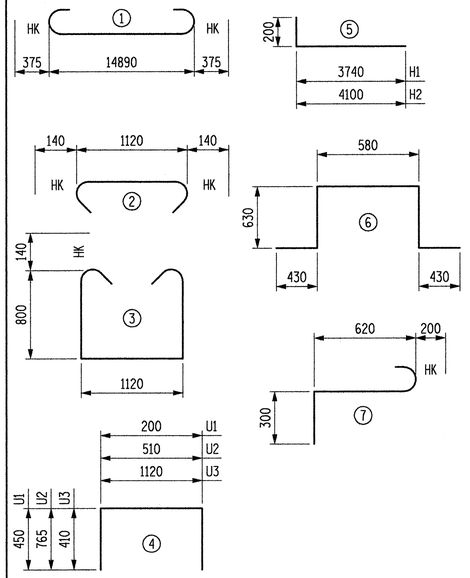

ALL BAR DIMENSIONS ARE OUT TO OUT.

BILL OF MATERIAL

END BENT #2

BAR	NO.	SIZE	TYPE	LENGTH	WEIGHT
B1	10	29	1	15640	791
B2	4	19	STR	14900	133
B3	16	13	STR	7820	124
B4	13	13	STR	1120	14
B5	20	13	STR	700	14
H1	30	16	5	3940	183
H2	28	16	5	4300	187
H3	10	13	STR	1160	12
K1	32	13	STR	7820	249
S1	65	16	3	3000	303
S2	65	16	2	1400	141
S3	6	19	7	1120	15
S4	2	19	6	2700	12
U1	42	13	4	1100	46
U2	36	13	4	2040	73
U3	20	13	4	1940	39
V1	84	16	STR	2860	373
V2	48	16	STR	2120	158
V3	12	16	STR	3500	65
V4	52	16	STR	2060	166
V5	12	16	STR	3280	61

REINFORCING STEEL 3159 kg

CLASS A CONCRETE BREAKDOWN
POUR #1 (CAP & WING) 19.7 CU. METERS
POUR #2 (BACKWALL & WING) 19.2 CU. METERS
TOTAL CLASS A CONCRETE 38.9 CU. METERS

HP 310 x 79 STEEL PILES
NO. 14 294.0 LIN. METERS

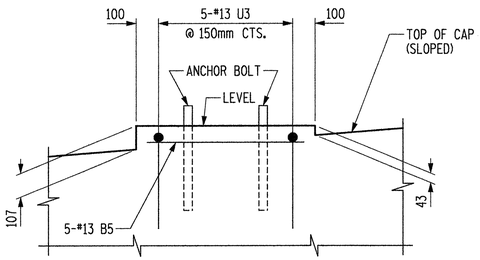

DETAIL "B"

PROJECT NO. R-2554BA
WAYNE COUNTY
STATION: 86+57.806 -L2-

SHEET 3 OF 3

METRIC

STATE OF NORTH CAROLINA
DEPARTMENT OF TRANSPORTATION
RALEIGH

SUBSTRUCTURE
END BENT #2

Plans prepared by:
KO & ASSOCIATES, P.C.
Consulting Engineers
1011 SCHAUB DR. SUITE #202
RALEIGH, N.C. 27606
For Division of Highways

NORTH CAROLINA PROFESSIONAL SEAL 6601 ENGINEER CHIH KUO KO
9-19-07

DWG. NO. 32

REVISIONS						SHEET NO.
NO.	BY:	DATE:	NO.	BY:	DATE:	S-151
1			3			TOTAL SHEETS
2			4			478

DRAWN BY B.E. LANNING DATE JAN. 2007
CHECKED BY A.K. ORR / J.C. KO DATE

PLOT: 1/18/2007 4:09:59 PM Ko & Associates, P.C.
FILE NAME: R:\Structures\r2554ba_sd_e2c_18.dgn

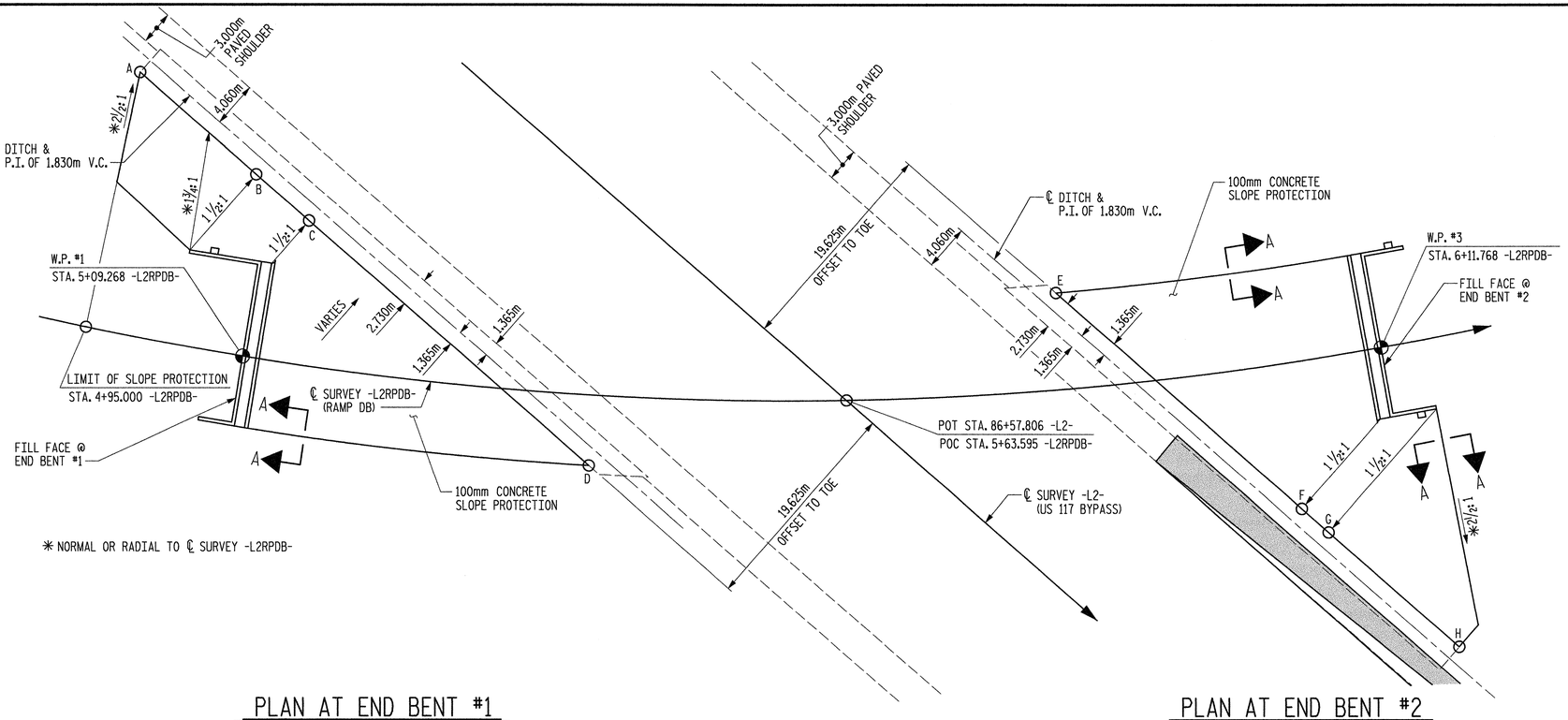

PLAN AT END BENT #1

PLAN AT END BENT #2

GENERAL NOTES

SLOPE PROTECTION SHALL BE PLACED UNDER THE ENDS OF THE BRIDGE AS SHOWN IN THE DETAILS. METHOD OF MEASUREMENT AND BASIS OF PAYMENT SHALL BE AS PRESCRIBED IN SECTION 462 OF THE STANDARD SPECIFICATIONS. FOR BERM WIDTH, SEE GENERAL DRAWING.

ALTERNATE "A"

ALTERNATE "A" SHALL CONSIST OF 100mm POURED-IN-PLACE CONCRETE PAVING AS SHOWN IN THE DETAILS ON THIS SHEET. CONCRETE SHALL BE CLASS "B". THE CONCRETE SURFACE SHALL BE FLOATED WITH A WOODEN FLOAT AND FINISHED. WELDED WIRE FABRIC REINFORCING SHALL BE 152 X 152 - W9.1 X W9.1, 1520mm WIDE. SLOPE PROTECTION SHALL BE POURED IN 1520mm STRIPS AS SHOWN IN THE "POURING DETAIL" WITH 600mm LONG #13 BARS PLACED ALONG THE SLOPE BETWEEN STRIPS AT 450mm MAXIMUM SPACING. SLOPE PROTECTION MAY BE POURED IN ALTERNATE 1220mm AND 1520mm STRIPS AS SHOWN IN THE "OPTIONAL POURING DETAIL" WITH ADJACENT RUNS OF WELDED WIRE FABRIC LAPPING AT LEAST 152mm. THE COST OF THE WELDED WIRE FABRIC AND #13 BARS, IF USED, SHALL BE INCLUDED IN THE CONTRACT UNIT PRICE BID PER SQUARE METER FOR SLOPE PROTECTION.

ESTIMATED QUANTITIES		
BRIDGE @ STA. 86+57.806 -L2-	100mm SLOPE PROTECTION	✳✳ WELDED WIRE FABRIC 1520mm WIDE
	SQUARE METERS	APPROX. METERS
END BENT #1	570	375
END BENT #2	730	480

✳✳ QUANTITY SHOWN IS BASED ON 1520mm POURS.

TOE OF SLOPE STATIONS AND ELEVATIONS		
POINT	-L2- STATION	TOE ELEVATION
A	85+90.872	38.023
B	86+04.714	38.125
C	86+10.985	38.171
D	86+44.303	38.401
E	86+65.525	38.537
F	86+94.848	38.713
G	86+98.031	38.731
H	87+16.500	38.833

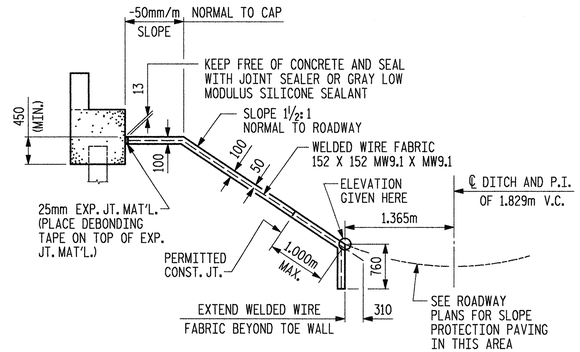

SECTION ALONG ℄ ROADWAY WHEN FILL CATCHES IN DITCH

DETAILS FOR ALTERNATE "A"

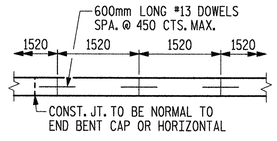

STRIP WIDTHS MAY VARY IN CURVED PORTION.

POURING DETAIL

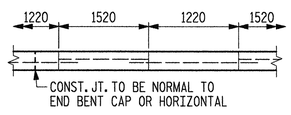

POUR A 1220mm STRIP FIRST. STRIP WIDTHS MAY VARY IN CURVED PORTION.

OPTIONAL POURING DETAIL

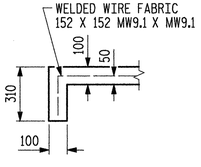

SECTION A-A

PROJECT NO. R-2554BA

WAYNE COUNTY

STATION: 86+57.806 -L2-

STATE OF NORTH CAROLINA
DEPARTMENT OF TRANSPORTATION
RALEIGH

SLOPE PROTECTION DETAILS

NORTH CAROLINA PROFESSIONAL SEAL 5501 ENGINEER CHIH KUO KO

DWG. NO. 33

REVISIONS						SHEET NO.
NO.	BY:	DATE:	NO.	BY:	DATE:	S-152
1			3			TOTAL SHEETS
2			4			478

DRAWN BY B.E. LANNING DATE JAN. 2007
CHECKED BY A.K. ORR / J.C. KO DATE JAN. 2007

PLOT: 1/18/2007 3:47:08 PM Ko & Associates, P.C.
FILE NAME: R:\Structures\r2554ba_sd_sp_18.dgn

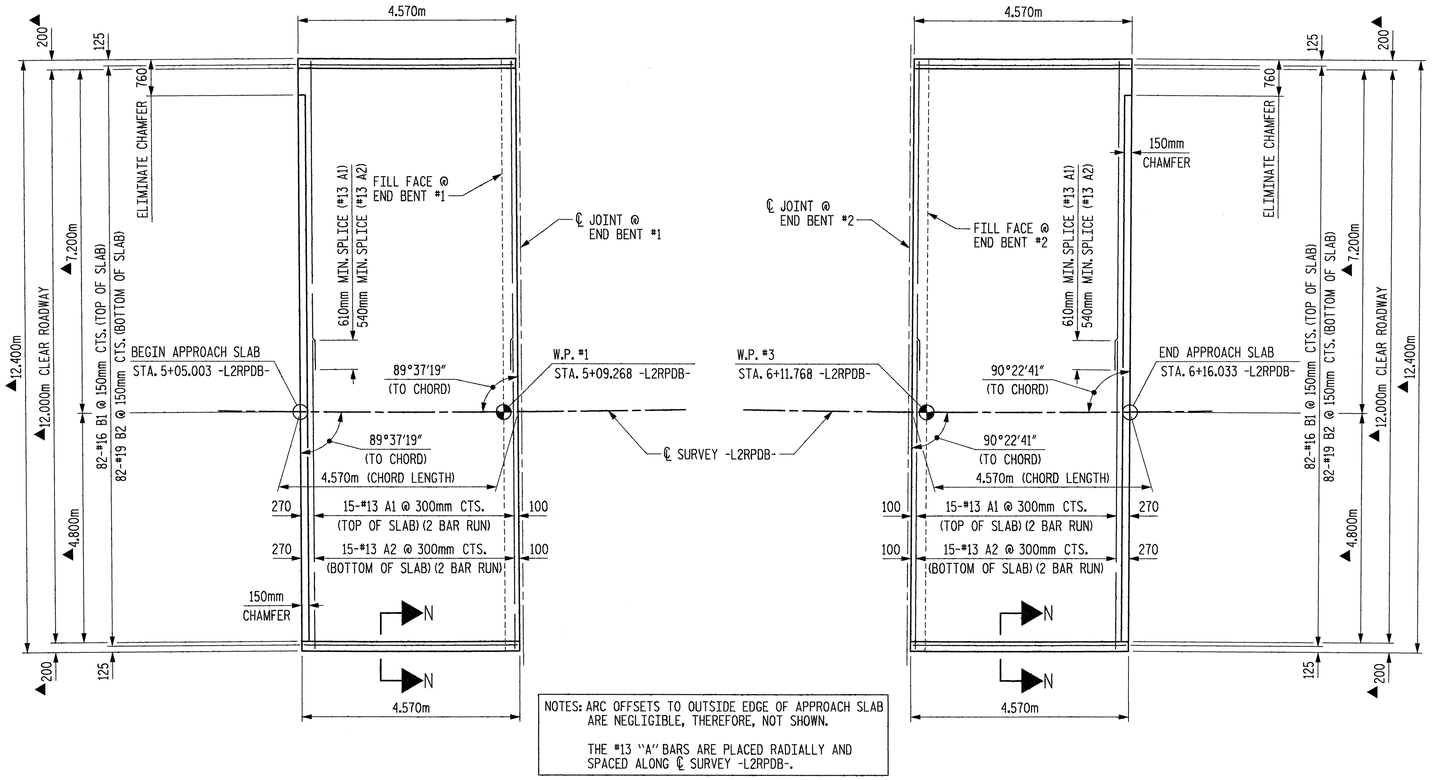

NOTES: ARC OFFSETS TO OUTSIDE EDGE OF APPROACH SLAB ARE NEGLIGIBLE, THEREFORE, NOT SHOWN.

THE #13 "A" BARS ARE PLACED RADIALLY AND SPACED ALONG ℄ SURVEY -L2RPDB-.

AT END BENT #1 ▲DIMENSIONS ARE NORMAL OR RADIAL TO ℄ SURVEY -L2RPDB-. AT END BENT #2

PLAN OF APPROACH SLABS

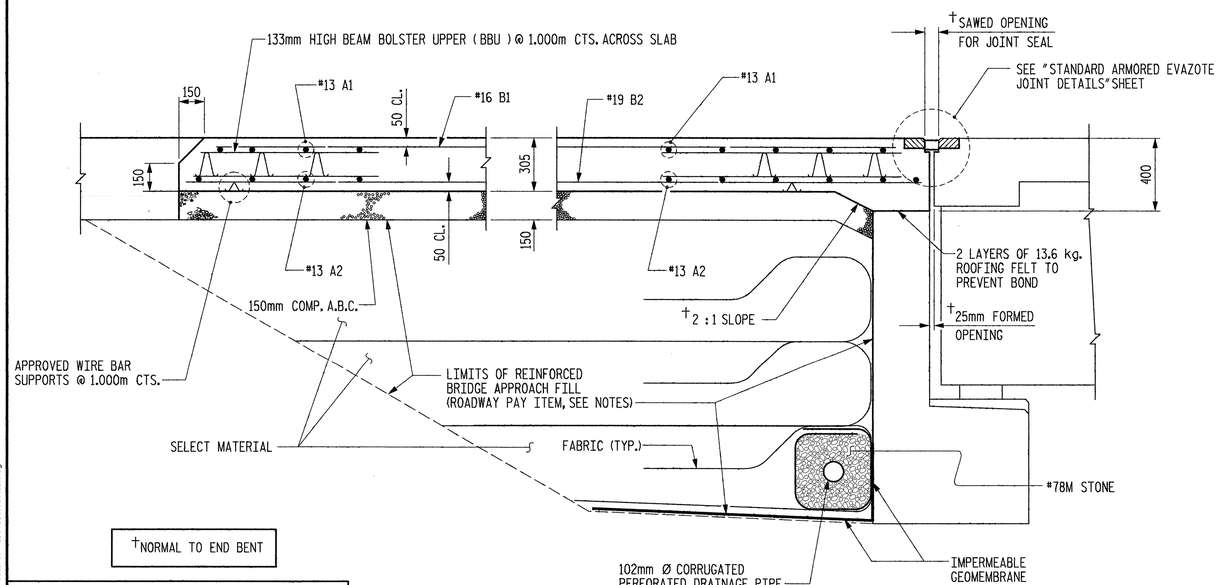

†NORMAL TO END BENT

SECTION THRU SLAB

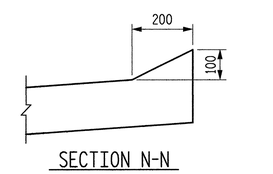

SECTION N-N

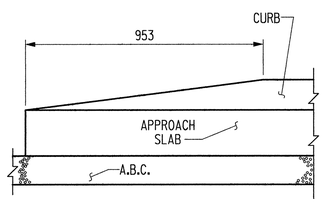

END OF CURB WITHOUT SHOULDER BERM GUTTER

CURB DETAILS

NOTES

APPROACH SLAB SHALL NOT BE CONSTRUCTED PRIOR TO COMPLETION OF THE BRIDGE DECK.

FOR REINFORCED BRIDGE APPROACH FILL INCLUDING FABRIC, IMPERMEABLE GEOMEMBRANE, 102mm Ø DRAINAGE PIPE, #78M STONE, AND SELECT MATERIAL, SEE ROADWAY PLANS.

AREA BETWEEN THE WINGWALL AND APPROACH SLAB SHALL BE GRADED TO DRAIN THE WATER AWAY FROM THE FILL FACE OF THE BRIDGE AND SHALL BE PAVED. SEE ROADWAY PLANS.

THE 150mm COMP. A.B.C. SHALL BE FLUSH WITH THE ROADWAY END OF THE APPROACH SLAB AND SHALL EXTEND 300mm OUTSIDE OF EACH EDGE OF THE APPROACH SLAB.

THE CONTRACTOR MAY USE 100mm TYPE B-25.0B ASPHALT CONCRETE COURSE IN LIEU OF 150mm COMP. A.B.C. IF THIS OPTION IS USED, THE BASE COURSE SHALL BE FLUSH WITH THE ROADWAY END OF THE APPROACH SLAB, AND THE WIDTH SHALL BE THE SAME AS THAT OF THE APPROACH SLAB.

THE CONTRACTOR MAY USE 125mm CLASS "A" CONCRETE BASE IN LIEU OF 150mm COMP. A.B.C. IF THIS OPTION IS USED, THE CONCRETE BASE SHALL BE FLUSH WITH THE ROADWAY END OF THE APPROACH SLAB, AND THE WIDTH SHALL BE THE SAME AS THAT OF THE APPROACH SLAB. THE CONCRETE SHALL BE FINISHED TO A SMOOTH SURFACE AND A LAYER OF 13.6 kg ROOFING FELT SHALL BE PLACED BETWEEN THE CONCRETE BASE AND THE APPROACH SLAB TO PREVENT BOND. THE APPROACH SLAB SHALL NOT BE CAST UNTIL THE CONCRETE BASE HAS REACHED AN AGE OF THREE CURING DAYS.

WITH EVAZOTE JOINT SEAL

FOR EVAZOTE JOINT SEALS, SEE SPECIAL PROVISIONS.

THE NOMINAL UNCOMPRESSED SEAL WIDTH OF THE EVAZOTE JOINT SEAL SHALL BE 64mm.

FOR ELASTOMERIC CONCRETE, SEE SPECIAL PROVISIONS.

~~WITH CONCRETE WEARING SURFACE~~

~~APPROACH SLABS SHALL BE POURED AFTER CONCRETE OVERLAY IS POURED.~~

~~THE JOINT SHALL BE SAWED AFTER THE CASTING OF THE PARAPET AND END POST.~~

BILL OF MATERIAL

APPROACH SLAB AT END BENT #1

BAR	NO.	SIZE	TYPE	LENGTH	WEIGHT
✳A1	30	13	STR	6460	193
A2	30	13	STR	6420	191
✳B1	82	16	STR	4320	550
B2	82	19	STR	4460	817
REINFORCING STEEL				kg.	1008
✳ EPOXY COATED REINFORCING STEEL				kg.	743
CLASS AA CONCRETE					
AT END BENT #1				C. M.	17.7

APPROACH SLAB AT END BENT #2

BAR	NO.	SIZE	TYPE	LENGTH	WEIGHT
✳A1	30	13	STR	6460	193
A2	30	13	STR	6420	191
✳B1	82	16	STR	4320	550
B2	82	19	STR	4460	817
REINFORCING STEEL				kg.	1008
✳ EPOXY COATED REINFORCING STEEL				kg.	743
CLASS AA CONCRETE					
AT END BENT #2				C. M.	17.7

PROJECT NO. R-2554BA

WAYNE COUNTY

STATION: 86+57.806 -L2-

SHEET 1 OF 2

STATE OF NORTH CAROLINA
DEPARTMENT OF TRANSPORTATION
RALEIGH

STANDARD
BRIDGE APPROACH SLAB FOR FLEXIBLE PAVEMENT

ASSEMBLED BY : B.E. LANNING	DATE : NOV. 2006
CHECKED BY : A.K. ORR / M.J. MOYER	DATE : NOV. 2006
DRAWN BY : FCJ 6/87	REV. 7/10/01 RWW/LES
CHECKED BY : EGA 6/87	REV. 5/7/03R RWW/JTE
	REV. 5/1/06R KMM/GM

Plans prepared by:
KO & ASSOCIATES, P.C.
Consulting Engineers
5121 KINGDOM WAY, SUITE #100
RALEIGH, N.C. 27607
(919)-851-6066

NORTH CAROLINA PROFESSIONAL ENGINEER SEAL 36001 CHIH KUO KO

DWG. NO. 34

REVISIONS						SHEET NO.
NO.	BY:	DATE:	NO.	BY:	DATE:	S-153
1			3			TOTAL SHEETS
2			4			478

STD. NO. BAS4SM

PLOT: 6/6/2006 12:02:36 PM Ko & Associates, P.C.
FILE NAME: N:\Structure\v2554ba_std_bas1.dgn

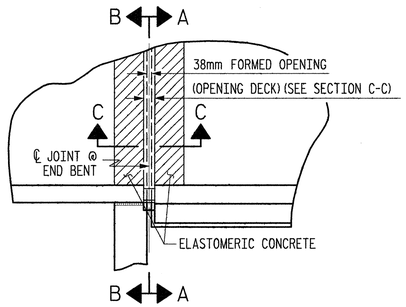

PLAN

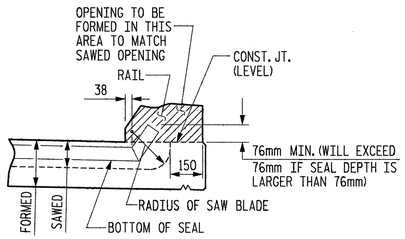

SECTION A-A

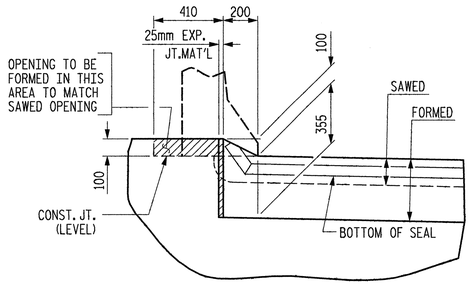

SECTION B-B

SECTION C-C
ARMORED EVAZOTE JOINT SEAL
(PRE-SAWED ELASTOMERIC
CONCRETE DIMENSIONS)

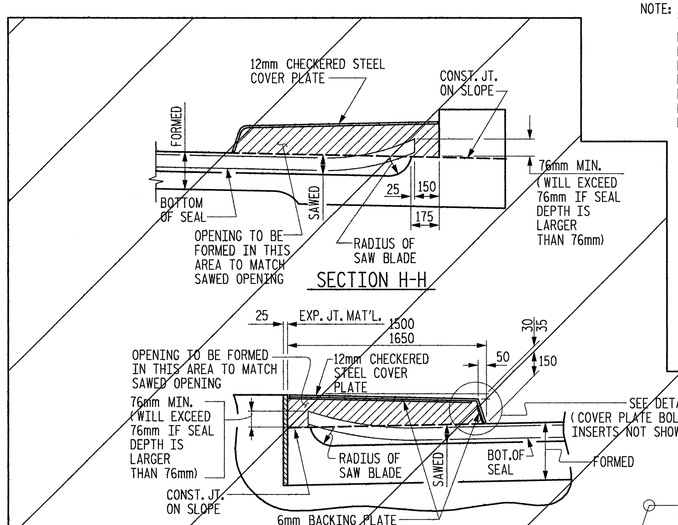

SECTION H-H

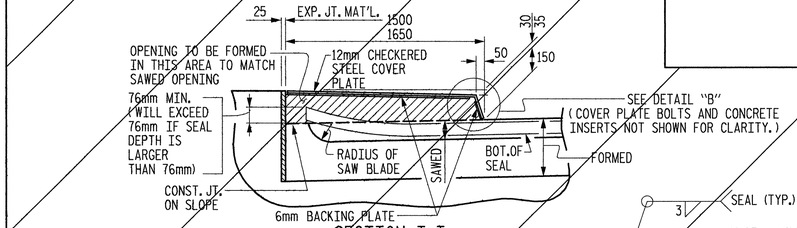

SECTION I-I

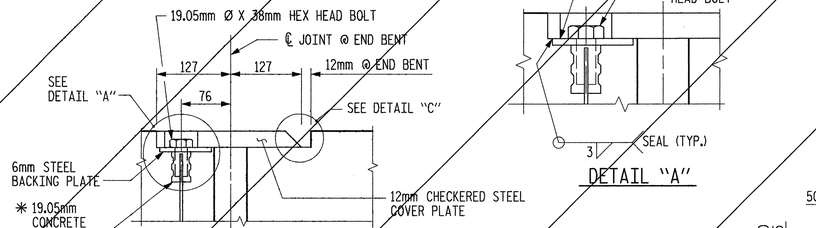

SECTION K-K

✳ THE 19.05mm CONCRETE INSERTS SHALL BE CLOSED-END FERRULES WITH LOOPED WIRE STRUTS ATTACHED TO THEM. THE INSERTS SHALL CONFORM TO AASHTO M169, GRADE 12L14 AND SHALL HAVE A TENSILE WORKING LOAD CAPACITY OF 13.3 kN.

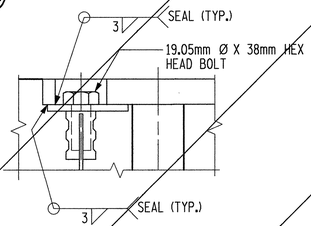

DETAIL "A"

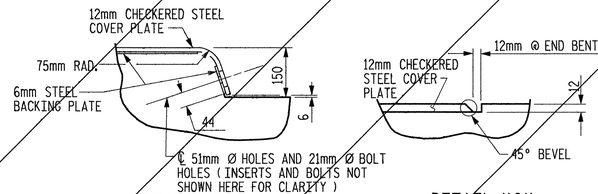

DETAIL "B" DETAIL "C"

JOINT SEAL DETAILS @ END BENT
(FOR SIDEWALK)

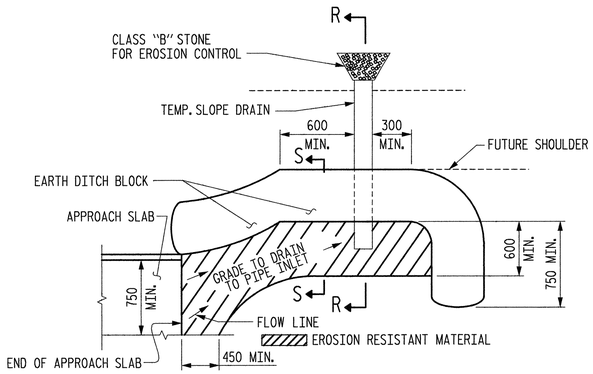

NOTE: IMMEDIATELY AFTER THE CONSTRUCTION OF THE APPROACH SLAB, THE CONTRACTOR SHALL PROVIDE TEMPORARY BERM AND SLOPE DRAIN. CONTRACTOR SHALL GRADE TO PIPE INLET AND PROVIDE EROSION RESISTANT MATERIAL AS SHOWN. THE EROSION RESISTANT MATERIAL SHALL BE EITHER 1) ASPHALT PLANT MIX, TYPE 1 OR TYPE 2, MIN. 50mm DEPTH, 2) EROSION CONTROL MAT, OR 3) CONCRETE, AS DIRECTED BY THE ENGINEER. THE SLOPE DRAIN SHALL CONSIST OF A NON-PERFORATED TEMPORARY DRAINAGE PIPE, 305mm IN DIAMETER.

PLAN VIEW

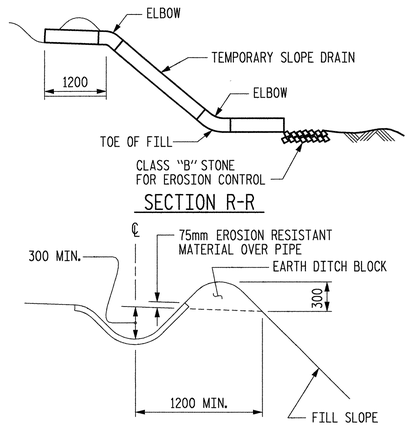

SECTION R-R

SECTION S-S

TEMPORARY BERM AND SLOPE DRAIN DETAILS

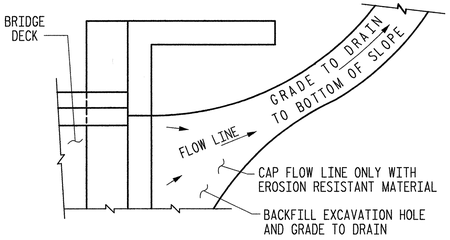

NOTE: IF THE APPROACH SLAB IS NOT CONSTRUCTED IMMEDIATELY AFTER THE BACKFILLING OF THE END BENT EXCAVATION, GRADE TO DRAIN TO THE BOTTOM OF THE SLOPE AND PROVIDE EROSION RESISTANT MATERIAL, SUCH AS FIBERGLASS ROVING OR AS DIRECTED BY THE ENGINEER TO PREVENT SOIL EROSION AND TO PROTECT THE AREA ADJACENT TO THE STRUCTURE. THE CONTRACTOR WILL BE REQUIRED TO REMOVE THESE MATERIALS PRIOR TO CONSTRUCTION OF THE APPROACH SLAB.

TEMPORARY DRAINAGE DETAIL

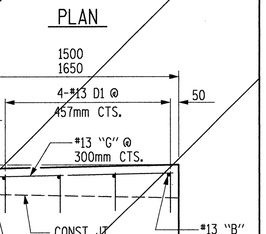

SECTION N-N

SIDEWALK DETAILS

PROJECT NO. R-2554BA

WAYNE COUNTY

STATION: 86+57.806 -L2-

SHEET 2 OF 2

STATE OF NORTH CAROLINA
DEPARTMENT OF TRANSPORTATION
RALEIGH

STANDARD

BRIDGE APPROACH SLAB DETAILS

REVISIONS						SHEET NO.
NO.	BY:	DATE:	NO.	BY:	DATE:	S-154
1			3			TOTAL SHEETS
2			4			478

DWG. NO. 35

STD. NO. BAS10SM

Plans prepared by:
KO & ASSOCIATES, P.C.
Consulting Engineers
5121 KINGDOM WAY, SUITE #100
RALEIGH, N.C. 27607
(919)-851-6066

NORTH CAROLINA PROFESSIONAL SEAL 030 ENGINEER CHIH KUO KO

ASSEMBLED BY : B.E. LANNING	DATE : NOV. 2006
CHECKED BY : A.K. ORR / M.J. MOYER	DATE : NOV. 2006
DRAWN BY : FCJ 11/88	REV. 10/17/00 RWW/LES
CHECKED BY : ARB 11/88	REV. 5/7/03 RWW/JTE
	REV. 5/1/06R MAA/KMM

PLOT: 6/6/2008 12:27:28 PM Ko & Associates, P.C.
FILE NAME: R:\Structures\r2554ba_sd_sd2_18.dgn

F.A. PROJECT NO.: NHS-70(106)

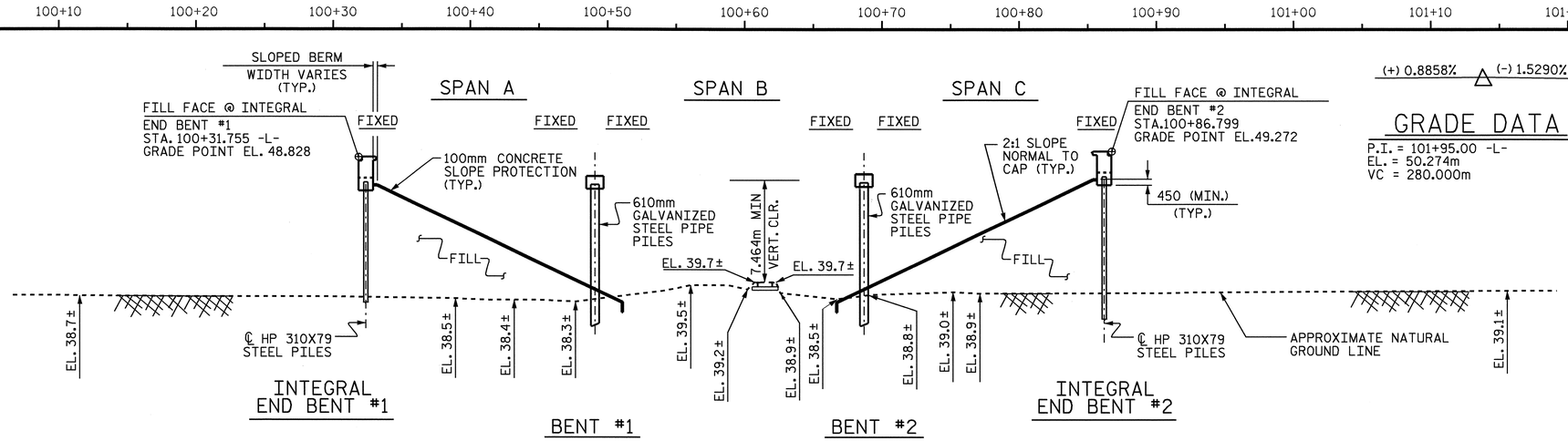

(+) 0.8858% (-) 1.5290%

GRADE DATA

P.I. = 101+95.00 -L-
EL. = 50.274m
VC = 280.000m

HORIZONTAL CURVE DATA -L-

PIs STA. 100+12.358 -L-
θs = 0°58'56.0"
Ls = 60.000m
LT = 40.001m
ST = 20.001m

PI STA. 102+66.635 -L-
Δ = 15°15'00.1" (LT.)
L = 465.785m
T = 234.277m
R = 1750.000m

TOP OF RAIL ELEVATIONS -Y1-

LEFT RAIL		RIGHT RAIL	
STATION	ELEV.	STATION	ELEV.
10+00.329	39.774	10+00.338	39.776
10+27.904	39.737	10+27.865	39.737
10+47.449	39.729	10+47.367	39.730
10+66.511	39.714	10+66.318	39.720
10+86.014	39.711	10+86.095	39.706
11+05.306	39.704	11+05.253	39.705
11+24.174	39.698	11+24.225	39.692
11+43.872	39.687	11+43.815	39.688
11+62.876	39.675	11+62.777	39.678
11+81.411	39.654	11+81.408	39.656

NOTE

THE RAILROAD TRACK TOP OF RAIL ELEVATIONS SHOWN ON THE PLANS ARE FROM THE BEST INFORMATION AVAILABLE. PRIOR TO BEGINNING BRIDGE CONSTRUCTION, VERIFY THE TOP OF RAIL ELEVATIONS AND REPORT ANY VARIATIONS TO THE ENGINEER. ANY PLAN REVISIONS NECESSARY TO ACHIEVE THE REQUIRED MINIMUM VERTICAL CLEARANCE WILL BE PROVIDED BY THE DEPARTMENT.

SECTION ALONG -L-

(SECTION AT END BENTS & BENTS ARE SHOWN AT RIGHT ANGLES)

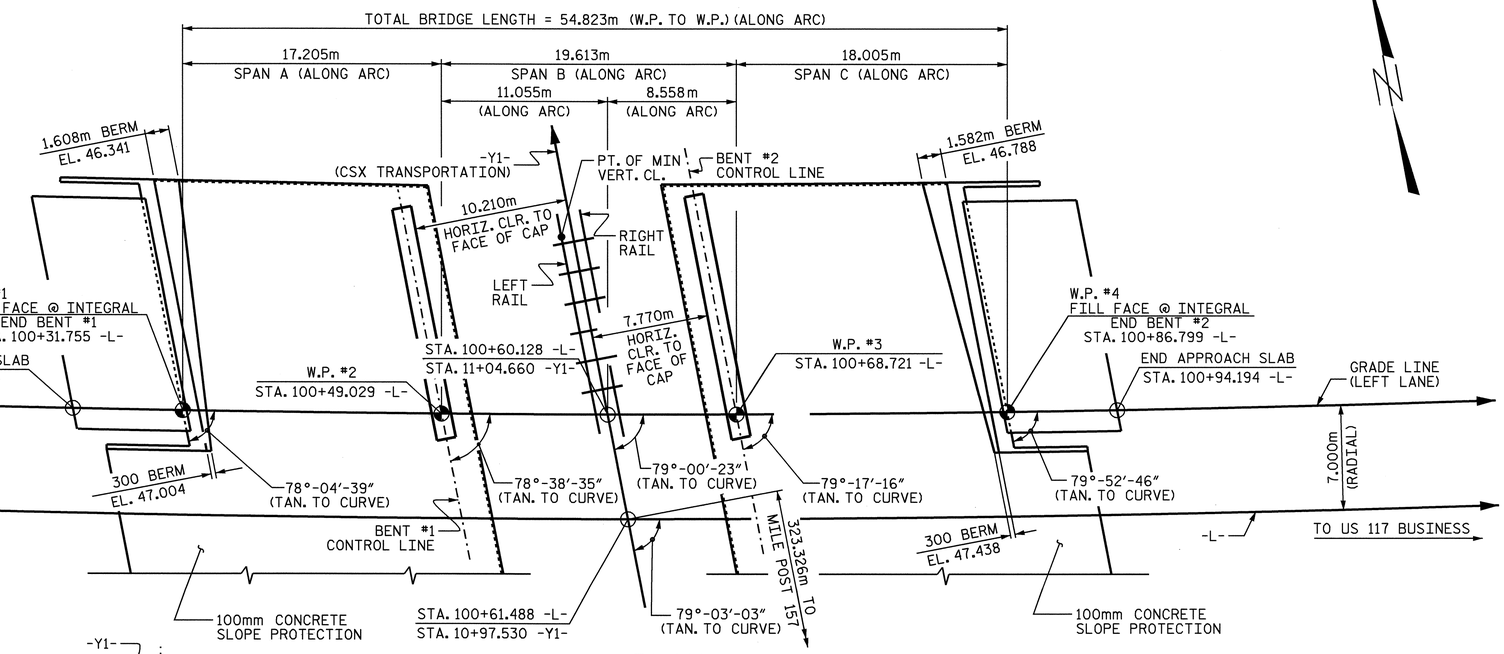

PLAN

(PILES ARE NOT SHOWN FOR CLARITY)

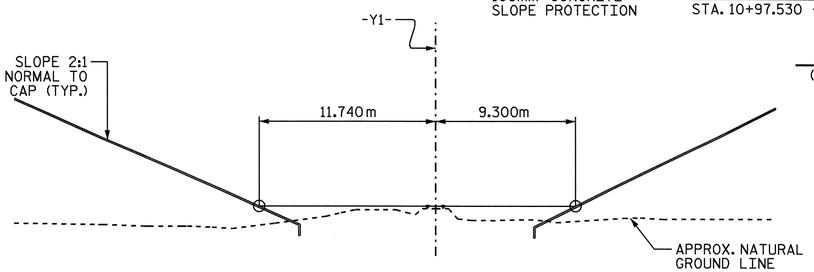

SPAN LENGTHS BASED ON THIS SECTION

(LOOKING STATION AHEAD ALONG RAILROAD)

METRIC

PROJECT NO. R-2554BA

WAYNE COUNTY

STATION: 100+61.488 -L-
10+97.530 -Y1-

BRIDGE NO. 358

SHEET 1 OF 4 MILE POST #156.799

STATE OF NORTH CAROLINA
DEPARTMENT OF TRANSPORTATION
RALEIGH

GENERAL DRAWING

FOR BRIDGE OVER CSX RAILROAD ON US 70 BYPASS BETWEEN US 117 BYPASS AND US 117 BUSINESS (LEFT LANE)

NORTH CAROLINA PROFESSIONAL SEAL 12274 ENGINEER OMAR R. AZIZI
6/9/08

NORTH CAROLINA PROFESSIONAL SEAL 14045 ENGINEER TIMOTHY M. COGGINS
6/9/08

REVISIONS						SHEET NO.
NO.	BY:	DATE:	NO.	BY:	DATE:	S-155
1			3			TOTAL SHEETS
2			4			478

DRAWN BY : ZION RORIE DATE : 9/28/07
CHECKED BY : B. N. BARODAWALA DATE : 10/01/07

06-JUN-2008 16:33
g:\structures\azizi\Str#6\FINAL PLANS\R-2554BA_sd_GD_06.dgn
tcoggins

STR. #6

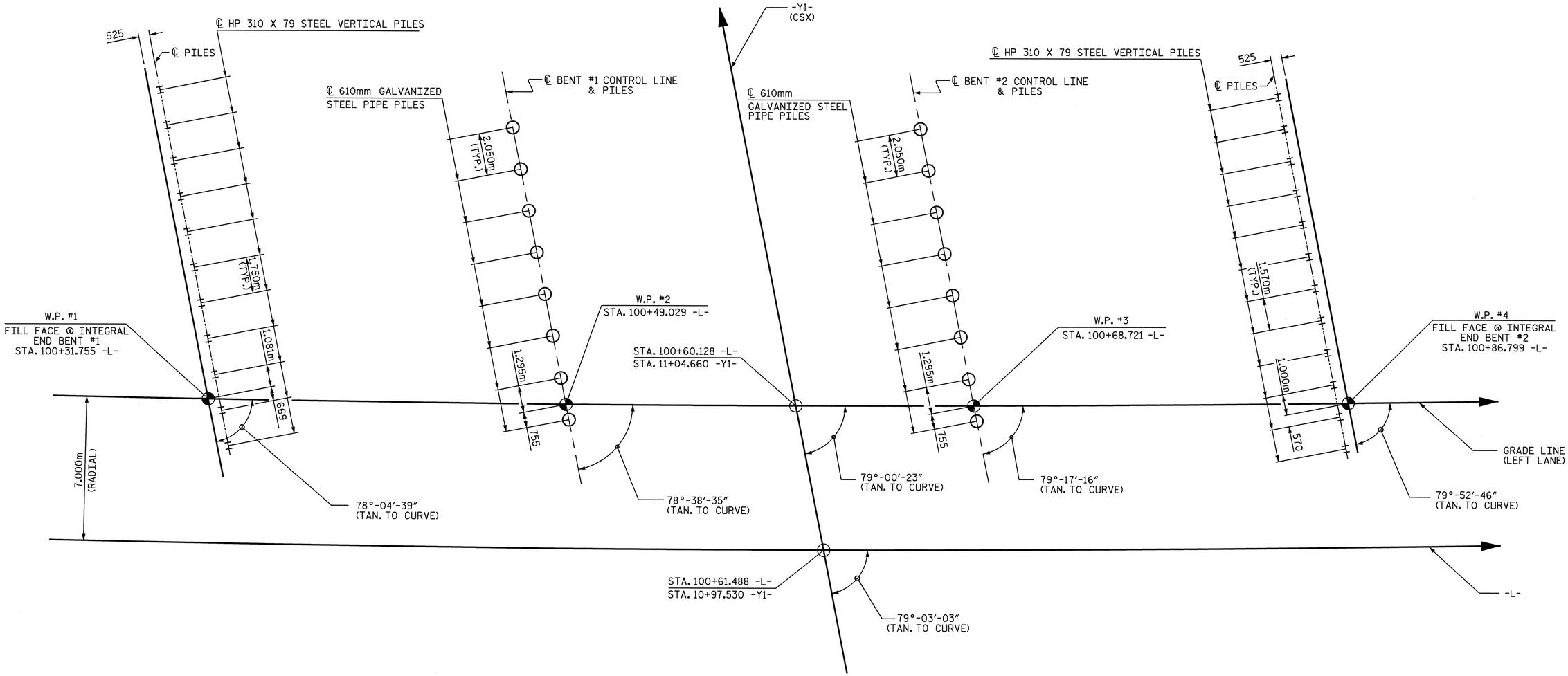

INTEGRAL END BENT #1 | BENT #1 | BENT #2 | INTEGRAL END BENT #2

FOUNDATION LAYOUT

DIMENSIONS LOCATING PILES ARE SHOWN TO PILE CENTERLINE.

PROJECT NO. R-2554BA

WAYNE COUNTY

STATION: 100+61.488 -L-
10+97.530 -Y1-

SHEET 2 OF 4

STATE OF NORTH CAROLINA
DEPARTMENT OF TRANSPORTATION
RALEIGH

GENERAL DRAWING

FOR BRIDGE OVER CSX RAILROAD ON US 70 BYPASS BETWEEN US 117 BYPASS AND US 117 BUSINESS (LEFT LANE)

REVISIONS						SHEET NO.
NO.	BY:	DATE:	NO.	BY:	DATE:	S-156
1			3			TOTAL SHEETS
2			4			478

NORTH CAROLINA PROFESSIONAL SEAL 14045 ENGINEER TIMOTHY W. COGGINS
6/9/08

DRAWN BY : PEGGY ADKINS DATE : 11-07
CHECKED BY : T.L. AVERETTE DATE : 4-08

09-JUN-2008 07:04
g:\tipprojects-r\r2554ba\structures\azlzl\str*6\final plans\r-2554ba_sd_gd_06.dgn
taverette

STR. #6

ANGLES			
LONG CHORD		SHORT CHORD	
L1	78°-58′-42″	S1	78°-21′-36″
		S2	78°-57′-55″
		S3	79°-35′-01″

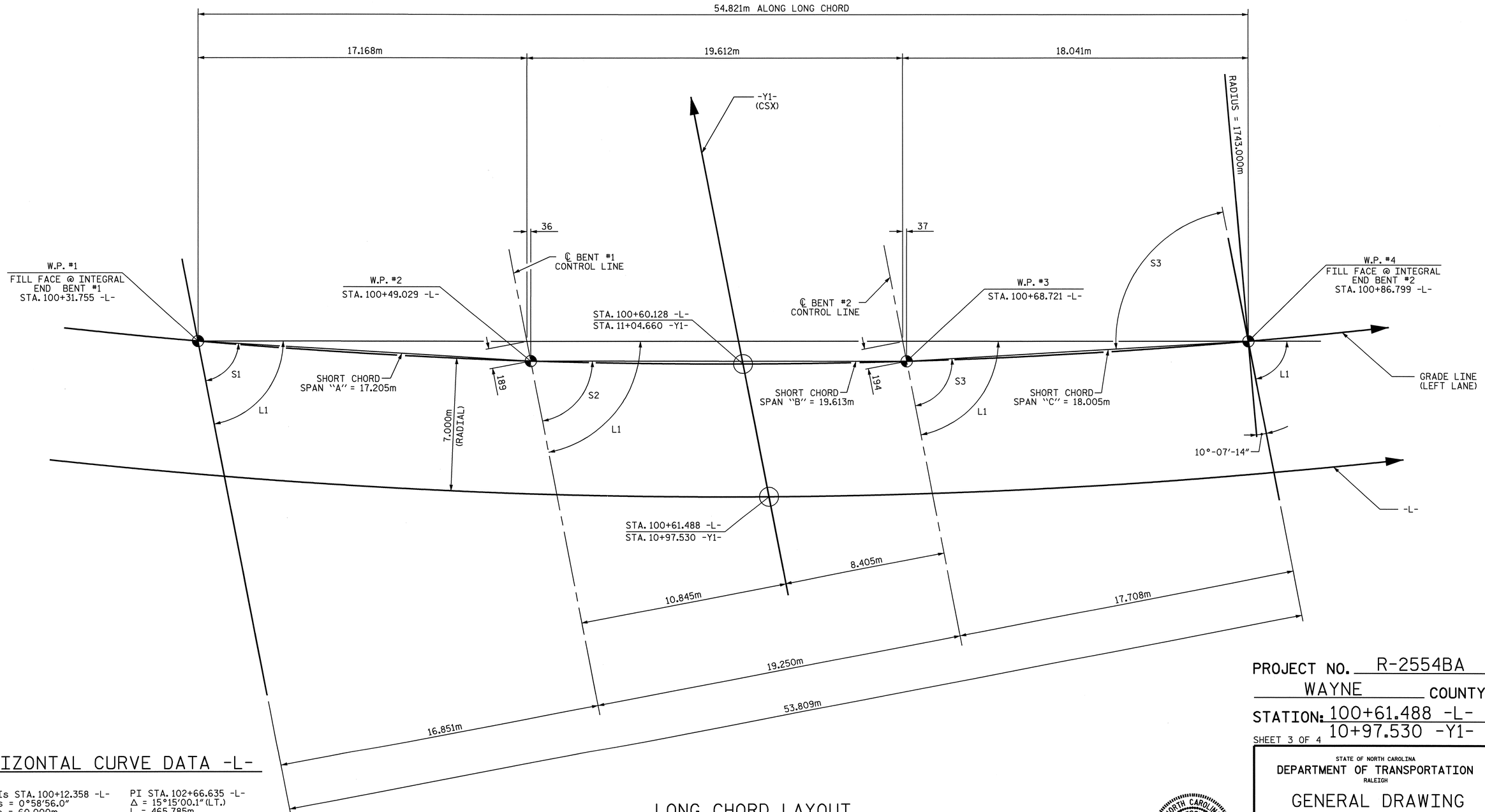

HORIZONTAL CURVE DATA -L-

PIs STA. 100+12.358 -L-
~~Θ~~s = 0°58′56.0″
Ls = 60.000m
LT = 40.001m
ST = 20.001m

PI STA. 102+66.635 -L-
Δ = 15°15′00.1″ (LT.)
L = 465.785m
T = 234.277m
R = 1750.000m

LONG CHORD LAYOUT

PROJECT NO. R-2554BA
WAYNE COUNTY
STATION: 100+61.488 -L-
10+97.530 -Y1-
SHEET 3 OF 4

STATE OF NORTH CAROLINA
DEPARTMENT OF TRANSPORTATION
RALEIGH

GENERAL DRAWING

FOR BRIDGE OVER CSX RAILROAD ON US 70 BYPASS BETWEEN US 117 BYPASS AND US 117 BUSINESS (LEFT LANE)

NORTH CAROLINA PROFESSIONAL SEAL 14045 ENGINEER TIMOTHY L. COGGINS
Timothy L. Coggins 6/9/08

REVISIONS						SHEET NO.
NO.	BY:	DATE:	NO.	BY:	DATE:	S-157
1			3			TOTAL SHEETS
2			4			478

DRAWN BY : PEGGY ADKINS DATE : 11-07
CHECKED BY : T.L. AVERETTE DATE : 04-08

09-JUN-2008 07:04
g:\tlpprojects-r\r2554ba\structures\azlzl\str#6\final plans\r-2554ba_sd_gd_06.dgn
taverette

STR. #6

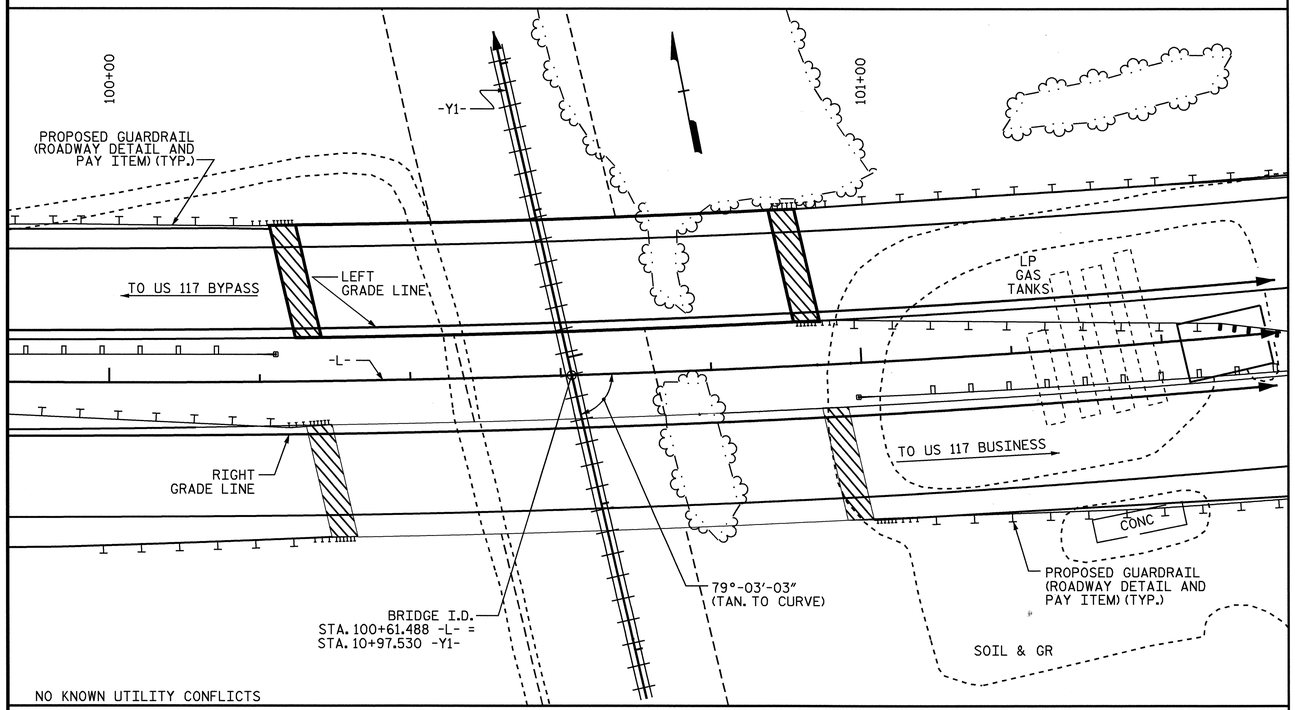

LOCATION SKETCH

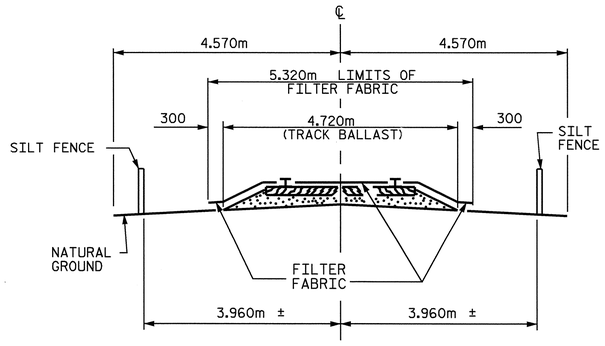

RAILROAD EROSION CONTROL DETAIL

NOTES

RAILROAD EROSION CONTROL MEASURES SHALL BE INSTALLED PRIOR TO PERFORMING ANY WORK IN THE RAILROAD RIGHT-OF-WAY.

ADDITIONAL EROSION CONTROL MEASURES FOR PROTECTION OF RAILROAD DITCHES MAY BE REQUIRED AS DIRECTED BY THE ENGINEER.

NO SEPARATE PAYMENT WILL BE MADE FOR RAILROAD EROSION CONTROL MEASURES.

LIMITS OF SILT FENCE AND FILTER FABRIC PARALLEL TO RAILROAD SHALL EXTEND A MINIMUM OF 8.000m OUTSIDE EDGE OF SUPERSTRUCTURE OR TOE OF SLOPE ON CONSTRUCTION. A GREATER LENGTH OF SILT FENCE OR FILTER FABRIC MAY BE REQUIRED IF SO DIRECTED BY THE ENGINEER.

FILTER FABRIC TO BE NAILED TO TIMBER RAIL TIES WITH PRIME SOURCE "GRIP CAP" OR EQUIVALENT. FILTER FABRIC ON SHOULDER TO BE SECURED AS DIRECTED BY THE ENGINEER AND RAILROAD.

NOTES:

ASSUMED LIVE LOAD = MS18 OR ALTERNATE LOADING, EXCEPT THAT THE GIRDERS HAVE BEEN DESIGNED FOR MS22.5

THIS BRIDGE HAS BEEN DESIGNED IN ACCORDANCE WITH THE REQUIREMENTS OF AASHTO STANDARD SPECIFICATIONS FOR SEISMIC DESIGN OF HIGHWAY BRIDGES FOR SEISMIC PERFORMANCE CATEGORY A.

ALL DIMENSIONS ARE IN MILLIMETERS UNLESS OTHERWISE NOTED.

ALL ELEVATIONS ARE IN METERS.

FOR OTHER DESIGN DATA AND GENERAL NOTES, SEE SHEET SNSM.

FOR EROSION CONTROL MEASURES, SEE EROSION CONTROL PLANS.

THIS BRIDGE HAS BEEN DESIGNED BY THE STRENGTH DESIGN METHOD AS SPECIFIED IN AASHTO STANDARD SPECIFICATIONS.

REMOVABLE FORMS MAY BE USED IN LIEU OF METAL STAY-IN-PLACE FORMS IN ACCORDANCE WITH ARTICLE 420-3 OF THE STANDARD SPECIFICATIONS.

THE CONTRACTOR SHALL PROVIDE INDEPENDENT ASSURANCE SAMPLES OF REINFORCING STEEL AS FOLLOWS: FOR PROJECTS REQUIRING UP TO 360,000 kg OF REINFORCING STEEL, ONE 760mm SAMPLE OF EACH SIZE BAR USED, AND FOR PROJECTS REQUIRING OVER 360,000 kg OF REINFORCING STEEL, TWO 760mm SAMPLES OF EACH SIZE BAR USED. THE BARS FROM WHICH THE SAMPLES ARE TAKEN MUST THEN BE SPLICED WITH REPLACEMENT BARS OF THE SIZE AND LENGTH OF THE SAMPLE PLUS A MINIMUM LAP SPLICE OF THIRTY BAR DIAMETERS.

NEEDLE BEAMS WILL NOT BE ALLOWED UNLESS OTHERWISE CALLED FOR ON THE PLANS OR APPROVED BY THE ENGINEER.

FOR SUBMITTAL OF WORKING DRAWINGS, SEE SPECIAL PROVISIONS.

FOR METRIC STRUCTURAL STEEL, SEE SPECIAL PROVISIONS.

FOR FALSEWORK AND FORMWORK, SEE SPECIAL PROVISIONS.

FOR PRESTRESSED CONCRETE MEMBERS, SEE SPECIAL PROVISIONS.

FOR CRANE SAFETY, SEE SPECIAL PROVISIONS.

FOR GROUT FOR STRUCTURES, SEE SPECIAL PROVISIONS.

FOR CRACK REPAIR OF PRESTRESSED CONCRETE GIRDERS, SEE SPECIAL PROVISIONS.

OBSERVE A 3 MONTH WAITING PERIOD AFTER CONSTRUCTING THE EMBANKMENT TO THE BOTTOM OF CAP ELEVATION BEFORE BEGINNING BENT OR REINFORCED BRIDGE APPROACH FILL CONSTRUCTION AT END BENTS NO. 1 AND 2 AND BENTS NO. 1 AND 2.

DRIVE PILES AT END BENT NO. 1 AND 2 TO A REQUIRED BEARING CAPACITY OF 1060 KN PER PILE. THE REQUIRED BEARING CAPACITY IS EQUAL TO THE ALLOWABLE BEARING CAPACITY WITH A MINIMUM FACTOR OF SAFETY OF TWO.

THE ALLOWABLE BEARING CAPACITY FOR PILES AT END BENTS NO. 1 AND 2 IS 530 KN PER PILE.

DRIVE PILES AT BENTS NO. 1 AND 2 TO A REQUIRED BEARING CAPACITY OF 1780 KN PER PILE. THE REQUIRED BEARING CAPACITY IS EQUAL TO THE ALLOWABLE BEARING CAPACITY WITH A MINIMUM FACTOR OF SAFETY OF TWO.

THE ALLOWABLE BEARING CAPACITY FOR PILES AT BENTS NO. 1 AND 2 IS 890 KN PER PILE.

DRIVE PILES AT BENTS NO. 1 AND 2 TO A TIP ELEVATION NO HIGHER THAN 29.0 METERS.

TESTING THE FIRST PRODUCTION PILE WITH THE PILE DRIVING ANALYZER (PDA) DURING DRIVING, RESTRIKING OR REDRIVING IS REQUIRED AT BENT NO. 1 AND BENT NO. 2. SEE PILE DRIVING ANALYZER SPECIAL PROVISION.

GALVANIZED STEEL PILES ARE REQUIRED IN ACCORDANCE WITH SECTION 450 OF THE STANDARD SPECIFICATIONS.

PIPE PILE PLATES ARE NOT REQUIRED FOR THE PIPE PILES AT BENTS NO. 1 AND 2.

FOR SETTLEMENT PLATES, SEE ROADWAY PLANS.

TOTAL BILL OF MATERIAL

	PDA TESTING	PDA ASSISTANCE	REINFORCED CONCRETE DECK SLAB	GROOVING BRIDGE FLOORS	CLASS A CONCRETE	BRIDGE APPROACH SLABS	REINFORCING STEEL	1143mm PRESTRESSED CONCRETE GIRDER		HP 310 X 79 STEEL PILES		PP 610 X 12.70 GALVANIZED STEEL PILES		PILE REDRIVES	CONCRETE BARRIER RAIL	100mm SLOPE PROTECTION	ELASTOMERIC BEARINGS	EVAZOTE JOINT SEALS	CHAIN LINK FENCE FOR PROTECTION OF RAILROAD
	EACH	EACH	SQ. METERS	SQ. METERS	CU. METERS	LUMP SUM	kg	NO.	METERS	NO.	METERS	NO.	METERS	EACH	METERS	SQ. METERS	LUMP SUM	LUMP SUM	LUMP SUM
SUPERSTRUCTURE			868.6	965.6		LUMP SUM		21	375.494						108.643		LUMP SUM	LUMP SUM	LUMP SUM
END BENT 1					20.4		2663			11	286.0			4		482			
BENT 1	1	1			15.2		1627					8	192.0	4					
BENT 2	1	1			15.2		1627					8	192.0	4					
END BENT 2					20.2		2681			12	312.0			4		499			
TOTAL	2	2	868.6	965.6	71.0	LUMP SUM	8598	21	375.494	23	598.0	16	384.0	16	108.643	981	LUMP SUM	LUMP SUM	LUMP SUM

NORTH CAROLINA PROFESSIONAL SEAL 14045 ENGINEER TIMOTHY R. COGGINS
6/9/08

PROJECT NO. R-2554BA
WAYNE COUNTY
STATION: 100+61.488 -L-
10+97.530 -Y1-
SHEET 4 OF 4

STATE OF NORTH CAROLINA
DEPARTMENT OF TRANSPORTATION
RALEIGH

GENERAL DRAWING

FOR BRIDGE OVER CSX RAILROAD ON US 70 BYPASS BETWEEN US 117 BYPASS AND US 117 BUSINESS (LEFT LANE)

REVISIONS						SHEET NO.
NO.	BY:	DATE:	NO.	BY:	DATE:	S-158
1			3			TOTAL SHEETS
2			4			478

DRAWN BY : ZION RORIE DATE : 9/28/07
CHECKED BY : B.N. BARODAWALA DATE : 10/01/07

09-JUN-2008 12:13
gi\tlpprojects-r\r2554ba\structures\azlzl\str#6\final plans\R-2554BA_sd_GD_06.dgn
taverette

STR. #6

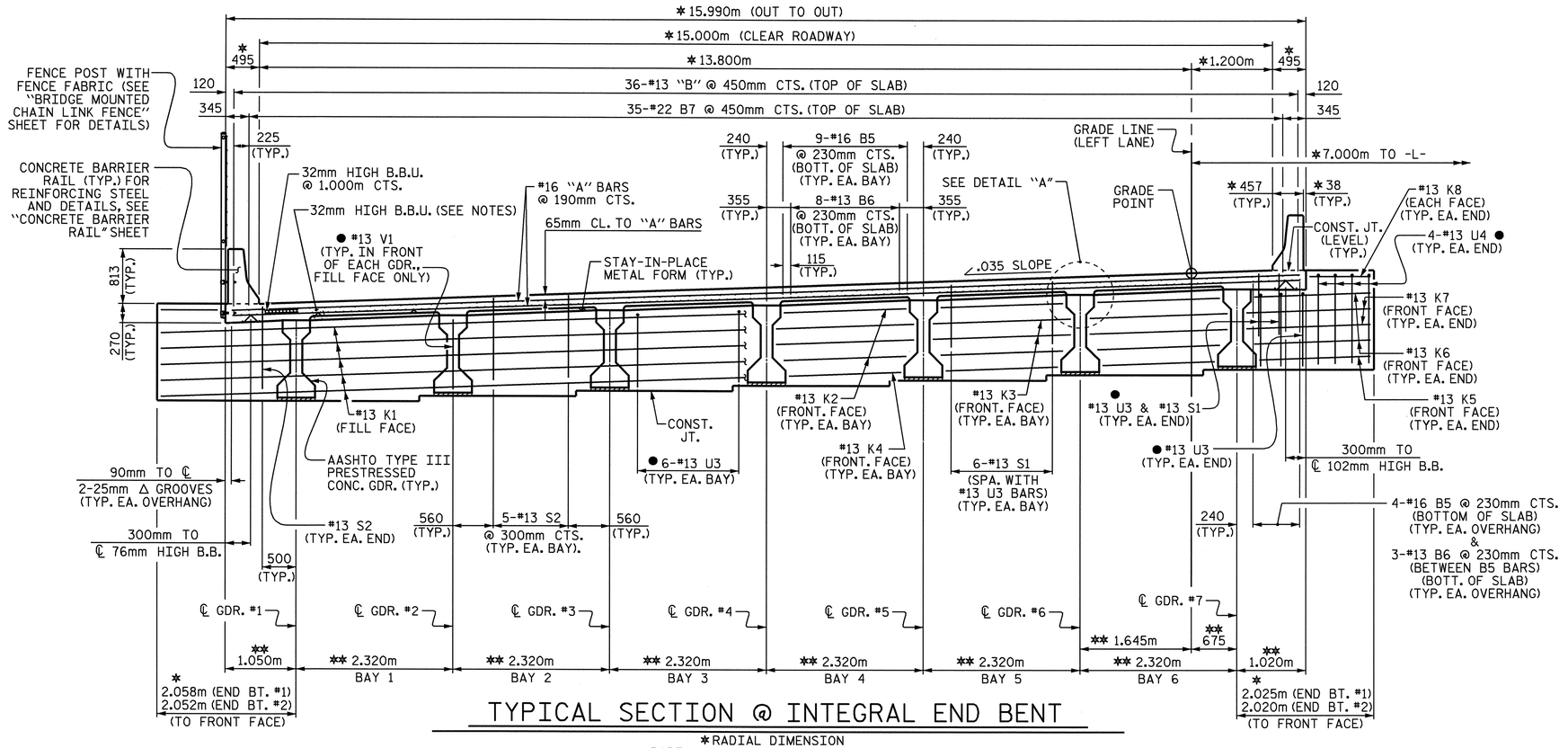

TYPICAL SECTION @ INTEGRAL END BENT

*RADIAL DIMENSION
**RADIAL DIMENSION THRU WORKPOINT
● #13 U3, #13 U4 & #13 V1 BARS TO MATCH WITH #13 "V" BARS IN INTEGRAL END BENT CAP

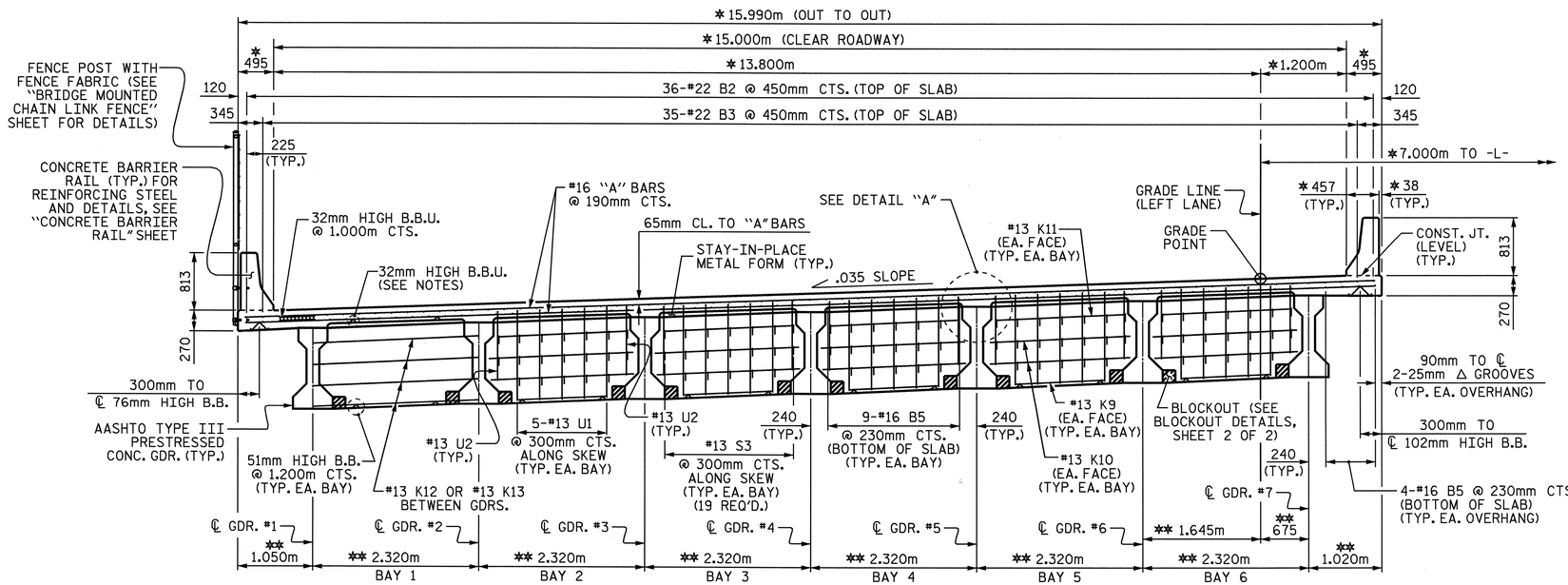

TYPICAL SECTION @ CONTINUOUS BENT DIAPHRAGM

*RADIAL DIMENSION
**RADIAL DIMENSION THRU WORKPOINT

NOTES

PROVIDE 32mm HIGH BEAM BOLSTERS UPPER AT 1.2m CTS. ATOP THE METAL STAY-IN-PLACE FORMS TO SUPPORT THE BOTTOM MAT OF 'A' BARS. WHEN USING REMOVABLE FORMS, PROVIDE CONTINUOUS HIGH CHAIRS FOR METAL DECK (C.H.C.M.) @ 1.2m CTS. WITH A HEIGHT TO SUPPORT THE BOTTOM MAT OF 'A' BARS A CLEAR DISTANCE OF 65mm ABOVE THE TOP OF THE REMOVABLE FORM.

LONGITUDINAL STEEL MAY BE SHIFTED SLIGHTLY, AS NECESSARY, TO AVOID INTERFERENCE WITH STIRRUPS IN PRESTRESSED CONCRETE GIRDERS.

PREVIOUSLY CAST CONCRETE IN A CONTINUOUS UNIT SHALL HAVE ATTAINED A MINIMUM COMPRESSESIVE STRENGTH OF 20.7 MPa BEFORE ADDITIONAL CONCRETE IS CAST IN THE UNIT.

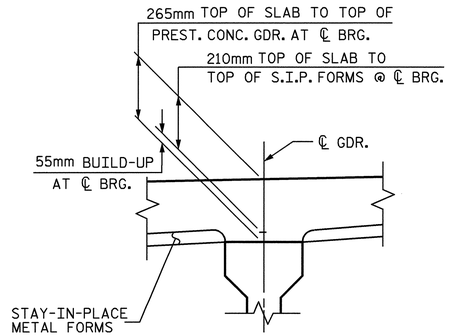

DETAIL "A"

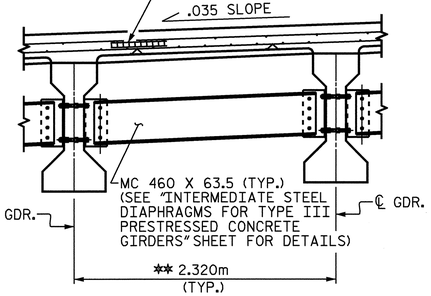

PARTIAL TYPICAL SECTION

AT INTERMEDIATE DIAPHRAGM

PROJECT NO. R-2554BA
WAYNE COUNTY
STATION: 100+61.488 -L-

SHEET 1 OF 2

STATE OF NORTH CAROLINA
DEPARTMENT OF TRANSPORTATION
RALEIGH

SUPERSTRUCTURE

TYPICAL SECTION
(LEFT LANE)

REVISIONS						SHEET NO.
NO.	BY:	DATE:	NO.	BY:	DATE:	S-159
1			3			TOTAL SHEETS
2			4			478

STR. #6

NORTH CAROLINA PROFESSIONAL SEAL 14045 ENGINEER TIMOTHY L. COSGINS
Timothy L. Cosgins 6/6/08

DRAWN BY : ZJR/T.L. AVERETTE DATE : 12-07
CHECKED BY : B.N. BARODAWALA DATE : 1-08

28-APR-2008 12:02
x:\structures\azlzl\str#6\taverette\r2554ba_sd_ts_06.dgn
jbullard

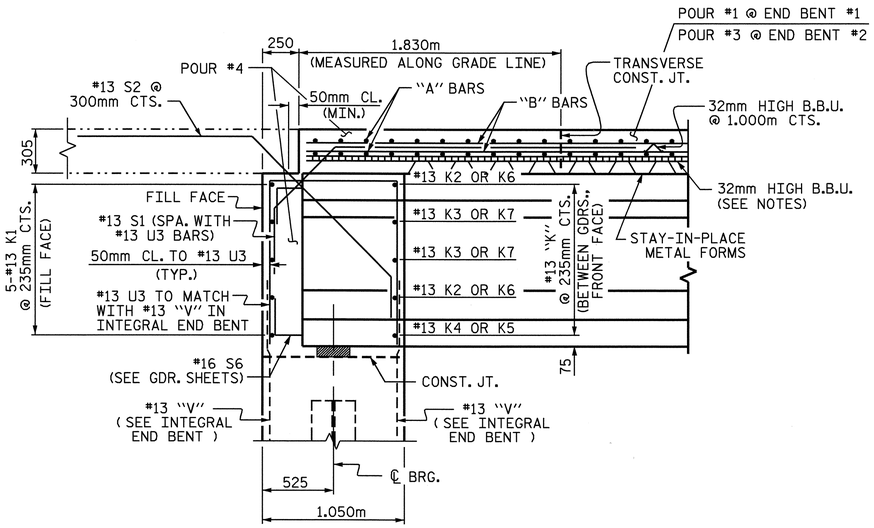

END OF GIRDER DETAIL AT INTEGRAL END BENT

#13 V1 BAR IN FRONT OF GIRDER NOT SHOWN

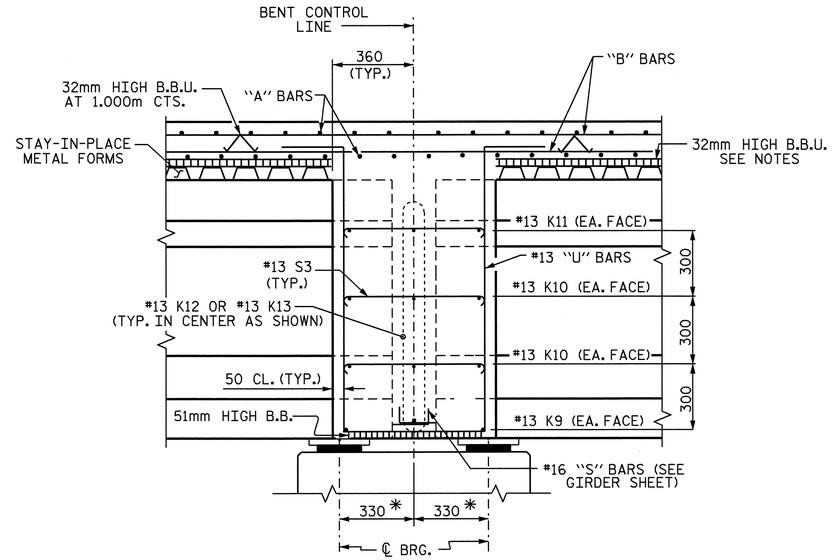

SECTION THRU BENT DIAPHRAGM

* MEASURED ALONG ℄ GDR.

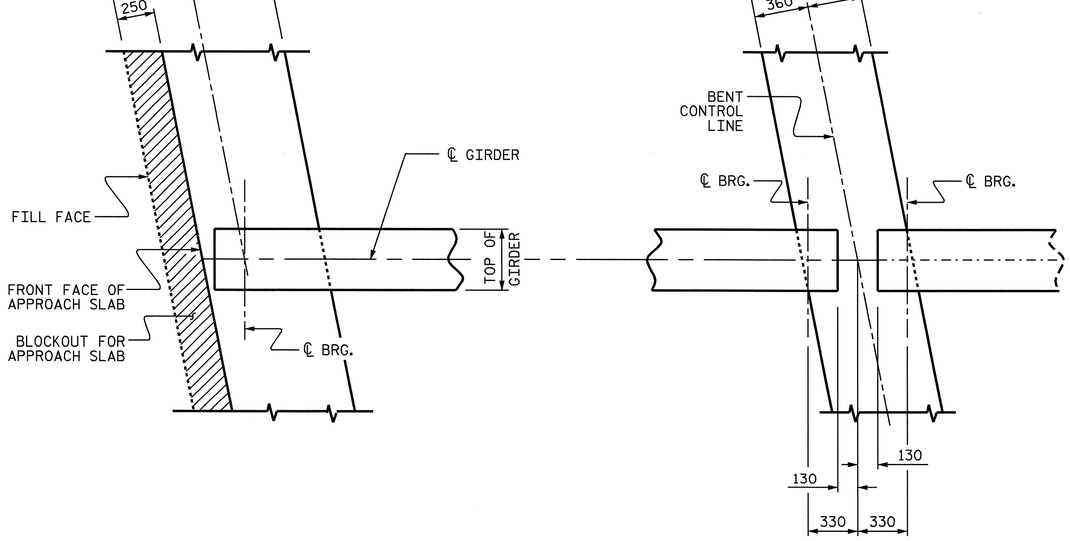

AT INTEGRAL END BENT

(END BENT #1 SHOWN, END BENT #2 SIMILAR)

AT BENT DIAPHRAGM

PLAN OF GIRDER

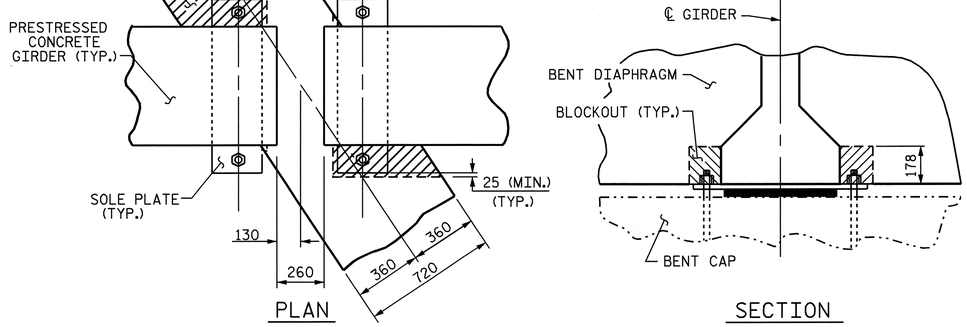

BENT DIAPHRAGM BLOCK-OUT DETAIL

PROJECT NO. R-2554BA

WAYNE COUNTY

STATION: 100+61.488 -L-

SHEET 2 OF 2

STATE OF NORTH CAROLINA
DEPARTMENT OF TRANSPORTATION
RALEIGH

SUPERSTRUCTURE

TYPICAL SECTION

(LEFT LANE)

REVISIONS						SHEET NO.
NO.	BY:	DATE:	NO.	BY:	DATE:	S-160
1			3			TOTAL SHEETS
2			4			478

STR. #6

NORTH CAROLINA PROFESSIONAL SEAL 14045 ENGINEER TIMOTHY L. COGGINS
6/6/08

DRAWN BY : ZJR/T.L. AVERETTE DATE : 12-07
CHECKED BY : B.N. BARODAWALA DATE : 1-08

28-APR-2008 12:02
x:\structures\azlzl\str#6\taverette\r2554ba_sd_ts_06.dgn
lbwilson

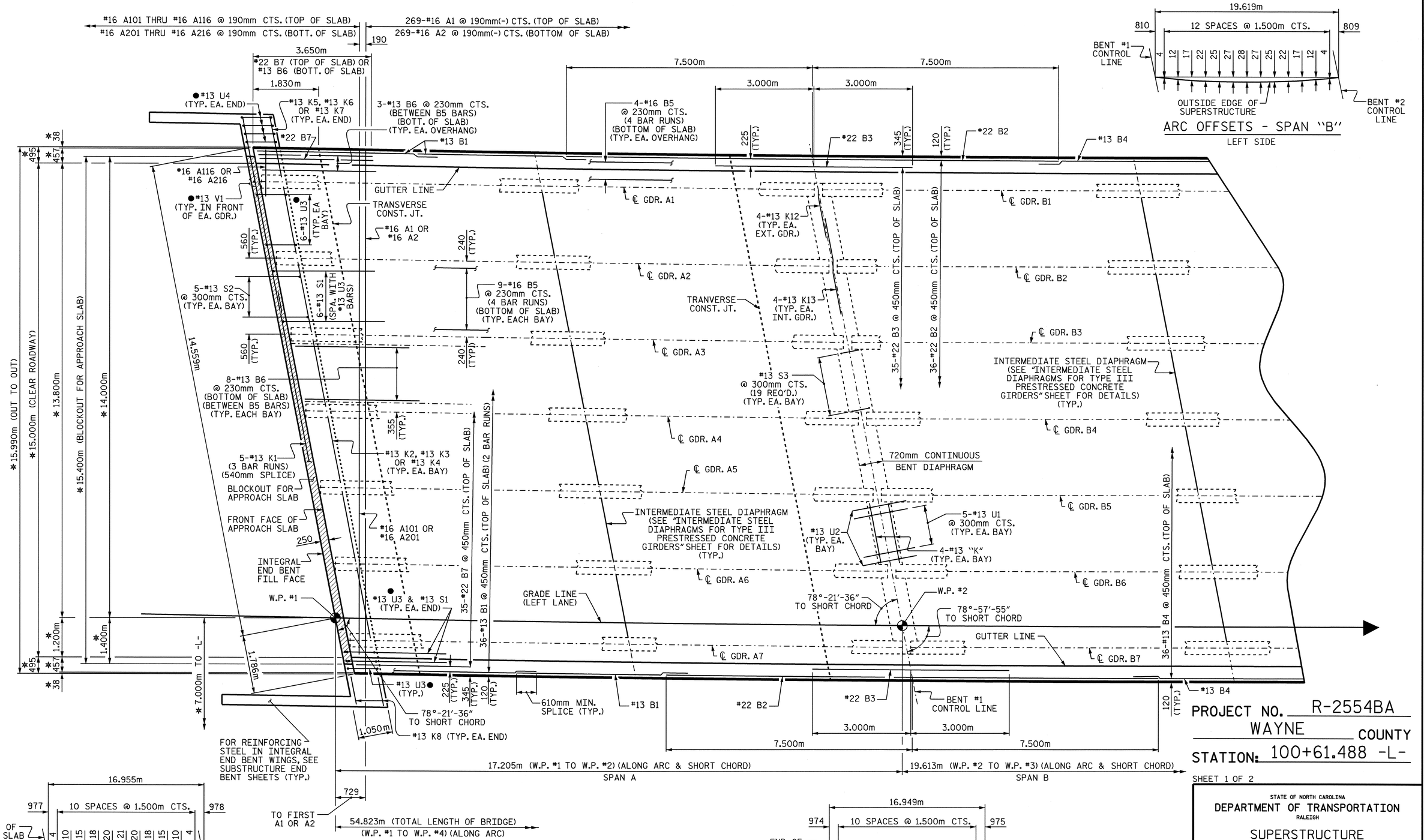

ARC OFFSETS - SPAN "B"

LEFT SIDE

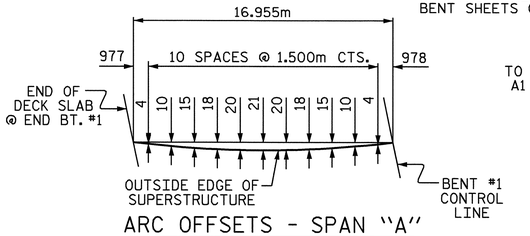

ARC OFFSETS - SPAN "A"

LEFT SIDE

PLAN OF SPAN

*RADIAL DIMENSION

●#13 U3, #13 U4 & #13 V1 BARS TO MATCH WITH #13 "V" BARS IN INTEGRAL END BENT CAP

FOR ARC OFFSETS - SPAN "B" RIGHT SIDE, SEE SHEET 2 OF 2.

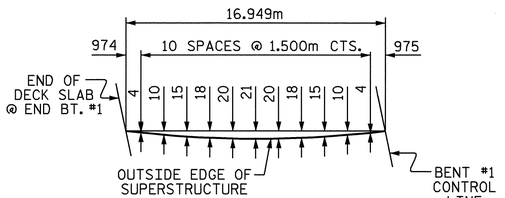

ARC OFFSETS - SPAN "A"

RIGHT SIDE

NORTH CAROLINA PROFESSIONAL SEAL 14045 ENGINEER TIMOTHY L. COGGINS

6/6/08

PROJECT NO. R-2554BA

WAYNE COUNTY

STATION: 100+61.488 -L-

SHEET 1 OF 2

STATE OF NORTH CAROLINA
DEPARTMENT OF TRANSPORTATION
RALEIGH

SUPERSTRUCTURE

PLAN OF SPANS

(LEFT LANE)

REVISIONS						SHEET NO.
NO.	BY:	DATE:	NO.	BY:	DATE:	S-161
1			3			TOTAL SHEETS
2			4			478

DRAWN BY : ZJR/T.L. AVERETTE DATE : 12-07
CHECKED BY : B.N. BARODAWALA DATE : 1-08

28-APR-2008 12:01
x:\structures\azlzl\str#6\taverette\r2554ba_sd_sl_06.dgn
jbwilson

STR.#6

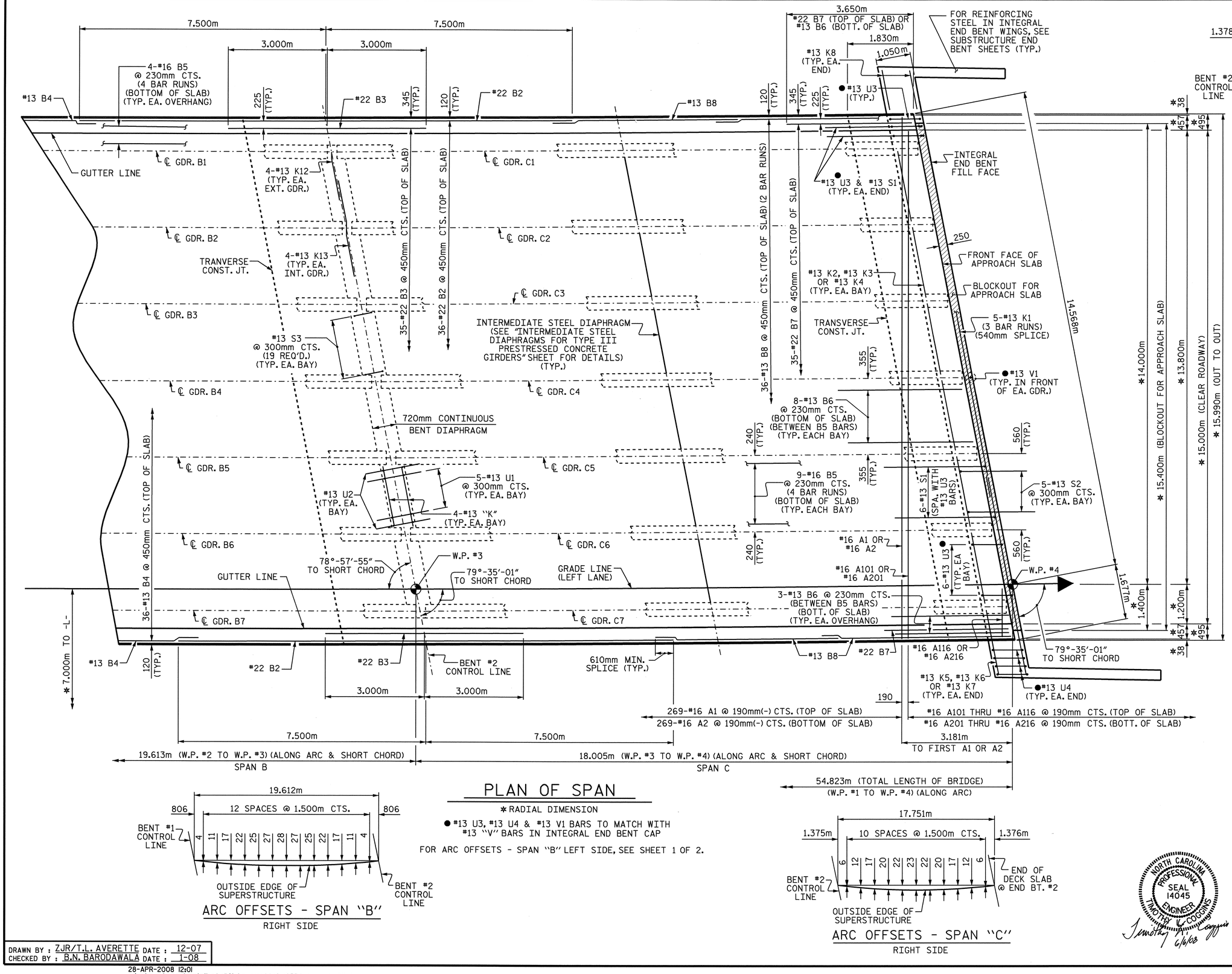

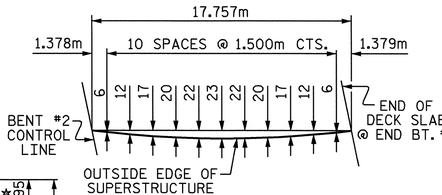

ARC OFFSETS - SPAN "C"

LEFT SIDE

ARC OFFSETS - SPAN "B"

RIGHT SIDE

PLAN OF SPAN

* RADIAL DIMENSION

● #13 U3, #13 U4 & #13 V1 BARS TO MATCH WITH #13 "V" BARS IN INTEGRAL END BENT CAP

FOR ARC OFFSETS - SPAN "B" LEFT SIDE, SEE SHEET 1 OF 2.

ARC OFFSETS - SPAN "C"

RIGHT SIDE

NORTH CAROLINA PROFESSIONAL SEAL 14045 ENGINEER TIMOTHY V. COGGINS
6/6/08

PROJECT NO. R-2554BA

WAYNE COUNTY

STATION: 100+61.488 -L-

SHEET 2 OF 2

STATE OF NORTH CAROLINA
DEPARTMENT OF TRANSPORTATION
RALEIGH

SUPERSTRUCTURE

PLAN OF SPANS
(LEFT LANE)

REVISIONS						SHEET NO.
NO.	BY:	DATE:	NO.	BY:	DATE:	S-162
1			3			TOTAL SHEETS
2			4			478

STR. #6

DRAWN BY : ZJR/T.L. AVERETTE DATE : 12-07
CHECKED BY : B.N. BARODAWALA DATE : 1-08

28-APR-2008 12:01
x:\structures\azlz1\str#6\taverette\r2554ba_sd_sl_06.dgn
jbwilson

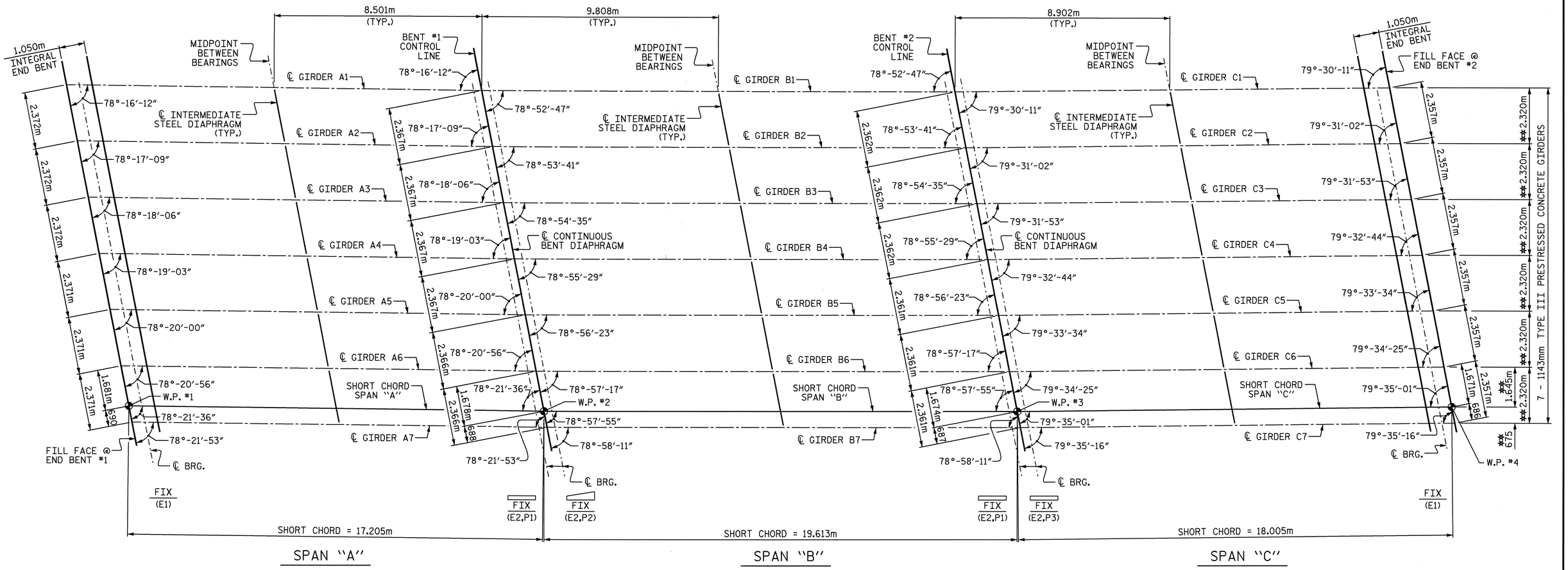

FRAMING PLAN

** RADIAL DIMENSION THRU WORKPOINT

PROJECT NO. R-2554BA

WAYNE COUNTY

STATION: 100+61.488 -L-

STATE OF NORTH CAROLINA
DEPARTMENT OF TRANSPORTATION
RALEIGH

SUPERSTRUCTURE

FRAMING PLAN

(LEFT LANE)

NORTH CAROLINA PROFESSIONAL SEAL 14045 ENGINEER TIMOTHY L. GREGGINS
6/6/08

REVISIONS						SHEET NO.
NO.	BY:	DATE:	NO.	BY:	DATE:	S-163
1			3			TOTAL SHEETS
2			4			478

DRAWN BY : ZJR/T.L. AVERETTE DATE : 12-07
CHECKED BY : B.N. BARODAWALA DATE : 1-08

28-APR-2008 12:02
x:\structures\azlzl\str#6\taverette\r2554ba_sd_fp_06.dgn
jbwilson

STR. #6

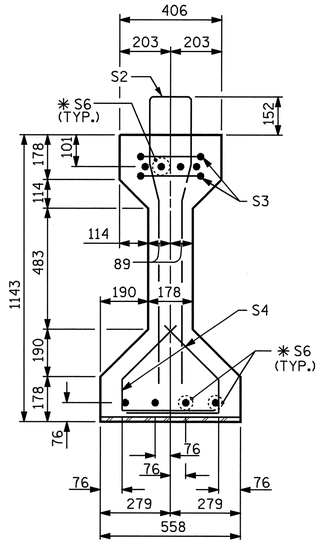

SECTION A-A

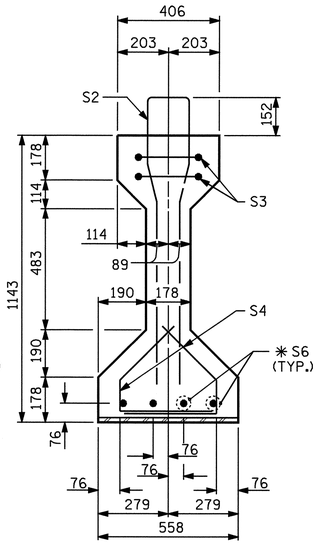

SECTION B-B

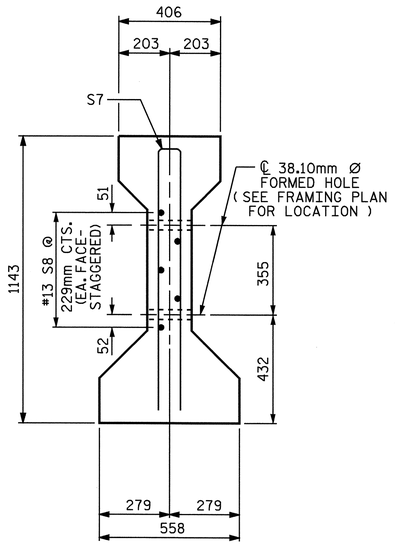

SECTION C-C

(S1 BARS NOT SHOWN)

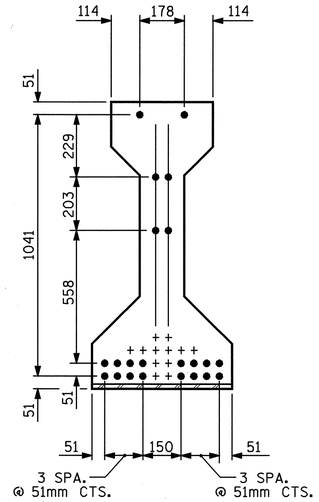

AT END OF GIRDER

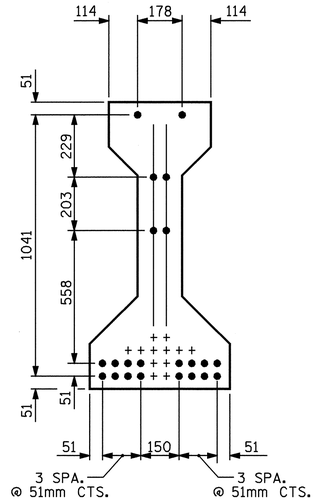

AT ℄ OF GIRDER

12.70mm Ø LOW RELAXATION STRAND LAYOUT

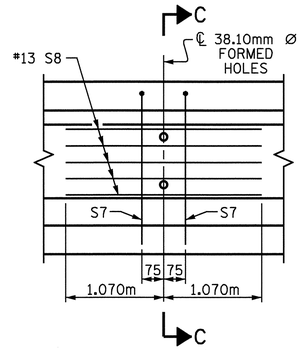

PARTIAL ELEVATION

SHOWING INTERMEDIATE DIAPHRAGM REINFORCING STEEL

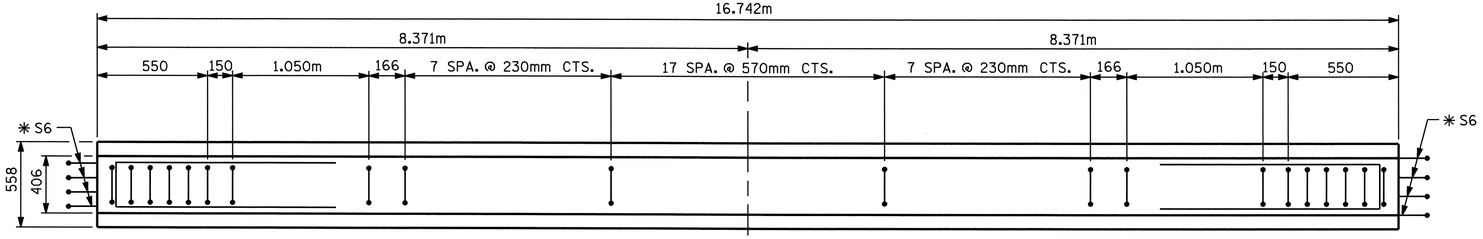

PLAN OF GIRDER

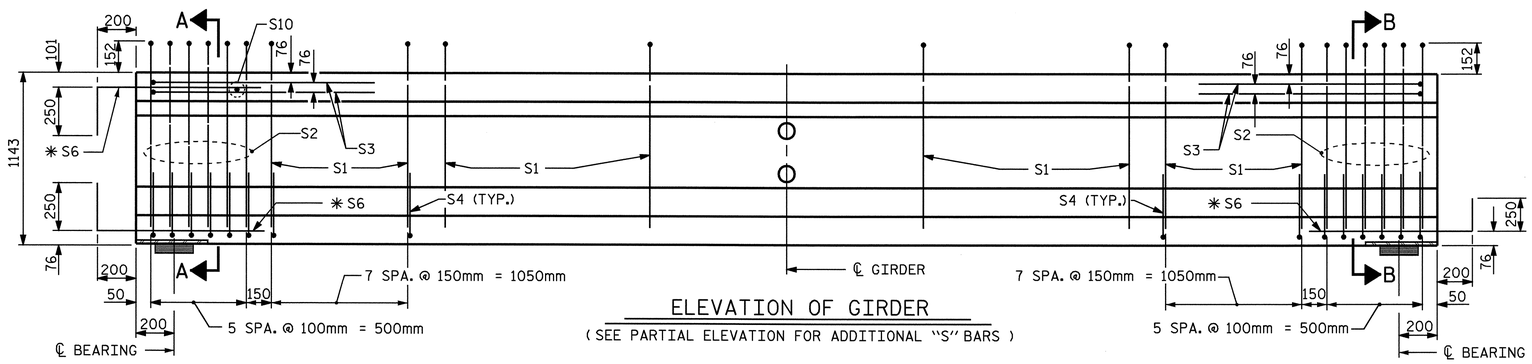

ELEVATION OF GIRDER

(SEE PARTIAL ELEVATION FOR ADDITIONAL "S" BARS)

INTEGRAL END BENT

FIX

12.70mm Ø L. R. GRADE 270 STRANDS

AREA (mm^2)	ULTIMATE STRENGTH (kN PER STRAND)	APPLIED PRESTRESS (kN PER STRAND)
98.71	183.7	137.8

REINFORCING STEEL FOR ONE GIRDER

BAR	NUMBER	SIZE	TYPE	LENGTH	WEIGHT
S1	48	#13	1	2600	124
S2	12	#19	1	2600	70
S3	4	#13	3	2660	11
S4	56	#13	2	840	47
✳S6	12	#16	STR	1120	21
S7	2	#16	3	2180	7
S8	5	#13	STR	2140	11
S10	1	#10	STR	300	1

✳NOTE: S6 BARS SHALL BE BENT BEFORE SHIPMENT. HEAT BENDING SHALL NOT BE ALLOWED.

BAR TYPES

ALL BAR DIMENSIONS ARE OUT-TO-OUT

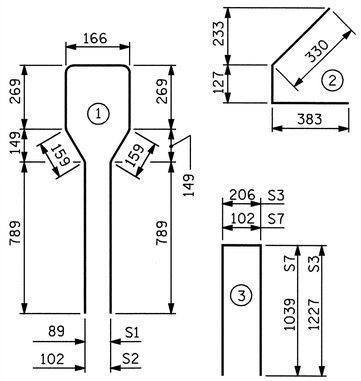

QUANTITIES FOR ONE GIRDER

	REINFORCING STEEL	34.5 MPa CONCRETE	12.70mm Ø L.R. STRANDS
	kg	m^3	No.
	292	6.0	22

GIRDERS REQUIRED

NUMBER	LENGTH	TOTAL LENGTH
7	16.742m	117.194m

PROJECT NO. R-2554BA

WAYNE COUNTY

STATION: 100+61.488 -L-

SHEET 1 OF 5

STATE OF NORTH CAROLINA
DEPARTMENT OF TRANSPORTATION
RALEIGH

STANDARD

AASHTO TYPE III
PRESTRESSED CONCRETE GIRDER
CONTINUOUS FOR LIVE LOAD
SPAN "A"
(LEFT LANE)

REVISIONS						SHEET NO.
NO.	BY:	DATE:	NO.	BY:	DATE:	S-164
1			3			TOTAL SHEETS
2			4			478

NORTH CAROLINA PROFESSIONAL SEAL 14045 ENGINEER TIMOTHY L. COGGINS 6/6/08

ASSEMBLED BY : ZJR/T.L. AVERETTE	DATE : 12-07	
CHECKED BY : B.N. BARODAWALA	DATE : 1-08	
DRAWN BY : ELR 8/91	REV. 7/17/98	RWW/LES
CHECKED BY : GRP 8/91	REV. 10/17/00R	RWW/LES
	REV. 5/1/06	TLA/GM

28-APR-2008 12:04
x:\structures\azlzl\str#6\taverette\r2554ba_sd_gl_06.dgn
lbwilson

STR. #6

STD. NO. PCG5SM

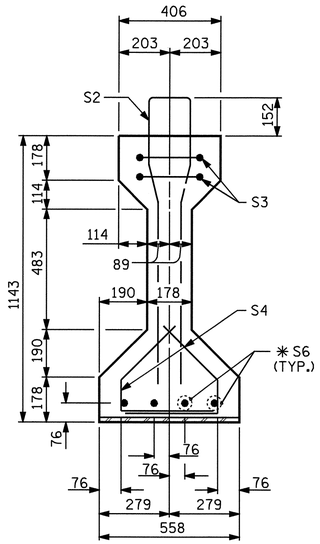

SECTION B-B

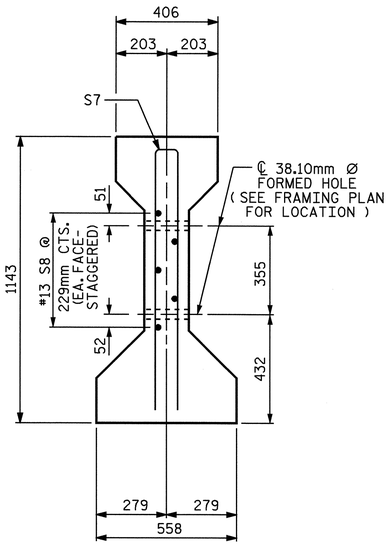

SECTION C-C

(S1 BARS NOT SHOWN)

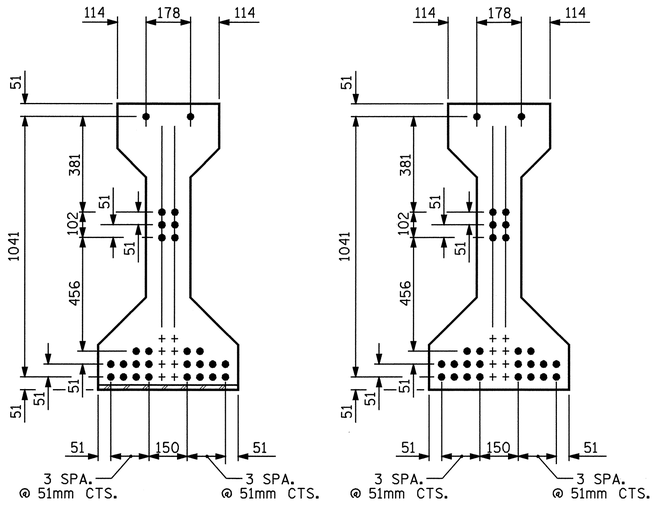

AT END OF GIRDER

AT ℄ OF GIRDER

12.70mm Ø LOW RELAXATION STRAND LAYOUT

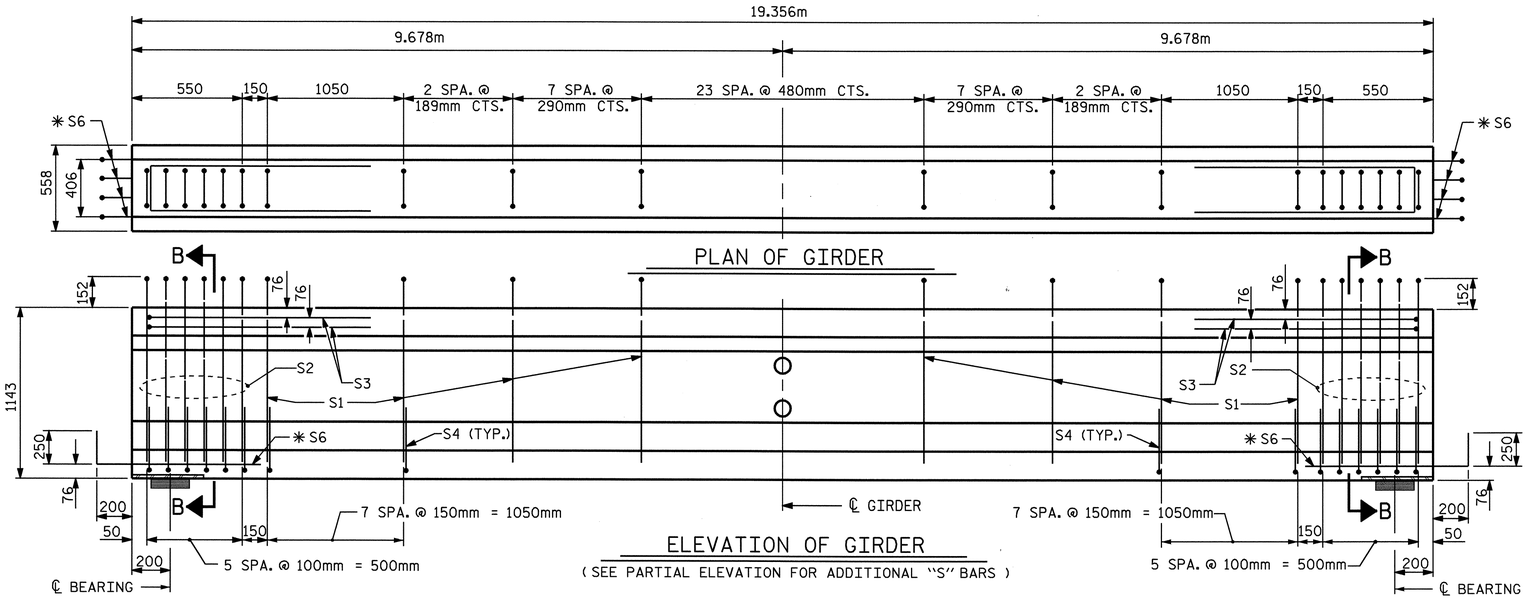

PLAN OF GIRDER

ELEVATION OF GIRDER

(SEE PARTIAL ELEVATION FOR ADDITIONAL "S" BARS)

FIX

FIX

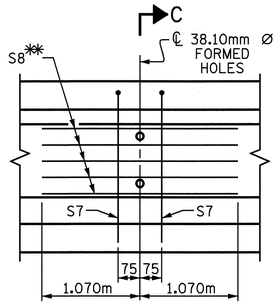

PARTIAL ELEVATION

SHOWING INTERMEDIATE DIAPHRAGM REINFORCING STEEL

✳✳ S8 BAR MAY BE SHIFTED SLIGHTLY TO AVOID INTERFERENCE WITH THE 12.70mm STRANDS.

12.70mm Ø L. R. GRADE 270 STRANDS

AREA (mm^2)	ULTIMATE STRENGTH (kN PER STRAND)	APPLIED PRESTRESS (kN PER STRAND)
98.71	183.7	137.8

REINFORCING STEEL FOR ONE GIRDER

BAR	NUMBER	SIZE	TYPE	LENGTH	WEIGHT
S1	56	#13	1	2600	145
S2	12	#19	1	2600	70
S3	4	#13	3	2660	11
S4	56	#13	2	840	47
✳S6	8	#16	STR	1120	14
S7	2	#16	3	2180	7
S8	5	#13	STR	2140	11

✳NOTE: S6 BARS SHALL BE BENT BEFORE SHIPMENT. HEAT BENDING SHALL NOT BE ALLOWED.

BAR TYPES

ALL BAR DIMENSIONS ARE OUT-TO-OUT

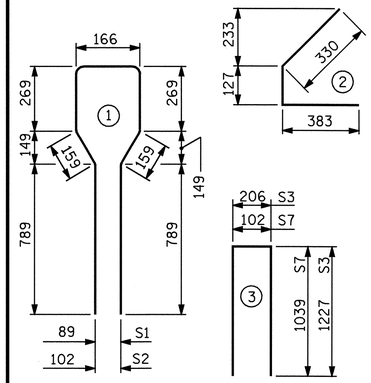

QUANTITIES FOR ONE GIRDER

REINFORCING STEEL	41.4 MPa CONCRETE	12.70mm Ø L.R. STRANDS
kg	m^3	No.
305	7.0	28

GIRDERS REQUIRED

NUMBER	LENGTH	TOTAL LENGTH
7	19.356m	135.492m

PROJECT NO. R-2554BA

WAYNE COUNTY

STATION: 100+61.488 -L-

SHEET 2 OF 5

STATE OF NORTH CAROLINA
DEPARTMENT OF TRANSPORTATION
RALEIGH

STANDARD
AASHTO TYPE III PRESTRESSED CONCRETE GIRDER CONTINUOUS FOR LIVE LOAD
SPAN "B" (LEFT LANE)

NORTH CAROLINA PROFESSIONAL SEAL 14045 ENGINEER TIMOTHY L COGGINS
6/6/08

REVISIONS						SHEET NO.
NO.	BY:	DATE:	NO.	BY:	DATE:	S-165
1			3			TOTAL SHEETS
2			4			478

ASSEMBLED BY : ZJR/T.L. AVERETTE DATE : 12-07
CHECKED BY : B.N. BARODAWALA DATE : 1-08

DRAWN BY : ELR 8/91
CHECKED BY : GRP 8/91

REV. 7/17/98 RWW/LES
REV. 10/17/00R RWW/LES
REV. 5/1/06 TLA/GM

28-APR-2008 12:04
x:\structures\azlzl\str#6\taverette\r2554ba_sd_gl_06.dgn
lbwilson

STR. #6

STD. NO. PCG5SM

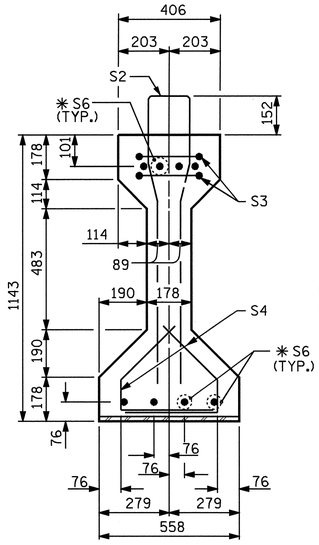

SECTION A-A

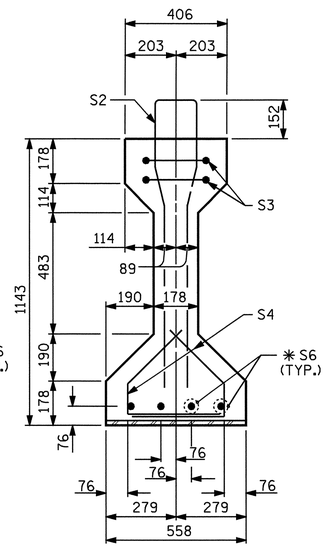

SECTION B-B

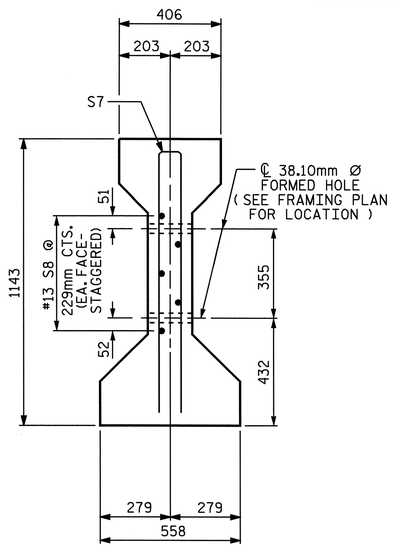

SECTION C-C

(S1 BARS NOT SHOWN)

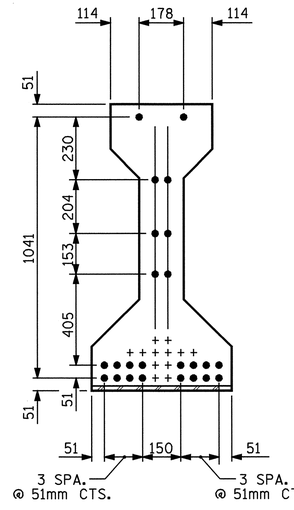

AT END OF GIRDER

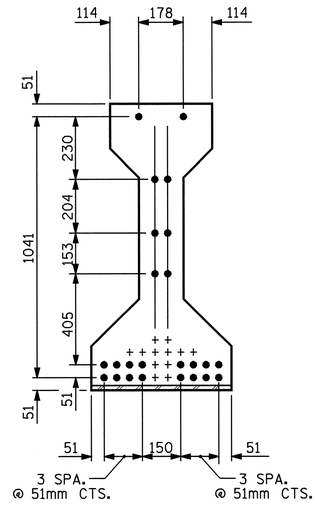

AT ℄ OF GIRDER

12.70mm Ø LOW RELAXATION STRAND LAYOUT

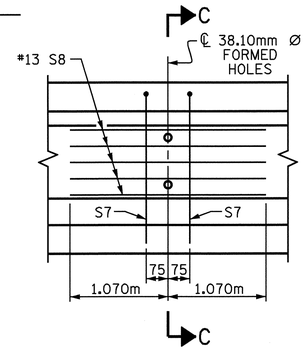

PARTIAL ELEVATION

SHOWING INTERMEDIATE DIAPHRAGM REINFORCING STEEL

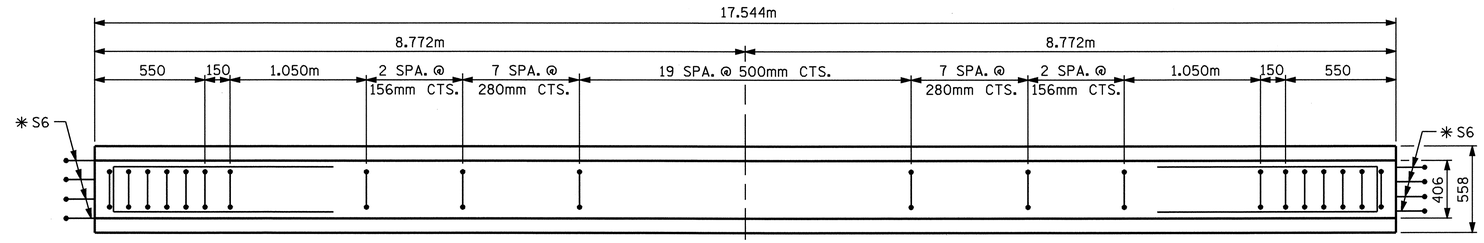

PLAN OF GIRDER

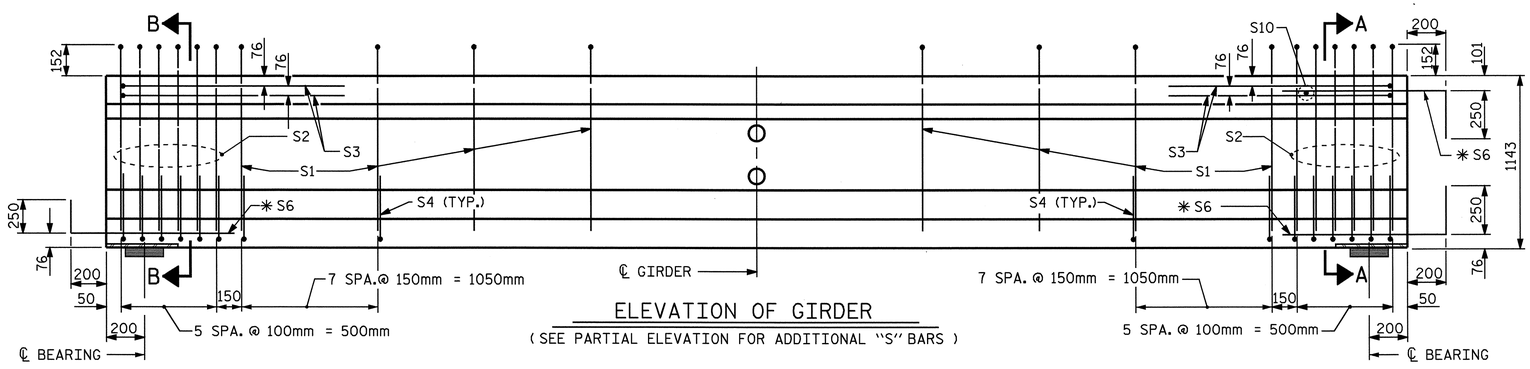

ELEVATION OF GIRDER

(SEE PARTIAL ELEVATION FOR ADDITIONAL "S" BARS)

FIX

INTEGRAL END BENT

12.70mm Ø L. R. GRADE 270 STRANDS

AREA (mm^2)	ULTIMATE STRENGTH (KN PER STRAND)	APPLIED PRESTRESS (KN PER STRAND)
98.71	183.7	137.8

REINFORCING STEEL FOR ONE GIRDER

BAR	NUMBER	SIZE	TYPE	LENGTH	WEIGHT
S1	52	#13	1	2600	134
S2	12	#19	1	2600	70
S3	4	#13	3	2660	11
S4	56	#13	2	840	47
✱S6	12	#16	STR	1120	21
S7	2	#16	3	2180	7
S8	5	#13	STR	2140	11
S10	1	#10	STR	300	1

✱NOTE: S6 BARS SHALL BE BENT BEFORE SHIPMENT. HEAT BENDING SHALL NOT BE ALLOWED.

BAR TYPES

ALL BAR DIMENSIONS ARE OUT-TO-OUT

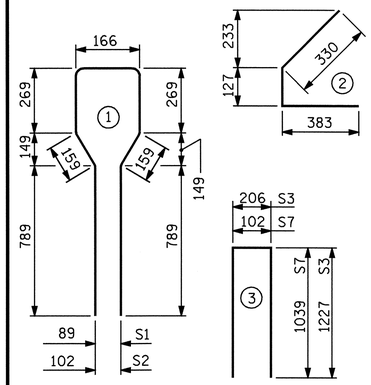

QUANTITIES FOR ONE GIRDER

REINFORCING STEEL	34.5 MPa CONCRETE	12.70mm Ø L.R. STRANDS
kg	m^3	No.
302	6.3	24

GIRDERS REQUIRED

NUMBER	LENGTH	TOTAL LENGTH
7	17.544m	122.808m

PROJECT NO. R-2554BA

WAYNE COUNTY

STATION: 100+61.488 -L-

SHEET 3 OF 5

STATE OF NORTH CAROLINA
DEPARTMENT OF TRANSPORTATION
RALEIGH

STANDARD
AASHTO TYPE III PRESTRESSED CONCRETE GIRDER CONTINUOUS FOR LIVE LOAD
SPAN "C"
(LEFT LANE)

REVISIONS						SHEET NO.
NO.	BY:	DATE:	NO.	BY:	DATE:	S-166
1			3			TOTAL SHEETS
2			4			478

ASSEMBLED BY : ZJR/T.L. AVERETTE DATE : 12-07
CHECKED BY : B.N. BARODAWALA DATE : 1-08

DRAWN BY : ELR 8/91
CHECKED BY : GRP 8/91

REV. 7/17/98 RWW/LES
REV. 10/17/00R RWW/LES
REV. 5/1/06 TLA/GM

NORTH CAROLINA PROFESSIONAL SEAL 14045 ENGINEER TIMOTHY L. COGGINS
6/6/08

28-APR-2008 12:04
x:\structures\azlzl\str#6\taverette\r2554ba_sd_gl_06.dgn
lbwilson

STR. #6

STD. NO. PCG5SM

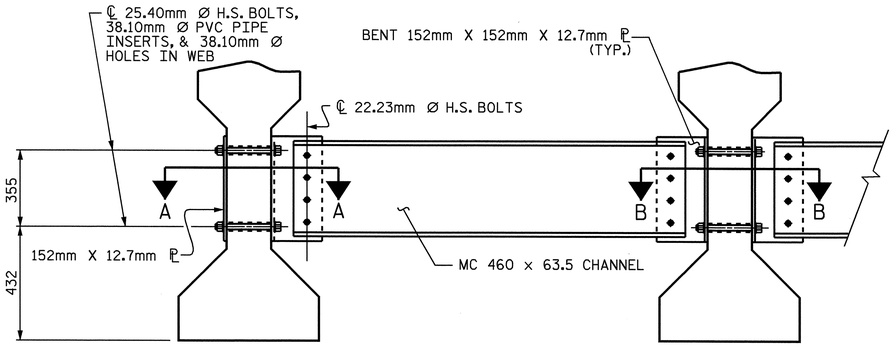

PART SECTION AT INTERMEDIATE DIAPHRAGM

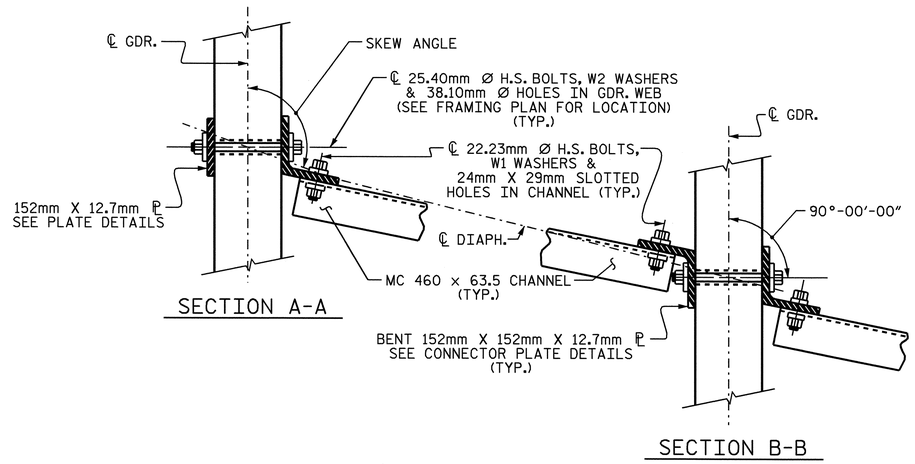

CONNECTION DETAILS

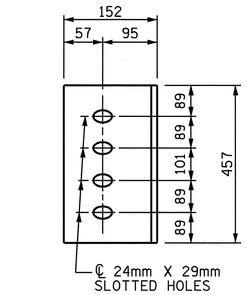

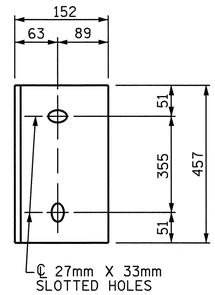

CONNECTOR PLATE DETAILS

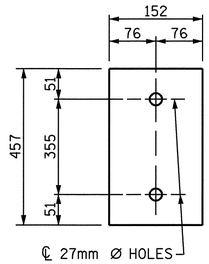

PLATE DETAILS

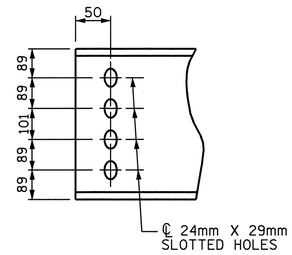

CHANNEL END

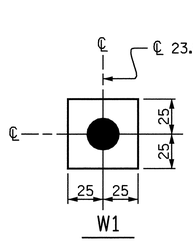

USE WITH 22.23mm Ø HVY. HEX NUTS
& DIRECT TENSION INDICATOR
WASHERS AT DIAPHRAGM CHANNEL
TO CONNECTOR PLATE CONNECTIONS

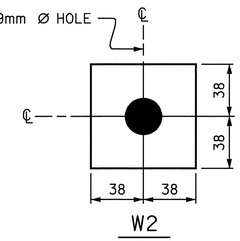

USE WITH 25.40mm Ø HVY. HEX
NUTS AT CONNECTOR PLATE
TO GIRDER CONNECTIONS

WASHER DETAILS

STRUCTURAL STEEL NOTES

ALL INTERMEDIATE DIAPHRAGM STEEL, CONNECTOR PLATES AND PLATE WASHERS SHALL BE AASHTO M270 GRADE 345 OR APPROVED EQUAL.

TENSION ON THE AASHTO M164 BOLTS THROUGH THE CHANNEL MEMBER SHALL BE CALIBRATED USING DIRECT TENSION INDICATOR WASHERS IN ACCORDANCE WITH ARTICLE 440-8 OF THE STANDARD SPECIFICATIONS.

TENSION ON THE AASHTO M164 BOLTS THROUGH THE GIRDER WEB SHALL BE SNUG TIGHTENED FOLLOWED BY AN ADDITIONAL ¼ TURN.

THE CHANNELS, ANGLES, WASHERS, PLATE WASHERS, AND DIRECT TENSION INDICATORS SHALL BE GALVANIZED OR METALLIZED IN ACCORDANCE WITH THE STANDARD SPECIFICATIONS. FOR THERMAL SPRAYED COATINGS (METALLIZATION), SEE SPECIAL PROVISIONS.

FOR METALLIZATION, APPLY AN 8 MIL THICK 99.99 PERCENT ZINC (W-Zn-1) THERMAL SPRAYED COATING WITH A 0.5 MIL THICK SEAL COAT TO ALL STEEL DIAPHRAGM SURFACES IN ACCORDANCE WITH THE THERMAL SPRAYED COATINGS SPECIAL PROVISIONS AND SECTION 442 OF THE STANDARD SPECIFICATIONS.

GALVANIZE THE HIGH STRENGTH BOLTS, NUTS, AND WASHERS IN ACCORDANCE WITH THE STANDARD SPECIFICATIONS. FOR HIGH STRENGTH BOLTS, SEE SPECIAL PROVISIONS.

USE A MINIMUM 11.1mm THICK PLATE WASHER WITH STANDARD HOLES UNDER EACH BOLT HEAD AND NUT. THE PLATE WASHERS SHALL HAVE SUFFICIENT SIZE TO COVER THE HOLES AFTER INSTALLATION. DIRECT TENSION INDICATORS ARE TO BE USED IN CONJUNCTION WITH THE PLATE WASHERS.

PROVIDE SUFFICIENT LENGTH OF ALL BOLTS TO ACCOMMODATE WASHERS, DIRECT TENSION INDICATORS, THE THICKNESS OF CONNECTING MEMBER PLUS AT LEAST 6mm PROJECTION BEYOND THE NUT.

INTERMEDIATE DIAPHRAGM ASSEMBLY SHALL COMPLY WITH SECTION 1072 OF THE STANDARD SPECIFICATIONS.

CONTRACTOR SHALL SUBMIT TWO SETS OF WORKING DRAWINGS FOR THE INTERMEDIATE DIAPHRAGM ASSEMBLY FOR REVIEW, COMMENTS AND ACCEPTANCE. AFTER REVIEW, COMMENTS, AND ACCEPTANCE, SUBMIT SEVEN SETS FOR DISTRIBUTION.

IN THE EXTERIOR BAYS, TEMPORARY STRUTS SHALL BE PLACED BETWEEN PRESTRESSED GIRDERS ADJACENT TO THE STEEL DIAPHRAGMS. STRUTS SHALL REMAIN IN PLACE 3 DAYS AFTER CONCRETE IS PLACED. ALL AASHTO M164 H.S. BOLTS SHALL BE FULLY TIGHTENED AFTER THE STRUTS HAVE BEEN REMOVED.

THE COST OF THE STEEL DIAPHRAGMS AND ASSEMBLIES SHALL BE INCLUDED IN THE UNIT PRICE BID FOR PRESTRESSED CONCRETE GIRDERS.

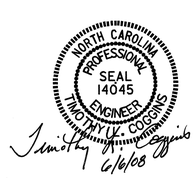

PROJECT NO. R-2554BA
WAYNE COUNTY
STATION: 100+61.488 -L-

SHEET 4 OF 5

STATE OF NORTH CAROLINA
DEPARTMENT OF TRANSPORTATION
RALEIGH

STANDARD
INTERMEDIATE
STEEL DIAPHRAGMS
FOR TYPE III PRESTRESSED
CONCRETE GIRDERS
(LEFT LANE)

REVISIONS						SHEET NO.
NO.	BY:	DATE:	NO.	BY:	DATE:	S-167
1			3			TOTAL SHEETS
2			4			478

ASSEMBLED BY : T.L. AVERETTE	DATE : 12-07
CHECKED BY : B.N. BARODAWALA	DATE : 1-08
DRAWN BY : TLA 6/05	ADDED 10/21/05
CHECKED BY : VC 6/05	REV. 5/1/06R KMM/GM

28-APR-2008 12:04
x:\structures\azlz1\str#6\taverette\r2554ba_sd_gl_06.dgn
jbwilson

STR. #6 STD.No.PCG12SM

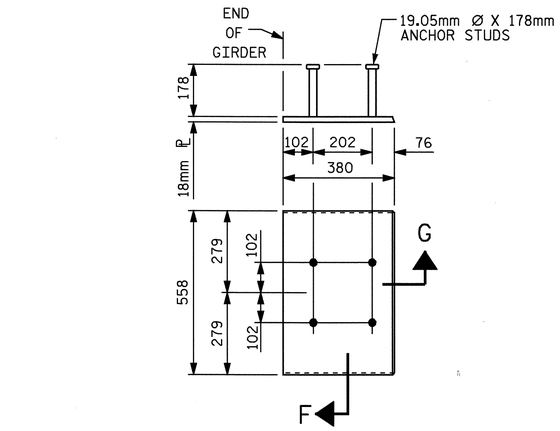

EMBEDDED PLATE "B-1" DETAILS
FOR AASHTO TYPE III GIRDER

(2 REQ'D PER GIRDER)

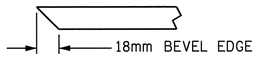

SECTION "F"

(SEE NOTES)

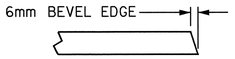

SECTION "G"

NOTES

ALL PRESTRESSING STRANDS SHALL BE 7-WIRE LOW-RELAXATION GRADE 270 STRANDS AND SHALL CONFORM TO AASHTO M203M EXCEPT FOR SAMPLING REQUIREMENTS WHICH SHALL BE IN ACCORDANCE WITH THE STANDARD SPECIFICATIONS.

ALL REINFORCING STEEL SHALL BE GRADE 420.

EMBEDDED PLATE "B-1" SHALL BE GALVANIZED IN ACCORDANCE WITH THE SPECIFICATIONS. BEVEL EDGES OF PLATE "B-1" TO GIVE CLOSE FIT BUT NOT TIGHT FIT TO STEEL CASTING FORM.

ANCHOR STUDS SHALL CONFORM TO AASHTO M169 GRADES 1010 THROUGH 1020 OR APPROVED EQUAL, AND SHALL MEET THE TYPE "B" REQUIREMENTS OF SUBSECTION 7.3 OF THE ANSI/AASHTO/AWS D1.5 BRIDGE WELDING CODE.

AT ENDS OF GIRDERS TO BE EMBEDDED IN CONCRETE DIAPHRAGMS OR END WALLS, PRESTRESSING STRANDS MAY EXTEND A MAXIMUM OF 50mm BEYOND THE GIRDER ENDS. OTHERWISE, PRESTRESSING STRANDS SHALL BE CUT FLUSH WITH THE GIRDER ENDS.

THE TRANSFER OF LOAD FROM THE ANCHORAGES TO THE GIRDER SHALL BE DONE WHEN CONCRETE HAS REACHED A COMPRESSIVE STRENGTH OF NOT LESS THAN 27.6 MPa FOR GIRDERS IN SPANS A AND C.

THE TRANSFER OF LOAD FROM THE ANCHORAGES TO THE GIRDER SHALL BE DONE WHEN CONCRETE HAS REACHED A COMPRESSIVE STRENGTH OF NOT LESS THAN 31.0 MPa FOR GIRDERS IN SPAN B.

DEPENDING ON THE TYPE OF SYSTEM USED TO SUPPORT THE DECK SLAB FORMS, PRESET ANCHORS MAY BE NECESSARY IN THE PRESTRESSED CONCRETE GIRDER.

THE TOP SURFACE OF THE GIRDER, EXCLUDING THE OUTSIDE 100mm, SHALL BE RAKED TO A DEPTH OF 6mm.

FOR CRACK REPAIR OF PRESTRESSED CONCRETE GIRDERS, SEE SPECIAL PROVISIONS.

DEAD LOAD DEFLECTION TABLE FOR SPAN A

12.70mm Ø LOW RELAXATION	GIRDERS A1 THRU A7										
TENTH POINTS	0	.1	.2	.3	.4	.5	.6	.7	.8	.9	0
CAMBER (GIRDER ALONE IN PLACE) ↑	0.000	0.007	0.014	0.019	0.022	0.023	0.022	0.019	0.014	0.007	0.000
* DEFLECTION DUE TO SUPERIMPOSED D.L. ↓	0.000	0.003	0.005	0.008	0.009	0.010	0.009	0.008	0.005	0.003	0.000
FINAL CAMBER ↑	0	4	9	11	13	13	13	11	9	4	0

* INCLUDES FUTURE WEARING SURFACE IN SUPERIMPOSED DEAD LOAD.
ALL VALUES ARE SHOWN IN METERS, EXCEPT "FINAL CAMBER" WHICH IS SHOWN IN MILLIMETERS.

DEAD LOAD DEFLECTION TABLE FOR SPAN B

12.70mm Ø LOW RELAXATION	GIRDERS B1 THRU B7										
TENTH POINTS	0	.1	.2	.3	.4	.5	.6	.7	.8	.9	0
CAMBER (GIRDER ALONE IN PLACE) ↑	0.000	0.012	0.022	0.031	0.036	0.038	0.036	0.031	0.022	0.012	0.000
* DEFLECTION DUE TO SUPERIMPOSED D.L. ↓	0.000	0.005	0.009	0.013	0.015	0.016	0.015	0.013	0.009	0.005	0.000
FINAL CAMBER ↑	0	7	13	18	21	22	21	18	13	7	0

* INCLUDES FUTURE WEARING SURFACE IN SUPERIMPOSED DEAD LOAD.
ALL VALUES ARE SHOWN IN METERS, EXCEPT "FINAL CAMBER" WHICH IS SHOWN IN MILLIMETERS.

DEAD LOAD DEFLECTION TABLE FOR SPAN C

12.70mm Ø LOW RELAXATION	GIRDERS C1 THRU C7										
TENTH POINTS	0	.1	.2	.3	.4	.5	.6	.7	.8	.9	0
CAMBER (GIRDER ALONE IN PLACE) ↑	0.000	0.008	0.014	0.019	0.023	0.024	0.023	0.019	0.014	0.008	0.000
* DEFLECTION DUE TO SUPERIMPOSED D.L. ↓	0.000	0.003	0.007	0.009	0.011	0.012	0.011	0.009	0.007	0.003	0.000
FINAL CAMBER ↑	0	5	7	10	12	12	12	10	7	5	0

* INCLUDES FUTURE WEARING SURFACE IN SUPERIMPOSED DEAD LOAD.
ALL VALUES ARE SHOWN IN METERS, EXCEPT "FINAL CAMBER" WHICH IS SHOWN IN MILLIMETERS.

PROJECT NO. R-2554BA

WAYNE COUNTY

STATION: 100+61.488 -L-

SHEET 5 OF 5

STATE OF NORTH CAROLINA
DEPARTMENT OF TRANSPORTATION
RALEIGH

STANDARD
PRESTRESSED CONCRETE GIRDER
CONTINUOUS FOR LIVE LOAD
DETAILS AND
DEAD LOAD DEFLECTIONS
(LEFT LANE)

REVISIONS						SHEET NO.
NO.	BY:	DATE:	NO.	BY:	DATE:	S-168
1			3			TOTAL SHEETS
2			4			478

ASSEMBLED BY : ZJR/T.L. AVERETTE	DATE : 12-07
CHECKED BY : B.N. BARODAWALA	DATE : 1-08
DRAWN BY : ELR 11/91	REV. 10/17/00 RWW/LES
CHECKED BY : GRP 11/91	REV. 7/10/01RR LES/RDR
	REV. 5/1/06 TLA/GM

28-APR-2008 12:03
x:\structures\azlzl\str#6\taverette\r2554ba_sd_gl_06.dgn
lbwilson

STR. #6

STD. NO. PCG11SM

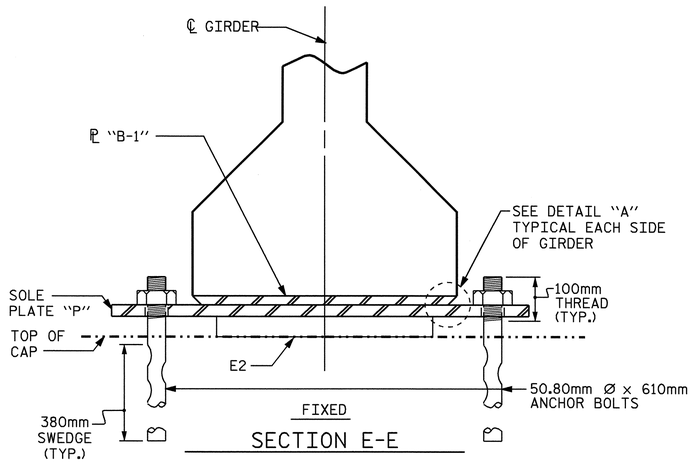

SECTION E-E

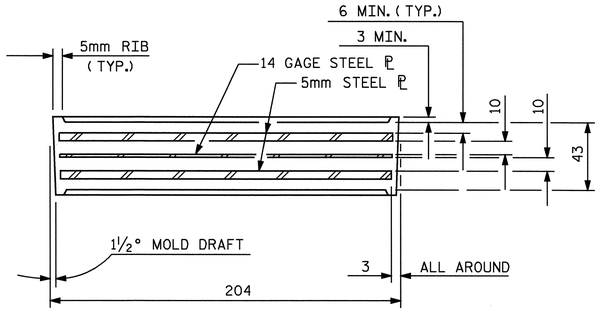

TYPICAL SECTION OF ELASTOMERIC BEARINGS

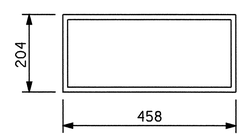

E2 (28 REQ'D)

PLAN VIEW OF ELASTOMERIC BEARING

TYPE III

(AT INTERIOR BENTS)

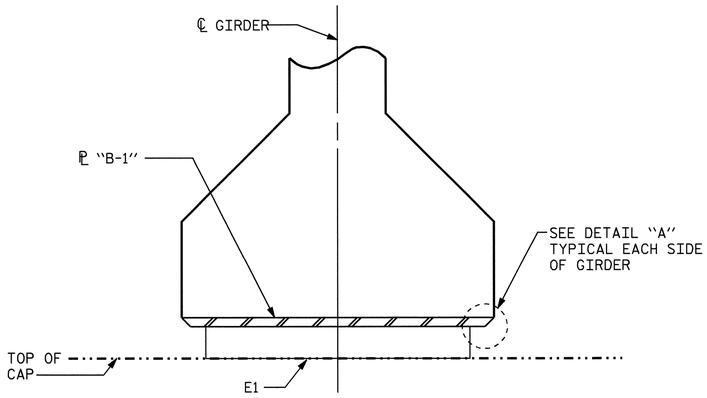

SECTION E-E

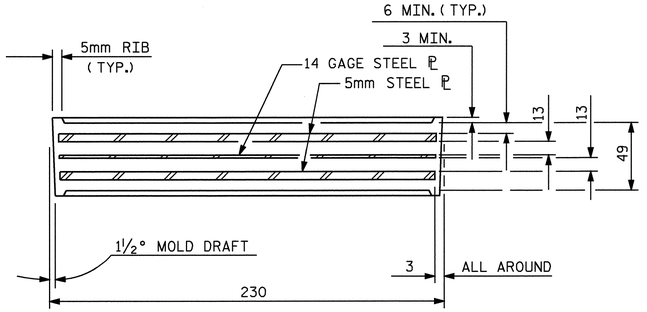

TYPICAL SECTION OF ELASTOMERIC BEARINGS

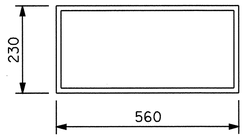

E1 (14 REQ'D)

PLAN VIEW OF ELASTOMERIC BEARING

TYPE IV

(AT INTEGRAL END BENTS)

NOTES

AT ALL FIXED POINTS OF SUPPORT, NUTS FOR ANCHOR BOLTS ARE TO BE TIGHTENED FINGER TIGHT AND THEN BACKED OFF ½ TURN. THE THREAD OF THE NUT AND BOLT SHALL THEN BE BURRED WITH A SHARP POINTED TOOL.

STEEL SOLE PLATES, ANCHOR BOLTS, NUTS, AND WASHERS SHALL BE GALVANIZED IN ACCORDANCE WITH THE STANDARD SPECIFICATIONS.

PRIOR TO WELDING, GRIND THE GALVANIZED SURFACE OF THE PORTION OF THE EMBEDDED PLATE AND SOLE PLATE THAT ARE TO BE WELDED. AFTER WELDING, DAMAGED GALVANIZED SURFACES SHALL BE REPAIRED IN ACCORDANCE WITH THE STANDARD SPECIFICATIONS.

WHEN WELDING THE SOLE PLATE TO THE EMBEDDED PLATE IN THE GIRDER, USE TEMPERATURE INDICATING WAX PENS, OR OTHER SUITABLE MEANS, TO ENSURE THAT THE TEMPERATURE OF THE SOLE PLATE DOES NOT EXCEED 149°C. TEMPERATURES ABOVE THIS MAY DAMAGE THE ELASTOMER.

SOLE PLATE "P", BOLTS, NUTS, AND WASHERS SHALL BE INCLUDED IN THE PAY ITEM FOR PRESTRESSED CONCRETE GIRDERS.

ANCHOR BOLTS SHALL MEET THE REQUIREMENTS OF ASTM A449. NUTS SHALL MEET THE REQUIREMENTS OF AASHTO M291M-12 OR AASHTO M292M-2H. WASHERS SHALL MEET THE REQUIREMENTS OF AASHTO M293M. SHOP DRAWINGS ARE NOT REQUIRED FOR ANCHOR BOLTS, NUTS AND WASHERS. SHOP INSPECTION IS REQUIRED.

ALL SURFACES OF BEARING PLATES SHALL BE SMOOTH AND STRAIGHT.

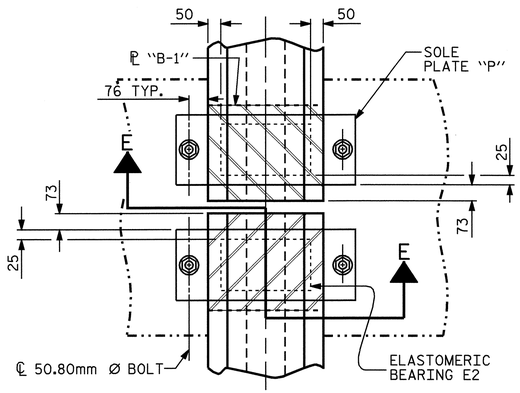

TYPICAL PLAN

(SHOWING CONTINUOUS BENT)

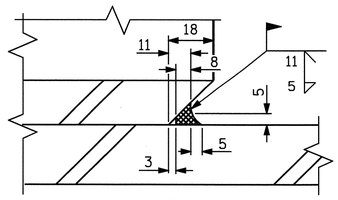

DETAIL "A"

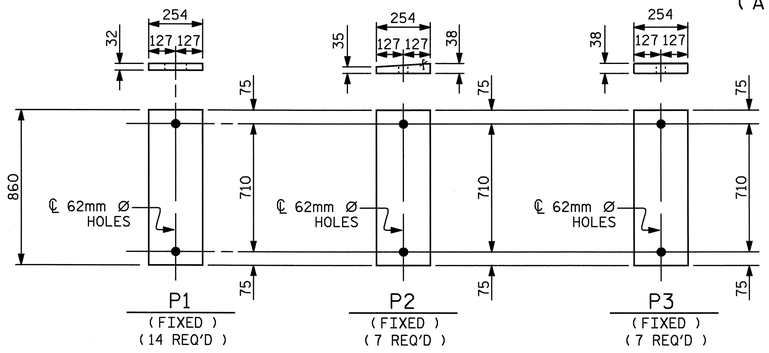

SOLE PLATE DETAILS ("P")

— LOAD RATINGS —	
	MAX.D.L.+L.L.
TYPE III	512 kN
TYPE IV	611 kN

PROJECT NO. R-2554BA

WAYNE COUNTY

STATION: 100+61.488 -L-

STATE OF NORTH CAROLINA
DEPARTMENT OF TRANSPORTATION
RALEIGH

STANDARD
ELASTOMERIC BEARING DETAILS
PRESTRESSED CONCRETE GIRDER SUPERSTRUCTURE
(LEFT LANE)

REVISIONS						SHEET NO.
NO.	BY:	DATE:	NO.	BY:	DATE:	S-169
1			3			TOTAL SHEETS
2			4			478

NORTH CAROLINA PROFESSIONAL SEAL 14045 ENGINEER TIMOTHY L. COGGINS
6/6/08

ASSEMBLED BY : ZJR/T.L. AVERETTE	DATE : 12-07	
CHECKED BY : B.N. BARODAWALA	DATE : 1-08	
DRAWN BY : WJH 8/89	REV. 10/17/00	RWW/LES
CHECKED BY : CRK 8/89	REV. 7/10/01	RWW/LES
	REV. 5/1/06	TLA/GM

28-APR-2008 12:07
x:\structures\gzlzl\str#6\taverette\r2554ba_sd_bg_06.dgn
lbwilson

STR. #6

STD. NO. EB3SM

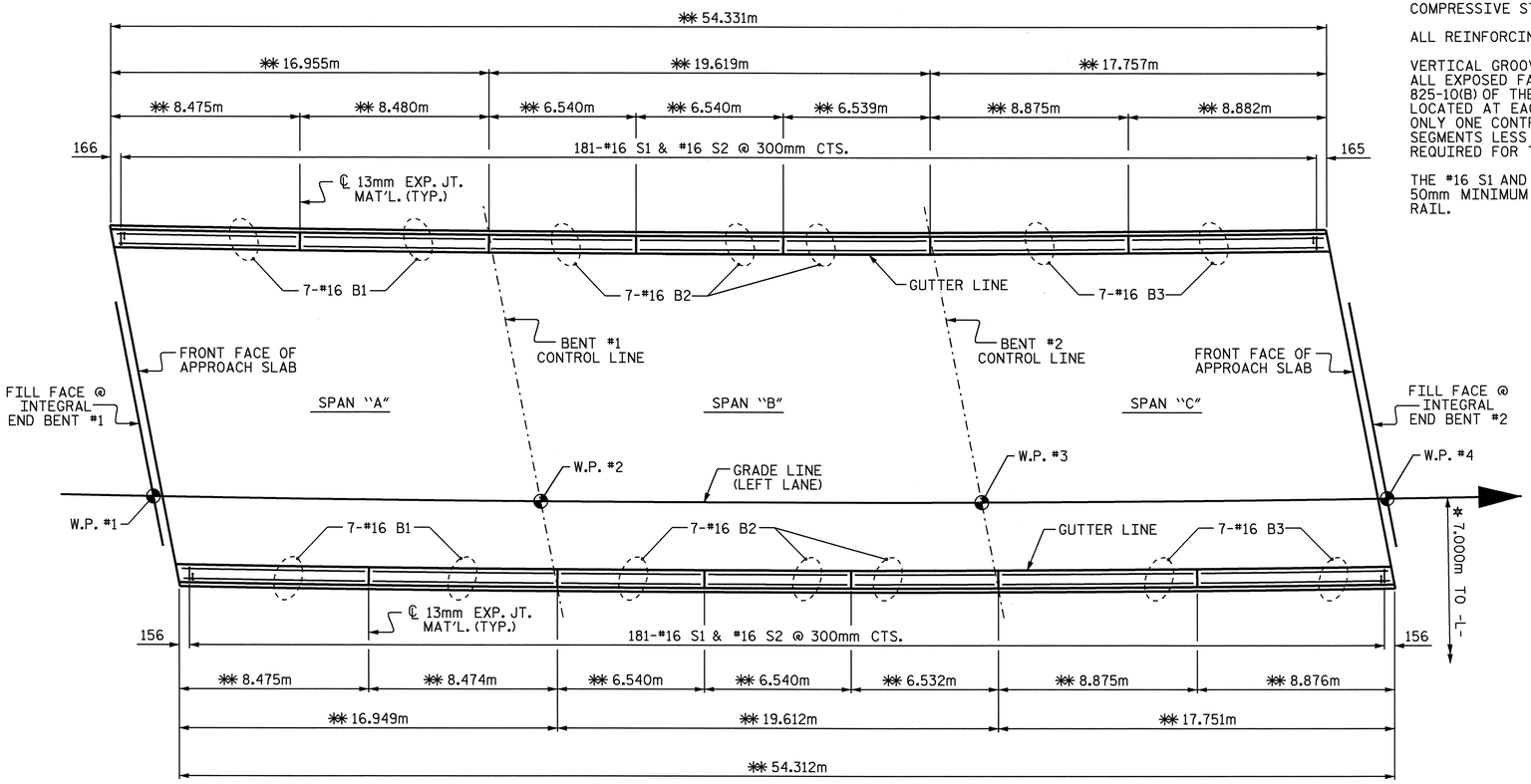

PLAN

✻✻ ARC DIMENSION ALONG OUTSIDE FACE OF BARRIER RAIL
✻ RADIAL DIMENSION

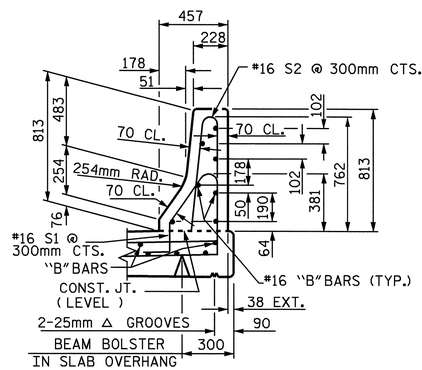

SECTION THRU RAIL

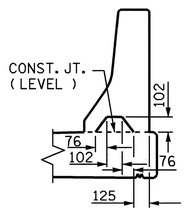

SECTION S-S

AT DAM IN OPEN JOINT
(THIS IS TO BE USED ONLY WHEN SLIP FORM IS USED)

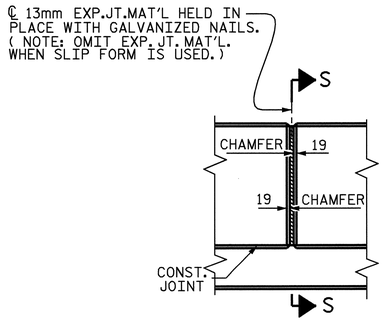

ELEVATION AT EXPANSION JOINTS

BARRIER RAIL DETAILS

NOTES

BARRIER RAIL IN A CONTINUOUS UNIT SHALL NOT BE CAST UNTIL ALL SLAB CONCRETE IN THE UNIT HAS BEEN CAST AND HAS REACHED A MINIMUM COMPRESSIVE STRENGTH OF 20.7 MPa.

ALL REINFORCING STEEL IN BARRIER RAILS SHALL BE EPOXY COATED.

VERTICAL GROOVED CONTRACTION JOINTS, 12mm IN DEPTH, SHALL BE TOOLED IN ALL EXPOSED FACES OF THE BARRIER RAIL AND IN ACCORDANCE WITH ARTICLE 825-10(B) OF THE STANDARD SPECIFICATIONS. THE CONTRACTION JOINT SHALL BE LOCATED AT EACH THIRD POINT BETWEEN BARRIER RAIL EXPANSION JOINTS. ONLY ONE CONTRACTION JOINT IS REQUIRED AT MIDPOINT OF BARRIER RAIL SEGMENTS LESS THAN 6.1m IN LENGTH AND NO CONTRACTION JOINTS ARE REQUIRED FOR THOSE SEGMENTS LESS THAN 3.5m IN LENGTH.

THE #16 S1 AND #16 S2 BARS MAY BE SHIFTED SLIGHTLY IN ORDER TO MAINTAIN A 50mm MINIMUM CLEARANCE TO 13mm EXPANSION JOINT MATERIAL IN THE BARRIER RAIL.

BAR TYPES

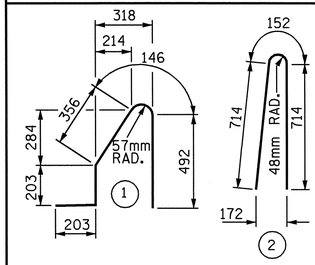

ALL BAR DIMENSIONS ARE OUT TO OUT

BILL OF MATERIAL

FOR CONCRETE BARRIER RAIL ONLY

BAR	NO.	SIZE	TYPE	LENGTH	WEIGHT
✻ B1	28	#16	STR	8280	360
✻ B2	42	#16	STR	6420	418
✻ B3	28	#16	STR	8700	378
✻ S1	362	#16	1	1400	787
✻ S2	362	#16	2	1580	888

✻ EPOXY COATED REINFORCING STEEL	2831 kg
CLASS AA CONCRETE	27.3 CU. METER
CONCRETE BARRIER RAIL	108.643 METERS

PROJECT NO. R-2554BA
WAYNE COUNTY
STATION: 100+61.488 -L-

STATE OF NORTH CAROLINA
DEPARTMENT OF TRANSPORTATION
RALEIGH

STANDARD
CONCRETE BARRIER RAIL
(LEFT LANE)

REVISIONS						SHEET NO.
NO.	BY:	DATE:	NO.	BY:	DATE:	S-170
1			3			TOTAL SHEETS
2			4			478

NORTH CAROLINA PROFESSIONAL SEAL 14045 ENGINEER TIMOTHY W. COGGINS
6/6/08

ASSEMBLED BY : ZJR/T.L. AVERETTE	DATE : 12-07	
CHECKED BY : B.N. BARODAWALA	DATE : 1-08	
DRAWN BY : ARB 5/87	REV. 10/17/00	RWW/LES
CHECKED BY : SJD 9/87	REV. 5/7/03R	RWW/JTE
	REV. 5/1/06	TLA/GM

28-APR-2008 12:07
x:\structures\azlzl\str#6\taverette\r2554ba_sd_br_06.dgn
lbwilson

STR. #6

STD. No. CBR1SM

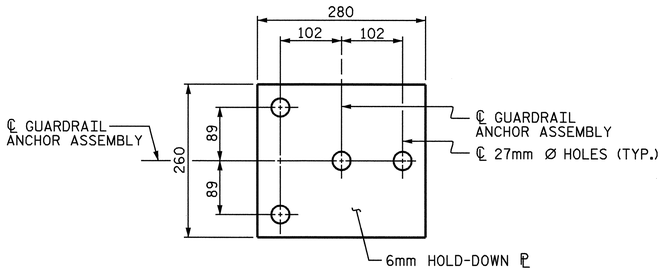

PLAN

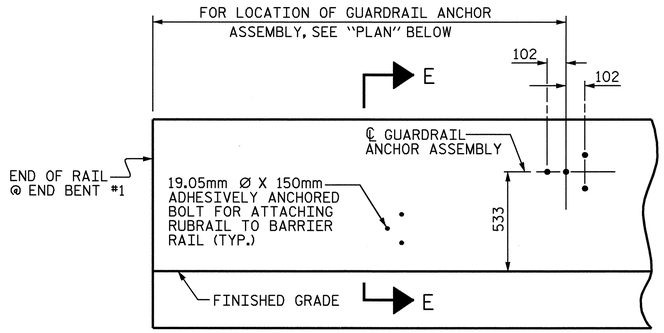

ELEVATION

FOR LOCATION OF RUBRAIL, SEE ROADWAY STD. 862.03

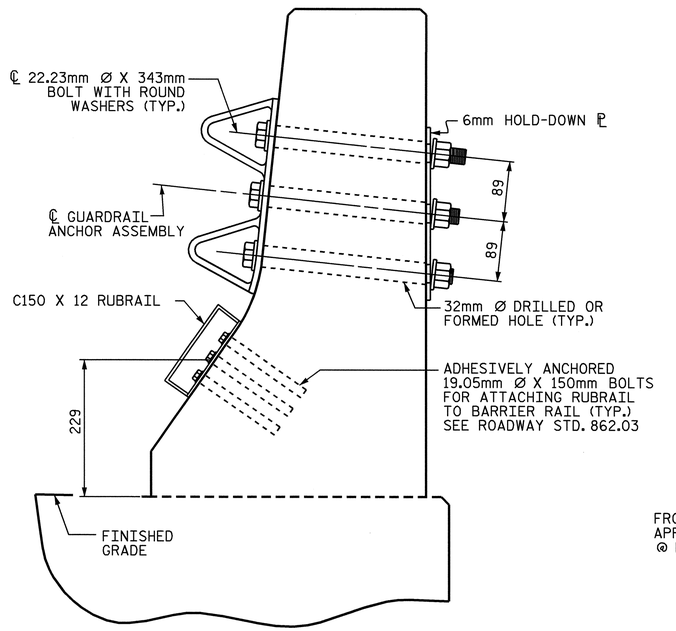

SECTION E-E

GUARDRAIL ANCHOR ASSEMBLY DETAILS

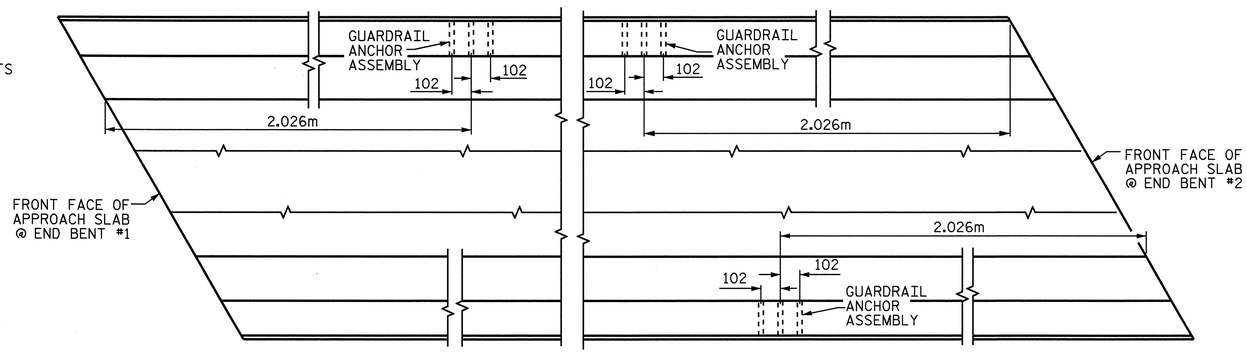

PLAN

LOCATION OF ANCHORS FOR GUARDRAIL

NOTES

THE GUARDRAIL ANCHOR ASSEMBLY SHALL CONSIST OF A 6mm HOLD DOWN PLATE AND 4 - 22.23mm Ø BOLTS WITH NUTS AND WASHERS, RUBRAIL, AND ADHESIVELY ANCHORED BOLTS.

THE HOLD-DOWN PLATE SHALL CONFORM TO AASHTO M270 GRADE 36. AFTER FABRICATION, THE HOLD-DOWN PLATE SHALL BE HOT-DIP GALVANIZED IN ACCORDANCE WITH AASHTO M111.

BOLTS SHALL CONFORM TO THE REQUIREMENTS OF ASTM A307 AND NUTS SHALL CONFORM TO THE REQUIREMENTS OF AASHTO M291. BOLTS, NUTS AND WASHERS SHALL BE GALVANIZED. (AT THE CONTRACTOR'S OPTION, STAINLESS STEEL BOLTS, NUTS AND WASHERS MAY BE USED AS AN ALTERNATE FOR THE 22.23mm Ø GALVANIZED BOLTS, NUTS AND WASHERS. THEY SHALL CONFORM TO OR EXCEED THE MECHANICAL REQUIREMENTS OF ASTM A307. THE USE OF THIS ALTERNATE SHALL BE APPROVED BY THE ENGINEER.)

THE GUARDRAIL ANCHOR ASSEMBLY IS REQUIRED AT ALL POINTS WHERE APPROACH GUARDRAIL IS TO BE ATTACHED TO THE END OF BARRIER RAIL. FOR POINTS OF ATTACHMENT, SEE SKETCH.

AFTER INSTALLATION, THE EXPOSED THREAD OF THE BOLT SHALL BE BURRED WITH A SHARP POINTED TOOL.

THE COST OF THE GUARDRAIL ANCHOR ASSEMBLY SHALL BE INCLUDED IN THE UNIT CONTRACT PRICE BID FOR CONCRETE BARRIER RAIL.

THE 32mm Ø HOLES SHALL BE FORMED OR DRILLED WITH A CORE BIT. IMPACT TOOLS WILL NOT BE PERMITTED. ANY CONCRETE DAMAGED BY THIS WORK SHALL BE REPAIRED TO THE SATISFACTION OF THE ENGINEER.

THE C150 X 12 RUBRAIL IS TO BE ADHESIVELY ANCHORED TO THE RAIL USING THREE 19.05mm Ø X 150mm BOLTS WITH WASHERS. LEVEL ONE FIELD TESTING IF REQUIRED, AND THE YIELD LOAD OF THE 19.05mm Ø BOLTS IS 53.4kN. FOR ADHESIVELY ANCHORED ANCHOR BOLTS OR DOWELS, SEE SPECIAL PROVISIONS. SEE ROADWAY STANDARD 862.03 FOR DETAILS AND LOCATION OF THE RUBRAIL.

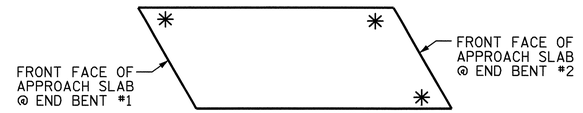

SKETCH SHOWING POINTS OF ATTACHMENTS

✳ DENOTES GUARDRAIL ANCHOR ASSEMBLY

PROJECT NO. R-2554BA

WAYNE COUNTY

STATION: 100+61.488 -L-

STATE OF NORTH CAROLINA
DEPARTMENT OF TRANSPORTATION
RALEIGH

STANDARD

GUARDRAIL ANCHORAGE FOR BARRIER RAIL

(LEFT LANE)

NORTH CAROLINA PROFESSIONAL SEAL 14045 ENGINEER TIMOTHY L. COGGINS
6/16/08

REVISIONS						SHEET NO.
NO.	BY:	DATE:	NO.	BY:	DATE:	S-171
1			3			TOTAL SHEETS
2			4			478

ASSEMBLED BY : T.L. AVERETTE	DATE : 12-07
CHECKED BY : B.N. BARODAWALA	DATE : 1-08
DRAWN BY : TLA 5/06	ADDED 5/1/06R KMM/GM
CHECKED BY : GM 5/06	

28-APR-2008 12:07
x:\structures\azlzl\str#6\taverette\r2554ba_sd_br_06.dgn
jbwilson

STR. #6 STD. NO. GRA2SM

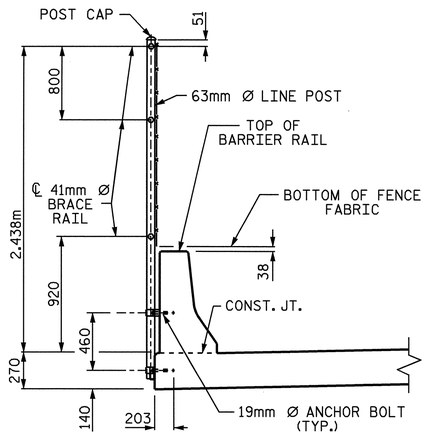

SECTION THRU FENCE

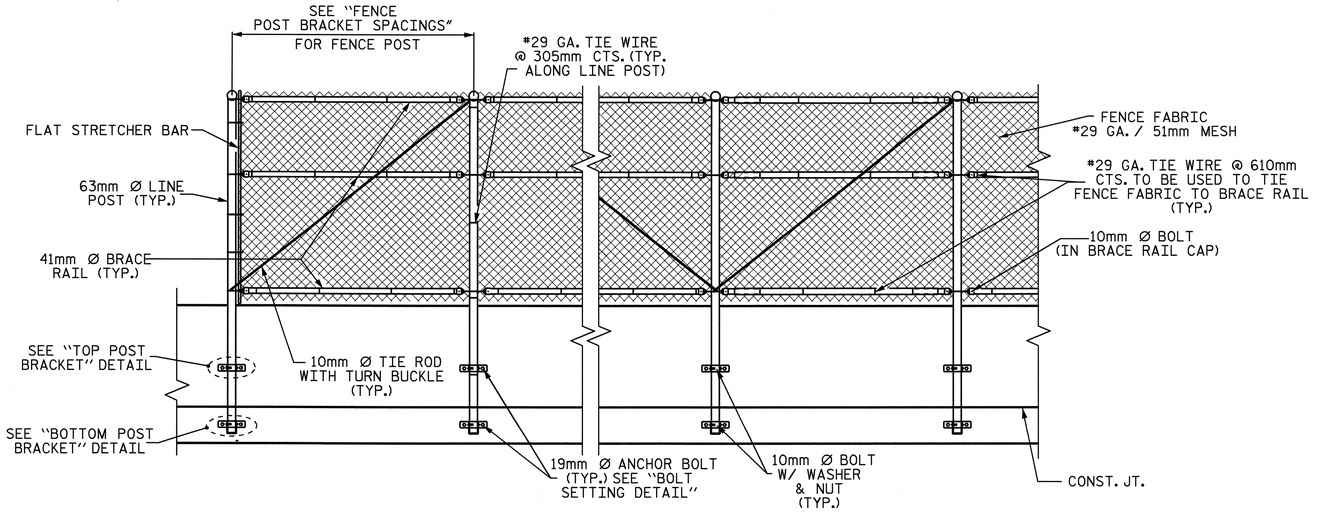

ELEVATION

NOTES

FOR CHAIN LINK FENCE FOR PROTECTION OF RAILROAD, SEE SPECIAL PROVISIONS.

MATERIAL FOR ANCHOR BOLTS SHALL BE TYPE 304 STAINLESS STEEL WITH A MINIMUM 62 MPa ULTIMATE STRENGTH. NUTS AND WASHERS SHALL BE TYPE 304 STAINLESS STEEL. ANCHOR BOLTS SHALL BE EMBEDDED AS PER ASHESIVE BONDING SYSTEM MANUFACTURER SPECIFICATIONS. NUTS SHALL BE AMERICAN STANDARD FINISHED HEXAGON THICK NUTS, CLASS 2B THREADS.

FOR SETTING ANCHOR BOLTS, THE CONTRACTOR SHALL USE AN ADHESIVE BONDING SYSTEM. SEE SPECIAL PROVISIONS FOR ADHESIVELY ANCHORED ANCHOR BOLTS OR DOWELS.

ADHESIVE ANCHOR SYSTEM SHALL HAVE A MINIMUM PULLOUT STRENGTH OF 45 Kn.

ALL FENCE MATERIAL SHALL MEET THE REQUIREMENTS OF SECTION 1050 OF THE STANDARD SPECIFICATIONS. GALVANIZE ALL STEEL PARTS AND HARDWARE IN ACCORDANCE WITH ARTICLE 1076 OF THE STANDARD SPECIFICATIONS.

WELDING SHALL BE DONE IN ACCORDANCE WITH ARTICLE 1072-20 OF THE STANDARD SPECIFICATIONS.

TESTING OF THE ANCHOR BOLTS TO 90% OF THE SPECIFIED STRENGTH SHALL BE PERFORMED AT THE OPTION OF THE ENGINEER.

LENGTH = 54.331 METERS

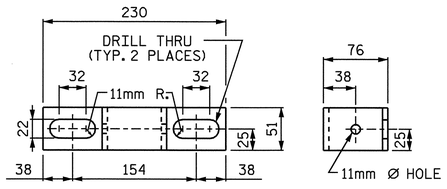

ELEVATION

RIGHT SIDE VIEW

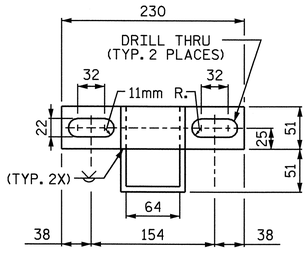

ELEVATION

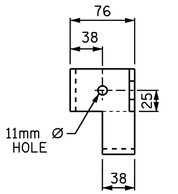

RIGHT SIDE VIEW

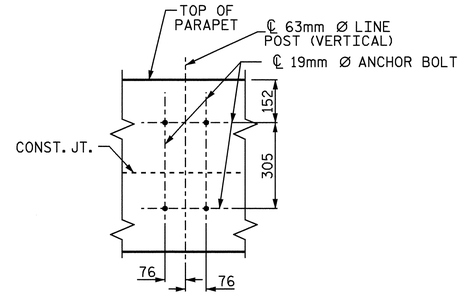

BOLT SETTING DETAIL

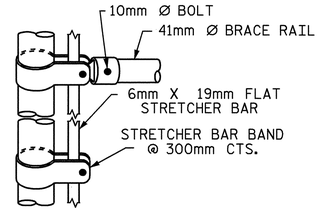

TERMINAL POST WITH STRETCHER BAR ATTACHMENT

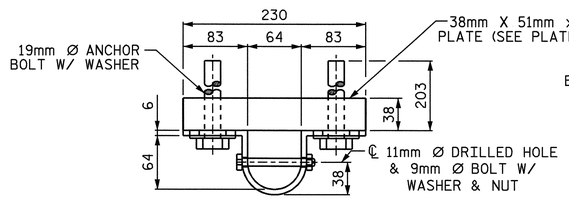

PLAN

TOP POST BRACKET

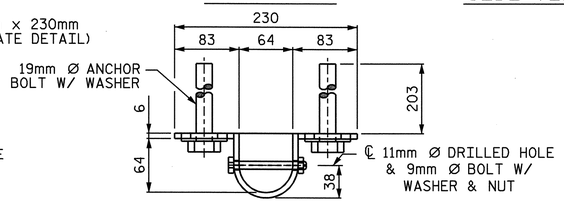

PLAN

BOTTOM POST BRACKET

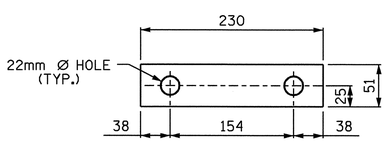

PLATE DETAIL

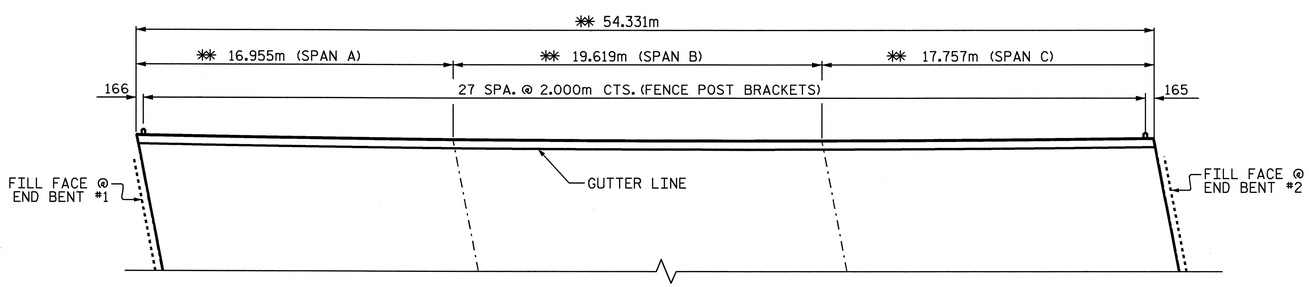

PLAN OF FENCE POST BRACKET SPACINGS

** ARC DIMENSION ALONG OUTSIDE FACE OF BARRIR RAIL.

NORTH CAROLINA PROFESSIONAL SEAL 14045 ENGINEER TIMOTHY W. COGGINS
6/6/08

PROJECT NO. R-2554BA

WAYNE COUNTY

STATION: 100+61.488 -L-

STATE OF NORTH CAROLINA
DEPARTMENT OF TRANSPORTATION
RALEIGH

BRIDGE MOUNTED CHAIN LINK FENCE DETAILS (LEFT LANE)

REVISIONS						SHEET NO.
NO.	BY:	DATE:	NO.	BY:	DATE:	S-172
1			3			TOTAL SHEETS
2			4			478

DRAWN BY : PEGGY ADKINS DATE : 12-07
CHECKED BY : B.N.BARODAWALA DATE : 2-08

05-JUN-2008 14:48
r:\structures\azlz1\Str#6\padkins\Microstation\r-2554ba_sd_clf_06.dgn

STR #6

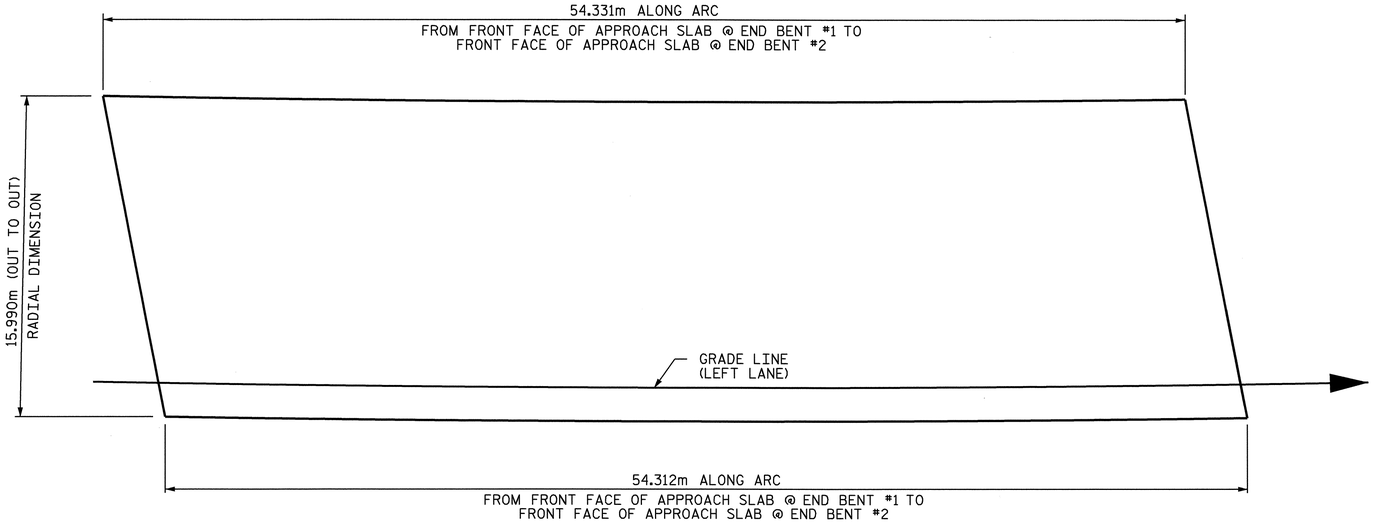

LAYOUT FOR COMPUTING AREA OF REINFORCED CONCRETE DECK SLAB (868.6 SQ. METER)

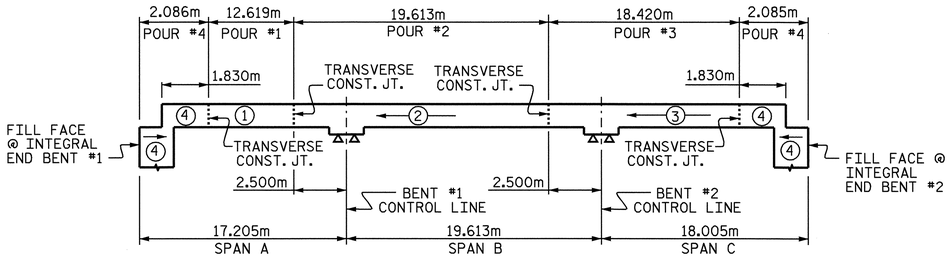

POURING SEQUENCE

DIMENSIONS GIVEN ALONG ARC OF GRADE LINE

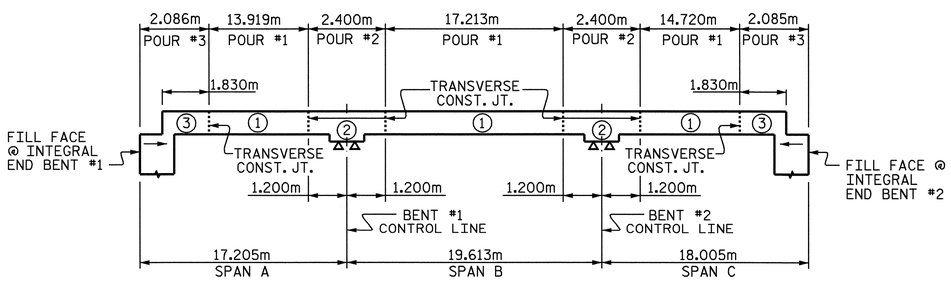

OPTIONAL POURING SEQUENCE

POUR (2) CAN NOT BE STARTED UNTIL BOTH ADJACENT (1) POURS REACH A MINIMUM OF 20.7MPa.
DIMENSIONS GIVEN ALONG ARC OF GRADE LINE

SUPERSTRUCTURE REINFORCING STEEL LENGTHS ARE BASED ON THE FOLLOWING MINIMUM SPLICE LENGTHS					
BAR SIZE	SUPERSTRUCTURE EXCEPT APPROACH SLABS, PARAPET, AND BARRIER RAIL		APPROACH SLABS		PARAPET AND BARRIER RAIL
	EPOXY COATED	UNCOATED	EPOXY COATED	UNCOATED	
#13	610	540	610	540	840
#16	770	660	770	660	1050
#19	920	790	1190	790	1330
#22	1580	1060			
#25	2080	1390			

GROOVING BRIDGE FLOORS	
APPROACH SLABS	207.8 SQ.METER
BRIDGE DECK	757.8 SQ.METER
TOTAL	965.6 SQ.METER

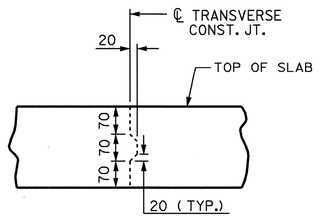

TRANSVERSE CONSTRUCTION JOINT DETAIL

NOTE: REINFORCING STEEL IN SLAB NOT SHOWN.
LONGITUDINAL REINFORCING STEEL SHALL BE CONTINUOUS THRU JOINT.

BILL OF MATERIAL
SPANS A, B & C

BAR	NO.	SIZE	TYPE	LENGTH	WEIGHT
✳A1	269	#16	STR	15880	6630
A2	269	#16	STR	15880	6630
✳A101	2	#16	STR	15440	48
✳A102	2	#16	STR	14460	45
✳A103	2	#16	STR	13480	42
✳A104	2	#16	STR	12520	39
✳A105	2	#16	STR	11540	36
✳A106	2	#16	STR	10560	33
✳A107	2	#16	STR	9600	30
✳A108	2	#16	STR	8620	27
✳A109	2	#16	STR	7640	24
✳A110	2	#16	STR	6660	21
✳ A111	2	#16	STR	5680	18
✳A112	2	#16	STR	4700	15
✳A113	2	#16	STR	3740	12
✳A114	2	#16	STR	2760	9
✳A115	2	#16	STR	1780	6
✳A116	2	#16	STR	800	2
A201	2	#16	STR	15440	48
A202	2	#16	STR	14460	45
A203	2	#16	STR	13480	42
A204	2	#16	STR	12520	39
A205	2	#16	STR	11540	36
A206	2	#16	STR	10560	33
A207	2	#16	STR	9600	30
A208	2	#16	STR	8620	27
A209	2	#16	STR	7640	24
A210	2	#16	STR	6660	21
A211	2	#16	STR	5680	18
A212	2	#16	STR	4700	15
A213	2	#16	STR	3740	12
A214	2	#16	STR	2760	9
A215	2	#16	STR	1780	6
A216	2	#16	STR	800	2
✳B1	72	#13	STR	5320	381
✳B2	72	#22	STR	15000	3285
✳B3	70	#22	STR	6000	1278
✳B4	36	#13	STR	5840	209
B5	248	#16	STR	14060	5412
B6	108	#13	STR	3600	386
✳B7	70	#22	STR	3600	767
✳B8	72	#13	STR	5720	409
K1	30	#13	STR	6460	193
K2	24	#13	STR	1840	44
K3	24	#13	STR	2060	49
K4	12	#13	STR	1680	20
K5	4	#13	STR	1660	7
K6	8	#13	STR	1740	14
K7	8	#13	STR	1860	15
K8	8	#13	STR	900	7
K9	24	#13	STR	1320	31
K10	48	#13	STR	2000	95
K11	24	#13	STR	1840	44
K12	16	#13	4	1460	23
K13	40	#13	2	2920	116
✳S1	80	#13	1	3560	283
✳S2	64	#13	1	3120	198
S3	228	#13	3	860	195
✳U1	60	#13	5	4000	239
✳U2	24	#13	5	3400	81
U3	84	#13	6	3020	252
U4	16	#13	6	3580	57
V1	14	#13	STR	1040	14
REINFORCING STEEL				= 14011	kg
✳EPOXY COATED REINFORCING STEEL				= 14167	kg

BAR TYPES

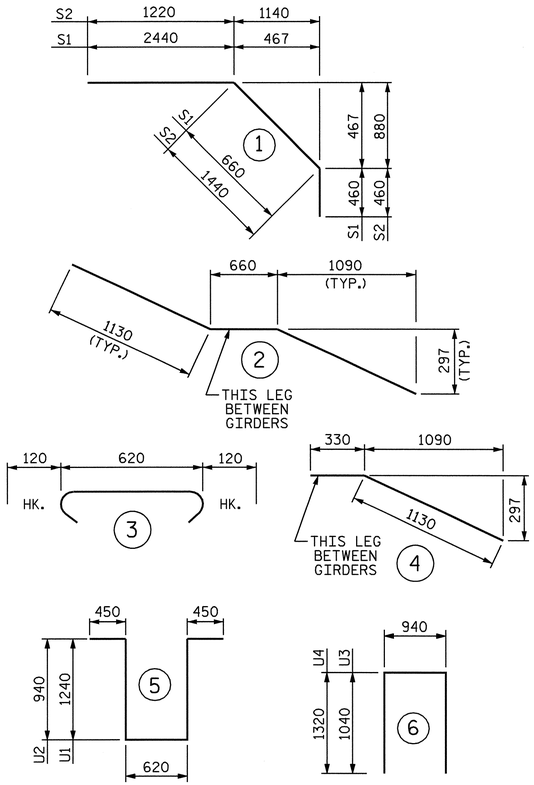

ALL BAR DIMENSIONS ARE OUT TO OUT

SUPERSTRUCTURE BILL OF MATERIAL

	CLASS AA CONCRETE		REINFORCING STEEL	EPOXY COATED REINFORCING STEEL
	(CU. METER)		(kg)	(kg)
SPAN A, B AND C	POUR 1	49.6	14011	14167
	POUR 2	87.8		
	POUR 3	83.1		
	● POUR 4	67.2		
TOTALS✳✳	287.7		14011	14167

✳✳ QUANTITIES FOR BARRIER RAIL ARE NOT INCLUDED
● POUR 4 QUANTITY INCLUDES UPPER POUR OF WINGS & INTEGRAL E. BT.

PROJECT NO. R-2554BA
WAYNE COUNTY
STATION: 100+61.488 -L-

STATE OF NORTH CAROLINA
DEPARTMENT OF TRANSPORTATION
RALEIGH

STANDARD
SUPERSTRUCTURE BILL OF MATERIAL
(LEFT LANE)

NORTH CAROLINA PROFESSIONAL SEAL 14045 ENGINEER TIMOTHY L. COGGINS
6/9/08

REVISIONS						SHEET NO.
NO.	BY:	DATE:	NO.	BY:	DATE:	S-173
1			3			TOTAL SHEETS
2			4			478

ASSEMBLED BY : ZJR/T.L. AVERETTE DATE : 12-07
CHECKED BY : B.N. BARODAWALA DATE : 1-08
DRAWN BY : JMB 5/87
CHECKED BY : SJD 9/87
REV. 5/16/97 EEM/RGW
REV. 5/1/06 TLA/GM

09-JUN-2008 07:05
g:\tipprojects-r\r2554ba\structures\azlzl\str#6\finalplans\R2554BA_sd_BM_06.dgn
taverette

STR. #6

STD. NO. BOM2SM

OVERHANG BRACKET CALCULATION INSTRUCTIONS

AASHTO SHAPES - TYPES III, IV, V, AND VI

1. RECORD KNOWN INFORMATION ON "BRIDGE OVERHANG BRACKET SUMMARY" ON SHEET 2
2. CALCULATE THE MAXIMUM SCREED LOAD PER BRACKET (SLPB) WITH AN ESTIMATED R = 1.5. SLPB = R X W. ROUND VALUE UP TO NEAREST SLPB VALUE INDICATED ON APPROPRIATE TABLE 1-1, 1-2, 1-3, OR 1-4.
3. WITH THE ESTIMATED SLPB, OVERHANG SLAB THICKNESS, "K" VALUE, AND 45° HANGER SAFE WORKING LOAD (SWL), ENTER THE APPROPRIATE TABLE 1-1, 1-2, 1-3, OR 1-4 (BASED ON OVERHANG DIMENSION) AND DETERMINE THE BRACKET SPACING, S.
4. CALCULATE S/D1 AND S/D2, ROUNDING UP TO NEAREST VALUE IN TABLE 2. ENTER TABLE 2 AND DETERMINE R VALUE.
5. CALCULATE REVISED SLPB. ROUND VALUE UP TO NEAREST SLPB VALUE INDICATED ON APPROPRIATE TABLE 1-1, 1-2, 1-3, OR 1-4.
6. WITH THE REVISED SLPB, OVERHANG SLAB THICKNESS, "K" VALUE AND 45 HANGER SAFE WORKING LOAD (SWL), ENTER THE APPROPRIATE TABLE 1-1, 1-2, 1-3 OR 1-4 (BASED ON OVERHANG DIMENSION) AND DETERMINE REVISED BRACKET SPACING, S.
7. CONTINUE ITERATIONS OF STEPS 4-6 UNTIL THE REVISED BRACKET SPACING, S, IS THE SAME AS THE PREVIOUS S VALUE.
8. CHECK LUMBER JOIST SPACING: WITH BRACKET SPACING VALUE, S, ROUND THIS VALUE UP TO THE NEAREST VALUE OF ALLOWABLE SPAN LENGTH OF JOIST OF TABLE 3. USING THIS VALUE, ALONG WITH THE AVERAGE OVERHANG SLAB THICKNESS AND THE LUMBER JOIST SIZE, DETERMINE JOIST SPACING FROM TABLE 3. IF NECESSARY, ADJUST LUMBER JOIST SIZE AND/OR JOIST SPACING TO MEET ALLOWABLE SPAN LENGTH OF JOIST.
9. CONVERSELY, IF THE DESIRED JOIST SPACING IS KNOWN, USE THIS ALONG WITH THE AVERAGE OVERHANG SLAB THICKNESS AND THE LUMBER JOIST SIZE TO DETERMINE IF ALLOWABLE SPAN LENGTH OF JOIST IS GREATER THAN THE BRACKET SPACING, S. IF NECESSARY, ADJUST LUMBER JOIST SIZE TO MEET REQUIREMENTS OF ALLOWABLE SPAN LENGTH OF JOIST AND JOIST SPACING.
10. RECORD REMAINING INFORMATION ON "BRIDGE OVERHANG BRACKET SUMMARY" FORM.
11. SUBMIT FORM AND CALCULATIONS FOR REVIEW AND APPROVAL.

TABLE 1-1 (FOR USE ON **UP TO 2'-0" OVERHANG (L)** & 54" HORIZONTAL LEG LENGTH OF THE OVERHANG BRACKET)

AVG. SLAB THICKNESS (T) (In)	BRACKET (K) DIMENSION (In)	SCREED LOAD PER BRACKET									45° HANGER SWL (lbs)
		2500 lbs.	2250 lbs.	2000 lbs.	1750 lbs.	1500 lbs.	1250 lbs.	1000 lbs.	750 lbs.	0 lbs.	
		BRACKET SPACING									
10	30				2'-1"	2'-7"	3'-2"	3'-8"	4'-2"	5'-9"	4000
		3'-6"	4'-0"	4'-5"	4'-9"	5'-1"	5'-3"	5'-5"	5'-7"	6'-7"	6000
	40				2'-1"	2'-7"	3'-2"	3'-8"	4'-2"	5'-9"	4000
		3'-6"	4'-0"	4'-5"	4'-9"	5'-1"	5'-3"	5'-5"	5'-7"	6'-7"	6000
	50				2'-1"	2'-7"	3'-2"	3'-8"	4'-2"	5'-9"	4000
		3'-6"	4'-0"	4'-5"	4'-9"	5'-1"	5'-3"	5'-5"	5'-7"	6'-7"	6000
12	30					2'-4"	2'-10"	3'-4"	3'-9"	5'-2"	4000
		3'-2"	3'-7"	4'-1"	4'-7"	5'-0"	5'-2"	5'-4"	5'-7"	6'-5"	6000
	40					2'-4"	2'-10"	3'-4"	3'-9"	5'-2"	4000
		3'-2"	3'-7"	4'-1"	4'-7"	5'-0"	5'-2"	5'-4"	5'-7"	6'-5"	6000
	50					2'-4"	2'-10"	3'-4"	3'-9"	5'-2"	4000
		3'-2"	3'-7"	4'-1"	4'-7"	5'-0"	5'-2"	5'-4"	5'-7"	6'-5"	6000
14	30					2'-2"	2'-7"	3'-0"	3'-5"	4'-9"	4000
		2'-10"	3'-4"	3'-9"	4'-2"	4'-7"	5'-0"	5'-4"	5'-7"	6'-4"	6000
	40					2'-2"	2'-7"	3'-0"	3'-5"	4'-9"	4000
		2'-10"	3'-4"	3'-9"	4'-2"	4'-7"	5'-0"	5'-4"	5'-7"	6'-4"	6000
	50					2'-2"	2'-7"	3'-0"	3'-5"	4'-9"	4000
		2'-10"	3'-4"	3'-9"	4'-2"	4'-7"	5'-0"	5'-4"	5'-7"	6'-4"	6000
16	30					2'-0"	2'-4"	2'-9"	3'-2"	4'-4"	4000
		2'-8"	3'-0"	3'-5"	3'-10"	4'-3"	4'-7"	5'-0"	5'-5"	6'-3"	6000
	40					2'-0"	2'-4"	2'-9"	3'-2"	4'-4"	4000
		2'-8"	3'-0"	3'-5"	3'-10"	4'-3"	4'-7"	5'-0"	5'-5"	6'-3"	6000
	50					2'-0"	2'-4"	2'-9"	3'-2"	4'-4"	4000
		2'-8"	3'-0"	3'-5"	3'-10"	4'-3"	4'-7"	5'-0"	5'-5"	6'-3"	6000

TABLE 1-2 (FOR USE ON **OVER 2'-0" TO 2'-6" OVERHANG (L)** & 54" HORIZONTAL LEG LENGTH OF THE OVERHANG BRACKET)

AVG. SLAB THICKNESS (T) (In)	BRACKET (K) DIMENSION (In)	SCREED LOAD PER BRACKET									45° HANGER SWL (lbs)
		2500 lbs.	2250 lbs.	2000 lbs.	1750 lbs.	1500 lbs.	1250 lbs.	1000 lbs.	750 lbs.	0 lbs.	
		BRACKET SPACING									
10	30					2'-4"	2'-9"	3'-3"	3'-8"	5'-1"	4000
		3'-1"	3'-6"	4'-0"	4'-5"	4'-11"	5'-3"	5'-5"	5'-7"	6'-7"	6000
	40					2'-4"	2'-9"	3'-3"	3'-8"	5'-1"	4000
		3'-1"	3'-6"	4'-0"	4'-5"	4'-11"	5'-3"	5'-5"	5'-7"	6'-7"	6000
	50					2'-4"	2'-9"	3'-3"	3'-8"	5'-1"	4000
		3'-1"	3'-6"	4'-0"	4'-5"	4'-11"	5'-3"	5'-5"	5'-7"	6'-7"	6000
12	30				2'-1"	2'-6"	2'-11"	3'-4"	4'-6"		4000
		2'-9"	3'-2"	3'-7"	4'-0"	4'-5"	4'-10"	5'-3"	5'-7"	6'-5"	6000
	40				2'-1"	2'-6"	2'-11"	3'-4"	4'-6"		4000
		2'-9"	3'-2"	3'-7"	4'-0"	4'-5"	4'-10"	5'-3"	5'-7"	6'-5"	6000
	50				2'-1"	2'-6"	2'-11"	3'-4"	4'-6"		4000
		2'-9"	3'-2"	3'-7"	4'-0"	4'-5"	4'-10"	5'-3"	5'-7"	6'-5"	6000
14	30					2'-3"	2'-7"	3'-0"	4'-1"		4000
		2'-6"	2'-10"	3'-3"	3'-7"	4'-0"	4'-4"	4'-9"	5'-1"	6'-3"	6000
	40					2'-3"	2'-7"	3'-0"	4'-1"		4000
		2'-6"	2'-10"	3'-3"	3'-7"	4'-0"	4'-4"	4'-9"	5'-1"	6'-3"	6000
	50					2'-3"	2'-7"	3'-0"	4'-1"		4000
		2'-6"	2'-10"	3'-3"	3'-7"	4'-0"	4'-4"	4'-9"	5'-1"	6'-3"	6000
16	30					2'-1"	2'-5"	2'-9"	3'-9"		4000
		2'-3"	2'-7"	2'-11"	3'-4"	3'-8"	4'-0"	4'-4"	4'-8"	5'-8"	6000
	40					2'-1"	2'-5"	2'-9"	3'-9"		4000
		2'-3"	2'-7"	2'-11"	3'-4"	3'-8"	4'-0"	4'-4"	4'-8"	5'-8"	6000
	50					2'-1"	2'-5"	2'-9"	3'-9"		4000
		2'-3"	2'-7"	2'-11"	3'-4"	3'-8"	4'-0"	4'-4"	4'-8"	5'-8"	6000

TABLE 1-3 (FOR USE ON **OVER 2'-6" TO 3'-0" OVERHANG (L)** & 54" HORIZONTAL LEG LENGTH OF THE OVERHANG BRACKET)

AVG. SLAB THICKNESS (T) (In)	BRACKET (K) DIMENSION (In)	SCREED LOAD PER BRACKET									45° HANGER SWL (lbs)
		2500 lbs.	2250 lbs.	2000 lbs.	1750 lbs.	1500 lbs.	1250 lbs.	1000 lbs.	750 lbs.	0 lbs.	
		BRACKET SPACING									
10	30					2'-1"	2'-6"	2'-11"	3'-4"	4'-6"	4000
						4'-5"	4'-10"	5'-3"	5'-7"	6'-7"	6000
	40					2'-1"	2'-6"	2'-11"	3'-4"	4'-6"	4000
		2'-9"	3'-2"	3'-7"	4'-0"	4'-5"	4'-10"	5'-3"	5'-7"	6'-7"	6000
	50					2'-1"	2'-6"	2'-11"	3'-4"	4'-6"	4000
		2'-9"	3'-2"	3'-7"	4'-0"	4'-5"	4'-10"	5'-3"	5'-7"	6'-7"	6000
12	30						2'-2"	2'-7"	2'-11"	4'-0"	4000
						3'-11"	4'-3"	4'-8"	5'-0"	6'-1"	6000
	40						2'-2"	2'-7"	2'-11"	4'-0"	4000
		2'-5"	2'-10"	3'-2"	3'-6"	3'-11"	4'-3"	4'-8"	5'-0"	6'-1"	6000
	50						2'-2"	2'-7"	2'-11"	4'-0"	4000
		2'-5"	2'-10"	3'-2"	3'-6"	3'-11"	4'-3"	4'-8"	5'-0"	6'-1"	6000
14	30						2'-0"	2'-4"	2'-8"	3'-8"	4000
					3'-2"	3'-6"	3'-10"	4'-2"	4'-6"	5'-6"	6000
	40						2'-0"	2'-4"	2'-8"	3'-8"	4000
		2'-2"	2'-6"	2'-10"	3'-2"	3'-6"	3'-10"	4'-2"	4'-6"	5'-6"	6000
	50						2'-0"	2'-4"	2'-8"	3'-8"	4000
		2'-2"	2'-6"	2'-10"	3'-2"	3'-6"	3'-10"	4'-2"	4'-6"	5'-6"	6000
16	30						2'-1"	2'-5"	3'-4"		4000
					2'-11"	3'-2"	3'-6"	3'-10"	4'-1"	5'-0"	6000
	40						2'-1"	2'-5"	3'-4"		4000
		2'-0"	2'-4"	2'-7"	2'-11"	3'-2"	3'-6"	3'-10"	4'-1"	5'-0"	6000
	50						2'-1"	2'-5"	3'-4"		4000
		2'-0"	2'-4"	2'-7"	2'-11"	3'-2"	3'-6"	3'-10"	4'-1"	5'-0"	6000

TABLE 1-4 (FOR USE ON **OVER 3'-0" TO 3'-6" OVERHANG (L)** & 54" HORIZONTAL LEG LENGTH OF THE OVERHANG BRACKET)

AVG. SLAB THICKNESS (T) (In)	BRACKET (K) DIMENSION (In)	SCREED LOAD PER BRACKET									45° HANGER SWL (lbs)
		2500 lbs.	2250 lbs.	2000 lbs.	1750 lbs.	1500 lbs.	1250 lbs.	1000 lbs.	750 lbs.	0 lbs.	
		BRACKET SPACING									
10	30						2'-1"	2'-5"	2'-9"	3'-10"	4000
						2'-3"	2'-11"	3'-7"	4'-3"	5'-9"	6000
	40						2'-1"	2'-5"	2'-9"	3'-10"	4000
					2'-4"	3'-0"	3'-7"	4'-1"	4'-5"	5'-9"	6000
	50						2'-1"	2'-5"	2'-9"	3'-10"	4000
		2'-4"	2'-8"	3'-0"	3'-4"	3'-8"	4'-1"	4'-5"	4'-9"	5'-9"	6000
12	30						2'-2"	2'-6"	3'-5"		4000
						2'-1"	2'-8"	3'-4"	3'-11"	5'-2"	6000
	40						2'-2"	2'-6"	3'-5"		4000
					2'-2"	2'-9"	3'-4"	3'-7"	3'-11"	4'-3"	5'-2"	6000
	50						2'-2"	2'-6"	3'-5"		4000
		2'-1"	2'-4"	2'-8"	3'-0"	3'-4"	3'-7"	3'-11"	4'-3"	5'-2"	6000
14	30						2'-3"	3'-1"			4000
						2'-0"	2'-6"	3'-1"	3'-8"	4'-8"	6000
	40						2'-3"	3'-1"			4000
					2'-0"	2'-7"	3'-0"	3'-3"	3'-6"	3'-10"	4'-8"	6000
	50						2'-3"	3'-1"			4000
				2'-2"	2'-5"	2'-8"	3'-0"	3'-3"	3'-6"	3'-10"	4'-8"	6000
16	30						2'-0"	2'-9"			4000
							2'-4"	2'-10"	3'-5"	4'-3"	6000
	40						2'-0"	2'-9"			4000
						2'-5"	2'-8"	2'-11"	3'-3"	3'-6"	4'-3"	6000
	50						2'-0"	2'-9"			4000
				2'-2"	2'-5"	2'-8"	2'-11"	3'-3"	3'-6"	4'-3"	6000

DEFINITIONS

SLPB = SCREED LOAD PER BRACKET (R x W)
R = SCREED LOAD FACTOR, OBTAINED FROM TABLE 2
W = WHEEL LOAD
S = BRACKET SPACING
T = AVERAGE SLAB THICKNESS
SWL = SAFE WORKING LOAD
K = DIMENSION DEFINED ON "BRIDGE OVERHANG BRACKET SUMMARY" ON SHEET 2
L = OVERHANG MEASURED FROM EDGE OF TOP FLANGE TO EDGE OF SUPERSTRUCTURE

PROJECT NO. R-2554BA
WAYNE COUNTY
STATION: 100+61.488 -L-

SHEET 1 OF 3

STATE OF NORTH CAROLINA
DEPARTMENT OF TRANSPORTATION
RALEIGH

STANDARD OVERHANG FALSEWORK

AASHTO TYPES
III, IV, V, AND VI

(LEFT LANE)

NORTH CAROLINA PROFESSIONAL SEAL 18788 ENGINEER CHANG-CHUAN VICTOR CHAO

Chang-Chuan Victor Chao
4-23-2008

REVISIONS						SHEET NO.
NO.	BY:	DATE:	NO.	BY:	DATE:	S-174
1			3			TOTAL SHEETS
2			4			478

ASSEMBLED BY:	DATE:
CHECKED BY:	DATE:
DRAWN BY: R. WRIGHT 06/04	REV.
CHECKED BY: C. V. CHAO 06/04	

23-APR-2008 11:52
d:\wdlr\victor\overhangfalsework\tiebar&strut\r-2554ba_type_III\r2554baleftoverhangsheets.dgn
vchao

STR. #6

0F1

BRIDGE OVERHANG BRACKET SUMMARY

TOTAL SCREED WEIGHT = _____ LBS.
NUMBER OF SCREED WHEELS = _____
SCREED WHEEL LOAD (W) = _____LBS.
SCREED LOAD PER BRACKET = _____ LBS.

PROJECT No. : _____
COUNTY : _____
STATION : _____
DESCRIPTION : _____
DATE : _____
DESIGN BY : _____
CHECK BY : _____

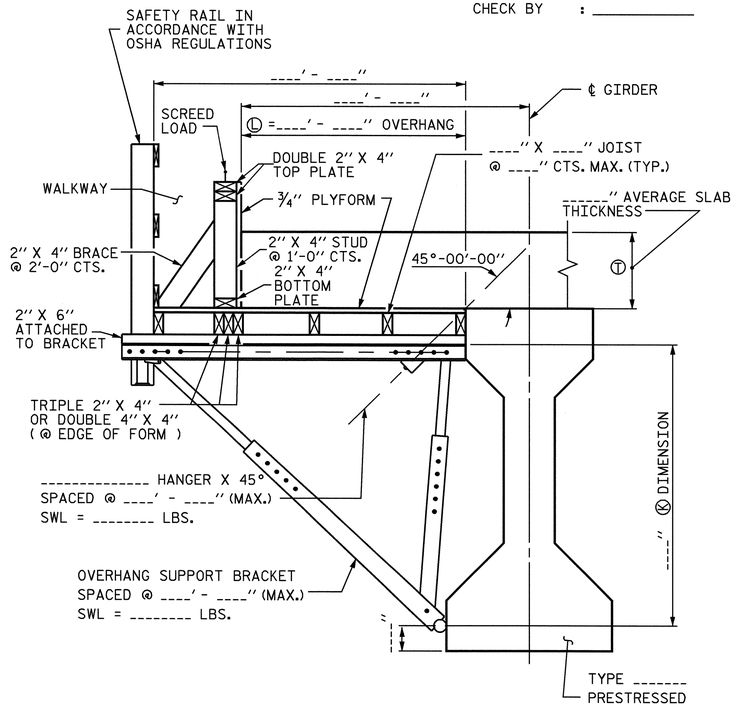

OVERHANG FALSEWORK

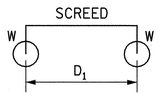

4-WHEEL MACHINE

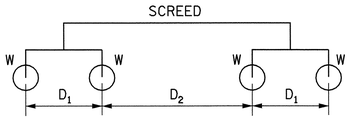

8-WHEEL MACHINE

4 WHEEL MACHINE	
S/D1	R
<= 1.0	1.00
1.1	1.09
1.2	1.17
1.3	1.23
1.4	1.29
1.5	1.33
1.6	1.38
1.7	1.41
1.8	1.44
1.9	1.47
2.0	1.50
2.2	1.55
2.4	1.58
2.6	1.62
2.8	1.64
3.0	1.67
3.5	1.71
4.0	1.75

TABLE 2: SCREED LOAD FACTOR "R"

		THE SCREED LOAD FACTOR R (FOR 8 WHEEL MACHINE)																	
		S/D_2																	
S/D_1		<= 1.0	1.1	1.2	1.3	1.4	1.5	1.6	1.7	1.8	1.9	2.0	2.2	2.4	2.6	2.8	3.0	3.5	4.0
	<= 1.0	1.00	1.09	1.17	1.23	1.29	1.33	1.38	1.41	1.44	1.47	1.50	1.55	1.58	1.62	1.64	1.67	1.71	1.75
	1.1	1.09	1.18	1.26	1.32	1.38	1.42	1.47	1.50	1.54	1.56	1.59	1.64	1.67	1.71	1.73	1.76	1.81	1.84
	1.2	1.17	1.26	1.33	1.40	1.45	1.50	1.54	1.58	1.61	1.64	1.67	1.71	1.75	1.78	1.81	1.83	1.88	1.92
	1.3	1.23	1.32	1.40	1.46	1.52	1.56	1.61	1.64	1.68	1.70	1.73	1.78	1.81	1.85	1.87	1.90	1.95	1.98
	1.4	1.29	1.38	1.45	1.52	1.57	1.62	1.66	1.70	1.73	1.76	1.79	1.83	1.87	1.90	1.93	1.95	2.00	2.07
	1.5	1.33	1.42	1.50	1.56	1.62	1.67	1.71	1.75	1.78	1.81	1.83	1.88	1.92	1.95	1.98	2.00	2.10	2.17
	1.6	1.38	1.47	1.54	1.61	1.66	1.71	1.75	1.79	1.82	1.85	1.88	1.92	1.96	1.99	2.04	2.08	2.18	2.25
	1.7	1.41	1.50	1.58	1.64	1.70	1.75	1.79	1.82	1.86	1.89	1.91	1.96	2.00	2.05	2.11	2.16	2.25	2.32
	1.8	1.44	1.54	1.61	1.68	1.73	1.78	1.82	1.86	1.89	1.92	1.94	1.99	2.06	2.12	2.17	2.22	2.32	2.39
	1.9	1.47	1.56	1.64	1.70	1.76	1.81	1.85	1.89	1.92	1.95	1.97	2.04	2.11	2.18	2.23	2.28	2.38	2.45
	2.0	1.50	1.59	1.67	1.73	1.79	1.83	1.88	1.91	1.94	1.97	2.00	2.09	2.17	2.23	2.29	2.33	2.43	2.50
	2.2	1.55	1.64	1.71	1.78	1.83	1.88	1.92	1.96	1.99	2.04	2.09	2.18	2.26	2.32	2.38	2.42	2.52	2.59
	2.4	1.58	1.67	1.75	1.81	1.87	1.92	1.96	2.00	2.06	2.11	2.17	2.26	2.33	2.40	2.45	2.50	2.60	2.67
	2.6	1.62	1.71	1.78	1.85	1.90	1.95	1.99	2.05	2.12	2.18	2.23	2.32	2.40	2.46	2.52	2.56	2.66	2.73
	2.8	1.64	1.73	1.81	1.87	1.93	1.98	2.04	2.11	2.17	2.23	2.29	2.38	2.45	2.52	2.57	2.62	2.71	2.79
	3.0	1.67	1.76	1.83	1.90	1.95	2.00	2.08	2.16	2.22	2.28	2.33	2.42	2.50	2.56	2.62	2.67	2.76	2.83
	3.5	1.71	1.81	1.88	1.95	2.00	2.10	2.18	2.25	2.32	2.38	2.43	2.52	2.60	2.66	2.71	2.76	2.86	2.93
	4.0	1.75	1.84	1.92	1.98	2.07	2.17	2.25	2.32	2.39	2.45	2.50	2.59	2.67	2.73	2.79	2.83	2.93	3.00

NOTES

DESIGN INCLUDES CONSTRUCTION LIVE LOAD 20 PSF ON THE AREA SUPPORTED AND 75 PLF AT THE OUTSIDE DECK OF OVERHANGS.

REQUIRED MINIMUM DIAGONAL LEG CAPACITY: 3600 LB WORKING LOAD

THE CONTRACTOR HAS THE OPTION OF SUBMITTING HIS OWN DESIGN FOR OVERHANG FALSEWORK IN ACCORDANCE WITH THE SPECIAL PROVISIONS.

SUBMITTALS UTILIZING THE INSTRUCTIONS AND PROCEDURES DESCRIBED ON SHEET 1 OF 3 SHALL BE IN ACCORDANCE WITH THE APPLICABLE SECTIONS OF THE SPECIFICATIONS AND SPECIAL PROVISIONS, EXCEPT THAT CALCULATIONS FOR OVERHANG FALSEWORK NEED NOT BE SEALED BY A REGISTERED ENGINEER.

FOR OVERHANG FALSEWORK BRACING DESIGN, SEE SHEET 3 OF 3.

TABLE 3: ALLOWABLE SPAN LENGTH OF JOISTS AND JOIST SPACINGS

AVG. SLAB THICKNESS Ⓣ (IN)	LUMBER JOIST SIZE (IN X IN)	JOIST SPACINGS			
		15 IN	12 IN	10 IN	8 IN
		THE ALLOWABLE SPAN LENGTH OF JOISTS			
10	2 X 4	———	4' - 6"	4' - 9"	5' - 0"
	4 X 4	5' - 9"	6' - 3"	6' - 6"	6' - 7"
12	2 X 4	———	4' - 3"	4' - 9"	5' - 0"
	4 X 4	5' - 3"	6' - 0"	6' - 3"	6' - 5"
14	2 X 4	———	4' - 0"	4' - 6"	5' - 0"
	4 X 4	———	5' - 6"	6' - 0"	6' - 4"
16	2 X 4	———	4' - 0"	4' - 3"	4' - 9"
	4 X 4	———	5' - 3"	5' - 9"	6' - 3"

PROJECT NO. R-2554BA
WAYNE COUNTY
STATION: 100+61.488 -L-

SHEET 2 OF 3

STATE OF NORTH CAROLINA
DEPARTMENT OF TRANSPORTATION
RALEIGH

STANDARD OVERHANG FALSEWORK

AASHTO TYPES
III, IV, V, AND VI

(LEFT LANE)

NORTH CAROLINA PROFESSIONAL SEAL 18788 ENGINEER CHANG-CHUAN VICTOR CHAO
Chang-Chuan Victor Chao
4-23-2008

REVISIONS						SHEET NO.
NO.	BY:	DATE:	NO.	BY:	DATE:	5-175
1			3			TOTAL SHEETS
2			4			478

ASSEMBLED BY:	DATE:
CHECKED BY:	DATE:
DRAWN BY: R. WRIGHT 06/04	REV.
CHECKED BY: C. V. CHAO 06/04	

23-APR-2008 11:52
d:\wdlr\victor\overhangfalsework\tiebar&strut\r-2554ba_type_III\r2554baleftoverhangsheets.dgn
vchao

STR. #6

0F2

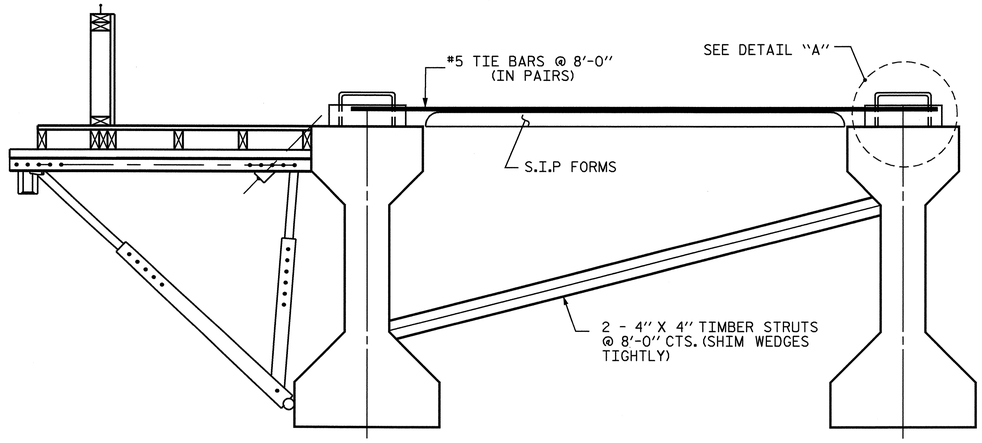

EXTERIOR GIRDER

INTERIOR GIRDER

DETAIL OF REQUIRED OVERHANG FALSEWORK BRACING SYSTEM

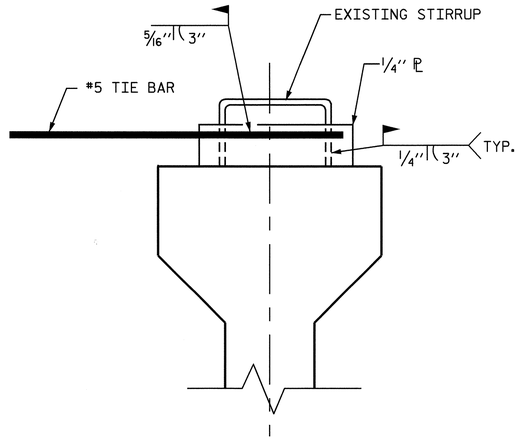

DETAIL "A"

NOTES:

EACH #5 TIE BAR SHALL BE WELDED TO ONE STIRRUP LOOP AS SHOWN IN DETAIL "A". #5 TIE BARS SHALL BE WELDED TO TWO ADJACENT STIRRUPS OF THE EXTERIOR GIRDER AND THE ADJACENT INTERIOR GIRDER BETWEEN PERMANENT DIAPHRAGMS. WELD STEEL PLATES IN BETWEEN THE TIE BARS AND THE STIRRUP LOOP. WELDING TWO TIE BARS TO THE SAME STIRRUP LOOP SHALL NOT BE PERMITTED.

MAXIMUM SPACING BETWEEN THE BRACING (TIE BARS-TIMBER STRUT) IS 8'-0" CTS. #5 TIE BARS SHALL BE LOCATED OVER A TIMBER STRUT.

INSTALL TIE BARS AND TIMBER STRUTS PRIOR TO PLACEMENT OF CONCRETE OR SCREED WEIGHT ONTO THE OVERHANG FALSEWORK.

NORTH CAROLINA PROFESSIONAL SEAL 18788 ENGINEER CHANG-CHUAN VICTOR CHAO

Chang-Chuan Victor Chao
4-23-2008

PROJECT NO. R-2554BA

WAYNE COUNTY

STATION: 100+61.488 -L-

SHEET 3 OF 3

STATE OF NORTH CAROLINA
DEPARTMENT OF TRANSPORTATION
RALEIGH

STANDARD OVERHANG FALSEWORK

AASHTO TYPES
III, IV, V, AND VI

(LEFT LANE)

REVISIONS						SHEET NO.
NO.	BY:	DATE:	NO.	BY:	DATE:	S-176
1			3			TOTAL SHEETS
2			4			478

DRAWN BY: R. WRIGHT 06/04 DATE : _____
CHECKED BY: C. V. CHAO 06/04 DATE : _____

23-APR-2008 11:52
d:\wdlr\victor\overhangfalsework\tiebar&strut\r-2554ba_type_III\r2554baleftoverhangsheets.dgn
vchao

STR. #6

0F3

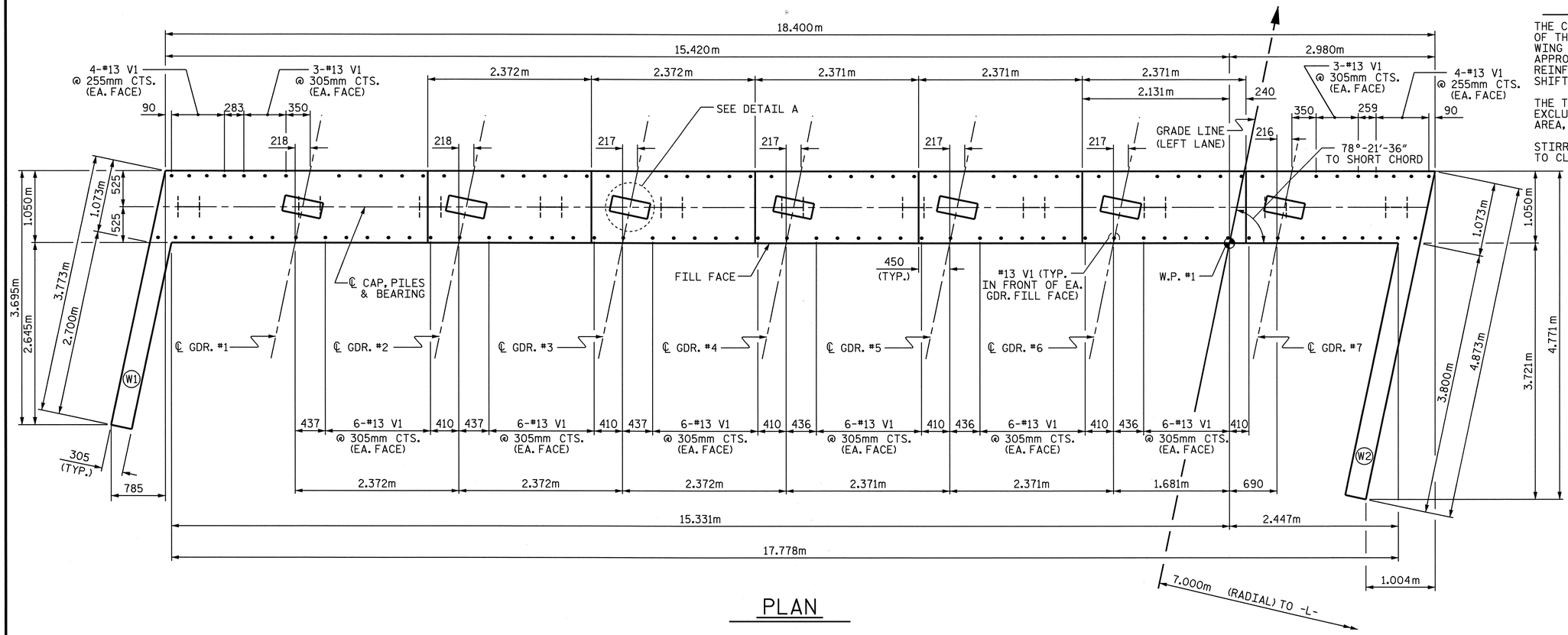

PLAN

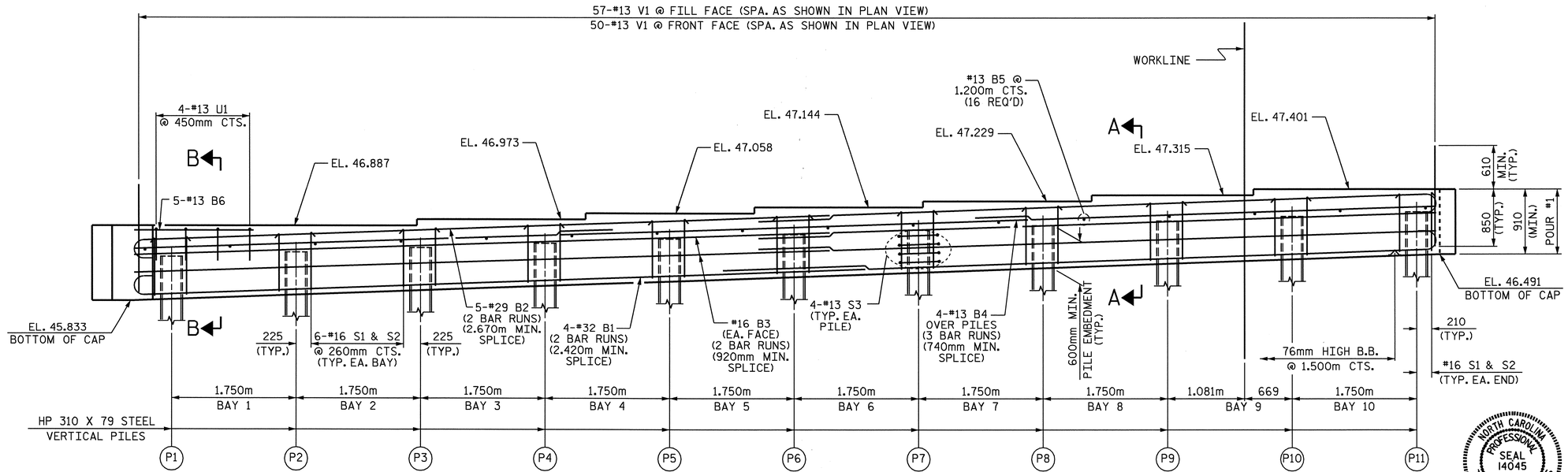

ELEVATION

(FOR WING REINFORCING STEEL AND DETAILS, SEE SHEET 2 OF 3)

NOTES:

THE CONTRACTOR SHALL PROVIDE FOR INSTALLATION OF THE 102mm DIAMETER DRAIN PIPE THROUGH THE WING WALL AS REQUIRED FOR REINFORCED BRIDGE APPROACH FILLS, SEE THE ROADWAY PLANS. REINFORCING STEEL IN THE WING WALL MAY BE SHIFTED AS NECESSARY TO CLEAR THE DRAIN PIPE.

THE TOP SURFACE OF THE END BENT CAP AND WINGS, EXCLUDING THE OUTSIDE 100mm AND THE BEARING AREA, SHALL BE RAKED TO A DEPTH OF 6mm.

STIRRUPS IN CAP MAY BE SHIFTED AS NECESSARY TO CLEAR #13 V1 BAR.

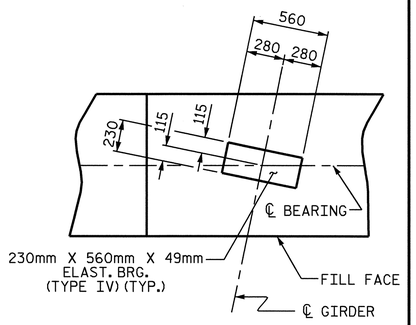

DETAIL A

(TYP. EA. GDR.)

TOP OF PILE ELEVATIONS	
P1	46.452
P2	46.515
P3	46.578
P4	46.641
P5	46.704
P6	46.768
P7	46.831
P8	46.894
P9	46.957
P10	47.020
P11	47.083

PROJECT NO. R-2554BA

WAYNE COUNTY

STATION: 100+61.488 -L-

SHEET 1 OF 3

STATE OF NORTH CAROLINA
DEPARTMENT OF TRANSPORTATION
RALEIGH

SUBSTRUCTURE

INTEGRAL END BENT #1

(LEFT LANE)

NORTH CAROLINA PROFESSIONAL SEAL 14045 ENGINEER TIMOTHY W. COGGINS

6/9/08

REVISIONS						SHEET NO.
NO.	BY:	DATE:	NO.	BY:	DATE:	S-177
1			3			TOTAL SHEETS
2			4			478

DRAWN BY : D. G. ELY DATE : 12/2007
CHECKED BY : J. B. WILSON DATE : 3/2008

09-JUN-2008 12:12
g:\tipprojects-r\r2554ba\structures\azlzl\str#6\finalplans\r-2554ba_sd_e#_str6.dgn
taverette

STR. #6

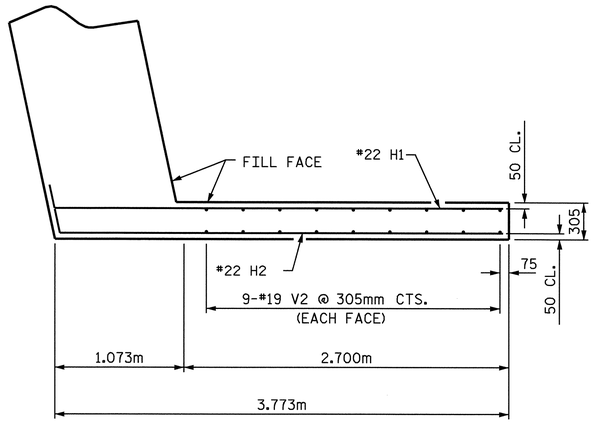

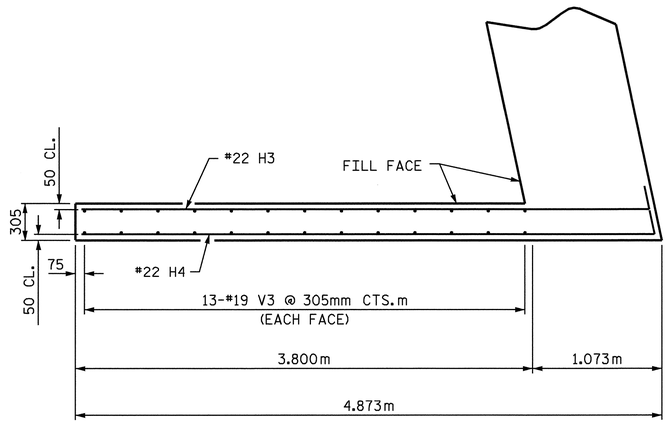

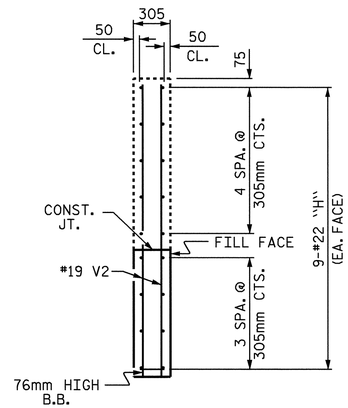

SECTION X-X

PLAN OF WING W1

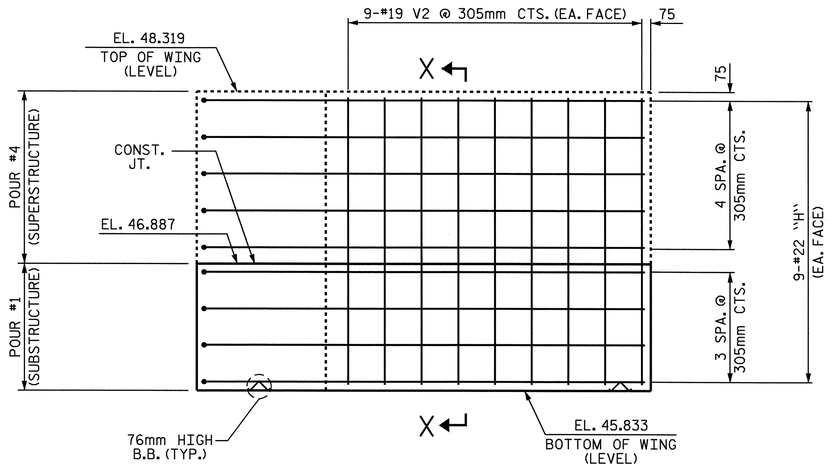

PLAN OF WING W2

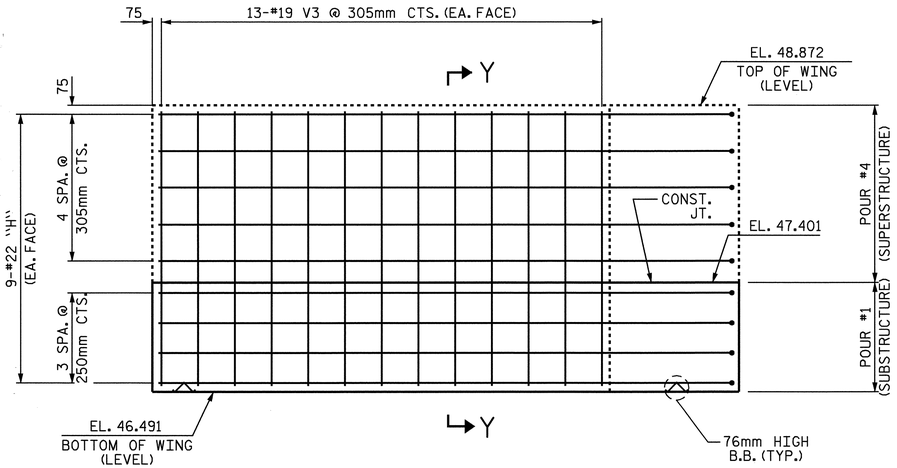

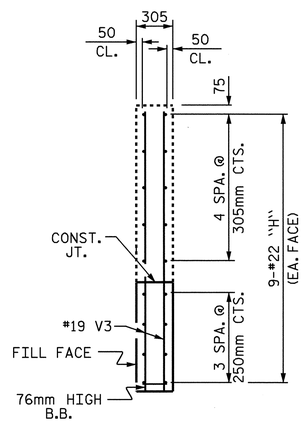

SECTION Y-Y

ELEVATION OF WING W1

ELEVATION OF WING W2

PROJECT NO. R-2554BA

WAYNE COUNTY

STATION: 100+61.488 -L-

SHEET 2 OF 3

STATE OF NORTH CAROLINA
DEPARTMENT OF TRANSPORTATION
RALEIGH

SUBSTRUCTURE

INTEGRAL END BENT #1
(LEFT LANE)

REVISIONS						SHEET NO.
NO.	BY:	DATE:	NO.	BY:	DATE:	S-178
1			3			TOTAL SHEETS
2			4			478

NORTH CAROLINA PROFESSIONAL SEAL 14045 ENGINEER TIMOTHY L. LEDGERWOOD
6/9/08

DRAWN BY : D. G. ELY DATE : 12/2007
CHECKED BY : J. B. WILSON DATE : 3/2008

09-JUN-2008 12:12
g:\tlpprojects-r\r2554ba\structures\azlzl\str#6\finalplans\r-2554ba_sd_e#_str6.dgn
taverette

STR. #6

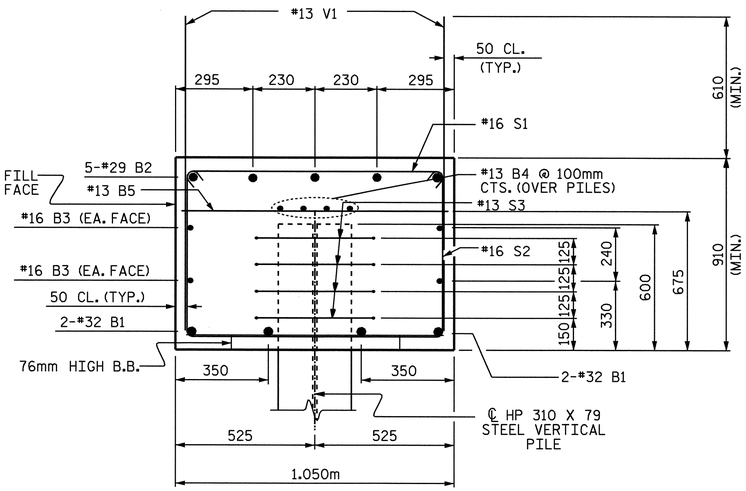

SECTION A-A

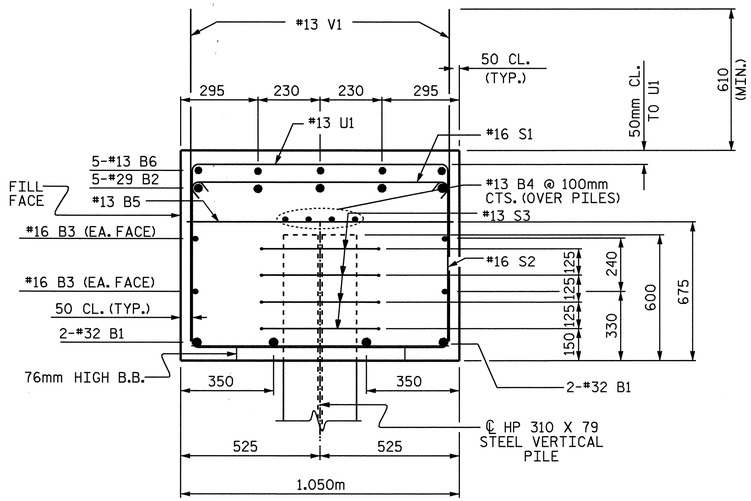

SECTION B-B

BAR TYPES

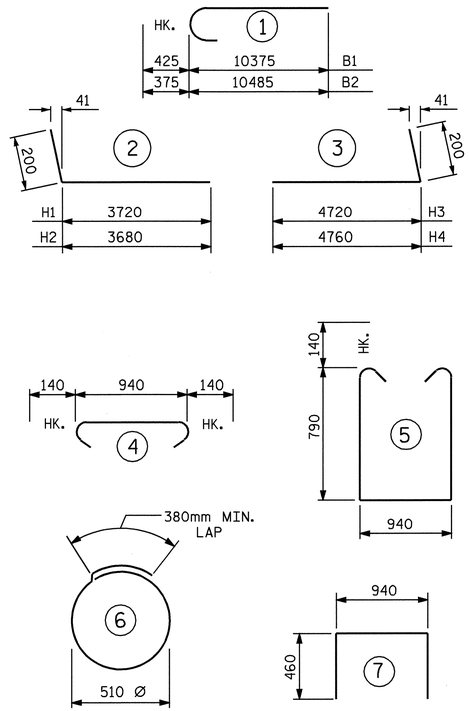

ALL BAR DIMENSIONS ARE OUT TO OUT.

BILL OF MATERIAL

END BENT #1

BAR	NO.	SIZE	TYPE	LENGTH	WEIGHT
B1	8	#32	1	10800	553
B2	10	#29	1	10860	550
B3	8	#16	STR	9620	119
B4	12	#13	STR	6600	79
B5	15	#13	STR	940	14
B6	5	#13	STR	1500	7
H1	9	#22	2	3920	107
H2	9	#22	2	3880	106
H3	9	#22	3	4920	135
H4	9	#22	3	4960	136
S1	62	#16	4	1220	117
S2	62	#16	5	2800	269
S3	44	#13	6	1980	87
U1	4	#13	7	1860	7
V1	107	#13	STR	1460	155
V2	18	#19	STR	2320	93
V3	26	#19	STR	2220	129

REINFORCING STEEL = 2663 kg

CLASS A CONCRETE BREAKDOWN
POUR #1: CAP & LOWER WINGS 20.4 m3

TOTAL CONCRETE 20.4 m3

HP 310 X 79 STEEL PILE
NO. 11 286.0 METERS

PILE REDRIVES EACH 4

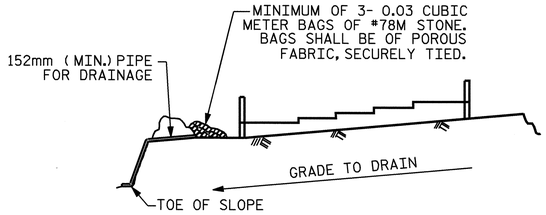

BAGGED STONE AND PIPE SHALL BE PLACED IMMEDIATELY AFTER COMPLETION OF END BENT EXCAVATION. PIPE MAY BE EITHER CONCRETE, CORRUGATED STEEL, CORRUGATED ALUMINUM ALLOY, OR CORRUGATED PLASTIC. PERFORATED PIPE WILL NOT BE ALLOWED.

BAGGED STONE SHALL REMAIN IN PLACE UNTIL THE ENGINEER DIRECTS THAT IT BE REMOVED. THE CONTRACTOR SHALL REMOVE AND DISPOSE OF SILT ACCUMULATIONS AT BAGGED STONE WHEN SO DIRECTED BY THE ENGINEER. BAGS SHALL BE REMOVED AND REPLACED WHENEVER THE ENGINEER DETERMINES THAT THEY HAVE DETERIORATED AND LOST THEIR EFFECTIVENESS.

NO SEPARATE PAYMENT WILL BE MADE FOR THIS WORK AND THE ENTIRE COST OF THIS WORK SHALL BE INCLUDED IN THE UNIT CONTRACT PRICE BID FOR THE SEVERAL PAY ITEMS.

TEMPORARY DRAINAGE AT END BENT

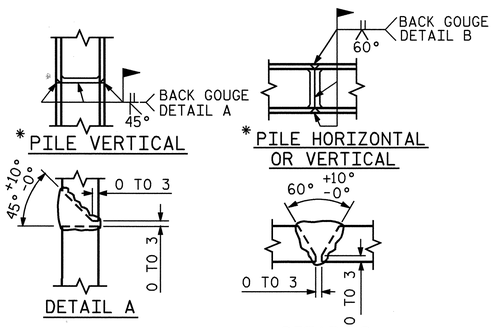

* POSITION OF PILE DURING WELDING.

PILE SPLICE DETAILS

PROJECT NO. R-2554BA

WAYNE COUNTY

STATION: 100+61.488 -L-

SHEET 3 OF 3

STATE OF NORTH CAROLINA
DEPARTMENT OF TRANSPORTATION
RALEIGH

SUBSTRUCTURE

INTEGRAL
END BENT #1
(LEFT LANE)

REVISIONS						SHEET NO.
NO.	BY:	DATE:	NO.	BY:	DATE:	S-179
1			3			TOTAL SHEETS
2			4			478

STR. #6

NORTH CAROLINA PROFESSIONAL SEAL 14045 ENGINEER TIMOTHY E. COGGINS
Timothy E. Coggins 6/9/08

DRAWN BY : D. G. ELY DATE : 12/2007
CHECKED BY : J. B. WILSON DATE : 3/2008

09-JUN-2008 12:12
g:\tlpprojects-r\r2554ba\structures\azlzl\str*6\final plans\r-2254ba_sd_e*_str6.dgn
taverette

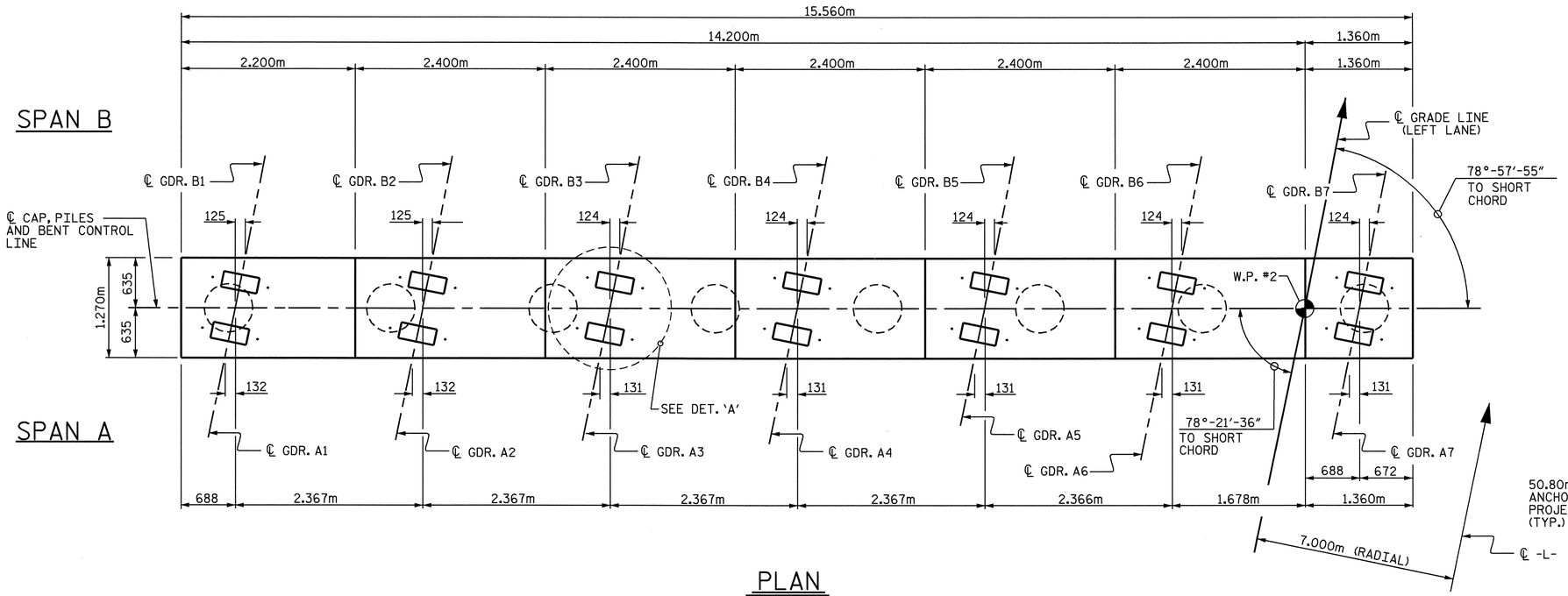

PLAN

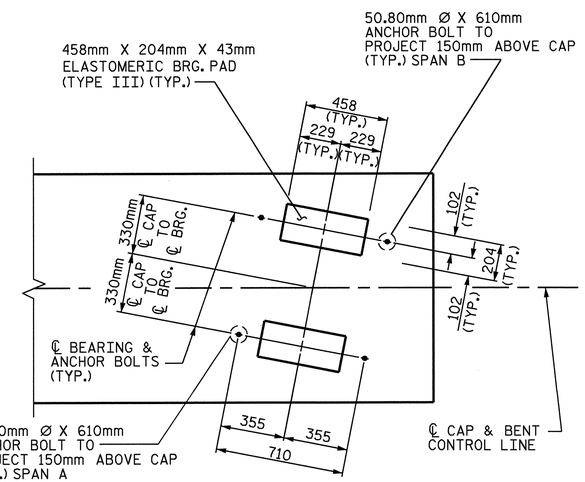

DETAIL 'A'

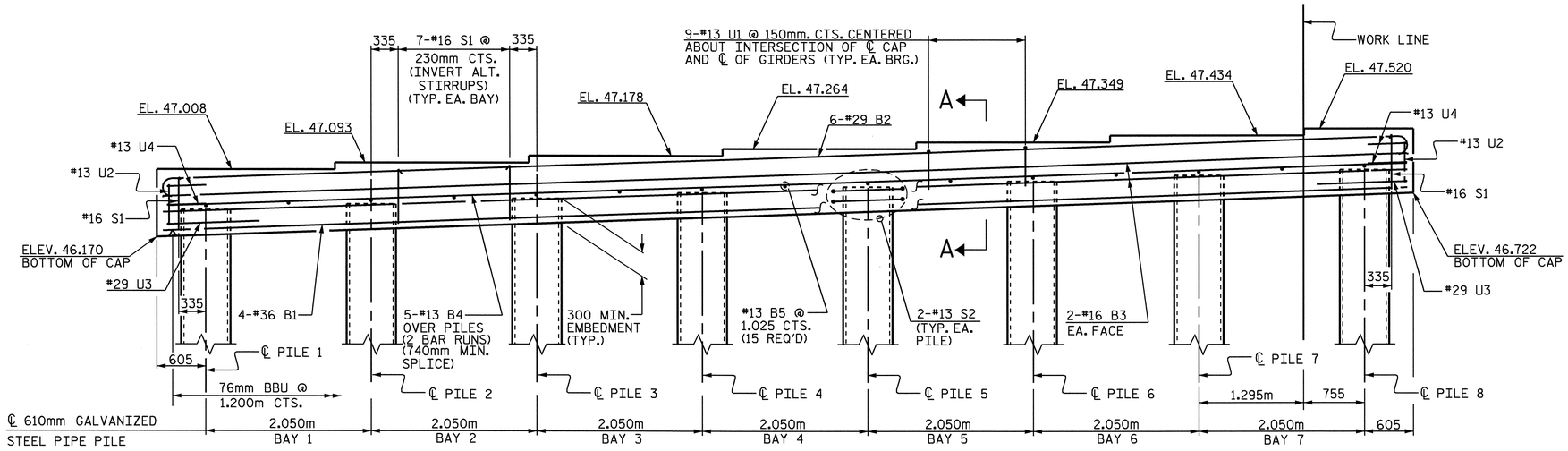

ELEVATION

FOR REINFORCING STEEL IN PIPE PILE, SEE STD. DRAWING "610mm STEEL PIPE PILE"

TABLE OF ELEVATIONS

TOP OF PILE ELEVATIONS @ ℄ PILE								MIN. TIP ELEV.
PILE 1	PILE 2	PILE 3	PILE 4	PILE 5	PILE 6	PILE 7	PILE 8	ALL PILES
46.502	46.575	46.648	46.720	46.793	46.866	46.939	47.011	29.000

PROJECT NO. R-2554BA

WAYNE COUNTY

STATION: 100+61.488 -L-

SHEET 1 OF 2

STATE OF NORTH CAROLINA
DEPARTMENT OF TRANSPORTATION
RALEIGH

SUBSTRUCTURE

BENT #1
(LEFT LANE)

REVISIONS						SHEET NO.
NO.	BY:	DATE:	NO.	BY:	DATE:	S-180
1			3			TOTAL SHEETS
2			4			478

STR. #6

NORTH CAROLINA PROFESSIONAL SEAL 14045 ENGINEER TIMOTHY J. COGGINS
Timothy J. Coggins 6/16/08

DRAWN BY : M.D.PISO DATE : 02/2008
CHECKED BY : J.B.WILSON DATE : 03/2008

06-JUN-2008 14:43
g:\structures\azizi\str#6\finalplans\b-2554ba_sd_b6.dgn
tcoggins

NOTES:

STIRRUPS IN THE CAP MAY BE SHIFTED AS NECESSARY TO CLEAR ANCHOR BOLTS.

THE CONCRETE DISPLACED BY THE FILLED 610mm Ø STEEL PIPE PILES HAS BEEN DEDUCTED FROM THE QUANTITY OF CLASS 'A' CONCRETE FOR THE BENT CAP.

THE STEEL PIPE PILES SHALL BE GALVANIZED IN ACCORDANCE WITH SECTION 1076 OF THE STANDARD SPECIFICATIONS.

BAR TYPES

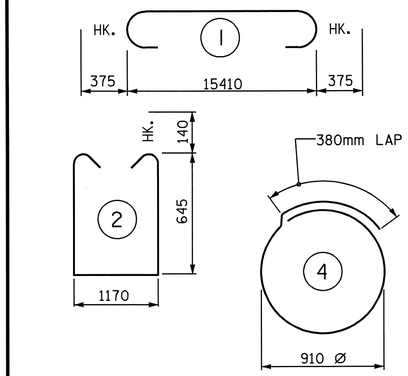

ALL BAR DIMENSIONS ARE OUT TO OUT.

BILL OF MATERIAL

BENT NO. 1

BAR	NO.	SIZE	TYPE	LENGTH	WEIGHT
B1	4	#36	STR.	15410	488
B2	6	#29	1	16160	491
B3	4	#16	STR.	15410	96
B4	10	#13	STR.	8080	80
B5	15	#13	STR.	1160	17
S1	51	#16	2	2740	217
S2	16	#13	4	3240	52
U1	63	#13	3	2100	132
U2	8	#13	3	1520	12
U3	2	#29	3	3360	34
U4	4	#13	3	2040	8

REINFORCING STEEL kg 1,627 kg

CLASS A CONCRETE
BENT CAP (m3) 15.2m3

PP 610 X 12.70 GALVANIZED STEEL PILE	NO.	TOT. LEN.
	8	192.0 m
PILE REDRIVES	EACH	4
PDA TESTING	EACH	1
PDA ASSISTANCE	EACH	1

SPLICE CHART

BAR SIZE	SPLICE LENGTH
#13	740mm

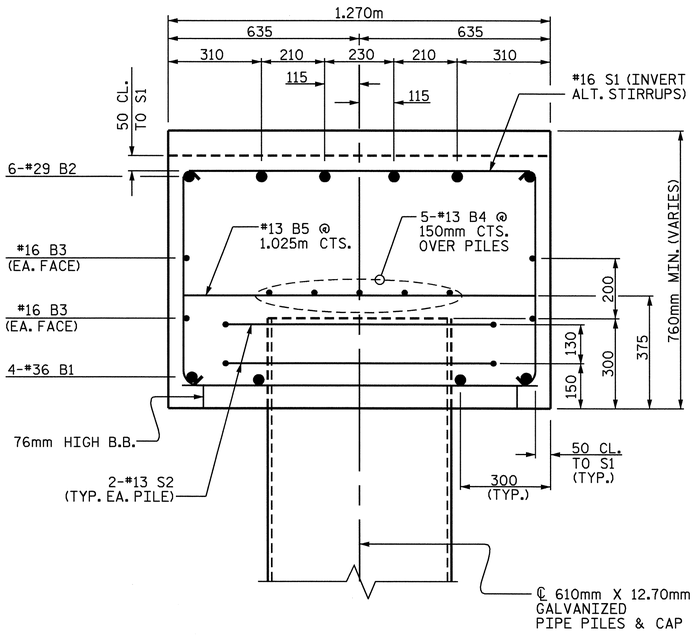

SECTION A-A

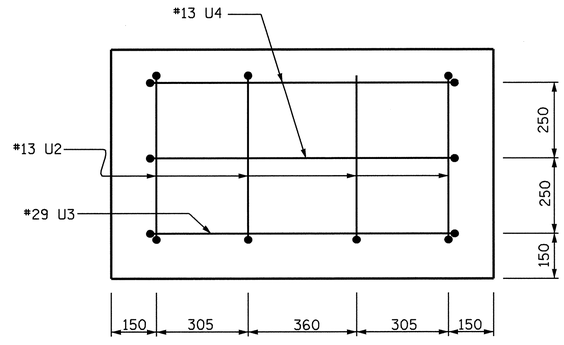

END VIEW
(TYP. EA. END)

PROJECT NO. R-2554BA
WAYNE COUNTY
STATION: 100+61.488 -L-

SHEET 2 OF 2

STATE OF NORTH CAROLINA
DEPARTMENT OF TRANSPORTATION
RALEIGH

SUBSTRUCTURE

BENT #1

(LEFT LANE)

REVISIONS						SHEET NO.
NO.	BY:	DATE:	NO.	BY:	DATE:	S-181
1			3			TOTAL SHEETS
2			4			478

NORTH CAROLINA PROFESSIONAL SEAL 14045 ENGINEER TIMOTHY L. COGGINS
6/6/08

DRAWN BY : M.D.PISO DATE : 02/2008
CHECKED BY : J.B.WILSON DATE : 03/2008

STR.#6

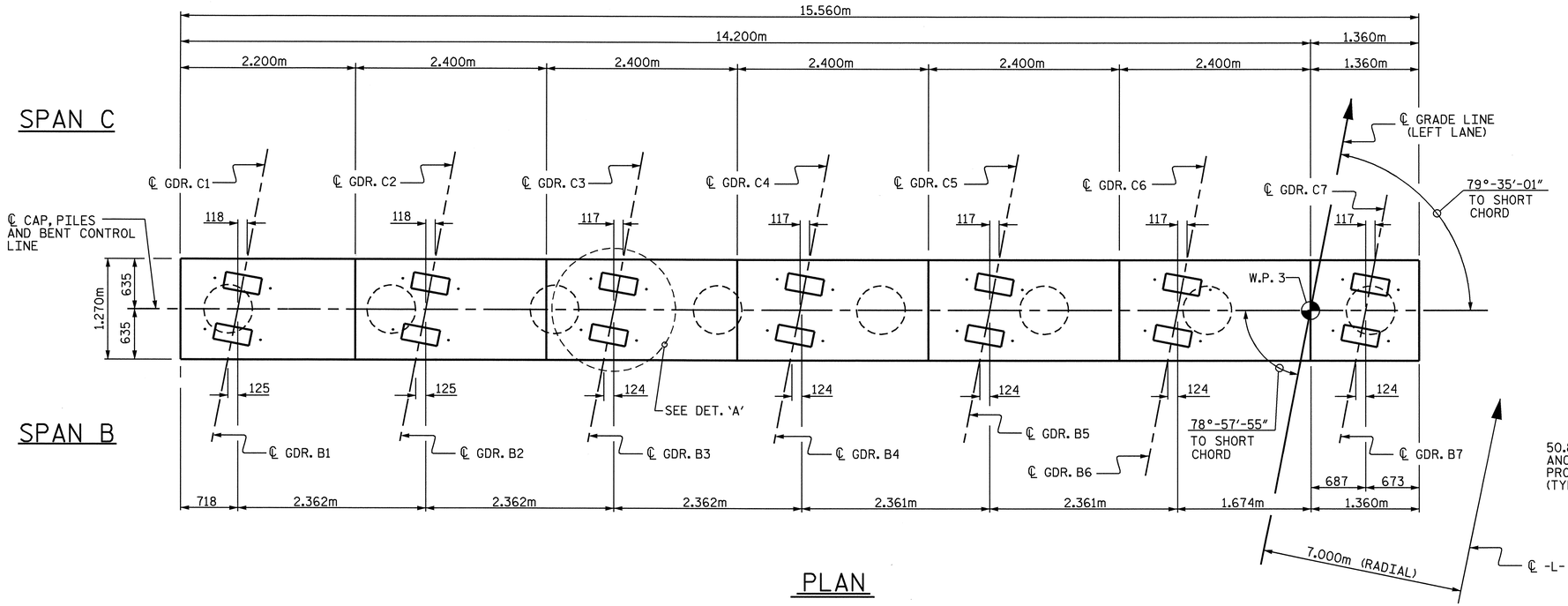

PLAN

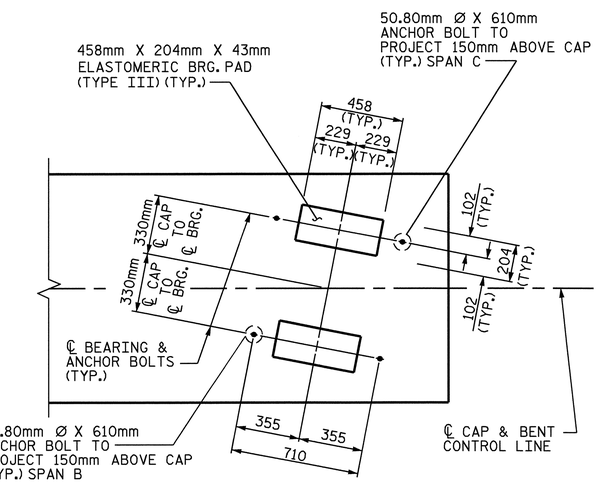

DETAIL 'A'

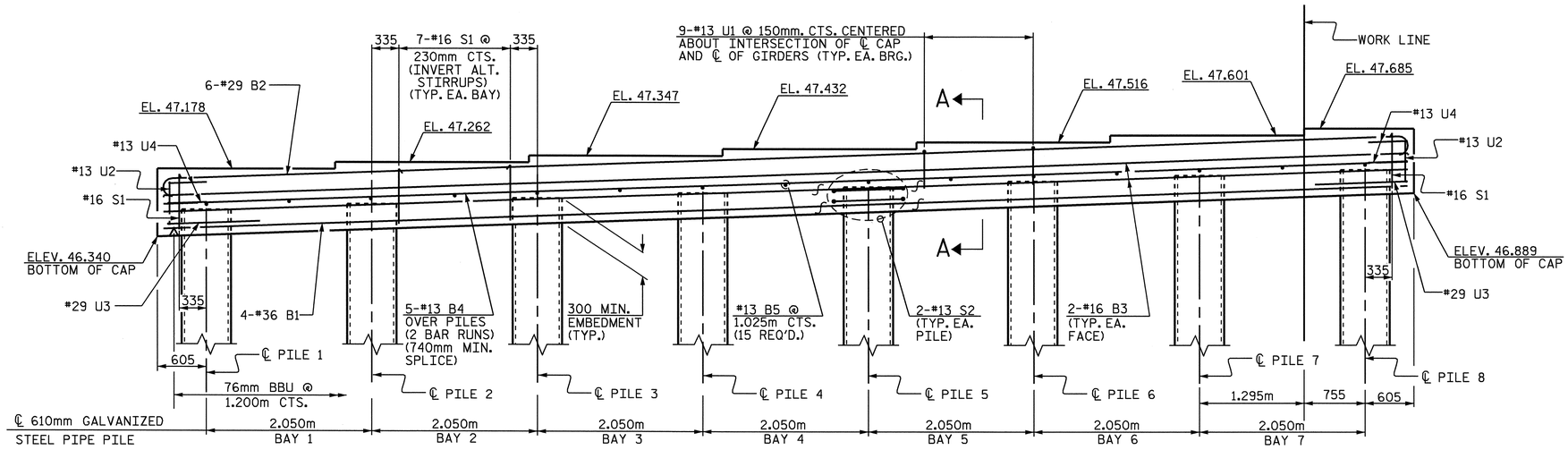

ELEVATION

FOR REINFORCING STEEL IN PIPE PILE, SEE STD. DRAWING "610mm STEEL PIPE PILE"

TABLE OF ELEVATIONS

TOP OF PILE ELEVATIONS @ ℄ PILE								MIN. TIP ELEV.
PILE 1	PILE 2	PILE 3	PILE 4	PILE 5	PILE 6	PILE 7	PILE 8	ALL PILES
46.672	46.744	46.817	46.889	46.961	47.034	47.106	47.178	29.000

NORTH CAROLINA PROFESSIONAL SEAL 14045 ENGINEER TIMOTHY L. COGGINS
Timothy L. Coggins 6/6/08

PROJECT NO. R-2554BA
WAYNE COUNTY
STATION: 100+61.488 -L-

SHEET 1 OF 2

STATE OF NORTH CAROLINA
DEPARTMENT OF TRANSPORTATION
RALEIGH

SUBSTRUCTURE

BENT #2

(LEFT LANE)

REVISIONS						SHEET NO.
NO.	BY:	DATE:	NO.	BY:	DATE:	S-182
1			3			TOTAL SHEETS
2			4			478

STR. #6

DRAWN BY : M.D.PISO DATE : 02/2008
CHECKED BY : J.B.WILSON DATE : 03/2008

06-JUN-2008 14:43
g:\structures\azizi\str#6\finalplans\b-2554ba_sd_b6.dgn
tcoggins

NOTES:

STIRRUPS IN THE CAP MAY BE SHIFTED AS NECESSARY TO CLEAR ANCHOR BOLTS.

THE CONCRETE DISPLACED BY THE FILLED 610mm Ø STEEL PIPE PILES HAS BEEN DEDUCTED FROM THE QUANTITY OF CLASS 'A' CONCRETE FOR THE BENT CAP.

THE STEEL PIPE PILES SHALL BE GALVANIZED IN ACCORDANCE WITH SECTION 1076 OF THE STANDARD SPECIFICATIONS.

BAR TYPES

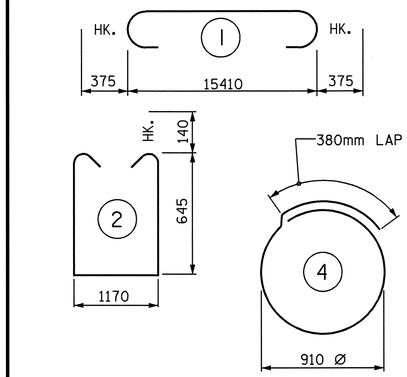

ALL BAR DIMENSIONS ARE OUT TO OUT.

BILL OF MATERIAL

BENT NO. 2

BAR	NO.	SIZE	TYPE	LENGTH	WEIGHT
B1	4	#36	STR.	15410	488
B2	6	#29	1	16160	491
B3	4	#16	STR.	15410	96
B4	10	#13	STR.	8080	80
B5	15	#13	STR.	1160	17
S1	51	#16	2	2740	217
S2	16	#13	4	3240	52
U1	63	#13	3	2100	132
U2	8	#13	3	1520	12
U3	2	#29	3	3360	34
U4	4	#13	3	2040	8
REINFORCING STEEL kg					1,627 kg

CLASS A CONCRETE BENT CAP (m3)	15.2m3

PP 610 X 12.70 GALVANIZED STEEL PILE	NO.	TOT. LEN.
	8	192.0 m
PILE REDRIVES	EACH	4
PDA TESTING	EACH	1
PDA ASSISTANCE	EACH	1

SPLICE CHART

BAR SIZE	SPLICE LENGTH
#13	740mm

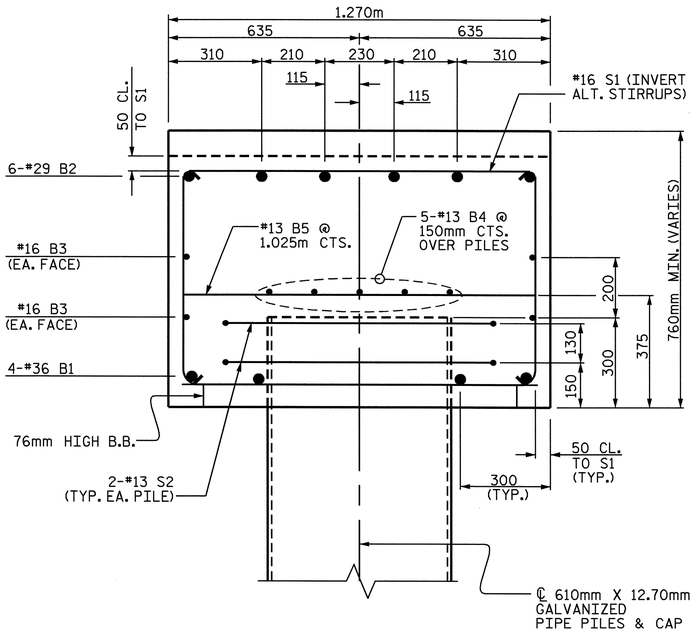

SECTION A-A

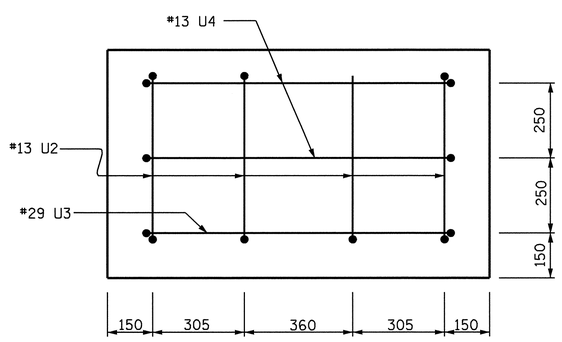

END VIEW

(TYP. EA. END)

PROJECT NO. R-2554BA

WAYNE COUNTY

STATION: 100+61.488 -L-

SHEET 2 OF 2

STATE OF NORTH CAROLINA
DEPARTMENT OF TRANSPORTATION
RALEIGH

SUBSTRUCTURE

BENT #2

(LEFT LANE)

NORTH CAROLINA PROFESSIONAL SEAL 14045 ENGINEER TIMOTHY L. COGGINS

Timothy L. Coggins 6/6/08

REVISIONS						SHEET NO.
NO.	BY:	DATE:	NO.	BY:	DATE:	S-183
1			3			TOTAL SHEETS
2			4			478

DRAWN BY : M.D.PISO DATE : 02/2008
CHECKED BY : J.B.WILSON DATE : 03/2008

STR.#6

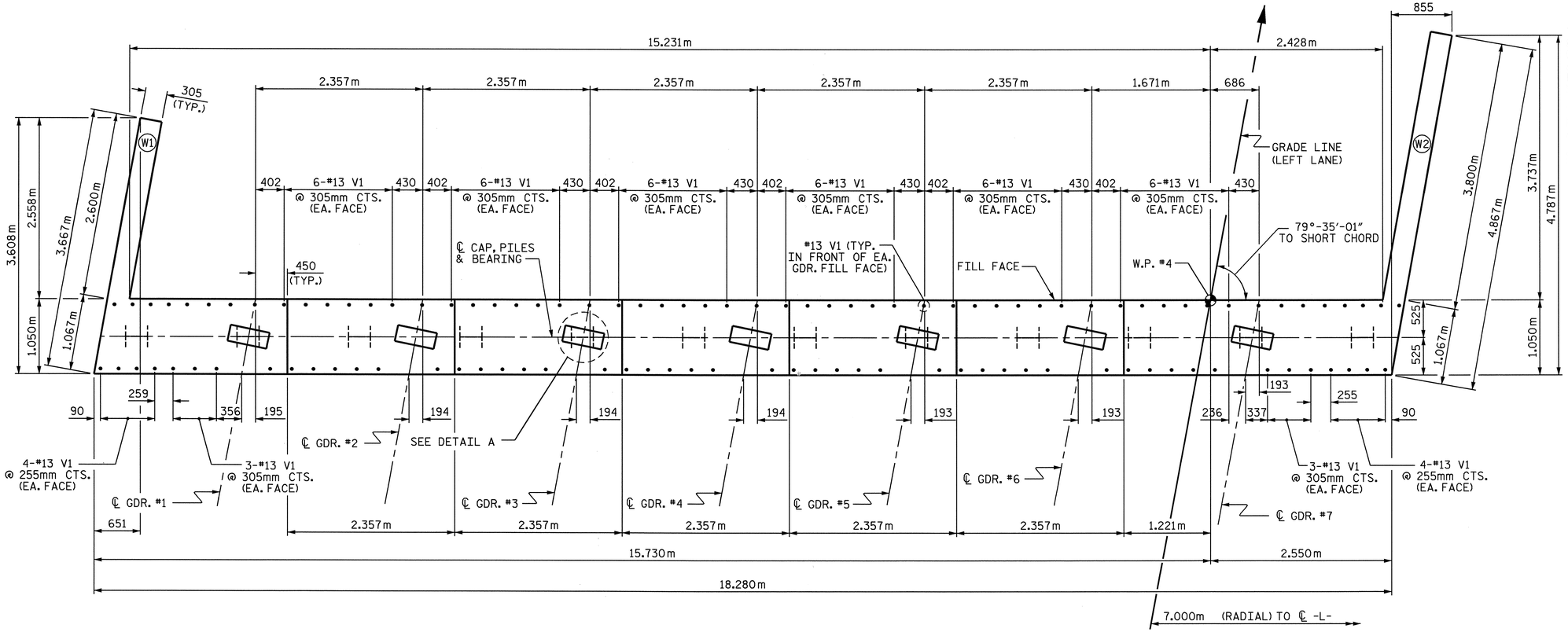

NOTES:

THE CONTRACTOR SHALL PROVIDE FOR INSTALLATION OF THE 102mm DIAMETER DRAIN PIPE THROUGH THE WING WALL AS REQUIRED FOR REINFORCED BRIDGE APPROACH FILLS, SEE THE ROADWAY PLANS. REINFORCING STEEL IN THE WING WALL MAY BE SHIFTED AS NECESSARY TO CLEAR THE DRAIN PIPE.

THE TOP SURFACE OF THE END BENT CAP AND WINGS, EXCLUDING THE OUTSIDE 100mm AND THE BEARING AREA, SHALL BE RAKED TO A DEPTH OF 6mm.

STIRRUPS IN CAP MAY BE SHIFTED AS NECESSARY TO CLEAR #13 V1 BAR.

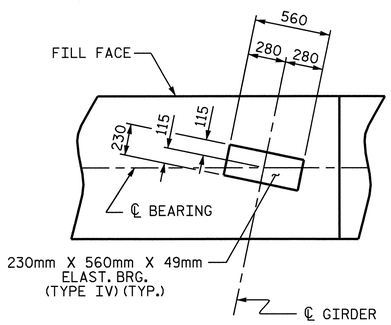

DETAIL A

(TYP. EA. GDR.)

TOP OF PILE ELEVATIONS	
P1	46.961
P2	47.011
P3	47.062
P4	47.112
P5	47.162
P6	47.213
P7	47.263
P8	47.313
P9	47.364
P10	47.414
P11	47.464
P12	47.515

PLAN

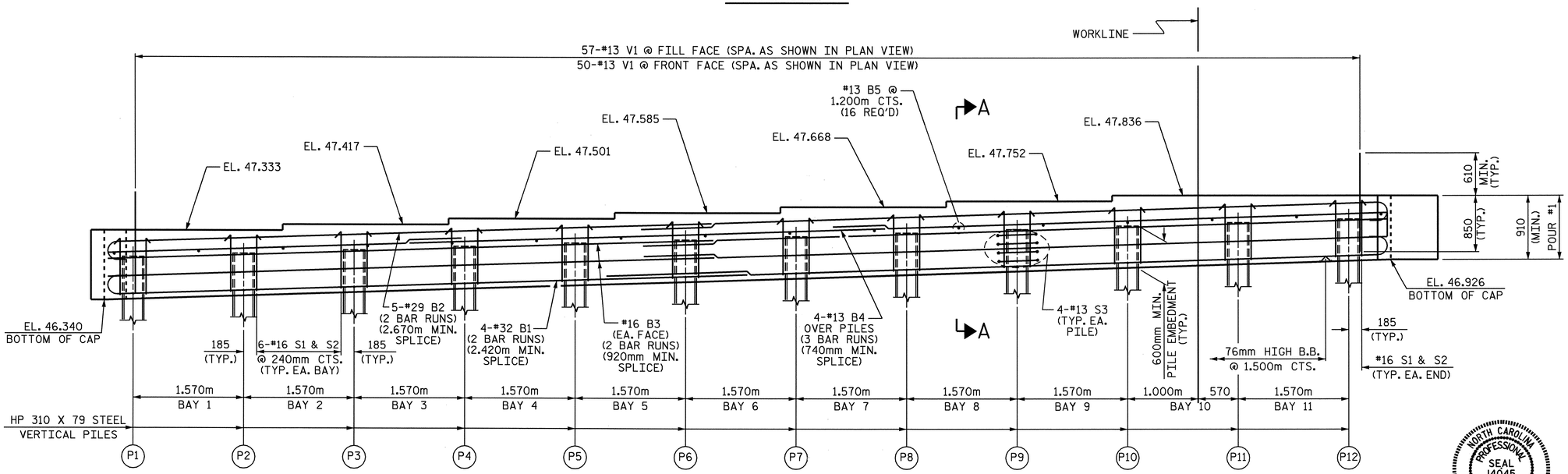

ELEVATION

(FOR WING REINFORCING STEEL AND DETAILS, SEE SHEET 2 OF 3)

PROJECT NO. R-2554BA

WAYNE COUNTY

STATION: 100+61.488 -L-

SHEET 1 OF 3

STATE OF NORTH CAROLINA
DEPARTMENT OF TRANSPORTATION
RALEIGH

SUBSTRUCTURE

INTEGRAL END BENT #2

(LEFT LANE)

REVISIONS						SHEET NO.
NO.	BY:	DATE:	NO.	BY:	DATE:	S-184
1			3			TOTAL SHEETS
2			4			478

DRAWN BY : D. G. ELY DATE : 12/2007
CHECKED BY : J. B. WILSON DATE : 3/2008

09-JUN-2008 12:13
g:\tlpprojects-r\r2554ba\structures\azlzl\str#6\final plans\r-2254ba_sd_e#_str6.dgn
tayeretta

STR. #6

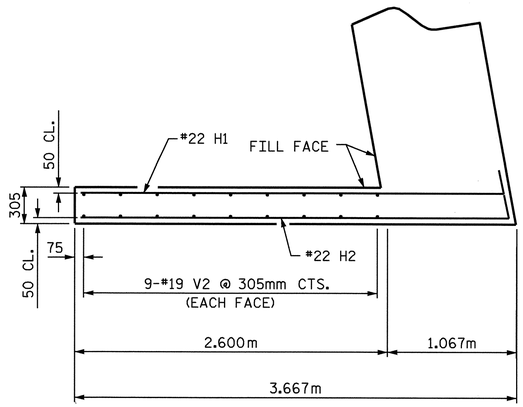

PLAN OF WING W1

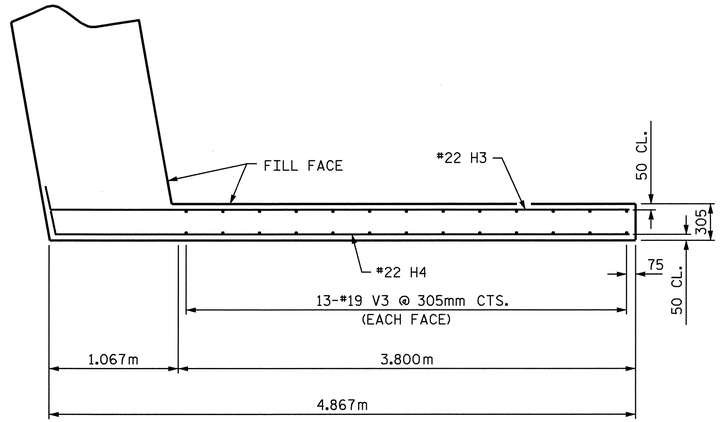

PLAN OF WING W2

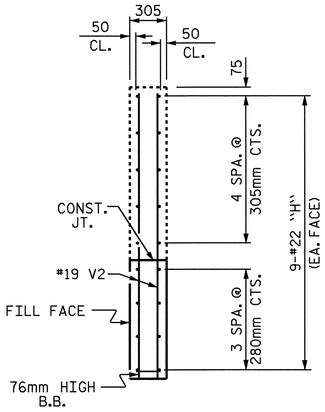

SECTION X-X

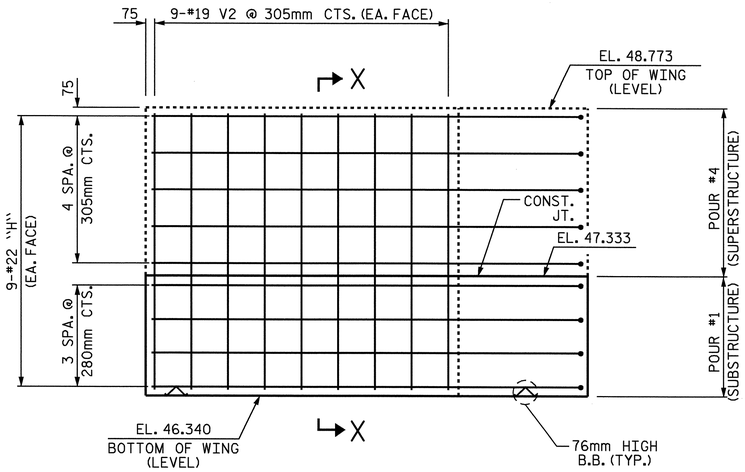

ELEVATION OF WING W1

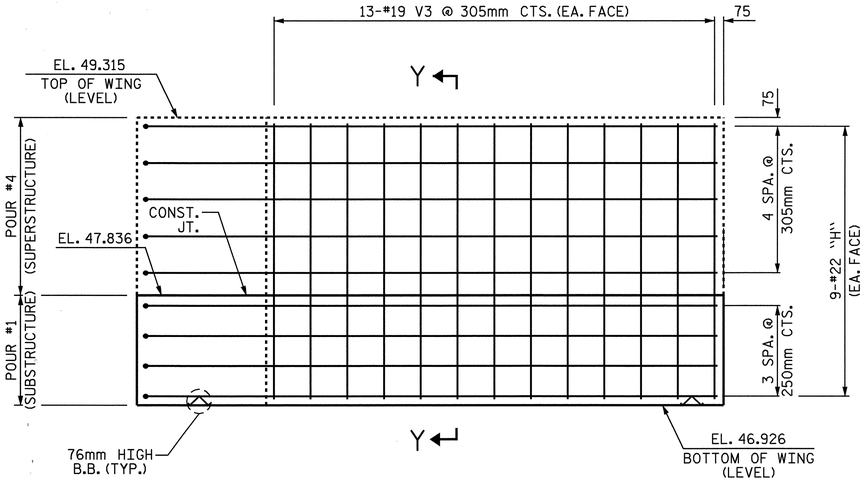

ELEVATION OF WING W2

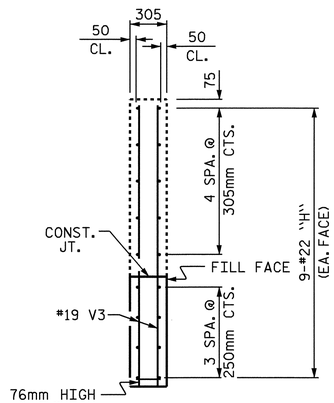

SECTION Y-Y

PROJECT NO. R-2554BA

WAYNE COUNTY

STATION: 100+61.488 -L-

SHEET 2 OF 3

STATE OF NORTH CAROLINA
DEPARTMENT OF TRANSPORTATION
RALEIGH

SUBSTRUCTURE

INTEGRAL END BENT #2 (LEFT LANE)

NORTH CAROLINA PROFESSIONAL SEAL 14045 ENGINEER TIMOTHY W. COGGINS
6/9/08

REVISIONS						SHEET NO.
NO.	BY:	DATE:	NO.	BY:	DATE:	S-185
1			3			TOTAL SHEETS
2			4			478

DRAWN BY : D. G. ELY DATE : 12/2007
CHECKED BY : J. B. WILSON DATE : 3/2008

09-JUN-2008 12:13
g:\tlpprojects-r\r2554ba\structures\aziz\str#6\final plans\r-2554ba_sd_e#_str6.dgn
taverette

STR. #6

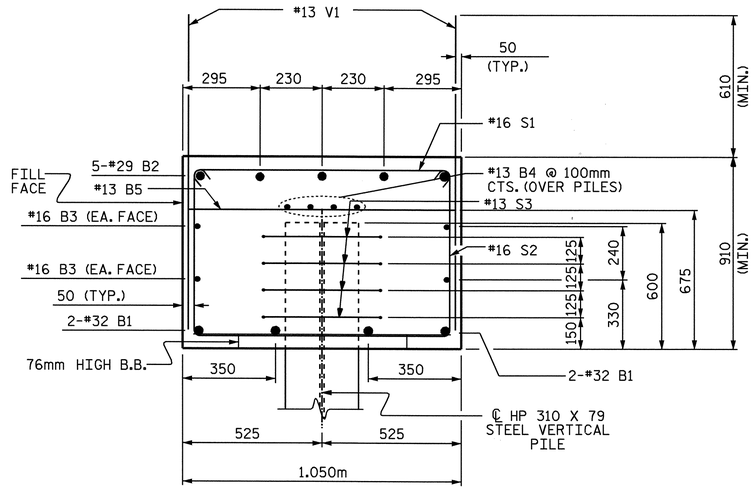

SECTION A-A

BAR TYPES

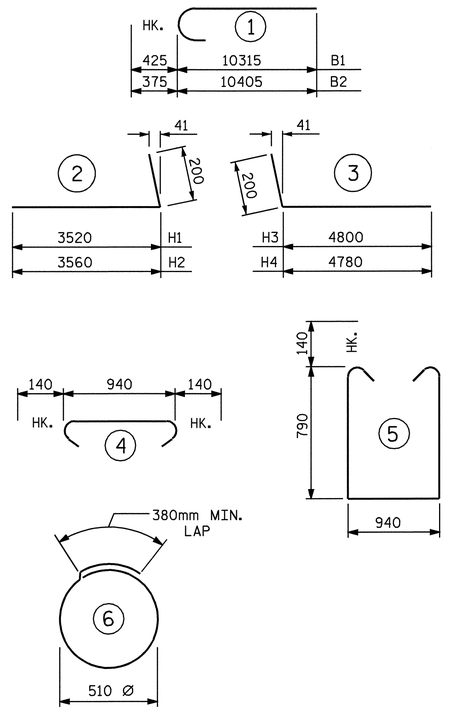

ALL BAR DIMENSIONS ARE OUT TO OUT.

BILL OF MATERIAL
END BENT #2

BAR	NO.	SIZE	TYPE	LENGTH	WEIGHT
B1	8	#32	1	10740	550
B2	10	#29	1	10780	545
B3	8	#16	STR	9560	119
B4	12	#13	STR	6560	78
B5	16	#13	STR	940	15
H1	9	#22	2	3720	102
H2	9	#22	2	3760	103
H3	9	#22	3	5000	137
H4	9	#22	3	4980	136
S1	68	#16	4	1220	129
S2	68	#16	5	2800	296
S3	48	#13	6	1980	94
V1	107	#13	STR	1460	155
V2	18	#19	STR	2280	92
V3	26	#19	STR	2240	130

REINFORCING STEEL = 2681 kg

CLASS A CONCRETE BREAKDOWN
POUR #1: CAP & LOWER WINGS 20.2 m3

TOTAL CONCRETE 20.2 m3

HP 310 X 79 STEEL PILE
NO. 12 312.0 METERS

PILE REDRIVES EACH 4

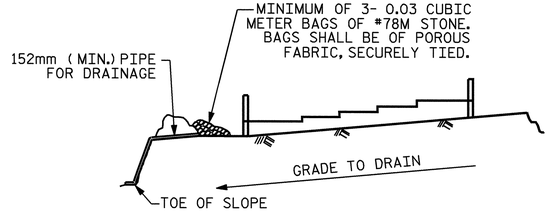

BAGGED STONE AND PIPE SHALL BE PLACED IMMEDIATELY AFTER COMPLETION OF END BENT EXCAVATION. PIPE MAY BE EITHER CONCRETE, CORRUGATED STEEL, CORRUGATED ALUMINUM ALLOY, OR CORRUGATED PLASTIC. PERFORATED PIPE WILL NOT BE ALLOWED.

BAGGED STONE SHALL REMAIN IN PLACE UNTIL THE ENGINEER DIRECTS THAT IT BE REMOVED. THE CONTRACTOR SHALL REMOVE AND DISPOSE OF SILT ACCUMULATIONS AT BAGGED STONE WHEN SO DIRECTED BY THE ENGINEER. BAGS SHALL BE REMOVED AND REPLACED WHENEVER THE ENGINEER DETERMINES THAT THEY HAVE DETERIORATED AND LOST THEIR EFFECTIVENESS.

NO SEPARATE PAYMENT WILL BE MADE FOR THIS WORK AND THE ENTIRE COST OF THIS WORK SHALL BE INCLUDED IN THE UNIT CONTRACT PRICE BID FOR THE SEVERAL PAY ITEMS.

TEMPORARY DRAINAGE AT END BENT

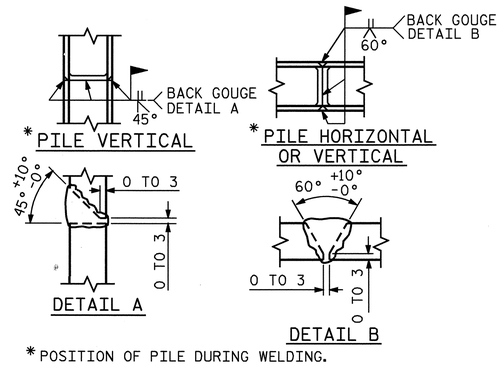

* POSITION OF PILE DURING WELDING.

PILE SPLICE DETAILS

PROJECT NO. R-2554BA
WAYNE COUNTY
STATION: 100+61.488 -L-

SHEET 3 OF 3

STATE OF NORTH CAROLINA
DEPARTMENT OF TRANSPORTATION
RALEIGH

SUBSTRUCTURE

INTEGRAL END BENT #2
(LEFT LANE)

REVISIONS						SHEET NO.
NO.	BY:	DATE:	NO.	BY:	DATE:	S-186
1			3			TOTAL SHEETS
2			4			478

NORTH CAROLINA PROFESSIONAL SEAL 14045 ENGINEER TIMOTHY L. LEDGERWOOD
6/9/08

DRAWN BY : D. G. ELY DATE : 12/2007
CHECKED BY : J. B. WILSON DATE : 3/2008

09-JUN-2008 12:13
g:\tipprojects-r\r2554ba\structures\azlzl\str#6\finalplans\r-2554ba_sd_e#_str6.dgn
tsweatte

STR. #6

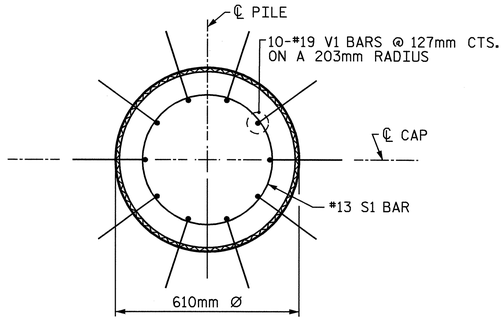

PLAN

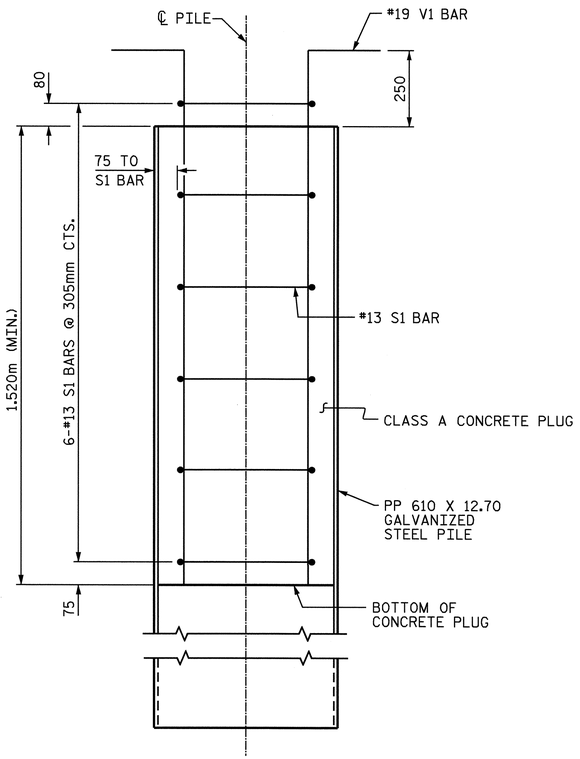

ELEVATION

PP 610 X 12.70 GALVANIZED STEEL PILE

(OPEN END)

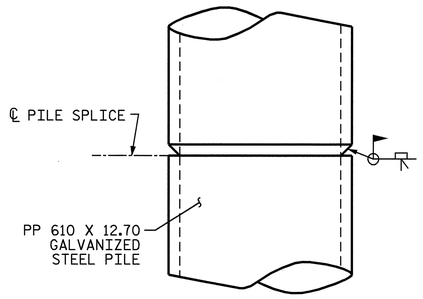

PIPE PILE SPLICE DETAIL

NOTES

PIPE PILES SHALL BE IN ACCORDANCE WITH SECTION 1084 OF THE STANDARD SPECIFICATIONS.

GALVANIZE STEEL PIPE PILES IN ACCORDANCE WITH SECTION 1076 OF THE STANDARD SPECIFICATIONS UNLESS METALLIZING IS REQUIRED.

REMOVE AND REPLACE OR REPAIR TO THE SATISFACTION OF THE ENGINEER PILES THAT ARE DAMAGED, DEFORMED OR COLLAPSED DURING INSTALLATION OR DRIVING.

PILE SPLICES SHALL BE IN ACCORDANCE WITH THE STANDARD SPECIFICATIONS AND AWS D1.1.

FOR OPEN END PIPE PILES, REMOVE ENOUGH SOIL AND WATER FROM INSIDE THE PILES TO CONSTRUCT THE CONCRETE PLUG WITHOUT FOULING THE CONCRETE.

FORM THE CONCRETE PLUG SUCH THAT THE REINFORCING STEEL OR CONCRETE DOES NOT MOVE AND THE CLEARANCE FROM THE REINFORCING STEEL TO THE INSIDE OF THE PILE IS MAINTAINED AFTER CONCRETE PLACEMENT. DO NOT PLACE CONCRETE IN THE BENT CAP UNTIL THE CONCRETE PLUG HAS ATTAINED A MINIMUM COMPRESSIVE STRENGTH OF 10.3 MPa.

THE REINFORCING STEEL, CLASS A CONCRETE, AND GALVANIZING ARE CONSIDERED INCIDENTAL TO THE CONTRACT UNIT PRICE BID PER METER FOR PP 610 X 12.70 GALVANIZED STEEL PILES.

BILL OF MATERIAL FOR ONE PP 610 X 12.70 GALVANIZED STEEL PILE

BAR	NO.	SIZE	TYPE	LENGTH	WEIGHT
S1	6	#13	1	1840	11
V1	10	#16	2	2020	45
REINFORCING STEEL =					56 kg

CLASS A CONCRETE

1.520m MINIMUM PLUG 0.4 CU. METER

BAR TYPES

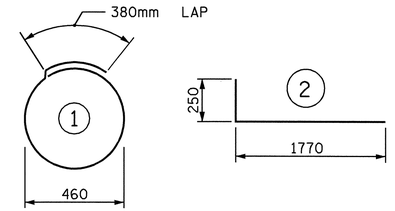

ALL BAR DIMENSIONS ARE OUT TO OUT.

PROJECT NO. R-2554BA

WAYNE COUNTY

STATION: 100+61.488 -L-

STATE OF NORTH CAROLINA
DEPARTMENT OF TRANSPORTATION
RALEIGH

STANDARD

610mm STEEL PIPE PILE (LEFT LANE)

REVISIONS						SHEET NO.
NO.	BY:	DATE:	NO.	BY:	DATE:	S-187
1			3			TOTAL SHEETS
2			4			478

NORTH CAROLINA PROFESSIONAL SEAL 14045 ENGINEER TIMOTHY W. COGGINS

6/6/08

ASSEMBLED BY : M.D.PISO	DATE : 02/2008		
CHECKED BY : J.B.WILSON	DATE : 03/2008		
DRAWN BY : TLA 8/05	ADDED 10/1/05		
CHECKED BY : GM 9/05	REV. 5/1/06R MAA/KMM		

28-APR-2008 12:09
x:\structures\azlzl\str#6\mdpiso\microstation\eb6_spp4 std drw.dgn
jbwilson

STR. #6 STD. NO. SPP4SM

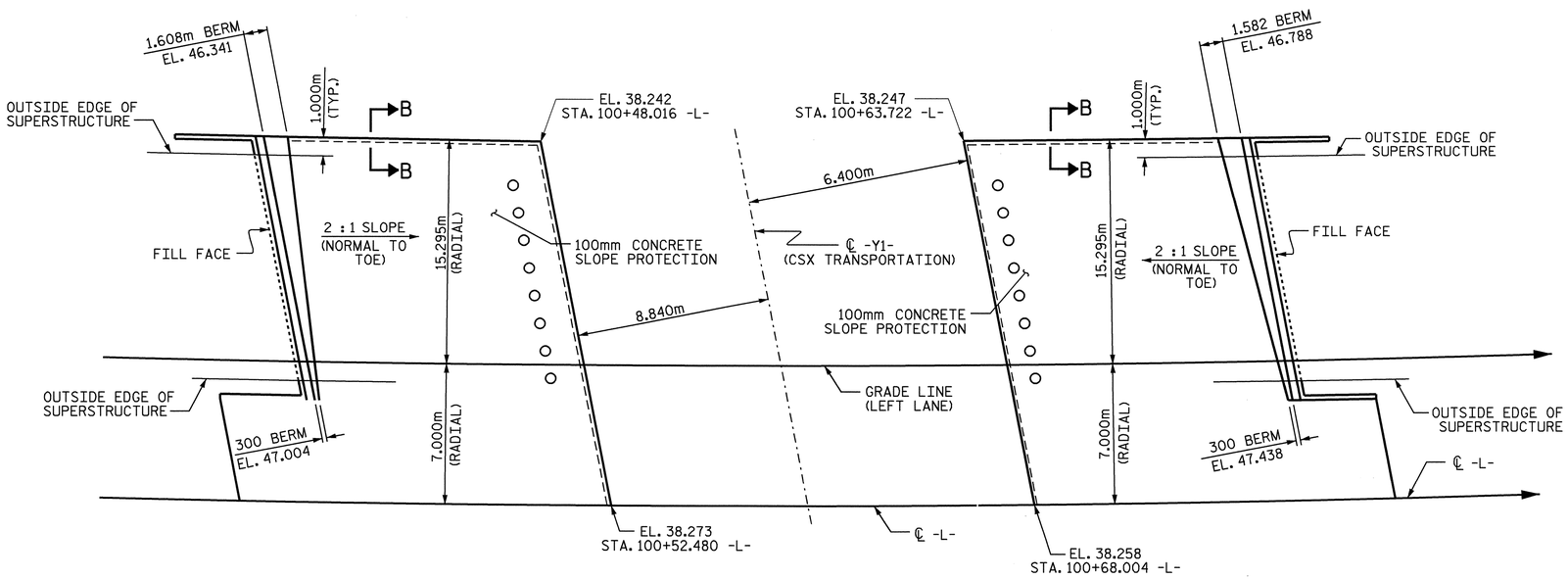

END BENT #1 — END BENT #2

PLAN

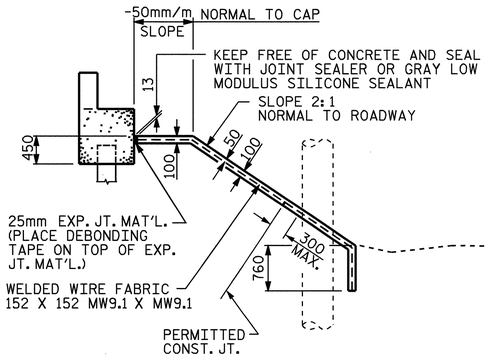

SECTION ALONG ℄ RAILROAD WITH SHOULDER PIER

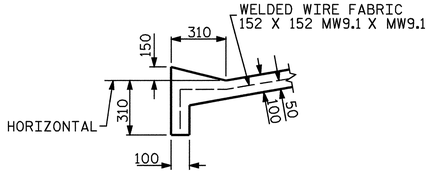

SECTION B-B

GENERAL NOTES

SLOPE PROTECTION SHALL BE PLACED UNDER THE ENDS OF THE BRIDGE AS SHOWN IN THE DETAILS. METHOD OF MEASUREMENT AND PAYMENT SHALL BE AS PRESCRIBED IN SECTION 462 OF THE STANDARD SPECIFICATIONS. FOR BERM WIDTH, SEE GENERAL DRAWING.

THE SLOPE PROTECTION SHALL CONSIST OF 100mm POURED-IN-PLACE CONCRETE PAVING AS SHOWN IN THE DETAILS ON THIS SHEET. CONCRETE SHALL BE CLASS "B". THE CONCRETE SURFACE SHALL BE FLOATED WITH A WOODEN FLOAT AND FINISHED. WELDED WIRE FABRIC REINFORCING SHALL BE 152 X 152 - W9.1 X W9.1, 1520mm WIDE. SLOPE PROTECTION SHALL BE POURED IN 1520mm STRIPS AS SHOWN IN THE "POURING DETAIL" WITH 600mm LONG #13 BARS PLACED ALONG THE SLOPE BETWEEN STRIPS AT 450mm MAXIMUM SPACING. SLOPE PROTECTION MAY BE POURED IN ALTERNATE 1220mm AND 1520mm STRIPS AS SHOWN IN THE "OPTIONAL POURING DETAIL" WITH ADJACENT RUNS OF WELDED WIRE FABRIC LAPPING AT LEAST 152mm. THE COST OF THE WELDED WIRE FABRIC AND #13 BARS, IF USED, SHALL BE INCLUDED IN THE CONTRACT UNIT PRICE BID PER SQUARE METER FOR SLOPE PROTECTION.

BRIDGE @ STA. 100+61.488 -L- STA. 10+97.530 -Y1-	100mm SLOPE PROTECTION	* WELDED WIRE FABRIC 1520mm WIDE
	SQUARE METERS	APPROX. METERS
END BENT 1	482	322
END BENT 2	499	334

* QUANTITY SHOWN IS BASED ON 1520mm POURS.

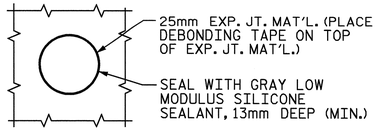

PLAN WHERE CONCRETE SLOPE PROTECTION MUST BE PLACED AROUND A BENT COLUMN

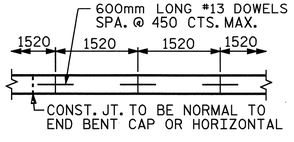

STRIP WIDTHS MAY VARY IN CURVED PORTION.

POURING DETAIL

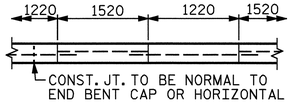

POUR A 1220mm STRIP FIRST. STRIP WIDTHS MAY VARY IN CURVED PORTION.

OPTIONAL POURING DETAIL

NORTH CAROLINA PROFESSIONAL SEAL 14045 ENGINEER TIMOTHY L. GOSSINS

6/9/08

PROJECT NO. R-2554BA

WAYNE COUNTY

STATION: 100+61.488 -L-

STATE OF NORTH CAROLINA
DEPARTMENT OF TRANSPORTATION
RALEIGH

STANDARD SLOPE PROTECTION DETAILS

(LEFT LANE)

REVISIONS						SHEET NO.
NO.	BY:	DATE:	NO.	BY:	DATE:	S-188
1			3			TOTAL SHEETS
2			4			478

ASSEMBLED BY : B.N.BARODAWALA	DATE : 10-8-07	
CHECKED BY : P. ADKINS	DATE : 4-08	
DRAWN BY : ELR 5/92	REV. 7/10/01	LES/RDR
CHECKED BY : GRP 6/92	REV. 5/7/03	RWW/JTE
	REV. 5/1/06	TLA/GM

09-JUN-2008 07:06
g:\tlpprojects-r\r2554ba\structures\azlzl\str#6\finalplans\r2554ba_sd_sp_06.dgn
taverette

STR. #6

STD. NO. SP1SM

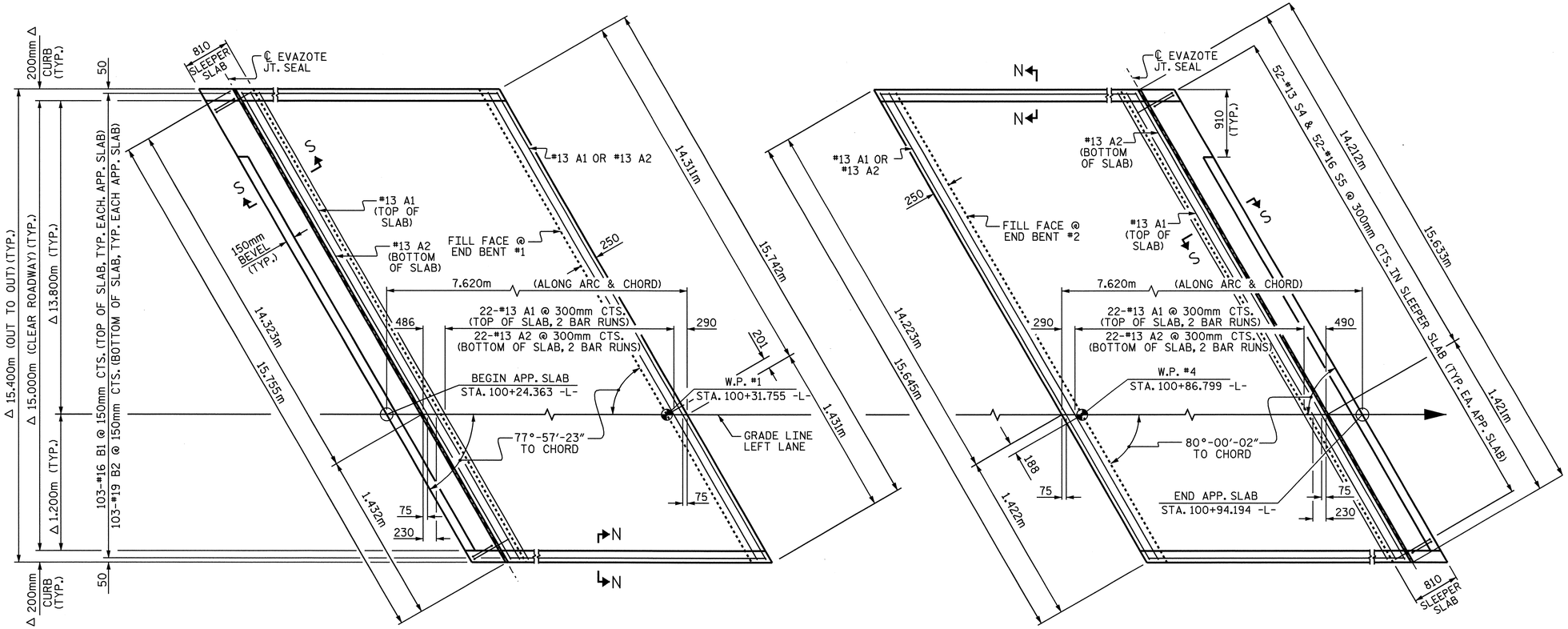

DIMENSIONS SHOWN ARE TYPICAL FOR BOTH APPROACH SLABS. #13 A1 BARS IN SLEEPER SLAB NOT SHOWN FOR CLARITY.

△ RADIAL DIMENSION

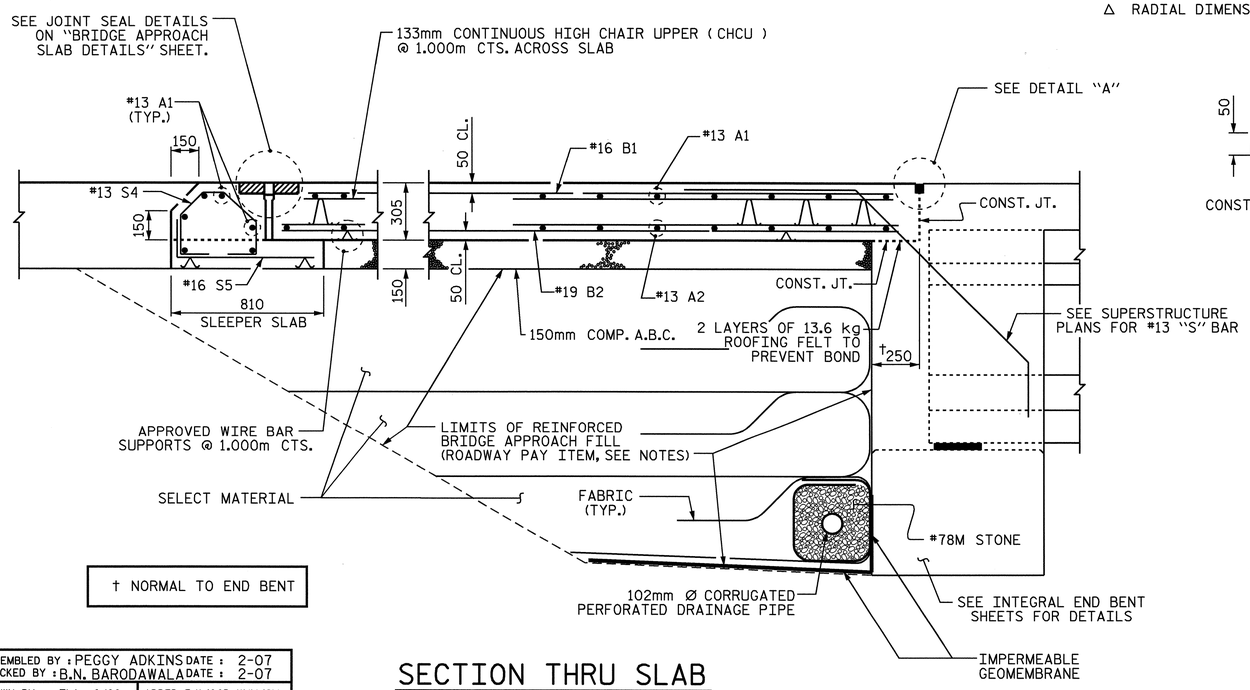

† NORMAL TO END BENT

SECTION THRU SLAB

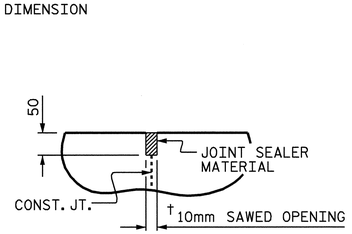

DETAIL "A"

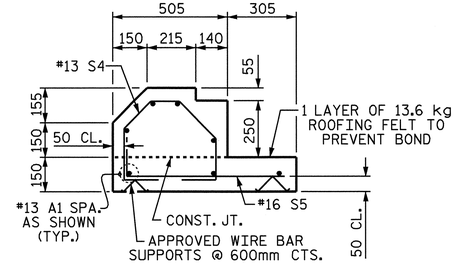

SECTION S-S

SHOWING SLEEPER SLAB

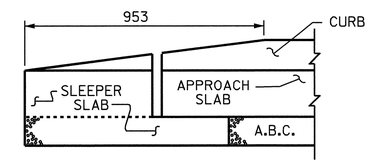

END OF CURB WITHOUT SHOULDER BERM GUTTER

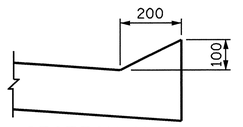

SECTION N-N

BILL OF MATERIAL

FOR ONE APPROACH SLAB (2 REQ'D)

BAR	NO.	SIZE	TYPE	LENGTH	WEIGHT
* A1	62	#13	STR	8140	502
A2	48	#13	STR	8100	386
* B1	103	#16	STR	6800	1087
B2	103	#19	STR	6960	1602
* S4	52	#13	1	1200	62
S5	52	#16	2	880	71

REINFORCING STEEL	kg.	2059
* EPOXY COATED REINFORCING STEEL	kg.	1651
CLASS AA CONCRETE		
POUR #1 - SLEEPER SLAB	C.M.	3.9
POUR #2 - SLAB AND CURB	C.M.	33.5
TOTAL	C.M.	37.4

BAR TYPES

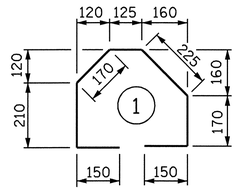

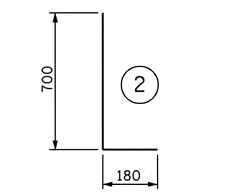

ALL BAR DIMENSIONS ARE OUT TO OUT

SPLICE CHART

BAR	SPLICE
* #13 A1	610
#13 A2	540

PROJECT NO. R-2554BA

WAYNE COUNTY

STATION: 100+61.488 -L-

SHEET 1 OF 3

STATE OF NORTH CAROLINA
DEPARTMENT OF TRANSPORTATION
RALEIGH
STANDARD

BRIDGE APPROACH SLAB FOR INTEGRAL ABUTMENT

(LEFT LANE)

REVISIONS						SHEET NO.
NO.	BY:	DATE:	NO.	BY:	DATE:	S-189
1			3			TOTAL SHEETS
2			4			478

NORTH CAROLINA PROFESSIONAL SEAL 14045 ENGINEER TIMOTHY U. COGGINS

6/6/06

ASSEMBLED BY : PEGGY ADKINS	DATE : 2-07
CHECKED BY : B.N. BARODAWALA	DATE : 2-07
DRAWN BY : TLA 6/06	ADDED 5/1/06R KMM/GM
CHECKED BY : GM 6/06	

06-JUN-2008 11:42
g:\tlpprojects-r\r2554ba\structures\azizi\str*6\padkins\microstation\r2554ba_sd_as_6.dgn
taverette

STR. # 6 STD. NO. BAS11SM

NOTES

APPROACH SLAB SHALL NOT BE CONSTRUCTED PRIOR TO COMPLETION OF THE BRIDGE DECK.

FOR REINFORCED BRIDGE APPROACH FILL INCLUDING FABRIC, IMPERMEABLE GEOMEMBRANE, 102mm Ø DRAINAGE PIPE, #78M STONE, AND SELECT MATERIAL, SEE ROADWAY PLANS.

AREA BETWEEN THE WINGWALL AND APPROACH SLAB SHALL BE GRADED TO DRAIN THE WATER AWAY FROM THE FILL FACE OF THE BRIDGE AND SHALL BE PAVED. SEE ROADWAY PLANS.

THE 150mm COMP. A.B.C. SHALL BE FLUSH WITH THE SLEEPER SLAB AND SHALL EXTEND 300mm OUTSIDE OF EACH EDGE OF APPROACH SLAB.

THE CONTRACTOR MAY USE 100mm TYPE B-25.0B ASPHALT CONCRETE BASE COURSE IN LIEU OF 150mm COMP. A.B.C. IF THIS OPTION IS USED, THE BASE COURSE SHALL BE FLUSH WITH THE SLEEPER SLAB AND THE WIDTH SHALL BE THE SAME AS THAT OF THE APPROACH SLAB.

THE CONTRACTOR MAY USE 125mm CLASS "A" CONCRETE BASE IN LIEU OF 150mm COMP. A.B.C. IF THIS OPTION IS USED, THE CONCRETE BASE SHALL BE FLUSH WITH THE SLEEPER SLAB AND THE WIDTH SHALL BE THE SAME AS THAT OF THE APPROACH SLAB. THE CONCRETE SHALL BE FINISHED TO A SMOOTH SURFACE AND A LAYER OF 13.6 kg ROOFING FELT SHALL BE PLACED BETWEEN THE CONCRETE BASE AND THE APPROACH SLAB TO PREVENT BOND. THE APPROACH SLAB SHALL NOT BE CAST UNTIL THE CONCRETE BASE HAS REACHED AN AGE OF THREE CURING DAYS.

THE VERTICAL JOINT ON THE RIGHT AND LEFT SIDE OF THE APPROACH SLAB AT THE ENDS OF THE EVAZOTE JOINT SHALL BE FILLED WITH SILICONE OR OTHER APPROVED MATERIAL IN ORDER TO PREVENT BACKFILL FROM ENTERING THE JOINT OPENING.

THE JOINT OPENING AT THE APPROACH SLAB/DECK INTERFACE SHALL BE SAWED NO MORE THAN 12 HOURS AFTER THE APPROACH SLAB IS CAST. THE JOINT SHALL BE CLEANED OF ALL DEBRIS BEFORE THE SEALANT IS APPLIED. THE JOINT SEALER MATERIAL SHALL CONFORM TO THE REQUIREMENTS OF TYPE SL LOW MODULUS SILICONE SEALANT.

WITH EVAZOTE JOINT SEAL

FOR EVAZOTE JOINT SEALS, SEE SPECIAL PROVISIONS.

THE NOMINAL UNCOMPRESSED SEAL WIDTH OF THE EVAZOTE JOINT SEAL SHALL BE 64mm.

FOR ELASTOMERIC CONCRETE, SEE SPECIAL PROVISIONS.

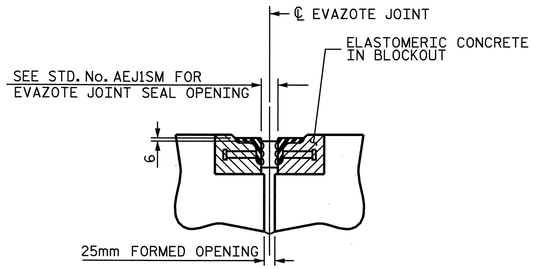

SECTION C-C
ARMORED EVAZOTE JOINT SEAL

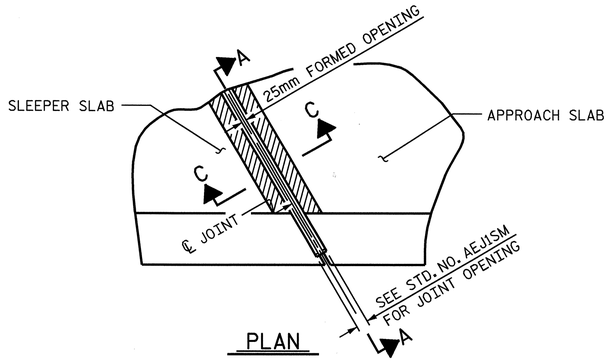

PLAN

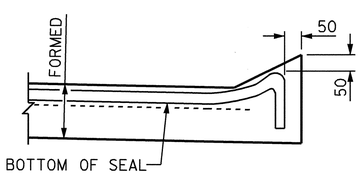

SECTION A-A

JOINT SEAL DETAILS @ SLEEPER SLAB

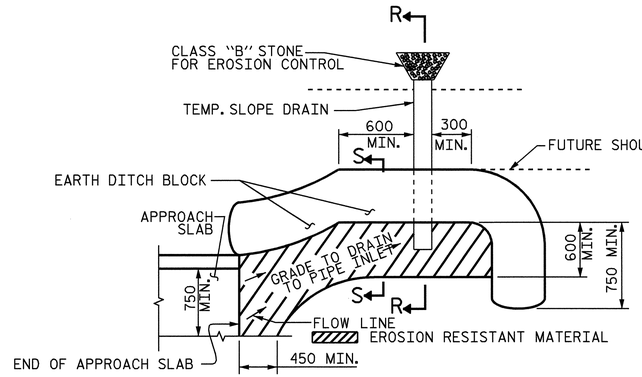

NOTE: IMMEDIATELY AFTER THE CONSTRUCTION OF THE APPROACH SLAB, THE CONTRACTOR SHALL PROVIDE TEMPORARY BERM AND SLOPE DRAIN. CONTRACTOR SHALL GRADE TO PIPE INLET AND PROVIDE EROSION RESISTANT MATERIAL AS SHOWN. THE EROSION RESISTANT MATERIAL SHALL BE EITHER 1) ASPHALT PLANT MIX, TYPE 1 OR TYPE 2, MIN. 50mm DEPTH, 2) EROSION CONTROL MAT, OR 3) CONCRETE, AS DIRECTED BY THE ENGINEER. THE SLOPE DRAIN SHALL CONSIST OF A NON-PERFORATED TEMPORARY DRAINAGE PIPE, 305mm IN DIAMETER.

PLAN VIEW

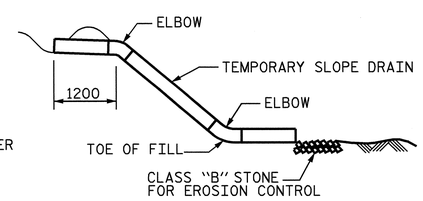

SECTION R-R

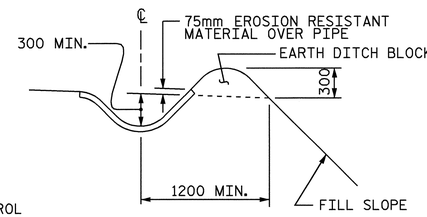

SECTION S-S

TEMPORARY BERM AND SLOPE DRAIN DETAILS

(TO BE USED WHEN SHOULDER BERM GUTTER IS REQUIRED)

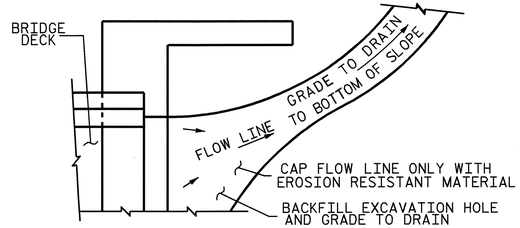

NOTE: IF THE APPROACH SLAB IS NOT CONSTRUCTED IMMEDIATELY AFTER THE BACKFILLING OF THE END BENT EXCAVATION, GRADE TO DRAIN TO THE BOTTOM OF THE SLOPE AND PROVIDE EROSION RESISTANT MATERIAL, SUCH AS FIBERGLASS ROVING OR AS DIRECTED BY THE ENGINEER TO PREVENT SOIL EROSION AND TO PROTECT THE AREA ADJACENT TO THE STRUCTURE. THE CONTRACTOR WILL BE REQUIRED TO REMOVE THESE MATERIALS PRIOR TO CONSTRUCTION OF THE APPROACH SLAB.

TEMPORARY DRAINAGE DETAIL

PROJECT NO. R-2554BA

WAYNE COUNTY

STATION: 100+61.488 -L-

SHEET 2 OF 3

STATE OF NORTH CAROLINA
DEPARTMENT OF TRANSPORTATION
RALEIGH

STANDARD
BRIDGE APPROACH
SLAB DETAILS

(LEFT LANE)

REVISIONS						SHEET NO.
NO.	BY:	DATE:	NO.	BY:	DATE:	S-190
1			3			TOTAL SHEETS
2			4			478

NORTH CAROLINA PROFESSIONAL SEAL 14045 ENGINEER TIMOTHY W. COGGINS
6/6/08

ASSEMBLED BY : PEGGY ADKINS	DATE : 2-07		
CHECKED BY : B.N.BARODAWALA	DATE : 2-07		
DRAWN BY : FCJ 11/88		REV. 10/17/00	RWW/LES
CHECKED BY : ARB 11/88		REV. 5/1/03	RWW/JTE
		REV. 5/1/06R	TLA/GM

28-APR-2008 11:53
x:\structures\gzlzl\str#6\padkins\microstation\r2554ba_sd_as_6.dgn

STR. #6

STD. NO. BAS10SM

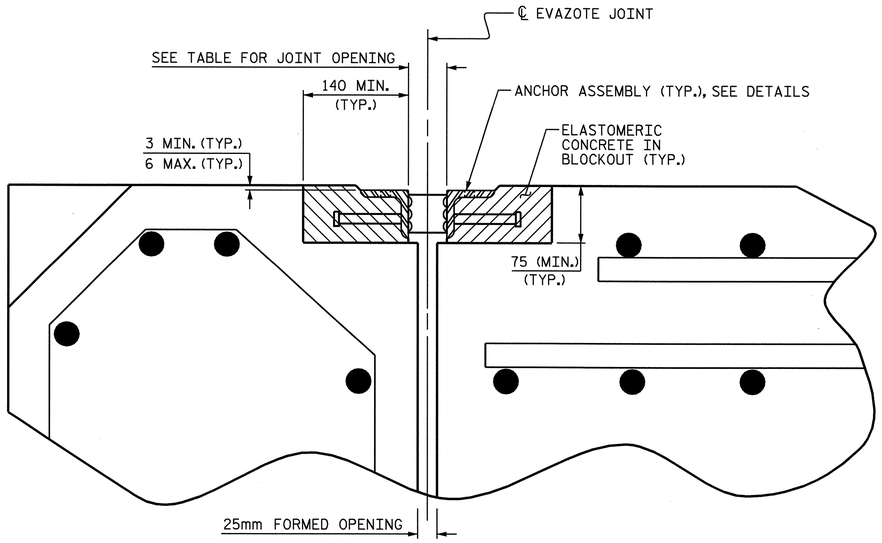

ARMORED JOINT DETAILS

SECTION NORMAL TO JOINT AT APPROACH SLAB SLEEPER SLAB

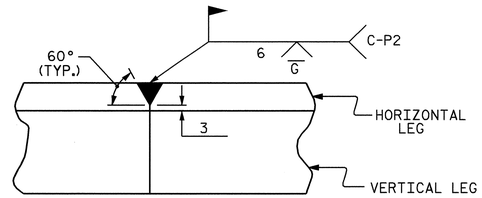

DETAIL- FIELD WELD SPLICE OF ANGLE

NOTES

ANGLES SHALL CONFORM TO AASHTO M270 GRADE 250 STEEL OR APPROVED EQUAL. ALL STUD ANCHORS SHALL CONFORM TO AASHTO M169 GRADES 1010 THRU 1020 OR APPROVED EQUAL.

STUD ANCHORS SHALL BE SHOP WELDED AND ALL HOLES SHALL BE SHOP DRILLED AS SHOWN ON THE PLANS. STUD ANCHORS SHALL BE ELECTRIC ARC END WELDED WITH COMPLETE FUSION.

UPON COMPLETION OF SHOP FABRICATION, THE ENTIRE ANCHOR ASSEMBLY SHALL BE METALLIZED. THE 12.70mm Ø STUD ANCHORS AND ANCHOR TABS NEED NOT BE METALLIZED. SEE SPECIAL PROVISION FOR THERMAL SPRAYED COATINGS (METALLIZATION).

ANCHOR ASSEMBLY SHALL BE MADE CONTINUOUS THE LENGTH OF THE JOINT FROM GUTTER TO GUTTER. FOR FIELD SPLICES AT ALL CROWN BREAK POINTS, THE ENDS OF THE STEEL ANGLES SHALL BE CUT PARALLEL TO THE BRIDGE CENTERLINE. FINISHED FIELD WELDS SHALL BE GROUND SMOOTH AND COATED WITH A MINIMUM THICKNESS OF 0.100mm OF ZINC-RICH PAINT IN ACCORDANCE WITH THE STANDARD SPECIFICATIONS.

ANCHOR ASSEMBLY SEGMENTS SHALL NOT BE LESS 3.6m NOR MORE THAN 6.1m IN LENGTH. SHORTER SEGMENTS MAY BE USED AT THE EDGE OF ROADWAY OR AT POINTS OF STAGED CONSTRUCTION.

THE ANCHOR ASSEMBLY SHALL BE SECURED AND LEVELED AS SHOWN IN THE "ARMORED JOINT ANCHOR ASSEMBLY DETAILS". NO SUBMITTALS ARE REQUIRED FOR 9.53mm Ø EXPANSION ANCHORS, NUTS OR WASHERS. THE CONTRACTOR MAY SUBMIT FOR APPROVAL AN ALTERNATE METHOD OF ALIGNING AND LEVELING THE ANGLES. THE ALTERNATE METHOD SHALL NOT INCLUDE ANY WELDING TO THE OUTSIDE FACE OF THE ANGLES.

AFTER THE ELASTOMERIC CONCRETE HAS BEEN CAST ON BOTH SIDES OF THE JOINT, REMOVE ANY EXCESS CONCRETE THAT COMES THROUGH THE WEEP HOLES AND THOROUGHLY CLEAN THE ANGLES. ANY DAMAGED STEEL SHALL BE COATED WITH A MINIMUM OF 0.100mm OF ZINC-RICH PAINT IN ACCORDANCE WITH THE STANDARD SPECIFICATIONS.

SEE SPECIAL PROVISIONS FOR EVAZOTE JOINT SEALS.

SEE SPECIAL PROVISIONS FOR ELASTOMERIC CONCRETE.

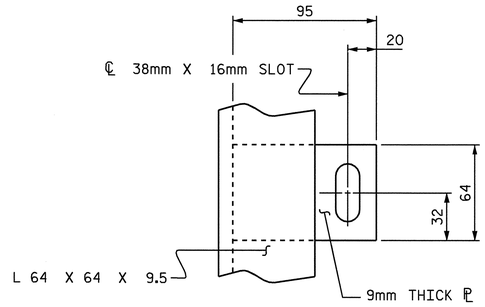

PLAN VIEW OF TAB

MOVEMENT AND SETTING AT EVAZOTE JOINT						
APPROACH SLAB NO.	SKEW ANGLE	NOMINAL UNCOMPRESSED SEAL WIDTH	TOTAL MOVEMENT (ALONG ℄ RDWY)	PERPENDICULAR JOINT OPENING AT 7° C	PERPENDICULAR JOINT OPENING AT 16° C	PERPENDICULAR JOINT OPENING AT 32° C
1	77°-57'-23"	64	24	56	51	43
2	80°-00'-02"	64	24	56	51	43

TOTAL MOVEMENT IS CALCULATED ALONG THE CENTERLINE OF ROADWAY.
JOINT OPENINGS ARE MEASURED PERPENDICULAR TO THE JOINT.

BILL OF MATERIAL		
APPROACH SLAB NO.	ELASTOMERIC CONCRETE * (CU. m)	TOTAL LENGTH OF ANGLE (m)
1	0.3	15.3
2	0.3	15.3
TOTAL	0.6	30.6

* BASED ON THE MINIMUM BLOCKOUT SHOWN.

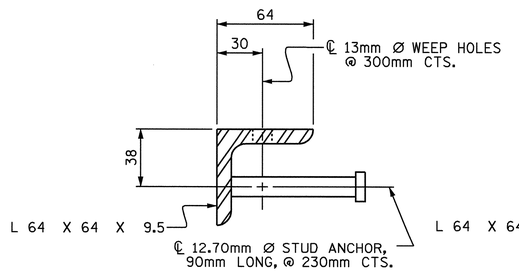

SECTION VIEW OF STUD

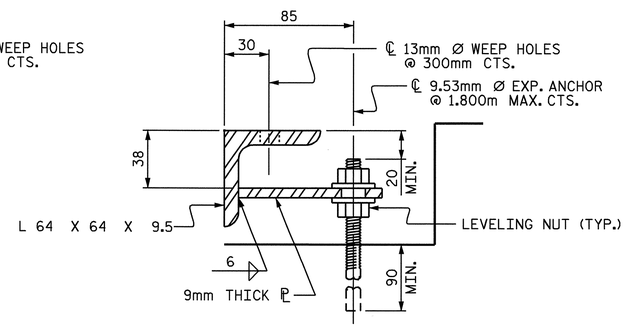

SECTION VIEW OF TAB

ARMORED JOINT ANCHOR ASSEMBLY DETAILS

PROJECT NO. R-2554BA
WAYNE COUNTY
STATION: 100+61.488 -L-

SHEET 3 OF 3

STATE OF NORTH CAROLINA
DEPARTMENT OF TRANSPORTATION
RALEIGH

STANDARD ARMORED EVAZOTE JOINT DETAILS

(LEFT LANE)

REVISIONS						SHEET NO.
NO.	BY:	DATE:	NO.	BY:	DATE:	S-191
1			3			TOTAL SHEETS 478
2			4			

NORTH CAROLINA PROFESSIONAL SEAL 14045 ENGINEER TIMOTHY L. COGGINS
6/6/08

ASSEMBLED BY : PEGGY ADKINS DATE : 12-07	
CHECKED BY : B.N.BARODAWALA DATE : 12-07	
DRAWN BY : EEM 1/96	REV. 7/10/01 LES/RDR
CHECKED BY : RGW 1/96	REV. 5/7/03RR RWW/JTE
	REV. 5/1/06 TLA/GM

06-JUN-2008 11:41
g:\tlpprojects-r\r2554ba\structures\azlzl\str#6\padkins\microstation\r2554ba_sd_as_6.dgn
tayeratte

STR. #6

STD. NO. AEJ1SM

F.A. PROJECT NO.: NHS-70(106)

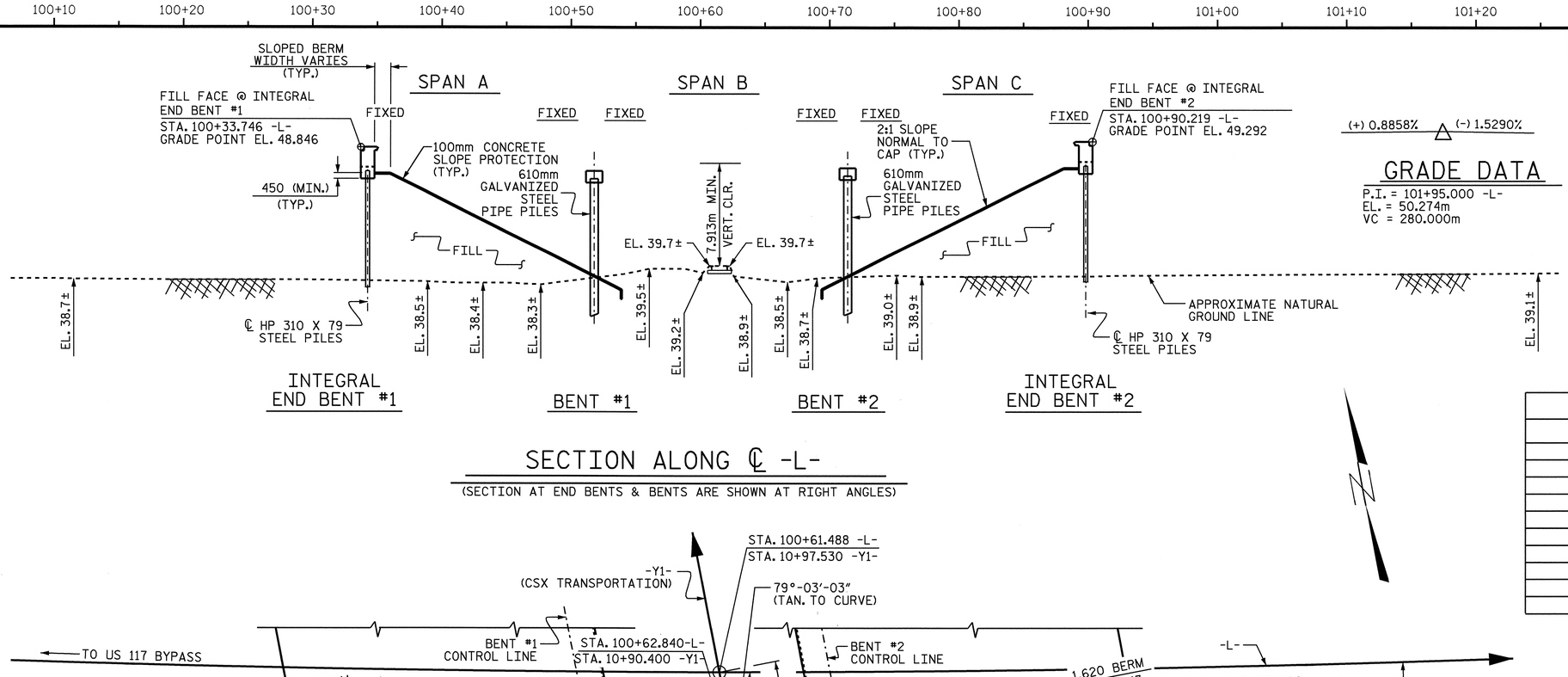

SECTION ALONG ℄ -L-

(SECTION AT END BENTS & BENTS ARE SHOWN AT RIGHT ANGLES)

GRADE DATA

(+) 0.8858% (-) 1.5290%

P.I. = 101+95.000 -L-
EL. = 50.274m
VC = 280.000m

HORIZONTAL CURVE DATA -L-

PIs STA. 100+12.358 -L-
~~Θs~~ = 0°58'56.0"
Ls = 60.000m
LT = 40.001m
ST = 20.001m

PI STA. 102+66.635 -L-
Δ = 15°15'00.1" (LT.)
L = 465.785m
T = 234.277m
R = 1,750.000m

TOP OF RAIL ELEVATIONS -Y1-

LEFT RAIL		RIGHT RAIL	
STATION	ELEV.	STATION	ELEV.
10+00.329	39.774	10+00.338	39.776
10+27.904	39.737	10+27.865	39.737
10+47.449	39.729	10+47.367	39.730
10+66.511	39.714	10+66.318	39.720
10+86.014	39.711	10+86.095	39.706
11+05.306	39.704	11+05.253	39.705
11+24.174	39.698	11+24.225	39.692
11+43.872	39.687	11+43.815	39.688
11+62.876	39.675	11+62.777	39.678
11+81.411	39.654	11+81.408	39.656

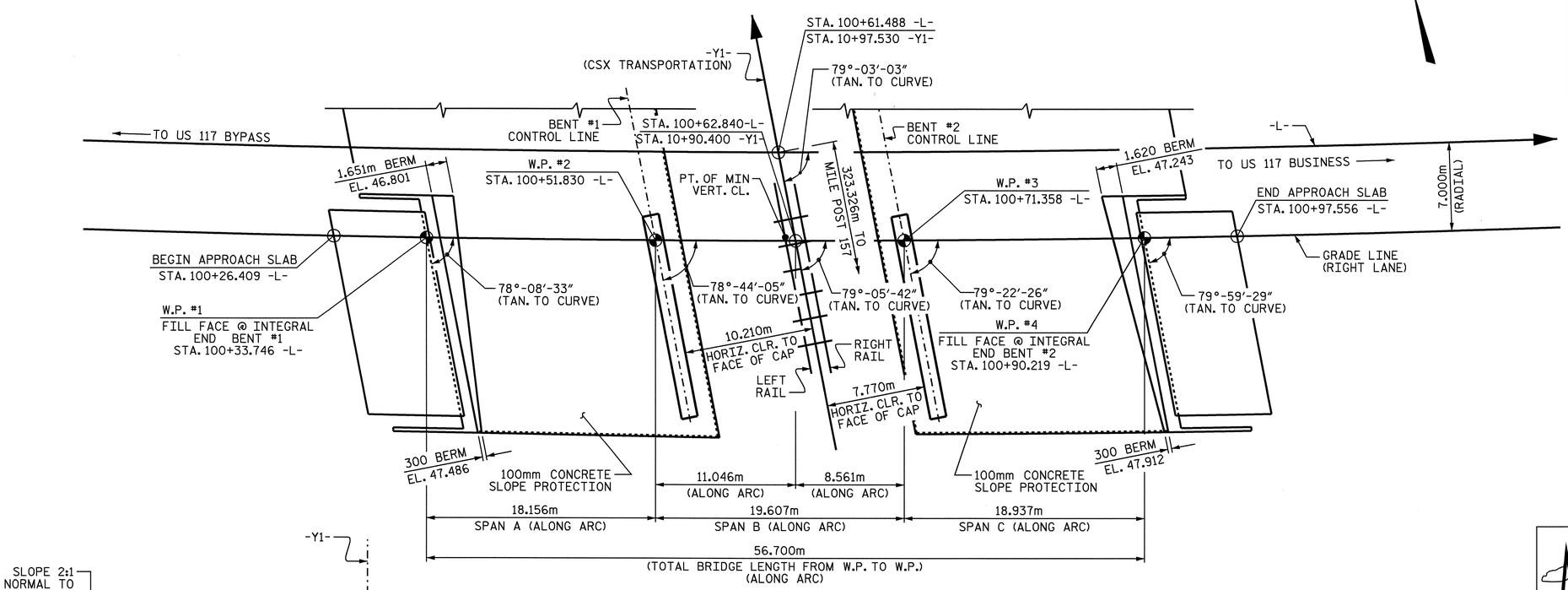

PLAN

(PILES ARE NOT SHOWN FOR CLARITY)

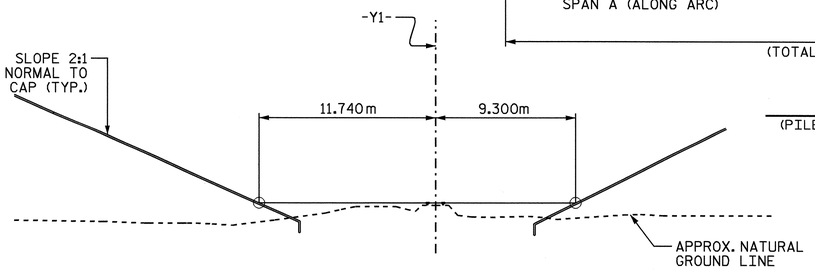

SPAN LENGTHS BASED ON THIS SECTION

(LOOKING STATION AHEAD ALONG RAILROAD)

NOTE

THE RAILROAD TRACK TOP OF RAIL ELEVATIONS SHOWN ON THE PLANS ARE FROM THE BEST INFORMATION AVAILABLE. PRIOR TO BEGINNING BRIDGE CONSTRUCTION, VERIFY THE TOP OF RAIL ELEVATIONS AND REPORT ANY VARIATIONS TO THE ENGINEER. ANY PLAN REVISIONS NECESSARY TO ACHIEVE THE REQUIRED MINIMUM VERTICAL CLEARANCE WILL BE PROVIDED BY THE DEPARTMENT.

METRIC

PROJECT NO. R-2554BA
WAYNE COUNTY
STATION: 100+61.488 -L-
10+97.530 -Y1-
BRIDGE NO. 359
MILE POST #156.799

SHEET 1 OF 4

STATE OF NORTH CAROLINA
DEPARTMENT OF TRANSPORTATION
RALEIGH

GENERAL DRAWING

FOR BRIDGE OVER CSX RAILROAD ON US 70 BYPASS BETWEEN US 117 BYPASS AND US 117 BUSINESS (RIGHT LANE)

REVISIONS						SHEET NO.
NO.	BY:	DATE:	NO.	BY:	DATE:	S-192
1			3			TOTAL SHEETS
2			4			478

NORTH CAROLINA PROFESSIONAL SEAL 12274 ENGINEER OMAR R. AZIZI
6/9/08

NORTH CAROLINA PROFESSIONAL SEAL 14045 ENGINEER TIMOTHY L. COGGINS
6/9/08

DRAWN BY : ZION RORIE DATE : 10/10/07
CHECKED BY : B.N. BARODAWALA DATE : 10/11/07

06-JUN-2008 16:45
gi\structures\azizi\str#7\padkins\microstation\r-2554ba_sd_gd_07.dgn
tcoggins

STR. #7

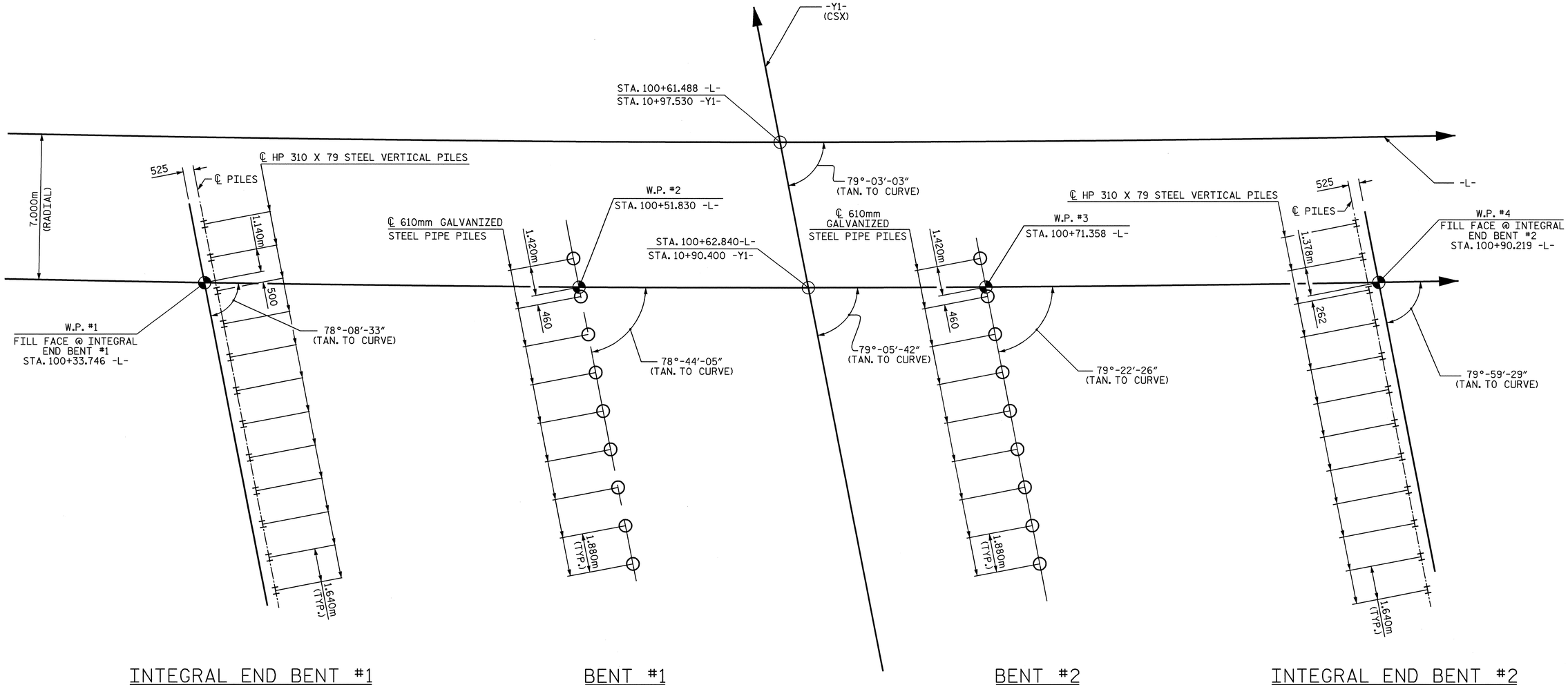

INTEGRAL END BENT #1 | BENT #1 | BENT #2 | INTEGRAL END BENT #2

FOUNDATION LAYOUT

DIMENSIONS LOCATING PILES ARE SHOWN TO PILE CENTERLINE.

PROJECT NO. R-2554BA

WAYNE COUNTY

STATION: 100+61.488 -L-
10+97.530 -Y1-

SHEET 2 OF 4

STATE OF NORTH CAROLINA
DEPARTMENT OF TRANSPORTATION
RALEIGH

GENERAL DRAWING

FOR BRIDGE OVER CSX RAILROAD ON US 70 BYPASS BETWEEN US 117 BYPASS AND US 117 BUSINESS (RIGHT LANE)

REVISIONS						SHEET NO.
NO.	BY:	DATE:	NO.	BY:	DATE:	S-193
1			3			TOTAL SHEETS
2			4			478

NORTH CAROLINA PROFESSIONAL SEAL 14045 ENGINEER TIMOTHY W. COGGINS
6/9/08

DRAWN BY : PEGGY ADKINS DATE : 11-07
CHECKED BY : T.L. AVERETTE DATE : 4-08

09-JUN-2008 07:06
g:\tlpprojects-r\r2554ba\structures\azlzl\Str#7\FINAL PLANS\R-2554BA_sd_GD_07.dgn
taverette

STR. #7

ANGLES			
LONG CHORD		SHORT CHORD	
L1	79°-04′-01″	S1	78°-26′-19″
		S2	79°-03′-15″
		S3	79°-40′-58″

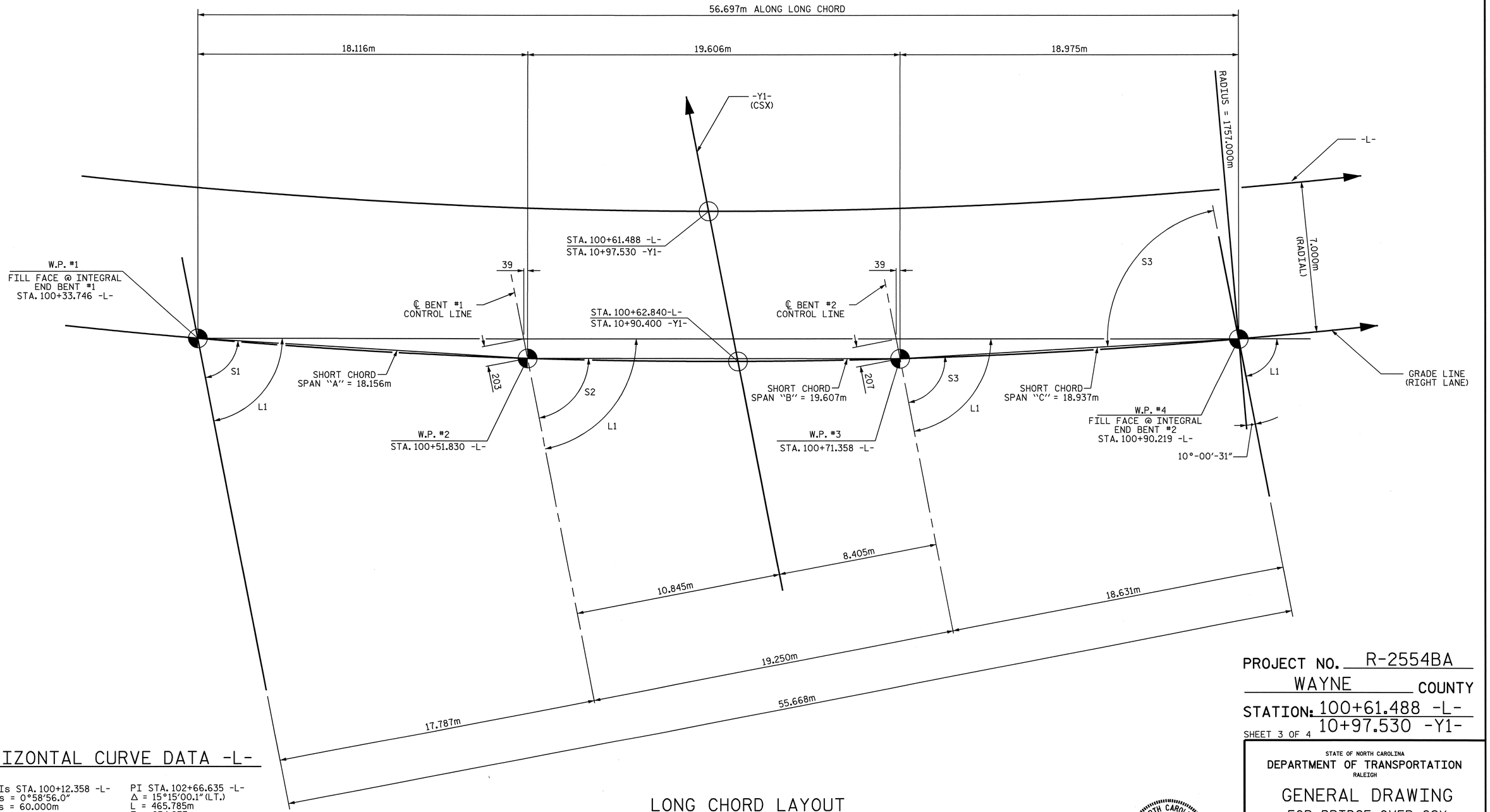

LONG CHORD LAYOUT

HORIZONTAL CURVE DATA -L-

PIs STA. 100+12.358 -L-
Θs = 0°58′56.0″
Ls = 60.000m
LT = 40.001m
ST = 20.001m

PI STA. 102+66.635 -L-
Δ = 15°15′00.1″ (LT.)
L = 465.785m
T = 234.277m
R = 1750.000m

PROJECT NO. R-2554BA
WAYNE COUNTY
STATION: 100+61.488 -L-
10+97.530 -Y1-
SHEET 3 OF 4

STATE OF NORTH CAROLINA
DEPARTMENT OF TRANSPORTATION
RALEIGH

GENERAL DRAWING

FOR BRIDGE OVER CSX RAILROAD ON US 70 BYPASS BETWEEN US 117 BYPASS AND US 117 BUSINESS (RIGHT LANE)

REVISIONS						SHEET NO.
NO.	BY:	DATE:	NO.	BY:	DATE:	S-194
1			3			TOTAL SHEETS
2			4			478

NORTH CAROLINA PROFESSIONAL SEAL 14045 ENGINEER TIMOTHY L. AVERETTE COGGINS
6/9/08

DRAWN BY : PEGGY ADKINS DATE : 11-07
CHECKED BY : T.L. AVERETTE DATE : 4-08

09-JUN-2008 07:06
g:\tlpprojects-r\r2554ba\structures\azlzl\Str#7\FINAL PLANS\R-2554BA_sd_GD_07.dgn
taverette

STR. #7

BM #3 RR SPIKE IN BASE OF 300mm OAK 61.854m LT OF -BL- STA. 15+81.681 ELEV. 39.107m

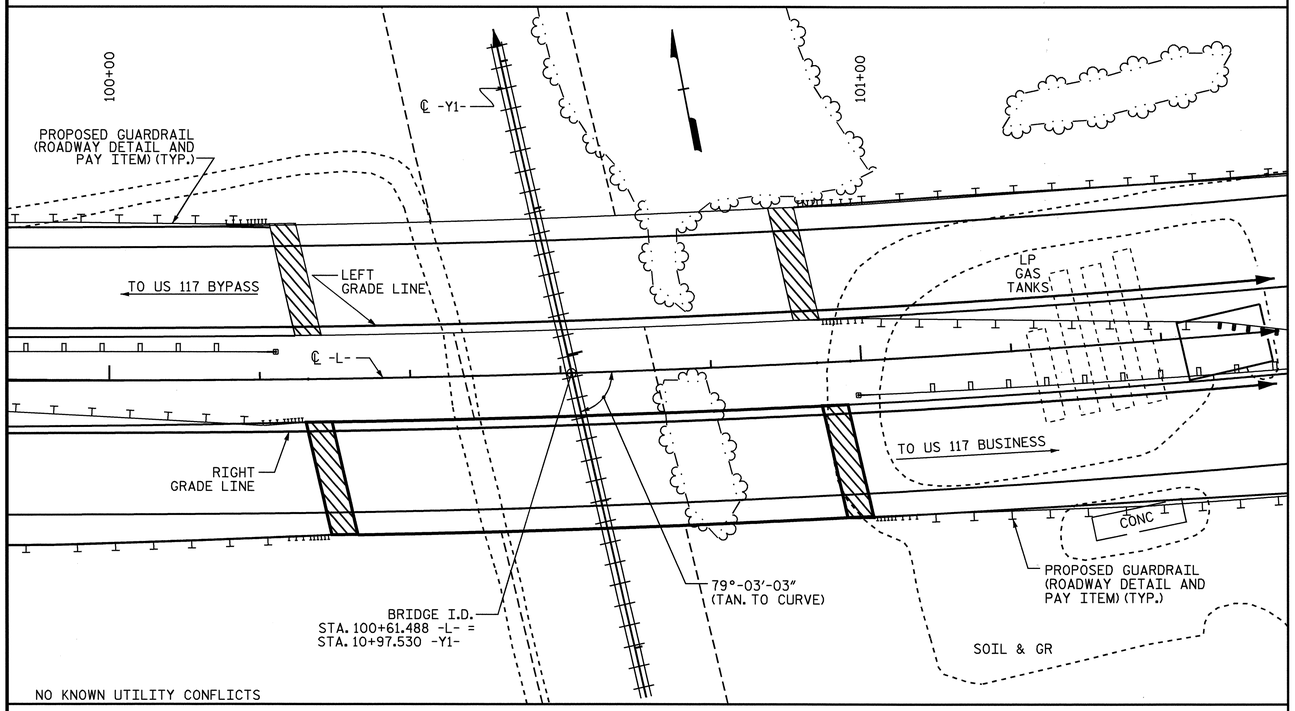

LOCATION SKETCH

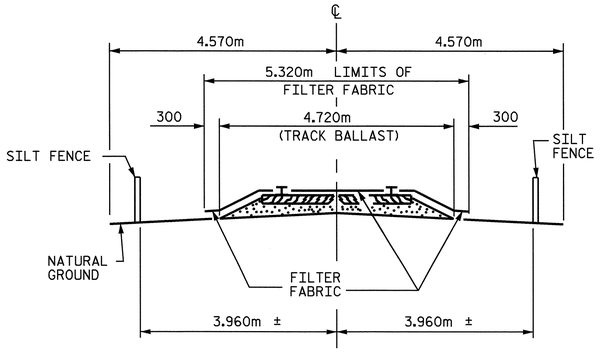

RAILROAD EROSION CONTROL DETAIL

NOTES

RAILROAD EROSION CONTROL MEASURES SHALL BE INSTALLED PRIOR TO PERFORMING ANY WORK IN THE RAILROAD RIGHT-OF-WAY.

ADDITIONAL EROSION CONTROL MEASURES FOR PROTECTION OF RAILROAD DITCHES MAY BE REQUIRED AS DIRECTED BY THE ENGINEER.

NO SEPARATE PAYMENT WILL BE MADE FOR RAILROAD EROSION CONTROL MEASURES.

LIMITS OF SILT FENCE AND FILTER FABRIC PARALLEL TO RAILROAD SHALL EXTEND A MINIMUM OF 8.000m OUTSIDE EDGE OF SUPERSTRUCTURE OR TOE OF SLOPE ON CONSTRUCTION. A GREATER LENGTH OF SILT FENCE OR FILTER FABRIC MAY BE REQUIRED IF SO DIRECTED BY THE ENGINEER.

FILTER FABRIC TO BE NAILED TO TIMBER RAIL TIES WITH PRIME SOURCE "GRIP CAP" OR EQUIVALENT. FILTER FABRIC ON SHOULDER TO BE SECURED AS DIRECTED BY THE ENGINEER AND RAILROAD.

NOTES:

ASSUMED LIVE LOAD = MS18 OR ALTERNATE LOADING, EXCEPT THAT THE GIRDERS HAVE BEEN DESIGNED FOR MS22.5

THIS BRIDGE HAS BEEN DESIGNED IN ACCORDANCE WITH THE REQUIREMENTS OF AASHTO STANDARD SPECIFICATIONS FOR SEISMIC DESIGN OF HIGHWAY BRIDGES FOR SEISMIC PERFORMANCE CATEGORY A.

ALL DIMENSIONS ARE IN MILLIMETERS UNLESS OTHERWISE NOTED.

ALL ELEVATIONS ARE IN METERS.

FOR OTHER DESIGN DATA AND GENERAL NOTES, SEE SHEET SNSM.

FOR EROSION CONTROL MEASURES, SEE EROSION CONTROL PLANS.

THIS BRIDGE HAS BEEN DESIGNED BY THE STRENGTH DESIGN METHOD AS SPECIFIED IN AASHTO STANDARD SPECIFICATIONS.

REMOVABLE FORMS MAY BE USED IN LIEU OF METAL STAY-IN-PLACE FORMS IN ACCORDANCE WITH ARTICLE 420-3 OF THE STANDARD SPECIFICATIONS.

THE CONTRACTOR SHALL PROVIDE INDEPENDENT ASSURANCE SAMPLES OF REINFORCING STEEL AS FOLLOWS: FOR PROJECTS REQUIRING UP TO 360,000 kg OF REINFORCING STEEL, ONE 760mm SAMPLE OF EACH SIZE BAR USED, AND FOR PROJECTS REQUIRING OVER 360,000 kg OF REINFORCING STEEL, TWO 760mm SAMPLES OF EACH SIZE BAR USED. THE BARS FROM WHICH THE SAMPLES ARE TAKEN MUST THEN BE SPLICED WITH REPLACEMENT BARS OF THE SIZE AND LENGTH OF THE SAMPLE PLUS A MINIMUM LAP SPLICE OF THIRTY BAR DIAMETERS.

NEEDLE BEAMS WILL NOT BE ALLOWED UNLESS OTHERWISE CALLED FOR ON THE PLANS OR APPROVED BY THE ENGINEER.

FOR SUBMITTAL OF WORKING DRAWINGS, SEE SPECIAL PROVISIONS.

FOR METRIC STRUCTURAL STEEL, SEE SPECIAL PROVISIONS.

FOR FALSEWORK AND FORMWORK, SEE SPECIAL PROVISIONS.

FOR PRESTRESSED CONCRETE MEMBERS, SEE SPECIAL PROVISIONS.

FOR CRANE SAFETY, SEE SPECIAL PROVISIONS.

FOR GROUT FOR STRUCTURES, SEE SPECIAL PROVISIONS.

FOR CRACK REPAIR OF PRESTRESSED CONCRETE GIRDERS, SEE SPECIAL PROVISIONS.

OBSERVE A 3 MONTH WAITING PERIOD AFTER CONSTRUCTING THE EMBANKMENT TO THE BOTTOM OF CAP ELEVATION BEFORE BEGINNING BENT OR REINFORCED BRIDGE APPROACH FILL CONSTRUCTION AT END BENTS NO. 1 AND 2 AND BENTS NO. 1 AND 2.

DRIVE PILES AT END BENT NO. 1 AND 2 TO A REQUIRED BEARING CAPACITY OF 1060 KN PER PILE. THE REQUIRED BEARING CAPACITY IS EQUAL TO THE ALLOWABLE BEARING CAPACITY WITH A MINIMUM FACTOR OF SAFETY OF TWO.

THE ALLOWABLE BEARING CAPACITY FOR PILES AT END BENTS NO. 1 AND 2 IS 530 KN PER PILE.

DRIVE PILES AT BENTS NO. 1 AND 2 TO A REQUIRED BEARING CAPACITY OF 1780 KN PER PILE. THE REQUIRED BEARING CAPACITY IS EQUAL TO THE ALLOWABLE BEARING CAPACITY WITH A MINIMUM FACTOR OF SAFETY OF TWO.

THE ALLOWABLE BEARING CAPACITY FOR PILES AT BENTS NO. 1 AND 2 IS 890 KN PER PILE.

DRIVE PILES AT BENTS NO. 1 AND 2 TO A TIP ELEVATION NO HIGHER THAN 29.0 METERS.

TESTING THE FIRST PRODUCTION PILE WITH THE PILE DRIVING ANALYZER (PDA) DURING DRIVING, RESTRIKING OR REDRIVING IS REQUIRED AT BENT NO. 1 AND BENT NO. 2. SEE PILE DRIVING ANALYZER SPECIAL PROVISION.

GALVANIZED STEEL PILES ARE REQUIRED IN ACCORDANCE WITH SECTION 450 OF THE STANDARD SPECIFICATIONS.

PIPE PILE PLATES ARE NOT REQUIRED FOR THE PIPE PILES AT BENTS NO. 1 AND 2.

FOR SETTLEMENT PLATES, SEE ROADWAY PLANS.

TOTAL BILL OF MATERIAL

	PDA TESTING	PDA ASSISTANCE	REINFORCED CONCRETE DECK SLAB	GROOVING BRIDGE FLOORS	CLASS A CONCRETE	BRIDGE APPROACH SLABS	REINFORCING STEEL	1143mm PRESTRESSED CONCRETE GIRDER		HP 310 X 79 STEEL PILE		PP 610 X 12.70 GALVANIZED STEEL PILE		PILE REDRIVES	CONCRETE BARRIER RAIL	100mm SLOPE PROTECTION	ELASTOMERIC BEARINGS	EVAZOTE JOINT SEALS	CHAIN LINK FENCE FOR PROTECTION OF RAILROAD
	EACH	EACH	SQ. METERS	SQ. METERS	CU. METERS	LUMP SUM	kg	NO.	METERS	NO.	METERS	NO.	METERS	EACH	METERS	SQ. METERS	LUMP SUM	LUMP SUM	LUMP SUM
SUPERSTRUCTURE			932.1	1041.5		LUMP SUM		21	388.514						112.365		LUMP SUM	LUMP SUM	LUMP SUM
END BENT 1					21.2		2738			12	312.0			4		497			
BENT 1	1	1			15.8		1696					9	216.0	4					
BENT 2	1	1			15.8		1696					9	216.0	4					
END BENT 2					21.1		2726			12	312.0			4		514			
TOTAL	2	2	932.1	1041.5	73.9	LUMP SUM	8856	21	388.514	24	624.0	18	432.0	16	112.365	1011	LUMP SUM	LUMP SUM	LUMP SUM

NORTH CAROLINA PROFESSIONAL SEAL 14045 ENGINEER TIMOTHY V. COGGINS

6/9/08

PROJECT NO. R-2554BA

WAYNE COUNTY

STATION: 100+61.488 -L-
10+97.530 -Y1-

SHEET 4 OF 4

STATE OF NORTH CAROLINA
DEPARTMENT OF TRANSPORTATION
RALEIGH

GENERAL DRAWING

FOR BRIDGE OVER CSX RAILROAD ON US 70 BYPASS BETWEEN US 117 BYPASS AND US 117 BUSINESS (RIGHT LANE)

REVISIONS						SHEET NO.
NO.	BY:	DATE:	NO.	BY:	DATE:	S-195
1			3			TOTAL SHEETS
2			4			478

DRAWN BY : ZION RORIE DATE : 10/10/07
CHECKED BY : B.N. RARODAWALA DATE : 10/11/07

09-JUN-2008 12:32
r:\structures\azlzl\str#7\final plans\R-2554BA_sd_GD_07.dgn
PADKINS

STR. #7

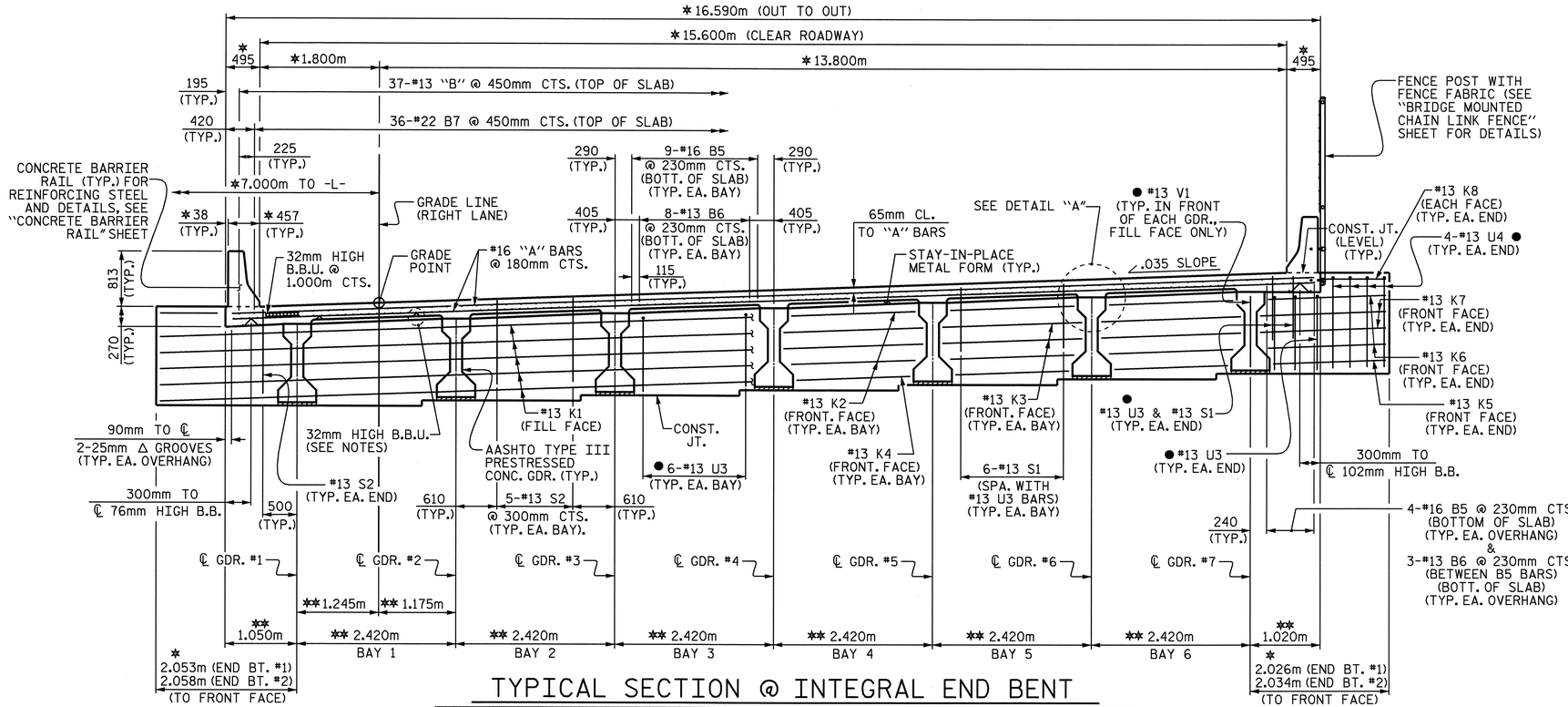

TYPICAL SECTION @ INTEGRAL END BENT

*RADIAL DIMENSION
**RADIAL DIMENSION THRU WORKPOINT
●#13 U3, #13 U4 & #13 V1 BARS TO MATCH WITH #13 "V" BARS IN INTEGRAL END BENT CAP

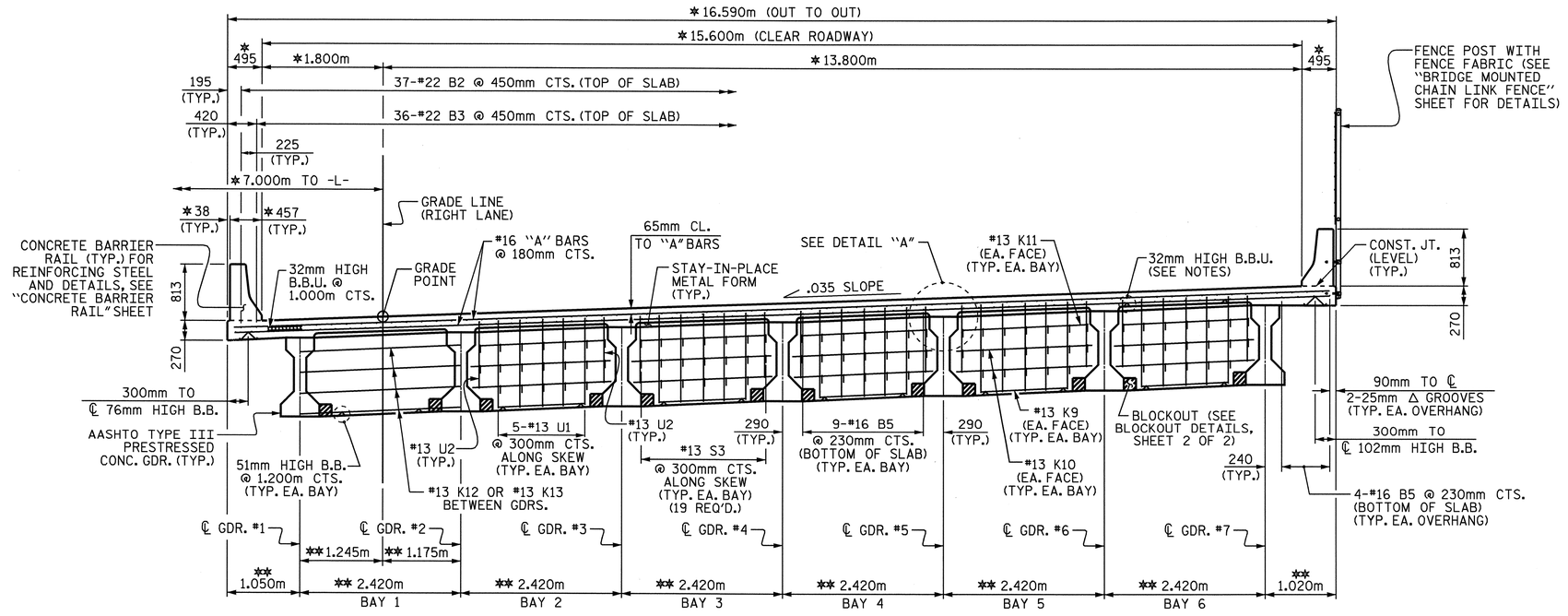

TYPICAL SECTION @ CONTINUOUS BENT DIAPHRAGM

*RADIAL DIMENSION
**RADIAL DIMENSION THRU WORKPOINT

NOTES

PROVIDE 32mm HIGH BEAM BOLSTERS UPPER AT 1.2m CTS. ATOP THE METAL STAY-IN-PLACE FORMS TO SUPPORT THE BOTTOM MAT OF 'A' BARS. WHEN USING REMOVABLE FORMS, PROVIDE CONTINUOUS HIGH CHAIRS FOR METAL DECK (C.H.C.M.) @ 1.2m CTS. WITH A HEIGHT TO SUPPORT THE BOTTOM MAT OF 'A' BARS A CLEAR DISTANCE OF 65mm ABOVE THE TOP OF THE REMOVABLE FORM.

LONGITUDINAL STEEL MAY BE SHIFTED SLIGHTLY, AS NECESSARY, TO AVOID INTERFERENCE WITH STIRRUPS IN PRESTRESSED CONCRETE GIRDERS.

PREVIOUSLY CAST CONCRETE IN A CONTINUOUS UNIT SHALL HAVE ATTAINED A MINIMUM COMPRESSESIVE STRENGTH OF 20.7 MPa BEFORE ADDITIONAL CONCRETE IS CAST IN THE UNIT.

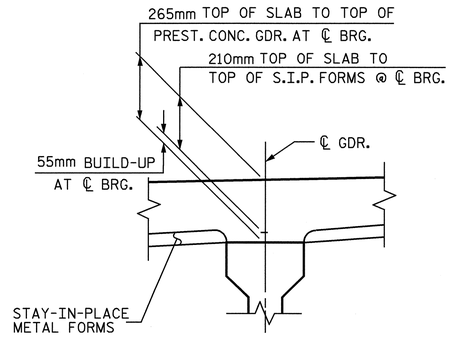

DETAIL "A"

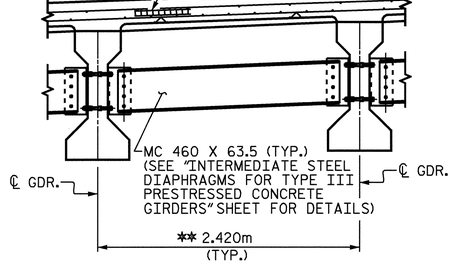

PARTIAL TYPICAL SECTION

AT INTERMEDIATE DIAPHRAGM

PROJECT NO. R-2554BA
WAYNE COUNTY
STATION: 100+61.488 -L-

SHEET 1 OF 2

STATE OF NORTH CAROLINA
DEPARTMENT OF TRANSPORTATION
RALEIGH

SUPERSTRUCTURE

TYPICAL SECTION
(RIGHT LANE)

REVISIONS						SHEET NO.
NO.	BY:	DATE:	NO.	BY:	DATE:	S-196
1			3			TOTAL SHEETS
2			4			478

DRAWN BY : T.L. AVERETTE DATE : 12-07
CHECKED BY : B.N. BARODAWALA DATE : 1-08

28-APR-2008 12:21
x:\structures\azlz1\str#7\taverette\microstation\r2554ba_sd_ts_07.dgn
lbwilson

STR. #7

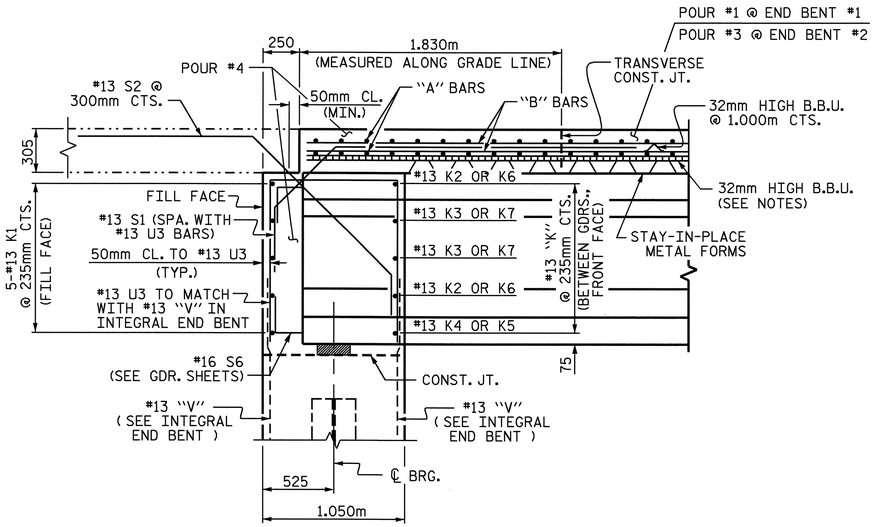

END OF GIRDER DETAIL AT INTEGRAL END BENT

#13 V1 BAR IN FRONT OF GIRDER NOT SHOWN

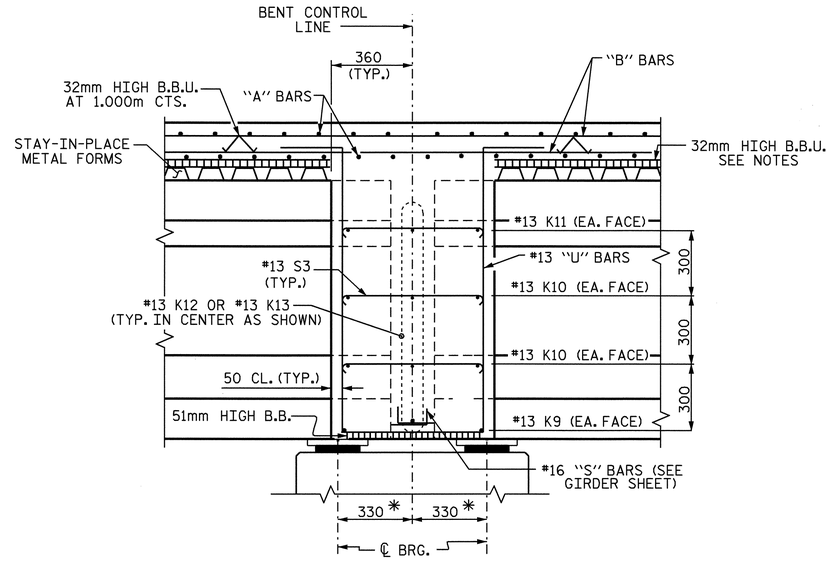

SECTION THRU BENT DIAPHRAGM

* MEASURED ALONG ℄ GDR.

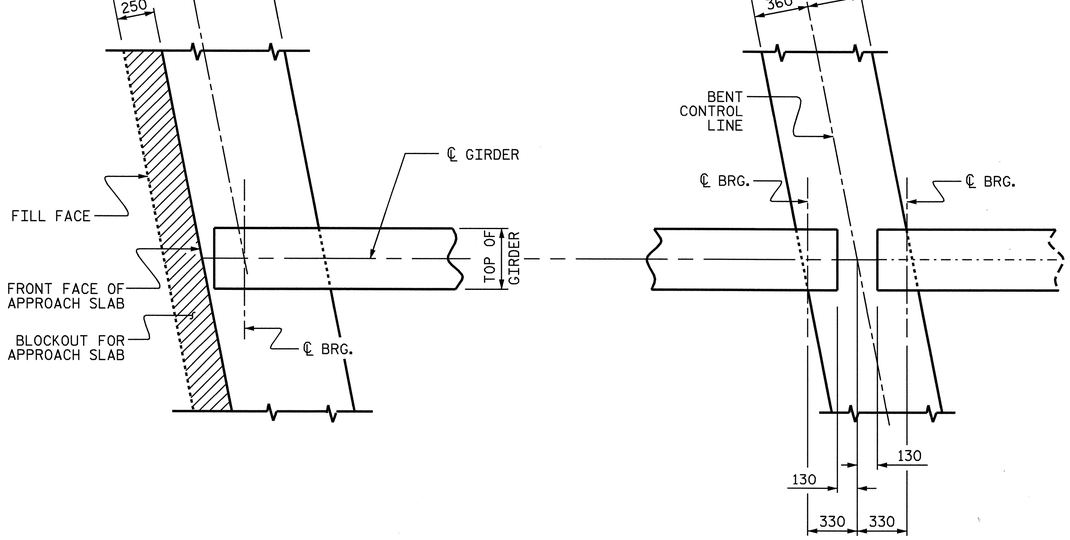

AT INTEGRAL END BENT

(END BENT #1 SHOWN, END BENT #2 SIMILAR)

AT BENT DIAPHRAGM

PLAN OF GIRDER

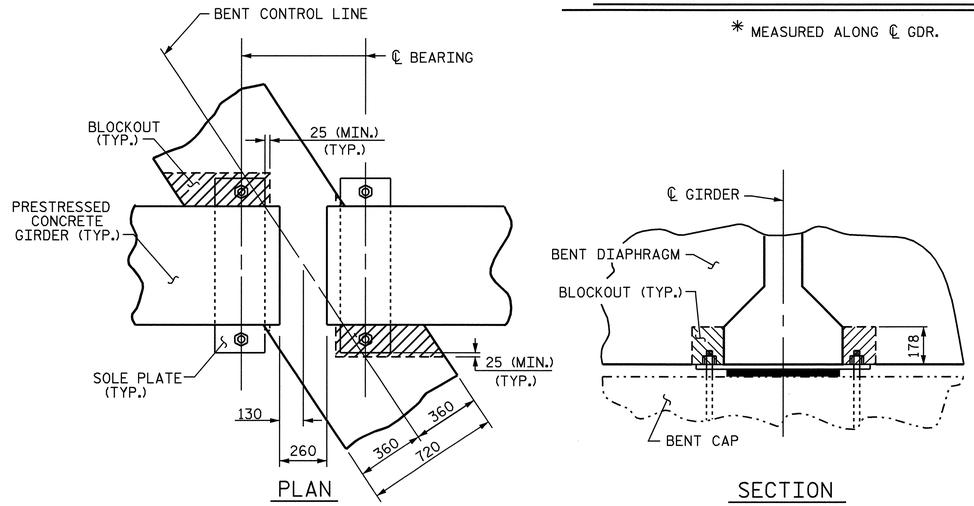

BENT DIAPHRAGM BLOCK-OUT DETAIL

PROJECT NO. R-2554BA

WAYNE COUNTY

STATION: 100+61.488 -L-

SHEET 2 OF 2

STATE OF NORTH CAROLINA
DEPARTMENT OF TRANSPORTATION
RALEIGH

SUPERSTRUCTURE

TYPICAL SECTION

(RIGHT LANE)

NORTH CAROLINA PROFESSIONAL SEAL 14045 ENGINEER TIMOTHY W. COGGINS
6/6/08

REVISIONS						SHEET NO.
NO.	BY:	DATE:	NO.	BY:	DATE:	S-197
1			3			TOTAL SHEETS
2			4			478

DRAWN BY : T.L. AVERETTE DATE : 12-07
CHECKED BY : B.N. BARODAWALA DATE : 1-08

28-APR-2008 12:21
x:\structures\azlzl\str#7\taverette\microstation\r2554ba_sd_ts_07.dgn
lbwilson

STR. #7

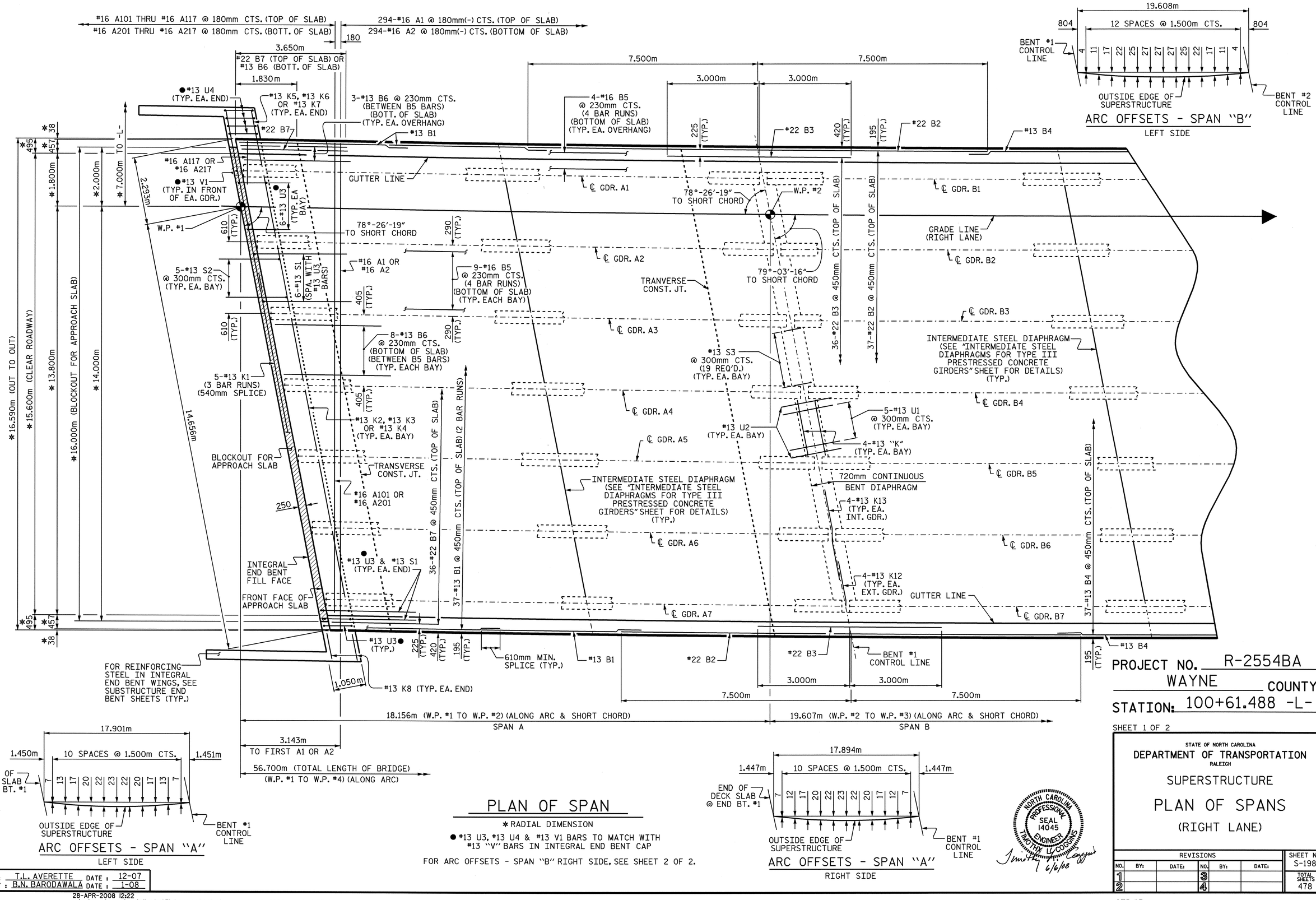

PLAN OF SPAN

* RADIAL DIMENSION

● *13 U3, *13 U4 & *13 V1 BARS TO MATCH WITH *13 "V" BARS IN INTEGRAL END BENT CAP

FOR ARC OFFSETS - SPAN "B" RIGHT SIDE, SEE SHEET 2 OF 2.

NORTH CAROLINA PROFESSIONAL SEAL 14045 ENGINEER TIMOTHY L. COGGINS 6/6/08

PROJECT NO. R-2554BA

WAYNE COUNTY

STATION: 100+61.488 -L-

SHEET 1 OF 2

STATE OF NORTH CAROLINA
DEPARTMENT OF TRANSPORTATION
RALEIGH

SUPERSTRUCTURE

PLAN OF SPANS

(RIGHT LANE)

REVISIONS						SHEET NO.
NO.	BY:	DATE:	NO.	BY:	DATE:	S-198
1			3			TOTAL SHEETS
2			4			478

DRAWN BY : T.L. AVERETTE DATE : 12-07
CHECKED BY : B.N. BARODAWALA DATE : 1-08

28-APR-2008 12:22
x:\structures\azlzl\str*7\taverette\microstation\r2554ba_sd_sl_07.dgn
lbwilson

STR.*7

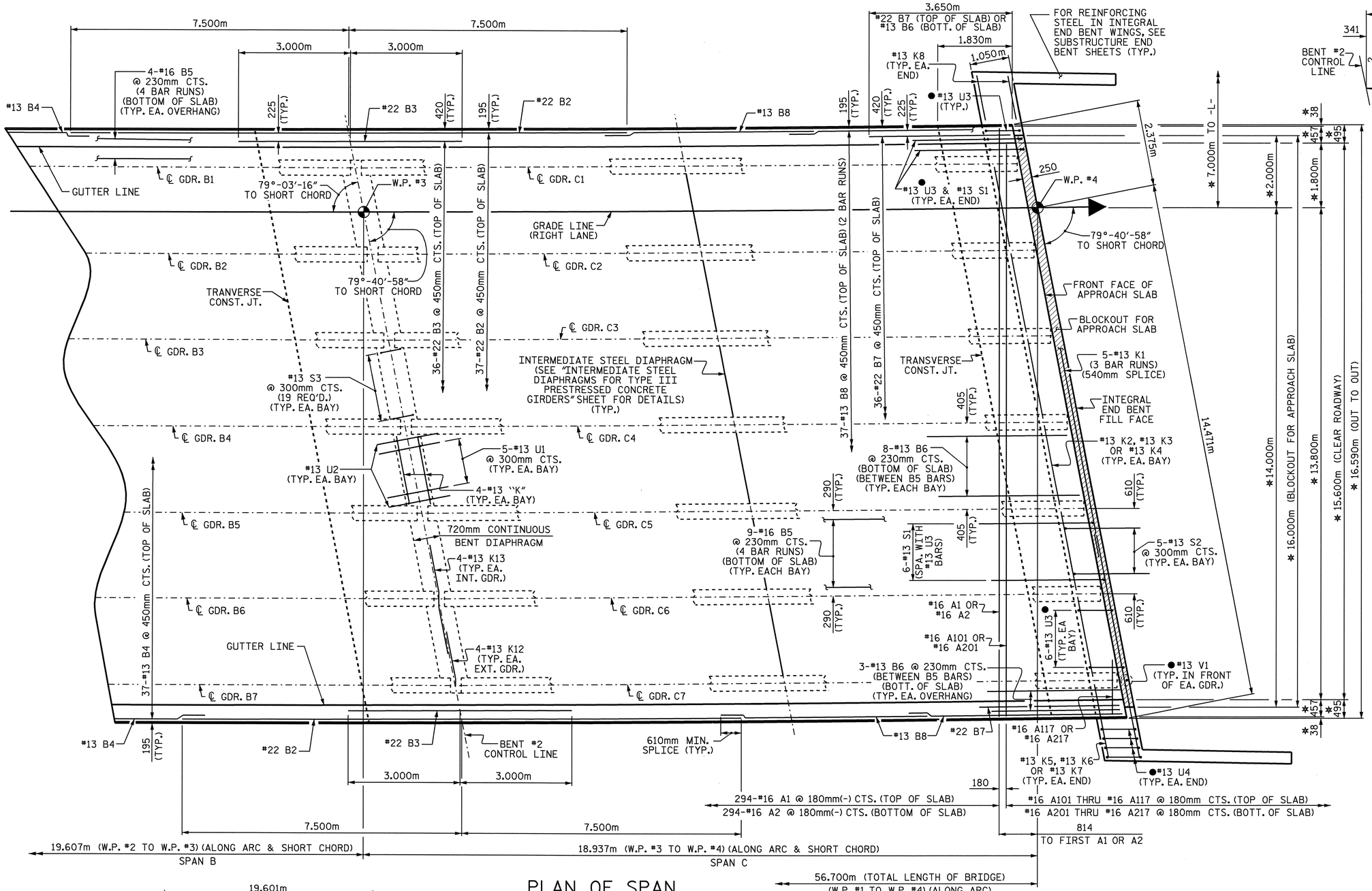

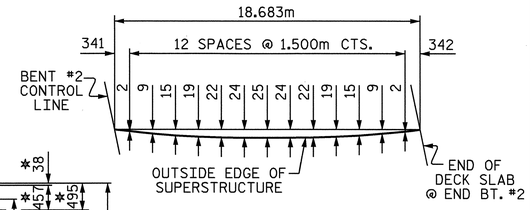

ARC OFFSETS - SPAN "C"

LEFT SIDE

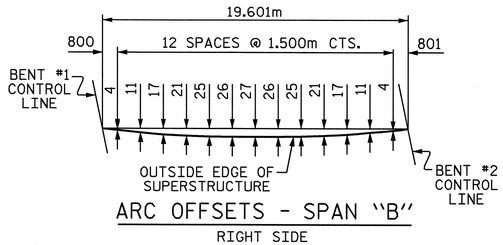

ARC OFFSETS - SPAN "B"

RIGHT SIDE

PLAN OF SPAN

* RADIAL DIMENSION

● #13 U3, #13 U4 & #13 V1 BARS TO MATCH WITH #13 "V" BARS IN INTEGRAL END BENT CAP

FOR ARC OFFSETS - SPAN "B" LEFT SIDE, SEE SHEET 1 OF 2.

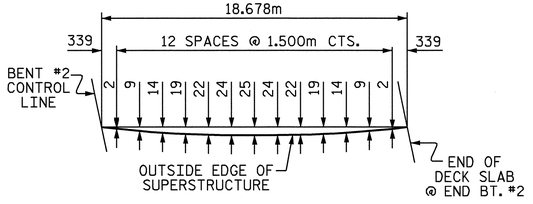

ARC OFFSETS - SPAN "C"

RIGHT SIDE

NORTH CAROLINA PROFESSIONAL SEAL 14045 ENGINEER TIMOTHY L. COGGINS

6/6/08

PROJECT NO. R-2554BA

WAYNE COUNTY

STATION: 100+61.488 -L-

SHEET 2 OF 2

STATE OF NORTH CAROLINA
DEPARTMENT OF TRANSPORTATION
RALEIGH

SUPERSTRUCTURE

PLAN OF SPANS
(RIGHT LANE)

REVISIONS						SHEET NO.
NO.	BY:	DATE:	NO.	BY:	DATE:	S-199
1			3			TOTAL SHEETS
2			4			478

STR. #7

DRAWN BY : T.L. AVERETTE DATE : 12-07
CHECKED BY : B.N. BARODAWALA DATE : 1-08

28-APR-2008 12:22
x:\structures\azlz1\str#7\taverette\microstation\r2554ba_sd_sl_07.dgn
jbwilson

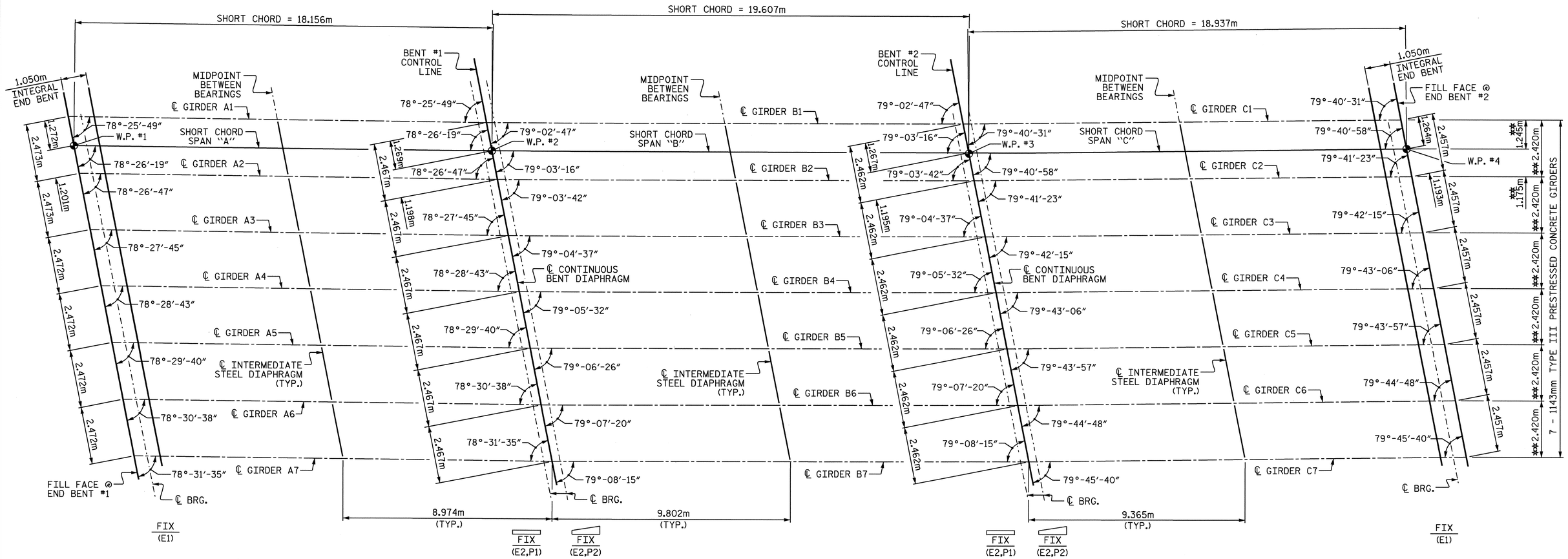

SPAN "A"

SPAN "B"

SPAN "C"

FRAMING PLAN

** RADIAL DIMENSION THRU WORKPOINT

PROJECT NO. R-2554BA

WAYNE COUNTY

STATION: 100+61.488 -L-

STATE OF NORTH CAROLINA
DEPARTMENT OF TRANSPORTATION
RALEIGH

SUPERSTRUCTURE

FRAMING PLAN

(RIGHT LANE)

NORTH CAROLINA PROFESSIONAL SEAL 14045 ENGINEER TIMOTHY L COGGINS
6/6/08

REVISIONS						SHEET NO.
NO.	BY:	DATE:	NO.	BY:	DATE:	S-200
1			3			TOTAL SHEETS
2			4			478

DRAWN BY : T.L. AVERETTE DATE : 12-07
CHECKED BY : B.N. BARODAWALA DATE : 1-08

28-APR-2008 12:22
x:\structures\dzlzl\str#7\taverette\microstation\r2554ba_sd_fp_07.dgn
jbwilson

STR. #7

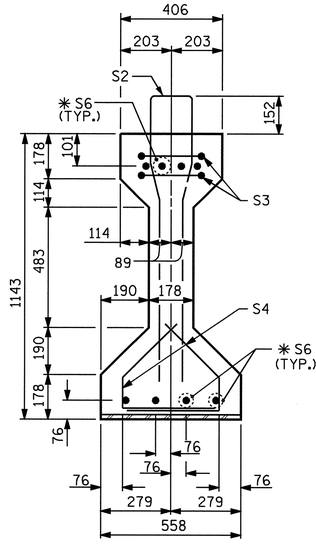

SECTION A-A

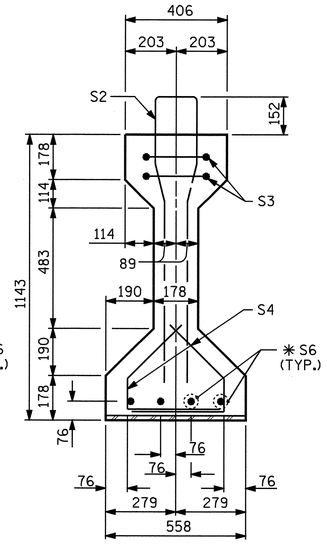

SECTION B-B

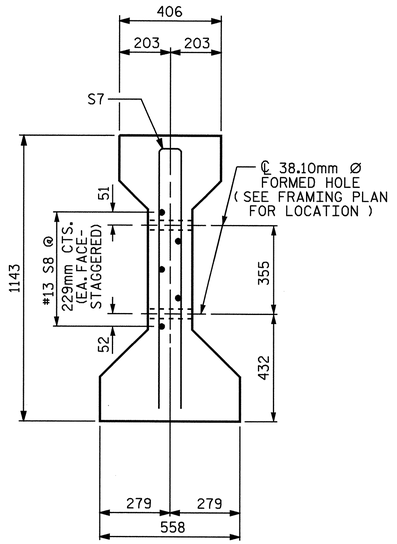

SECTION C-C

(S1 BARS NOT SHOWN)

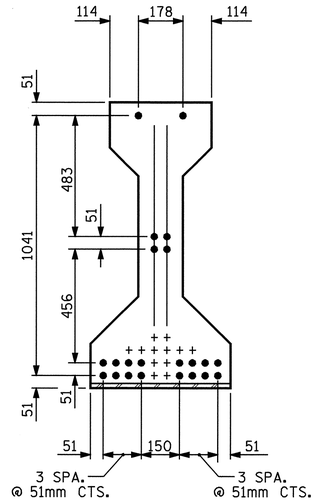

AT END OF GIRDER

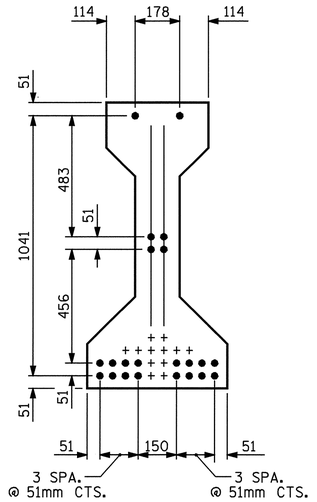

AT ℄ OF GIRDER

12.70mm Ø LOW RELAXATION STRAND LAYOUT

PLAN OF GIRDER

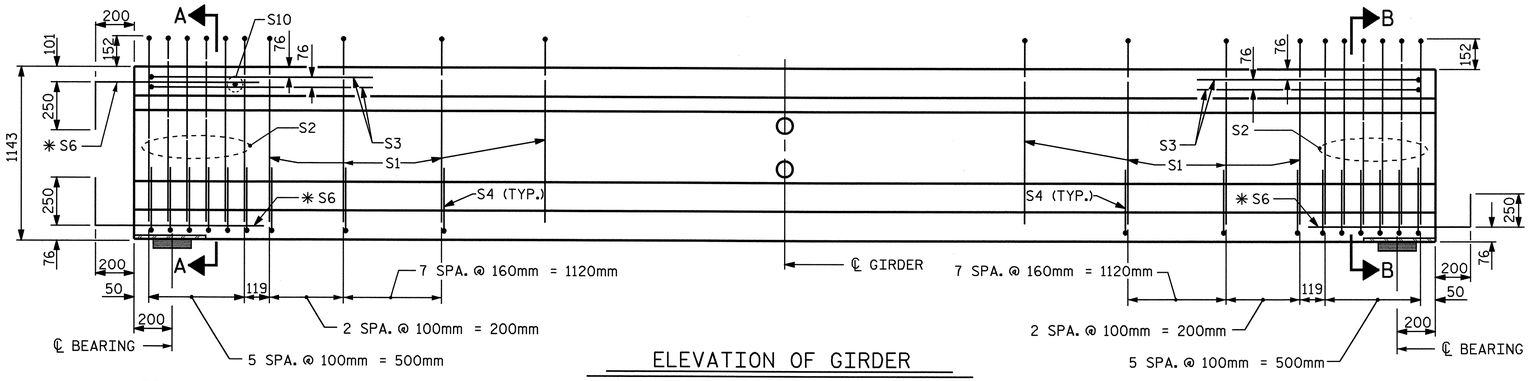

ELEVATION OF GIRDER

(SEE PARTIAL ELEVATION FOR ADDITIONAL "S" BARS)

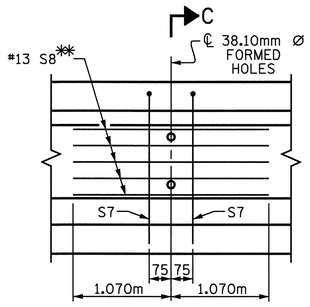

PARTIAL ELEVATION

SHOWING INTERMEDIATE DIAPHRAGM REINFORCING STEEL

✱✱ S8 BAR MAY BE SHIFTED SLIGHTLY TO AVOID INTERFERENCE WITH THE 12.70mm STRANDS.

12.70mm Ø L. R. GRADE 270 STRANDS

AREA (mm^2)	ULTIMATE STRENGTH (kN PER STRAND)	APPLIED PRESTRESS (kN PER STRAND)
98.71	183.7	137.8

REINFORCING STEEL FOR ONE GIRDER

BAR	NUMBER	SIZE	TYPE	LENGTH	WEIGHT
S1	56	#13	1	2600	145
S2	12	#19	1	2600	70
S3	4	#13	3	2660	11
S4	64	#13	2	840	53
✱S6	12	#16	STR	1120	21
S7	2	#16	3	2180	7
S8	5	#13	STR	2140	11
S10	1	#10	STR	300	1

✱NOTE: S6 BARS SHALL BE BENT BEFORE SHIPMENT. HEAT BENDING SHALL NOT BE ALLOWED.

BAR TYPES

ALL BAR DIMENSIONS ARE OUT-TO-OUT

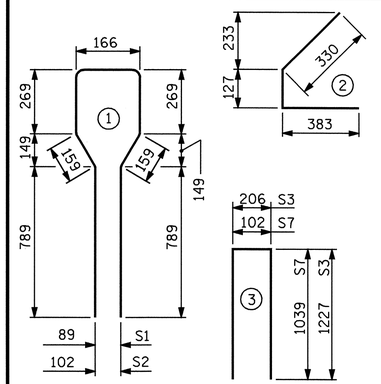

QUANTITIES FOR ONE GIRDER

REINFORCING STEEL	41.4 MPa CONCRETE	12.70mm Ø L.R. STRANDS
Kg	m^3	No.
319	6.4	22

GIRDERS REQUIRED

NUMBER	LENGTH	TOTAL LENGTH
7	17.688m	123.816m

PROJECT NO. R-2554BA

WAYNE COUNTY

STATION: 100+61.488 -L-

SHEET 1 OF 5

STATE OF NORTH CAROLINA
DEPARTMENT OF TRANSPORTATION
RALEIGH

STANDARD
AASHTO TYPE III PRESTRESSED CONCRETE GIRDER CONTINUOUS FOR LIVE LOAD
SPAN "A"
(RIGHT LANE)

NORTH CAROLINA PROFESSIONAL SEAL 14045 ENGINEER TIMOTHY M. COGGINS
6/6/08

REVISIONS						SHEET NO.
NO.	BY:	DATE:	NO.	BY:	DATE:	S-201
1			3			TOTAL SHEETS
2			4			478

ASSEMBLED BY : T.L. AVERETTE	DATE : 12-07	
CHECKED BY : B.N. BARODAWALA	DATE : 1-08	
DRAWN BY : ELR 8/91	REV. 7/17/98	RWW/LES
CHECKED BY : GRP 8/91	REV. 10/17/00R	RWW/LES
	REV. 5/1/06	TLA/GM

28-APR-2008 12:23
x:\structures\gzlzl\str#7\taverette\microstation\r2554ba_sd_gl_07.dgn
jhuffman

STR. #7

STD. NO. PCG5SM

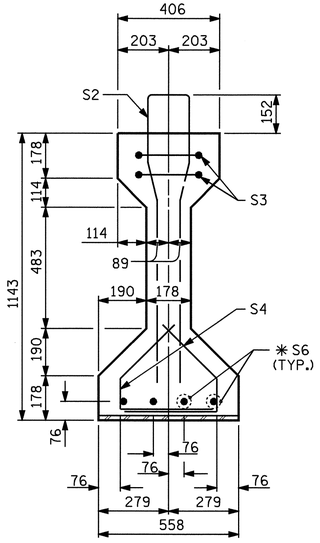

SECTION B-B

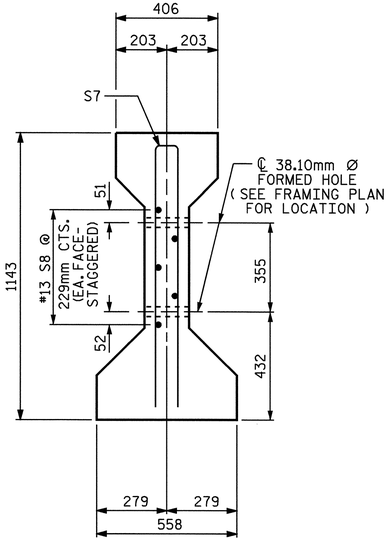

SECTION C-C

(S1 BARS NOT SHOWN)

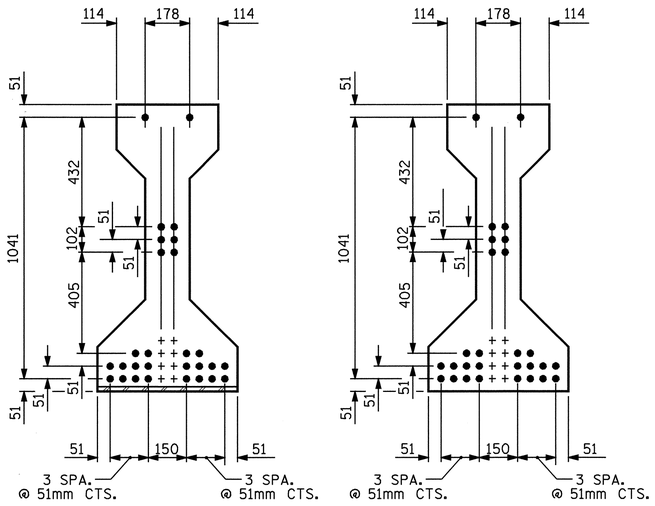

AT END OF GIRDER

AT ℄ OF GIRDER

12.70mm Ø LOW RELAXATION STRAND LAYOUT

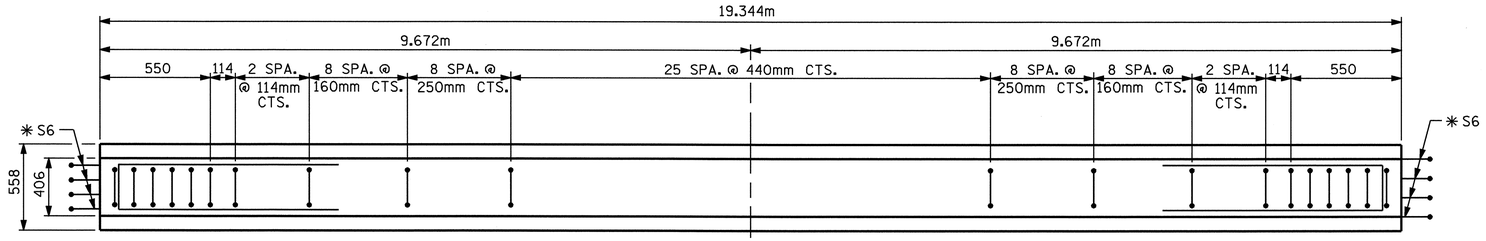

PLAN OF GIRDER

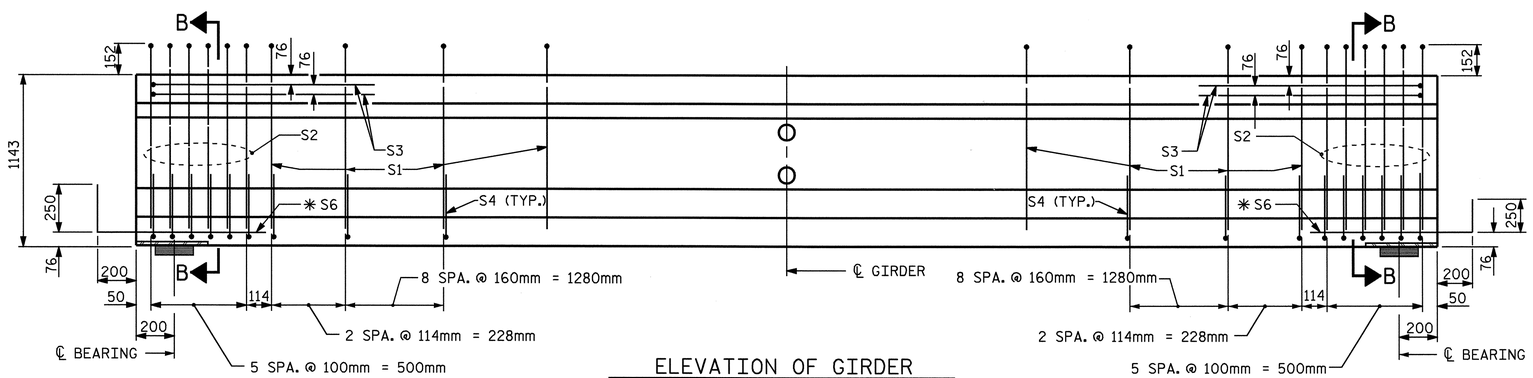

FIX

ELEVATION OF GIRDER

(SEE PARTIAL ELEVATION FOR ADDITIONAL "S" BARS)

FIX

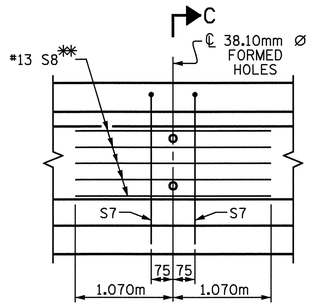

PARTIAL ELEVATION

SHOWING INTERMEDIATE DIAPHRAGM REINFORCING STEEL

✳✳ S8 BAR MAY BE SHIFTED SLIGHTLY TO AVOID INTERFERENCE WITH THE 12.70mm STRANDS.

12.70mm Ø L. R. GRADE 270 STRANDS

AREA (mm^2)	ULTIMATE STRENGTH (kN PER STRAND)	APPLIED PRESTRESS (kN PER STRAND)
98.71	183.7	137.8

REINFORCING STEEL FOR ONE GIRDER

BAR	NUMBER	SIZE	TYPE	LENGTH	WEIGHT
S1	62	#13	1	2600	160
S2	12	#19	1	2600	70
S3	4	#13	3	2660	11
S4	68	#13	2	840	57
✳S6	8	#16	STR	1120	14
S7	2	#16	3	2180	7
S8	5	#13	STR	2140	11

✳NOTE: S6 BARS SHALL BE BENT BEFORE SHIPMENT. HEAT BENDING SHALL NOT BE ALLOWED.

BAR TYPES

ALL BAR DIMENSIONS ARE OUT-TO-OUT

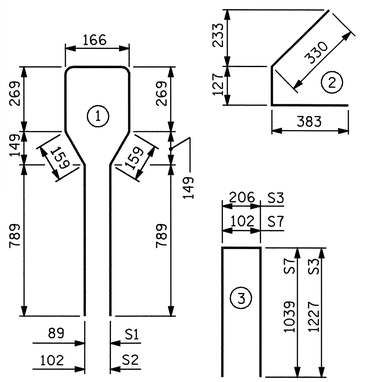

QUANTITIES FOR ONE GIRDER

REINFORCING STEEL	41.4 MPa CONCRETE	12.70mm Ø L.R. STRANDS
kg	m^3	No.
330	7.0	28

GIRDERS REQUIRED

NUMBER	LENGTH	TOTAL LENGTH
7	19.344m	135.408m

PROJECT NO. R-2554BA

WAYNE COUNTY

STATION: 100+61.488 -L-

SHEET 2 OF 5

STATE OF NORTH CAROLINA
DEPARTMENT OF TRANSPORTATION
RALEIGH

STANDARD
AASHTO TYPE III PRESTRESSED CONCRETE GIRDER CONTINUOUS FOR LIVE LOAD
SPAN "B"
(RIGHT LANE)

REVISIONS						SHEET NO.
NO.	BY:	DATE:	NO.	BY:	DATE:	S-202
1			3			TOTAL SHEETS
2			4			478

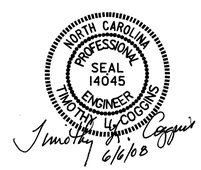

ASSEMBLED BY : T.L. AVERETTE	DATE : 12-07	
CHECKED BY : B.N. BARODAWALA	DATE : 1-08	
DRAWN BY : ELR 8/91	REV. 7/17/98	RWW/LES
CHECKED BY : GRP 8/91	REV. 10/17/00R	RWW/LES
	REV. 5/1/06	TLA/GM

28-APR-2008 12:23
x:\structures\azlzl\str#7\taverette\microstation\r2554ba_sd_gl_07.dgn
lbwilson

STR. #7

STD. NO. PCG5SM

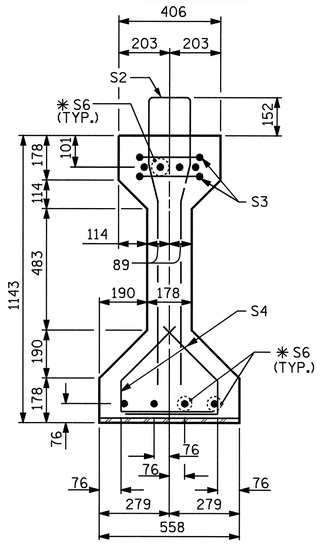

SECTION A-A

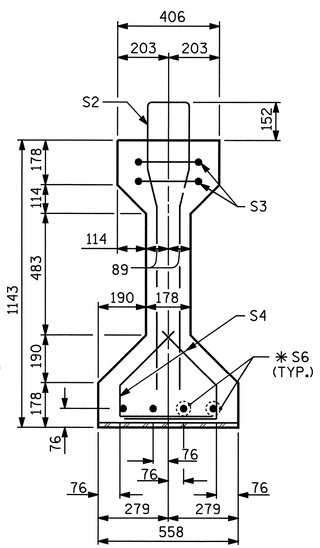

SECTION B-B

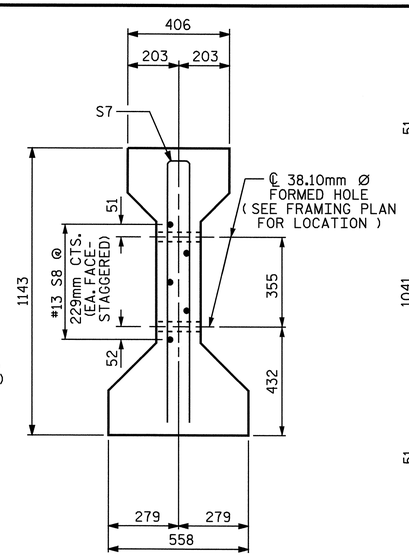

SECTION C-C

(S1 BARS NOT SHOWN)

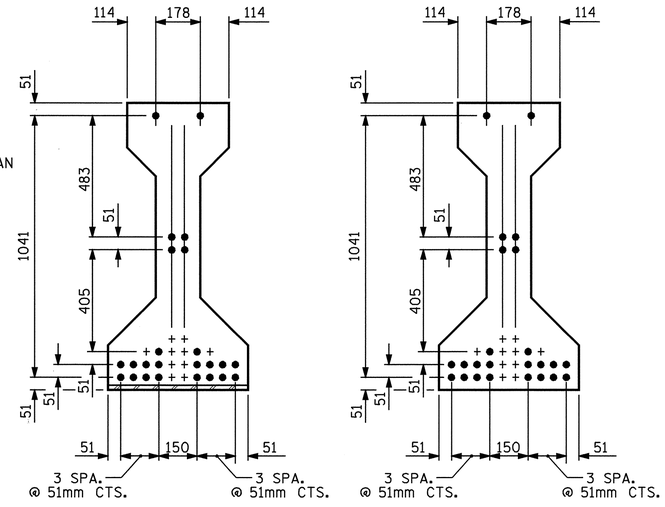

AT END OF GIRDER

AT ℄ OF GIRDER

12.70mm Ø LOW RELAXATION STRAND LAYOUT

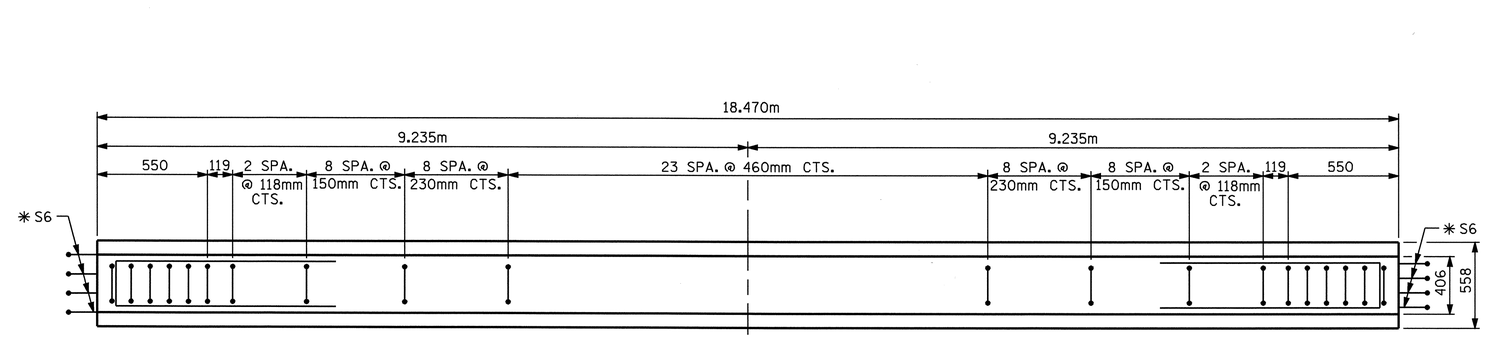

PLAN OF GIRDER

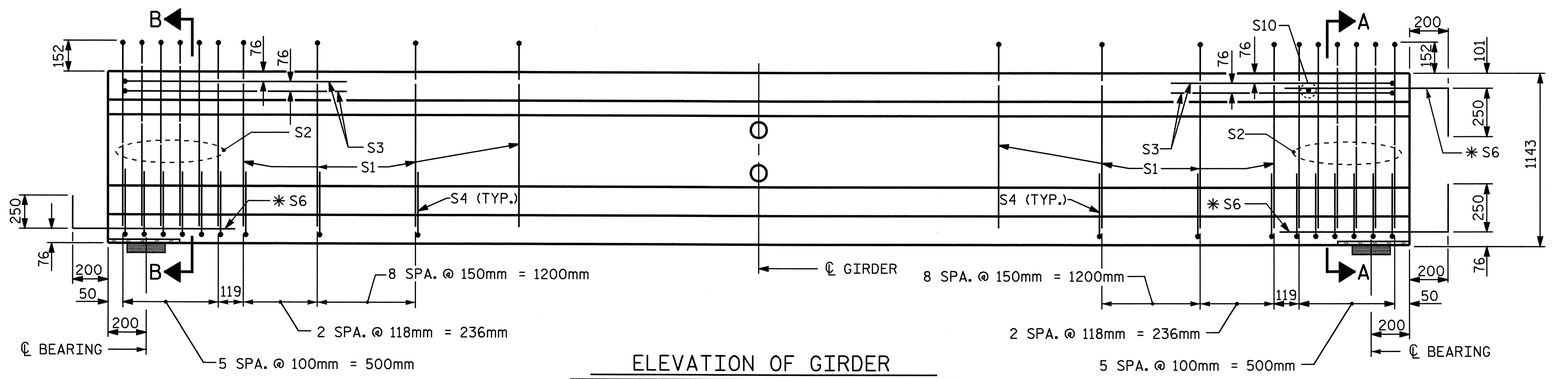

FIX

ELEVATION OF GIRDER

(SEE PARTIAL ELEVATION FOR ADDITIONAL "S" BARS)

INTEGRAL END BENT

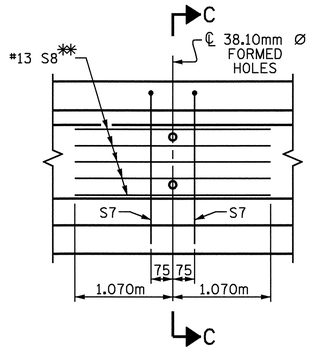

PARTIAL ELEVATION

SHOWING INTERMEDIATE DIAPHRAGM REINFORCING STEEL

✳✳ S8 BAR MAY BE SHIFTED SLIGHTLY TO AVOID INTERFERENCE WITH THE 12.70mm STRANDS.

12.70mm Ø L. R. GRADE 270 STRANDS

AREA (mm^2)	ULTIMATE STRENGTH (kN PER STRAND)	APPLIED PRESTRESS (kN PER STRAND)
98.71	183.7	137.8

REINFORCING STEEL FOR ONE GIRDER

BAR	NUMBER	SIZE	TYPE	LENGTH	WEIGHT
S1	60	#13	1	2600	155
S2	12	#19	1	2600	70
S3	4	#13	3	2660	11
S4	68	#13	2	840	57
✳S6	12	#16	STR	1120	21
S7	2	#16	3	2180	7
S8	5	#13	STR	2140	11
S10	1	#10	STR	300	1

✳NOTE: S6 BARS SHALL BE BENT BEFORE SHIPMENT. HEAT BENDING SHALL NOT BE ALLOWED.

BAR TYPES

ALL BAR DIMENSIONS ARE OUT-TO-OUT

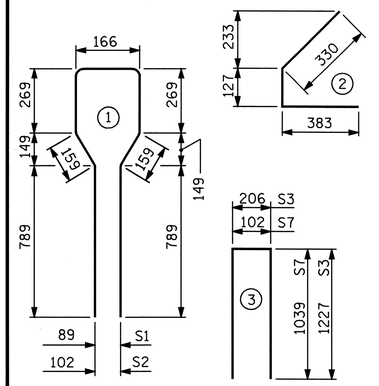

QUANTITIES FOR ONE GIRDER

REINFORCING STEEL	41.4 MPa CONCRETE	12.70mm Ø L.R. STRANDS
Kg	m^3	No.
333	6.7	24

GIRDERS REQUIRED

NUMBER	LENGTH	TOTAL LENGTH
7	18.470m	129.290m

PROJECT NO. R-2554BA

WAYNE COUNTY

STATION: 100+61.488 -L-

SHEET 3 OF 5

STATE OF NORTH CAROLINA
DEPARTMENT OF TRANSPORTATION
RALEIGH

STANDARD
AASHTO TYPE III
PRESTRESSED CONCRETE GIRDER
CONTINUOUS FOR LIVE LOAD
SPAN "C"
(RIGHT LANE)

NORTH CAROLINA PROFESSIONAL SEAL 14045 ENGINEER TIMOTHY A. COGGINS
6/6/08

ASSEMBLED BY : T.L. AVERETTE	DATE : 12-07
CHECKED BY : B.N. BARODAWALA	DATE : 1-08

DRAWN BY : ELR 8/91	REV. 7/17/98 RWW/LES
CHECKED BY : GRP 8/91	REV. 10/17/00R RWW/LES
	REV. 5/1/06 TLA/GM

REVISIONS						SHEET NO.
NO.	BY:	DATE:	NO.	BY:	DATE:	S-203
1			3			TOTAL SHEETS
2			4			478

28-APR-2008 12:23
x:\structures\aziz\str#7\taverette\microstation\r2554ba_sd_gi_07.dgn
lbwilson

STR. #7

STD. NO. PCG5SM

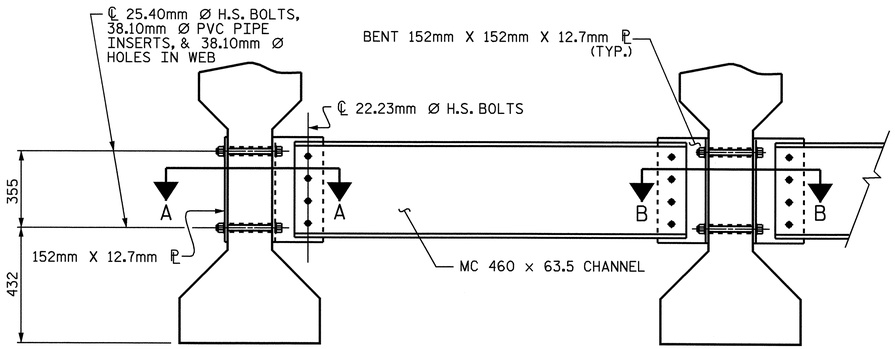

PART SECTION AT INTERMEDIATE DIAPHRAGM

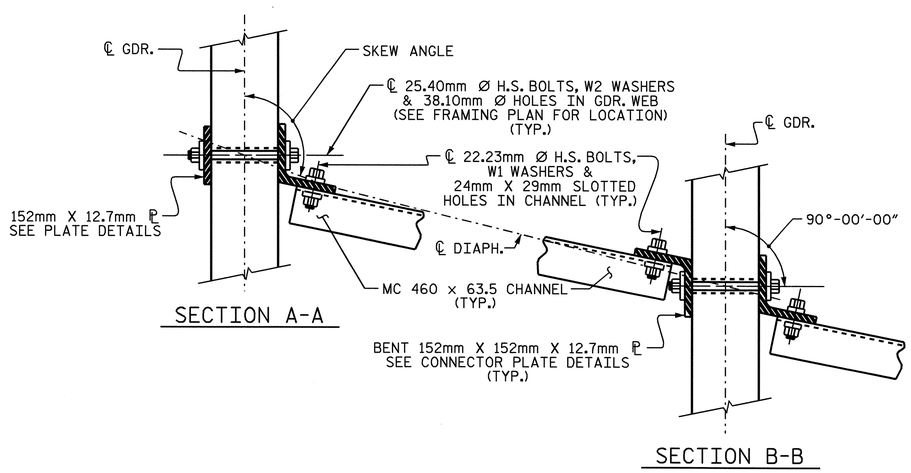

CONNECTION DETAILS

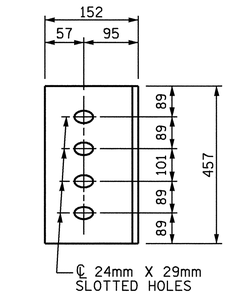

DIAPHRAGM FACE

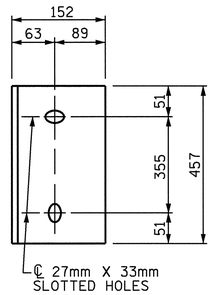

WEB FACE

CONNECTOR PLATE DETAILS

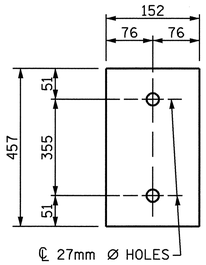

PLATE DETAILS

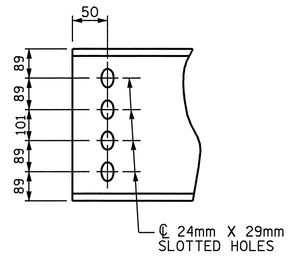

CHANNEL END

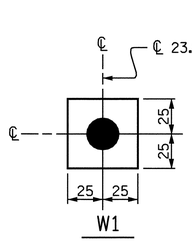

USE WITH 22.23mm Ø HVY. HEX NUTS & DIRECT TENSION INDICATOR WASHERS AT DIAPHRAGM CHANNEL TO CONNECTOR PLATE CONNECTIONS

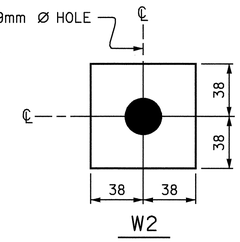

USE WITH 25.40mm Ø HVY. HEX NUTS AT CONNECTOR PLATE TO GIRDER CONNECTIONS

WASHER DETAILS

STRUCTURAL STEEL NOTES

ALL INTERMEDIATE DIAPHRAGM STEEL, CONNECTOR PLATES AND PLATE WASHERS SHALL BE AASHTO M270 GRADE 345 OR APPROVED EQUAL.

TENSION ON THE AASHTO M164 BOLTS THROUGH THE CHANNEL MEMBER SHALL BE CALIBRATED USING DIRECT TENSION INDICATOR WASHERS IN ACCORDANCE WITH ARTICLE 440-8 OF THE STANDARD SPECIFICATIONS.

TENSION ON THE AASHTO M164 BOLTS THROUGH THE GIRDER WEB SHALL BE SNUG TIGHTENED FOLLOWED BY AN ADDITIONAL 1/4 TURN.

THE CHANNELS, ANGLES, WASHERS, PLATE WASHERS, AND DIRECT TENSION INDICATORS SHALL BE GALVANIZED OR METALLIZED IN ACCORDANCE WITH THE STANDARD SPECIFICATIONS. FOR THERMAL SPRAYED COATINGS (METALLIZATION), SEE SPECIAL PROVISIONS.

FOR METALLIZATION, APPLY AN 8 MIL THICK 99.99 PERCENT ZINC (W-Zn-1) THERMAL SPRAYED COATING WITH A 0.5 MIL THICK SEAL COAT TO ALL STEEL DIAPHRAGM SURFACES IN ACCORDANCE WITH THE THERMAL SPRAYED COATINGS SPECIAL PROVISIONS AND SECTION 442 OF THE STANDARD SPECIFICATIONS.

GALVANIZE THE HIGH STRENGTH BOLTS, NUTS, AND WASHERS IN ACCORDANCE WITH THE STANDARD SPECIFICATIONS. FOR HIGH STRENGTH BOLTS, SEE SPECIAL PROVISIONS.

USE A MINIMUM 11.1mm THICK PLATE WASHER WITH STANDARD HOLES UNDER EACH BOLT HEAD AND NUT. THE PLATE WASHERS SHALL HAVE SUFFICIENT SIZE TO COVER THE HOLES AFTER INSTALLATION. DIRECT TENSION INDICATORS ARE TO BE USED IN CONJUNCTION WITH THE PLATE WASHERS.

PROVIDE SUFFICIENT LENGTH OF ALL BOLTS TO ACCOMMODATE WASHERS, DIRECT TENSION INDICATORS, THE THICKNESS OF CONNECTING MEMBER PLUS AT LEAST 6mm PROJECTION BEYOND THE NUT.

INTERMEDIATE DIAPHRAGM ASSEMBLY SHALL COMPLY WITH SECTION 1072 OF THE STANDARD SPECIFICATIONS.

CONTRACTOR SHALL SUBMIT TWO SETS OF WORKING DRAWINGS FOR THE INTERMEDIATE DIAPHRAGM ASSEMBLY FOR REVIEW, COMMENTS AND ACCEPTANCE. AFTER REVIEW, COMMENTS, AND ACCEPTANCE, SUBMIT SEVEN SETS FOR DISTRIBUTION.

IN THE EXTERIOR BAYS, TEMPORARY STRUTS SHALL BE PLACED BETWEEN PRESTRESSED GIRDERS ADJACENT TO THE STEEL DIAPHRAGMS. STRUTS SHALL REMAIN IN PLACE 3 DAYS AFTER CONCRETE IS PLACED. ALL AASHTO M164 H.S. BOLTS SHALL BE FULLY TIGHTENED AFTER THE STRUTS HAVE BEEN REMOVED.

THE COST OF THE STEEL DIAPHRAGMS AND ASSEMBLIES SHALL BE INCLUDED IN THE UNIT PRICE BID FOR PRESTRESSED CONCRETE GIRDERS.

PROJECT NO. R-2554BA

WAYNE COUNTY

STATION: 100+61.488 -L-

SHEET 4 OF 5

STATE OF NORTH CAROLINA
DEPARTMENT OF TRANSPORTATION
RALEIGH

STANDARD
INTERMEDIATE STEEL DIAPHRAGMS FOR TYPE III PRESTRESSED CONCRETE GIRDERS
(RIGHT LANE)

REVISIONS						SHEET NO.
NO.	BY:	DATE:	NO.	BY:	DATE:	S-204
1			3			TOTAL SHEETS 478
2			4			

NORTH CAROLINA PROFESSIONAL SEAL 14045 ENGINEER TIMOTHY L GOGGINS
Timothy L Goggins 6/6/08

ASSEMBLED BY : T.L. AVERETTE	DATE : 12-07
CHECKED BY : B.N. BARODAWALA	DATE : 1-08
DRAWN BY : TLA 6/05	ADDED 10/21/05
CHECKED BY : VC 6/05	REV. 5/1/06R KMM/GM

28-APR-2008 12:22
x:\structures\dzlzl\str#7\taverette\microstation\r2554ba_sd_gl_07.dgn
jbwilson

STR. #7 STD.No.PCG12SM

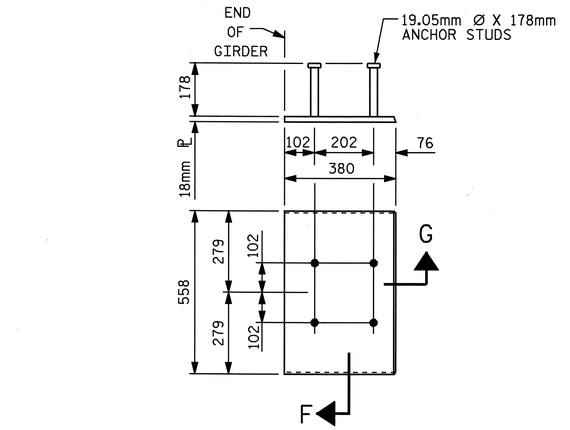

EMBEDDED PLATE "B-1" DETAILS
FOR AASHTO TYPE III GIRDER

(2 REQ'D PER GIRDER)

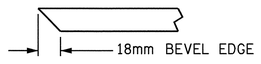

SECTION "F"

(SEE NOTES)

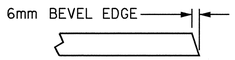

SECTION "G"

NOTES

ALL PRESTRESSING STRANDS SHALL BE 7-WIRE LOW-RELAXATION GRADE 270 STRANDS AND SHALL CONFORM TO AASHTO M203M EXCEPT FOR SAMPLING REQUIREMENTS WHICH SHALL BE IN ACCORDANCE WITH THE STANDARD SPECIFICATIONS.

ALL REINFORCING STEEL SHALL BE GRADE 420.

EMBEDDED PLATE "B-1" SHALL BE GALVANIZED IN ACCORDANCE WITH THE SPECIFICATIONS. BEVEL EDGES OF PLATE "B-1" TO GIVE CLOSE FIT BUT NOT TIGHT FIT TO STEEL CASTING FORM.

ANCHOR STUDS SHALL CONFORM TO AASHTO M169 GRADES 1010 THROUGH 1020 OR APPROVED EQUAL, AND SHALL MEET THE TYPE "B" REQUIREMENTS OF SUBSECTION 7.3 OF THE ANSI/AASHTO/AWS D1.5 BRIDGE WELDING CODE.

AT ENDS OF GIRDERS TO BE EMBEDDED IN CONCRETE DIAPHRAGMS OR END WALLS, PRESTRESSING STRANDS MAY EXTEND A MAXIMUM OF 50mm BEYOND THE GIRDER ENDS. OTHERWISE, PRESTRESSING STRANDS SHALL BE CUT FLUSH WITH THE GIRDER ENDS.

THE TRANSFER OF LOAD FROM THE ANCHORAGES TO THE GIRDER SHALL BE DONE WHEN CONCRETE HAS REACHED A COMPRESSIVE STRENGTH OF NOT LESS THAN 31.8 MPa FOR GIRDERS IN SPAN A.

THE TRANSFER OF LOAD FROM THE ANCHORAGES TO THE GIRDER SHALL BE DONE WHEN CONCRETE HAS REACHED A COMPRESSIVE STRENGTH OF NOT LESS THAN 32.4 MPa FOR GIRDERS IN SPANS B AND C.

DEPENDING ON THE TYPE OF SYSTEM USED TO SUPPORT THE DECK SLAB FORMS, PRESET ANCHORS MAY BE NECESSARY IN THE PRESTRESSED CONCRETE GIRDER.

THE TOP SURFACE OF THE GIRDER, EXCLUDING THE OUTSIDE 100mm, SHALL BE RAKED TO A DEPTH OF 6mm.

FOR CRACK REPAIR OF PRESTRESSED CONCRETE GIRDERS, SEE SPECIAL PROVISIONS.

DEAD LOAD DEFLECTION TABLE FOR SPAN A

12.70mm Ø LOW RELAXATION	GIRDERS A1 THRU A7										
TENTH POINTS	0	.1	.2	.3	.4	.5	.6	.7	.8	.9	0
CAMBER (GIRDER ALONE IN PLACE) ▲	0.000	0.009	0.017	0.023	0.027	0.028	0.027	0.023	0.017	0.009	0.000
* DEFLECTION DUE TO SUPERIMPOSED D.L. ▼	0.000	0.003	0.006	0.009	0.010	0.012	0.010	0.009	0.006	0.003	0.000
FINAL CAMBER ▲	0	6	11	14	17	16	17	14	11	6	0

* INCLUDES FUTURE WEARING SURFACE IN SUPERIMPOSED DEAD LOAD.
ALL VALUES ARE SHOWN IN METERS, EXCEPT "FINAL CAMBER" WHICH IS SHOWN IN MILLIMETERS.

DEAD LOAD DEFLECTION TABLE FOR SPAN B

12.70mm Ø LOW RELAXATION	GIRDERS B1 THRU B7										
TENTH POINTS	0	.1	.2	.3	.4	.5	.6	.7	.8	.9	0
CAMBER (GIRDER ALONE IN PLACE) ▲	0.000	0.013	0.024	0.032	0.038	0.040	0.038	0.032	0.024	0.013	0.000
* DEFLECTION DUE TO SUPERIMPOSED D.L. ▼	0.000	0.005	0.009	0.013	0.015	0.017	0.015	0.013	0.009	0.005	0.000
FINAL CAMBER ▲	0	8	15	19	23	23	23	19	15	8	0

* INCLUDES FUTURE WEARING SURFACE IN SUPERIMPOSED DEAD LOAD.
ALL VALUES ARE SHOWN IN METERS, EXCEPT "FINAL CAMBER" WHICH IS SHOWN IN MILLIMETERS.

DEAD LOAD DEFLECTION TABLE FOR SPAN C

12.70mm Ø LOW RELAXATION	GIRDERS C1 THRU C7										
TENTH POINTS	0	.1	.2	.3	.4	.5	.6	.7	.8	.9	0
CAMBER (GIRDER ALONE IN PLACE) ▲	0.000	0.011	0.021	0.028	0.033	0.035	0.033	0.028	0.021	0.011	0.000
* DEFLECTION DUE TO SUPERIMPOSED D.L. ▼	0.000	0.004	0.008	0.011	0.013	0.014	0.013	0.011	0.008	0.004	0.000
FINAL CAMBER ▲	0	7	13	17	20	21	20	17	13	7	0

* INCLUDES FUTURE WEARING SURFACE IN SUPERIMPOSED DEAD LOAD.
ALL VALUES ARE SHOWN IN METERS, EXCEPT "FINAL CAMBER" WHICH IS SHOWN IN MILLIMETERS.

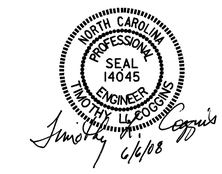

PROJECT NO. R-2554BA

WAYNE COUNTY

STATION: 100+61.488 -L-

SHEET 5 OF 5

STATE OF NORTH CAROLINA
DEPARTMENT OF TRANSPORTATION
RALEIGH

STANDARD
PRESTRESSED CONCRETE GIRDER
CONTINUOUS FOR LIVE LOAD
DETAILS AND
DEAD LOAD DEFLECTIONS
(RIGHT LANE)

REVISIONS						SHEET NO.
NO.	BY:	DATE:	NO.	BY:	DATE:	S-205
1			3			TOTAL SHEETS
2			4			478

ASSEMBLED BY : T.L. AVERETTE	DATE : 12-07
CHECKED BY : B.N. BARODAWALA	DATE : I-08
DRAWN BY : ELR 11/91	REV. 10/17/00 RWW/LES
CHECKED BY : GRP 11/91	REV. 7/10/01RR LES/RDR
	REV. 5/1/06 TLA/GM

28-APR-2008 12:22
x:\structures\azlzl\str#7\taverette\microstation\r2554ba_sd_gl_07.dgn
lbwilson

STR. #7

STD. NO. PCG11SM

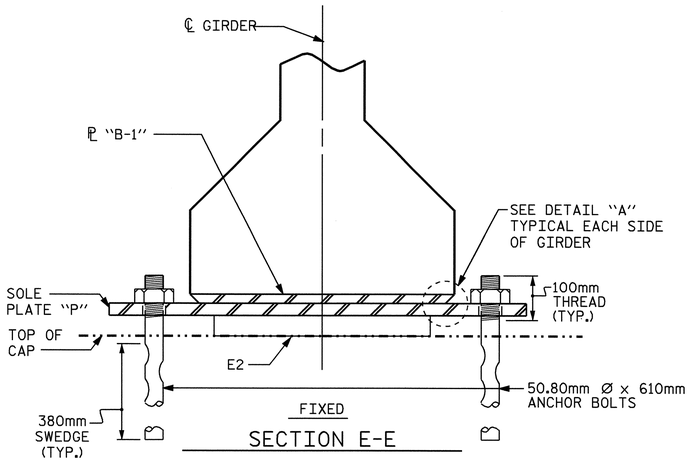

SECTION E-E

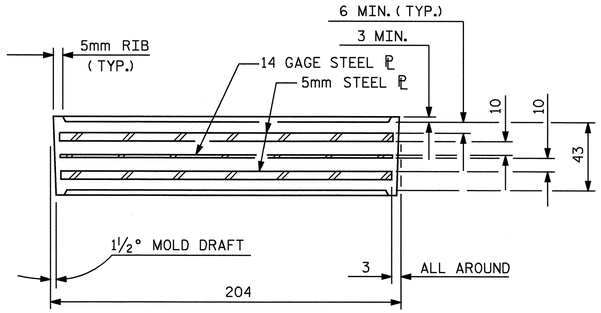

TYPICAL SECTION OF ELASTOMERIC BEARINGS

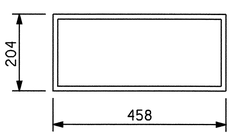

E2 (28 REQ'D)

PLAN VIEW OF ELASTOMERIC BEARING

TYPE III

(AT INTERIOR BENTS)

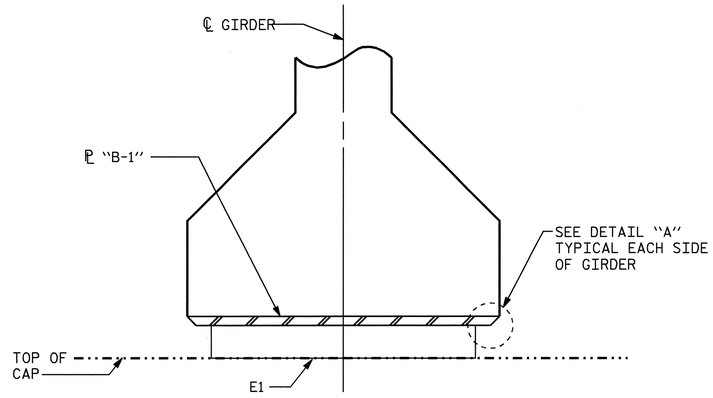

SECTION E-E

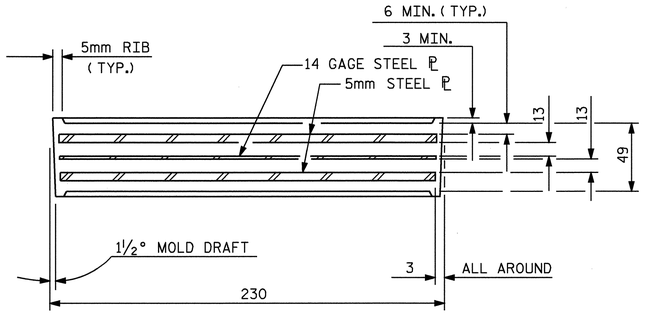

TYPICAL SECTION OF ELASTOMERIC BEARINGS

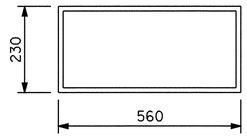

E1 (14 REQ'D)

PLAN VIEW OF ELASTOMERIC BEARING

TYPE IV

(AT INTEGRAL END BENTS)

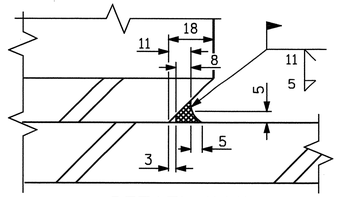

DETAIL "A"

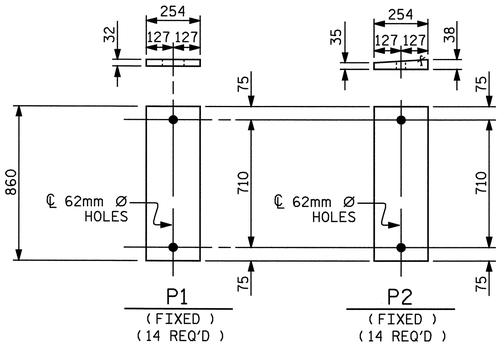

SOLE PLATE DETAILS ("P")

NOTES

AT ALL FIXED POINTS OF SUPPORT, NUTS FOR ANCHOR BOLTS ARE TO BE TIGHTENED FINGER TIGHT AND THEN BACKED OFF ½ TURN. THE THREAD OF THE NUT AND BOLT SHALL THEN BE BURRED WITH A SHARP POINTED TOOL.

STEEL SOLE PLATES, ANCHOR BOLTS, NUTS, AND WASHERS SHALL BE GALVANIZED IN ACCORDANCE WITH THE STANDARD SPECIFICATIONS.

PRIOR TO WELDING, GRIND THE GALVANIZED SURFACE OF THE PORTION OF THE EMBEDDED PLATE AND SOLE PLATE THAT ARE TO BE WELDED. AFTER WELDING, DAMAGED GALVANIZED SURFACES SHALL BE REPAIRED IN ACCORDANCE WITH THE STANDARD SPECIFICATIONS.

WHEN WELDING THE SOLE PLATE TO THE EMBEDDED PLATE IN THE GIRDER, USE TEMPERATURE INDICATING WAX PENS, OR OTHER SUITABLE MEANS, TO ENSURE THAT THE TEMPERATURE OF THE SOLE PLATE DOES NOT EXCEED 149°C. TEMPERATURES ABOVE THIS MAY DAMAGE THE ELASTOMER.

SOLE PLATE "P", BOLTS, NUTS, AND WASHERS SHALL BE INCLUDED IN THE PAY ITEM FOR PRESTRESSED CONCRETE GIRDERS.

ANCHOR BOLTS SHALL MEET THE REQUIREMENTS OF ASTM A449. NUTS SHALL MEET THE REQUIREMENTS OF AASHTO M291M-12 OR AASHTO M292M-2H. WASHERS SHALL MEET THE REQUIREMENTS OF AASHTO M293M. SHOP DRAWINGS ARE NOT REQUIRED FOR ANCHOR BOLTS, NUTS AND WASHERS. SHOP INSPECTION IS REQUIRED.

ALL SURFACES OF BEARING PLATES SHALL BE SMOOTH AND STRAIGHT.

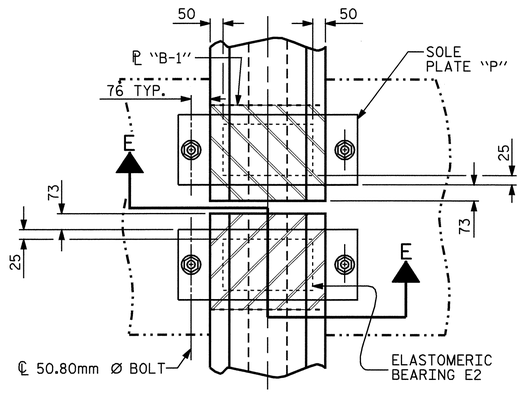

TYPICAL PLAN

(SHOWING CONTINUOUS BENT)

— LOAD RATINGS —	
	MAX.D.L.+L.L.
TYPE III	512 kN
TYPE IV	611 kN

PROJECT NO. R-2554BA

WAYNE COUNTY

STATION: 100+61.488 -L-

STATE OF NORTH CAROLINA
DEPARTMENT OF TRANSPORTATION
RALEIGH

STANDARD

ELASTOMERIC BEARING DETAILS

PRESTRESSED CONCRETE GIRDER SUPERSTRUCTURE (RIGHT LANE)

NORTH CAROLINA PROFESSIONAL SEAL 14045 ENGINEER TIMOTHY V. COGGINS

6/16/08

REVISIONS						SHEET NO.
NO.	BY:	DATE:	NO.	BY:	DATE:	S-206
1			3			TOTAL SHEETS
2			4			478

ASSEMBLED BY : T.L. AVERETTE	DATE : 12-07	
CHECKED BY : B.N. BARODAWALA	DATE : 1-08	
DRAWN BY : WJH 8/89	REV. 10/17/00	RWW/LES
CHECKED BY : CRK 8/89	REV. 7/10/01	RWW/LES
	REV. 5/1/06	TLA/GM

28-APR-2008 12:24
x:\structures\gzlzl\str#7\taverette\microstation\r2554ba_sd_bg_07.dgn
jbwilson

STR. #7

STD. NO. EB3SM

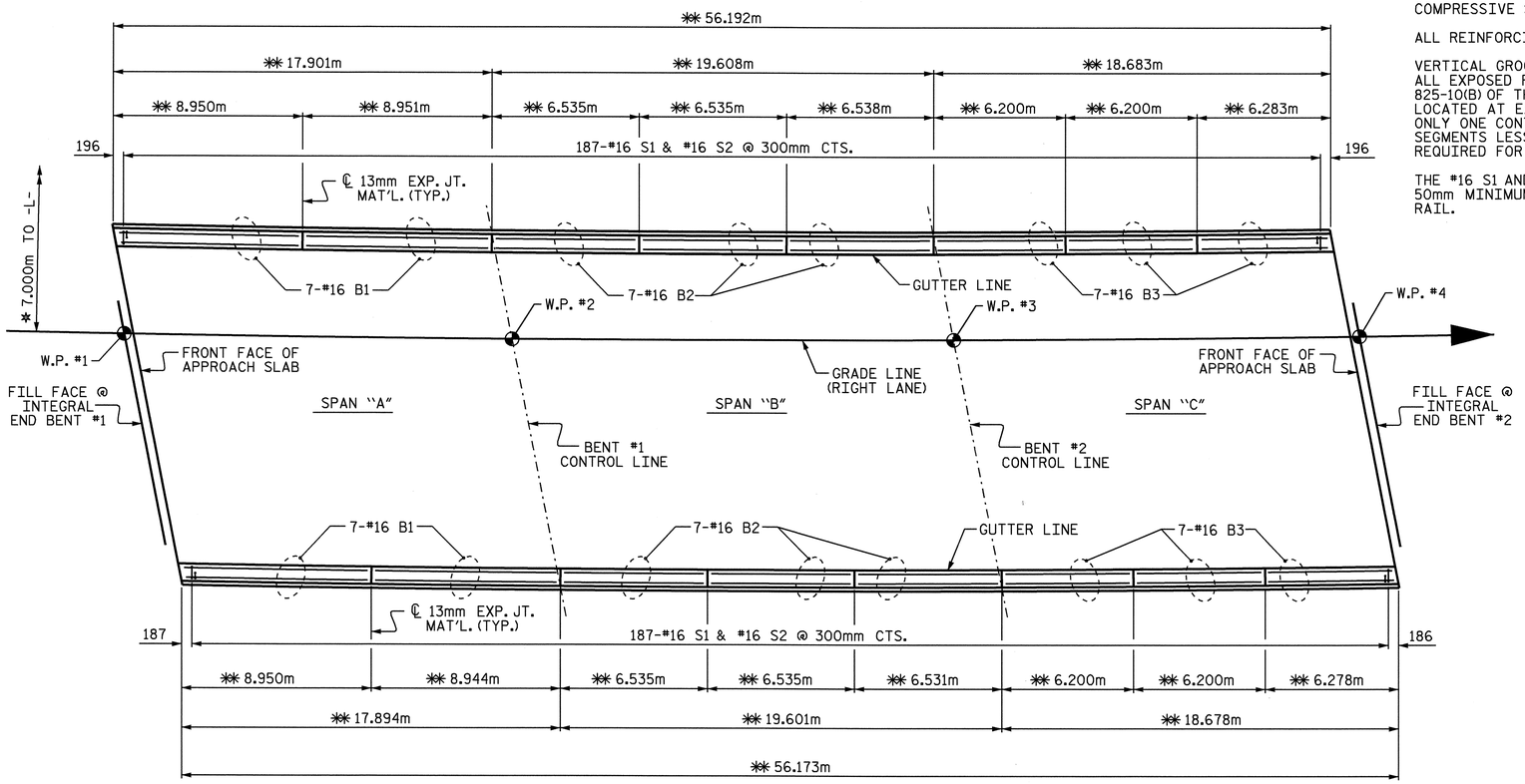

PLAN

✻✻ ARC DIMENSION ALONG OUTSIDE FACE OF BARRIER RAIL
✻ RADIAL DIMENSION

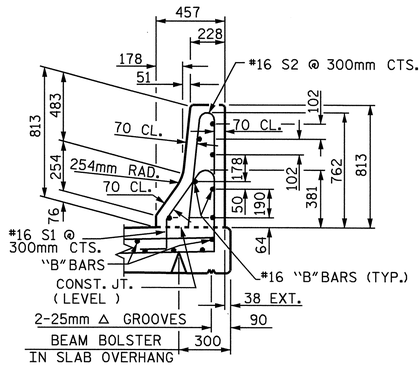

SECTION THRU RAIL

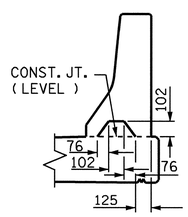

SECTION S-S

AT DAM IN OPEN JOINT
(THIS IS TO BE USED ONLY WHEN SLIP FORM IS USED)

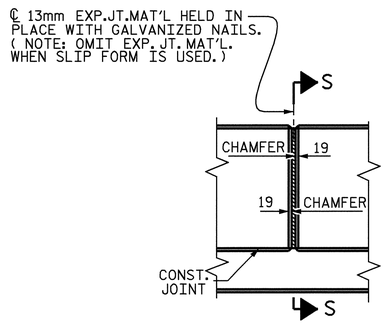

ELEVATION AT EXPANSION JOINTS

NOTES

BARRIER RAIL IN A CONTINUOUS UNIT SHALL NOT BE CAST UNTIL ALL SLAB CONCRETE IN THE UNIT HAS BEEN CAST AND HAS REACHED A MINIMUM COMPRESSIVE STRENGTH OF 20.7 MPa.

ALL REINFORCING STEEL IN BARRIER RAILS SHALL BE EPOXY COATED.

VERTICAL GROOVED CONTRACTION JOINTS, 12mm IN DEPTH, SHALL BE TOOLED IN ALL EXPOSED FACES OF THE BARRIER RAIL AND IN ACCORDANCE WITH ARTICLE 825-10(B) OF THE STANDARD SPECIFICATIONS. THE CONTRACTION JOINT SHALL BE LOCATED AT EACH THIRD POINT BETWEEN BARRIER RAIL EXPANSION JOINTS. ONLY ONE CONTRACTION JOINT IS REQUIRED AT MIDPOINT OF BARRIER RAIL SEGMENTS LESS THAN 6.1m IN LENGTH AND NO CONTRACTION JOINTS ARE REQUIRED FOR THOSE SEGMENTS LESS THAN 3.5m IN LENGTH.

THE #16 S1 AND #16 S2 BARS MAY BE SHIFTED SLIGHTLY IN ORDER TO MAINTAIN A 50mm MINIMUM CLEARANCE TO 13mm EXPANSION JOINT MATERIAL IN THE BARRIER RAIL.

BAR TYPES

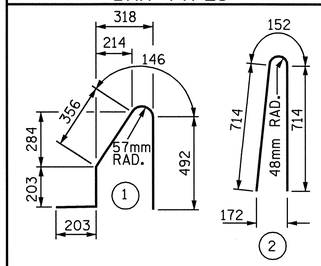

ALL BAR DIMENSIONS ARE OUT TO OUT

BILL OF MATERIAL

FOR CONCRETE BARRIER RAIL ONLY

BAR	NO.	SIZE	TYPE	LENGTH	WEIGHT
✻ B1	28	#16	STR	8760	381
✻ B2	42	#16	STR	6420	418
✻ B3	42	#16	STR	6100	398
✻ S1	374	#16	1	1400	813
✻ S2	374	#16	2	1580	917

✻ EPOXY COATED REINFORCING STEEL	2927 kg
CLASS AA CONCRETE	28.2 CU. METER
CONCRETE BARRIER RAIL	112.365 METERS

BARRIER RAIL DETAILS

PROJECT NO. R-2554BA
WAYNE COUNTY
STATION: 100+61.488 -L-

STATE OF NORTH CAROLINA
DEPARTMENT OF TRANSPORTATION
RALEIGH

STANDARD
CONCRETE BARRIER RAIL
(RIGHT LANE)

REVISIONS						SHEET NO.
NO.	BY:	DATE:	NO.	BY:	DATE:	S-207
1			3			TOTAL SHEETS
2			4			478

NORTH CAROLINA PROFESSIONAL SEAL 14045 ENGINEER TIMOTHY L. COGGINS
6/6/08

ASSEMBLED BY : T.L. AVERETTE	DATE : 12-07	
CHECKED BY : B.N. BARODAWALA	DATE : 1-08	
DRAWN BY : ARB 5/87	REV. 10/17/00	RWW/LES
CHECKED BY : SJD 9/87	REV. 5/7/03R	RWW/JTE
	REV. 5/1/06	TLA/GM

28-APR-2008 12:24
x:\structures\azlzl\str#7\taverette\microstation\r2554ba_sd_br_07.dgn
jbullard

STR. #7

STD. No. CBR1SM

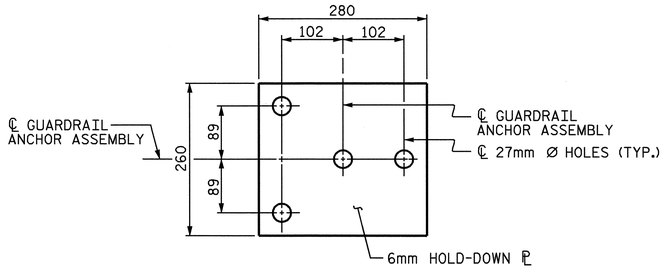

PLAN

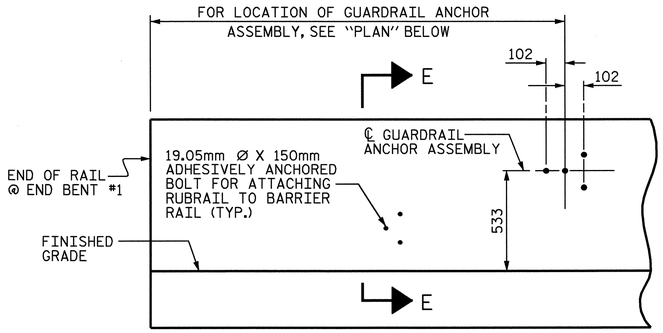

ELEVATION

FOR LOCATION OF RUBRAIL, SEE ROADWAY STD. 862.03

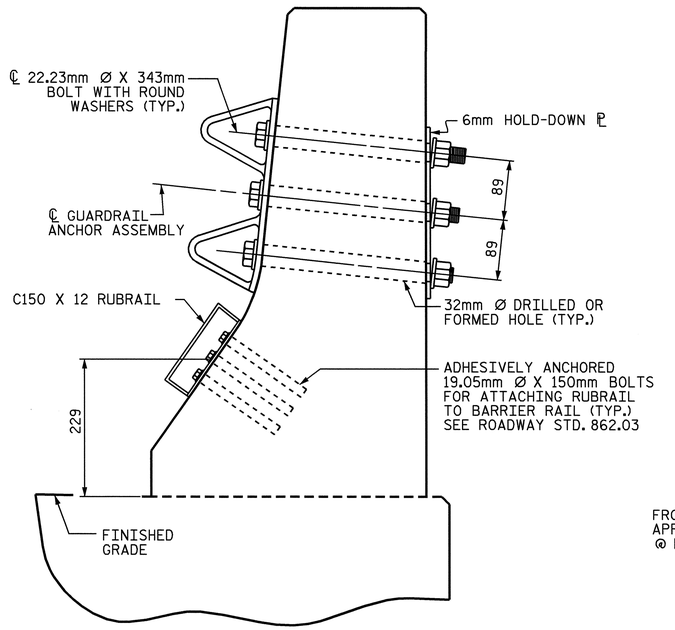

SECTION E-E

GUARDRAIL ANCHOR ASSEMBLY DETAILS

NOTES

THE GUARDRAIL ANCHOR ASSEMBLY SHALL CONSIST OF A 6mm HOLD DOWN PLATE AND 4 - 22.23mm Ø BOLTS WITH NUTS AND WASHERS, RUBRAIL, AND ADHESIVELY ANCHORED BOLTS.

THE HOLD-DOWN PLATE SHALL CONFORM TO AASHTO M270 GRADE 36. AFTER FABRICATION, THE HOLD-DOWN PLATE SHALL BE HOT-DIP GALVANIZED IN ACCORDANCE WITH AASHTO M111.

BOLTS SHALL CONFORM TO THE REQUIREMENTS OF ASTM A307 AND NUTS SHALL CONFORM TO THE REQUIREMENTS OF AASHTO M291. BOLTS, NUTS AND WASHERS SHALL BE GALVANIZED. (AT THE CONTRACTOR'S OPTION, STAINLESS STEEL BOLTS, NUTS AND WASHERS MAY BE USED AS AN ALTERNATE FOR THE 22.23mm Ø GALVANIZED BOLTS, NUTS AND WASHERS. THEY SHALL CONFORM TO OR EXCEED THE MECHANICAL REQUIREMENTS OF ASTM A307. THE USE OF THIS ALTERNATE SHALL BE APPROVED BY THE ENGINEER.)

THE GUARDRAIL ANCHOR ASSEMBLY IS REQUIRED AT ALL POINTS WHERE APPROACH GUARDRAIL IS TO BE ATTACHED TO THE END OF BARRIER RAIL. FOR POINTS OF ATTACHMENT, SEE SKETCH.

AFTER INSTALLATION, THE EXPOSED THREAD OF THE BOLT SHALL BE BURRED WITH A SHARP POINTED TOOL.

THE COST OF THE GUARDRAIL ANCHOR ASSEMBLY SHALL BE INCLUDED IN THE UNIT CONTRACT PRICE BID FOR CONCRETE BARRIER RAIL.

THE 32mm Ø HOLES SHALL BE FORMED OR DRILLED WITH A CORE BIT. IMPACT TOOLS WILL NOT BE PERMITTED. ANY CONCRETE DAMAGED BY THIS WORK SHALL BE REPAIRED TO THE SATISFACTION OF THE ENGINEER.

THE C150 X 12 RUBRAIL IS TO BE ADHESIVELY ANCHORED TO THE RAIL USING THREE 19.05mm Ø X 150mm BOLTS WITH WASHERS. LEVEL ONE FIELD TESTING IF REQUIRED, AND THE YIELD LOAD OF THE 19.05mm Ø BOLTS IS 53.4kN. FOR ADHESIVELY ANCHORED ANCHOR BOLTS OR DOWELS, SEE SPECIAL PROVISIONS. SEE ROADWAY STANDARD 862.03 FOR DETAILS AND LOCATION OF THE RUBRAIL.

SKETCH SHOWING POINTS OF ATTACHMENTS

✳ DENOTES GUARDRAIL ANCHOR ASSEMBLY

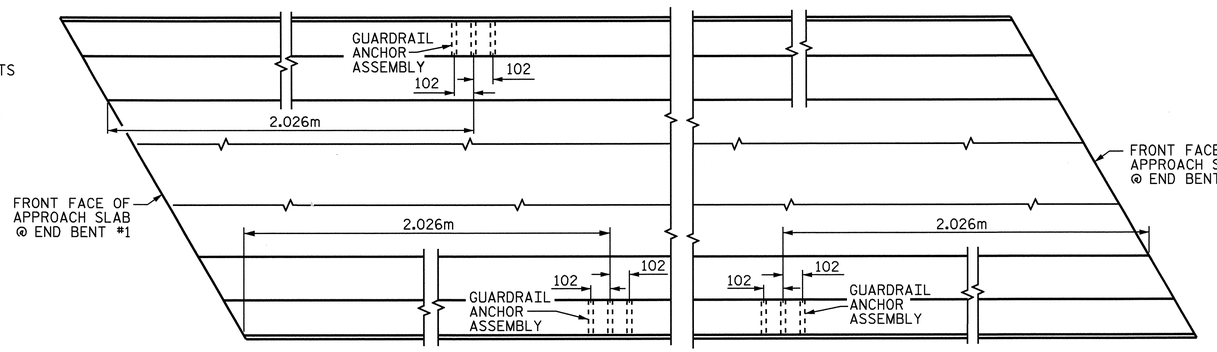

PLAN

LOCATION OF ANCHORS FOR GUARDRAIL

PROJECT NO. R-2554BA

WAYNE COUNTY

STATION: 100+61.488 -L-

STATE OF NORTH CAROLINA
DEPARTMENT OF TRANSPORTATION
RALEIGH

STANDARD

GUARDRAIL ANCHORAGE FOR BARRIER RAIL

(RIGHT LANE)

NORTH CAROLINA PROFESSIONAL SEAL 14045 ENGINEER TIMOTHY V. COSGROVE
6/6/08

REVISIONS						SHEET NO.
NO.	BY:	DATE:	NO.	BY:	DATE:	S-208
1			3			TOTAL SHEETS
2			4			478

ASSEMBLED BY : T.L. AVERETTE	DATE : 12-07
CHECKED BY : B.N. BARODAWALA	DATE : 1-08
DRAWN BY : TLA 5/06	ADDED 5/1/06R KMM/GM
CHECKED BY : GM 5/06	

28-APR-2008 12:24
x:\structures\azlzl\str#7\taverette\microstation\r2554ba_sd_br_07.dgn
lbwilson

STR. #7 STD. NO. GRA2SM

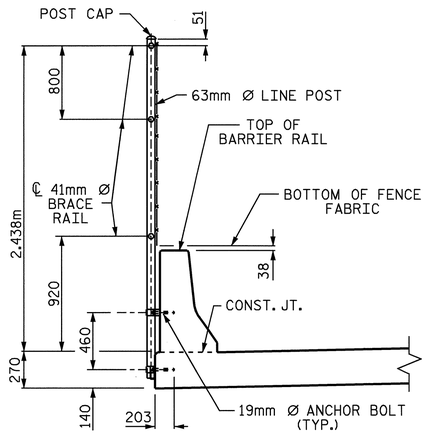

SECTION THRU FENCE

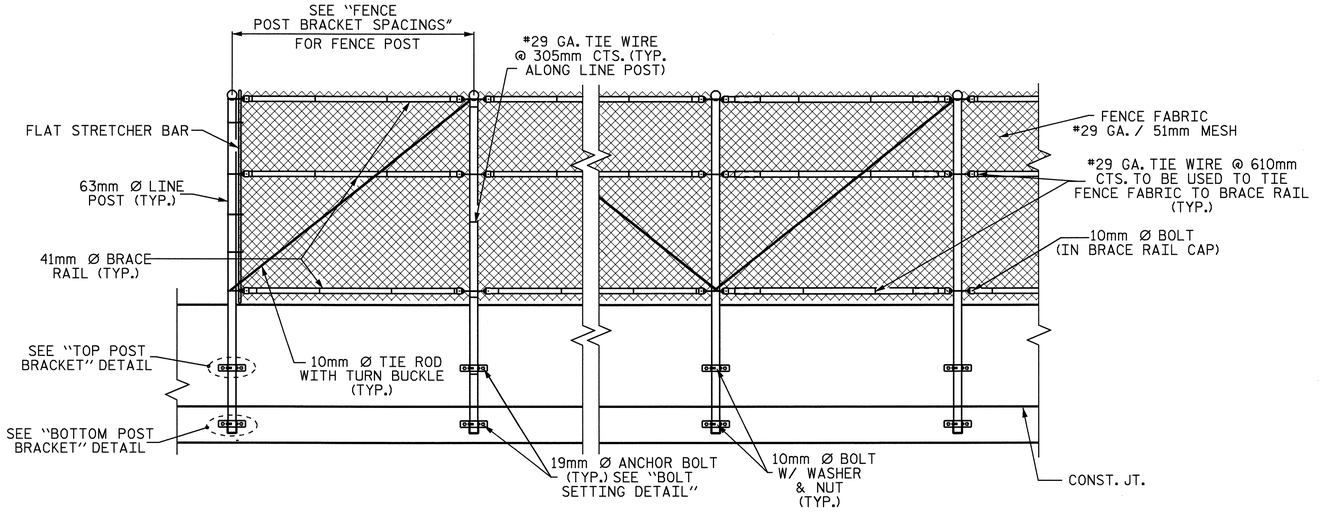

ELEVATION

NOTES

FOR CHAIN LINK FENCE FOR PROTECTION OF RAILROAD, SEE SPECIAL PROVISIONS.

MATERIAL FOR ANCHOR BOLTS SHALL BE TYPE 304 STAINLESS STEEL WITH A MINIMUM 62 MPa ULTIMATE STRENGTH. NUTS AND WASHERS SHALL BE TYPE 304 STAINLESS STEEL. ANCHOR BOLTS SHALL BE EMBEDDED AS PER ASHESIVE BONDING SYSTEM MANUFACTURER SPECIFICATIONS. NUTS SHALL BE AMERICAN STANDARD FINISHED HEXAGON THICK NUTS, CLASS 2B THREADS.

FOR SETTING ANCHOR BOLTS, THE CONTRACTOR SHALL USE AN ADHESIVE BONDING SYSTEM. SEE SPECIAL PROVISIONS FOR ADHESIVELY ANCHORED ANCHOR BOLTS OR DOWELS.

ADHESIVE ANCHOR SYSTEM SHALL HAVE A MINIMUM PULLOUT STRENGTH OF 45 Kn.

ALL FENCE MATERIAL SHALL MEET THE REQUIREMENTS OF SECTION 1050 OF THE STANDARD SPECIFICATIONS. GALVANIZE ALL STEEL PARTS AND HARDWARE IN ACCORDANCE WITH ARTICLE 1076 OF THE STANDARD SPECIFICATIONS.

WELDING SHALL BE DONE IN ACCORDANCE WITH ARTICLE 1072-20 OF THE STANDARD SPECIFICATIONS.

TESTING OF THE ANCHOR BOLTS TO 90% OF THE SPECIFIED STRENGTH SHALL BE PERFORMED AT THE OPTION OF THE ENGINEER.

LENGTH = 56.173 METERS

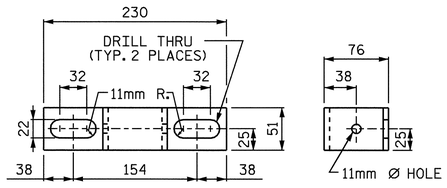

ELEVATION

RIGHT SIDE VIEW

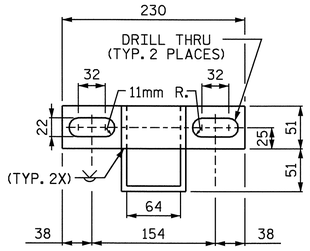

ELEVATION

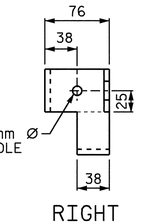

RIGHT SIDE VIEW

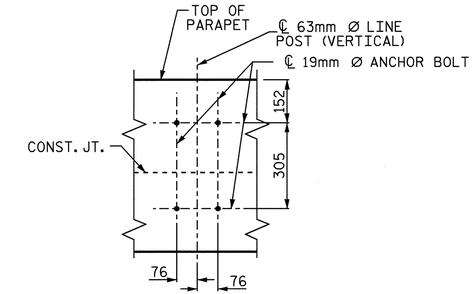

BOLT SETTING DETAIL

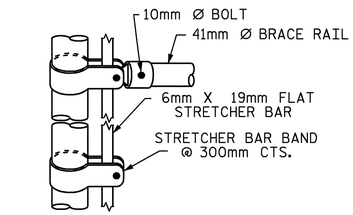

TERMINAL POST WITH STRETCHER BAR ATTACHMENT

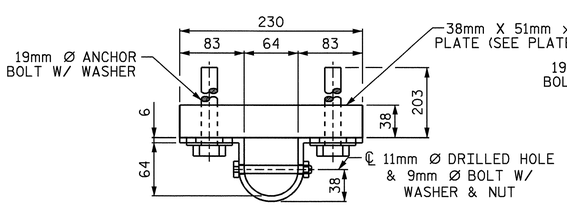

PLAN

TOP POST BRACKET

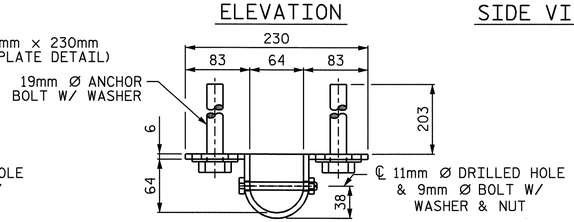

PLAN

BOTTOM POST BRACKET

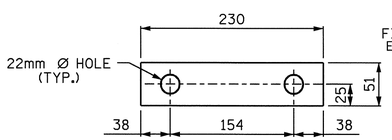

PLATE DETAIL

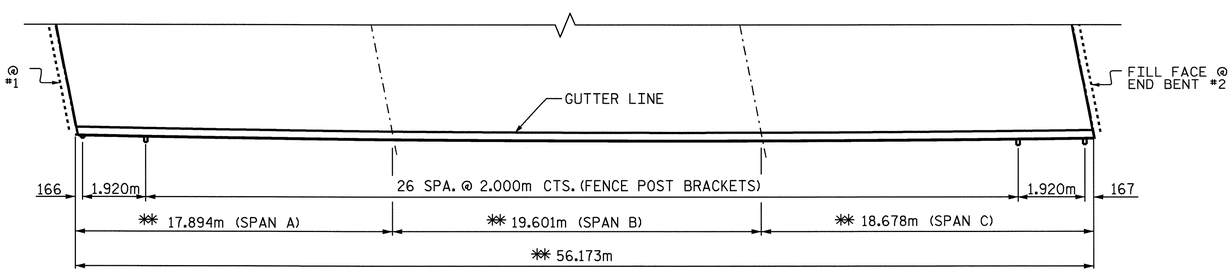

PLAN OF FENCE POST BRACKET SPACINGS

** ARC DIMENSION ALONG OUTSIDE FACE OF BARRIR RAIL.

PROJECT NO. R-2554BA

WAYNE COUNTY

STATION: 100+61.488 -L-

STATE OF NORTH CAROLINA
DEPARTMENT OF TRANSPORTATION
RALEIGH

BRIDGE MOUNTED CHAIN LINK FENCE DETAILS (RIGHT LANE)

REVISIONS						SHEET NO.
NO.	BY:	DATE:	NO.	BY:	DATE:	S-209
1			3			TOTAL SHEETS
2			4			478

NORTH CAROLINA PROFESSIONAL SEAL 14045 ENGINEER TIMOTHY L. GOGGINS
6/6/08

DRAWN BY : PEGGY ADKINS DATE : 12-07
CHECKED BY : B.N.BARODAWALA DATE : 2-08

05-JUN-2008 14:48
r:\structures\gzlz1\Str#7\padkins\Microstation\R-2554BA_sd_CLF_07.dgn

STR #7

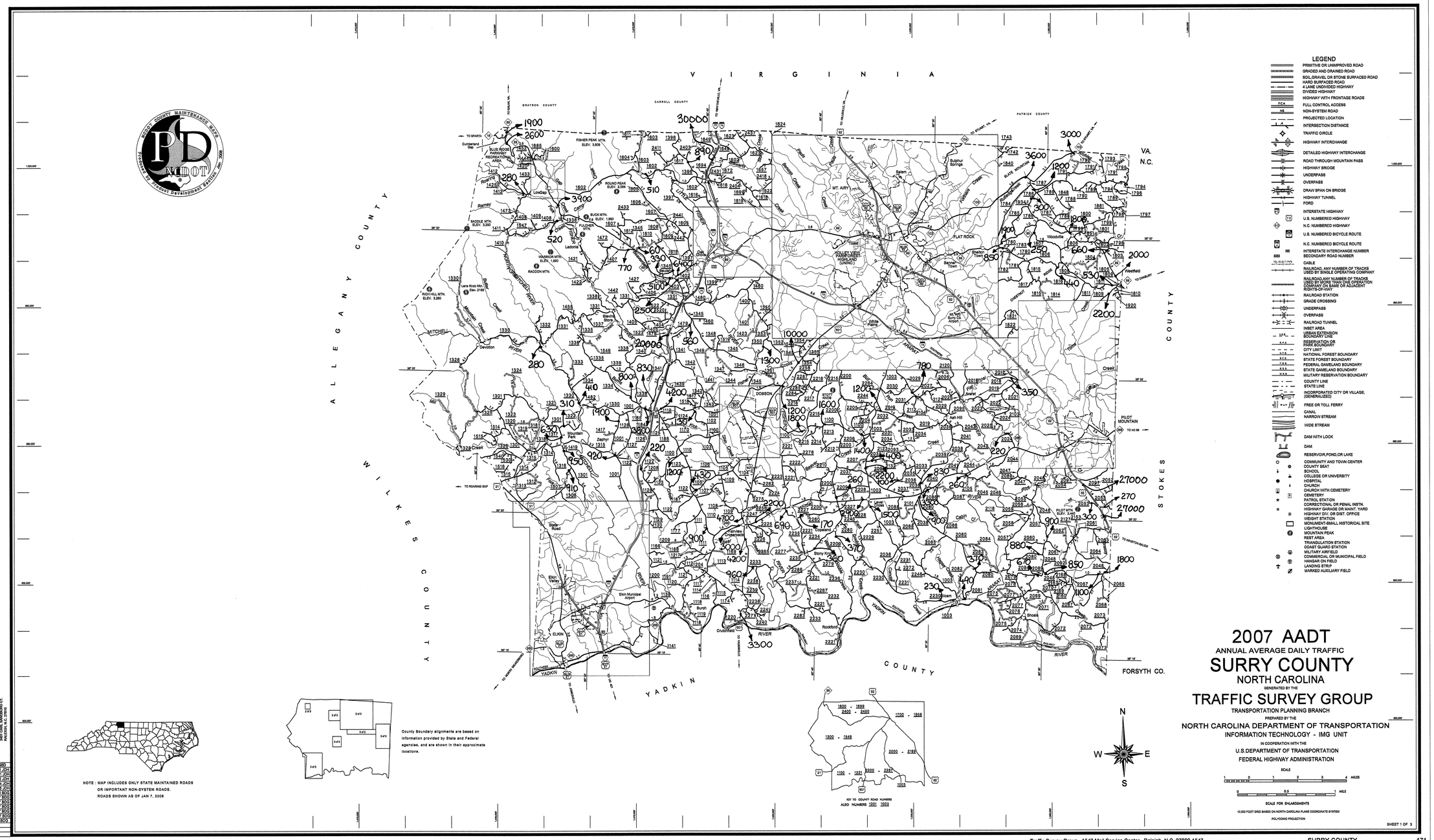

2007 AADT

ANNUAL AVERAGE DAILY TRAFFIC

SURRY COUNTY

NORTH CAROLINA

GENERATED BY THE

TRAFFIC SURVEY GROUP

TRANSPORTATION PLANNING BRANCH

PREPARED BY THE

NORTH CAROLINA DEPARTMENT OF TRANSPORTATION

INFORMATION TECHNOLOGY - IMG UNIT

IN COOPERATION WITH THE

U.S.DEPARTMENT OF TRANSPORTATION

FEDERAL HIGHWAY ADMINISTRATION

SCALE

1 0 1 2 3 4 MILES

0 0.5 1 MILE

SCALE FOR ENLARGEMENTS

10,000 FOOT GRID BASED ON NORTH CAROLINA PLANE COORDINATE SYSTEM

POLYCONIC PROJECTION

SHEET 1 OF 3

LEGEND

- PRIMITIVE OR UNIMPROVED ROAD
- GRADED AND DRAINED ROAD
- SOIL,GRAVEL OR STONE SURFACED ROAD
- HARD SURFACED ROAD
- 4 LANE UNDIVIDED HIGHWAY
- DIVIDED HIGHWAY
- HIGHWAY WITH FRONTAGE ROADS
- FCA FULL CONTROL ACCESS
- NS NON-SYSTEM ROAD
- PROJECTED LOCATION
- INTERSECTION DISTANCE
- TRAFFIC CIRCLE
- HIGHWAY INTERCHANGE
- DETAILED HIGHWAY INTERCHANGE
- ROAD THROUGH MOUNTAIN PASS
- HIGHWAY BRIDGE
- UNDERPASS
- OVERPASS
- DRAW SPAN ON BRIDGE
- HIGHWAY TUNNEL
- FORD
- I-77 INTERSTATE HIGHWAY
- U.S. NUMBERED HIGHWAY
- N.C. NUMBERED HIGHWAY
- U.S. NUMBERED BICYCLE ROUTE
- N.C. NUMBERED BICYCLE ROUTE
- INTERSTATE INTERCHANGE NUMBER / SECONDARY ROAD NUMBER
- CABLE
- RAILROAD, ANY NUMBER OF TRACKS USED BY SINGLE OPERATING COMPANY
- RAILROAD ANY NUMBER OF TRACKS USED BY MORE THAN ONE OPERATION ON SAME OR ADJACENT RIGHTS-OF-WAY
- RAILROAD STATION
- GRADE CROSSING
- UNDERPASS
- OVERPASS
- RAILROAD TUNNEL
- INSET AREA
- URBAN EXTENSION BOUNDARY LINE
- RESERVATION OR PARK BOUNDARY
- CITY LIMIT
- NATIONAL FOREST BOUNDARY
- STATE FOREST BOUNDARY
- FEDERAL GAMELAND BOUNDARY
- STATE GAMELAND BOUNDARY
- MILITARY RESERVATION BOUNDARY
- COUNTY LINE
- STATE LINE
- INCORPORATED CITY OR VILLAGE, (GENERALIZED)
- FREE OR TOLL FERRY
- CANAL
- NARROW STREAM
- WIDE STREAM
- DAM WITH LOCK
- DAM
- RESERVOIR,POND,OR LAKE
- COMMUNITY AND TOWN CENTER
- COUNTY SEAT
- SCHOOL
- COLLEGE OR UNIVERSITY
- HOSPITAL
- CHURCH
- CHURCH WITH CEMETERY
- CEMETERY
- PATROL STATION
- CORRECTIONAL OR PENAL INSTN.
- HIGHWAY GARAGE OR MAINT. YARD
- HIGHWAY DIV. OR DIST. OFFICE
- WEIGHT STATION
- MONUMENT-SMALL HISTORICAL SITE
- LIGHTHOUSE
- MOUNTAIN PEAK
- REST AREA
- TRIANGULATION STATION
- COAST GUARD STATION
- MILITARY AIRFIELD
- COMMERCIAL OR MUNICIPAL FIELD
- HANGAR ON FIELD
- LANDING STRIP
- MARKED AUXILIARY FIELD

NOTE : MAP INCLUDES ONLY STATE MAINTAINED ROADS OR IMPORTANT NON-SYSTEM ROADS. ROADS SHOWN AS OF JAN 7, 2008

County Boundary alignments are based on information provided by State and Federal agencies, and are shown in their approximate locations.

KEY TO COUNTY ROAD NUMBERS
ALSO NUMBERS 1001 1003

REVISED
3/07/01 JDH
12/31/01 JDH
6/09/02 JDH
11/18/04 JDH
11/10/06 JDH
6/02/08 BDG
7/03/07 BDG
7/31/07 BDG
7/19/07 BDG
8/1/2007 BDG
11/18/07 BDG
1/7/08 BDG

SURRY

COPIES OF THIS MAP ARE AVAILABLE TO THE PUBLIC AT A NOMINAL COST.

ADDRESS:
N.C. DEPARTMENT OF TRANSPORTATION
INFORMATION, MAPPING, AND GRAPHICS
1557 MAIL SERVICE CENTER
RALEIGH, N.C. 27699

Disclaimer: The IMG Unit's goal is to provide the most accurate information as possible, the magnitude of the data prevents any guarantee of accuracy or completeness. If you find any information that is incorrect, please send your request to the IMG Unit.

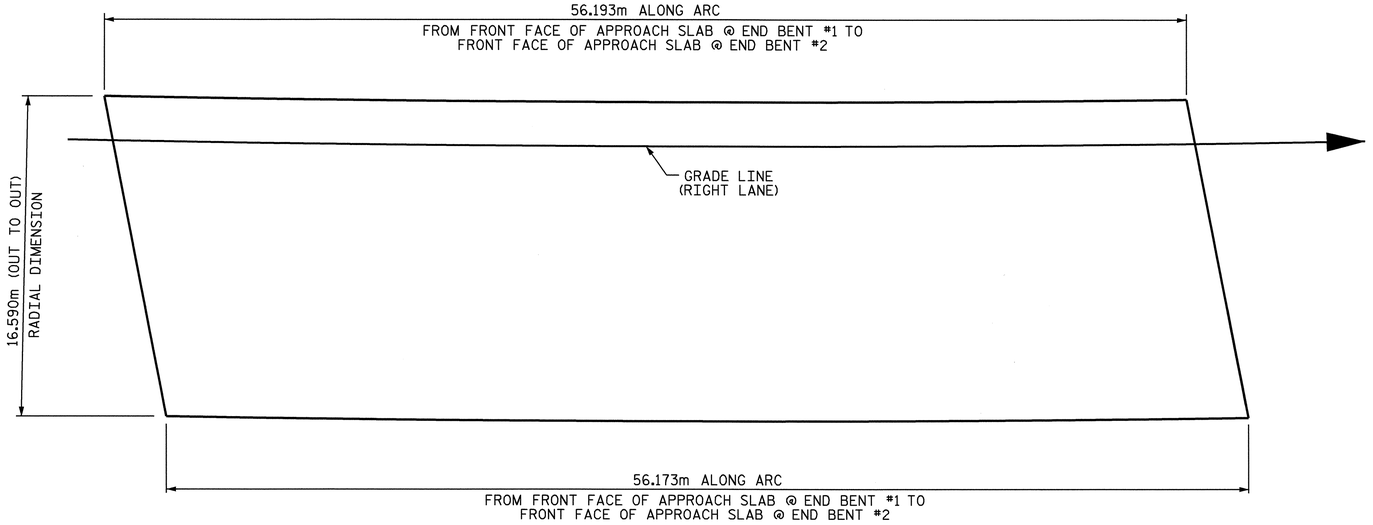

LAYOUT FOR COMPUTING AREA OF REINFORCED CONCRETE DECK SLAB (932.1 SQ. METER)

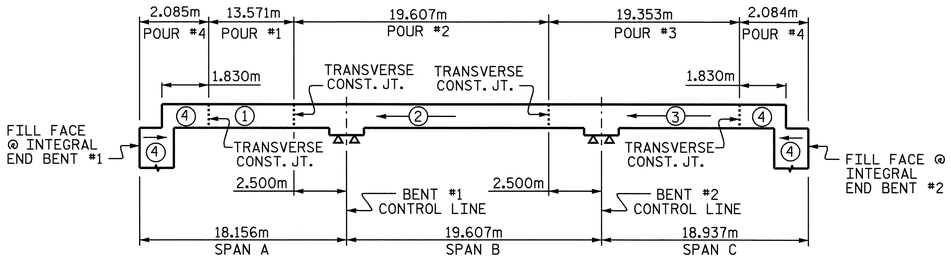

POURING SEQUENCE

DIMENSIONS GIVEN ALONG ARC OF GRADE LINE

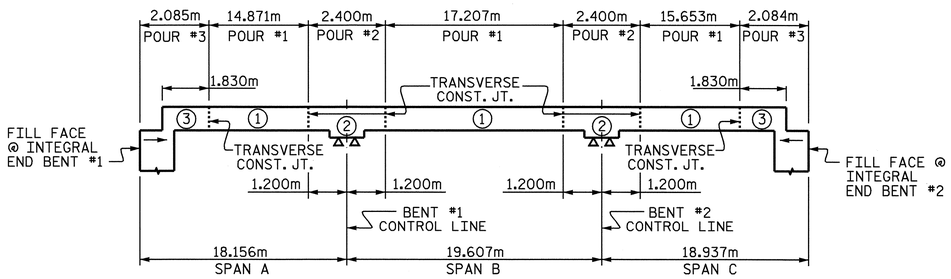

OPTIONAL POURING SEQUENCE

POUR (2) CAN NOT BE STARTED UNTIL BOTH ADJACENT (1) POURS REACH A MINIMUM OF 20.7MPa.
DIMENSIONS GIVEN ALONG ARC OF GRADE LINE

SUPERSTRUCTURE REINFORCING STEEL LENGTHS ARE BASED ON THE FOLLOWING MINIMUM SPLICE LENGTHS

BAR SIZE	SUPERSTRUCTURE EXCEPT APPROACH SLABS, PARAPET, AND BARRIER RAIL		APPROACH SLABS		PARAPET AND BARRIER RAIL
	EPOXY COATED	UNCOATED	EPOXY COATED	UNCOATED	
#13	610	540	610	540	840
#16	770	660	770	660	1050
#19	920	790	1190	790	1330
#22	1580	1060			
#25	2080	1390			

GROOVING BRIDGE FLOORS	
APPROACH SLABS	216.7 SQ.METER
BRIDGE DECK	824.8 SQ.METER
TOTAL	1041.5 SQ.METER

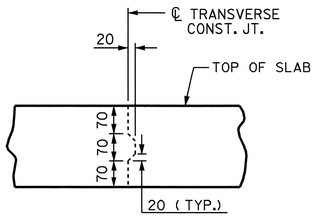

TRANSVERSE CONSTRUCTION JOINT DETAIL

NOTE: REINFORCING STEEL IN SLAB NOT SHOWN. LONGITUDINAL REINFORCING STEEL SHALL BE CONTINUOUS THRU JOINT.

BILL OF MATERIAL

SPANS A, B & C

BAR	NO.	SIZE	TYPE	LENGTH	WEIGHT
✳A1	294	#16	STR	16480	7520
A2	294	#16	STR	16480	7520
✳A101	2	#16	STR	15960	50
✳A102	2	#16	STR	15020	47
✳A103	2	#16	STR	14100	44
✳A104	2	#16	STR	13160	41
✳A105	2	#16	STR	12240	38
✳A106	2	#16	STR	11300	35
✳A107	2	#16	STR	10380	32
✳A108	2	#16	STR	9440	29
✳A109	2	#16	STR	8520	26
✳A110	2	#16	STR	7580	24
✳A111	2	#16	STR	6640	21
✳A112	2	#16	STR	5720	18
✳A113	2	#16	STR	4780	15
✳A114	2	#16	STR	3840	12
✳A115	2	#16	STR	2900	9
✳A116	2	#16	STR	1980	6
✳A117	2	#16	STR	1040	3
A201	2	#16	STR	15960	50
A202	2	#16	STR	15020	47
A203	2	#16	STR	14100	44
A204	2	#16	STR	13160	41
A205	2	#16	STR	12240	38
A206	2	#16	STR	11300	35
A207	2	#16	STR	10380	32
A208	2	#16	STR	9440	29
A209	2	#16	STR	8520	26
A210	2	#16	STR	7580	24
A211	2	#16	STR	6640	21
A212	2	#16	STR	5720	18
A213	2	#16	STR	4780	15
A214	2	#16	STR	3840	12
A215	2	#16	STR	2900	9
A216	2	#16	STR	1980	6
A217	2	#16	STR	1040	3
✳B1	74	#13	STR	5800	427
✳B2	74	#22	STR	15000	3377
✳B3	72	#22	STR	6000	1314
✳B4	37	#13	STR	5840	215
B5	248	#16	STR	14520	5589
B6	108	#13	STR	3600	386
✳B7	72	#22	STR	3600	788
✳B8	74	#13	STR	6180	455
K1	30	#13	STR	6660	199
K2	24	#13	STR	1940	46
K3	24	#13	STR	2160	52
K4	12	#13	STR	1780	21
K5	4	#13	STR	1680	7
K6	8	#13	STR	1760	14
K7	8	#13	STR	1880	15
K8	8	#13	STR	920	7
K9	24	#13	STR	1420	34
K10	48	#13	STR	2100	100
K11	24	#13	STR	1940	46
K12	16	#13	4	1510	24
K13	40	#13	2	3020	120
✳S1	80	#13	1	3560	283
✳S2	64	#13	1	3120	198
S3	228	#13	3	860	195
✳U1	60	#13	5	4000	239
✳U2	24	#13	5	3400	81
U3	84	#13	6	3020	252
U4	16	#13	6	3580	57
V1	14	#13	STR	1040	14

REINFORCING STEEL	= 15148	kg
✳EPOXY COATED REINFORCING STEEL	= 15347	kg

BAR TYPES

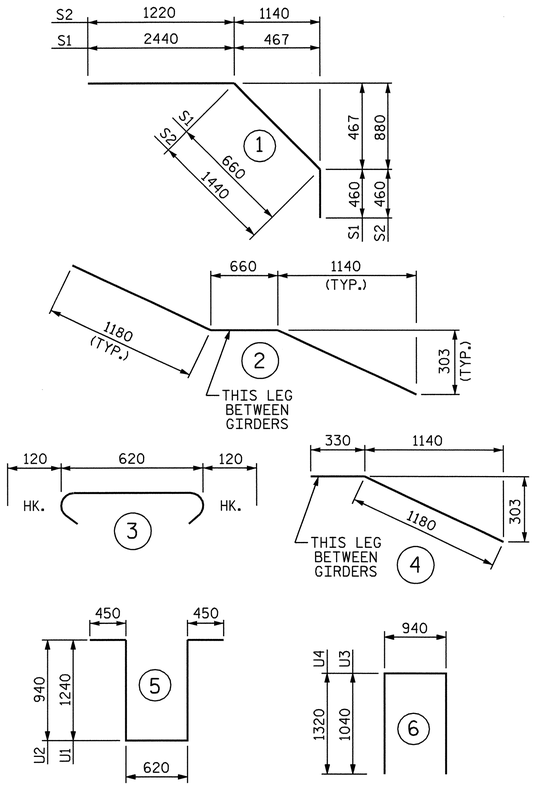

ALL BAR DIMENSIONS ARE OUT TO OUT

SUPERSTRUCTURE BILL OF MATERIAL

	CLASS AA CONCRETE		REINFORCING STEEL	EPOXY COATED REINFORCING STEEL
	(CU. METER)		(kg)	(kg)
SPAN A, B AND C	POUR 1	55.2	15148	15347
	POUR 2	91.0		
	POUR 3	90.0		
	● POUR 4	68.9		
TOTALS✳✳	305.1		15148	15347

✳✳ QUANTITIES FOR BARRIER RAIL ARE NOT INCLUDED
● POUR 4 QUANTITY INCLUDES UPPER POUR OF WINGS & INTEGRAL E. BT.

PROJECT NO. R-2554BA

WAYNE COUNTY

STATION: 100+61.488 -L-

NORTH CAROLINA PROFESSIONAL SEAL 14045 ENGINEER TIMOTHY L. COGGINS
Timothy L. Coggins 6/4/08

STATE OF NORTH CAROLINA
DEPARTMENT OF TRANSPORTATION
RALEIGH

STANDARD
SUPERSTRUCTURE BILL OF MATERIAL
(RIGHT LANE)

REVISIONS						SHEET NO.
NO.	BY:	DATE:	NO.	BY:	DATE:	S-210
1			3			TOTAL SHEETS
2			4			478

ASSEMBLED BY : T.L. AVERETTE		DATE : 12-07	
CHECKED BY : B.N. BARODAWALA		DATE : 1-08	
DRAWN BY : JMB	5/87	REV. 5/16/97	EEM/RGW
CHECKED BY : SJD	9/87	REV. 5/1/06	TLA/GM

09-JUN-2008 07:07
g:\tlpprojects-r\r2554ba\structures\azlzl\Str#7\FINAL PLANS\r2554ba_sd_bm_07.dgn
taverette

STR. #7

STD. NO. BOM2SM

OVERHANG BRACKET CALCULATION INSTRUCTIONS

AASHTO SHAPES - TYPES III, IV, V, AND VI

1. RECORD KNOWN INFORMATION ON "BRIDGE OVERHANG BRACKET SUMMARY" ON SHEET 2
2. CALCULATE THE MAXIMUM SCREED LOAD PER BRACKET (SLPB) WITH AN ESTIMATED R = 1.5. SLPB = R X W. ROUND VALUE UP TO NEAREST SLPB VALUE INDICATED ON APPROPRIATE TABLE 1-1, 1-2, 1-3, OR 1-4.
3. WITH THE ESTIMATED SLPB, OVERHANG SLAB THICKNESS, "K" VALUE, AND 45° HANGER SAFE WORKING LOAD (SWL), ENTER THE APPROPRIATE TABLE 1-1, 1-2, 1-3, OR 1-4 (BASED ON OVERHANG DIMENSION) AND DETERMINE THE BRACKET SPACING, S.
4. CALCULATE S/D1 AND S/D2, ROUNDING UP TO NEAREST VALUE IN TABLE 2. ENTER TABLE 2 AND DETERMINE R VALUE.
5. CALCULATE REVISED SLPB. ROUND VALUE UP TO NEAREST SLPB VALUE INDICATED ON APPROPRIATE TABLE 1-1, 1-2, 1-3, OR 1-4.
6. WITH THE REVISED SLPB, OVERHANG SLAB THICKNESS, "K" VALUE AND 45 HANGER SAFE WORKING LOAD (SWL), ENTER THE APPROPRIATE TABLE 1-1, 1-2, 1-3 OR 1-4 (BASED ON OVERHANG DIMENSION) AND DETERMINE REVISED BRACKET SPACING, S.
7. CONTINUE ITERATIONS OF STEPS 4-6 UNTIL THE REVISED BRACKET SPACING, S, IS THE SAME AS THE PREVIOUS S VALUE.
8. CHECK LUMBER JOIST SPACING: WITH BRACKET SPACING VALUE, S, ROUND THIS VALUE UP TO THE NEAREST VALUE OF ALLOWABLE SPAN LENGTH OF JOIST OF TABLE 3. USING THIS VALUE, ALONG WITH THE AVERAGE OVERHANG SLAB THICKNESS AND THE LUMBER JOIST SIZE, DETERMINE JOIST SPACING FROM TABLE 3. IF NECESSARY, ADJUST LUMBER JOIST SIZE AND/OR JOIST SPACING TO MEET ALLOWABLE SPAN LENGTH OF JOIST.
9. CONVERSELY, IF THE DESIRED JOIST SPACING IS KNOWN, USE THIS ALONG WITH THE AVERAGE OVERHANG SLAB THICKNESS AND THE LUMBER JOIST SIZE TO DETERMINE IF ALLOWABLE SPAN LENGTH OF JOIST IS GREATER THAN THE BRACKET SPACING, S. IF NECESSARY, ADJUST LUMBER JOIST SIZE TO MEET REQUIREMENTS OF ALLOWABLE SPAN LENGTH OF JOIST AND JOIST SPACING.
10. RECORD REMAINING INFORMATION ON "BRIDGE OVERHANG BRACKET SUMMARY" FORM.
11. SUBMIT FORM AND CALCULATIONS FOR REVIEW AND APPROVAL.

TABLE 1-1 (FOR USE ON **UP TO 2'-0" OVERHANG** Ⓛ & 54" HORIZONTAL LEG LENGTH OF THE OVERHANG BRACKET)

AVG. SLAB THICKNESS Ⓣ (In)	BRACKET Ⓚ DIMENSION (In)	SCREED LOAD PER BRACKET									45° HANGER SWL (lbs)
		2500 lbs.	2250 lbs.	2000 lbs.	1750 lbs.	1500 lbs.	1250 lbs.	1000 lbs.	750 lbs.	0 lbs.	
		BRACKET SPACING									
10	30				2'-1"	2'-7"	3'-2"	3'-8"	4'-2"	5'-9"	4000
		3'-6"	4'-0"	4'-5"	4'-9"	5'-1"	5'-3"	5'-5"	5'-7"	6'-7"	6000
	40				2'-1"	2'-7"	3'-2"	3'-8"	4'-2"	5'-9"	4000
		3'-6"	4'-0"	4'-5"	4'-9"	5'-1"	5'-3"	5'-5"	5'-7"	6'-7"	6000
	50				2'-1"	2'-7"	3'-2"	3'-8"	4'-2"	5'-9"	4000
		3'-6"	4'-0"	4'-5"	4'-9"	5'-1"	5'-3"	5'-5"	5'-7"	6'-7"	6000
12	30					2'-4"	2'-10"	3'-4"	3'-9"	5'-2"	4000
		3'-2"	3'-7"	4'-1"	4'-7"	5'-0"	5'-2"	5'-4"	5'-7"	6'-5"	6000
	40					2'-4"	2'-10"	3'-4"	3'-9"	5'-2"	4000
		3'-2"	3'-7"	4'-1"	4'-7"	5'-0"	5'-2"	5'-4"	5'-7"	6'-5"	6000
	50					2'-4"	2'-10"	3'-4"	3'-9"	5'-2"	4000
		3'-2"	3'-7"	4'-1"	4'-7"	5'-0"	5'-2"	5'-4"	5'-7"	6'-5"	6000
14	30					2'-2"	2'-7"	3'-0"	3'-5"	4'-9"	4000
		2'-10"	3'-4"	3'-9"	4'-2"	4'-7"	5'-0"	5'-4"	5'-7"	6'-4"	6000
	40					2'-2"	2'-7"	3'-0"	3'-5"	4'-9"	4000
		2'-10"	3'-4"	3'-9"	4'-2"	4'-7"	5'-0"	5'-4"	5'-7"	6'-4"	6000
	50					2'-2"	2'-7"	3'-0"	3'-5"	4'-9"	4000
		2'-10"	3'-4"	3'-9"	4'-2"	4'-7"	5'-0"	5'-4"	5'-7"	6'-4"	6000
16	30					2'-0"	2'-4"	2'-9"	3'-2"	4'-4"	4000
		2'-8"	3'-0"	3'-5"	3'-10"	4'-3"	4'-7"	5'-0"	5'-5"	6'-3"	6000
	40					2'-0"	2'-4"	2'-9"	3'-2"	4'-4"	4000
		2'-8"	3'-0"	3'-5"	3'-10"	4'-3"	4'-7"	5'-0"	5'-5"	6'-3"	6000
	50					2'-0"	2'-4"	2'-9"	3'-2"	4'-4"	4000
		2'-8"	3'-0"	3'-5"	3'-10"	4'-3"	4'-7"	5'-0"	5'-5"	6'-3"	6000

TABLE 1-2 (FOR USE ON **OVER 2'-0" TO 2'-6" OVERHANG** Ⓛ & 54" HORIZONTAL LEG LENGTH OF THE OVERHANG BRACKET)

AVG. SLAB THICKNESS Ⓣ (In)	BRACKET Ⓚ DIMENSION (In)	SCREED LOAD PER BRACKET									45° HANGER SWL (lbs)
		2500 lbs.	2250 lbs.	2000 lbs.	1750 lbs.	1500 lbs.	1250 lbs.	1000 lbs.	750 lbs.	0 lbs.	
		BRACKET SPACING									
10	30					2'-4"	2'-9"	3'-3"	3'-8"	5'-1"	4000
		3'-1"	3'-6"	4'-0"	4'-5"	4'-11"	5'-3"	5'-5"	5'-7"	6'-7"	6000
	40					2'-4"	2'-9"	3'-3"	3'-8"	5'-1"	4000
		3'-1"	3'-6"	4'-0"	4'-5"	4'-11"	5'-3"	5'-5"	5'-7"	6'-7"	6000
	50					2'-4"	2'-9"	3'-3"	3'-8"	5'-1"	4000
		3'-1"	3'-6"	4'-0"	4'-5"	4'-11"	5'-3"	5'-5"	5'-7"	6'-7"	6000
12	30					2'-1"	2'-6"	2'-11"	3'-4"	4'-6"	4000
		2'-9"	3'-2"	3'-7"	4'-0"	4'-5"	4'-10"	5'-3"	5'-7"	6'-5"	6000
	40					2'-1"	2'-6"	2'-11"	3'-4"	4'-6"	4000
		2'-9"	3'-2"	3'-7"	4'-0"	4'-5"	4'-10"	5'-3"	5'-7"	6'-5"	6000
	50					2'-1"	2'-6"	2'-11"	3'-4"	4'-6"	4000
		2'-9"	3'-2"	3'-7"	4'-0"	4'-5"	4'-10"	5'-3"	5'-7"	6'-5"	6000
14	30						2'-3"	2'-7"	3'-0"	4'-1"	4000
		2'-6"	2'-10"	3'-3"	3'-7"	4'-0"	4'-4"	4'-9"	5'-1"	6'-3"	6000
	40						2'-3"	2'-7"	3'-0"	4'-1"	4000
		2'-6"	2'-10"	3'-3"	3'-7"	4'-0"	4'-4"	4'-9"	5'-1"	6'-3"	6000
	50						2'-3"	2'-7"	3'-0"	4'-1"	4000
		2'-6"	2'-10"	3'-3"	3'-7"	4'-0"	4'-4"	4'-9"	5'-1"	6'-3"	6000
16	30						2'-1"	2'-5"	2'-11"	3'-9"	4000
		2'-3"	2'-7"	2'-11"	3'-4"	3'-8"	4'-0"	4'-4"	4'-8"	5'-8"	6000
	40						2'-1"	2'-5"	2'-9"	3'-9"	4000
		2'-3"	2'-7"	2'-11"	3'-4"	3'-8"	4'-0"	4'-4"	4'-8"	5'-8"	6000
	50						2'-1"	2'-5"	2'-9"	3'-9"	4000
		2'-3"	2'-7"	2'-11"	3'-4"	3'-8"	4'-0"	4'-4"	4'-8"	5'-8"	6000

TABLE 1-3 (FOR USE ON **OVER 2'-6" TO 3'-0" OVERHANG** Ⓛ & 54" HORIZONTAL LEG LENGTH OF THE OVERHANG BRACKET)

AVG. SLAB THICKNESS Ⓣ (In)	BRACKET Ⓚ DIMENSION (In)	SCREED LOAD PER BRACKET									45° HANGER SWL (lbs)
		2500 lbs.	2250 lbs.	2000 lbs.	1750 lbs.	1500 lbs.	1250 lbs.	1000 lbs.	750 lbs.	0 lbs.	
		BRACKET SPACING									
10	30					2'-1"	2'-6"	2'-11"	3'-4"	4'-6"	4000
						4'-5"	4'-10"	5'-3"	5'-7"	6'-7"	6000
	40					2'-1"	2'-6"	2'-11"	3'-4"	4'-6"	4000
		2'-9"	3'-2"	3'-7"	4'-0"	4'-5"	4'-10"	5'-3"	5'-7"	6'-7"	6000
	50					2'-1"	2'-6"	2'-11"	3'-4"	4'-6"	4000
		2'-9"	3'-2"	3'-7"	4'-0"	4'-5"	4'-10"	5'-3"	5'-7"	6'-7"	6000
12	30						2'-2"	2'-7"	2'-11"	4'-0"	4000
						3'-11"	4'-3"	4'-8"	5'-0"	6'-1"	6000
	40						2'-2"	2'-7"	2'-11"	4'-0"	4000
		2'-5"	2'-10"	3'-2"	3'-6"	3'-11"	4'-3"	4'-8"	5'-0"	6'-1"	6000
	50						2'-2"	2'-7"	2'-11"	4'-0"	4000
		2'-5"	2'-10"	3'-2"	3'-6"	3'-11"	4'-3"	4'-8"	5'-0"	6'-1"	6000
14	30						2'-0"	2'-4"	2'-8"	3'-8"	4000
					3'-2"	3'-6"	3'-10"	4'-2"	4'-6"	5'-6"	6000
	40						2'-0"	2'-4"	2'-8"	3'-8"	4000
		2'-2"	2'-6"	2'-10"	3'-2"	3'-6"	3'-10"	4'-2"	4'-6"	5'-6"	6000
	50						2'-0"	2'-4"	2'-8"	3'-8"	4000
		2'-2"	2'-6"	2'-10"	3'-2"	3'-6"	3'-10"	4'-2"	4'-6"	5'-6"	6000
16	30						2'-1"	2'-5"	3'-4"	4000	
					2'-11"	3'-2"	3'-6"	3'-10"	4'-1"	5'-0"	6000
	40						2'-1"	2'-5"	3'-4"	4000	
		2'-0"	2'-4"	2'-7"	2'-11"	3'-2"	3'-6"	3'-10"	4'-1"	5'-0"	6000
	50						2'-1"	2'-5"	3'-4"	4000	
		2'-0"	2'-4"	2'-7"	2'-11"	3'-2"	3'-6"	3'-10"	4'-1"	5'-0"	6000

TABLE 1-4 (FOR USE ON **OVER 3'-0" TO 3'-6" OVERHANG** Ⓛ & 54" HORIZONTAL LEG LENGTH OF THE OVERHANG BRACKET)

AVG. SLAB THICKNESS Ⓣ (In)	BRACKET Ⓚ DIMENSION (In)	SCREED LOAD PER BRACKET									45° HANGER SWL (lbs)
		2500 lbs.	2250 lbs.	2000 lbs.	1750 lbs.	1500 lbs.	1250 lbs.	1000 lbs.	750 lbs.	0 lbs.	
		BRACKET SPACING									
10	30						2'-1"	2'-5"	2'-9"	3'-10"	4000
						2'-3"	2'-11"	3'-7"	4'-3"	5'-9"	6000
	40						2'-1"	2'-5"	2'-9"	3'-10"	4000
					2'-4"	3'-0"	3'-7"	4'-1"	4'-5"	5'-9"	6000
	50						2'-1"	2'-5"	2'-9"	3'-10"	4000
		2'-4"	2'-8"	3'-0"	3'-4"	3'-8"	4'-1"	4'-5"	4'-9"	5'-9"	6000
12	30						2'-2"	2'-6"	3'-5"	4000	
						2'-1"	2'-8"	3'-4"	3'-11"	5'-2"	6000
	40						2'-2"	2'-6"	3'-5"	4000	
					2'-2"	2'-9"	3'-4"	3'-7"	3'-11"	4'-3"	5'-2"	6000
	50						2'-2"	2'-6"	3'-5"	4000	
		2'-1"	2'-4"	2'-8"	3'-0"	3'-4"	3'-7"	3'-11"	4'-3"	5'-2"	6000
14	30						2'-3"	3'-1"	4000		
						2'-0"	2'-6"	3'-1"	3'-8"	4'-8"	6000
	40						2'-3"	3'-1"	4000		
					2'-0"	2'-7"	3'-0"	3'-3"	3'-6"	4'-8"	6000
	50						2'-3"	3'-1"	4000		
				2'-2"	2'-5"	2'-8"	3'-0"	3'-3"	3'-6"	4'-8"	6000
16	30						2'-0"	2'-9"	4000		
							2'-4"	2'-10"	3'-5"	4'-3"	6000
	40						2'-0"	2'-9"	4000		
						2'-5"	2'-8"	2'-11"	3'-3"	3'-6"	4'-3"	6000
	50						2'-0"	2'-9"	4000		
					2'-2"	2'-5"	2'-8"	2'-11"	3'-3"	3'-6"	4'-3"	6000

DEFINITIONS

SLPB = SCREED LOAD PER BRACKET (R x W)
R = SCREED LOAD FACTOR, OBTAINED FROM TABLE 2
W = WHEEL LOAD
S = BRACKET SPACING
T = AVERAGE SLAB THICKNESS
SWL = SAFE WORKING LOAD
K = DIMENSION DEFINED ON "BRIDGE OVERHANG BRACKET SUMMARY" ON SHEET 2
L = OVERHANG MEASURED FROM EDGE OF TOP FLANGE TO EDGE OF SUPERSTRUCTURE

NORTH CAROLINA PROFESSIONAL SEAL 18788 ENGINEER CHANG-CHUAN VICTOR CHAO

Chang-Chuan Victor Chao
4-23-2008

PROJECT NO. R-2554BA
WAYNE COUNTY
STATION: 100+61.488 -L-

SHEET 1 OF 3

STATE OF NORTH CAROLINA
DEPARTMENT OF TRANSPORTATION
RALEIGH

STANDARD OVERHANG FALSEWORK

AASHTO TYPES
III, IV, V, AND VI

(RIGHT LANE)

REVISIONS						SHEET NO.
NO.	BY:	DATE:	NO.	BY:	DATE:	S-211
1			3			TOTAL SHEETS
2			4			478

ASSEMBLED BY:	DATE:
CHECKED BY:	DATE:
DRAWN BY: R. WRIGHT 06/04	REV.
CHECKED BY: C. V. CHAO 06/04	

23-APR-2008 11:54
di\wdlr\victor\overhangfalsework\tiebar&strut\r-2554ba_type_III\r2554barightoverhangsheets.dgn
vchao

STR. #7 OF1

BRIDGE OVERHANG BRACKET SUMMARY

TOTAL SCREED WEIGHT = _____ LBS.
NUMBER OF SCREED WHEELS = _____
SCREED WHEEL LOAD (W) = _____LBS.
SCREED LOAD PER BRACKET = _____ LBS.

PROJECT No. : _____
COUNTY : _____
STATION : _____
DESCRIPTION : _____
DATE : _____
DESIGN BY : _____
CHECK BY : _____

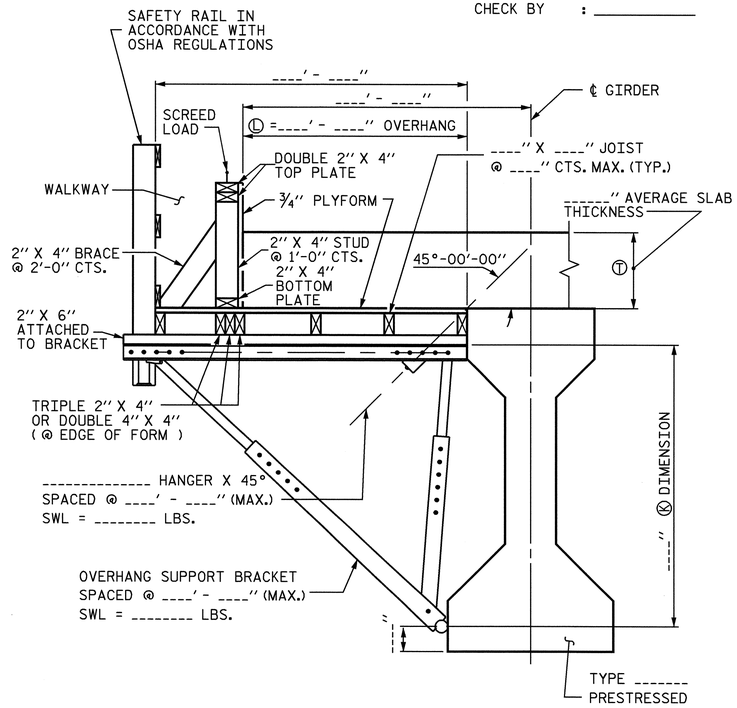

OVERHANG FALSEWORK

NOTES

DESIGN INCLUDES CONSTRUCTION LIVE LOAD 20 PSF ON THE AREA SUPPORTED AND 75 PLF AT THE OUTSIDE DECK OF OVERHANGS.

REQUIRED MINIMUM DIAGONAL LEG CAPACITY: 3600 LB WORKING LOAD

THE CONTRACTOR HAS THE OPTION OF SUBMITTING HIS OWN DESIGN FOR OVERHANG FALSEWORK IN ACCORDANCE WITH THE SPECIAL PROVISIONS.

SUBMITTALS UTILIZING THE INSTRUCTIONS AND PROCEDURES DESCRIBED ON SHEET 1 OF 3 SHALL BE IN ACCORDANCE WITH THE APPLICABLE SECTIONS OF THE SPECIFICATIONS AND SPECIAL PROVISIONS, EXCEPT THAT CALCULATIONS FOR OVERHANG FALSEWORK NEED NOT BE SEALED BY A REGISTERED ENGINEER.

FOR OVERHANG FALSEWORK BRACING DESIGN, SEE SHEET 3 OF 3.

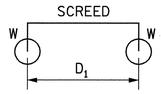

4-WHEEL MACHINE

4 WHEEL MACHINE	
S/D1	R
<= 1.0	1.00
1.1	1.09
1.2	1.17
1.3	1.23
1.4	1.29
1.5	1.33
1.6	1.38
1.7	1.41
1.8	1.44
1.9	1.47
2.0	1.50
2.2	1.55
2.4	1.58
2.6	1.62
2.8	1.64
3.0	1.67
3.5	1.71
4.0	1.75

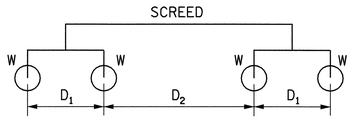

8-WHEEL MACHINE

TABLE 2: SCREED LOAD FACTOR "R"

		THE SCREED LOAD FACTOR R (FOR 8 WHEEL MACHINE)																		
		S/D2																		
S/D1		<= 1.0	1.1	1.2	1.3	1.4	1.5	1.6	1.7	1.8	1.9	2.0	2.2	2.4	2.6	2.8	3.0	3.5	4.0
	<= 1.0	1.00	1.09	1.17	1.23	1.29	1.33	1.38	1.41	1.44	1.47	1.50	1.55	1.58	1.62	1.64	1.67	1.71	1.75
	1.1	1.09	1.18	1.26	1.32	1.38	1.42	1.47	1.50	1.54	1.56	1.59	1.64	1.67	1.71	1.73	1.76	1.81	1.84
	1.2	1.17	1.26	1.33	1.40	1.45	1.50	1.54	1.58	1.61	1.64	1.67	1.71	1.75	1.78	1.81	1.83	1.88	1.92
	1.3	1.23	1.32	1.40	1.46	1.52	1.56	1.61	1.64	1.68	1.70	1.73	1.78	1.81	1.85	1.87	1.90	1.95	1.98
	1.4	1.29	1.38	1.45	1.52	1.57	1.62	1.66	1.70	1.73	1.76	1.79	1.83	1.87	1.90	1.93	1.95	2.00	2.07
	1.5	1.33	1.42	1.50	1.56	1.62	1.67	1.71	1.75	1.78	1.81	1.83	1.88	1.92	1.95	1.98	2.00	2.10	2.17
	1.6	1.38	1.47	1.54	1.61	1.66	1.71	1.75	1.79	1.82	1.85	1.88	1.92	1.96	1.99	2.04	2.08	2.18	2.25
	1.7	1.41	1.50	1.58	1.64	1.70	1.75	1.79	1.82	1.86	1.89	1.91	1.96	2.00	2.05	2.11	2.16	2.25	2.32
	1.8	1.44	1.54	1.61	1.68	1.73	1.78	1.82	1.86	1.89	1.92	1.94	1.99	2.06	2.12	2.17	2.22	2.32	2.39
	1.9	1.47	1.56	1.64	1.70	1.76	1.81	1.85	1.89	1.92	1.95	1.97	2.04	2.11	2.18	2.23	2.28	2.38	2.45
	2.0	1.50	1.59	1.67	1.73	1.79	1.83	1.88	1.91	1.94	1.97	2.00	2.09	2.17	2.23	2.29	2.33	2.43	2.50
	2.2	1.55	1.64	1.71	1.78	1.83	1.88	1.92	1.96	1.99	2.04	2.09	2.18	2.26	2.32	2.38	2.42	2.52	2.59
	2.4	1.58	1.67	1.75	1.81	1.87	1.92	1.96	2.00	2.06	2.11	2.17	2.26	2.33	2.40	2.45	2.50	2.60	2.67
	2.6	1.62	1.71	1.78	1.85	1.90	1.95	1.99	2.05	2.12	2.18	2.23	2.32	2.40	2.46	2.52	2.56	2.66	2.73
	2.8	1.64	1.73	1.81	1.87	1.93	1.98	2.04	2.11	2.17	2.23	2.29	2.38	2.45	2.52	2.57	2.62	2.71	2.79
	3.0	1.67	1.76	1.83	1.90	1.95	2.00	2.08	2.16	2.22	2.28	2.33	2.42	2.50	2.56	2.62	2.67	2.76	2.83
	3.5	1.71	1.81	1.88	1.95	2.00	2.10	2.18	2.25	2.32	2.38	2.43	2.52	2.60	2.66	2.71	2.76	2.86	2.93
	4.0	1.75	1.84	1.92	1.98	2.07	2.17	2.25	2.32	2.39	2.45	2.50	2.59	2.67	2.73	2.79	2.83	2.93	3.00

TABLE 3: ALLOWABLE SPAN LENGTH OF JOISTS AND JOIST SPACINGS

AVG. SLAB THICKNESS Ⓣ (IN)	LUMBER JOIST SIZE (IN X IN)	JOIST SPACINGS			
		15 IN	12 IN	10 IN	8 IN
		THE ALLOWABLE SPAN LENGTH OF JOISTS			
10	2 X 4	———	4' - 6"	4' - 9"	5' - 0"
	4 X 4	5' - 9"	6' - 3"	6' - 6"	6' - 7"
12	2 X 4	———	4' - 3"	4' - 9"	5' - 0"
	4 X 4	5' - 3"	6' - 0"	6' - 3"	6' - 5"
14	2 X 4	———	4' - 0"	4' - 6"	5' - 0"
	4 X 4	———	5' - 6"	6' - 0"	6' - 4"
16	2 X 4	———	4' - 0"	4' - 3"	4' - 9"
	4 X 4	———	5' - 3"	5' - 9"	6' - 3"

PROJECT NO. R-2554BA
WAYNE COUNTY
STATION: 100+61.488 -L-

SHEET 2 OF 3

STATE OF NORTH CAROLINA
DEPARTMENT OF TRANSPORTATION
RALEIGH

STANDARD OVERHANG FALSEWORK

AASHTO TYPES
III, IV, V, AND VI

(RIGHT LANE)

NORTH CAROLINA PROFESSIONAL SEAL 18788 ENGINEER CHARNG-CHUAN VICTOR CHAO
Charng-Chuan Victor Chao
4-23-2008

REVISIONS						SHEET NO.
NO.	BY:	DATE:	NO.	BY:	DATE:	S-2/2
1			3			TOTAL SHEETS
2			4			478

ASSEMBLED BY:	DATE:
CHECKED BY:	DATE:
DRAWN BY: R. WRIGHT 06/04	REV.
CHECKED BY: C. V. CHAO 06/04	

23-APR-2008 11:55
d:\wdlr\victor\overhangfalsework\tiebar&strut\r-2554ba_type_III\r2554barightoverhangsheets.dgn
vchao

STR. #7

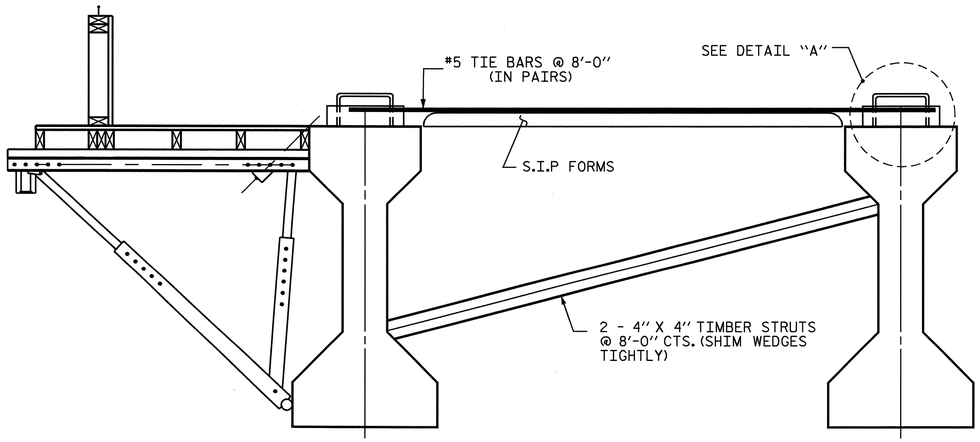

EXTERIOR GIRDER

INTERIOR GIRDER

DETAIL OF REQUIRED OVERHANG FALSEWORK BRACING SYSTEM

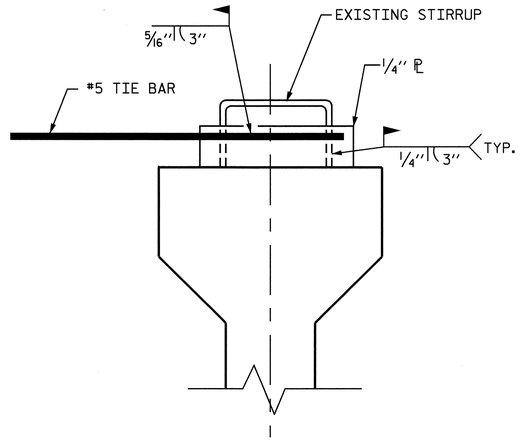

DETAIL "A"

NOTES:

EACH #5 TIE BAR SHALL BE WELDED TO ONE STIRRUP LOOP AS SHOWN IN DETAIL "A". #5 TIE BARS SHALL BE WELDED TO TWO ADJACENT STIRRUPS OF THE EXTERIOR GIRDER AND THE ADJACENT INTERIOR GIRDER BETWEEN PERMANENT DIAPHRAGMS. WELD STEEL PLATES IN BETWEEN THE TIE BARS AND THE STIRRUP LOOP. WELDING TWO TIE BARS TO THE SAME STIRRUP LOOP SHALL NOT BE PERMITTED.

MAXIMUM SPACING BETWEEN THE BRACING (TIE BARS-TIMBER STRUT) IS 8'-0" CTS. #5 TIE BARS SHALL BE LOCATED OVER A TIMBER STRUT.

INSTALL TIE BARS AND TIMBER STRUTS PRIOR TO PLACEMENT OF CONCRETE OR SCREED WEIGHT ONTO THE OVERHANG FALSEWORK.

NORTH CAROLINA PROFESSIONAL SEAL 18788 ENGINEER CHANG-CHUAN VICTOR CHAO

Chang-Chuan Victor Chao
4-23-2008

PROJECT NO. R-2554BA

WAYNE COUNTY

STATION: 100+61.488 -L-

SHEET 3 OF 3

STATE OF NORTH CAROLINA
DEPARTMENT OF TRANSPORTATION
RALEIGH

STANDARD OVERHANG FALSEWORK

AASHTO TYPES
III, IV, V, AND VI

(RIGHT LANE)

REVISIONS						SHEET NO.
NO.	BY:	DATE:	NO.	BY:	DATE:	S-2I3
1			3			TOTAL SHEETS
2			4			478

DRAWN BY: R. WRIGHT 06/04 DATE : _____
CHECKED BY: C. V. CHAO 06/04 DATE : _____

23-APR-2008 11:55
d:\wdlr\victor\overhangfalsework\tiebar&strut\r-2554ba_type_III\r2554barightoverhangsheets.dgn
vchao

STR. #7

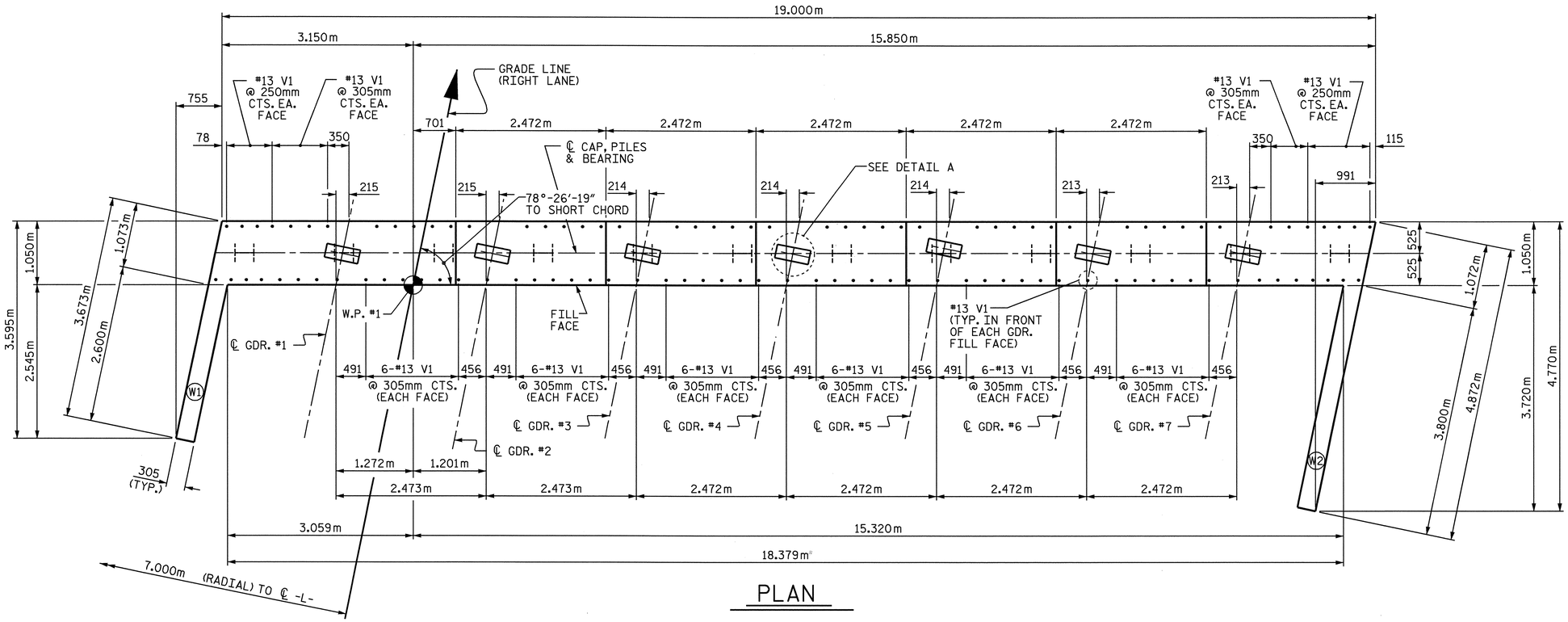

PLAN

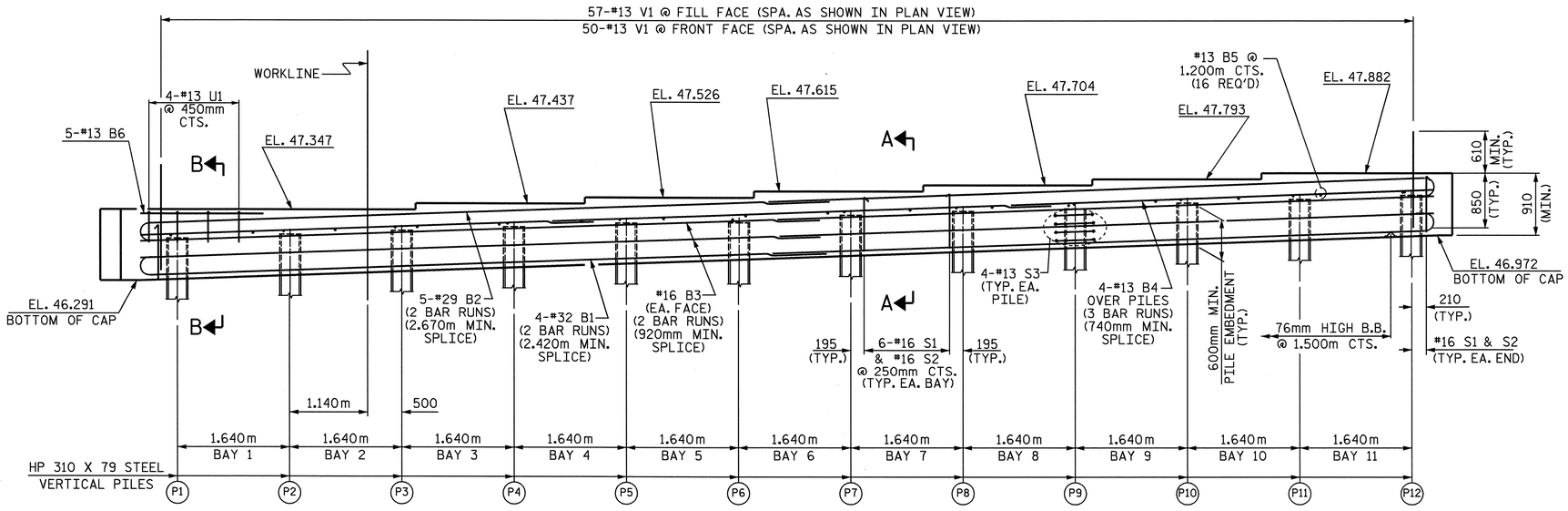

ELEVATION

(FOR WING REINFORCING STEEL AND DETAILS, SEE SHEET 2 OF 3)

NOTES:

THE CONTRACTOR SHALL PROVIDE FOR INSTALLATION OF THE 102mm DIAMETER DRAIN PIPE THROUGH THE WING WALL AS REQUIRED FOR REINFORCED BRIDGE APPROACH FILLS. SEE THE ROADWAY PLANS. REINFORCING STEEL IN THE WING WALL MAY BE SHIFTED AS NECESSARY TO CLEAR THE DRAIN PIPE.

THE TOP SURFACE OF THE END BENT CAP AND WINGS, EXCLUDING THE OUTSIDE 100mm AND THE BEARING AREA, SHALL BE RAKED TO A DEPTH OF 6mm.

STIRRUPS IN CAP MAY BE SHIFTED AS NECESSARY TO CLEAR #13 V1 BARS.

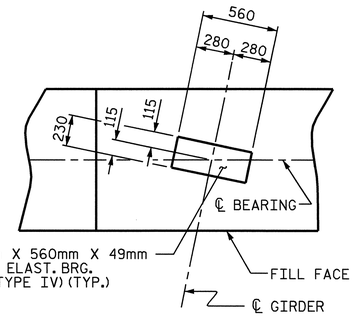

DETAIL A

(TYP. EA. GDR.)

TOP OF PILE ELEVATIONS	
P1	46.908
P2	46.967
P3	47.026
P4	47.085
P5	47.143
P6	47.202
P7	47.261
P8	47.320
P9	47.378
P10	47.437
P11	47.496
P12	47.555

PROJECT NO. R-2554BA

WAYNE COUNTY

STATION: 100+61.488 -L-

SHEET 1 OF 3

STATE OF NORTH CAROLINA
DEPARTMENT OF TRANSPORTATION
RALEIGH

SUBSTRUCTURE

INTEGRAL END BENT #1

(RIGHT LANE)

NORTH CAROLINA PROFESSIONAL SEAL 14045 ENGINEER TIMOTHY L. COGGINS
6/9/08

REVISIONS						SHEET NO.
NO.	BY:	DATE:	NO.	BY:	DATE:	S-214
1			3			TOTAL SHEETS
2			4			478

STR. #7

DRAWN BY : PEGGY ADKINS DATE : 04-08
CHECKED BY : J.B. WILSON DATE : 04-08

09-JUN-2008 11:59
r:\structures\azlzl\str#7\final plans\r-2554ba_sd_eb_07.dgn
PADKINS

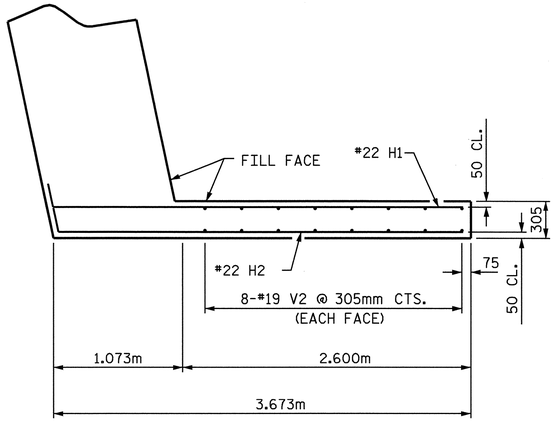

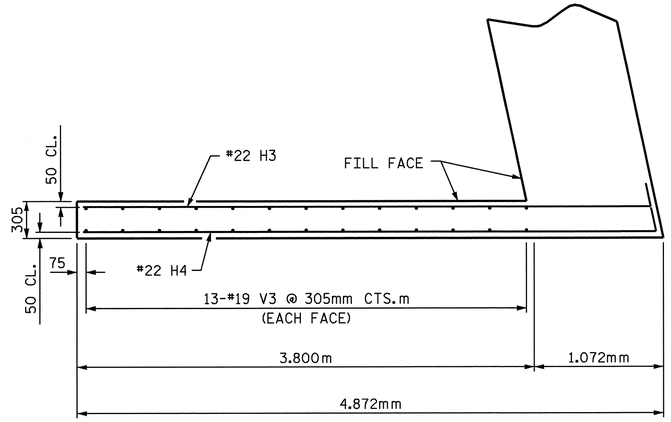

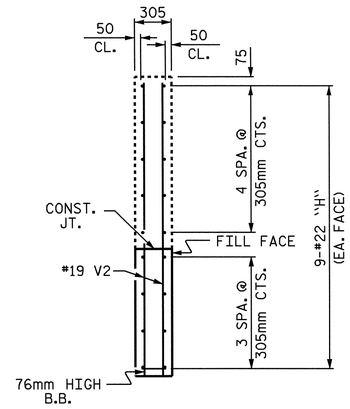

SECTION X-X

PLAN OF WING W1

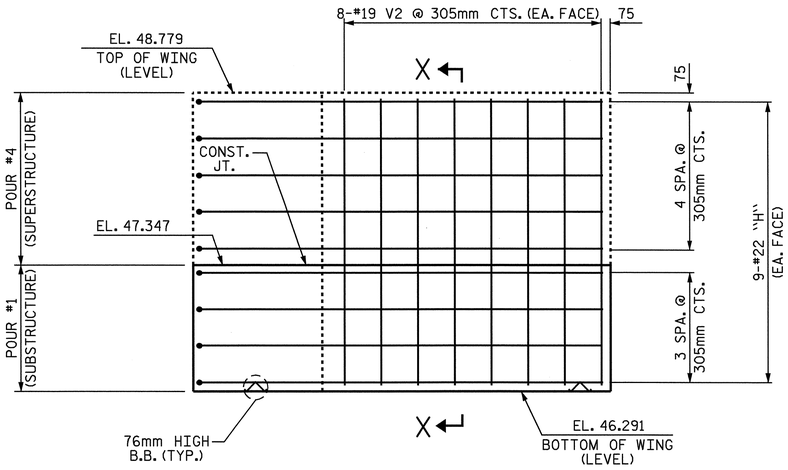

PLAN OF WING W2

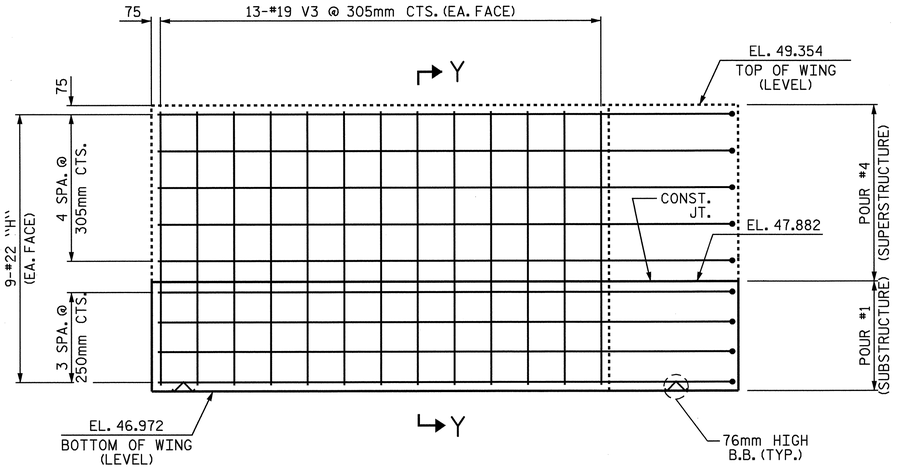

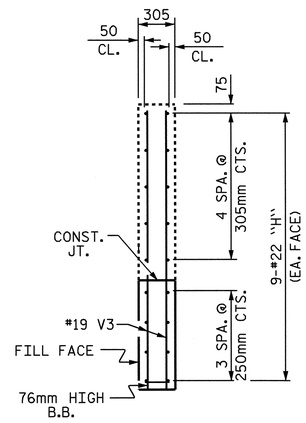

SECTION Y-Y

ELEVATION OF WING W1

ELEVATION OF WING W2

PROJECT NO. R-2554BA

WAYNE COUNTY

STATION: 100+61.488 -L-

SHEET 2 OF 3

STATE OF NORTH CAROLINA
DEPARTMENT OF TRANSPORTATION
RALEIGH

SUBSTRUCTURE

INTEGRAL END BENT #1 (RIGHT LANE)

REVISIONS						SHEET NO.
NO.	BY:	DATE:	NO.	BY:	DATE:	S-215
1			3			TOTAL SHEETS
2			4			478

NORTH CAROLINA PROFESSIONAL SEAL 14045 ENGINEER TIMOTHY J. COGGINS
6/9/08

DRAWN BY : PEGGY ADKINS DATE : 04-08
CHECKED BY : J.B. WILSON DATE : 04-08

09-JUN-2008 11:59
r:\structures\azlzl\str#7\finalplans\r-2554ba_sd_eb_07.dgn
PADKINS

STR. #7

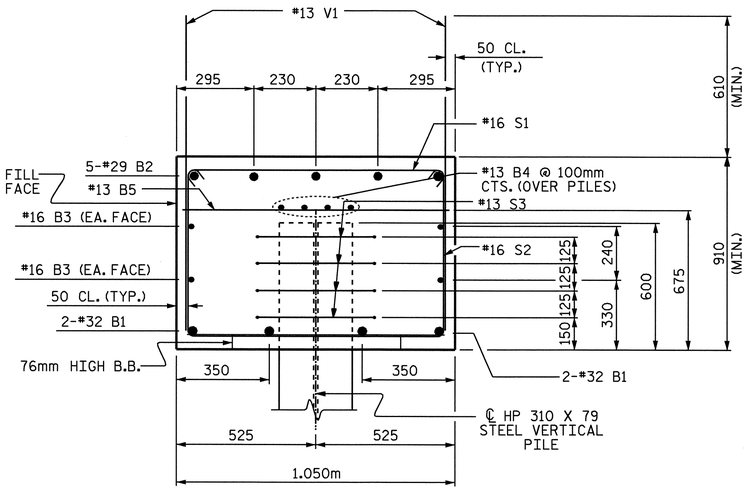

SECTION A-A

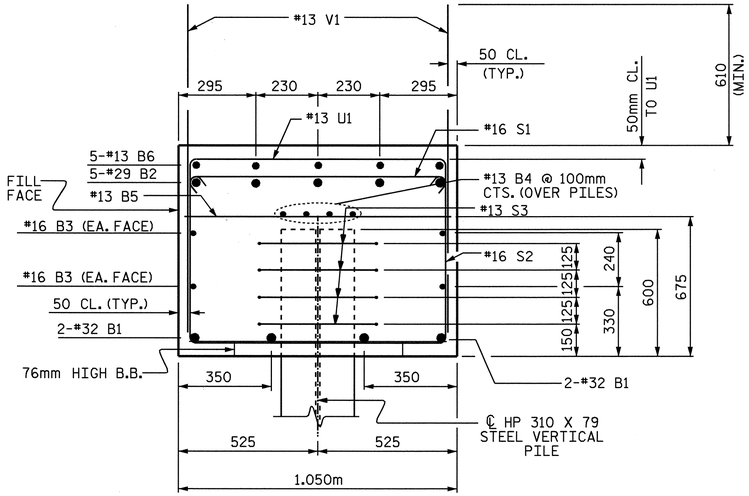

SECTION B-B

BAR TYPES

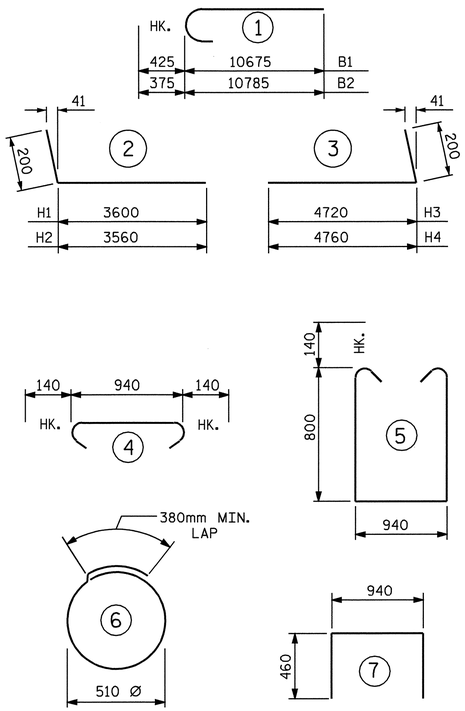

ALL BAR DIMENSIONS ARE OUT TO OUT.

BILL OF MATERIAL

END BENT #1

BAR	NO.	SIZE	TYPE	LENGTH	WEIGHT
B1	8	#32	1	11100	569
B2	10	#29	1	11160	565
B3	8	#16	STR	9920	123
B4	12	#13	STR	6800	81
B5	16	#13	STR	940	15
B6	5	#13	STR	1500	7
H1	9	#22	2	3800	104
H2	9	#22	2	3760	103
H3	9	#22	3	4920	135
H4	9	#22	3	4960	136
S1	68	#16	4	1220	129
S2	68	#16	5	2820	298
S3	48	#13	6	1980	94
U1	4	#13	7	1860	7
V1	107	#13	STR	1460	155
V2	16	#19	STR	2380	85
V3	26	#19	STR	2280	132

REINFORCING STEEL = 2738 KG

CLASS A CONCRETE BREAKDOWN
POUR #1: CAP & LOWER WINGS 21.2 m³

TOTAL CONCRETE 21.2 m³

HP 310 X 79 STEEL PILE
NO. 12 312.0 METERS

PILE REDRIVES EACH 4

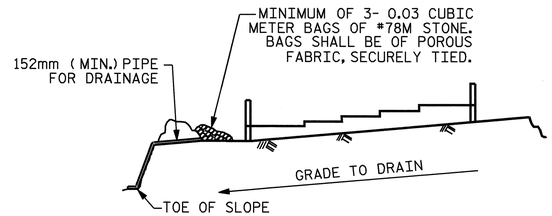

BAGGED STONE AND PIPE SHALL BE PLACED IMMEDIATELY AFTER COMPLETION OF END BENT EXCAVATION. PIPE MAY BE EITHER CONCRETE, CORRUGATED STEEL, CORRUGATED ALUMINUM ALLOY, OR CORRUGATED PLASTIC. PERFORATED PIPE WILL NOT BE ALLOWED.

BAGGED STONE SHALL REMAIN IN PLACE UNTIL THE ENGINEER DIRECTS THAT IT BE REMOVED. THE CONTRACTOR SHALL REMOVE AND DISPOSE OF SILT ACCUMULATIONS AT BAGGED STONE WHEN SO DIRECTED BY THE ENGINEER. BAGS SHALL BE REMOVED AND REPLACED WHENEVER THE ENGINEER DETERMINES THAT THEY HAVE DETERIORATED AND LOST THEIR EFFECTIVENESS.

NO SEPARATE PAYMENT WILL BE MADE FOR THIS WORK AND THE ENTIRE COST OF THIS WORK SHALL BE INCLUDED IN THE UNIT CONTRACT PRICE BID FOR THE SEVERAL PAY ITEMS.

TEMPORARY DRAINAGE AT END BENT

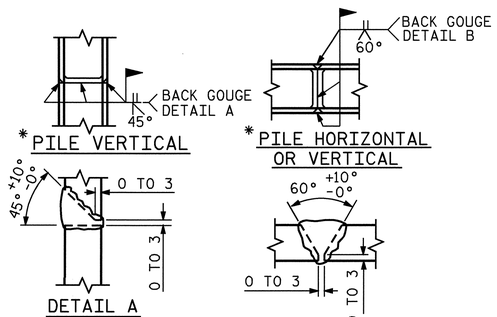

* POSITION OF PILE DURING WELDING.

PILE SPLICE DETAILS

PROJECT NO. R-2554BA

WAYNE COUNTY

STATION: 100+61.488 -L-

SHEET 3 OF 3

STATE OF NORTH CAROLINA
DEPARTMENT OF TRANSPORTATION
RALEIGH

SUBSTRUCTURE

INTEGRAL END BENT #1
(RIGHT LANE)

NORTH CAROLINA PROFESSIONAL SEAL 14045 ENGINEER TIMOTHY W. COGGINS
Timothy W. Coggins 6/9/08

REVISIONS						SHEET NO.
NO.	BY:	DATE:	NO.	BY:	DATE:	S-216
1			3			TOTAL SHEETS
2			4			478

DRAWN BY : PEGGY ADKINS DATE : 04-08
CHECKED BY : J.B. WILSON DATE : 04-08

09-JUN-2008 11:59
r:\structures\azlz1\str#7\final plans\r-2554ba_sd_eb_07.dgn
PADKINS

STR. #7

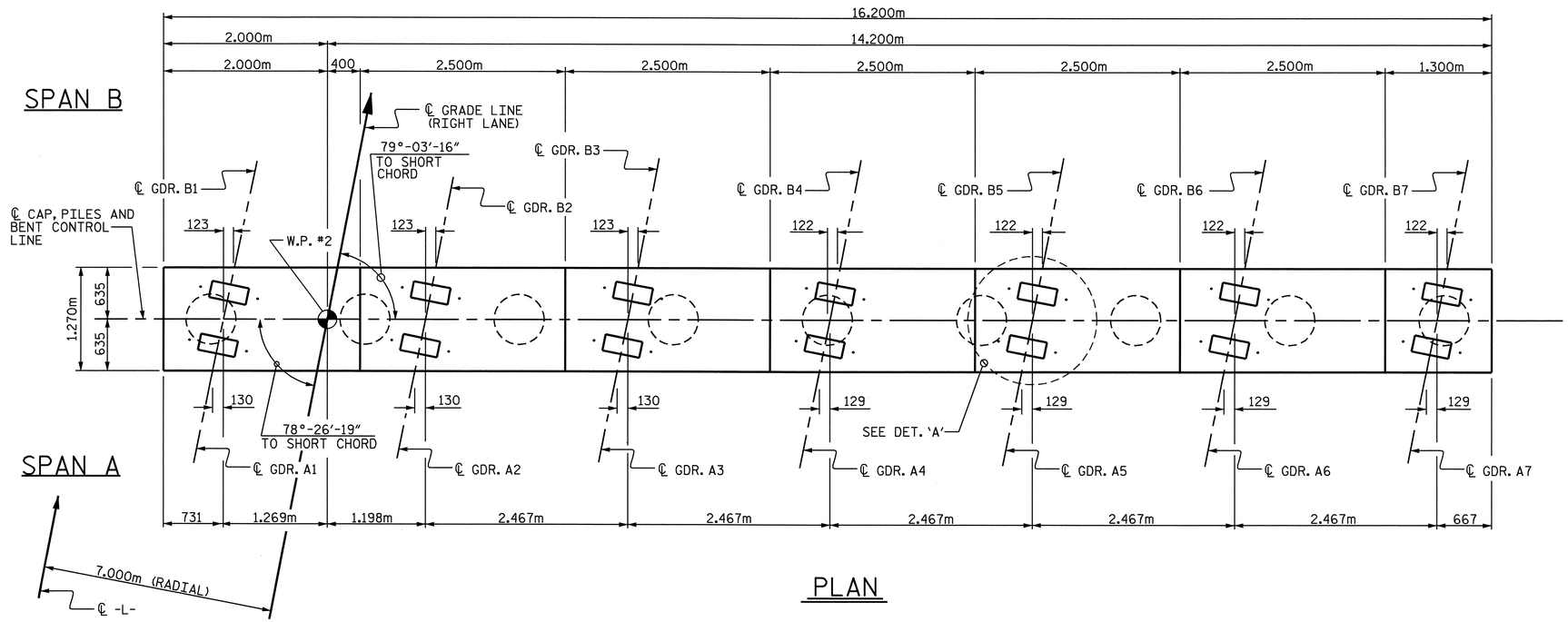

PLAN

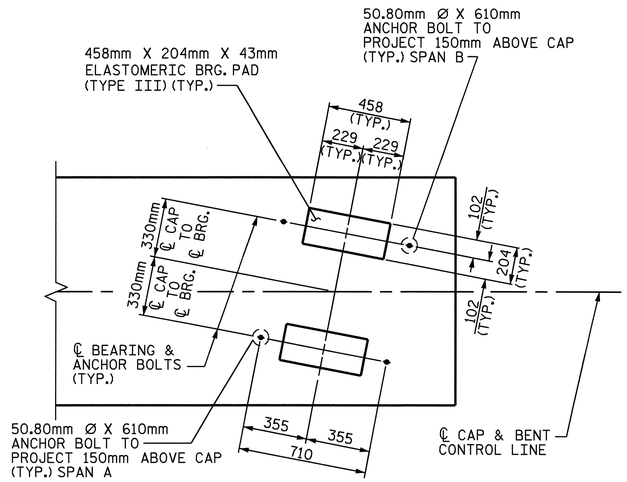

DETAIL 'A'

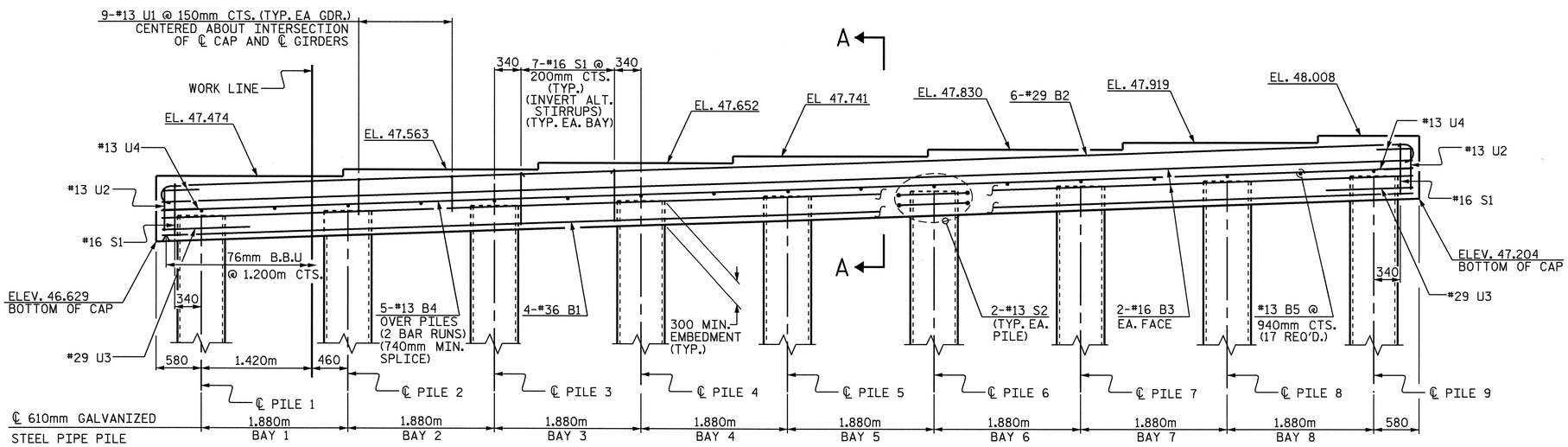

ELEVATION

FOR REINFORCING STEEL IN PIPE PILE, SEE STD. DRAWING "610mm STEEL PIPE PILE"

TABLE OF ELEVATIONS

TOP OF PILE ELEVATIONS @ ℄ PILE									MIN. TIP ELEV.
PILE 1	PILE 2	PILE 3	PILE 4	PILE 5	PILE 6	PILE 7	PILE 8	PILE 9	ALL PILES
46.960	47.027	47.094	47.161	47.227	47.294	47.361	47.428	47.494	29.000

DRAWN BY : M.D.PISO DATE : 02/2008
CHECKED BY : J.B.WILSON DATE : 03/2008

06-JUN-2008 16:04
r:\structures\azlz1\Str#7\mdpiso\Microstation\b-2554ba_sd_b7.dgn
padkins

STATE OF NORTH CAROLINA PROFESSIONAL SEAL 14045 ENGINEER TIMOTHY L. COGGINS
Timothy L. Coggins 6/6/08

PROJECT NO. R-2554BA
WAYNE COUNTY
STATION: 100+61.488 -L-

SHEET 1 OF 2

STATE OF NORTH CAROLINA
DEPARTMENT OF TRANSPORTATION
RALEIGH

SUBSTRUCTURE

BENT #1

(RIGHT LANE)

REVISIONS						SHEET NO.
NO.	BY:	DATE:	NO.	BY:	DATE:	S-217
1			3			TOTAL SHEETS
2			4			478

STR. #7

NOTES:

STIRRUPS IN THE CAP MAY BE SHIFTED AS NECESSARY TO CLEAR ANCHOR BOLTS.

THE CONCRETE DISPLACED BY THE FILLED 610mm Ø STEEL PIPE PILES HAS BEEN DEDUCTED FROM THE QUANTITY OF CLASS 'A' CONCRETE FOR THE BENT CAP.

THE STEEL PIPE PILES SHALL BE GALVANIZED IN ACCORDANCE WITH SECTION 1076 OF THE STANDARD SPECIFICATIONS.

BAR TYPES

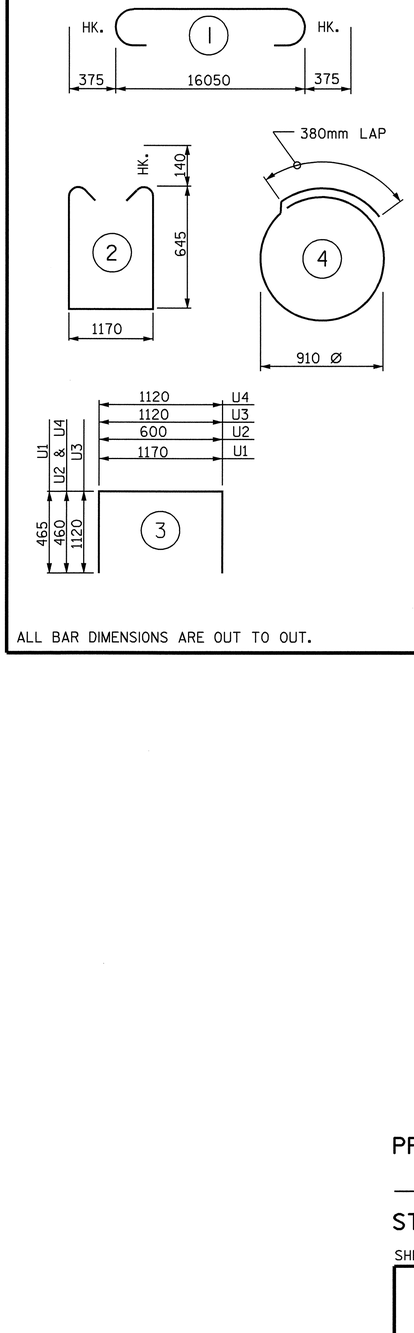

ALL BAR DIMENSIONS ARE OUT TO OUT.

BILL OF MATERIAL

BENT NO. 1

BAR	NO.	SIZE	TYPE	LENGTH	WEIGHT
B1	4	#36	STR.	16060	508
B2	6	#29	1	16800	510
B3	4	#16	STR.	16060	100
B4	8	#13	STR.	8400	67
B5	17	#13	STR.	1160	20
S1	58	#16	2	2740	247
S2	18	#13	4	3240	58
U1	63	#13	3	2100	132
U2	8	#13	3	1520	12
U3	2	#29	3	3360	34
U4	4	#13	3	2040	8

REINFORCING STEEL kg 1696 kg

CLASS A CONCRETE
BENT CAP (m³) 15.8 m³

PP 610 X 12.70 GALVANIZED STEEL PILE
NO. 9 TOT. LEN. 216.0 m

PILE REDRIVES	EACH	4
PDA TESTING	EACH	1
PDA ASSISTANCE	EACH	1

SPLICE CHART

BAR SIZE	SPLICE LENGTH
#13	740mm

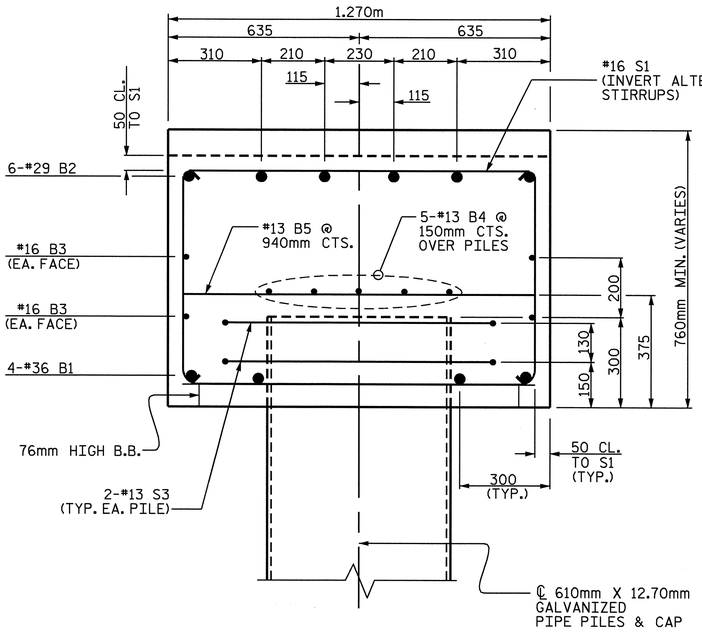

SECTION A-A

END VIEW
(TYP. EA. END)

PROJECT NO. R-2554BA
WAYNE COUNTY
STATION: 100+61.488 -L-

SHEET 2 OF 2

STATE OF NORTH CAROLINA
DEPARTMENT OF TRANSPORTATION
RALEIGH

SUBSTRUCTURE

BENT #1

(RIGHT LANE)

NORTH CAROLINA PROFESSIONAL SEAL 14045 ENGINEER TIMOTHY B. COGGINS
6/6/08

REVISIONS						SHEET NO.
NO.	BY:	DATE:	NO.	BY:	DATE:	S-218
1			3			TOTAL SHEETS
2			4			478

DRAWN BY : M.D.PISO DATE : 02/2008
CHECKED BY : J.B.WILSON DATE : 03/2008

STR.#7

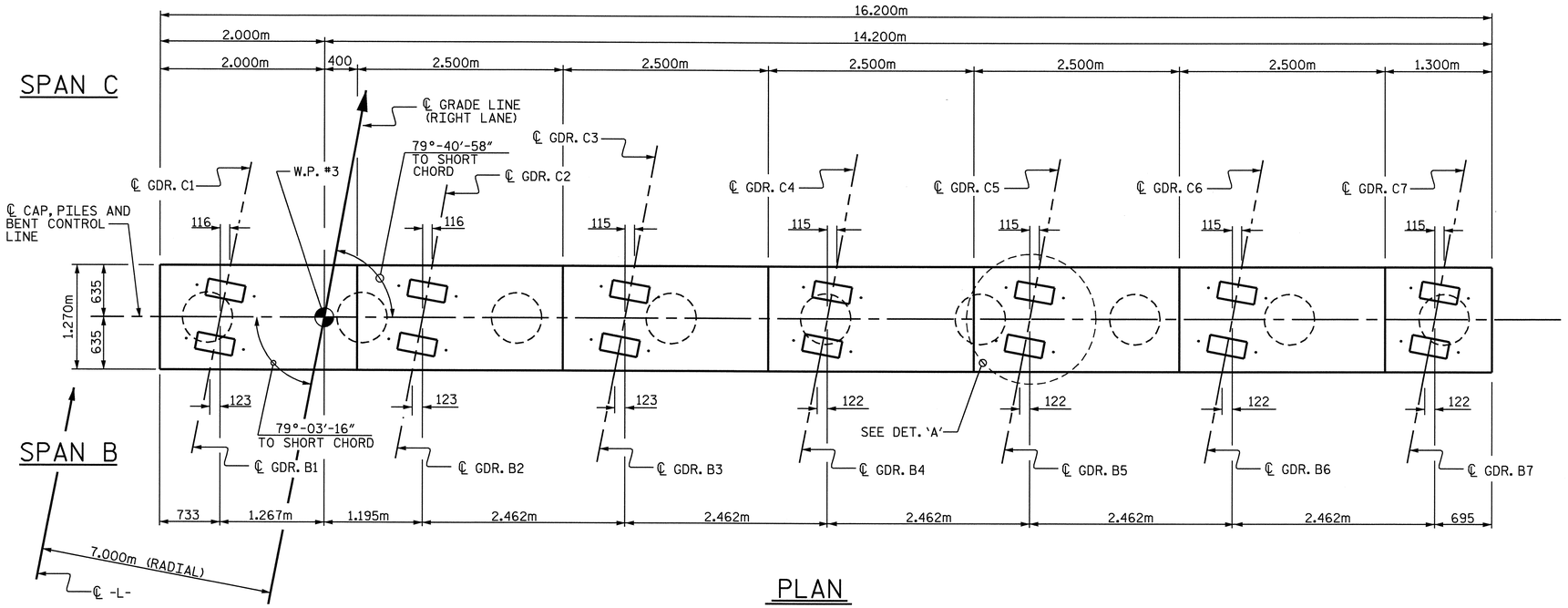

PLAN

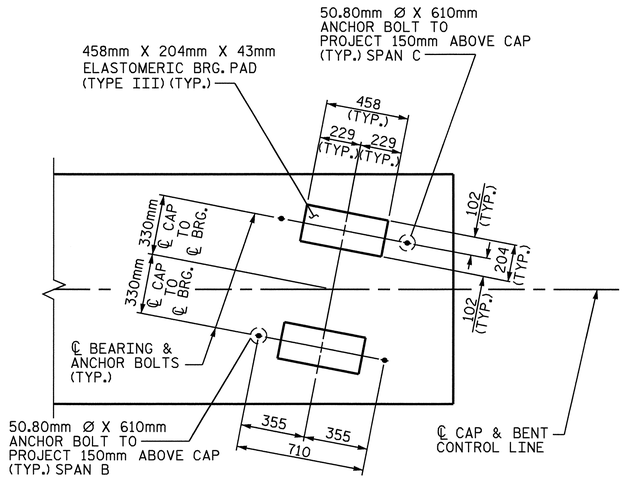

DETAIL 'A'

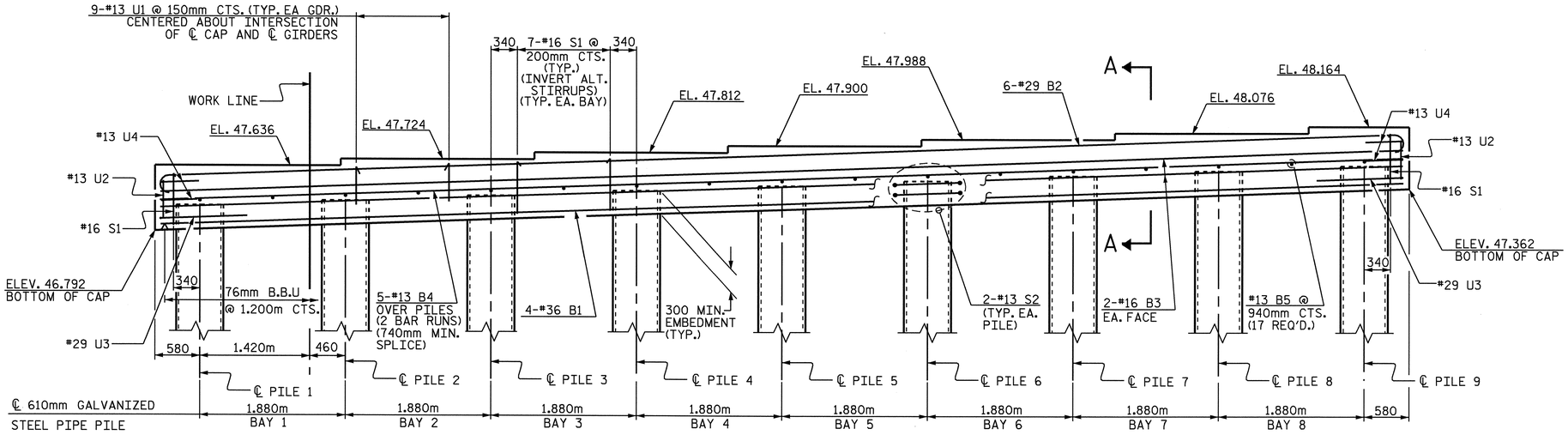

ELEVATION

FOR REINFORCING STEEL IN PIPE PILE SEE STD. DRAWING "610 STEEL PIPE PILE."

TABLE OF ELEVATIONS

TOP OF PILE ELEVATIONS @ ℄ PILE									MIN. TIP ELEV.
PILE 1	PILE 2	PILE 3	PILE 4	PILE 5	PILE 6	PILE 7	PILE 8	PILE 9	ALL PILES
47.123	47.189	47.255	47.322	47.388	47.454	47.520	47.586	47.652	29.000

PROJECT NO. R-2554BA

WAYNE COUNTY

STATION: 100+61.488 -L-

SHEET 1 OF 2

STATE OF NORTH CAROLINA
DEPARTMENT OF TRANSPORTATION
RALEIGH

SUBSTRUCTURE

BENT #2

(RIGHT LANE)

REVISIONS						SHEET NO.
NO.	BY:	DATE:	NO.	BY:	DATE:	S-219
1			3			TOTAL SHEETS
2			4			478

STR. #7

NORTH CAROLINA PROFESSIONAL SEAL 14045 ENGINEER TIMOTHY L. GIBSONS

6/6/08

DRAWN BY : M.D.PISO DATE : 02/2008
CHECKED BY : J.B.WILSON DATE : 03/2008

06-JUN-2008 16:04
r:\structures\azlz1\Str#7\mdpiso\Microstation\b-2554ba_sd_b7.dgn
padkins

NOTES:

STIRRUPS IN THE CAP MAY BE SHIFTED AS NECESSARY TO CLEAR ANCHOR BOLTS.

THE CONCRETE DISPLACED BY THE FILLED 610mm Ø STEEL PIPE PILES HAS BEEN DEDUCTED FROM THE QUANTITY OF CLASS 'A' CONCRETE FOR THE BENT CAP.

THE STEEL PIPE PILES SHALL BE GALVANIZED IN ACCORDANCE WITH SECTION 1076 OF THE STANDARD SPECIFICATIONS.

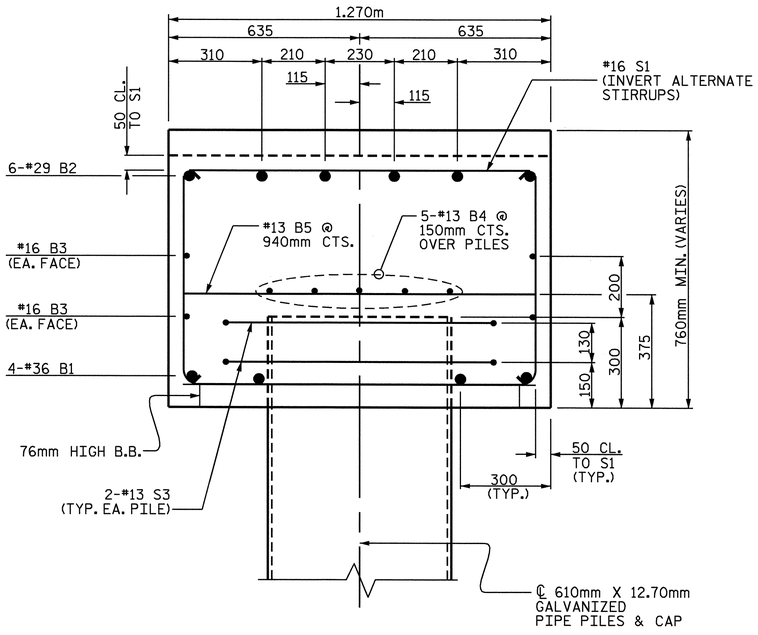

SECTION A-A

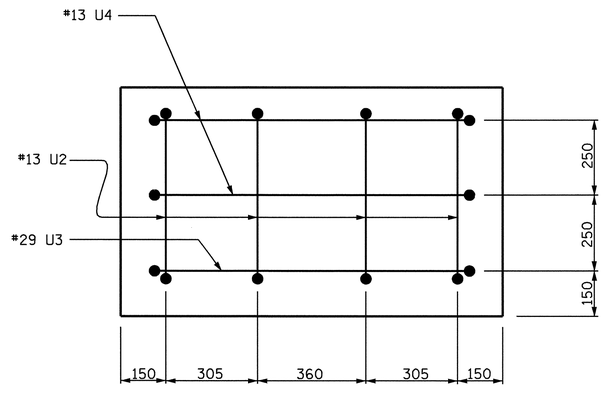

END VIEW
(TYP. EA. END)

BAR TYPES

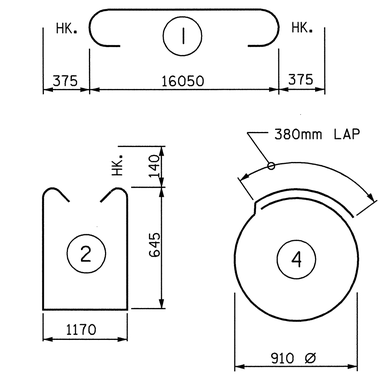

ALL BAR DIMENSIONS ARE OUT TO OUT.

BILL OF MATERIAL

BENT NO. 2

BAR	NO.	SIZE	TYPE	LENGTH	WEIGHT
B1	4	#36	STR.	16060	508
B2	6	#29	1	16800	510
B3	4	#16	STR.	16060	100
B4	8	#13	STR.	8400	67
B5	17	#13	STR.	1160	20
S1	58	#16	2	2740	247
S2	18	#13	4	3240	58
U1	63	#13	3	2100	132
U2	8	#13	3	1520	12
U3	2	#29	3	3360	34
U4	4	#13	3	2040	8

REINFORCING STEEL kg 1696 kg

CLASS A CONCRETE
BENT CAP (m3) 15.8 m3

PP 610 X 12.70 GALVANIZED STEEL PILE
NO. 9 TOT. LEN. 216.0 m

PILE REDRIVES	EACH	4
PDA TESTING	EACH	1
PDA ASSISTANCE	EACH	1

SPLICE CHART

BAR SIZE	SPLICE LENGTH
#13	740mm

DRAWN BY : M.D.PISO DATE : 02/2008
CHECKED BY : J.B.WILSON DATE : 03/2008

NORTH CAROLINA PROFESSIONAL SEAL 14045 ENGINEER TIMOTHY W. COGGINS
6/6/08

PROJECT NO. R-2554BA
WAYNE COUNTY
STATION: 100+61.488 -L-

SHEET 2 OF 2

STATE OF NORTH CAROLINA
DEPARTMENT OF TRANSPORTATION
RALEIGH

SUBSTRUCTURE

BENT #2

(RIGHT LANE)

REVISIONS						SHEET NO.
NO.	BY:	DATE:	NO.	BY:	DATE:	S-220
1			3			TOTAL SHEETS
2			4			478

STR.#7

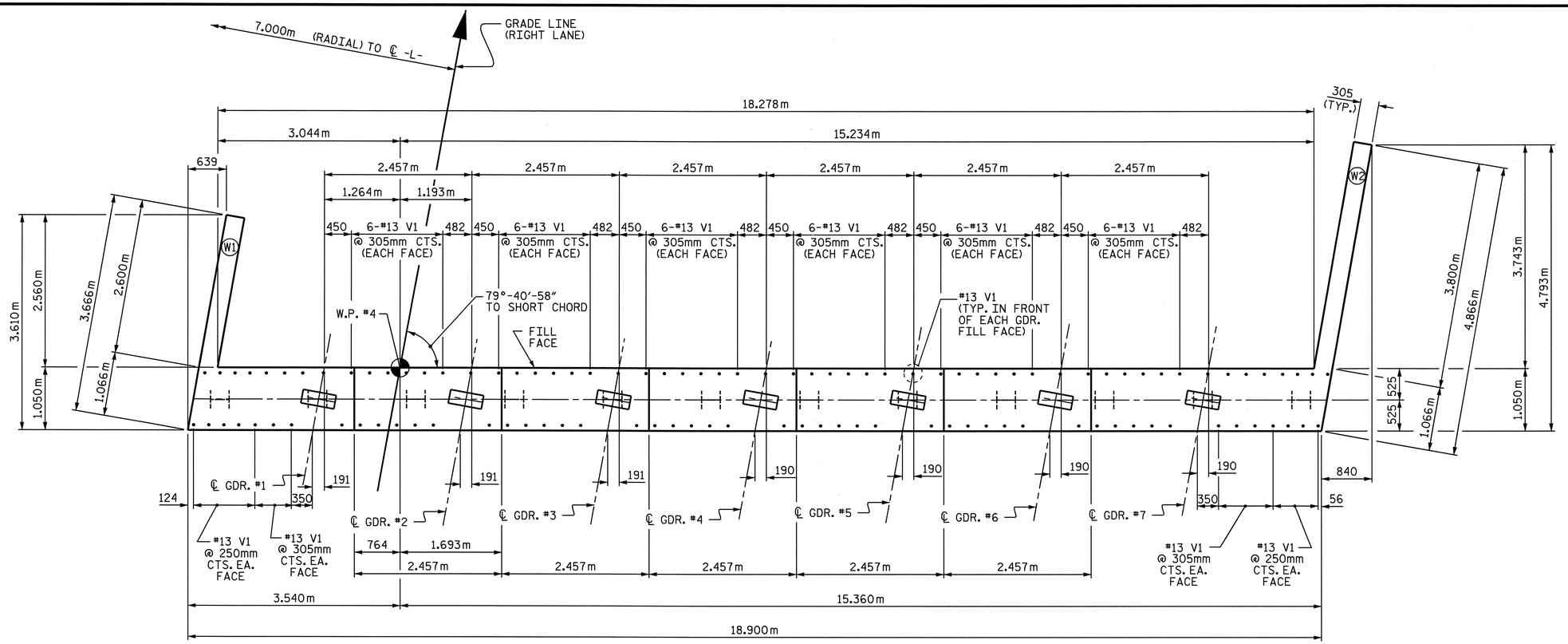

PLAN

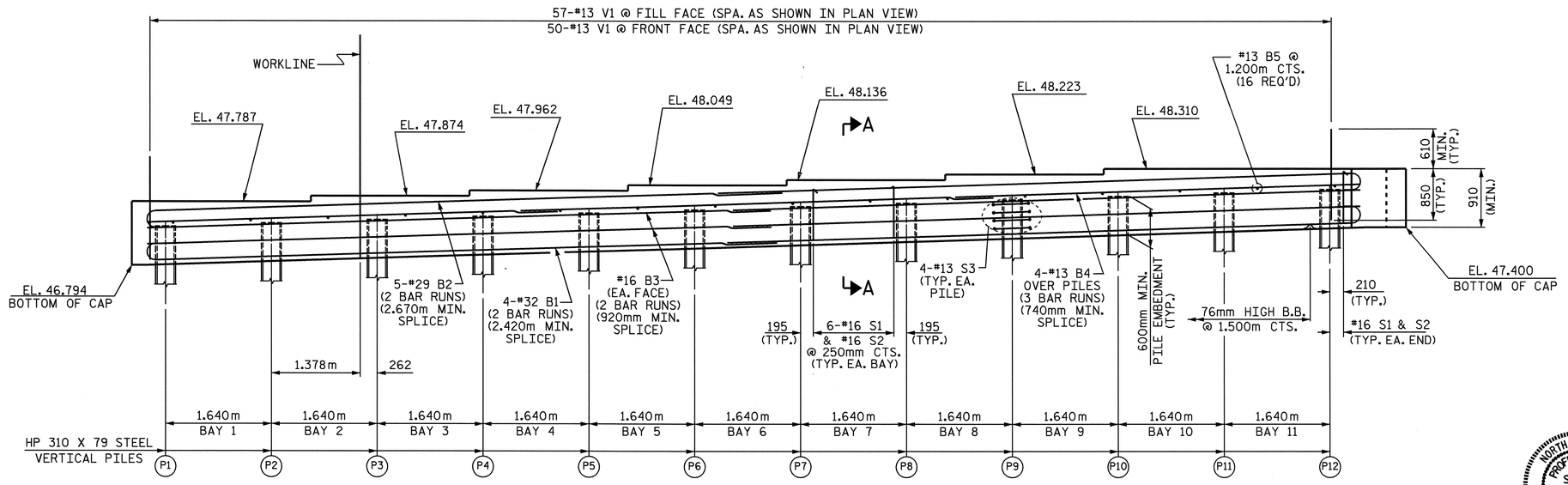

ELEVATION

(FOR WING REINFORCING STEEL AND DETAILS, SEE SHEET 2 OF 3)

NOTES:

THE CONTRACTOR SHALL PROVIDE FOR INSTALLATION OF THE 102mm DIAMETER DRAIN PIPE THROUGH THE WING WALL AS REQUIRED FOR REINFORCED BRIDGE APPROACH FILLS, SEE THE ROADWAY PLANS. REINFORCING STEEL IN THE WING WALL MAY BE SHIFTED AS NECESSARY TO CLEAR THE DRAIN PIPE.

THE TOP SURFACE OF THE END BENT CAP AND WINGS, EXCLUDING THE OUTSIDE 100mm AND THE BEARING AREA, SHALL BE RAKED TO A DEPTH OF 6mm.

STIRRUPS IN CAP MAY BE SHIFTED AS NECESSARY TO CLEAR #13 V1 BARS.

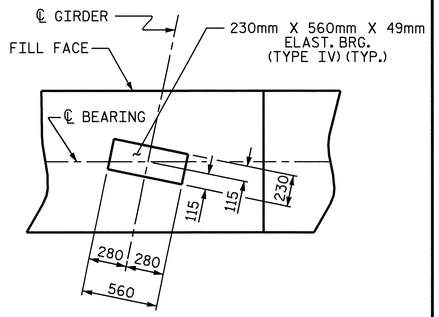

DETAIL A

(TYP. EA. GDR.)

TOP OF PILE ELEVATIONS	
P1	47.408
P2	47.460
P3	47.513
P4	47.566
P5	47.618
P6	47.671
P7	47.723
P8	47.776
P9	47.828
P10	47.881
P11	47.934
P12	47.986

PROJECT NO. R-2554BA

WAYNE COUNTY

STATION: 100+61.488 -L-

SHEET 1 OF 3

STATE OF NORTH CAROLINA
DEPARTMENT OF TRANSPORTATION
RALEIGH

SUBSTRUCTURE

INTEGRAL END BENT #2

(RIGHT LANE)

NORTH CAROLINA PROFESSIONAL SEAL 14045 ENGINEER TIMOTHY W. COSGRIS
6/9/08

REVISIONS						SHEET NO.
NO.	BY:	DATE:	NO.	BY:	DATE:	S-221
1			3			TOTAL SHEETS
2			4			478

STR. #7

DRAWN BY : PEGGY ADKINS DATE : 4-08
CHECKED BY : J.B. WILSON DATE : 4-08

09-JUN-2008 11:59
r:\structures\azizi\str#7\final plans\r-2554ba_sd_eb_07.dgn
PADKINS

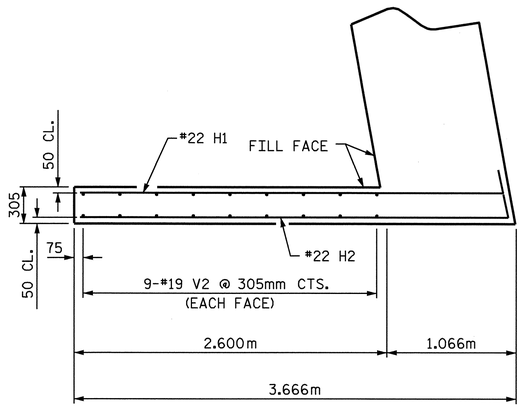

PLAN OF WING W1

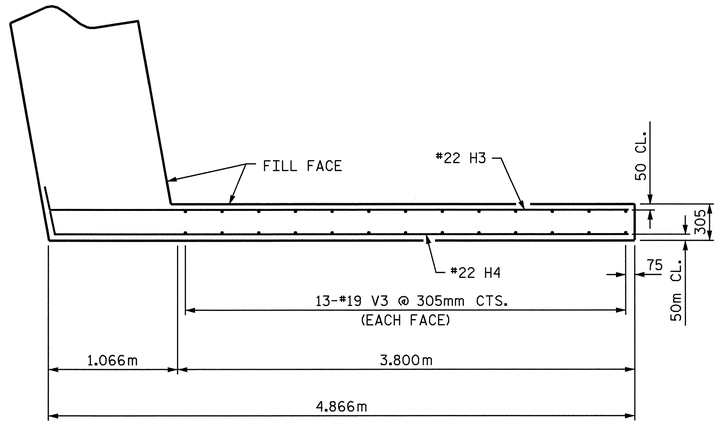

PLAN OF WING W2

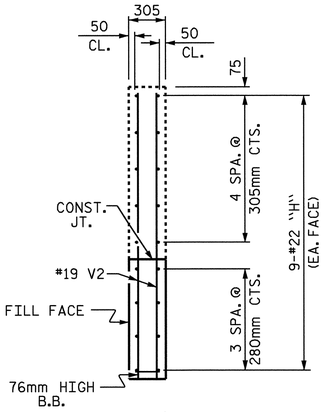

SECTION X-X

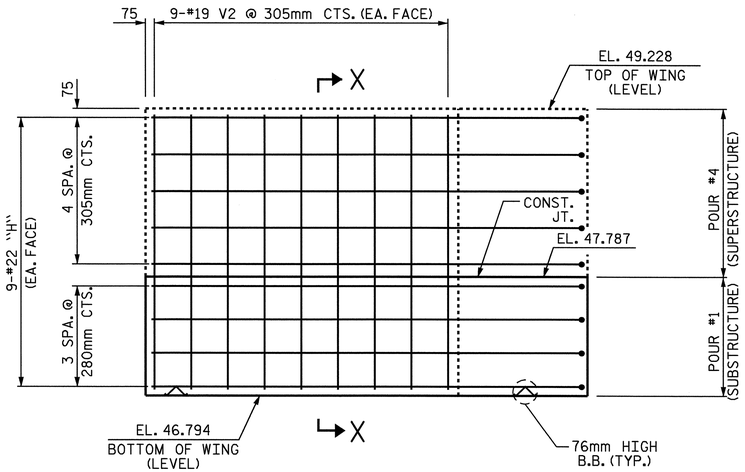

ELEVATION OF WING W1

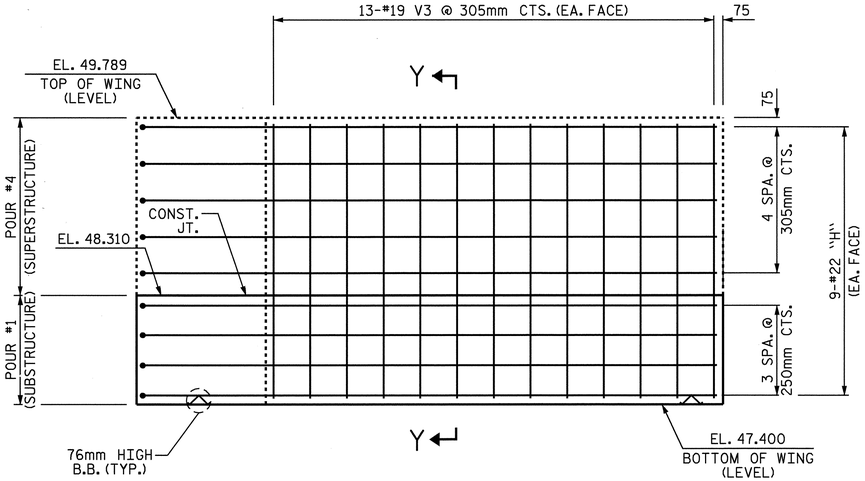

ELEVATION OF WING W2

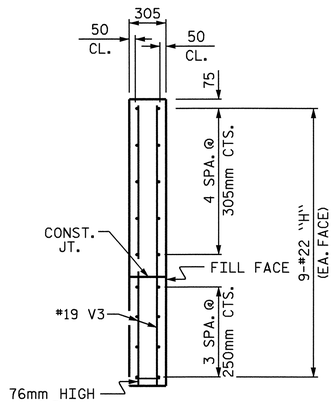

SECTION Y-Y

PROJECT NO. R-2554BA

WAYNE COUNTY

STATION: 100+61.488 -L-

SHEET 2 OF 3

STATE OF NORTH CAROLINA
DEPARTMENT OF TRANSPORTATION
RALEIGH

SUBSTRUCTURE

INTEGRAL END BENT #2
(RIGHT LANE)

NORTH CAROLINA PROFESSIONAL SEAL 14045 ENGINEER TIMOTHY J. COGGINS
6/9/08

REVISIONS						SHEET NO.
NO.	BY:	DATE:	NO.	BY:	DATE:	S-222
1			3			TOTAL SHEETS
2			4			478

DRAWN BY : PEGGY ADKINS DATE : 04-08
CHECKED BY : J.B. WILSON DATE : 04-08

09-JUN-2008 11:59
r:\structures\azizi\str#7\final plans\r-2554ba_sd_eb_07.dgn
PADKINS

STR. #7

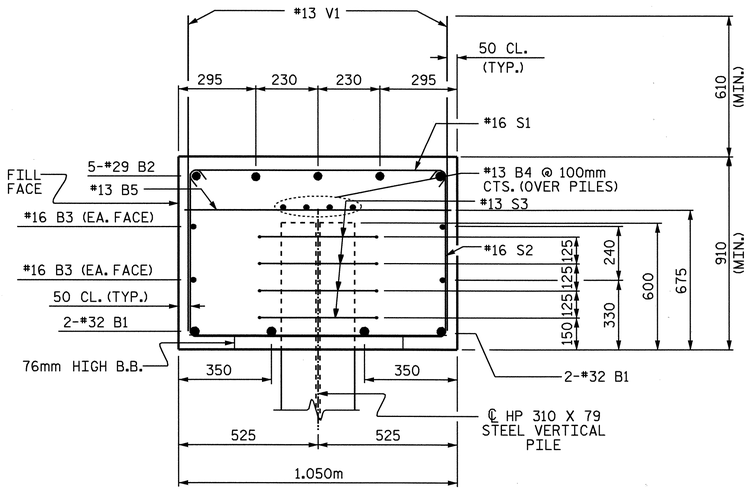

SECTION A-A

BAR TYPES

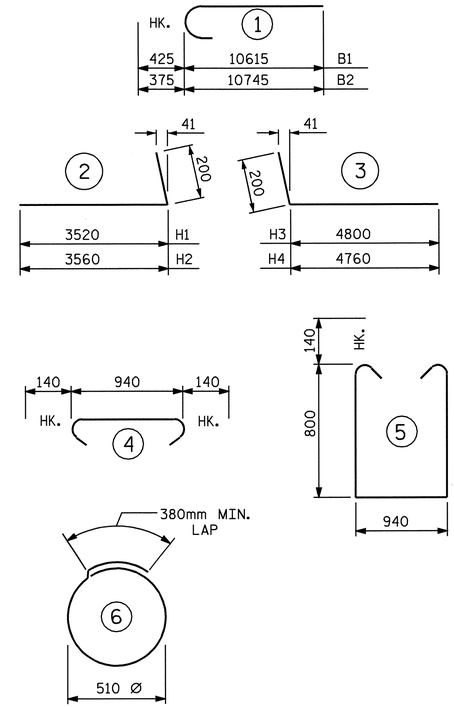

ALL BAR DIMENSIONS ARE OUT TO OUT.

BILL OF MATERIAL

END BENT #2

BAR	NO.	SIZE	TYPE	LENGTH	WEIGHT
B1	8	#32	1	11040	566
B2	10	#29	1	11120	563
B3	8	#16	STR	9860	122
B4	12	#13	STR	6760	81
B5	16	#13	STR	940	15
H1	9	#22	2	3720	102
H2	9	#22	2	3760	103
H3	9	#22	3	5000	137
H4	9	#22	3	4960	136
S1	68	#16	4	1220	129
S2	68	#16	5	2820	298
S3	48	#13	6	1980	94
V1	107	#13	STR	1460	155
V2	18	#19	STR	2320	93
V3	26	#19	STR	2280	132

REINFORCING STEEL = 2726 KG

CLASS A CONCRETE BREAKDOWN
POUR #1: CAP & LOWER WINGS 21.1 m³

TOTAL CONCRETE 21.1 m³

HP 310 X 79 STEEL PILE
NO. 12 312.0 METERS

PILE REDRIVES EACH 4

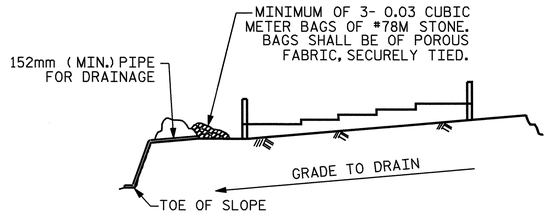

BAGGED STONE AND PIPE SHALL BE PLACED IMMEDIATELY AFTER COMPLETION OF END BENT EXCAVATION. PIPE MAY BE EITHER CONCRETE, CORRUGATED STEEL, CORRUGATED ALUMINUM ALLOY, OR CORRUGATED PLASTIC. PERFORATED PIPE WILL NOT BE ALLOWED.

BAGGED STONE SHALL REMAIN IN PLACE UNTIL THE ENGINEER DIRECTS THAT IT BE REMOVED. THE CONTRACTOR SHALL REMOVE AND DISPOSE OF SILT ACCUMULATIONS AT BAGGED STONE WHEN SO DIRECTED BY THE ENGINEER. BAGS SHALL BE REMOVED AND REPLACED WHENEVER THE ENGINEER DETERMINES THAT THEY HAVE DETERIORATED AND LOST THEIR EFFECTIVENESS.

NO SEPARATE PAYMENT WILL BE MADE FOR THIS WORK AND THE ENTIRE COST OF THIS WORK SHALL BE INCLUDED IN THE UNIT CONTRACT PRICE BID FOR THE SEVERAL PAY ITEMS.

TEMPORARY DRAINAGE AT END BENT

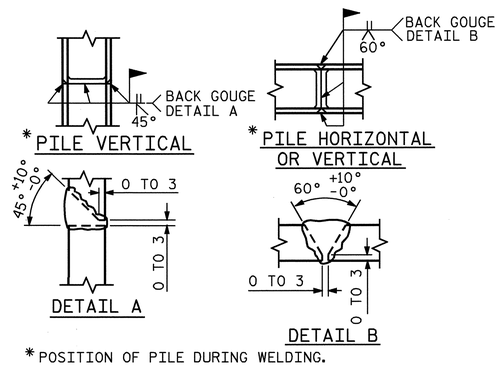

* POSITION OF PILE DURING WELDING.

PILE SPLICE DETAILS

PROJECT NO. R-2554BA

WAYNE COUNTY

STATION: 100+61.488 -L-

SHEET 3 OF 3

STATE OF NORTH CAROLINA
DEPARTMENT OF TRANSPORTATION
RALEIGH

SUBSTRUCTURE

INTEGRAL
END BENT #2
(RIGHT LANE)

NORTH CAROLINA PROFESSIONAL SEAL 14045 ENGINEER TIMOTHY L. COGGINS
6/9/08

REVISIONS						SHEET NO.
NO.	BY:	DATE:	NO.	BY:	DATE:	S-223
1			3			TOTAL SHEETS
2			4			478

STR. #7

DRAWN BY : PEGGY ADKINS DATE : 04-08
CHECKED BY : J.B. WILSON DATE : 04-08

09-JUN-2008 12:00
r:\structures\azizi\str#7\final plans\r-2554ba_sd_eb_07.dgn
PADKINS

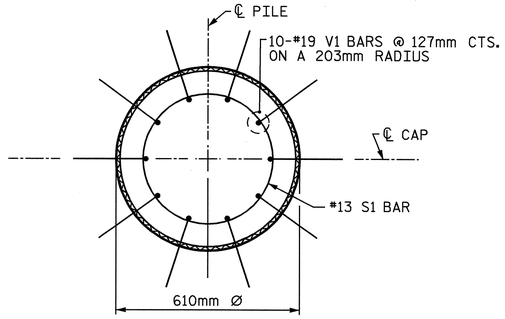

PLAN

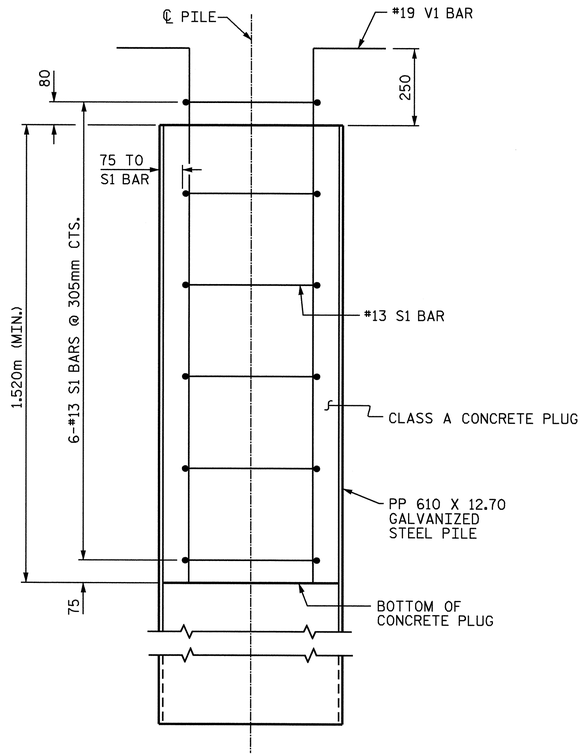

ELEVATION

PP 610 X 12.70 GALVANIZED STEEL PILE

(OPEN END)

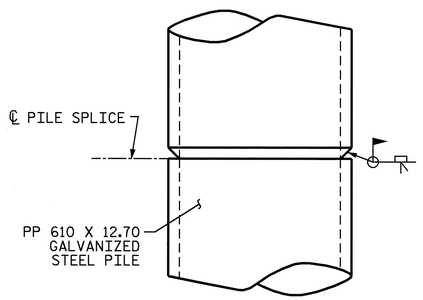

PIPE PILE SPLICE DETAIL

NOTES

PIPE PILES SHALL BE IN ACCORDANCE WITH SECTION 1084 OF THE STANDARD SPECIFICATIONS.

GALVANIZE STEEL PIPE PILES IN ACCORDANCE WITH SECTION 1076 OF THE STANDARD SPECIFICATIONS UNLESS METALLIZING IS REQUIRED.

REMOVE AND REPLACE OR REPAIR TO THE SATISFACTION OF THE ENGINEER PILES THAT ARE DAMAGED, DEFORMED OR COLLAPSED DURING INSTALLATION OR DRIVING.

PILE SPLICES SHALL BE IN ACCORDANCE WITH THE STANDARD SPECIFICATIONS AND AWS D1.1.

FOR OPEN END PIPE PILES, REMOVE ENOUGH SOIL AND WATER FROM INSIDE THE PILES TO CONSTRUCT THE CONCRETE PLUG WITHOUT FOULING THE CONCRETE.

FORM THE CONCRETE PLUG SUCH THAT THE REINFORCING STEEL OR CONCRETE DOES NOT MOVE AND THE CLEARANCE FROM THE REINFORCING STEEL TO THE INSIDE OF THE PILE IS MAINTAINED AFTER CONCRETE PLACEMENT. DO NOT PLACE CONCRETE IN THE BENT CAP UNTIL THE CONCRETE PLUG HAS ATTAINED A MINIMUM COMPRESSIVE STRENGTH OF 10.3 MPa.

THE REINFORCING STEEL, CLASS A CONCRETE, GALVANIZING , AND THE PIPE PILE PLATES, IF REQUIRED, ARE CONSIDERED INCIDENTAL TO THE CONTRACT UNIT PRICE BID PER METER FOR PP 610 X 12.70 GALVANIZED STEEL PILES.

BILL OF MATERIAL FOR ONE PP 610 X 12.70 GALVANIZED STEEL PILE

BAR	NO.	SIZE	TYPE	LENGTH	WEIGHT
S1	6	#13	1	1840	11
V1	10	#16	2	2020	45
REINFORCING STEEL =					56 kg

CLASS A CONCRETE

1.520m MINIMUM PLUG 0.4 CU. METER

BAR TYPES

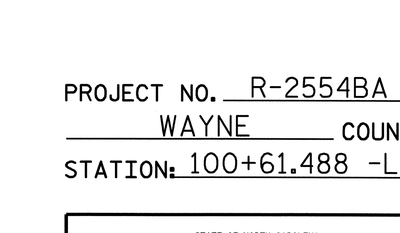

ALL BAR DIMENSIONS ARE OUT TO OUT.

PROJECT NO. R-2554BA

WAYNE COUNTY

STATION: 100+61.488 -L-

STATE OF NORTH CAROLINA
DEPARTMENT OF TRANSPORTATION
RALEIGH

STANDARD

610mm STEEL PIPE PILE

(RIGHT LANE)

REVISIONS						SHEET NO.
NO.	BY:	DATE:	NO.	BY:	DATE:	S-224
1			3			TOTAL SHEETS
2			4			478

NORTH CAROLINA PROFESSIONAL SEAL 14045 ENGINEER TIMOTHY L COGGINS

6/6/08

ASSEMBLED BY : M.D.PISO	DATE : 02/2008
CHECKED BY : J.B.WILSON	DATE : 03/2008
DRAWN BY : TLA 8/05	ADDED 10/1/05
CHECKED BY : GM 9/05	REV. 5/1/06R MAA/KMM

28-APR-2008 12:19
x:\structures\azlzl\str*7\mdplso\microstation\eb7_spp4 std drw.dgn
jbwilson

STD. NO. SPP4SM

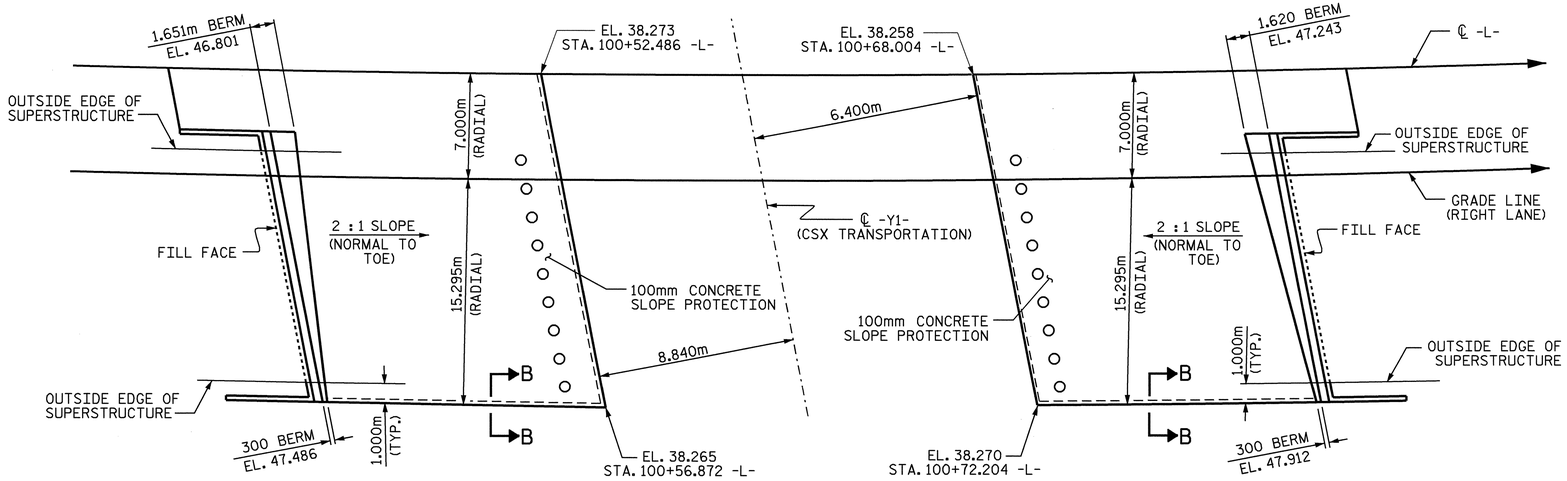

PLAN

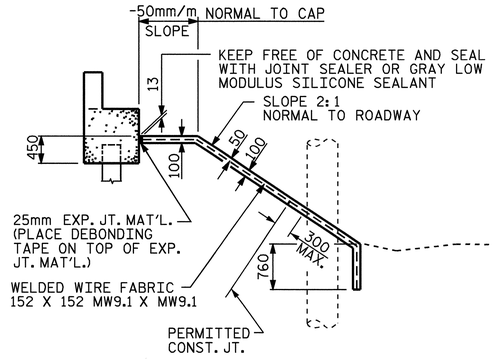

SECTION ALONG ℄ RAILROAD WITH SHOULDER PIER

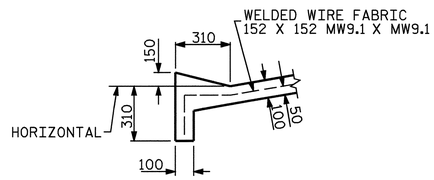

SECTION B-B

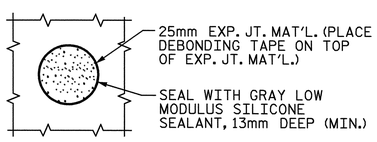

PLAN WHERE CONCRETE SLOPE PROTECTION MUST BE PLACED AROUND A BENT COLUMN

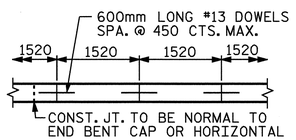

STRIP WIDTHS MAY VARY IN CURVED PORTION.

POURING DETAIL

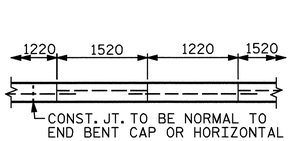

POUR A 1220mm STRIP FIRST. STRIP WIDTHS MAY VARY IN CURVED PORTION.

OPTIONAL POURING DETAIL

GENERAL NOTES

SLOPE PROTECTION SHALL BE PLACED UNDER THE ENDS OF THE BRIDGE AS SHOWN IN THE DETAILS. METHOD OF MEASUREMENT AND PAYMENT SHALL BE AS PRESCRIBED IN SECTION 462 OF THE STANDARD SPECIFICATIONS. FOR BERM WIDTH, SEE GENERAL DRAWING.

THE SLOPE PROTECTION SHALL CONSIST OF 100mm POURED-IN-PLACE CONCRETE PAVING AS SHOWN IN THE DETAILS ON THIS SHEET. CONCRETE SHALL BE CLASS "B". THE CONCRETE SURFACE SHALL BE FLOATED WITH A WOODEN FLOAT AND FINISHED. WELDED WIRE FABRIC REINFORCING SHALL BE 152 X 152 - W9.1 X W9.1, 1520mm WIDE. SLOPE PROTECTION SHALL BE POURED IN 1520mm STRIPS AS SHOWN IN THE "POURING DETAIL" WITH 600mm LONG #13 BARS PLACED ALONG THE SLOPE BETWEEN STRIPS AT 450mm MAXIMUM SPACING. SLOPE PROTECTION MAY BE POURED IN ALTERNATE 1220mm AND 1520mm STRIPS AS SHOWN IN THE "OPTIONAL POURING DETAIL" WITH ADJACENT RUNS OF WELDED WIRE FABRIC LAPPING AT LEAST 152mm. THE COST OF THE WELDED WIRE FABRIC AND #13 BARS, IF USED, SHALL BE INCLUDED IN THE CONTRACT UNIT PRICE BID PER SQUARE METER FOR SLOPE PROTECTION.

BRIDGE @ STA. 100+61.488 -L- STA. 10+97.530 -Y1-	100mm SLOPE PROTECTION	* WELDED WIRE FABRIC 1520mm WIDE
	SQUARE METERS	APPROX. METERS
END BENT 1	497	333
END BENT 2	514	344

* QUANTITY SHOWN IS BASED ON 1520mm POURS.

PROJECT NO. R-2554BA
WAYNE COUNTY
STATION: 100+61.488 -L-

STATE OF NORTH CAROLINA
DEPARTMENT OF TRANSPORTATION
RALEIGH

STANDARD SLOPE PROTECTION DETAILS

(RIGHT LANE)

NORTH CAROLINA PROFESSIONAL SEAL 14045 ENGINEER TIMOTHY L. COSGRIS
6/9/08

REVISIONS						SHEET NO.
NO.	BY:	DATE:	NO.	BY:	DATE:	S-225
1			3			TOTAL SHEETS
2			4			478

STR. #7

STD. NO. SP1SM

ASSEMBLED BY : B.N.BARODAWALA	DATE : 10-8-07	
CHECKED BY : P. ADKINS	DATE : 4-08	
DRAWN BY : ELR 5/92	REV. 7/10/01	LES/RDR
CHECKED BY : GRP 6/92	REV. 5/7/03	RWW/JTE
	REV. 5/1/06	TLA/GM

09-JUN-2008 07:08
g:\tlpprojects-r\r2554ba\structures\azlzl\Str#7\FINAL PLANS\R-2554BA_sd_SP_07.dgn
taverette

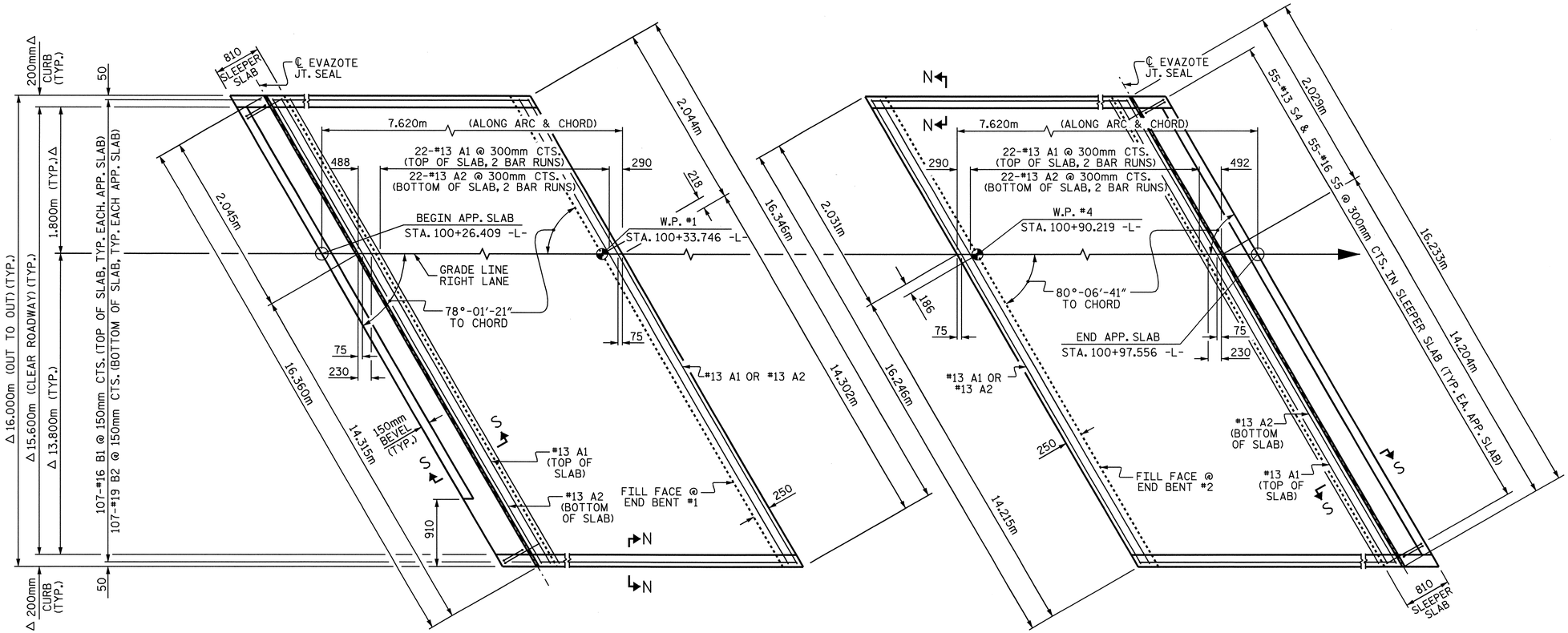

DIMENSIONS SHOWN ARE TYPICAL FOR BOTH APPROACH SLABS. #13 A1 BARS IN SLEEPER SLAB NOT SHOWN FOR CLARITY.

△ RADIAL DIMENSION

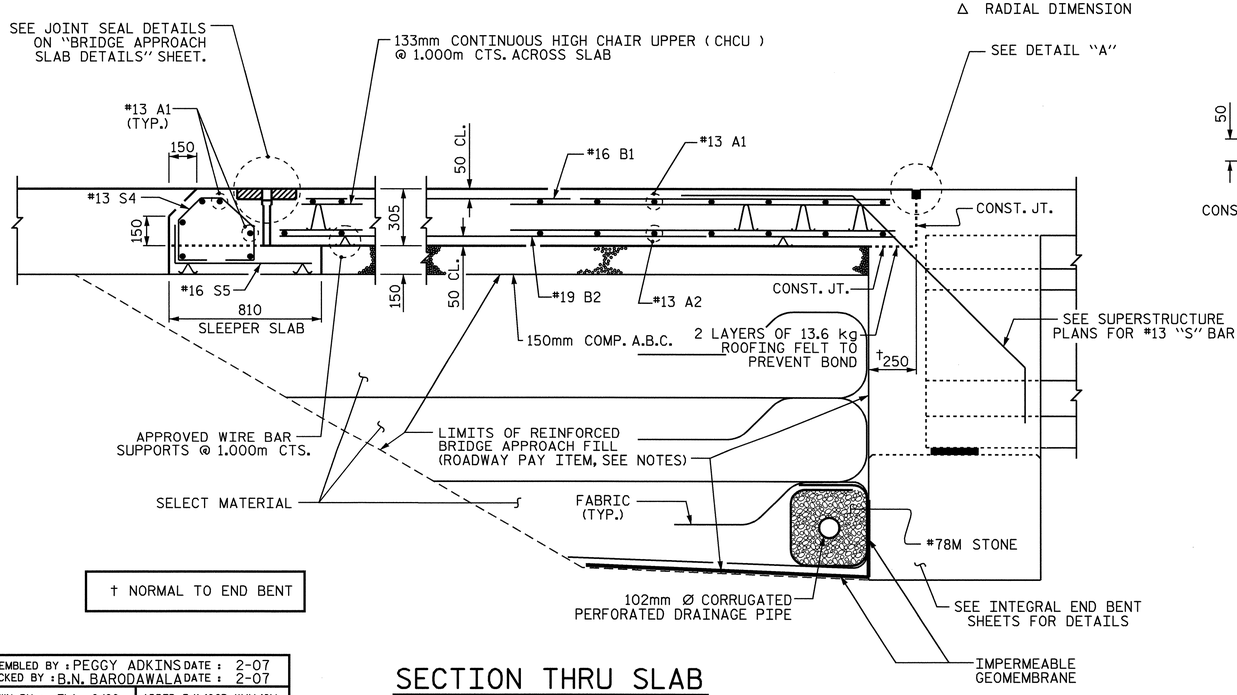

† NORMAL TO END BENT

SECTION THRU SLAB

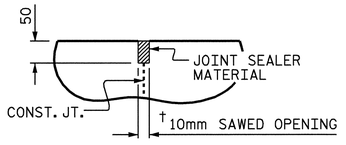

DETAIL "A"

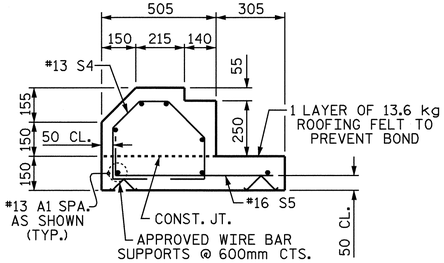

SECTION S-S
SHOWING SLEEPER SLAB

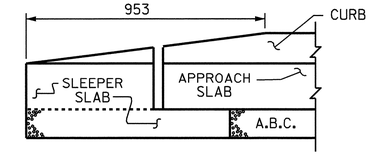

END OF CURB WITHOUT SHOULDER BERM GUTTER

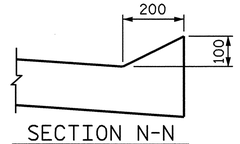

SECTION N-N

BILL OF MATERIAL

FOR ONE APPROACH SLAB (2 REQ'D)

BAR	NO.	SIZE	TYPE	LENGTH	WEIGHT
✳ A1	62	#13	STR	8440	520
A2	48	#13	STR	8400	401
✳ B1	107	#16	STR	6800	1129
B2	107	#19	STR	6960	1664
✳ S4	55	#13	1	1200	66
S5	55	#16	2	880	75
REINFORCING STEEL				kg.	2140
✳EPOXY COATED REINFORCING STEEL				kg.	1715
CLASS AA CONCRETE					
POUR #1 - SLEEPER SLAB				C.M.	4.2
POUR #2 - SLAB AND CURB				C.M.	34.8
TOTAL				C.M.	39.0

BAR TYPES

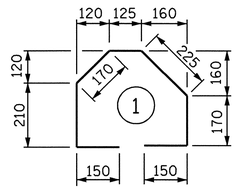

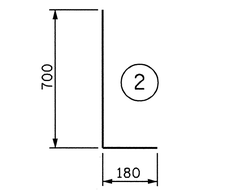

ALL BAR DIMENSIONS ARE OUT TO OUT

SPLICE CHART

BAR	SPLICE
✳ #13 A1	610
#13 A2	540

PROJECT NO. R-2554BA

WAYNE COUNTY

STATION: 100+61.488 -L-

SHEET 1 OF 3

STATE OF NORTH CAROLINA
DEPARTMENT OF TRANSPORTATION
RALEIGH

STANDARD

BRIDGE APPROACH SLAB FOR INTEGRAL ABUTMENT

(RIGHT LANE)

REVISIONS						SHEET NO.
NO.	BY:	DATE:	NO.	BY:	DATE:	S-226
1			3			TOTAL SHEETS
2			4			478

STR. #7 STD. NO. BAS11SM

ASSEMBLED BY : PEGGY ADKINS DATE : 2-07
CHECKED BY : B.N. BARODAWALA DATE : 2-07

DRAWN BY : TLA 6/06
CHECKED BY : GM 6/06

ADDED 5/1/06R KMM/GM

09-JUN-2008 07:08
g:\tlpprojects-r\r2554ba\structures\azlzl\Str#7\FINAL PLANS\R2554BA_AD_AS_07.DGN
tavarette

NOTES

APPROACH SLAB SHALL NOT BE CONSTRUCTED PRIOR TO COMPLETION OF THE BRIDGE DECK.

FOR REINFORCED BRIDGE APPROACH FILL INCLUDING FABRIC, IMPERMEABLE GEOMEMBRANE, 102mm Ø DRAINAGE PIPE, #78M STONE, AND SELECT MATERIAL, SEE ROADWAY PLANS.

AREA BETWEEN THE WINGWALL AND APPROACH SLAB SHALL BE GRADED TO DRAIN THE WATER AWAY FROM THE FILL FACE OF THE BRIDGE AND SHALL BE PAVED. SEE ROADWAY PLANS.

THE 150mm COMP. A.B.C. SHALL BE FLUSH WITH THE SLEEPER SLAB AND SHALL EXTEND 300mm OUTSIDE OF EACH EDGE OF APPROACH SLAB.

THE CONTRACTOR MAY USE 100mm TYPE B-25.0B ASPHALT CONCRETE BASE COURSE IN LIEU OF 150mm COMP. A.B.C. IF THIS OPTION IS USED, THE BASE COURSE SHALL BE FLUSH WITH THE SLEEPER SLAB AND THE WIDTH SHALL BE THE SAME AS THAT OF THE APPROACH SLAB.

THE CONTRACTOR MAY USE 125mm CLASS "A" CONCRETE BASE IN LIEU OF 150mm COMP. A.B.C. IF THIS OPTION IS USED, THE CONCRETE BASE SHALL BE FLUSH WITH THE SLEEPER SLAB AND THE WIDTH SHALL BE THE SAME AS THAT OF THE APPROACH SLAB. THE CONCRETE SHALL BE FINISHED TO A SMOOTH SURFACE AND A LAYER OF 13.6 kg ROOFING FELT SHALL BE PLACED BETWEEN THE CONCRETE BASE AND THE APPROACH SLAB TO PREVENT BOND. THE APPROACH SLAB SHALL NOT BE CAST UNTIL THE CONCRETE BASE HAS REACHED AN AGE OF THREE CURING DAYS.

THE VERTICAL JOINT ON THE RIGHT AND LEFT SIDE OF THE APPROACH SLAB AT THE ENDS OF THE EVAZOTE JOINT SHALL BE FILLED WITH SILICONE OR OTHER APPROVED MATERIAL IN ORDER TO PREVENT BACKFILL FROM ENTERING THE JOINT OPENING.

THE JOINT OPENING AT THE APPROACH SLAB/DECK INTERFACE SHALL BE SAWED NO MORE THAN 12 HOURS AFTER THE APPROACH SLAB IS CAST. THE JOINT SHALL BE CLEANED OF ALL DEBRIS BEFORE THE SEALANT IS APPLIED. THE JOINT SEALER MATERIAL SHALL CONFORM TO THE REQUIREMENTS OF TYPE SL LOW MODULUS SILICONE SEALANT.

WITH EVAZOTE JOINT SEAL

FOR EVAZOTE JOINT SEALS, SEE SPECIAL PROVISIONS.

THE NOMINAL UNCOMPRESSED SEAL WIDTH OF THE EVAZOTE JOINT SEAL SHALL BE 64mm.

FOR ELASTOMERIC CONCRETE, SEE SPECIAL PROVISIONS.

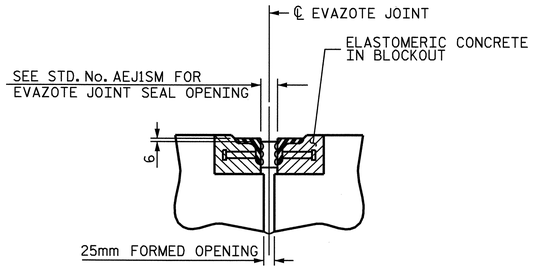

SECTION C-C
ARMORED EVAZOTE JOINT SEAL

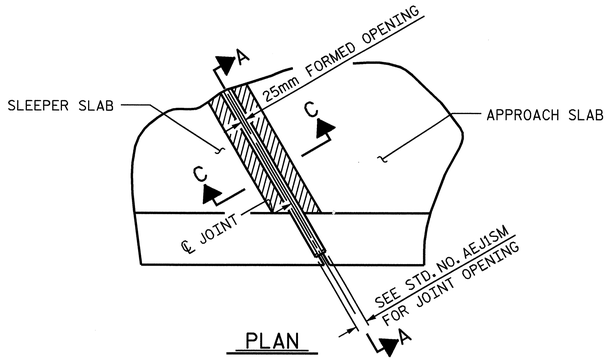

PLAN

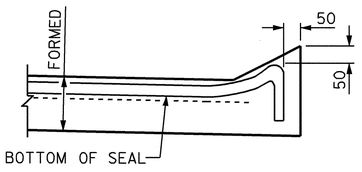

SECTION A-A

JOINT SEAL DETAILS @ SLEEPER SLAB

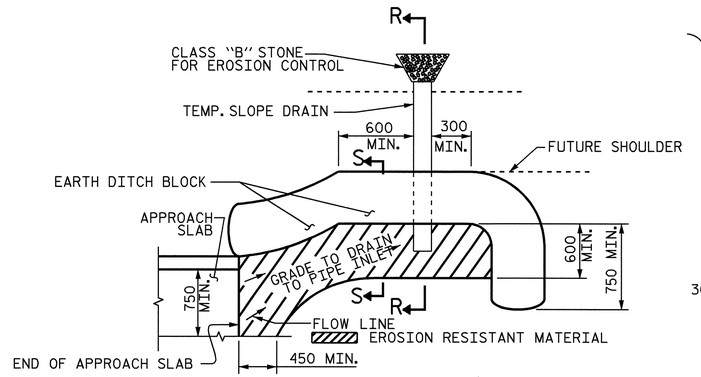

NOTE: IMMEDIATELY AFTER THE CONSTRUCTION OF THE APPROACH SLAB, THE CONTRACTOR SHALL PROVIDE TEMPORARY BERM AND SLOPE DRAIN. CONTRACTOR SHALL GRADE TO PIPE INLET AND PROVIDE EROSION RESISTANT MATERIAL AS SHOWN. THE EROSION RESISTANT MATERIAL SHALL BE EITHER 1) ASPHALT PLANT MIX, TYPE 1 OR TYPE 2, MIN. 50mm DEPTH, 2) EROSION CONTROL MAT, OR 3) CONCRETE, AS DIRECTED BY THE ENGINEER. THE SLOPE DRAIN SHALL CONSIST OF A NON-PERFORATED TEMPORARY DRAINAGE PIPE, 305mm IN DIAMETER.

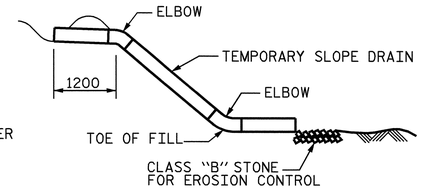

SECTION R-R

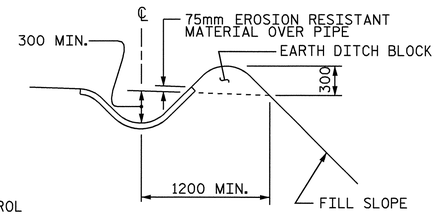

SECTION S-S

PLAN VIEW

TEMPORARY BERM AND SLOPE DRAIN DETAILS

(TO BE USED WHEN SHOULDER BERM GUTTER IS REQUIRED)

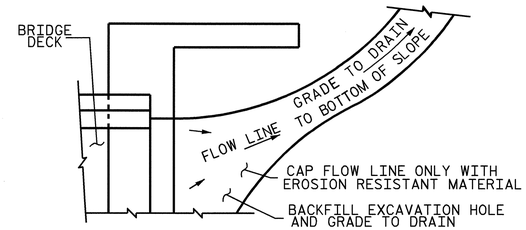

NOTE: IF THE APPROACH SLAB IS NOT CONSTRUCTED IMMEDIATELY AFTER THE BACKFILLING OF THE END BENT EXCAVATION, GRADE TO DRAIN TO THE BOTTOM OF THE SLOPE AND PROVIDE EROSION RESISTANT MATERIAL, SUCH AS FIBERGLASS ROVING OR AS DIRECTED BY THE ENGINEER TO PREVENT SOIL EROSION AND TO PROTECT THE AREA ADJACENT TO THE STRUCTURE. THE CONTRACTOR WILL BE REQUIRED TO REMOVE THESE MATERIALS PRIOR TO CONSTRUCTION OF THE APPROACH SLAB.

TEMPORARY DRAINAGE DETAIL

PROJECT NO. R-2554BA

WAYNE COUNTY

STATION: 100+61.488 -L-

SHEET 2 OF 3

STATE OF NORTH CAROLINA
DEPARTMENT OF TRANSPORTATION
RALEIGH

STANDARD
BRIDGE APPROACH
SLAB DETAILS

(RIGHT LANE)

REVISIONS						SHEET NO.
NO.	BY:	DATE:	NO.	BY:	DATE:	S-227
1			3			TOTAL SHEETS
2			4			478

NORTH CAROLINA PROFESSIONAL SEAL 14045 ENGINEER TIMOTHY W. COGGINS
Timothy W. Coggins 6/6/08

ASSEMBLED BY : PEGGY ADKINS	DATE : 2-07	
CHECKED BY : B.N.BARODAWALA	DATE : 2-07	
DRAWN BY : FCJ 11/88	REV. 10/17/00	RWW/LES
CHECKED BY : ARB 11/88	REV. 5/7/03	RWW/JTE
	REV. 5/1/06R	TLA/GM

05-JUN-2008 12:50
r:\structures\aziz\Str#7\padkins\Microstation\R2554BA_AD_AS_07.DGN
padkins

STR. #7

STD. NO. BAS10SM

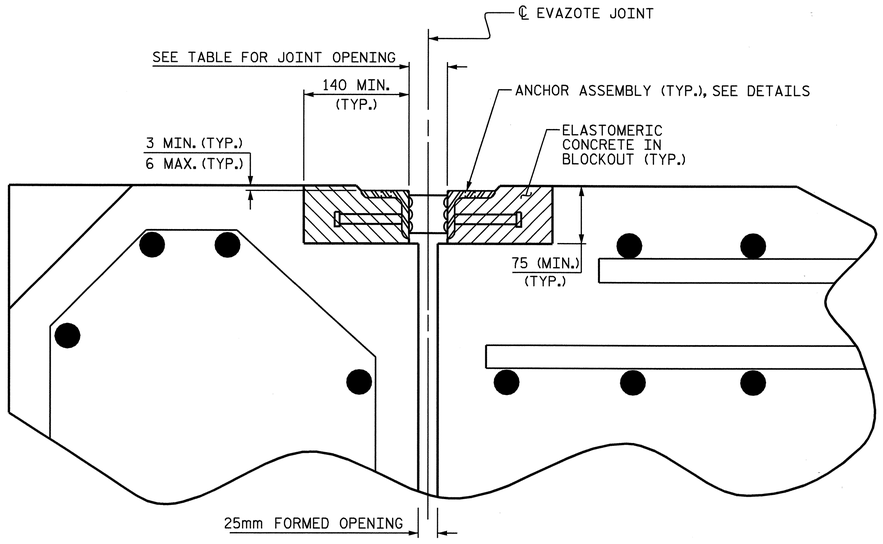

ARMORED JOINT DETAILS

SECTION NORMAL TO JOINT AT APPROACH SLAB SLEEPER SLAB

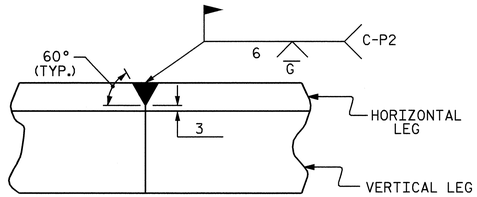

DETAIL- FIELD WELD SPLICE OF ANGLE

NOTES

ANGLES SHALL CONFORM TO AASHTO M270 GRADE 250 STEEL OR APPROVED EQUAL. ALL STUD ANCHORS SHALL CONFORM TO AASHTO M169 GRADES 1010 THRU 1020 OR APPROVED EQUAL.

STUD ANCHORS SHALL BE SHOP WELDED AND ALL HOLES SHALL BE SHOP DRILLED AS SHOWN ON THE PLANS. STUD ANCHORS SHALL BE ELECTRIC ARC END WELDED WITH COMPLETE FUSION.

UPON COMPLETION OF SHOP FABRICATION, THE ENTIRE ANCHOR ASSEMBLY SHALL BE METALLIZED. THE 12.70mm Ø STUD ANCHORS AND ANCHOR TABS NEED NOT BE METALLIZED. SEE SPECIAL PROVISION FOR THERMAL SPRAYED COATINGS (METALLIZATION).

ANCHOR ASSEMBLY SHALL BE MADE CONTINUOUS THE LENGTH OF THE JOINT FROM GUTTER TO GUTTER. FOR FIELD SPLICES AT ALL CROWN BREAK POINTS, THE ENDS OF THE STEEL ANGLES SHALL BE CUT PARALLEL TO THE BRIDGE CENTERLINE. FINISHED FIELD WELDS SHALL BE GROUND SMOOTH AND COATED WITH A MINIMUM THICKNESS OF 0.100mm OF ZINC-RICH PAINT IN ACCORDANCE WITH THE STANDARD SPECIFICATIONS.

ANCHOR ASSEMBLY SEGMENTS SHALL NOT BE LESS 3.6m NOR MORE THAN 6.1m IN LENGTH. SHORTER SEGMENTS MAY BE USED AT THE EDGE OF ROADWAY OR AT POINTS OF STAGED CONSTRUCTION.

THE ANCHOR ASSEMBLY SHALL BE SECURED AND LEVELED AS SHOWN IN THE "ARMORED JOINT ANCHOR ASSEMBLY DETAILS". NO SUBMITTALS ARE REQUIRED FOR 9.53mm Ø EXPANSION ANCHORS, NUTS OR WASHERS. THE CONTRACTOR MAY SUBMIT FOR APPROVAL AN ALTERNATE METHOD OF ALIGNING AND LEVELING THE ANGLES. THE ALTERNATE METHOD SHALL NOT INCLUDE ANY WELDING TO THE OUTSIDE FACE OF THE ANGLES.

AFTER THE ELASTOMERIC CONCRETE HAS BEEN CAST ON BOTH SIDES OF THE JOINT, REMOVE ANY EXCESS CONCRETE THAT COMES THROUGH THE WEEP HOLES AND THOROUGHLY CLEAN THE ANGLES. ANY DAMAGED STEEL SHALL BE COATED WITH A MINIMUM OF 0.100mm OF ZINC-RICH PAINT IN ACCORDANCE WITH THE STANDARD SPECIFICATIONS.

SEE SPECIAL PROVISIONS FOR EVAZOTE JOINT SEALS.

SEE SPECIAL PROVISIONS FOR ELASTOMERIC CONCRETE.

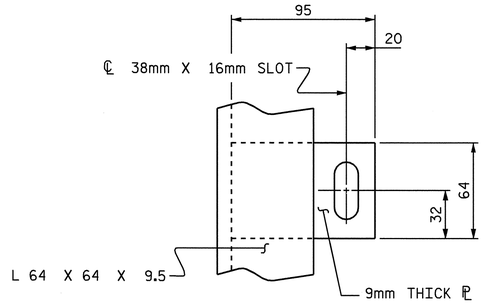

PLAN VIEW OF TAB

MOVEMENT AND SETTING AT EVAZOTE JOINT						
APPROACH SLAB NO.	SKEW ANGLE	NOMINAL UNCOMPRESSED SEAL WIDTH	TOTAL MOVEMENT (ALONG ℄ RDWY)	PERPENDICULAR JOINT OPENING AT 7° C	PERPENDICULAR JOINT OPENING AT 16° C	PERPENDICULAR JOINT OPENING AT 32° C
1	78°-01'-21"	64	25	56	51	43
2	80°-06'-41"	64	25	56	51	43

TOTAL MOVEMENT IS CALCULATED ALONG THE CENTERLINE OF ROADWAY.
JOINT OPENINGS ARE MEASURED PERPENDICULAR TO THE JOINT.

BILL OF MATERIAL		
APPROACH SLAB NO.	ELASTOMERIC CONCRETE * (CU. m)	TOTAL LENGTH OF ANGLE (m)
1	0.3	15.3
2	0.3	15.3
TOTAL	0.6	30.6

* BASED ON THE MINIMUM BLOCKOUT SHOWN.

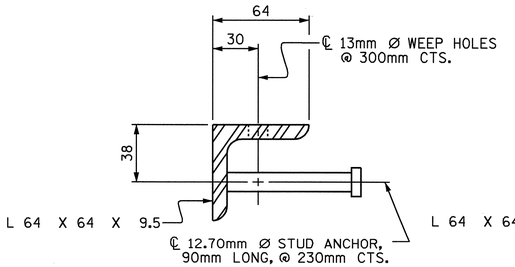

SECTION VIEW OF STUD

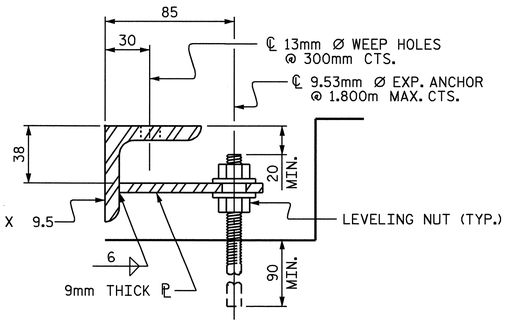

SECTION VIEW OF TAB

ARMORED JOINT ANCHOR ASSEMBLY DETAILS

PROJECT NO. R-2554BA
WAYNE COUNTY
STATION: 100+61.488 -L-

SHEET 3 OF 3

STATE OF NORTH CAROLINA
DEPARTMENT OF TRANSPORTATION
RALEIGH

STANDARD ARMORED EVAZOTE JOINT DETAILS

(RIGHT LANE)

NORTH CAROLINA PROFESSIONAL SEAL 14045 ENGINEER TIMOTHY L. COGGINS 6/6/08

REVISIONS						SHEET NO.
NO.	BY:	DATE:	NO.	BY:	DATE:	S-228
1			3			TOTAL SHEETS
2			4			478

ASSEMBLED BY : PEGGY ADKINS	DATE : 12-07	
CHECKED BY : B.N.BARODAWALA	DATE : 12-07	
DRAWN BY : EEM 1/96	REV. 7/10/01	LES/RDR
CHECKED BY : RGW 1/96	REV. 5/7/03RR	RWW/JTE
	REV. 5/1/06	TLA/GM

06-JUN-2008 11:52
G:\TIPProjects-R\R2554ba\Structures\AZIZI\Str#7\padkins\Microstation\R2554BA_AD_AS_07.DGN
taverette

STR. #7

STD. NO. AEJ1SM