CONTRACT: C202007 TIP PROJECT: R-2518B

STRUCTURES

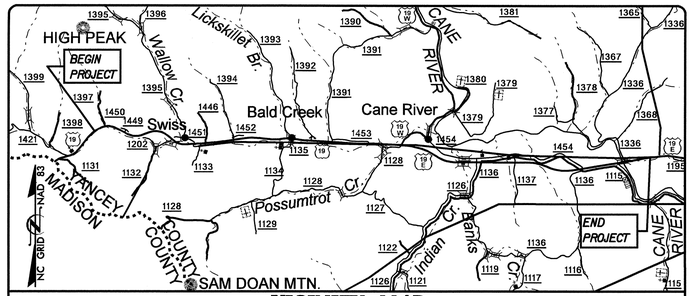

VICINITY MAP

STATE OF NORTH CAROLINA
DIVISION OF HIGHWAYS

YANCEY COUNTY

STATE	STATE PROJECT REFERENCE NO.	SHEET NO.	TOTAL SHEETS
N.C.	R-2518B		

STATE PROJ. NO.	F.A. PROJ. NO.	DESCRIPTION
34445.1.1		P.E.
34445.2.3		ROW & UTIL.
34445.4.2		CONSTR.

METRIC

LOCATION: US 19 FROM EAST OF THE MADISON COUNTY LINE TO SR 1336

TYPE OF WORK: GRADING, DRAINAGE, WIDENING, PAVING, STRUCTURES, AND SIGNALS

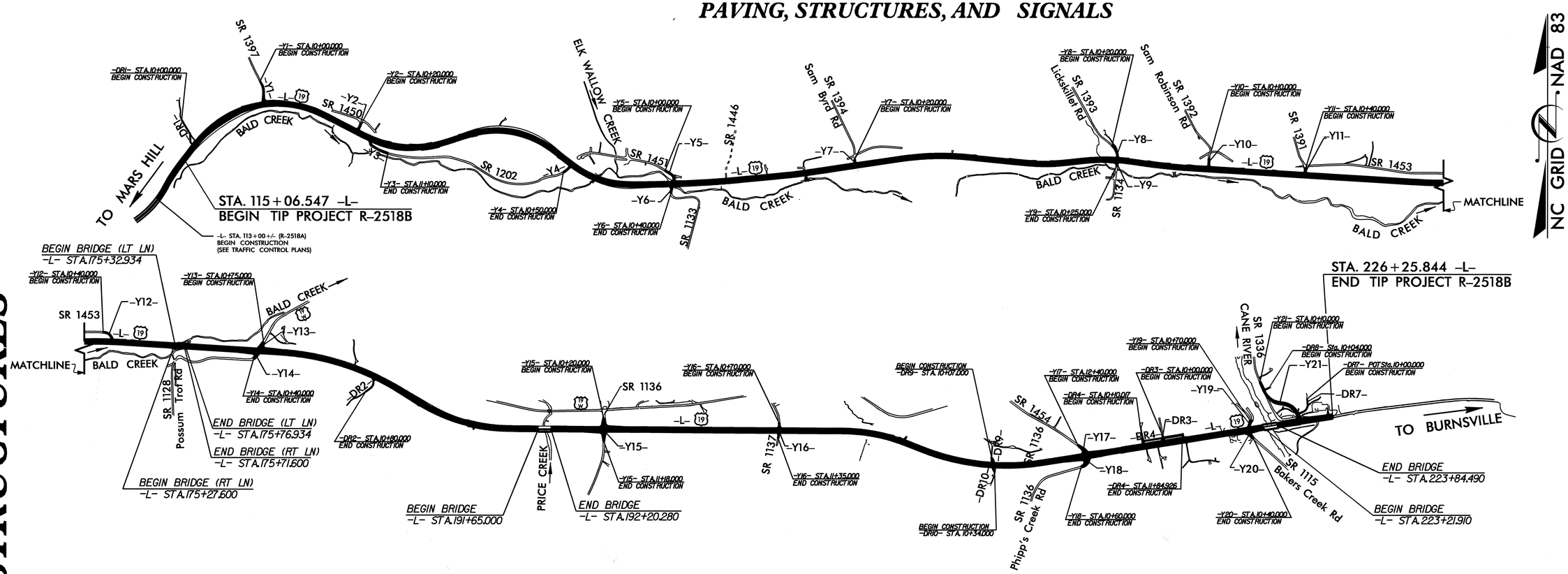

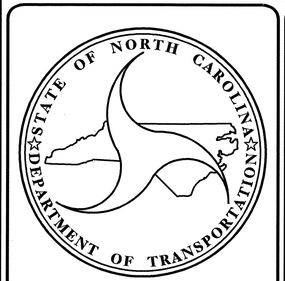

DESIGN DATA

ADT 2008 = 14,183
ADT 2028 = 20,017
DHV = 11 %
D = 55 %
T = 8 % *
** V = 100 Km/H
* (TTST 3% + DUALS = 5%)
FUNC. CLASS =
RURAL PRINCIPAL ARTERIAL

PROJECT LENGTH

LENGTH ROADWAY TIP PROJECT R-2518B	=	10.916 km
LENGTH STRUCTURES TIP PROJECT R-2518B	=	0.203 km
TOTAL LENGTH STATE TIP PROJECT R-2518B	=	11.119 km

Prepared In the Office of:

DIVISION OF HIGHWAYS

2006 STANDARD SPECIFICATIONS

LETTING DATE :
JULY 15, 2008

Q.H. NGUYEN, P.E.
PROJECT ENGINEER

MARC G. CHEEK, P.E.
PROJECT DESIGN ENGINEER

STRUCTURE DESIGN UNIT
1000 BIRCH RIDGE DR.
RALEIGH, N.C. 27610

DIVISION OF HIGHWAYS
STATE OF NORTH CAROLINA

P.E.
STATE DESIGN ENGINEER

DEPARTMENT OF TRANSPORTATION
FEDERAL HIGHWAY ADMINISTRATION

APPROVED
DIVISION ADMINISTRATOR DATE

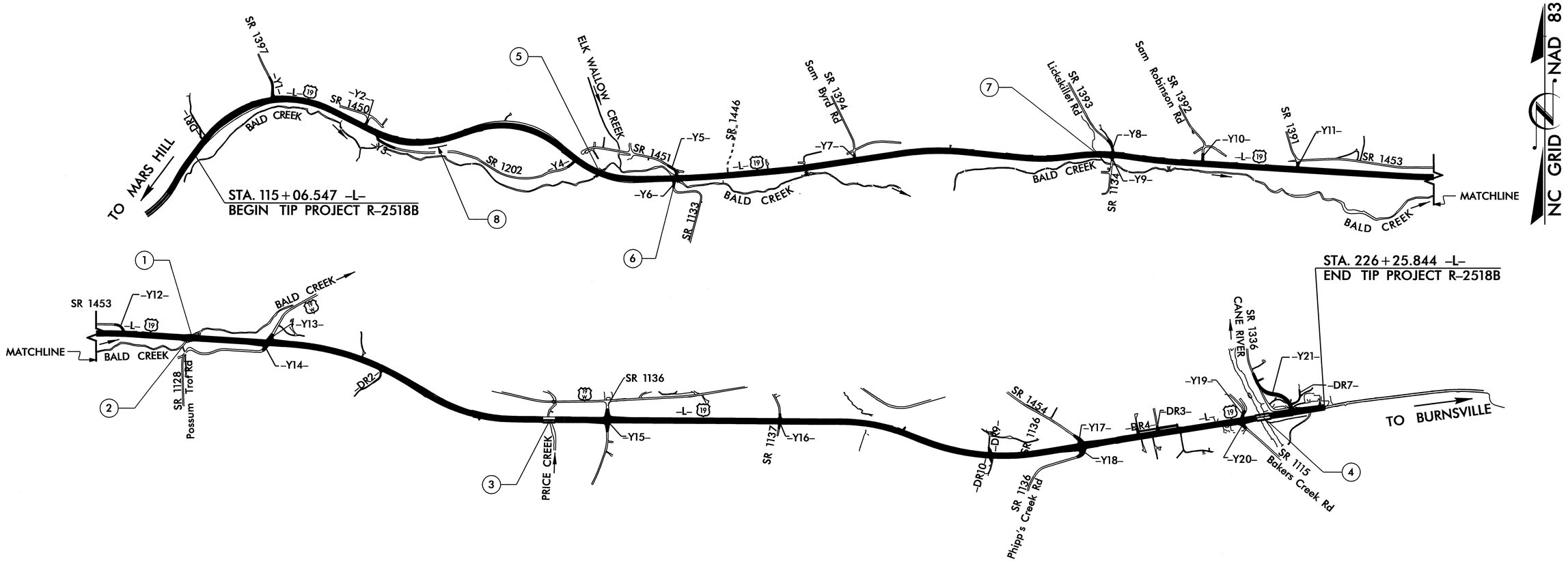

INDEX

STR. No.	STATION	DESCRIPTION	SHEET NUMBERS
1	175+52.267 -L-	BRIDGE ON US 19 OVER BALD CREEK BETWEEN SR 1453 AND SR 1128 LEFT LANE	S-1 THRU S-37
2	175+52.267 -L-	BRIDGE ON US 19 OVER BALD CREEK BETWEEN SR 1453 AND SR 1128 RIGHT LANE	S-38 THRU S-74
3	191+92.500 -L-	BRIDGE ON US 19 OVER PRICE CREEK BETWEEN SR 1128 AND SR 1136 RIGHT LANE	S-75 THRU S-110
4	223+53.200 -L-	BRIDGE ON US 19 OVER CANE RIVER BETWEEN SR 1115 AND SR 1336	S-111 THRU S-154
5	134+72.000 -L-	TRIPLE 3.1m X 2.7m RCBC LEFT EXTENSION	C-1 THRU C-5
6	138+05.000 -L-	QUADRUPLE 3.4m X 3.0m RCBC LEFT & RIGHT EXTENSION	C-6 THRU C-15
7	156+63.000 -L-	TRIPLE 2.1m X 2.4m RCBC LEFT & RIGHT EXTENSION	C-16 THRU C-24
8	126+50.000 -L-	MSE WALL	W-1 THRU W-2

PROJECT NO. R-2518B
YANCEY COUNTY
STATION:

NORTH CAROLINA PROFESSIONAL SEAL 20125 ENGINEER MARSHALL LEE SHEEK, JR.
3-31-08

STATE OF NORTH CAROLINA
DEPARTMENT OF TRANSPORTATION
RALEIGH

STRUCTURE INDEX

REVISIONS						SHEET NO.
NO.	BY:	DATE:	NO.	BY:	DATE:	
1			3			TOTAL SHEETS
2			4			

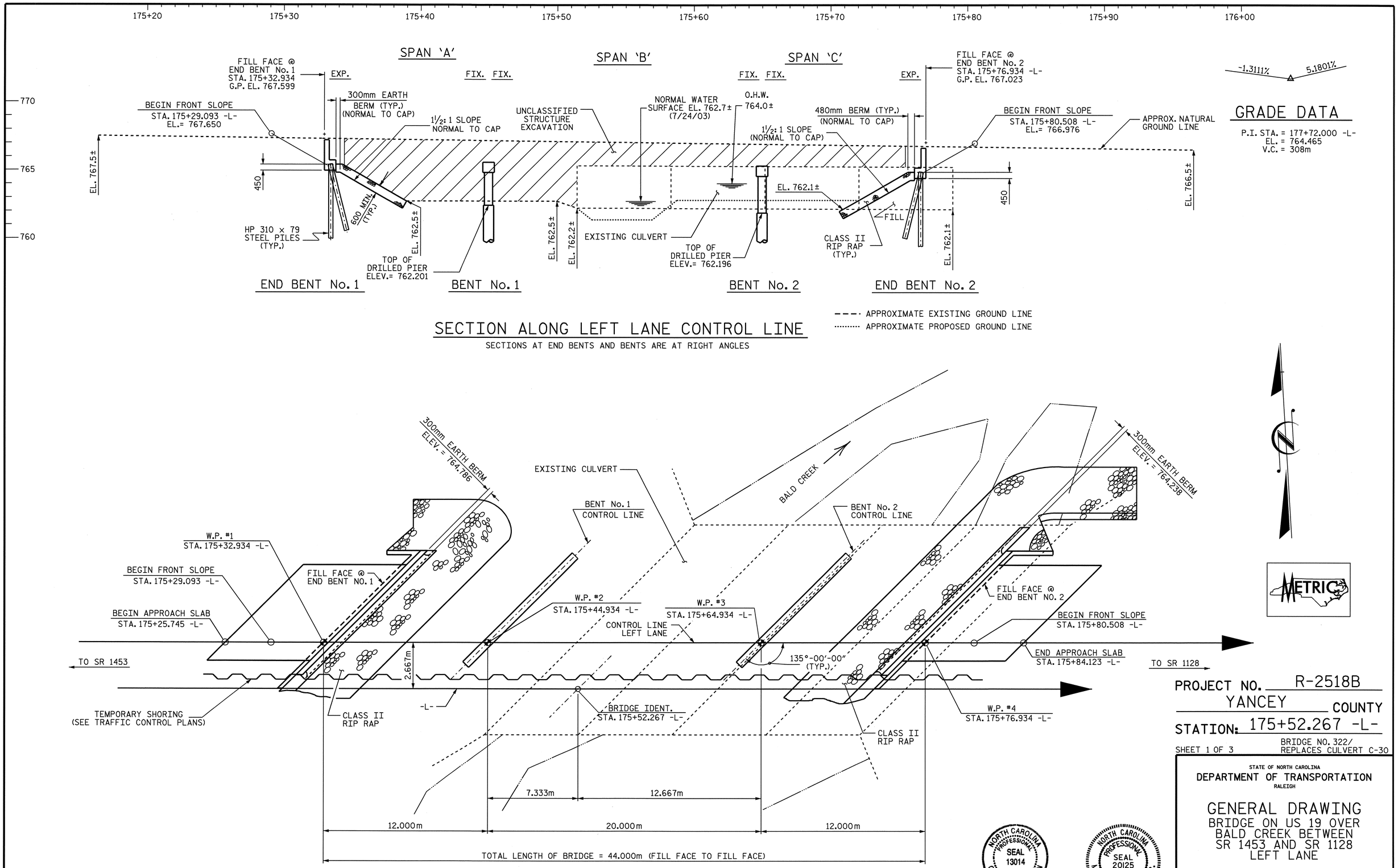

SECTION ALONG LEFT LANE CONTROL LINE

SECTIONS AT END BENTS AND BENTS ARE AT RIGHT ANGLES

PLAN

PILES AND COLUMNS NOT SHOWN IN PLAN VIEW

PROJECT NO. R-2518B

YANCEY COUNTY

STATION: 175+52.267 -L-

SHEET 1 OF 3

BRIDGE NO. 322/ REPLACES CULVERT C-30

STATE OF NORTH CAROLINA
DEPARTMENT OF TRANSPORTATION
RALEIGH

GENERAL DRAWING
BRIDGE ON US 19 OVER BALD CREEK BETWEEN SR 1453 AND SR 1128 LEFT LANE

NORTH CAROLINA PROFESSIONAL SEAL 13014 ENGINEER QUANG H. NGUYEN

Quang H. Nguyen 4-16-08

NORTH CAROLINA PROFESSIONAL SEAL 20125 ENGINEER MARSHALL G. CHEEK, JR.

4-7-08

REVISIONS						
NO.	BY:	DATE:	NO.	BY:	DATE:	
1			3			
2			4			

SHEET NO. S-1

TOTAL SHEETS 154

STR. #1

DRAWN BY : A.L. FIGUEROA DATE : 12-18-07
CHECKED BY : M.G. CHEEK DATE : 01-15-08

07-APR-2008 10:46
r:\structures\Final plans\Str #1\r2518b_sd_gd_ll-str#1.dgn
lmurphy

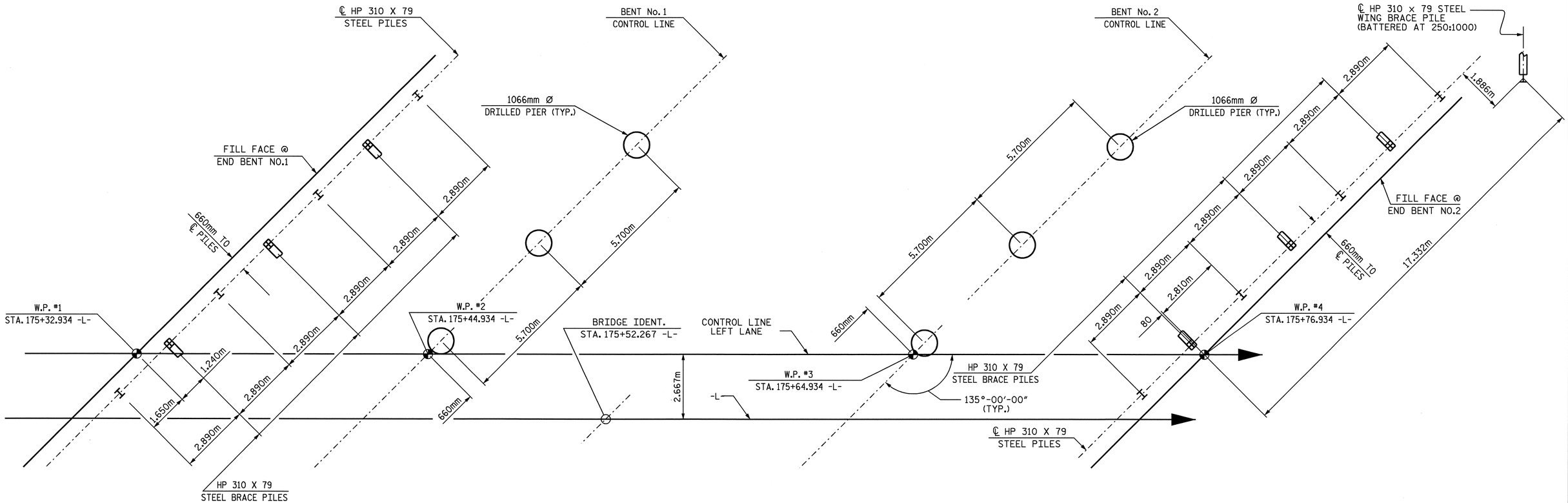

FOUNDATION LAYOUT

ALL END BENT PILES ARE HP 310 X 79
DIMENSIONS LOCATING PILES ARE SHOWN TO THE
PILE CENTERLINE AT THE BOTTOM OF THE CAP.
END BENT & WING BRACE PILES ARE BATTERED 250:1000.

NOTES

DRIVE PILES AT END BENT NO.1 TO A REQUIRED BEARING CAPACITY OF 1,080 kN PER PILE. THE REQUIRED BEARING CAPACITY IS EQUAL TO THE ALLOWABLE BEARING CAPACITY WITH A MINIMUM FACTOR OF SAFETY OF TWO.

THE ALLOWABLE BEARING CAPACITY FOR PILES AT END BENT NO.1 IS 540 kN PER PILE.

FOR DRILLED PIERS, SEE DRILLED PIERS SPECIAL PROVISIONS.

DRILLED PIERS AT BENT NO. 1 ARE DESIGNED FOR BOTH SKIN FRICTION AND END BEARING. CHECK FIELD CONDITIONS FOR THE REQUIRED END BEARING CAPACITY OF 4.3 MPa.

DRILLED PIERS AT BENT NO.1 ARE DESIGNED FOR AN APPLIED LOAD OF 1,667 kN EACH AT THE TOP OF THE COLUMN.

DRILLED PIERS AT BENT NO.1 SHALL EXTEND TO AN ELEVATION NO HIGHER THAN 760.0 AND SATISFY THE REQUIRED END BEARING CAPACITY.

THE SCOUR CRITICAL ELEVATION FOR BENT NO.1 IS ELEVATION 761.0. SCOUR CRITICAL ELEVATIONS ARE USED TO MONITOR POSSIBLE SCOUR PROBLEMS DURING THE LIFE OF THE STRUCTURE.

THE DRILLED PIERS AT BENT NO.2 ARE DESIGNED FOR BOTH SKIN FRICTION AND END BEARING. CHECK FIELD CONDITIONS FOR THE REQUIRED END BEARING CAPACITY OF 3.4 MPa.

DRILLED PIERS AT BENT NO.2 ARE DESIGNED FOR AN APPLIED LOAD OF 1,666 kN EACH AT THE TOP OF THE COLUMN.

PERMANENT STEEL CASING MAY BE REQUIRED FOR DRILLED PIERS AT BENT NO.2. IF REQUIRED, DO NOT EXTEND CASING BELOW ELEVATION 761.8 WITHOUT PRIOR APPROVAL FROM THE ENGINEER. THE ENGINEER WILL DETERMINE THE NEED FOR PERMANENT STEEL CASING.

DRILLED PIERS AT BENT NO.2 SHALL EXTEND TO AN ELEVATION NO HIGHER THAN 757.5 (LT), 758.5 (CT) AND 760.0 (RT) AND SATISFY THE REQUIRED END BEARING CAPACITY.

THE SCOUR CRITICAL ELEVATION FOR BENT NO.2 IS ELEVATION 759.0 (LT), 760.0 (CT) AND 761.0 (RT). SCOUR CRITICAL ELEVATIONS ARE USED TO MONITOR POSSIBLE SCOUR PROBLEMS DURING THE LIFE OF THE STRUCTURE.

SID INSPECTIONS MAY BE REQUIRED FOR DRILLED PIERS. THE ENGINEER WILL DETERMINE THE NEED FOR SID INSPECTIONS.

CSL TUBES ARE REQUIRED AND CSL TESTING MAY BE REQUIRED FOR THE DRILLED PIERS. THE ENGINEER WILL DETERMINE THE NEED FOR CSL TESTING. SEE CROSSHOLE SONIC LOGGING SPECIAL PROVISION.

DRIVE PILES AT END BENT NO.2 TO A REQUIRED BEARING CAPACITY OF 1,080 kN PER PILE. THE REQUIRED BEARING CAPACITY IS EQUAL TO THE ALLOWABLE BEARING CAPACITY WITH A MINIMUM FACTOR OF SAFETY OF TWO.

THE ALLOWABLE BEARING CAPACITY FOR PILES AT END BENT NO.2 IS 540 kN PER PILE.

PROJECT NO. R-2518B
YANCEY COUNTY
STATION: 175+52.267 -L-

SHEET 2 OF 3

STATE OF NORTH CAROLINA
DEPARTMENT OF TRANSPORTATION
RALEIGH

GENERAL DRAWING
BRIDGE ON US 19 OVER
BALD CREEK BETWEEN
SR 1453 AND SR 1128
LEFT LANE

NORTH CAROLINA PROFESSIONAL SEAL 20125 ENGINEER MARSHALL G. CHEEK, JR.
3-31-08

REVISIONS						SHEET NO.
NO.	BY:	DATE:	NO.	BY:	DATE:	S-2
1			3			TOTAL SHEETS
2			4			154

STR. #1

DRAWN BY : A.L. FIGUEROA DATE : 01-17-08
CHECKED BY : M.G. CHEEK DATE : 01-29-08

25-MAR-2008 10:52
R:\Structures\Final plans\Str #1\R2518B_sd_FL_STR#1.dgn
afigueroa

BENCHMARK #10: SPIKE IN 250mm WALNUT TREE, 75.964m RIGHT OF STA. 167+99.226 -L-, ELEV. 771.711

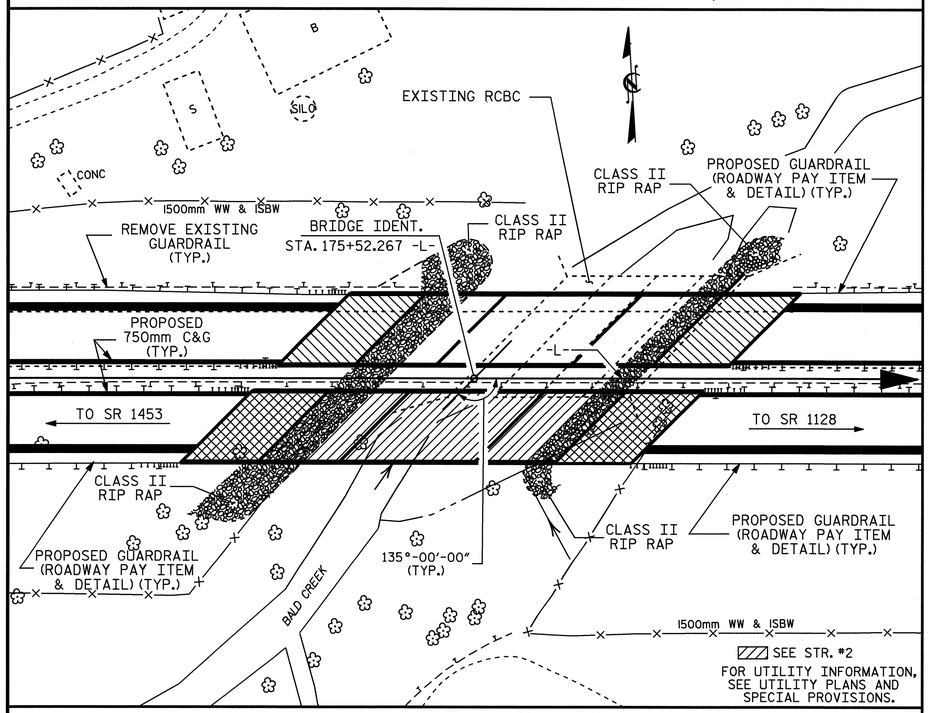

LOCATION SKETCH

HYDRAULIC DATA

DESIGN DISCHARGE	=	127 m^3/S
FREQUENCY OF DESIGN FLOOD	=	50 YRS.
DESIGN HIGH WATER ELEVATION	=	765.71
DRAINAGE AREA	=	42.99 SQ. km.
BASIC DISCHARGE (Q100)	=	158 m^3/S
BASIC HIGH WATER ELEVATION	=	766.00

OVERTOPPING FLOOD DATA

OVERTOPPING DISCHARGE	=	197± m^3/S
FREQUENCY OF OVERTOPPING FLOOD	=	100+ YRS.
OVERTOPPING FLOOD ELEVATION	=	766.08

NOTES

ALL DIMENSIONS ARE IN MILLIMETERS UNLESS OTHERWISE NOTED.

ALL ELEVATIONS ARE IN METERS.

ASSUMED LIVE LOAD = MS 18 OR ALTERNATE LOADING, EXCEPT THAT THE GIRDERS HAVE BEEN DESIGNED FOR MS 22.5.

FOR OTHER DESIGN DATA AND GENERAL NOTES, SEE SHEET SNSM.

FOR EROSION CONTROL MEASURES, SEE EROSION CONTROL PLANS.

THIS BRIDGE HAS BEEN DESIGNED BY THE STRENGTH DESIGN METHOD AS SPECIFIED IN AASHTO STANDARD SPECIFICATIONS.

PRESTRESSED CONCRETE DECK PANELS MAY BE USED IN LIEU OF METAL STAY-IN-PLACE FORMS IN ACCORDANCE WITH ARTICLE 420-3 OF THE STANDARD SPECIFICATIONS.

REMOVABLE FORMS MAY BE USED IN LIEU OF METAL STAY-IN-PLACE FORMS IN ACCORDANCE WITH ARTICLE 420-3 OF THE STANDARD SPECIFICATIONS.

THE EXISTING CULVERT AS SHOWN ON THE PLANS IS FROM THE BEST INFORMATION AVAILABLE. SINCE THIS INFORMATION IS SHOWN FOR THE CONVENIENCE OF THE CONTRACTOR, THE CONTRACTOR SHALL HAVE NO CLAIM WHATSOEVER AGAINST THE DEPARTMENT OF TRANSPORTATION FOR ANY DELAYS OR ADDITIONAL COST INCURRED BASED ON DIFFERENCES BETWEEN THE EXISTING CULVERT AS SHOWN ON THE PLANS AND THE ACTUAL CONDITIONS AT THE PROJECT SITE.

REMOVAL OF THE EXISTING CULVERT SHALL BE PERFORMED SO AS NOT TO ALLOW DEBRIS TO FALL INTO THE WATER. THE CONTRACTOR SHALL REMOVE THE CULVERT AND SUBMIT PLANS FOR DEMOLITION IN ACCORDANCE WITH ARTICLE 402-2 OF THE STANDARD SPECIFICATIONS.

THE MATERIAL SHOWN IN THE CROSS-HATCHED AREA (SEE SHEET 1 OF 3) SHALL BE EXCAVATED FOR A DISTANCE APPROXIMATELY 20m TO THE LEFT OF -L- AS DIRECTED BY THE ENGINEER. THIS WORK WILL BE MEASURED AND PAID AS UNCLASSIFIED STRUCTURE EXCAVATION.

FOR CRANE SAFETY, SEE SPECIAL PROVISIONS.

THE CLASS AA CONCRETE IN THE BRIDGE DECK SHALL CONTAIN FLY ASH OR GROUND GRANULATED BLAST FURNACE SLAG AT THE SUBSTITUTION RATE SPECIFIED IN ARTICLE 1024-1 AND IN ACCORDANCE WITH ARTICLES 1024-5 AND 1024-6 OF THE STANDARD SPECIFICATIONS. NO PAYMENT WILL BE MADE FOR THIS SUBSTITUTION AS IT IS CONSIDERED INCIDENTAL TO THE COST OF THE REINFORCED CONCRETE DECK SLAB.

THIS STRUCTURE HAS BEEN DESIGNED IN ACCORDANCE WITH HEC 18, "EVALUATING SCOUR AT BRIDGES", NOVEMBER, 1995.

THIS BRIDGE HAS BEEN DESIGNED IN ACCORDANCE WITH THE REQUIREMENTS OF THE AASHTO STANDARD SPECIFICATIONS FOR SEISMIC DESIGN OF HIGHWAY BRIDGES FOR SEISMIC PERFORMANCE CATEGORY B.

FOR LIMITS OF TEMPORARY SHORING FOR MAINTENANCE OF TRAFFIC, SEE TRAFFIC CONTROL PLANS. FOR PAY ITEM FOR TEMPORARY SHORING FOR MAINTENANCE OF TRAFFIC, SEE ROADWAY PLANS.

THE LOCATION OF THE CONSTRUCTION JOINT IN THE DRILLED PIERS IS BASED ON AN APPROXIMATE GROUND LINE ELEVATION. IF THE CONSTRUCTION JOINT IS ABOVE THE ACTUAL GROUND ELEVATION, THE CONTRACTOR SHALL PLACE THE CONSTRUCTION JOINT 300mm BELOW THE GROUND LINE.

STEEL SHEET PILING REQUIRED FOR SHORING SHALL BE HOT ROLLED.

NEEDLE BEAMS WILL NOT BE ALLOWED UNLESS OTHERWISE CALLED FOR THE PLANS OR APPROVED BY THE ENGINEER.

FOR SUBMITTAL OF WORKING DRAWINGS, SEE SPECIAL PROVISIONS.

FOR METRIC STRUCTURAL STEEL, SEE SPECIAL PROVISIONS.

FOR FALSEWORK AND FORMWORK, SEE SPECIAL PROVISIONS.

FOR PRESTRESSED CONCRETE MEMBERS, SEE SPECIAL PROVISIONS.

FOR SPECIAL STEEL 2-BAR METAL RAIL, SEE SPECIAL PROVISIONS.

FOR GROUT FOR STRUCTURES, SEE SPECIAL PROVISIONS.

TOTAL BILL OF MATERIAL

	REMOVAL OF EXISTING STRUCTURE	1066mm Ø DRILLED PIERS IN SOIL	1066mm Ø DRILLED PIERS NOT IN SOIL	PERMANENT STEEL CASING FOR 1066mm Ø DRILLED PIERS	SID INSPECTION	CROSSHOLE SONIC LOGGING	UNCLASSIFIED STRUCTURE EXCAVATION	REINFORCED CONCRETE DECK SLAB	GROOVING BRIDGE FLOORS	CLASS A CONCRETE	BRIDGE APPROACH SLABS	REINFORCING STEEL	SPIRAL COLUMN REINFORCING STEEL	1143mm PRESTRESSED CONCRETE GIRDERS		HP 310 X 79 STEEL PILES		483 X 178 CONCRETE PARAPET	RIP RAP CLASS II (600mm THICK)	FILTER FABRIC FOR DRAINAGE	ELASTOMERIC BEARINGS	EVAZOTE JOINT SEALS	SPECIAL STEEL 2 BAR METAL RAIL
	LUMP SUM	METERS	METERS	METERS	EACH	EACH	CU. METERS	SQ. METERS	SQ. METERS	CU. METERS	LUMP SUM	kg	kg	NO.	METERS	NO.	METERS	METERS	METRIC TONS	SQ. METERS	LUMP SUM	LUMP SUM	METERS
SUPERSTRUCTURE	LUMP SUM						1960	484.6	529.7		LUMP SUM			15	208.200			86.204			LUMP SUM	LUMP SUM	80.158
END BENT NO. 1										29.5		2521				7	42		109	112			
BENT NO.1		1.7	5.0							27.1		2918	467										
BENT NO. 2		4.6	6.0	1.2						26.6		3145	561										
END BENT NO. 2										30.4		2549				8	71		252	256			
TOTAL	LUMP SUM	6.3	11.0	1.2	2	2	1960	484.6	529.7	113.6	LUMP SUM	11133	1028	15	208.200	15	113	86.204	361	368	LUMP SUM	LUMP SUM	80.158

PROJECT NO. R-2518B

YANCEY COUNTY

STATION: 175+52.267 -L-

SHEET 3 OF 3

STATE OF NORTH CAROLINA
DEPARTMENT OF TRANSPORTATION
RALEIGH

GENERAL DRAWING
BRIDGE ON US 19 OVER
BALD CREEK BETWEEN
SR 1453 AND SR 1128
LEFT LANE

NORTH CAROLINA PROFESSIONAL SEAL 20125 ENGINEER MARSHALL G. CHEEK, JR.
4-24-08

REVISIONS						SHEET NO.
NO.	BY:	DATE:	NO.	BY:	DATE:	S-3
1			3			TOTAL SHEETS
2			4			154

STR. #1

DRAWN BY : A.L. FIGUEROA DATE : 12-18-07
CHECKED BY : M.G. CHEEK DATE : 01-15-08

24-APR-2008 13:47
r:\structures\finalplans\str #1\r2518b_sd_gd_ll-str#1.dgn
dahodge

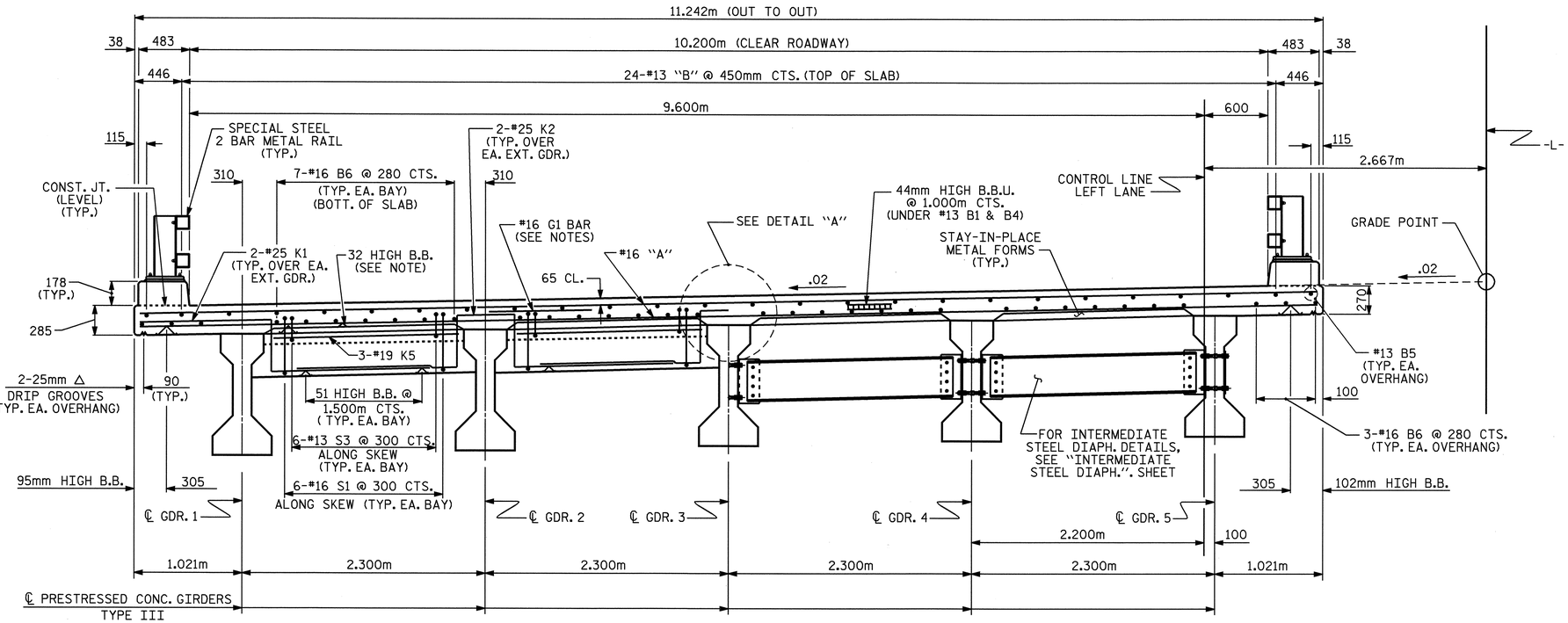

TYPICAL HALF SECTION

(SHOWING END BENT DIAPHRAGMS)

TYPICAL HALF SECTION

(SHOWING INTERMEDIATE STEEL DIAPHRAGMS)

NOTES

PROVIDE 32mm HIGH BEAM BOLSTERS UPPER AT 1.2m CTS. ATOP THE METAL STAY-IN-PLACE FORMS TO SUPPORT THE BOTTOM MAT OF 'A' BARS. WHEN USING REMOVABLE FORMS, PROVIDE CONTINUOUS HIGH CHAIRS FOR METAL DECK (C.H.C.M.) @ 1.2m CTS. WITH A HEIGHT TO SUPPORT THE BOTTOM MAT OF 'A' BARS A CLEAR DISTANCE OF 65mm ABOVE THE TOP OF THE REMOVABLE FORM.

LONGITUDINAL STEEL MAY BE SHIFTED SLIGHTLY, AS NECESSARY, TO AVOID INTERFERENCE WITH STIRRUPS IN PRESTRESSED CONCRETE GIRDERS.

PARAPET IN EACH SPAN SHALL NOT BE CAST UNTIL ALL SLAB CONCRETE IN THAT SPAN HAS BEEN CAST AND HAS REACHED A MINIMUM COMPRESSIVE STRENGTH OF 20.7 MPa.

PREVIOUSLY CAST CONCRETE IN A CONTINUOUS UNIT SHALL HAVE ATTAINED A MINIMUM COMPRESSIVE STRENGTH OF 20.7 MPa BEFORE ADDITIONAL CONCRETE IS CAST IN THE UNIT.

ALL REINFORCING STEEL IN PARAPET SHALL BE EPOXY COATED.

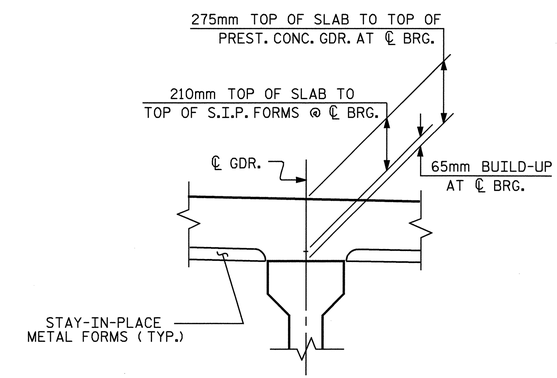

DETAIL "A"

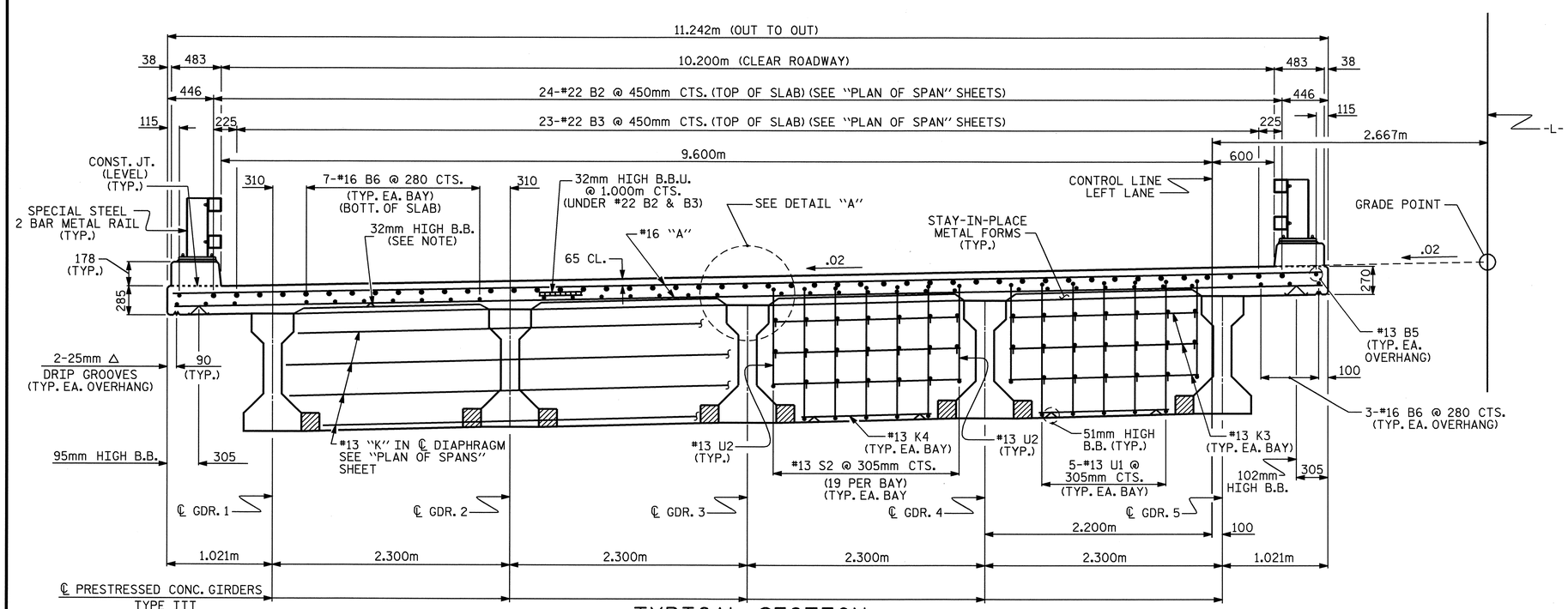

TYPICAL SECTION

(SHOWING CONTINUOUS BENT DIAPHRAGMS)

PROJECT NO. R-2518B

YANCEY COUNTY

STATION: 175+52.267 -L-

SHEET 1 OF 2

STATE OF NORTH CAROLINA
DEPARTMENT OF TRANSPORTATION
RALEIGH

SUPERSTRUCTURE

TYPICAL SECTIONS

LEFT LANE

NORTH CAROLINA PROFESSIONAL SEAL 20125 ENGINEER MARSHALL B. CHEEK, JR.
4-24-08

REVISIONS							SHEET NO.
NO.	BY:	DATE:	NO.	BY:	DATE:		S-4
1			3				TOTAL SHEETS
2			4				154

DRAWN BY : S.B. WILLIAMS DATE : 6-07
CHECKED BY : V. NGUYEN DATE : 11/07

24-APR-2008 13:48
r:\structures\finalplans\str #1\R-2518B_sd_TS.dgn
dahodge

STR. #1

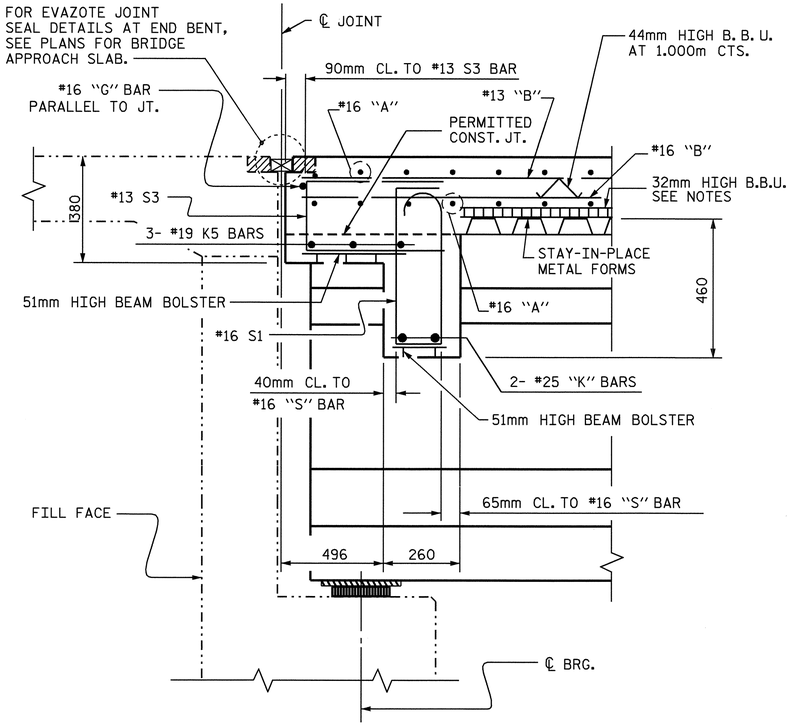

SECTION A-A

✱ #16 "G" BAR MAY BE SHIFTED SLIGHTLY, AS NECESSARY, TO CLEAR REINFORCING STEEL AND STIRRUPS.

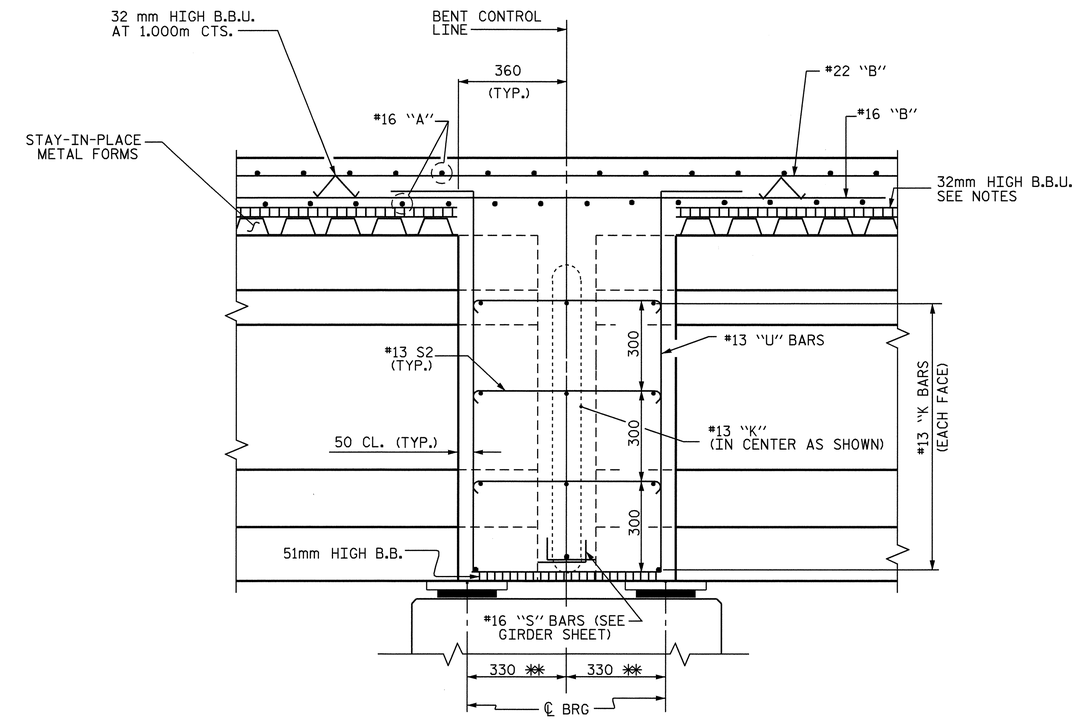

SECTION B-B

✱✱ MEASURED ALONG ℄ GIRDER

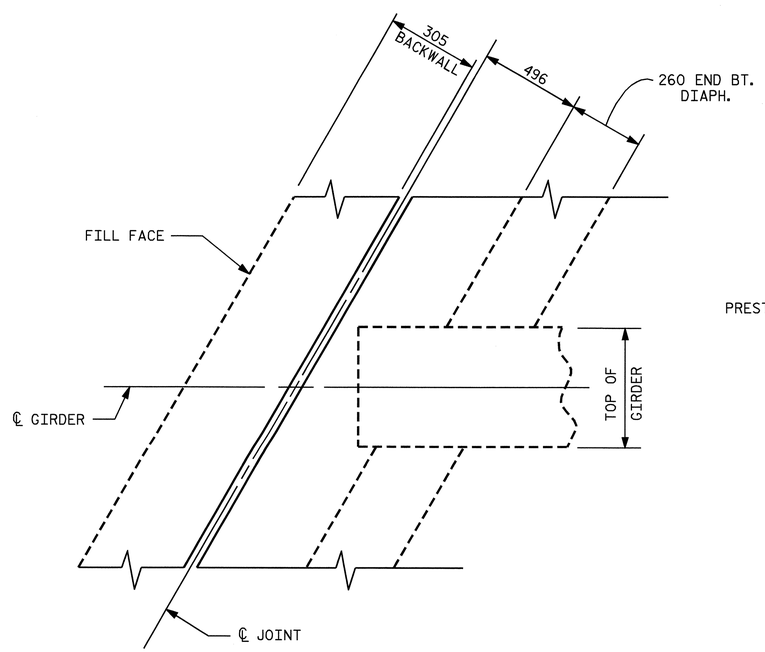

PLAN OF END BENT DIAPHRAGM

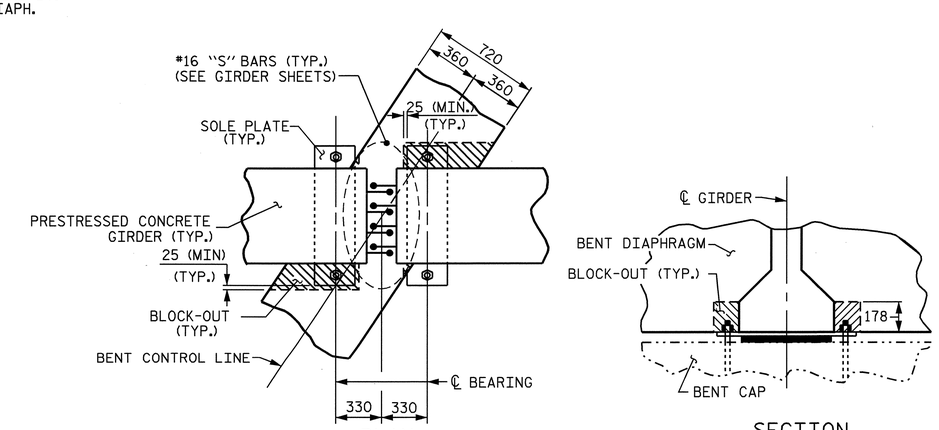

PLAN

SECTION

BENT DIAPHRAGM BLOCK-OUT DETAIL

PROJECT NO. R-2518B

YANCEY COUNTY

STATION: 175+52.267 -L-

SHEET 2 OF 2

STATE OF NORTH CAROLINA
DEPARTMENT OF TRANSPORTATION
RALEIGH

SUPERSTRUCTURE

TYPICAL SECTIONS

LEFT LANE

NORTH CAROLINA PROFESSIONAL SEAL 20125 ENGINEER MARSHALL B. CHEEK, JR. 3-31-08

REVISIONS							SHEET NO.
NO.	BY:	DATE:	NO.	BY:	DATE:		S-5
1			3				TOTAL SHEETS
2			4				154

DRAWN BY : S.B. WILLIAMS DATE : 6-07
CHECKED BY : V. NGUYEN DATE : 11/07

24-MAR-2008 13:07
R:\Structures\Finalplans\Str #1\R-2518B_sd_TS.dgn
lmurphy

STR. #1

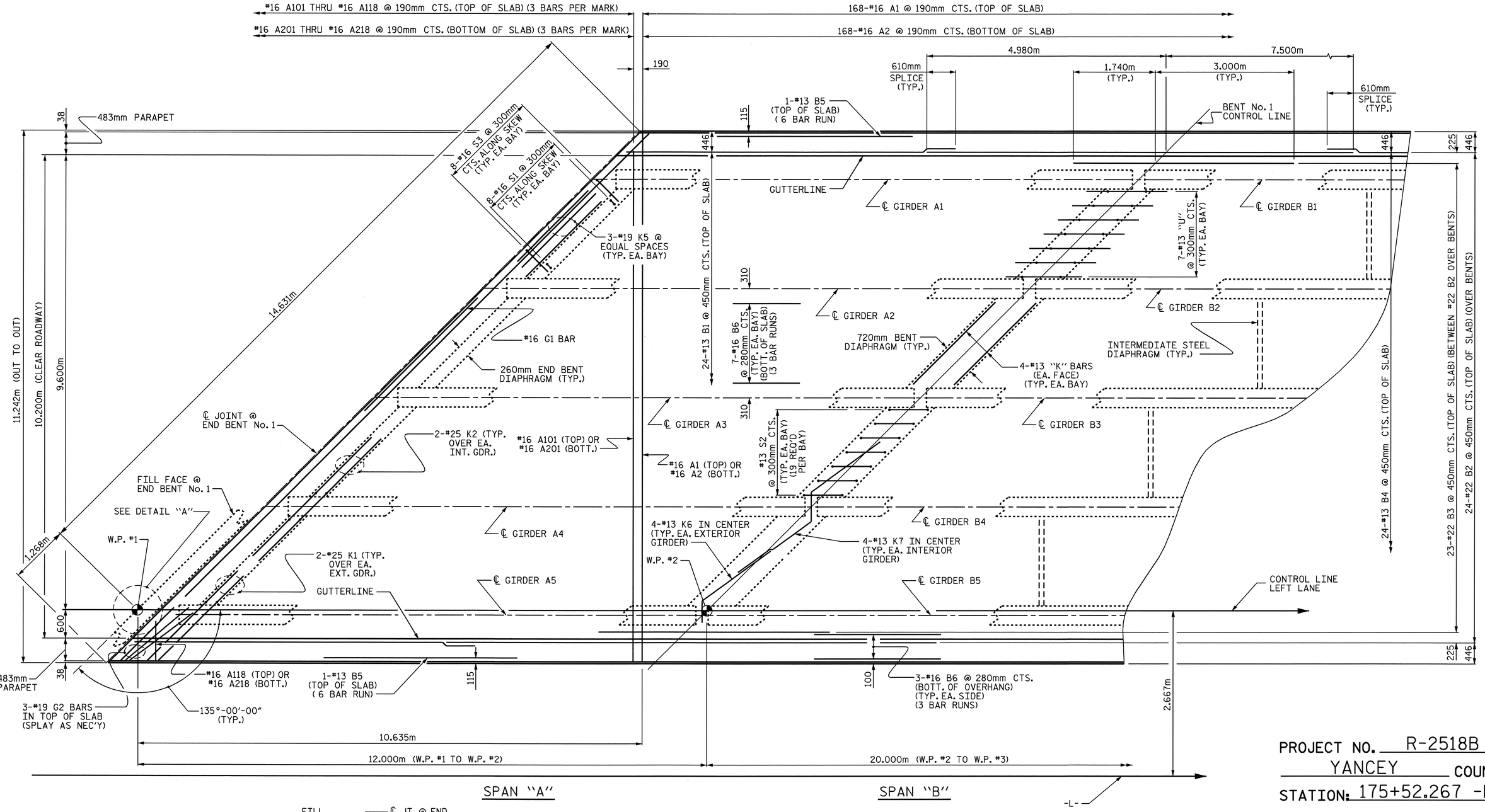

PROJECT NO. R-2518B
YANCEY COUNTY
STATION: 175+52.267 -L-

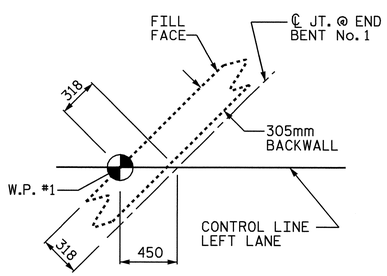

DETAIL "A"

PARTIAL PLAN OF SPAN

FOR PARAPET REINFORCING STEEL AND DETAILS, SEE "CONCRETE PARAPET" SHEETS.

STATE OF NORTH CAROLINA
DEPARTMENT OF TRANSPORTATION
RALEIGH

SUPERSTRUCTURE
PLAN OF SPANS
LEFT LANE

NORTH CAROLINA PROFESSIONAL SEAL 20125 ENGINEER MARSHALL B. CHEEK, JR.
3-31-08

REVISIONS							SHEET NO.
NO.	BY:	DATE:	NO.	BY:	DATE:		S-6
1			3				TOTAL SHEETS
2			4				154

DRAWN BY : S. B. WILLIAMS DATE : 6-07
CHECKED BY : V. NGUYEN DATE : 11/07

24-MAR-2008 13:15
r:\structures\finalplans\Str #1\R-2518B_sd_PS.dgn
lmurphy

STR. #1

168-#16 A1 @ 190mm CTS. (TOP OF SLAB)
168-#16 A2 @ 190mm CTS. (BOTTOM OF SLAB)
#16 A101 THRU #16 A118 @ 190mm CTS. (TOP OF SLAB) (3 BARS PER MARK)
#16 A201 THRU #16 A218 @ 190mm CTS. (BOTTOM OF SLAB) (3 BARS PER MARK)
190
7.500m
4.980m
610mm SPLICE (TYP.)
3.000m (TYP.)
1.740m (TYP.)
610mm SPLICE (TYP.)
GUTTERLINE
1-#13 B5 (TOP OF SLAB) (6 BAR RUN)
3-#19 G2 BARS IN TOP OF SLAB (SPLAY AS NEC'Y)
#16 A118 (TOP) OR #16 A218 (BOTT.)
115
38
446
225
24-#13 B4 @ 450mm CTS. (TOP OF SLAB)
24-#13 B1 @ 450mm CTS. (TOP OF SLAB)
℄ GIRDER B1
4-#13 K6 IN CENTER (TYP. EA. EXTERIOR GIRDER)
4-#13 K7 IN CENTER (TYP. EA. INTERIOR GIRDER)
℄ GIRDER B2
℄ GIRDER C1
℄ GIRDER C2
2-#25 K1 (TYP. OVER EA. EXT. GDR.)
483mm PARAPET
#16 G1 BAR
INTERMEDIATE STEEL DIAPHRAGM (TYP.)
#13 S2 @ 300mm CTS. (TYP. EA. BAY) (19 REQ'D PER BAY)
#16 A1 (TOP) OR #16 A2 (BOTT.)
#16 A101 (TOP) OR #16 A201 (BOTT.)
2-#25 K2 (TYP. OVER EA. INT. GDR.)
℄ JOINT @ END BENT No. 2
℄ GIRDER B3
℄ GIRDER C3
310
7-#16 B6 @ 280mm CTS. (BOTT. OF SLAB) (TYP. EA. BAY) (3 BAR RUNS)
3-#19 K5 @ EQUAL SPACES (TYP. EA. BAY)
FILL FACE @ END BENT No. 2
4-#13 "K" BARS (EA. FACE) (TYP. EA. BAY)
720mm BENT DIAPHRAGM (TYP.)
℄ GIRDER B4
℄ GIRDER C4
13.996m
9.600m
10.200m (CLEAR ROADWAY)
11.242m (OUT TO OUT)
24-#22 B2 @ 450mm CTS. (TOP OF SLAB) (OVER BENTS)
23-#22 B3 @ 450mm CTS. (TOP OF SLAB) (BETWEEN #22 B2 OVER BENTS)
7-#13 "U" @ 300mm CTS. (TYP. EA. BAY)
W.P. #3
260mm END BENT DIAPHRAGM (TYP.)
8-#16 S1 @ 300mm CTS. ALONG SKEW (TYP. EA. BAY)
8-#16 S3 @ 300mm CTS. ALONG SKEW (TYP. EA. BAY)
W.P. #4
SEE DETAIL "B"
CONTROL LINE LEFT LANE
℄ GIRDER B5
GUTTERLINE
℄ GIRDER C5
600
1-#13 B5 (TOP OF SLAB) (6 BAR RUN)
115
100
3-#16 B6 @ 280mm CTS. (BOTT. OF OVERHANG) (TYP. EA. SIDE) (3 BAR RUNS)
483mm PARAPET
38
BENT No. 2 CONTROL LINE
1.903m
135°-00'-00" (TYP.)
2.667m
1.635m
20.000m (W.P. #2 TO W.P. #3)
12.000m (W.P. #3 TO W.P. #4)
-L-
SPAN "B"
SPAN "C"

PARTIAL PLAN OF SPAN

FOR PARAPET REINFORCING STEEL AND DETAILS, SEE "CONCRETE PARAPET" SHEETS.

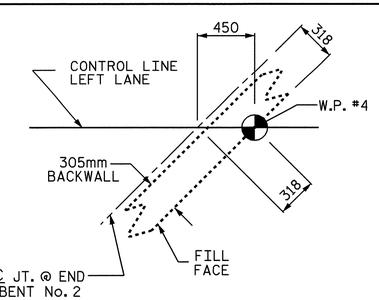

DETAIL "B"

PROJECT NO. R-2518B
YANCEY COUNTY
STATION: 175+52.267 -L-

STATE OF NORTH CAROLINA
DEPARTMENT OF TRANSPORTATION
RALEIGH

SUPERSTRUCTURE
PLAN OF SPANS
LEFT LANE

REVISIONS						SHEET NO.
NO.	BY:	DATE:	NO.	BY:	DATE:	S-7
1			3			TOTAL SHEETS
2			4			154

NORTH CAROLINA PROFESSIONAL SEAL 20125 ENGINEER MARSHALL L. CREEK, JR.
3-31-08

DRAWN BY : S. B. WILLIAMS DATE : 6-07
CHECKED BY : V. NGUYEN DATE : 11/07

24-MAR-2008 13:15
r:\structures\finalplans\Str #1\R-2518B_sd_PS.dgn
lmurphy

STR. #1

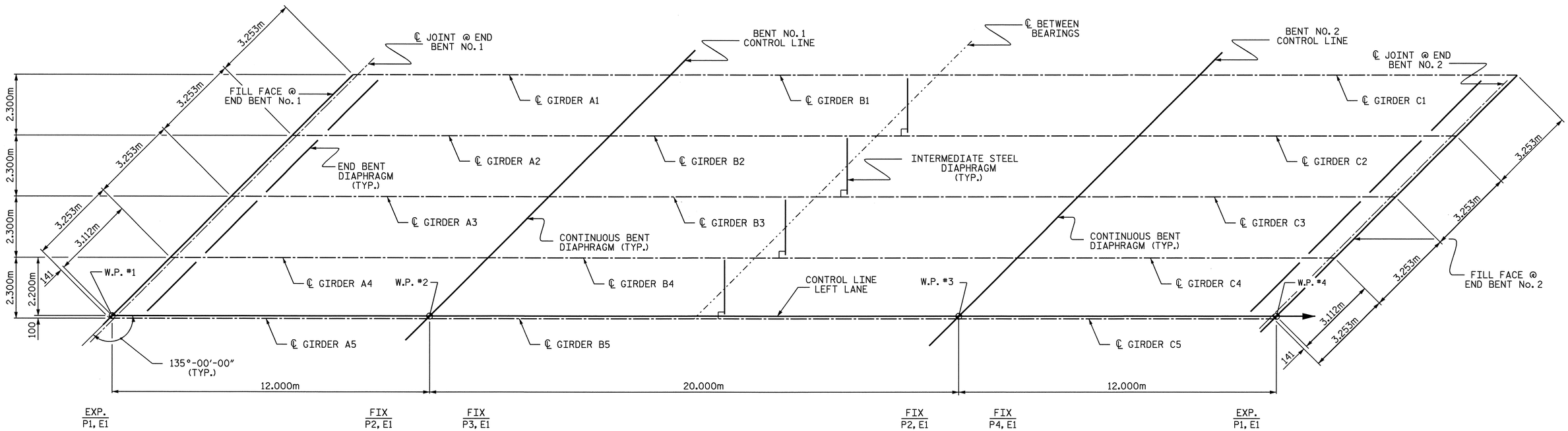

FRAMING PLAN

PROJECT NO. R-2518B
YANCEY COUNTY
STATION: 175+52.267 -L-

STATE OF NORTH CAROLINA
DEPARTMENT OF TRANSPORTATION
RALEIGH

SUPERSTRUCTURE
FRAMING PLAN
LEFT LANE

NORTH CAROLINA PROFESSIONAL SEAL 20125 ENGINEER MARSHALL G. CHEEK, JR.
3-31-08

REVISIONS								SHEET NO.
NO.	BY:	DATE:	NO.	BY:	DATE:			S-8
1			3					TOTAL SHEETS
2			4					154

DRAWN BY : S.B.WILLIAMS DATE : 6-07
CHECKED BY : V. NGUYEN DATE : 11/07

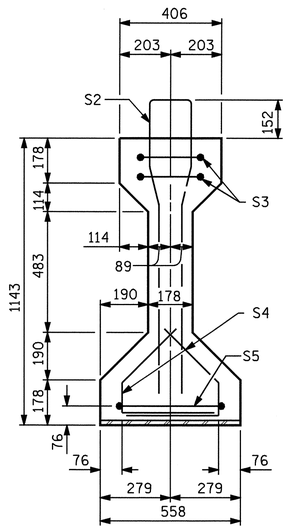

SECTION A-A

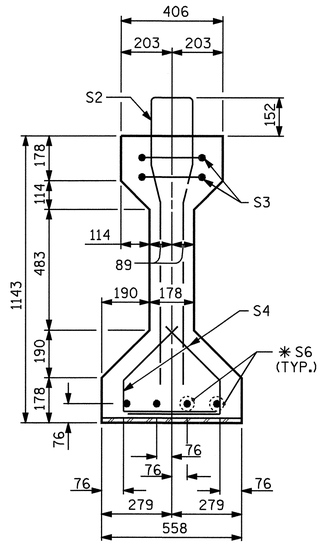

SECTION B-B

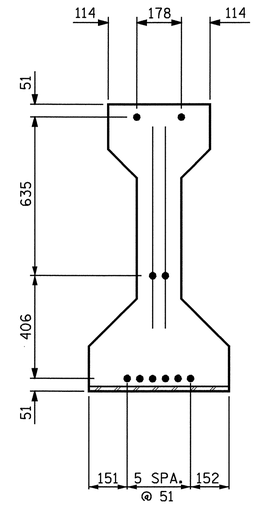

AT END OF GIRDER

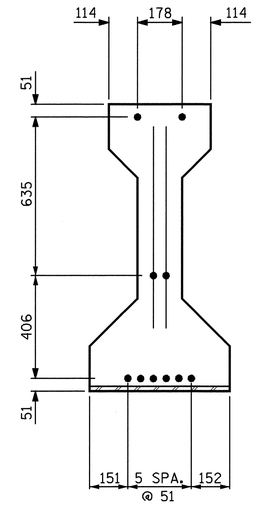

AT ℄ OF GIRDER

12.70mm Ø LOW RELAXATION STRAND LAYOUT

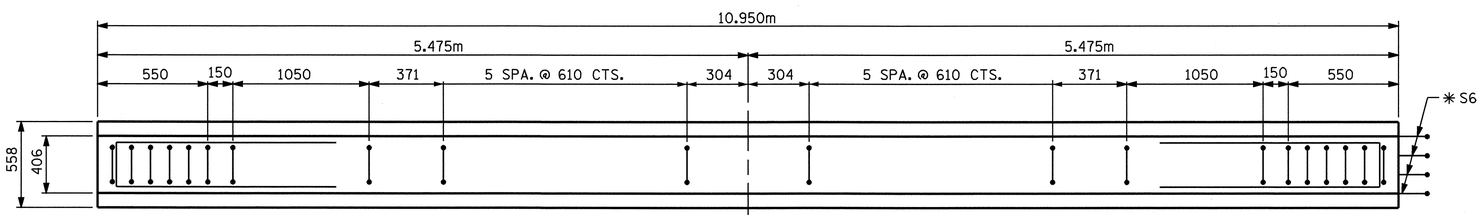

PLAN OF GIRDER

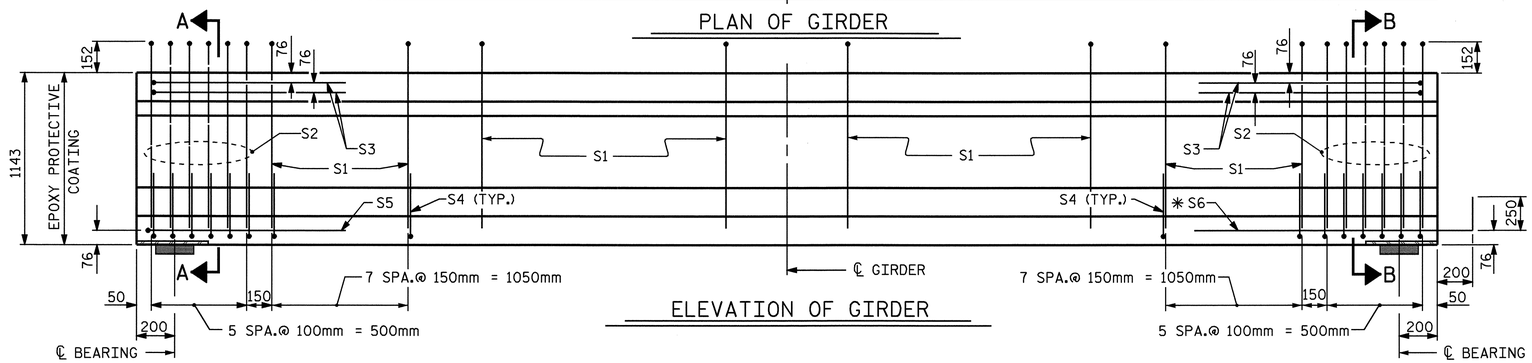

ELEVATION OF GIRDER

EXP

FIX

12.70mm Ø L. R. GRADE 270 STRANDS

AREA (mm²)	ULTIMATE STRENGTH (kN PER STRAND)	APPLIED PRESTRESS (kN PER STRAND)
98.71	183.7	137.8

REINFORCING STEEL FOR ONE GIRDER

BAR	NUMBER	SIZE	TYPE	LENGTH	WEIGHT
S1	28	#13	1	2600	72
S2	12	#19	1	2600	70
S3	4	#13	3	2660	11
S4	56	#13	2	840	47
S5	1	#13	3	2900	3
* S6	4	#16	STR	1120	7

* NOTE: S6 BARS SHALL BE BENT BEFORE SHIPMENT. HEAT BENDING SHALL NOT BE ALLOWED.

BAR TYPES

ALL BAR DIMENSIONS ARE OUT-TO-OUT

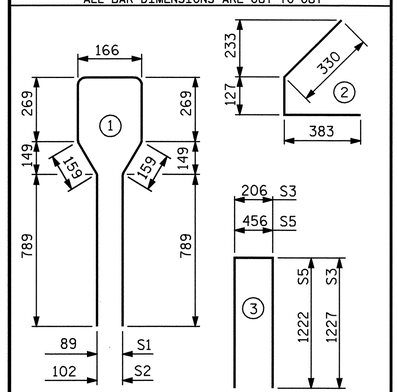

QUANTITIES FOR ONE GIRDER

	REINFORCING STEEL	34.5 MPa CONCRETE	12.70mm Ø L.R. STRANDS
	kg	m³	No.
	210	4.0	10

GIRDERS REQUIRED

NUMBER	LENGTH	TOTAL LENGTH
5	10.950m	54.750m

PROJECT NO. R-2518B

YANCEY COUNTY

STATION: 175+52.267 -L-

SHEET 1 OF 5

DEAD LOAD DEFLECTION TABLE

	SPAN A - GIRDER #1 THRU #5										
TENTH POINTS	0	.1	.2	.3	.4	.5	.6	.7	.8	.9	0
CAMBER (GIRDER ALONE IN PLACE) ↑	.000	.001	.002	.003	.003	.003	.003	.003	.002	.001	.000
* DEFLECTION DUE TO WEIGHT OF SLAB ↓	.000	.000	.000	.001	.001	.001	.001	.001	.000	.000	.000
FINAL CAMBER ↑	0	1	2	2	2	2	2	2	2	1	0

* INCLUDES SLAB, BUILDUPS & STAY-IN-PLACE FORMS.
ALL VALUES ARE SHOWN IN METERS, EXCEPT "FINAL CAMBER" WHICH IS SHOWN IN MILLIMETERS.

STATE OF NORTH CAROLINA
DEPARTMENT OF TRANSPORTATION
RALEIGH

STANDARD
AASHTO TYPE III
PRESTRESSED CONCRETE GIRDER
CONTINUOUS FOR LIVE LOAD
SPAN "A"
LEFT LANE

NORTH CAROLINA PROFESSIONAL SEAL 20125 ENGINEER MARSHALL G. OHEEK, JR.
4-16-08

REVISIONS						SHEET NO.
NO.	BY:	DATE:	NO.	BY:	DATE:	S-9
1			3			TOTAL SHEETS
2			4			154

ASSEMBLED BY : S.B. WILLIAMS DATE : 7-07
CHECKED BY : V. NGUYEN DATE : 11/07

DRAWN BY : ELR 8/91 REV. 7/17/98 RWW/LES
CHECKED BY : GRP 8/91 REV. 10/17/00R RWW/LES
REV. 5/1/06 TLA/GM

16-APR-2008 11:29
r:\structures\final plans\str #1\r-2518b_sd_g#.dgn
lmurphy

STR. #1

STD. NO. PCG5SM

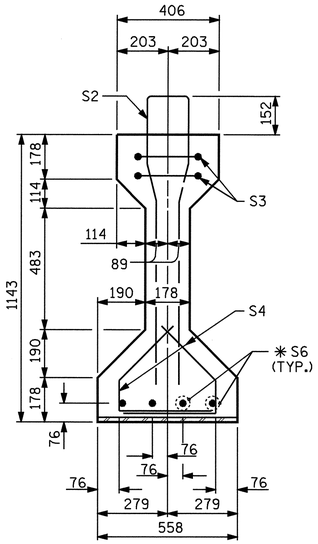

SECTION A-A

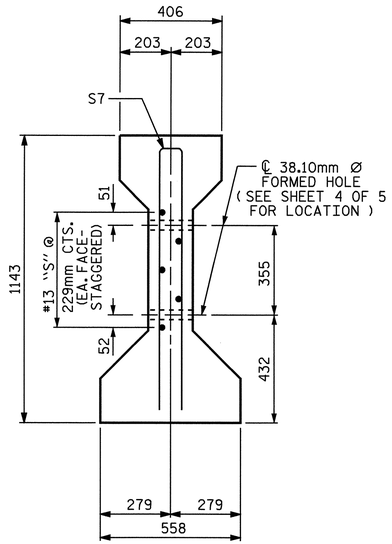

SECTION C-C

(S1 BARS NOT SHOWN)

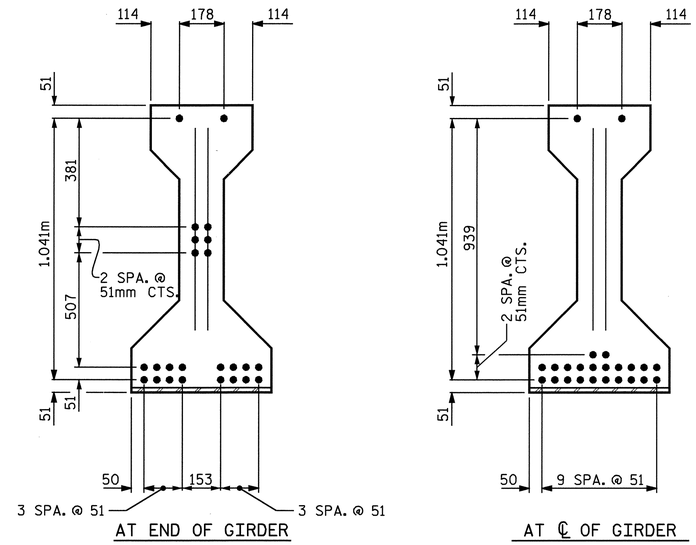

AT END OF GIRDER

AT ℄ OF GIRDER

12.70mm Ø LOW RELAXATION STRAND LAYOUT

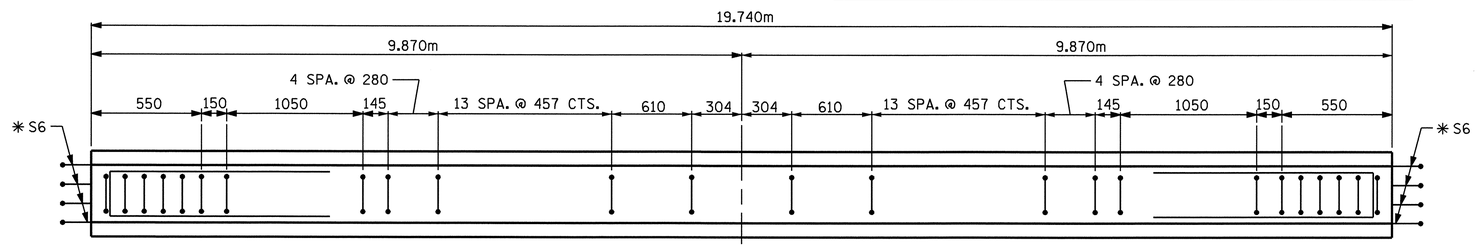

PLAN OF GIRDER

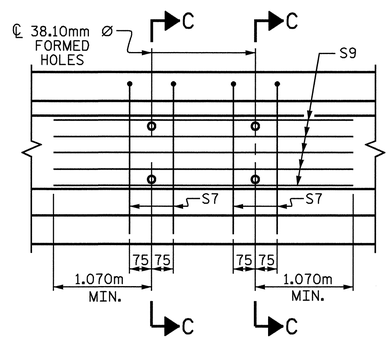

PARTIAL ELEVATION

SHOWING INTERMEDIATE DIAPHRAGM
REINFORCING STEEL FOR GIRDER Nos. 2,3 & 4

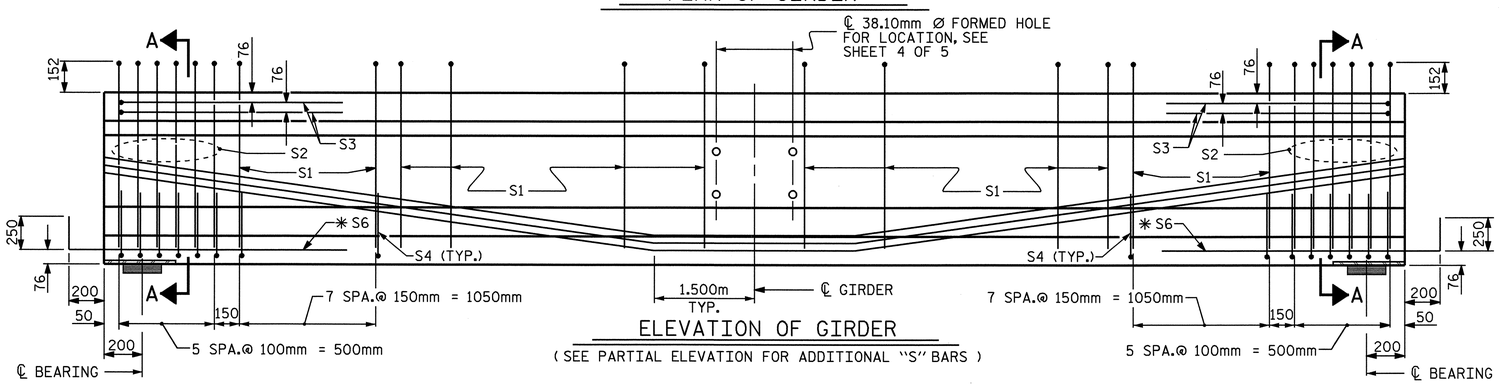

ELEVATION OF GIRDER

(SEE PARTIAL ELEVATION FOR ADDITIONAL "S" BARS)

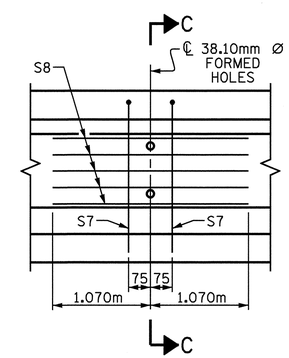

PARTIAL ELEVATION

SHOWING INTERMEDIATE DIAPHRAGM
REINFORCING STEEL FOR GIRDER Nos. 1 & 5

12.70mm Ø L. R. GRADE 270 STRANDS

AREA (mm2)	ULTIMATE STRENGTH (kN PER STRAND)	APPLIED PRESTRESS (kN PER STRAND)
98.71	183.7	137.8

REINFORCING STEEL FOR ONE GIRDER

	BAR	NUMBER	SIZE	TYPE	LENGTH	WEIGHT
	S1	54	#13	1	2600	140
	S2	12	#19	1	2600	70
	S3	4	#13	3	2660	11
	S4	56	#13	2	840	47
	S5	1	#13	3	2900	3
	✱S6	8	#16	STR	1120	14
EXTERIOR GDR.	S7	2	#16	3	2180	7
INTERIOR GDR.	S7	4	#16	3	2180	14
EXTERIOR GDR.	S8	5	#13	STR	2140	11
INTERIOR GDR.	S9	5	#13	STR	4440	22

✱NOTE: S6 BARS SHALL BE BENT BEFORE SHIPMENT. HEAT BENDING SHALL NOT BE ALLOWED.

BAR TYPES

ALL BAR DIMENSIONS ARE OUT-TO-OUT

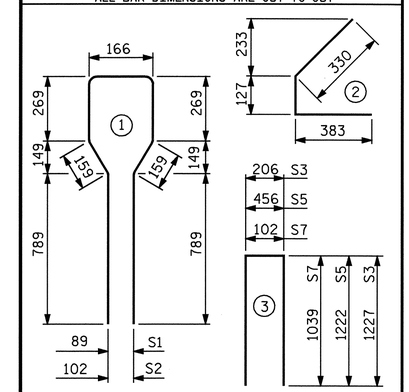

QUANTITIES FOR ONE GIRDER

	REINFORCING STEEL (kg)	34.5 MPa CONCRETE (m^3)	12.70mm Ø L.R. STRANDS (No.)
EXTERIOR GDR.	303	7.1	24
INTERIOR GDR.	321	7.1	24

GIRDERS REQUIRED

NUMBER	LENGTH	TOTAL LENGTH
5	19.740m	98.700m

PROJECT NO. R-2518B

YANCEY COUNTY

STATION: 175+52.267 -L-

SHEET 2 OF 5

DEAD LOAD DEFLECTION TABLE

	SPAN B - GIRDER #1 THRU #5										
TENTH POINTS	0	.1	.2	.3	.4	.5	.6	.7	.8	.9	0
CAMBER (GIRDER ALONE IN PLACE) ↑	.000	.016	.031	.042	.049	.052	.049	.042	.031	.016	.000
✱DEFLECTION DUE TO WEIGHT OF SLAB ↓	.000	.006	.011	.015	.018	.019	.018	.015	.011	.006	.000
FINAL CAMBER ↑	0	10	20	27	31	33	31	27	20	10	0

✱INCLUDES SLAB, BUILDUPS & STAY-IN-PLACE FORMS.
ALL VALUES ARE SHOWN IN METERS, EXCEPT "FINAL CAMBER" WHICH IS SHOWN IN MILLIMETERS.

STATE OF NORTH CAROLINA
DEPARTMENT OF TRANSPORTATION
RALEIGH

STANDARD

AASHTO TYPE III
PRESTRESSED CONCRETE GIRDER
CONTINUOUS FOR LIVE LOAD
SPAN "B"
LEFT LANE

NORTH CAROLINA PROFESSIONAL SEAL 20125 ENGINEER MARSHALL L. JOYNER, JR.

4-16-08

ASSEMBLED BY : S.B. WILLIAMS	DATE : 7-07
CHECKED BY : V. NGUYEN	DATE : 11/07
DRAWN BY : ELR 8/91	REV. 7/17/98 RWW/LES
CHECKED BY : GRP 8/91	REV. 10/17/00R RWW/LES
	REV. 5/1/06 TLA/GM

REVISIONS								SHEET NO.
NO.	BY:	DATE:	NO.	BY:	DATE:			S-10
1			3					TOTAL SHEETS
2			4					154

STR. #1

STD. NO. PCG5SM

16-APR-2008 11:29
r:\structures\final plans\str #1\r-2518b_sd_g#.dgn
lmurphy

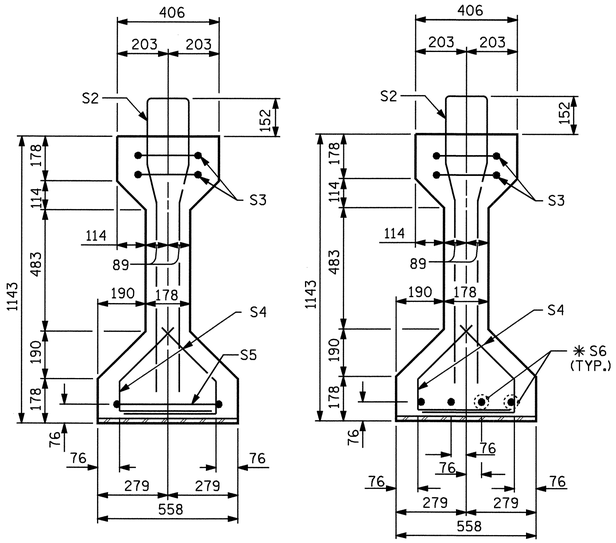

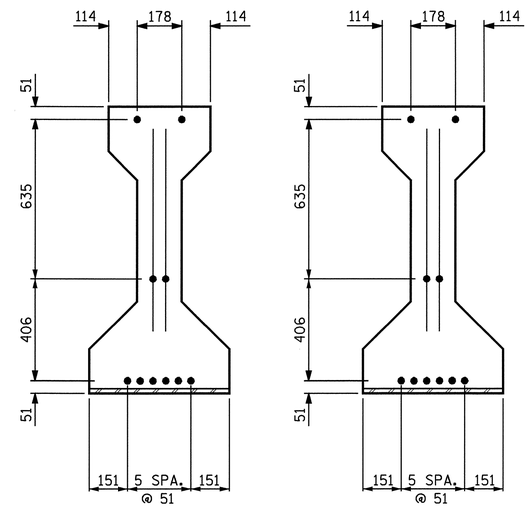

12.70mm Ø LOW RELAXATION STRAND LAYOUT

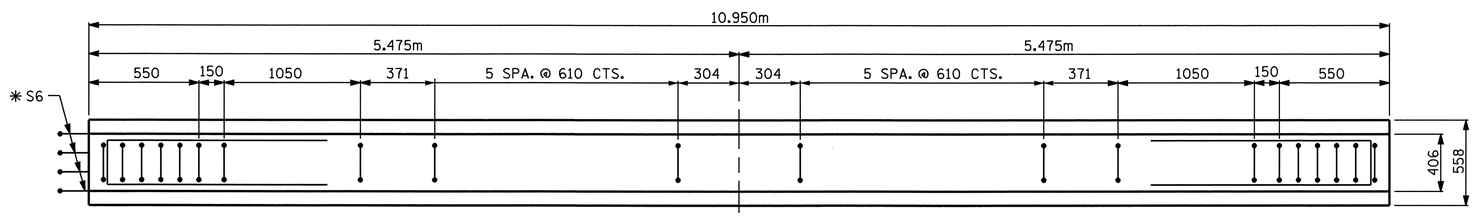

PLAN OF GIRDER

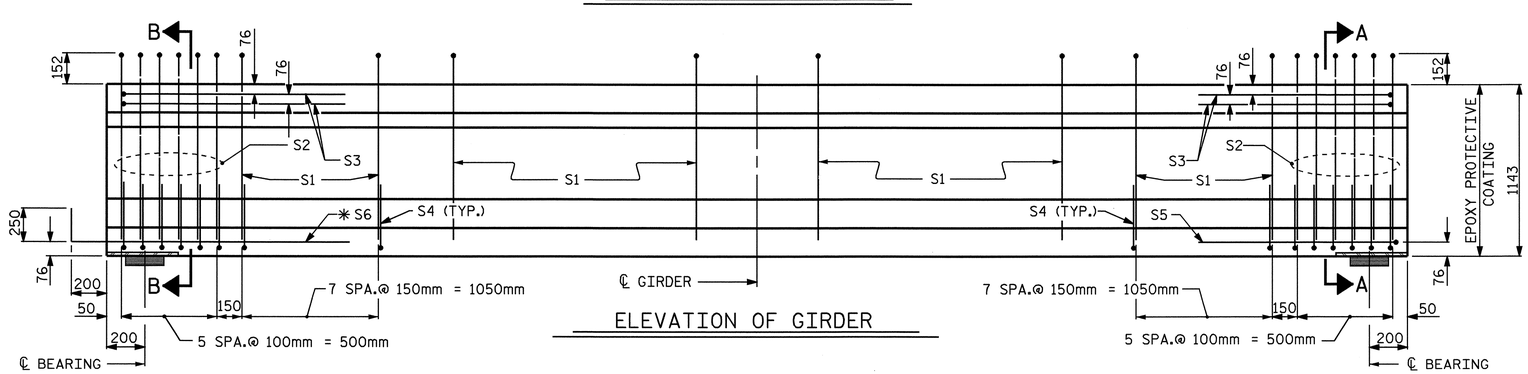

ELEVATION OF GIRDER

DEAD LOAD DEFLECTION TABLE

	SPAN C - GIRDER #1 THRU #5										
TENTH POINTS	0	.1	.2	.3	.4	.5	.6	.7	.8	.9	0
CAMBER (GIRDER ALONE IN PLACE) ↑	.000	.001	.002	.003	.003	.003	.003	.003	.002	.001	.000
✳DEFLECTION DUE TO WEIGHT OF SLAB ↓	.000	.000	.000	.001	.001	.001	.001	.001	.000	.000	.000
FINAL CAMBER ↑	0	1	2	2	2	2	2	2	2	1	0

✳ INCLUDES SLAB, BUILDUPS & STAY-IN-PLACE FORMS.
ALL VALUES ARE SHOWN IN METERS, EXCEPT "FINAL CAMBER" WHICH IS SHOWN IN MILLIMETERS.

12.70mm Ø L. R. GRADE 270 STRANDS

AREA (mm^2)	ULTIMATE STRENGTH (kN PER STRAND)	APPLIED PRESTRESS (kN PER STRAND)
98.71	183.7	137.8

REINFORCING STEEL FOR ONE GIRDER

BAR	NUMBER	SIZE	TYPE	LENGTH	WEIGHT
S1	28	#13	1	2600	72
S2	12	#19	1	2600	70
S3	4	#13	3	2660	11
S4	56	#13	2	840	47
S5	1	#13	3	2900	3
✳ S6	4	#16	STR	1120	7

✳ NOTE: S6 BARS SHALL BE BENT BEFORE SHIPMENT. HEAT BENDING SHALL NOT BE ALLOWED.

BAR TYPES

ALL BAR DIMENSIONS ARE OUT-TO-OUT

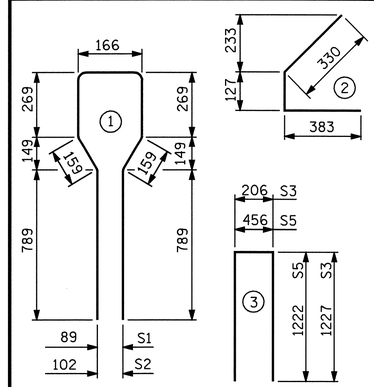

QUANTITIES FOR ONE GIRDER

	REINFORCING STEEL	34.5 MPa CONCRETE	12.70mm Ø L.R. STRANDS
	kg	m^3	No.
	210	4.0	10

GIRDERS REQUIRED

NUMBER	LENGTH	TOTAL LENGTH
5	10.950m	54.750m

PROJECT NO. R-2518B
YANCEY COUNTY
STATION: 175+52.267 -L-

SHEET 3 OF 5

STATE OF NORTH CAROLINA
DEPARTMENT OF TRANSPORTATION
RALEIGH

STANDARD
AASHTO TYPE III
PRESTRESSED CONCRETE GIRDER
CONTINUOUS FOR LIVE LOAD
SPAN "C"
LEFT LANE

NORTH CAROLINA PROFESSIONAL SEAL 20125 ENGINEER
MARSHAL K. GHEEK, JR.
4-16-08

REVISIONS						SHEET NO.
NO.	BY:	DATE:	NO.	BY:	DATE:	S-11
1			3			TOTAL SHEETS
2			4			154

ASSEMBLED BY : S.B. WILLIAMS	DATE : 7-07		
CHECKED BY : V. NGUYEN	DATE : 11/07		
DRAWN BY : ELR 8/91	REV. 7/17/98	RWW/LES	
CHECKED BY : GRP 8/91	REV. 10/17/00R	RWW/LES	
	REV. 5/1/06	TLA/GM	

16-APR-2008 11:29
r:\structures\final plans\str #1\r-2518b_sd_g#.dgn
lmurphy

STR. #1

STD. NO. PCG5SM

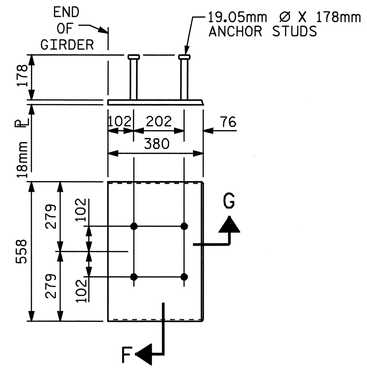

EMBEDDED PLATE "B-1" DETAILS FOR AASHTO TYPE III GIRDER

(2 REQ'D PER GIRDER)

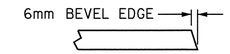

SECTION "G"

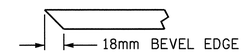

SECTION "F"

(SEE NOTES)

NOTES

ALL PRESTRESSING STRANDS SHALL BE 7-WIRE LOW-RELAXATION GRADE 270 STRANDS AND SHALL CONFORM TO AASHTO M203M EXCEPT FOR SAMPLING REQUIREMENTS WHICH SHALL BE IN ACCORDANCE WITH THE STANDARD SPECIFICATIONS.

ALL REINFORCING STEEL SHALL BE GRADE 420.

APPLY EPOXY PROTECTIVE COATING TO END OF GIRDER SURFACES INDICATED IN ELEVATION VIEW.

EMBEDDED PLATE "B-1" SHALL BE GALVANIZED IN ACCORDANCE WITH THE SPECIFICATIONS. BEVEL EDGES OF PLATE "B-1" TO GIVE CLOSE FIT BUT NOT TIGHT FIT TO STEEL CASTING FORM.

ANCHOR STUDS SHALL CONFORM TO AASHTO M169 GRADES 1010 THROUGH 1020 OR APPROVED EQUAL, AND SHALL MEET THE TYPE "B" REQUIREMENTS OF SUBSECTION 7.3 OF THE ANSI/AASHTO/AWS D1.5 BRIDGE WELDING CODE.

AT ENDS OF GIRDERS TO BE EMBEDDED IN CONCRETE DIAPHRAGMS OR END WALLS, PRESTRESSING STRANDS MAY EXTEND A MAXIMUM OF 50mm BEYOND THE GIRDER ENDS. OTHERWISE, PRESTRESSING STRANDS SHALL BE CUT FLUSH WITH THE GIRDER ENDS.

THE TRANSFER OF LOAD FROM THE ANCHORAGES TO THE GIRDER SHALL BE DONE WHEN CONCRETE HAS REACHED A COMPRESSIVE STRENGTH OF NOT LESS THAN 27.6 MPa.

DEPENDING ON THE TYPE OF SYSTEM USED TO SUPPORT THE DECK SLAB FORMS, PRESET ANCHORS MAY BE NECESSARY IN THE PRESTRESSED CONCRETE GIRDER.

THE TOP SURFACE OF THE GIRDER, EXCLUDING THE OUTSIDE 100mm, SHALL BE RAKED TO A DEPTH OF 6mm.

WHEN DRAPED STRANDS ARE DETAILED, THE LONGITUDINAL LOCATION OF THE HOLD DOWN DEVICES SHALL BE WITHIN 150mm OF THE LOCATION SHOWN AND THE CENTER OF GRAVITY OF THE GROUP OF DRAPED STRANDS SHALL BE LOCATED WITHIN 13mm OF THE THEORETICAL LOCATION SHOWN.

FOR CRACK REPAIR OF PRESTRESSED CONCRETE GIRDERS, SEE SPECIAL PROVISIONS.

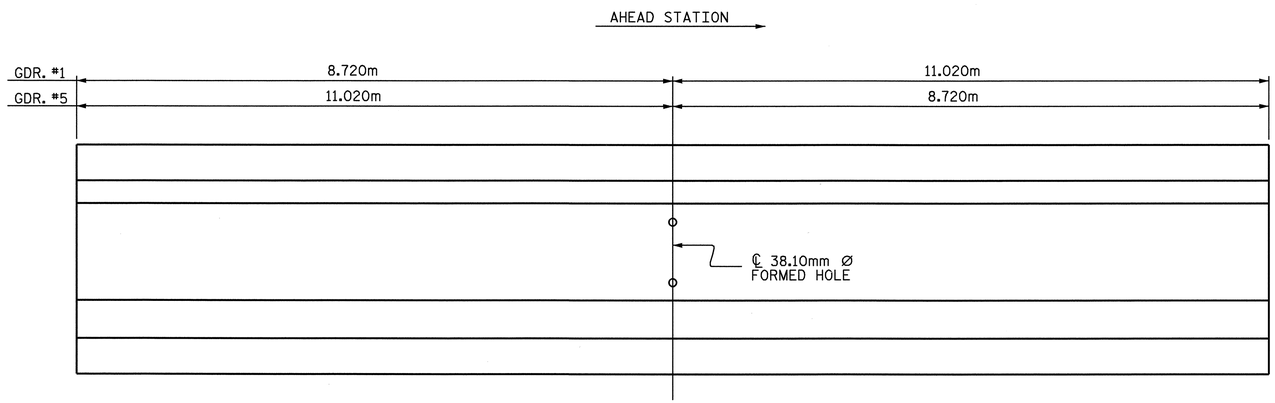

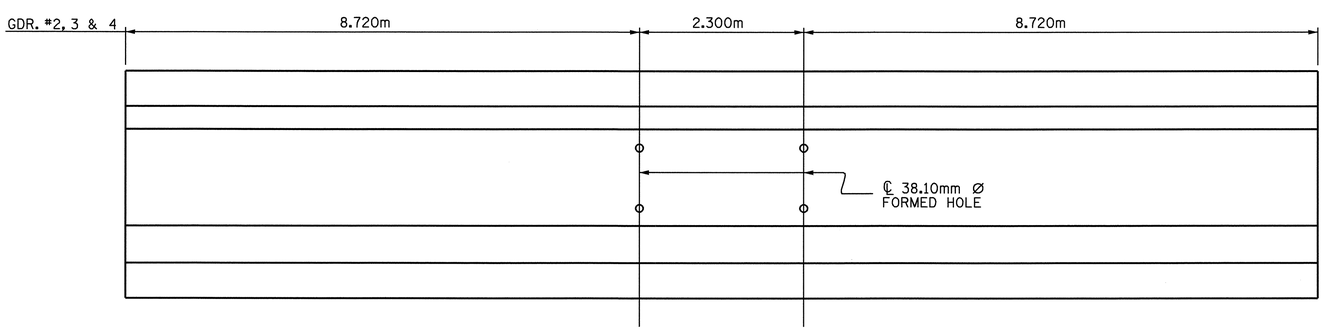

LOCATION OF BOLT HOLES IN GIRDERS

PROJECT NO. R-2518B
YANCEY COUNTY
STATION: 175+52.267 -L-

SHEET 4 OF 5

STATE OF NORTH CAROLINA
DEPARTMENT OF TRANSPORTATION
RALEIGH

STANDARD
PRESTRESSED CONCRETE GIRDER
CONTINUOUS FOR LIVE LOAD
DETAILS
LEFT LANE

REVISIONS						SHEET NO.
NO.	BY:	DATE:	NO.	BY:	DATE:	S-12
1			3			TOTAL SHEETS
2			4			154

NORTH CAROLINA PROFESSIONAL SEAL 20125 ENGINEER MARSHALL E. CHEEK, JR.
3-31-08

ASSEMBLED BY : S.B. WILLIAMS DATE : 7-07	
CHECKED BY : V. NGUYEN DATE : 11/07	
DRAWN BY : ELR 11/91	REV. 10/17/00 RWW/LES
CHECKED BY : GRP 11/91	REV. 7/10/01RR LES/RDR
	REV. 5/1/06 TLA/GM

24-MAR-2008 13:26
r:\structures\finalplans\Str #\R-2518B_sd_G#.dgn
lmurphy

STR. #1

STD. NO. PCG11SM

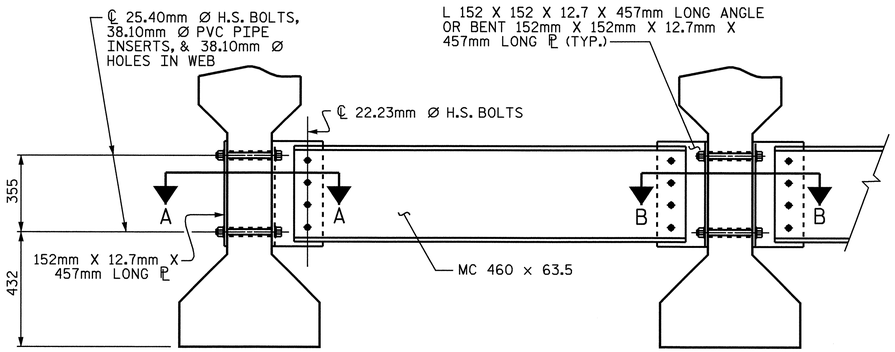

EXTERIOR GIRDER

INTERIOR GIRDER

PART SECTION AT INTERMEDIATE DIAPHRAGM

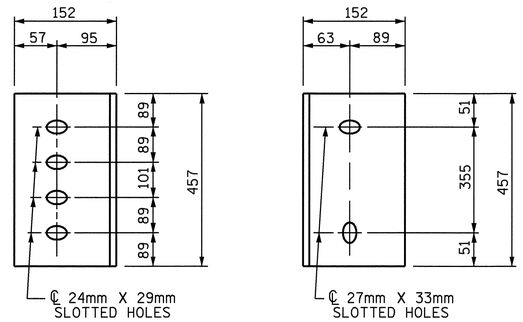

DIAPHRAGM FACE

WEB FACE

CONNECTOR PLATE DETAILS

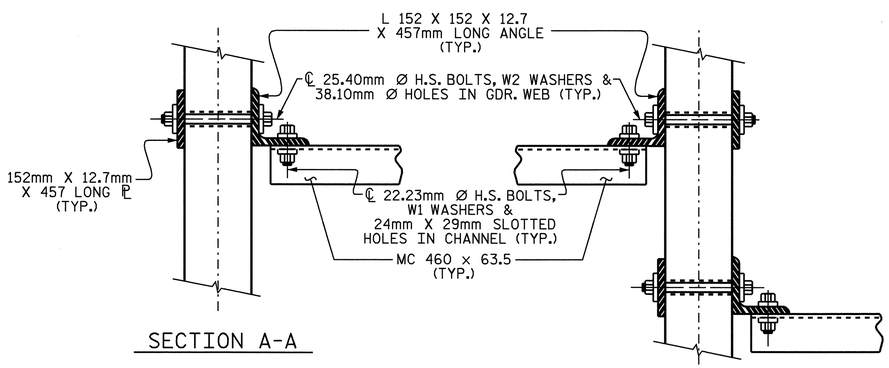

SECTION A-A

SECTION B-B

CONNECTION DETAILS

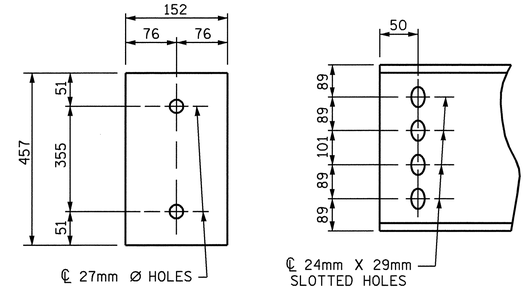

PLATE DETAILS

CHANNEL END

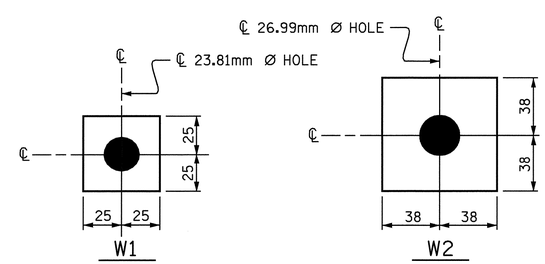

W1

ℙ 11.1 X 50 X 50

USE WITH 22.23mm Ø HVY. HEX NUTS & DIRECT TENSION INDICATOR WASHERS AT DIAPHRAGM CHANNEL TO CONNECTOR PLATE CONNECTIONS

W2

ℙ 11.1 X 76 X 76

USE WITH 25.40mm Ø HVY. HEX NUTS & DIRECT TENSION INDICATOR WASHERS AT CONNECTOR PLATE TO GIRDER CONNECTIONS

WASHER DETAILS

STRUCTURAL STEEL NOTES

ALL INTERMEDIATE DIAPHRAGM STEEL, CONNECTOR PLATES AND PLATE WASHERS SHALL BE AASHTO M270 GRADE 345 OR APPROVED EQUAL.

TENSION ON THE AASHTO M164 BOLTS THROUGH THE CHANNEL MEMBER SHALL BE CALIBRATED USING DIRECT TENSION INDICATOR WASHERS IN ACCORDANCE WITH ARTICLE 440-8 OF THE STANDARD SPECIFICATIONS.

TENSION ON THE AASHTO M164 BOLTS THROUGH THE GIRDER WEB SHALL BE SNUG TIGHTENED FOLLOWED BY AN ADDITIONAL 1/4 TURN.

THE CHANNELS, ANGLES, WASHERS, PLATE WASHERS AND DIRECT TENSION INDICATORS SHALL BE GALVANIZED OR METALLIZED IN ACCORDANCE WITH THE STANDARD SPECIFICATIONS. FOR THERMAL SPRAYED COATINGS (METALLIZATION), SEE SPECIAL PROVISIONS.

FOR METALLIZATION, APPLY AN 8 MIL THICK 99.99 PERCENT ZINC (W-Zn-1) THERMAL SPRAYED COATING WITH A 0.5 MIL THICK SEAL COAT TO ALL STEEL DIAPHRAGM SURFACES IN ACCORDANCE WITH THE THERMAL SPRAYED COATINGS SPECIAL PROVISIONS AND SECTION 442 OF THE STANDARD SPECIFICATIONS.

GALVANIZE THE HIGH STRENGTH BOLTS, NUTS, AND WASHERS IN ACCORDANCE WITH THE STANDARD SPECIFICATIONS. FOR HIGH STRENGTH BOLTS, SEE SPECIAL PROVISIONS.

USE A MINIMUM 11.1mm THICK PLATE WASHER WITH STANDARD HOLES UNDER EACH BOLT HEAD AND NUT. THE PLATE WASHERS SHALL HAVE SUFFICIENT SIZE TO COVER THE HOLES AFTER INSTALLATION. DIRECT TENSION INDICATORS ARE TO BE USED IN CONJUNCTION WITH THE PLATE WASHERS.

PROVIDE SUFFICIENT LENGTH OF ALL BOLTS TO ACCOMODATE WASHERS, DIRECT TENSION INDICATORS, THE THICKNESS OF CONNECTING MEMBER PLUS AT LEAST 6mm PROJECTION BEYOND THE NUT.

INTERMEDIATE DIAPHRAGM ASSEMBLY SHALL COMPLY WITH SECTION 1072 OF THE STANDARD SPECIFICATIONS.

CONTRACTOR SHALL SUBMIT TWO SETS OF WORKING DRAWINGS FOR THE INTERMEDIATE DIAPHRAGM ASSEMBLY FOR REVIEW, COMMENTS AND ACCEPTANCE. AFTER REVIEW, COMMENTS, AND ACCEPTANCE, SUBMIT SEVEN SETS FOR DISTRIBUTION.

IN THE EXTERIOR BAYS, TEMPORARY STRUTS SHALL BE PLACED BETWEEN PRESTRESSED GIRDERS ADJACENT TO THE STEEL DIAPHRAGMS. STRUTS SHALL REMAIN IN PLACE 3 DAYS AFTER CONCRETE IS PLACED. ALL AASHTO M164 H.S. BOLTS SHALL BE FULLY TIGHTENED AFTER THE STRUTS HAVE BEEN REMOVED.

THE COST OF THE STEEL DIAPHRAGMS AND ASSEMBLIES SHALL BE INCLUDED IN THE UNIT PRICE BID FOR PRESTRESSED CONCRETE GIRDERS.

PROJECT NO. R-2518B
YANCEY COUNTY
STATION: 175+52.267 -L-

SHEET 5 OF 5

STATE OF NORTH CAROLINA
DEPARTMENT OF TRANSPORTATION
RALEIGH

STANDARD
INTERMEDIATE
STEEL DIAPHRAGMS
FOR TYPE III
PRESTRESSED CONCRETE
GIRDERS
LEFT LANE

NORTH CAROLINA PROFESSIONAL SEAL 20125 ENGINEER MARSHALL LGH CHEEK, JR.
3-3-08

REVISIONS						SHEET NO.
NO.	BY:	DATE:	NO.	BY:	DATE:	S-13
1			3			TOTAL SHEETS
2			4			154

ASSEMBLED BY : S.B. WILLIAMS DATE : 6-07 CHECKED BY : V. NGUYEN DATE : 11/07	
DRAWN BY : TLA 6/05 CHECKED BY : VC 6/05	ADDED 10/21/05 REV. 5/1/06 TLA/GM

24-MAR-2008 13:27
r:\structures\finalplans\Str #1\R-2518B_sd_G*.dgn
lmurphy

STR. #1

STD.No.PCG12SM

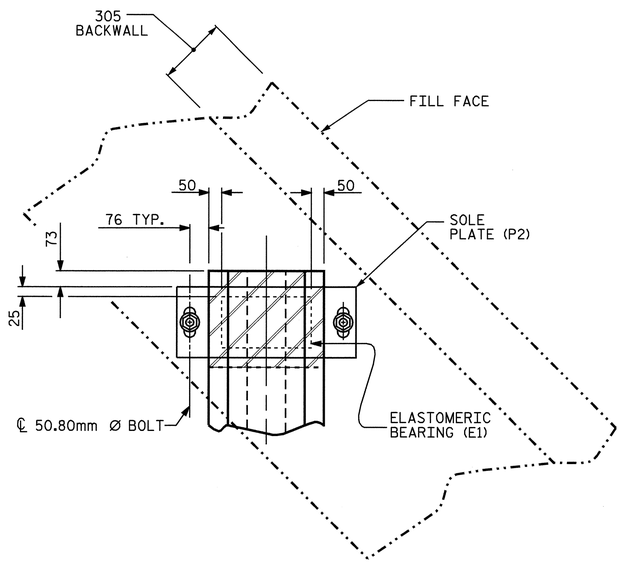

PLAN VIEW AT END BENTS

(EXP.)

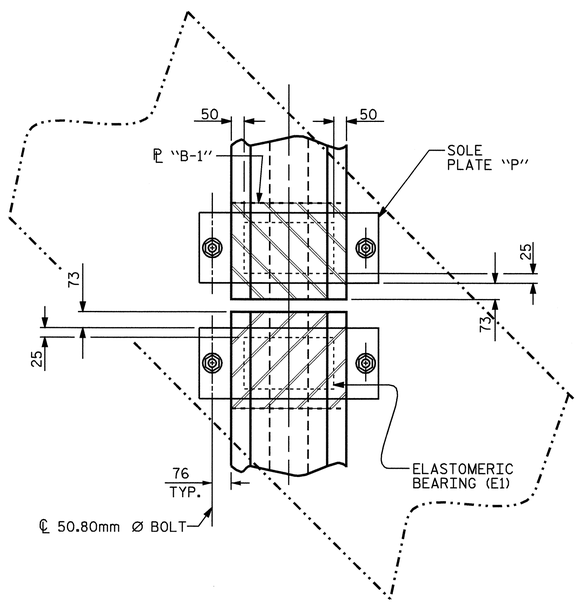

PLAN VIEW AT BENTS

(FIXED)

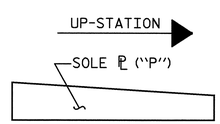

SOLE ℗ PLACEMENT DETAIL

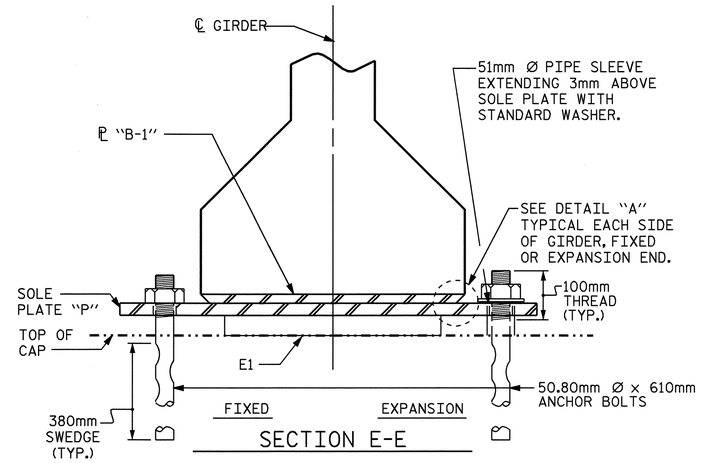

SECTION E-E

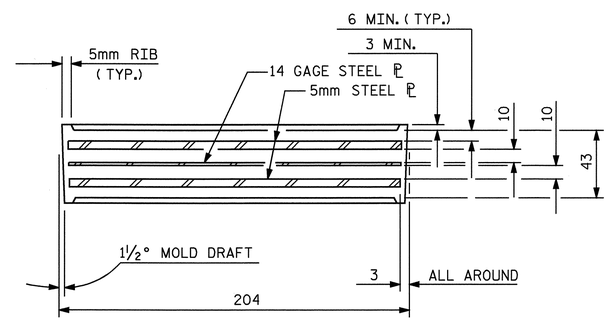

TYPICAL SECTION OF ELASTOMERIC BEARINGS

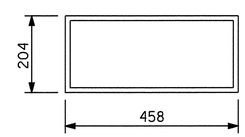

E1 (30 REQ'D)

PLAN VIEW OF ELASTOMERIC BEARING

TYPE III

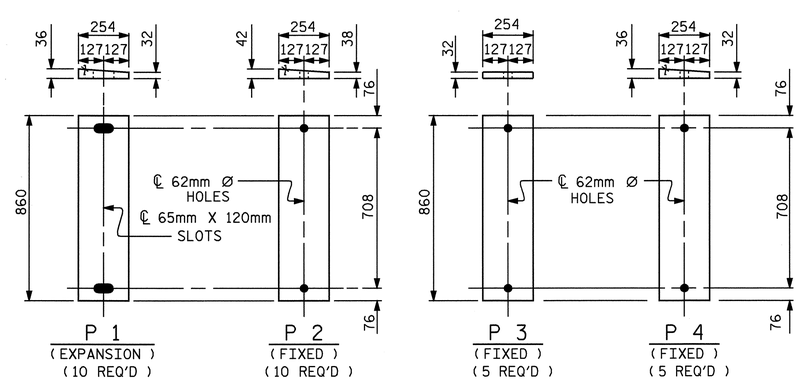

SOLE PLATE DETAILS ("P")

FOR LOCATION OF SOLE PLATES, SEE "FRAMING PLAN" SHEET.

NOTES

AT ALL FIXED POINTS OF SUPPORT, NUTS FOR ANCHOR BOLTS ARE TO BE TIGHTENED FINGER TIGHT AND THEN BACKED OFF ½ TURN. THE THREAD OF THE NUT AND BOLT SHALL THEN BE BURRED WITH A SHARP POINTED TOOL.

THE 51mm Ø PIPE SLEEVE SHALL BE CUT FROM SCHEDULE 40 PVC PLASTIC PIPE. THE PVC PLASTIC PIPE SHALL MEET THE REQUIREMENTS OF ASTM D1785.

STEEL SOLE PLATES, ANCHOR BOLTS, NUTS, AND WASHERS SHALL BE GALVANIZED IN ACCORDANCE WITH THE STANDARD SPECIFICATIONS.

PRIOR TO WELDING, GRIND THE GALVANIZED SURFACE OF THE PORTION OF THE EMBEDDED PLATE AND SOLE PLATE THAT ARE TO BE WELDED. AFTER WELDING, DAMAGED GALVANIZED SURFACES SHALL BE REPAIRED IN ACCORDANCE WITH THE STANDARD SPECIFICATIONS.

WHEN WELDING THE SOLE PLATE TO THE EMBEDDED PLATE IN THE GIRDER, USE TEMPERATURE INDICATING WAX PENS, OR OTHER SUITABLE MEANS, TO ENSURE THAT THE TEMPERATURE OF THE SOLE PLATE DOES NOT EXCEED 149°C. TEMPERATURES ABOVE THIS MAY DAMAGE THE ELASTOMER.

SOLE PLATE "P", BOLTS, NUTS, WASHERS, AND PIPE SLEEVE SHALL BE INCLUDED IN THE PAY ITEM FOR PRESTRESSED CONCRETE GIRDERS.

ANCHOR BOLTS SHALL MEET THE REQUIREMENTS OF ASTM A449. NUTS SHALL MEET THE REQUIREMENTS OF AASHTO M291M-12 OR AASHTO M292M-2H. WASHERS SHALL MEET THE REQUIREMENTS OF AASHTO M293M. SHOP DRAWINGS ARE NOT REQUIRED FOR ANCHOR BOLTS, NUTS AND WASHERS. SHOP INSPECTION IS REQUIRED.

ALL SURFACES OF BEARING PLATES SHALL BE SMOOTH AND STRAIGHT.

— LOAD RATINGS —	
	MAX.D.L.+L.L.
1143mm PCG -TYPE III	512 kN

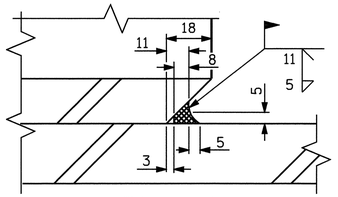

DETAIL "A"

PROJECT NO. R-2518B

YANCEY COUNTY

STATION: 175+52.267 -L-

STATE OF NORTH CAROLINA
DEPARTMENT OF TRANSPORTATION
RALEIGH

STANDARD
ELASTOMERIC BEARING
DETAILS

PRESTRESSED CONCRETE GIRDER
SUPERSTRUCTURE
LEFT LANE

NORTH CAROLINA PROFESSIONAL SEAL 20125 ENGINEER MARSHALL G. CHEEK, JR.
3-31-08

ASSEMBLED BY : S.B.WILLIAMS	DATE : 6-07
CHECKED BY : V. NGUYEN	DATE : 11/07

DRAWN BY : WJH 8/89	REV. 10/17/00 RWW/LES
CHECKED BY : CRK 8/89	REV. 7/10/01 RWW/LES
	REV. 5/1/06 TLA/GM

REVISIONS						SHEET NO.
NO.	BY:	DATE:	NO.	BY:	DATE:	S-14
1			3			TOTAL SHEETS
2			4			154

STR. #1

STD. NO. EB3SM

24-MAR-2008 13:28
r:\structures\finalplans\Str #1\R-2518B_sd_BG.dgn
lmurphy

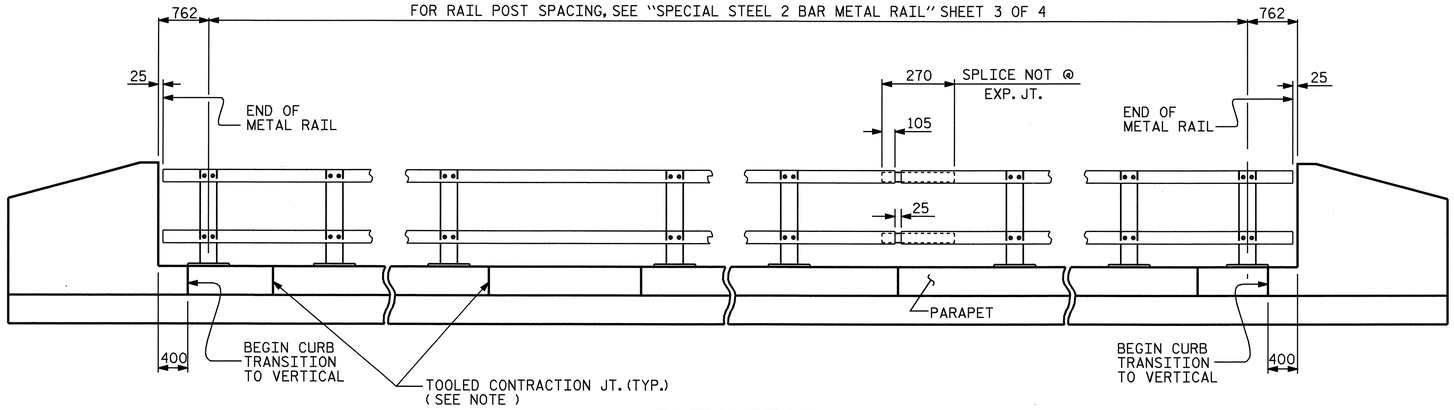

ELEVATION

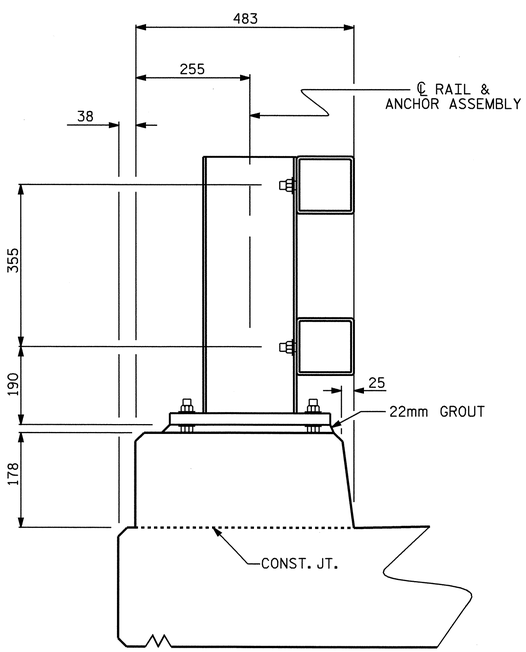

SECTION THRU RAIL

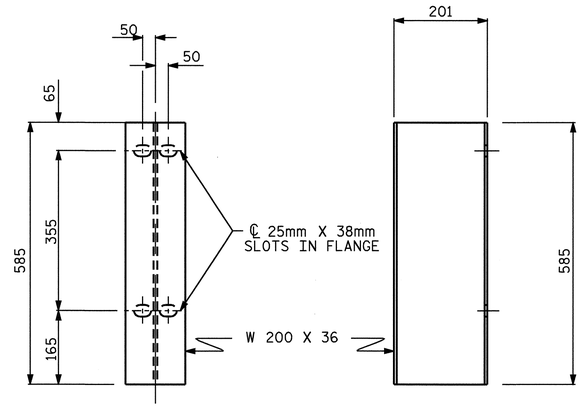

FRONT ELEVATION SIDE ELEVATION

DETAILS OF POST

NOTES

METAL RAIL SHALL BE GALVANIZED STEEL IN ACCORDANCE WITH THE REQUIREMENTS OF THE GENERAL NOTES AND THE FOLLOWING SPECIFICATIONS.

GALVANIZED STEEL RAILS

MATERIAL AND GALVANIZING ARE TO CONFORM TO THE FOLLOWING SPECIFICATIONS:

ANCHOR PLATE: AASHTO M270 GRADE 250 STRUCTURAL STEEL

POST, POST BASES AND RAIL SPLICE BARS: AASHTO M270 GRADE 250 STRUCTURAL STEEL GALVANIZED TO AASHTO M111

SHIMS: SHIMS SHALL MEET THE REQUIREMENTS OF ASTM A570 FOR GRADE 230 OR A611 FOR GRADE C AND SHALL BE GALVANIZED IN ACCORDANCE WITH AASHTO M111.

RAIL CAPS: RAIL CAPS SHALL MEET THE REQUIREMENTS OF ASTM A570 FOR GRADE 230 OR A611 FOR GRADE C AND SHALL BE GALVANIZED IN ACCORDANCE WITH AASHTO M111.

RAILS: ASTM A500, A501 OR A618 - GALVANIZED TO AASHTO M111. ALUMINUM WILL NOT BE ALLOWED.

THE REDUCED BASE WELDED STUDS AND THE CUT ENDS OF THE GALVANIZED RAILING (AFTER GRINDING SMOOTH) SHALL BE GIVEN TWO COATS OF ZINC RICH PAINT MEETING THE REQUIREMENTS OF FEDERAL SPECIFICATION MIL-P-26915 USAF TYPE 1, OR OF FEDERAL SPECIFICATIONS TT-P-641.

STUDS, NUTS, AND WASHERS: REDUCED BASE WELDED STUDS SHALL MEET THE REQUIREMENTS OF ASTM A108. NUTS SHALL CONFORM TO ASTM A563 DH AND WASHERS TO A436. NUTS AND WASHERS SHALL BE GALVANIZED.

ANCHOR BOLTS SHALL BE ASTM A325 AND SHALL BE GALVANIZED. FOR HIGH STRENGTH BOLTS, SEE SPECIAL PROVISIONS.

GENERAL NOTES

1. RAILING SHALL BE CONTINUOUS FROM END POST TO END POST OF BRIDGE. EACH JOINT IN RAIL LENGTH SHALL BE SPLICED AS DETAILED. PANEL LENGTHS OF RAIL SHALL BE ATTACHED TO A MINIMUM OF THREE POSTS.
2. FOR END OF RAIL TO CLEAR FACE OF CONCRETE END POST DIMENSION, SEE "PLAN - RAIL AND END POST", SHEET 3 OF 4.
3. CERTIFIED MILL REPORTS ARE REQUIRED FOR RAILS AND POSTS. SHOP INSPECTION IS NOT REQUIRED.
4. METAL RAIL POSTS SHALL BE SET NORMAL TO CURB GRADE.
5. METHOD OF MEASUREMENT FOR METAL RAILS: FOR LENGTH OF METAL RAILS TO BE PAID FOR, SEE THE STANDARD SPECIFICATIONS.
6. CURVED RAIL USAGE: WHERE RAILS ARE TO BE USED ON BRIDGES ON HORIZONTAL AND/OR VERTICAL CURVATURE THE CONTRACTOR MAY, AT HIS OPTION, HAVE THE REQUIRED CURVATURE IN THE RAIL FORMED IN THE SHOP OR IN THE FIELD. IN EITHER EVENT, THE RAIL SHALL CONFORM WITHOUT BUCKLING OR KINKING TO THE REQUIRED CURVATURE IN A UNIFORM MANNER ACCEPTABLE TO THE ENGINEER.
7. TO INSURE FUTURE IDENTIFICATION OF THE FABRICATOR, A PERMANENT IDENTIFYING MARK SHALL BE PLACED ON EACH POST. THE METHOD OF MARKING AND LOCATION SHALL BE SUCH THAT IT DOES NOT DETRACT FROM THE APPEARANCE OF THE POST, BUT REMAINS VISIBLE AFTER RAIL PLACEMENT.
8. MINOR VARIATIONS IN DETAILS OF METAL RAIL WILL BE CONSIDERED. DETAILS OF SUCH VARIATIONS, IF DESIRED, SHALL BE SUBMITTED FOR APPROVAL.
9. GROOVED CONTRACTION JOINTS, 12mm IN DEPTH, SHALL BE TOOLED IN ALL EXPOSED FACES OF THE PARAPET IN ACCORDANCE WITH ARTICLE 825-10(B) OF THE STANDARD SPECIFICATIONS. THE CONTRACTION JOINT SHALL BE LOCATED AT A SPACING OF 2.4m TO 3.0m BETWEEN EXPANSION JOINTS. NO CONTRACTION JOINTS WILL BE REQUIRED FOR SEGMENTS LESS THAN 3.0m IN LENGTH.
10. THE GROUT BED SHALL BE PLACED PRIOR TO INSTALLING THE END POSTS. GROUT SHALL BE NON-SHRINK, NON-METALLIC GROUT, SEE SPECIAL PROVISIONS.

PAY LENGTH = 80.158 METERS

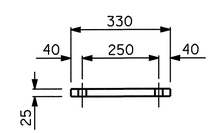

FRONT ELEVATION

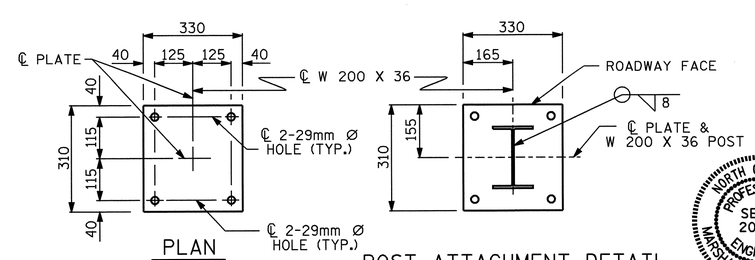

PLAN POST ATTACHMENT DETAIL

POST BASE DETAILS

PROJECT NO. R-2518B

YANCEY COUNTY

STATION: 175+52.267 -L-

SHEET 1 OF 4

STATE OF NORTH CAROLINA
DEPARTMENT OF TRANSPORTATION
RALEIGH

SPECIAL STEEL 2 BAR METAL RAIL

LEFT LANE

NORTH CAROLINA PROFESSIONAL SEAL 20125 ENGINEER MARSHALL L. GREEK, JR. 4-24-08

REVISIONS								SHEET NO.
NO.	BY:	DATE:	NO.	BY:	DATE:			S-15
1			3					TOTAL SHEETS
2			4					154

ASSEMBLED BY : S.B. WILLIAMS DATE : 7-07
CHECKED BY : V. NGUYEN DATE : 11/07

24-APR-2008 13:48
r:\structures\finalplans\str #1\R-2518B_sd_BR.dgn
dahodge

STR. #1

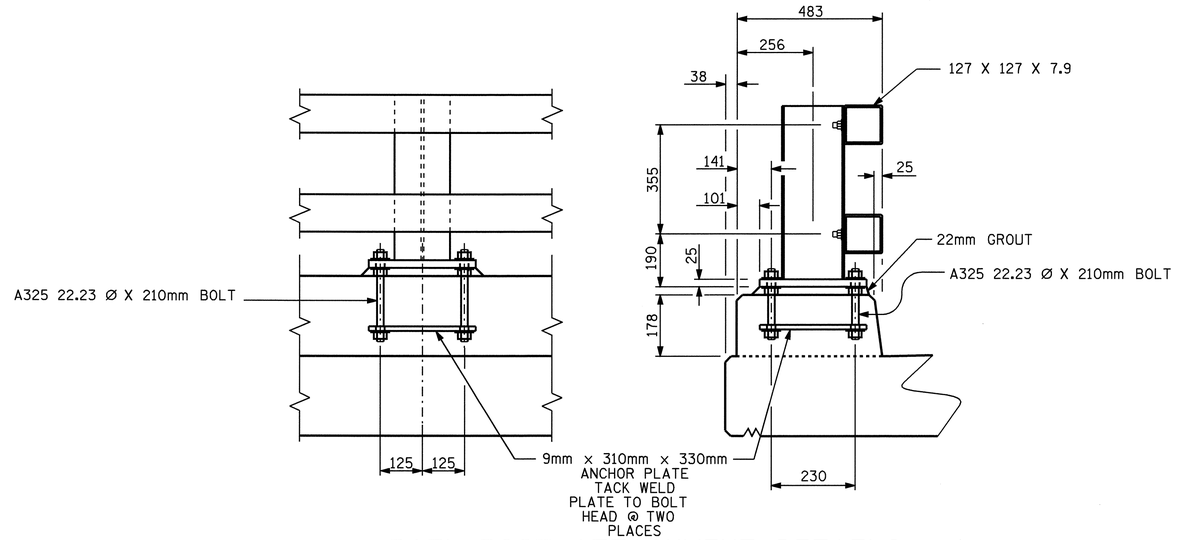

RAIL POST ATTACHMENT DETAILS

NOTE : BOLTS AND PLATE TO BE PLACED BEFORE DECK IS CAST.
SEE ANCHOR PLATE DETAILS.

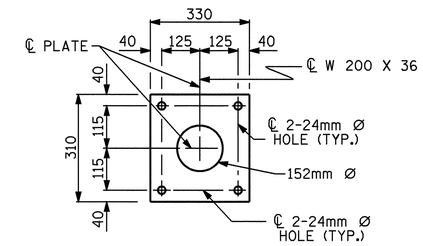

ANCHOR PLATE DETAILS

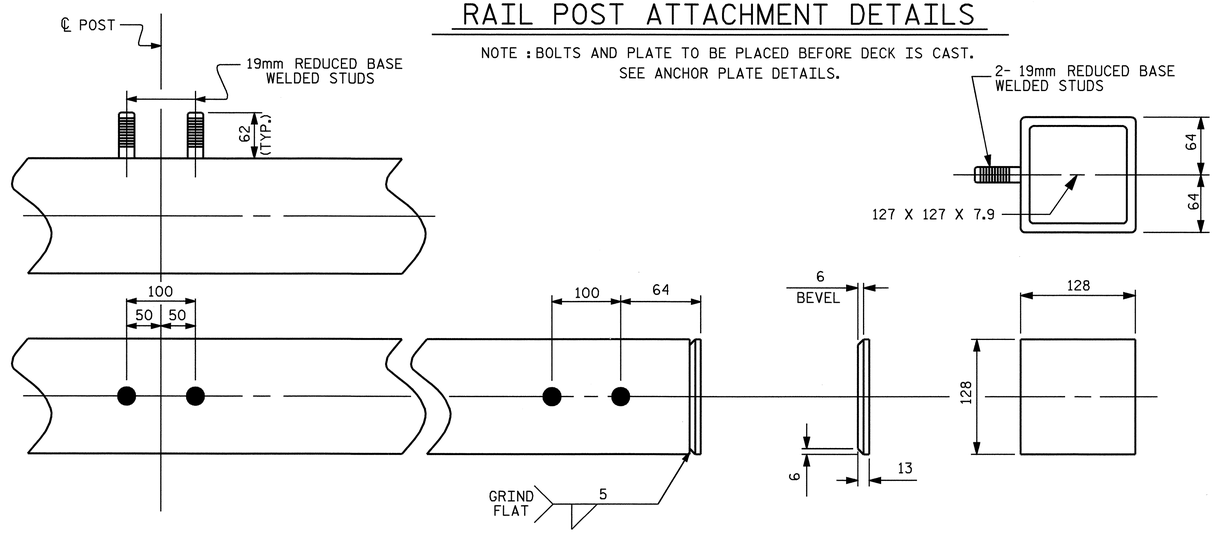

RAIL CAP AND ATTACHMENT STUD DETAILS

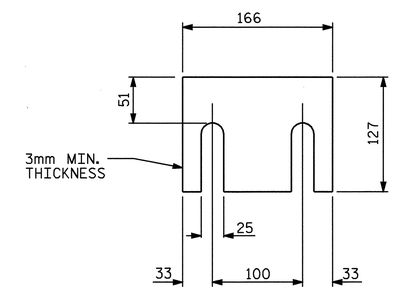

RAILING SHIM DETAIL

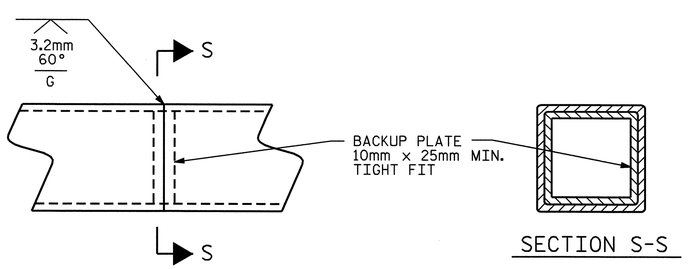

RAIL WELDED SPLICE DETAILS

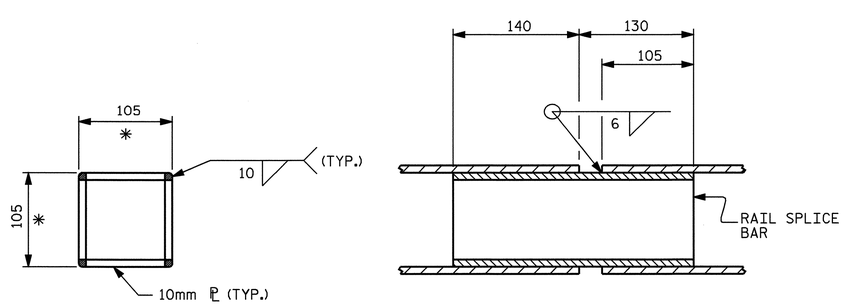

RAIL EXPANSION SPLICE DETAILS

* - DIMENSION AFTER GRINDING RADIUS ON CORNERS
TO MATCH INSIDE OF METAL RAIL.

PROJECT NO. R-2518B
YANCEY COUNTY
STATION: 175+52.267 -L-

SHEET 2 OF 4

STATE OF NORTH CAROLINA
DEPARTMENT OF TRANSPORTATION
RALEIGH

SPECIAL STEEL 2 BAR METAL RAIL
LEFT LANE

NORTH CAROLINA PROFESSIONAL SEAL 20125 ENGINEER
MARSHALL L. CHEEK, JR.
4-24-08

REVISIONS						SHEET NO.
NO.	BY:	DATE:	NO.	BY:	DATE:	S-16
1			3			TOTAL SHEETS
2			4			154

ASSEMBLED BY : S.B. WILLIAMS DATE : 7-07
CHECKED BY : V. NGUYEN DATE : 11/07

24-APR-2008 13:48
r:\structures\finalplans\str #1\R-2518B_sd_BR.dgn

STR. #1

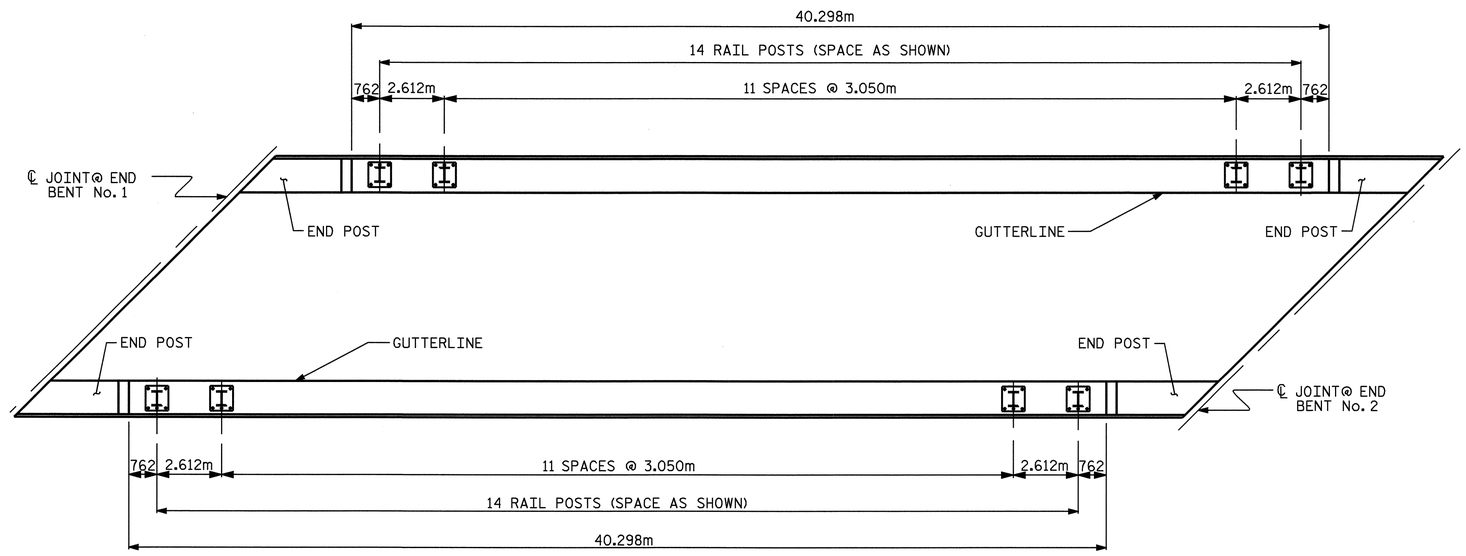

PLAN - RAIL AND END POST

ALL DIMENSIONS TAKEN ALONG THE OUTSIDE OF PARAPET

PROJECT NO. R-2518B

YANCEY COUNTY

STATION: 175+52.267 -L-

SHEET 3 OF 4

STATE OF NORTH CAROLINA
DEPARTMENT OF TRANSPORTATION
RALEIGH

NORTH CAROLINA PROFESSIONAL SEAL 20125 ENGINEER MARSHALL G. CLICKEN, JR.
4-24-08

SPECIAL STEEL 2 BAR METAL RAIL

LEFT LANE

REVISIONS						SHEET NO.
NO.	BY:	DATE:	NO.	BY:	DATE:	S-17
1			3			TOTAL SHEETS
2			4			154

DRAWN BY : S.B. WILLIAMS DATE : 7-07
CHECKED BY : V. NGUYEN DATE : 11/07

24-APR-2008 13:49
r:\structures\finalplans\str #1\R-2518B_sd_BR.dgn
dahodge

STR. #1

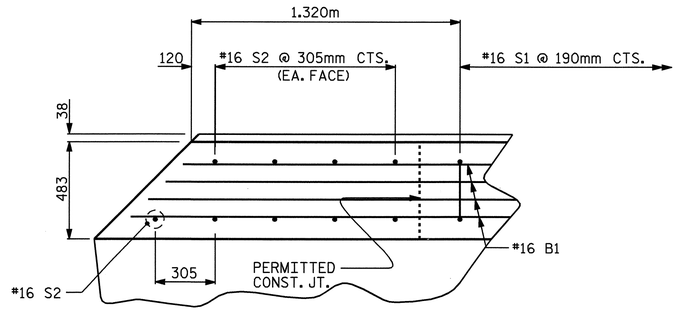

PLAN OF PARAPET

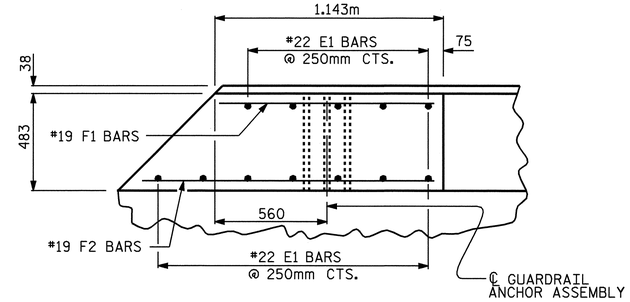

PLAN OF END POST

BILL OF MATERIAL FOR PARAPET AND END POSTS

BAR	NO.	SIZE	TYPE	LENGTH	WEIGHT
✳B1	32	16	STR	3440	171
✳B2	32	16	STR	5880	292
✳B3	8	16	STR	7880	98
✳E1	48	22	STR	740	108
✳F1	16	19	STR	1060	38
✳F2	16	19	STR	1440	51
✳S1	424	16	1	1400	921
✳S2	36	16	STR	920	51

✳EPOXY COATED REINFORCING STEEL 1730 kg

CLASS "AA" CONCRETE 9.0 m³

483mm X 178mm CONCRETE PARAPET 86.204 METERS

✳THESE BARS ARE EPOXY COATED

BAR TYPE

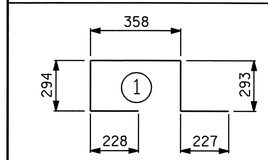

BAR DIMENSION IS OUT TO OUT

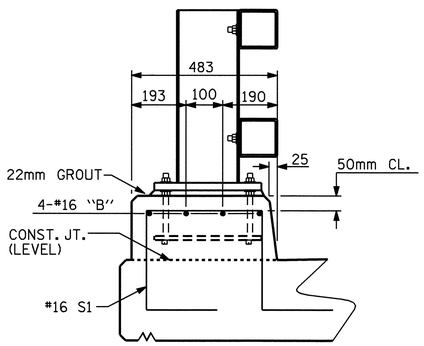

SECTION THRU PARAPET

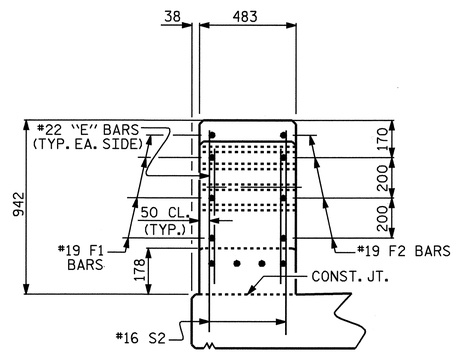

END VIEW

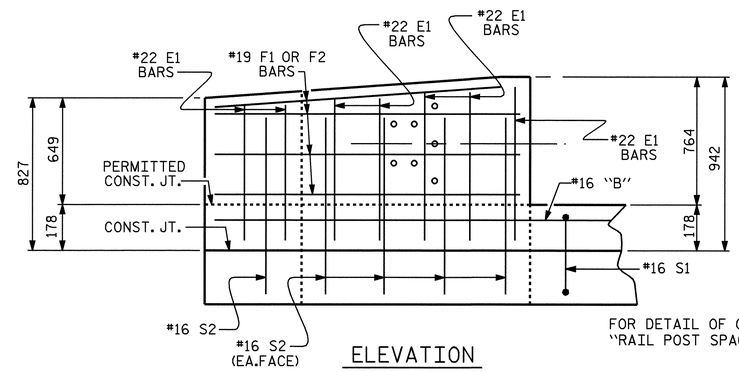

ELEVATION

PARAPET AND END POST FOR TWO BAR RAIL

NOTES

FOR DETAIL OF CONCRETE INSERT AND GUARDRAIL ANCHOR ASSEMBLY, SEE "RAIL POST SPACINGS AND END OF RAIL DETAIL" SHEETS.

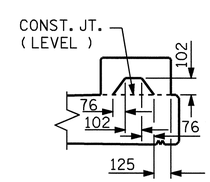

SECTION S-S

AT DAM IN OPEN JOINT
(THIS IS TO BE USED ONLY WHEN SLIP FORM IS USED)

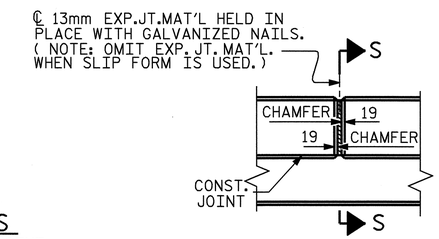

ELEVATION AT EXPANSION JOINTS

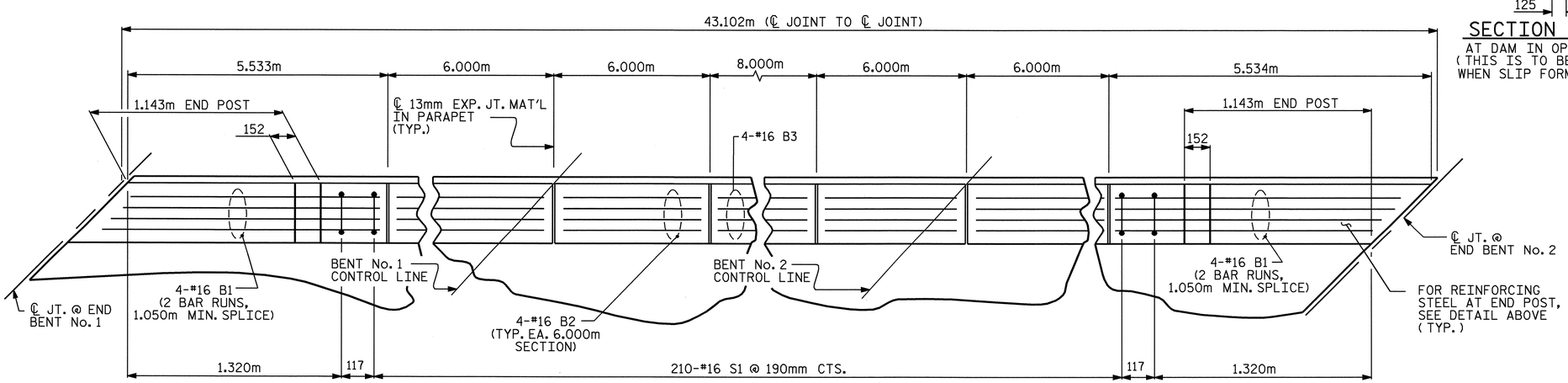

PLAN OF PARAPET

(LEFT SIDE PARAPET SHOWN, RIGHT SIDE PARAPET SIMILAR)

#16 "S" BARS MAY BE SHIFTED SLIGHTLY IN ORDER TO MAINTAIN A 50mm MINIMUM CLEARANCE TO THE 13mm EXPANSION JOINT MATERIAL IN PARAPET.

BARRIER RAIL DETAILS

PROJECT NO. R-2518B

YANCEY COUNTY

STATION: 175+52.267 -L-

SHEET 4 OF 4

STATE OF NORTH CAROLINA
DEPARTMENT OF TRANSPORTATION
RALEIGH

SUPERSTRUCTURE

CONCRETE PARAPET DETAILS
LEFT LANE

NORTH CAROLINA PROFESSIONAL SEAL 20125 ENGINEER MARSHALL L. CHEEK, JR.
4-24-08

REVISIONS							SHEET NO.
NO.	BY:	DATE:	NO.	BY:	DATE:		S-18
1			3				TOTAL SHEETS
2			4				154

DRAWN BY : S.B. WILLIAMS DATE : 7-07
CHECKED BY : V. NGUYEN DATE : 11/07

24-APR-2008 13:50
r:\structures\finalplans\str #1\R-2518B_sd_CP.dgn
dahodge

STR. #1

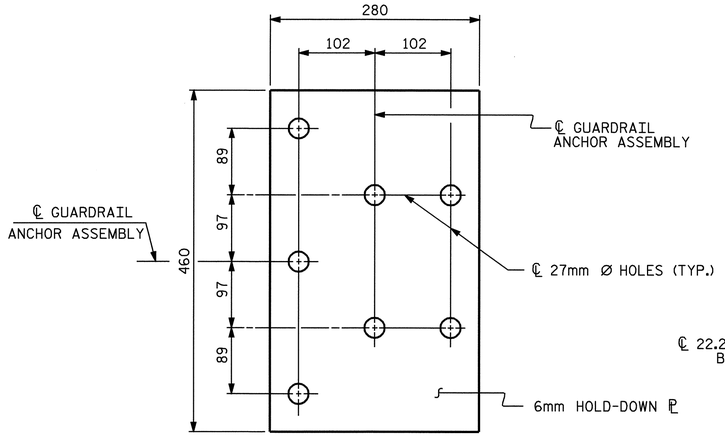

PLAN

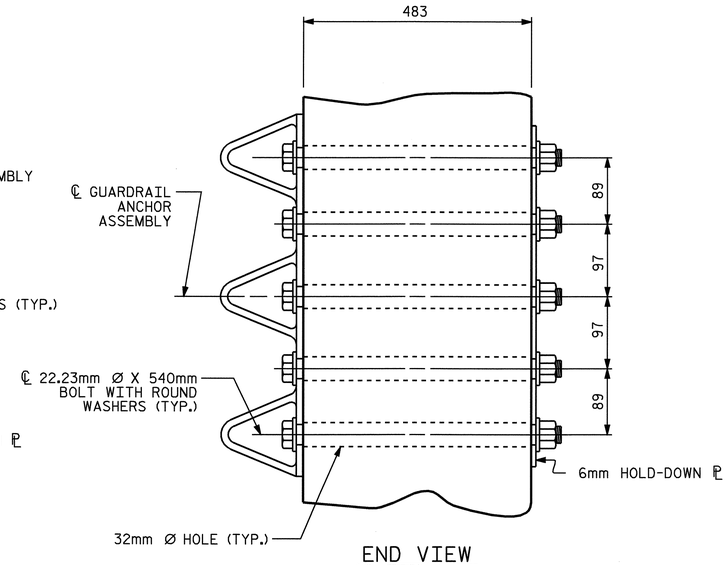

END VIEW

GUARDRAIL ANCHOR ASSEMBLY DETAILS

NOTES

THE GUARDRAIL ANCHOR ASSEMBLY SHALL CONSIST OF A 6mm HOLD DOWN PLATE AND 7 - 22.23mm Ø BOLTS WITH NUTS AND WASHERS.

THE HOLD-DOWN PLATE SHALL CONFORM TO AASHTO M270 GRADE 250. AFTER FABRICATION, THE HOLD-DOWN PLATE SHALL BE HOT-DIP GALVANIZED IN ACCORDANCE WITH AASHTO M111.

BOLTS SHALL CONFORM TO THE REQUIREMENTS OF ASTM A307 AND NUTS SHALL CONFORM TO THE REQUIREMENTS OF AASHTO M291M. BOLTS, NUTS AND WASHERS SHALL BE GALVANIZED. AT THE CONTRACTOR'S OPTION, STAINLESS STEEL BOLTS, NUTS AND WASHERS MAY BE USED AS AN ALTERNATE FOR THE 22.23mm Ø GALVANIZED BOLTS, NUTS AND WASHERS. THEY SHALL CONFORM TO OR EXCEED THE MECHANICAL REQUIREMENTS OF ASTM A307. THE USE OF THIS ALTERNATE SHALL BE APPROVED BY THE ENGINEER.

AFTER INSTALLATION, THE EXPOSED THREAD OF THE BOLT SHALL BE BURRED WITH A SHARP POINTED TOOL.

THE COST OF THE GUARDRAIL ANCHOR ASSEMBLIES WITH BOLTS, NUTS AND WASHERS COMPLETE IN PLACE, SHALL BE INCLUDED IN THE VARIOUS PAY ITEMS.

THE VERTICAL REINFORCING BARS MAY BE SHIFTED SLIGHTLY IN THE END POST TO CLEAR ASSEMBLY BOLTS.

THE 32mm Ø HOLES SHALL BE FORMED OR DRILLED WITH A CORE BIT. IMPACT TOOLS WILL NOT BE PERMITTED. ANY CONCRETE DAMAGED BY THIS WORK SHALL BE REPAIRED TO THE SATISFACTION OF THE ENGINEER.

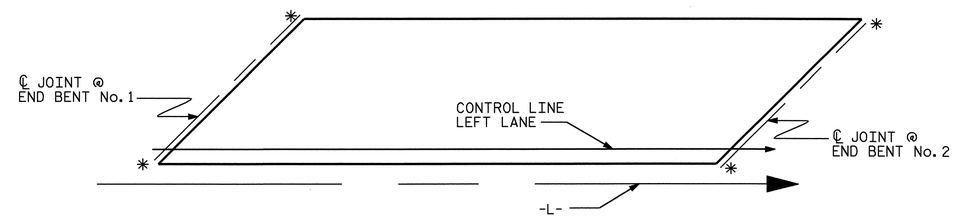

SKETCH SHOWING POINTS OF ATTACHMENT

✱ LOCATION OF GUARDRAIL ATTACHMENT

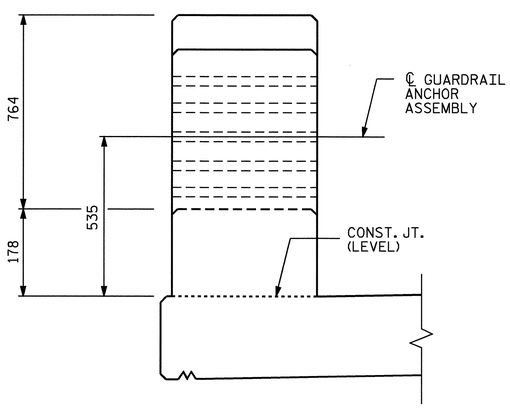

END VIEW

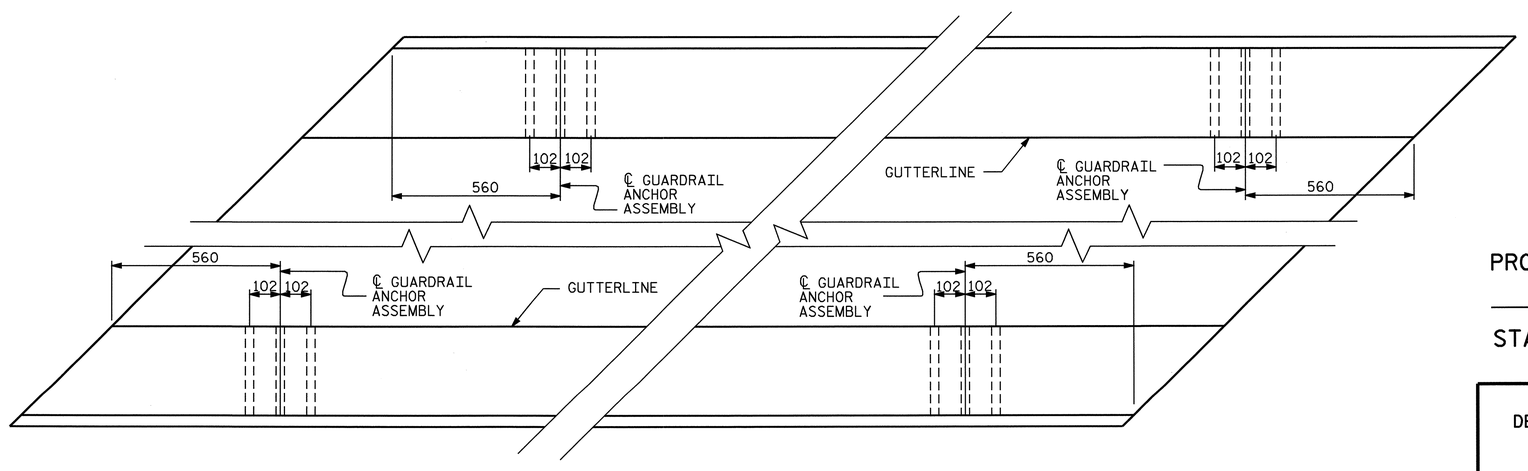

PLAN

LOCATION OF GUARDRAIL ANCHOR AT END POST

PROJECT NO. R-2518B
YANCEY COUNTY
STATION: 175+52.267 -L-

STATE OF NORTH CAROLINA
DEPARTMENT OF TRANSPORTATION
RALEIGH

STANDARD
GUARDRAIL ANCHORAGE DETAILS
FOR SPECIAL STEEL
2 BAR METAL RAIL
LEFT LANE

NORTH CAROLINA PROFESSIONAL SEAL 20125 ENGINEER MARSHALL E. GREEK, JR.
4-24-08

REVISIONS								SHEET NO.
NO.	BY:	DATE:	NO.	BY:	DATE:			S-19
1			3					TOTAL SHEETS
2			4					154

ASSEMBLED BY : S.B. WILLIAMS		DATE :	7-07
CHECKED BY : V. NGUYEN		DATE :	11/07
DRAWN BY : EEM	6/94	REV. 10/17/00	RWW/LES
CHECKED BY : RGW	6/94	REV. 5/7/03	RWW/JTE
		REV. 5/1/06	TLA/GM

24-APR-2008 13:49
r:\structures\final plans\str #1\R-2518B_sd_BR.dgn
dahodge

STR. #1

STD. NO. BMR8SM

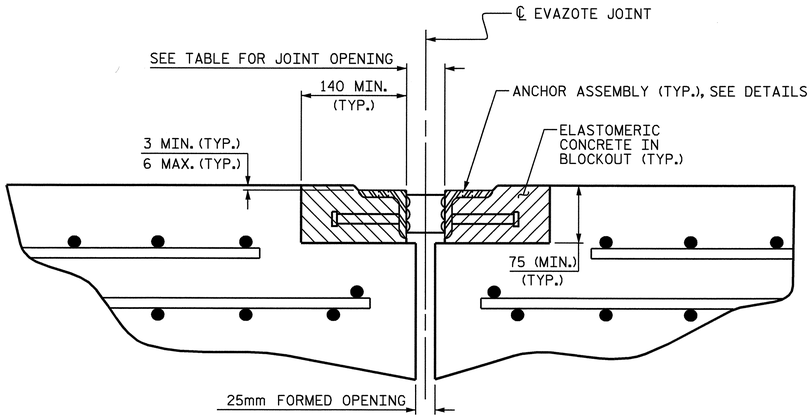

ARMORED JOINT DETAILS

SECTION NORMAL TO JOINT AT BENT

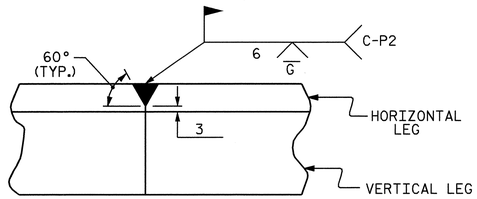

DETAIL- FIELD WELD SPLICE OF ANGLE

NOTES

ANGLES SHALL CONFORM TO AASHTO M270 GRADE 250 STEEL OR APPROVED EQUAL. ALL STUD ANCHORS SHALL CONFORM TO AASHTO M169 GRADES 1010 THRU 1020 OR APPROVED EQUAL.

STUD ANCHORS SHALL BE SHOP WELDED AND ALL HOLES SHALL BE SHOP DRILLED AS SHOWN ON THE PLANS. STUD ANCHORS SHALL BE ELECTRIC ARC END WELDED WITH COMPLETE FUSION.

UPON COMPLETION OF SHOP FABRICATION, THE ENTIRE ANCHOR ASSEMBLY SHALL BE METALLIZED. THE 12.70mm Ø STUD ANCHORS AND ANCHOR TABS NEED NOT BE METALLIZED. SEE SPECIAL PROVISION FOR THERMAL SPRAYED COATINGS (METALLIZATION).

ANCHOR ASSEMBLY SHALL BE MADE CONTINUOUS THE LENGTH OF THE JOINT FROM GUTTER TO GUTTER. FOR FIELD SPLICES AT ALL CROWN BREAK POINTS, THE ENDS OF THE STEEL ANGLES SHALL BE CUT PARALLEL TO THE BRIDGE CENTERLINE. FINISHED FIELD WELDS SHALL BE GROUND SMOOTH AND COATED WITH A MINIMUM THICKNESS OF 0.100mm OF ZINC-RICH PAINT IN ACCORDANCE WITH THE STANDARD SPECIFICATIONS.

ANCHOR ASSEMBLY SEGMENTS SHALL NOT BE LESS 3.6m NOR MORE THAN 6.1m IN LENGTH. SHORTER SEGMENTS MAY BE USED AT THE EDGE OF ROADWAY OR AT POINTS OF STAGED CONSTRUCTION.

THE ANCHOR ASSEMBLY SHALL BE SECURED AND LEVELED AS SHOWN IN THE "ARMORED JOINT ANCHOR ASSEMBLY DETAILS". NO SUBMITTALS ARE REQUIRED FOR 9.53mm Ø EXPANSION ANCHORS, NUTS OR WASHERS. THE CONTRACTOR MAY SUBMIT FOR APPROVAL AN ALTERNATE METHOD OF ALIGNING AND LEVELING THE ANGLES. THE ALTERNATE METHOD SHALL NOT INCLUDE ANY WELDING TO THE OUTSIDE FACE OF THE ANGLES.

AFTER THE ELASTOMERIC CONCRETE HAS BEEN CAST ON BOTH SIDES OF THE JOINT, REMOVE ANY EXCESS CONCRETE THAT COMES THROUGH THE WEEP HOLES AND THOROUGHLY CLEAN THE ANGLES. ANY DAMAGED STEEL SHALL BE COATED WITH A MINIMUM OF 0.100mm OF ZINC-RICH PAINT IN ACCORDANCE WITH THE STANDARD SPECIFICATIONS.

SEE SPECIAL PROVISIONS FOR EVAZOTE JOINT SEALS.

SEE SPECIAL PROVISIONS FOR ELASTOMERIC CONCRETE.

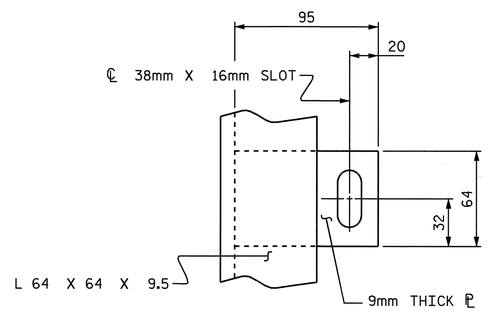

PLAN VIEW OF TAB

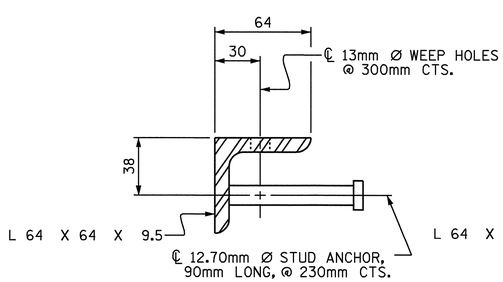

SECTION VIEW OF STUD

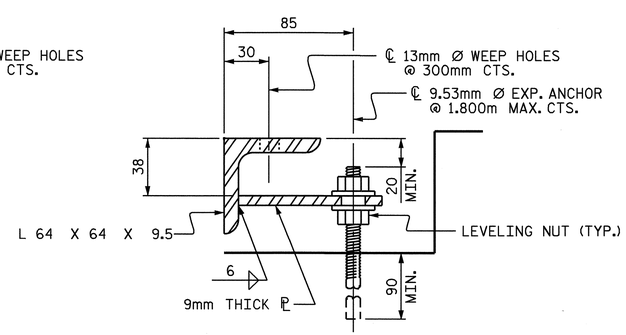

SECTION VIEW OF TAB

ARMORED JOINT ANCHOR ASSEMBLY DETAILS

MOVEMENT AND SETTING AT EVAZOTE JOINT						
END BENT NO.	SKEW ANGLE	NOMINAL UNCOMPRESSED SEAL WIDTH	TOTAL MOVEMENT (ALONG ℄ RDWY)	PERPENDICULAR JOINT OPENING AT 7° C	PERPENDICULAR JOINT OPENING AT 16° C	PERPENDICULAR JOINT OPENING AT 32° C
1	135°-00'-00"	64mm	15.28mm	55mm	51mm	46mm
2	135°-00'-00"	64mm	15.28mm	55mm	51mm	46mm

TOTAL MOVEMENT IS CALCULATED ALONG THE CENTERLINE OF ROADWAY.
JOINT OPENINGS ARE MEASURED PERPENDICULAR TO THE JOINT.

BILL OF MATERIAL		
END BENT NO.	ELASTOMERIC CONCRETE ✳ (CU. m)	TOTAL LENGTH OF ANGLE (m)
1	0.3	28.850m
2	0.3	28.850m

✳ BASED ON THE MINIMUM BLOCKOUT SHOWN.

PROJECT NO. R-2518B
YANCEY COUNTY
STATION: 175+52.267-L-

STATE OF NORTH CAROLINA
DEPARTMENT OF TRANSPORTATION
RALEIGH

STANDARD ARMORED EVAZOTE JOINT DETAILS

LEFT LANE

NORTH CAROLINA PROFESSIONAL SEAL 20125 ENGINEER MARSHALL G. CHEEK, JR.
3-31-08

REVISIONS						
NO.	BY:	DATE:	NO.	BY:	DATE:	
1			3			
2			4			

SHEET NO. S-20
TOTAL SHEETS 154

ASSEMBLED BY : L.L. MURPHY		DATE : 01-08	
CHECKED BY : M.G. CHEEK		DATE : 01-08	
DRAWN BY : EEM 1/96	REV. 7/10/01	LES/RDR	
CHECKED BY : RGW 1/96	REV. 5/7/03	RRR RWW/JTE	
	REV. 5/1/06	TLA/GM	

24-MAR-2008 13:39
r:\structures\final plans\Str #1\R2518B_sd_JS_ARM.dgn
lmurphy

STR #1

STD. NO. AEJ1SM

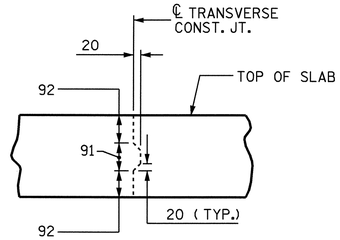

TRANSVERSE CONSTRUCTION JOINT DETAIL

NOTE: REINFORCING STEEL IN SLAB NOT SHOWN. LONGITUDINAL REINFORCING STEEL SHALL BE CONTINUOUS THRU JOINT

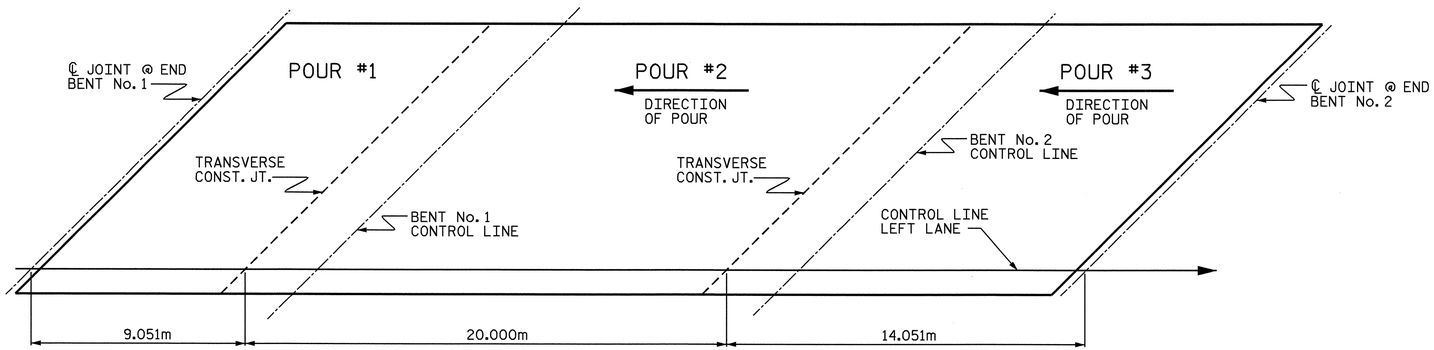

POURING SEQUENCE

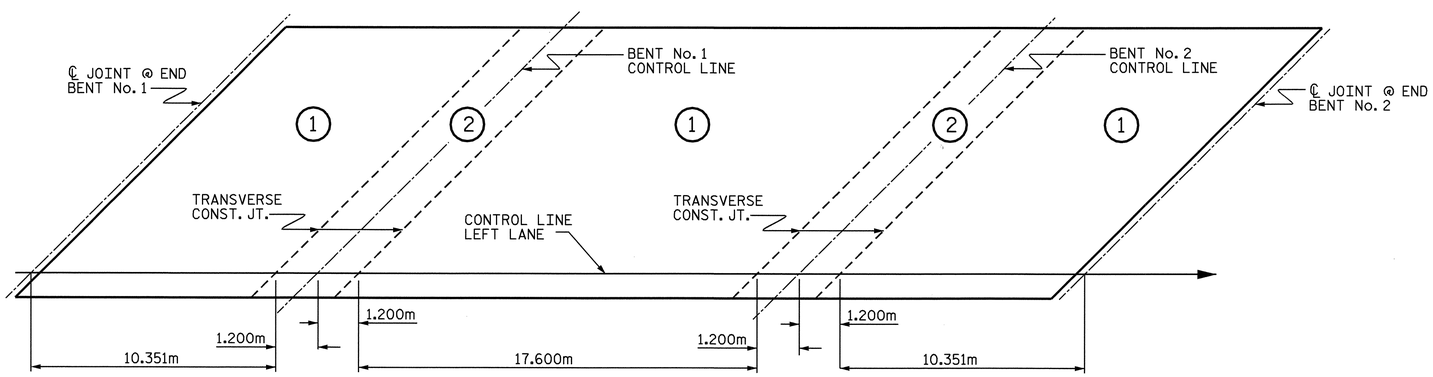

OPTIONAL POURING SEQUENCE

POUR (2) CANNOT BE STARTED UNTIL BOTH ADJACENT (1) POURS REACH A MINIMUM OF 20.7 MPa

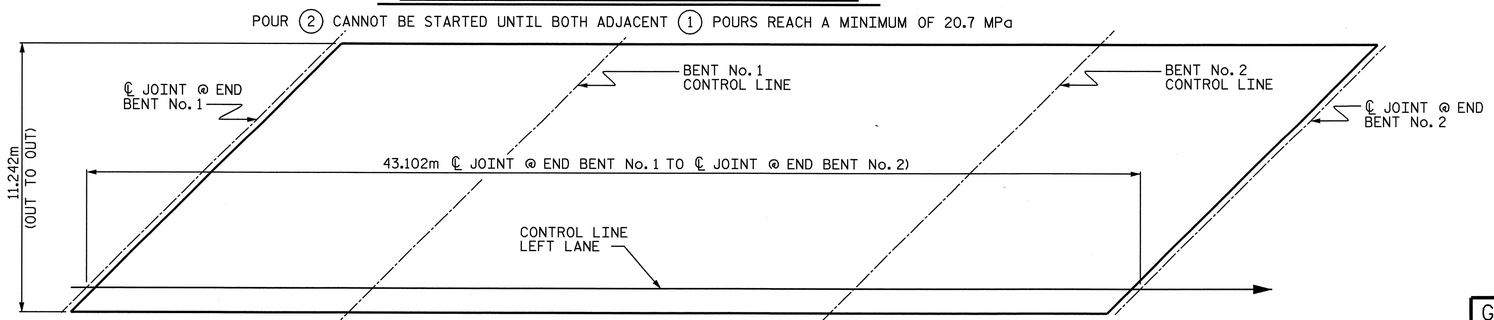

LAYOUT FOR COMPUTING AREA OF REINFORCED CONCRETE DECK SLAB
(SQ. METERS = 484.6)

SUPERSTRUCTURE REINFORCING STEEL LENGTHS ARE BASED ON THE FOLLOWING MINIMUM SPLICE LENGTHS					
BAR SIZE	SUPERSTRUCTURE EXCEPT APPROACH SLABS, PARAPET, AND BARRIER RAIL		APPROACH SLABS		PARAPET AND BARRIER RAIL
	EPOXY COATED	UNCOATED	EPOXY COATED	UNCOATED	
#13	610	540	610	540	840
#16	770	660	770	660	1050
#19	920	790	1190	790	1330
#22	1580	1060			
#25	2080	1390			

BILL OF MATERIAL
SPAN "A", "B" & "C"

BAR	NO.	SIZE	TYPE	LENGTH	WEIGHT
✳ A1	168	16	STR	11140	2905
A2	168	16	STR	11140	2905
✳ A101	6	16	STR	10600	99
✳ A102	6	16	STR	10020	93
✳ A103	6	16	STR	9460	88
✳ A104	6	16	STR	8880	83
✳ A105	6	16	STR	8320	77
✳ A106	6	16	STR	7740	72
✳ A107	6	16	STR	7180	67
✳ A108	6	16	STR	6600	61
✳ A109	6	16	STR	6040	56
✳ A110	6	16	STR	5460	51
✳ A111	6	16	STR	4900	46
✳ A112	6	16	STR	4320	40
✳ A113	6	16	STR	3760	35
✳ A114	6	16	STR	3180	30
✳ A115	6	16	STR	2620	24
✳ A116	6	16	STR	2040	19
✳ A117	6	16	STR	1480	14
✳ A118	6	16	STR	900	8
A201	6	16	STR	10600	99
A202	6	16	STR	10020	93
A203	6	16	STR	9460	88
A204	6	16	STR	8880	83
A205	6	16	STR	8320	77
A206	6	16	STR	7740	72
A207	6	16	STR	7180	67
A208	6	16	STR	6600	61
A209	6	16	STR	6040	56
A210	6	16	STR	5460	51
A211	6	16	STR	4900	46
A212	6	16	STR	4320	40
A213	6	16	STR	3760	35
A214	6	16	STR	3180	30
A215	6	16	STR	2620	24
A216	6	16	STR	2040	19
A217	6	16	STR	1480	14
A218	6	16	STR	900	8
✳ B1	48	13	STR	7100	339
✳ B2	48	22	STR	12480	1822
✳ B3	46	22	STR	4740	663
✳ B4	24	13	STR	6220	148
✳ B5	12	13	STR	7680	92
B6	102	16	STR	14760	2337
✳ G1	2	16	STR	15740	49
✳ G2	6	19	STR	1880	25
✳ K1	8	25	1	4520	144
✳ K2	12	25	2	6380	304
K3	48	13	STR	2540	121
K4	16	13	STR	2060	33
K5	24	19	STR	2540	136
K6	16	13	6	2060	33
K7	24	13	7	4060	97
✳ S1	64	16	5	1500	149
S2	152	13	3	1100	166
✳ S3	64	16	4	1380	137
U1	40	13	2	4280	170
U2	16	13	2	3660	58

REINFORCING STEEL = 7019 kg
✳ EPOXY COATED REINF. STEEL = 7740 kg

✳ THESE BARS ARE EPOXY COATED.

BAR TYPES

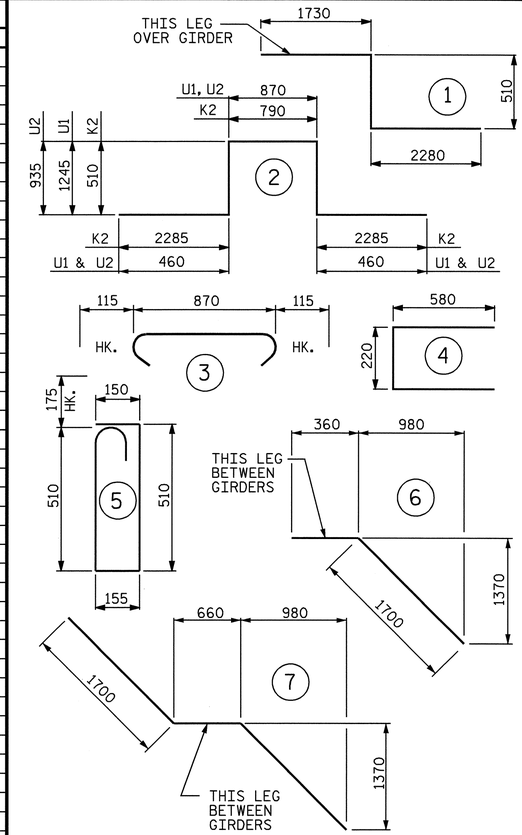

ALL BAR DIMENSIONS ARE OUT TO OUT

SUPERSTRUCTURE BILL OF MATERIAL

SPANS A,B & C	CLASS AA CONCRETE	REINFORCING STEEL	EPOXY COATED REINFORCING STEEL
	(CU. METERS)	(kg)	(kg)
POUR 1	27.0		
POUR 2	66.3		
POUR 3	52.7		
TOTALS✳✳	146.0	7019	7740

✳✳ QUANTITIES FOR PARAPET AND END POSTS ARE NOT INCLUDED

GROOVING BRIDGE FLOORS		
APPROACH SLABS	131.4	SQ.METERS
BRIDGE DECK	398.3	SQ.METERS
TOTAL	529.7	SQ.METERS

PROJECT NO. R-2518B
YANCEY COUNTY
STATION: 175+52.267 -L-

STATE OF NORTH CAROLINA
DEPARTMENT OF TRANSPORTATION
RALEIGH

STANDARD

SUPERSTRUCTURE
BILL OF MATERIAL
LEFT LANE

NORTH CAROLINA PROFESSIONAL SEAL 20125 ENGINEER MARSHALL L. CHEEK, JR.
4-10-08

REVISIONS							
NO.	BY:	DATE:	NO.	BY:	DATE:	SHEET NO. S-21
1			3			TOTAL SHEETS 154
2			4			

ASSEMBLED BY : S.B. WILLIAMS	DATE : 7-07		
CHECKED BY : V. NGUYEN	DATE : 11/07		
DRAWN BY : JMB 5/87	REV. 5/16/97	EEM/RGW	
CHECKED BY : SJD 9/87	REV. 5/1/06	TLA/GM	

03-APR-2008 17:02
r:\structures\Final plans\Str #1\R-2518B_sd_BM.dgn
lmurphy

STR. #1

STD. NO. BOM2SM

NOTES

STIRRUPS IN CAP MAY BE SHIFTED AS NECESSARY TO CLEAR ANCHOR BOLTS.

FOR SECTION A-A, SEE SHEET 3 OF 3.

FOR PILE SPLICE DETAILS, SEE SHEET 3 OF 3.

FOR TEMPORARY DRAINAGE AT END BENTS, SEE SHEET 3 OF 3.

BACKWALL SHALL BE PLACED BEFORE APPLYING THE EPOXY PROTECTIVE COATING.

THE TOP SURFACE AREA OF THE END BENT CAP SHALL BE CURED IN ACCORDANCE WITH THE STANDARD SPECIFICATIONS EXCEPT THAT THE MEMBRANE CURING COMPOUND METHOD SHALL NOT BE USED.

THE TOP SURFACE OF THE END BENT CAP EXCEPT THE BRIDGE SEAT BUILDUPS SHALL BE SLOPED TRANSVERSELY FROM THE FILL FACE TO THE BACK FACE AT THE RATE OF 2%.

THE CONTRACTOR SHALL PROVIDE FOR INSTALLATION OF THE 200mm Ø DRAIN PIPE THROUGH THE WING WALL AS REQUIRED FOR REINFORCED BRIDGE APPROACH FILLS, SEE THE ROADWAY PLANS. REINFORCING STEEL IN THE WING WALL MAY BE SHIFTED AS NECESSARY TO CLEAR THE DRAIN PIPE.

THE CONCRETE IN THE SHADED AREA OF THE WING SHALL BE POURED AFTER THE PARAPET AND END POST ARE CAST IF SLIP FORMING IS USED.

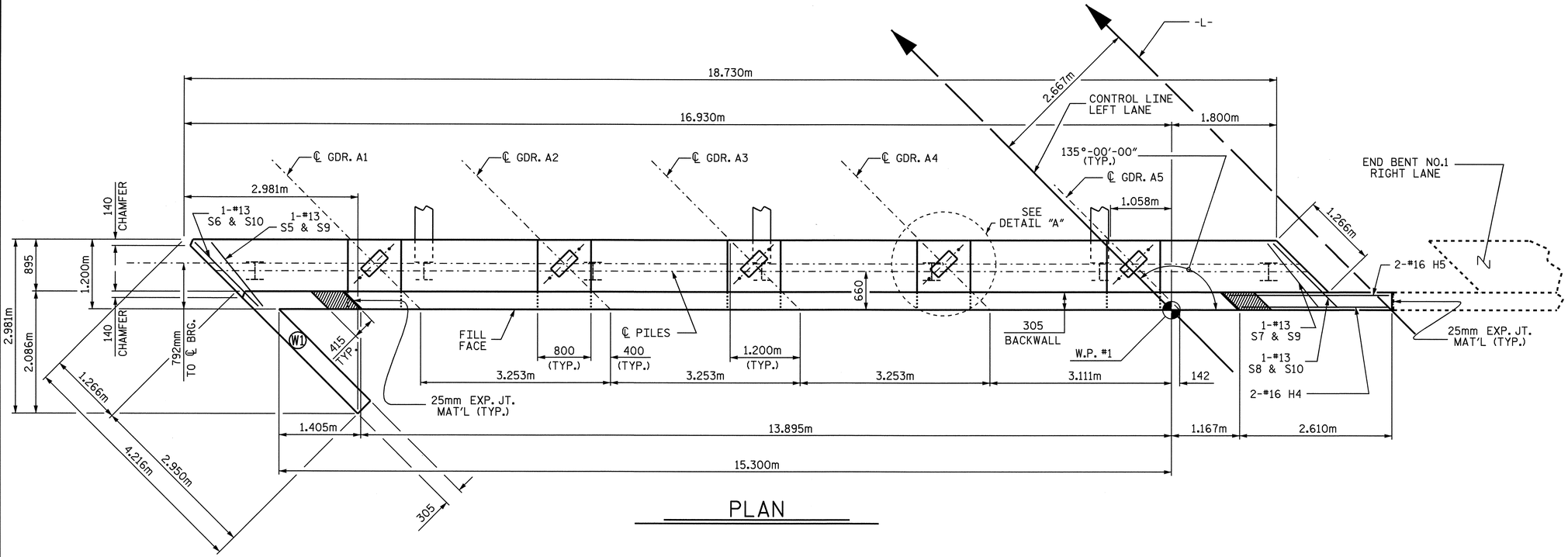

PLAN

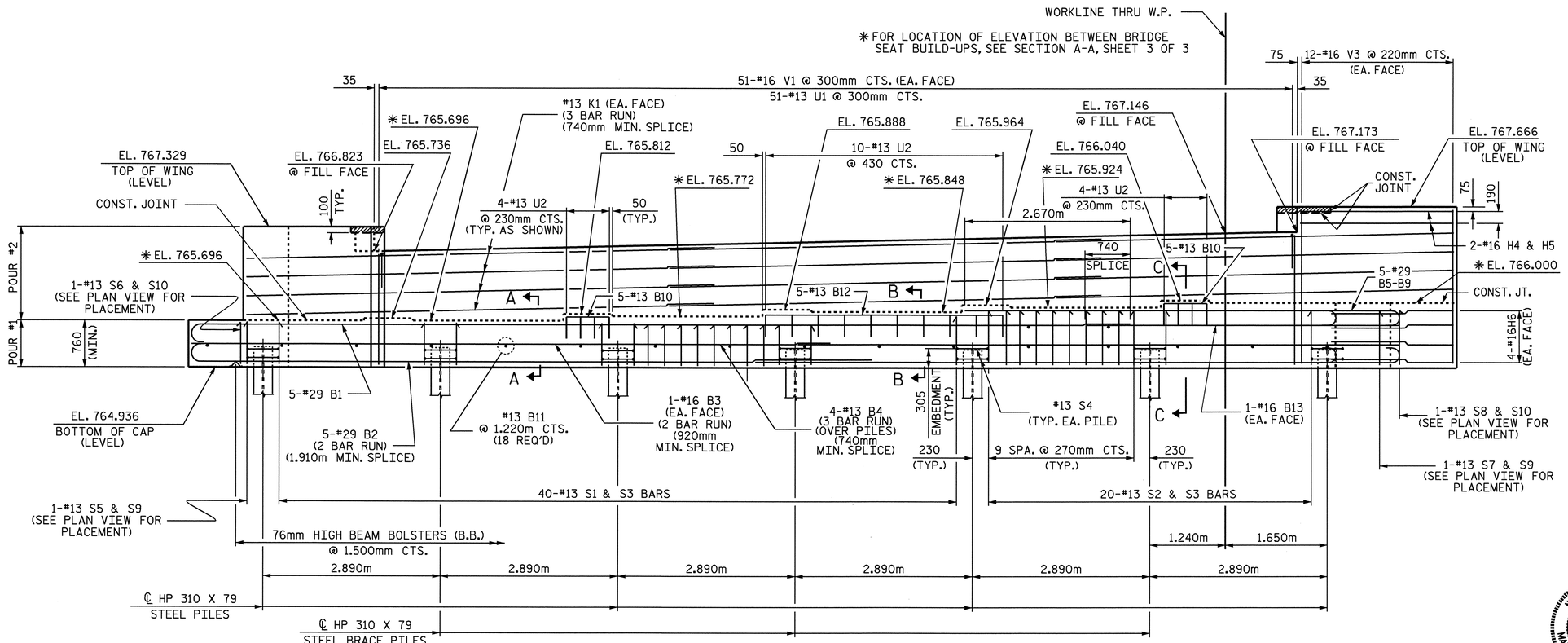

ELEVATION

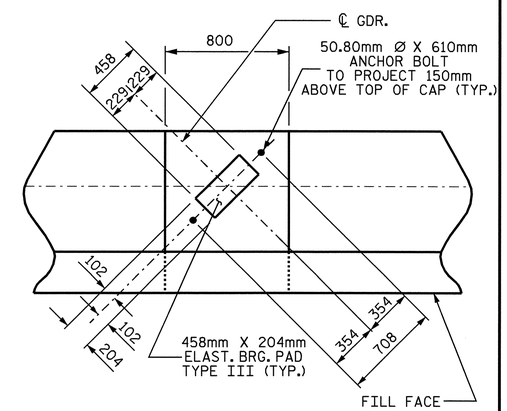

DETAIL "A"

PROJECT NO. R-2518B

YANCEY COUNTY

STATION: 175+52.267 -L-

SHEET 1 OF 3

STATE OF NORTH CAROLINA
DEPARTMENT OF TRANSPORTATION
RALEIGH

SUBSTRUCTURE END BENT NO.1 LEFT LANE

NORTH CAROLINA PROFESSIONAL SEAL 20125 ENGINEER MARSHALL G. CHEEK, JR.

4-16-08

REVISIONS						SHEET NO.
NO.	BY:	DATE:	NO.	BY:	DATE:	S-22
1			3			TOTAL SHEETS
2			4			154

STR #1

DRAWN BY : A.L. FIGUEROA DATE : 9-18-07
CHECKED BY : M.G. CHEEK DATE : 01-11-08

16-APR-2008 11:32
r:\structures\finalplans\str #1\R2518B_sd_EB* 1&2 LL-Str1.dgn
lmurphy

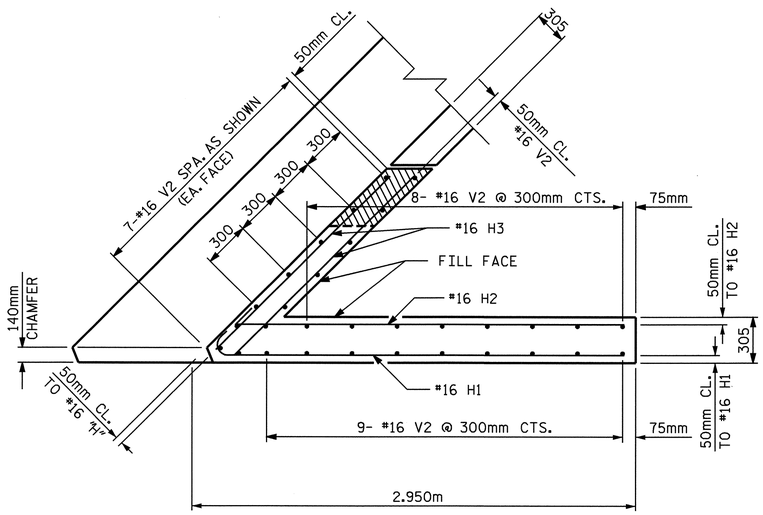

PLAN OF LEFT WING - W1

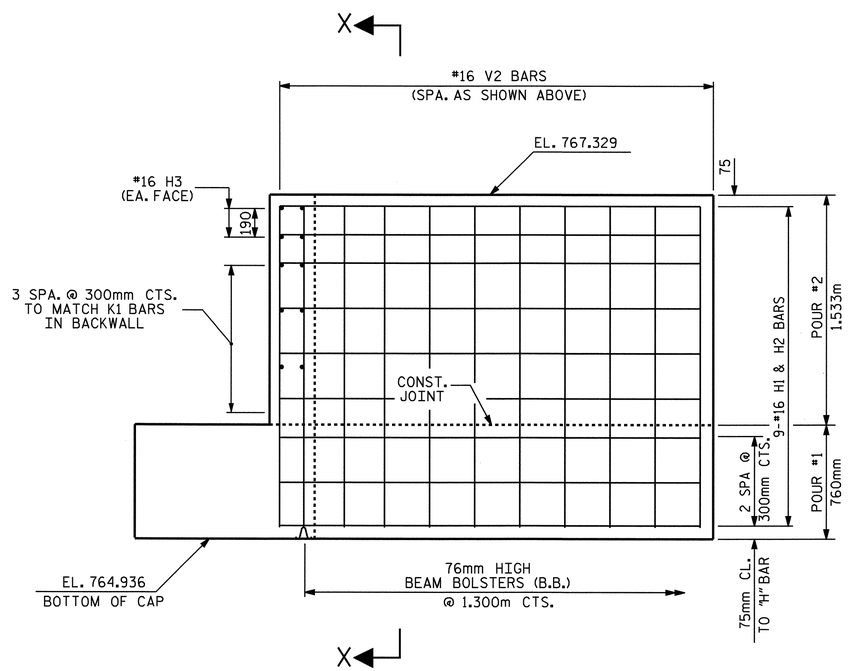

ELEVATION OF LEFT WING - W1

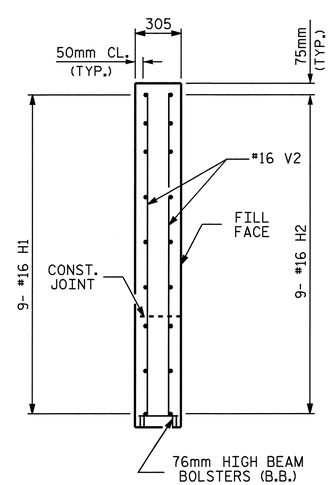

SECTION X-X

PROJECT NO. R-2518B

YANCEY COUNTY

STATION: 175+52.267-L-

SHEET 2 OF 3

STATE OF NORTH CAROLINA
DEPARTMENT OF TRANSPORTATION
RALEIGH

SUBSTRUCTURE END BENT NO.1 LEFT LANE

NORTH CAROLINA PROFESSIONAL SEAL 20125 ENGINEER MARSHAL G. CHEEK, JR.
3-31-08

REVISIONS							SHEET NO.
NO.	BY:	DATE:	NO.	BY:	DATE:		S-23
1			3				TOTAL SHEETS
2			4				154

STR #1

DRAWN BY : A.L. FIGUEROA DATE : 9-18-07
CHECKED BY : M.G. CHEEK DATE : 01-11-08

06-MAR-2008 13:48
r:\structures\finalplans\Str #1\R2518B_sd_EB* 1&2 LL-Str1.dgn
dahodge

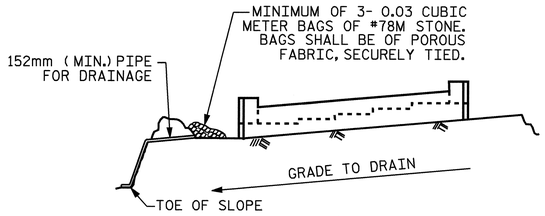

BAGGED STONE AND PIPE SHALL BE PLACED IMMEDIATELY AFTER COMPLETION OF END BENT EXCAVATION. PIPE MAY BE EITHER CONCRETE, CORRUGATED STEEL, CORRUGATED ALUMINUM ALLOY, OR CORRUGATED PLASTIC. PERFORATED PIPE WILL NOT BE ALLOWED.

BAGGED STONE SHALL REMAIN IN PLACE UNTIL THE ENGINEER DIRECTS THAT IT BE REMOVED. THE CONTRACTOR SHALL REMOVE AND DISPOSE OF SILT ACCUMULATIONS AT BAGGED STONE WHEN SO DIRECTED BY THE ENGINEER. BAGS SHALL BE REMOVED AND REPLACED WHENEVER THE ENGINEER DETERMINES THAT THEY HAVE DETERIORATED AND LOST THEIR EFFECTIVENESS.

NO SEPARATE PAYMENT WILL BE MADE FOR THIS WORK AND THE ENTIRE COST OF THIS WORK SHALL BE INCLUDED IN THE UNIT CONTRACT PRICE BID FOR THE SEVERAL PAY ITEMS.

TEMPORARY DRAINAGE AT END BENT

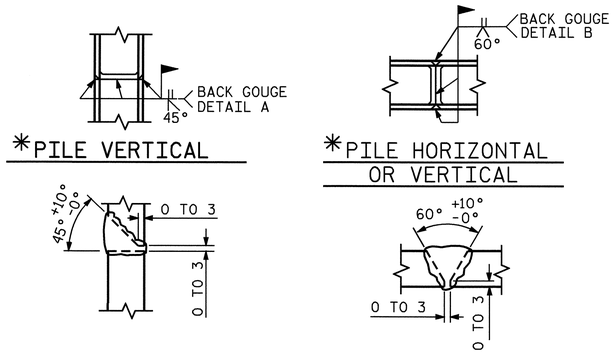

*POSITION OF PILE DURING WELDING.

PILE SPLICE DETAILS

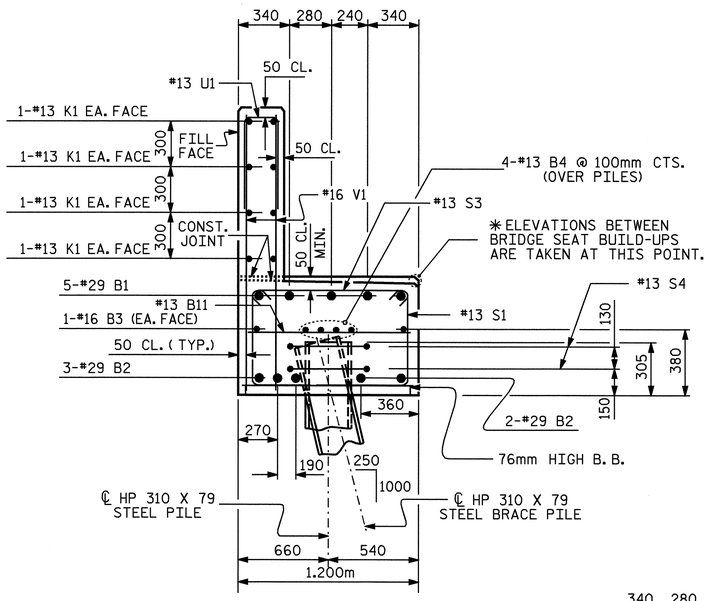

SECTION A-A

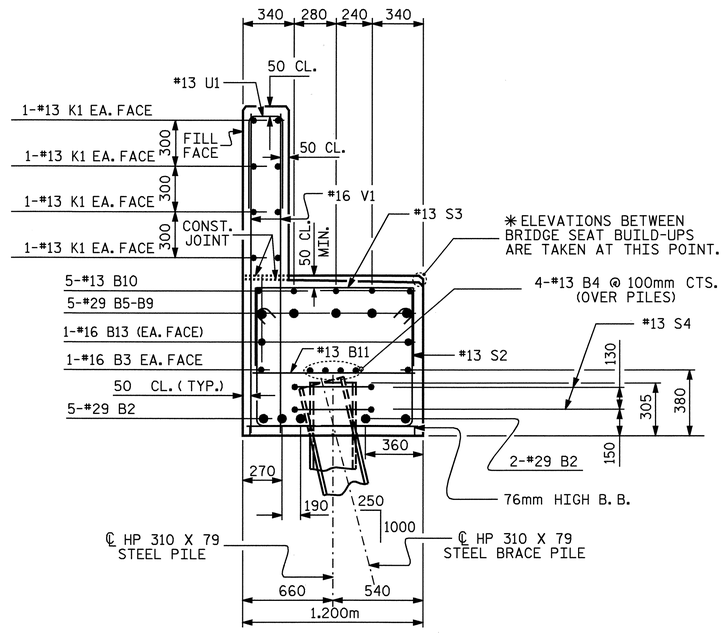

SECTION C-C

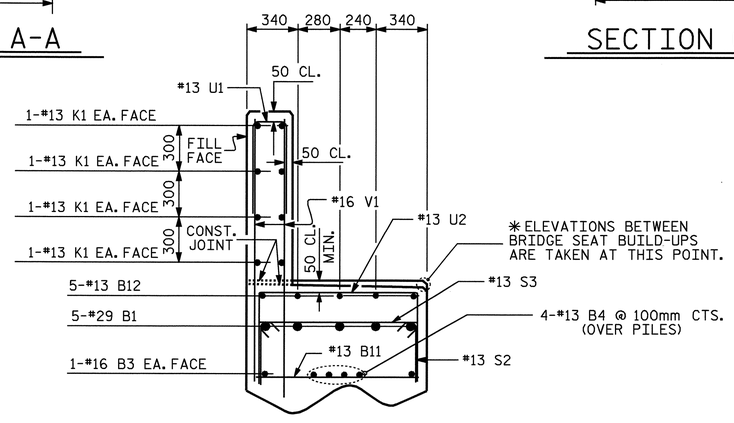

SECTION B-B

BAR TYPES

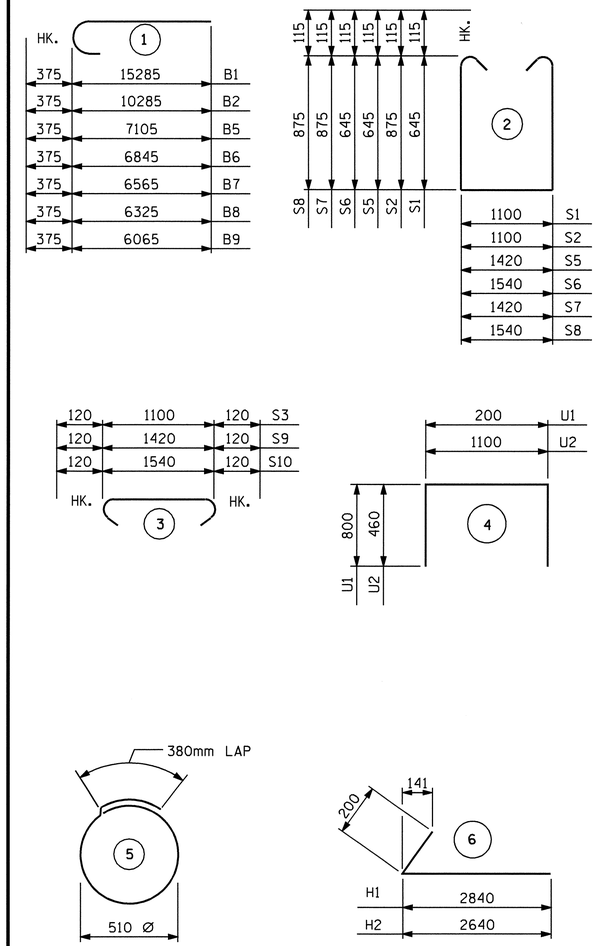

ALL BAR DIMENSIONS ARE OUT TO OUT.

BILL OF MATERIAL

END BENT NO. 1

BAR	NO.	SIZE	TYPE	LENGTH	WEIGHT
B1	5	#29	1	15660	396
B2	10	#29	1	10660	539
B3	4	#16	STR	9780	61
B4	12	#13	STR	6720	80
B5	1	#29	1	7480	38
B6	1	#29	1	7220	37
B7	1	#29	1	6940	35
B8	1	#29	1	6700	34
B9	1	#29	1	6440	33
B10	10	#13	STR	700	7
B11	18	#13	STR	1100	20
B12	5	#13	STR	3960	20
B13	2	#16	STR	4140	13
H1	9	#16	6	3040	42
H2	9	#16	6	2840	40
H3	4	#16	STR	1740	11
H4	2	#16	STR	2500	8
H5	2	#16	STR	2700	8
H6	8	#16	STR	2000	25
K1	24	#13	STR	7040	168
S1	40	#13	2	2620	104
S2	20	#13	2	3080	61
S3	60	#13	3	1340	80
S4	14	#13	5	1980	28
S5	1	#13	2	2940	3
S6	1	#13	2	3060	3
S7	1	#13	2	3400	3
S8	1	#13	2	3520	3
S9	2	#13	3	1660	3
S10	2	#13	3	1780	4
U1	51	#13	4	1800	91
U2	18	#13	4	2020	36
V1	102	#16	STR	1760	279
V2	31	#16	STR	2280	110
V3	24	#16	STR	2620	98

REINFORCING STEEL = 2521 kg

CLASS A CONCRETE BREAKDOWN

POUR #1
CAP & LOWER PART OF WINGS 20.9 C.M.

POUR #2
BACKWALL & UPPER PART OF WINGS 8.6 C.M

CLASS A CONCRETE TOTAL 29.5 C.M.

HP 310 X 79 STEEL PILES

NO. 7 42 METERS

PROJECT NO. R-2518B
YANCEY COUNTY
STATION: 175+52.267 -L-

SHEET 3 OF 3

STATE OF NORTH CAROLINA
DEPARTMENT OF TRANSPORTATION
RALEIGH

SUBSTRUCTURE
END BENT NO.1
LEFT LANE

NORTH CAROLINA PROFESSIONAL SEAL 20125 ENGINEER MARSHALL G. CHEEK, JR.
3-31-08

REVISIONS						SHEET NO.
NO.	BY:	DATE:	NO.	BY:	DATE:	S-24
1			3			TOTAL SHEETS
2			4			154

STR #1

DRAWN BY : A.L. FIGUEROA DATE : 9-18-07
CHECKED BY : M.G. CHEEK DATE : 01-11-08

06-MAR-2008 13:48
r:\structures\final plans\Str #1\R2518B_sd_EB* 1&2 LL-Str1.dgn
dehodge

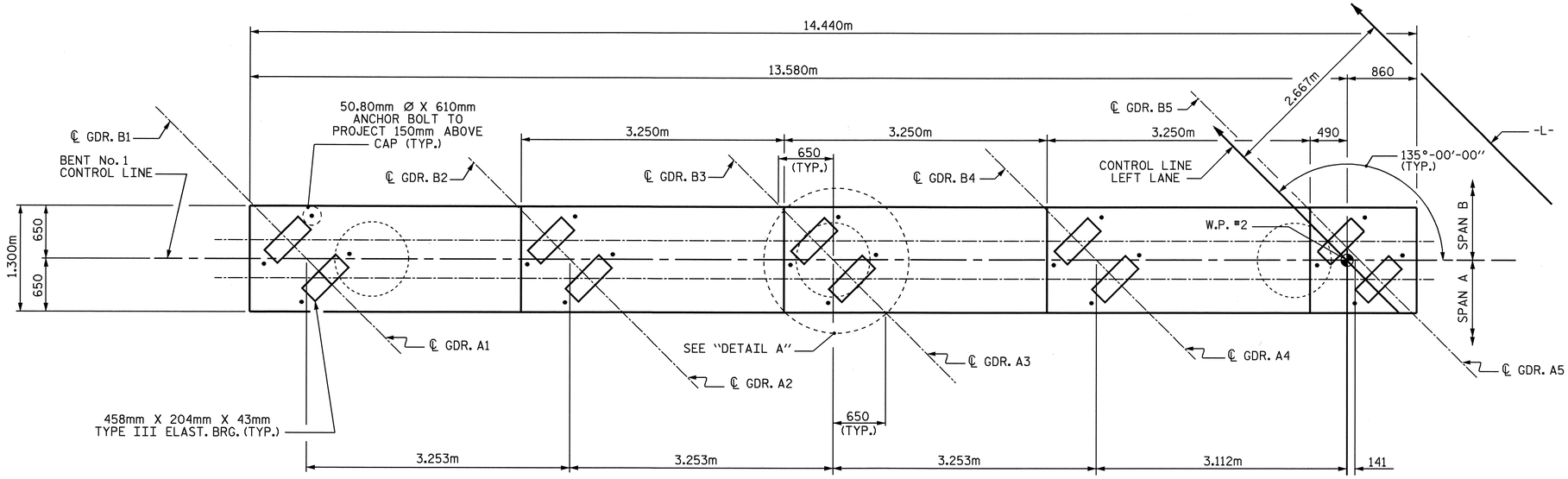

PLAN

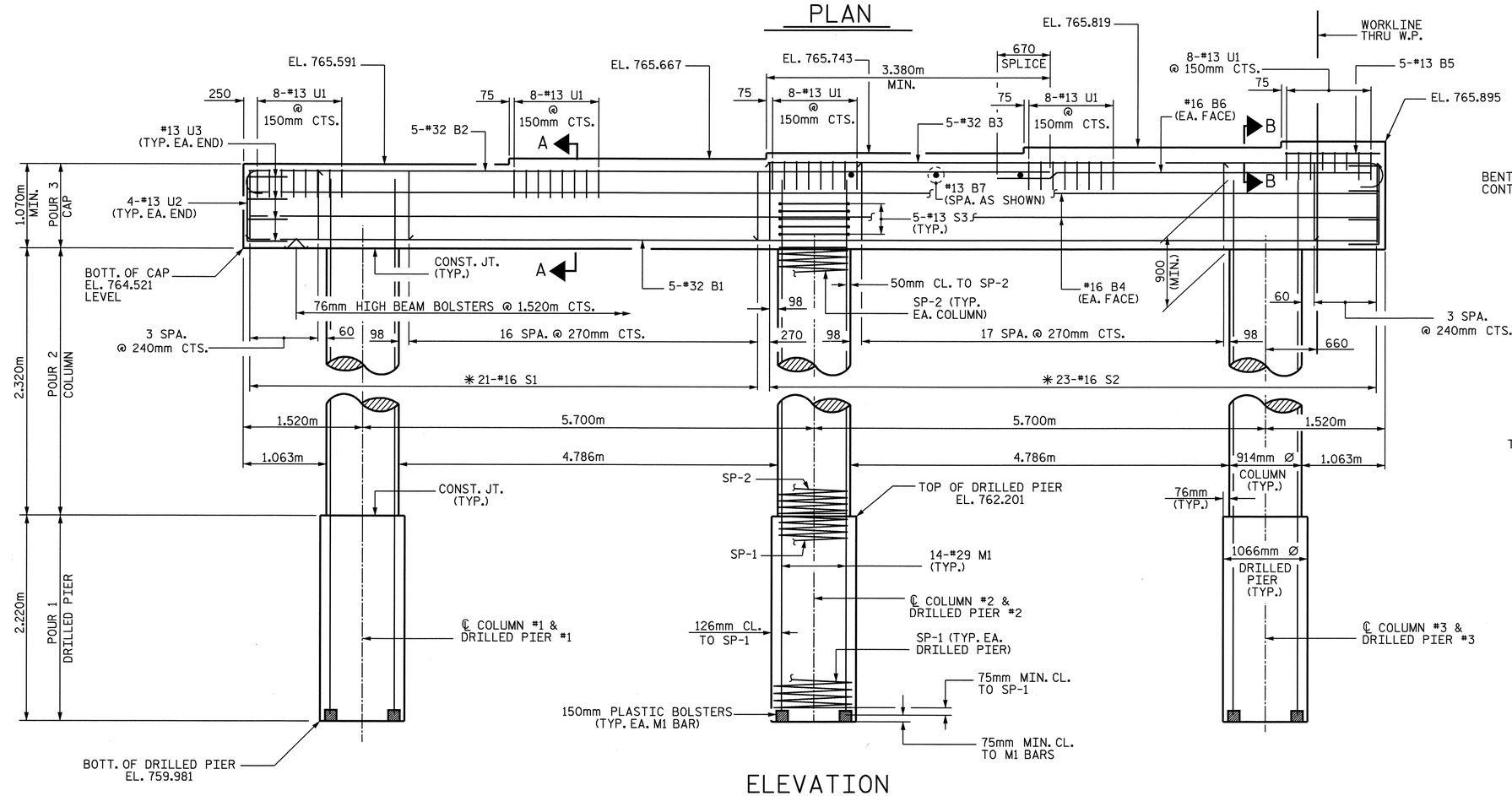

ELEVATION

✳ INVERT ALTERNATE STIRRUPS

DIMENSIONS AND REINFORCING STEEL ARE TYPICAL FOR EACH COLUMN & DRILLED PIER

NOTES

STIRRUPS IN CAP MAY BE SHIFTED AS NECESSARY TO CLEAR ANCHOR BOLTS.

HOOKS ON "V" BARS MAY BE TURNED AS NECESSARY FOR PLACING REINFORCING STEEL.

ALL STEEL IN THE DRILLED PIERS IS INCLUDED IN THE PAY ITEMS FOR "REINFORCING STEEL" AND "SPIRAL COLUMN REINFORCING STEEL".

THE CONTRACTOR'S ATTENTION IS CALLED TO THE FACT THAT THE LONGITUDINAL REINFORCEMENT FOR THE DRILLED PIERS IS DETAILED WITH ONE METER OF EXTRA LENGTH.

THE LOCATION OF THE CONSTRUCTION JOINT IN THE DRILLED PIERS IS BASED ON AN APPROXIMATE GROUND LINE ELEVATION. IF THE CONSTRUCTION JOINT IS ABOVE THE ACTUAL GROUND LINE ELEVATION, THE CONTRACTOR SHALL PLACE THE CONSTRUCTION JOINT 300mm BELOW THE GROUND LINE.

SPLICING OF THE LONGITUDINAL BARS IN THE DRILLED PIERS WILL NOT BE PERMITTED.

"U" BARS IN THE END OF CAP MAY BE SHIFTED SLIGHTLY AS NECESSARY TO CLEAR "B" BARS.

50mm MINIMUM CONCRETE COVER FROM END OF CAP IS REQUIRED FOR ALL "U" BARS.

THE CONTRACTOR SHALL ALIGN THE "M" AND "V" BARS AS SHOWN IN THE PLAN OF DRILLED PIERS AND COLUMNS.

FOR DRILLED PIERS, SEE SPECIAL PROVISIONS.

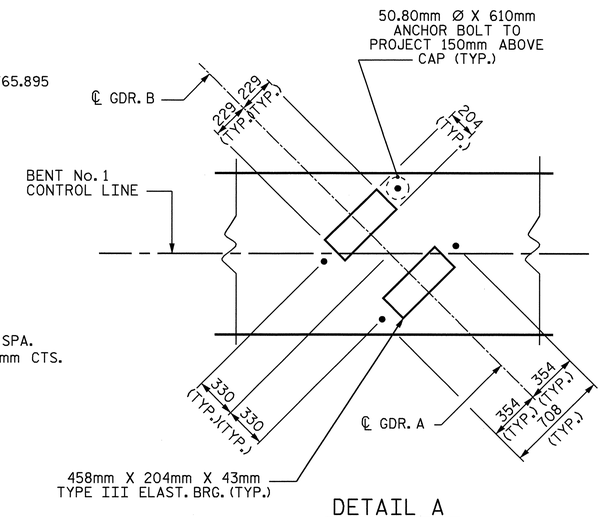

DETAIL A

PROJECT NO. R-2518B

YANCEY COUNTY

STATION: 175+52.267 -L-

SHEET 1 OF 2

STATE OF NORTH CAROLINA
DEPARTMENT OF TRANSPORTATION
RALEIGH

SUBSTRUCTURE
BENT No. 1
LEFT LANE

NORTH CAROLINA PROFESSIONAL SEAL 20125 ENGINEER MARSHALL G. CHEEK, JR. 4-4-08

REVISIONS						SHEET NO.
NO.	BY:	DATE:	NO.	BY:	DATE:	S-25
1			3			TOTAL SHEETS
2			4			154

DRAWN BY : M. POOLE DATE : 01-08
CHECKED BY : M. G. CHEEK DATE : 02-08

03-APR-2008 17:13
r:\structures\finalplans\str #1\R2518B_sd_B1_01.dgn
lmurphy

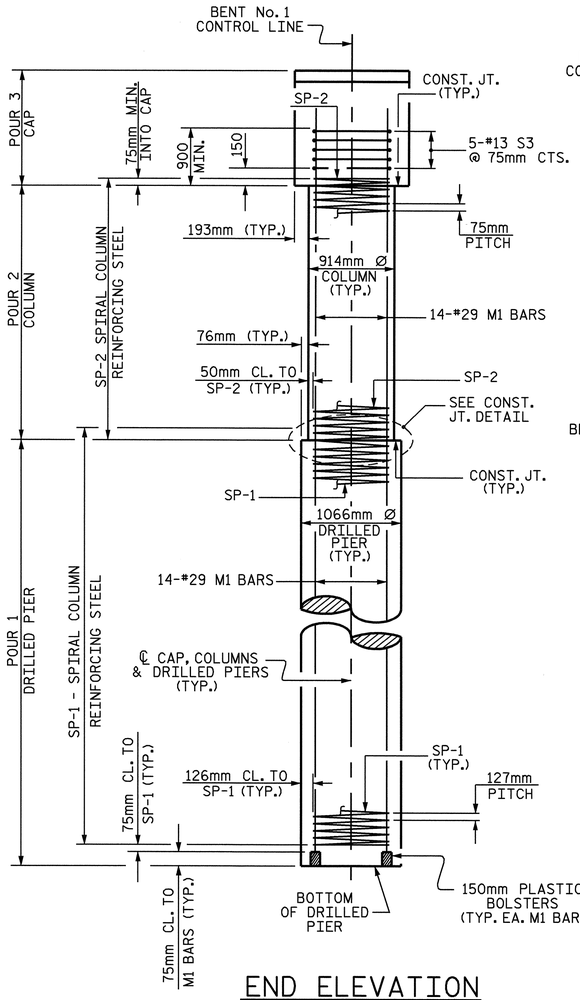

END ELEVATION

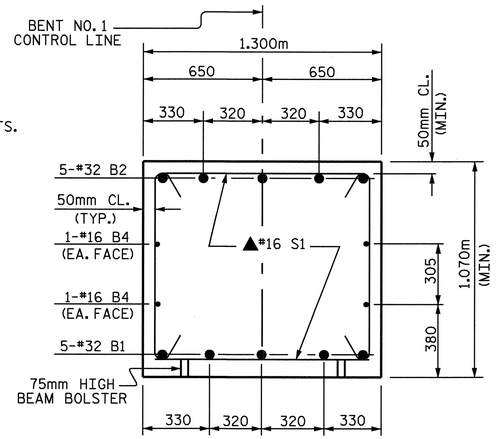

SECTION A-A

▲ INVERT ALTERNATE STIRRUPS

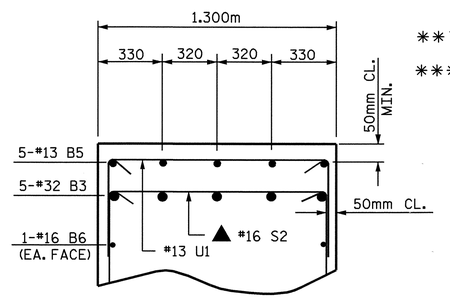

SECTION B-B

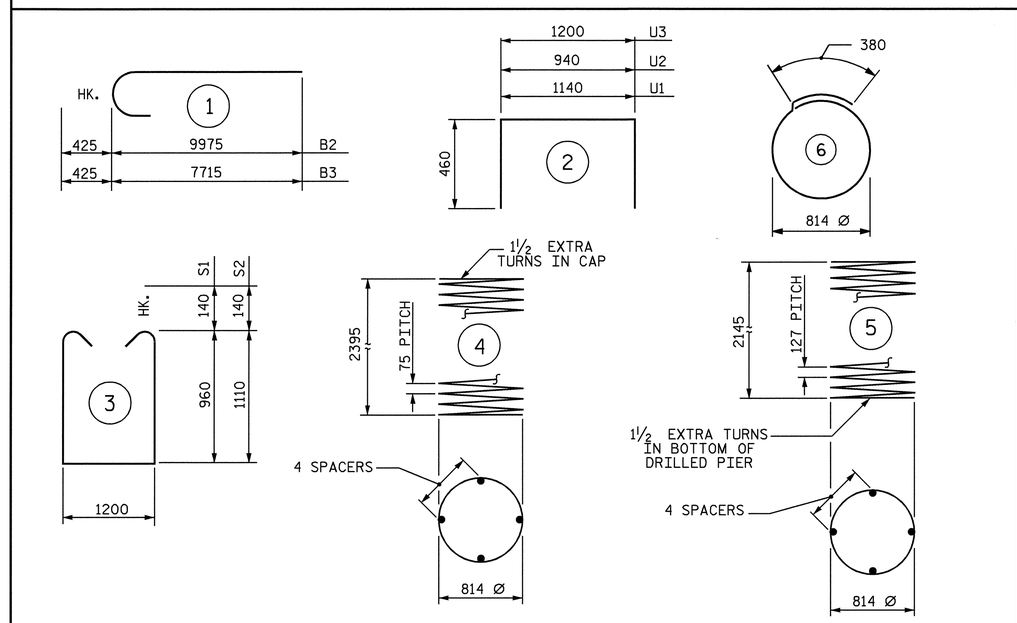

ALL BAR DIMENSIONS ARE OUT TO OUT.

BILL OF MATERIAL

BENT No. 1

BAR	NO.	SIZE	TYPE	LENGTH	WEIGHT
B1	5	32	STR	14340	459
B2	5	32	1	10400	333
B3	5	32	1	8140	261
B4	4	16	STR	14340	89
B5	5	13	STR	1240	6
B6	2	16	STR	4560	14
B7	3	13	STR	1200	4
M1	42	29	STR	6360	1352
S1	21	16	3	3400	111
S2	23	16	3	3700	132
S3	15	13	6	2940	44
U1	40	13	2	2060	82
U2	8	13	2	1860	15
U3	8	13	2	2060	16
REINFORCING STEEL				kg	2918

BAR	NO.	SIZE	TYPE	LENGTH	WEIGHT
SP-1	3	***	5	46620	217
SP-2	3	**	4	83740	250
SPIRAL COLUMN REINFORCING STEEL					467 kg

CLASS A CONCRETE BREAKDOWN

POUR 2	(COLUMNS)	4.6 C.M.
POUR 3	(CAP)	22.5 C.M.
TOTAL		27.1 C.M.

DRILLED PIER QUANTITIES
DRILLED PIER CONCRETE BREAKDOWN

POUR 1	(DRILLED PIERS)	5.9 C.M.
1066mm Ø DRILLED PIERS NOT IN SOIL		5.0 METERS
1066mm Ø DRILLED PIERS IN SOIL		1.7 METERS
▲CSL TUBES		35.8 METERS

▲ NO SEPARATE PAYMENT WILL BE MADE FOR CSL TUBES. CSL TUBES WILL BE INCLUDED IN THE UNIT BID PRICE FOR DRILLED PIERS

** THE SP-2 SPIRAL REINFORCING STEEL SHALL BE W20 OR D-20 COLD DRAWN WIRE OR #4 PLAIN OR DEFORMED BAR.

*** THE SP-1 SPIRAL REINFORCING STEEL SHALL BE W31 OR D-31 COLD DRAWN WIRE OR #5 PLAIN OR DEFORMED BAR.

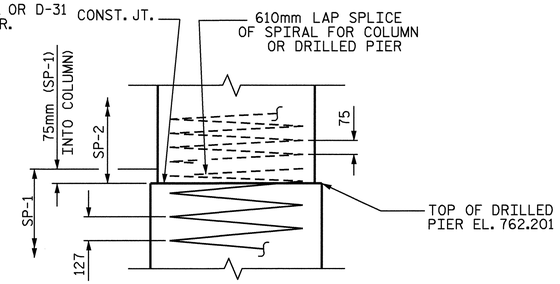

CONSTRUCTION JOINT DETAIL

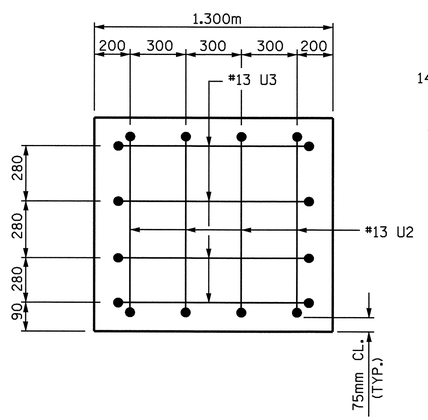

END OF CAP ELEVATION

(TYP. EA. END)

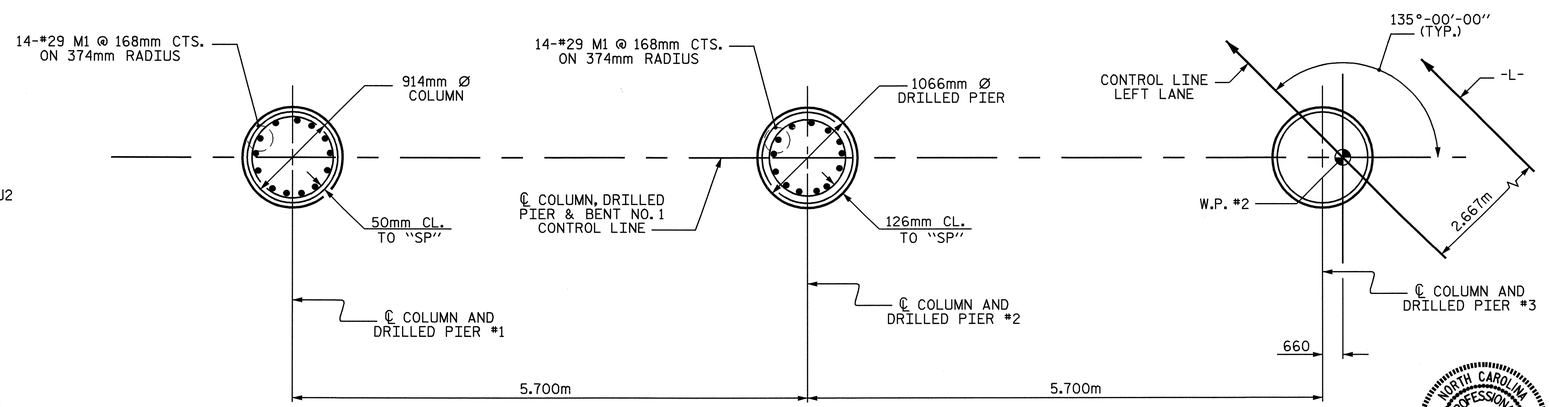

PLAN OF DRILLED PIERS AND COLUMNS

REINFORCING STEEL AND DIMENSIONS TYPICAL FOR ALL DRILLED PIERS AND COLUMNS

PROJECT NO. R-2518B
YANCEY COUNTY
STATION: 175+52.267 -L-

SHEET 2 OF 2

STATE OF NORTH CAROLINA
DEPARTMENT OF TRANSPORTATION
RALEIGH

SUBSTRUCTURE
BENT No. 1
LEFT LANE

NORTH CAROLINA PROFESSIONAL SEAL 20125 ENGINEER MARSHALL G. CHEEK, JR. 3-31-08

REVISIONS								SHEET NO.
NO.	BY:	DATE:	NO.	BY:	DATE:			S-26
1			3					TOTAL SHEETS
2			4					154

DRAWN BY : M. POOLE DATE : 01/2008
CHECKED BY : M. G. CHEEK DATE : 02-08

25-MAR-2008 12:15
R:\Structures\Final plans\Str #1\R2518B_sd_B1_01.dgn
mpoole

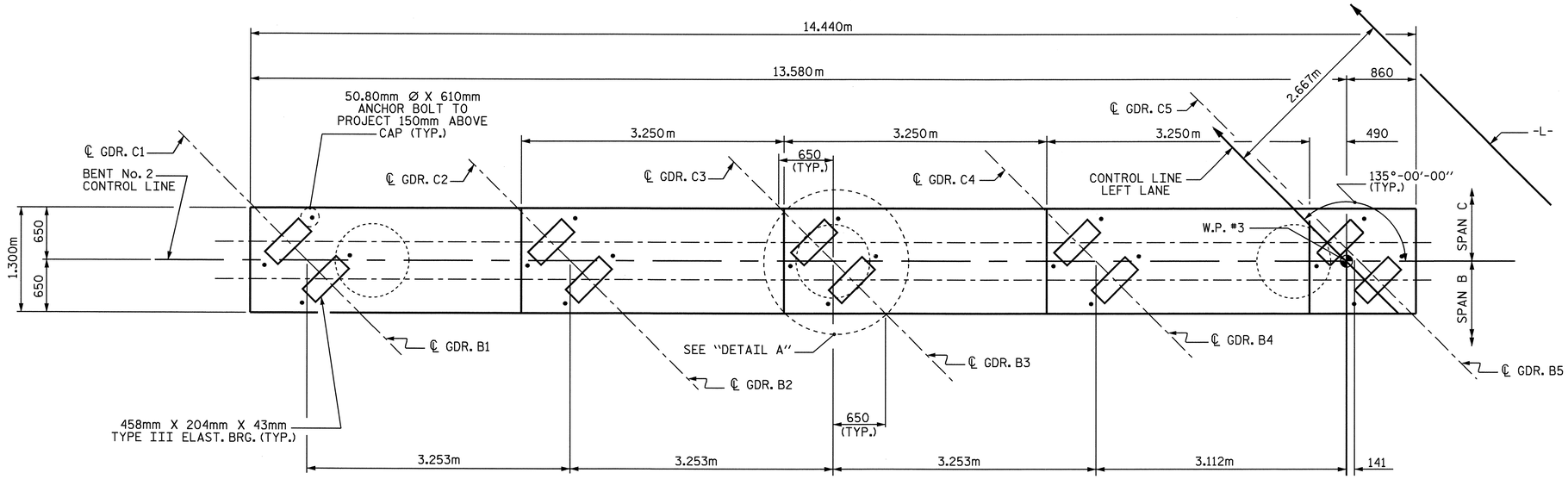

PLAN

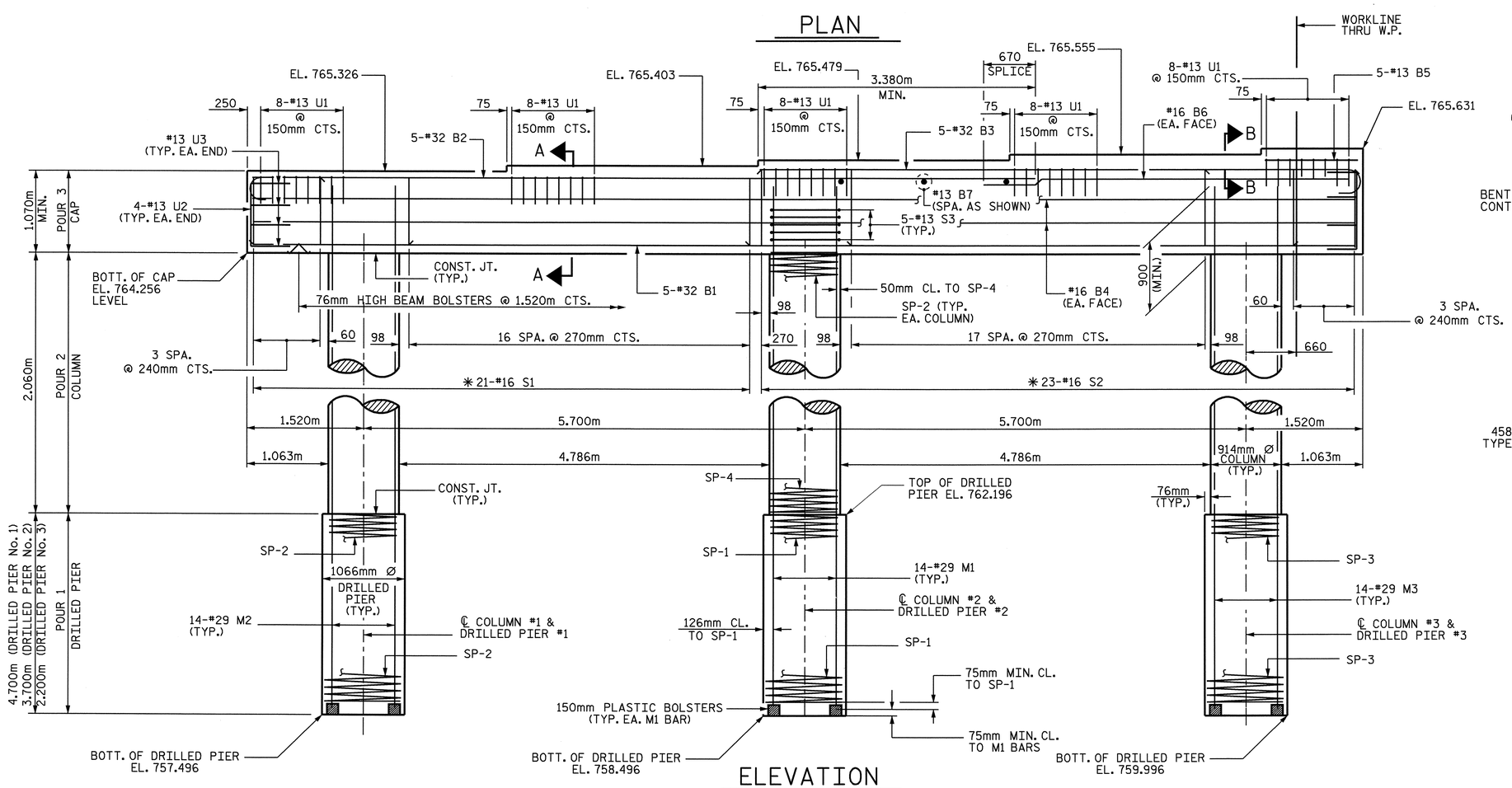

ELEVATION

✳ INVERT ALTERNATE STIRRUPS

DIMENSIONS AND REINFORCING STEEL ARE TYPICAL FOR EACH COLUMN & DRILLED PIER

NOTES

STIRRUPS IN CAP MAY BE SHIFTED AS NECESSARY TO CLEAR ANCHOR BOLTS.

HOOKS ON "V" BARS MAY BE TURNED AS NECESSARY FOR PLACING REINFORCING STEEL.

ALL STEEL IN THE DRILLED PIERS IS INCLUDED IN THE PAY ITEMS FOR "REINFORCING STEEL" AND "SPIRAL COLUMN REINFORCING STEEL".

THE CONTRACTOR'S ATTENTION IS CALLED TO THE FACT THAT THE LONGITUDINAL REINFORCEMENT FOR THE DRILLED PIERS IS DETAILED WITH ONE METER OF EXTRA LENGTH.

THE LOCATION OF THE CONSTRUCTION JOINT IN THE DRILLED PIERS IS BASED ON AN APPROXIMATE GROUND LINE ELEVATION. IF THE CONSTRUCTION JOINT IS ABOVE THE ACTUAL GROUND LINE ELEVATION, THE CONTRACTOR SHALL PLACE THE CONSTRUCTION JOINT 300mm BELOW THE GROUND LINE.

SPLICING OF THE LONGITUDINAL BARS IN THE DRILLED PIERS WILL NOT BE PERMITTED.

"U" BARS IN THE END OF CAP MAY BE SHIFTED SLIGHTLY AS NECESSARY TO CLEAR "B" BARS.

50mm MINIMUM CONCRETE COVER FROM END OF CAP IS REQUIRED FOR ALL "U" BARS.

THE CONTRACTOR SHALL ALIGN THE "M" AND "V" BARS AS SHOWN IN THE PLAN OF DRILLED PIERS AND COLUMNS.

FOR DRILLED PIERS, SEE SPECIAL PROVISIONS.

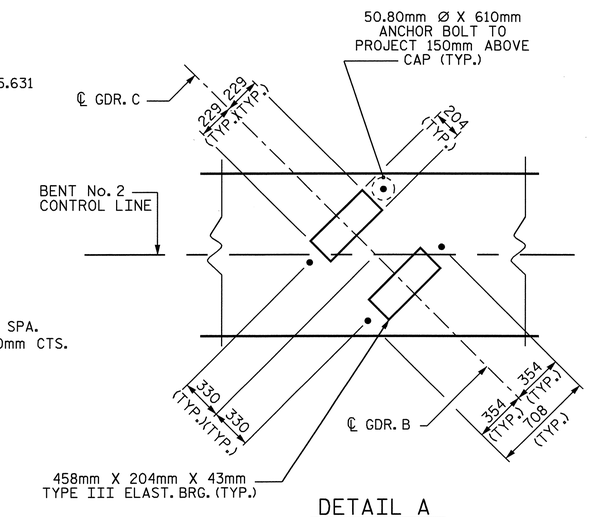

DETAIL A

PROJECT NO. R-2518B

YANCEY COUNTY

STATION: 175+52.267 -L-

SHEET 1 OF 2

STATE OF NORTH CAROLINA
DEPARTMENT OF TRANSPORTATION
RALEIGH

SUBSTRUCTURE
BENT No. 2
LEFT LANE

NORTH CAROLINA PROFESSIONAL SEAL 20125 ENGINEER MARSHALL G. CHEEK, JR.
3-31-08

REVISIONS							SHEET NO.
NO.	BY:	DATE:	NO.	BY:	DATE:		S-27
1			3				TOTAL SHEETS
2			4				154

DRAWN BY : M. POOLE DATE : 01/08
CHECKED BY : M. G. CHEEK DATE : 02/08

25-MAR-2008 12:15
R:\Structures\Finalplans\Str #1\R2518B_sd_B2_01.dgn
mpoole

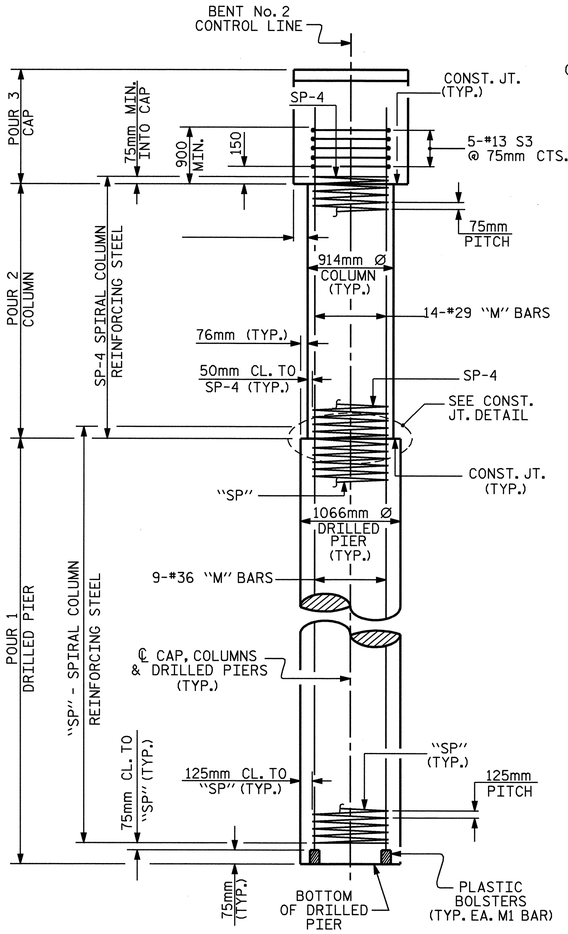

END ELEVATION

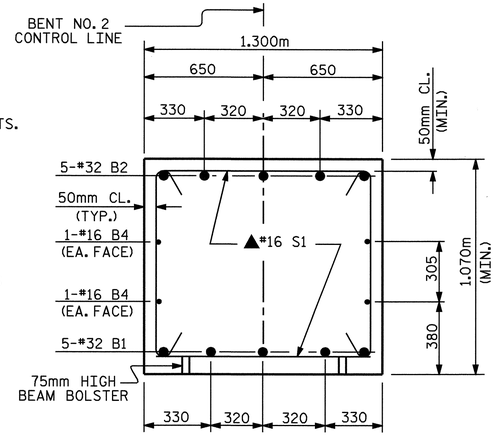

SECTION A-A

▲ INVERT ALTERNATE STIRRUPS

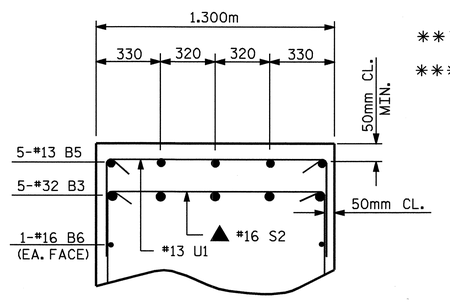

SECTION B-B

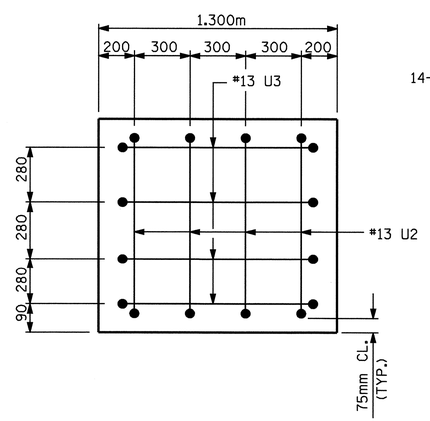

END OF CAP ELEVATION

(TYP. EA. END)

BAR TYPES

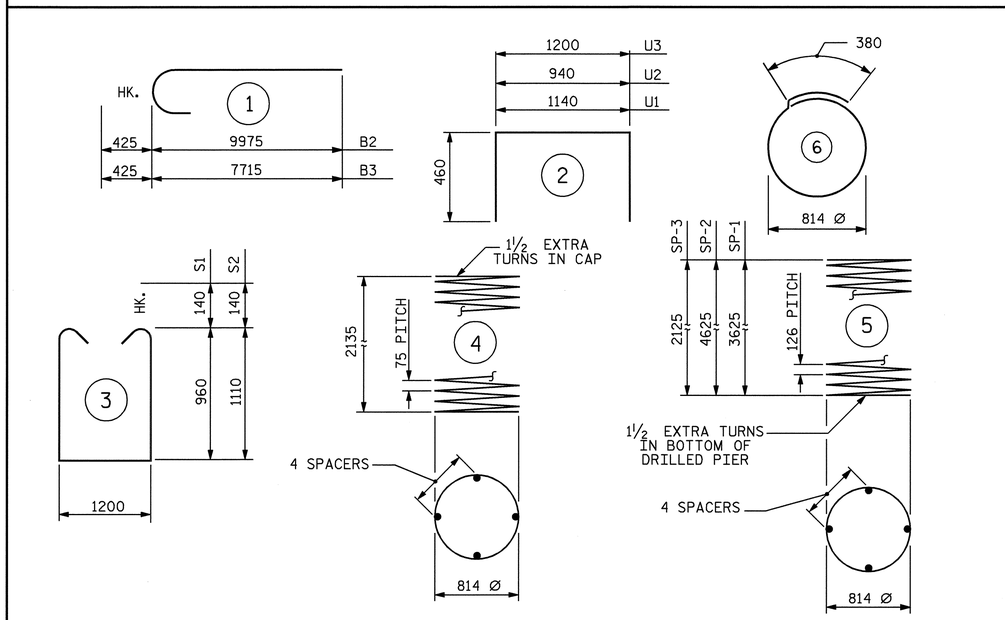

ALL BAR DIMENSIONS ARE OUT TO OUT.

** THE SP-2 SPIRAL REINFORCING STEEL SHALL BE W20 OR D-20 COLD DRAWN WIRE OR #4 PLAIN OR DEFORMED BAR.

*** THE SP-1 SPIRAL REINFORCING STEEL SHALL BE W31 OR D-31 COLD DRAWN WIRE OR #5 PLAIN OR DEFORMED BAR.

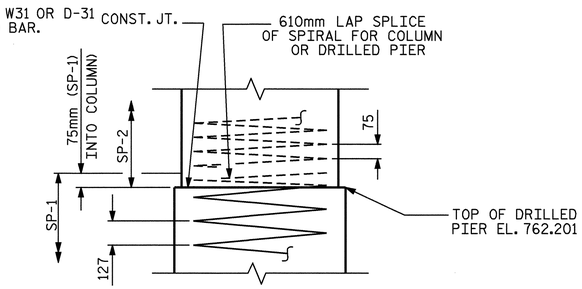

CONSTRUCTION JOINT DETAIL

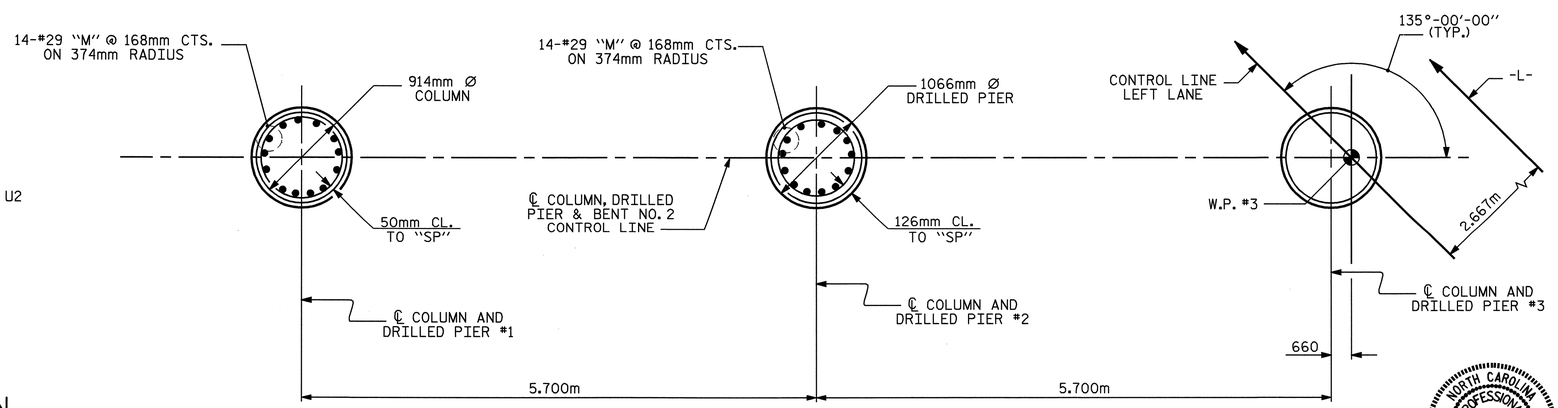

PLAN OF DRILLED PIERS AND COLUMNS

REINFORCING STEEL AND DIMENSIONS TYPICAL
FOR ALL DRILLED PIERS AND COLUMNS

BILL OF MATERIAL

BENT No. 2

BAR	NO.	SIZE	TYPE	LENGTH	WEIGHT
B1	5	32	STR	14340	459
B2	5	32	1	10400	333
B3	5	32	1	8140	261
B4	4	16	STR	14340	89
B5	5	13	STR	1240	6
B6	2	16	STR	4560	14
B7	3	13	STR	1200	4
M1	14	29	STR	7600	538
M2	14	29	STR	8600	609
M3	14	29	STR	6100	432
S1	21	16	3	3400	111
S2	23	16	3	3700	132
S3	15	13	6	2940	44
U1	40	13	2	2060	82
U2	8	13	2	1860	15
U3	8	13	2	2060	16

REINFORCING STEEL kg 3145

BAR	NO.	SIZE	TYPE	LENGTH	WEIGHT
SP-1	1	***	5	76230	118
SP-2	1	***	5	95760	149
SP-3	1	***	5	45990	71
SP-4	3	**	4	74930	223

SPIRAL COLUMN REINFORCING STEEL 561 kg

CLASS A CONCRETE BREAKDOWN

POUR 2	(COLUMNS)	4.1 C.M.
POUR 3	(CAP)	22.5 C.M.
TOTAL		26.6 C.M.

DRILLED PIER QUANTITIES
DRILLED PIER CONCRETE BREAKDOWN

POUR 1 (DRILLED PIERS)	9.5 C.M.
1066mm Ø DRILLED PIERS NOT IN SOIL	6.0 METERS
1066mm Ø DRILLED PIERS IN SOIL	4.6 METERS

PERMANENT STEEL CASING FOR 1066mm Ø DRILLED PIERS 1.2 METERS

▲CSL TUBES 51.5 METERS

▲ NO SEPARATE PAYMENT WILL BE MADE FOR CSL TUBES. CSL TUBES WILL BE INCLUDED IN THE UNIT BID PRICE FOR DRILLED PIERS

PROJECT NO. R-2518B
YANCEY COUNTY
STATION: 175+52.267 -L-

SHEET 2 OF 2

STATE OF NORTH CAROLINA
DEPARTMENT OF TRANSPORTATION
RALEIGH

SUBSTRUCTURE
BENT No. 2
LEFT LANE

NORTH CAROLINA PROFESSIONAL SEAL 20125 ENGINEER MARSHALL G. CHEEK, JR.
4-4-08

REVISIONS						SHEET NO.
NO.	BY:	DATE:	NO.	BY:	DATE:	S-28
1			3			TOTAL SHEETS
2			4			154

DRAWN BY : M. POOLE DATE : 01/2008
CHECKED BY : M. G. CHEEK DATE : 02/08

04-APR-2008 08:25
r:\structures\Final plans\Str #1\R2518B_sd_B2_01.dgn
dahodge

STR. #1

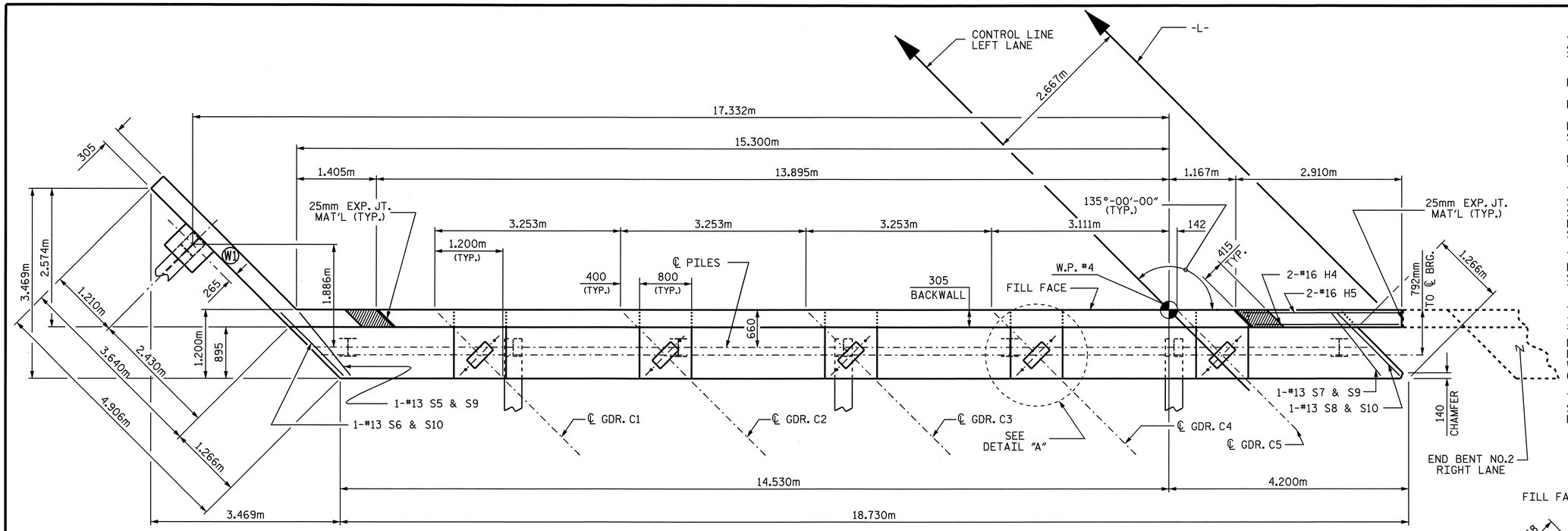

PLAN

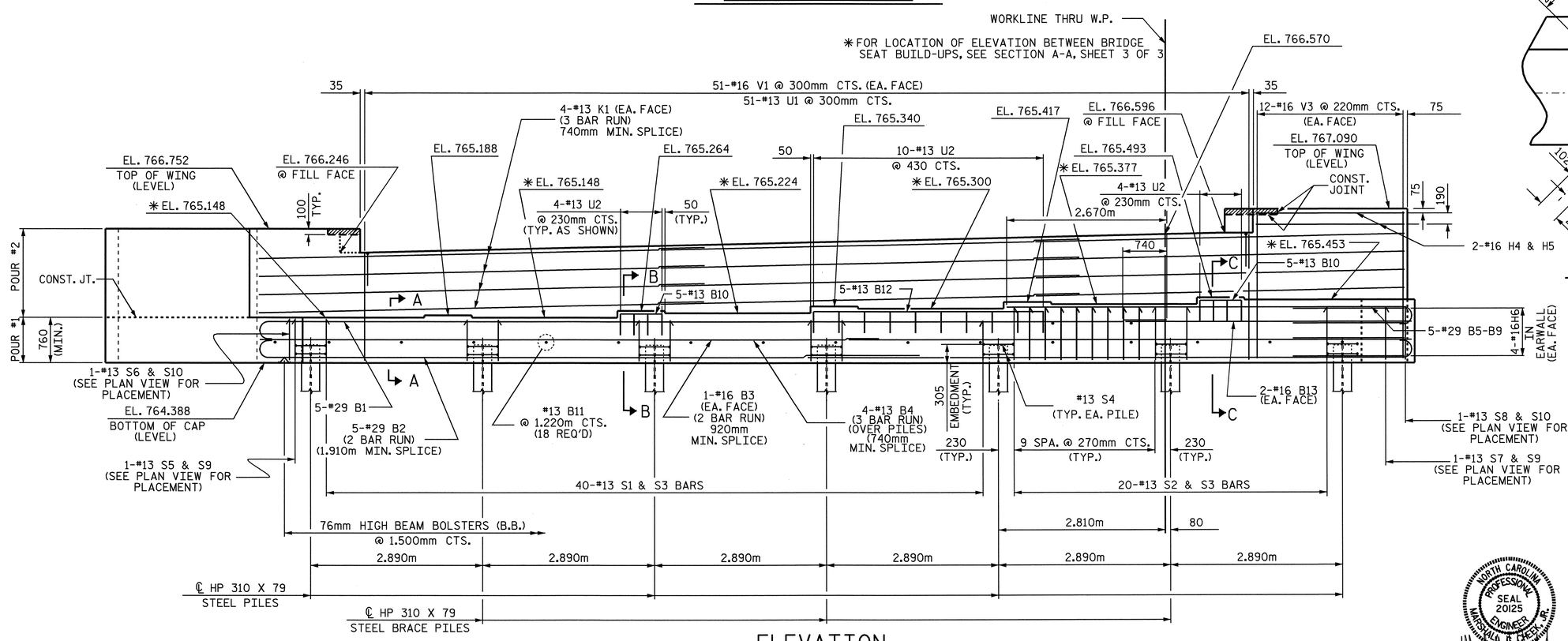

ELEVATION

WING BRACE PILE NOT SHOWN FOR CLARITY

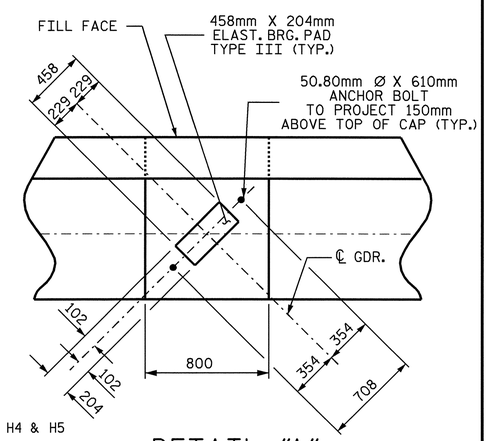

DETAIL "A"

NOTES

STIRRUPS IN CAP MAY BE SHIFTED AS NECESSARY TO CLEAR ANCHOR BOLTS.

FOR SECTION A-A, SEE SHEET 3 OF 3.

FOR PILE SPLICE DETAILS, SEE SHEET 3 OF 3.

FOR TEMPORARY DRAINAGE AT END BENTS, SEE SHEET 3 OF 3.

BACKWALL SHALL BE PLACED BEFORE APPLYING THE EPOXY PROTECTIVE COATING.

THE TOP SURFACE AREA OF THE END BENT CAP SHALL BE CURED IN ACCORDANCE WITH THE STANDARD SPECIFICATIONS EXCEPT THAT THE MEMBRANE CURING COMPOUND METHOD SHALL NOT BE USED.

THE TOP SURFACE OF THE END BENT CAP EXCEPT THE BRIDGE SEAT BUILDUPS SHALL BE SLOPED TRANSVERSELY FROM THE FILL FACE TO THE BACK FACE AT THE RATE OF 2%.

THE CONTRACTOR SHALL PROVIDE FOR INSTALLATION OF THE 200mm Ø DRAIN PIPE THROUGH THE WING WALL AS REQUIRED FOR REINFORCED BRIDGE APPROACH FILLS, SEE THE ROADWAY PLANS. REINFORCING STEEL IN THE WING WALL MAY BE SHIFTED AS NECESSARY TO CLEAR THE DRAIN PIPE.

THE CONCRETE IN THE SHADED AREA OF THE WING SHALL BE POURED AFTER THE PARAPET AND END POST ARE CAST IF SLIP FORMING IS USED.

PROJECT NO. R-2518B

YANCEY COUNTY

STATION: 175+52.267 -L-

SHEET 1 OF 3

STATE OF NORTH CAROLINA
DEPARTMENT OF TRANSPORTATION
RALEIGH

SUBSTRUCTURE
END BENT NO.2
LEFT LANE

NORTH CAROLINA PROFESSIONAL SEAL 20125 ENGINEER MARSHALL G. CHEEK, JR.
3-31-08

REVISIONS							SHEET NO.
NO.	BY:	DATE:	NO.	BY:	DATE:		S-29
1			3				TOTAL SHEETS
2			4				154

DRAWN BY : A.L. FIGUEROA DATE : 9-18-07
CHECKED BY : M.G. CHEEK DATE : 01-11-08

27-MAR-2008 09:59
R:\Structures\Final plans\Str #1\R2518B_sd_EB* 1&2 LL-Strl.dgn
afigueroa

STR #1

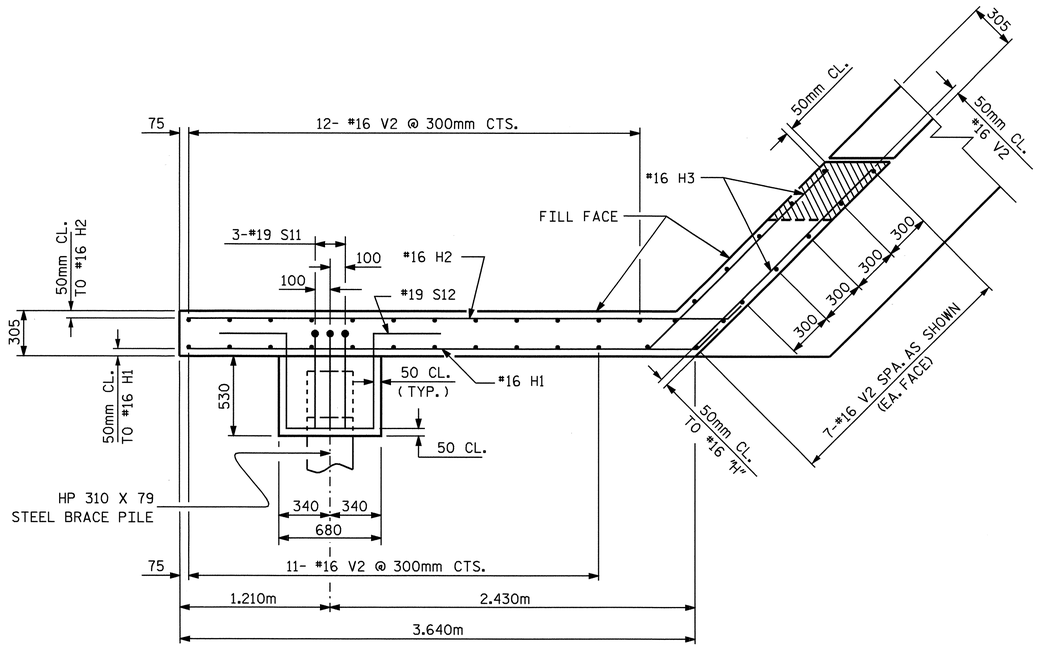

PLAN OF LEFT WING - W1

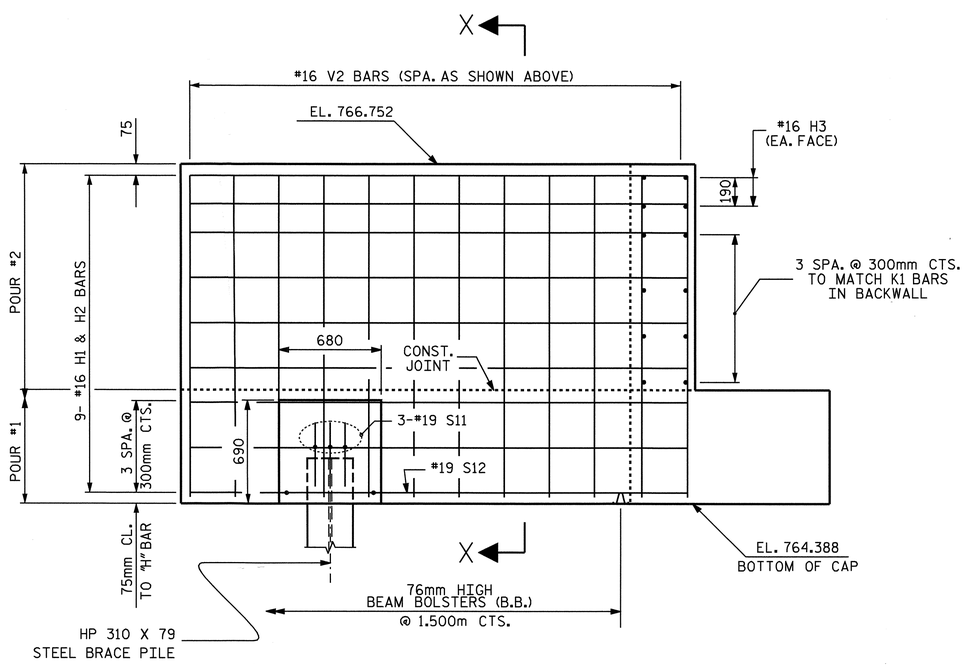

ELEVATION OF LEFT WING - W1

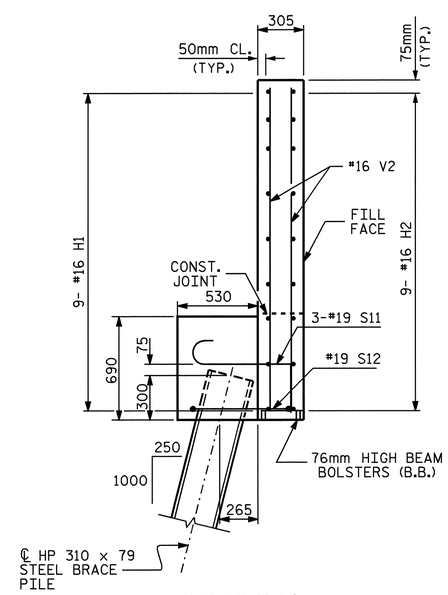

SECTION X-X

PROJECT NO. R-2518B

YANCEY COUNTY

STATION: 175+52.267-L-

SHEET 2 OF 3

STATE OF NORTH CAROLINA
DEPARTMENT OF TRANSPORTATION
RALEIGH

SUBSTRUCTURE END BENT NO.2 LEFT LANE

NORTH CAROLINA PROFESSIONAL SEAL 20125 ENGINEER MARSHALL G. CHEEK, JR.
3-31-08

REVISIONS						SHEET NO.
NO.	BY:	DATE:	NO.	BY:	DATE:	S-30
1			3			TOTAL SHEETS
2			4			154

STR #1

DRAWN BY : A.L. FIGUEROA DATE : 9-18-07
CHECKED BY : M.G. CHEEK DATE : 01-11-08

06-MAR-2008 13:48
r:\structures\final plans\Str #1\R2518B_sd_EB* 1&2 LL-Str1.dgn
dahodge

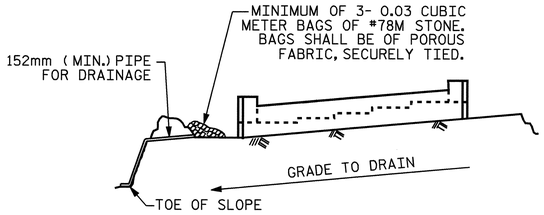

BAGGED STONE AND PIPE SHALL BE PLACED IMMEDIATELY AFTER COMPLETION OF END BENT EXCAVATION. PIPE MAY BE EITHER CONCRETE, CORRUGATED STEEL, CORRUGATED ALUMINUM ALLOY, OR CORRUGATED PLASTIC. PERFORATED PIPE WILL NOT BE ALLOWED.

BAGGED STONE SHALL REMAIN IN PLACE UNTIL THE ENGINEER DIRECTS THAT IT BE REMOVED. THE CONTRACTOR SHALL REMOVE AND DISPOSE OF SILT ACCUMULATIONS AT BAGGED STONE WHEN SO DIRECTED BY THE ENGINEER. BAGS SHALL BE REMOVED AND REPLACED WHENEVER THE ENGINEER DETERMINES THAT THEY HAVE DETERIORATED AND LOST THEIR EFFECTIVENESS.

NO SEPARATE PAYMENT WILL BE MADE FOR THIS WORK AND THE ENTIRE COST OF THIS WORK SHALL BE INCLUDED IN THE UNIT CONTRACT PRICE BID FOR THE SEVERAL PAY ITEMS.

TEMPORARY DRAINAGE AT END BENT

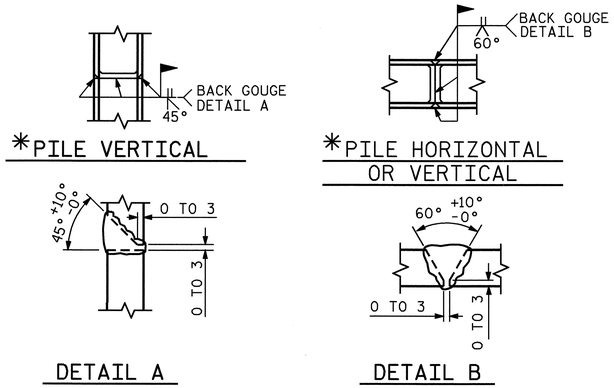

*POSITION OF PILE DURING WELDING.

PILE SPLICE DETAILS

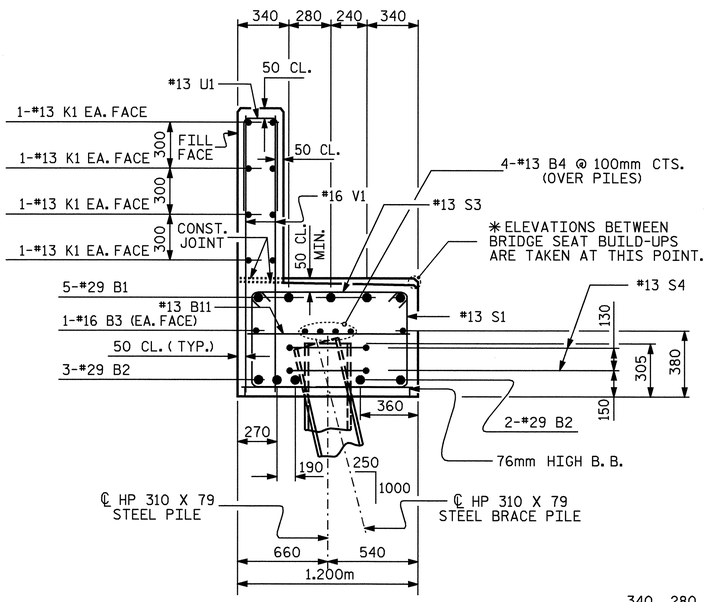

SECTION A-A

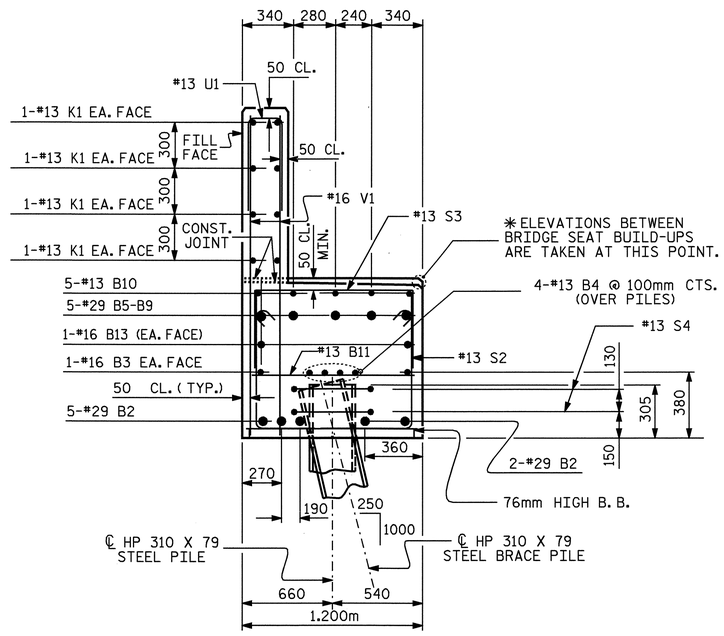

SECTION C-C

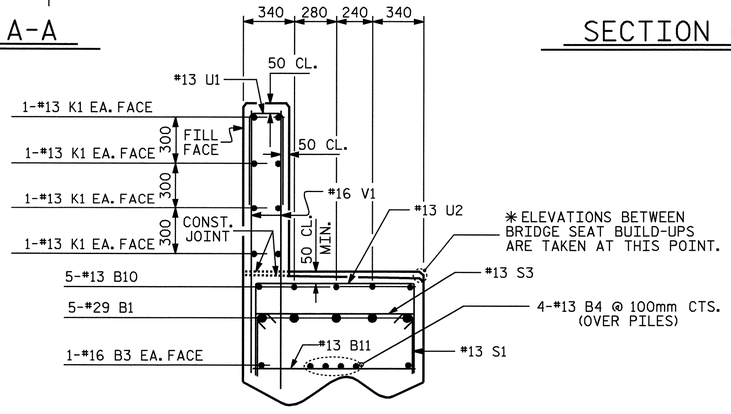

SECTION B-B

BAR TYPES

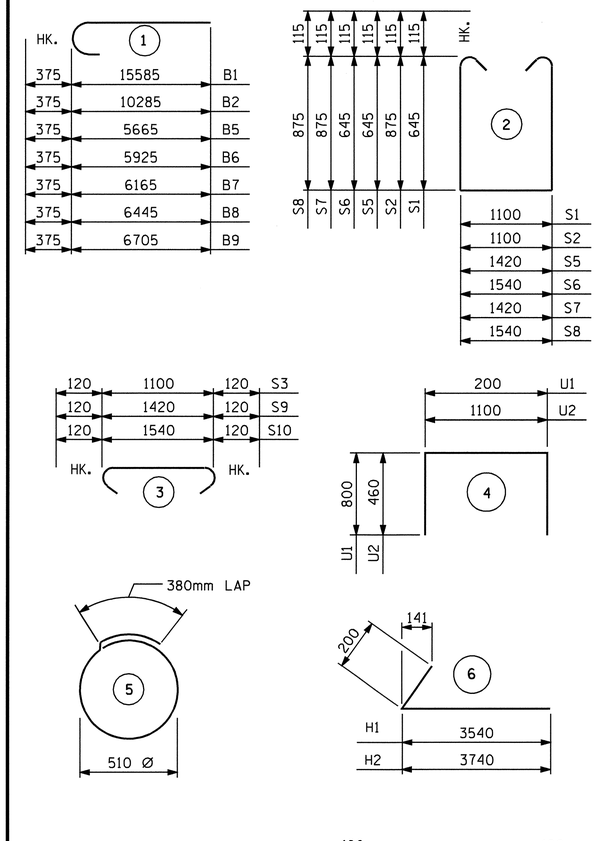

ALL BAR DIMENSIONS ARE OUT TO OUT.

BILL OF MATERIAL
END BENT NO. 2

BAR	NO.	SIZE	TYPE	LENGTH	WEIGHT
B1	5	#29	1	15960	404
B2	10	#29	1	10660	539
B3	4	#16	STR	9780	61
B4	12	#13	STR	6720	80
B5	1	#29	1	6040	31
B6	1	#29	1	6300	32
B7	1	#29	1	6540	33
B8	1	#29	1	6820	35
B9	1	#29	1	7080	36
B10	10	#13	STR	700	7
B11	18	#13	STR	1100	20
B12	5	#13	STR	3960	20
B13	2	#16	STR	3800	12
H1	9	#16	6	3740	52
H2	9	#16	6	3940	55
H3	4	#16	STR	1740	11
H4	2	#16	STR	2500	8
H5	2	#16	STR	2800	9
K1	24	#13	STR	7080	169
S1	40	#13	2	2620	104
S2	20	#13	2	3080	61
S3	60	#13	3	1340	80
S4	14	#13	5	1980	28
S5	1	#13	2	2940	3
S6	1	#13	2	3060	3
S7	1	#13	2	3400	3
S8	1	#13	2	3520	3
S9	2	#13	3	1660	3
S10	2	#13	3	1780	4
S11	3	#19	7	1140	8
S12	1	#19	8	2700	6
U1	51	#13	4	1800	91
U2	18	#13	4	2020	36
V1	102	#16	STR	1740	275
V2	37	#16	STR	2260	130
V3	24	#16	STR	2600	97

REINFORCING STEEL = 2549 kg

CLASS A CONCRETE BREAKDOWN

POUR #1 CAP & LOWER PART OF WINGS	21.6 C.M.
POUR #2 BACKWALL & UPPER PART OF WINGS	8.8 C.M
CLASS A CONCRETE TOTAL	30.4 C.M.

HP 310 X 79 STEEL PILES

NO. 8 71 METERS

PROJECT NO. R-2518B
YANCEY COUNTY
STATION: 175+52.267 -L-

SHEET 3 OF 3

STATE OF NORTH CAROLINA
DEPARTMENT OF TRANSPORTATION
RALEIGH

SUBSTRUCTURE END BENT NO.2 LEFT LANE

NORTH CAROLINA PROFESSIONAL SEAL 20125 ENGINEER MARSHALL G. CHEEK, JR. 3-31-08

REVISIONS								SHEET NO.
NO.	BY:	DATE:	NO.	BY:	DATE:			S-31
1			3					TOTAL SHEETS
2			4					154

DRAWN BY : A.L. FIGUEROA DATE : 9-18-07
CHECKED BY : M.G. CHEEK DATE : 01-11-08

06-MAR-2008 13:48
r:\structures\finalplans\Str #1\R2518B_sd_EB* 1&2 LL-Str1.dgn
dahodge

STR #1

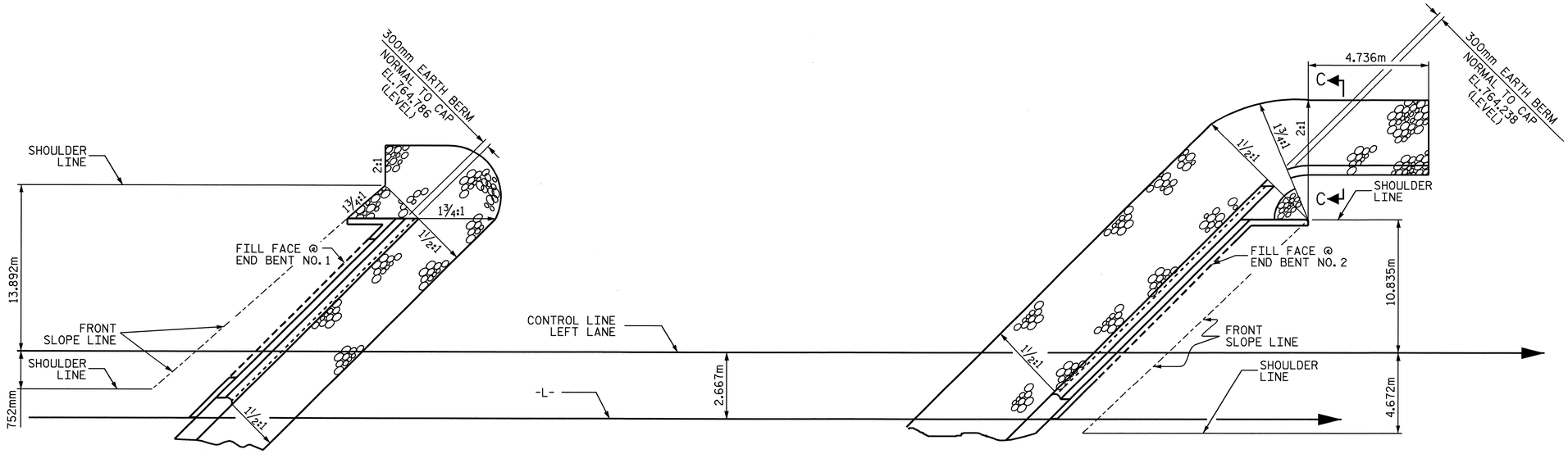

END BENT No. 1

END BENT No. 2

PLAN

ESTIMATED QUANTITIES		
BRIDGE @ STA. 175+52.267-L- LEFT LANE	RIP RAP CLASS II	FILTER FABRIC FOR DRAINAGE
	METRIC TONS	SQUARE METERS
END BENT NO. 1	109	112
END BENT NO. 2	252	256

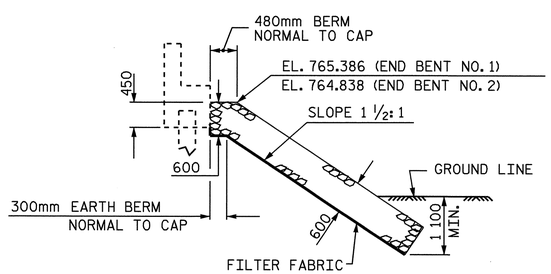

℄ SECTION

BERM RIP RAPPED

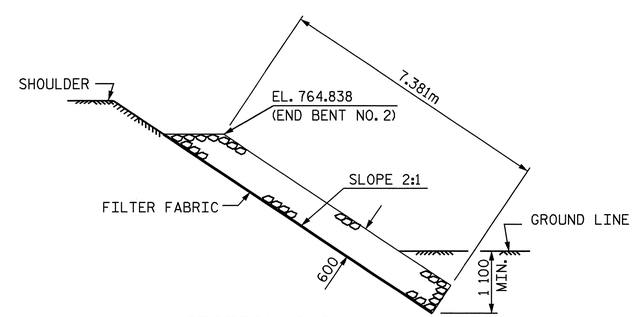

SECTION C-C

PROJECT NO. R-2518B

YANCEY COUNTY

STATION: 175+52.267 -L-

STATE OF NORTH CAROLINA
DEPARTMENT OF TRANSPORTATION
RALEIGH

STANDARD

RIP RAP DETAILS
LEFT LANE

NORTH CAROLINA PROFESSIONAL SEAL 20125 ENGINEER MARSHALL NG CREEK, JR.
4-4-08

ASSEMBLED BY : A.L. FIGUEROA	DATE : 10-29-07
CHECKED BY : L.L.MURPHY	DATE : 01-23-08

DRAWN BY : REK 1/84	REV. 8/16/99 RWW/LES
CHECKED BY : RDU 1/84	REV. 10/17/00 RWW/LES
	REV. 5/1/06 TLA/GM

REVISIONS							SHEET NO.
NO.	BY:	DATE:	NO.	BY:	DATE:		S-32
1			3				TOTAL SHEETS
2			4				154

STR #1 STD. NO. RR3SM

03-APR-2008 17:16
r:\structures\finalplans\str #1\R2518B_sd_SP_STR#1.dgn
lmurphy

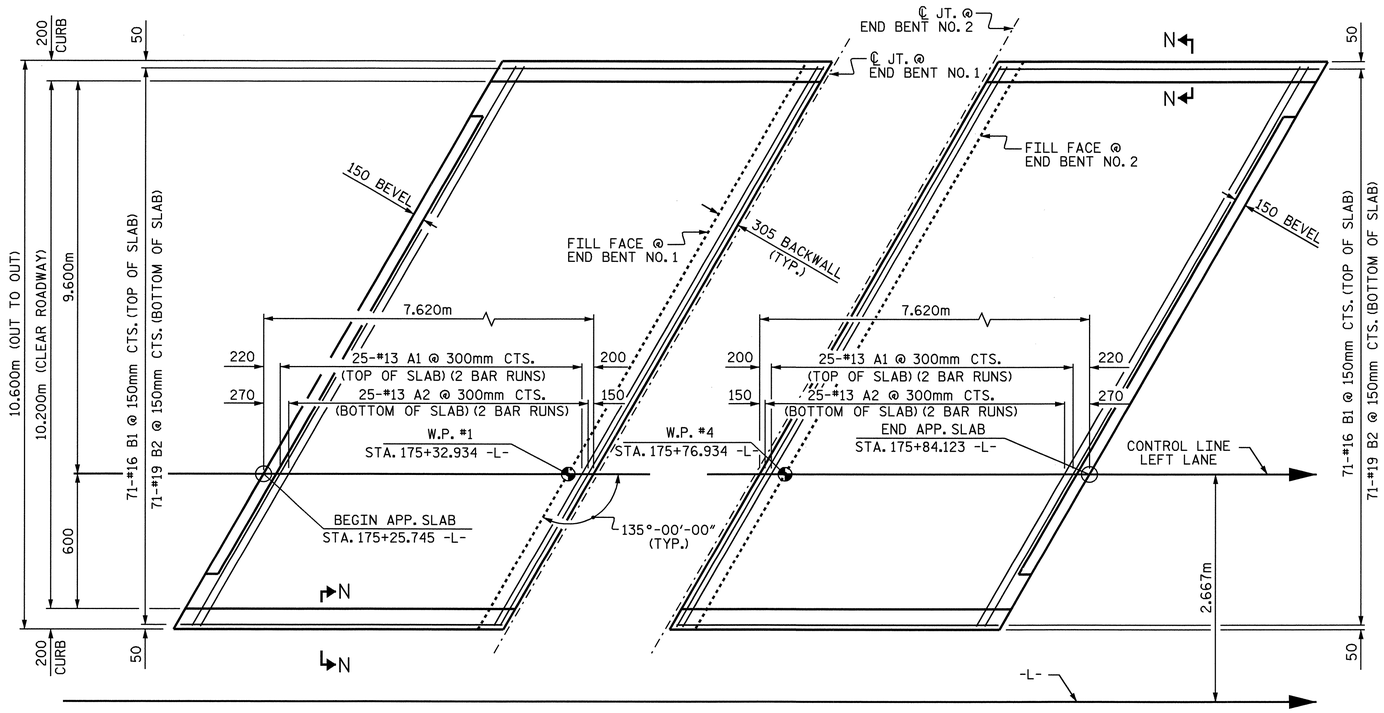

PLAN

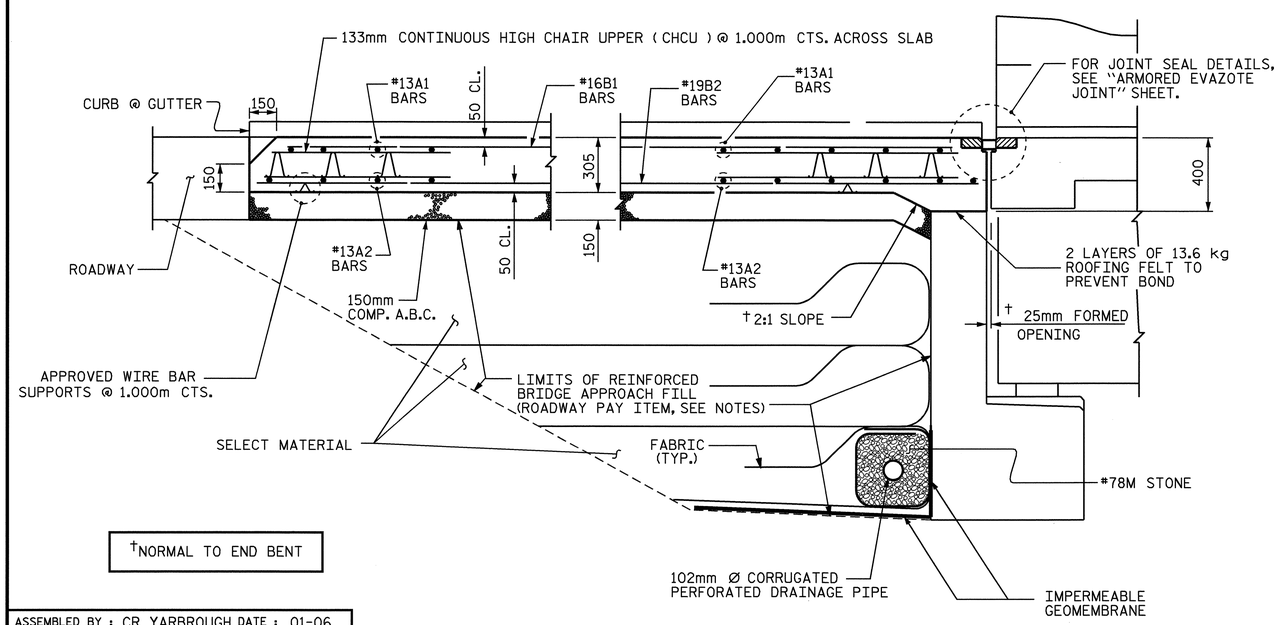

†NORMAL TO END BENT

SECTION THRU SLAB

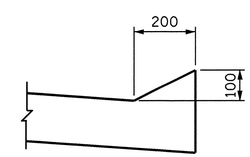

SECTION N-N

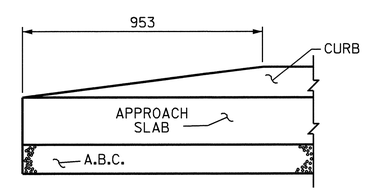

END OF CURB WITHOUT SHOULDER BERM GUTTER

CURB DETAILS

NOTES

APPROACH SLAB SHALL NOT BE CONSTRUCTED PRIOR TO COMPLETION OF THE BRIDGE DECK.

FOR REINFORCED BRIDGE APPROACH FILL INCLUDING FABRIC, IMPERMEABLE GEOMEMBRANE, 102mm Ø DRAINAGE PIPE, #78M STONE, AND SELECT MATERIAL, SEE ROADWAY PLANS.

TEMPORARY DRAINAGE AND TEMPORARY BERM AND SLOPE DRAINS WILL BE PAID FOR UNDER THE LUMP SUM PRICE FOR BRIDGE APPROACH SLAB.

AREA BETWEEN THE WINGWALL AND APPROACH SLAB SHALL BE GRADED TO DRAIN THE WATER AWAY FROM THE FILL FACE OF THE BRIDGE AND SHALL BE PAVED. SEE ROADWAY PLANS.

THE 150mm COMP. A.B.C. SHALL BE FLUSH WITH THE ROADWAY END OF THE APPROACH SLAB AND SHALL EXTEND 300mm OUTSIDE OF EACH EDGE OF THE APPROACH SLAB.

THE CONTRACTOR MAY USE 100mm TYPE B-25.0B ASPHALT CONCRETE COURSE IN LIEU OF 150mm COMP. A.B.C. IF THIS OPTION IS USED, THE BASE COURSE SHALL BE FLUSH WITH THE ROADWAY END OF THE APPROACH SLAB, AND THE WIDTH SHALL BE THE SAME AS THAT OF THE APPROACH SLAB.

THE CONTRACTOR MAY USE 125mm CLASS "A" CONCRETE BASE IN LIEU OF 150mm COMP. A.B.C. IF THIS OPTION IS USED, THE CONCRETE BASE SHALL BE FLUSH WITH THE ROADWAY END OF THE APPROACH SLAB, AND THE WIDTH SHALL BE THE SAME AS THAT OF THE APPROACH SLAB. THE CONCRETE SHALL BE FINISHED TO A SMOOTH SURFACE AND A LAYER OF 13.6 kg ROOFING FELT SHALL BE PLACED BETWEEN THE CONCRETE BASE AND THE APPROACH SLAB TO PREVENT BOND. THE APPROACH SLAB SHALL NOT BE CAST UNTIL THE CONCRETE BASE HAS REACHED AN AGE OF THREE CURING DAYS.

FOR EVAZOTE JOINT SEALS, SEE SPECIAL PROVISIONS.

BILL OF MATERIAL
FOR ONE APPROACH SLAB (2 REQ'D)

BAR	NO.	SIZE	TYPE	LENGTH	WEIGHT
✱ A1	50	#13	STR	7760	386
A2	50	#13	STR	7720	384
✱ B1	71	#16	STR	7260	800
B2	71	#19	STR	7520	1193
REINFORCING STEEL				kg	1577
✱ EPOXY COATED REINFORCING STEEL				kg	1186
CLASS AA CONCRETE BREAKDOWN					
SLAB AND CURB				CU. METERS	25.1
CLASS AA CONCRETE				CU. METERS	25.1

✱ THESE BARS ARE EPOXY COATED

SPLICE CHART

BAR SIZE	EPOXY COATED	UNCOATED
#13	610	540
#16	770	660
#19	1190	790

PROJECT NO. R-2518B
YANCEY COUNTY
STATION: 175+52.267 -L-

SHEET 1 OF 2

STATE OF NORTH CAROLINA
DEPARTMENT OF TRANSPORTATION
RALEIGH

STANDARD

BRIDGE APPROACH SLAB FOR FLEXIBLE PAVEMENT LEFT LANE

NORTH CAROLINA PROFESSIONAL SEAL 20125 ENGINEER MARSHALL B. CHEEK, JR. 4-4-08

REVISIONS							
NO.	BY:	DATE:	NO.	BY:	DATE:	SHEET NO. S-33
1			3			TOTAL SHEETS 154
2			4			

ASSEMBLED BY : CR YARBROUGH DATE : 01-06
CHECKED BY : MG CHEEK DATE : 01-08

DRAWN BY : FCJ 6/87
CHECKED BY : EGA 6/87

REV. 7/10/01 RWW/LES
REV. 5/7/03R RWW/JTE
REV. 5/1/06R KMM/GM

03-APR-2008 17:27
r:\structures\final plans\str #1\R-2518B_sd_AS_01.dgn
lmurphy

STR. 1 STD. NO. BAS4SM

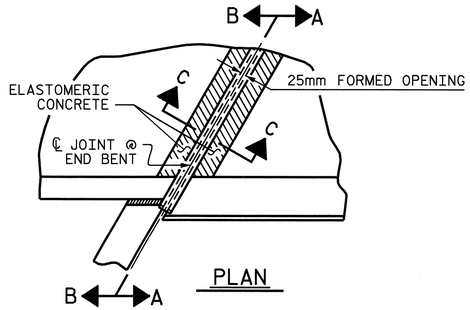

PLAN

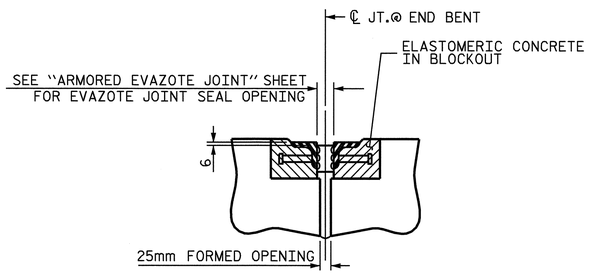

SECTION C-C
ARMORED EVAZOTE JOINT SEAL

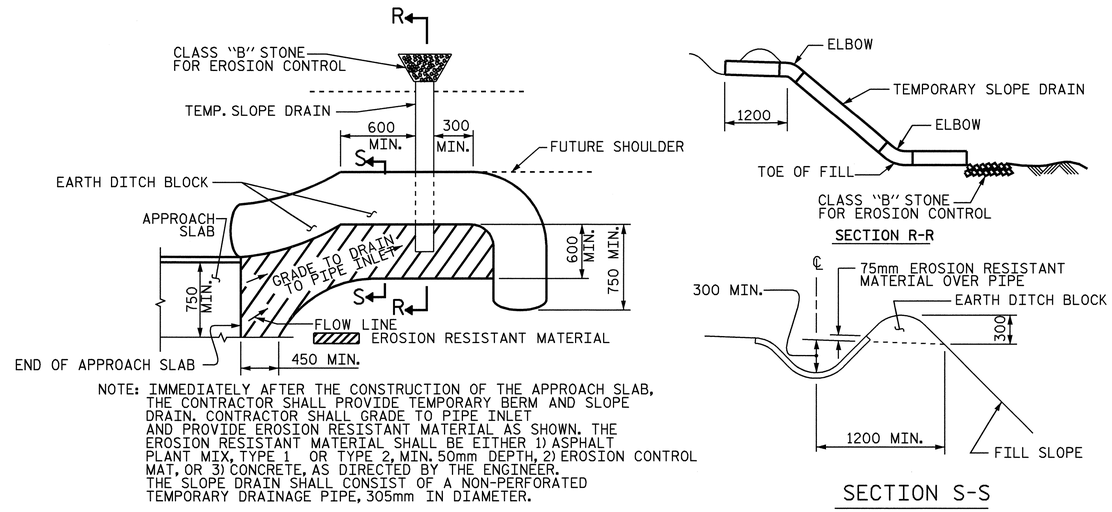

NOTE: IMMEDIATELY AFTER THE CONSTRUCTION OF THE APPROACH SLAB, THE CONTRACTOR SHALL PROVIDE TEMPORARY BERM AND SLOPE DRAIN. CONTRACTOR SHALL GRADE TO PIPE INLET AND PROVIDE EROSION RESISTANT MATERIAL AS SHOWN. THE EROSION RESISTANT MATERIAL SHALL BE EITHER 1) ASPHALT PLANT MIX, TYPE 1 OR TYPE 2, MIN. 50mm DEPTH, 2) EROSION CONTROL MAT, OR 3) CONCRETE, AS DIRECTED BY THE ENGINEER. THE SLOPE DRAIN SHALL CONSIST OF A NON-PERFORATED TEMPORARY DRAINAGE PIPE, 305mm IN DIAMETER.

SECTION S-S

PLAN VIEW

TEMPORARY BERM AND SLOPE DRAIN DETAILS

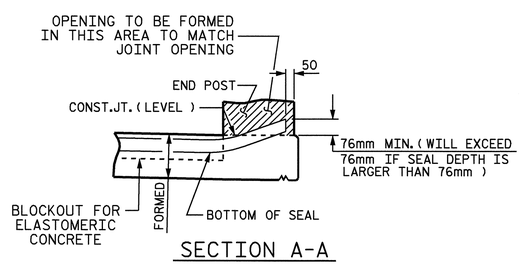

SECTION A-A

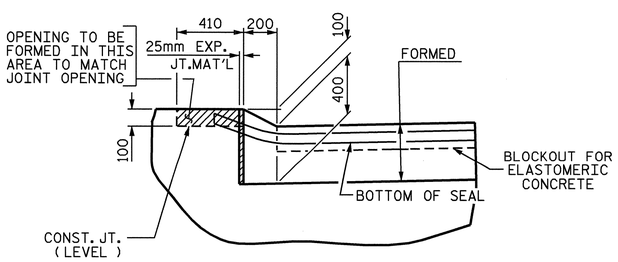

SECTION B-B

JOINT SEAL DETAILS @ END BENT

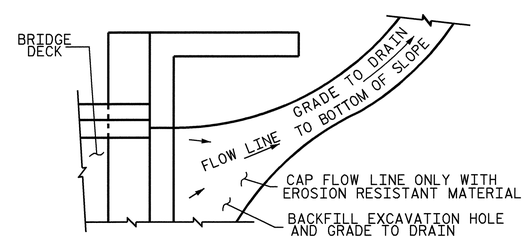

NOTE: IF THE APPROACH SLAB IS NOT CONSTRUCTED IMMEDIATELY AFTER THE BACKFILLING OF THE END BENT EXCAVATION, GRADE TO DRAIN TO THE BOTTOM OF THE SLOPE AND PROVIDE EROSION RESISTANT MATERIAL, SUCH AS FIBERGLASS ROVING OR AS DIRECTED BY THE ENGINEER TO PREVENT SOIL EROSION AND TO PROTECT THE AREA ADJACENT TO THE STRUCTURE. THE CONTRACTOR WILL BE REQUIRED TO REMOVE THESE MATERIALS PRIOR TO CONSTRUCTION OF THE APPROACH SLAB.

TEMPORARY DRAINAGE DETAIL

PROJECT NO. R-2518B
YANCEY COUNTY
STATION: 175+52.267 -L-

SHEET 2 OF 2

STATE OF NORTH CAROLINA
DEPARTMENT OF TRANSPORTATION
RALEIGH

STANDARD
BRIDGE APPROACH
SLAB DETAILS
LEFT LANE

NORTH CAROLINA PROFESSIONAL SEAL 20125 ENGINEER MARSHALL G. CHEEK, JR.
3-31-08

REVISIONS						SHEET NO.
NO.	BY:	DATE:	NO.	BY:	DATE:	S-34
1			3			TOTAL SHEETS
2			4			154

ASSEMBLED BY : CR YARBROUGH	DATE : 01-06		
CHECKED BY : MG CHEEK	DATE : 01-08		
DRAWN BY : FCJ 11/88	REV. 8/16/99	RAL/LES	
CHECKED BY : ARB 11/88	REV. 10/17/00	RWW/LES	
	REV. 5/7/03	RWW/JTE	

STR. #1

STD. NO. BAS10SM

OVERHANG BRACKET CALCULATION INSTRUCTIONS

AASHTO SHAPES - TYPES III, IV, V, AND VI

1. RECORD KNOWN INFORMATION ON "BRIDGE OVERHANG BRACKET SUMMARY" ON SHEET 2
2. CALCULATE THE MAXIMUM SCREED LOAD PER BRACKET (SLPB) WITH AN ESTIMATED R = 1.5. SLPB = R X W. ROUND VALUE UP TO NEAREST SLPB VALUE INDICATED ON APPROPRIATE TABLE 1-1, 1-2, 1-3, OR 1-4.
3. WITH THE ESTIMATED SLPB, OVERHANG SLAB THICKNESS, "K" VALUE, AND 45° HANGER SAFE WORKING LOAD (SWL), ENTER THE APPROPRIATE TABLE 1-1, 1-2, 1-3, OR 1-4 (BASED ON OVERHANG DIMENSION) AND DETERMINE THE BRACKET SPACING, S.
4. CALCULATE S/D1 AND S/D2, ROUNDING UP TO NEAREST VALUE IN TABLE 2. ENTER TABLE 2 AND DETERMINE R VALUE.
5. CALCULATE REVISED SLPB. ROUND VALUE UP TO NEAREST SLPB VALUE INDICATED ON APPROPRIATE TABLE 1-1, 1-2, 1-3, OR 1-4.
6. WITH THE REVISED SLPB, OVERHANG SLAB THICKNESS, "K" VALUE AND 45 HANGER SAFE WORKING LOAD (SWL), ENTER THE APPROPRIATE TABLE 1-1, 1-2, 1-3 OR 1-4 (BASED ON OVERHANG DIMENSION) AND DETERMINE REVISED BRACKET SPACING, S.
7. CONTINUE ITERATIONS OF STEPS 4-6 UNTIL THE REVISED BRACKET SPACING, S, IS THE SAME AS THE PREVIOUS S VALUE.
8. CHECK LUMBER JOIST SPACING: WITH BRACKET SPACING VALUE, S, ROUND THIS VALUE UP TO THE NEAREST VALUE OF ALLOWABLE SPAN LENGTH OF JOIST OF TABLE 3. USING THIS VALUE, ALONG WITH THE AVERAGE OVERHANG SLAB THICKNESS AND THE LUMBER JOIST SIZE, DETERMINE JOIST SPACING FROM TABLE 3. IF NECESSARY, ADJUST LUMBER JOIST SIZE AND/OR JOIST SPACING TO MEET ALLOWABLE SPAN LENGTH OF JOIST.
9. CONVERSELY, IF THE DESIRED JOIST SPACING IS KNOWN, USE THIS ALONG WITH THE AVERAGE OVERHANG SLAB THICKNESS AND THE LUMBER JOIST SIZE TO DETERMINE IF ALLOWABLE SPAN LENGTH OF JOIST IS GREATER THAN THE BRACKET SPACING, S. IF NECESSARY, ADJUST LUMBER JOIST SIZE TO MEET REQUIREMENTS OF ALLOWABLE SPAN LENGTH OF JOIST AND JOIST SPACING.
10. RECORD REMAINING INFORMATION ON "BRIDGE OVERHANG BRACKET SUMMARY" FORM.
11. SUBMIT FORM AND CALCULATIONS FOR REVIEW AND APPROVAL.

TABLE 1-1

(FOR USE ON **UP TO 2'-0" OVERHANG Ⓛ** & 54" HORIZONTAL LEG LENGTH OF THE OVERHANG BRACKET)

AVG. SLAB THICKNESS Ⓣ (In)	BRACKET Ⓚ DIMENSION (In)	SCREED LOAD PER BRACKET 2500 lbs.	2250 lbs.	2000 lbs.	1750 lbs.	1500 lbs.	1250 lbs.	1000 lbs.	750 lbs.	0 lbs.	45° HANGER SWL (lbs)
		BRACKET SPACING									
10	30				2'-1"	2'-7"	3'-2"	3'-8"	4'-2"	5'-9"	4000
		3'-6"	4'-0"	4'-5"	4'-9"	5'-1"	5'-3"	5'-5"	5'-7"	6'-7"	6000
	40				2'-1"	2'-7"	3'-2"	3'-8"	4'-2"	5'-9"	4000
		3'-6"	4'-0"	4'-5"	4'-9"	5'-1"	5'-3"	5'-5"	5'-7"	6'-7"	6000
	50				2'-1"	2'-7"	3'-2"	3'-8"	4'-2"	5'-9"	4000
		3'-6"	4'-0"	4'-5"	4'-9"	5'-1"	5'-3"	5'-5"	5'-7"	6'-7"	6000
12	30					2'-4"	2'-10"	3'-4"	3'-9"	5'-2"	4000
		3'-2"	3'-7"	4'-1"	4'-7"	5'-0"	5'-2"	5'-4"	5'-7"	6'-5"	6000
	40					2'-4"	2'-10"	3'-4"	3'-9"	5'-2"	4000
		3'-2"	3'-7"	4'-1"	4'-7"	5'-0"	5'-2"	5'-4"	5'-7"	6'-5"	6000
	50					2'-4"	2'-10"	3'-4"	3'-9"	5'-2"	4000
		3'-2"	3'-7"	4'-1"	4'-7"	5'-0"	5'-2"	5'-4"	5'-7"	6'-5"	6000
14	30					2'-2"	2'-7"	3'-0"	3'-5"	4'-9"	4000
		2'-10"	3'-4"	3'-9"	4'-2"	4'-7"	5'-0"	5'-4"	5'-7"	6'-4"	6000
	40					2'-2"	2'-7"	3'-0"	3'-5"	4'-9"	4000
		2'-10"	3'-4"	3'-9"	4'-2"	4'-7"	5'-0"	5'-4"	5'-7"	6'-4"	6000
	50					2'-2"	2'-7"	3'-0"	3'-5"	4'-9"	4000
		2'-10"	3'-4"	3'-9"	4'-2"	4'-7"	5'-0"	5'-4"	5'-7"	6'-4"	6000
16	30					2'-0"	2'-4"	2'-9"	3'-2"	4'-4"	4000
		2'-8"	3'-0"	3'-5"	3'-10"	4'-3"	4'-7"	5'-0"	5'-5"	6'-3"	6000
	40					2'-0"	2'-4"	2'-9"	3'-2"	4'-4"	4000
		2'-8"	3'-0"	3'-5"	3'-10"	4'-3"	4'-7"	5'-0"	5'-5"	6'-3"	6000
	50					2'-0"	2'-4"	2'-9"	3'-2"	4'-4"	4000
		2'-8"	3'-0"	3'-5"	3'-10"	4'-3"	4'-7"	5'-0"	5'-5"	6'-3"	6000

TABLE 1-2

(FOR USE ON **OVER 2'-0" TO 2'-6" OVERHANG Ⓛ** & 54" HORIZONTAL LEG LENGTH OF THE OVERHANG BRACKET)

AVG. SLAB THICKNESS Ⓣ (In)	BRACKET Ⓚ DIMENSION (In)	SCREED LOAD PER BRACKET 2500 lbs.	2250 lbs.	2000 lbs.	1750 lbs.	1500 lbs.	1250 lbs.	1000 lbs.	750 lbs.	0 lbs.	45° HANGER SWL (lbs)
		BRACKET SPACING									
10	30					2'-4"	2'-9"	3'-3"	3'-8"	5'-1"	4000
		3'-1"	3'-6"	4'-0"	4'-5"	4'-11"	5'-3"	5'-5"	5'-7"	6'-7"	6000
	40					2'-4"	2'-9"	3'-3"	3'-8"	5'-1"	4000
		3'-1"	3'-6"	4'-0"	4'-5"	4'-11"	5'-3"	5'-5"	5'-7"	6'-7"	6000
	50					2'-4"	2'-9"	3'-3"	3'-8"	5'-1"	4000
		3'-1"	3'-6"	4'-0"	4'-5"	4'-11"	5'-3"	5'-5"	5'-7"	6'-7"	6000
12	30					2'-1"	2'-6"	2'-11"	3'-4"	4'-6"	4000
		2'-9"	3'-2"	3'-7"	4'-0"	4'-5"	4'-10"	5'-3"	5'-7"	6'-5"	6000
	40					2'-1"	2'-6"	2'-11"	3'-4"	4'-6"	4000
		2'-9"	3'-2"	3'-7"	4'-0"	4'-5"	4'-10"	5'-3"	5'-7"	6'-5"	6000
	50					2'-1"	2'-6"	2'-11"	3'-4"	4'-6"	4000
		2'-9"	3'-2"	3'-7"	4'-0"	4'-5"	4'-10"	5'-3"	5'-7"	6'-5"	6000
14	30						2'-3"	2'-7"	3'-0"	4'-1"	4000
		2'-6"	2'-10"	3'-3"	3'-7"	4'-0"	4'-4"	4'-9"	5'-1"	6'-3"	6000
	40						2'-3"	2'-7"	3'-0"	4'-1"	4000
		2'-6"	2'-10"	3'-3"	3'-7"	4'-0"	4'-4"	4'-9"	5'-1"	6'-3"	6000
	50						2'-3"	2'-7"	3'-0"	4'-1"	4000
		2'-6"	2'-10"	3'-3"	3'-7"	4'-0"	4'-4"	4'-9"	5'-1"	6'-3"	6000
16	30						2'-1"	2'-5"	2'-9"	3'-9"	4000
		2'-3"	2'-7"	2'-11"	3'-4"	3'-8"	4'-0"	4'-4"	4'-8"	5'-8"	6000
	40						2'-1"	2'-5"	2'-9"	3'-9"	4000
		2'-3"	2'-7"	2'-11"	3'-4"	3'-8"	4'-0"	4'-4"	4'-8"	5'-8"	6000
	50						2'-1"	2'-5"	2'-9"	3'-9"	4000
		2'-3"	2'-7"	2'-11"	3'-4"	3'-8"	4'-0"	4'-4"	4'-8"	5'-8"	6000

TABLE 1-3

(FOR USE ON **OVER 2'-6" TO 3'-0" OVERHANG Ⓛ** & 54" HORIZONTAL LEG LENGTH OF THE OVERHANG BRACKET)

AVG. SLAB THICKNESS Ⓣ (In)	BRACKET Ⓚ DIMENSION (In)	SCREED LOAD PER BRACKET 2500 lbs.	2250 lbs.	2000 lbs.	1750 lbs.	1500 lbs.	1250 lbs.	1000 lbs.	750 lbs.	0 lbs.	45° HANGER SWL (lbs)
		BRACKET SPACING									
10	30					2'-1"	2'-6"	2'-11"	3'-4"	4'-6"	4000
						4'-5"	4'-10"	5'-3"	5'-7"	6'-7"	6000
	40					2'-1"	2'-6"	2'-11"	3'-4"	4'-6"	4000
		2'-9"	3'-2"	3'-7"	4'-0"	4'-5"	4'-10"	5'-3"	5'-7"	6'-7"	6000
	50					2'-1"	2'-6"	2'-11"	3'-4"	4'-6"	4000
		2'-9"	3'-2"	3'-7"	4'-0"	4'-5"	4'-10"	5'-3"	5'-7"	6'-7"	6000
12	30						2'-2"	2'-7"	2'-11"	4'-0"	4000
						3'-11"	4'-3"	4'-8"	5'-0"	6'-1"	6000
	40						2'-2"	2'-7"	2'-11"	4'-0"	4000
		2'-5"	2'-10"	3'-2"	3'-6"	3'-11"	4'-3"	4'-8"	5'-0"	6'-1"	6000
	50						2'-2"	2'-7"	2'-11"	4'-0"	4000
		2'-5"	2'-10"	3'-2"	3'-6"	3'-11"	4'-3"	4'-8"	5'-0"	6'-1"	6000
14	30						2'-0"	2'-4"	2'-8"	3'-8"	4000
					3'-2"	3'-6"	3'-10"	4'-2"	4'-6"	5'-6"	6000
	40						2'-0"	2'-4"	2'-8"	3'-8"	4000
		2'-2"	2'-6"	2'-10"	3'-2"	3'-6"	3'-10"	4'-2"	4'-6"	5'-6"	6000
	50						2'-0"	2'-4"	2'-8"	3'-8"	4000
		2'-2"	2'-6"	2'-10"	3'-2"	3'-6"	3'-10"	4'-2"	4'-6"	5'-6"	6000
16	30							2'-1"	2'-5"	3'-4"	4000
					2'-11"	3'-2"	3'-6"	3'-10"	4'-1"	5'-0"	6000
	40							2'-1"	2'-5"	3'-4"	4000
		2'-0"	2'-4"	2'-7"	2'-11"	3'-2"	3'-6"	3'-10"	4'-1"	5'-0"	6000
	50							2'-1"	2'-5"	3'-4"	4000
		2'-0"	2'-4"	2'-7"	2'-11"	3'-2"	3'-6"	3'-10"	4'-1"	5'-0"	6000

TABLE 1-4

(FOR USE ON **OVER 3'-0" TO 3'-6" OVERHANG Ⓛ** & 54" HORIZONTAL LEG LENGTH OF THE OVERHANG BRACKET)

AVG. SLAB THICKNESS Ⓣ (In)	BRACKET Ⓚ DIMENSION (In)	SCREED LOAD PER BRACKET 2500 lbs.	2250 lbs.	2000 lbs.	1750 lbs.	1500 lbs.	1250 lbs.	1000 lbs.	750 lbs.	0 lbs.	45° HANGER SWL (lbs)
		BRACKET SPACING									
10	30						2'-1"	2'-5"	2'-9"	3'-10"	4000
						2'-3"	2'-11"	3'-7"	4'-3"	5'-9"	6000
	40						2'-1"	2'-5"	2'-9"	3'-10"	4000
				2'-4"	3'-0"	3'-7"	4'-1"	4'-5"	4'-9"	5'-9"	6000
	50						2'-1"	2'-5"	2'-9"	3'-10"	4000
		2'-4"	2'-8"	3'-0"	3'-4"	3'-8"	4'-1"	4'-5"	4'-9"	5'-9"	6000
12	30							2'-2"	2'-6"	3'-5"	4000
						2'-1"	2'-8"	3'-4"	3'-11"	5'-2"	6000
	40							2'-2"	2'-6"	3'-5"	4000
				2'-2"	2'-9"	3'-4"	3'-7"	3'-11"	4'-3"	5'-2"	6000
	50							2'-2"	2'-6"	3'-5"	4000
		2'-1"	2'-4"	2'-8"	3'-0"	3'-4"	3'-7"	3'-11"	4'-3"	5'-2"	6000
14	30								2'-3"	3'-1"	4000
						2'-0"	2'-6"	3'-1"	3'-8"	4'-8"	6000
	40								2'-3"	3'-1"	4000
				2'-0"	2'-7"	3'-0"	3'-3"	3'-6"	3'-10"	4'-8"	6000
	50								2'-3"	3'-1"	4000
			2'-2"	2'-5"	2'-8"	3'-0"	3'-3"	3'-6"	3'-10"	4'-8"	6000
16	30								2'-0"	2'-9"	4000
							2'-4"	2'-10"	3'-5"	4'-3"	6000
	40								2'-0"	2'-9"	4000
					2'-5"	2'-8"	2'-11"	3'-3"	3'-6"	4'-3"	6000
	50								2'-0"	2'-9"	4000
				2'-2"	2'-5"	2'-8"	2'-11"	3'-3"	3'-6"	4'-3"	6000

DEFINITIONS

SLPB = SCREED LOAD PER BRACKET (R x W)
R = SCREED LOAD FACTOR, OBTAINED FROM TABLE 2
W = WHEEL LOAD
S = BRACKET SPACING
T = AVERAGE SLAB THICKNESS
SWL = SAFE WORKING LOAD
K = DIMENSION DEFINED ON "BRIDGE OVERHANG BRACKET SUMMARY" ON SHEET 2
L = OVERHANG MEASURED FROM EDGE OF TOP FLANGE TO EDGE OF SUPERSTRUCTURE

PROJECT NO. R-2518B
YANCEY COUNTY
STATION: 175+52.267-L-

SHEET 1 OF 3

STATE OF NORTH CAROLINA
DEPARTMENT OF TRANSPORTATION
RALEIGH

STANDARD OVERHANG FALSEWORK

AASHTO TYPES
III, IV, V, AND VI

LEFT LANE

NORTH CAROLINA PROFESSIONAL SEAL 18788 ENGINEER CHANG-CHUAN VICTOR CHAO
Chang-Chuan Victor Chao
2-19-2008

REVISIONS						SHEET NO.
NO.	BY:	DATE:	NO.	BY:	DATE:	S-35
1			3			TOTAL SHEETS
2			4			154

ASSEMBLED BY:	DATE:
CHECKED BY:	DATE:
DRAWN BY: R. WRIGHT 06/04	REV.
CHECKED BY: C. V. CHAO 06/04	

18-FEB-2008 15:40
d:\wdlr\victor\overhangfalsework\tlebar&strut\r-2518b-1&2_type_III\r2518bstr1overhangsheets.dgn
vchao

STR #1

OF1

BRIDGE OVERHANG BRACKET SUMMARY

TOTAL SCREED WEIGHT = _____ LBS.
NUMBER OF SCREED WHEELS = _____
SCREED WHEEL LOAD (W) = _____ LBS.
SCREED LOAD PER BRACKET = _____ LBS.

PROJECT No. : _____
COUNTY : _____
STATION : _____
DESCRIPTION : _____

DATE : _____
DESIGN BY : _____
CHECK BY : _____

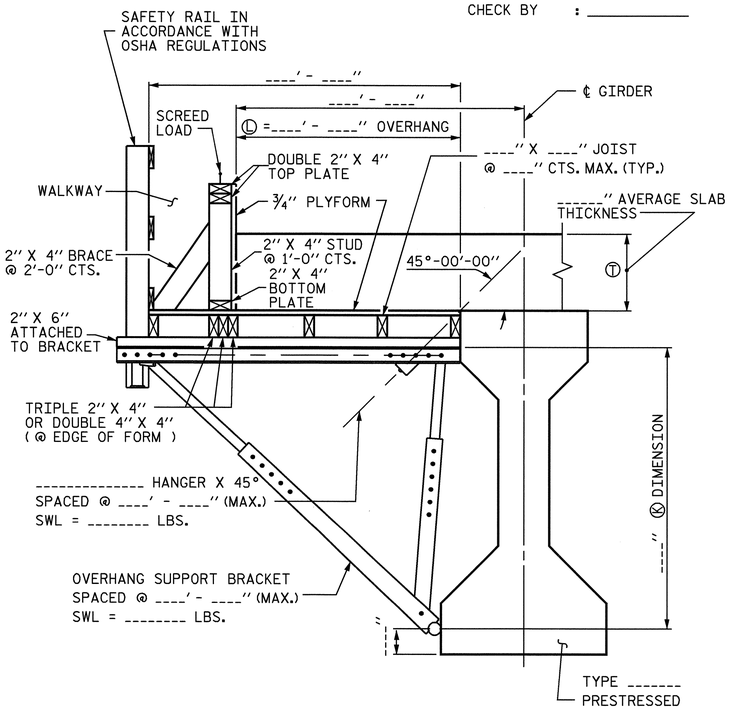

OVERHANG FALSEWORK

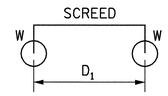

4-WHEEL MACHINE

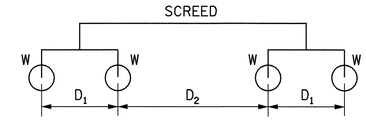

8-WHEEL MACHINE

4 WHEEL MACHINE	
S/D1	R
<= 1.0	1.00
1.1	1.09
1.2	1.17
1.3	1.23
1.4	1.29
1.5	1.33
1.6	1.38
1.7	1.41
1.8	1.44
1.9	1.47
2.0	1.50
2.2	1.55
2.4	1.58
2.6	1.62
2.8	1.64
3.0	1.67
3.5	1.71
4.0	1.75

TABLE 2: SCREED LOAD FACTOR "R"

		THE SCREED LOAD FACTOR R (FOR 8 WHEEL MACHINE)																	
		S/D_2																	
		<= 1.0	1.1	1.2	1.3	1.4	1.5	1.6	1.7	1.8	1.9	2.0	2.2	2.4	2.6	2.8	3.0	3.5	4.0
S/D_1	<= 1.0	1.00	1.09	1.17	1.23	1.29	1.33	1.38	1.41	1.44	1.47	1.50	1.55	1.58	1.62	1.64	1.67	1.71	1.75
	1.1	1.09	1.18	1.26	1.32	1.38	1.42	1.47	1.50	1.54	1.56	1.59	1.64	1.67	1.71	1.73	1.76	1.81	1.84
	1.2	1.17	1.26	1.33	1.40	1.45	1.50	1.54	1.58	1.61	1.64	1.67	1.71	1.75	1.78	1.81	1.83	1.88	1.92
	1.3	1.23	1.32	1.40	1.46	1.52	1.56	1.61	1.64	1.68	1.70	1.73	1.78	1.81	1.85	1.87	1.90	1.95	1.98
	1.4	1.29	1.38	1.45	1.52	1.57	1.62	1.66	1.70	1.73	1.76	1.79	1.83	1.87	1.90	1.93	1.95	2.00	2.07
	1.5	1.33	1.42	1.50	1.56	1.62	1.67	1.71	1.75	1.78	1.81	1.83	1.88	1.92	1.95	1.98	2.00	2.10	2.17
	1.6	1.38	1.47	1.54	1.61	1.66	1.71	1.75	1.79	1.82	1.85	1.88	1.92	1.96	1.99	2.04	2.08	2.18	2.25
	1.7	1.41	1.50	1.58	1.64	1.70	1.75	1.79	1.82	1.86	1.89	1.91	1.96	2.00	2.05	2.11	2.16	2.25	2.32
	1.8	1.44	1.54	1.61	1.68	1.73	1.78	1.82	1.86	1.89	1.92	1.94	1.99	2.06	2.12	2.17	2.22	2.32	2.39
	1.9	1.47	1.56	1.64	1.70	1.76	1.81	1.85	1.89	1.92	1.95	1.97	2.04	2.11	2.18	2.23	2.28	2.38	2.45
	2.0	1.50	1.59	1.67	1.73	1.79	1.83	1.88	1.91	1.94	1.97	2.00	2.09	2.17	2.23	2.29	2.33	2.43	2.50
	2.2	1.55	1.64	1.71	1.78	1.83	1.88	1.92	1.96	1.99	2.04	2.09	2.18	2.26	2.32	2.38	2.42	2.52	2.59
	2.4	1.58	1.67	1.75	1.81	1.87	1.92	1.96	2.00	2.06	2.11	2.17	2.26	2.33	2.40	2.45	2.50	2.60	2.67
	2.6	1.62	1.71	1.78	1.85	1.90	1.95	1.99	2.05	2.12	2.18	2.23	2.32	2.40	2.46	2.52	2.56	2.66	2.73
	2.8	1.64	1.73	1.81	1.87	1.93	1.98	2.04	2.11	2.17	2.23	2.29	2.38	2.45	2.52	2.57	2.62	2.71	2.79
	3.0	1.67	1.76	1.83	1.90	1.95	2.00	2.08	2.16	2.22	2.28	2.33	2.42	2.50	2.56	2.62	2.67	2.76	2.83
	3.5	1.71	1.81	1.88	1.95	2.00	2.10	2.18	2.25	2.32	2.38	2.43	2.52	2.60	2.66	2.71	2.76	2.86	2.93
	4.0	1.75	1.84	1.92	1.98	2.07	2.17	2.25	2.32	2.39	2.45	2.50	2.59	2.67	2.73	2.79	2.83	2.93	3.00

TABLE 3: ALLOWABLE SPAN LENGTH OF JOISTS AND JOIST SPACINGS

AVG. SLAB THICKNESS Ⓣ (IN)	LUMBER JOIST SIZE (IN X IN)	JOIST SPACINGS			
		15 IN	12 IN	10 IN	8 IN
		THE ALLOWABLE SPAN LENGTH OF JOISTS			
10	2 X 4	———	4' - 6"	4' - 9"	5' - 0"
	4 X 4	5' - 9"	6' - 3"	6' - 6"	6' - 7"
12	2 X 4	———	4' - 3"	4' - 9"	5' - 0"
	4 X 4	5' - 3"	6' - 0"	6' - 3"	6' - 5"
14	2 X 4	———	4' - 0"	4' - 6"	5' - 0"
	4 X 4	———	5' - 6"	6' - 0"	6' - 4"
16	2 X 4	———	4' - 0"	4' - 3"	4' - 9"
	4 X 4	———	5' - 3"	5' - 9"	6' - 3"

NOTES

DESIGN INCLUDES CONSTRUCTION LIVE LOAD 20 PSF ON THE AREA SUPPORTED AND 75 PLF AT THE OUTSIDE DECK OF OVERHANGS.

REQUIRED MINIMUM DIAGONAL LEG CAPACITY: 3600 LB WORKING LOAD

THE CONTRACTOR HAS THE OPTION OF SUBMITTING HIS OWN DESIGN FOR OVERHANG FALSEWORK IN ACCORDANCE WITH THE SPECIAL PROVISIONS.

SUBMITTALS UTILIZING THE INSTRUCTIONS AND PROCEDURES DESCRIBED ON SHEET 1 OF 3 SHALL BE IN ACCORDANCE WITH THE APPLICABLE SECTIONS OF THE SPECIFICATIONS AND SPECIAL PROVISIONS, EXCEPT THAT CALCULATIONS FOR OVERHANG FALSEWORK NEED NOT BE SEALED BY A REGISTERED ENGINEER.

FOR OVERHANG FALSEWORK BRACING DESIGN, SEE SHEET 3 OF 3.

PROJECT NO. R-2518B
YANCEY COUNTY
STATION: 175+52.267-L-

SHEET 2 OF 3

STATE OF NORTH CAROLINA
DEPARTMENT OF TRANSPORTATION
RALEIGH

STANDARD OVERHANG FALSEWORK

AASHTO TYPES
III, IV, V, AND VI

LEFT LANE

NORTH CAROLINA PROFESSIONAL SEAL 18788 ENGINEER CHANG-CHUAN VICTOR CHAO

Chang-Chuan Victor Chao
2-19-2008

ASSEMBLED BY:	DATE:
CHECKED BY:	DATE:
DRAWN BY: R. WRIGHT 06/04	REV.
CHECKED BY: C. V. CHAO 06/04	

REVISIONS						SHEET NO.
NO.	BY:	DATE:	NO.	BY:	DATE:	S-36
1			3			TOTAL SHEETS
2			4			154

18-FEB-2008 15:40
d:\wdir\victor\overhangfalsework\tiebar&strut\r-2518b-1&2_type_III\r2518bstr1overhangsheets.dgn
vchao

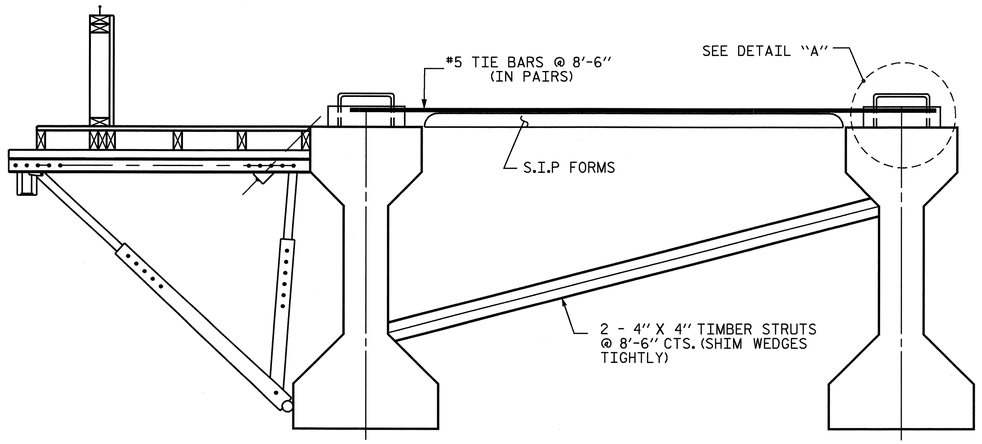

EXTERIOR GIRDER INTERIOR GIRDER

DETAIL OF REQUIRED OVERHANG FALSEWORK BRACING SYSTEM

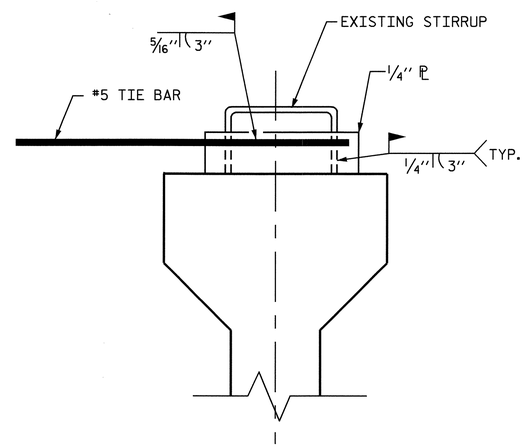

DETAIL "A"

NOTES:

EACH #5 TIE BAR SHALL BE WELDED TO ONE STIRRUP LOOP AS SHOWN IN DETAIL "A". #5 TIE BARS SHALL BE WELDED TO TWO ADJACENT STIRRUPS OF THE EXTERIOR GIRDER AND THE ADJACENT INTERIOR GIRDER BETWEEN PERMANENT DIAPHRAGMS. WELD STEEL PLATES IN BETWEEN THE TIE BARS AND THE STIRRUP LOOP. WELDING TWO TIE BARS TO THE SAME STIRRUP LOOP SHALL NOT BE PERMITTED.

MAXIMUM SPACING BETWEEN THE BRACING (TIE BARS-TIMBER STRUT) IS 8'-6" CTS. #5 TIE BARS SHALL BE LOCATED OVER A TIMBER STRUT.

INSTALL TIE BARS AND TIMBER STRUTS PRIOR TO PLACEMENT OF CONCRETE OR SCREED WEIGHT ONTO THE OVERHANG FALSEWORK.

PROJECT NO. R-2518B
YANCEY COUNTY
STATION: 175+52.267-L-

SHEET 3 OF 3

STATE OF NORTH CAROLINA
DEPARTMENT OF TRANSPORTATION
RALEIGH

STANDARD OVERHANG FALSEWORK

AASHTO TYPES
III, IV, V, AND VI

LEFT LANE

NORTH CAROLINA PROFESSIONAL SEAL 18788 ENGINEER CHANG-CHUAN VICTOR CHAO

Chang-Chuan Victor Chao
2-19-2008

REVISIONS						SHEET NO.
NO.	BY:	DATE:	NO.	BY:	DATE:	S-37
1			3			TOTAL SHEETS
2			4			154

DRAWN BY: R. WRIGHT 06/04 DATE :
CHECKED BY: C. V. CHAO 06/04 DATE :

18-FEB-2008 15:41
d:\wdlr\victor\overhangfalsework\tiebar&strut\r-2518b-1&2_type_III\r2518bstr1overhangsheets.dgn
vchao

STR #1 OF3

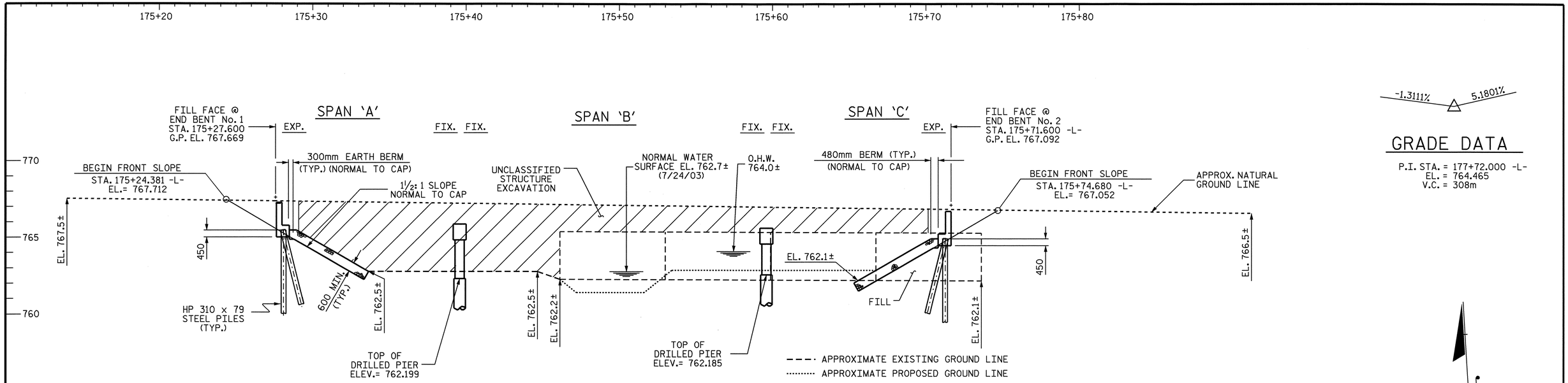

SECTION ALONG RIGHT LANE CONTROL LINE

SECTIONS AT BENTS AND END BENTS ARE AT RIGHT ANGLES

GRADE DATA

P.I. STA. = 177+72.000 -L-
EL. = 764.465
V.C. = 308m

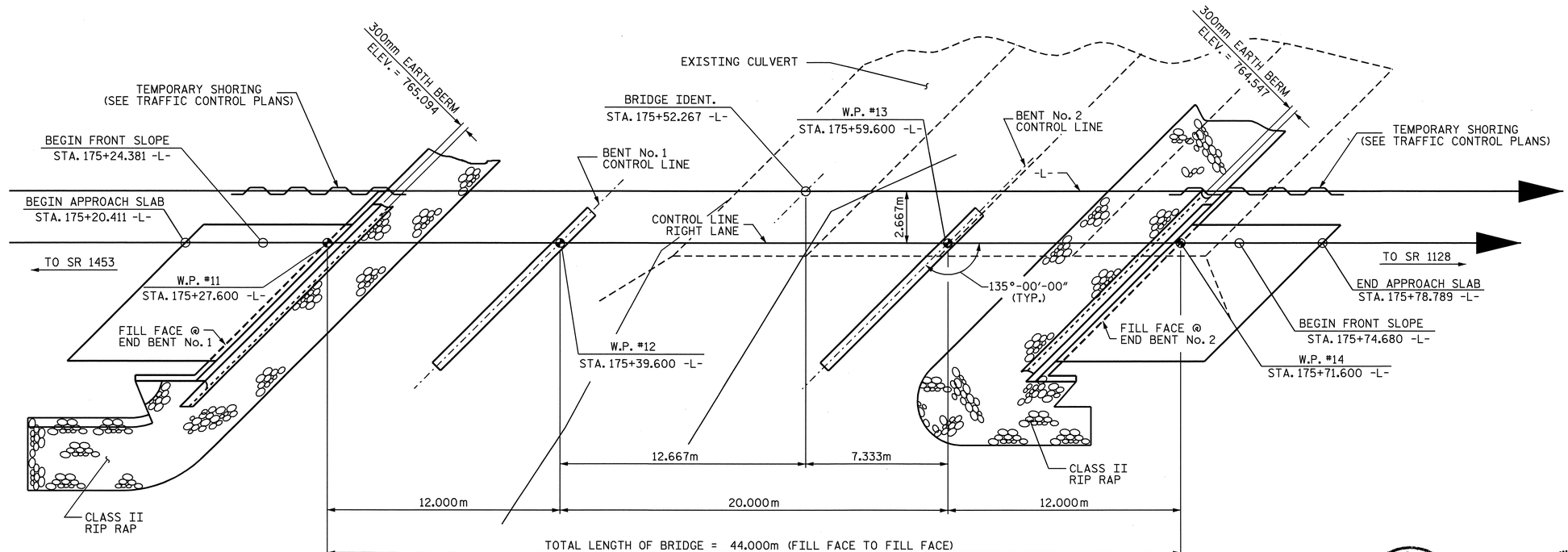

PLAN

PILES AND COLUMNS NOT SHOWN IN PLAN VIEW

METRIC

PROJECT NO. R-2518B
YANCEY COUNTY
STATION: 175+52.267 -L-

SHEET 1 OF 3 BRIDGE NO. 321

STATE OF NORTH CAROLINA
DEPARTMENT OF TRANSPORTATION
RALEIGH

GENERAL DRAWING

BRIDGE ON US 19 OVER
BALD CREEK BETWEEN
SR 1453 AND SR 1128
RIGHT LANE

NORTH CAROLINA PROFESSIONAL SEAL 13014 ENGINEER QUANG H. NGUYEN
Quang H. Nguyen 4-16-08

NORTH CAROLINA PROFESSIONAL SEAL 20125 ENGINEER MARSHALL G. CHEEK, JR.
Marshall G. Cheek, Jr. 4-7-08

REVISIONS							SHEET NO.
NO.	BY:	DATE:	NO.	BY:	DATE:		S-38
1			3				TOTAL SHEETS
2			4				154

STR. #2

DRAWN BY : A.L. FIGUEROA DATE : 10-29-07
CHECKED BY : M.G. CHEEK DATE : 01-15-08

07-APR-2008 10:48
r:\structures\Final plans\Str #2\r2518b_sd_gd_rl-str#2.dgn
lmurphy

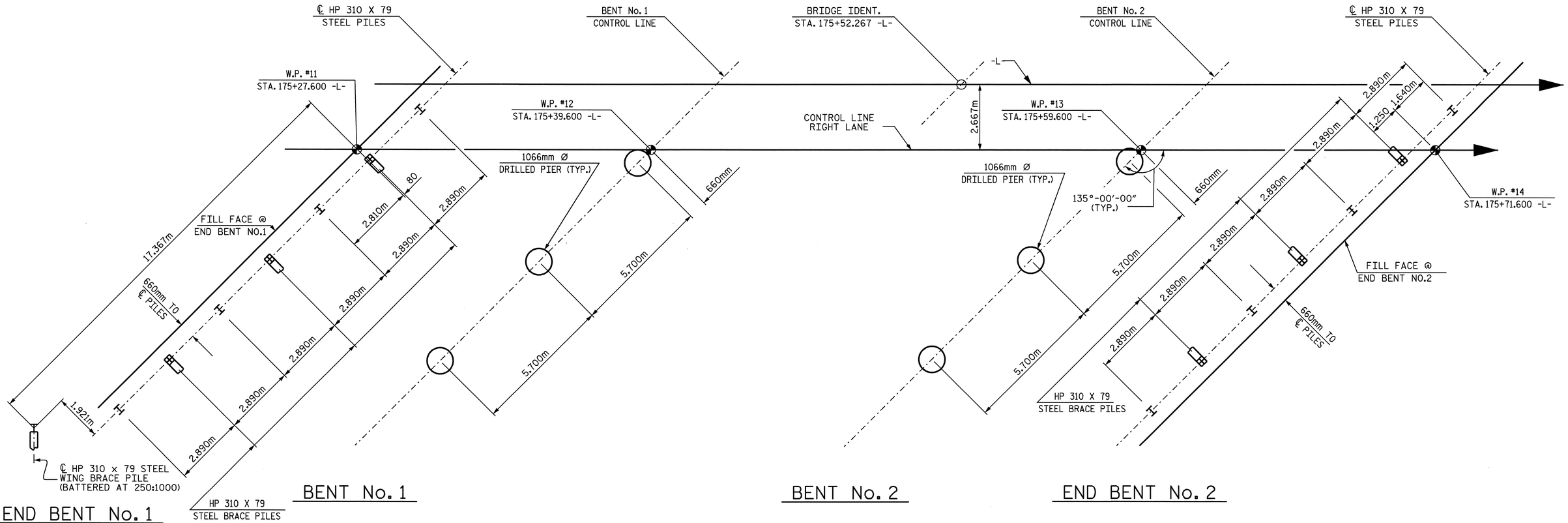

FOUNDATION LAYOUT

ALL END BENT PILES ARE HP 310 X 79
DIMENSIONS LOCATING PILES ARE SHOWN TO THE
PILE CENTERLINE AT THE BOTTOM OF THE CAP.
END BENT BRACE PILES ARE BATTERED 250:1000.

NOTES

DRIVE PILES AT END BENT NO.1 TO A REQUIRED BEARING CAPACITY OF 1,080 kN PER PILE. THE REQUIRED BEARING CAPACITY IS EQUAL TO THE ALLOWABLE BEARING CAPACITY WITH A MINIMUM FACTOR OF SAFETY OF TWO.

THE ALLOWABLE BEARING CAPACITY FOR PILES AT END BENT NO.1 IS 540 kN PER PILE.

FOR DRILLED PIERS, SEE DRILLED PIERS SPECIAL PROVISIONS.

DRILLED PIERS AT BENT NO. 1 ARE DESIGNED FOR BOTH SKIN FRICTION AND END BEARING. CHECK FIELD CONDITIONS FOR THE REQUIRED END BEARING CAPACITY OF 8.6 MPa.

DRILLED PIERS AT BENT NO.1 ARE DESIGNED FOR AN APPLIED LOAD OF 1,661 kN EACH AT THE TOP OF THE COLUMN.

DRILLED PIERS AT BENT NO.1 SHALL EXTEND TO AN ELEVATION NO HIGHER THAN 756.5 AND SATISFY THE REQUIRED END BEARING CAPACITY.

THE SCOUR CRITICAL ELEVATION FOR BENT NO.1 IS ELEVATION 757.0. SCOUR CRITICAL ELEVATIONS ARE USED TO MONITOR POSSIBLE SCOUR PROBLEMS DURING THE LIFE OF THE STRUCTURE.

THE DRILLED PIERS AT BENT NO.2 ARE DESIGNED FOR BOTH SKIN FRICTION AND END BEARING. CHECK FIELD CONDITIONS FOR THE REQUIRED END BEARING CAPACITY OF 12.4 MPa.

DRILLED PIERS AT BENT NO.2 ARE DESIGNED FOR AN APPLIED LOAD OF 1,667 kN EACH AT THE TOP OF THE COLUMN.

DRILLED PIERS AT BENT NO.2 SHALL EXTEND TO AN ELEVATION NO HIGHER THAN 760.0 AND SATISFY THE REQUIRED END BEARING CAPACITY.

THE SCOUR CRITICAL ELEVATION FOR BENT NO.2 IS ELEVATION 761.0 (LT), 760.5 (CT), AND 760.5 (RT). SCOUR CRITICAL ELEVATIONS ARE USED TO MONITOR POSSIBLE SCOUR PROBLEMS DURING THE LIFE OF THE STRUCTURE.

SPT TESTING MAY BE REQUIRED FOR DRILLED PIERS. THE ENGINEER WILL DETERMINE THE NEED FOR SPT TESTING.

SID INSPECTIONS MAY BE REQUIRED FOR DRILLED PIERS. THE ENGINEER WILL DETERMINE THE NEED FOR SID INSPECTIONS.

CSL TUBES ARE REQUIRED AND CSL TESTING MAY BE REQUIRED FOR THE DRILLED PIERS. THE ENGINEER WILL DETERMINE THE NEED FOR CSL TESTING. SEE CROSSHOLE SONIC LOGGING SPECIAL PROVISION.

DRIVE PILES AT END BENT NO.2 TO A REQUIRED BEARING CAPACITY OF 1,080 kN PER PILE. THE REQUIRED BEARING CAPACITY IS EQUAL TO THE ALLOWABLE BEARING CAPACITY WITH A MINIMUN FACTOR OF SAFETY OF TWO.

THE ALLOWABLE BEARING CAPACITY FOR PILES AT END BENT NO.2 IS 540 kN PER PILE.

PROJECT NO. R-2518B
YANCEY COUNTY
STATION: 175+52.267 -L-

SHEET 2 OF 3

STATE OF NORTH CAROLINA
DEPARTMENT OF TRANSPORTATION
RALEIGH

GENERAL DRAWING
BRIDGE ON US 19 OVER
BALD CREEK BETWEEN
SR 1453 AND SR 1128
RIGHT LANE

NORTH CAROLINA PROFESSIONAL SEAL 20125 ENGINEER MARSHALL G. CHEEK, JR.
3-31-08

REVISIONS						SHEET NO.
NO.	BY:	DATE:	NO.	BY:	DATE:	S-39
1			3			TOTAL SHEETS
2			4			154

STR. #2

DRAWN BY : A.L. FIGUEROA DATE : 01-17-08
CHECKED BY : M.G. CHEEK DATE : 01-29-08

25-MAR-2008 10:56
R:\Structures\Finalplans\Str #2\R2518B_sd_FL_STR#2.dgn
afigueroa

BENCHMARK #10: SPIKE IN 250mm WALNUT TREE, 75.964m RIGHT OF STA. 167+99.226 -L-, ELEV. 771.711

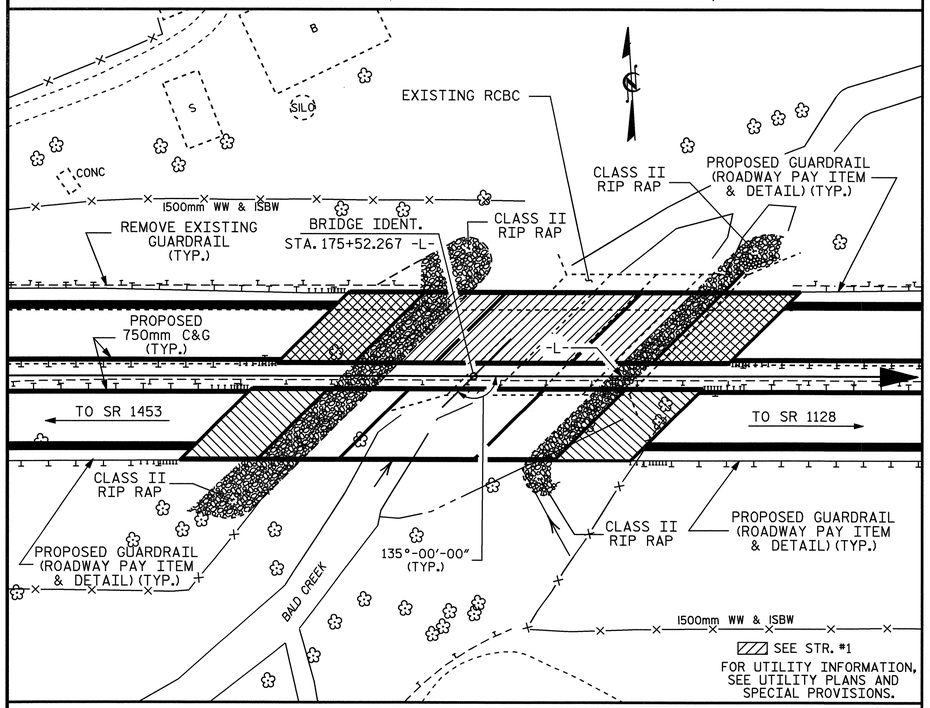

LOCATION SKETCH

HYDRAULIC DATA

DESIGN DISCHARGE	=	127 m³/S
FREQUENCY OF DESIGN FLOOD	=	50 YRS.
DESIGN HIGH WATER ELEVATION	=	765.71
DRAINAGE AREA	=	42.99 SQ. km.
BASIC DISCHARGE (Q100)	=	158 m³/S
BASIC HIGH WATER ELEVATION	=	766.00

OVERTOPPING FLOOD DATA

OVERTOPPING DISCHARGE	=	197± m³/S
FREQUENCY OF OVERTOPPING FLOOD	=	100+ YRS.
OVERTOPPING FLOOD ELEVATION	=	766.08

NOTES

ALL DIMENSIONS ARE IN MILLIMETERS UNLESS OTHERWISE NOTED.

ALL ELEVATIONS ARE IN METERS.

ASSUMED LIVE LOAD = MS 18 OR ALTERNATE LOADING, EXCEPT THAT THE GIRDERS HAVE BEEN DESIGNED FOR MS 22.5.

FOR OTHER DESIGN DATA AND GENERAL NOTES, SEE SHEET SNSM.

FOR EROSION CONTROL MEASURES, SEE EROSION CONTROL PLANS.

THIS BRIDGE HAS BEEN DESIGNED BY THE STRENGTH DESIGN METHOD AS SPECIFIED IN AASHTO STANDARD SPECIFICATIONS.

PRESTRESSED CONCRETE DECK PANELS MAY BE USED IN LIEU OF METAL STAY-IN-PLACE FORMS IN ACCORDANCE WITH ARTICLE 420-3 OF THE STANDARD SPECIFICATIONS.

REMOVABLE FORMS MAY BE USED IN LIEU OF METAL STAY-IN-PLACE FORMS IN ACCORDANCE WITH ARTICLE 420-3 OF THE STANDARD SPECIFICATIONS.

THE EXISTING CULVERT AS SHOWN ON THE PLANS IS FROM THE BEST INFORMATION AVAILABLE. SINCE THIS INFORMATION IS SHOWN FOR THE CONVENIENCE OF THE CONTRACTOR, THE CONTRACTOR SHALL HAVE NO CLAIM WHATSOEVER AGAINST THE DEPARTMENT OF TRANSPORTATION FOR ANY DELAYS OR ADDITIONAL COST INCURRED BASED ON DIFFERENCES BETWEEN THE EXISTING CULVERT AS SHOWN ON THE PLANS AND THE ACTUAL CONDITIONS AT THE PROJECT SITE.

REMOVAL OF THE EXISTING CULVERT SHALL BE PERFORMED SO AS NOT TO ALLOW DEBRIS TO FALL INTO THE WATER. THE CONTRACTOR SHALL REMOVE THE CULVERT AND SUBMIT PLANS FOR DEMOLITION IN ACCORDANCE WITH ARTICLE 402-2 OF THE STANDARD SPECIFICATIONS.

THE MATERIAL SHOWN IN THE CROSS-HATCHED AREA SHALL BE EXCAVATED FOR A DISTANCE OF 10m EACH SIDE OF CENTER LINE OF THE PROPOSED BRIDGE AS DIRECTED BY THE ENGINEER. THIS WORK WILL BE MEASURED AND PAID AS UNCLASSIFIED STRUCTURE EXCAVATION.

FOR CRANE SAFETY, SEE SPECIAL PROVISIONS.

THE CLASS AA CONCRETE IN THE BRIDGE DECK SHALL CONTAIN FLY ASH OR GROUND GRANULATED BLAST FURNACE SLAG AT THE SUBSTITUTION RATE SPECIFIED IN ARTICLE 1024-1 AND IN ACCORDANCE WITH ARTICLES 1024-5 AND 1024-6 OF THE STANDARD SPECIFICATIONS. NO PAYMENT WILL BE MADE FOR THIS SUBSTITUTION AS IT IS CONSIDERED INCIDENTAL TO THE COST OF THE REINFORCED CONCRETE DECK SLAB.

THIS STRUCTURE HAS BEEN DESIGNED IN ACCORDANCE WITH HEC 18, "EVALUATING SCOUR AT BRIDGES", NOVEMBER, 1995.

THIS BRIDGE HAS BEEN DESIGNED IN ACCORDANCE WITH THE REQUIREMENTS OF THE AASHTO STANDARD SPECIFICATIONS FOR SEISMIC DESIGN OF HIGHWAY BRIDGES FOR SEISMIC PERFORMANCE CATEGORY B.

FOR LIMITS OF TEMPORARY SHORING FOR MAINTENANCE OF TRAFFIC, SEE TRAFFIC CONTROL PLANS. FOR PAY ITEM FOR TEMPORARY SHORING FOR MAINTENANCE OF TRAFFIC, SEE ROADWAY PLANS.

THE LOCATION OF THE CONSTRUCTION JOINT IN THE DRILLED PIERS IS BASED ON AN APPROXIMATE GROUND LINE ELEVATION. IF THE CONSTRUCTION JOINT IS ABOVE THE ACTUAL GROUND ELEVATION, THE CONTRACTOR SHALL PLACE THE CONSTRUCTION JOINT 300mm BELOW THE GROUND LINE.

STEEL SHEET PILING REQUIRED FOR SHORING SHALL BE HOT ROLLED.

NEEDLE BEAMS WILL NOT BE ALLOWED UNLESS OTHERWISE CALLED FOR THE PLANS OR APPROVED BY THE ENGINEER.

FOR SUBMITTAL OF WORKING DRAWINGS, SEE SPECIAL PROVISIONS.

FOR METRIC STRUCTURAL STEEL, SEE SPECIAL PROVISIONS.

FOR FALSEWORK AND FORMWORK, SEE SPECIAL PROVISIONS.

FOR PRESTRESSED CONCRETE MEMBERS, SEE SPECIAL PROVISIONS.

FOR SPECIAL STEEL 2-BAR METAL RAIL, SEE SPECIAL PROVISIONS.

FOR GROUT FOR STRUCTURES, SEE SPECIAL PROVISIONS.

TOTAL BILL OF MATERIAL

	1066mm Ø DRILLED PIERS IN SOIL	1066mm Ø DRILLED PIERS NOT IN SOIL	SID INSPECTION	SPT TESTING	CROSSHOLE SONIC LOGGING	UNCLASSIFIED STRUCTURE EXCAVATION	REINFORCED CONCRETE DECK SLAB	GROOVING BRIDGE FLOORS	CLASS A CONCRETE	BRIDGE APPROACH SLABS	REINFORCING STEEL	SPIRAL COLUMN REINFORCING STEEL	1143mm PRESTRESSED CONCRETE GIRDERS		HP 310 X 79 STEEL PILES		483 X 178 CONCRETE PARAPET	RIP RAP CLASS II (600mm THICK)	FILTER FABRIC FOR DRAINAGE	ELASTOMERIC BEARINGS	EVAZOTE JOINT SEALS	SPECIAL STEEL 2 BAR METAL RAIL
	METERS	METERS	EACH	EACH	EACH	CU. METERS	SQ. METERS	SQ. METERS	CU. METERS	LUMP SUM	kg	kg	NO.	METERS	NO.	METERS	METERS	METRIC TONS	SQ. METERS	LUMP SUM	LUMP SUM	METERS
SUPERSTRUCTURE						320	484.6	529.7		LUMP SUM			15	208.200			86.204			LUMP SUM	LUMP SUM	80.158
END BENT NO. 1									27.9		2437				8	56		129	132			
BENT NO.1	15.1	2.0							27.7		3725	820										
BENT NO. 2	1.6	3.0							27.2		2856	409										
END BENT NO. 2									26.7		2367				7	41		183	187			
TOTAL	16.7	5.0	2	1	2	320	484.6	529.7	109.5	LUMP SUM	11385	1229	15	208.200	15	97	86.204	312	319	LUMP SUM	LUMP SUM	80.158

PROJECT NO. R-2518B
YANCEY COUNTY
STATION: 175+52.267 -L-

SHEET 3 OF 3

STATE OF NORTH CAROLINA
DEPARTMENT OF TRANSPORTATION
RALEIGH

GENERAL DRAWING
BRIDGE ON US 19 OVER
BALD CREEK BETWEEN
SR 1453 AND SR 1128
RIGHT LANE

NORTH CAROLINA PROFESSIONAL SEAL 20125 ENGINEER MARSHALL G. CHEEK, JR.
4-24-08

REVISIONS						SHEET NO.
NO.	BY:	DATE:	NO.	BY:	DATE:	S-40
1			3			TOTAL SHEETS
2			4			154

STR. #2

DRAWN BY : A.L. FIGUEROA DATE : 12-18-07
CHECKED BY : M.G. CHEEK DATE : 01-15-08

24-APR-2008 13:50
r:\structures\finalplans\Str #2\r2518b_sd_gd_rl-str#2.dgn
dahodge

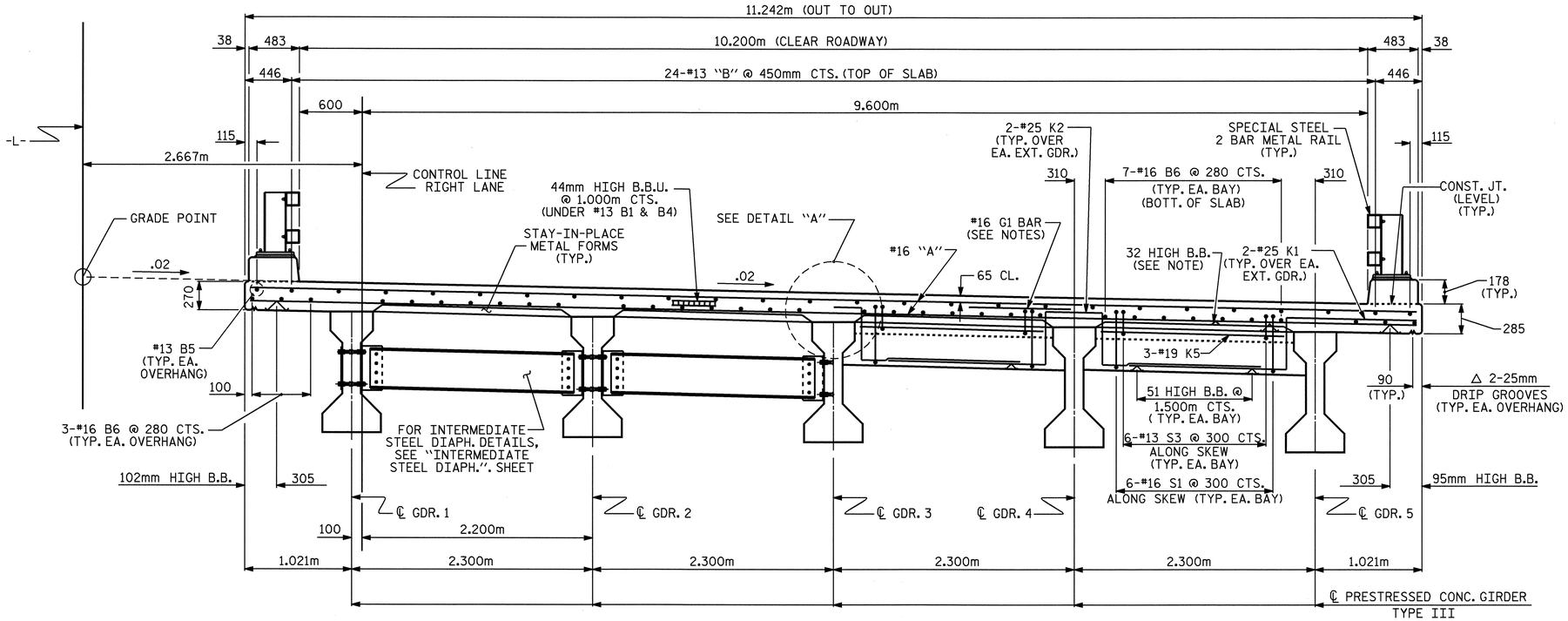

TYPICAL HALF SECTION

(SHOWING INTERMEDIATE STEEL DIAPHRAGMS)

TYPICAL HALF SECTION

(SHOWING END BENT DIAPHRAGMS)

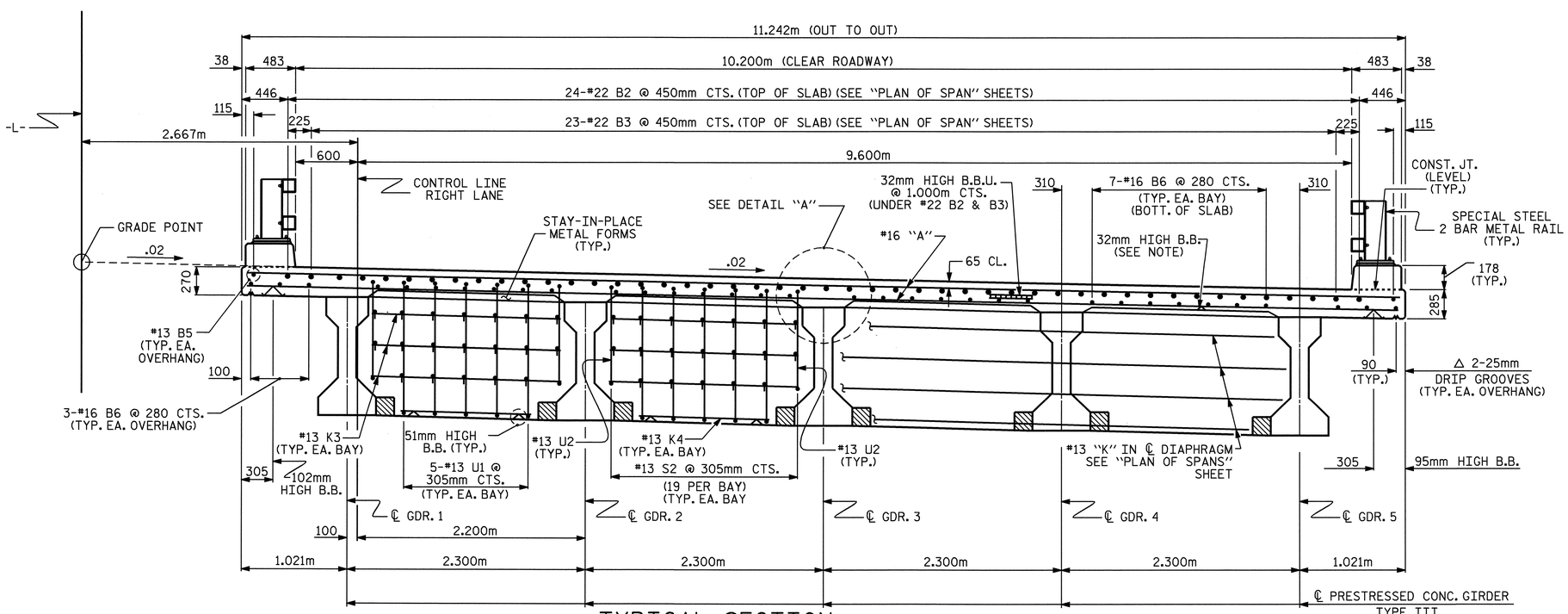

TYPICAL SECTION

(SHOWING CONTINUOUS BENT DIAPHRAGMS)

NOTES

PROVIDE 32mm HIGH BEAM BOLSTERS UPPER AT 1.2m CTS. ATOP THE METAL STAY-IN-PLACE FORMS TO SUPPORT THE BOTTOM MAT OF 'A' BARS. WHEN USING REMOVABLE FORMS, PROVIDE CONTINUOUS HIGH CHAIRS FOR METAL DECK (C.H.C.M.) @ 1.2m CTS. WITH A HEIGHT TO SUPPORT THE BOTTOM MAT OF 'A' BARS A CLEAR DISTANCE OF 65mm ABOVE THE TOP OF THE REMOVABLE FORM.

LONGITUDINAL STEEL MAY BE SHIFTED SLIGHTLY, AS NECESSARY, TO AVOID INTERFERENCE WITH STIRRUPS IN PRESTRESSED CONCRETE GIRDERS.

PARAPET IN EACH SPAN SHALL NOT BE CAST UNTIL ALL SLAB CONCRETE IN THAT SPAN HAS BEEN CAST AND HAS REACHED A MINIMUM COMPRESSIVE STRENGTH OF 20.7 MPa.

PREVIOUSLY CAST CONCRETE IN A CONTINUOUS UNIT SHALL HAVE ATTAINED A MINIMUM COMPRESSIVE STRENGTH OF 20.7 MPa BEFORE ADDITIONAL CONCRETE IS CAST IN THE UNIT.

ALL REINFORCING STEEL IN PARAPET SHALL BE EPOXY COATED.

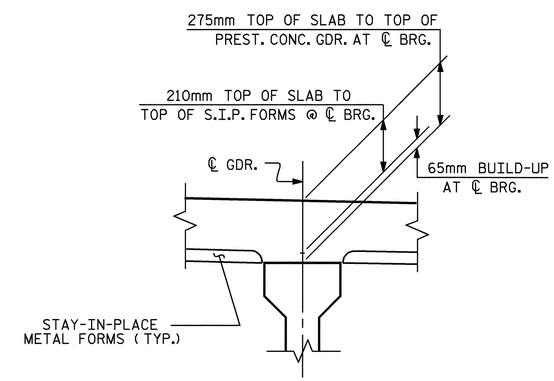

DETAIL "A"

PROJECT NO. R-2518B

YANCEY COUNTY

STATION: 175+52.267 -L-

SHEET 1 OF 2

STATE OF NORTH CAROLINA
DEPARTMENT OF TRANSPORTATION
RALEIGH

SUPERSTRUCTURE

TYPICAL SECTIONS

RIGHT LANE

NORTH CAROLINA PROFESSIONAL SEAL 20125 ENGINEER MARSHALL L. GREEN, JR.
4-24-08

REVISIONS						SHEET NO.
NO.	BY:	DATE:	NO.	BY:	DATE:	S-41
1			3			TOTAL SHEETS
2			4			154

DRAWN BY : L.L.MURPHY DATE : 6-07
CHECKED BY : V. NGUYEN DATE : 11/07

24-APR-2008 13:51
r:\structures\final plans\Str #2\R-2518B_sd_TS.dgn
dahodge

STR. #2

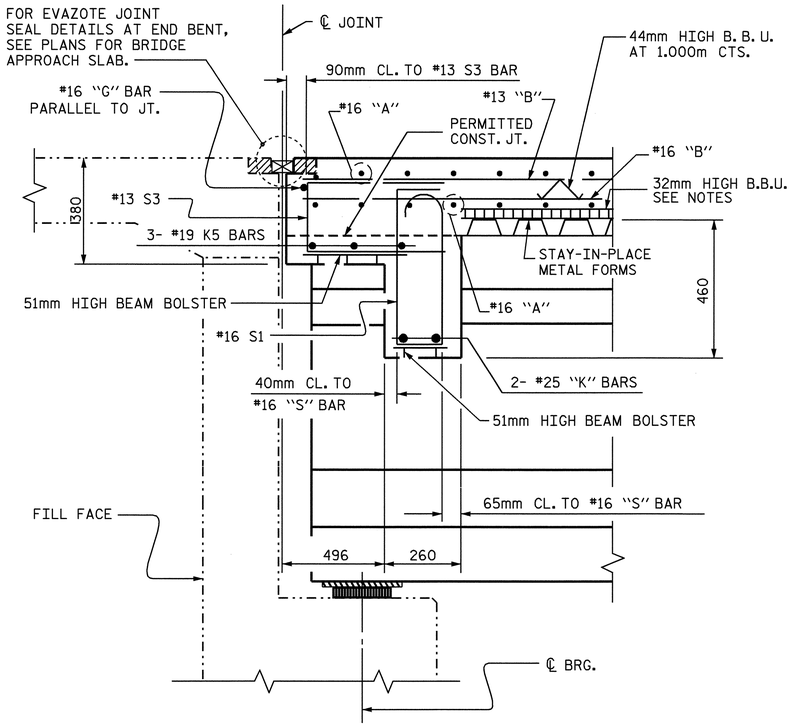

SECTION A-A

✱ #16 "G" BAR MAY BE SHIFTED SLIGHTLY, AS NECESSARY, TO CLEAR REINFORCING STEEL AND STIRRUPS.

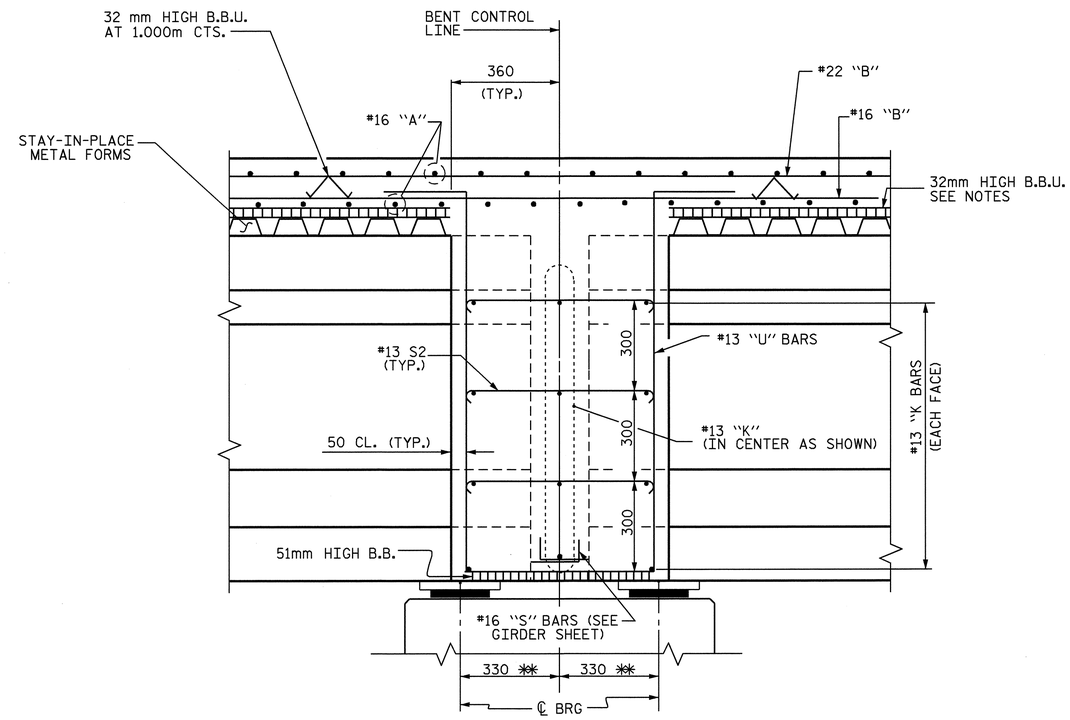

SECTION B-B

✱✱ MEASURED ALONG ℄ GIRDER

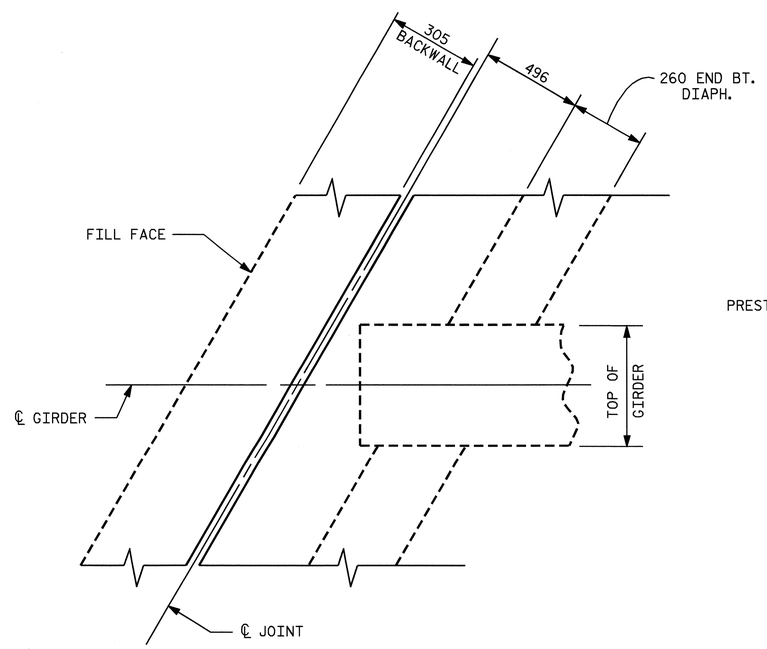

PLAN OF END BENT DIAPHRAGM

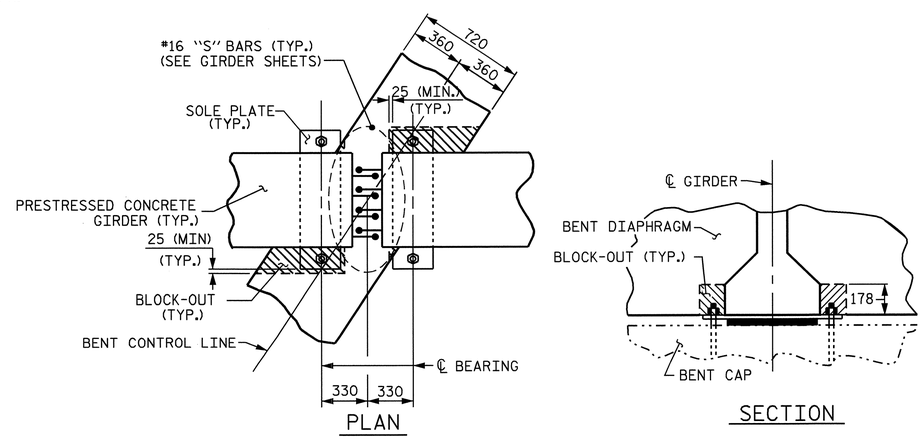

BENT DIAPHRAGM BLOCK-OUT DETAIL

PROJECT NO. R-2518B
YANCEY COUNTY
STATION: 175+52.267 -L-

SHEET 2 OF 2

STATE OF NORTH CAROLINA
DEPARTMENT OF TRANSPORTATION
RALEIGH

SUPERSTRUCTURE
TYPICAL SECTIONS
RIGHT LANE

NORTH CAROLINA PROFESSIONAL SEAL 20125 ENGINEER MARSHALL L. GLICKEL, JR.
3-18-08

REVISIONS						SHEET NO.
NO.	BY:	DATE:	NO.	BY:	DATE:	S-42
1			3			TOTAL SHEETS
2			4			154

DRAWN BY : L.L.MURPHY DATE : 6-07
CHECKED BY : V. NGUYEN DATE : 11/07

26-MAR-2008 08:05
R:\Structures\Final plans\Str #2\R-2518B_sd_TS.dgn
afigueroa

STR. #2

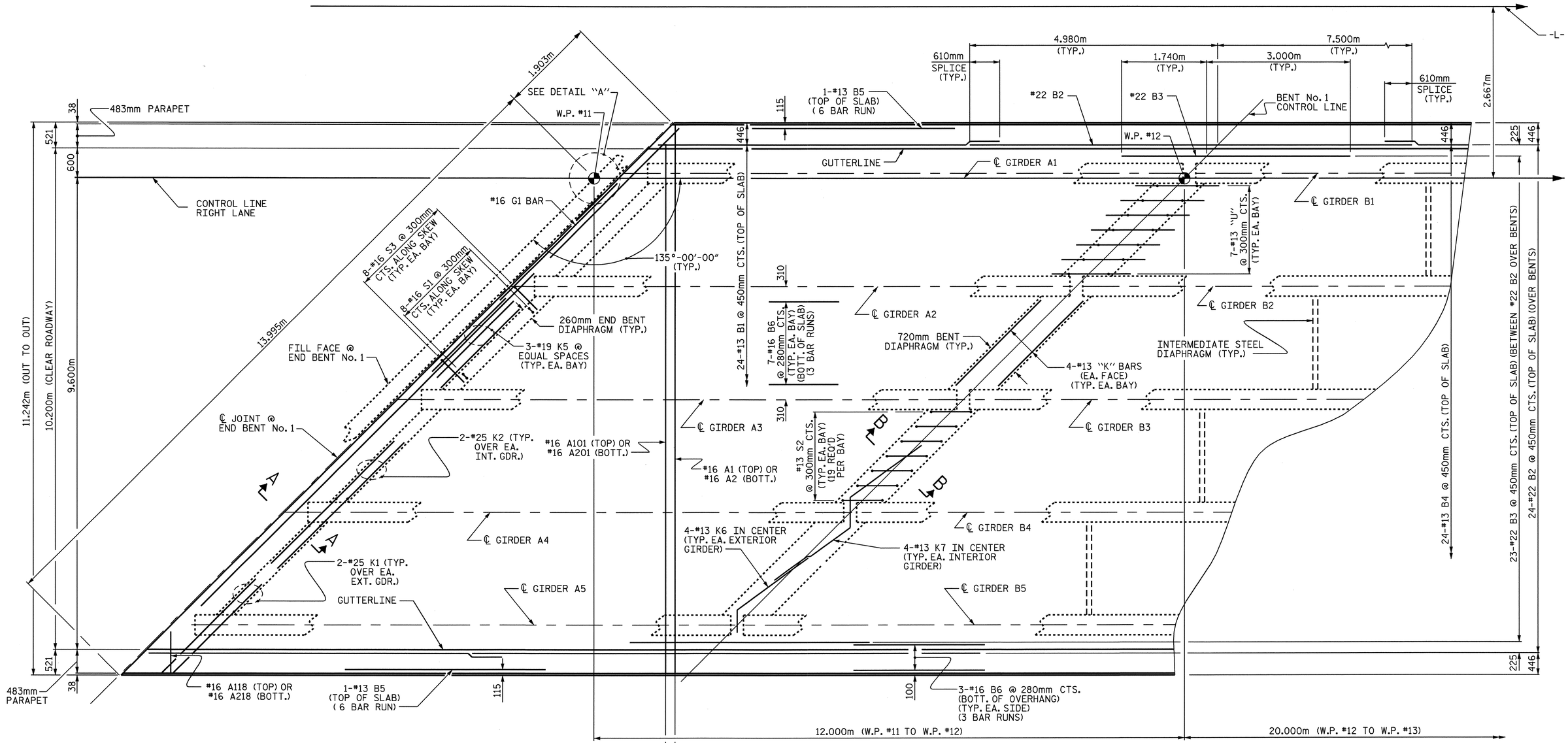

PROJECT NO. R-2518B
YANCEY COUNTY
STATION: 175+52.267 -L-

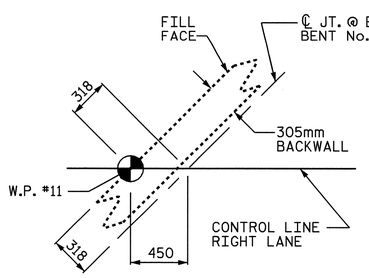

DETAIL "A"

PARTIAL PLAN OF SPAN

FOR SECTIONS A-A AND B-B, SEE "TYPICAL SECTIONS", SHEET 2 OF 2.

FOR PARAPET REINFORCING STEEL AND DETAILS, SEE "CONCRETE PARAPET" SHEETS.

NORTH CAROLINA PROFESSIONAL SEAL 20125 ENGINEER MARSHALL L. GILCHRIST, JR.
3-28-08

STATE OF NORTH CAROLINA
DEPARTMENT OF TRANSPORTATION
RALEIGH

SUPERSTRUCTURE
PLAN OF SPANS
RIGHT LANE

REVISIONS						SHEET NO.
NO.	BY:	DATE:	NO.	BY:	DATE:	S-43
1			3			TOTAL SHEETS
2			4			154

DRAWN BY : L.L. MURPHY DATE : 6-07
CHECKED BY : V. NGUYEN DATE : 11/07

26-MAR-2008 08:06
R:\Structures\Finalplans\Str #2\R-2518B_sd_PS.dgn
afigueroa

STR. #2

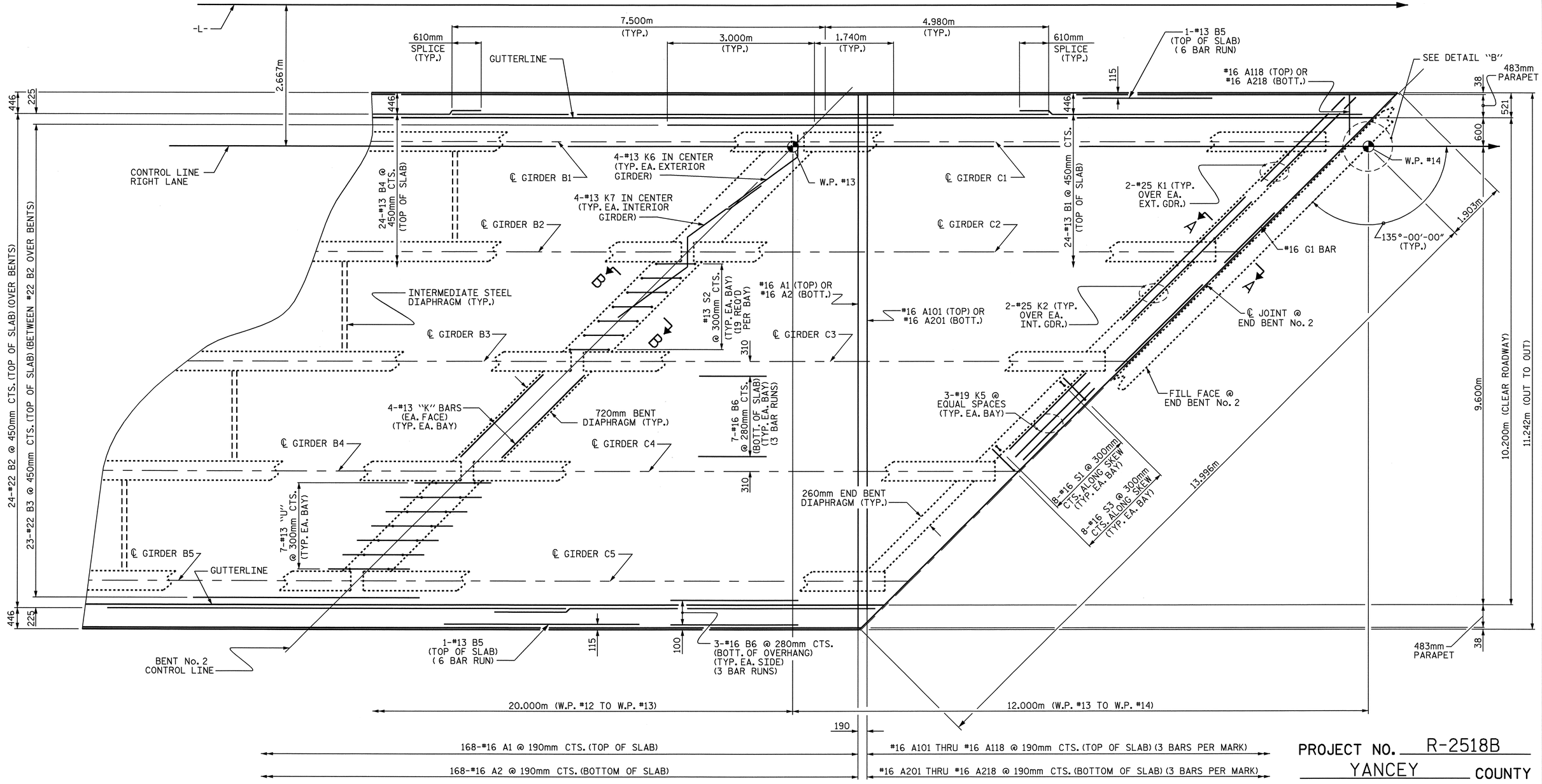

PARTIAL PLAN OF SPAN

FOR SECTIONS A-A AND B-B, SEE "TYPICAL SECTIONS", SHEET 2 OF 2.

FOR PARAPET REINFORCING STEEL AND DETAILS, SEE "CONCRETE PARAPET" SHEETS.

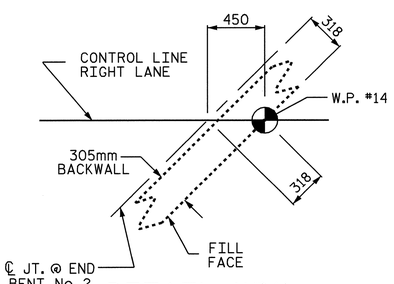

DETAIL "B"

NORTH CAROLINA PROFESSIONAL SEAL 20125 ENGINEER MARSHALL G. CHEEK, JR.
3-18-08

PROJECT NO. R-2518B
YANCEY COUNTY
STATION: 175+52.267 -L-

STATE OF NORTH CAROLINA
DEPARTMENT OF TRANSPORTATION
RALEIGH

SUPERSTRUCTURE
PLAN OF SPANS
RIGHT LANE

REVISIONS						SHEET NO.
NO.	BY:	DATE:	NO.	BY:	DATE:	S-44
1			3			TOTAL SHEETS
2			4			154

DRAWN BY : L.L. MURPHY DATE : 6-07
CHECKED BY : V. NGUYEN DATE : 11/07

26-MAR-2008 08:06
R:\Structures\Finalplans\Str #2\R-2518B_sd_PS.dgn
afigueroa

STR. #2

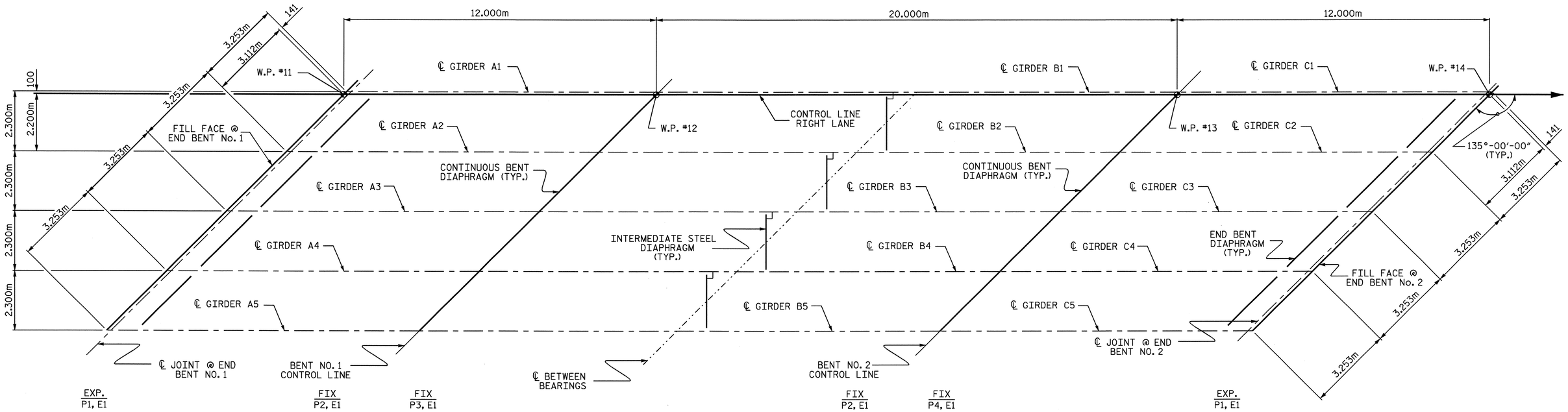

FRAMING PLAN

PROJECT NO. R-2518B
YANCEY COUNTY
STATION: 175+52.267 -L-

NORTH CAROLINA PROFESSIONAL SEAL 20125 ENGINEER MARSHALL G. CHEEK, JR.
3-18-08

STATE OF NORTH CAROLINA
DEPARTMENT OF TRANSPORTATION
RALEIGH

SUPERSTRUCTURE
FRAMING PLAN
RIGHT LANE

REVISIONS						SHEET NO.
NO.	BY:	DATE:	NO.	BY:	DATE:	S-45
1			3			TOTAL SHEETS
2			4			154

DRAWN BY : L.L.MURPHY DATE : 6-07
CHECKED BY : V. NGUYEN DATE : 11/07

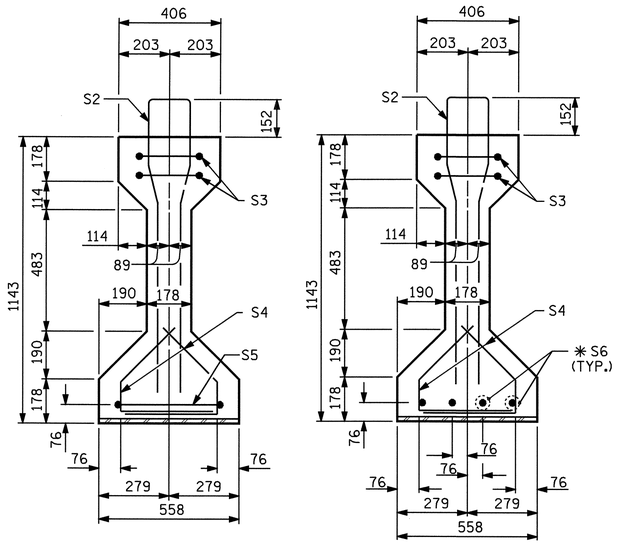

SECTION A-A

SECTION B-B

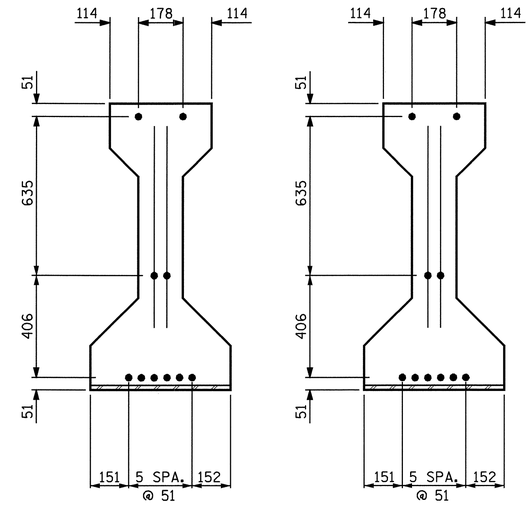

AT END OF GIRDER

AT ℄ OF GIRDER

12.70mm Ø LOW RELAXATION STRAND LAYOUT

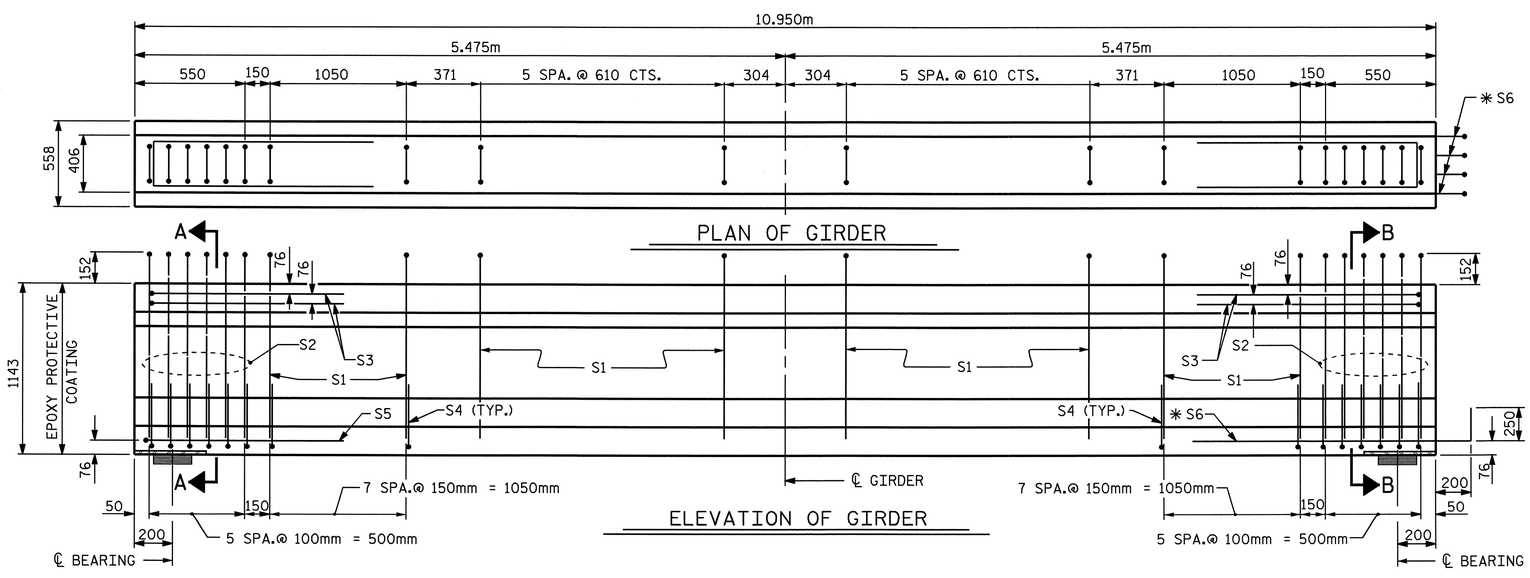

12.70mm Ø L. R. GRADE 270 STRANDS

AREA (mm²)	ULTIMATE STRENGTH (kN PER STRAND)	APPLIED PRESTRESS (kN PER STRAND)
98.71	183.7	137.8

REINFORCING STEEL FOR ONE GIRDER

BAR	NUMBER	SIZE	TYPE	LENGTH	WEIGHT
S1	28	#13	1	2600	72
S2	12	#19	1	2600	70
S3	4	#13	3	2660	11
S4	56	#13	2	840	47
S5	1	#13	3	2900	3
✳ S6	4	#16	STR	1120	7

✳ NOTE: S6 BARS SHALL BE BENT BEFORE SHIPMENT. HEAT BENDING SHALL NOT BE ALLOWED.

BAR TYPES

ALL BAR DIMENSIONS ARE OUT-TO-OUT

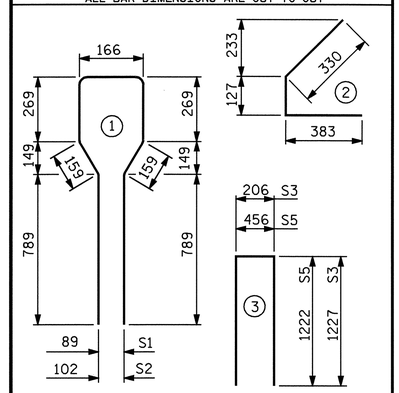

QUANTITIES FOR ONE GIRDER

	REINFORCING STEEL	34.5 MPa CONCRETE	12.70mm Ø L.R. STRANDS
	kg	m³	No.
	210	4.0	10

GIRDERS REQUIRED

NUMBER	LENGTH	TOTAL LENGTH
5	10.950m	54.750m

PROJECT NO. R-2518B

YANCEY COUNTY

STATION: 175+52.267 -L-

SHEET 1 OF 5

STATE OF NORTH CAROLINA
DEPARTMENT OF TRANSPORTATION
RALEIGH

STANDARD
AASHTO TYPE III
PRESTRESSED CONCRETE GIRDER
CONTINUOUS FOR LIVE LOAD
SPAN "A"
RIGHT LANE

NORTH CAROLINA PROFESSIONAL SEAL 20125 ENGINEER MARSHALL B. CHEEK, JR.
5-28-08

REVISIONS							SHEET NO.
NO.	BY:	DATE:	NO.	BY:	DATE:		S-46
1			3				TOTAL SHEETS
2			4				154

ASSEMBLED BY :	L.L. MUIRPHY	DATE :	7-07
CHECKED BY :	V. NGUYEN	DATE :	11/07
DRAWN BY : ELR 8/91	REV. 7/17/98	RWW/LES	
CHECKED BY : GRP 8/91	REV. 10/17/00R	RWW/LES	
	REV. 5/1/06	TLA/GM	

26-MAR-2008 08:07
R:\Structures\Finalplans\Str #2\R-2518B_sd_G*.dgn
afigueroa

STR. #2

STD. NO. PCG5SM

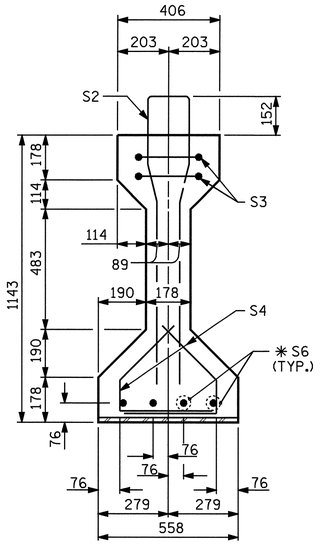

SECTION A-A

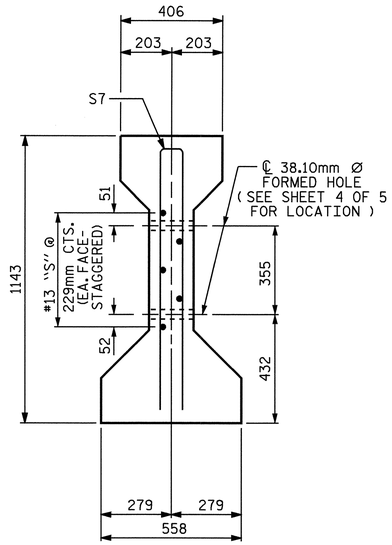

SECTION C-C

(S1 BARS NOT SHOWN)

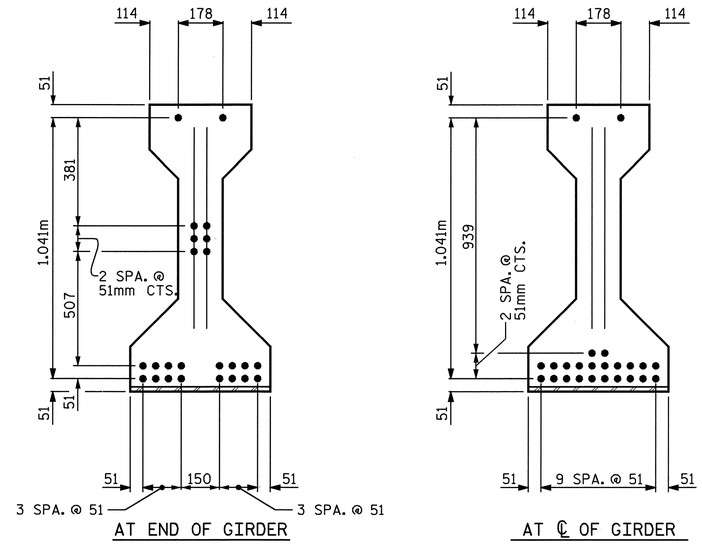

AT END OF GIRDER

AT ℄ OF GIRDER

12.70mm Ø LOW RELAXATION STRAND LAYOUT

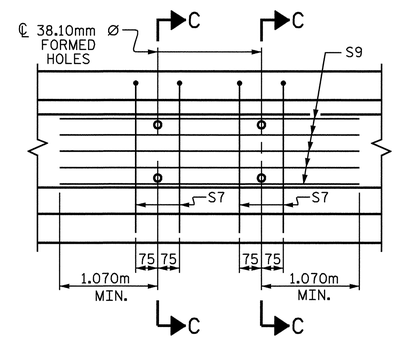

PARTIAL ELEVATION

SHOWING INTERMEDIATE DIAPHRAGM
REINFORCING STEEL FOR GIRDER Nos. 2,3 & 4

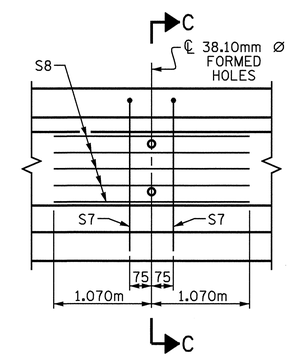

PARTIAL ELEVATION

SHOWING INTERMEDIATE DIAPHRAGM
REINFORCING STEEL FOR GIRDER Nos. 1 & 5

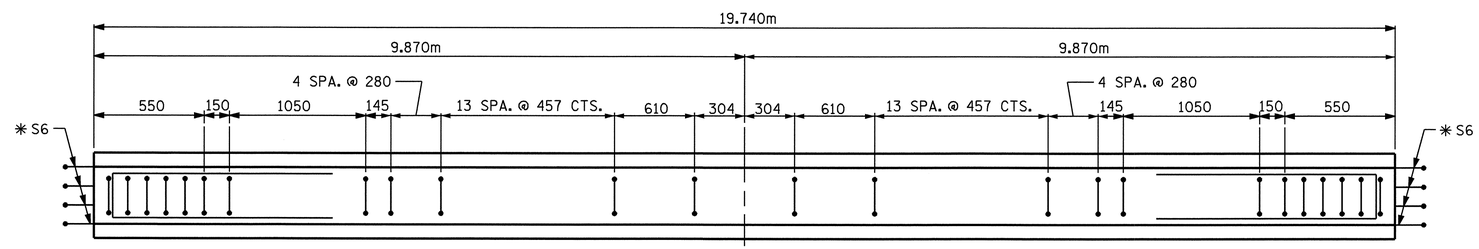

PLAN OF GIRDER

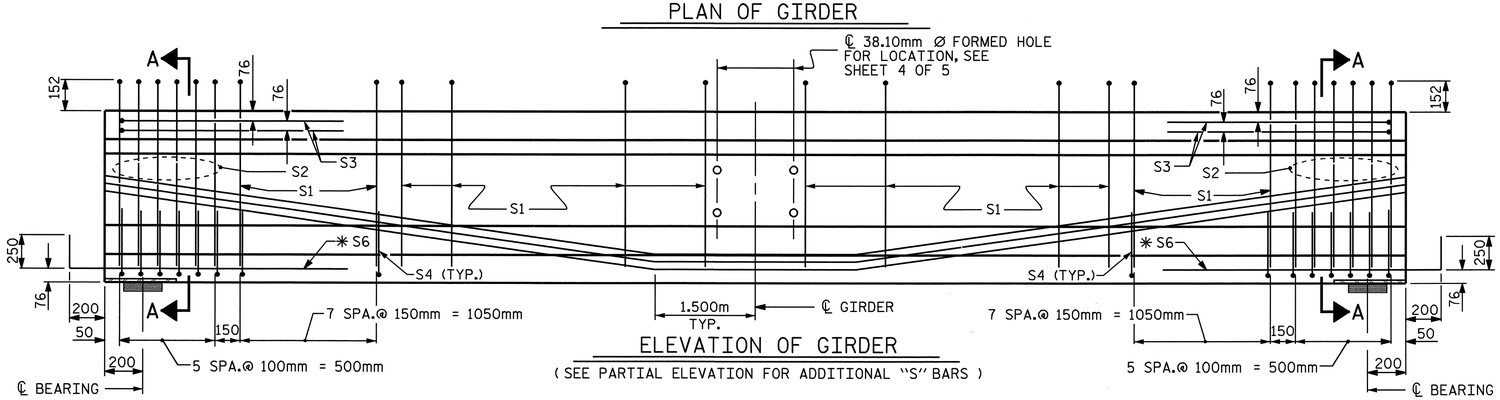

ELEVATION OF GIRDER

(SEE PARTIAL ELEVATION FOR ADDITIONAL "S" BARS)

12.70mm Ø L. R. GRADE 270 STRANDS

AREA (mm²)	ULTIMATE STRENGTH (kN PER STRAND)	APPLIED PRESTRESS (kN PER STRAND)
98.71	183.7	137.8

REINFORCING STEEL FOR ONE GIRDER

	BAR	NUMBER	SIZE	TYPE	LENGTH	WEIGHT
	S1	54	#13	1	2600	140
	S2	12	#19	1	2600	70
	S3	4	#13	3	2660	11
	S4	56	#13	2	840	47
	S5	1	#13	3	2900	3
	✱S6	8	#16	STR	1120	14
EXTERIOR GDR.	S7	2	#16	3	2180	7
INTERIOR GDR.	S7	4	#16	3	2180	14
EXTERIOR GDR.	S8	5	#13	STR	2140	11
INTERIOR GDR.	S9	5	#13	STR	4440	22

✱NOTE: S6 BARS SHALL BE BENT BEFORE SHIPMENT. HEAT BENDING SHALL NOT BE ALLOWED.

BAR TYPES

ALL BAR DIMENSIONS ARE OUT-TO-OUT

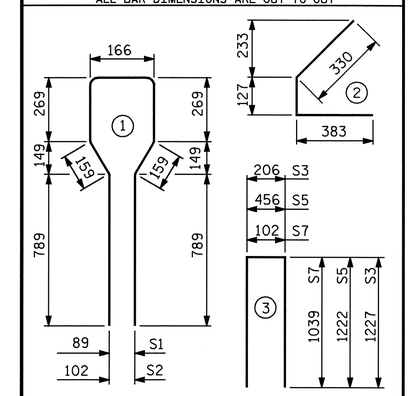

QUANTITIES FOR ONE GIRDER

	REINFORCING STEEL (kg)	34.5 MPa CONCRETE (m³)	12.70mm Ø L.R. STRANDS (No.)
EXTERIOR GDR.	303	7.1	24
INTERIOR GDR.	321	7.1	24

GIRDERS REQUIRED

NUMBER	LENGTH	TOTAL LENGTH
5	19.740m	98.700m

PROJECT NO. R-2518B

YANCEY COUNTY

STATION: 175+52.267 -L-

SHEET 2 OF 5

STATE OF NORTH CAROLINA
DEPARTMENT OF TRANSPORTATION
RALEIGH

STANDARD
AASHTO TYPE III
PRESTRESSED CONCRETE GIRDER
CONTINUOUS FOR LIVE LOAD
SPAN "B"
RIGHT LANE

NORTH CAROLINA PROFESSIONAL SEAL 20125 ENGINEER MARSHALL G. CHECK, JR.

3-28-08

REVISIONS								SHEET NO.
NO.	BY:	DATE:	NO.	BY:	DATE:			S-47
1			3					TOTAL SHEETS
2			4					154

ASSEMBLED BY :	L.L. MURPHY	DATE :	7-07
CHECKED BY :	V. NGUYEN	DATE :	11/07
DRAWN BY : ELR 8/91	REV. 7/17/98	RWW/LES	
CHECKED BY : GRP 8/91	REV. 10/17/00R	RWW/LES	
	REV. 5/1/06	TLA/GM	

26-MAR-2008 08:42
R:\Structures\Finalplans\Str #2\R-2518B_sd_G*.dgn
afigueroa

STR. #2

STD. NO. PCG5SM

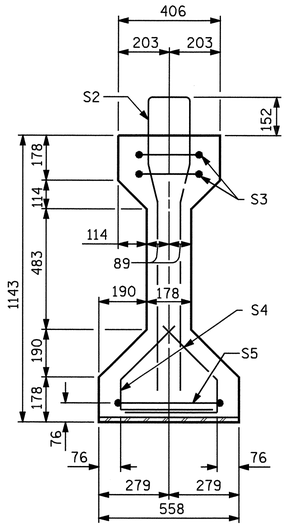

SECTION A-A

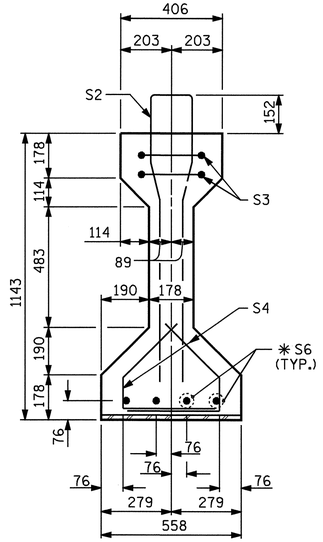

SECTION B-B

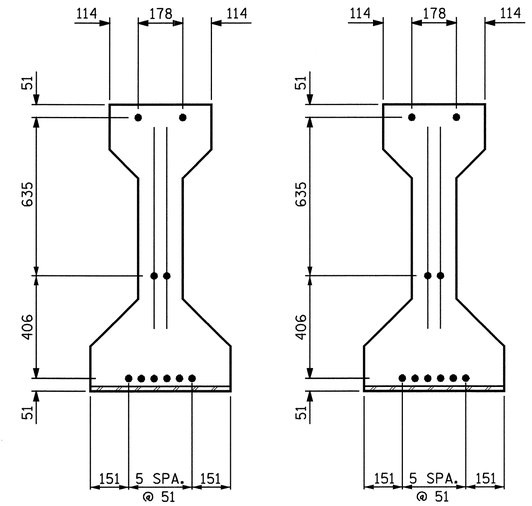

AT END OF GIRDER

AT ℄ OF GIRDER

12.70mm Ø LOW RELAXATION STRAND LAYOUT

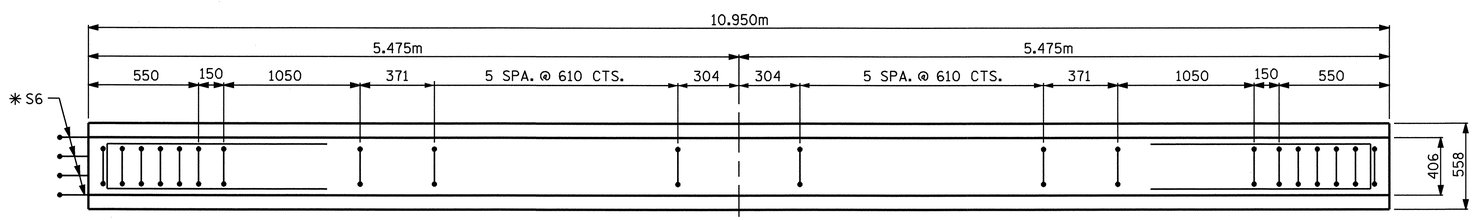

PLAN OF GIRDER

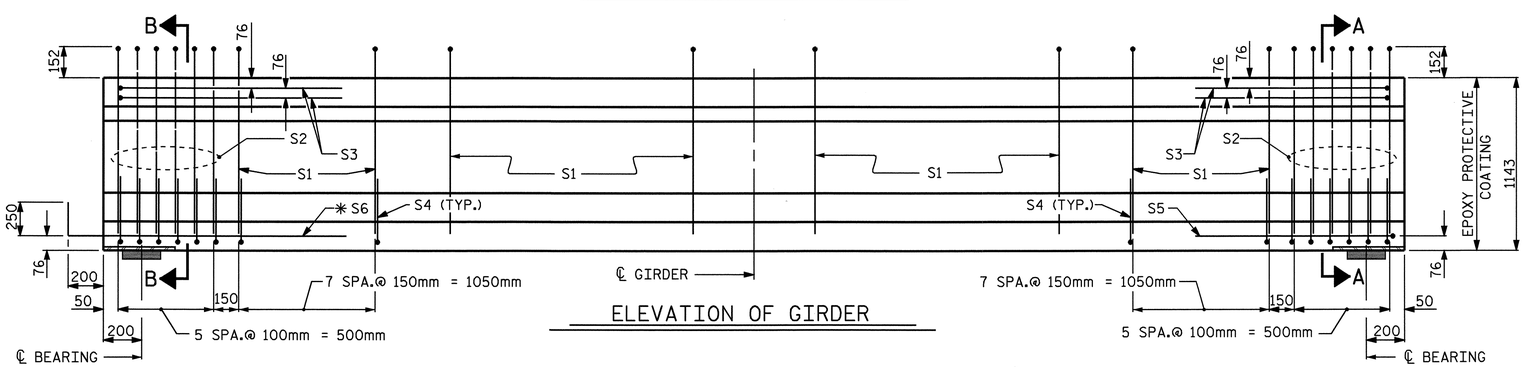

ELEVATION OF GIRDER

FIX

EXP

12.70mm Ø L. R. GRADE 270 STRANDS

AREA (mm²)	ULTIMATE STRENGTH (kN PER STRAND)	APPLIED PRESTRESS (kN PER STRAND)
98.71	183.7	137.8

REINFORCING STEEL FOR ONE GIRDER

BAR	NUMBER	SIZE	TYPE	LENGTH	WEIGHT
S1	28	#13	1	2600	72
S2	12	#19	1	2600	70
S3	4	#13	3	2660	11
S4	56	#13	2	840	47
S5	1	#13	3	2900	3
✳ S6	4	#16	STR	1120	7

✳ NOTE: S6 BARS SHALL BE BENT BEFORE SHIPMENT. HEAT BENDING SHALL NOT BE ALLOWED.

BAR TYPES

ALL BAR DIMENSIONS ARE OUT-TO-OUT

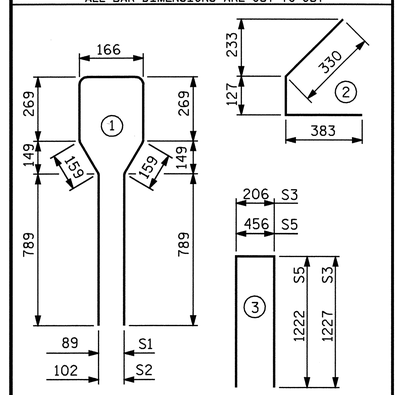

QUANTITIES FOR ONE GIRDER

	REINFORCING STEEL	34.5 MPa CONCRETE	12.70mm Ø L.R. STRANDS
	kg	m³	No.
	210	4.0	10

GIRDERS REQUIRED

NUMBER	LENGTH	TOTAL LENGTH
5	10.950m	54.750m

PROJECT NO. R-2518B

YANCEY COUNTY

STATION: 175+52.267 -L-

SHEET 3 OF 5

STATE OF NORTH CAROLINA
DEPARTMENT OF TRANSPORTATION
RALEIGH

STANDARD
AASHTO TYPE III
PRESTRESSED CONCRETE GIRDER
CONTINUOUS FOR LIVE LOAD
SPAN "C"
RIGHT LANE

NORTH CAROLINA PROFESSIONAL SEAL 20125 ENGINEER MARSHALL G. COREY, JR.
3-28-08

REVISIONS							
NO.	BY:	DATE:	NO.	BY:	DATE:		
1			3				
2			4				

SHEET NO. S-48

TOTAL SHEETS 154

ASSEMBLED BY :	L.L. MURPHY	DATE :	7-07
CHECKED BY :	V. NGUYEN	DATE :	11/07
DRAWN BY : ELR 8/91	REV. 7/17/98	RWW/LES	
CHECKED BY : GRP 8/91	REV. 10/17/00R	RWW/LES	
	REV. 5/1/06	TLA/GM	

26-MAR-2008 08:07
R:\Structures\Finalplans\Str #2\R-2518B_sd_G*.dgn
afigueroa

STR. #2

STD. NO. PCG5SM

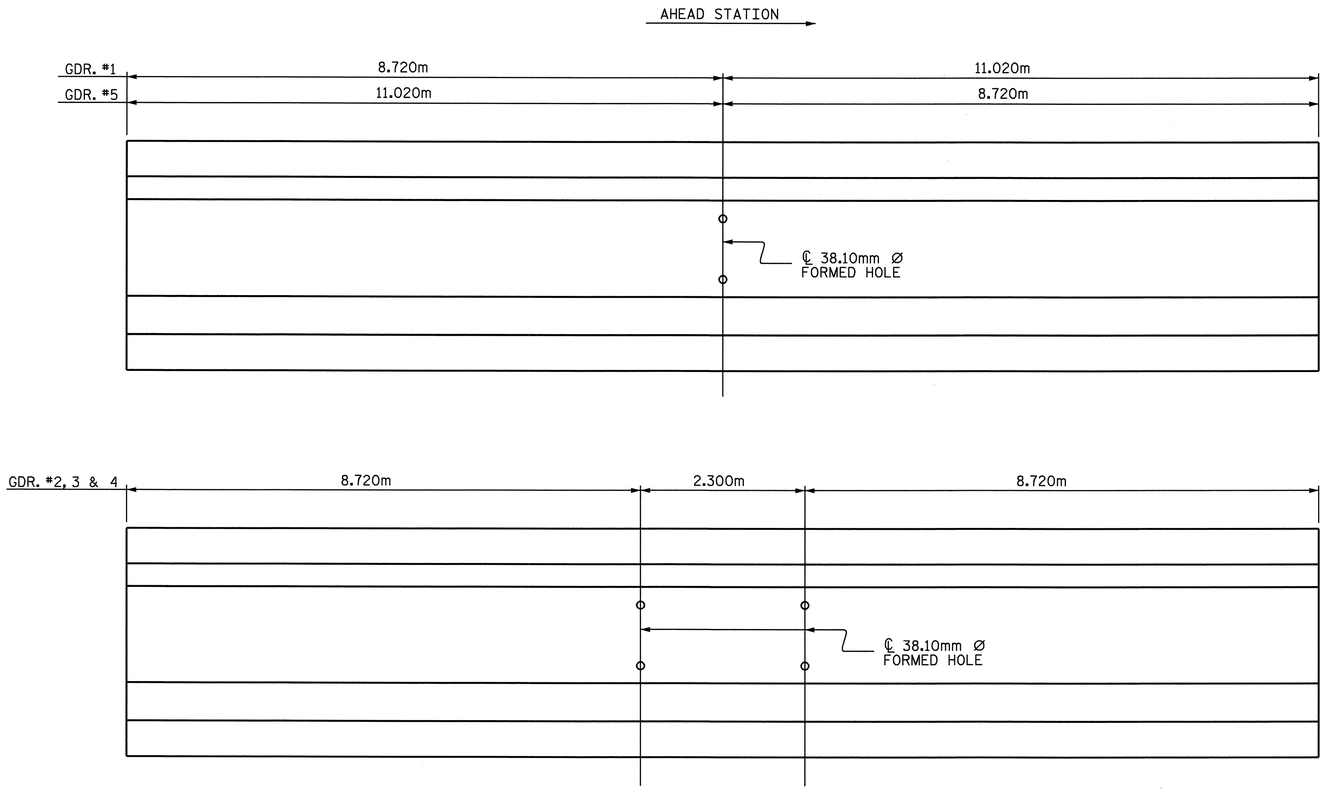

LOCATION OF BOLT HOLES IN GIRDERS

DEAD LOAD DEFLECTION TABLE

	SPAN A - GIRDER #1 THRU #5										
TENTH POINTS	0	.1	.2	.3	.4	.5	.6	.7	.8	.9	0
CAMBER (GIRDER ALONE IN PLACE) ↑	.000	.001	.002	.003	.003	.003	.003	.003	.002	.001	.000
✳DEFLECTION DUE TO WEIGHT OF SLAB ↓	.000	.000	.000	.001	.001	.001	.001	.001	.000	.000	.000
FINAL CAMBER ↑	0	1	2	2	2	2	2	2	2	1	0

DEAD LOAD DEFLECTION TABLE

	SPAN B - GIRDER #1 THRU #5										
TENTH POINTS	0	.1	.2	.3	.4	.5	.6	.7	.8	.9	0
CAMBER (GIRDER ALONE IN PLACE) ↑	.000	.016	.031	.042	.049	.052	.049	.042	.031	.016	.000
✳DEFLECTION DUE TO WEIGHT OF SLAB ↓	.000	.006	.011	.015	.018	.019	.018	.015	.011	.006	.000
FINAL CAMBER ↑	0	10	20	27	31	33	31	27	20	10	0

DEAD LOAD DEFLECTION TABLE

	SPAN C - GIRDER #1 THRU #5										
TENTH POINTS	0	.1	.2	.3	.4	.5	.6	.7	.8	.9	0
CAMBER (GIRDER ALONE IN PLACE) ↑	.000	.001	.002	.003	.003	.003	.003	.003	.002	.001	.000
✳DEFLECTION DUE TO WEIGHT OF SLAB ↓	.000	.000	.000	.001	.001	.001	.001	.001	.000	.000	.000
FINAL CAMBER ↑	0	1	2	2	2	2	2	2	2	1	0

✳ INCLUDES SLAB, BUILDUPS & STAY-IN-PLACE FORMS.
ALL VALUES ARE SHOWN IN METERS, EXCEPT "FINAL CAMBER" WHICH IS SHOWN IN MILLIMETERS.

NOTES

ALL PRESTRESSING STRANDS SHALL BE 7-WIRE LOW-RELAXATION GRADE 270 STRANDS AND SHALL CONFORM TO AASHTO M203M EXCEPT FOR SAMPLING REQUIREMENTS WHICH SHALL BE IN ACCORDANCE WITH THE STANDARD SPECIFICATIONS.

ALL REINFORCING STEEL SHALL BE GRADE 420.

APPLY EPOXY PROTECTIVE COATING TO END OF GIRDER SURFACES INDICATED IN ELEVATION VIEW.

EMBEDDED PLATE "B-1" SHALL BE GALVANIZED IN ACCORDANCE WITH THE SPECIFICATIONS. BEVEL EDGES OF PLATE "B-1" TO GIVE CLOSE FIT BUT NOT TIGHT FIT TO STEEL CASTING FORM.

ANCHOR STUDS SHALL CONFORM TO AASHTO M169 GRADES 1010 THROUGH 1020 OR APPROVED EQUAL, AND SHALL MEET THE TYPE "B" REQUIREMENTS OF SUBSECTION 7.3 OF THE ANSI/AASHTO/AWS D1.5 BRIDGE WELDING CODE.

AT ENDS OF GIRDERS TO BE EMBEDDED IN CONCRETE DIAPHRAGMS OR END WALLS, PRESTRESSING STRANDS MAY EXTEND A MAXIMUM OF 50mm BEYOND THE GIRDER ENDS. OTHERWISE, PRESTRESSING STRANDS SHALL BE CUT FLUSH WITH THE GIRDER ENDS.

THE TRANSFER OF LOAD FROM THE ANCHORAGES TO THE GIRDER SHALL BE DONE WHEN CONCRETE HAS REACHED A COMPRESSIVE STRENGTH OF NOT LESS THAN 27.6 MPa.

DEPENDING ON THE TYPE OF SYSTEM USED TO SUPPORT THE DECK SLAB FORMS, PRESET ANCHORS MAY BE NECESSARY IN THE PRESTRESSED CONCRETE GIRDER.

THE TOP SURFACE OF THE GIRDER, EXCLUDING THE OUTSIDE 100mm, SHALL BE RAKED TO A DEPTH OF 6mm.

WHEN DRAPED STRANDS ARE DETAILED, THE LONGITUDINAL LOCATION OF THE HOLD DOWN DEVICES SHALL BE WITHIN 150mm OF THE LOCATION SHOWN AND THE CENTER OF GRAVITY OF THE GROUP OF DRAPED STRANDS SHALL BE LOCATED WITHIN 13mm OF THE THEORETICAL LOCATION SHOWN.

FOR CRACK REPAIR OF PRESTRESSED CONCRETE GIRDERS, SEE SPECIAL PROVISIONS.

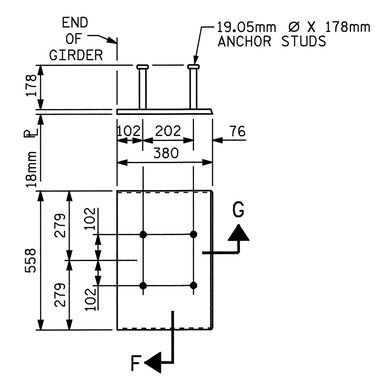

EMBEDDED PLATE "B-1" DETAILS
FOR AASHTO TYPE III GIRDER
(2 REQ'D PER GIRDER)

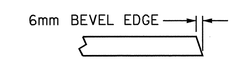

SECTION "G"

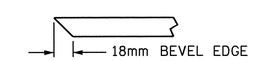

SECTION "F"
(SEE NOTES)

PROJECT NO. R-2518B
YANCEY COUNTY
STATION: 175+52.267 -L-

SHEET 4 OF 5

STATE OF NORTH CAROLINA
DEPARTMENT OF TRANSPORTATION
RALEIGH

STANDARD
PRESTRESSED CONCRETE GIRDER
CONTINUOUS FOR LIVE LOAD
DETAILS
RIGHT LANE

NORTH CAROLINA PROFESSIONAL SEAL 20125 ENGINEER MARSHALL G. CHESK, JR.
4-16-08

REVISIONS								SHEET NO.
NO.	BY:	DATE:	NO.	BY:	DATE:			S-49
1			3					TOTAL SHEETS
2			4					154

ASSEMBLED BY : L.L. MURPHY		DATE : 7-07	
CHECKED BY : V. NGUYEN		DATE : 11/07	
DRAWN BY : ELR 11/91	REV. 10/17/00 RWW/LES		
CHECKED BY : GRP 11/91	REV. 7/10/01RR LES/RDR		
	REV. 5/1/06 TLA/GM		

16-APR-2008 11:35
r:\structures\finalplans\Str #2\R-2518B_sd_G*.dgn
lmurphy

STR. #2

STD. NO. PCG11SM

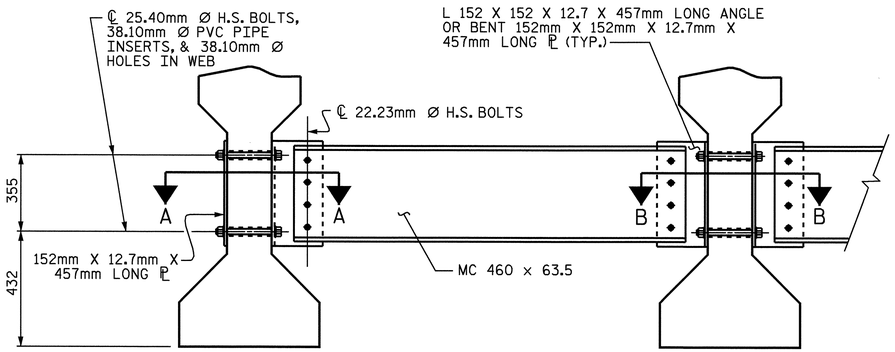

PART SECTION AT INTERMEDIATE DIAPHRAGM

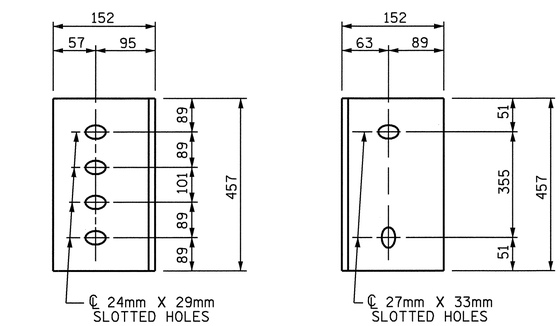

DIAPHRAGM FACE

WEB FACE

CONNECTOR PLATE DETAILS

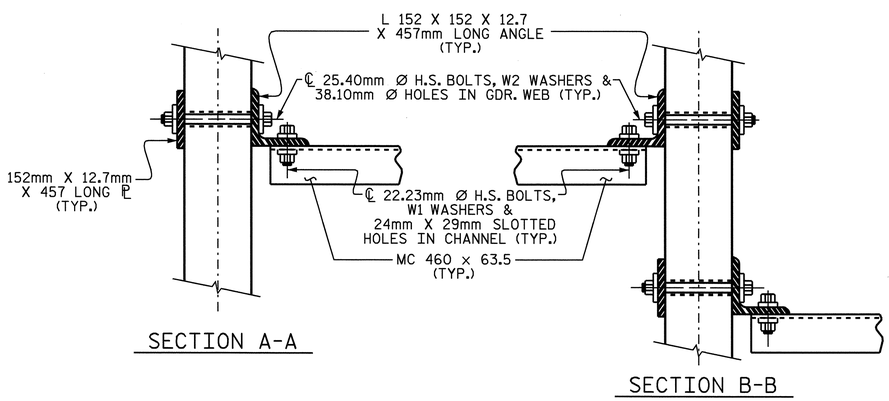

CONNECTION DETAILS

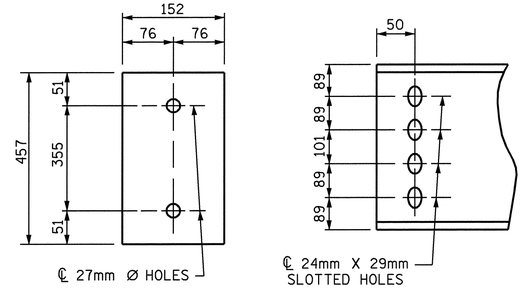

PLATE DETAILS

CHANNEL END

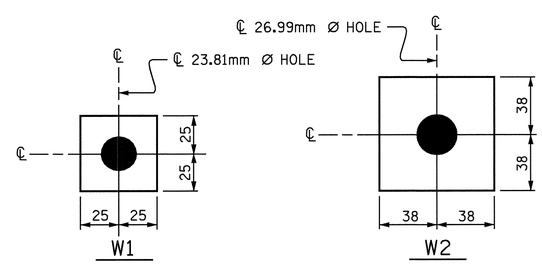

W1

ℙ 11.1 X 50 X 50

USE WITH 22.23mm Ø HVY. HEX NUTS & DIRECT TENSION INDICATOR WASHERS AT DIAPHRAGM CHANNEL TO CONNECTOR PLATE CONNECTIONS

W2

ℙ 11.1 X 76 X 76

USE WITH 25.40mm Ø HVY. HEX NUTS & DIRECT TENSION INDICATOR WASHERS AT CONNECTOR PLATE TO GIRDER CONNECTIONS

WASHER DETAILS

STRUCTURAL STEEL NOTES

ALL INTERMEDIATE DIAPHRAGM STEEL, CONNECTOR PLATES AND PLATE WASHERS SHALL BE AASHTO M270 GRADE 345 OR APPROVED EQUAL.

TENSION ON THE AASHTO M164 BOLTS THROUGH THE CHANNEL MEMBER SHALL BE CALIBRATED USING DIRECT TENSION INDICATOR WASHERS IN ACCORDANCE WITH ARTICLE 440-8 OF THE STANDARD SPECIFICATIONS.

TENSION ON THE AASHTO M164 BOLTS THROUGH THE GIRDER WEB SHALL BE SNUG TIGHTENED FOLLOWED BY AN ADDITIONAL 1/4 TURN.

THE CHANNELS, ANGLES, WASHERS, PLATE WASHERS AND DIRECT TENSION INDICATORS SHALL BE GALVANIZED OR METALLIZED IN ACCORDANCE WITH THE STANDARD SPECIFICATIONS. FOR THERMAL SPRAYED COATINGS (METALLIZATION), SEE SPECIAL PROVISIONS.

FOR METALLIZATION, APPLY AN 8 MIL THICK 99.99 PERCENT ZINC (W-Zn-1) THERMAL SPRAYED COATING WITH A 0.5 MIL THICK SEAL COAT TO ALL STEEL DIAPHRAGM SURFACES IN ACCORDANCE WITH THE THERMAL SPRAYED COATINGS SPECIAL PROVISIONS AND SECTION 442 OF THE STANDARD SPECIFICATIONS.

GALVANIZE THE HIGH STRENGTH BOLTS, NUTS, AND WASHERS IN ACCORDANCE WITH THE STANDARD SPECIFICATIONS. FOR HIGH STRENGTH BOLTS, SEE SPECIAL PROVISIONS.

USE A MINIMUM 11.1mm THICK PLATE WASHER WITH STANDARD HOLES UNDER EACH BOLT HEAD AND NUT. THE PLATE WASHERS SHALL HAVE SUFFICIENT SIZE TO COVER THE HOLES AFTER INSTALLATION. DIRECT TENSION INDICATORS ARE TO BE USED IN CONJUNCTION WITH THE PLATE WASHERS.

PROVIDE SUFFICIENT LENGTH OF ALL BOLTS TO ACCOMODATE WASHERS, DIRECT TENSION INDICATORS, THE THICKNESS OF CONNECTING MEMBER PLUS AT LEAST 6mm PROJECTION BEYOND THE NUT.

INTERMEDIATE DIAPHRAGM ASSEMBLY SHALL COMPLY WITH SECTION 1072 OF THE STANDARD SPECIFICATIONS.

CONTRACTOR SHALL SUBMIT TWO SETS OF WORKING DRAWINGS FOR THE INTERMEDIATE DIAPHRAGM ASSEMBLY FOR REVIEW, COMMENTS AND ACCEPTANCE. AFTER REVIEW, COMMENTS, AND ACCEPTANCE, SUBMIT SEVEN SETS FOR DISTRIBUTION.

IN THE EXTERIOR BAYS, TEMPORARY STRUTS SHALL BE PLACED BETWEEN PRESTRESSED GIRDERS ADJACENT TO THE STEEL DIAPHRAGMS. STRUTS SHALL REMAIN IN PLACE 3 DAYS AFTER CONCRETE IS PLACED. ALL AASHTO M164 H.S. BOLTS SHALL BE FULLY TIGHTENED AFTER THE STRUTS HAVE BEEN REMOVED.

THE COST OF THE STEEL DIAPHRAGMS AND ASSEMBLIES SHALL BE INCLUDED IN THE UNIT PRICE BID FOR PRESTRESSED CONCRETE GIRDERS.

PROJECT NO. R-2518B
YANCEY COUNTY
STATION: 175+52.267 -L-

SHEET 5 OF 5

STATE OF NORTH CAROLINA
DEPARTMENT OF TRANSPORTATION
RALEIGH

STANDARD
INTERMEDIATE
STEEL DIAPHRAGMS
FOR TYPE III
PRESTRESSED CONCRETE
GIRDERS
RIGHT LANE

REVISIONS						SHEET NO.
NO.	BY:	DATE:	NO.	BY:	DATE:	S-50
1			3			TOTAL SHEETS
2			4			154

NORTH CAROLINA PROFESSIONAL SEAL 20125 ENGINEER MARSHALL IGI GHEEK, JR.
3-28-08

ASSEMBLED BY : L.L. MURPHY	DATE : 6-07
CHECKED BY : V. NGUYEN	DATE : 11/07
DRAWN BY : TLA 6/05	ADDED 10/21/05
CHECKED BY : VC 6/05	REV. 5/1/06 TLA/GM

26-MAR-2008 08:07
R:\Structures\Finalplans\Str #2\R-2518B_sd_G*.dgn
afigueroa

STR. #2

STD.No.PCG12SM

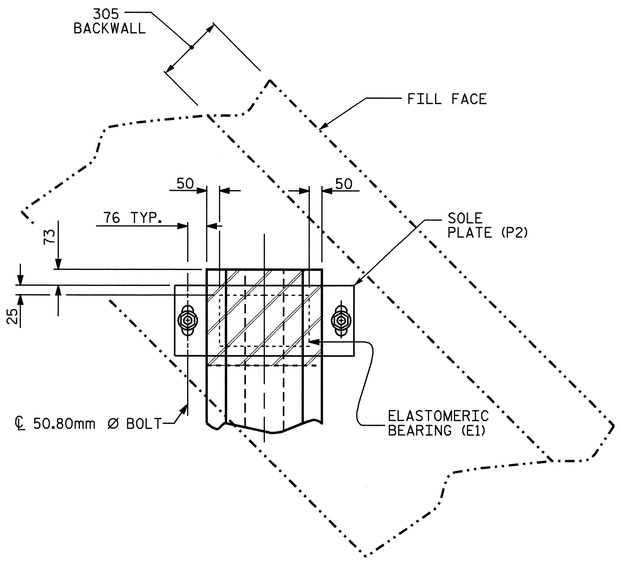

PLAN VIEW AT END BENTS

(EXP.)

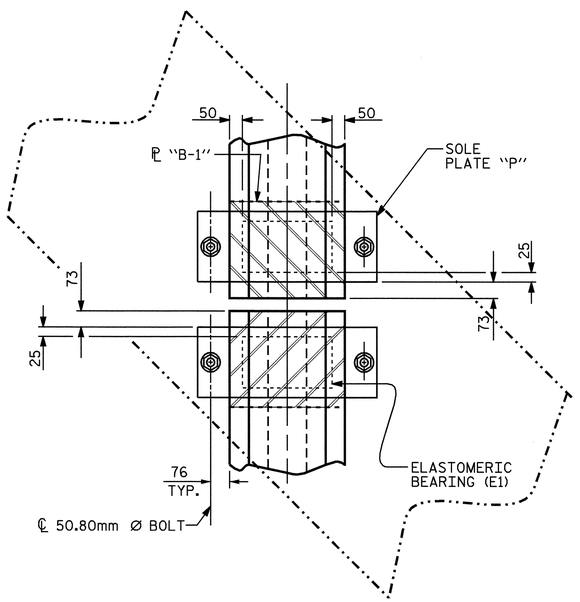

PLAN VIEW AT BENTS

(FIXED)

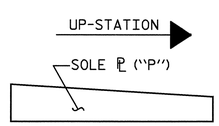

SOLE ℙ PLACEMENT DETAIL

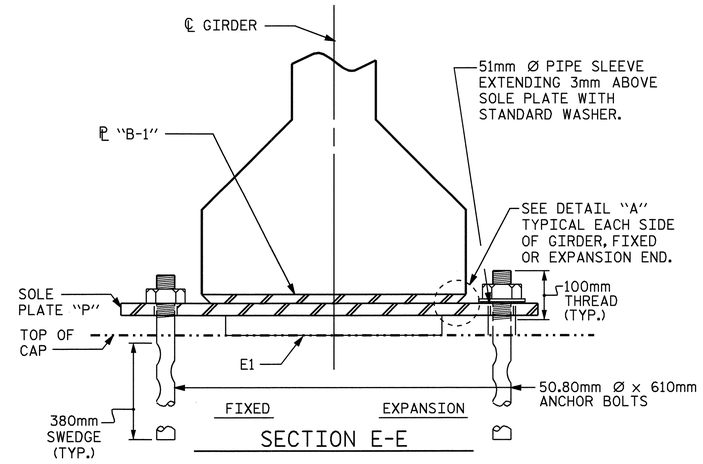

SECTION E-E

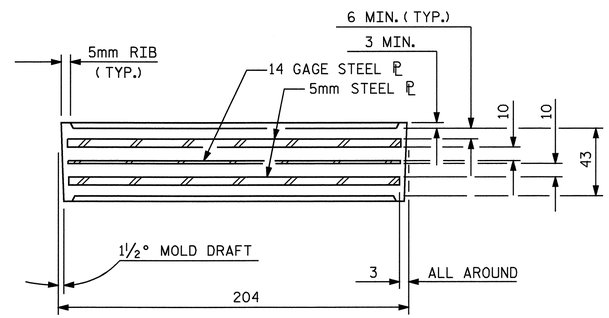

TYPICAL SECTION OF ELASTOMERIC BEARINGS

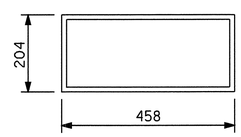

E1 (30 REQ'D)

PLAN VIEW OF ELASTOMERIC BEARING

TYPE III

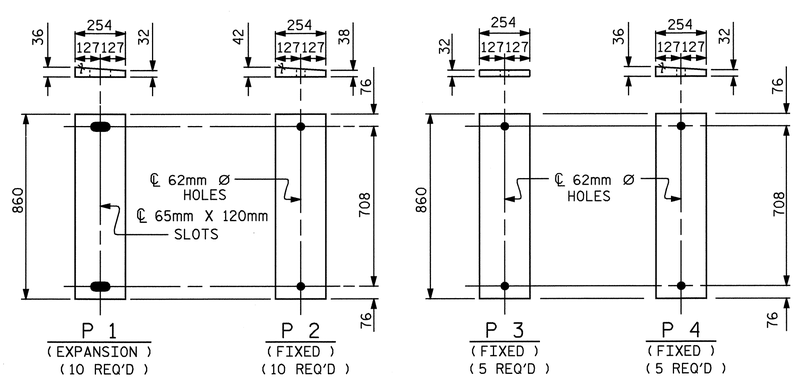

SOLE PLATE DETAILS ("P")

FOR LOCATION OF SOLE PLATES, SEE "FRAMING PLAN" SHEET.

NOTES

AT ALL FIXED POINTS OF SUPPORT, NUTS FOR ANCHOR BOLTS ARE TO BE TIGHTENED FINGER TIGHT AND THEN BACKED OFF ½ TURN. THE THREAD OF THE NUT AND BOLT SHALL THEN BE BURRED WITH A SHARP POINTED TOOL.

THE 51mm Ø PIPE SLEEVE SHALL BE CUT FROM SCHEDULE 40 PVC PLASTIC PIPE. THE PVC PLASTIC PIPE SHALL MEET THE REQUIREMENTS OF ASTM D1785.

STEEL SOLE PLATES, ANCHOR BOLTS, NUTS, AND WASHERS SHALL BE GALVANIZED IN ACCORDANCE WITH THE STANDARD SPECIFICATIONS.

PRIOR TO WELDING, GRIND THE GALVANIZED SURFACE OF THE PORTION OF THE EMBEDDED PLATE AND SOLE PLATE THAT ARE TO BE WELDED. AFTER WELDING, DAMAGED GALVANIZED SURFACES SHALL BE REPAIRED IN ACCORDANCE WITH THE STANDARD SPECIFICATIONS.

WHEN WELDING THE SOLE PLATE TO THE EMBEDDED PLATE IN THE GIRDER, USE TEMPERATURE INDICATING WAX PENS, OR OTHER SUITABLE MEANS, TO ENSURE THAT THE TEMPERATURE OF THE SOLE PLATE DOES NOT EXCEED 149°C. TEMPERATURES ABOVE THIS MAY DAMAGE THE ELASTOMER.

SOLE PLATE "P", BOLTS, NUTS, WASHERS, AND PIPE SLEEVE SHALL BE INCLUDED IN THE PAY ITEM FOR PRESTRESSED CONCRETE GIRDERS.

ANCHOR BOLTS SHALL MEET THE REQUIREMENTS OF ASTM A449. NUTS SHALL MEET THE REQUIREMENTS OF AASHTO M291M-12 OR AASHTO M292M-2H. WASHERS SHALL MEET THE REQUIREMENTS OF AASHTO M293M. SHOP DRAWINGS ARE NOT REQUIRED FOR ANCHOR BOLTS, NUTS AND WASHERS. SHOP INSPECTION IS REQUIRED.

ALL SURFACES OF BEARING PLATES SHALL BE SMOOTH AND STRAIGHT.

— LOAD RATINGS —	
	MAX.D.L.+L.L.
1143mm PCG -TYPE III	512 kN

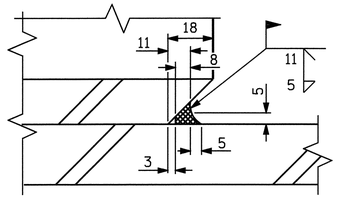

DETAIL "A"

PROJECT NO. R-2518B

YANCEY COUNTY

STATION: 175+52.267 -L-

STATE OF NORTH CAROLINA
DEPARTMENT OF TRANSPORTATION
RALEIGH

STANDARD
ELASTOMERIC BEARING
DETAILS
PRESTRESSED CONCRETE GIRDER
SUPERSTRUCTURE
RIGHT LANE

NORTH CAROLINA PROFESSIONAL SEAL 20125 ENGINEER MARSHALL G. CHEEK, JR.
3-28-08

REVISIONS							SHEET NO.
NO.	BY:	DATE:	NO.	BY:	DATE:		S-51
1			3				TOTAL SHEETS
2			4				154

ASSEMBLED BY :	L.L. MURPHY	DATE :	6-07
CHECKED BY :	V. NGUYEN	DATE :	11/07
DRAWN BY : WJH 8/89	REV. 10/17/00	RWW/LES	
CHECKED BY : CRK 8/89	REV. 7/10/01	RWW/LES	
	REV. 5/1/06	TLA/GM	

26-MAR-2008 08:09
R:\Structures\Final plans\Str #2\R-2518B_sd_BG.dgn
afiguero a

STR. #2

STD. NO. EB3SM

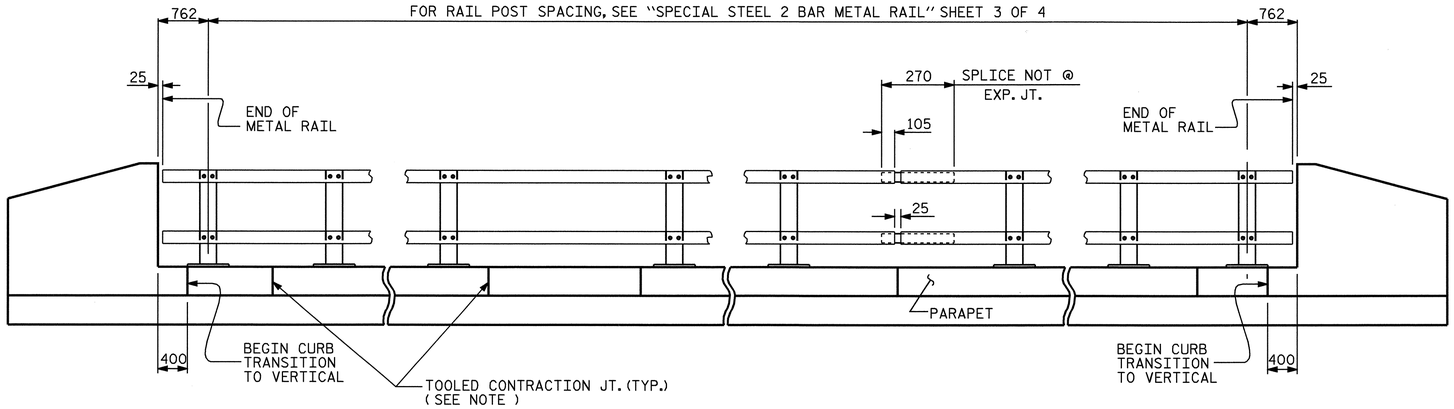

ELEVATION

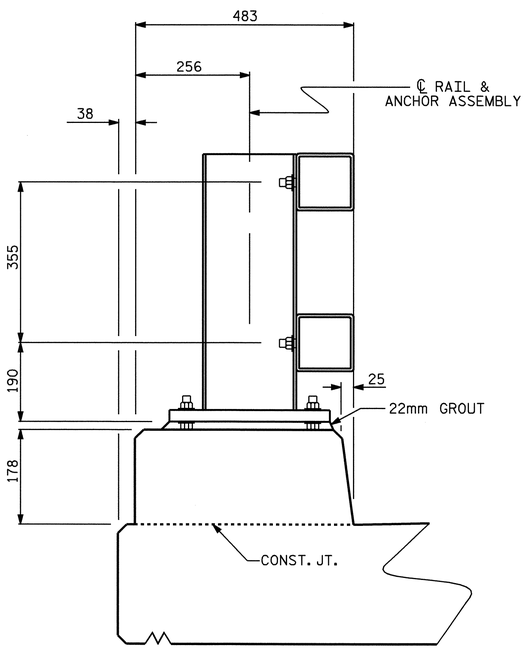

SECTION THRU RAIL

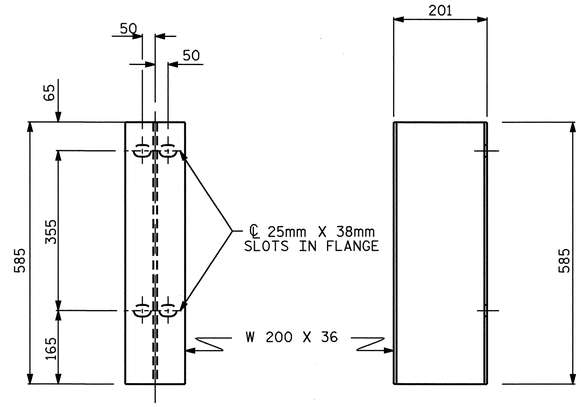

FRONT ELEVATION SIDE ELEVATION

DETAILS OF POST

NOTES

METAL RAIL SHALL BE GALVANIZED STEEL IN ACCORDANCE WITH THE REQUIREMENTS OF THE GENERAL NOTES AND THE FOLLOWING SPECIFICATIONS.

GALVANIZED STEEL RAILS

MATERIAL AND GALVANIZING ARE TO CONFORM TO THE FOLLOWING SPECIFICATIONS:

ANCHOR PLATE: AASHTO M270 GRADE 250 STRUCTURAL STEEL

POST, POST BASES AND RAIL SPLICE BARS: AASHTO M270 GRADE 250 STRUCTURAL STEEL GALVANIZED TO AASHTO M111

SHIMS: SHIMS SHALL MEET THE REQUIREMENTS OF ASTM A570 FOR GRADE 230 OR A611 FOR GRADE C AND SHALL BE GALVANIZED IN ACCORDANCE WITH AASHTO M111.

RAIL CAPS: RAIL CAPS SHALL MEET THE REQUIREMENTS OF ASTM A570 FOR GRADE 230 OR A611 FOR GRADE C AND SHALL BE GALVANIZED IN ACCORDANCE WITH AASHTO M111.

RAILS: ASTM A500, A501 OR A618 - GALVANIZED TO AASHTO M111. ALUMINUM WILL NOT BE ALLOWED.

THE REDUCED BASE WELDED STUDS AND THE CUT ENDS OF THE GALVANIZED RAILING (AFTER GRINDING SMOOTH) SHALL BE GIVEN TWO COATS OF ZINC RICH PAINT MEETING THE REQUIREMENTS OF FEDERAL SPECIFICATION MIL-P-26915 USAF TYPE 1, OR OF FEDERAL SPECIFICATIONS TT-P-641.

STUDS, NUTS, AND WASHERS: REDUCED BASE WELDED STUDS SHALL MEET THE REQUIREMENTS OF ASTM A108. NUTS SHALL CONFORM TO ASTM A563 DH AND WASHERS TO A436. NUTS AND WASHERS SHALL BE GALVANIZED.

ANCHOR BOLTS SHALL BE ASTM A325 AND SHALL BE GALVANIZED. FOR HIGH STRENGTH BOLTS, SEE SPECIAL PROVISIONS.

GENERAL NOTES

1. RAILING SHALL BE CONTINUOUS FROM END POST TO END POST OF BRIDGE. EACH JOINT IN RAIL LENGTH SHALL BE SPLICED AS DETAILED. PANEL LENGTHS OF RAIL SHALL BE ATTACHED TO A MINIMUM OF THREE POSTS.
2. FOR END OF RAIL TO CLEAR FACE OF CONCRETE END POST DIMENSION, SEE "PLAN - RAIL AND END POST", SHEET 3 OF 4.
3. CERTIFIED MILL REPORTS ARE REQUIRED FOR RAILS AND POSTS. SHOP INSPECTION IS NOT REQUIRED.
4. METAL RAIL POSTS SHALL BE SET NORMAL TO CURB GRADE.
5. METHOD OF MEASUREMENT FOR METAL RAILS: FOR LENGTH OF METAL RAILS TO BE PAID FOR, SEE THE STANDARD SPECIFICATIONS.
6. CURVED RAIL USAGE: WHERE RAILS ARE TO BE USED ON BRIDGES ON HORIZONTAL AND/OR VERTICAL CURVATURE THE CONTRACTOR MAY, AT HIS OPTION, HAVE THE REQUIRED CURVATURE IN THE RAIL FORMED IN THE SHOP OR IN THE FIELD. IN EITHER EVENT, THE RAIL SHALL CONFORM WITHOUT BUCKLING OR KINKING TO THE REQUIRED CURVATURE IN A UNIFORM MANNER ACCEPTABLE TO THE ENGINEER.
7. TO INSURE FUTURE IDENTIFICATION OF THE FABRICATOR, A PERMANENT IDENTIFYING MARK SHALL BE PLACED ON EACH POST. THE METHOD OF MARKING AND LOCATION SHALL BE SUCH THAT IT DOES NOT DETRACT FROM THE APPEARANCE OF THE POST, BUT REMAINS VISIBLE AFTER RAIL PLACEMENT.
8. MINOR VARIATIONS IN DETAILS OF METAL RAIL WILL BE CONSIDERED. DETAILS OF SUCH VARIATIONS, IF DESIRED, SHALL BE SUBMITTED FOR APPROVAL.
9. GROOVED CONTRACTION JOINTS, 12mm IN DEPTH, SHALL BE TOOLED IN ALL EXPOSED FACES OF THE PARAPET IN ACCORDANCE WITH ARTICLE 825-10(B) OF THE STANDARD SPECIFICATIONS. THE CONTRACTION JOINT SHALL BE LOCATED AT A SPACING OF 2.4m TO 3.0m BETWEEN EXPANSION JOINTS. NO CONTRACTION JOINTS WILL BE REQUIRED FOR SEGMENTS LESS THAN 3.0m IN LENGTH.
10. THE GROUT BED SHALL BE PLACED PRIOR TO INSTALLING THE END POSTS. GROUT SHALL BE NON-SHRINK, NON-METALLIC GROUT, SEE SPECIAL PROVISIONS.

PAY LENGTH = 80.158 METERS

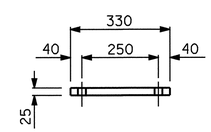

FRONT ELEVATION

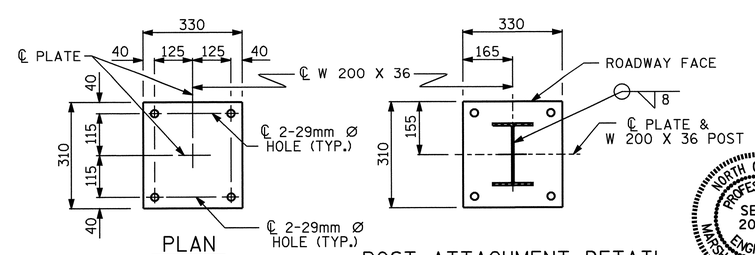

PLAN POST ATTACHMENT DETAIL

POST BASE DETAILS

PROJECT NO. R-2518B
YANCEY COUNTY
STATION: 175+52.267 -L-

SHEET 1 OF 4

STATE OF NORTH CAROLINA
DEPARTMENT OF TRANSPORTATION
RALEIGH

SPECIAL STEEL 2 BAR METAL RAIL

RIGHT LANE

NORTH CAROLINA PROFESSIONAL SEAL 20125 ENGINEER MARSHALL B. GREEL, JR.
4-24-08

REVISIONS								SHEET NO.
NO.	BY:	DATE:	NO.	BY:	DATE:			S-52
1			3					TOTAL SHEETS
2			4					154

ASSEMBLED BY : S.B. WILLIAMS DATE : 7-07
CHECKED BY : V. NGUYEN DATE : 11/07

24-APR-2008 13:51
r:\structures\finalplans\Str #2\R-2518B_sd_BR.dgn
dahodge

STR. #2

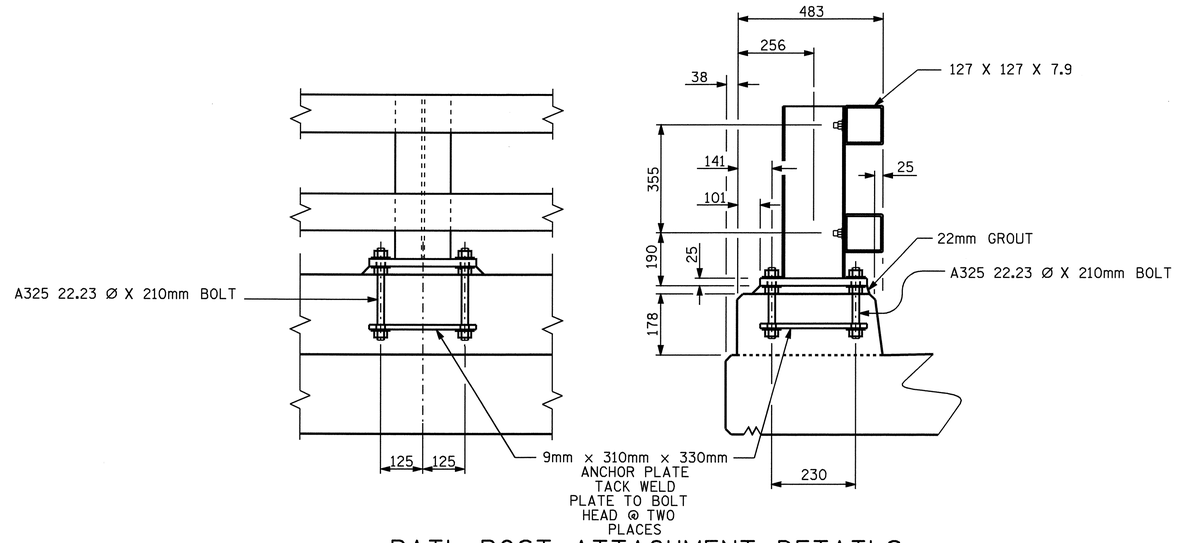

RAIL POST ATTACHMENT DETAILS

NOTE : BOLTS AND PLATE TO BE PLACED BEFORE DECK IS CAST.
SEE ANCHOR PLATE DETAILS.

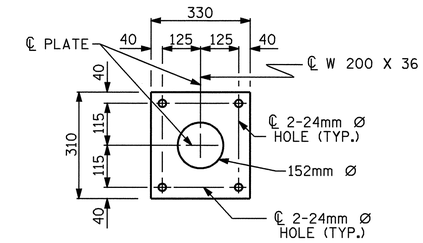

ANCHOR PLATE DETAILS

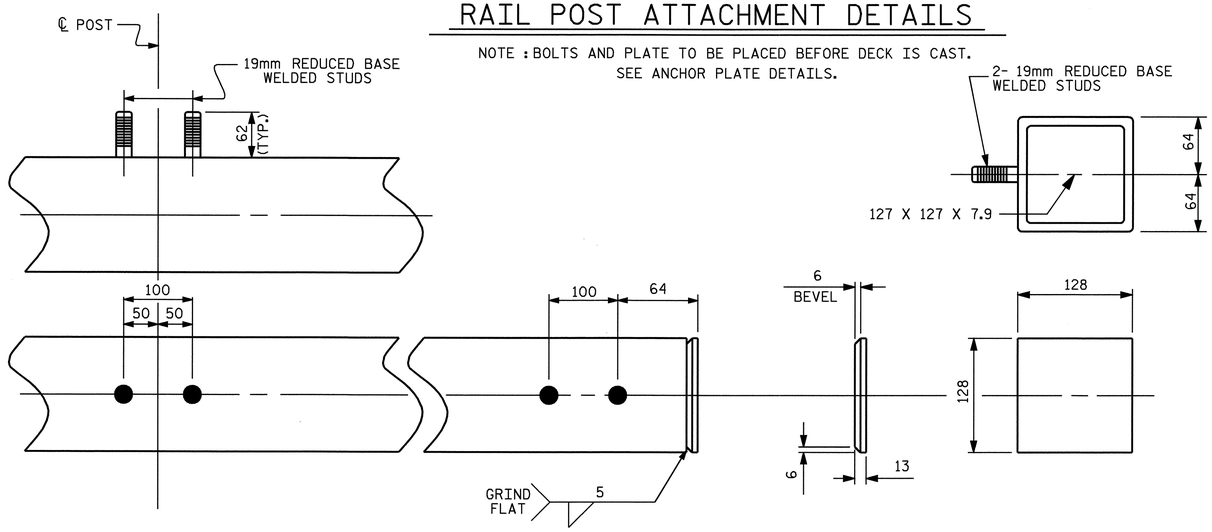

RAIL CAP AND ATTACHMENT STUD DETAILS

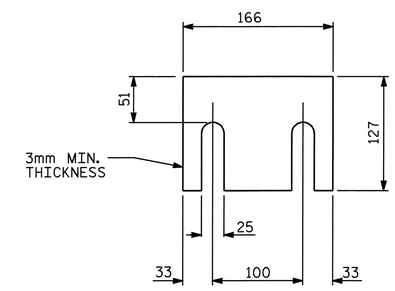

RAILING SHIM DETAIL

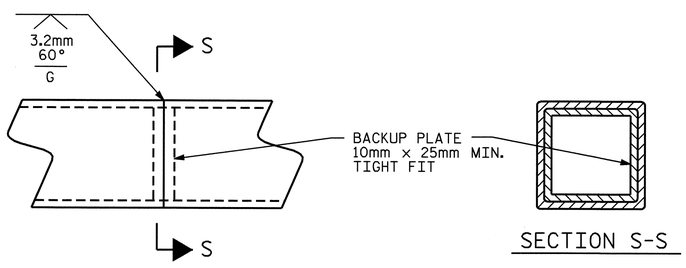

RAIL WELDED SPLICE DETAILS

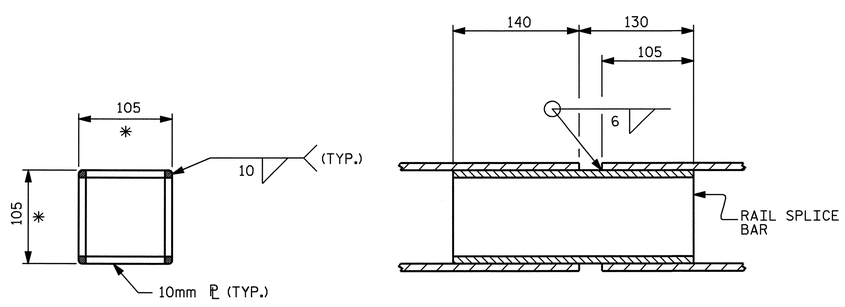

RAIL EXPANSION SPLICE DETAILS

* - DIMENSION AFTER GRINDING RADIUS ON CORNERS
TO MATCH INSIDE OF METAL RAIL.

PROJECT NO. R-2518B
YANCEY COUNTY
STATION: 175+52.267 -L-

SHEET 2 OF 4

STATE OF NORTH CAROLINA
DEPARTMENT OF TRANSPORTATION
RALEIGH

SPECIAL STEEL
2 BAR METAL RAIL
RIGHT LANE

NORTH CAROLINA PROFESSIONAL SEAL 20125 ENGINEER MARSHALL G. CHEK, JR.
4-24-08

REVISIONS						SHEET NO.
NO.	BY:	DATE:	NO.	BY:	DATE:	S-53
1			3			TOTAL SHEETS
2			4			154

ASSEMBLED BY : S.B. WILLIAMS DATE : 7-07
CHECKED BY : V. NGUYEN DATE : 11/07

24-APR-2008 13:52
r:\structures\final plans\Str #2\R-2518B_sd_BR.dgn
dahodge

STR. #2

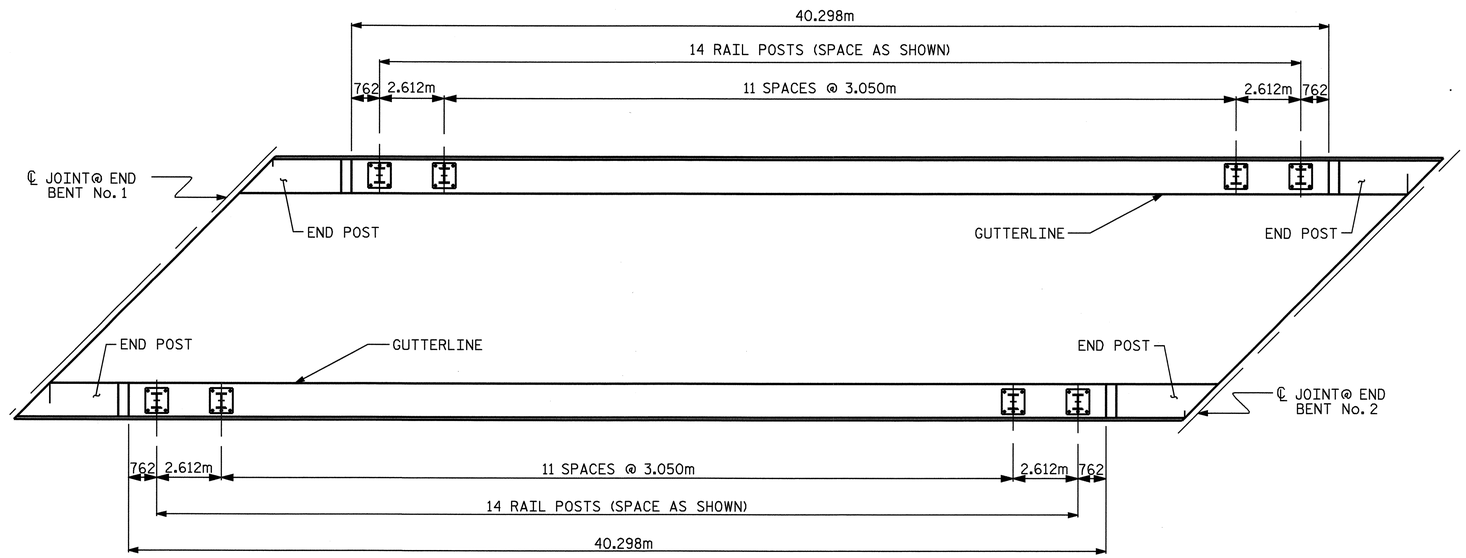

PLAN - RAIL AND END POST

ALL DIMENSIONS TAKEN ALONG THE OUTSIDE OF PARAPET

PROJECT NO. R-2518B

YANCEY COUNTY

STATION: 175+52.267 -L-

SHEET 3 OF 4

STATE OF NORTH CAROLINA
DEPARTMENT OF TRANSPORTATION
RALEIGH

NORTH CAROLINA PROFESSIONAL SEAL 20125 ENGINEER MARSHALL H. CREEK, JR.
4-24-08

SPECIAL STEEL 2 BAR METAL RAIL

RIGHT LANE

REVISIONS						SHEET NO.
NO.	BY:	DATE:	NO.	BY:	DATE:	S-54
1			3			TOTAL SHEETS
2			4			154

DRAWN BY : S.B. WILLIAMS DATE : 7-07
CHECKED BY : V. NGUYEN DATE : 11/07

24-APR-2008 13:52
r:\structures\final plans\Str #2\R-2518B_sd_BR.dgn
dahodge

STR. #2

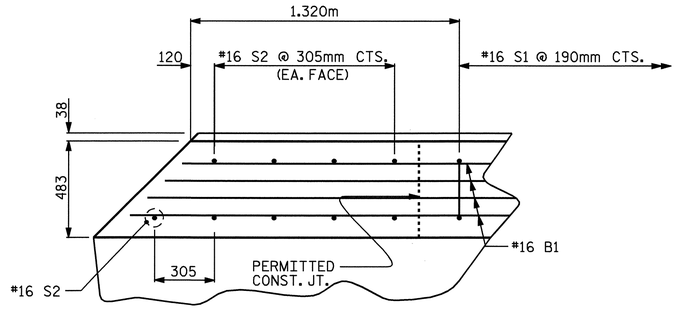

PLAN OF PARAPET

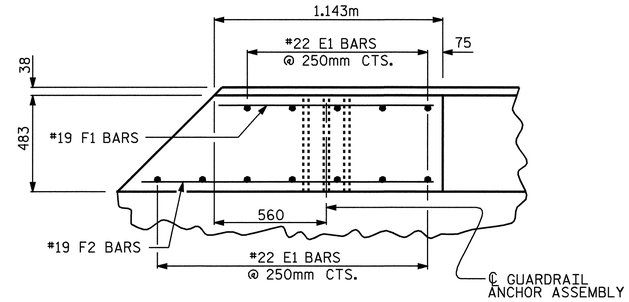

PLAN OF END POST

BILL OF MATERIAL FOR PARAPET AND END POSTS

BAR	NO.	SIZE	TYPE	LENGTH	WEIGHT
✱B1	32	16	STR	3440	171
✱B2	32	16	STR	5880	292
✱B3	8	16	STR	7880	98
✱E1	48	22	STR	740	108
✱F1	16	19	STR	1060	38
✱F2	16	19	STR	1440	51
✱S1	424	16	1	1400	921
✱S2	36	16	STR	920	51

✱EPOXY COATED REINFORCING STEEL 1730 kg

CLASS "AA" CONCRETE 9.0 m³

483mm X 178mm CONCRETE PARAPET 86.204 METERS

✱THESE BARS ARE EPOXY COATED

BAR TYPE

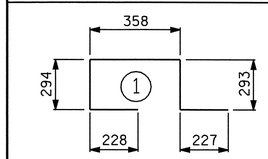

BAR DIMENSION IS OUT TO OUT

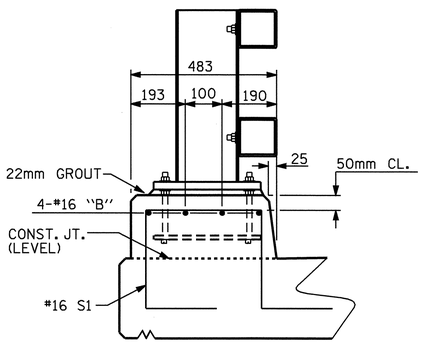

SECTION THRU PARAPET

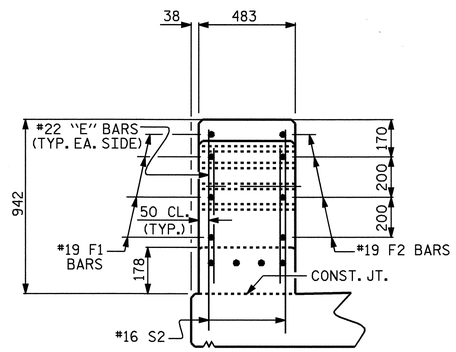

END VIEW

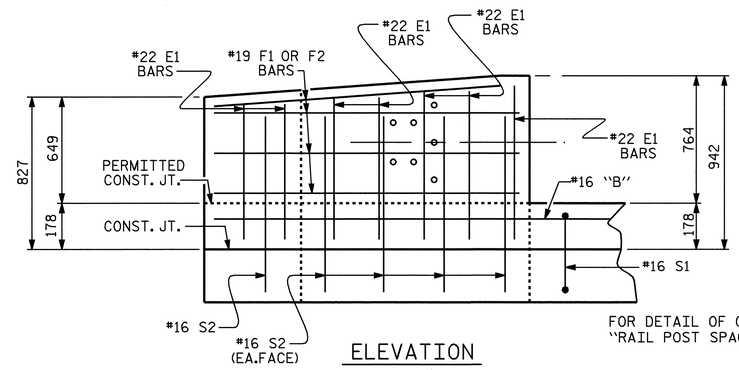

ELEVATION

PARAPET AND END POST FOR TWO BAR RAIL

NOTES

FOR DETAIL OF CONCRETE INSERT AND GUARDRAIL ANCHOR ASSEMBLY, SEE "RAIL POST SPACINGS AND END OF RAIL DETAIL" SHEETS.

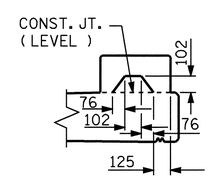

SECTION S-S

AT DAM IN OPEN JOINT
(THIS IS TO BE USED ONLY WHEN SLIP FORM IS USED)

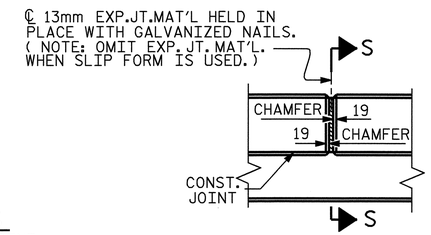

ELEVATION AT EXPANSION JOINTS

BARRIER RAIL DETAILS

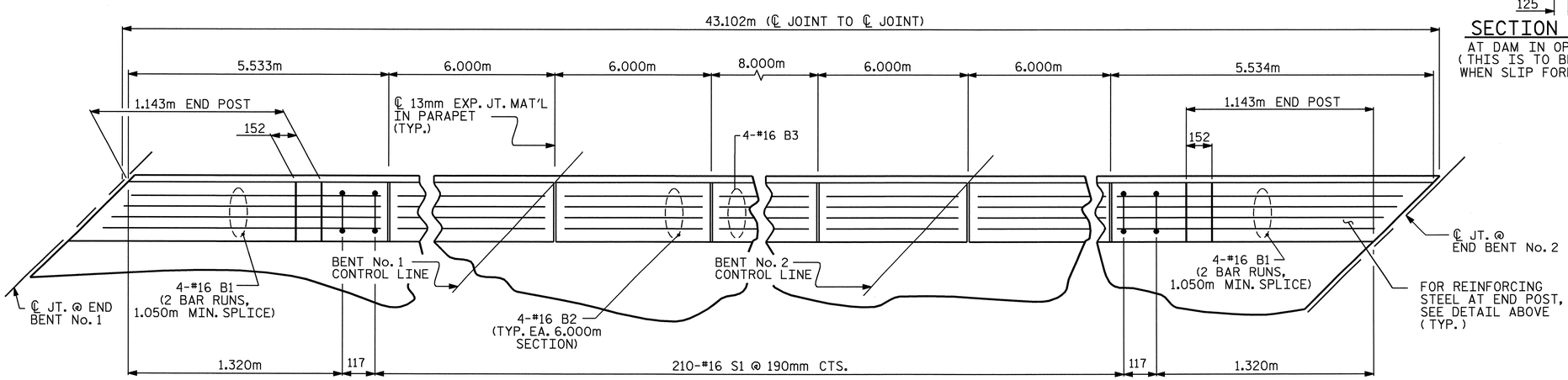

PLAN OF PARAPET

(LEFT SIDE PARAPET SHOWN, RIGHT SIDE PARAPET SIMILAR)

#16 "S" BARS MAY BE SHIFTED SLIGHTLY IN ORDER TO MAINTAIN A 50mm MINIMUM CLEARANCE TO THE 13mm EXPANSION JOINT MATERIAL IN PARAPET.

PROJECT NO. R-2518B

YANCEY COUNTY

STATION: 175+52.267 -L-

SHEET 4 OF 4

STATE OF NORTH CAROLINA
DEPARTMENT OF TRANSPORTATION
RALEIGH

SUPERSTRUCTURE

CONCRETE PARAPET DETAILS

RIGHT LANE

NORTH CAROLINA PROFESSIONAL SEAL 20125 ENGINEER MARSHALL C. GREEK, JR.
4-24-08

REVISIONS								SHEET NO.
NO.	BY:	DATE:	NO.	BY:	DATE:			S-55
1			3					TOTAL SHEETS
2			4					154

STR. #2

DRAWN BY : S.B. WILLIAMS DATE : 7-07
CHECKED BY : V. NGUYEN DATE : 11/07

24-APR-2008 13:53
r:\structures\finalplans\Str #2\R-2518B_sd_CP.dgn
dahodge

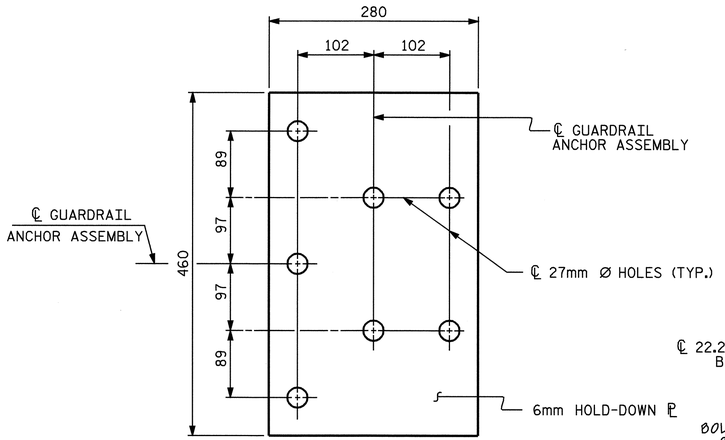

PLAN

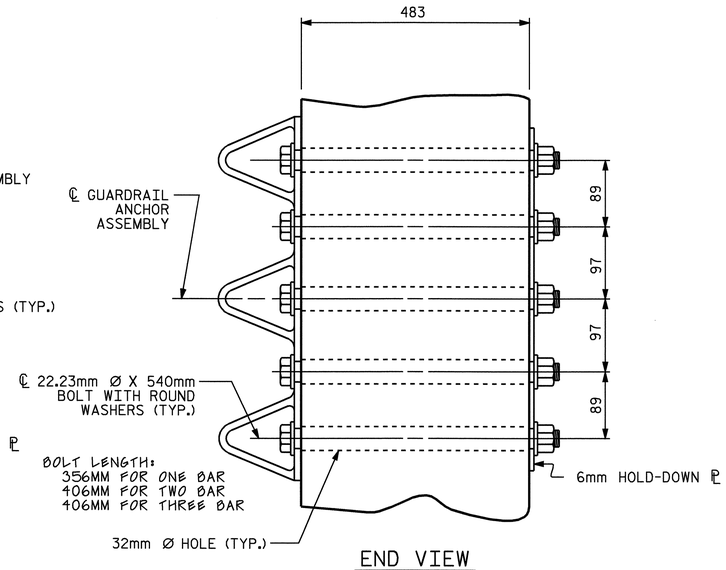

END VIEW

GUARDRAIL ANCHOR ASSEMBLY DETAILS

NOTES

THE GUARDRAIL ANCHOR ASSEMBLY SHALL CONSIST OF A 6mm HOLD DOWN PLATE AND 7 - 22.23mm Ø BOLTS WITH NUTS AND WASHERS.

THE HOLD-DOWN PLATE SHALL CONFORM TO AASHTO M270 GRADE 250. AFTER FABRICATION, THE HOLD-DOWN PLATE SHALL BE HOT-DIP GALVANIZED IN ACCORDANCE WITH AASHTO M111.

BOLTS SHALL CONFORM TO THE REQUIREMENTS OF ASTM A307 AND NUTS SHALL CONFORM TO THE REQUIREMENTS OF AASHTO M291M. BOLTS, NUTS AND WASHERS SHALL BE GALVANIZED. AT THE CONTRACTOR'S OPTION, STAINLESS STEEL BOLTS, NUTS AND WASHERS MAY BE USED AS AN ALTERNATE FOR THE 22.23mm Ø GALVANIZED BOLTS, NUTS AND WASHERS. THEY SHALL CONFORM TO OR EXCEED THE MECHANICAL REQUIREMENTS OF ASTM A307. THE USE OF THIS ALTERNATE SHALL BE APPROVED BY THE ENGINEER.

AFTER INSTALLATION, THE EXPOSED THREAD OF THE BOLT SHALL BE BURRED WITH A SHARP POINTED TOOL.

THE COST OF THE GUARDRAIL ANCHOR ASSEMBLIES WITH BOLTS, NUTS AND WASHERS COMPLETE IN PLACE, SHALL BE INCLUDED IN THE VARIOUS PAY ITEMS.

THE VERTICAL REINFORCING BARS MAY BE SHIFTED SLIGHTLY IN THE END POST TO CLEAR ASSEMBLY BOLTS.

THE 32mm Ø HOLES SHALL BE FORMED OR DRILLED WITH A CORE BIT. IMPACT TOOLS WILL NOT BE PERMITTED. ANY CONCRETE DAMAGED BY THIS WORK SHALL BE REPAIRED TO THE SATISFACTION OF THE ENGINEER.

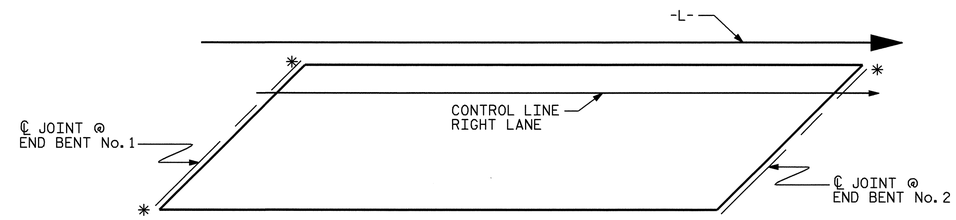

SKETCH SHOWING POINTS OF ATTACHMENT

✳ LOCATION OF GUARDRAIL ATTACHMENT

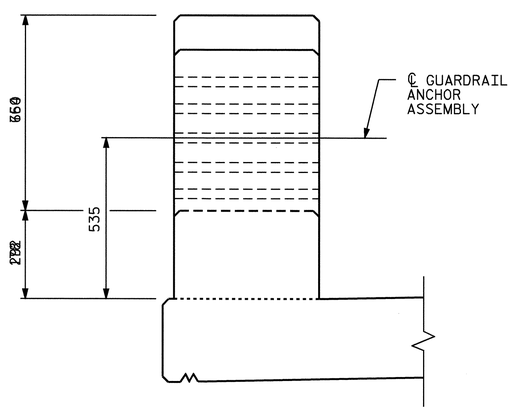

END VIEW

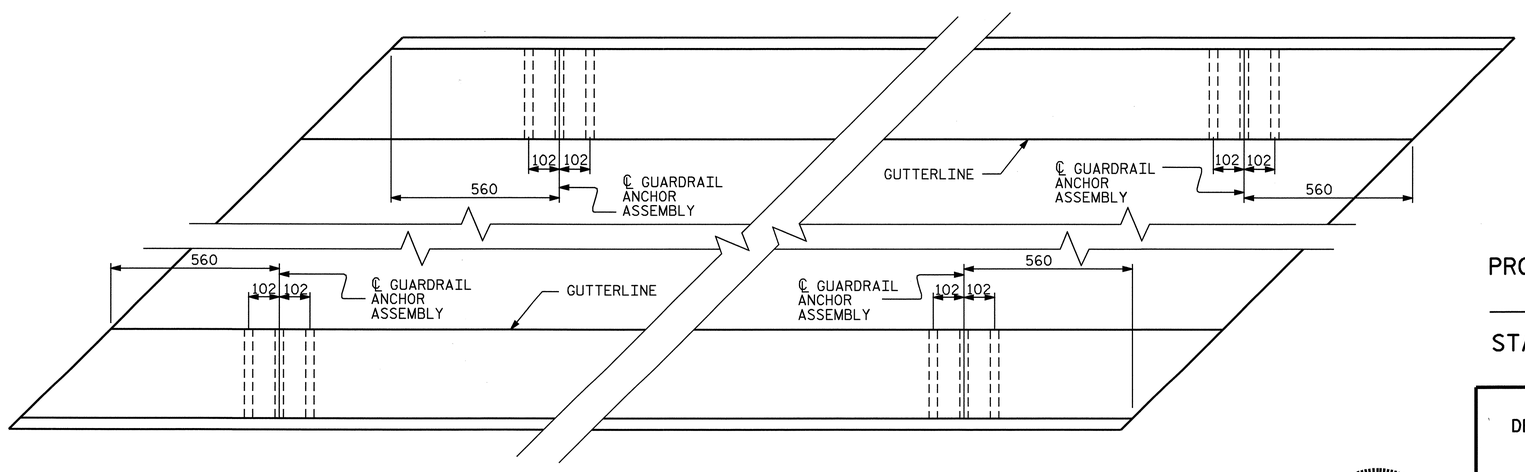

PLAN

LOCATION OF GUARDRAIL ANCHOR AT END POST

PROJECT NO. R-2518B
YANCEY COUNTY
STATION: 175+52.267 -L-

STATE OF NORTH CAROLINA
DEPARTMENT OF TRANSPORTATION
RALEIGH

STANDARD
GUARDRAIL ANCHORAGE
DETAILS
FOR SPECIAL STEEL
2 BAR METAL RAIL
RIGHT LANE

NORTH CAROLINA PROFESSIONAL SEAL 20125 ENGINEER MARSHALL L. GOODSPEED, JR.
4-24-08

ASSEMBLED BY : L.L. MURPHY	DATE : 7-07
CHECKED BY : V. NGUYEN	DATE : 11/07

DRAWN BY : EEM	6/94	REV. 10/17/00	RWW/LES
CHECKED BY : RGW	6/94	REV. 5/7/03	RWW/JTE
		REV. 5/1/06	TLA/GM

REVISIONS

NO.	BY:	DATE:	NO.	BY:	DATE:
1			3		
2			4		

SHEET NO. S-56
TOTAL SHEETS 154

24-APR-2008 13:53
r:\structures\final plans\Str #2\R-2518B_sd_BR.dgn
dahodge

STR. #2

STD. NO. BMR8SM

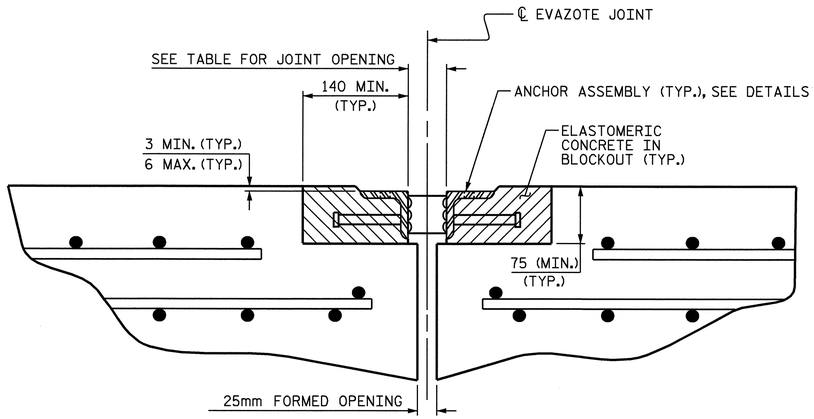

ARMORED JOINT DETAILS

SECTION NORMAL TO JOINT AT BENT

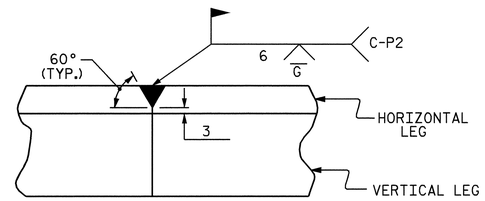

DETAIL- FIELD WELD SPLICE OF ANGLE

NOTES

ANGLES SHALL CONFORM TO AASHTO M270 GRADE 250 STEEL OR APPROVED EQUAL. ALL STUD ANCHORS SHALL CONFORM TO AASHTO M169 GRADES 1010 THRU 1020 OR APPROVED EQUAL.

STUD ANCHORS SHALL BE SHOP WELDED AND ALL HOLES SHALL BE SHOP DRILLED AS SHOWN ON THE PLANS. STUD ANCHORS SHALL BE ELECTRIC ARC END WELDED WITH COMPLETE FUSION.

UPON COMPLETION OF SHOP FABRICATION, THE ENTIRE ANCHOR ASSEMBLY SHALL BE METALLIZED. THE 12.70mm Ø STUD ANCHORS AND ANCHOR TABS NEED NOT BE METALLIZED. SEE SPECIAL PROVISION FOR THERMAL SPRAYED COATINGS (METALLIZATION).

ANCHOR ASSEMBLY SHALL BE MADE CONTINUOUS THE LENGTH OF THE JOINT FROM GUTTER TO GUTTER. FOR FIELD SPLICES AT ALL CROWN BREAK POINTS, THE ENDS OF THE STEEL ANGLES SHALL BE CUT PARALLEL TO THE BRIDGE CENTERLINE. FINISHED FIELD WELDS SHALL BE GROUND SMOOTH AND COATED WITH A MINIMUM THICKNESS OF 0.100mm OF ZINC-RICH PAINT IN ACCORDANCE WITH THE STANDARD SPECIFICATIONS.

ANCHOR ASSEMBLY SEGMENTS SHALL NOT BE LESS 3.6m NOR MORE THAN 6.1m IN LENGTH. SHORTER SEGMENTS MAY BE USED AT THE EDGE OF ROADWAY OR AT POINTS OF STAGED CONSTRUCTION.

THE ANCHOR ASSEMBLY SHALL BE SECURED AND LEVELED AS SHOWN IN THE "ARMORED JOINT ANCHOR ASSEMBLY DETAILS". NO SUBMITTALS ARE REQUIRED FOR 9.53mm Ø EXPANSION ANCHORS, NUTS OR WASHERS. THE CONTRACTOR MAY SUBMIT FOR APPROVAL AN ALTERNATE METHOD OF ALIGNING AND LEVELING THE ANGLES. THE ALTERNATE METHOD SHALL NOT INCLUDE ANY WELDING TO THE OUTSIDE FACE OF THE ANGLES.

AFTER THE ELASTOMERIC CONCRETE HAS BEEN CAST ON BOTH SIDES OF THE JOINT, REMOVE ANY EXCESS CONCRETE THAT COMES THROUGH THE WEEP HOLES AND THOROUGHLY CLEAN THE ANGLES. ANY DAMAGED STEEL SHALL BE COATED WITH A MINIMUM OF 0.100mm OF ZINC-RICH PAINT IN ACCORDANCE WITH THE STANDARD SPECIFICATIONS.

SEE SPECIAL PROVISIONS FOR EVAZOTE JOINT SEALS.

SEE SPECIAL PROVISIONS FOR ELASTOMERIC CONCRETE.

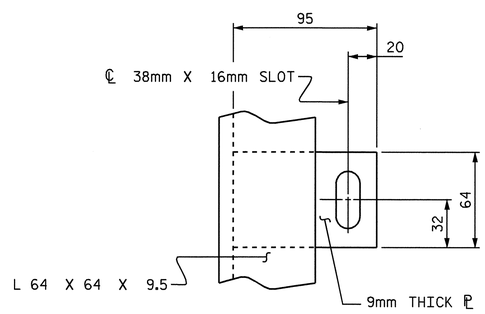

PLAN VIEW OF TAB

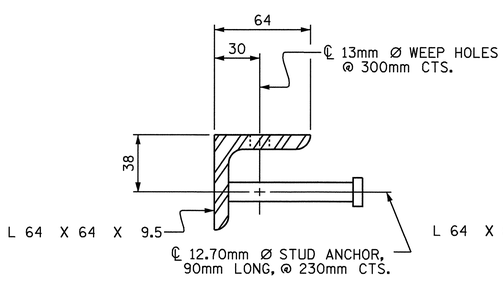

SECTION VIEW OF STUD

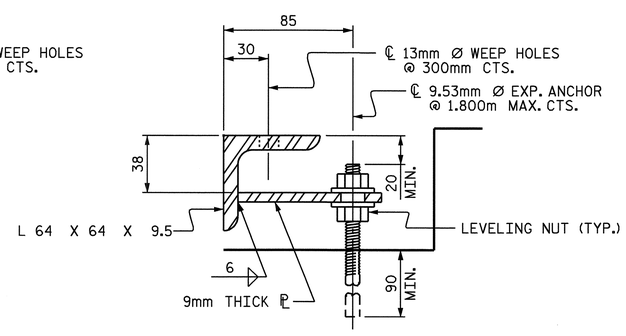

SECTION VIEW OF TAB

ARMORED JOINT ANCHOR ASSEMBLY DETAILS

MOVEMENT AND SETTING AT EVAZOTE JOINT						
END BENT NO.	SKEW ANGLE	NOMINAL UNCOMPRESSED SEAL WIDTH	TOTAL MOVEMENT (ALONG ℄ RDWY)	PERPENDICULAR JOINT OPENING AT 7° C	PERPENDICULAR JOINT OPENING AT 16° C	PERPENDICULAR JOINT OPENING AT 32° C
1	135°-00'-00"	64mm	15.28mm	55mm	51mm	46mm
2	135°-00'-00"	64mm	15.28mm	55mm	51mm	46mm

TOTAL MOVEMENT IS CALCULATED ALONG THE CENTERLINE OF ROADWAY.
JOINT OPENINGS ARE MEASURED PERPENDICULAR TO THE JOINT.

BILL OF MATERIAL		
END BENT NO.	ELASTOMERIC CONCRETE ✳ (CU. m)	TOTAL LENGTH OF ANGLE (m)
1	0.3	28.850m
2	0.3	28.850m

✳ BASED ON THE MINIMUM BLOCKOUT SHOWN.

PROJECT NO. R-2518B
YANCEY COUNTY
STATION: 175+52.267-L-

STATE OF NORTH CAROLINA
DEPARTMENT OF TRANSPORTATION
RALEIGH

STANDARD ARMORED EVAZOTE JOINT DETAILS

RIGHT LANE

NORTH CAROLINA PROFESSIONAL SEAL 20125 ENGINEER MARSHALL B. GREEN, JR. 3-18-08

REVISIONS						
NO.	BY:	DATE:	NO.	BY:	DATE:	
1			3			
2			4			

SHEET NO. S-57
TOTAL SHEETS 154

ASSEMBLED BY : L.L. MURPHY	DATE : 01-08		
CHECKED BY : V. NGUYEN	DATE :		
DRAWN BY : EEM 1/96	REV. 7/10/01	LES/RDR	
CHECKED BY : RGW 1/96	REV. 5/7/03	RRR RWW/JTE	
	REV. 5/1/06	TLA/GM	

26-MAR-2008 08:18
R:\Structures\Final plans\Str #2\R2518B_sd_JS_ARM.dgn
aflaueroa

STR #2

STD. NO. AEJ1SM

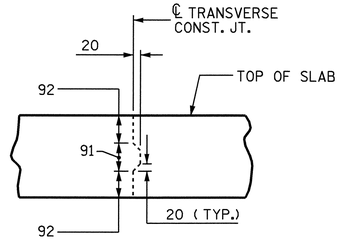

TRANSVERSE CONSTRUCTION JOINT DETAIL

NOTE: REINFORCING STEEL IN SLAB NOT SHOWN. LONGITUDINAL REINFORCING STEEL SHALL BE CONTINUOUS THRU JOINT

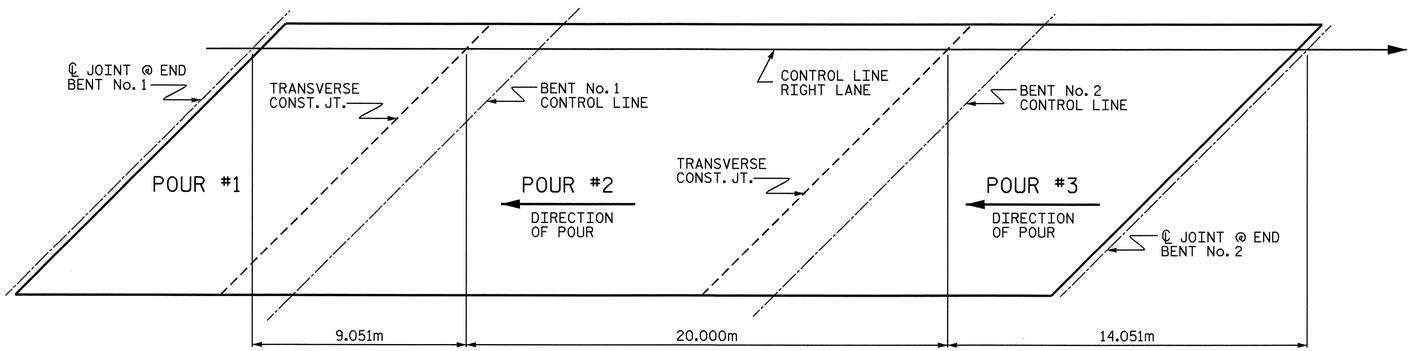

POURING SEQUENCE

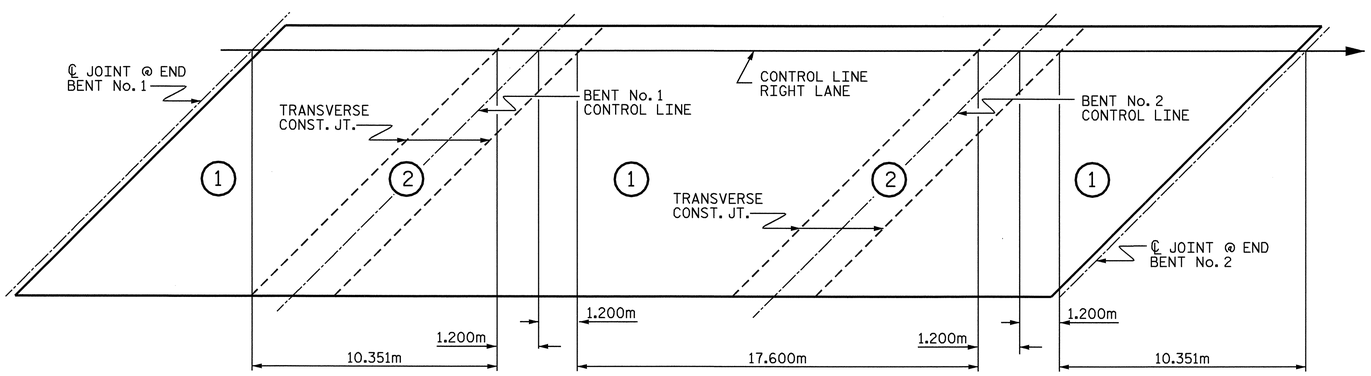

OPTIONAL POURING SEQUENCE

POUR (2) CANNOT BE STARTED UNTIL BOTH ADJACENT (1) POURS REACH A MINIMUM OF 20.7 MPa

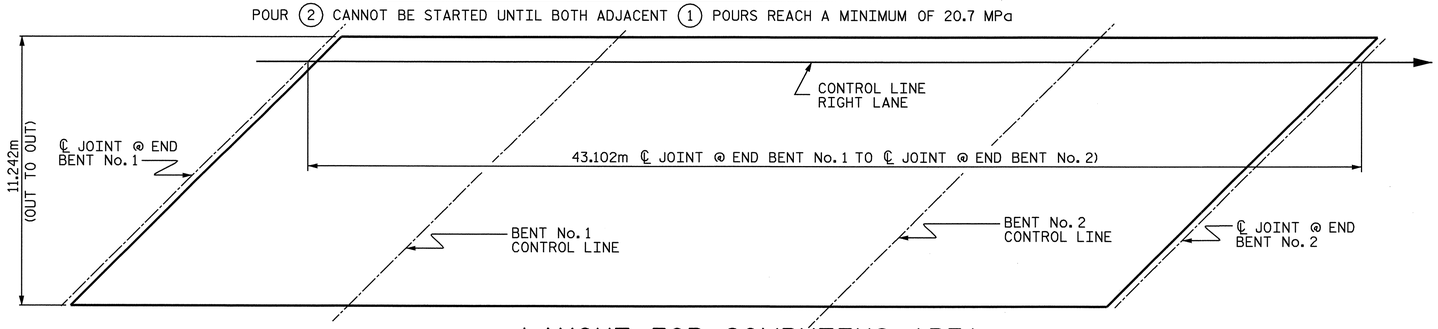

LAYOUT FOR COMPUTING AREA OF REINFORCED CONCRETE DECK SLAB
(SQ. METERS = 484.6)

ASSEMBLED BY : L.L. MURPHY	DATE : 7-07		
CHECKED BY : V. NGUYEN	DATE : 11/07		
DRAWN BY : JMB 5/87	REV. 5/16/97	EEM/RGW	
CHECKED BY : SJD 9/87	REV. 5/1/06	TLA/GM	

SUPERSTRUCTURE REINFORCING STEEL LENGTHS ARE BASED ON THE FOLLOWING MINIMUM SPLICE LENGTHS

BAR SIZE	SUPERSTRUCTURE EXCEPT APPROACH SLABS, PARAPET, AND BARRIER RAIL		APPROACH SLABS		PARAPET AND BARRIER RAIL
	EPOXY COATED	UNCOATED	EPOXY COATED	UNCOATED	
#13	610	540	610	540	840
#16	770	660	770	660	1050
#19	920	790	1190	790	1330
#22	1580	1060			
#25	2080	1390			

BILL OF MATERIAL
SPAN "A", "B" & "C"

BAR	NO.	SIZE	TYPE	LENGTH	WEIGHT
✳ A1	168	16	STR	11140	2905
A2	168	16	STR	11140	2905
✳ A101	6	16	STR	10600	99
✳ A102	6	16	STR	10020	93
✳ A103	6	16	STR	9460	88
✳ A104	6	16	STR	8880	83
✳ A105	6	16	STR	8320	77
✳ A106	6	16	STR	7740	72
✳ A107	6	16	STR	7180	67
✳ A108	6	16	STR	6600	61
✳ A109	6	16	STR	6040	56
✳ A110	6	16	STR	5460	51
✳ A111	6	16	STR	4900	46
✳ A112	6	16	STR	4320	40
✳ A113	6	16	STR	3760	35
✳ A114	6	16	STR	3180	30
✳ A115	6	16	STR	2620	24
✳ A116	6	16	STR	2040	19
✳ A117	6	16	STR	1480	14
✳ A118	6	16	STR	900	8
A201	6	16	STR	10600	99
A202	6	16	STR	10020	93
A203	6	16	STR	9460	88
A204	6	16	STR	8880	83
A205	6	16	STR	8320	77
A206	6	16	STR	7740	72
A207	6	16	STR	7180	67
A208	6	16	STR	6600	61
A209	6	16	STR	6040	56
A210	6	16	STR	5460	51
A211	6	16	STR	4900	46
A212	6	16	STR	4320	40
A213	6	16	STR	3760	35
A214	6	16	STR	3180	30
A215	6	16	STR	2620	24
A216	6	16	STR	2040	19
A217	6	16	STR	1480	14
A218	6	16	STR	900	8
✳ B1	48	13	STR	7100	339
✳ B2	48	22	STR	12480	1822
✳ B3	46	22	STR	4740	663
✳ B4	24	13	STR	6220	148
✳ B5	12	13	STR	7680	92
B6	102	16	STR	14760	2337
✳ G1	2	16	STR	15740	49
✳ G2	6	19	STR	1880	25
✳ K1	8	25	1	4520	144
✳ K2	12	25	2	6380	304
K3	48	13	STR	2540	121
K4	16	13	STR	2060	33
K5	24	19	STR	2540	136
K6	16	13	6	2060	33
K7	24	13	7	4060	97
✳ S1	64	16	5	1500	149
S2	152	13	3	1100	166
✳ S3	64	16	4	1380	137
U1	40	13	2	4280	170
U2	16	13	2	3660	58

REINFORCING STEEL = 7019 kg
✳ EPOXY COATED REINF. STEEL = 7740 kg

✳ THESE BARS ARE EPOXY COATED.

GROOVING BRIDGE FLOORS

APPROACH SLABS	131.4	SQ.METERS
BRIDGE DECK	398.3	SQ.METERS
TOTAL	529.7	SQ.METERS

BAR TYPES

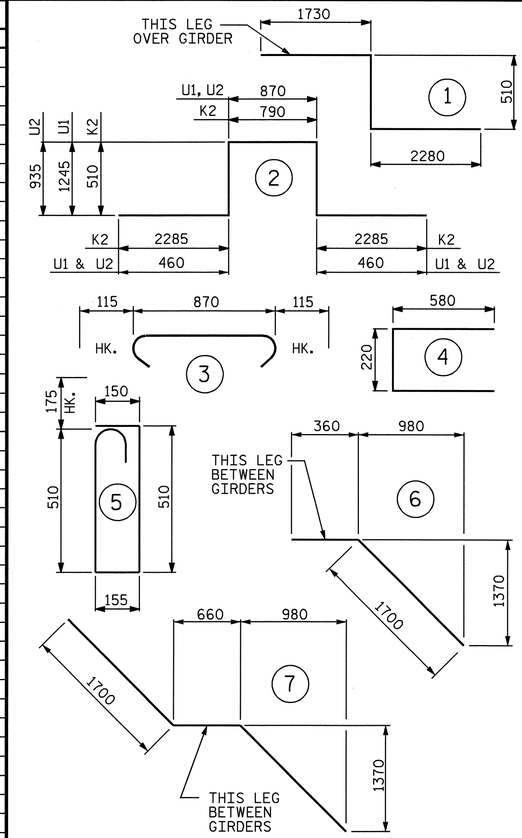

ALL BAR DIMENSIONS ARE OUT TO OUT

SUPERSTRUCTURE BILL OF MATERIAL

SPANS A,B & C	CLASS AA CONCRETE	REINFORCING STEEL	EPOXY COATED REINFORCING STEEL
	(CU. METERS)	(kg)	(kg)
POUR 1	27.0		
POUR 2	66.3		
POUR 3	52.7		
TOTALS✳✳	146.0	7019	7740

✳✳ QUANTITIES FOR PARAPET AND END POSTS ARE NOT INCLUDED

PROJECT NO. R-2518B
YANCEY COUNTY
STATION: 175+52.267 -L-

STATE OF NORTH CAROLINA
DEPARTMENT OF TRANSPORTATION
RALEIGH

STANDARD

SUPERSTRUCTURE
BILL OF MATERIAL
RIGHT LANE

NORTH CAROLINA PROFESSIONAL SEAL 20125 ENGINEER MARSHALL D. CHEEK, JR.
4-4-08

REVISIONS						SHEET NO.
NO.	BY:	DATE:	NO.	BY:	DATE:	S-58
1			3			TOTAL SHEETS
2			4			154

STR. #2

STD. NO. BOM2SM

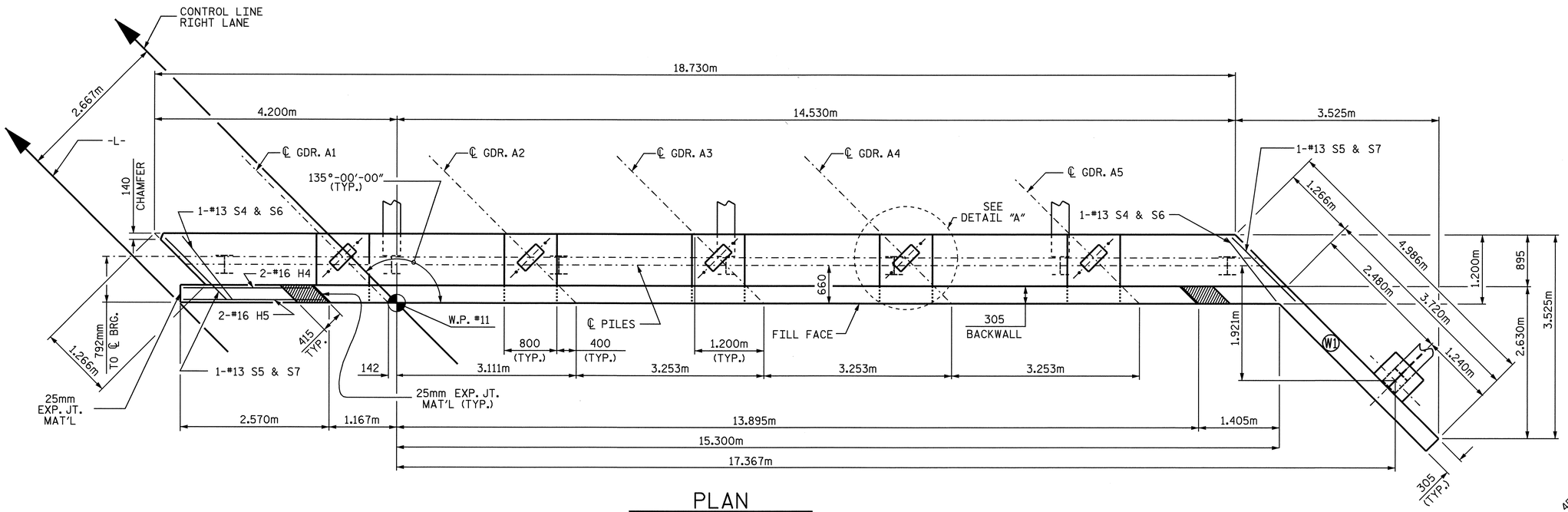

PLAN

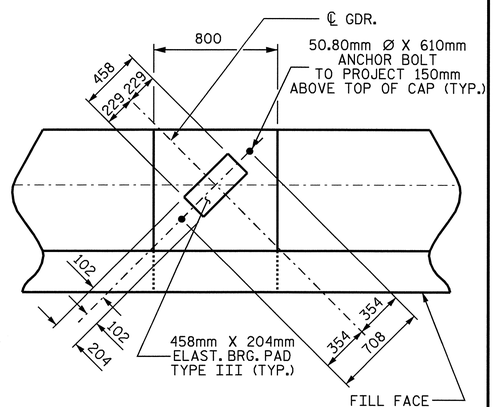

DETAIL "A"

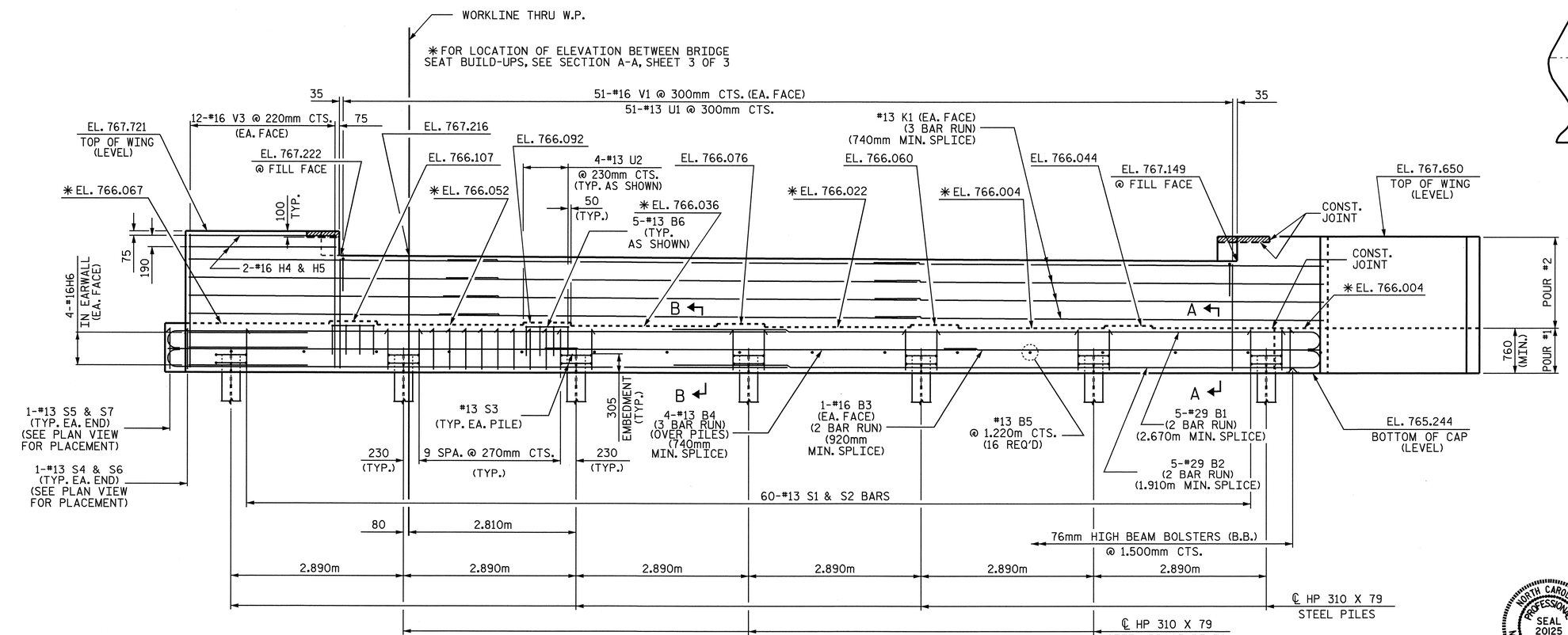

ELEVATION

NOTES

STIRRUPS IN CAP MAY BE SHIFTED AS NECESSARY TO CLEAR ANCHOR BOLTS.

FOR SECTION A-A, SEE SHEET 3 OF 3.

FOR PILE SPLICE DETAILS, SEE SHEET 3 OF 3.

FOR TEMPORARY DRAINAGE AT END BENTS, SEE SHEET 3 OF 3.

BACKWALL SHALL BE PLACED BEFORE APPLYING THE EPOXY PROTECTIVE COATING.

THE TOP SURFACE AREA OF THE END BENT CAP SHALL BE CURED IN ACCORDANCE WITH THE STANDARD SPECIFICATIONS EXCEPT THAT THE MEMBRANE CURING COMPOUND METHOD SHALL NOT BE USED.

THE TOP SURFACE OF THE END BENT CAP EXCEPT THE BRIDGE SEAT BUILDUPS SHALL BE SLOPED TRANSVERSELY FROM THE FILL FACE TO THE BACK FACE AT THE RATE OF 2%.

THE CONTRACTOR SHALL PROVIDE FOR INSTALLATION OF THE 200mm Ø DRAIN PIPE THROUGH THE WING WALL AS REQUIRED FOR REINFORCED BRIDGE APPROACH FILLS, SEE THE ROADWAY PLANS. REINFORCING STEEL IN THE WING WALL MAY BE SHIFTED AS NECESSARY TO CLEAR THE DRAIN PIPE.

THE CONCRETE IN THE SHADED AREA OF THE WING SHALL BE POURED AFTER THE PARAPET AND END POST ARE CAST IF SLIP FORMING IS USED.

PROJECT NO. R-2518B
YANCEY COUNTY
STATION: 175+52.267 -L-

SHEET 1 OF 3

STATE OF NORTH CAROLINA
DEPARTMENT OF TRANSPORTATION
RALEIGH

SUBSTRUCTURE END BENT NO.1 RIGHT LANE

NORTH CAROLINA PROFESSIONAL SEAL 20125 ENGINEER
MARSHALL G. CHEEK, JR.
3-28-08

REVISIONS							SHEET NO.
NO.	BY:	DATE:	NO.	BY:	DATE:		S-59
1			3				TOTAL SHEETS
2			4				154

DRAWN BY : A.L. FIGUEROA DATE : 9-18-07
CHECKED BY : M.G. CHEEK DATE : 12-14-07

27-MAR-2008 10:00
R:\Structures\Finalplans\Str #2\R2518B_sd_EB* 1&2 RL-str2.dgn
afigueroa

STR #2

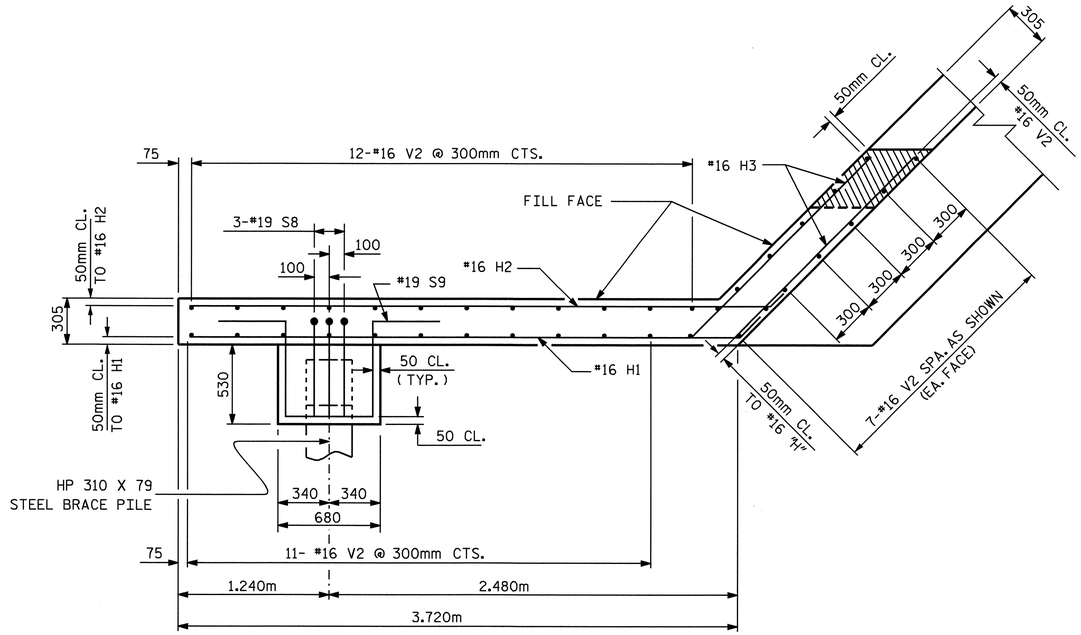

PLAN OF RIGHT WING - W1

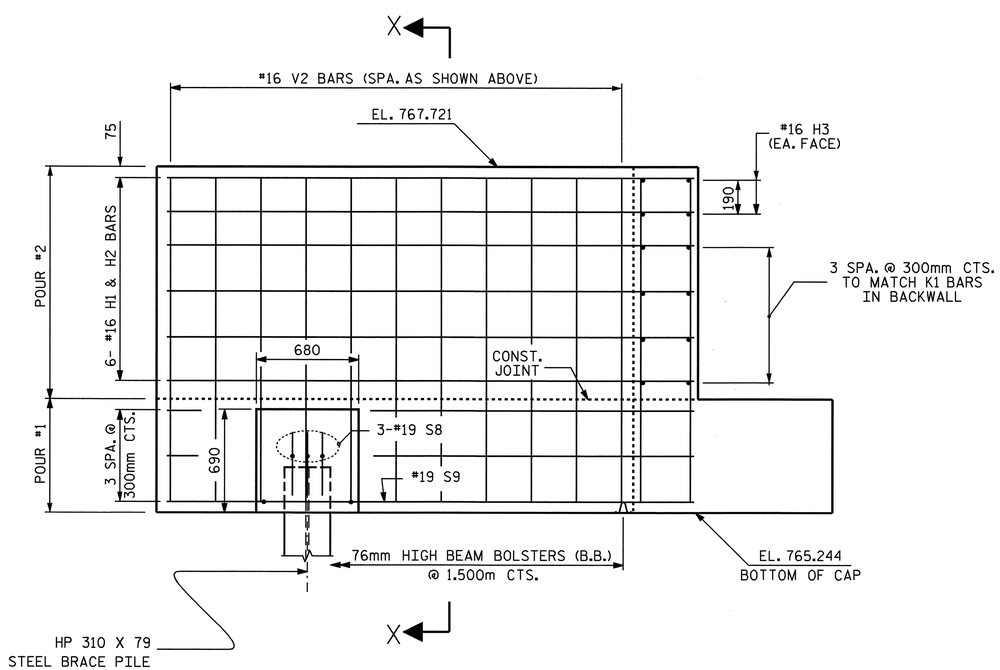

ELEVATION OF RIGHT WING - W1

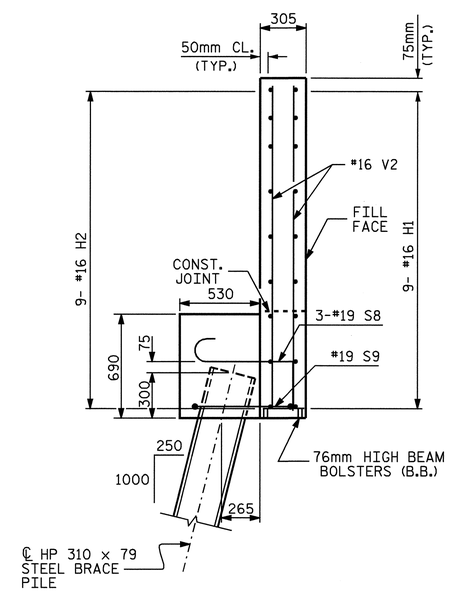

SECTION X-X

PROJECT NO. R-2518B

YANCEY COUNTY

STATION: 175+52.267-L-

SHEET 2 OF 3

STATE OF NORTH CAROLINA
DEPARTMENT OF TRANSPORTATION
RALEIGH

SUBSTRUCTURE END BENT NO.1 RIGHT LANE

NORTH CAROLINA PROFESSIONAL SEAL 20125 ENGINEER MARSHALL G. CHEEK, JR.
5-28-08

REVISIONS						SHEET NO.
NO.	BY:	DATE:	NO.	BY:	DATE:	S-60
1			3			TOTAL SHEETS
2			4			154

STR #2

DRAWN BY : A.L. FIGUEROA DATE : 9-18-07
CHECKED BY : M.G. CHEEK DATE : 12-14-07

06-MAR-2008 13:49
r:\structures\finalplans\Str #2\R2518B_sd_EB* 1&2 RL-str2.dgn
dahodge

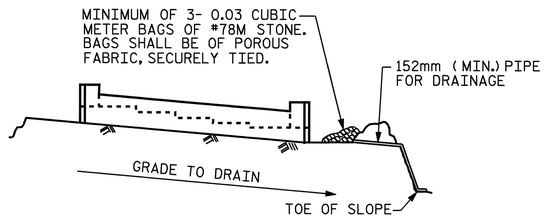

BAGGED STONE AND PIPE SHALL BE PLACED IMMEDIATELY AFTER COMPLETION OF END BENT EXCAVATION. PIPE MAY BE EITHER CONCRETE, CORRUGATED STEEL, CORRUGATED ALUMINUM ALLOY, OR CORRUGATED PLASTIC. PERFORATED PIPE WILL NOT BE ALLOWED.

BAGGED STONE SHALL REMAIN IN PLACE UNTIL THE ENGINEER DIRECTS THAT IT BE REMOVED. THE CONTRACTOR SHALL REMOVE AND DISPOSE OF SILT ACCUMULATIONS AT BAGGED STONE WHEN SO DIRECTED BY THE ENGINEER. BAGS SHALL BE REMOVED AND REPLACED WHENEVER THE ENGINEER DETERMINES THAT THEY HAVE DETERIORATED AND LOST THEIR EFFECTIVENESS.

NO SEPARATE PAYMENT WILL BE MADE FOR THIS WORK AND THE ENTIRE COST OF THIS WORK SHALL BE INCLUDED IN THE UNIT CONTRACT PRICE BID FOR THE SEVERAL PAY ITEMS.

TEMPORARY DRAINAGE AT END BENT

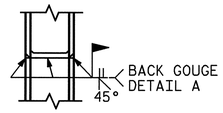

*PILE VERTICAL

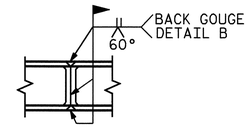

*PILE HORIZONTAL OR VERTICAL

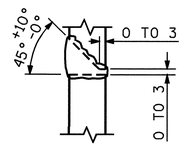

DETAIL A

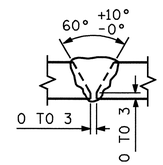

DETAIL B

*POSITION OF PILE DURING WELDING.

PILE SPLICE DETAILS

BAR TYPES

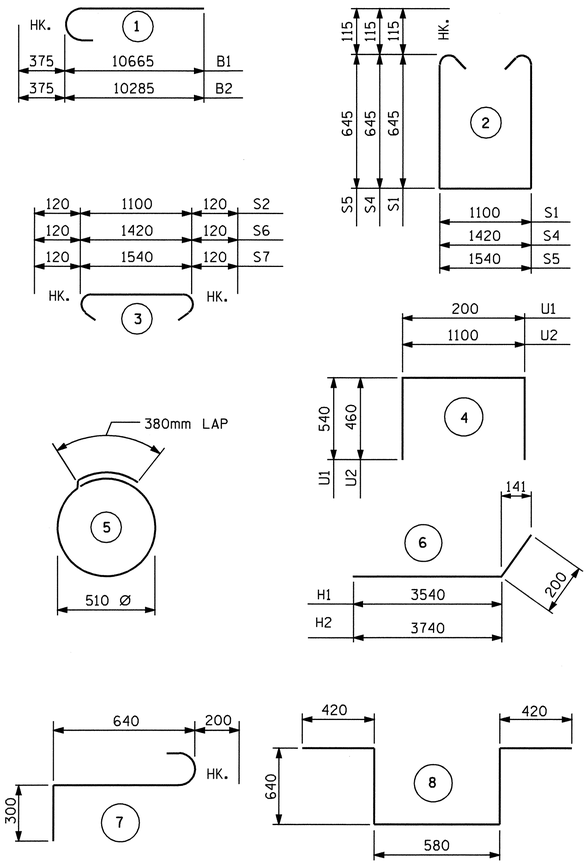

ALL BAR DIMENSIONS ARE OUT TO OUT.

BILL OF MATERIAL

END BENT NO. 1

BAR	NO.	SIZE	TYPE	LENGTH	WEIGHT
B1	10	#29	1	11040	559
B2	10	#29	1	10660	539
B3	4	#16	STR	9780	61
B4	12	#13	STR	6720	80
B5	16	#13	STR	1100	17
B6	10	#13	STR	700	7
H1	9	#16	6	3740	52
H2	9	#16	6	3940	55
H3	4	#16	STR	1720	11
H4	2	#16	STR	2200	7
H5	2	#16	STR	2400	7
K1	24	#13	STR	6960	166
S1	60	#13	2	2620	156
S2	60	#13	3	1340	80
S3	14	#13	5	1980	28
S4	2	#13	2	2940	6
S5	2	#13	2	3060	6
S6	2	#13	3	1660	3
S7	2	#13	3	1780	4
S8	3	#19	7	1140	8
S9	1	#19	8	2700	6
U1	51	#13	5	1280	65
U2	8	#13	5	2020	16
V1	102	#16	STR	1760	279
V2	37	#16	STR	2280	131
V3	24	#16	STR	2360	88

REINFORCING STEEL = 2437 kg

CLASS A CONCRETE BREAKDOWN

POUR #1
CAP & LOWER PART OF WINGS 19.1 C.M.

POUR #2
BACKWALL & UPPER PART OF WINGS 8.8 C.M

CLASS A CONCRETE TOTAL 27.9 C.M.

HP 310 X 79 STEEL PILES

NO. 8 56 METERS

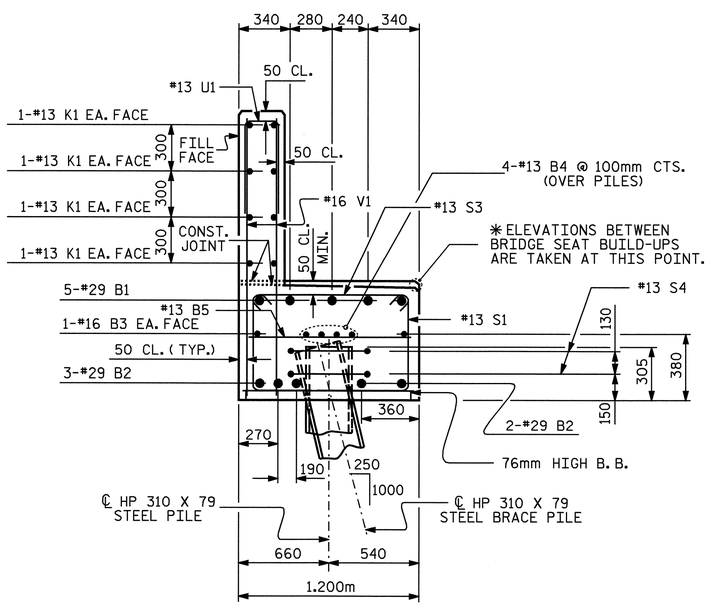

SECTION A-A

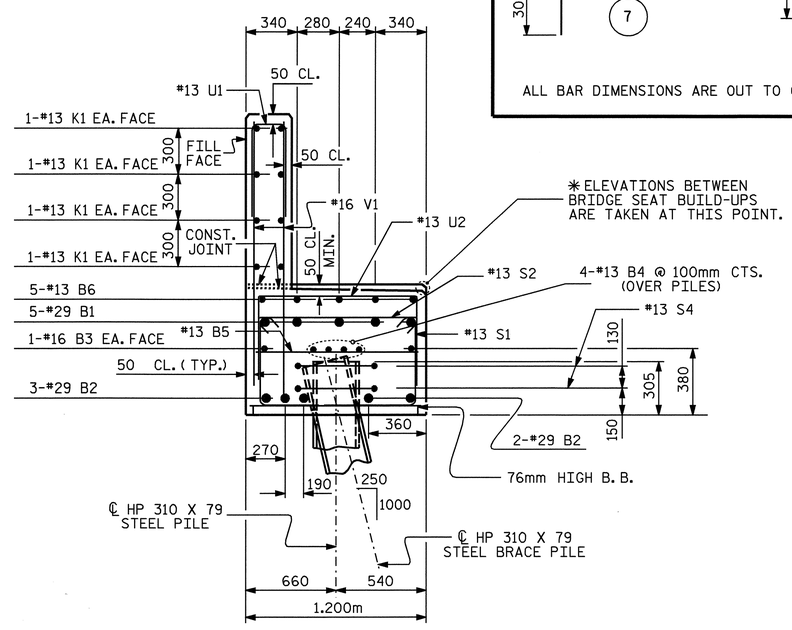

SECTION B-B

PROJECT NO. R-2518B
YANCEY COUNTY
STATION: 175+52.267 -L-

SHEET 3 OF 3

STATE OF NORTH CAROLINA
DEPARTMENT OF TRANSPORTATION
RALEIGH

SUBSTRUCTURE END BENT NO.1 RIGHT LANE

NORTH CAROLINA PROFESSIONAL SEAL 20125 ENGINEER MARSHALL E. CHEEK, JR.
3-28-08

REVISIONS						
NO.	BY:	DATE:	NO.	BY:	DATE:	
1			3			
2			4			

SHEET NO. S-61
TOTAL SHEETS 154

DRAWN BY : A.L. FIGUEROA DATE : 9-18-07
CHECKED BY : M.G. CHEEK DATE : 12-14-07

06-MAR-2008 13:49
r:\structures\final plans\Str #2\R2518B_sd_EB* 1&2 RL-str2.dgn
dehodge

STR #2

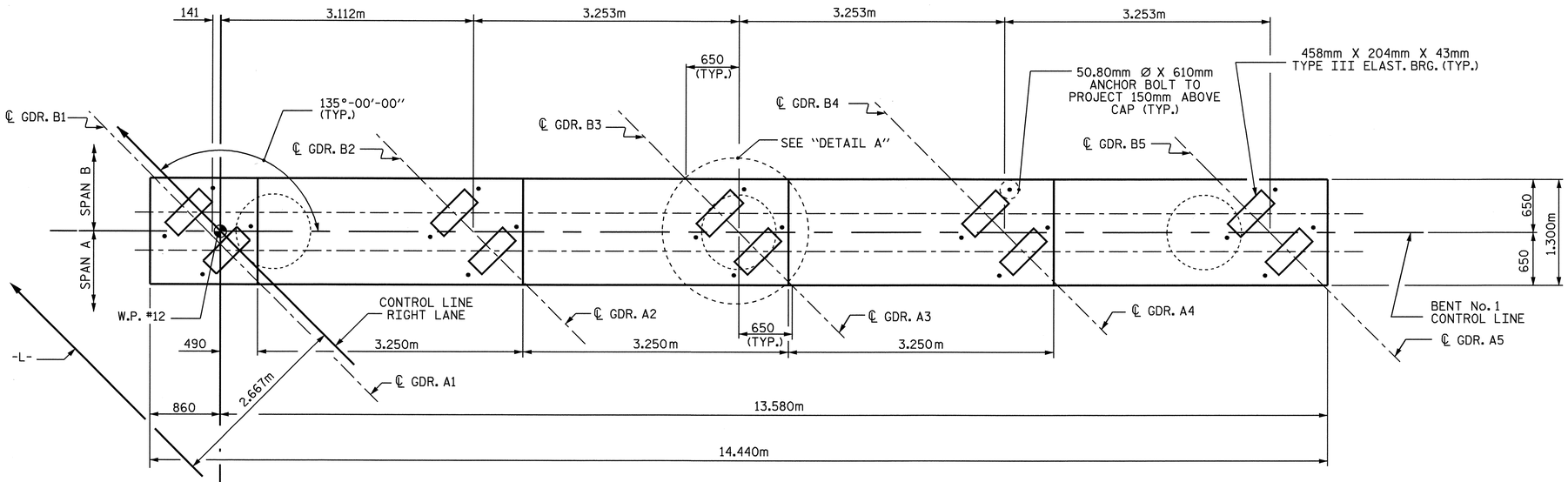

PLAN

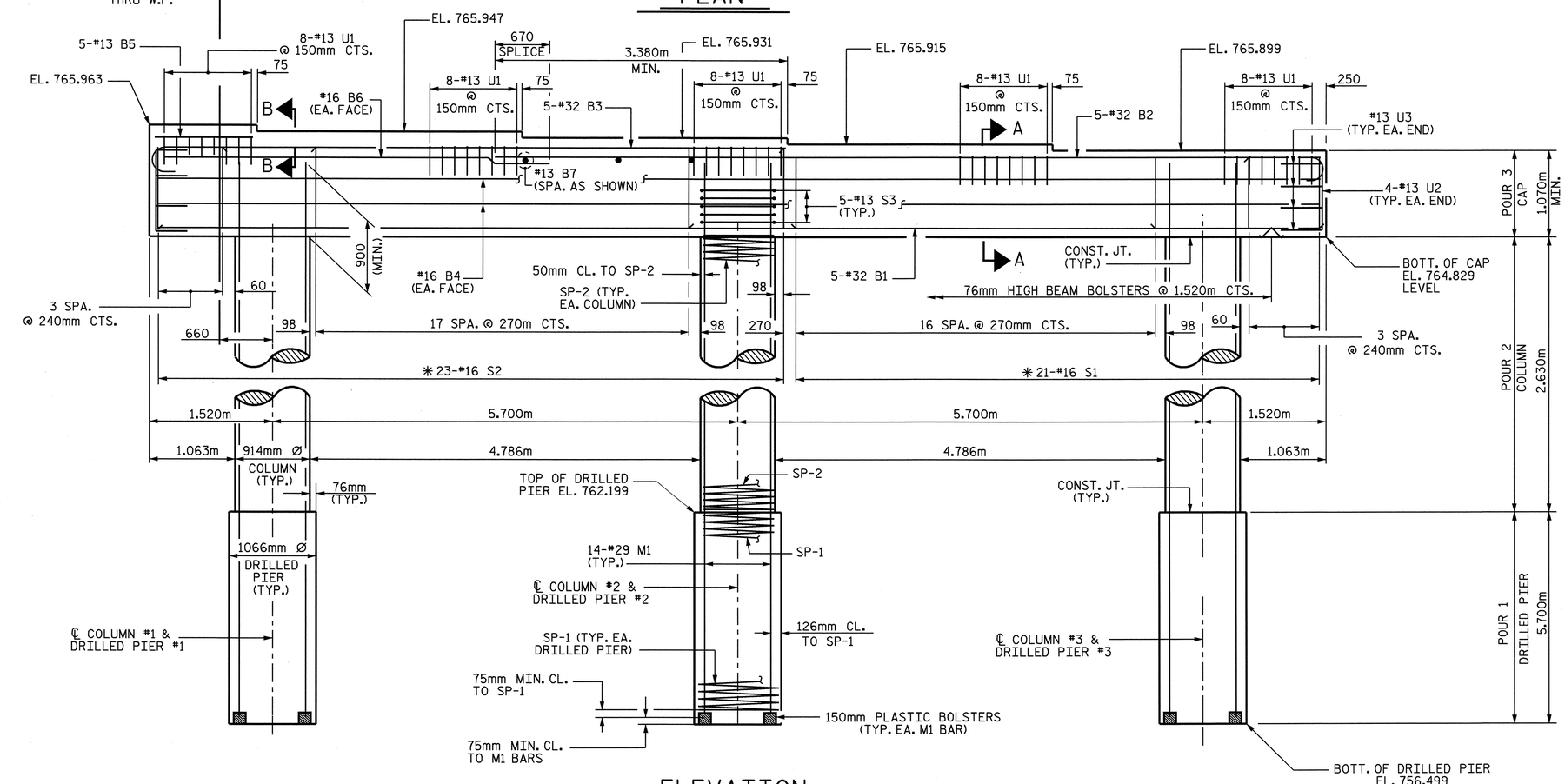

ELEVATION

✱INVERT ALTERNATE STIRRUPS

DIMENSIONS AND REINFORCING STEEL ARE TYPICAL FOR EACH COLUMN & DRILLED PIER

NOTES

STIRRUPS IN CAP MAY BE SHIFTED AS NECESSARY TO CLEAR ANCHOR BOLTS.

HOOKS ON "V" BARS MAY BE TURNED AS NECESSARY FOR PLACING REINFORCING STEEL.

ALL STEEL IN THE DRILLED PIERS IS INCLUDED IN THE PAY ITEMS FOR "REINFORCING STEEL" AND "SPIRAL COLUMN REINFORCING STEEL".

THE CONTRACTOR'S ATTENTION IS CALLED TO THE FACT THAT THE LONGITUDINAL REINFORCEMENT FOR THE DRILLED PIERS IS DETAILED WITH ONE METER OF EXTRA LENGTH.

THE LOCATION OF THE CONSTRUCTION JOINT IN THE DRILLED PIERS IS BASED ON AN APPROXIMATE GROUND LINE ELEVATION. IF THE CONSTRUCTION JOINT IS ABOVE THE ACTUAL GROUND LINE ELEVATION, THE CONTRACTOR SHALL PLACE THE CONSTRUCTION JOINT 300mm BELOW THE GROUND LINE.

SPLICING OF THE LONGITUDINAL BARS IN THE DRILLED PIERS WILL NOT BE PERMITTED.

"U" BARS IN THE END OF CAP MAY BE SHIFTED SLIGHTLY AS NECESSARY TO CLEAR "B" BARS.

50mm MINIMUM CONCRETE COVER FROM END OF CAP IS REQUIRED FOR ALL "U" BARS.

THE CONTRACTOR SHALL ALIGN THE "M" AND "V" BARS AS SHOWN IN THE PLAN OF DRILLED PIERS AND COLUMNS.

FOR DRILLED PIERS, SEE SPECIAL PROVISIONS.

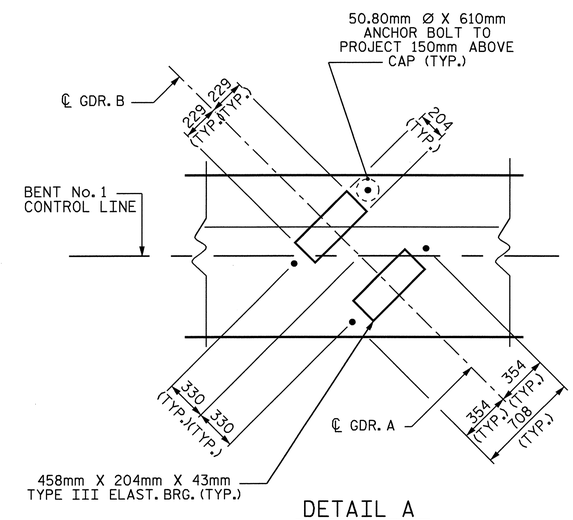

DETAIL A

PROJECT NO. R-2518B

YANCEY COUNTY

STATION: 175+52.267 -L-

SHEET 1 OF 2

STATE OF NORTH CAROLINA
DEPARTMENT OF TRANSPORTATION
RALEIGH

SUBSTRUCTURE
BENT No. 1
RIGHT LANE

NORTH CAROLINA PROFESSIONAL SEAL 20125 ENGINEER
MARSHALL G. CHEEK, JR.
3-28-08

REVISIONS								SHEET NO.
NO.	BY:	DATE:	NO.	BY:	DATE:			S-62
1			3					TOTAL SHEETS
2			4					154

DRAWN BY :	M. POOLE	DATE :	01-08
CHECKED BY :	M. G. CHEEK	DATE :	02-08

25-MAR-2008 12:15
R:\Structures\Final plans\Str #2\R2518B_sd_B1_02.dgn
mpoole

STR. #2

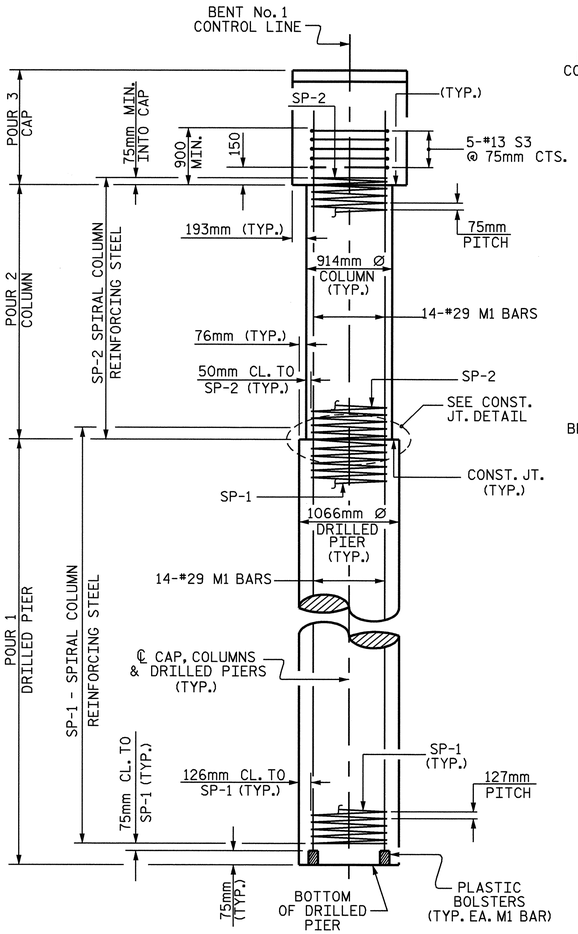

END ELEVATION

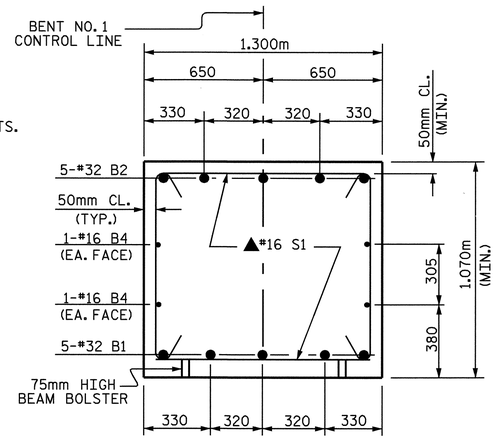

SECTION A-A

▲ INVERT
ALTERNATE STIRRUPS

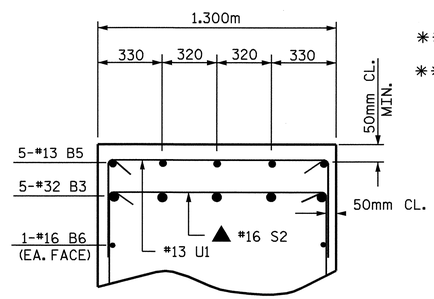

SECTION B-B

END OF CAP ELEVATION

(TYP. EA. END)

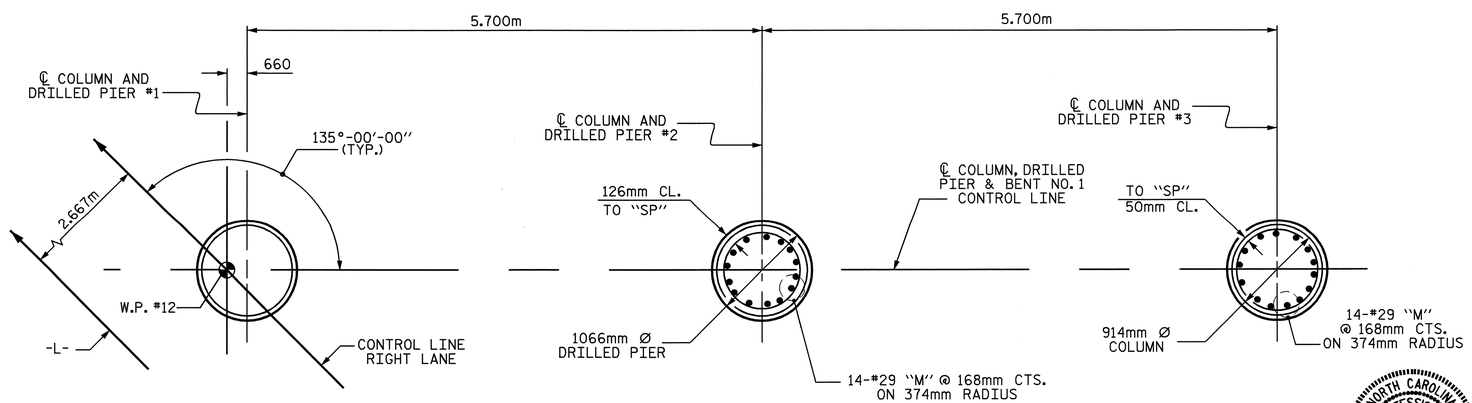

PLAN OF DRILLED PIERS AND COLUMNS

REINFORCING STEEL AND DIMENSIONS TYPICAL
FOR ALL DRILLED PIERS AND COLUMNS

BAR TYPES

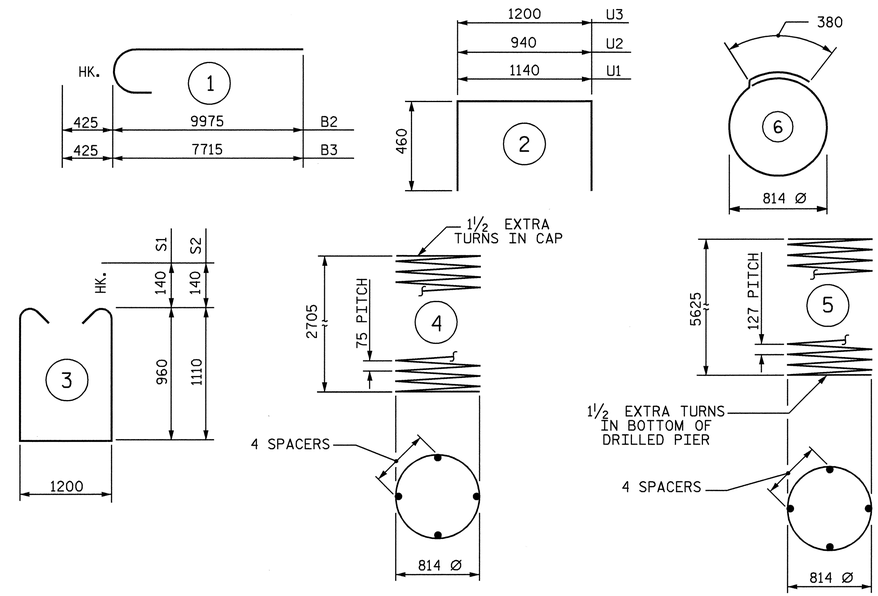

ALL BAR DIMENSIONS ARE OUT TO OUT.

** THE SP-2 SPIRAL REINFORCING STEEL SHALL BE W20 OR D-20 COLD DRAWN WIRE OR #4 PLAIN OR DEFORMED BAR.

*** THE SP-1 SPIRAL REINFORCING STEEL SHALL BE W31 OR D-31 COLD DRAWN WIRE OR #5 PLAIN OR DEFORMED BAR.

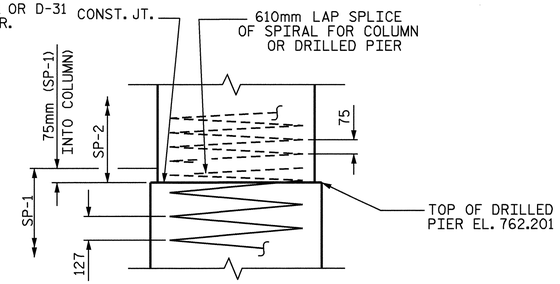

CONSTRUCTION JOINT DETAIL

BILL OF MATERIAL

BENT No. 1

BAR	NO.	SIZE	TYPE	LENGTH	WEIGHT
B1	5	32	STR	14340	459
B2	5	32	1	10400	333
B3	5	32	1	8140	261
B4	4	16	STR	14340	89
B5	5	13	STR	1240	6
B6	2	16	STR	4560	14
B7	3	13	STR	1200	4
M1	42	29	STR	10160	2159
S1	21	16	3	3400	111
S2	23	16	3	3700	132
S3	15	13	6	2940	44
U1	40	13	2	2060	82
U2	8	13	2	1860	15
U3	8	13	2	2060	16

REINFORCING STEEL kg 3725

BAR	NO.	SIZE	TYPE	LENGTH	WEIGHT
SP-1	3	***	5	115920	540
SP-2	3	**	4	93810	280

SPIRAL COLUMN REINFORCING STEEL 820 METERS

CLASS A CONCRETE BREAKDOWN

POUR 2	(COLUMNS)	5.2 C.M.
POUR 3	(CAP)	22.5 C.M.
TOTAL		27.7 C.M.

DRILLED PIER QUANTITIES
DRILLED PIER CONCRETE BREAKDOWN

POUR 1	(DRILLED PIERS)	15.3 C.M.
1066mm Ø DRILLED PIERS NOT IN SOIL		2.0 METERS
1066mm Ø DRILLED PIERS IN SOIL		15.1 METERS
▲CSL TUBES		77.5 METERS

▲ NO SEPARATE PAYMENT WILL BE MADE FOR CSL TUBES. CSL TUBES WILL BE INCLUDED IN THE UNIT BID PRICE FOR DRILLED PIERS

PROJECT NO. R-2518B
YANCEY COUNTY
STATION: 175+52.267 -L-

SHEET 2 OF 2

STATE OF NORTH CAROLINA
DEPARTMENT OF TRANSPORTATION
RALEIGH

SUBSTRUCTURE
BENT No. 1
RIGHT LANE

NORTH CAROLINA PROFESSIONAL SEAL 20125 ENGINEER MARSHAL G. CHEEK, JR.
3-28-08

REVISIONS								SHEET NO.
NO.	BY:	DATE:	NO.	BY:	DATE:			S-63
1			3					TOTAL SHEETS
2			4					154

DRAWN BY : M. POOLE DATE : 01/2008
CHECKED BY : M. G. CHEEK DATE : 02-08

25-MAR-2008 12:14
R:\Structures\Final plans\Str #2\R2518B_sd_B1_02.dgn
mpoole

STR. #2

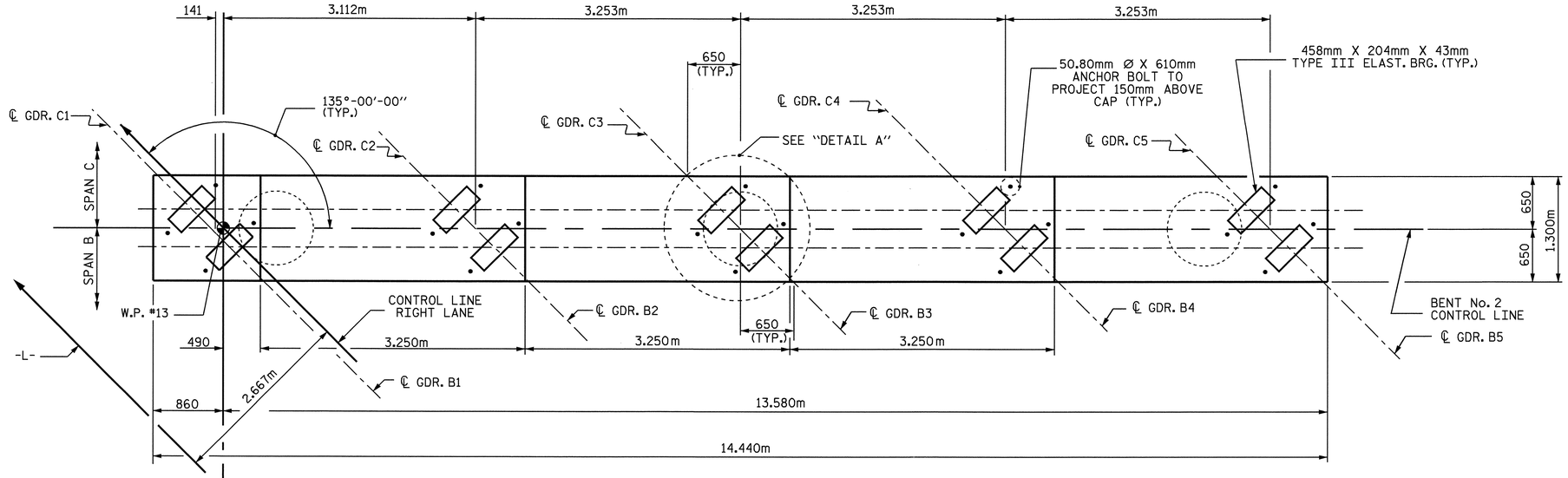

PLAN

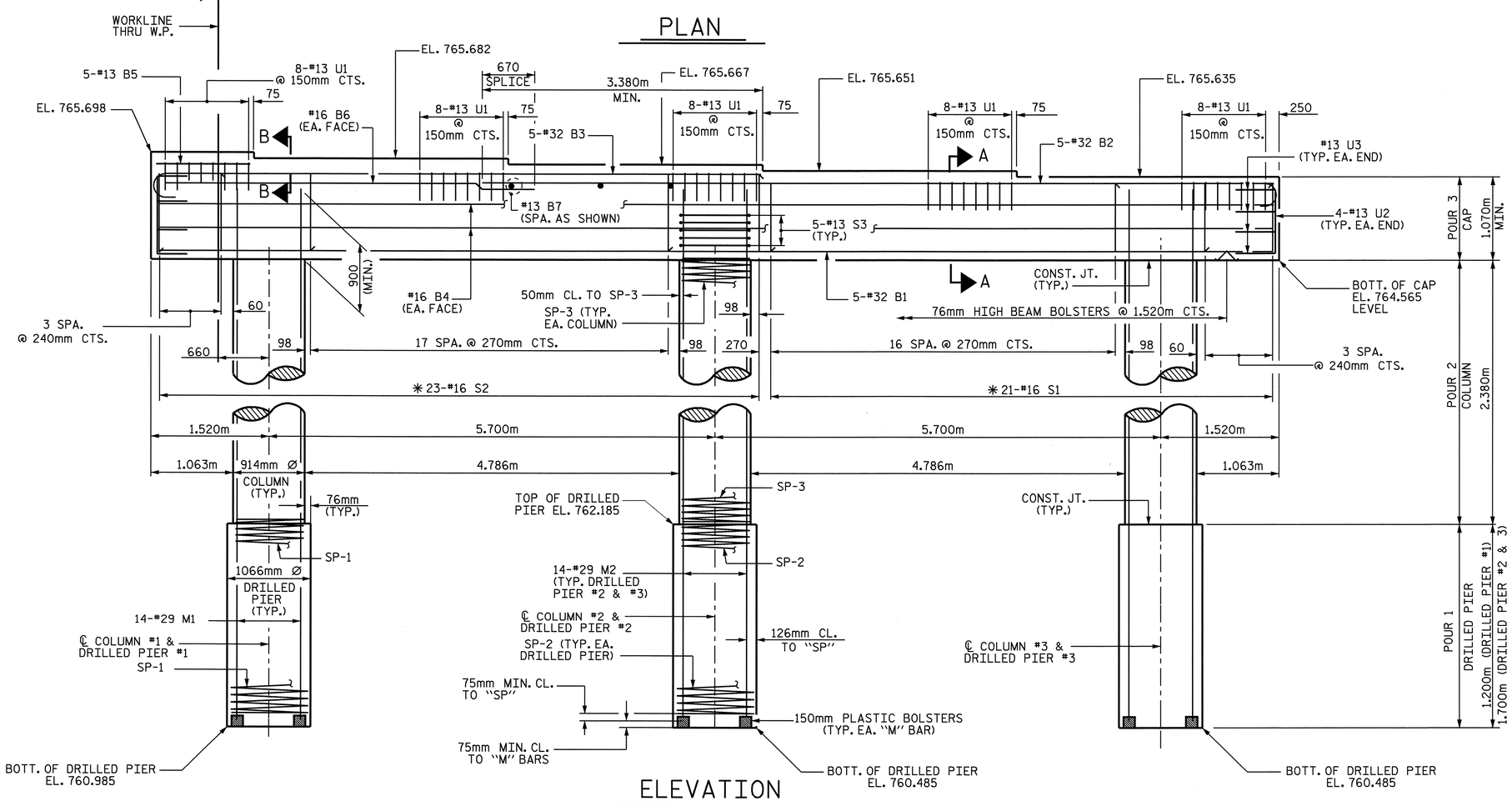

ELEVATION

✱ INVERT ALTERNATE STIRRUPS

DIMENSIONS AND REINFORCING STEEL ARE TYPICAL FOR EACH COUMN & DRILLED PIER

NOTES

STIRRUPS IN CAP MAY BE SHIFTED AS NECESSARY TO CLEAR ANCHOR BOLTS.

HOOKS ON "V" BARS MAY BE TURNED AS NECESSARY FOR PLACING REINFORCING STEEL.

ALL STEEL IN THE DRILLED PIERS IS INCLUDED IN THE PAY ITEMS FOR "REINFORCING STEEL" AND "SPIRAL COLUMN REINFORCING STEEL".

THE CONTRACTOR'S ATTENTION IS CALLED TO THE FACT THAT THE LONGITUDINAL REINFORCEMENT FOR THE DRILLED PIERS IS DETAILED WITH ONE METER OF EXTRA LENGTH.

THE LOCATION OF THE CONSTRUCTION JOINT IN THE DRILLED PIERS IS BASED ON AN APPROXIMATE GROUND LINE ELEVATION. IF THE CONSTRUCTION JOINT IS ABOVE THE ACTUAL GROUND LINE ELEVATION, THE CONTRACTOR SHALL PLACE THE CONSTRUCTION JOINT 300mm BELOW THE GROUND LINE.

SPLICING OF THE LONGITUDINAL BARS IN THE DRILLED PIERS WILL NOT BE PERMITTED.

"U" BARS IN THE END OF CAP MAY BE SHIFTED SLIGHTLY AS NECESSARY TO CLEAR "B" BARS.

50mm MINIMUM CONCRETE COVER FROM END OF CAP IS REQUIRED FOR ALL "U" BARS.

THE CONTRACTOR SHALL ALIGN THE "M" AND "V" BARS AS SHOWN IN THE PLAN OF DRILLED PIERS AND COLUMNS.

FOR DRILLED PIERS, SEE SPECIAL PROVISIONS.

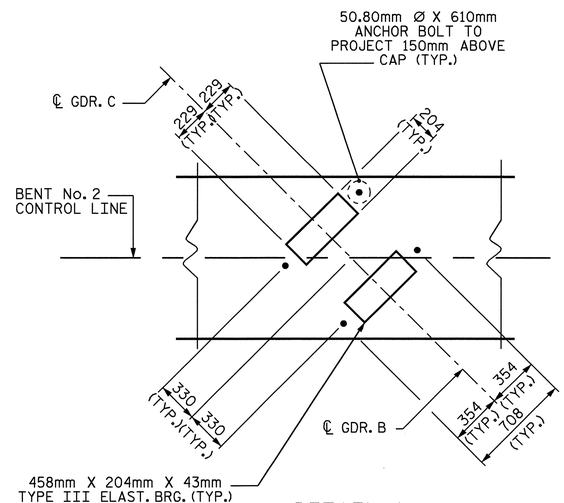

DETAIL A

PROJECT NO. R-2518B

YANCEY COUNTY

STATION: 175+52.267 -L-

SHEET 1 OF 2

STATE OF NORTH CAROLINA
DEPARTMENT OF TRANSPORTATION
RALEIGH

SUBSTRUCTURE
BENT No. 2
RIGHT LANE

NORTH CAROLINA PROFESSIONAL SEAL 20125 ENGINEER MARSHALL G. CHEEK, JR.
3-28-08

REVISIONS								SHEET NO.
NO.	BY:	DATE:	NO.	BY:	DATE:			S-64
1			3					TOTAL SHEETS
2			4					154

DRAWN BY : M. POOLE DATE : 01/08
CHECKED BY : M. G. CHEEK DATE : 02 /08

25-MAR-2008 12:14
R:\Structures\Finalplans\Str #2\R2518B_sd_B2_02.dgn
mpoole

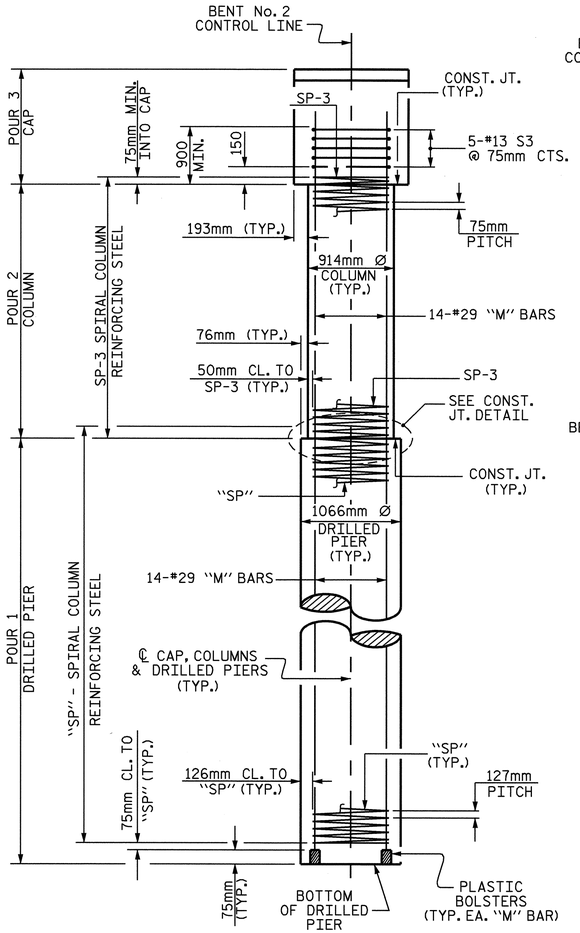

END ELEVATION

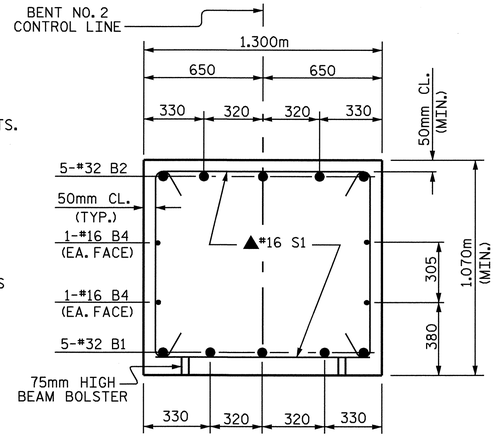

SECTION A-A

▲ INVERT ALTERNATE STIRRUPS

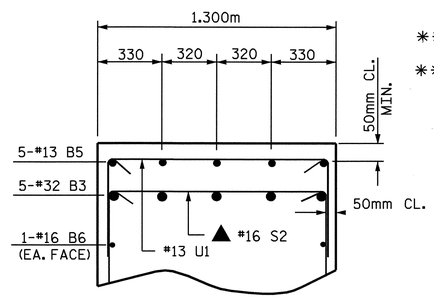

SECTION B-B

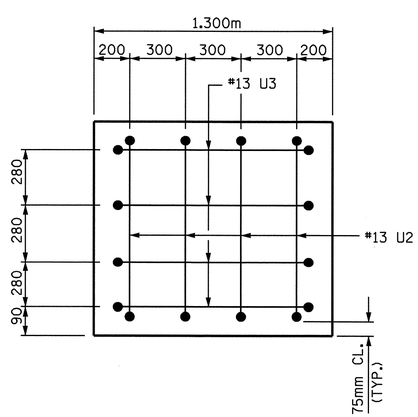

END OF CAP ELEVATION

(TYP. EA. END)

BAR TYPES

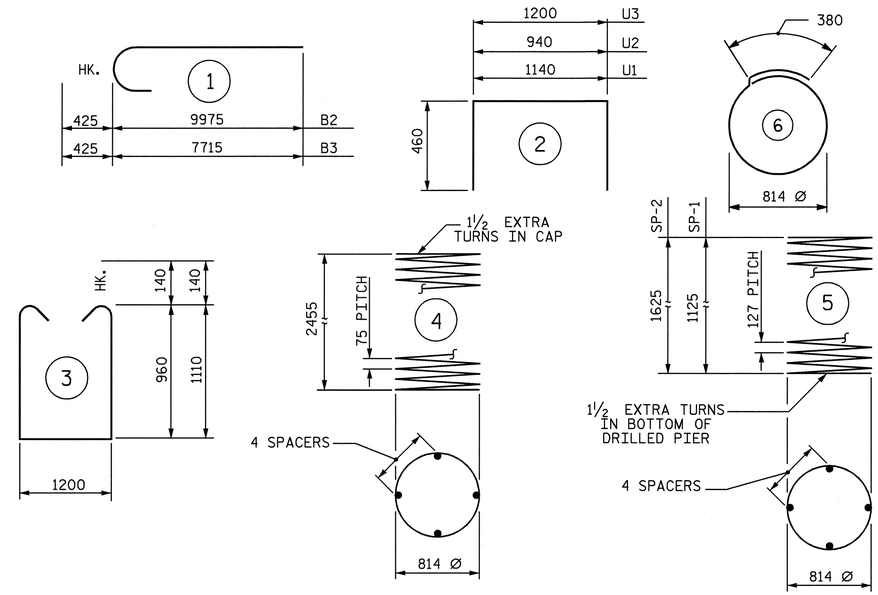

ALL BAR DIMENSIONS ARE OUT TO OUT.

** THE SP-2 SPIRAL REINFORCING STEEL SHALL BE W20 OR D-20 COLD DRAWN WIRE OR #4 PLAIN OR DEFORMED BAR.

*** THE SP-1 SPIRAL REINFORCING STEEL SHALL BE W31 OR D-31 COLD DRAWN WIRE OR #5 PLAIN OR DEFORMED BAR.

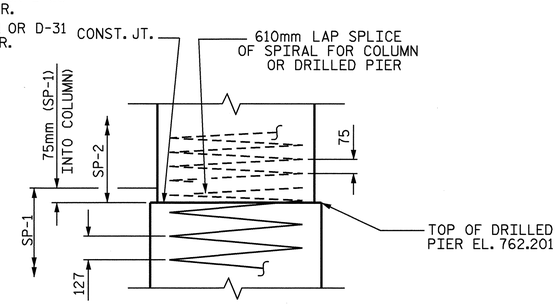

CONSTRUCTION JOINT DETAIL

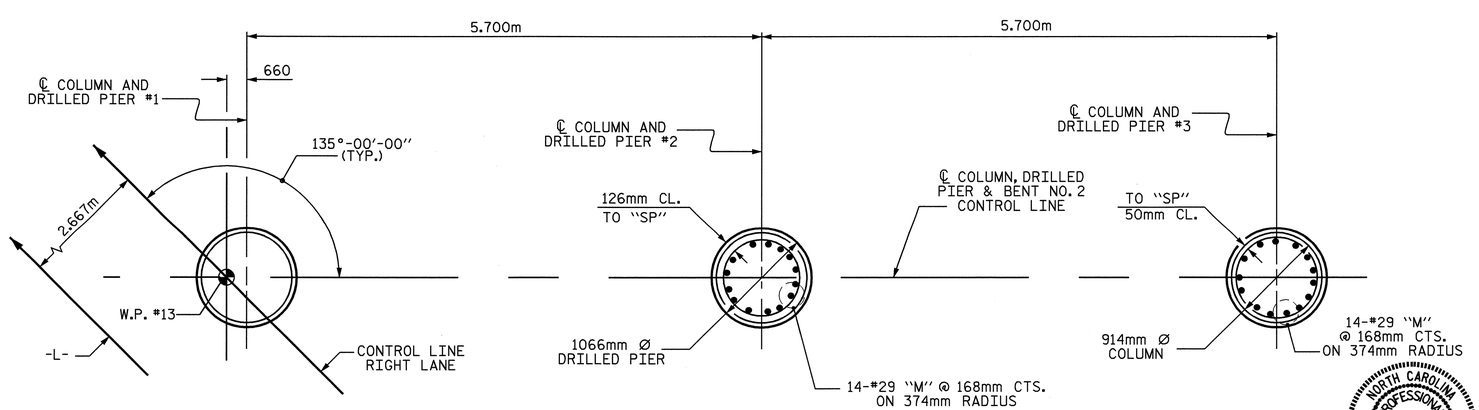

PLAN OF DRILLED PIERS AND COLUMNS

REINFORCING STEEL AND DIMENSIONS TYPICAL FOR ALL DRILLED PIERS AND COLUMNS

BILL OF MATERIAL

BENT No. 2

BAR	NO.	SIZE	TYPE	LENGTH	WEIGHT
B1	5	32	STR	14340	459
B2	5	32	1	10400	333
B3	5	32	1	8140	261
B4	4	16	STR	14340	89
B5	5	13	STR	1240	6
B6	2	16	STR	4560	14
B7	3	13	STR	1200	4
M1	14	29	STR	5400	383
M2	28	29	STR	6400	907
S1	21	16	3	3400	111
S2	23	16	3	3700	132
S3	15	13	6	2940	44
U1	40	13	2	2060	82
U2	8	13	2	1860	15
U3	8	13	2	2060	16

REINFORCING STEEL kg 2856

BAR	NO.	SIZE	TYPE	LENGTH	WEIGHT
SP-1	1	***	5	26460	41
SP-2	2	***	5	36540	113
SP-3	3	**	4	85630	255

SPIRAL COLUMN REINFORCING STEEL 409 kg

CLASS A CONCRETE BREAKDOWN

POUR 2	(COLUMNS)	4.7 C.M.
POUR 3	(CAP)	22.5 C.M.
TOTAL		27.2 C.M.

DRILLED PIER QUANTITIES
DRILLED PIER CONCRETE BREAKDOWN

POUR 1	(DRILLED PIERS)	4.1 C.M.
1066mm Ø DRILLED PIERS NOT IN SOIL		3.0 METERS
1066mm Ø DRILLED PIERS IN SOIL		1.6 METERS
▲CSL TUBES		27.5 METERS

▲ NO SEPARATE PAYMENT WILL BE MADE FOR CSL TUBES. CSL TUBES WILL BE INCLUDED IN THE UNIT BID PRICE FOR DRILLED PIERS

PROJECT NO. R-2518B
YANCEY COUNTY
STATION: 175+52.267 -L-

SHEET 2 OF 2

STATE OF NORTH CAROLINA
DEPARTMENT OF TRANSPORTATION
RALEIGH

SUBSTRUCTURE
BENT No. 2
RIGHT LANE

NORTH CAROLINA PROFESSIONAL SEAL 20125 ENGINEER
MARSHALL G. CHEEK, JR.
3-28-08

REVISIONS							SHEET NO.
NO.	BY:	DATE:	NO.	BY:	DATE:		S-65
1			3				TOTAL SHEETS
2			4				154

DRAWN BY : M. POOLE DATE : 01/2008
CHECKED BY : M. G. CHEEK DATE : 01/2008

25-MAR-2008 12:14
R:\Structures\Finalplans\Str #2\R2518B_sd_B2_02.dgn
mpoole

STR. #2

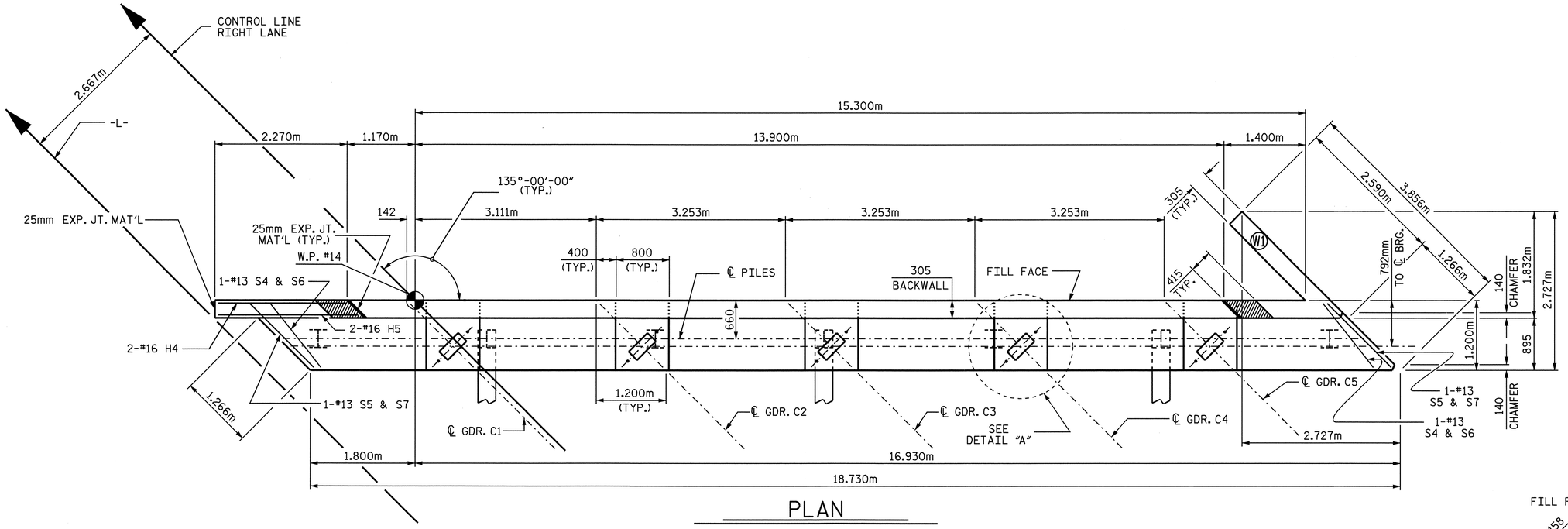

PLAN

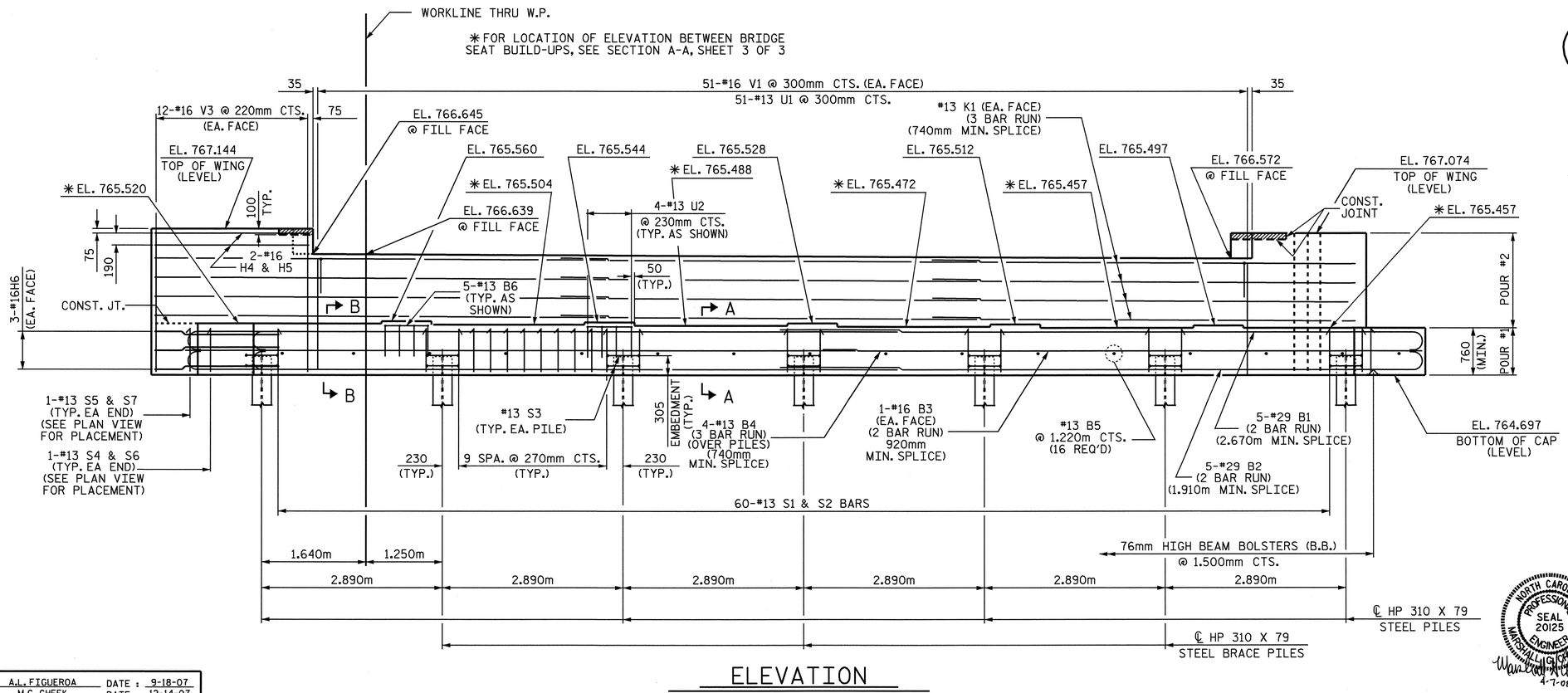

ELEVATION

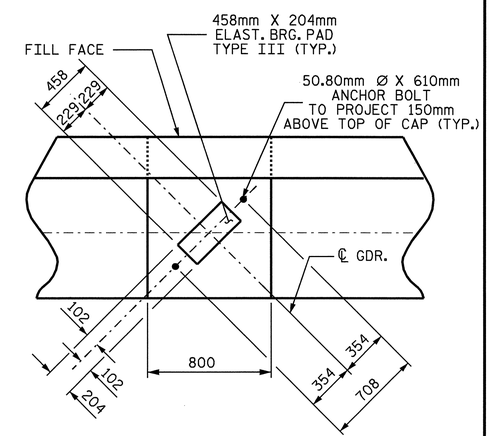

DETAIL "A"

NOTES

STIRRUPS IN CAP MAY BE SHIFTED AS NECESSARY TO CLEAR ANCHOR BOLTS.

FOR SECTION A-A, SEE SHEET 3 OF 3.

FOR PILE SPLICE DETAILS, SEE SHEET 3 OF 3.

FOR TEMPORARY DRAINAGE AT END BENTS, SEE SHEET 3 OF 3.

BACKWALL SHALL BE PLACED BEFORE APPLYING THE EPOXY PROTECTIVE COATING.

THE TOP SURFACE AREA OF THE END BENT CAP SHALL BE CURED IN ACCORDANCE WITH THE STANDARD SPECIFICATIONS EXCEPT THAT THE MEMBRANE CURING COMPOUND METHOD SHALL NOT BE USED.

THE TOP SURFACE OF THE END BENT CAP EXCEPT THE BRIDGE SEAT BUILDUPS SHALL BE SLOPED TRANSVERSELY FROM THE FILL FACE TO THE BACK FACE AT THE RATE OF 2%.

THE CONTRACTOR SHALL PROVIDE FOR INSTALLATION OF THE 200mm Ø DRAIN PIPE THROUGH THE WING WALL AS REQUIRED FOR REINFORCED BRIDGE APPROACH FILLS, SEE THE ROADWAY PLANS. REINFORCING STEEL IN THE WING WALL MAY BE SHIFTED AS NECESSARY TO CLEAR THE DRAIN PIPE.

THE CONCRETE IN THE SHADED AREA OF THE WING SHALL BE POURED AFTER THE PARAPET AND END POST ARE CAST IF SLIP FORMING IS USED.

PROJECT NO. R-2518B
YANCEY COUNTY
STATION: 175+52.267 -L-

SHEET 1 OF 3

STATE OF NORTH CAROLINA
DEPARTMENT OF TRANSPORTATION
RALEIGH

SUBSTRUCTURE END BENT NO.2 RIGHT LANE

REVISIONS								SHEET NO.
NO.	BY:	DATE:	NO.	BY:	DATE:			S-66
1			3					TOTAL SHEETS
2			4					154

NORTH CAROLINA PROFESSIONAL SEAL 20125 ENGINEER MARSHALL G. CHEEK JR.
4-7-08

DRAWN BY : A.L. FIGUEROA DATE : 9-18-07
CHECKED BY : M.G. CHEEK DATE : 12-14-07

04-APR-2008 10:59
r:\structures\finalplans\Str #2\R2518B_sd_EB* 1&2 RL-str2.dgn
lmurphy

STR #2

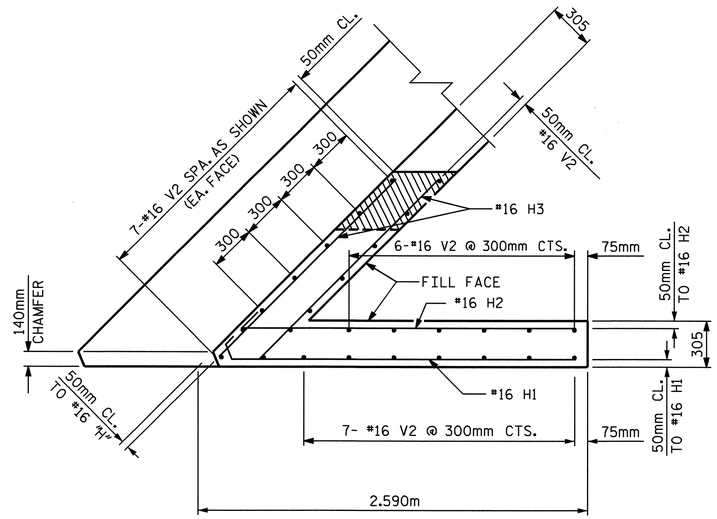

PLAN OF RIGHT WING - W1

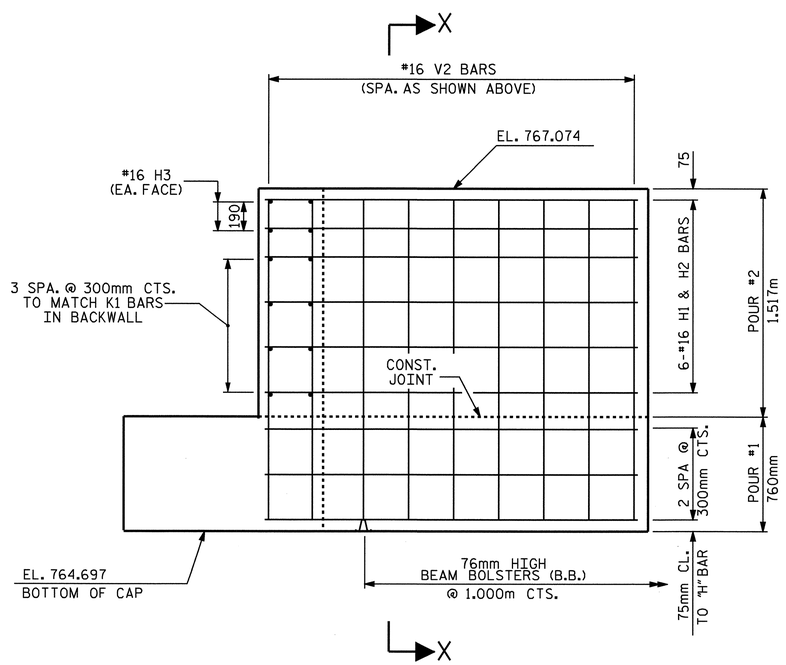

ELEVATION OF RIGHT WING - W1

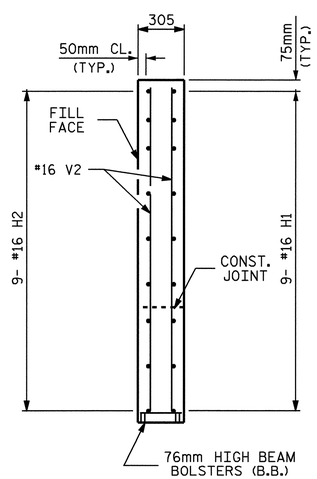

SECTION X-X

PROJECT NO. R-2518B

YANCEY COUNTY

STATION: 175+52.267-L-

SHEET 2 OF 3

STATE OF NORTH CAROLINA
DEPARTMENT OF TRANSPORTATION
RALEIGH

SUBSTRUCTURE END BENT NO.2 RIGHT LANE

NORTH CAROLINA PROFESSIONAL SEAL 20125 ENGINEER MARSHALL G. CHEEK, JR.
3-18-08

REVISIONS						SHEET NO.
NO.	BY:	DATE:	NO.	BY:	DATE:	S-67
1			3			TOTAL SHEETS
2			4			154

STR #2

DRAWN BY : A.L. FIGUEROA DATE : 9-18-07
CHECKED BY : M.G. CHEEK DATE : 12-14-07

06-MAR-2008 13:50
r:\structures\finalplans\Str #2\R2518B_sd_EB* 1&2 RL-str2.dgn
dahodge

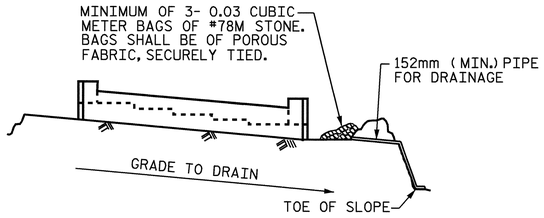

BAGGED STONE AND PIPE SHALL BE PLACED IMMEDIATELY AFTER COMPLETION OF END BENT EXCAVATION. PIPE MAY BE EITHER CONCRETE, CORRUGATED STEEL, CORRUGATED ALUMINUM ALLOY, OR CORRUGATED PLASTIC. PERFORATED PIPE WILL NOT BE ALLOWED.

BAGGED STONE SHALL REMAIN IN PLACE UNTIL THE ENGINEER DIRECTS THAT IT BE REMOVED. THE CONTRACTOR SHALL REMOVE AND DISPOSE OF SILT ACCUMULATIONS AT BAGGED STONE WHEN SO DIRECTED BY THE ENGINEER. BAGS SHALL BE REMOVED AND REPLACED WHENEVER THE ENGINEER DETERMINES THAT THEY HAVE DETERIORATED AND LOST THEIR EFFECTIVENESS.

NO SEPARATE PAYMENT WILL BE MADE FOR THIS WORK AND THE ENTIRE COST OF THIS WORK SHALL BE INCLUDED IN THE UNIT CONTRACT PRICE BID FOR THE SEVERAL PAY ITEMS.

TEMPORARY DRAINAGE AT END BENT

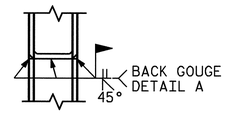

*PILE VERTICAL

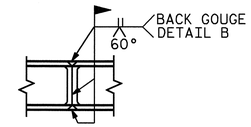

*PILE HORIZONTAL OR VERTICAL

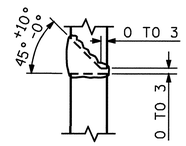

DETAIL A

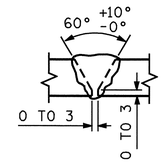

DETAIL B

*POSITION OF PILE DURING WELDING.

PILE SPLICE DETAILS

BAR TYPES

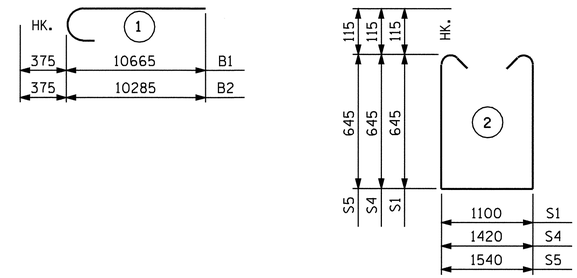

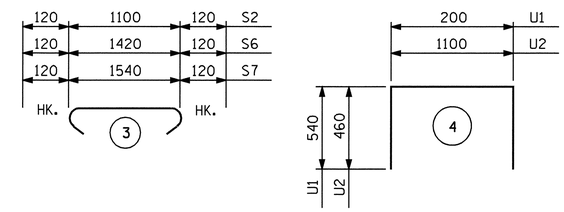

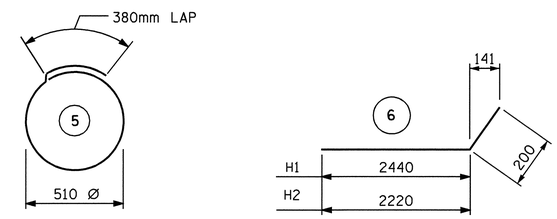

ALL BAR DIMENSIONS ARE OUT TO OUT.

BILL OF MATERIAL
END BENT NO. 2

BAR	NO.	SIZE	TYPE	LENGTH	WEIGHT
B1	10	#29	1	11040	559
B2	10	#29	1	10660	539
B3	4	#16	STR	9780	61
B4	12	#13	STR	6720	80
B5	16	#13	STR	1100	17
B6	10	#13	STR	700	7
H1	9	#16	6	2640	37
H2	9	#16	6	2420	34
H3	4	#16	STR	1720	11
H4	2	#16	STR	2200	7
H5	2	#16	STR	2400	7
H6	6	#16	STR	2000	19
K1	24	#13	STR	6920	165
S1	60	#13	2	2620	156
S2	60	#13	3	1340	80
S3	14	#13	5	1980	28
S4	2	#13	2	2940	6
S5	2	#13	2	3060	6
S6	2	#13	3	1660	3
S7	2	#13	3	1780	4
U1	51	#13	5	1280	65
U2	8	#13	5	2020	16
V1	102	#16	STR	1760	279
V2	27	#16	STR	2240	94
V3	24	#16	STR	2340	87

REINFORCING STEEL = 2367 kg

CLASS A CONCRETE BREAKDOWN

POUR #1
CAP & LOWER PART OF WINGS 18.6 C.M.

POUR #2
BACKWALL & UPPER PART OF WINGS 8.1 C.M

CLASS A CONCRETE TOTAL 26.7 C.M.

HP 310 X 79 STEEL PILES

NO. 7 41 METERS

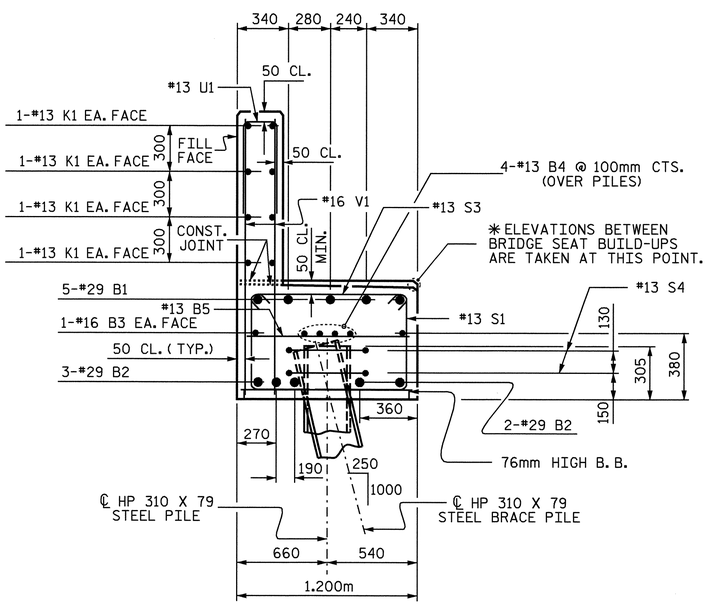

SECTION A-A

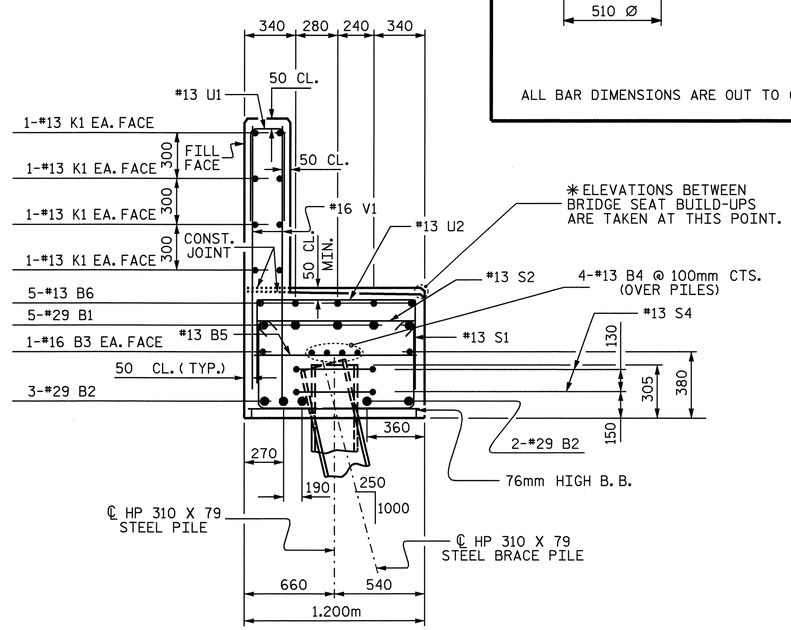

SECTION B-B

PROJECT NO. R-2518B
YANCEY COUNTY
STATION: 175+52.267 -L-

SHEET 3 OF 3

STATE OF NORTH CAROLINA
DEPARTMENT OF TRANSPORTATION
RALEIGH

SUBSTRUCTURE
END BENT NO.2
RIGHT LANE

NORTH CAROLINA PROFESSIONAL SEAL 20125 ENGINEER MARSHALL G. CHEEK, JR.
3-28-08

REVISIONS						SHEET NO.
NO.	BY:	DATE:	NO.	BY:	DATE:	S-68
1			3			TOTAL SHEETS
2			4			154

STR #2

DRAWN BY : A.L. FIGUEROA DATE : 9-18-07
CHECKED BY : M.G. CHEEK DATE : 12-14-07

27-MAR-2008 10:00
R:\Structures\Finalplans\Str #2\R2518B_sd_EB* 1&2 RL-str2.dgn

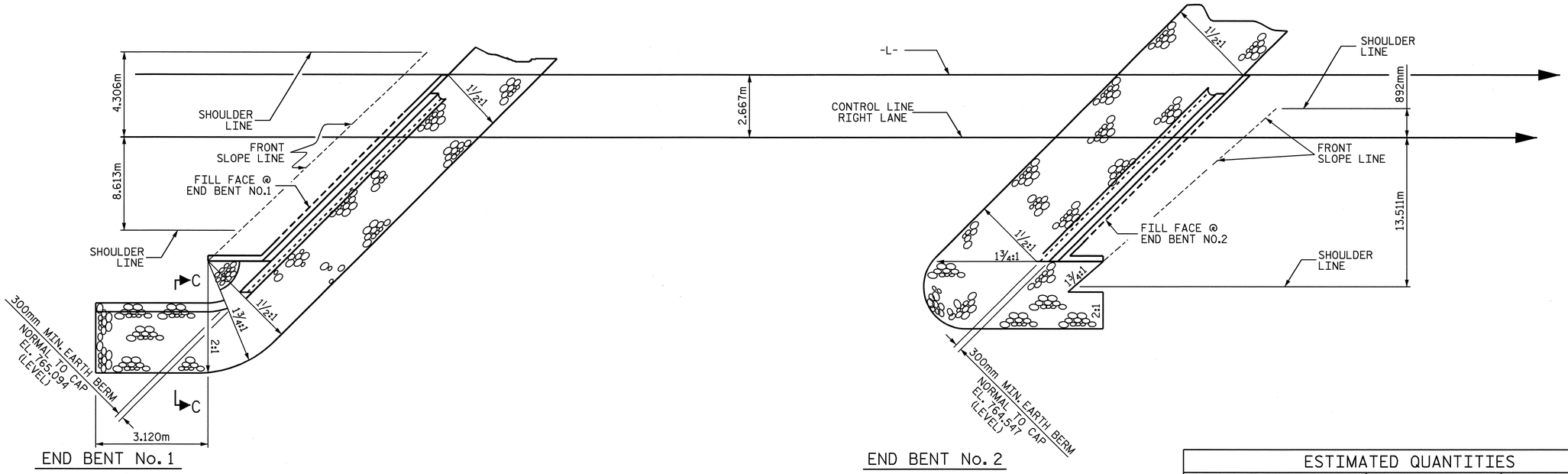

PLAN

ESTIMATED QUANTITIES		
BRIDGE @ STA. 175+52.267-L- RIGHT LANE	RIP RAP CLASS II	FILTER FABRIC FOR DRAINAGE
	METRIC TONS	SQUARE METERS
END BENT NO.1	129	132
END BENT NO.2	183	187

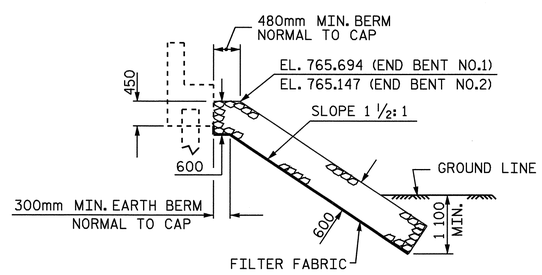

℄ SECTION

BERM RIP RAPPED

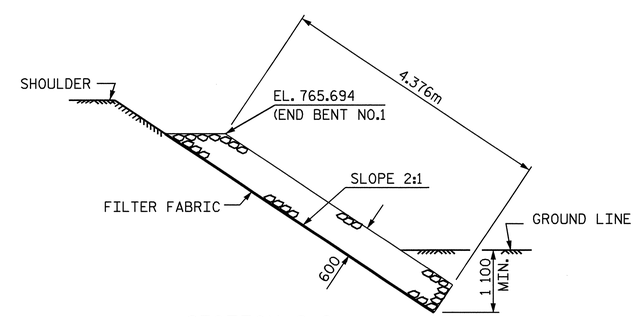

SECTION C-C

PROJECT NO. R-2518B

YANCEY COUNTY

STATION: 175+52.267 -L-

STATE OF NORTH CAROLINA
DEPARTMENT OF TRANSPORTATION
RALEIGH

STANDARD

RIP RAP DETAILS
RIGHT LANE

NORTH CAROLINA PROFESSIONAL SEAL 20125 ENGINEER MARSHALL L. GHEEK, JR.
4-7-08

ASSEMBLED BY : A.L. FIGUEROA	DATE : 10-29-07		
CHECKED BY : L.L. MURPHY	DATE : 01-24-08		
DRAWN BY : REK 1/84	REV. 8/16/99	RWW/LES	
CHECKED BY : RDU 1/84	REV. 10/17/00	RWW/LES	
	REV. 5/1/06	TLA/GM	

REVISIONS						SHEET NO.
NO.	BY:	DATE:	NO.	BY:	DATE:	S-69
1			3			TOTAL SHEETS
2			4			154

STR #2 STD. NO. RR3SM

04-APR-2008 11:01
r:\structures\finalplans\Str #2\R2518B_sd_SP_STR#2.dgn
lmurphy

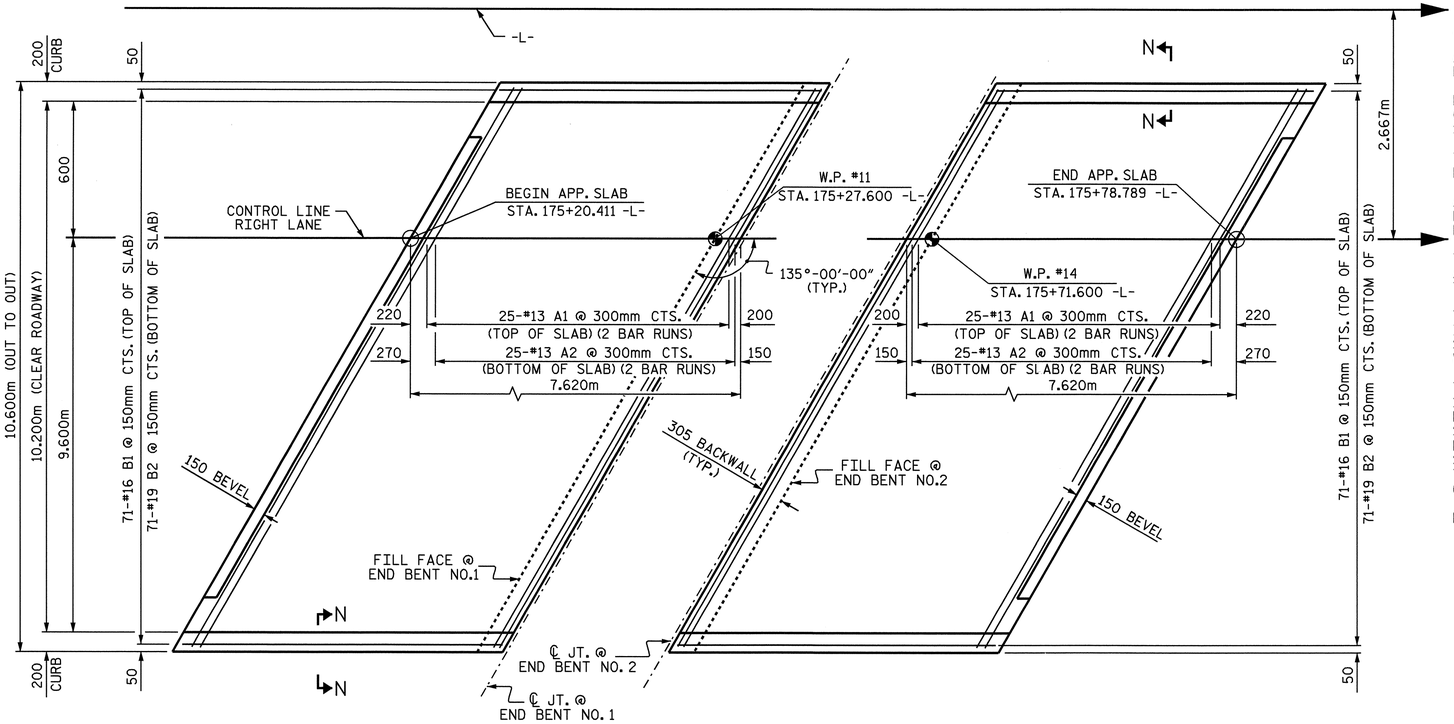

APPROACH SLAB @ END BENT NO. 1

APPROACH SLAB @ END BENT NO. 2

PLAN

NOTES

APPROACH SLAB SHALL NOT BE CONSTRUCTED PRIOR TO COMPLETION OF THE BRIDGE DECK.

FOR REINFORCED BRIDGE APPROACH FILL INCLUDING FABRIC, IMPERMEABLE GEOMEMBRANE, 102mm Ø DRAINAGE PIPE, #78M STONE, AND SELECT MATERIAL, SEE ROADWAY PLANS.

TEMPORARY DRAINAGE AND TEMPORARY BERM AND SLOPE DRAINS WILL BE PAID FOR UNDER THE LUMP SUM PRICE FOR BRIDGE APPROACH SLAB.

AREA BETWEEN THE WINGWALL AND APPROACH SLAB SHALL BE GRADED TO DRAIN THE WATER AWAY FROM THE FILL FACE OF THE BRIDGE AND SHALL BE PAVED. SEE ROADWAY PLANS.

THE 150mm COMP. A.B.C. SHALL BE FLUSH WITH THE ROADWAY END OF THE APPROACH SLAB AND SHALL EXTEND 300mm OUTSIDE OF EACH EDGE OF THE APPROACH SLAB.

THE CONTRACTOR MAY USE 100mm TYPE B-25.0B ASPHALT CONCRETE COURSE IN LIEU OF 150mm COMP. A.B.C. IF THIS OPTION IS USED, THE BASE COURSE SHALL BE FLUSH WITH THE ROADWAY END OF THE APPROACH SLAB, AND THE WIDTH SHALL BE THE SAME AS THAT OF THE APPROACH SLAB.

THE CONTRACTOR MAY USE 125mm CLASS "A" CONCRETE BASE IN LIEU OF 150mm COMP. A.B.C. IF THIS OPTION IS USED, THE CONCRETE BASE SHALL BE FLUSH WITH THE ROADWAY END OF THE APPROACH SLAB, AND THE WIDTH SHALL BE THE SAME AS THAT OF THE APPROACH SLAB. THE CONCRETE SHALL BE FINISHED TO A SMOOTH SURFACE AND A LAYER OF 13.6 kg ROOFING FELT SHALL BE PLACED BETWEEN THE CONCRETE BASE AND THE APPROACH SLAB TO PREVENT BOND. THE APPROACH SLAB SHALL NOT BE CAST UNTIL THE CONCRETE BASE HAS REACHED AN AGE OF THREE CURING DAYS.

FOR EVAZOTE JOINT SEALS, SEE SPECIAL PROVISIONS.

BILL OF MATERIAL
FOR ONE APPROACH SLAB (2 REQ'D)

BAR	NO.	SIZE	TYPE	LENGTH	WEIGHT
✳ A1	50	#13	STR	7760	386
A2	50	#13	STR	7720	384
✳ B1	71	#16	STR	7260	800
B2	71	#19	STR	7520	1193
REINFORCING STEEL				kg	1577
✳ EPOXY COATED REINFORCING STEEL				kg	1186
CLASS AA CONCRETE BREAKDOWN					
SLAB AND CURB				CU. METERS	25.1
CLASS AA CONCRETE				CU. METERS	25.1

✳ THESE BARS ARE EPOXY COATED

SPLICE CHART

BAR SIZE	EPOXY COATED	UNCOATED
#13	610	540
#16	770	660
#19	1190	790

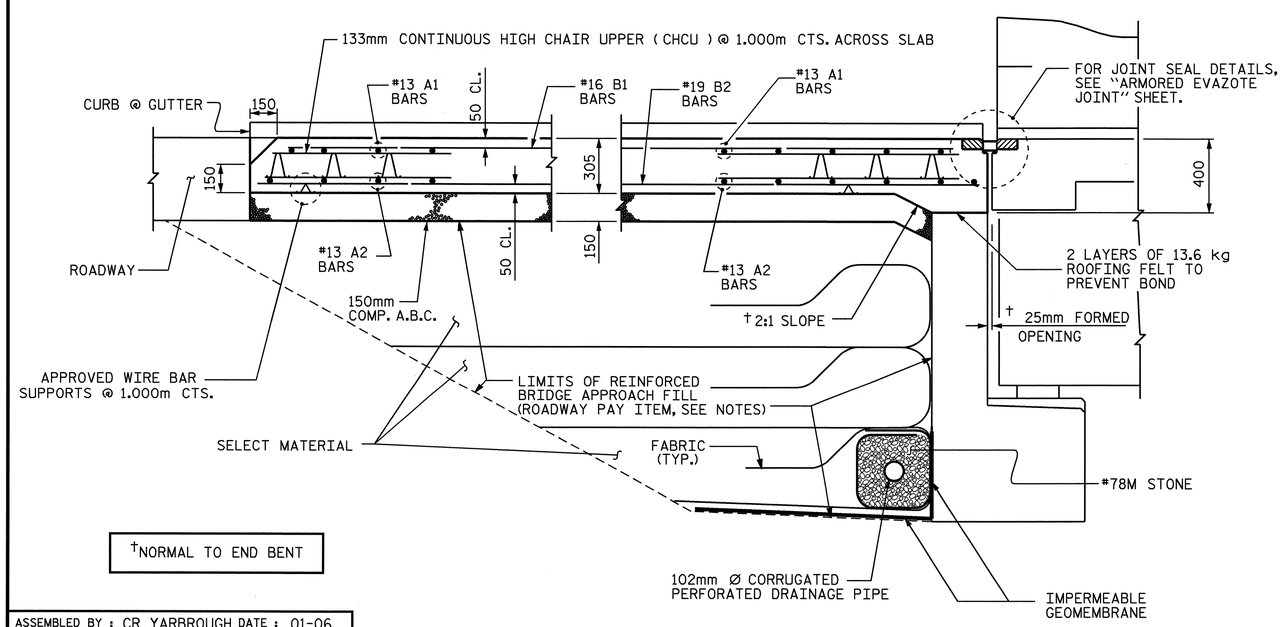

†NORMAL TO END BENT

SECTION THRU SLAB

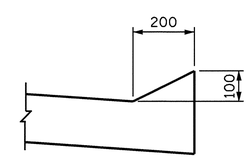

SECTION N-N

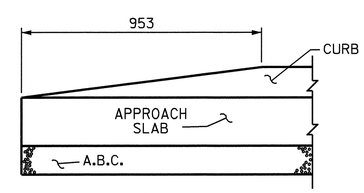

END OF CURB WITHOUT SHOULDER BERM GUTTER

CURB DETAILS

ASSEMBLED BY : CR YARBROUGH	DATE : 01-06		
CHECKED BY : MG CHEEK	DATE : 01-08		
DRAWN BY : FCJ 6/87	REV. 7/10/01	RWW/LES	
CHECKED BY : EGA 6/87	REV. 5/7/03R	RWW/JTE	
	REV. 5/1/06R	KMM/GM	

NORTH CAROLINA PROFESSIONAL SEAL 20125 ENGINEER MARSHALL G. CHEEK, JR.
4-16-08

PROJECT NO. R-2518B
YANCEY COUNTY
STATION: 175+52.267 -L-

SHEET 1 OF 2

STATE OF NORTH CAROLINA
DEPARTMENT OF TRANSPORTATION
RALEIGH

STANDARD

BRIDGE APPROACH SLAB FOR FLEXIBLE PAVEMENT RIGHT LANE

REVISIONS						SHEET NO.
NO.	BY:	DATE:	NO.	BY:	DATE:	S-70
1			3			TOTAL SHEETS
2			4			154

STR. #2 STD. NO. BAS4SM

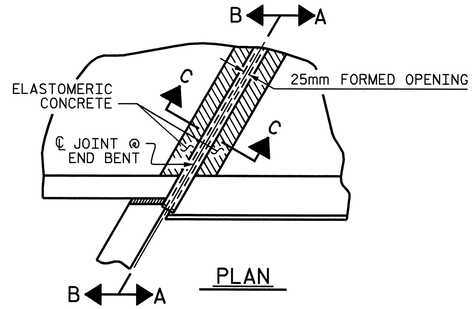

PLAN

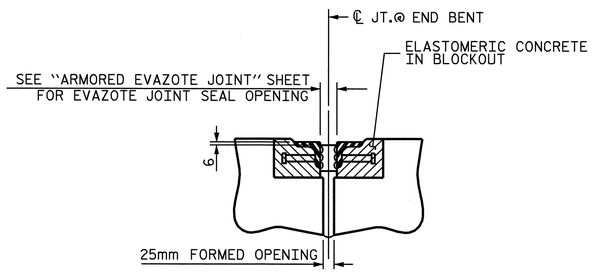

SECTION C-C
ARMORED EVAZOTE JOINT SEAL

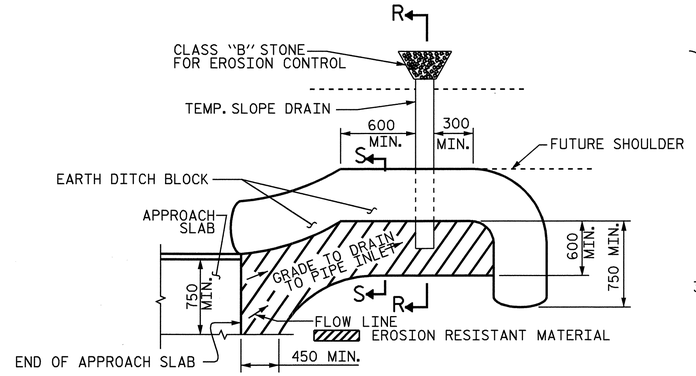

NOTE: IMMEDIATELY AFTER THE CONSTRUCTION OF THE APPROACH SLAB, THE CONTRACTOR SHALL PROVIDE TEMPORARY BERM AND SLOPE DRAIN. CONTRACTOR SHALL GRADE TO PIPE INLET AND PROVIDE EROSION RESISTANT MATERIAL AS SHOWN. THE EROSION RESISTANT MATERIAL SHALL BE EITHER 1) ASPHALT PLANT MIX, TYPE 1 OR TYPE 2, MIN. 50mm DEPTH, 2) EROSION CONTROL MAT, OR 3) CONCRETE, AS DIRECTED BY THE ENGINEER. THE SLOPE DRAIN SHALL CONSIST OF A NON-PERFORATED TEMPORARY DRAINAGE PIPE, 305mm IN DIAMETER.

PLAN VIEW

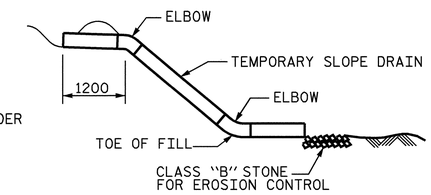

SECTION R-R

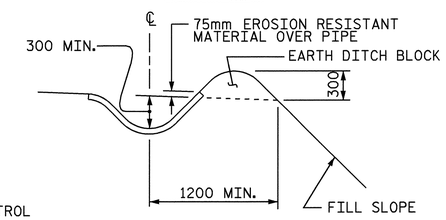

SECTION S-S

TEMPORARY BERM AND SLOPE DRAIN DETAILS

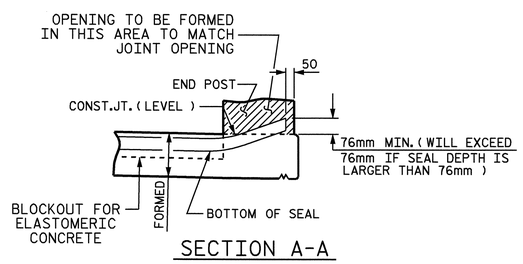

SECTION A-A

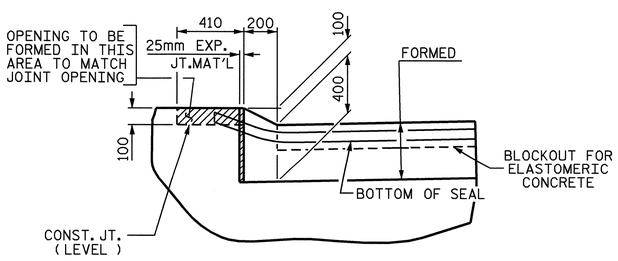

SECTION B-B

JOINT SEAL DETAILS @ END BENT

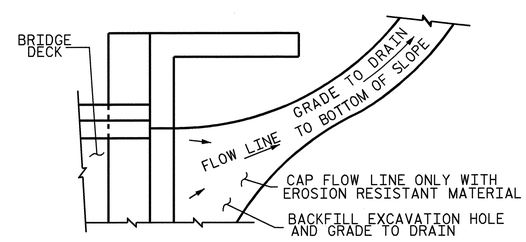

NOTE: IF THE APPROACH SLAB IS NOT CONSTRUCTED IMMEDIATELY AFTER THE BACKFILLING OF THE END BENT EXCAVATION, GRADE TO DRAIN TO THE BOTTOM OF THE SLOPE AND PROVIDE EROSION RESISTANT MATERIAL, SUCH AS FIBERGLASS ROVING OR AS DIRECTED BY THE ENGINEER TO PREVENT SOIL EROSION AND TO PROTECT THE AREA ADJACENT TO THE STRUCTURE. THE CONTRACTOR WILL BE REQUIRED TO REMOVE THESE MATERIALS PRIOR TO CONSTRUCTION OF THE APPROACH SLAB.

TEMPORARY DRAINAGE DETAIL

PROJECT NO. R-2518B
YANCEY COUNTY
STATION: 175+52.267 -L-

SHEET 2 OF 2

STATE OF NORTH CAROLINA
DEPARTMENT OF TRANSPORTATION
RALEIGH

STANDARD
BRIDGE APPROACH
SLAB DETAILS
RIGHT LANE

NORTH CAROLINA PROFESSIONAL SEAL 20125 ENGINEER MARSHALL LEE CHEEK, JR.
3-28-08

REVISIONS						SHEET NO.
NO.	BY:	DATE:	NO.	BY:	DATE:	S-71
1			3			TOTAL SHEETS
2			4			154

ASSEMBLED BY : CR YARBROUGH	DATE : 01-06		
CHECKED BY : MG CHEEK	DATE : 01-08		
DRAWN BY : FCJ 11/88	REV. 8/16/99	RAL/LES	
CHECKED BY : ARB 11/88	REV. 10/17/00	RWW/LES	
	REV. 5/7/03	RWW/JTE	

STR. #2

STD. NO. BAS10SM

24-MAR-2008 12:34
r:\structures\final plans\Str #2\R-2518B_sd_AS_02.dgn
lmurphy

OVERHANG BRACKET CALCULATION INSTRUCTIONS

AASHTO SHAPES - TYPES III, IV, V, AND VI

1. RECORD KNOWN INFORMATION ON "BRIDGE OVERHANG BRACKET SUMMARY" ON SHEET 2
2. CALCULATE THE MAXIMUM SCREED LOAD PER BRACKET (SLPB) WITH AN ESTIMATED R = 1.5. SLPB = R X W. ROUND VALUE UP TO NEAREST SLPB VALUE INDICATED ON APPROPRIATE TABLE 1-1, 1-2, 1-3, OR 1-4.
3. WITH THE ESTIMATED SLPB, OVERHANG SLAB THICKNESS, "K" VALUE, AND 45° HANGER SAFE WORKING LOAD (SWL), ENTER THE APPROPRIATE TABLE 1-1, 1-2, 1-3, OR 1-4 (BASED ON OVERHANG DIMENSION) AND DETERMINE THE BRACKET SPACING, S.
4. CALCULATE S/D1 AND S/D2, ROUNDING UP TO NEAREST VALUE IN TABLE 2. ENTER TABLE 2 AND DETERMINE R VALUE.
5. CALCULATE REVISED SLPB. ROUND VALUE UP TO NEAREST SLPB VALUE INDICATED ON APPROPRIATE TABLE 1-1, 1-2, 1-3, OR 1-4.
6. WITH THE REVISED SLPB, OVERHANG SLAB THICKNESS, "K" VALUE AND 45 HANGER SAFE WORKING LOAD (SWL), ENTER THE APPROPRIATE TABLE 1-1, 1-2, 1-3 OR 1-4 (BASED ON OVERHANG DIMENSION) AND DETERMINE REVISED BRACKET SPACING, S.
7. CONTINUE ITERATIONS OF STEPS 4-6 UNTIL THE REVISED BRACKET SPACING, S, IS THE SAME AS THE PREVIOUS S VALUE.
8. CHECK LUMBER JOIST SPACING: WITH BRACKET SPACING VALUE, S, ROUND THIS VALUE UP TO THE NEAREST VALUE OF ALLOWABLE SPAN LENGTH OF JOIST OF TABLE 3. USING THIS VALUE, ALONG WITH THE AVERAGE OVERHANG SLAB THICKNESS AND THE LUMBER JOIST SIZE, DETERMINE JOIST SPACING FROM TABLE 3. IF NECESSARY, ADJUST LUMBER JOIST SIZE AND/OR JOIST SPACING TO MEET ALLOWABLE SPAN LENGTH OF JOIST.
9. CONVERSELY, IF THE DESIRED JOIST SPACING IS KNOWN, USE THIS ALONG WITH THE AVERAGE OVERHANG SLAB THICKNESS AND THE LUMBER JOIST SIZE TO DETERMINE IF ALLOWABLE SPAN LENGTH OF JOIST IS GREATER THAN THE BRACKET SPACING, S. IF NECESSARY, ADJUST LUMBER JOIST SIZE TO MEET REQUIREMENTS OF ALLOWABLE SPAN LENGTH OF JOIST AND JOIST SPACING.
10. RECORD REMAINING INFORMATION ON "BRIDGE OVERHANG BRACKET SUMMARY" FORM.
11. SUBMIT FORM AND CALCULATIONS FOR REVIEW AND APPROVAL.

TABLE 1-1

(FOR USE ON **UP TO 2'-0" OVERHANG** Ⓛ & 54" HORIZONTAL LEG LENGTH OF THE OVERHANG BRACKET)

AVG. SLAB THICKNESS Ⓣ (In)	BRACKET Ⓚ DIMENSION (In)	SCREED LOAD PER BRACKET									45° HANGER SWL (lbs)
		2500 lbs.	2250 lbs.	2000 lbs.	1750 lbs.	1500 lbs.	1250 lbs.	1000 lbs.	750 lbs.	0 lbs.	
		BRACKET SPACING									
10	30				2'-1"	2'-7"	3'-2"	3'-8"	4'-2"	5'-9"	4000
		3'-6"	4'-0"	4'-5"	4'-9"	5'-1"	5'-3"	5'-5"	5'-7"	6'-7"	6000
	40				2'-1"	2'-7"	3'-2"	3'-8"	4'-2"	5'-9"	4000
		3'-6"	4'-0"	4'-5"	4'-9"	5'-1"	5'-3"	5'-5"	5'-7"	6'-7"	6000
	50				2'-1"	2'-7"	3'-2"	3'-8"	4'-2"	5'-9"	4000
		3'-6"	4'-0"	4'-5"	4'-9"	5'-1"	5'-3"	5'-5"	5'-7"	6'-7"	6000
12	30					2'-4"	2'-10"	3'-4"	3'-9"	5'-2"	4000
		3'-2"	3'-7"	4'-1"	4'-7"	5'-0"	5'-2"	5'-4"	5'-7"	6'-5"	6000
	40					2'-4"	2'-10"	3'-4"	3'-9"	5'-2"	4000
		3'-2"	3'-7"	4'-1"	4'-7"	5'-0"	5'-2"	5'-4"	5'-7"	6'-5"	6000
	50					2'-4"	2'-10"	3'-4"	3'-9"	5'-2"	4000
		3'-2"	3'-7"	4'-1"	4'-7"	5'-0"	5'-2"	5'-4"	5'-7"	6'-5"	6000
14	30					2'-2"	2'-7"	3'-0"	3'-5"	4'-9"	4000
		2'-10"	3'-4"	3'-9"	4'-2"	4'-7"	5'-0"	5'-4"	5'-7"	6'-4"	6000
	40					2'-2"	2'-7"	3'-0"	3'-5"	4'-9"	4000
		2'-10"	3'-4"	3'-9"	4'-2"	4'-7"	5'-0"	5'-4"	5'-7"	6'-4"	6000
	50					2'-2"	2'-7"	3'-0"	3'-5"	4'-9"	4000
		2'-10"	3'-4"	3'-9"	4'-2"	4'-7"	5'-0"	5'-4"	5'-7"	6'-4"	6000
16	30					2'-0"	2'-4"	2'-9"	3'-2"	4'-4"	4000
		2'-8"	3'-0"	3'-5"	3'-10"	4'-3"	4'-7"	5'-0"	5'-5"	6'-3"	6000
	40					2'-0"	2'-4"	2'-9"	3'-2"	4'-4"	4000
		2'-8"	3'-0"	3'-5"	3'-10"	4'-3"	4'-7"	5'-0"	5'-5"	6'-3"	6000
	50					2'-0"	2'-4"	2'-9"	3'-2"	4'-4"	4000
		2'-8"	3'-0"	3'-5"	3'-10"	4'-3"	4'-7"	5'-0"	5'-5"	6'-3"	6000

TABLE 1-2

(FOR USE ON **OVER 2'-0" TO 2'-6" OVERHANG** Ⓛ & 54" HORIZONTAL LEG LENGTH OF THE OVERHANG BRACKET)

AVG. SLAB THICKNESS Ⓣ (In)	BRACKET Ⓚ DIMENSION (In)	SCREED LOAD PER BRACKET									45° HANGER SWL (lbs)
		2500 lbs.	2250 lbs.	2000 lbs.	1750 lbs.	1500 lbs.	1250 lbs.	1000 lbs.	750 lbs.	0 lbs.	
		BRACKET SPACING									
10	30					2'-4"	2'-9"	3'-3"	3'-8"	5'-1"	4000
		3'-1"	3'-6"	4'-0"	4'-5"	4'-11"	5'-3"	5'-5"	5'-7"	6'-7"	6000
	40					2'-4"	2'-9"	3'-3"	3'-8"	5'-1"	4000
		3'-1"	3'-6"	4'-0"	4'-5"	4'-11"	5'-3"	5'-5"	5'-7"	6'-7"	6000
	50					2'-4"	2'-9"	3'-3"	3'-8"	5'-1"	4000
		3'-1"	3'-6"	4'-0"	4'-5"	4'-11"	5'-3"	5'-5"	5'-7"	6'-7"	6000
12	30					2'-1"	2'-6"	2'-11"	3'-4"	4'-6"	4000
		2'-9"	3'-2"	3'-7"	4'-0"	4'-5"	4'-10"	5'-3"	5'-7"	6'-5"	6000
	40					2'-1"	2'-6"	2'-11"	3'-4"	4'-6"	4000
		2'-9"	3'-2"	3'-7"	4'-0"	4'-5"	4'-10"	5'-3"	5'-7"	6'-5"	6000
	50					2'-1"	2'-6"	2'-11"	3'-4"	4'-6"	4000
		2'-9"	3'-2"	3'-7"	4'-0"	4'-5"	4'-10"	5'-3"	5'-7"	6'-5"	6000
14	30						2'-3"	2'-7"	3'-0"	4'-1"	4000
		2'-6"	2'-10"	3'-3"	3'-7"	4'-0"	4'-4"	4'-9"	5'-1"	6'-3"	6000
	40						2'-3"	2'-7"	3'-0"	4'-1"	4000
		2'-6"	2'-10"	3'-3"	3'-7"	4'-0"	4'-4"	4'-9"	5'-1"	6'-3"	6000
	50						2'-3"	2'-7"	3'-0"	4'-1"	4000
		2'-6"	2'-10"	3'-3"	3'-7"	4'-0"	4'-4"	4'-9"	5'-1"	6'-3"	6000
16	30						2'-1"	2'-5"	2'-9"	3'-9"	4000
		2'-3"	2'-7"	2'-11"	3'-4"	3'-8"	4'-0"	4'-4"	4'-8"	5'-8"	6000
	40						2'-1"	2'-5"	2'-9"	3'-9"	4000
		2'-3"	2'-7"	2'-11"	3'-4"	3'-8"	4'-0"	4'-4"	4'-8"	5'-8"	6000
	50						2'-1"	2'-5"	2'-9"	3'-9"	4000
		2'-3"	2'-7"	2'-11"	3'-4"	3'-8"	4'-0"	4'-4"	4'-8"	5'-8"	6000

TABLE 1-3

(FOR USE ON **OVER 2'-6" TO 3'-0" OVERHANG** Ⓛ & 54" HORIZONTAL LEG LENGTH OF THE OVERHANG BRACKET)

AVG. SLAB THICKNESS Ⓣ (In)	BRACKET Ⓚ DIMENSION (In)	SCREED LOAD PER BRACKET									45° HANGER SWL (lbs)
		2500 lbs.	2250 lbs.	2000 lbs.	1750 lbs.	1500 lbs.	1250 lbs.	1000 lbs.	750 lbs.	0 lbs.	
		BRACKET SPACING									
10	30					2'-1"	2'-6"	2'-11"	3'-4"	4'-6"	4000
						4'-5"	4'-10"	5'-3"	5'-7"	6'-7"	6000
	40					2'-1"	2'-6"	2'-11"	3'-4"	4'-6"	4000
		2'-9"	3'-2"	3'-7"	4'-0"	4'-5"	4'-10"	5'-3"	5'-7"	6'-7"	6000
	50					2'-1"	2'-6"	2'-11"	3'-4"	4'-6"	4000
		2'-9"	3'-2"	3'-7"	4'-0"	4'-5"	4'-10"	5'-3"	5'-7"	6'-7"	6000
12	30						2'-2"	2'-7"	2'-11"	4'-0"	4000
						3'-11"	4'-3"	4'-8"	5'-0"	6'-1"	6000
	40						2'-2"	2'-7"	2'-11"	4'-0"	4000
		2'-5"	2'-10"	3'-2"	3'-6"	3'-11"	4'-3"	4'-8"	5'-0"	6'-1"	6000
	50						2'-2"	2'-7"	2'-11"	4'-0"	4000
		2'-5"	2'-10"	3'-2"	3'-6"	3'-11"	4'-3"	4'-8"	5'-0"	6'-1"	6000
14	30						2'-0"	2'-4"	2'-8"	3'-8"	4000
					3'-2"	3'-6"	3'-10"	4'-2"	4'-6"	5'-6"	6000
	40						2'-0"	2'-4"	2'-8"	3'-8"	4000
		2'-2"	2'-6"	2'-10"	3'-2"	3'-6"	3'-10"	4'-2"	4'-6"	5'-6"	6000
	50						2'-0"	2'-4"	2'-8"	3'-8"	4000
		2'-2"	2'-6"	2'-10"	3'-2"	3'-6"	3'-10"	4'-2"	4'-6"	5'-6"	6000
16	30							2'-1"	2'-5"	3'-4"	4000
					2'-11"	3'-2"	3'-6"	3'-10"	4'-1"	5'-0"	6000
	40							2'-1"	2'-5"	3'-4"	4000
		2'-0"	2'-4"	2'-7"	2'-11"	3'-2"	3'-6"	3'-10"	4'-1"	5'-0"	6000
	50							2'-1"	2'-5"	3'-4"	4000
		2'-0"	2'-4"	2'-7"	2'-11"	3'-2"	3'-6"	3'-10"	4'-1"	5'-0"	6000

TABLE 1-4

(FOR USE ON **OVER 3'-0" TO 3'-6" OVERHANG** Ⓛ & 54" HORIZONTAL LEG LENGTH OF THE OVERHANG BRACKET)

AVG. SLAB THICKNESS Ⓣ (In)	BRACKET Ⓚ DIMENSION (In)	SCREED LOAD PER BRACKET									45° HANGER SWL (lbs)
		2500 lbs.	2250 lbs.	2000 lbs.	1750 lbs.	1500 lbs.	1250 lbs.	1000 lbs.	750 lbs.	0 lbs.	
		BRACKET SPACING									
10	30						2'-1"	2'-5"	2'-9"	3'-10"	4000
						2'-3"	2'-11"	3'-7"	4'-3"	5'-9"	6000
	40						2'-1"	2'-5"	2'-9"	3'-10"	4000
				2'-4"	3'-0"	3'-7"	4'-1"	4'-5"	4'-9"	5'-9"	6000
	50						2'-1"	2'-5"	2'-9"	3'-10"	4000
		2'-4"	2'-8"	3'-0"	3'-4"	3'-8"	4'-1"	4'-5"	4'-9"	5'-9"	6000
12	30							2'-2"	2'-6"	3'-5"	4000
						2'-1"	2'-8"	3'-4"	3'-11"	5'-2"	6000
	40							2'-2"	2'-6"	3'-5"	4000
				2'-2"	2'-9"	3'-4"	3'-7"	3'-11"	4'-3"	5'-2"	6000
	50							2'-2"	2'-6"	3'-5"	4000
		2'-1"	2'-4"	2'-8"	3'-0"	3'-4"	3'-7"	3'-11"	4'-3"	5'-2"	6000
14	30								2'-3"	3'-1"	4000
						2'-0"	2'-6"	3'-1"	3'-8"	4'-8"	6000
	40								2'-3"	3'-1"	4000
				2'-0"	2'-7"	3'-0"	3'-3"	3'-6"	3'-10"	4'-8"	6000
	50								2'-3"	3'-1"	4000
			2'-2"	2'-5"	2'-8"	3'-0"	3'-3"	3'-6"	3'-10"	4'-8"	6000
16	30								2'-0"	2'-9"	4000
							2'-4"	2'-10"	3'-5"	4'-3"	6000
	40								2'-0"	2'-9"	4000
					2'-5"	2'-8"	2'-11"	3'-3"	3'-6"	4'-3"	6000
	50								2'-0"	2'-9"	4000
				2'-2"	2'-5"	2'-8"	2'-11"	3'-3"	3'-6"	4'-3"	6000

DEFINITIONS

SLPB = SCREED LOAD PER BRACKET (R x W)
R = SCREED LOAD FACTOR, OBTAINED FROM TABLE 2
W = WHEEL LOAD
S = BRACKET SPACING
T = AVERAGE SLAB THICKNESS
SWL = SAFE WORKING LOAD
K = DIMENSION DEFINED ON "BRIDGE OVERHANG BRACKET SUMMARY" ON SHEET 2
L = OVERHANG MEASURED FROM EDGE OF TOP FLANGE TO EDGE OF SUPERSTRUCTURE

PROJECT NO. R-2518B
YANCEY COUNTY
STATION: 175+52.267-L-

SHEET 1 OF 3

STATE OF NORTH CAROLINA
DEPARTMENT OF TRANSPORTATION
RALEIGH

STANDARD OVERHANG FALSEWORK

AASHTO TYPES
III, IV, V, AND VI

RIGHT LANE

NORTH CAROLINA PROFESSIONAL SEAL 18788 ENGINEER CHANG-CHUAN VICTOR CHAO

Chang-Chuan Victor Chao
2-19-2008

REVISIONS								SHEET NO.
NO.	BY:	DATE:	NO.	BY:	DATE:			S-72
1			3					TOTAL SHEETS
2			4					154

ASSEMBLED BY:	DATE:
CHECKED BY:	DATE:
DRAWN BY: R. WRIGHT 06/04	REV.
CHECKED BY: C. V. CHAO 06/04	

18-FEB-2008 15:41
d:\wdlr\victor\overhangfalsework\tiebar&strut\r-2518b-1&2_type_III\r2518bstr2overhangsheets.dgn
vchao

BRIDGE OVERHANG BRACKET SUMMARY

TOTAL SCREED WEIGHT = _____ LBS.
NUMBER OF SCREED WHEELS = _____
SCREED WHEEL LOAD (W) = _____ LBS.
SCREED LOAD PER BRACKET = _____ LBS.

PROJECT No. : _____
COUNTY : _____
STATION : _____
DESCRIPTION : _____
_____
DATE : _____
DESIGN BY : _____
CHECK BY : _____

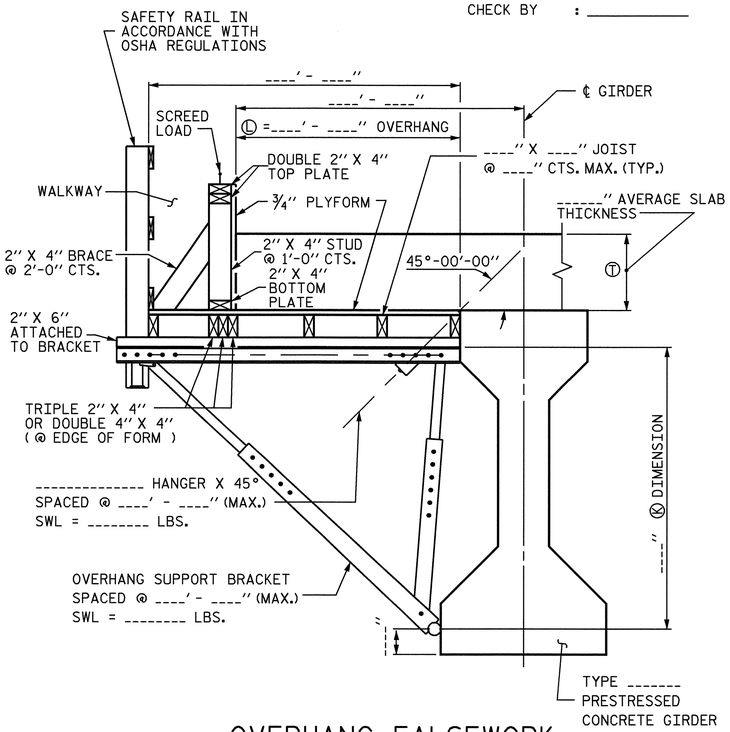

OVERHANG FALSEWORK

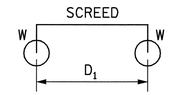

4-WHEEL MACHINE

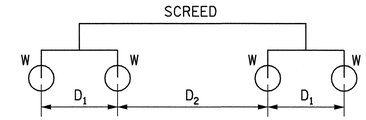

8-WHEEL MACHINE

4 WHEEL MACHINE	
S/D1	R
<= 1.0	1.00
1.1	1.09
1.2	1.17
1.3	1.23
1.4	1.29
1.5	1.33
1.6	1.38
1.7	1.41
1.8	1.44
1.9	1.47
2.0	1.50
2.2	1.55
2.4	1.58
2.6	1.62
2.8	1.64
3.0	1.67
3.5	1.71
4.0	1.75

TABLE 2: SCREED LOAD FACTOR "R"

		THE SCREED LOAD FACTOR R (FOR 8 WHEEL MACHINE)																	
		S/D_2																	
		<= 1.0	1.1	1.2	1.3	1.4	1.5	1.6	1.7	1.8	1.9	2.0	2.2	2.4	2.6	2.8	3.0	3.5	4.0
S/D_1	<= 1.0	1.00	1.09	1.17	1.23	1.29	1.33	1.38	1.41	1.44	1.47	1.50	1.55	1.58	1.62	1.64	1.67	1.71	1.75
	1.1	1.09	1.18	1.26	1.32	1.38	1.42	1.47	1.50	1.54	1.56	1.59	1.64	1.67	1.71	1.73	1.76	1.81	1.84
	1.2	1.17	1.26	1.33	1.40	1.45	1.50	1.54	1.58	1.61	1.64	1.67	1.71	1.75	1.78	1.81	1.83	1.88	1.92
	1.3	1.23	1.32	1.40	1.46	1.52	1.56	1.61	1.64	1.68	1.70	1.73	1.78	1.81	1.85	1.87	1.90	1.95	1.98
	1.4	1.29	1.38	1.45	1.52	1.57	1.62	1.66	1.70	1.73	1.76	1.79	1.83	1.87	1.90	1.93	1.95	2.00	2.07
	1.5	1.33	1.42	1.50	1.56	1.62	1.67	1.71	1.75	1.78	1.81	1.83	1.88	1.92	1.95	1.98	2.00	2.10	2.17
	1.6	1.38	1.47	1.54	1.61	1.66	1.71	1.75	1.79	1.82	1.85	1.88	1.92	1.96	1.99	2.04	2.08	2.18	2.25
	1.7	1.41	1.50	1.58	1.64	1.70	1.75	1.79	1.82	1.86	1.89	1.91	1.96	2.00	2.05	2.11	2.16	2.25	2.32
	1.8	1.44	1.54	1.61	1.68	1.73	1.78	1.82	1.86	1.89	1.92	1.94	1.99	2.06	2.12	2.17	2.22	2.32	2.39
	1.9	1.47	1.56	1.64	1.70	1.76	1.81	1.85	1.89	1.92	1.95	1.97	2.04	2.11	2.18	2.23	2.28	2.38	2.45
	2.0	1.50	1.59	1.67	1.73	1.79	1.83	1.88	1.91	1.94	1.97	2.00	2.09	2.17	2.23	2.29	2.33	2.43	2.50
	2.2	1.55	1.64	1.71	1.78	1.83	1.88	1.92	1.96	1.99	2.04	2.09	2.18	2.26	2.32	2.38	2.42	2.52	2.59
	2.4	1.58	1.67	1.75	1.81	1.87	1.92	1.96	2.00	2.06	2.11	2.17	2.26	2.33	2.40	2.45	2.50	2.60	2.67
	2.6	1.62	1.71	1.78	1.85	1.90	1.95	1.99	2.05	2.12	2.18	2.23	2.32	2.40	2.46	2.52	2.56	2.66	2.73
	2.8	1.64	1.73	1.81	1.87	1.93	1.98	2.04	2.11	2.17	2.23	2.29	2.38	2.45	2.52	2.57	2.62	2.71	2.79
	3.0	1.67	1.76	1.83	1.90	1.95	2.00	2.08	2.16	2.22	2.28	2.33	2.42	2.50	2.56	2.62	2.67	2.76	2.83
	3.5	1.71	1.81	1.88	1.95	2.00	2.10	2.18	2.25	2.32	2.38	2.43	2.52	2.60	2.66	2.71	2.76	2.86	2.93
	4.0	1.75	1.84	1.92	1.98	2.07	2.17	2.25	2.32	2.39	2.45	2.50	2.59	2.67	2.73	2.79	2.83	2.93	3.00

TABLE 3: ALLOWABLE SPAN LENGTH OF JOISTS AND JOIST SPACINGS

AVG. SLAB THICKNESS Ⓣ (IN)	LUMBER JOIST SIZE (IN X IN)	JOIST SPACINGS			
		15 IN	12 IN	10 IN	8 IN
		THE ALLOWABLE SPAN LENGTH OF JOISTS			
10	2 X 4	———	4' - 6"	4' - 9"	5' - 0"
	4 X 4	5' - 9"	6' - 3"	6' - 6"	6' - 7"
12	2 X 4	———	4' - 3"	4' - 9"	5' - 0"
	4 X 4	5' - 3"	6' - 0"	6' - 3"	6' - 5"
14	2 X 4	———	4' - 0"	4' - 6"	5' - 0"
	4 X 4	———	5' - 6"	6' - 0"	6' - 4"
16	2 X 4	———	4' - 0"	4' - 3"	4' - 9"
	4 X 4	———	5' - 3"	5' - 9"	6' - 3"

NOTES

DESIGN INCLUDES CONSTRUCTION LIVE LOAD 20 PSF ON THE AREA SUPPORTED AND 75 PLF AT THE OUTSIDE DECK OF OVERHANGS.

REQUIRED MINIMUM DIAGONAL LEG CAPACITY: 3600 LB WORKING LOAD

THE CONTRACTOR HAS THE OPTION OF SUBMITTING HIS OWN DESIGN FOR OVERHANG FALSEWORK IN ACCORDANCE WITH THE SPECIAL PROVISIONS.

SUBMITTALS UTILIZING THE INSTRUCTIONS AND PROCEDURES DESCRIBED ON SHEET 1 OF 3 SHALL BE IN ACCORDANCE WITH THE APPLICABLE SECTIONS OF THE SPECIFICATIONS AND SPECIAL PROVISIONS, EXCEPT THAT CALCULATIONS FOR OVERHANG FALSEWORK NEED NOT BE SEALED BY A REGISTERED ENGINEER.

FOR OVERHANG FALSEWORK BRACING DESIGN, SEE SHEET 3 OF 3.

PROJECT NO. R-2518B
YANCEY COUNTY
STATION: 175+52.267-L-

SHEET 2 OF 3

STATE OF NORTH CAROLINA
DEPARTMENT OF TRANSPORTATION
RALEIGH

STANDARD OVERHANG FALSEWORK

AASHTO TYPES
III, IV, V, AND VI

RIGHT LANE

NORTH CAROLINA PROFESSIONAL SEAL 18788 ENGINEER CHANG-CHUAN VICTOR CHAO

Chang-Chuan Victor Chao
2-19-2008

ASSEMBLED BY:	DATE:
CHECKED BY:	DATE:
DRAWN BY: R. WRIGHT 06/04	REV.
CHECKED BY: C. V. CHAO 06/04	

REVISIONS						SHEET NO.
NO.	BY:	DATE:	NO.	BY:	DATE:	S-73
1			3			TOTAL SHEETS
2			4			154

18-FEB-2008 15:42
d:\wdlr\victor\overhangfalsework\tiebar&strut\r-2518b-1&2_type_III\r2518bstr2overhangsheets.dgn
vchao

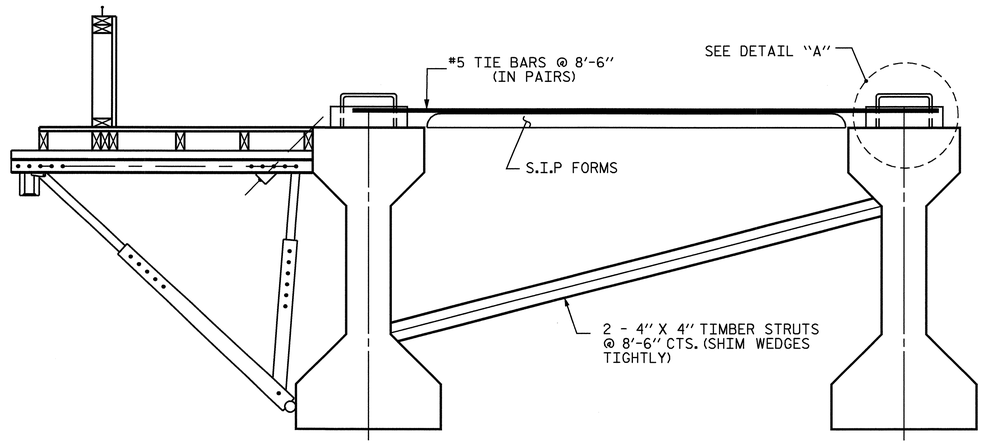

EXTERIOR GIRDER INTERIOR GIRDER

DETAIL OF REQUIRED OVERHANG FALSEWORK BRACING SYSTEM

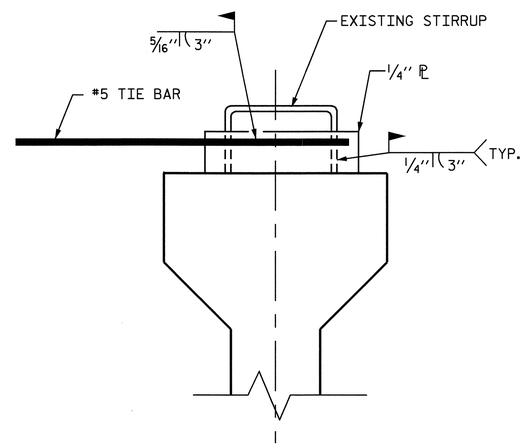

DETAIL "A"

NOTES:

EACH #5 TIE BAR SHALL BE WELDED TO ONE STIRRUP LOOP AS SHOWN IN DETAIL "A". #5 TIE BARS SHALL BE WELDED TO TWO ADJACENT STIRRUPS OF THE EXTERIOR GIRDER AND THE ADJACENT INTERIOR GIRDER BETWEEN PERMANENT DIAPHRAGMS. WELD STEEL PLATES IN BETWEEN THE TIE BARS AND THE STIRRUP LOOP. WELDING TWO TIE BARS TO THE SAME STIRRUP LOOP SHALL NOT BE PERMITTED.

MAXIMUM SPACING BETWEEN THE BRACING (TIE BARS-TIMBER STRUT) IS 8'-6" CTS. #5 TIE BARS SHALL BE LOCATED OVER A TIMBER STRUT.

INSTALL TIE BARS AND TIMBER STRUTS PRIOR TO PLACEMENT OF CONCRETE OR SCREED WEIGHT ONTO THE OVERHANG FALSEWORK.

PROJECT NO. R-2518B
YANCEY COUNTY
STATION: 175+52.267-L-

SHEET 3 OF 3

STATE OF NORTH CAROLINA
DEPARTMENT OF TRANSPORTATION
RALEIGH

STANDARD OVERHANG FALSEWORK

AASHTO TYPES
III, IV, V, AND VI

RIGHT LANE

NORTH CAROLINA PROFESSIONAL SEAL 18788 ENGINEER CHANG-CHUAN VICTOR CHAO

Chang-Chuan Victor Chao
2-19-2008

REVISIONS						SHEET NO.
NO.	BY:	DATE:	NO.	BY:	DATE:	S-74
1			3			TOTAL SHEETS
2			4			154

DRAWN BY: R. WRIGHT 06/04 DATE :
CHECKED BY: C. V. CHAO 06/04 DATE :

18-FEB-2008 15:43
d:\wdlr\victor\overhangfalsework\tiebar&strut\r-2518b-1&2_type_III\r2518bstr2overhangsheets.dgn
vchao

STR #2 OF3

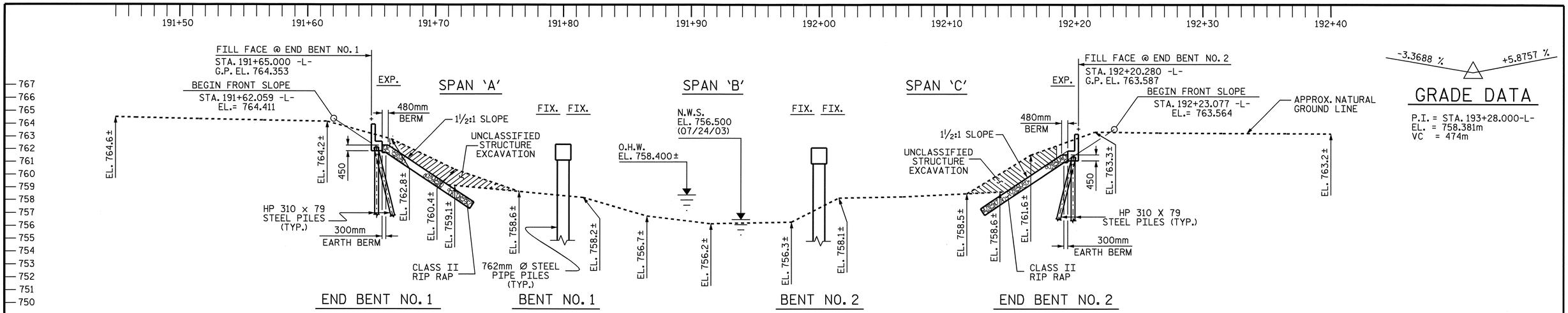

SECTION ALONG RIGHT LANE CONTROL LINE

SECTIONS AT END BENTS AND BENTS ARE AT RIGHT ANGLES

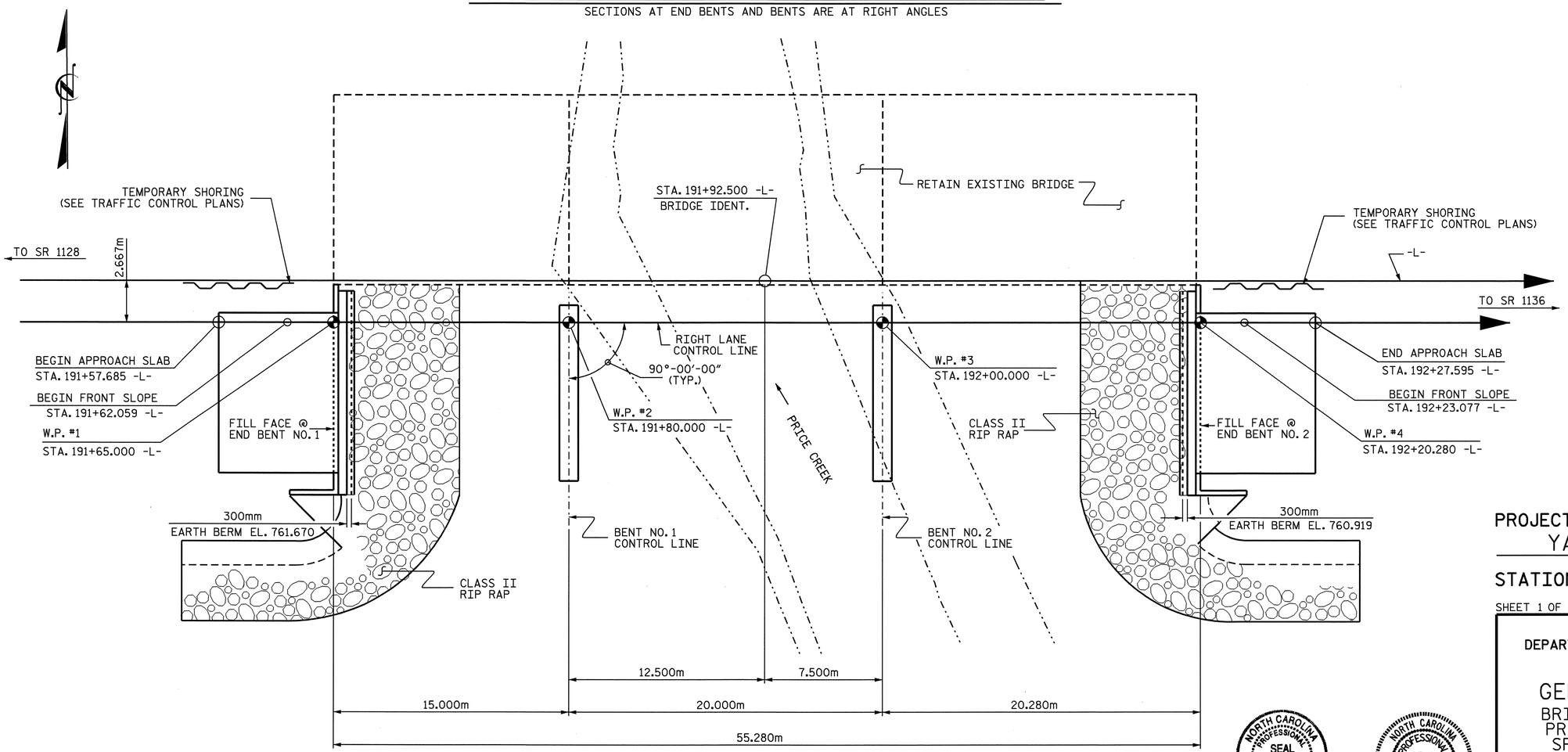

PLAN

(PILES NOT SHOWN IN PLAN VEIW)

METRIC

PROJECT NO. R-2518B
YANCEY COUNTY
STATION: 191+92.500 -L-

SHEET 1 OF 3 BRIDGE NO. 309

STATE OF NORTH CAROLINA
DEPARTMENT OF TRANSPORTATION
RALEIGH

GENERAL DRAWING

BRIDGE ON US 19 OVER PRICE CREEK BETWEEN SR 1128 AND SR 1136

NORTH CAROLINA PROFESSIONAL SEAL 13014 ENGINEER QUANG H. NGUYEN
4-16-08

NORTH CAROLINA PROFESSIONAL SEAL 20125 ENGINEER MARSHALL G. CHEEK, JR.
4-7-08

REVISIONS								SHEET NO.
NO.	BY:	DATE:	NO.	BY:	DATE:			S-75
1			3					TOTAL SHEETS
2			4					154

DRAWN BY : A.L.FIGUEROA DATE : 01-23-08
CHECKED BY : M.G. CHEEK DATE : 01-31-08

04-APR-2008 11:40
r:\structures\finalplans\Str #3\r2518b_sd_gd_str#3.dgn
lmurphy

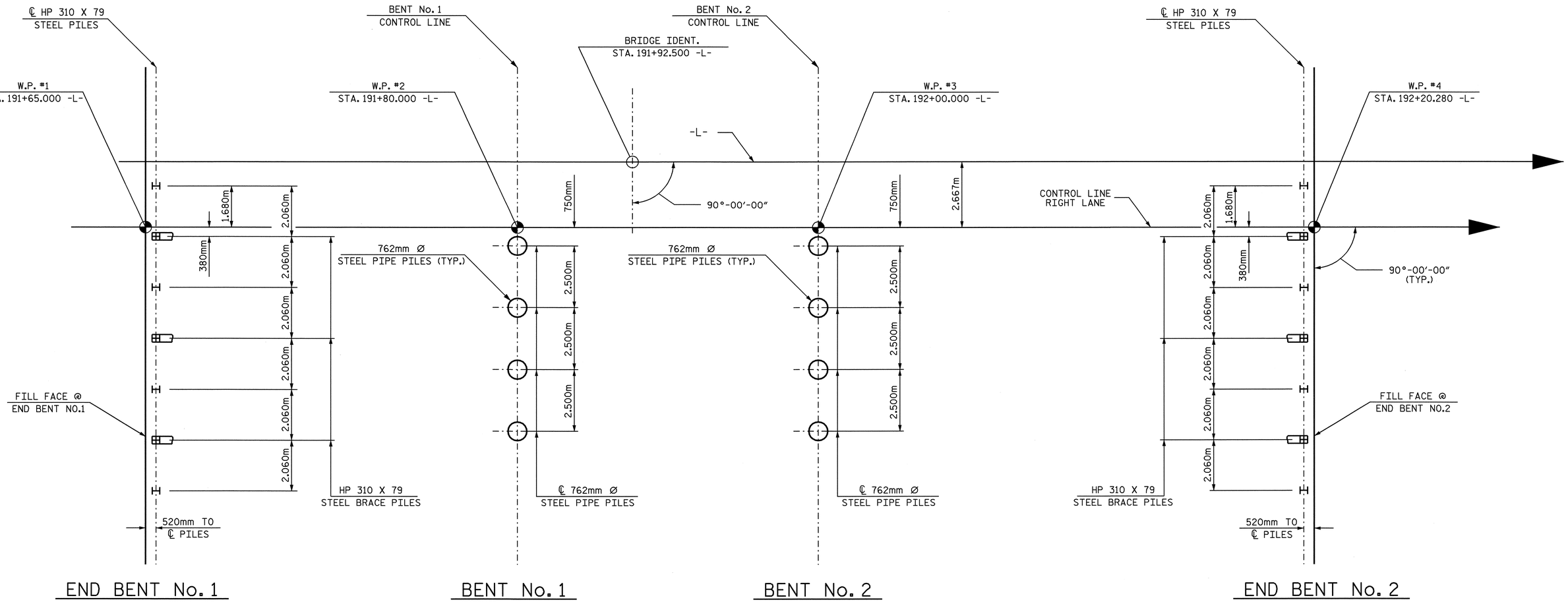

FOUNDATION LAYOUT

DIMENSIONS LOCATING PILES ARE SHOWN TO THE PILE CENTERLINE AT THE BOTTOM OF THE CAP. END BENT BRACE PILES ARE BATTERED 250:1000.

NOTES

DRIVE PILES AT END BENT NO.1 TO A REQUIRED BEARING CAPACITY OF 1,080 kN PER PILE. THE REQUIRED BEARING CAPACITY IS EQUAL TO THE ALLOWABLE BEARING CAPACITY WITH A MINIMUM FACTOR OF SAFETY OF TWO.

THE ALLOWABLE BEARING CAPACITY FOR PILES AT END BENT NO. 1 IS 540 kN PER PILE.

DRIVE PILES AT BENT NO. 1 TO A REQUIRED BEARING CAPACITY OF 3,000 kN PER PILE. THE REQUIRED BEARING CAPACITY IS EQUAL TO THE ALLOWABLE BEARING CAPACITY WITH A MINIMUM FACTOR OF SAFETY OF TWO.

THE ALLOWABLE BEARING CAPACITY FOR PILES AT BENT NO. 1 IS 1,500 kN PER PILE.

PIPE PILE PLATES ARE NOT REQUIRED FOR PILES AT BENT NO.1.

THE SCOUR CRITICAL ELEVATION FOR BENT NO.1 IS ELEVATION 751.0. SCOUR CRITICAL ELEVATIONS ARE USED TO MONITOR POSSIBLE SCOUR PROBLEMS DURING THE LIFE OF THE STRUCTURE.

DRIVE PILES AT BENT NO. 2 TO A REQUIRED BEARING CAPACITY OF 3,000 kN PER PILE. THE REQUIRED BEARING CAPACITY IS EQUAL TO THE ALLOWABLE BEARING CAPACITY WITH A MINIMUM FACTOR OF SAFETY OF TWO.

THE ALLOWABLE BEARING CAPACITY FOR PILES AT BENT NO. 2 IS 1,500 kN PER PILE.

PIPE PILE PLATES ARE NOT REQUIRED FOR PILES AT BENT NO.2.

THE SCOUR CRITICAL ELEVATION FOR BENT NO.2 IS ELEVATION 749.0. SCOUR CRITICAL ELEVATIONS ARE USED TO MONITOR POSSIBLE SCOUR PROBLEMS DURING THE LIFE OF THE STRUCTURE.

DRIVE PILES AT END BENT NO.2 TO A REQUIRED BEARING CAPACITY OF 1,080 kN PER PILE. THE REQUIRED BEARING CAPACITY IS EQUAL TO THE ALLOWABLE BEARING CAPACITY WITH A MINIMUM FACTOR OF SAFETY OF TWO.

THE ALLOWABLE BEARING CAPACITY FOR PILES AT END BENT NO.2 IS 540 kN PER PILE.

PROJECT NO. R-2518B
YANCEY COUNTY
STATION: 191+92.500 -L-

SHEET 2 OF 3

STATE OF NORTH CAROLINA
DEPARTMENT OF TRANSPORTATION
RALEIGH

GENERAL DRAWING
BRIDGE ON US 19 OVER PRICE CREEK BETWEEN SR 1128 AND SR 1136

NORTH CAROLINA PROFESSIONAL SEAL 20125 ENGINEER MARSHALL G. CHEEK, JR.
4-7-08

REVISIONS						SHEET NO.
NO.	BY:	DATE:	NO.	BY:	DATE:	S-76
2			3			TOTAL SHEETS
			4			154

STR. #3

DRAWN BY : A.L. FIGUEROA DATE : 01-22-08
CHECKED BY : M.G. CHEEK DATE : 01-23-08

04-APR-2008 11:43
r:\structures\finalplans\Str #3\R2518B_sd_FL_STR#3.dgn
lmurphy

BENCHMARK #14 : SPIKE IN 400mm ELM 74.856 RT. OF STA. 189+01.530 -L- EL. 777.134

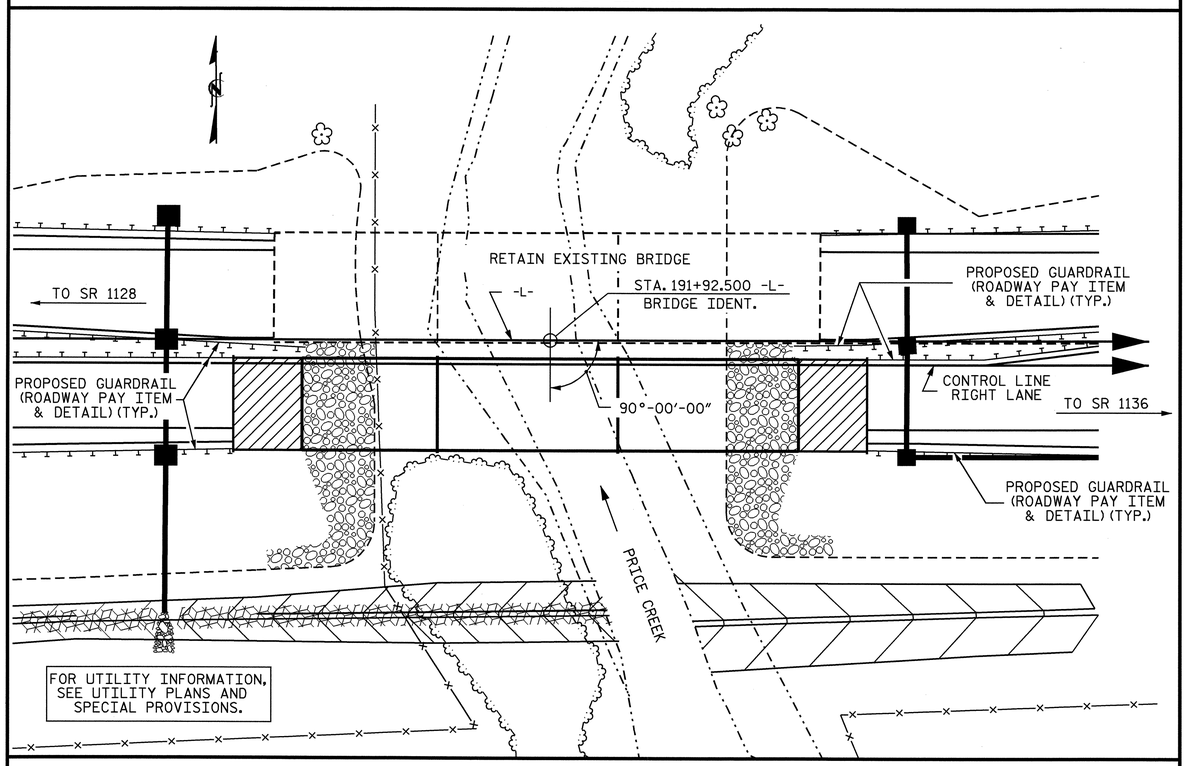

LOCATION SKETCH

NOTES

ALL DIMENSIONS ARE IN MILLIMETERS UNLESS OTHERWISE NOTED.

ALL ELEVATIONS ARE IN METERS.

ASSUMED LIVE LOAD = MS 18 OR ALTERNATE LOADING, EXCEPT THAT THE GIRDERS HAVE BEEN DESIGNED FOR MS 22.5.

FOR OTHER DESIGN DATA AND GENERAL NOTES, SEE SHEET SNSM.

FOR EROSION CONTROL MEASURES, SEE EROSION CONTROL PLANS.

THIS BRIDGE HAS BEEN DESIGNED BY THE STRENGTH DESIGN METHOD AS SPECIFIED IN AASHTO STANDARD SPECIFICATIONS.

PRESTRESSED CONCRETE DECK PANELS MAY BE USED IN LIEU OF METAL STAY-IN-PLACE FORMS IN ACCORDANCE WITH ARTICLE 420-3 OF THE STANDARD SPECIFICATIONS.

REMOVABLE FORMS MAY BE USED IN LIEU OF METAL STAY-IN-PLACE FORMS IN ACCORDANCE WITH ARTICLE 420-3 OF THE STANDARD SPECIFICATIONS.

THE CLASS AA CONCRETE IN THE BRIDGE DECK SHALL CONTAIN FLY ASH OR GROUND GRANULATED BLAST FURNACE SLAG AT THE SUBSTITUTION RATE SPECIFIED IN ARTICLE 1024-1 AND IN ACCORDANCE WITH THE ARTICLE 1024-5 AND 1024-6 OF THE STANDARD SPECIFICATIONS. NO PAYMENT WILL BE MADE FOR THIS SUBSTITUTION AS IT IS CONSIDERED INCIDENTAL TO THE COST OF THE REINFORCED CONCRETE DECK SLAB.

AT THE CONTRACTOR'S OPTION, AND UPON REMOVAL OF THE CAUSEWAY, THE CLASS II RIP RAP USED IN THE CAUSEWAY MAY BE PLACE AS RIP RAP SLOPE PROTECTION. SEE SPECIAL PROVISIONS FOR CONSTRUCTION, MAINTENANCE AND REMOVAL OF TEMPORARY ACCESS.

THE MATERIAL SHOWN IN THE CROSS-HATCHED AREA (SEE SHEET 1 OF 3) SHALL BE EXCAVATED FOR A DISTANCE OF APPROXIMATELY 20m TO THE RIGHT OF -L- AS DIRECTED BY THE ENGINEER. THE ESTIMATED QUANTITY IS LESS THAN 500 CUBIC METERS. THIS WORK WILL BE PAID FOR AT THE CONTRACT LUMP SUM PRICE FOR UNCLASSIFIED STRUCTURE EXCAVATION.

THIS STRUCTURE HAS BEEN DESIGNED IN ACCORDANCE WITH HEC 18, "EVALUATING SCOUR AT BRIDGES", NOVEMBER, 1995.

THIS BRIDGE HAS BEEN DESIGNED IN ACCORDANCE WITH THE REQUIREMENTS OF THE AASHTO STANDARD SPECIFICATIONS FOR SEISMIC DESIGN OF HIGHWAY BRIDGES FOR SEISMIC PERFORMANCE CATEGORY B.

TEMPORARY SHORING WILL BE REQUIRED IN THE AREAS INDICATED IN THE PLAN VIEW. SEE SPECIAL PROVISIONS FOR TEMPORARY SHORING.

FOR LIMITS OF TEMPORARY SHORING FOR MAINTENANCE OF TRAFFIC, SEE TRAFFIC CONTROL PLANS. FOR PAY ITEM FOR TEMPORARY SHORING FOR MAINTENANCE OF TRAFFIC, SEE ROADWAY PLANS.

STEEL SHEET PILING REQUIRED FOR SHORING SHALL BE HOT ROLLED.

NEEDLE BEAMS WILL NOT BE ALLOWED UNLESS OTHERWISE CALLED FOR THE PLANS OR APPROVED BY THE ENGINEER.

FOR SUBMITTAL OF WORKING DRAWINGS, SEE SPECIAL PROVISIONS.

FOR METRIC STRUCTURAL STEEL, SEE SPECIAL PROVISIONS.

FOR FALSEWORK AND FORMWORK, SEE SPECIAL PROVISIONS.

FOR PRESTRESSED CONCRETE MEMBERS, SEE SPECIAL PROVISIONS.

FOR GROUT FOR STRUCTURES, SEE SPECIAL PROVISIONS.

FOR CRANE SAFETY, SEE SPECIAL PROVISIONS.

HYDRAULIC DATA

DESIGN DISCHARGE	=	123 m^3/S
FREQUENCY OF DESIGN FLOOD	=	50 YRS.
DESIGN HIGH WATER ELEVATION	=	759.56
DRAINAGE AREA	=	58 SQ. km.
BASIC DISCHARGE (Q100)	=	147 m^3/S
BASIC HIGH WATER ELEVATION	=	759.790

OVERTOPPING FLOOD DATA

OVERTOPPING DISCHARGE	=	655± m^3/S
FREQUENCY OF OVERTOPPING FLOOD	=	500+ YRS.
OVERTOPPING FLOOD ELEVATION	=	763.460

TOTAL BILL OF MATERIAL

	CONSTRUCTION, MAINTENANCE, AND REMOVAL OF TEMPORARY ACCESS	UNCLASSIFIED STRUCTURE EXCAVATION	REINFORCED CONCRETE DECK SLAB	GROOVING BRIDGE FLOORS	CLASS A CONCRETE	BRIDGE APPROACH SLABS	REINFORCING STEEL	1143mm PRESTRESSED CONCRETE GIRDERS		HP 310 X 79 STEEL PILES		PP 762 X 12.7 GALVANIZED STEEL PILES		CONCRETE BARRIER RAIL	RIP RAP CLASS II (600mm THICK)	FILTER FABRIC FOR DRAINAGE	ELASTOMERIC BEARINGS	EVAZOTE JOINT SEALS
	LUMP SUM	LUMP SUM	SQ. METERS	SQ. METERS	CU. METERS	LUMP SUM	kg	NO.	METERS	NO.	METERS	NO.	METERS	METERS	METRIC TONS	SQ. METERS	LUMP SUM	LUMP SUM
SUPERSTRUCTURE	LUMP SUM		611.5	643.0		LUMP SUM		12	215.760					109.290			LUMP SUM	LUMP SUM
END BENT NO. 1					17.3		1666			7	147				208	213		
BENT NO.1					17.4		1105					4	64.8					
BENT NO. 2					17.4		1105					4	81.6					
END BENT NO. 2					16.9		1664			7	182				214	219		
TOTAL	LUMP SUM	LUMP SUM	611.5	643.0	69.0	LUMP SUM	5540	12	215.760	14	329	8	146.4	109.290	422	432	LUMP SUM	LUMP SUM

PROJECT NO. R-2518B
YANCEY COUNTY
STATION: 191+92.500 -L-

SHEET 3 OF 3

STATE OF NORTH CAROLINA
DEPARTMENT OF TRANSPORTATION
RALEIGH

GENERAL DRAWING
BRIDGE ON US 19 OVER PRICE CREEK BETWEEN SR 1128 AND SR 1136

NORTH CAROLINA PROFESSIONAL SEAL 20125 ENGINEER MARSHALL G. CHEEK, JR.
4-7-08

REVISIONS						SHEET NO.
NO.	BY:	DATE:	NO.	BY:	DATE:	S-77
1			3			TOTAL SHEETS
2			4			154

DRAWN BY : A.L. FIGUEROA DATE : 01-29-08
CHECKED BY : M.G. CHEEK DATE : 01-31-08

04-APR-2008 14:12
r:\structures\finalplans\Str #3\r2518b_sd_gd_str#3.dgn
lmurphy

STR #3

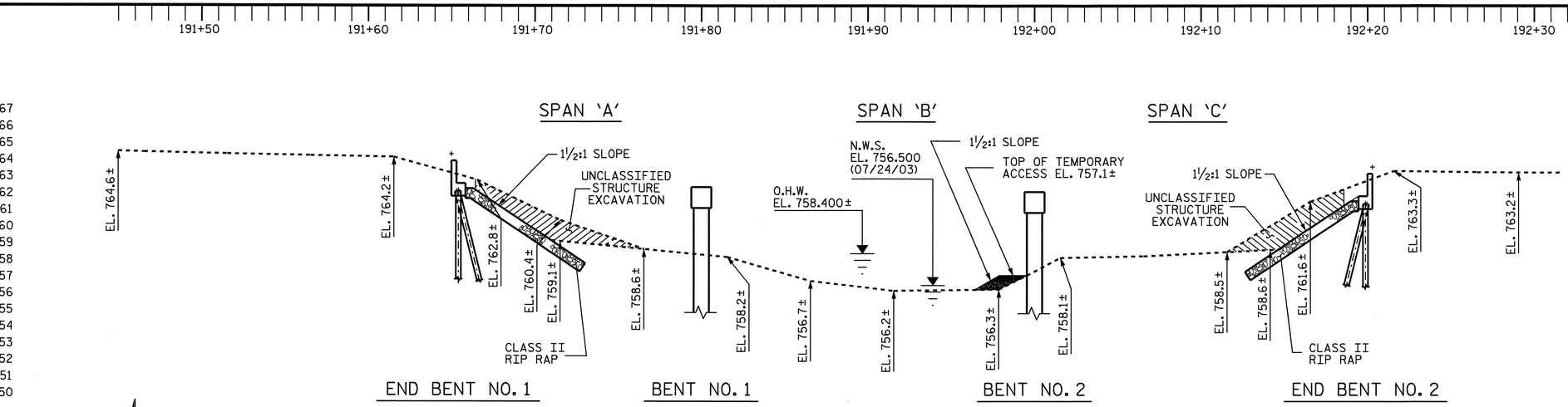

SECTION ALONG RIGHT LANE CONTROL LINE

NOTES

FOR CONSTRUCTION, MAINTENANCE AND REMOVAL OF TEMPORARY ACCESS, SEE SPECIAL PROVISIONS.

ALL GRADING REQUIRED FOR ACCESS TO THE TEMPORARY ACCESS SHALL BE INCLUDED IN THE LUMP SUM BID PRICE FOR "CONSTRUCTION, MAINTENANCE, AND AND REMOVAL OF TEMPORARY ACCESS".

THE CONTRACTOR'S ATTENTION IS CALLED TO THE FACT THAT THE LOCATION AND PROFILE OF THE TEMPORARY ACCESS SHOWN ON THE PLANS IS FOR ESTIMATING PURPOSES ONLY. THE ACTUAL LOCATION AND PROFILE SHALL BE DETERMINED IN THE FIELD BY THE APPROVAL OF THE ENGINEER.

FOR CLASS II RIP RAP AND CLASS B RIP RAP, SEE SPECIAL PROVISION, "CONSTRUCTION, MAINTENANCE, AND REMOVAL OF TEMPORARY ACCESS".

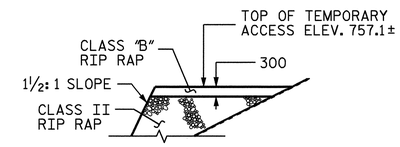

SECTION B-B

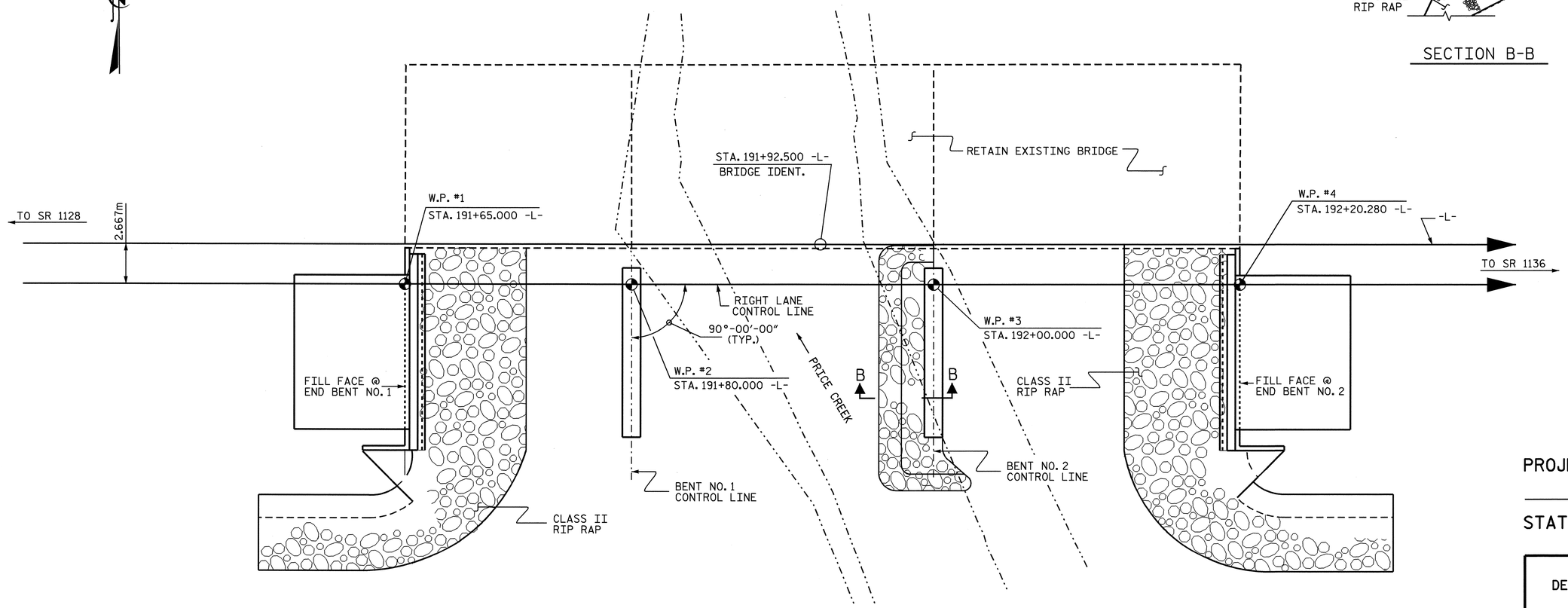

PLAN

(PILES NOT SHOWN IN PLAN VEIW)

PROJECT NO. R-2518B
YANCEY COUNTY
STATION: 191+92.500 -L-

STATE OF NORTH CAROLINA
DEPARTMENT OF TRANSPORTATION
RALEIGH

TEMPORARY ACCESS

NORTH CAROLINA PROFESSIONAL SEAL 20125 ENGINEER MARSHALL G. CHEEK, JR.
1-7-08

REVISIONS								SHEET NO.
NO.	BY:	DATE:	NO.	BY:	DATE:			S-78
1			3					TOTAL SHEETS
2			4					154

DRAWN BY : A.L.FIGUEROA DATE : 01-23-08
CHECKED BY : M.G. CHEEK DATE : 01-31-08

04-APR-2008 14:31
r:\structures\finalplans\Str #3\R2518B_sd_TA_STR#3.dgn
lmurphy

STR #3

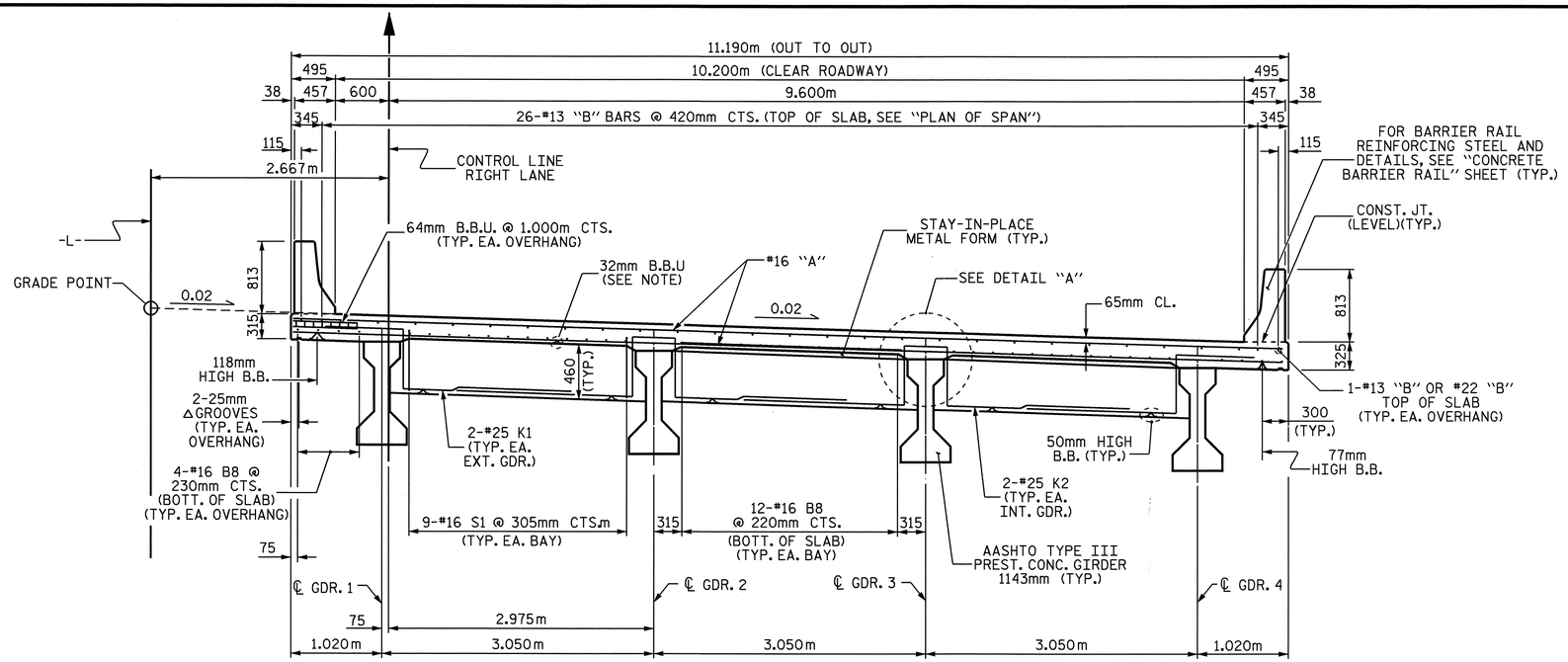

TYPICAL SECTION

(SHOWING END BENT DIAPHRAGMS)

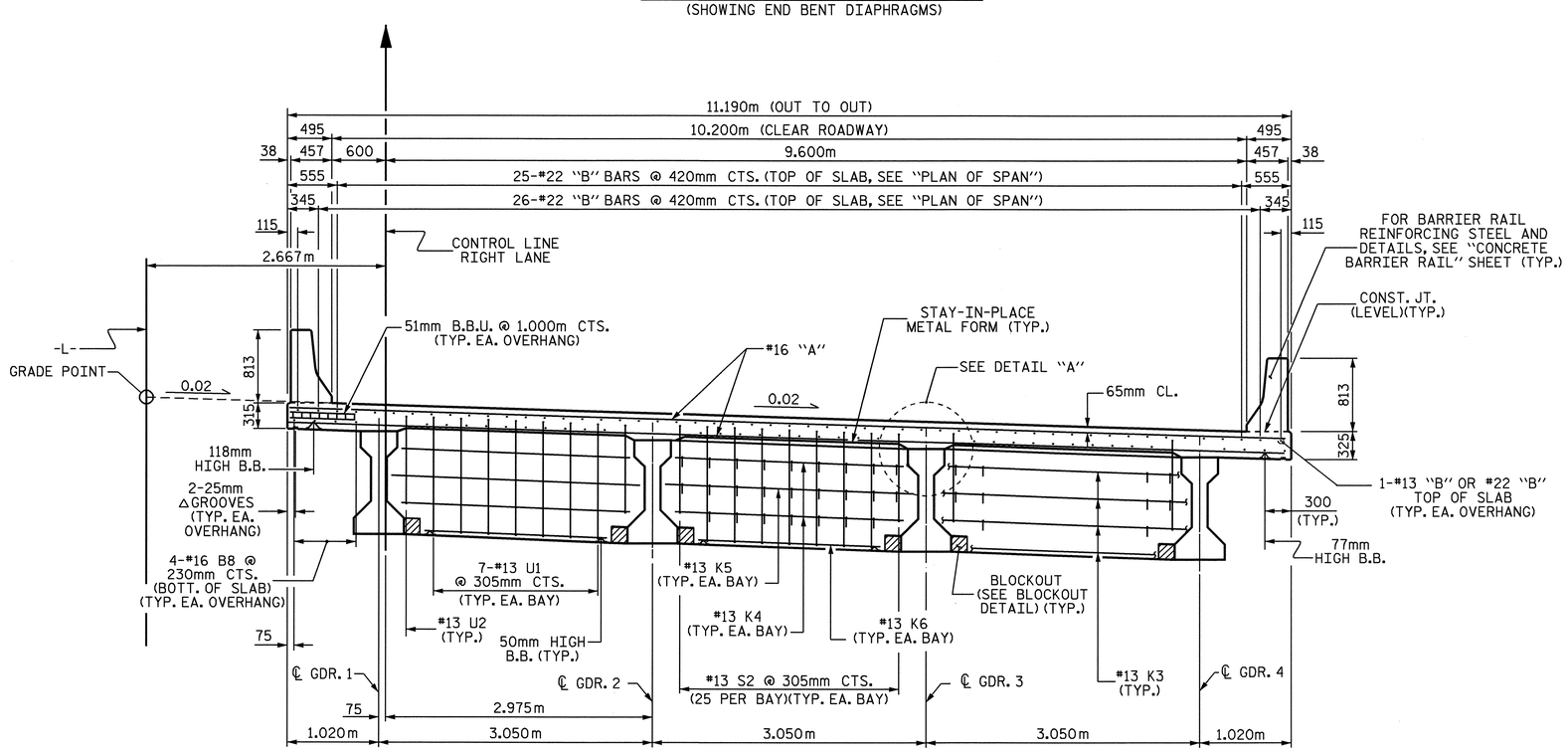

TYPICAL SECTION

(SHOWING BENT DIAPHRAGMS)

NOTES

PROVIDE 32mm HIGH BEAM BOLSTERS UPPER AT 1.2m CTS. ATOP THE METAL STAY-IN-PLACE FORMS TO SUPPORT THE BOTTOM MAT OF 'A' BARS. WHEN USING REMOVABLE FORMS, PROVIDE CONTINUOUS HIGH CHAIRS FOR METAL DECK (C.H.C.M.) @ 1.2m CTS. WITH A HEIGHT TO SUPPORT THE BOTTOM MAT OF 'A' BARS A CLEAR DISTANCE OF 65mm ABOVE THE TOP OF THE REMOVABLE FORM.

LONGITUDINAL STEEL MAY BE SHIFTED SLIGHTLY, AS NECESSARY, TO AVOID INTERFERENCE WITH STIRRUPS IN PRESTRESSED CONCRETE GIRDERS.

BARRIER RAIL IN A CONTINUOUS UNIT SHALL NOT BE CAST UNIT ALL SLAB CONCRETE IN THE UNIT HAS BEEN CAST AND HAS REACHED A MINIMUM COMPRESSIVE STRENGTH OF 20.7 MPa.

#16 G1 BAR MAY BE SHIFTED SLIGHTLY, AS NECESSARY, TO CLEAR REINFORCING STEEL AND STIRRUPS.

ALL REINFORCING STEEL IN BARRIER RAILS SHALL BE EPOXY COATED.

PREVIOUSLY CAST CONCRETE IN CONTINUOUS UNIT SHALL HAVE ATTAINED A MINIMUM COMPRESSIVE STRENGTH OF 20.7 MPa BEFORE ADDITIONAL CONCRETE IS CAST IN THE UNIT.

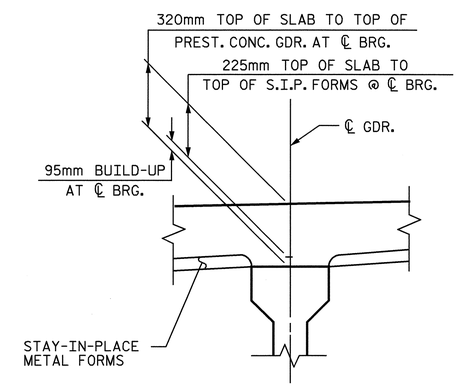

DETAIL "A"

PROJECT NO. R-2518B

YANCEY COUNTY

STATION: 191+92.500 -L-

SHEET 1 OF 3

STATE OF NORTH CAROLINA
DEPARTMENT OF TRANSPORTATION
RALEIGH

SUPERSTRUCTURE
TYPICAL SECTIONS

NORTH CAROLINA PROFESSIONAL SEAL 20125 ENGINEER MARSHALL B. CHEEK, JR. 4-4-08

REVISIONS						SHEET NO.
NO.	BY:	DATE:	NO.	BY:	DATE:	S-79
1			3			TOTAL SHEETS
2			4			154

STR. #3

DRAWN BY : A. SORSENGINH/L.L.M. DATE : 10/17/05
CHECKED BY : V.X. NGUYEN DATE : 2/06

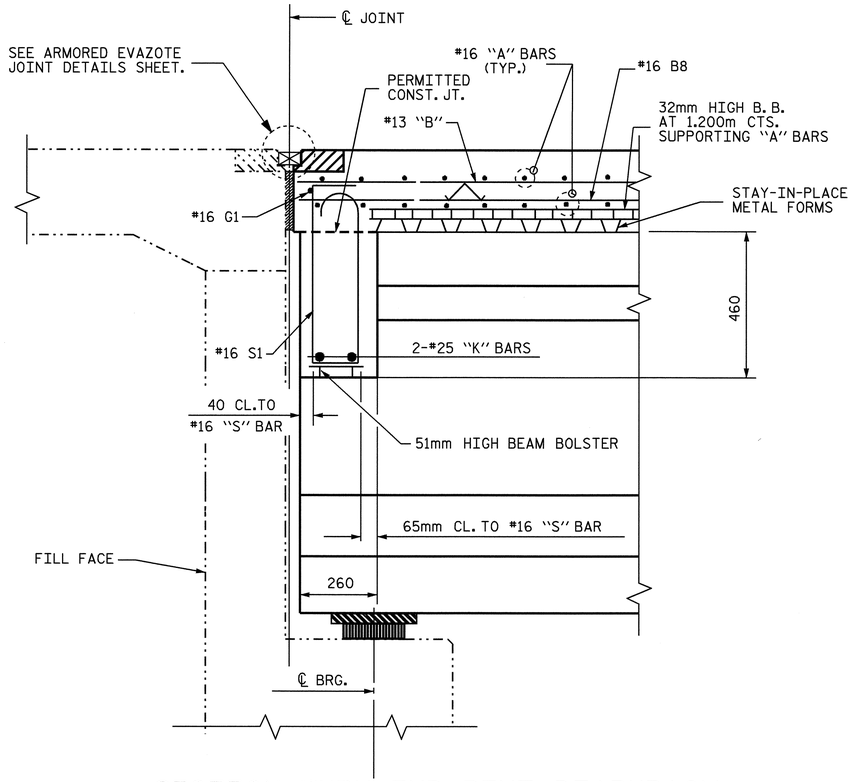

SECTION THRU END BENT DIAPHRAGM

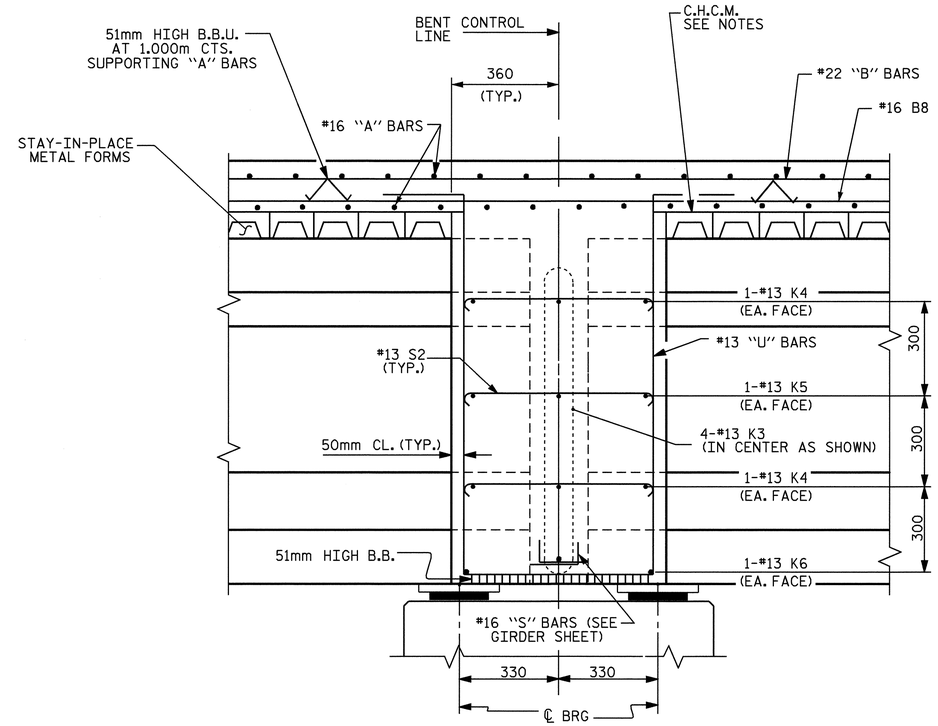

SECTION THRU CONTINUOUS BENT DIAPHRAGM

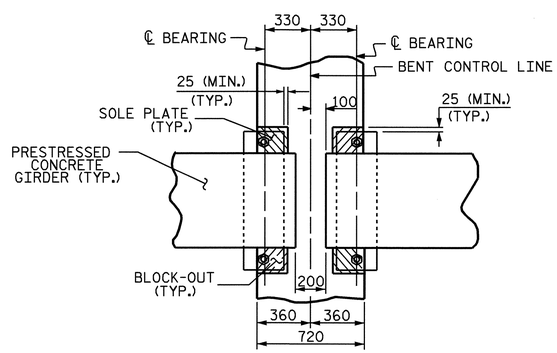

PLAN

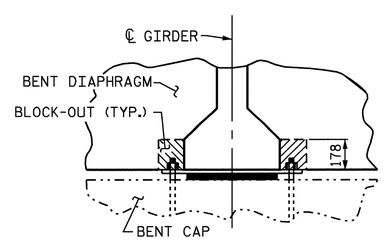

SECTION

BENT DIAPHRAGM BLOCKOUT DETAIL

PROJECT NO. R-2518B
YANCEY COUNTY
STATION: 191+92.500 -L-

SHEET 2 OF 3

STATE OF NORTH CAROLINA
DEPARTMENT OF TRANSPORTATION
RALEIGH

SUPERSTRUCTURE

TYPICAL SECTION DETAILS

NORTH CAROLINA PROFESSIONAL SEAL 20125 ENGINEER MARSHALL G. CHECK, JR.
3-28-08

REVISIONS						SHEET NO.
NO.	BY:	DATE:	NO.	BY:	DATE:	S-80
1			3			TOTAL SHEETS
2			4			154

DRAWN BY : A. SORSENGINH/L.L.M. DATE : 10/18/05
CHECKED BY : V.X. NGUYEN DATE : 2/06

TABLE

GIRDER TYPE	CHANNEL SIZE	DIM "A"	DIM "B"	DIM "L"
III	MC 460 x 63.5	432	355	457

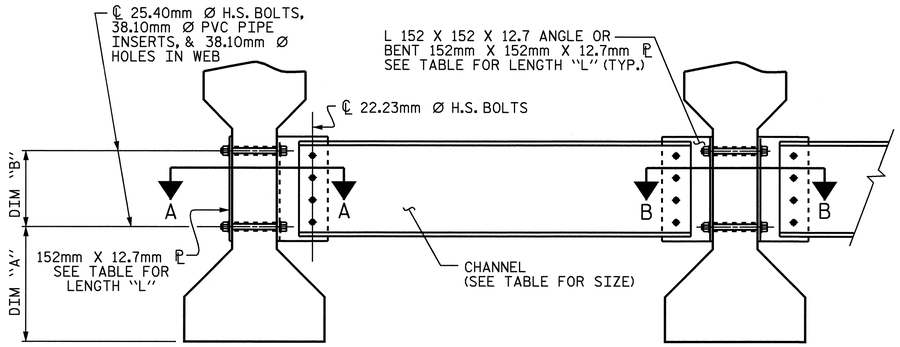

EXTERIOR GIRDER

INTERIOR GIRDER

PART SECTION AT INTERMEDIATE DIAPHRAGM

(TYPE III OR TYPE IV GIRDER SHOWN)

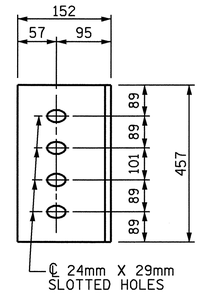

DIAPHRAGM FACE

(TYPE III GDR.)

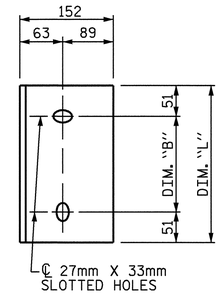

WEB FACE

CONNECTOR PLATE DETAILS

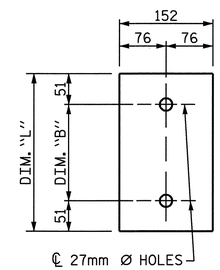

PLATE DETAILS

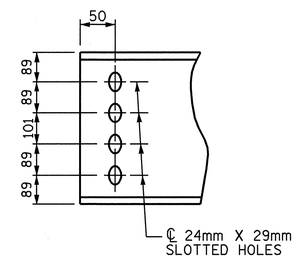

CHANNEL END

(TYPE III OR TYPE IV GDR.)

STRUCTURAL STEEL NOTES

ALL INTERMEDIATE DIAPHRAGM STEEL, CONNECTOR PLATES AND PLATE WASHERS SHALL BE AASHTO M270 GRADE 345 OR APPROVED EQUAL.

TENSION ON THE AASHTO M164 BOLTS THROUGH THE CHANNEL MEMBER SHALL BE CALIBRATED USING DIRECT TENSION INDICATOR WASHERS IN ACCORDANCE WITH ARTICLE 440-8 OF THE STANDARD SPECIFICATIONS.

TENSION ON THE AASHTO M164 BOLTS THROUGH THE GIRDER WEB SHALL BE SNUG TIGHTENED FOLLOWED BY AN ADDITIONAL 1/4 TURN.

THE CHANNELS, ANGLES, WASHERS, PLATE WASHERS, AND DIRECT TENSION INDICATORS SHALL BE GALVANIZED OR METALLIZED IN ACCORDANCE WITH THE STANDARD SPECIFICATIONS. FOR THERMAL SPRAYED COATINGS (METALLIZATION), SEE SPECIAL PROVISIONS.

FOR METALLIZATION, APPLY AN 8 MIL THICK 99.99 PERCENT ZINC (W-Zn-1) THERMAL SPRAYED COATING WITH A 0.5 MIL THICK SEAL COAT TO ALL STEEL DIAPHRAGM SURFACES IN ACCORDANCE WITH THE THERMAL SPRAYED COATINGS SPECIAL PROVISIONS AND SECTION 442 OF THE STANDARD SPECIFICATIONS.

GALVANIZE THE HIGH STRENGTH BOLTS, NUTS, AND WASHERS IN ACCORDANCE WITH THE STANDARD SPECIFICATIONS. FOR HIGH STRENGTH BOLTS, SEE SPECIAL PROVISIONS.

USE A MINIMUM 11.1mm THICK PLATE WASHER WITH STANDARD HOLES UNDER EACH BOLT HEAD AND NUT. THE PLATE WASHERS SHALL HAVE SUFFICIENT SIZE TO COVER THE HOLES AFTER INSTALLATION. DIRECT TENSION INDICATORS ARE TO BE USED IN CONJUNCTION WITH THE PLATE WASHERS.

PROVIDE SUFFICIENT LENGTH OF ALL BOLTS TO ACCOMMODATE WASHERS, DIRECT TENSION INDICATORS, THE THICKNESS OF CONNECTING MEMBER PLUS AT LEAST 6mm PROJECTION BEYOND THE NUT.

INTERMEDIATE DIAPHRAGM ASSEMBLY SHALL COMPLY WITH SECTION 1072 OF THE STANDARD SPECIFICATIONS.

CONTRACTOR SHALL SUBMIT TWO SETS OF WORKING DRAWINGS FOR THE INTERMEDIATE DIAPHRAGM ASSEMBLY FOR REVIEW, COMMENTS AND ACCEPTANCE. AFTER REVIEW, COMMENTS, AND ACCEPTANCE, SUBMIT SEVEN SETS FOR DISTRIBUTION.

IN THE EXTERIOR BAYS, TEMPORARY STRUTS SHALL BE PLACED BETWEEN PRESTRESSED GIRDERS ADJACENT TO THE STEEL DIAPHRAGMS. STRUTS SHALL REMAIN IN PLACE 3 DAYS AFTER CONCRETE IS PLACED. ALL AASHTO M164 H.S. BOLTS SHALL BE FULLY TIGHTENED AFTER THE STRUTS HAVE BEEN REMOVED.

THE COST OF THE STEEL DIAPHRAGMS AND ASSEMBLIES SHALL BE INCLUDED IN THE UNIT PRICE BID FOR PRESTRESSED CONCRETE GIRDERS.

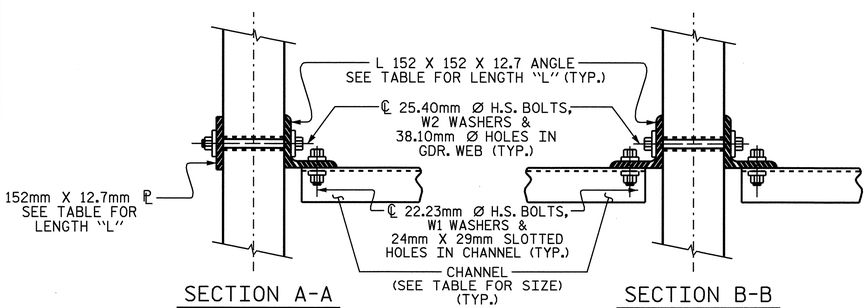

SECTION A-A

SECTION B-B

CONNECTION DETAILS

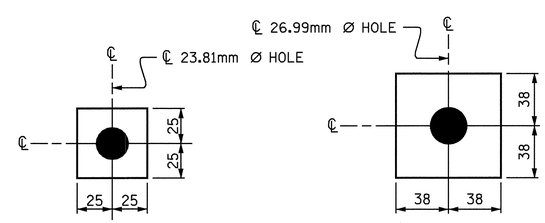

W1

ℙ 11.1 X 50 X 50

USE WITH 22.23mm Ø HVY. HEX NUTS & DIRECT TENSION INDICATOR WASHERS AT DIAPHRAGM CHANNEL TO CONNECTOR PLATE CONNECTIONS

W2

ℙ 11.1 X 76 X 76

USE WITH 25.40mm Ø HVY. HEX NUTS AT CONNECTOR PLATE TO GIRDER CONNECTIONS

WASHER DETAILS

PROJECT NO. R-2518B

YANCEY COUNTY

STATION: 191+92.500-L-

SHEET 3 OF 3

STATE OF NORTH CAROLINA
DEPARTMENT OF TRANSPORTATION
RALEIGH

STANDARD

INTERMEDIATE STEEL DIAPHRAGMS FOR TYPE III PRESTRESSED CONCRETE GIRDERS

NORTH CAROLINA PROFESSIONAL SEAL 20125 ENGINEER
MARSHALL G. CHEEK, JR.
3-28-08

REVISIONS						SHEET NO.
NO.	BY:	DATE:	NO.	BY:	DATE:	S-81
1			3			TOTAL SHEETS
2			4			154

ASSEMBLED BY : A. SORSENGINH/L.L.M. DATE : 10/26/05
CHECKED BY : V.X. NGUYEN DATE : 02/06

DRAWN BY : TLA 6/05
CHECKED BY : VC 6/05

ADDED 10/21/05
REV. 5/1/06R KMM/GM

26-MAR-2008 10:14
R:\Structures\Final plans\Str #3\R2518B_sd_TS_STR#3.dgn
mpoole

STR #3

STD.No.PCG12SM

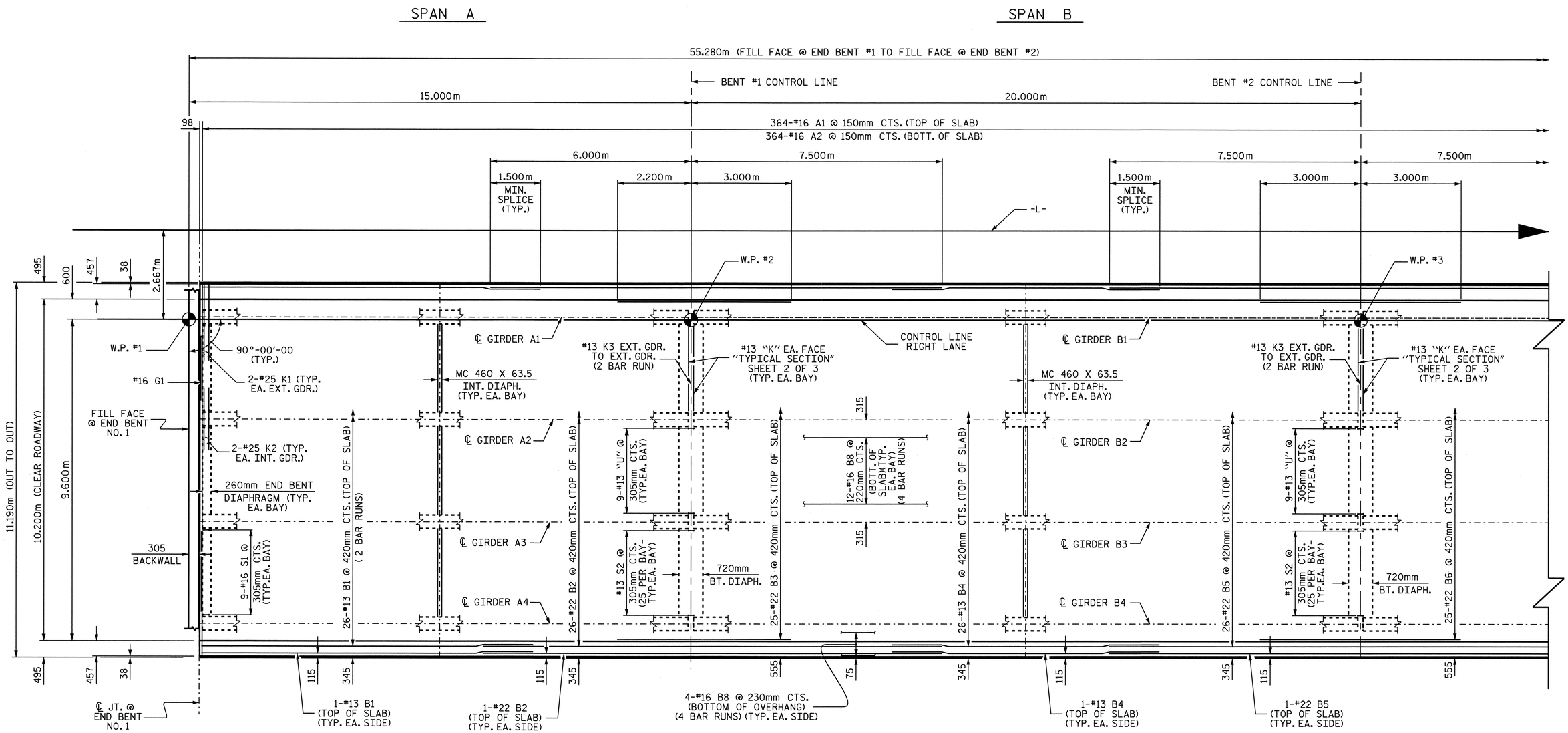

PLAN OF SPANS A & B

FOR INTERMEDIATE DIAPHRAGMS, SEE "INTERMEDIATE STEEL DIAPHRAGMS" SHEET.

PROJECT NO. R-2518B
YANCEY COUNTY
STATION: 191+92.500 -L-

SHEET 1 OF 2

STATE OF NORTH CAROLINA
DEPARTMENT OF TRANSPORTATION
RALEIGH

SUPERSTRUCTURE
PLAN OF SPANS

NORTH CAROLINA PROFESSIONAL SEAL 20125 ENGINEER MARSHALL G. CHEEK, JR.
3-28-08

REVISIONS						SHEET NO.
NO.	BY:	DATE:	NO.	BY:	DATE:	S-82
1			3			TOTAL SHEETS
2			4			154

DRAWN BY : A. SORSENGINH/L.L.M. DATE : 10/26/05
CHECKED BY : V.X. NGUYEN DATE : 2/06

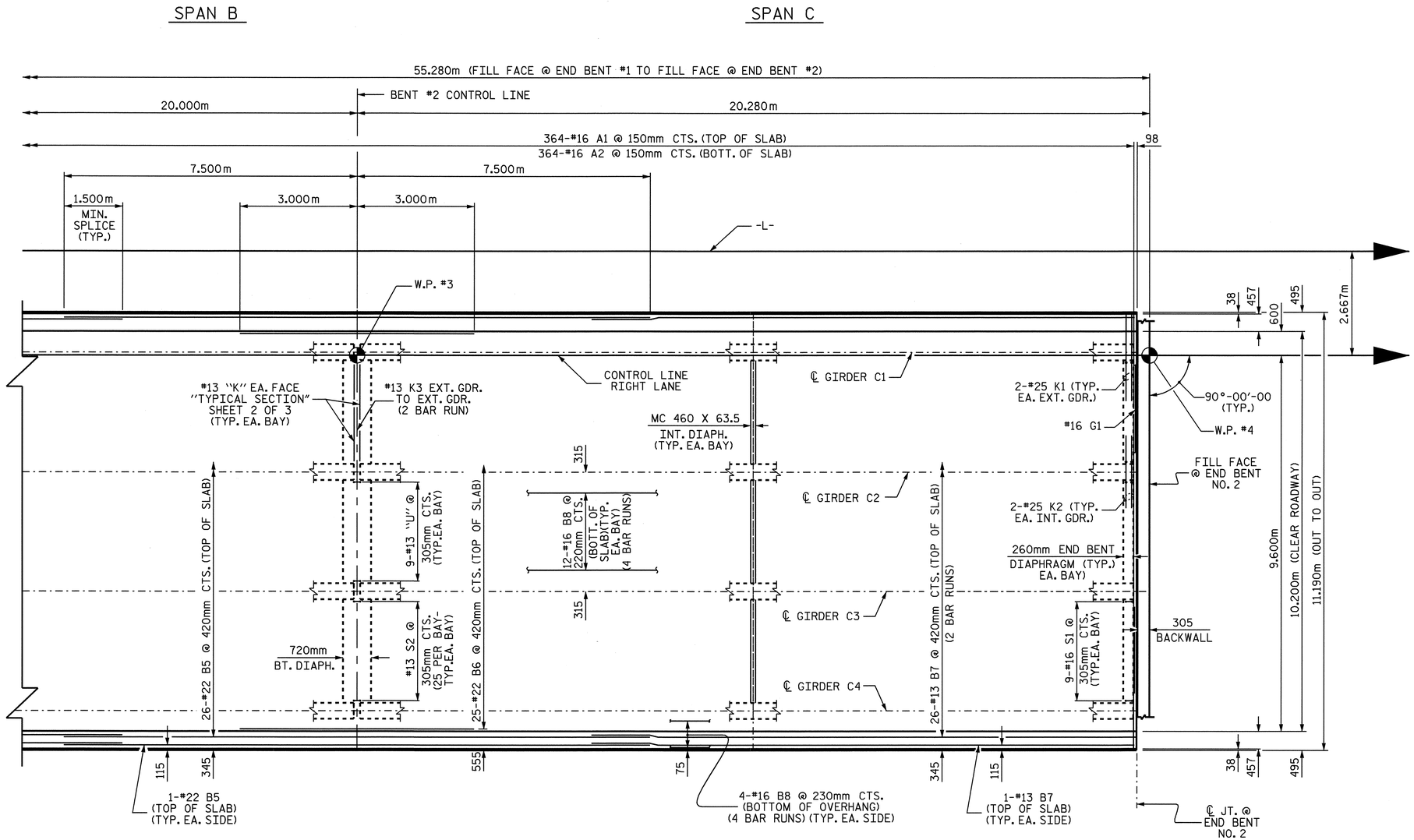

PLAN OF SPAN C

FOR INTERMEDIATE DIAPHRAGMS, SEE "INTERMEDIATE STEEL DIAPHRAGMS" SHEET.

PROJECT NO. R-2518B
YANCEY COUNTY
STATION: 191+92.500 -L-

SHEET 2 OF 2

STATE OF NORTH CAROLINA
DEPARTMENT OF TRANSPORTATION
RALEIGH

SUPERSTRUCTURE
PLAN OF SPANS

NORTH CAROLINA PROFESSIONAL SEAL 20125 ENGINEER MARSHALL L. GOODCHECK, JR.
3-28-06

REVISIONS						SHEET NO.
NO.	BY:	DATE:	NO.	BY:	DATE:	S-83
1			3			TOTAL SHEETS
2			4			154

DRAWN BY : A. SORSENGINH/L.L.M. DATE : 10/26/05
CHECKED BY : V.X. NGUYEN DATE : 2/06

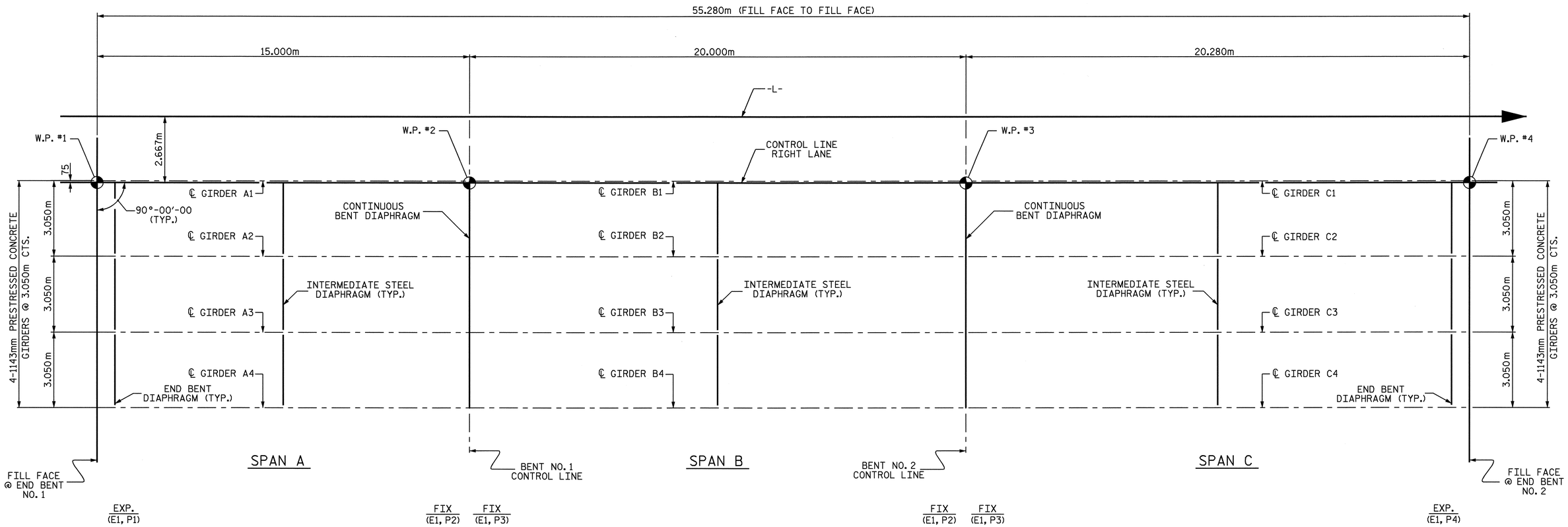

FRAMING PLAN

PROJECT NO. R-2518B
YANCEY COUNTY
STATION: 191+92.500 -L-

STATE OF NORTH CAROLINA
DEPARTMENT OF TRANSPORTATION
RALEIGH

SUPERSTRUCTURE
FRAMING PLAN

NORTH CAROLINA PROFESSIONAL SEAL 20125 ENGINEER MARSHALL G. CHEEK, JR.
3-28-08

REVISIONS						SHEET NO.
NO.	BY:	DATE:	NO.	BY:	DATE:	S-84
1			3			TOTAL SHEETS
2			4			154

DRAWN BY : A. SORSENGINH/L.L.M. DATE : 10/20/05
CHECKED BY : V.X. NGUYEN DATE : 2/06

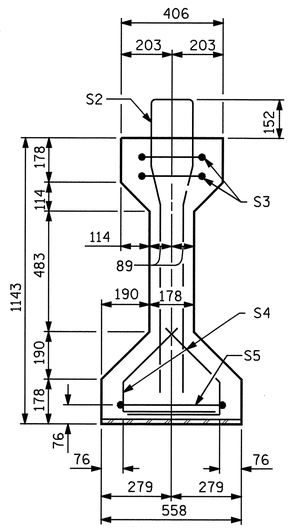

SECTION A-A

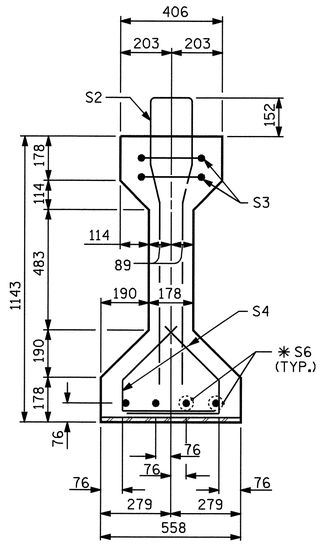

SECTION B-B

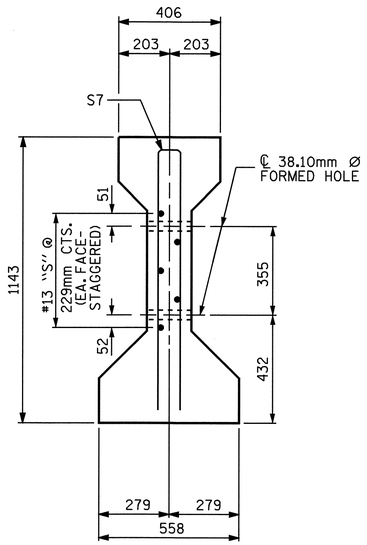

SECTION C-C

(S1 BARS NOT SHOWN)

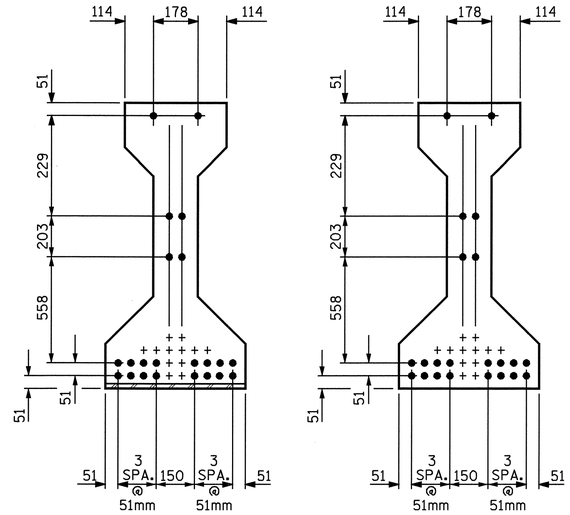

AT END OF GIRDER

AT ℄ OF GIRDER

12.70mm Ø LOW RELAXATION STRAND LAYOUT

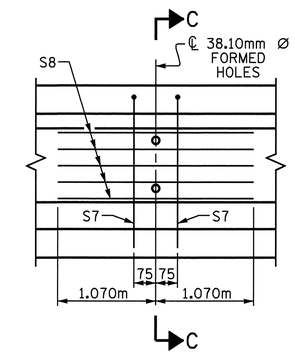

PARTIAL ELEVATION

SHOWING INTERMEDIATE DIAPHRAGM
REINFORCING STEEL FOR GIRDER Nos. 1-4

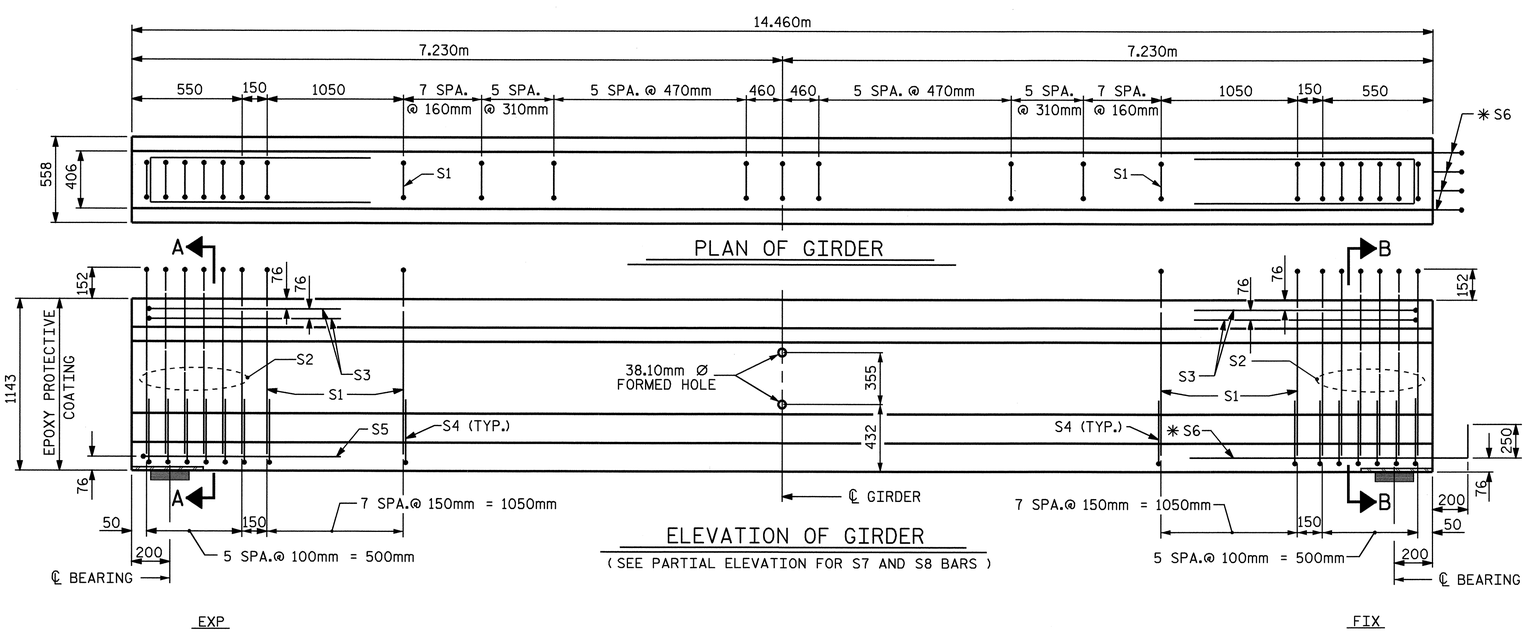

ELEVATION OF GIRDER

(SEE PARTIAL ELEVATION FOR S7 AND S8 BARS)

12.70mm Ø L. R. GRADE 270 STRANDS

AREA (mm^2)	ULTIMATE STRENGTH (kN PER STRAND)	APPLIED PRESTRESS (kN PER STRAND)
98.71	183.7	137.8

REINFORCING STEEL FOR ONE GIRDER

BAR	NUMBER	SIZE	TYPE	LENGTH	WEIGHT
S1	51	#13	1	2600	132
S2	12	#19	1	2600	70
S3	4	#13	3	2660	11
S4	56	#13	2	840	47
S5	1	#13	3	2900	3
✱ S6	4	#16	STR	1120	7
S7	2	#16	3	2180	7
S8	5	#13	STR	2140	11

✱ NOTE: S6 BARS SHALL BE BENT BEFORE SHIPMENT. HEAT BENDING SHALL NOT BE ALLOWED.

BAR TYPES

ALL BAR DIMENSIONS ARE OUT-TO-OUT

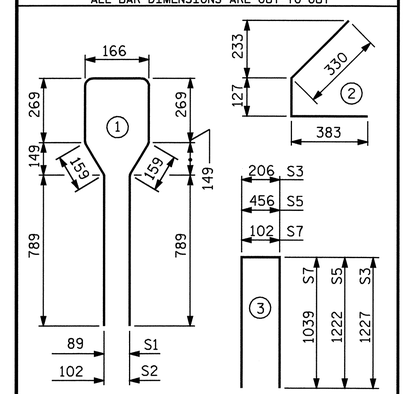

QUANTITIES FOR ONE GIRDER

	REINFORCING STEEL	34.5 MPa CONCRETE	12.70mm Ø L.R. STRANDS
	kg	m^3	No.
	288	5.2	22

GIRDERS REQUIRED

NUMBER	LENGTH	TOTAL LENGTH
4	14.460m	57.840m

NOTE : THE TRANSFER OF LOAD FROM THE ANCHORAGES TO THE GIRDER SHALL BE DONE WHEN CONCRETE HAS REACHED A COMPRESSIVE STRENGTH OF NOT LESS THAN 27.6 MPa.

PROJECT NO. R-2518B

YANCEY COUNTY

STATION: 191+92.500 -L-

SHEET 1 OF 4

STATE OF NORTH CAROLINA
DEPARTMENT OF TRANSPORTATION
RALEIGH

STANDARD
AASHTO TYPE III
PRESTRESSED CONCRETE GIRDER
CONTINUOUS FOR LIVE LOAD
SPAN A

NORTH CAROLINA PROFESSIONAL SEAL 20125 ENGINEER MARSHALL L. GIBBS, JR.
3-26-08

REVISIONS						SHEET NO.
NO.	BY:	DATE:	NO.	BY:	DATE:	S-85
1			3			TOTAL SHEETS
2			4			154

STR. #3

STD. NO. PCG5SM

ASSEMBLED BY : A. SORSENGINH/L.L.M.	DATE : 10/24/05		
CHECKED BY : V.X. NGUYEN	DATE : 2/06		
DRAWN BY : ELR 8/91	REV. 7/17/98	RWW/LES	
CHECKED BY : GRP 8/91	REV. 10/17/00R	RWW/LES	
	REV. 5/1/06	TLA/GM	

26-MAR-2008 10:13
R:\Structures\Final plans\Str #3\R2518B_sd_G*_STR*3.dgn
mpoole

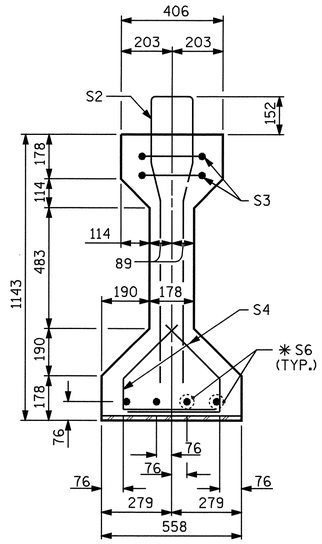

SECTION A-A

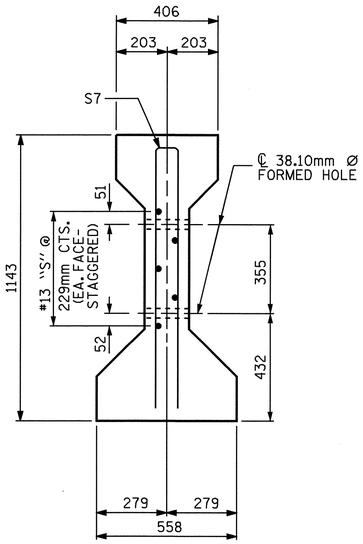

SECTION C-C

(S1 BARS NOT SHOWN)

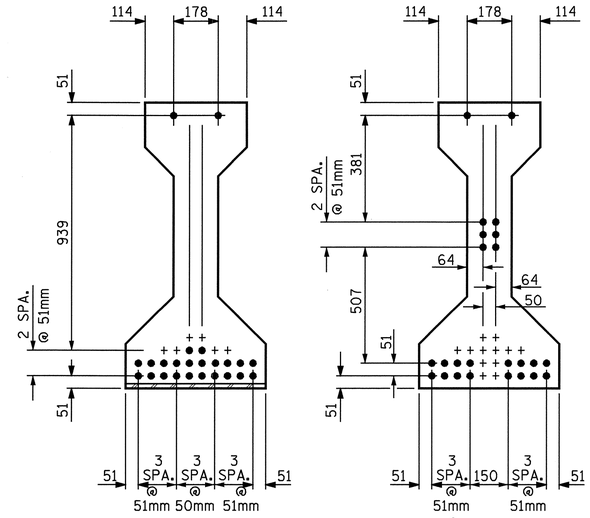

AT END OF GIRDER

AT ℄ OF GIRDER

15.24mm Ø LOW RELAXATION STRAND LAYOUT

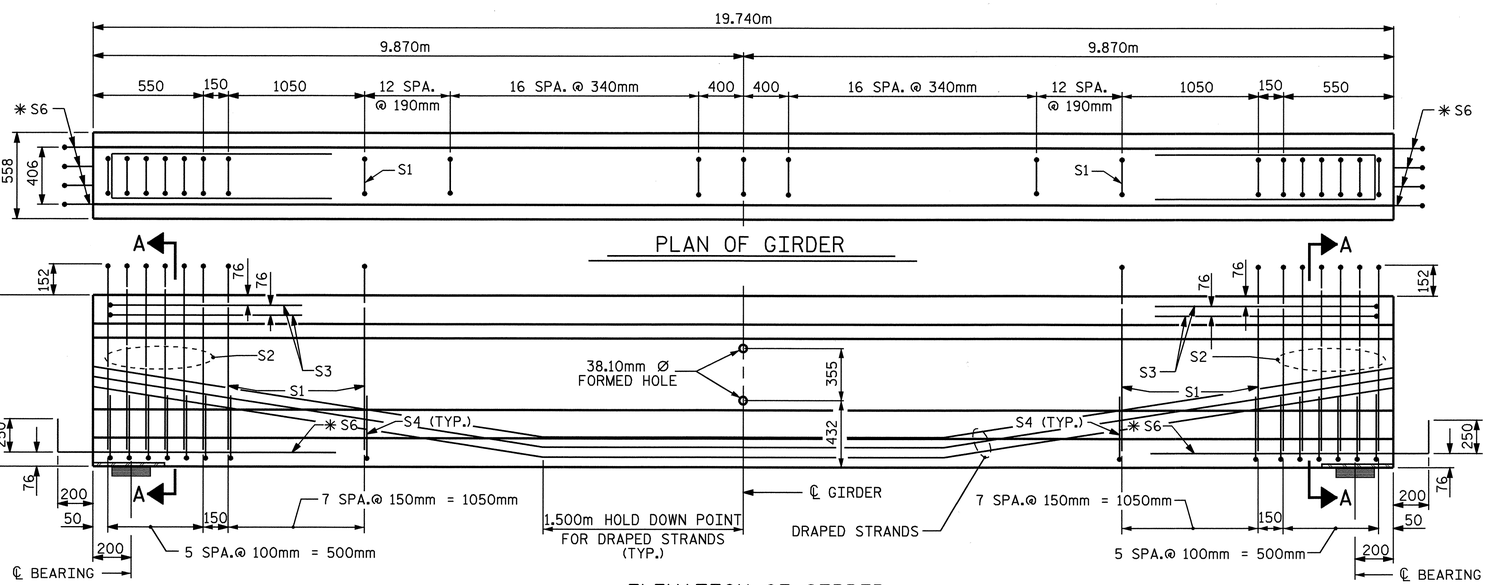

ELEVATION OF GIRDER

(SEE PARTIAL ELEVATION FOR S7 AND S8 BARS)

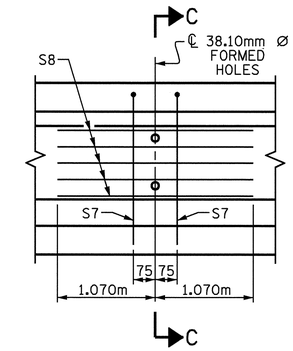

PARTIAL ELEVATION

SHOWING INTERMEDIATE DIAPHRAGM
REINFORCING STEEL FOR GIRDER Nos.1-4

15.24mm Ø L. R. GRADE 270 STRANDS

AREA (mm²)	ULTIMATE STRENGTH (kN PER STRAND)	APPLIED PRESTRESS (kN PER STRAND)
140.00	260.7	195.5

REINFORCING STEEL FOR ONE GIRDER

BAR	NUMBER	SIZE	TYPE	LENGTH	WEIGHT
S1	73	#13	1	2600	189
S2	12	#19	1	2600	70
S3	4	#13	3	2660	11
S4	56	#13	2	840	47
✱ S6	8	#16	STR	1120	14
S7	2	#16	3	2180	7
S8	5	#13	STR	2140	11

✱ NOTE: S6 BARS SHALL BE BENT BEFORE SHIPMENT. HEAT BENDING SHALL NOT BE ALLOWED.

BAR TYPES

ALL BAR DIMENSIONS ARE OUT-TO-OUT

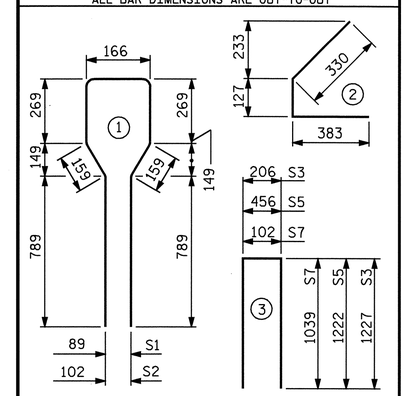

QUANTITIES FOR ONE GIRDER

	REINFORCING STEEL	48.3 MPa CONCRETE	15.24mm Ø L.R. STRANDS
	kg	m3	No.
	349	7.1	24

GIRDERS REQUIRED

NUMBER	LENGTH	TOTAL LENGTH
4	19.740m	78.960m

NOTE : THE TRANSFER OF LOAD FROM THE ANCHORAGES TO THE GIRDER SHALL BE DONE WHEN CONCRETE HAS REACHED A COMPRESSIVE STRENGTH OF NOT LESS THAN 37.9 MPa.

PROJECT NO. R-2518B

YANCEY COUNTY

STATION: 191+92.500 -L-

SHEET 2 OF 4

STATE OF NORTH CAROLINA
DEPARTMENT OF TRANSPORTATION
RALEIGH

STANDARD
AASHTO TYPE III
PRESTRESSED CONCRETE GIRDER
CONTINUOUS FOR LIVE LOAD
SPAN B

NORTH CAROLINA PROFESSIONAL SEAL 20125 ENGINEER MARSHALL L. GREEK, JR.
4-7-08

REVISIONS						SHEET NO.
NO.	BY:	DATE:	NO.	BY:	DATE:	S-86
1			3			TOTAL SHEETS
2			4			154

ASSEMBLED BY : A. SORSENGINH/L.L.M.	DATE : 10/24/05		
CHECKED BY : V.X. NGUYEN	DATE : 2/06		
DRAWN BY : ELR 8/91	REV. 7/17/98	RWW/LES	
CHECKED BY : GRP 8/91	REV. 10/17/00R	RWW/LES	
	REV. 5/1/06	TLA/GM	

04-APR-2008 10:18
r:\structures\final plans\str #3\r2518b_sd_g#_str#3.dgn
lmurphy

STR. #3

STD. NO. PCG5SM

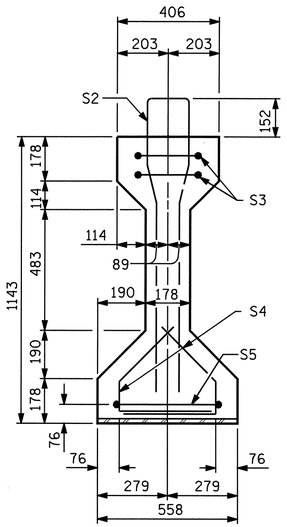

SECTION A-A

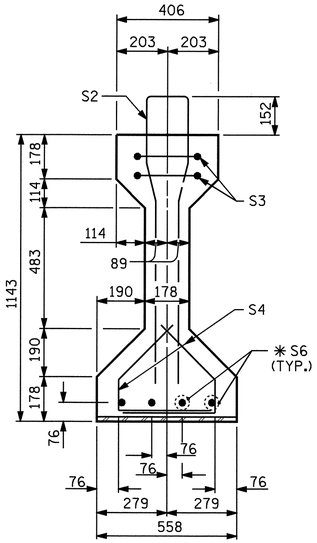

SECTION B-B

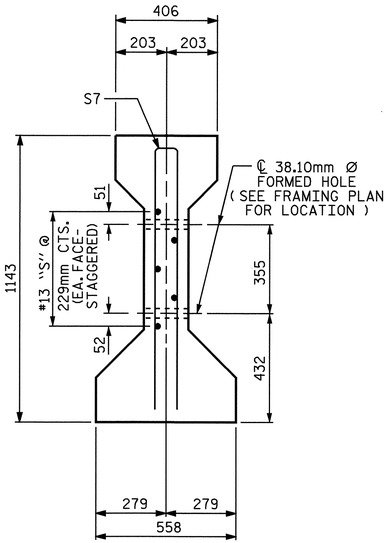

SECTION C-C

(S1 BARS NOT SHOWN)

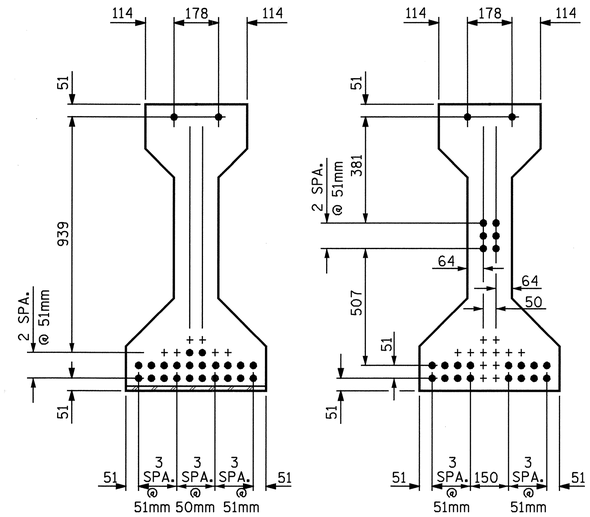

AT END OF GIRDER

AT ℄ OF GIRDER

15.24mm Ø LOW RELAXATION STRAND LAYOUT

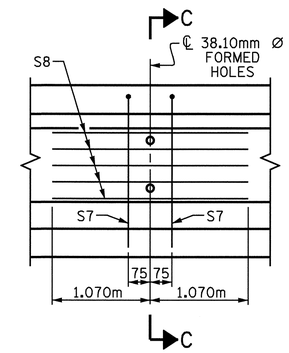

PARTIAL ELEVATION

SHOWING INTERMEDIATE DIAPHRAGM REINFORCING STEEL FOR GIRDER Nos. 1-4

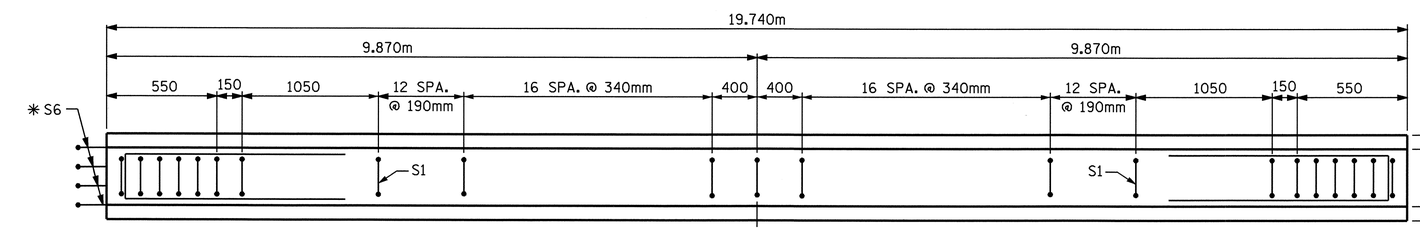

PLAN OF GIRDER

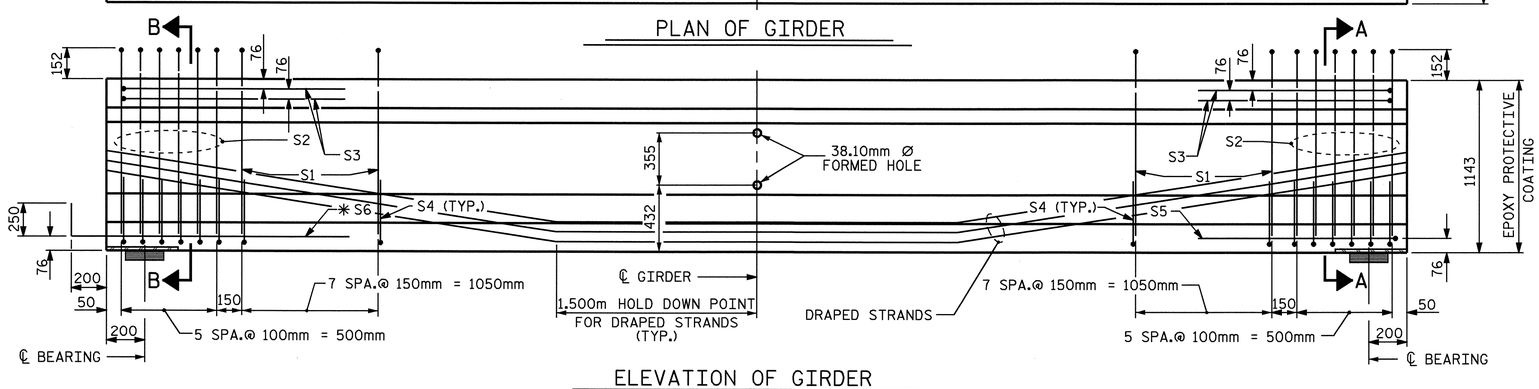

ELEVATION OF GIRDER

(SEE PARTIAL ELEVATION FOR S7 AND S8 BARS)

15.24mm Ø L. R. GRADE 270 STRANDS

AREA (mm^2)	ULTIMATE STRENGTH (kN PER STRAND)	APPLIED PRESTRESS (kN PER STRAND)
140.00	260.7	195.5

REINFORCING STEEL FOR ONE GIRDER

BAR	NUMBER	SIZE	TYPE	LENGTH	WEIGHT
S1	73	#13	1	2600	189
S2	12	#19	1	2600	70
S3	4	#13	3	2660	11
S4	56	#13	2	840	47
S5	1	#13	3	2900	3
✱ S6	4	#16	STR	1120	7
S7	2	#16	3	2180	7
S8	5	#13	STR	2140	11

✱ NOTE: S6 BARS SHALL BE BENT BEFORE SHIPMENT. HEAT BENDING SHALL NOT BE ALLOWED.

BAR TYPES

ALL BAR DIMENSIONS ARE OUT-TO-OUT

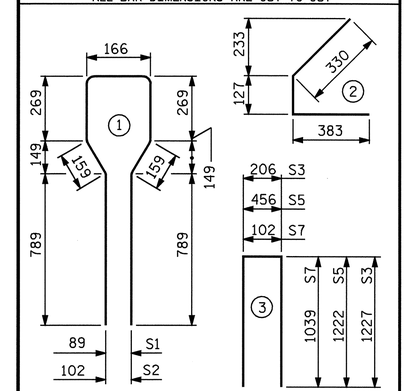

QUANTITIES FOR ONE GIRDER

	REINFORCING STEEL	48.3 MPa CONCRETE	15.24mm Ø L.R. STRANDS
	kg	m3	No.
	345	7.1	24

GIRDERS REQUIRED

NUMBER	LENGTH	TOTAL LENGTH
4	19.740m	78.960m

NOTE : THE TRANSFER OF LOAD FROM THE ANCHORAGES TO THE GIRDER SHALL BE DONE WHEN CONCRETE HAS REACHED A COMPRESSIVE STRENGTH OF NOT LESS THAN 37.9 MPa.

PROJECT NO. R-2518B

YANCEY COUNTY

STATION: 191+92.500 -L-

SHEET 3 OF 4

STATE OF NORTH CAROLINA
DEPARTMENT OF TRANSPORTATION
RALEIGH

STANDARD
AASHTO TYPE III
PRESTRESSED CONCRETE GIRDER
CONTINUOUS FOR LIVE LOAD
SPAN C

NORTH CAROLINA PROFESSIONAL SEAL 20125 ENGINEER MARSHALL E. CHEEK, JR.
4-7-08

ASSEMBLED BY : L.L. MURPHY	DATE : 02-08
CHECKED BY : M.G. CHEEK	DATE : 03-08

DRAWN BY : ELR 8/91	REV. 7/17/98 RWW/LES
CHECKED BY : GRP 8/91	REV. 10/17/00R RWW/LES
	REV. 5/1/06 TLA/GM

REVISIONS

NO.	BY:	DATE:	NO.	BY:	DATE:
1			3		
2			4		

SHEET NO. S-87

TOTAL SHEETS 154

STR. #3

STD. NO. PCG5SM

04-APR-2008 10:19
r:\structures\final plans\str #3\r2518b_sd_g#_str#3.dgn
lmurphy

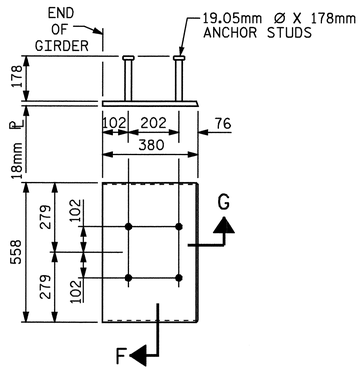

EMBEDDED PLATE "B-1" DETAILS FOR AASHTO TYPE III GIRDER

(2 REQ'D PER GIRDER)

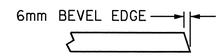

SECTION "G"

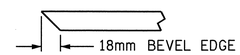

SECTION "F"

(SEE NOTES)

NOTES

ALL PRESTRESSING STRANDS SHALL BE 7-WIRE LOW-RELAXATION GRADE 270 STRANDS AND SHALL CONFORM TO AASHTO M203M EXCEPT FOR SAMPLING REQUIREMENTS WHICH SHALL BE IN ACCORDANCE WITH THE STANDARD SPECIFICATIONS.

ALL REINFORCING STEEL SHALL BE GRADE 420.

APPLY EPOXY PROTECTIVE COATING TO END OF GIRDER SURFACES INDICATED IN ELEVATION VIEW.

EMBEDDED PLATE "B-1" SHALL BE GALVANIZED IN ACCORDANCE WITH THE SPECIFICATIONS. BEVEL EDGES OF PLATE "B-1" TO GIVE CLOSE FIT BUT NOT TIGHT FIT TO STEEL CASTING FORM.

ANCHOR STUDS SHALL CONFORM TO AASHTO M169 GRADES 1010 THROUGH 1020 OR APPROVED EQUAL, AND SHALL MEET THE TYPE "B" REQUIREMENTS OF SUBSECTION 7.3 OF THE ANSI/AASHTO/AWS D1.5 BRIDGE WELDING CODE.

AT ENDS OF GIRDERS TO BE EMBEDDED IN CONCRETE DIAPHRAGMS OR END WALLS, PRESTRESSING STRANDS MAY EXTEND A MAXIMUM OF 50mm BEYOND THE GIRDER ENDS. OTHERWISE, PRESTRESSING STRANDS SHALL BE CUT FLUSH WITH THE GIRDER ENDS.

DEPENDING ON THE TYPE OF SYSTEM USED TO SUPPORT THE DECK SLAB FORMS, PRESET ANCHORS MAY BE NECESSARY IN THE PRESTRESSED CONCRETE GIRDER.

THE TOP SURFACE OF THE GIRDER, EXCLUDING THE OUTSIDE 100mm, SHALL BE RAKED TO A DEPTH OF 6mm.

WHEN DRAPED STRANDS ARE DETAILED, THE LONGITUDINAL LOCATION OF THE HOLD DOWN DEVICES SHALL BE WITHIN 150mm OF THE LOCATION SHOWN AND THE CENTER OF GRAVITY OF THE GROUP OF DRAPED STRANDS SHALL BE LOCATED WITHIN 13mm OF THE THEORETICAL LOCATION SHOWN.

FOR CRACK REPAIR OF PRESTRESSED CONCRETE GIRDERS, SEE SPECIAL PROVISIONS.

FOR PRESTRESSED CONCRETE MEMBERS, SEE SPECIAL PROVISIONS.

DEAD LOAD DEFLECTION TABLE FOR GIRDERS

12.70mm Ø LOW RELAXATION	SPAN A GIRDER 1-4										
TENTH POINTS	℄ BRG.	.1	.2	.3	.4	.5	.6	.7	.8	.9	℄ BRG.
CAMBER (GIRDER ALONE IN PLACE) ↑	0.000	0.006	0.012	0.016	0.019	0.020	0.019	0.016	0.012	0.006	0.000
✱DEFLECTION DUE TO SUPERIMPOSED D.L. ↓	0.000	0.002	0.004	0.005	0.006	0.007	0.006	0.005	0.004	0.002	0.000
FINAL CAMBER ↑	0	4	8	11	13	13	13	11	8	4	0

DEAD LOAD DEFLECTION TABLE FOR GIRDERS

15.24mm Ø LOW RELAXATION	SPAN B GIRDER 1-4										
TENTH POINTS	℄ BRG.	.1	.2	.3	.4	.5	.6	.7	.8	.9	℄ BRG.
CAMBER (GIRDER ALONE IN PLACE) ↑	0.000	0.022	0.042	0.057	0.067	0.070	0.067	0.057	0.042	0.022	0.000
✱DEFLECTION DUE TO SUPERIMPOSED D.L. ↓	0.000	0.006	0.012	0.016	0.019	0.021	0.019	0.016	0.012	0.006	0.000
FINAL CAMBER ↑	0	16	30	41	48	49	48	41	30	16	0

DEAD LOAD DEFLECTION TABLE FOR GIRDERS

15.24mm Ø LOW RELAXATION	SPAN C GIRDER 1-4										
TENTH POINTS	℄ BRG.	.1	.2	.3	.4	.5	.6	.7	.8	.9	℄ BRG.
CAMBER (GIRDER ALONE IN PLACE) ↑	0.000	0.022	0.042	0.057	0.067	0.070	0.067	0.057	0.042	0.022	0.000
✱DEFLECTION DUE TO SUPERIMPOSED D.L. ↓	0.000	0.006	0.012	0.016	0.019	0.021	0.019	0.016	0.012	0.006	0.000
FINAL CAMBER ↑	0	16	30	41	48	49	48	41	30	16	0

✱INCLUDES FUTURE WEARING SURFACE
ALL VALUES ARE SHOWN IN METERS, EXCEPT "FINAL CAMBER" WHICH IS SHOWN IN MILLIMETERS.

PROJECT NO. R-2518B
YANCEY COUNTY
STATION: 191+92.500 -L-

SHEET 4 OF 4

NORTH CAROLINA PROFESSIONAL SEAL 20125 ENGINEER MARSHALL A. CHEEK, JR.
3-28-08

STATE OF NORTH CAROLINA
DEPARTMENT OF TRANSPORTATION
RALEIGH

STANDARD
PRESTRESSED CONCRETE GIRDER
CONTINUOUS FOR LIVE LOAD
DETAILS

REVISIONS						SHEET NO.
NO.	BY:	DATE:	NO.	BY:	DATE:	S-88
1			3			TOTAL SHEETS
2			4			154

ASSEMBLED BY : A. SORSENGINH/L.L.M. DATE : 10/24/05
CHECKED BY : V.X. NGUYEN DATE : 2/06

DRAWN BY : ELR 11/91
CHECKED BY : GRP 11/91

REV. 10/17/00 RWW/LES
REV. 7/10/01RR LES/RDR
REV. 5/1/06 TLA/GM

26-MAR-2008 10:13
R:\Structures\Finalplans\Str #3\R2518B_sd_G#_STR#3.dgn
mpoole

STR. #3

STD. NO. PCG11SM

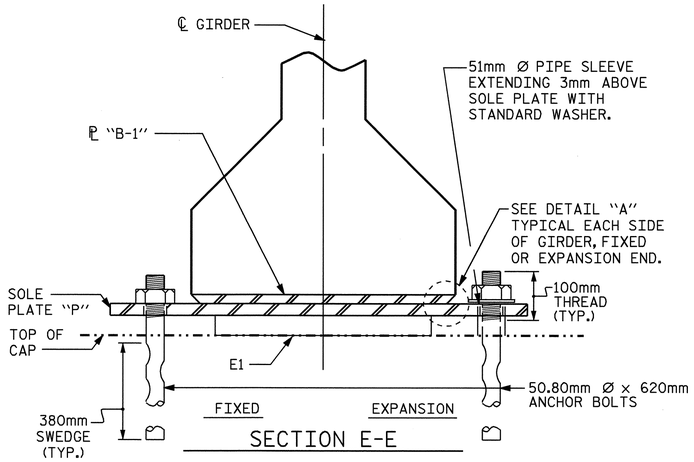

SECTION E-E

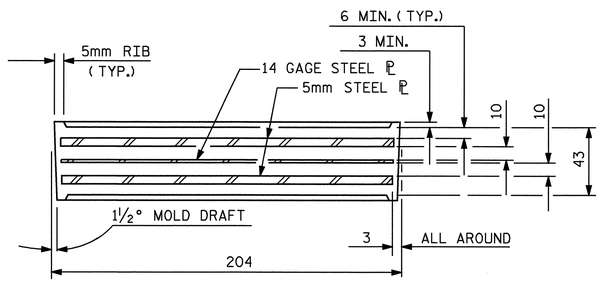

TYPICAL SECTION OF ELASTOMERIC BEARINGS

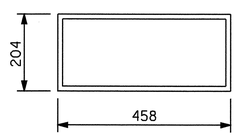

E1 (24 REQ'D)

PLAN VIEW OF ELASTOMERIC BEARING

TYPE III

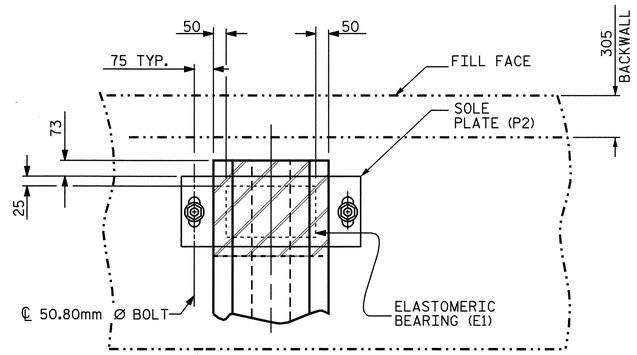

PLAN VIEW AT END BENTS

(EXP.)

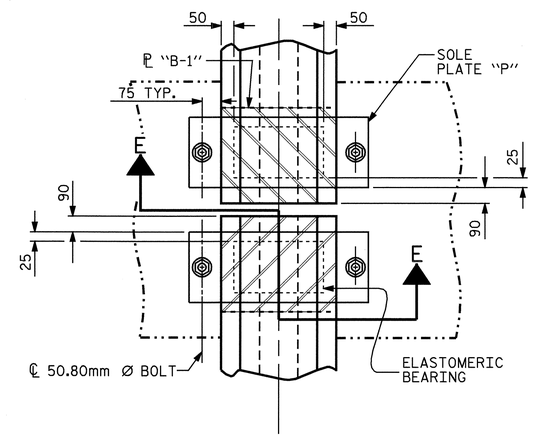

TYPICAL HALF-PLAN

(SHOWING CONTINUOUS BENT)

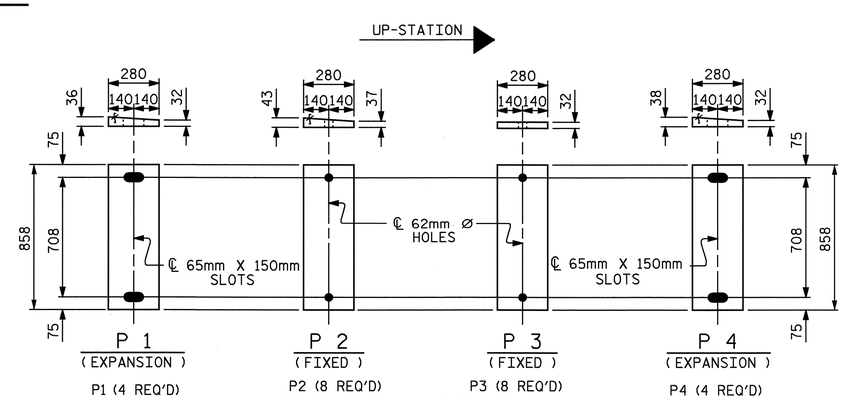

SOLE PLATE DETAILS ("P")

FOR LOCATION OF SOLE PLATES, SEE "FRAMING PLAN" SHEET.

NOTES

AT ALL FIXED POINTS OF SUPPORT, NUTS FOR ANCHOR BOLTS ARE TO BE TIGHTENED FINGER TIGHT AND THEN BACKED OFF ½ TURN. THE THREAD OF THE NUT AND BOLT SHALL THEN BE BURRED WITH A SHARP POINTED TOOL.

THE 51mm Ø PIPE SLEEVE SHALL BE CUT FROM SCHEDULE 40 PVC PLASTIC PIPE. THE PVC PLASTIC PIPE SHALL MEET THE REQUIREMENTS OF ASTM D1785.

STEEL SOLE PLATES, ANCHOR BOLTS, NUTS, AND WASHERS SHALL BE GALVANIZED IN ACCORDANCE WITH THE STANDARD SPECIFICATIONS.

PRIOR TO WELDING, GRIND THE GALVANIZED SURFACE OF THE PORTION OF THE EMBEDDED PLATE AND SOLE PLATE THAT ARE TO BE WELDED. AFTER WELDING, DAMAGED GALVANIZED SURFACES SHALL BE REPAIRED IN ACCORDANCE WITH THE STANDARD SPECIFICATIONS.

WHEN WELDING THE SOLE PLATE TO THE EMBEDDED PLATE IN THE GIRDER, USE TEMPERATURE INDICATING WAX PENS, OR OTHER SUITABLE MEANS, TO ENSURE THAT THE TEMPERATURE OF THE SOLE PLATE DOES NOT EXCEED 149°C. TEMPERATURES ABOVE THIS MAY DAMAGE THE ELASTOMER.

SOLE PLATE "P", BOLTS, NUTS, WASHERS, AND PIPE SLEEVE SHALL BE INCLUDED IN THE PAY ITEM FOR PRESTRESSED CONCRETE GIRDERS.

ANCHOR BOLTS SHALL MEET THE REQUIREMENTS OF ASTM A449. NUTS SHALL MEET THE REQUIREMENTS OF AASHTO M291M-12 OR AASHTO M292M-2H. WASHERS SHALL MEET THE REQUIREMENTS OF AASHTO M293M. SHOP DRAWINGS ARE NOT REQUIRED FOR ANCHOR BOLTS, NUTS AND WASHERS. SHOP INSPECTION IS REQUIRED.

ALL SURFACES OF BEARING PLATES SHALL BE SMOOTH AND STRAIGHT.

— LOAD RATINGS —	
	MAX.D.L.+L.L.
1143mm PCG -TYPE III	512 kN

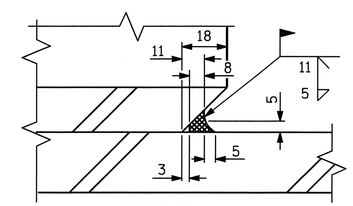

DETAIL "A"

PROJECT NO. R-2518B

YANCEY COUNTY

STATION: 191+92.500 -L-

STATE OF NORTH CAROLINA
DEPARTMENT OF TRANSPORTATION
RALEIGH

STANDARD
ELASTOMERIC BEARING DETAILS
PRESTRESSED CONCRETE GIRDER SUPERSTRUCTURE

NORTH CAROLINA PROFESSIONAL SEAL 20125 ENGINEER MARSHALL L. CREED, JR. 4-4-06

REVISIONS						SHEET NO.
NO.	BY:	DATE:	NO.	BY:	DATE:	S-89
1			3			TOTAL SHEETS
2			4			154

ASSEMBLED BY A. SORSENGINH/L.L.M.	DATE : 10/21/05		
CHECKED BY : V.X. NGUYEN	DATE : 2/06		
DRAWN BY : WJH 8/89	REV. 10/17/00	RWW/LES	
CHECKED BY : CRK 8/89	REV. 7/10/01	RWW/LES	
	REV. 5/1/06	TLA/GM	

03-APR-2008 15:07
r:\structures\finalplans\str #3\R2518B_sd_BG_STR#3.dgn
lmurphy

STR. #3

STD. NO. EB3SM

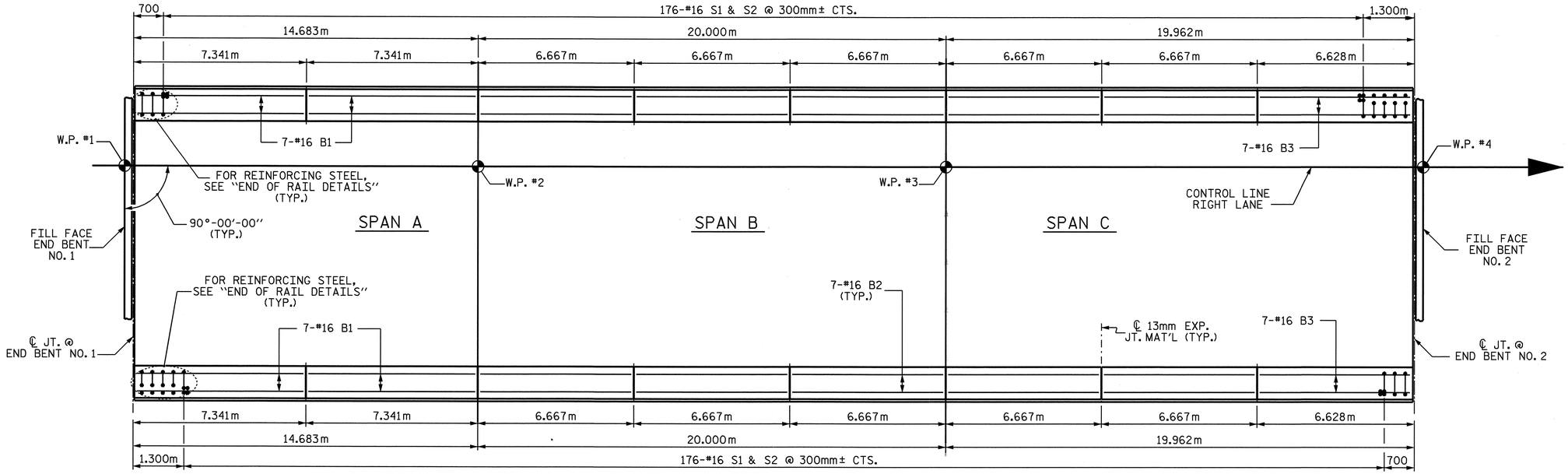

PLAN

BAR TYPES

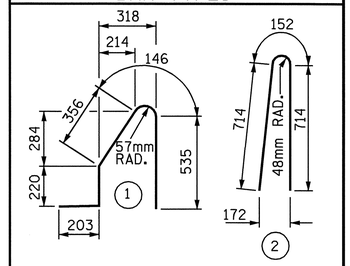

ALL BAR DIMENSIONS ARE OUT TO OUT

BILL OF MATERIAL

FOR CONCRETE BARRIER RAIL ONLY

BAR	NO.	SIZE	TYPE	LENGTH	WEIGHT
✱ S1	364	#16	1	1460	825
✱ S2	364	#16	2	1580	893
✱ B1	28	#16	STR	7220	314
✱ B2	70	#16	STR	6540	711
✱ B3	14	#16	STR	6500	141

✱ EPOXY COATED REINFORCING STEEL 2884 kg

CLASS AA CONCRETE 27.4 CU. METERS

CONCRETE BARRIER RAIL 109.290 METERS

✱ THESE BARS ARE EPOXY COATED.

NOTES

THE BARRIER RAIL IN A CONTINUOUS UNIT SHALL NOT BE CAST UNTIL ALL SLAB CONCRETE IN THAT UNIT HAS BEEN CAST AND HAS REACHED A MINIMUM COMPRESSIVE STRENGTH OF 20.7 MPa.

ALL REINFORCING STEEL IN BARRIER RAILS SHALL BE EPOXY COATED.

VERTICAL GROOVED CONTRACTION JOINTS, 12mm IN DEPTH, SHALL BE TOOLED IN ALL EXPOSED FACES OF THE BARRIER RAIL AND IN ACCORDANCE WITH ARTICLE 825-10(B) OF THE STANDARD SPECIFICATIONS. THE CONTRACTION JOINT SHALL BE LOCATED AT EACH THIRD POINT BETWEEN BARRIER RAIL EXPANSION JOINTS. ONLY ONE CONTRACTION JOINT IS REQUIRED AT MIDPOINT OF BARRIER RAIL SEGMENTS LESS THAN 6.1m IN LENGTH AND NO CONTRACTION JOINTS ARE REQUIRED FOR THOSE SEGMENTS LESS THAN 3.5m IN LENGTH.

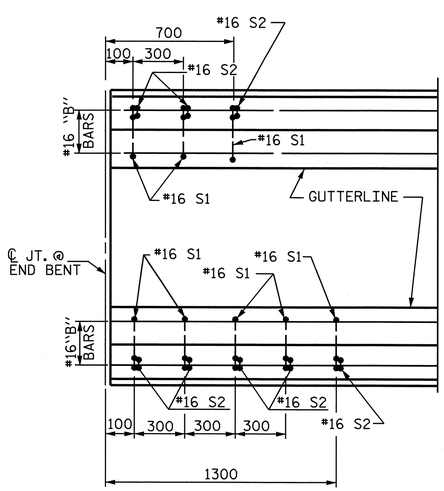

PLAN

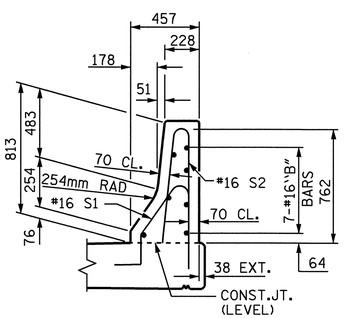

END VIEW

END OF RAIL DETAILS

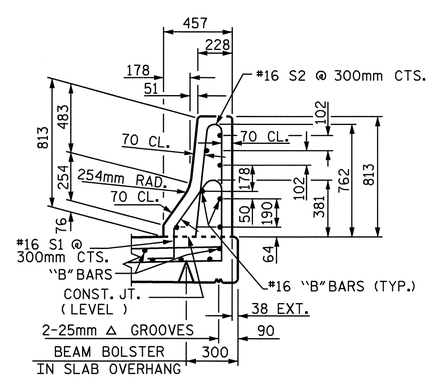

SECTION THRU RAIL

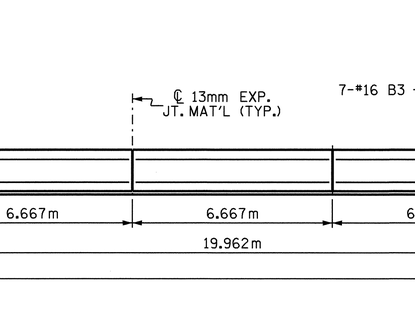

ELEVATION AT EXPANSION JOINTS

BARRIER RAIL DETAILS

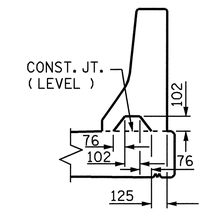

SECTION S-S

AT DAM IN OPEN JOINT (THIS IS TO BE USED ONLY WHEN SLIP FORM IS USED)

PROJECT NO. R-2518B

YANCEY COUNTY

STATION: 191+92.500 -L-

STATE OF NORTH CAROLINA
DEPARTMENT OF TRANSPORTATION
RALEIGH

STANDARD

CONCRETE BARRIER RAIL

NORTH CAROLINA PROFESSIONAL SEAL 20125 ENGINEER MARSHALL E. SHEEK, JR.
4-7-08

REVISIONS						SHEET NO.
NO.	BY:	DATE:	NO.	BY:	DATE:	S-90
1			3			TOTAL SHEETS
2			4			154

ASSEMBLED BY A. SORSENGINH/L.L.M.	DATE : 10/24/05		
CHECKED BY : V.X. NGUYEN	DATE : 2/06		
DRAWN BY : ARB 5/87	REV. 10/17/00	RWW/LES	
CHECKED BY : SJD 9/87	REV. 5/7/03R	RWW/JTE	
	REV. 5/1/06	TLA/GM	

04-APR-2008 15:00
r:\structures\Final plans\Str #3\R2518B_sd_BR_STR#3.dgn
lmurphy

STR. #3

STD. No. CBR1SM

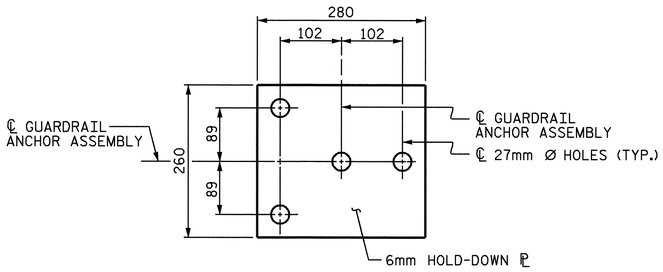

PLAN

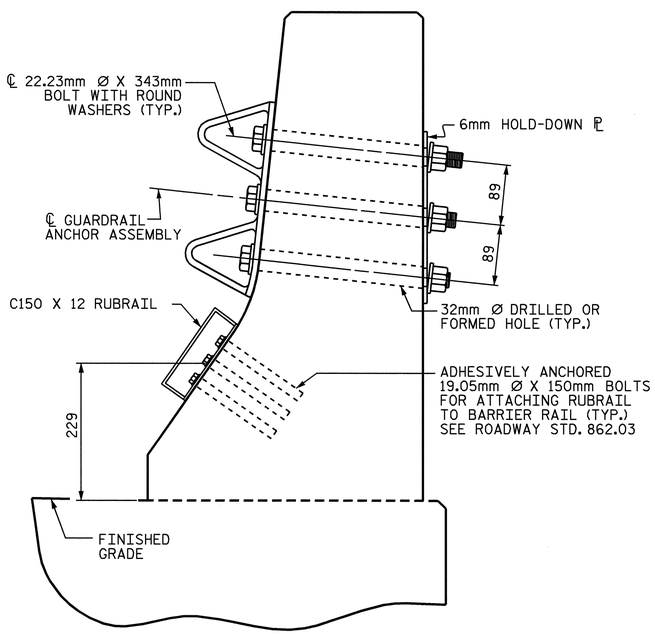

SECTION E-E

GUARDRAIL ANCHOR ASSEMBLY DETAILS

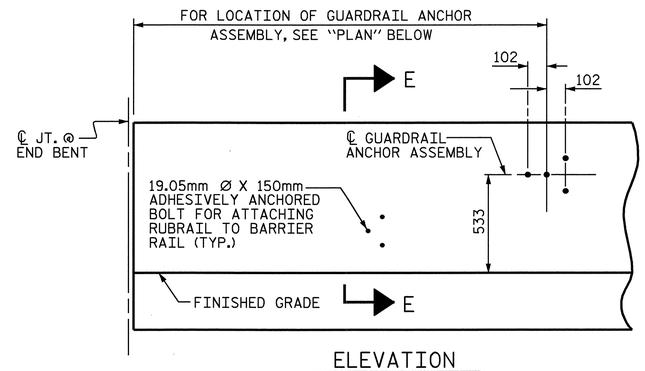

ELEVATION

FOR LOCATION OF RUBRAIL, SEE ROADWAY STD. 862.03

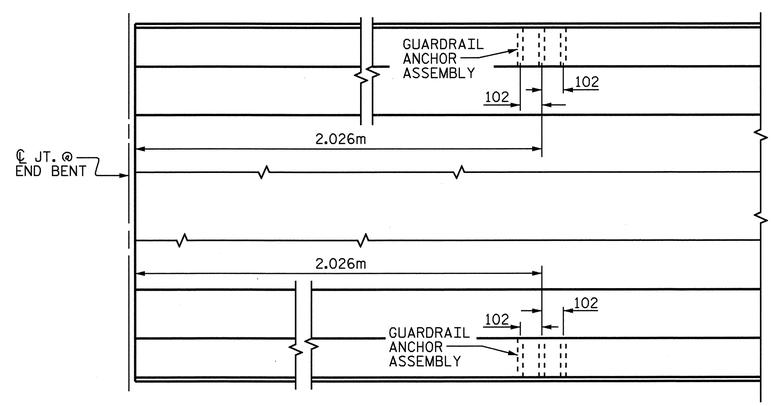

PLAN

LOCATION OF ANCHORS FOR GUARDRAIL

END BENT #1 SHOWN, END BENT #2 SIMILAR.

NOTES

THE GUARDRAIL ANCHOR ASSEMBLY SHALL CONSIST OF A 6mm HOLD DOWN PLATE AND 4 - 22.23mm Ø BOLTS WITH NUTS AND WASHERS, RUBRAIL, AND ADHESIVELY ANCHORED BOLTS.

THE HOLD-DOWN PLATE SHALL CONFORM TO AASHTO M270 GRADE 36. AFTER FABRICATION, THE HOLD-DOWN PLATE SHALL BE HOT-DIP GALVANIZED IN ACCORDANCE WITH AASHTO M111.

BOLTS SHALL CONFORM TO THE REQUIREMENTS OF ASTM A307 AND NUTS SHALL CONFORM TO THE REQUIREMENTS OF AASHTO M291. BOLTS, NUTS AND WASHERS SHALL BE GALVANIZED. (AT THE CONTRACTOR'S OPTION, STAINLESS STEEL BOLTS, NUTS AND WASHERS MAY BE USED AS AN ALTERNATE FOR THE 22.23mm Ø GALVANIZED BOLTS, NUTS AND WASHERS. THEY SHALL CONFORM TO OR EXCEED THE MECHANICAL REQUIREMENTS OF ASTM A307. THE USE OF THIS ALTERNATE SHALL BE APPROVED BY THE ENGINEER.)

THE GUARDRAIL ANCHOR ASSEMBLY IS REQUIRED AT ALL POINTS WHERE APPROACH GUARDRAIL IS TO BE ATTACHED TO THE END OF BARRIER RAIL. FOR POINTS OF ATTACHMENT, SEE SKETCH.

AFTER INSTALLATION, THE EXPOSED THREAD OF THE BOLT SHALL BE BURRED WITH A SHARP POINTED TOOL.

THE COST OF THE GUARDRAIL ANCHOR ASSEMBLY SHALL BE INCLUDED IN THE UNIT CONTRACT PRICE BID FOR CONCRETE BARRIER RAIL.

THE 32mm Ø HOLES SHALL BE FORMED OR DRILLED WITH A CORE BIT. IMPACT TOOLS WILL NOT BE PERMITTED. ANY CONCRETE DAMAGED BY THIS WORK SHALL BE REPAIRED TO THE SATISFACTION OF THE ENGINEER.

THE C150 X 12 RUBRAIL IS TO BE ADHESIVELY ANCHORED TO THE RAIL USING THREE 19.05mm Ø X 150mm BOLTS WITH WASHERS. LEVEL ONE FIELD TESTING IF REQUIRED, AND THE YIELD LOAD OF THE 19.05mm Ø BOLTS IS 53.4kN. FOR ADHESIVELY ANCHORED ANCHOR BOLTS OR DOWELS, SEE SPECIAL PROVISIONS. SEE ROADWAY STANDARD 862.03 FOR DETAILS AND LOCATION OF THE RUBRAIL.

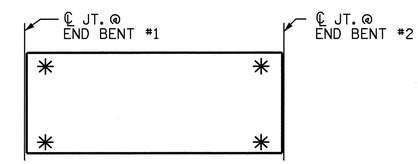

SKETCH SHOWING POINTS OF ATTACHMENTS

✳ DENOTES GUARDRAIL ANCHOR ASSEMBLY

PROJECT NO. R-2518B

YANCEY COUNTY

STATION: 191+92.500 -L-

STATE OF NORTH CAROLINA
DEPARTMENT OF TRANSPORTATION
RALEIGH

STANDARD

GUARDRAIL ANCHORAGE FOR BARRIER RAIL

NORTH CAROLINA PROFESSIONAL SEAL 20125 ENGINEER MARSHALL G. CHEEK, JR.
3-26-08

REVISIONS						
NO.	BY:	DATE:	NO.	BY:	DATE:	
1			3			
2			4			

SHEET NO. S-91

TOTAL SHEETS 154

STR. #3 STD. NO. GRA2SM

ASSEMBLED BY : L.L. MURPHY	DATE : 01-08
CHECKED BY : M.G. CHEEK	DATE : 01-08
DRAWN BY : TLA 5/06	ADDED 5/1/06R KMM/GM
CHECKED BY : GM 5/06	

26-MAR-2008 10:11
R:\Structures\Final plans\Str #3\R2518B_sd_BR_STR#3.dgn
mpoole

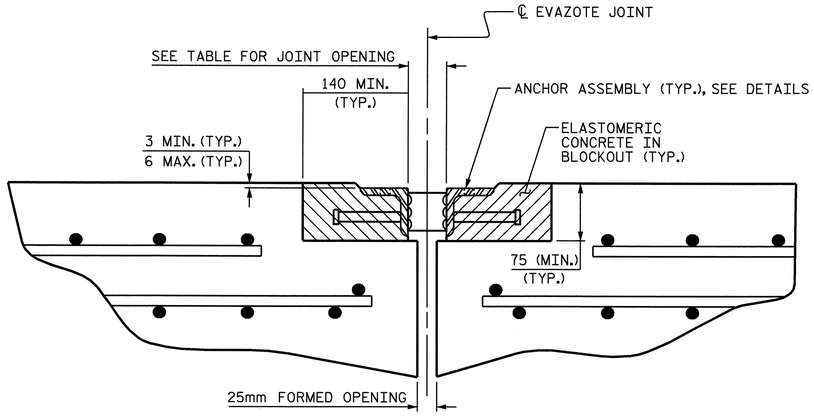

ARMORED JOINT DETAILS

SECTION NORMAL TO JOINT AT BENT

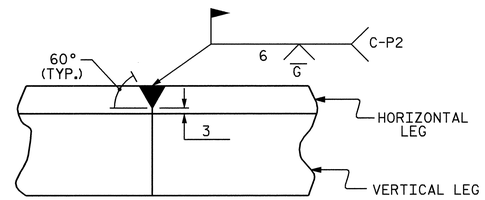

DETAIL- FIELD WELD SPLICE OF ANGLE

NOTES

ANGLES SHALL CONFORM TO AASHTO M270 GRADE 250 STEEL OR APPROVED EQUAL. ALL STUD ANCHORS SHALL CONFORM TO AASHTO M169 GRADES 1010 THRU 1020 OR APPROVED EQUAL.

STUD ANCHORS SHALL BE SHOP WELDED AND ALL HOLES SHALL BE SHOP DRILLED AS SHOWN ON THE PLANS. STUD ANCHORS SHALL BE ELECTRIC ARC END WELDED WITH COMPLETE FUSION.

UPON COMPLETION OF SHOP FABRICATION, THE ENTIRE ANCHOR ASSEMBLY SHALL BE METALLIZED. THE 12.70mm Ø STUD ANCHORS AND ANCHOR TABS NEED NOT BE METALLIZED. SEE SPECIAL PROVISION FOR THERMAL SPRAYED COATINGS (METALLIZATION).

ANCHOR ASSEMBLY SHALL BE MADE CONTINUOUS THE LENGTH OF THE JOINT FROM GUTTER TO GUTTER. FOR FIELD SPLICES AT ALL CROWN BREAK POINTS, THE ENDS OF THE STEEL ANGLES SHALL BE CUT PARALLEL TO THE BRIDGE CENTERLINE. FINISHED FIELD WELDS SHALL BE GROUND SMOOTH AND COATED WITH A MINIMUM THICKNESS OF 0.100mm OF ZINC-RICH PAINT IN ACCORDANCE WITH THE STANDARD SPECIFICATIONS.

ANCHOR ASSEMBLY SEGMENTS SHALL NOT BE LESS 3.6m NOR MORE THAN 6.1m IN LENGTH. SHORTER SEGMENTS MAY BE USED AT THE EDGE OF ROADWAY OR AT POINTS OF STAGED CONSTRUCTION.

THE ANCHOR ASSEMBLY SHALL BE SECURED AND LEVELED AS SHOWN IN THE "ARMORED JOINT ANCHOR ASSEMBLY DETAILS". NO SUBMITTALS ARE REQUIRED FOR 9.53mm Ø EXPANSION ANCHORS, NUTS OR WASHERS. THE CONTRACTOR MAY SUBMIT FOR APPROVAL AN ALTERNATE METHOD OF ALIGNING AND LEVELING THE ANGLES. THE ALTERNATE METHOD SHALL NOT INCLUDE ANY WELDING TO THE OUTSIDE FACE OF THE ANGLES.

AFTER THE ELASTOMERIC CONCRETE HAS BEEN CAST ON BOTH SIDES OF THE JOINT, REMOVE ANY EXCESS CONCRETE THAT COMES THROUGH THE WEEP HOLES AND THOROUGHLY CLEAN THE ANGLES. ANY DAMAGED STEEL SHALL BE COATED WITH A MINIMUM OF 0.100mm OF ZINC-RICH PAINT IN ACCORDANCE WITH THE STANDARD SPECIFICATIONS.

SEE SPECIAL PROVISIONS FOR EVAZOTE JOINT SEALS.

SEE SPECIAL PROVISIONS FOR ELASTOMERIC CONCRETE.

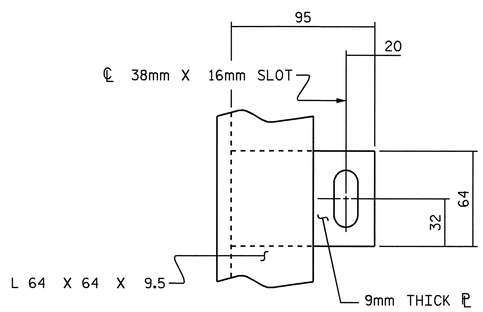

PLAN VIEW OF TAB

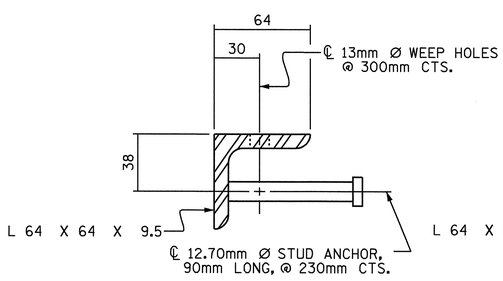

SECTION VIEW OF STUD

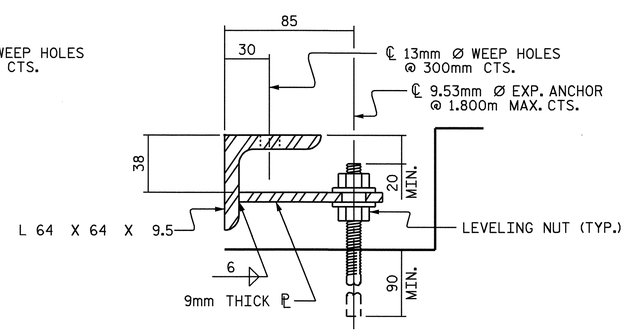

SECTION VIEW OF TAB

ARMORED JOINT ANCHOR ASSEMBLY DETAILS

MOVEMENT AND SETTING AT EVAZOTE JOINT

END BENT NO.	SKEW ANGLE	NOMINAL UNCOMPRESSED SEAL WIDTH	TOTAL MOVEMENT (ALONG ℄ RDWY)	PERPENDICULAR JOINT OPENING AT 7° C	PERPENDICULAR JOINT OPENING AT 16° C	PERPENDICULAR JOINT OPENING AT 32° C
1	90°-00'-00"	64mm	18mm	58mm	51mm	45mm
2	90°-00'-00"	64mm	21mm	55mm	51mm	48mm

TOTAL MOVEMENT IS CALCULATED ALONG THE CENTERLINE OF ROADWAY.
JOINT OPENINGS ARE MEASURED PERPENDICULAR TO THE JOINT.

BILL OF MATERIAL

END BENT NO.	ELASTOMERIC CONCRETE ✳ (CU. m)	TOTAL LENGTH OF ANGLE (m)
1	0.214	20.400m
2	0.214	20.400m

✳ BASED ON THE MINIMUM BLOCKOUT SHOWN.

PROJECT NO. R-2518B
YANCEY COUNTY
STATION: 191+92.500-L-

STATE OF NORTH CAROLINA
DEPARTMENT OF TRANSPORTATION
RALEIGH

STANDARD ARMORED EVAZOTE JOINT DETAILS

NORTH CAROLINA PROFESSIONAL SEAL 20125 ENGINEER MARSHALL G. CHEEK, JR. 3-18-08

REVISIONS						SHEET NO.
NO.	BY:	DATE:	NO.	BY:	DATE:	S-92
1			3			TOTAL SHEETS
2			4			154

ASSEMBLED BY : L.L. MURPHY	DATE : 02-08		
CHECKED BY : M.G. CHEEK	DATE : 02-08		
DRAWN BY : EEM 1/96	REV. 7/10/01	LES/RDR	
CHECKED BY : RGW 1/96	REV. 5/7/03RR	RWW/JTE	
	REV. 5/1/06	TLA/GM	

26-MAR-2008 10:12
R:\Structures\Final plans\Str #3\R2518B_sd_JS_ARMSTR#3.dgn
mpoole

STR #3

STD. NO. AEJ1SM

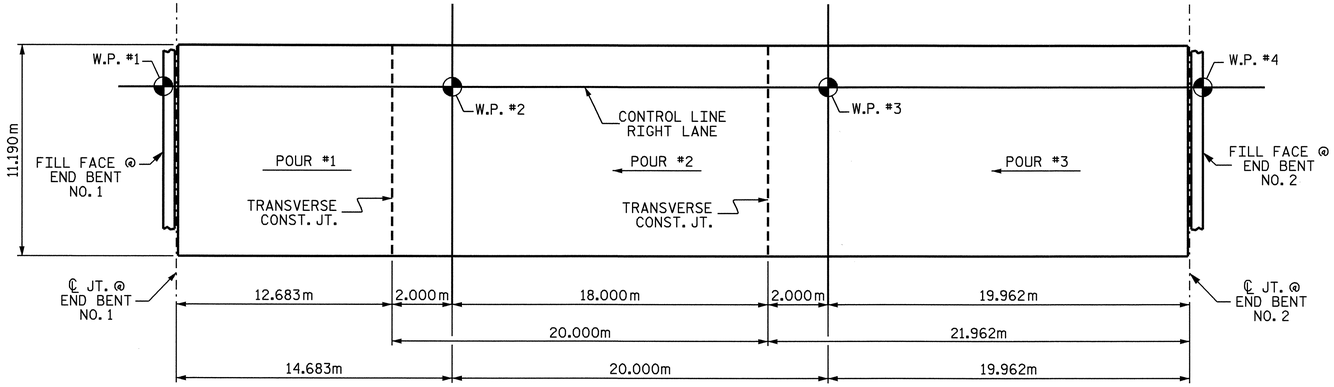

POUR SEQUENCE

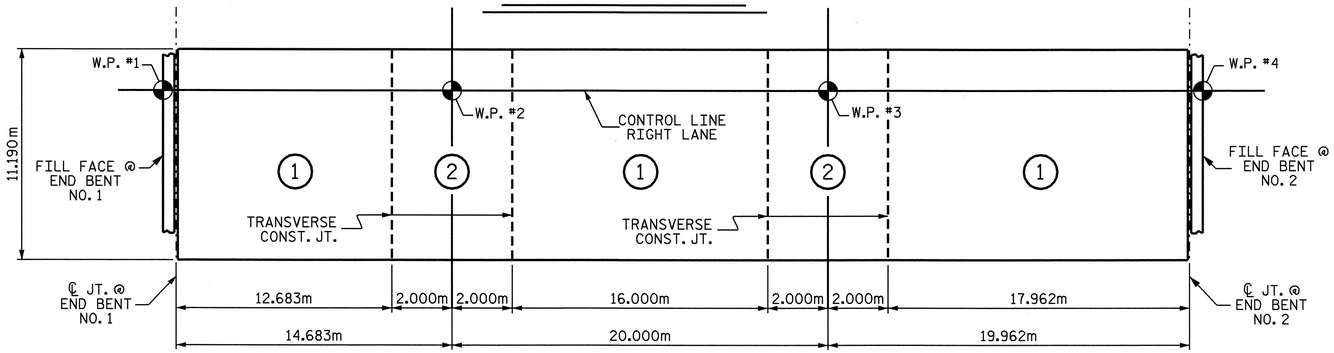

OPTIONAL POURING SEQUENCE

POUR (2) CANNOT BE STARTED UNTIL BOTH ADJACENT (1) POURS REACH A MINIMUM OF 20.7 mPa

REINFORCING BAR SCHEDULE

SPANS A, B & C

BAR	NO.	SIZE	TYPE	LENGTH	WEIGHT
✳ A1	364	#16	STR	11080	6259
A2	364	#16	STR	11080	6259
✳ B1	56	#13	STR	5400	301
✳ B2	28	#22	STR	13500	1150
✳ B3	25	#22	STR	5200	395
✳ B4	28	#13	STR	8000	223
✳ B5	28	#22	STR	15000	1278
✳ B6	25	#22	STR	6000	456
✳ B7	56	#13	STR	7300	406
B8	176	#16	STR	14160	3868
✳ G1	2	#16	STR	11080	34
✳ K1	8	#25	1	3280	104
✳ K2	8	#25	2	6260	199
K3	16	#13	STR	4900	78
K4	24	#13	STR	2520	60
K5	12	#13	STR	2740	33
K6	12	#13	STR	2080	25
✳ S1	54	#16	3	1500	126
✳ S2	150	#13	5	860	128
U1	42	#13	4	4080	170
U2	12	#13	4	3480	42
REINFORCING STEEL				=	10535 kg
✳ EPOXY COATED REINF. STEEL				=	11059 kg

✳ THESE BARS ARE EPOXY COATED

BAR TYPES

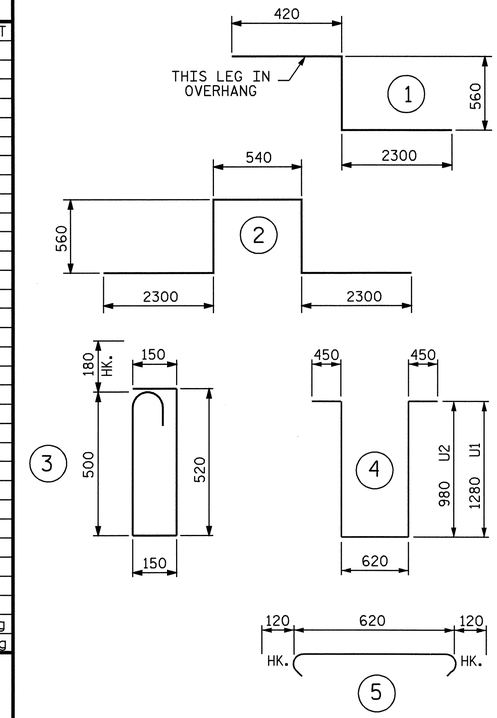

ALL BAR DIMENSIONS ARE OUT TO OUT

GROOVING BRIDGE FLOORS

BRIDGE DECK	506	SQ.METERS
APPROACH SLAB	137	SQ.METERS
TOTAL	643	SQ.METERS

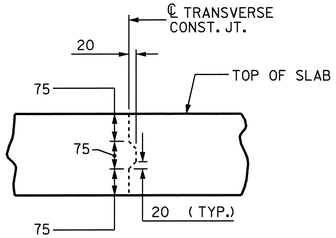

TRANSVERSE CONSTRUCTION JOINT DETAIL

NOTE: REINFORCING STEEL IN SLAB NOT SHOWED. LONGITUDINAL REINFORCING STEEL SHALL BE CONTINUOUS THRU JOINT

SUPERSTRUCTURE REINFORCING STEEL LENGTHS ARE BASED ON THE FOLLOWING MINIMUM SPLICE LENGTHS

BAR SIZE	SUPERSTRUCTURE EXCEPT APPROACH SLABS, PARAPET, AND BARRIER RAIL		APPROACH SLABS		PARAPET AND BARRIER RAIL
	EPOXY COATED	UNCOATED	EPOXY COATED	UNCOATED	
#13	610	540	610	540	840
#16	770	660	770	660	1050
#19	920	790	1190	790	1330
#22	1580	1060			
#25	2080	1390			

ALL DIMENSIONS ARE IN MILLIMETERS

SUPERSTRUCTURE BILL OF MATERIAL

	CLASS AA CONCRETE				REINFORCING STEEL	✳ EPOXY COATED REINFORCING STEEL
	POUR 1	POUR 2	POUR 3	TOTAL	(kg)	(kg)
SPANS A THRU C	41.4	65.4	71.7	178.5	10535	11059

■■ QUANTITIES FOR BARRIER RAIL ARE NOT INCLUDED

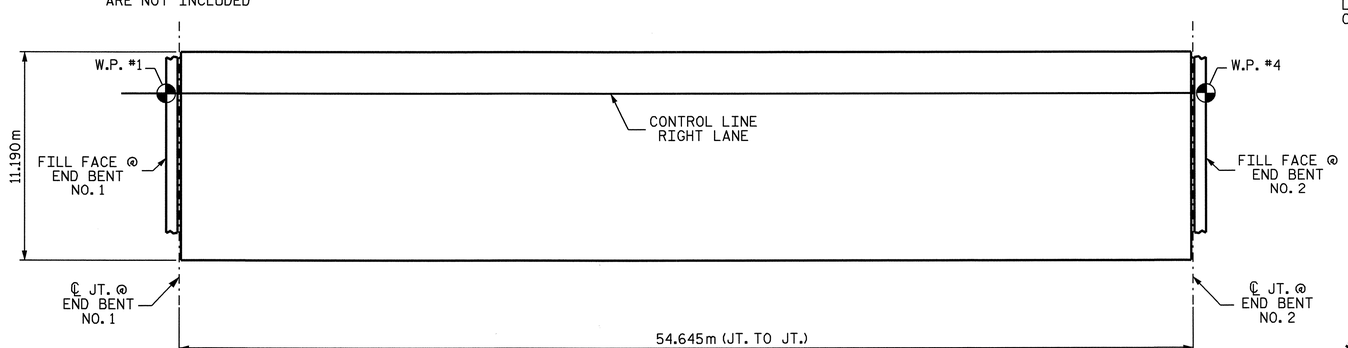

LAYOUT FOR COMPUTING AREA OF REINFORCED CONCRETE DECK SLAB (SQ. METERS = 611.5)

PROJECT NO. R-2518B
YANCEY COUNTY
STATION: 191+92.500 -L-

STATE OF NORTH CAROLINA
DEPARTMENT OF TRANSPORTATION
RALEIGH

SUPERSTRUCTURE BILL OF MATERIAL

NORTH CAROLINA PROFESSIONAL SEAL 20125 ENGINEER MARSHALL F. CHEEK, JR.
4-25-08

ASSEMBLED BY : A. SORSENGINH/L.L.M	DATE : 10/25/05
CHECKED BY : V.X. NGUYEN	DATE : 2/06
DRAWN BY : JMB 5/87	REV. 5/16/97 EEM/RGW
CHECKED BY : SJD 9/87	

REVISIONS							SHEET NO.
NO.	BY:	DATE:	NO.	BY:	DATE:		S-93
1			3				TOTAL SHEETS
2			4				154

STR. #3

STD. NO. BOM2SM

25-APR-2008 10:24
r:\structures\final plans\str #3\r2518b_sd_bm_str#3.dgn
lmurphy

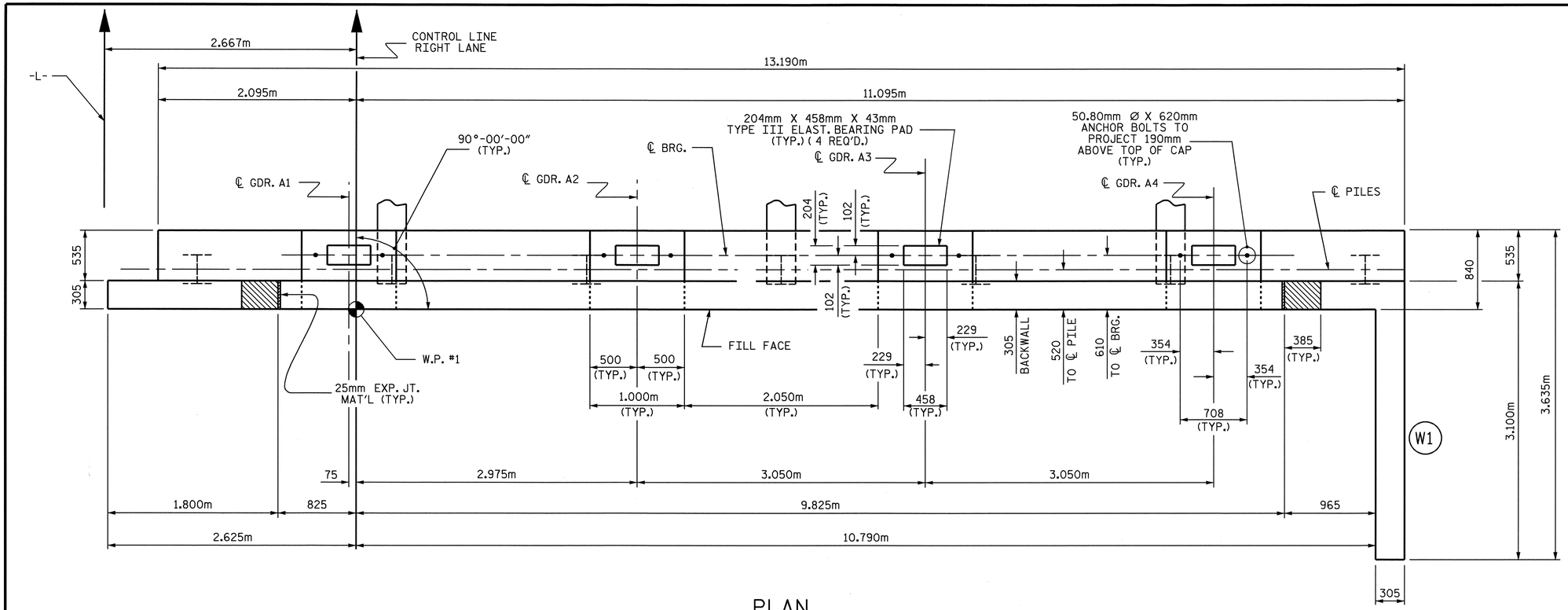

PLAN

NOTES

STIRRUPS IN CAP MAY BE SHIFTED AS NECESSARY TO CLEAR ANCHOR BOLTS.

BACKWALL SHALL BE PLACED BEFORE APPLYING THE EPOXY PROTECTIVE COATING.

THE TOP SURFACE AREAS OF THE END BENT CAPS SHALL BE CURED IN ACCORDANCE WITH THE STANDARD SPECIFICATIONS EXCEPT THE MEMBRANE CURING COMPOUND METHOD SHALL NOT BE USED.

THE TOP SURFACE OF THE CAP EXCEPT THE BRIDGE SEAT BUILDUPS SHALL BE SLOPED TRANSVERSELY FROM THE FILL FACE TO THE BACK FACE AT THE RATE OF 2 %.

THE CONTRACTOR SHALL PROVIDE FOR INSTALLATION OF THE 102mm DIAMETER DRAIN PIPE THROUGH THE WING WALL AS REQUIRED FOR REINFORCED BRIDGE APPROACH FILLS, SEE THE ROADWAY PLANS. REINFORCING STEEL IN THE WING WALL MAY BE SHIFTED AS NECESSARY TO CLEAR THE DRAIN PIPE.

THE CONCRETE IN THE SHADED AREA OF THE WING SHALL BE POURED AFTER THE BARRIER RAIL IS CAST IF SLIP FORMING IS USED.

✳ FOR LOCATION OF ELEVATION BETWEEN BRIDGE SEAT BUILDUPS, SEE SECTION A-A, SHEET 3 OF 3.

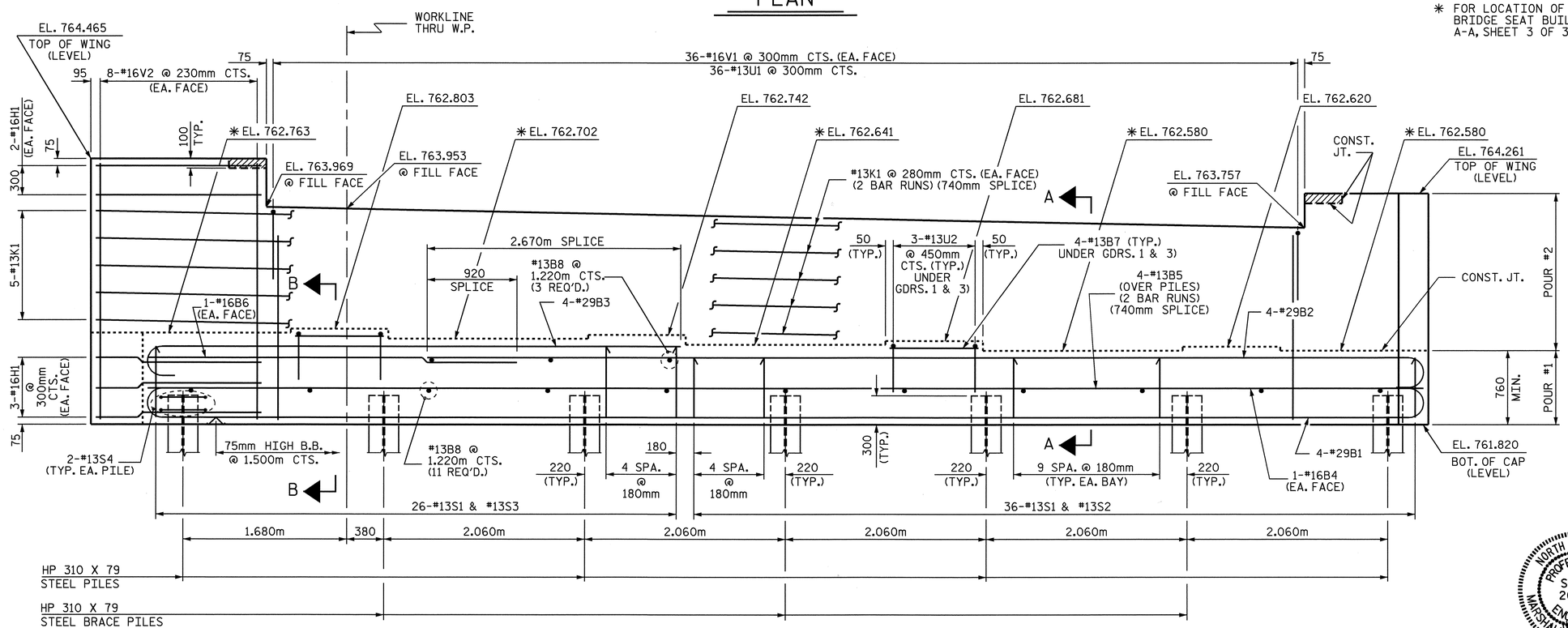

ELEVATION

PROJECT NO. R-2518B
YANCEY COUNTY
STATION: 191+92.500-L-

SHEET 1 OF 3

STATE OF NORTH CAROLINA
DEPARTMENT OF TRANSPORTATION
RALEIGH

SUBSTRUCTURE

END BENT NO. 1

NORTH CAROLINA PROFESSIONAL SEAL 20125 ENGINEER MARSHALL L. GLICHESKI, JR. 4-4-08

REVISIONS								SHEET NO.
NO.	BY:	DATE:	NO.	BY:	DATE:			S-94
1			3					TOTAL SHEETS
2			4					154

STR #3

DRAWN BY : L.L. MURPHY DATE : 02-06
CHECKED BY : A. SORSENGINH DATE : 04-06

02-APR-2008 17:13
r:\structures\finalplans\str #3\r2518b_sd_e*.dgn
lmurphy

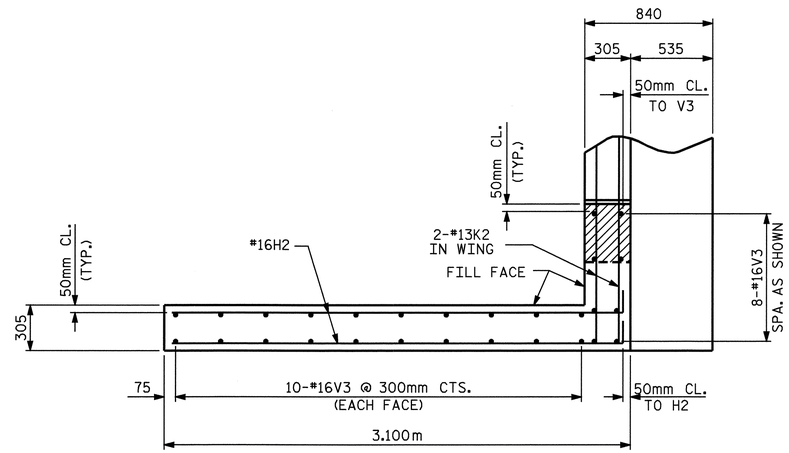

PLAN OF RIGHT WING W1

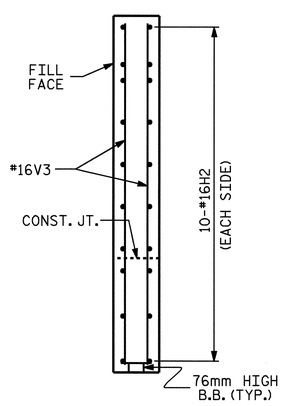

SECTION Y-Y

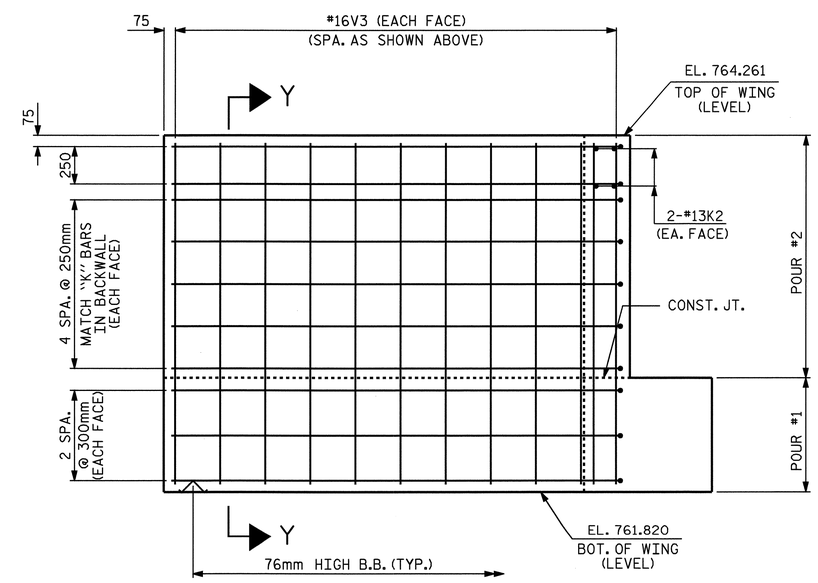

ELEVATION OF RIGHT WING W1

PROJECT NO. R-2518B

YANCEY COUNTY

STATION: 191+92.500-L-

SHEET 2 OF 3

STATE OF NORTH CAROLINA
DEPARTMENT OF TRANSPORTATION
RALEIGH

SUBSTRUCTURE

END BENT NO. 1

NORTH CAROLINA PROFESSIONAL SEAL 20125 ENGINEER MARSHALL E. CHEEK, JR.
3-28-08

REVISIONS						SHEET NO.
NO.	BY:	DATE:	NO.	BY:	DATE:	S-95
1			3			TOTAL SHEETS
2			4			154

DRAWN BY : L.L. MURPHY DATE : 02-06
CHECKED BY : A. SORSENGINH DATE : 04-06

07-MAR-2008 07:17
r:\structures\finalplans\str #3\r2518b_sd_e*.dgn
dahodge

STR #3

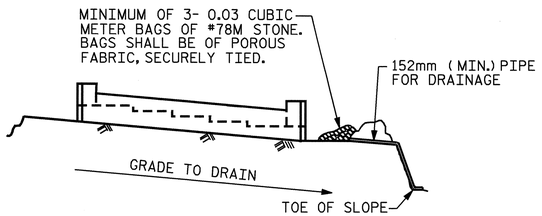

BAGGED STONE AND PIPE SHALL BE PLACED IMMEDIATELY AFTER COMPLETION OF END BENT EXCAVATION. PIPE MAY BE EITHER CONCRETE, CORRUGATED STEEL, CORRUGATED ALUMINUM ALLOY, OR CORRUGATED PLASTIC. PERFORATED PIPE WILL NOT BE ALLOWED.

BAGGED STONE SHALL REMAIN IN PLACE UNTIL THE ENGINEER DIRECTS THAT IT BE REMOVED. THE CONTRACTOR SHALL REMOVE AND DISPOSE OF SILT ACCUMULATIONS AT BAGGED STONE WHEN SO DIRECTED BY THE ENGINEER. BAGS SHALL BE REMOVED AND REPLACED WHENEVER THE ENGINEER DETERMINES THAT THEY HAVE DETERIORATED AND LOST THEIR EFFECTIVENESS.

NO SEPARATE PAYMENT WILL BE MADE FOR THIS WORK AND THE ENTIRE COST OF THIS WORK SHALL BE INCLUDED IN THE UNIT CONTRACT PRICE BID FOR THE SEVERAL PAY ITEMS.

TEMPORARY DRAINAGE AT END BENT

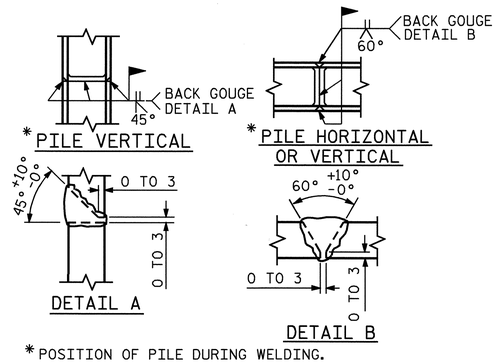

* POSITION OF PILE DURING WELDING.

PILE SPLICE DETAILS

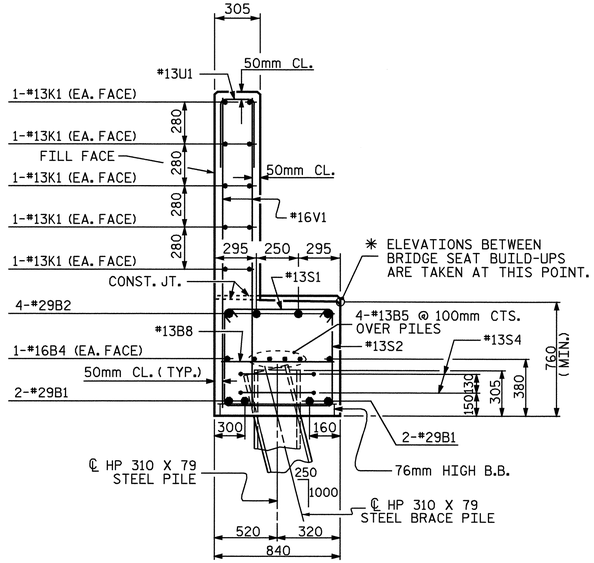

SECTION A-A

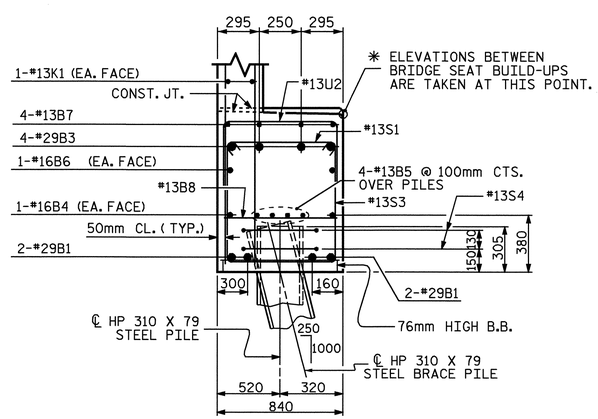

SECTION B-B

BAR TYPES

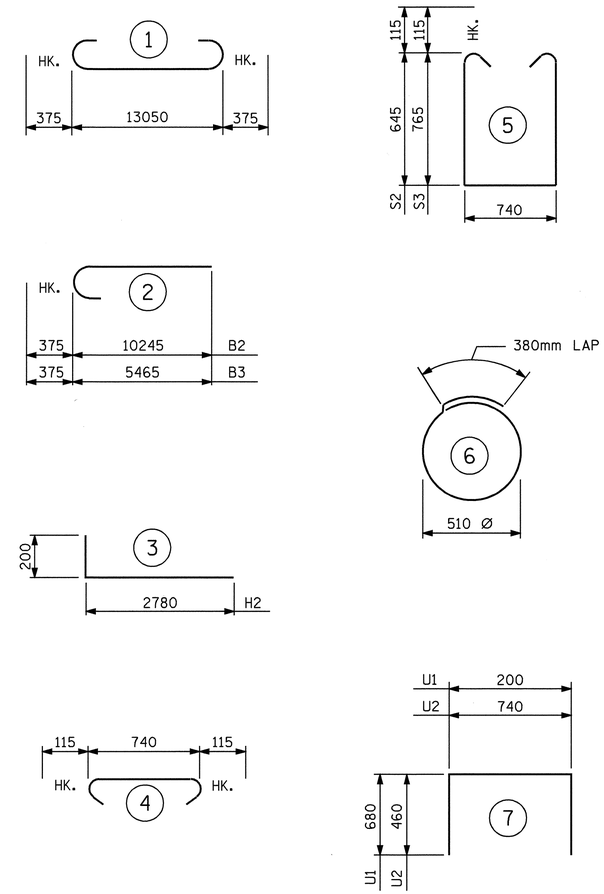

ALL BAR DIMENSIONS ARE OUT TO OUT.

BILL OF MATERIAL
END BENT NO. 1

BAR	NO.	SIZE	TYPE	LENGTH	WEIGHT
B1	4	#29	1	13800	279
B2	4	#29	2	10620	215
B3	4	#29	2	5840	118
B4	2	#16	STR	13080	41
B5	8	#13	STR	6920	55
B6	2	#16	STR	3780	12
B7	8	#13	STR	900	7
B8	14	#13	STR	740	10
H1	10	#16	STR	1700	26
H2	20	#16	3	2980	92
K1	20	#13	STR	7180	143
K2	4	#13	STR	860	3
S1	62	#13	4	970	60
S2	36	#13	5	2260	81
S3	26	#13	5	2500	65
S4	14	#13	6	1960	27
U1	36	#13	7	1580	57
U2	6	#13	7	1660	10
V1	72	#16	STR	1800	201
V2	16	#16	STR	2520	63
V3	28	#16	STR	2320	101

REINFORCING STEEL = 1666 kg

CLASS A CONCRETE BREAKDOWN

POUR #1 :
CAP & LOWER WINGS 10.2 CU. M.

POUR #2
BACKWALL & UPPER WINGS 7.1 CU. M.

CLASS A CONCRETE TOTAL 17.3 CU. M.

HP 310 X 79 STEEL PILES
NO. 7 147 METERS

PROJECT NO. R-2518B
YANCEY COUNTY
STATION: 191+92.500-L-

SHEET 3 OF 3

STATE OF NORTH CAROLINA
DEPARTMENT OF TRANSPORTATION
RALEIGH

SUBSTRUCTURE
END BENT NO. 1

NORTH CAROLINA PROFESSIONAL SEAL 20125 ENGINEER MARSHALL L. GIVENS, JR.
4-4-08

REVISIONS							SHEET NO.
NO.	BY:	DATE:	NO.	BY:	DATE:		S-96
1			3				TOTAL SHEETS
2			4				154

STR #3

DRAWN BY : L.L. MURPHY DATE : 02-06
CHECKED BY : A. SORSENGINH DATE : 04-06

02-APR-2008 17:24
r:\structures\finalplans\str #3\r2518b_sd_e*.dgn
lmurphy

NOTES

STIRRUPS IN CAP MAY BE SHIFTED AS NECESSARY TO CLEAR ANCHOR BOLTS.

"U" BARS IN END CAP MAY BE SHIFTED SLIGHTLY AS NECESSARY TO CLEAR "B" BARS.

75mm MINIMUM CONCRETE COVER FROM THE END OF CAP IS REQUIRED FOR ALL "U" BARS.

FOR PIPE PILE SPLICE DETAILS, SEE 762mm STEEL PIPE PILE SHEET.

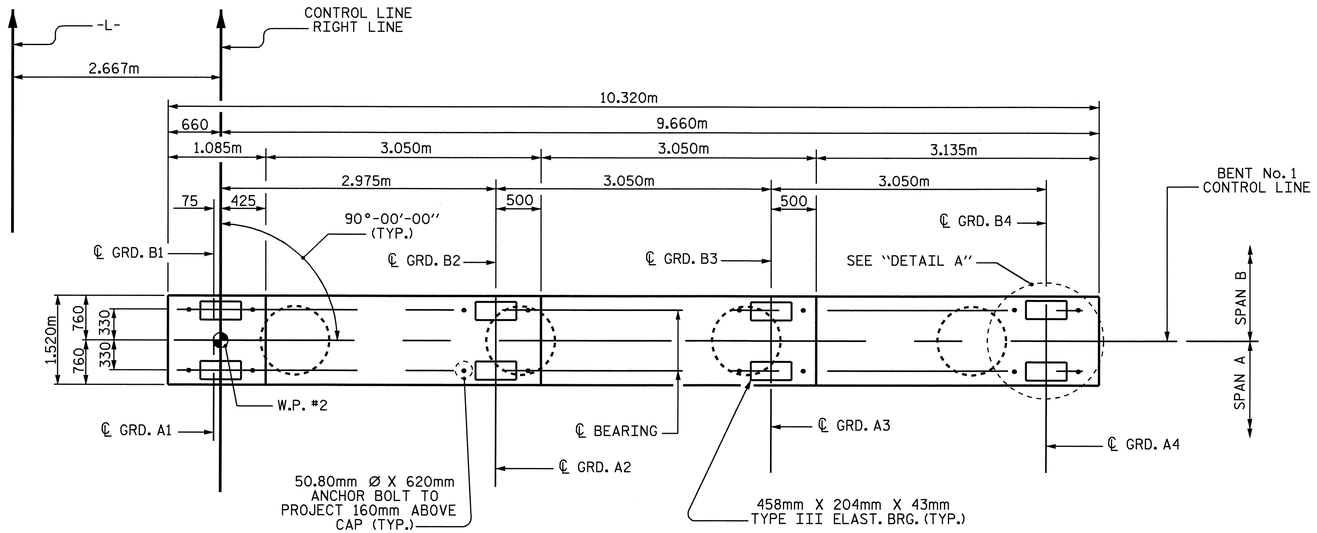

PLAN

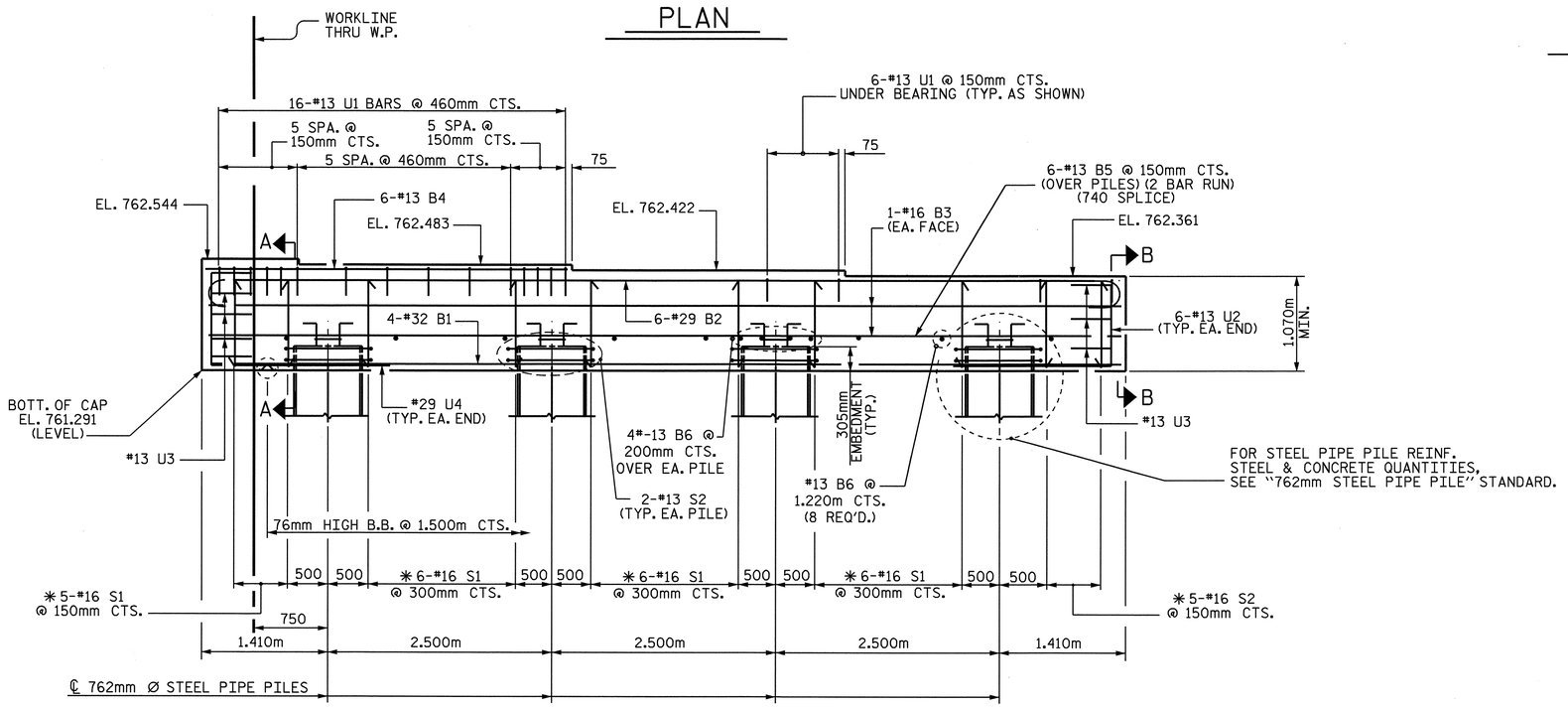

ELEVATION

✳ INVERT ALTERNATE STIRRUPS

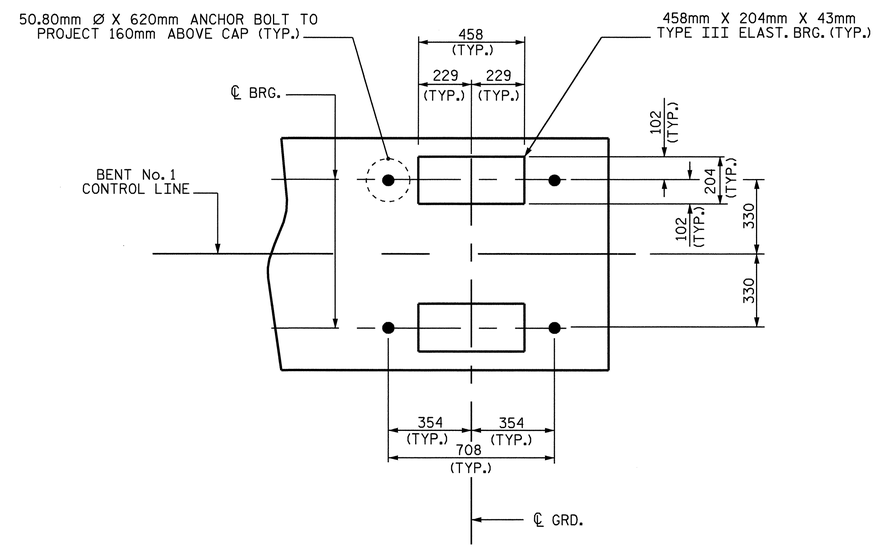

DETAIL A

PROJECT NO. R-2518B

YANCEY COUNTY

STATION: 191+92.500 -L-

SHEET 1 OF 2

STATE OF NORTH CAROLINA
DEPARTMENT OF TRANSPORTATION
RALEIGH

SUBSTRUCTURE
BENT No. 1

NORTH CAROLINA PROFESSIONAL SEAL 20125 ENGINEER MARSHALL G. CHEEK, JR.
3-28-08

REVISIONS						SHEET NO.
NO.	BY:	DATE:	NO.	BY:	DATE:	S-97
1			3			TOTAL SHEETS
2			4			154

DRAWN BY : M. POOLE DATE : 12-07
CHECKED BY : M. G. CHEEK DATE : 01-08

10-MAR-2008 09:15
R:\Structures\Final plans\Str #3\R2518B_sd_B1_03.dgn
mpoole

STR. #3

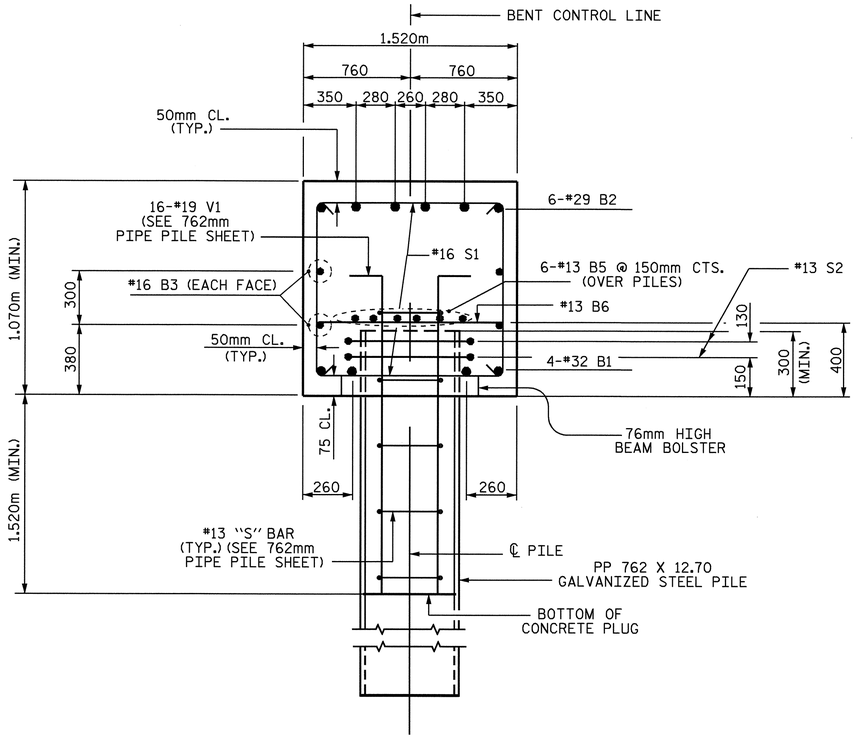

SECTION THRU
CAP & STEEL PIPE PILE

BAR TYPES

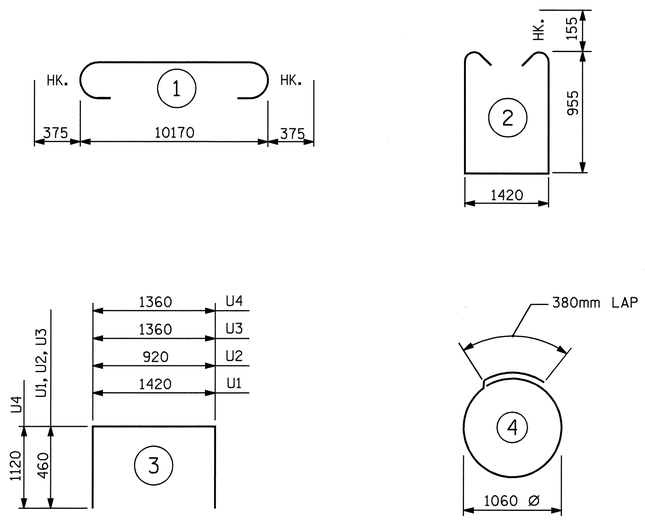

ALL BAR DIMENSIONS ARE OUT TO OUT.

BILL OF MATERIAL

BENT No. 1

BAR	NO.	SIZE	TYPE	LENGTH	WEIGHT
B1	4	32	STR	10220	262
B2	6	29	1	10920	332
B3	4	16	STR	10220	63
B4	6	13	STR	4020	24
B5	12	13	STR	5480	65
B6	24	13	STR	1420	34
S1	28	16	2	3640	158
S2	8	13	2	3710	30
U1	28	13	3	2340	65
U2	12	13	3	1840	22
U3	6	13	3	2280	14
U4	2	29	3	3600	36

REINFORCING STEEL 1105 kg

CLASS A CONCRETE
POUR 1 CAP 17.4 CU. METERS
** TOTAL 17.4 CU. METERS

PP 762 X 12.7 GALVANIZED STEEL PILES
NO. 4 64.8 METERS

** CONCRETE DISPLACED BY THE FILLED 762mm Ø STEEL PIPE PILES HAS BEEN DEDUCTED.

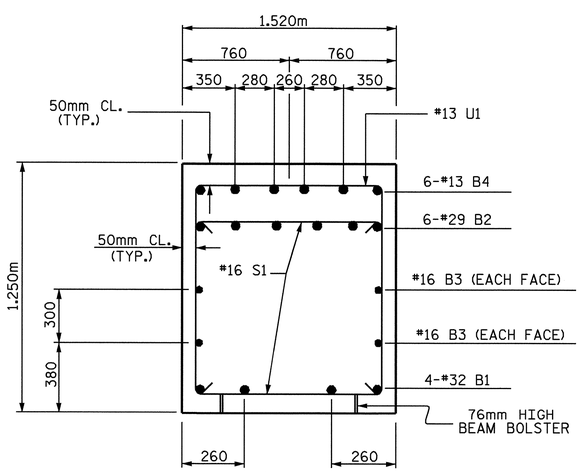

SECTION A-A

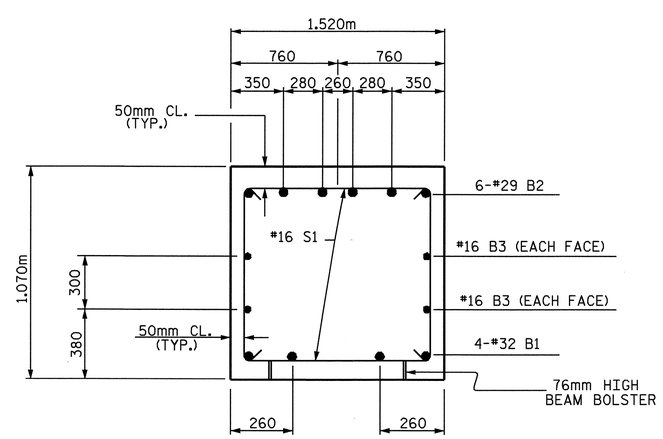

SECTION B-B

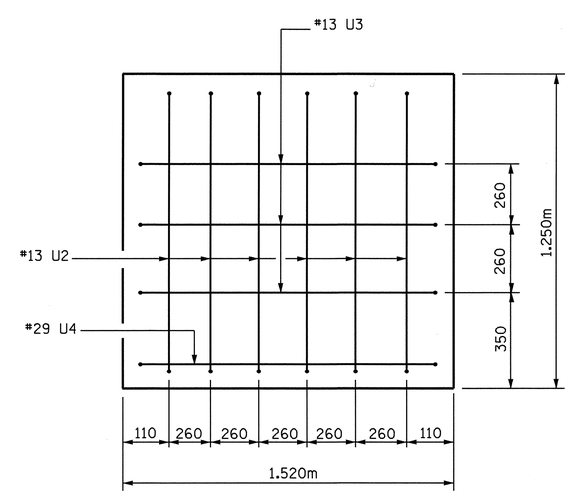

END VIEW

PROJECT NO. R-2518B
YANCEY COUNTY
STATION: 191+92.500 -L-

SHEET 2 OF 2

STATE OF NORTH CAROLINA
DEPARTMENT OF TRANSPORTATION
RALEIGH

SUBSTRUCTURE
BENT No. 1

NORTH CAROLINA PROFESSIONAL SEAL 20125 ENGINEER MARSHALL G. CHEEK, JR.
4-16-08

REVISIONS						SHEET NO.
NO.	BY:	DATE:	NO.	BY:	DATE:	S-98
1			3			TOTAL SHEETS
2			4			154

DRAWN BY : M. POOLE DATE : 12/07
CHECKED BY : M. G. CHEEK DATE : 01-08

NOTES

STIRRUPS IN CAP MAY BE SHIFTED AS NECESSARY TO CLEAR ANCHOR BOLTS.

"U" BARS IN END CAP MAY BE SHIFTED SLIGHTLY AS NECESSARY TO CLEAR "B" BARS.

75mm MINIMUM CONCRETE COVER FROM THE END OF CAP IS REQUIRED FOR ALL "U" BARS.

FOR PIPE PILE SPLICE DETAILS, SEE 762mm STEEL PIPE PILE SHEET.

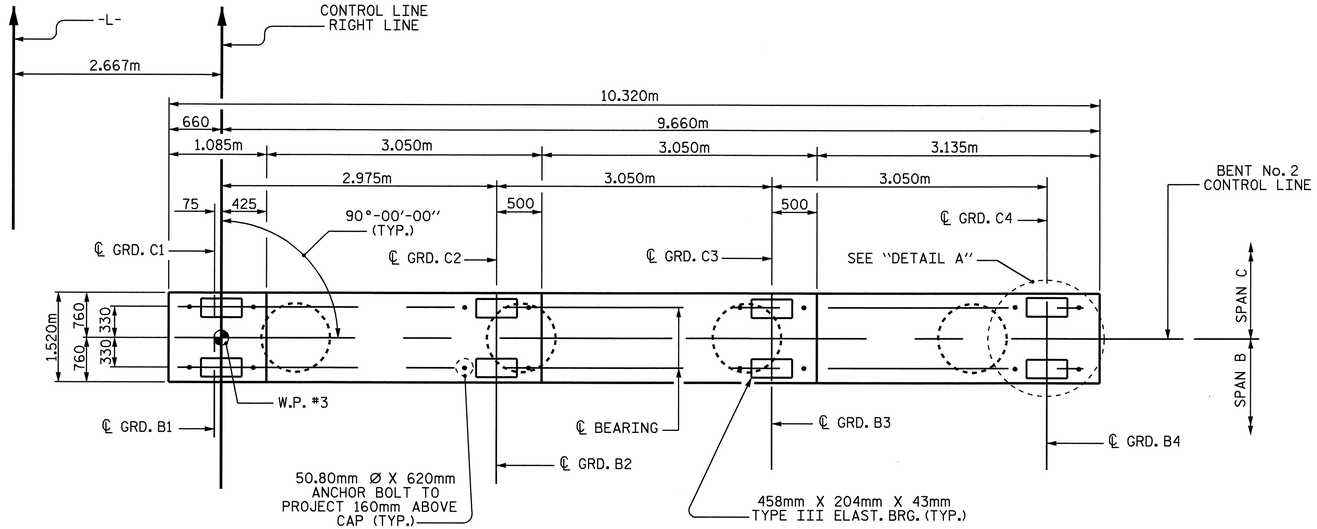

PLAN

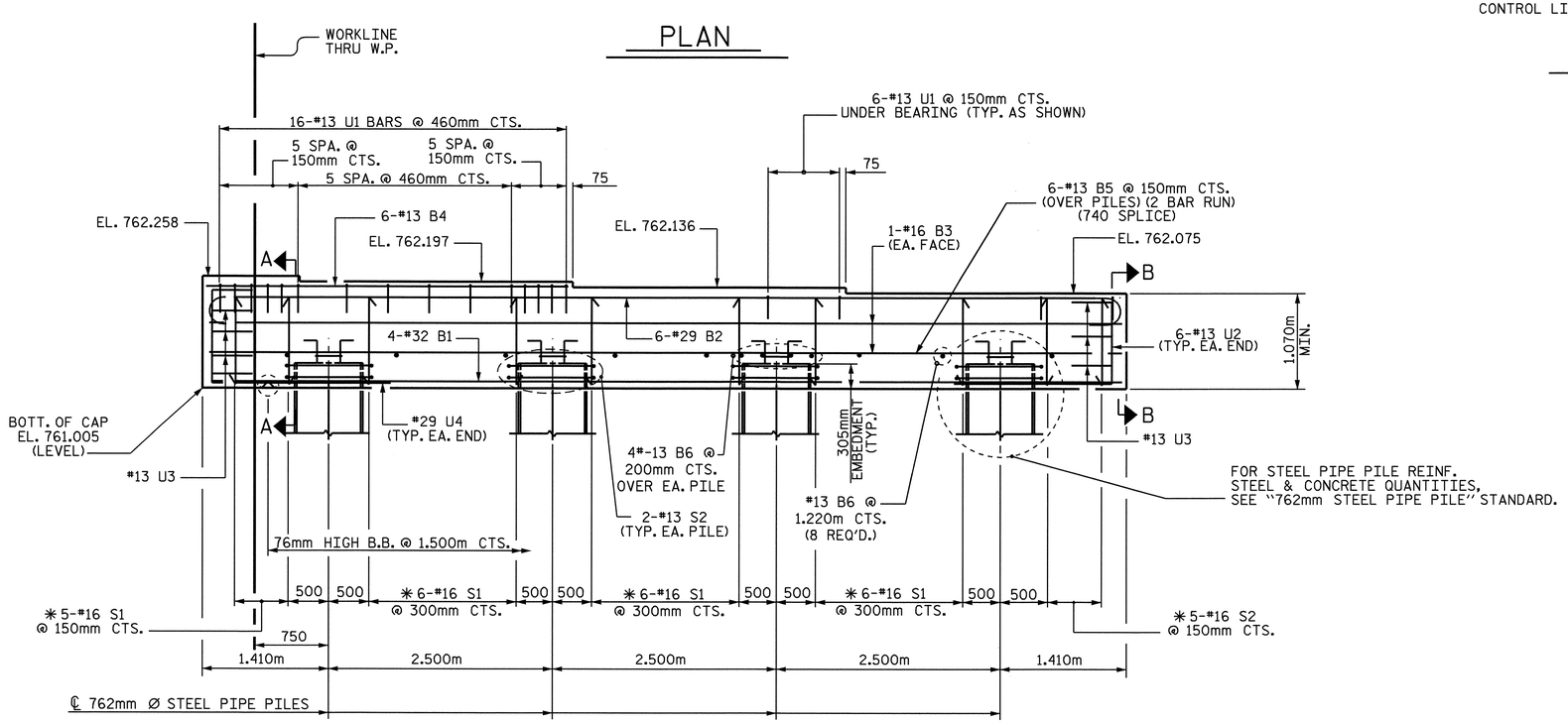

ELEVATION

✳ INVERT ALTERNATE STIRRUPS

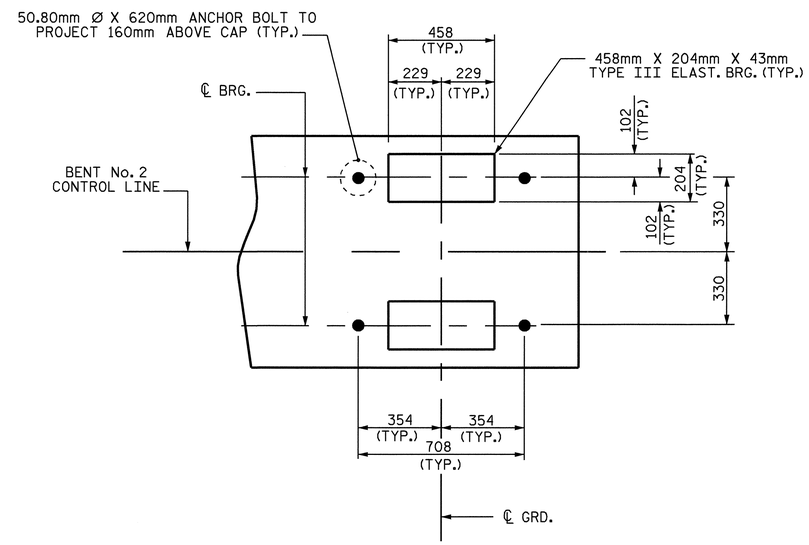

DETAIL A

PROJECT NO. R-2518B

YANCEY COUNTY

STATION: 191+92.500 -L-

SHEET 1 OF 2

STATE OF NORTH CAROLINA
DEPARTMENT OF TRANSPORTATION
RALEIGH

SUBSTRUCTURE
BENT No. 2

NORTH CAROLINA PROFESSIONAL SEAL 20125 ENGINEER MARSHALL G. CHEEK, JR.
3-18-08

REVISIONS							SHEET NO.
NO.	BY:	DATE:	NO.	BY:	DATE:		S-99
1			3				TOTAL SHEETS
2			4				154

DRAWN BY : M. POOLE DATE : 12-07
CHECKED BY : M. G. CHEEK DATE : 01-08

10-MAR-2008 09:13
R:\Structures\Final plans\Str #3\R2518B_sd_B2_03.dgn
mpoole

STR. #3

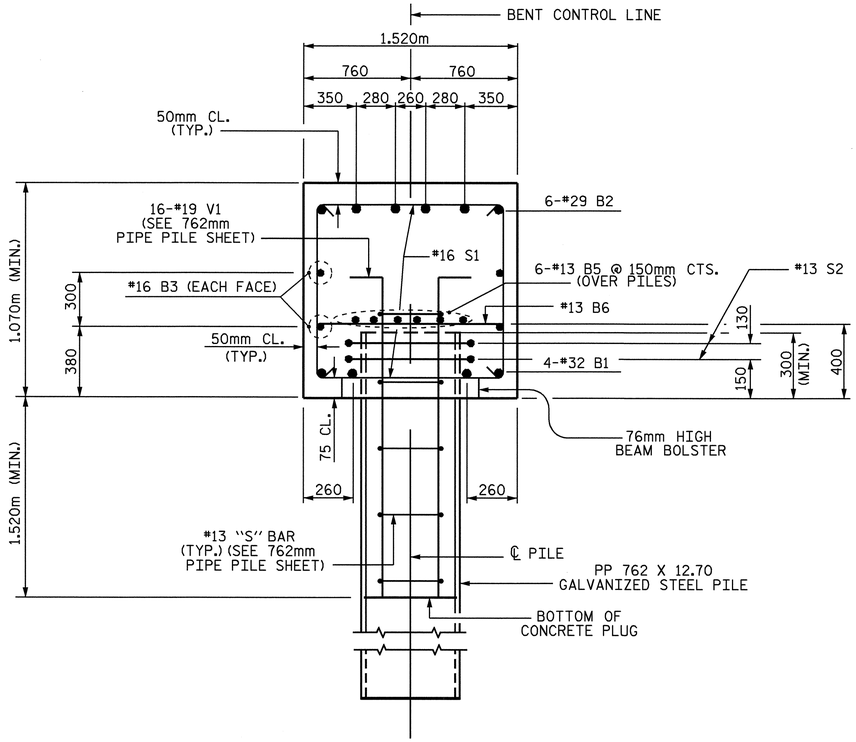

SECTION THRU
CAP & STEEL PIPE PILE

BAR TYPES

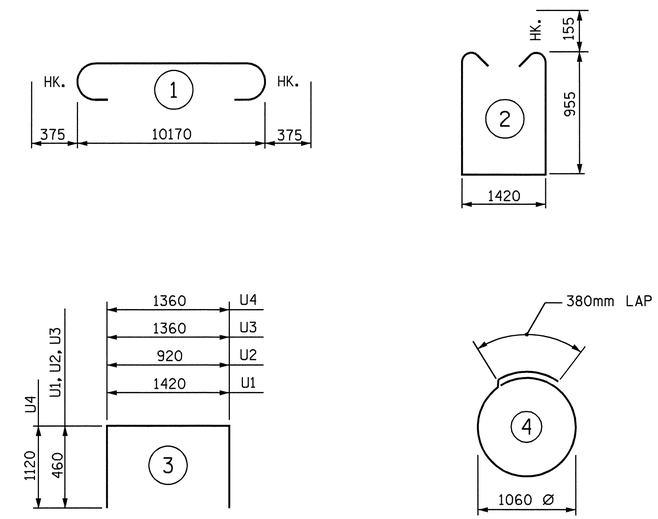

ALL BAR DIMENSIONS ARE OUT TO OUT.

BILL OF MATERIAL

BENT No. 2

BAR	NO.	SIZE	TYPE	LENGTH	WEIGHT
B1	4	32	STR	10220	262
B2	6	29	1	10920	332
B3	4	16	STR	10220	63
B4	6	13	STR	4020	24
B5	12	13	STR	5480	65
B6	24	13	STR	1420	34
S1	28	16	2	3640	158
S2	8	13	2	3710	30
U1	28	13	3	2340	65
U2	12	13	3	1840	22
U3	6	13	3	2280	14
U4	2	29	3	3600	36
REINFORCING STEEL					1105 kg

CLASS A CONCRETE

POUR 1 CAP 17.4 CU. METERS

** TOTAL 17.4 CU. METERS

PP 762 X 12.7 GALVANIZED STEEL PILES

NO. 4 81.6 METERS

** CONCRETE DISPLACED BY THE FILLED 762mm Ø STEEL PIPE PILES HAS BEEN DEDUCTED.

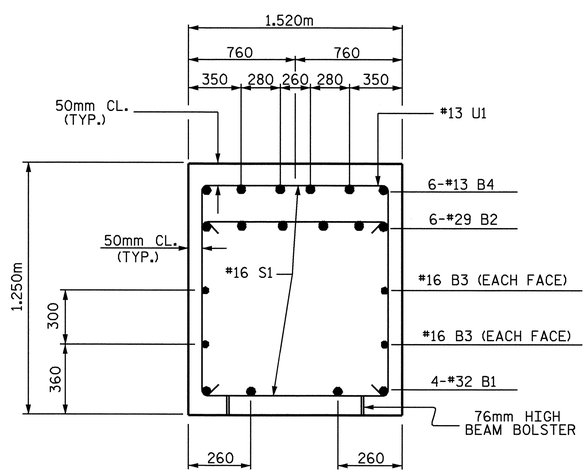

SECTION A-A

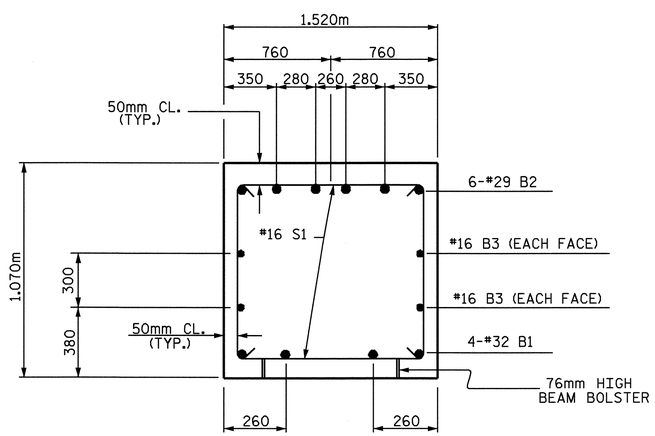

SECTION B-B

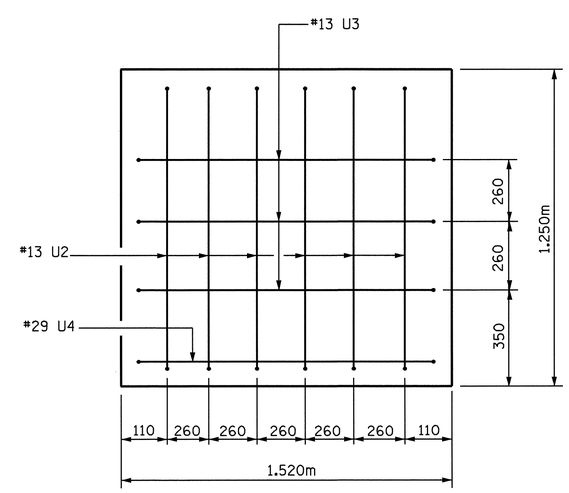

END VIEW

PROJECT NO. R-2518B
YANCEY COUNTY
STATION: 191+92.500 -L-

SHEET 2 OF 2

STATE OF NORTH CAROLINA
DEPARTMENT OF TRANSPORTATION
RALEIGH

SUBSTRUCTURE
BENT No. 2

NORTH CAROLINA PROFESSIONAL SEAL 20125 ENGINEER MARSHALL G. CHEEK, JR.
4-16-08

REVISIONS						SHEET NO.
NO.	BY:	DATE:	NO.	BY:	DATE:	S-100
1			3			TOTAL SHEETS
2			4			154

DRAWN BY : M. POOLE DATE : 12/07
CHECKED BY : M. G. CHEEK DATE : 01-08

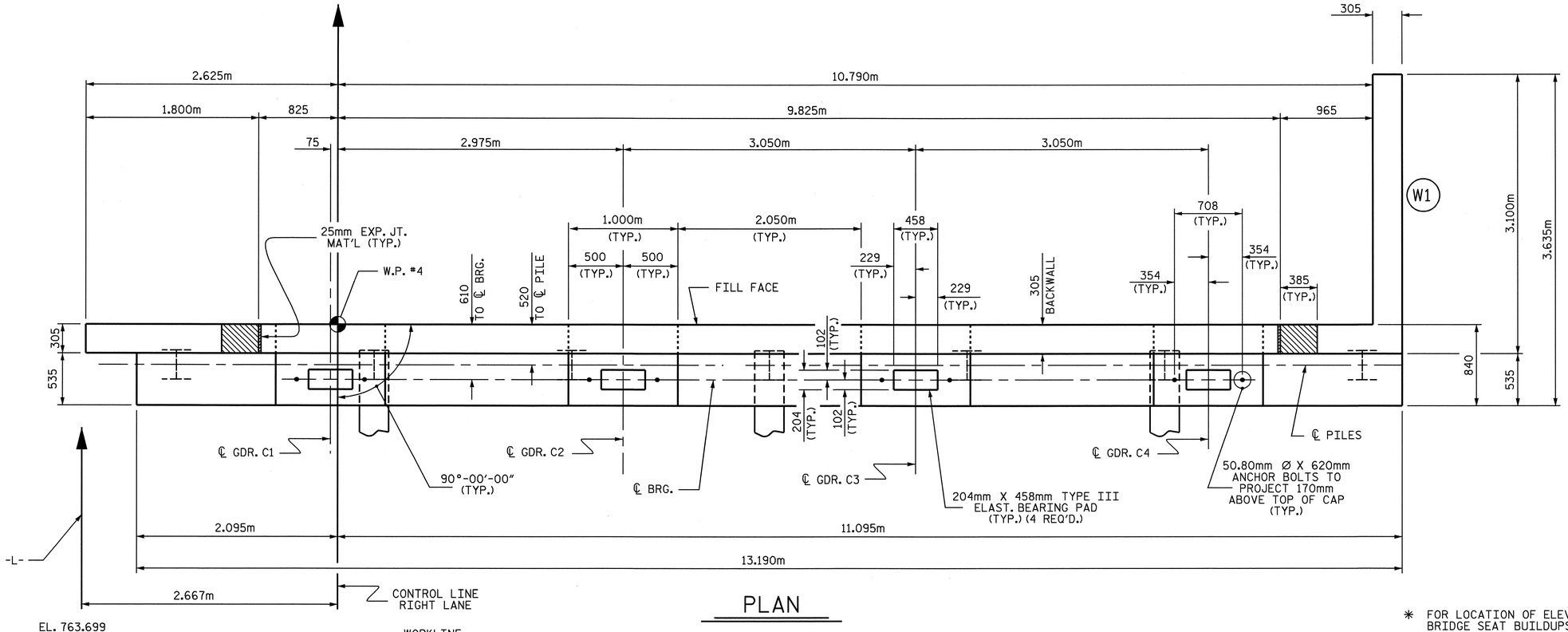

PLAN

NOTES

STIRRUPS IN CAP MAY BE SHIFTED AS NECESSARY TO CLEAR ANCHOR BOLTS.

BACKWALL SHALL BE PLACED BEFORE APPLYING THE EPOXY PROTECTIVE COATING.

THE TOP SURFACE AREAS OF THE END BENT CAPS SHALL BE CURED IN ACCORDANCE WITH THE STANDARD SPECIFICATIONS EXCEPT THE MEMBRANE CURING COMPOUND METHOD SHALL NOT BE USED.

THE TOP SURFACE OF THE CAP EXCEPT THE BRIDGE SEAT BUILDUPS SHALL BE SLOPED TRANSVERSELY FROM THE FILL FACE TO THE BACK FACE AT THE RATE OF 2 %.

THE CONTRACTOR SHALL PROVIDE FOR INSTALLATION OF THE 102mm DIAMETER DRAIN PIPE THROUGH THE WING WALL AS REQUIRED FOR REINFORCED BRIDGE APPROACH FILLS, SEE THE ROADWAY PLANS. REINFORCING STEEL IN THE WING WALL MAY BE SHIFTED AS NECESSARY TO CLEAR THE DRAIN PIPE.

THE CONCRETE IN THE SHADED AREA OF THE WING SHALL BE POURED AFTER THE BARRIER RAIL IS CAST IF SLIP FORMING IS USED.

✳ FOR LOCATION OF ELEVATION BETWEEN BRIDGE SEAT BUILDUPS, SEE SECTION A-A, SHEET 3 OF 3.

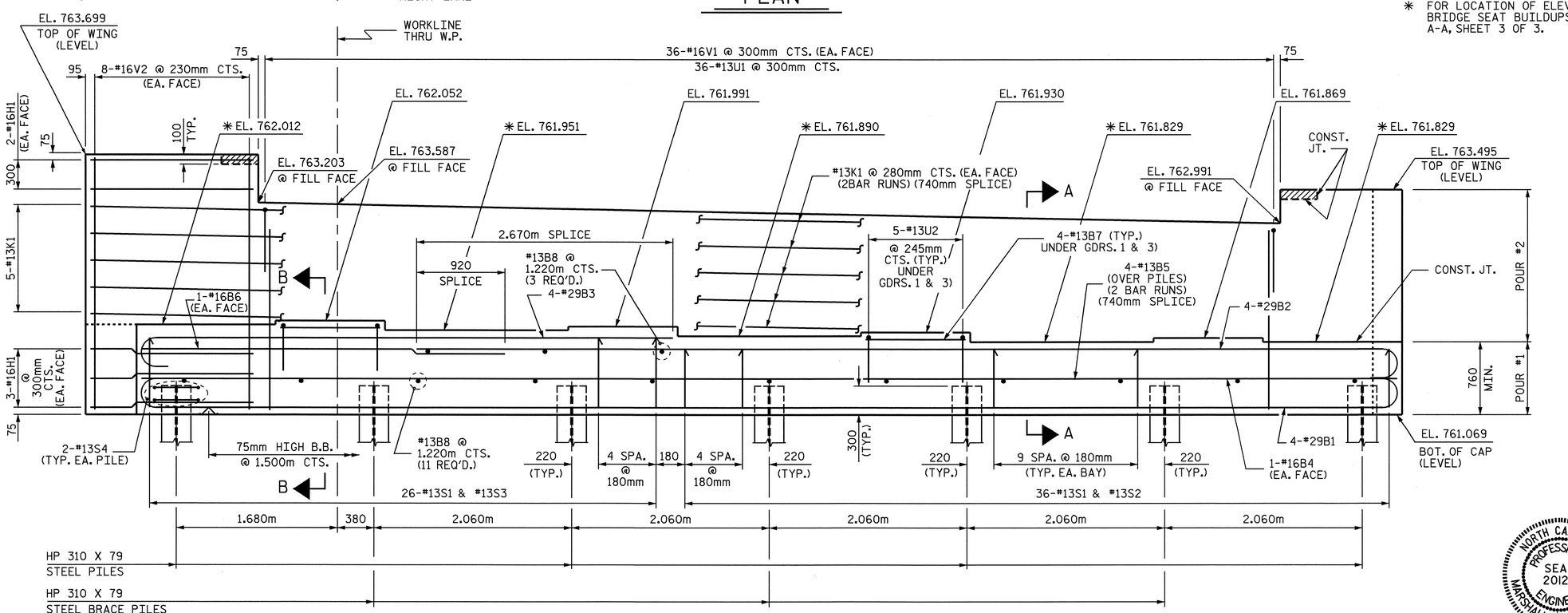

ELEVATION

PROJECT NO. R-2518B
YANCEY COUNTY
STATION: 191+92.500-L-

SHEET 1 OF 3

STATE OF NORTH CAROLINA
DEPARTMENT OF TRANSPORTATION
RALEIGH

SUBSTRUCTURE

END BENT NO. 2

NORTH CAROLINA PROFESSIONAL SEAL 20125 ENGINEER MARSHALL A. SHEEK, JR.
4-8-08

REVISIONS								SHEET NO.
NO.	BY:	DATE:	NO.	BY:	DATE:			S-101
1			3					TOTAL SHEETS
2			4					154

STR #3

DRAWN BY : L.L. MURPHY DATE : 02-06
CHECKED BY : A. SORSENGINH DATE : 04-06

02-APR-2008 17:24
r:\structures\finalplans\str #3\r2518b_sd_e*.dgn
lmurphy

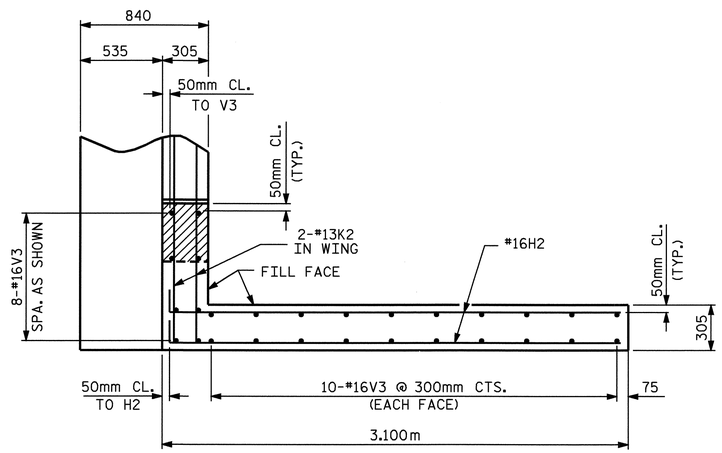

PLAN OF RIGHT WING W1

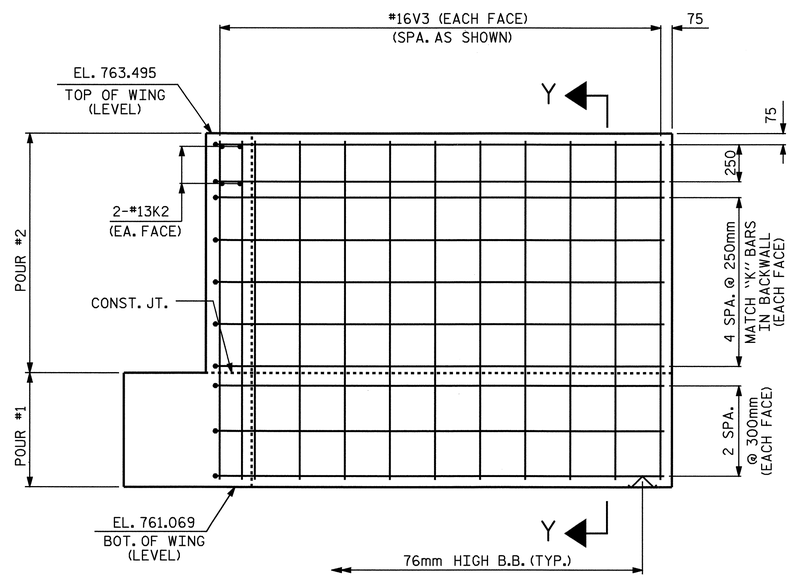

ELEVATION OF RIGHT WING W1

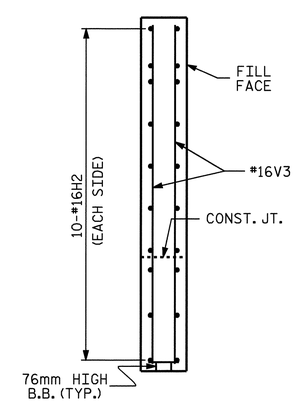

SECTION Y-Y

PROJECT NO. R-2518B

YANCEY COUNTY

STATION: 191+92.500-L-

SHEET 2 OF 3

STATE OF NORTH CAROLINA
DEPARTMENT OF TRANSPORTATION
RALEIGH

SUBSTRUCTURE

END BENT NO. 2

NORTH CAROLINA PROFESSIONAL SEAL 20125 ENGINEER MARSHALL R. GREEK, JR.
3-28-08

REVISIONS						SHEET NO.
NO.	BY:	DATE:	NO.	BY:	DATE:	S-102
1			3			TOTAL SHEETS
2			4			154

DRAWN BY : L.L. MURPHY DATE : 02-06
CHECKED BY : A. SORSENGINH DATE : 04-06

07-MAR-2008 07:17
r:\structures\finalplans\str #3\r2518b_sd_e*.dgn
dahodge

STR #3

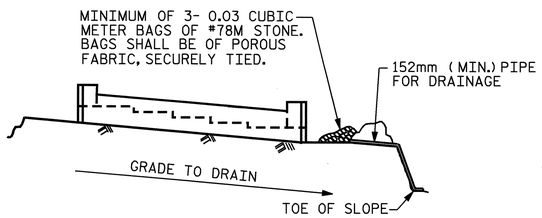

BAGGED STONE AND PIPE SHALL BE PLACED IMMEDIATELY AFTER COMPLETION OF END BENT EXCAVATION. PIPE MAY BE EITHER CONCRETE, CORRUGATED STEEL, CORRUGATED ALUMINUM ALLOY, OR CORRUGATED PLASTIC. PERFORATED PIPE WILL NOT BE ALLOWED.

BAGGED STONE SHALL REMAIN IN PLACE UNTIL THE ENGINEER DIRECTS THAT IT BE REMOVED. THE CONTRACTOR SHALL REMOVE AND DISPOSE OF SILT ACCUMULATIONS AT BAGGED STONE WHEN SO DIRECTED BY THE ENGINEER. BAGS SHALL BE REMOVED AND REPLACED WHENEVER THE ENGINEER DETERMINES THAT THEY HAVE DETERIORATED AND LOST THEIR EFFECTIVENESS.

NO SEPARATE PAYMENT WILL BE MADE FOR THIS WORK AND THE ENTIRE COST OF THIS WORK SHALL BE INCLUDED IN THE UNIT CONTRACT PRICE BID FOR THE SEVERAL PAY ITEMS.

TEMPORARY DRAINAGE AT END BENT

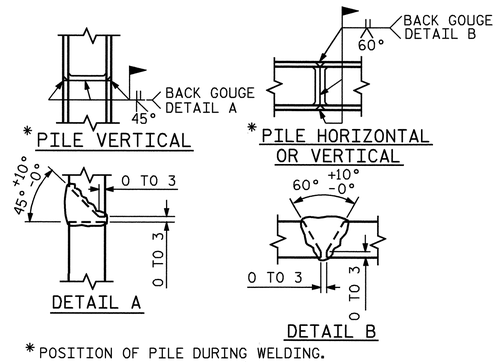

* POSITION OF PILE DURING WELDING.

PILE SPLICE DETAILS

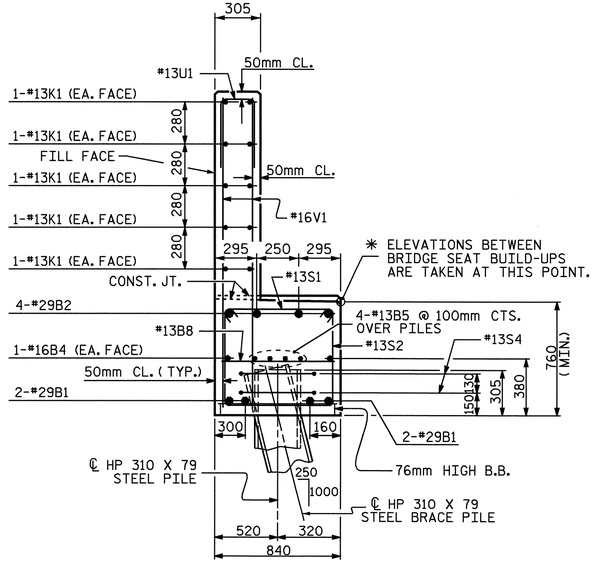

SECTION A-A

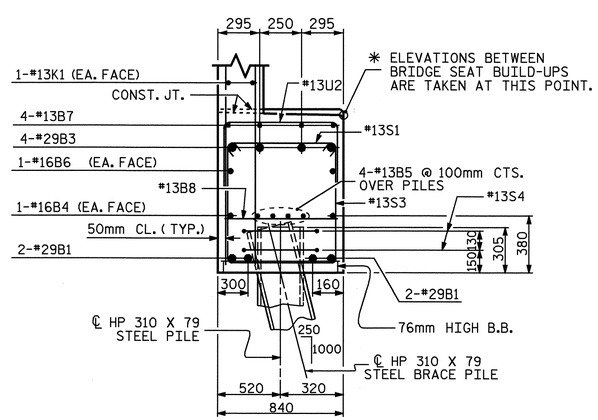

SECTION B-B

BAR TYPES

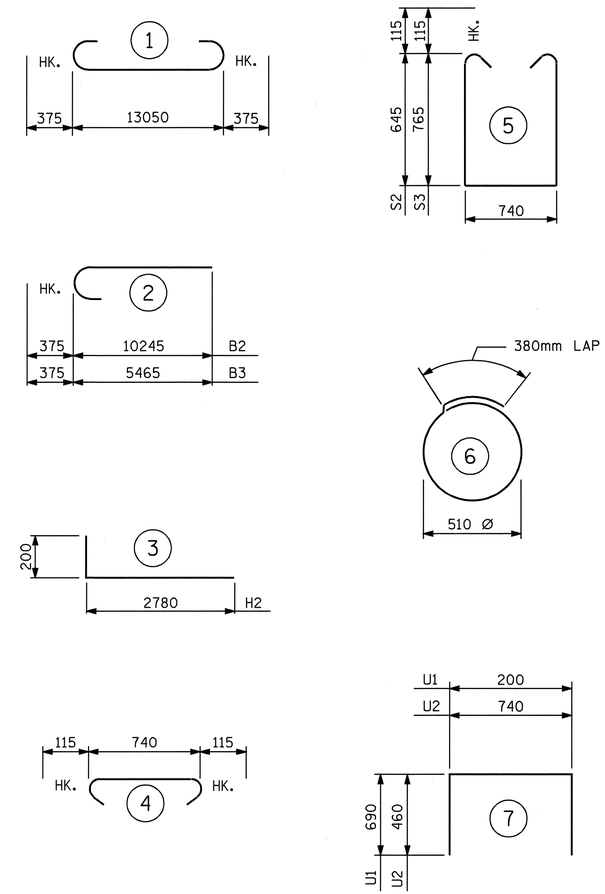

ALL BAR DIMENSIONS ARE OUT TO OUT.

BILL OF MATERIAL
END BENT NO. 2

BAR	NO.	SIZE	TYPE	LENGTH	WEIGHT
B1	4	#29	1	13800	279
B2	4	#29	2	10620	215
B3	4	#29	2	5840	118
B4	2	#16	STR	13080	41
B5	8	#13	STR	6920	55
B6	2	#16	STR	3780	12
B7	8	#13	STR	900	7
B8	14	#13	STR	740	10
H1	10	#16	STR	1700	26
H2	20	#16	3	2980	92
K1	20	#13	STR	7180	143
K2	4	#13	STR	860	3
S1	62	#13	4	970	60
S2	36	#13	5	2260	81
S3	26	#13	5	2500	65
S4	14	#13	6	1960	27
U1	36	#13	7	1580	57
U2	6	#13	7	1660	10
V1	72	#16	STR	1800	201
V2	16	#16	STR	2500	62
V3	28	#16	STR	2300	100

REINFORCING STEEL = 1664 kg

CLASS A CONCRETE BREAKDOWN

POUR #1 :
CAP & LOWER WINGS 10.1 CU. M.

POUR #2
BACKWALL & UPPER WINGS 6.8 CU. M.

CLASS A CONCRETE TOTAL 16.9 CU. M.

HP 310 X 79 STEEL PILES
NO. 7 182 METERS

PROJECT NO. R-2518B
YANCEY COUNTY
STATION: 191+92.500-L-

SHEET 3 OF 3

STATE OF NORTH CAROLINA
DEPARTMENT OF TRANSPORTATION
RALEIGH

SUBSTRUCTURE
END BENT NO. 2

NORTH CAROLINA PROFESSIONAL SEAL 20125 ENGINEER MARSHALL G. SHEEK, JR.
4-4-08

REVISIONS							SHEET NO.
NO.	BY:	DATE:	NO.	BY:	DATE:		S-103
1			3				TOTAL SHEETS
2			4				154

DRAWN BY : L.L. MURPHY DATE : 02-06
CHECKED BY : A. SORSENGINH DATE : 04-06

02-APR-2008 17:24
r:\structures\finalplans\str #3\r2518b_sd_e*.dgn
lmurphy

STR #3

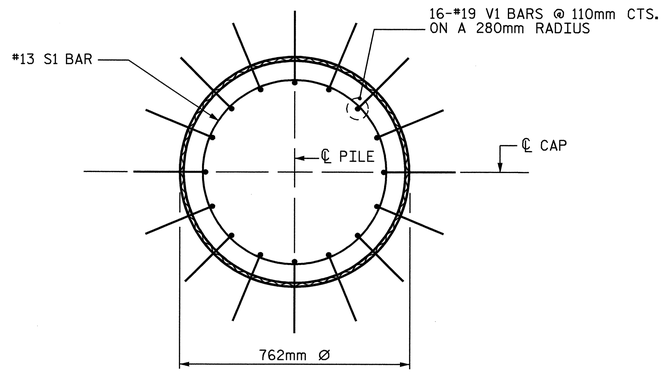

PLAN

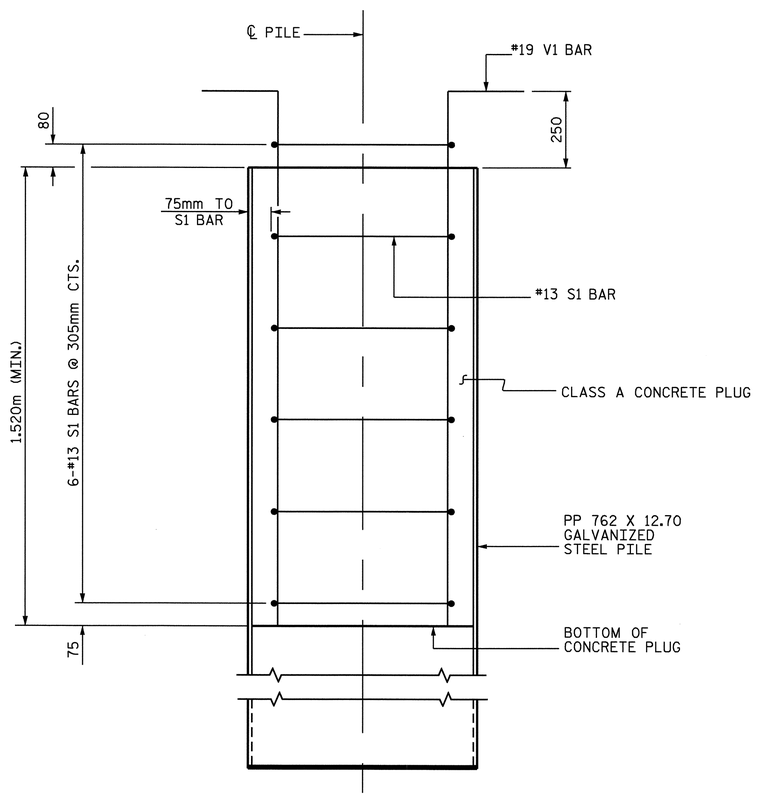

ELEVATION

PP 762 X 12.70 GALVANIZED STEEL PILE
(OPEN END)

NOTES

PIPE PILES SHALL BE IN ACCORDANCE WITH SECTION 1084 OF THE STANDARD SPECIFICATIONS.

GALVANIZE STEEL PIPE PILES IN ACCORDANCE WITH SECTION 1076 OF THE STANDARD SPECIFICATIONS UNLESS METALLIZING IS REQUIRED. GALVANIZING OR METALLIZING PIPE PILE PLATES IS NOT REQUIRED.

REMOVE AND REPLACE OR REPAIR TO THE SATISFACTION OF THE ENGINEER PILES THAT ARE DAMAGED, DEFORMED OR COLLAPSED DURING INSTALLATION OR DRIVING.

PILE SPLICES SHALL BE IN ACCORDANCE WITH THE STANDARD SPECIFICATIONS AND AWS D1.1.

FOR OPEN END PIPE PILES, REMOVE ENOUGH SOIL AND WATER FROM INSIDE THE PILES TO CONSTRUCT THE CONCRETE PLUG WITHOUT FOULING THE CONCRETE.

FORM THE CONCRETE PLUG SUCH THAT THE REINFORCING STEEL OR CONCRETE DOES NOT MOVE AND THE CLEARANCE FROM THE REINFORCING STEEL TO THE INSIDE OF THE PILE IS MAINTAINED AFTER CONCRETE PLACEMENT. DO NOT PLACE CONCRETE IN THE BENT CAP UNTIL THE CONCRETE PLUG HAS ATTAINED A MINIMUM COMPRESSIVE STRENGTH OF 10.3 MPa.

THE REINFORCING STEEL, CLASS A CONCRETE, AND GALVANIZING ARE CONSIDERED INCIDENTAL TO THE CONTRACT UNIT PRICE BID PER METER FOR PP 762 X 12.70 GALVANIZED STEEL PILES.

BILL OF MATERIAL FOR ONE PP 762 X 12.70 GALVANIZED STEEL PILE

BAR	NO.	SIZE	TYPE	LENGTH	WEIGHT
S1	6	#13	1	2300	14
V1	16	#19	2	2020	74
REINFORCING STEEL					88 kg
CLASS A CONCRETE					
1.520m MINIMUM PLUG					0.6 CU. METER

BAR TYPES

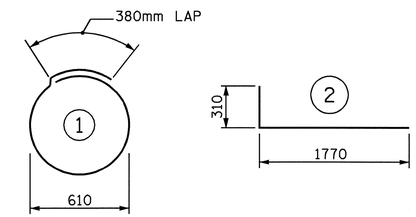

ALL BAR DIMENSIONS ARE OUT TO OUT.

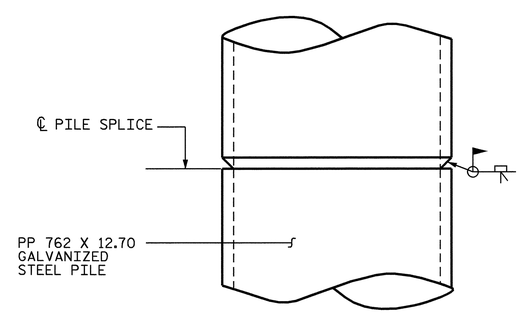

PIPE PILE SPLICE DETAIL

PROJECT NO. R-2518B
YANCEY COUNTY
STATION: 191+92.500 -L-

STATE OF NORTH CAROLINA
DEPARTMENT OF TRANSPORTATION
RALEIGH

762mm STEEL
PIPE PILE

NORTH CAROLINA PROFESSIONAL SEAL 20125 ENGINEER
MARSHALL G. CHEEK, JR.
3-26-08

REVISIONS						SHEET NO.
NO.	BY:	DATE:	NO.	BY:	DATE:	S-104
1			3			TOTAL SHEETS
2			4			154

ASSEMBLED BY : M. POOLE DATE : 12/07	
CHECKED BY : M. G. CHEEK DATE : 01/08	
DRAWN BY : TLA 8/05	ADDED 10/1/05
CHECKED BY : GM 9/05	REV. 5/1/06R MAA/KMM

03-MAR-2008 09:38
R:\Structures\Str#3\Marle\R2518B_sd_Bl_03.dgn
mpoole

STD. NO. SPP5SM

STR. #3

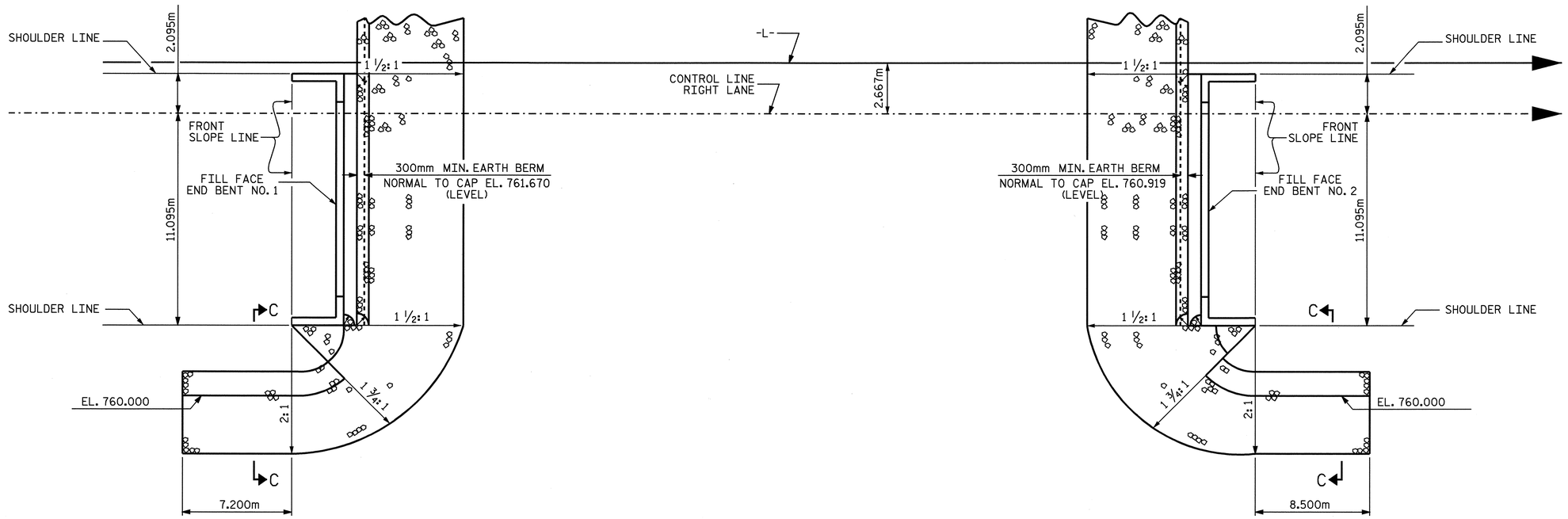

END BENT NO.1

PLAN

END BENT NO.2

ESTIMATED QUANTITIES		
BRIDGE @ STA. 191+92.500-L-	RIP RAP CLASS II	FILTER FABRIC FOR DRAINAGE
	METRIC TONS	SQUARE METERS
END BENT NO.1	208	213
END BENT NO.2	214	219

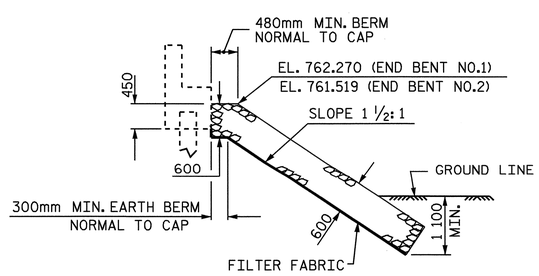

℄ SECTION

BERM RIP RAPPED

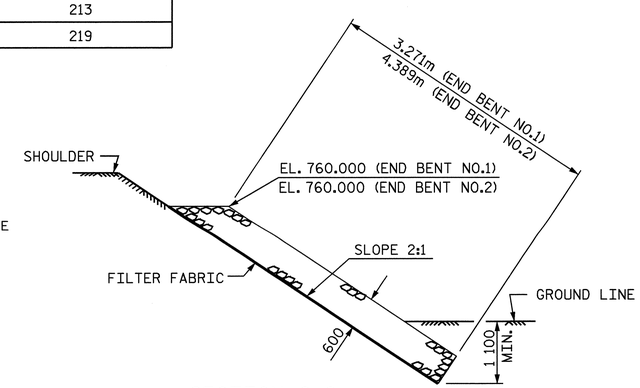

SECTION C-C

PROJECT NO. R-2518B

YANCEY COUNTY

STATION: 191+92.500 -L-

STATE OF NORTH CAROLINA
DEPARTMENT OF TRANSPORTATION
RALEIGH

RIP RAP DETAILS

NORTH CAROLINA PROFESSIONAL SEAL 20125 ENGINEER MARSHALL LUTHER GEEL, JR.
4-4-08

REVISIONS							SHEET NO.
NO.	BY:	DATE:	NO.	BY:	DATE:		S-105
1			3				TOTAL SHEETS
2			4				154

ASSEMBLED BY : A.L. FIGUEROA		DATE : 10-31-07
CHECKED BY : L.L. MURPHY		DATE : 01-24-08
DRAWN BY : REK 1/84	REV. 8/16/99	RWW/LES
CHECKED BY : RDU 1/84	REV. 10/17/00	RWW/LES
	REV. 5/1/06	TLA/GM

03-APR-2008 15:31
R:\Structures\Final plans\Str #3\R2518B_sd_SP_STR#3.dgn
lmurphy

STR #3 STD. NO. RR2SM

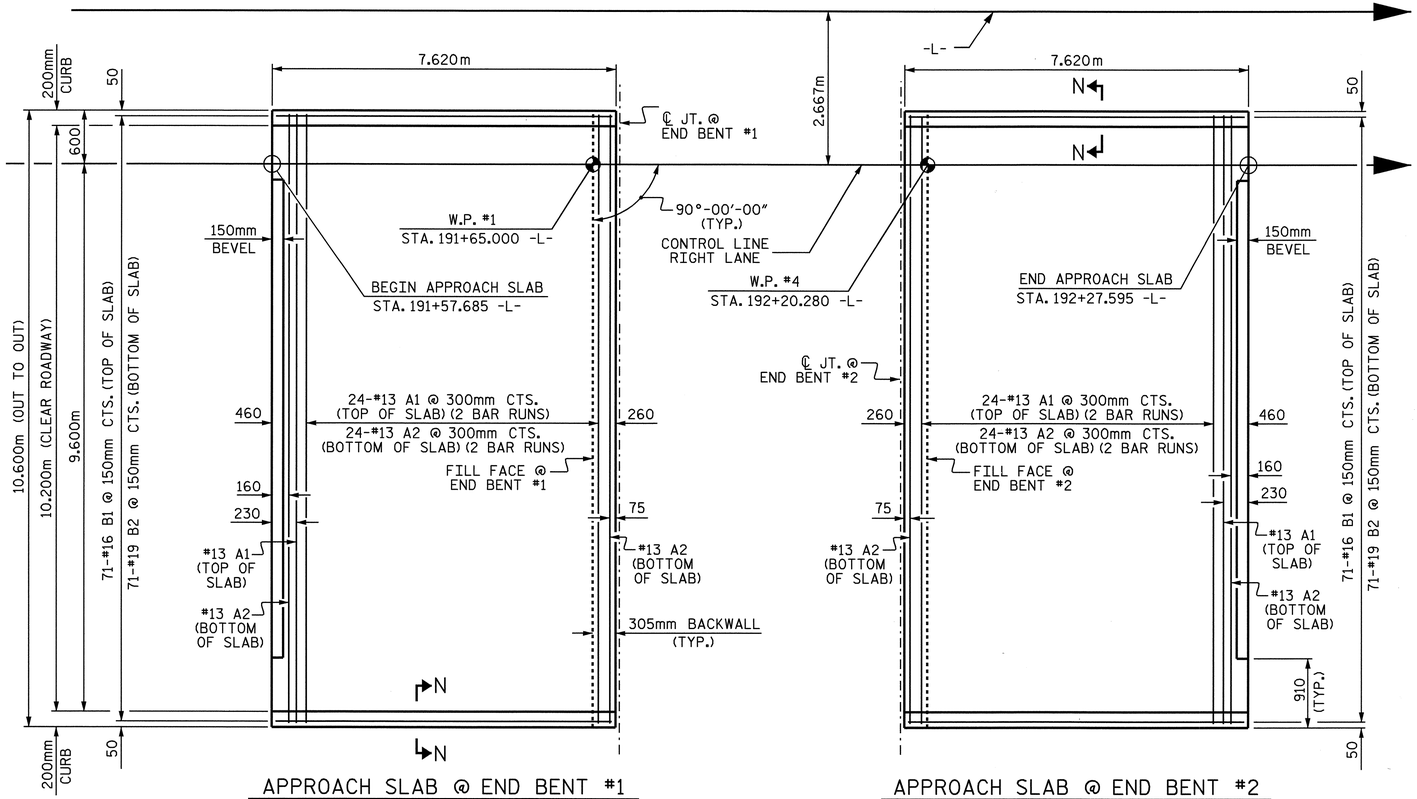

APPROACH SLAB @ END BENT #1

APPROACH SLAB @ END BENT #2

PLAN

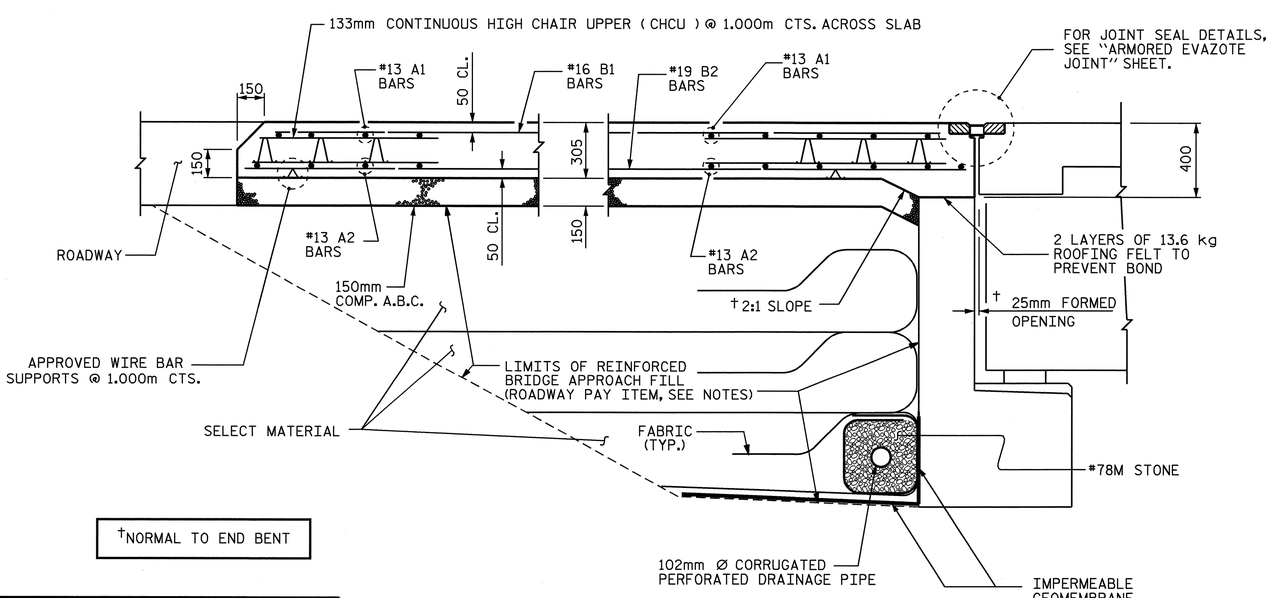

†NORMAL TO END BENT

SECTION THRU SLAB

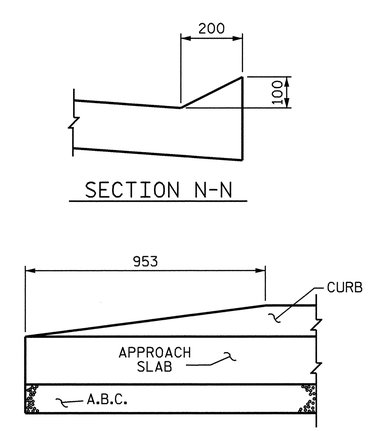

SECTION N-N

END OF CURB WITHOUT SHOULDER BERM GUTTER

CURB DETAILS

NOTES

APPROACH SLAB SHALL NOT BE CONSTRUCTED PRIOR TO COMPLETION OF THE BRIDGE DECK.

FOR REINFORCED BRIDGE APPROACH FILL INCLUDING FABRIC, IMPERMEABLE GEOMEMBRANE, 102mm Ø DRAINAGE PIPE, #78M STONE, AND SELECT MATERIAL, SEE ROADWAY PLANS.

AREA BETWEEN THE WINGWALL AND APPROACH SLAB SHALL BE GRADED TO DRAIN THE WATER AWAY FROM THE FILL FACE OF THE BRIDGE AND SHALL BE PAVED. SEE ROADWAY PLANS.

THE 150mm COMP. A.B.C. SHALL BE FLUSH WITH THE ROADWAY END OF THE APPROACH SLAB AND SHALL EXTEND 300mm OUTSIDE OF EACH EDGE OF THE APPROACH SLAB.

THE CONTRACTOR MAY USE 100mm TYPE B-25.0B ASPHALT CONCRETE COURSE IN LIEU OF 150mm COMP. A.B.C. IF THIS OPTION IS USED, THE BASE COURSE SHALL BE FLUSH WITH THE ROADWAY END OF THE APPROACH SLAB, AND THE WIDTH SHALL BE THE SAME AS THAT OF THE APPROACH SLAB.

THE CONTRACTOR MAY USE 125mm CLASS "A" CONCRETE BASE IN LIEU OF 150mm COMP. A.B.C. IF THIS OPTION IS USED, THE CONCRETE BASE SHALL BE FLUSH WITH THE ROADWAY END OF THE APPROACH SLAB, AND THE WIDTH SHALL BE THE SAME AS THAT OF THE APPROACH SLAB. THE CONCRETE SHALL BE FINISHED TO A SMOOTH SURFACE AND A LAYER OF 13.6 kg ROOFING FELT SHALL BE PLACED BETWEEN THE CONCRETE BASE AND THE APPROACH SLAB TO PREVENT BOND. THE APPROACH SLAB SHALL NOT BE CAST UNTIL THE CONCRETE BASE HAS REACHED AN AGE OF THREE CURING DAYS.

TEMPORARY DRAINAGE AND TEMPORARY BERM AND SLOPE DRAINS WILL BE PAID FOR UNDER THE LUMP SUM PRICE FOR BRIDGE APPROACH SLAB.

FOR EVAZOTE JOINT SEALS, SEE SPECIAL PROVISIONS.

BILL OF MATERIAL

APPROACH SLAB AT EB NO.1

BAR	NO.	SIZE	TYPE	LENGTH	WEIGHT
* A1	50	#13	STR	5560	276
A2	52	#13	STR	5520	285
* B1	71	#16	STR	7260	800
B2	71	#19	STR	7520	1193
REINFORCING STEEL				kg	1478
* EPOXY COATED REINFORCING STEEL				kg	1076
CLASS AA CONCRETE				CU. METERS	25.1

APPROACH SLAB AT EB NO.2

BAR	NO.	SIZE	TYPE	LENGTH	WEIGHT
* A1	50	#13	STR	5560	276
A2	52	#13	STR	5520	285
* B1	71	#16	STR	7260	800
B2	71	#19	STR	7520	1193
REINFORCING STEEL				kg	1478
* EPOXY COATED REINFORCING STEEL				kg	1076
CLASS AA CONCRETE				CU. METERS	25.1

* THESE BARS ARE EPOXY COATED

SPLICE CHART

BAR SIZE	EPOXY COATED	UNCOATED
#13	610	540
#16	770	660
#19	1190	790

PROJECT NO. R-2518B
YANCEY COUNTY
STATION: 191+92.500 -L-

SHEET 1 OF 2

STATE OF NORTH CAROLINA
DEPARTMENT OF TRANSPORTATION
RALEIGH

STANDARD

BRIDGE APPROACH SLAB FOR FLEXIBLE PAVEMENT

NORTH CAROLINA PROFESSIONAL SEAL 20125 ENGINEER
MARSHALL LIGHTCHEEK, JR.
4-4-08

REVISIONS						
NO.	BY:	DATE:	NO.	BY:	DATE:	
1			3			
2			4			

SHEET NO. S-106
TOTAL SHEETS 154

STR. #3 STD. NO. BAS4SM

ASSEMBLED BY : A.L. FIGUEROA		DATE :	06-20-06
CHECKED BY : A.SORSENGINH		DATE :	06-23-06
DRAWN BY : FCJ 6/87	REV. 7/10/01	RWW/LES	
CHECKED BY : EGA 6/87	REV. 5/7/03R	RWW/JTE	
	REV. 5/1/06R	KMM/GM	

03-APR-2008 16:31
R:\Structures\Finalplans\Str #3\R2518B_sd_AS_STR#3.dgn

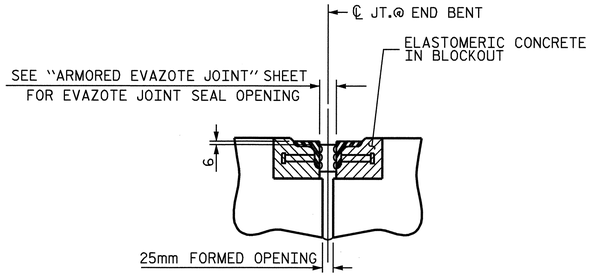

SECTION C-C

ARMORED EVAZOTE JOINT SEAL

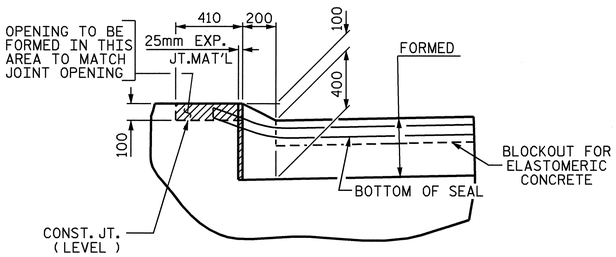

SECTION B-B

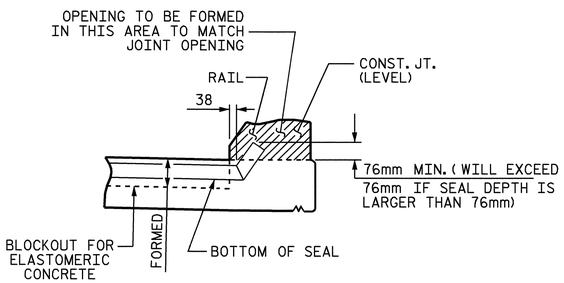

SECTION A-A

EVAZOTE JOINT SEAL TO BE CUT, HEAT WELDED AND TURNED UP PARALLEL TO SLOPED FACE OF THE BARRIER RAIL.

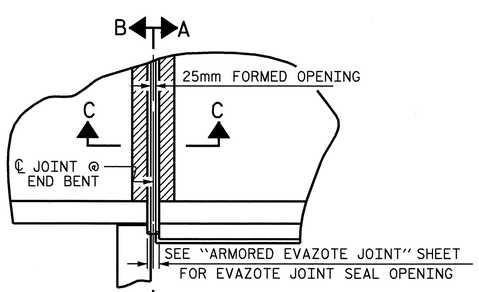

PLAN

JOINT SEAL DETAILS @ END BENT

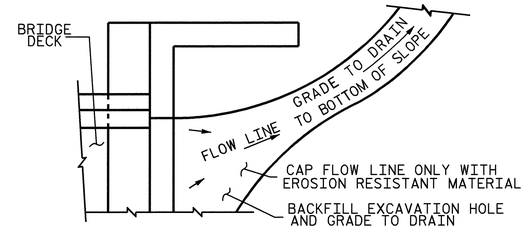

NOTE: IF THE APPROACH SLAB IS NOT CONSTRUCTED IMMEDIATELY AFTER THE BACKFILLING OF THE END BENT EXCAVATION, GRADE TO DRAIN TO THE BOTTOM OF THE SLOPE AND PROVIDE EROSION RESISTANT MATERIAL SUCH AS FIBERGLASS ROVING OR AS DIRECTED BY THE ENGINEER TO PREVENT SOIL EROSION AND TO PROTECT THE AREA ADJACENT TO THE STRUCTURE. THE CONTRACTOR WILL BE REQUIRED TO REMOVE THESE MATERIALS PRIOR TO CONSTRUCTION OF THE APPROACH SLAB.

TEMPORARY DRAINAGE DETAIL

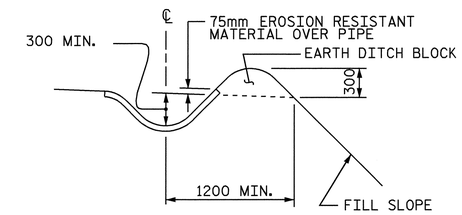

SECTION S-S

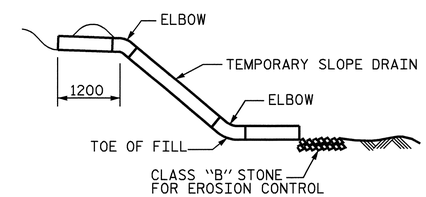

SECTION R-R

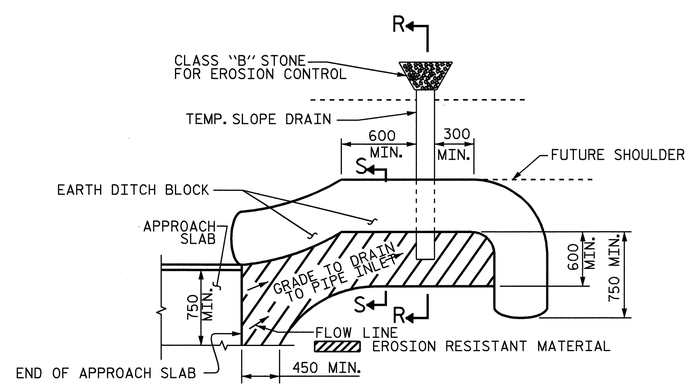

NOTE: IMMEDIATELY AFTER THE CONSTRUCTION OF THE APPROACH SLAB, THE CONTRACTOR SHALL PROVIDE TEMPORARY BERM AND SLOPE DRAIN. CONTRACTOR SHALL GRADE TO PIPE INLET AND PROVIDE EROSION RESISTANT MATERIAL AS SHOWN. THE EROSION RESISTANT MATERIAL SHALL BE EITHER 1) ASPHALT PLANT MIX, TYPE 1 OR TYPE 2, MIN. 50mm DEPTH, 2) EROSION CONTROL MAT, OR 3) CONCRETE, AS DIRECTED BY THE ENGINEER. THE SLOPE DRAIN SHALL CONSIST OF A NON-PERFORATED TEMPORARY DRAINAGE PIPE, 305mm IN DIAMETER.

PLAN VIEW

TEMPORARY BERM AND SLOPE DRAIN DETAILS

PROJECT NO. R-2518B

YANCEY COUNTY

STATION: 191+92.500 -L-

SHEET 2 OF 2

STATE OF NORTH CAROLINA
DEPARTMENT OF TRANSPORTATION
RALEIGH

STANDARD

BRIDGE APPROACH SLAB DETAILS

NORTH CAROLINA PROFESSIONAL SEAL 20125 ENGINEER MARSHALL G. CREEK, JR.
3-28-08

REVISIONS						SHEET NO.
NO.	BY:	DATE:	NO.	BY:	DATE:	S-107
1			3			TOTAL SHEETS
2			4			S-154

STR. 3

STD. NO. BAS10

ASSEMBLED BY : A.L. FIGUEROA		DATE :	06-20-06
CHECKED BY : A.SORSENGINH		DATE :	06-23-06
DRAWN BY : FCJ 11/88	REV. 10/17/00	RWW/LES	
CHECKED BY : ARB 11/88	REV. 5/7/03	RWW/JTE	
	REV. 5/1/06R	MAA/KMM	

27-MAR-2008 10:02
R:\Structures\Final plans\Str #3\R2518B_sd_AS_STR#3.dgn
aflgueroa

OVERHANG BRACKET CALCULATION INSTRUCTIONS

AASHTO SHAPES - TYPES III, IV, V, AND VI

1. RECORD KNOWN INFORMATION ON "BRIDGE OVERHANG BRACKET SUMMARY" ON SHEET 2
2. CALCULATE THE MAXIMUM SCREED LOAD PER BRACKET (SLPB) WITH AN ESTIMATED R = 1.5. SLPB = R X W. ROUND VALUE UP TO NEAREST SLPB VALUE INDICATED ON APPROPRIATE TABLE 1-1, 1-2, 1-3, OR 1-4.
3. WITH THE ESTIMATED SLPB, OVERHANG SLAB THICKNESS, "K" VALUE, AND 45° HANGER SAFE WORKING LOAD (SWL), ENTER THE APPROPRIATE TABLE 1-1, 1-2, 1-3, OR 1-4 (BASED ON OVERHANG DIMENSION) AND DETERMINE THE BRACKET SPACING, S.
4. CALCULATE S/D1 AND S/D2, ROUNDING UP TO NEAREST VALUE IN TABLE 2. ENTER TABLE 2 AND DETERMINE R VALUE.
5. CALCULATE REVISED SLPB. ROUND VALUE UP TO NEAREST SLPB VALUE INDICATED ON APPROPRIATE TABLE 1-1, 1-2, 1-3, OR 1-4.
6. WITH THE REVISED SLPB, OVERHANG SLAB THICKNESS, "K" VALUE AND 45 HANGER SAFE WORKING LOAD (SWL), ENTER THE APPROPRIATE TABLE 1-1, 1-2, 1-3 OR 1-4 (BASED ON OVERHANG DIMENSION) AND DETERMINE REVISED BRACKET SPACING, S.
7. CONTINUE ITERATIONS OF STEPS 4-6 UNTIL THE REVISED BRACKET SPACING, S, IS THE SAME AS THE PREVIOUS S VALUE.
8. CHECK LUMBER JOIST SPACING: WITH BRACKET SPACING VALUE, S, ROUND THIS VALUE UP TO THE NEAREST VALUE OF ALLOWABLE SPAN LENGTH OF JOIST OF TABLE 3. USING THIS VALUE, ALONG WITH THE AVERAGE OVERHANG SLAB THICKNESS AND THE LUMBER JOIST SIZE, DETERMINE JOIST SPACING FROM TABLE 3. IF NECESSARY, ADJUST LUMBER JOIST SIZE AND/OR JOIST SPACING TO MEET ALLOWABLE SPAN LENGTH OF JOIST.
9. CONVERSELY, IF THE DESIRED JOIST SPACING IS KNOWN, USE THIS ALONG WITH THE AVERAGE OVERHANG SLAB THICKNESS AND THE LUMBER JOIST SIZE TO DETERMINE IF ALLOWABLE SPAN LENGTH OF JOIST IS GREATER THAN THE BRACKET SPACING, S. IF NECESSARY, ADJUST LUMBER JOIST SIZE TO MEET REQUIREMENTS OF ALLOWABLE SPAN LENGTH OF JOIST AND JOIST SPACING.
10. RECORD REMAINING INFORMATION ON "BRIDGE OVERHANG BRACKET SUMMARY" FORM.
11. SUBMIT FORM AND CALCULATIONS FOR REVIEW AND APPROVAL.

TABLE 1-1

(FOR USE ON **UP TO 2'-0" OVERHANG Ⓛ** & 54" HORIZONTAL LEG LENGTH OF THE OVERHANG BRACKET)

AVG. SLAB THICKNESS Ⓣ (In)	BRACKET Ⓚ DIMENSION (In)	SCREED LOAD PER BRACKET									45° HANGER SWL (lbs)
		2500 lbs.	2250 lbs.	2000 lbs.	1750 lbs.	1500 lbs.	1250 lbs.	1000 lbs.	750 lbs.	0 lbs.	
		BRACKET SPACING									
10	30				2'-1"	2'-7"	3'-2"	3'-8"	4'-2"	5'-9"	4000
		3'-6"	4'-0"	4'-5"	4'-9"	5'-1"	5'-3"	5'-5"	5'-7"	6'-7"	6000
	40				2'-1"	2'-7"	3'-2"	3'-8"	4'-2"	5'-9"	4000
		3'-6"	4'-0"	4'-5"	4'-9"	5'-1"	5'-3"	5'-5"	5'-7"	6'-7"	6000
	50				2'-1"	2'-7"	3'-2"	3'-8"	4'-2"	5'-9"	4000
		3'-6"	4'-0"	4'-5"	4'-9"	5'-1"	5'-3"	5'-5"	5'-7"	6'-7"	6000
12	30					2'-4"	2'-10"	3'-4"	3'-9"	5'-2"	4000
		3'-2"	3'-7"	4'-1"	4'-7"	5'-0"	5'-2"	5'-4"	5'-7"	6'-5"	6000
	40					2'-4"	2'-10"	3'-4"	3'-9"	5'-2"	4000
		3'-2"	3'-7"	4'-1"	4'-7"	5'-0"	5'-2"	5'-4"	5'-7"	6'-5"	6000
	50					2'-4"	2'-10"	3'-4"	3'-9"	5'-2"	4000
		3'-2"	3'-7"	4'-1"	4'-7"	5'-0"	5'-2"	5'-4"	5'-7"	6'-5"	6000
14	30					2'-2"	2'-7"	3'-0"	3'-5"	4'-9"	4000
		2'-10"	3'-4"	3'-9"	4'-2"	4'-7"	5'-0"	5'-4"	5'-7"	6'-4"	6000
	40					2'-2"	2'-7"	3'-0"	3'-5"	4'-9"	4000
		2'-10"	3'-4"	3'-9"	4'-2"	4'-7"	5'-0"	5'-4"	5'-7"	6'-4"	6000
	50					2'-2"	2'-7"	3'-0"	3'-5"	4'-9"	4000
		2'-10"	3'-4"	3'-9"	4'-2"	4'-7"	5'-0"	5'-4"	5'-7"	6'-4"	6000
16	30					2'-0"	2'-4"	2'-9"	3'-2"	4'-4"	4000
		2'-8"	3'-0"	3'-5"	3'-10"	4'-3"	4'-7"	5'-0"	5'-5"	6'-3"	6000
	40					2'-0"	2'-4"	2'-9"	3'-2"	4'-4"	4000
		2'-8"	3'-0"	3'-5"	3'-10"	4'-3"	4'-7"	5'-0"	5'-5"	6'-3"	6000
	50					2'-0"	2'-4"	2'-9"	3'-2"	4'-4"	4000
		2'-8"	3'-0"	3'-5"	3'-10"	4'-3"	4'-7"	5'-0"	5'-5"	6'-3"	6000

TABLE 1-2

(FOR USE ON **OVER 2'-0" TO 2'-6" OVERHANG Ⓛ** & 54" HORIZONTAL LEG LENGTH OF THE OVERHANG BRACKET)

AVG. SLAB THICKNESS Ⓣ (In)	BRACKET Ⓚ DIMENSION (In)	SCREED LOAD PER BRACKET									45° HANGER SWL (lbs)
		2500 lbs.	2250 lbs.	2000 lbs.	1750 lbs.	1500 lbs.	1250 lbs.	1000 lbs.	750 lbs.	0 lbs.	
		BRACKET SPACING									
10	30					2'-4"	2'-9"	3'-3"	3'-8"	5'-1"	4000
		3'-1"	3'-6"	4'-0"	4'-5"	4'-11"	5'-3"	5'-5"	5'-7"	6'-7"	6000
	40					2'-4"	2'-9"	3'-3"	3'-8"	5'-1"	4000
		3'-1"	3'-6"	4'-0"	4'-5"	4'-11"	5'-3"	5'-5"	5'-7"	6'-7"	6000
	50					2'-4"	2'-9"	3'-3"	3'-8"	5'-1"	4000
		3'-1"	3'-6"	4'-0"	4'-5"	4'-11"	5'-3"	5'-5"	5'-7"	6'-7"	6000
12	30					2'-1"	2'-6"	2'-11"	3'-4"	4'-6"	4000
		2'-9"	3'-2"	3'-7"	4'-0"	4'-5"	4'-10"	5'-3"	5'-7"	6'-5"	6000
	40					2'-1"	2'-6"	2'-11"	3'-4"	4'-6"	4000
		2'-9"	3'-2"	3'-7"	4'-0"	4'-5"	4'-10"	5'-3"	5'-7"	6'-5"	6000
	50					2'-1"	2'-6"	2'-11"	3'-4"	4'-6"	4000
		2'-9"	3'-2"	3'-7"	4'-0"	4'-5"	4'-10"	5'-3"	5'-7"	6'-5"	6000
14	30						2'-3"	2'-7"	3'-0"	4'-1"	4000
		2'-6"	2'-10"	3'-3"	3'-7"	4'-0"	4'-4"	4'-9"	5'-1"	6'-3"	6000
	40						2'-3"	2'-7"	3'-0"	4'-1"	4000
		2'-6"	2'-10"	3'-3"	3'-7"	4'-0"	4'-4"	4'-9"	5'-1"	6'-3"	6000
	50						2'-3"	2'-7"	3'-0"	4'-1"	4000
		2'-6"	2'-10"	3'-3"	3'-7"	4'-0"	4'-4"	4'-9"	5'-1"	6'-3"	6000
16	30						2'-1"	2'-5"	2'-9"	3'-9"	4000
		2'-3"	2'-7"	2'-11"	3'-4"	3'-8"	4'-0"	4'-4"	4'-8"	5'-8"	6000
	40						2'-1"	2'-5"	2'-9"	3'-9"	4000
		2'-3"	2'-7"	2'-11"	3'-4"	3'-8"	4'-0"	4'-4"	4'-8"	5'-8"	6000
	50						2'-1"	2'-5"	2'-9"	3'-9"	4000
		2'-3"	2'-7"	2'-11"	3'-4"	3'-8"	4'-0"	4'-4"	4'-8"	5'-8"	6000

TABLE 1-3

(FOR USE ON **OVER 2'-6" TO 3'-0" OVERHANG Ⓛ** & 54" HORIZONTAL LEG LENGTH OF THE OVERHANG BRACKET)

AVG. SLAB THICKNESS Ⓣ (In)	BRACKET Ⓚ DIMENSION (In)	SCREED LOAD PER BRACKET									45° HANGER SWL (lbs)
		2500 lbs.	2250 lbs.	2000 lbs.	1750 lbs.	1500 lbs.	1250 lbs.	1000 lbs.	750 lbs.	0 lbs.	
		BRACKET SPACING									
10	30					2'-1"	2'-6"	2'-11"	3'-4"	4'-6"	4000
						4'-5"	4'-10"	5'-3"	5'-7"	6'-7"	6000
	40					2'-1"	2'-6"	2'-11"	3'-4"	4'-6"	4000
		2'-9"	3'-2"	3'-7"	4'-0"	4'-5"	4'-10"	5'-3"	5'-7"	6'-7"	6000
	50					2'-1"	2'-6"	2'-11"	3'-4"	4'-6"	4000
		2'-9"	3'-2"	3'-7"	4'-0"	4'-5"	4'-10"	5'-3"	5'-7"	6'-7"	6000
12	30						2'-2"	2'-7"	2'-11"	4'-0"	4000
						3'-11"	4'-3"	4'-8"	5'-0"	6'-1"	6000
	40						2'-2"	2'-7"	2'-11"	4'-0"	4000
		2'-5"	2'-10"	3'-2"	3'-6"	3'-11"	4'-3"	4'-8"	5'-0"	6'-1"	6000
	50						2'-2"	2'-7"	2'-11"	4'-0"	4000
		2'-5"	2'-10"	3'-2"	3'-6"	3'-11"	4'-3"	4'-8"	5'-0"	6'-1"	6000
14	30						2'-0"	2'-4"	2'-8"	3'-8"	4000
					3'-2"	3'-6"	3'-10"	4'-2"	4'-6"	5'-6"	6000
	40						2'-0"	2'-4"	2'-8"	3'-8"	4000
		2'-2"	2'-6"	2'-10"	3'-2"	3'-6"	3'-10"	4'-2"	4'-6"	5'-6"	6000
	50						2'-0"	2'-4"	2'-8"	3'-8"	4000
		2'-2"	2'-6"	2'-10"	3'-2"	3'-6"	3'-10"	4'-2"	4'-6"	5'-6"	6000
16	30						2'-1"	2'-5"	3'-4"	4000
					2'-11"	3'-2"	3'-6"	3'-10"	4'-1"	5'-0"	6000
	40							2'-1"	2'-5"	3'-4"	4000
		2'-0"	2'-4"	2'-7"	2'-11"	3'-2"	3'-6"	3'-10"	4'-1"	5'-0"	6000
	50							2'-1"	2'-5"	3'-4"	4000
		2'-0"	2'-4"	2'-7"	2'-11"	3'-2"	3'-6"	3'-10"	4'-1"	5'-0"	6000

TABLE 1-4

(FOR USE ON **OVER 3'-0" TO 3'-6" OVERHANG Ⓛ** & 54" HORIZONTAL LEG LENGTH OF THE OVERHANG BRACKET)

AVG. SLAB THICKNESS Ⓣ (In)	BRACKET Ⓚ DIMENSION (In)	SCREED LOAD PER BRACKET									45° HANGER SWL (lbs)
		2500 lbs.	2250 lbs.	2000 lbs.	1750 lbs.	1500 lbs.	1250 lbs.	1000 lbs.	750 lbs.	0 lbs.	
		BRACKET SPACING									
10	30						2'-1"	2'-5"	2'-9"	3'-10"	4000
						2'-3"	2'-11"	3'-7"	4'-3"	5'-9"	6000
	40						2'-1"	2'-5"	2'-9"	3'-10"	4000
				2'-4"	3'-0"	3'-7"	4'-1"	4'-5"	4'-9"	5'-9"	6000
	50						2'-1"	2'-5"	2'-9"	3'-10"	4000
		2'-4"	2'-8"	3'-0"	3'-4"	3'-8"	4'-1"	4'-5"	4'-9"	5'-9"	6000
12	30							2'-2"	2'-6"	3'-5"	4000
						2'-1"	2'-8"	3'-4"	3'-11"	5'-2"	6000
	40							2'-2"	2'-6"	3'-5"	4000
				2'-2"	2'-9"	3'-4"	3'-7"	3'-11"	4'-3"	5'-2"	6000
	50							2'-2"	2'-6"	3'-5"	4000
		2'-1"	2'-4"	2'-8"	3'-0"	3'-4"	3'-7"	3'-11"	4'-3"	5'-2"	6000
14	30								2'-3"	3'-1"	4000
						2'-0"	2'-6"	3'-1"	3'-8"	4'-8"	6000
	40								2'-3"	3'-1"	4000
				2'-0"	2'-7"	3'-0"	3'-3"	3'-6"	3'-10"	4'-8"	6000
	50								2'-3"	3'-1"	4000
			2'-2"	2'-5"	2'-8"	3'-0"	3'-3"	3'-6"	3'-10"	4'-8"	6000
16	30								2'-0"	2'-9"	4000
							2'-4"	2'-10"	3'-5"	4'-3"	6000
	40								2'-0"	2'-9"	4000
					2'-5"	2'-8"	2'-11"	3'-3"	3'-6"	4'-3"	6000
	50								2'-0"	2'-9"	4000
				2'-2"	2'-5"	2'-8"	2'-11"	3'-3"	3'-6"	4'-3"	6000

DEFINITIONS

SLPB = SCREED LOAD PER BRACKET (R × W)
R = SCREED LOAD FACTOR, OBTAINED FROM TABLE 2
W = WHEEL LOAD
S = BRACKET SPACING
T = AVERAGE SLAB THICKNESS
SWL = SAFE WORKING LOAD
K = DIMENSION DEFINED ON "BRIDGE OVERHANG BRACKET SUMMARY" ON SHEET 2
L = OVERHANG MEASURED FROM EDGE OF TOP FLANGE TO EDGE OF SUPERSTRUCTURE

PROJECT NO. R-2518B
YANCEY COUNTY
STATION: 191+92.500-L-

SHEET 1 OF 3

STATE OF NORTH CAROLINA
DEPARTMENT OF TRANSPORTATION
RALEIGH

STANDARD OVERHANG FALSEWORK

AASHTO TYPES
III, IV, V, AND VI

NORTH CAROLINA PROFESSIONAL SEAL 18788 ENGINEER CHANG-CHUAN VICTOR CHAO

Chang-Chuan Victor Chao
2-19-2008

REVISIONS								SHEET NO.
NO.	BY:	DATE:	NO.	BY:	DATE:			S-108
1			3					TOTAL SHEETS 154
2			4					

ASSEMBLED BY:	DATE:
CHECKED BY:	DATE:
DRAWN BY: R. WRIGHT 06/04	REV.
CHECKED BY: C. V. CHAO 06/04	

18-FEB-2008 15:38
d:\wdir\victor\overhangfalsework\tlebar&strut\r-2518b-3_type_III\r2518bstr3overhangsheets.dgn
vchao

STR #3

OF1

BRIDGE OVERHANG BRACKET SUMMARY

TOTAL SCREED WEIGHT = _____ LBS.
NUMBER OF SCREED WHEELS = _____
SCREED WHEEL LOAD (W) = _____ LBS.
SCREED LOAD PER BRACKET = _____ LBS.

PROJECT No. : _____
COUNTY : _____
STATION : _____
DESCRIPTION : _____

DATE : _____
DESIGN BY : _____
CHECK BY : _____

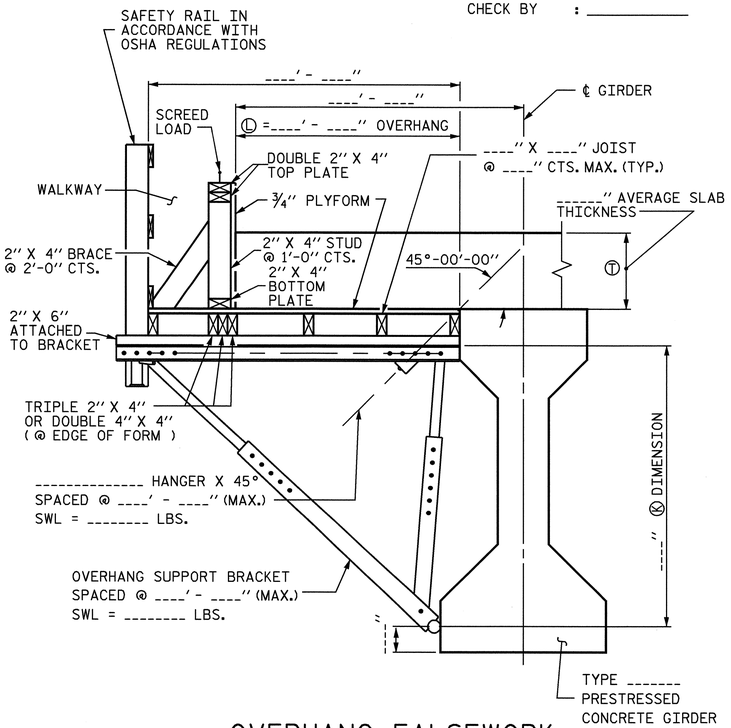

OVERHANG FALSEWORK

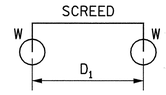

4-WHEEL MACHINE

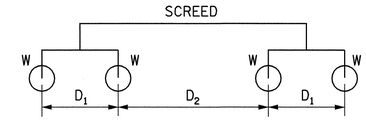

8-WHEEL MACHINE

4 WHEEL MACHINE	
S/D1	R
<= 1.0	1.00
1.1	1.09
1.2	1.17
1.3	1.23
1.4	1.29
1.5	1.33
1.6	1.38
1.7	1.41
1.8	1.44
1.9	1.47
2.0	1.50
2.2	1.55
2.4	1.58
2.6	1.62
2.8	1.64
3.0	1.67
3.5	1.71
4.0	1.75

TABLE 2: SCREED LOAD FACTOR "R"

		THE SCREED LOAD FACTOR R (FOR 8 WHEEL MACHINE)																	
		S/D_2																	
		<= 1.0	1.1	1.2	1.3	1.4	1.5	1.6	1.7	1.8	1.9	2.0	2.2	2.4	2.6	2.8	3.0	3.5	4.0
S/D_1	<= 1.0	1.00	1.09	1.17	1.23	1.29	1.33	1.38	1.41	1.44	1.47	1.50	1.55	1.58	1.62	1.64	1.67	1.71	1.75
	1.1	1.09	1.18	1.26	1.32	1.38	1.42	1.47	1.50	1.54	1.56	1.59	1.64	1.67	1.71	1.73	1.76	1.81	1.84
	1.2	1.17	1.26	1.33	1.40	1.45	1.50	1.54	1.58	1.61	1.64	1.67	1.71	1.75	1.78	1.81	1.83	1.88	1.92
	1.3	1.23	1.32	1.40	1.46	1.52	1.56	1.61	1.64	1.68	1.70	1.73	1.78	1.81	1.85	1.87	1.90	1.95	1.98
	1.4	1.29	1.38	1.45	1.52	1.57	1.62	1.66	1.70	1.73	1.76	1.79	1.83	1.87	1.90	1.93	1.95	2.00	2.07
	1.5	1.33	1.42	1.50	1.56	1.62	1.67	1.71	1.75	1.78	1.81	1.83	1.88	1.92	1.95	1.98	2.00	2.10	2.17
	1.6	1.38	1.47	1.54	1.61	1.66	1.71	1.75	1.79	1.82	1.85	1.88	1.92	1.96	1.99	2.04	2.08	2.18	2.25
	1.7	1.41	1.50	1.58	1.64	1.70	1.75	1.79	1.82	1.86	1.89	1.91	1.96	2.00	2.05	2.11	2.16	2.25	2.32
	1.8	1.44	1.54	1.61	1.68	1.73	1.78	1.82	1.86	1.89	1.92	1.94	1.99	2.06	2.12	2.17	2.22	2.32	2.39
	1.9	1.47	1.56	1.64	1.70	1.76	1.81	1.85	1.89	1.92	1.95	1.97	2.04	2.11	2.18	2.23	2.28	2.38	2.45
	2.0	1.50	1.59	1.67	1.73	1.79	1.83	1.88	1.91	1.94	1.97	2.00	2.09	2.17	2.23	2.29	2.33	2.43	2.50
	2.2	1.55	1.64	1.71	1.78	1.83	1.88	1.92	1.96	1.99	2.04	2.09	2.18	2.26	2.32	2.38	2.42	2.52	2.59
	2.4	1.58	1.67	1.75	1.81	1.87	1.92	1.96	2.00	2.06	2.11	2.17	2.26	2.33	2.40	2.45	2.50	2.60	2.67
	2.6	1.62	1.71	1.78	1.85	1.90	1.95	1.99	2.05	2.12	2.18	2.23	2.32	2.40	2.46	2.52	2.56	2.66	2.73
	2.8	1.64	1.73	1.81	1.87	1.93	1.98	2.04	2.11	2.17	2.23	2.29	2.38	2.45	2.52	2.57	2.62	2.71	2.79
	3.0	1.67	1.76	1.83	1.90	1.95	2.00	2.08	2.16	2.22	2.28	2.33	2.42	2.50	2.56	2.62	2.67	2.76	2.83
	3.5	1.71	1.81	1.88	1.95	2.00	2.10	2.18	2.25	2.32	2.38	2.43	2.52	2.60	2.66	2.71	2.76	2.86	2.93
	4.0	1.75	1.84	1.92	1.98	2.07	2.17	2.25	2.32	2.39	2.45	2.50	2.59	2.67	2.73	2.79	2.83	2.93	3.00

TABLE 3: ALLOWABLE SPAN LENGTH OF JOISTS AND JOIST SPACINGS

AVG. SLAB THICKNESS Ⓣ (IN)	LUMBER JOIST SIZE (IN X IN)	JOIST SPACINGS			
		15 IN	12 IN	10 IN	8 IN
		THE ALLOWABLE SPAN LENGTH OF JOISTS			
10	2 X 4	———	4' - 6"	4' - 9"	5' - 0"
	4 X 4	5' - 9"	6' - 3"	6' - 6"	6' - 7"
12	2 X 4	———	4' - 3"	4' - 9"	5' - 0"
	4 X 4	5' - 3"	6' - 0"	6' - 3"	6' - 5"
14	2 X 4	———	4' - 0"	4' - 6"	5' - 0"
	4 X 4	———	5' - 6"	6' - 0"	6' - 4"
16	2 X 4	———	4' - 0"	4' - 3"	4' - 9"
	4 X 4	———	5' - 3"	5' - 9"	6' - 3"

NOTES

DESIGN INCLUDES CONSTRUCTION LIVE LOAD 20 PSF ON THE AREA SUPPORTED AND 75 PLF AT THE OUTSIDE DECK OF OVERHANGS.

REQUIRED MINIMUM DIAGONAL LEG CAPACITY: 3600 LB WORKING LOAD

THE CONTRACTOR HAS THE OPTION OF SUBMITTING HIS OWN DESIGN FOR OVERHANG FALSEWORK IN ACCORDANCE WITH THE SPECIAL PROVISIONS.

SUBMITTALS UTILIZING THE INSTRUCTIONS AND PROCEDURES DESCRIBED ON SHEET 1 OF 3 SHALL BE IN ACCORDANCE WITH THE APPLICABLE SECTIONS OF THE SPECIFICATIONS AND SPECIAL PROVISIONS, EXCEPT THAT CALCULATIONS FOR OVERHANG FALSEWORK NEED NOT BE SEALED BY A REGISTERED ENGINEER.

FOR OVERHANG FALSEWORK BRACING DESIGN, SEE SHEET 3 OF 3.

PROJECT NO. R-2518B
YANCEY COUNTY
STATION: 191+92.500-L-

SHEET 2 OF 3

STATE OF NORTH CAROLINA
DEPARTMENT OF TRANSPORTATION
RALEIGH

STANDARD OVERHANG FALSEWORK

AASHTO TYPES
III, IV, V, AND VI

NORTH CAROLINA PROFESSIONAL SEAL 18788 ENGINEER CHANG-CHUAN VICTOR CHAO
Chang-Chuan Victor Chao
2-19-2008

ASSEMBLED BY:	DATE:
CHECKED BY:	DATE:
DRAWN BY: R. WRIGHT 06/04	REV.
CHECKED BY: C. V. CHAO 06/04	

REVISIONS							SHEET NO.
NO.	BY:	DATE:	NO.	BY:	DATE:		S-109
1			3				TOTAL SHEETS
2			4				154

18-FEB-2008 15:38
d:\wdlr\victor\overhangfalsework\tlebar&strut\r-2518b-3_type_III\r2518bstr3overhangsheets.dgn
vchao

STR #3 OF2

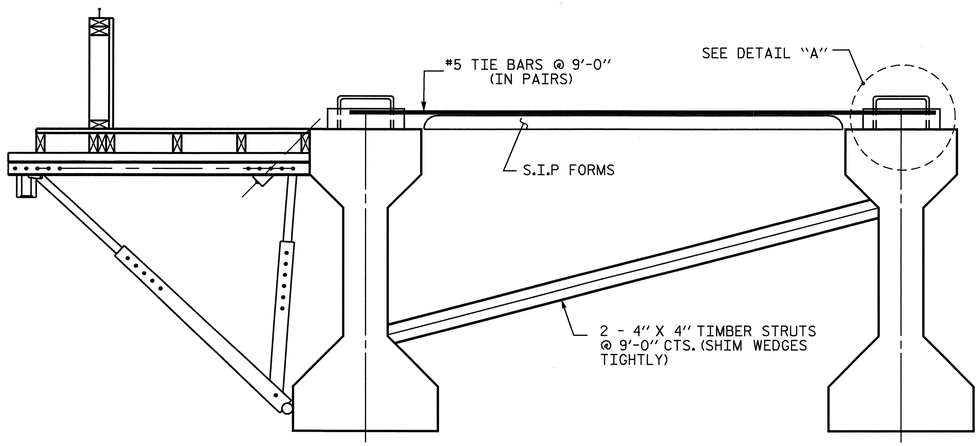

EXTERIOR GIRDER INTERIOR GIRDER

DETAIL OF REQUIRED OVERHANG FALSEWORK BRACING SYSTEM

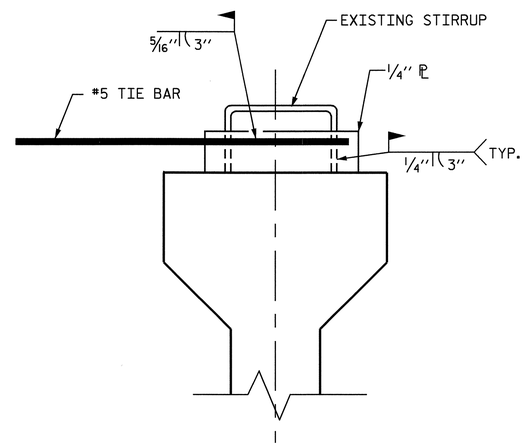

DETAIL "A"

NOTES:

EACH #5 TIE BAR SHALL BE WELDED TO ONE STIRRUP LOOP AS SHOWN IN DETAIL "A". #5 TIE BARS SHALL BE WELDED TO TWO ADJACENT STIRRUPS OF THE EXTERIOR GIRDER AND THE ADJACENT INTERIOR GIRDER BETWEEN PERMANENT DIAPHRAGMS. WELD STEEL PLATES IN BETWEEN THE TIE BARS AND THE STIRRUP LOOP. WELDING TWO TIE BARS TO THE SAME STIRRUP LOOP SHALL NOT BE PERMITTED.

MAXIMUM SPACING BETWEEN THE BRACING (TIE BARS-TIMBER STRUT) IS 9'-0" CTS. #5 TIE BARS SHALL BE LOCATED OVER A TIMBER STRUT.

INSTALL TIE BARS AND TIMBER STRUTS PRIOR TO PLACEMENT OF CONCRETE OR SCREED WEIGHT ONTO THE OVERHANG FALSEWORK.

PROJECT NO. R-2518B
YANCEY COUNTY
STATION: 191+92.500-L-

SHEET 3 OF 3

STATE OF NORTH CAROLINA
DEPARTMENT OF TRANSPORTATION
RALEIGH

STANDARD OVERHANG FALSEWORK

AASHTO TYPES
III, IV, V, AND VI

NORTH CAROLINA PROFESSIONAL SEAL 18788 ENGINEER CHANG-CHUAN VICTOR CHAO

Chang-Chuan Victor Chao
2-19-2008

REVISIONS						SHEET NO.
NO.	BY:	DATE:	NO.	BY:	DATE:	S-110
1			3			TOTAL SHEETS
2			4			154

DRAWN BY: R. WRIGHT 06/04 DATE :
CHECKED BY: C. V. CHAO 06/04 DATE :

18-FEB-2008 15:39
d:\wdlr\victor\overhangfalsework\tiebar&strut\r-2518b-3_type_III\r2518bstr3overhangsheets.dgn
vchao

STR #3 OF3

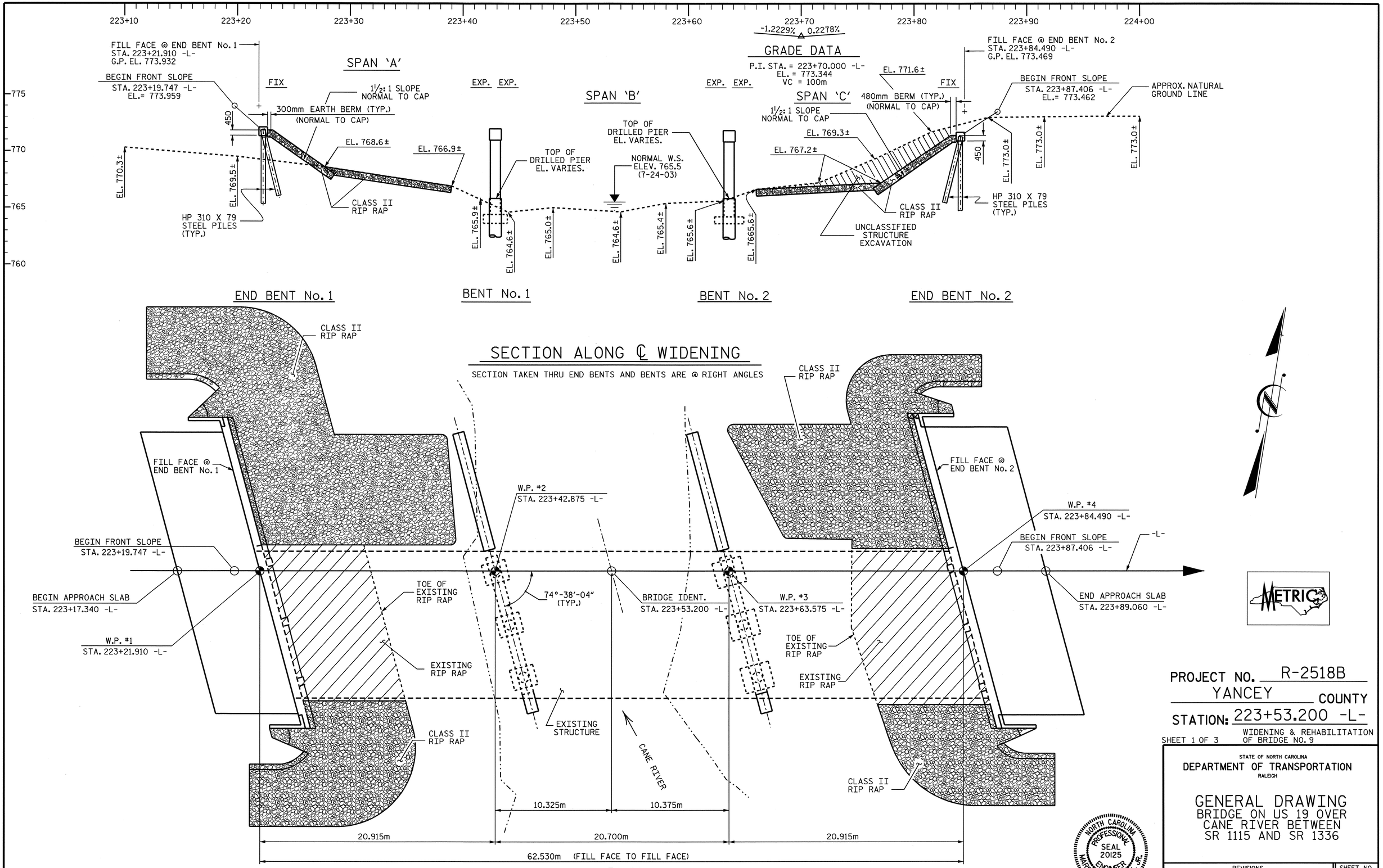
223+10
223+20
223+30
223+40
223+50
223+60
223+70
223+80
223+90
224+00
-1.2229%
0.2278%
GRADE DATA
P.I. STA. = 223+70.000 -L-
EL. = 773.344
VC = 100m
775
770
765
760
FILL FACE @ END BENT No. 1
STA. 223+21.910 -L-
G.P. EL. 773.932
BEGIN FRONT SLOPE
STA. 223+19.747 -L-
EL.= 773.959
FIX
SPAN 'A'
1½:1 SLOPE
NORMAL TO CAP
300mm EARTH BERM (TYP.)
(NORMAL TO CAP)
450
EL. 768.6±
EL. 766.9±
EL. 770.3±
EL. 769.5±
HP 310 X 79
STEEL PILES
(TYP.)
CLASS II
RIP RAP
EXP. EXP.
SPAN 'B'
TOP OF
DRILLED PIER
EL. VARIES.
NORMAL W.S.
ELEV. 765.5
(7-24-03)
EL. 765.9±
EL. 764.6±
EL. 765.0±
EL. 764.6±
EL. 765.4±
EL. 765.6±
EL. 765.6±
EXP. EXP.
EL. 771.6±
FIX
SPAN 'C'
480mm BERM (TYP.)
(NORMAL TO CAP)
1½:1 SLOPE
NORMAL TO CAP
EL. 769.3±
EL. 767.2±
FILL FACE @ END BENT No. 2
STA. 223+84.490 -L-
G.P. EL. 773.469
BEGIN FRONT SLOPE
STA. 223+87.406 -L-
EL.= 773.462
APPROX. NATURAL
GROUND LINE
450
EL. 773.0±
EL. 773.0±
EL. 773.0±
HP 310 X 79
STEEL PILES
(TYP.)
CLASS II
RIP RAP
UNCLASSIFIED
STRUCTURE
EXCAVATION
END BENT No. 1
BENT No. 1
BENT No. 2
END BENT No. 2
SECTION ALONG ℄ WIDENING
SECTION TAKEN THRU END BENTS AND BENTS ARE @ RIGHT ANGLES
CLASS II
RIP RAP
FILL FACE @
END BENT No. 1
W.P. #2
STA. 223+42.875 -L-
BEGIN FRONT SLOPE
STA. 223+19.747 -L-
BEGIN APPROACH SLAB
STA. 223+17.340 -L-
W.P. #1
STA. 223+21.910 -L-
TOE OF
EXISTING
RIP RAP
EXISTING
RIP RAP
CLASS II
RIP RAP
74°-38'-04"
(TYP.)
EXISTING
STRUCTURE
CANE RIVER
BRIDGE IDENT.
STA. 223+53.200 -L-
W.P. #3
STA. 223+63.575 -L-
CLASS II
RIP RAP
FILL FACE @
END BENT No. 2
W.P. #4
STA. 223+84.490 -L-
BEGIN FRONT SLOPE
STA. 223+87.406 -L-
-L-
END APPROACH SLAB
STA. 223+89.060 -L-
TOE OF
EXISTING
RIP RAP
EXISTING
RIP RAP
CLASS II
RIP RAP
10.325m
10.375m
20.915m
20.700m
20.915m
62.530m (FILL FACE TO FILL FACE)
PLAN
PILES AND COLUMNS NOT SHOWN IN PLAN VIEW
METRIC
NORTH CAROLINA
PROFESSIONAL
SEAL
20125
ENGINEER
MARSHALL G. CHEEK, JR.
3-28-08
PROJECT NO. R-2518B
YANCEY COUNTY
STATION: 223+53.200 -L-
SHEET 1 OF 3
WIDENING & REHABILITATION
OF BRIDGE NO. 9
STATE OF NORTH CAROLINA
DEPARTMENT OF TRANSPORTATION
RALEIGH
GENERAL DRAWING
BRIDGE ON US 19 OVER
CANE RIVER BETWEEN
SR 1115 AND SR 1336
REVISIONS
NO. BY: DATE: NO. BY: DATE:
1
2
3
4
SHEET NO.
S-111
TOTAL
SHEET S
154
DRAWN BY : A.L. FIGUEROA DATE : 02-12-08
CHECKED BY : M.G. CHEEK DATE : 02-14-08
27-MAR-2008 12:30
R:\Structures\Final plans\Str #4\r2518b_sd_gd_str#4.dgn
aflgueroa
STR #4

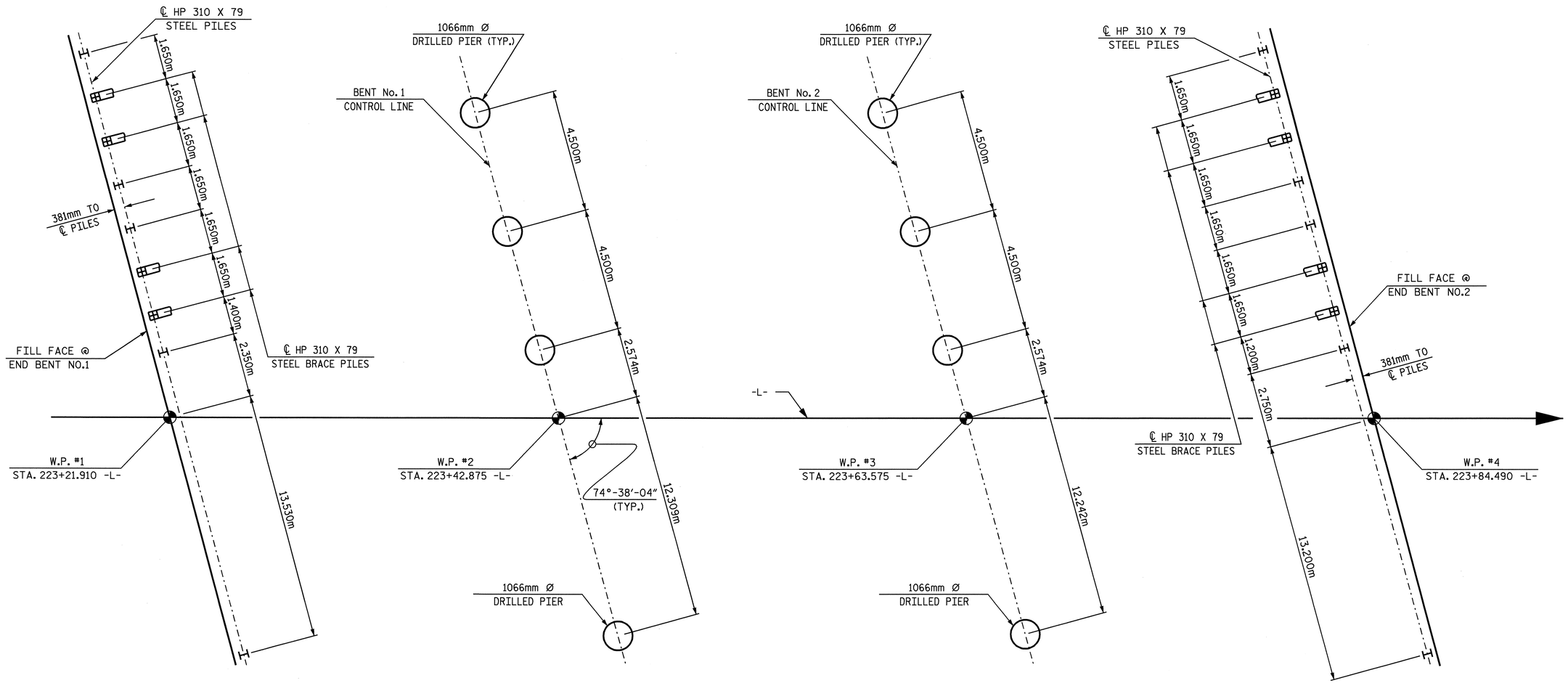

FOUNDATION LAYOUT

ALL END BENT PILES ARE HP 310 X 79
DIMENSIONS LOCATING PILES ARE SHOWN TO THE
PILE CENTERLINE AT THE BOTTOM OF THE CAP.
END BENT BRACE PILES ARE BATTERED 250:1000.

NOTES

DRIVE PILES AT END BENT NO.1 TO A REQUIRED BEARING CAPACITY OF 1,080 kN PER PILE. THE REQUIRED BEARING CAPACITY IS EQUAL TO THE ALLOWABLE BEARING CAPACITY WITH A MINIMUM FACTOR OF SAFETY OF TWO.

THE ALLOWABLE BEARING CAPACITY FOR PILES AT END BENT NO.1 IS 540 kN PER PILE.

STEEL PILE POINTS ARE REQUIRED FOR STEEL PILES AT END BENT NO.1

FOR DRILLED PIERS, SEE DRILLED PIERS SPECIAL PROVISIONS.

DRILLED PIERS AT BENT NO. 1 ARE DESIGNED FOR BOTH SKIN FRICTION AND END BEARING. CHECK FIELD CONDITIONS FOR THE REQUIRED END BEARING CAPACITY OF 5.7 MPa. AT COLUMNS 1,2,3 AND 2.9 MPa. AT COLUMN 4.

DRILLED PIERS AT BENT NO.1 ARE DESIGNED FOR AN APPLIED LOAD OF 1,385 kN, 1716 kN, 1383 KN AND 826 kN AT THE TOP OF COLUMN 1,2,3, AND 4 RESPECTIVELY.

PERMANENT STEEL CASING MAY BE REQUIRED FOR DRILLED PIERS AT BENT NO.1. IF REQUIRED, DO NOT EXTEND CASING BELOW ELEVATION 764.0m (COLUMN 1), 763.7m (COLUMN 2), 763.4m (COLUMN 3), AND 763.0m (COLUMN 4) WITHOUT PRIOR APPROVAL FROM THE ENGINEER. THE ENGINEER WILL DETERMINE THE NEED FOR PERMANENT STEEL CASING.

DRILLED PIERS AT BENT NO.1 SHALL EXTEND TO AN ELEVATION NO HIGHER THAN 761.0 (COLUMNS 1,2,3) AND 759.5m (COLUMN 4) AND SATISFY THE REQUIRED END BEARING CAPACITY.

THE SCOUR CRITICAL ELEVATION FOR BENT NO.1 IS ELEVATION 763.5m (COLUMN 1), 763.0m (COLUMNS 2,3) AND 760.5m (COLUMN 4). SCOUR CRITICAL ELEVATIONS ARE USED TO MONITOR POSSIBLE SCOUR PROBLEMS DURING THE LIFE OF THE STRUCTURE.

THE DRILLED PIERS AT BENT NO.2 ARE DESIGNED FOR BOTH SKIN FRICTION AND END BEARING. CHECK FIELD CONDITIONS FOR THE REQUIRED END BEARING CAPACITY OF 5.3 MPa. AT COLUMNS 1,2,3 AND 3.4 MPa. AT COLUMN 4.

DRILLED PIERS AT BENT NO.2 ARE DESIGNED FOR AN APPLIED LOAD OF 1,384 kN, 1725 kN, 1382 kN AND 782 kN AT THE OF COLUMN 1,2,3 AND 4 RESPECTIVELY.

DRILLED PIERS AT BENT NO.2 SHALL EXTEND TO AN ELEVATION NO HIGHER THAN 757.0m (COLUMN 1), 758.0m (COLUMN 2), 760.0m (COLUMN 3), AND 762.0m (COLUMN 4) AND SATISFY THE REQUIRED END BEARING CAPACITY.

THE SCOUR CRITICAL ELEVATION FOR BENT NO.2 IS ELEVATION 757.5m (COLUMN 1), 759.5m (COLUMN 2), 762.0m (COLUMN 3), AND 762.5m (COLUMN 4). SCOUR CRITICAL ELEVATIONS ARE USED TO MONITOR POSSIBLE SCOUR PROBLEMS DURING THE LIFE OF THE STRUCTURE.

SPT TESTING MAY BE REQUIRED FOR DRILLED PIERS. THE ENGINEER WILL DETERMINE THE NEED FOR SPT TESTING.

SID INSPECTIONS MAY BE REQUIRED FOR DRILLED PIERS. THE ENGINEER WILL DETERMINE THE NEED FOR SID INSPECTIONS.

CSL TUBES ARE REQUIRED AND CSL TESTING MAY BE REQUIRED FOR THE DRILLED PIERS. THE ENGINEER WILL DETERMINE THE NEED FOR CSL TESTING. SEE CROSSHOLE SONIC LOGGING SPECIAL PROVISION.

DRIVE PILES AT END BENT NO.2 TO A REQUIRED BEARING CAPACITY OF 1,080 kN PER PILE. THE REQUIRED BEARING CAPACITY IS EQUAL TO THE ALLOWABLE BEARING CAPACITY WITH A MINIMUM FACTOR OF SAFETY OF TWO.

THE ALLOWABLE BEARING CAPACITY FOR PILES AT END BENT NO.2 IS 540 kN PER PILE.

STEEL PILE POINTS ARE REQUIRED FOR STEEL PILES AT END BENT NO.2.

PROJECT NO. R-2518B
YANCEY COUNTY
STATION: 223+53.200 -L-

SHEET 2 OF 3

STATE OF NORTH CAROLINA
DEPARTMENT OF TRANSPORTATION
RALEIGH

GENERAL DRAWING
BRIDGE ON US 19 OVER
CANE RIVER BETWEEN
SR 1115 AND SR 1336

NORTH CAROLINA PROFESSIONAL SEAL 20125 ENGINEER MARSHALL G. CHEEK, JR.
4-4-08

REVISIONS						SHEET NO.
NO.	BY:	DATE:	NO.	BY:	DATE:	S-112
1			3			TOTAL SHEETS
2			4			154

STR. #4

DRAWN BY : A.L. FIGUEROA DATE : 02-26-08
CHECKED BY : M.G. CHEEK DATE : 02-28-08

03-APR-2008 15:51
R:\Structures\Final plans\Str #4\R2518B_sd_FL_STR#4.dgn
afigueroa

BENCHMARK #19 : SPIKE IN 500mm WALNUT 20.661m LT. OF STA.218+60.896-L- EL. = 779.920

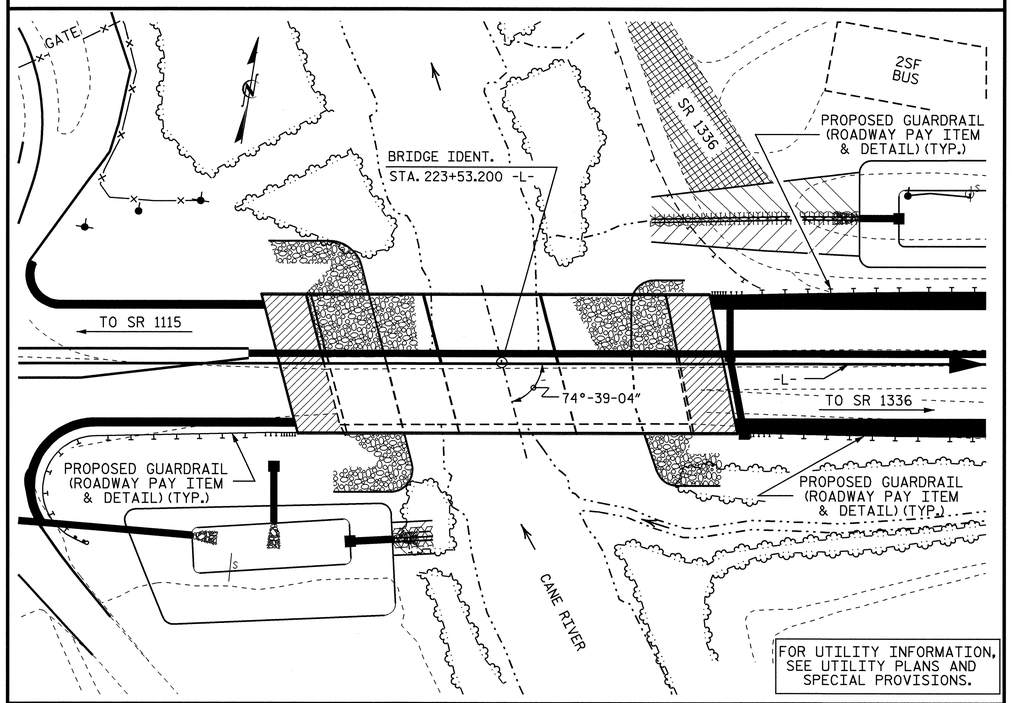

LOCATION SKETCH

NOTES

ALL DIMENSIONS ARE IN MILLIMETERS UNLESS OTHERWISE NOTED.

ALL ELEVATIONS ARE IN METERS.

ASSUMED LIVE LOAD = MS 18 OR ALTERNATE LOADING, EXCEPT THAT THE GIRDERS HAVE BEEN DESIGNED FOR MS 22.5.

FOR OTHER DESIGN DATA AND GENERAL NOTES, SEE SHEET SNSM.

FOR EROSION CONTROL MEASURES, SEE EROSION CONTROL PLANS.

THIS BRIDGE HAS BEEN DESIGNED BY THE STRENGTH DESIGN METHOD AS SPECIFIED IN AASHTO STANDARD SPECIFICATIONS.

PRESTRESSED CONCRETE DECK PANELS MAY BE USED IN LIEU OF METAL STAY-IN-PLACE FORMS IN ACCORDANCE WITH ARTICLE 420-3 OF THE STANDARD SPECIFICATIONS.

REMOVABLE FORMS MAY BE USED IN LIEU OF METAL STAY-IN-PLACE FORMS IN ACCORDANCE WITH ARTICLE 420-3 OF THE STANDARD SPECIFICATIONS.

DIMENSIONS GIVEN FOR THE EXISTING STRUCTURE ARE FROM THE BEST INFORMATION AVAILABLE. IF FIELD CONDITIONS VARY FROM PLANS, MODIFICATIONS WILL BE MADE AS NECESSARY AS DIRECTED BY THE ENGINEER.

BERM AND SLOPE PROTECTION MAY BE ADJUSTED SLIGHTLY AS REQUIRED IN ORDER TO MATCH EXISTING SITE CONDITIONS. THE CONTRACTOR SHALL PROVIDE AS SMOOTH A TRANSITION AS POSSIBLE BETWEEN EXISTING AND PROPOSED SLOPE AS DIRECTED BY THE ENGINEER.

HYDRAULIC DATA

DESIGN DISCHARGE	=	569 m^3/S
FREQUENCY OF DESIGN FLOOD	=	50 YRS.
DESIGN HIGH WATER ELEVATION	=	769.99 m
DRAINAGE AREA	=	153.69 Sq. km.
BASIC DISCHARGE (Q100)	=	792 m^3/S
BASIC HIGH WATER ELEVATION*	=	770.83 m

OVERTOPPING FLOOD DATA

OVERTOPPING DISCHARGE	=	1200 m^3/S
FREQUENCY OF OVERTOPPING FLOOD	=	200+ YRS.
OVERTOPPING FLOOD ELEVATION	=	773.23 m

THE LOCATION OF THE CONSTRUCTION JOINT IN THE DRILLED PIERS IS BASED ON AN APPROXIMATE GROUND LINE ELEVATION. IF THE CONSTRUCTION JOINT IS ABOVE THE ACTUAL GROUND ELEVATION, THE CONTRACTOR SHALL PLACE THE CONSTRUCTION JOINT 300mm BELOW THE GROUND LINE.

THE CLASS AA CONCRETE IN THE BRIDGE DECK SHALL CONTAIN FLY ASH OR GROUND GRANULATED BLAST FURNACE SLAG AT THE SUBSTITUTION RATE SPECIFIED IN ARTICLE 1024-1 AND IN ACCORDANCE WITH ARTICLES 1024-5 AND 1024-6 OF THE STANDARD SPECIFICATIONS. NO PAYMENT WILL BE MADE FOR THIS SUBSTITUTION AS IT IS CONSIDERED INCIDENTAL TO THE COST OF THE REINFORCED CONCRETE DECK SLAB.

AT THE CONTRACTOR'S OPTION, AND UPON REMOVAL OF THE CAUSEWAY, THE CLASS II RIP RAP USED IN THE CAUSEWAY MAY BE PLACED AS RIP RAP SLOPE PROTECTION. SEE SPECIAL PROVISIONS FOR CONSTRUCTION, MAINTENANCE AND REMOVAL OF TEMPORARY ACCESS.

REMOVAL OF THE EXISTING BRIDGE SHALL BE PERFORMED SO AS NOT TO ALLOW DEBRIS TO FALL INTO THE WATER. THE CONTRACTOR SHALL REMOVE THE BRIDGE AND SUBMIT PLANS FOR DEMOLITION IN ACCORDANCE WITH ARTICLE 402-2 OF THE STANDARD SPECIFICATIONS.

THE SUBSTRUCTURE OF THE EXISTING BRIDGE INDICATED ON THE PLANS IS FROM THE BEST INFORMATION AVAILABLE. SINCE THIS INFORMATION IS SHOWN FOR THE CONVENIENCE OF THE CONTRACTOR, THE CONTRACTOR SHALL HAVE NO CLAIM WHATSOEVER AGAINST THE DEPARTMENT OF TRANSPORTATION FOR ANY DELAYS OR ADDITIONAL COST INCURRED BASED ON DIFFERENCES BETWEEN THE EXISTING BRIDGE SUBSTRUCTURE SHOWN ON THE PLANS AND THE ACTUAL CONDITIONS AT THE PROJECT SITE.

THE MATERIAL SHOWN IN THE CROSS-HATCHED AREA (SEE SHEET 1 OF 3) SHALL BE EXCAVATED FOR A DISTANCE OF APPROXIMATELY 20m TO THE LEFT OF THE EXISTING STRUCTURE AND APPROXIMATELY 10m TO THE RIGHT OF THE EXISTING STRUCTURE AS DIRECTED BY THE ENGINEER. THIS WORK WILL BE MEASURED AND PAID FOR AS UNCLASSIFIED STRUCTURE EXCAVATION.

THIS STRUCTURE HAS BEEN DESIGNED IN ACCORDANCE WITH HEC 18, "EVALUATING SCOUR AT BRIDGES", NOVEMBER, 1995.

THIS BRIDGE HAS BEEN DESIGNED IN ACCORDANCE WITH THE REQUIREMENTS OF THE AASHTO STANDARD SPECIFICATIONS FOR SEISMIC DESIGN OF HIGHWAY BRIDGES FOR SEISMIC PERFORMANCE CATEGORY B.

FOR LIMITS OF TEMPORARY SHORING FOR MAINTENANCE OF TRAFFIC, SEE TRAFFIC CONTROL PLANS. FOR PAY ITEM FOR TEMPORARY SHORING FOR MAINTENANCE OF TRAFFIC, SEE ROADWAY PLANS.

STEEL SHEET PILING REQUIRED FOR SHORING SHALL BE HOT ROLLED.

NEEDLE BEAMS WILL NOT BE ALLOWED UNLESS OTHERWISE CALLED FOR THE PLANS OR APPROVED BY THE ENGINEER.

FOR SUBMITTAL OF WORKING DRAWINGS, SEE SPECIAL PROVISIONS.

FOR METRIC STRUCTURAL STEEL, SEE SPECIAL PROVISIONS.

FOR FALSEWORK AND FORMWORK, SEE SPECIAL PROVISIONS.

FOR PRESTRESSED CONCRETE MEMBERS, SEE SPECIAL PROVISIONS.

FOR GROUT FOR STRUCTURES, SEE SPECIAL PROVISIONS.

FOR CRANE SAFETY, SEE SPECIAL PROVISIONS.

TOTAL BILL OF MATERIAL

	CONSTRUCTION, MAINTENANCE AND REMOVAL OF TEMPORARY ACCESS	REMOVAL OF EXISTING STRUCTURE	1066mm Ø DRILLED PIERS IN SOIL	1066mm Ø DRILLED PIERS NOT IN SOIL	PERMANENT STEEL CASING FOR 1066mm Ø DRILLED PIERS	SID INSPECTION	SPT TESTING	CROSSHOLE SONIC LOGGING	UNCLASSIFIED STRUCTURE EXCAVATION	REINFORCED CONCRETE DECK SLAB	GROOVING BRIDGE FLOORS	CLASS AA CONCRETE	CLASS A CONCRETE	BRIDGE APPROACH SLABS	REINFORCING STEEL
	LUMP SUM	LUMP SUM	METERS	METERS	METERS	EACH	EACH	EACH	CU. METERS	SQ. METERS	SQ. METERS	CU. METERS	CU. METERS	LUMP SUM	kg
SUPERSTRUCTURE	LUMP SUM	LUMP SUM								854.5	1648.4	94.9		LUMP SUM	
END BENT NO. 1													13.2		1349
BENT NO.1			15.8	5.0	8.8								27.7		6248
BENT NO. 2			21.3	5.0									27.6		6809
END BENT NO. 2									460				13.4		1354
TOTAL	LUMP SUM	LUMP SUM	37.1	10.0	8.8	2	2	2	460	854.5	1648.4	94.9	81.9	LUMP SUM	15760

TOTAL BILL OF MATERIAL

	EPOXY COATED REINFORCING STEEL	SPIRAL COLUMN REINFORCING STEEL	1143mm PRESTRESSED CONCRETE GIRDER		HP 310 X 79 STEEL PILES		STEEL PILE POINTS	CONCRETE BARRIER RAIL	CLASS I SURFACE PREPA-RATION	CLASS II SURFACE PREPA-RATION	CLASS III SURFACE PREPA-RATION	LATEX MODIFIED CONCRETE OVERLAY	PLACING AND FINISHING OF LATEX MODIFIED CONCRETE OVERLAY	RIP RAP CLASS II (600mm THICK)	FILTER FABRIC FOR DRAINAGE	ELASTOMERIC BEARINGS	EVAZOTE JOINT SEALS
	kg	kg	NO.	METERS	NO.	METERS	EACH	METERS	SQ.METERS	SQ.METERS	SQ.METERS	CU. METERS	SQ. METERS	METRIC TONS	SQ. METERS	LUMP SUM	LUMP SUM
SUPERSTRUCTURE	1945		18	372.420				125.160	743	35	10	49.0	1535			LUMP SUM	LUMP SUM
END BENT NO. 1					9	24	9							477	502		
BENT NO.1		1352															
BENT NO. 2		1500															
END BENT NO. 2					9	60	9							502	533		
TOTAL	1945	2852	18	372.420	18	84	18	125.160	743	35	10	49.0	1535	979	1035	LUMP SUM	LUMP SUM

PROJECT NO. R-2518B
YANCEY COUNTY
STATION: 223+53.200 -L-

SHEET 3 OF 3

STATE OF NORTH CAROLINA
DEPARTMENT OF TRANSPORTATION
RALEIGH

GENERAL DRAWING
BRIDGE ON US 19 OVER CANE RIVER BETWEEN SR 1115 AND SR 1336

NORTH CAROLINA PROFESSIONAL SEAL 20125 ENGINEER MARSHALL G. CHEEK, JR.
4-25-08

REVISIONS								SHEET NO.
NO.	BY:	DATE:	NO.	BY:	DATE:			S-113
1			3					TOTAL SHEETS
2			4					154

DRAWN BY : A.L. FIGUEROA DATE : 02-12-08
CHECKED BY : M.G. CHEEK DATE : 02-13-08

25-APR-2008 10:10
r:\structures\finalplans\str #4\r2518b_sd_gd_str#4.dgn
lmurphy

STR #4

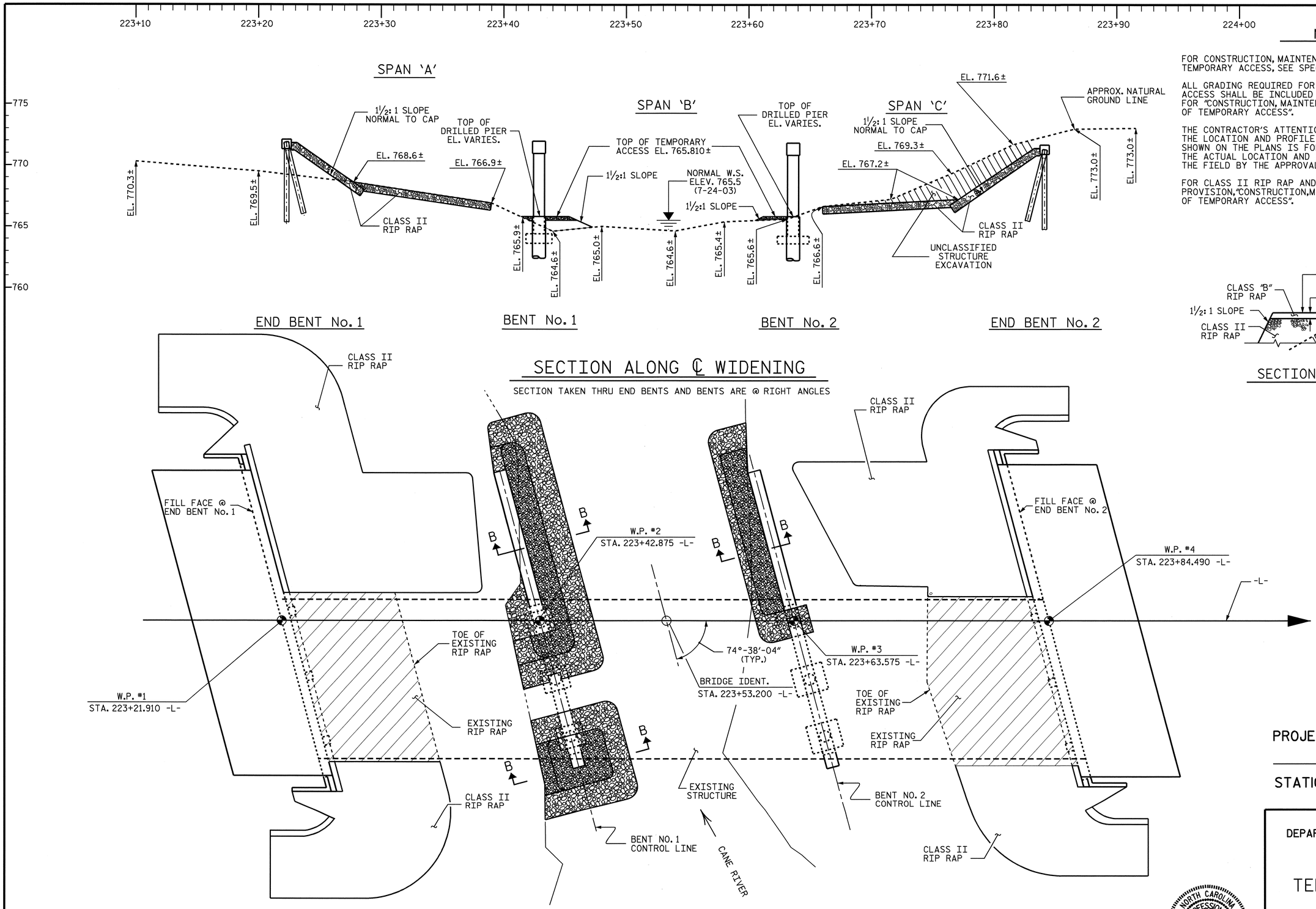

NOTES

FOR CONSTRUCTION, MAINTENANCE AND REMOVAL OF TEMPORARY ACCESS, SEE SPECIAL PROVISIONS.

ALL GRADING REQUIRED FOR ACCESS TO THE TEMPORARY ACCESS SHALL BE INCLUDED IN THE LUMP SUM BID PRICE FOR "CONSTRUCTION, MAINTENANCE, AND AND REMOVAL OF TEMPORARY ACCESS".

THE CONTRACTOR'S ATTENTION IS CALLED TO THE FACT THAT THE LOCATION AND PROFILE OF THE TEMPORARY ACCESS SHOWN ON THE PLANS IS FOR ESTIMATING PURPOSES ONLY. THE ACTUAL LOCATION AND PROFILE SHALL BE DETERMINED IN THE FIELD BY THE APPROVAL OF THE ENGINEER.

FOR CLASS II RIP RAP AND CLASS B RIP RAP, SEE SPECIAL PROVISION, "CONSTRUCTION, MAINTENANCE, AND REMOVAL OF TEMPORARY ACCESS".

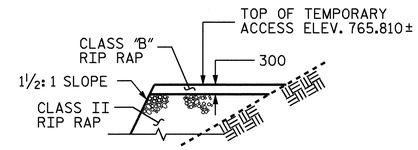

SECTION B-B

PLAN

PILES AND COLUMNS NOT SHOWN IN PLAN VIEW

PROJECT NO. R-2518B
YANCEY COUNTY
STATION: 223+53.200 -L-

STATE OF NORTH CAROLINA
DEPARTMENT OF TRANSPORTATION
RALEIGH

TEMPORARY ACCESS

NORTH CAROLINA PROFESSIONAL SEAL 20125 ENGINEER MARSHALL G. CHEEK, JR.
4-4-08

REVISIONS						SHEET NO.
NO.	BY:	DATE:	NO.	BY:	DATE:	S-114
1			3			TOTAL SHEETS
2			4			154

DRAWN BY : A.L. FIGUEROA DATE : 02-07-08
CHECKED BY : M.G. CHEEK DATE : 02-13-08

03-APR-2008 15:24
R:\Structures\Final plans\Str #4\R2518B_sd_TA_STR#4.dgn
lmurphy

STR #4

NOTES

FOR MAINTENANCE OF TRAFFIC, SEE TRAFFIC CONTROL PLANS.

THE PORTABLE CONCRETE BARRIER IS A TRAFFIC CONTROL PAY ITEM.

CARE SHALL BE TAKEN DURING THE PARTIAL REMOVAL OF THE EXISTING STRUCTURE. DAMAGE TO THE REMAINING STRUCTURE SHALL BE REPAIRED BY THE CONTRACTOR AT NO ADDITIONAL COST TO THE DEPARTMENT. THE METHOD OF REPAIR SHALL BE SUBJECT TO THE APPROVAL OF THE ENGINEER.

ALL WORK, MATERIALS, EQUIPMENT, AND INCIDENTALS REQUIRED FOR THE PARTIAL REMOVAL AND DISPOSAL OF THE EXISTING STRUCTURE AND REMOVAL AND DISPOSAL OF THE EXISTING APPROACH SLABS SHALL BE INCLUDED IN THE UNIT CONTRACT BID PRICE FOR "REMOVAL OF EXISTING STRUCTURE".

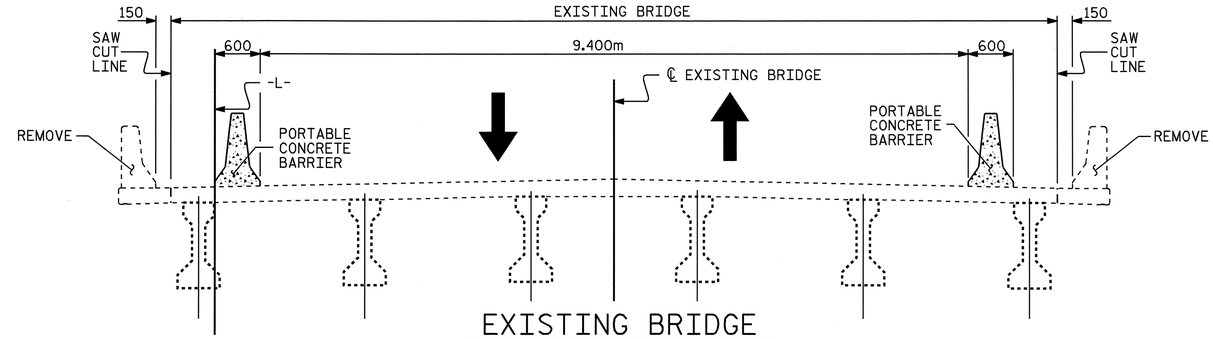

EXISTING BRIDGE

FOR LOCATION OF UNANCHORED PORTABLE CONCRETE BARRIERS WHILE REMOVING THE EXISTING RAILS, SEE TRAFFIC CONTROL PLANS. REMOVE EXISTING RAILS AND CURTAIN WALL TO THE CUT LINES. REMOVE END BENT EAR WALLS AND A PORTION OF THE TOP OF CAP AS SHOWN IN THE SUBSTRUCTURE PLANS. PORTABLE CONCRETE BARRIERS SHALL BE ANCHORED AT THE LOCATIONS SHOWN ABOVE.

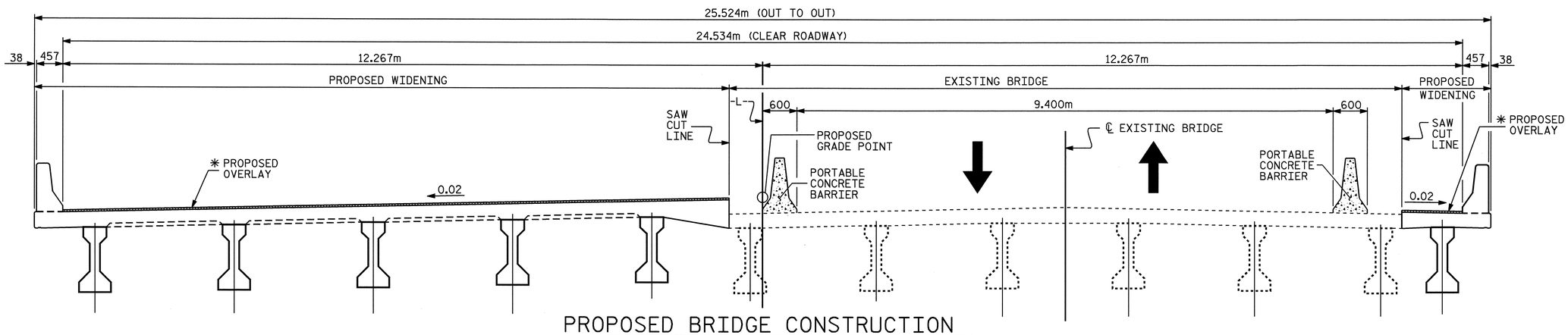

PROPOSED BRIDGE CONSTRUCTION

CONSTRUCT PROPOSED WIDENING AS SHOWN. CONSTRUCT LATEX MODIFIED CONCRETE OVERLAY. CONSTRUCT STAGE I APPROACH SLABS AND PLACE ARMORED EVAZOTE JOINT SEALS AT END BENTS AND BENTS. THE APPROACH SLABS WILL NOT RECEIVE A LATEX MODIFIED CONCRETE OVERLAY.

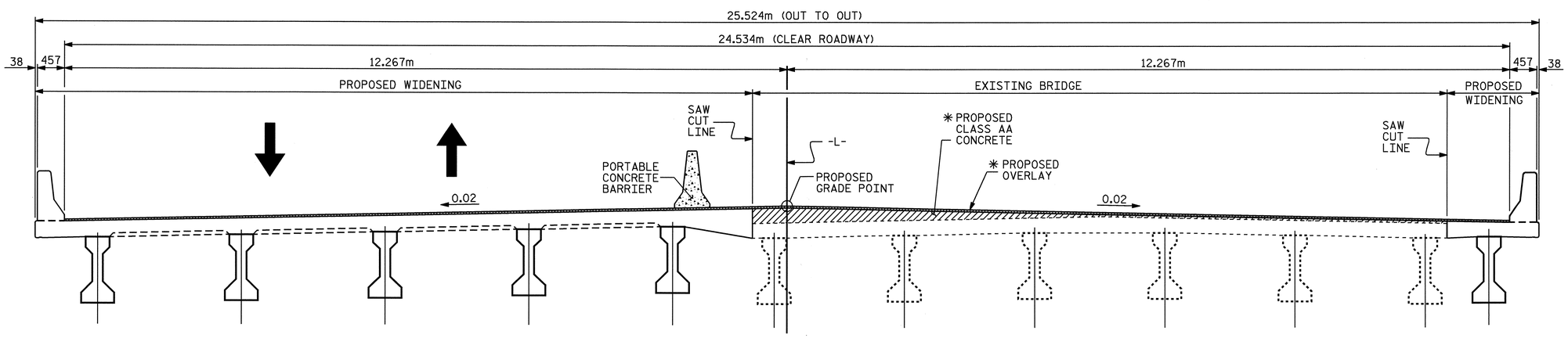

FINAL BRIDGE

PLACE PORTABLE CONCRETE BARRIER AS SHOWN. REMOVE THE EXISTING APPROACH SLABS. PERFORM CLASS I, CLASS II AND CLASS III SURFACE PREPARATION IN THE AREA OF THE EXISTING BRIDGE. CONSTRUCT CLASS AA CONCRETE OVERLAY AS SHOWN IN THE PLANS. CONSTRUCT LATEX MODIFIED CONCRETE OVERLAY AS SHOWN IN THE PLANS. CONSTRUCT STAGE II APPROACH SLABS AND PLACE ARMORED EVAZOTE JOINT SEALS AT END BENTS AND BENTS. THE APPROACH SLABS WILL NOT RECEIVE A LATEX MODIFIED CONCRETE OVERLAY.

✱ FOR LIMITS OF CLASS AA CONCRETE OVERLAY AND LATEX MODIFIED CONCRETE OVERLAY, SEE "CONSTRUCTION AND PAY LIMIT" SHEET.

NORTH CAROLINA PROFESSIONAL SEAL 20125 ENGINEER MARSHALL G. CHEEK, JR.
4-29-08

PROJECT NO. R-2518B
YANCEY COUNTY
STATION: 223+53.200 -L-

STATE OF NORTH CAROLINA
DEPARTMENT OF TRANSPORTATION
RALEIGH

CONSTRUCTION SEQUENCE

REVISIONS						SHEET NO.
NO.	BY:	DATE:	NO.	BY:	DATE:	S-115
1			3			TOTAL SHEETS
2			4			154

DRAWN BY : D. HODGE DATE : 2/08
CHECKED BY : M.G. CHEEK DATE : 2/08

29-APR-2008 15:13
r:\structures\finalplans\str #4\R2518B_sd_CS_str 4.dgn
dahodge

STR. #4

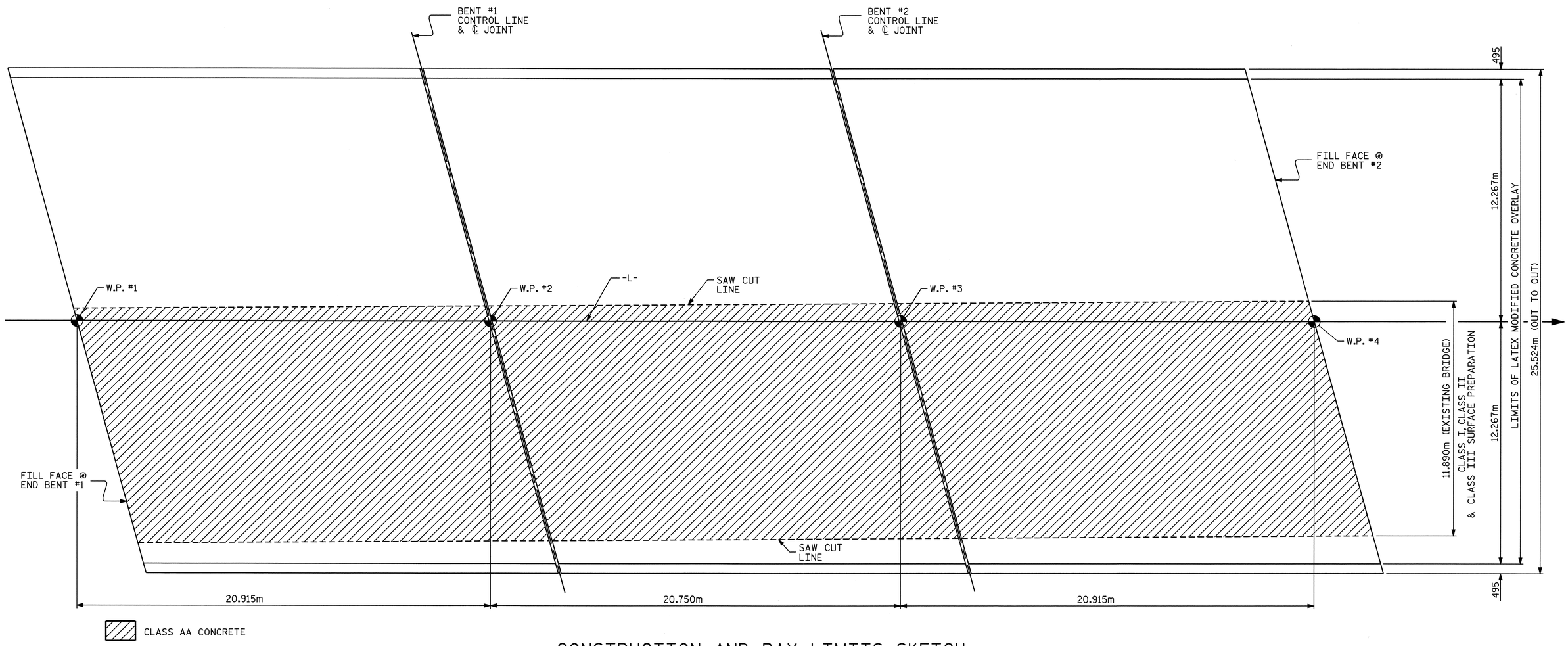

CONSTRUCTION AND PAY LIMITS SKETCH

NOTES

THE EXISTING BRIDGE DECK IS TO HAVE 13mm OF THE EXISTING DECK REMOVED AS COVERED UNDER CLASS I SURFACE PREPARATION. FOR CLASS I SURFACE PREPARATION, SEE "REPAIR OF BRIDGE DECKS AND APPROACH PAVEMENT WITH LATEX MODIFIED CONCRETE" SPECIAL PROVISION.

THE CONTRACTOR'S ATTENTION IS CALLED TO THE FACT THAT THE CLASS AA CONCRETE OVERLAY SHALL BE PLACED IN VARYING DEPTH FROM THE LEFT SIDE SAW CUT LINE TO THE RIGHT SIDE SAW CUT LINE. THE CLASS AA CONCRETE OVERLAY SHALL BE PLACED TO SUCH A DEPTH THAT WILL ALLOW THE 32mm LATEX MODIFIED CONCRETE TO ACHIEVE THE FINISHED GRADE.

QUANTITIES SHOWN FOR CLASS II AND CLASS III SURFACE PREPARATION ARE ESTIMATED. THE QUANTITIES TO BE PAID FOR WILL BE THE ACTUAL NUMBER OF SQUARE METERS OF CLASS II AND CLASS III SURFACE PREPARATION COMPUTED BY THE ENGINEER FROM MEASUREMENTS OF THE AREAS THAT ARE PREPARED TO RECEIVE THE OVERLAY.

FOR CLASS I, II AND III SURFACE PREPARATIONS SEE SPECIAL PROVISION "REPAIR OF BRIDGE DECKS AND APPROACH PAVEMENT WITH LATEX MODIFIED CONCRETE".

FOR LATEX MODIFIED CONCRETE, SEE SPECIAL PROVISIONS.

BILL OF MATERIAL

CLASS I	743	SQ. METERS
CLASS II	35	SQ. METERS
CLASS III	10	SQ. METERS
LATEX MODIFIED CONCRETE	49.0	CU. METERS
PLACING AND FINISHING LATEX MODIFIED CONCRETE OVERLAY	1,535	SQ. METERS

FOR CLASS AA CONCRETE AND EPOXY COATED REINFORCING STEEL BILL OF MATERIAL, SEE "PLAN OF SPAN A, B & C CONCRETE OVERLAY", SHEET 4 OF 4.

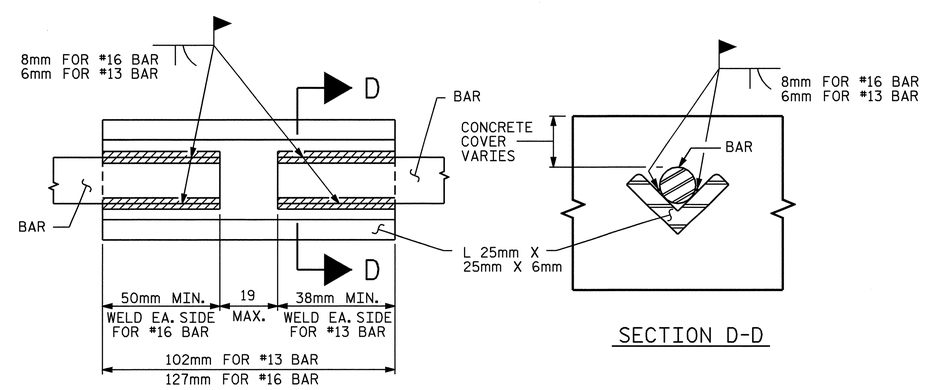

PLAN VIEW

SECTION D-D

WELD DETAILS FOR SPLICING REINFORCING STEEL

NORTH CAROLINA PROFESSIONAL SEAL 20125 ENGINEER M.G. CHEEK, JR.
4-29-08

PROJECT NO. R-2518B
YANCEY COUNTY
STATION: 223+53.200 -L-

STATE OF NORTH CAROLINA
DEPARTMENT OF TRANSPORTATION
RALEIGH

CONSTRUCTION AND PAY LIMITS

REVISIONS						SHEET NO.
NO.	BY:	DATE:	NO.	BY:	DATE:	S-116
1			3			TOTAL SHEETS
2			4			154

DRAWN BY : D. HODGE DATE : 2/08
CHECKED BY : M.G. CHEEK DATE : 2/08

29-APR-2008 15:12
r:\structures\final plans\str #4\r2518b_sd_c&pl_str 4.dgn
dahodge

STR. #4

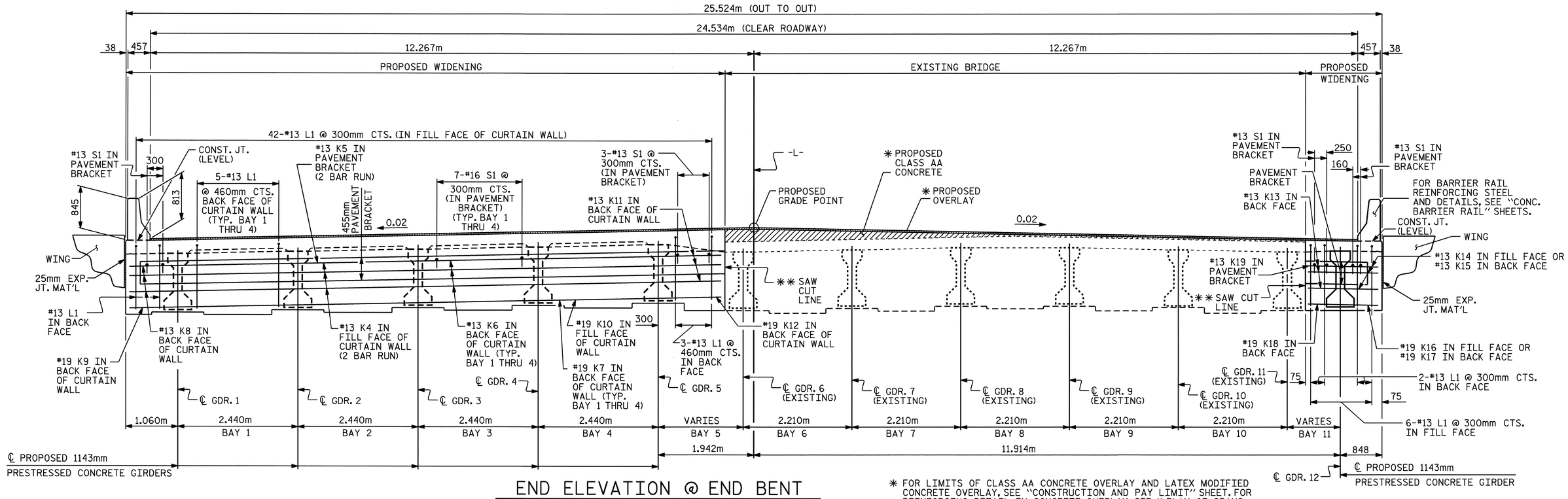

END ELEVATION @ END BENT

✱✱ FOR LOCATION OF SAW CUT LINE, SEE "CONSTRUCTION SEQUENCE" SHEET

✱ FOR LIMITS OF CLASS AA CONCRETE OVERLAY AND LATEX MODIFIED CONCRETE OVERLAY, SEE "CONSTRUCTION AND PAY LIMIT" SHEET. FOR REINFORCING DETAIL IN CONCRETE OVERLAY, SEE "PLAN OF SPANS A, B, C CONCRETE OVERLAY" SHEET.

NOTES

PROVIDE 32mm HIGH BEAM BOLSTERS UPPER AT 1.2m CTS. ATOP THE METAL STAY-IN-PLACE FORMS TO SUPPORT THE BOTTOM MAT OF 'A' BARS. WHEN USING REMOVABLE FORMS, PROVIDE CONTINUOUS HIGH CHAIRS FOR METAL DECK (C.H.C.M.) @ 1.2m CTS. WITH A HEIGHT TO SUPPORT THE BOTTOM MAT OF 'A' BARS A CLEAR DISTANCE OF 65mm ABOVE THE TOP OF THE REMOVABLE FORM.

LONGITUDINAL STEEL MAY BE SHIFTED SLIGHTLY, AS NECESSARY, TO AVOID INTERFERENCE WITH STIRRUPS IN PRESTRESSED CONCRETE GIRDERS.

BARRIER RAIL IN EACH SPAN SHALL NOT BE CAST UNTIL ALL SLAB CONCRETE IN THAT SPAN HAS BEEN CAST AND HAS REACHED A MINIMUM COMPRESSIVE STRENGTH OF 20.7 MPa.

A FULL DEPTH SAW CUT SHALL BE MADE AND EXISTING CONCRETE REMOVED IN ACCORDANCE WITH PLAN DETAILS.

TEMPORARY STRUTS SHALL BE PLACED IN BAY 11 BETWEEN EXISTING PRESTRESSED GIRDER 11 AND PROPOSED PRESTRESSED GIRDER 12 ADJACENT TO THE DIAPHRAGMS, AND THE NUTS ON THE 31.75mm DIA. TIE RODS SHALL BE FULLY TIGHTENED BEFORE THE DIAPHRAGMS ARE CAST. STRUTS SHALL REMAIN IN PLACE 3 DAYS AFTER CONCRETE IS PLACED. THE TIE RODS SHALL BE RE-TIGHTENED AFTER THE STRUTS HAVE BEEN REMOVED.

CONCRETE IN BENT AND INTERMEDIATE DIAPHRAGMS MAY BE CLASS A IN LIEU OF CLASS AA. PAYMENT SHALL BE MADE UNDER THE UNIT CONTRACT PRICE FOR REINFORCED CONCRETE DECK SLAB.

SEE TRAFFIC CONTROL PLANS FOR LOCATION AND PAY LIMITS OF THE ANCHORED PORTABLE CONCRETE BARRIER.

PLACEMENT OF THE CONCRETE OVERLAY SHALL OCCUR AFTER CASTING THE CONCRETE BARRIER RAIL.

PROJECT NO. R-2518B
YANCEY COUNTY
STATION: 223+53.200 -L-

SHEET 1 OF 3

STATE OF NORTH CAROLINA
DEPARTMENT OF TRANSPORTATION
RALEIGH

SUPERSTRUCTURE
TYPICAL SECTION

NORTH CAROLINA PROFESSIONAL SEAL 20125 ENGINEER
4-29-08

REVISIONS							SHEET NO.
NO.	BY:	DATE:	NO.	BY:	DATE:		S-117
1			3				TOTAL SHEETS
2			4				154

STR. #4

DRAWN BY : D. HODGE DATE : 1-08
CHECKED BY : M.G. CHEEK DATE : 2-08

29-APR-2008 15:14
r:\structures\finalplans\str #4\R2518B_sd_TS_str 4.dgn
dahodge

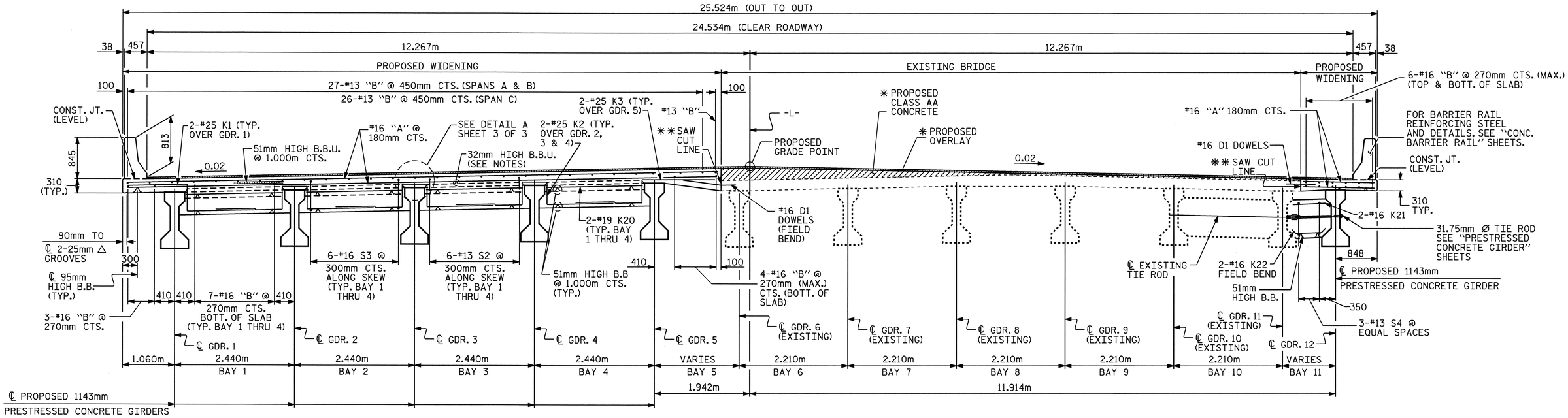

TYPICAL SECTION @ BENT DIAPHRAGM

TYPICAL SECTION @ INTERMEDIATE DIAPHRAGM

(BAY 11)

* FOR LIMITS OF CLASS AA CONCRETE OVERLAY AND LATEX MODIFIED CONCRETE OVERLAY, SEE "CONSTRUCTION AND PAY LIMIT" SHEET. FOR REINFORCING DETAIL IN CONCRETE OVERLAY, SEE "PLAN OF SPANS A, B, C CONCRETE OVERLAY" SHEET.

** FOR LOCATION OF SAW CUT LINE, SEE "CONSTRUCTION SEQUENCE" SHEET

PROJECT NO. R-2518B
YANCEY COUNTY
STATION: 223+53.200 -L-

SHEET 2 OF 3

STATE OF NORTH CAROLINA
DEPARTMENT OF TRANSPORTATION
RALEIGH

SUPERSTRUCTURE
TYPICAL SECTION

NORTH CAROLINA PROFESSIONAL SEAL 20125 ENGINEER
MARK G. CHEEK
4-29-08

REVISIONS						SHEET NO.
NO.	BY:	DATE:	NO.	BY:	DATE:	S-118
1			3			TOTAL SHEETS
2			4			154

DRAWN BY : D. HODGE DATE : 1-08
CHECKED BY : M.G. CHEEK DATE : 2-08

29-APR-2008 15:14
r:\structures\finalplans\str #4\R2518B_sd_TS_str 4.dgn
dahodge

STR. #4

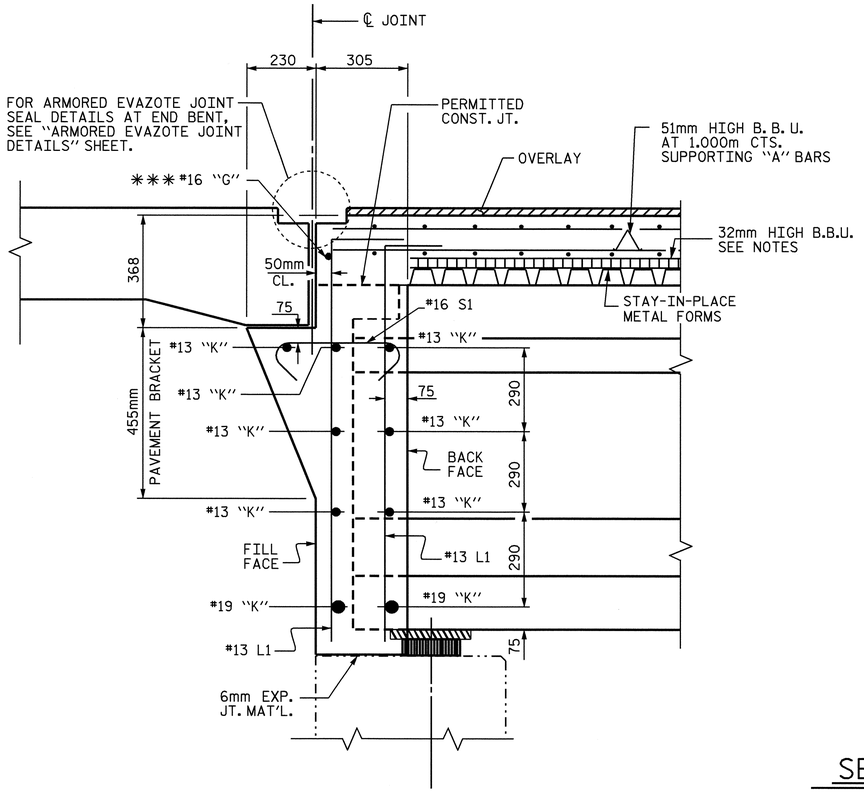

SECTION THRU CURTAIN WALL

✱✱✱#16 "G" BAR MAY BE SHIFTED SLIGHTLY, AS NECESSARY, TO CLEAR REINFORCING STEEL AND STIRRUPS.

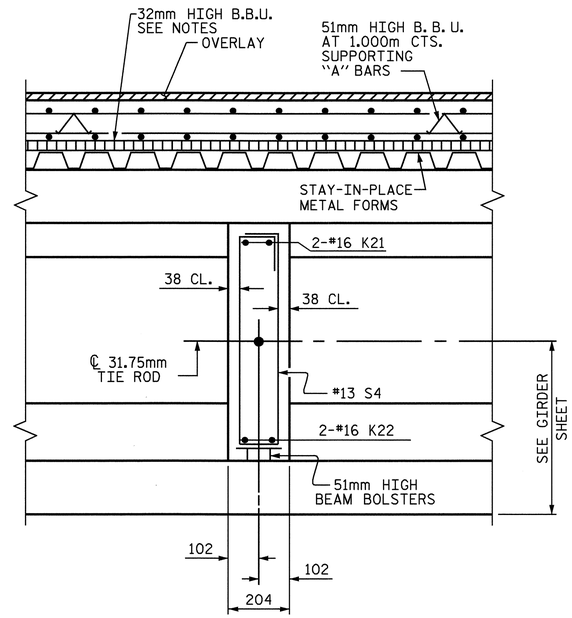

SECTION THRU INTERMEDIATE DIAPHRAGM

(BAY 11 ONLY)

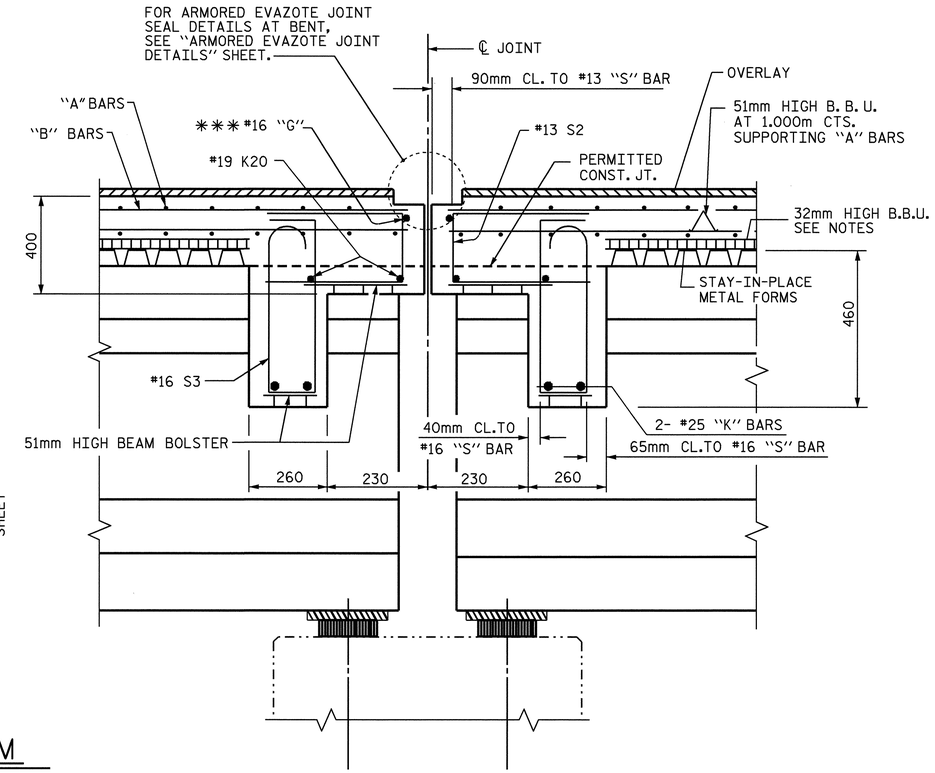

SECTION THRU BENT DIAPHRAGM

✱✱✱#16 "G" BAR MAY BE SHIFTED SLIGHTLY, AS NECESSARY, TO CLEAR REINFORCING STEEL AND STIRRUPS.

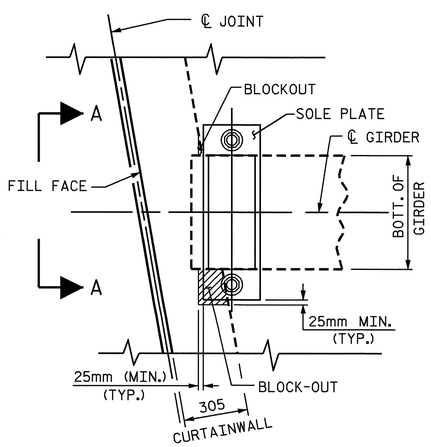

PLAN

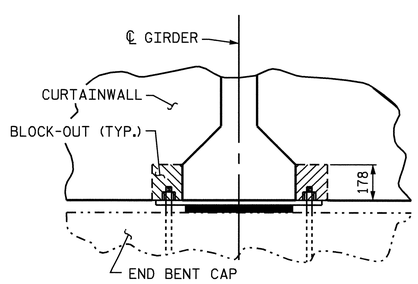

SECTION A-A

CURTAINWALL BLOCK-OUT DETAIL

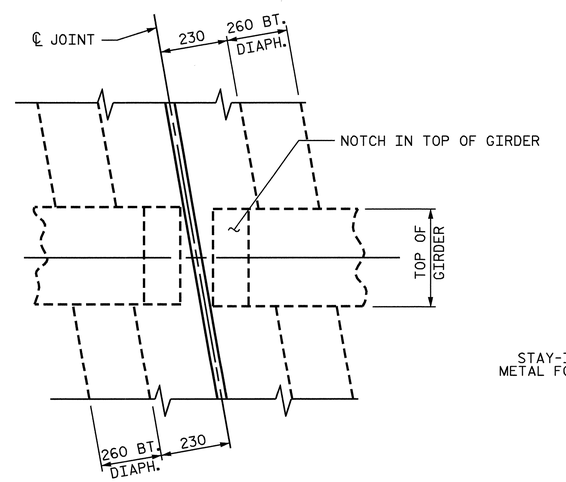

BENT DIAPHRAGM

PLAN

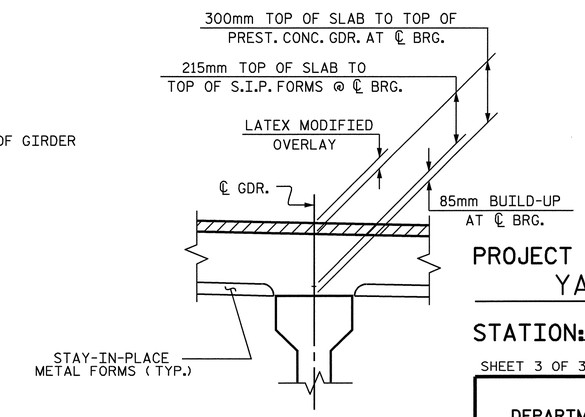

DETAIL "A"

PROJECT NO. R-2518B

YANCEY COUNTY

STATION: 223+53.200 -L-

SHEET 3 OF 3

STATE OF NORTH CAROLINA
DEPARTMENT OF TRANSPORTATION
RALEIGH

SUPERSTRUCTURE
TYPICAL SECTION

NORTH CAROLINA PROFESSIONAL SEAL 20125 ENGINEER MARSHALL G. CHEEK, JR.
4-24-08

REVISIONS						SHEET NO.
NO.	BY:	DATE:	NO.	BY:	DATE:	S-119
1			3			TOTAL SHEETS
2			4			154

DRAWN BY : D. HODGE DATE : 1-08
CHECKED BY : M.G. CHEEK DATE : 2-08

17-APR-2008 09:32
r:\structures\finalplans\str #4\r2518b_sd_ts_str 4.dgn
lmurphy

STR. #4

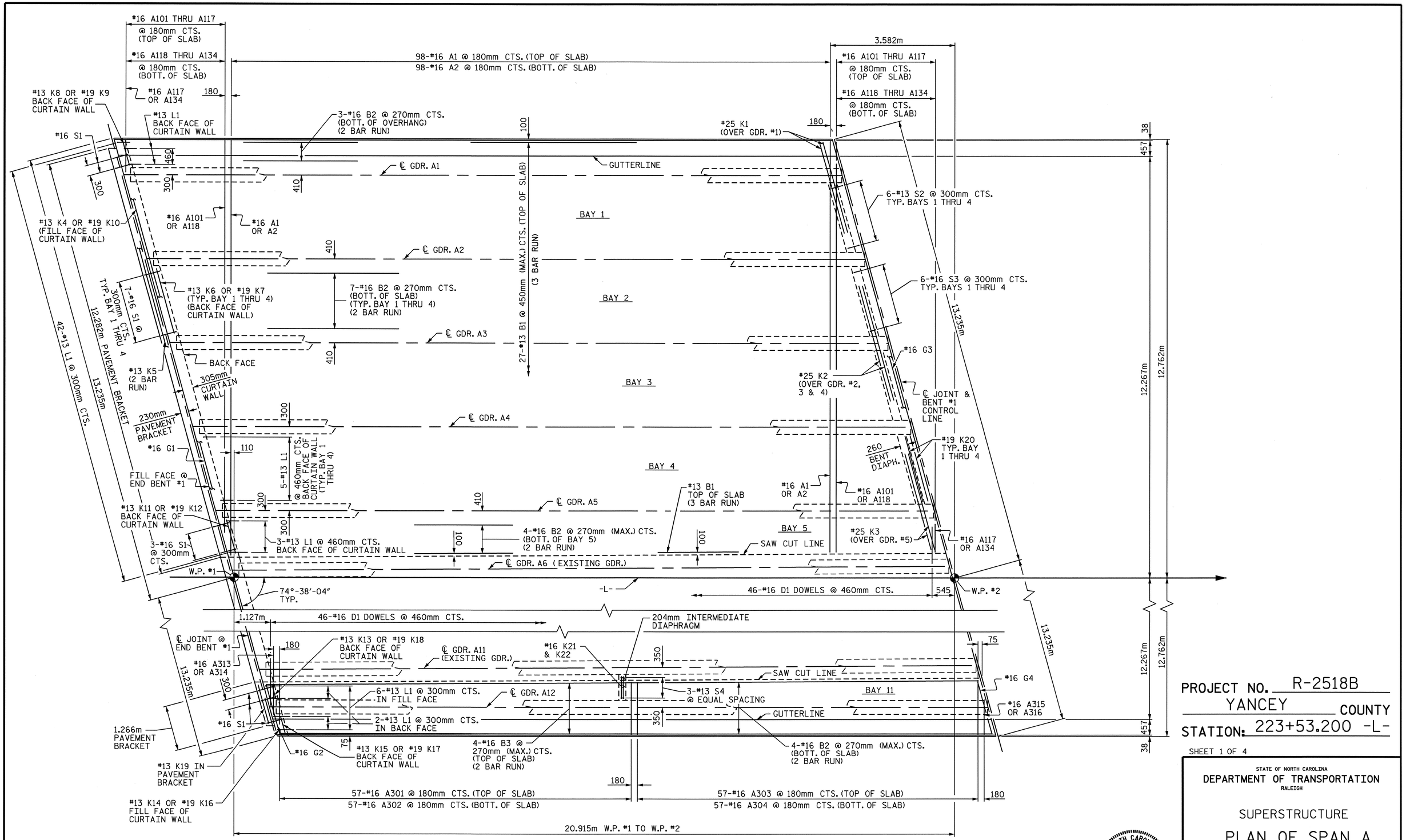

PLAN OF SPAN A

FOR REINFORCING STEEL IN BARRIER RAIL, SEE "CONCRETE BARRIER RAIL" SHEET.

FOR REINFORCING STEEL IN CONCRETE OVERLAY SEE "PLAN OF SPANS A, B, C CONCRETE OVERLAY" SHEET.

PROJECT NO. R-2518B
YANCEY COUNTY
STATION: 223+53.200 -L-

SHEET 1 OF 4

STATE OF NORTH CAROLINA
DEPARTMENT OF TRANSPORTATION
RALEIGH

SUPERSTRUCTURE
PLAN OF SPAN A

NORTH CAROLINA PROFESSIONAL SEAL 20125 ENGINEER MARSHALL G. CHEEK, JR.
4-24-08

REVISIONS								SHEET NO.
NO.	BY:	DATE:	NO.	BY:	DATE:			S-120
1			3					TOTAL SHEETS
2			4					154

STR. #4

DRAWN BY : D. HODGE DATE : 1/08
CHECKED BY : M.G. CHEEK DATE : 2/08

17-APR-2008 09:37
r:\structures\finalplans\str #4\r2518b_sd_s*_str 4.dgn
lmurphy

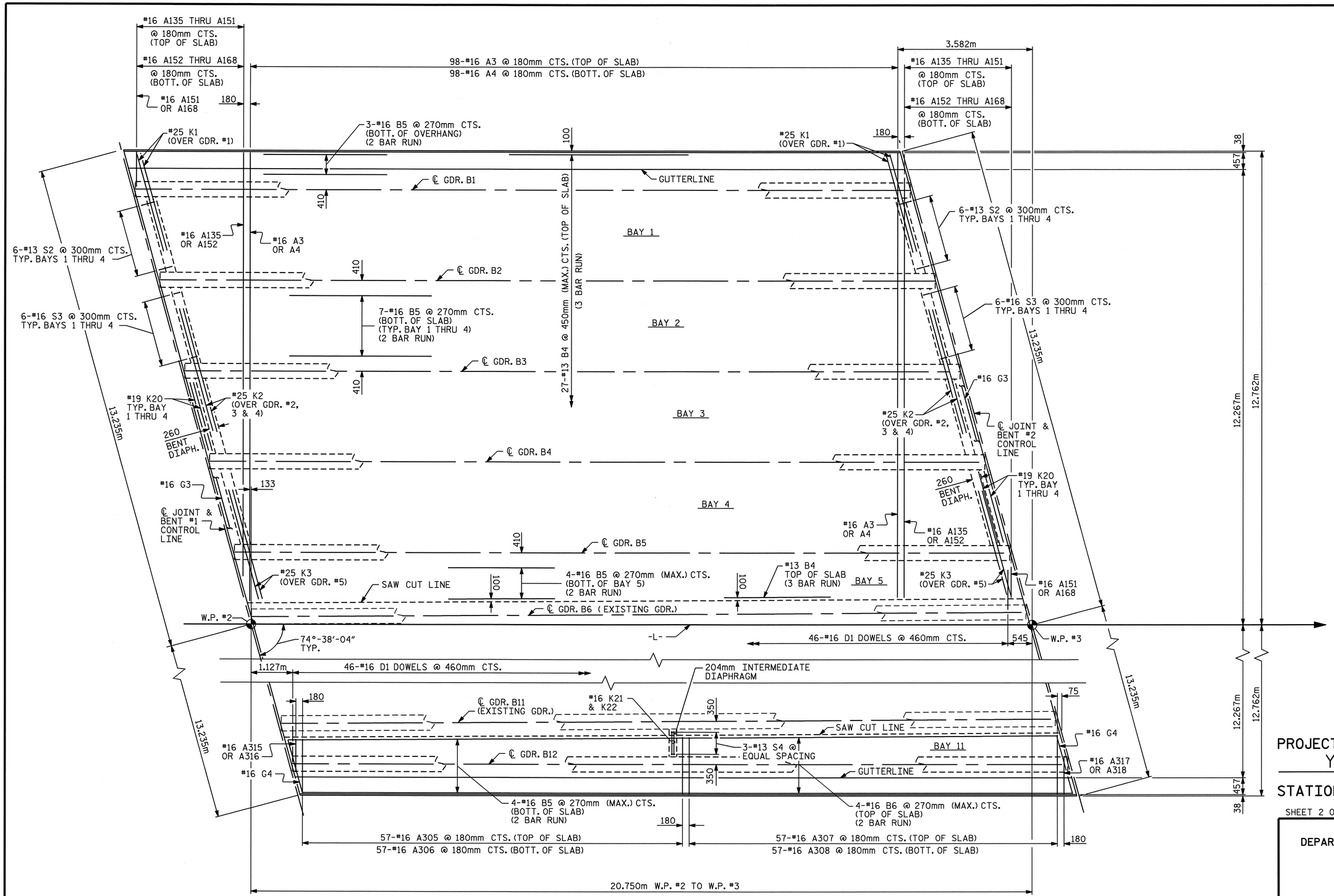

PLAN OF SPAN B

FOR REINFORCING STEEL IN BARRIER RAIL, SEE "CONCRETE BARRIER RAIL" SHEET.

FOR REINFORCING STEEL IN CONCRETE OVERLAY SEE "PLAN OF SPANS A, B, C CONCRETE OVERLAY" SHEET.

PROJECT NO. R-2518B
YANCEY COUNTY
STATION: 223+53.200 -L-

SHEET 2 OF 4

STATE OF NORTH CAROLINA
DEPARTMENT OF TRANSPORTATION
RALEIGH

SUPERSTRUCTURE
PLAN OF SPAN B

NORTH CAROLINA PROFESSIONAL SEAL 20125 ENGINEER MARSHALL G. CHEEK, JR. 3-28-08

REVISIONS						SHEET NO.
NO.	BY:	DATE:	NO.	BY:	DATE:	S-121
1			3			TOTAL SHEETS
2			4			154

DRAWN BY : D. HODGE DATE : 1/08
CHECKED BY : M.G. CHEEK DATE : 2/08

04-MAR-2008 08:39
r:\structures\str#4\dhodge\r2518b_sd_s#_str 4.dgn
dahodge

STR. #4

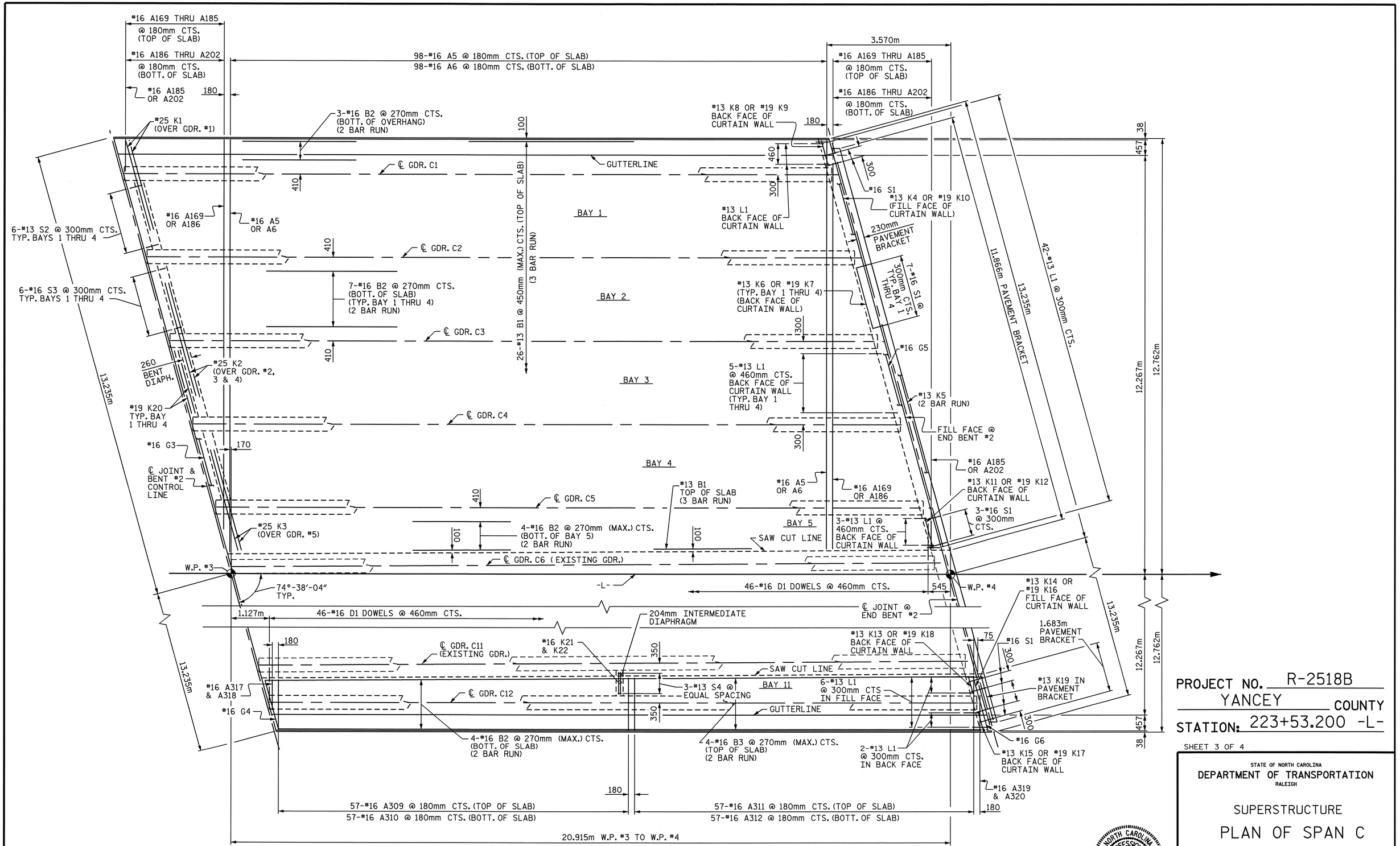

PLAN OF SPAN C

FOR REINFORCING STEEL IN BARRIER RAIL, SEE "CONCRETE BARRIER RAIL" SHEET.

FOR REINFORCING STEEL IN CONCRETE OVERLAY SEE "PLAN OF SPANS A, B, C CONCRETE OVERLAY" SHEET.

PROJECT NO. R-2518B
YANCEY COUNTY
STATION: 223+53.200 -L-

SHEET 3 OF 4

STATE OF NORTH CAROLINA
DEPARTMENT OF TRANSPORTATION
RALEIGH

SUPERSTRUCTURE
PLAN OF SPAN C

NORTH CAROLINA PROFESSIONAL SEAL 20125 ENGINEER MARSHALL G. CHEEK, JR.
4-24-08

REVISIONS							SHEET NO.
NO.	BY:	DATE:	NO.	BY:	DATE:		S-122
1			3				TOTAL SHEETS
2			4				154

DRAWN BY : D. HODGE DATE : 1/08
CHECKED BY : M.G. CHEEK DATE : 2/08

17-APR-2008 09:37
r:\structures\finalplans\str #4\r2518b_sd_s#_str 4.dgn
lmurphy

STR. #4

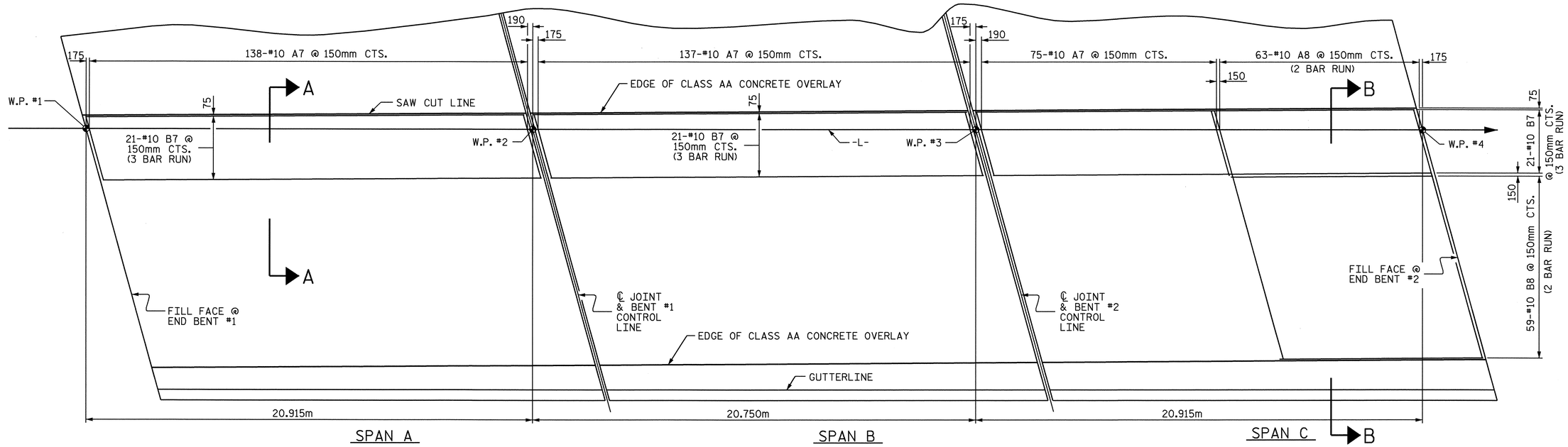

BAR LAYOUT IN CONCRETE OVERLAY ON EXISTING BRIDGE

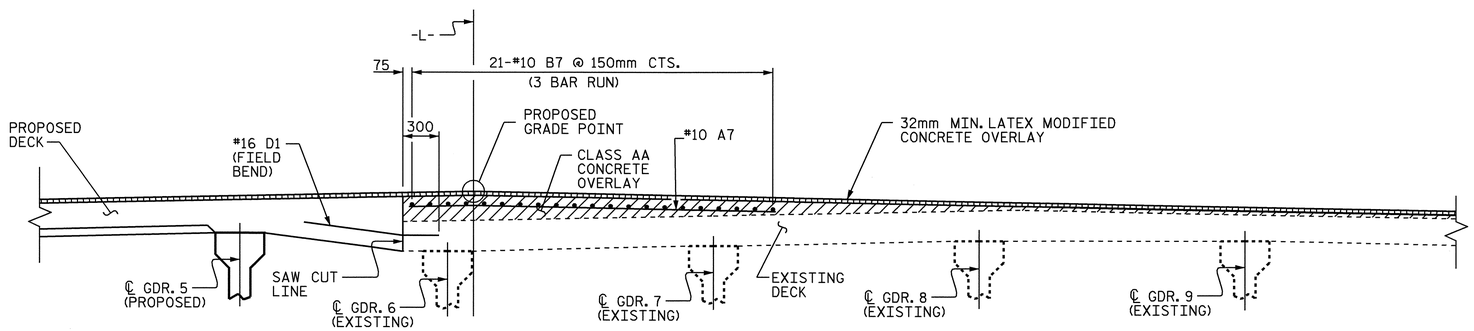

SECTION A-A

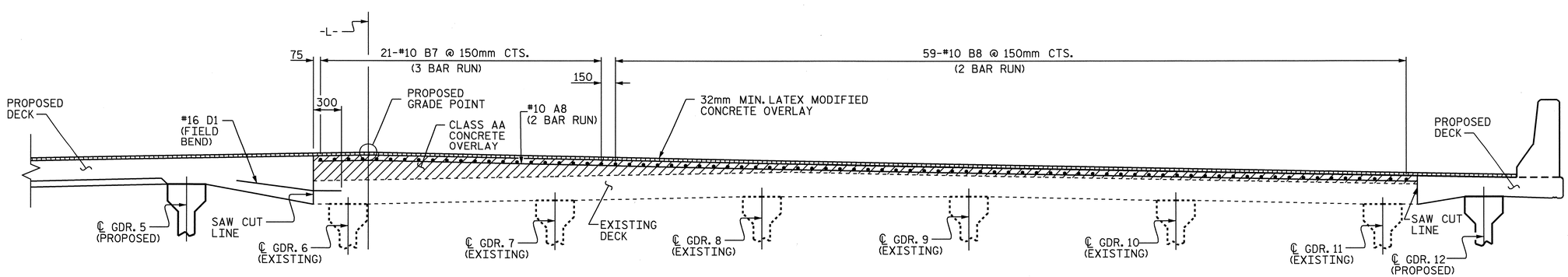

SECTION B-B

CONCRETE OVERLAY BAR SCHEDULE

SPAN A

BAR	NO.	SIZE	TYPE	LENGTH	WEIGHT
✳A7	138	10	STR	3200	247
✳B7	63	10	STR	7240	255

✳EPOXY COATED REINF. STEEL = 502 kg

SPAN B

BAR	NO.	SIZE	TYPE	LENGTH	WEIGHT
✳A7	137	10	STR	3200	246
✳B7	63	10	STR	7240	255

✳EPOXY COATED REINF. STEEL = 501 kg

SPAN C

BAR	NO.	SIZE	TYPE	LENGTH	WEIGHT
✳A7	75	10	STR	3200	134
✳A8	63	10	STR	6340	224
✳B7	63	10	STR	7240	255
✳B8	118	10	STR	4980	329

✳EPOXY COATED REINF. STEEL = 942 kg

CONCRETE OVERLAY BILL OF MATERIAL

	CLASS AA CONCRETE	REINFORCING STEEL
	(CU. METER)	(kg)
SPAN A	24.4	502
SPAN B	26.4	501
SPAN C	44.1	942
TOTALS	94.9	1,945

NORTH CAROLINA PROFESSIONAL SEAL 20125 ENGINEER MARSHALL G. CHEEK, JR.
4-25-08

PROJECT NO. R-2518B
YANCEY COUNTY
STATION: 223+53.200 -L-

SHEET 4 OF 4

STATE OF NORTH CAROLINA
DEPARTMENT OF TRANSPORTATION
RALEIGH

SUPERSTRUCTURE

PLAN OF SPAN A,B, &C
CONCRETE OVERLAY

REVISIONS						SHEET NO.
NO.	BY:	DATE:	NO.	BY:	DATE:	S-123
1			3			TOTAL SHEETS
2			4			154

DRAWN BY : D. HODGE DATE : 2/08
CHECKED BY : M.G. CHEEK DATE : 2/08

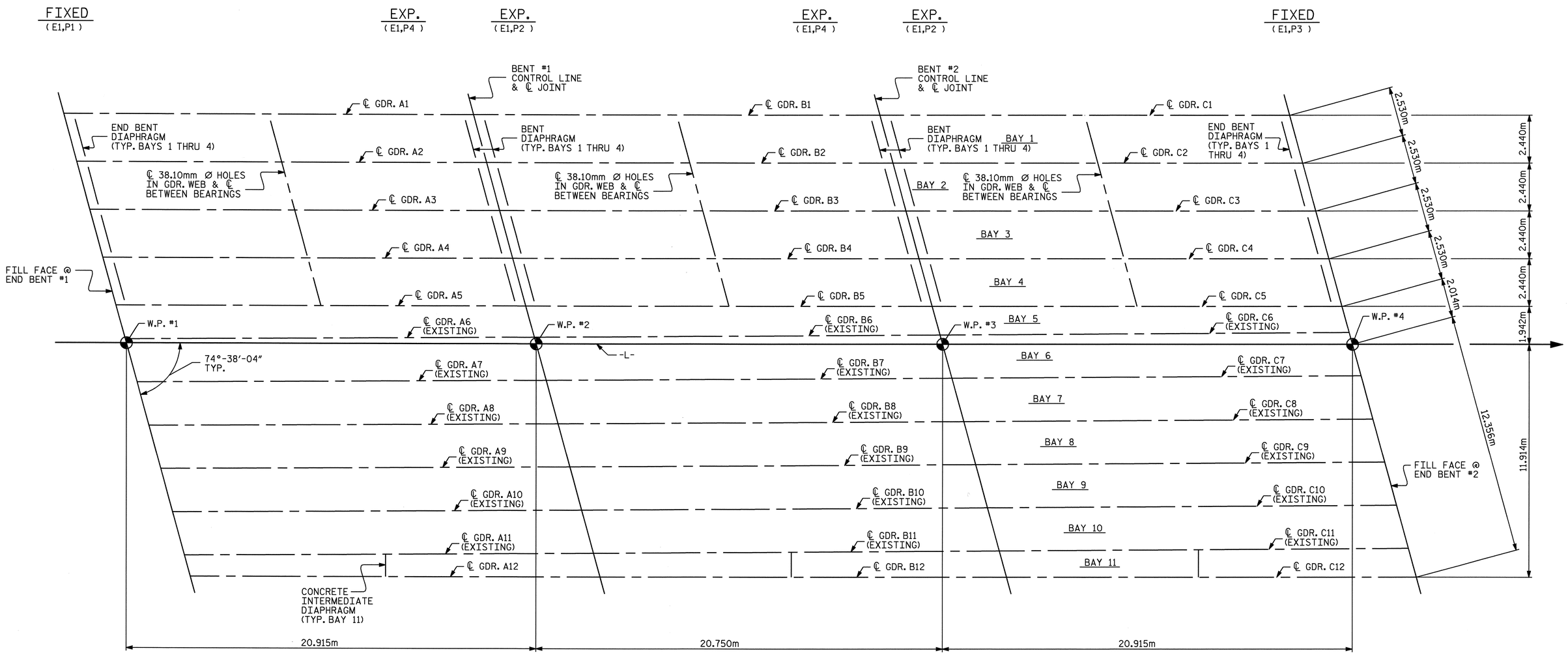

FRAMING PLAN

PROJECT NO. R-2518B
YANCEY COUNTY
STATION: 223+53.200 -L-

STATE OF NORTH CAROLINA
DEPARTMENT OF TRANSPORTATION
RALEIGH

SUPERSTRUCTURE
FRAMING PLAN

NORTH CAROLINA PROFESSIONAL SEAL 20125 ENGINEER MARSHALL G. CHEEK, JR.
3-18-08

REVISIONS						SHEET NO.
NO.	BY:	DATE:	NO.	BY:	DATE:	S-124
1			3			TOTAL SHEETS
2			4			154

STR. #4

DRAWN BY : D. HODGE DATE : 2/08
CHECKED BY : M.G. CHEEK DATE : 2/08

04-MAR-2008 08:41
r:\structures\str#4\dhodge\R2518B_sd_FP_str 4.dgn
dahodge

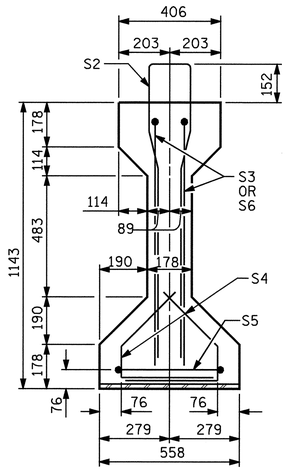

SECTION A-A

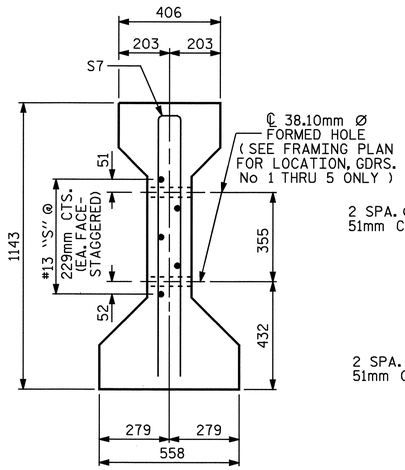

SECTION C-C

(S1 BARS NOT SHOWN)
(GDRS. No. 1 THRU 5 ONLY)

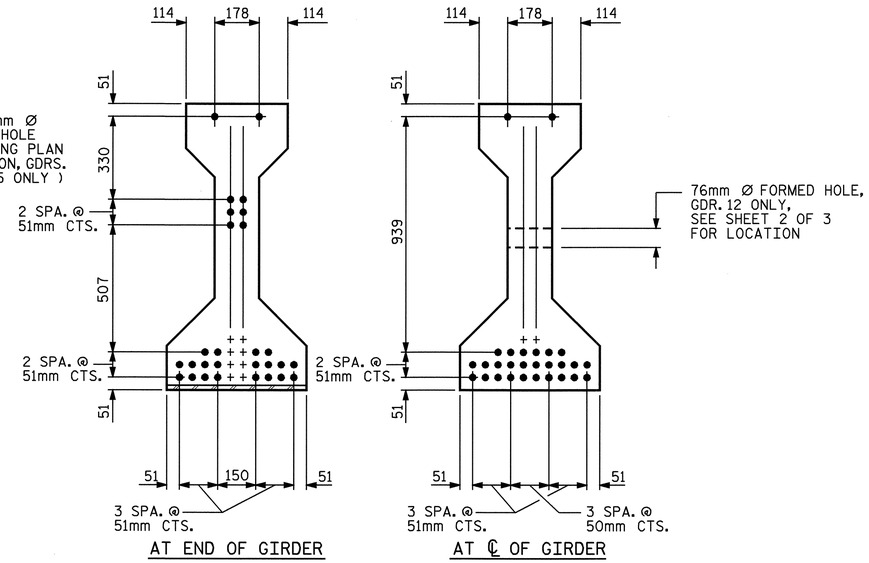

12.70mm Ø LOW RELAXATION STRAND LAYOUT

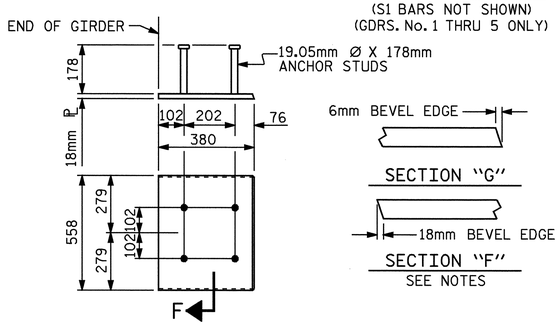

EMBEDDED PLATE "B-1" DETAILS

TWO EMBEDDED PLATES "B-1" ARE REQUIRED FOR EACH GIRDER.

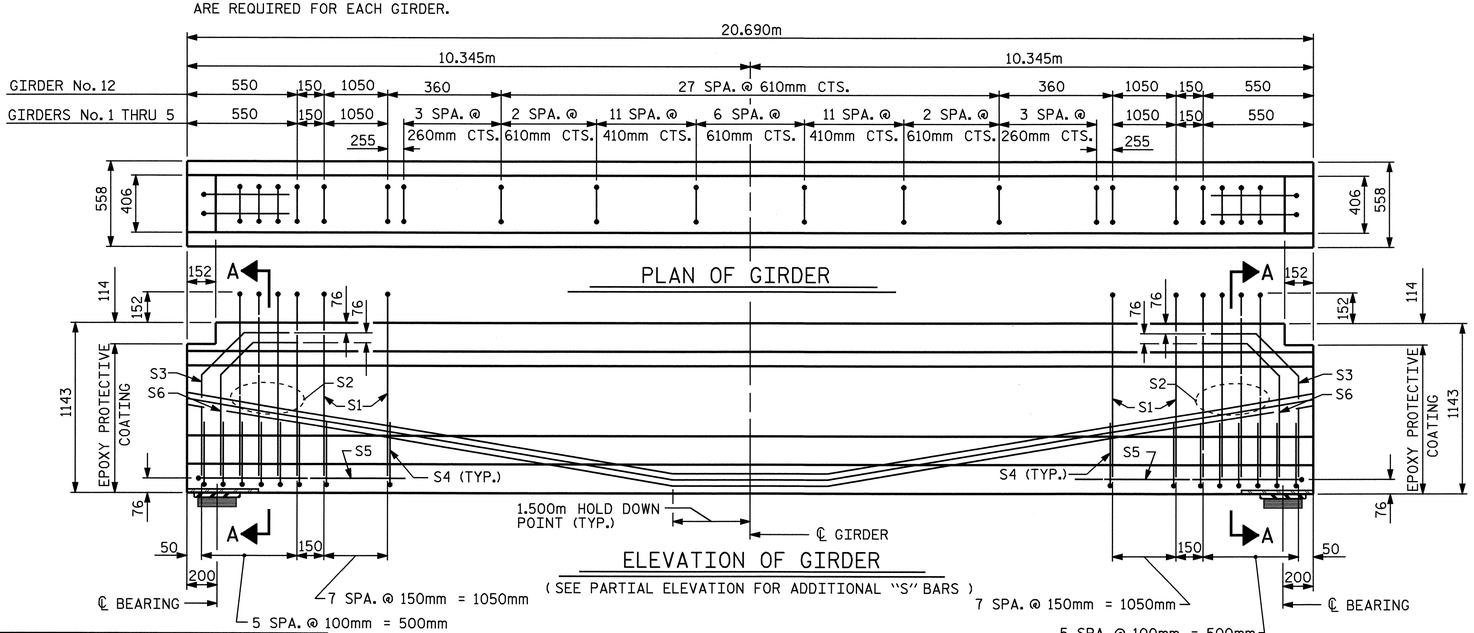

PLAN OF GIRDER

ELEVATION OF GIRDER

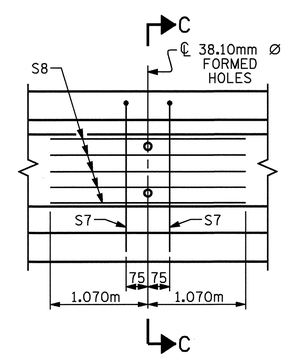

PARTIAL ELEVATION

SHOWING INTERMEDIATE DIAPHRAGM REINFORCING STEEL FOR GIRDERS No. 1 THRU 5 ONLY

12.70mm Ø L. R. GRADE 270 STRANDS		
AREA (mm²)	ULTIMATE STRENGTH (KN PER STRAND)	APPLIED PRESTRESS (KN PER STRAND)
98.71	183.7	137.8

REINF. STEEL FOR ONE GDR. (1 THRU 5)

BAR	NUMBER	SIZE	TYPE	LENGTH	WEIGHT
S1	55	#13	1	2600	142
S2	8	#19	1	2600	46
S3	4	#19	2	1420	13
S4	56	#13	3	840	47
S5	2	#13	4	2900	6
S6	4	#19	2	1380	12
S7	2	#16	4	2180	7
S8	5	#13	STR	2140	11

REINF. STEEL FOR ONE GDR. (12)

BAR	NUMBER	SIZE	TYPE	LENGTH	WEIGHT
S1	44	#13	1	2600	114
S2	8	#19	1	2600	46
S3	4	#19	2	1420	13
S4	56	#13	3	840	47
S5	2	#13	4	2900	6
S6	4	#19	2	1380	12

BAR TYPES

ALL BAR DIMENSIONS ARE OUT-TO-OUT

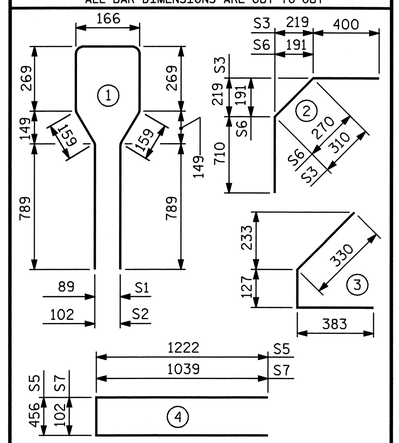

QUANTITIES FOR ONE GIRDER

	REINFORCING STEEL	39.3 MPa CONCRETE	12.70mm Ø L.R. STRANDS
	kg	m³	No.
GDR. No. 1 THRU 5	284	7.5	28
GDR. No. 12	238	7.5	28

GIRDERS REQUIRED

NUMBER	LENGTH	TOTAL LENGTH
18	20.690m	372.420m

PROJECT NO. R-2518B
YANCEY COUNTY
STATION: 223+53.200 -L-

SHEET 1 OF 3

STATE OF NORTH CAROLINA
DEPARTMENT OF TRANSPORTATION
RALEIGH

STANDARD

AASHTO TYPE III
PRESTRESSED CONCRETE GIRDER

NORTH CAROLINA PROFESSIONAL SEAL 20125 ENGINEER MARSHALL L. GHELL, JR.
4-4-08

ASSEMBLED BY : D. HODGE	DATE : 2/08
CHECKED BY : M.G. CHEEK	DATE : 2/08
DRAWN BY : JMB 10/87	REV. 7/17/98 RWW/LES
CHECKED BY : GRP 10/87	REV. 8/16/99RR RWW/LES
	REV. 5/1/06 TLA/GM

REVISIONS

NO.	BY:	DATE:	NO.	BY:	DATE:
1			3		
2			4		

SHEET NO. S-125
TOTAL SHEETS 154

STR. #4

STD. NO. PCG2SM

04-APR-2008 10:14
r:\structures\final plans\str #4\R2518B_sd_G#_str 4.dgn

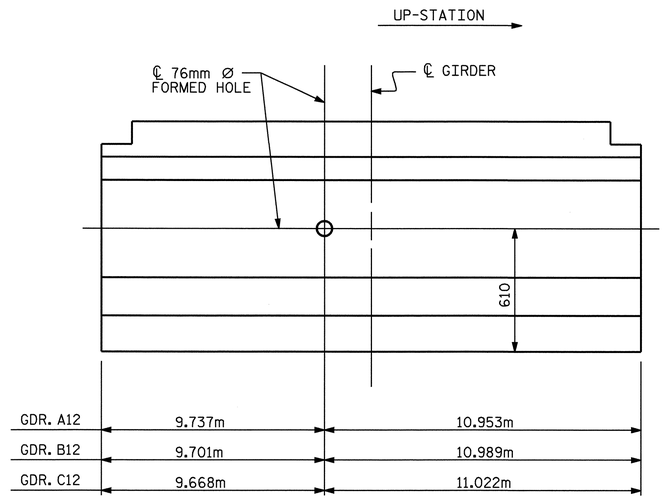

TIE ROD PLACEMENT DETAIL

NOTES

ALL PRESTRESSING STRANDS SHALL BE 7-WIRE LOW-RELAXATION GRADE 270 STRANDS AND SHALL CONFORM TO AASHTO M203M EXCEPT FOR SAMPLING REQUIREMENTS WHICH SHALL BE IN ACCORDANCE WITH THE STANDARD SPECIFICATIONS.

ALL REINFORCING STEEL SHALL BE GRADE 420.

APPLY EPOXY PROTECTIVE COATING TO END OF GIRDER SURFACES.

EMBEDDED PLATE "B-1" SHALL BE GALVANIZED IN ACCORDANCE WITH THE SPECIFICATIONS.

BEVEL EDGES OF PLATE "B-1" TO GIVE CLOSE FIT BUT NOT TIGHT FIT TO STEEL CASTING FORM.

ANCHOR STUDS SHALL CONFORM TO AASHTO M169 GRADES 1010 THROUGH 1020 OR APPROVED EQUAL, AND SHALL MEET THE TYPE "B" REQUIREMENTS OF SUBSECTION 7.3 OF THE ANSI/AASHTO/AWS D1.5 BRIDGE WELDING CODE.

ALL PRESTRESSED STRANDS SHALL BE CUT FLUSH WITH THE GIRDER ENDS.

THE TRANSFER OF LOAD FROM THE ANCHORAGES TO THE GIRDER SHALL BE DONE WHEN CONCRETE HAS REACHED A COMPRESSIVE STRENGTH OF NOT LESS THAN 31.0 MPa.

DEPENDING ON THE TYPE OF SYSTEM USED TO SUPPORT THE DECK SLAB FORMS, PRESET ANCHORS MAY BE NECESSARY IN THE PRESTRESSED CONCRETE GIRDER.

THE TOP SURFACE OF THE GIRDER SHALL BE RAKED TO A DEPTH OF 6mm EXCEPT IN THE AREA BETWEEN THE STIRRUP AND THE EDGE OF THE GIRDER.

WHEN DRAPED STRANDS ARE DETAILED, THE LONGITUDINAL LOCATION OF THE HOLD DOWN DEVICES SHALL BE WITHIN 150mm OF THE LOCATION SHOWN AND THE CENTER OF GRAVITY OF THE GROUP OF DRAPED STRANDS SHALL BE LOCATED WITHIN 13mm OF THE THEORETICAL LOCATION SHOWN.

FOR CRACK REPAIR OF PRESTRESSED CONCRETE GIRDERS, SEE SPECIAL PROVISIONS.

TIE ROD ASSEMBLY SHALL BE AASHTO M270 GRADE 36 STRUCTURAL STEEL

DEAD LOAD DEFLECTION TABLE FOR GIRDERS

12.70mm Ø LOW RELAXATION	SPANS A, B & C										
	GIRDERS No. 1 THRU 5										
TENTH POINTS	℄ BRG.	.1	.2	.3	.4	.5	.6	.7	.8	.9	℄ BRG.
CAMBER (GIRDER ALONE IN PLACE) ↑	0.000	0.020	0.039	0.053	0.062	0.065	0.062	0.053	0.039	0.020	0.000
✳ DEFLECTION DUE TO SUPERIMPOSED D.L. ↓	0.000	0.007	0.014	0.020	0.023	0.025	0.023	0.020	0.014	0.007	0.000
FINAL CAMBER ↑	0	13	25	33	39	40	39	33	25	13	0

✳ INCLUDES FUTURE WEARING SURFACE
ALL VALUES ARE SHOWN IN METERS, EXCEPT "FINAL CAMBER" WHICH IS SHOWN IN MILLIMETERS.

DEAD LOAD DEFLECTION TABLE FOR GIRDERS

12.70mm Ø LOW RELAXATION	SPANS A, B & C										
	GIRDER No. 12										
TENTH POINTS	℄ BRG.	.1	.2	.3	.4	.5	.6	.7	.8	.9	℄ BRG.
CAMBER (GIRDER ALONE IN PLACE) ↑	0.000	0.020	0.039	0.053	0.062	0.065	0.062	0.053	0.039	0.020	0.000
✳ DEFLECTION DUE TO SUPERIMPOSED D.L. ↓	0.000	0.006	0.012	0.016	0.019	0.021	0.019	0.016	0.012	0.006	0.000
FINAL CAMBER ↑	0	14	27	37	43	44	43	37	27	14	0

✳ INCLUDES FUTURE WEARING SURFACE
ALL VALUES ARE SHOWN IN METERS, EXCEPT "FINAL CAMBER" WHICH IS SHOWN IN MILLIMETERS.

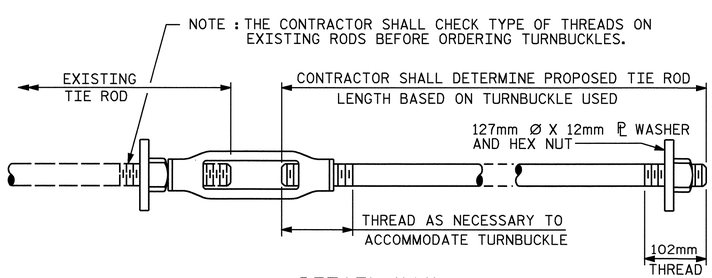

DETAIL "A"

31.75mm Ø TIE ROD ASSEMBLY WITH TURNBUCKLE OR SLEEVE NUT

(3 COMPLETE ASSEMBLIES REQUIRED)

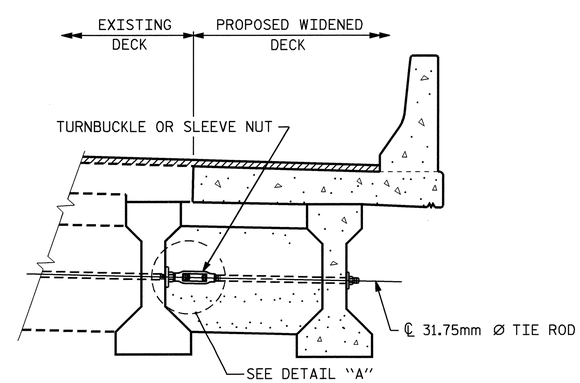

PART - SECTION AT INTERMEDIATE DIAPHRAGM

LOCATION OF THE PROPOSED 31.75mm Ø TIE RODS FOR THE INTERIOR DIAPHRAGMS IS TO LINE UP, AS NEAR AS POSSIBLE, WITH EXISTING 31.75mm Ø TIE RODS. THESE DIMENSIONS SHOWN ON THE PLANS SHALL BE CHECKED BY THE ENGINEER AND SUBMITTED, ALONG WITH SPAN LENGTHS, TO THE STRUCTURE DESIGN UNIT.

NUTS ON EXISTING TIE RODS SHALL NOT BE REMOVED UNLESS TIE ROD PROJECTION BEYOND THE NUT IS LESS THAN 29mm. TURNBUCKLES SHALL BE TIGHTENED AGAINST THE EXISTING NUTS EXCEPT AS NOTED ABOVE.

NORTH CAROLINA PROFESSIONAL SEAL 20125 ENGINEER MARSHALL G. CHEEK, JR. 4-4-08

PROJECT NO. R-2518B
YANCEY COUNTY
STATION: 223+53.200 -L-

SHEET 2 OF 3

STATE OF NORTH CAROLINA
DEPARTMENT OF TRANSPORTATION
RALEIGH

PRESTRESSED CONCRETE GIRDER DETAILS

REVISIONS						SHEET NO.
NO.	BY:	DATE:	NO.	BY:	DATE:	S-126
1			3			TOTAL SHEETS
2			4			154

STR #4

DRAWN BY : D. HODGE DATE : 2/08
CHECKED BY : M.G. CHEEK DATE : 2/08

04-APR-2008 10:14
r:\structures\finalplans\str #4\R2518B_sd_G*_str 4.dgn
dahodge

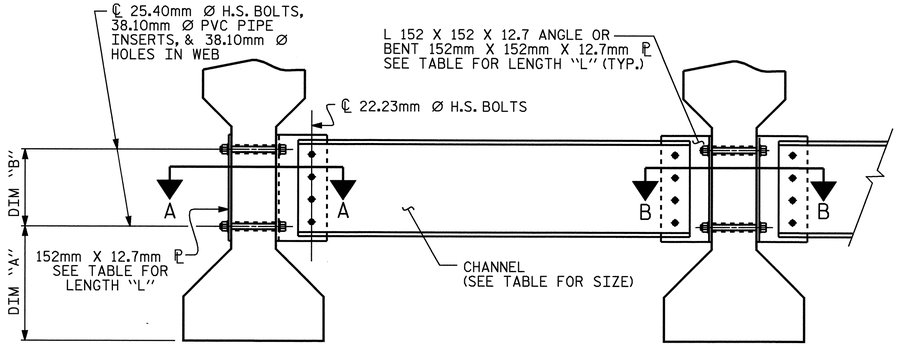

PART SECTION AT INTERMEDIATE DIAPHRAGM

(TYPE III GIRDER SHOWN)

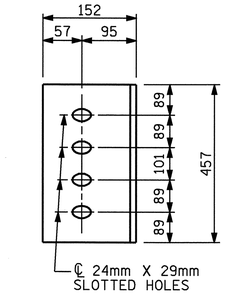

DIAPHRAGM FACE

(TYPE III GDR.)

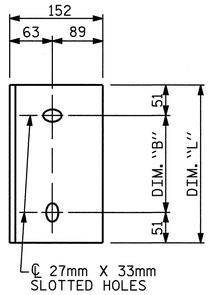

WEB FACE

CONNECTOR PLATE DETAILS

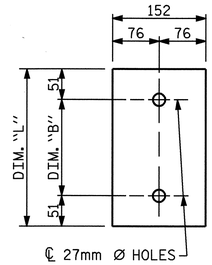

PLATE DETAILS

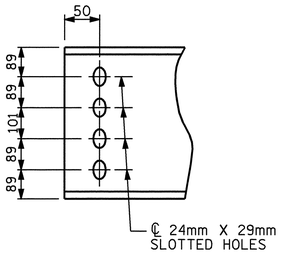

CHANNEL END

(TYPE III GDR.)

STRUCTURAL STEEL NOTES

ALL INTERMEDIATE DIAPHRAGM STEEL, CONNECTOR PLATES AND PLATE WASHERS SHALL BE AASHTO M270 GRADE 345 OR APPROVED EQUAL.

TENSION ON THE AASHTO M164 BOLTS THROUGH THE CHANNEL MEMBER SHALL BE CALIBRATED USING DIRECT TENSION INDICATOR WASHERS IN ACCORDANCE WITH ARTICLE 440-8 OF THE STANDARD SPECIFICATIONS.

TENSION ON THE AASHTO M164 BOLTS THROUGH THE GIRDER WEB SHALL BE SNUG TIGHTENED FOLLOWED BY AN ADDITIONAL 1/4 TURN.

THE CHANNELS, ANGLES, WASHERS, PLATE WASHERS, AND DIRECT TENSION INDICATORS SHALL BE GALVANIZED OR METALLIZED IN ACCORDANCE WITH THE STANDARD SPECIFICATIONS. FOR THERMAL SPRAYED COATINGS (METALLIZATION), SEE SPECIAL PROVISIONS.

FOR METALLIZATION, APPLY AN 8 MIL THICK 99.99 PERCENT ZINC (W-Zn-1) THERMAL SPRAYED COATING WITH A 0.5 MIL THICK SEAL COAT TO ALL STEEL DIAPHRAGM SURFACES IN ACCORDANCE WITH THE THERMAL SPRAYED COATINGS SPECIAL PROVISIONS AND SECTION 442 OF THE STANDARD SPECIFICATIONS.

GALVANIZE THE HIGH STRENGTH BOLTS, NUTS, AND WASHERS IN ACCORDANCE WITH THE STANDARD SPECIFICATIONS. FOR HIGH STRENGTH BOLTS, SEE SPECIAL PROVISIONS.

USE A MINIMUM 11.1mm THICK PLATE WASHER WITH STANDARD HOLES UNDER EACH BOLT HEAD AND NUT. THE PLATE WASHERS SHALL HAVE SUFFICIENT SIZE TO COVER THE HOLES AFTER INSTALLATION. DIRECT TENSION INDICATORS ARE TO BE USED IN CONJUNCTION WITH THE PLATE WASHERS.

PROVIDE SUFFICIENT LENGTH OF ALL BOLTS TO ACCOMMODATE WASHERS, DIRECT TENSION INDICATORS, THE THICKNESS OF CONNECTING MEMBER PLUS AT LEAST 6mm PROJECTION BEYOND THE NUT.

INTERMEDIATE DIAPHRAGM ASSEMBLY SHALL COMPLY WITH SECTION 1072 OF THE STANDARD SPECIFICATIONS.

CONTRACTOR SHALL SUBMIT TWO SETS OF WORKING DRAWINGS FOR THE INTERMEDIATE DIAPHRAGM ASSEMBLY FOR REVIEW, COMMENTS AND ACCEPTANCE. AFTER REVIEW, COMMENTS, AND ACCEPTANCE, SUBMIT SEVEN SETS FOR DISTRIBUTION.

IN THE EXTERIOR BAYS, TEMPORARY STRUTS SHALL BE PLACED BETWEEN PRESTRESSED GIRDERS ADJACENT TO THE STEEL DIAPHRAGMS. STRUTS SHALL REMAIN IN PLACE 3 DAYS AFTER CONCRETE IS PLACED. ALL AASHTO M164 H.S. BOLTS SHALL BE FULLY TIGHTENED AFTER THE STRUTS HAVE BEEN REMOVED.

THE COST OF THE STEEL DIAPHRAGMS AND ASSEMBLIES SHALL BE INCLUDED IN THE UNIT PRICE BID FOR PRESTRESSED CONCRETE GIRDERS.

TABLE

GIRDER TYPE	CHANNEL SIZE	DIM "A"	DIM "B"	DIM "L"
III	MC 460 x 63.5	432	355	457

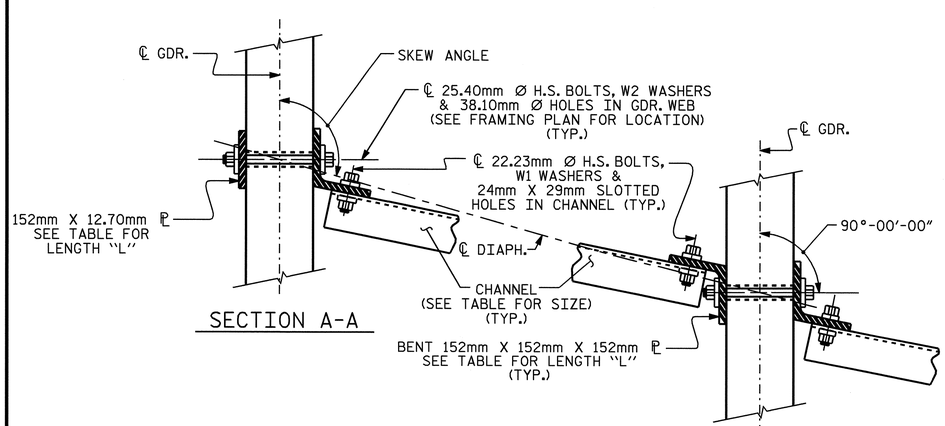

SECTION A-A

SECTION B-B

CONNECTION DETAILS

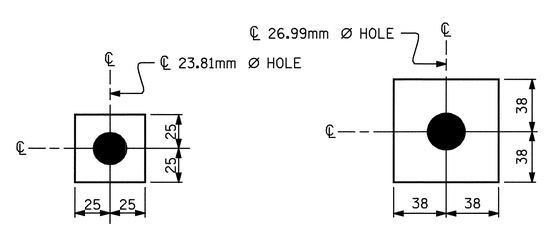

W1

ℙ 11.1 X 50 X 50

USE WITH 22.23mm Ø HVY. HEX NUTS & DIRECT TENSION INDICATOR WASHERS AT DIAPHRAGM CHANNEL TO CONNECTOR PLATE CONNECTIONS

W2

ℙ 11.1 X 76 X 76

USE WITH 25.40mm Ø HVY. HEX NUTS AT CONNECTOR PLATE TO GIRDER CONNECTIONS

WASHER DETAILS

PROJECT NO. R-2518B

YANCEY COUNTY

STATION: 223+53.200 -L-

SHEET 3 OF 3

STATE OF NORTH CAROLINA
DEPARTMENT OF TRANSPORTATION
RALEIGH

STANDARD

INTERMEDIATE STEEL DIAPHRAGMS FOR TYPE II, III, & IV PRESTRESSED CONCRETE GIRDERS

NORTH CAROLINA PROFESSIONAL SEAL 20125 ENGINEER MARSHALL G. CHEEK, JR.

3-28-08

REVISIONS								
NO.	BY:	DATE:	NO.	BY:	DATE:		SHEET NO.	
1			3				S-127	
2			4				TOTAL SHEETS 154	

ASSEMBLED BY : D. HODGE	DATE : 2/08
CHECKED BY : M.G. CHEEK	DATE : 2/08
DRAWN BY : TLA 6/05	ADDED 10/21/05
CHECKED BY : VC 6/05	REV. 5/1/06 KMM/GM

04-MAR-2008 09:12
r:\structures\str#4\dhodge\R2518B_sd_G#_str 4.dgn
dahodge

STR. #4

STD.No.PCG12SM

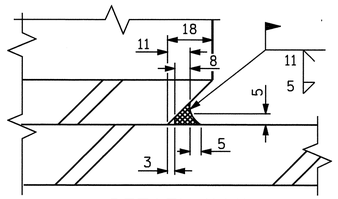

DETAIL "A"

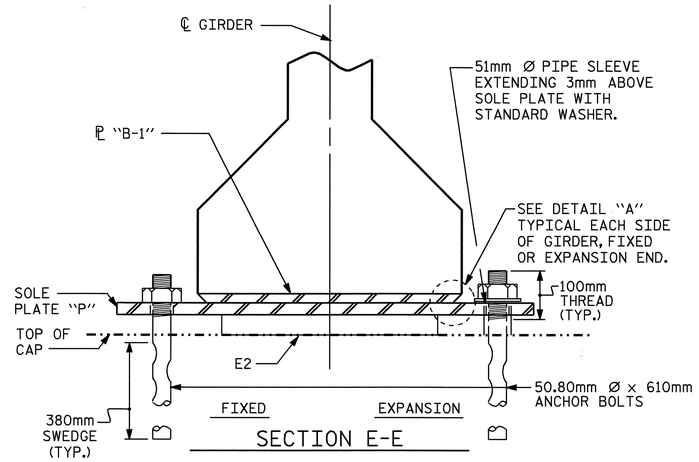

SECTION E-E

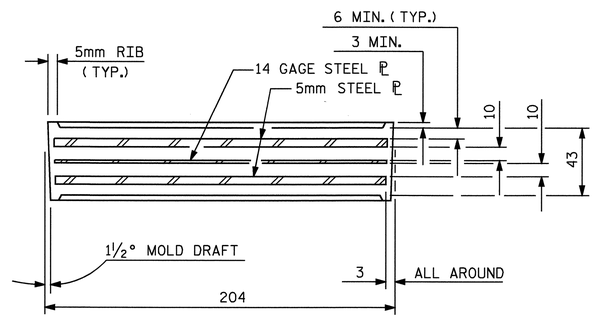

TYPICAL SECTION OF ELASTOMERIC BEARINGS

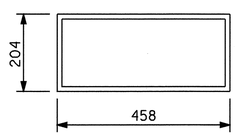

E1 (36 REQ'D)

PLAN VIEW OF ELASTOMERIC BEARING

TYPE III

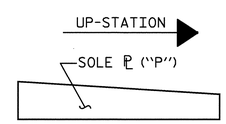

SOLE ℗ PLACEMENT DETAIL

NOTES

AT ALL FIXED POINTS OF SUPPORT, NUTS FOR ANCHOR BOLTS ARE TO BE TIGHTENED FINGER TIGHT AND THEN BACKED OFF ½ TURN. THE THREAD OF THE NUT AND BOLT SHALL THEN BE BURRED WITH A SHARP POINTED TOOL.

THE 51mm Ø PIPE SLEEVE SHALL BE CUT FROM SCHEDULE 40 PVC PLASTIC PIPE. THE PVC PLASTIC PIPE SHALL MEET THE REQUIREMENTS OF ASTM D1785.

STEEL SOLE PLATES, ANCHOR BOLTS, NUTS, AND WASHERS SHALL BE GALVANIZED IN ACCORDANCE WITH THE STANDARD SPECIFICATIONS.

PRIOR TO WELDING, GRIND THE GALVANIZED SURFACE OF THE PORTION OF THE EMBEDDED PLATE AND SOLE PLATE THAT ARE TO BE WELDED. AFTER WELDING, DAMAGED GALVANIZED SURFACES SHALL BE REPAIRED IN ACCORDANCE WITH THE STANDARD SPECIFICATIONS.

WHEN WELDING THE SOLE PLATE TO THE EMBEDDED PLATE IN THE GIRDER, USE TEMPERATURE INDICATING WAX PENS, OR OTHER SUITABLE MEANS, TO ENSURE THAT THE TEMPERATURE OF THE SOLE PLATE DOES NOT EXCEED 149°C. TEMPERATURES ABOVE THIS MAY DAMAGE THE ELASTOMER.

SOLE PLATE "P", BOLTS, NUTS, WASHERS, AND PIPE SLEEVE SHALL BE INCLUDED IN THE PAY ITEM FOR PRESTRESSED CONCRETE GIRDERS.

ANCHOR BOLTS SHALL MEET THE REQUIREMENTS OF ASTM A449. NUTS SHALL MEET THE REQUIREMENTS OF AASHTO M291M-12 OR AASHTO M292M-2H. WASHERS SHALL MEET THE REQUIREMENTS OF AASHTO M293M. SHOP DRAWINGS ARE NOT REQUIRED FOR ANCHOR BOLTS, NUTS AND WASHERS. SHOP INSPECTION IS REQUIRED.

ALL SURFACES OF BEARING PLATES SHALL BE SMOOTH AND STRAIGHT.

ELASTOMER IN ALL BEARINGS SHALL BE 60 DUROMETER HARDNESS.

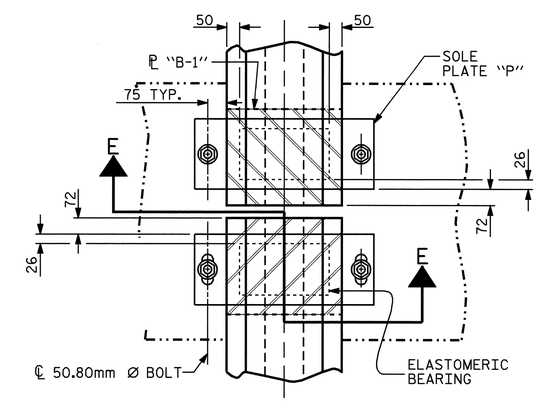

TYPICAL PLAN
(SHOWING SIMPLE SPAN BENT)

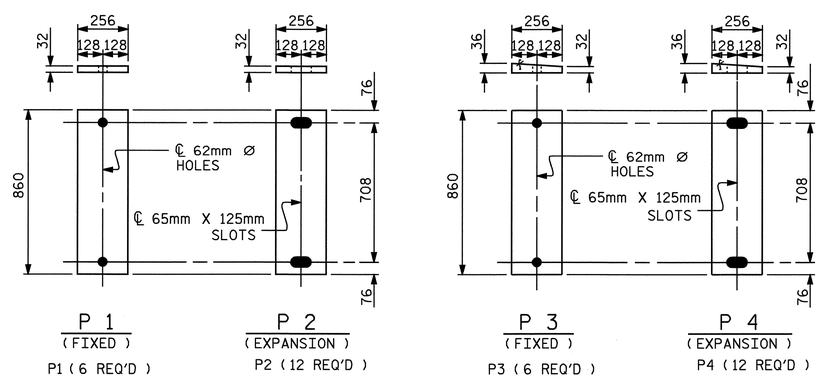

SOLE PLATE DETAILS ("P")

— LOAD RATINGS —	
	MAX.D.L.+L.L.
1143mm PCG -TYPE III	512 kN

PROJECT NO. R-2518B
YANCEY COUNTY
STATION: 223+53.200 -L-

STATE OF NORTH CAROLINA
DEPARTMENT OF TRANSPORTATION
RALEIGH

STANDARD
ELASTOMERIC BEARING DETAILS
PRESTRESSED CONCRETE GIRDER SUPERSTRUCTURE

NORTH CAROLINA PROFESSIONAL SEAL 20125 ENGINEER MARSHALL G. CHEEK, JR.
5-28-08

REVISIONS								SHEET NO.
NO.	BY:	DATE:	NO.	BY:	DATE:			S-128
1			3					TOTAL SHEETS
2			4					154

STR. #4

STD. NO. EB3SM

ASSEMBLED BY : D. HODGE		DATE : 2/08	
CHECKED BY : M.G. CHEEK		DATE : 2/08	
DRAWN BY : WJH 8/89	REV. 10/17/00	RWW/LES	
CHECKED BY : CRK 8/89	REV. 7/10/01	RWW/LES	
	REV. 5/1/06	TLA/GM	

04-MAR-2008 09:12
r:\structures\str#4\dhodge\R2518B_sd_BG_str 4.dgn
dahodge

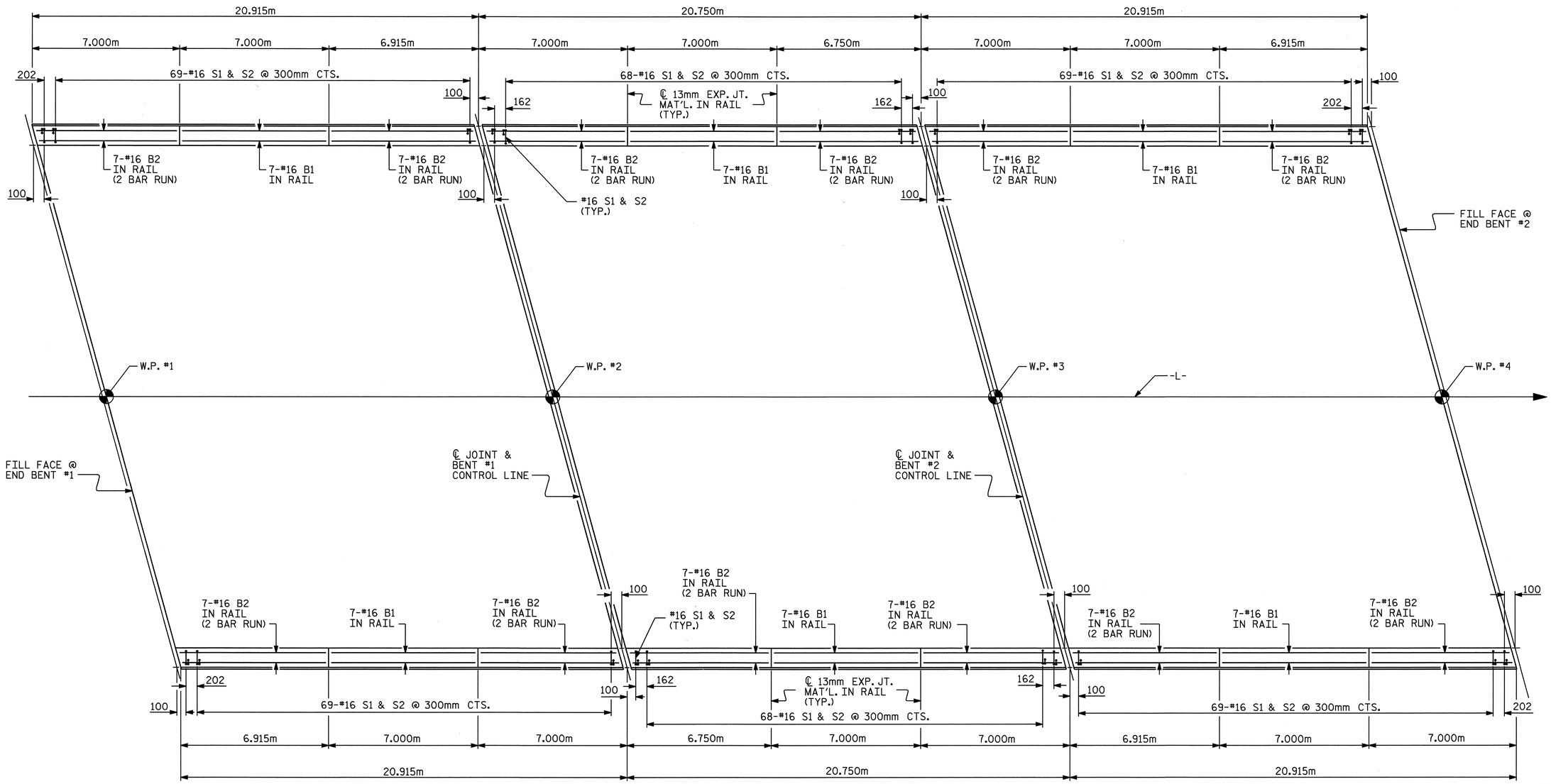

PLAN OF BARRIER RAIL

BARRIER RAIL DIMENSIONS ARE TAKEN ALONG OUTSIDE FACE OF BARRIER RAIL.

PROJECT NO. R-2518B

YANCEY COUNTY

STATION: 223+53.200 -L-

SHEET 1 OF 3

STATE OF NORTH CAROLINA
DEPARTMENT OF TRANSPORTATION
RALEIGH

CONCRETE BARRIER RAIL

REVISIONS						SHEET NO.
NO.	BY:	DATE:	NO.	BY:	DATE:	S-129
1			3			TOTAL SHEETS
2			4			154

NORTH CAROLINA PROFESSIONAL SEAL 20125 ENGINEER MARSHALL G. CHEEK, JR.

3-28-08

STR. #4

DRAWN BY : D. HODGE DATE : 2/08
CHECKED BY : M.G. CHEEK DATE : 2/08

04-MAR-2008 09:13
r:\structures\str#4\dhodge\R2518B_sd_BR_str 4.dgn
dahodge

NOTES

THE BARRIER RAIL IN EACH SPAN SHALL NOT BE CAST UNTIL ALL SLAB CONCRETE IN THAT SPAN HAS BEEN CAST AND HAS REACHED A MINIMUM COMPRESSIVE STRENGTH OF 20.7 MPa.

ALL REINFORCING STEEL IN BARRIER RAILS SHALL BE EPOXY COATED.

VERTICAL GROOVED CONTRACTION JOINTS, 12mm IN DEPTH, SHALL BE TOOLED IN ALL EXPOSED FACES OF THE BARRIER RAIL AND IN ACCORDANCE WITH ARTICLE 825-10(B) OF THE STANDARD SPECIFICATIONS. THE CONTRACTION JOINT SHALL BE LOCATED AT EACH THIRD POINT BETWEEN BARRIER RAIL EXPANSION JOINTS. ONLY ONE CONTRACTION JOINT IS REQUIRED AT MIDPOINT OF BARRIER RAIL SEGMENTS LESS THAN 6.1m IN LENGTH AND NO CONTRACTION JOINTS ARE REQUIRED FOR THOSE SEGMENTS LESS THAN 3.5m IN LENGTH.

BAR TYPES

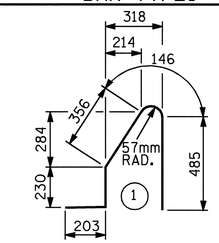

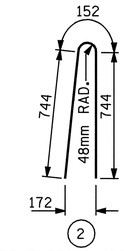

ALL BAR DIMENSIONS ARE OUT TO OUT

BILL OF MATERIAL

FOR CONCRETE BARRIER RAIL ONLY

BAR	NO.	SIZE	TYPE	LENGTH	WEIGHT
* S1	420	#16	1	1420	926
* S2	420	#16	2	1640	1069
* B1	42	#16	STR	6880	448
* B2	168	#16	STR	4020	1048

* EPOXY COATED REINFORCING STEEL 3491 kg

CLASS AA CONCRETE 33.2 CU. METERS

CONCRETE BARRIER RAIL 125.160 METERS

* THESE BARS ARE EPOXY COATED

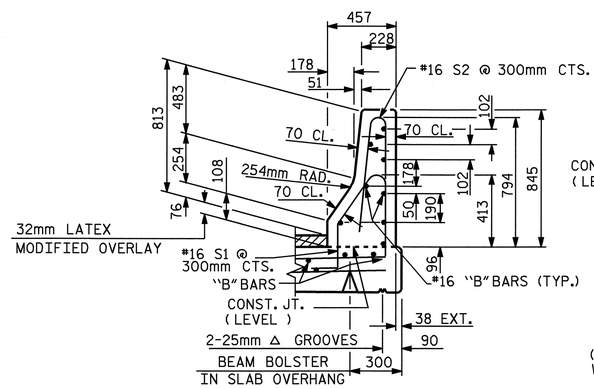

SECTION THRU RAIL

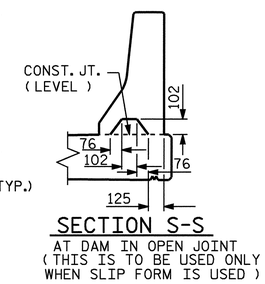

SECTION S-S

AT DAM IN OPEN JOINT (THIS IS TO BE USED ONLY WHEN SLIP FORM IS USED)

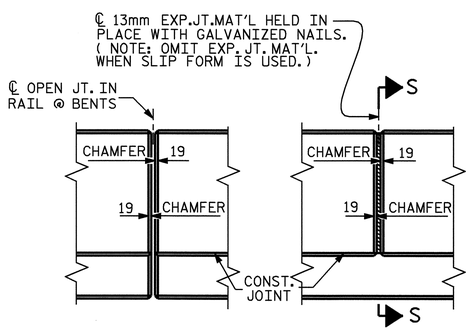

ELEVATION AT EXPANSION JOINTS

BARRIER RAIL DETAILS

PROJECT NO. R-2518B

YANCEY COUNTY

STATION: 223+53.200 -L-

SHEET 2 OF 3

STATE OF NORTH CAROLINA
DEPARTMENT OF TRANSPORTATION
RALEIGH

STANDARD

CONCRETE BARRIER RAIL

NORTH CAROLINA PROFESSIONAL SEAL 20125 ENGINEER MARSHALL G. CHEEK, JR.

3-28-08

ASSEMBLED BY : D. HODGE	DATE : 2/08		
CHECKED BY : M.G. CHEEK	DATE : 2/08		
DRAWN BY : ARB 5/87	REV. 10/17/00	RWW/LES	
CHECKED BY : SJD 9/87	REV. 5/7/03R	RWW/JTE	
	REV. 5/1/06	TLA/GM	

REVISIONS						SHEET NO.
NO.	BY:	DATE:	NO.	BY:	DATE:	S-130
1			3			TOTAL SHEETS
2			4			154

STR. #4

STD. No. CBR1SM

04-MAR-2008 09:13
r:\structures\str#4\dhodge\R2518B_sd_BR_str 4.dgn
dahodge

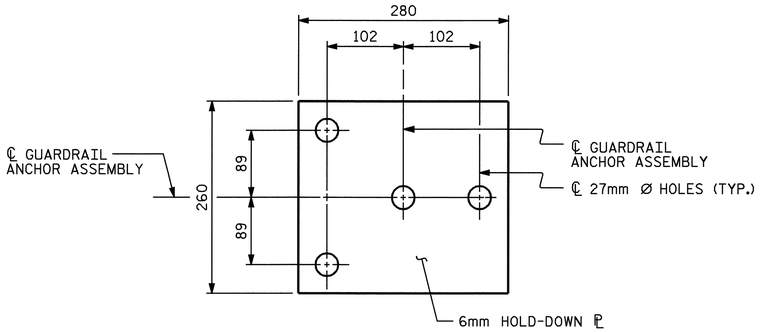

PLAN

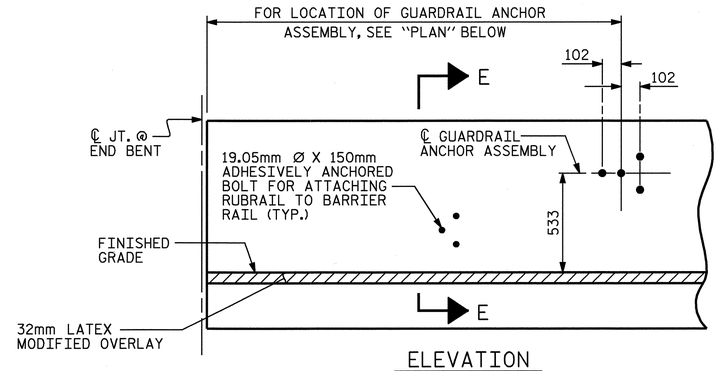

ELEVATION

FOR LOCATION OF RUBRAIL, SEE ROADWAY STD. 862.03

NOTES

THE GUARDRAIL ANCHOR ASSEMBLY SHALL CONSIST OF A 6mm HOLD DOWN PLATE AND 4 - 22.23mm Ø BOLTS WITH NUTS AND WASHERS, RUBRAIL, AND ADHESIVELY ANCHORED BOLTS.

THE HOLD-DOWN PLATE SHALL CONFORM TO AASHTO M270 GRADE 36. AFTER FABRICATION, THE HOLD-DOWN PLATE SHALL BE HOT-DIP GALVANIZED IN ACCORDANCE WITH AASHTO M111.

BOLTS SHALL CONFORM TO THE REQUIREMENTS OF ASTM A307 AND NUTS SHALL CONFORM TO THE REQUIREMENTS OF AASHTO M291. BOLTS, NUTS AND WASHERS SHALL BE GALVANIZED. (AT THE CONTRACTOR'S OPTION, STAINLESS STEEL BOLTS, NUTS AND WASHERS MAY BE USED AS AN ALTERNATE FOR THE 22.23mm Ø GALVANIZED BOLTS, NUTS AND WASHERS. THEY SHALL CONFORM TO OR EXCEED THE MECHANICAL REQUIREMENTS OF ASTM A307. THE USE OF THIS ALTERNATE SHALL BE APPROVED BY THE ENGINEER.)

THE GUARDRAIL ANCHOR ASSEMBLY IS REQUIRED AT ALL POINTS WHERE APPROACH GUARDRAIL IS TO BE ATTACHED TO THE END OF BARRIER RAIL. FOR POINTS OF ATTACHMENT, SEE SKETCH.

AFTER INSTALLATION, THE EXPOSED THREAD OF THE BOLT SHALL BE BURRED WITH A SHARP POINTED TOOL.

THE COST OF THE GUARDRAIL ANCHOR ASSEMBLY SHALL BE INCLUDED IN THE UNIT CONTRACT PRICE BID FOR CONCRETE BARRIER RAIL.

THE 32mm Ø HOLES SHALL BE FORMED OR DRILLED WITH A CORE BIT. IMPACT TOOLS WILL NOT BE PERMITTED. ANY CONCRETE DAMAGED BY THIS WORK SHALL BE REPAIRED TO THE SATISFACTION OF THE ENGINEER.

THE C150 X 12 RUBRAIL IS TO BE ADHESIVELY ANCHORED TO THE RAIL USING THREE 19.05mm Ø X 150mm BOLTS WITH WASHERS. LEVEL ONE FIELD TESTING IS REQUIRED, AND THE YIELD LOAD OF THE 19.05mm Ø BOLTS IS 53.4kN. FOR ADHESIVELY ANCHORED ANCHOR BOLTS OR DOWELS, SEE SPECIAL PROVISIONS. SEE ROADWAY STANDARD 862.03 FOR DETAILS AND LOCATION OF THE RUBRAIL.

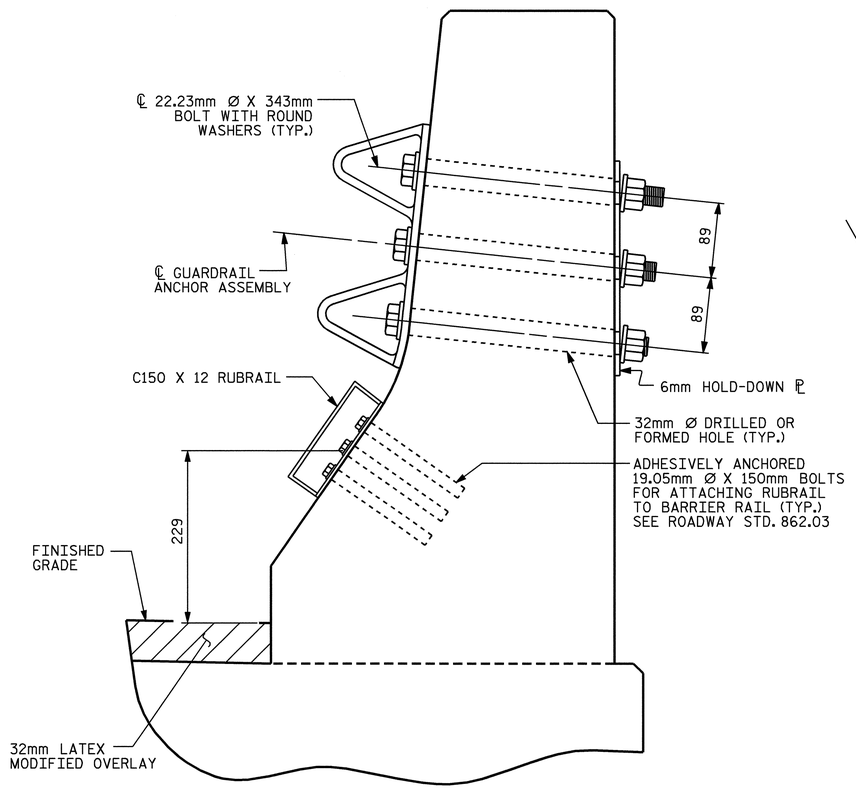

SECTION E-E

GUARDRAIL ANCHOR ASSEMBLY DETAILS

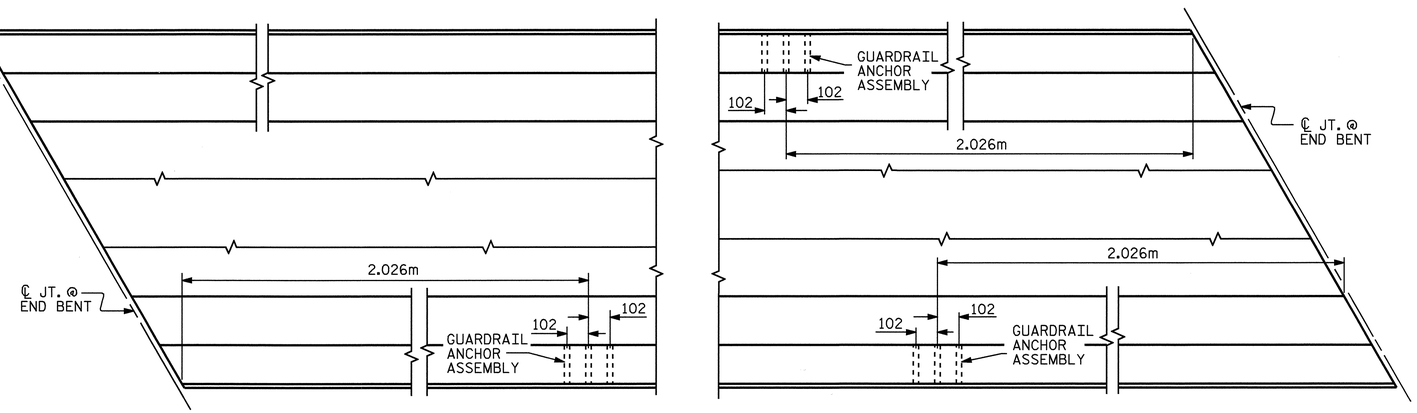

LOCATION OF ANCHORS FOR GUARDRAIL

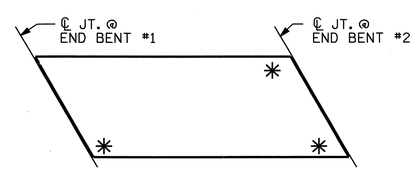

✳ DENOTES GUARDRAIL ANCHOR ASSEMBLY REQUIRED

SKETCH SHOWING POINTS OF ATTACHMENTS

PROJECT NO. R-2518B

YANCEY COUNTY

STATION: 223+53.200 -L-

SHEET 3 OF 3

STATE OF NORTH CAROLINA
DEPARTMENT OF TRANSPORTATION
RALEIGH

STANDARD

GUARDRAIL ANCHORAGE FOR BARRIER RAIL

REVISIONS						SHEET NO.
NO.	BY:	DATE:	NO.	BY:	DATE:	S-131
1			3			TOTAL SHEETS
2			4			154

NORTH CAROLINA PROFESSIONAL SEAL 20125 ENGINEER MARSHALL G. CHEEK, JR.
3-28-08

STR. #4

STD. NO. GRA2

ASSEMBLED BY : D. HODGE	DATE : 02/08
CHECKED BY : M.G. CHEEK	DATE : 02/08
DRAWN BY : TLA 5/06	ADDED 5/1/06R KMM/GM
CHECKED BY : GM 5/06	

04-MAR-2008 09:13
r:\structures\str#4\dhodge\R2518B_sd_BR_str 4.dgn
dahodge

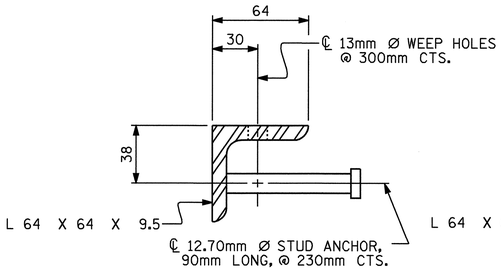

SECTION VIEW OF STUD

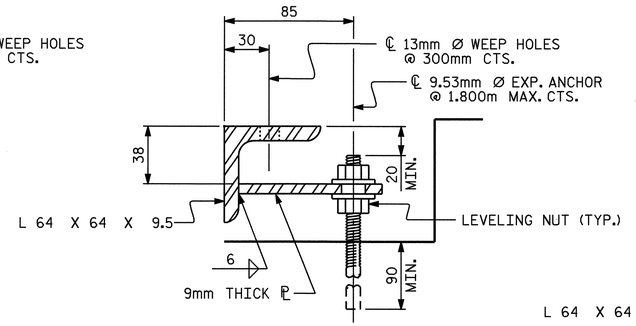

SECTION VIEW OF TAB

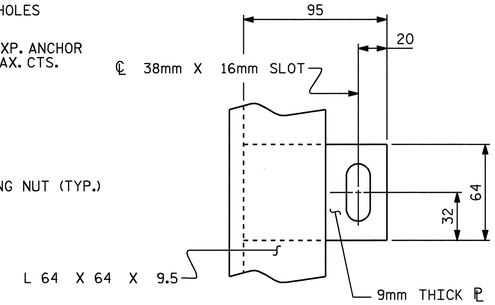

PLAN VIEW OF TAB

ARMORED JOINT ANCHOR ASSEMBLY DETAILS

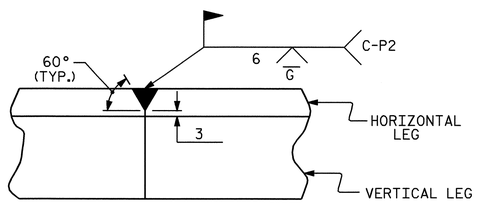

DETAIL- FIELD WELD SPLICE OF ANGLE

BILL OF MATERIAL		
LOCATION	ELASTOMERIC CONCRETE ✳ (CU. m)	TOTAL LENGTH OF ANGLE (m)
END BENT No. 1	0.5	50.880
BENT No. 1	0.5	50.880
BENT No. 2	0.5	50.880
END BENT No. 2	0.5	50.880

✳ BASED ON THE MINIMUM BLOCKOUT SHOWN.

NOTES

ANGLES SHALL CONFORM TO AASHTO M270 GRADE 250 STEEL OR APPROVED EQUAL. ALL STUD ANCHORS SHALL CONFORM TO AASHTO M169 GRADES 1010 THRU 1020 OR APPROVED EQUAL.

STUD ANCHORS SHALL BE SHOP WELDED AND ALL HOLES SHALL BE SHOP DRILLED AS SHOWN ON THE PLANS. STUD ANCHORS SHALL BE ELECTRIC ARC END WELDED WITH COMPLETE FUSION.

UPON COMPLETION OF SHOP FABRICATION, THE ENTIRE ANCHOR ASSEMBLY SHALL BE METALLIZED. THE 12.70mm Ø STUD ANCHORS AND ANCHOR TABS NEED NOT BE METALLIZED. SEE SPECIAL PROVISION FOR THERMAL SPRAYED COATINGS (METALLIZATION).

ANCHOR ASSEMBLY SHALL BE MADE CONTINUOUS THE LENGTH OF THE JOINT FROM GUTTER TO GUTTER. FOR FIELD SPLICES AT ALL CROWN BREAK POINTS, THE ENDS OF THE STEEL ANGLES SHALL BE CUT PARALLEL TO THE BRIDGE CENTERLINE. FINISHED FIELD WELDS SHALL BE GROUND SMOOTH AND COATED WITH A MINIMUM THICKNESS OF 0.100mm OF ZINC-RICH PAINT IN ACCORDANCE WITH THE STANDARD SPECIFICATIONS.

ANCHOR ASSEMBLY SEGMENTS SHALL NOT BE LESS 3.6m NOR MORE THAN 6.1m IN LENGTH. SHORTER SEGMENTS MAY BE USED AT THE EDGE OF ROADWAY OR AT POINTS OF STAGED CONSTRUCTION.

THE ANCHOR ASSEMBLY SHALL BE SECURED AND LEVELED AS SHOWN IN THE "ARMORED JOINT ANCHOR ASSEMBLY DETAILS". NO SUBMITTALS ARE REQUIRED FOR 9.53mm Ø EXPANSION ANCHORS, NUTS OR WASHERS. THE CONTRACTOR MAY SUBMIT FOR APPROVAL AN ALTERNATE METHOD OF ALIGNING AND LEVELING THE ANGLES. THE ALTERNATE METHOD SHALL NOT INCLUDE ANY WELDING TO THE OUTSIDE FACE OF THE ANGLES.

AFTER THE ELASTOMERIC CONCRETE HAS BEEN CAST ON BOTH SIDES OF THE JOINT, REMOVE ANY EXCESS CONCRETE THAT COMES THROUGH THE WEEP HOLES AND THOROUGHLY CLEAN THE ANGLES. ANY DAMAGED STEEL SHALL BE COATED WITH A MINIMUM OF 0.100mm OF ZINC-RICH PAINT IN ACCORDANCE WITH THE STANDARD SPECIFICATIONS.

SEE SPECIAL PROVISIONS FOR EVAZOTE JOINT SEALS.

SEE SPECIAL PROVISIONS FOR ELASTOMERIC CONCRETE.

THE NOMINAL UNCOMPRESSED SEAL WIDTH OF THE EVAZOTE JOINT SEAL SHALL BE 64mm FOR END BENTS No.'s 1 & 2.

DURING THE JOINT INSTALLATION, THE JOINT AND SURROUNDING AREA SHALL BE KEPT CLEAN AND FREE OF DEBRIS.

MOVEMENT AND SETTING AT EVAZOTE JOINT						
BENT NO.	SKEW ANGLE	NOMINAL UNCOMPRESSED SEAL WIDTH	TOTAL MOVEMENT (ALONG ℄ RDWY)	PERPENDICULAR JOINT OPENING AT 7° C	PERPENDICULAR JOINT OPENING AT 16° C	PERPENDICULAR JOINT OPENING AT 32° C
1	74°-38'-04"	64mm	21mm	44mm	51mm	55mm
2	74°-38'-04"	64mm	21mm	44mm	51mm	55mm

TOTAL MOVEMENT IS CALCULATED ALONG THE CENTERLINE OF ROADWAY.
JOINT OPENINGS ARE MEASURED PERPENDICULAR TO THE JOINT.

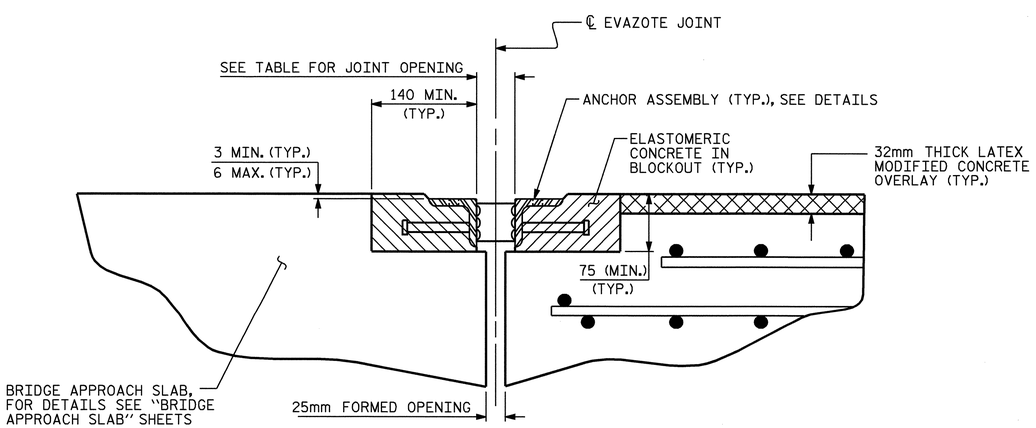

ARMORED JOINT DETAILS

SECTION NORMAL TO JOINT AT END BENT

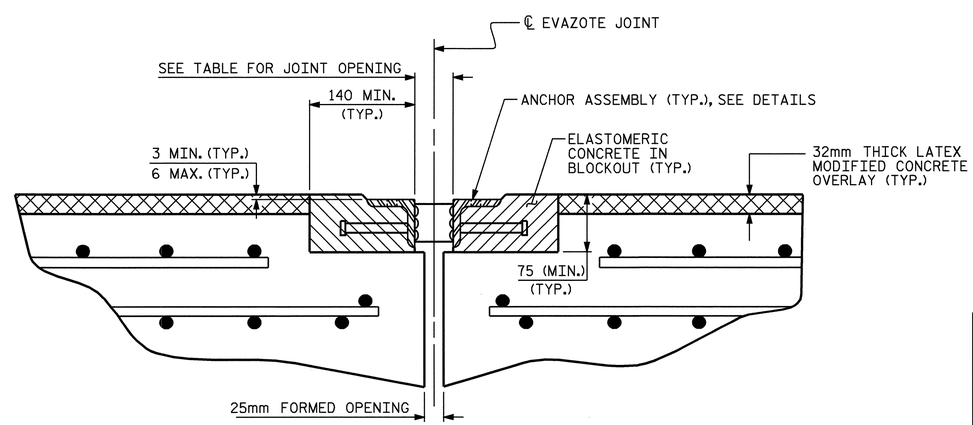

ARMORED JOINT DETAILS

SECTION NORMAL TO JOINT AT BENT

PROJECT NO. R-2518B
YANCEY COUNTY
STATION: 223+53.200 -L-

STATE OF NORTH CAROLINA
DEPARTMENT OF TRANSPORTATION
RALEIGH

STANDARD ARMORED EVAZOTE JOINT DETAILS

NORTH CAROLINA PROFESSIONAL SEAL 20125 ENGINEER MARSHALL G. CHEEK, JR. 3-28-08

REVISIONS								SHEET NO.
NO.	BY:	DATE:	NO.	BY:	DATE:			S-132
1			3					TOTAL SHEETS
2			4					154

ASSEMBLED BY : D. HODGE		DATE : 2/08	
CHECKED BY : M.G. CHEEK		DATE : 2/08	
DRAWN BY : EEM 1/96	REV. 7/10/01	LES/RDR	
CHECKED BY : RGW 1/96	REV. 5/7/03	RWW/JTE	
	REV. 5/1/06	TLA/GM	

STR. #4

STD. NO. AEJ1SM

04-MAR-2008 09:14
r:\structures\str#4\dhodge\R2518B_sd_JS_str 4.dgn
dahodge

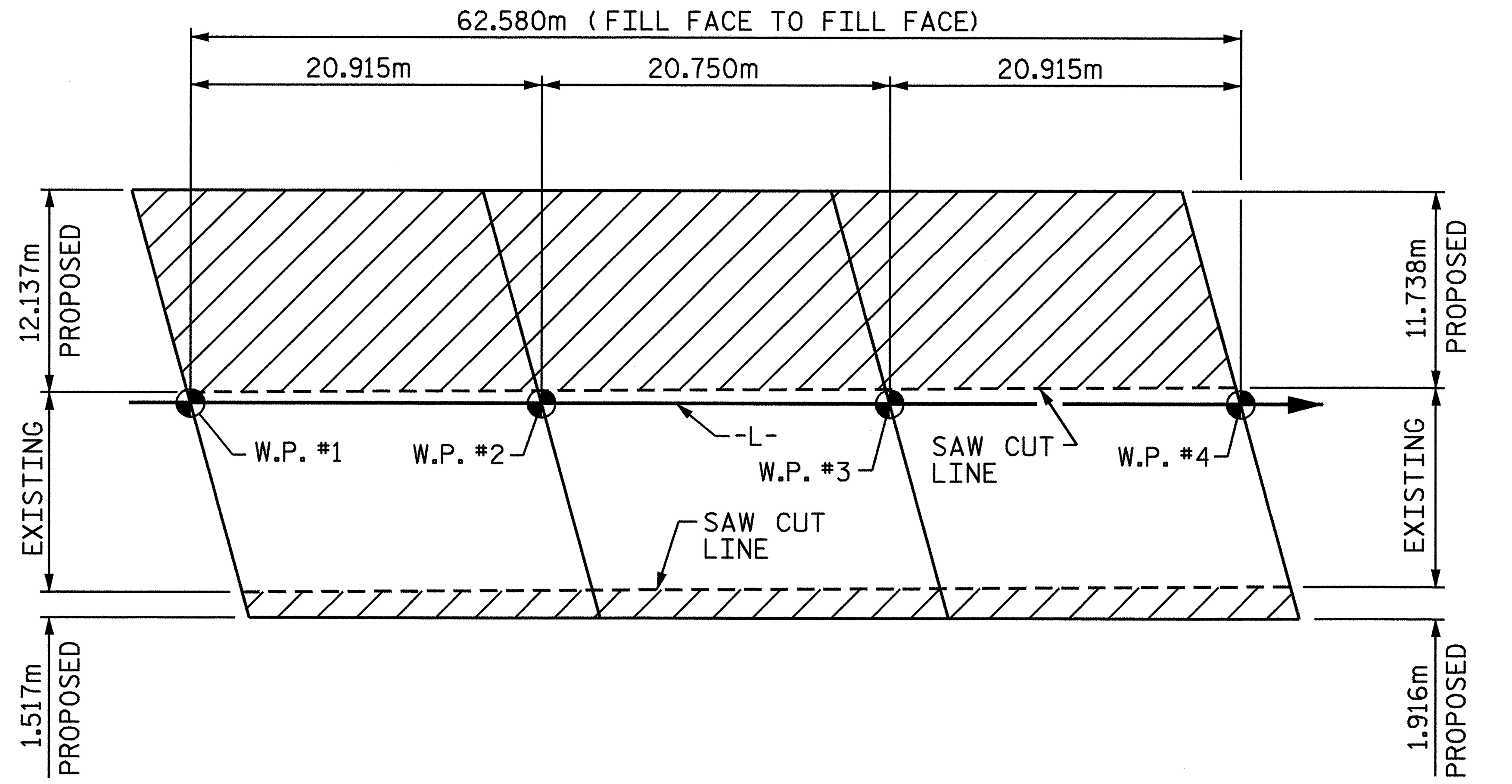

LAYOUT FOR COMPUTING AREA OF REINFORCED CONCRETE DECK SLAB
(SQ. METERS = 854.5)

GROOVING BRIDGE FLOORS		
APPROACH SLABS	196.6	SQ.METERS
BRIDGE DECK	1451.8	SQ.METERS
TOTAL	1648.4	SQ.METERS

SUPERSTRUCTURE REINFORCING STEEL LENGTHS ARE BASED ON THE FOLLOWING MINIMUM SPLICE LENGTHS

BAR SIZE	SUPERSTRUCTURE EXCEPT APPROACH SLABS, PARAPET, AND BARRIER RAIL		APPROACH SLABS		PARAPET AND BARRIER RAIL
	EPOXY COATED	UNCOATED	EPOXY COATED	UNCOATED	
#10	460				
#13	610	540	610	540	840
#16	770	660	770	660	1050
#19	920	790	1190	790	1330
#22	1580	1060			
#25	2080	1390			

ASSEMBLED BY : D. HODGE	DATE : 2/08		
CHECKED BY : M.G. CHEEK	DATE : 2/08		
DRAWN BY : JMB 5/87		REV. 5/16/97	EEM/RGW
CHECKED BY : SJD 9/87		REV. 5/1/06	TLA/GM

REINFORCING BAR SCHEDULE

SPAN A

BAR	NO.	SIZE	TYPE	LENGTH	WEIGHT
* A1	98	16	STR	11920	1813
A2	98	16	STR	11920	1813
* A101	2	16	STR	11360	35
* A102	2	16	STR	10700	33
* A103	2	16	STR	10040	31
* A104	2	16	STR	9380	29
* A105	2	16	STR	8740	27
* A106	2	16	STR	8080	25
* A107	2	16	STR	7420	23
* A108	2	16	STR	6760	21
* A109	2	16	STR	6100	19
* A110	2	16	STR	5460	17
* A111	2	16	STR	4800	15
* A112	2	16	STR	4140	13
* A113	2	16	STR	3480	11
* A114	2	16	STR	2820	9
* A115	2	16	STR	2160	7
* A116	2	16	STR	1520	5
* A117	2	16	STR	860	3
A118	2	16	STR	11360	35
A119	2	16	STR	10700	33
A120	2	16	STR	10040	31
A121	2	16	STR	9380	29
A122	2	16	STR	8740	27
A123	2	16	STR	8080	25
A124	2	16	STR	7420	23
A125	2	16	STR	6760	21
A126	2	16	STR	6100	19
A127	2	16	STR	5460	17
A128	2	16	STR	4800	15
A129	2	16	STR	4140	13
A130	2	16	STR	3480	11
A131	2	16	STR	2820	9
A132	2	16	STR	2160	7
A133	2	16	STR	1520	5
A134	2	16	STR	860	3
* A301	57	16	STR	1420	126
A302	57	16	STR	1420	126
* A303	57	16	STR	1480	131
A304	57	16	STR	1480	131
* A313	1	16	STR	860	1
A314	1	16	STR	860	1
* A315	1	16	STR	980	2
A316	1	16	STR	980	2
* B1	84	13	STR	7340	613
B2	78	16	STR	10740	1300
* B3	8	16	STR	10800	134
* D1	92	16	STR	1080	154
* G1	1	16	STR	12480	19
* G2	1	16	STR	1460	2
* G3	1	16	STR	12200	19
* G4	1	16	STR	1600	2
* K1	2	25	1	3760	30
* K2	6	25	2	5500	131
* K3	2	25	1	3240	26
K4	6	13	STR	6520	39
K5	2	13	STR	6360	13
K6	12	13	STR	1840	22
K7	4	19	STR	1840	16
K8	3	13	STR	760	2
K9	1	19	STR	760	2
K10	1	19	STR	12480	28
K11	3	13	STR	1020	3
K12	1	19	STR	1020	2
K13	3	13	STR	360	1
K14	3	13	STR	1480	4
K15	3	13	STR	540	2
K16	1	19	STR	1480	3
K17	1	19	STR	540	1
K18	1	19	STR	360	1
K19	1	13	STR	1160	1
K20	8	19	STR	2000	36
K21	2	16	STR	640	2
K22	2	16	STR	900	3
* L1	77	13	4	1940	148
S1	37	16	6	640	37
* S2	24	13	5	860	21
S3	24	16	3	1460	54
S4	3	13	7	1860	6

REINFORCING STEEL = 3,974 kg

* EPOXY COATED REINF. STEEL = 3,695 kg

* THESE BARS ARE EPOXY COATED

SPAN B

BAR	NO.	SIZE	TYPE	LENGTH	WEIGHT
* A3	98	16	STR	11800	1795
A4	98	16	STR	11800	1795
* A135	2	16	STR	11220	35
* A136	2	16	STR	10560	33
* A137	2	16	STR	9900	31
* A138	2	16	STR	9260	29
* A139	2	16	STR	8600	27
* A140	2	16	STR	7940	25
* A141	2	16	STR	7300	23
* A142	2	16	STR	6640	21
* A143	2	16	STR	5980	19
* A144	2	16	STR	5320	17
* A145	2	16	STR	4660	14
* A146	2	16	STR	4000	12
* A147	2	16	STR	3360	10
* A148	2	16	STR	2700	8
* A149	2	16	STR	2040	6
* A150	2	16	STR	1380	4
* A151	2	16	STR	720	2
A152	2	16	STR	11220	35
A153	2	16	STR	10560	33
A154	2	16	STR	9900	31
A155	2	16	STR	9260	29
A156	2	16	STR	8600	27
A157	2	16	STR	7940	25
A158	2	16	STR	7300	23
A159	2	16	STR	6640	21
A160	2	16	STR	5980	19
A161	2	16	STR	5320	17
A162	2	16	STR	4660	14
A163	2	16	STR	4000	12
A164	2	16	STR	3360	10
A165	2	16	STR	2700	8
A166	2	16	STR	2040	6
A167	2	16	STR	1380	4
A168	2	16	STR	720	2
* A305	57	16	STR	1560	138
A306	57	16	STR	1560	138
* A307	57	16	STR	1620	143
A308	57	16	STR	1620	143
* A315	1	16	STR	980	2
A316	1	16	STR	980	2
* A317	1	16	STR	1120	2
A318	1	16	STR	1120	2
* B4	84	13	STR	7280	608
B5	78	16	STR	10640	1288
* B6	8	16	STR	10700	133
* D1	92	16	STR	1080	154
* G3	2	16	STR	12200	38
* G4	2	16	STR	1600	5
* K1	4	25	1	3760	60
* K2	12	25	2	5500	262
* K3	4	25	1	3240	51
K20	16	19	STR	2000	72
K21	2	16	STR	640	2
K22	2	16	STR	900	3
* S2	48	13	5	860	41
S3	48	16	3	1460	109
S4	3	13	7	1860	6

REINFORCING STEEL = 3,876 kg

* EPOXY COATED REINF. STEEL = 3,748 kg

* THESE BARS ARE EPOXY COATED

SPAN C

BAR	NO.	SIZE	TYPE	LENGTH	WEIGHT
* A5	98	16	STR	11660	1773
A6	98	16	STR	11660	1773
* A169	2	16	STR	11100	34
* A170	2	16	STR	10440	32
* A171	2	16	STR	9780	30
* A172	2	16	STR	9120	28
* A173	2	16	STR	8480	26
* A174	2	16	STR	7820	24
* A175	2	16	STR	7160	22
* A176	2	16	STR	6500	20
* A177	2	16	STR	5840	18
* A178	2	16	STR	5200	16
* A179	2	16	STR	4540	14
* A180	2	16	STR	3880	12
* A181	2	16	STR	3220	10
* A182	2	16	STR	2560	8
* A183	2	16	STR	1900	6
* A184	2	16	STR	1260	4
* A185	2	16	STR	600	2
A186	2	16	STR	11100	34
A187	2	16	STR	10440	32
A188	2	16	STR	9780	30
A189	2	16	STR	9120	28
A190	2	16	STR	8480	26
A191	2	16	STR	7820	24
A192	2	16	STR	7160	22
A193	2	16	STR	6500	20
A194	2	16	STR	5840	18
A195	2	16	STR	5200	16
A196	2	16	STR	4540	14
A197	2	16	STR	3880	12
A198	2	16	STR	3220	10
A199	2	16	STR	2560	8
A200	2	16	STR	1900	6
A201	2	16	STR	1260	4
A202	2	16	STR	600	2
* A309	57	16	STR	1680	149
A310	57	16	STR	1680	149
* A311	57	16	STR	1760	156
A312	57	16	STR	1760	156
* A317	1	16	STR	1120	2
A318	1	16	STR	1120	2
* A319	1	16	STR	1240	2
A320	1	16	STR	1240	2
* B1	81	13	STR	7340	591
B2	78	16	STR	10740	1300
* B3	8	16	STR	10800	134
* D1	92	16	STR	1080	154
* G3	1	16	STR	12200	19
* G4	1	16	STR	1600	2
* G5	1	16	STR	12060	19
* G6	1	16	STR	1880	3
* K1	2	25	1	3760	30
* K2	6	25	2	5500	131
* K3	2	25	1	3240	26
K4	6	13	STR	6520	39
K5	2	13	STR	6360	13
K6	12	13	STR	1840	22
K7	4	19	STR	1840	16
K8	3	13	STR	760	2
K9	1	19	STR	760	2
K10	1	19	STR	12480	28
K11	3	13	STR	1020	3
K12	1	19	STR	1020	2
K13	3	13	STR	360	1
K14	3	13	STR	1480	4
K15	3	13	STR	540	2
K16	1	19	STR	1480	3
K17	1	19	STR	540	1
K18	1	19	STR	360	1
K19	1	13	STR	1160	1
K20	8	19	STR	2000	36
K21	2	16	STR	640	2
K22	2	16	STR	900	3
* L1	77	13	4	1940	148
S1	37	16	6	640	37
* S2	24	13	5	860	21
S3	24	16	3	1460	54
S4	3	13	7	1860	6

REINFORCING STEEL = 3,966 kg

* EPOXY COATED REINF. STEEL = 3,666 kg

* THESE BARS ARE EPOXY COATED

BAR TYPES

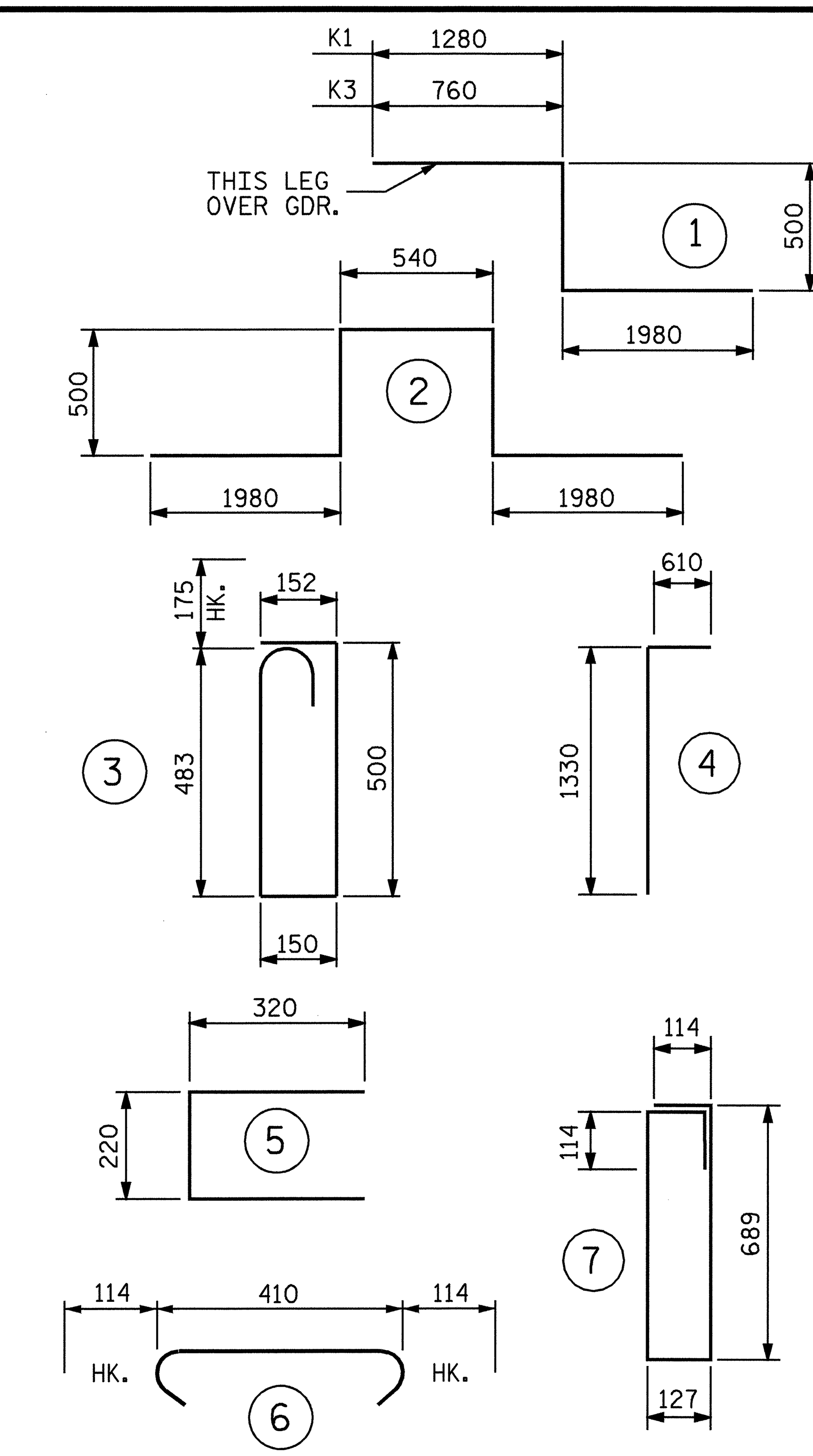

ALL BAR DIMENSIONS ARE OUT TO OUT

SUPERSTRUCTURE BILL OF MATERIAL

	CLASS AA CONCRETE	REINFORCING STEEL	EPOXY COATED REINFORCING STEEL
	(CU. METERS)	(kg)	(kg)
SPAN A	85.0	3,974	3,695
SPAN B	79.5	3,876	3,748
SPAN C	84.5	3,966	3,666
TOTALS**	249.0	11,816	11,109

** QUANTITIES FOR BARRIER RAIL & CLASS AA CONCRETE OVERLAY ARE NOT INCLUDED

PROJECT NO. R-2518B

YANCEY COUNTY

STATION: 223+53.200 -L-

STATE OF NORTH CAROLINA
DEPARTMENT OF TRANSPORTATION
RALEIGH

STANDARD

SUPERSTRUCTURE BILL OF MATERIAL

REVISIONS						SHEET NO.
NO.	BY:	DATE:	NO.	BY:	DATE:	S-133
1			3			TOTAL SHEETS
2			4			154

4-24-08

STR. #4

STD. NO. BOM2SM

17-APR-2008 11:07
R:\Structures\Final plans\Str #4\R2518B_sd_BM_str 4.dgn
lmurphy

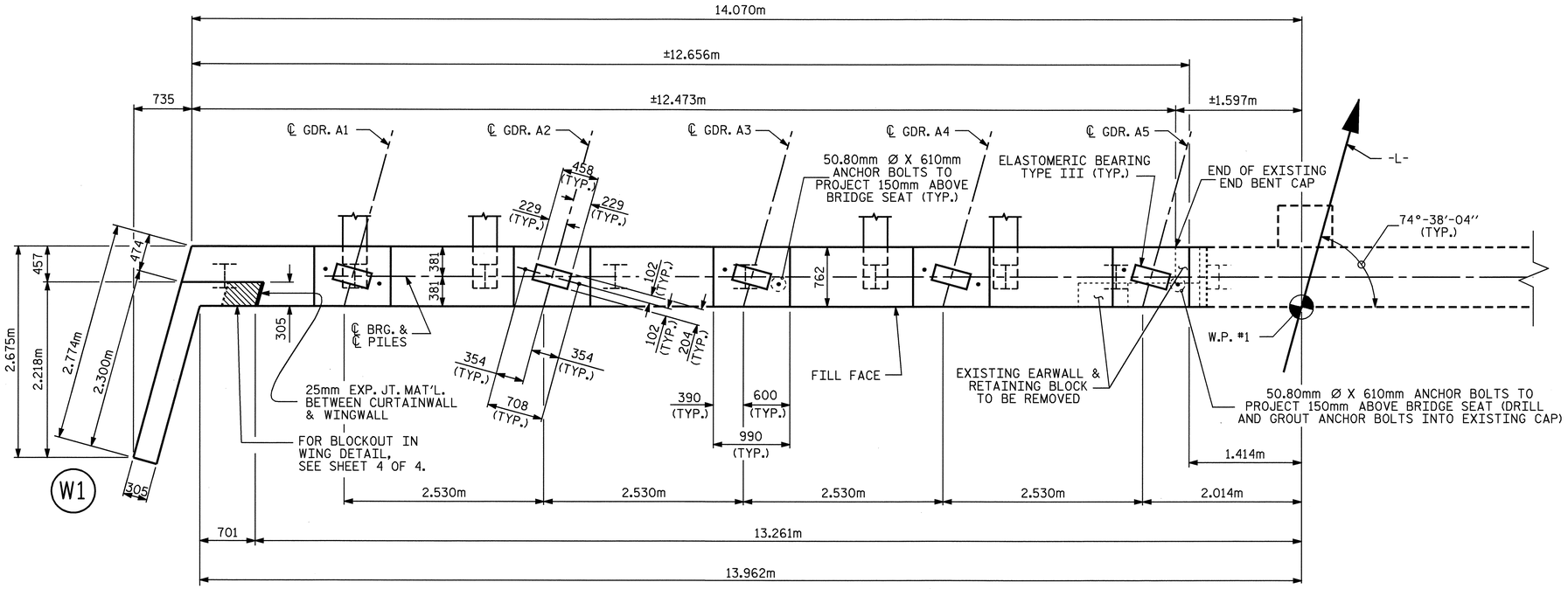

PLAN

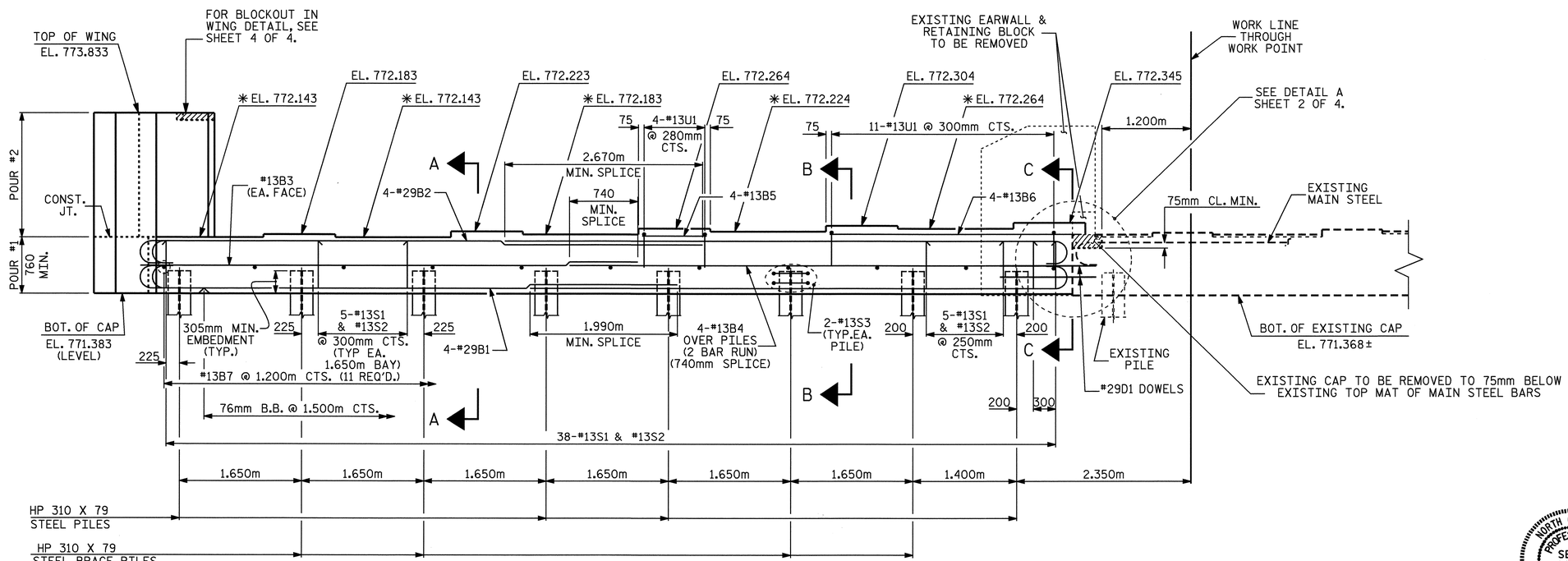

ELEVATION

✳ FOR LOCATION OF ELEVATIONS BETWEEN BRIDGE SEAT BUILD-UPS, SEE SHEET 4 OF 4.

NOTES

STIRRUPS, AND "U" BARS IN CAP MAY BE SHIFTED AS NECESSARY TO CLEAR ANCHOR BOLTS.

THE TOP SURFACE AREAS OF THE END BENT CAPS SHALL BE CURED IN ACCORDANCE WITH THE STANDARD SPECIFICATIONS EXCEPT THE MEMBRANE CURING COMPOUND METHOD SHALL NOT BE USED.

THE TOP SURFACE OF THE CAP EXCEPT THE BRIDGE SEAT BUILDUPS SHALL BE SLOPED TRANSVERSELY FROM THE FILL FACE TO THE BACK FACE AT THE RATE OF 2 %.

FOR BOND OF NEW CONCRETE TO OLD, THE OLD CONCRETE SHALL BE THOROUGHLY ROUGHENED, CLEANED OF LOOSE MATERIAL, AND WETTED FOR A MINIMUM OF 2 HOURS PRIOR TO PLACING NEW CONCRETE. PAYMENT FOR THIS WORK SHALL BE INCLUDED IN THE CONTRACT PRICE FOR CLASS A CONCRETE.

THE CONTRACTOR SHALL USE ADHESIVELY ANCHORED DOWELS. LEVEL 1 FIELD TESTING IS REQUIRED, AND THE YIELD LOAD OF THE DOWELS IS 117.4 kN (26.4k). FOR ADHESIVELY ANCHORED DOWELS, SEE SPECIAL PROVISIONS.

THE CONTRACTOR SHALL USE ADHESIVELY ANCHORED ANCHOR BOLTS AT GIRDER 5 AND GIRDER 12 IF ANCHOR BOLT EXTENDS INTO EXISTING END BENT CAP. LEVEL 1 FIELD TESTING IS REQUIRED, AND THE YIELD LOAD OF THE ANCHOR BOLT IS 645.0 kN (145k). FOR ADHESIVELY ANCHORED ANCHOR BOLTS OR DOWELS, SEE SPECIAL PROVISIONS.

THE CONCRETE IN THE SHADED AREA OF THE WING SHALL BE POURED AFTER THE CONCRETE BARRIER RAIL IS CAST IF SLIP FORMING IS USED.

THE CONTRACTOR SHALL PROVIDE FOR INSTALLATION OF THE 102mm DIAMETER DRAIN PIPE THROUGH THE WING WALL AS REQUIRED FOR REINFORCED BRIDGE APPROACH FILLS, SEE THE ROADWAY PLANS. REINFORCING STEEL IN THE WING WALL MAY BE SHIFTED AS NECESSARY TO CLEAR THE DRAIN PIPE.

PROJECT NO. R-2518B
YANCEY COUNTY
STATION: 223+53.200-L-

SHEET 1 OF 4

STATE OF NORTH CAROLINA
DEPARTMENT OF TRANSPORTATION
RALEIGH

SUBSTRUCTURE
END BENT NO. 1

NORTH CAROLINA PROFESSIONAL SEAL 20125 ENGINEER MARSHALL G. OBEL, JR.
4-4-08

REVISIONS						SHEET NO.
NO.	BY:	DATE:	NO.	BY:	DATE:	S-134
1			3			TOTAL SHEETS
2			4			154

DRAWN BY : L.L. MURPHY DATE : 02-08
CHECKED BY : D. HODGE DATE : 03-08

04-APR-2008 07:45
r:\Structures\Str#4\lmurphy\Microstation\R2518B_sd_E#_STR#4.dgn
dahodge

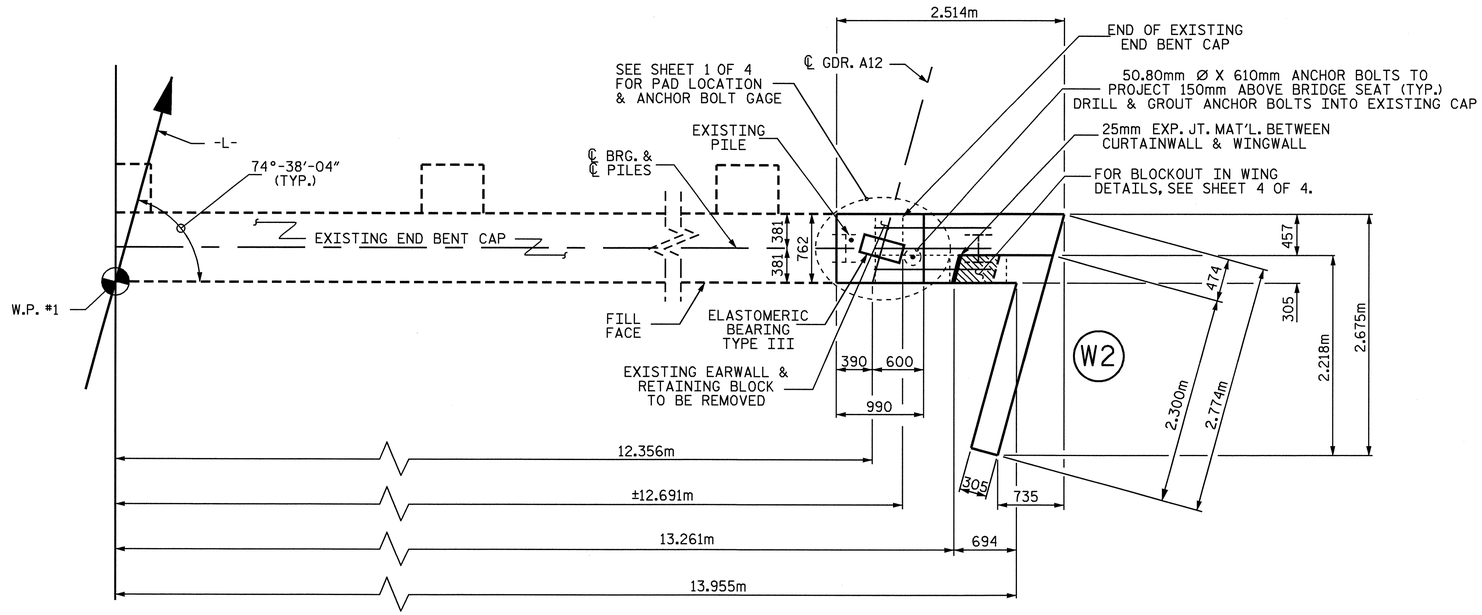

PLAN

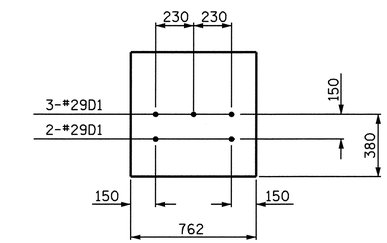

SECTION C-C

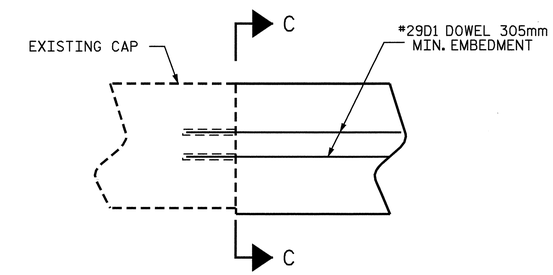

ELEVATION

DETAIL A

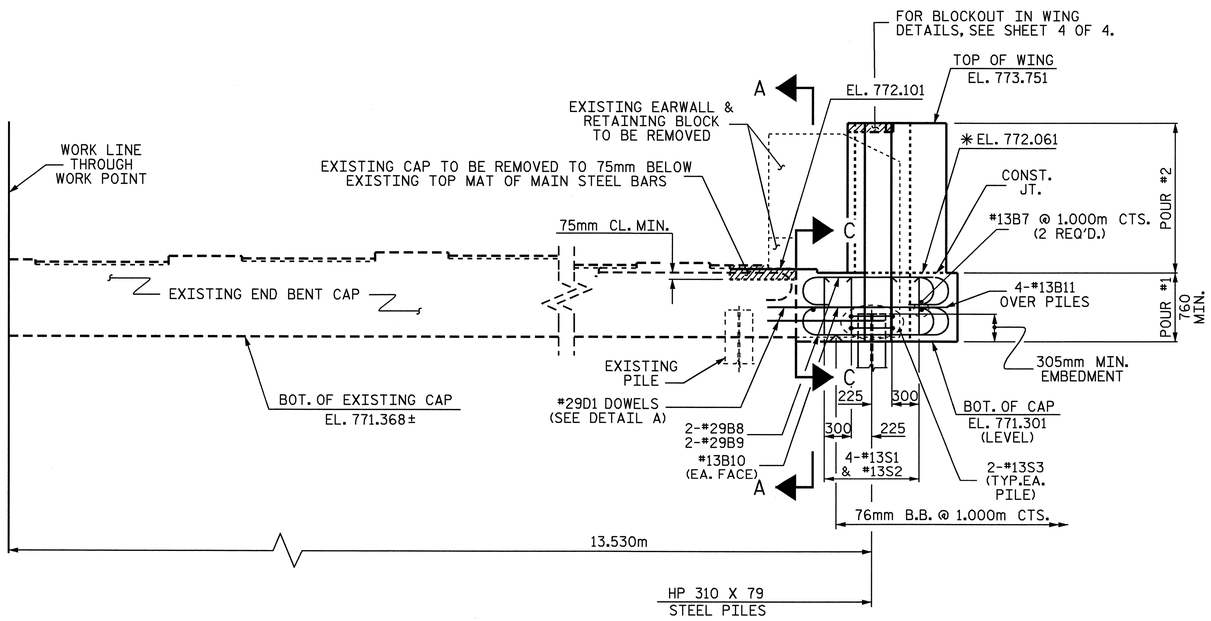

ELEVATION

✱ FOR LOCATION OF ELEVATIONS BETWEEN BRIDGE SEAT BUILD-UPS, SEE SHEET 4 OF 4.

PROJECT NO. R-2518B
YANCEY COUNTY
STATION: 223+53.200-L-

SHEET 2 OF 4

STATE OF NORTH CAROLINA
DEPARTMENT OF TRANSPORTATION
RALEIGH

SUBSTRUCTURE
END BENT NO. 1

NORTH CAROLINA PROFESSIONAL SEAL 20125 ENGINEER MARSHALL BIRKEK, JR.
3-28-08

REVISIONS							SHEET NO.
NO.	BY:	DATE:	NO.	BY:	DATE:		S-135
1			3				TOTAL SHEETS
2			4				154

DRAWN BY : L.L. MURPHY DATE : 02-08
CHECKED BY : D. HODGE DATE : 03-08

26-MAR-2008 13:43
Y:\Structures\Str#4\lmurphy\Microstation\R2518B_sd_E#_STR#4.dgn
mpoole

STR #4

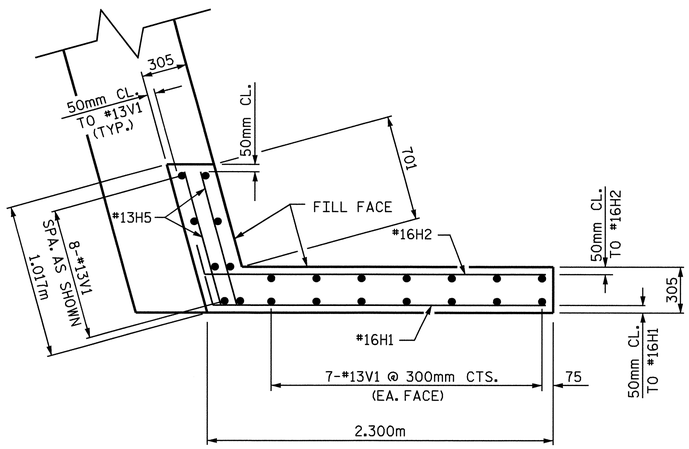

PLAN OF LEFT WING - W1

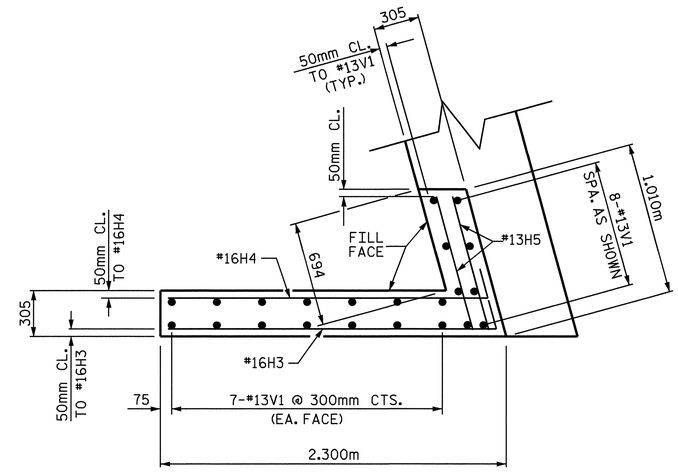

PLAN OF RIGHT WING - W2

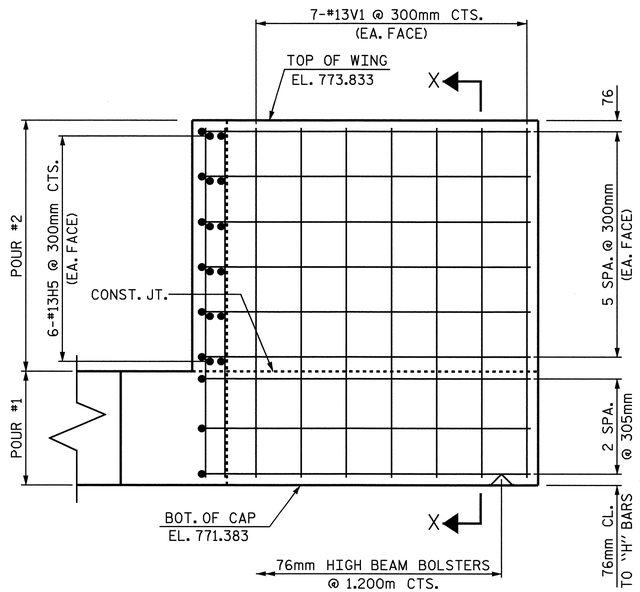

ELEVATION OF LEFT WING - W1

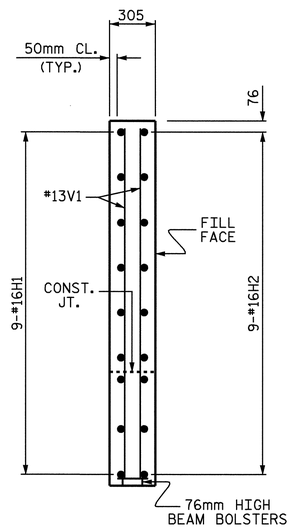

SECTION X-X

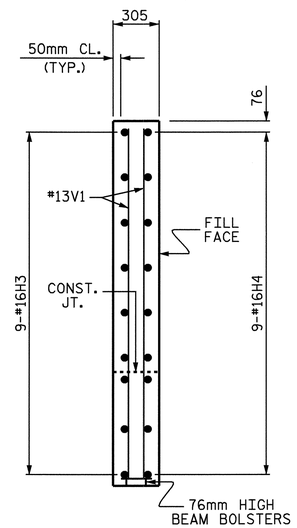

SECTION Y-Y

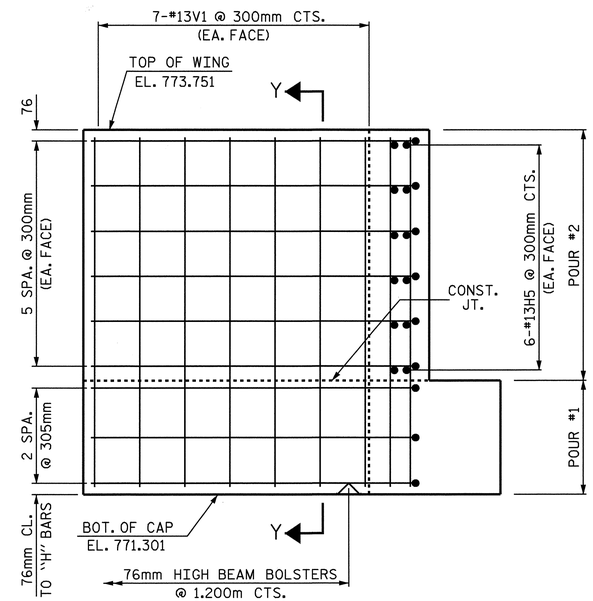

ELEVATION OF RIGHT WING - W2

PROJECT NO. R-2518B

YANCEY COUNTY

STATION: 223+53.200-L-

SHEET 3 OF 4

STATE OF NORTH CAROLINA
DEPARTMENT OF TRANSPORTATION
RALEIGH

SUBSTRUCTURE
END BENT NO. 1

NORTH CAROLINA PROFESSIONAL SEAL 20125 ENGINEER MARSHALL A. PARKER, JR.
4-24-08

REVISIONS						SHEET NO.
NO.	BY:	DATE:	NO.	BY:	DATE:	S-136
1			3			TOTAL SHEETS
2			4			154

DRAWN BY : L.L. MURPHY DATE : 02-08
CHECKED BY : D. HODGE DATE : 03-08

16-APR-2008 11:41
r:\structures\final plans\Str #4\R2518B_sd_E*_STR#4.dgn
lmurphy

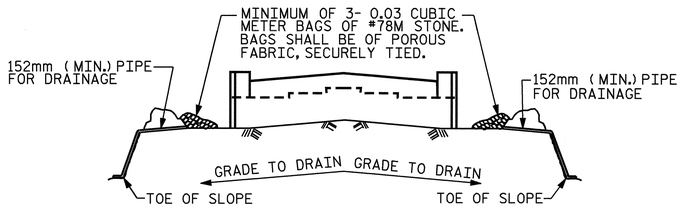

BAGGED STONE AND PIPE SHALL BE PLACED IMMEDIATELY AFTER COMPLETION OF END BENT EXCAVATION. PIPE MAY BE EITHER CONCRETE, CORRUGATED STEEL, CORRUGATED ALUMINUM ALLOY, OR CORRUGATED PLASTIC. PERFORATED PIPE WILL NOT BE ALLOWED.

BAGGED STONE SHALL REMAIN IN PLACE UNTIL THE ENGINEER DIRECTS THAT IT BE REMOVED. THE CONTRACTOR SHALL REMOVE AND DISPOSE OF SILT ACCUMULATIONS AT BAGGED STONE WHEN SO DIRECTED BY THE ENGINEER. BAGS SHALL BE REMOVED AND REPLACED WHENEVER THE ENGINEER DETERMINES THAT THEY HAVE DETERIORATED AND LOST THEIR EFFECTIVENESS.

NO SEPARATE PAYMENT WILL BE MADE FOR THIS WORK AND THE ENTIRE COST OF THIS WORK SHALL BE INCLUDED IN THE UNIT CONTRACT PRICE FOR THE SEVERAL PAY ITEMS.

TEMPORARY DRAINAGE AT END BENT

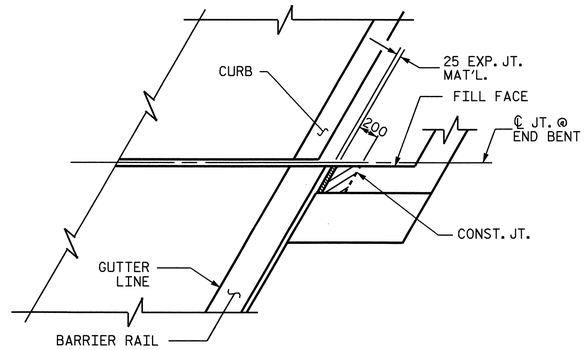

PLAN

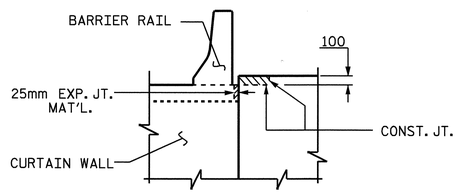

ELEVATION

BLOCKOUT IN WING WALL

BAR TYPES

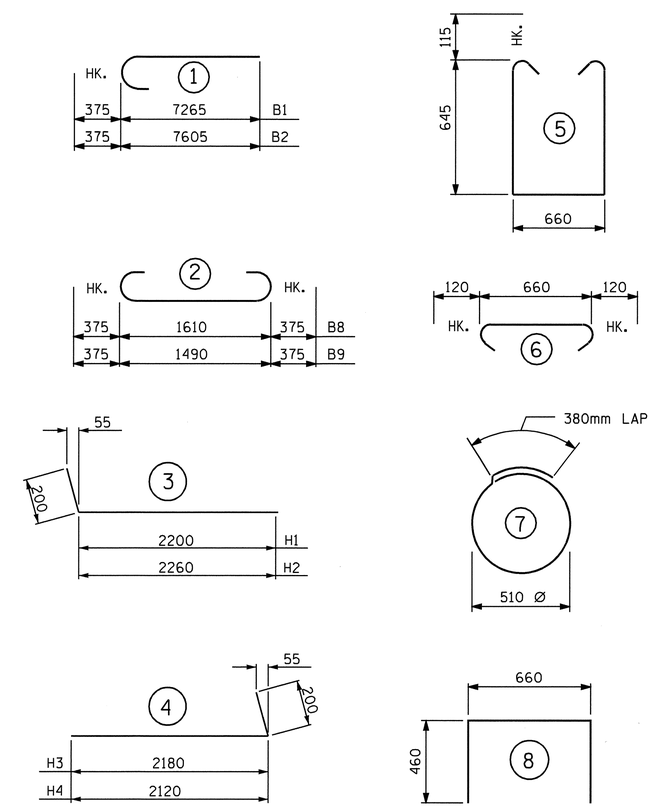

ALL BAR DIMENSIONS ARE OUT TO OUT.

BILL OF MATERIAL

END BENT NO. 1 LEFT SIDE

BAR	NO.	SIZE	TYPE	LENGTH	WEIGHT
B1	8	#29	1	7640	309
B2	8	#29	1	7980	323
B3	4	#13	STR	6620	26
B4	8	#13	STR	6620	53
B5	4	#13	STR	880	3
B6	4	#13	STR	3420	14
B7	11	#13	STR	660	7
D1	5	#29	STR	1300	33
H1	9	#16	3	2400	34
H2	9	#16	3	2460	34
H5	12	#13	STR	900	11
S1	38	#13	5	2180	82
S2	38	#13	6	900	34
S3	16	#13	7	1980	31
U1	15	#13	8	1580	24
V1	22	#13	STR	2320	51
REINFORCING STEEL				= 1069 kg	

END BENT NO. 1 RIGHT SIDE

BAR	NO.	SIZE	TYPE	LENGTH	WEIGHT
B7	2	#13	STR	660	1
B8	4	#29	2	2360	48
B9	4	#29	2	2240	45
B10	2	#13	STR	1440	3
B11	4	#13	STR	1540	6
D1	5	#29	STR	1300	33
H3	9	#16	4	2380	33
H4	9	#16	4	2320	32
H5	12	#13	STR	900	11
S1	4	#13	5	2180	9
S2	4	#13	6	900	4
S3	2	#13	7	1980	4
V1	22	#13	STR	2320	51
REINFORCING STEEL				= 280 kg	

REINFORCING STEEL BREAKDOWN

LEFT SIDE	1069 kg
RIGHT SIDE	280 kg
TOTAL	1349 kg

CLASS A CONCRETE BREAKDOWN

LEFT SIDE	
POUR #1	
CAP & LOWER PART OF WING	8.6 CU. METERS
POUR #2	
UPPER PART OF WING	1.6 CU. METERS
RIGHT SIDE	
POUR #1	
CAP & LOWER PART OF WING	1.5 CU. METERS
POUR #2	
UPPER PART OF WING	1.5 CU. METERS
CLASS A CONCRETE TOTAL	13.2 CU. METERS

HP 310 X 79 STEEL PILES

LEFT SIDE		
NO. 8	20	LIN. METERS
RIGHT SIDE		
NO. 1	4	LIN. METERS
TOTAL		
NO. 9	24	LIN. METERS

STEEL PILES POINTS

EACH 9

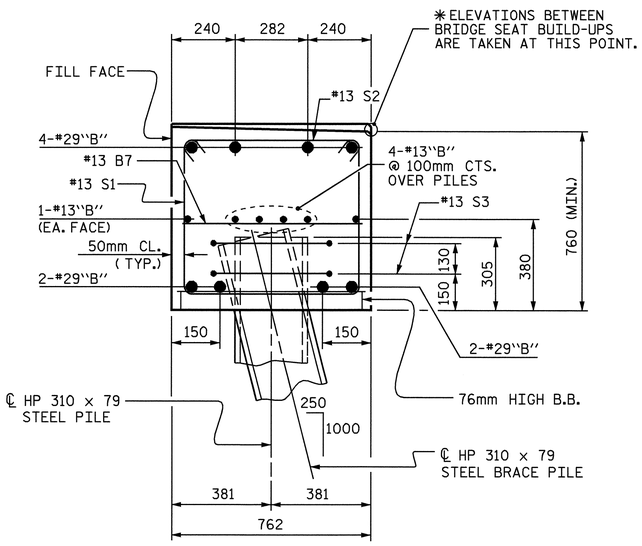

SECTION A-A

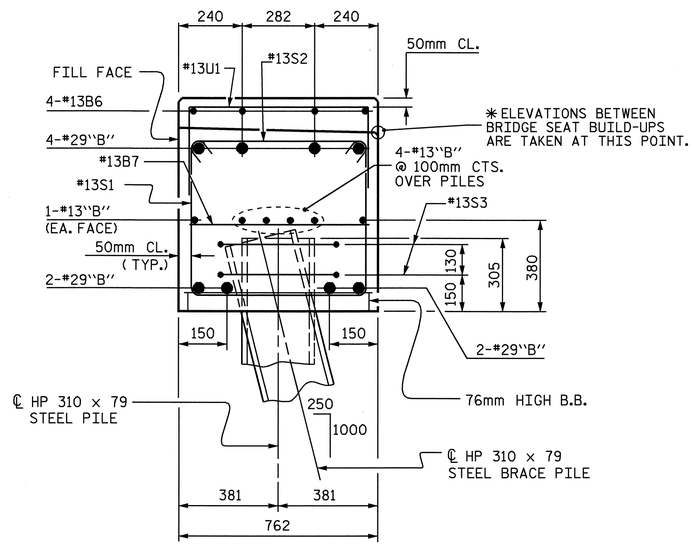

SECTION B-B

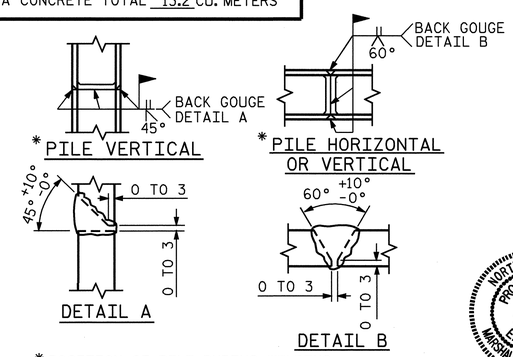

✱ POSITION OF PILE DURING WELDING.

PILE SPLICE DETAILS

PROJECT NO. R-2518B

YANCEY COUNTY

STATION: 223+53.200-L-

SHEET 4 OF 4

STATE OF NORTH CAROLINA
DEPARTMENT OF TRANSPORTATION
RALEIGH

SUBSTRUCTURE
END BENT NO. 1

NORTH CAROLINA PROFESSIONAL SEAL 20125 ENGINEER MARSHALL & CHERK, INC.
4-25-08

REVISIONS						SHEET NO.
NO.	BY:	DATE:	NO.	BY:	DATE:	S-137
1			3			TOTAL SHEETS
2			4			154

DRAWN BY : L.L. MURPHY DATE : 02-08
CHECKED BY : D. HODGE DATE : 03-08

25-APR-2008 08:36
r:\structures\final plans\str #4\r2518b_sd_e*_str*4.dgn
vnguyen

STR #4

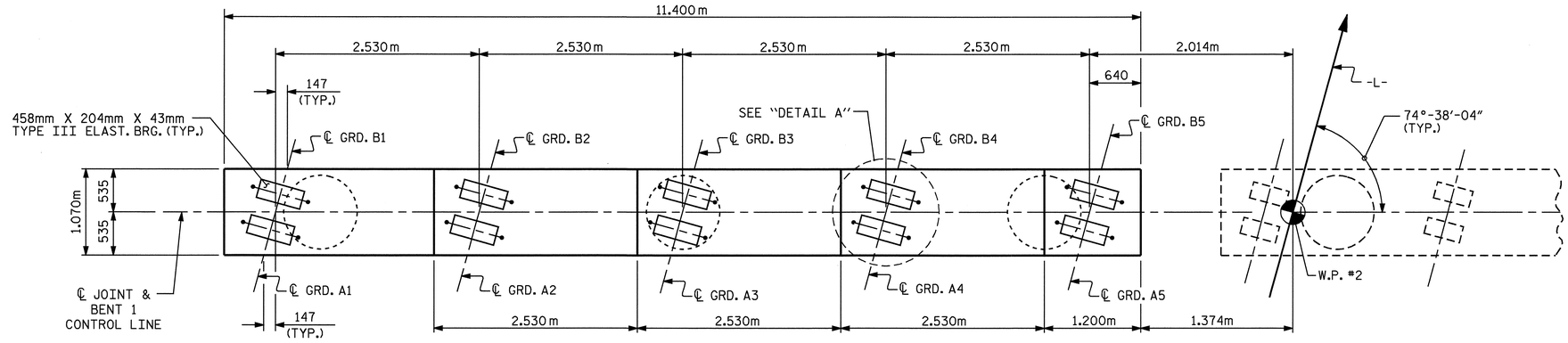

PLAN

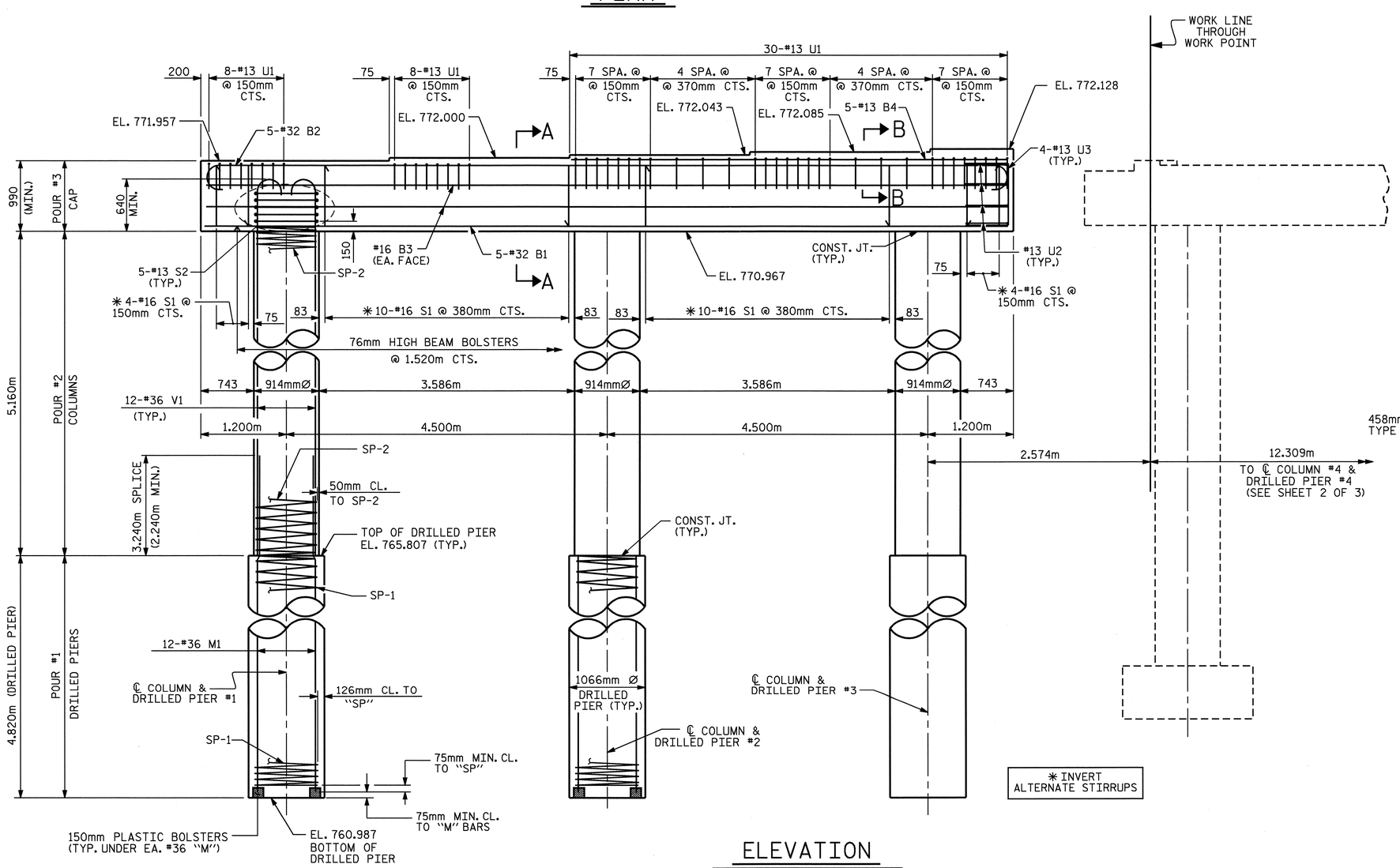

ELEVATION

DIMENSIONS AND REINFORCING STEEL ARE TYPICAL FOR EACH COLUMN AND DRILLED PIER EXCEPT AS NOTED. FOR END ELEVATION, SEE SHEET 3 OF 3.

NOTES

STIRRUPS IN CAP MAY BE SHIFTED AS NECESSARY TO CLEAR ANCHOR BOLTS.

HOOKS ON "V" BARS MAY BE TURNED AS NECESSARY FOR PLACING REINFORCING STEEL.

ALL STEEL IN THE DRILLED PIERS IS INCLUDED IN THE PAY ITEMS FOR "REINFORCING STEEL" AND "SPIRAL COLUMN REINFORCING STEEL".

THE CONTRACTOR'S ATTENTION IS CALLED TO THE FACT THAT THE LONGITUDINAL REINFORCEMENT FOR THE DRILLED PIERS IS DETAILED WITH ONE METER OF EXTRA LENGTH.

SPLICING OF THE LONGITUDINAL BARS IN THE DRILLED PIERS WILL NOT BE PERMITTED.

"U" BARS IN THE END OF CAP MAY BE SHIFTED SLIGHTLY AS NECESSARY TO CLEAR "B" BARS.

50mm MINIMUM CONCRETE COVER FROM END OF CAP IS REQUIRED FOR ALL "U" BARS.

FOR DRILLED PIERS, SEE SPECIAL PROVISIONS.

THE TOP SURFACE AREAS OF THE BENT CAPS SHALL BE CURED IN ACCORDANCE WITH THE STANDARD SPECIFICATIONS EXCEPT THE MEMBRANE CURING COMPOUND METHOD SHALL NOT BE USED.

THE D1 DOWELS SHALL BE INSTALLED USING AN ADHESIVE ANCHORING SYSTEM. THE YIELD LOAD IS 117.4kN FOR #19 D1. FIELD TESTING FOR THE ANCHORING SYSTEM IS REQUIRED. FOR ADHESIVELY ANCHORED BOLTS OR DOWELS, SEE SPECIAL PROVISIONS.

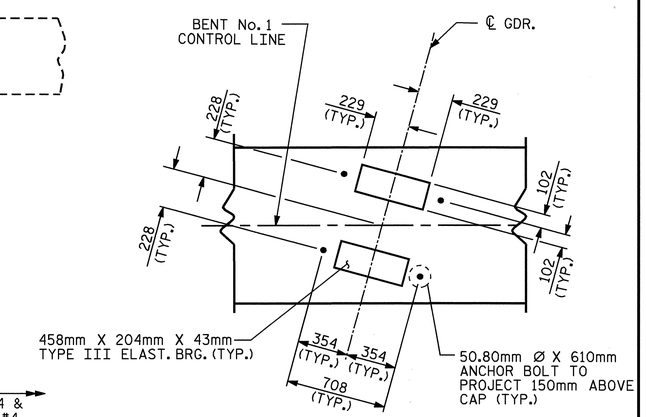

DETAIL A

PROJECT NO. R-2518B

YANCEY COUNTY

STATION: 223+53.200-L-

SHEET 1 OF 3

STATE OF NORTH CAROLINA
DEPARTMENT OF TRANSPORTATION
RALEIGH

SUBSTRUCTURE
BENT #1

NORTH CAROLINA PROFESSIONAL SEAL 20125 ENGINEER MARSHALL E. SHEEK, JR. 4-4-08

REVISIONS							SHEET NO.
NO.	BY:	DATE:	NO.	BY:	DATE:		S-138
1			3				TOTAL SHEETS
2			4				S-154

DRAWN BY : V.X. NGUYEN DATE : 2-13-08
CHECKED BY : M.G. CHEEK DATE : 3-08

04-APR-2008 07:54
r:\Structures\Finalplans\Str #4\R2518B_sd_B*.dgn
dahodge

STR. #4

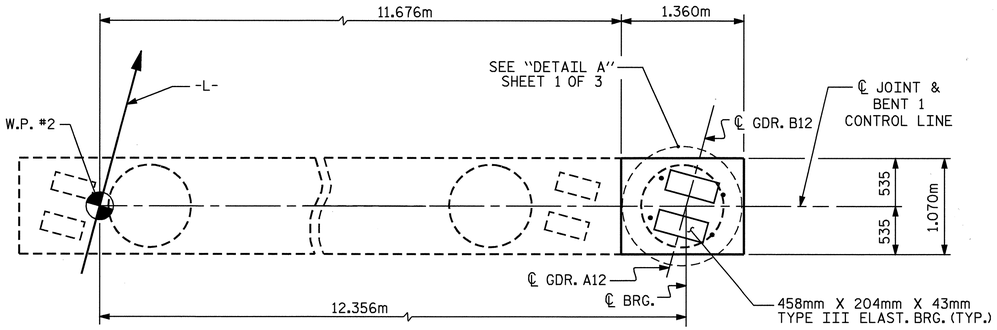

PLAN

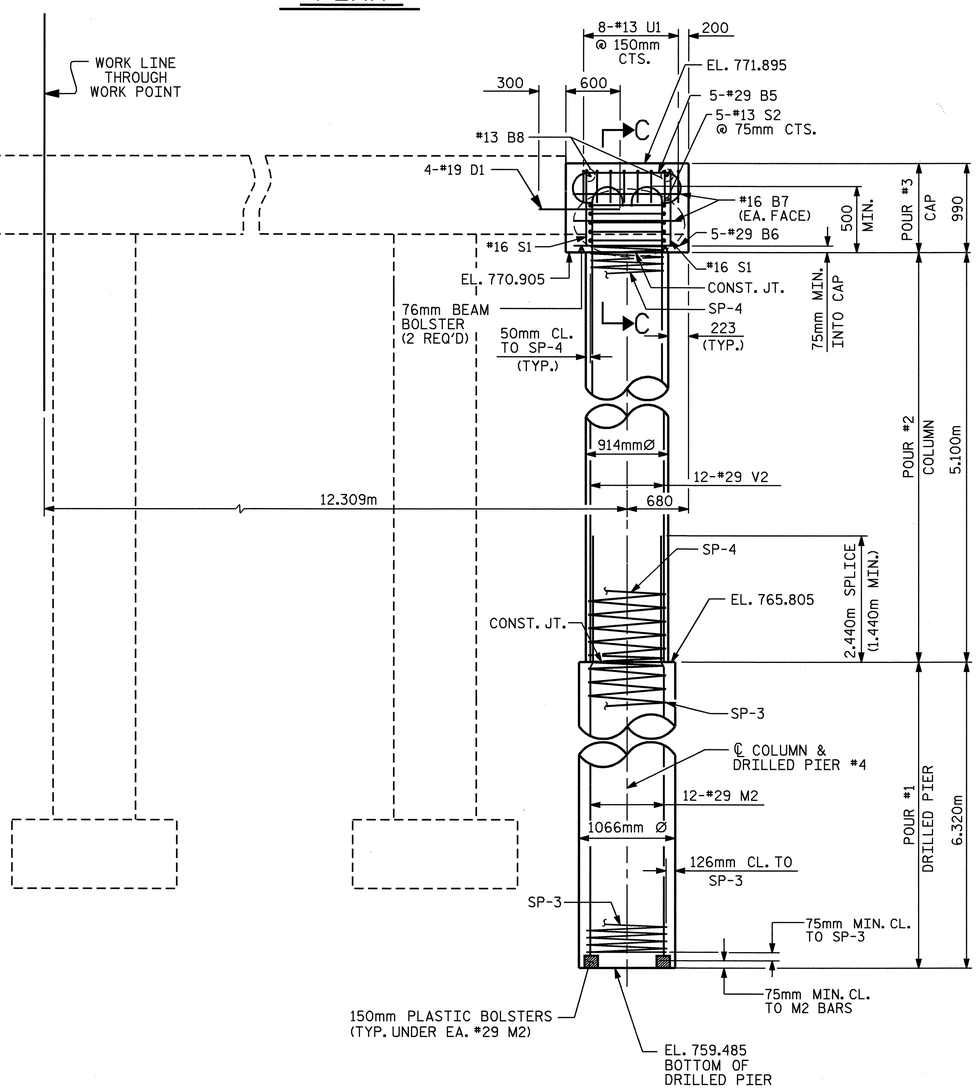

ELEVATION

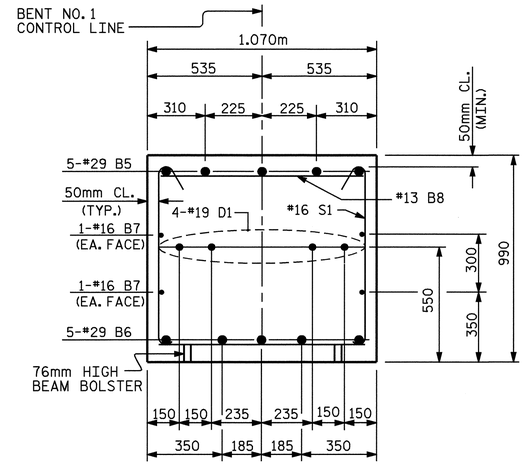

SECTION C-C

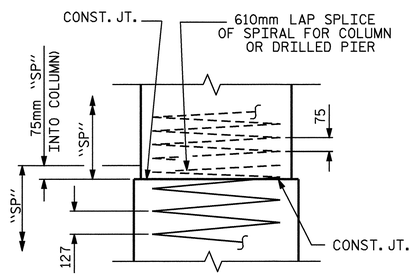

CONSTRUCTION JOINT DETAIL

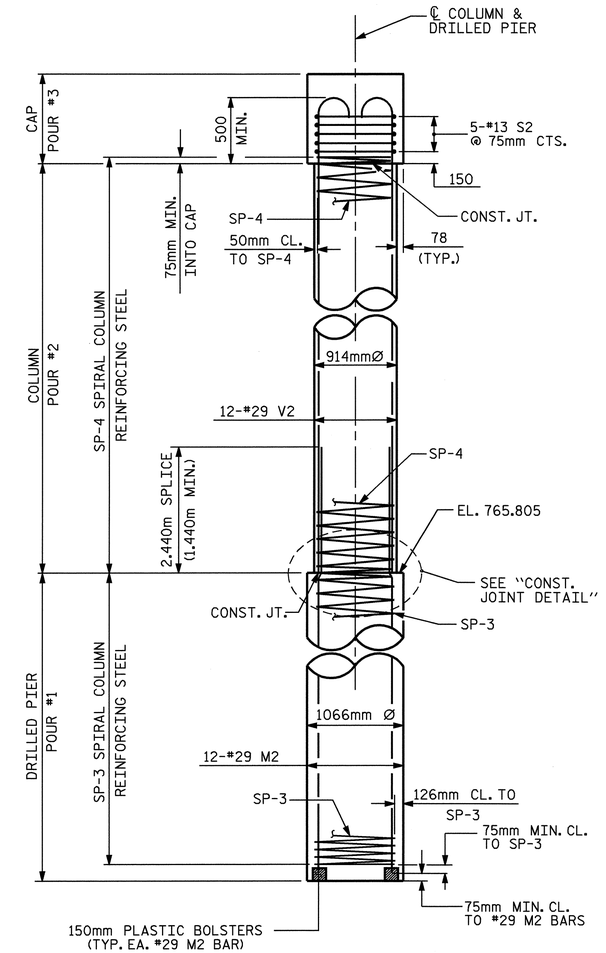

RIGHT SIDE - END ELEVATION

PROJECT NO. R-2518B
YANCEY COUNTY
STATION: 223+53.200-L-

SHEET 2 OF 3

STATE OF NORTH CAROLINA
DEPARTMENT OF TRANSPORTATION
RALEIGH

SUBSTRUCTURE
BENT #1

NORTH CAROLINA PROFESSIONAL SEAL 20125 ENGINEER
MARSHALL G. CHEEK, JR.
4-4-08

REVISIONS						SHEET NO.
NO.	BY:	DATE:	NO.	BY:	DATE:	S-139
1			3			TOTAL SHEETS
2			4			S-154

DRAWN BY : V.X. NGUYEN DATE : 2-13-08
CHECKED BY : M.G. CHEEK DATE : 3-08

04-APR-2008 07:54
r:\Structures\Finalplans\Str #4\R2518B_sd_B*.dgn
dahodge

STR. #4

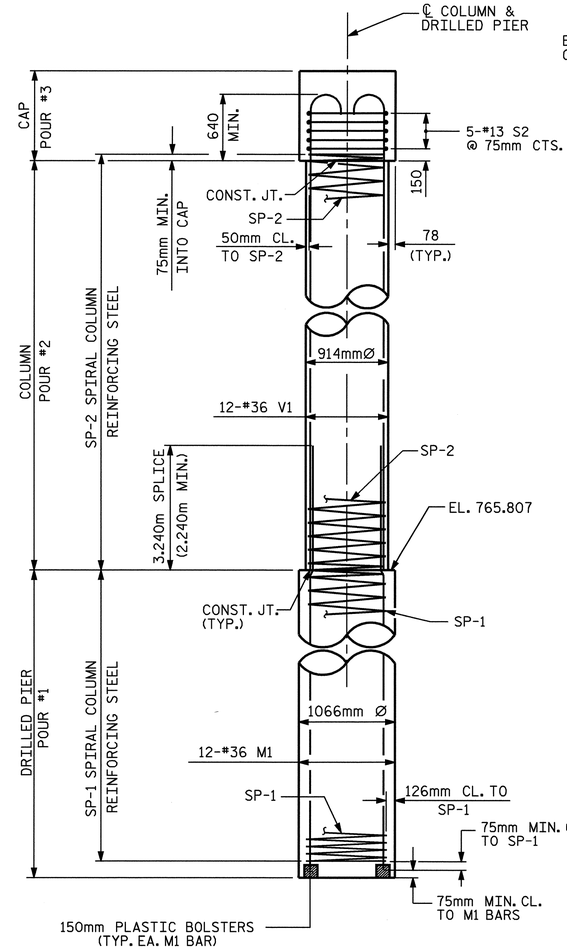

LEFT SIDE - END ELEVATION

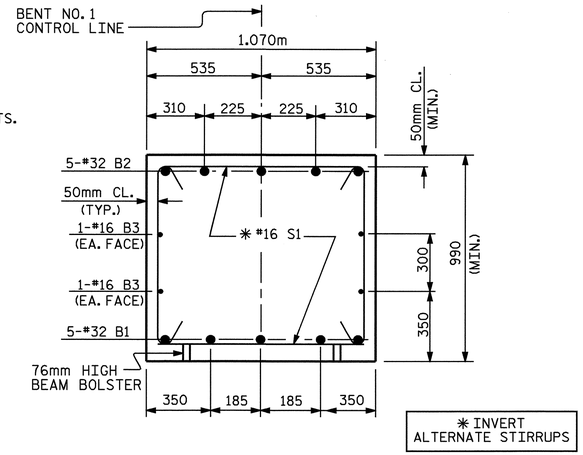

SECTION A-A

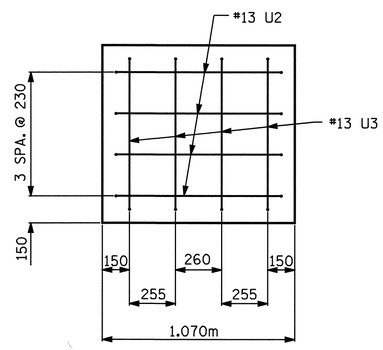

END OF CAP ELEVATION

BAR TYPES

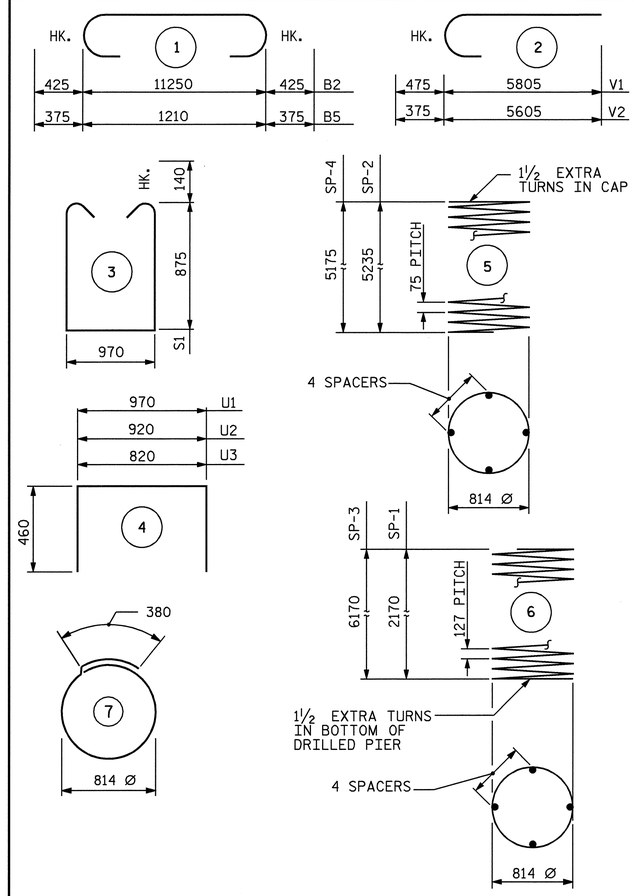

ALL BAR DIMENSIONS ARE OUT TO OUT.

✱✱ THE SP-3 & SP-5 SPIRAL REINFORCING STEEL SHALL BE W20 OR D-20 COLD DRAWN WIRE OR #4 PLAIN OR DEFORMED BAR.

✱✱✱ THE SP-1,SP-2 & SP-4 SPIRAL REINFORCING STEEL SHALL BE W31 OR D-31 COLD DRAWN WIRE OR #5 PLAIN OR DEFORMED BAR.

BILL OF MATERIAL

BENT No. 1 - LEFT SIDE

BAR	NO.	SIZE	TYPE	LENGTH	WEIGHT
B1	5	32	STR	11300	362
B2	5	32	1	12100	387
B3	4	16	STR	11300	70
B4	5	13	STR	6160	31
M1	36	36	STR	8000	2277
V1	36	36	2	6280	1788
S1	28	16	3	3000	130
S2	15	13	7	2940	44
U1	46	13	4	1890	86
U2	8	13	4	1840	15
U3	8	13	4	1740	14
REINFORCING STEEL				kg	5204

BAR	NO.	SIZE	TYPE	LENGTH	WEIGHT
SP-1	3	✱✱✱	6	96900	451
SP-2	3	✱✱	5	177550	530
SPIRAL COLUMN REINFORCING STEEL					981 kg

CLASS A CONCRETE BREAKDOWN

POUR 2	(COLUMNS)	10.2 C.M.
POUR 3	(CAP)	12.9 C.M.
TOTAL		23.1 C.M.

DRILLED PIER QUANTITIES
DRILLED PIER CONCRETE BREAKDOWN

POUR 1	(DRILLED PIERS)	12.9 C.M.
1066mm Ø DRILLED PIERS NOT IN SOIL		3.8 METERS
1066mm Ø DRILLED PIERS IN SOIL		10.7 METERS

PERMANENT STEEL CASING FOR 1066mm Ø DRILLED PIERS 6.3 METERS

BENT No. 1 - RIGHT SIDE

BAR	NO.	SIZE	TYPE	LENGTH	WEIGHT
B5	5	29	1	1960	50
B6	5	29	STR	1260	32
B7	4	16	STR	1260	8
B8	2	13	STR	960	2
D1	4	19	STR	900	8
M2	12	29	STR	8700	528
V2	12	29	2	5980	363
S1	2	16	3	3000	9
S2	5	13	7	2940	15
U1	8	13	4	1890	15
U2	4	13	4	1840	7
U3	4	13	4	1740	7
REINFORCING STEEL				kg	1044

BAR	NO.	SIZE	TYPE	LENGTH	WEIGHT
SP-3	1	✱✱✱	6	126470	196
SP-4	1	✱✱	5	175670	175
SPIRAL COLUMN REINFORCING STEEL					371 kg

CLASS A CONCRETE BREAKDOWN

POUR 2	(COLUMNS)	3.3 C.M.
POUR 3	(CAP)	1.3 C.M.
TOTAL		4.6 C.M.

DRILLED PIER QUANTITIES
DRILLED PIER CONCRETE BREAKDOWN

POUR 1	(DRILLED PIERS)	5.6 C.M.
1066mm Ø DRILLED PIERS NOT IN SOIL		1.2 METERS
1066mm Ø DRILLED PIERS IN SOIL		5.1 METERS

PERMANENT STEEL CASING FOR 1066mm Ø DRILLED PIERS 2.5 METERS

TOTAL QUANTITIES

	LEFT SIDE	RIGHT SIDE	TOTAL
REINFORCING STEEL	5204 kg	1044 kg	6248 kg
SPIRAL COLUMN REINFORCING STEEL	981 kg	371 kg	1352 kg
CLASS A CONCRETE BREAKDOWN	23.1 C.M.	4.6 C.M.	27.7 C.M.
1066mm Ø DRILLED PIERS IN SOIL	10.7 METERS	5.1 METERS	15.8 METERS
1066mm Ø DRILLED PIERS NOT IN SOIL	3.8 METERS	1.2 METERS	5.0 METERS
PERMANENT STEEL CASING FOR 1066mm Ø DRILLED PIERS	6.3 METERS	2.5 METERS	8.8 METERS
▲ CSL TUBES	67.0 METERS	28.3 METERS	95.3 METERS

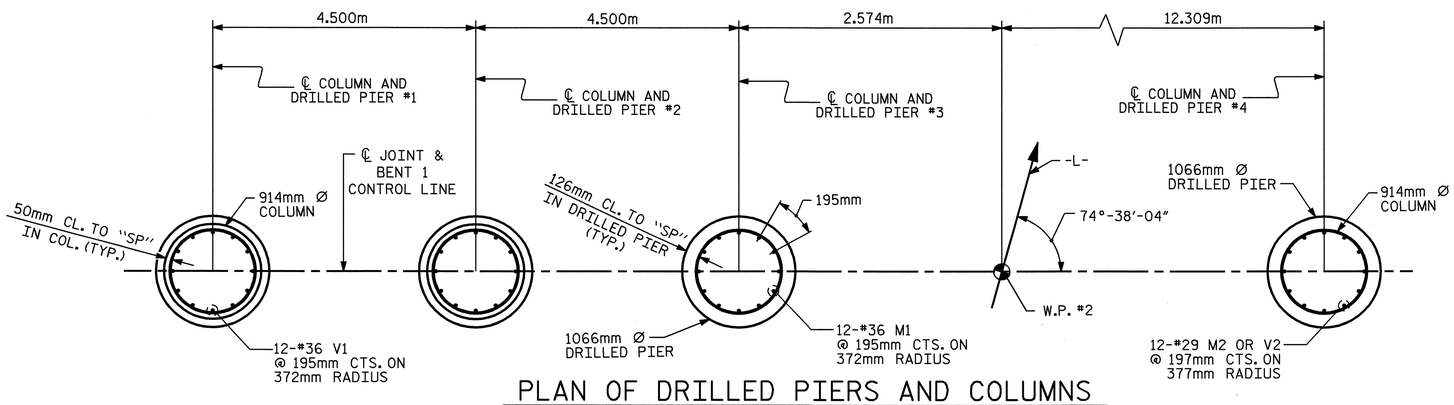

PLAN OF DRILLED PIERS AND COLUMNS

REINFORCING STEEL AND DIMENSIONS TYPICAL FOR ALL DRILLED PIERS AND COLUMNS EXCEPT AS NOTED.

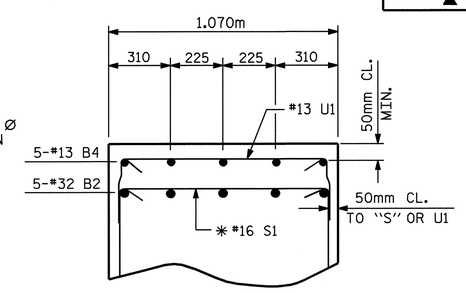

PART SECTION B

▲ NO SEPARATE PAYMENT WILL BE MADE FOR CSL TUBES. CSL TUBES WILL BE INCLUDED IN THE UNIT BID PRICE FOR DRILLED PIERS.

PROJECT NO. R-2518B
YANCEY COUNTY
STATION: 223+53.200-L-

SHEET 3 OF 3

STATE OF NORTH CAROLINA
DEPARTMENT OF TRANSPORTATION
RALEIGH

SUBSTRUCTURE
BENT #1

NORTH CAROLINA PROFESSIONAL SEAL 20125 ENGINEER MARSHALL G. CHEEK, JR.
4-8-08

REVISIONS						SHEET NO.
NO.	BY:	DATE:	NO.	BY:	DATE:	S-140
1			3			TOTAL SHEETS
2			4			S-154

DRAWN BY : V.X. NGUYEN DATE : 2-15-08
CHECKED BY : M.G. CHEEK DATE : 3-08

04-APR-2008 07:55
r:\Structures\Finalplans\Str #4\R2518B_sd_B*.dgn
dahodge

STR. #4

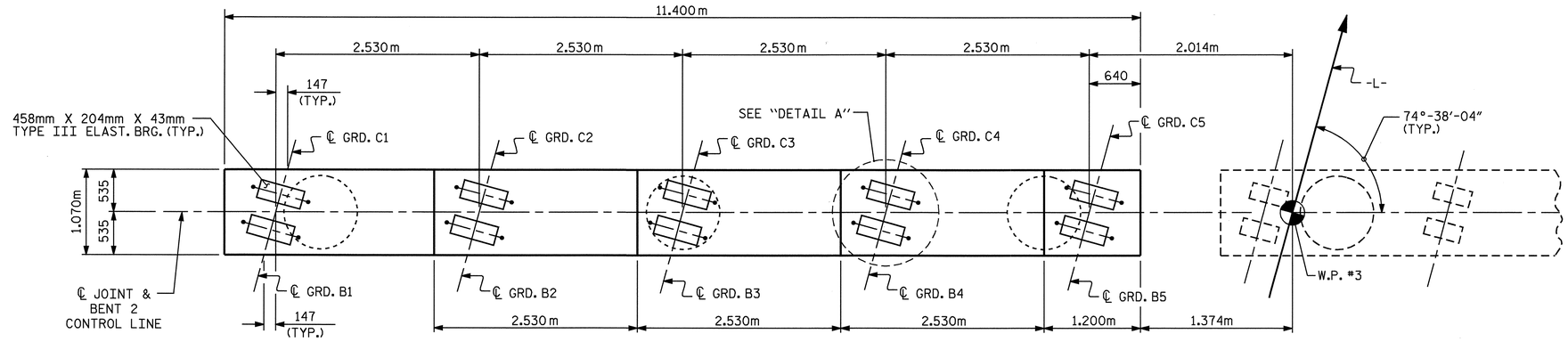

PLAN

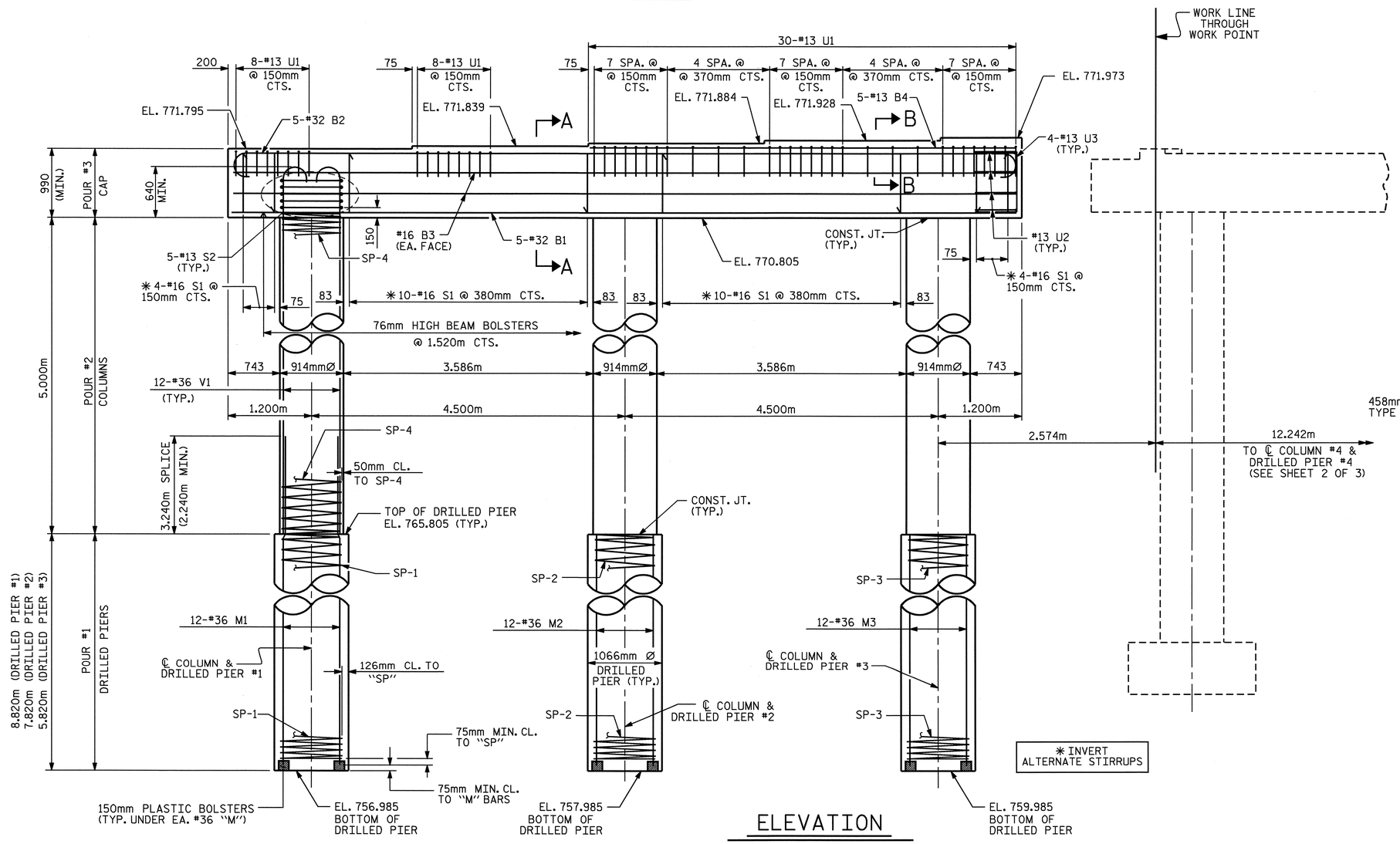

ELEVATION

DIMENSIONS AND REINFORCING STEEL ARE TYPICAL FOR EACH COLUMN AND DRILLED PIER EXCEPT AS NOTED. FOR END ELEVATION, SEE SHEET 3 OF 3.

NOTES

STIRRUPS IN CAP MAY BE SHIFTED AS NECESSARY TO CLEAR ANCHOR BOLTS.

HOOKS ON "V" BARS MAY BE TURNED AS NECESSARY FOR PLACING REINFORCING STEEL.

ALL STEEL IN THE DRILLED PIERS IS INCLUDED IN THE PAY ITEMS FOR "REINFORCING STEEL" AND "SPIRAL COLUMN REINFORCING STEEL".

THE CONTRACTOR'S ATTENTION IS CALLED TO THE FACT THAT THE LONGITUDINAL REINFORCEMENT FOR THE DRILLED PIERS IS DETAILED WITH ONE METER OF EXTRA LENGTH.

SPLICING OF THE LONGITUDINAL BARS IN THE DRILLED PIERS WILL NOT BE PERMITTED.

"U" BARS IN THE END OF CAP MAY BE SHIFTED SLIGHTLY AS NECESSARY TO CLEAR "B" BARS.

50mm MINIMUM CONCRETE COVER FROM END OF CAP IS REQUIRED FOR ALL "U" BARS.

FOR DRILLED PIERS, SEE SPECIAL PROVISIONS.

THE TOP SURFACE AREAS OF THE BENT CAPS SHALL BE CURED IN ACCORDANCE WITH THE STANDARD SPECIFICATIONS EXCEPT THE MEMBRANE CURING COMPOUND METHOD SHALL NOT BE USED.

THE D1 DOWELS SHALL BE INSTALLED USING AN ADHESIVE ANCHORING SYSTEM. THE YIELD LOAD IS 117.4kN FOR #19 D1. FIELD TESTING FOR THE ANCHORING SYSTEM IS REQUIRED. FOR ADHESIVELY ANCHORED BOLTS OR DOWELS, SEE SPECIAL PROVISIONS.

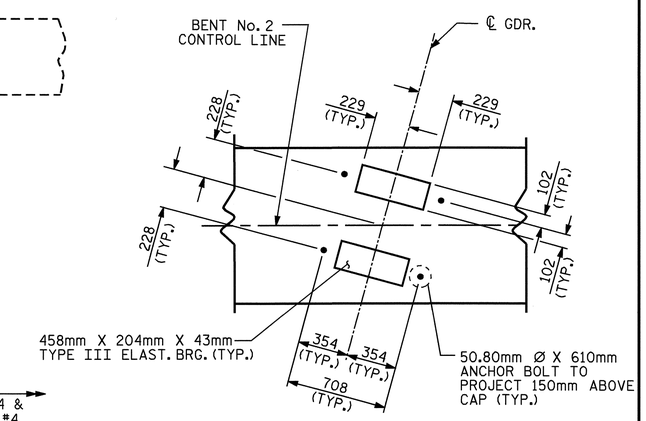

DETAIL A

PROJECT NO. R-2518B
YANCEY COUNTY
STATION: 223+53.200-L-

SHEET 1 OF 3

STATE OF NORTH CAROLINA
DEPARTMENT OF TRANSPORTATION
RALEIGH

SUBSTRUCTURE
BENT #2

NORTH CAROLINA PROFESSIONAL SEAL 20125 ENGINEER MARSHALL G. CHEEK, JR.
4-4-08

REVISIONS						SHEET NO.
NO.	BY:	DATE:	NO.	BY:	DATE:	S-141
1			3			TOTAL SHEETS
2			4			S-154

DRAWN BY : V.X. NGUYEN DATE : 2-13-08
CHECKED BY : M.G. CHEEK DATE : 3-08

04-APR-2008 07:55
r:\Structures\Final plans\Str #4\R2518B_sd_B*.dgn
dahadge

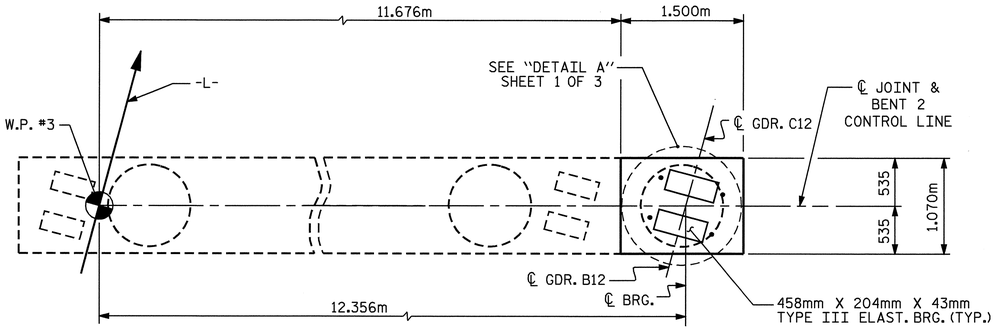

PLAN

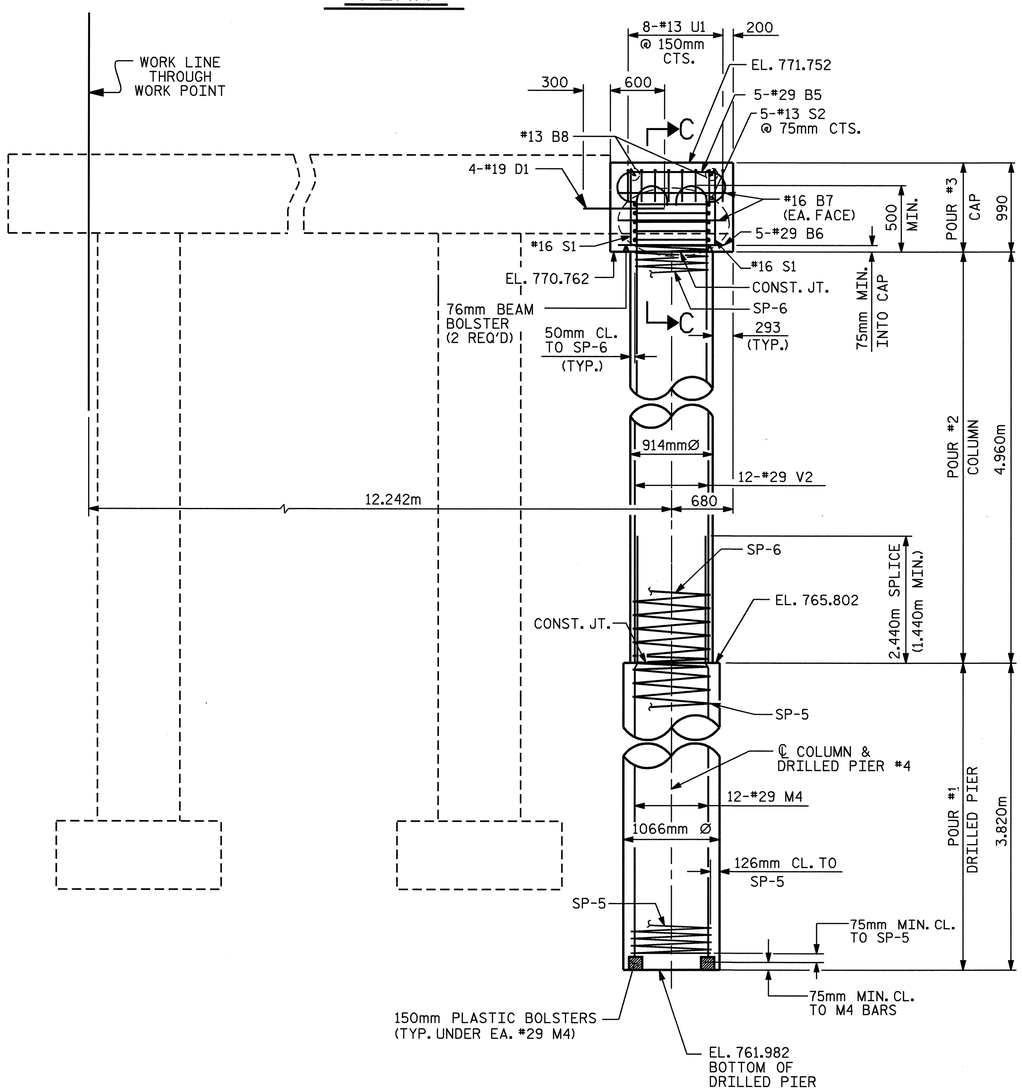

ELEVATION

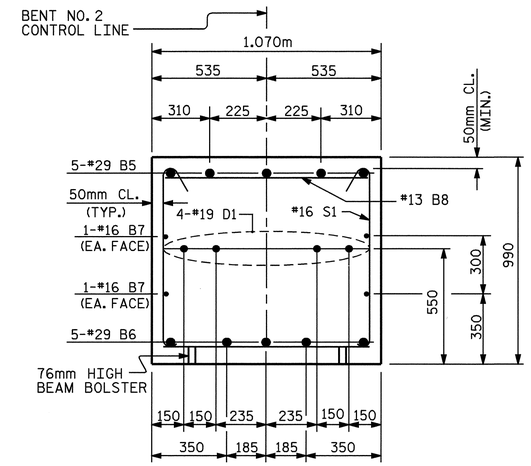

SECTION C-C

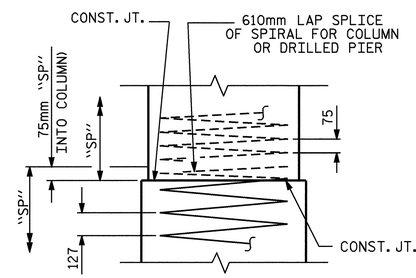

CONSTRUCTION JOINT DETAIL

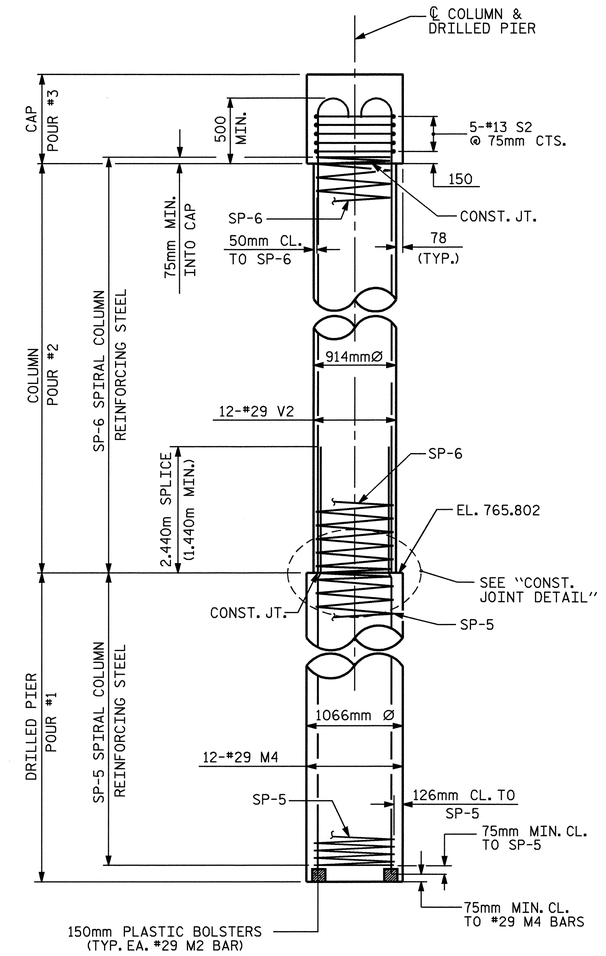

RIGHT SIDE - END ELEVATION

PROJECT NO. R-2518B
YANCEY COUNTY
STATION: 223+53.200-L-

SHEET 2 OF 3

STATE OF NORTH CAROLINA
DEPARTMENT OF TRANSPORTATION
RALEIGH

SUBSTRUCTURE
BENT #2

NORTH CAROLINA PROFESSIONAL SEAL 20125 ENGINEER MARSHALL G. CHEEK, JR.
4-4-08

REVISIONS						SHEET NO.
NO.	BY:	DATE:	NO.	BY:	DATE:	S-142
1			3			TOTAL SHEETS
2			4			S-154

DRAWN BY : V.X. NGUYEN DATE : 2-13-08
CHECKED BY : M.G. CHEEK DATE : 3-08

04-APR-2008 07:55
r:\Structures\Final plans\Str #4\R2518B_sd_B*.dgn
dahodge

STR. #4

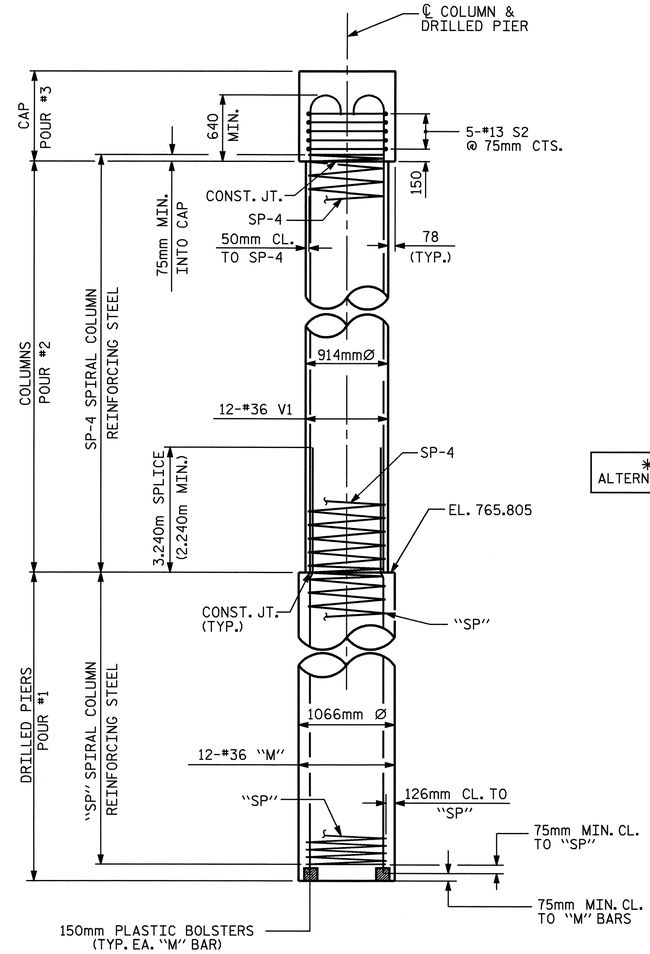

LEFT SIDE - END ELEVATION

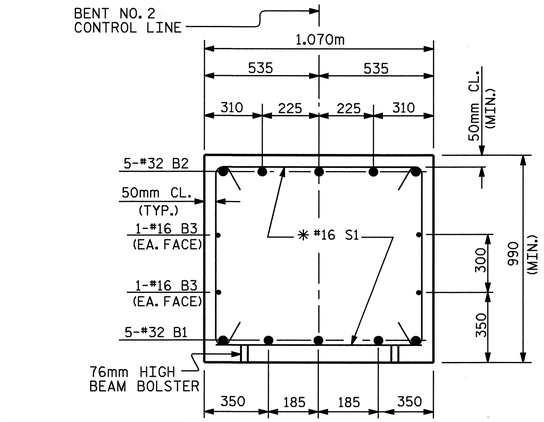

✱ INVERT ALTERNATE STIRRUPS

SECTION A-A

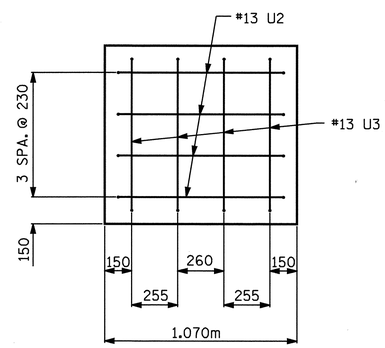

END OF CAP ELEVATION

BAR TYPES

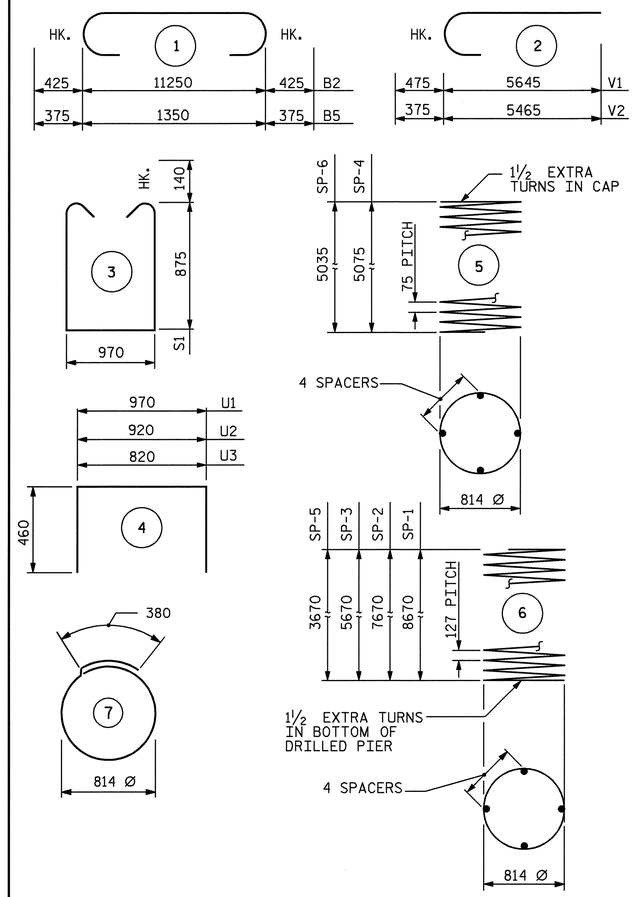

ALL BAR DIMENSIONS ARE OUT TO OUT.

✱✱ THE SP-3 & SP-5 SPIRAL REINFORCING STEEL SHALL BE W20 OR D-20 COLD DRAWN WIRE OR #4 PLAIN OR DEFORMED BAR.

✱✱✱ THE SP-1,SP-2 & SP-4 SPIRAL REINFORCING STEEL SHALL BE W31 OR D-31 COLD DRAWN WIRE OR #5 PLAIN OR DEFORMED BAR.

BILL OF MATERIAL

BENT No. 2 - LEFT SIDE

BAR	NO.	SIZE	TYPE	LENGTH	WEIGHT
B1	5	32	STR	11300	362
B2	5	32	1	12100	387
B3	4	16	STR	11300	70
B4	5	13	STR	6160	31
M1	12	36	STR	12000	1139
M2	12	36	STR	11000	1044
M3	12	36	STR	9000	854
V1	36	36	2	6120	1742
S1	28	16	3	3000	130
S2	15	13	7	2940	44
U1	46	13	4	1890	86
U2	8	13	4	1840	15
U3	8	13	4	1740	14
REINFORCING STEEL				kg	5918

BAR	NO.	SIZE	TYPE	LENGTH	WEIGHT
SP-1	1	✱✱✱	6	176180	273
SP-2	1	✱✱✱	6	156040	242
SP-3	1	✱✱✱	6	116400	181
SP-4	3	✱✱	5	172520	515
SPIRAL COLUMN REINFORCING STEEL					1211 kg

CLASS A CONCRETE BREAKDOWN

POUR 2	(COLUMNS)	9.8 C.M.
POUR 3	(CAP)	12.9 C.M.
TOTAL		22.7 C.M.

DRILLED PIER QUANTITIES
DRILLED PIER CONCRETE BREAKDOWN

POUR 1	(DRILLED PIERS)	20.0 C.M.
1066mm Ø DRILLED PIERS NOT IN SOIL		3.8 METERS
1066mm Ø DRILLED PIERS IN SOIL		18.7 METERS

BENT No. 2 - RIGHT SIDE

BAR	NO.	SIZE	TYPE	LENGTH	WEIGHT
B5	5	29	1	2100	53
B6	5	29	STR	1400	35
B7	4	16	STR	1400	9
B8	2	13	STR	960	2
D1	4	19	STR	900	8
M4	12	29	STR	6200	376
V2	12	29	2	5840	355
S1	2	16	3	3000	9
S2	5	13	7	2940	15
U1	8	13	4	1890	15
U2	4	13	4	1840	7
U3	4	13	4	1740	7
REINFORCING STEEL				kg	891

BAR	NO.	SIZE	TYPE	LENGTH	WEIGHT
SP-5	1	✱✱✱	6	76760	119
SP-6	1	✱✱	5	170630	170
SPIRAL COLUMN REINFORCING STEEL					289 kg

CLASS A CONCRETE BREAKDOWN

POUR 2	(COLUMNS)	3.3 C.M.
POUR 3	(CAP)	1.6 C.M.
TOTAL		4.9 C.M.

DRILLED PIER QUANTITIES
DRILLED PIER CONCRETE BREAKDOWN

POUR 1	(DRILLED PIERS)	3.4 C.M.
1066mm Ø DRILLED PIERS NOT IN SOIL		1.2 METERS
1066mm Ø DRILLED PIERS IN SOIL		2.6 METERS

TOTAL QUANTITIES

	LEFT SIDE	RIGHT SIDE	TOTAL
REINFORCING STEEL	5918 kg	891 kg	6809 kg
SPIRAL COLUMN REINFORCING STEEL	1211 kg	289 kg	1500 kg
CLASS A CONCRETE BREAKDOWN	22.7 C.M.	4.9 C.M.	27.6 C.M.
1066mm Ø DRILLED PIERS IN SOIL	18.7 METERS	2.6 METERS	21.3 METERS
1066mm Ø DRILLED PIERS NOT IN SOIL	3.8 METERS	1.2 METERS	5.0 METERS
▲ CSL TUBES	99.0 METERS	18.3 METERS	117.3 METERS

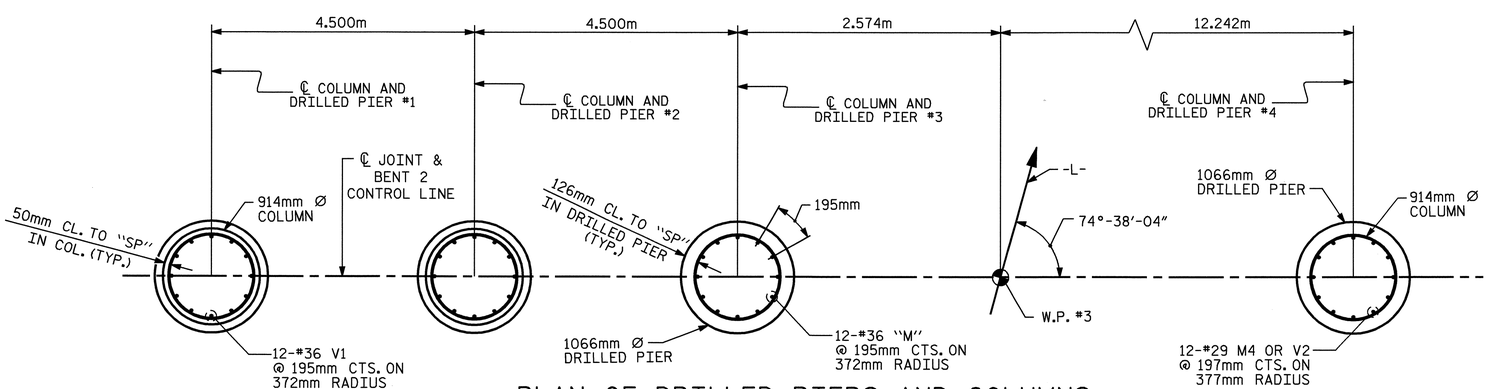

PLAN OF DRILLED PIERS AND COLUMNS

REINFORCING STEEL AND DIMENSIONS TYPICAL FOR ALL DRILLED PIERS AND COLUMNS EXCEPT AS NOTED.

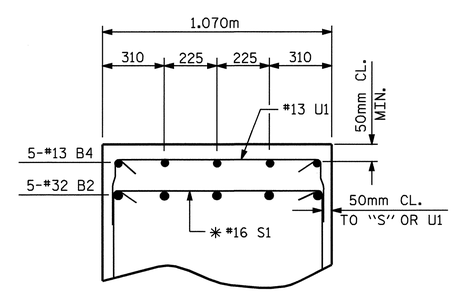

PART SECTION B

▲ NO SEPARATE PAYMENT WILL BE MADE FOR CSL TUBES. CSL TUBES WILL BE INCLUDED IN THE UNIT BID PRICE FOR DRILLED PIERS.

PROJECT NO. R-2518B
YANCEY COUNTY
STATION: 223+53.200-L-

SHEET 3 OF 3

STATE OF NORTH CAROLINA
DEPARTMENT OF TRANSPORTATION
RALEIGH

SUBSTRUCTURE
BENT #2

NORTH CAROLINA PROFESSIONAL SEAL 20125 ENGINEER MARSHALL G. CHEEK JR. 4-4-08

REVISIONS							SHEET NO.
NO.	BY:	DATE:	NO.	BY:	DATE:		S-143
1			3				TOTAL SHEETS
2			4				S-154

DRAWN BY : V.X. NGUYEN DATE : 2-15-08
CHECKED BY : M.G. CHEEK DATE : 3-08

04-APR-2008 07:55
r:\Structures\Final plans\Str #4\R2518B_sd_B*.dgn
dahodge

STR. #4

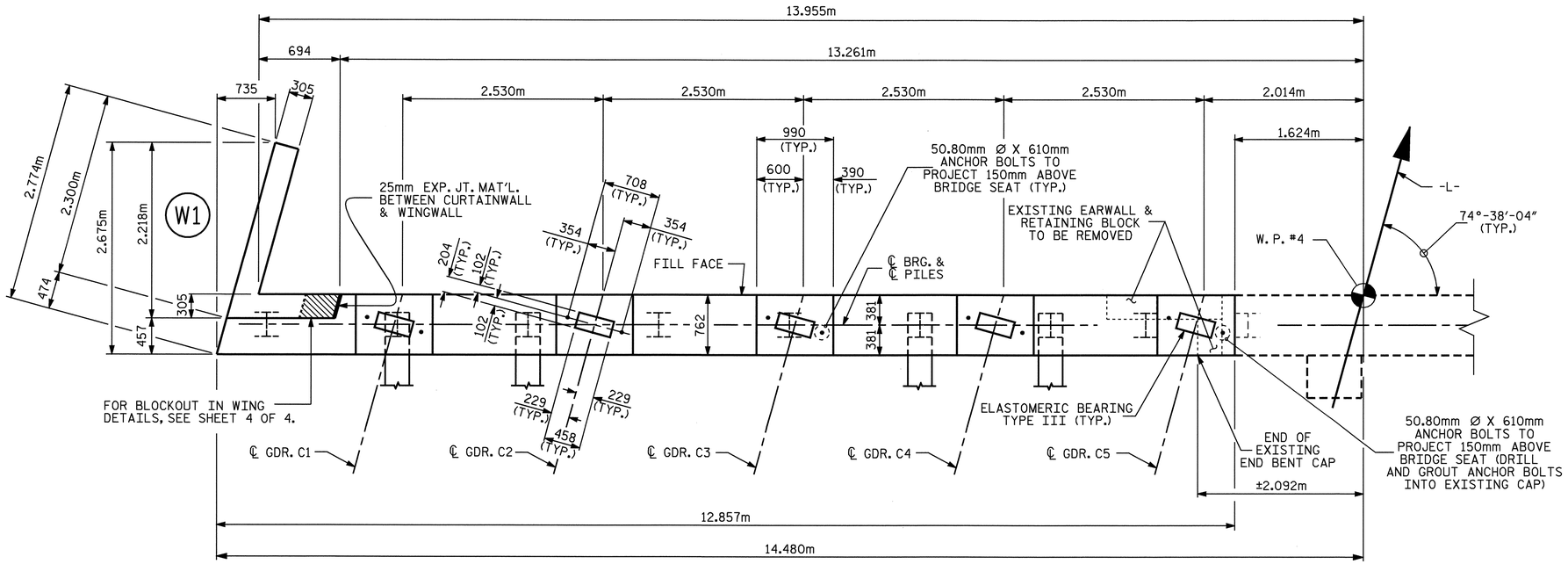

PLAN

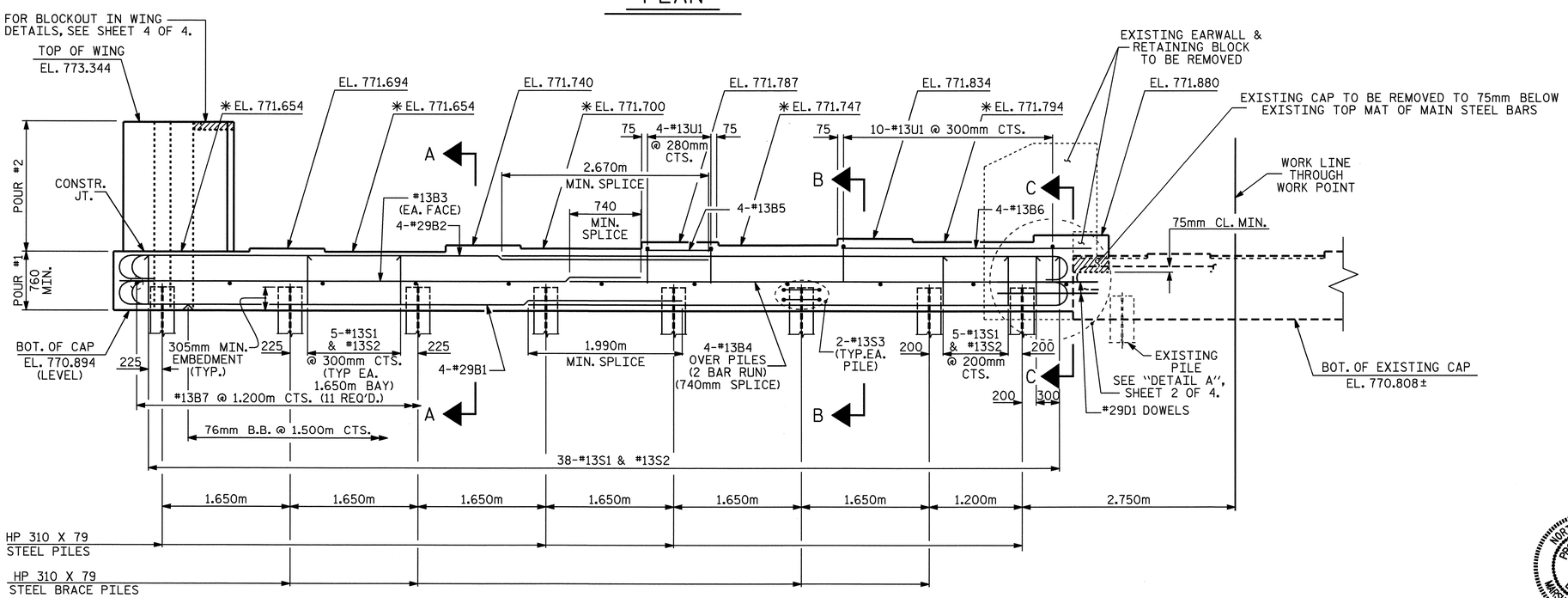

ELEVATION

✱ FOR LOCATION OF ELEVATIONS BETWEEN BRIDGE SEAT BUILD-UPS, SEE SHEET 4 OF 4.

NOTES

STIRRUPS, AND "U" BARS IN CAP MAY BE SHIFTED AS NECESSARY TO CLEAR ANCHOR BOLTS.

THE TOP SURFACE AREAS OF THE END BENT CAPS SHALL BE CURED IN ACCORDANCE WITH THE STANDARD SPECIFICATIONS EXCEPT THE MEMBRANE CURING COMPOUND METHOD SHALL NOT BE USED.

THE TOP SURFACE OF THE CAP EXCEPT THE BRIDGE SEAT BUILDUPS SHALL BE SLOPED TRANSVERSELY FROM THE FILL FACE TO THE BACK FACE AT THE RATE OF 2 %.

FOR BOND OF NEW CONCRETE TO OLD, THE OLD CONCRETE SHALL BE THOROUGHLY ROUGHENED, CLEANED OF LOOSE MATERIAL, AND WETTED FOR A MINIMUM OF 2 HOURS PRIOR TO PLACING NEW CONCRETE. PAYMENT FOR THIS WORK SHALL BE INCLUDED IN THE CONTRACT PRICE FOR CLASS A CONCRETE.

THE CONTRACTOR SHALL USE ADHESIVELY ANCHORED DOWELS. LEVEL 1 FIELD TESTING IS REQUIRED, AND THE YIELD LOAD OF THE DOWELS IS 117.4 kN (26.4k). FOR ADHESIVELY ANCHORED DOWELS, SEE SPECIAL PROVISIONS.

THE CONTRACTOR SHALL USE ADHESIVELY ANCHORED ANCHOR BOLTS AT GIRDER 5 AND GIRDER 12 IF ANCHOR BOLT EXTENDS INTO EXISTING END BENT CAP. LEVEL 1 FIELD TESTING IS REQUIRED, AND THE YIELD LOAD OF THE ANCHOR BOLT IS 645.0 kN (145k). FOR ADHESIVELY ANCHORED ANCHOR BOLTS OR DOWELS, SEE SPECIAL PROVISIONS.

THE CONCRETE IN THE SHADED AREA OF THE WING SHALL BE POURED AFTER THE CONCRETE BARRIER RAIL IS CAST IF SLIP FORMING IS USED.

THE CONTRACTOR SHALL PROVIDE FOR INSTALLATION OF THE 102mm DIAMETER DRAIN PIPE THROUGH THE WING WALL AS REQUIRED FOR REINFORCED BRIDGE APPROACH FILLS, SEE THE ROADWAY PLANS. REINFORCING STEEL IN THE WING WALL MAY BE SHIFTED AS NECESSARY TO CLEAR THE DRAIN PIPE.

PROJECT NO. R-2518B
YANCEY COUNTY
STATION: 223+53.200-L-

SHEET 1 OF 4

STATE OF NORTH CAROLINA
DEPARTMENT OF TRANSPORTATION
RALEIGH

SUBSTRUCTURE
END BENT NO. 2

NORTH CAROLINA PROFESSIONAL SEAL 20125 ENGINEER
MARSHALL C. PUGH, JR.
4-4-08

REVISIONS						SHEET NO.
NO.	BY:	DATE:	NO.	BY:	DATE:	S-144
1			3			TOTAL SHEETS
2			4			154

DRAWN BY : L.L. MURPHY DATE : 02-08
CHECKED BY : D. HODGE DATE : 03-08

04-APR-2008 07:46
r:\Structures\Str#4\lmurphy\Microstation\R2518B_sd_E#_STR#4.dgn
dahodge

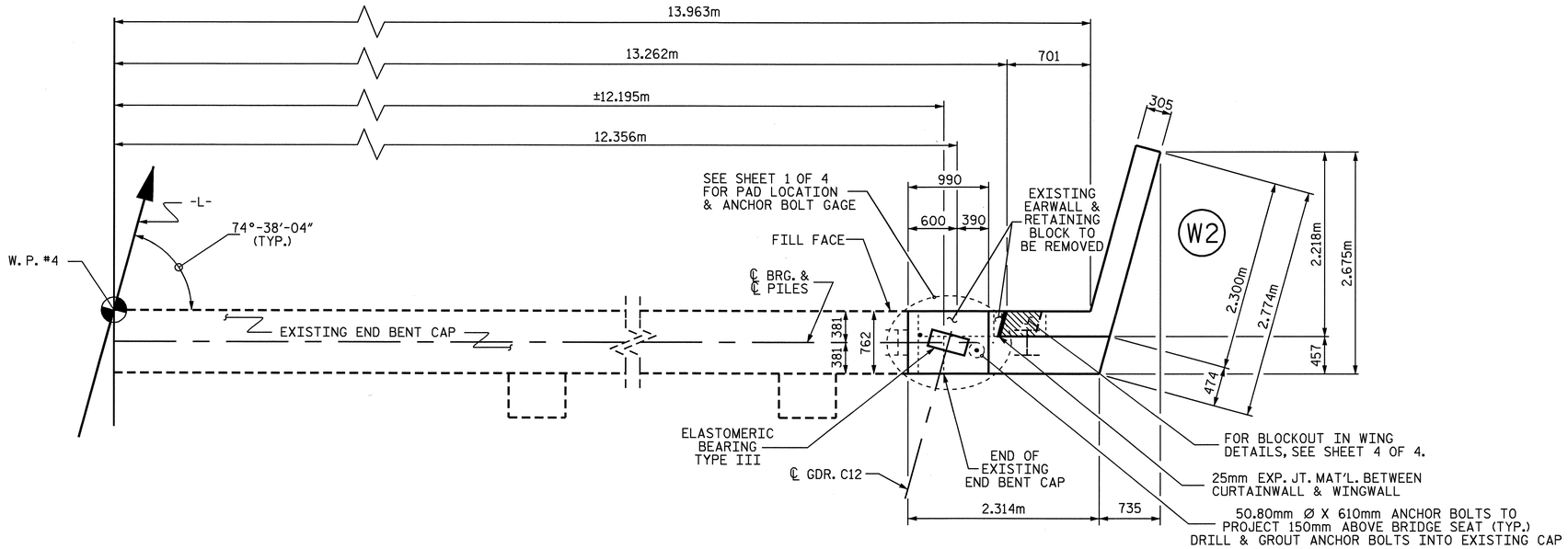

PLAN

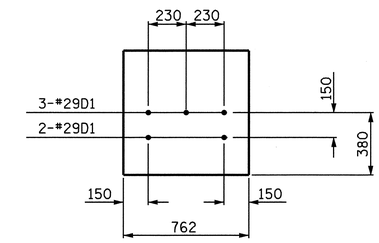

SECTION C-C

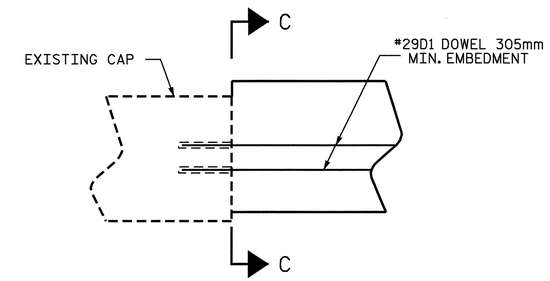

ELEVATION

DETAIL A

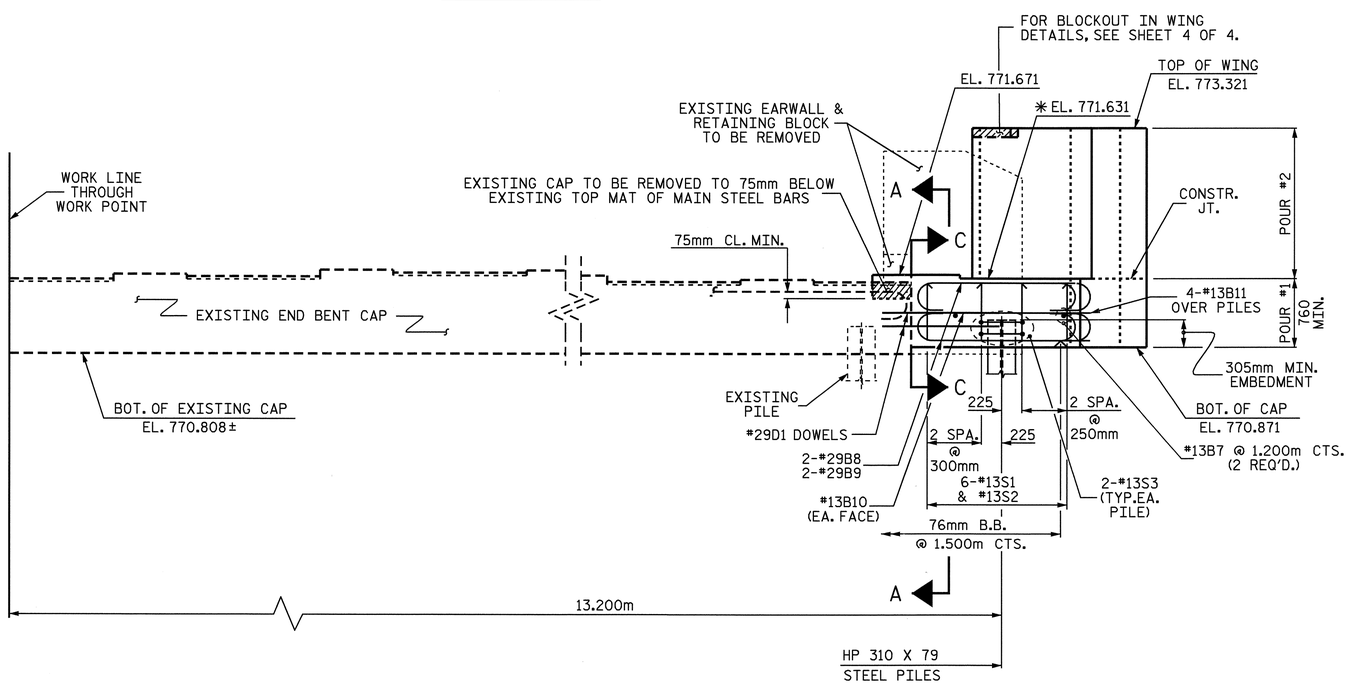

ELEVATION

✱ FOR LOCATION OF ELEVATIONS BETWEEN BRIDGE SEAT BUILD-UPS, SEE SHEET 4 OF 4.

PROJECT NO. R-2518B

YANCEY COUNTY

STATION: 223+53.200-L-

SHEET 2 OF 4

STATE OF NORTH CAROLINA
DEPARTMENT OF TRANSPORTATION
RALEIGH

SUBSTRUCTURE

END BENT NO. 2

NORTH CAROLINA PROFESSIONAL SEAL 20125 ENGINEER MARSHALL C. GREEN, JR. 3-28-08

REVISIONS							SHEET NO.
NO.	BY:	DATE:	NO.	BY:	DATE:		S-145
1			3				TOTAL SHEETS
2			4				154

DRAWN BY : L.L. MURPHY DATE : 02-08
CHECKED BY : D. HODGE DATE : 03-08

26-MAR-2008 13:43
Y:\Structures\Str#4\lmurphy\Microstation\R2518B_sd_E#_STR#4.dgn
mpoole

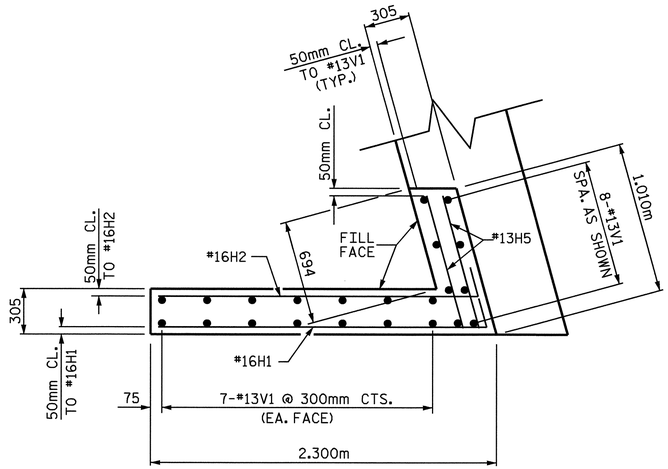

PLAN OF LEFT WING - W1

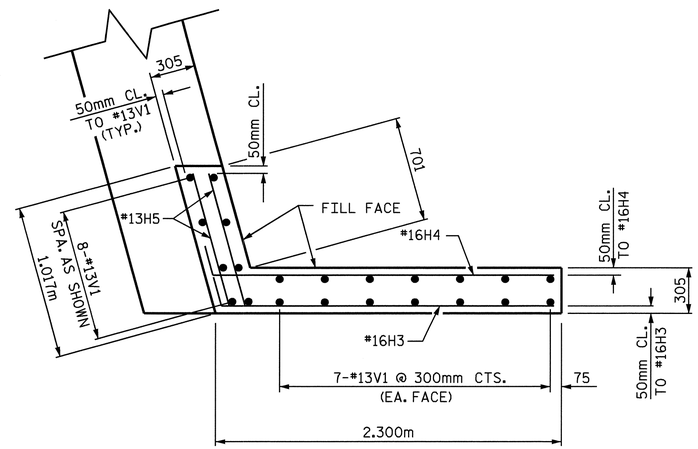

PLAN OF RIGHT WING - W2

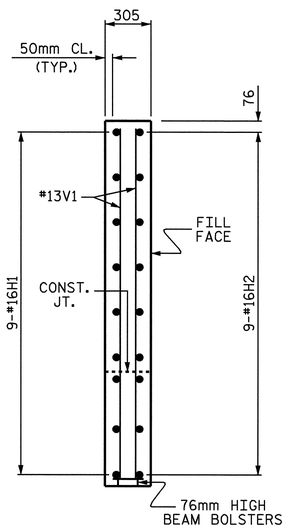

SECTION Y-Y

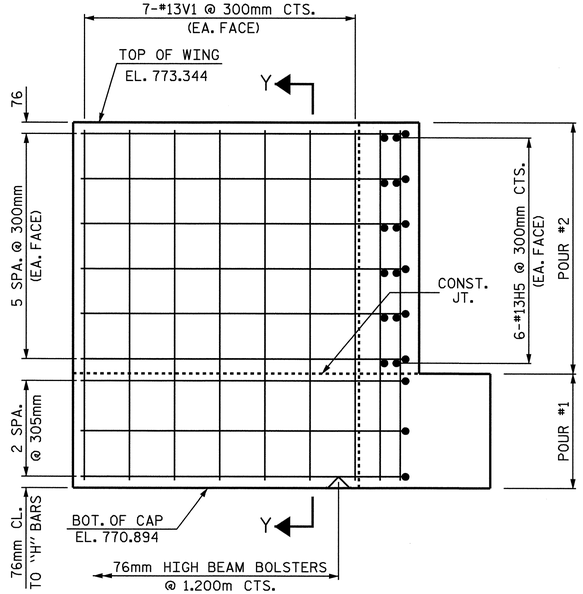

ELEVATION OF LEFT WING - W1

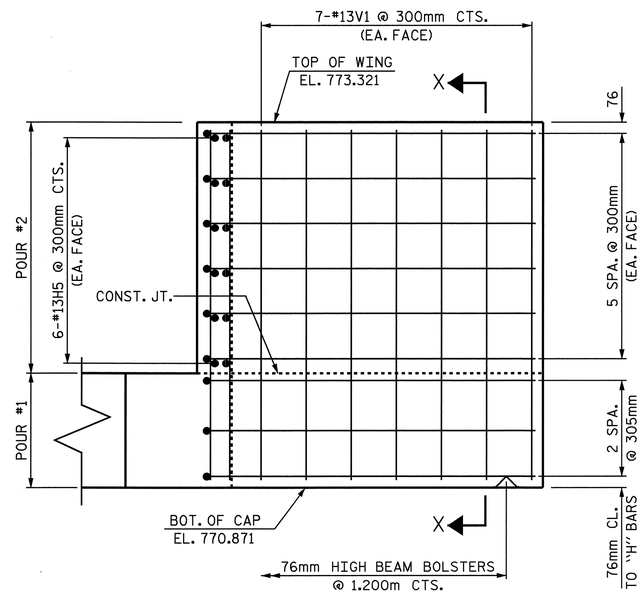

ELEVATION OF RIGHT WING - W2

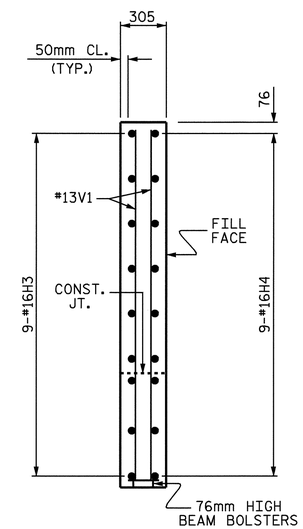

SECTION X-X

PROJECT NO. R-2518B

YANCEY COUNTY

STATION: 223+53.200-L-

SHEET 3 OF 4

STATE OF NORTH CAROLINA
DEPARTMENT OF TRANSPORTATION
RALEIGH

SUBSTRUCTURE
END BENT NO. 2

NORTH CAROLINA PROFESSIONAL SEAL 20125 ENGINEER MARSHALL GLOVER, JR.
4-14-08

REVISIONS						SHEET NO.
NO.	BY:	DATE:	NO.	BY:	DATE:	S-146
1			3			TOTAL SHEETS
2			4			154

DRAWN BY : L.L. MURPHY DATE : 02-08
CHECKED BY : D. HODGE DATE : 03-08

16-APR-2008 11:42
r:\structures\finalplans\Str #4\R2518B_sd_E*_STR#4.dgn
lmurphy

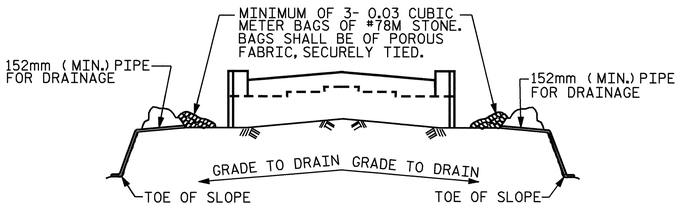

BAGGED STONE AND PIPE SHALL BE PLACED IMMEDIATELY AFTER COMPLETION OF END BENT EXCAVATION. PIPE MAY BE EITHER CONCRETE, CORRUGATED STEEL, CORRUGATED ALUMINUM ALLOY, OR CORRUGATED PLASTIC. PERFORATED PIPE WILL NOT BE ALLOWED.

BAGGED STONE SHALL REMAIN IN PLACE UNTIL THE ENGINEER DIRECTS THAT IT BE REMOVED. THE CONTRACTOR SHALL REMOVE AND DISPOSE OF SILT ACCUMULATIONS AT BAGGED STONE WHEN SO DIRECTED BY THE ENGINEER. BAGS SHALL BE REMOVED AND REPLACED WHENEVER THE ENGINEER DETERMINES THAT THEY HAVE DETERIORATED AND LOST THEIR EFFECTIVENESS.

NO SEPARATE PAYMENT WILL BE MADE FOR THIS WORK AND THE ENTIRE COST OF THIS WORK SHALL BE INCLUDED IN THE UNIT CONTRACT PRICE FOR THE SEVERAL PAY ITEMS.

TEMPORARY DRAINAGE AT END BENT

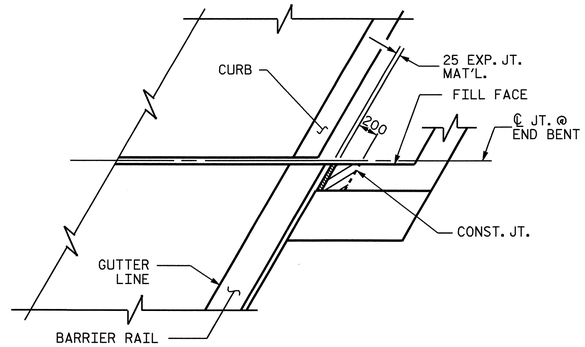

PLAN

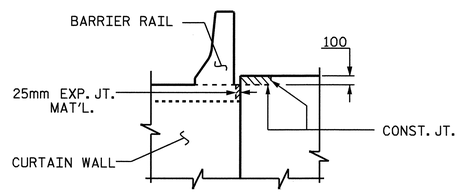

ELEVATION

BLOCKOUT IN WING WALL

BAR TYPES

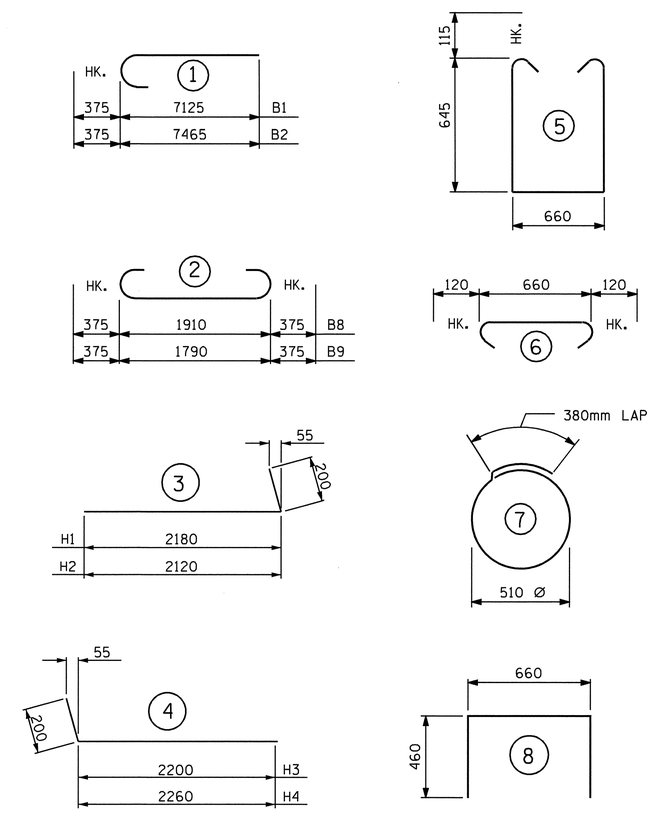

ALL BAR DIMENSIONS ARE OUT TO OUT.

CLASS A CONCRETE BREAKDOWN

LEFT SIDE		
POUR #1		
CAP & LOWER PART OF WING	8.5	CU. METERS
POUR #2		
UPPER PART OF WING	1.5	CU. METERS
RIGHT SIDE		
POUR #1		
CAP & LOWER PART OF WING	1.8	CU. METERS
POUR #2		
UPPER PART OF WING	1.6	CU. METERS
CLASS A CONCRETE TOTAL	13.4	CU. METERS

HP 310 X 79 STEEL PILES

LEFT SIDE			
NO.	8	56	LIN. METERS
RIGHT SIDE			
NO.	1	4	LIN. METERS
TOTAL			
NO.	9	60	LIN. METERS

STEEL PILES POINTS

EACH 9

BILL OF MATERIAL

END BENT NO. 2 LEFT SIDE

BAR	NO.	SIZE	TYPE	LENGTH	WEIGHT
B1	8	#29	1	7500	304
B2	8	#29	1	7840	317
B3	4	#13	STR	6480	26
B4	8	#13	STR	6480	52
B5	4	#13	STR	880	3
B6	4	#13	STR	3420	14
B7	11	#13	STR	660	7
D1	5	#29	STR	1300	33
H1	9	#16	3	2380	33
H2	9	#16	3	2320	32
H5	12	#13	STR	900	11
S1	38	#13	5	2180	82
S2	38	#13	6	900	34
S3	16	#13	7	1980	31
U1	14	#13	8	1580	22
V1	22	#13	STR	2320	51
REINFORCING STEEL				=	1052 kg

END BENT NO. 2 RIGHT SIDE

BAR	NO.	SIZE	TYPE	LENGTH	WEIGHT
B7	2	#13	STR	660	1
B8	4	#29	2	2660	54
B9	4	#29	2	2540	51
B10	2	#13	STR	1780	4
B11	4	#13	STR	1820	7
D1	5	#29	STR	1300	33
H3	9	#16	4	2400	34
H4	9	#16	4	2460	34
H5	12	#13	STR	900	11
S1	6	#13	5	2180	13
S2	6	#13	6	900	5
S3	2	#13	7	1980	4
V1	22	#13	STR	2320	51
REINFORCING STEEL				=	302 kg

REINFORCING STEEL BREAKDOWN

LEFT SIDE	1052 kg
RIGHT SIDE	302 kg
TOTAL	1354 kg

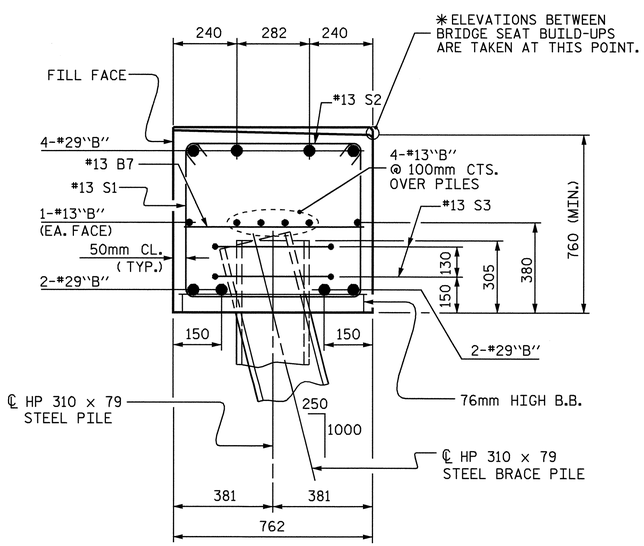

SECTION A-A

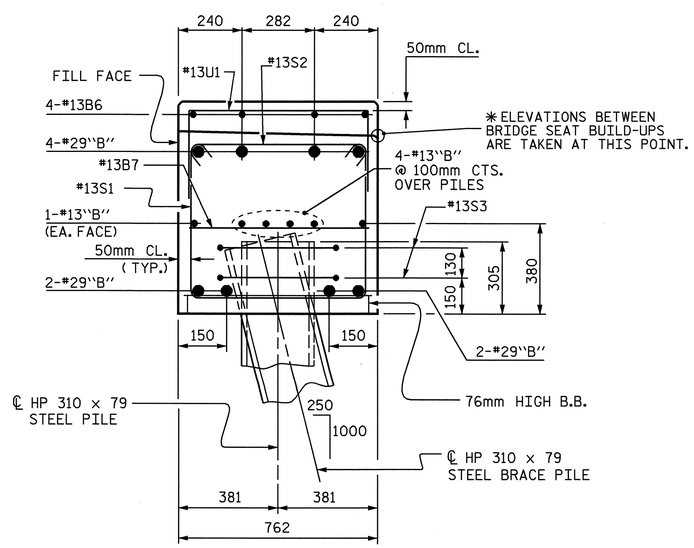

SECTION B-B

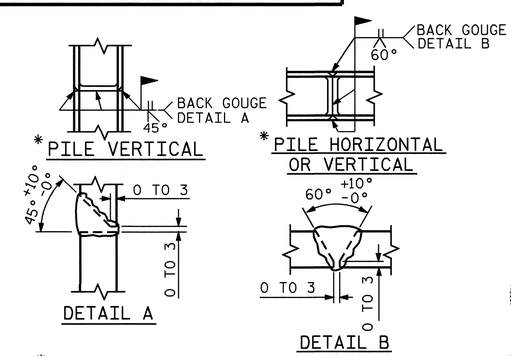

✱ POSITION OF PILE DURING WELDING.

PILE SPLICE DETAILS

PROJECT NO. R-2518B

YANCEY COUNTY

STATION: 223+53.200-L-

SHEET 4 OF 4

STATE OF NORTH CAROLINA
DEPARTMENT OF TRANSPORTATION
RALEIGH

SUBSTRUCTURE
END BENT NO. 2

NORTH CAROLINA PROFESSIONAL SEAL 20125 ENGINEER MARSHALL L. GLOVER, JR.
4-25-08

REVISIONS								SHEET NO.
NO.	BY:	DATE:	NO.	BY:	DATE:			S-147
1			3					TOTAL SHEETS
2			4					154

DRAWN BY : L.L. MURPHY DATE : 02-08
CHECKED BY : D. HODGE DATE : 03-08

25-APR-2008 08:37
r:\structures\final plans\str #4\r2518b_sd_e*_str*4.dgn
vnguyen

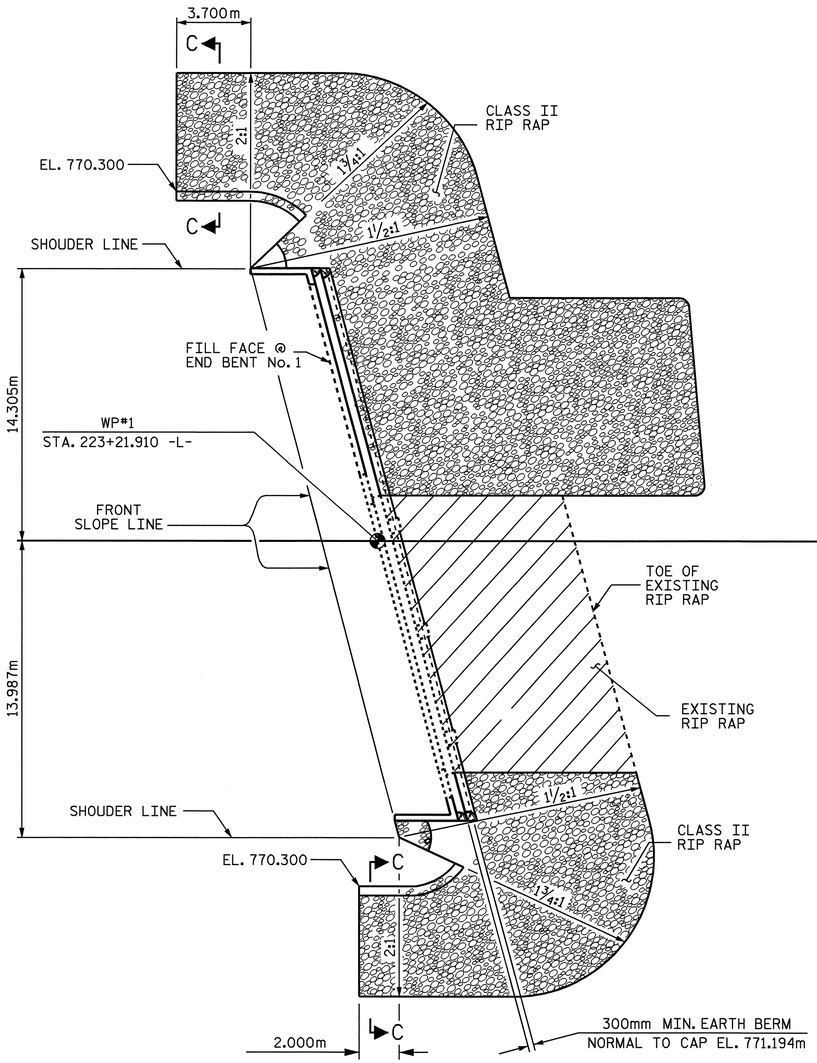

END BENT No. 1

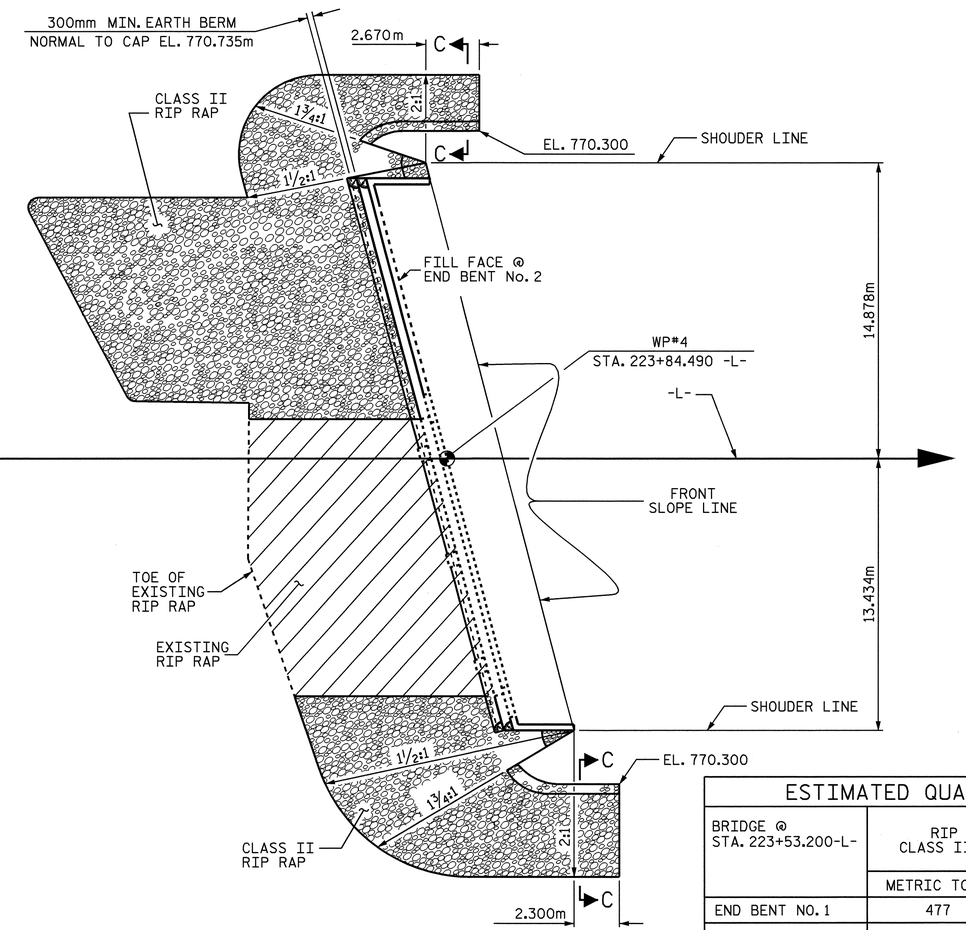

END BENT No. 2

ESTIMATED QUANTITIES		
BRIDGE @ STA. 223+53.200-L-	RIP RAP CLASS II	FILTER FABRIC FOR DRAINAGE
	METRIC TONS	SQUARE METERS
END BENT NO. 1	477	502
END BENT NO. 2	502	533

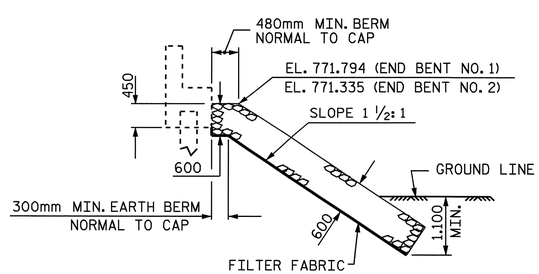

℄ SECTION

BERM RIP RAPPED

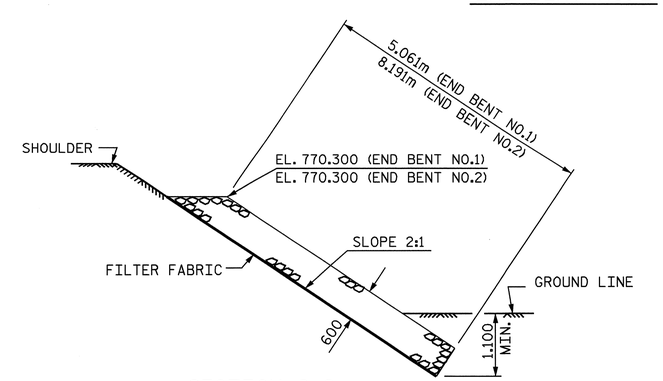

SECTION C-C

PROJECT NO. R-2518B

YANCEY COUNTY

STATION: 223+53.200 -L-

STATE OF NORTH CAROLINA
DEPARTMENT OF TRANSPORTATION
RALEIGH

STANDARD

RIP RAP DETAILS

NORTH CAROLINA PROFESSIONAL SEAL 20125 ENGINEER MARSHALL LIGHTSEY, JR.
4-24-08

REVISIONS									SHEET NO.
NO.	BY:	DATE:	NO.	BY:	DATE:				S-148
1			3						TOTAL SHEETS
2			4						154

ASSEMBLED BY : A.L. FIGUEROA		DATE :	02-06-08
CHECKED BY : L.L. MURPHY		DATE :	03-10-08
DRAWN BY : REK 1/84	REV. 8/16/99	RWW/LES	
CHECKED BY : RDU 1/84	REV. 10/17/00	RWW/LES	
	REV. 5/1/06	TLA/GM	

16-APR-2008 11:44
r:\structures\finalplans\Str #4\R2518B_sd_SP_STR#4.dgn
lmurphy

STR #4 STD. NO. RR1SM

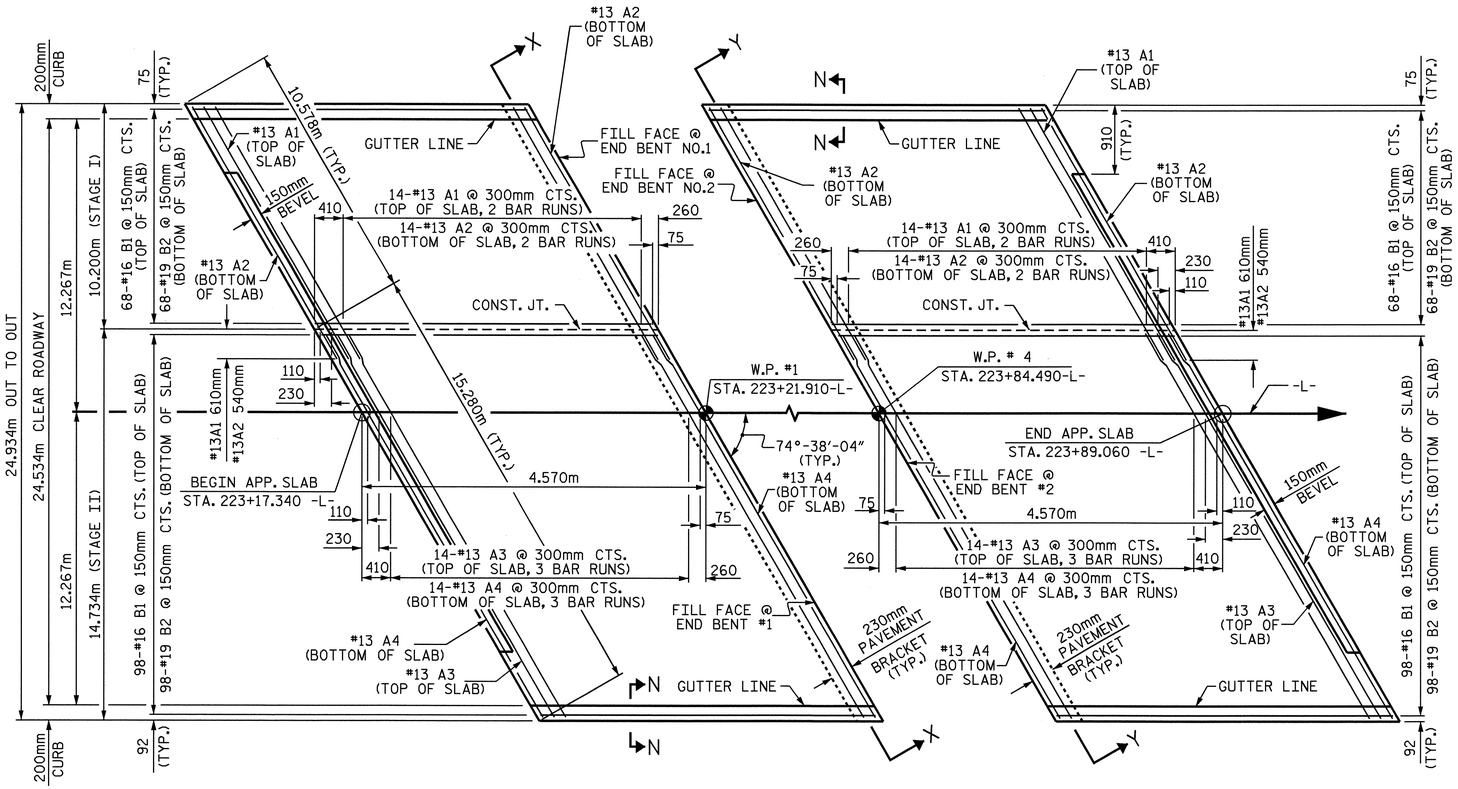

PLAN OF APPROACH SLAB @ END BENT NO.1

FOR ADDITIONAL REINFORCING STEEL IN APPROACH SLAB, SEE SECTION X-X, SEE SHEET 2 OF 3

PLAN OF APPROACH SLAB @ END BENT NO. 2

FOR ADDITIONAL REINFORCING STEEL IN APPROACH SLAB, SEE SECTION Y-Y, SEE SHEET 2 OF 3

NOTES

APPROACH SLAB SHALL NOT BE CONSTRUCTED PRIOR TO COMPLETION OF THE BRIDGE DECK.

FOR REINFORCED BRIDGE APPROACH FILL INCLUDING FABRIC, IMPERMEABLE GEOMEMBRANE, 102mm Ø DRAINAGE PIPE, #78M STONE, AND SELECT MATERIAL, SEE ROADWAY PLANS.

AREA BETWEEN THE WINGWALL AND APPROACH SLAB SHALL BE GRADED TO DRAIN THE WATER AWAY FROM THE FILL FACE OF THE BRIDGE AND SHALL BE PAVED. SEE ROADWAY PLANS.

THE 150mm COMP. A.B.C. SHALL BE FLUSH WITH THE ROADWAY END OF THE APPROACH SLAB AND SHALL EXTEND 300mm OUTSIDE OF EACH EDGE OF THE APPROACH SLAB.

THE CONTRACTOR MAY USE 100mm TYPE B-25.0B ASPHALT CONCRETE COURSE IN LIEU OF 150mm COMP. A.B.C. IF THIS OPTION IS USED, THE BASE COURSE SHALL BE FLUSH WITH THE ROADWAY END OF THE APPROACH SLAB, AND THE WIDTH SHALL BE THE SAME AS THAT OF THE APPROACH SLAB.

THE CONTRACTOR MAY USE 125mm CLASS "A" CONCRETE BASE IN LIEU OF 150mm COMP. A.B.C. IF THIS OPTION IS USED, THE CONCRETE BASE SHALL BE FLUSH WITH THE ROADWAY END OF THE APPROACH SLAB, AND THE WIDTH SHALL BE THE SAME AS THAT OF THE APPROACH SLAB. THE CONCRETE SHALL BE FINISHED TO A SMOOTH SURFACE AND A LAYER OF 13.6 kg ROOFING FELT SHALL BE PLACED BETWEEN THE CONCRETE BASE AND THE APPROACH SLAB TO PREVENT BOND. THE APPROACH SLAB SHALL NOT BE CAST UNTIL THE CONCRETE BASE HAS REACHED AN AGE OF THREE CURING DAYS.

FOR EVAZOTE JOINT SEALS, SEE SPECIAL PROVISIONS.

TEMPORARY DRAINAGE AND TEMPORARY BERM AND SLOPE DRAINS WILL BE PAID FOR UNDER THE LUMP SUM PRICE FOR BRIDGE APPROACH SLABS.

BILL OF MATERIAL

APPROACH SLAB AT EB NO.1 — STAGE I

BAR	NO.	SIZE	TYPE	LENGTH	WEIGHT
✳ A1	30	#13	STR	5880	175
A2	32	#13	STR	5800	184
✳ B1	68	#16	STR	4200	443
B2	68	#19	STR	4460	678
REINFORCING STEEL				kg	862
✳ EPOXY COATED REINFORCING STEEL				kg	618
CLASS AA CONCRETE				14.8 CU.METERS	

APPROACH SLAB AT EB NO.1 — STAGE II

BAR	NO.	SIZE	TYPE	LENGTH	WEIGHT
✳ A3	45	#13	STR	5480	245
A4	48	#13	STR	5420	259
A5	2	#13	STR	6700	13
✳ B1	98	#16	STR	4200	639
B2	98	#19	STR	4460	977
U1	7	#13	1	1120	8
U2	7	#13	1	1040	7
U3	6	#13	1	940	6
REINFORCING STEEL				kg	1270
✳ EPOXY COATED REINFORCING STEEL				kg	884
CLASS AA CONCRETE				21.8 CU.METERS	

APPROACH SLAB AT EB NO.2 — STAGE I

BAR	NO.	SIZE	TYPE	LENGTH	WEIGHT
✳ A1	30	#13	STR	5880	175
A2	32	#13	STR	5800	184
✳ B1	68	#16	STR	4200	443
B2	68	#19	STR	4460	678
REINFORCING STEEL				kg	862
✳ EPOXY COATED REINFORCING STEEL				kg	618
CLASS AA CONCRETE				14.8 CU.METERS	

APPROACH SLAB AT EB NO.2 — STAGE II

BAR	NO.	SIZE	TYPE	LENGTH	WEIGHT
✳ A3	45	#13	STR	5480	245
A4	48	#13	STR	5420	259
A6	2	#13	STR	6380	13
✳ B1	98	#16	STR	4200	639
B2	98	#19	STR	4460	977
U4	41	#13	1	1000	41
REINFORCING STEEL				kg	1290
✳ EPOXY COATED REINFORCING STEEL				kg	884
CLASS AA CONCRETE				22.9 CU.METERS	

✳ THESE BARS ARE EPOXY COATED.

BAR TYPE

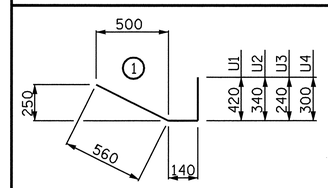

BAR DIMENSIONS ARE OUT TO OUT.

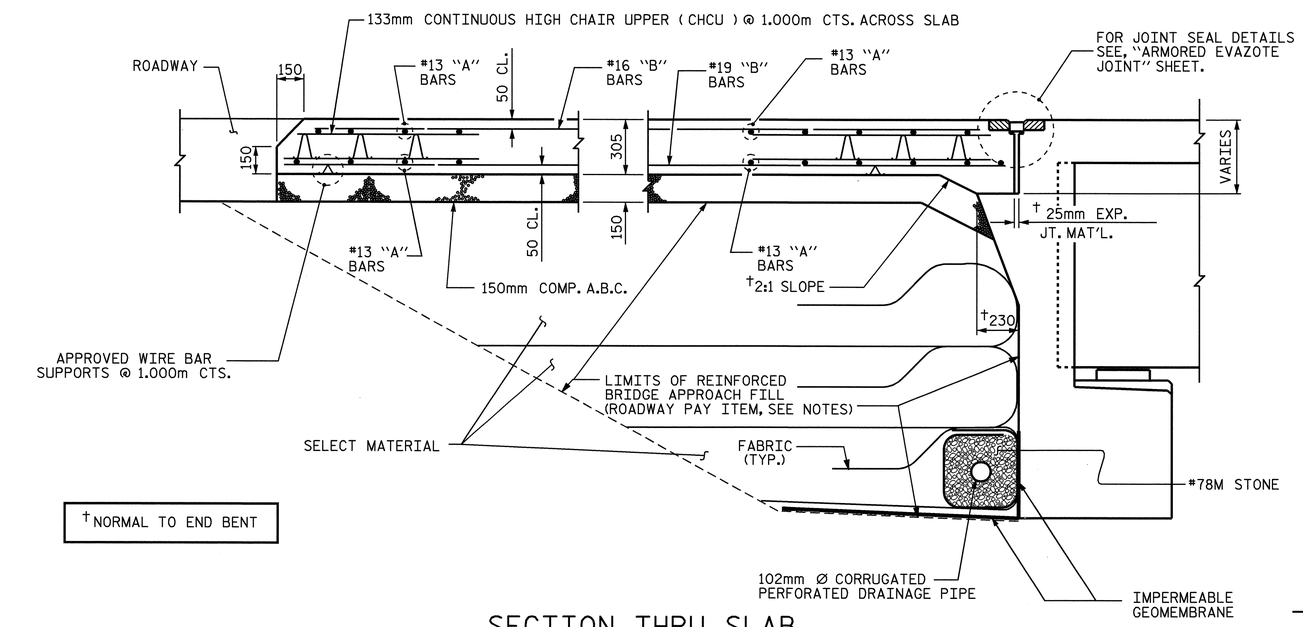

† NORMAL TO END BENT

SECTION THRU SLAB

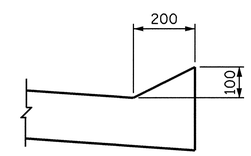

SECTION N-N

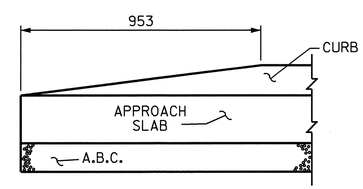

END OF CURB WITHOUT SHOULDER BERM GUTTER

CURB DETAILS

PROJECT NO. R-2518B

YANCEY COUNTY

STATION: 223+53.200-L-

SHEET 1 OF 3

STATE OF NORTH CAROLINA
DEPARTMENT OF TRANSPORTATION
RALEIGH

BRIDGE APPROACH SLAB FOR FLEXIBLE PAVEMENT

NORTH CAROLINA PROFESSIONAL SEAL 20125 ENGINEER MARSHAL W. CHEEK, JR.
4-24-08

REVISIONS								SHEET NO.
NO.	BY:	DATE:	NO.	BY:	DATE:			S-149
1			3					TOTAL SHEETS
2			4					154

ASSEMBLED BY : L.L. MURPHY DATE : 02-08
CHECKED BY : M.G. CHEEK DATE : 02-08

17-APR-2008 11:04
r:\structures\finalplans\str #4\r2518b_sd_as_str#4.dgn
lmurphy

STR #4 STD. NO. BAS4SM

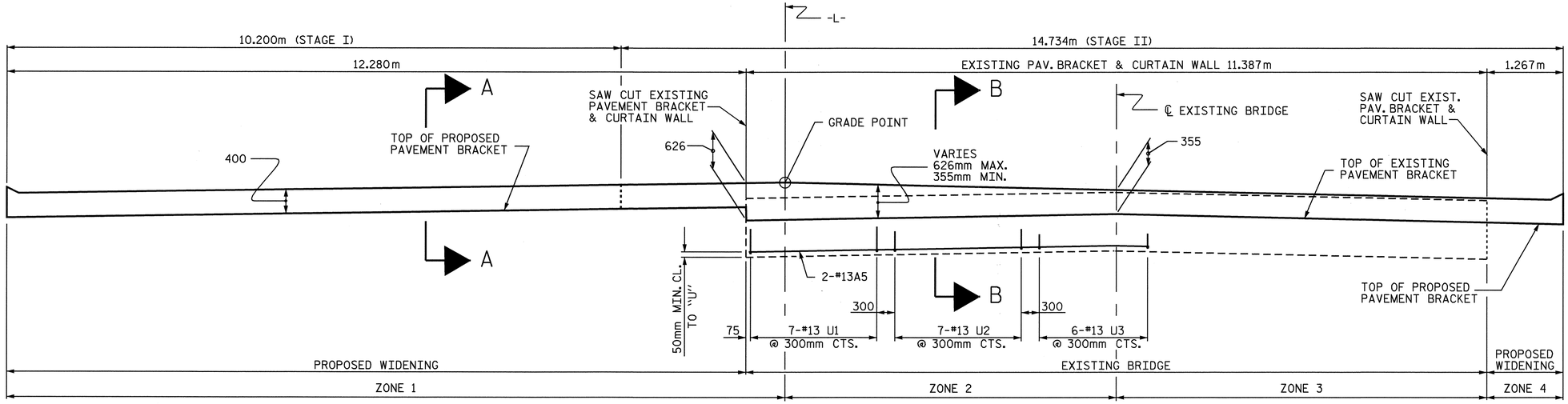

END BENT NO. 1

SECTION X-X

SHOWING VARYING APPROACH SLAB DEPTH AT PAVEMENT BRACKET AND ADDITIONAL STEEL @ END BENT NO. 1

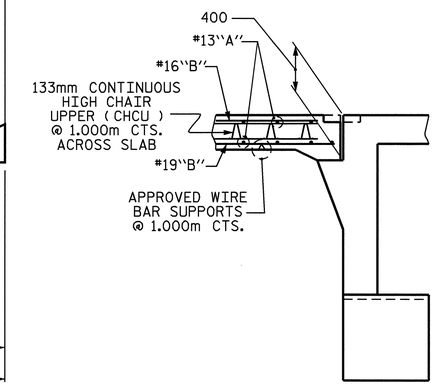

SECTION A-A

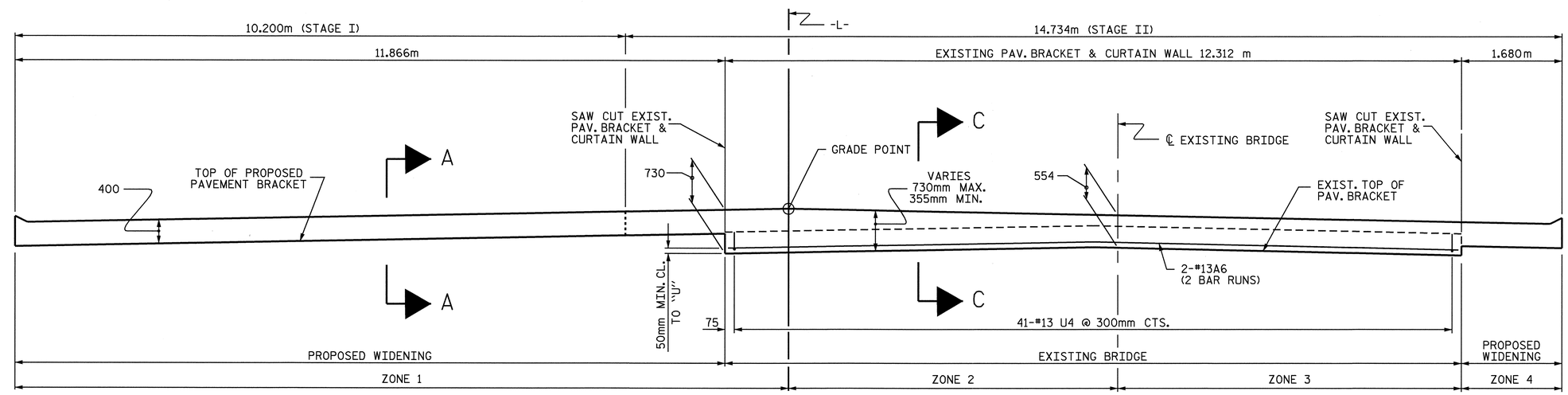

END BENT NO. 2

SECTION Y-Y

SHOWING VARYING APPROACH SLAB DEPTH AT PAVEMENT BRACKET AND ADDITIONAL STEEL @ END BENT NO. 2

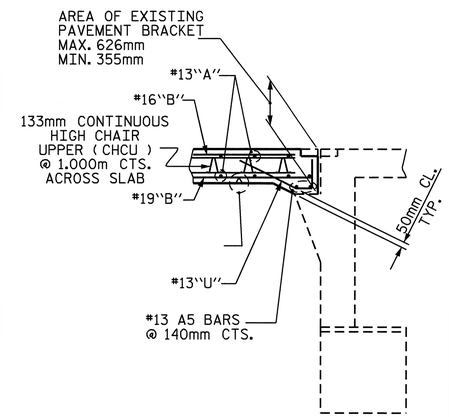

SECTION B-B

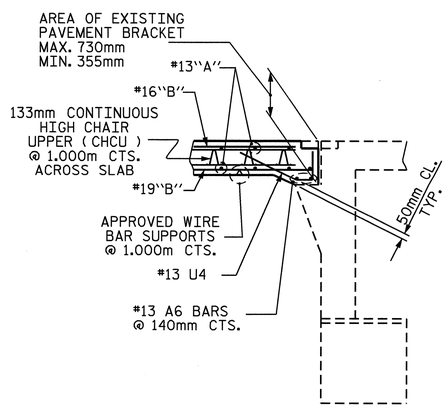

SECTION C-C

PROJECT NO. R-2518B

YANCEY COUNTY

STATION: 223+53.200-L-

SHEET 2 OF 3

STATE OF NORTH CAROLINA
DEPARTMENT OF TRANSPORTATION
RALEIGH

APPROACH SLAB DETAILS

NORTH CAROLINA PROFESSIONAL SEAL 20125 ENGINEER MARSHALL G. CHEEK, JR.

REVISIONS						SHEET NO.
NO.	BY:	DATE:	NO.	BY:	DATE:	S-150
1			3			TOTAL SHEETS
2			4			154

DRAWN BY : L.L. MURPHY DATE : 02-08
CHECKED BY : M.G. CHEEK DATE : 02-08

26-MAR-2008 12:09
R:\Structures\Final plans\Str #4\R2518B_sd_AS_STR#4.dgn
afigueroa

STR #4

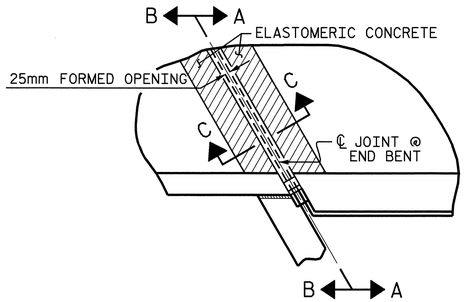

PLAN

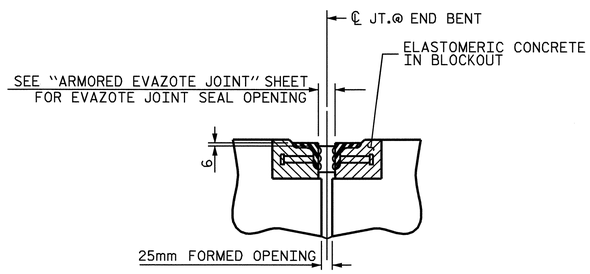

SECTION C-C
ARMORED EVAZOTE JOINT SEAL

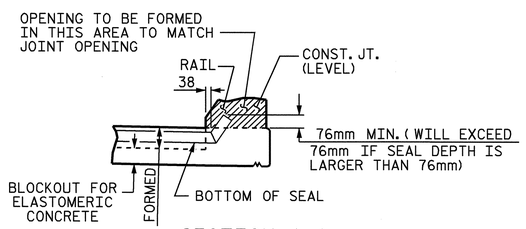

SECTION A-A

EVAZOTE JOINT SEAL TO BE CUT, HEAT WELDED AND TURNED UP PARALLEL TO SLOPED FACE OF THE BARRIER RAIL.

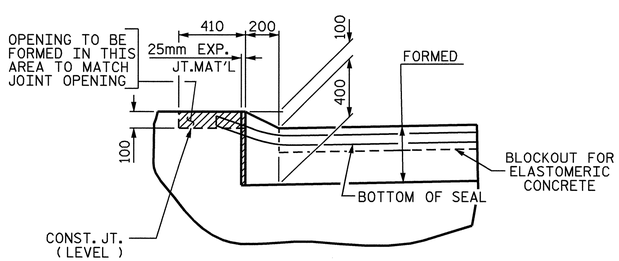

SECTION B-B

JOINT SEAL DETAILS @ END BENT

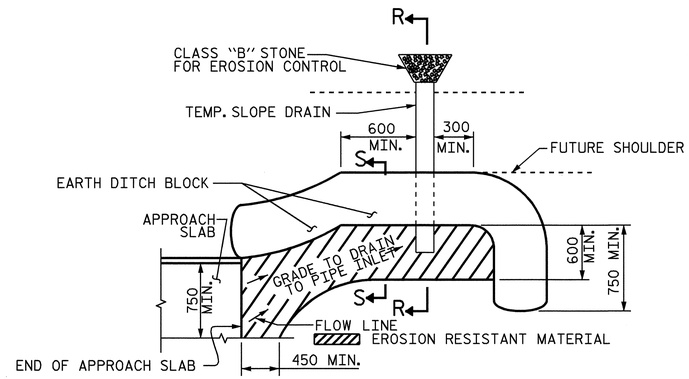

NOTE: IMMEDIATELY AFTER THE CONSTRUCTION OF THE APPROACH SLAB, THE CONTRACTOR SHALL PROVIDE TEMPORARY BERM AND SLOPE DRAIN. CONTRACTOR SHALL GRADE TO PIPE INLET AND PROVIDE EROSION RESISTANT MATERIAL AS SHOWN. THE EROSION RESISTANT MATERIAL SHALL BE EITHER 1) ASPHALT PLANT MIX, TYPE 1 OR TYPE 2, MIN. 50mm DEPTH, 2) EROSION CONTROL MAT, OR 3) CONCRETE, AS DIRECTED BY THE ENGINEER. THE SLOPE DRAIN SHALL CONSIST OF A NON-PERFORATED TEMPORARY DRAINAGE PIPE, 305mm IN DIAMETER.

PLAN VIEW

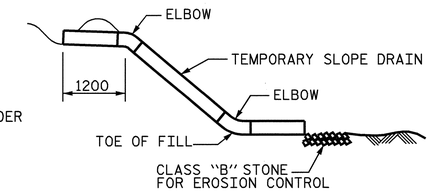

SECTION R-R

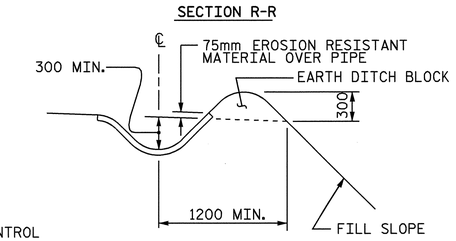

SECTION S-S

TEMPORARY BERM AND SLOPE DRAIN DETAILS

(TO BE USED WHEN SHOULDER BERM GUTTER IS REQUIRED)

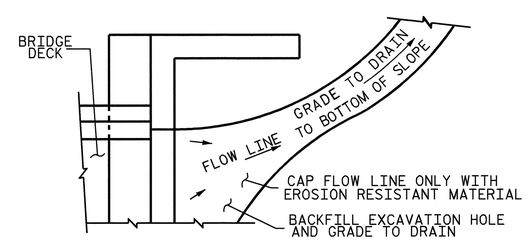

NOTE: IF THE APPROACH SLAB IS NOT CONSTRUCTED IMMEDIATELY AFTER THE BACKFILLING OF THE END BENT EXCAVATION, GRADE TO DRAIN TO THE BOTTOM OF THE SLOPE AND PROVIDE EROSION RESISTANT MATERIAL, SUCH AS FIBERGLASS ROVING OR AS DIRECTED BY THE ENGINEER TO PREVENT SOIL EROSION AND TO PROTECT THE AREA ADJACENT TO THE STRUCTURE. THE CONTRACTOR WILL BE REQUIRED TO REMOVE THESE MATERIALS PRIOR TO CONSTRUCTION OF THE APPROACH SLAB.

TEMPORARY DRAINAGE DETAIL

PROJECT NO. R-2518B
YANCEY COUNTY
STATION: 223+53.200-L-

SHEET 3 OF 3

STATE OF NORTH CAROLINA
DEPARTMENT OF TRANSPORTATION
RALEIGH

STANDARD
BRIDGE APPROACH
SLAB DETAILS

NORTH CAROLINA PROFESSIONAL SEAL 20125 ENGINEER MARSHALL G. CHEEK, JR.
4-25-08

REVISIONS								SHEET NO.
NO.	BY:	DATE:	NO.	BY:	DATE:			S-151
1			3					TOTAL SHEETS
2			4					154

ASSEMBLED BY : L.L. MURPHY	DATE : 02-08		
CHECKED BY : M.G. CHEEK	DATE : 02-08		
DRAWN BY : FCJ 11/88	REV. 10/17/00 RWW/LES		
CHECKED BY : ARB 11/88	REV. 5/7/03 RWW/JTE		
	REV. 5/1/06R MAA/KMM		

25-APR-2008 09:38
r:\structures\finalplans\str #4\r2518b_sd_as_str#4.dgn
vnguyen

STR #4

OVERHANG BRACKET CALCULATION INSTRUCTIONS

AASHTO SHAPES - TYPES III, IV, V, AND VI

1. RECORD KNOWN INFORMATION ON "BRIDGE OVERHANG BRACKET SUMMARY" ON SHEET 2
2. CALCULATE THE MAXIMUM SCREED LOAD PER BRACKET (SLPB) WITH AN ESTIMATED R = 1.5. SLPB = R X W. ROUND VALUE UP TO NEAREST SLPB VALUE INDICATED ON APPROPRIATE TABLE 1-1, 1-2, 1-3, OR 1-4.
3. WITH THE ESTIMATED SLPB, OVERHANG SLAB THICKNESS, "K" VALUE, AND 45° HANGER SAFE WORKING LOAD (SWL), ENTER THE APPROPRIATE TABLE 1-1, 1-2, 1-3, OR 1-4 (BASED ON OVERHANG DIMENSION) AND DETERMINE THE BRACKET SPACING, S.
4. CALCULATE S/D1 AND S/D2, ROUNDING UP TO NEAREST VALUE IN TABLE 2. ENTER TABLE 2 AND DETERMINE R VALUE.
5. CALCULATE REVISED SLPB. ROUND VALUE UP TO NEAREST SLPB VALUE INDICATED ON APPROPRIATE TABLE 1-1, 1-2, 1-3, OR 1-4.
6. WITH THE REVISED SLPB, OVERHANG SLAB THICKNESS, "K" VALUE AND 45 HANGER SAFE WORKING LOAD (SWL), ENTER THE APPROPRIATE TABLE 1-1, 1-2, 1-3 OR 1-4 (BASED ON OVERHANG DIMENSION) AND DETERMINE REVISED BRACKET SPACING, S.
7. CONTINUE ITERATIONS OF STEPS 4-6 UNTIL THE REVISED BRACKET SPACING, S, IS THE SAME AS THE PREVIOUS S VALUE.
8. CHECK LUMBER JOIST SPACING: WITH BRACKET SPACING VALUE, S, ROUND THIS VALUE UP TO THE NEAREST VALUE OF ALLOWABLE SPAN LENGTH OF JOIST OF TABLE 3. USING THIS VALUE, ALONG WITH THE AVERAGE OVERHANG SLAB THICKNESS AND THE LUMBER JOIST SIZE, DETERMINE JOIST SPACING FROM TABLE 3. IF NECESSARY, ADJUST LUMBER JOIST SIZE AND/OR JOIST SPACING TO MEET ALLOWABLE SPAN LENGTH OF JOIST.
9. CONVERSELY, IF THE DESIRED JOIST SPACING IS KNOWN, USE THIS ALONG WITH THE AVERAGE OVERHANG SLAB THICKNESS AND THE LUMBER JOIST SIZE TO DETERMINE IF ALLOWABLE SPAN LENGTH OF JOIST IS GREATER THAN THE BRACKET SPACING, S. IF NECESSARY, ADJUST LUMBER JOIST SIZE TO MEET REQUIREMENTS OF ALLOWABLE SPAN LENGTH OF JOIST AND JOIST SPACING.
10. RECORD REMAINING INFORMATION ON "BRIDGE OVERHANG BRACKET SUMMARY" FORM.
11. SUBMIT FORM AND CALCULATIONS FOR REVIEW AND APPROVAL.

TABLE 1-1

(FOR USE ON **UP TO 2'-0" OVERHANG** Ⓛ & 54" HORIZONTAL LEG LENGTH OF THE OVERHANG BRACKET)

AVG. SLAB THICKNESS Ⓣ (In)	BRACKET Ⓚ DIMENSION (In)	SCREED LOAD PER BRACKET									45° HANGER SWL (lbs)
		2500 lbs.	2250 lbs.	2000 lbs.	1750 lbs.	1500 lbs.	1250 lbs.	1000 lbs.	750 lbs.	0 lbs.	
		BRACKET SPACING									
10	30				2'-1"	2'-7"	3'-2"	3'-8"	4'-2"	5'-9"	4000
		3'-6"	4'-0"	4'-5"	4'-9"	5'-1"	5'-3"	5'-5"	5'-7"	6'-7"	6000
	40				2'-1"	2'-7"	3'-2"	3'-8"	4'-2"	5'-9"	4000
		3'-6"	4'-0"	4'-5"	4'-9"	5'-1"	5'-3"	5'-5"	5'-7"	6'-7"	6000
	50				2'-1"	2'-7"	3'-2"	3'-8"	4'-2"	5'-9"	4000
		3'-6"	4'-0"	4'-5"	4'-9"	5'-1"	5'-3"	5'-5"	5'-7"	6'-7"	6000
12	30					2'-4"	2'-10"	3'-4"	3'-9"	5'-2"	4000
		3'-2"	3'-7"	4'-1"	4'-7"	5'-0"	5'-2"	5'-4"	5'-7"	6'-5"	6000
	40					2'-4"	2'-10"	3'-4"	3'-9"	5'-2"	4000
		3'-2"	3'-7"	4'-1"	4'-7"	5'-0"	5'-2"	5'-4"	5'-7"	6'-5"	6000
	50					2'-4"	2'-10"	3'-4"	3'-9"	5'-2"	4000
		3'-2"	3'-7"	4'-1"	4'-7"	5'-0"	5'-2"	5'-4"	5'-7"	6'-5"	6000
14	30					2'-2"	2'-7"	3'-0"	3'-5"	4'-9"	4000
		2'-10"	3'-4"	3'-9"	4'-2"	4'-7"	5'-0"	5'-4"	5'-7"	6'-4"	6000
	40					2'-2"	2'-7"	3'-0"	3'-5"	4'-9"	4000
		2'-10"	3'-4"	3'-9"	4'-2"	4'-7"	5'-0"	5'-4"	5'-7"	6'-4"	6000
	50					2'-2"	2'-7"	3'-0"	3'-5"	4'-9"	4000
		2'-10"	3'-4"	3'-9"	4'-2"	4'-7"	5'-0"	5'-4"	5'-7"	6'-4"	6000
16	30					2'-0"	2'-4"	2'-9"	3'-2"	4'-4"	4000
		2'-8"	3'-0"	3'-5"	3'-10"	4'-3"	4'-7"	5'-0"	5'-5"	6'-3"	6000
	40					2'-0"	2'-4"	2'-9"	3'-2"	4'-4"	4000
		2'-8"	3'-0"	3'-5"	3'-10"	4'-3"	4'-7"	5'-0"	5'-5"	6'-3"	6000
	50					2'-0"	2'-4"	2'-9"	3'-2"	4'-4"	4000
		2'-8"	3'-0"	3'-5"	3'-10"	4'-3"	4'-7"	5'-0"	5'-5"	6'-3"	6000

TABLE 1-2

(FOR USE ON **OVER 2'-0" TO 2'-6" OVERHANG** Ⓛ & 54" HORIZONTAL LEG LENGTH OF THE OVERHANG BRACKET)

AVG. SLAB THICKNESS Ⓣ (In)	BRACKET Ⓚ DIMENSION (In)	SCREED LOAD PER BRACKET									45° HANGER SWL (lbs)
		2500 lbs.	2250 lbs.	2000 lbs.	1750 lbs.	1500 lbs.	1250 lbs.	1000 lbs.	750 lbs.	0 lbs.	
		BRACKET SPACING									
10	30					2'-4"	2'-9"	3'-3"	3'-8"	5'-1"	4000
		3'-1"	3'-6"	4'-0"	4'-5"	4'-11"	5'-3"	5'-5"	5'-7"	6'-7"	6000
	40					2'-4"	2'-9"	3'-3"	3'-8"	5'-1"	4000
		3'-1"	3'-6"	4'-0"	4'-5"	4'-11"	5'-3"	5'-5"	5'-7"	6'-7"	6000
	50					2'-4"	2'-9"	3'-3"	3'-8"	5'-1"	4000
		3'-1"	3'-6"	4'-0"	4'-5"	4'-11"	5'-3"	5'-5"	5'-7"	6'-7"	6000
12	30					2'-1"	2'-6"	2'-11"	3'-4"	4'-6"	4000
		2'-9"	3'-2"	3'-7"	4'-0"	4'-5"	4'-10"	5'-3"	5'-7"	6'-5"	6000
	40					2'-1"	2'-6"	2'-11"	3'-4"	4'-6"	4000
		2'-9"	3'-2"	3'-7"	4'-0"	4'-5"	4'-10"	5'-3"	5'-7"	6'-5"	6000
	50					2'-1"	2'-6"	2'-11"	3'-4"	4'-6"	4000
		2'-9"	3'-2"	3'-7"	4'-0"	4'-5"	4'-10"	5'-3"	5'-7"	6'-5"	6000
14	30					2'-3"	2'-7"	3'-0"	4'-1"	4000
		2'-6"	2'-10"	3'-3"	3'-7"	4'-0"	4'-4"	4'-9"	5'-1"	6'-3"	6000
	40					2'-3"	2'-7"	3'-0"	4'-1"	4000
		2'-6"	2'-10"	3'-3"	3'-7"	4'-0"	4'-4"	4'-9"	5'-1"	6'-3"	6000
	50					2'-3"	2'-7"	3'-0"	4'-1"	4000
		2'-6"	2'-10"	3'-3"	3'-7"	4'-0"	4'-4"	4'-9"	5'-1"	6'-3"	6000
16	30					2'-1"	2'-5"	2'-9"	3'-9"	4000
		2'-3"	2'-7"	2'-11"	3'-4"	3'-8"	4'-0"	4'-4"	4'-8"	5'-8"	6000
	40					2'-1"	2'-5"	2'-9"	3'-9"	4000
		2'-3"	2'-7"	2'-11"	3'-4"	3'-8"	4'-0"	4'-4"	4'-8"	5'-8"	6000
	50					2'-1"	2'-5"	2'-9"	3'-9"	4000
		2'-3"	2'-7"	2'-11"	3'-4"	3'-8"	4'-0"	4'-4"	4'-8"	5'-8"	6000

TABLE 1-3

(FOR USE ON **OVER 2'-6" TO 3'-0" OVERHANG** Ⓛ & 54" HORIZONTAL LEG LENGTH OF THE OVERHANG BRACKET)

AVG. SLAB THICKNESS Ⓣ (In)	BRACKET Ⓚ DIMENSION (In)	SCREED LOAD PER BRACKET									45° HANGER SWL (lbs)
		2500 lbs.	2250 lbs.	2000 lbs.	1750 lbs.	1500 lbs.	1250 lbs.	1000 lbs.	750 lbs.	0 lbs.	
		BRACKET SPACING									
10	30					2'-1"	2'-6"	2'-11"	3'-4"	4'-6"	4000
						4'-5"	4'-10"	5'-3"	5'-7"	6'-7"	6000
	40					2'-1"	2'-6"	2'-11"	3'-4"	4'-6"	4000
		2'-9"	3'-2"	3'-7"	4'-0"	4'-5"	4'-10"	5'-3"	5'-7"	6'-7"	6000
	50					2'-1"	2'-6"	2'-11"	3'-4"	4'-6"	4000
		2'-9"	3'-2"	3'-7"	4'-0"	4'-5"	4'-10"	5'-3"	5'-7"	6'-7"	6000
12	30						2'-2"	2'-7"	2'-11"	4'-0"	4000
						3'-11"	4'-3"	4'-8"	5'-0"	6'-1"	6000
	40						2'-2"	2'-7"	2'-11"	4'-0"	4000
		2'-5"	2'-10"	3'-2"	3'-6"	3'-11"	4'-3"	4'-8"	5'-0"	6'-1"	6000
	50						2'-2"	2'-7"	2'-11"	4'-0"	4000
		2'-5"	2'-10"	3'-2"	3'-6"	3'-11"	4'-3"	4'-8"	5'-0"	6'-1"	6000
14	30						2'-0"	2'-4"	2'-8"	3'-8"	4000
					3'-2"	3'-6"	3'-10"	4'-2"	4'-6"	5'-6"	6000
	40						2'-0"	2'-4"	2'-8"	3'-8"	4000
		2'-2"	2'-6"	2'-10"	3'-2"	3'-6"	3'-10"	4'-2"	4'-6"	5'-6"	6000
	50						2'-0"	2'-4"	2'-8"	3'-8"	4000
		2'-2"	2'-6"	2'-10"	3'-2"	3'-6"	3'-10"	4'-2"	4'-6"	5'-6"	6000
16	30							2'-1"	2'-5"	3'-4"	4000
					2'-11"	3'-2"	3'-6"	3'-10"	4'-1"	5'-0"	6000
	40							2'-1"	2'-5"	3'-4"	4000
		2'-0"	2'-4"	2'-7"	2'-11"	3'-2"	3'-6"	3'-10"	4'-1"	5'-0"	6000
	50							2'-1"	2'-5"	3'-4"	4000
		2'-0"	2'-4"	2'-7"	2'-11"	3'-2"	3'-6"	3'-10"	4'-1"	5'-0"	6000

TABLE 1-4

(FOR USE ON **OVER 3'-0" TO 3'-6" OVERHANG** Ⓛ & 54" HORIZONTAL LEG LENGTH OF THE OVERHANG BRACKET)

AVG. SLAB THICKNESS Ⓣ (In)	BRACKET Ⓚ DIMENSION (In)	SCREED LOAD PER BRACKET									45° HANGER SWL (lbs)
		2500 lbs.	2250 lbs.	2000 lbs.	1750 lbs.	1500 lbs.	1250 lbs.	1000 lbs.	750 lbs.	0 lbs.	
		BRACKET SPACING									
10	30						2'-1"	2'-5"	2'-9"	3'-10"	4000
						2'-3"	2'-11"	3'-7"	4'-3"	5'-9"	6000
	40						2'-1"	2'-5"	2'-9"	3'-10"	4000
				2'-4"	3'-0"	3'-7"	4'-1"	4'-5"	4'-9"	5'-9"	6000
	50						2'-1"	2'-5"	2'-9"	3'-10"	4000
		2'-4"	2'-8"	3'-0"	3'-4"	3'-8"	4'-1"	4'-5"	4'-9"	5'-9"	6000
12	30							2'-2"	2'-6"	3'-5"	4000
						2'-1"	2'-8"	3'-4"	3'-11"	5'-2"	6000
	40							2'-2"	2'-6"	3'-5"	4000
				2'-2"	2'-9"	3'-4"	3'-7"	3'-11"	4'-3"	5'-2"	6000
	50							2'-2"	2'-6"	3'-5"	4000
		2'-1"	2'-4"	2'-8"	3'-0"	3'-4"	3'-7"	3'-11"	4'-3"	5'-2"	6000
14	30								2'-3"	3'-1"	4000
						2'-0"	2'-6"	3'-1"	3'-8"	4'-8"	6000
	40								2'-3"	3'-1"	4000
				2'-0"	2'-7"	3'-0"	3'-3"	3'-6"	3'-10"	4'-8"	6000
	50								2'-3"	3'-1"	4000
			2'-2"	2'-5"	2'-8"	3'-0"	3'-3"	3'-6"	3'-10"	4'-8"	6000
16	30								2'-0"	2'-9"	4000
							2'-4"	2'-10"	3'-5"	4'-3"	6000
	40								2'-0"	2'-9"	4000
					2'-5"	2'-8"	2'-11"	3'-3"	3'-6"	4'-3"	6000
	50								2'-0"	2'-9"	4000
				2'-2"	2'-5"	2'-8"	2'-11"	3'-3"	3'-6"	4'-3"	6000

DEFINITIONS

SLPB = SCREED LOAD PER BRACKET (R x W)
R = SCREED LOAD FACTOR, OBTAINED FROM TABLE 2
W = WHEEL LOAD
S = BRACKET SPACING
T = AVERAGE SLAB THICKNESS
SWL = SAFE WORKING LOAD
K = DIMENSION DEFINED ON "BRIDGE OVERHANG BRACKET SUMMARY" ON SHEET 2
L = OVERHANG MEASURED FROM EDGE OF TOP FLANGE TO EDGE OF SUPERSTRUCTURE

PROJECT NO. R-2518B
YANCEY COUNTY
STATION: 223+53.200-L-

SHEET 1 OF 3

STATE OF NORTH CAROLINA
DEPARTMENT OF TRANSPORTATION
RALEIGH

STANDARD OVERHANG FALSEWORK

AASHTO TYPES
III, IV, V, AND VI

NORTH CAROLINA PROFESSIONAL SEAL 18788 ENGINEER CHANG-CHUAN VICTOR CHAO

Chang-Chuan Victor Chao
2-19-2008

REVISIONS								SHEET NO.
NO.	BY:	DATE:	NO.	BY:	DATE:			S-152
1			3					TOTAL SHEETS
2			4					154

ASSEMBLED BY:	DATE:
CHECKED BY:	DATE:
DRAWN BY: R. WRIGHT 06/04	REV.
CHECKED BY: C. V. CHAO 06/04	

18-FEB-2008 14:45
d:\wdlr\victor\overhangfalsework\tiebar&strut\r-2518b-4_type_III\r2518bstr4overhangsheets.dgn
vchao

BRIDGE OVERHANG BRACKET SUMMARY

TOTAL SCREED WEIGHT = _____ LBS.
NUMBER OF SCREED WHEELS = _____
SCREED WHEEL LOAD (W) = _____ LBS.
SCREED LOAD PER BRACKET = _____ LBS.

PROJECT No. : _____
COUNTY : _____
STATION : _____
DESCRIPTION : _____

DATE : _____
DESIGN BY : _____
CHECK BY : _____

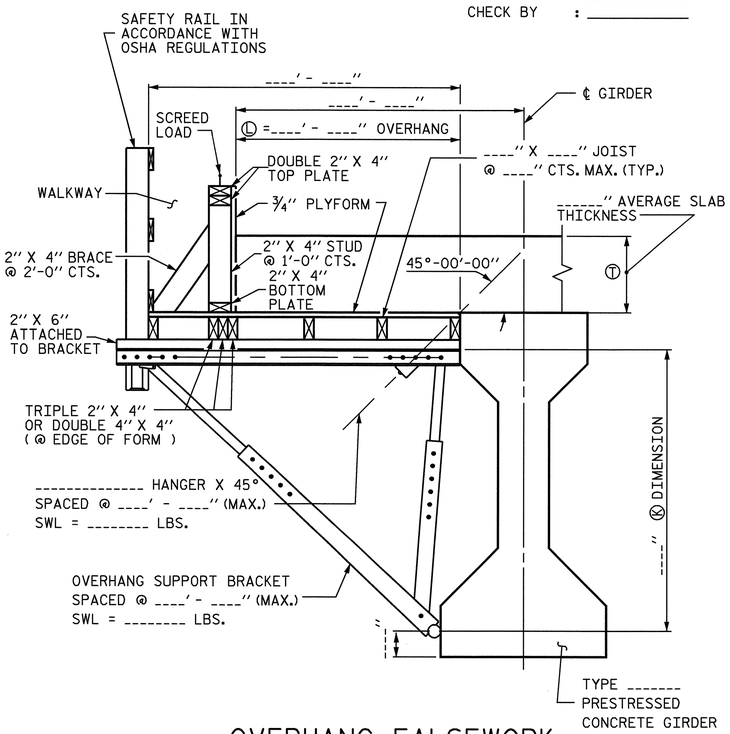

OVERHANG FALSEWORK

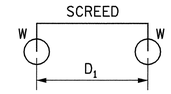

4-WHEEL MACHINE

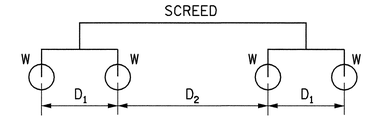

8-WHEEL MACHINE

4 WHEEL MACHINE	
S/D1	R
<= 1.0	1.00
1.1	1.09
1.2	1.17
1.3	1.23
1.4	1.29
1.5	1.33
1.6	1.38
1.7	1.41
1.8	1.44
1.9	1.47
2.0	1.50
2.2	1.55
2.4	1.58
2.6	1.62
2.8	1.64
3.0	1.67
3.5	1.71
4.0	1.75

TABLE 2: SCREED LOAD FACTOR "R"

		THE SCREED LOAD FACTOR R (FOR 8 WHEEL MACHINE)																	
		S/D_2																	
		<= 1.0	1.1	1.2	1.3	1.4	1.5	1.6	1.7	1.8	1.9	2.0	2.2	2.4	2.6	2.8	3.0	3.5	4.0
S/D_1	<= 1.0	1.00	1.09	1.17	1.23	1.29	1.33	1.38	1.41	1.44	1.47	1.50	1.55	1.58	1.62	1.64	1.67	1.71	1.75
	1.1	1.09	1.18	1.26	1.32	1.38	1.42	1.47	1.50	1.54	1.56	1.59	1.64	1.67	1.71	1.73	1.76	1.81	1.84
	1.2	1.17	1.26	1.33	1.40	1.45	1.50	1.54	1.58	1.61	1.64	1.67	1.71	1.75	1.78	1.81	1.83	1.88	1.92
	1.3	1.23	1.32	1.40	1.46	1.52	1.56	1.61	1.64	1.68	1.70	1.73	1.78	1.81	1.85	1.87	1.90	1.95	1.98
	1.4	1.29	1.38	1.45	1.52	1.57	1.62	1.66	1.70	1.73	1.76	1.79	1.83	1.87	1.90	1.93	1.95	2.00	2.07
	1.5	1.33	1.42	1.50	1.56	1.62	1.67	1.71	1.75	1.78	1.81	1.83	1.88	1.92	1.95	1.98	2.00	2.10	2.17
	1.6	1.38	1.47	1.54	1.61	1.66	1.71	1.75	1.79	1.82	1.85	1.88	1.92	1.96	1.99	2.04	2.08	2.18	2.25
	1.7	1.41	1.50	1.58	1.64	1.70	1.75	1.79	1.82	1.86	1.89	1.91	1.96	2.00	2.05	2.11	2.16	2.25	2.32
	1.8	1.44	1.54	1.61	1.68	1.73	1.78	1.82	1.86	1.89	1.92	1.94	1.99	2.06	2.12	2.17	2.22	2.32	2.39
	1.9	1.47	1.56	1.64	1.70	1.76	1.81	1.85	1.89	1.92	1.95	1.97	2.04	2.11	2.18	2.23	2.28	2.38	2.45
	2.0	1.50	1.59	1.67	1.73	1.79	1.83	1.88	1.91	1.94	1.97	2.00	2.09	2.17	2.23	2.29	2.33	2.43	2.50
	2.2	1.55	1.64	1.71	1.78	1.83	1.88	1.92	1.96	1.99	2.04	2.09	2.18	2.26	2.32	2.38	2.42	2.52	2.59
	2.4	1.58	1.67	1.75	1.81	1.87	1.92	1.96	2.00	2.06	2.11	2.17	2.26	2.33	2.40	2.45	2.50	2.60	2.67
	2.6	1.62	1.71	1.78	1.85	1.90	1.95	1.99	2.05	2.12	2.18	2.23	2.32	2.40	2.46	2.52	2.56	2.66	2.73
	2.8	1.64	1.73	1.81	1.87	1.93	1.98	2.04	2.11	2.17	2.23	2.29	2.38	2.45	2.52	2.57	2.62	2.71	2.79
	3.0	1.67	1.76	1.83	1.90	1.95	2.00	2.08	2.16	2.22	2.28	2.33	2.42	2.50	2.56	2.62	2.67	2.76	2.83
	3.5	1.71	1.81	1.88	1.95	2.00	2.10	2.18	2.25	2.32	2.38	2.43	2.52	2.60	2.66	2.71	2.76	2.86	2.93
	4.0	1.75	1.84	1.92	1.98	2.07	2.17	2.25	2.32	2.39	2.45	2.50	2.59	2.67	2.73	2.79	2.83	2.93	3.00

TABLE 3: ALLOWABLE SPAN LENGTH OF JOISTS AND JOIST SPACINGS

AVG. SLAB THICKNESS Ⓣ (IN)	LUMBER JOIST SIZE (IN X IN)	JOIST SPACINGS			
		15 IN	12 IN	10 IN	8 IN
		THE ALLOWABLE SPAN LENGTH OF JOISTS			
10	2 X 4	———	4' - 6"	4' - 9"	5' - 0"
	4 X 4	5' - 9"	6' - 3"	6' - 6"	6' - 7"
12	2 X 4	———	4' - 3"	4' - 9"	5' - 0"
	4 X 4	5' - 3"	6' - 0"	6' - 3"	6' - 5"
14	2 X 4	———	4' - 0"	4' - 6"	5' - 0"
	4 X 4	———	5' - 6"	6' - 0"	6' - 4"
16	2 X 4	———	4' - 0"	4' - 3"	4' - 9"
	4 X 4	———	5' - 3"	5' - 9"	6' - 3"

NOTES

DESIGN INCLUDES CONSTRUCTION LIVE LOAD 20 PSF ON THE AREA SUPPORTED AND 75 PLF AT THE OUTSIDE DECK OF OVERHANGS.

REQUIRED MINIMUM DIAGONAL LEG CAPACITY: 3600 LB WORKING LOAD

THE CONTRACTOR HAS THE OPTION OF SUBMITTING HIS OWN DESIGN FOR OVERHANG FALSEWORK IN ACCORDANCE WITH THE SPECIAL PROVISIONS.

SUBMITTALS UTILIZING THE INSTRUCTIONS AND PROCEDURES DESCRIBED ON SHEET 1 OF 3 SHALL BE IN ACCORDANCE WITH THE APPLICABLE SECTIONS OF THE SPECIFICATIONS AND SPECIAL PROVISIONS, EXCEPT THAT CALCULATIONS FOR OVERHANG FALSEWORK NEED NOT BE SEALED BY A REGISTERED ENGINEER.

FOR OVERHANG FALSEWORK BRACING DESIGN, SEE SHEET 3 OF 3.

PROJECT NO. R-2518B
YANCEY COUNTY
STATION: 223+53.200-L-

SHEET 2 OF 3

STATE OF NORTH CAROLINA
DEPARTMENT OF TRANSPORTATION
RALEIGH

STANDARD OVERHANG FALSEWORK

AASHTO TYPES
III, IV, V, AND VI

NORTH CAROLINA PROFESSIONAL SEAL 18788 ENGINEER CHANG-CHUAN VICTOR CHAO

Chang-Chuan Victor Chao
2-19-2008

REVISIONS						SHEET NO.
NO.	BY:	DATE:	NO.	BY:	DATE:	S-153
1			3			TOTAL SHEETS
2			4			154

ASSEMBLED BY:	DATE:
CHECKED BY:	DATE:
DRAWN BY: R. WRIGHT 06/04	REV.
CHECKED BY: C. V. CHAO 06/04	

18-FEB-2008 14:46
d:\wdlr\victor\overhangfalsework\tlebar&strut\r-2518b-4_type_III\r2518bstr4overhangsheets.dgn
vchao

STR #4 OF2

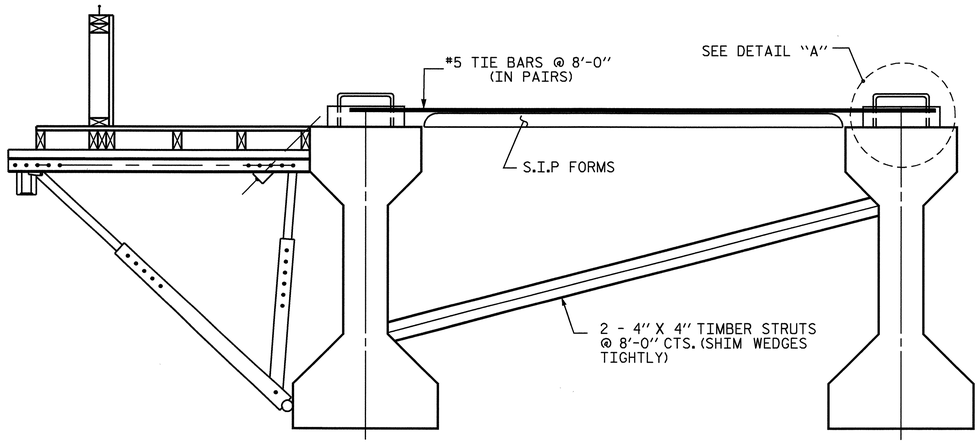

EXTERIOR GIRDER INTERIOR GIRDER

DETAIL OF REQUIRED OVERHANG FALSEWORK BRACING SYSTEM

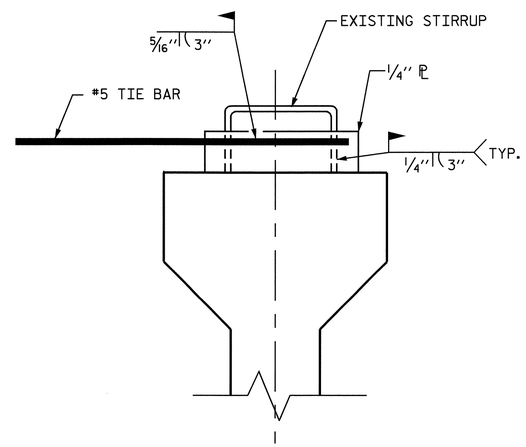

DETAIL "A"

NOTES:

EACH #5 TIE BAR SHALL BE WELDED TO ONE STIRRUP LOOP AS SHOWN IN DETAIL "A". #5 TIE BARS SHALL BE WELDED TO TWO ADJACENT STIRRUPS OF THE EXTERIOR GIRDER AND THE ADJACENT INTERIOR GIRDER BETWEEN PERMANENT DIAPHRAGMS. WELD STEEL PLATES IN BETWEEN THE TIE BARS AND THE STIRRUP LOOP. WELDING TWO TIE BARS TO THE SAME STIRRUP LOOP SHALL NOT BE PERMITTED.

MAXIMUM SPACING BETWEEN THE BRACING (TIE BARS-TIMBER STRUT) IS 8'-0" CTS. #5 TIE BARS SHALL BE LOCATED OVER A TIMBER STRUT.

INSTALL TIE BARS AND TIMBER STRUTS PRIOR TO PLACEMENT OF CONCRETE OR SCREED WEIGHT ONTO THE OVERHANG FALSEWORK.

PROJECT NO. R-2518B
YANCEY COUNTY
STATION: 223+53.200-L-

SHEET 3 OF 3

STATE OF NORTH CAROLINA
DEPARTMENT OF TRANSPORTATION
RALEIGH

STANDARD OVERHANG FALSEWORK

AASHTO TYPES
III, IV, V, AND VI

NORTH CAROLINA PROFESSIONAL SEAL 18788 ENGINEER CHANG-CHUAN VICTOR CHAO

Chang-Chuan Victor Chao
2-19-2008

REVISIONS						SHEET NO.
NO.	BY:	DATE:	NO.	BY:	DATE:	S-154
1			3			TOTAL SHEETS
2			4			154

DRAWN BY: R. WRIGHT 06/04 DATE :
CHECKED BY: C. V. CHAO 06/04 DATE :

18-FEB-2008 14:47
d:\wdlr\victor\overhangfalsework\tiebar&strut\r-2518b-4_type_III\r2518bstr4overhangsheets.dgn
vchao

BM #5: CHISELED SQUARE ON SE SIDE OF BOX CULVERT ON CORNER OF HEADWALL 106.708 LT. OF STA. 135+37.934 -L-. ELEV. = 816.532

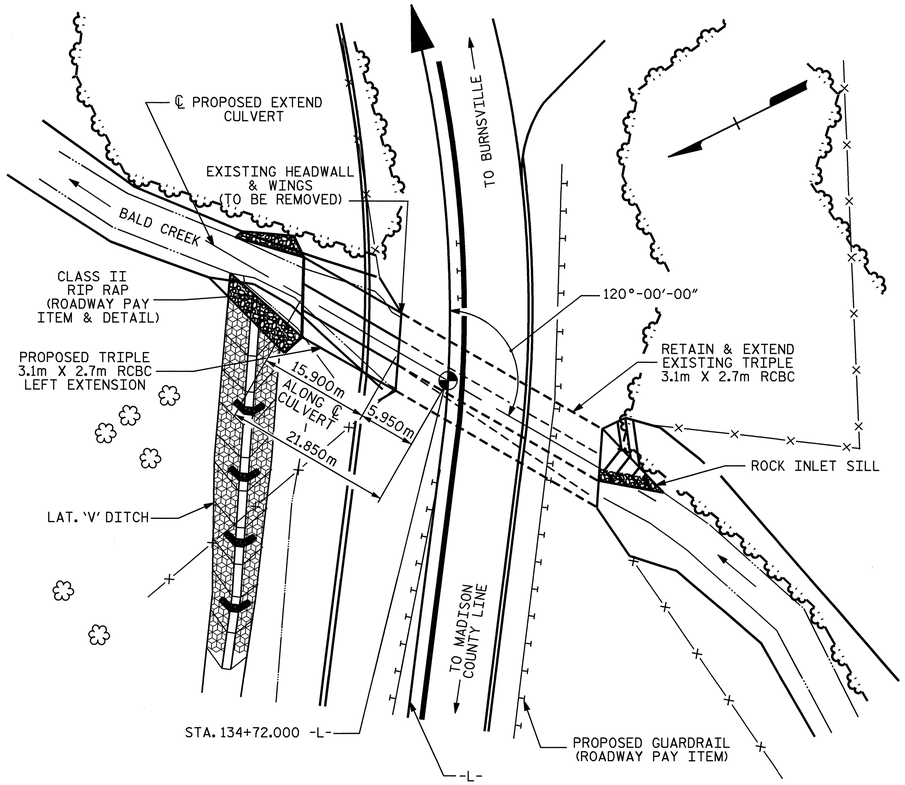

LOCATION SKETCH

FOR UTILITY INFORMATION, SEE UTILITY PLANS AND SPECIAL PROVISIONS.

HYDRAULIC DATA

DESIGN DISCHARGE	= 45.59 cms
FREQUENCY OF DESIGN FLOOD	= 50 yrs.
DESIGN HIGH WATER ELEVATION	= 816.300
DRAINAGE AREA	= 12.430 sq.km
BASIC DISCHARGE (Q100)	= 55.76 cms
BASIC HIGH WATER ELEVATION	= 816.610

OVERTOPPING FLOOD DATA

OVERTOPPING DISCHARGE	= 89.30 cms
FREQUENCY OF OVERTOPPING FLOOD	= 500 yr. +
OVERTOPPING FLOOD ELEVATION	= 817.500

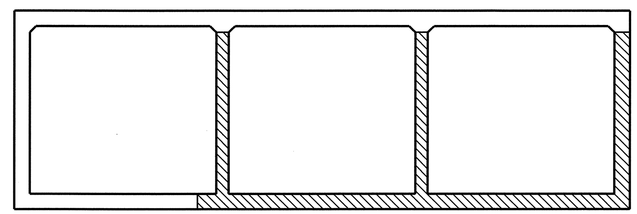

CONSTRUCTION PHASING

(LOOKING DOWNSTREAM)

PHASE I CONSTRUCTION

PHASE II CONSTRUCTION

NOTES

ASSUMED LIVE LOAD ----------MS18 OR ALTERNATE LOADING.

DESIGN FILL---------- 3.630m

FOR OTHER DESIGN DATA AND NOTES SEE STANDARD NOTE SHEET.

76mm Ø WEEP HOLES INDICATED TO BE IN ACCORDANCE WITH THE SPECIFICATIONS.

CONCRETE IN CULVERTS TO BE POURED IN THE FOLLOWING ORDER:

1. WING FOOTINGS AND FLOOR SLAB INCLUDING 100mm OF ALL VERTICAL WALLS.
2. THE REMAINING PORTIONS OF THE WALLS AND WINGS FULL HEIGHT FOLLOWED BY ROOF SLAB AND HEADWALLS.

THE RESIDENT ENGINEER SHALL CHECK THE LENGTH OF CULVERT BEFORE STAKING IT OUT TO MAKE CERTAIN THAT IT WILL PROPERLY TAKE CARE OF THE FILL.

DIMENSIONS FOR WING LAYOUT AS WELL AS ADDITIONAL REINFORCING STEEL EMBEDDED IN BARREL ARE SHOWN ON WING SHEET.

TRANSVERSE CONSTRUCTION JOINTS SHALL BE USED IN THE BARREL, SPACED TO LIMIT THE POURS TO A MAXIMUM OF 21.0m. LOCATION OF JOINTS SHALL BE SUBJECT TO APPROVAL OF THE ENGINEER.

STEEL IN THE BOTTOM SLAB MAY BE SPLICED AT THE PERMITTED CONSTRUCTION JOINT AT THE CONTRACTOR'S OPTION. EXTRA WEIGHT OF STEEL DUE TO THE SPLICES SHALL BE PAID FOR BY THE CONTRACTOR.

AT THE CONTRACTOR'S OPTION, HE MAY SPLICE THE VERTICAL REINFORCING STEEL IN THE INTERIOR FACE OF EXTERIOR WALL AND BOTH FACES OF INTERIOR WALLS ABOVE LOWER WALL CONSTRUCTION JOINT. THE SPLICE LENGTH SHALL BE AS PROVIDED IN THE SPLICE LENGTH CHART SHOWN ON THE PLANS. EXTRA WEIGHT OF STEEL DUE TO THE SPLICES SHALL BE PAID FOR BY THE CONTRACTOR.

IF APPROVED BY THE ENGINEER, THE CONTRACTOR MAY USED THE EXISTING WINGS AS TEMPORARY SHORING FOR THE CONSTRUCTION OF THE CULVERT EXTENSIONS. IN THIS CASE, THE BOTTOM SLAB OF THE EXTENSION SHALL BE POURED AT LEAST 72 HOURS PRIOR TO CUTTING THE WINGS. THE WINGS MAY BE CUT EARLIER PROVIDED THE SLAB CONCRETE STRENGTH HAS REACHED A MINIMUM COMPRESSIVE STRENGTH OF 10.3 MPa.

DOWELS SHALL BE USED TO CONNECT THE CULVERT EXTENSION TO THE EXISTING CULVERT AS SHOWN. FOR NOTE REGARDING SETTING OF DOWELS, SEE SHEET SN.

FOR CULVERT DIVERSION DETAILS AND PAY ITEM, SEE EROSION CONTROL PLANS.

NO PRECAST REINFORCED BOX CULVERT OPTION WILL BE ALLOWED.

FOR SUBMITTAL OF WORKING DRAWINGS, SEE SPECIAL PROVISIONS.

FOR FALSEWORK AND FORMWORK, SEE SPECIAL PROVISIONS.

ALL DIMENSIONS ARE IN MILIMETERS UNLESS OTHERWISE NOTED.

ALL ELEVATIONS ARE IN METERS.

FOR CRANE SAFETY, SEE SPECIAL PROVISIONS.

FOR ADHESIVELY ANCHORED BOLTS OR DOWELS, SEE SPECIAL PROVISIONS.

FOR GROUT FOR STRUCTURES, SEE SPECIAL PROVISIONS.

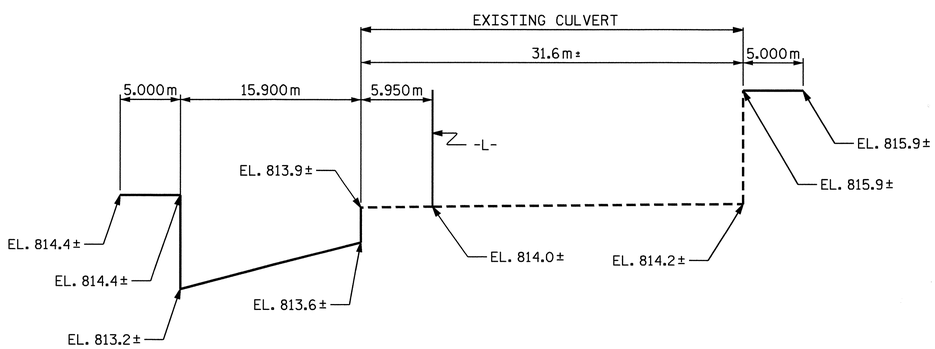

PROFILE ALONG ℄ CULVERT

TOTAL STRUCTURE QUANTITIES		
CLASS A CONCRETE		
BARREL @ 8.60 m^3/m	136.8 m^3	
WINGS, ETC.	15.7 m^3	
TOTAL	152.5 m^3	
REINFORCING STEEL		
BARREL	16,963 kg	
WINGS, ETC.	471 kg	
TOTAL	17,434 kg	
CULVERT EXCAVATION ----------	LUMP SUM	
FOUNDATION COND. MAT'L -----	109 METRIC TONS	

METRIC

PROJECT NO. R-2518B
YANCEY COUNTY
STATION: 134+72.000 -L-

SHEET 1 OF 5 CULVERT #C310

STATE OF NORTH CAROLINA
DEPARTMENT OF TRANSPORTATION
RALEIGH

TRIPLE 3.1m X 2.7m CONCRETE BOX CULVERT LEFT EXTENSION

NORTH CAROLINA PROFESSIONAL SEAL 13014 ENGINEER QUANG H. NGUYEN
Quang H. Nguyen 4-16-08

NORTH CAROLINA PROFESSIONAL SEAL 20125 ENGINEER MARSHALL L. DUCK, JR.
4-16-08

REVISIONS						SHEET NO.
NO.	BY:	DATE:	NO.	BY:	DATE:	C-1
1			3			TOTAL SHEETS
2			4			24

ASSEMBLED BY : A. SORSENGINH DATE : 5-11-05
CHECKED BY : V. X. NGUYEN DATE : 11/05
DRAWN BY : EEM 6/97
CHECKED BY : ARB 7/97

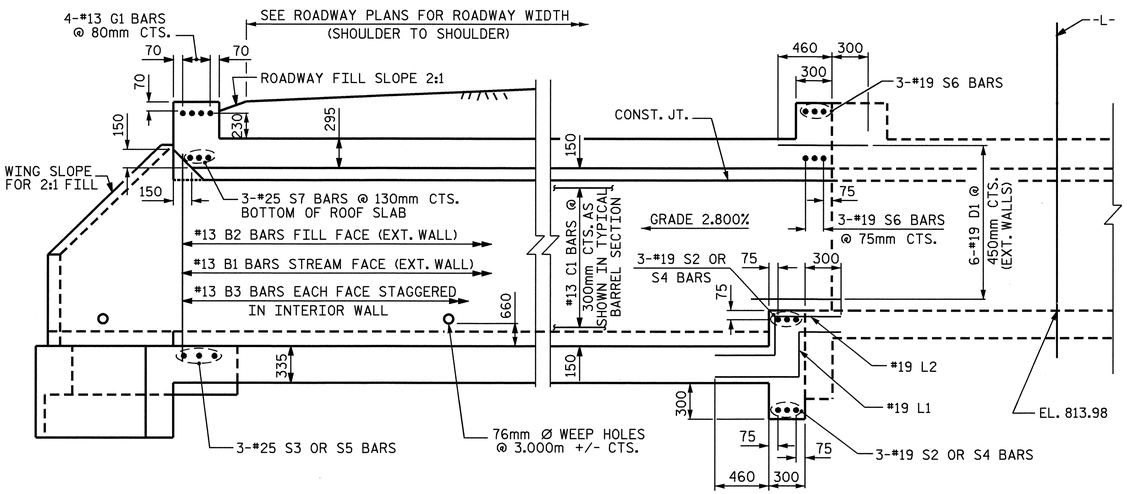

LEFT CULVERT EXTENSION SECTION NORMAL TO ROADWAY

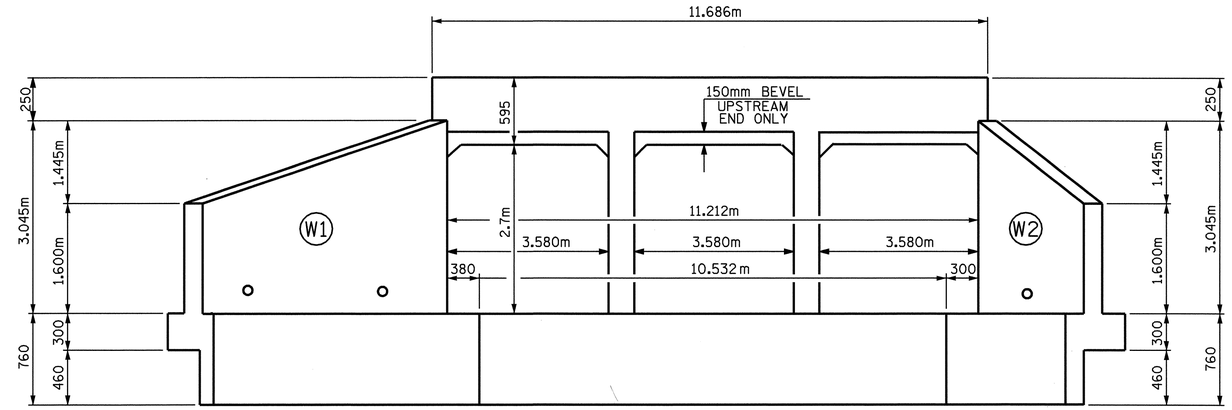

OUTLET END ELEVATION NORMAL TO SKEW

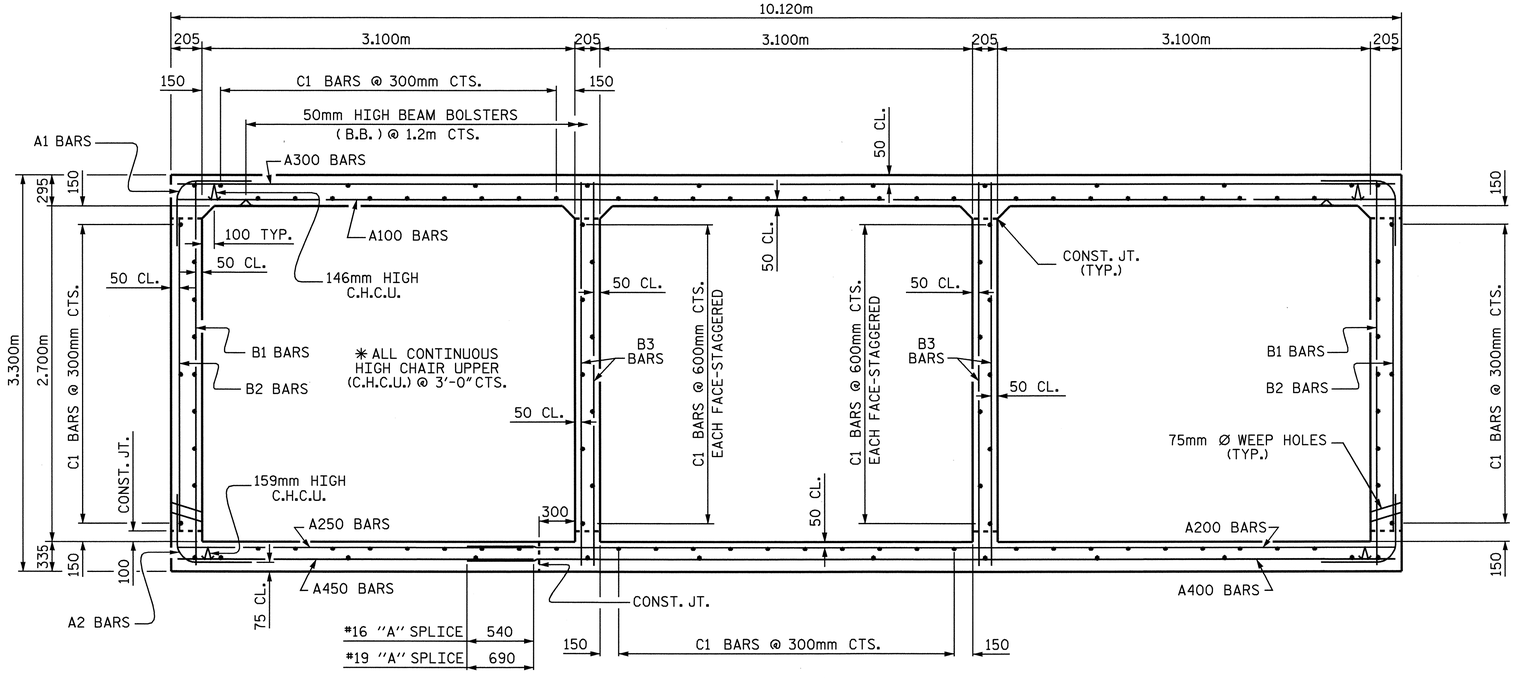

RIGHT ANGLE SECTION OF BARREL

THERE ARE 118 "C" BARS IN SECTION OF BARREL.
(LOOKING DOWNSTREAM)

PROJECT NO. R-2518B
YANCEY COUNTY
STATION: 134+72.000 -L-

SHEET 2 OF 5

STATE OF NORTH CAROLINA
DEPARTMENT OF TRANSPORTATION
RALEIGH

TRIPLE 3.1m X 2.7m
CONCRETE BOX CULVERT
EXTENSION
120° SKEW

NORTH CAROLINA PROFESSIONAL SEAL 20125 ENGINEER MARSHALL L. GREEK, JR.
4-7-08

REVISIONS						SHEET NO.
NO.	BY:	DATE:	NO.	BY:	DATE:	C-2
1			3			TOTAL SHEETS
2			4			24

ASSEMBLED BY : A. SORSENGINH DATE : 5-11-05
CHECKED BY : V. X. NGUYEN DATE : 11/05
DRAWN BY : EEM 6/97
CHECKED BY : ARB 7/97

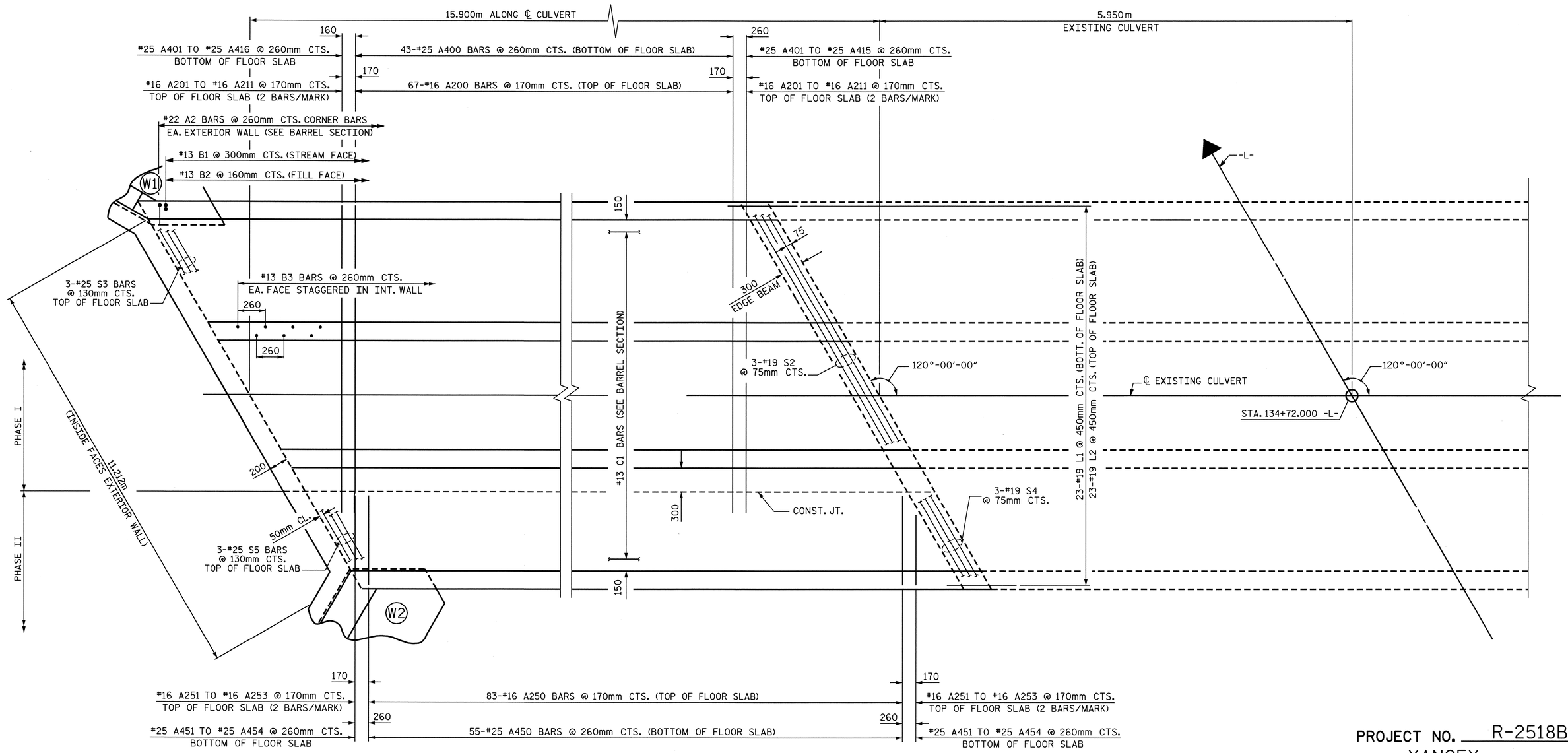

PLAN - FLOOR SLAB-LEFT EXTENSION

PROJECT NO. R-2518B
YANCEY COUNTY
STATION: 134+72.000 -L-

SHEET 3 OF 5

STATE OF NORTH CAROLINA
DEPARTMENT OF TRANSPORTATION
RALEIGH

TRIPLE 3.1m X 2.7m
CONCRETE BOX CULVERT
(LEFT EXTENSION)

NORTH CAROLINA PROFESSIONAL SEAL 20125 ENGINEER
MARSHALL G. FRIDDLE, JR.
8-28-08

REVISIONS						SHEET NO.
NO.	BY:	DATE:	NO.	BY:	DATE:	C-3
1			3			TOTAL SHEETS
2			4			24

ASSEMBLED BY : A. SORSENGINH DATE : 5-11-05
CHECKED BY : V. X. NGUYEN DATE : 11/05
DRAWN BY : EEM 6/97
CHECKED BY : ARB 7/97

BAR TYPE

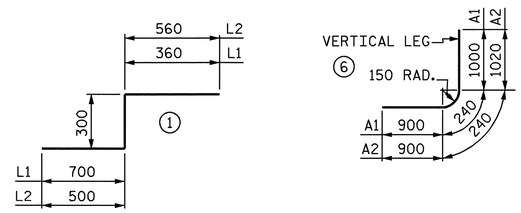

DIMENSIONS ARE OUT TO OUT

SPLICE LENGTH CHART

BAR	SIZE	SPLICE LENGTH
A200	16	540
A400	25	1220
B1	13	540
B2	13	540
B3	19	690

BILL OF MATERIAL

BARS	NO.	SIZE	TYPE	LENGTH	WEIGHT
A1	124	22	6	2140	807
A2	124	22	6	2160	815
A100	63	16	STR	9980	976
A101	4	16	STR	9380	58
A102	4	16	STR	8820	55
A103	4	16	STR	8280	51
A104	4	16	STR	7720	48
A105	4	16	STR	7160	44
A106	4	16	STR	6600	41
A107	4	16	STR	6040	37
A108	4	16	STR	5520	34
A109	4	16	STR	4960	31
A110	4	16	STR	4400	27
A111	4	16	STR	3840	24
A112	4	16	STR	3280	20
A113	4	16	STR	2720	17
A114	4	16	STR	2180	14
A115	4	16	STR	1620	10
A116	4	16	STR	1060	7
A200	67	16	STR	7640	794
A201	4	16	STR	7140	44
A202	4	16	STR	6520	40
A203	4	16	STR	5940	37
A204	4	16	STR	5340	33
A205	4	16	STR	4760	30
A206	4	16	STR	4160	26
A207	4	16	STR	3580	22

BARS	NO.	SIZE	TYPE	LENGTH	WEIGHT
A208	4	16	STR	3000	19
A209	4	16	STR	2400	15
A210	4	16	STR	1820	11
A211	4	16	STR	1220	8
A250	83	16	STR	2900	374
A251	4	16	STR	2420	15
A252	4	16	STR	1820	11
A253	4	16	STR	1240	8
A300	39	25	STR	9980	1546
A301	2	25	STR	9480	75
A302	2	25	STR	9040	72
A303	2	25	STR	8580	68
A304	2	25	STR	8120	65
A305	2	25	STR	7680	61
A306	2	25	STR	7240	58
A307	2	25	STR	6780	54
A308	2	25	STR	6320	50
A309	2	25	STR	5900	47
A310	2	25	STR	5440	43
A311	2	25	STR	4980	40
A312	2	25	STR	4520	36
A313	2	25	STR	4080	32
A314	2	25	STR	3640	29
A315	2	25	STR	3180	25
A316	2	25	STR	2720	22
A317	2	25	STR	2280	18
A318	2	25	STR	1820	14
A319	2	25	STR	1380	11
A320	2	25	STR	940	7
A400	43	25	STR	8320	1421
A401	2	25	STR	7860	62
A402	2	25	STR	7400	59

BARS	NO.	SIZE	TYPE	LENGTH	WEIGHT
A403	2	25	STR	6960	55
A404	2	25	STR	6500	52
A405	2	25	STR	6040	48
A406	2	25	STR	5600	44
A407	2	25	STR	5160	41
A408	2	25	STR	4700	37
A409	4	25	STR	4240	34
A410	2	25	STR	3800	30
A411	2	25	STR	3340	27
A412	2	25	STR	2900	23
A413	2	25	STR	2440	19
A414	2	25	STR	2000	16
A415	2	25	STR	1540	12
A450	55	25	STR	2940	642
A451	2	25	STR	2440	19
A452	2	25	STR	2000	16
A453	2	25	STR	1540	12
A454	2	25	STR	1080	9
B1	106	13	STR	3180	335
B2	200	13	STR	2480	493
B3	248	19	STR	3180	1763
C1	472	13	STR	8180	3838
D1	35	19	STR	750	59
G1	4	16	STR	11560	72
L1	23	19	1	1360	70
L2	23	19	1	1360	70
S2	6	19	STR	8840	119
S3	3	25	STR	9360	112
S4	6	19	STR	3360	45
S5	3	25	STR	3360	40
S6	6	19	STR	11560	155
S7	3	25	STR	11560	138
REINFORCING STEEL				=	16,963 kg

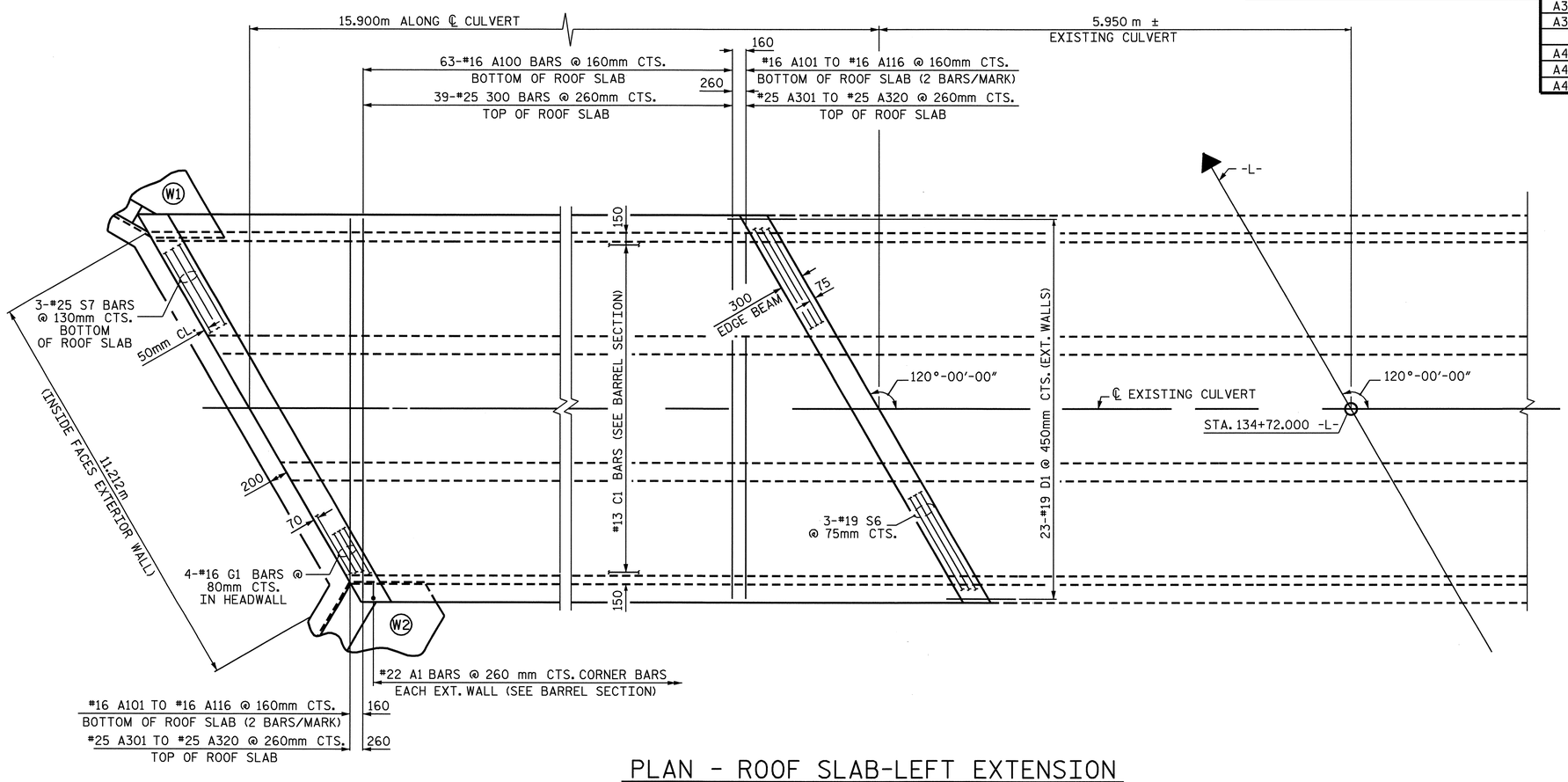

PLAN - ROOF SLAB-LEFT EXTENSION

PROJECT NO. R-2518B
YANCEY COUNTY
STATION: 134+72.000 -L-

SHEET 4 OF 5

STATE OF NORTH CAROLINA
DEPARTMENT OF TRANSPORTATION
RALEIGH

TRIPLE 3.1m X 2.7m
CONCRETE BOX CULVERT
(LEFT EXTENSION)

NORTH CAROLINA PROFESSIONAL SEAL 20125 ENGINEER MARSHALL V. CHECK, JR.
5-28-08

REVISIONS						SHEET NO.
NO.	BY:	DATE:	NO.	BY:	DATE:	C-4
1			3			TOTAL SHEETS
2			4			24

DRAWN BY : A. SORSENGINH DATE : 5-13-05
CHECKED BY : V. X. NGUYEN DATE : 11/05

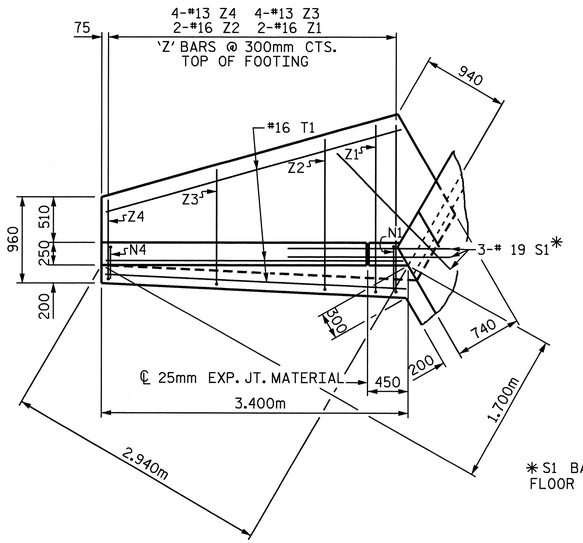

PLAN W2

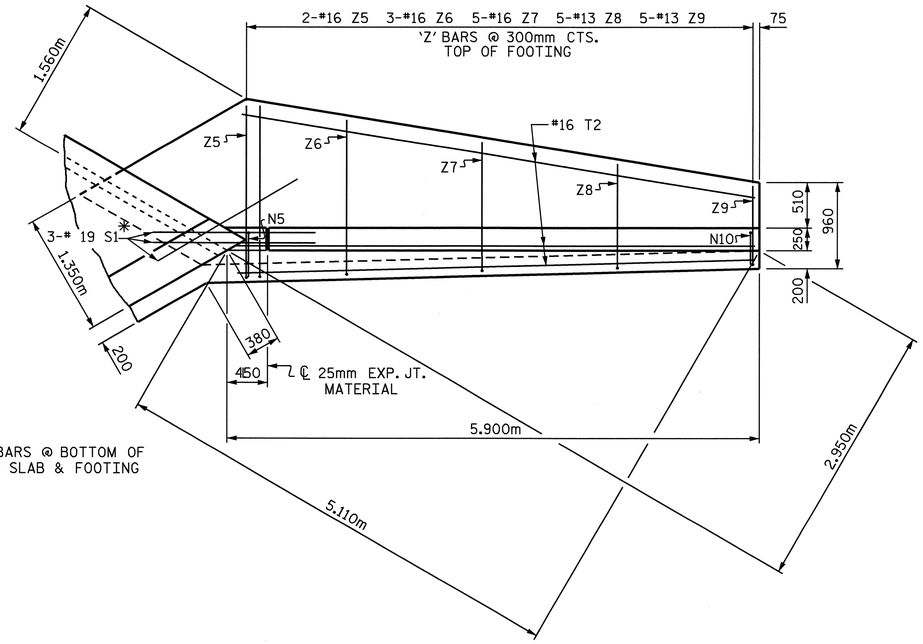

PLAN W1

*S1 BARS @ BOTTOM OF FLOOR SLAB & FOOTING

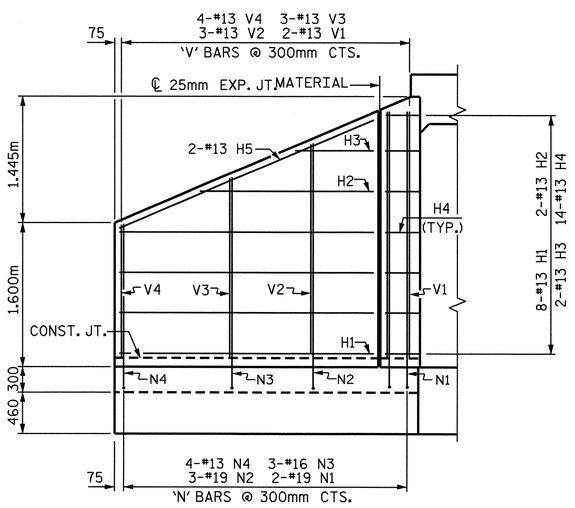

ELEVATION W2

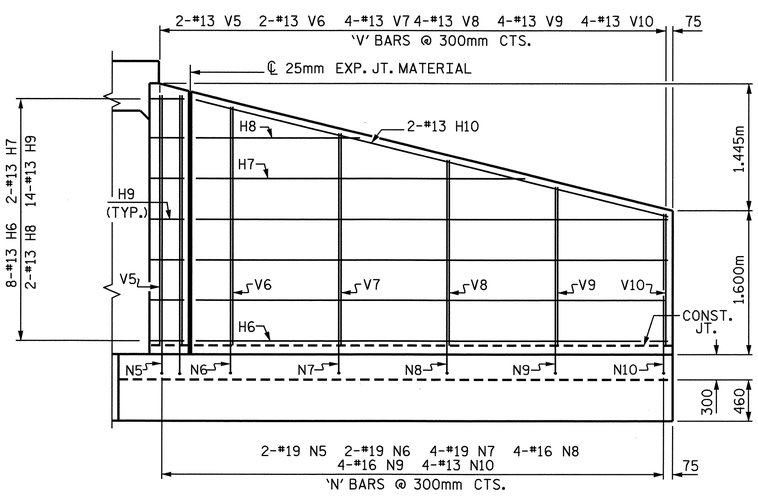

ELEVATION W1

FOR WING ORIENTATION, SEE BARREL STANDARD SHEET.

BAR TYPES

ALL BAR DIMENSIONS ARE OUT TO OUT.

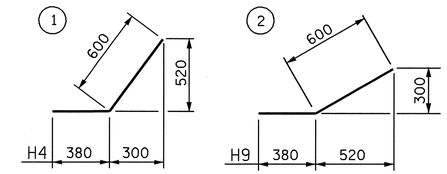

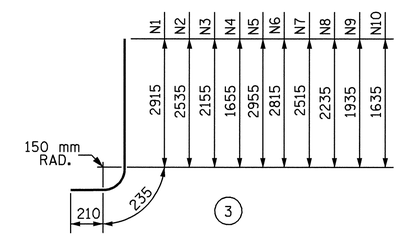

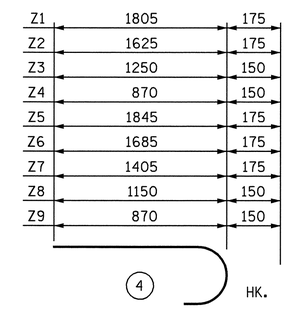

BILL OF MATERIAL

BAR	NO.	SIZE	TYPE	LENGTH	WEIGHT
H1	8	13	STR	2840	23
H2	2	13	STR	1940	4
H3	2	13	STR	860	2
H4	14	13	1	980	14
H5	2	13	STR	3060	6
H6	8	13	STR	5340	42
H7	2	13	STR	3820	8
H8	2	13	STR	1980	4
H9	14	13	2	980	14
H10	2	13	STR	5480	11
N1	2	19	3	3360	15
N2	3	19	3	2980	20
N3	3	16	3	2600	12
N4	4	13	3	2100	8
N5	2	19	3	3400	15
N6	2	19	3	3260	15
N7	4	19	3	2960	26
N8	4	16	3	2680	17
N9	4	16	3	2380	15
N10	4	13	3	2080	8
S1	6	19	STR	1800	24
T1	3	16	STR	3400	16
T2	3	16	STR	5900	27
V1	2	13	STR	2740	5
V2	3	13	STR	2360	7
V3	3	13	STR	1980	6
V4	4	13	STR	1480	6
V5	2	13	STR	2780	6
V6	2	13	STR	2640	5
V7	4	13	STR	2340	9
V8	4	13	STR	2060	8
V9	4	13	STR	1760	7
V10	4	13	STR	1460	6
Z1	2	16	4	1980	6
Z2	2	16	4	1800	6
Z3	4	13	4	1400	6
Z4	4	13	4	1020	4
Z5	2	16	4	2020	6
Z6	3	16	4	1860	9
Z7	5	16	4	1580	12
Z8	5	13	4	1300	6
Z9	5	13	4	1020	5

REINFORCING STEEL FOR 2 WING WALLS 471 kg

CLASS A CONCRETE

2 WINGS	10.7	m^3
1 HEADWALL	1.3	m^3
1 END CURTAIN WALL	1.6	m^3
2 EDGE BEAMS	2.1	m^3
TOTAL	15.7	m^3

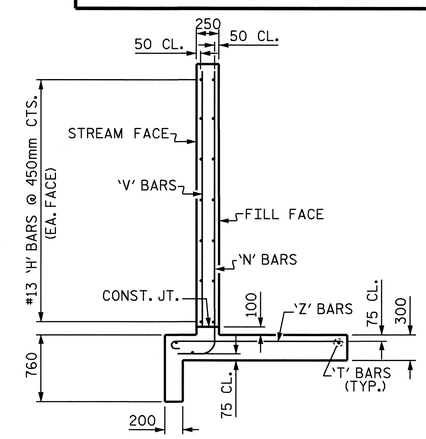

TYPICAL WING SECTION

PROJECT NO. R-2518B

YANCEY COUNTY

STATION: 134+72.000 -L-

SHEET 5 OF 5

STATE OF NORTH CAROLINA
DEPARTMENT OF TRANSPORTATION
RALEIGH

WINGS FOR CONCRETE BOX CULVERT H = 2.700m SLOPE 2:1 120° SKEW

NORTH CAROLINA PROFESSIONAL SEAL 20125 ENGINEER MARSHALL D. GREEK, JR.
3-28-08

REVISIONS						SHEET NO.
NO.	BY:	DATE:	NO.	BY:	DATE:	C-5
1			3			TOTAL SHEETS
2			4			24

ASSEMBLED BY : A. SORSENGINH DATE : 5-13-05
CHECKED BY : V. X. NGUYEN DATE : 11/05
DRAWN BY : KJA 6/97
CHECKED BY : VAP 10/97

BENCHMARK #6: SPIKE IN 500mm MAPLE TREE, 26.594 LT OF STA. 140+14.040 -L-, EL. 810.389

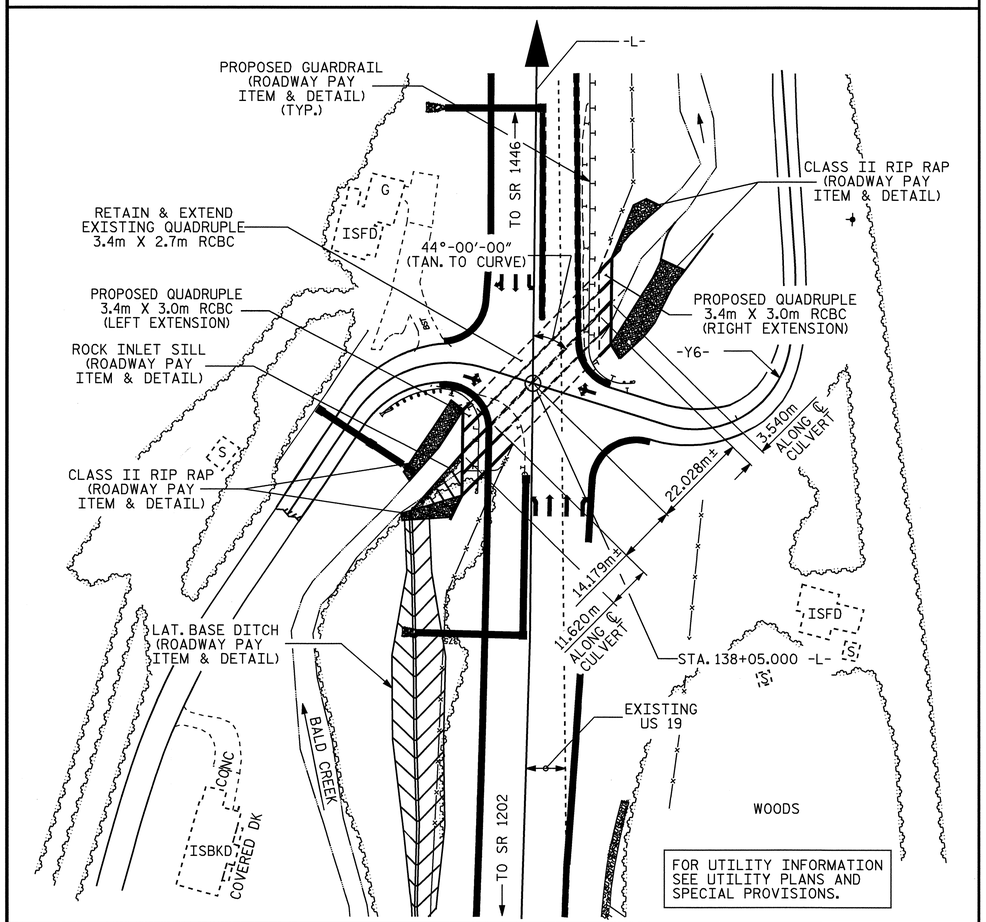

LOCATION SKETCH

HYDRAULIC DATA

DESIGN DISCHARGE	= 72.90 m³/s
FREQUENCY OF DESIGN FLOOD	= 50 YEARS
DESIGN HIGH WATER ELEVATION	= 810.45m
DRAINAGE AREA	= 21.240 SQ. Km
BASIC DISCHARGE (Q100)	= 89.10 m³/s
BASIC HIGH WATER ELEVATION	= 810.72m

OVERTOPPING FLOOD DATA

OVERTOPPING DISCHARGE	= 122.40± m³/s
FREQUENCY OF OVERTOPPING FLOOD	= 100± YEARS
OVERTOPPING FLOOD ELEVATION	= 811.23m

ROADWAY DATA

GRADE POINT ELEV. @ STA. 138+05.000 -L-	= 813.019m
BED ELEV. @ STA. 138+05.000 -L-	= 807.990m
ROADWAY SLOPE	= 2 :1

TOTAL STRUCTURE QUANTITIES

CLASS A CONCRETE		
LEFT EXTENSION	160.7	m³
RIGHT EXTENSION	72.8	m³
TOTAL	233.5	m³
REINFORCING STEEL		
LEFT EXTENSION	18,646	kg
RIGHT EXTENSION	7,813	kg
TOTAL	26,459	kg
CULVERT EXCAVATION	LUMP SUM	
FOUNDATION COND. MAT'L		METRIC TONS
LEFT EXTENSION	115	METRIC TONS
RIGHT EXTENSION	35	METRIC TONS
TOTAL	150	METRIC TONS

NOTES

ASSUMED LIVE LOAD ----------MS18 OR ALTERNATE LOADING.

DESIGN FILL LEFT EXTENSION---------- 2.360m
DESIGN FILL RIGHT EXTENSION---------- 2.000m

FOR OTHER DESIGN DATA AND NOTES, SEE STANDARD NOTE SHEET.

76mm Ø WEEP HOLES INDICATED TO BE IN ACCORDANCE WITH THE SPECIFICATIONS.

CONCRETE IN CULVERT TO BE POURED IN THE FOLLOWING ORDER:

1. PHASE I WING FOOTINGS AND FLOOR SLAB INCLUDING 100mm OF PHASE I VERTICAL WALLS.
2. THE REMAINING PORTIONS OF PHASE I WALLS AND PHASE I WINGS FULL HEIGHT.
3. PHASE II WING FOOTINGS AND FLOOR SLAB INCLUDING 100mm OF PHASE II VERTICAL WALLS.
4. THE REMAINING PORTIONS OF PHASE II WALLS AND PHASE II WINGS FULL HEIGHT.
5. ROOF SLAB IN IT'S ENTIRETY AND HEADWALLS.

THE RESIDENT ENGINEER SHALL CHECK THE LENGTH OF CULVERT BEFORE STAKING IT OUT TO MAKE CERTAIN THAT IT WILL PROPERLY TAKE CARE OF THE FILL.

DIMENSIONS FOR WING LAYOUT AS WELL AS ADDITIONAL REINFORCING STEEL EMBEDDED IN BARREL ARE SHOWN ON WING SHEET.

AT THE CONTRACTOR'S OPTION, HE MAY SPLICE THE VERTICAL REINFORCING STEEL IN THE INTERIOR FACES OF THE EXTERIOR WALLS AND BOTH FACES OF INTERIOR WALLS ABOVE LOWER WALL CONSTRUCTION JOINT. THE SPLICE LENGTH SHALL BE AS PROVIDED IN THE SPLICE LENGTH CHART SHOWN ON THE PLANS. EXTRA WEIGHT OF STEEL DUE TO THE SPLICES SHALL BE PAID FOR BY THE CONTRACTOR.

IF APPROVED BY THE ENGINEER, THE CONTRACTOR MAY USE THE EXISTING WINGS AS TEMPORARY SHORING FOR THE CONSTRUCTION OF THE CULVERT EXTENSION. IN THIS CASE, THE BOTTOM SLAB OF THE EXTENSION SHALL BE POURED A LEAST 72 HOURS PRIOR TO CUTTING THE WINGS. THE WINGS MAY BE CUT EARLIER PROVIDE THE SLAB CONCRETE STRENGTH HAS REACHED A MINIMUM COMPRESSIVE STRENGTH OF 10.3 MPa.

DOWELS SHALL BE USED TO CONNECT THE CULVERT EXTENSIONS TO THE EXISTING CULVERT AS SHOWN. FOR NOTE REGARDING SETTING OF DOWELS, SEE SHEET STANDARD NOTES SHEET SNSM.

FOR ADHESIVELY ANCHORED BOLTS OR DOWELS, SEE SPECIAL PROVISIONS.

FOR CONSTRUCTION SEQUENCE, SEE EROSION CONTROL PLANS.

FOR GROUT FOR STRUCTURES, SEE SPECIAL PROVISIONS.

FOR FALSEWORK AND FORMWORK, SEE SPECIAL PROVISIONS.

FOR SUBMITTAL OF WORKING DRAWINGS, SEE SPECIAL PROVISIONS.

FOR CULVERT DIVERSION DETAILS AND PAY ITEM, SEE EROSION CONTROL PLANS.

FOR CRANE SAFETY, SEE SPECIAL PROVISIONS.

ALL DIMENSIONS ARE IN MILLIMETERS UNLESS OTHERWISE NOTED.

ALL ELEVATIONS ARE IN METERS.

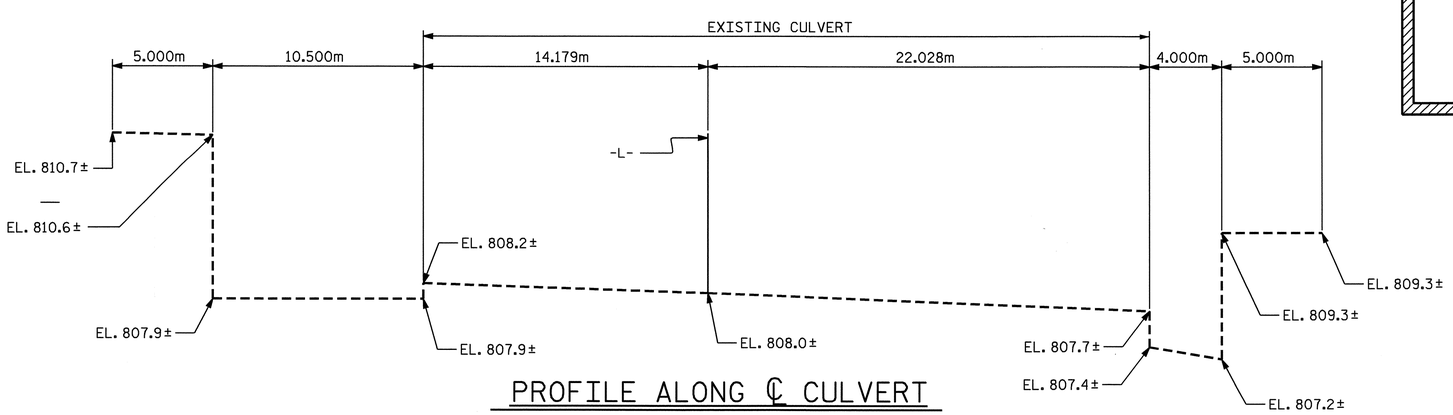

PROFILE ALONG ℄ CULVERT

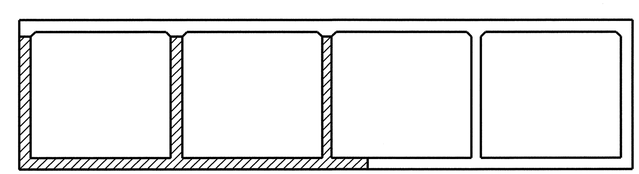

CONSTRUCTION PHASING

(LOOKING DOWNSTREAM)

PHASE I CONSTRUCTION

PHASE II CONSTRUCTION

NORTH CAROLINA PROFESSIONAL SEAL 13014 ENGINEER QUANG H. NGUYEN

Quang H. Nguyen 4-16-08

NORTH CAROLINA PROFESSIONAL SEAL 20125 ENGINEER MARSHALL G. CHEEK, JR.

4-16-08

ASSEMBLED BY : A.S. /A.L.F. DATE : 05-19-06
CHECKED BY : M.G. CHEEK DATE : 11-14-07

PROJECT NO. R-2518B
YANCEY COUNTY
STATION: 138+05.000 -L-

SHEET 1 OF 10 CULVERT #C311

STATE OF NORTH CAROLINA
DEPARTMENT OF TRANSPORTATION
RALEIGH

QUADRUPLE 3.400m X 3.000m CONCRETE BOX CULVERT LEFT & RIGHT EXTENSIONS

REVISIONS								SHEET NO.
NO.	BY:	DATE:	NO.	BY:	DATE:			C-6
1			3					TOTAL SHEETS
2			4					24

STR. No. 6

BAR TYPE

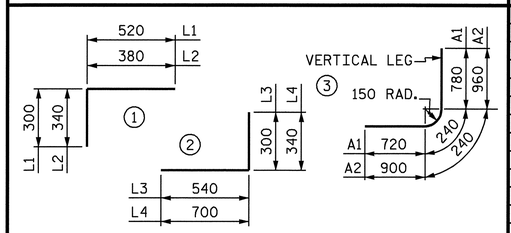

BAR DIMENSIONS ARE OUT TO OUT

SPLICE LENGTH CHART

BAR	SIZE	SPLICE LENGTH
A200	16	540
A400	22	920
B1	13	540
B3	13	540
C1	13	590
G1	16	920
H1	13	540
"S"	25	1500

LEFT EXTENSION BAR SCHEDULE

BAR	NO.	SIZE	TYPE	LENGTH	WEIGHT
A1	146	19	3	1740	568
A2	146	22	3	2100	933
A100	26	19	STR	14480	841
A101	3	19	STR	14000	94
A102	3	19	STR	13540	91
A103	3	19	STR	13080	88
A104	3	19	STR	12620	85
A105	3	19	STR	12140	81
A106	3	19	STR	11680	78
A107	3	19	STR	11220	75
A108	3	19	STR	10760	72
A109	3	19	STR	10280	69
A110	3	19	STR	9820	66
A111	3	19	STR	9380	63
A112	3	19	STR	8920	60
A113	3	19	STR	8440	57
A114	3	19	STR	7980	54
A115	3	19	STR	7520	50
A116	3	19	STR	7060	47
A117	3	19	STR	6580	44
A118	3	19	STR	6120	41
A119	3	19	STR	5660	38
A120	3	19	STR	5200	35
A121	3	19	STR	4720	32
A122	3	19	STR	4260	29
A123	3	19	STR	3800	25
A124	3	19	STR	3360	23
A125	3	19	STR	2880	19
A126	3	19	STR	2420	16
A127	3	19	STR	1960	13
A128	3	19	STR	1500	10
A129	3	19	STR	1020	7

BAR	NO.	SIZE	TYPE	LENGTH	WEIGHT
A200	26	16	STR	8220	332
A201	3	16	STR	7740	36
A202	3	16	STR	7260	34
A203	3	16	STR	6800	32
A204	3	16	STR	6340	30
A205	3	16	STR	5880	27
A206	3	16	STR	5420	25
A207	3	16	STR	4940	23
A208	3	16	STR	4480	21
A209	3	16	STR	4020	19
A210	3	16	STR	3560	17
A211	3	16	STR	3100	14
A212	3	16	STR	2640	12
A213	3	16	STR	2160	10
A214	3	16	STR	1700	8
A215	3	16	STR	1240	6
A250	75	16	STR	6860	799
A251	3	16	STR	6460	30
A252	3	16	STR	6000	28
A253	3	16	STR	5540	26
A254	3	16	STR	5060	24
A255	3	16	STR	4600	21
A256	3	16	STR	4140	19
A257	3	16	STR	3680	17
A258	3	16	STR	3220	15
A259	3	16	STR	2760	13
A260	3	16	STR	2300	11
A261	3	16	STR	1820	8
A262	3	16	STR	1360	6
A263	3	16	STR	900	4

BAR	NO.	SIZE	TYPE	LENGTH	WEIGHT
A300	26	22	STR	14480	1145
A301	3	22	STR	14000	128
A302	3	22	STR	13540	124
A303	3	22	STR	13080	119
A304	3	22	STR	12620	115
A305	3	22	STR	12140	111
A306	3	22	STR	11680	107
A307	3	22	STR	11220	102
A308	3	22	STR	10760	98
A309	3	22	STR	10280	94
A310	3	22	STR	9820	90
A311	3	22	STR	9380	86
A312	3	22	STR	8920	81
A313	3	22	STR	8440	77
A314	3	22	STR	7980	73
A315	3	22	STR	7520	69
A316	3	22	STR	7060	64
A317	3	22	STR	6580	60
A318	3	22	STR	6120	56
A319	3	22	STR	5660	52
A320	3	22	STR	5200	47
A321	3	22	STR	4720	43
A322	3	22	STR	4260	39
A323	3	22	STR	3800	35
A324	3	22	STR	3360	31
A325	3	22	STR	2880	26
A326	3	22	STR	2420	22
A327	3	22	STR	1960	18
A328	3	22	STR	1500	14
A329	3	22	STR	1020	9

BAR	NO.	SIZE	TYPE	LENGTH	WEIGHT
A400	27	22	STR	8600	706
A401	3	22	STR	8240	75
A402	3	22	STR	7800	71
A403	3	22	STR	7360	67
A404	3	22	STR	6940	63
A405	3	22	STR	6500	59
A406	3	22	STR	6060	55
A407	3	22	STR	5620	51
A408	3	22	STR	5200	47
A409	3	22	STR	4760	43
A410	3	22	STR	4320	39
A411	3	22	STR	3900	36
A412	3	22	STR	3460	32
A413	3	22	STR	3020	28
A414	3	22	STR	2580	24
A415	3	22	STR	2160	20
A416	3	22	STR	1860	17
A450	79	22	STR	6860	1649
A451	3	22	STR	6480	59
A452	3	22	STR	6040	55
A453	3	22	STR	5600	51
A454	3	22	STR	5180	47
A455	3	22	STR	4740	43
A456	3	22	STR	4300	39
A457	3	22	STR	3880	35
A458	3	22	STR	3440	31
A459	3	22	STR	3000	27
A460	3	22	STR	2560	23
A461	3	22	STR	2140	20
A462	3	22	STR	1700	16
A463	3	22	STR	1260	11
A464	3	22	STR	820	7

BAR	NO.	SIZE	TYPE	LENGTH	WEIGHT
B1	78	13	STR	3400	264
B2	146	13	STR	2800	406
B3	318	13	STR	3400	1075
C1	69	13	STR	4000	274
C2	104	13	STR	6100	631
C3	80	13	STR	7980	635
C4	123	13	STR	6800	831
D1	47	19	STR	760	80
G1	8	16	STR	10700	133
H1	4	13	STR	8260	33
H2	4	13	STR	6860	27
L1	36	19	1	820	66
L2	32	19	1	720	51
L3	36	19	2	840	68
L4	32	19	2	1040	74
S2	3	25	STR	12620	150
S3	3	25	STR	9220	110
S4	3	25	STR	9820	117
S5	3	25	STR	6860	82
S6	3	25	STR	14520	173
S7	6	25	STR	11240	268

REINFORCING STEEL = 17,700 kg

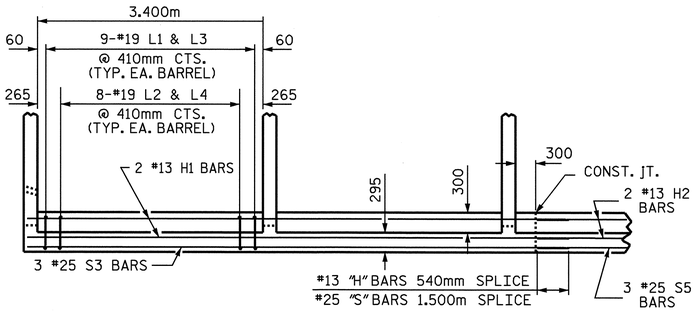

SECTION X-X

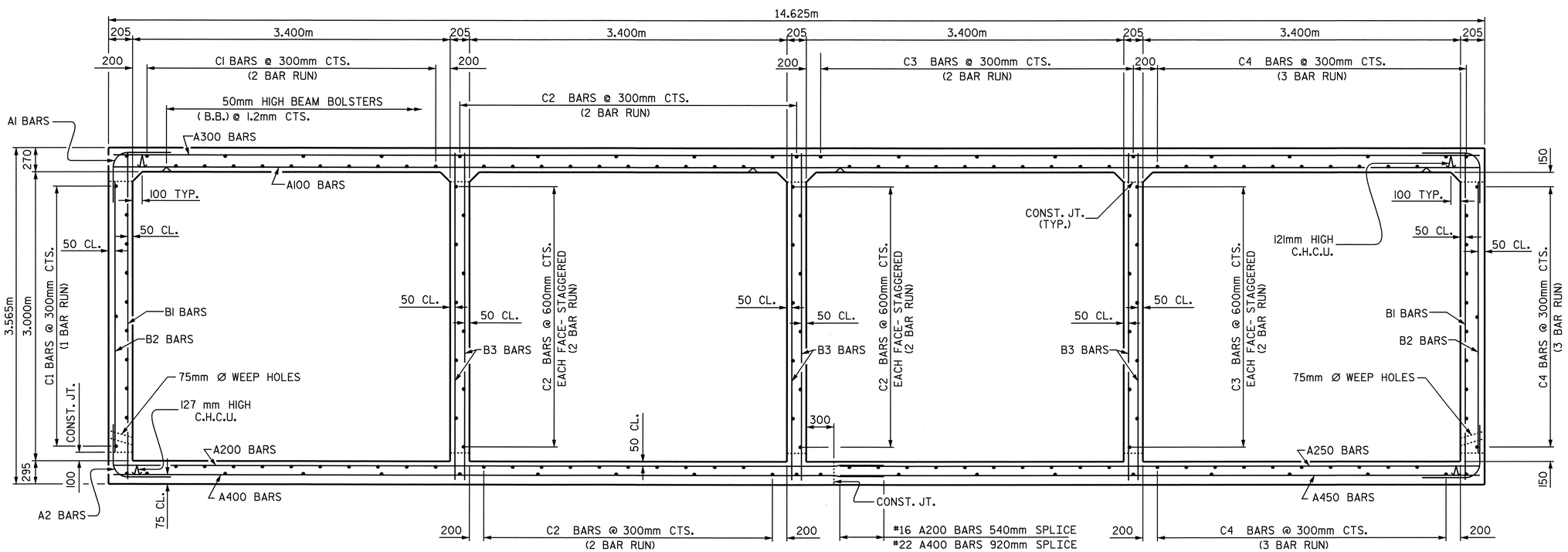

RIGHT ANGLE SECTION OF BARREL

THERE ARE 174 "C" BARS IN SECTION OF BARREL.
(LOOKING DOWNSTREAM)

LEFT EXTENSION QUANTITIES

CLASS A CONCRETE			
BARREL @	11.35 m/m³	131.9	m³
WINGS, ETC.		28.8	m³
TOTAL		160.7	m³
REINFORCING STEEL			
BARREL & HEADWALL		17,700	kg
WINGS, ETC.		946	kg
TOTAL		18,646	kg

CULVERT EXCAVATION ---------- LUMP SUM
FOUNDATION COND. MAT'L ---- 115 METRIC TONS

PROJECT NO. R-2518B
YANCEY COUNTY
STATION: 138+05.000 -L-

SHEET 2 OF 10

STATE OF NORTH CAROLINA
DEPARTMENT OF TRANSPORTATION
RALEIGH

QUADRUPLE
3.400m X 3.000m
CONCRETE BOX CULVERT
LEFT EXTENSION

NORTH CAROLINA PROFESSIONAL SEAL 20125 ENGINEER MARSHALL G. CHEEK, JR.
4-7-08

REVISIONS						SHEET NO.
NO.	BY:	DATE:	NO.	BY:	DATE:	C-7
1			3			TOTAL SHEETS
2			4			24

ASSEMBLED BY : A.S./A.L.F. DATE : 05-19-06
CHECKED BY : M.G. CHEEK DATE : 11-14-06

STR. No. 6

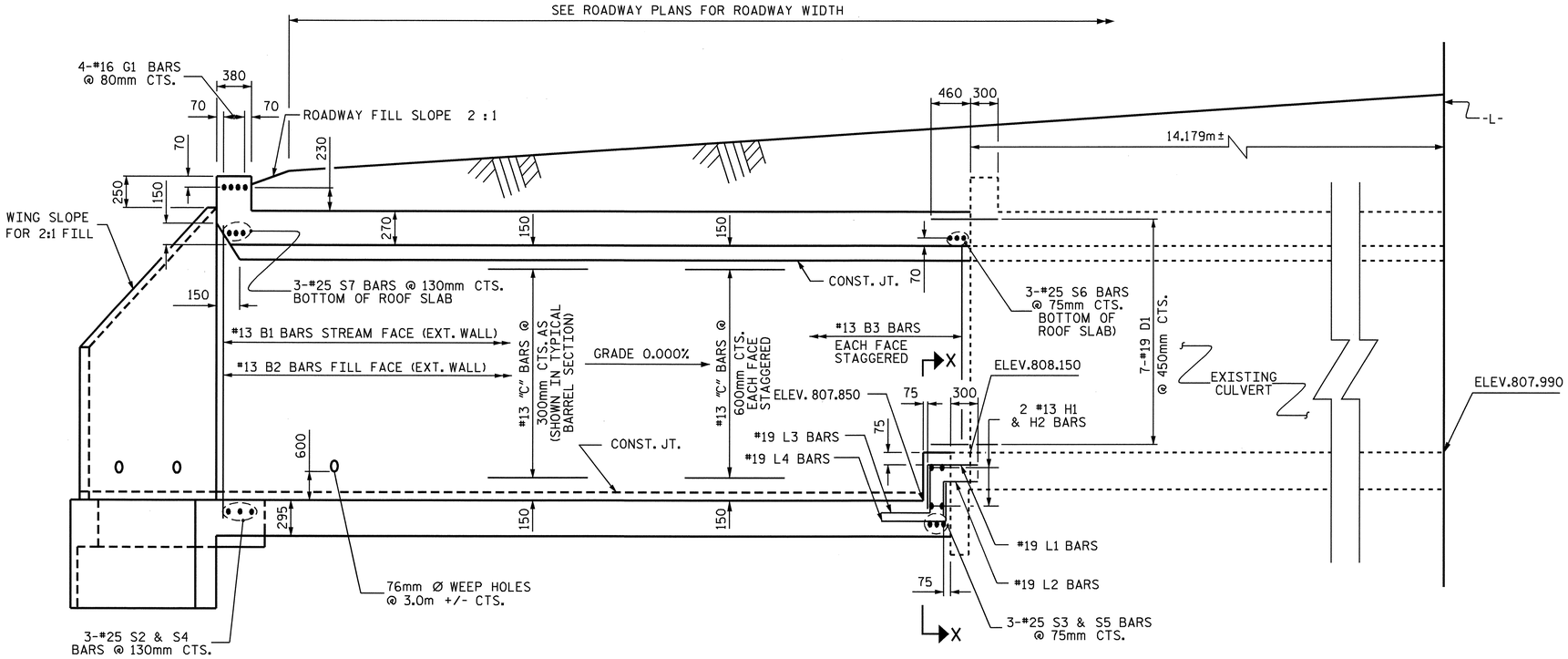

EXTERIOR WALL INTERIOR WALL

CULVERT SECTION NORMAL TO ROADWAY

FOR SECTION X-X, SEE SHEET 2 OF 10

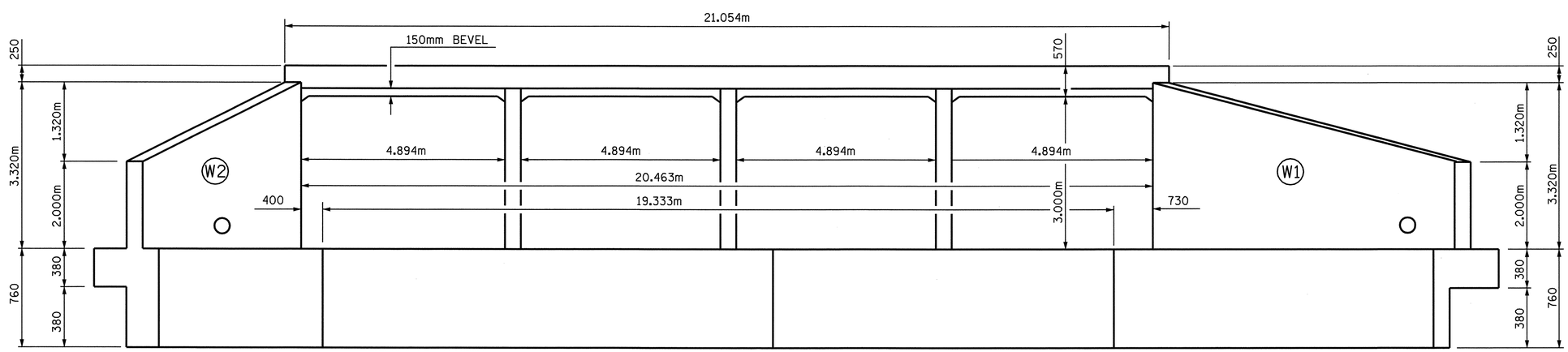

INLET END ELEVATION NORMAL TO SKEW

PROJECT NO. R-2518B
YANCEY COUNTY
STATION: 138+05.000 -L-

SHEET 3 OF 10

STATE OF NORTH CAROLINA
DEPARTMENT OF TRANSPORTATION
RALEIGH

QUADRUPLE
3.400m X 3.000m
CONCRETE BOX CULVERT
LEFT EXTENSION

NORTH CAROLINA PROFESSIONAL SEAL 20125 ENGINEER MARSHALL G. CHEEK, JR.
3-28-08

REVISIONS						SHEET NO.
NO.	BY:	DATE:	NO.	BY:	DATE:	C-8
1			3			TOTAL SHEETS
2			4			24

STR. No. 6

ASSEMBLED BY : A.S./A.L.F. DATE : 05-19-06
CHECKED BY : M.G. CHEEK DATE : 11-14-06

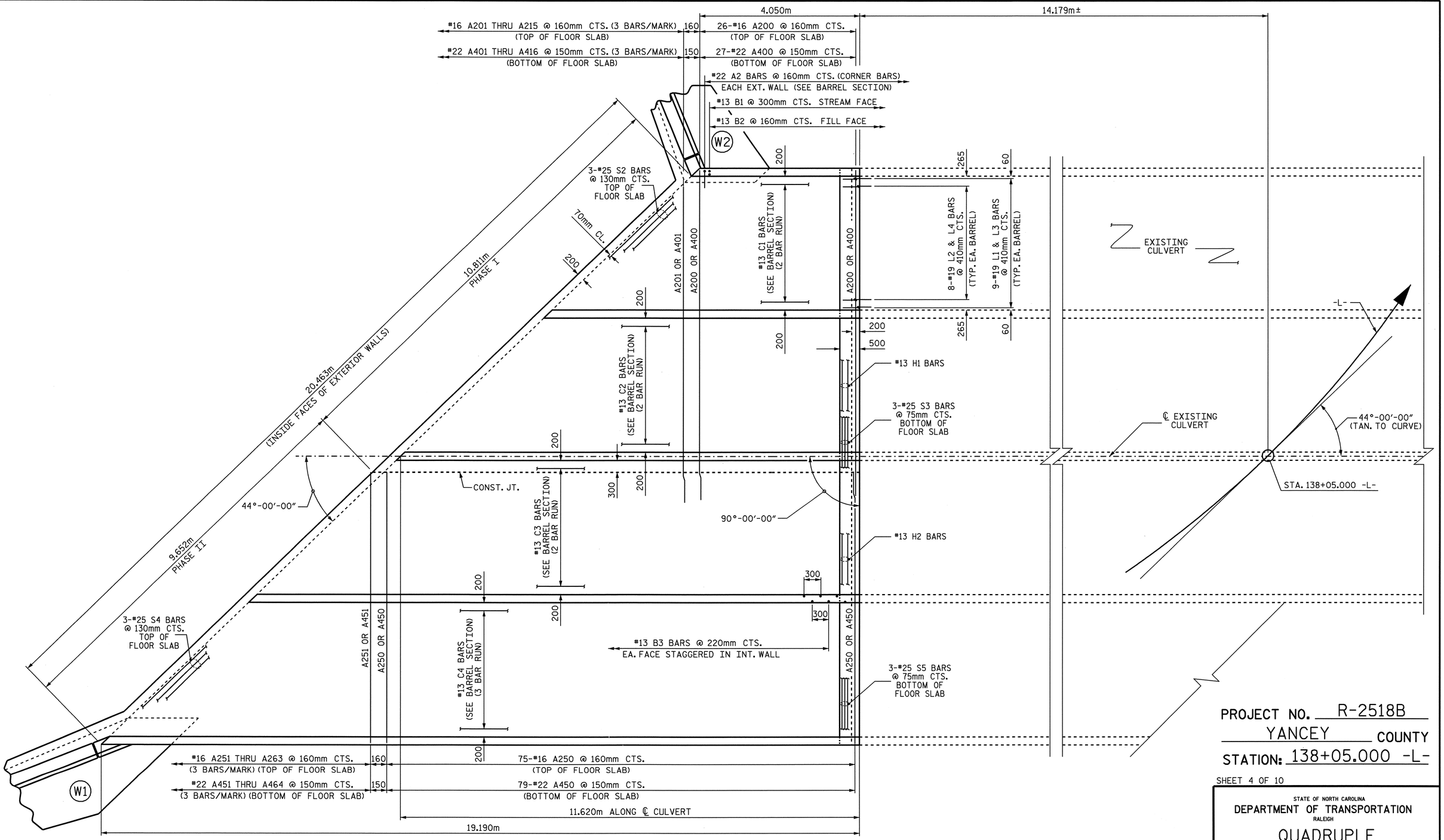

PROJECT NO. R-2518B
YANCEY COUNTY
STATION: 138+05.000 -L-

SHEET 4 OF 10

STATE OF NORTH CAROLINA
DEPARTMENT OF TRANSPORTATION
RALEIGH

QUADRUPLE
3.400m X 3.000m
CONCRETE BOX CULVERT
LEFT EXTENSION

NORTH CAROLINA PROFESSIONAL SEAL 20125 ENGINEER MARSHALL G. CHEEK, JR.
3-28-06

REVISIONS							SHEET NO.
NO.	BY:	DATE:	NO.	BY:	DATE:		C-9
1			3				TOTAL SHEETS
2			4				24

STR. No. 6

ASSEMBLED BY : A.S./A.L.F. DATE : 05-19-06
CHECKED BY : M.G. CHEEK DATE : 11-14-06

PLAN-FLOOR SLAB-LEFT EXTENSION

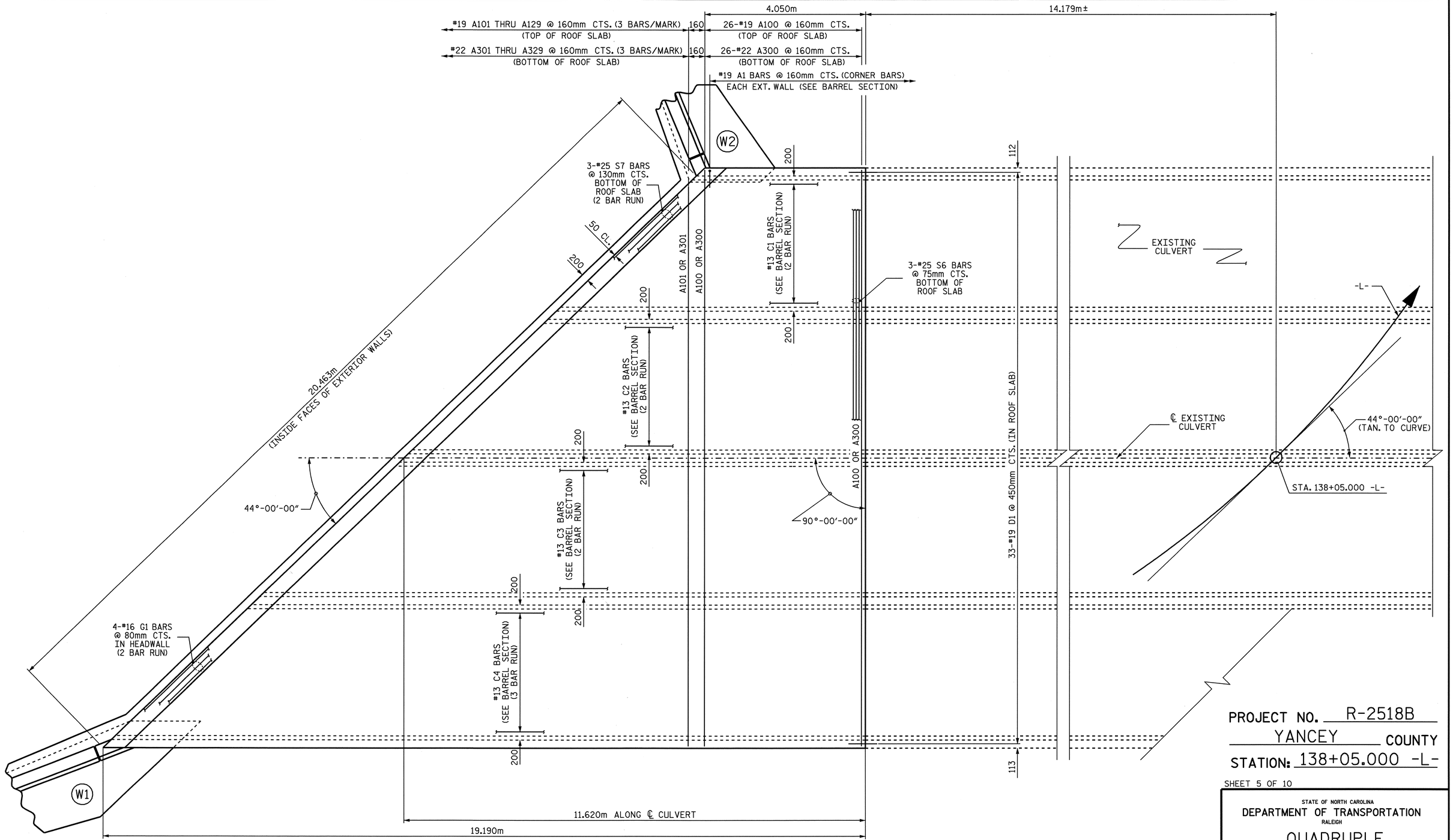

PROJECT NO. R-2518B

YANCEY COUNTY

STATION: 138+05.000 -L-

SHEET 5 OF 10

STATE OF NORTH CAROLINA
DEPARTMENT OF TRANSPORTATION
RALEIGH

QUADRUPLE
3.400m X 3.000m
CONCRETE BOX CULVERT
LEFT EXTENSION

NORTH CAROLINA PROFESSIONAL SEAL 20125 ENGINEER MARSHALL G. CHEEK, JR.
3-28-08

REVISIONS						SHEET NO.
NO.	BY:	DATE:	NO.	BY:	DATE:	C-10
1			3			TOTAL SHEETS
2			4			24

STR. No. 6

ASSEMBLED BY : A.S./A.L.F. DATE : 05-19-06
CHECKED BY : M.G. CHEEK DATE : 11-14-06

PLAN-ROOF SLAB-LEFT EXTENSION

BAR TYPE

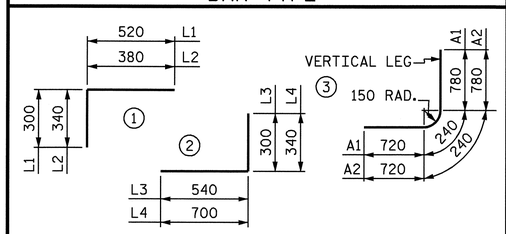

BAR DIMENSIONS ARE OUT TO OUT

SPLICE LENGTH CHART

BAR	SIZE	SPLICE LENGTH
A200	16	540
A400	22	920
B1	13	540
B3	19	690
G1	16	920
H1	13	540
"S"	25	1500

RIGHT EXTENSION BAR SCHEDULE

BAR	NO.	SIZE	TYPE	LENGTH	WEIGHT
A1	48	19	3	1740	187
A2	48	19	3	1740	187
A100	73	19	STR	3280	535
A101	6	19	STR	2820	38
A102	6	19	STR	2340	31
A103	6	19	STR	1880	25
A104	6	19	STR	1420	19
A105	6	19	STR	960	13
A200	33	16	STR	3280	168
A201	3	16	STR	2820	13
A202	3	16	STR	2340	11
A203	3	16	STR	1880	9
A204	3	16	STR	1420	7
A205	3	16	STR	960	4
A206	3	16	STR	2920	14
A207	3	16	STR	2460	11
A208	3	16	STR	2000	9
A209	3	16	STR	1540	7
A210	3	16	STR	1060	5

BAR	NO.	SIZE	TYPE	LENGTH	WEIGHT
A250	23	16	STR	3280	117
A251	3	16	STR	2820	13
A252	3	16	STR	2340	11
A253	3	16	STR	1880	9
A254	3	16	STR	1420	7
A255	3	16	STR	960	4
A256	3	16	STR	2840	13
A257	3	16	STR	2380	11
A258	3	16	STR	1920	9
A259	3	16	STR	1460	7
A260	3	16	STR	980	5
A300	78	22	STR	3280	778
A301	6	22	STR	2840	52
A302	6	22	STR	2420	44
A303	6	22	STR	1960	36
A304	6	22	STR	1520	28
A305	6	22	STR	1100	20
A306	6	22	STR	660	12

BAR	NO.	SIZE	TYPE	LENGTH	WEIGHT
A400	38	22	STR	3280	379
A401	3	22	STR	2840	26
A402	3	22	STR	2400	22
A403	3	22	STR	1960	18
A404	3	22	STR	1520	14
A405	3	22	STR	1100	10
A406	3	22	STR	660	6
A407	3	22	STR	2980	27
A408	3	22	STR	2520	23
A409	3	22	STR	2080	19
A410	3	22	STR	1640	15
A411	3	22	STR	1220	11
A412	3	22	STR	760	7
A450	24	22	STR	3280	239
A451	3	22	STR	2840	26
A452	3	22	STR	2420	22
A453	3	22	STR	1960	18
A454	3	22	STR	1540	14
A455	3	22	STR	1100	10
A456	3	22	STR	660	6
A457	3	22	STR	2960	27
A458	3	22	STR	2520	23
A459	3	22	STR	2080	19
A460	3	22	STR	1640	15
A461	3	22	STR	1220	11
A462	3	22	STR	760	7

BAR	NO.	SIZE	TYPE	LENGTH	WEIGHT
B1	24	13	STR	3400	81
B2	48	13	STR	2800	134
B3	90	19	STR	3400	684
C1	174	13	STR	3400	588
D1	47	19	STR	760	80
G1	8	16	STR	10700	133
H1	4	13	STR	11600	46
H2	4	13	STR	9840	39
L1	36	19	1	820	66
L2	32	19	1	720	51
L3	36	19	2	840	68
L4	32	19	2	1040	74
S2	6	25	STR	12620	301
S3	6	25	STR	9840	235
S4	18	25	STR	11240	804

REINFORCING STEEL = 6,867 kg

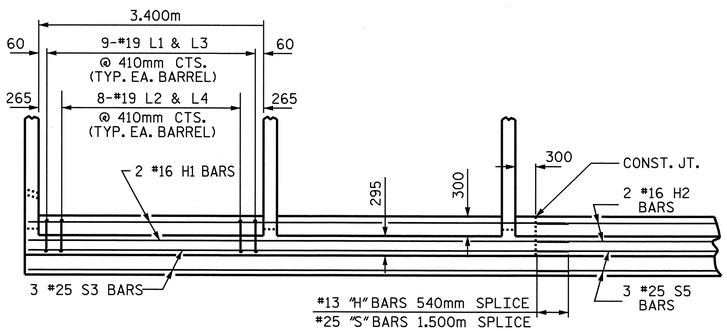

SECTION X-X

RIGHT EXTENSION QUANTITIES

CLASS A CONCRETE			
BARREL @	11.35 m/m³	40.2	m³
WINGS, ETC.		32.6	m³
TOTAL		72.8	m³
REINFORCING STEEL			
BARREL & HEADWALL		6,867	kg
WINGS, ETC.		946	kg
TOTAL		7,813	kg
CULVERT EXCAVATION ---------- LUMP SUM			
FOUNDATION COND. MAT'L ---- 35 METRIC TONS			

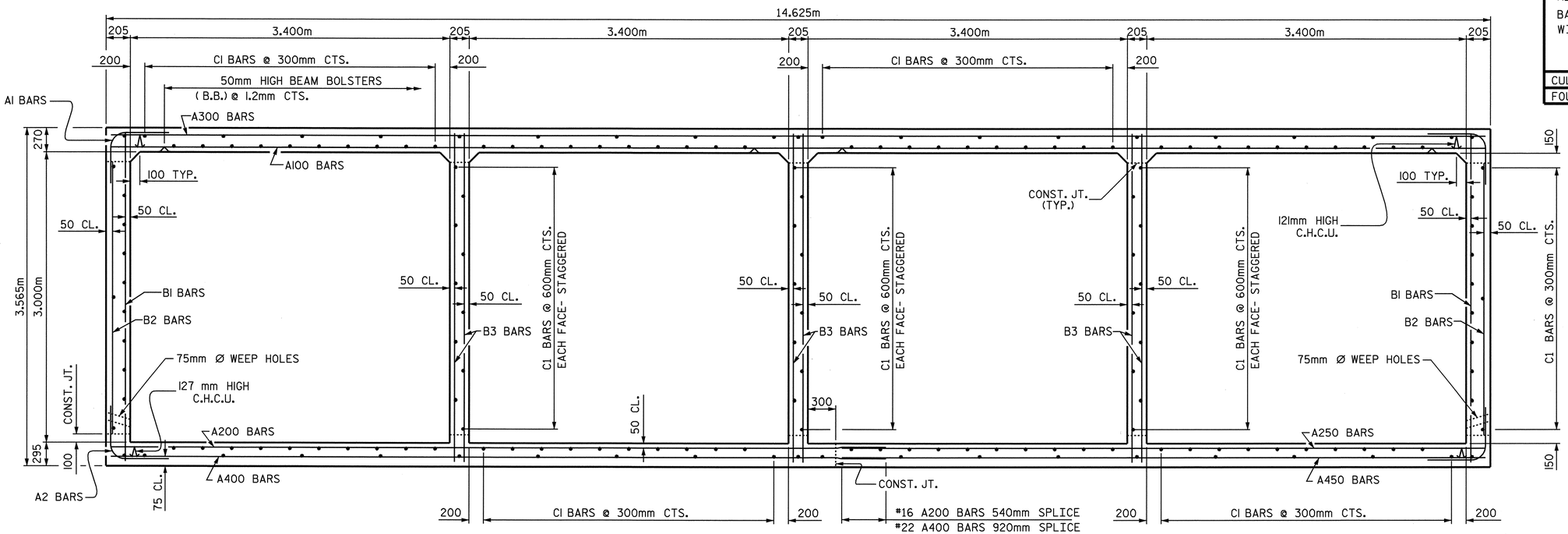

RIGHT ANGLE SECTION OF BARREL

THERE ARE 174 "C" BARS IN SECTION OF BARREL.
(LOOKING DOWNSTREAM)

PROJECT NO. R-2518B
YANCEY COUNTY
STATION: 138+05.000 -L-

SHEET 6 OF 10

STATE OF NORTH CAROLINA
DEPARTMENT OF TRANSPORTATION
RALEIGH

QUADRUPLE
3.400m X 3.000m
CONCRETE BOX CULVERT
RIGHT EXTENSION

NORTH CAROLINA PROFESSIONAL SEAL 20125 ENGINEER MARSHALL G. CHEEK, JR.
4-7-08

REVISIONS						SHEET NO.
NO.	BY:	DATE:	NO.	BY:	DATE:	C-11
1			3			TOTAL SHEETS
2			4			24

ASSEMBLED BY : A.S./A.L.F. DATE : 05-19-06
CHECKED BY : M.G. CHEEK DATE : 11-14-06

STR. No. 6

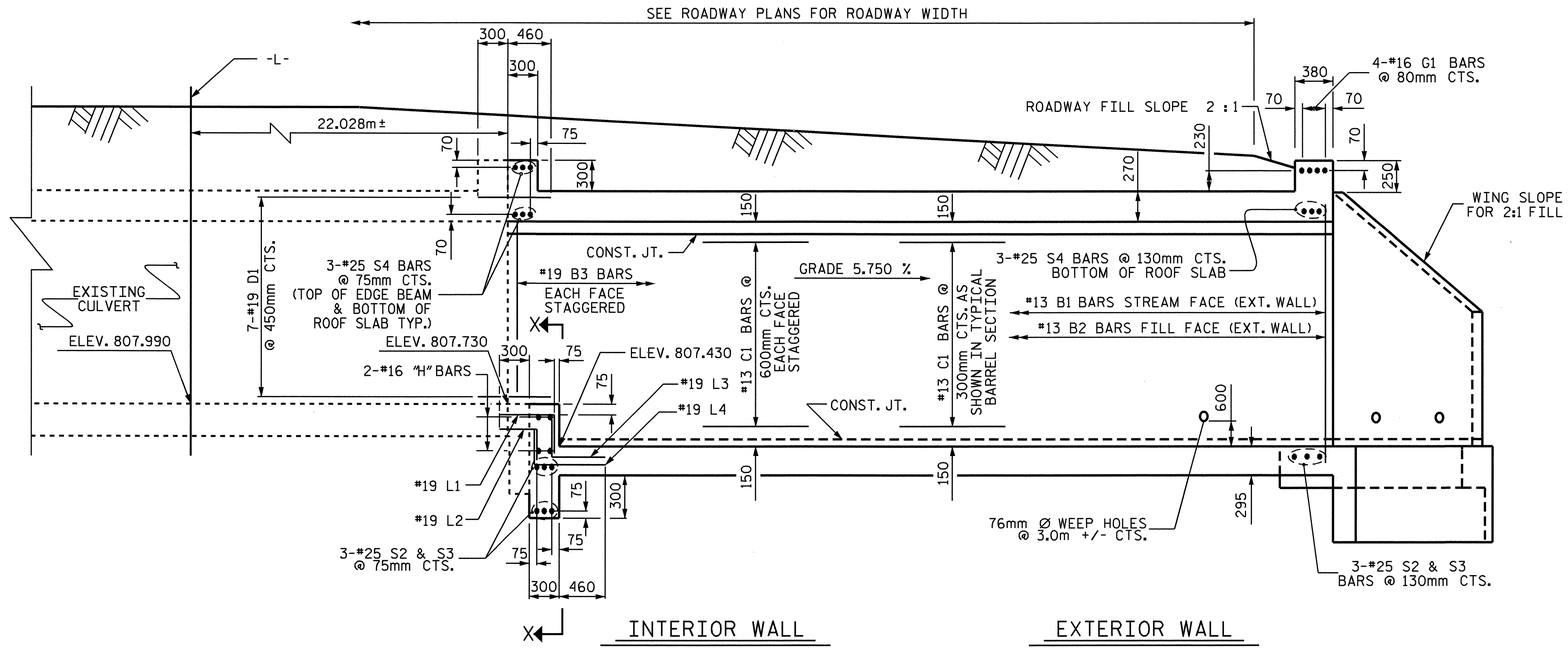

CULVERT SECTION NORMAL TO ROADWAY

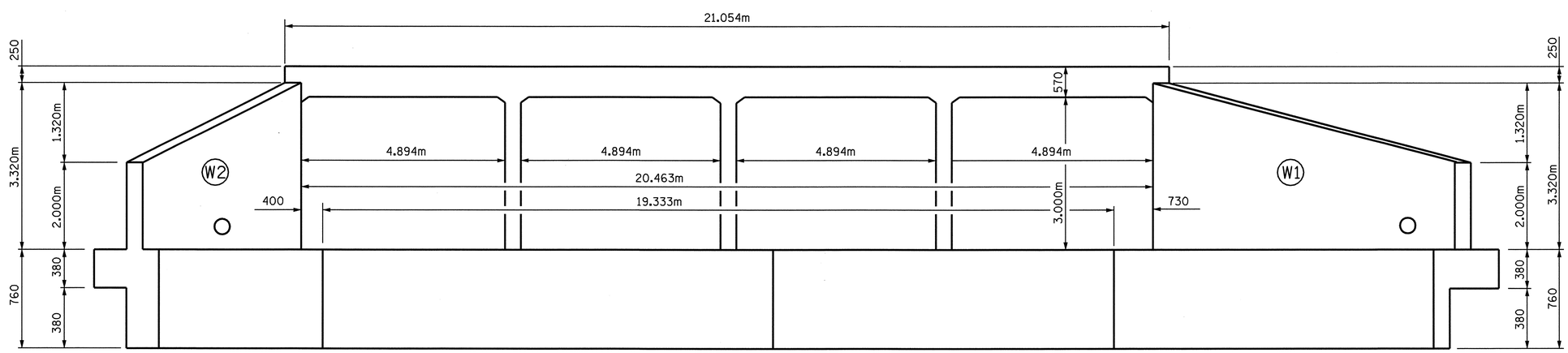

OUTLET END ELEVATION NORMAL TO SKEW

PROJECT NO. R-2518B
YANCEY COUNTY
STATION: 138+05.000 -L-

SHEET 7 OF 10

STATE OF NORTH CAROLINA
DEPARTMENT OF TRANSPORTATION
RALEIGH

QUADRUPLE
3.400m X 3.000m
CONCRETE BOX CULVERT
RIGHT EXTENSION

NORTH CAROLINA PROFESSIONAL SEAL 20125 ENGINEER MARSHALL B. CHEEK, JR.
3-18-08

REVISIONS						SHEET NO.
NO.	BY:	DATE:	NO.	BY:	DATE:	C-12
1			3			TOTAL SHEETS
2			4			24

STR. No. 6

ASSEMBLED BY : A.S./A.L.F. DATE : 05-19-06
CHECKED BY : M.G. CHEEK DATE : 11-14-06

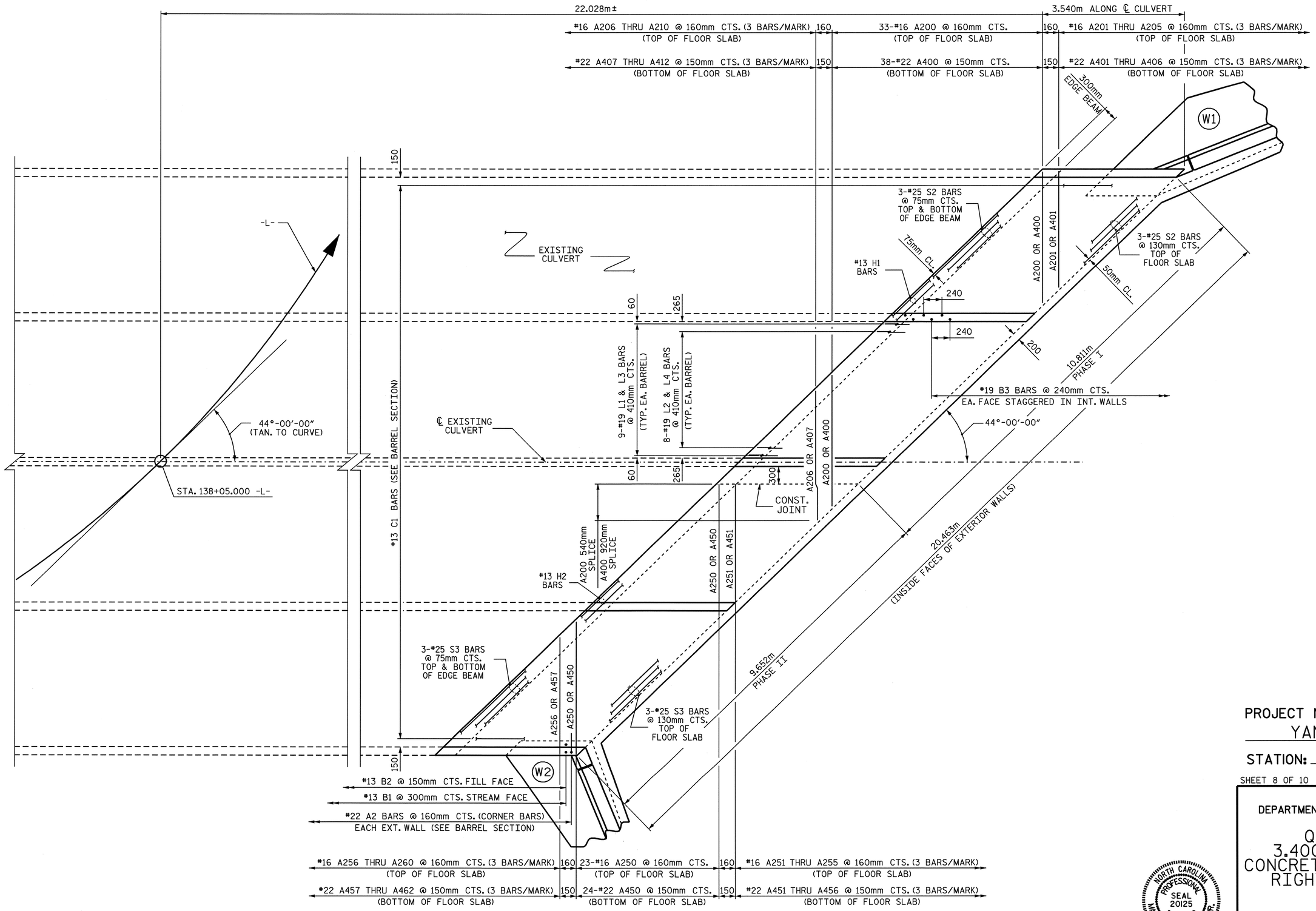

PLAN-FLOOR SLAB-RIGHT EXTENSION

PROJECT NO. R-2518B
YANCEY COUNTY
STATION: 138+05.000 -L-

SHEET 8 OF 10

STATE OF NORTH CAROLINA
DEPARTMENT OF TRANSPORTATION
RALEIGH

QUADRUPLE
3.400m X 3.000m
CONCRETE BOX CULVERT
RIGHT EXTENSION

NORTH CAROLINA PROFESSIONAL SEAL 20125 ENGINEER MARSHALL G. CHEEK, JR.
3-28-08

REVISIONS								SHEET NO.
NO.	BY:	DATE:	NO.	BY:	DATE:			C-13
1			3					TOTAL SHEETS
2			4					24

ASSEMBLED BY : A.S./A.L.F. DATE : 05-19-06
CHECKED BY : M.G. CHEEK DATE : 11-14-06

STR. No. 6

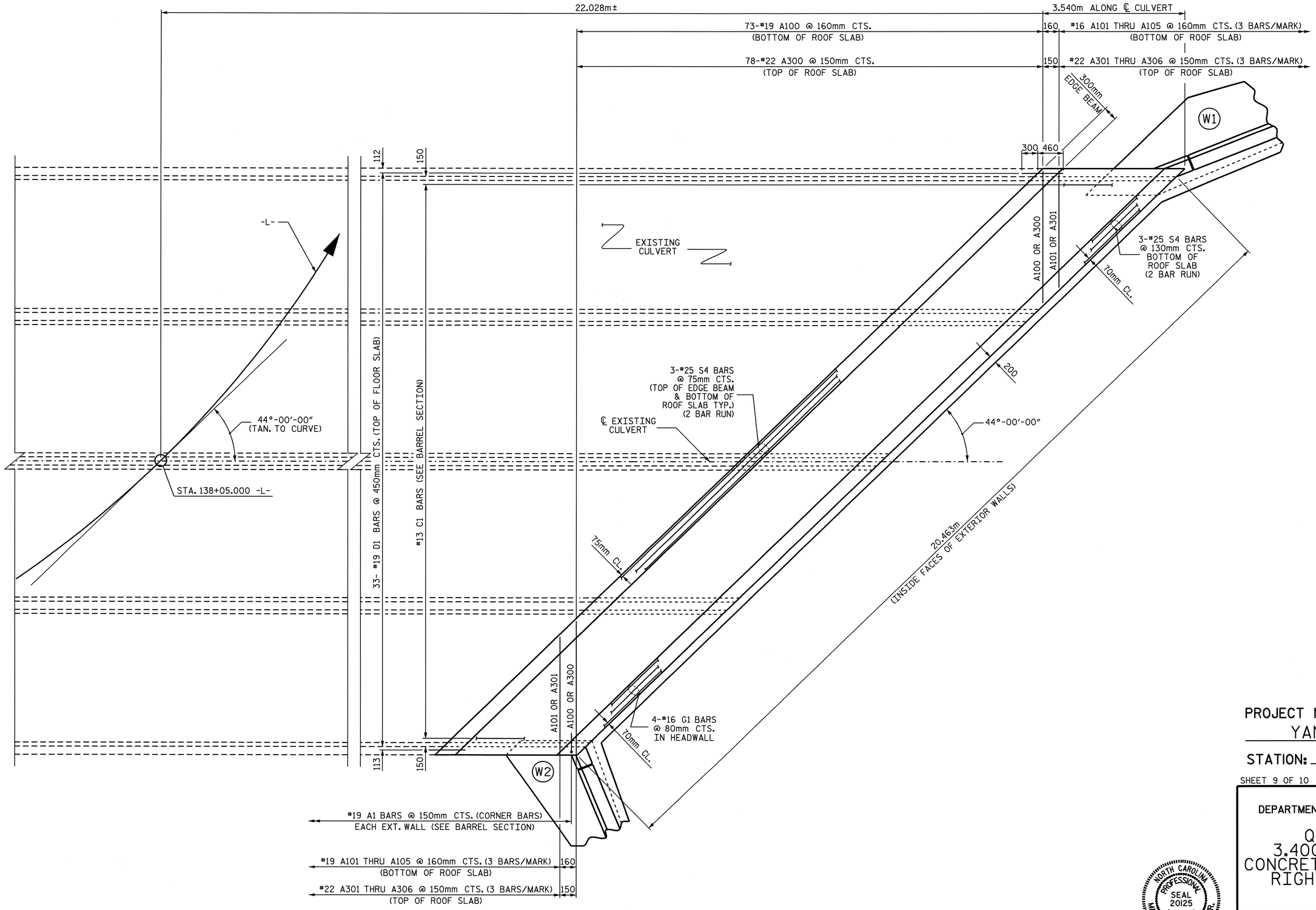

PLAN-ROOF SLAB-RIGHT EXTENSION

PROJECT NO. R-2518B
YANCEY COUNTY
STATION: 138+05.000 -L-

SHEET 9 OF 10

STATE OF NORTH CAROLINA
DEPARTMENT OF TRANSPORTATION
RALEIGH

QUADRUPLE
3.400m X 3.000m
CONCRETE BOX CULVERT
RIGHT EXTENSION

NORTH CAROLINA PROFESSIONAL SEAL 20125 ENGINEER MARSHALL G. CHEEK, JR.
3-28-06

REVISIONS								SHEET NO.
NO.	BY:	DATE:		NO.	BY:	DATE:		C-14
1				3				TOTAL SHEETS
2				4				24

ASSEMBLED BY : A.S./A.L.F. DATE : 05-19-06
CHECKED BY : M.G. CHEEK DATE : 11-14-06

STR. No. 6

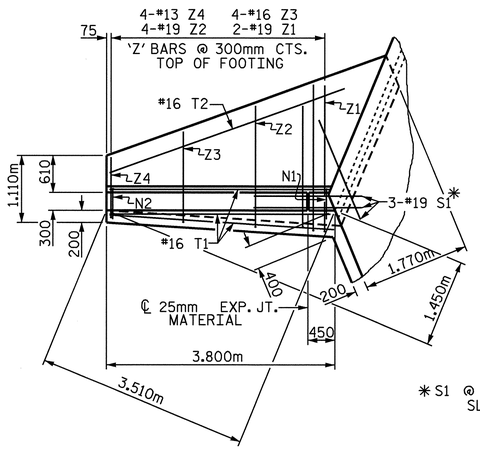

PLAN W2

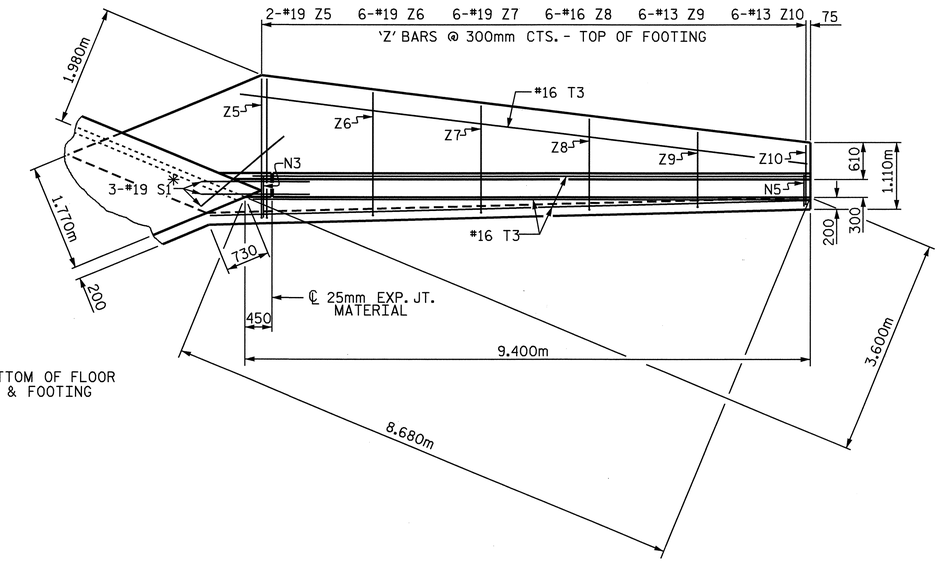

PLAN W1

* S1 @ BOTTOM OF FLOOR SLAB & FOOTING

NOTES

FOR WING ORIENTATION, SEE PLAN OF FLOOR SLAB.

A 900mm STRIP OF FILTER FABRIC SHALL BE ATTACHED TO THE FILL FACE OF THE WING COVERING THE ENTIRE LENGTH OF THE EXPANSION JOINT.

G1 BARS IN HEADWALL ARE INCLUDED WITH BARREL REINFORCING STEEL.

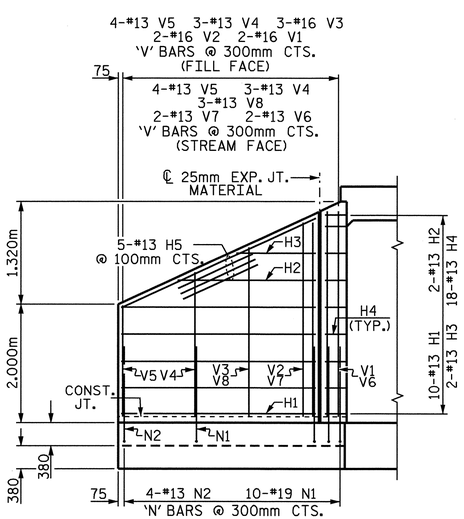

ELEVATION W2

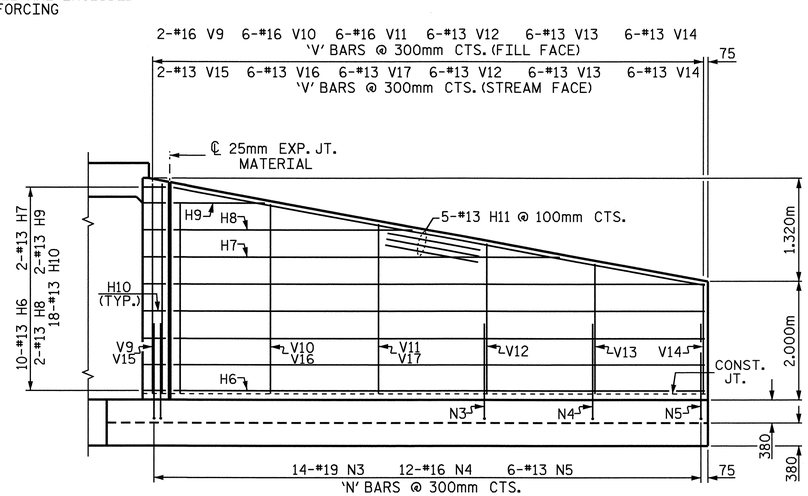

ELEVATION W1

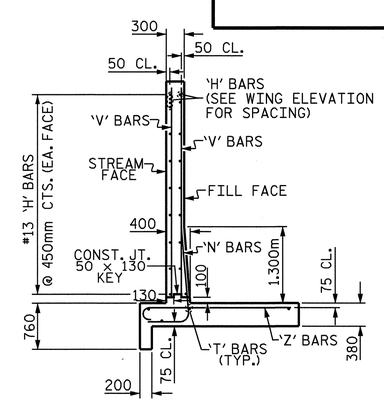

TYPICAL WING SECTION

BAR TYPES

ALL BAR DIMENSIONS ARE OUT TO OUT.

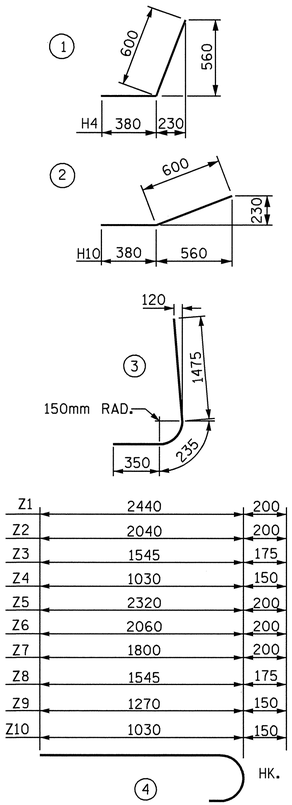

Z1	2440	200
Z2	2040	200
Z3	1545	175
Z4	1030	150
Z5	2320	200
Z6	2060	200
Z7	1800	200
Z8	1545	175
Z9	1270	150
Z10	1030	150

BILL OF MATERIAL

BAR	NO.	SIZE	TYPE	LENGTH	WEIGHT
H1	20	13	STR	3240	64
H2	4	13	STR	2280	9
H3	4	13	STR	1300	5
H4	36	13	1	980	35
H5	10	13	STR	3540	35
H6	20	13	STR	8840	176
H7	4	13	STR	6600	26
H8	4	13	STR	4160	17
H9	4	13	STR	1760	7
H10	36	13	2	980	35
H11	10	13	STR	8980	89
N1	20	19	3	2060	92
N2	8	13	3	2060	16
N3	28	19	3	2060	129
N4	24	16	3	2060	77
N5	12	13	3	2060	25
S1	12	19	STR	1800	48
T1	6	16	STR	3800	35
T2	2	16	STR	4160	13
T3	8	16	STR	9400	117
V1	4	16	STR	3420	21
V2	4	16	STR	3260	20
V3	6	16	STR	2840	26
V4	12	13	STR	2420	29
V5	16	13	STR	1880	30
V6	4	13	STR	3420	14
V7	4	13	STR	3260	13
V8	6	13	STR	2840	17
V9	4	16	STR	3520	22
V10	12	16	STR	3200	60
V11	12	16	STR	2860	53
V12	24	13	STR	2520	60
V13	24	13	STR	2200	52
V14	24	13	STR	1860	44
V15	4	13	STR	3520	14
V16	12	13	STR	3200	38
V17	12	13	STR	2860	34
Z1	4	19	4	2640	24
Z2	8	19	4	2240	40
Z3	8	16	4	1720	21
Z4	8	13	4	1180	9
Z5	4	19	4	2520	23
Z6	12	19	4	2260	61
Z7	12	19	4	2000	54
Z8	12	16	4	1720	32
Z9	12	13	4	1420	17
Z10	12	13	4	1180	14

REINFORCING STEEL FOR 4 WING WALLS 1892 kg

CLASS A CONCRETE LEFT EXTENSION

2 WINGS	23.5	m^3
1 HEADWALLS	2.4	m^3
1 END CURTAIN WALLS	2.9	m^3
TOTAL	28.8	m^3

CLASS A CONCRETE RIGHT EXTENSION

2 WINGS	23.5	m^3
1 HEADWALLS	2.4	m^3
1 END CURTAIN WALLS	2.9	m^3
2 EDGE BEAMS	3.8	m^3
TOTAL	32.6	m^3

PROJECT NO. R-2518B
YANCEY COUNTY
STATION: 138+05.000 -L-

SHEET 10 OF 10

STATE OF NORTH CAROLINA
DEPARTMENT OF TRANSPORTATION
RALEIGH

STANDARD WINGS FOR CONCRETE BOX CULVERT

NORTH CAROLINA PROFESSIONAL SEAL 20125 ENGINEER MARSHALL G. CHEEK, JR.
4-7-08

ASSEMBLED BY : A.S./A.L.F. DATE : 05-19-06
CHECKED BY : M.G. CHEEK DATE : 11-14-06

DRAWN BY : FPP 07/97
CHECKED BY : VAP 07/97

REVISIONS						SHEET NO.
NO.	BY:	DATE:	NO.	BY:	DATE:	C-15
1			3			TOTAL SHEETS
2			4			24

STR #6 STD. NO. CW4534

BM #8: SPIKE IN 350mm SYCAMORE TREE, 52.281RT. OF STA. 153+28.371 -L-, ELEV. = 787.849

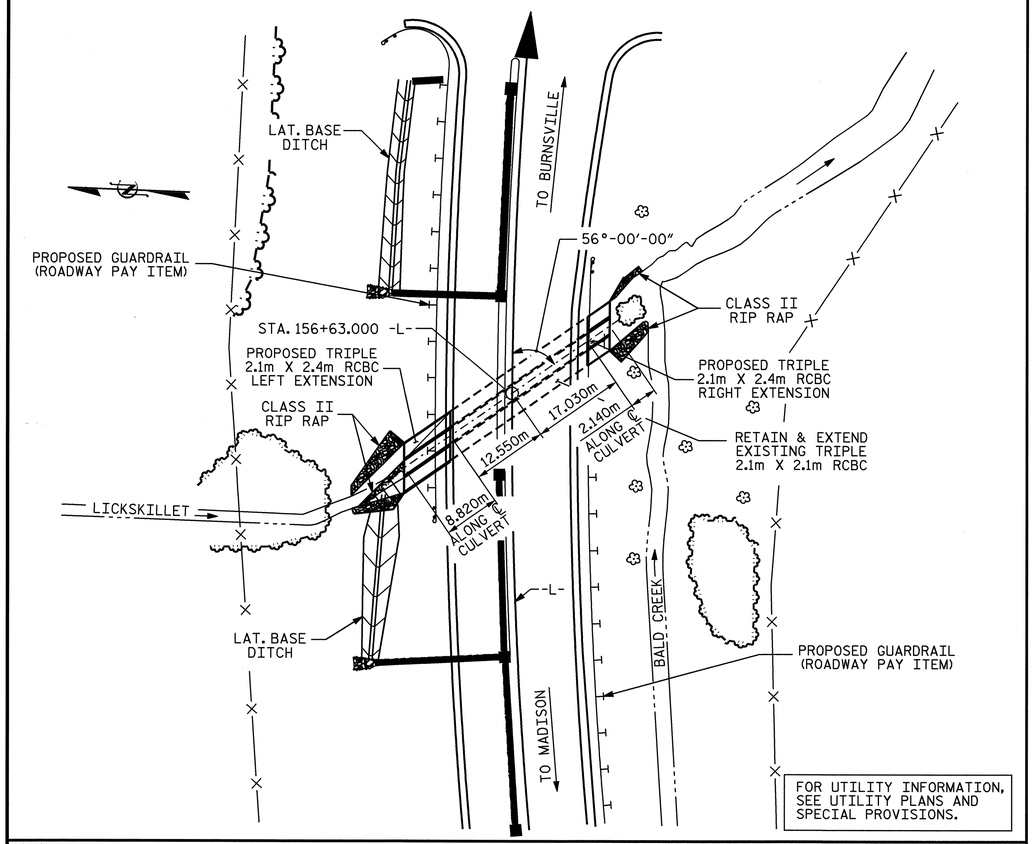

LOCATION SKETCH

HYDRAULIC DATA

DESIGN DISCHARGE	= 29.00 m^3/s
FREQUENCY OF DESIGN FLOOD	= 50 yrs.
DESIGN HIGH WATER ELEVATION	= 784.720
DRAINAGE AREA	= 6.220 sq.km
BASIC DISCHARGE (Q100)	= 36.00 m^3/s
BASIC HIGH WATER ELEVATION	= 785.090

OVERTOPPING FLOOD DATA

OVERTOPPING DISCHARGE	= 29.00 m^3/s
FREQUENCY OF OVERTOPPING FLOOD	= 50 yrs.
OVERTOPPING FLOOD ELEVATION	= 784.730

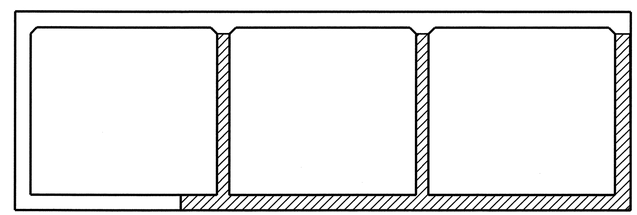

CONSTRUCTION STAGING

(LOOKING DOWNSTREAM)

PHASE I CONSTRUCTION

PHASE II CONSTRUCTION

NOTES

ASSUMED LIVE LOAD ----------MS18 OR ALTERNATE LOADING.

DESIGN FILL LEFT EXTENSION ----------2.300m

DESIGN FILL RIGHT EXTENSION ----------1.900m

FOR OTHER DESIGN DATA AND NOTES SEE STANDARD NOTE SHEET.

76mm Ø WEEP HOLES INDICATED TO BE IN ACCORDANCE WITH THE SPECIFICATIONS.

CONCRETE IN CULVERTS TO BE POURED IN THE FOLLOWING ORDER:

1. WING FOOTINGS AND FLOOR SLAB INCLUDING 100mm OF ALL VERTICAL WALLS.
2. THE REMAINING PORTIONS OF THE WALLS AND WINGS FULL HEIGHT FOLLOWED BY ROOF SLAB AND HEADWALLS.

THE RESIDENT ENGINEER SHALL CHECK THE LENGTH OF CULVERT BEFORE STAKING IT OUT TO MAKE CERTAIN THAT IT WILL PROPERLY TAKE CARE OF THE FILL.

DIMENSIONS FOR WING LAYOUT AS WELL AS ADDITIONAL REINFORCING STEEL EMBEDDED IN BARREL ARE SHOWN ON WING SHEET.

TRANSVERSE CONSTRUCTION JOINTS SHALL BE USED IN THE BARREL, SPACED TO LIMIT THE POURS TO A MAXIMUM OF 21.0m. LOCATION OF JOINTS SHALL BE SUBJECT TO APPROVAL OF THE ENGINEER.

STEEL IN THE BOTTOM SLAB MAY BE SPLICED AT THE PERMITTED CONSTRUCTION JOINT AT THE CONTRACTOR'S OPTION. EXTRA WEIGHT OF STEEL DUE TO THE SPLICES SHALL BE PAID FOR BY THE CONTRACTOR.

AT THE CONTRACTOR'S OPTION, HE MAY SPLICE THE VERTICAL REINFORCING STEEL IN THE INTERIOR FACE OF EXTERIOR WALL AND BOTH FACES OF INTERIOR WALLS ABOVE LOWER WALL CONSTRUCTION JOINT. THE SPLICE LENGTH SHALL BE AS PROVIDED IN THE SPLICE LENGTH CHART SHOWN ON THE PLANS. EXTRA WEIGHT OF STEEL DUE TO THE SPLICES SHALL BE PAID FOR BY THE CONTRACTOR.

IF APPROVED BY THE ENGINEER, THE CONTRACTOR MAY USED THE EXISTING WINGS AS TEMPORARY SHORING FOR THE CONSTRUCTION OF THE CULVERT EXTENSIONS. IN THIS CASE, THE BOTTOM SLAB OF THE EXTENSION SHALL BE POURED AT LEAST 72 HOURS PRIOR TO CUTTING THE WINGS. THE WINGS MAY BE CUT EARLIER PROVIDED THE SLAB CONCRETE STRENGTH HAS REACHED A MINIMUM COMPRESSIVE STRENGTH OF 10.3 MPa.

DOWELS SHALL BE USED TO CONNECT THE CULVERT EXTENSION TO THE EXISTING CULVERT AS SHOWN. FOR NOTE REGARDING SETTING OF DOWELS, SEE SHEET SN.

FOR CULVERT DIVERSION DETAILS AND PAY ITEM, SEE EROSION CONTROL PLANS.

NO PRECAST REINFORCED BOX CULVERT OPTION WILL BE ALLOWED.

FOR SUBMITTAL OF WORKING DRAWINGS, SEE SPECIAL PROVISIONS.

FOR FALSEWORK AND FORMWORK, SEE SPECIAL PROVISIONS.

ALL DIMENSIONS ARE IN MILLIMETERS UNLESS OTHERWISE NOTED.

ALL ELEVATIONS ARE IN METERS.

FOR CONSTRUCTION SEQUENCE, SEE EROSION CONTROL PLAN.

FOR CRANE SAFETY, SEE SPECIAL PROVISIONS.

FOR ADHESIVELY ANCHORED BOLTS OR DOWELS, SEE SPECIAL PROVISIONS.

FOR GROUT FOR STRUCTURES, SEE SPECIAL PROVISIONS.

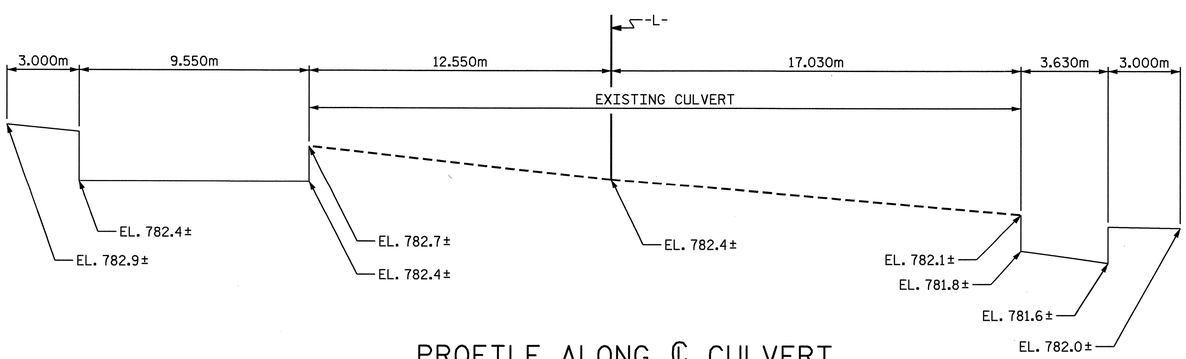

PROFILE ALONG ℄ CULVERT

TOTAL STRUCTURE QUANTITIES	
CLASS A CONCRETE	
LEFT EXTENSION	56.1 m^3
RIGHT EXTENSION	23.0 m^3
TOTAL	79.1 m^3
REINFORCING STEEL	
LEFT EXTENSION	5,476 kg
RIGHT EXTENSION	2,082 kg
TOTAL	7,558 kg
FOUNDATION CONDITIONING MATERIAL	
LEFT EXTENSION	43 METRIC TONS
RIGHT EXTENSION	10 METRIC TONS
TOTAL	53 METRIC TONS
CULVERT EXCAVATION	LUMP SUM

METRIC

PROJECT NO. R-2518B
YANCEY COUNTY
STATION: 156+63.000 -L-

SHEET 1 OF 9 CULVERT #C312

NORTH CAROLINA PROFESSIONAL SEAL 13014 ENGINEER QUANG H. NGUYEN
Quang H. Nguyen 4-16-08

NORTH CAROLINA PROFESSIONAL SEAL 20125 ENGINEER MARSHALL C. ELDER, JR.
4-16-08

STATE OF NORTH CAROLINA
DEPARTMENT OF TRANSPORTATION
RALEIGH

TRIPLE 2.100m X 2.400m CONCRETE BOX CULVERT EXTENSION

REVISIONS						
NO.	BY:	DATE:	NO.	BY:	DATE:	
1			3			
2			4			

SHEET NO. C-16
TOTAL SHEETS 24

ASSEMBLED BY : A. SORSENGINH DATE : 8/31/05
CHECKED BY : CR. YARBROUGH DATE : 11/05
DRAWN BY : EEM 6/97
CHECKED BY : ARB 7/97

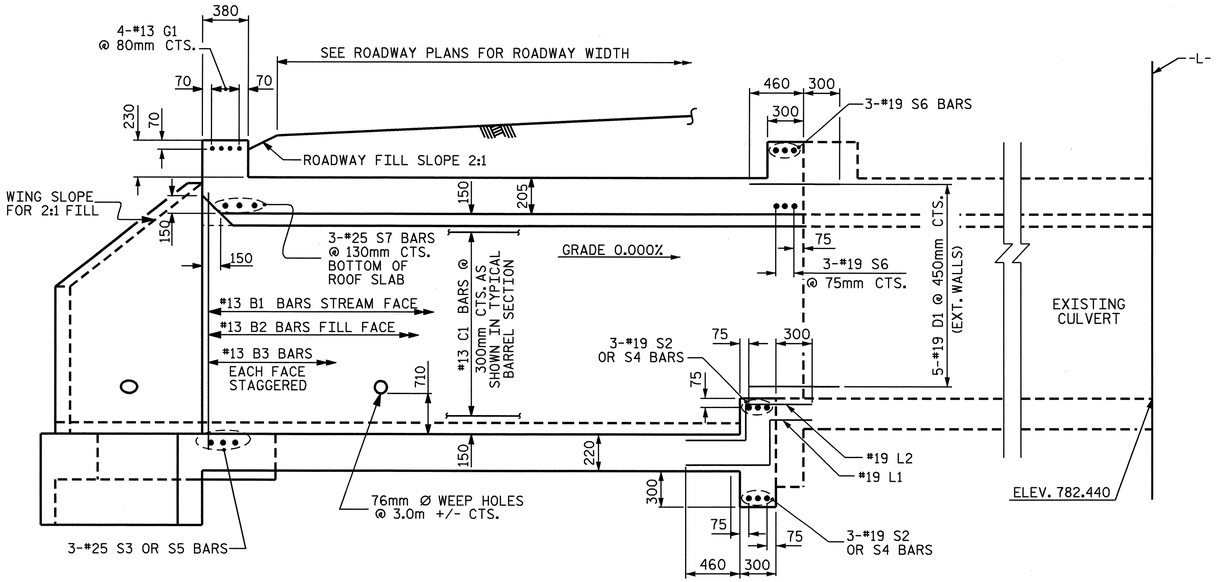

LEFT CULVERT EXTENSION SECTION NORMAL TO ROADWAY

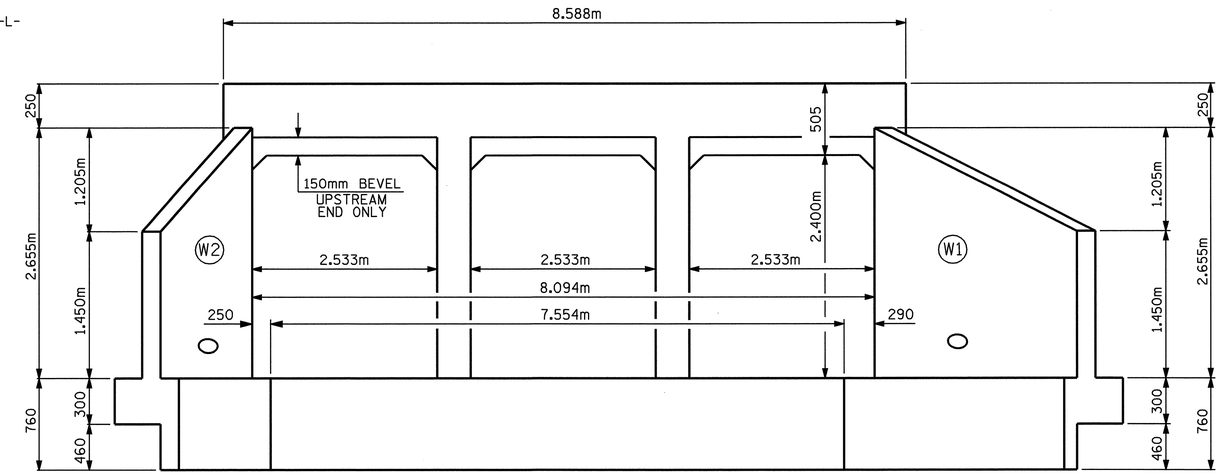

INLET END ELEVATION - NORMAL TO SKEW

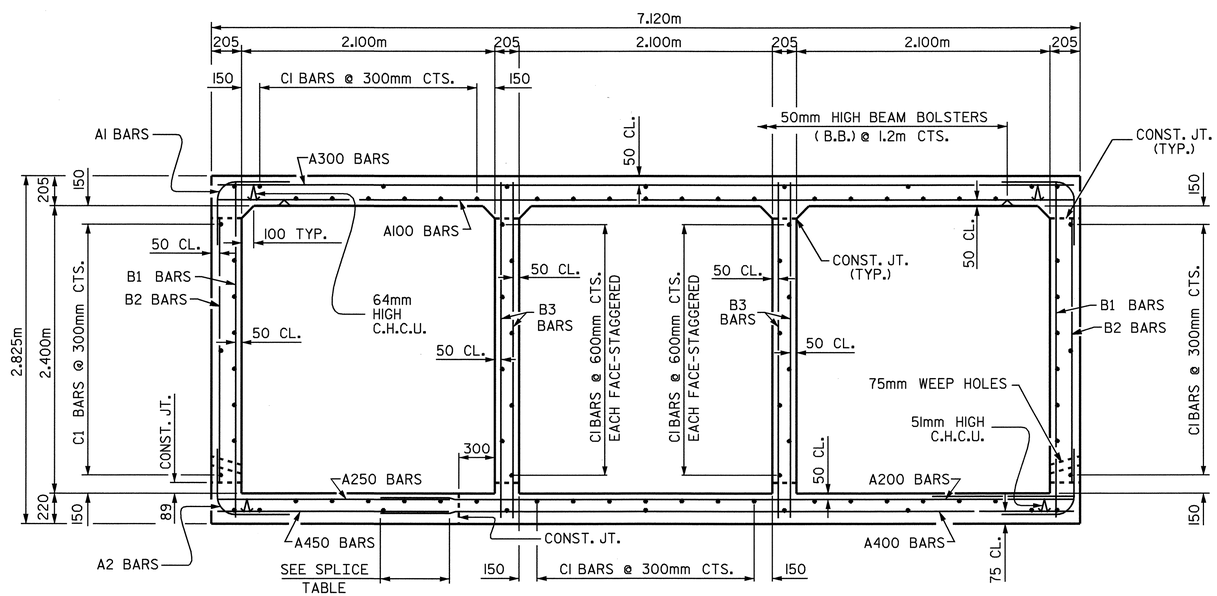

RIGHT ANGLE SECTION OF BARREL

THERE ARE 90 "C" BARS IN SECTION OF BARREL.
(LOOKING DOWNSTREAM)

LEFT EXTENSION STRUCTURE QUANTITIES		
CLASS A CONCRETE		
BARREL @ 4.96 m^3/m	43.7 m^3	
WINGS ETC.	12.4 m^3	
TOTAL	56.1 m^3	
REINFORCING STEEL		
BARREL	5,100 kg	
WING ETC.	376 kg	
TOTAL	5,476 kg	
CULVERT EXCAVATION ----------	LUMP SUM	
FOUNDATION COND. MAT'L -----	43 METRIC TONS	

PROJECT NO. R-2518B
YANCEY COUNTY
STATION: 156+63.000 -L-

SHEET 2 OF 9

STATE OF NORTH CAROLINA
DEPARTMENT OF TRANSPORTATION
RALEIGH

TRIPLE 2.100m X 2.400m
CONCRETE BOX CULVERT
(LEFT EXTENSION)

NORTH CAROLINA PROFESSIONAL SEAL 20125 ENGINEER MARSHALL LIGON CHECK, JR.
3-28-08

ASSEMBLED BY : A. SORSENGINH	DATE : 9/1/05
CHECKED BY : CR. YARBROUGH	DATE : 11/05
DRAWN BY : EEM	6/97
CHECKED BY : ARB	7/97

REVISIONS								SHEET NO.
NO.	BY:	DATE:	NO.	BY:	DATE:			C-17
1			3					TOTAL SHEETS
2			4					24

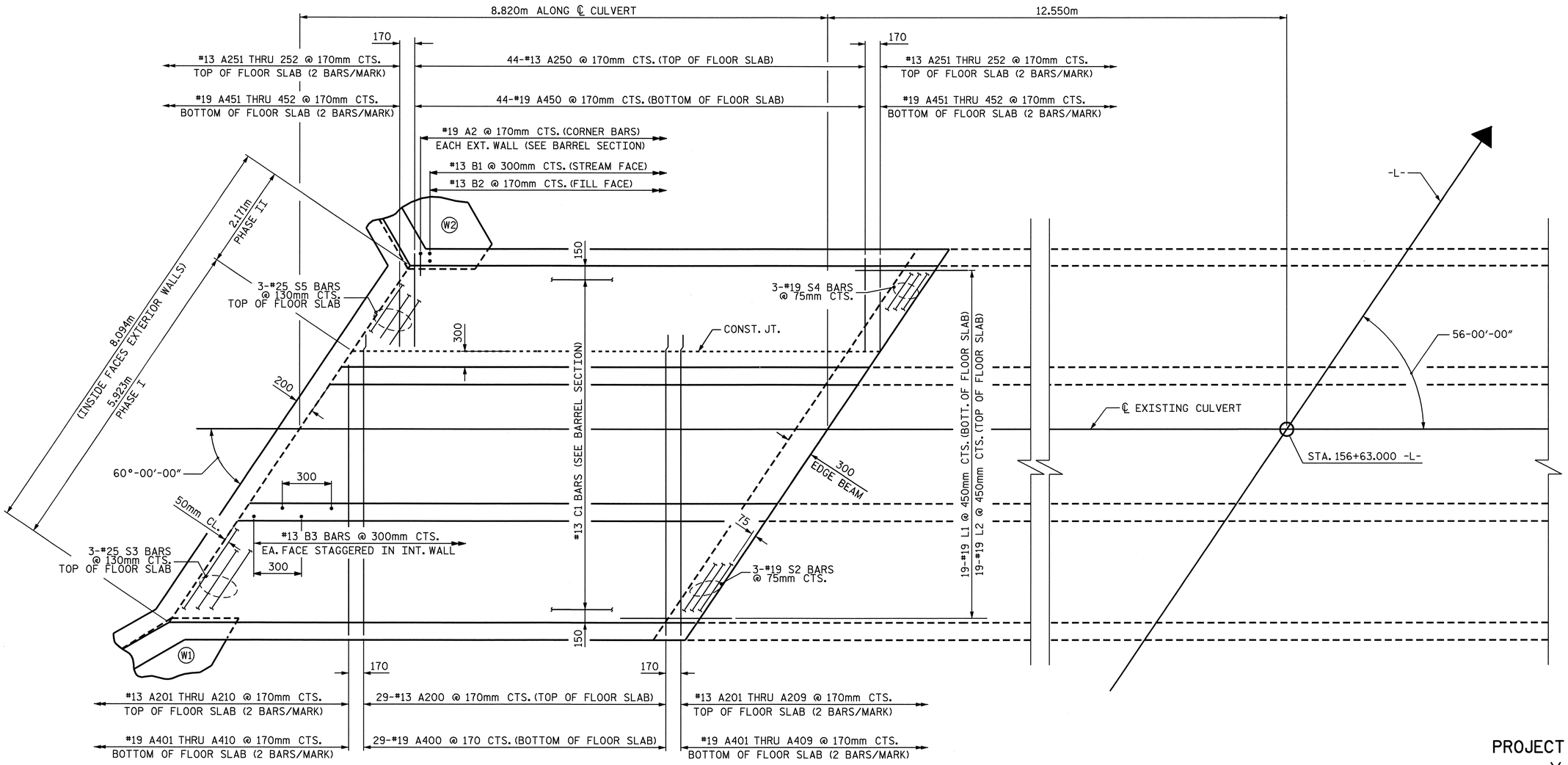

PLAN - FLOOR SLAB-LEFT EXTENSION

PROJECT NO. R-2518B
YANCEY COUNTY
STATION: 156+63.000 -L-

SHEET 3 OF 9

STATE OF NORTH CAROLINA
DEPARTMENT OF TRANSPORTATION
RALEIGH

TRIPLE 2.100m X 2.400m
CONCRETE BOX CULVERT
(LEFT EXTENSION)

NORTH CAROLINA PROFESSIONAL SEAL 20125 ENGINEER MARSHAL L. GILCHRIST, JR.
4-18-03

REVISIONS						SHEET NO.
NO.	BY:	DATE:	NO.	BY:	DATE:	C-18
1			3			TOTAL SHEETS
2			4			24

ASSEMBLED BY : A. SORSENGINH DATE : 9/1/05
CHECKED BY : CR. YARBROUGH DATE : 11/05
DRAWN BY : EEM 6/97
CHECKED BY : ARB 7/97

BAR TYPE

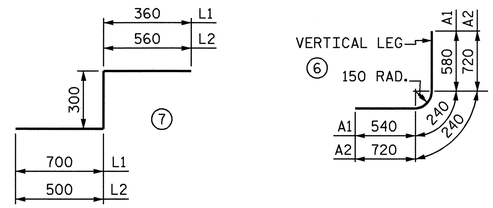

DIMENSIONS ARE OUT TO OUT

SPLICE LENGTH CHART

BAR	SIZE	SPLICE LENGTH
A200	13	540
A400	19	690
B1	13	540
B2	13	540
B3	13	590
S2	19	690
S3	25	1220

BILL OF MATERIAL

REINFORCING BAR SCHEDULE

BARS	NO.	SIZE	TYPE	LENGTH	WEIGHT
A1	104	16	6	1360	220
A2	104	19	6	1680	390
A100	24	13	STR	6980	167
A101	4	13	STR	6460	26
A102	4	13	STR	5940	24
A103	4	13	STR	5440	22
A104	4	13	STR	4920	20
A105	4	13	STR	4420	18
A106	4	13	STR	3920	16
A107	4	13	STR	3420	14
A108	4	13	STR	2920	12
A109	4	13	STR	2420	10
A110	4	13	STR	1900	8
A111	4	13	STR	1400	6
A112	4	13	STR	880	3
A200	29	13	STR	5660	161
A201	4	13	STR	5220	21
A202	4	13	STR	4720	19
A203	4	13	STR	4200	17
A204	4	13	STR	3700	15
A205	4	13	STR	3200	13
A206	4	13	STR	2700	11
A207	4	13	STR	2180	9

BARS	NO.	SIZE	TYPE	LENGTH	WEIGHT
A208	4	13	STR	1680	7
A209	4	13	STR	1180	5
A250	44	13	STR	1940	85
A251	4	13	STR	1500	6
A252	4	13	STR	1000	4
A300	24	19	STR	6980	374
A301	4	19	STR	6460	58
A302	4	19	STR	5940	53
A303	4	19	STR	5440	49
A304	4	19	STR	4920	44
A305	4	19	STR	4420	40
A306	4	19	STR	3920	35
A307	4	19	STR	3420	31
A308	4	19	STR	2920	26
A309	4	19	STR	2420	22
A310	4	19	STR	1900	17
A311	4	19	STR	1400	13
A312	4	19	STR	880	8
A400	29	19	STR	5760	373
A401	4	19	STR	5280	47
A402	4	19	STR	4780	43
A403	4	19	STR	4280	38
A404	4	19	STR	3780	34
A405	4	19	STR	3280	29

BARS	NO.	SIZE	TYPE	LENGTH	WEIGHT
A406	4	19	STR	2760	25
A407	4	19	STR	2260	20
A408	4	19	STR	1760	16
A409	4	19	STR	1260	11
A410	2	19	STR	760	3
A450	44	19	STR	1940	191
A451	4	19	STR	1500	13
A452	4	19	STR	1000	9
B1	60	13	STR	2640	157
B2	104	13	STR	2180	225
B3	120	13	STR	2640	315
C1	90	13	STR	8680	777
D1	29	19	STR	760	49
G1	4	16	STR	8460	53
L1	19	19	7	1360	58
L2	19	19	7	1360	58
S2	6	19	STR	6940	93
S3	3	25	STR	7580	90
S4	6	19	STR	2360	32
S5	3	25	STR	2360	28
S6	6	19	STR	8460	113
S7	3	25	STR	8460	101

REINFORCING STEEL = 5,100 kg

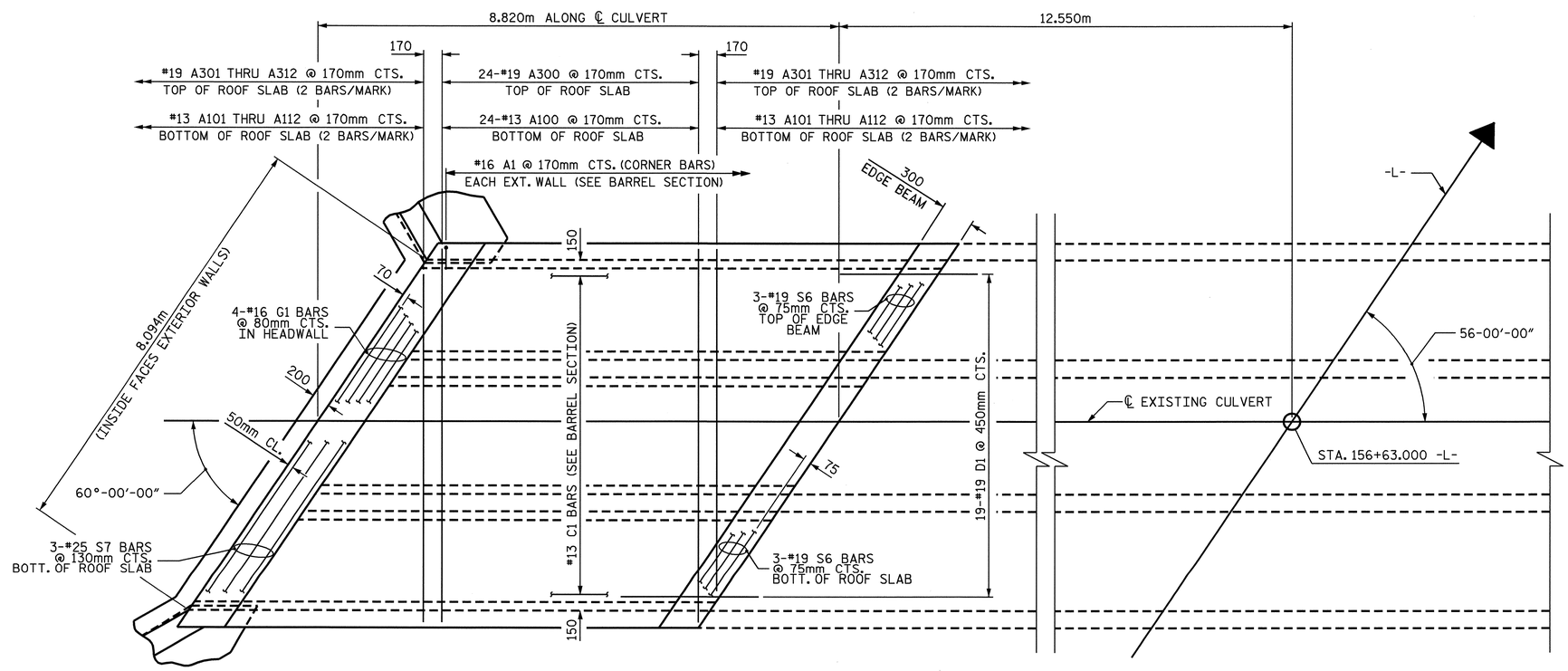

PLAN - ROOF SLAB-LEFT EXTENSION

PROJECT NO. R-2518B
YANCEY COUNTY
STATION: 156+63.000 -L-

SHEET 4 OF 9

STATE OF NORTH CAROLINA
DEPARTMENT OF TRANSPORTATION
RALEIGH

TRIPLE 2.100m X 2.400m
CONCRETE BOX CULVERT
(LEFT EXTENSION)

NORTH CAROLINA PROFESSIONAL SEAL 20125 ENGINEER MARSHALL G. CREEK, JR.
3-28-08

REVISIONS						SHEET NO.
NO.	BY:	DATE:	NO.	BY:	DATE:	C-19
1			3			TOTAL SHEETS
2			4			24

ASSEMBLED BY : A. SORSENGINH DATE : 9/2/05
CHECKED BY : CR. YARBROUGH DATE : 11/05
DRAWN BY : EEM 6/97
CHECKED BY : ARB 7/97

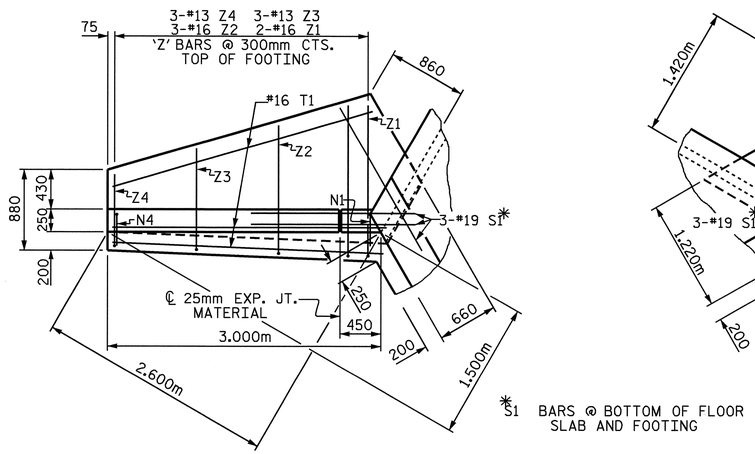

*S1 BARS @ BOTTOM OF FLOOR SLAB AND FOOTING

PLAN W2

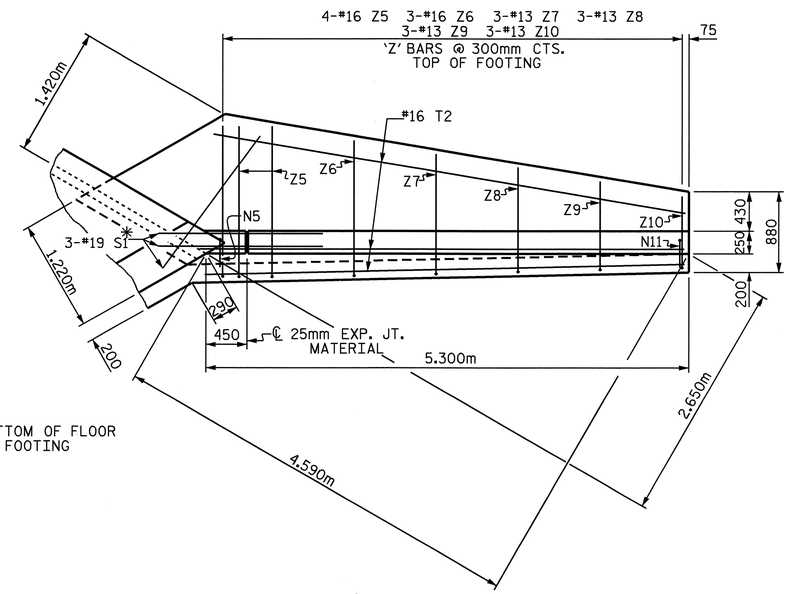

PLAN W1

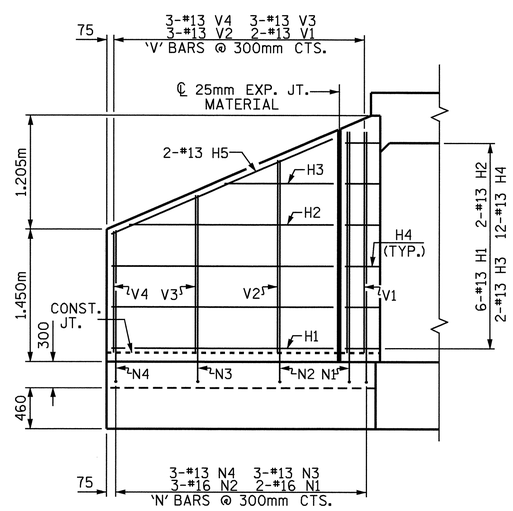

ELEVATION W2

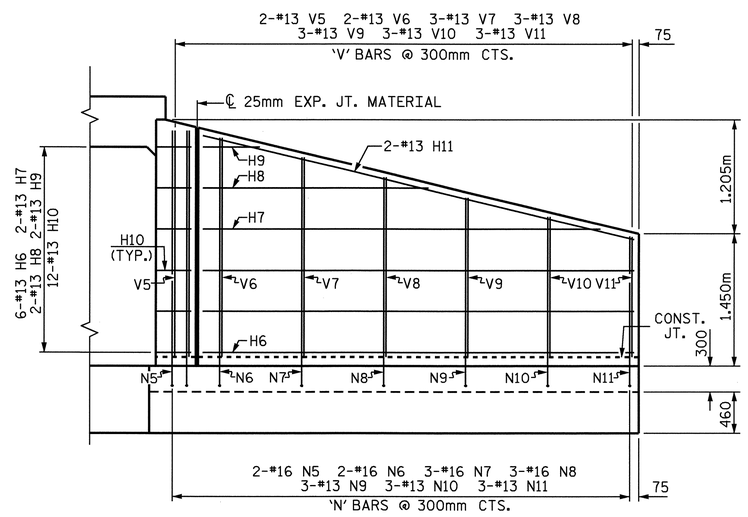

ELEVATION W1

FOR WING ORIENTATION, SEE BARREL STANDARD SHEET.

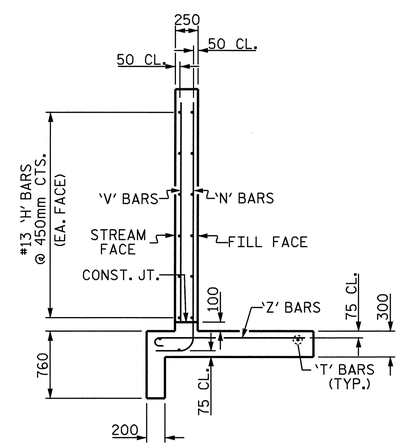

TYPICAL WING SECTION

BAR TYPES

ALL BAR DIMENSIONS ARE OUT TO OUT.

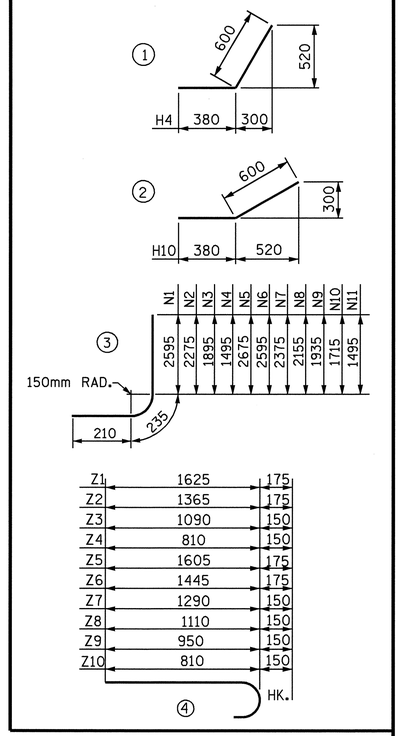

BILL OF MATERIAL

BAR	NO.	SIZE	TYPE	LENGTH	WEIGHT
H1	6	13	STR	2440	15
H2	2	13	STR	2240	5
H3	2	13	STR	1200	2
H4	12	13	1	980	12
H5	2	13	STR	2640	5
H6	6	13	STR	4740	28
H7	2	13	STR	4460	9
H8	2	13	STR	2600	5
H9	2	13	STR	760	2
H10	12	13	2	980	12
H11	2	13	STR	4860	10
N1	2	16	3	3040	9
N2	3	16	3	2720	13
N3	3	13	3	2340	7
N4	3	13	3	1940	6
N5	2	16	3	3120	10
N6	2	16	3	3040	9
N7	3	16	3	2820	13
N8	3	16	3	2600	12
N9	3	13	3	2380	7
N10	3	13	3	2160	6
N11	3	13	3	1940	6
S1	6	19	STR	1800	24
T1	3	16	STR	3000	14
T2	3	16	STR	5300	25
V1	2	13	STR	2420	5
V2	3	13	STR	2100	6
V3	3	13	STR	1720	5
V4	3	13	STR	1320	4
V5	2	13	STR	2500	5
V6	2	13	STR	2420	5
V7	3	13	STR	2200	7
V8	3	13	STR	1980	6
V9	3	13	STR	1760	5
V10	3	13	STR	1540	5
V11	3	13	STR	1320	4
Z1	2	16	4	1800	6
Z2	3	16	4	1540	7
Z3	3	13	4	1240	4
Z4	3	13	4	960	3
Z5	4	16	4	1780	11
Z6	3	16	4	1620	8
Z7	3	13	4	1440	4
Z8	3	13	4	1260	4
Z9	3	13	4	1100	3
Z10	3	13	4	960	3

REINFORCING STEEL FOR 2 WING WALLS	376	kg
CLASS A CONCRETE		
2 WINGS	8.8	m^3
1 HEADWALL	1.0	m^3
1 END CURTAIN WALL	1.1	m^3
2 EDGE BEAMS	1.5	m^3
TOTAL	12.4	m^3

PROJECT NO. R-2518B
YANCEY COUNTY
STATION: 156+63.000 -L-

SHEET 5 OF 9

STATE OF NORTH CAROLINA
DEPARTMENT OF TRANSPORTATION
RALEIGH

STANDARD WINGS FOR CONCRETE BOX CULVERT H=2.400m SLOPE=2:1 60° OR 120° SKEW

NORTH CAROLINA PROFESSIONAL SEAL 20125 ENGINEER MARSHALL B. QUICKER, JR.
3-28-06

REVISIONS						SHEET NO.
NO.	BY:	DATE:	NO.	BY:	DATE:	C-20
1			3			TOTAL SHEETS
2			4			24

ASSEMBLED BY : A. SORSENGINH DATE : 9/6/05
CHECKED BY : CR. YARBROUGH DATE : 1/05
DRAWN BY : JLR 6/97
CHECKED BY : VAP 6/97

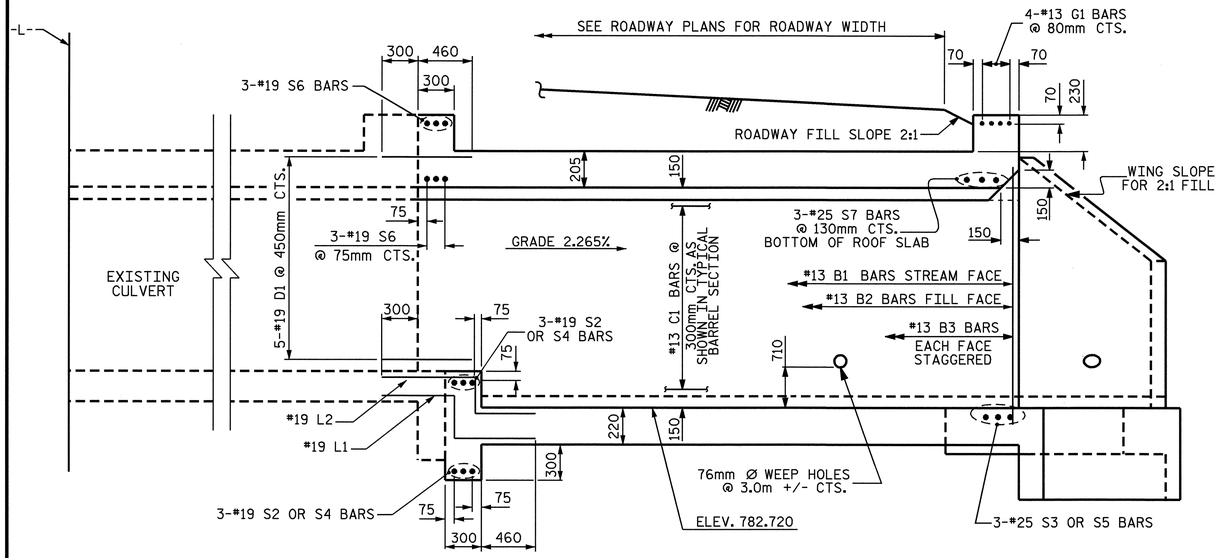

RIGHT CULVERT EXTENSION SECTION NORMAL TO ROADWAY

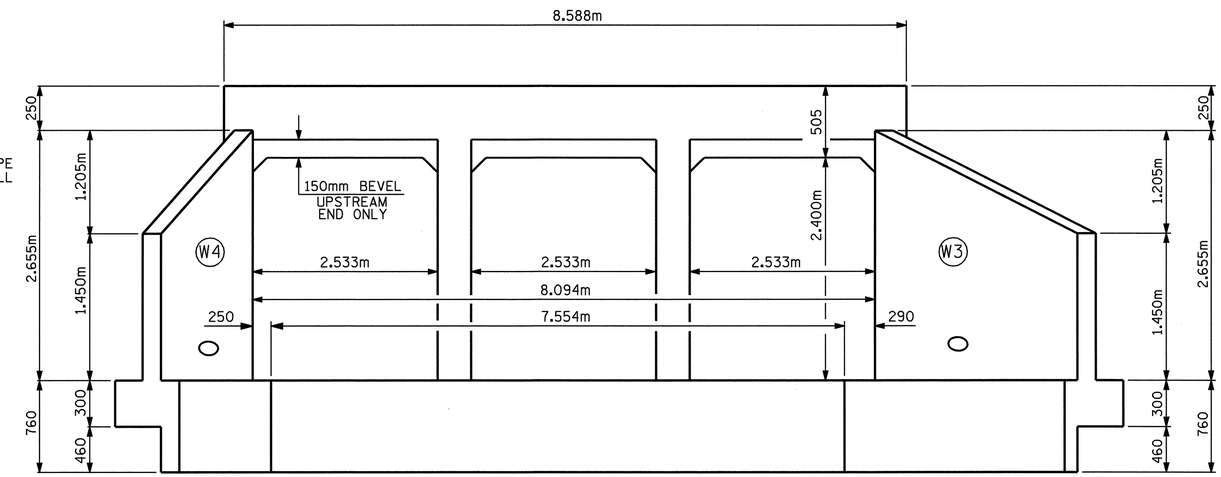

OUTLET END ELEVATION - NORMAL TO SKEW

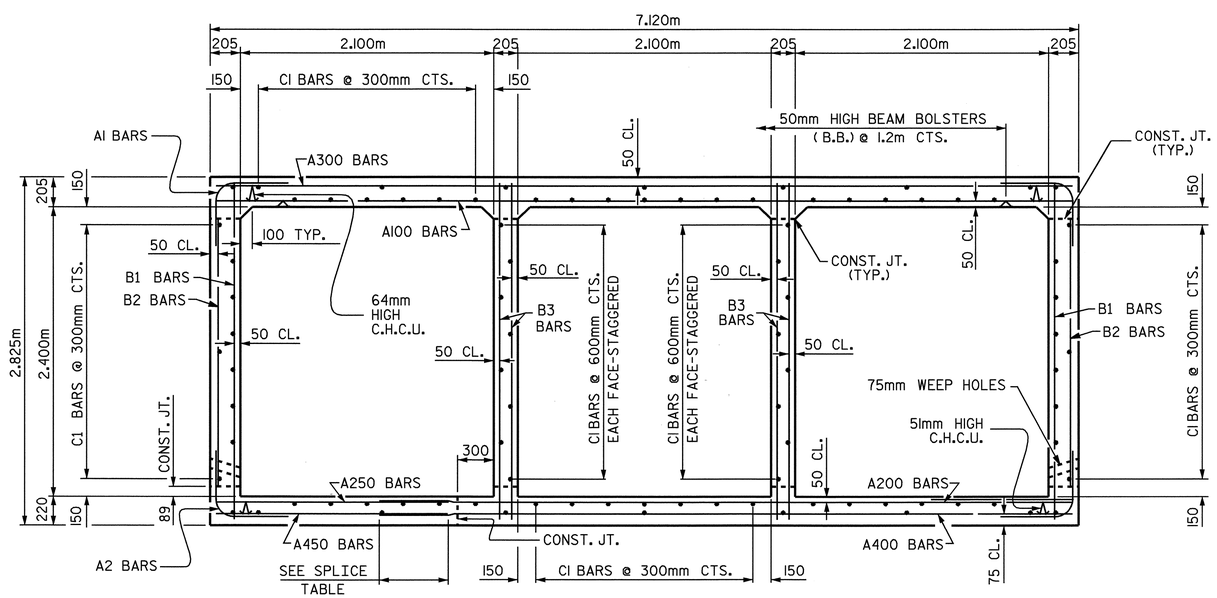

RIGHT ANGLE SECTION OF BARREL

THERE ARE 90 "C" BARS IN SECTION OF BARREL.
(LOOKING DOWNSTREAM)

RIGHT EXTENSION STRUCTURE QUANTITIES		
CLASS A CONCRETE		
BARREL @ 4.96 m^3/m	10.6	m^3
WINGS ETC.	12.4	m^3
TOTAL	23.0	m^3
REINFORCING STEEL		
BARREL	1,706	kg
WING ETC.	376	kg
TOTAL	2,082	kg
CULVERT EXCAVATION ----------	LUMP SUM	
FOUNDATION COND. MAT'L -----	10 METRIC TONS	

PROJECT NO. R-2518B
YANCEY COUNTY
STATION: 156+63.000 -L-

SHEET 6 OF 9

STATE OF NORTH CAROLINA
DEPARTMENT OF TRANSPORTATION
RALEIGH

TRIPLE 2.100m X 2.400m CONCRETE BOX CULVERT (RIGHT EXTENSION)

NORTH CAROLINA PROFESSIONAL SEAL 20125 ENGINEER MARSHALL H. CHEEK, JR.
5-28-08

ASSEMBLED BY : A. SORSENGINH DATE : 9/1/05
CHECKED BY : CR. YARBROUGH DATE : 11/05
DRAWN BY : EEM 6/97
CHECKED BY : ARB 7/97

REVISIONS								SHEET NO.
NO.	BY:	DATE:	NO.	BY:	DATE:			C-21
1			3					TOTAL SHEETS
2			4					24

STP #7

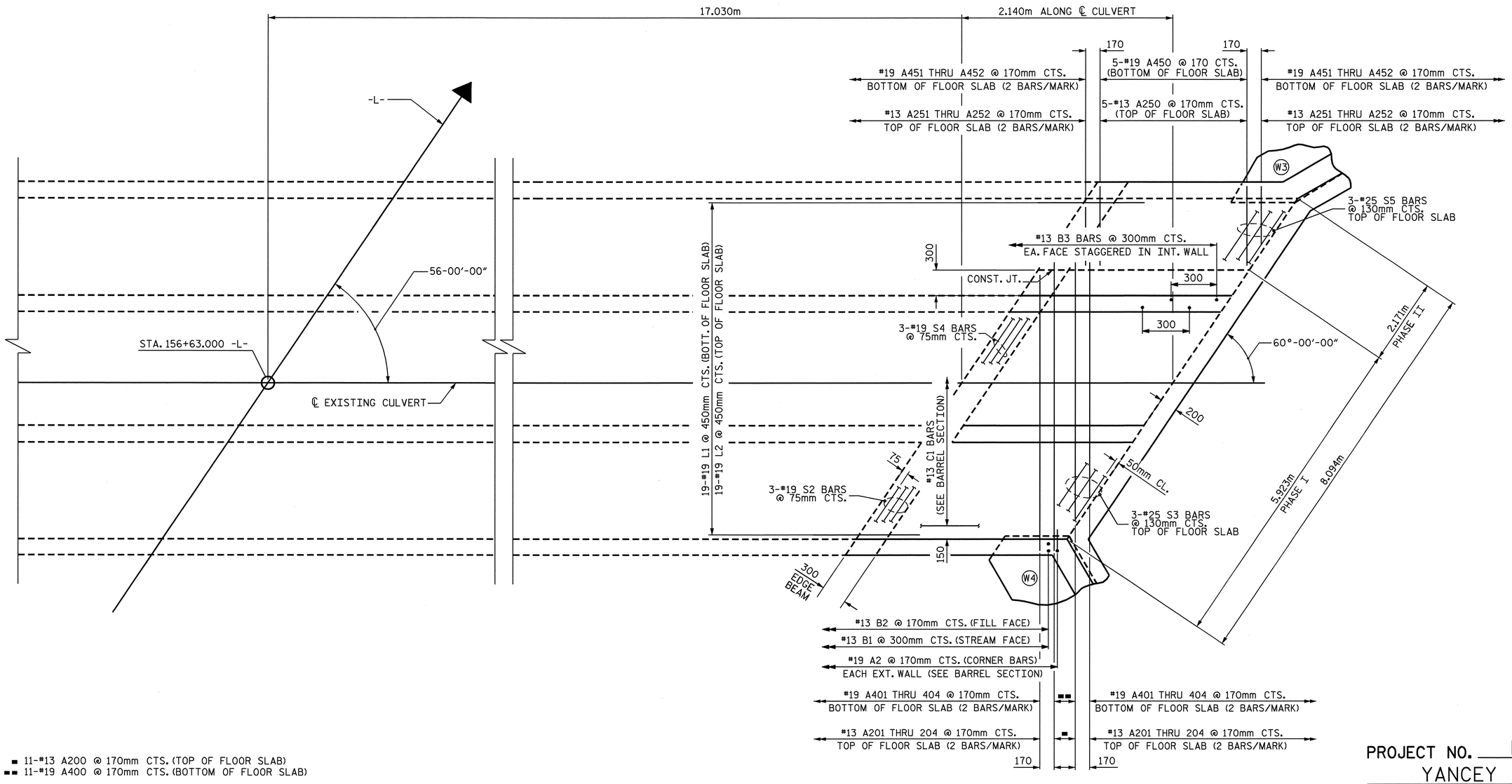

▪ 11-#13 A200 @ 170mm CTS. (TOP OF FLOOR SLAB)
▪▪ 11-#19 A400 @ 170mm CTS. (BOTTOM OF FLOOR SLAB)

PLAN - FLOOR SLAB-RIGHT EXTENSION

PROJECT NO. R-2518B
YANCEY COUNTY
STATION: 156+63.000 -L-

SHEET 7 OF 9

STATE OF NORTH CAROLINA
DEPARTMENT OF TRANSPORTATION
RALEIGH

TRIPLE 2.100m X 2.400m
CONCRETE BOX CULVERT
(RIGHT EXTENSION)

NORTH CAROLINA PROFESSIONAL SEAL 20125 ENGINEER MARSHALL H. CREEK, JR.
3-28-08

REVISIONS						SHEET NO.
NO.	BY:	DATE:	NO.	BY:	DATE:	C-22
1			3			TOTAL SHEETS
2			4			24

ASSEMBLED BY : A. SORSENGINH DATE : 9/6/05
CHECKED BY : CR. YARBROUGH DATE : 11/05
DRAWN BY : EEM 6/97
CHECKED BY : ARB 7/97

■ 17-#19 A300 @ 170mm CTS. (TOP OF ROOF SLAB)
■■ 17-#13 A100 @ 170mm CTS. (BOTTOM OF ROOF SLAB)

BAR TYPE

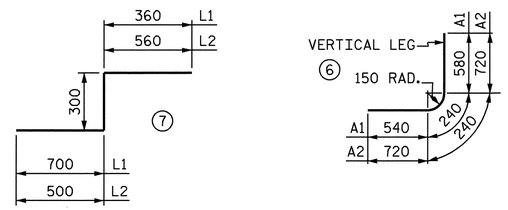

DIMENSIONS ARE OUT TO OUT

SPLICE LENGTH CHART

BAR	SIZE	SPLICE LENGTH
A200	13	540
A400	19	690
B1	13	540
B2	13	540
B3	13	590
S2	19	690
S3	25	1220

BILL OF MATERIAL

REINFORCING BAR SCHEDULE

BARS	NO.	SIZE	TYPE	LENGTH	WEIGHT
A1	26	16	6	1360	55
A2	26	19	6	1680	98
A100	17	13	STR	2980	50
A101	4	13	STR	2480	10
A102	4	13	STR	1980	8
A103	4	13	STR	1480	6
A104	4	13	STR	980	4
A200	11	13	STR	2980	33
A201	4	13	STR	2520	10
A202	4	13	STR	2020	8
A203	4	13	STR	1520	6
A204	4	13	STR	1020	4
A250	5	13	STR	1960	10
A251	4	13	STR	1460	6
A252	4	13	STR	960	4
A300	17	19	STR	2980	113
A301	4	19	STR	2480	22
A302	4	19	STR	1980	18
A303	4	19	STR	1480	13
A304	4	19	STR	980	9

BARS	NO.	SIZE	TYPE	LENGTH	WEIGHT
A400	11	19	STR	2980	73
A401	4	19	STR	2600	23
A402	4	19	STR	2100	19
A403	4	19	STR	1600	14
A404	4	19	STR	1100	10
A450	5	19	STR	1960	22
A451	4	19	STR	1460	13
A452	4	19	STR	960	9
B1	16	13	STR	2640	42
B2	26	13	STR	2180	56
B3	32	13	STR	2640	84
C1	90	13	STR	2000	179
D1	29	19	STR	760	49
G1	4	16	STR	8460	53
L1	19	19	7	1360	58
L2	19	19	7	1360	58
S2	6	19	STR	6940	93
S3	3	25	STR	7580	90
S4	6	19	STR	2360	32
S5	3	25	STR	2360	28
S6	6	19	STR	8460	113
S7	3	25	STR	8460	101

REINFORCING STEEL = 1,706 kg

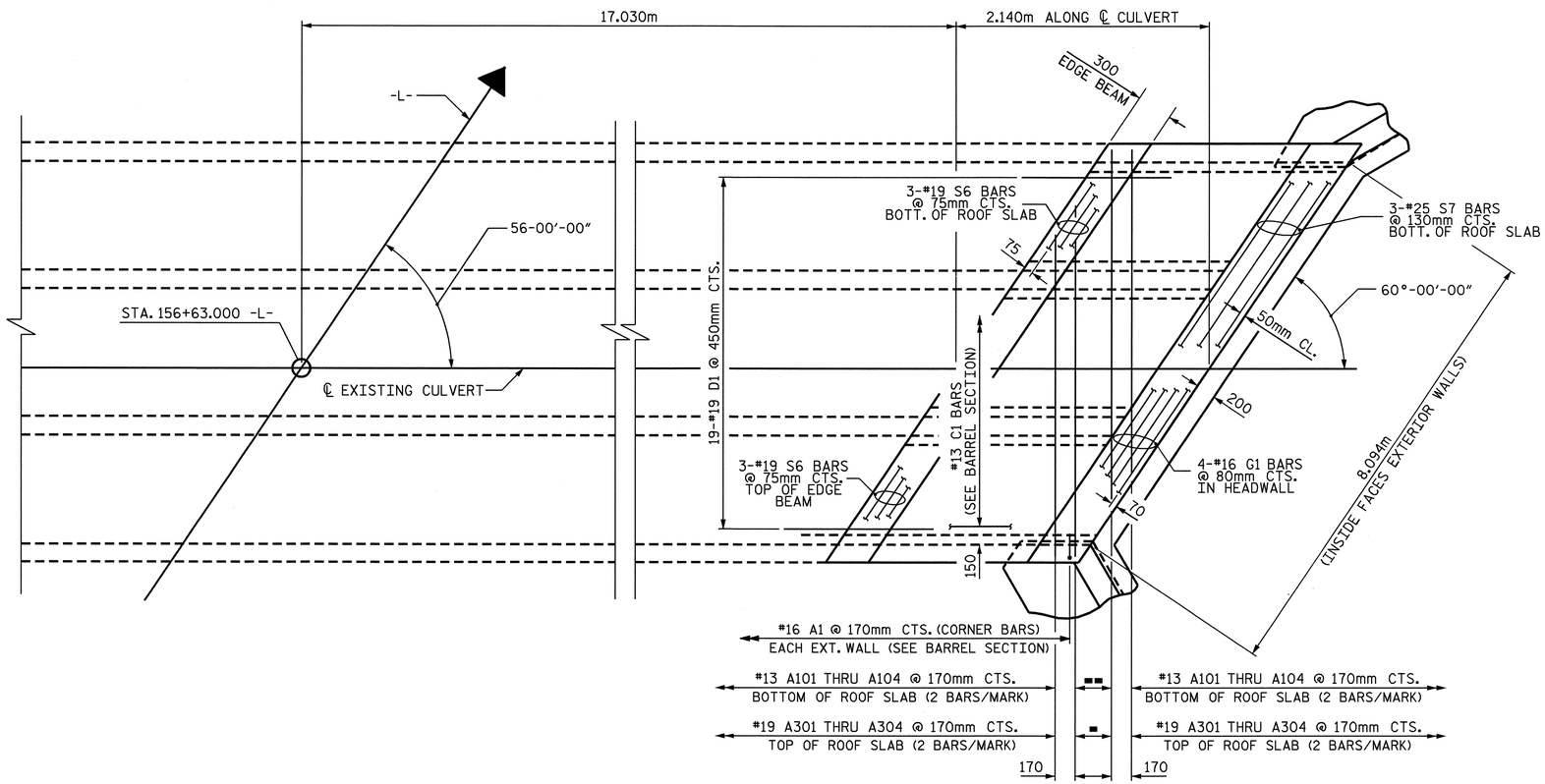

PLAN - ROOF SLAB-RIGHT EXTENSION

PROJECT NO. R-2518B
YANCEY COUNTY
STATION: 156+63.000 -L-

SHEET 8 OF 9

STATE OF NORTH CAROLINA
DEPARTMENT OF TRANSPORTATION
RALEIGH

TRIPLE 2.100m X 2.400m
CONCRETE BOX CULVERT
(RIGHT EXTENSION)

NORTH CAROLINA PROFESSIONAL SEAL 20125 ENGINEER MARSHALL B. CHEEK, JR.
3-28-08

ASSEMBLED BY : A. SORSENGINH	DATE : 9/2/05
CHECKED BY : CR. YARBROUGH	DATE : 11/05
DRAWN BY : EEM	6/97
CHECKED BY : ARB	7/97

REVISIONS								SHEET NO.
NO.	BY:	DATE:	NO.	BY:	DATE:			C-23
1			3					TOTAL SHEETS
2			4					24

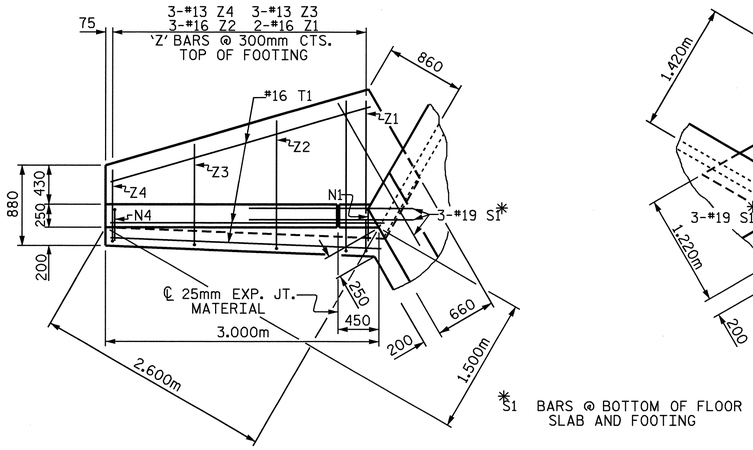

*S1 BARS @ BOTTOM OF FLOOR SLAB AND FOOTING

PLAN W4

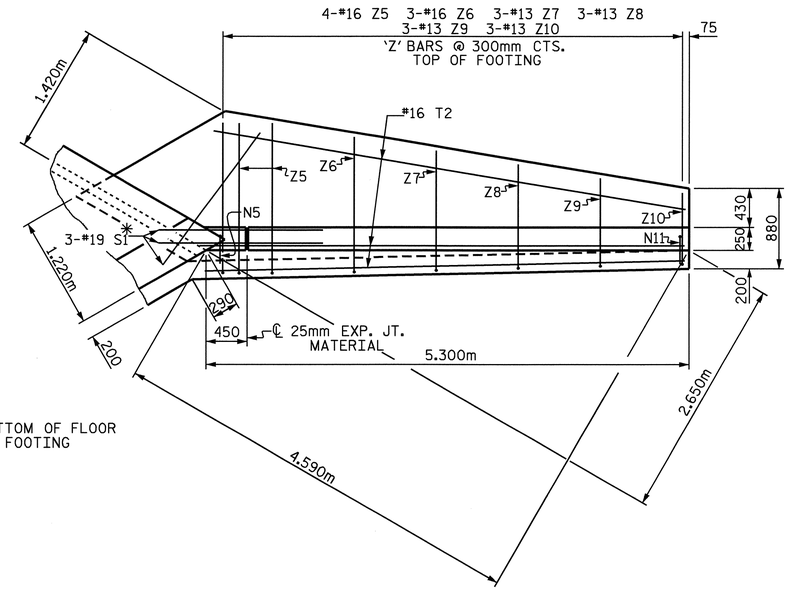

PLAN W3

BAR TYPES

ALL BAR DIMENSIONS ARE OUT TO OUT.

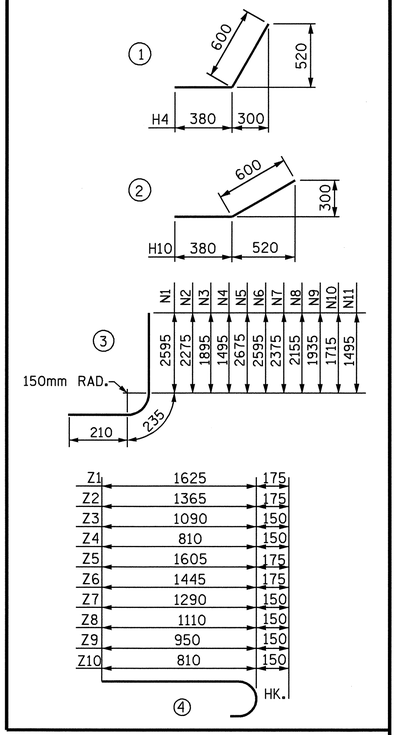

BILL OF MATERIAL

BAR	NO.	SIZE	TYPE	LENGTH	WEIGHT
H1	6	13	STR	2440	15
H2	2	13	STR	2240	5
H3	2	13	STR	1200	2
H4	12	13	1	980	12
H5	2	13	STR	2640	5
H6	6	13	STR	4740	28
H7	2	13	STR	4460	9
H8	2	13	STR	2600	5
H9	2	13	STR	760	2
H10	12	13	2	980	12
H11	2	13	STR	4860	10
N1	2	16	3	3040	9
N2	3	16	3	2720	13
N3	3	13	3	2340	7
N4	3	13	3	1940	6
N5	2	16	3	3120	10
N6	2	16	3	3040	9
N7	3	16	3	2820	13
N8	3	16	3	2600	12
N9	3	13	3	2380	7
N10	3	13	3	2160	6
N11	3	13	3	1940	6
S1	6	19	STR	1800	24
T1	3	16	STR	3000	14
T2	3	16	STR	5300	25
V1	2	13	STR	2420	5
V2	3	13	STR	2100	6
V3	3	13	STR	1720	5
V4	3	13	STR	1320	4
V5	2	13	STR	2500	5
V6	2	13	STR	2420	5
V7	3	13	STR	2200	7
V8	3	13	STR	1980	6
V9	3	13	STR	1760	5
V10	3	13	STR	1540	5
V11	3	13	STR	1320	4
Z1	2	16	4	1800	6
Z2	3	16	4	1540	7
Z3	3	13	4	1240	4
Z4	3	13	4	960	3
Z5	4	16	4	1780	11
Z6	3	16	4	1620	8
Z7	3	13	4	1440	4
Z8	3	13	4	1260	4
Z9	3	13	4	1100	3
Z10	3	13	4	960	3

REINFORCING STEEL FOR 2 WING WALLS	376	kg
CLASS A CONCRETE		
2 WINGS	8.8	m^3
1 HEADWALL	1.0	m^3
1 END CURTAIN WALL	1.1	m^3
2 EDGE BEAMS	1.5	m^3
TOTAL	12.4	m^3

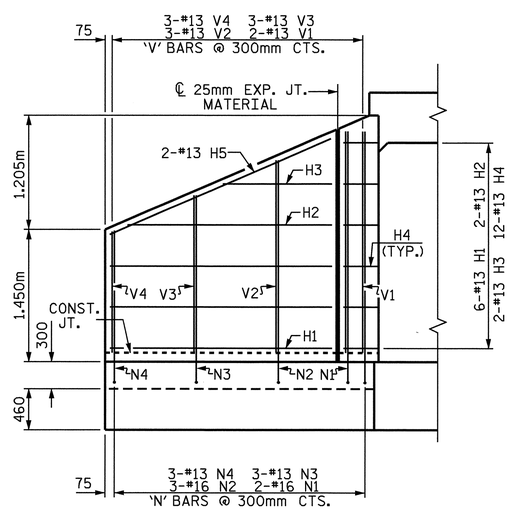

ELEVATION W4

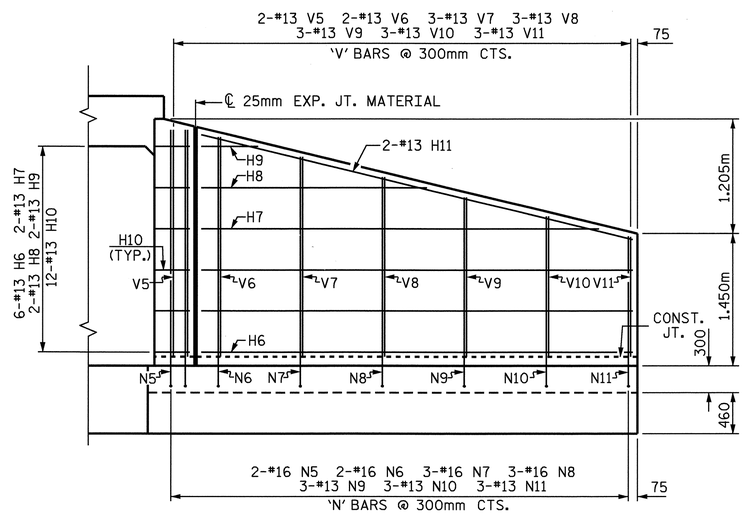

ELEVATION W3

FOR WING ORIENTATION, SEE BARREL STANDARD SHEET.

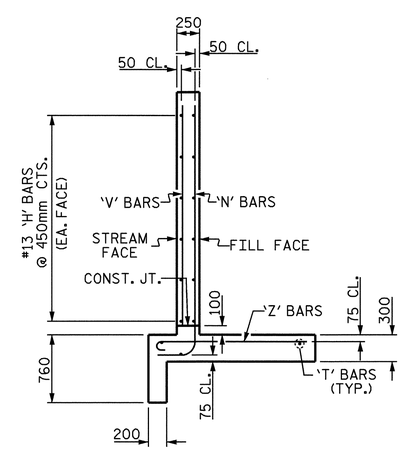

TYPICAL WING SECTION

PROJECT NO. R-2518B
YANCEY COUNTY
STATION: 156+63.000 -L-

SHEET 9 OF 9

STATE OF NORTH CAROLINA
DEPARTMENT OF TRANSPORTATION
RALEIGH

STANDARD WINGS FOR CONCRETE BOX CULVERT H=2.400m SLOPE=2:1 60° OR 120° SKEW

NORTH CAROLINA PROFESSIONAL SEAL 20125 ENGINEER MARSHALL B. CREEK, JR.
3-18-08

REVISIONS						SHEET NO.
NO.	BY:	DATE:	NO.	BY:	DATE:	C-24
1			3			TOTAL SHEETS
2			4			24

ASSEMBLED BY : A. SORSENGINH DATE : 9/6/05
CHECKED BY : CR. YARBROUGH DATE : 1/05
DRAWN BY : JLR 6/97
CHECKED BY : VAP 6/97

BM - 3 CHISELED SQUARE ON SW CORNER OF BOX CULVERT ON HW STA. 124+12 -L- 37.00 M LT.
EL. = 845.212 M N 245496 E 297652

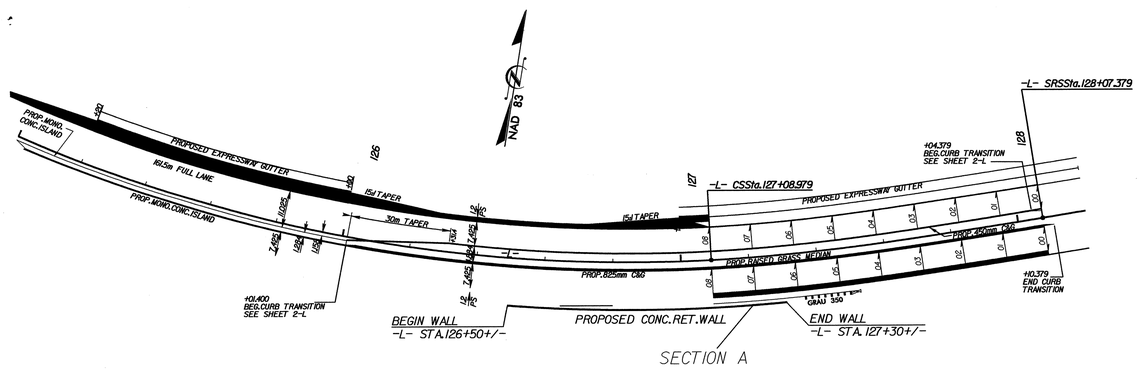

LOCATION SKETCH

MSE RETAINING WALL ELEVATIONS			
-L- STA	OFFSET FROM ℄ (RIGHT)	ELEV @ TOP OF WALL	* PROPOSED FINISHED GRADE
126+50.00	13.87	851.00	849.52
126+60.00	13.87	851.17	849.75
126+80.00	13.87	851.46	848.72
127+00.00	13.87	851.68	848.49
127+20.00	13.87	851.69	847.73
127+30.00	13.87	851.62	848.58

TOTAL STRUCTURE QUANTITIES		
MSE RETAINING WALL	222	SQ. M

* EMBEDDMENT DEPTH NOT INCLUDED IN ELEVATION TABLES.

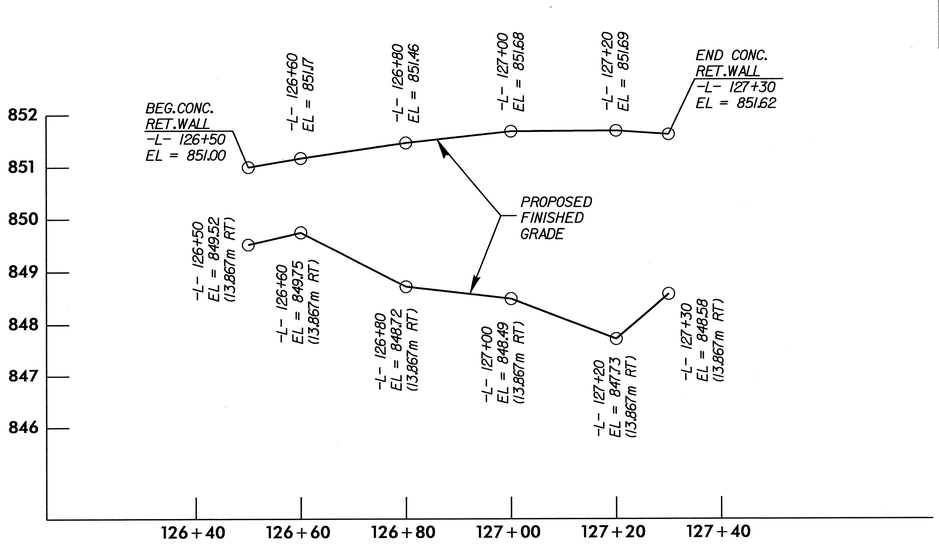

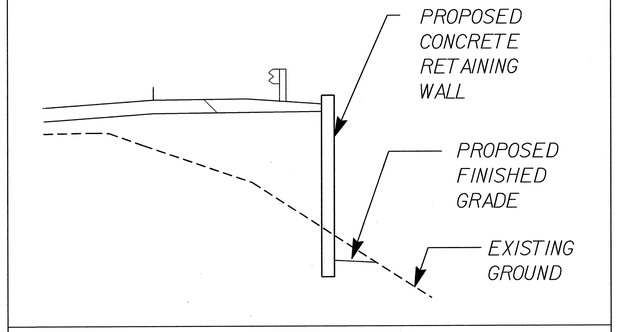

SECTION A

GEOTECHNICAL ENGINEER
NORTH CAROLINA PROFESSIONAL SEAL 29869 ENGINEER SHANE C. CLARK
SIGNATURE 3/15/08 DATE

ENGINEER
SIGNATURE DATE

PROJECT NO.: R-2518B
YANCEY COUNTY
STATION: 126+50.00 -L- TO 127+30.00 -L-

GEOTECHNICAL ENGINEERING UNIT
☐ EASTERN REGIONAL OFFICE
☒ WESTERN REGIONAL OFFICE

STATE OF NORTH CAROLINA
DEPARTMENT OF TRANSPORTATION
RALEIGH

MSE RETAINING WALL

REVISIONS						SHEET NO.
NO.	BY	DATE	NO.	BY	DATE	W-1
1			3			TOTAL SHEETS
2			4			2

PREPARED BY:	J.T. WILLIAMS	DATE: 02/19/08
REVIEWED BY:	S.C. CLARK	DATE: 02/19/08

MSE RETAINING WALL NOTES

FOR MECHANICALLY STABILIZED EARTH (MSE) RETAINING WALLS, SEE MECHANICALLY STABILIZED EARTH RETAINING WALLS SPECIAL PROVISION.

FOR GUARDRAIL, SEE ROADWAY PLANS AND SECTION 862 OF THE STANDARD SPECIFICATIONS.

DO NOT USE STANDARD SIZE NO. 2S OR 2MS FOR WALL BACKFILL.

DO NOT USE AN MSE WALL SYSTEM WITH SEGMENTAL RETAINING WALL UNITS.

BEFORE BEGINNING MSE WALL DESIGN, SURVEY ALL EXISTING GROUND ELEVATIONS SHOWN ON THE PLANS AND SUBMIT A REVISED WALL ENVELOPE FOR REVIEW. DO NOT START WALL DESIGN OR CONSTRUCTION UNTIL THIS ENVELOPE IS ACCEPTED.

CAST-IN-PLACE CONCRETE COPING IS REQUIRED.

A BROOMED ARCHITECTURAL FINISH IS REQUIRED ON THE FRONT FACE OF THE PRECAST CONCRETE PANELS.

DESIGN RETAINING WALL FOR A WALL HEIGHT EQUAL TO THE DESIGN HEIGHT (DIFFERENCE BETWEEN GRADE ELEVATION AND BOTTOM OF WALL ELEVATION) PLUS EMBEDMENT (DIFFERENCE BETWEEN BOTTOM OF WALL ELEVATION AND TOP OF LEVELING PAD ELEVATION).

DESIGN RETAINING WALL FOR THE FOLLOWING:
1) MINIMUM SERVICE LIFE = 100 YEARS
2) ALLOWABLE BEARING CAPACITY = 200 kPa
3) WALL BACKFILL MATERIAL PARAMETERS:

MATERIAL STANDARD SIZE NO. (IN ACCORDANCE WITH SECTIONS 1005 AND 1014 OF THE STANDARD SPECIFICATIONS)	UNIT WEIGHT (γ) kN/m^3	FRICTION ANGLE (ϕ) DEGREES	COHESION (c) kPa
57, 67 AND 78M	17.25	38	0

4) IN-SITU ASSUMED MATERIAL PARAMETERS:

MATERIAL TYPE	UNIT WEIGHT (γ) kN/m^3	FRICTION ANGLE (ϕ) DEGREES	COHESION (c) kPa
RETAINED AND RANDOM BACKFILL	18.0	36	4.75

DESIGN RETAINING WALL FOR A LIVE LOAD (TRAFFIC) SURCHARGE.

EXISTING OR FUTURE OBSTRUCTIONS SUCH AS FOUNDATIONS, GUARDRAIL POSTS, PAVEMENTS, PIPES, INLETS OR UTILITIES MAY INTERFERE WITH REINFORCEMENT FOR RETAINING WALL.

DO NOT PLACE LEVELING PAD CONCRETE, WALL BACKFILL OR FIRST REINFORCEMENT LAYER FOR RETAINING WALL UNTIL OBTAINING APPROVAL OF THE EXCAVATION DEPTH AND FOUNDATION MATERIAL.

TEMPORARY SHORING FOR WALL CONSTRUCTION MAY BE REQUIRED FOR RETAINING WALL, AT THE DISCRETION OF THE CONTRACTOR. NO SEPARATE PAYMENT WILL BE MADE FOR TEMPORARY SHORING FOR WALL CONSTRUCTION.

TRANSITION 2:1 (H:V) SLOPE FROM STATION 127+30 TOWARDS 126+50 AROUND FRONT OF WALL AS NEEDED. ROCK PLATE SLOPES STEEPER THAN 1.5:1 (H:V) ACCORDING TO DETAIL AND ROCK PLATING SPECIAL PROVISION, OR AT THE DIRECTION OF THE ENGINEER.

METRIC

GEOTECHNICAL ENGINEER	ENGINEER
NORTH CAROLINA PROFESSIONAL SEAL 29869 ENGINEER SHANE C. CLARK	
SIGNATURE DATE 3/13/18	SIGNATURE DATE

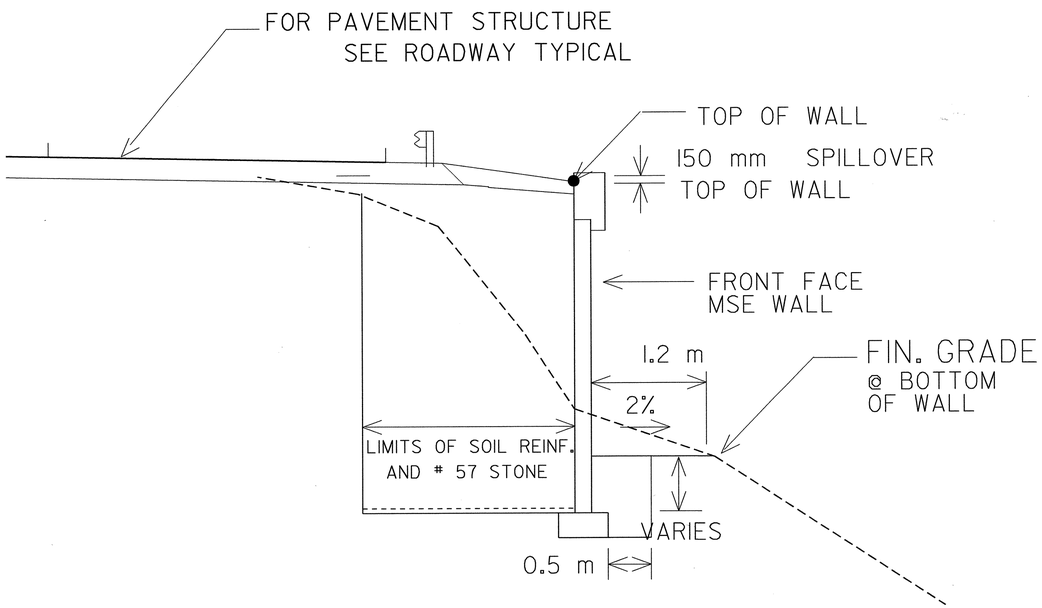

TYPICAL SECTION

N.T.S.

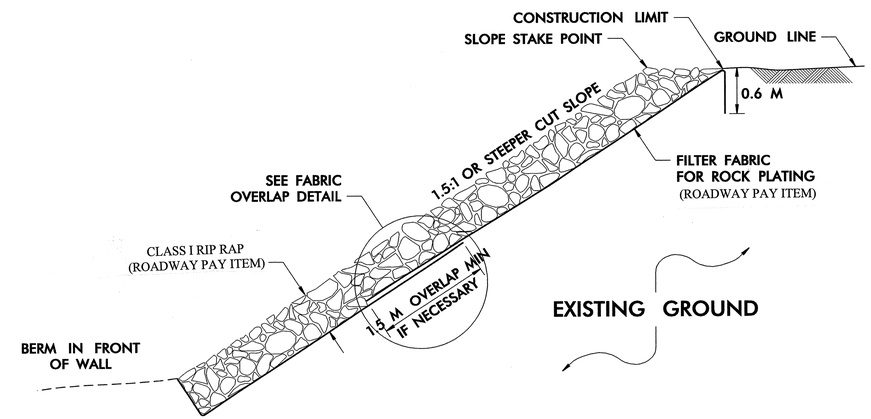

ROCK PLATING DETAIL

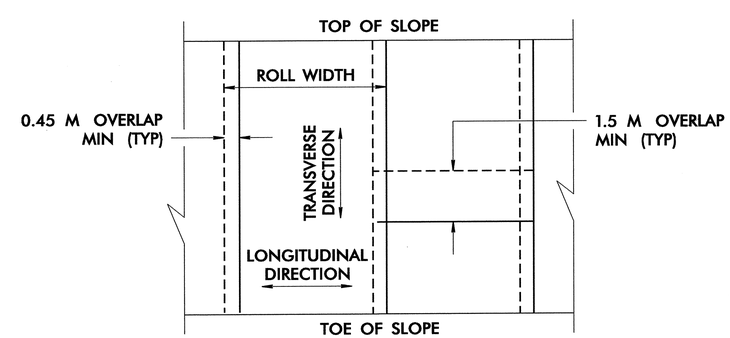

FABRIC OVERLAP DETAIL
(PLAN VIEW)

PROJECT NO.: R-2518B
YANCEY *COUNTY*
STATION: 126+50.00 -L- TO 127+30.00 -L-

PREPARED BY:	J.T. WILLIAMS	DATE: 02/12/08
REVIEWED BY:	S.C. CLARK	DATE: 02/12/08

GEOTECHNICAL ENGINEERING UNIT

☐ *EASTERN REGIONAL OFFICE*
☒ *WESTERN REGIONAL OFFICE*

STATE OF NORTH CAROLINA
DEPARTMENT OF TRANSPORTATION
RALEIGH

MSE
RETAINING WALL

REVISIONS							SHEET NO.
NO.	BY	DATE	NO.	BY	DATE		W-2
1			3				TOTAL SHEETS
2			4				2

STANDARD NOTES

DESIGN DATA:

SPECIFICATIONS	A.A.S.H.T.O. (CURRENT)
LIVE LOAD	SEE PLANS
IMPACT ALLOWANCE	SEE A.A.S.H.T.O.
STRESS IN EXTREME FIBER OF	
STRUCTURAL STEEL - AASHTO M270 GRADE 250	140 MPa
- AASHTO M270 GRADE 345W	190 MPa
- AASHTO M270 GRADE 345	190 MPa
REINFORCING STEEL IN TENSION	
GRADE 420	165 MPa
CONCRETE IN COMPRESSION	8.3 MPa
CONCRETE IN SHEAR	SEE A.A.S.H.T.O.
STRUCTURAL TIMBER - TREATED OR	
UNTREATED - EXTREME FIBER STRESS	12 MPa
COMPRESSION PERPENDICULAR TO GRAIN OF TIMBER	2.6 MPa
EQUIVALENT FLUID PRESSURE OF EARTH	480 kg/m^3 (MINIMUM)

MATERIAL AND WORKMANSHIP:

EXCEPT AS MAY OTHERWISE BE SPECIFIED ON PLANS OR IN THE SPECIAL PROVISIONS, ALL MATERIAL AND WORKMANSHIP SHALL BE IN ACCORDANCE WITH THE 2002 STANDARD SPECIFICATIONS "FOR ROADS AND STRUCTURES" OF THE N. C. DEPARTMENT OF TRANSPORTATION.

STEEL SHEET PILING FOR PERMANENT OR TEMPORARY APPLICATIONS SHALL BE HOT ROLLED.

CONCRETE:

UNLESS OTHERWISE REQUIRED ON PLANS, CLASS A CONCRETE SHALL BE USED FOR ALL PORTIONS OF ALL STRUCTURES WITH THE EXCEPTION THAT: CLASS AA CONCRETE SHALL BE USED IN BRIDGE SUPERSTRUCTURES, ABUTMENT BACKWALLS, AND APPROACH SLABS; CLASS B CONCRETE SHALL BE USED FOR SLOPE PROTECTION AND RIP RAP; AND CLASS S SHALL BE USED FOR UNDERWATER FOOTING SEALS.

CONCRETE CHAMFERS:

UNLESS OTHERWISE NOTED ON THE PLANS, ALL EXPOSED CORNERS ON STRUCTURES SHALL BE CHAMFERED 19mm WITH THE FOLLOWING EXCEPTIONS: TOP CORNERS OF CURBS MAY BE ROUNDED TO 38mm RADIUS WHICH IS BUILT INTO CURB FORMS; CORNERS OF TRANSVERSE FLOOR EXPANSION JOINTS SHALL BE ROUNDED WITH A 6mm FINISHING TOOL UNLESS OTHERWISE REQUIRED ON PLANS; AND CORNERS OF EXPANSION JOINTS IN THE ROADWAY FACES AND TOPS OF CURBS AND SIDEWALKS SHALL BE ROUNDED TO A 6mm RADIUS WITH A FINISHING STONE OR TOOL UNLESS OTHERWISE REQUIRED ON PLANS.

DOWELS:

DOWELS WHEN INDICATED ON PLANS AS FOR CULVERT EXTENSIONS, SHALL BE EMBEDDED AT LEAST 300mm INTO THE OLD CONCRETE AND GROUTED INTO PLACE WITH 1:2 CEMENT MORTAR.

ALLOWANCE FOR DEAD LOAD DEFLECTION, SETTLEMENT, ETC. IN CASTING SUPERSTRUCTURES:

BRIDGES SHALL BE BUILT ON THE GRADE OR VERTICAL CURVE SHOWN ON PLANS. SLABS, CURBS AND PARAPETS SHALL CONFORM TO THE GRADE OR CURVE.

ALL DIMENSIONS WHICH ARE GIVEN IN SECTION AND ARE AFFECTED BY DEAD LOAD DEFLECTIONS ARE DIMENSIONS AT CENTER LINE OF BEARING UNLESS OTHERWISE NOTED ON PLANS. IN SETTING FORMS FOR STEEL BEAM BRIDGES AND PRESTRESSED CONCRETE GIRDER BRIDGES, ADJUSTMENTS SHALL BE MADE DUE TO THE DEAD LOAD DEFLECTIONS FOR THE ELEVATIONS SHOWN. WHERE BLOCKS ARE SHOWN OVER BEAMS FOR BUILDING UP TO THE SLAB, THE VERTICAL DIMENSIONS OF THE BLOCKS SHALL BE ADJUSTED BETWEEN BEARINGS TO COMPENSATE FOR DEAD LOAD DEFLECTIONS, VERTICAL CURVE ORDINATE, AND ACTUAL BEAM CAMBER. WHERE BOTTOM OF SLAB IS IN LINE WITH BOTTOM OF TOP FLANGES, DEPTH OF SLAB BETWEEN BEARINGS SHALL BE ADJUSTED TO COMPENSATE FOR DEAD LOAD DEFLECTION, VERTICAL CURVE ORDINATE, AND ACTUAL BEAM CAMBER.

IN SETTING FALSEWORK AND FORMS FOR REINFORCED CONCRETE SPANS, AN ALLOWANCE SHALL BE MADE FOR DEAD LOAD DEFLECTIONS, SETTLEMENT OF FALSEWORK, AND PERMANENT CAMBER WHICH SHALL BE PROVIDED FOR IN ADDITION TO THE ELEVATIONS SHOWN. AFTER REMOVAL OF THE FALSEWORK, THE FINISHED STRUCTURES SHALL CONFORM TO THE PROFILE AND ELEVATIONS SHOWN ON THE PLANS AND CONSTRUCTION ELEVATIONS FURNISHED BY THE ENGINEER.

DETAILED DRAWINGS FOR FALSEWORK OR FORMS FOR BRIDGE SUPERSTRUCTURE AND ANY STRUCTURE OR PARTS OF A STRUCTURE AS NOTED ON THE PLANS SHALL BE SUBMITTED TO THE ENGINEER FOR APPROVAL BEFORE CONSTRUCTION OF THE FALSEWORK OR FORMS IS STARTED.

REINFORCING STEEL:

ALL REINFORCING STEEL SHALL BE DEFORMED. DIMENSIONS RELATIVE TO PLACEMENT OF REINFORCING ARE TO CENTERS OF BARS UNLESS OTHERWISE INDICATED IN THE PLANS. DIMENSIONS ON BAR DETAILS ARE TO CENTERS OF BARS OR ARE OUT TO OUT AS INDICATED ON PLANS.

WIRE BAR SUPPORTS SHALL BE PROVIDED FOR REINFORCING STEEL WHERE INDICATED ON THE PLANS. WHEN BAR SUPPORT PIECES ARE PLACED IN CONTINUOUS LINES, THEY SHALL BE SO PLACED THAT THE ENDS OF THE SUPPORTING WIRES SHALL BE LAPPED TO LOCK LEGS ON ADJOINING PIECES.

STRUCTURAL STEEL:

AT THE CONTRACTOR'S OPTION, HE MAY SUBSTITUTE 22.23mm Ø SHEAR STUDS FOR THE 19.05mm Ø STUDS SPECIFIED ON THE PLANS. THIS SUBSTITUTION SHALL BE MADE AT THE RATE OF 3 -22.23mm Ø STUDS FOR 4 - 19.05mm Ø STUDS, AND STUD SPACING CHANGES SHALL BE MADE AS NECESSARY TO PROVIDE THE SAME EQUIVALENT NUMBER OF 22.23mm Ø STUDS ALONG THE BEAM AS SHOWN FOR 19.05mm Ø STUDS BASED ON THE RATIO OF 3 - 22.23mm Ø STUDS FOR 4 - 19.05mm Ø STUDS. STUDS OF THE LENGTH SPECIFIED ON THE PLANS MUST BE PROVIDED. THE MAXIMUM SPACING SHALL BE 610mm.

EXCEPT AT THE INTERIOR SUPPORTS OF CONTINUOUS BEAMS WHERE THE COVER PLATE IS IN CONTACT WITH BEARING PLATE, THE CONTRACTOR MAY, AT HIS OPTION, SUBSTITUTE FOR THE COVER PLATES DESIGNATED ON THE PLANS COVER PLATES OF THE EQUIVALENT AREA PROVIDED THESE PLATES ARE AT LEAST 8mm IN THICKNESS AND DO NOT EXCEED A WIDTH EQUAL TO THE FLANGE WIDTH LESS 50mm OR A THICKNESS EQUAL TO 2 TIMES THE FLANGE THICKNESS. THE SIZE OF FILLET WELDS SHALL CONFORM TO THE REQUIREMENTS OF THE CURRENT ANSI/AASHTO/AWS "BRIDGE WELDING CODE". ELECTROSLAG WELDING WILL NOT BE PERMITTED.

PLACEMENT OF BEAM OR GIRDER MEMBERS ON TRUCKS FOR HAULING SHALL BE DONE IN COMPLIANCE WITH LIMITS SHOWN ON SKETCHES PROVIDED TO THE MATERIALS AND TEST UNIT APPROVED BY THE STRUCTURE DESIGN UNIT DATED MAY 8, 1991. THESE SKETCHES PRIMARILY LIMIT THE UNSUPPORTED CANTILEVER LENGTH OF MEMBERS. WHEN THE CONTRACTOR WISHES TO PLACE MEMBERS ON TRUCKS NOT IN ACCORDANCE WITH THESE LIMITS, TO SHIP BY RAIL, TO ATTACH SHIPPING RESTRAINTS TO THE MEMBERS OR TO INVERT MEMBERS, HE SHALL SUBMIT A SKETCH FOR APPROVAL PRIOR TO SHIPPING. SEE ALSO ARTICLE 1072-11.

WITH THE SOLE EXCEPTION OF EDGES AT SURFACES WHICH BEAR ON OTHER SURFACES, ALL SHARP EDGES AND ENDS OF SHAPES AND PLATES SHALL BE SLIGHTLY ROUNDED BY SUITABLE MEANS TO A RADIUS OF APPROXIMATELY 2mm OR EQUIVALENT FLAT SURFACE AT A SUITABLE ANGLE PRIOR TO PAINTING, GALVANIZING, OR METALLIZING.

HANDRAILS AND POSTS:

METAL STANDARDS AND FACES OF THE CONCRETE END POSTS FOR THE METAL RAIL SHALL BE SET NORMAL TO THE GRADE OF THE CURB, UNLESS OTHERWISE SHOWN ON PLANS. THE METAL RAIL AND TOPS OF CONCRETE POSTS USED WITH THE ALUMINUM RAIL SHALL BE BUILT PARALLEL TO THE GRADE OF THE CURB.

METAL HANDRAILS SHALL BE IN ACCORDANCE WITH THE PLANS. RAILS SHALL BE AS MANUFACTURED FOR BRIDGE RAILING. CASTINGS SHALL BE OF A UNIFORM APPEARANCE. FINS AND OTHER DEFORMATIONS RESULTING FROM CASTING OR OTHERWISE SHALL BE REMOVED IN A MANNER SO THAT A UNIFORM COLORING OF THE COMPLETED CASTING SHALL BE OBTAINED. CASTINGS WITH DISCOLORATIONS OR OF NON-UNIFORM COLORING WILL NOT BE ACCEPTED. CERTIFIED MILL REPORTS ARE REQUIRED FOR METAL RAILS AND POSTS.

SPECIAL NOTES:

GENERALLY, IN CASE OF DISCREPANCY, THIS STANDARD SHEET OF NOTES SHALL GOVERN OVER THE SPECIFICATIONS, BUT THE REMAINDER OF THE PLANS SHALL GOVERN OVER NOTES HEREON, AND SPECIAL PROVISIONS SHALL GOVERN OVER ALL. SEE SPECIFICATIONS ARTICLE 105-4.

METRIC

JANUARY, 1990