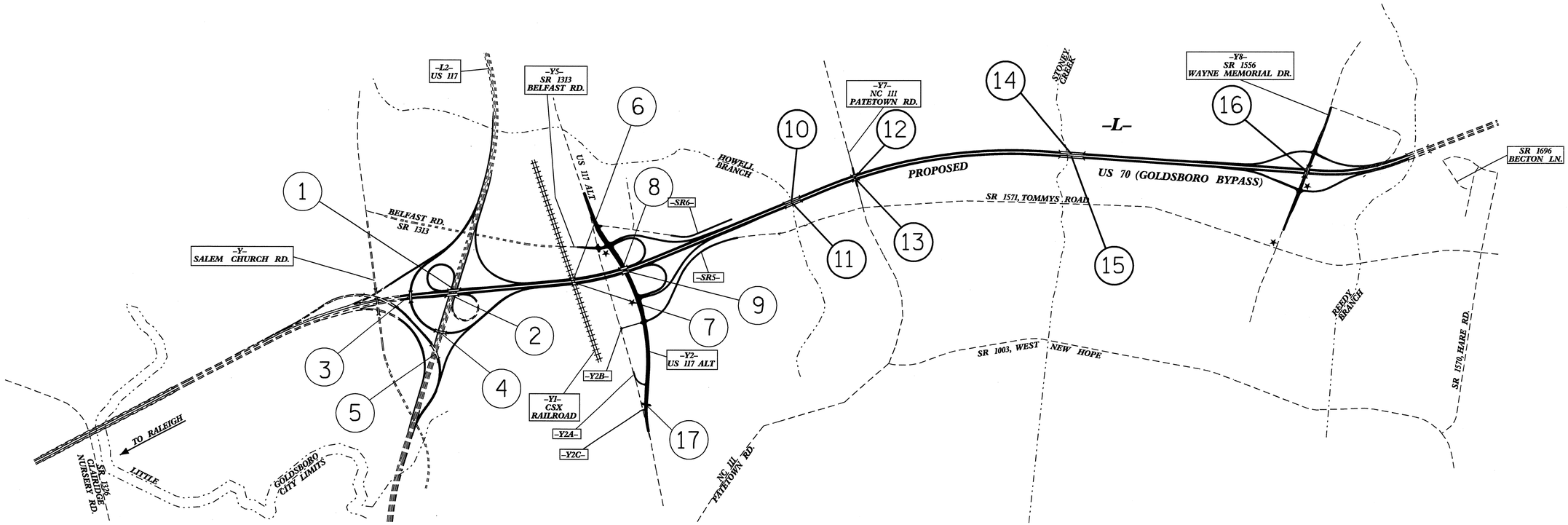

INDEX

STR. No.	STATION	DESCRIPTION	SHEETS
1	93+23.591 -L- LT	BRIDGE ON PROPOSED US 70 BYPASS OVER US 117 (LEFT LANE)	S-1 THRU S-26
2	93+23.591 -L- RT	BRIDGE ON PROPOSED US 70 BYPASS OVER US 117 (RIGHT LANE)	S-27 THRU S-52
3	8+00.816 -L2RPBD-	BRIDGE ON RAMP BD OVER PROPOSED US 70 BYPASS	S-53 THRU S-83
4	11+09.326 -L2RPBD-	BRIDGE ON RAMP BD OVER US 117	S-84 THRU S-119
5	5+63.595 -L2RPDB-	BRIDGE ON RAMP DB OVER US 117	S-120 THRU S-154
6	100+61.488 -L- LT	BRIDGE ON PROPOSED US 70 BYPASS OVER CSX RAILROAD (LEFT LANE)	S-155 THRU S-191
7	100+61.488 -L- RT	BRIDGE ON PROPOSED US 70 BYPASS OVER CSX RAILROAD (RIGHT LANE)	S-192 THRU S-228
8	103+80.709 -L- LT	BRIDGE ON PROPOSED US 70 BYPASS OVER US 117 ALT (LEFT LANE)	S-229 THRU S-249
9	103+80.709 -L- RT	BRIDGE ON PROPOSED US 70 BYPASS OVER US 117 ALT (RIGHT LANE)	S-250 THRU S-270
10	114+74.700 -L- LT	BRIDGE ON PROPOSED US 70 BYPASS OVER HOWELL BRANCH (LEFT LANE)	S-271 THRU S-297
11	114+74.700 -L-RT	BRIDGE ON PROPOSED US 70 BYPASS OVER HOWELL BRANCH (RIGHT LANE)	S-298 THRU S-324
12	118+92.556 -L- LT	BRIDGE ON PROPOSED US 70 BYPASS OVER NC 111 (LEFT LANE)	S-325 THRU S-353
13	118+92.556 -L- RT	BRIDGE ON PROPOSED US 70 BYPASS OVER NC 111 (RIGHT LANE)	S-354 THRU S-382
14	132+37.000 -L- LT	BRIDGE ON PROPOSED US 70 BYPASS OVER STONEY CREEK (LEFT LANE)	S-383 THRU S-416
15	132+37.000 -L- RT	BRIDGE ON PROPOSED US 70 BYPASS OVER STONEY CREEK (RIGHT LANE)	S-417 THRU S-450
16	15+85.032 -Y8-	BRIDGE ON SR 1556 OVER PROPOSED US 70 BYPASS	S-451 THRU S-478
17	12+60.000 -Y2-	SINGLE 2.400m X 1.800m RCBC	C1 THRU C3

PART 1

PART 2

PART 2 OF 2

PROJECT NO. R-2554BA
WAYNE COUNTY

STATE OF NORTH CAROLINA
DEPARTMENT OF TRANSPORTATION
RALEIGH

INDEX

REVISIONS					
NO.	BY:	DATE:	NO.	BY:	DATE:
1			3		
2			4		

F.A. PROJECT NO.: NHS-70(106)

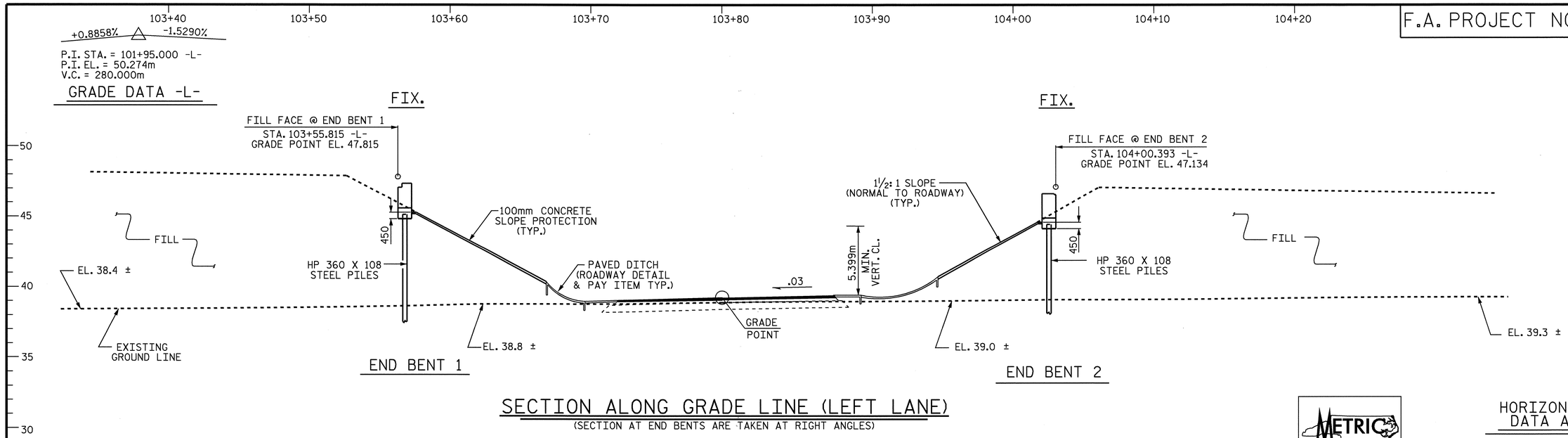

SECTION ALONG GRADE LINE (LEFT LANE)

(SECTION AT END BENTS ARE TAKEN AT RIGHT ANGLES)

METRIC

HORIZONTAL CURVE DATA ALONG -L-

P.I. STA. 102+66.635
Δ = 15°-15′-00.1″ (LT.)
L = 465.785m
R = 1750.000m
T = 234.277m

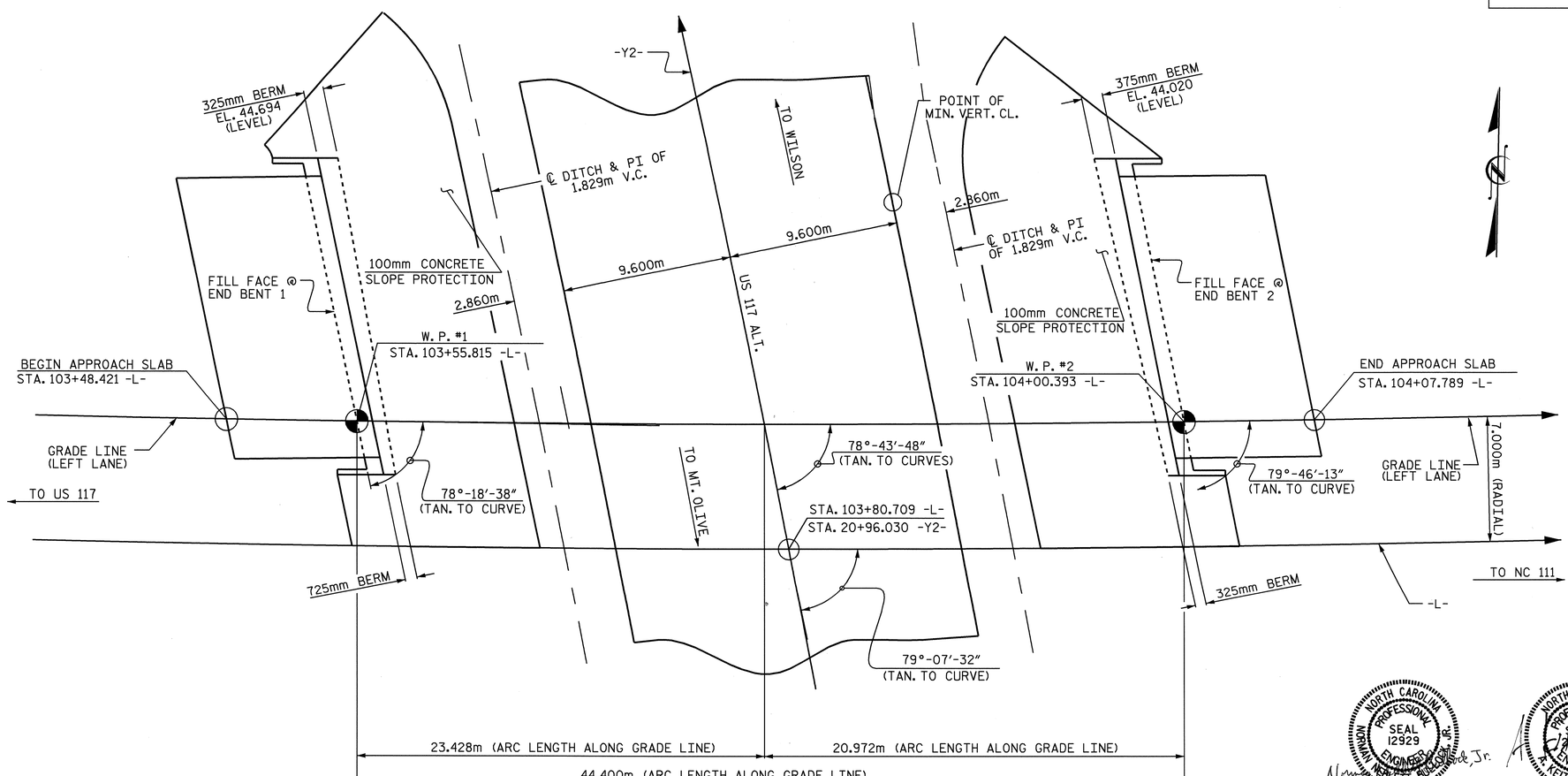

PLAN

PROJECT NO. R-2554BA
WAYNE COUNTY
STATION: 103+80.709 -L-
20+96.030 -Y2-

SHEET 1 OF 3

STATE OF NORTH CAROLINA
DEPARTMENT OF TRANSPORTATION
RALEIGH

GENERAL DRAWING
FOR BRIDGE OVER US 117 ALT.
ON US 70 BYPASS
BETWEEN US 117
AND NC 111
(LEFT LANE)

NORTH CAROLINA PROFESSIONAL SEAL 12929 ENGINEER NORMAN NEBLETT BULLOCK, JR.
Norman Neblett Bullock, Jr.
6/9/08

NORTH CAROLINA PROFESSIONAL SEAL 022005 ENGINEER A. KEITH PASCHAL
6/9/08

REVISIONS							SHEET NO.
NO.	BY:	DATE:	NO.	BY:	DATE:		S-229
1			3				TOTAL SHEETS
2			4				478

DRAWN BY : J. G. KHARVA DATE : 09-27-07
CHECKED BY : A. K. PASCHAL DATE : 04-23-08

09-JUN-2008 08:22
R:\Structures\BULLOCK\Str#8\FINAL PLANS\R-2554ba_sd_GD_08.dgn
ldhaWK

STR. #8

FOUNDATION NOTES :

DRIVE PILES AT END BENT 1 AND END BENT 2 TO A REQUIRED BEARING CAPACITY OF 1340 KN PER PILE. THE REQUIRED BEARING CAPACITY IS EQUAL TO THE ALLOWABLE BEARING CAPACITY WITH A MINIMUM FACTOR OF SAFETY OF TWO.

THE ALLOWABLE BEARING CAPACITY FOR PILES AT END BENT 1 AND END BENT 2 IS 670 KN PER PILE.

TESTING PILES WITH THE PILE DRIVING ANALYZER (PDA) DURING DRIVING, RESTRIKING OR REDRIVING MAY BE REQUIRED. THE ENGINEER WILL DETERMINE THE NEED FOR PDA TESTING. SEE PILE DRIVING ANALYZER SPECIAL PROVISIONS

OBSERVE A SIX MONTH WAITING PERIOD AFTER CONSTRUCTING THE EMBANKMENT TO THE BOTTOM OF CAP ELEVATION BEFORE BEGINNING END BENT CONSTRUCTION AT END BENT 1 AND END BENT 2.

PILE RESTRIKES FOR LRFD MAY BE REQUIRED. SEE PILE RESTRIKES FOR LRFD SPECIAL PROVISION.

HORIZONTAL CURVE DATA ALONG -L-

P.I. STA. 102+66.635
Δ = 15°-15'-00.1" (LT.)
L = 465.785m
R = 1750.000m
T = 234.277m

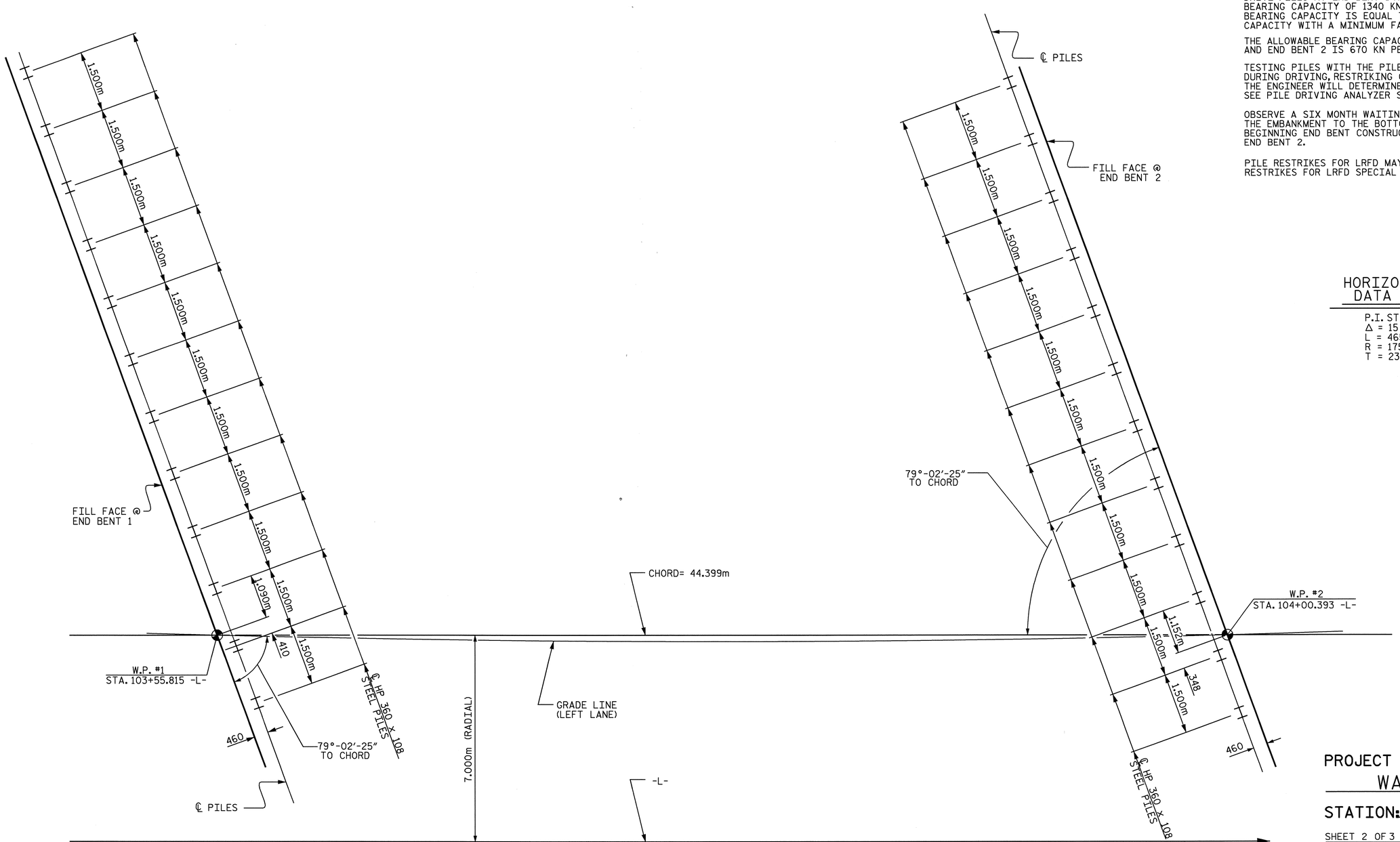

FOUNDATION LAYOUT & LONG CHORD DATA

(DIMENSIONS LOCATING PILES ARE SHOWN TO THE CENTERLINE OF PILES)

PROJECT NO. R-2554BA
WAYNE COUNTY
STATION: 103+80.709 -L-
20+96.030 -Y2-

SHEET 2 OF 3

STATE OF NORTH CAROLINA
DEPARTMENT OF TRANSPORTATION
RALEIGH

GENERAL DRAWING
FOR BRIDGE OVER US 117 ALT.
ON US 70 BYPASS
BETWEEN US 117
AND NC 111
(LEFT LANE)

NORTH CAROLINA PROFESSIONAL SEAL 22005 ENGINEER A. KEITH PASCHAL
6/9/08

REVISIONS						SHEET NO.
NO.	BY:	DATE:	NO.	BY:	DATE:	S-230
1			3			TOTAL SHEETS
2			4			478

DRAWN BY : J. G. KHARVA DATE : 10/02/07
CHECKED BY : A. K. PASCHAL DATE : 04/23/08

09-JUN-2008 08:22
R:\Structures\BULLOCK\Str#8\FINAL PLANS\R-2554ba_sd_GD_08.dgn
JdhaWK

STR. #8

B.M. :- #4 RR SPIKE IN BASE OF 460mm (18") POPLAR 90.908m RT OF -BL- STA. 25+29.607 EL. 39.648m

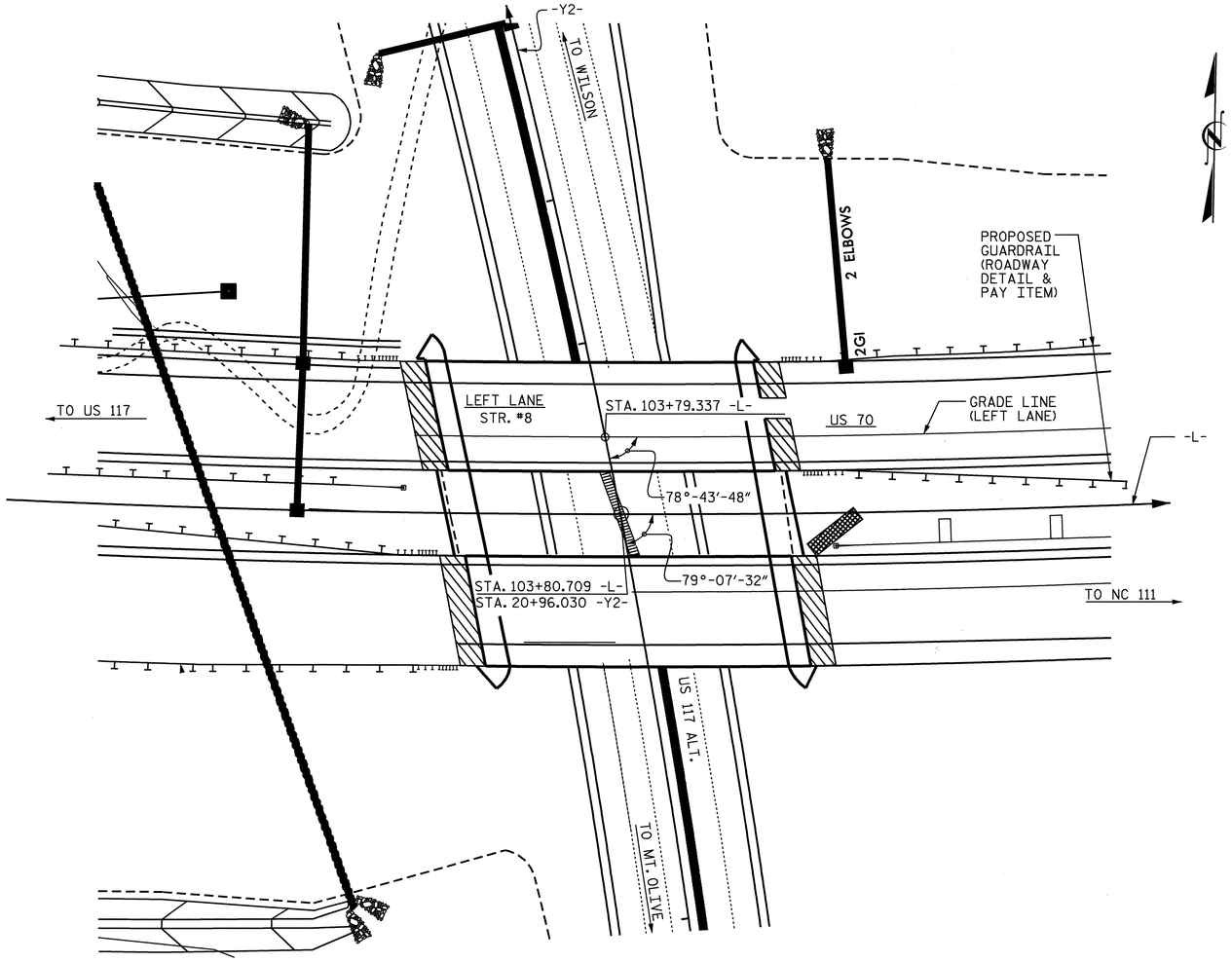

FOR UTILITY INFORMATION, SEE UTILITY PLANS AND SPECIAL PROVISIONS.

LOCATION SKETCH

NOTES :

ALL DIMENSIONS ARE IN MILLIMETERS UNLESS OTHERWISE NOTED.

ALL ELEVATIONS ARE IN METERS.

ASSUMED LIVE LOAD = MS18 OR ALTERNATE LOADING, EXCEPT THAT THE GIRDERS HAVE BEEN DESIGNED FOR MS22.5.

FOR OTHER DESIGN DATA AND GENERAL NOTES, SEE SHEET SNSM.

THIS BRIDGE HAS BEEN DESIGNED BY THE STRENGTH DESIGN METHOD AS SPECIFIED IN AASHTO STANDARD SPECIFICATIONS.

THIS BRIDGE HAS BEEN DESIGNED IN ACCORDANCE WITH THE REQUIREMENTS OF THE AASHTO STANDARD SPECIFICATIONS FOR SEISMIC DESIGN OF HIGHWAY BRIDGES FOR SEISMIC PERFORMANCE CATEGORY A.

ALL STRUCTURAL STEEL SHALL BE AASHTO M270 GRADE 345W.

REMOVABLE FORMS MAY BE USED IN LIEU OF METAL STAY-IN-PLACE FORMS IN ACCORDANCE WITH ARTICLE 420-3 OF THE STANDARD SPECIFICATIONS.

FOR MAINTENANCE AND PROTECTION OF TRAFFIC BENEATH PROPOSED STRUCTURE, SEE SPECIAL PROVISIONS.

THE CONTRACTOR SHALL PROVIDE INDEPENDENT ASSURANCE SAMPLES OF REINFORCING STEEL AS FOLLOWS: FOR PROJECTS REQUIRING UP TO 360,000 kg OF REINFORCING STEEL, ONE 760mm SAMPLE OF EACH SIZE BAR USED, AND FOR PROJECTS REQUIRING OVER 360,000 kg OF REINFORCING STEEL, TWO 760mm SAMPLES OF EACH SIZE BAR USED. THE BARS FROM WHICH THE SAMPLES ARE TAKEN MUST THEN BE SPLICED WITH REPLACEMENT BARS OF THE SIZE AND LENGTH OF THE SAMPLE PLUS A MINIMUM LAP SPLICE OF THIRTY BAR DIAMETERS.

FOR FALSEWORK AND FORMS OVER OR ADJACENT TO TRAFFIC, SEE SPECIAL PROVISIONS .

NEEDLE BEAMS WILL NOT BE ALLOWED UNLESS OTHERWISE CALLED FOR ON THE PLANS OR APPROVED BY THE ENGINEER.

FOR SUBMITTAL OF WORKING DRAWINGS, SEE SPECIAL PROVISIONS.

FOR METRIC STRUCTURAL STEEL, SEE SPECIAL PROVISIONS.

FOR FALSEWORK AND FORMWORK, SEE SPECIAL PROVISIONS.

FOR CRANE SAFETY, SEE SPECIAL PROVISIONS.

FOR GROUT FOR STRUCTURES, SEE SPECIAL PROVISIONS.

FOR SHIPPING STEEL STRUCTURAL MEMBERS, SEE SPECIAL PROVISIONS.

TOTAL BILL OF MATERIAL

	PDA TESTING	PDA ASSISTANCE	REINFORCED CONCRETE DECK SLAB	GROOVING BRIDGE FLOORS	CLASS A CONCRETE	BRIDGE APPROACH SLABS	REINFORCING STEEL	STRUCTURAL STEEL	HP 360 X 108 STEEL PILES		PILE REDRIVES	CONCRETE BARRIER RAIL	100mm SLOPE PROTECTION	EVAZOTE JOINT SEALS
	EACH	EACH	SQ. M.	SQ. M.	CU. M.	LUMP SUM	Kg.	APPROX. Kg.	NO.	METERS	EACH	METERS	SQ. M.	LUMP SUM
SUPERSTRUCTURE			706.8	805.3				83000				88.788		LUMP SUM
END BENT 1					22.6		3017		12	264	5		256	
END BENT 2					23.1		3024		12	264	5		261	
TOTAL	1	1	706.8	805.3	45.7	LUMP SUM	6041	83000	24	528	10	88.788	517	LUMP SUM

PROJECT NO. R-2554BA
WAYNE COUNTY
STATION: 103+80.709 -L-
20+96.030 -Y2-
SHEET 3 OF 3

STATE OF NORTH CAROLINA
DEPARTMENT OF TRANSPORTATION
RALEIGH

GENERAL DRAWING
FOR BRIDGE OVER US 117 ALT.
ON US 70 BYPASS
BETWEEN US 117
AND NC 111
(LEFT LANE)

NORTH CAROLINA PROFESSIONAL SEAL 22005 ENGINEER A. KEITH PASCHAL
6/9/08

REVISIONS						SHEET NO.
NO.	BY:	DATE:	NO.	BY:	DATE:	S-231
1			3			TOTAL SHEETS
2			4			478

DRAWN BY : J. C. KHARVA DATE : 09-27-07
CHECKED BY : A. K. PASCHAL DATE : 04-23-08

09-JUN-2008 13:56
r:\structures\bullock\Str#8\FINAL PLANS\R-2554ba_sd_GD_08.dgn
jdhaWK

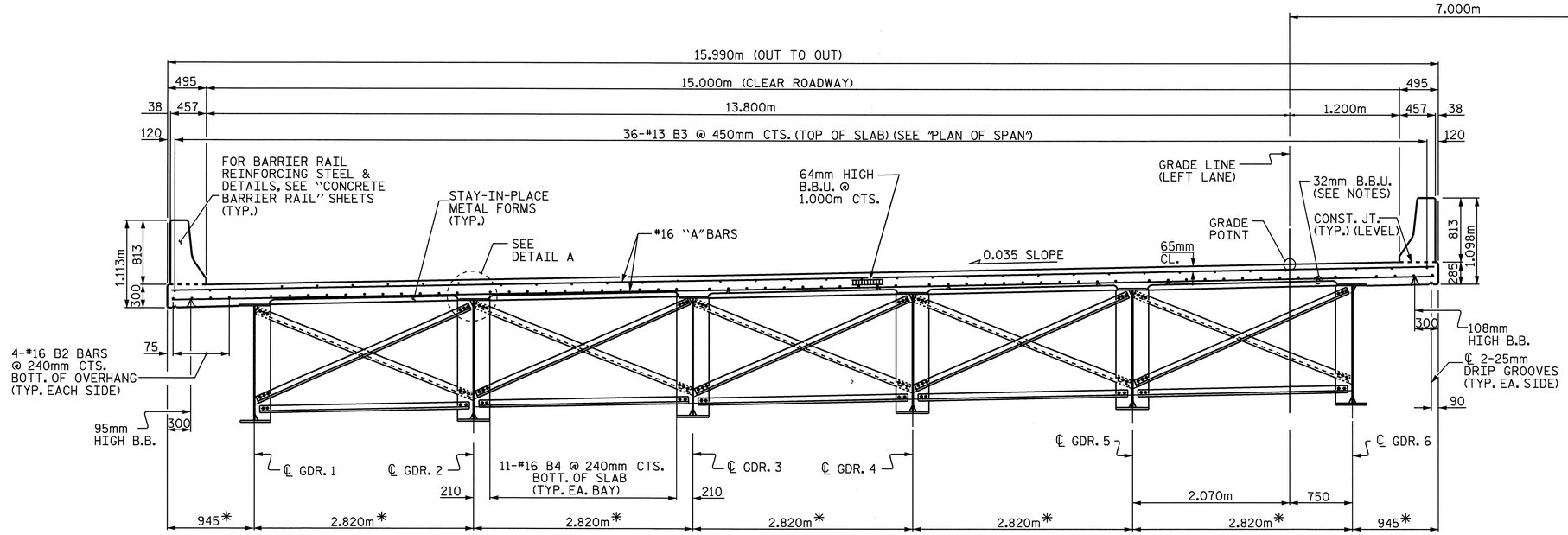

* ALL HORIZONTAL DIMENSIONS ARE TO CURVES CONCENTRIC WITH GRADE LINE (LEFT LANE). GIRDERS ARE ON THE CHORDS OF THESE CONCENTRIC CIRCLES.

ALL HORIZONTAL DIMENSIONS ARE RADIAL EXCEPT AS NOTED.

TYPICAL SECTION @ INTERMEDIATE DIAPHRAGMS

NOTES

PROVIDE 32mm HIGH BEAM BOLSTERS UPPER AT 1.200m CTS. ATOP THE METAL STAY-IN-PLACE FORMS TO SUPPORT THE BOTTOM MAT OF "A" BARS. WHEN USING REMOVABLE FORMS, PROVIDE CONTINUOUS HIGH CHAIRS FOR METAL DECK (C.H.C.M.) @ 1.200m CTS. WITH A HEIGHT TO SUPPORT THE BOTTOM MAT OF "A" BARS A CLEAR DISTANCE OF 65mm ABOVE THE TOP OF THE REMOVABLE FORM.

THE CONTRACTOR MAY, WHEN NECESSARY, PROPOSE A SCHEME FOR AVOIDING INTERFERENCE BETWEEN METAL STAY-IN-PLACE FORM SUPPORTS OR FORMS AND GIRDER STIFFENERS OR CONNECTOR PLATES. THE PROPOSAL SHALL BE INDICATED, AS APPROPRIATE, ON EITHER THE STEEL WORKING DRAWINGS OR THE METAL STAY-IN- PLACE FORM WORKING DRAWINGS.

METAL STAY-IN-PLACE FORMS SHALL NOT BE WELDED TO BEAM OR GIRDER FLANGES IN THE ZONES REQUIRING CHARPY V-NOTCH TEST. SEE STRUCTURAL STEEL DETAIL SHEET.

PREVIOUSLY CAST CONCRETE IN THE SPAN SHALL HAVE A MINIMUM COMPRESSIVE STREGTH OF 20.7 MPa BEFORE ADDITIONAL CONCRETE IS CAST IN THE SPAN.

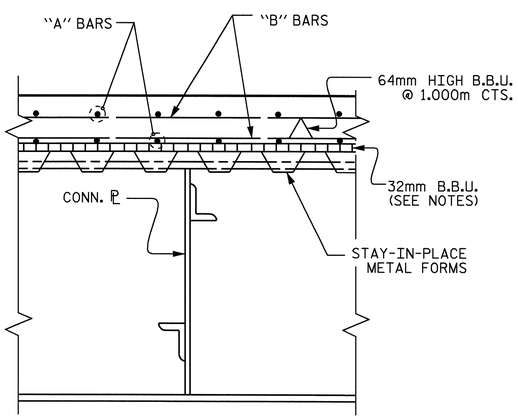

SECTION THRU INTERMEDIATE DIAPHRAGM

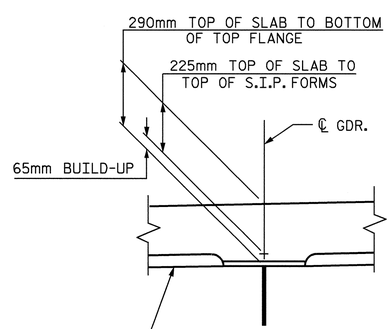

DETAIL A

PROJECT NO. R-2554BA
WAYNE COUNTY
STATION: 103+80.709 -L-

SHEET 1 OF 2

STATE OF NORTH CAROLINA
DEPARTMENT OF TRANSPORTATION
RALEIGH

SUPERSTRUCTURE

TYPICAL SECTION

(LEFT LANE)

NORTH CAROLINA PROFESSIONAL SEAL 22005 ENGINEER D. KEITH PASCHAL
6/9/08

REVISIONS						SHEET NO.
NO.	BY:	DATE:	NO.	BY:	DATE:	S-232
1			3			TOTAL SHEETS
2			4			478

DRAWN BY : J. G. KHARVA DATE : 02/22/06
CHECKED BY : J. E. LAZAROVICH DATE : 4/25/08

09-JUN-2008 08:22
R:\Structures\BULLOCK\Str#8\FINAL PLANS\R2554BA_sd_TS_STR. #8.dgn
jdhaWK

STR. #8

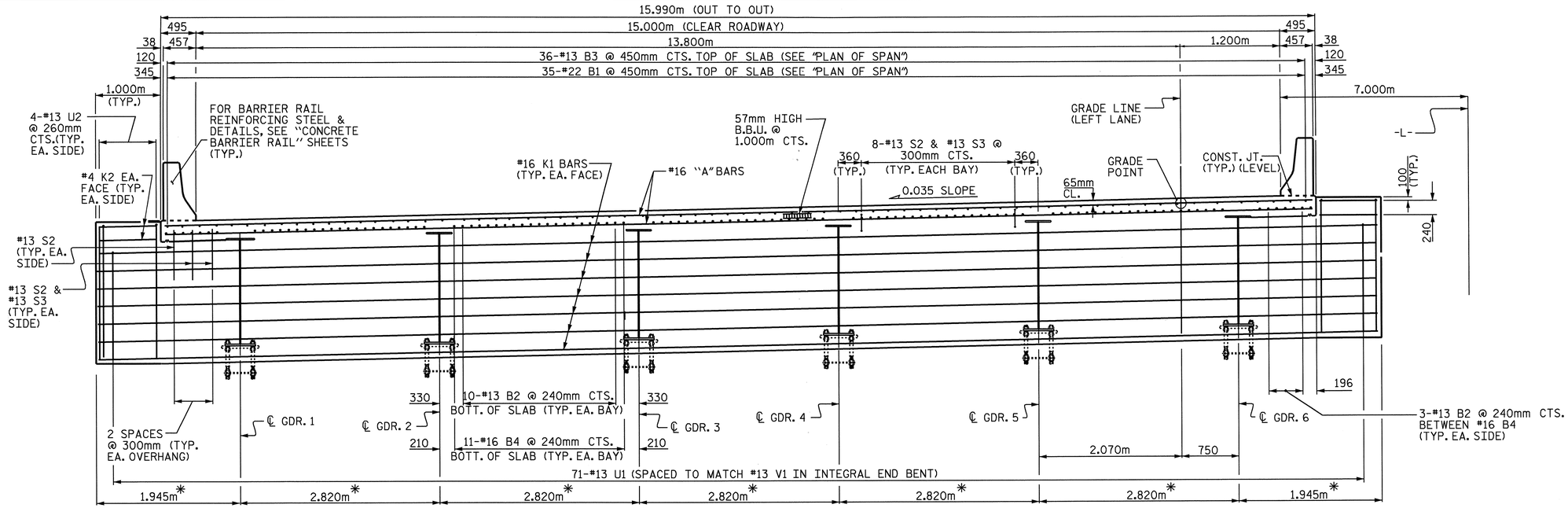

*DIMENSIONS ARE TO CURVES CONCENTRIC WITH GRADE LINE (LEFT LANE). GIRDERS ARE ON THE CHORDS OF THESE CONCENTRIC CIRCLES.

ALL HORIZONTAL DIMENSIONS ARE RADIAL EXCEPT AS NOTED.

TYPICAL SECTION @ INTEGRAL END BENT

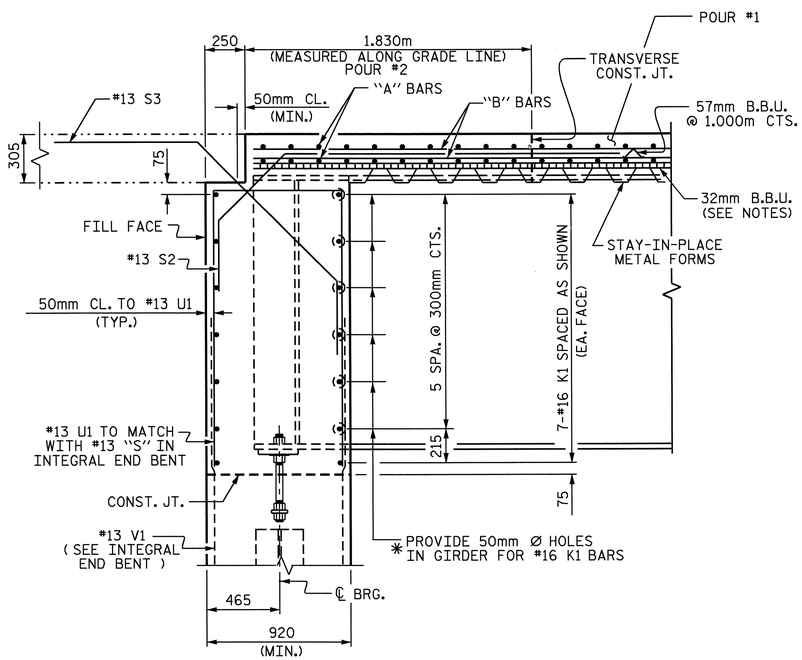

SECTION A-A

*(INTEGRAL END BENT 1 SHOWN INTEGRAL END BENT 2 SIMILAR)
DIAMETER OF HOLES IN WEB MAY BE INCREASED TO ACCOMODATE SKEW

PROJECT NO. R-2554BA
WAYNE COUNTY
STATION: 103+80.709 -L-

SHEET 2 OF 2

STATE OF NORTH CAROLINA
DEPARTMENT OF TRANSPORTATION
RALEIGH

SUPERSTRUCTURE
TYPICAL SECTION
(LEFT LANE)

NORTH CAROLINA PROFESSIONAL SEAL 22005 ENGINEER A. KEITH PASCHAL
6/9/08

REVISIONS						SHEET NO.
NO.	BY:	DATE:	NO.	BY:	DATE:	S-233
1			3			TOTAL SHEETS
2			4			478

DRAWN BY : J. G. KHARVA DATE : 02/22/06
CHECKED BY : J. E. LAZAROVICH DATE : 4/25/08

09-JUN-2008 08:22
R:\Structures\BULLOCK\Str#8\FINAL PLANS\R2554BA_sd_TS_STR. #8.dgn
ldhaWK

NOTES

FOR SECTION VIEWS, SEE "TYPICAL SECTION" SHEET.

FOR LOCATION OF INTERMEDIATE DIAPHRAGMS, SEE "FRAMING PLAN" SHEET.

FOR BARRIER RAIL REINFORCING STEEL & DETAILS, SEE "CONCRETE BARRIER RAIL" SHEETS.

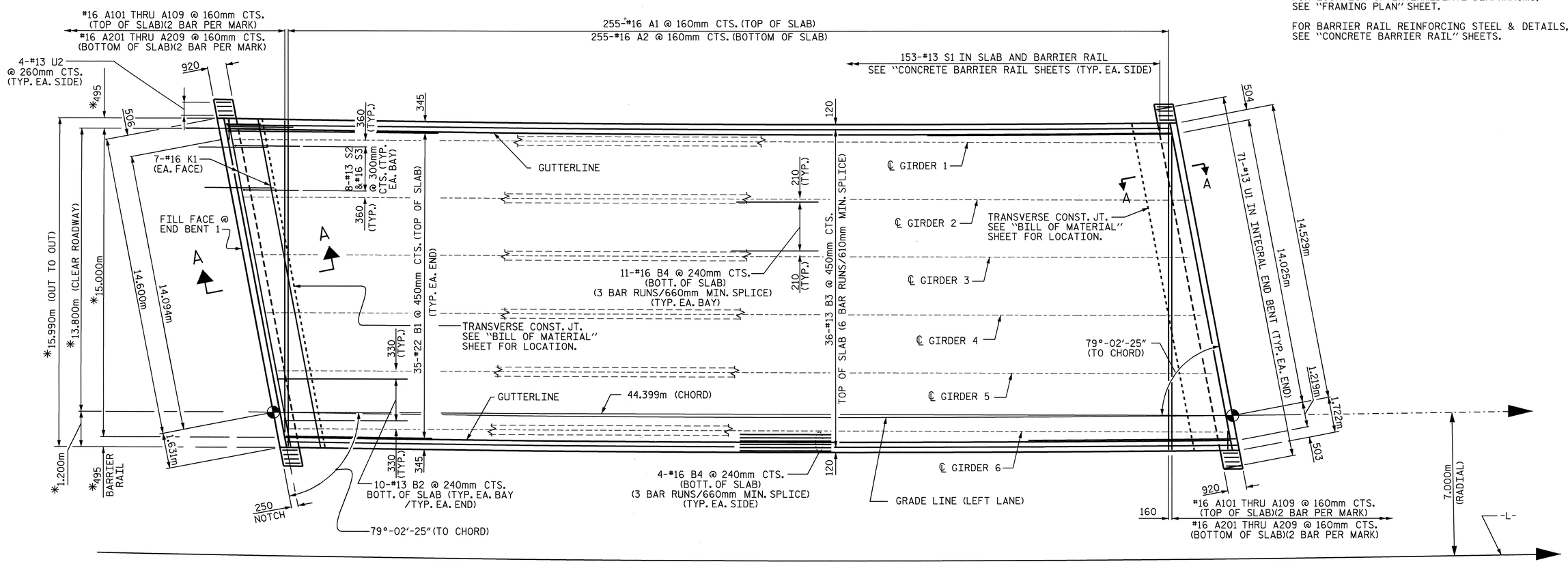

* RADIAL DIMENSIONS

PLAN OF SPAN

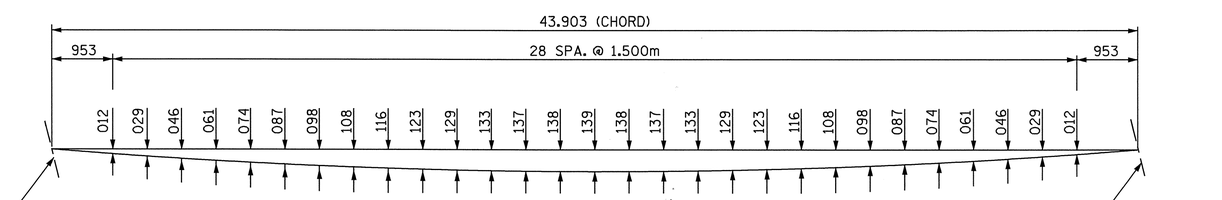

ARC OFFSETS - LEFT SIDE

ARC OFFSETS ARE TAKEN ALONG THE OUTSIDE EDGE OF SUPERSTRUCTURE.

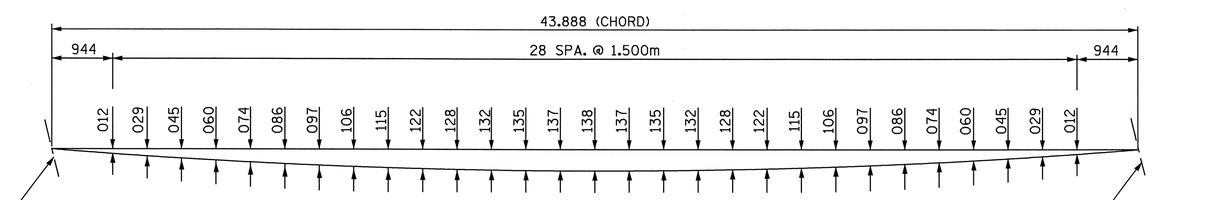

ARC OFFSETS - RIGHT SIDE

ARC OFFSETS ARE TAKEN ALONG THE OUTSIDE EDGE OF SUPERSTRUCTURE.

PROJECT NO. R-2554BA
WAYNE COUNTY
STATION: 103+80.709 -L-

NORTH CAROLINA PROFESSIONAL SEAL 024008 ENGINEER A. KEITH PASCHAL
6/9/08

STATE OF NORTH CAROLINA
DEPARTMENT OF TRANSPORTATION
RALEIGH

SUPERSTRUCTURE
PLAN OF SPAN
(LEFT LANE)

REVISIONS						SHEET NO.
NO.	BY:	DATE:	NO.	BY:	DATE:	S-234
1			3			TOTAL SHEETS
2			4			478

DRAWN BY : J. G. KHARVA DATE : 12/06/06
CHECKED BY : J. E. LAZAROVICH DATE : 1/25/08

09-JUN-2008 08:22
R:\Structures\BULLOCK\Str#8\FINAL PLANS\R2554BA_sd_S*_STR. #8.dgn
jdhaWK

STR. #8

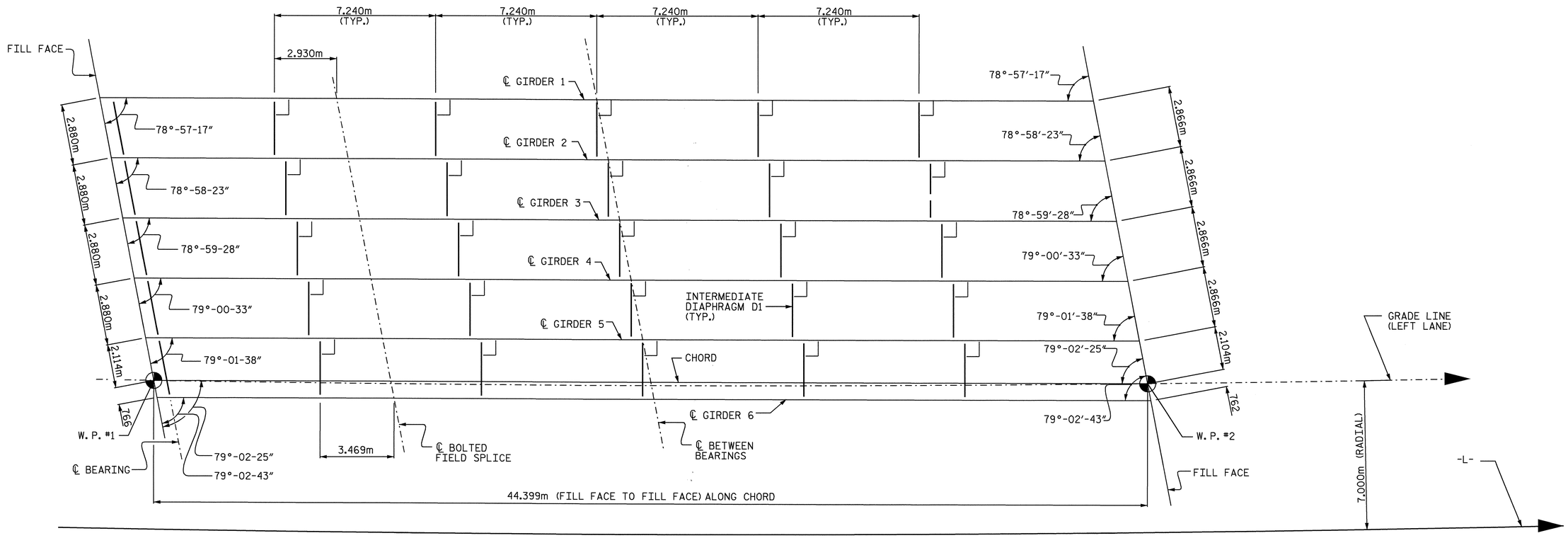

FRAMING PLAN

DEAD LOAD DEFLECTION TABLE

	GIRDER 1 THRU 3																				
TWENTIETH POINTS	0	.05	.10	.15	.20	.25	.30	.35	.40	.45	.50	.55	.60	.65	.70	.75	.80	.85	.90	.95	0
DEFLECTION DUE TO WEIGHT OF GIRDER ↓	0.000	0.007	0.013	0.019	0.024	0.028	0.032	0.035	0.038	0.039	0.039	0.039	0.038	0.035	0.032	0.028	0.024	0.019	0.013	0.007	0.000
✳ DEFLECTION DUE TO WEIGHT OF SLAB ↓	0.000	0.015	0.038	0.059	0.078	0.095	0.108	0.120	0.128	0.133	0.132	0.133	0.128	0.120	0.108	0.095	0.078	0.059	0.038	0.015	0.000
DEFLECTION DUE TO WEIGHT OF BARRIER RAIL ↓	0.000	0.000	0.000	0.001	0.001	0.001	0.001	0.002	0.002	0.002	0.002	0.002	0.002	0.002	0.001	0.001	0.001	0.001	0.000	0.000	0.000
TOTAL DEAD LOAD DEFLECTION ↓	0.000	0.022	0.051	0.079	0.103	0.124	0.141	0.157	0.168	0.174	0.173	0.174	0.168	0.157	0.141	0.124	0.103	0.079	0.051	0.022	0.000
CAMBER FOR SUPERELEVATION	0.000	-0.001	-0.002	-0.002	-0.003	-0.004	-0.004	-0.004	-0.005	-0.005	-0.005	-0.005	-0.005	-0.004	-0.004	-0.004	-0.003	-0.002	-0.002	-0.001	0.000
REQUIRED CAMBER ↑	0	21	49	77	100	120	137	153	163	169	168	169	163	153	137	120	100	77	49	21	0

	GIRDER 4 THRU 6																				
TWENTIETH POINTS	0	.05	.10	.15	.20	.25	.30	.35	.40	.45	.50	.55	.60	.65	.70	.75	.80	.85	.90	.95	0
DEFLECTION DUE TO WEIGHT OF GIRDER ↓	0.000	0.007	0.013	0.019	0.024	0.028	0.032	0.035	0.038	0.039	0.039	0.039	0.038	0.035	0.032	0.028	0.024	0.019	0.013	0.007	0.000
✳ DEFLECTION DUE TO WEIGHT OF SLAB ↓	0.000	0.018	0.041	0.062	0.081	0.098	0.111	0.123	0.131	0.136	0.137	0.136	0.131	0.123	0.111	0.098	0.081	0.062	0.041	0.018	0.000
DEFLECTION DUE TO WEIGHT OF BARRIER RAIL ↓	0.000	0.000	0.000	0.001	0.001	0.001	0.001	0.002	0.002	0.002	0.002	0.002	0.002	0.002	0.001	0.001	0.001	0.001	0.000	0.000	0.000
TOTAL DEAD LOAD DEFLECTION ↓	0.000	0.025	0.054	0.082	0.106	0.127	0.144	0.160	0.171	0.177	0.178	0.177	0.171	0.160	0.144	0.127	0.106	0.082	0.054	0.025	0.000
CAMBER FOR SUPERELEVATION	0.000	-0.001	-0.002	-0.002	-0.003	-0.004	-0.004	-0.004	-0.005	-0.005	-0.005	-0.005	-0.005	-0.004	-0.004	-0.004	-0.003	-0.002	-0.002	-0.001	0.000
REQUIRED CAMBER ↑	0	24	52	80	103	123	140	156	166	172	173	172	166	156	140	123	103	80	52	24	0

✳ INCLUDES SLAB, BUILDUPS & STAY-IN-PLACE FORMS.

PROJECT NO. R-2554BA
WAYNE COUNTY
STATION: 103+80.709 -L-
20+96.030 -Y2-

STATE OF NORTH CAROLINA
DEPARTMENT OF TRANSPORTATION
RALEIGH

SUPERSTRUCTURE
FRAMING PLAN
(LEFT LANE)

NORTH CAROLINA PROFESSIONAL SEAL 27005 ENGINEER J. KEITH PASCHAL
6/9/08

REVISIONS						SHEET NO.
NO.	BY:	DATE:	NO.	BY:	DATE:	S-235
1			3			TOTAL SHEETS
2			4			478

DRAWN BY : J. G. KHARVA DATE : 02/22/06
CHECKED BY : J. E. LAZAROVICH DATE : 4/25/08

09-JUN-2008 08:22
R:\Structures\BULLOCK\Str*8\FINAL PLANS\R2554BA_sd_FP_STR. *8.dgn
jdhaWK

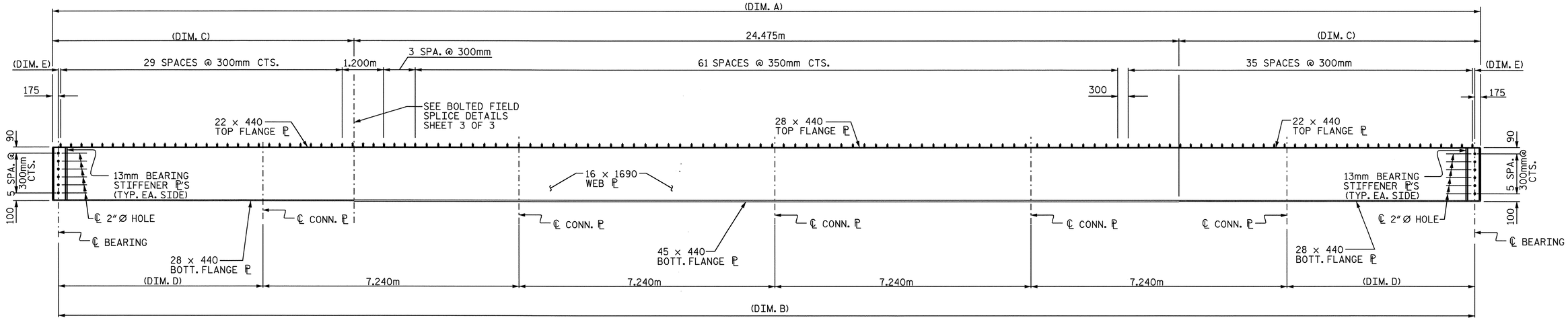

ELEVATION OF GIRDER

402 SHEAR STUDS REQUIRED PER GIRDER

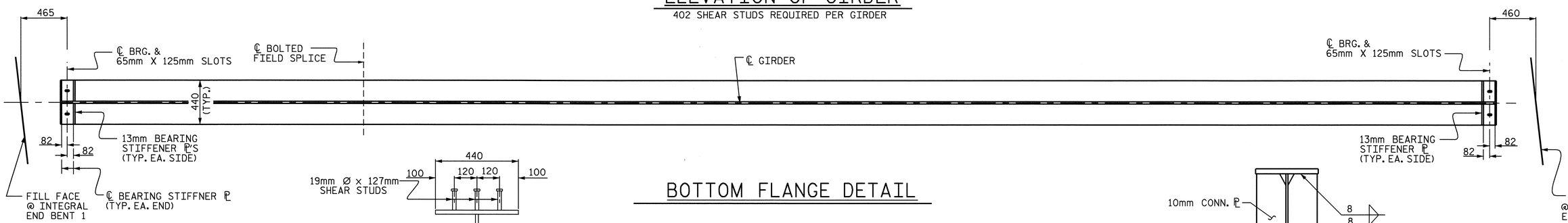

BOTTOM FLANGE DETAIL

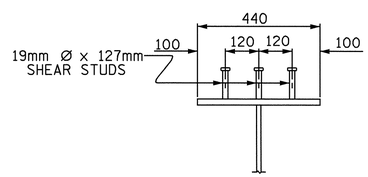

SHEAR STUD DETAILS

DIMENSIONS					
	A	B	C	D	E
GIRDER #1	43.825	43.475	9.675	7.257	438
GIRDER #2	43.822	43.472	9.674	7.255	436
GIRDER #3	43.819	43.469	9.672	7.254	435
GIRDER #4	43.817	43.467	9.671	7.253	434
GIRDER #5	43.814	43.464	9.670	7.252	432
GIRDER #6	43.811	43.461	9.668	7.250	431

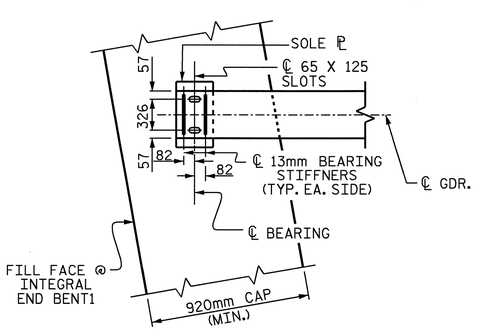

ANCHOR BOLTS SLOT DETAILS

(BOTTOM FLANGE OF GIRDER)

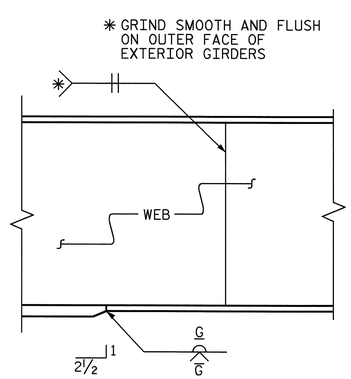

ELEVATION

TYPICAL FLANGE AND WEB BUTT JOINT

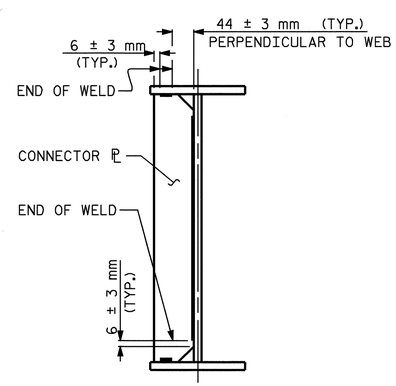

TYPICAL CONNECTOR PLATE CONNECTIONS

WELD TERMINATION DETAIL

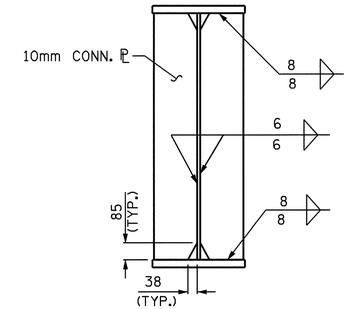

CONNECTOR PLATE

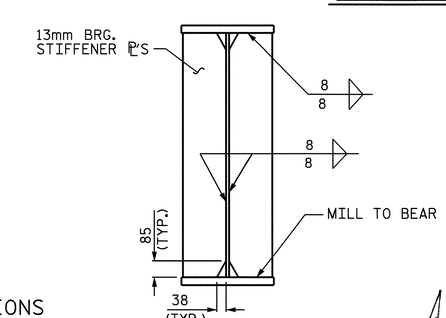

BEARING STIFFENER

PROJECT NO. R-2554BA

WAYNE COUNTY

STATION: 103+80.709 -L-

SHEET 2 OF 3

STATE OF NORTH CAROLINA
DEPARTMENT OF TRANSPORTATION
RALEIGH

SUPERSTRUCTURE

STRUCTURAL STEEL

(LEFT LANE)

NORTH CAROLINA PROFESSIONAL SEAL 22005 ENGINEER A. KEITH PASCHAL
6/9/08

REVISIONS						SHEET NO.
NO.	BY:	DATE:	NO.	BY:	DATE:	S-236
1			3			TOTAL SHEETS
2			4			478

DRAWN BY : J. G. KHARVA DATE : 12/20/06
CHECKED BY : J. E. LAZAROVICH DATE : 4/25/08

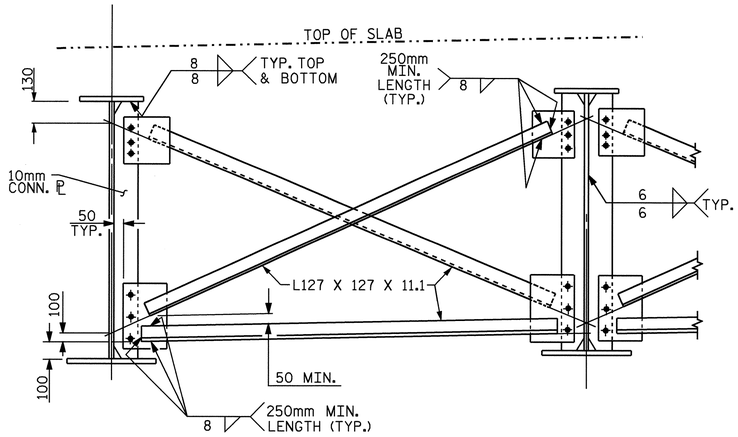

TYPICAL OPTIONAL INTERMEDIATE CROSSFRAME

SHOWING INTERMEDIATE DIAPHRAGM
(TYPICAL EACH BAY)

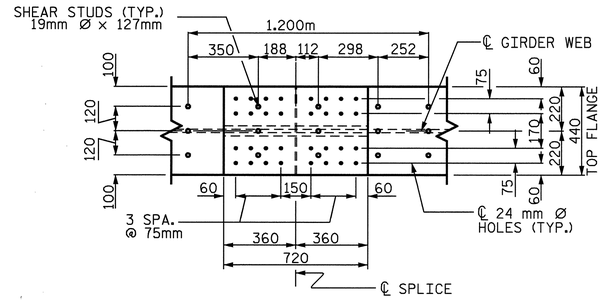

PLAN (TOP OF TOP FLANGE)

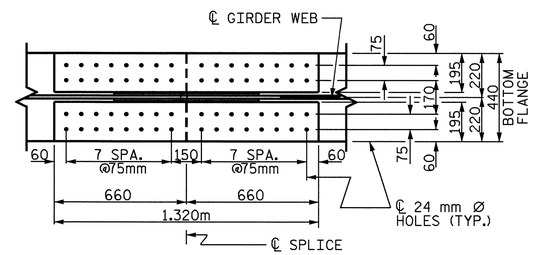

PLAN (TOP OF BOTTOM FLANGE)

NOTES :

ALL STRUCTURAL STEEL SHALL BE AASHTO M270 GRADE 345 W. WITH A MINIMUM YIELD STRENGTH OF 345 MPA, UNLESS OTHERWISE NOTED ON THE PLANS.

ALL DIMENSIONS SHOWN ARE HORIZONTAL OR VERTICAL, UNLESS OTHERWISE NOTED.

ALL FIELD CONNECTIONS TO BE 22.23mm DIA. HIGH STRENGTH BOLTS UNLESS OTHERWISE NOTED.

BEARING STIFFENERS ARE TO BE PLACED NORMAL TO THE WEB OF THE GIRDER AND SHALL BE PLUMB.

SHOP SPLICES ARE PERMITTED TO LIMIT THE MAXIMUM REQUIRED FLANGE PIECE LENGTHS TO 18 METERS AND WEB PIECE LENGTHS TO 14.0 METERS. PERMITTED FLANGE AND WEB SHOP SPLICES SHALL NOT BE LOCATED WITHIN 4.5 METERS OF MAXIMUM DEAD LOAD DEFLECTION NOR WITHIN 4.5 METERS OF INTERMEDIATE BEARINGS OF CONTINUOUS UNITS. KEEP 150mm MINIMUM BETWEEN WEB AND FLANGE SHOP SPLICES.

STUDS ON GIRDERS MAY BE SHIFTED UP TO 25 MM IF NECESSARY TO CLEAR FLANGE SPLICE WELD.

END OF GIRDERS SHALL BE PLUMB.

✱ NOTE: SHEAR STUDS ARE TO BE SHOP WELDED ON TOP OF PLATE BEFORE FIELD ASSEMBLY

A CHARPY V-NOTCH TEST IS REQUIRED FOR WEB PLATES, BOTTOM FLANGE PLATES, BOTTOM FLANGE SPLICE PLATES, TOP FLANGE PLATES WITHIN 4.300m OF ENDS OF GIRDERS AND WEB SPLICE PLATES FOR ALL GIRDERS AND IN ACCORDANCE WITH ARTICLE 1072-9 OF THE STANDARD SPECIFICATIONS.

FOR HIGH STRENTH BOLTS, SEE SPECIAL PROVISIONS.

TENSION ON THE AASHTO M164 SHALL BE CALIBRATED USING DIRECT TENSION INDICATOR WASHERS IN ACCORDANCE WITH ARTICLE 440-8 OF THE STANDARD SPECIFICATIONS.

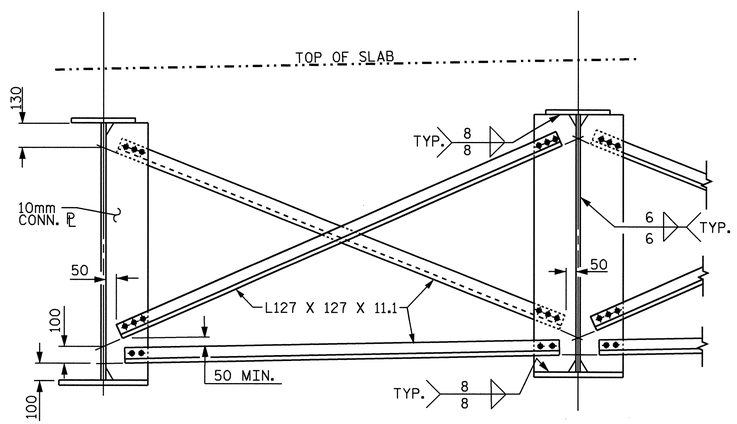

TYPICAL INTERMEDIATE CROSSFRAME

SHOWING INTERMEDIATE DIAPHRAGM
(TYPICAL EACH BAY)

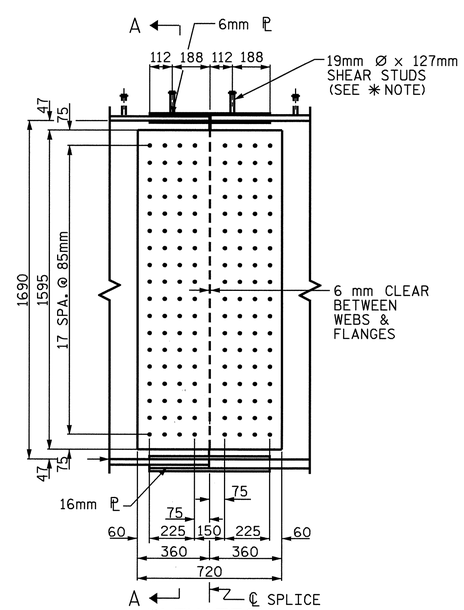

ELEVATION

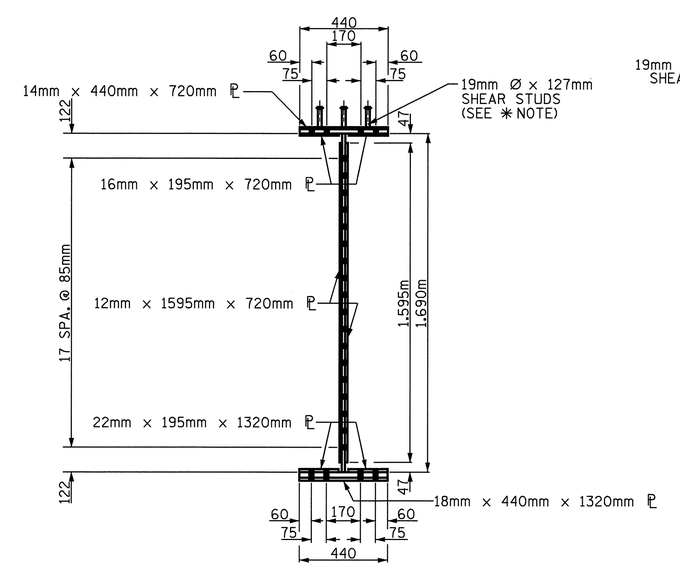

SECTION A-A

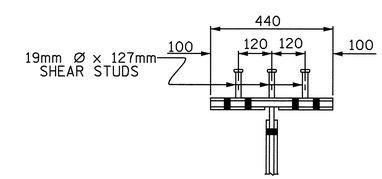

SHEAR STUD DETAIL FOR TOP FLANGE SPLICE PLATE

BOLTED FIELD SPLICE DETAILS

(TYPICAL EACH FIELD SPLICE)

PROJECT NO. R-2554BA
WAYNE COUNTY
STATION: 103+80.709 -L-

SHEET 3 OF 3

STATE OF NORTH CAROLINA
DEPARTMENT OF TRANSPORTATION
RALEIGH

SUPERSTRUCTURE
STRUCTURAL
STEEL DETAILS &
BOLTED FIELD SPLICE
(LEFT LANE)

NORTH CAROLINA PROFESSIONAL SEAL 22005 ENGINEER A. KEITH PASCHAL
6/9/08

REVISIONS						SHEET NO.
NO.	BY:	DATE:	NO.	BY:	DATE:	S-237
1			3			TOTAL SHEETS
2			4			478

DRAWN BY : J. G. KHARVA DATE : 12/20/06
CHECKED BY : J. E. LAZAROVICH DATE : 4/25/08

09-JUN-2008 08:22
R:\Structures\BULLOCK\Str*8\FINAL PLANS\R2554BA_sd_SS_STR.*8.dgn
ldhaWK

STR. 8

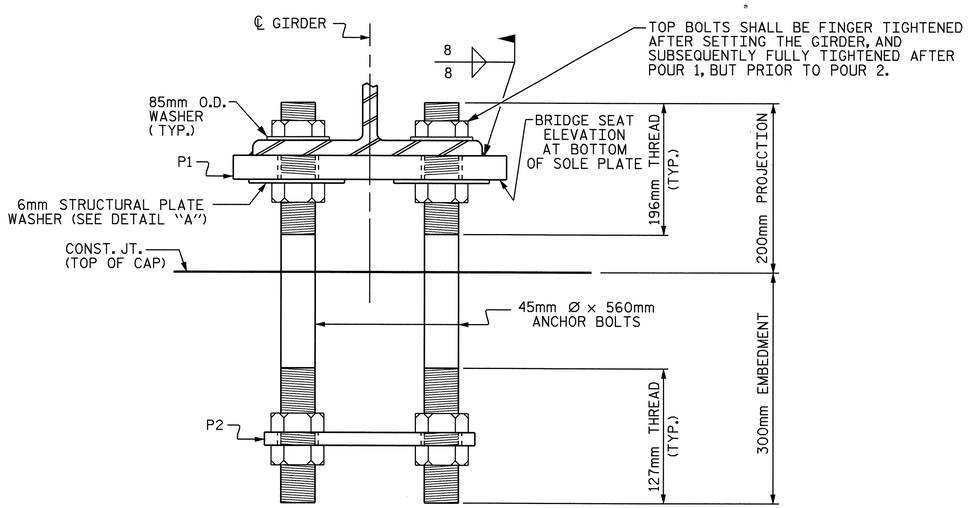

FIXED

END VIEW

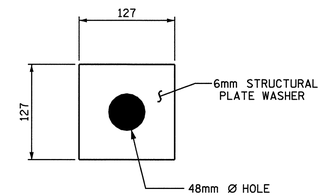

DETAIL "A"

NOTES

AASHTO M270 GRADE 345W STRUCTURAL STEEL, SOLE PLATES AND ANCHORAGE PLATES SHALL BE AASHTO M270 GRADE 345W AND SHALL NOT BE GALVANIZED. ANCHOR BOLTS, NUTS AND WASHERS SHALL BE GALVANIZED IN ACCORDANCE WITH THE STANDARD SPECIFICATIONS.

ANCHOR BOLTS SHALL MEET THE REQUIREMENTS OF ASTM A449. NUTS SHALL MEET THE REQUIREMENTS OF AASHTO M291M-DH OR AASHTO M292M-2H. WASHERS SHALL MEET THE REQUIREMENTS OF AASHTO M293M. SHOP DRAWINGS ARE NOT REQUIRED FOR ANCHOR BOLTS, NUTS AND WASHERS. SHOP INSPECTION IS REQUIRED.

ALL SURFACES OF SOLE PLATES SHALL BE SMOOTH AND STRAIGHT.

STRUCTURAL PLATE WASHERS SHALL BE AASHTO M270 GRADE 345W, AND SHALL NOT BE GALVANIZED.

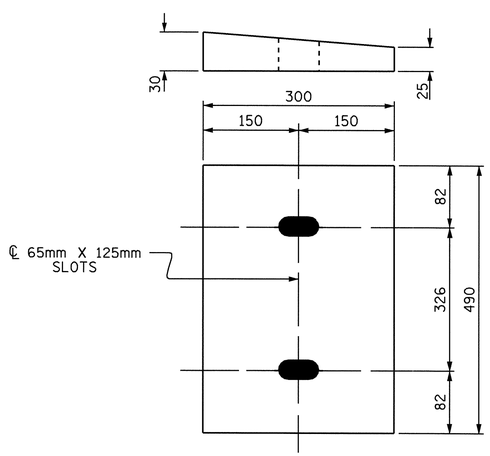

P1

P1 (12 REQ'D)

SOLE PLATE DETAILS (P1)

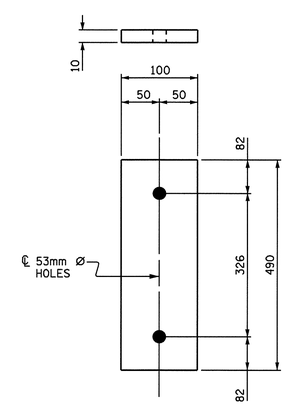

P2

P2 (8 REQ'D)

ANCHORAGE PLATE (P2)

PROJECT NO. R-2554BA

WAYNE COUNTY

STATION: 103+80.709 -L-

STATE OF NORTH CAROLINA
DEPARTMENT OF TRANSPORTATION
RALEIGH

SUPERSTRUCTURE
ANCHORAGE
DETAILS
(LEFT LANE)

NORTH CAROLINA PROFESSIONAL SEAL 12005 ENGINEER A. KEITH PASCHAL

6/9/08

REVISIONS						SHEET NO.
NO.	BY:	DATE:	NO.	BY:	DATE:	S-238
1			3			TOTAL SHEETS
2			4			478

DRAWN BY : J. G. KHARVA DATE : 12/20/06
CHECKED BY : J. E. LAZAROVICH DATE : 4/25/08

09-JUN-2008 08:22
R:\Structures\BULLOCK\Str*8\FINAL PLANS\R2554BA_sd_SS_STR. *8.dgn
jdhaWK

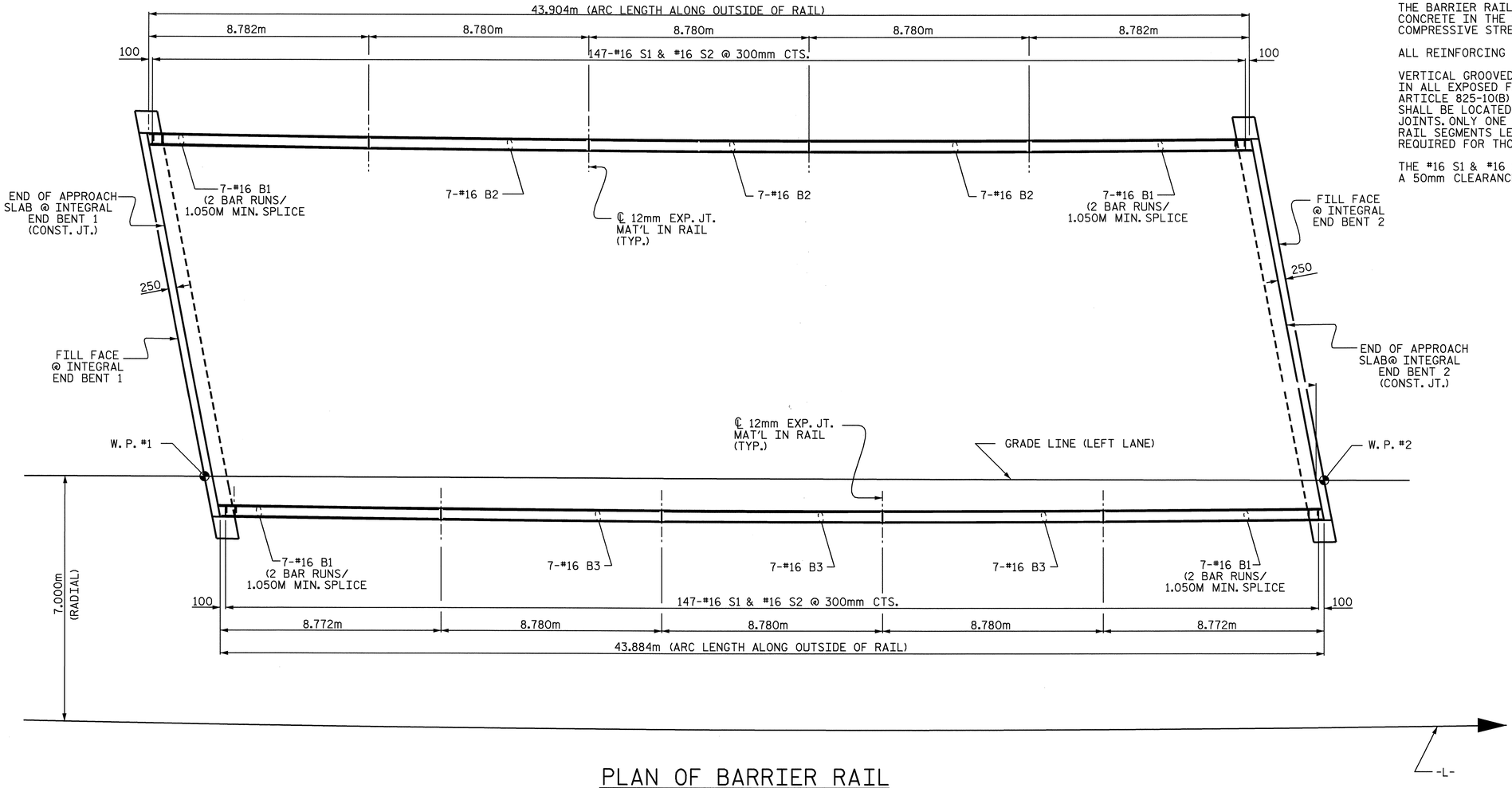

PLAN OF BARRIER RAIL

NOTES

THE BARRIER RAIL IN THE SPAN SHALL NOT BE CAST UNTIL ALL SLAB CONCRETE IN THE SPAN HAS BEEN CAST AND HAS REACHED A MINIMUM COMPRESSIVE STRENGTH OF 20.7 MPa.

ALL REINFORCING STEEL IN BARRIER RAILS SHALL BE EPOXY COATED.

VERTICAL GROOVED CONTRACTION JOINTS, 12mm IN DEPTH, SHALL BE TOOLED IN ALL EXPOSED FACES OF THE BARRIER RAIL AND IN ACCORDANCE WITH ARTICLE 825-10(B) OF THE STANDARD SPECIFICATIONS. THE CONTRACTION JOINT SHALL BE LOCATED AT EACH THIRD POINT BETWEEN BARRIER RAIL EXPANSION JOINTS. ONLY ONE CONTRACTION JOINT IS REQUIRED AT MIDPOINT OF BARRIER RAIL SEGMENTS LESS THAN 6.1m IN LENGTH AND NO CONTRACTION JOINTS ARE REQUIRED FOR THOSE SEGMENTS LESS THAN 3.5m IN LENGTH.

THE #16 S1 & #16 S2 BARS MAY BE SHIFTED SLIGHTLY IN ORDER TO MAINTAIN A 50mm CLEARANCE TO THE 13mm EXPANSION JOINT MATERIAL IN BARRIER RAIL.

BAR TYPES

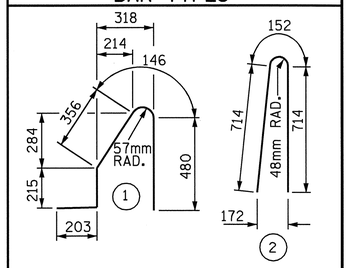

ALL BAR DIMENSIONS ARE OUT TO OUT

BILL OF MATERIAL

FOR CONCRETE BARRIER RAIL ONLY

BAR	NO.	SIZE	TYPE	LENGTH	WEIGHT
* B1	56	#16	STR	4880	424
* B2	42	#16	STR	8660	564
* S1	294	#16	1	1400	638
* S2	294	#16	2	1580	721

* EPOXY COATED REINFORCING STEEL	2347 kg
CLASS AA CONCRETE	22.0 m³
CONCRETE BARRIER RAIL	88.788 METERS

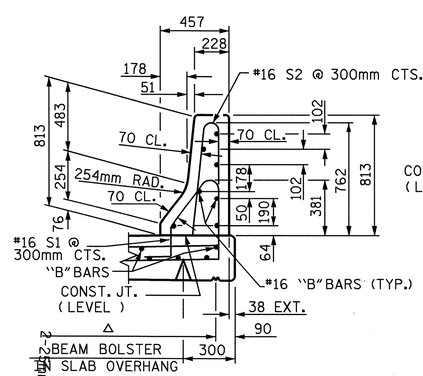

SECTION THRU RAIL

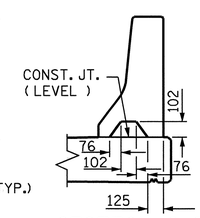

SECTION S-S

AT DAM IN OPEN JOINT (THIS IS TO BE USED ONLY WHEN SLIP FORM IS USED)

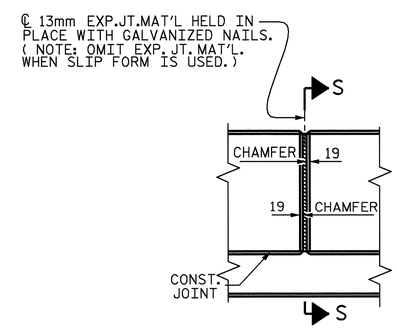

ELEVATION AT EXPANSION JOINTS

BARRIER RAIL DETAILS

PROJECT NO. R-2554BA

WAYNE COUNTY

STATION: 103+80.709 -L-

STATE OF NORTH CAROLINA
DEPARTMENT OF TRANSPORTATION
RALEIGH

STANDARD
CONCRETE
BARRIER RAIL
(LEFT LANE)

ASSEMBLED BY : J. G. KHARVA	DATE : 12/11/06
CHECKED BY : J. E. LAZAROVICH	DATE : 4/25/08
DRAWN BY : ARB 5/87	REV. 10/17/00 RWW/LES
CHECKED BY : SJD 9/87	REV. 5/7/03R RWW/JTE
	REV. 5/1/06 TLA/GM

REVISIONS						SHEET NO.
NO.	BY:	DATE:	NO.	BY:	DATE:	S-239
1			3			TOTAL SHEETS
2			4			478

NORTH CAROLINA PROFESSIONAL SEAL 22005 ENGINEER TLA KEITH PASCHAL

6/9/08

09-JUN-2008 08:22
R:\Structures\BULLOCK\Str#8\FINAL PLANS\R2554BA_sd_BR_STR. #8.dgn
ldhaWK

STD. No. CBR1SM

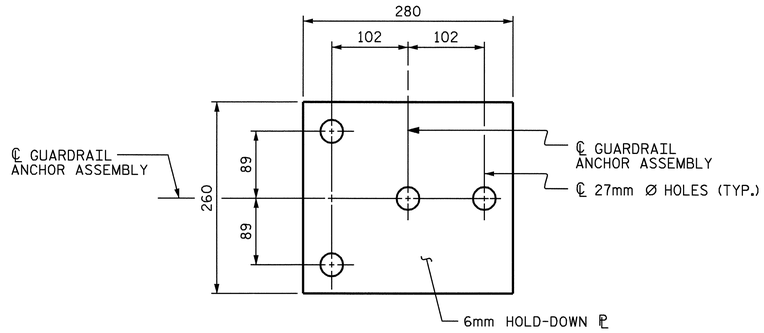

PLAN

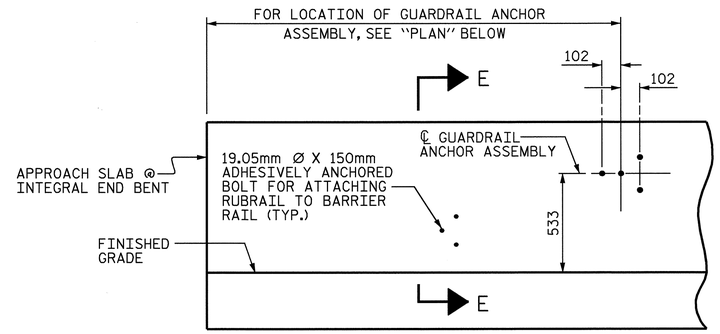

ELEVATION

FOR LOCATION OF RUBRAIL, SEE ROADWAY STD. 862.03

NOTES

THE GUARDRAIL ANCHOR ASSEMBLY SHALL CONSIST OF A 6mm HOLD DOWN PLATE AND 4 - 22.23mm Ø BOLTS WITH NUTS AND WASHERS, RUBRAIL, AND ADHESIVELY ANCHORED BOLTS.

THE HOLD-DOWN PLATE SHALL CONFORM TO AASHTO M270 GRADE 36. AFTER FABRICATION, THE HOLD-DOWN PLATE SHALL BE HOT-DIP GALVANIZED IN ACCORDANCE WITH AASHTO M111.

BOLTS SHALL CONFORM TO THE REQUIREMENTS OF ASTM A307 AND NUTS SHALL CONFORM TO THE REQUIREMENTS OF AASHTO M291. BOLTS, NUTS AND WASHERS SHALL BE GALVANIZED. (AT THE CONTRACTOR'S OPTION, STAINLESS STEEL BOLTS, NUTS AND WASHERS MAY BE USED AS AN ALTERNATE FOR THE 22.23mm Ø GALVANIZED BOLTS, NUTS AND WASHERS. THEY SHALL CONFORM TO OR EXCEED THE MECHANICAL REQUIREMENTS OF ASTM A307. THE USE OF THIS ALTERNATE SHALL BE APPROVED BY THE ENGINEER.)

THE GUARDRAIL ANCHOR ASSEMBLY IS REQUIRED AT ALL POINTS WHERE APPROACH GUARDRAIL IS TO BE ATTACHED TO THE END OF BARRIER RAIL. FOR POINTS OF ATTACHMENT, SEE SKETCH.

AFTER INSTALLATION, THE EXPOSED THREAD OF THE BOLT SHALL BE BURRED WITH A SHARP POINTED TOOL.

THE COST OF THE GUARDRAIL ANCHOR ASSEMBLY SHALL BE INCLUDED IN THE UNIT CONTRACT PRICE BID FOR CONCRETE BARRIER RAIL.

THE 32mm Ø HOLES SHALL BE FORMED OR DRILLED WITH A CORE BIT. IMPACT TOOLS WILL NOT BE PERMITTED. ANY CONCRETE DAMAGED BY THIS WORK SHALL BE REPAIRED TO THE SATISFACTION OF THE ENGINEER.

THE C150 X 12 RUBRAIL IS TO BE ADHESIVELY ANCHORED TO THE RAIL USING THREE 19.05mm Ø X 150mm BOLTS WITH WASHERS. LEVEL ONE FIELD TESTING IF REQUIRED, AND THE YIELD LOAD OF THE 19.05mm Ø BOLTS IS 53.4kN. FOR ADHESIVELY ANCHORED ANCHOR BOLTS OR DOWELS, SEE SPECIAL PROVISIONS. SEE ROADWAY STANDARD 862.03 FOR DETAILS AND LOCATION OF THE RUBRAIL.

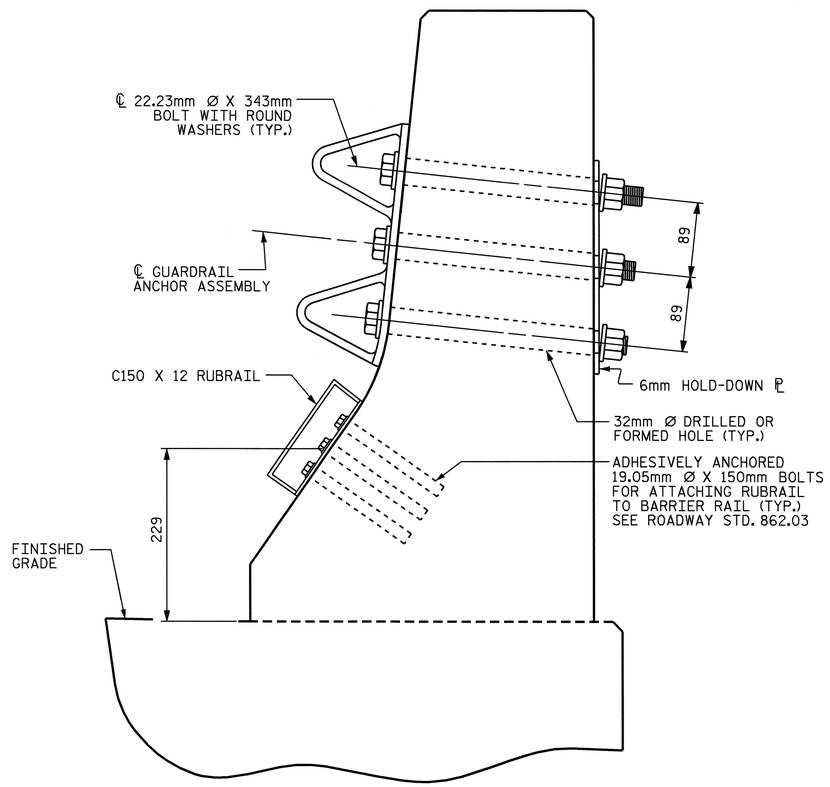

SECTION E-E

GUARDRAIL ANCHOR ASSEMBLY DETAILS

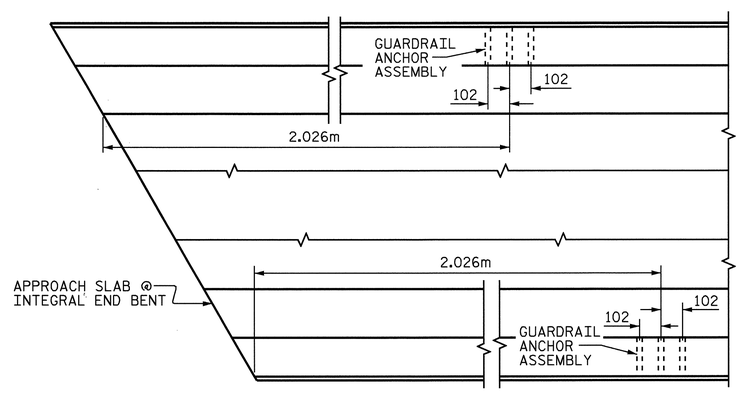

PLAN

LOCATION OF ANCHORS FOR GUARDRAIL

END BENT 1 SHOWN, END BENT 2 SIMILAR.

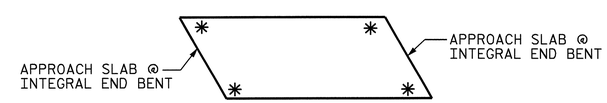

SKETCH SHOWING POINTS OF ATTACHMENTS

✳ DENOTES GUARDRAIL ANCHOR ASSEMBLY

PROJECT NO. R2554BA

WAYNE COUNTY

STATION: 103+80.709 -L-

STATE OF NORTH CAROLINA
DEPARTMENT OF TRANSPORTATION
RALEIGH

STANDARD

GUARDRAIL ANCHORAGE FOR BARRIER RAIL

NORTH CAROLINA PROFESSIONAL SEAL 22008 ENGINEER A. KEITH PASCHAL

6/9/08

REVISIONS						SHEET NO.
NO.	BY:	DATE:	NO.	BY:	DATE:	S-240
1			3			TOTAL SHEETS
2			4			478

ASSEMBLED BY : J.G.KHARVA DATE : 3/01/08
CHECKED BY : A.K. PASCHAL DATE : 4/25/08
DRAWN BY : TLA 5/06
CHECKED BY : GM 5/06
ADDED 5/1/06R KMM/GM

09-JUN-2008 08:22
R:\Structures\BULLOCK\Str*8\FINAL PLANS\R2554BA_sd_GR_STR.*8.dgn
IdhaWK

STD. NO. GRA2

SUPERSTRUCTURE REINFORCING STEEL LENGTHS ARE BASED ON THE FOLLOWING MINIMUM SPLICE LENGTHS					
BAR SIZE	SUPERSTRUCTURE SLABS, PARAPET, AND BARRIER RAIL (EXCEPT APPROACH)		APPROACH SLABS		PARAPET AND BARRIER RAIL
	EPOXY COATED	UNCOATED	EPOXY COATED	UNCOATED	
#13	610	540	610	540	840
#16	770	660	770	660	1050
#19	920	790	1190	790	1330
#22	1580	1060			
#25	2080	1390			

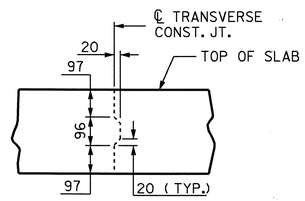

TRANSVERSE CONSTRUCTION JOINT DETAIL

NOTE: REINFORCING STEEL IN SLAB NOT SHOWN. LONGITUDINAL REINFORCING STEEL SHALL BE CONTINUOUS THRU JOINT.

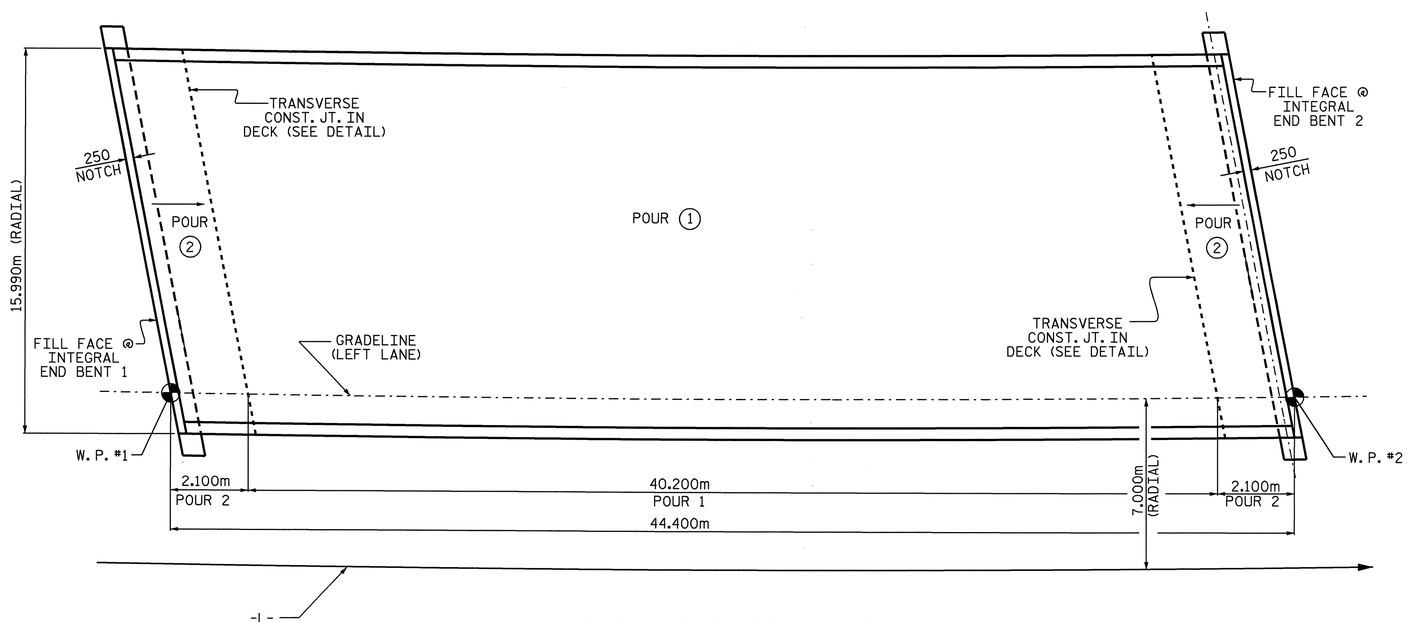

LAYOUT FOR COMPUTING AREA OF REINFORCED CONCRETE DECK SLAB AND POURING SEQUENCE (SQ. METER = 706.8)

BILL OF MATERIAL

BAR	NO.	SIZE	TYPE	LENGTH	WEIGHT
* A1	255	#16	STR	15880	6285
* A101	4	#16	STR	14360	89
* A102	4	#16	STR	12680	79
* A103	4	#16	STR	11000	68
* A104	4	#16	STR	9320	58
* A105	4	#16	STR	7640	47
* A106	4	#16	STR	5960	37
* A107	4	#16	STR	4280	27
* A108	4	#16	STR	2600	16
* A109	4	#16	STR	900	6
A2	255	#16	STR	15880	6285
A201	4	#16	STR	14360	89
A202	4	#16	STR	12680	79
A203	4	#16	STR	11000	68
A204	4	#16	STR	9320	58
A205	4	#16	STR	7640	47
A206	4	#16	STR	5960	37
A207	4	#16	STR	4280	27
A208	4	#16	STR	2600	16
A209	4	#16	STR	900	6
* B1	70	#22	STR	9000	1916
B2	112	#13	STR	9000	1002
* B3	216	#13	STR	7840	1683
B4	189	#16	STR	15060	4418
K1	28	#16	STR	18240	793
K2	16	#16	STR	900	22
U1	142	#13	2	4340	613
U2	16	#13	2	4940	79
* S2	92	#13	1	3560	326
* S3	88	#13	1	2920	255
REINFORCING STEEL					13639 kgs.
* EPOXY COATED REINFORCING STEEL					10892 kgs.

BAR TYPES

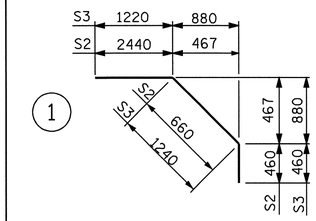

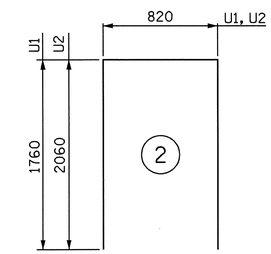

ALL BAR DIMENSIONS ARE OUT TO OUT

SUPERSTRUCTURE BILL OF MATERIAL

	CLASS AA CONCRETE	REINFORCING STEEL	EPOXY COATED REINFORCING STEEL
	(CU.M.)	(KGS.)	(KGS.)
POUR #1	164.4	——	——
POUR #2	96.6	——	——
TOTALS **	260.0	13639	10892

** QUANTITIES FOR BARRIER RAIL ARE NOT INCLUDED

GROOVING BRIDGE FLOORS		
APPROACH SLABS	188.7	SQ.M.
BRIDGE DECK	616.6	SQ.M
TOTAL	805.3	SQ.M

PROJECT NO. R-2554BA
WAYNE COUNTY
STATION: 103+80.709 -L-

STATE OF NORTH CAROLINA
DEPARTMENT OF TRANSPORTATION
RALEIGH

SUPERSTRUCTURE
BILL OF MATERIAL
(LEFT LANE)

NORTH CAROLINA PROFESSIONAL SEAL 022005 ENGINEER J. KEITH PASCHAL
6/9/08

REVISIONS						SHEET NO.
NO.	BY:	DATE:	NO.	BY:	DATE:	S-241
1			3			TOTAL SHEETS
2			4			478

DRAWN BY : J. G. KHARVA DATE : 6/18/06
CHECKED BY : J. E. LAZAROVICH DATE : 4/25/08

09-JUN-2008 08:22
R:\Structures\BULLOCK\Str*8\FINAL PLANS\R2554BA_sd_BM_STR. *8.dgn
jdhaWK

NOTES:

STIRRUPS IN CAP MAY BE SHIFTED AS NECESSARY TO CLEAR ANCHOR BOLTS.

THE CONTRACTOR SHALL PROVIDE FOR INSTALLATION OF THE 100mm DIAMETER DRAIN PIPE THROUGH THE WING WALL AS REQUIRED FOR REINFORCED BRIDGE APPROACH FILLS, SEE THE ROADWAY PLANS. REINFORCING STEEL IN THE WING WALL MAY BE SHIFTED AS NECESSARY TO CLEAR THE DRAIN PIPE.

THE CONTRACTOR'S ATTENTION IS CALLED TO THE FACT THAT THE UPPER PART OF WING IS TO BE POURED WITH SUPERSTRUCTURE.

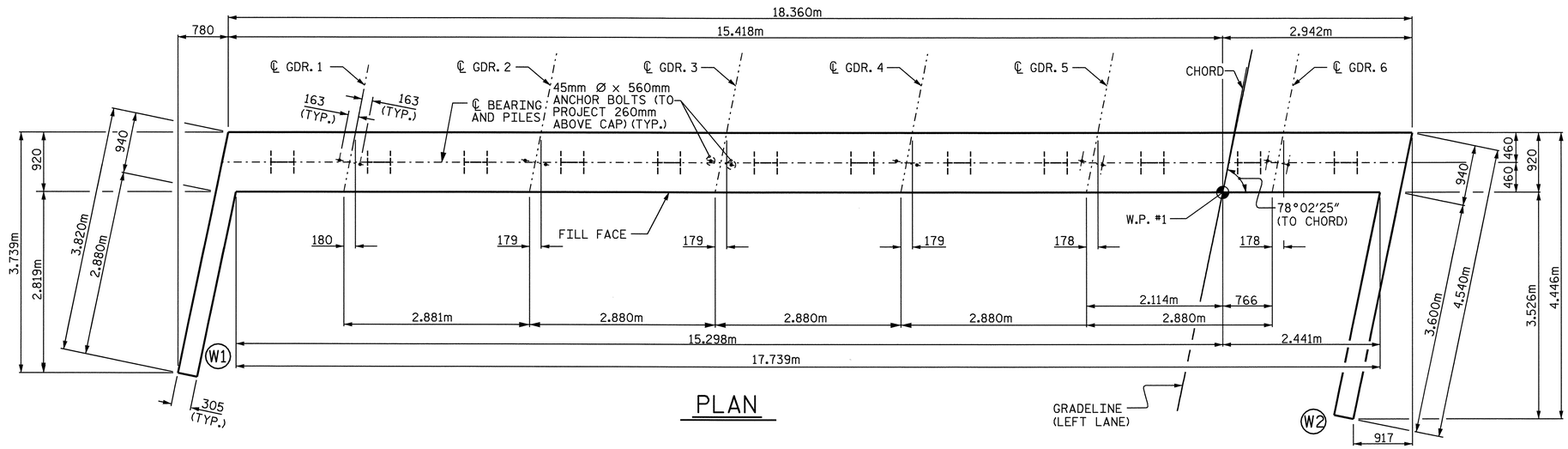

PLAN

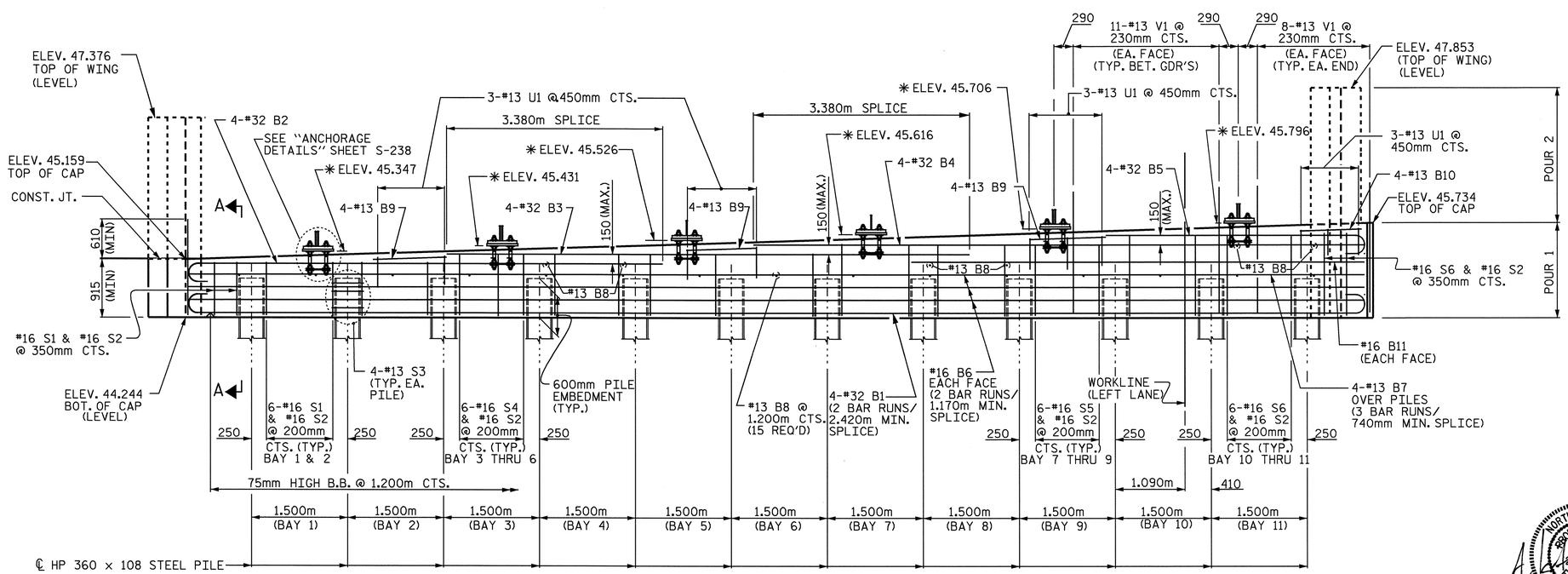

ELEVATION

✱ BRIDGE SEAT ELEVATIONS ARE TAKEN AT BOTTOM OF SOLE PLATES

PROJECT NO. R-2554BA
WAYNE COUNTY
STATION: 103+80.709 -L-

SHEET 1 OF 2

STATE OF NORTH CAROLINA
DEPARTMENT OF TRANSPORTATION
RALEIGH

SUBSTRUCTURE

INTEGRAL END BENT 1

(LEFT LANE)

NORTH CAROLINA PROFESSIONAL SEAL 22008 ENGINEER A. KEITH PASCHAL 6/9/08

REVISIONS						SHEET NO.
NO.	BY:	DATE:	NO.	BY:	DATE:	S-242
1			3			TOTAL SHEETS
2			4			478

DRAWN BY : J. G. KHARVA DATE : 09/19/07
CHECKED BY : A. K. PASCHAL DATE : 10/12/07

09-JUN-2008 08:21
R:\Structures\BULLOCK\Str#8\FINAL PLANS\R-2554BA_sd_EI&2_08.dgn
jdhaWK

STR. #8

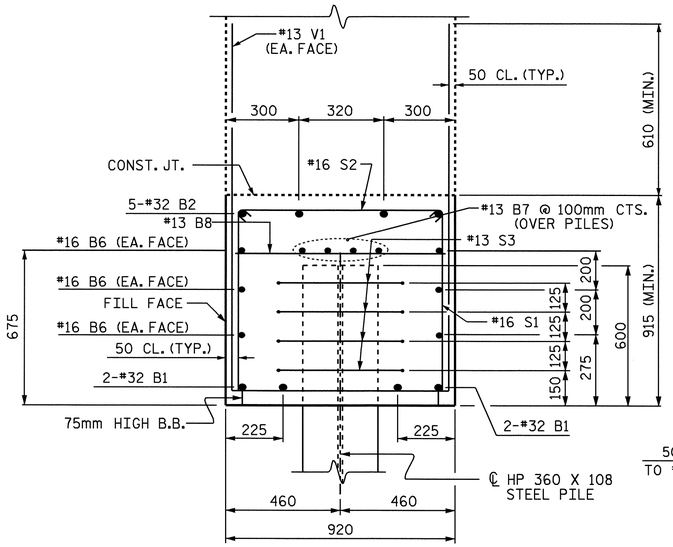

SECTION A-A

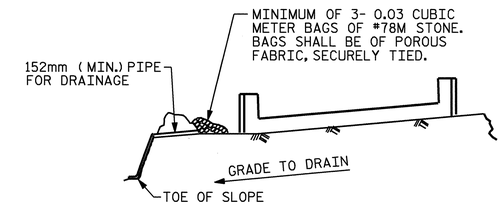

BAGGED STONE AND PIPE SHALL BE PLACED IMMEDIATELY AFTER COMPLETION OF END BENT EXCAVATION. PIPE MAY BE EITHER CONCRETE, CORRUGATED STEEL, CORRUGATED ALUMINUM ALLOY, OR CORRUGATED PLASTIC. PERFORATED PIPE WILL NOT BE ALLOWED.

BAGGED STONE SHALL REMAIN IN PLACE UNTIL THE ENGINEER DIRECTS THAT IT BE REMOVED. THE CONTRACTOR SHALL REMOVE AND DISPOSE OF SILT ACCUMULATIONS AT BAGGED STONE WHEN SO DIRECTED BY THE ENGINEER. BAGS SHALL BE REMOVED AND REPLACED WHENEVER THE ENGINEER DETERMINES THAT THEY HAVE DETERIORATED AND LOST THEIR EFFECTIVENESS.

NO SEPARATE PAYMENT WILL BE MADE FOR THIS WORK AND THE ENTIRE COST OF THIS WORK SHALL BE INCLUDED IN THE UNIT CONTRACT PRICE BID FOR THE SEVERAL PAY ITEMS.

TEMPORARY DRAINAGE AT END BENT

BAR TYPES

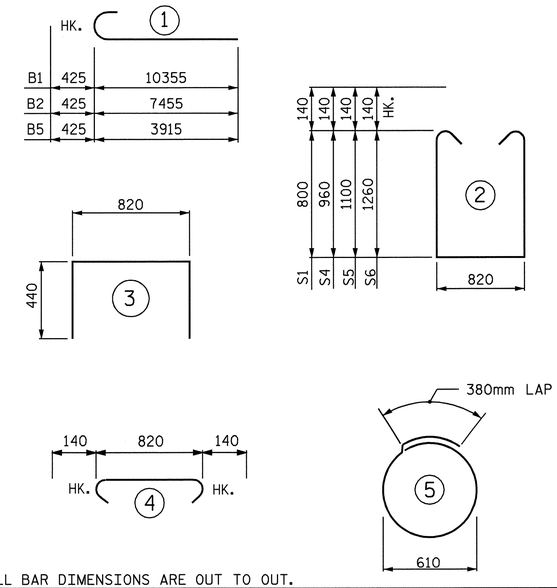

ALL BAR DIMENSIONS ARE OUT TO OUT.

BILL OF MATERIAL
END BENT 1

BAR NO.	SIZE	TYPE	LENGTH	WEIGHT
B1 8	32	1	10780	552
B2 4	32	1	7880	202
B3 4	32	STR	8180	210
B4 4	32	STR	9540	244
B5 4	32	1	4040	113
B6 12	16	STR	9720	181
B7 12	13	STR	6580	78
B8 21	13	STR	820	7
B9 12	13	STR	1200	14
B10 4	13	STR	960	4
B11 2	16	STR	7080	22
H1 10	16	STR	3760	58
H2 10	16	STR	3720	58
H3 12	16	STR	4360	81
H4 12	16	STR	4400	82
S1 14	16	2	2700	59
S2 70	16	4	1100	120
S3 48	13	5	2300	110
S4 24	16	2	3020	112
S5 18	16	2	3300	92
S6 14	16	2	3620	79
U1 12	13	3	1700	20
V1 142	13	STR	2080	295
V2 20	16	STR	3020	94
V3 24	16	STR	3500	130
REINFORCING STEEL			kg.	3017

CLASS A CONCRETE BREAKDOWN

* POUR 1 (CAP AND LOWER PART OF WINGS) 22.6 m³

TOTAL 22.6 m³

HP 360 x 108 STEEL PILES
NO. 12 264 METERS

PILE REDRIVES NO.: 5

* UPPER WINGS (POUR 2) TO BE POURED WITH SUPERSTRUCTURE

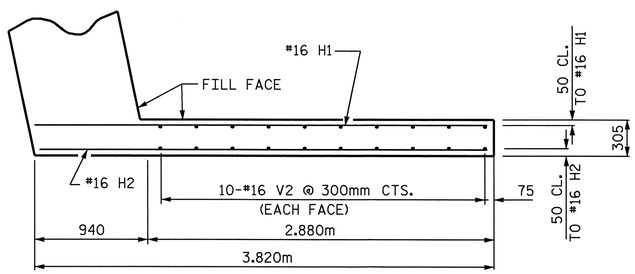

PLAN W1

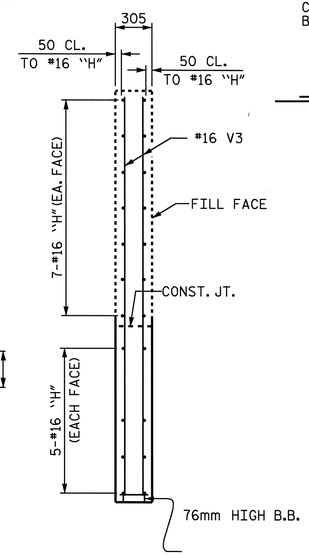

SECTION Y-Y

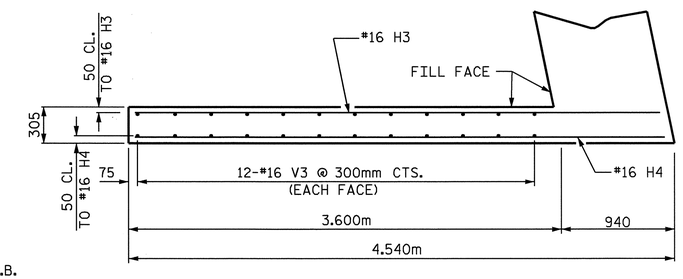

PLAN W2

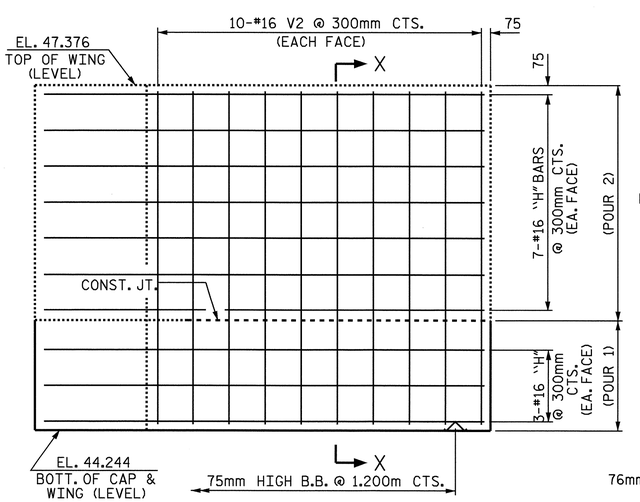

ELEVATION W1

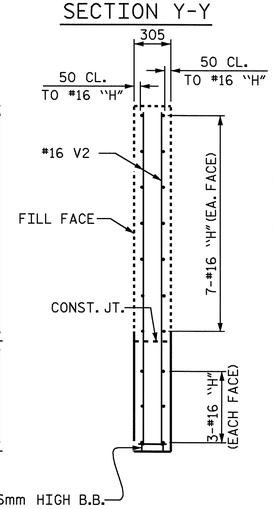

SECTION X-X

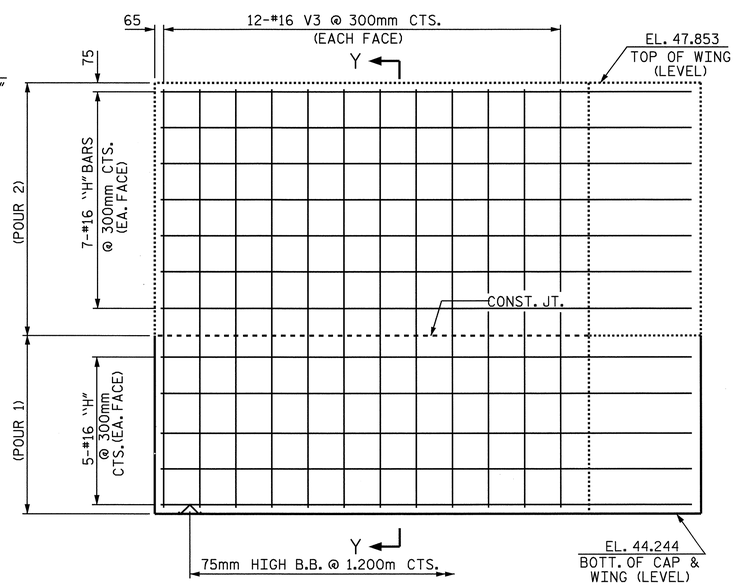

ELEVATION W2

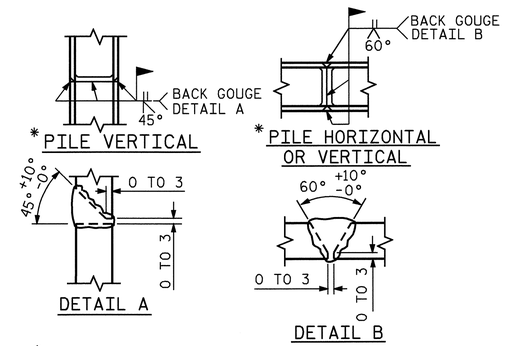

* POSITION OF PILE DURING WELDING.

PILE SPLICE DETAILS

PROJECT NO. R-2554BA
WAYNE COUNTY
STATION: 103+80.709 -L-

SHEET 2 OF 2

STATE OF NORTH CAROLINA
DEPARTMENT OF TRANSPORTATION
RALEIGH

SUBSTRUCTURE
INTEGRAL END BENT 1
(LEFT LANE)

NORTH CAROLINA PROFESSIONAL SEAL 22005 ENGINEER A. KEITH PASCHAL 6/9/08

REVISIONS							
NO.	BY:	DATE:	NO.	BY:	DATE:		
1			3				
2			4				

SHEET NO. S-243
TOTAL SHEETS 478

DRAWN BY : J. G. KHARVA DATE : 09-14-07
CHECKED BY : A. K. PASCHAL DATE : 10/12/07

09-JUN-2008 08:21
R:\Structures\BULLOCK\Str*8\FINAL PLANS\R-2554BA_sd_EI&2_08.dgn
IdhaWK

STR. *8

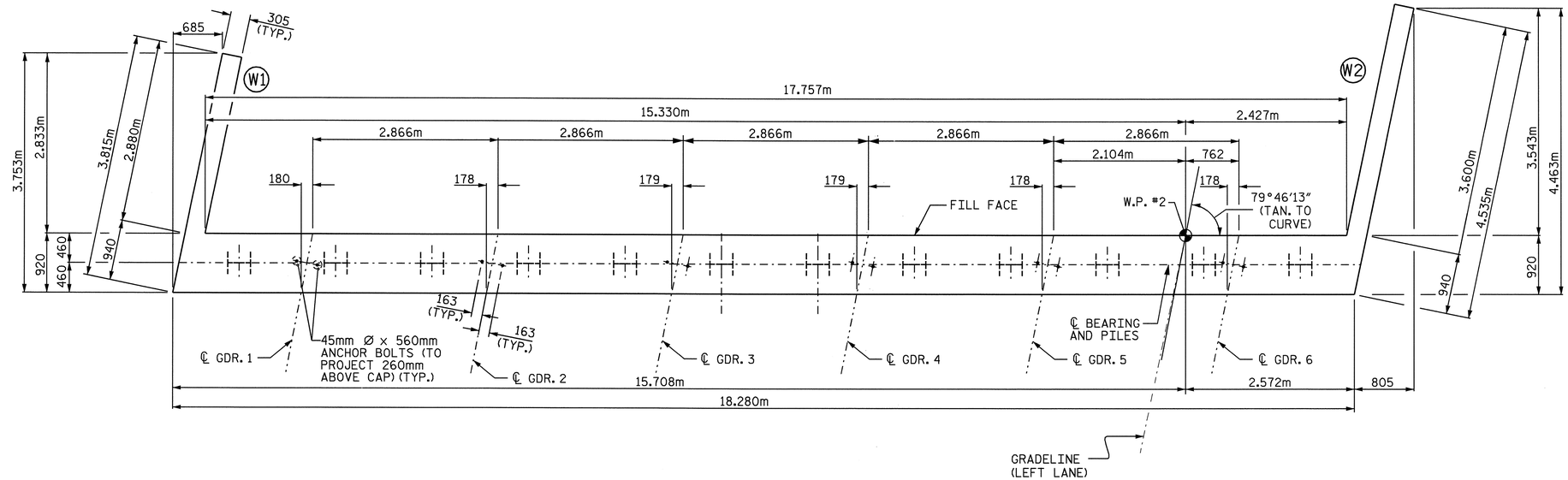

PLAN

NOTES:

STIRRUPS IN CAP MAY BE SHIFTED AS NECESSARY TO CLEAR ANCHOR BOLTS.

THE CONTRACTOR SHALL PROVIDE FOR INSTALLATION OF THE 100mm DIAMETER DRAIN PIPE THROUGH THE WING WALL AS REQUIRED FOR REINFORCED BRIDGE APPROACH FILLS, SEE THE ROADWAY PLANS. REINFORCING STEEL IN THE WING WALL MAY BE SHIFTED AS NECESSARY TO CLEAR THE DRAIN PIPE.

THE CONTRACTOR'S ATTENTION IS CALLED TO THE FACT THAT THE UPPER PART OF WING IS TO BE POURED WITH SUPERSTRUCTURE.

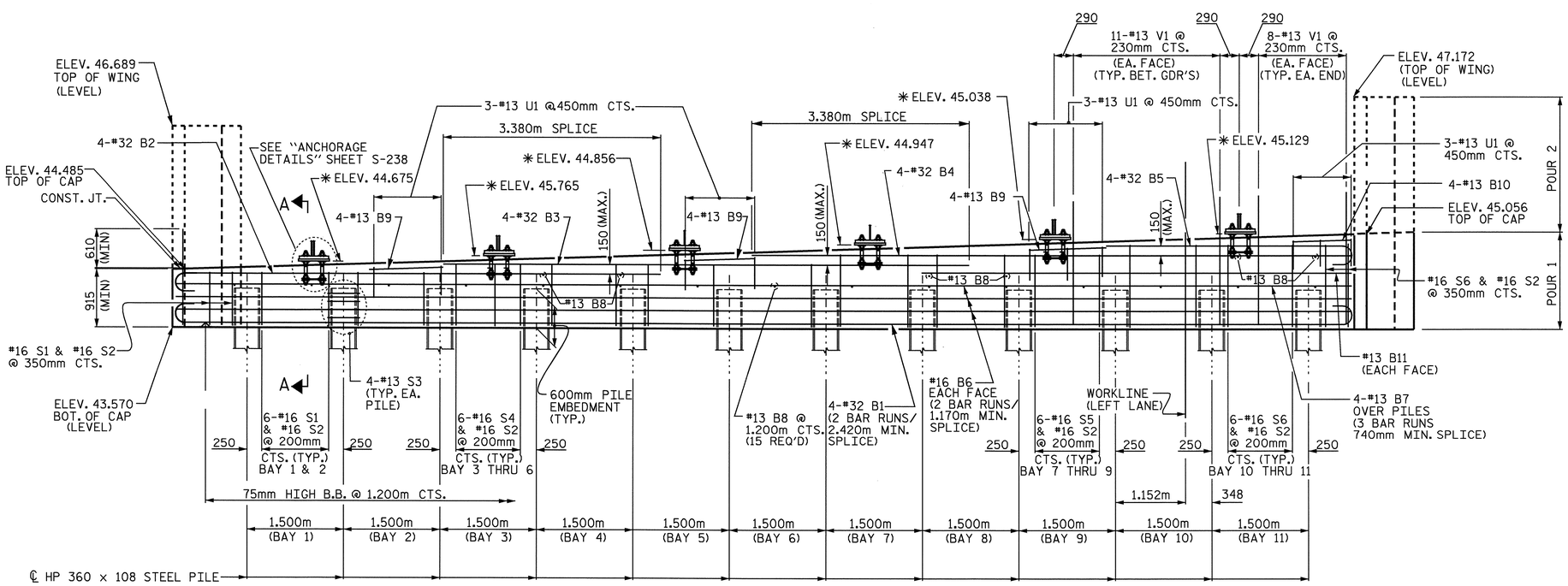

ELEVATION

✳ BRIDGE SEAT ELEVATIONS ARE TAKEN AT BOTTOM OF LEVELING PLATE

PROJECT NO. R-2554BA
WAYNE COUNTY
STATION: 103+80.709 -L-

SHEET 1 OF 2

STATE OF NORTH CAROLINA
DEPARTMENT OF TRANSPORTATION
RALEIGH

SUBSTRUCTURE
INTEGRAL END BENT 2
(LEFT LANE)

NORTH CAROLINA PROFESSIONAL SEAL 12006 ENGINEER A. KEITH PASCHAL
6/9/08

REVISIONS						SHEET NO.
NO.	BY:	DATE:	NO.	BY:	DATE:	S-244
1			3			TOTAL SHEETS
2			4			478

DRAWN BY : J. G. KHARVA DATE : 9/14/07
CHECKED BY : A. K. PASCHAL DATE : 10/12/07

09-JUN-2008 08:22
R:\Structures\BULLOCK\Str#8\FINAL PLANS\R-2554BA_sd_EI&2_08.dgn
ldhaWK

STR. #8

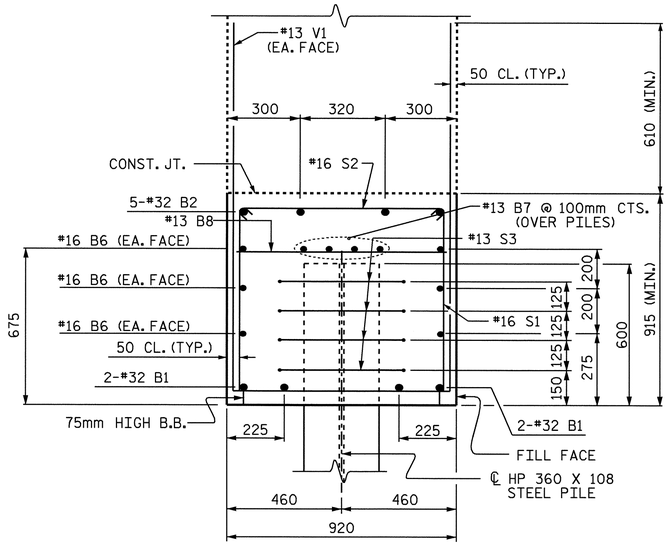

SECTION A-A

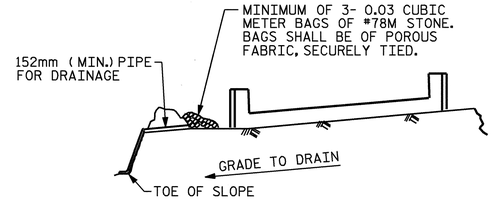

BAGGED STONE AND PIPE SHALL BE PLACED IMMEDIATELY AFTER COMPLETION OF END BENT EXCAVATION. PIPE MAY BE EITHER CONCRETE, CORRUGATED STEEL, CORRUGATED ALUMINUM ALLOY, OR CORRUGATED PLASTIC. PERFORATED PIPE WILL NOT BE ALLOWED.

BAGGED STONE SHALL REMAIN IN PLACE UNTIL THE ENGINEER DIRECTS THAT IT BE REMOVED. THE CONTRACTOR SHALL REMOVE AND DISPOSE OF SILT ACCUMULATIONS AT BAGGED STONE WHEN SO DIRECTED BY THE ENGINEER. BAGS SHALL BE REMOVED AND REPLACED WHENEVER THE ENGINEER DETERMINES THAT THEY HAVE DETERIORATED AND LOST THEIR EFFECTIVENESS.

NO SEPARATE PAYMENT WILL BE MADE FOR THIS WORK AND THE ENTIRE COST OF THIS WORK SHALL BE INCLUDED IN THE UNIT CONTRACT PRICE BID FOR THE SEVERAL PAY ITEMS.

TEMPORARY DRAINAGE AT END BENT

BAR TYPES

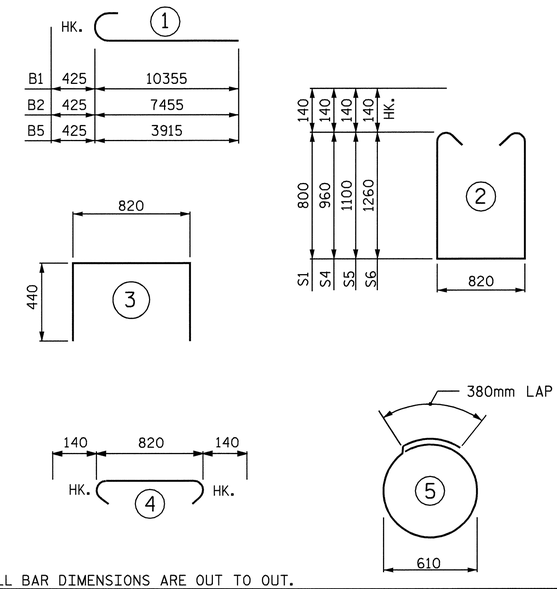

ALL BAR DIMENSIONS ARE OUT TO OUT.

BILL OF MATERIAL
END BENT 2

BAR	NO.	SIZE	TYPE	LENGTH	WEIGHT
B1	8	32	1	10780	552
B2	4	32	1	7880	202
B3	4	32	STR	8180	210
B4	4	32	STR	9540	244
B5	4	32	1	4040	113
B6	12	16	STR	9720	181
B7	12	13	STR	6580	78
B8	21	13	STR	820	7
B9	12	13	STR	1200	14
B10	4	13	STR	960	4
B11	2	16	STR	7080	22
H1	11	16	STR	3640	62
H2	11	16	STR	3680	63
H3	12	16	STR	4480	83
H4	12	16	STR	4440	83
S1	14	16	2	2700	59
S2	70	16	4	1100	120
S3	48	13	5	2300	110
S4	24	16	2	3020	112
S5	18	16	2	3300	92
S6	14	16	2	3620	79
U1	12	13	3	1700	20
V1	142	13	STR	2100	296
V2	18	16	STR	3020	84
V3	24	16	STR	3600	134
REINFORCING STEEL				kg.	3024

CLASS A CONCRETE BREAKDOWN

* POUR 1 (CAP AND LOWER PART OF WINGS) 23.1 m³

TOTAL 23.1 m³

HP 360 x 108 STEEL PILES
NO. 12 264 METERS

PILE REDRIVES NO.: 5

* UPPER WINGS (POUR 2) TO BE POURED WITH SUPERSTRUCTURE

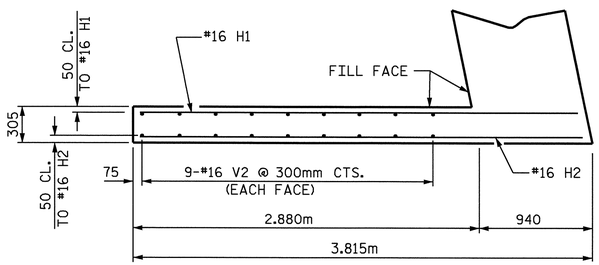

PLAN W1

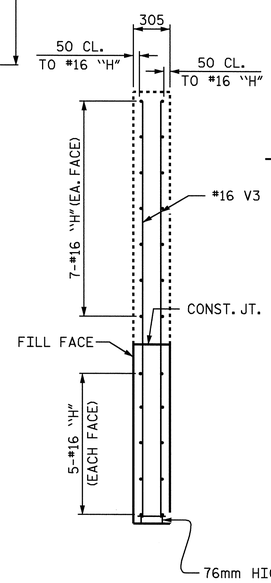

SECTION Y-Y

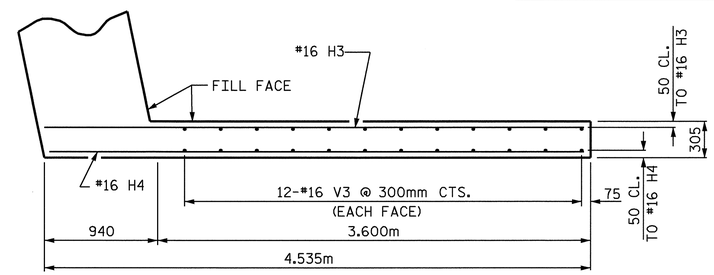

PLAN W2

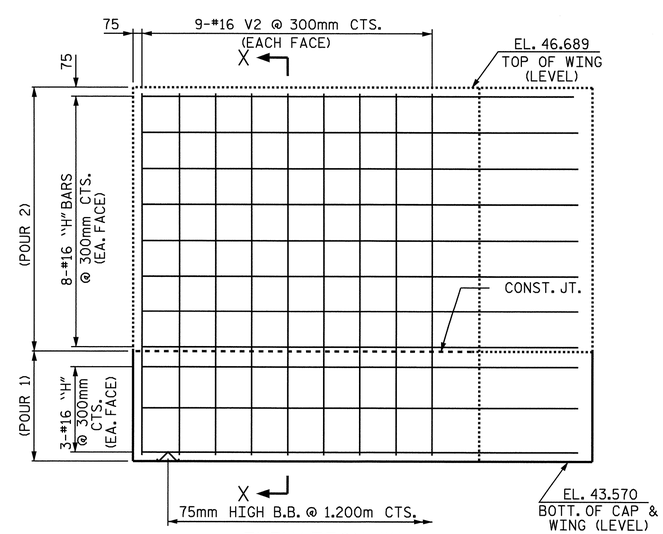

ELEVATION W1

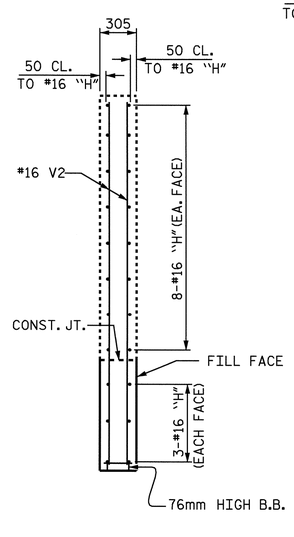

SECTION X-X

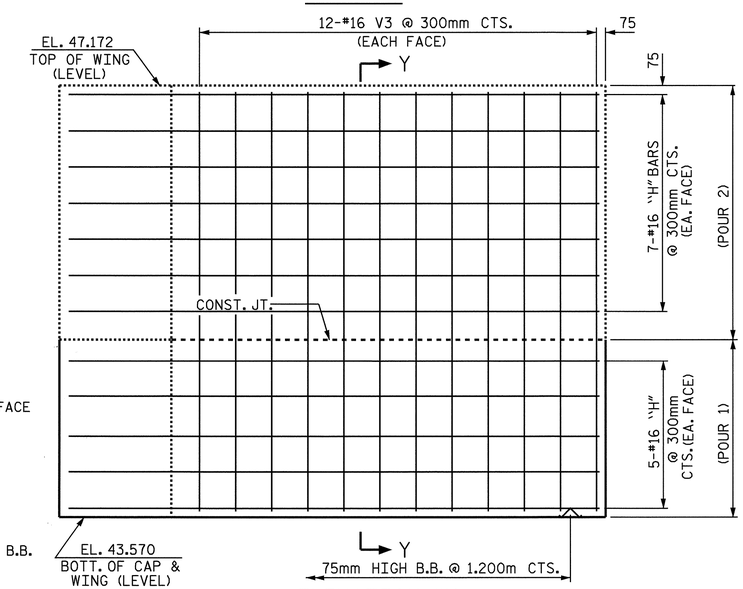

ELEVATION W2

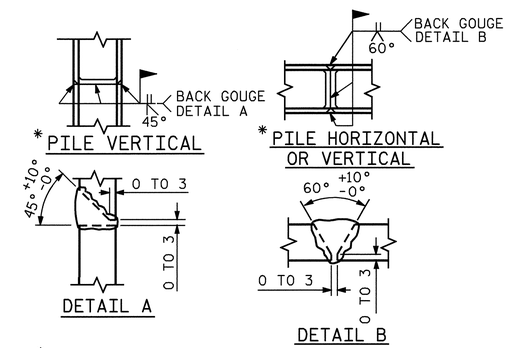

* POSITION OF PILE DURING WELDING.

PILE SPLICE DETAILS

PROJECT NO. R-2554BA
WAYNE COUNTY
STATION: 103+80.709 -L-

SHEET 2 OF 2

STATE OF NORTH CAROLINA
DEPARTMENT OF TRANSPORTATION
RALEIGH

SUBSTRUCTURE
INTEGRAL END BENT 2
(LEFT LANE)

NORTH CAROLINA PROFESSIONAL SEAL 12005 ENGINEER A. KEITH PASCHAL
6/9/08

REVISIONS						SHEET NO.
NO.	BY:	DATE:	NO.	BY:	DATE:	S-245
1			3			TOTAL SHEETS
2			4			478

DRAWN BY : J. G. KHARVA DATE : 09/14/07
CHECKED BY : A. K. PASCHAL DATE : 10/12/07

09-JUN-2008 08:22
R:\Structures\BULLOCK\Str*8\FINAL PLANS\R-2554BA_sd_EI&2_08.dgn
IdhaWK

STR. #8

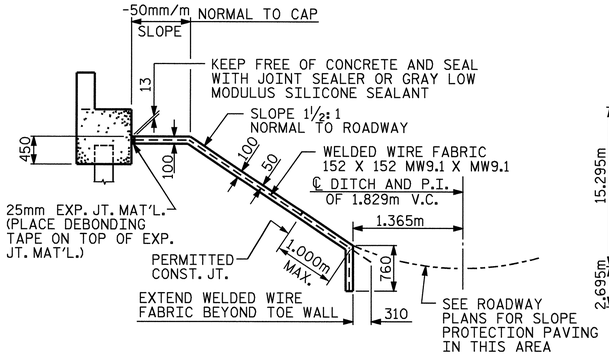

SECTION ALONG ℄ ROADWAY WHEN FILL CATCHES IN DITCH

DETAILS FOR ALTERNATE "A"

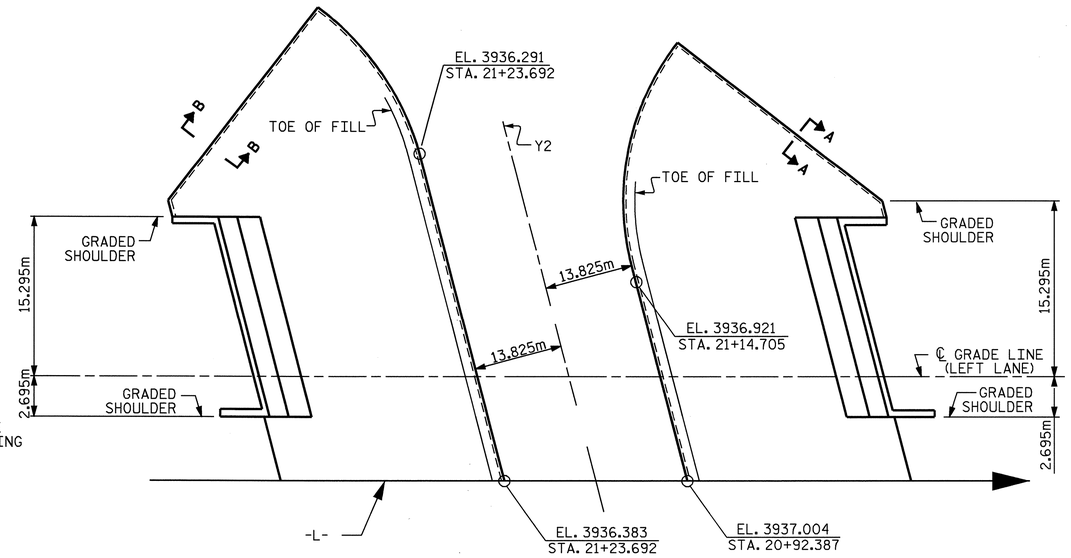

GENERAL NOTES

SLOPE PROTECTION SHALL BE PLACED UNDER THE ENDS OF THE BRIDGE AS SHOWN IN THE DETAILS. THE CONTRACTOR, AT HIS OPTION, MAY USE ALTERNATE "B" ONLY FOR HIGHWAY OVER HIGHWAY GRADE SEPARATIONS WITH 2:1 END BENT SLOPE IN RURAL, UNPOPULATED AREAS. STRAIGHT EDGING WILL NOT BE REQUIRED UNLESS, IN THE OPINION OF THE ENGINEER, VISUAL INSPECTION INDICATES A NEED FOR IT. MEASUREMENT AND PAYMENT SHALL BE AS PRESCRIBED IN SECTION 462 OF THE STANDARD SPECIFICATIONS. FOR BERM WIDTH, SEE GENERAL DRAWING.

ALTERNATE "A"

ALTERNATE "A" SHALL CONSIST OF 100mm POURED-IN-PLACE CONCRETE PAVING AS SHOWN IN THE DETAILS ON THIS SHEET. CONCRETE SHALL BE CLASS "B". THE CONCRETE SURFACE SHALL BE FLOATED WITH A WOODEN FLOAT AND FINISHED. WELDED WIRE FABRIC REINFORCING SHALL BE 152 X 152 - W9.1 X W9.1, 1520mm WIDE. SLOPE PROTECTION SHALL BE POURED IN 1520mm STRIPS AS SHOWN IN THE "POURING DETAIL" WITH 600mm LONG #13 BARS PLACED ALONG THE SLOPE BETWEEN STRIPS AT 450mm MAXIMUM SPACING. SLOPE PROTECTION MAY BE POURED IN ALTERNATE 1220mm AND 1520mm STRIPS AS SHOWN IN THE "OPTIONAL POURING DETAIL" WITH ADJACENT RUNS OF WELDED WIRE FABRIC LAPPING AT LEAST 152mm. THE COST OF THE WELDED WIRE FABRIC AND #13 BARS, IF USED, SHALL BE INCLUDED IN THE CONTRACT UNIT PRICE BID PER SQUARE METER FOR SLOPE PROTECTION.

BRIDGE @ STA. 103+80.709 -L-	100 mm SLOPE PROTECTION	* WELDED WIRE FABRIC 1520mm WIDE
	SQUARE METERS	APPROX. METERS
END BENT 1	256.0	512.0
END BENT 2	261.0	522.0

* QUANTITY SHOWN IS BASED ON 1520mm POURS.

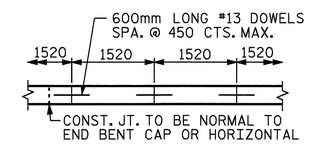

STRIP WIDTHS MAY VARY IN CURVED PORTION.

POURING DETAIL

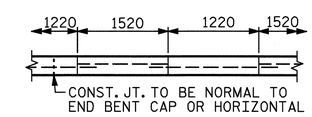

POUR A 1220mm STRIP FIRST. STRIP WIDTHS MAY VARY IN CURVED PORTION.

OPTIONAL POURING DETAIL

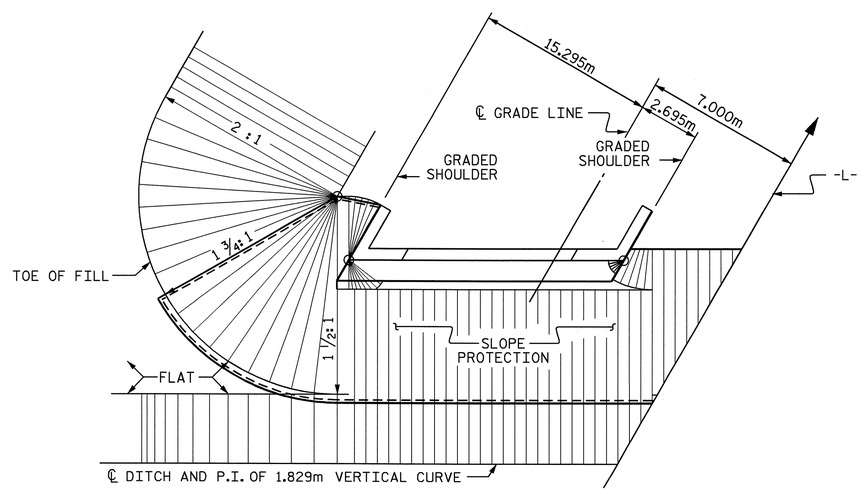

PLAN - END BENT WITH SWEPT BACK WINGS - SKEWED

(1 1/2:1 SLOPE)

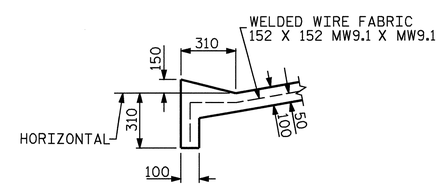

SECTION B-B

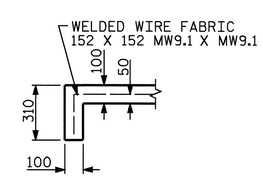

SECTION A-A

PROJECT NO. R-2554BA

WAYNE COUNTY

STATION: 103+80.709 -L-

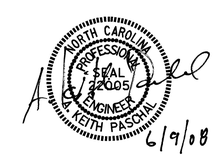

STATE OF NORTH CAROLINA
DEPARTMENT OF TRANSPORTATION
RALEIGH

STANDARD
SLOPE PROTECTION DETAILS
(LEFT LANE)

REVISIONS						SHEET NO.
NO.	BY:	DATE:	NO.	BY:	DATE:	S-246
1			3			TOTAL SHEETS
2			4			478

ASSEMBLED BY : J. G. KHARVA	DATE : 09/27/07
CHECKED BY : A. K. PASCHAL	DATE : 04-23-08
DRAWN BY : ELR 5/92	REV. 7/10/01 LES/RDR
CHECKED BY : GRP 6/92	REV. 5/7/03 RWW/JTE
	REV. 5/1/06 TLA/GM

09-JUN-2008 08:21
R:\Structures\BULLOCK\Str#8\FINAL PLANS\R-2554ba_sd_SP_08.dgn
ldhaWK

STR. #8

STD. NO. SP1SM

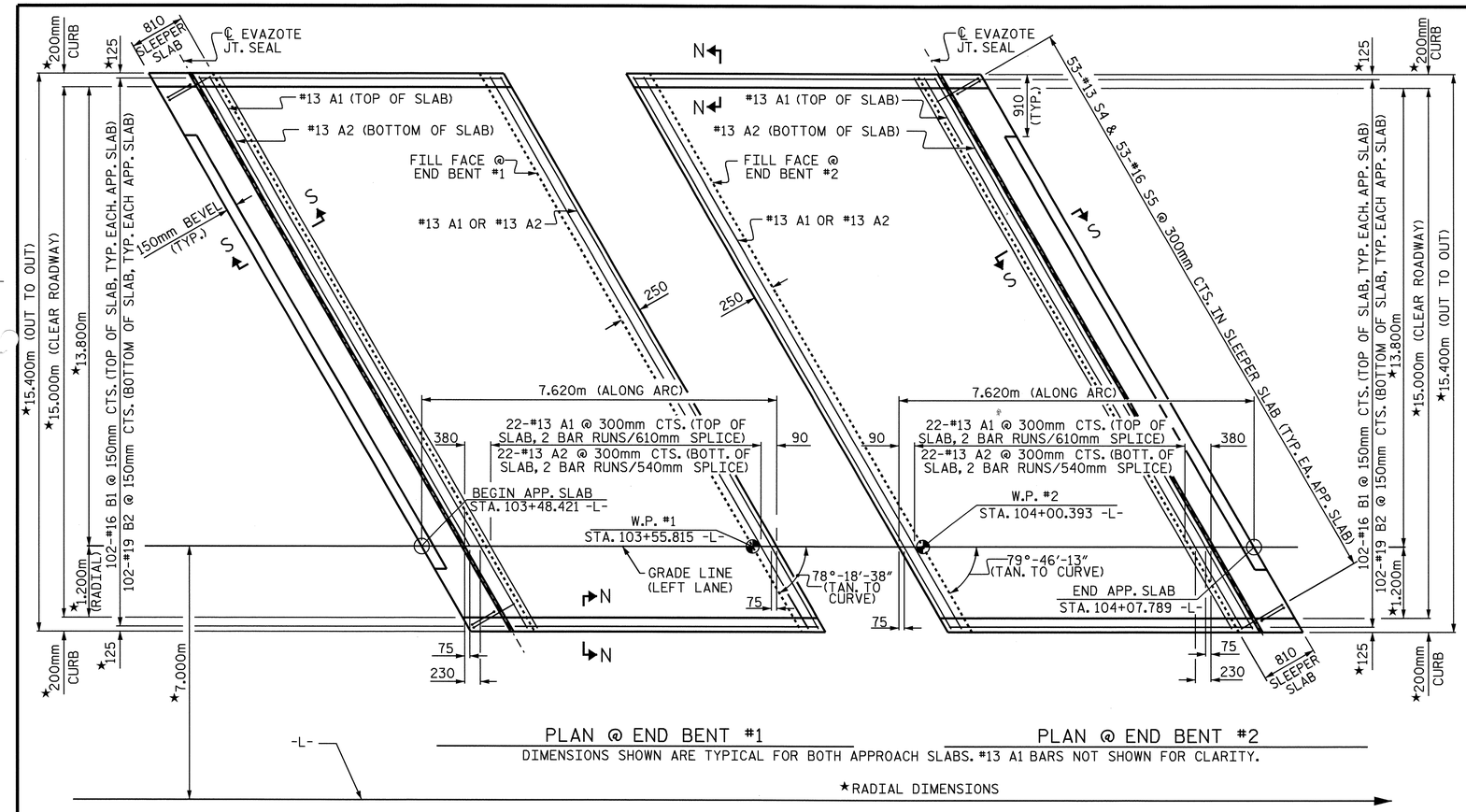

PLAN @ END BENT #1

PLAN @ END BENT #2

DIMENSIONS SHOWN ARE TYPICAL FOR BOTH APPROACH SLABS. #13 A1 BARS NOT SHOWN FOR CLARITY.

★RADIAL DIMENSIONS

NOTES

APPROACH SLAB SHALL NOT BE CONSTRUCTED PRIOR TO COMPLETION OF THE BRIDGE DECK.

FOR REINFORCED BRIDGE APPROACH FILL INCLUDING FABRIC, IMPERMEABLE GEOMEMBRANE, 102mm Ø DRAINAGE PIPE, #78M STONE, AND SELECT MATERIAL, SEE ROADWAY PLANS.

AREA BETWEEN THE WINGWALL AND APPROACH SLAB SHALL BE GRADED TO DRAIN THE WATER AWAY FROM THE FILL FACE OF THE BRIDGE AND SHALL BE PAVED. SEE ROADWAY PLANS.

THE 150mm COMP. A.B.C. SHALL BE FLUSH WITH THE ROADWAY END OF THE APPROACH SLAB AND SHALL EXTEND 300mm OUTSIDE OF EACH EDGE OF THE APPROACH SLAB.

THE CONTRACTOR MAY USE 100mm TYPE B-25.0B ASPHALT CONCRETE BASE COURSE IN LIEU OF 150mm COMP. A.B.C. IF THIS OPTION IS USED, THE BASE COURSE SHALL BE FLUSH WITH THE ROADWAY END OF THE APPROACH SLAB, AND THE WIDTH SHALL BE THE SAME AS THAT OF THE APPROACH SLAB.

THE CONTRACTOR MAY USE 125mm CLASS "A" CONCRETE BASE IN LIEU OF 150mm COMP. A.B.C. IF THIS OPTION IS USED, THE CONCRETE BASE SHALL BE FLUSH WITH THE ROADWAY END OF THE APPROACH SLAB, AND THE WIDTH SHALL BE THE SAME AS THAT OF THE APPROACH SLAB. THE CONCRETE SHALL BE FINISHED TO A SMOOTH SURFACE AND A LAYER OF 13.6 kg ROOFING FELT SHALL BE PLACED BETWEEN THE CONCRETE BASE AND THE APPROACH SLAB TO PREVENT BOND. THE APPROACH SLAB SHALL NOT BE CAST UNTIL THE CONCRETE BASE HAS REACHED AN AGE OF THREE CURING DAYS.

THE VERTICAL JOINT ON THE RIGHT AND LEFT SIDE OF THE APPROACH SLAB AT THE ENDS OF THE EVAZOTE JOINT SHALL BE FILLED WITH SILICONE OR OTHER APPROVED MATERIAL IN ORDER TO PREVENT BACKFILL FROM ENTERING THE JOINT OPENING.

THE JOINT OPENING AT THE APPROACH SLAB/DECK INTERFACE SHALL BE SAWED NO MORE THAN 12 HOURS AFTER THE APPROACH SLAB IS CAST. THE JOINT SHALL BE CLEANED OF ALL DEBRIS BEFORE THE SEALANT IS APPLIED. THE JOINT SEALER MATERIAL SHALL CONFORM TO THE REQUIREMENTS OF TYPE SL LOW MODULUS SILICONE SEALANT.

FOR EVAZOTE JOINT SEALS, SEE SPECIAL PROVISIONS.

THE NOMINAL UNCOMPRESSED SEAL WIDTH OF THE EVAZOTE JOINT SEAL SHALL BE 62.5mm.

FOR ELASTOMERIC CONCRETE, SEE SPECIAL PROVISIONS.

SLEEPER SLAB, ELASTOMERIC CONCRETE AND EVAZOTE SEAL AT APPROACH SLAB SHALL BE PAID IN FULL UNDER THE LUMP SUM PAY ITEM FOR "BRIDGE APPROACH SLABS."

BILL OF MATERIAL

FOR ONE APPROACH SLAB (2 REQ'D)

BAR	NO.	SIZE	TYPE	LENGTH	WEIGHT
* A1	62	#13	STR	8120	500
A2	48	#13	STR	8100	386
* B1	102	#16	STR	6820	1080
B2	102	#19	STR	6980	1591
* S4	53	#13	1	1200	63
S5	53	#16	2	900	74

REINFORCING STEEL	kg.	2051
* EPOXY COATED REINFORCING STEEL	kg.	1643
CLASS AA CONCRETE		
POUR #1 - SLEEPER SLAB	C.M.	4.0
POUR #2 - SLAB & CURB	C.M.	33.3
TOTAL	C.M.	37.3

BAR TYPES

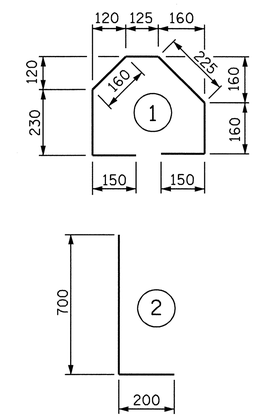

ALL BAR DIMENSIONS ARE OUT TO OUT

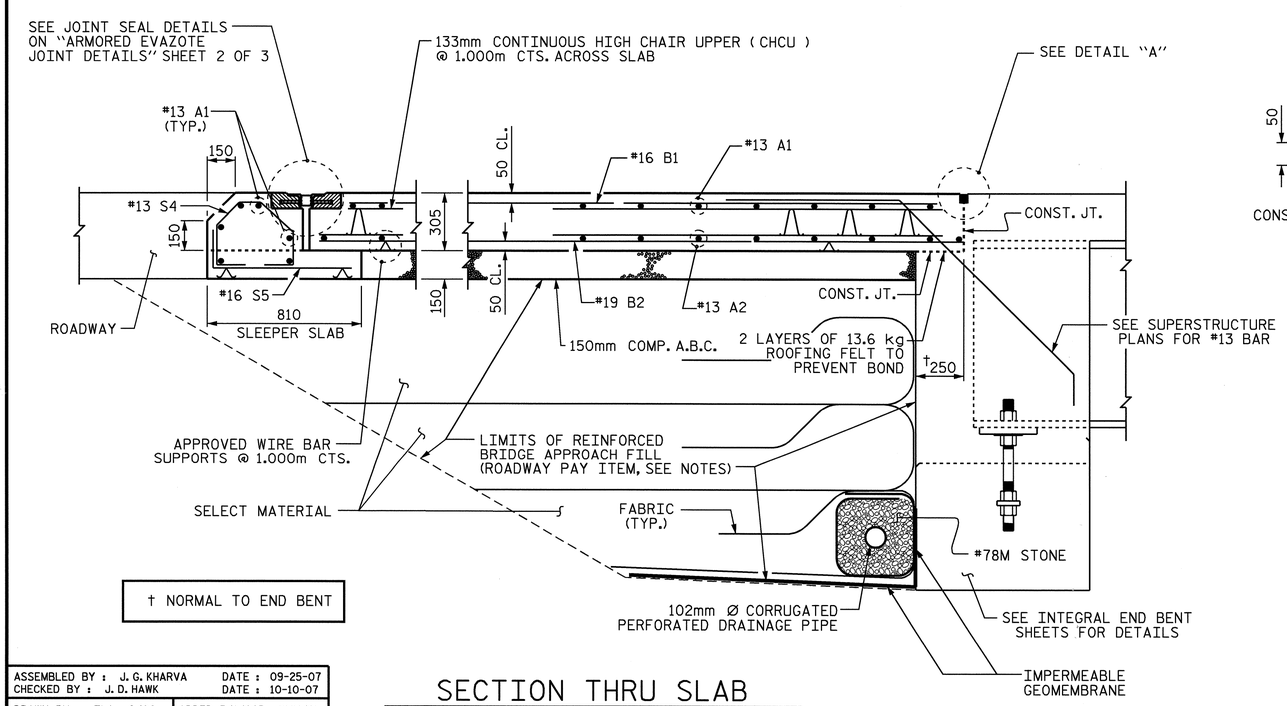

† NORMAL TO END BENT

SECTION THRU SLAB

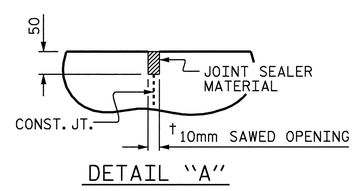

DETAIL "A"

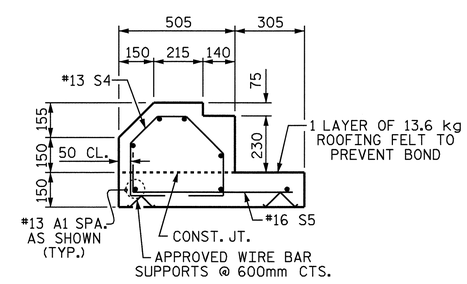

SECTION S-S

SHOWING SLEEPER SLAB

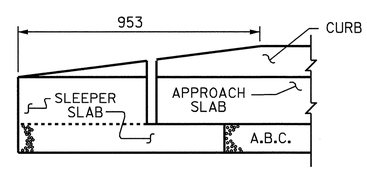

END OF CURB WITHOUT SHOULDER BERM GUTTER

(OMIT TAPER WHEN SHOULDER BERM GUTTER IS REQUIRED)

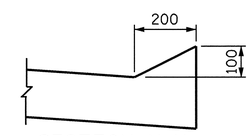

SECTION N-N

PROJECT NO. R-2554BA

WAYNE COUNTY

STATION: 103+80.709 -L-

SHEET 1 OF 3

STATE OF NORTH CAROLINA
DEPARTMENT OF TRANSPORTATION
RALEIGH

STANDARD
BRIDGE APPROACH SLAB FOR INTEGRAL ABUTMENT
(LEFT LANE)

NORTH CAROLINA PROFESSIONAL SEAL 22005 ENGINEER A. KEITH PASCHAL
6/9/08

REVISIONS						SHEET NO.
NO.	BY:	DATE:	NO.	BY:	DATE:	S-247
1			3			TOTAL SHEETS
2			4			478

ASSEMBLED BY : J. G. KHARVA	DATE : 09-25-07
CHECKED BY : J. D. HAWK	DATE : 10-10-07
DRAWN BY : TLA 6/06	ADDED 5/1/06R KMM/GM
CHECKED BY : GM 6/06	

09-JUN-2008 08:50
r:\structures\bullock\Str*8\FINAL PLANS\R-2554BA_sd_AS_08.dgn
jdhaWK

STR. #8

STD. NO. BAS11SM

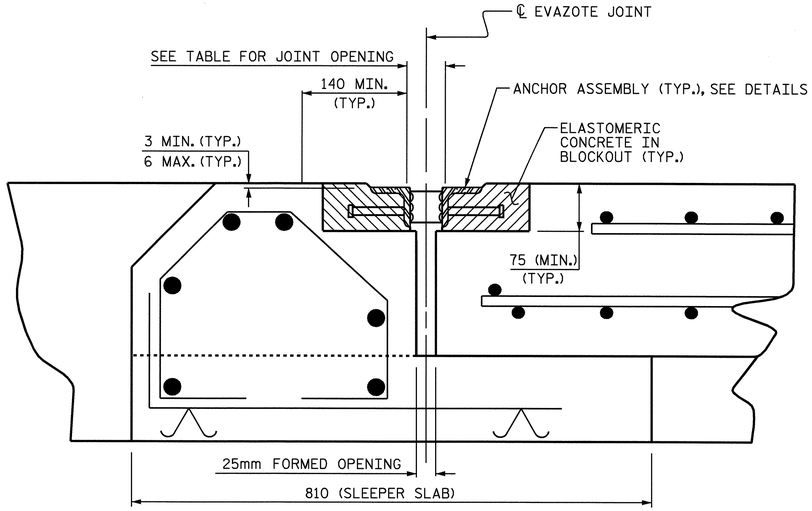

ARMORED JOINT DETAILS

SECTION NORMAL TO JOINT AT END BENT

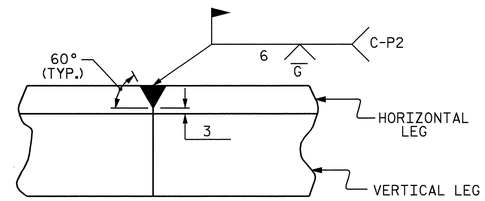

DETAIL- FIELD WELD SPLICE OF ANGLE

NOTES

ANGLES SHALL CONFORM TO AASHTO M270M GRADE 250 STEEL OR APPROVED EQUAL. ALL STUD ANCHORS SHALL CONFORM TO AASHTO M169M GRADES 1010 THRU 1020 OR APPROVED EQUAL.

STUD ANCHORS SHALL BE SHOP WELDED AND ALL HOLES SHALL BE SHOP DRILLED AS SHOWN ON THE PLANS. STUD ANCHORS SHALL BE ELECTRIC ARC END WELDED WITH COMPLETE FUSION.

UPON COMPLETION OF SHOP FABRICATION, THE ENTIRE ANCHOR ASSEMBLY SHALL BE METALLIZED. THE 12.70mm Ø STUD ANCHORS AND ANCHOR TABS NEED NOT BE METALLIZED. SEE SPECIAL PROVISION FOR THERMAL SPRAYED COATINGS (METALLIZATION).

ANCHOR ASSEMBLY SHALL BE MADE CONTINUOUS THE LENGTH OF THE JOINT FROM GUTTER TO GUTTER. FOR FIELD SPLICES AT ALL CROWN BREAK POINTS, THE ENDS OF THE STEEL ANGLES SHALL BE CUT PARALLEL TO THE BRIDGE CENTERLINE. FINISHED FIELD WELDS SHALL BE GROUND SMOOTH AND COATED WITH A MINIMUM THICKNESS OF 0.100mm OF ZINC-RICH PAINT IN ACCORDANCE WITH THE STANDARD SPECIFICATIONS.

ANCHOR ASSEMBLY SEGMENTS SHALL NOT BE LESS 3.6m NOR MORE THAN 6.1m IN LENGTH. SHORTER SEGMENTS MAY BE USED AT THE EDGE OF ROADWAY OR AT POINTS OF STAGED CONSTRUCTION.

THE ANCHOR ASSEMBLY SHALL BE SECURED AND LEVELED AS SHOWN IN THE "ARMORED JOINT ANCHOR ASSEMBLY DETAILS". NO SUBMITTALS ARE REQUIRED FOR 9.53mm Ø EXPANSION ANCHORS, NUTS OR WASHERS. THE CONTRACTOR MAY SUBMIT FOR APPROVAL AN ALTERNATE METHOD OF ALIGNING AND LEVELING THE ANGLES. THE ALTERNATE METHOD SHALL NOT INCLUDE ANY WELDING TO THE OUTSIDE FACE OF THE ANGLES.

AFTER THE ELASTOMERIC CONCRETE HAS BEEN CAST ON BOTH SIDES OF THE JOINT, REMOVE ANY EXCESS CONCRETE THAT COMES THROUGH THE WEEP HOLES AND THOROUGHLY CLEAN THE ANGLES. ANY DAMAGED STEEL SHALL BE COATED WITH A MINIMUM OF 0.100mm OF ZINC-RICH PAINT IN ACCORDANCE WITH THE STANDARD SPECIFICATIONS.

SEE SPECIAL PROVISIONS FOR EVAZOTE JOINT SEALS.

SEE SPECIAL PROVISIONS FOR ELASTOMERIC CONCRETE.

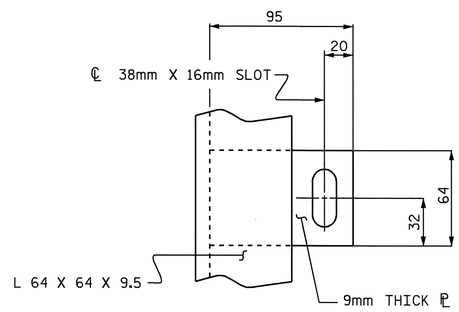

PLAN VIEW OF TAB

MOVEMENT AND SETTING AT EVAZOTE JOINT						
END BENT NO.	SKEW ANGLE	NOMINAL UNCOMPRESSED SEAL WIDTH	TOTAL MOVEMENT (ALONG ℄ RDWY)	PERPENDICULAR JOINT OPENING AT 7° C	PERPENDICULAR JOINT OPENING AT 16° C	PERPENDICULAR JOINT OPENING AT 32° C
1	78°-18′-38″	64	25	52	48	41
2	79°-46′-13″	64	25	52	48	41

TOTAL MOVEMENT IS CALCULATED ALONG THE CENTERLINE OF ROADWAY.
JOINT OPENINGS ARE MEASURED PERPENDICULAR TO THE JOINT.

BILL OF MATERIAL		
END BENT NO.	ELASTOMERIC CONCRETE ✳ (CU. m)	TOTAL LENGTH OF ANGLE (m)
1	0.3	50.635
2	0.3	30.635

✳ BASED ON THE MINIMUM BLOCKOUT SHOWN.

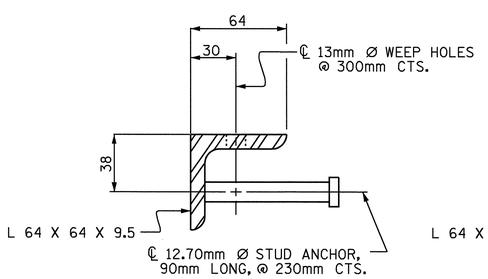

SECTION VIEW OF STUD

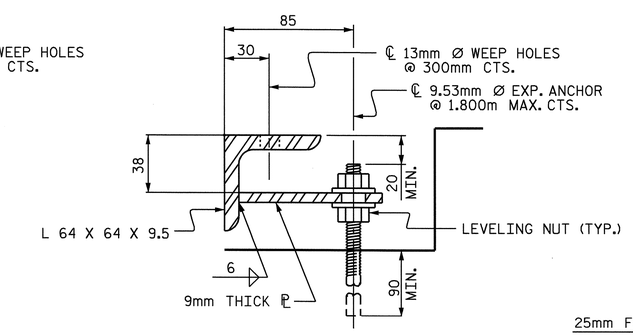

SECTION VIEW OF TAB

ARMORED JOINT ANCHOR ASSEMBLY DETAILS

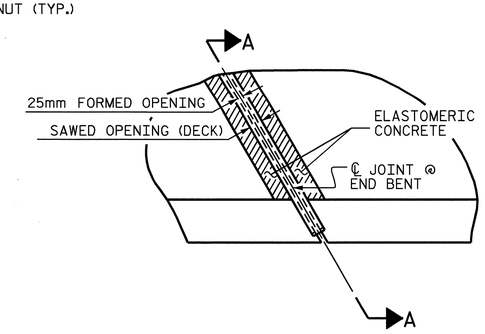

PLAN

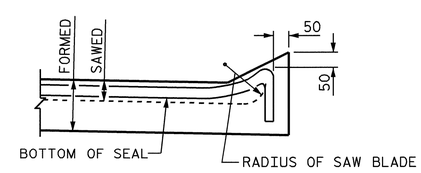

SECTION A-A

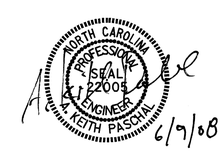

PROJECT NO. R-2554BA
WAYNE COUNTY
STATION: 103+80.709 -L-

SHEET 2 OF 3

STATE OF NORTH CAROLINA
DEPARTMENT OF TRANSPORTATION
RALEIGH

STANDARD
ARMORED EVAZOTE JOINT DETAILS
(LEFT LANE)

REVISIONS						SHEET NO.
NO.	BY:	DATE:	NO.	BY:	DATE:	S-248
1			3			TOTAL SHEETS
2			4			478

ASSEMBLED BY : J. G. KHARVA	DATE : 10/25/07		
CHECKED BY : J. D. HAWK	DATE : 4/25/08		
DRAWN BY : EEM 1/96	REV. 7/10/01 LES/RDR		
CHECKED BY : RGW 1/96	REV. 5/7/03RR RWW/JTE		
	REV. 5/1/06 TLA/GM		

09-JUN-2008 08:21
R:\Structures\BULLOCK\Str#8\FINAL PLANS\R-2554BA_sd_AS_08.dgn
jdhawk

STR. #8

STD. NO. AEJ1SM

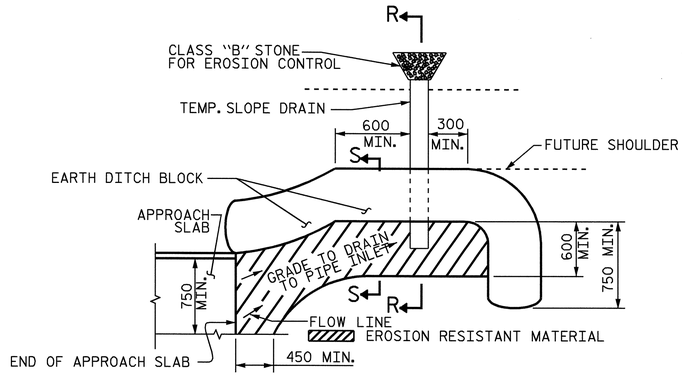

NOTE: IMMEDIATELY AFTER THE CONSTRUCTION OF THE APPROACH SLAB, THE CONTRACTOR SHALL PROVIDE TEMPORARY BERM AND SLOPE DRAIN. CONTRACTOR SHALL GRADE TO PIPE INLET AND PROVIDE EROSION RESISTANT MATERIAL AS SHOWN. THE EROSION RESISTANT MATERIAL SHALL BE EITHER 1) ASPHALT PLANT MIX, TYPE 1 OR TYPE 2, MIN. 50mm DEPTH, 2) EROSION CONTROL MAT, OR 3) CONCRETE, AS DIRECTED BY THE ENGINEER. THE SLOPE DRAIN SHALL CONSIST OF A NON-PERFORATED TEMPORARY DRAINAGE PIPE, 305mm IN DIAMETER.

PLAN VIEW

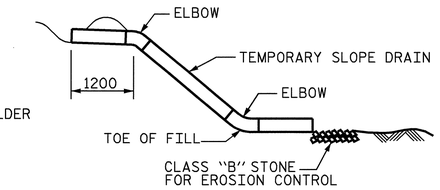

SECTION R-R

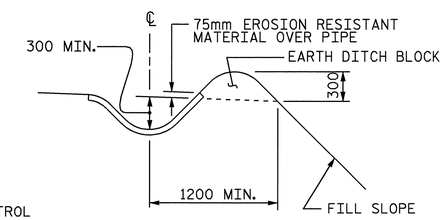

SECTION S-S

TEMPORARY BERM AND SLOPE DRAIN DETAILS

(TO BE USED WHEN SHOULDER BERM GUTTER IS REQUIRED)

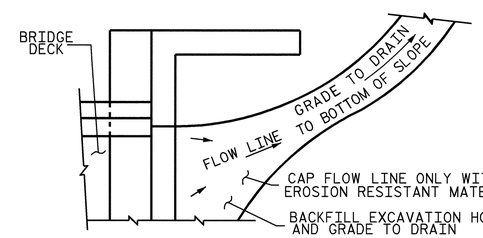

NOTE: IF THE APPROACH SLAB IS NOT CONSTRUCTED IMMEDIATELY AFTER THE BACKFILLING OF THE END BENT EXCAVATION, GRADE TO DRAIN TO THE BOTTOM OF THE SLOPE AND PROVIDE EROSION RESISTANT MATERIAL, SUCH AS FIBERGLASS ROVING OR AS DIRECTED BY THE ENGINEER TO PREVENT SOIL EROSION AND TO PROTECT THE AREA ADJACENT TO THE STRUCTURE. THE CONTRACTOR WILL BE REQUIRED TO REMOVE THESE MATERIALS PRIOR TO CONSTRUCTION OF THE APPROACH SLAB.

TEMPORARY DRAINAGE DETAIL

PROJECT NO. R-2554BA
WAYNE COUNTY
STATION: 103+80.709 -L-

SHEET 3 OF 3

STATE OF NORTH CAROLINA
DEPARTMENT OF TRANSPORTATION
RALEIGH

STANDARD
BRIDGE APPROACH SLAB DETAILS
(LEFT LANE)

NORTH CAROLINA PROFESSIONAL SEAL 22006 ENGINEER A. KEITH PASCHAL
6/9/08

REVISIONS						SHEET NO.
NO.	BY:	DATE:	NO.	BY:	DATE:	S-249
1			3			TOTAL SHEETS
2			4			478

ASSEMBLED BY : J. G. KHARVA		DATE : 09/26/07	
CHECKED BY : J. D. HAWK		DATE : 10/10/07	
DRAWN BY : FCJ 11/88	REV. 10/17/00	RWW/LES	
CHECKED BY : ARB 11/88	REV. 5/7/03	RWW/JTE	
	REV. 5/1/06R	MAA/KMM	

09-JUN-2008 08:21
R:\Structures\BULLOCK\Str#8\FINAL PLANS\R-2554BA_sd_AS_08.dgn
ldhaWK

STR. #8

STD. NO. BAS10SM

F.A. PROJECT NO.: NHS-70(106)

+0.8858% △ -1.5290%

P.I. STA. = 101+95.000 -L-
P.I. EL. = 50.274m
V.C. = 280.000m

GRADE DATA -L-

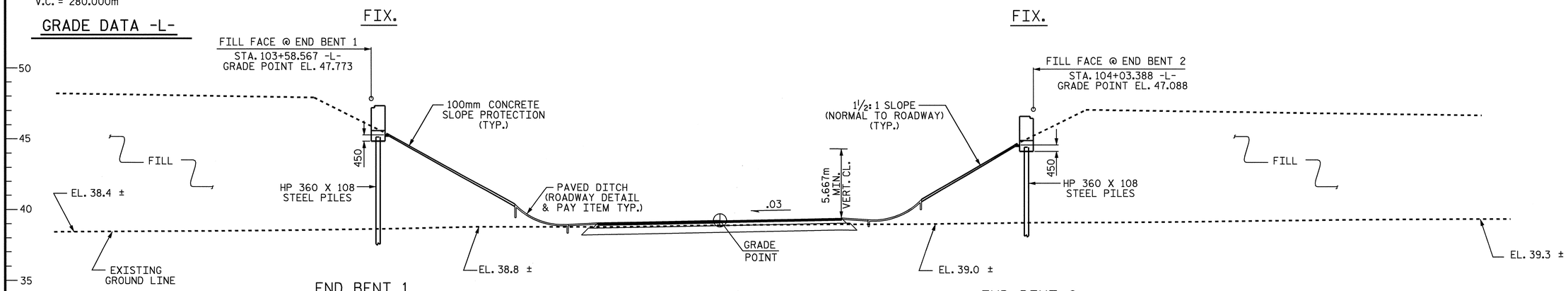

SECTION ALONG GRADE LINE (RIGHT LANE)

(SECTION AT END BENTS ARE TAKEN AT RIGHT ANGLES)

METRIC

HORIZONTAL CURVE DATA ALONG -L-

P.I. STA. 102+66.635
Δ = 15°-15′-00.1″ (LT.)
L = 465.785m
R = 1750.000m
T = 234.277m

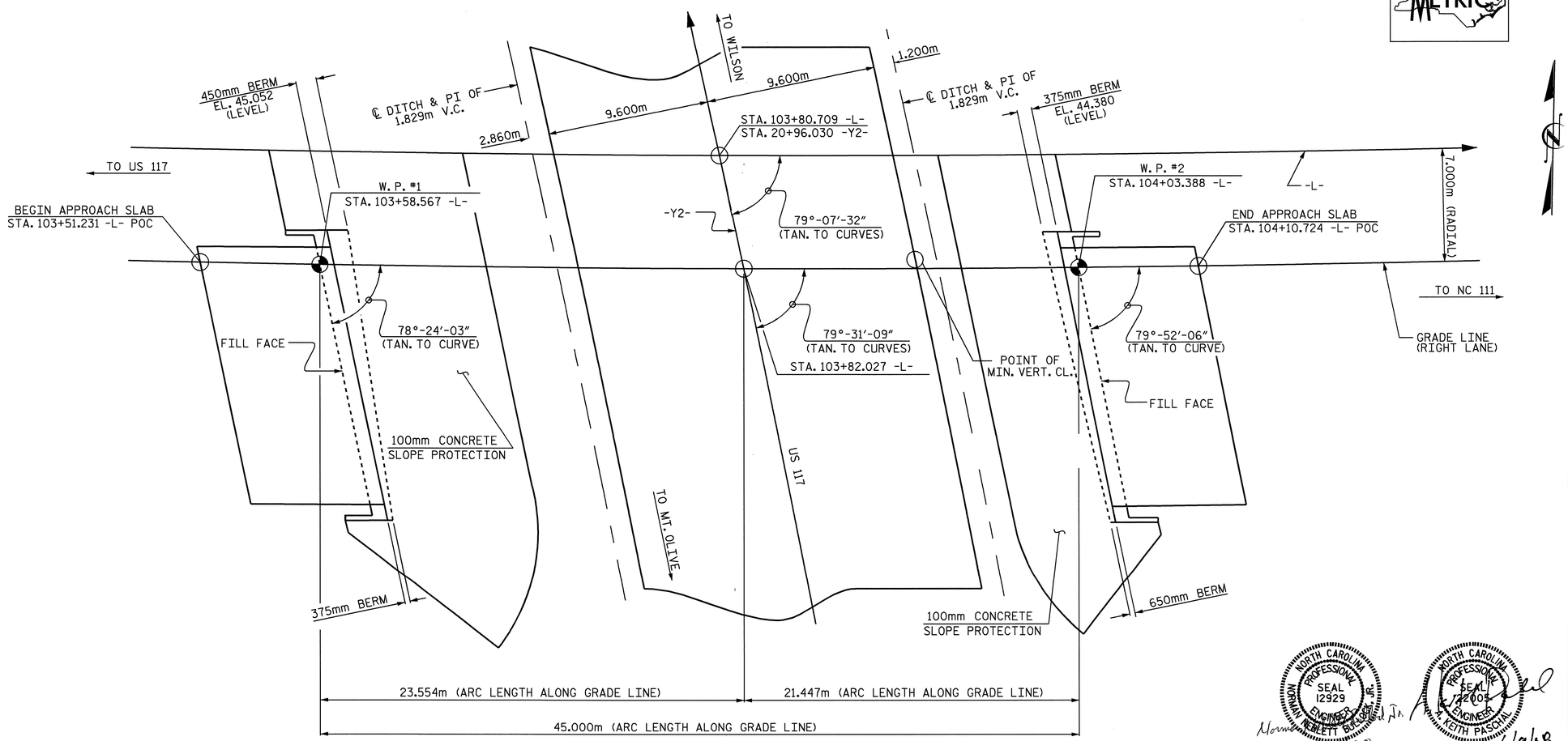

PLAN

NORTH CAROLINA PROFESSIONAL SEAL 12929 ENGINEER NORMAN NEBLETT BULLOCK JR.
Norman N. Bullock Jr.
6/9/08

NORTH CAROLINA PROFESSIONAL SEAL 12005 ENGINEER JOHN KEITH PASCHAL
6/9/08

PROJECT NO. R-2554BA
WAYNE COUNTY
STATION: 103+80.709 -L-
20+96.030 -Y2-

SHEET 1 OF 3

STATE OF NORTH CAROLINA
DEPARTMENT OF TRANSPORTATION
RALEIGH

GENERAL DRAWING
FOR BRIDGE OVER US 117 ALT.
ON US 70 BYPASS
BETWEEN US 117
AND NC 111
(RIGHT LANE)

REVISIONS						SHEET NO.
NO.	BY:	DATE:	NO.	BY:	DATE:	S-250
1			3			TOTAL SHEETS
2			4			478

DRAWN BY : J. G. KHARVA DATE : 06/17/06
CHECKED BY : J. E. LAZAROVICH DATE : 4/25/08

09-JUN-2008 08:50
R:\Structures\BULLOCK\Str#9\FINAL PLANS\R-2554BA_sd_GD_09.dgn
IdhaWK

STR. #9

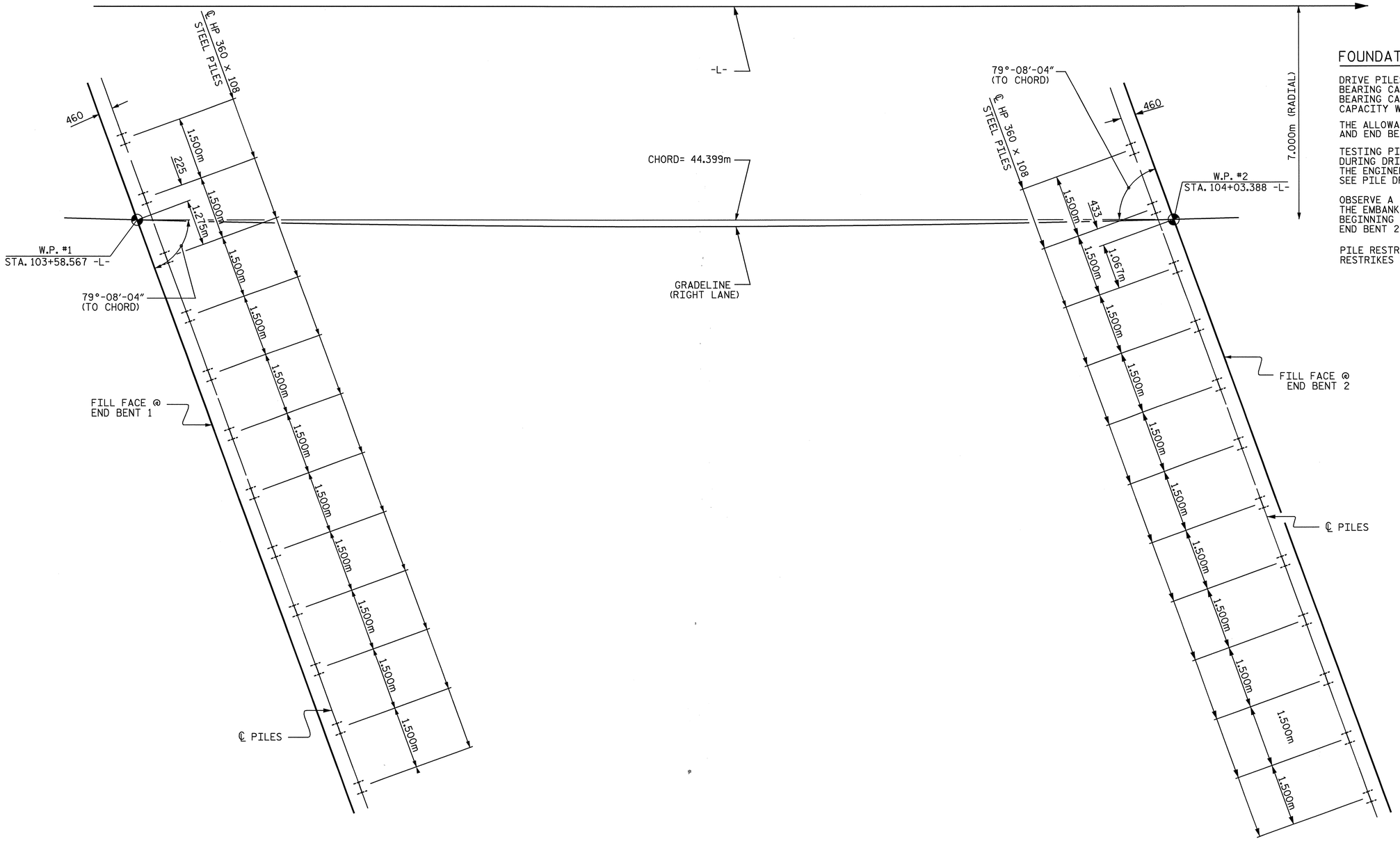

FOUNDATION NOTES :

DRIVE PILES AT END BENT 1 AND END BENT 2 TO A REQUIRED BEARING CAPACITY OF 1340 KN PER PILE. THE REQUIRED BEARING CAPACITY IS EQUAL TO THE ALLOWABLE BEARING CAPACITY WITH A MINIMUM FACTOR OF SAFETY OF TWO.

THE ALLOWABLE BEARING CAPACITY FOR PILES AT END BENT 1 AND END BENT 2 IS 670 KN PER PILE.

TESTING PILES WITH THE PILE DRIVING ANALYZER (PDA) DURING DRIVING, RESTRIKING OR REDRIVING MAY BE REQUIRED. THE ENGINEER WILL DETERMINE THE NEED FOR PDA TESTING. SEE PILE DRIVING ANALYZER SPECIAL PROVISIONS

OBSERVE A THREE MONTH WAITING PERIOD AFTER CONSTRUCTING THE EMBANKMENT TO THE BOTTOM OF CAP ELEVATION BEFORE BEGINNING END BENT CONSTRUCTION AT END BENT 1 AND END BENT 2.

PILE RESTRIKES FOR LRFD MAY BE REQUIRED. SEE PILE RESTRIKES FOR LRFD SPECIAL PROVISION.

HORIZONTAL CURVE DATA ALONG -L-

P.I. STA. 102+66.635
Δ = 15°-15'-00.1" (LT.)
L = 465.785m
R = 1750.000m
T = 234.277m

FOUNDATION LAYOUT & LONG CHORD DATA

(DIMENSIONS LOCATING PILES ARE SHOWN TO THE CENTERLINE OF PILES)

PROJECT NO. R-2554BA
WAYNE COUNTY
STATION: 103+80.709 -L-
20+96.030 -Y2-
SHEET 2 OF 3

STATE OF NORTH CAROLINA
DEPARTMENT OF TRANSPORTATION
RALEIGH

GENERAL DRAWING
FOR BRIDGE OVER US 117 ALT.
ON US 70 BYPASS
BETWEEN US 117
AND NC 111
(RIGHT LANE)

NORTH CAROLINA PROFESSIONAL SEAL 22005 ENGINEER KEITH PASCHAL
6/9/08

REVISIONS						SHEET NO.
NO.	BY:	DATE:	NO.	BY:	DATE:	S-25.1
1			3			TOTAL SHEETS
2			4			478

DRAWN BY : J. G. KHARVA DATE : 06/17/06
CHECKED BY : J. E. LAZAROVICH DATE : 04/25/08

09-JUN-2008 08:50
R:\Structures\BULLOCK\Str#9\FINAL PLANS\R-2554BA_sd_GD_09.dgn
jdhaWK

B.M. :- #4 RR SPIKE IN BASE OF 460mm (18") POPLAR 90.908m RT OF -BL- STA. 25+29.607 EL. 39.648m

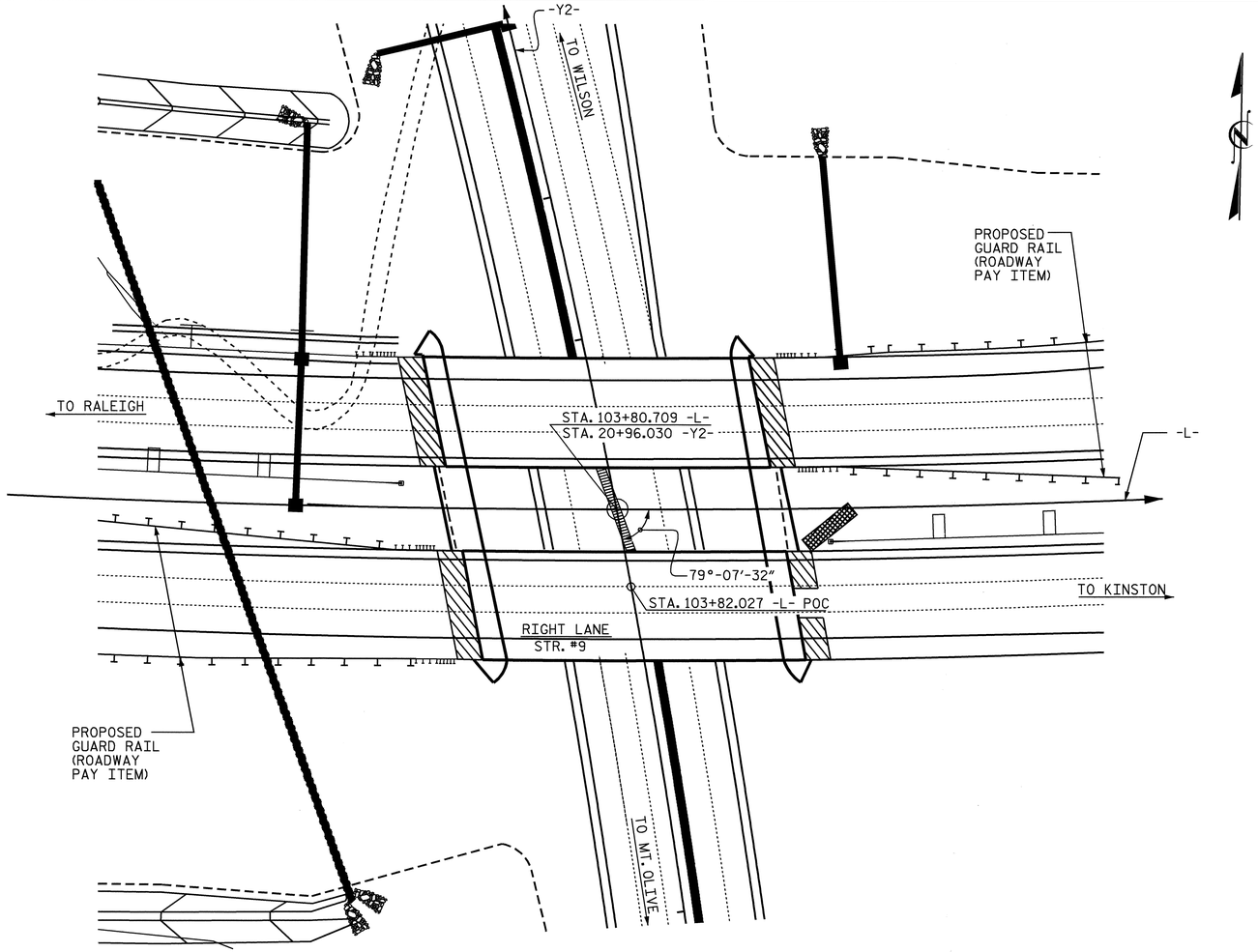

FOR UTILITY INFORMATION, SEE UTILITY PLANS AND SPECIAL PROVISIONS.

LOCATION SKETCH

NOTES :

ALL DIMENSIONS ARE IN MILLIMETERS UNLESS OTHERWISE NOTED.

ALL ELEVATIONS ARE IN METERS.

ASSUMED LIVE LOAD = MS18 OR ALTERNATE LOADING, EXCEPT THAT THE GIRDERS HAVE BEEN DESIGNED FOR MS22.5.

FOR OTHER DESIGN DATA AND GENERAL NOTES, SEE SHEET SNSM.

THIS BRIDGE HAS BEEN DESIGNED BY THE STRENGTH DESIGN METHOD AS SPECIFIED IN AASHTO STANDARD SPECIFICATIONS.

THIS BRIDGE HAS BEEN DESIGNED IN ACCORDANCE WITH THE REQUIREMENTS OF THE AASHTO STANDARD SPECIFICATIONS FOR SEISMIC DESIGN OF HIGHWAY BRIDGES FOR SEISMIC PERFORMANCE CATEGORY A.

ALL STRUCTURAL STEEL SHALL BE AASHTO M270 GRADE 345W.

REMOVABLE FORMS MAY BE USED IN LIEU OF METAL STAY-IN-PLACE FORMS IN ACCORDANCE WITH ARTICLE 420-3 OF THE STANDARD SPECIFICATIONS.

FOR MAINTENANCE AND PROTECTION OF TRAFFIC BENEATH PROPOSED STRUCTURE, SEE SPECIAL PROVISIONS.

THE CONTRACTOR SHALL PROVIDE INDEPENDENT ASSURANCE SAMPLES OF REINFORCING STEEL AS FOLLOWS: FOR PROJECTS REQUIRING UP TO 360,000 kg OF REINFORCING STEEL, ONE 760mm SAMPLE OF EACH SIZE BAR USED, AND FOR PROJECTS REQUIRING OVER 360,000 kg OF REINFORCING STEEL, TWO 760mm SAMPLES OF EACH SIZE BAR USED. THE BARS FROM WHICH THE SAMPLES ARE TAKEN MUST THEN BE SPLICED WITH REPLACEMENT BARS OF THE SIZE AND LENGTH OF THE SAMPLE PLUS A MINIMUM LAP SPLICE OF THIRTY BAR DIAMETERS.

FOR FALSEWORK AND FORMS OVER OR ADJACENT TO TRAFFIC, SEE SPECIAL PROVISIONS .

NEEDLE BEAMS WILL NOT BE ALLOWED UNLESS OTHERWISE CALLED FOR ON THE PLANS OR APPROVED BY THE ENGINEER.

FOR SUBMITTAL OF WORKING DRAWINGS, SEE SPECIAL PROVISIONS.

FOR METRIC STRUCTURAL STEEL, SEE SPECIAL PROVISIONS.

FOR FALSEWORK AND FORMWORK, SEE SPECIAL PROVISIONS.

FOR CRANE SAFETY, SEE SPECIAL PROVISIONS.

FOR GROUT FOR STRUCTURES, SEE SPECIAL PROVISIONS.

FOR SHIPPING STEEL STRUCTURAL MEMBERS, SEE SPECIAL PROVISIONS.

TOTAL BILL OF MATERIAL

	PDA TESTING	PDA ASSISTANCE	REINFORCED CONCRETE DECK SLAB	GROOVING BRIDGE FLOORS	CLASS A CONCRETE	BRIDGE APPROACH SLABS	REINFORCING STEEL	STRUCTURAL STEEL	HP 360 X 108 STEEL PILES		PILE REDRIVES	CONCRETE BARRIER RAIL	100mm SLOPE PROTECTION	EVAZOTE JOINT SEALS
	EACH	EACH	SQ. M.	SQ. M.	CU. M.	LUMP SUM	Kg.	APPROX. Kg.	NO.	METERS	EACH	METERS	SQ. M.	LUMP SUM
SUPERSTRUCTURE			706.8	805.3				83000				88.966		LUMP SUM
END BENT 1					23.1		3013		12	264	5		256	
END BENT 2					23.1		3014		12	264	5		261	
TOTAL	1	1	706.8	805.3	46.2	LUMP SUM	6027	83000	24	528	10	88.966	517	LUMP SUM

PROJECT NO. R-2554BA
WAYNE COUNTY
STATION: 103+80.709 -L-
20+96.030 -Y2-
SHEET 3 OF 3

NORTH CAROLINA PROFESSIONAL SEAL 26005 ENGINEER A. KEITH PASCHAL

6/9/08

STATE OF NORTH CAROLINA
DEPARTMENT OF TRANSPORTATION
RALEIGH

GENERAL DRAWING
FOR BRIDGE OVER US 117 ALT. ON US 70 BYPASS BETWEEN US 117 AND NC 111
(RIGHT LANE)

REVISIONS						SHEET NO.
NO.	BY:	DATE:	NO.	BY:	DATE:	S-252
1			3			TOTAL SHEETS
2			4			478

DRAWN BY : J. G. KHARVA DATE : 10-02-07
CHECKED BY J. E. LAZAROVICH DATE : 4/25/08

09-JUN-2008 13:57
r:\structures\bullock\Str#9\FINAL PLANS\R-2554BA_sd_GD_09.dgn
ldhaWK

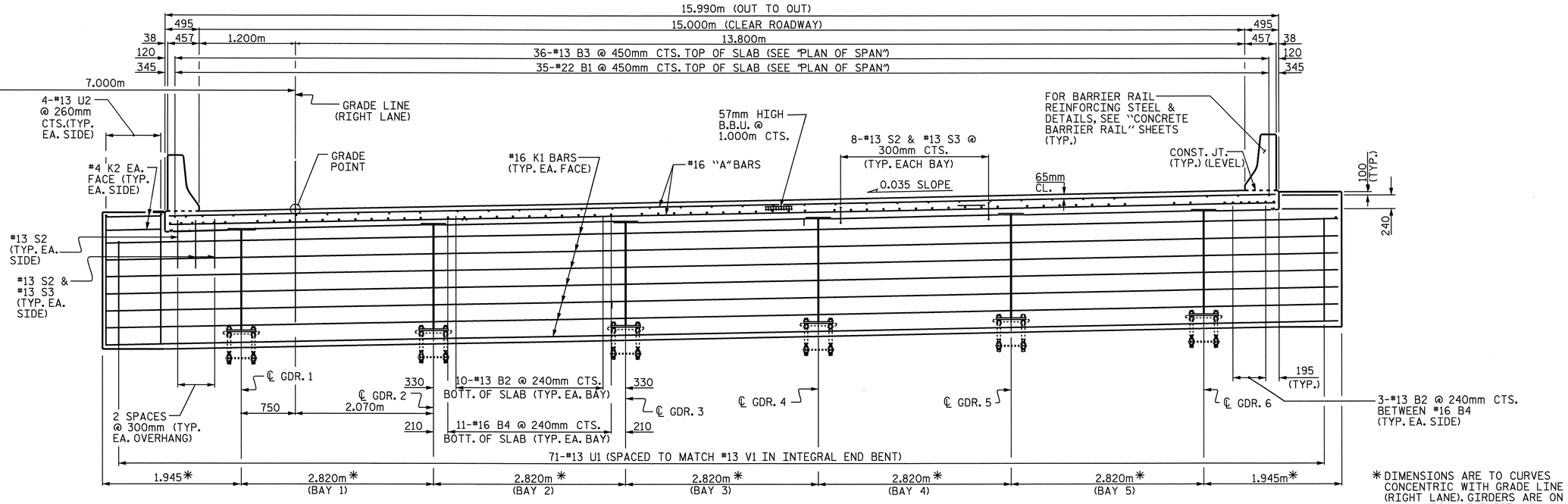

*DIMENSIONS ARE TO CURVES CONCENTRIC WITH GRADE LINE (RIGHT LANE). GIRDERS ARE ON THE CHORDS OF THESE CONCENTRIC CIRCLES.

TYPICAL SECTION @ INTEGRAL END BENT

ALL HORIZONTAL DIMENSIONS ARE RADIAL EXCEPT AS NOTED.

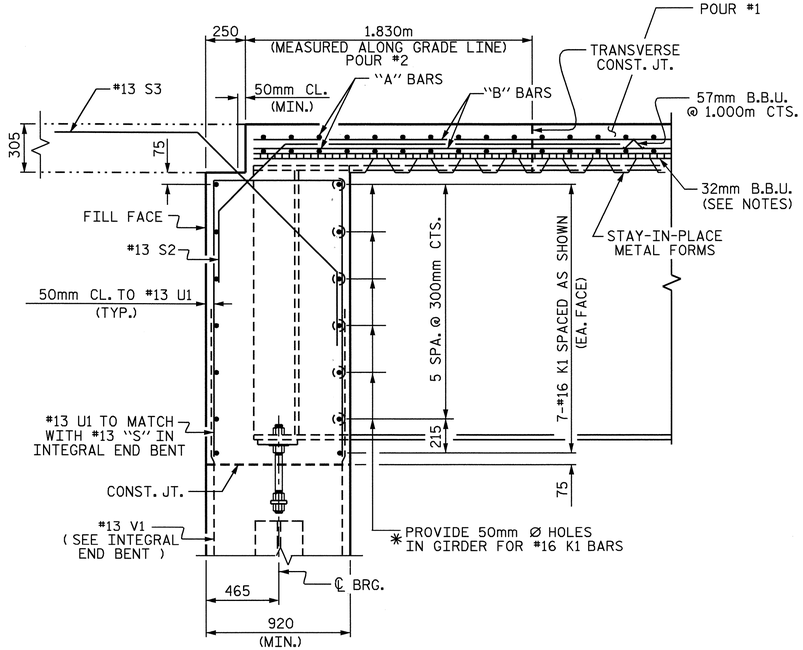

SECTION A-A

(INTEGRAL END BENT 1 SHOWN INTEGRAL END BENT 2 SIMILAR)

*DIAMETER OF HOLES IN WEB MAY BE INCREASED TO ACCOMODATE SKEW

PROJECT NO. R-2554BA

WAYNE COUNTY

STATION: 103+80.709 -L-

SHEET 2 OF 2

STATE OF NORTH CAROLINA
DEPARTMENT OF TRANSPORTATION
RALEIGH

SUPERSTRUCTURE

TYPICAL SECTION

(RIGHT LANE)

NORTH CAROLINA PROFESSIONAL SEAL 022005 ENGINEER A. KEITH PASCHAL 6/9/08

REVISIONS						SHEET NO.
NO.	BY:	DATE:	NO.	BY:	DATE:	S-253
1			3			TOTAL SHEETS
2			4			478

DRAWN BY : J. G. KHARVA DATE : 02/22/06
CHECKED BY : J. E. LAZAROVICH DATE : 04/25/08

09-JUN-2008 08:49
R:\Structures\BULLOCK\Str#9\FINAL PLANS\R-2554BA_sd_TS_STR.#9.dgn
jdhaWK

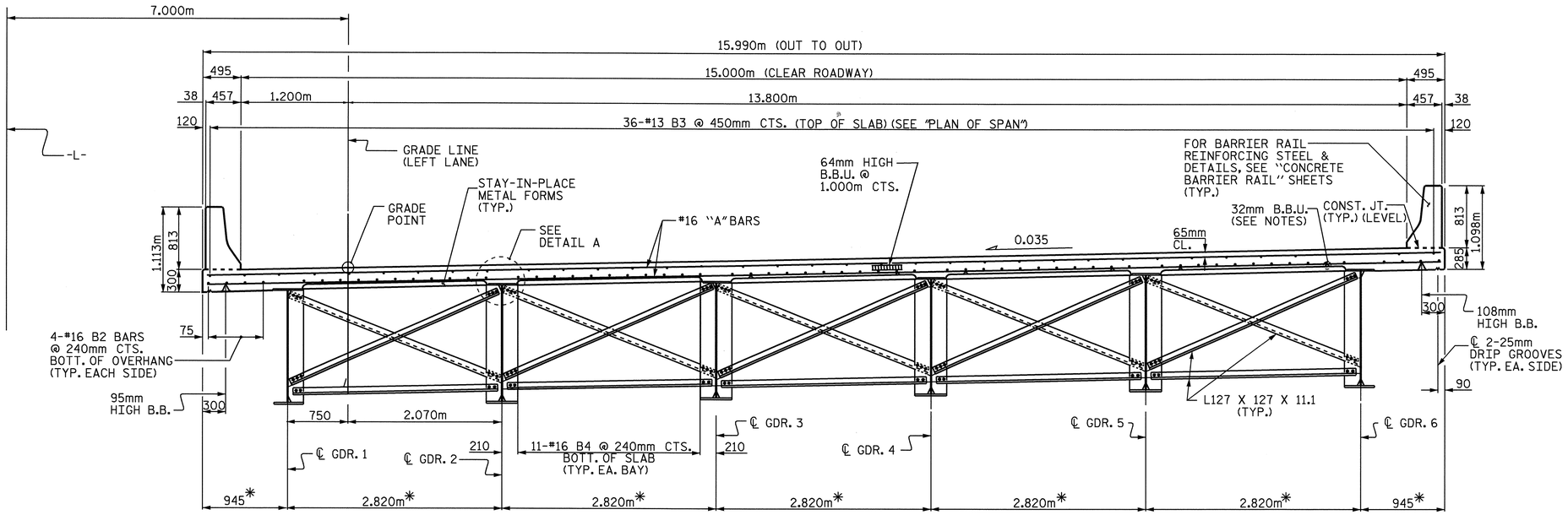

* DIMENSIONS ARE TO CURVES CONCENTRIC WITH GRADE LINE (RIGHT LANE). GIRDERS ARE ON THE CHORDS OF THESE CONCENTRIC CIRCLES.

TYPICAL SECTION @ INTERMEDIATE DIAPHRAGMS

ALL HORIZONTAL DIMENSIONS ARE RADIAL EXCEPT AS NOTED.

NOTES

PROVIDE 32mm HIGH BEAM BOLSTERS UPPER AT 1.200m CTS. ATOP THE METAL STAY-IN-PLACE FORMS TO SUPPORT THE BOTTOM MAT OF "A" BARS. WHEN USING REMOVABLE FORMS, PROVIDE CONTINUOUS HIGH CHAIRS FOR METAL DECK (C.H.C.M.) @ 1.200m CTS. WITH A HEIGHT TO SUPPORT THE BOTTOM MAT OF "A" BARS A CLEAR DISTANCE OF 65mm ABOVE THE TOP OF THE REMOVABLE FORM.

THE CONTRACTOR MAY, WHEN NECESSARY, PROPOSE A SCHEME FOR AVOIDING INTERFERENCE BETWEEN METAL STAY-IN-PLACE FORM SUPPORTS OR FORMS AND GIRDER STIFFENERS OR CONNECTOR PLATES. THE PROPOSAL SHALL BE INDICATED, AS APPROPRIATE, ON EITHER THE STEEL WORKING DRAWINGS OR THE METAL STAY-IN- PLACE FORM WORKING DRAWINGS.

METAL STAY-IN-PLACE FORMS SHALL NOT BE WELDED TO BEAM OR GIRDER FLANGES IN THE ZONES REQUIRING CHARPY V-NOTCH TEST. SEE STRUCTURAL STEEL DETAIL SHEET.

PREVIOUSLY CAST CONCRETE IN THE SPAN SHALL HAVE A MINIMUM COMPRESSIVE STREGTH OF 20.7 MPa BEFORE ADDITIONAL CONCRETE IS CAST IN THE SPAN.

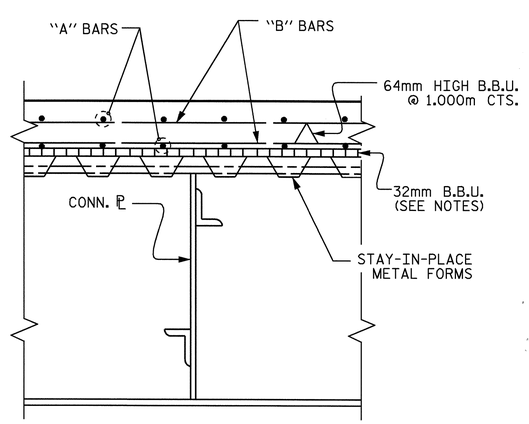

SECTION THRU INTERMEDIATE DIAPHRAGM

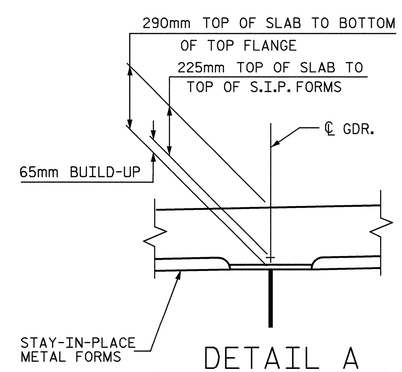

DETAIL A

PROJECT NO. R-2554BA
WAYNE COUNTY
STATION: 103+80.709 -L-

SHEET 1 OF 2

STATE OF NORTH CAROLINA
DEPARTMENT OF TRANSPORTATION
RALEIGH

SUPERSTRUCTURE
TYPICAL SECTION
(RIGHT LANE)

NORTH CAROLINA PROFESSIONAL SEAL 12005 ENGINEER KEITH PASCHAL
6/9/08

REVISIONS						SHEET NO.
NO.	BY:	DATE:	NO.	BY:	DATE:	S-254
1			3			TOTAL SHEETS
2			4			478

DRAWN BY : J. G. KHARVA DATE : 02/22/06
CHECKED BY : J. E. LAZAROVICH DATE : 04/25/08

09-JUN-2008 08:50
R:\Structures\BULLOCK\Str#9\FINAL PLANS\R-2554BA_sd_TS_STR.#9.dgn
ldhaWK

STR. #9

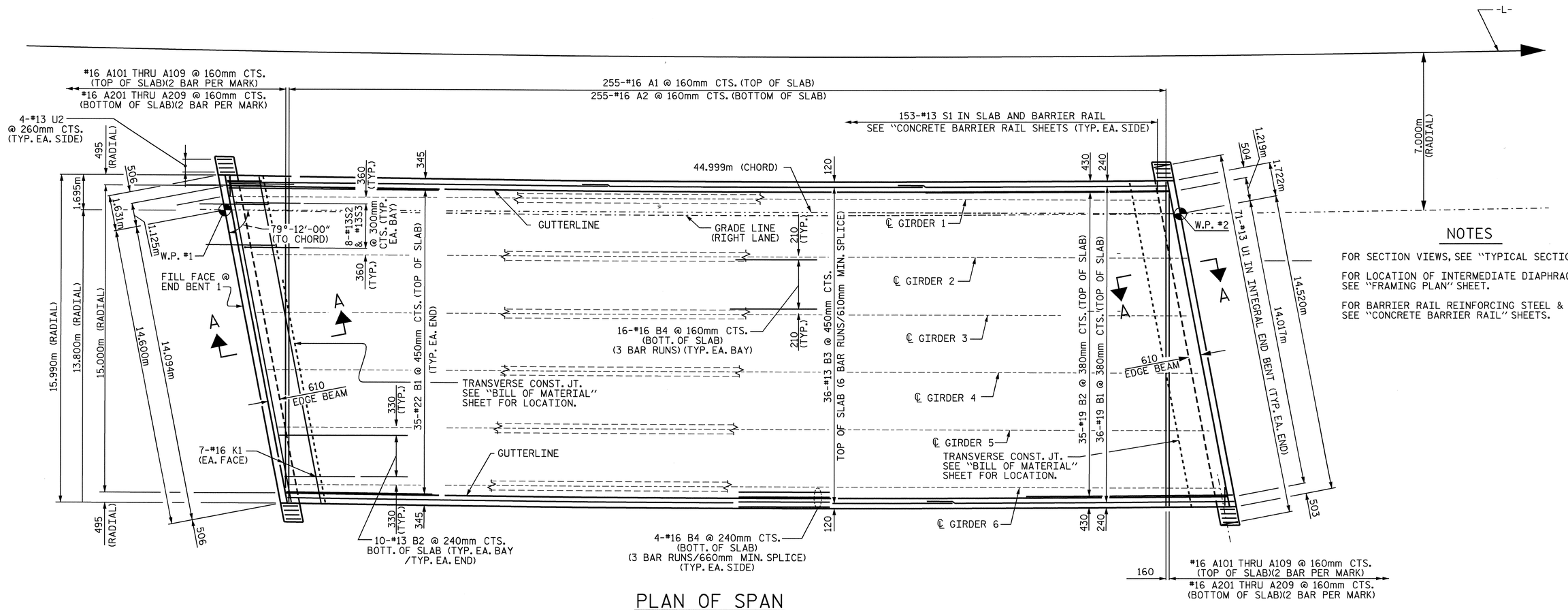

PLAN OF SPAN

NOTES

FOR SECTION VIEWS, SEE "TYPICAL SECTION" SHEET.

FOR LOCATION OF INTERMEDIATE DIAPHRAGMS, SEE "FRAMING PLAN" SHEET.

FOR BARRIER RAIL REINFORCING STEEL & DETAILS, SEE "CONCRETE BARRIER RAIL" SHEETS.

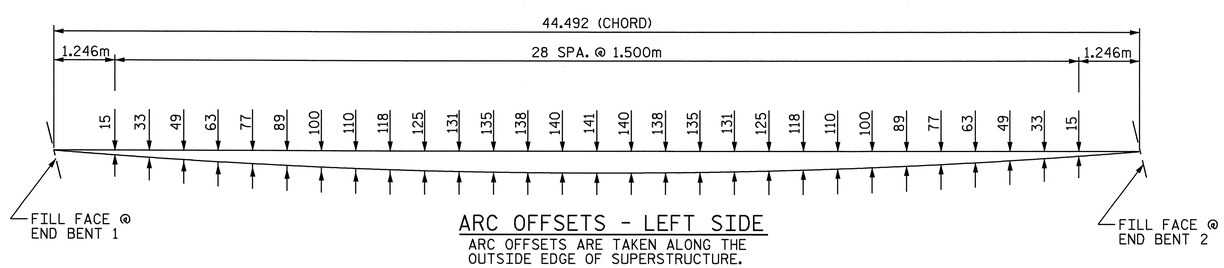

ARC OFFSETS - LEFT SIDE

ARC OFFSETS ARE TAKEN ALONG THE OUTSIDE EDGE OF SUPERSTRUCTURE.

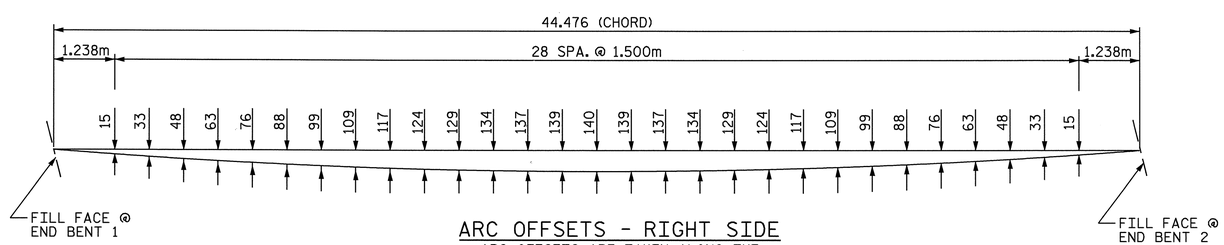

ARC OFFSETS - RIGHT SIDE

ARC OFFSETS ARE TAKEN ALONG THE OUTSIDE EDGE OF SUPERSTRUCTURE.

PROJECT NO. R-2554BA
WAYNE COUNTY
STATION: 103+80.709 -L-

STATE OF NORTH CAROLINA
DEPARTMENT OF TRANSPORTATION
RALEIGH

SUPERSTRUCTURE
PLAN OF SPAN
(RIGHT LANE)

NORTH CAROLINA PROFESSIONAL SEAL 22008 ENGINEER A. KEITH PASCHAL
6/9/08

REVISIONS						SHEET NO.
NO.	BY:	DATE:	NO.	BY:	DATE:	S-255
1			3			TOTAL SHEETS
2			4			478

DRAWN BY : J. G. KHARVA DATE : 12/18/06
CHECKED BY : J. E. LAZAROVICH DATE : 4/25/08

09-JUN-2008 08:49
R:\Structures\BULLOCK\Str#9\FINAL PLANS\R-2554BA_sd_S#_STR.#9.dgn
jdhaWK

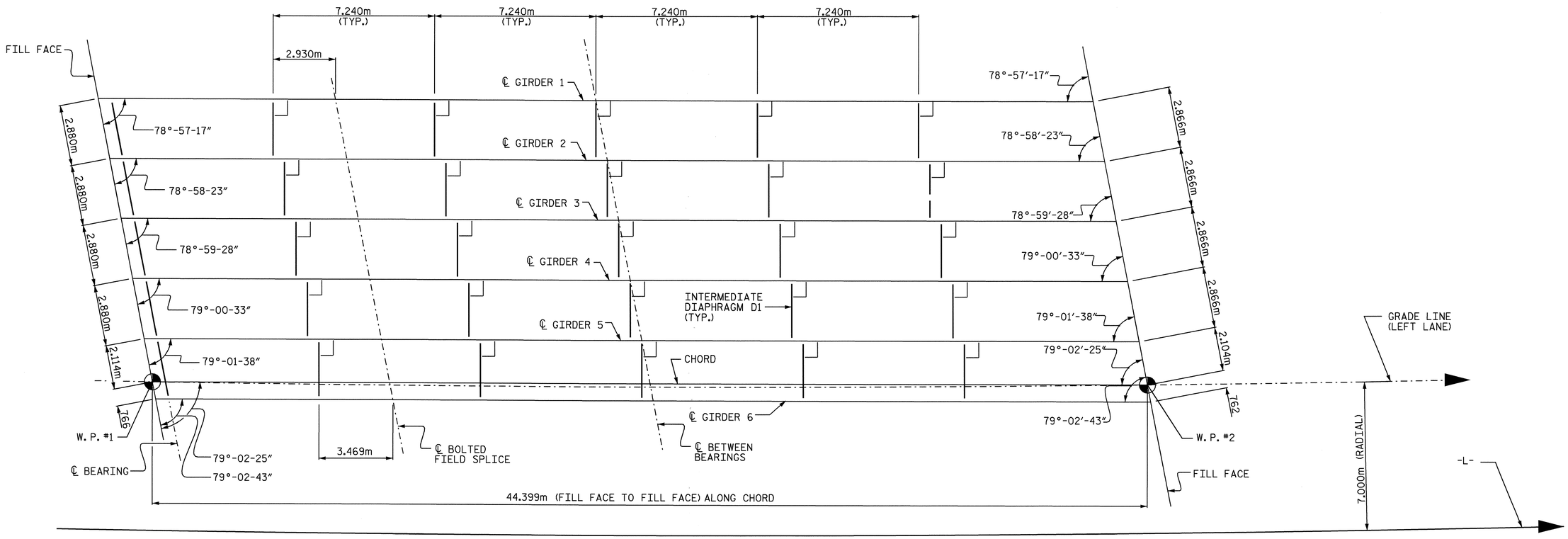

FRAMING PLAN

DEAD LOAD DEFLECTION TABLE

GIRDER 1 THRU 3																					
TWENTIETH POINTS	0	.05	.10	.15	.20	.25	.30	.35	.40	.45	.50	.55	.60	.65	.70	.75	.80	.85	.90	.95	0
DEFLECTION DUE TO WEIGHT OF GIRDER ↓	0.000	0.007	0.013	0.019	0.024	0.028	0.032	0.035	0.038	0.039	0.039	0.039	0.038	0.035	0.032	0.028	0.024	0.019	0.013	0.007	0.000
✳ DEFLECTION DUE TO WEIGHT OF SLAB ↓	0.000	0.015	0.038	0.059	0.078	0.095	0.108	0.120	0.128	0.133	0.132	0.133	0.128	0.120	0.108	0.095	0.078	0.059	0.038	0.015	0.000
DEFLECTION DUE TO WEIGHT OF BARRIER RAIL ↓	0.000	0.000	0.000	0.001	0.001	0.001	0.001	0.002	0.002	0.002	0.002	0.002	0.002	0.002	0.001	0.001	0.001	0.001	0.000	0.000	0.000
TOTAL DEAD LOAD DEFLECTION ↓	0.000	0.022	0.051	0.079	0.103	0.124	0.141	0.157	0.168	0.174	0.173	0.174	0.168	0.157	0.141	0.124	0.103	0.079	0.051	0.022	0.000
CAMBER FOR SUPERELEVATION	0.000	-0.001	-0.002	-0.002	-0.003	-0.004	-0.004	-0.004	-0.005	-0.005	-0.005	-0.005	-0.005	-0.004	-0.004	-0.004	-0.003	-0.002	-0.002	-0.001	0.000
REQUIRED CAMBER ↑	0	21	49	77	100	120	137	153	163	169	168	169	163	153	137	120	100	77	49	21	0

GIRDER 4 THRU 6																					
TWENTIETH POINTS	0	.05	.10	.15	.20	.25	.30	.35	.40	.45	.50	.55	.60	.65	.70	.75	.80	.85	.90	.95	0
DEFLECTION DUE TO WEIGHT OF GIRDER ↓	0.000	0.007	0.013	0.019	0.024	0.028	0.032	0.035	0.038	0.039	0.039	0.039	0.038	0.035	0.032	0.028	0.024	0.019	0.013	0.007	0.000
✳ DEFLECTION DUE TO WEIGHT OF SLAB ↓	0.000	0.018	0.041	0.062	0.081	0.098	0.111	0.123	0.131	0.136	0.137	0.136	0.131	0.123	0.111	0.098	0.081	0.062	0.041	0.018	0.000
DEFLECTION DUE TO WEIGHT OF BARRIER RAIL ↓	0.000	0.000	0.000	0.001	0.001	0.001	0.001	0.002	0.002	0.002	0.002	0.002	0.002	0.002	0.001	0.001	0.001	0.001	0.000	0.000	0.000
TOTAL DEAD LOAD DEFLECTION ↓	0.000	0.025	0.054	0.082	0.106	0.127	0.144	0.160	0.171	0.177	0.178	0.177	0.171	0.160	0.144	0.127	0.106	0.082	0.054	0.025	0.000
CAMBER FOR SUPERELEVATION	0.000	-0.001	-0.002	-0.002	-0.003	-0.004	-0.004	-0.004	-0.005	-0.005	-0.005	-0.005	-0.005	-0.004	-0.004	-0.004	-0.003	-0.002	-0.002	-0.001	0.000
REQUIRED CAMBER ↑	0	24	52	80	103	123	140	156	166	172	173	172	166	156	140	123	103	80	52	24	0

✳ INCLUDES SLAB, BUILDUPS & STAY-IN-PLACE FORMS.

PROJECT NO. R-2554BA
WAYNE COUNTY
STATION: 103+80.709 -L-

SHEET 1 OF 3

STATE OF NORTH CAROLINA
DEPARTMENT OF TRANSPORTATION
RALEIGH

SUPERSTRUCTURE
FRAMING PLAN
(RIGHT LANE)

NORTH CAROLINA PROFESSIONAL SEAL 22005 ENGINEER KEITH PASCHAL
6/9/08

REVISIONS						SHEET NO.
NO.	BY:	DATE:	NO.	BY:	DATE:	S-256
1			3			TOTAL SHEETS
2			4			478

DRAWN BY : J. G. KHARVA DATE : 02/22/06
CHECKED BY : J. E. LAZAROVICH DATE : 4/25/08

09-JUN-2008 09:11
r:\structures\bullock\Str#9\FINAL PLANS\R-2554BA_sd_FP.dgn
jdhaWK

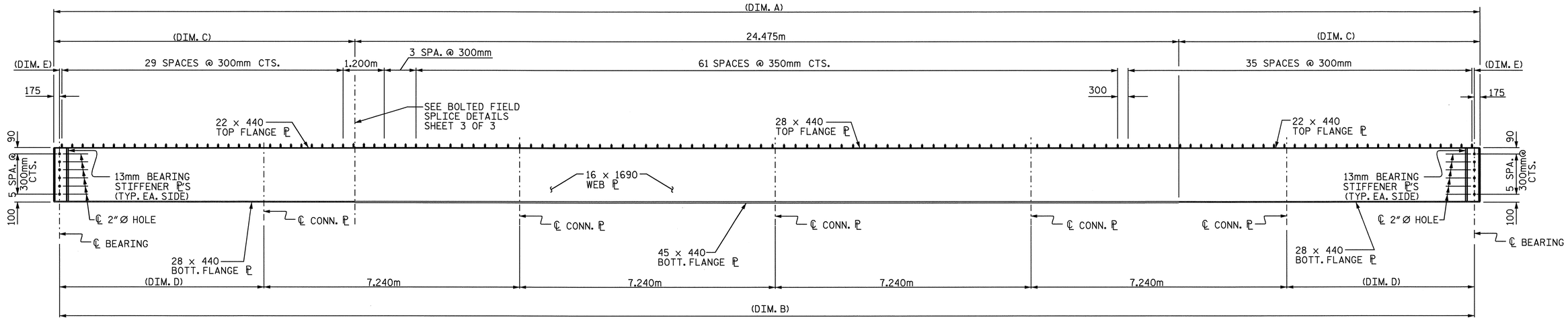

ELEVATION OF GIRDER

402 SHEAR STUDS REQUIRED PER GIRDER

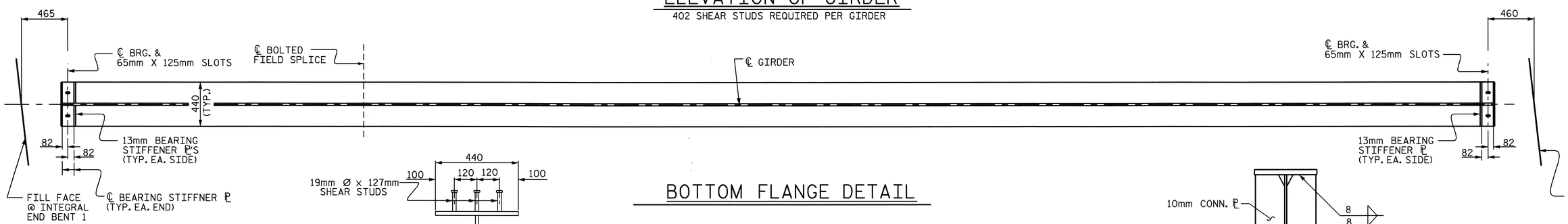

BOTTOM FLANGE DETAIL

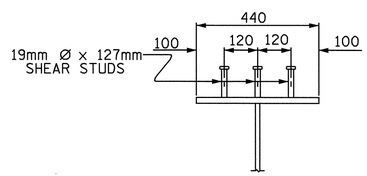

SHEAR STUD DETAILS

DIMENSIONS					
	A	B	C	D	E
GIRDER #1	44.413	44.063	9.969	7.331	507
GIRDER #2	44.410	44.060	9.968	7.330	505
GIRDER #3	44.408	44.058	9.967	7.329	504
GIRDER #4	44.405	44.055	9.965	7.328	503
GIRDER #5	44.403	44.053	9.964	7.327	502
GIRDER #6	44.400	44.05	9.963	7.325	500

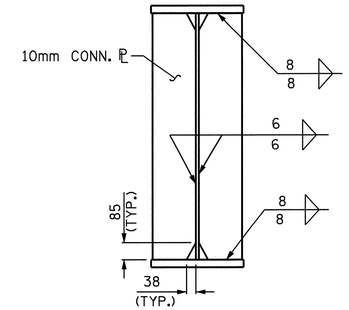

CONNECTOR PLATE

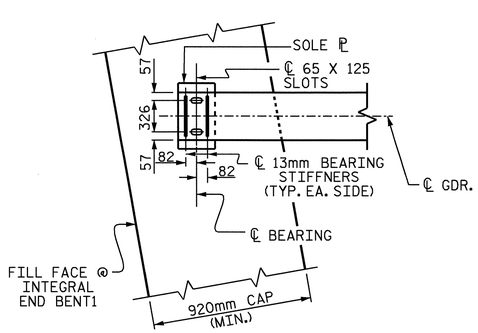

ANCHOR BOLTS SLOT DETAILS

(BOTTOM FLANGE OF GIRDER)

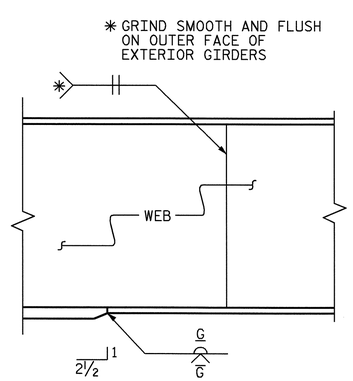

ELEVATION

TYPICAL FLANGE AND WEB BUTT JOINT

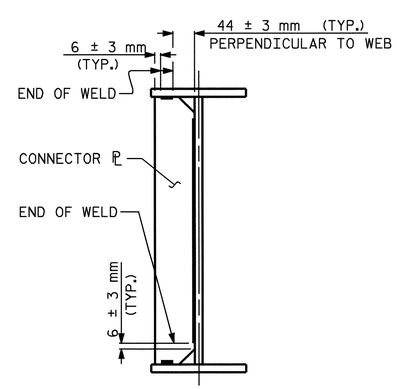

TYPICAL CONNECTOR PLATE CONNECTIONS

WELD TERMINATION DETAIL

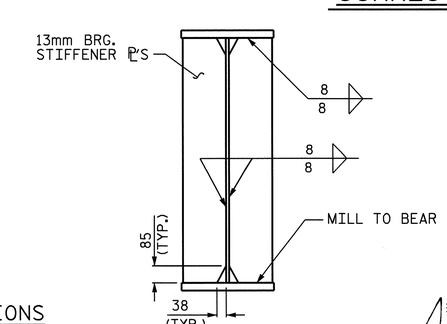

BEARING STIFFENER

PROJECT NO. R-2554BA

WAYNE COUNTY

STATION: 103+80.709 -L-

SHEET 2 OF 3

STATE OF NORTH CAROLINA
DEPARTMENT OF TRANSPORTATION
RALEIGH

SUPERSTRUCTURE

STRUCTURAL STEEL

(RIGHT LANE)

NORTH CAROLINA PROFESSIONAL SEAL 22005 ENGINEER A. KEITH PASCHAL

6/9/08

REVISIONS						SHEET NO.
NO.	BY:	DATE:	NO.	BY:	DATE:	S-257
1			3			TOTAL SHEETS
2			4			478

DRAWN BY : J. G. KHARVA DATE : 12/20/06
CHECKED BY : J. E. LAZAROVICH DATE : 4/25/08

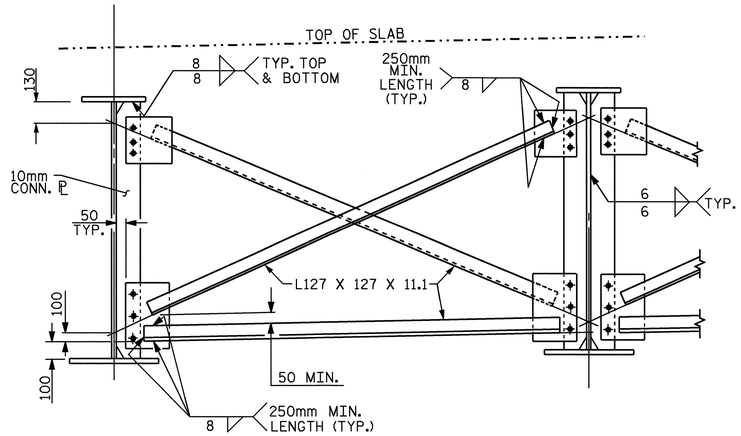

TYPICAL OPTIONAL INTERMEDIATE CROSSFRAME

SHOWING INTERMEDIATE DIAPHRAGM
(TYPICAL EACH BAY)

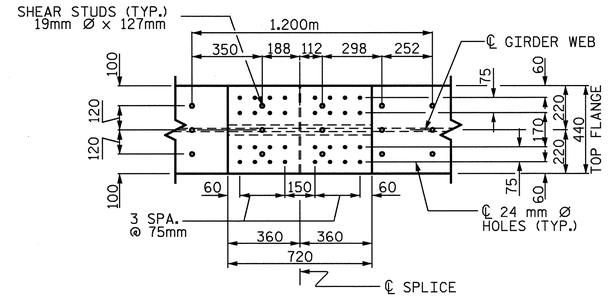

PLAN (TOP OF TOP FLANGE)

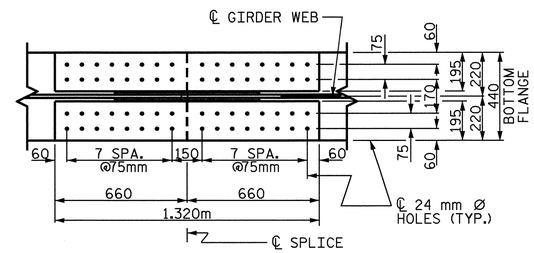

PLAN (TOP OF BOTTOM FLANGE)

NOTES :

ALL STRUCTURAL STEEL SHALL BE AASHTO M270 GRADE 345 W. WITH A MINIMUM YIELD STRENGTH OF 345 MPA, UNLESS OTHERWISE NOTED ON THE PLANS.

ALL DIMENSIONS SHOWN ARE HORIZONTAL OR VERTICAL, UNLESS OTHERWISE NOTED.

ALL FIELD CONNECTIONS TO BE 22.23mm DIA. HIGH STRENGTH BOLTS UNLESS OTHERWISE NOTED.

BEARING STIFFENERS ARE TO BE PLACED NORMAL TO THE WEB OF THE GIRDER AND SHALL BE PLUMB.

SHOP SPLICES ARE PERMITTED TO LIMIT THE MAXIMUM REQUIRED FLANGE PIECE LENGTHS TO 18 METERS AND WEB PIECE LENGTHS TO 14.0 METERS. PERMITTED FLANGE AND WEB SHOP SPLICES SHALL NOT BE LOCATED WITHIN 4.5 METERS OF MAXIMUM DEAD LOAD DEFLECTION NOR WITHIN 4.5 METERS OF INTERMEDIATE BEARINGS OF CONTINUOUS UNITS. KEEP 150mm MINIMUM BETWEEN WEB AND FLANGE SHOP SPLICES.

STUDS ON GIRDERS MAY BE SHIFTED UP TO 25 MM IF NECESSARY TO CLEAR FLANGE SPLICE WELD.

END OF GIRDERS SHALL BE PLUMB.

✱ NOTE: SHEAR STUDS ARE TO BE SHOP WELDED ON TOP OF PLATE BEFORE FIELD ASSEMBLY

A CHARPY V-NOTCH TEST IS REQUIRED FOR WEB PLATES, BOTTOM FLANGE PLATES, BOTTOM FLANGE SPLICE PLATES, TOP FLANGE PLATES WITHIN 4.300m OF ENDS OF GIRDERS AND WEB SPLICE PLATES FOR ALL GIRDERS AND IN ACCORDANCE WITH ARTICLE 1072-9 OF THE STANDARD SPECIFICATIONS.

FOR HIGH STRENTH BOLTS, SEE SPECIAL PROVISIONS.

TENSION ON THE AASHTO M164 SHALL BE CALIBRATED USING DIRECT TENSION INDICATOR WASHERS IN ACCORDANCE WITH ARTICLE 440-8 OF THE STANDARD SPECIFICATIONS.

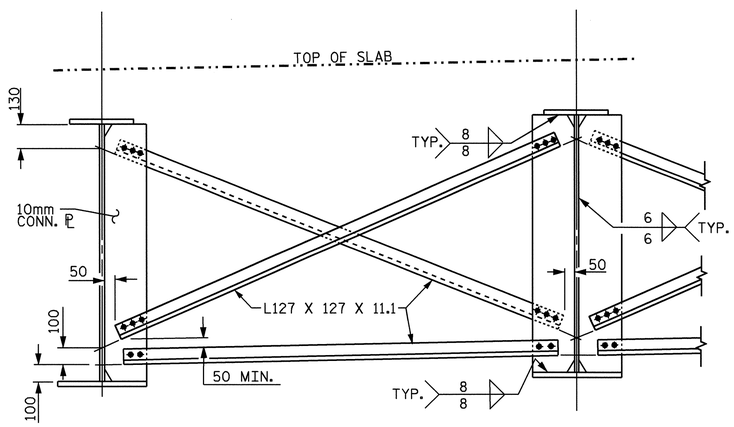

TYPICAL INTERMEDIATE CROSSFRAME

SHOWING INTERMEDIATE DIAPHRAGM
(TYPICAL EACH BAY)

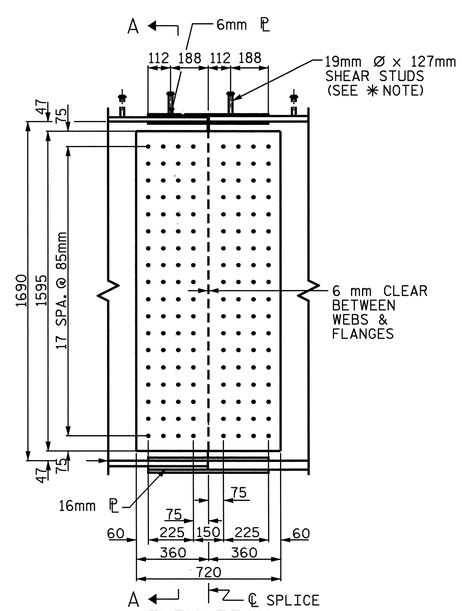

ELEVATION

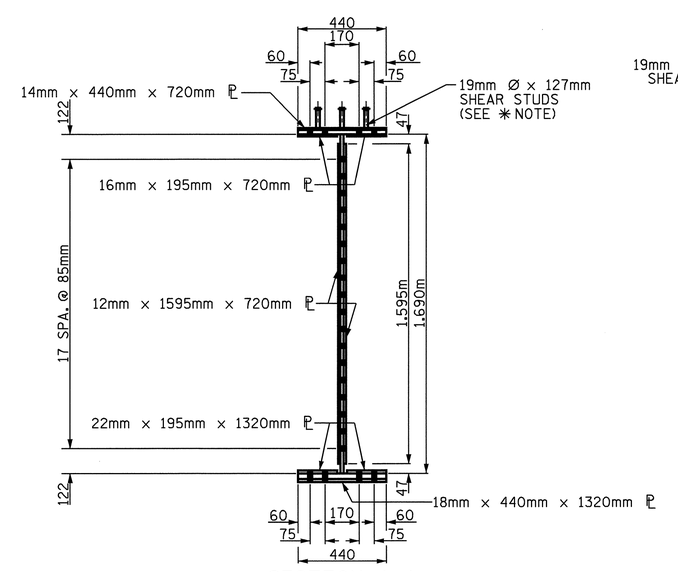

SECTION A-A

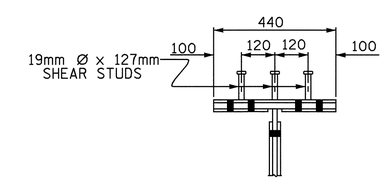

SHEAR STUD DETAIL FOR TOP FLANGE SPLICE PLATE

BOLTED FIELD SPLICE DETAILS

(TYPICAL EACH FIELD SPLICE)

NORTH CAROLINA PROFESSIONAL SEAL 22005 ENGINEER A. KEITH PASCHAL
6/9/08

PROJECT NO. R-2554BA
WAYNE COUNTY
STATION: 103+80.709 -L-

SHEET 3 OF 3

STATE OF NORTH CAROLINA
DEPARTMENT OF TRANSPORTATION
RALEIGH

SUPERSTRUCTURE
STRUCTURAL
STEEL DETAILS
BOLTED FIELD SPLICE
(RIGHT LANE)

REVISIONS						SHEET NO.
NO.	BY:	DATE:	NO.	BY:	DATE:	S-258
1			3			TOTAL SHEETS
2			4			478

DRAWN BY : J. G. KHARVA DATE : 12/20/06
CHECKED BY : J. E. LAZAROVICH DATE : 4/25/08

09-JUN-2008 08:49
R:\Structures\BULLOCK\Str*9\FINAL PLANS\R-2554BA_sd_SS_STR.*9.dgn
IdhaWK

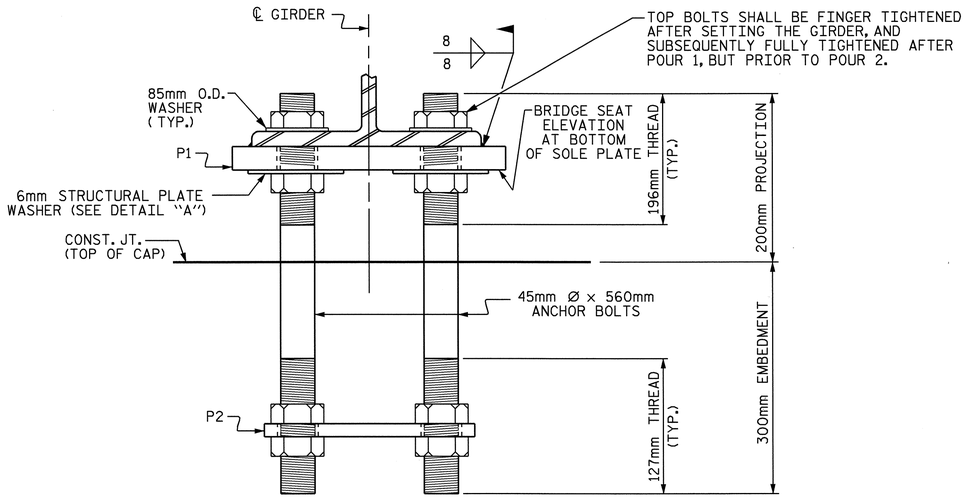

FIXED

END VIEW

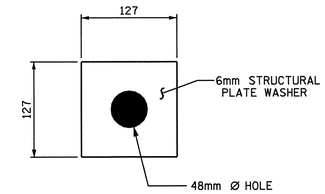

DETAIL "A"

NOTES

AASHTO M270 GRADE 345W STRUCTURAL STEEL, SOLE PLATES AND ANCHORAGE PLATES SHALL BE AASHTO M270 GRADE 345W AND SHALL NOT BE GALVANIZED. ANCHOR BOLTS, NUTS AND WASHERS SHALL BE GALVANIZED IN ACCORDANCE WITH THE STANDARD SPECIFICATIONS.

ANCHOR BOLTS SHALL MEET THE REQUIREMENTS OF ASTM A449. NUTS SHALL MEET THE REQUIREMENTS OF AASHTO M291M-DH OR AASHTO M292M-2H. WASHERS SHALL MEET THE REQUIREMENTS OF AASHTO M293M. SHOP DRAWINGS ARE NOT REQUIRED FOR ANCHOR BOLTS, NUTS AND WASHERS. SHOP INSPECTION IS REQUIRED.

ALL SURFACES OF SOLE PLATES SHALL BE SMOOTH AND STRAIGHT.

STRUCTURAL PLATE WASHERS SHALL BE AASHTO M270 GRADE 345W, AND SHALL NOT BE GALVANIZED.

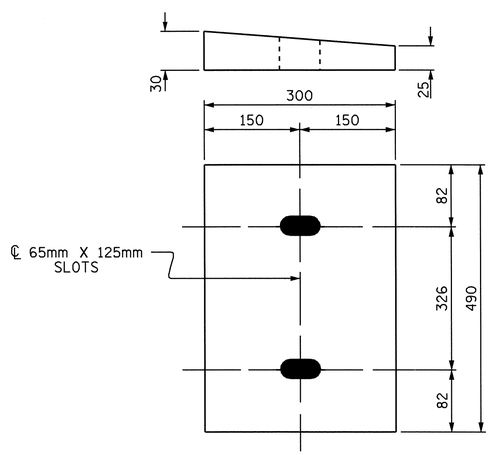

P1

P1 (12 REQ'D)

SOLE PLATE DETAILS (P1)

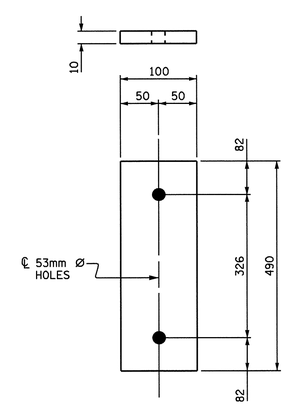

P2

P2 (8 REQ'D)

ANCHORAGE PLATE (P2)

PROJECT NO. R-2554BA

WAYNE COUNTY

STATION: 103+80.709 -L-

STATE OF NORTH CAROLINA
DEPARTMENT OF TRANSPORTATION
RALEIGH

SUPERSTRUCTURE
ANCHORAGE
DETAILS
(RIGHT LANE)

NORTH CAROLINA PROFESSIONAL SEAL 24008 ENGINEER A. KEITH PASCHAL
6/9/08

REVISIONS						SHEET NO.
NO.	BY:	DATE:	NO.	BY:	DATE:	S-259
1			3			TOTAL SHEETS
2			4			478

DRAWN BY : J. G. KHARVA DATE : 12/20/06
CHECKED BY : J. E. LAZAROVICH DATE : 4/25/08

09-JUN-2008 08:49
R:\Structures\BULLOCK\Str*9\FINAL PLANS\R-2554BA_sd_SS_STR.*9.dgn
jdhaWK

NOTES

THE BARRIER RAIL IN THE SPAN SHALL NOT BE CAST UNTIL ALL SLAB CONCRETE IN THE SPAN HAS BEEN CAST AND HAS REACHED A MINIMUM COMPRESSIVE STRENGTH OF 20.7 MPa.

ALL REINFORCING STEEL IN BARRIER RAILS SHALL BE EPOXY COATED.

VERTICAL GROOVED CONTRACTION JOINTS, 12mm IN DEPTH, SHALL BE TOOLED IN ALL EXPOSED FACES OF THE BARRIER RAIL AND IN ACCORDANCE WITH ARTICLE 825-10(B) OF THE STANDARD SPECIFICATIONS. THE CONTRACTION JOINT SHALL BE LOCATED AT EACH THIRD POINT BETWEEN BARRIER RAIL EXPANSION JOINTS. ONLY ONE CONTRACTION JOINT IS REQUIRED AT MIDPOINT OF BARRIER RAIL SEGMENTS LESS THAN 6.1m IN LENGTH AND NO CONTRACTION JOINTS ARE REQUIRED FOR THOSE SEGMENTS LESS THAN 3.5m IN LENGTH.

THE #16 S1 & #16 S2 BARS MAY BE SHIFTED SLIGHTLY IN ORDER TO MAINTAIN A 50mm CLEARANCE TO THE 13mm EXPANSION JOINT MATERIAL IN BARRIER RAIL.

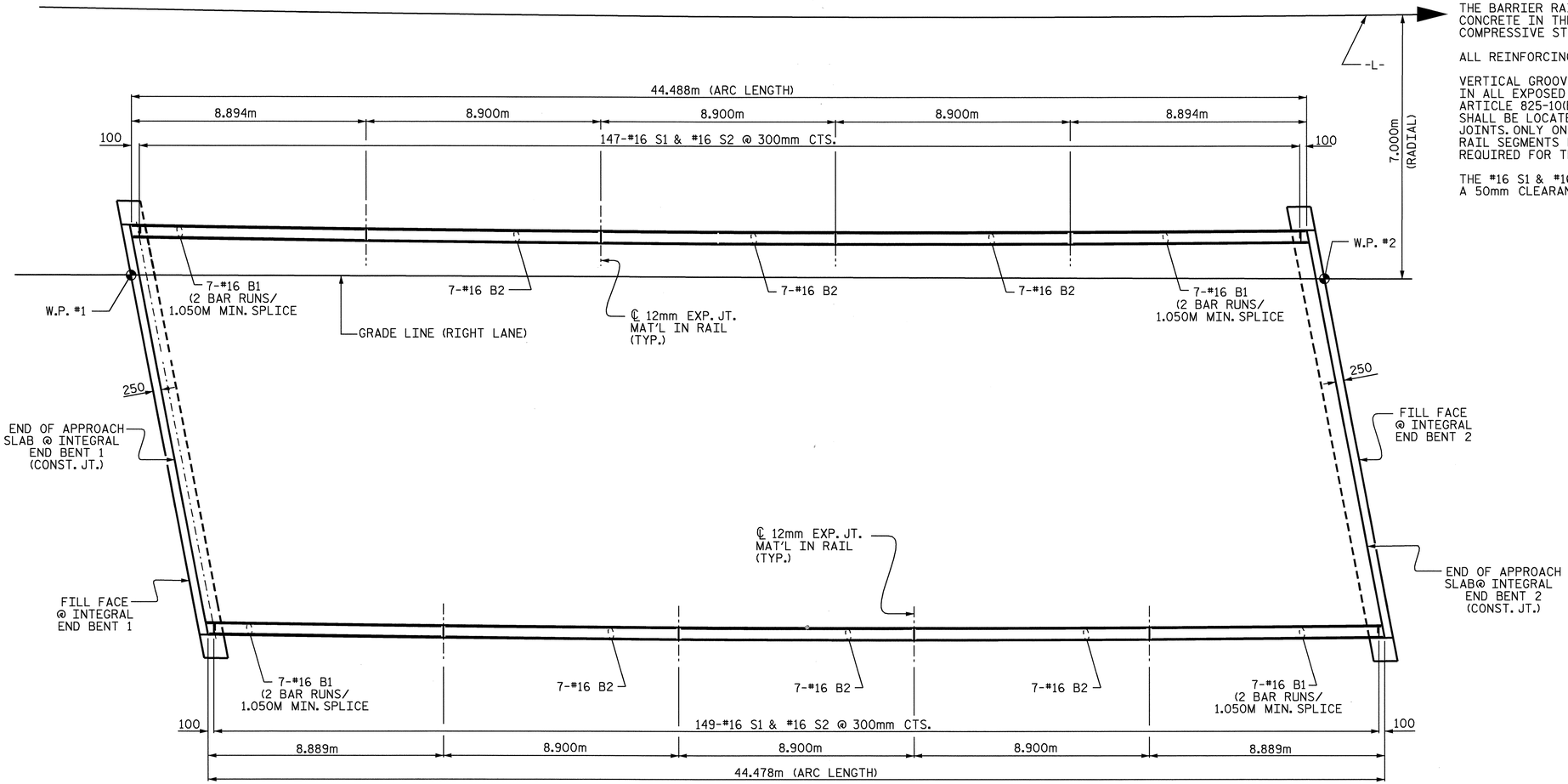

PLAN OF BARRIER RAIL

BAR TYPES

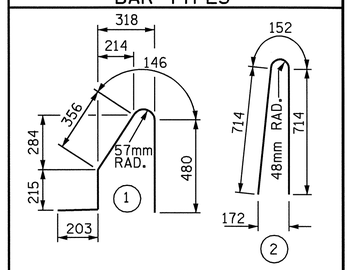

ALL BAR DIMENSIONS ARE OUT TO OUT

BILL OF MATERIAL

FOR CONCRETE BARRIER RAIL ONLY

BAR	NO.	SIZE	TYPE	LENGTH	WEIGHT
* B1	56	#16	STR	4960	431
* B2	42	#16	STR	8780	572
* S1	298	#16	1	1400	647
* S2	298	#16	2	1580	731

* EPOXY COATED REINFORCING STEEL 2381 kg

CLASS AA CONCRETE 22.0 m3

CONCRETE BARRIER RAIL 88.966 METERS

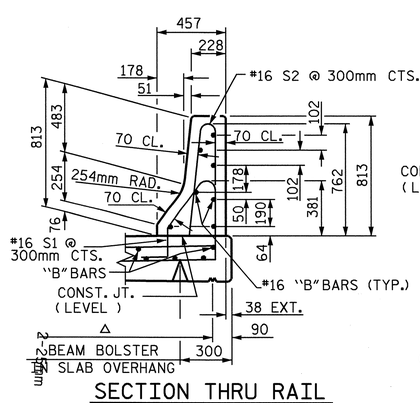

SECTION THRU RAIL

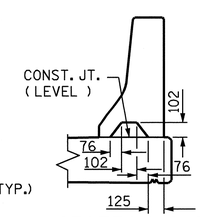

SECTION S-S

AT DAM IN OPEN JOINT
(THIS IS TO BE USED ONLY WHEN SLIP FORM IS USED)

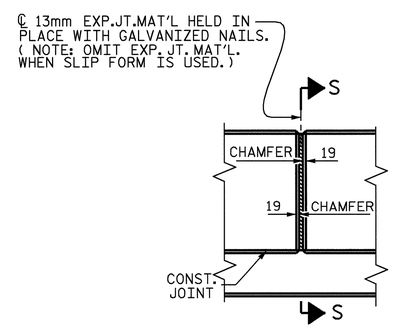

ELEVATION AT EXPANSION JOINTS

BARRIER RAIL DETAILS

PROJECT NO. R-2554BA
WAYNE COUNTY
STATION: 103+80.709 -L-

STATE OF NORTH CAROLINA
DEPARTMENT OF TRANSPORTATION
RALEIGH

STANDARD
CONCRETE
BARRIER RAIL
(RIGHT LANE)

NORTH CAROLINA PROFESSIONAL SEAL 22005 ENGINEER A. KEITH PASCHAL 6/9/08

ASSEMBLED BY : J. G. KHARVA	DATE : 12/11/06		
CHECKED BY : JE. LAZAROVICH	DATE : 4/25/08		
DRAWN BY : ARB 5/87	REV. 10/17/00	RWW/LES	
CHECKED BY : SJD 9/87	REV. 5/7/03R	RWW/JTE	
	REV. 5/1/06	TLA/GM	

REVISIONS						SHEET NO.
NO.	BY:	DATE:	NO.	BY:	DATE:	S-260
1			3			TOTAL SHEETS
2			4			478

09-JUN-2008 08:49
R:\Structures\BULLOCK\Str#9\FINAL PLANS\R-2554BA_sd_BR.dgn
jdhaWK

STR #9 STD. No. CBR1SM

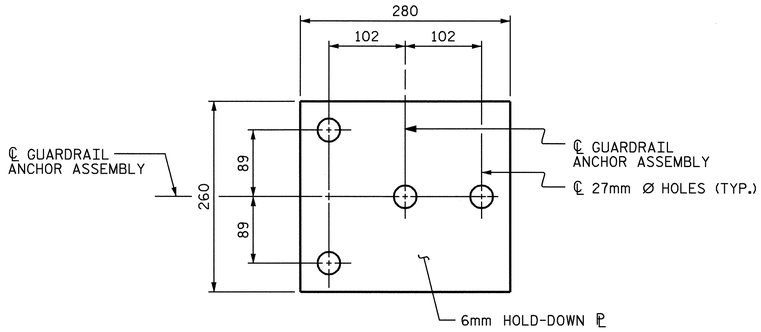

PLAN

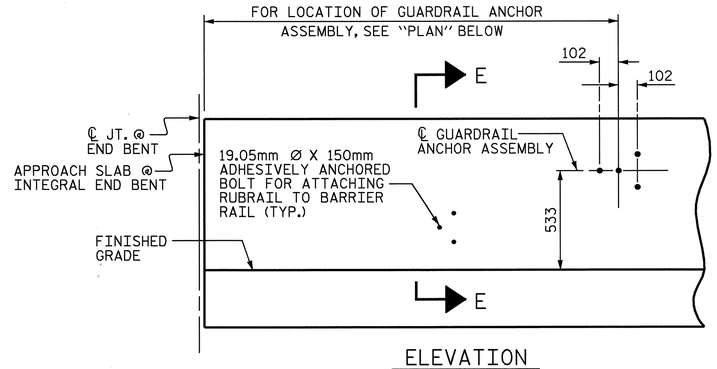

ELEVATION

FOR LOCATION OF RUBRAIL, SEE ROADWAY STD. 862.03

NOTES

THE GUARDRAIL ANCHOR ASSEMBLY SHALL CONSIST OF A 6mm HOLD DOWN PLATE AND 4 - 22.23mm Ø BOLTS WITH NUTS AND WASHERS, RUBRAIL, AND ADHESIVELY ANCHORED BOLTS.

THE HOLD-DOWN PLATE SHALL CONFORM TO AASHTO M270 GRADE 36. AFTER FABRICATION, THE HOLD-DOWN PLATE SHALL BE HOT-DIP GALVANIZED IN ACCORDANCE WITH AASHTO M111.

BOLTS SHALL CONFORM TO THE REQUIREMENTS OF ASTM A307 AND NUTS SHALL CONFORM TO THE REQUIREMENTS OF AASHTO M291. BOLTS, NUTS AND WASHERS SHALL BE GALVANIZED. (AT THE CONTRACTOR'S OPTION, STAINLESS STEEL BOLTS, NUTS AND WASHERS MAY BE USED AS AN ALTERNATE FOR THE 22.23mm Ø GALVANIZED BOLTS, NUTS AND WASHERS. THEY SHALL CONFORM TO OR EXCEED THE MECHANICAL REQUIREMENTS OF ASTM A307. THE USE OF THIS ALTERNATE SHALL BE APPROVED BY THE ENGINEER.)

THE GUARDRAIL ANCHOR ASSEMBLY IS REQUIRED AT ALL POINTS WHERE APPROACH GUARDRAIL IS TO BE ATTACHED TO THE END OF BARRIER RAIL. FOR POINTS OF ATTACHMENT, SEE SKETCH.

AFTER INSTALLATION, THE EXPOSED THREAD OF THE BOLT SHALL BE BURRED WITH A SHARP POINTED TOOL.

THE COST OF THE GUARDRAIL ANCHOR ASSEMBLY SHALL BE INCLUDED IN THE UNIT CONTRACT PRICE BID FOR CONCRETE BARRIER RAIL.

THE 32mm Ø HOLES SHALL BE FORMED OR DRILLED WITH A CORE BIT. IMPACT TOOLS WILL NOT BE PERMITTED. ANY CONCRETE DAMAGED BY THIS WORK SHALL BE REPAIRED TO THE SATISFACTION OF THE ENGINEER.

THE C150 X 12 RUBRAIL IS TO BE ADHESIVELY ANCHORED TO THE RAIL USING THREE 19.05mm Ø X 150mm BOLTS WITH WASHERS. LEVEL ONE FIELD TESTING IF REQUIRED, AND THE YIELD LOAD OF THE 19.05mm Ø BOLTS IS 53.4kN. FOR ADHESIVELY ANCHORED ANCHOR BOLTS OR DOWELS, SEE SPECIAL PROVISIONS. SEE ROADWAY STANDARD 862.03 FOR DETAILS AND LOCATION OF THE RUBRAIL.

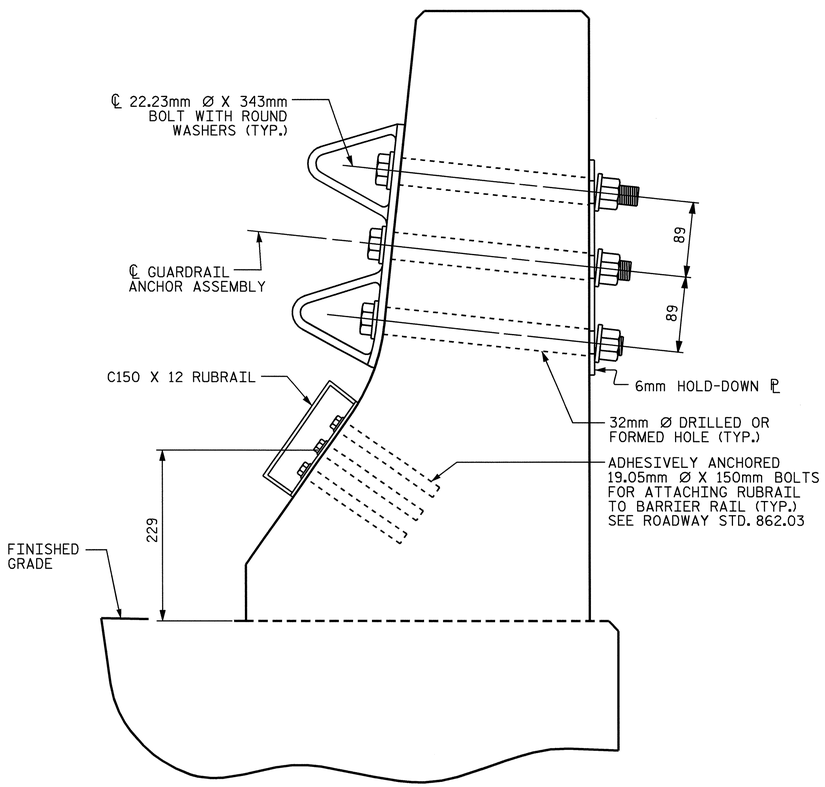

SECTION E-E

GUARDRAIL ANCHOR ASSEMBLY DETAILS

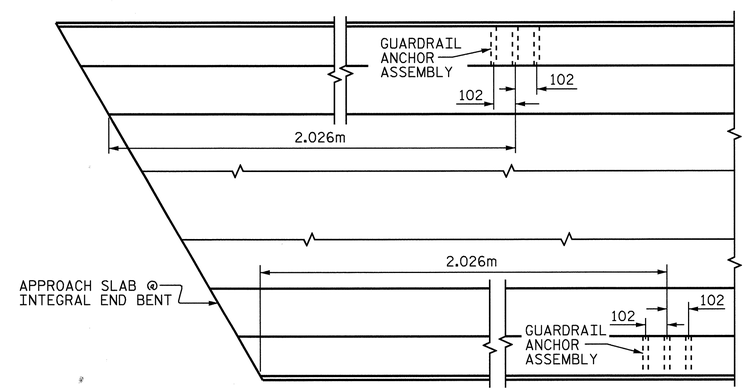

PLAN

LOCATION OF ANCHORS FOR GUARDRAIL

END BENT 1 SHOWN, END BENT 2 SIMILAR.

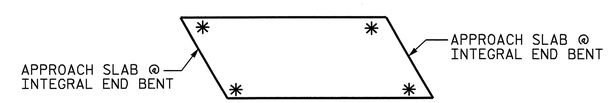

SKETCH SHOWING POINTS OF ATTACHMENTS

✳ DENOTES GUARDRAIL ANCHOR ASSEMBLY

PROJECT NO. R2554BA

WAYNE COUNTY

STATION: 103+80.709 -L-

STATE OF NORTH CAROLINA
DEPARTMENT OF TRANSPORTATION
RALEIGH

STANDARD

GUARDRAIL ANCHORAGE FOR BARRIER RAIL

NORTH CAROLINA PROFESSIONAL SEAL 22005 ENGINEER A. KEITH PASCHAL

6/9/08

REVISIONS						SHEET NO.
NO.	BY:	DATE:	NO.	BY:	DATE:	S-261
1			3			TOTAL SHEETS
2			4			478

ASSEMBLED BY : J.G.KHARVA	DATE : 3/01/08
CHECKED BY : A.K. PASCHAL	DATE : 4/25/08
DRAWN BY : TLA 5/06	ADDED 5/1/06R KMM/GM
CHECKED BY : GM 5/06	

09-JUN-2008 09:12
r:\structures\bullock\Str#9\FINAL PLANS\R-2554ba_sd_gr_09.dgn
ldhaWK

STD. NO. GRA2

SUPERSTRUCTURE REINFORCING STEEL LENGTHS ARE BASED ON THE FOLLOWING MINIMUM SPLICE LENGTHS

BAR SIZE	SUPERSTRUCTURE EXCEPT APPROACH SLABS, PARAPET, AND BARRIER RAIL		APPROACH SLABS		PARAPET AND BARRIER RAIL
	EPOXY COATED	UNCOATED	EPOXY COATED	UNCOATED	
#13	610	540	610	540	840
#16	770	660	770	660	1050
#19	920	790	1190	790	1330
#22	1580	1060			
#25	2080	1390			

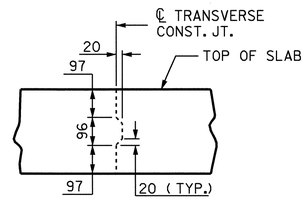

TRANSVERSE CONSTRUCTION JOINT DETAIL

NOTE: REINFORCING STEEL IN SLAB NOT SHOWN. LONGITUDINAL REINFORCING STEEL SHALL BE CONTINUOUS THRU JOINT.

BILL OF MATERIAL

BAR	NO.	SIZE	TYPE	LENGTH	WEIGHT
* A1	255	#16	STR	15880	6285
* A101	4	#16	STR	14360	89
* A102	4	#16	STR	12680	79
* A103	4	#16	STR	11000	68
* A104	4	#16	STR	9320	58
* A105	4	#16	STR	7640	47
* A106	4	#16	STR	5960	37
* A107	4	#16	STR	4280	27
* A108	4	#16	STR	2600	16
* A109	4	#16	STR	900	6
A2	255	#16	STR	15880	6285
A201	4	#16	STR	14360	89
A202	4	#16	STR	12680	79
A203	4	#16	STR	11000	68
A204	4	#16	STR	9320	58
A205	4	#16	STR	7640	47
A206	4	#16	STR	5960	37
A207	4	#16	STR	4280	27
A208	4	#16	STR	2600	16
A209	4	#16	STR	900	6
* B1	70	#22	STR	9000	1916
B2	112	#13	STR	9000	1002
* B3	216	#13	STR	7840	1683
B4	189	#16	STR	15060	4418
K1	28	#16	STR	18240	793
K2	16	#16	STR	900	22
U1	142	#13	2	4340	613
U2	16	#13	2	4940	79
* S2	92	#13	1	3560	326
* S3	88	#13	1	2920	255
REINFORCING STEEL					13639 kgs.
* EPOXY COATED REINFORCING STEEL					10892 kgs.

BAR TYPES

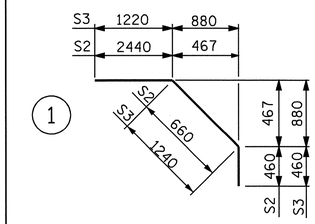

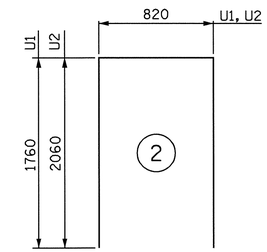

ALL BAR DIMENSIONS ARE OUT TO OUT

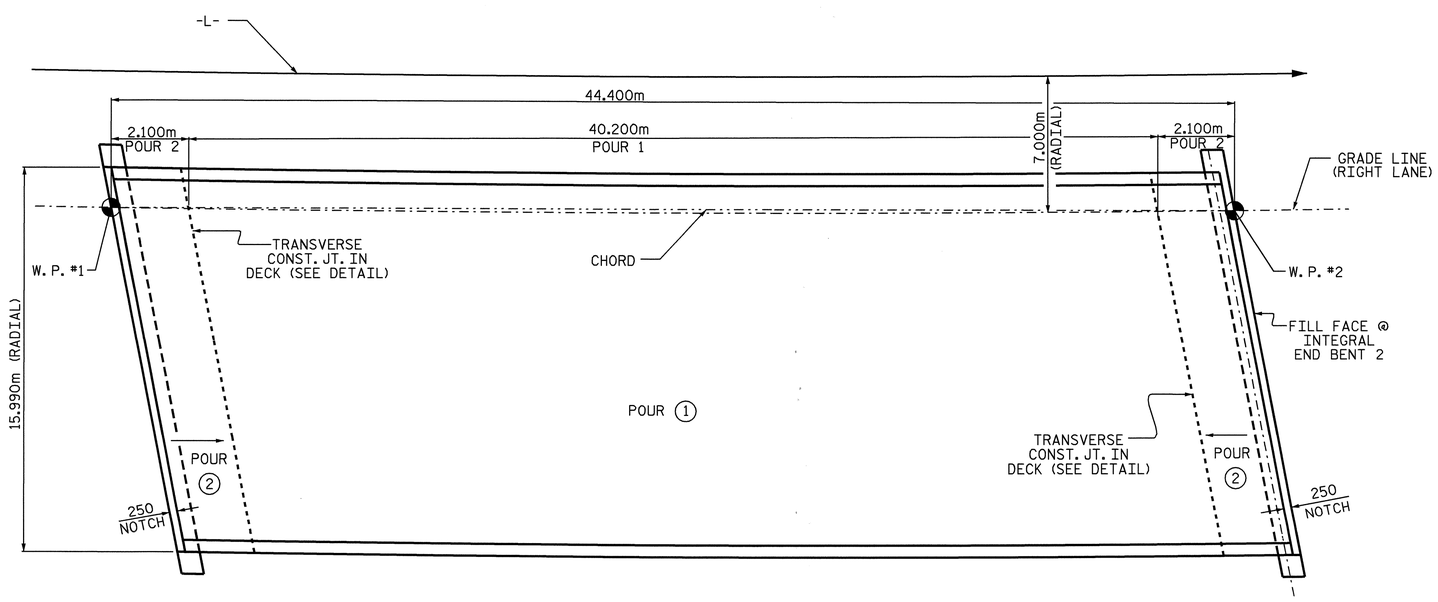

LAYOUT FOR COMPUTING AREA OF REINFORCED CONCRETE DECK SLAB AND POURING SEQUENCE (SQ. METER = 706.8)

SUPERSTRUCTURE BILL OF MATERIAL

	CLASS AA CONCRETE	REINFORCING STEEL	EPOXY COATED REINFORCING STEEL
	(CU.M.)	(KGS.)	(KGS.)
POUR #1	164.4	——	——
POUR #2	96.6	——	——
TOTALS **	260.0	13639	10892

** QUANTITIES FOR BARRIER RAIL ARE NOT INCLUDED

GROOVING BRIDGE FLOORS

APPROACH SLABS	188.7	SQ.M.
BRIDGE DECK	616.6	SQ.M
TOTAL	805.3	SQ.M

PROJECT NO. R-2554BA
WAYNE COUNTY
STATION: 103+80.709 -L-

STATE OF NORTH CAROLINA
DEPARTMENT OF TRANSPORTATION
RALEIGH

SUPERSTRUCTURE
BILL OF MATERIAL
(RIGHT LANE)

NORTH CAROLINA PROFESSIONAL SEAL 22005 ENGINEER J. KEITH PASCHAL
6/9/08

REVISIONS						SHEET NO.
NO.	BY:	DATE:	NO.	BY:	DATE:	S-262
1			3			TOTAL SHEETS
2			4			478

DRAWN BY : J. G. KHARVA DATE : 6/18/06
CHECKED BY : J. E. LAZAROVICH DATE : 4/25/08

09-JUN-2008 08:49
R:\Structures\BULLOCK\Str#9\FINAL PLANS\R-2554BA_sd_BM_09.dgn
jdhaWK

STR. #9

NOTES:

STIRRUPS IN CAP MAY BE SHIFTED AS NECESSARY TO CLEAR ANCHOR BOLTS.

THE CONTRACTOR SHALL PROVIDE FOR INSTALLATION OF THE 100mm DIAMETER DRAIN PIPE THROUGH THE WING WALL AS REQUIRED FOR REINFORCED BRIDGE APPROACH FILLS, SEE THE ROADWAY PLANS. REINFORCING STEEL IN THE WING WALL MAY BE SHIFTED AS NECESSARY TO CLEAR THE DRAIN PIPE.

THE CONTRACTOR'S ATTENTION IS CALLED TO THE FACT THAT THE UPPER PART OF WING IS TO BE POURED WITH SUPERSTRUCTURE.

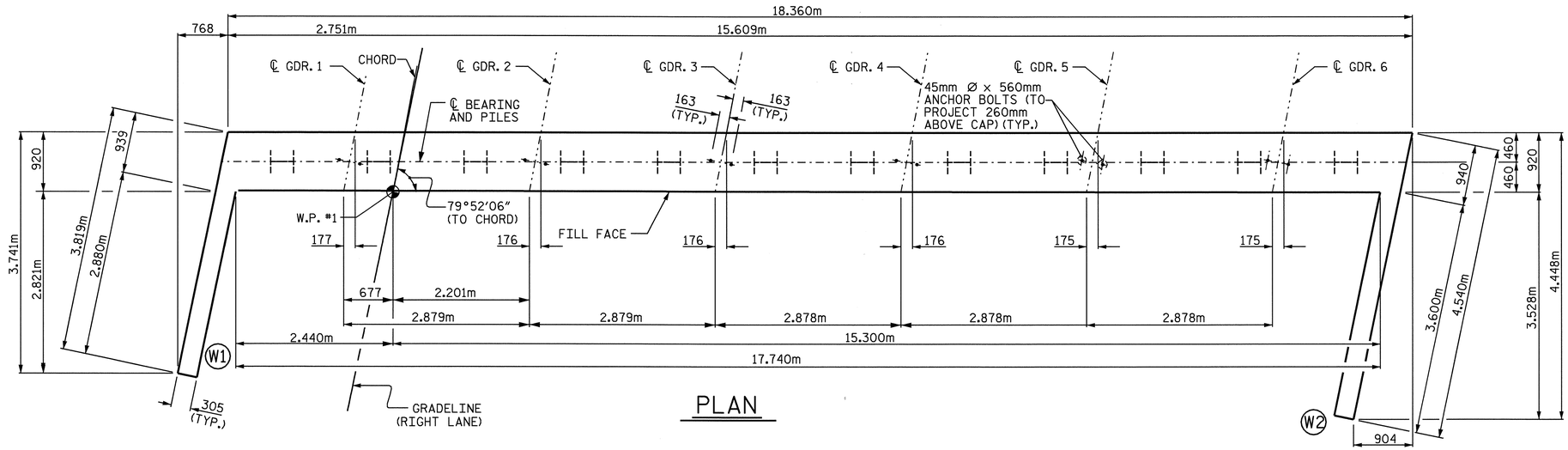

PLAN

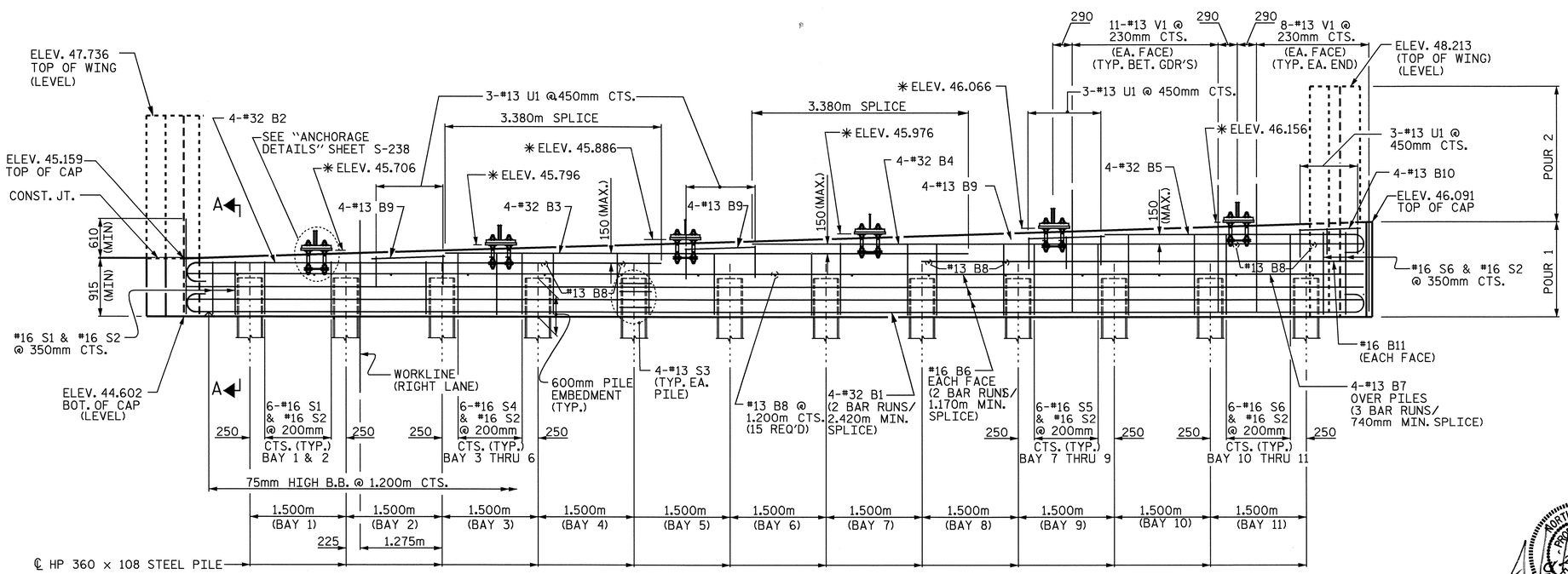

ELEVATION

✳ BRIDGE SEAT ELEVATIONS ARE TAKEN AT BOTTOM OF SOLE PLATES

NORTH CAROLINA PROFESSIONAL SEAL 22006 ENGINEER A. KEITH PASCHAL

6/9/08

PROJECT NO. R-2554BA

WAYNE COUNTY

STATION: 103+80.709 -L-

SHEET 1 OF 2

STATE OF NORTH CAROLINA
DEPARTMENT OF TRANSPORTATION
RALEIGH

SUBSTRUCTURE

INTEGRAL END BENT 1

(RIGHT LANE)

REVISIONS						SHEET NO.
NO.	BY:	DATE:	NO.	BY:	DATE:	S-263
1			3			TOTAL SHEETS
2			4			478

DRAWN BY : J. G. KHARVA DATE : 09/19/07
CHECKED BY : A. K. PASCHAL DATE : 10/12/07

09-JUN-2008 08:49
R:\Structures\BULLOCK\Str#9\FINAL PLANS\R-2554BA_sd_EI&E2_09.dgn
jdhaWK

STR. #9

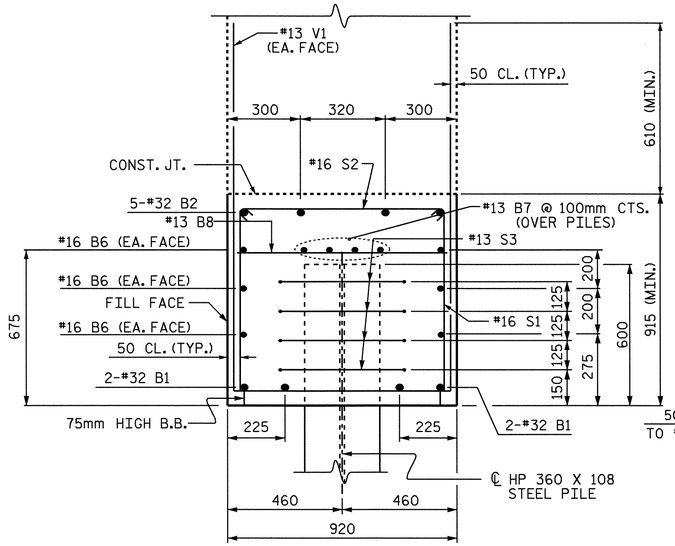

SECTION A-A

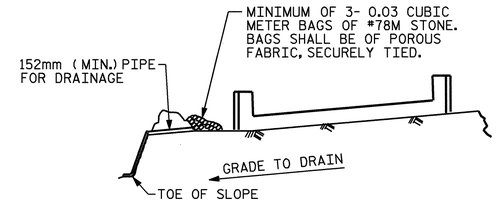

BAGGED STONE AND PIPE SHALL BE PLACED IMMEDIATELY AFTER COMPLETION OF END BENT EXCAVATION. PIPE MAY BE EITHER CONCRETE, CORRUGATED STEEL, CORRUGATED ALUMINUM ALLOY, OR CORRUGATED PLASTIC. PERFORATED PIPE WILL NOT BE ALLOWED.

BAGGED STONE SHALL REMAIN IN PLACE UNTIL THE ENGINEER DIRECTS THAT IT BE REMOVED. THE CONTRACTOR SHALL REMOVE AND DISPOSE OF SILT ACCUMULATIONS AT BAGGED STONE WHEN SO DIRECTED BY THE ENGINEER. BAGS SHALL BE REMOVED AND REPLACED WHENEVER THE ENGINEER DETERMINES THAT THEY HAVE DETERIORATED AND LOST THEIR EFFECTIVENESS.

NO SEPARATE PAYMENT WILL BE MADE FOR THIS WORK AND THE ENTIRE COST OF THIS WORK SHALL BE INCLUDED IN THE UNIT CONTRACT PRICE BID FOR THE SEVERAL PAY ITEMS.

TEMPORARY DRAINAGE AT END BENT

BAR TYPES

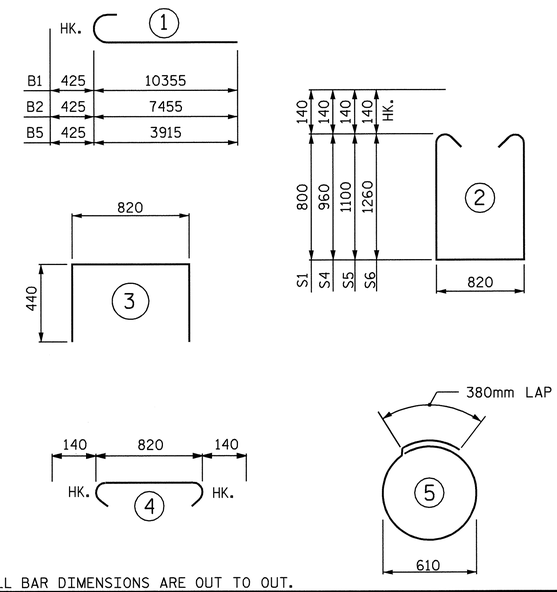

ALL BAR DIMENSIONS ARE OUT TO OUT.

BILL OF MATERIAL
END BENT 1

BAR NO.	SIZE	TYPE	LENGTH	WEIGHT
B1 8	32	1	10780	552
B2 4	32	1	7880	202
B3 4	32	STR	8180	210
B4 4	32	STR	9540	244
B5 4	32	1	4040	113
B6 12	16	STR	9720	181
B7 12	13	STR	6580	78
B8 21	13	STR	820	7
B9 12	13	STR	1200	14
B10 4	13	STR	960	4
B11 2	16	STR	7080	22
H1 10	16	STR	3760	58
H2 10	16	STR	3720	58
H3 12	16	STR	4360	81
H4 12	16	STR	4400	82
S1 14	16	2	2700	59
S2 70	16	4	1100	120
S3 48	13	5	2300	110
S4 24	16	2	3020	112
S5 18	16	2	3300	92
S6 14	16	2	3620	79
U1 12	13	3	1700	20
V1 142	13	STR	2080	296
V2 20	16	STR	3020	84
V3 32	16	STR	3600	134
REINFORCING STEEL			kg.	3013

CLASS A CONCRETE BREAKDOWN

* POUR 1 (CAP AND LOWER PART OF WINGS) 23.1 m³

TOTAL 23.1 m³

HP 360 x 108 STEEL PILES
NO. 12 264 METERS

PILE REDRIVES NO.: 5

* UPPER WINGS (POUR 2) TO BE POURED WITH SUPERSTRUCTURE

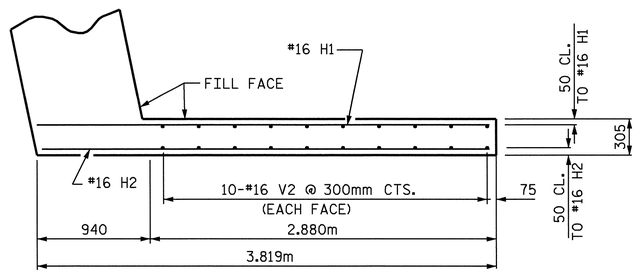

PLAN W1

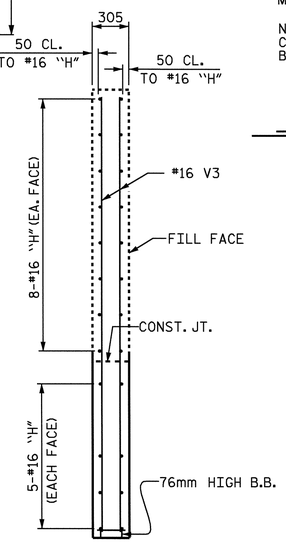

SECTION Y-Y

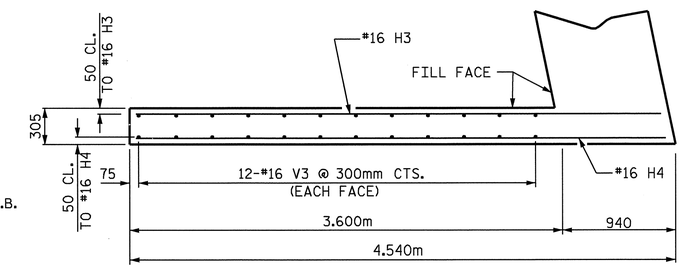

PLAN W2

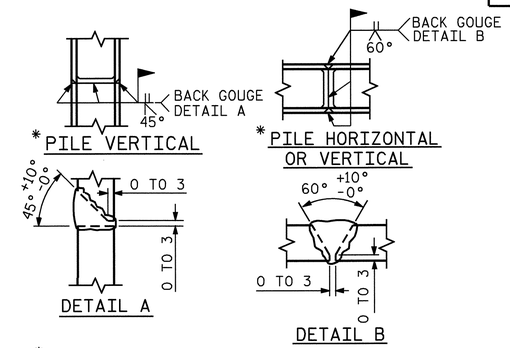

PILE SPLICE DETAILS

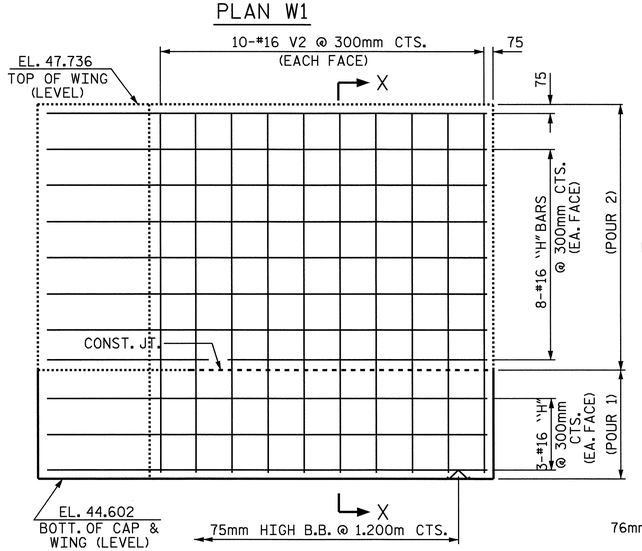

ELEVATION W1

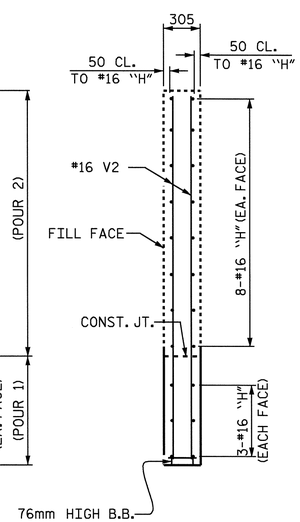

SECTION X-X

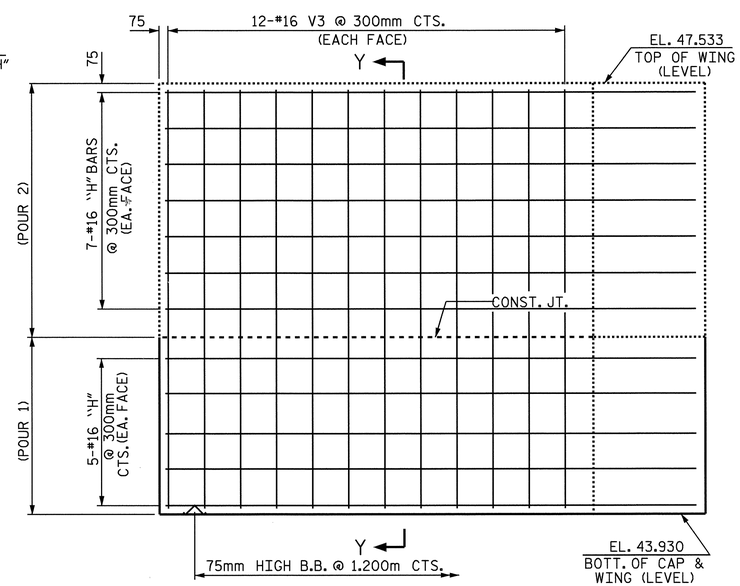

ELEVATION W2

PROJECT NO. R-2554BA
WAYNE COUNTY
STATION: 103+80.709 -L-

SHEET 2 OF 2

STATE OF NORTH CAROLINA
DEPARTMENT OF TRANSPORTATION
RALEIGH

SUBSTRUCTURE
INTEGRAL END BENT 1
(RIGHT LANE)

NORTH CAROLINA PROFESSIONAL SEAL 20056 ENGINEER A. KEITH PASCHAL
6/9/08

REVISIONS								SHEET NO.
NO.	BY:	DATE:	NO.	BY:	DATE:			S-264
1			3					TOTAL SHEETS
2			4					478

DRAWN BY : J. G. KHARVA DATE : 09-14-07
CHECKED BY : A. K. PASCHAL DATE : 10/12/07

09-JUN-2008 08:49
R:\Structures\BULLOCK\Str#9\FINAL PLANS\R-2554BA_sd_EI&E2_09.dgn
jdhaWK

STR. #9

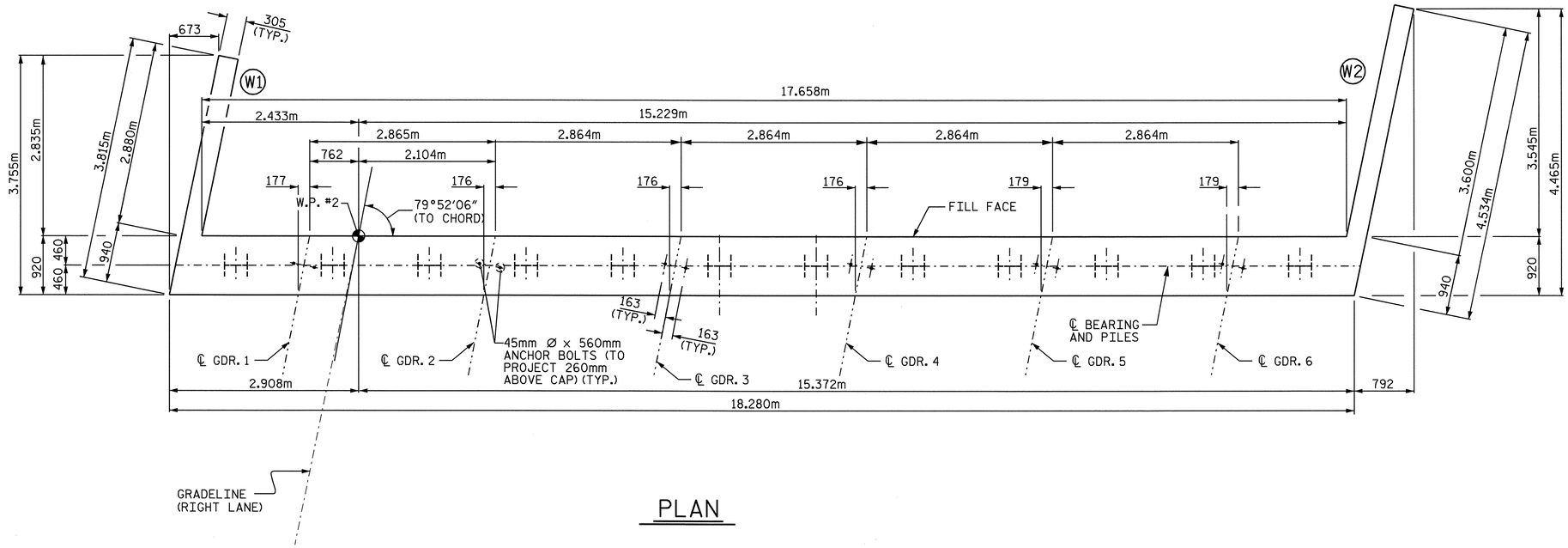

PLAN

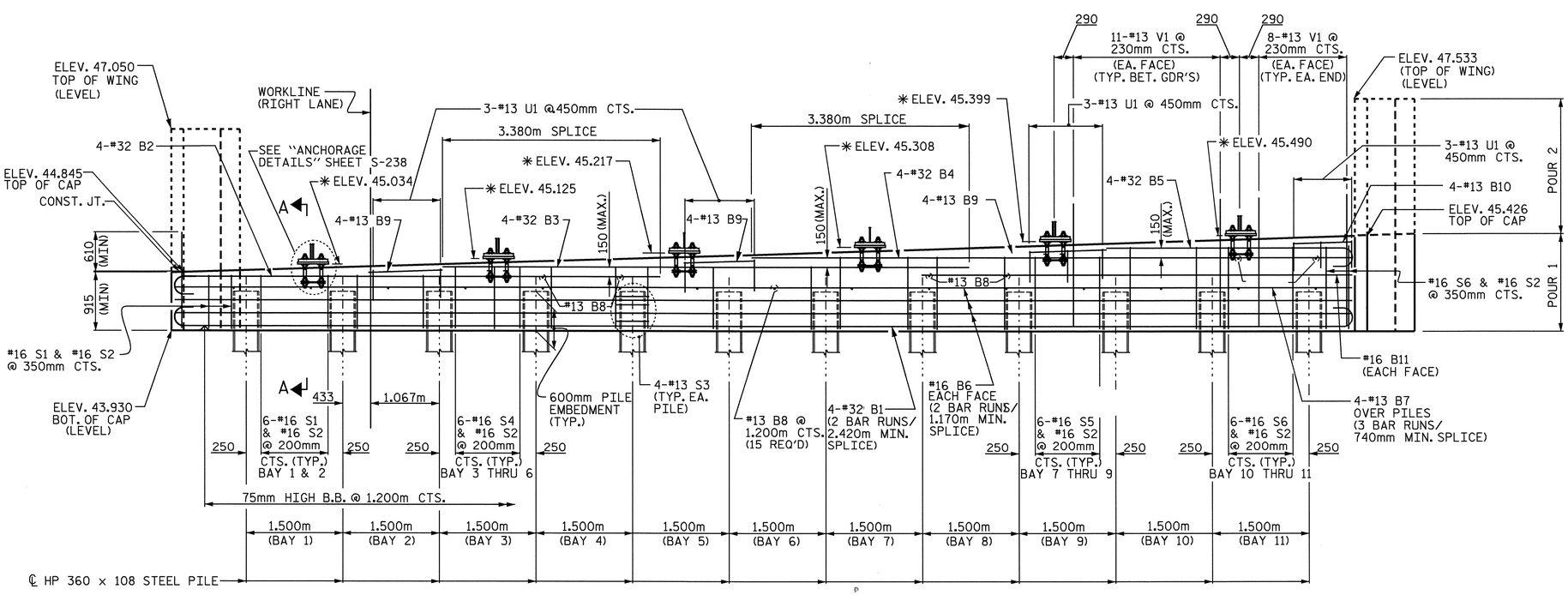

ELEVATION

✱ BRIDGE SEAT ELEVATIONS ARE TAKEN AT BOTTOM OF LEVELING PLATE

NOTES:

STIRRUPS IN CAP MAY BE SHIFTED AS NECESSARY TO CLEAR ANCHOR BOLTS.

THE CONTRACTOR SHALL PROVIDE FOR INSTALLATION OF THE 100mm DIAMETER DRAIN PIPE THROUGH THE WING WALL AS REQUIRED FOR REINFORCED BRIDGE APPROACH FILLS, SEE THE ROADWAY PLANS. REINFORCING STEEL IN THE WING WALL MAY BE SHIFTED AS NECESSARY TO CLEAR THE DRAIN PIPE.

THE CONTRACTOR'S ATTENTION IS CALLED TO THE FACT THAT THE UPPER PART OF WING IS TO BE POURED WITH SUPERSTRUCTURE.

PROJECT NO. R-2554BA
WAYNE COUNTY
STATION: 103+80.709 -L-

SHEET 1 OF 2

STATE OF NORTH CAROLINA
DEPARTMENT OF TRANSPORTATION
RALEIGH

SUBSTRUCTURE
INTEGRAL END BENT 2
(RIGHT LANE)

NORTH CAROLINA PROFESSIONAL SEAL 12006 ENGINEER A. KEITH PASCHAL
6/9/08

REVISIONS						SHEET NO.
NO.	BY:	DATE:	NO.	BY:	DATE:	S-265
1			3			TOTAL SHEETS
2			4			478

DRAWN BY : J. G. KHARVA DATE : 9/14/07
CHECKED BY : A. K. PASCHAL DATE : 10/12/07

09-JUN-2008 08:49
R:\Structures\BULLOCK\Str#9\FINAL PLANS\R-2554BA_sd_EI&E2_09.dgn
jdhdWK

STR. #9

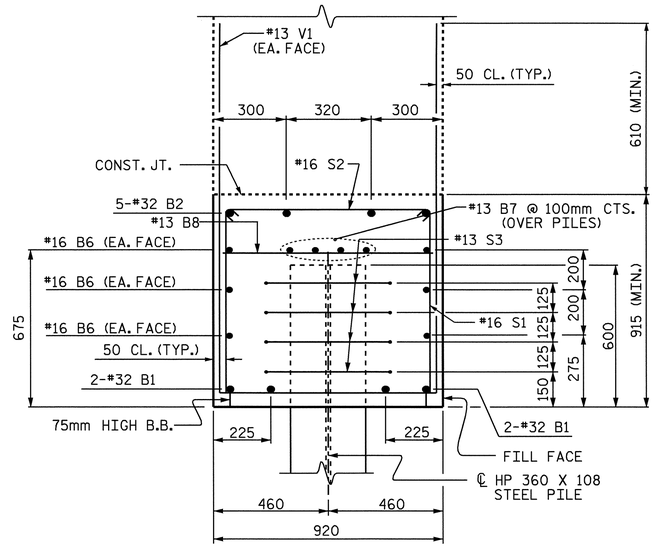

SECTION A-A

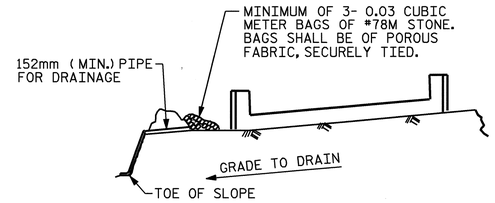

BAGGED STONE AND PIPE SHALL BE PLACED IMMEDIATELY AFTER COMPLETION OF END BENT EXCAVATION. PIPE MAY BE EITHER CONCRETE, CORRUGATED STEEL, CORRUGATED ALUMINUM ALLOY, OR CORRUGATED PLASTIC. PERFORATED PIPE WILL NOT BE ALLOWED.

BAGGED STONE SHALL REMAIN IN PLACE UNTIL THE ENGINEER DIRECTS THAT IT BE REMOVED. THE CONTRACTOR SHALL REMOVE AND DISPOSE OF SILT ACCUMULATIONS AT BAGGED STONE WHEN SO DIRECTED BY THE ENGINEER. BAGS SHALL BE REMOVED AND REPLACED WHENEVER THE ENGINEER DETERMINES THAT THEY HAVE DETERIORATED AND LOST THEIR EFFECTIVENESS.

NO SEPARATE PAYMENT WILL BE MADE FOR THIS WORK AND THE ENTIRE COST OF THIS WORK SHALL BE INCLUDED IN THE UNIT CONTRACT PRICE BID FOR THE SEVERAL PAY ITEMS.

TEMPORARY DRAINAGE AT END BENT

BAR TYPES

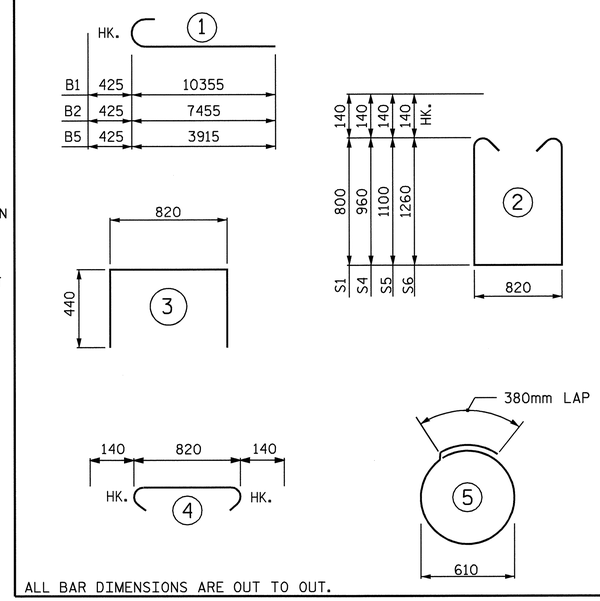

ALL BAR DIMENSIONS ARE OUT TO OUT.

BILL OF MATERIAL
END BENT 2

BAR	NO.	SIZE	TYPE	LENGTH	WEIGHT
B1	8	32	1	10780	552
B2	4	32	1	7880	202
B3	4	32	STR	8180	210
B4	4	32	STR	9540	244
B5	4	32	1	4040	113
B6	12	16	STR	9720	181
B7	12	13	STR	6580	78
B8	21	13	STR	820	7
B9	12	13	STR	1200	14
B10	4	13	STR	960	4
B11	2	16	STR	7080	22
H1	11	16	STR	3640	62
H2	11	16	STR	3680	63
H3	12	16	STR	4480	83
H4	12	16	STR	4440	83
S1	14	16	2	2700	59
S2	70	16	4	1100	120
S3	48	13	5	2300	110
S4	24	16	2	3020	112
S5	18	16	2	3300	92
S6	14	16	2	3620	79
U1	12	13	3	1700	20
V1	142	13	STR	2100	296
V2	18	16	STR	3020	84
V3	24	16	STR	3600	134
REINFORCING STEEL				kg.	3014

CLASS A CONCRETE BREAKDOWN

* POUR 1 (CAP AND LOWER PART OF WINGS) 23.1 m3

TOTAL 23.1 m3

HP 360 x 108 STEEL PILES
NO. 12 264 METERS

PILE REDRIVES NO.: 5

* UPPER WINGS (POUR 2) TO BE POURED WITH SUPERSTRUCTURE

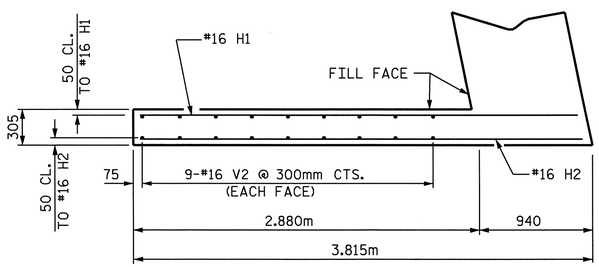

PLAN W1

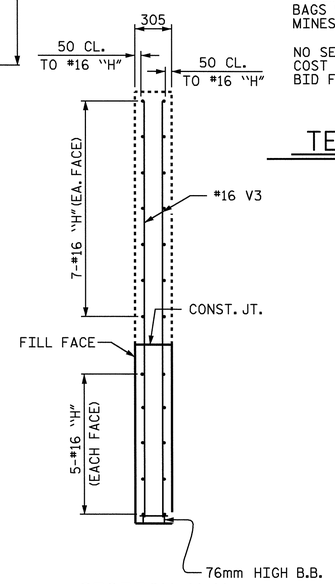

SECTION Y-Y

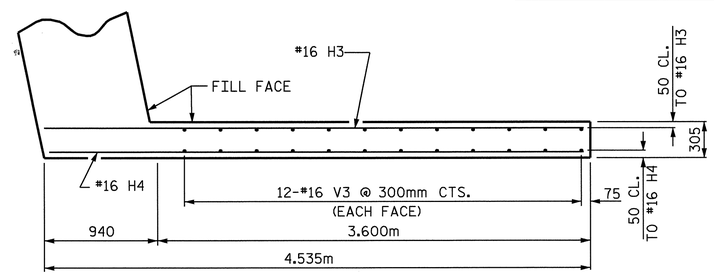

PLAN W2

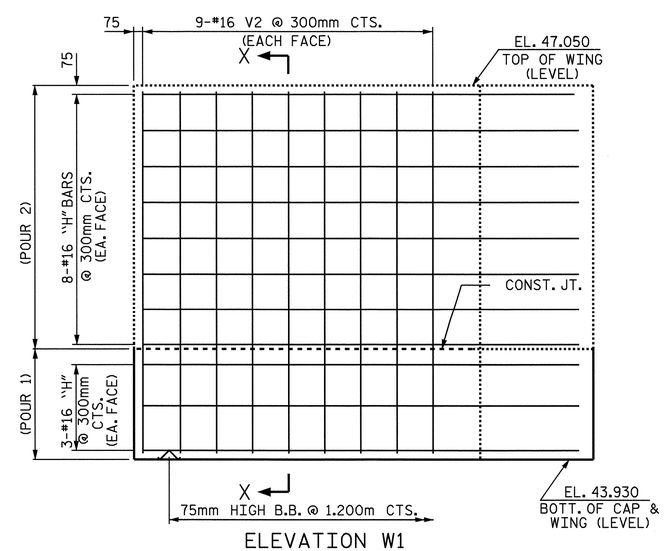

ELEVATION W1

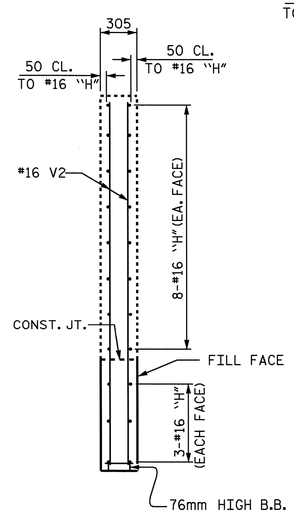

SECTION X-X

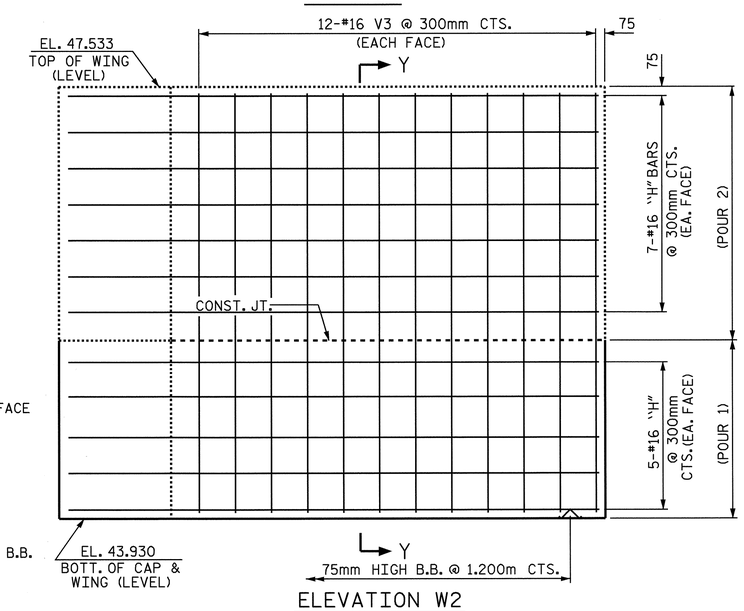

ELEVATION W2

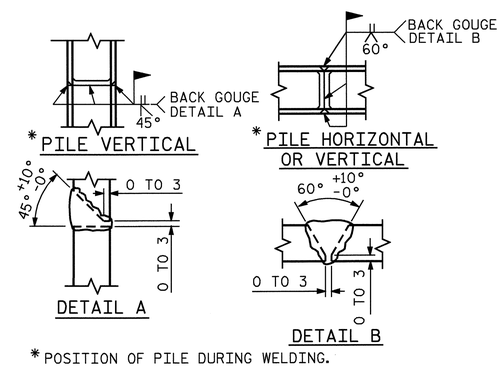

* POSITION OF PILE DURING WELDING.

PILE SPLICE DETAILS

PROJECT NO. R-2554BA
WAYNE COUNTY
STATION: 103+80.709 -L-

SHEET 2 OF 2

STATE OF NORTH CAROLINA
DEPARTMENT OF TRANSPORTATION
RALEIGH

SUBSTRUCTURE
INTEGRAL END BENT 2
(RIGHT LANE)

NORTH CAROLINA PROFESSIONAL SEAL 20018 ENGINEER A. KEITH PASCHAL
6/9/08

REVISIONS						SHEET NO.
NO.	BY:	DATE:	NO.	BY:	DATE:	S-266
1			3			TOTAL SHEETS
2			4			478

DRAWN BY : J. G. KHARVA DATE : 09/14/07
CHECKED BY : A. K. PASCHAL DATE : 10/12/07

09-JUN-2008 08:49
R:\Structures\BULLOCK\Str#9\FINAL PLANS\R-2554BA_sd_EI&E2_09.dgn
jdhaWK

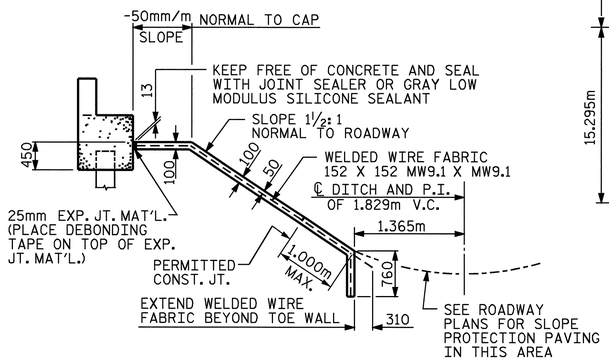

SECTION ALONG ℄ ROADWAY WHEN FILL CATCHES IN DITCH

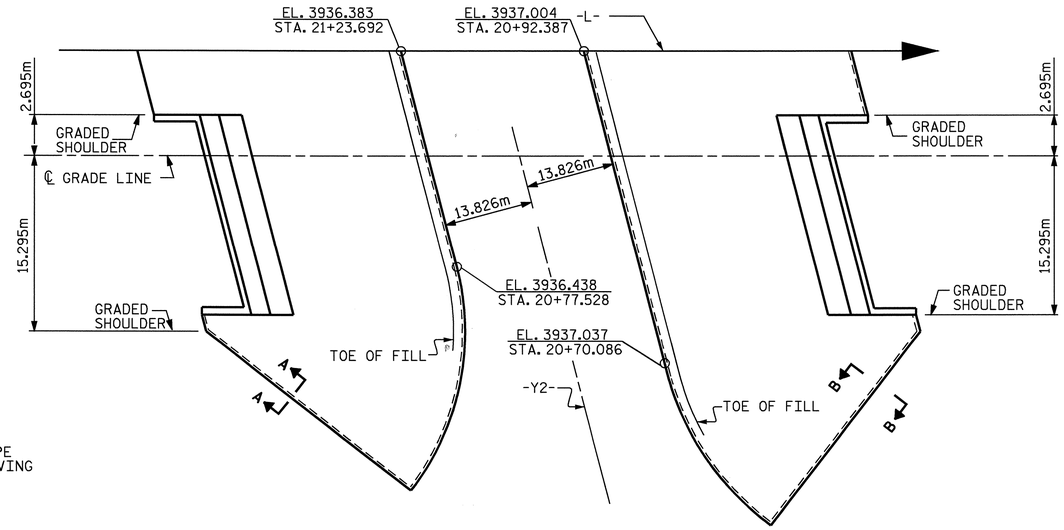

GENERAL NOTES

SLOPE PROTECTION SHALL BE PLACED UNDER THE ENDS OF THE BRIDGE AS SHOWN IN THE DETAILS. THE CONTRACTOR, AT HIS OPTION, MAY USE ALTERNATE "B" ONLY FOR HIGHWAY OVER HIGHWAY GRADE SEPARATIONS WITH 2:1 END BENT SLOPE IN RURAL, UNPOPULATED AREAS. STRAIGHT EDGING WILL NOT BE REQUIRED UNLESS, IN THE OPINION OF THE ENGINEER, VISUAL INSPECTION INDICATES A NEED FOR IT. MEASUREMENT AND PAYMENT SHALL BE AS PRESCRIBED IN SECTION 462 OF THE STANDARD SPECIFICATIONS. FOR BERM WIDTH, SEE GENERAL DRAWING.

ALTERNATE "A"

ALTERNATE "A" SHALL CONSIST OF 100mm POURED-IN-PLACE CONCRETE PAVING AS SHOWN IN THE DETAILS ON THIS SHEET. CONCRETE SHALL BE CLASS "B". THE CONCRETE SURFACE SHALL BE FLOATED WITH A WOODEN FLOAT AND FINISHED. WELDED WIRE FABRIC REINFORCING SHALL BE 152 X 152 - W9.1 X W9.1, 1520mm WIDE. SLOPE PROTECTION SHALL BE POURED IN 1520mm STRIPS AS SHOWN IN THE "POURING DETAIL" WITH 600mm LONG #13 BARS PLACED ALONG THE SLOPE BETWEEN STRIPS AT 450mm MAXIMUM SPACING. SLOPE PROTECTION MAY BE POURED IN ALTERNATE 1220mm AND 1520mm STRIPS AS SHOWN IN THE "OPTIONAL POURING DETAIL" WITH ADJACENT RUNS OF WELDED WIRE FABRIC LAPPING AT LEAST 152mm. THE COST OF THE WELDED WIRE FABRIC AND #13 BARS, IF USED, SHALL BE INCLUDED IN THE CONTRACT UNIT PRICE BID PER SQUARE METER FOR SLOPE PROTECTION.

BRIDGE @ STA. 103+80.709 -L-	100 mm SLOPE PROTECTION	* WELDED WIRE FABRIC 1520mm WIDE
	SQUARE METERS	APPROX. METERS
END BENT 1	256.0	512.0
END BENT 2	261.0	522.0

* QUANTITY SHOWN IS BASED ON 1520mm POURS.

DETAILS FOR ALTERNATE "A"

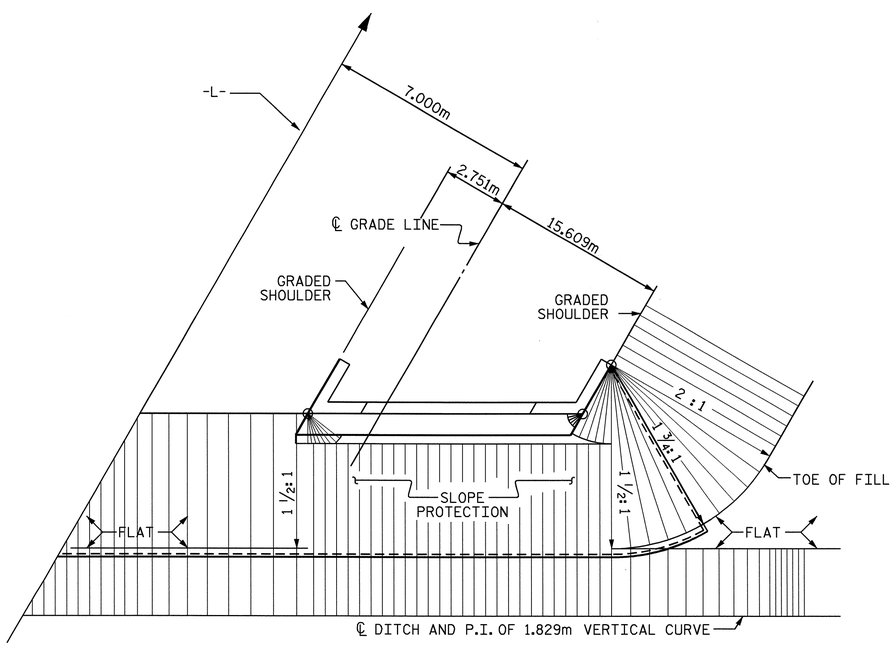

PLAN - END BENT WITH SWEPT BACK WINGS - SKEWED

(1 ½:1 SLOPE)

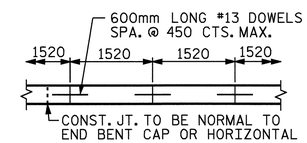

STRIP WIDTHS MAY VARY IN CURVED PORTION.

POURING DETAIL

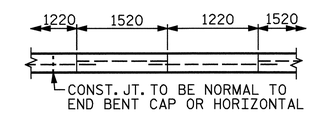

POUR A 1220mm STRIP FIRST. STRIP WIDTHS MAY VARY IN CURVED PORTION.

OPTIONAL POURING DETAIL

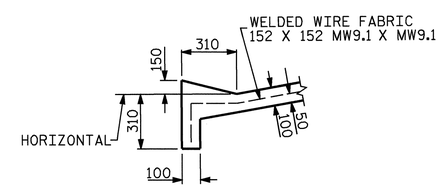

SECTION B-B

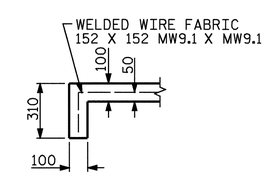

SECTION A-A

PROJECT NO. R-2554BA

WAYNE COUNTY

STATION: 103+80.709 -L-

STATE OF NORTH CAROLINA
DEPARTMENT OF TRANSPORTATION
RALEIGH

STANDARD
SLOPE PROTECTION DETAILS
(RIGHT LANE)

NORTH CAROLINA PROFESSIONAL SEAL 19005 ENGINEER D. KEITH PASCHAL 6/9/08

ASSEMBLED BY : J. G. KHARVA	DATE : 09/27/07
CHECKED BY : J. E. LAZAROVICH	DATE : 4/25/08

DRAWN BY : ELR 5/92	REV. 7/10/01 LES/RDR
CHECKED BY : GRP 6/92	REV. 5/7/03 RWW/JTE
	REV. 5/1/06 TLA/GM

REVISIONS									SHEET NO.
NO.	BY:	DATE:	NO.	BY:	DATE:				S-267
1			3						TOTAL SHEETS
2			4						478

09-JUN-2008 08:49
R:\Structures\BULLOCK\Str#9\FINAL PLANS\R-2554BA_sd_SP_09.dgn
jdhaWK

STR. #9

STD. NO. SP1SM

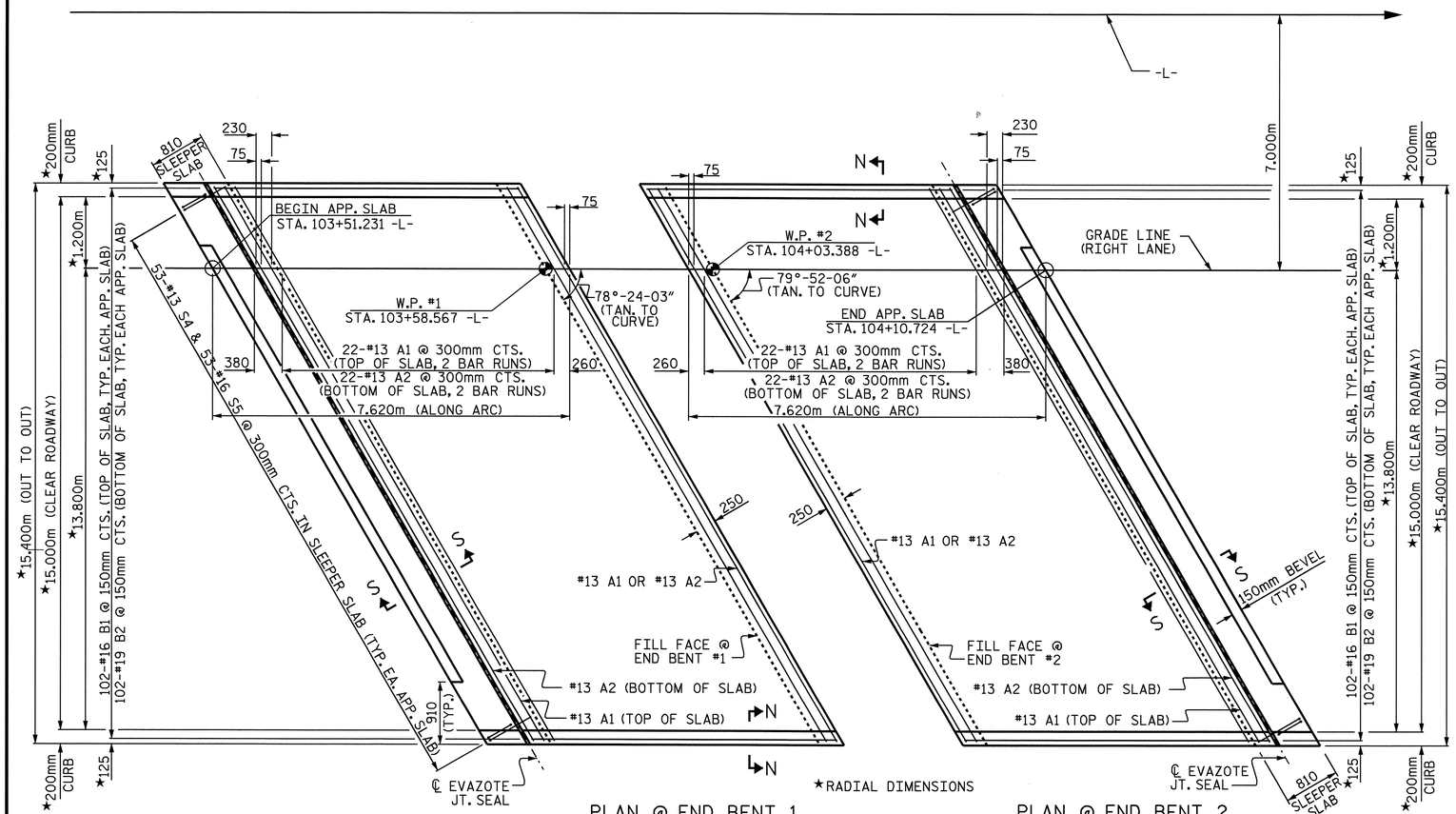

PLAN @ END BENT 1

PLAN @ END BENT 2

DIMENSIONS SHOWN ARE TYPICAL FOR BOTH APPROACH SLABS. #13 A1 BARS NOT SHOWN FOR CLARITY.

NOTES

APPROACH SLAB SHALL NOT BE CONSTRUCTED PRIOR TO COMPLETION OF THE BRIDGE DECK.

FOR REINFORCED BRIDGE APPROACH FILL INCLUDING FABRIC, IMPERMEABLE GEOMEMBRANE, 102mm Ø DRAINAGE PIPE, #78M STONE, AND SELECT MATERIAL, SEE ROADWAY PLANS.

AREA BETWEEN THE WINGWALL AND APPROACH SLAB SHALL BE GRADED TO DRAIN THE WATER AWAY FROM THE FILL FACE OF THE BRIDGE AND SHALL BE PAVED. SEE ROADWAY PLANS.

THE 150mm COMP. A.B.C. SHALL BE FLUSH WITH THE ROADWAY END OF THE APPROACH SLAB AND SHALL EXTEND 300mm OUTSIDE OF EACH EDGE OF THE APPROACH SLAB.

THE CONTRACTOR MAY USE 100mm TYPE B-25.0B ASPHALT CONCRETE BASE COURSE IN LIEU OF 150mm COMP. A.B.C. IF THIS OPTION IS USED, THE BASE COURSE SHALL BE FLUSH WITH THE ROADWAY END OF THE APPROACH SLAB, AND THE WIDTH SHALL BE THE SAME AS THAT OF THE APPROACH SLAB.

THE CONTRACTOR MAY USE 125mm CLASS "A" CONCRETE BASE IN LIEU OF 150mm COMP. A.B.C. IF THIS OPTION IS USED, THE CONCRETE BASE SHALL BE FLUSH WITH THE ROADWAY END OF THE APPROACH SLAB, AND THE WIDTH SHALL BE THE SAME AS THAT OF THE APPROACH SLAB. THE CONCRETE SHALL BE FINISHED TO A SMOOTH SURFACE AND A LAYER OF 13.6 kg ROOFING FELT SHALL BE PLACED BETWEEN THE CONCRETE BASE AND THE APPROACH SLAB TO PREVENT BOND. THE APPROACH SLAB SHALL NOT BE CAST UNTIL THE CONCRETE BASE HAS REACHED AN AGE OF THREE CURING DAYS.

THE VERTICAL JOINT ON THE RIGHT AND LEFT SIDE OF THE APPROACH SLAB AT THE ENDS OF THE EVAZOTE JOINT SHALL BE FILLED WITH SILICONE OR OTHER APPROVED MATERIAL IN ORDER TO PREVENT BACKFILL FROM ENTERING THE JOINT OPENING.

THE JOINT OPENING AT THE APPROACH SLAB/DECK INTERFACE SHALL BE SAWED NO MORE THAN 12 HOURS AFTER THE APPROACH SLAB IS CAST. THE JOINT SHALL BE CLEANED OF ALL DEBRIS BEFORE THE SEALANT IS APPLIED. THE JOINT SEALER MATERIAL SHALL CONFORM TO THE REQUIREMENTS OF TYPE SL LOW MODULUS SILICONE SEALANT.

FOR EVAZOTE JOINT SEALS, SEE SPECIAL PROVISIONS.

THE NOMINAL UNCOMPRESSED SEAL WIDTH OF THE EVAZOTE JOINT SEAL SHALL BE 62.5mm.

FOR ELASTOMERIC CONCRETE, SEE SPECIAL PROVISIONS.

SLEEPER SLAB, ELASTOMERIC CONCRETE AND EVAZOTE SEAL AT APPROACH SLAB SHALL BE PAID IN FULL UNDER THE LUMP SUM PAY ITEM FOR "BRIDGE APPROACH SLABS."

BILL OF MATERIAL

FOR ONE APPROACH SLAB (2 REQ'D)

BAR	NO.	SIZE	TYPE	LENGTH	WEIGHT
✳ A1	62	#13	STR	8120	500
A2	48	#13	STR	8100	386
✳ B1	102	#16	STR	6820	1080
B2	102	#19	STR	6980	1591
✳ S4	53	#13	1	1200	63
S5	53	#16	2	900	74

REINFORCING STEEL	kg.	2051
✳ EPOXY COATED REINFORCING STEEL	kg.	1643
CLASS AA CONCRETE		
POUR #1 - SLEEPER SLAB	C.M.	4.0
POUR #2 - SLAB & CURB	C.M.	33.3
TOTAL	C.M.	37.3

BAR TYPES

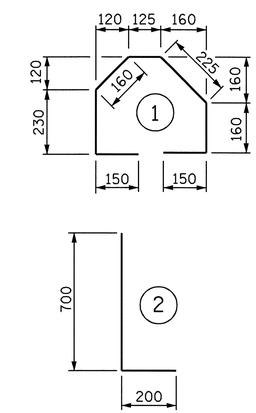

ALL BAR DIMENSIONS ARE OUT TO OUT

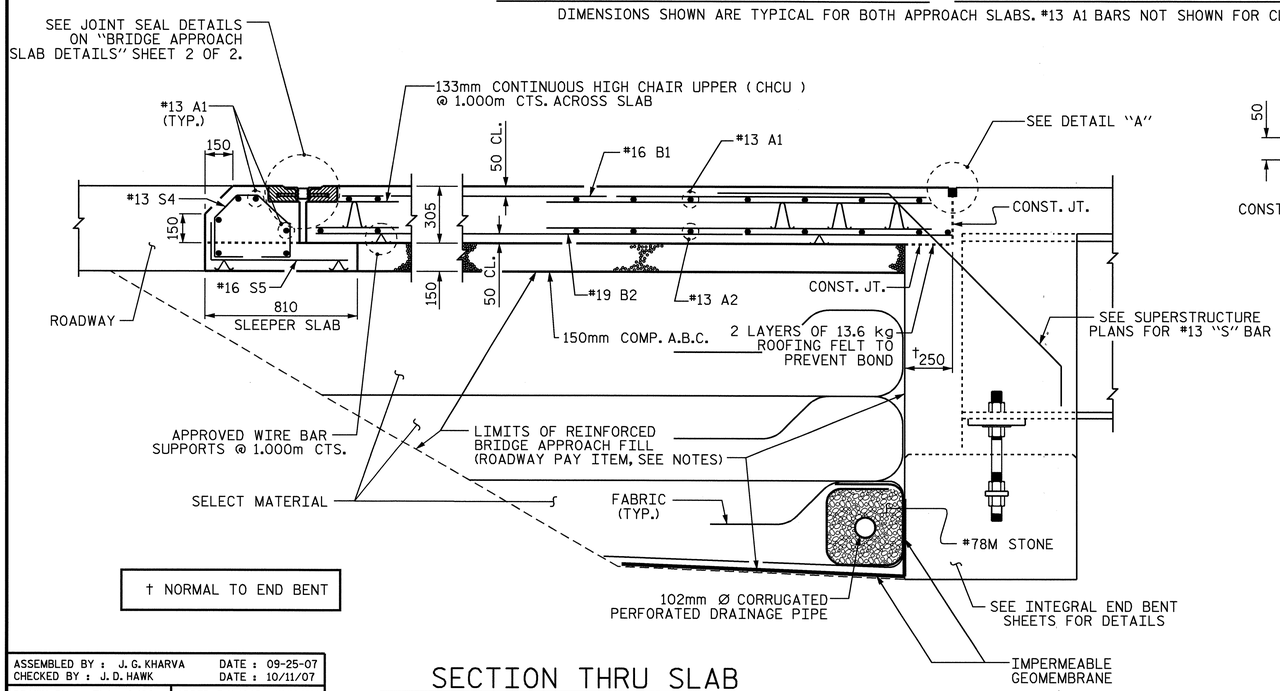

† NORMAL TO END BENT

SECTION THRU SLAB

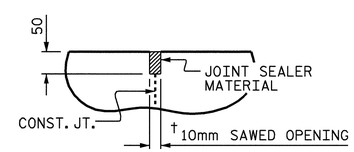

DETAIL "A"

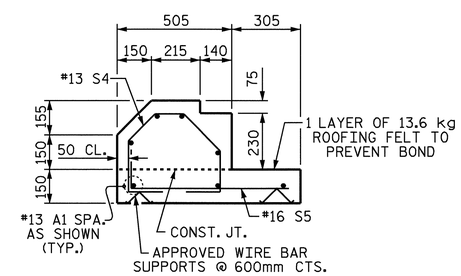

SECTION S-S

SHOWING SLEEPER SLAB

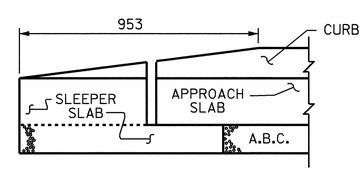

END OF CURB WITHOUT SHOULDER BERM GUTTER

(OMIT TAPER WHEN SHOULDER BERM GUTTER IS REQUIRED)

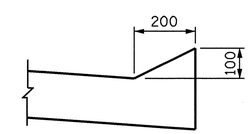

SECTION N-N

PROJECT NO. R-2554BA

WAYNE COUNTY

STATION: 103+80.709 -L-

SHEET 1 OF 2

STATE OF NORTH CAROLINA
DEPARTMENT OF TRANSPORTATION
RALEIGH

STANDARD
BRIDGE APPROACH SLAB FOR INTEGRAL ABUTMENT
(RIGHT LANE)

NORTH CAROLINA PROFESSIONAL SEAL 22005 ENGINEER A. KEITH PASCHAL 6/9/08

REVISIONS							SHEET NO.
NO.	BY:	DATE:	NO.	BY:	DATE:		S-268
1			3				TOTAL SHEETS
2			4				478

ASSEMBLED BY : J. G. KHARVA	DATE : 09-25-07
CHECKED BY : J. D. HAWK	DATE : 10/11/07
DRAWN BY : TLA 6/06	ADDED 5/1/06R KMM/GM
CHECKED BY : GM 6/06	

09-JUN-2008 08:49
R:\Structures\BULLOCK\Str#9\FINAL PLANS\R-2554BA_sd_AS_09.dgn
jdhaWK

STR.# 9

STD. NO. BAS11SM

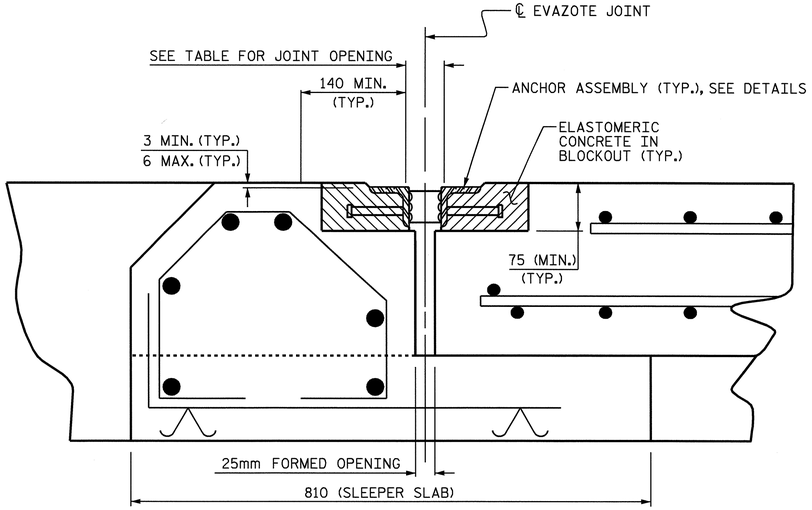

ARMORED JOINT DETAILS

SECTION NORMAL TO JOINT AT BENT

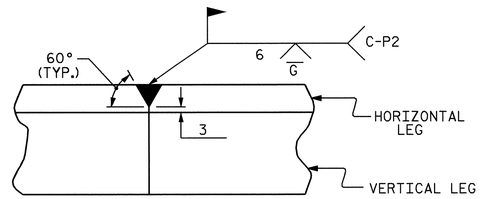

DETAIL- FIELD WELD SPLICE OF ANGLE

NOTES

ANGLES SHALL CONFORM TO AASHTO M270M GRADE 250 STEEL OR APPROVED EQUAL. ALL STUD ANCHORS SHALL CONFORM TO AASHTO M169M GRADES 1010 THRU 1020 OR APPROVED EQUAL.

STUD ANCHORS SHALL BE SHOP WELDED AND ALL HOLES SHALL BE SHOP DRILLED AS SHOWN ON THE PLANS. STUD ANCHORS SHALL BE ELECTRIC ARC END WELDED WITH COMPLETE FUSION.

UPON COMPLETION OF SHOP FABRICATION, THE ENTIRE ANCHOR ASSEMBLY SHALL BE METALLIZED. THE 12.70mm Ø STUD ANCHORS AND ANCHOR TABS NEED NOT BE METALLIZED. SEE SPECIAL PROVISION FOR THERMAL SPRAYED COATINGS (METALLIZATION).

ANCHOR ASSEMBLY SHALL BE MADE CONTINUOUS THE LENGTH OF THE JOINT FROM GUTTER TO GUTTER. FOR FIELD SPLICES AT ALL CROWN BREAK POINTS, THE ENDS OF THE STEEL ANGLES SHALL BE CUT PARALLEL TO THE BRIDGE CENTERLINE. FINISHED FIELD WELDS SHALL BE GROUND SMOOTH AND COATED WITH A MINIMUM THICKNESS OF 0.100mm OF ZINC-RICH PAINT IN ACCORDANCE WITH THE STANDARD SPECIFICATIONS.

ANCHOR ASSEMBLY SEGMENTS SHALL NOT BE LESS 3.6m NOR MORE THAN 6.1m IN LENGTH. SHORTER SEGMENTS MAY BE USED AT THE EDGE OF ROADWAY OR AT POINTS OF STAGED CONSTRUCTION.

THE ANCHOR ASSEMBLY SHALL BE SECURED AND LEVELED AS SHOWN IN THE "ARMORED JOINT ANCHOR ASSEMBLY DETAILS". NO SUBMITTALS ARE REQUIRED FOR 9.53mm Ø EXPANSION ANCHORS, NUTS OR WASHERS. THE CONTRACTOR MAY SUBMIT FOR APPROVAL AN ALTERNATE METHOD OF ALIGNING AND LEVELING THE ANGLES. THE ALTERNATE METHOD SHALL NOT INCLUDE ANY WELDING TO THE OUTSIDE FACE OF THE ANGLES.

AFTER THE ELASTOMERIC CONCRETE HAS BEEN CAST ON BOTH SIDES OF THE JOINT, REMOVE ANY EXCESS CONCRETE THAT COMES THROUGH THE WEEP HOLES AND THOROUGHLY CLEAN THE ANGLES. ANY DAMAGED STEEL SHALL BE COATED WITH A MINIMUM OF 0.100mm OF ZINC-RICH PAINT IN ACCORDANCE WITH THE STANDARD SPECIFICATIONS.

SEE SPECIAL PROVISIONS FOR EVAZOTE JOINT SEALS.

SEE SPECIAL PROVISIONS FOR ELASTOMERIC CONCRETE.

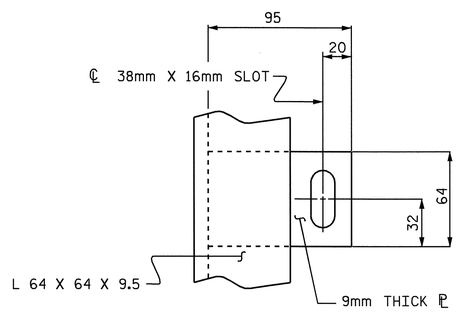

PLAN VIEW OF TAB

MOVEMENT AND SETTING AT EVAZOTE JOINT						
END BENT NO.	SKEW ANGLE	NOMINAL UNCOMPRESSED SEAL WIDTH	TOTAL MOVEMENT (ALONG ℄ RDWY)	PERPENDICULAR JOINT OPENING AT 7° C	PERPENDICULAR JOINT OPENING AT 16° C	PERPENDICULAR JOINT OPENING AT 32° C
1	78°-18'-38"	64	25	52	48	41
2	79°-46'-12"	64	25	52	48	41

TOTAL MOVEMENT IS CALCULATED ALONG THE CENTERLINE OF ROADWAY.
JOINT OPENINGS ARE MEASURED PERPENDICULAR TO THE JOINT.

BILL OF MATERIAL		
END BENT NO.	ELASTOMERIC CONCRETE ✳ (CU. m)	TOTAL LENGTH OF ANGLE (m)
1	0.3	30.635
2	0.3	30.635

✳ BASED ON THE MINIMUM BLOCKOUT SHOWN.

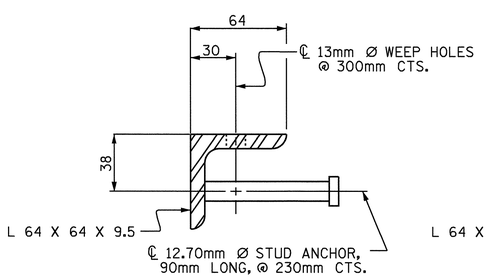

SECTION VIEW OF STUD

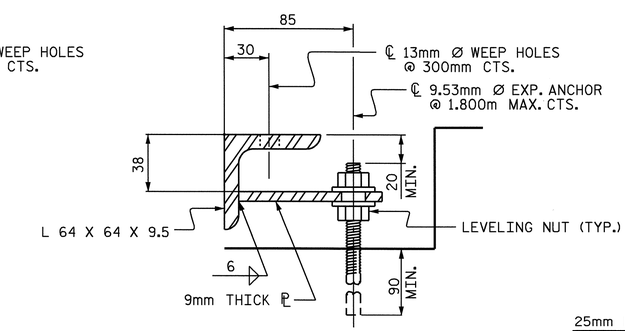

SECTION VIEW OF TAB

ARMORED JOINT ANCHOR ASSEMBLY DETAILS

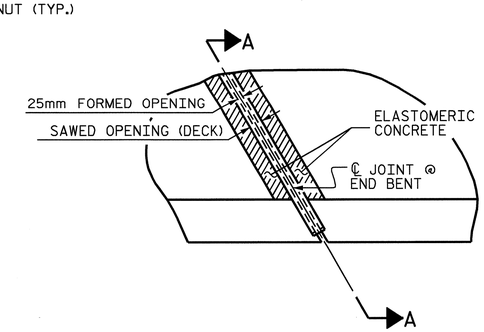

PLAN

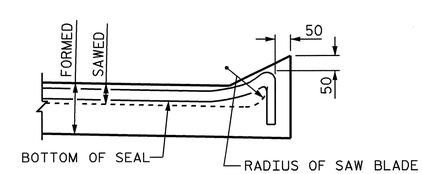

SECTION A-A

PROJECT NO. R-2554BA
WAYNE COUNTY
STATION: 103+80.709 -L-

SHEET 2 OF 3

STATE OF NORTH CAROLINA
DEPARTMENT OF TRANSPORTATION
RALEIGH

STANDARD
ARMORED EVAZOTE JOINT DETAILS
(RIGHT LANE)

NORTH CAROLINA PROFESSIONAL SEAL 22005 ENGINEER A. KEITH PASCHAL
6/9/08

REVISIONS						SHEET NO.
NO.	BY:	DATE:	NO.	BY:	DATE:	S-269
1			3			TOTAL SHEETS
2			4			478

STD. NO. AEJ1SM

ASSEMBLED BY : J. G. KHARVA	DATE : 10/25/07		
CHECKED BY : J. D. HAWK	DATE : 4/25/08		
DRAWN BY : EEM 1/96	REV. 7/10/01	LES/RDR	
CHECKED BY : RGW 1/96	REV. 5/7/03	RRR RWW/JTE	
	REV. 5/1/06	TLA/GM	

09-JUN-2008 08:49
R:\Structures\BULLOCK\Str#9\FINAL PLANS\R-2554BA_sd_AS_09.dgn
jdhawk

STR. #9

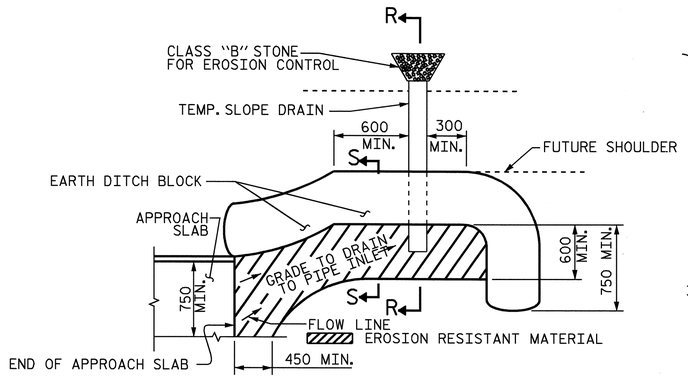

NOTE: IMMEDIATELY AFTER THE CONSTRUCTION OF THE APPROACH SLAB, THE CONTRACTOR SHALL PROVIDE TEMPORARY BERM AND SLOPE DRAIN. CONTRACTOR SHALL GRADE TO PIPE INLET AND PROVIDE EROSION RESISTANT MATERIAL AS SHOWN. THE EROSION RESISTANT MATERIAL SHALL BE EITHER 1) ASPHALT PLANT MIX, TYPE 1 OR TYPE 2, MIN. 50mm DEPTH, 2) EROSION CONTROL MAT, OR 3) CONCRETE, AS DIRECTED BY THE ENGINEER. THE SLOPE DRAIN SHALL CONSIST OF A NON-PERFORATED TEMPORARY DRAINAGE PIPE, 305mm IN DIAMETER.

PLAN VIEW

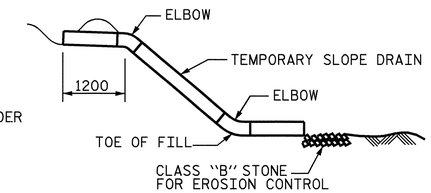

SECTION R-R

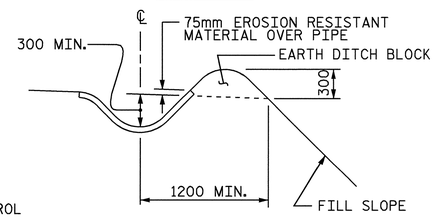

SECTION S-S

TEMPORARY BERM AND SLOPE DRAIN DETAILS

(TO BE USED WHEN SHOULDER BERM GUTTER IS REQUIRED)

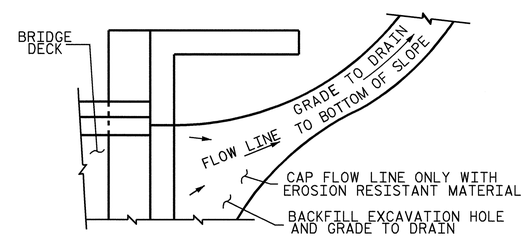

NOTE: IF THE APPROACH SLAB IS NOT CONSTRUCTED IMMEDIATELY AFTER THE BACKFILLING OF THE END BENT EXCAVATION, GRADE TO DRAIN TO THE BOTTOM OF THE SLOPE AND PROVIDE EROSION RESISTANT MATERIAL, SUCH AS FIBERGLASS ROVING OR AS DIRECTED BY THE ENGINEER TO PREVENT SOIL EROSION AND TO PROTECT THE AREA ADJACENT TO THE STRUCTURE. THE CONTRACTOR WILL BE REQUIRED TO REMOVE THESE MATERIALS PRIOR TO CONSTRUCTION OF THE APPROACH SLAB.

TEMPORARY DRAINAGE DETAIL

PROJECT NO. R-2554BA
WAYNE COUNTY
STATION: 103+80.709 -L-

SHEET 3 OF 3

STATE OF NORTH CAROLINA
DEPARTMENT OF TRANSPORTATION
RALEIGH

STANDARD
BRIDGE APPROACH SLAB DETAILS
(RIGHT LANE)

NORTH CAROLINA PROFESSIONAL SEAL 22005 ENGINEER W. KEITH PASCHAL
6/9/08

REVISIONS						SHEET NO.
NO.	BY:	DATE:	NO.	BY:	DATE:	S-270
1			3			TOTAL SHEETS
2			4			478

ASSEMBLED BY : J. G. KHARVA	DATE : 09/26/07
CHECKED BY : J. D. HAWK	DATE : 10/11/07
DRAWN BY : FCJ 11/88	REV. 10/17/00 RWW/LES
CHECKED BY : ARB 11/88	REV. 5/7/03 RWW/JTE
	REV. 5/1/06R MAA/KMM

09-JUN-2008 08:49
R:\Structures\BULLOCK\Str#9\FINAL PLANS\R-2554BA_sd_AS_09.dgn
kdhaWK

STR. #9

STD. NO. BAS10SM

F. A. PROJECT NO. NHS-70(106)

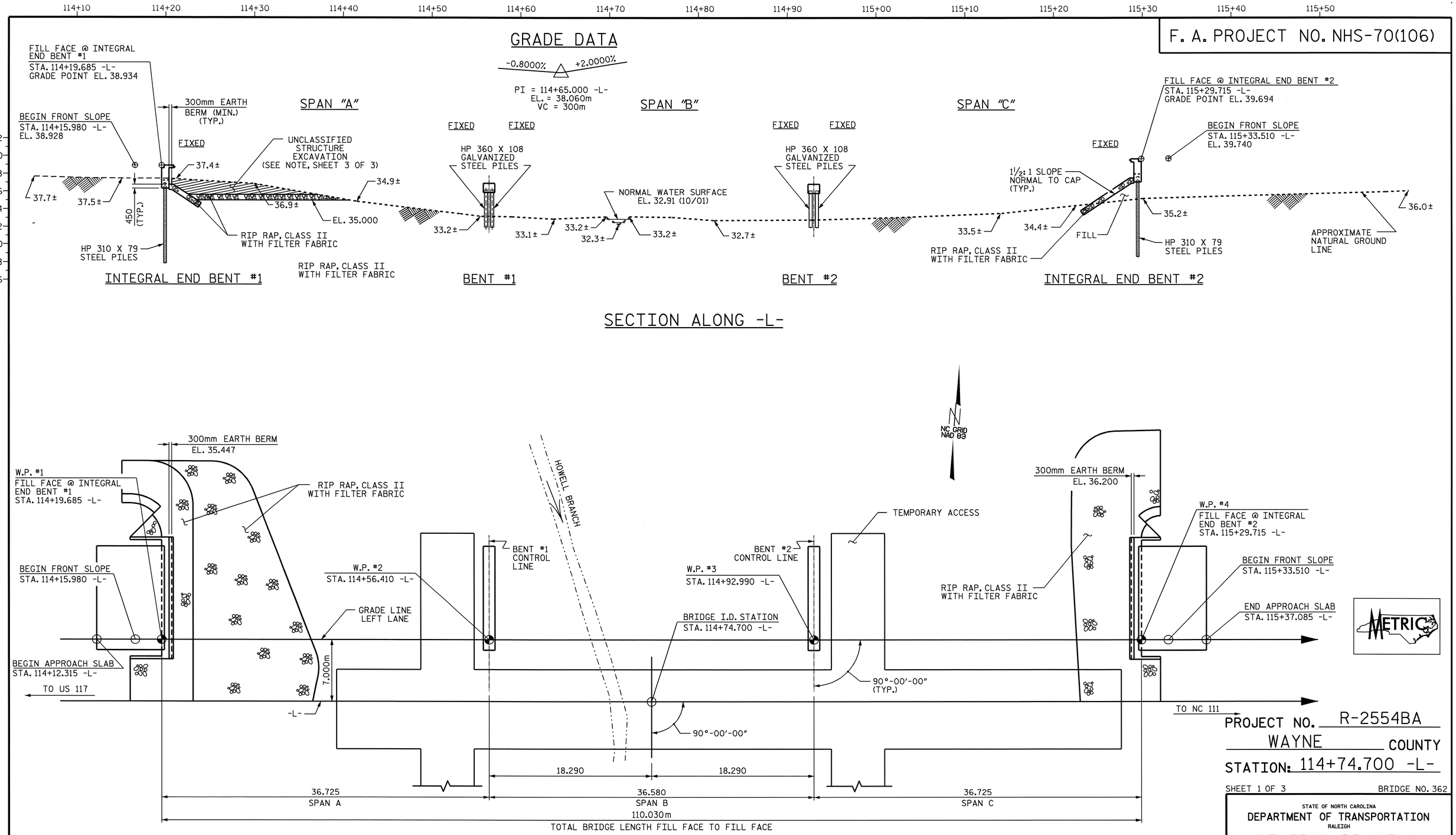

SECTION ALONG -L-

PLAN

(PILES NOT SHOWN FOR CLARITY)

PROJECT NO. R-2554BA

WAYNE COUNTY

STATION: 114+74.700 -L-

SHEET 1 OF 3 BRIDGE NO. 362

STATE OF NORTH CAROLINA
DEPARTMENT OF TRANSPORTATION
RALEIGH

GENERAL DRAWING

FOR BRIDGE OVER HOWELL BRANCH ON US 70 BYPASS BETWEEN US 117 AND NC 111 (LEFT LANE)

NORTH CAROLINA PROFESSIONAL SEAL 12274 ENGINEER OMAR R. AZIZ
6/6/08

NORTH CAROLINA PROFESSIONAL SEAL 14045 ENGINEER TIMOTHY L. COGGINS
6/6/08

REVISIONS								SHEET NO.
NO.	BY:	DATE:	NO.	BY:	DATE:			S-271
1			3					TOTAL SHEETS
2			4					478

DRAWN BY : PEGGY ADKINS DATE : 2-06
CHECKED BY : Z. RORIE DATE : 11-06

06-JUN-2008 11:54
r:\structures\azlz1\Str#10\FINAL PLANS\r2554ba_sd_gd_10.dgn
padkins

STR. #10

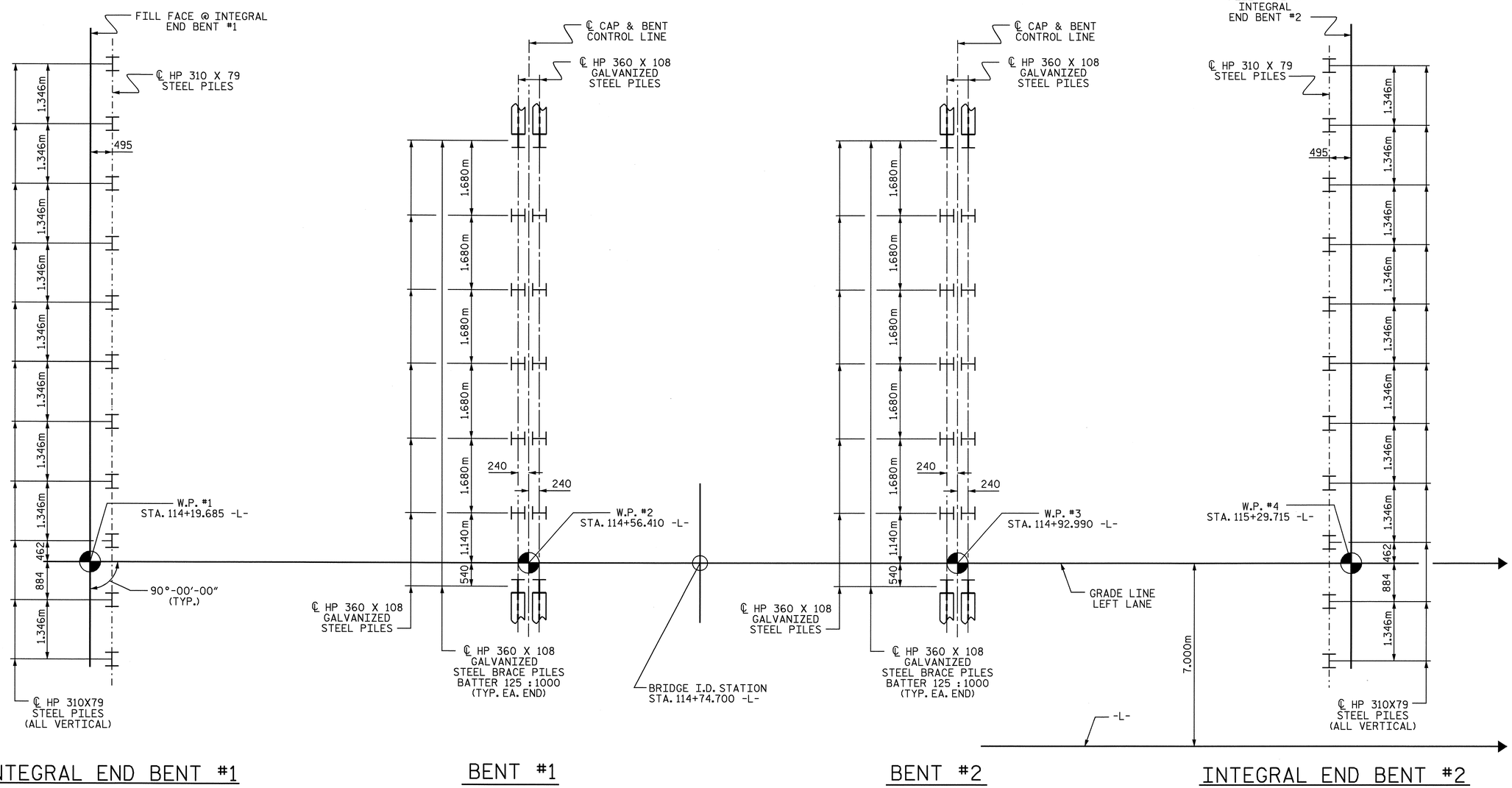

FOUNDATION LAYOUT

DIMENSIONS LOCATING PILES ARE SHOWN TO PILE CENTERLINE AT BOTTOM OF CAP

PROJECT NO. R-2554BA

WAYNE COUNTY

STATION: 114+74.700 -L-

SHEET 2 OF 3

STATE OF NORTH CAROLINA
DEPARTMENT OF TRANSPORTATION
RALEIGH

GENERAL DRAWING

FOR BRIDGE OVER HOWELL BRANCH ON US 70 BYPASS BETWEEN US 117 AND NC 111

(LEFT LANE)

NORTH CAROLINA PROFESSIONAL SEAL 14045 ENGINEER TIMOTHY L. COGGINS

6/6/08

REVISIONS							
NO.	BY:	DATE:	NO.	BY:	DATE:		
1			3				
2			4				

SHEET NO. S-272

TOTAL SHEETS 478

DRAWN BY : B.N.BARODAWALA DATE : 4-28-08
CHECKED BY : T.L. AVERETTE DATE : 4-08

06-JUN-2008 11:29
g:\structures\azlzl\str#10\finalplans\r2554ba_sd_gd_10.dgn
tcoggins

STR. #10

BM #5 RR SPIKE IN BASE OF 360mm OAK 36.829m RT. OF -BL- STA. 31+74.508; ELEV. 36.147, NGVD 1929.

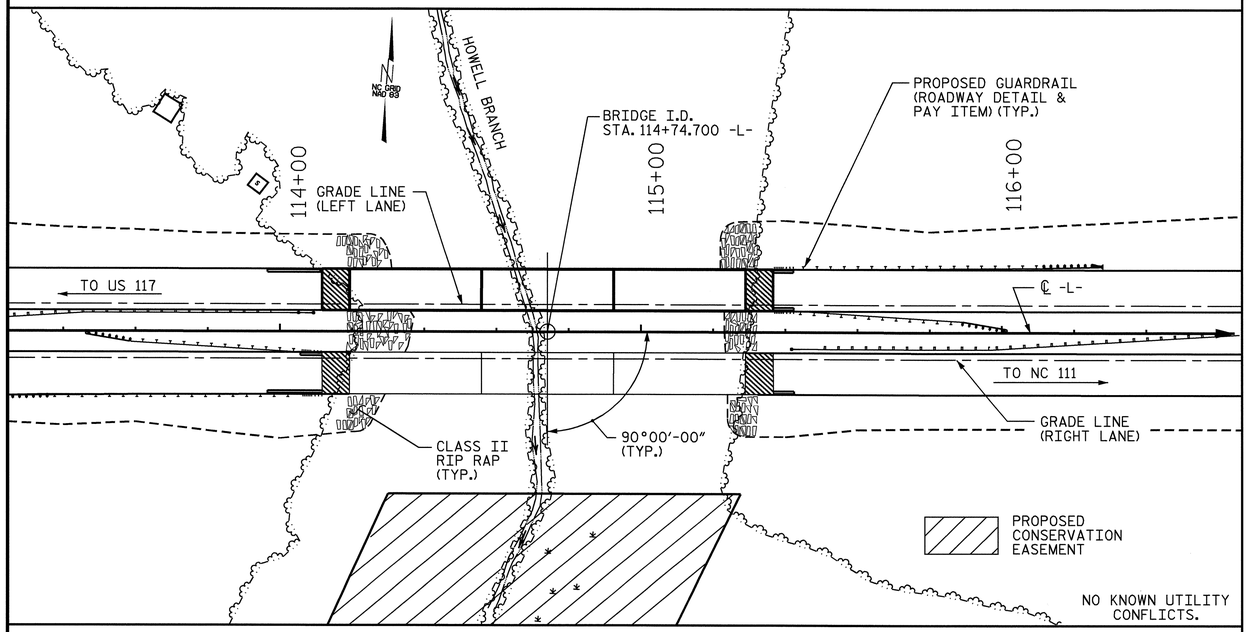

LOCATION SKETCH

HYDRAULIC DATA

DESIGN DISCHARGE	= 26.7 m3/s
FREQUENCY OF DESIGN FLOOD	= 50 YR.
DESIGN HIGH WATER ELEVATION	= 34.12m
DRAINAGE AREA	= 2.7 Sq. Km.
BASIC DISCHARGE (Q100)	= 30.8 m3/s
BASIC HIGH WATER ELEVATION	= 34.20m

OVERTOPPING FLOOD DATA

OVERTOPPING DISCHARGE	= 940 m3/s
FREQUENCY OF OVERTOPPING FLOOD	= > 500 YR.
OVERTOPPING FLOOD ELEVATION	= 38.92m *

* OVERTOPPING ELEV. IS AT THE UPSTREAM BRIDGE SECTION. ALL OTHER ELEVATIONS ARE AT THE APPROACH SECTIONS.

NOTES:

ASSUMED LIVE LOAD = MS18 OR ALTERNATE LOADING, EXCEPT THAT THE GIRDERS HAVE BEEN DESIGNED FOR MS22.5.

THIS BRIDGE HAS BEEN DESIGNED IN ACCORDANCE WITH THE REQUIREMENTS OF AASHTO STANDARD SPECIFICATIONS FOR SEISMIC DESIGN OF HIGHWAY BRIDGES FOR SEISMIC PERFORMANCE CATEGORY A.

ALL DIMENSIONS ARE IN MILLIMETERS UNLESS OTHERWISE NOTED.

ALL ELEVATIONS ARE IN METERS.

FOR OTHER DESIGN DATA AND GENERAL NOTES, SEE SHEET SNSM.

FOR EROSION CONTROL MEASURES, SEE EROSION CONTROL PLANS.

THIS BRIDGE HAS BEEN DESIGNED BY THE STRENGTH DESIGN METHOD AS SPECIFIED IN AASHTO STANDARD SPECIFICATIONS.

REMOVABLE FORMS MAY BE USED IN LIEU OF METAL STAY-IN-PLACE FORMS IN ACCORDANCE WITH ARTICLE 420-3 OF THE STANDARD SPECIFICATIONS.

THE CONTRACTOR SHALL PROVIDE INDEPENDENT ASSURANCE SAMPLES OF REINFORCING STEEL AS FOLLOWS: FOR PROJECTS REQUIRING UP TO 360,000 kg OF REINFORCING STEEL, ONE 760mm SAMPLE OF EACH SIZE BAR USED, AND FOR PROJECTS REQUIRING OVER 360,000 kg OF REINFORCING STEEL, TWO 760mm SAMPLES OF EACH SIZE BAR USED. THE BARS FROM WHICH THE SAMPLES ARE TAKEN MUST THEN BE SPLICED WITH REPLACEMENT BARS OF THE SIZE AND LENGTH OF THE SAMPLE PLUS A MINIMUM LAP SPLICE OF THIRTY BAR DIAMETERS.

NEEDLE BEAMS WILL NOT BE ALLOWED UNLESS OTHERWISE CALLED FOR ON THE PLANS OR APPROVED BY THE ENGINEER.

FOR SUBMITTAL OF WORKING DRAWINGS, SEE SPECIAL PROVISIONS.

FOR METRIC STRUCTURAL STEEL, SEE SPECIAL PROVISIONS.

FOR FALSEWORK AND FORMWORK, SEE SPECIAL PROVISIONS.

FOR PRESTRESSED CONCRETE MEMBERS, SEE SPECIAL PROVISIONS.

FOR CONSTRUCTION, MAINTENANCE AND REMOVAL OF TEMPORARY ACCESS AT STATION 114+74.700 -L-, SEE SPECIAL PROVISIONS.

FOR CRANE SAFETY, SEE SPECIAL PROVISIONS.

FOR CRACK REPAIR OF PRESTRESSED CONCRETE GIRDERS, SEE SPECIAL PROVISIONS.

FOR GROUT FOR STRUCTURES, SEE SPECIAL PROVISIONS.

THE MATERIAL SHOWN IN THE CROSS-HATCHED AREA SHALL BE EXCAVATED FOR A DISTANCE OF 23m TO THE LEFT SIDE OF CENTERLINE ROADWAY AS DIRECTED BY THE ENGINEER. THE ESTIMATED QUANTITY IS LESS THAN 500 CUBIC METERS. THIS WORK WILL BE PAID FOR AT THE CONTRACT LUMP SUM PRICE FOR UNCLASSIFIED STRUCTURE EXCAVATION. FOR UNCLASSIFIED STRUCTURE EXCAVATION, SEE SPECIAL PROVISIONS.

DRIVE PILES AT END BENT NO. 1 AND END BENT NO. 2 TO A REQUIRED BEARING CAPACITY OF 1340 KN PER PILE. THE REQUIRED BEARING CAPACITY IS EQUAL TO THE ALLOWABLE BEARING CAPACITY WITH A MINIMUM FACTOR OF SAFETY OF TWO.

DRIVE PILES AT BENT NO. 1 AND BENT NO. 2 TO A REQUIRED BEARING CAPACITY OF 1650 KN PER PILE. THE REQUIRED BEARING CAPACITY IS EQUAL TO THE ALLOWABLE BEARING CAPACITY WITH A MINIMUM FACTOR OF SAFETY OF TWO PLUS ANY ADDITIONAL CAPACITY TO ACCOUNT FOR DOWN DRAG OR NEGATIVE SKIN FRICTION AND SCOUR.

THE ALLOWABLE BEARING CAPACITY FOR PILES AT END BENT NO. 1 AND END BENT NO. 2 IS 670 KN PER PILE.

THE ALLOWABLE BEARING CAPACITY FOR PILES AT BENT NO. 1 AND BENT NO. 2 IS 800 KN PER PILE.

THE SCOUR CRITICAL ELEVATION FOR BENT NO. 1 AND BENT NO. 2 IS 29 METERS. SCOUR CRITICAL ELEVATIONS ARE USED TO MONITOR POSSIBLE SCOUR PROBLEMS DURING THE LIFE OF THE STRUCTURE.

TESTING PILES WITH THE PILE DRIVING ANALYZER (PDA) DURING DRIVING, RESTRIKING OR REDRIVING MAY BE REQUIRED. THE ENGINEER WILL DETERMINE THE NEED FOR PDA TESTING. SEE PILE DRIVING ANALYZER SPECIAL PROVISION.

OBSERVE A SIX MONTH WAITING PERIOD AFTER CONSTRUCTING THE EMBANKMENT TO THE BOTTOM OF CAP ELEVATION BEFORE BEGINNING END BENT CONSTRUCTION AT END BENT NO. 2.

PILE RESTRIKES FOR LRFD MAY BE REQUIRED. SEE PILE RESTRIKES FOR LRFD SPECIAL PROVISION.

FOR EMBANKMENT MONITORING DETAILS, SEE ROADWAY PLANS.

THIS STRUCTURE HAS BEEN DESIGNED IN ACCORDANCE WITH HEC 18, "EVALUATING SCOUR AT BRIDGES", MAY, 2001.

TOTAL BILL OF MATERIAL

	CONSTRUCTION, MAINTENANCE AND REMOVAL OF TEMPORARY ACCESS	PDA TESTING	PDA ASSISTANCE	UNCLASSIFIED STRUCTURE EXCAVATION	REINFORCED CONCRETE DECK SLAB	GROOVING BRIDGE FLOORS	CLASS A CONCRETE	BRIDGE APPROACH SLABS	REINFORCING STEEL	MODIFIED 1829mm PRESTRESSED CONCRETE GIRDER		HP 310 X 79 STEEL PILES		HP 360 X 108 GALVANIZED STEEL PILES		PILE REDRIVES	CONCRETE BARRIER RAIL	RIP RAP CLASS II (600mm THICK)	FILTER FABRIC FOR DRAINAGE	ELASTOMERIC BEARINGS	EVAZOTE JOINT SEALS
	LUMP SUM	EACH	EACH	LUMP SUM	SQ. METERS	SQ. METERS	CU. METERS	LUMP SUM	kg	NO.	METERS	NO.	METERS	NO.	METERS	EACH	METERS	METRIC TON	SQ. METERS	LUMP SUM	LUMP SUM
SUPERSTRUCTURE				LUMP SUM	1357.1	1303.7		LUMP SUM		15	544.800						219.060			LUMP SUM	LUMP SUM
END BENT 1							16.7		2530			11	209.0			4		388	396		
BENT 1							14.6		1406					14	266.0	4					
BENT 2							14.6		1406					14	252.0	4					
END BENT 2							16.7		2530			11	187.0			4		130	133		
TOTAL	LUMP SUM	1	1	LUMP SUM	1357.1	1303.7	62.6	LUMP SUM	7872	15	544.800	22	396.0	28	518.0	16	219.060	518	529	LUMP SUM	LUMP SUM

PROJECT NO. R-2554BA
WAYNE COUNTY
STATION: 114+74.700 -L-

SHEET 3 OF 3

STATE OF NORTH CAROLINA
DEPARTMENT OF TRANSPORTATION
RALEIGH

GENERAL DRAWING

FOR BRIDGE OVER
HOWELL BRANCH ON
US 70 BYPASS BETWEEN
US 117 AND NC 111
(LEFT LANE)

NORTH CAROLINA PROFESSIONAL SEAL 14045 ENGINEER TIMOTHY L. COGGINS
6/6/08

REVISIONS						SHEET NO.
NO.	BY:	DATE:	NO.	BY:	DATE:	S-273
1			3			TOTAL SHEETS
2			4			478

DRAWN BY : PEGGY ADKINS DATE : 2-06
CHECKED BY : Z. RORIE DATE : 3-06

06-JUN-2008 09:50
h:\structures\ozlzl\str#10\finalplans\r2554ba_sd_gd_10.dgn

STR. #10

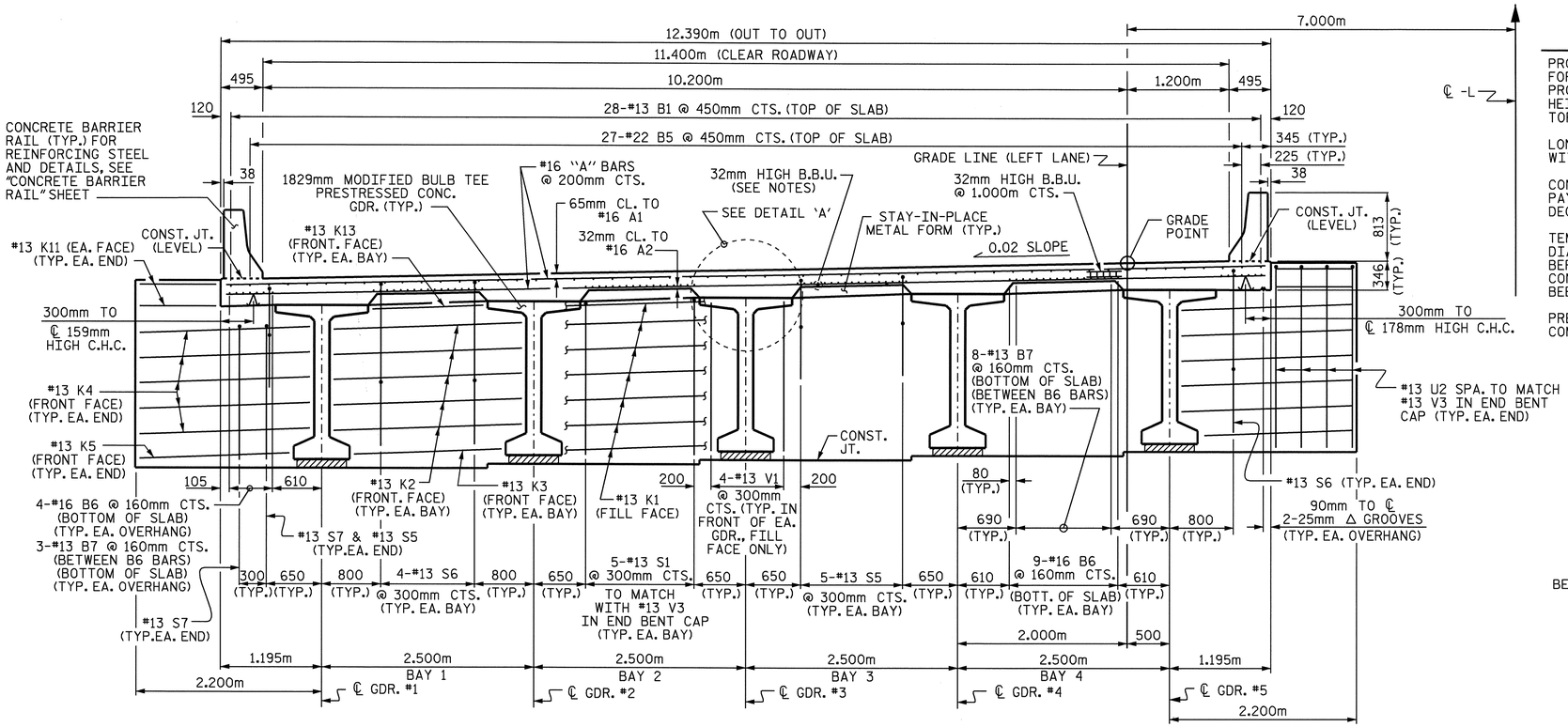

TYPICAL SECTION @ INTEGRAL END BENT

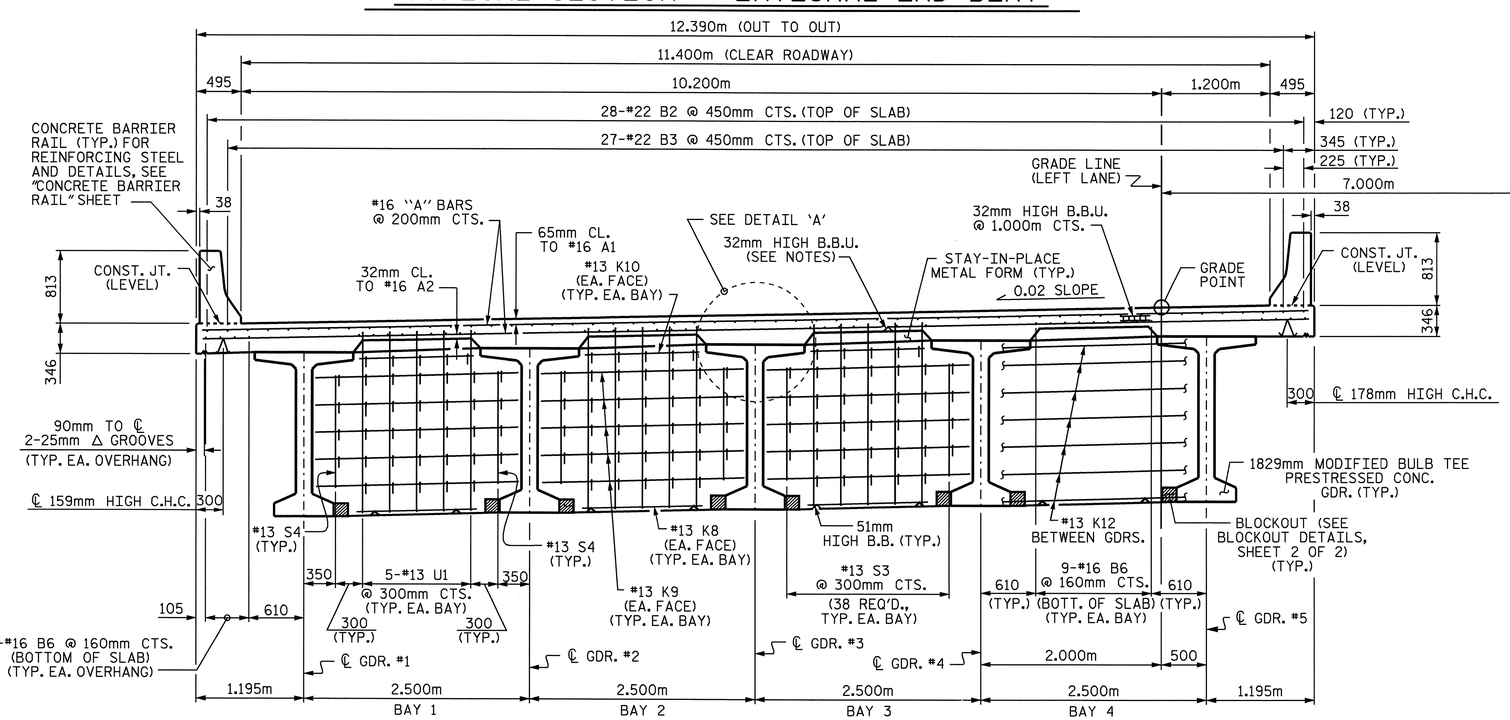

TYPICAL SECTION

AT CONTINUOUS BENT DIAPHRAGMS

NOTES

PROVIDE 32mm HIGH BEAM BOLSTERS UPPER AT 1.2m CTS. ATOP THE METAL STAY-IN-PLACE FORMS TO SUPPORT THE BOTTOM MAT OF 'A' BARS. WHEN USING REMOVABLE FORMS, PROVIDE CONTINUOUS HIGH CHAIRS FOR METAL DECK (C.H.C.M.) @ 1.2m CTS. WITH A HEIGHT TO SUPPORT THE BOTTOM MAT OF 'A' BARS A CLEAR DISTANCE OF 65mm ABOVE THE TOP OF THE REMOVABLE FORM.

LONGITUDINAL STEEL MAY BE SHIFTED SLIGHTLY, AS NECESSARY, TO AVOID INTERFERENCE WITH STIRRUPS IN PRESTRESSED CONCRETE GIRDERS.

CONCRETE IN INTERMEDIATE DIAPHRAGMS MAY BE CLASS A IN LIEU OF CLASS AA. PAYMENT SHALL BE MADE UNDER THE UNIT CONTRACT PRICE FOR REINFORCED CONCRETE DECK SLAB.

TEMPORARY STRUTS SHALL BE PLACED BETWEEN PRESTRESSED GIRDERS ADJACENT TO THE DIAPHRAGMS, AND THE NUTS ON THE 31.75mm DIA. TIE RODS SHALL BE FULLY TIGHTENED BEFORE THE DIAPHRAGMS ARE CAST. STRUTS SHALL REMAIN IN PLACE 3 DAYS AFTER CONCRETE IS PLACED. THE TIE RODS SHALL BE RE-TIGHTENED AFTER THE STRUTS HAVE BEEN REMOVED.

PREVIOUSLY CAST CONCRETE IN A CONTINUOUS UNIT SHALL HAVE ATTAINED A MINIMUM COMPRESSESIVE STRENGTH OF 20.7 MPa BEFORE ADDITIONAL CONCRETE IS CAST IN THE UNIT.

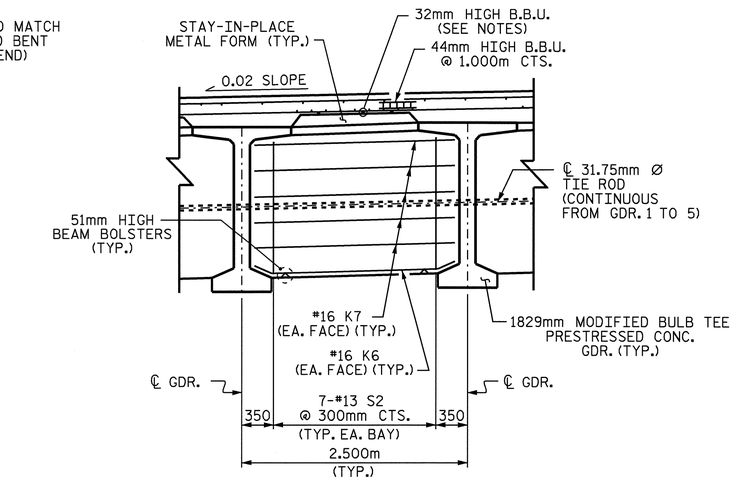

PARTIAL TYPICAL SECTION AT INTERMEDIATE DIAPHRAGMS

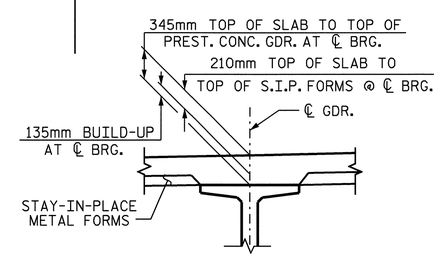

DETAIL 'A'

PROJECT NO. R-2554BA

WAYNE COUNTY

STATION: 114+74.700 -L-

SHEET 1 OF 2

STATE OF NORTH CAROLINA
DEPARTMENT OF TRANSPORTATION
RALEIGH

SUPERSTRUCTURE

TYPICAL SECTION

(LEFT LANE)

NORTH CAROLINA PROFESSIONAL SEAL 14045 ENGINEER TIMOTHY J. COGGINS

Timothy J. Coggins 6/5/08

REVISIONS						SHEET NO.
NO.	BY:	DATE:	NO.	BY:	DATE:	S-274
1			3			TOTAL SHEETS
2			4			478

STR. #10

DRAWN BY : B.N.BARODAWALA DATE : 2-1-07
CHECKED BY : ZION RORIE DATE : 8-13-07

25-APR-2008 09:31
r:\structures\azlzl\str#10\barodawala\r2554ba_sd_ts_10.dgn
jbwilson

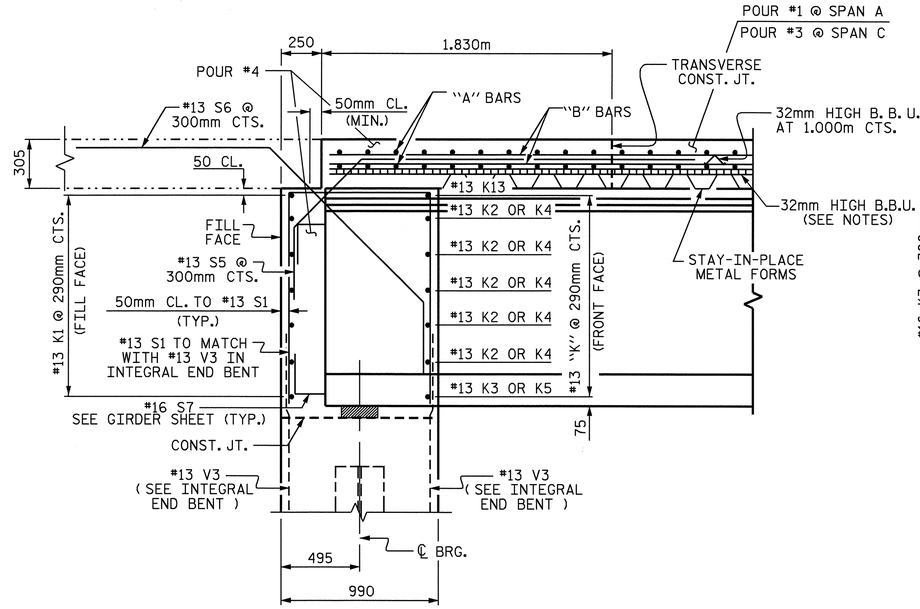

END OF GIRDER DETAIL AT INTEGRAL END BENT

#13 V1 BARS IN FRONT OF GIRDER NOT SHOWN

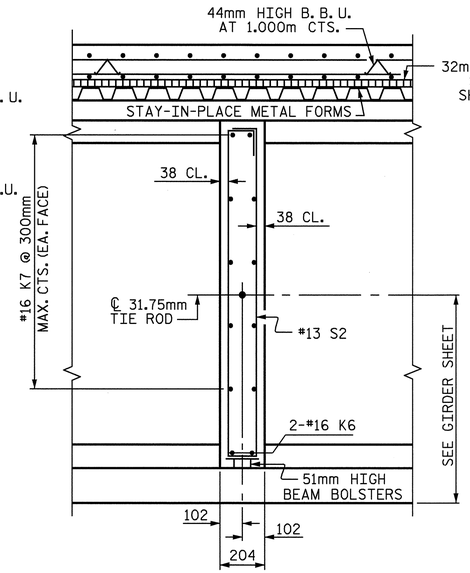

SECTION B-B

SECTION THRU INTERMEDIATE DIAPHGRAMS

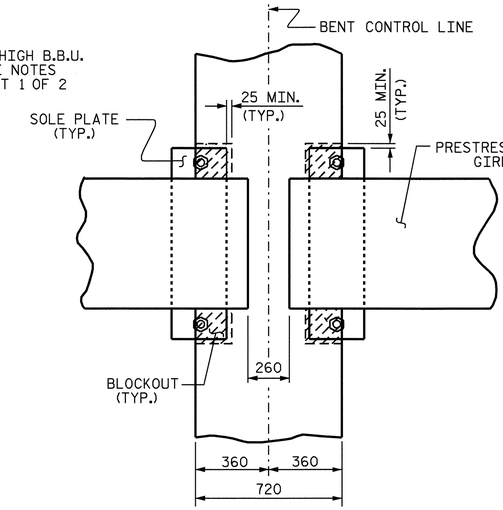

PLAN VIEW

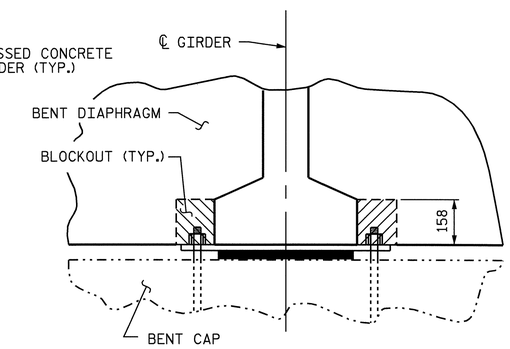

SECTION

BENT DIAPHRAGM BLOCK-OUT DETAIL

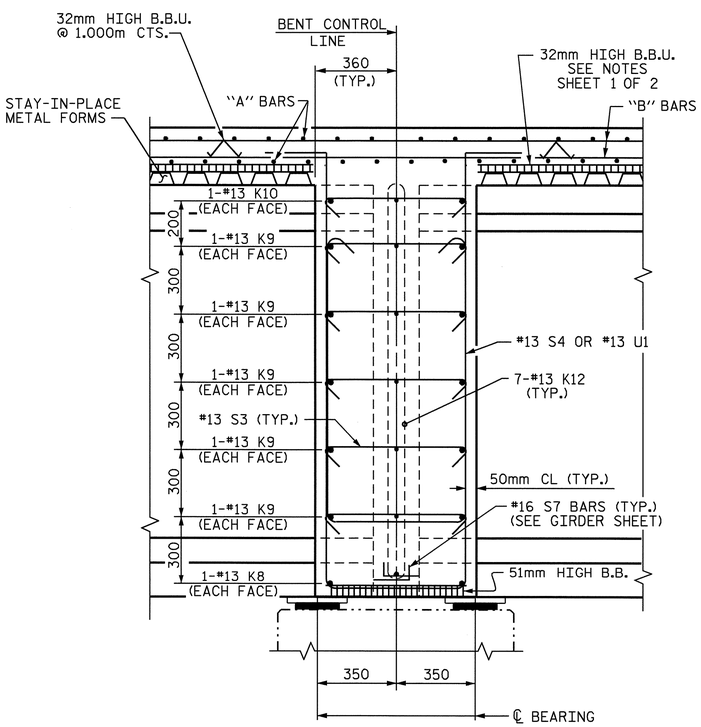

SECTION C-C

SECTION THRU BENT DIAPHGRAMS

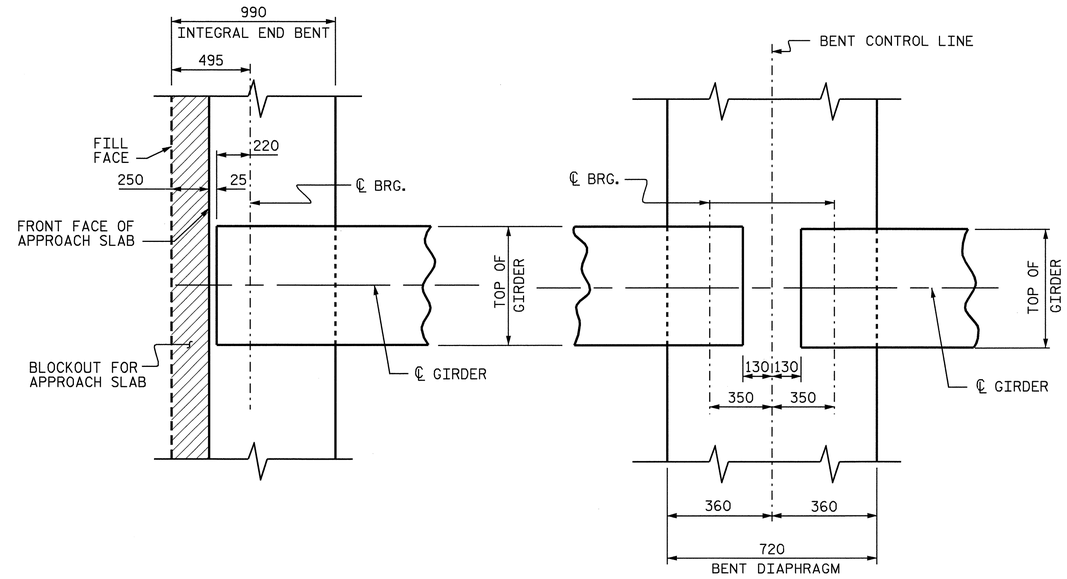

AT INTEGRAL END BENT

AT BENT DIAPHRAGM

PLAN OF GIRDER

PROJECT NO. R-2554BA

WAYNE COUNTY

STATION: 114+74.700 -L-

SHEET 2 OF 2

STATE OF NORTH CAROLINA
DEPARTMENT OF TRANSPORTATION
RALEIGH

SUPERSTRUCTURE

TYPICAL SECTION DETAILS

(LEFT LANE)

NORTH CAROLINA PROFESSIONAL SEAL 14045 ENGINEER TIMOTHY R. COGGINS

Timothy R. Coggins 6/5/08

REVISIONS							SHEET NO.
NO.	BY:	DATE:	NO.	BY:	DATE:		S-275
1			3				TOTAL SHEETS
2			4				478

STR. #10

DRAWN BY : B.N.BARODAWALA DATE : 2-1-07
CHECKED BY : ZION RORIE DATE : 8-13-07

25-APR-2008 09:34
r:\structures\azlzl\str#10\barodawala\r2554ba_sd_ts_10.dgn
jbwilson

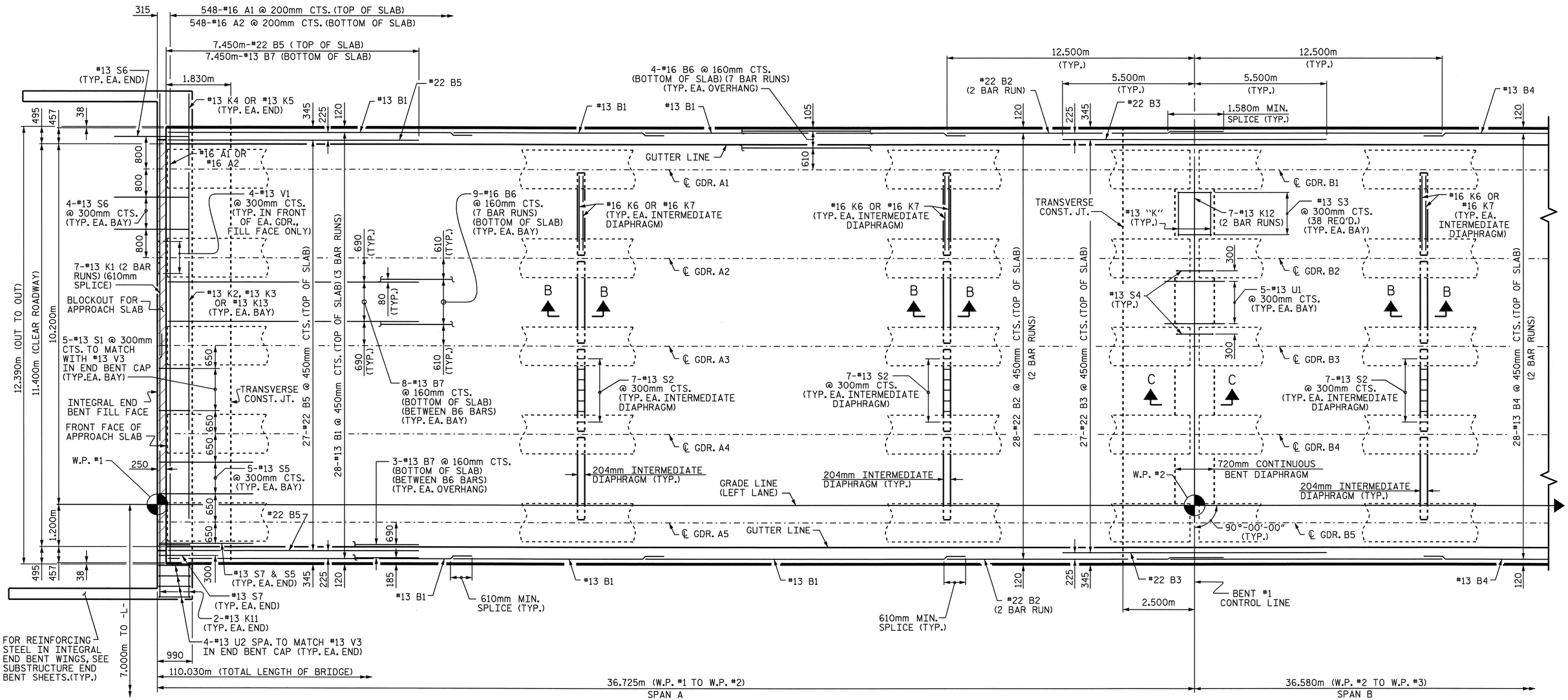

PLAN OF SPAN

FOR LOCATION OF INTERMEDIATE DIAPHRAGMS, SEE "FRAMING PLAN."
FOR SECTIONS B-B AND C-C, SEE "TYPICAL SECTION" SHEET 2 OF 2.

PROJECT NO. R-2554BA
WAYNE COUNTY
STATION: 114+74.700 -L-

SHEET 1 OF 2

STATE OF NORTH CAROLINA
DEPARTMENT OF TRANSPORTATION
RALEIGH

SUPERSTRUCTURE

PLAN OF SPAN
(LEFT LANE)

NORTH CAROLINA PROFESSIONAL SEAL 14045 ENGINEER TIMOTHY L. COGGINS
6/5/08

REVISIONS						SHEET NO.
NO.	BY:	DATE:	NO.	BY:	DATE:	S-276
1			3			TOTAL SHEETS
2			4			478

STR. #10

DRAWN BY : B.N.BARODAWALA DATE : 7-23-07
CHECKED BY : ZION RORIE DATE : 8-13-07

25-APR-2008 09:39
r:\structures\azlzl\str#10\barodawala\r2554ba_sd_s#_10.dgn
jbwilson

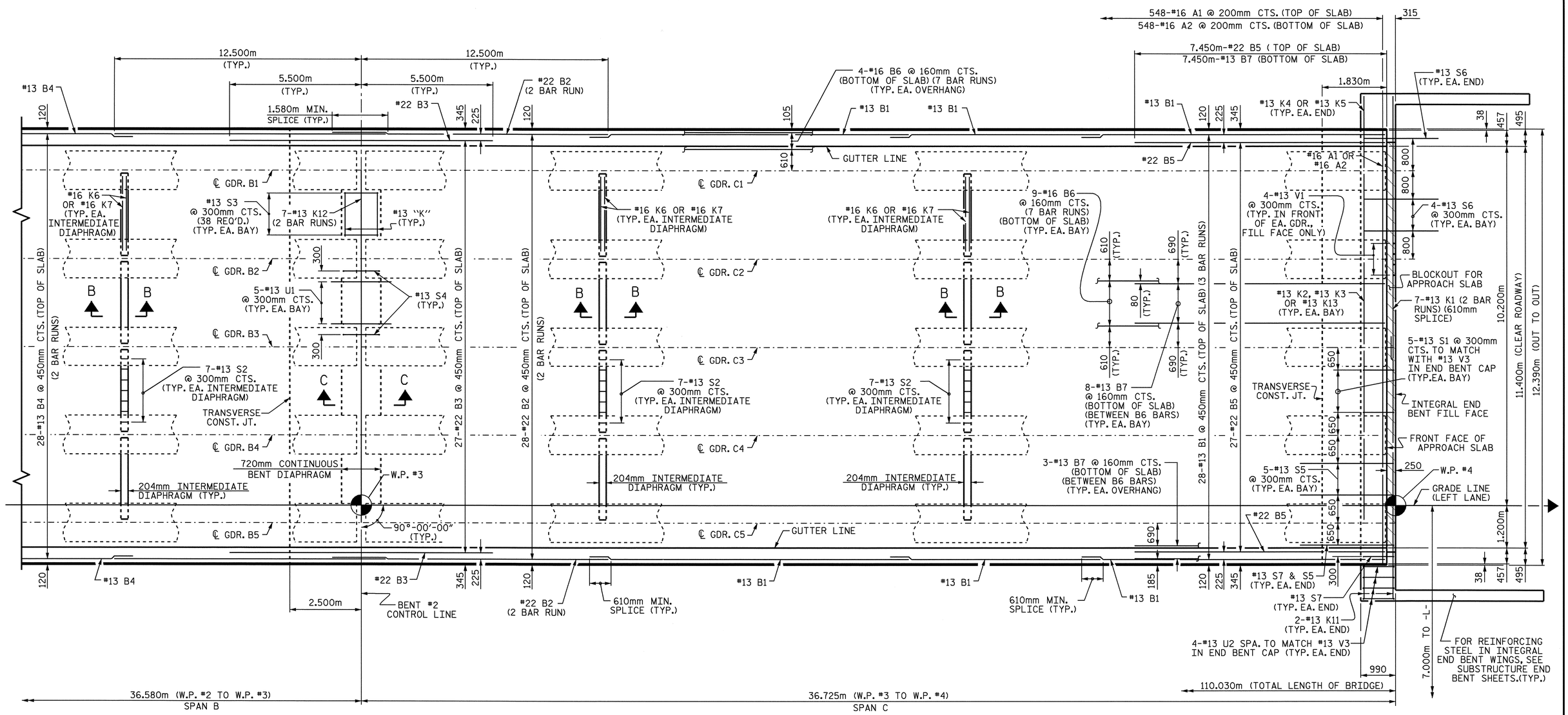

PLAN OF SPAN

FOR LOCATION OF INTERMEDIATE DIAPHRAGMS, SEE "FRAMING PLAN."
FOR SECTIONS B-B AND C-C, SEE "TYPICAL SECTION" SHEET 2 OF 2.

PROJECT NO. R-2554BA
WAYNE COUNTY
STATION: 114+74.700 -L-

SHEET 2 OF 2

STATE OF NORTH CAROLINA
DEPARTMENT OF TRANSPORTATION
RALEIGH

SUPERSTRUCTURE

PLAN OF SPAN
(LEFT LANE)

NORTH CAROLINA PROFESSIONAL SEAL 14045 ENGINEER TIMOTHY A. COGGINS
6/6/08

REVISIONS						SHEET NO.
NO.	BY:	DATE:	NO.	BY:	DATE:	S-277
1			3			TOTAL SHEETS
2			4			478

STR. #10

DRAWN BY : B.N.BARODAWALA DATE : 7-23-07
CHECKED BY : ZION RORIE DATE : 8-13-07

06-JUN-2008 11:08
r:\structures\azlzl\Str#10\FINAL PLANS\r2554ba_sd_s#_10.dgn
padkins

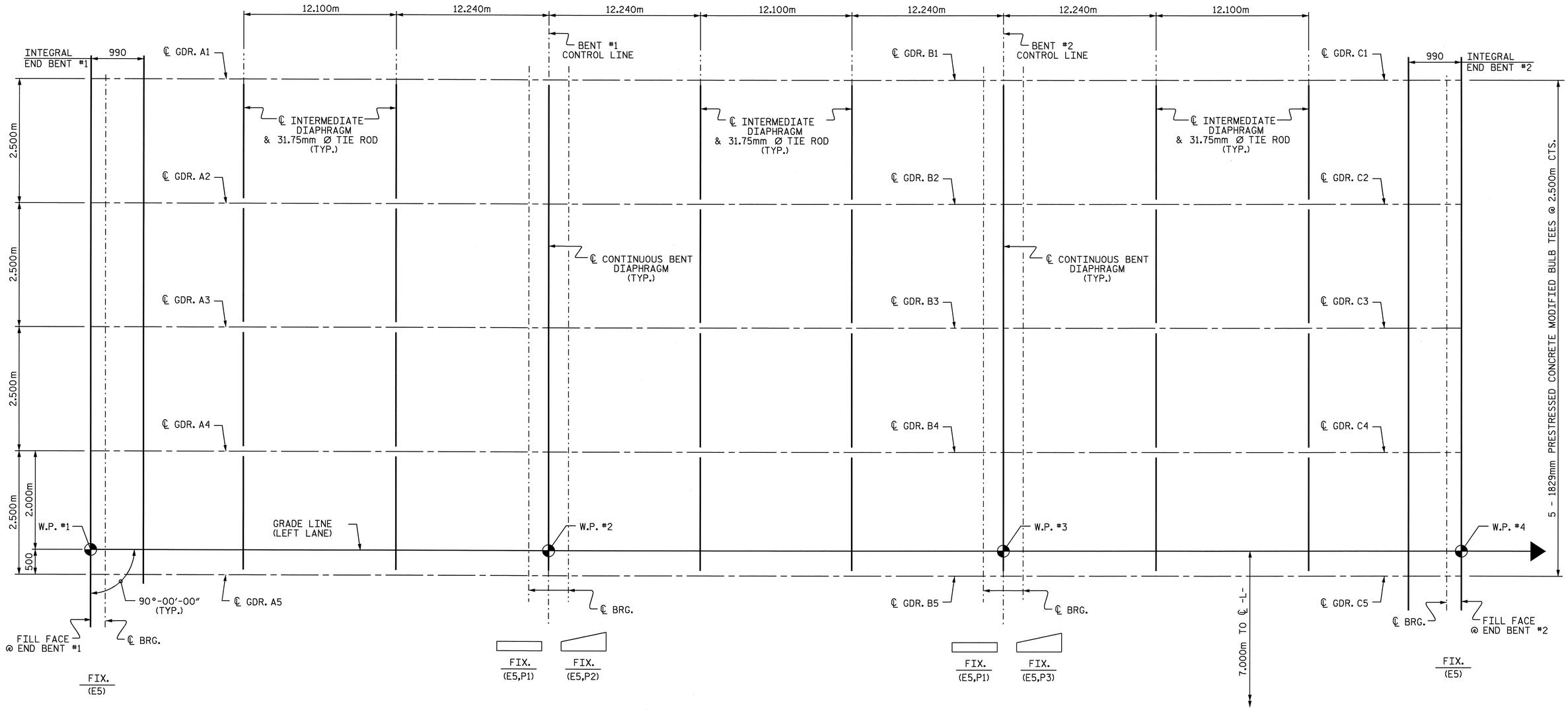

PROJECT NO. R-2554BA

WAYNE COUNTY

STATION: 114+74.700 -L-

GIRDER LAYOUT

STATE OF NORTH CAROLINA
DEPARTMENT OF TRANSPORTATION
RALEIGH

SUPERSTRUCTURE

GIRDER LAYOUT

(LEFT LANE)

NORTH CAROLINA PROFESSIONAL SEAL 14045 ENGINEER TIMOTHY L. COGGINS

6/5/08

REVISIONS						SHEET NO.
NO.	BY:	DATE:	NO.	BY:	DATE:	S-278
1			3			TOTAL SHEETS
2			4			478

STR. #10

DRAWN BY : B.N.BARODAWALA DATE : 7-31-07
CHECKED BY : ZION RORIE DATE : 8-13-07

05-JUN-2008 09:49
g:\tlpprojects-r\r2554ba\structures\azlzl\Str#10\FINAL PLANS\R2554BA_sd_FP_10.dgn
taverette

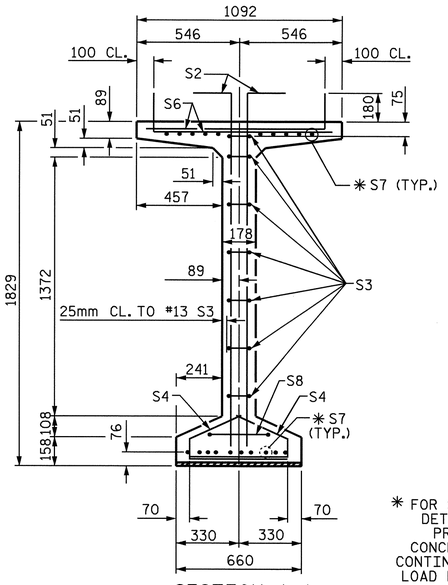

SECTION A-A

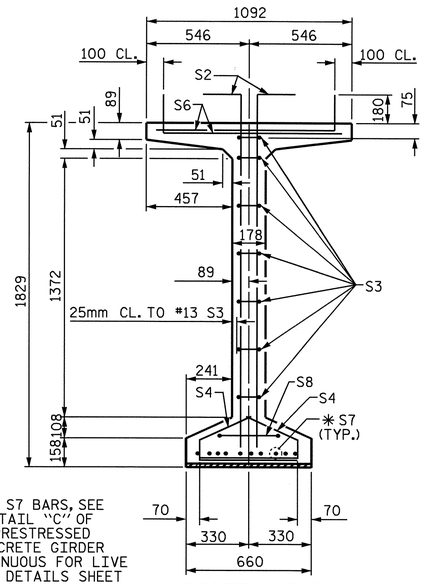

✱ FOR S7 BARS, SEE DETAIL "C" OF PRESTRESSED CONCRETE GIRDER CONTINUOUS FOR LIVE LOAD DETAILS SHEET

SECTION B-B

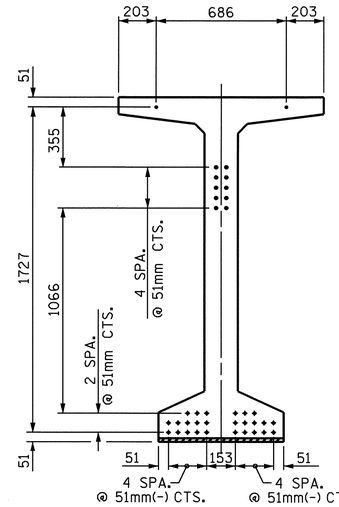

AT END OF GIRDERS

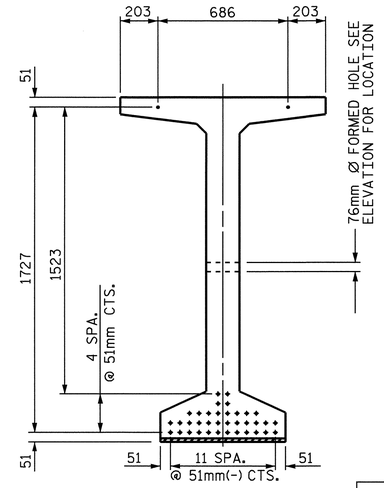

AT ℄ OF GIRDERS

15.24mm Ø LOW RELAXATION STRAND LAYOUT

DEBONDING LEGEND

- FULLY BONDED STRANDS

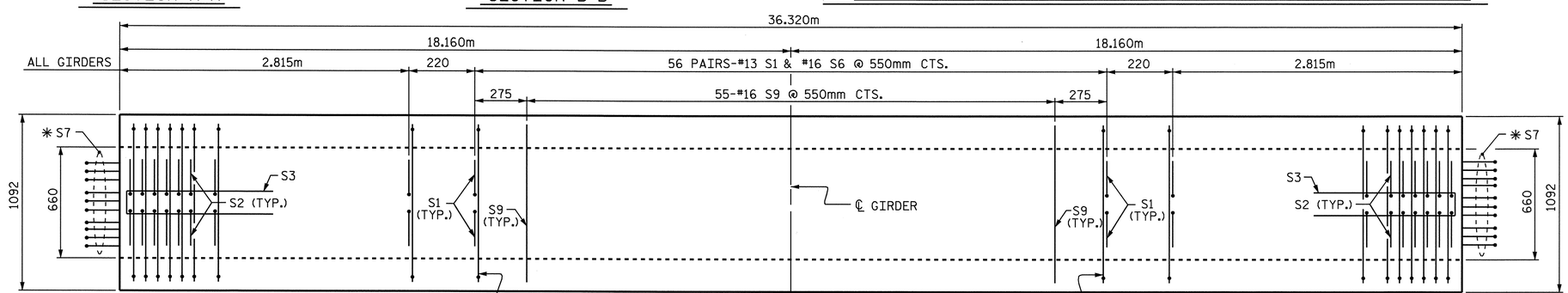

PLAN OF GIRDER

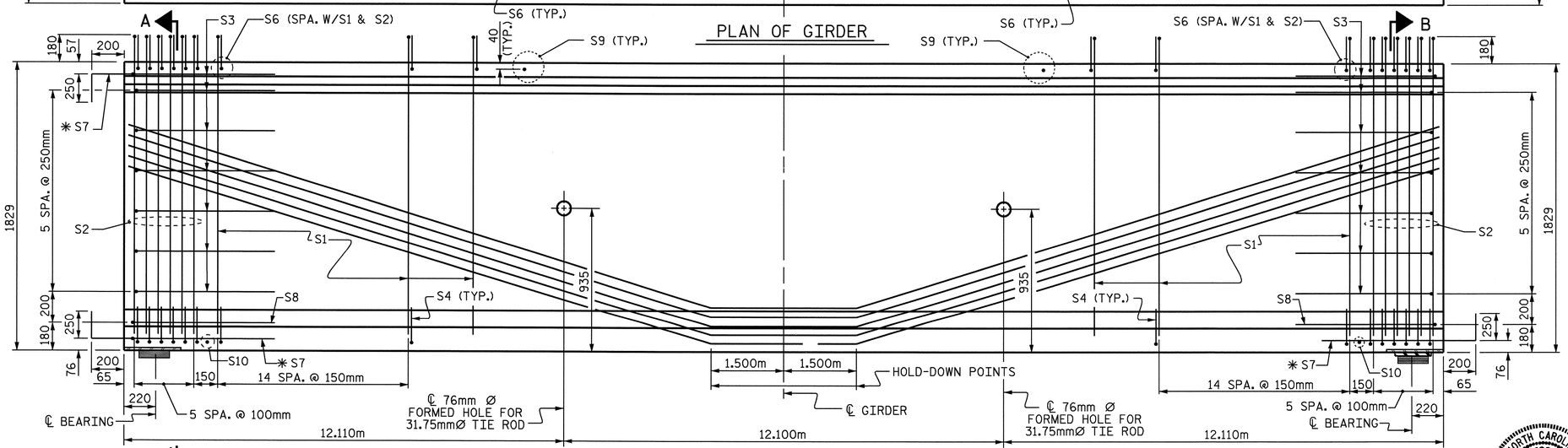

INTEGRAL END BENT

ELEVATION OF GIRDER

FIX

15.24mm Ø L.R. GRADE 270 STRANDS

AREA (mm²)	ULTIMATE STRENGTH (kN PER STRAND)	APPLIED PRESTRESS (kN PER STRAND)
140.0	260.7	195.5

REINFORCING STEEL FOR ONE GIRDER

BAR	NUMBER	SIZE	TYPE	LENGTH	WEIGHT
S1	172	#13	1	2140	366
S2	24	#16	1	2140	80
S3	14	#13	2	2560	36
S4	84	#13	3	920	77
S6	196	#16	1	1160	353
✱ S7	30	#16	STR	1120	52
S8	2	#16	2	2740	9
S9	55	#16	STR	980	84
S10	2	#10	STR	560	1

✱ NOTE: S7 BARS SHALL BE BENT BEFORE SHIPMENT. HEAT BENDING SHALL NOT BE ALLOWED.

BAR TYPES

ALL BAR DIMENSIONS ARE OUT-TO-OUT

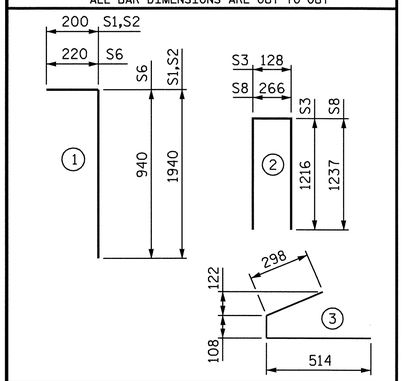

QUANTITIES FOR ONE GIRDER

	REINFORCING STEEL	51.7 MPa CONCRETE	15.24mm Ø L.R. STRANDS
	kg	m³	No.
	1058	19.5	38

GIRDERS REQUIRED

NUMBER	LENGTH	TOTAL LENGTH
10	36.320m	363.200m

PROJECT NO. R-2554BA

WAYNE COUNTY

STATION: 114+74.700 -L-

SHEET 1 OF 3

STATE OF NORTH CAROLINA
DEPARTMENT OF TRANSPORTATION
RALEIGH

1829mm PRESTRESSED CONCRETE MODIFIED BULB TEE CONTINUOUS FOR LIVE LOAD

SPAN A & C (LEFT LANE)

NORTH CAROLINA PROFESSIONAL SEAL 14045 ENGINEER TIMOTHY W. COGGINS
6/5/08

REVISIONS							SHEET NO.
NO.	BY:	DATE:	NO.	BY:	DATE:		S-279
1			3				TOTAL SHEETS
2			4				478

STR. #10

STD. NO. PCG10SM

ASSEMBLED BY : B.N.BARODAWALA DATE : 7-31-07
CHECKED BY : ZION RORIE DATE : 8-13-07

DRAWN BY : EEM 2/6/97
CHECKED BY : VAP 2/6/97

REV. 8/16/99 RWW/LES
REV. 10/17/00 RWW/LES
REV. 5/1/06 TLA/GM

05-JUN-2008 09:47
g:\tlpprojects-r\r2554ba\structures\azlzl\Str#10\FINAL PLANS\r2554ba_sd_bk_10.dgn
taverette

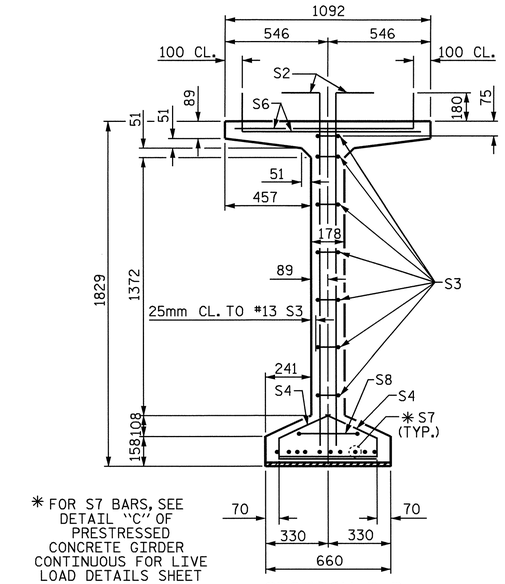

SECTION B-B

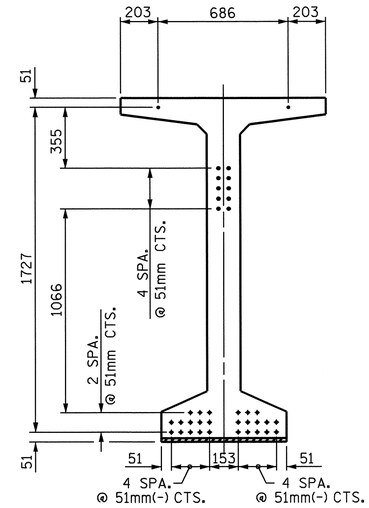

AT END OF GIRDERS

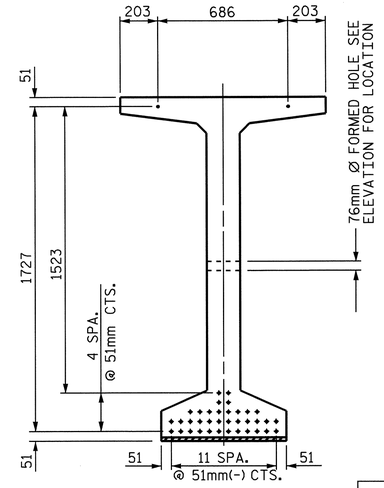

AT ℄ OF GIRDERS

15.24mm Ø LOW RELAXATION STRAND LAYOUT

DEBONDING LEGEND

- FULLY BONDED STRANDS

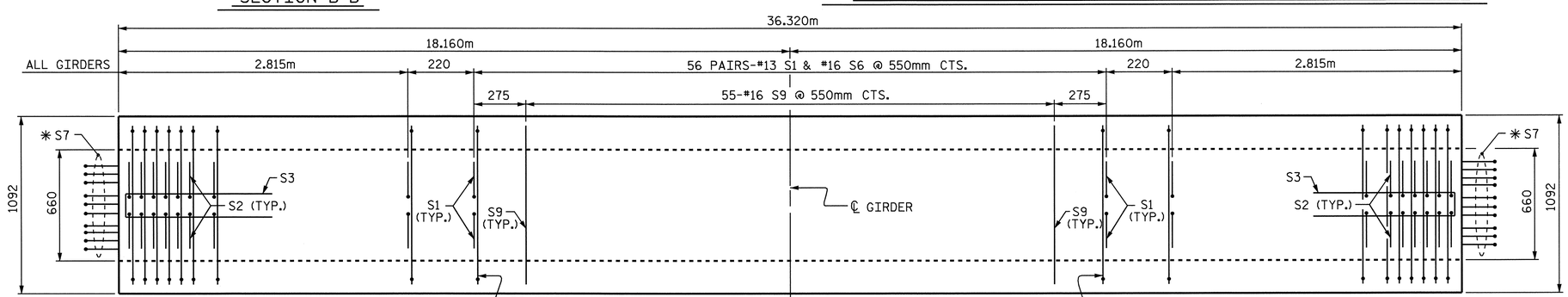

PLAN OF GIRDER

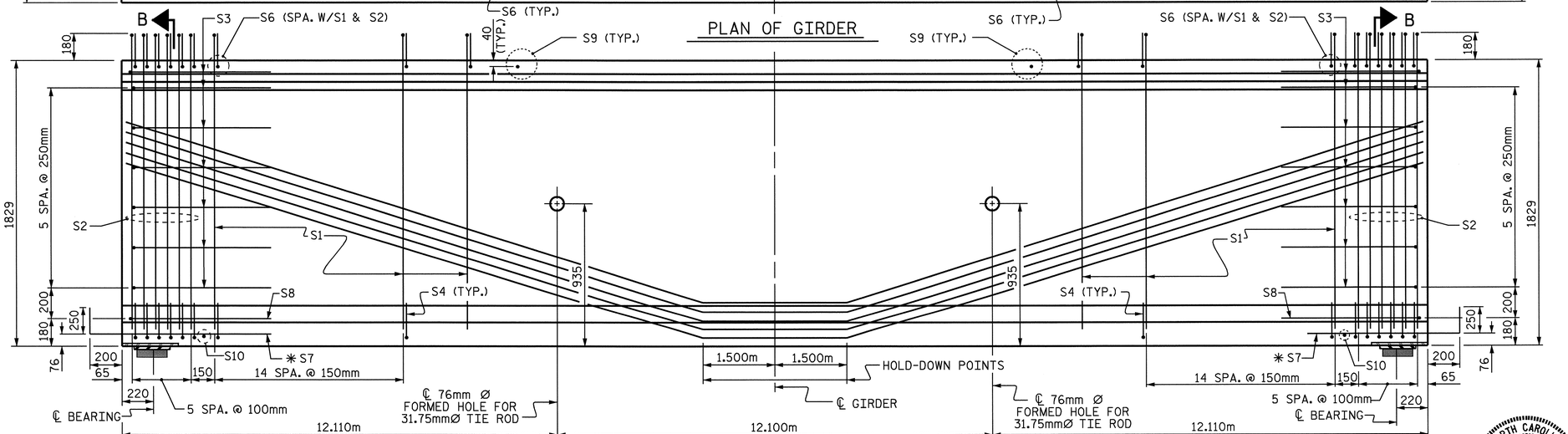

FIX.

ELEVATION OF GIRDER

FIX

15.24mm Ø L.R. GRADE 270 STRANDS

AREA (mm²)	ULTIMATE STRENGTH (KN PER STRAND)	APPLIED PRESTRESS (KN PER STRAND)
140.0	260.7	195.5

REINFORCING STEEL FOR ONE GIRDER

BAR	NUMBER	SIZE	TYPE	LENGTH	WEIGHT
S1	172	#13	1	2140	366
S2	24	#16	1	2140	80
S3	14	#13	2	2560	36
S4	84	#13	3	920	77
S6	196	#16	1	1160	353
✳ S7	20	#16	STR	1120	35
S8	2	#16	2	2740	9
S9	55	#16	STR	980	84
S10	2	#10	STR	560	1

✳ NOTE: S7 BARS SHALL BE BENT BEFORE SHIPMENT. HEAT BENDING SHALL NOT BE ALLOWED.

BAR TYPES

ALL BAR DIMENSIONS ARE OUT-TO-OUT

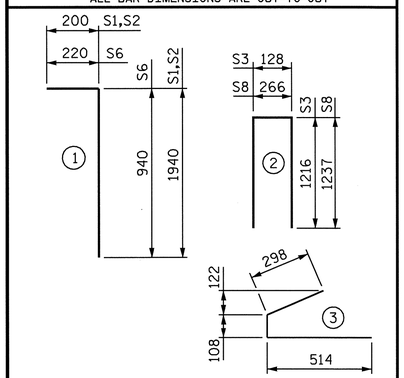

QUANTITIES FOR ONE GIRDER

	REINFORCING STEEL	51.7 MPa CONCRETE	15.24mm Ø L.R. STRANDS
	kg	m³	No.
	1041	19.5	38

GIRDERS REQUIRED

NUMBER	LENGTH	TOTAL LENGTH
5	36.320m	181.600m

PROJECT NO. R-2554BA

WAYNE COUNTY

STATION: 114+74.700 -L-

SHEET 2 OF 3

STATE OF NORTH CAROLINA
DEPARTMENT OF TRANSPORTATION
RALEIGH

1829mm PRESTRESSED CONCRETE MODIFIED BULB TEE CONTINUOUS FOR LIVE LOAD

SPAN B (LEFT LANE)

REVISIONS						SHEET NO.
NO.	BY:	DATE:	NO.	BY:	DATE:	S-280
1			3			TOTAL SHEETS
2			4			478

NORTH CAROLINA PROFESSIONAL SEAL 14045 ENGINEER TIMOTHY L. COGGINS

6/5/08

STR. #10

STD. NO. PCG10SM

ASSEMBLED BY : B.N.BARODAWALA	DATE : 7-31-07
CHECKED BY : ZION RORIE	DATE : 8-13-07
DRAWN BY : EEM 2/6/97	REV. 8/16/99 RWW/LES
CHECKED BY : VAP 2/6/97	REV. 10/17/00 RWW/LES
	REV. 5/1/06 TLA/GM

05-JUN-2008 09:47
g:\tlpprojects-r\r2554ba\structures\azlzl\Str#10\FINAL PLANS\r2554ba_sd_bk_10.dgn
taverette

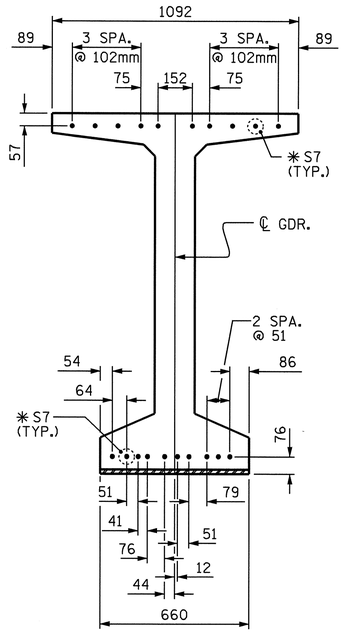

DETAIL "C"

S7 BARS AT TOP OF GIRDER
AT INTEGRAL END BENT ENDS ONLY

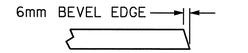

SECTION "G"

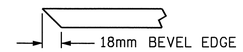

SECTION "F"

(SEE NOTES)

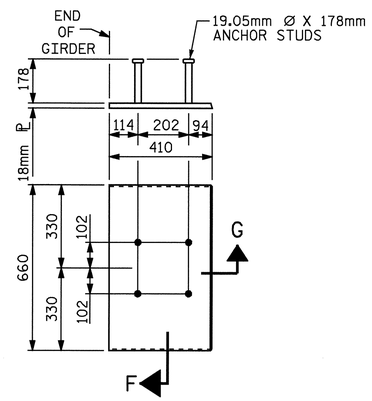

EMBEDDED PLATE "B-1" DETAILS
1829mm MODIFIED BULB TEES

(2 REQ'D PER GIRDER)

NOTES

ALL PRESTRESSING STRANDS SHALL BE 7-WIRE LOW-RELAXATION GRADE 270 STRANDS AND SHALL CONFORM TO AASHTO M203M EXCEPT FOR SAMPLING REQUIREMENTS WHICH SHALL BE IN ACCORDANCE WITH THE STANDARD SPECIFICATIONS.

TIE ROD ASSEMBLY SHALL BE AASHTO M270 GRADE 250 STRUCTURAL STEEL.

ALL REINFORCING STEEL SHALL BE GRADE 420.

EMBEDDED PLATE "B-1" SHALL BE GALVANIZED IN ACCORDANCE WITH THE SPECIFICATIONS. BEVEL EDGES OF PLATE "B-1" TO GIVE CLOSE FIT BUT NOT TIGHT FIT TO STEEL CASTING FORM.

ANCHOR STUDS SHALL CONFORM TO AASHTO M169 GRADES 1010 THROUGH 1020 OR APPROVED EQUAL, AND SHALL MEET THE TYPE "B" REQUIREMENTS OF SUBSECTION 7.3 OF THE ANSI/AASHTO/AWS D1.5 BRIDGE WELDING CODE.

AT ENDS OF GIRDERS TO BE EMBEDDED IN CONCRETE DIAPHRAGMS OR END WALLS, PRESTRESSING STRANDS MAY EXTEND A MAXIMUM OF 50mm BEYOND THE GIRDER ENDS. OTHERWISE, PRESTRESSING STRANDS SHALL BE CUT FLUSH WITH THE GIRDER ENDS.

THE TRANSFER OF LOAD FROM THE ANCHORAGES TO THE GIRDER SHALL BE DONE WHEN CONCRETE HAS REACHED A COMPRESSIVE STRENGTH OF NOT LESS THAN 41.3 MPa.

DEPENDING ON THE TYPE OF SYSTEM USED TO SUPPORT THE DECK SLAB FORMS, PRESET ANCHORS MAY BE NECESSARY IN THE PRESTRESSED CONCRETE GIRDER.

THE TOP SURFACE OF THE GIRDER, EXCLUDING THE OUTSIDE 100mm, SHALL BE RAKED TO A DEPTH OF 6mm.

WHEN DRAPED STRANDS ARE DETAILED, THE LONGITUDINAL LOCATION OF THE HOLD DOWN DEVICES SHALL BE WITHIN 150mm OF THE LOCATION SHOWN AND THE CENTER OF GRAVITY OF THE GROUP OF DRAPED STRANDS SHALL BE LOCATED WITHIN 13mm OF THE THEORETICAL LOCATION SHOWN.

A 51mm x 51mm CHAMFER IS ALLOWED AT THE INTERSECTION OF THE WEB AND THE BOTTOM FLANGE OF THE 1829mm MODIFIED BULB TEES ONLY.

THE CONTRACTOR HAS THE OPTION TO PROVIDE, AT NO ADDITIONAL COST TO THE DEPARTMENT, 2 ADDITIONAL STRANDS AT THE TOP OF THE GIRDER TO FACILITATE TYING OF THE REINFORCING STEEL. THESE STRANDS SHALL BE PULLED TO A LOAD OF 20 Kn.

FOR CRACK REPAIR OF PRESTRESSED CONCRETE GIRDERS, SEE SPECIAL PROVISIONS.

THE UPLIFT FORCE FOR GIRDERS DUE TO DRAPED STRANDS IS 136.9KN.

FOR PRESTRESSED CONCRETE MEMBERS, SEE SPECIAL PROVISIONS.

DEAD LOAD DEFLECTION TABLE FOR SPANS A, B AND C

15.24mm Ø LOW RELAXATION	GIRDER 1											GIRDERS 2, 3 & 4											GIRDER 5										
TENTH POINTS	0	.1	.2	.3	.4	.5	.6	.7	.8	.9	0	0	.1	.2	.3	.4	.5	.6	.7	.8	.9	0	0	.1	.2	.3	.4	.5	.6	.7	.8	.9	0
CAMBER (GIRDER ALONE IN PLACE) ↑	0.000	0.042	0.080	0.109	0.128	0.134	0.128	0.109	0.080	0.042	0.000	0.000	0.042	0.080	0.109	0.128	0.134	0.128	0.109	0.080	0.042	0.000	0.000	0.042	0.080	0.109	0.128	0.134	0.128	0.109	0.080	0.042	0.000
* DEFLECTION DUE TO SUPERIMPOSED D.L. ↓	0.000	0.017	0.033	0.046	0.054	0.057	0.054	0.046	0.033	0.017	0.000	0.000	0.017	0.032	0.044	0.052	0.055	0.052	0.044	0.032	0.017	0.000	0.000	0.018	0.034	0.046	0.054	0.058	0.054	0.046	0.034	0.018	0.000
FINAL CAMBER ↑	0	25	47	63	74	77	74	63	47	25	0	0	25	48	65	76	79	76	65	48	25	0	0	24	46	63	74	76	74	63	46	24	0

* INCLUDES FUTURE WEARING SURFACE IN SUPERIMPOSED DEAD LOAD.
ALL VALUES ARE SHOWN IN METERS, EXCEPT "FINAL CAMBER" WHICH IS SHOWN IN MILLIMETERS.

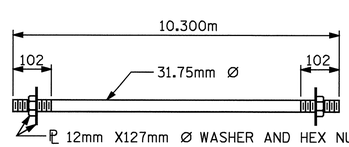

31.75mm Ø TIE ROD ASSEMBLY

(6 COMPLETE ASSEMBLIES REQUIRED)

PROJECT NO. R-2554BA
WAYNE COUNTY
STATION: 114+74.700 -L-

SHEET 3 OF 3

STATE OF NORTH CAROLINA
DEPARTMENT OF TRANSPORTATION
RALEIGH

STANDARD
PRESTRESSED CONCRETE GIRDER
CONTINUOUS FOR LIVE LOAD
DETAILS AND
DEAD LOAD DEFLECTIONS
(LEFT LANE)

NORTH CAROLINA PROFESSIONAL SEAL 14045 ENGINEER TIMOTHY W. COGGINS
6/5/08

REVISIONS						SHEET NO.
NO.	BY:	DATE:	NO.	BY:	DATE:	S-281
1			3			TOTAL SHEETS
2			4			478

ASSEMBLED BY : B.N.BARODAWALA DATE : 7-31-07
CHECKED BY : ZION RORIE DATE : 8-13-07

DRAWN BY : ELR 11/91
CHECKED BY : GRP 11/91

REV. 10/17/00 RWW/LES
REV. 7/10/01RR LES/RDR
REV. 5/1/06 TLA/GM

25-APR-2008 09:38
r:\structures\azlzl\str#10\barodawala\r2554ba_sd_bk_10.dgn
lbwilson

STR. #10

STD. NO. PCG11SM

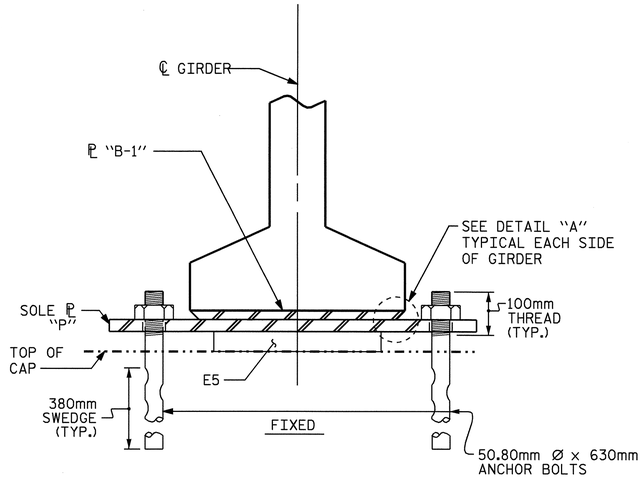

SECTION E-E

(OMIT SOLE PLATE AND ANCHOR BOLTS AT INTEGRAL END BENT)

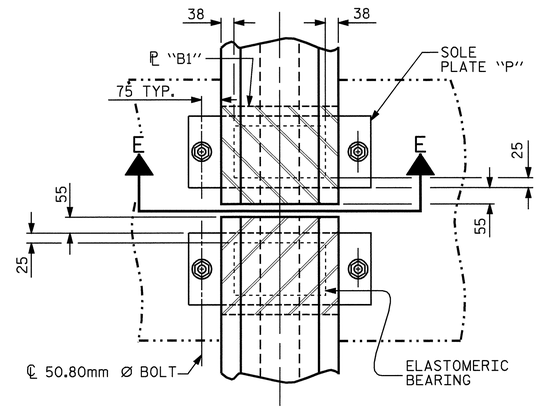

TYPICAL PLAN

(SHOWING CONTINUOUS BENT)

NOTES

AT ALL FIXED POINTS OF SUPPORT, NUTS FOR ANCHOR BOLTS ARE TO BE TIGHTENED FINGER TIGHT AND THEN BACKED OFF ½ TURN. THE THREAD OF THE NUT AND BOLT SHALL THEN BE BURRED WITH A SHARP POINTED TOOL.

STEEL SOLE PLATES, ANCHOR BOLTS, NUTS, AND WASHERS SHALL BE GALVANIZED IN ACCORDANCE WITH THE STANDARD SPECIFICATIONS.

PRIOR TO WELDING, GRIND THE GALVANIZED SURFACE OF THE PORTION OF THE EMBEDDED PLATE AND SOLE PLATE THAT ARE TO BE WELDED. AFTER WELDING, DAMAGED GALVANIZED SURFACES SHALL BE REPAIRED IN ACCORDANCE WITH THE STANDARD SPECIFICATIONS.

WHEN WELDING THE SOLE PLATE TO THE EMBEDDED PLATE IN THE GIRDER, USE TEMPERATURE INDICATING WAX PENS, OR OTHER SUITABLE MEANS, TO ENSURE THAT THE TEMPERATURE OF THE SOLE PLATE DOES NOT EXCEED 149°C. TEMPERATURES ABOVE THIS MAY DAMAGE THE ELASTOMER.

SOLE PLATE "P", BOLTS, NUTS AND WASHERS SHALL BE INCLUDED IN THE PAY ITEM FOR PRESTRESSED CONCRETE GIRDERS.

ANCHOR BOLTS SHALL MEET THE REQUIREMENTS OF ASTM A449. NUTS SHALL MEET THE REQUIREMENTS OF AASHTO M291M-12 OR AASHTO M292M-2H. WASHERS SHALL MEET THE REQUIREMENTS OF AASHTO M293M. SHOP DRAWINGS ARE NOT REQUIRED FOR ANCHOR BOLTS, NUTS AND WASHERS. SHOP INSPECTION IS REQUIRED.

ALL SURFACES OF BEARING PLATES SHALL BE SMOOTH AND STRAIGHT.

LOAD RATINGS	
	MAX.D.L.+ L.L.
TYPE VI	936 kN

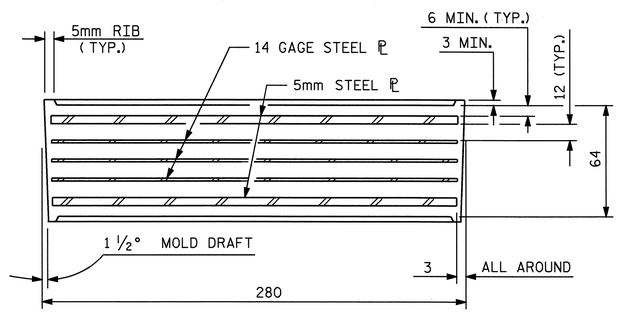

TYPICAL SECTION OF ELASTOMERIC BEARINGS

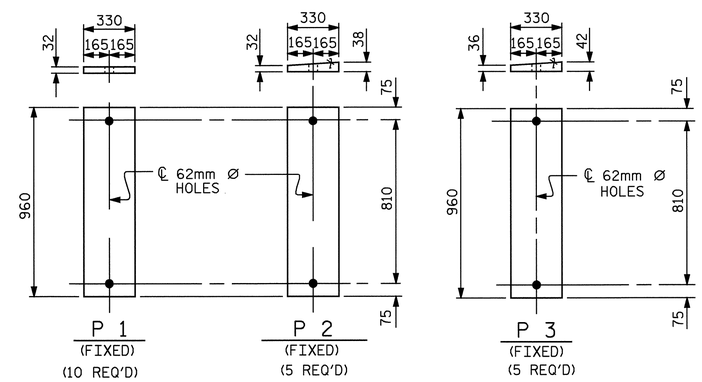

SOLE PLATE DETAILS ("P")

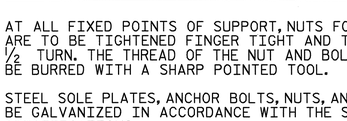

SOLE ℗ PLACEMENT DETAIL

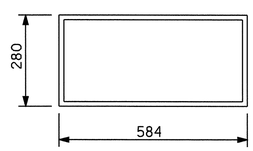

E5 (30 REQ'D)

PLAN VIEW OF ELASTOMERIC BEARING

TYPE VI

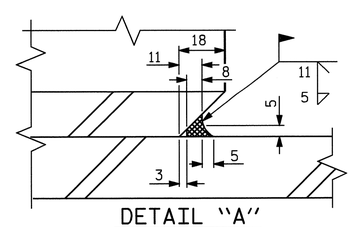

DETAIL "A"

PROJECT NO. R-2554BA

WAYNE COUNTY

STATION: 114+74.700 -L-

STATE OF NORTH CAROLINA
DEPARTMENT OF TRANSPORTATION
RALEIGH

STANDARD
ELASTOMERIC BEARING
DETAILS
PRESTRESSED CONCRETE GIRDER
SUPERSTRUCTURE
(LEFT LANE)

NORTH CAROLINA PROFESSIONAL SEAL 14045 ENGINEER TIMOTHY L. LEDBETTER

Timothy L. Ledbetter 6/5/08

REVISIONS						
NO.	BY:	DATE:	NO.	BY:	DATE:	
1			3			
2			4			

SHEET NO. S-282

TOTAL SHEETS 478

ASSEMBLED BY : B.N.BARODAWALA DATE : 7-31-07
CHECKED BY : ZION RORIE DATE : 8-13-07

DRAWN BY : EEM 2/97
CHECKED BY : VAP 2/97

REV. 8/16/99 RWW/LES
REV. 10/17/00 RWW/LES
REV. 5/1/06 TLA/GM

STR. #10

STD. NO. EB4SM

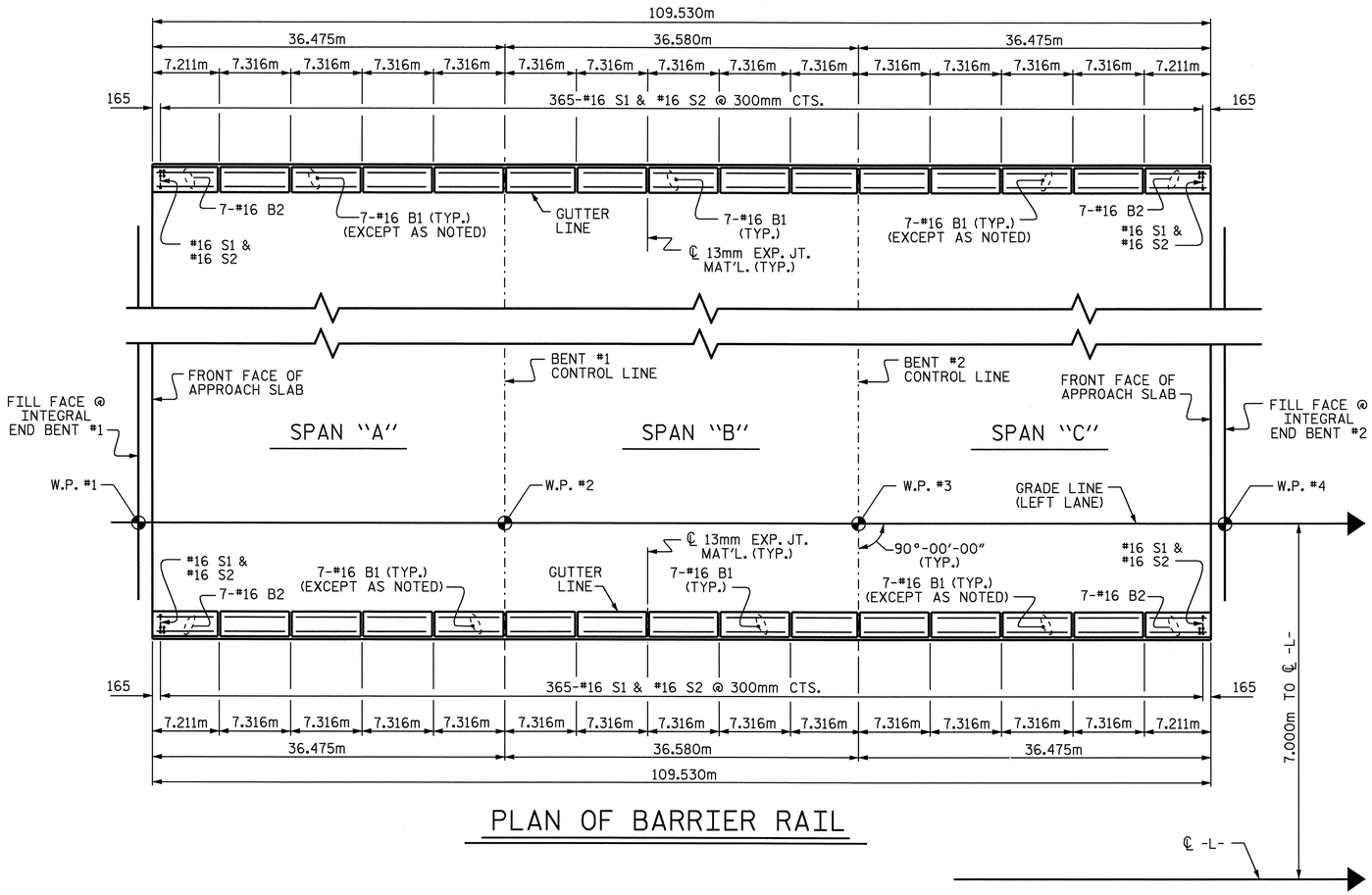

PLAN OF BARRIER RAIL

NOTES

BARRIER RAIL IN CONTINUOUS UNIT SPAN SHALL NOT BE CAST UNTIL ALL SLAB CONCRETE IN THE UNIT HAS BEEN CAST AND HAS REACHED A MINIMUM COMPRESSIVE STRENGTH OF 20.7 MPa.

ALL REINFORCING STEEL IN BARRIER RAILS SHALL BE EPOXY COATED.

VERTICAL GROOVED CONTRACTION JOINTS, 12mm IN DEPTH, SHALL BE TOOLED IN ALL EXPOSED FACES OF THE BARRIER RAIL AND IN ACCORDANCE WITH ARTICLE 825-10(B) OF THE STANDARD SPECIFICATIONS. THE CONTRACTION JOINT SHALL BE LOCATED AT EACH THIRD POINT BETWEEN BARRIER RAIL EXPANSION JOINTS. ONLY ONE CONTRACTION JOINT IS REQUIRED AT MIDPOINT OF BARRIER RAIL SEGMENTS LESS THAN 6.1m IN LENGTH AND NO CONTRACTION JOINTS ARE REQUIRED FOR THOSE SEGMENTS LESS THAN 3.5m IN LENGTH.

THE #16 S1 AND #16 S2 BARS MAY BE SHIFTED SLIGHTLY IN ORDER TO MAINTAIN A 50mm MINIMUM CLEARANCE TO 13mm EXPANSION JOINT MATERIAL IN THE BARRIER RAIL.

BAR TYPES

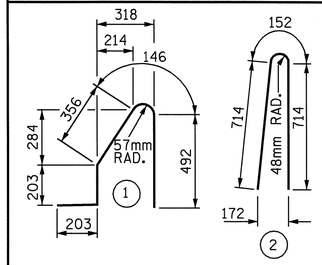

ALL BAR DIMENSIONS ARE OUT TO OUT

BILL OF MATERIAL

FOR CONCRETE BARRIER RAIL ONLY

BAR	NO.	SIZE	TYPE	LENGTH	WEIGHT
* B1	182	#16	STR	7200	2034
* B2	28	#16	STR	7100	309
* S1	730	#16	1	1400	1586
* S2	730	#16	2	1580	1790

* EPOXY COATED REINFORCING STEEL	5719 kg
CLASS AA CONCRETE	55.0 CU. METER
CONCRETE BARRIER RAIL	219.060 METERS

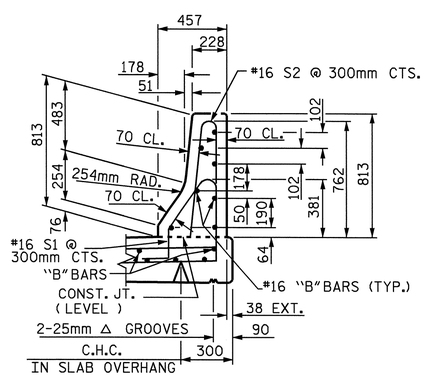

SECTION THRU RAIL

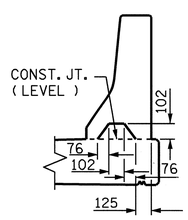

SECTION S-S

AT DAM IN OPEN JOINT
(THIS IS TO BE USED ONLY WHEN SLIP FORM IS USED)

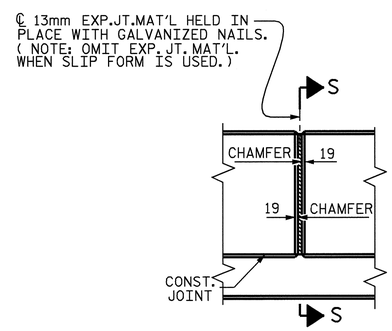

ELEVATION AT EXPANSION JOINTS

BARRIER RAIL DETAILS

PROJECT NO. R-2554BA
WAYNE COUNTY
STATION: 114+74.700 -L-

STATE OF NORTH CAROLINA
DEPARTMENT OF TRANSPORTATION
RALEIGH

STANDARD
CONCRETE BARRIER RAIL
(LEFT LANE)

NORTH CAROLINA PROFESSIONAL SEAL 14045 ENGINEER TIMOTHY L. COGGINS
Timothy L. Coggins 6/5/08

REVISIONS						SHEET NO.
NO.	BY:	DATE:	NO.	BY:	DATE:	S-283
1			3			TOTAL SHEETS
2			4			478

ASSEMBLED BY : B.N. BARODAWALA	DATE : 7-31-07		
CHECKED BY : ZION RORIE	DATE : 8-13-07		
DRAWN BY : ARB 5/87	REV. 10/17/00	RWW/LES	
CHECKED BY : SJD 9/87	REV. 5/7/03R	RWW/JTE	
	REV. 5/1/06	TLA/GM	

STR. #10

STD. No. CBR1SM

25-APR-2008 09:41
r:\structures\azlzl\str#10\barodawala\r2554ba_sd_br_10.dgn

NOTES

THE GUARDRAIL ANCHOR ASSEMBLY SHALL CONSIST OF A 6mm HOLD DOWN PLATE AND 4 - 22.23mm Ø BOLTS WITH NUTS AND WASHERS, RUBRAIL, AND ADHESIVELY ANCHORED BOLTS.

THE HOLD-DOWN PLATE SHALL CONFORM TO AASHTO M270 GRADE 36. AFTER FABRICATION, THE HOLD-DOWN PLATE SHALL BE HOT-DIP GALVANIZED IN ACCORDANCE WITH AASHTO M111.

BOLTS SHALL CONFORM TO THE REQUIREMENTS OF ASTM A307 AND NUTS SHALL CONFORM TO THE REQUIREMENTS OF AASHTO M291. BOLTS, NUTS AND WASHERS SHALL BE GALVANIZED. (AT THE CONTRACTOR'S OPTION, STAINLESS STEEL BOLTS, NUTS AND WASHERS MAY BE USED AS AN ALTERNATE FOR THE 22.23mm Ø GALVANIZED BOLTS, NUTS AND WASHERS. THEY SHALL CONFORM TO OR EXCEED THE MECHANICAL REQUIREMENTS OF ASTM A307. THE USE OF THIS ALTERNATE SHALL BE APPROVED BY THE ENGINEER.)

THE GUARDRAIL ANCHOR ASSEMBLY IS REQUIRED AT ALL POINTS WHERE APPROACH GUARDRAIL IS TO BE ATTACHED TO THE END OF BARRIER RAIL. FOR POINTS OF ATTACHMENT, SEE SKETCH.

AFTER INSTALLATION, THE EXPOSED THREAD OF THE BOLT SHALL BE BURRED WITH A SHARP POINTED TOOL.

THE COST OF THE GUARDRAIL ANCHOR ASSEMBLY SHALL BE INCLUDED IN THE UNIT CONTRACT PRICE BID FOR CONCRETE BARRIER RAIL.

THE 32mm Ø HOLES SHALL BE FORMED OR DRILLED WITH A CORE BIT. IMPACT TOOLS WILL NOT BE PERMITTED. ANY CONCRETE DAMAGED BY THIS WORK SHALL BE REPAIRED TO THE SATISFACTION OF THE ENGINEER.

THE C150 X 12 RUBRAIL IS TO BE ADHESIVELY ANCHORED TO THE RAIL USING THREE 19.05mm Ø X 150mm BOLTS WITH WASHERS. LEVEL ONE FIELD TESTING IF REQUIRED, AND THE YIELD LOAD OF THE 19.05mm Ø BOLTS IS 53.4kN. FOR ADHESIVELY ANCHORED ANCHOR BOLTS OR DOWELS, SEE SPECIAL PROVISIONS. SEE ROADWAY STANDARD 862.03 FOR DETAILS AND LOCATION OF THE RUBRAIL.

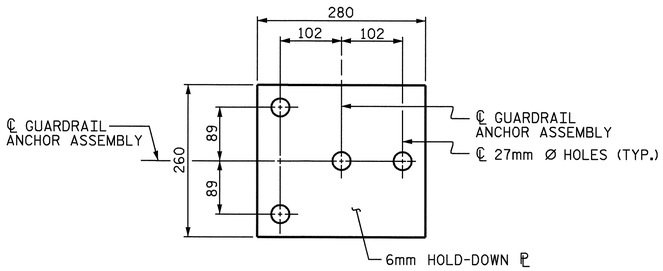

PLAN

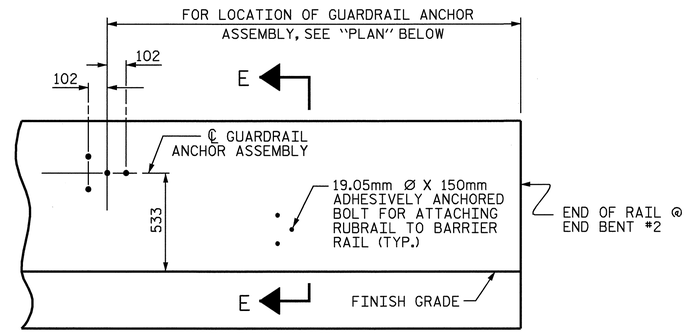

ELEVATION

FOR LOCATION OF RUBRAIL, SEE ROADWAY STD. 862.03

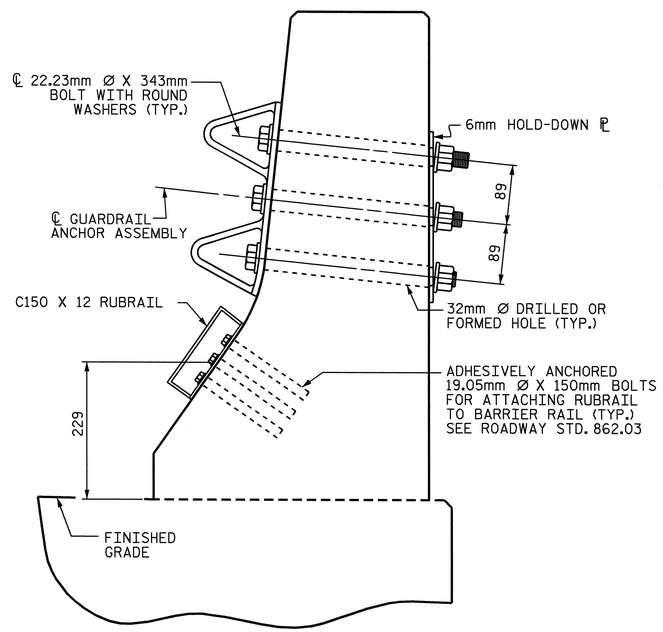

SECTION E-E

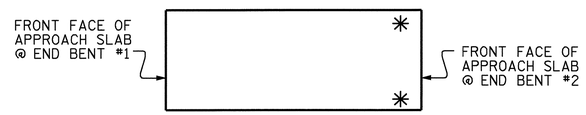

SKETCH SHOWING POINTS OF ATTACHMENTS

✳ DENOTES GUARDRAIL ANCHOR ASSEMBLY

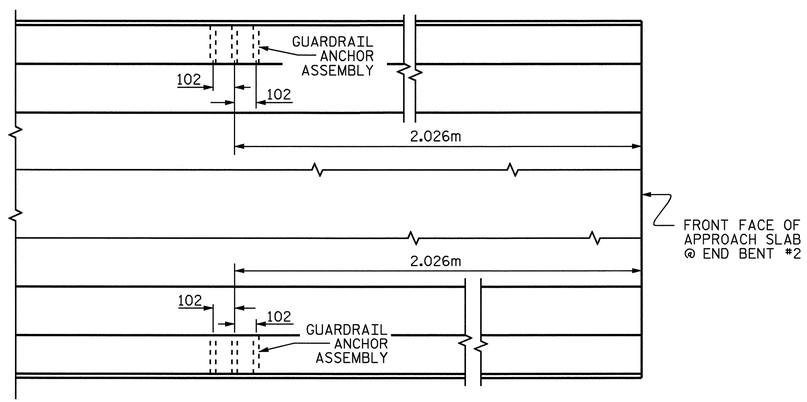

PLAN

GUARDRAIL ANCHOR ASSEMBLY DETAILS

LOCATION OF ANCHORS FOR GUARDRAIL

@ END BENT #2 ONLY

PROJECT NO. R-2554BA
WAYNE COUNTY
STATION: 114+74.700 -L-

STATE OF NORTH CAROLINA
DEPARTMENT OF TRANSPORTATION
RALEIGH

STANDARD
GUARDRAIL ANCHORAGE FOR BARRIER RAIL
(LEFT LANE)

NORTH CAROLINA PROFESSIONAL SEAL 14045 ENGINEER TIMOTHY W. COGGINS
6/5/08

REVISIONS						SHEET NO.
NO.	BY:	DATE:	NO.	BY:	DATE:	S-284
1			3			TOTAL SHEETS
2			4			478

STR. #10 STD. NO. GRA2SM

ASSEMBLED BY : B.N.BARODAWALA	DATE : 7-31-07		
CHECKED BY : ZION RORIE	DATE : 8-13-07		
DRAWN BY : TLA 5/06	ADDED 5/1/06R KMM/GM		
CHECKED BY : GM 5/06			

25-APR-2008 09:41
r:\structures\azlzl\str#10\barodawala\r2554ba_sd_br_10.dgn
jbwilson

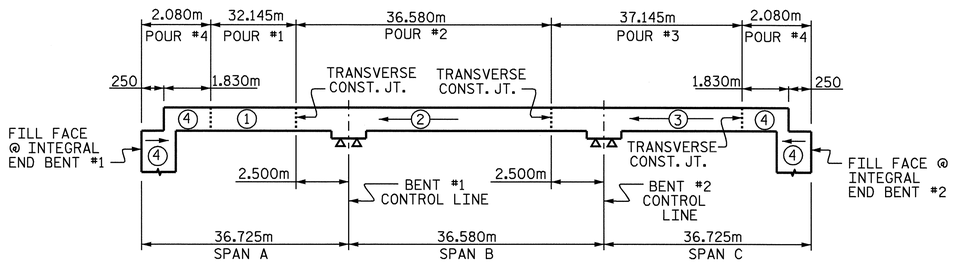

POURING SEQUENCE

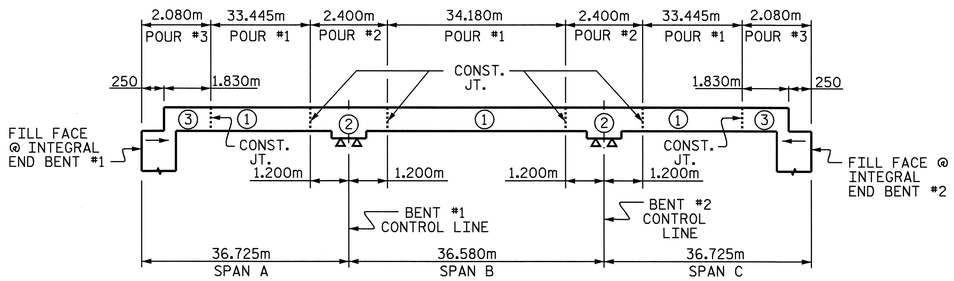

OPTIONAL POURING SEQUENCE

POUR #2 CAN NOT BE STARTED UNTIL BOTH ADJACENT POURS #1 REACH A MINIMUM OF 20.7MPa.

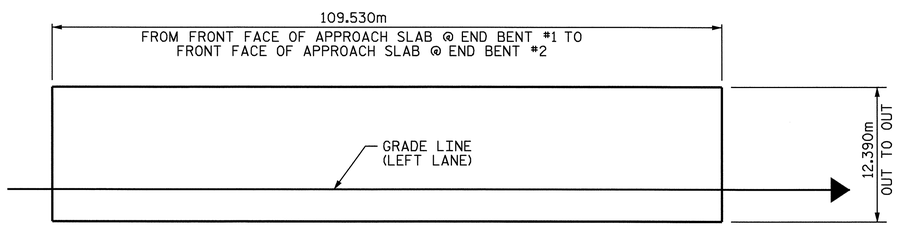

LAYOUT FOR COMPUTING AREA OF REINFORCED CONCRETE DECK SLAB (1357.1 SQ. METER)

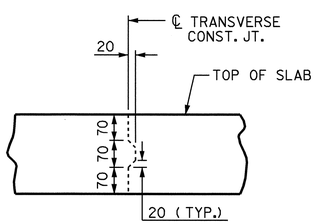

TRANSVERSE CONSTRUCTION JOINT DETAIL

NOTE: REINFORCING STEEL IN SLAB NOT SHOWN. LONGITUDINAL REINFORCING STEEL SHALL BE CONTINUOUS THRU JOINT.

SUPERSTRUCTURE REINFORCING STEEL LENGTHS ARE BASED ON THE FOLLOWING MINIMUM SPLICE LENGTHS

BAR SIZE	SUPERSTRUCTURE EXCEPT APPROACH SLABS, PARAPET, AND BARRIER RAIL		APPROACH SLABS		PARAPET AND BARRIER RAIL
	EPOXY COATED	UNCOATED	EPOXY COATED	UNCOATED	
#13	610	540	610	540	840
#16	770	660	770	660	1050
#19	920	790	1190	790	1330
#22	1580	1060			
#25	2080	1390			

GROOVING BRIDGE FLOORS

BRIDGE DECK	1147.9	SQ.METER
APPROACH SLABS	155.8	SQ.METER
TOTAL	1303.7	SQ.METER

BILL OF MATERIAL

SPANS A, B & C

BAR	NO.	SIZE	TYPE	LENGTH	WEIGHT
* A1	548	#16	STR	12280	10444
A2	548	#16	STR	12280	10444
* B1	168	#13	STR	8600	1436
* B2	112	#22	STR	13300	4531
* B3	54	#22	STR	11000	1807
* B4	56	#13	STR	6720	374
* B5	54	#22	STR	7400	1216
B6	308	#16	STR	16200	7744
B7	76	#13	STR	7400	559
K1	28	#13	STR	7460	208
K2	40	#13	STR	2220	88
K3	8	#13	STR	1740	14
K4	20	#13	STR	2000	40
K5	4	#13	STR	1760	7
K6	48	#16	3	2220	165
K7	240	#16	STR	2220	827
K8	16	#13	STR	1380	22
K9	80	#13	STR	2220	177
K10	16	#13	STR	1300	21
K11	16	#13	STR	900	14
K12	28	#13	STR	5340	149
K13	8	#13	STR	1300	10
S1	40	#13	2	4060	161
S2	168	#13	4	3460	578
S3	304	#13	5	840	254
S4	16	#13	7	3300	52
* S5	44	#13	1	3560	156
* S6	36	#13	1	3060	109
S7	8	#13	2	4460	35
* U1	40	#13	6	5500	219
U2	16	#13	2	5140	82
V1	40	#13	STR	1800	72
REINFORCING STEEL				= 21723	kg
*EPOXY COATED REINFORCING STEEL				= 20292	kg

BAR TYPES

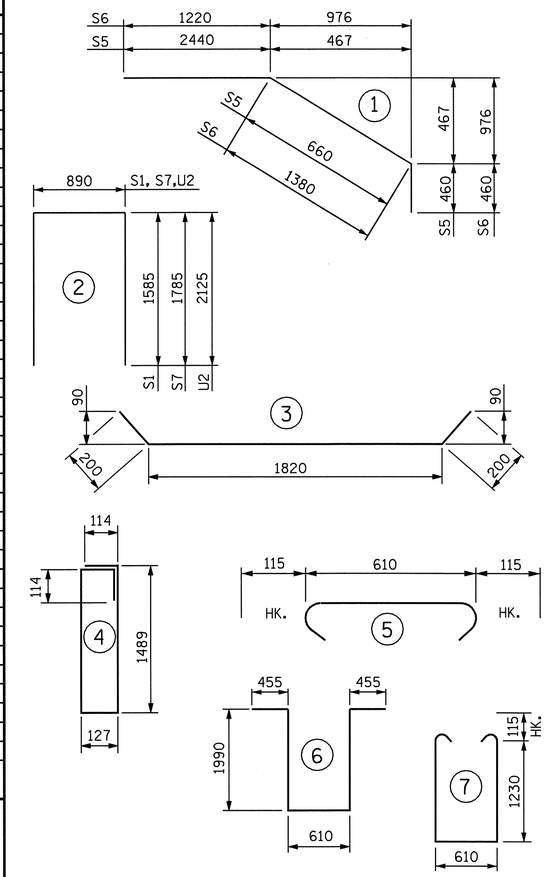

ALL BAR DIMENSIONS ARE OUT TO OUT.

SUPERSTRUCTURE BILL OF MATERIAL

	CLASS AA CONCRETE		REINFORCING STEEL	EPOXY COATED REINFORCING STEEL
	(CU. METER)		(kg)	(kg)
SPAN A, B AND C	POUR 1	123.5	21723	20292
	POUR 2	152.3		
	POUR 3	155.7		
	POUR 4 •	77.2		
TOTALS **	TOTAL	508.7	21723	20292

** QUANTITIES FOR BARRIER RAIL ARE NOT INCLUDED

• POUR 4 QUANTITY INCLUDES UPPER POUR OF WINGS & INTEGRAL END BENT

PROJECT NO. R-2554BA

WAYNE COUNTY

STATION: 114+74.700 -L-

STATE OF NORTH CAROLINA
DEPARTMENT OF TRANSPORTATION
RALEIGH

STANDARD

SUPERSTRUCTURE BILL OF MATERIAL

(LEFT LANE)

NORTH CAROLINA PROFESSIONAL SEAL 14045 ENGINEER TIMOTHY L. COGGINS

6/5/08

REVISIONS								SHEET NO.
NO.	BY:	DATE:	NO.	BY:	DATE:			S-285
1			3					TOTAL SHEETS
2			4					478

ASSEMBLED BY : B.N.BARODAWALA	DATE : 7-30-07		
CHECKED BY : ZION RORIE	DATE : 8-13-07		
DRAWN BY : JMB 5/87	REV. 5/16/97	EEM/RGW	
CHECKED BY : SJD 9/87			

28-APR-2008 10:05
g:\structures\azlzl\Str#10\BARODAWALA\R2554BA_sd_BM_10.dgn
tcoggins

STR. #10

STD. NO. BOM2SM

NOTES:

THE CONTRACTOR SHALL PROVIDE FOR INSTALLATION OF THE 102mm DIAMETER DRAIN PIPE THROUGH THE WING WALL AS REQUIRED FOR REINFORCED BRIDGE APPROACH FILLS, SEE THE ROADWAY PLANS. REINFORCING STEEL IN THE WING WALL MAY BE SHIFTED AS NECESSARY TO CLEAR THE DRAIN PIPE.

THE TOP SURFACE OF THE END BENT CAP AND WINGS, EXCLUDING THE OUTSIDE 100mm AND THE BEARING AREA, SHALL BE RAKED TO A DEPTH OF 6mm.

STIRRUPS IN CAP MAY BE SHIFTED AS NECESSARY TO CLEAR #13 V3 BARS.

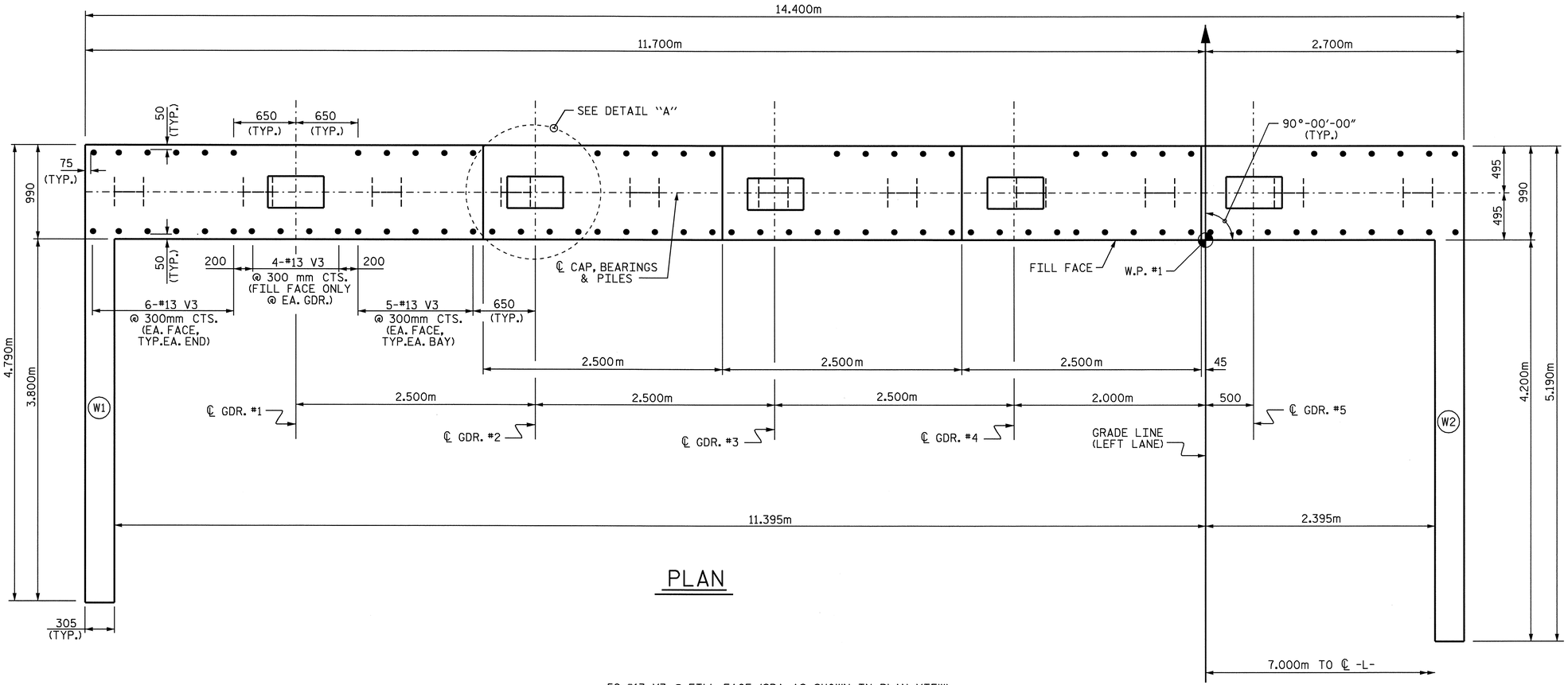

PLAN

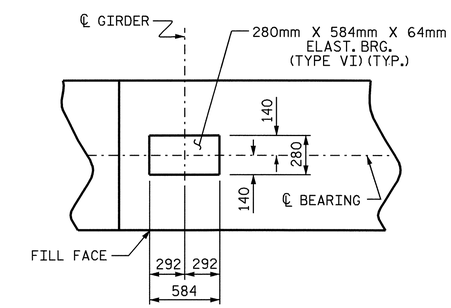

DETAIL A

(TYP. EA. GDR.)

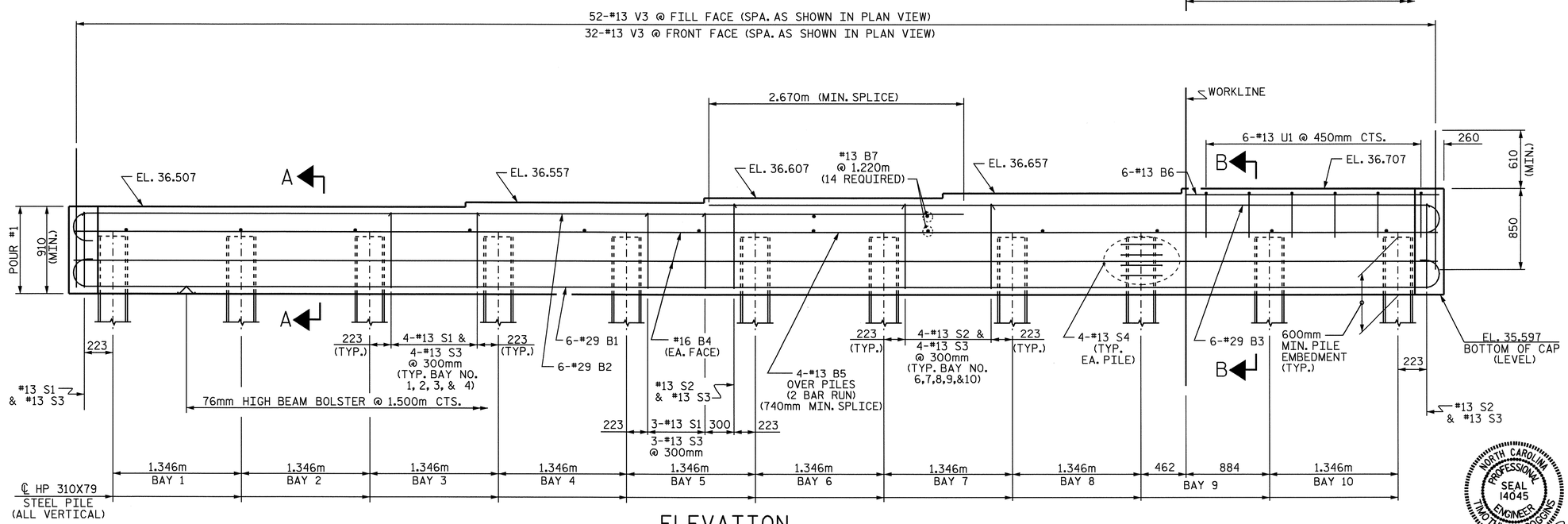

ELEVATION

(FOR WING REINFORCING STEEL AND DETAILS, SEE SHEET 2 OF 3)

PROJECT NO. R-2554BA

WAYNE COUNTY

STATION: 114+74.000 -L-

SHEET 1 OF 3

STATE OF NORTH CAROLINA
DEPARTMENT OF TRANSPORTATION
RALEIGH

SUBSTRUCTURE

INTEGRAL END BENT #1 (LEFT LANE)

NORTH CAROLINA PROFESSIONAL SEAL 14045 ENGINEER TIMOTHY R. COGGINS

Timothy R. Coggins 6/6/08

REVISIONS						SHEET NO.
NO.	BY:	DATE:	NO.	BY:	DATE:	S-286
1			3			TOTAL SHEETS
2			4			478

STR. #10

DRAWN BY : B.N.BARODAWALA DATE : 9-21-07
CHECKED BY : M.D.PISO DATE : 3-08

06-JUN-2008 09:49
r:\structures\azlzl\Str#10\FINAL PLANS\r2554ba_sd_e*_10.dgn
pgdkins

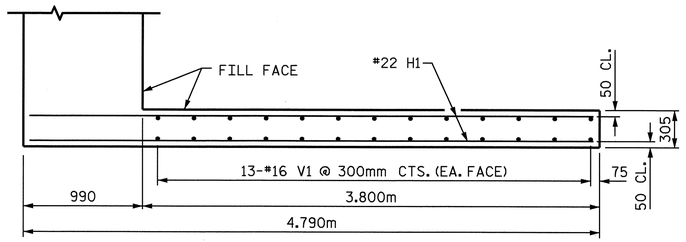

PLAN OF WING W1

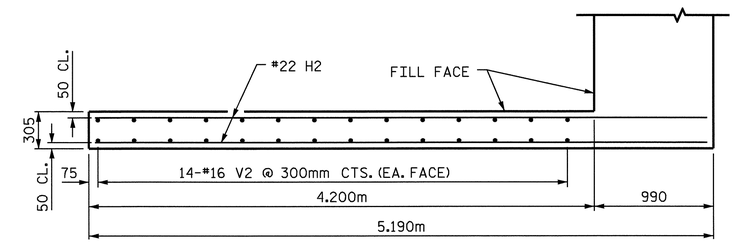

PLAN OF WING W2

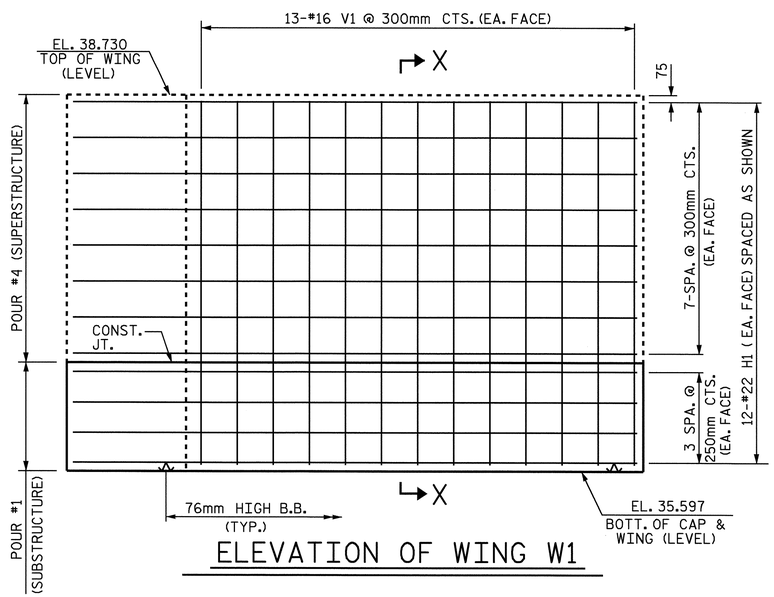

ELEVATION OF WING W1

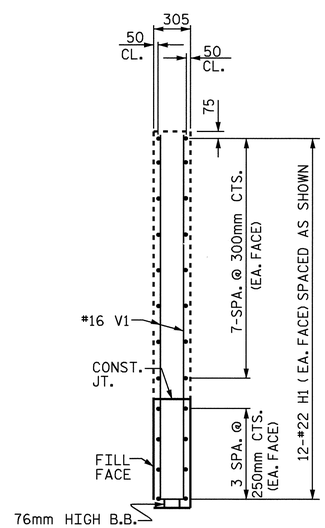

SECTION X-X

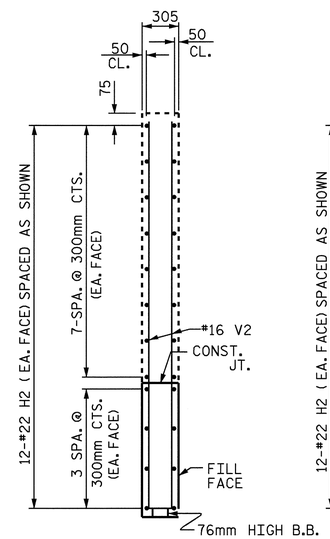

SECTION Y-Y

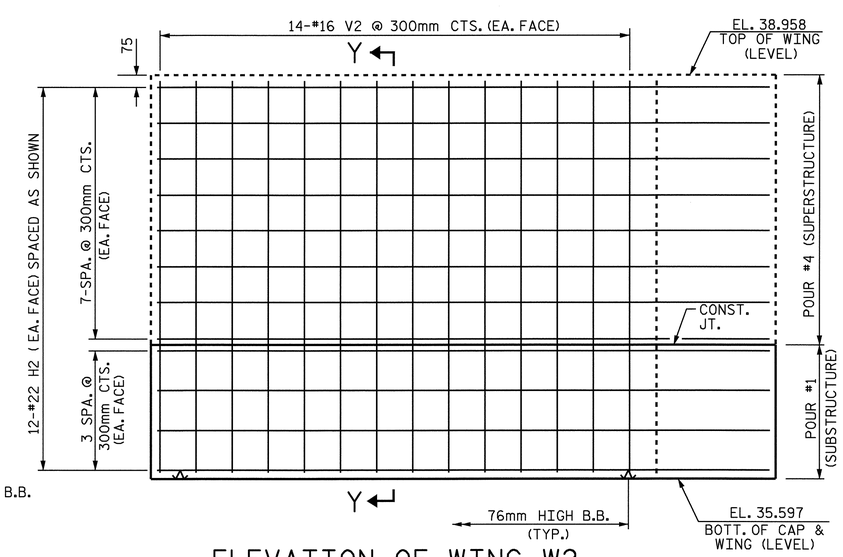

ELEVATION OF WING W2

PROJECT NO. R-2554BA

WAYNE COUNTY

STATION: 114+74.000 -L-

SHEET 2 OF 3

STATE OF NORTH CAROLINA
DEPARTMENT OF TRANSPORTATION
RALEIGH

SUBSTRUCTURE

INTEGRAL
END BENT #1
(LEFT LANE)

NORTH CAROLINA PROFESSIONAL SEAL 14045 ENGINEER TIMOTHY L. COGGINS

6/6/08

REVISIONS						SHEET NO.
NO.	BY:	DATE:	NO.	BY:	DATE:	S-287
1			3			TOTAL SHEETS
2			4			478

DRAWN BY : B.N.BARODAWALA DATE : 10-24-07
CHECKED BY : M.D.PISO DATE : 3-08

06-JUN-2008 09:49
r:\structures\azlz1\Str#10\FINAL PLANS\r2554ba_sd_e*_10.dgn
padkins

STR. #10

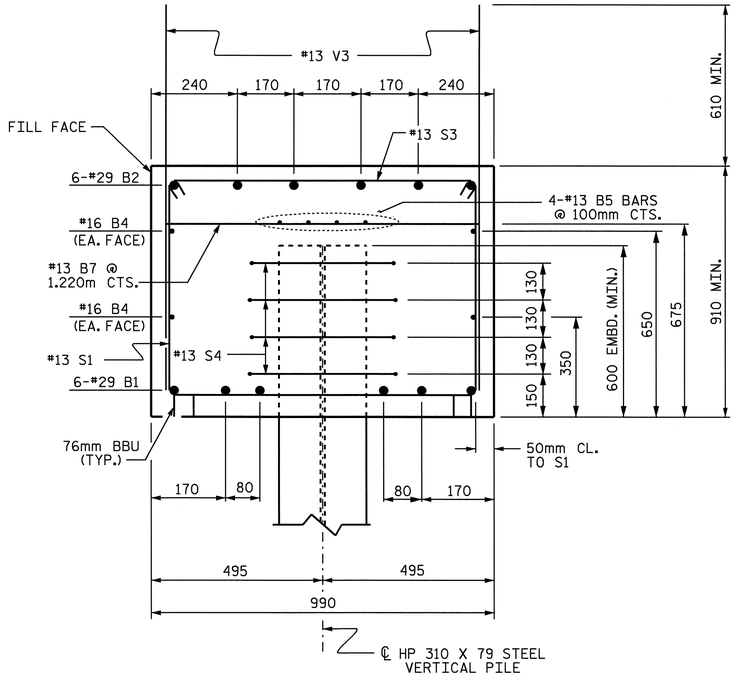

SECTION A-A

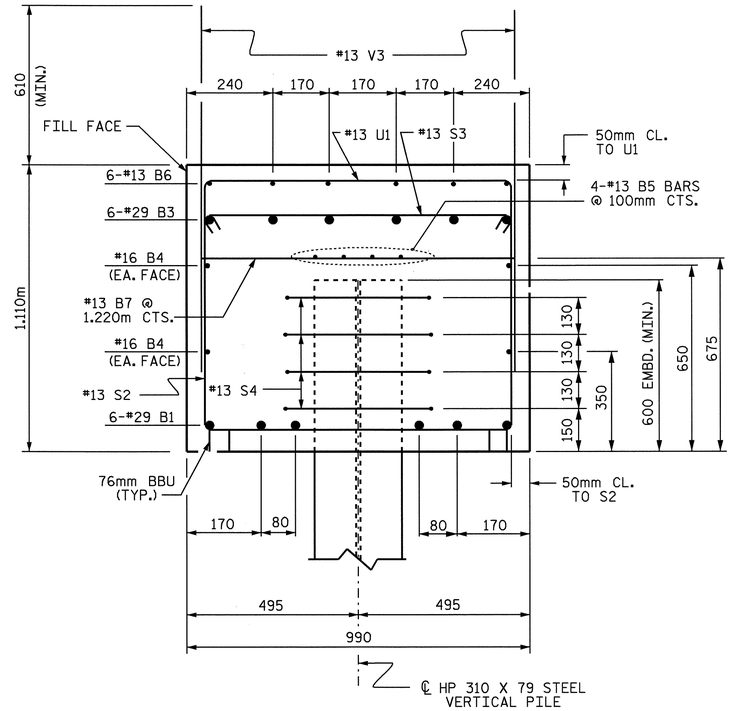

SECTION B-B

BAR TYPES

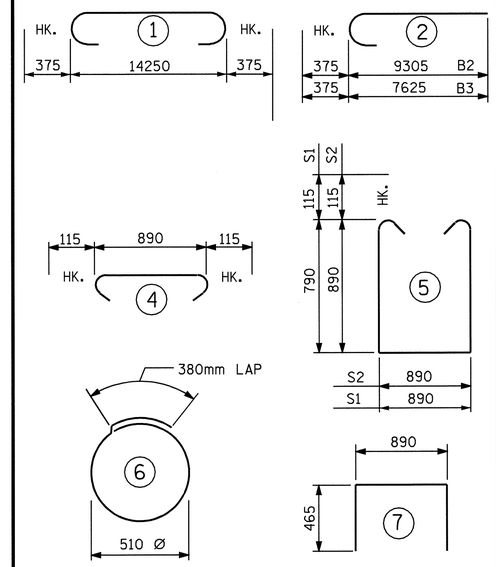

ALL BAR DIMENSIONS ARE OUT TO OUT.

BILL OF MATERIAL
END BENT #1

BAR	NO.	SIZE	TYPE	LENGTH	WEIGHT
B1	6	#29	1	15000	455
B2	6	#29	2	9680	294
B3	6	#29	2	8000	243
B4	4	#16	STR	14300	89
B5	8	#13	STR	7520	60
B6	6	#13	STR	2640	16
B7	14	#13	STR	880	12
H1	24	#22	STR	4680	342
H2	24	#22	STR	5080	371
S1	20	#13	5	2700	54
S2	22	#13	5	2900	63
S3	42	#13	4	1120	47
S4	44	#13	6	1980	87
U1	6	#13	7	1820	11
V1	26	#16	STR	3020	122
V2	28	#16	STR	3260	142
V3	84	#13	STR	1460	122

REINFORCING STEEL = 2530 KG

CLASS A CONCRETE BREAKDOWN
POUR #1: CAP & LOWER WINGS 16.7 m3

TOTAL CONCRETE 16.7 m3

HP 310 X 79 STEEL PILES
NO. 11 209.0 METERS

PILE REDRIVES EACH 4

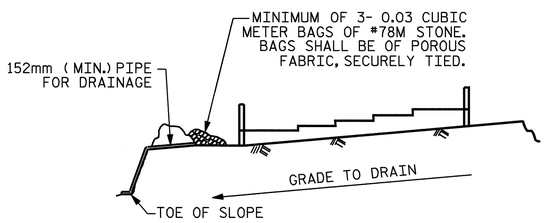

BAGGED STONE AND PIPE SHALL BE PLACED IMMEDIATELY AFTER COMPLETION OF END BENT EXCAVATION. PIPE MAY BE EITHER CONCRETE, CORRUGATED STEEL, CORRUGATED ALUMINUM ALLOY, OR CORRUGATED PLASTIC. PERFORATED PIPE WILL NOT BE ALLOWED.

BAGGED STONE SHALL REMAIN IN PLACE UNTIL THE ENGINEER DIRECTS THAT IT BE REMOVED. THE CONTRACTOR SHALL REMOVE AND DISPOSE OF SILT ACCUMULATIONS AT BAGGED STONE WHEN SO DIRECTED BY THE ENGINEER. BAGS SHALL BE REMOVED AND REPLACED WHENEVER THE ENGINEER DETERMINES THAT THEY HAVE DETERIORATED AND LOST THEIR EFFECTIVENESS.

NO SEPARATE PAYMENT WILL BE MADE FOR THIS WORK AND THE ENTIRE COST OF THIS WORK SHALL BE INCLUDED IN THE UNIT CONTRACT PRICE BID FOR THE SEVERAL PAY ITEMS.

TEMPORARY DRAINAGE AT END BENT

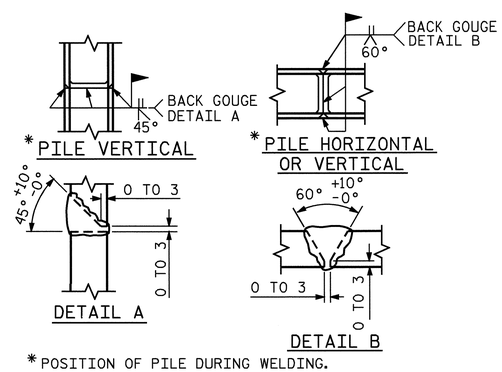

* POSITION OF PILE DURING WELDING.

PILE SPLICE DETAILS

PROJECT NO. R-2554BA
WAYNE COUNTY
STATION: 114+74.000 -L-

SHEET 3 OF 3

STATE OF NORTH CAROLINA
DEPARTMENT OF TRANSPORTATION
RALEIGH

SUBSTRUCTURE

INTEGRAL END BENT #1
(LEFT LANE)

NORTH CAROLINA PROFESSIONAL SEAL 14045 ENGINEER TIMOTHY A. L. COGGINS
6/6/08

REVISIONS						SHEET NO.
NO.	BY:	DATE:	NO.	BY:	DATE:	S-288
1			3			TOTAL SHEETS
2			4			478

DRAWN BY : B.N.BARODAWALA DATE : 10-24-07
CHECKED BY : M.D.PISO DATE : 3-08

06-JUN-2008 09:49
r:\structures\azlz1\Str#10\FINAL PLANS\r2554ba_sd_e#_10.dgn
padkins

STR. #10

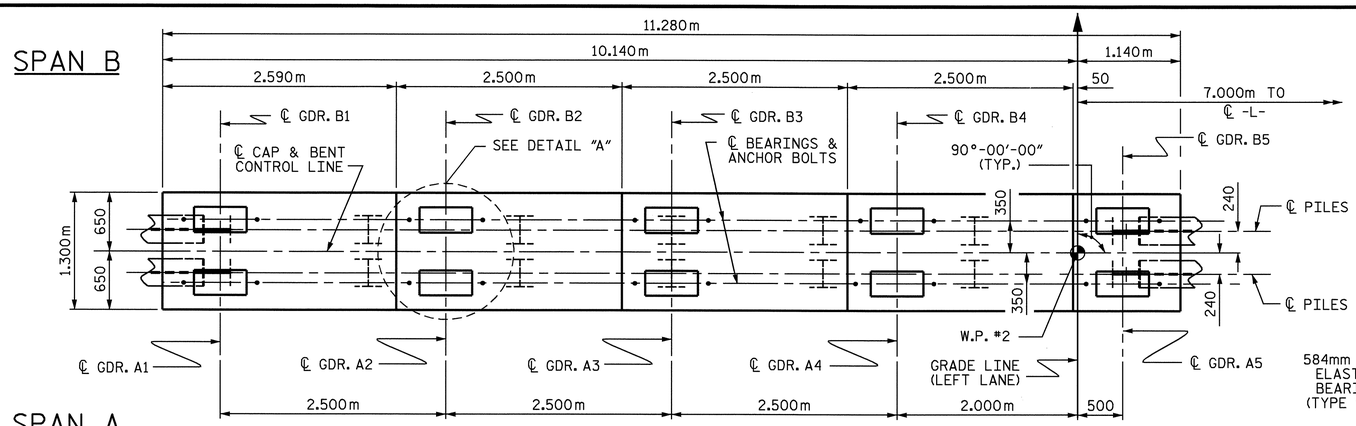

PLAN

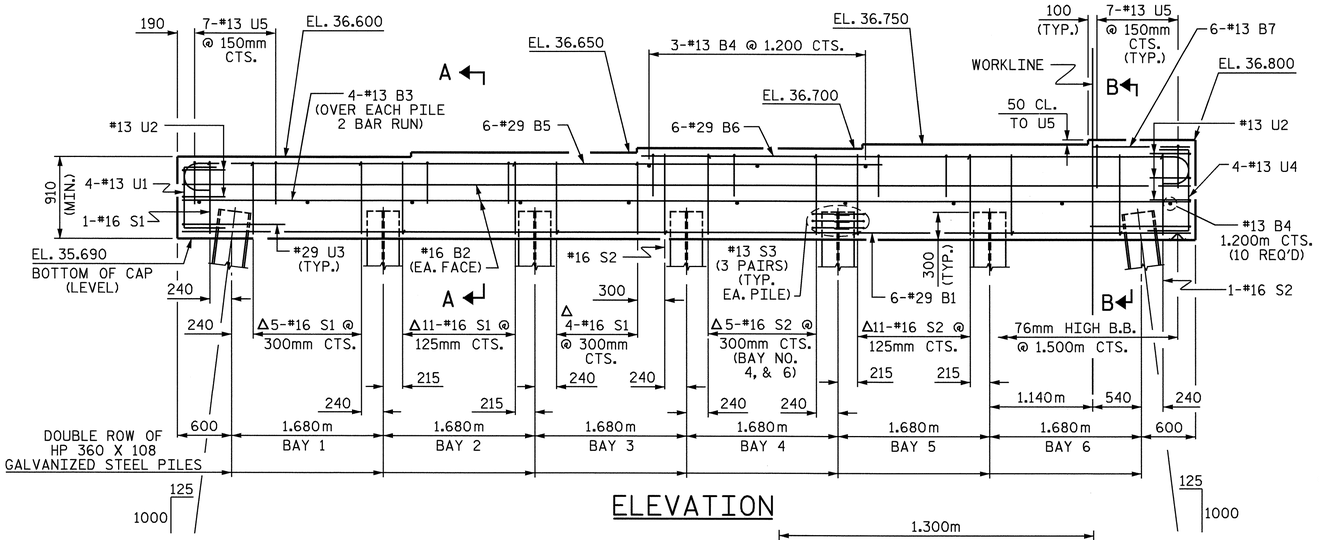

ELEVATION

NOTES

STIRRUPS IN CAP MAY BE SHIFTED AS NECESSARY TO CLEAR ANCHOR BOLTS.

FOR PILE SPLICE DETAILS, SEE END BENT SHEETS 3 OF 3.

Δ INVERT ALTERNATE STIRRUPS

THE STEEL PILES SHALL BE GALVANIZED IN ACCORDANCE WITH SECTION 1076 IN THE STANDARD SPECIFICATIONS.

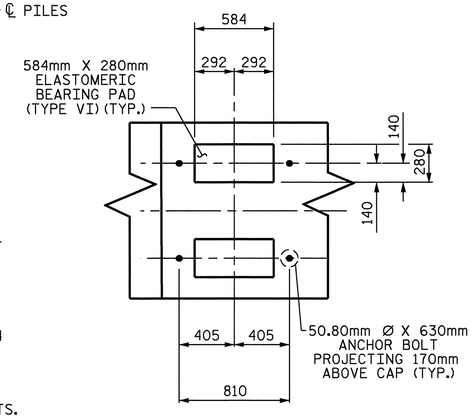

DETAIL "A"
(TYP. EA. GDR.)

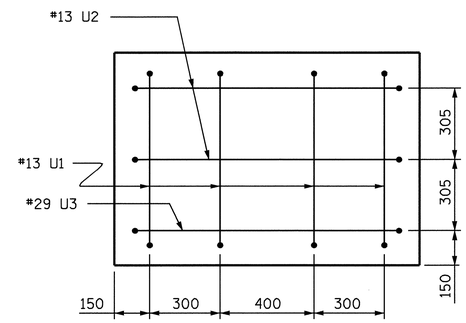

LEFT END VIEW

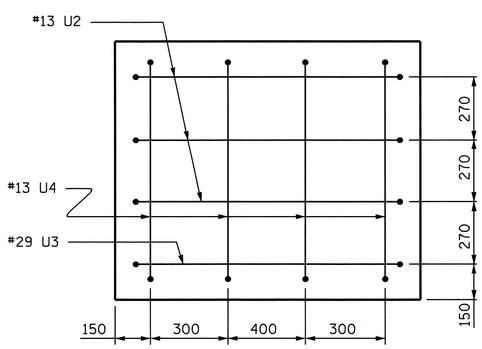

RIGHT END VIEW

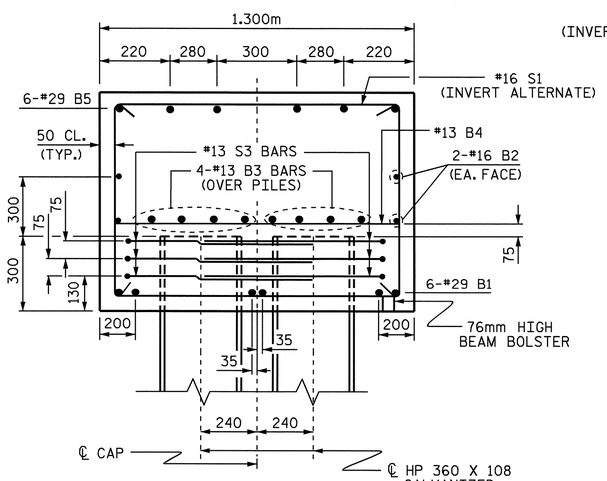

SECTION A-A

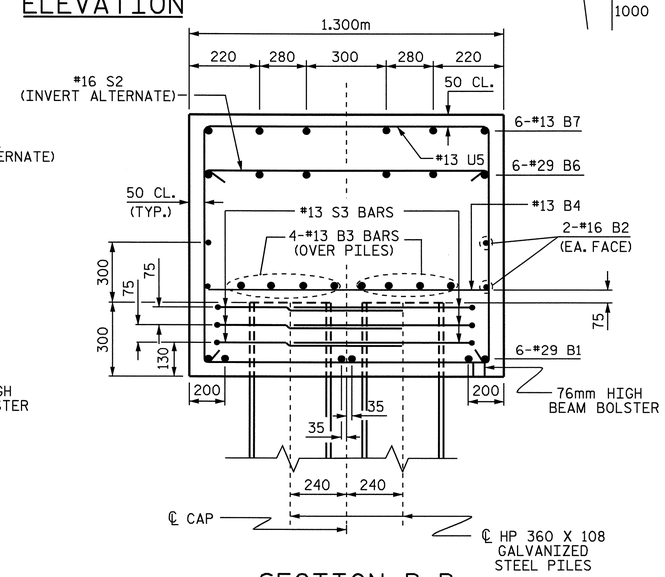

SECTION B-B

— BAR TYPES —

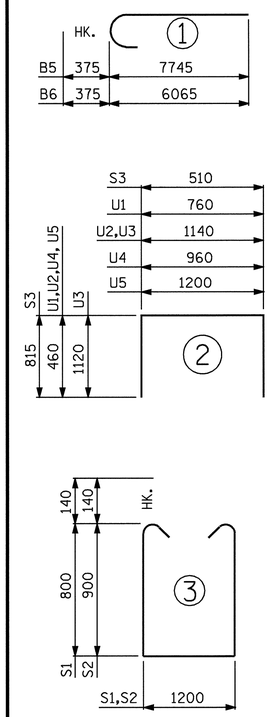

ALL BAR DIMENSIONS ARE OUT TO OUT.

BILL OF MATERIAL

BENT #1

BAR	NO.	SIZE	TYPE	LENGTH	WEIGHT
B1	6	#29	STR	11180	339
B2	4	#16	STR	11180	69
B3	16	#13	STR	5960	95
B4	13	#13	STR	1200	16
B5	6	#29	1	8120	247
B6	6	#29	1	6440	196
B7	6	#13	STR	1080	6
S1	21	#16	3	3080	100
S2	23	#16	3	3280	117
S3	42	#13	2	2140	89
U1	4	#13	2	1680	7
U2	5	#13	2	2060	10
U3	2	#29	2	3380	34
U4	4	#13	2	1880	7
U5	35	#13	2	2120	74
REINFORCING STEEL				kg	1406
CLASS "A" CONCRETE				m³	14.6
HP 360 X 108 GALVANIZED STEEL PILE					
NO. 14				METERS	266.0
PILE REDRIVES				EACH	4

SPLICE LENGTH CHART

BAR	SIZE	LENGTH
B3	#13	740mm
B5	#29	2670mm

PROJECT NO. R-2554BA
WAYNE COUNTY
STATION: 114+74.700 -L-

STATE OF NORTH CAROLINA
DEPARTMENT OF TRANSPORTATION
RALEIGH

SUBSTRUCTURE
BENT #1
(LEFT LANE)

NORTH CAROLINA PROFESSIONAL SEAL 14045 ENGINEER TIMOTHY W. COGGINS
6/16/08

REVISIONS						SHEET NO.
NO.	BY:	DATE:	NO.	BY:	DATE:	S-289
1			3			TOTAL SHEETS
2			4			478

DRAWN BY : M. GUDLAUGSSON DATE : 12/17/07
CHECKED BY : B. BARADOWALA DATE : 02/18/08

06-JUN-2008 09:50
r:\structures\azlzl\Str#10\FINAL PLANS\R2554BA_sd_B_10.dgn
padkins

STR. #10

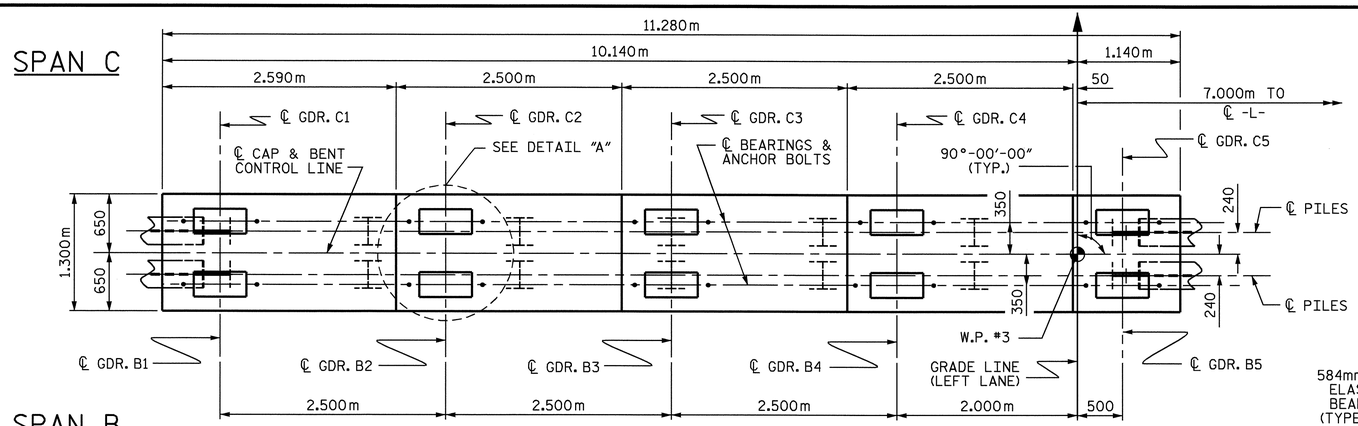

PLAN

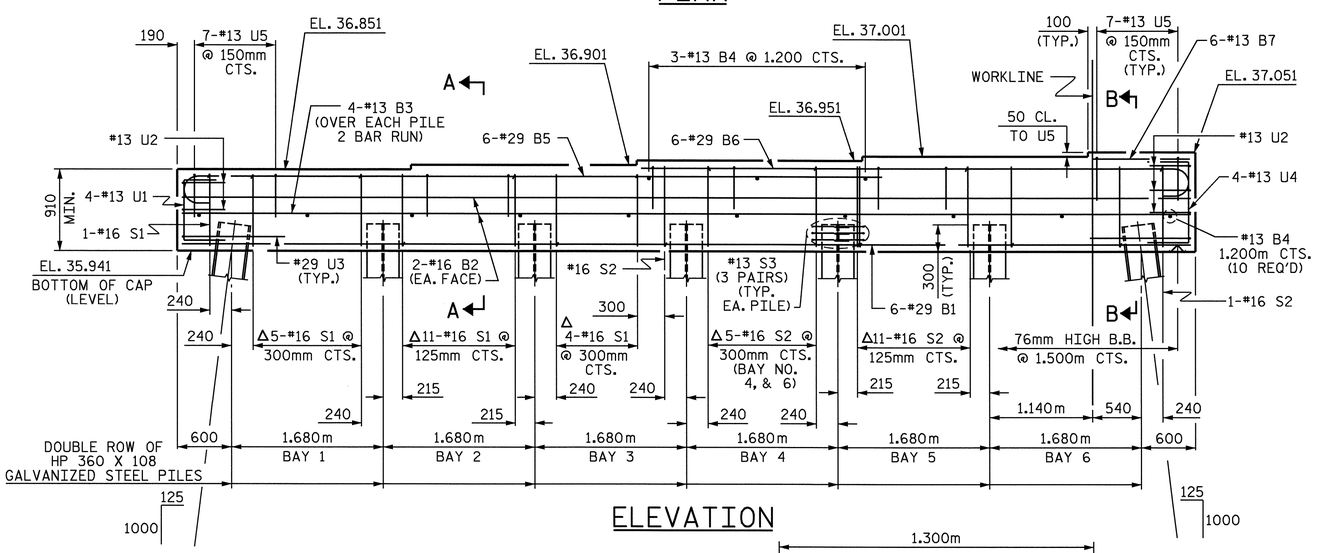

ELEVATION

NOTES

STIRRUPS IN CAP MAY BE SHIFTED AS NECESSARY TO CLEAR ANCHOR BOLTS.

FOR PILE SPLICE DETAILS, SEE END BENT SHEETS 3 OF 3.

Δ INVERT ALTERNATE STIRRUPS

THE STEEL PILES SHALL BE GALVANIZED IN ACCORDANCE WITH SECTION 1076 IN THE STANDARD SPECIFICATIONS.

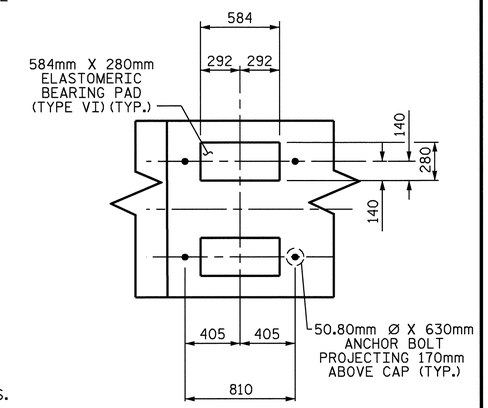

DETAIL "A"
(TYP. EA. GDR.)

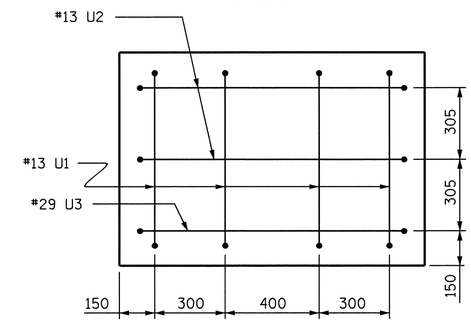

LEFT END VIEW

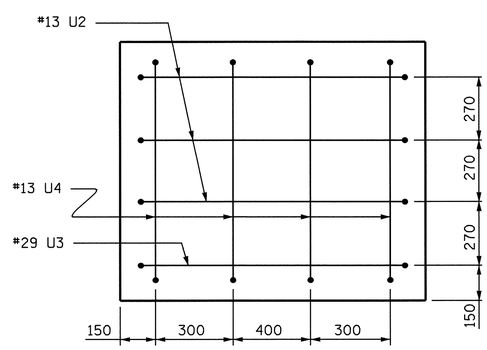

RIGHT END VIEW

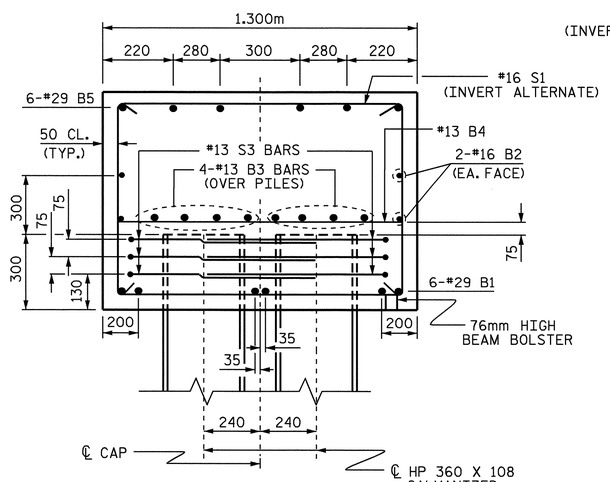

SECTION A-A

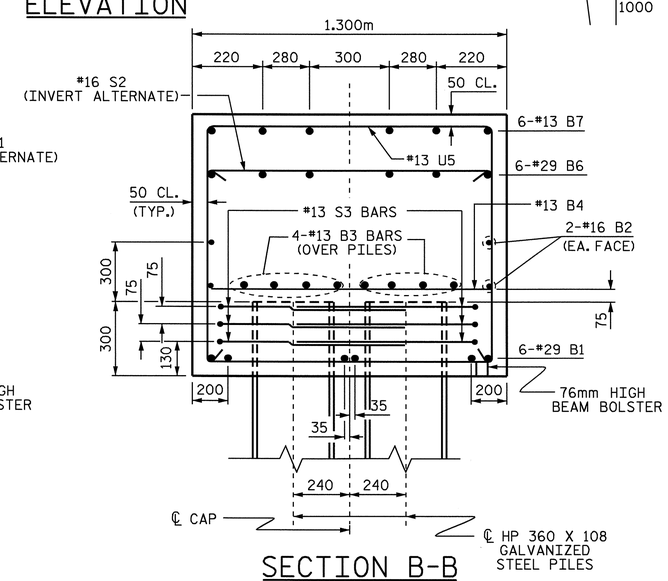

SECTION B-B

— BAR TYPES —

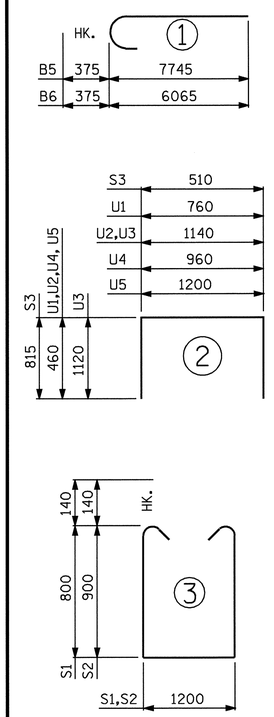

ALL BAR DIMENSIONS ARE OUT TO OUT.

BILL OF MATERIAL

BENT #2

BAR	NO.	SIZE	TYPE	LENGTH	WEIGHT
B1	6	#29	STR	11180	339
B2	4	#16	STR	11180	69
B3	16	#13	STR	5960	95
B4	13	#13	STR	1200	16
B5	6	#29	1	8120	247
B6	6	#29	1	6440	196
B7	6	#13	STR	1080	6
S1	21	#16	3	3080	100
S2	23	#16	3	3280	117
S3	42	#13	2	2140	89
U1	4	#13	2	1680	7
U2	5	#13	2	2060	10
U3	2	#29	2	3380	34
U4	4	#13	2	1880	7
U5	35	#13	2	2120	74
REINFORCING STEEL				kg	1406
CLASS "A" CONCRETE				m3	14.6
HP 360 X 108 GALVANIZED STEEL PILE					
NO. 14				METERS	252.0
PILE REDRIVES				EACH	4

SPLICE LENGTH CHART

BAR	SIZE	LENGTH
B3	#13	740mm
B5	#29	2670mm

PROJECT NO. R-2554BA
WAYNE COUNTY
STATION: 114+74.700 -L-

STATE OF NORTH CAROLINA
DEPARTMENT OF TRANSPORTATION
RALEIGH

SUBSTRUCTURE
BENT #2
(LEFT LANE)

NORTH CAROLINA PROFESSIONAL SEAL 14045 ENGINEER TIMOTHY J. COGGINS
6/4/08

REVISIONS						SHEET NO.
NO.	BY:	DATE:	NO.	BY:	DATE:	S-290
1			3			TOTAL SHEETS
2			4			478

DRAWN BY : M. GUDLAUGSSON DATE : 12/17/07
CHECKED BY : B. BARADOWALA DATE : 02/18/08

06-JUN-2008 09:50
r:\structures\azlz1\Str#10\FINAL PLANS\R2554BA_sd_B_10.dgn
padkins

STR. #10

NOTES:

THE CONTRACTOR SHALL PROVIDE FOR INSTALLATION OF THE 102mm DIAMETER DRAIN PIPE THROUGH THE WING WALL AS REQUIRED FOR REINFORCED BRIDGE APPROACH FILLS, SEE THE ROADWAY PLANS. REINFORCING STEEL IN THE WING WALL MAY BE SHIFTED AS NECESSARY TO CLEAR THE DRAIN PIPE.

THE TOP SURFACE OF THE END BENT CAP AND WINGS, EXCLUDING THE OUTSIDE 100mm AND THE BEARING AREA, SHALL BE RAKED TO A DEPTH OF 6mm.

STIRRUPS IN CAP MAY BE SHIFTED AS NECESSARY TO CLEAR #13 V3 BARS.

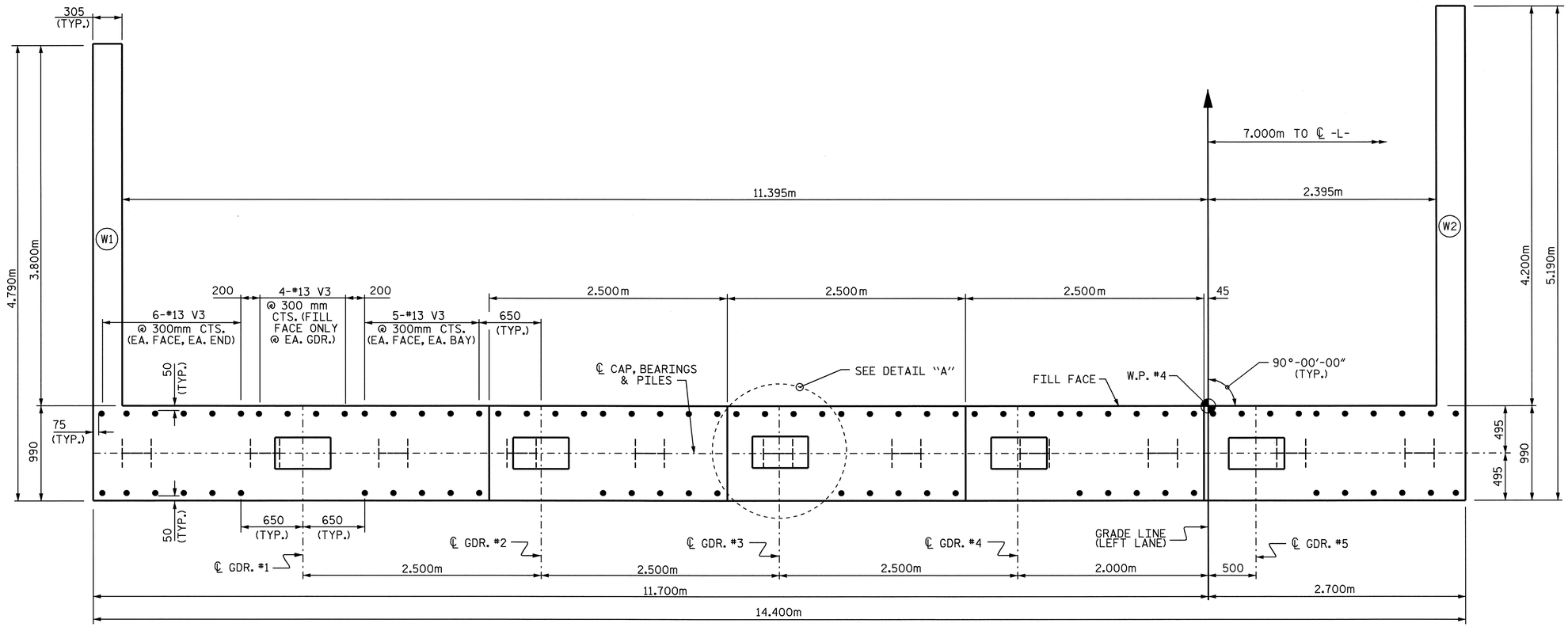

PLAN

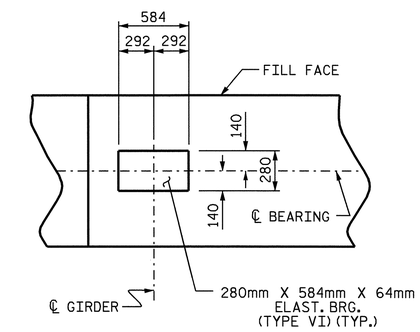

DETAIL A

(TYP. EA. GDR.)

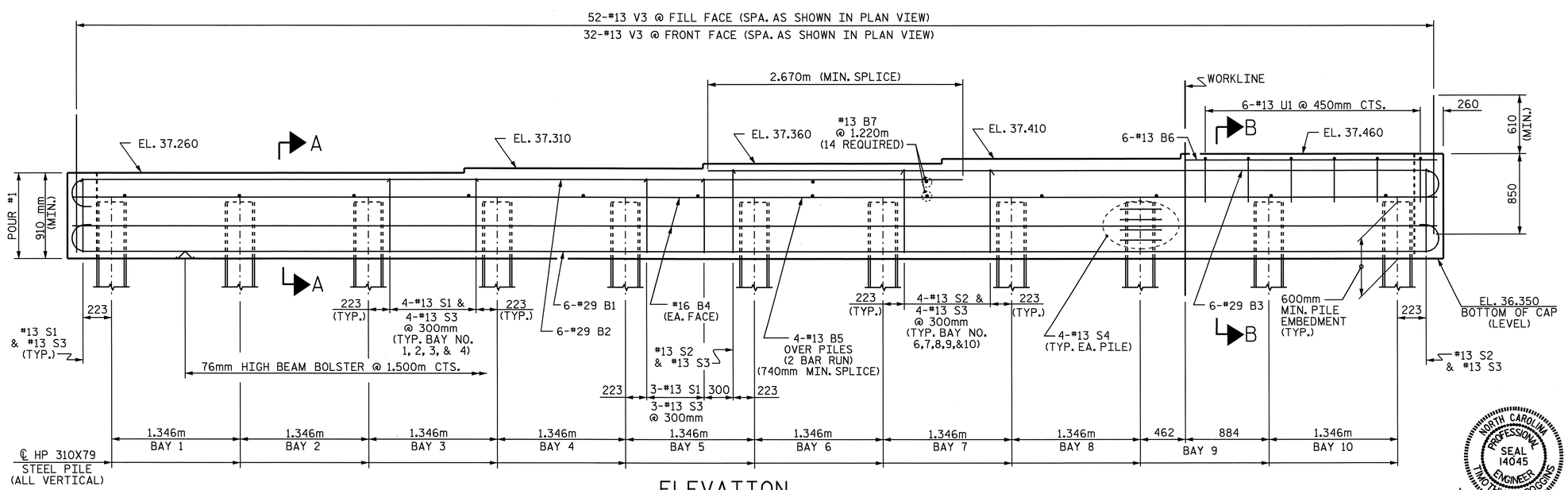

ELEVATION

(FOR WING REINFORCING STEEL AND DETAILS, SEE SHEET 2 OF 3)

PROJECT NO. R-2554BA

WAYNE COUNTY

STATION: 114+74.000 -L-

SHEET 1 OF 3

STATE OF NORTH CAROLINA
DEPARTMENT OF TRANSPORTATION
RALEIGH

SUBSTRUCTURE
INTEGRAL
END BENT #2
(LEFT LANE)

NORTH CAROLINA PROFESSIONAL SEAL 14045 ENGINEER TIMOTHY R. COGGINS

Timothy R. Coggins 6/6/08

REVISIONS						SHEET NO.
NO.	BY:	DATE:	NO.	BY:	DATE:	S-291
1			3			TOTAL SHEETS
2			4			478

DRAWN BY : B.N.BARODAWALA DATE : 9-21-07
CHECKED BY : M.D.PISO DATE : 3-08

06-JUN-2008 09:49
r:\structures\azlzl\Str#10\FINAL PLANS\r2554ba_sd_e*_10.dgn
padkins

STR. #10

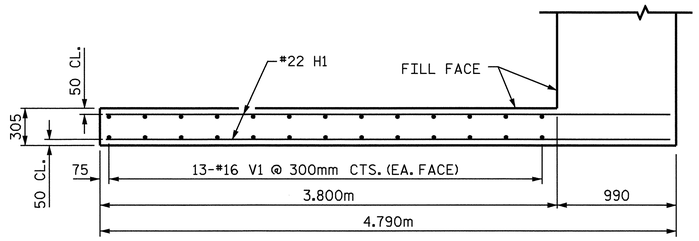

PLAN OF WING W1

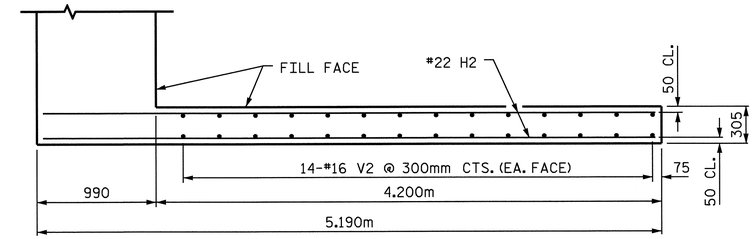

PLAN OF WING W2

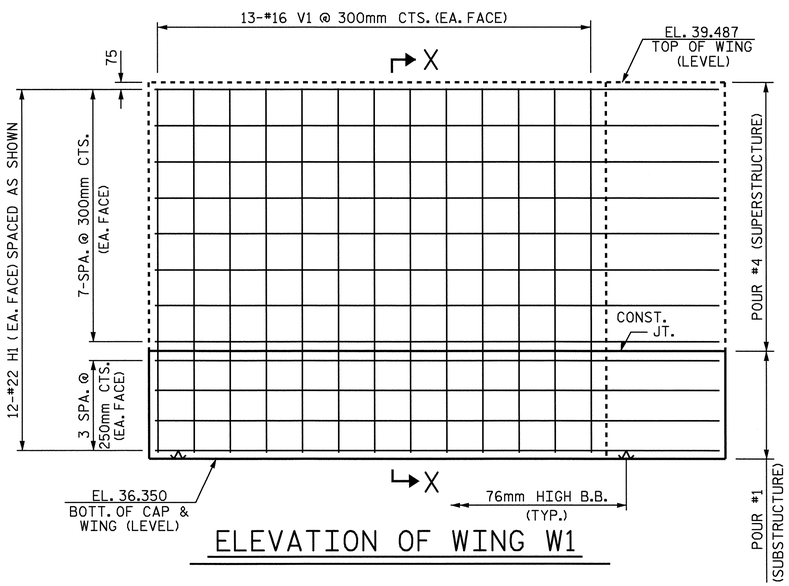

ELEVATION OF WING W1

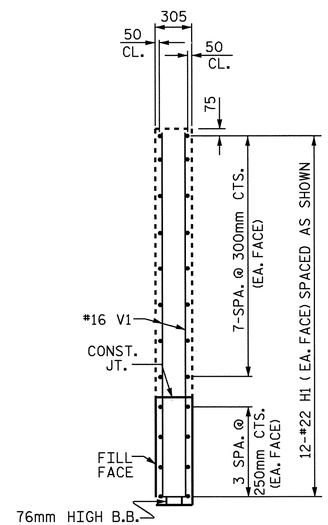

SECTION X-X

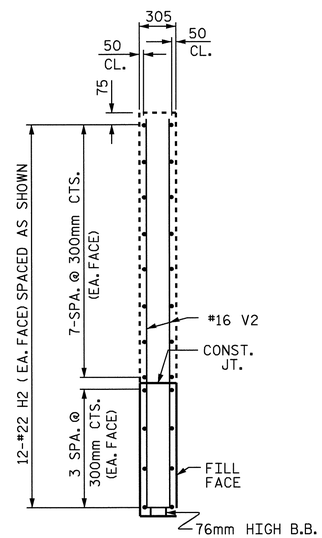

SECTION Y-Y

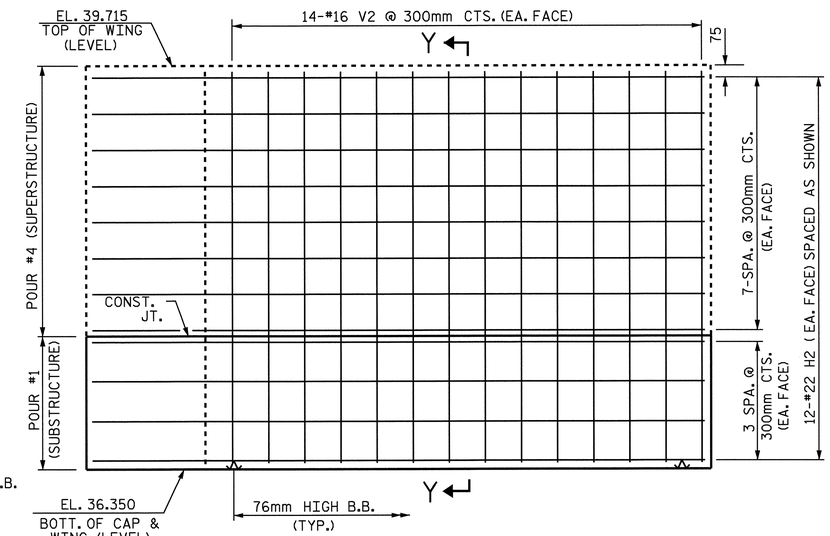

ELEVATION OF WING W2

PROJECT NO. R-2554BA

WAYNE COUNTY

STATION: 114+74.000 -L-

SHEET 2 OF 3

STATE OF NORTH CAROLINA
DEPARTMENT OF TRANSPORTATION
RALEIGH

SUBSTRUCTURE

INTEGRAL
END BENT #2
(LEFT LANE)

NORTH CAROLINA PROFESSIONAL SEAL 14045 ENGINEER TIMOTHY A. COGGINS
6/6/08

REVISIONS						SHEET NO.
NO.	BY:	DATE:	NO.	BY:	DATE:	S-292
1			3			TOTAL SHEETS
2			4			478

DRAWN BY : B.N.BARODAWALA DATE : 10-24-07
CHECKED BY : M.D.PISO DATE : 3-08

06-JUN-2008 09:50
r:\structures\azlzl\Str#10\FINAL PLANS\r2554ba_sd_e*_10.dgn
padkins

STR. #10

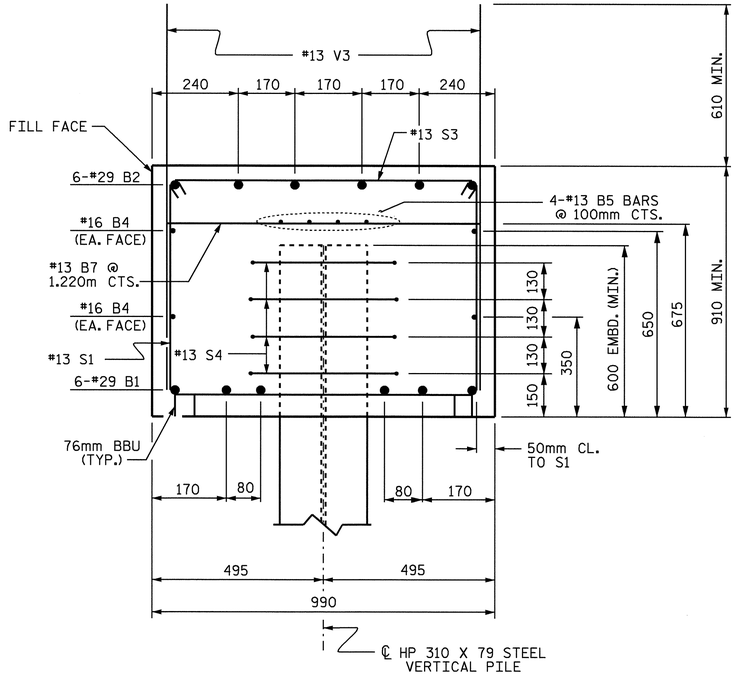

SECTION A-A

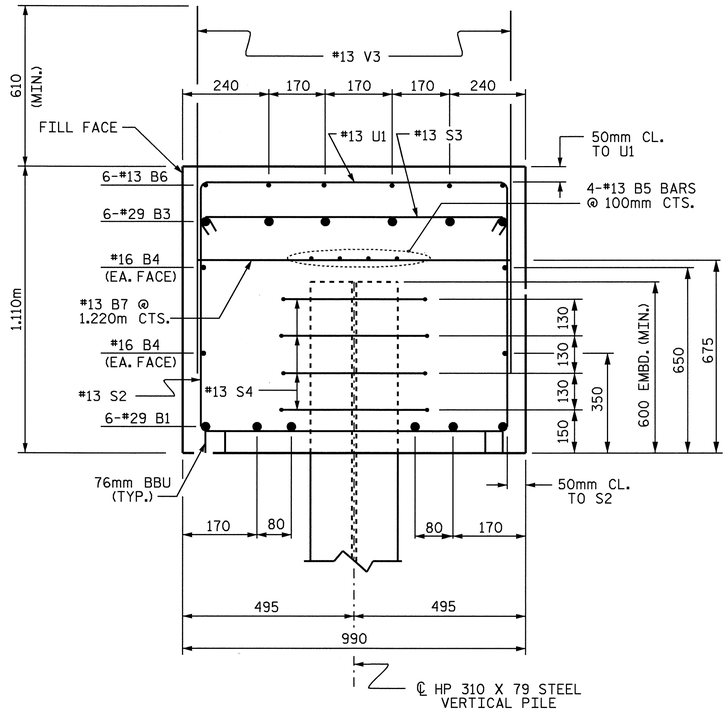

SECTION B-B

BAR TYPES

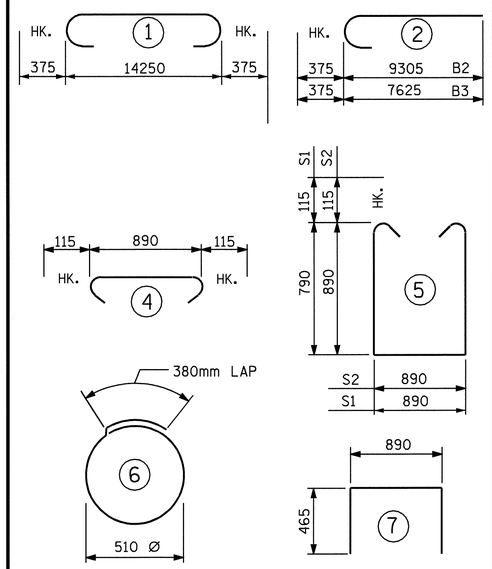

ALL BAR DIMENSIONS ARE OUT TO OUT.

BILL OF MATERIAL
END BENT #2

BAR	NO.	SIZE	TYPE	LENGTH	WEIGHT
B1	6	#29	1	15000	455
B2	6	#29	2	9680	294
B3	6	#29	2	8000	243
B4	4	#16	STR	14300	89
B5	8	#13	STR	7520	60
B6	6	#13	STR	2640	16
B7	14	#13	STR	880	12
H1	24	#22	STR	4680	342
H2	24	#22	STR	5080	371
S1	20	#13	5	2700	54
S2	22	#13	5	2900	63
S3	42	#13	4	1120	47
S4	44	#13	6	1980	87
U1	6	#13	7	1820	11
V1	26	#16	STR	3020	122
V2	28	#16	STR	3260	142
V3	84	#13	STR	1460	122

REINFORCING STEEL = 2530 KG

CLASS A CONCRETE BREAKDOWN
POUR #1: CAP & LOWER WINGS 16.7 m3

TOTAL CONCRETE 16.7 m3

HP 310 X 79 STEEL PILES
NO. 11 187.0 METERS

PILE REDRIVES EACH 4

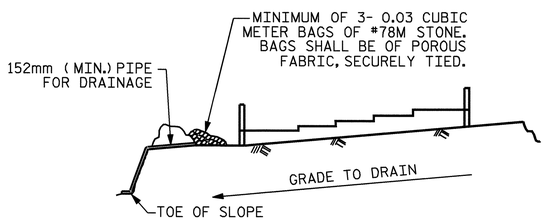

BAGGED STONE AND PIPE SHALL BE PLACED IMMEDIATELY AFTER COMPLETION OF END BENT EXCAVATION. PIPE MAY BE EITHER CONCRETE, CORRUGATED STEEL, CORRUGATED ALUMINUM ALLOY, OR CORRUGATED PLASTIC. PERFORATED PIPE WILL NOT BE ALLOWED.

BAGGED STONE SHALL REMAIN IN PLACE UNTIL THE ENGINEER DIRECTS THAT IT BE REMOVED. THE CONTRACTOR SHALL REMOVE AND DISPOSE OF SILT ACCUMULATIONS AT BAGGED STONE WHEN SO DIRECTED BY THE ENGINEER. BAGS SHALL BE REMOVED AND REPLACED WHENEVER THE ENGINEER DETERMINES THAT THEY HAVE DETERIORATED AND LOST THEIR EFFECTIVENESS.

NO SEPARATE PAYMENT WILL BE MADE FOR THIS WORK AND THE ENTIRE COST OF THIS WORK SHALL BE INCLUDED IN THE UNIT CONTRACT PRICE BID FOR THE SEVERAL PAY ITEMS.

TEMPORARY DRAINAGE AT END BENT

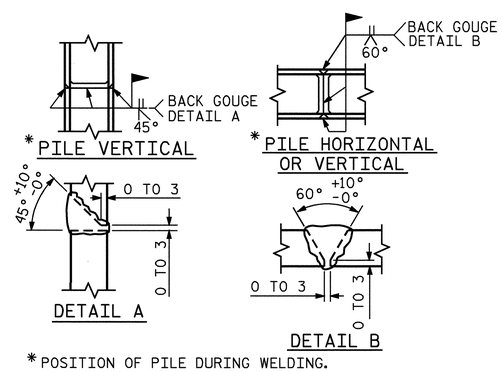

* POSITION OF PILE DURING WELDING.

PILE SPLICE DETAILS

PROJECT NO. R-2554BA
WAYNE COUNTY
STATION: 114+74.000 -L-

SHEET 3 OF 3

STATE OF NORTH CAROLINA
DEPARTMENT OF TRANSPORTATION
RALEIGH

SUBSTRUCTURE

INTEGRAL
END BENT #2
(LEFT LANE)

NORTH CAROLINA PROFESSIONAL SEAL 14045 ENGINEER TIMOTHY N. COGGINS
Timothy N. Coggins 6/6/08

REVISIONS						SHEET NO.
NO.	BY:	DATE:	NO.	BY:	DATE:	S-293
1			3			TOTAL SHEETS
2			4			478

DRAWN BY : B.N.BARODAWALA DATE : 10-24-07
CHECKED BY : M.D.PISO DATE : 3-08

06-JUN-2008 09:50
r:\structures\azlzl\Str#10\FINAL PLANS\r2554ba_sd_e*_10.dgn
padkins

STR. #10

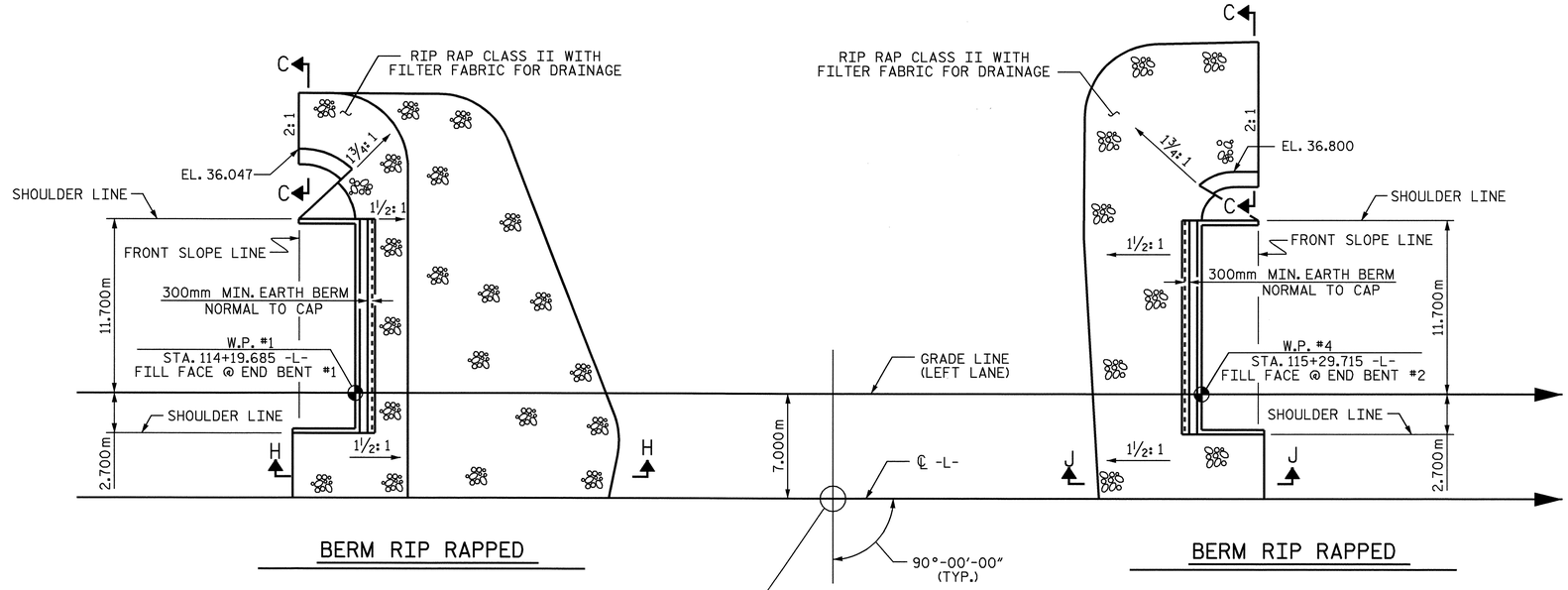

BERM RIP RAPPED

BERM RIP RAPPED

ESTIMATED QUANTITIES		
BRIDGE @ STA. 144+74.000 -L- (LEFT LANE)	RIP RAP CLASS II (600mm THICK)	FILTER FABRIC FOR DRAINAGE
	METRIC TON	SQUARE METERS
END BENT #1	388	396
END BENT #2	130	133

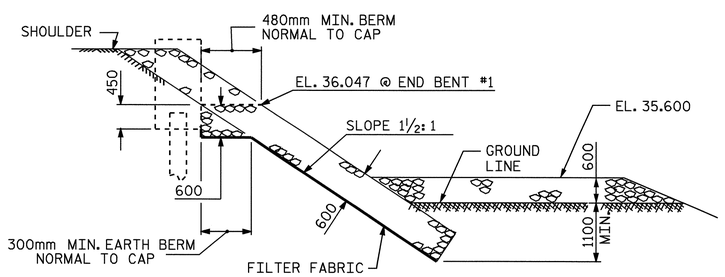

SECTION H-H

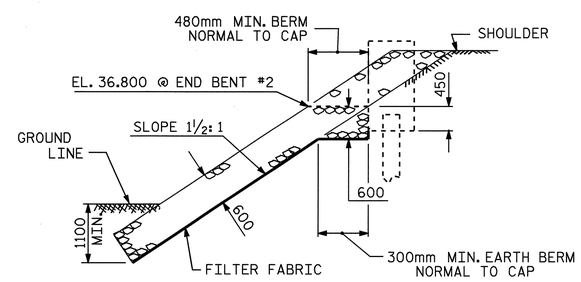

SECTION J-J

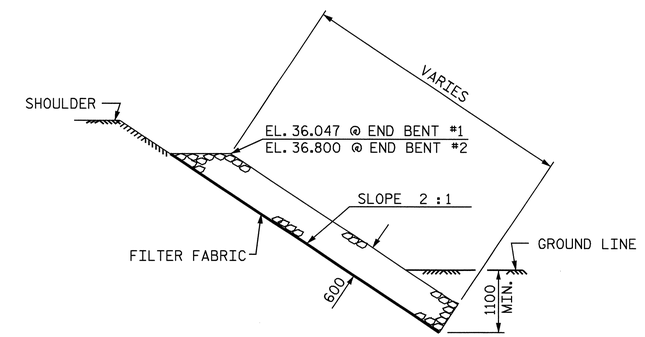

SECTION C-C

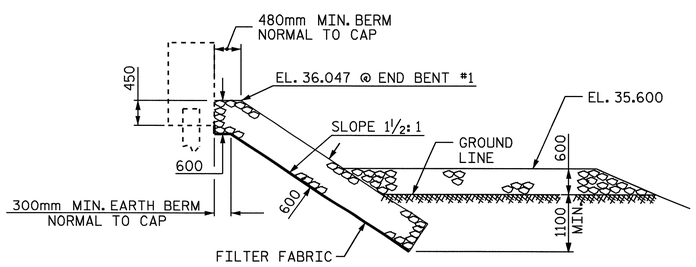

GRADE LINE SECTION

BERM RIP RAPPED

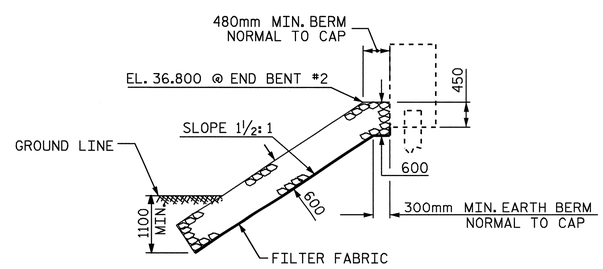

GRADE LINE SECTION

BERM RIP RAPPED

PROJECT NO. R-2554BA

WAYNE COUNTY

STATION: 114+74.700 -L-

STATE OF NORTH CAROLINA
DEPARTMENT OF TRANSPORTATION
RALEIGH

RIP RAP DETAILS

(LEFT LANE)

NORTH CAROLINA PROFESSIONAL SEAL 14045 ENGINEER TIMOTHY L. LEBOGGINS

Timothy L. Leboggins 6/6/08

REVISIONS						SHEET NO.
NO.	BY:	DATE:	NO.	BY:	DATE:	S-294
1			3			TOTAL SHEETS
2			4			478

STR. #10 SKEW 90°

DRAWN BY : B.N.BARODAWALA DATE : 2-8-07
CHECKED BY : CRAIG MILLER DATE : 2-07

06-JUN-2008 10:30
h:\structures\azlzl\str#10\finalplans\r2554ba_sd_rr_10.dgn
bbarodawala

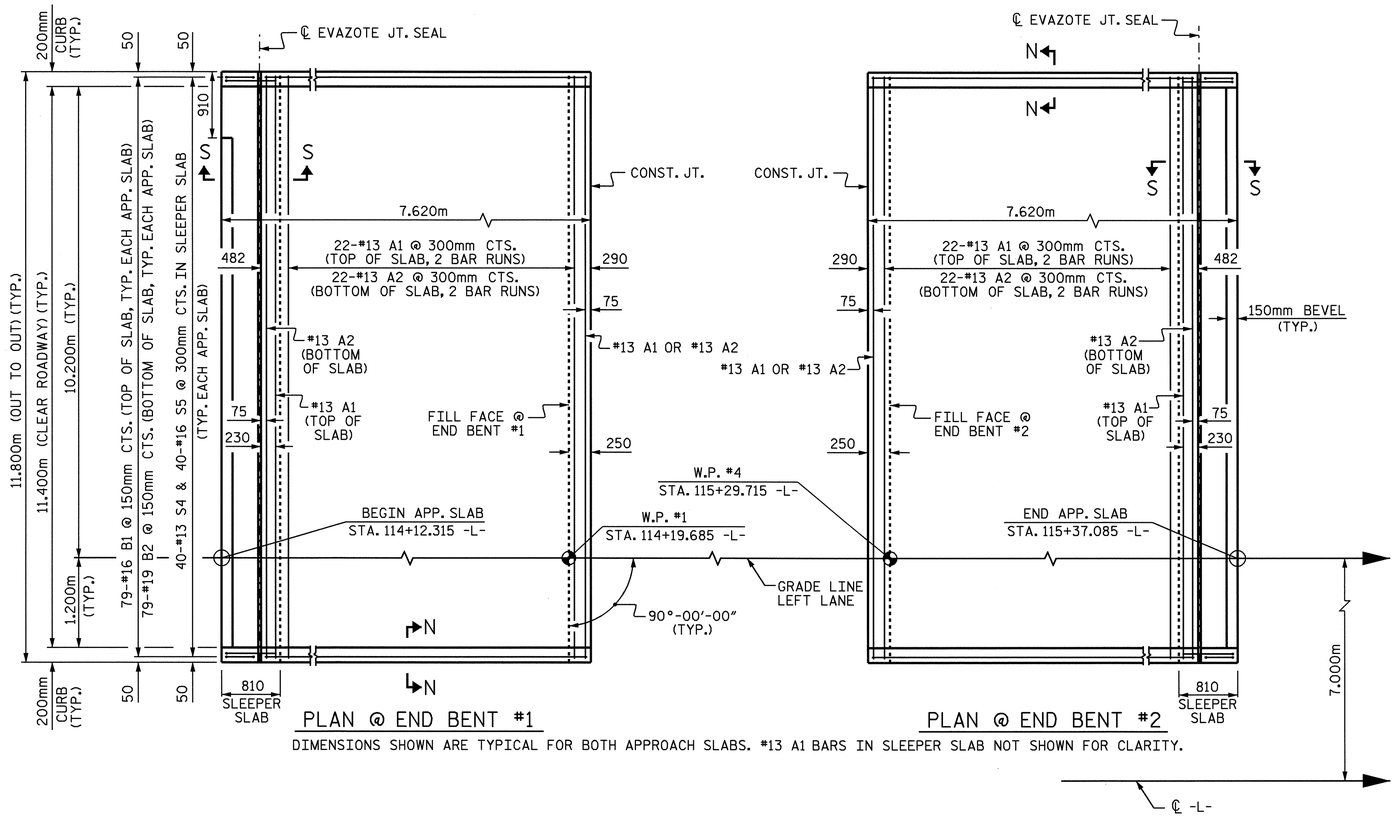

DIMENSIONS SHOWN ARE TYPICAL FOR BOTH APPROACH SLABS. #13 A1 BARS IN SLEEPER SLAB NOT SHOWN FOR CLARITY.

NOTES

APPROACH SLAB SHALL NOT BE CONSTRUCTED PRIOR TO COMPLETION OF THE BRIDGE DECK.

FOR REINFORCED BRIDGE APPROACH FILL INCLUDING FABRIC, IMPERMEABLE GEOMEMBRANE, 102mm Ø DRAINAGE PIPE, #78M STONE, AND SELECT MATERIAL, SEE ROADWAY PLANS.

AREA BETWEEN THE WINGWALL AND APPROACH SLAB SHALL BE GRADED TO DRAIN THE WATER AWAY FROM THE FILL FACE OF THE BRIDGE AND SHALL BE PAVED. SEE ROADWAY PLANS.

THE 150mm COMP. A.B.C. SHALL BE FLUSH WITH THE SLEEPER SLAB AND SHALL EXTEND 300mm OUTSIDE OF EACH EDGE OF THE APPROACH SLAB.

THE CONTRACTOR MAY USE 100mm TYPE B-25.0B ASPHALT CONCRETE BASE COURSE IN LIEU OF 150mm COMP. A.B.C. IF THIS OPTION IS USED, THE BASE COURSE SHALL BE FLUSH WITH THE SLEEPER SLAB AND THE WIDTH SHALL BE THE SAME AS THAT OF THE APPROACH SLAB.

THE CONTRACTOR MAY USE 125mm CLASS "A" CONCRETE BASE IN LIEU OF 150mm COMP. A.B.C. IF THIS OPTION IS USED, THE CONCRETE BASE SHALL BE FLUSH WITH THE SLEEPER SLAB AND THE WIDTH SHALL BE THE SAME AS THAT OF THE APPROACH SLAB. THE CONCRETE SHALL BE FINISHED TO A SMOOTH SURFACE AND A LAYER OF 13.6 kg ROOFING FELT SHALL BE PLACED BETWEEN THE CONCRETE BASE AND THE APPROACH SLAB TO PREVENT BOND. THE APPROACH SLAB SHALL NOT BE CAST UNTIL THE CONCRETE BASE HAS REACHED AN AGE OF THREE CURING DAYS.

THE VERTICAL JOINT ON THE RIGHT AND LEFT SIDE OF THE APPROACH SLAB AT THE ENDS OF THE EVAZOTE JOINT SHALL BE FILLED WITH SILICONE OR OTHER APPROVED MATERIAL IN ORDER TO PREVENT BACKFILL FROM ENTERING THE JOINT OPENING.

THE JOINT OPENING AT THE APPROACH SLAB/DECK INTERFACE SHALL BE SAWED NO MORE THAN 12 HOURS AFTER THE APPROACH SLAB IS CAST. THE JOINT SHALL BE CLEANED OF ALL DEBRIS BEFORE THE SEALANT IS APPLIED. THE JOINT SEALER MATERIAL SHALL CONFORM TO THE REQUIREMENTS OF TYPE SL LOW MODULUS SILICONE SEALANT.

WITH EVAZOTE JOINT SEAL

FOR EVAZOTE JOINT SEALS, SEE SPECIAL PROVISIONS.

THE NOMINAL UNCOMPRESSED SEAL WIDTH OF THE EVAZOTE JOINT SEAL SHALL BE 87mm.

FOR ELASTOMERIC CONCRETE, SEE SPECIAL PROVISIONS.

BILL OF MATERIAL

FOR ONE APPROACH SLAB (2 REQ'D)

BAR	NO.	SIZE	TYPE	LENGTH	WEIGHT
* A1	62	#13	STR	6160	380
A2	48	#13	STR	6120	292
* B1	79	#16	STR	6820	836
B2	79	#19	STR	6960	1229
* S4	40	#13	1	1200	48
S5	40	#16	2	880	55

REINFORCING STEEL	kg.	1576
* EPOXY COATED REINFORCING STEEL	kg.	1264
CLASS AA CONCRETE		
POUR #1 - SLEEPER SLAB	C.M.	3.0
POUR #2 - SLAB AND CURB	C.M.	25.6
TOTAL	C.M.	28.6

BAR TYPES

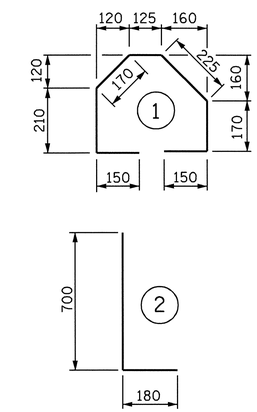

ALL BAR DIMENSIONS ARE OUT TO OUT

SPLICE CHART

BAR	SPLICE
* #13 A1	610
#13 A2	540

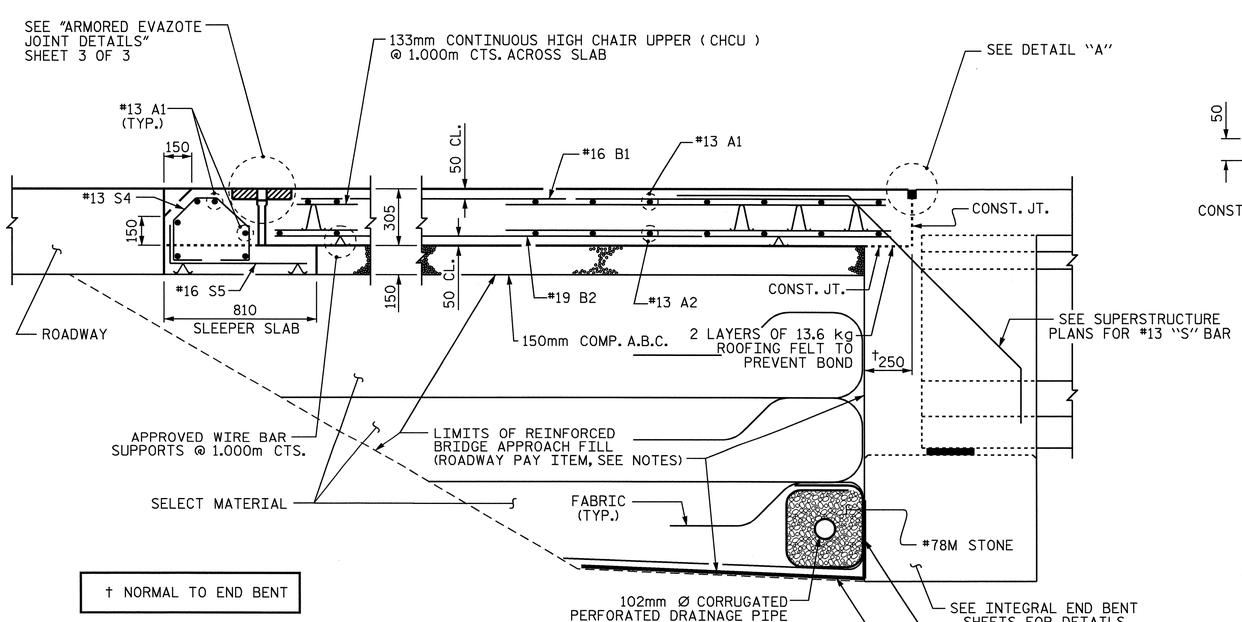

† NORMAL TO END BENT

SECTION THRU SLAB

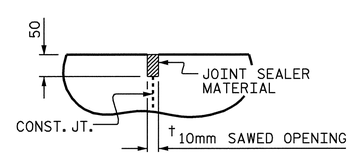

DETAIL "A"

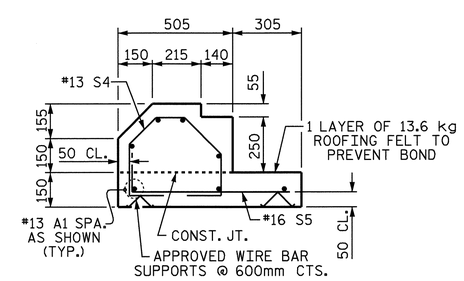

SECTION S-S

SHOWING SLEEPER SLAB

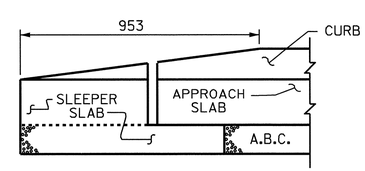

END OF CURB WITHOUT SHOULDER BERM GUTTER

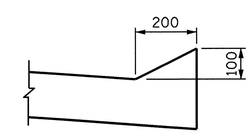

SECTION N-N

PROJECT NO. R-2554BA

WAYNE COUNTY

STATION: 114+74.700 -L-

SHEET 1 OF 3

STATE OF NORTH CAROLINA
DEPARTMENT OF TRANSPORTATION
RALEIGH

STANDARD

BRIDGE APPROACH SLAB FOR INTEGRAL ABUTMENT

(LEFT LANE)

NORTH CAROLINA PROFESSIONAL SEAL 14045 ENGINEER TIMOTHY R. COGGINS

6/6/08

REVISIONS						SHEET NO.
NO.	BY:	DATE:	NO.	BY:	DATE:	S-295
1			3			TOTAL SHEETS
2			4			478

ASSEMBLED BY : PEGGY ADKINS	DATE : 2-07
CHECKED BY : B.N. BARODAWALA	DATE : 2-07
DRAWN BY : TLA 6/06	ADDED 5/1/06R KMM/GM
CHECKED BY : GM 6/06	

06-JUN-2008 09:36
r:\structures\azlzl\Str#10\FINAL PLANS\R2554BA_sd_AS_10.dgn
padkins

STR. # 10 STD. NO. BAS11SM

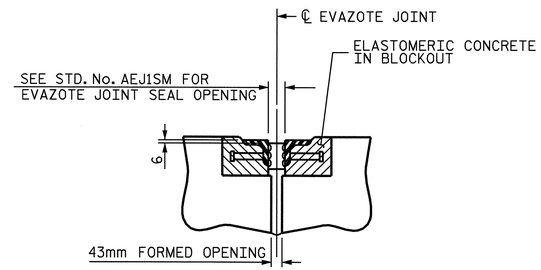

SECTION C-C

ARMORED EVAZOTE JOINT SEAL

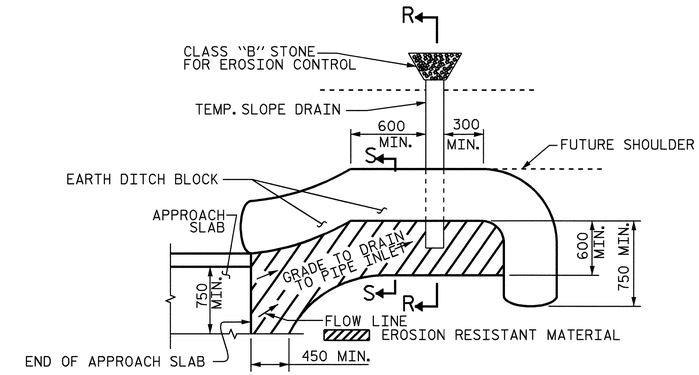

NOTE: IMMEDIATELY AFTER THE CONSTRUCTION OF THE APPROACH SLAB, THE CONTRACTOR SHALL PROVIDE TEMPORARY BERM AND SLOPE DRAIN. CONTRACTOR SHALL GRADE TO PIPE INLET AND PROVIDE EROSION RESISTANT MATERIAL AS SHOWN. THE EROSION RESISTANT MATERIAL SHALL BE EITHER 1) ASPHALT PLANT MIX, TYPE 1 OR TYPE 2, MIN. 50mm DEPTH, 2) EROSION CONTROL MAT, OR 3) CONCRETE, AS DIRECTED BY THE ENGINEER. THE SLOPE DRAIN SHALL CONSIST OF A NON-PERFORATED TEMPORARY DRAINAGE PIPE, 305mm IN DIAMETER.

PLAN VIEW

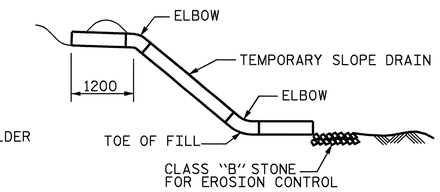

SECTION R-R

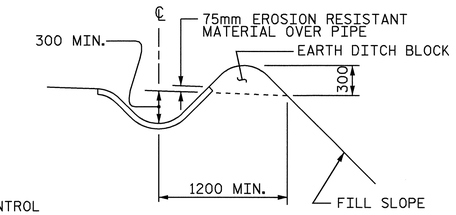

SECTION S-S

TEMPORARY BERM AND SLOPE DRAIN DETAILS

(TO BE USED WHEN SHOULDER BERM GUTTER IS REQUIRED)

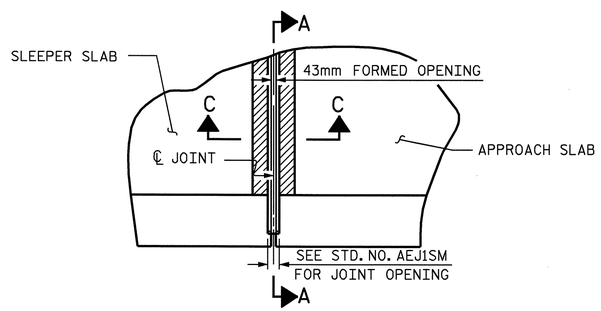

PLAN

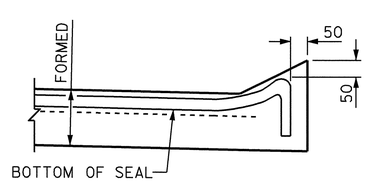

SECTION A-A

JOINT SEAL DETAILS @ SLEEPER SLAB

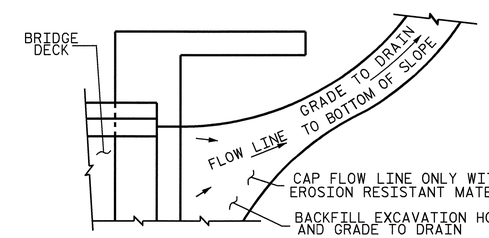

NOTE: IF THE APPROACH SLAB IS NOT CONSTRUCTED IMMEDIATELY AFTER THE BACKFILLING OF THE END BENT EXCAVATION, GRADE TO DRAIN TO THE BOTTOM OF THE SLOPE AND PROVIDE EROSION RESISTANT MATERIAL, SUCH AS FIBERGLASS ROVING OR AS DIRECTED BY THE ENGINEER TO PREVENT SOIL EROSION AND TO PROTECT THE AREA ADJACENT TO THE STRUCTURE. THE CONTRACTOR WILL BE REQUIRED TO REMOVE THESE MATERIALS PRIOR TO CONSTRUCTION OF THE APPROACH SLAB.

TEMPORARY DRAINAGE DETAIL

PROJECT NO. R-2554BA

WAYNE COUNTY

STATION: 114+74.700 -L-

SHEET 2 OF 3

STATE OF NORTH CAROLINA
DEPARTMENT OF TRANSPORTATION
RALEIGH

STANDARD
BRIDGE APPROACH
SLAB DETAILS

(LEFT LANE)

NORTH CAROLINA PROFESSIONAL SEAL 14045 ENGINEER TIMOTHY R. COGGINS

Timothy R. Coggins 6/5/08

REVISIONS						SHEET NO.
NO.	BY:	DATE:	NO.	BY:	DATE:	S-296
1			3			TOTAL SHEETS
2			4			478

ASSEMBLED BY : PEGGY ADKINS	DATE : 2-07	
CHECKED BY : B.N.BARODAWALA	DATE : 2-07	
DRAWN BY : FCJ 11/88	REV. 10/17/00	RWW/LES
CHECKED BY : ARB 11/88	REV. 5/7/03	RWW/JTE
	REV. 5/1/06R	TLA/GM

25-APR-2008 10:01
r:\structures\azlzl\str#10\padkins\microstation\r2554ba_sd_as_10.dgn
lbwilson

STR. # 10

STD. NO. BAS10SM

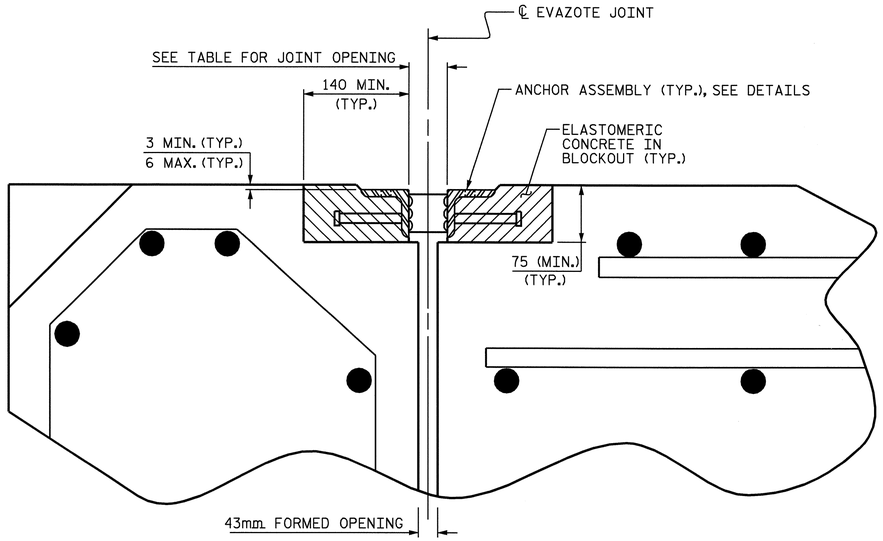

ARMORED JOINT DETAILS

SECTION NORMAL TO JOINT AT APPROACH SLAB SLEEPER SLAB

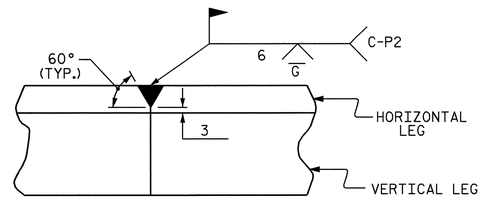

DETAIL- FIELD WELD SPLICE OF ANGLE

NOTES

ANGLES SHALL CONFORM TO AASHTO M270 GRADE 250 STEEL OR APPROVED EQUAL. ALL STUD ANCHORS SHALL CONFORM TO AASHTO M169 GRADES 1010 THRU 1020 OR APPROVED EQUAL.

STUD ANCHORS SHALL BE SHOP WELDED AND ALL HOLES SHALL BE SHOP DRILLED AS SHOWN ON THE PLANS. STUD ANCHORS SHALL BE ELECTRIC ARC END WELDED WITH COMPLETE FUSION.

UPON COMPLETION OF SHOP FABRICATION, THE ENTIRE ANCHOR ASSEMBLY SHALL BE METALLIZED. THE 12.70mm Ø STUD ANCHORS AND ANCHOR TABS NEED NOT BE METALLIZED. SEE SPECIAL PROVISION FOR THERMAL SPRAYED COATINGS (METALLIZATION).

ANCHOR ASSEMBLY SHALL BE MADE CONTINUOUS THE LENGTH OF THE JOINT FROM GUTTER TO GUTTER. FOR FIELD SPLICES AT ALL CROWN BREAK POINTS, THE ENDS OF THE STEEL ANGLES SHALL BE CUT PARALLEL TO THE BRIDGE CENTERLINE. FINISHED FIELD WELDS SHALL BE GROUND SMOOTH AND COATED WITH A MINIMUM THICKNESS OF 0.100mm OF ZINC-RICH PAINT IN ACCORDANCE WITH THE STANDARD SPECIFICATIONS.

ANCHOR ASSEMBLY SEGMENTS SHALL NOT BE LESS 3.6m NOR MORE THAN 6.1m IN LENGTH. SHORTER SEGMENTS MAY BE USED AT THE EDGE OF ROADWAY OR AT POINTS OF STAGED CONSTRUCTION.

THE ANCHOR ASSEMBLY SHALL BE SECURED AND LEVELED AS SHOWN IN THE "ARMORED JOINT ANCHOR ASSEMBLY DETAILS". NO SUBMITTALS ARE REQUIRED FOR 9.53mm Ø EXPANSION ANCHORS, NUTS OR WASHERS. THE CONTRACTOR MAY SUBMIT FOR APPROVAL AN ALTERNATE METHOD OF ALIGNING AND LEVELING THE ANGLES. THE ALTERNATE METHOD SHALL NOT INCLUDE ANY WELDING TO THE OUTSIDE FACE OF THE ANGLES.

AFTER THE ELASTOMERIC CONCRETE HAS BEEN CAST ON BOTH SIDES OF THE JOINT, REMOVE ANY EXCESS CONCRETE THAT COMES THROUGH THE WEEP HOLES AND THOROUGHLY CLEAN THE ANGLES. ANY DAMAGED STEEL SHALL BE COATED WITH A MINIMUM OF 0.100mm OF ZINC-RICH PAINT IN ACCORDANCE WITH THE STANDARD SPECIFICATIONS.

SEE SPECIAL PROVISIONS FOR EVAZOTE JOINT SEALS.

SEE SPECIAL PROVISIONS FOR ELASTOMERIC CONCRETE.

MOVEMENT AND SETTING AT EVAZOTE JOINT

APPROACH SLAB NO.	SKEW ANGLE	NOMINAL UNCOMPRESSED SEAL WIDTH	TOTAL MOVEMENT (ALONG ℄ RDWY)	PERPENDICULAR JOINT OPENING AT 7° C	PERPENDICULAR JOINT OPENING AT 16° C	PERPENDICULAR JOINT OPENING AT 32° C
1	90	87	44	75	67	52
2	90	87	44	75	67	52

TOTAL MOVEMENT IS CALCULATED ALONG THE CENTERLINE OF ROADWAY.
JOINT OPENINGS ARE MEASURED PERPENDICULAR TO THE JOINT.

BILL OF MATERIAL

APPROACH SLAB NO.	ELASTOMERIC CONCRETE ✳ (CU. m)	TOTAL LENGTH OF ANGLE (m)
1	0.2	11.4
2	0.2	11.4
TOTAL	0.4	22.8

✳ BASED ON THE MINIMUM BLOCKOUT SHOWN.

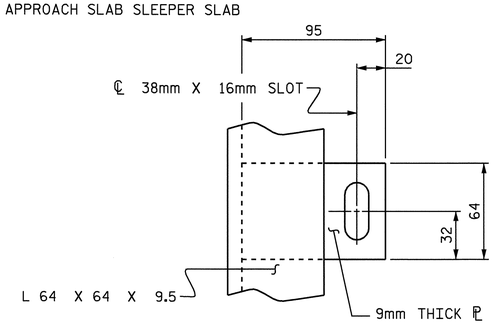

PLAN VIEW OF TAB

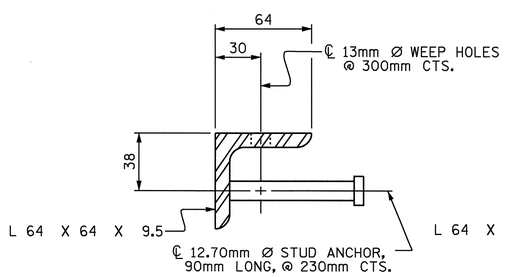

SECTION VIEW OF STUD

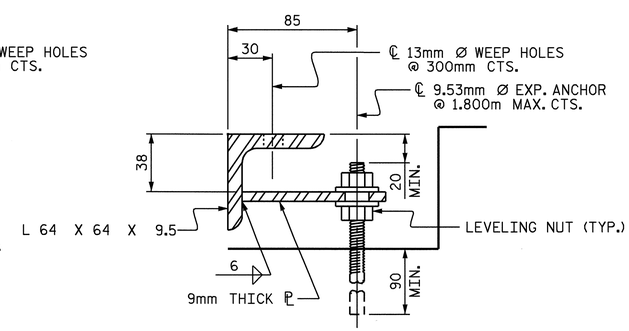

SECTION VIEW OF TAB

ARMORED JOINT ANCHOR ASSEMBLY DETAILS

PROJECT NO. R-2554BA
WAYNE COUNTY
STATION: 114+74.700 -L-

SHEET 3 OF 3

STATE OF NORTH CAROLINA
DEPARTMENT OF TRANSPORTATION
RALEIGH

STANDARD ARMORED EVAZOTE JOINT DETAILS

(LEFT LANE)

NORTH CAROLINA PROFESSIONAL SEAL 14045 ENGINEER TIMOTHY L. COGGINS
Timothy L. Coggins 6/5/08

REVISIONS						SHEET NO.
NO.	BY:	DATE:	NO.	BY:	DATE:	S-297
1			3			TOTAL SHEETS
2			4			478

ASSEMBLED BY : PEGGY ADKINS	DATE : 12-07		
CHECKED BY : B.N.BARODAWALA	DATE : 12-07		
DRAWN BY : EEM 1/96	REV. 7/10/01	LES/RDR	
CHECKED BY : RGW 1/96	REV. 5/7/03	RR RWW/JTE	
	REV. 5/1/06	TLA/GM	

25-APR-2008 09:45
r:\structures\azlzl\str#10\padkins\microstation\r2554ba_sd_as_10.dgn
lbwilson

STR. # 10

STD. NO. AEJ1SM

F. A. PROJECT NO. NHS-70(106)

GRADE DATA

-0.8000% +2.0000%

PI = 114+65.000 -L-
EL. = 38.060m
VC = 300m

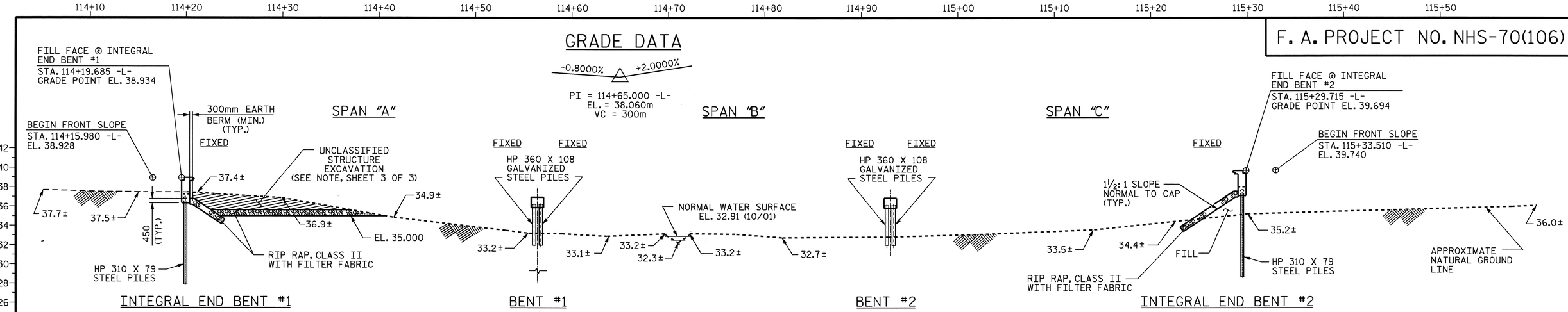

SECTION ALONG -L-

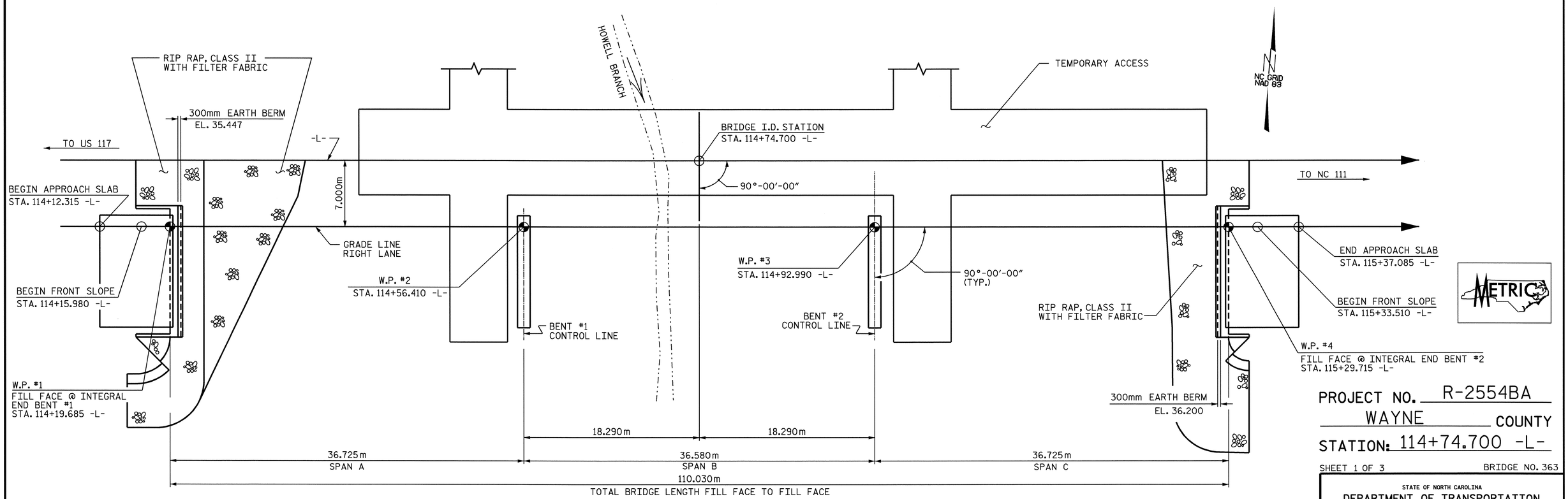

PLAN

(PILES NOT SHOWN FOR CLARITY)

METRIC

PROJECT NO. R-2554BA
WAYNE COUNTY
STATION: 114+74.700 -L-

SHEET 1 OF 3 BRIDGE NO. 363

STATE OF NORTH CAROLINA
DEPARTMENT OF TRANSPORTATION
RALEIGH

GENERAL DRAWING

FOR BRIDGE OVER HOWELL BRANCH ON US 70 BYPASS BETWEEN US 117 AND NC 111 (RIGHT LANE)

NORTH CAROLINA PROFESSIONAL SEAL 12274 ENGINEER OMAR R. AZIZI
Omar R. Azizi 6/6/08

NORTH CAROLINA PROFESSIONAL SEAL 14045 ENGINEER TIMOTHY A. COGGINS
Timothy A. Coggins 6/6/08

REVISIONS						SHEET NO.
NO.	BY:	DATE:	NO.	BY:	DATE:	S-298
1			3			TOTAL SHEETS
2			4			478

DRAWN BY : PEGGY ADKINS DATE : 2-06
CHECKED BY : Z. RORIE DATE : 11-06

06-JUN-2008 11:55
r:\structures\azlzl\Str#11\FINAL PLANS\R2554BA_SD_GD_11.dgn
padkins

STR. #11

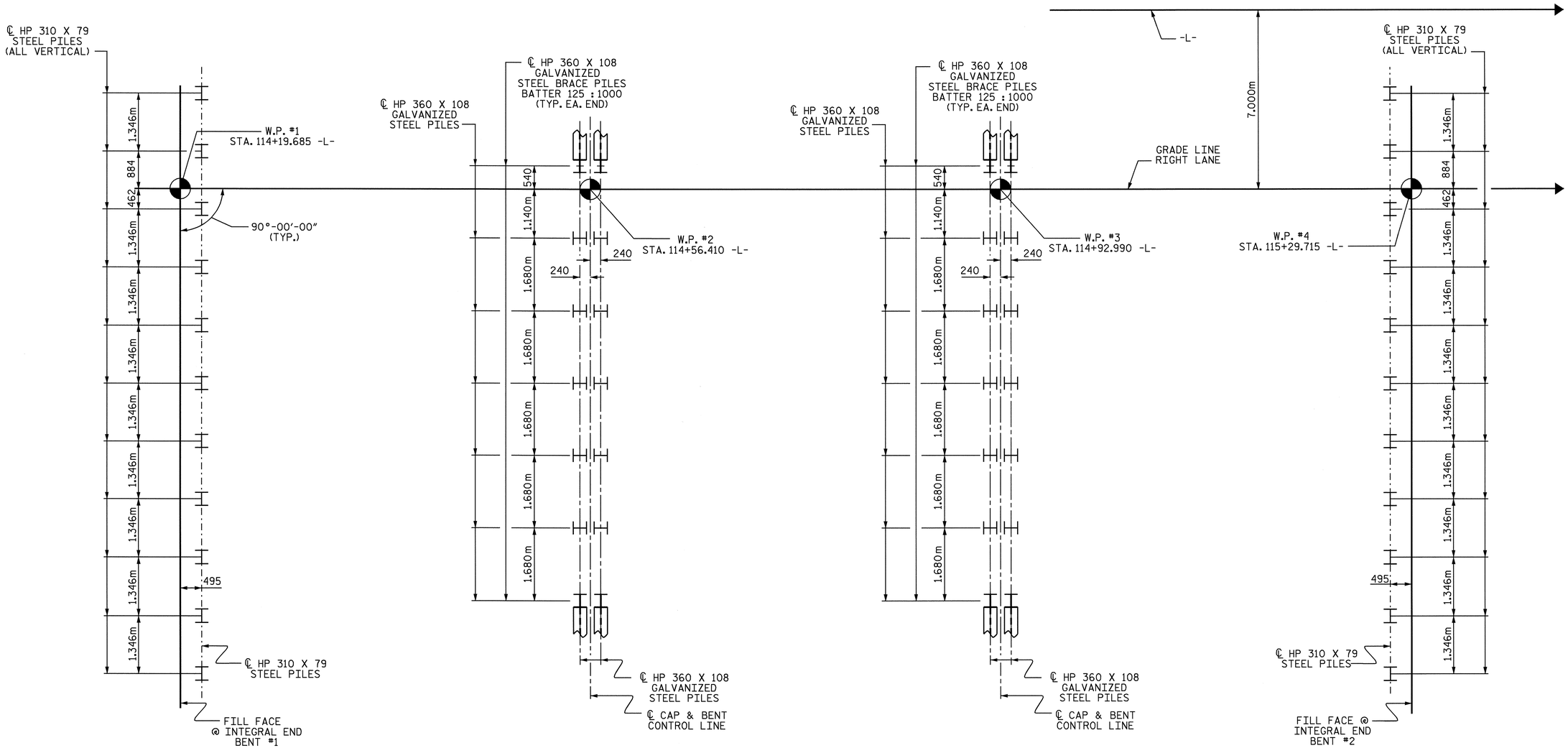

FOUNDATION LAYOUT

DIMENSIONS LOCATING PILES ARE SHOWN TO PILE CENTERLINE AT BOTTOM OF CAP

PROJECT NO. R-2554BA

WAYNE COUNTY

STATION: 114+74.700 -L-

SHEET 2 OF 3

STATE OF NORTH CAROLINA
DEPARTMENT OF TRANSPORTATION
RALEIGH

GENERAL DRAWING

FOR BRIDGE OVER
HOWELL BRANCH ON
US 70 BYPASS BETWEEN
US 117 AND NC 111
(RIGHT LANE)

NORTH CAROLINA PROFESSIONAL SEAL 14045 ENGINEER TIMOTHY L. COGGINS

6/6/08

REVISIONS						SHEET NO.
NO.	BY:	DATE:	NO.	BY:	DATE:	S-299
1			3			TOTAL SHEETS
2			4			478

STR. #11

DRAWN BY : B.N.BARODAWALA DATE : 4-28-08
CHECKED BY : T.L. AVERETTE DATE : 4-08

06-JUN-2008 09:50
h:\structures\azlzl\str*11\final plans\r2554ba_sd_gd_11.dgn
bbarodawala

BM #5 RR SPIKE IN BASE OF 360mm OAK 36.829m RT. OF -BL- STA. 31+74.508; ELEV. 36.147, NGVD 1929.

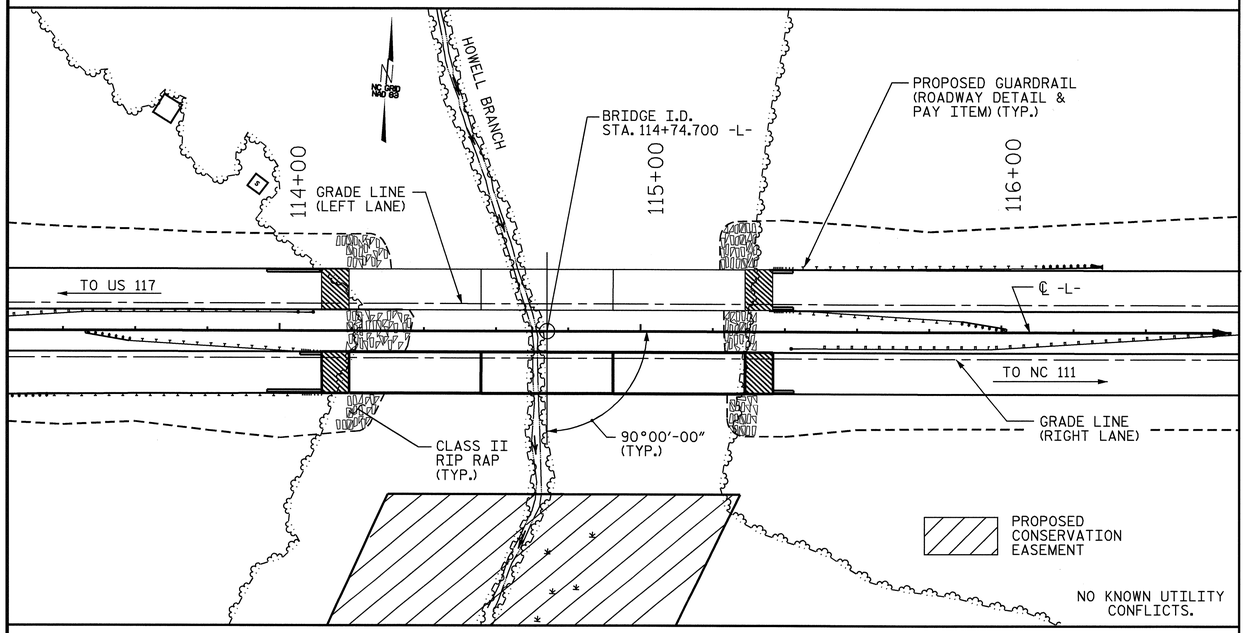

LOCATION SKETCH

HYDRAULIC DATA

DESIGN DISCHARGE	= 26.7 m^3/s
FREQUENCY OF DESIGN FLOOD	= 50 YR.
DESIGN HIGH WATER ELEVATION	= 34.12m
DRAINAGE AREA	= 2.7 Sq. Km.
BASIC DISCHARGE (Q100)	= 30.8 m^3/s
BASIC HIGH WATER ELEVATION	= 34.20m

OVERTOPPING FLOOD DATA

OVERTOPPING DISCHARGE	= 940 m^3/s
FREQUENCY OF OVERTOPPING FLOOD	= > 500 YR.
OVERTOPPING FLOOD ELEVATION	= 38.92m ✳

✳ OVERTOPPING ELEV. IS AT THE UPSTREAM BRIDGE SECTION. ALL OTHER ELEVATIONS ARE AT THE APPROACH SECTIONS.

NOTES:

ASSUMED LIVE LOAD = MS18 OR ALTERNATE LOADING, EXCEPT THAT THE GIRDERS HAVE BEEN DESIGNED FOR MS22.5.

THIS BRIDGE HAS BEEN DESIGNED IN ACCORDANCE WITH THE REQUIREMENTS OF AASHTO STANDARD SPECIFICATIONS FOR SEISMIC DESIGN OF HIGHWAY BRIDGES FOR SEISMIC PERFORMANCE CATEGORY A.

ALL DIMENSIONS ARE IN MILLIMETERS UNLESS OTHERWISE NOTED.

ALL ELEVATIONS ARE IN METERS.

FOR OTHER DESIGN DATA AND GENERAL NOTES, SEE SHEET SNSM.

FOR EROSION CONTROL MEASURES, SEE EROSION CONTROL PLANS.

THIS BRIDGE HAS BEEN DESIGNED BY THE STRENGTH DESIGN METHOD AS SPECIFIED IN AASHTO STANDARD SPECIFICATIONS.

REMOVABLE FORMS MAY BE USED IN LIEU OF METAL STAY-IN-PLACE FORMS IN ACCORDANCE WITH ARTICLE 420-3 OF THE STANDARD SPECIFICATIONS.

THE CONTRACTOR SHALL PROVIDE INDEPENDENT ASSURANCE SAMPLES OF REINFORCING STEEL AS FOLLOWS: FOR PROJECTS REQUIRING UP TO 360,000 kg OF REINFORCING STEEL, ONE 760mm SAMPLE OF EACH SIZE BAR USED, AND FOR PROJECTS REQUIRING OVER 360,000 kg OF REINFORCING STEEL, TWO 760mm SAMPLES OF EACH SIZE BAR USED. THE BARS FROM WHICH THE SAMPLES ARE TAKEN MUST THEN BE SPLICED WITH REPLACEMENT BARS OF THE SIZE AND LENGTH OF THE SAMPLE PLUS A MINIMUM LAP SPLICE OF THIRTY BAR DIAMETERS.

NEEDLE BEAMS WILL NOT BE ALLOWED UNLESS OTHERWISE CALLED FOR ON THE PLANS OR APPROVED BY THE ENGINEER.

FOR SUBMITTAL OF WORKING DRAWINGS, SEE SPECIAL PROVISIONS.

FOR METRIC STRUCTURAL STEEL, SEE SPECIAL PROVISIONS.

FOR FALSEWORK AND FORMWORK, SEE SPECIAL PROVISIONS.

FOR PRESTRESSED CONCRETE MEMBERS, SEE SPECIAL PROVISIONS.

FOR CONSTRUCTION, MAINTENANCE AND REMOVAL OF TEMPORARY ACCESS AT STATION 114+74.700 -L-, SEE SPECIAL PROVISIONS.

FOR CRANE SAFETY, SEE SPECIAL PROVISIONS.

FOR CRACK REPAIR OF PRESTRESSED CONCRETE GIRDERS, SEE SPECIAL PROVISIONS.

FOR GROUT FOR STRUCTURES, SEE SPECIAL PROVISIONS.

THE MATERIAL SHOWN IN THE CROSS-HATCHED AREA SHALL BE EXCAVATED FOR A DISTANCE OF 23m TO THE RIGHT SIDE OF CENTERLINE ROADWAY AS DIRECTED BY THE ENGINEER. THE ESTIMATED QUANTITY IS LESS THAN 500 CUBIC METERS. THIS WORK WILL BE PAID FOR AT THE CONTRACT LUMP SUM PRICE FOR UNCLASSIFIED STRUCTURE EXCAVATION. FOR UNCLASSIFIED STRUCTURE EXCAVATION, SEE SPECIAL PROVISIONS.

DRIVE PILES AT END BENT NO. 1 AND END BENT NO. 2 TO A REQUIRED BEARING CAPACITY OF 1340 KN PER PILE. THE REQUIRED BEARING CAPACITY IS EQUAL TO THE ALLOWABLE BEARING CAPACITY WITH A MINIMUM FACTOR OF SAFETY OF TWO.

DRIVE PILES AT BENT NO. 1 AND BENT NO. 2 TO A REQUIRED BEARING CAPACITY OF 1650 KN PER PILE. THE REQUIRED BEARING CAPACITY IS EQUAL TO THE ALLOWABLE BEARING CAPACITY WITH A MINIMUM FACTOR OF SAFETY OF TWO PLUS ANY ADDITIONAL CAPACITY TO ACCOUNT FOR DOWN DRAG OR NEGATIVE SKIN FRICTION AND SCOUR.

THE ALLOWABLE BEARING CAPACITY FOR PILES AT END BENT NO. 1 AND END BENT NO. 2 IS 670 KN PER PILE.

THE ALLOWABLE BEARING CAPACITY FOR PILES AT BENT NO. 1 AND BENT NO. 2 IS 800 KN PER PILE.

THE SCOUR CRITICAL ELEVATION FOR BENT NO. 1 AND BENT NO. 2 IS 29 METERS. SCOUR CRITICAL ELEVATIONS ARE USED TO MONITOR POSSIBLE SCOUR PROBLEMS DURING THE LIFE OF THE STRUCTURE.

TESTING PILES WITH THE PILE DRIVING ANALYZER (PDA) DURING DRIVING, RESTRIKING OR REDRIVING MAY BE REQUIRED. THE ENGINEER WILL DETERMINE THE NEED FOR PDA TESTING. SEE PILE DRIVING ANALYZER SPECIAL PROVISION.

OBSERVE A THREE MONTH WAITING PERIOD AFTER CONSTRUCTING THE EMBANKMENT TO THE BOTTOM OF CAP ELEVATION BEFORE BEGINNING END BENT CONSTRUCTION AT END BENT NO. 2.

PILE RESTRIKES FOR LRFD MAY BE REQUIRED. SEE PILE RESTRIKES FOR LRFD SPECIAL PROVISION.

FOR EMBANKMENT MONITORING DETAILS, SEE ROADWAY PLANS.

THIS STRUCTURE HAS BEEN DESIGNED IN ACCORDANCE WITH HEC 18, "EVALUATING SCOUR AT BRIDGES", MAY, 2001.

TOTAL BILL OF MATERIAL

	CONSTRUCTION, MAINTENANCE AND REMOVAL OF TEMPORARY ACCESS	PDA TESTING	PDA ASSISTANCE	UNCLASSIFIED STRUCTURE EXCAVATION	REINFORCED CONCRETE DECK SLAB	GROOVING BRIDGE FLOORS	CLASS A CONCRETE	BRIDGE APPROACH SLABS	REINFORCING STEEL	MODIFIED 1829mm PRESTRESSED CONCRETE GIRDERS		HP 310 X 79 STEEL PILES		HP 360 X 108 GALVANIZED STEEL PILES		PILE REDRIVES	CONCRETE BARRIER RAIL	RIP RAP CLASS II (600mm THICK)	FILTER FABRIC FOR DRAINAGE	ELASTOMERIC BEARINGS	EVAZOTE JOINT SEALS
	LUMP SUM	EACH	EACH	LUMP SUM	SQ. METERS	SQ. METERS	CU. METERS	LUMP SUM	kg	NO.	METERS	NO.	METERS	NO.	METERS	EACH	METERS	METRIC TON	SQ. METERS	LUMP SUM	LUMP SUM
SUPERSTRUCTURE				LUMP SUM	1357.1	1303.7		LUMP SUM		15	544.800						219.060			LUMP SUM	LUMP SUM
END BENT 1							16.7		2530			11	187.0			4		320	327		
BENT 1							14.6		1406					14	280.0	4					
BENT 2							14.6		1406					14	266.0	4					
END BENT 2							16.7		2530			11	187.0			4		130	133		
TOTAL	LUMP SUM	1	1	LUMP SUM	1357.1	1303.7	62.6	LUMP SUM	7872	15	544.800	22	374.0	28	546.0	16	219.060	450	460	LUMP SUM	LUMP SUM

PROJECT NO. R-2554BA
WAYNE COUNTY
STATION: 114+74.700 -L-

SHEET 3 OF 3

NORTH CAROLINA PROFESSIONAL SEAL 14045 ENGINEER TIMOTHY C. COGGINS
Timothy C. Coggins 6/6/08

STATE OF NORTH CAROLINA
DEPARTMENT OF TRANSPORTATION
RALEIGH

GENERAL DRAWING
FOR BRIDGE OVER
HOWELL BRANCH ON
US 70 BYPASS BETWEEN
US 117 AND NC 111
(RIGHT LANE)

REVISIONS						SHEET NO.
NO.	BY:	DATE:	NO.	BY:	DATE:	S-300
1			3			TOTAL SHEETS
2			4			478

DRAWN BY : PEGGY ADKINS DATE : 2-06
CHECKED BY : Z. RORIE DATE : 3-06

06-JUN-2008 09:50
h:\structures\gzlz\str#11\finalplans\r2554ba_sd_gd_11.dgn

STR. #11

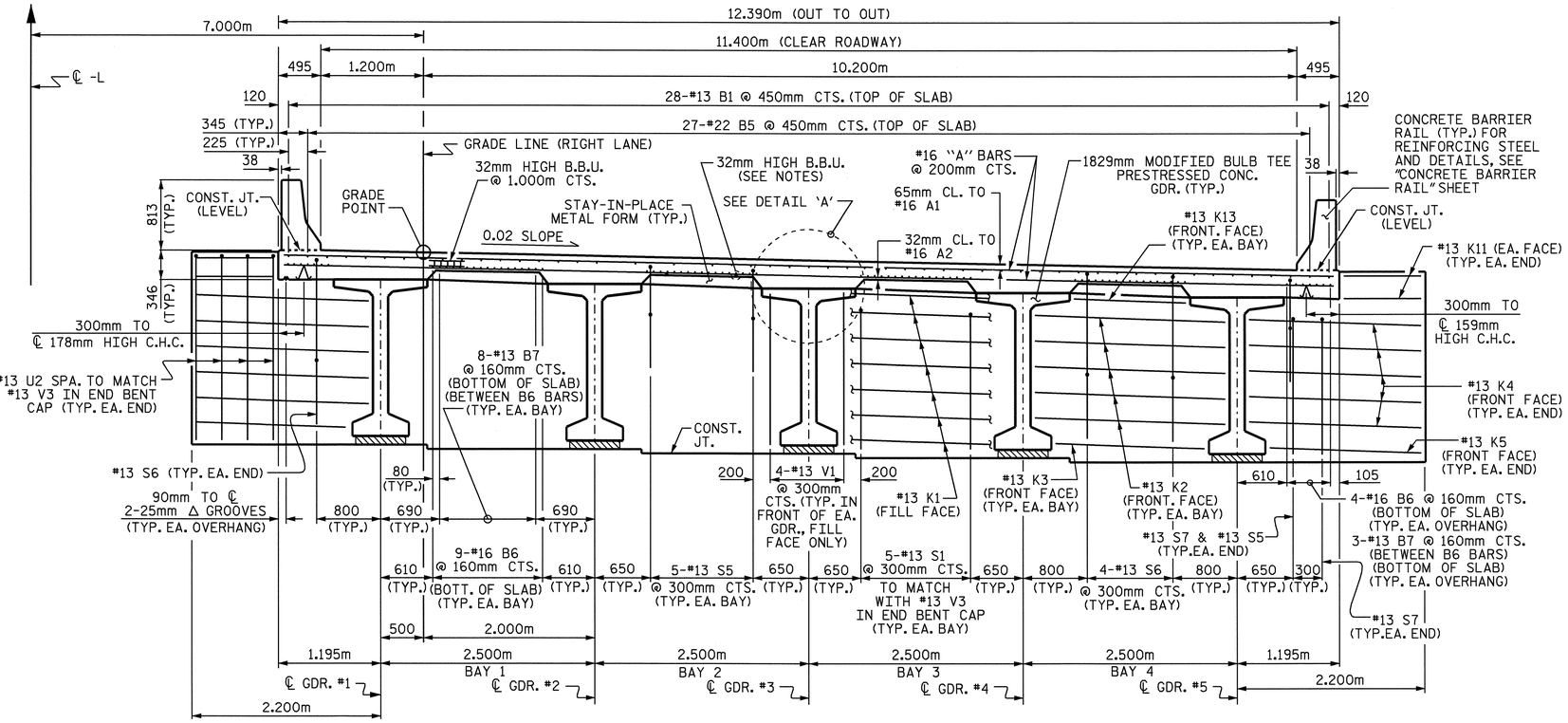

TYPICAL SECTION @ INTEGRAL END BENT

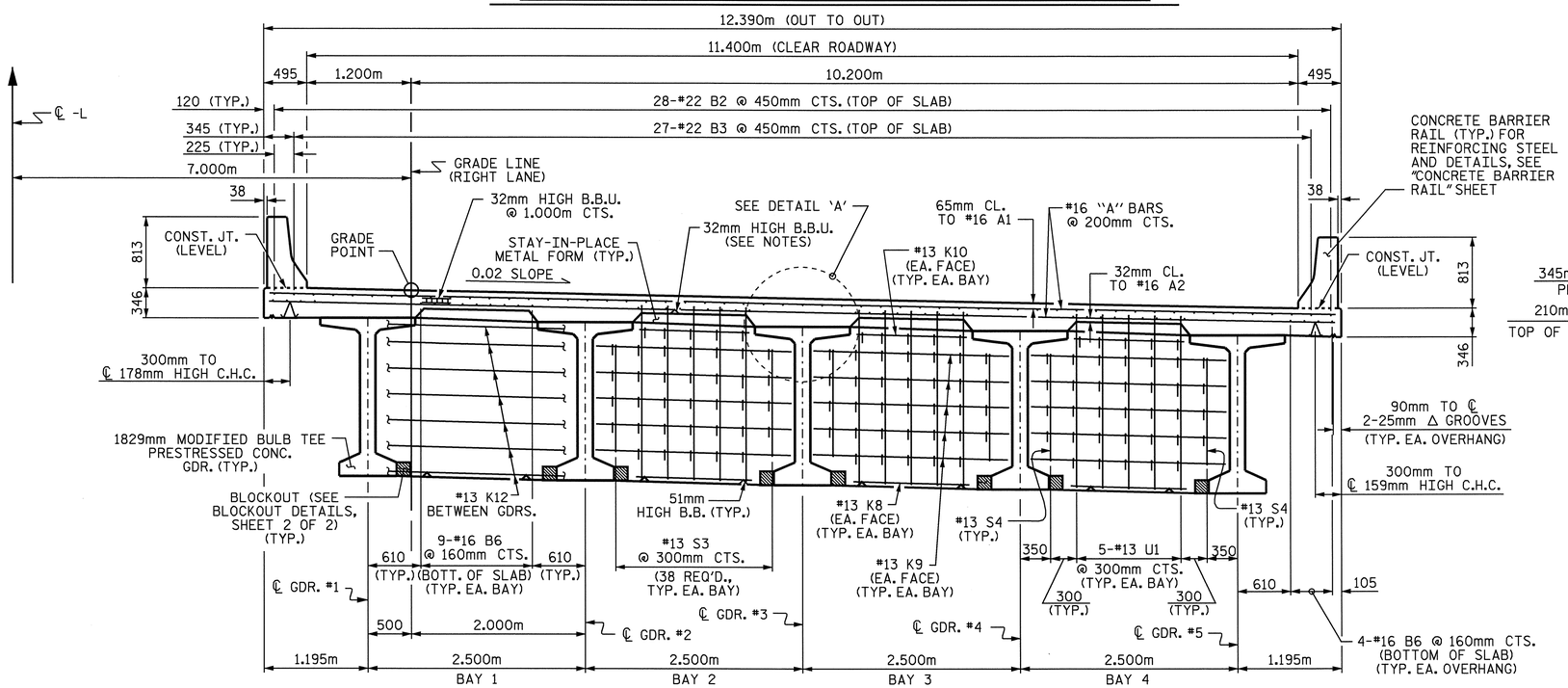

TYPICAL SECTION

AT CONTINUOUS BENT DIAPHRAGMS

NOTES

PROVIDE 32mm HIGH BEAM BOLSTERS UPPER AT 1.2m CTS. ATOP THE METAL STAY-IN-PLACE FORMS TO SUPPORT THE BOTTOM MAT OF 'A' BARS. WHEN USING REMOVABLE FORMS, PROVIDE CONTINUOUS HIGH CHAIRS FOR METAL DECK (C.H.C.M.) @ 1.2m CTS. WITH A HEIGHT TO SUPPORT THE BOTTOM MAT OF 'A' BARS A CLEAR DISTANCE OF 65mm ABOVE THE TOP OF THE REMOVABLE FORM.

LONGITUDINAL STEEL MAY BE SHIFTED SLIGHTLY, AS NECESSARY, TO AVOID INTERFERENCE WITH STIRRUPS IN PRESTRESSED CONCRETE GIRDERS.

CONCRETE IN INTERMEDIATE DIAPHRAGMS MAY BE CLASS A IN LIEU OF CLASS AA. PAYMENT SHALL BE MADE UNDER THE UNIT CONTRACT PRICE FOR REINFORCED CONCRETE DECK SLAB.

TEMPORARY STRUTS SHALL BE PLACED BETWEEN PRESTRESSED GIRDERS ADJACENT TO THE DIAPHRAGMS, AND THE NUTS ON THE 31.75mm DIA. TIE RODS SHALL BE FULLY TIGHTENED BEFORE THE DIAPHRAGMS ARE CAST. STRUTS SHALL REMAIN IN PLACE 3 DAYS AFTER CONCRETE IS PLACED. THE TIE RODS SHALL BE RE-TIGHTENED AFTER THE STRUTS HAVE BEEN REMOVED.

PREVIOUSLY CAST CONCRETE IN A CONTINUOUS UNIT SHALL HAVE ATTAINED A MINIMUM COMPRESSESIVE STRENGTH OF 20.7 MPa BEFORE ADDITIONAL CONCRETE IS CAST IN THE UNIT.

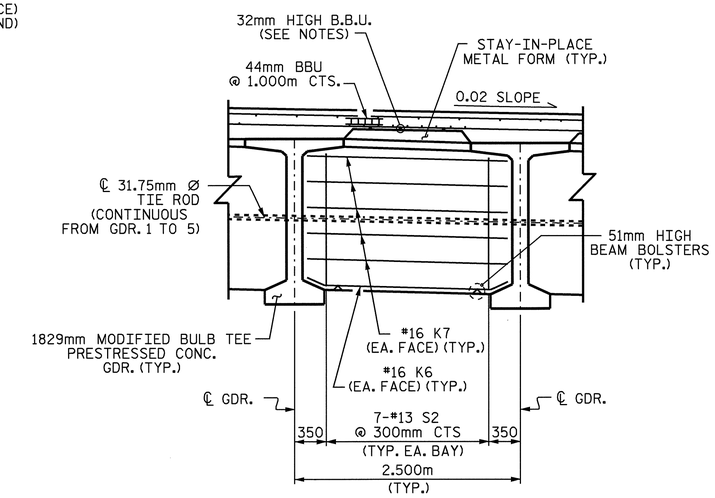

PARTIAL TYPICAL SECTION AT INTERMEDIATE DIAPHRAGMS

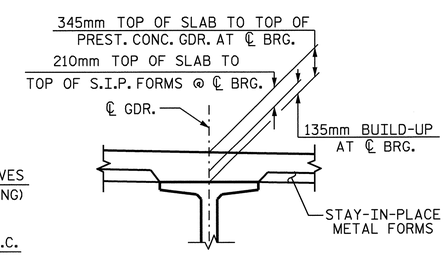

DETAIL 'A'

PROJECT NO. R-2554BA

WAYNE COUNTY

STATION: 114+74.700 -L-

SHEET 1 OF 2

STATE OF NORTH CAROLINA
DEPARTMENT OF TRANSPORTATION
RALEIGH

SUPERSTRUCTURE

TYPICAL SECTION

(RIGHT LANE)

NORTH CAROLINA PROFESSIONAL SEAL 14045 ENGINEER TIMOTHY W. COGGINS

Timothy W. Coggins 6/5/08

REVISIONS						SHEET NO.
NO.	BY:	DATE:	NO.	BY:	DATE:	S-301
1			3			TOTAL SHEETS
2			4			478

STR. #11

DRAWN BY : B.N.BARODAWALA DATE : 8-9-07
CHECKED BY : ZION RORIE DATE : 8-13-07

25-APR-2008 10:16
r:\structures\azlzl\str*11\barodawala\r2554ba_sd_ts_11.dgn
jbwilson

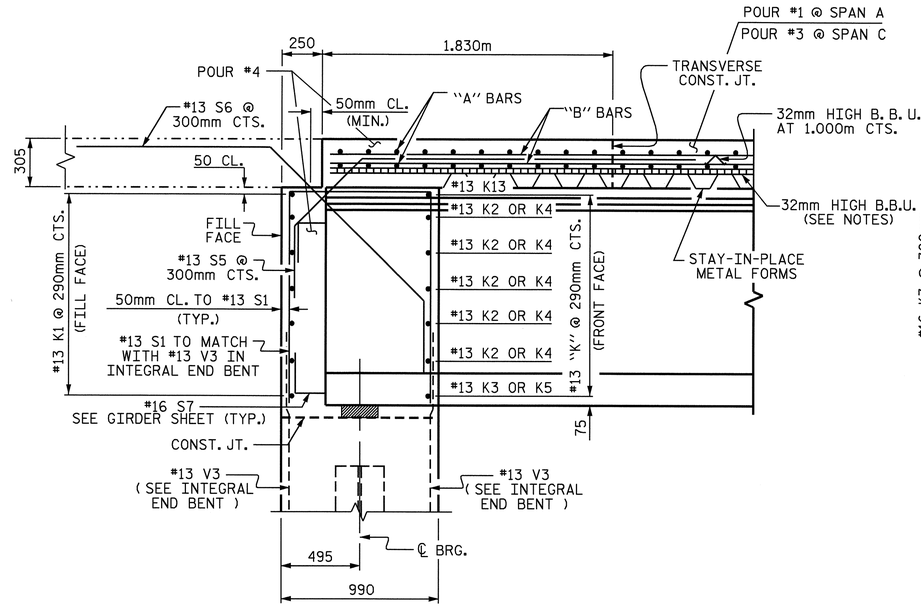

END OF GIRDER DETAIL AT INTEGRAL END BENT

#13 V1 BARS IN FRONT OF GIRDER NOT SHOWN

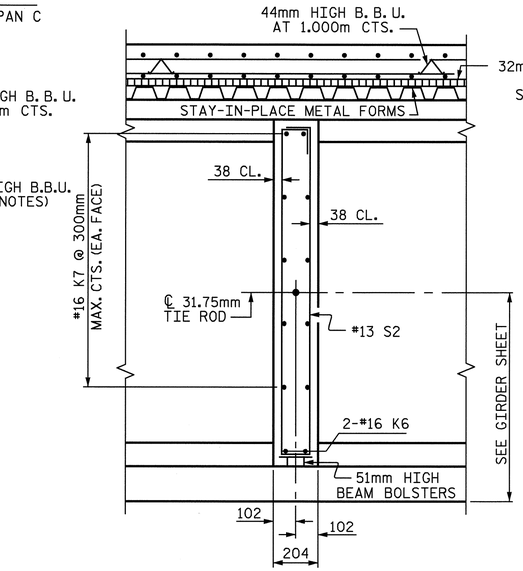

SECTION B-B

SECTION THRU INTERMEDIATE DIAPHGRAM

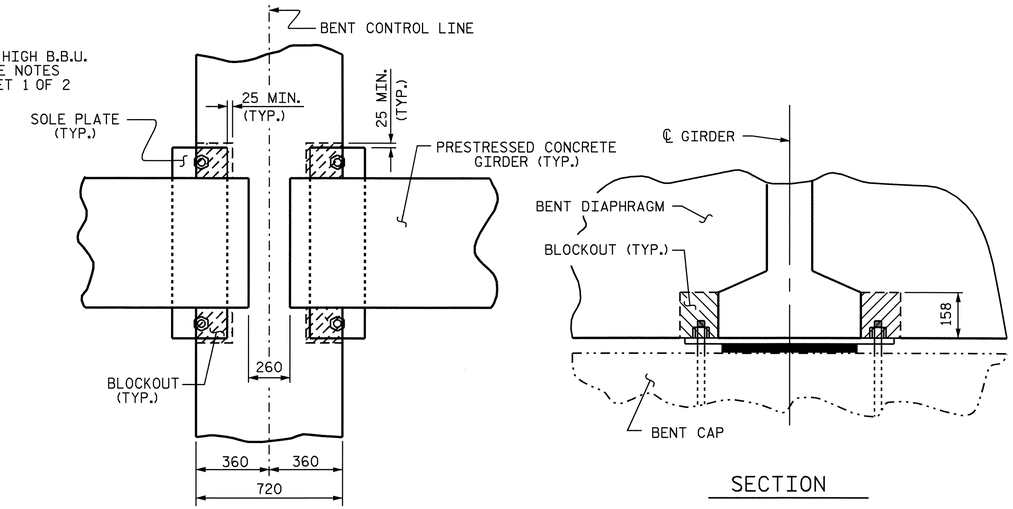

BENT DIAPHRAGM BLOCK-OUT DETAIL

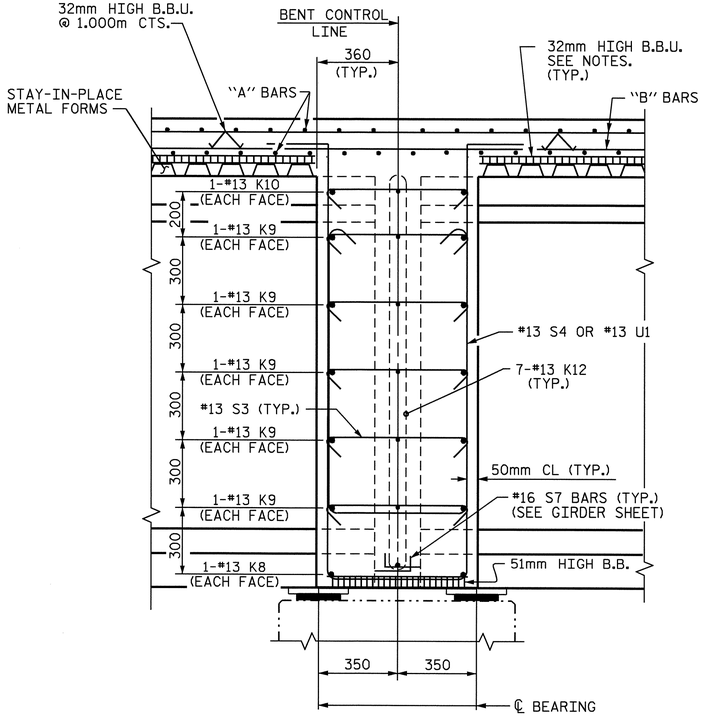

SECTION C-C

SECTION THRU BENT DIAPHGRAMS

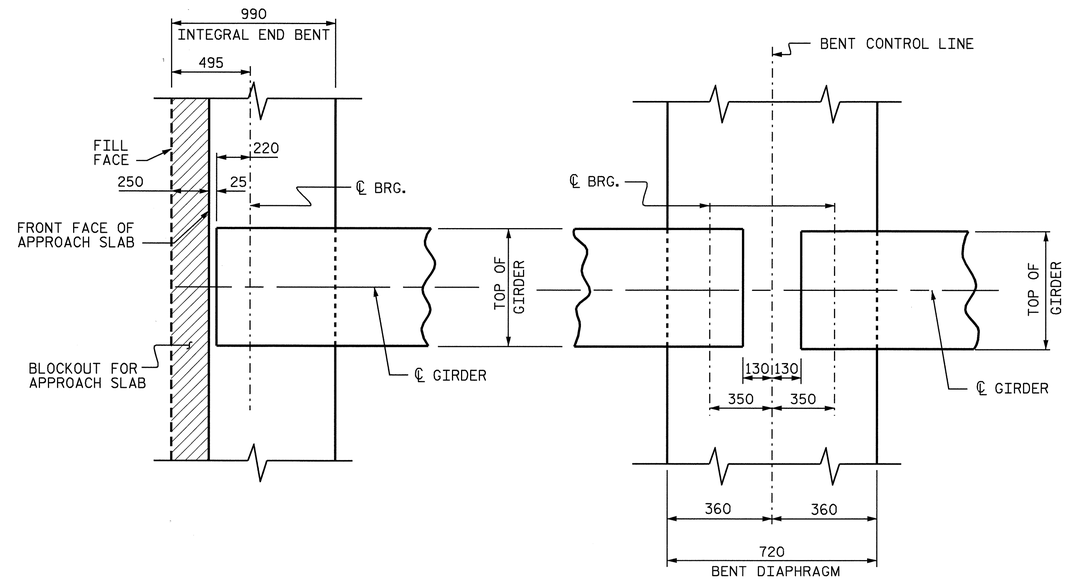

AT INTEGRAL END BENT

AT BENT DIAPHRAGM

PLAN OF GIRDER

PROJECT NO. R-2554BA
WAYNE COUNTY
STATION: 114+74.700 -L-

SHEET 2 OF 2

STATE OF NORTH CAROLINA
DEPARTMENT OF TRANSPORTATION
RALEIGH

SUPERSTRUCTURE
TYPICAL SECTION DETAILS
(RIGHT LANE)

NORTH CAROLINA PROFESSIONAL SEAL 14045 ENGINEER TIMOTHY J. COGGINS
Timothy J. Coggins 6/5/08

REVISIONS						SHEET NO.
NO.	BY:	DATE:	NO.	BY:	DATE:	S-302
1			3			TOTAL SHEETS
2			4			478

STR. #11

DRAWN BY : B.N.BARODAWALA DATE : 2-1-07
CHECKED BY : ZION RORIE DATE : 8-13-07

25-APR-2008 10:16
r:\structures\azlzl\str#11\barodawala\r2554ba_sd_ts_11.dgn
lbwilson

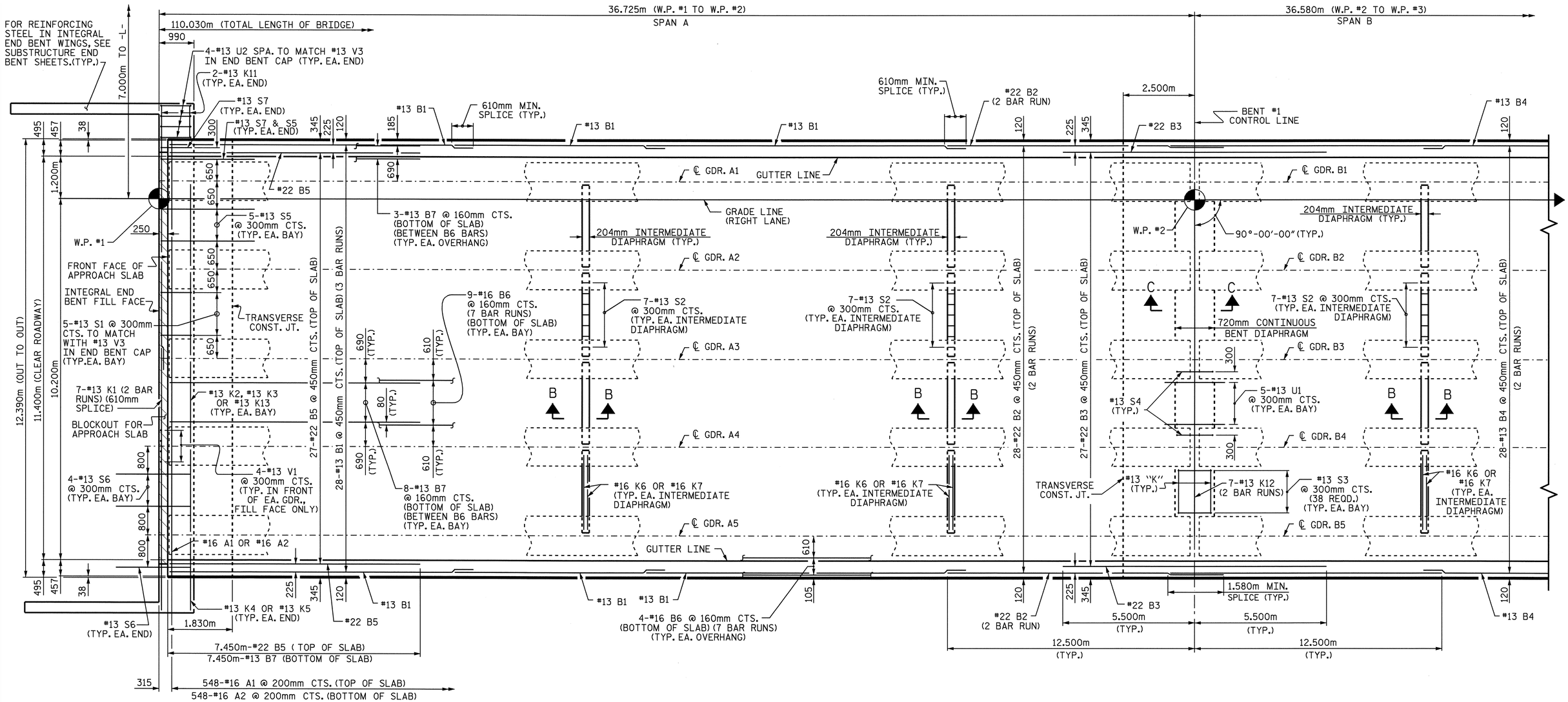

PLAN OF SPAN

FOR LOCATION OF INTERMEDIATE DIAPHRAGMS, SEE "FRAMING PLAN."
FOR SECTIONS B-B AND C-C, SEE "TYPICAL SECTION" SHEET 2 OF 2.

PROJECT NO. R-2554BA
WAYNE COUNTY
STATION: 114+74.700 -L-

SHEET 1 OF 2

STATE OF NORTH CAROLINA
DEPARTMENT OF TRANSPORTATION
RALEIGH

SUPERSTRUCTURE

PLAN OF SPAN
(RIGHT LANE)

NORTH CAROLINA PROFESSIONAL SEAL 14045 ENGINEER TIMOTHY L. COGGINS
6/5/08

REVISIONS						SHEET NO.
NO.	BY:	DATE:	NO.	BY:	DATE:	S-303
1			3			TOTAL SHEETS
2			4			478

DRAWN BY : B.N.BARODAWALA DATE : 7-23-07
CHECKED BY : ZION RORIE DATE : 8-13-07

25-APR-2008 10:15
r:\structures\azlzl\str*ll\barodawala\r2554ba_sd_s*_ll.dgn

STR. #11

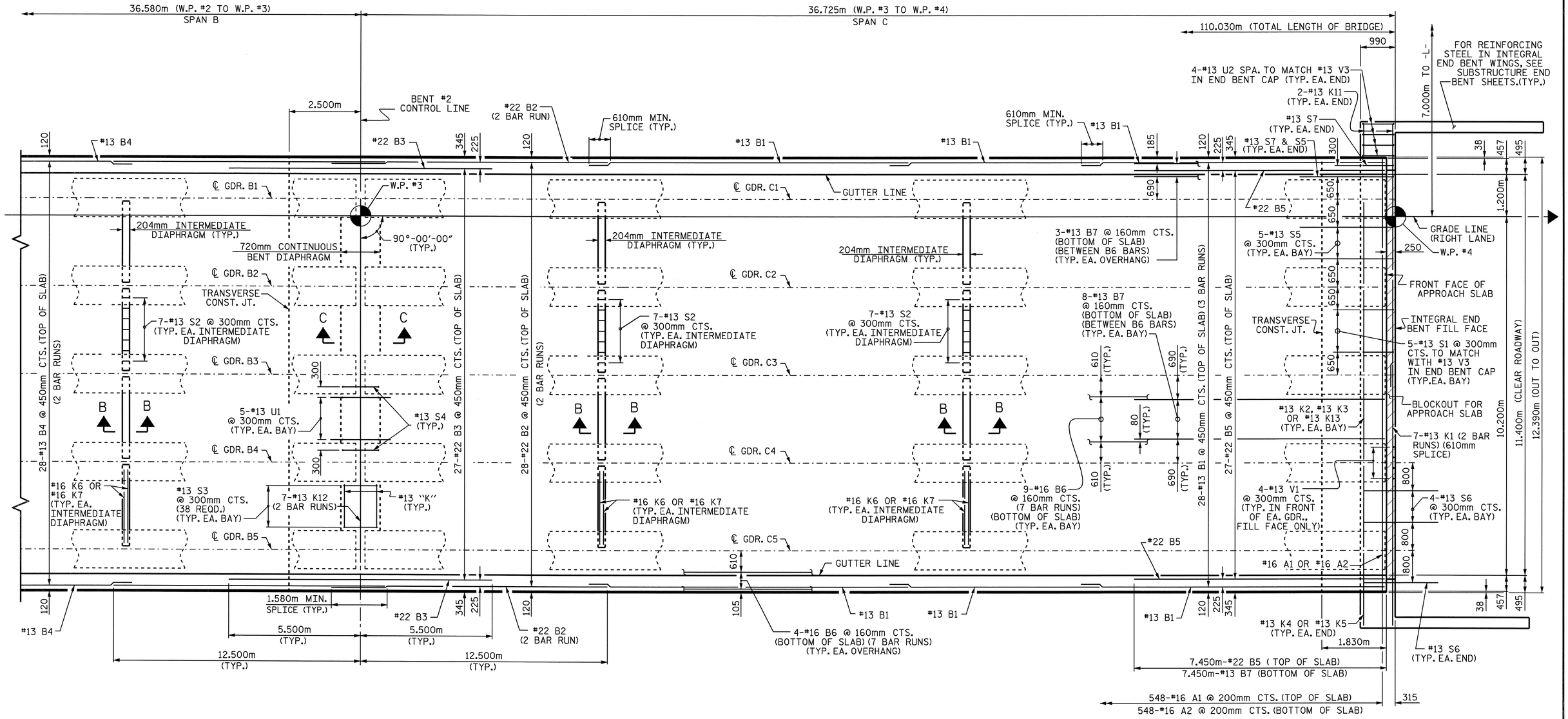

PLAN OF SPAN

FOR LOCATION OF INTERMEDIATE DIAPHRAGMS, SEE "FRAMING PLAN."
FOR SECTIONS B-B AND C-C, SEE "TYPICAL SECTION" SHEET 2 OF 2.

PROJECT NO. R-2554BA
WAYNE COUNTY
STATION: 114+74.700 -L-

SHEET 2 OF 2

STATE OF NORTH CAROLINA
DEPARTMENT OF TRANSPORTATION
RALEIGH

SUPERSTRUCTURE

PLAN OF SPAN
(RIGHT LANE)

NORTH CAROLINA PROFESSIONAL SEAL 14045 ENGINEER TIMOTHY W. COGGINS
6/5/08

REVISIONS							SHEET NO.
NO.	BY:	DATE:	NO.	BY:	DATE:		S-304
1			3				TOTAL SHEETS
2			4				478

STR. #11

DRAWN BY : B.N.BARODAWALA DATE : 7-23-07
CHECKED BY : ZION RORIE DATE : 8-13-07

25-APR-2008 10:15
r:\structures\azlzl\str*ll\barodawala\r2554ba_sd_s*_ll.dgn
jbwilson

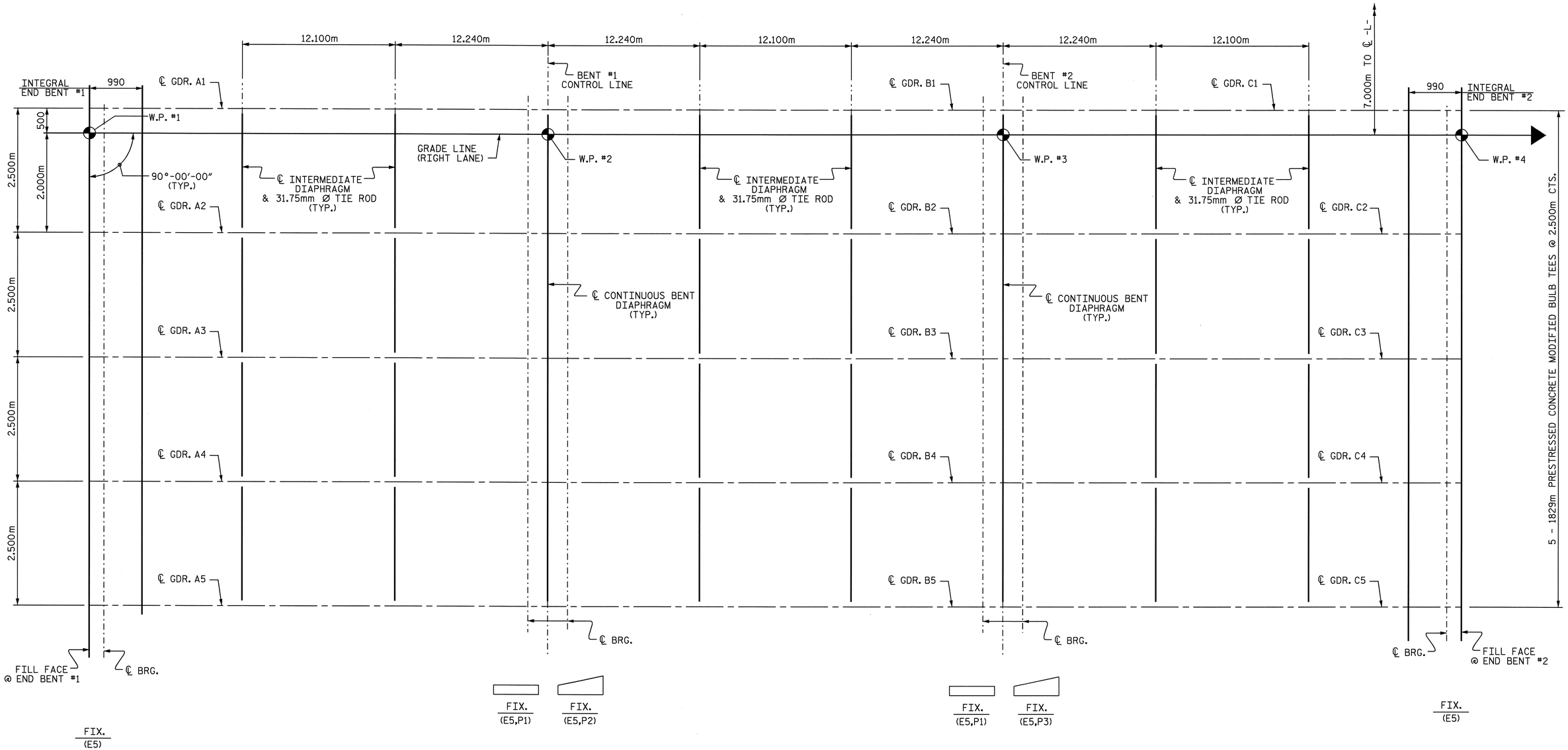

GIRDER LAYOUT

PROJECT NO. R-2554BA
WAYNE COUNTY
STATION: 114+74.700 -L-

STATE OF NORTH CAROLINA
DEPARTMENT OF TRANSPORTATION
RALEIGH

SUPERSTRUCTURE
GIRDER LAYOUT
(RIGHT LANE)

NORTH CAROLINA PROFESSIONAL SEAL 14045 ENGINEER TIMOTHY W. COGGINS
6/5/08

REVISIONS						SHEET NO.
NO.	BY:	DATE:	NO.	BY:	DATE:	S-305
1			3			TOTAL SHEETS
2			4			478

STR. #11

DRAWN BY : B.N.BARODAWALA DATE : 7-31-07
CHECKED BY : ZION RORIE DATE : 8-13-07

25-APR-2008 10:14
r:\structures\azlzl\str*ll\barodawala\r2554ba_sd_fp_ll.dgn
lbwilson

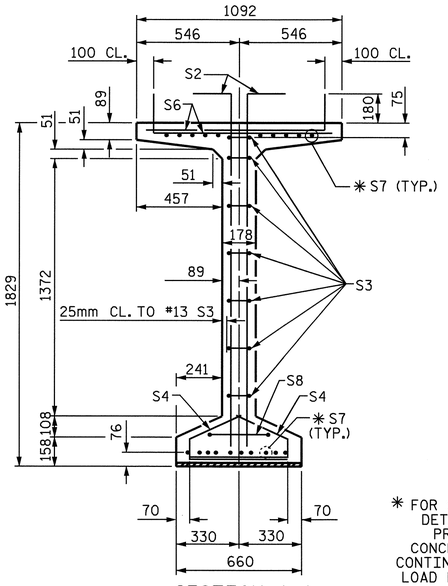

SECTION A-A

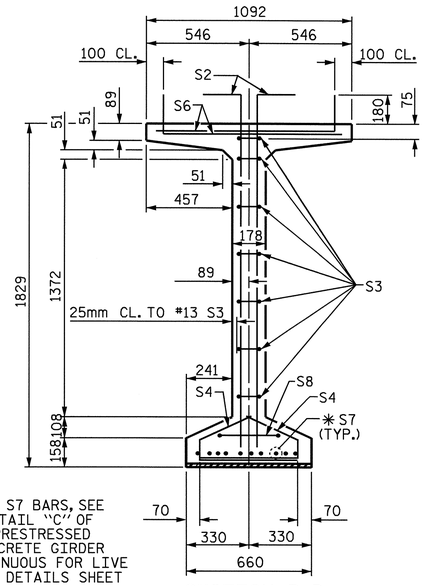

SECTION B-B

✱ FOR S7 BARS, SEE DETAIL "C" OF PRESTRESSED CONCRETE GIRDER CONTINUOUS FOR LIVE LOAD DETAILS SHEET

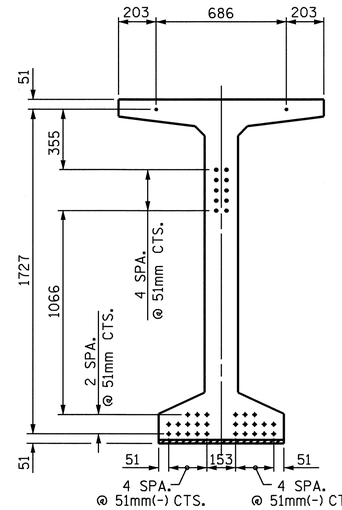

AT END OF GIRDERS

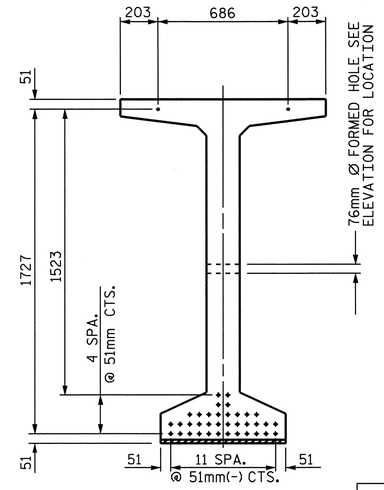

AT ℄ OF GIRDERS

15.24mm Ø LOW RELAXATION STRAND LAYOUT

DEBONDING LEGEND

- FULLY BONDED STRANDS

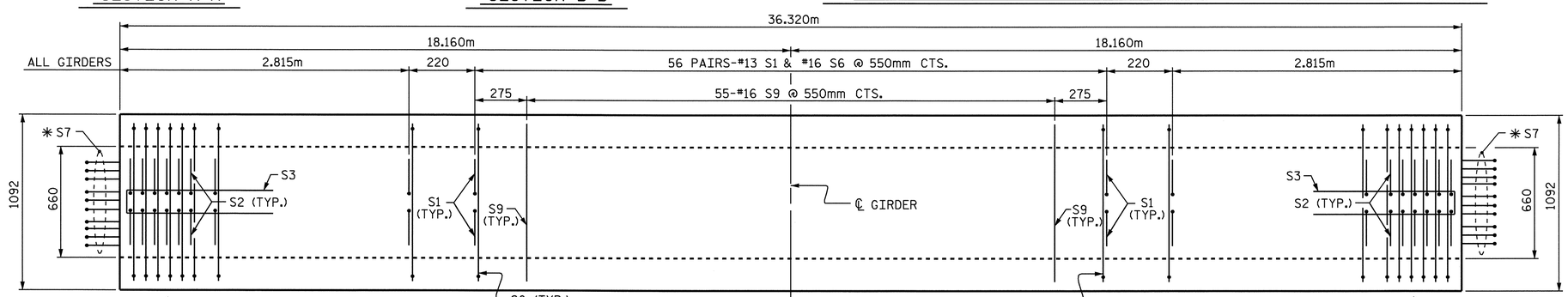

PLAN OF GIRDER

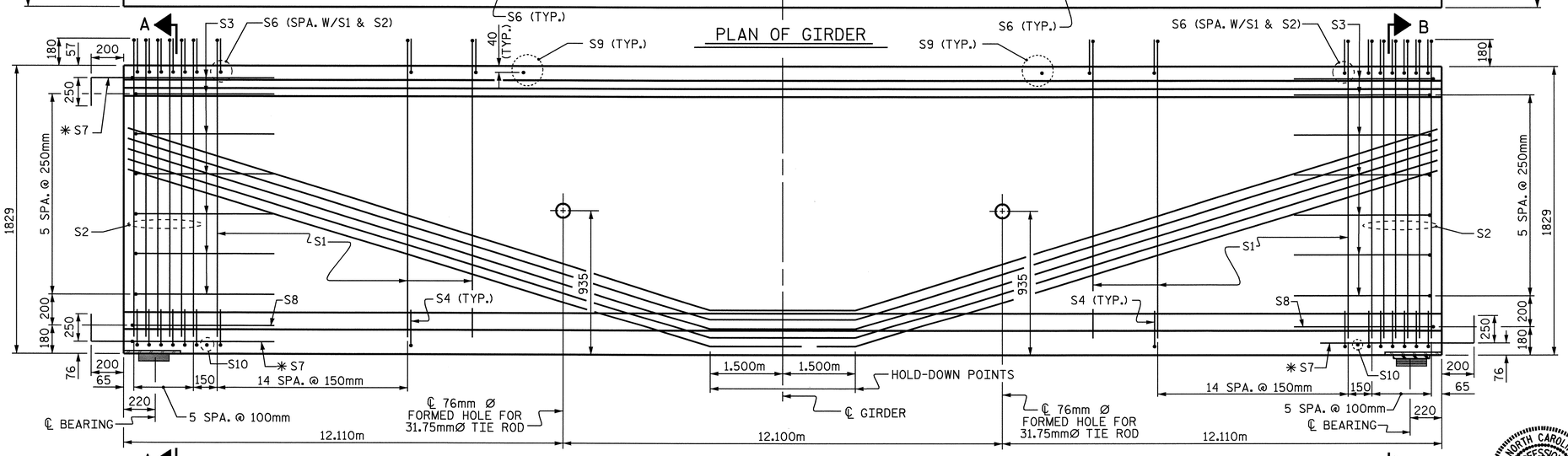

INTEGRAL END BENT

ELEVATION OF GIRDER

FIX

15.24mm Ø L.R. GRADE 270 STRANDS		
AREA (mm²)	ULTIMATE STRENGTH (kN PER STRAND)	APPLIED PRESTRESS (kN PER STRAND)
140.0	260.7	195.5

REINFORCING STEEL FOR ONE GIRDER

BAR	NUMBER	SIZE	TYPE	LENGTH	WEIGHT
S1	172	#13	1	2140	366
S2	24	#16	1	2140	80
S3	14	#13	2	2560	36
S4	84	#13	3	920	77
S6	196	#16	1	1160	353
✱ S7	30	#16	STR	1120	52
S8	2	#16	2	2740	9
S9	55	#16	STR	980	84
S10	2	#10	STR	560	1

✱ NOTE: S7 BARS SHALL BE BENT BEFORE SHIPMENT. HEAT BENDING SHALL NOT BE ALLOWED.

BAR TYPES

ALL BAR DIMENSIONS ARE OUT-TO-OUT

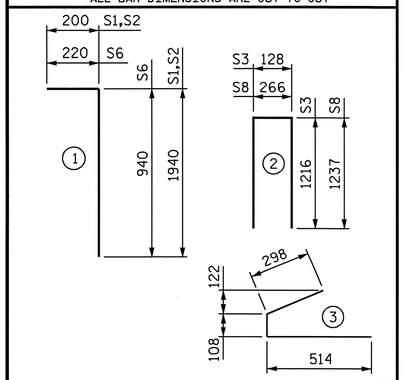

QUANTITIES FOR ONE GIRDER

	REINFORCING STEEL	51.7 MPa CONCRETE	15.24mm Ø L.R. STRANDS
	kg	m³	No.
	1058	19.5	38

GIRDERS REQUIRED

NUMBER	LENGTH	TOTAL LENGTH
10	36.320m	363.200m

PROJECT NO. R-2554BA

WAYNE COUNTY

STATION: 114+74.700 -L-

SHEET 1 OF 3

STATE OF NORTH CAROLINA
DEPARTMENT OF TRANSPORTATION
RALEIGH

1829mm PRESTRESSED CONCRETE MODIFIED BULB TEE CONTINUOUS FOR LIVE LOAD

SPAN A & C (RIGHT LANE)

NORTH CAROLINA PROFESSIONAL SEAL 14045 ENGINEER TIMOTHY L. COGGINS

6/5/08

REVISIONS						SHEET NO.
NO.	BY:	DATE:	NO.	BY:	DATE:	S-306
1			3			TOTAL SHEETS
2			4			478

STR. #11

STD. NO. PCG10SM

ASSEMBLED BY : B.N.BARODAWALA		DATE : 7-31-07	
CHECKED BY : ZION RORIE		DATE : 8-13-07	
DRAWN BY : EEM 2/6/97	REV. 8/16/99	RWW/LES	
CHECKED BY : VAP 2/6/97	REV. 10/17/00	RWW/LES	
	REV. 5/1/06	TLA/GM	

05-JUN-2008 10:00
g:\tlpprojects-r\r2554ba\structures\azlzl\Str#11\FINAL PLANS\R2554BA_sd_BK_11.dgn
taverette

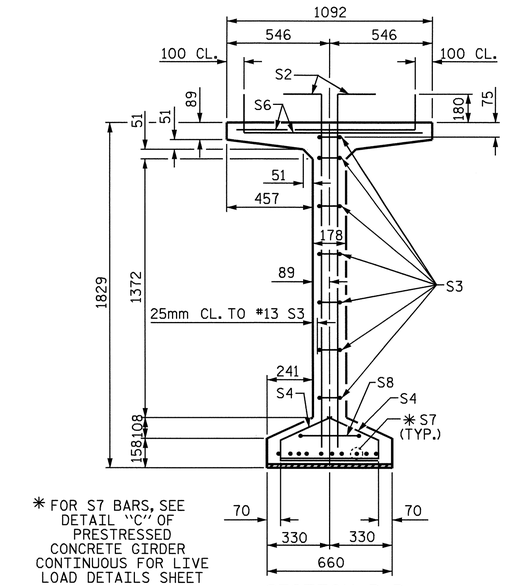

SECTION B-B

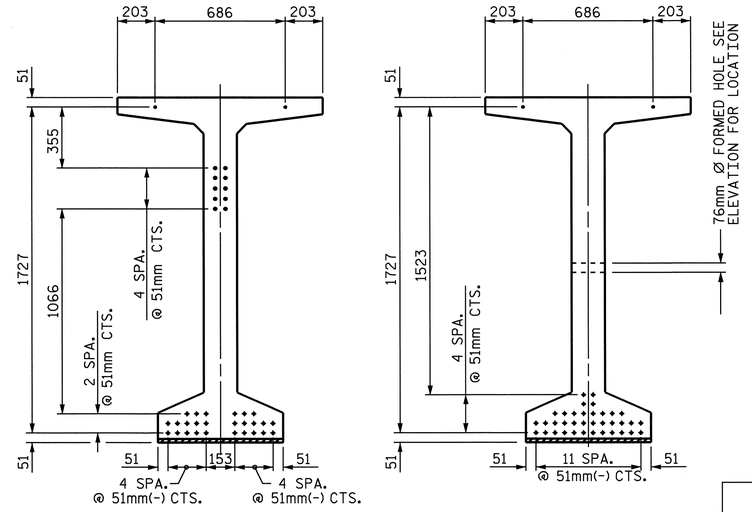

AT END OF GIRDERS

AT ℄ OF GIRDERS

DEBONDING LEGEND

- FULLY BONDED STRANDS

15.24mm Ø LOW RELAXATION STRAND LAYOUT

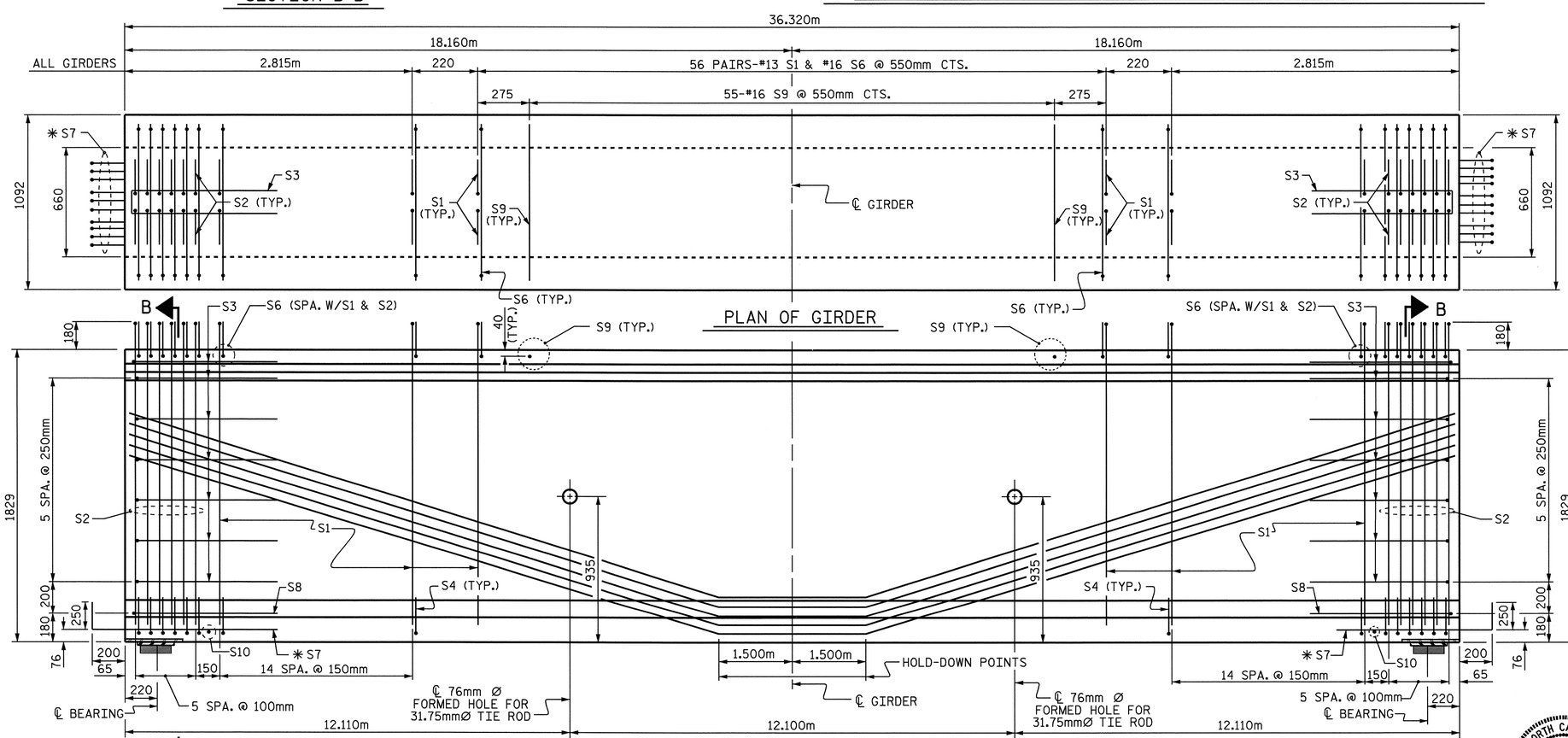

ELEVATION OF GIRDER

15.24mm Ø L.R. GRADE 270 STRANDS

AREA (mm²)	ULTIMATE STRENGTH (kN PER STRAND)	APPLIED PRESTRESS (kN PER STRAND)
140.0	260.7	195.5

REINFORCING STEEL FOR ONE GIRDER

BAR	NUMBER	SIZE	TYPE	LENGTH	WEIGHT
S1	172	#13	1	2140	366
S2	24	#16	1	2140	80
S3	14	#13	2	2560	36
S4	84	#13	3	920	77
S6	196	#16	1	1160	353
✳ S7	20	#16	STR	1120	35
S8	2	#16	2	2740	9
S9	55	#16	STR	980	84
S10	2	#10	STR	560	1

✳ NOTE: S7 BARS SHALL BE BENT BEFORE SHIPMENT. HEAT BENDING SHALL NOT BE ALLOWED.

BAR TYPES

ALL BAR DIMENSIONS ARE OUT-TO-OUT

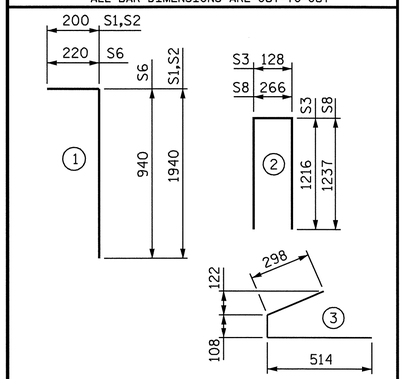

QUANTITIES FOR ONE GIRDER

	REINFORCING STEEL	51.7 MPa CONCRETE	15.24mm Ø L.R. STRANDS
	kg	m³	No.
	1041	19.5	38

GIRDERS REQUIRED

NUMBER	LENGTH	TOTAL LENGTH
5	36.320m	181.600m

PROJECT NO. R-2554BA

WAYNE COUNTY

STATION: 114+74.700 -L-

SHEET 2 OF 3

STATE OF NORTH CAROLINA
DEPARTMENT OF TRANSPORTATION
RALEIGH

1829mm PRESTRESSED CONCRETE MODIFIED BULB TEE CONTINUOUS FOR LIVE LOAD

SPAN B
(RIGHT LANE)

NORTH CAROLINA PROFESSIONAL SEAL 14045 ENGINEER TIMOTHY L. COGGINS

6/5/08

REVISIONS						SHEET NO.
NO.	BY:	DATE:	NO.	BY:	DATE:	S-307
1			3			TOTAL SHEETS
2			4			478

STR. #11

STD. NO. PCG10SM

ASSEMBLED BY : B.N.BARODAWALA	DATE : 7-31-07		
CHECKED BY : ZION RORIE	DATE : 8-13-07		
DRAWN BY : EEM 2/6/97	REV. 8/16/99	RWW/LES	
CHECKED BY : VAP 2/6/97	REV. 10/17/00	RWW/LES	
	REV. 5/1/06	TLA/GM	

05-JUN-2008 10:00
g:\tlpprojects-r\r2554ba\structures\azlzl\Str#11\FINAL PLANS\R2554BA_sd_BK_11.dgn
taverette

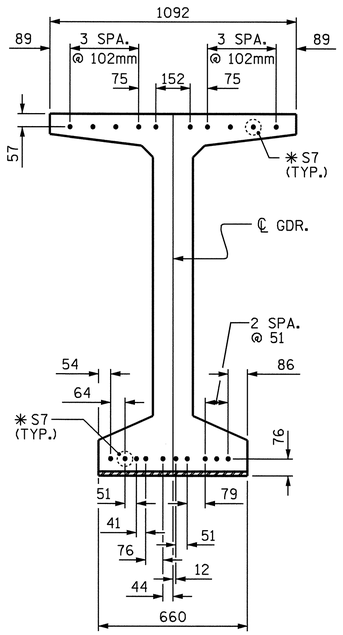

DETAIL "C"

S7 BARS AT TOP OF GIRDER
AT INTEGRAL END BENT ENDS ONLY

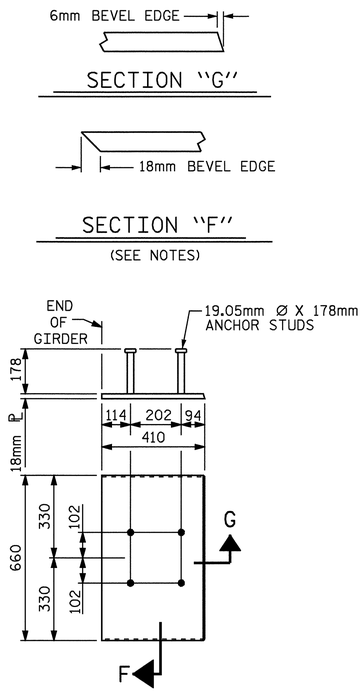

EMBEDDED PLATE "B-1" DETAILS
1829mm MODIFIED BULB TEES

(2 REQ'D PER GIRDER)

NOTES

ALL PRESTRESSING STRANDS SHALL BE 7-WIRE LOW-RELAXATION GRADE 270 STRANDS AND SHALL CONFORM TO AASHTO M203M EXCEPT FOR SAMPLING REQUIREMENTS WHICH SHALL BE IN ACCORDANCE WITH THE STANDARD SPECIFICATIONS.

TIE ROD ASSEMBLY SHALL BE AASHTO M270 GRADE 250 STRUCTURAL STEEL.

ALL REINFORCING STEEL SHALL BE GRADE 420.

EMBEDDED PLATE "B-1" SHALL BE GALVANIZED IN ACCORDANCE WITH THE SPECIFICATIONS. BEVEL EDGES OF PLATE "B-1" TO GIVE CLOSE FIT BUT NOT TIGHT FIT TO STEEL CASTING FORM.

ANCHOR STUDS SHALL CONFORM TO AASHTO M169 GRADES 1010 THROUGH 1020 OR APPROVED EQUAL, AND SHALL MEET THE TYPE "B" REQUIREMENTS OF SUBSECTION 7.3 OF THE ANSI/AASHTO/AWS D1.5 BRIDGE WELDING CODE.

AT ENDS OF GIRDERS TO BE EMBEDDED IN CONCRETE DIAPHRAGMS OR END WALLS, PRESTRESSING STRANDS MAY EXTEND A MAXIMUM OF 50mm BEYOND THE GIRDER ENDS. OTHERWISE, PRESTRESSING STRANDS SHALL BE CUT FLUSH WITH THE GIRDER ENDS.

THE TRANSFER OF LOAD FROM THE ANCHORAGES TO THE GIRDER SHALL BE DONE WHEN CONCRETE HAS REACHED A COMPRESSIVE STRENGTH OF NOT LESS THAN 41.3 MPa.

DEPENDING ON THE TYPE OF SYSTEM USED TO SUPPORT THE DECK SLAB FORMS, PRESET ANCHORS MAY BE NECESSARY IN THE PRESTRESSED CONCRETE GIRDER.

THE TOP SURFACE OF THE GIRDER, EXCLUDING THE OUTSIDE 100mm, SHALL BE RAKED TO A DEPTH OF 6mm.

WHEN DRAPED STRANDS ARE DETAILED, THE LONGITUDINAL LOCATION OF THE HOLD DOWN DEVICES SHALL BE WITHIN 150mm OF THE LOCATION SHOWN AND THE CENTER OF GRAVITY OF THE GROUP OF DRAPED STRANDS SHALL BE LOCATED WITHIN 13mm OF THE THEORETICAL LOCATION SHOWN.

A 51mm x 51mm CHAMFER IS ALLOWED AT THE INTERSECTION OF THE WEB AND THE BOTTOM FLANGE OF THE 1829mm MODIFIED BULB TEES ONLY.

THE CONTRACTOR HAS THE OPTION TO PROVIDE, AT NO ADDITIONAL COST TO THE DEPARTMENT, 2 ADDITIONAL STRANDS AT THE TOP OF THE GIRDER TO FACILITATE TYING OF THE REINFORCING STEEL. THESE STRANDS SHALL BE PULLED TO A LOAD OF 20 Kn.

FOR CRACK REPAIR OF PRESTRESSED CONCRETE GIRDERS, SEE SPECIAL PROVISIONS.

THE UPLIFT FORCE FOR GIRDERS DUE TO DRAPED STRANDS IS 136.9KN.

FOR PRESTRESSED CONCRETE MEMBERS, SEE SPECIAL PROVISIONS.

DEAD LOAD DEFLECTION TABLE FOR SPANS A, B AND C

15.24mm Ø LOW RELAXATION	GIRDER 1											GIRDERS 2, 3 & 4											GIRDER 5										
TENTH POINTS	0	.1	.2	.3	.4	.5	.6	.7	.8	.9	0	0	.1	.2	.3	.4	.5	.6	.7	.8	.9	0	0	.1	.2	.3	.4	.5	.6	.7	.8	.9	0
CAMBER (GIRDER ALONE IN PLACE) ↑	0.000	0.042	0.080	0.109	0.128	0.134	0.128	0.109	0.080	0.042	0.000	0.000	0.042	0.080	0.109	0.128	0.134	0.128	0.109	0.080	0.042	0.000	0.000	0.042	0.080	0.109	0.128	0.134	0.128	0.109	0.080	0.042	0.000
✱ DEFLECTION DUE TO SUPERIMPOSED D.L. ↓	0.000	0.018	0.034	0.046	0.054	0.058	0.054	0.046	0.034	0.018	0.000	0.000	0.017	0.032	0.044	0.052	0.055	0.052	0.044	0.032	0.017	0.000	0.000	0.017	0.033	0.046	0.054	0.057	0.054	0.046	0.033	0.017	0.000
FINAL CAMBER ↑	0	24	46	63	74	76	74	63	46	24	0	0	25	48	65	76	79	76	65	48	25	0	0	25	47	63	74	77	74	63	47	25	0

✱ INCLUDES FUTURE WEARING SURFACE IN SUPERIMPOSED DEAD LOAD.
ALL VALUES ARE SHOWN IN METERS, EXCEPT "FINAL CAMBER" WHICH IS SHOWN IN MILLIMETERS.

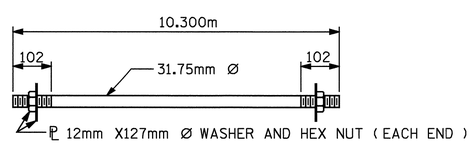

31.75mm Ø TIE ROD ASSEMBLY

(6 COMPLETE ASSEMBLIES REQUIRED)

PROJECT NO. R-2554BA
WAYNE COUNTY
STATION: 114+74.700 -L-

SHEET 3 OF 3

STATE OF NORTH CAROLINA
DEPARTMENT OF TRANSPORTATION
RALEIGH

STANDARD
PRESTRESSED CONCRETE GIRDER
CONTINUOUS FOR LIVE LOAD
DETAILS AND
DEAD LOAD DEFLECTIONS
(RIGHT LANE)

NORTH CAROLINA PROFESSIONAL SEAL 14045 ENGINEER TIMOTHY L. COGGINS
Timothy L. Coggins 6/5/06

REVISIONS						SHEET NO.
NO.	BY:	DATE:	NO.	BY:	DATE:	S-308
1			3			TOTAL SHEETS
2			4			478

STR. #11

STD. NO. PCG11SM

ASSEMBLED BY : B.N.BARODAWALA DATE : 7-31-07
CHECKED BY : ZION RORIE DATE : 8-13-07

DRAWN BY : ELR 11/91
CHECKED BY : GRP 11/91

REV. 10/17/00 RWW/LES
REV. 7/10/01RR LES/RDR
REV. 5/1/06 TLA/GM

25-APR-2008 10:11
r:\structures\azlzl\str#11\barodawala\r2554ba_sd_bk_11.dgn

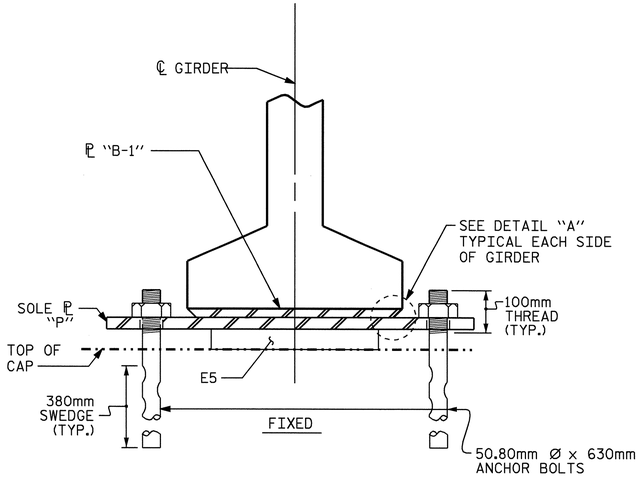

SECTION E-E

(OMIT SOLE PLATE AND ANCHOR BOLTS AT INTEGRAL END BENT)

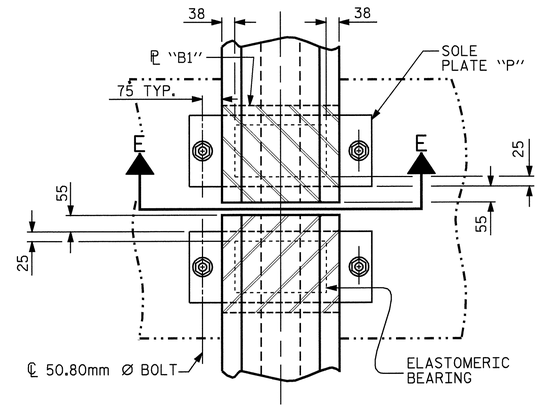

TYPICAL PLAN

(SHOWING CONTINUOUS BENT)

NOTES

AT ALL FIXED POINTS OF SUPPORT, NUTS FOR ANCHOR BOLTS ARE TO BE TIGHTENED FINGER TIGHT AND THEN BACKED OFF ½ TURN. THE THREAD OF THE NUT AND BOLT SHALL THEN BE BURRED WITH A SHARP POINTED TOOL.

STEEL SOLE PLATES, ANCHOR BOLTS, NUTS, AND WASHERS SHALL BE GALVANIZED IN ACCORDANCE WITH THE STANDARD SPECIFICATIONS.

PRIOR TO WELDING, GRIND THE GALVANIZED SURFACE OF THE PORTION OF THE EMBEDDED PLATE AND SOLE PLATE THAT ARE TO BE WELDED. AFTER WELDING, DAMAGED GALVANIZED SURFACES SHALL BE REPAIRED IN ACCORDANCE WITH THE STANDARD SPECIFICATIONS.

WHEN WELDING THE SOLE PLATE TO THE EMBEDDED PLATE IN THE GIRDER, USE TEMPERATURE INDICATING WAX PENS, OR OTHER SUITABLE MEANS, TO ENSURE THAT THE TEMPERATURE OF THE SOLE PLATE DOES NOT EXCEED 149°C. TEMPERATURES ABOVE THIS MAY DAMAGE THE ELASTOMER.

SOLE PLATE "P", BOLTS, NUTS AND WASHERS SHALL BE INCLUDED IN THE PAY ITEM FOR PRESTRESSED CONCRETE GIRDERS.

ANCHOR BOLTS SHALL MEET THE REQUIREMENTS OF ASTM A449. NUTS SHALL MEET THE REQUIREMENTS OF AASHTO M291M-12 OR AASHTO M292M-2H. WASHERS SHALL MEET THE REQUIREMENTS OF AASHTO M293M. SHOP DRAWINGS ARE NOT REQUIRED FOR ANCHOR BOLTS, NUTS AND WASHERS. SHOP INSPECTION IS REQUIRED.

ALL SURFACES OF BEARING PLATES SHALL BE SMOOTH AND STRAIGHT.

LOAD RATINGS	
	MAX.D.L.+ L.L.
TYPE VI	936 kN

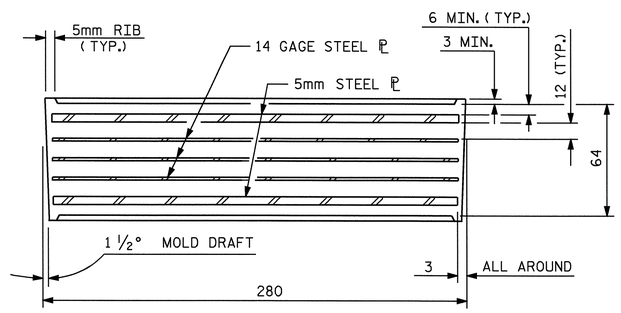

TYPICAL SECTION OF ELASTOMERIC BEARINGS

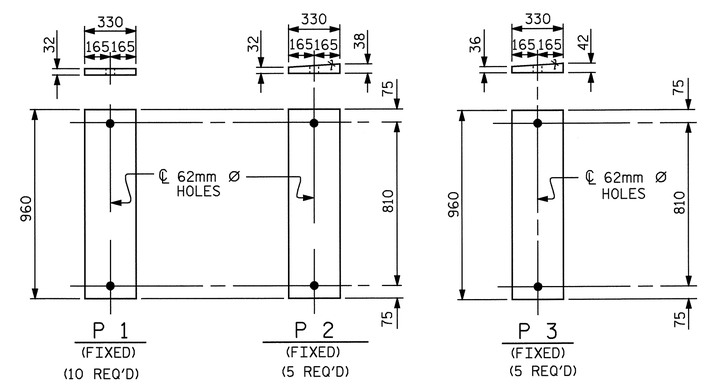

SOLE PLATE DETAILS ("P")

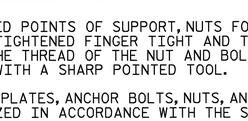

SOLE ℗ PLACEMENT DETAIL

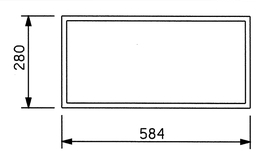

E5 (30 REQ'D)

PLAN VIEW OF ELASTOMERIC BEARING

TYPE VI

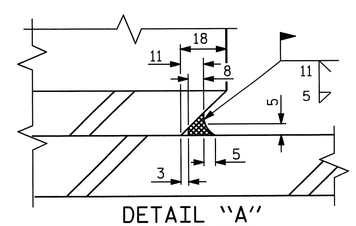

DETAIL "A"

PROJECT NO. R-2554BA

WAYNE COUNTY

STATION: 114+74.700 -L-

STATE OF NORTH CAROLINA
DEPARTMENT OF TRANSPORTATION
RALEIGH

STANDARD
ELASTOMERIC BEARING DETAILS
PRESTRESSED CONCRETE GIRDER SUPERSTRUCTURE
(RIGHT LANE)

REVISIONS						SHEET NO.
NO.	BY:	DATE:	NO.	BY:	DATE:	S-309
1			3			TOTAL SHEETS
2			4			478

NORTH CAROLINA PROFESSIONAL SEAL 14045 ENGINEER TIMOTHY W. COGGINS
6/5/08

ASSEMBLED BY : B.N.BARODAWALA	DATE : 7-31-07
CHECKED BY : ZION RORIE	DATE : 8-13-07
DRAWN BY : EEM 2/97	REV. 8/16/99 RWW/LES
CHECKED BY : VAP 2/97	REV. 10/17/00 RWW/LES
	REV. 5/1/06 TLA/GM

25-APR-2008 10:10
r:\structures\azizi\str#11\barodawala\r2554ba_sd_bk_11.dgn
jbwilson

STR. #11

STD. NO. EB4SM

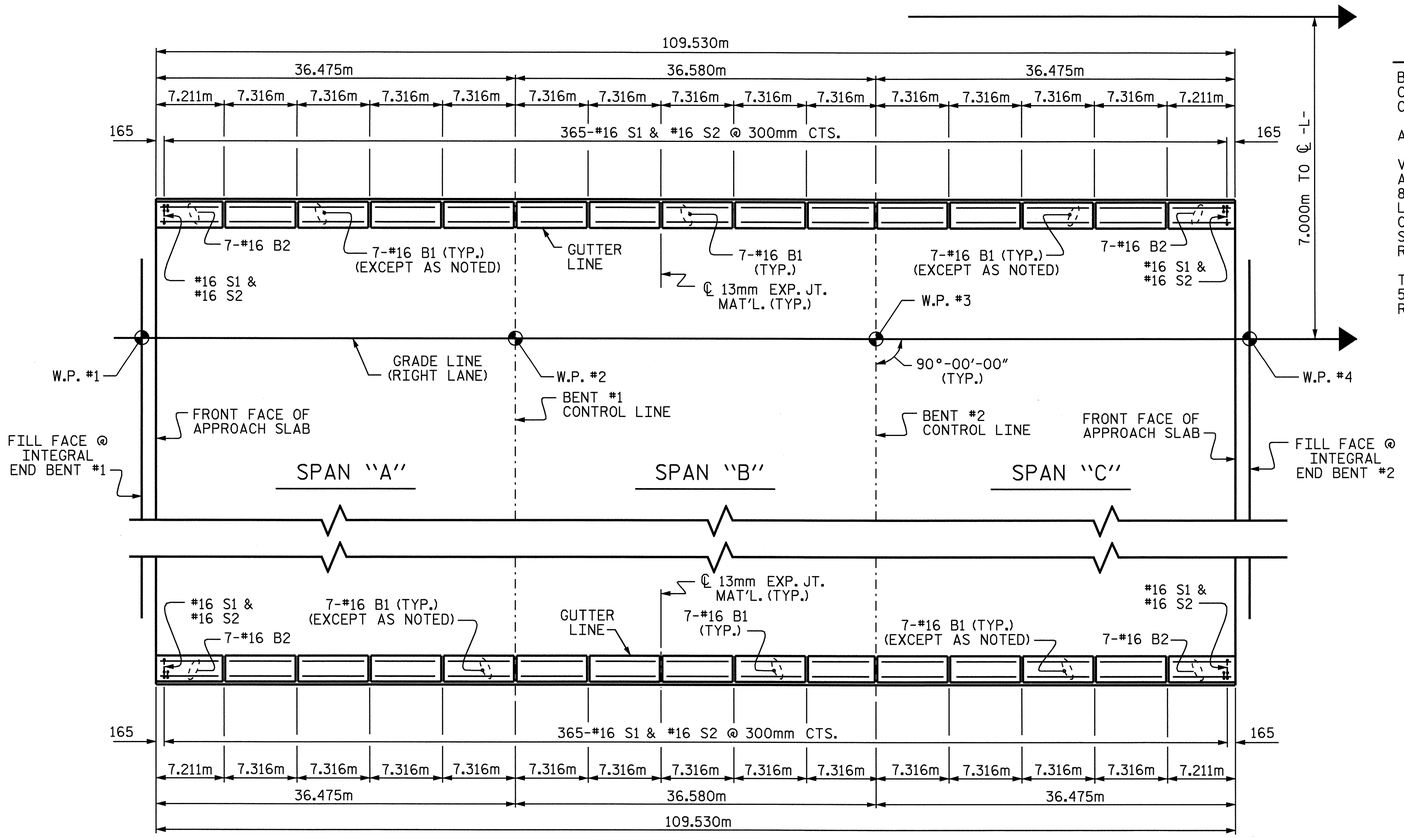

PLAN OF BARRIER RAIL

NOTES

BARRIER RAIL IN CONTINUOUS UNIT SPAN SHALL NOT BE CAST UNTIL ALL SLAB CONCRETE IN THE UNIT HAS BEEN CAST AND HAS REACHED A MINIMUM COMPRESSIVE STRENGTH OF 20.7 MPa.

ALL REINFORCING STEEL IN BARRIER RAILS SHALL BE EPOXY COATED.

VERTICAL GROOVED CONTRACTION JOINTS, 12mm IN DEPTH, SHALL BE TOOLED IN ALL EXPOSED FACES OF THE BARRIER RAIL AND IN ACCORDANCE WITH ARTICLE 825-10(B) OF THE STANDARD SPECIFICATIONS. THE CONTRACTION JOINT SHALL BE LOCATED AT EACH THIRD POINT BETWEEN BARRIER RAIL EXPANSION JOINTS. ONLY ONE CONTRACTION JOINT IS REQUIRED AT MIDPOINT OF BARRIER RAIL SEGMENTS LESS THAN 6.1m IN LENGTH AND NO CONTRACTION JOINTS ARE REQUIRED FOR THOSE SEGMENTS LESS THAN 3.5m IN LENGTH.

THE #16 S1 AND #16 S2 BARS MAY BE SHIFTED SLIGHTLY IN ORDER TO MAINTAIN A 50mm MINIMUM CLEARANCE TO 13mm EXPANSION JOINT MATERIAL IN THE BARRIER RAIL.

BAR TYPES

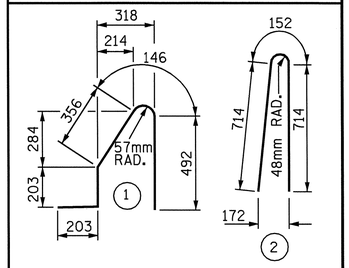

ALL BAR DIMENSIONS ARE OUT TO OUT

BILL OF MATERIAL

FOR CONCRETE BARRIER RAIL ONLY

BAR	NO.	SIZE	TYPE	LENGTH	WEIGHT
✳ B1	182	#16	STR	7200	2034
✳ B2	28	#16	STR	7100	309
✳ S1	730	#16	1	1400	1586
✳ S2	730	#16	2	1580	1790

✳ EPOXY COATED REINFORCING STEEL 5719 kg

CLASS AA CONCRETE 55.0 CU. METER

CONCRETE BARRIER RAIL 219.060 METERS

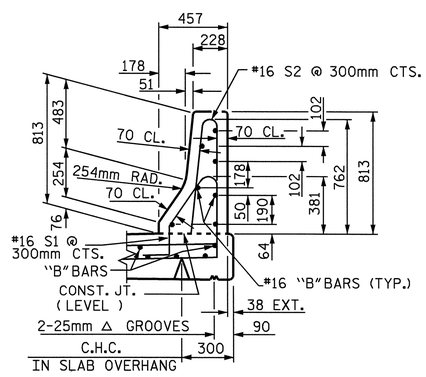

SECTION THRU RAIL

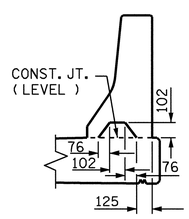

SECTION S-S

AT DAM IN OPEN JOINT
(THIS IS TO BE USED ONLY WHEN SLIP FORM IS USED)

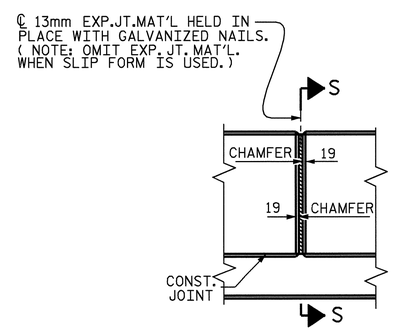

ELEVATION AT EXPANSION JOINTS

BARRIER RAIL DETAILS

PROJECT NO. R-2554BA
WAYNE COUNTY
STATION: 114+74.700 -L-

STATE OF NORTH CAROLINA
DEPARTMENT OF TRANSPORTATION
RALEIGH

STANDARD
CONCRETE BARRIER RAIL
(RIGHT LANE)

NORTH CAROLINA PROFESSIONAL SEAL 14045 ENGINEER TIMOTHY L. COGGINS
Timothy L. Coggins 6/5/08

REVISIONS						SHEET NO.
NO.	BY:	DATE:	NO.	BY:	DATE:	S-310
1			3			TOTAL SHEETS
2			4			478

STR. #11

STD. No. CBR1SM

ASSEMBLED BY : B.N.BARODAWALA	DATE : 7-31-07		
CHECKED BY : ZION RORIE	DATE : 8-13-07		
DRAWN BY : ARB 5/87	REV. 10/17/00	RWW/LES	
CHECKED BY : SJD 9/87	REV. 5/7/03R	RWW/JTE	
	REV. 5/1/06	TLA/GM	

25-APR-2008 10:14
r:\structures\gzlz\str#11\barodawala\r2554ba_sd_br_11.dgn

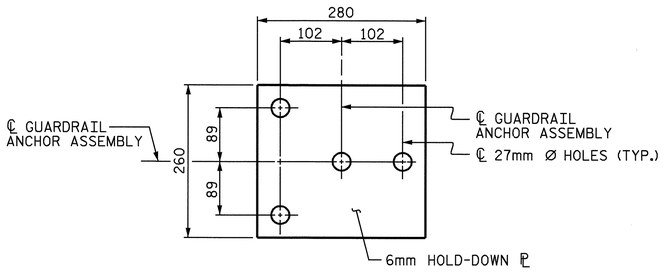

PLAN

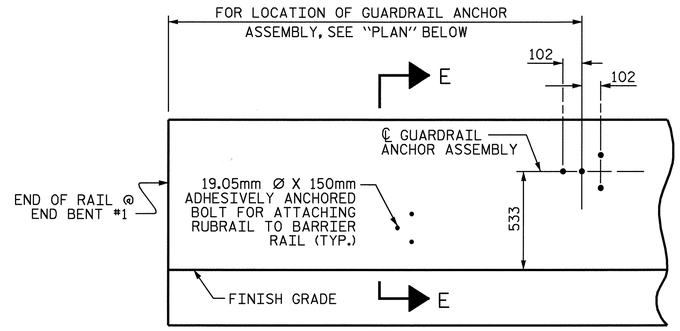

ELEVATION

FOR LOCATION OF RUBRAIL, SEE ROADWAY STD. 862.03

NOTES

THE GUARDRAIL ANCHOR ASSEMBLY SHALL CONSIST OF A 6mm HOLD DOWN PLATE AND 4 - 22.23mm Ø BOLTS WITH NUTS AND WASHERS, RUBRAIL, AND ADHESIVELY ANCHORED BOLTS.

THE HOLD-DOWN PLATE SHALL CONFORM TO AASHTO M270 GRADE 36. AFTER FABRICATION, THE HOLD-DOWN PLATE SHALL BE HOT-DIP GALVANIZED IN ACCORDANCE WITH AASHTO M111.

BOLTS SHALL CONFORM TO THE REQUIREMENTS OF ASTM A307 AND NUTS SHALL CONFORM TO THE REQUIREMENTS OF AASHTO M291. BOLTS, NUTS AND WASHERS SHALL BE GALVANIZED. (AT THE CONTRACTOR'S OPTION, STAINLESS STEEL BOLTS, NUTS AND WASHERS MAY BE USED AS AN ALTERNATE FOR THE 22.23mm Ø GALVANIZED BOLTS, NUTS AND WASHERS. THEY SHALL CONFORM TO OR EXCEED THE MECHANICAL REQUIREMENTS OF ASTM A307. THE USE OF THIS ALTERNATE SHALL BE APPROVED BY THE ENGINEER.)

THE GUARDRAIL ANCHOR ASSEMBLY IS REQUIRED AT ALL POINTS WHERE APPROACH GUARDRAIL IS TO BE ATTACHED TO THE END OF BARRIER RAIL. FOR POINTS OF ATTACHMENT, SEE SKETCH.

AFTER INSTALLATION, THE EXPOSED THREAD OF THE BOLT SHALL BE BURRED WITH A SHARP POINTED TOOL.

THE COST OF THE GUARDRAIL ANCHOR ASSEMBLY SHALL BE INCLUDED IN THE UNIT CONTRACT PRICE BID FOR CONCRETE BARRIER RAIL.

THE 32mm Ø HOLES SHALL BE FORMED OR DRILLED WITH A CORE BIT. IMPACT TOOLS WILL NOT BE PERMITTED. ANY CONCRETE DAMAGED BY THIS WORK SHALL BE REPAIRED TO THE SATISFACTION OF THE ENGINEER.

THE C150 X 12 RUBRAIL IS TO BE ADHESIVELY ANCHORED TO THE RAIL USING THREE 19.05mm Ø X 150mm BOLTS WITH WASHERS. LEVEL ONE FIELD TESTING IF REQUIRED, AND THE YIELD LOAD OF THE 19.05mm Ø BOLTS IS 53.4kN. FOR ADHESIVELY ANCHORED ANCHOR BOLTS OR DOWELS, SEE SPECIAL PROVISIONS. SEE ROADWAY STANDARD 862.03 FOR DETAILS AND LOCATION OF THE RUBRAIL.

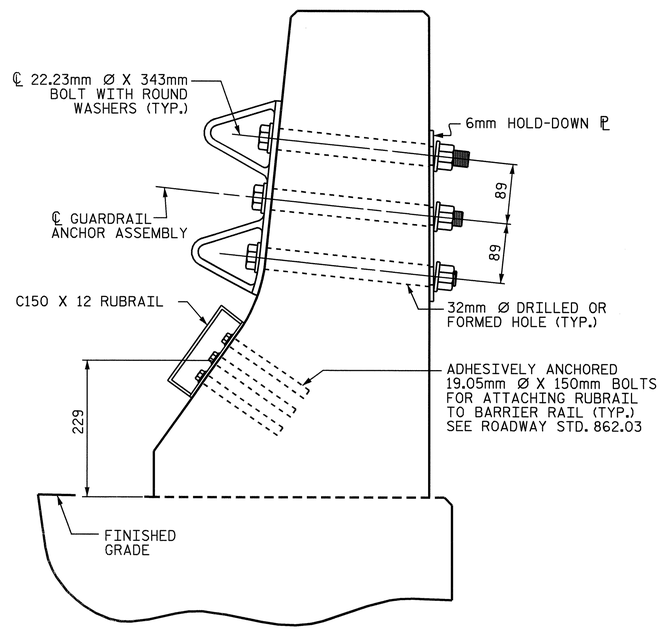

SECTION E-E

GUARDRAIL ANCHOR ASSEMBLY DETAILS

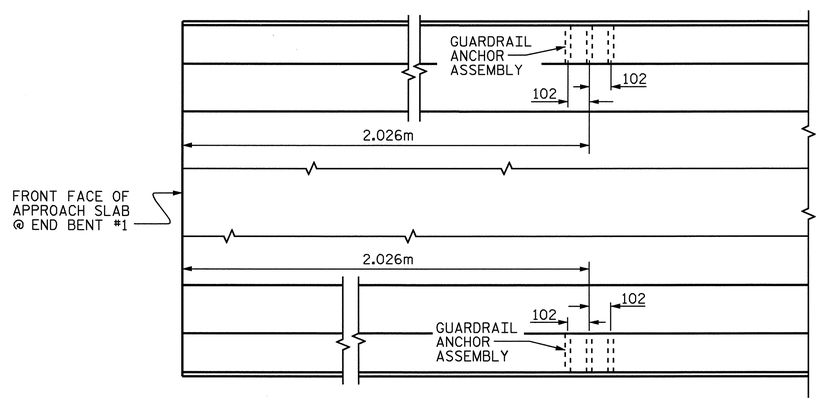

PLAN

LOCATION OF ANCHORS FOR GUARDRAIL

@ END BENT #1 ONLY

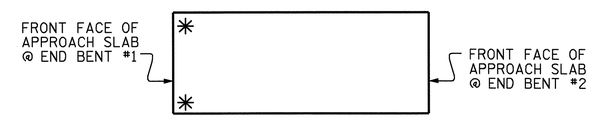

SKETCH SHOWING POINTS OF ATTACHMENTS

✳ DENOTES GUARDRAIL ANCHOR ASSEMBLY

PROJECT NO. R-2554BA
WAYNE COUNTY
STATION: 114+74.700 -L-

STATE OF NORTH CAROLINA
DEPARTMENT OF TRANSPORTATION
RALEIGH

STANDARD
GUARDRAIL ANCHORAGE FOR BARRIER RAIL
(RIGHT LANE)

NORTH CAROLINA PROFESSIONAL SEAL 14045 ENGINEER TIMOTHY L. COGGINS
6/5/08

REVISIONS						SHEET NO.
NO.	BY:	DATE:	NO.	BY:	DATE:	S-311
1			3			TOTAL SHEETS
2			4			478

STR. #11 STD. NO. GRA2SM

ASSEMBLED BY : B.N.BARODAWALA DATE : 7-31-07
CHECKED BY : ZION RORIE DATE : 8-13-07
DRAWN BY : TLA 5/06
CHECKED BY : GM 5/06
ADDED 5/1/06R KMM/GM

25-APR-2008 10:13
r:\structures\azlzl\str#11\barodawala\r2554ba_sd_br_11.dgn
jbwilson

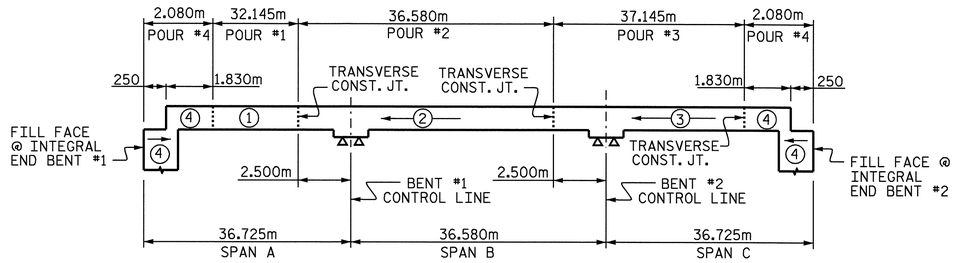

POURING SEQUENCE

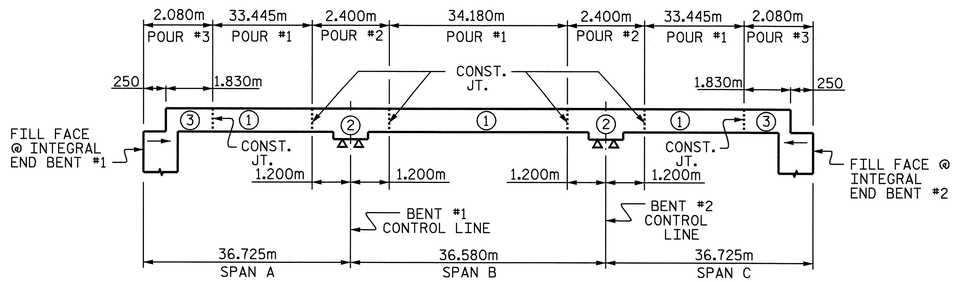

OPTIONAL POURING SEQUENCE

POUR #2 CAN NOT BE STARTED UNTIL BOTH ADJACENT POURS #1 REACH A MINIMUM OF 20.7MPa.

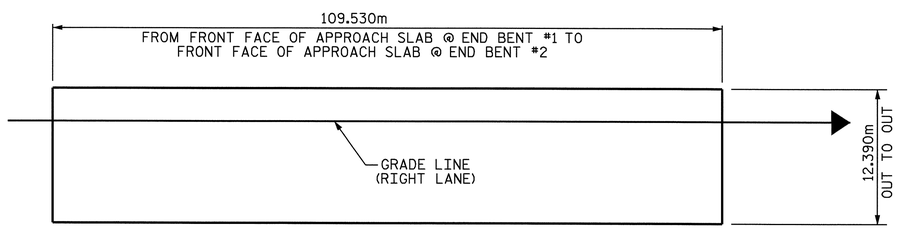

LAYOUT FOR COMPUTING AREA OF REINFORCED CONCRETE DECK SLAB (1357.1 SQ. METER)

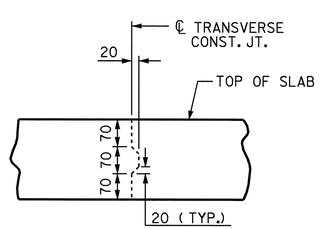

TRANSVERSE CONSTRUCTION JOINT DETAIL

NOTE: REINFORCING STEEL IN SLAB NOT SHOWN. LONGITUDINAL REINFORCING STEEL SHALL BE CONTINUOUS THRU JOINT.

SUPERSTRUCTURE REINFORCING STEEL LENGTHS ARE BASED ON THE FOLLOWING MINIMUM SPLICE LENGTHS

BAR SIZE	SUPERSTRUCTURE EXCEPT APPROACH SLABS, PARAPET, AND BARRIER RAIL		APPROACH SLABS		PARAPET AND BARRIER RAIL
	EPOXY COATED	UNCOATED	EPOXY COATED	UNCOATED	
#13	610	540	610	540	840
#16	770	660	770	660	1050
#19	920	790	1190	790	1330
#22	1580	1060			
#25	2080	1390			

GROOVING BRIDGE FLOORS

BRIDGE DECK	1147.9	SQ.METER
APPROACH SLABS	155.8	SQ.METER
TOTAL	1303.7	SQ.METER

BILL OF MATERIAL

SPANS A, B & C

BAR	NO.	SIZE	TYPE	LENGTH	WEIGHT
✳ A1	548	#16	STR	12280	10444
A2	548	#16	STR	12280	10444
✳ B1	168	#13	STR	8600	1436
✳ B2	112	#22	STR	13300	4531
✳ B3	54	#22	STR	11000	1807
✳ B4	56	#13	STR	6720	374
✳ B5	54	#22	STR	7400	1216
B6	308	#16	STR	16200	7744
B7	76	#13	STR	7400	559
K1	28	#13	STR	7460	208
K2	40	#13	STR	2220	88
K3	8	#13	STR	1740	14
K4	20	#13	STR	2000	40
K5	4	#13	STR	1760	7
K6	48	#16	3	2220	165
K7	240	#16	STR	2220	827
K8	16	#13	STR	1380	22
K9	80	#13	STR	2220	177
K10	16	#13	STR	1300	21
K11	16	#13	STR	900	14
K12	28	#13	STR	5340	149
K13	8	#13	STR	1300	10
S1	40	#13	2	4060	161
S2	168	#13	4	3460	578
S3	304	#13	5	840	254
S4	16	#13	7	3300	52
✳ S5	44	#13	1	3560	156
✳ S6	36	#13	1	3060	109
S7	8	#13	2	4460	35
✳ U1	40	#13	6	5500	219
U2	16	#13	2	5140	82
V1	40	#13	STR	1800	72

REINFORCING STEEL = 21723 kg

✳EPOXY COATED REINFORCING STEEL = 20292 kg

BAR TYPES

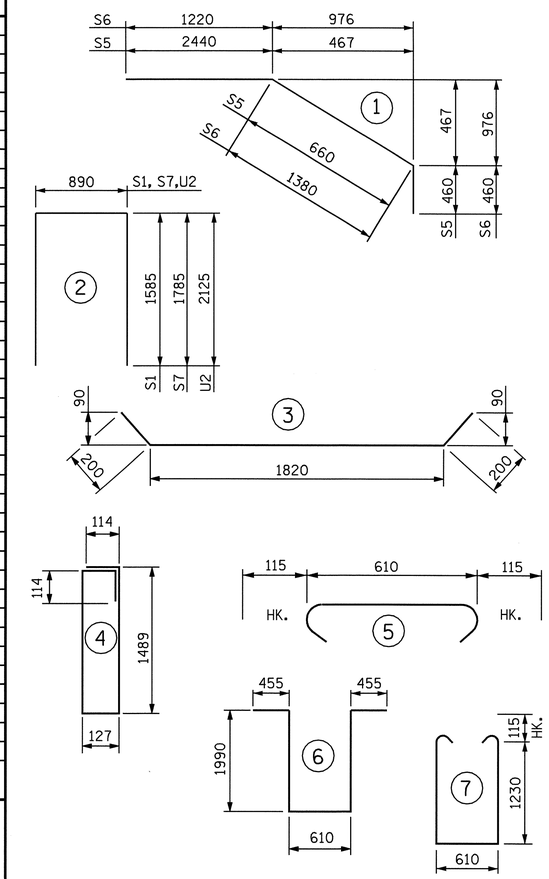

ALL BAR DIMENSIONS ARE OUT TO OUT.

SUPERSTRUCTURE BILL OF MATERIAL

	CLASS AA CONCRETE		REINFORCING STEEL	EPOXY COATED REINFORCING STEEL
	(CU. METER)		(kg)	(kg)
SPAN A, B AND C	POUR 1	123.5	21723	20292
	POUR 2	152.3		
	POUR 3	155.7		
	POUR 4 ●	77.2		
TOTALS ✳✳	TOTAL	508.7	21723	20292

✳✳ QUANTITIES FOR BARRIER RAIL ARE NOT INCLUDED

● POUR 4 QUANTITY INCLUDES UPPER POUR OF WINGS & INTEGRAL END BENT

PROJECT NO. R-2554BA

WAYNE COUNTY

STATION: 114+74.700 -L-

STATE OF NORTH CAROLINA
DEPARTMENT OF TRANSPORTATION
RALEIGH

STANDARD

SUPERSTRUCTURE BILL OF MATERIAL

(RIGHT LANE)

NORTH CAROLINA PROFESSIONAL SEAL 14045 ENGINEER TIMOTHY W. COGGINS

Timothy W. Coggins 6/5/08

REVISIONS								SHEET NO.
NO.	BY:	DATE:	NO.	BY:	DATE:			S-312
1			3					TOTAL SHEETS
2			4					478

ASSEMBLED BY : B.N.BARODAWALA DATE : 7-30-07
CHECKED BY : ZION RORIE DATE : 8-13-07

DRAWN BY : JMB 5/87
CHECKED BY : SJD 9/87

REV. 5/16/97 EEM/RGW

28-APR-2008 10:05
g:\structures\azlzl\Str#11\BARODAWALA\r2554ba_sd_bm_11.dgn
tcoggins

STR. #11

STD. NO. BOM2SM

NOTES:

THE CONTRACTOR SHALL PROVIDE FOR INSTALLATION OF THE 102mm DIAMETER DRAIN PIPE THROUGH THE WING WALL AS REQUIRED FOR REINFORCED BRIDGE APPROACH FILLS, SEE THE ROADWAY PLANS. REINFORCING STEEL IN THE WING WALL MAY BE SHIFTED AS NECESSARY TO CLEAR THE DRAIN PIPE.

THE TOP SURFACE OF THE END BENT CAP AND WINGS, EXCLUDING THE OUTSIDE 100mm AND THE BEARING AREA, SHALL BE RAKED TO A DEPTH OF 6mm.

STIRRUPS IN CAP MAY BE SHIFTED AS NECESSARY TO CLEAR #13 V3 BARS.

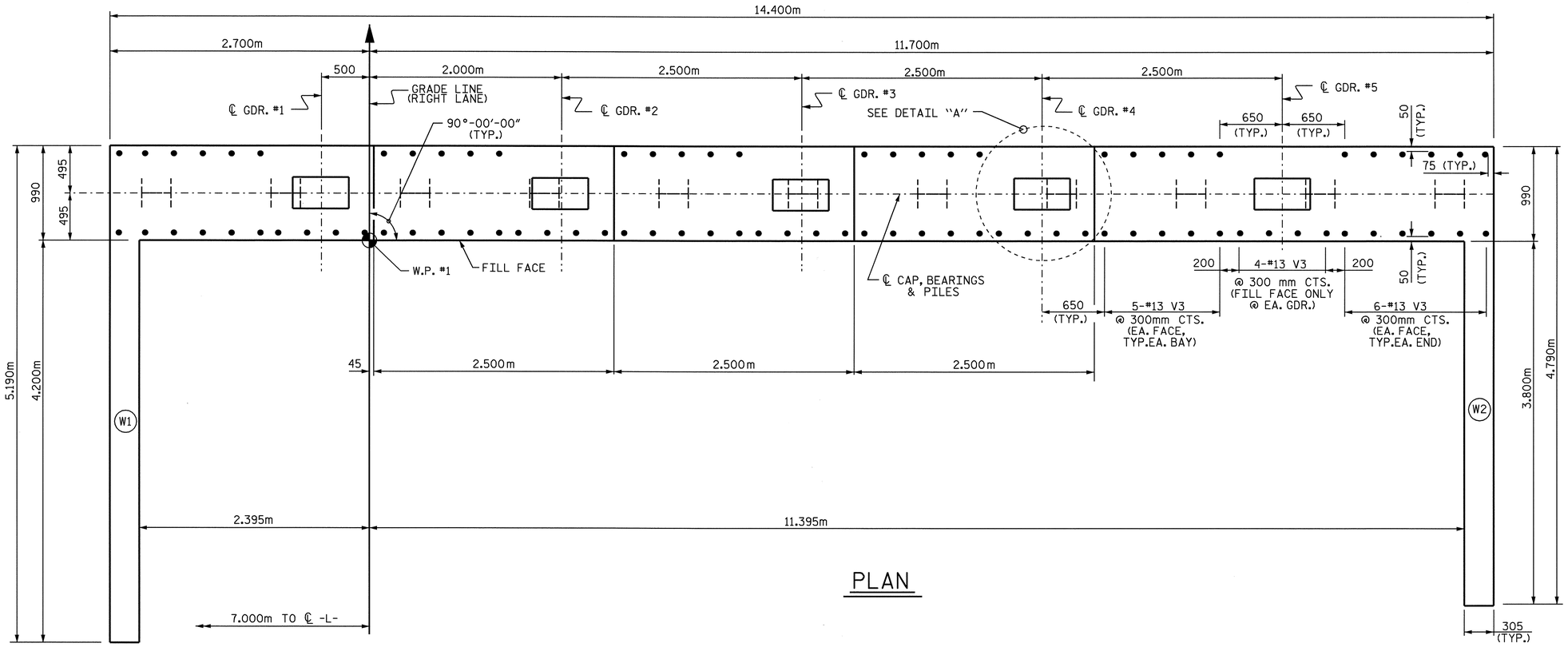

PLAN

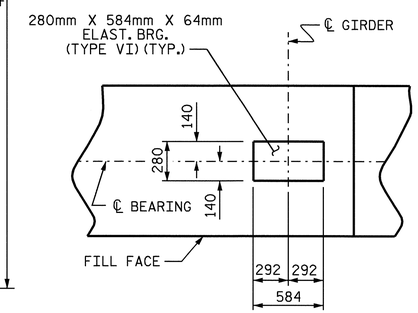

DETAIL A

(TYP. EA. GDR.)

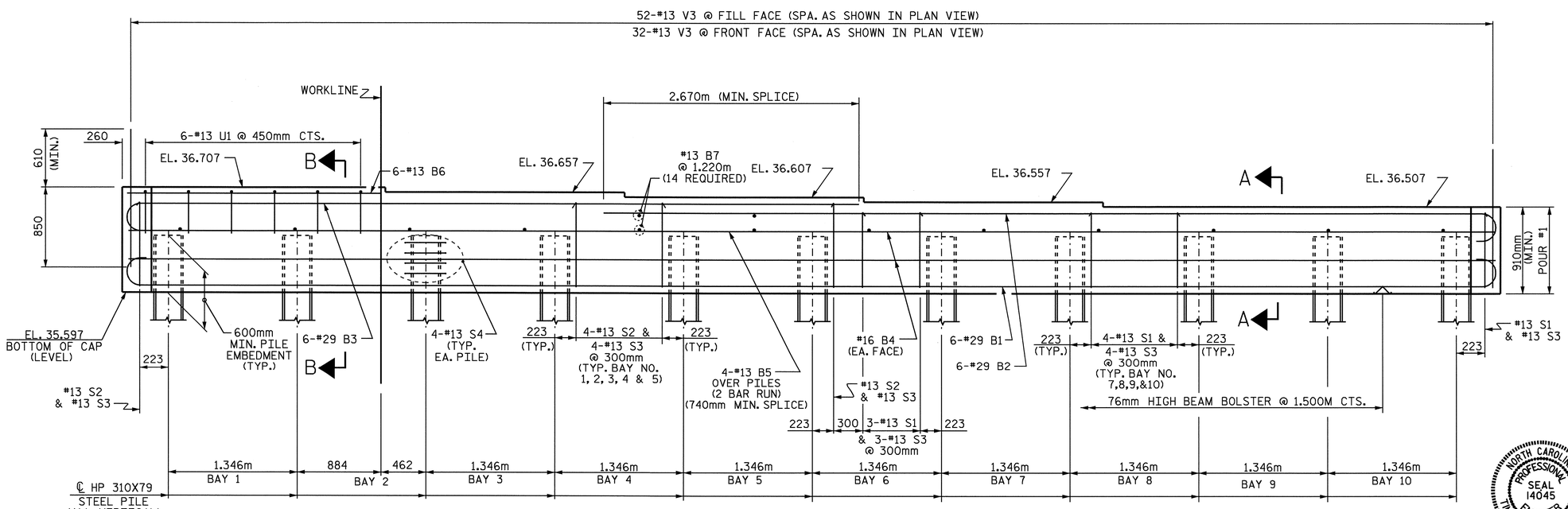

ELEVATION

(FOR WING REINFORCING STEEL AND DETAILS, SEE SHEET 2 OF 3)

NORTH CAROLINA PROFESSIONAL SEAL 14045 ENGINEER TIMOTHY V. COGGINS

Timothy V. Coggins 6/6/08

PROJECT NO. R-2554BA

WAYNE COUNTY

STATION: 114+74.000 -L-

SHEET 1 OF 3

STATE OF NORTH CAROLINA
DEPARTMENT OF TRANSPORTATION
RALEIGH

SUBSTRUCTURE

INTEGRAL END BENT #1 (RIGHT LANE)

REVISIONS						SHEET NO.
NO.	BY:	DATE:	NO.	BY:	DATE:	S-313
1			3			TOTAL SHEETS
2			4			478

STR. #11

DRAWN BY : B.N.BARODAWALA DATE : 9-21-07
CHECKED BY : M.D.PISO DATE : 3-08

06-JUN-2008 09:39
r:\structures\azlzl\Str*ll\FINAL PLANS\R2554BA_sd_E*_ll.dgn
padkins

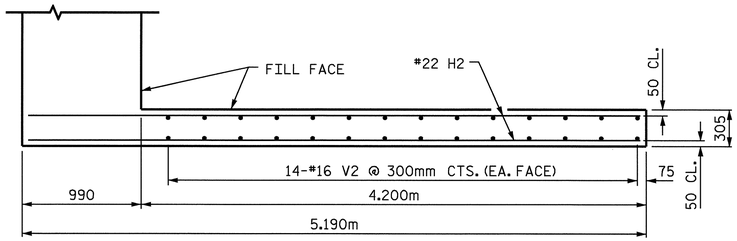

PLAN OF WING W1

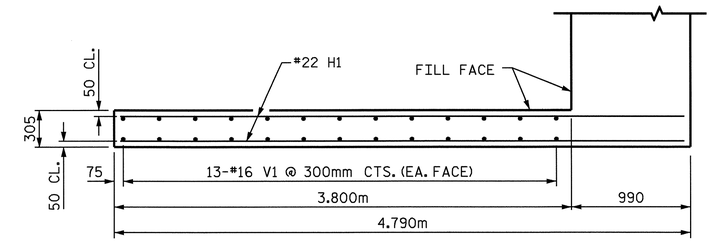

PLAN OF WING W2

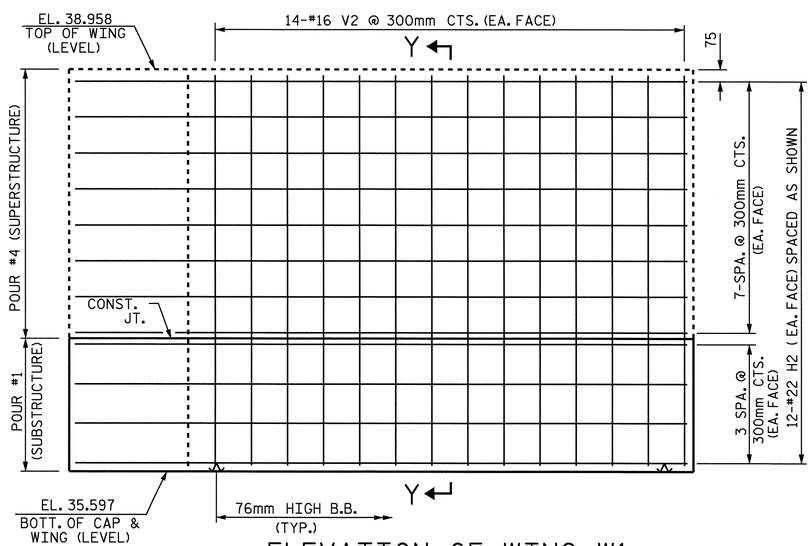

ELEVATION OF WING W1

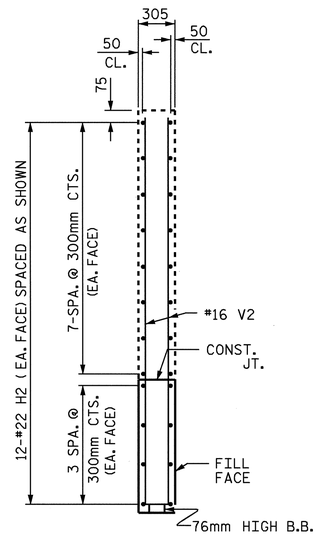

SECTION Y-Y

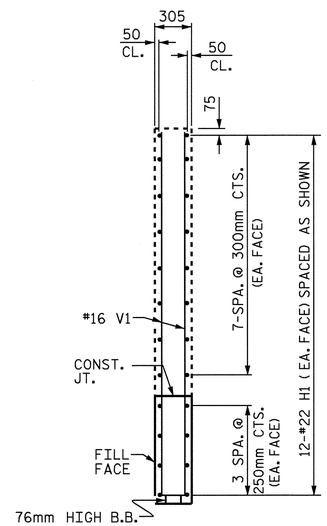

SECTION X-X

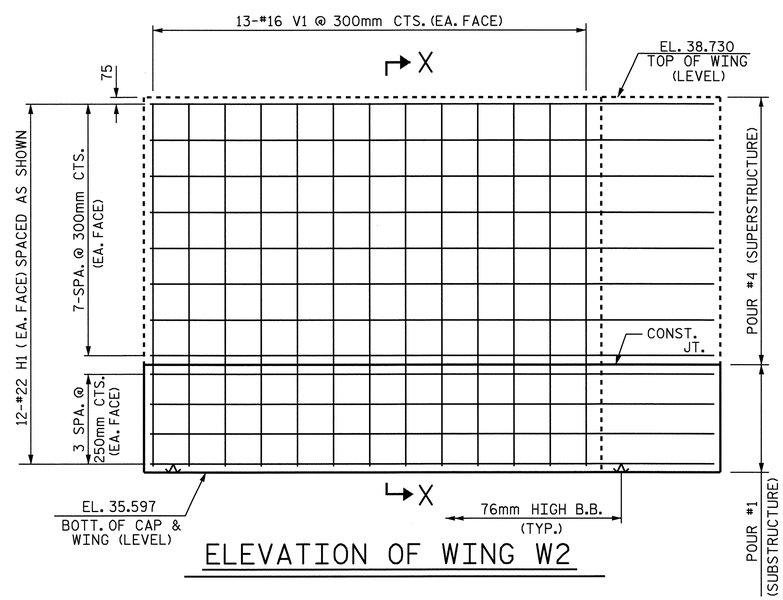

ELEVATION OF WING W2

PROJECT NO. R-2554BA

WAYNE COUNTY

STATION: 114+74.000 -L-

SHEET 2 OF 3

STATE OF NORTH CAROLINA
DEPARTMENT OF TRANSPORTATION
RALEIGH

SUBSTRUCTURE

INTEGRAL
END BENT #1
(RIGHT LANE)

NORTH CAROLINA PROFESSIONAL SEAL 14045 ENGINEER TIMOTHY A. COGGINS
Timothy A. Coggins
6/6/08

REVISIONS						SHEET NO.
NO.	BY:	DATE:	NO.	BY:	DATE:	S-314
1			3			TOTAL SHEETS
2			4			478

DRAWN BY : B.N.BARODAWALA DATE : 10-24-07
CHECKED BY : M.D.PISO DATE : 3-08

06-JUN-2008 09:39
r:\structures\azlzl\Str*11\FINAL PLANS\R2554BA_sd_E*_11.dgn
padkins

STR. #11

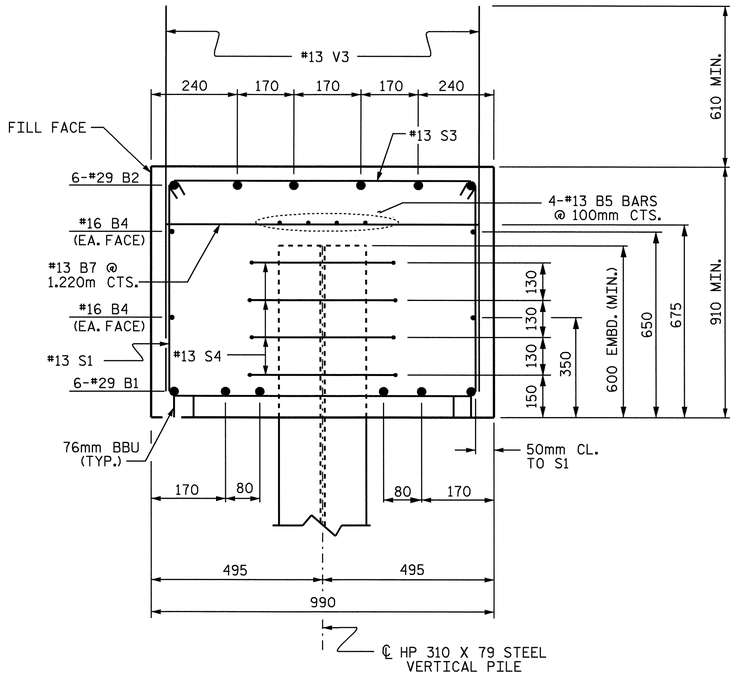

SECTION A-A

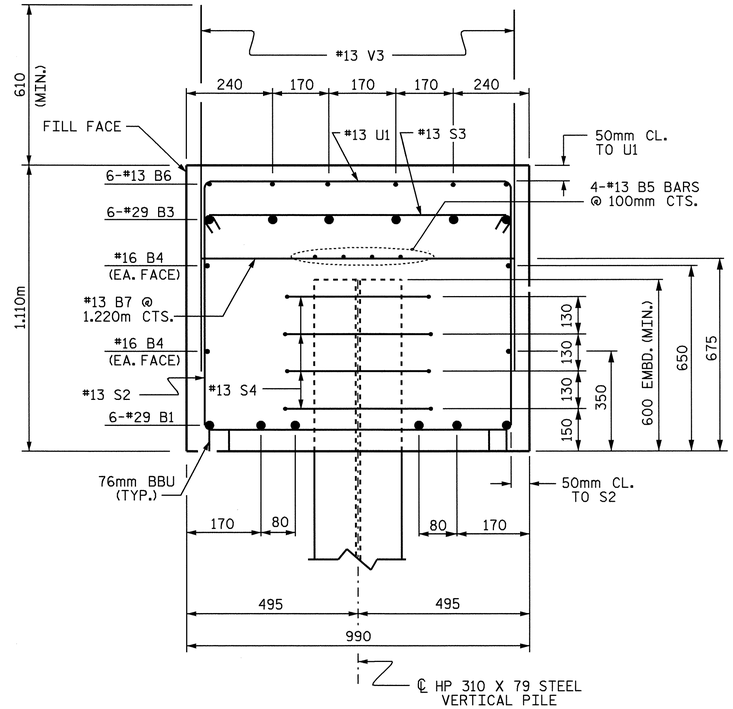

SECTION B-B

BAR TYPES

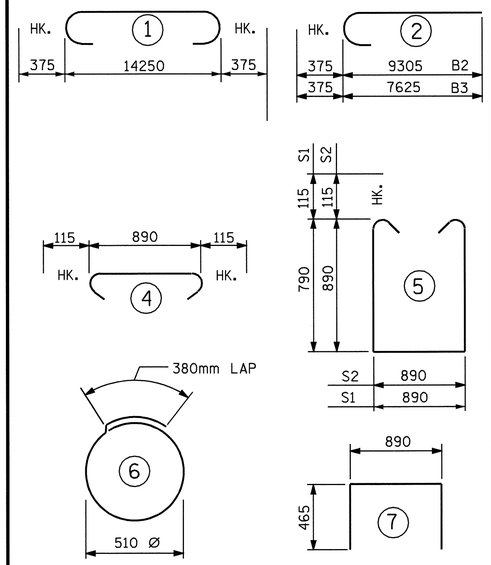

ALL BAR DIMENSIONS ARE OUT TO OUT.

BILL OF MATERIAL
END BENT #1

BAR	NO.	SIZE	TYPE	LENGTH	WEIGHT
B1	6	#29	1	15000	455
B2	6	#29	2	9680	294
B3	6	#29	2	8000	243
B4	4	#16	STR	14300	89
B5	8	#13	STR	7520	60
B6	6	#13	STR	2640	16
B7	14	#13	STR	880	12
H1	24	#22	STR	4680	342
H2	24	#22	STR	5080	371
S1	20	#13	5	2700	54
S2	22	#13	5	2900	63
S3	42	#13	4	1120	47
S4	44	#13	6	1980	87
U1	6	#13	7	1820	11
V1	26	#16	STR	3020	122
V2	28	#16	STR	3260	142
V3	84	#13	STR	1460	122

REINFORCING STEEL = 2530 KG

CLASS A CONCRETE BREAKDOWN
POUR #1: CAP & LOWER WINGS 16.7 m3

TOTAL CONCRETE 16.7 m3

HP 310 X 79 STEEL PILES
NO. 11 187.0 METERS

PILE REDRIVES EACH 4

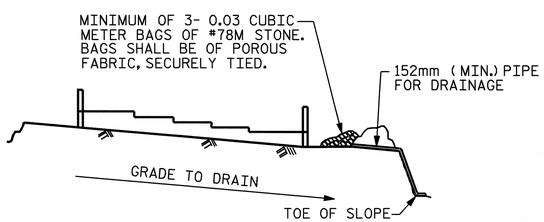

BAGGED STONE AND PIPE SHALL BE PLACED IMMEDIATELY AFTER COMPLETION OF END BENT EXCAVATION. PIPE MAY BE EITHER CONCRETE, CORRUGATED STEEL, CORRUGATED ALUMINUM ALLOY, OR CORRUGATED PLASTIC. PERFORATED PIPE WILL NOT BE ALLOWED.

BAGGED STONE SHALL REMAIN IN PLACE UNTIL THE ENGINEER DIRECTS THAT IT BE REMOVED. THE CONTRACTOR SHALL REMOVE AND DISPOSE OF SILT ACCUMULATIONS AT BAGGED STONE WHEN SO DIRECTED BY THE ENGINEER. BAGS SHALL BE REMOVED AND REPLACED WHENEVER THE ENGINEER DETERMINES THAT THEY HAVE DETERIORATED AND LOST THEIR EFFECTIVENESS.

NO SEPARATE PAYMENT WILL BE MADE FOR THIS WORK AND THE ENTIRE COST OF THIS WORK SHALL BE INCLUDED IN THE UNIT CONTRACT PRICE BID FOR THE SEVERAL PAY ITEMS.

TEMPORARY DRAINAGE AT END BENT

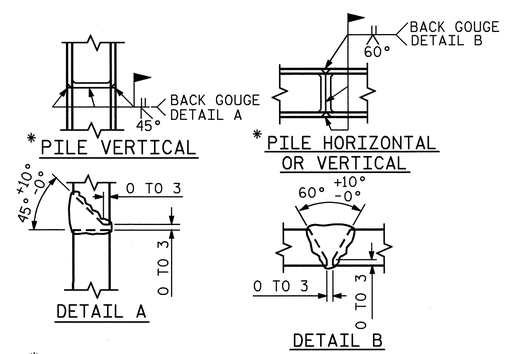

* POSITION OF PILE DURING WELDING.

PILE SPLICE DETAILS

PROJECT NO. R-2554BA
WAYNE COUNTY
STATION: 114+74.000 -L-

SHEET 3 OF 3

STATE OF NORTH CAROLINA
DEPARTMENT OF TRANSPORTATION
RALEIGH

SUBSTRUCTURE

INTEGRAL
END BENT #1
(RIGHT LANE)

NORTH CAROLINA PROFESSIONAL SEAL 14045 ENGINEER TIMOTHY L. JEDCOSKINS
Timothy L. Jedcoskins 6/6/08

REVISIONS						SHEET NO.
NO.	BY:	DATE:	NO.	BY:	DATE:	S-315
1			3			TOTAL SHEETS
2			4			478

STR. #11

DRAWN BY : B.N.BARODAWALA DATE : 10-24-07
CHECKED BY : M.D.PISO DATE : 3-08

06-JUN-2008 09:40
r:\structures\azlzl\Str#11\FINAL PLANS\R2554BA_sd_E*_11.dgn
padkins

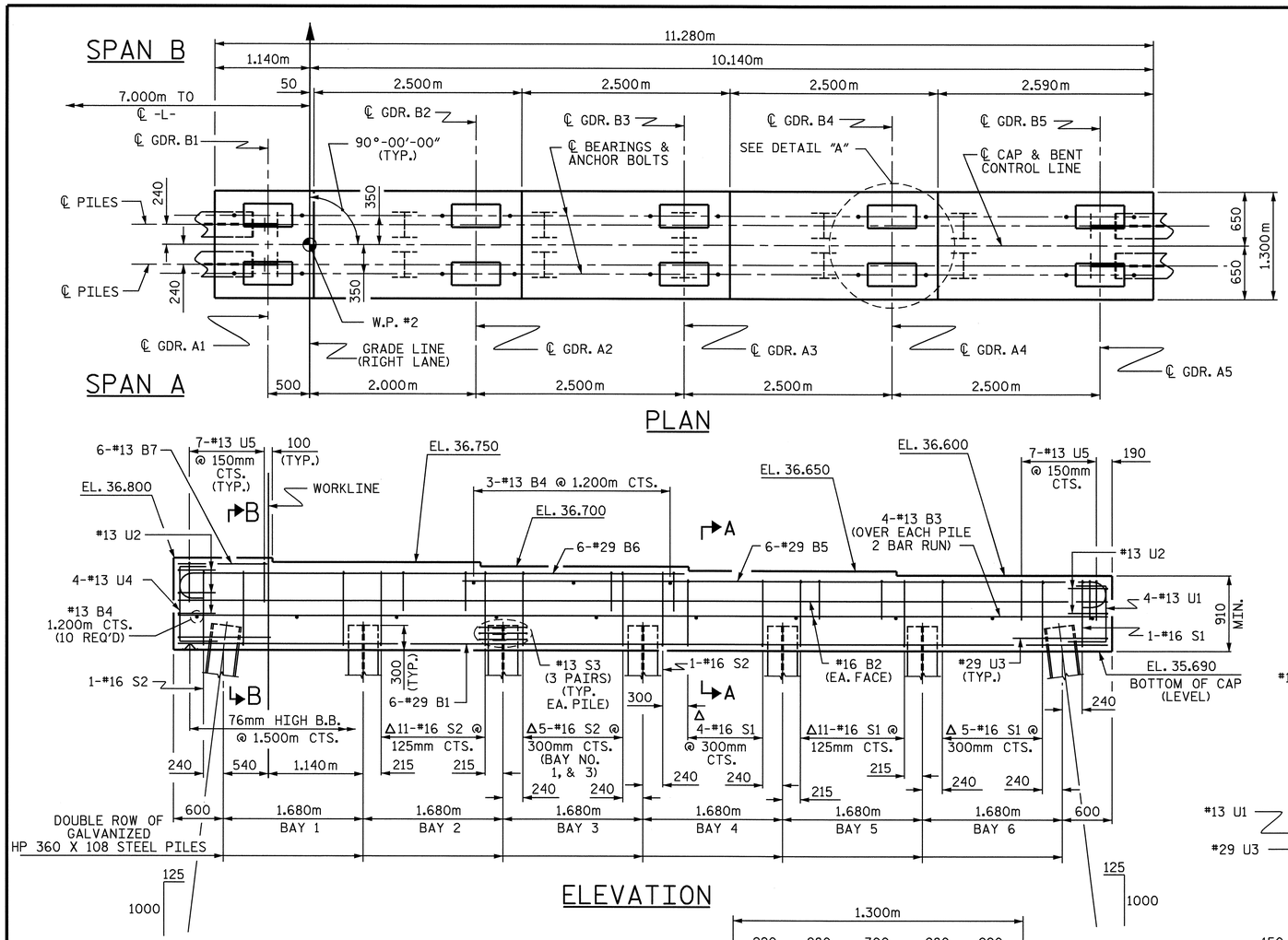

PLAN

ELEVATION

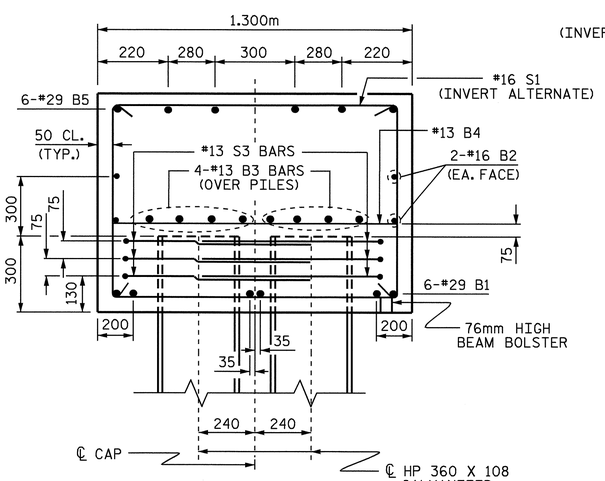

SECTION A-A

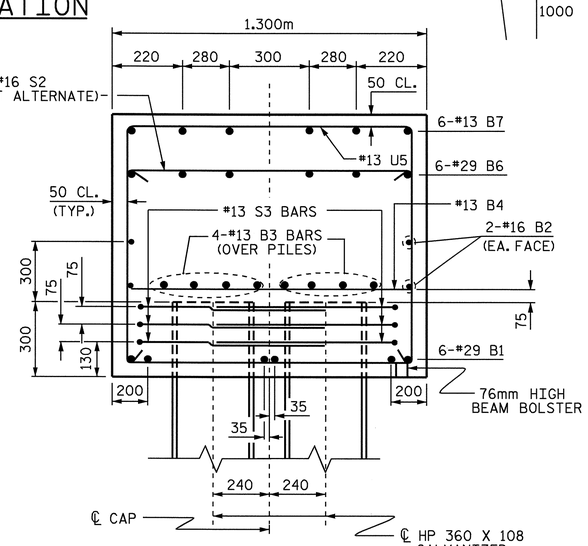

SECTION B-B

NOTES

STIRRUPS IN CAP MAY BE SHIFTED AS NECESSARY TO CLEAR ANCHOR BOLTS.

FOR PILE SPLICE DETAILS, SEE END BENT SHEETS 3 OF 3.

Δ INVERT ALTERNATE STIRRUPS

THE STEEL PILES SHALL BE GALVANIZED IN ACCORDANCE WITH SECTION 1076 IN THE STANDARD SPECIFICATIONS.

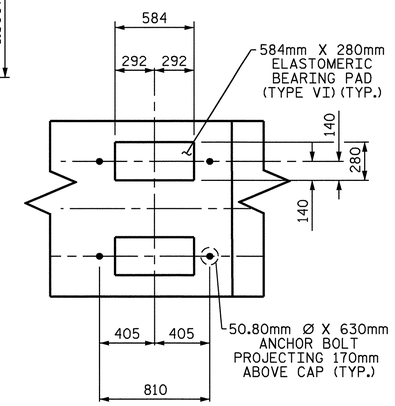

DETAIL "A"
(TYP. EA. GDR.)

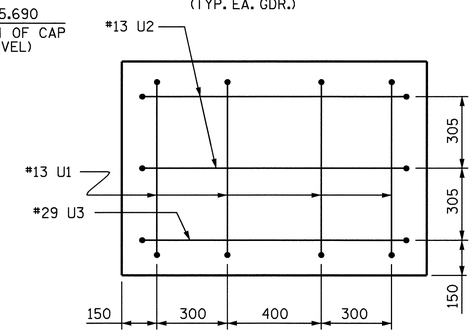

RIGHT END VIEW

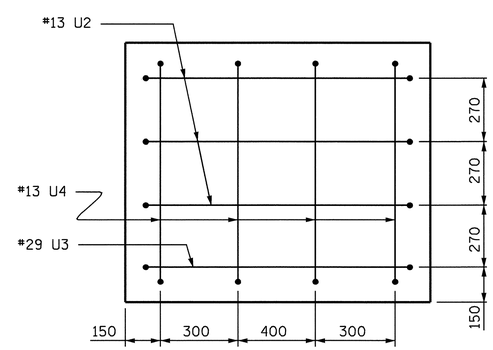

LEFT END VIEW

BAR TYPES

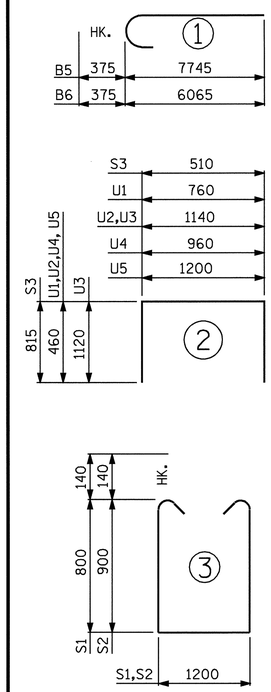

ALL BAR DIMENSIONS ARE OUT TO OUT.

BILL OF MATERIAL
BENT #1

BAR	NO.	SIZE	TYPE	LENGTH	WEIGHT
B1	6	#29	STR	11180	339
B2	4	#16	STR	11180	69
B3	16	#13	STR	5960	95
B4	13	#13	STR	1200	16
B5	6	#29	1	8120	247
B6	6	#29	1	6440	196
B7	6	#13	STR	1080	6
S1	21	#16	3	3080	100
S2	23	#16	3	3280	117
S3	42	#13	2	2140	89
U1	4	#13	2	1680	7
U2	5	#13	2	2060	10
U3	2	#29	2	3380	34
U4	4	#13	2	1880	7
U5	35	#13	2	2120	74
REINFORCING STEEL				kg	1406
CLASS "A" CONCRETE				m³	14.6
HP 360 X 108 GALVANIZED STEEL PILE					
NO. 14				METERS	280.0
PILE REDRIVES				EACH	4

SPLICE LENGTH CHART

BAR	SIZE	LENGTH
B3	#13	740mm
B5	#29	2670mm

PROJECT NO. R-2554BA
WAYNE COUNTY
STATION: 114+74.700 -L-

STATE OF NORTH CAROLINA
DEPARTMENT OF TRANSPORTATION
RALEIGH

SUBSTRUCTURE
BENT #1
(RIGHT LANE)

NORTH CAROLINA PROFESSIONAL SEAL 14045 ENGINEER TIMOTHY L. COGGINS
Timothy L. Coggins 6/6/08

REVISIONS						SHEET NO.
NO.	BY:	DATE:	NO.	BY:	DATE:	S-316
1			3			TOTAL SHEETS
2			4			478

DRAWN BY : M. GUDLAUGSSON DATE : 12/17/07
CHECKED BY : B. BARADOWALA DATE : 02/18/08

06-JUN-2008 09:41
r:\structures\azlzl\Str*ll\FINAL PLANS\R2554BA_sd_B*_ll.dgn
padkins

STR. #11

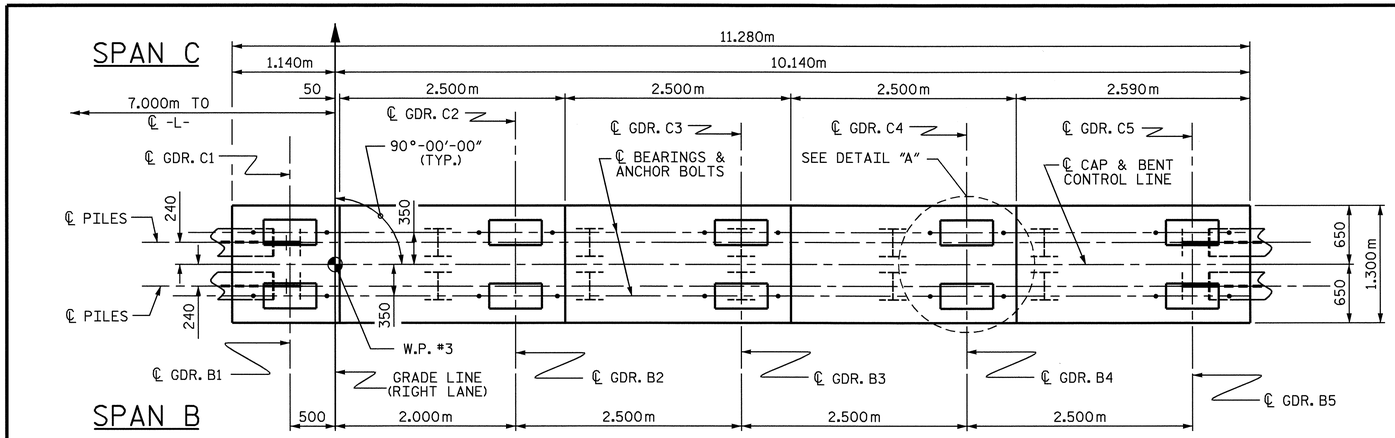

PLAN

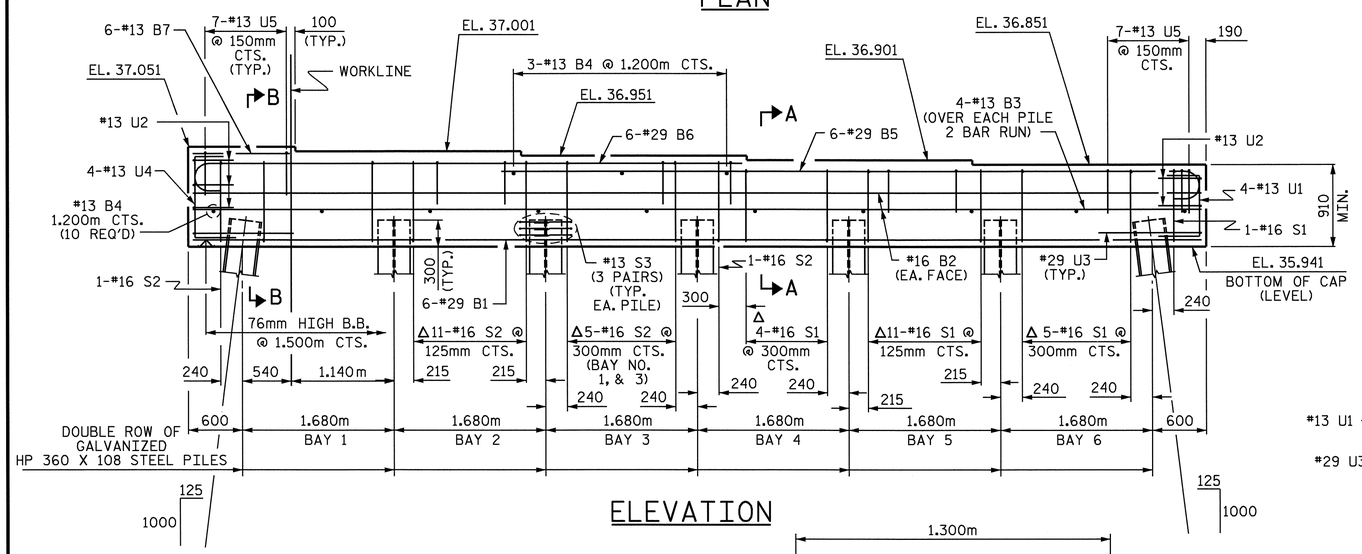

ELEVATION

NOTES

STIRRUPS IN CAP MAY BE SHIFTED AS NECESSARY TO CLEAR ANCHOR BOLTS.

FOR PILE SPLICE DETAILS, SEE END BENT SHEETS 3 OF 3.

Δ INVERT ALTERNATE STIRRUPS

THE STEEL PILES SHALL BE GALVANIZED IN ACCORDANCE WITH SECTION 1076 IN THE STANDARD SPECIFICATIONS.

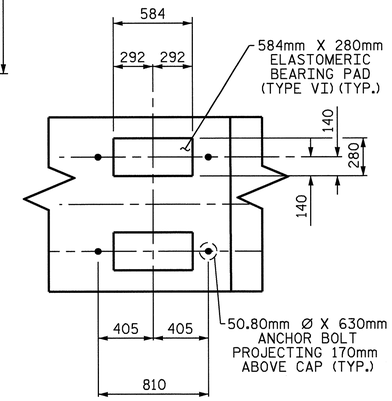

DETAIL "A"
(TYP. EA. GDR.)

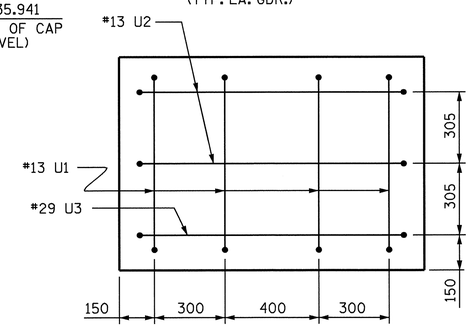

RIGHT END VIEW

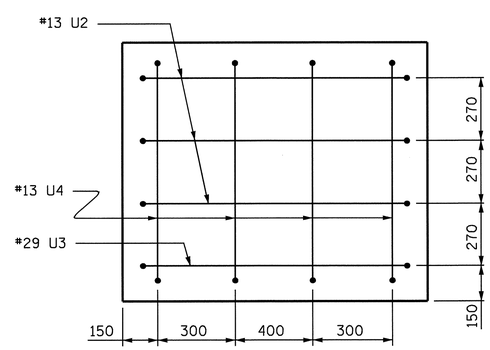

LEFT END VIEW

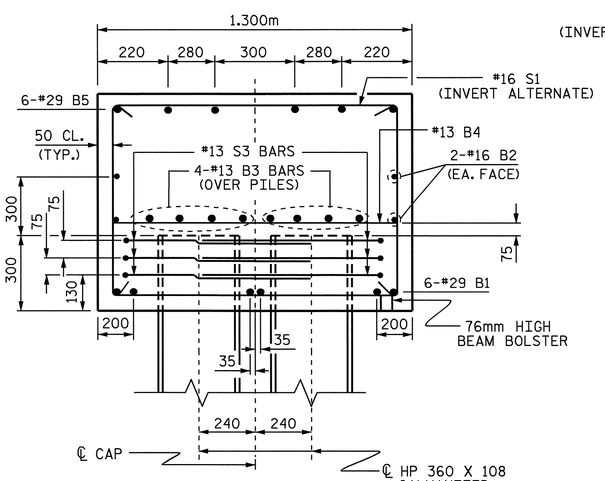

SECTION A-A

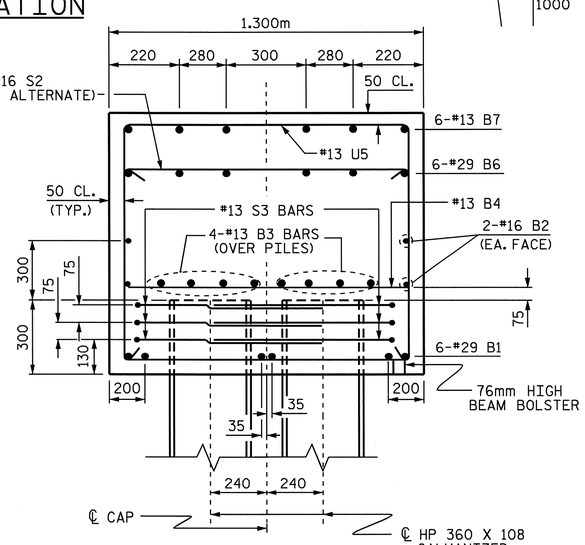

SECTION B-B

— BAR TYPES —

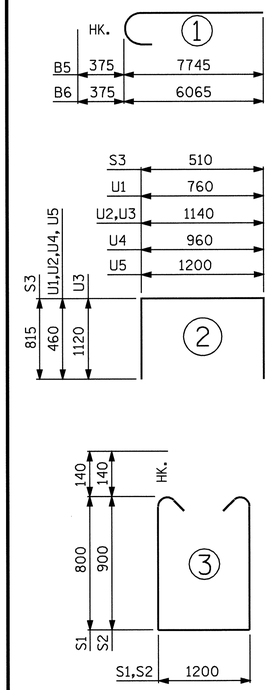

ALL BAR DIMENSIONS ARE OUT TO OUT.

BILL OF MATERIAL

BENT #2

BAR	NO.	SIZE	TYPE	LENGTH	WEIGHT
B1	6	#29	STR	11180	339
B2	4	#16	STR	11180	69
B3	16	#13	STR	5960	95
B4	13	#13	STR	1200	16
B5	6	#29	1	8120	247
B6	6	#29	1	6440	196
B7	6	#13	STR	1080	6
S1	21	#16	3	3080	100
S2	23	#16	3	3280	117
S3	42	#13	2	2140	89
U1	4	#13	2	1680	7
U2	5	#13	2	2060	10
U3	2	#29	2	3380	34
U4	4	#13	2	1880	7
U5	35	#13	2	2120	74
REINFORCING STEEL				kg	1406
CLASS "A" CONCRETE				m3	14.6
HP 360 X 108 GALVANIZED STEEL PILE					
NO. 14				METERS	266.0
PILE REDRIVES				EACH	4

SPLICE LENGTH CHART

BAR	SIZE	LENGTH
B3	#13	740mm
B5	#29	2670mm

PROJECT NO. R-2554BA
WAYNE COUNTY
STATION: 114+74.700 -L-

STATE OF NORTH CAROLINA
DEPARTMENT OF TRANSPORTATION
RALEIGH

SUBSTRUCTURE
BENT #2
(RIGHT LANE)

NORTH CAROLINA PROFESSIONAL SEAL 14045 ENGINEER TIMOTHY L. COGGINS
Timothy L. Coggins 6/6/08

REVISIONS						SHEET NO.
NO.	BY:	DATE:	NO.	BY:	DATE:	S-317
1			3			TOTAL SHEETS
2			4			478

DRAWN BY : M. GUDLAUGSSON DATE : 12/17/08
CHECKED BY : B. BARADOWALA DATE : 02/18/08

06-JUN-2008 09:41
r:\structures\azlzl\Str*11\FINAL PLANS\R2554BA_sd_B*_11.dgn
padkins

STR. #11

NOTES:

THE CONTRACTOR SHALL PROVIDE FOR INSTALLATION OF THE 102mm DIAMETER DRAIN PIPE THROUGH THE WING WALL AS REQUIRED FOR REINFORCED BRIDGE APPROACH FILLS, SEE THE ROADWAY PLANS. REINFORCING STEEL IN THE WING WALL MAY BE SHIFTED AS NECESSARY TO CLEAR THE DRAIN PIPE.

THE TOP SURFACE OF THE END BENT CAP AND WINGS, EXCLUDING THE OUTSIDE 100mm AND THE BEARING AREA, SHALL BE RAKED TO A DEPTH OF 6mm.

STIRRUPS IN CAP MAY BE SHIFTED AS NECESSARY TO CLEAR #13 V3 BARS.

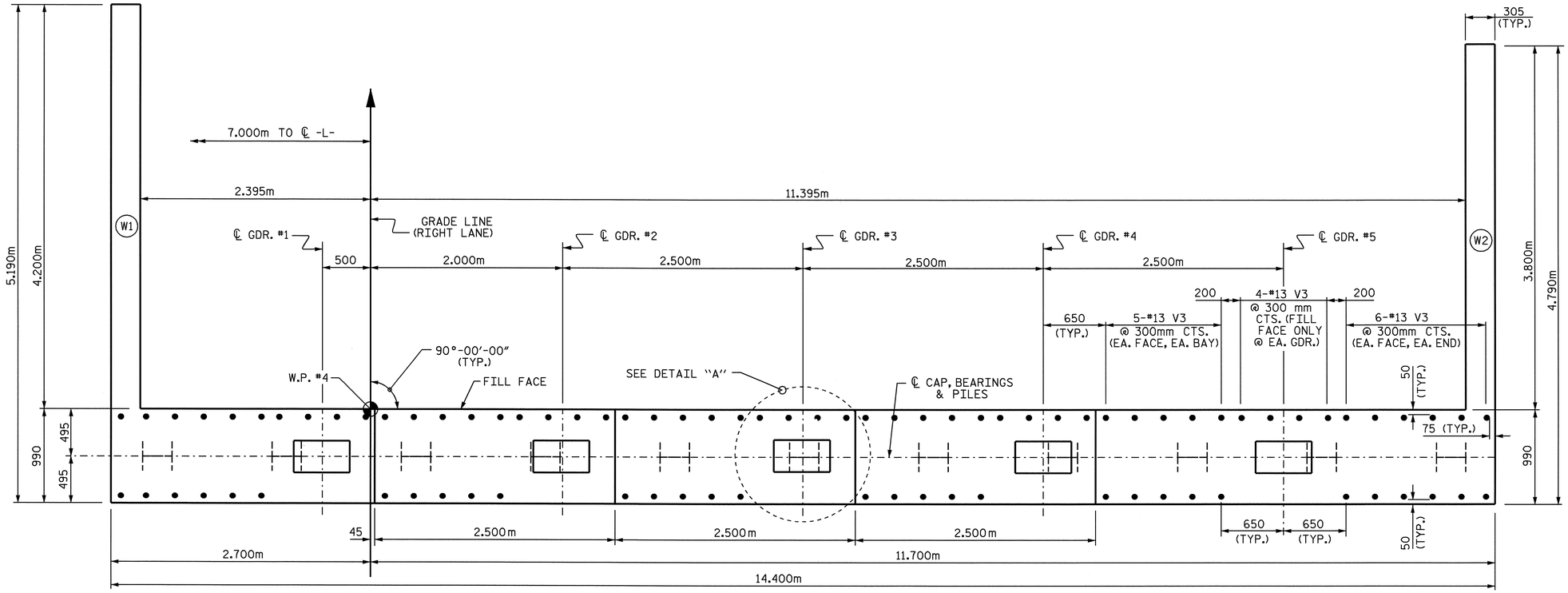

PLAN

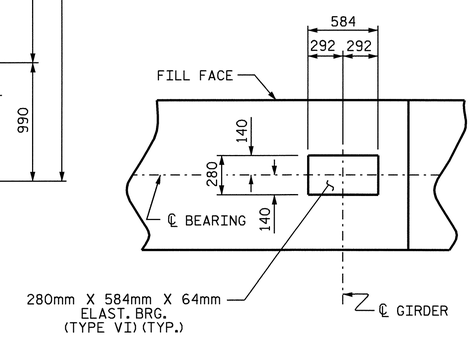

DETAIL A

(TYP. EA. GDR.)

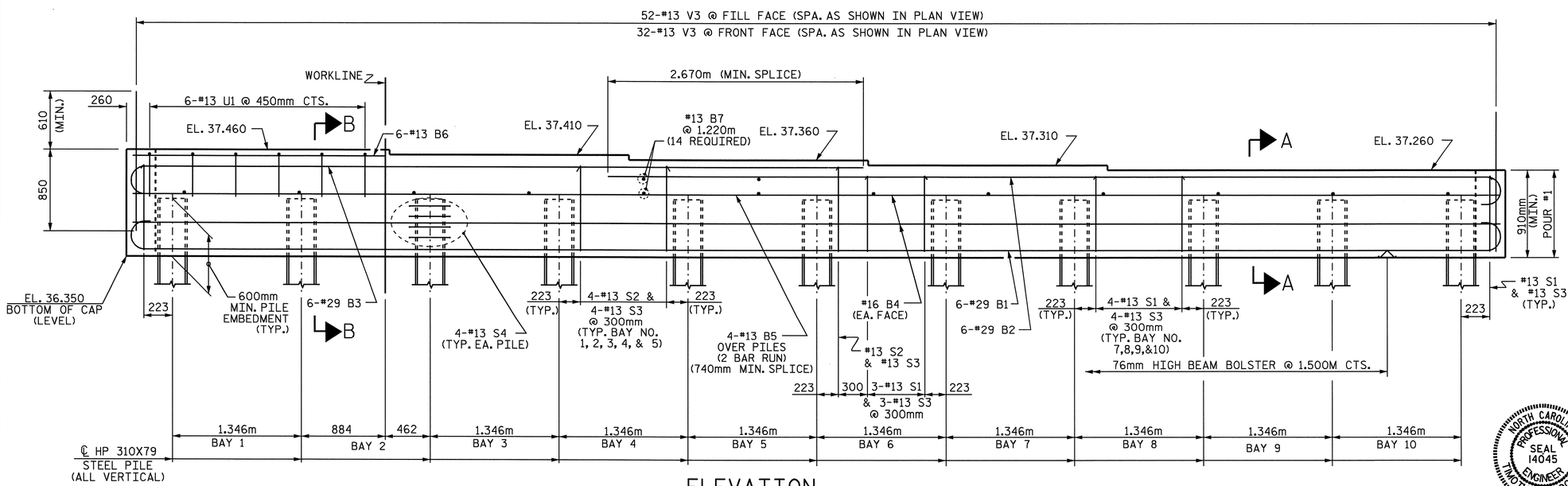

ELEVATION

(FOR WING REINFORCING STEEL AND DETAILS, SEE SHEET 2 OF 3)

PROJECT NO. R-2554BA

WAYNE COUNTY

STATION: 114+74.000 -L-

SHEET 1 OF 3

STATE OF NORTH CAROLINA
DEPARTMENT OF TRANSPORTATION
RALEIGH

SUBSTRUCTURE
INTEGRAL END BENT #2
(RIGHT LANE)

NORTH CAROLINA PROFESSIONAL SEAL 14045 ENGINEER TIMOTHY L. COGGINS

Timothy L. Coggins 6/6/08

REVISIONS						SHEET NO.
NO.	BY:	DATE:	NO.	BY:	DATE:	S-318
1			3			TOTAL SHEETS
2			4			478

STR. #11

DRAWN BY : B.N.BARODAWALA DATE : 9-21-07
CHECKED BY : M.D.PISO DATE : 3-08

06-JUN-2008 09:40
r:\structures\azlzl\Str*11\FINAL PLANS\R2554BA_sd_E*_11.dgn
padkins

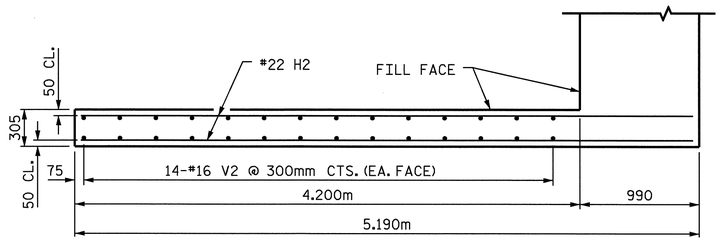

PLAN OF WING W1

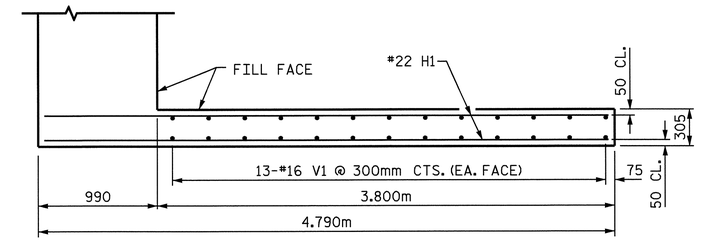

PLAN OF WING W2

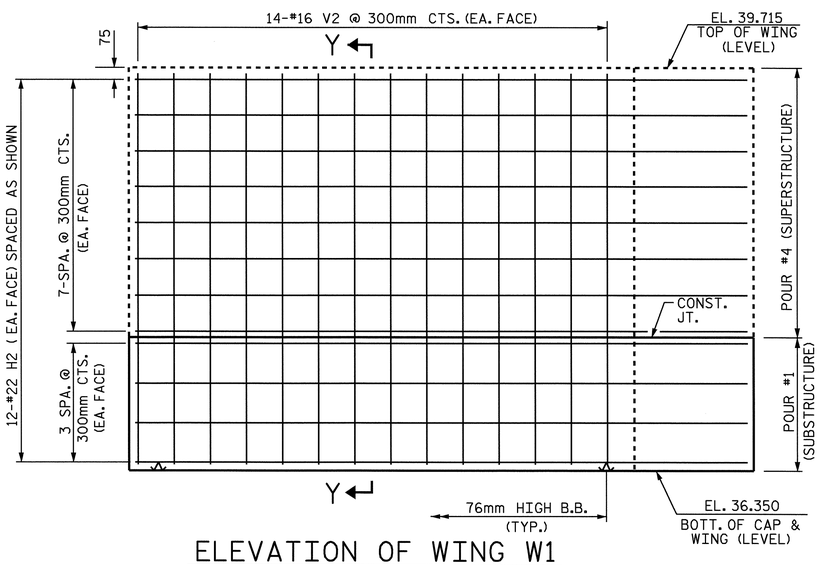

ELEVATION OF WING W1

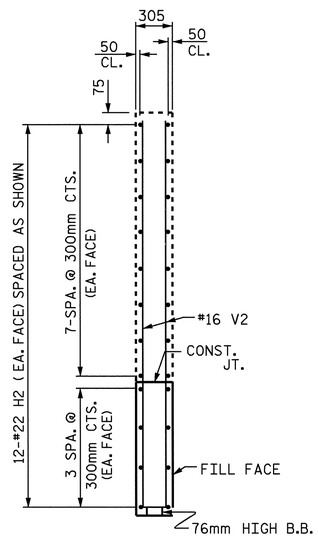

SECTION Y-Y

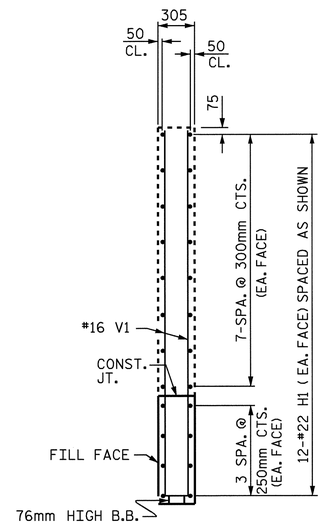

SECTION X-X

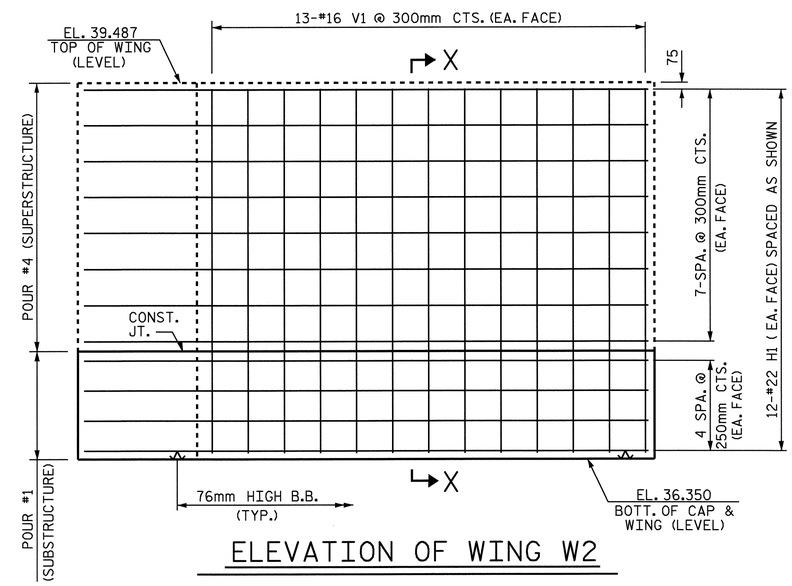

ELEVATION OF WING W2

PROJECT NO. R-2554BA

WAYNE COUNTY

STATION: 114+74.000 -L-

SHEET 2 OF 3

STATE OF NORTH CAROLINA
DEPARTMENT OF TRANSPORTATION
RALEIGH

SUBSTRUCTURE

INTEGRAL
END BENT #2
(RIGHT LANE)

NORTH CAROLINA PROFESSIONAL SEAL 14045 ENGINEER TIMOTHY L. LOGGINS
6/6/08

REVISIONS						SHEET NO.
NO.	BY:	DATE:	NO.	BY:	DATE:	S-319
1			3			TOTAL SHEETS
2			4			478

DRAWN BY : B.N.BARODAWALA DATE : 10-24-07
CHECKED BY : M.D.PISO DATE : 3-08

06-JUN-2008 09:40
r:\structures\azlzl\Str*11\FINAL PLANS\R2554BA_sd_E*_11.dgn
padkins

STR. #11

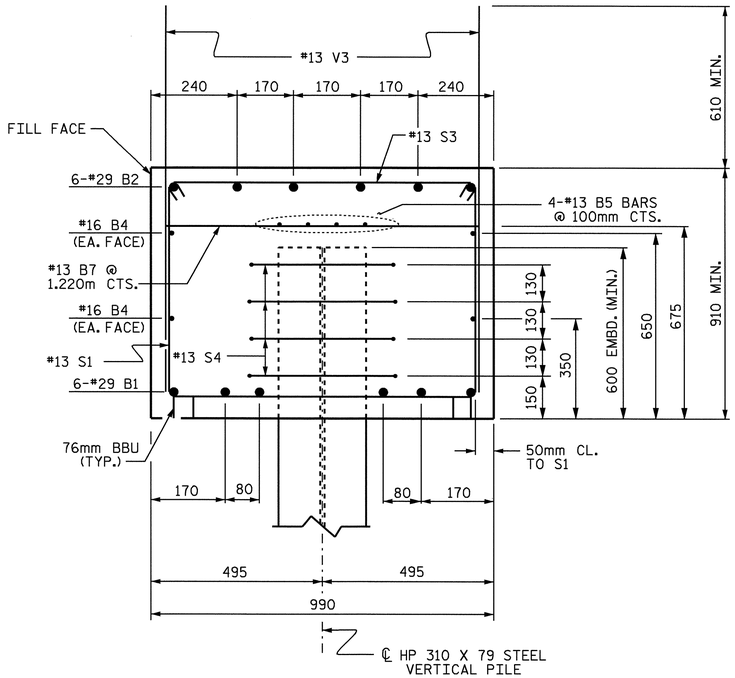

SECTION A-A

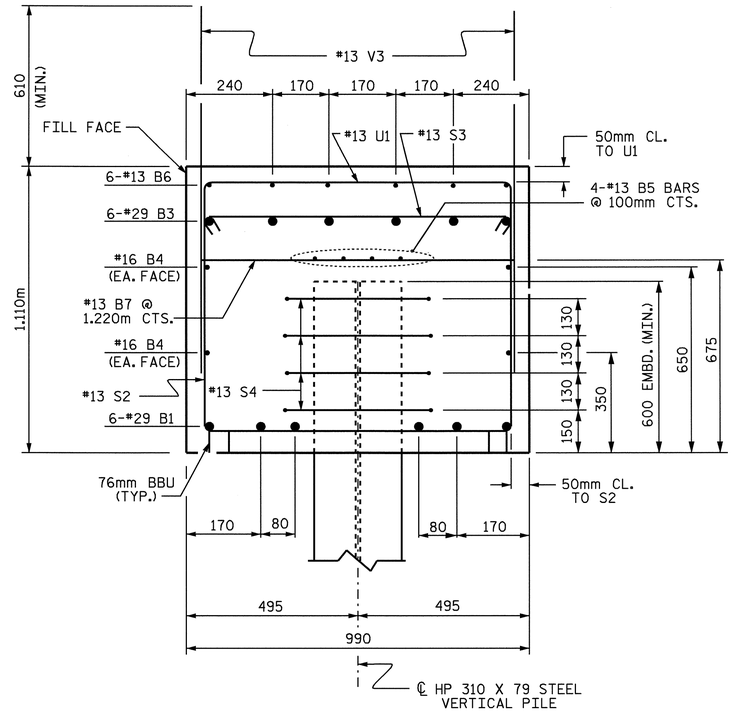

SECTION B-B

BAR TYPES

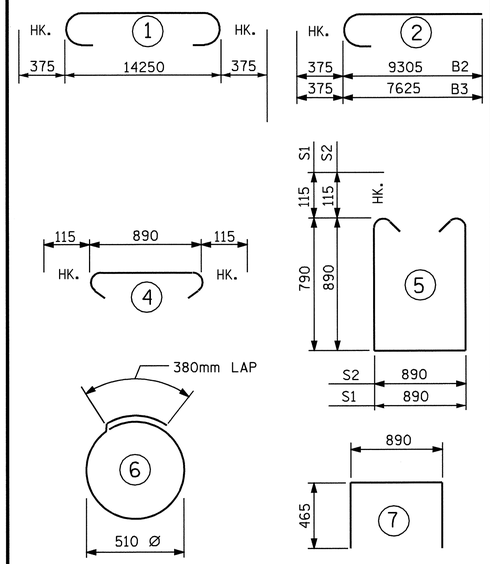

ALL BAR DIMENSIONS ARE OUT TO OUT.

BILL OF MATERIAL
END BENT #2

BAR	NO.	SIZE	TYPE	LENGTH	WEIGHT
B1	6	#29	1	15000	455
B2	6	#29	2	9680	294
B3	6	#29	2	8000	243
B4	4	#16	STR	14300	89
B5	8	#13	STR	7520	60
B6	6	#13	STR	2640	16
B7	14	#13	STR	880	12
H1	24	#22	STR	4680	342
H2	24	#22	STR	5080	371
S1	20	#13	5	2700	54
S2	22	#13	5	2900	63
S3	42	#13	4	1120	47
S4	44	#13	6	1980	87
U1	6	#13	7	1820	11
V1	26	#16	STR	3020	122
V2	28	#16	STR	3260	142
V3	84	#13	STR	1460	122

REINFORCING STEEL = 2530 KG

CLASS A CONCRETE BREAKDOWN
POUR #1: CAP & LOWER WINGS 16.7 m3

TOTAL CONCRETE 16.7 m3

HP 310 X 79 STEEL PILES
NO. 11 187.0 METERS

PILE REDRIVES EACH 4

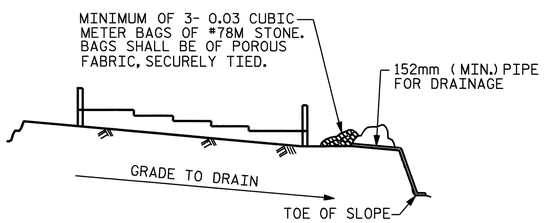

BAGGED STONE AND PIPE SHALL BE PLACED IMMEDIATELY AFTER COMPLETION OF END BENT EXCAVATION. PIPE MAY BE EITHER CONCRETE, CORRUGATED STEEL, CORRUGATED ALUMINUM ALLOY, OR CORRUGATED PLASTIC. PERFORATED PIPE WILL NOT BE ALLOWED.

BAGGED STONE SHALL REMAIN IN PLACE UNTIL THE ENGINEER DIRECTS THAT IT BE REMOVED. THE CONTRACTOR SHALL REMOVE AND DISPOSE OF SILT ACCUMULATIONS AT BAGGED STONE WHEN SO DIRECTED BY THE ENGINEER. BAGS SHALL BE REMOVED AND REPLACED WHENEVER THE ENGINEER DETERMINES THAT THEY HAVE DETERIORATED AND LOST THEIR EFFECTIVENESS.

NO SEPARATE PAYMENT WILL BE MADE FOR THIS WORK AND THE ENTIRE COST OF THIS WORK SHALL BE INCLUDED IN THE UNIT CONTRACT PRICE BID FOR THE SEVERAL PAY ITEMS.

TEMPORARY DRAINAGE AT END BENT

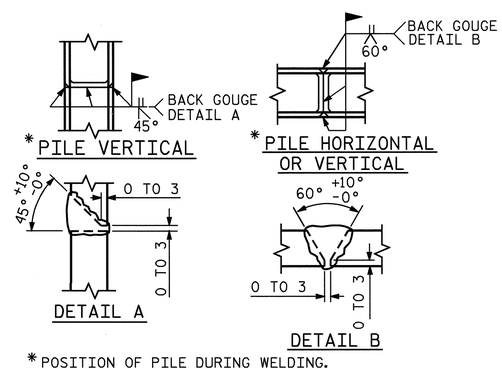

* POSITION OF PILE DURING WELDING.

PILE SPLICE DETAILS

PROJECT NO. R-2554BA
WAYNE COUNTY
STATION: 114+74.000 -L-

SHEET 3 OF 3

STATE OF NORTH CAROLINA
DEPARTMENT OF TRANSPORTATION
RALEIGH

SUBSTRUCTURE
INTEGRAL
END BENT #2
(RIGHT LANE)

NORTH CAROLINA PROFESSIONAL SEAL 14045 ENGINEER TIMOTHY L. COGGINS
Timothy L. Coggins 6/6/08

REVISIONS						SHEET NO.
NO.	BY:	DATE:	NO.	BY:	DATE:	S-320
1			3			TOTAL SHEETS
2			4			478

DRAWN BY : B.N.BARODAWALA DATE : 10-24-07
CHECKED BY : M.D.PISO DATE : 3-08

06-JUN-2008 09:40
r:\structures\azlz1\Str#11\FINAL PLANS\R2554BA_sd_E*_11.dgn
padkins

STR. #11

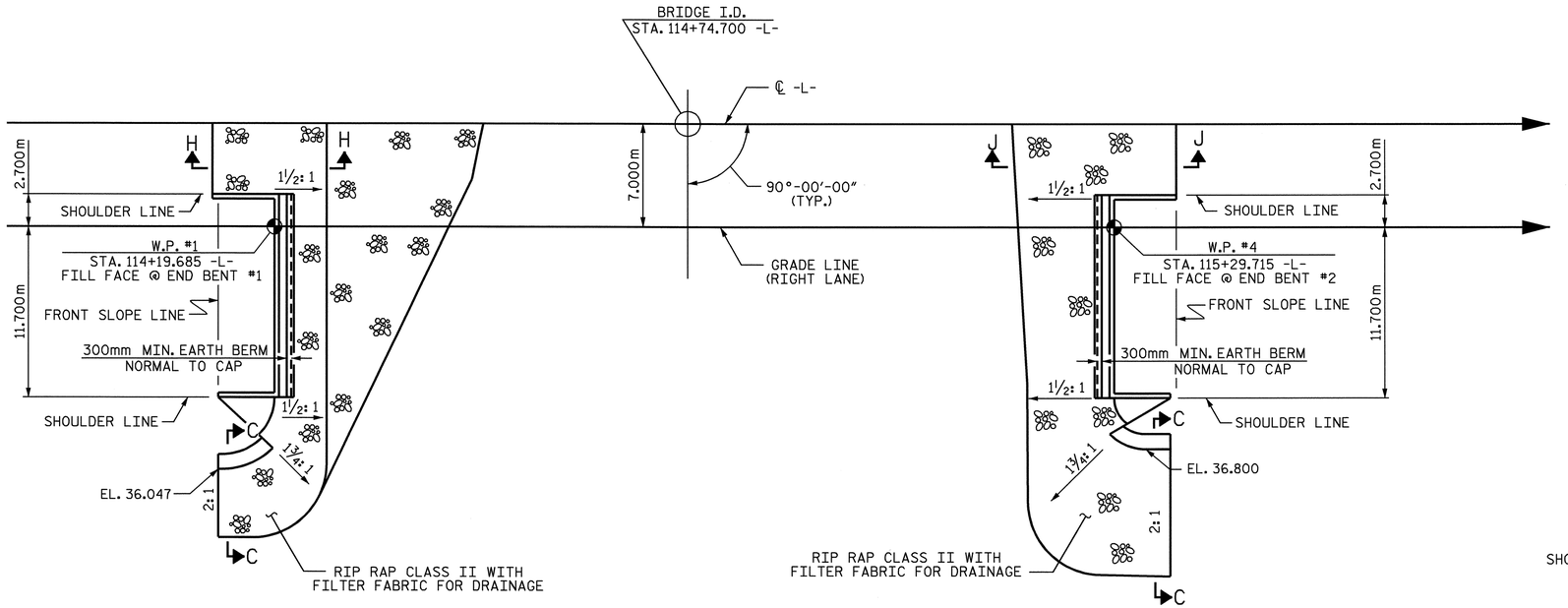

BERM RIP RAPPED

BERM RIP RAPPED

ESTIMATED QUANTITIES		
BRIDGE @ STA. 144+74.000 -L- (RIGHT LANE)	RIP RAP CLASS II (600mm THICK)	FILTER FABRIC FOR DRAINAGE
	METRIC TON	SQUARE METERS
END BENT #1	320	327
END BENT #2	130	133

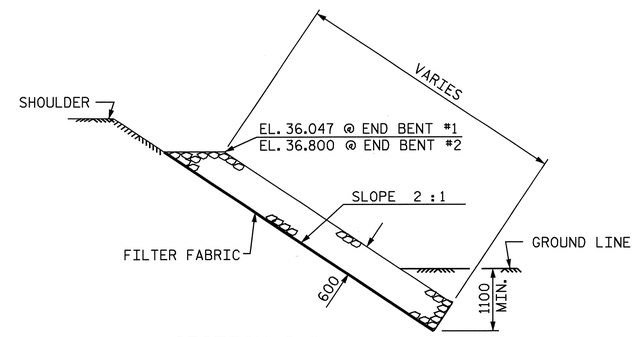

SECTION C-C

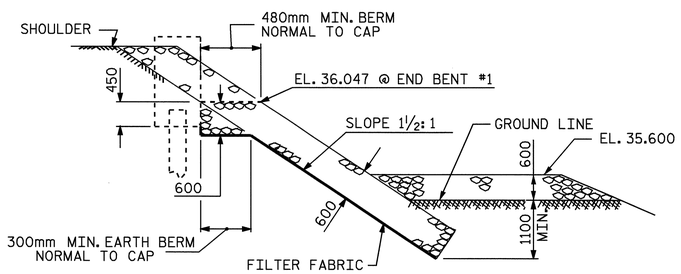

SECTION H-H

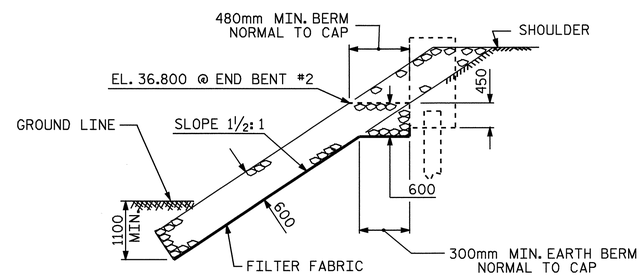

SECTION J-J

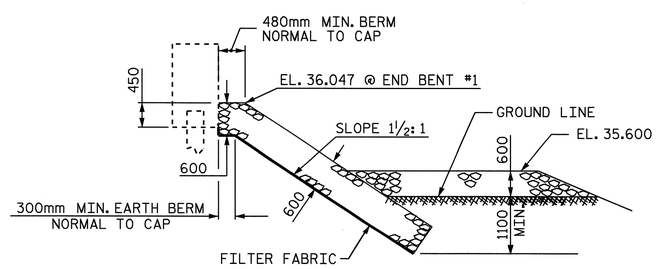

GRADE LINE SECTION

BERM RIP RAPPED

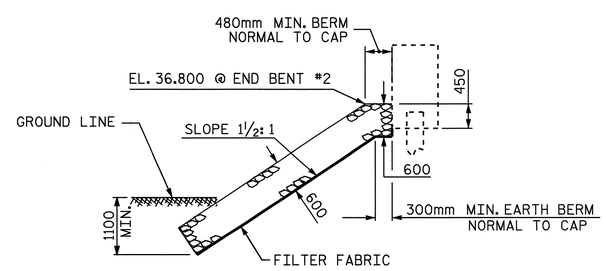

GRADE LINE SECTION

BERM RIP RAPPED

PROJECT NO. R-2554BA

WAYNE COUNTY

STATION: 114+74.700 -L-

STATE OF NORTH CAROLINA
DEPARTMENT OF TRANSPORTATION
RALEIGH

RIP RAP DETAILS

(RIGHT LANE)

NORTH CAROLINA PROFESSIONAL SEAL 14045 ENGINEER TIMOTHY W. COGGINS

6/6/08

REVISIONS						SHEET NO.
NO.	BY:	DATE:	NO.	BY:	DATE:	S-321
1			3			TOTAL SHEETS
2			4			478

DRAWN BY : B.N.BARODAWALA DATE : 2-8-07
CHECKED BY : CRAIG MILLER DATE : 2-07

06-JUN-2008 10:33
h:\structures\azlz1\Str#11\FINAL PLANS\r2554ba_sd_rr_11.dgn
bbarodawala

STR. #11 SKEW 90°

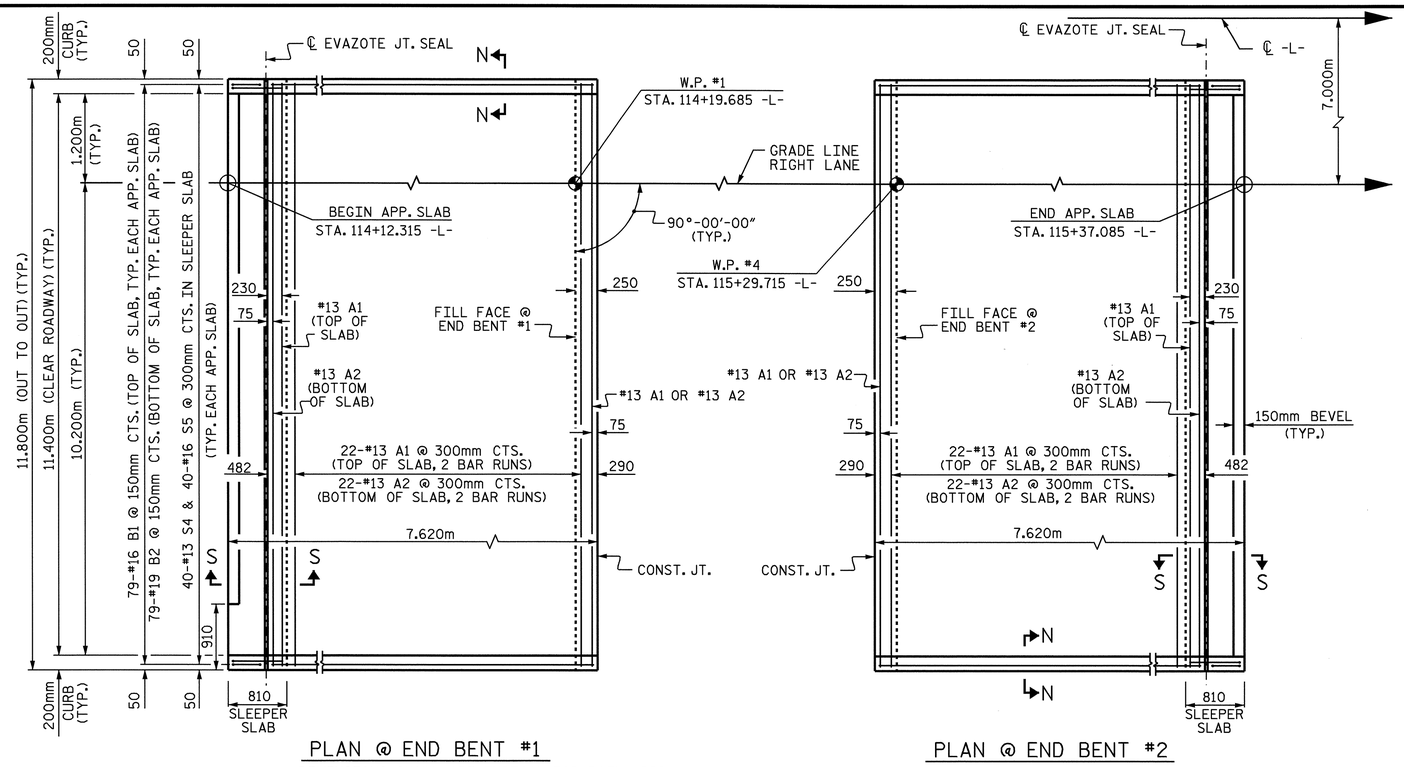

PLAN @ END BENT #1

PLAN @ END BENT #2

DIMENSIONS SHOWN ARE TYPICAL FOR BOTH APPROACH SLABS. #13 A1 BARS IN SLEEPER SLAB NOT SHOWN FOR CLARITY.

NOTES

APPROACH SLAB SHALL NOT BE CONSTRUCTED PRIOR TO COMPLETION OF THE BRIDGE DECK.

FOR REINFORCED BRIDGE APPROACH FILL INCLUDING FABRIC, IMPERMEABLE GEOMEMBRANE, 102mm Ø DRAINAGE PIPE, #78M STONE, AND SELECT MATERIAL, SEE ROADWAY PLANS.

AREA BETWEEN THE WINGWALL AND APPROACH SLAB SHALL BE GRADED TO DRAIN THE WATER AWAY FROM THE FILL FACE OF THE BRIDGE AND SHALL BE PAVED. SEE ROADWAY PLANS.

THE 150mm COMP. A.B.C. SHALL BE FLUSH WITH THE SLEEPER SLAB AND SHALL EXTEND 300mm OUTSIDE OF EACH EDGE OF THE APPROACH SLAB.

THE CONTRACTOR MAY USE 100mm TYPE B-25.0B ASPHALT CONCRETE BASE COURSE IN LIEU OF 150mm COMP. A.B.C. IF THIS OPTION IS USED, THE BASE COURSE SHALL BE FLUSH WITH THE SLEEPER SLAB AND THE WIDTH SHALL BE THE SAME AS THAT OF THE APPROACH SLAB.

THE CONTRACTOR MAY USE 125mm CLASS "A" CONCRETE BASE IN LIEU OF 150mm COMP. A.B.C. IF THIS OPTION IS USED, THE CONCRETE BASE SHALL BE FLUSH WITH THE SLEEPER SLAB AND THE WIDTH SHALL BE THE SAME AS THAT OF THE APPROACH SLAB. THE CONCRETE SHALL BE FINISHED TO A SMOOTH SURFACE AND A LAYER OF 13.6 kg ROOFING FELT SHALL BE PLACED BETWEEN THE CONCRETE BASE AND THE APPROACH SLAB TO PREVENT BOND. THE APPROACH SLAB SHALL NOT BE CAST UNTIL THE CONCRETE BASE HAS REACHED AN AGE OF THREE CURING DAYS.

THE VERTICAL JOINT ON THE RIGHT AND LEFT SIDE OF THE APPROACH SLAB AT THE ENDS OF THE EVAZOTE JOINT SHALL BE FILLED WITH SILICONE OR OTHER APPROVED MATERIAL IN ORDER TO PREVENT BACKFILL FROM ENTERING THE JOINT OPENING.

THE JOINT OPENING AT THE APPROACH SLAB/DECK INTERFACE SHALL BE SAWED NO MORE THAN 12 HOURS AFTER THE APPROACH SLAB IS CAST. THE JOINT SHALL BE CLEANED OF ALL DEBRIS BEFORE THE SEALANT IS APPLIED. THE JOINT SEALER MATERIAL SHALL CONFORM TO THE REQUIREMENTS OF TYPE SL LOW MODULUS SILICONE SEALANT.

WITH EVAZOTE JOINT SEAL

FOR EVAZOTE JOINT SEALS, SEE SPECIAL PROVISIONS.

THE NOMINAL UNCOMPRESSED SEAL WIDTH OF THE EVAZOTE JOINT SEAL SHALL BE 87mm.

FOR ELASTOMERIC CONCRETE, SEE SPECIAL PROVISIONS.

BILL OF MATERIAL

FOR ONE APPROACH SLAB (2 REQ'D)

BAR	NO.	SIZE	TYPE	LENGTH	WEIGHT
* A1	62	#13	STR	6160	380
A2	48	#13	STR	6120	292
* B1	79	#16	STR	6820	836
B2	79	#19	STR	6960	1229
* S4	40	#13	1	1200	48
S5	40	#16	2	880	55

REINFORCING STEEL	kg.	1576
* EPOXY COATED REINFORCING STEEL	kg.	1264
CLASS AA CONCRETE		
POUR #1 - SLEEPER SLAB	C.M.	3.0
POUR #2 - SLAB AND CURB	C.M.	25.6
TOTAL	C.M.	28.6

BAR TYPES

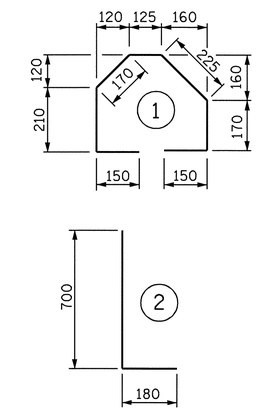

ALL BAR DIMENSIONS ARE OUT TO OUT

SPLICE CHART

BAR	SPLICE
* #13 A1	610
#13 A2	540

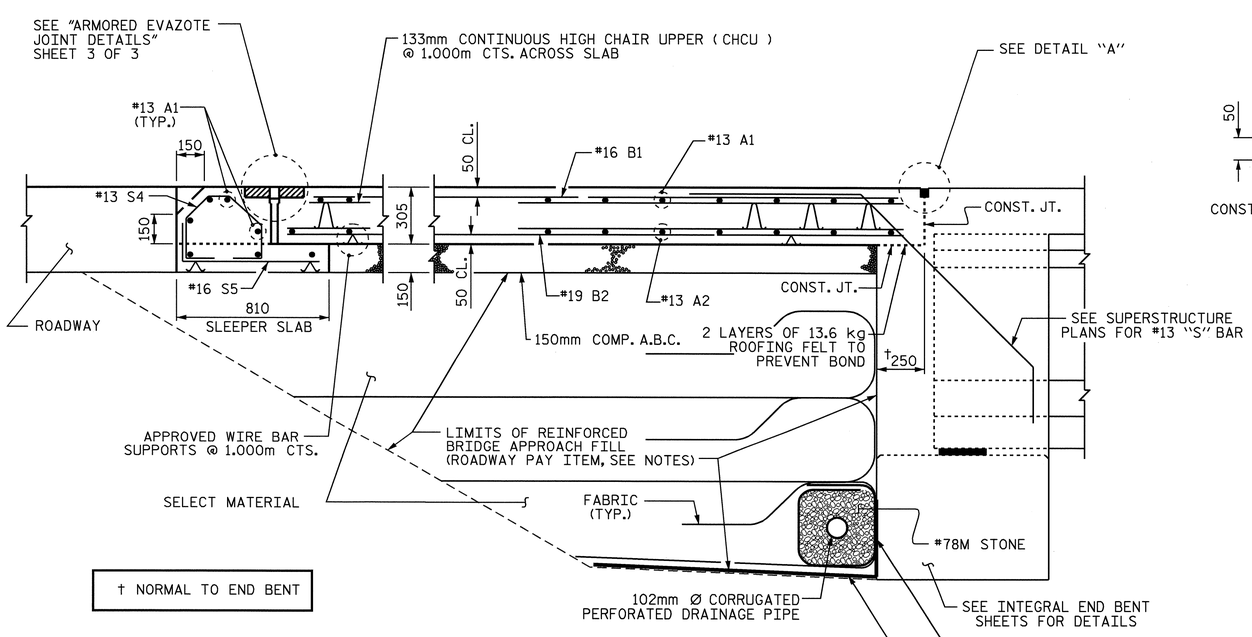

† NORMAL TO END BENT

SECTION THRU SLAB

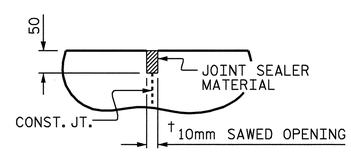

DETAIL "A"

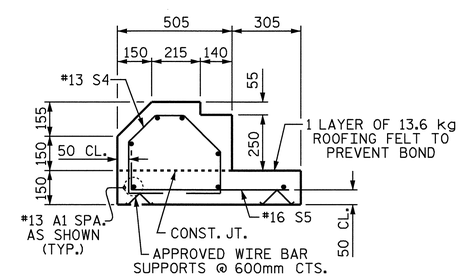

SECTION S-S

SHOWING SLEEPER SLAB

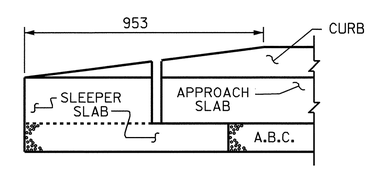

END OF CURB WITHOUT SHOULDER BERM GUTTER

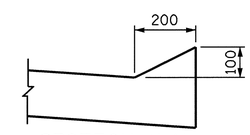

SECTION N-N

PROJECT NO. R-2554BA

WAYNE COUNTY

STATION: 114+74.700 -L-

SHEET 1 OF 3

STATE OF NORTH CAROLINA
DEPARTMENT OF TRANSPORTATION
RALEIGH

STANDARD

BRIDGE APPROACH SLAB FOR INTEGRAL ABUTMENT

(RIGHT LANE)

NORTH CAROLINA PROFESSIONAL SEAL 14045 ENGINEER TIMOTHY L. COGGINS
6/6/08

REVISIONS						SHEET NO.
NO.	BY:	DATE:	NO.	BY:	DATE:	S-322
1			3			TOTAL SHEETS
2			4			478

ASSEMBLED BY : PEGGY ADKINS DATE : 2-07
CHECKED BY : B.N. BARODAWALA DATE : 2-07
DRAWN BY : TLA 6/06
CHECKED BY : GM 6/06
ADDED 5/1/06R KMM/GM

06-JUN-2008 09:34
r:\structures\azlz1\Str*11\FINAL PLANS\R2554B_sd_ap_11.dgn
padkins

STR. # 11 STD. NO. BAS11SM

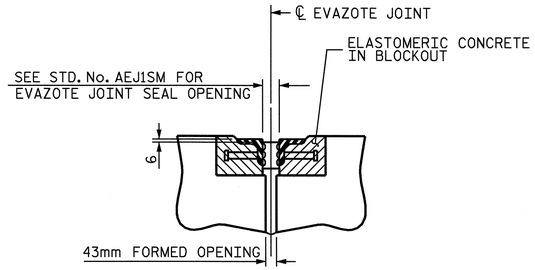

SECTION C-C
ARMORED EVAZOTE JOINT SEAL

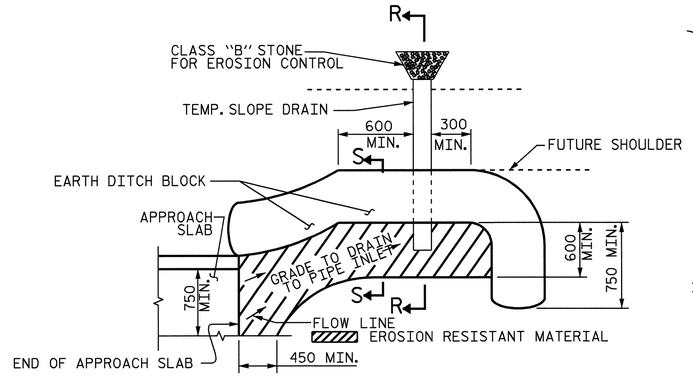

NOTE: IMMEDIATELY AFTER THE CONSTRUCTION OF THE APPROACH SLAB, THE CONTRACTOR SHALL PROVIDE TEMPORARY BERM AND SLOPE DRAIN. CONTRACTOR SHALL GRADE TO PIPE INLET AND PROVIDE EROSION RESISTANT MATERIAL AS SHOWN. THE EROSION RESISTANT MATERIAL SHALL BE EITHER 1) ASPHALT PLANT MIX, TYPE 1 OR TYPE 2, MIN. 50mm DEPTH, 2) EROSION CONTROL MAT, OR 3) CONCRETE, AS DIRECTED BY THE ENGINEER. THE SLOPE DRAIN SHALL CONSIST OF A NON-PERFORATED TEMPORARY DRAINAGE PIPE, 305mm IN DIAMETER.

PLAN VIEW

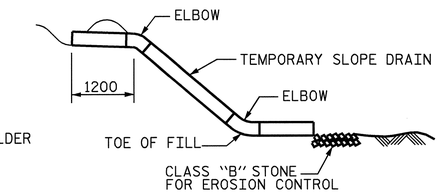

SECTION R-R

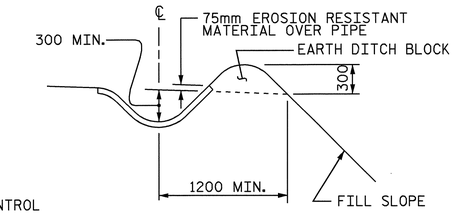

SECTION S-S

TEMPORARY BERM AND SLOPE DRAIN DETAILS

(TO BE USED WHEN SHOULDER BERM GUTTER IS REQUIRED)

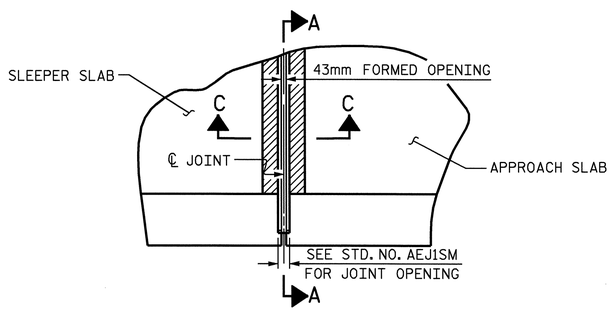

PLAN

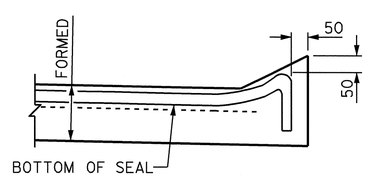

SECTION A-A

JOINT SEAL DETAILS @ SLEEPER SLAB

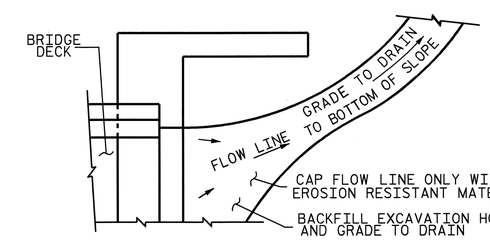

NOTE: IF THE APPROACH SLAB IS NOT CONSTRUCTED IMMEDIATELY AFTER THE BACKFILLING OF THE END BENT EXCAVATION, GRADE TO DRAIN TO THE BOTTOM OF THE SLOPE AND PROVIDE EROSION RESISTANT MATERIAL, SUCH AS FIBERGLASS ROVING OR AS DIRECTED BY THE ENGINEER TO PREVENT SOIL EROSION AND TO PROTECT THE AREA ADJACENT TO THE STRUCTURE. THE CONTRACTOR WILL BE REQUIRED TO REMOVE THESE MATERIALS PRIOR TO CONSTRUCTION OF THE APPROACH SLAB.

TEMPORARY DRAINAGE DETAIL

PROJECT NO. R-2554BA
WAYNE COUNTY
STATION: 114+74.700 -L-

SHEET 2 OF 3

STATE OF NORTH CAROLINA
DEPARTMENT OF TRANSPORTATION
RALEIGH

STANDARD
BRIDGE APPROACH
SLAB DETAILS

(RIGHT LANE)

NORTH CAROLINA PROFESSIONAL SEAL 14045 ENGINEER TIMOTHY A. COGGINS
6/15/08

REVISIONS						SHEET NO.
NO.	BY:	DATE:	NO.	BY:	DATE:	S-323
1			3			TOTAL SHEETS
2			4			478

ASSEMBLED BY : PEGGY ADKINS	DATE : 2-07		
CHECKED BY : B.N.BARODAWALA	DATE : 2-07		
DRAWN BY : FCJ 11/88	REV. 10/17/00	RWW/LES	
CHECKED BY : ARB 11/88	REV. 5/7/03	RWW/JTE	
	REV. 5/1/06R	TLA/GM	

25-APR-2008 10:19
r:\structures\azlzl\str*ll\padkins\microstation\r2554b_sd_ap_ll.dgn
lbwilson

STR. # 11

STD. NO. BAS10SM

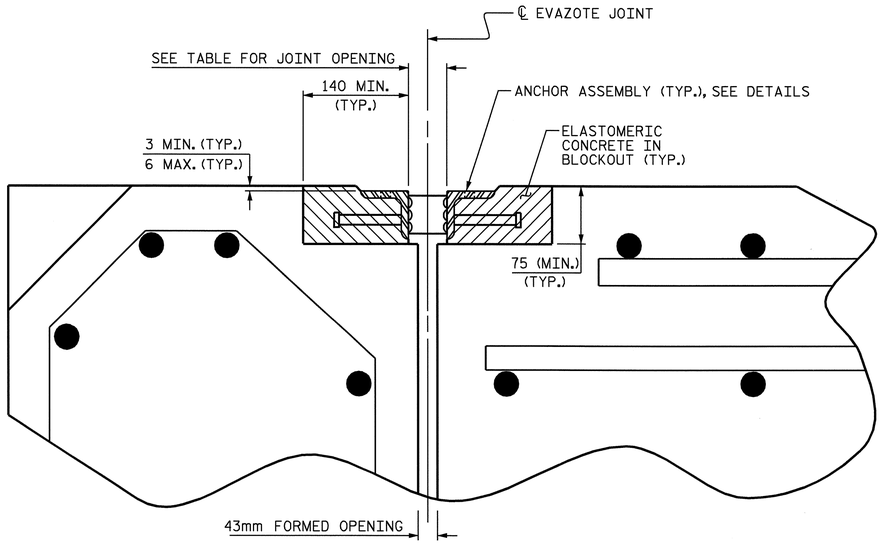

ARMORED JOINT DETAILS

SECTION NORMAL TO JOINT AT APPROACH SLAB SLEEPER SLAB

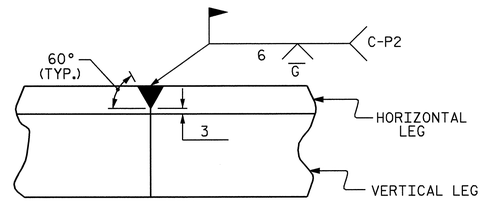

DETAIL- FIELD WELD SPLICE OF ANGLE

NOTES

ANGLES SHALL CONFORM TO AASHTO M270 GRADE 250 STEEL OR APPROVED EQUAL. ALL STUD ANCHORS SHALL CONFORM TO AASHTO M169 GRADES 1010 THRU 1020 OR APPROVED EQUAL.

STUD ANCHORS SHALL BE SHOP WELDED AND ALL HOLES SHALL BE SHOP DRILLED AS SHOWN ON THE PLANS. STUD ANCHORS SHALL BE ELECTRIC ARC END WELDED WITH COMPLETE FUSION.

UPON COMPLETION OF SHOP FABRICATION, THE ENTIRE ANCHOR ASSEMBLY SHALL BE METALLIZED. THE 12.70mm Ø STUD ANCHORS AND ANCHOR TABS NEED NOT BE METALLIZED. SEE SPECIAL PROVISION FOR THERMAL SPRAYED COATINGS (METALLIZATION).

ANCHOR ASSEMBLY SHALL BE MADE CONTINUOUS THE LENGTH OF THE JOINT FROM GUTTER TO GUTTER. FOR FIELD SPLICES AT ALL CROWN BREAK POINTS, THE ENDS OF THE STEEL ANGLES SHALL BE CUT PARALLEL TO THE BRIDGE CENTERLINE. FINISHED FIELD WELDS SHALL BE GROUND SMOOTH AND COATED WITH A MINIMUM THICKNESS OF 0.100mm OF ZINC-RICH PAINT IN ACCORDANCE WITH THE STANDARD SPECIFICATIONS.

ANCHOR ASSEMBLY SEGMENTS SHALL NOT BE LESS 3.6m NOR MORE THAN 6.1m IN LENGTH. SHORTER SEGMENTS MAY BE USED AT THE EDGE OF ROADWAY OR AT POINTS OF STAGED CONSTRUCTION.

THE ANCHOR ASSEMBLY SHALL BE SECURED AND LEVELED AS SHOWN IN THE "ARMORED JOINT ANCHOR ASSEMBLY DETAILS". NO SUBMITTALS ARE REQUIRED FOR 9.53mm Ø EXPANSION ANCHORS, NUTS OR WASHERS. THE CONTRACTOR MAY SUBMIT FOR APPROVAL AN ALTERNATE METHOD OF ALIGNING AND LEVELING THE ANGLES. THE ALTERNATE METHOD SHALL NOT INCLUDE ANY WELDING TO THE OUTSIDE FACE OF THE ANGLES.

AFTER THE ELASTOMERIC CONCRETE HAS BEEN CAST ON BOTH SIDES OF THE JOINT, REMOVE ANY EXCESS CONCRETE THAT COMES THROUGH THE WEEP HOLES AND THOROUGHLY CLEAN THE ANGLES. ANY DAMAGED STEEL SHALL BE COATED WITH A MINIMUM OF 0.100mm OF ZINC-RICH PAINT IN ACCORDANCE WITH THE STANDARD SPECIFICATIONS.

SEE SPECIAL PROVISIONS FOR EVAZOTE JOINT SEALS.

SEE SPECIAL PROVISIONS FOR ELASTOMERIC CONCRETE.

MOVEMENT AND SETTING AT EVAZOTE JOINT

APPROACH SLAB NO.	SKEW ANGLE	NOMINAL UNCOMPRESSED SEAL WIDTH	TOTAL MOVEMENT (ALONG ℄ RDWY)	PERPENDICULAR JOINT OPENING AT 7° C	PERPENDICULAR JOINT OPENING AT 16° C	PERPENDICULAR JOINT OPENING AT 32° C
1	90	87	44	75	67	52
2	90	87	44	75	67	52

TOTAL MOVEMENT IS CALCULATED ALONG THE CENTERLINE OF ROADWAY.
JOINT OPENINGS ARE MEASURED PERPENDICULAR TO THE JOINT.

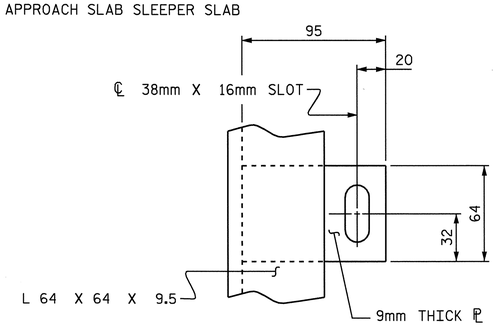

PLAN VIEW OF TAB

BILL OF MATERIAL

APPROACH SLAB NO.	ELASTOMERIC CONCRETE ✳ (CU. m)	TOTAL LENGTH OF ANGLE (m)
1	0.2	11.4
2	0.2	11.4
TOTAL	0.4	22.8

✳ BASED ON THE MINIMUM BLOCKOUT SHOWN.

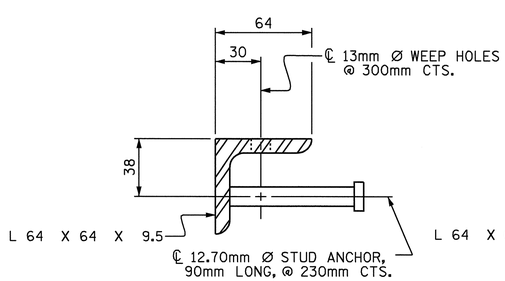

SECTION VIEW OF STUD

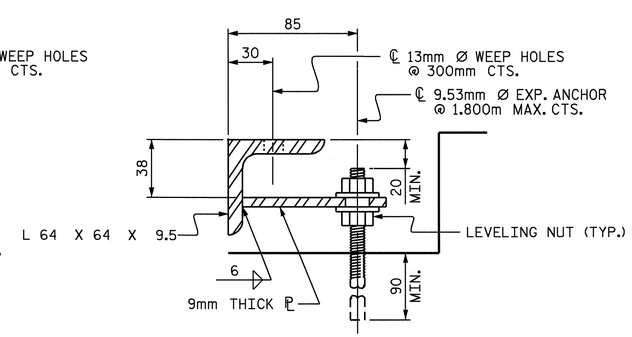

SECTION VIEW OF TAB

ARMORED JOINT ANCHOR ASSEMBLY DETAILS

PROJECT NO. R-2554BA
WAYNE COUNTY
STATION: 114+74.700 -L-

SHEET 3 OF 3

STATE OF NORTH CAROLINA
DEPARTMENT OF TRANSPORTATION
RALEIGH

STANDARD ARMORED EVAZOTE JOINT DETAILS

(RIGHT LANE)

NORTH CAROLINA PROFESSIONAL SEAL 14045 ENGINEER TIMOTHY A. COGGINS
6/5/08

REVISIONS								SHEET NO.
NO.	BY:	DATE:	NO.	BY:	DATE:			S-324
1			3					TOTAL SHEETS
2			4					478

ASSEMBLED BY : PEGGY ADKINS	DATE : 12-07		
CHECKED BY : B.N.BARODAWALA	DATE : 12-07		
DRAWN BY : EEM 1/96	REV. 7/10/01	LES/RDR	
CHECKED BY : RGW 1/96	REV. 5/7/03	RR RWW/JTE	
	REV. 5/1/06	TLA/GM	

25-APR-2008 10:19
r:\structures\azlzl\str#11\padkins\microstation\r2554b_sd_ap_11.dgn

STR. # 11

STD. NO. AEJ1SM

F. A. PROJECT NO. NHS-70(106)

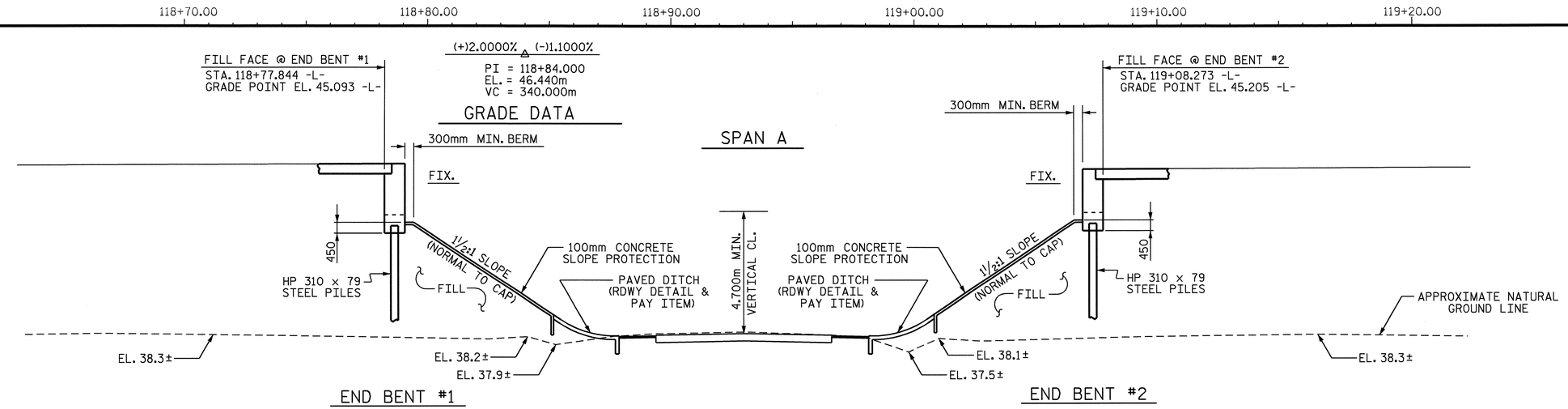

SECTION ALONG CONTROL LINE (LEFT LANE)

(END BENTS ON SECTION ARE AT RIGHT ANGLES TO END BENTS.)

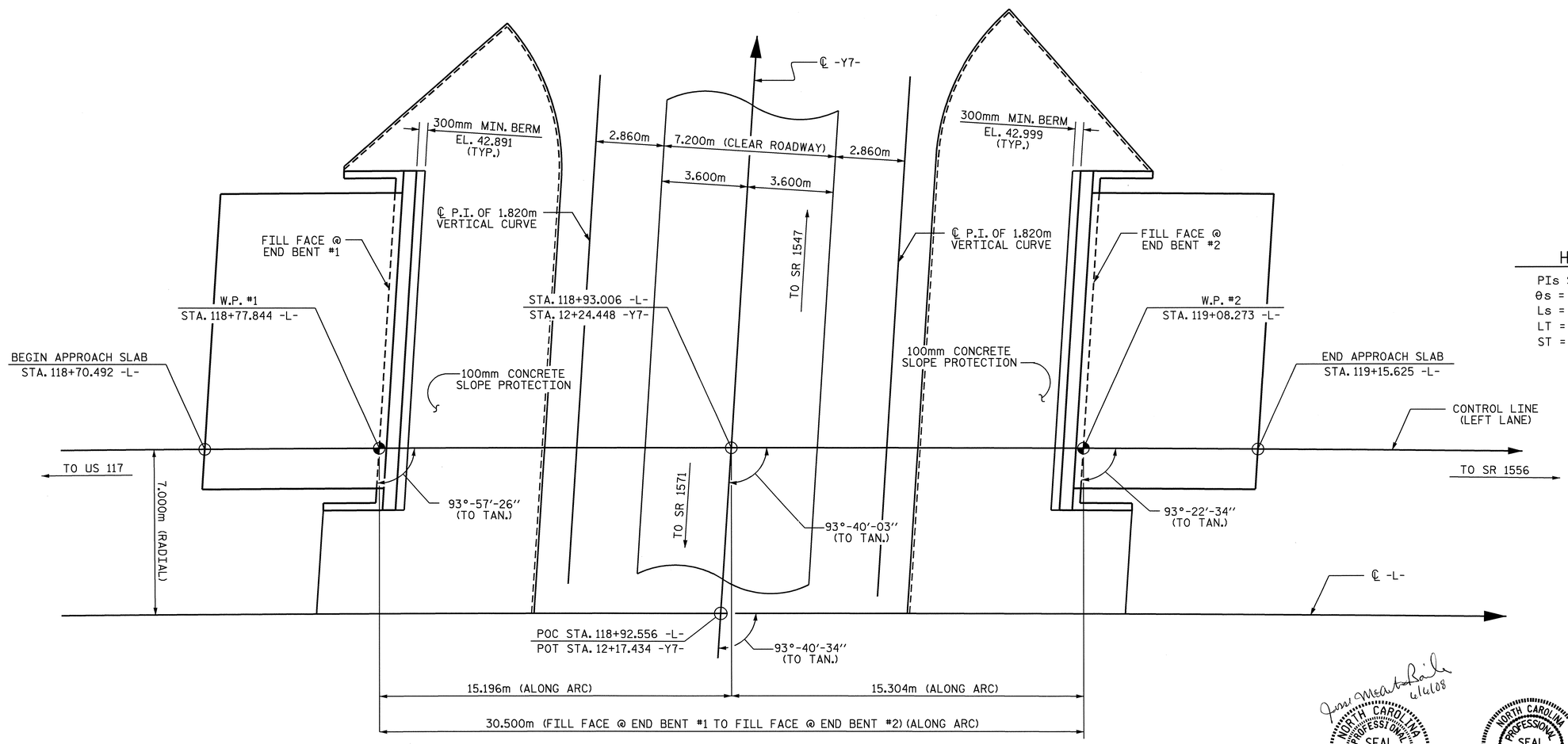

PLAN

PILES ARE NOT SHOWN FOR CLARITY

HORIZONTAL CURVE DATA

PIs Sta 116+87.637	PI Sta 123+83.422
θs = 0° 45′ 50.2″	Δ = 25° 08′ 48.6″ (RT)
Ls = 80.000	L = 1,316.685
LT = 53.334	T = 669.118
ST = 26.667	R = 3,000.000

PROJECT NO. R-2554BA

WAYNE COUNTY

STATION: 118+92.556 -L-
12+17.434 -Y7-

SHEET 1 OF 4 BRIDGE #364

STATE OF NORTH CAROLINA
DEPARTMENT OF TRANSPORTATION
RALEIGH

GENERAL DRAWING
FOR BRIDGE ON US 70
(GOLDSBORO BYPASS) OVER
NC 111 (PATETOWN RD.) BETWEEN
US 117 AND SR 1556
(LEFT LANE)

NORTH CAROLINA PROFESSIONAL SEAL 022506 ENGINEER JESSE McARTHUR BAILEY
6/4/08

NORTH CAROLINA PROFESSIONAL SEAL 15625 ENGINEER BRUCE D. KLAPPENBACH
6-6-08

REVISIONS								SHEET NO.
NO.	BY:	DATE:	NO.	BY:	DATE:			S-325
1			3					TOTAL SHEETS
2			4					478

DRAWN BY : M. G. SHAIKH DATE : 5-3-06
CHECKED BY : A. SORSENGINH DATE : 2-05-08

06-JUN-2008 14:49
r:\structures\bailey\Str#12\mshaikh\Microstation\R-2554BA_sd_GD.dgn
tbarbour

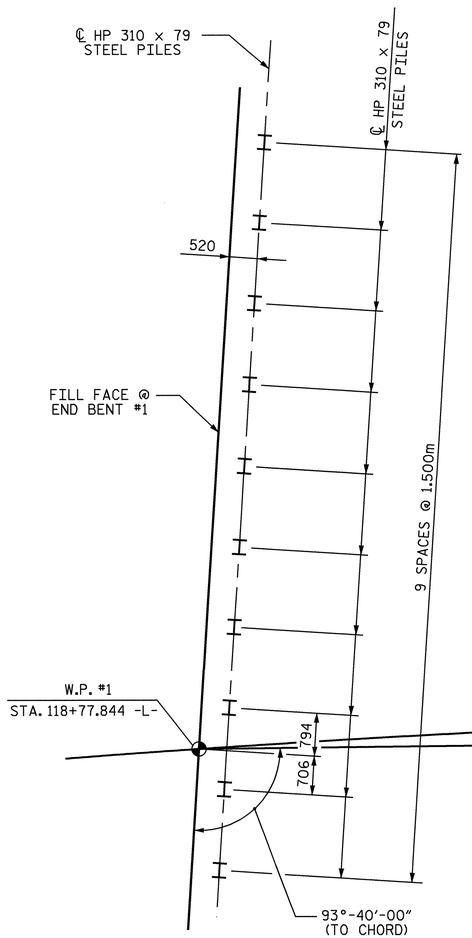

END BENT #1

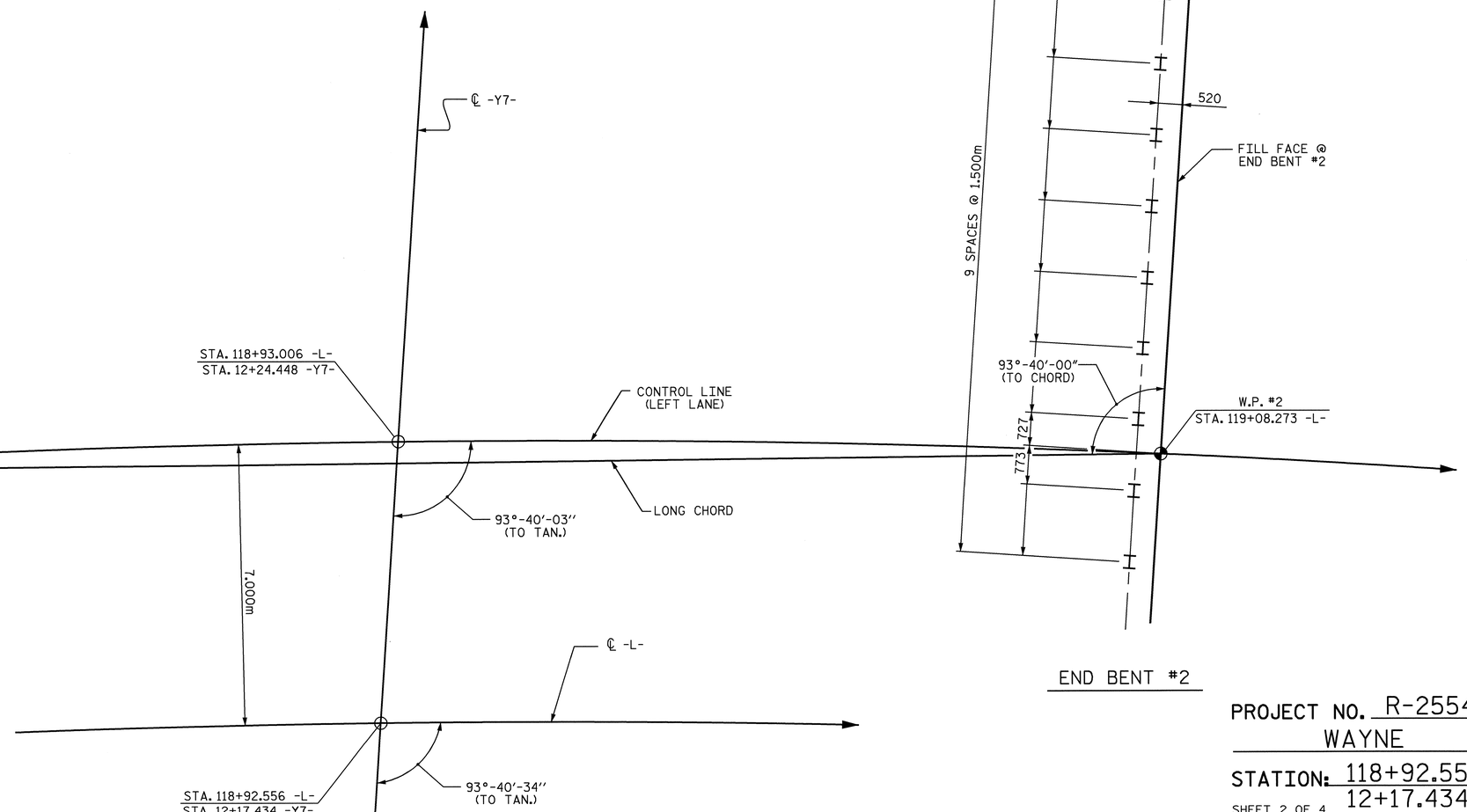

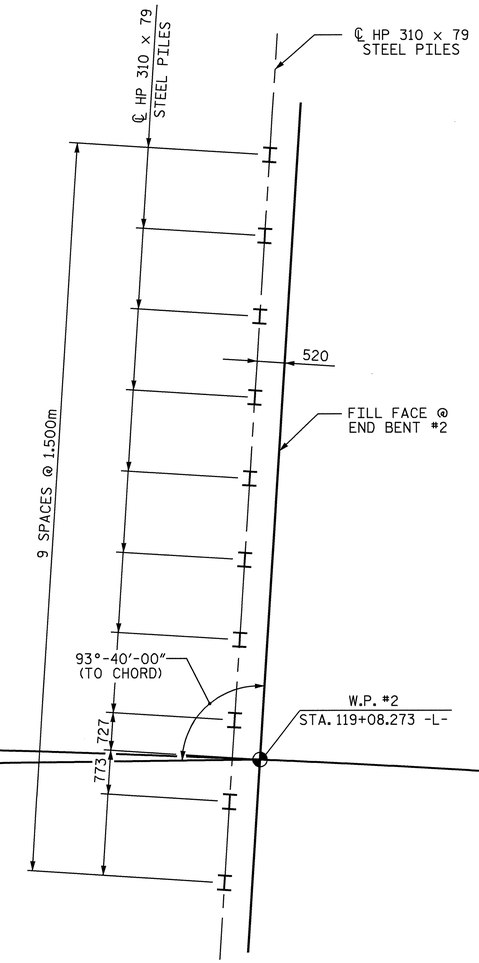

END BENT #2

FOUNDATION LAYOUT

DIMENSIONS LOCATING PILES ARE TO PILE CENTERLINE

PROJECT NO. R-2554BA

WAYNE COUNTY

STATION: 118+92.556 -L-
12+17.434 -Y7-

SHEET 2 OF 4

STATE OF NORTH CAROLINA
DEPARTMENT OF TRANSPORTATION
RALEIGH

GENERAL DRAWING
FOR BRIDGE ON US 70
(GOLDSBORO BYPASS) OVER
NC 111 (PATETOWN RD.) BETWEEN
US 117 AND SR 1556
(LEFT LANE)

NORTH CAROLINA PROFESSIONAL SEAL 15825 ENGINEER BRYCE D. KLAPPENBACH
6-6-08

REVISIONS						SHEET NO. S-326
NO.	BY:	DATE:	NO.	BY:	DATE:	TOTAL SHEETS 478
1			3			
2			4			

DRAWN BY : M. G. SHAIKH DATE : 12-10-07
CHECKED BY : A. SORSENGINH DATE : 2-05-08

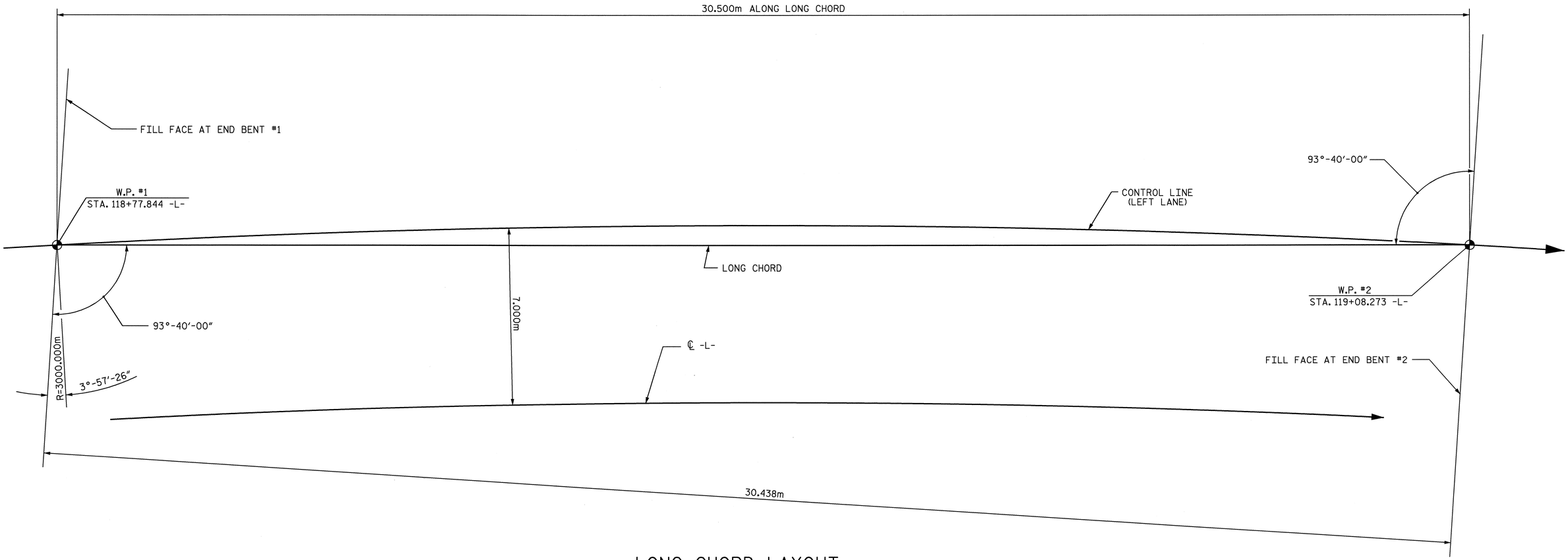

LONG CHORD LAYOUT

(END BENTS ARE PARALLEL)

HORIZONTAL CURVE DATA

PIs Sta 116+87.637	PI Sta 123+83.422
θs = 0° 45' 50.2"	Δ = 25° 08' 48.6" (RT)
Ls = 80.000	L = 1,316.685
LT = 53.334	T = 669.118
ST = 26.667	R = 3,000.000

PROJECT NO. R-2554BA

WAYNE COUNTY

STATION: 118+92.556 -L-
12+17.434 -Y7-

SHEET 3 OF 4

STATE OF NORTH CAROLINA
DEPARTMENT OF TRANSPORTATION
RALEIGH

GENERAL DRAWING

LONG CHORD LAYOUT
(LEFT LANE)

NORTH CAROLINA PROFESSIONAL SEAL 15825 ENGINEER BRUCE D. KLAPPENBACH

6-6-08

REVISIONS						SHEET NO.
NO.	BY:	DATE:	NO.	BY:	DATE:	S-327
1			3			TOTAL SHEETS
2			4			478

DRAWN BY : M. G. SHAIKH DATE : 11-13-07
CHECKED BY : A. SORSENGTNH DATE : 2-05-08

B.M. #6 RAILROAD SPIKE IN BASE OF 660mm TWIN OAK 176.263m LT. OF STA. 35+55.047 -BL- EL. 38.557m

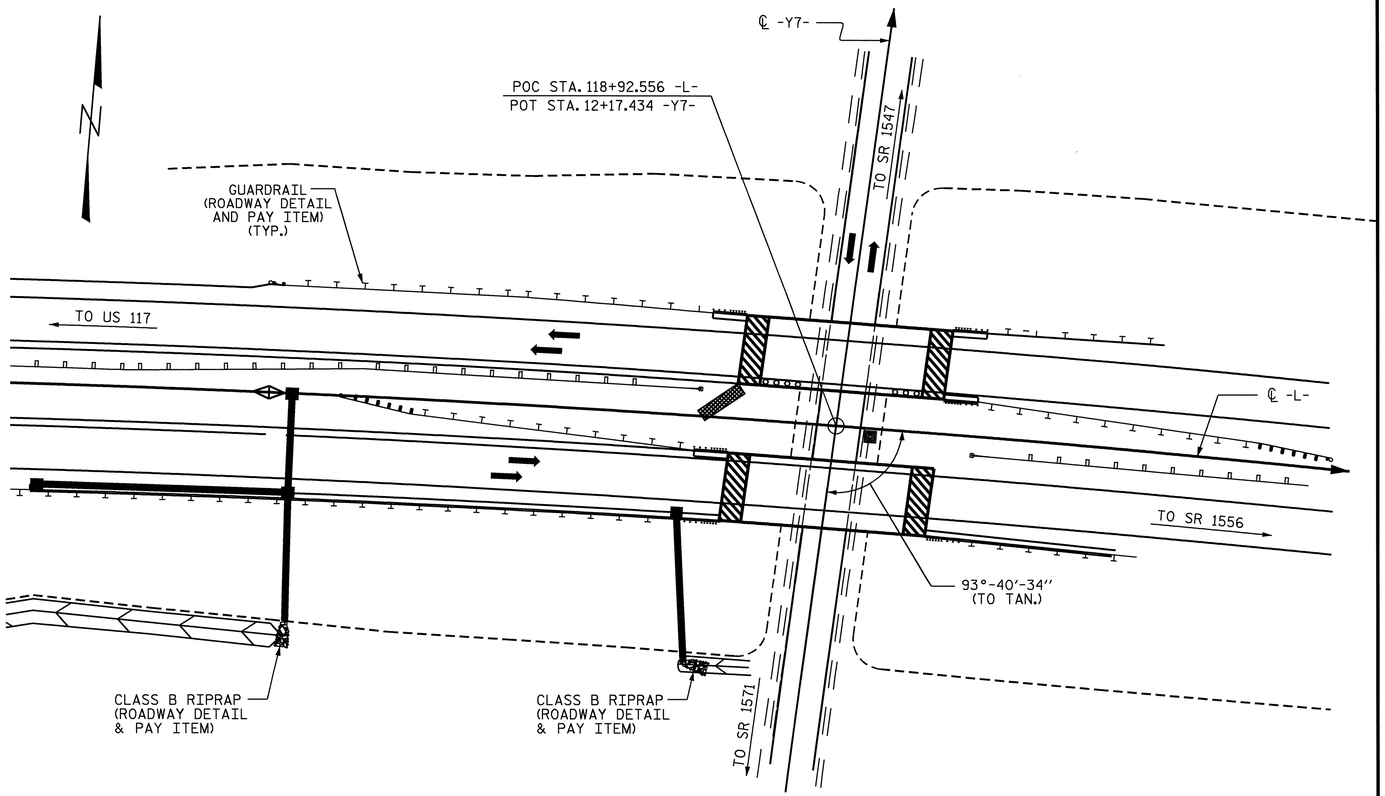

FOR UTILITY INFORMATION, SEE UTILITY PLANS AND SPECIAL PROVISIONS.

LOCATION SKETCH

NOTES

ALL DIMENSIONS ARE IN MILLIMETERS UNLESS OTHERWISE NOTED.

ALL ELEVATIONS ARE IN METERS.

ASSUMED LIVE LOAD = MS18 OR ALTERNATE LOADING. EXCEPT THE GIRDERS HAVE BEEN DESIGNED FOR MS22.5

FOR OTHER DESIGN DATA AND GENERAL NOTES, SEE SHEET SNSM.

THIS BRIDGE HAS BEEN DESIGNED BY THE STRENGTH DESIGN METHOD AS SPECIFIED IN AASHTO STANDARD SPECIFICATIONS.

PRESTRESSED CONCRETE DECK PANELS MAY BE USED IN LIEU OF METAL STAY-IN-PLACE FORMS IN ACCORDANCE WITH ARTICLE 420-3 OF THE STANDARD SPECIFICATIONS.

REMOVABLE FORMS MAY BE USED IN LIEU OF METAL STAY-IN-PLACE FORMS IN ACCORDANCE WITH ARTICLE 420-3 OF THE STANDARD SPECIFICATIONS.

FOR MAINTENANCE AND PROTECTION OF TRAFFIC BENEATH PROPOSED STRUCTURE, SEE SPECIAL PROVISIONS.

THIS BRIDGE HAS BEEN DESIGNED IN ACCORDANCE WITH THE REQUIREMENTS OF THE AASHTO STANDARD SPECIFICATIONS FOR SEISMIC DESIGN OF HIGHWAY BRIDGES FOR SEISMIC PERFORMANCE CATEGORY A.

FOR PRESTRESSED CONCRETE MEMBERS, SEE SPECIAL PROVISIONS.

DRIVE PILES AT END BENT NO. 1 AND END BENT NO. 2 TO A REQUIRED BEARING CAPACITY OF 1260 kN PER PILE. THE REQUIRED BEARING CAPACITY IS EQUAL TO THE ALLOWABLE BEARING CAPACITY WITH A MINIMUM FACTOR OF SAFETY OF TWO.

THE ALLOWABLE BEARING CAPACITY FOR PILES AT END BENT NO. 1 AND END BENT NO. 2 IS 630 kN PER PILE.

THE CONTRACTOR MAY CHOOSE TO UTILIZE THE STANDARD OVERHANGE FALSEWORK BRACING SYSTEM. SEE "STANDARD OVERHANGE FALSEWORK" SHEET.

FOR EROSION CONTROL MEASURES SEE EROSION CONTROL PLANS.

THE CONTRACTOR SHALL PROVIDE INDEPENDENT ASSURANCE SAMPLES OF REINFORCING STEEL AS FOLLOWS: FOR PROJECTS REQUIRING UP TO 360,000 kg OF REINFORCING STEEL, ONE 760mm SAMPLE OF EACH SIZE BAR USED, AND FOR PROJECTS REQUIRING OVER 360,000 kg OF REINFORCING STEEL, TWO 760mm SAMPLES OF EACH SIZE BAR USED. THE BARS FROM WHICH THE SAMPLES ARE TAKEN MUST THEN BE SPLICED WITH REPLACEMENT BARS OF THE SIZE AND LENGTH OF THE SAMPLE, PLUS A MINIMUM LAP SPLICE OF THIRTY BAR DIAMETERS.

FOR FALSEWORK AND FORMWORK, SEE SPECIAL PROVISIONS.

NEEDLE BEAMS WILL NOT BE ALLOWED UNLESS OTHERWISE CALLED FOR ON THE PLANS OR APPROVED BY THE ENGINEER.

FOR SUBMITTAL OF WORKING DRAWINGS, SEE SPECIAL PROVISIONS.

FOR CRANE SAFETY, SEE SPECIAL PROVISIONS.

FOR METRIC STRUCTURAL STEEL, SEE SPECIAL PROVISIONS.

FOR GROUT FOR STRUCTURES, SEE SPECIAL PROVISIONS.

TOTAL BILL OF MATERIAL

	REINFORCED CONCRETE DECK SLAB	GROOVING BRIDGE FLOORS	CLASS A CONCRETE	BRIDGE APPROACH SLABS	REINFORCING STEEL	1372 mm PRESTRESSED CONCRETE GIRDER		HP 310 X 79 STEEL PILES		PILE REDRIVES	CONCRETE BARRIER RAIL	100mm SLOPE PROTECTION	ELASTOMERIC BEARINGS	EVAZOTE JOINT SEALS
	SQ. METERS	SQ. METERS	CU. METERS	LUMP SUM	kg	NO.	METERS	NO.	METERS	EACH	METERS	SQ. METERS	LUMP SUM	LUMP SUM
SUPERSTRUCTURE	378	453.6				5	149.5				59.996		LUMP SUM	
END BENT 1			16.8		1809			10	310	5		283		
END BENT 2			16.8		1809			10	240	5		280		
TOTAL	378	453.6	33.6	LUMP SUM	3618	5	149.5		550	10	59.996	563	LUMP SUM	LUMP SUM

PROJECT NO. R-2554BA
WAYNE COUNTY
STATION: 118+92.556 -L-
12+17.434 -Y7-
SHEET 4 OF 4

STATE OF NORTH CAROLINA
DEPARTMENT OF TRANSPORTATION
RALEIGH

GENERAL DRAWING
FOR BRIDGE ON US 70 (GOLDSBORO BYPASS) OVER NC 111 (PATETOWN RD.) BETWEEN US 117 AND SR 1556 (LEFT LANE)

NORTH CAROLINA PROFESSIONAL SEAL 15825 ENGINEER BRUCE D. KLAPPENBERGER
6-6-08

REVISIONS						SHEET NO.
NO.	BY:	DATE:	NO.	BY:	DATE:	S-328
1			3			TOTAL SHEETS
2			4			478

DRAWN BY : M. G. SHAIKH DATE : 11-07-07
CHECKED BY : A. SORSENGINH DATE : 2-05-08

05-JUN-2008 09:28
r:\structures\bailey\str#12\mshaikh\microstation\r-2554ba_sd_gd.dgn
tbarbour

STR. #12

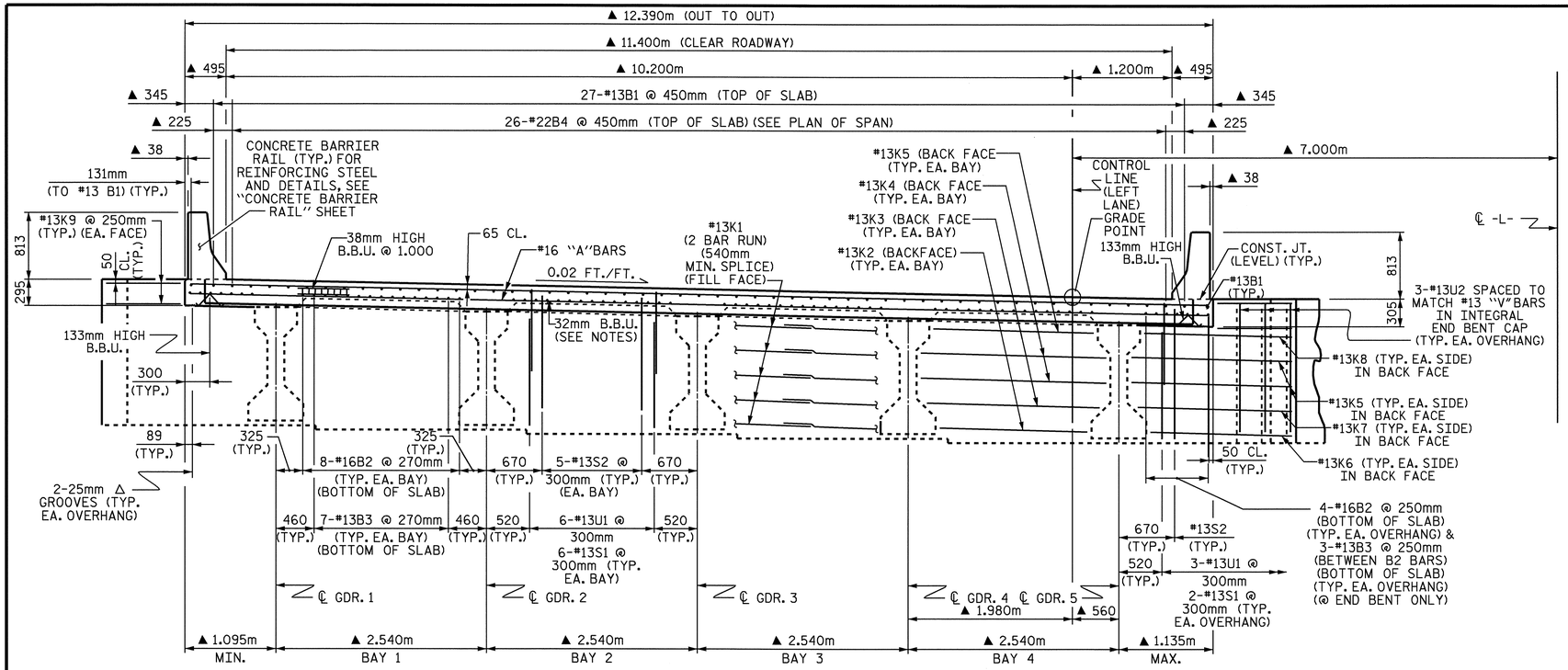

AT INTEGRAL END BENTS
TYPICAL SECTION

▲ DIMENSIONS ARE TO CURVES CONCENTRIC WITH ℄ -L.
GIRDERS ARE ON THE CHORDS OF THESE CONCENTRIC CIRCLES.

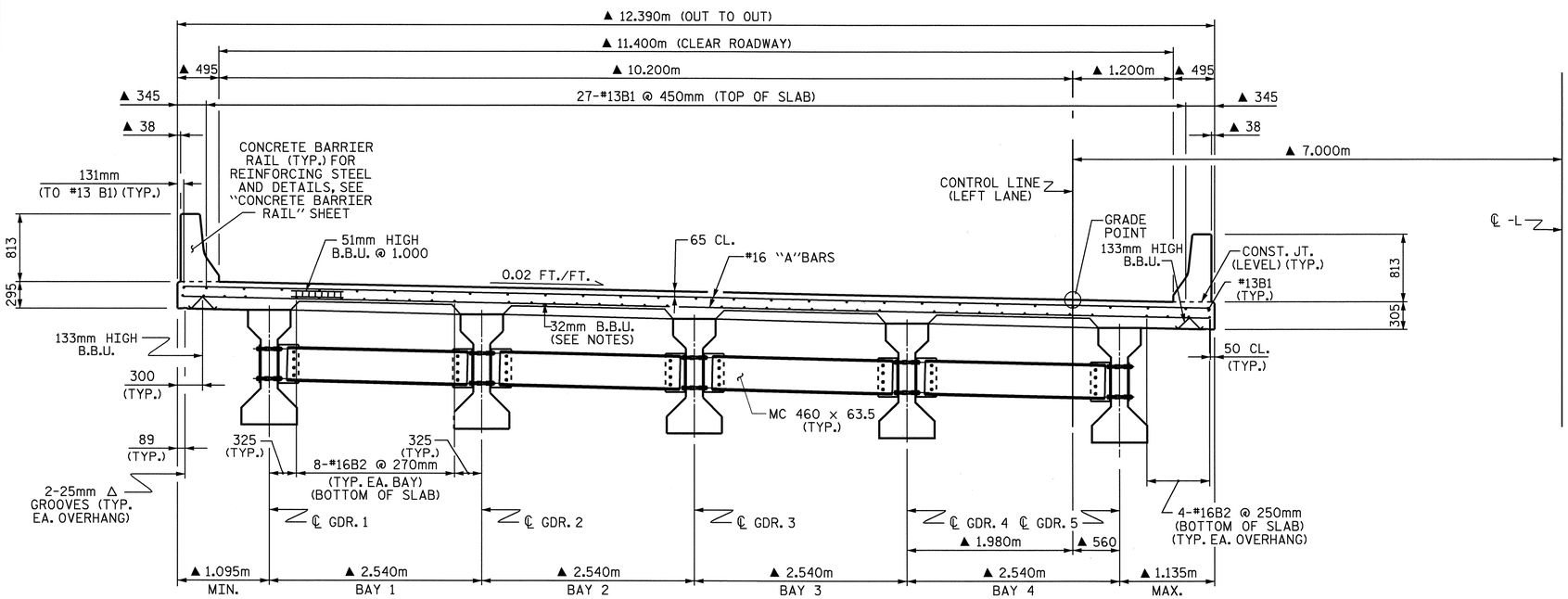

AT INTERMEDIATE DIAPHRAGMS
TYPICAL SECTION

▲ DIMENSIONS ARE TO CURVES CONCENTRIC WITH ℄ -L.
GIRDERS ARE ON THE CHORDS OF THESE CONCENTRIC CIRCLES.

NOTES

PROVIDE 32mm HIGH BEAM BOLSTERS UPPER AT 1.2m CTS. ATOP THE METAL STAY-IN-PLACE FORMS TO SUPPORT THE BOTTOM MAT OF 'A' BARS. WHEN USING REMOVABLE FORMS, PROVIDE CONTINUOUS HIGH CHAIRS FOR METAL DECK (C.H.C.M.) @ 1.2m CTS. WITH A HEIGHT TO SUPPORT THE BOTTOM MAT OF 'A' BARS A CLEAR DISTANCE OF 65mm ABOVE THE TOP OF THE REMOVABLE FORM.

LONGITUDINAL STEEL MAY BE SHIFTED SLIGHTLY, AS NECESSARY, TO AVOID INTERFERENCE WITH STIRRUPS IN PRESTRESSED CONCRETE GIRDERS.

BARRIER RAIL IN SPAN A SHALL NOT BE CAST UNTIL ALL SLAB CONCRETE IN THE UNIT HAS BEEN CAST AND HAS REACHED A MINIMUM COMPRESSIVE STRENGTH OF 20.7 MPa.

PREVIOUSLY CAST CONCRETE IN SPAN A SHALL HAVE ATTAINED A MINIMUM COMPRESSESIVE STRENGTH OF 20.7 MPa BEFORE ADDITIONAL CONCRETE IS CAST IN THE UNIT.

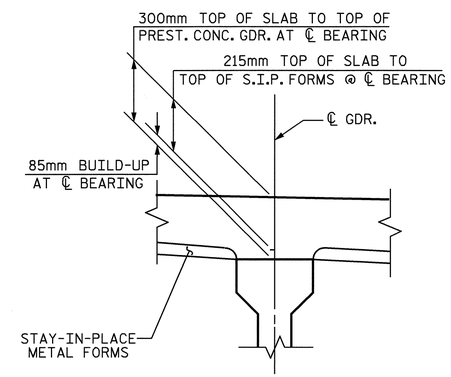

SLAB DETAIL

PROJECT NO. R-2554BA
WAYNE COUNTY
STATION: 118+92.556 -L-

SHEET 1 OF 2

STATE OF NORTH CAROLINA
DEPARTMENT OF TRANSPORTATION
RALEIGH

SUPERSTRUCTURE

TYPICAL SECTION
(LEFT LANE)

NORTH CAROLINA PROFESSIONAL SEAL 15825 ENGINEER BRUCE D. KLAPPENBACH
6-6-08

REVISIONS						SHEET NO.
NO.	BY:	DATE:	NO.	BY:	DATE:	S-329
1			3			TOTAL SHEETS
2			4			478

STR. #12

DRAWN BY : H. T. BARBOUR DATE : 11-01-07
CHECKED BY : M. G. SHAIKH DATE : 11-07

05-JUN-2008 16:04
r:\structures\bailey\Str#12\tbarbour\R2554BA_sd_TS.dgn
tbarbour

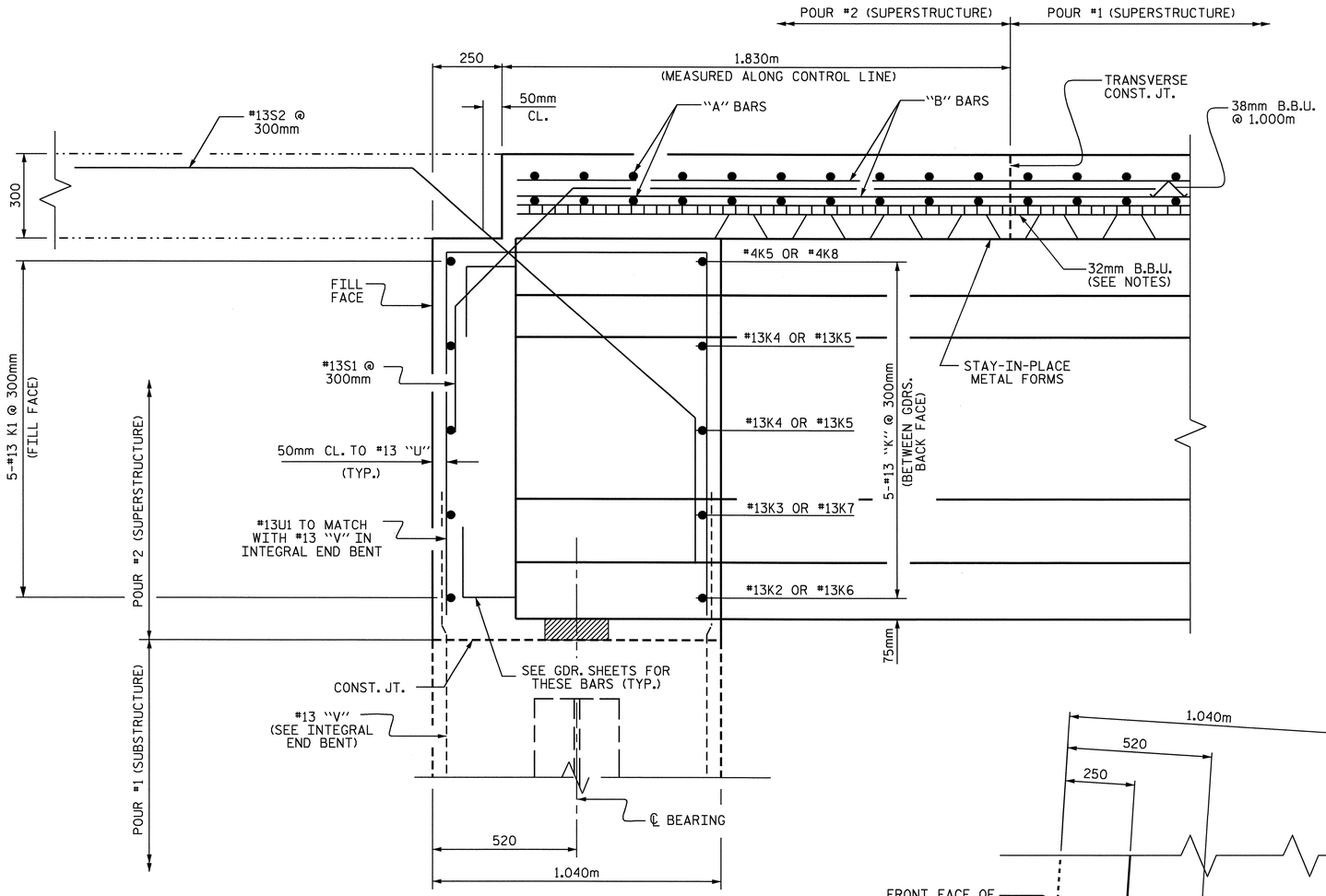

SECTION AT INTEGRAL END BENT

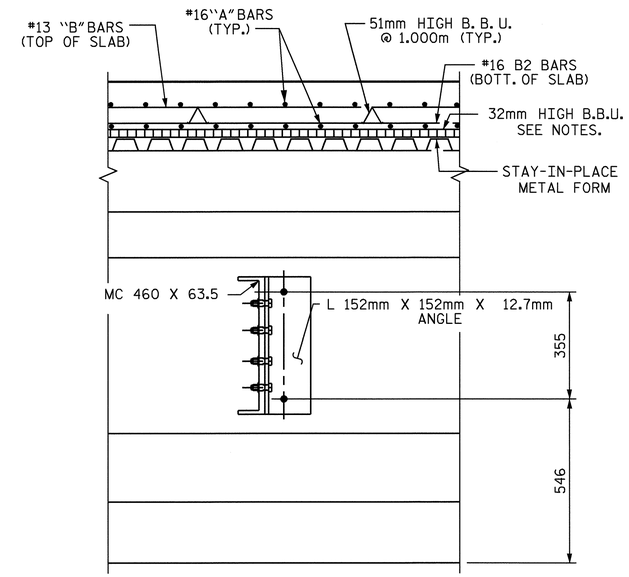

SECTION AT INTERMEDIATE DIAPHRAGM

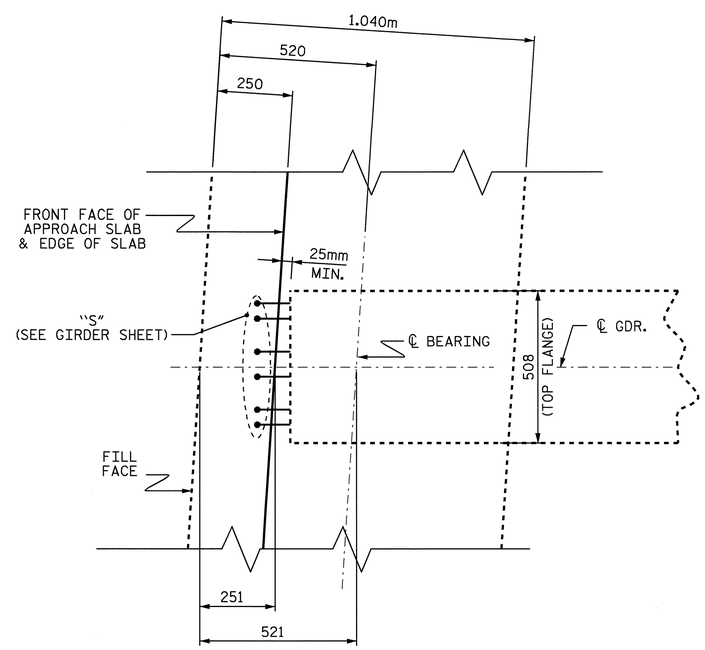

PLAN OF GIRDER AT INTEGRAL END BENT

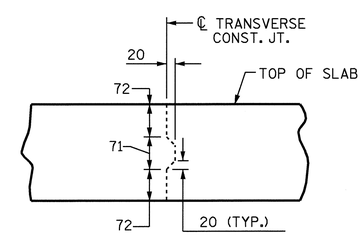

TRANSVERSE CONSTRUCTION JOINT DETAIL

NOTE: REINFORCING STEEL IN SLAB NOT SHOWN.
LONGITUDINAL REINFORCING STEEL SHALL BE
CONTINUOUS THRU JOINT

PROJECT NO. R-2554BA
WAYNE COUNTY
STATION: 118+92.556 -L-

SHEET 2 OF 2

STATE OF NORTH CAROLINA
DEPARTMENT OF TRANSPORTATION
RALEIGH

SUPERSTRUCTURE

TYPICAL SECTION
(LEFT LANE)

NORTH CAROLINA PROFESSIONAL SEAL 15825 ENGINEER BRUCE D. KLAPPERICH
6-6-08

REVISIONS						SHEET NO.
NO.	BY:	DATE:	NO.	BY:	DATE:	S-330
1			3			TOTAL SHEETS
2			4			478

DRAWN BY : H .T. BARBOUR DATE : 11-01-07
CHECKED BY : M. G. SHAIKH DATE : 11-07

05-JUN-2008 09:32
r:\structures\bailey\str#12\tbarbour\R2554BA_sd_TS.dgn
tbarbour

STR. #12

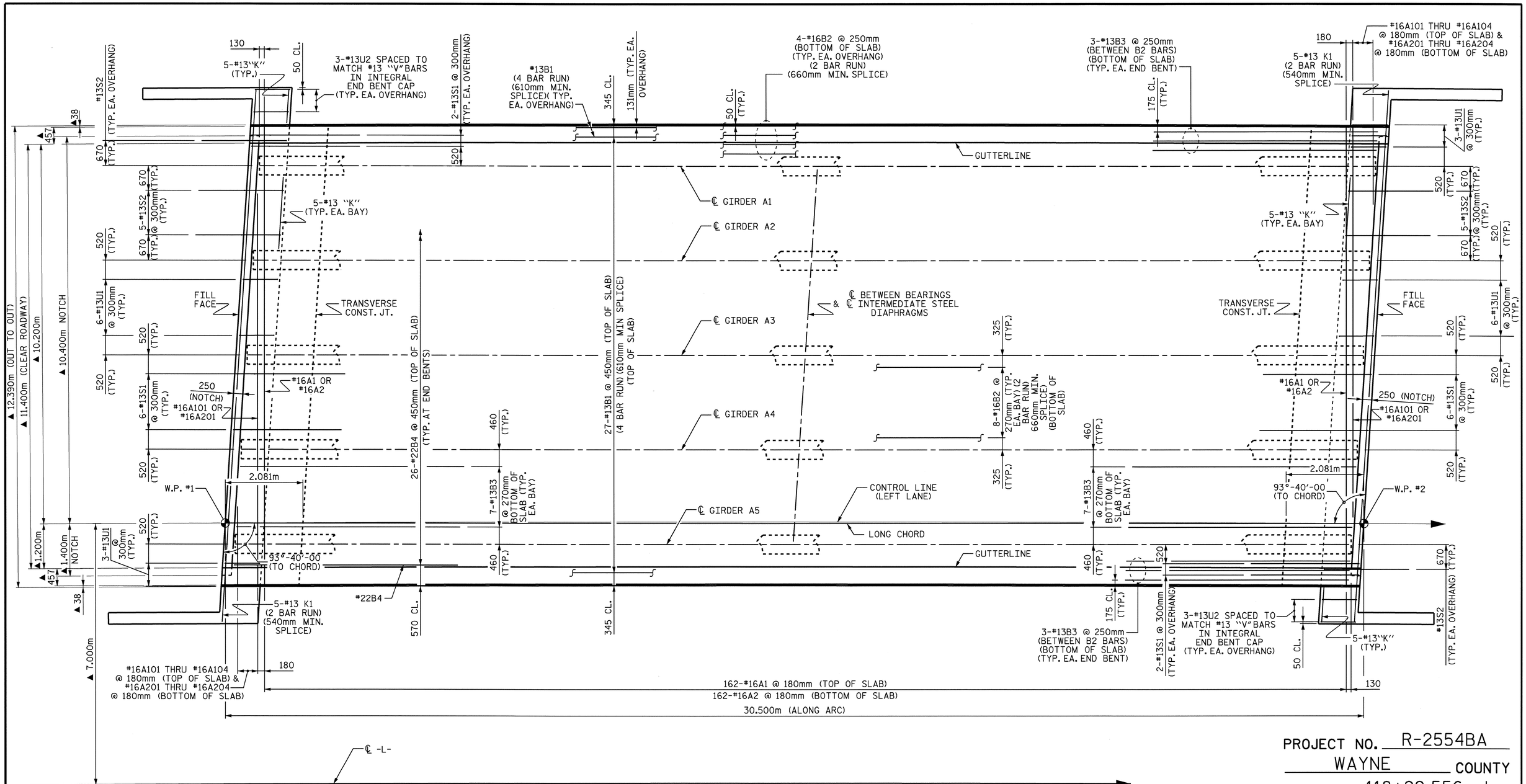

PROJECT NO. R-2554BA

WAYNE COUNTY

STATION: 118+92.556 -L-

SHEET 1 OF 2

PLAN OF SPAN

▲ DIMENSIONS ARE TO CURVES CONCENTRIC WITH ℄ -L.
GIRDERS ARE ON THE CHORDS OF THESE CONCENTRIC CIRCLES.

"A" BARS TO BE PLACED AT RIGHT ANGLES TO THE LONG CHORD.

NORTH CAROLINA PROFESSIONAL SEAL 15825 ENGINEER BRUCE D. KLAPPENBACH

6-6-08

STATE OF NORTH CAROLINA
DEPARTMENT OF TRANSPORTATION
RALEIGH

SUPERSTRUCTURE
PLAN OF SPAN
(LEFT LANE)

REVISIONS						SHEET NO.
NO.	BY:	DATE:	NO.	BY:	DATE:	S-331
1			3			TOTAL SHEETS
2			4			478

DRAWN BY : H. T. BARBOUR DATE : 11-06-07
CHECKED BY : M. G. SHAIKH DATE : 11-07

05-JUN-2008 09:34
r:\structures\bailey\str#12\tbarbour\R2554BA_sd_S*.dgn
tbarbour

STR. #12

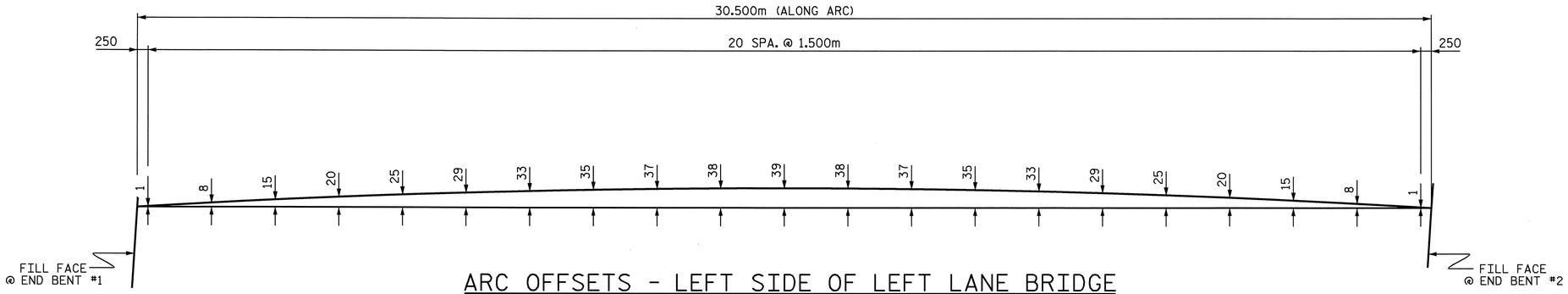

ARC OFFSETS - LEFT SIDE OF LEFT LANE BRIDGE

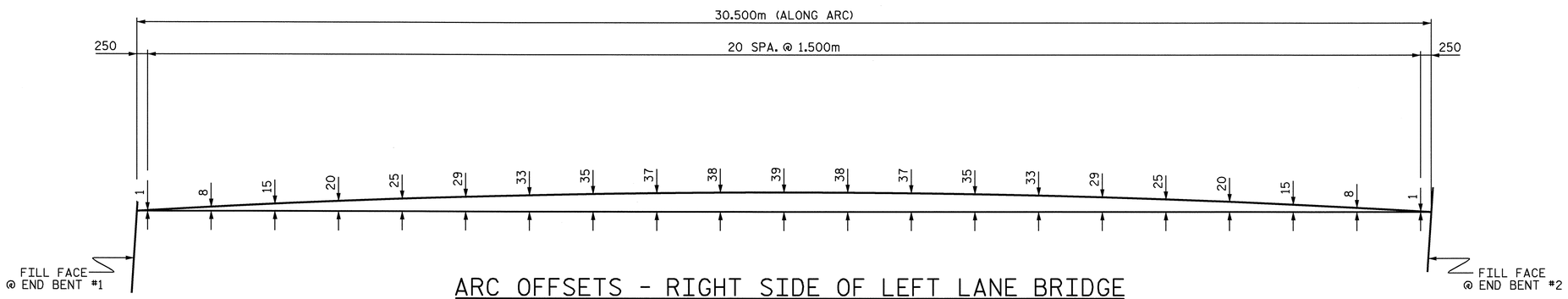

ARC OFFSETS - RIGHT SIDE OF LEFT LANE BRIDGE

PROJECT NO. R-2554BA

WAYNE COUNTY

STATION: 118+92.556 -L-

SHEET 2 OF 2

STATE OF NORTH CAROLINA
DEPARTMENT OF TRANSPORTATION
RALEIGH

SUPERSTRUCTURE
ARC OFFSETS
(LEFT LANE)

NORTH CAROLINA PROFESSIONAL SEAL 15625 ENGINEER BRUCE D. KLAPPENBACH

6-6-08

REVISIONS						SHEET NO.
NO.	BY:	DATE:	NO.	BY:	DATE:	S-332
1			3			TOTAL SHEETS
2			4			478

DRAWN BY : H .T. BARBOUR DATE : 11-08-07
CHECKED BY : M. G. SHAIKH DATE : 11-07

05-JUN-2008 09:35
r:\structures\bailey\str#12\tbarbour\R2554BA_sd_S*.dgn
tbarbour

STR. #12

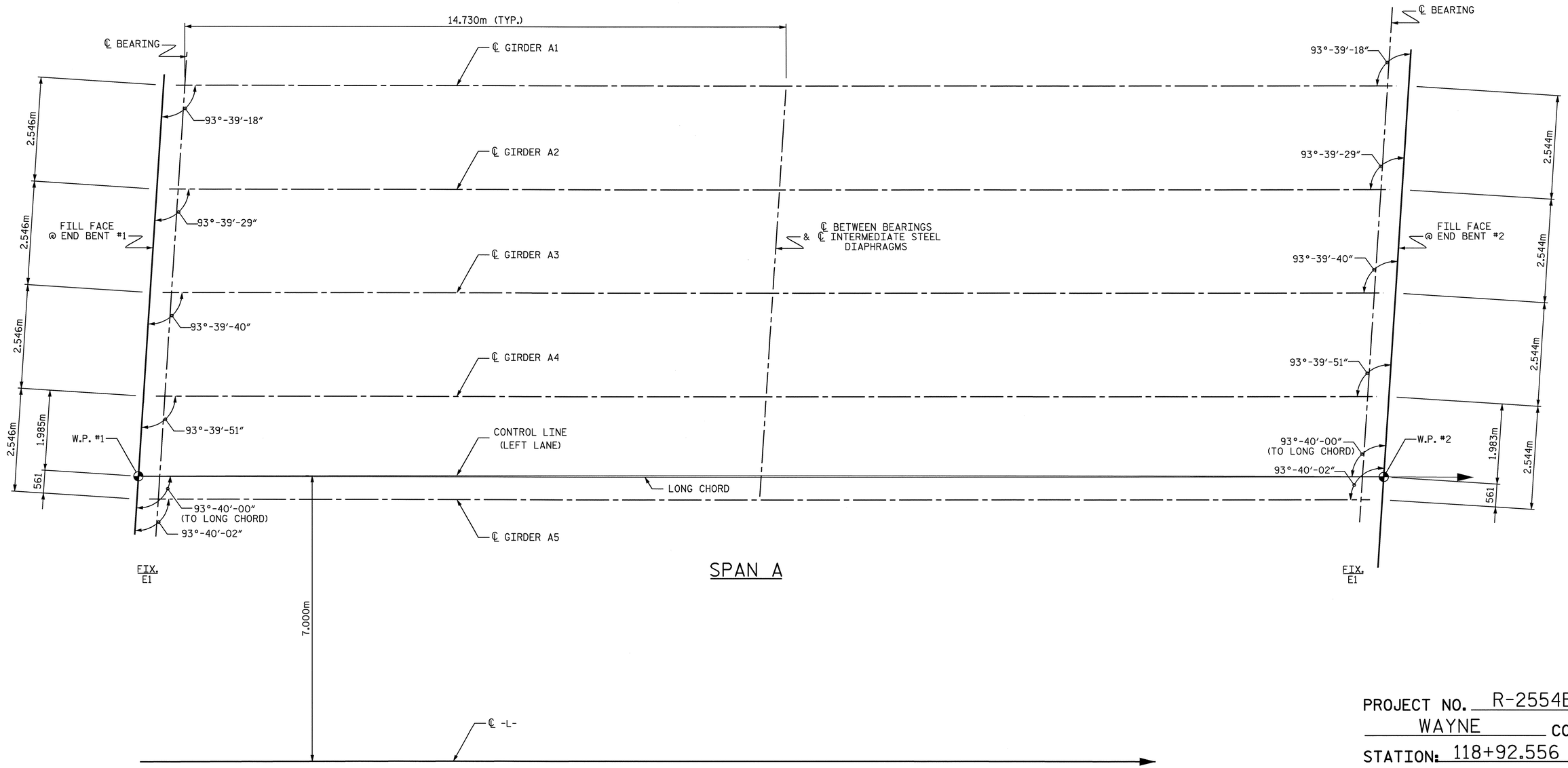

PROJECT NO. R-2554BA

WAYNE COUNTY

STATION: 118+92.556 -L-

STATE OF NORTH CAROLINA
DEPARTMENT OF TRANSPORTATION
RALEIGH

SUPERSTRUCTURE FRAMING PLAN (LEFT LANE)

NORTH CAROLINA PROFESSIONAL SEAL 15825 ENGINEER BRUCE D. KLAPPENBACH
6-6-08

REVISIONS						SHEET NO. S-333
NO.	BY:	DATE:	NO.	BY:	DATE:	TOTAL SHEETS 478
1			3			
2			4			

DRAWN BY : H. T. BARBOUR DATE : 11-05-07
CHECKED BY : M. G. SHAIKH DATE : 11-07

05-JUN-2008 09:38
r:\structures\bailey\str#12\tbarbour\R2554BA_sd_FP.dgn
tbarbour

STR. #12

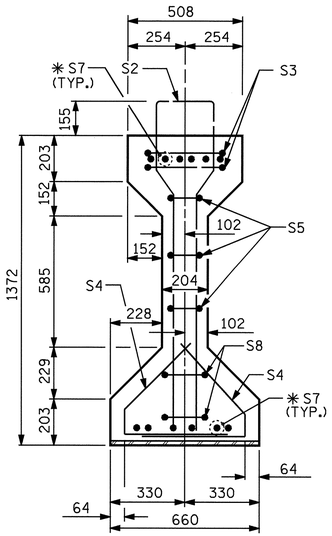

SECTION A-A

✱FOR S7 BARS SEE DETAIL A
"PRESTRESSED CONCRETE GIRDER CONTINUOUS FOR LIVE LOAD DETAILS (RIGHT LANE)"

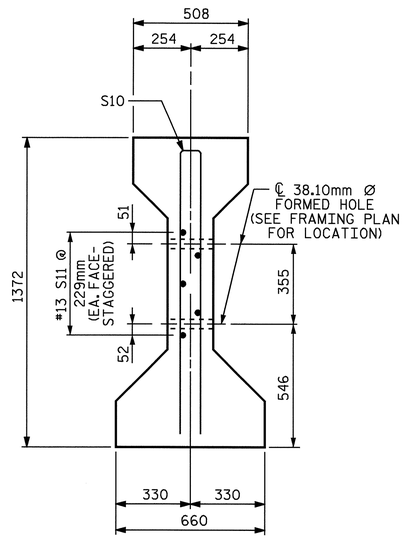

SECTION C-C

(S1 BARS NOT SHOWN)

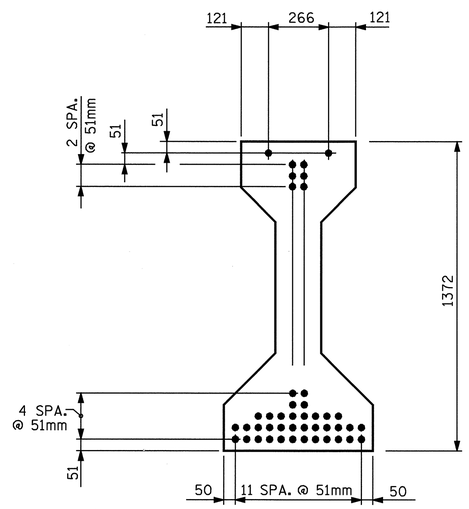

AT END OF GIRDER

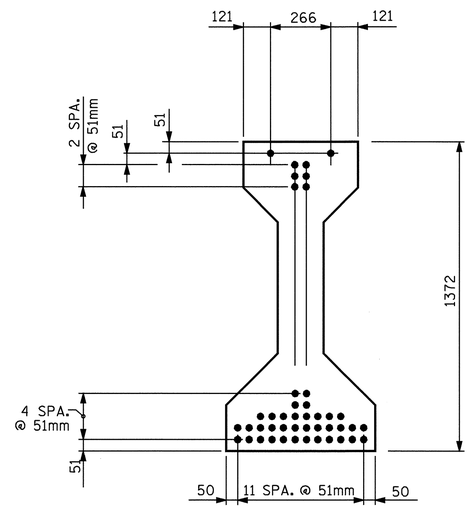

AT ℄ OF GIRDER

15.24mm Ø LOW RELAXATION STRAND LAYOUT

15.24mm Ø L. R. GRADE 270 STRANDS		
AREA (mm2)	ULTIMATE STRENGTH (kN PER STRAND)	APPLIED PRESTRESS (kN PER STRAND)
140.0	260.4	195.3

REINFORCING STEEL FOR ONE GIRDER

BAR	NUMBER	SIZE	TYPE	LENGTH	WEIGHT
S1	87	#13	1	3260	282
S2	12	#19	1	3260	87
S3	4	#13	2	2760	11
S4	80	#13	3	1040	83
S5	6	#13	2	2560	15
✱S7	24	#16	STR	1120	42
S8	4	#13	2	2620	10
S9	2	#10	STR	560	1
S10	2	#16	2	2640	8
S11	5	#13	STR	2140	11
S12	2	#10	STR	400	1

✱NOTE: S7 BARS SHALL BE BENT BEFORE SHIPMENT. HEAT BENDING SHALL NOT BE ALLOWED.

BAR TYPES

ALL BAR DIMENSIONS ARE OUT-TO-OUT

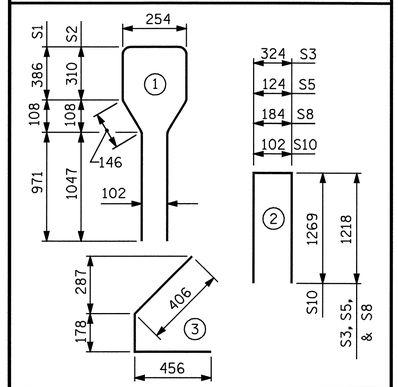

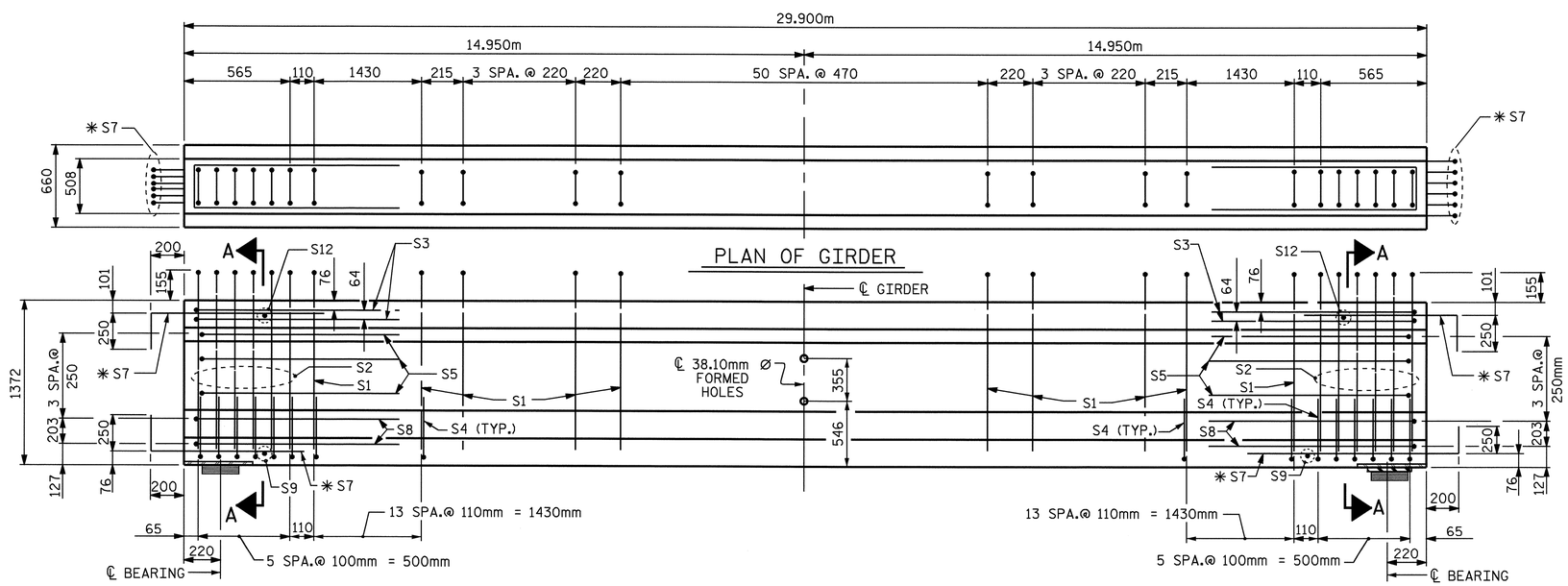

FIX
INTEGRAL END BENT

ELEVATION OF GIRDER

(SEE PARTIAL ELEVATION FOR ADDITIONAL "S" BARS)

FIX
INTEGRAL END BENT

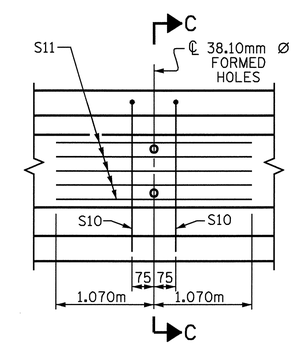

PARTIAL ELEVATION

SHOWING INTERMEDIATE DIAPHRAGM REINFORCING STEEL FOR ALL GIRDERS.

QUANTITIES FOR ONE GIRDER

	REINFORCING STEEL	64 MPa CONCRETE	15.24mm Ø L.R. STRANDS
	kg	m3	No.
GIRDER	551	15.2	44

GIRDERS REQUIRED

NUMBER	LENGTH	TOTAL LENGTH
5	29.900m	149.500m

PROJECT NO. R-2554BA

WAYNE COUNTY

STATION: 118+92.556 -L-

SHEET 1 OF 2

STATE OF NORTH CAROLINA
DEPARTMENT OF TRANSPORTATION
RALEIGH

AASHTO TYPE IV PRESTRESSED CONCRETE GIRDER CONTINUOUS FOR LIVE LOAD (LEFT LANE)

ASSEMBLED BY : H. T. BARBOUR	DATE : 11-01-07		
CHECKED BY : M. G. SHAIKH	DATE : 3-08		
DRAWN BY : ELR 8/91	REV. 7/17/98	RWW/LES	
CHECKED BY : GRP 8/91	REV. 10/17/00R	RWW/LES	
	REV. 5/1/06	TLA/GM	

REVISIONS

NO.	BY:	DATE:	NO.	BY:	DATE:
1			3		
2			4		

SHEET NO. S-334

TOTAL SHEETS 478

NORTH CAROLINA PROFESSIONAL SEAL 15825 ENGINEER BRUCE D. KLAPPENBACH
6-6-08

05-JUN-2008 09:51
r:\structures\bailey\str#12\tbarbour\R2554BA_sd_G*.dgn
tbarbour

STR. #12

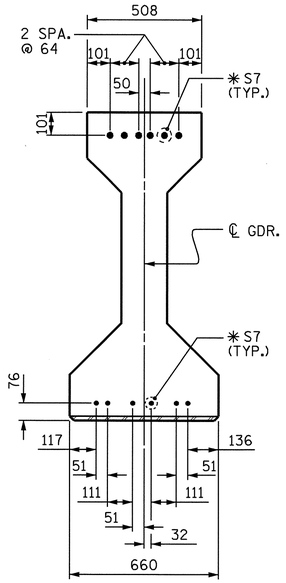

DETAIL "A"

(FOR AASHTO TYPE IV GIRDERS)

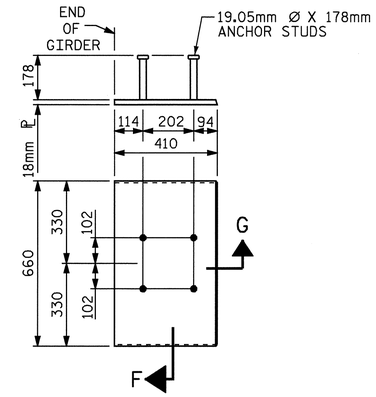

EMBEDDED PLATE "B-1" DETAILS FOR AASHTO TYPE IV GIRDER 1600mm & 1829mm MODIFIED BULB TEES

(2 REQ'D PER GIRDER)

NOTES

ALL PRESTRESSING STRANDS SHALL BE 7-WIRE LOW-RELAXATION GRADE 270 STRANDS AND SHALL CONFORM TO AASHTO M203M EXCEPT FOR SAMPLING REQUIREMENTS WHICH SHALL BE IN ACCORDANCE WITH THE STANDARD SPECIFICATIONS.

ALL REINFORCING STEEL SHALL BE GRADE 420.

EMBEDDED PLATE "B-1" SHALL BE GALVANIZED IN ACCORDANCE WITH THE SPECIFICATIONS. BEVEL EDGES OF PLATE "B-1" TO GIVE CLOSE FIT BUT NOT TIGHT FIT TO STEEL CASTING FORM.

ANCHOR STUDS SHALL CONFORM TO AASHTO M169 GRADES 1010 THROUGH 1020 OR APPROVED EQUAL, AND SHALL MEET THE TYPE "B" REQUIREMENTS OF SUBSECTION 7.3 OF THE ANSI/AASHTO/AWS D1.5 BRIDGE WELDING CODE.

AT ENDS OF GIRDERS TO BE EMBEDDED IN CONCRETE DIAPHRAGMS OR END WALLS, PRESTRESSING STRANDS MAY EXTEND A MAXIMUM OF 50mm BEYOND THE GIRDER ENDS. OTHERWISE, PRESTRESSING STRANDS SHALL BE CUT FLUSH WITH THE GIRDER ENDS.

THE TRANSFER OF LOAD FROM THE ANCHORAGES TO THE GIRDER SHALL BE DONE WHEN CONCRETE HAS REACHED A COMPRESSIVE STRENGTH OF NOT LESS THAN 51 MPa.

DEPENDING ON THE TYPE OF SYSTEM USED TO SUPPORT THE DECK SLAB FORMS, PRESET ANCHORS MAY BE NECESSARY IN THE PRESTRESSED CONCRETE GIRDER.

THE TOP SURFACE OF THE GIRDER, EXCLUDING THE OUTSIDE 100mm, SHALL BE RAKED TO A DEPTH OF 6mm.

FOR CRACK REPAIR OF PRESTRESSED CONCRETE GIRDERS, SEE SPECIAL PROVISIONS.

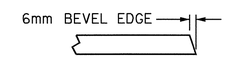

SECTION "G"

SECTION "F"

(SEE NOTES)

DEAD LOAD DEFLECTION TABLE FOR SPAN A																							
15.24mm Ø LOW RELAXATION	GIRDERS 1 & 5											GIRDERS 2, 3 & 4											
TENTH POINTS	0	.1	.2	.3	.4	.5	.6	.7	.8	.9	0	0	.1	.2	.3	.4	.5	.6	.7	.8	.9	0
CAMBER (GIRDER ALONE IN PLACE) ↑	0.0	0.029	0.055	0.075	0.088	0.092	0.088	0.075	0.055	0.029	0.0	0.0	0.029	0.055	0.075	0.088	0.092	0.088	0.075	0.055	0.029	0.0
✱ DEFLECTION DUE TO SUPERIMPOSED D.L. ↓	0.0	0.013	0.026	0.036	0.042	0.044	0.042	0.036	0.026	0.013	0.0	0.0	0.014	0.026	0.036	0.042	0.045	0.042	0.036	0.026	0.014	0.0
FINAL CAMBER ↑	0.0	16	29	39	46	48	46	39	29	16	0.0	0.0	15	29	39	46	47	46	39	29	15	0.0

✱ INCLUDES FUTURE WEARING SURFACE. ALL VALUES ARE SHOWN IN METERS, EXCEPT FINAL CAMBER, WHICH IS GIVEN IN MILLIMETERS.

PROJECT NO. R-2554BA

WAYNE COUNTY

STATION: 118+92.556 -L-

SHEET 2 OF 2

STATE OF NORTH CAROLINA
DEPARTMENT OF TRANSPORTATION
RALEIGH

PRESTRESSED CONCRETE GIRDER CONTINUOUS FOR LIVE LOAD DETAILS (LEFT LANE)

REVISIONS						SHEET NO.
NO.	BY:	DATE:	NO.	BY:	DATE:	S-335
1			3			TOTAL SHEETS
2			4			478

ASSEMBLED BY : H. T. BARBOUR DATE : 11-01-07 CHECKED BY : M. G. SHAIKH DATE : 3-08	
DRAWN BY : ELR 11/91 CHECKED BY : GRP 11/91	REV. 10/17/00 RWW/LES REV. 7/10/01RR LES/RDR REV. 5/1/06 TLA/GM

05-JUN-2008 09:51
r:\structures\bailey\str#12\tbarbour\R2554BA_sd_G*.dgn
tbarbour

STR. #12

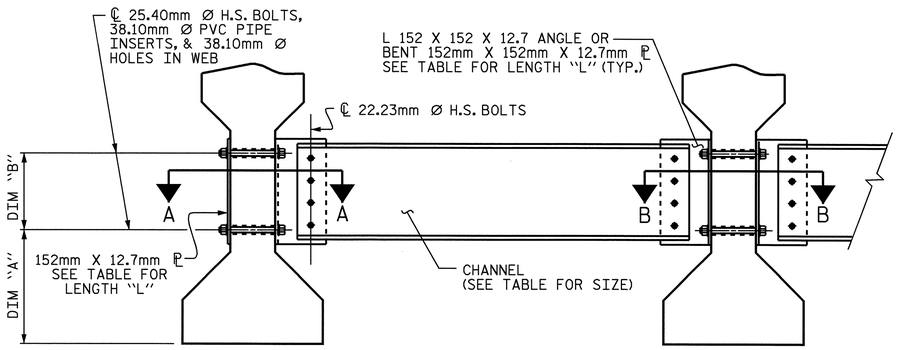

PART SECTION AT INTERMEDIATE DIAPHRAGM

(TYPE III OR TYPE IV GIRDER SHOWN)

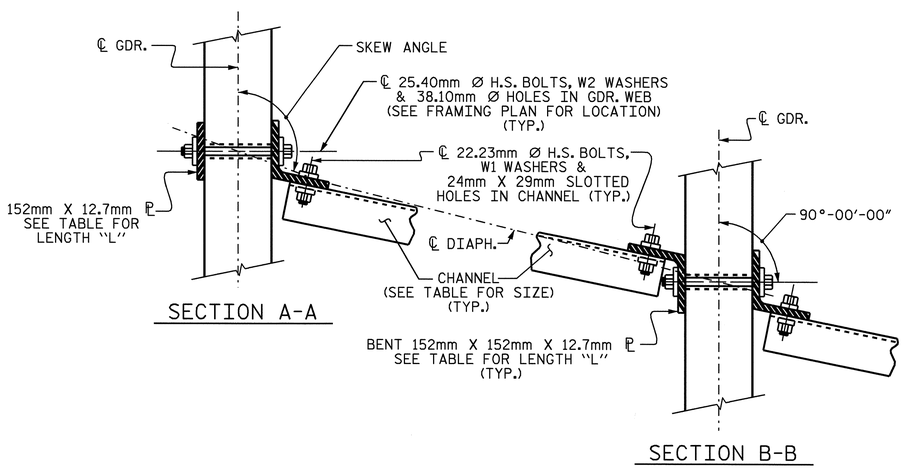

CONNECTION DETAILS

(FOR 70° ≤ SKEW < 90° OR 90° < SKEW ≤ 110°)

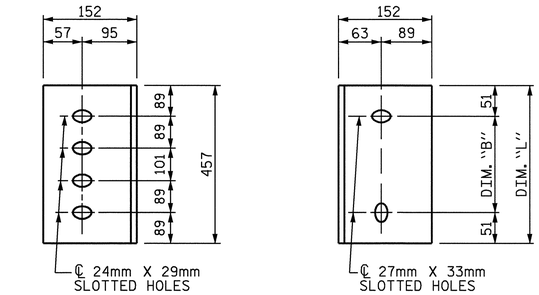

CONNECTOR PLATE DETAILS

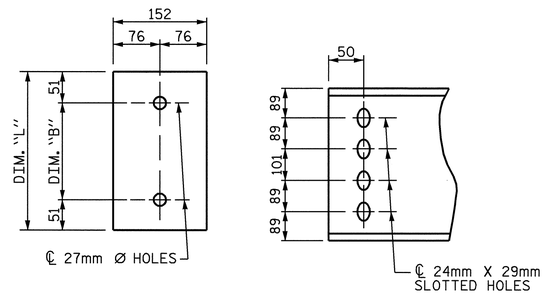

PLATE DETAILS CHANNEL END

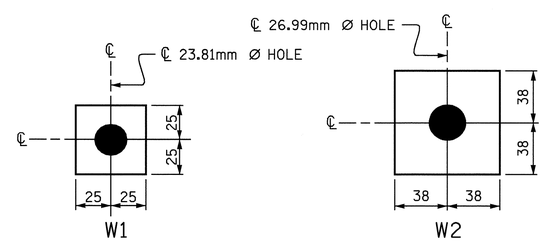

ℙ 11.1 X 50 X 50

USE WITH 22.23mm Ø HVY. HEX NUTS & DIRECT TENSION INDICATOR WASHERS AT DIAPHRAGM CHANNEL TO CONNECTOR PLATE CONNECTIONS

ℙ 11.1 X 76 X 76

USE WITH 25.40mm Ø HVY. HEX NUTS AT CONNECTOR PLATE TO GIRDER CONNECTIONS

WASHER DETAILS

STRUCTURAL STEEL NOTES

ALL INTERMEDIATE DIAPHRAGM STEEL, CONNECTOR PLATES AND PLATE WASHERS SHALL BE AASHTO M270 GRADE 345 OR APPROVED EQUAL.

TENSION ON THE AASHTO M164 BOLTS THROUGH THE CHANNEL MEMBER SHALL BE CALIBRATED USING DIRECT TENSION INDICATOR WASHERS IN ACCORDANCE WITH ARTICLE 440-8 OF THE STANDARD SPECIFICATIONS.

TENSION ON THE AASHTO M164 BOLTS THROUGH THE GIRDER WEB SHALL BE SNUG TIGHTENED FOLLOWED BY AN ADDITIONAL 1/4 TURN.

THE CHANNELS, ANGLES, WASHERS, PLATE WASHERS, AND DIRECT TENSION INDICATORS SHALL BE GALVANIZED OR METALLIZED IN ACCORDANCE WITH THE STANDARD SPECIFICATIONS. FOR THERMAL SPRAYED COATINGS (METALLIZATION), SEE SPECIAL PROVISIONS.

FOR METALLIZATION, APPLY AN 8 MIL THICK 99.99 PERCENT ZINC (W-Zn-1) THERMAL SPRAYED COATING WITH A 0.5 MIL THICK SEAL COAT TO ALL STEEL DIAPHRAGM SURFACES IN ACCORDANCE WITH THE THERMAL SPRAYED COATINGS SPECIAL PROVISIONS AND SECTION 442 OF THE STANDARD SPECIFICATIONS.

GALVANIZE THE HIGH STRENGTH BOLTS, NUTS, AND WASHERS IN ACCORDANCE WITH THE STANDARD SPECIFICATIONS. FOR HIGH STRENGTH BOLTS, SEE SPECIAL PROVISIONS.

USE A MINIMUM 11.1mm THICK PLATE WASHER WITH STANDARD HOLES UNDER EACH BOLT HEAD AND NUT. THE PLATE WASHERS SHALL HAVE SUFFICIENT SIZE TO COVER THE HOLES AFTER INSTALLATION. DIRECT TENSION INDICATORS ARE TO BE USED IN CONJUNCTION WITH THE PLATE WASHERS.

PROVIDE SUFFICIENT LENGTH OF ALL BOLTS TO ACCOMMODATE WASHERS, DIRECT TENSION INDICATORS, THE THICKNESS OF CONNECTING MEMBER PLUS AT LEAST 6mm PROJECTION BEYOND THE NUT.

INTERMEDIATE DIAPHRAGM ASSEMBLY SHALL COMPLY WITH SECTION 1072 OF THE STANDARD SPECIFICATIONS.

CONTRACTOR SHALL SUBMIT TWO SETS OF WORKING DRAWINGS FOR THE INTERMEDIATE DIAPHRAGM ASSEMBLY FOR REVIEW, COMMENTS AND ACCEPTANCE. AFTER REVIEW, COMMENTS, AND ACCEPTANCE, SUBMIT SEVEN SETS FOR DISTRIBUTION.

IN THE EXTERIOR BAYS, TEMPORARY STRUTS SHALL BE PLACED BETWEEN PRESTRESSED GIRDERS ADJACENT TO THE STEEL DIAPHRAGMS. STRUTS SHALL REMAIN IN PLACE 3 DAYS AFTER CONCRETE IS PLACED. ALL AASHTO M164 H.S. BOLTS SHALL BE FULLY TIGHTENED AFTER THE STRUTS HAVE BEEN REMOVED.

THE COST OF THE STEEL DIAPHRAGMS AND ASSEMBLIES SHALL BE INCLUDED IN THE UNIT PRICE BID FOR PRESTRESSED CONCRETE GIRDERS.

TABLE

GIRDER TYPE	CHANNEL SIZE	DIM "A"	DIM "B"	DIM "L"
IV	MC 460 x 63.5	546	355	457

PROJECT NO. R-2554BA

WAYNE COUNTY

STATION: 118+92.556 -L-

STATE OF NORTH CAROLINA
DEPARTMENT OF TRANSPORTATION
RALEIGH

INTERMEDIATE STEEL DIAPHRAGMS FOR TYPE IV PRESTRESSED CONCRETE GIRDERS (LEFT LANE)

NORTH CAROLINA PROFESSIONAL SEAL 15825 ENGINEER BRUCE D. KLAPPENBACH
6-6-08

REVISIONS						SHEET NO. S-336
NO.	BY:	DATE:	NO.	BY:	DATE:	TOTAL SHEETS 478
1			3			
2			4			

ASSEMBLED BY : H. T. BARBOUR	DATE : 11-01-07
CHECKED BY : M. G. SHAIKH	DATE : 11-07
DRAWN BY : TLA 6/05	ADDED 10/21/05
CHECKED BY : VC 6/05	REV. 5/1/06R KMM/GM

05-JUN-2008 09:40
r:\structures\bailey\str#12\tbarbour\R2554BA_sd_FP.dgn
tbarbour

STR. #12

STD.No.PCG12SM

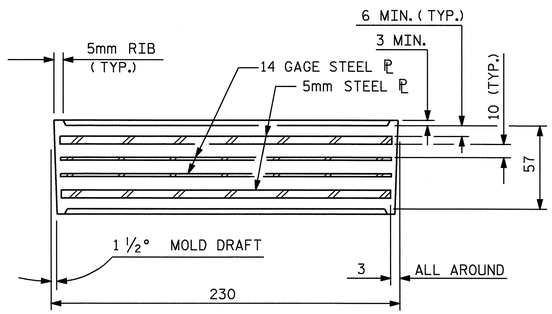

TYPICAL SECTION OF ELASTOMERIC BEARINGS

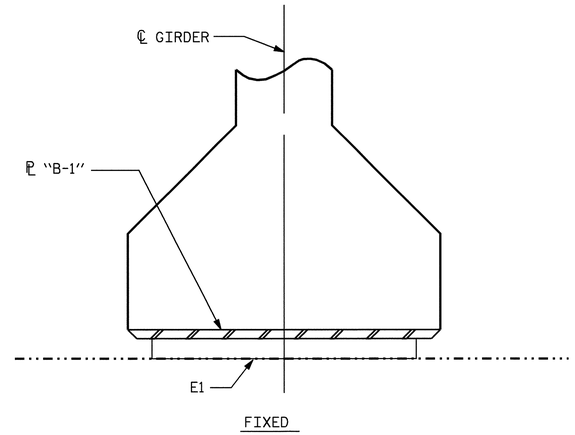

SECTION E-E

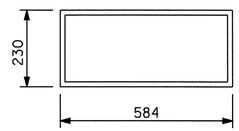

E1 (10 REQ'D)

PLAN VIEW OF ELASTOMERIC BEARING

TYPE V

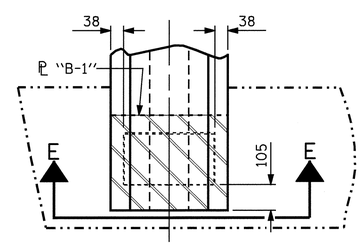

TYPICAL

LOAD RATINGS	
	MAX.D.L.+ L.L.
1372 PCG-TYPE V	801 kN

PROJECT NO. R-2554BA

WAYNE COUNTY

STATION: 118+92.556 -L-

STATE OF NORTH CAROLINA
DEPARTMENT OF TRANSPORTATION
RALEIGH

ELASTOMERIC BEARING DETAILS

PRESTRESSED CONCRETE GIRDER
SUPERSTRUCTURE
(LEFT LANE)

NORTH CAROLINA PROFESSIONAL SEAL 15825 ENGINEER BRUCE D. KLAPPENBACH
6-6-06

REVISIONS						SHEET NO.
NO.	BY:	DATE:	NO.	BY:	DATE:	S-337
1			3			TOTAL SHEETS
2			4			478

ASSEMBLED BY : H. T. BARBOUR		DATE :	11-01-07
CHECKED BY : M. G. SHAIKH		DATE :	11-07
DRAWN BY : EEM 2/97	REV. 8/16/99	RWW/LES	
CHECKED BY : VAP 2/97	REV. 10/17/00	RWW/LES	
	REV. 5/1/06	TLA/GM	

05-JUN-2008 09:53
r:\structures\bailey\str#12\tbarbour\R2554BA_sd_BG.dgn
tbarbour

STR. #12

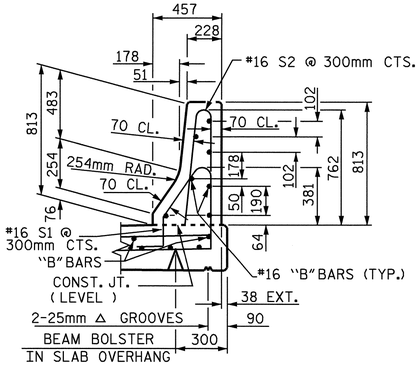

SECTION THRU RAIL

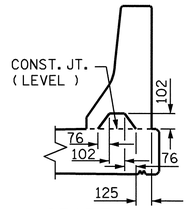

SECTION S-S

AT DAM IN OPEN JOINT
(THIS IS TO BE USED ONLY WHEN SLIP FORM IS USED)

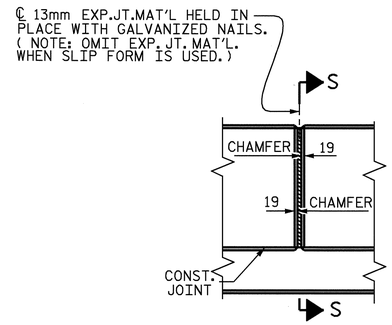

ELEVATION AT EXPANSION JOINTS

BARRIER RAIL DETAILS

NOTES

THE BARRIER RAIL IN EACH SPAN SHALL NOT BE CAST UNTIL ALL SLAB CONCRETE IN THAT SPAN HAS BEEN CAST AND HAS REACHED A MINIMUM COMPRESSIVE STRENGTH OF 20.7 MPa.

ALL REINFORCING STEEL IN BARRIER RAILS SHALL BE EPOXY COATED.

VERTICAL GROOVED CONTRACTION JOINTS, 12mm IN DEPTH, SHALL BE TOOLED IN ALL EXPOSED FACES OF THE BARRIER RAIL AND IN ACCORDANCE WITH ARTICLE 825-10(B) OF THE STANDARD SPECIFICATIONS. THE CONTRACTION JOINT SHALL BE LOCATED AT EACH THIRD POINT BETWEEN BARRIER RAIL EXPANSION JOINTS. ONLY ONE CONTRACTION JOINT IS REQUIRED AT MIDPOINT OF BARRIER RAIL SEGMENTS LESS THAN 6.1m IN LENGTH AND NO CONTRACTION JOINTS ARE REQUIRED FOR THOSE SEGMENTS LESS THAN 3.5m IN LENGTH.

BAR TYPES

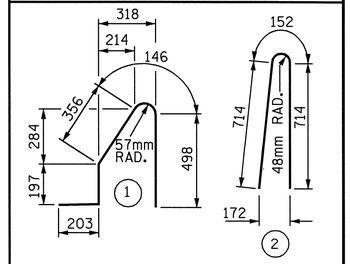

ALL BAR DIMENSIONS ARE OUT TO OUT

BILL OF MATERIAL

FOR CONCRETE BARRIER RAIL ONLY

BAR	NO.	SIZE	TYPE	LENGTH	WEIGHT
* B1	56	#16	STR.	3460	301
* B2	42	#16	STR.	5880	383
* S1	100	#16	1	1400	217
* S2	100	#16	2	1580	245

* EPOXY COATED REINFORCING STEEL 1146 kg

CLASS AA CONCRETE 15.0 CU. METER

CONCRETE BARRIER RAIL 59.996 METERS

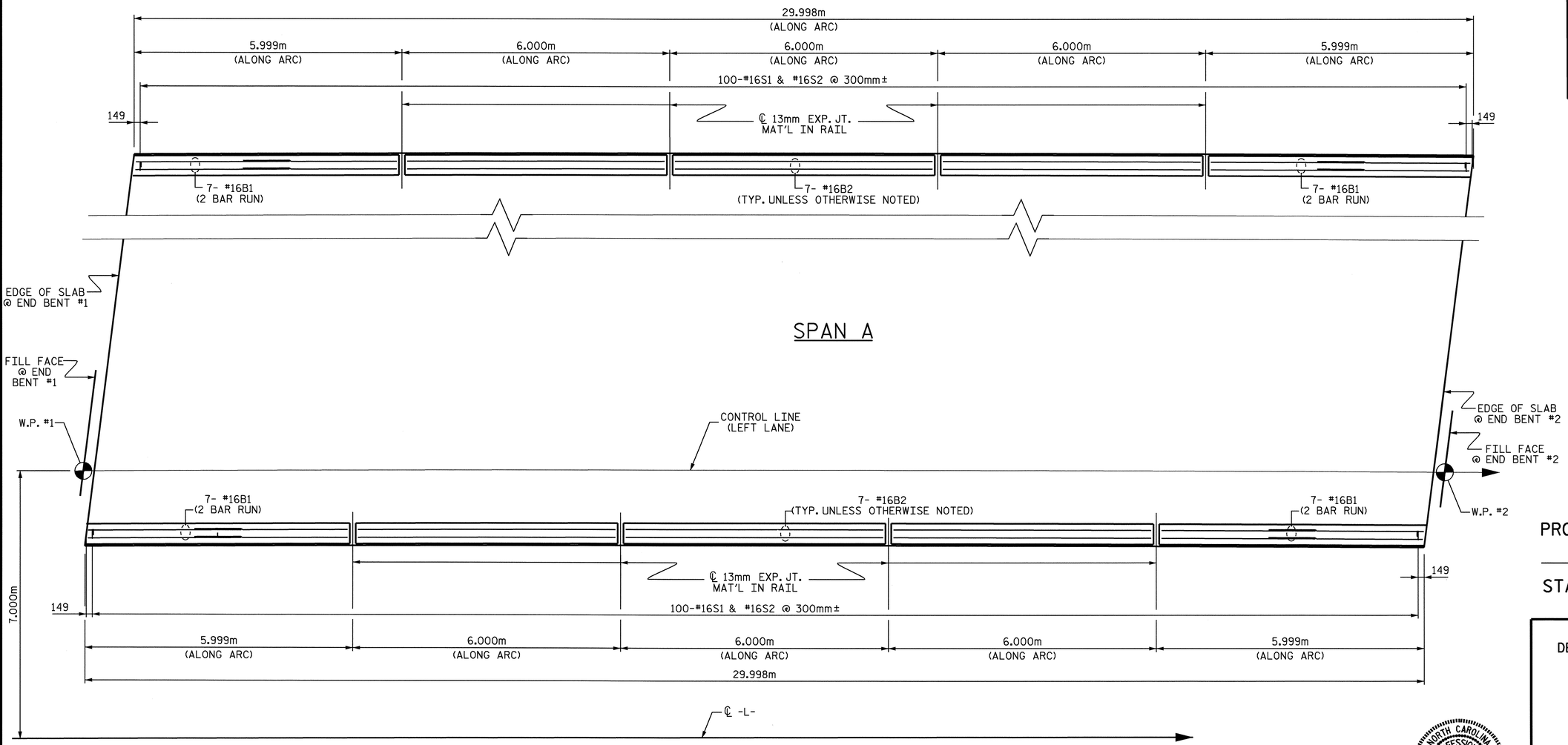

PLAN OF BARRIER RAIL

PROJECT NO. R-2554BA
WAYNE COUNTY
STATION: 118+92.556 -L-

STATE OF NORTH CAROLINA
DEPARTMENT OF TRANSPORTATION
RALEIGH

CONCRETE BARRIER RAIL (LEFT LANE)

NORTH CAROLINA PROFESSIONAL SEAL 15825 ENGINEER BRUCE D. KLAPPENBACH 6-6-08

ASSEMBLED BY : H. T. BARBOUR	DATE : 11-05-07		
CHECKED BY : M. G. SHAIKH	DATE : 11-07		
DRAWN BY : ARB 5/87	REV. 10/17/00	RWW/LES	
CHECKED BY : SJD 9/87	REV. 5/7/03R	RWW/JTE	
	REV. 5/1/06	TLA/GM	

REVISIONS						SHEET NO.
NO.	BY:	DATE:	NO.	BY:	DATE:	S-338
1			3			TOTAL SHEETS
2			4			478

STR. #12

05-JUN-2008 09:55
r:\structures\bailey\str#12\tbarbour\R2554BA_sd_BR.dgn
tbarbour

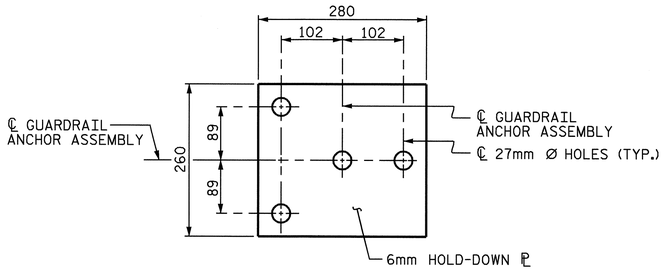

PLAN

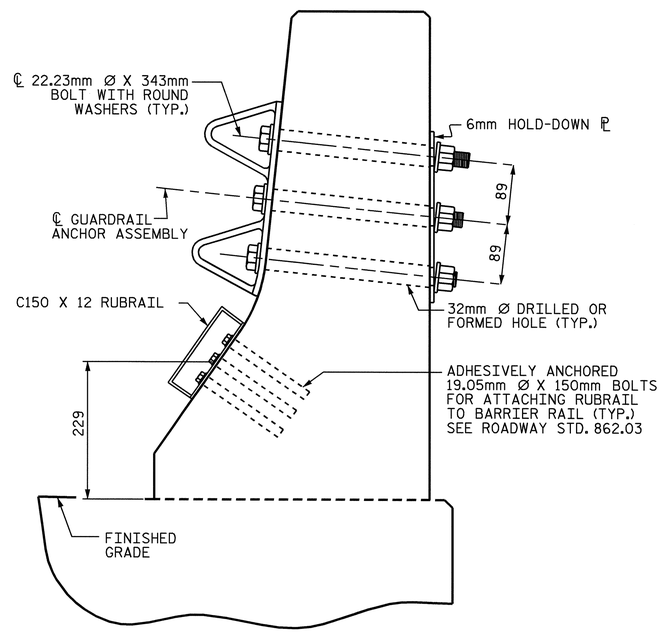

SECTION E-E

GUARDRAIL ANCHOR ASSEMBLY DETAILS

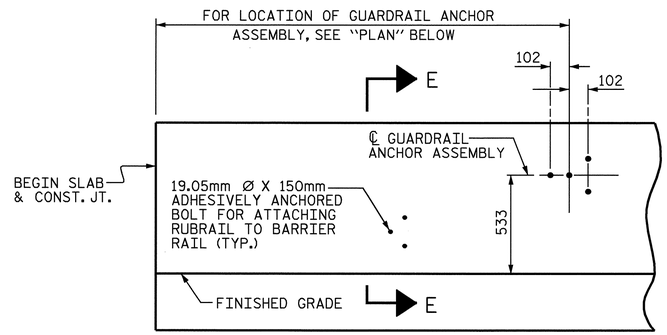

ELEVATION

FOR LOCATION OF RUBRAIL, SEE ROADWAY STD. 862.03

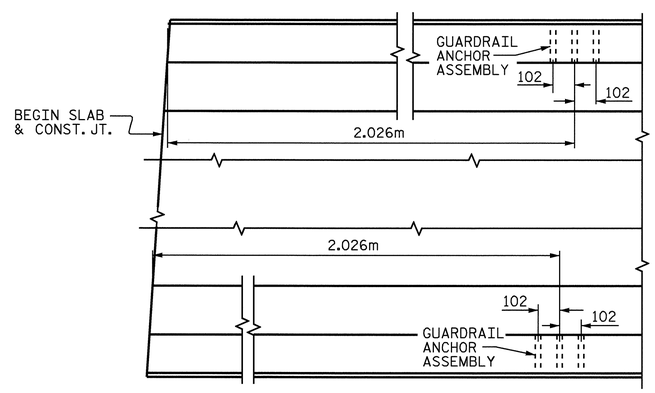

PLAN

LOCATION OF ANCHORS FOR GUARDRAIL

END BENT #1 SHOWN, END BENT #2 SIMILAR.

NOTES

THE GUARDRAIL ANCHOR ASSEMBLY SHALL CONSIST OF A 6mm HOLD DOWN PLATE AND 4 - 22.23mm Ø BOLTS WITH NUTS AND WASHERS, RUBRAIL, AND ADHESIVELY ANCHORED BOLTS.

THE HOLD-DOWN PLATE SHALL CONFORM TO AASHTO M270 GRADE 36. AFTER FABRICATION, THE HOLD-DOWN PLATE SHALL BE HOT-DIP GALVANIZED IN ACCORDANCE WITH AASHTO M111.

BOLTS SHALL CONFORM TO THE REQUIREMENTS OF ASTM A307 AND NUTS SHALL CONFORM TO THE REQUIREMENTS OF AASHTO M291. BOLTS, NUTS AND WASHERS SHALL BE GALVANIZED. (AT THE CONTRACTOR'S OPTION, STAINLESS STEEL BOLTS, NUTS AND WASHERS MAY BE USED AS AN ALTERNATE FOR THE 22.23mm Ø GALVANIZED BOLTS, NUTS AND WASHERS. THEY SHALL CONFORM TO OR EXCEED THE MECHANICAL REQUIREMENTS OF ASTM A307. THE USE OF THIS ALTERNATE SHALL BE APPROVED BY THE ENGINEER.)

THE GUARDRAIL ANCHOR ASSEMBLY IS REQUIRED AT ALL POINTS WHERE APPROACH GUARDRAIL IS TO BE ATTACHED TO THE END OF BARRIER RAIL. FOR POINTS OF ATTACHMENT, SEE SKETCH.

AFTER INSTALLATION, THE EXPOSED THREAD OF THE BOLT SHALL BE BURRED WITH A SHARP POINTED TOOL.

THE COST OF THE GUARDRAIL ANCHOR ASSEMBLY SHALL BE INCLUDED IN THE UNIT CONTRACT PRICE BID FOR CONCRETE BARRIER RAIL.

THE 32mm Ø HOLES SHALL BE FORMED OR DRILLED WITH A CORE BIT. IMPACT TOOLS WILL NOT BE PERMITTED. ANY CONCRETE DAMAGED BY THIS WORK SHALL BE REPAIRED TO THE SATISFACTION OF THE ENGINEER.

THE C150 X 12 RUBRAIL IS TO BE ADHESIVELY ANCHORED TO THE RAIL USING THREE 19.05mm Ø X 150mm BOLTS WITH WASHERS. LEVEL ONE FIELD TESTING IF REQUIRED, AND THE YIELD LOAD OF THE 19.05mm Ø BOLTS IS 53.4kN. FOR ADHESIVELY ANCHORED ANCHOR BOLTS OR DOWELS, SEE SPECIAL PROVISIONS. SEE ROADWAY STANDARD 862.03 FOR DETAILS AND LOCATION OF THE RUBRAIL.

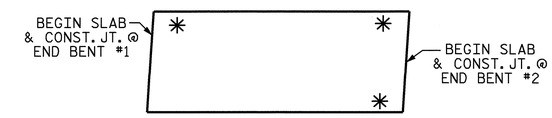

SKETCH SHOWING POINTS OF ATTACHMENTS

✳ DENOTES GUARDRAIL ANCHOR ASSEMBLY

PROJECT NO. R-2554BA
WAYNE COUNTY
STATION: 118+92.556 -L-

STATE OF NORTH CAROLINA
DEPARTMENT OF TRANSPORTATION
RALEIGH

STANDARD
GUARDRAIL ANCHORAGE FOR BARRIER RAIL (LEFT LANE)

NORTH CAROLINA PROFESSIONAL SEAL 15825 ENGINEER BRUCE D. KLAPPENBACH
6-6-08

ASSEMBLED BY : H. T. BARBOUR	DATE : 11-01-07
CHECKED BY : M. G. SHAIKH	DATE : 11-07
DRAWN BY : TLA 5/06	ADDED 5/1/06R KMM/GM
CHECKED BY : GM 5/06	

05-JUN-2008 09:56
r:\structures\bailey\str#12\tbarbour\R2554BA_sd_GR.dgn
tbarbour

REVISIONS							SHEET NO. S-339
NO.	BY:	DATE:	NO.	BY:	DATE:		TOTAL SHEETS 478
1			3				
2			4				

STR. #12

STD. NO. GRA2SM

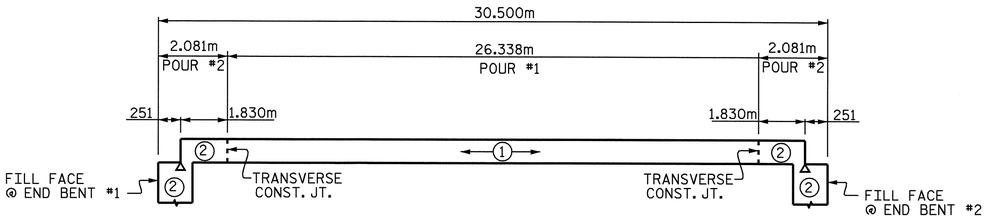

POURING SEQUENCE

ALL DIMENSIONS, ALONG ARC

UPPER PART OF WINGS ARE INCLUDED IN POUR #2

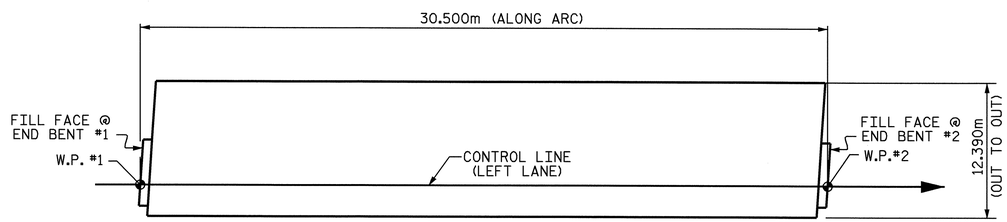

LAYOUT FOR COMPUTING AREA OF REINFORCED CONCRETE DECK SLAB (378 SQ. METER)

SUPERSTRUCTURE REINFORCING STEEL LENGTHS ARE BASED ON THE FOLLOWING MINIMUM SPLICE LENGTHS

BAR SIZE	SUPERSTRUCTURE EXCEPT APPROACH SLABS, PARAPET, AND BARRIER RAIL		APPROACH SLABS		PARAPET AND BARRIER RAIL
	EPOXY COATED	UNCOATED	EPOXY COATED	UNCOATED	
#13	610	540	610	540	840
#16	770	660	770	660	1050
#19	920	790	1190	790	1330
#22	1580	1060			
#25	2080	1390			

GROOVING BRIDGE FLOORS

BRIDGE DECK	318.6	SQ.METER
APPROACH SLABS	135.0	SQ.METER
TOTAL	453.6	SQ.METER

BILL OF MATERIAL

SPAN A

BAR	NO.	SIZE	TYPE	LENGTH	WEIGHT
* A1	162	#16	STR	12280	3087
A2	162	#16	STR	12280	3087
* A101	2	#16	STR	10480	33
* A102	2	#16	STR	7680	24
* A103	2	#16	STR	4880	15
* A104	2	#16	STR	2080	6
A201	2	#16	STR	10480	33
A202	2	#16	STR	7680	24
A203	2	#16	STR	4880	15
A204	2	#16	STR	2080	6
* B1	116	#13	STR	7940	916
B2	80	#16	STR	15280	1897
B3	68	#13	STR	6000	406
* B4	52	#22	STR	6000	949
K1	20	#13	STR	7440	148
K2	8	#13	STR	1780	14
K3	8	#13	STR	2080	17
K4	16	#13	STR	2240	36
K5	16	#13	STR	1920	31
K6	4	#13	STR	1700	7
K7	4	#13	STR	1860	7
K8	4	#13	STR	1780	7
K9	16	#13	STR	900	14
* S1	56	#13	1	3560	198
* S2	44	#13	1	3220	141
U1	60	#13	2	3580	214
U2	12	#13	2	4060	48

REINFORCING STEEL	= 6011 kg
* EPOXY COATED REINFORCING STEEL	= 5369 kg

BAR TYPES

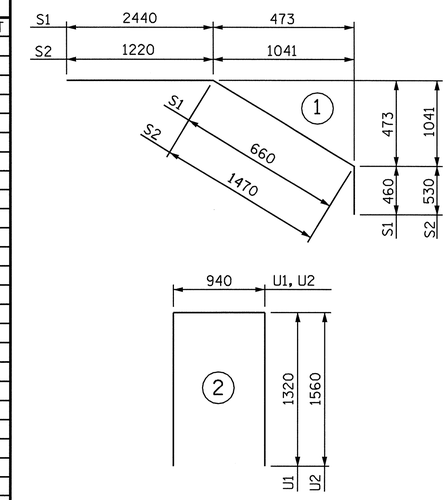

ALL BAR DIMENSIONS ARE OUT TO OUT.

SUPERSTRUCTURE BILL OF MATERIAL

	CLASS AA CONCRETE		REINFORCING STEEL	EPOXY COATED REINFORCING STEEL
	(CU. METER)		(kg)	(kg)
SPAN A	POUR 1	86	6011	5369
	POUR 2	55.2		
TOTALS **	TOTAL	141.2	6011	5369

** QUANTITIES FOR BARRIER RAIL ARE NOT INCLUDED

UPPER PART OF WINGS, AND INTEGRAL END BENTS ARE INCLUDED IN POUR #2

PROJECT NO. R-2554BA
WAYNE COUNTY
STATION: 118+92.556-L-

STATE OF NORTH CAROLINA
DEPARTMENT OF TRANSPORTATION
RALEIGH

SUPERSTRUCTURE BILL OF MATERIAL (LEFT LANE)

NORTH CAROLINA PROFESSIONAL SEAL 15825 ENGINEER BRUCE D. KLAPPENBACH
6-6-08

REVISIONS						SHEET NO. S-340
NO.	BY:	DATE:	NO.	BY:	DATE:	TOTAL SHEETS 478
1			3			
2			4			

STR. #12

ASSEMBLED BY : H. T. BARBOUR	DATE : 11-08-07
CHECKED BY : M. G. SHAIKH	DATE : 3-08
DRAWN BY : JMB 5/87	REV. 5/16/97 EEM/RGW
CHECKED BY : SJD 9/87	

05-JUN-2008 11:00
r:\structures\bailey\str#12\tbarbour\R2554BA_sd_BM.dgn
tbarbour

NOTES

SEE SUPERSTRUCTURE SHEETS FOR UPPER PART OF INTEGRAL END BENT DETAILS.

THE CONTRACTORE SHALL PROVIDE FOR INSTALLATION OF THE 102mm DIAMETER DRAIN PIPE THROUGH THE WING WALL AS REQUIRED FOR REINFORCED BRIDGE APPROACH FILLS, SEE THE ROADWAY PLANS. REINFORCING STEEL IN THE WING WALL MAY BE SHIFTED AS NECESSARY TO CLEAR THE DRAIN PIPE.

THE CONTRACTOR'S ATTENTION IS CALLED TO THE FACT THAT THE UPPER PART OF WINGS IS TO BE POURED WITH SUPERSTRUCTURE.

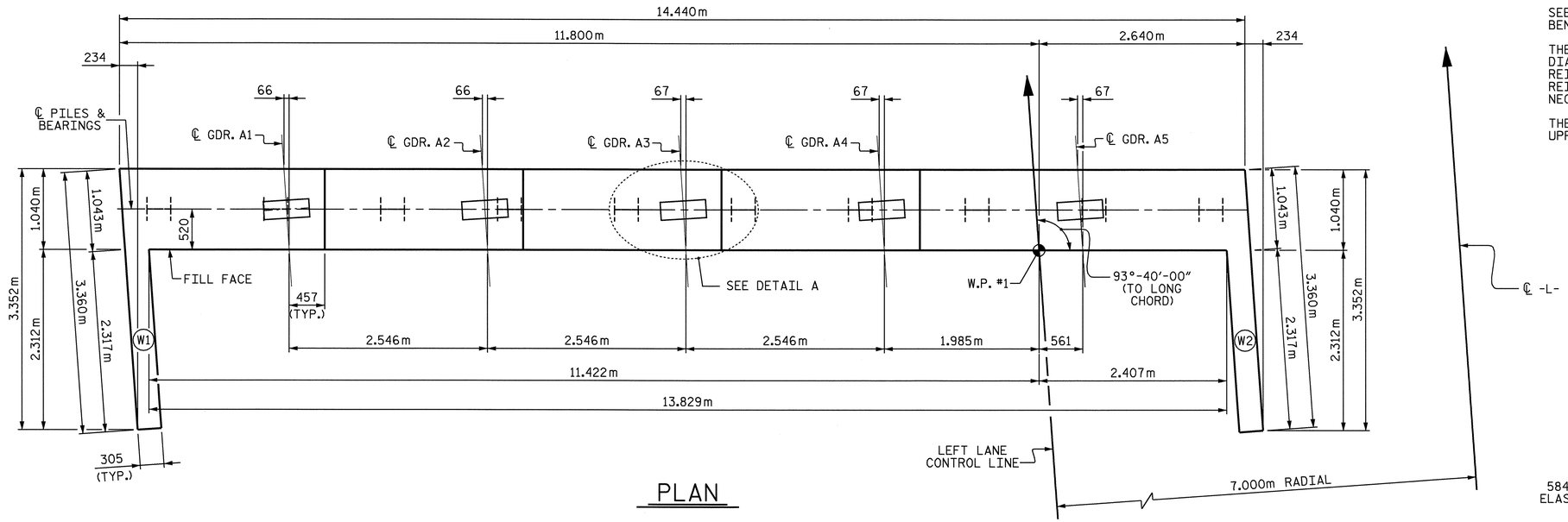

PLAN

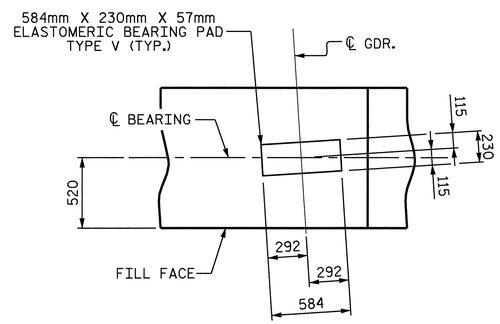

DETAIL A

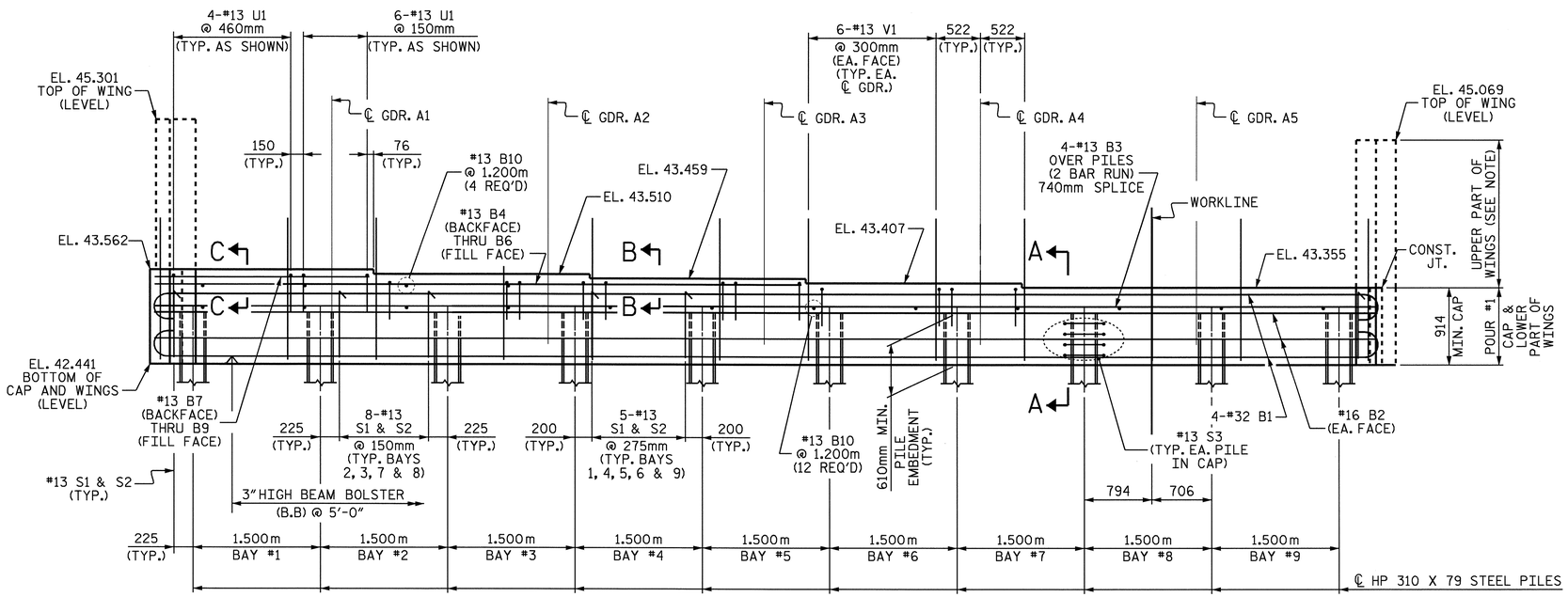

ELEVATION

PROJECT NO. R-2554BA
WAYNE COUNTY
STATION: 118+92.556 -L-

SHEET 1 OF 3

STATE OF NORTH CAROLINA
DEPARTMENT OF TRANSPORTATION
RALEIGH

SUBSTRUCTURE END BENT #1 (LEFT LANE)

NORTH CAROLINA PROFESSIONAL SEAL 15825 ENGINEER BRUCE D. KLAPPENBACH
6-6-08

REVISIONS						SHEET NO. S-341
NO.	BY:	DATE:	NO.	BY:	DATE:	TOTAL SHEETS 478
1			3			
2			4			

DRAWN BY : A. SORSENGINH DATE : 11/28/07
CHECKED BY : H. T. BARBOUR DATE : 12/17/07

05-JUN-2008 10:23
r:\structures\bailey\str#12\asorsenginh\r-2554ba_sd_e*.dgn
tbarbour

STR. #12

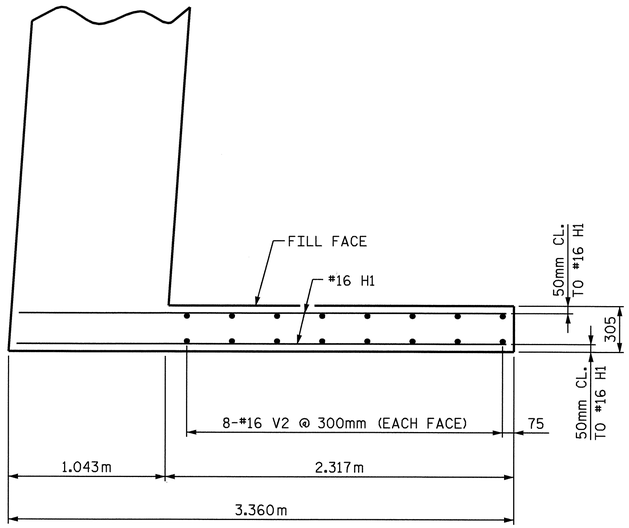

PLAN OF LEFT WING (W1)

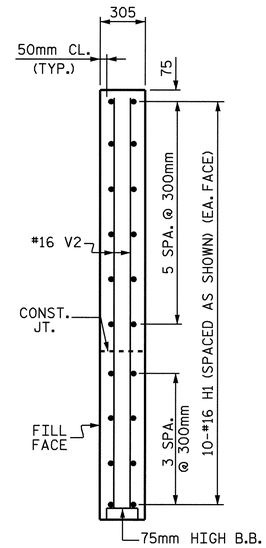

SECTION X-X

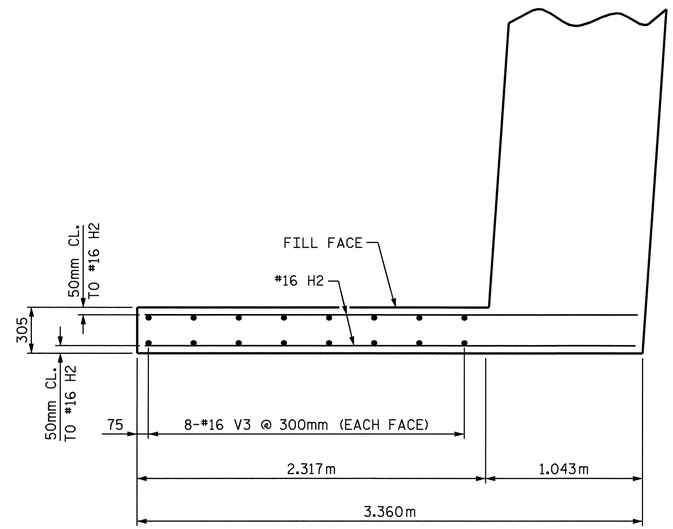

PLAN OF RIGHT RIGHT (W2)

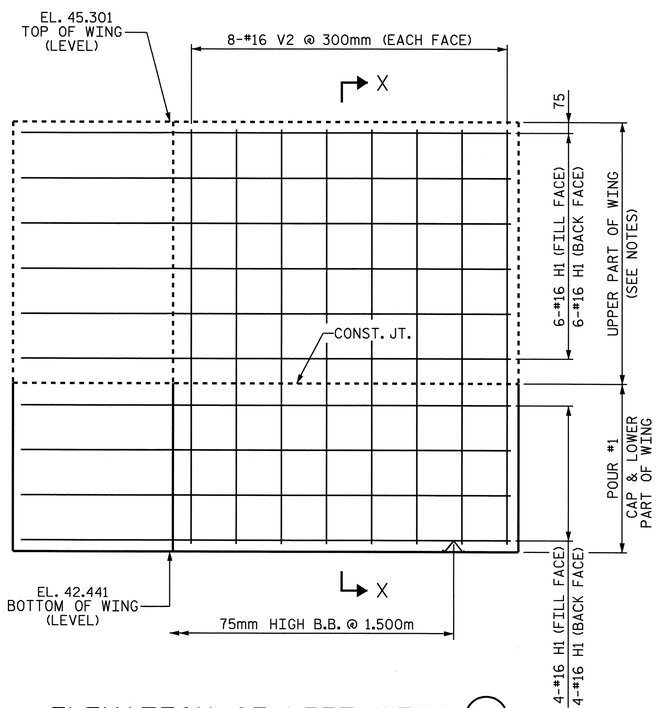

ELEVATION OF LEFT WING (W1)

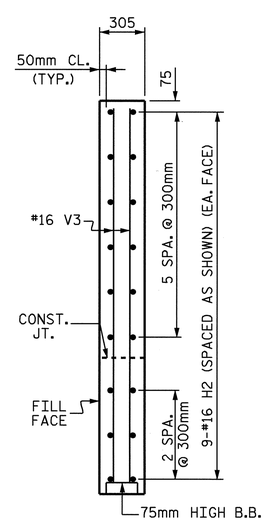

SECTION Y-Y

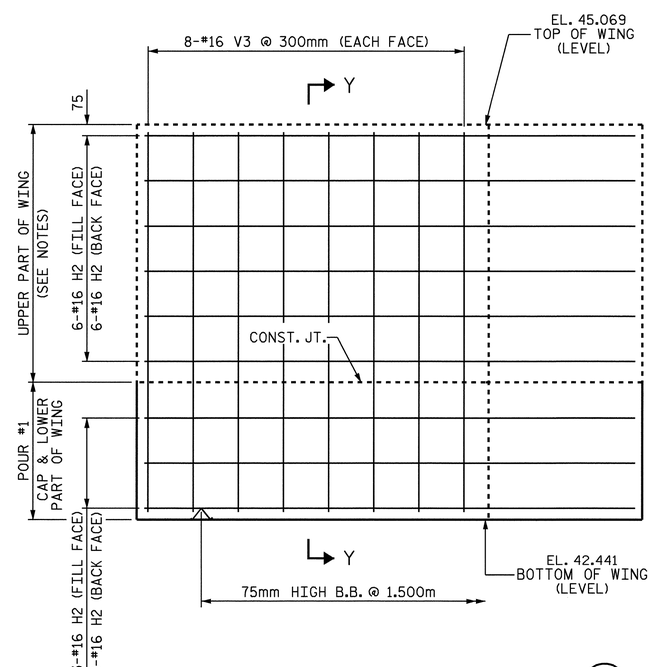

ELEVATION OF RIGHT WING (W2)

PROJECT NO. R-2554BA
WAYNE COUNTY
STATION: 118+92.556 -L-

SHEET 2 OF 3

STATE OF NORTH CAROLINA
DEPARTMENT OF TRANSPORTATION
RALEIGH

SUBSTRUCTURE END BENT #1 (LEFT LANE)

NORTH CAROLINA PROFESSIONAL SEAL 15825 ENGINEER BRUCE D. KLAPPENBACH
6-6-08

REVISIONS						SHEET NO.
NO.	BY:	DATE:	NO.	BY:	DATE:	S-342
1			3			TOTAL SHEETS
2			4			478

STR. #12

DRAWN BY : A. SORSENGINH DATE : 11/29/07
CHECKED BY : H. T. BARBOUR DATE : 12/17/07

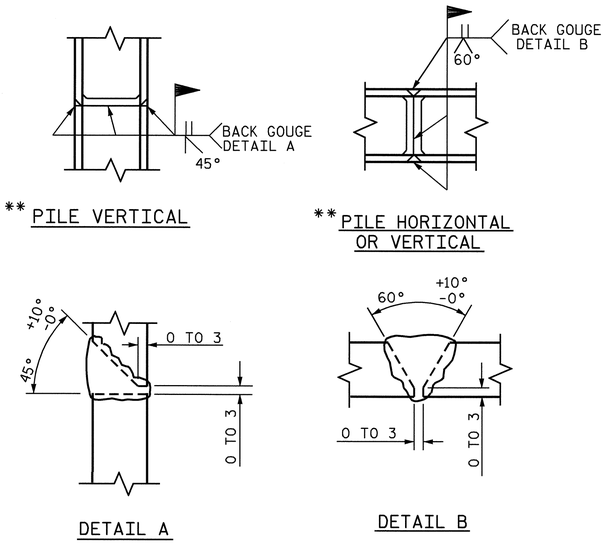

PILE SPLICE DETAILS

** POSITION OF PILE DURING WELDING.

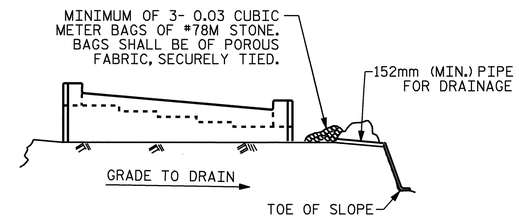

BAGGED STONE AND PIPE SHALL BE PLACED IMMEDIATELY AFTER COMPLETION OF END BENT EXCAVATION. PIPE MAY BE EITHER CONCRETE, CORRUGATED STEEL, CORRUGATED ALUMINUM ALLOY, OR CORRUGATED PLASTIC. PERFORATED PIPE WILL NOT BE ALLOWED.

BAGGED STONE SHALL REMAIN IN PLACE UNTIL THE ENGINEER DIRECTS THAT IT BE REMOVED. THE CONTRACTOR SHALL REMOVE AND DISPOSE OF SILT ACCUMULATIONS AT BAGGED STONE WHEN SO DIRECTED BY THE ENGINEER. BAGS SHALL BE REMOVED AND REPLACED WHENEVER THE ENGINEER DETERMINES THAT THEY HAVE DETERIORATED AND LOST THEIR EFFECTIVENESS.

NO SEPARATE PAYMENT WILL BE MADE FOR THIS WORK AND THE ENTIRE COST OF THIS WORK SHALL BE INCLUDED IN THE UNIT CONTRACT PRICE BID FOR THE SEVERAL PAY ITEMS.

TEMPORARY DRAINAGE AT END BENT

BAR TYPES

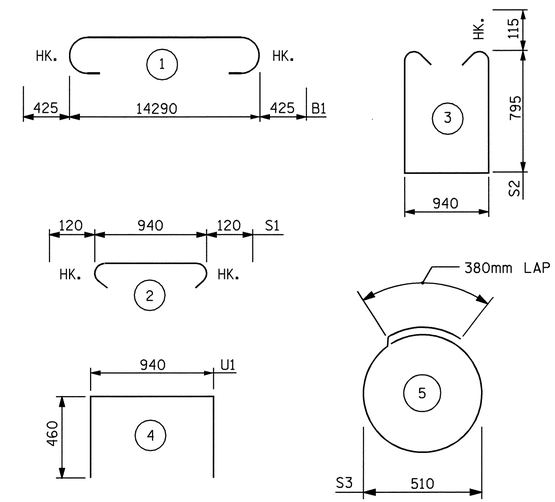

ALL BAR DIMENSIONS ARE OUT TO OUT.

BILL OF MATERIAL

END BENT #1

BAR	NO.	SIZE	TYPE	LENGTH	WEIGHT
B1	8	#32	1	15140	776
B2	4	#16	STR	14340	89
B3	8	#13	STR	7540	60
B4	1	#13	STR	7620	8
B5	2	#13	STR	7600	15
B6	1	#13	STR	7580	8
B7	1	#13	STR	2520	3
B8	2	#13	STR	2500	5
B9	1	#13	STR	2480	2
B10	16	#13	STR	940	15
H1	20	#16	STR	3240	101
H2	18	#16	STR	3260	91
S1	59	#13	2	1180	69
S2	59	#13	3	2760	162
S3	40	#13	5	1980	79
U1	40	#13	4	1860	74
V1	72	#13	STR	1680	120
V2	16	#16	STR	2760	69
V3	16	#16	STR	2520	63

REINFORCING STEEL = 1809 KG

CLASS A CONCRETE BREAKDOWN:

POUR #1
(CAP & LOWER PART OF WINGS)

	CU. METERS	16.8
TOTAL	CU. METERS	16.8

HP 310 X 79 STEEL PILES

NO. 10	METERS	310

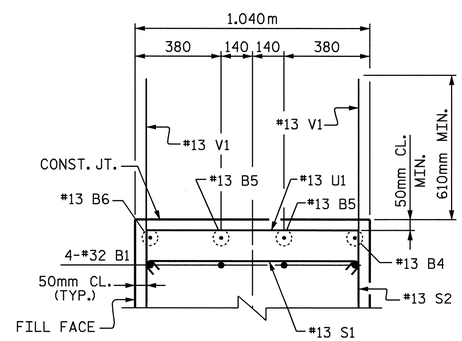

SECTION B-B

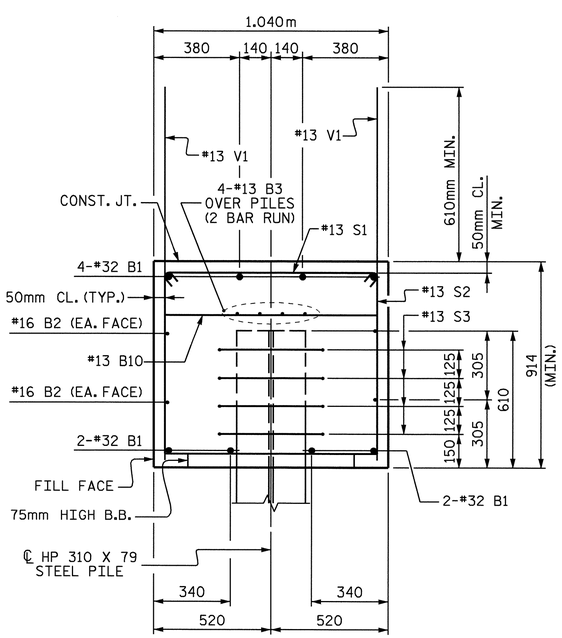

SECTION A-A

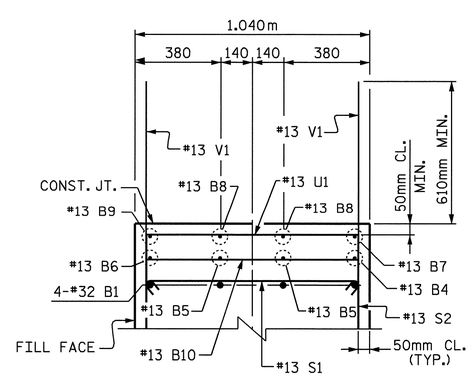

SECTION C-C

PROJECT NO. R-2554BA
WAYNE COUNTY
STATION: 118+92.556 -L-

SHEET 3 OF 3

STATE OF NORTH CAROLINA
DEPARTMENT OF TRANSPORTATION
RALEIGH

SUBSTRUCTURE END BENT #1 (LEFT LANE)

NORTH CAROLINA PROFESSIONAL SEAL 15825 ENGINEER BRUCE D. KLAPPENBACH
6-6-08

REVISIONS						SHEET NO.
NO.	BY:	DATE:	NO.	BY:	DATE:	S-343
1			3			TOTAL SHEETS
2			4			478

DRAWN BY : A. SORSENGINH DATE : 11/29/07
CHECKED BY : H. T. BARBOUR DATE : 12/17/07

STR. #12

NOTES

SEE SUPERSTRUCTURE SHEETS FOR UPPER PART OF INTEGRAL END BENT DETAILS.

THE CONTRACTORE SHALL PROVIDE FOR INSTALLATION OF THE 102mm DIAMETER DRAIN PIPE THROUGH THE WING WALL AS REQUIRED FOR REINFORCED BRIDGE APPROACH FILLS, SEE THE ROADWAY PLANS. REINFORCING STEEL IN THE WING WALL MAY BE SHIFTED AS NECESSARY TO CLEAR THE DRAIN PIPE.

THE CONTRACTOR'S ATTENTION IS CALLED TO THE FACT THAT THE UPPER PART OF WINGS IS TO BE POURED WITH SUPERSTRUCTURE.

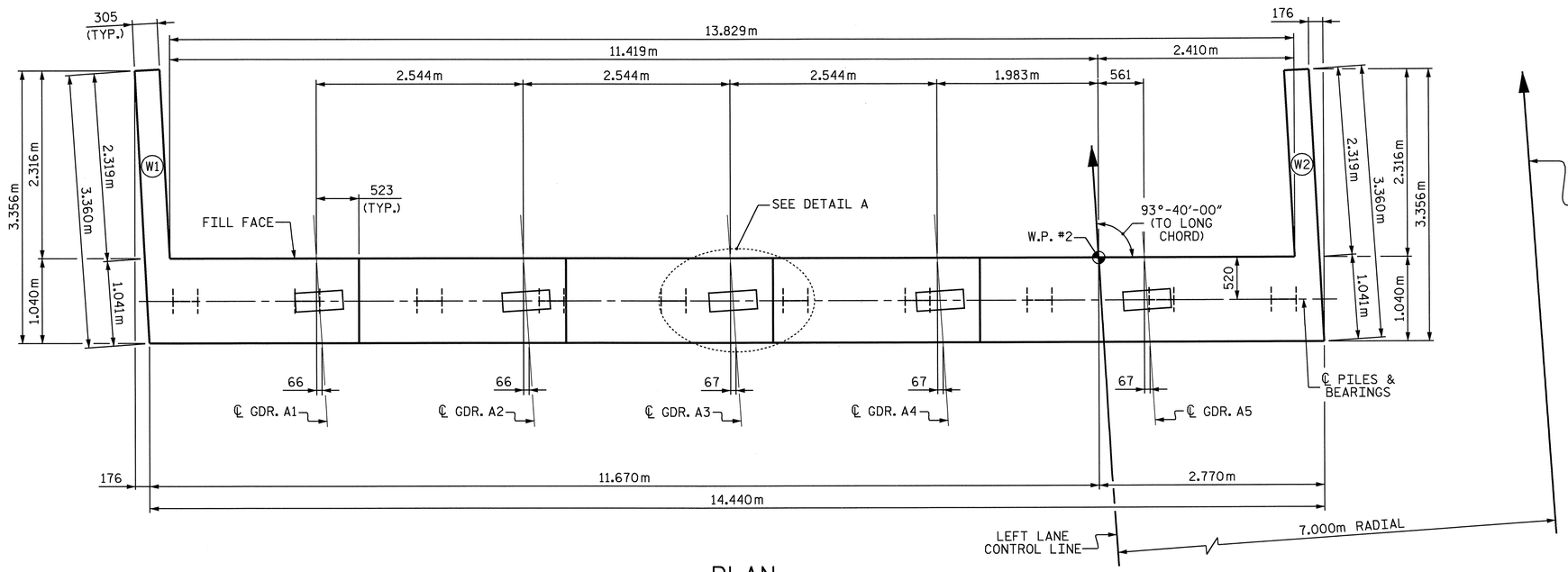

PLAN

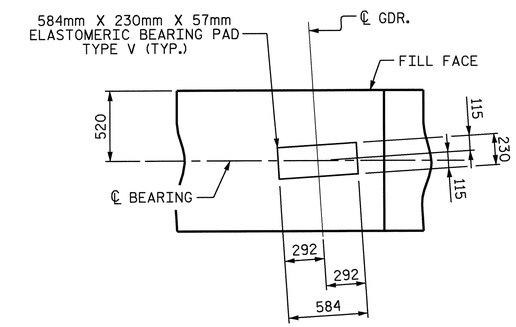

DETAIL A

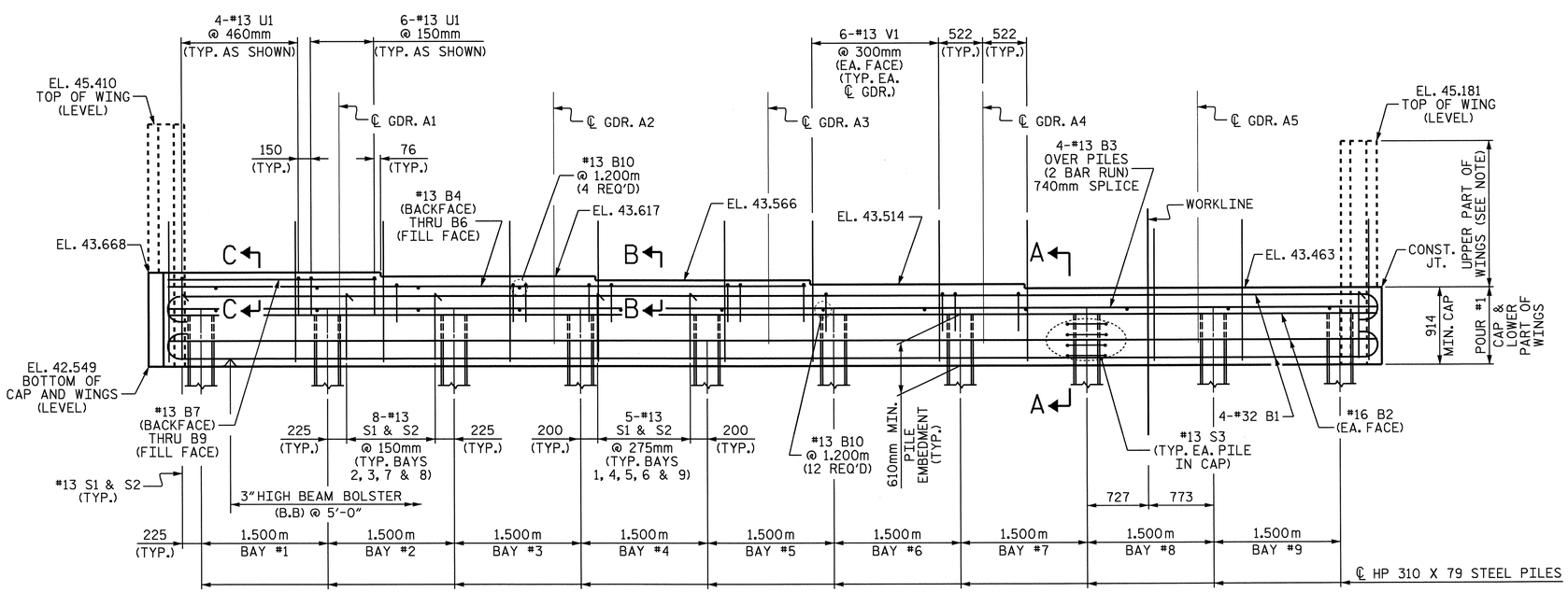

ELEVATION

PROJECT NO. R-2554BA
WAYNE COUNTY
STATION: 118+92.556 -L-

SHEET 1 OF 3

STATE OF NORTH CAROLINA
DEPARTMENT OF TRANSPORTATION
RALEIGH

SUBSTRUCTURE END BENT #2 (LEFT LANE)

NORTH CAROLINA PROFESSIONAL SEAL 15825 ENGINEER BRUCE D. KLAPPENBACH
6-6-08

REVISIONS						SHEET NO. S-344
NO.	BY:	DATE:	NO.	BY:	DATE:	TOTAL SHEETS 478
1			3			
2			4			

STR. #12

DRAWN BY : A. SORSENGINH DATE : 11/28/07
CHECKED BY : H. T. BARBOUR DATE : 12/17/07

05-JUN-2008 10:23
r:\structures\bailey\str#12\asorsenginh\r-2554ba_sd_e*.dgn
tbarbour

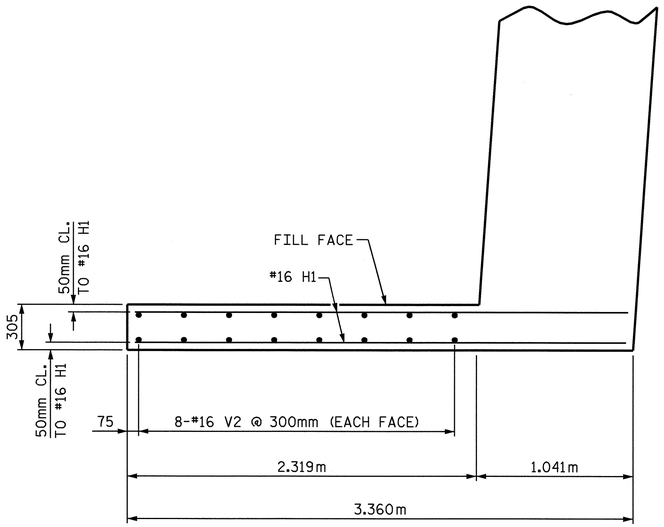

PLAN OF LEFT WING (W1)

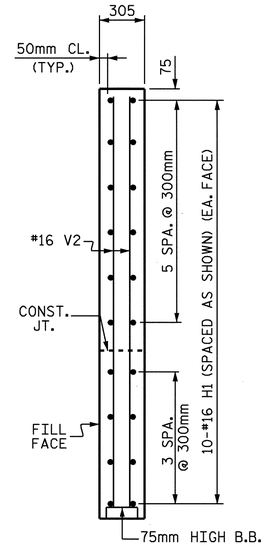

SECTION Y-Y

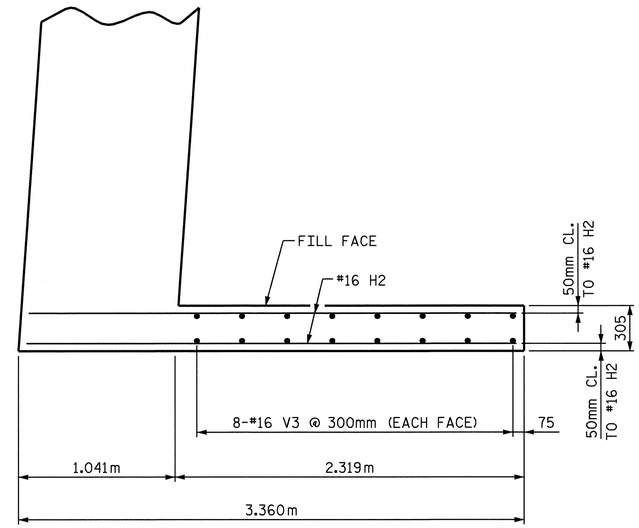

PLAN OF RIGHT RIGHT (W2)

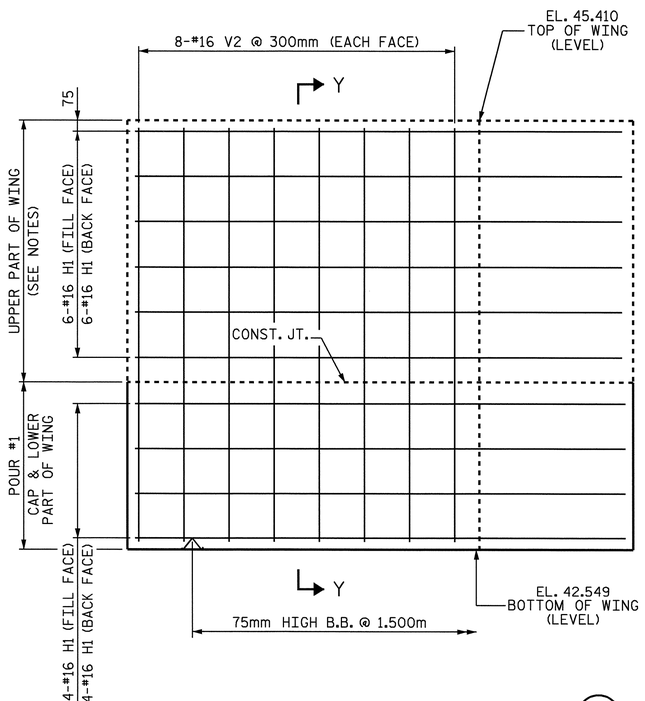

ELEVATION OF LEFT WING (W1)

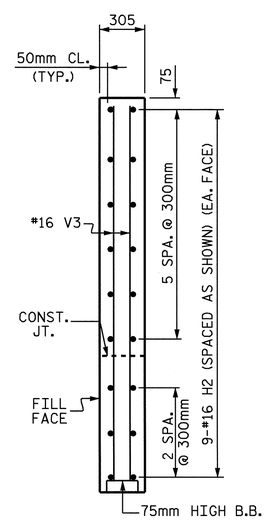

SECTION X-X

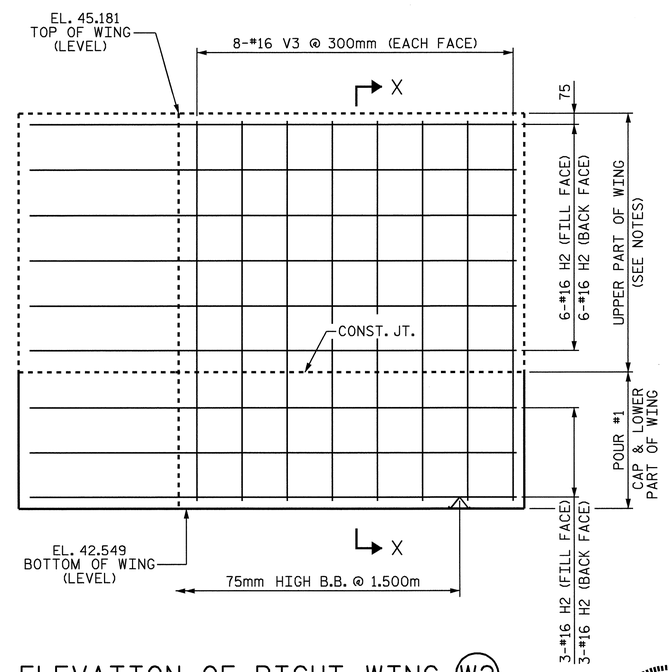

ELEVATION OF RIGHT WING (W2)

NORTH CAROLINA PROFESSIONAL SEAL 15825 ENGINEER BRUCE D. KLAPPENBACH
6-6-08

PROJECT NO. R-2554BA
WAYNE COUNTY
STATION: 118+92.556 -L-

SHEET 2 OF 3

STATE OF NORTH CAROLINA
DEPARTMENT OF TRANSPORTATION
RALEIGH

SUBSTRUCTURE
END BENT #2
(LEFT LANE)

REVISIONS						SHEET NO.
NO.	BY:	DATE:	NO.	BY:	DATE:	S-345
1			3			TOTAL SHEETS
2			4			478

DRAWN BY : A. SORSENGINH DATE : 11/29/07
CHECKED BY : H. T. BARBOUR DATE : 12/17/07

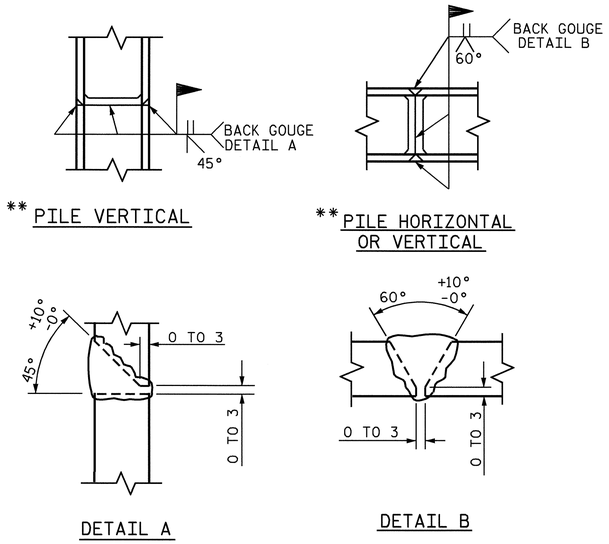

PILE SPLICE DETAILS

** POSITION OF PILE DURING WELDING.

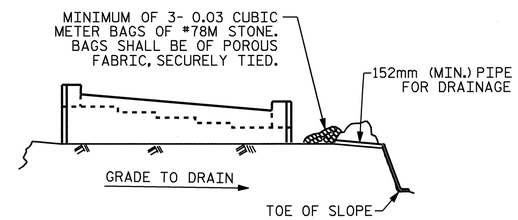

BAGGED STONE AND PIPE SHALL BE PLACED IMMEDIATELY AFTER COMPLETION OF END BENT EXCAVATION. PIPE MAY BE EITHER CONCRETE, CORRUGATED STEEL, CORRUGATED ALUMINUM ALLOY, OR CORRUGATED PLASTIC. PERFORATED PIPE WILL NOT BE ALLOWED.

BAGGED STONE SHALL REMAIN IN PLACE UNTIL THE ENGINEER DIRECTS THAT IT BE REMOVED. THE CONTRACTOR SHALL REMOVE AND DISPOSE OF SILT ACCUMULATIONS AT BAGGED STONE WHEN SO DIRECTED BY THE ENGINEER. BAGS SHALL BE REMOVED AND REPLACED WHENEVER THE ENGINEER DETERMINES THAT THEY HAVE DETERIORATED AND LOST THEIR EFFECTIVENESS.

NO SEPARATE PAYMENT WILL BE MADE FOR THIS WORK AND THE ENTIRE COST OF THIS WORK SHALL BE INCLUDED IN THE UNIT CONTRACT PRICE BID FOR THE SEVERAL PAY ITEMS.

TEMPORARY DRAINAGE AT END BENT

BAR TYPES

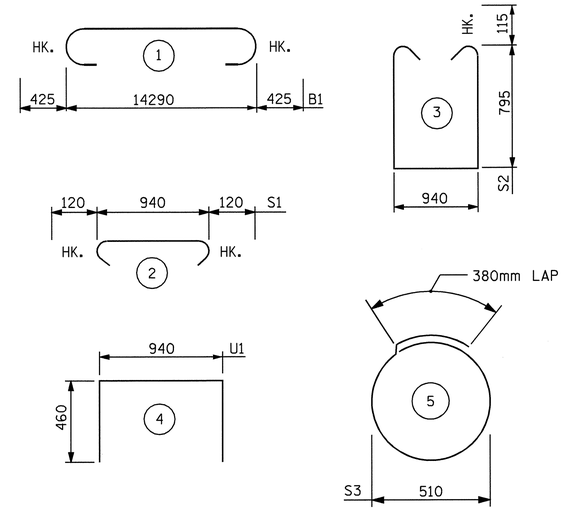

ALL BAR DIMENSIONS ARE OUT TO OUT.

BILL OF MATERIAL

END BENT #2

BAR	NO.	SIZE	TYPE	LENGTH	WEIGHT
B1	8	#32	1	15140	776
B2	4	#16	STR	14340	89
B3	8	#13	STR	7540	60
B4	1	#13	STR	7560	8
B5	2	#13	STR	7580	15
B6	1	#13	STR	7600	8
B7	1	#13	STR	2480	2
B8	2	#13	STR	2500	5
B9	1	#13	STR	2520	3
B10	16	#13	STR	940	15
H1	20	#16	3	3260	101
H2	18	#16	3	3240	91
S1	59	#13	2	1180	69
S2	59	#13	3	2760	162
S3	40	#13	5	1980	79
U1	40	#13	4	1860	74
V1	72	#13	STR	1680	120
V2	16	#16	STR	2760	69
V3	16	#16	STR	2520	63

REINFORCING STEEL = 1809 KG

CLASS A CONCRETE BREAKDOWN:

POUR #1
(CAP & LOWER PART OF WINGS)
CU. METERS 16.8
TOTAL CU. METERS 16.8

HP 310 X 79 STEEL PILES
NO. 10 METERS 240

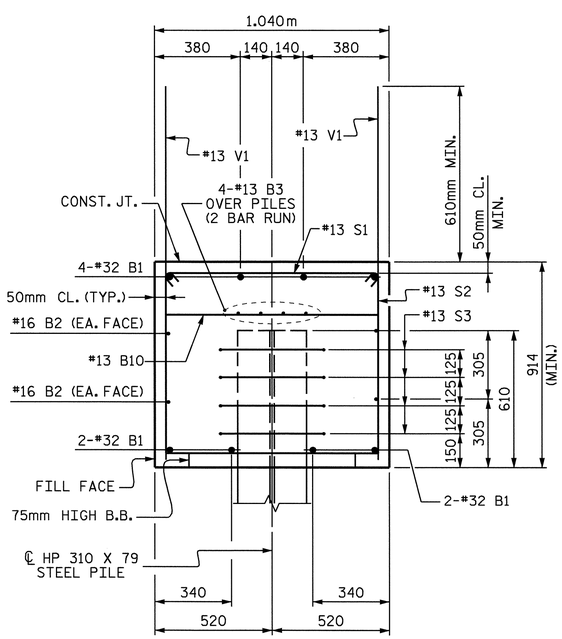

SECTION A-A

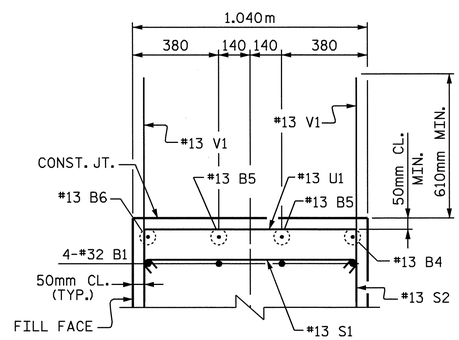

SECTION B-B

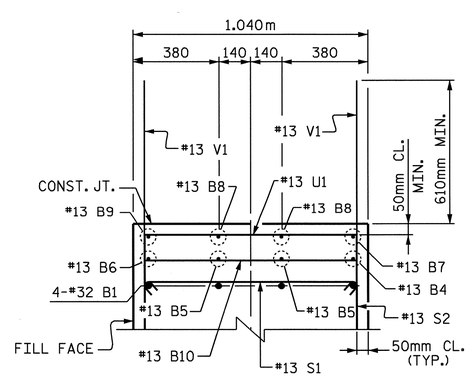

SECTION C-C

PROJECT NO. R-2554BA
WAYNE COUNTY
STATION: 118+92.556 -L-

SHEET 3 OF 3

STATE OF NORTH CAROLINA
DEPARTMENT OF TRANSPORTATION
RALEIGH

SUBSTRUCTURE
END BENT #2
(LEFT LANE)

NORTH CAROLINA PROFESSIONAL SEAL 15825 ENGINEER BRUCE D. KLAPPENBACH
1-6-08

REVISIONS						SHEET NO.
NO.	BY:	DATE:	NO.	BY:	DATE:	S-346
1			3			TOTAL SHEETS
2			4			478

STR. #12

DRAWN BY : A. SORSENGINH DATE : 12/5/07
CHECKED BY : H. T. BARBOUR DATE : 12/17/07

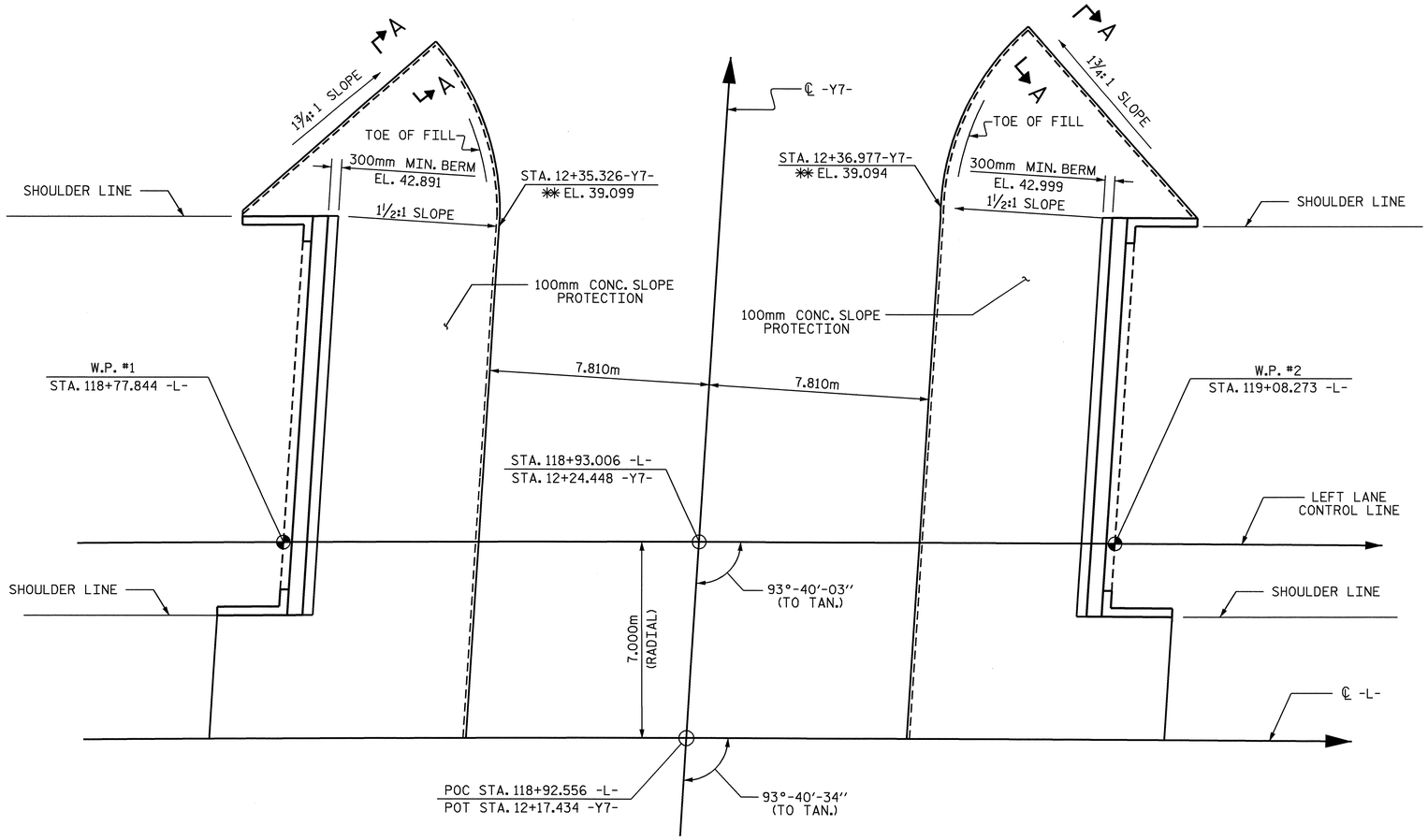

NOTES

SLOPE PROTECTION SHALL BE PLACED UNDER THE ENDS OF THE BRIDGE AS SHOWN IN THE DETAILS. THE CONTRACTOR, AT HIS OPTION, MAY USE ALTERNATE "B" ONLY FOR HIGHWAY OVER HIGHWAY GRADE SEPARATIONS WITH 2:1 END BENT SLOPE IN RURAL, UNPOPULATED AREAS. STRAIGHT EDGING WILL NOT BE REQUIRED UNLESS, IN THE OPINION OF THE ENGINEER, VISUAL INSPECTION INDICATES A NEED FOR IT. MEASUREMENT AND PAYMENT SHALL BE AS PRESCRIBED IN SECTION 462 OF THE STANDARD SPECIFICATIONS. FOR BERM WIDTH, SEE GENERAL DRAWING.

ALTERNATE "A" SHALL CONSIST OF 100mm POURED-IN-PLACE CONCRETE PAVING AS SHOWN IN THE DETAILS ON THIS SHEET. CONCRETE SHALL BE CLASS "B". THE CONCRETE SURFACE SHALL BE FLOATED WITH A WOODEN FLOAT AND FINISHED. WELDED WIRE FABRIC REINFORCING SHALL BE 152 X 152 - W9.1 X W9.1, 1520mm WIDE. SLOPE PROTECTION SHALL BE POURED IN 1520mm STRIPS AS SHOWN IN THE "POURING DETAIL" WITH 600mm LONG #13 BARS PLACED ALONG THE SLOPE BETWEEN STRIPS AT 450mm MAXIMUM SPACING. SLOPE PROTECTION MAY BE POURED IN ALTERNATE 1220mm AND 1520mm STRIPS AS SHOWN IN THE "OPTIONAL POURING DETAIL" WITH ADJACENT RUNS OF WELDED WIRE FABRIC LAPPING AT LEAST 152mm. THE COST OF THE WELDED WIRE FABRIC AND #13 BARS, IF USED, SHALL BE INCLUDED IN THE CONTRACT UNIT PRICE BID PER SQUARE METER FOR SLOPE PROTECTION.

BRIDGE @ STA. 118+92.556-L- (LEFT LANE)	100 mm SLOPE PROTECTION	✱ WELDED WIRE FABRIC 1520mm WIDE
	SQUARE METERS	APPROX. METERS
END BENT 1	283	206
END BENT 2	280	204

✱ QUANTITY SHOWN IS BASED ON 1520mm POURS.

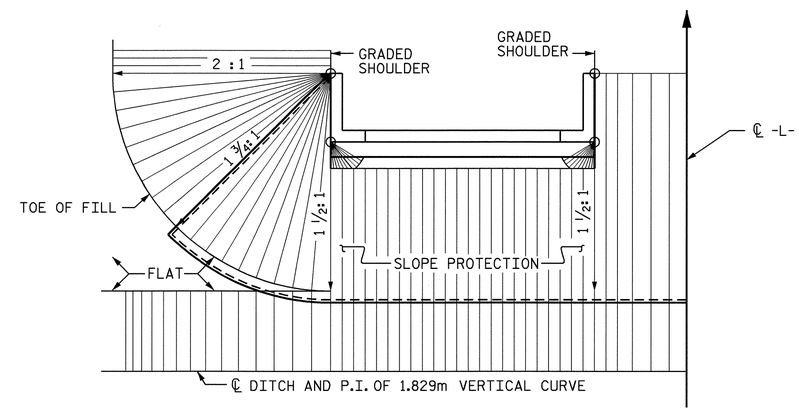

PLAN - END BENT WITH SWEPT BACK WINGS

(1 ½: 1 SLOPE)

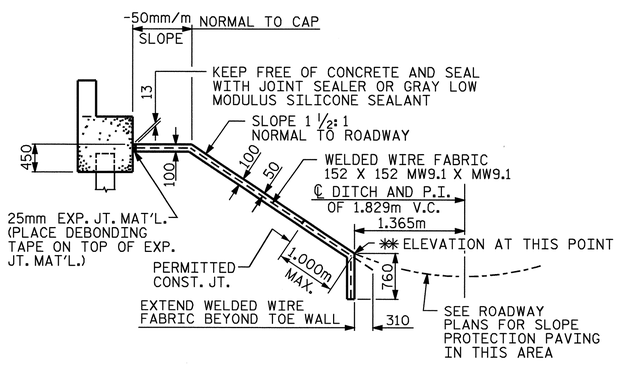

SECTION ALONG ℄ ROADWAY WHEN FILL CATCHES IN DITCH

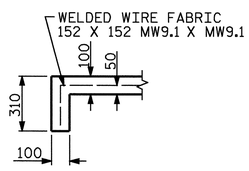

SECTION A-A

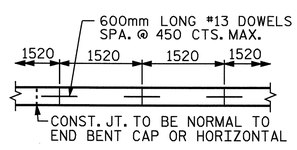

STRIP WIDTHS MAY VARY IN CURVED PORTION.

POURING DETAIL

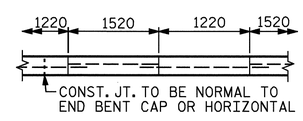

POUR A 1220mm STRIP FIRST. STRIP WIDTHS MAY VARY IN CURVED PORTION.

OPTIONAL POURING DETAIL

PROJECT NO. R-2554BA

WAYNE COUNTY

STATION: 118+92.556 -L-

STATE OF NORTH CAROLINA
DEPARTMENT OF TRANSPORTATION
RALEIGH

STANDARD SLOPE PROTECTION DETAILS (LEFT LANE)

NORTH CAROLINA PROFESSIONAL SEAL 15825 ENGINEER BRYAN D. KLAPPENBACH
6-6-08

REVISIONS							SHEET NO. S-347
NO.	BY:	DATE:	NO.	BY:	DATE:		TOTAL SHEETS 478
1			3				
2			4				

DRAWN BY : M. G. SHAIKH DATE : 11-06-07
CHECKED BY : B. D. KLAPPENBACH DATE : 04-24-08

05-JUN-2008 16:42
R:\Structures\BAILEY\Str#12\mshaikh\Microstation\R-2554BA_sd_SP.dgn
bklappenbach

STR #12

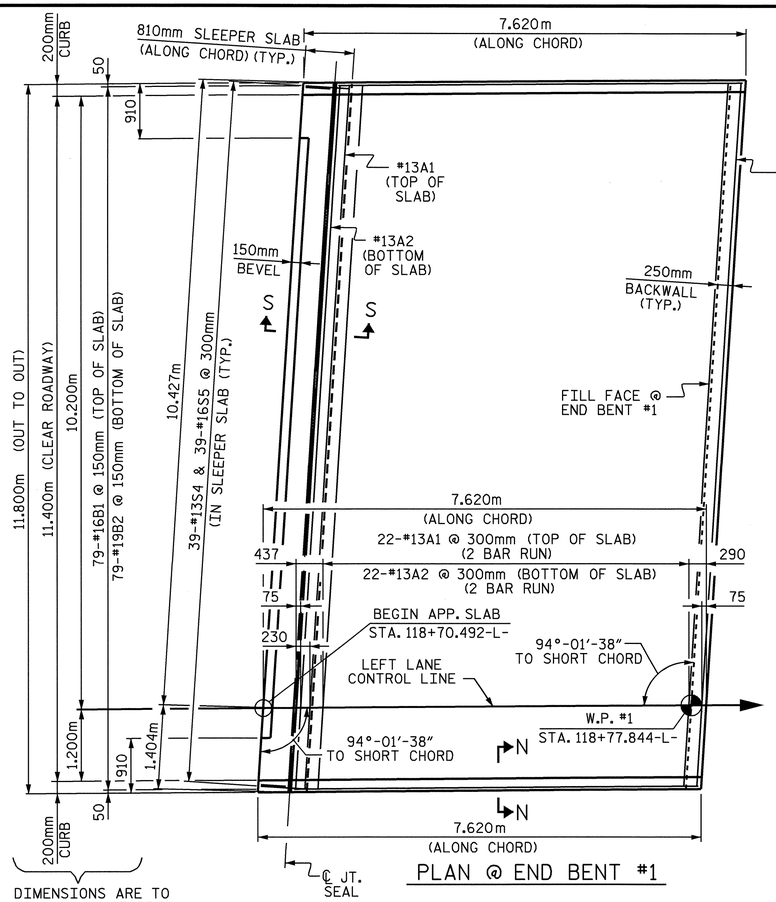

PLAN @ END BENT #1

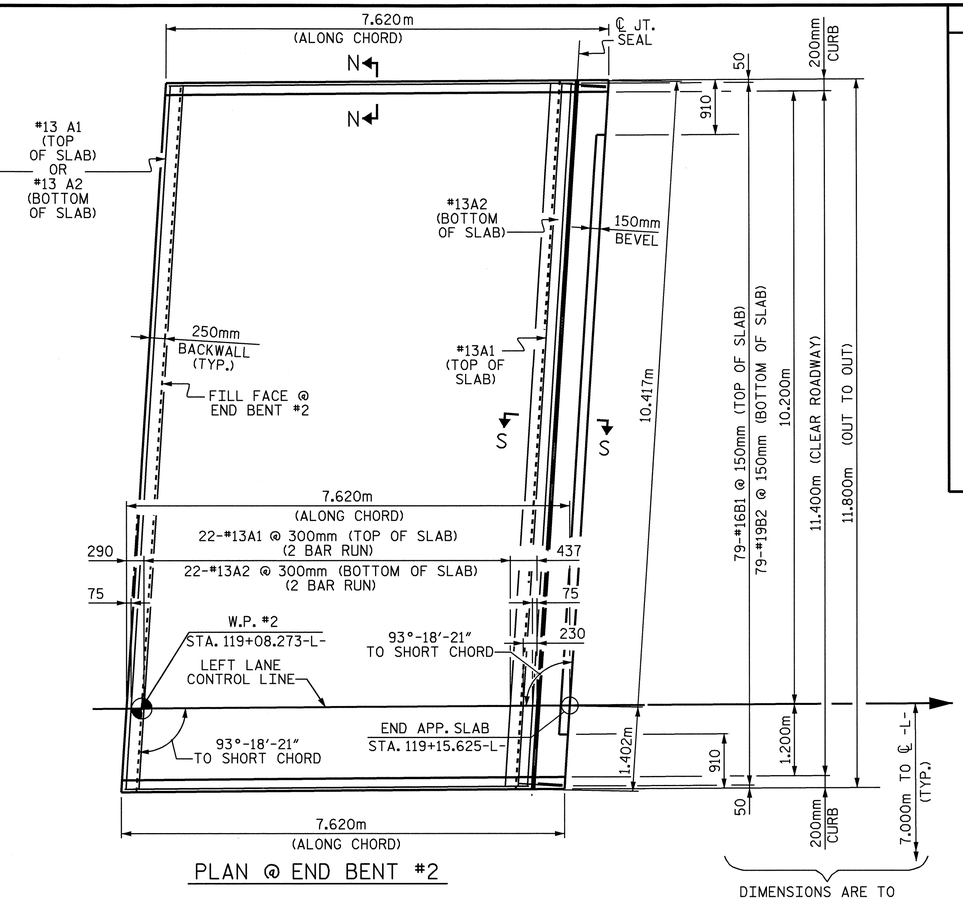

PLAN @ END BENT #2

ARC OFFSETS ARE NEGLIGIBLE, THEREFORE NOT SHOWN.

"A" BARS IN SLEEPER SLAB NOT SHOWN FOR CLARITY.

BAR TYPES

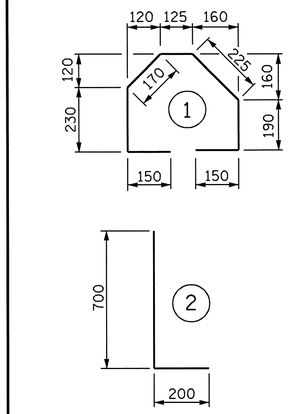

ALL BAR DIMENSIONS ARE OUT TO OUT

BILL OF MATERIAL

FOR ONE APPROACH SLAB (2 REQ'D)

BAR	NO.	SIZE	TYPE	LENGTH	WEIGHT
✳ A1	60	#13	STR	6160	367
A2	48	#13	STR	6140	293
✳ B1	79	#16	STR	6800	834
B2	79	#19	STR	7000	1236
✳ S4	39	#13	1	1240	48
S5	39	#16	2	900	54

REINFORCING STEEL	kg.	1583
✳ EPOXY COATED REINFORCING STEEL	kg.	1249
CLASS AA CONCRETE		
POUR #1 - SLEEPER SLAB	C.M.	3.0
POUR #2 - SLAB AND CURB	C.M.	25.8
TOTAL	C.M.	28.8

NOTES

APPROACH SLAB SHALL NOT BE CONSTRUCTED PRIOR TO COMPLETION OF THE BRIDGE DECK.

FOR REINFORCED BRIDGE APPROACH FILL INCLUDING FABRIC, IMPERMEABLE GEOMEMBRANE, 102mm Ø DRAINAGE PIPE, #78M STONE, AND SELECT MATERIAL, SEE ROADWAY PLANS.

AREA BETWEEN THE WINGWALL AND APPROACH SLAB SHALL BE GRADED TO DRAIN THE WATER AWAY FROM THE FILL FACE OF THE BRIDGE AND SHALL BE PAVED. SEE ROADWAY PLANS.

THE 150mm COMP. A.B.C. SHALL BE FLUSH WITH THE SLEEPER SLAB AND SHALL EXTEND 300mm OUTSIDE OF EACH EDGE OF THE APPROACH SLAB.

THE CONTRACTOR MAY USE 100mm TYPE B-25.0B ASPHALT CONCRETE BASE COURSE IN LIEU OF 150mm COMP. A.B.C. IF THIS OPTION IS USED, THE BASE COURSE SHALL BE FLUSH WITH THE SLEEPER SLAB, AND THE WIDTH SHALL BE THE SAME AS THAT OF THE APPROACH SLAB.

THE CONTRACTOR MAY USE 125mm CLASS "A" CONCRETE BASE IN LIEU OF 150mm COMP. A.B.C. IF THIS OPTION IS USED, THE CONCRETE BASE SHALL BE FLUSH WITH THE SLEEPER SLAB, AND THE WIDTH SHALL BE THE SAME AS THAT OF THE APPROACH SLAB. THE CONCRETE SHALL BE FINISHED TO A SMOOTH SURFACE AND A LAYER OF 13.6 kg ROOFING FELT SHALL BE PLACED BETWEEN THE CONCRETE BASE AND THE APPROACH SLAB TO PREVENT BOND. THE APPROACH SLAB SHALL NOT BE CAST UNTIL THE CONCRETE BASE HAS REACHED AN AGE OF THREE CURING DAYS.

THE VERTICAL JOINT ON THE RIGHT AND LEFT SIDE OF THE APPROACH SLAB AT THE ENDS OF THE EVAZOTE JOINT SHALL BE FILLED WITH SILICONE OR OTHER APPROVED MATERIAL IN ORDER TO PREVENT BACKFILL FROM ENTERING THE JOINT OPENING.

THE JOINT OPENING AT THE APPROACH SLAB/DECK INTERFACE SHALL BE SAWED NO MORE THAN 12 HOURS AFTER THE APPROACH SLAB IS CAST. THE JOINT SHALL BE CLEANED OF ALL DEBRIS BEFORE THE SEALANT IS APPLIED. THE JOINT SEALER MATERIAL SHALL CONFORM TO THE REQUIREMENTS OF TYPE SL LOW MODULUS SILICONE SEALANT.

FOR EVAZOTE JOINT SEALS, SEE SPECIAL PROVISIONS.

THE NOMINAL UNCOMPRESSED SEAL WIDTH OF THE EVAZOTE JOINT SEAL SHALL BE 64mm.

FOR ELASTOMERIC CONCRETE, SEE SPECIAL PROVISIONS.

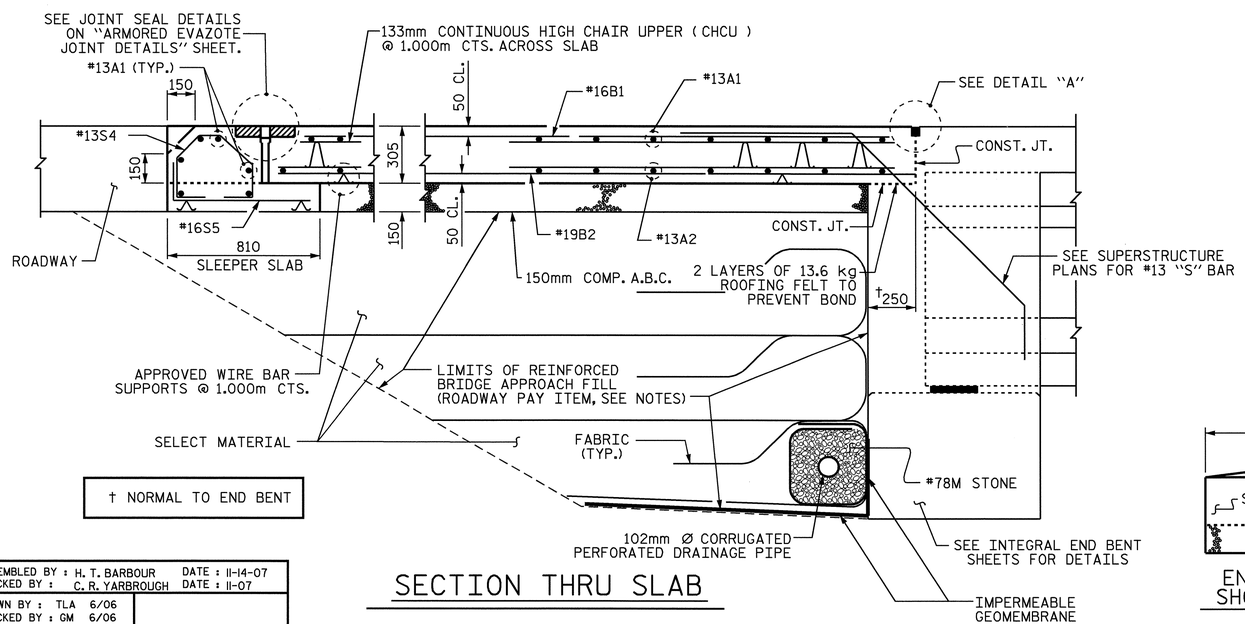

SECTION THRU SLAB

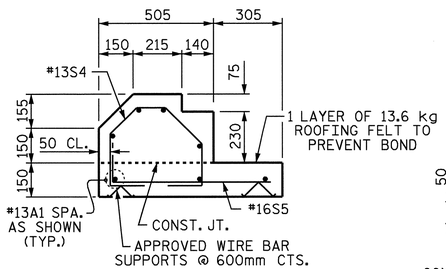

SECTION S-S

SHOWING SLEEPER SLAB

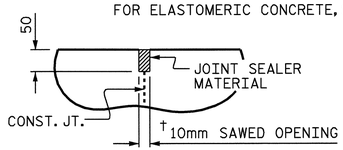

DETAIL "A"

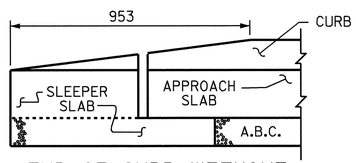

END OF CURB WITHOUT SHOULDER BERM GUTTER

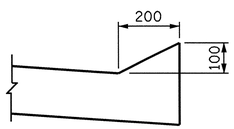

SECTION N-N

NORTH CAROLINA PROFESSIONAL SEAL 15825 ENGINEER D. KLAPPENBACH

6-6-08

PROJECT NO. R-2554BA

WAYNE COUNTY

STATION: 118+92.556 -L-

SHEET 1 OF 3

STATE OF NORTH CAROLINA
DEPARTMENT OF TRANSPORTATION
RALEIGH

BRIDGE APPROACH SLAB FOR INTEGRAL ABUTMENT

(LEFT LANE)

REVISIONS						SHEET NO.
NO.	BY:	DATE:	NO.	BY:	DATE:	S-348
1			3			TOTAL SHEETS
2			4			478

ASSEMBLED BY :	H. T. BARBOUR	DATE :	11-14-07
CHECKED BY :	C. R. YARBROUGH	DATE :	11-07
DRAWN BY :	TLA		6/06
CHECKED BY :	GM		6/06

05-JUN-2008 10:56
r:\structures\bailey\str#12\tbarbour\r-2554ba_sd_as.dgn
tbarbour

STR. # 12

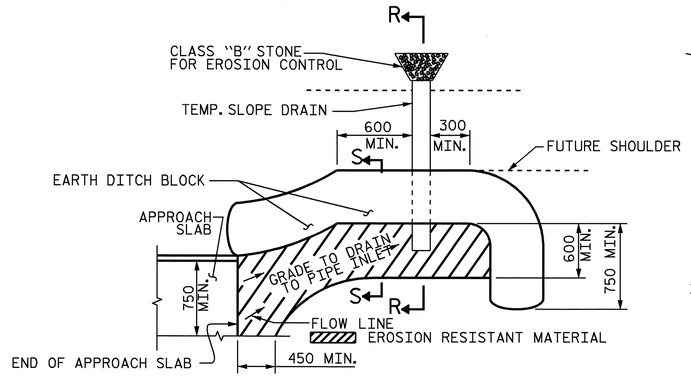

NOTE: IMMEDIATELY AFTER THE CONSTRUCTION OF THE APPROACH SLAB, THE CONTRACTOR SHALL PROVIDE TEMPORARY BERM AND SLOPE DRAIN. CONTRACTOR SHALL GRADE TO PIPE INLET AND PROVIDE EROSION RESISTANT MATERIAL AS SHOWN. THE EROSION RESISTANT MATERIAL SHALL BE EITHER 1) ASPHALT PLANT MIX, TYPE 1 OR TYPE 2, MIN. 50mm DEPTH, 2) EROSION CONTROL MAT, OR 3) CONCRETE, AS DIRECTED BY THE ENGINEER. THE SLOPE DRAIN SHALL CONSIST OF A NON-PERFORATED TEMPORARY DRAINAGE PIPE, 305mm IN DIAMETER.

PLAN VIEW

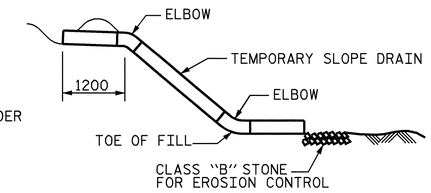

SECTION R-R

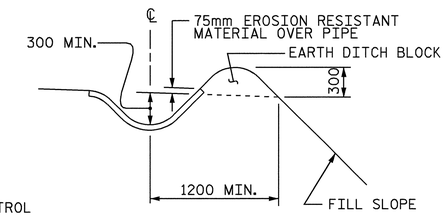

SECTION S-S

TEMPORARY BERM AND SLOPE DRAIN DETAILS

(TO BE USED WHEN SHOULDER BERM GUTTER IS REQUIRED)

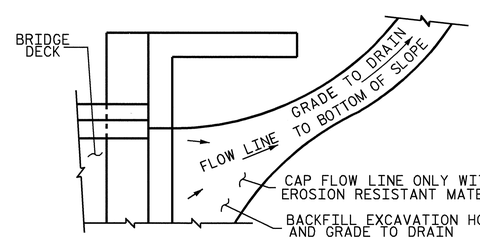

NOTE: IF THE APPROACH SLAB IS NOT CONSTRUCTED IMMEDIATELY AFTER THE BACKFILLING OF THE END BENT EXCAVATION, GRADE TO DRAIN TO THE BOTTOM OF THE SLOPE AND PROVIDE EROSION RESISTANT MATERIAL, SUCH AS FIBERGLASS ROVING OR AS DIRECTED BY THE ENGINEER TO PREVENT SOIL EROSION AND TO PROTECT THE AREA ADJACENT TO THE STRUCTURE. THE CONTRACTOR WILL BE REQUIRED TO REMOVE THESE MATERIALS PRIOR TO CONSTRUCTION OF THE APPROACH SLAB.

TEMPORARY DRAINAGE DETAIL

PROJECT NO. R-2554BA
WAYNE COUNTY
STATION: 118+92.556 -L-

SHEET 2 OF 3

STATE OF NORTH CAROLINA
DEPARTMENT OF TRANSPORTATION
RALEIGH

BRIDGE APPROACH SLAB DETAILS

(LEFT LANE)

NORTH CAROLINA PROFESSIONAL SEAL 15825 ENGINEER BRIDGE D. KLAPPENBACH
6-6-08

REVISIONS						SHEET NO. S-349
NO.	BY:	DATE:	NO.	BY:	DATE:	TOTAL SHEETS 478
1			3			
2			4			

ASSEMBLED BY : H. T. BARBOUR		DATE : 11-14-07	
CHECKED BY : C. R. YARBROUGH		DATE : 11-07	
DRAWN BY : FCJ 11/88	REV. 10/17/00	RWW/LES	
CHECKED BY : ARB 11/88	REV. 5/7/03	RWW/JTE	
	REV. 5/1/06	TLA/GM	

05-JUN-2008 10:56
r:\structures\balley\str#12\tbarbour\r-2554ba_sd_as.dgn
tbarbour

STR. #12

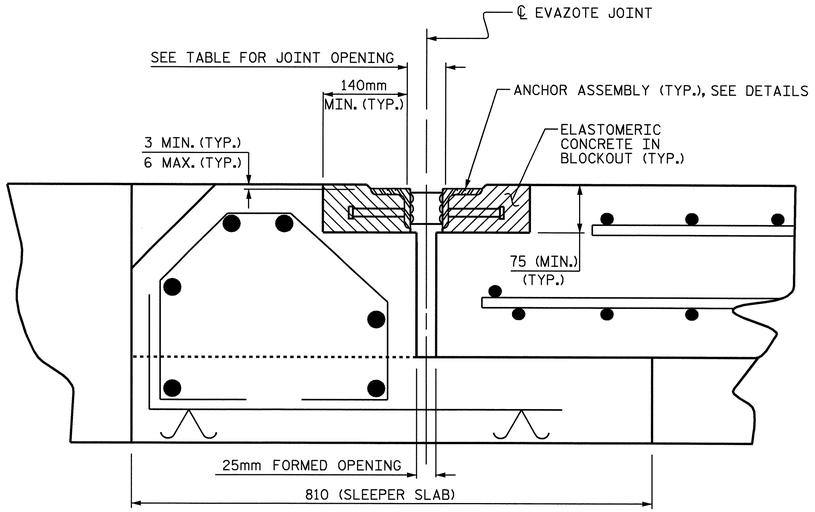

ARMORED JOINT DETAILS

SECTION NORMAL TO JOINT AT BENT

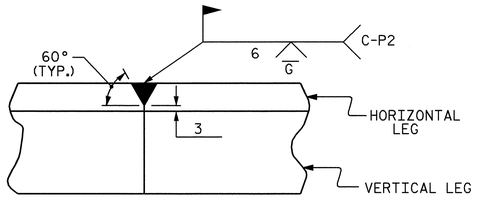

DETAIL- FIELD WELD SPLICE OF ANGLE

NOTES

ANGLES SHALL CONFORM TO AASHTO M270 GRADE 250 STEEL OR APPROVED EQUAL. ALL STUD ANCHORS SHALL CONFORM TO AASHTO M169 GRADES 1010 THRU 1020 OR APPROVED EQUAL.

STUD ANCHORS SHALL BE SHOP WELDED AND ALL HOLES SHALL BE SHOP DRILLED AS SHOWN ON THE PLANS. STUD ANCHORS SHALL BE ELECTRIC ARC END WELDED WITH COMPLETE FUSION.

UPON COMPLETION OF SHOP FABRICATION, THE ENTIRE ANCHOR ASSEMBLY SHALL BE METALLIZED. THE 12.70mm Ø STUD ANCHORS AND ANCHOR TABS NEED NOT BE METALLIZED. SEE SPECIAL PROVISION FOR THERMAL SPRAYED COATINGS (METALLIZATION).

ANCHOR ASSEMBLY SHALL BE MADE CONTINUOUS THE LENGTH OF THE JOINT FROM GUTTER TO GUTTER. FOR FIELD SPLICES AT ALL CROWN BREAK POINTS, THE ENDS OF THE STEEL ANGLES SHALL BE CUT PARALLEL TO THE BRIDGE CENTERLINE. FINISHED FIELD WELDS SHALL BE GROUND SMOOTH AND COATED WITH A MINIMUM THICKNESS OF 0.100mm OF ZINC-RICH PAINT IN ACCORDANCE WITH THE STANDARD SPECIFICATIONS.

ANCHOR ASSEMBLY SEGMENTS SHALL NOT BE LESS 3.6m NOR MORE THAN 6.1m IN LENGTH. SHORTER SEGMENTS MAY BE USED AT THE EDGE OF ROADWAY OR AT POINTS OF STAGED CONSTRUCTION.

THE ANCHOR ASSEMBLY SHALL BE SECURED AND LEVELED AS SHOWN IN THE "ARMORED JOINT ANCHOR ASSEMBLY DETAILS". NO SUBMITTALS ARE REQUIRED FOR 9.53mm Ø EXPANSION ANCHORS, NUTS OR WASHERS. THE CONTRACTOR MAY SUBMIT FOR APPROVAL AN ALTERNATE METHOD OF ALIGNING AND LEVELING THE ANGLES. THE ALTERNATE METHOD SHALL NOT INCLUDE ANY WELDING TO THE OUTSIDE FACE OF THE ANGLES.

AFTER THE ELASTOMERIC CONCRETE HAS BEEN CAST ON BOTH SIDES OF THE JOINT, REMOVE ANY EXCESS CONCRETE THAT COMES THROUGH THE WEEP HOLES AND THOROUGHLY CLEAN THE ANGLES. ANY DAMAGED STEEL SHALL BE COATED WITH A MINIMUM OF 0.100mm OF ZINC-RICH PAINT IN ACCORDANCE WITH THE STANDARD SPECIFICATIONS.

SEE SPECIAL PROVISIONS FOR EVAZOTE JOINT SEALS.

SEE SPECIAL PROVISIONS FOR ELASTOMERIC CONCRETE.

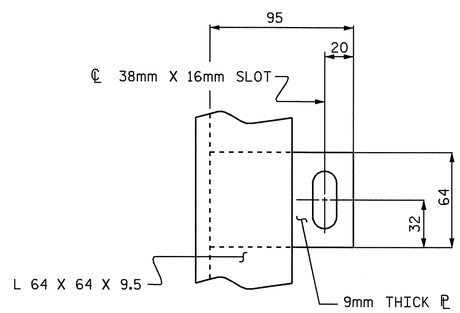

PLAN VIEW OF TAB

MOVEMENT AND SETTING AT EVAZOTE JOINT

END BENT NO.	SKEW ANGLE	NOMINAL UNCOMPRESSED SEAL WIDTH	TOTAL MOVEMENT (ALONG ℄ RDWY)	PERPENDICULAR JOINT OPENING AT 7° C	PERPENDICULAR JOINT OPENING AT 16° C	PERPENDICULAR JOINT OPENING AT 32° C
1	93°-57′-26″	64mm	11mm	53mm	51mm	47mm
2	93°-22′-34″	64mm	11mm	53mm	51mm	47mm

TOTAL MOVEMENT IS CALCULATED ALONG THE CENTERLINE OF ROADWAY.
JOINT OPENINGS ARE MEASURED PERPENDICULAR TO THE JOINT.

BILL OF MATERIAL

END BENT NO.	ELASTOMERIC CONCRETE ✳ (CU. m)	TOTAL LENGTH OF ANGLE (m)
1	0.2	22.855
2	0.2	22.840

✳ BASED ON THE MINIMUM BLOCKOUT SHOWN.

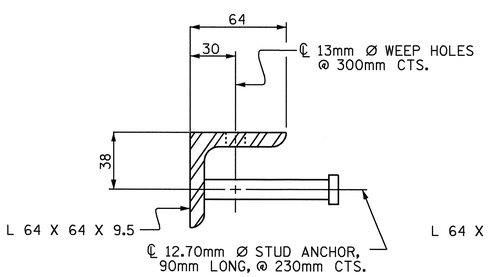

SECTION VIEW OF STUD

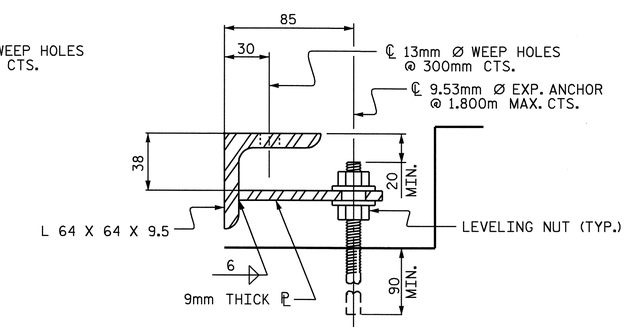

SECTION VIEW OF TAB

ARMORED JOINT ANCHOR ASSEMBLY DETAILS

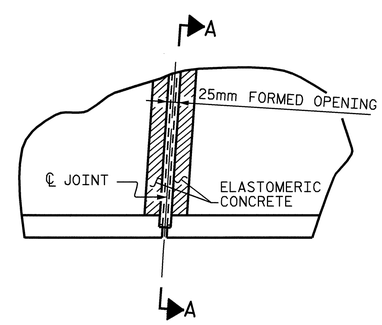

PLAN

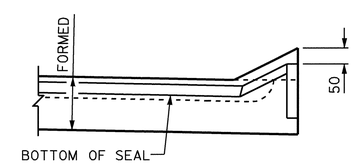

SECTION A-A

PROJECT NO. R-2554BA
WAYNE COUNTY
STATION: 118+92.556 -L-
12+17.434 -Y7-

SHEET 3 OF 3

STATE OF NORTH CAROLINA
DEPARTMENT OF TRANSPORTATION
RALEIGH

STANDARD ARMORED EVAZOTE JOINT DETAILS (LEFT LANE)

NORTH CAROLINA PROFESSIONAL SEAL 15825 ENGINEER BRUCE D. KLAPPENBACH
6-6-08

REVISIONS							SHEET NO. S-350
NO.	BY:	DATE:	NO.	BY:	DATE:		TOTAL SHEETS 478
1			3				
2			4				

ASSEMBLED BY : H. T. BARBOUR DATE : 1-07-08		
CHECKED BY : C. R. YARBROUGH DATE : 4-08		
DRAWN BY : EEM 1/96	REV. 7/10/01	LES/RDR
CHECKED BY : RGW 1/96	REV. 5/7/03	RWW/JTE
	REV. 5/1/06	TLA/GM

05-JUN-2008 10:56
r:\structures\bailey\str#12\tbarbour\r-2554ba_sd_as.dgn
tbarbour

STR. #12

STD. NO. AEJ1SM

OVERHANG BRACKET CALCULATION INSTRUCTIONS

AASHTO SHAPES - TYPES III, IV, V, AND VI

1. RECORD KNOWN INFORMATION ON "BRIDGE OVERHANG BRACKET SUMMARY" ON SHEET 2
2. CALCULATE THE MAXIMUM SCREED LOAD PER BRACKET (SLPB) WITH AN ESTIMATED R = 1.5. SLPB = R X W. ROUND VALUE UP TO NEAREST SLPB VALUE INDICATED ON APPROPRIATE TABLE 1-1, 1-2, 1-3, OR 1-4.
3. WITH THE ESTIMATED SLPB, OVERHANG SLAB THICKNESS, "K" VALUE, AND 45° HANGER SAFE WORKING LOAD (SWL), ENTER THE APPROPRIATE TABLE 1-1, 1-2, 1-3, OR 1-4 (BASED ON OVERHANG DIMENSION) AND DETERMINE THE BRACKET SPACING, S.
4. CALCULATE S/D1 AND S/D2, ROUNDING UP TO NEAREST VALUE IN TABLE 2. ENTER TABLE 2 AND DETERMINE R VALUE.
5. CALCULATE REVISED SLPB. ROUND VALUE UP TO NEAREST SLPB VALUE INDICATED ON APPROPRIATE TABLE 1-1, 1-2, 1-3, OR 1-4.
6. WITH THE REVISED SLPB, OVERHANG SLAB THICKNESS, "K" VALUE AND 45 HANGER SAFE WORKING LOAD (SWL), ENTER THE APPROPRIATE TABLE 1-1, 1-2, 1-3 OR 1-4 (BASED ON OVERHANG DIMENSION) AND DETERMINE REVISED BRACKET SPACING, S.
7. CONTINUE ITERATIONS OF STEPS 4-6 UNTIL THE REVISED BRACKET SPACING, S, IS THE SAME AS THE PREVIOUS S VALUE.
8. CHECK LUMBER JOIST SPACING: WITH BRACKET SPACING VALUE, S, ROUND THIS VALUE UP TO THE NEAREST VALUE OF ALLOWABLE SPAN LENGTH OF JOIST OF TABLE 3. USING THIS VALUE, ALONG WITH THE AVERAGE OVERHANG SLAB THICKNESS AND THE LUMBER JOIST SIZE, DETERMINE JOIST SPACING FROM TABLE 3. IF NECESSARY, ADJUST LUMBER JOIST SIZE AND/OR JOIST SPACING TO MEET ALLOWABLE SPAN LENGTH OF JOIST.
9. CONVERSELY, IF THE DESIRED JOIST SPACING IS KNOWN, USE THIS ALONG WITH THE AVERAGE OVERHANG SLAB THICKNESS AND THE LUMBER JOIST SIZE TO DETERMINE IF ALLOWABLE SPAN LENGTH OF JOIST IS GREATER THAN THE BRACKET SPACING, S. IF NECESSARY, ADJUST LUMBER JOIST SIZE TO MEET REQUIREMENTS OF ALLOWABLE SPAN LENGTH OF JOIST AND JOIST SPACING.
10. RECORD REMAINING INFORMATION ON "BRIDGE OVERHANG BRACKET SUMMARY" FORM.
11. SUBMIT FORM AND CALCULATIONS FOR REVIEW AND APPROVAL.

TABLE 1-1

(FOR USE ON **UP TO 2'-0" OVERHANG Ⓛ** & 54" HORIZONTAL LEG LENGTH OF THE OVERHANG BRACKET)

AVG. SLAB THICKNESS Ⓣ (In)	BRACKET Ⓚ DIMENSION (In)	SCREED LOAD PER BRACKET									45° HANGER SWL (lbs)
		2500 lbs.	2250 lbs.	2000 lbs.	1750 lbs.	1500 lbs.	1250 lbs.	1000 lbs.	750 lbs.	0 lbs.	
		BRACKET SPACING									
10	30				2'-1"	2'-7"	3'-2"	3'-8"	4'-2"	5'-9"	4000
		3'-6"	4'-0"	4'-5"	4'-9"	5'-1"	5'-3"	5'-5"	5'-7"	6'-7"	6000
	40				2'-1"	2'-7"	3'-2"	3'-8"	4'-2"	5'-9"	4000
		3'-6"	4'-0"	4'-5"	4'-9"	5'-1"	5'-3"	5'-5"	5'-7"	6'-7"	6000
	50				2'-1"	2'-7"	3'-2"	3'-8"	4'-2"	5'-9"	4000
		3'-6"	4'-0"	4'-5"	4'-9"	5'-1"	5'-3"	5'-5"	5'-7"	6'-7"	6000
12	30					2'-4"	2'-10"	3'-4"	3'-9"	5'-2"	4000
		3'-2"	3'-7"	4'-1"	4'-7"	5'-0"	5'-2"	5'-4"	5'-7"	6'-5"	6000
	40					2'-4"	2'-10"	3'-4"	3'-9"	5'-2"	4000
		3'-2"	3'-7"	4'-1"	4'-7"	5'-0"	5'-2"	5'-4"	5'-7"	6'-5"	6000
	50					2'-4"	2'-10"	3'-4"	3'-9"	5'-2"	4000
		3'-2"	3'-7"	4'-1"	4'-7"	5'-0"	5'-2"	5'-4"	5'-7"	6'-5"	6000
14	30					2'-2"	2'-7"	3'-0"	3'-5"	4'-9"	4000
		2'-10"	3'-4"	3'-9"	4'-2"	4'-7"	5'-0"	5'-4"	5'-7"	6'-4"	6000
	40					2'-2"	2'-7"	3'-0"	3'-5"	4'-9"	4000
		2'-10"	3'-4"	3'-9"	4'-2"	4'-7"	5'-0"	5'-4"	5'-7"	6'-4"	6000
	50					2'-2"	2'-7"	3'-0"	3'-5"	4'-9"	4000
		2'-10"	3'-4"	3'-9"	4'-2"	4'-7"	5'-0"	5'-4"	5'-7"	6'-4"	6000
16	30					2'-0"	2'-4"	2'-9"	3'-2"	4'-4"	4000
		2'-8"	3'-0"	3'-5"	3'-10"	4'-3"	4'-7"	5'-0"	5'-5"	6'-3"	6000
	40					2'-0"	2'-4"	2'-9"	3'-2"	4'-4"	4000
		2'-8"	3'-0"	3'-5"	3'-10"	4'-3"	4'-7"	5'-0"	5'-5"	6'-3"	6000
	50					2'-0"	2'-4"	2'-9"	3'-2"	4'-4"	4000
		2'-8"	3'-0"	3'-5"	3'-10"	4'-3"	4'-7"	5'-0"	5'-5"	6'-3"	6000

TABLE 1-2

(FOR USE ON **OVER 2'-0" TO 2'-6" OVERHANG Ⓛ** & 54" HORIZONTAL LEG LENGTH OF THE OVERHANG BRACKET)

AVG. SLAB THICKNESS Ⓣ (In)	BRACKET Ⓚ DIMENSION (In)	SCREED LOAD PER BRACKET									45° HANGER SWL (lbs)
		2500 lbs.	2250 lbs.	2000 lbs.	1750 lbs.	1500 lbs.	1250 lbs.	1000 lbs.	750 lbs.	0 lbs.	
		BRACKET SPACING									
10	30					2'-4"	2'-9"	3'-3"	3'-8"	5'-1"	4000
		3'-1"	3'-6"	4'-0"	4'-5"	4'-11"	5'-3"	5'-5"	5'-7"	6'-7"	6000
	40					2'-4"	2'-9"	3'-3"	3'-8"	5'-1"	4000
		3'-1"	3'-6"	4'-0"	4'-5"	4'-11"	5'-3"	5'-5"	5'-7"	6'-7"	6000
	50					2'-4"	2'-9"	3'-3"	3'-8"	5'-1"	4000
		3'-1"	3'-6"	4'-0"	4'-5"	4'-11"	5'-3"	5'-5"	5'-7"	6'-7"	6000
12	30					2'-1"	2'-6"	2'-11"	3'-4"	4'-6"	4000
		2'-9"	3'-2"	3'-7"	4'-0"	4'-5"	4'-10"	5'-3"	5'-7"	6'-5"	6000
	40					2'-1"	2'-6"	2'-11"	3'-4"	4'-6"	4000
		2'-9"	3'-2"	3'-7"	4'-0"	4'-5"	4'-10"	5'-3"	5'-7"	6'-5"	6000
	50					2'-1"	2'-6"	2'-11"	3'-4"	4'-6"	4000
		2'-9"	3'-2"	3'-7"	4'-0"	4'-5"	4'-10"	5'-3"	5'-7"	6'-5"	6000
14	30					2'-3"	2'-7"	3'-0"	3'-9"	4'-1"	4000
		2'-6"	2'-10"	3'-3"	3'-7"	4'-0"	4'-4"	4'-9"	5'-1"	6'-3"	6000
	40					2'-3"	2'-7"	3'-0"	3'-9"	4'-1"	4000
		2'-6"	2'-10"	3'-3"	3'-7"	4'-0"	4'-4"	4'-9"	5'-1"	6'-3"	6000
	50					2'-3"	2'-7"	3'-0"	3'-9"	4'-1"	4000
		2'-6"	2'-10"	3'-3"	3'-7"	4'-0"	4'-4"	4'-9"	5'-1"	6'-3"	6000
16	30						2'-1"	2'-5"	2'-9"	3'-9"	4000
		2'-3"	2'-7"	2'-11"	3'-4"	3'-8"	4'-0"	4'-4"	4'-8"	5'-8"	6000
	40						2'-1"	2'-5"	2'-9"	3'-9"	4000
		2'-3"	2'-7"	2'-11"	3'-4"	3'-8"	4'-0"	4'-4"	4'-8"	5'-8"	6000
	50						2'-1"	2'-5"	2'-9"	3'-9"	4000
		2'-3"	2'-7"	2'-11"	3'-4"	3'-8"	4'-0"	4'-4"	4'-8"	5'-8"	6000

TABLE 1-3

(FOR USE ON **OVER 2'-6" TO 3'-0" OVERHANG Ⓛ** & 54" HORIZONTAL LEG LENGTH OF THE OVERHANG BRACKET)

AVG. SLAB THICKNESS Ⓣ (In)	BRACKET Ⓚ DIMENSION (In)	SCREED LOAD PER BRACKET									45° HANGER SWL (lbs)
		2500 lbs.	2250 lbs.	2000 lbs.	1750 lbs.	1500 lbs.	1250 lbs.	1000 lbs.	750 lbs.	0 lbs.	
		BRACKET SPACING									
10	30					2'-1"	2'-6"	2'-11"	3'-4"	4'-6"	4000
						4'-5"	4'-10"	5'-3"	5'-7"	6'-7"	6000
	40					2'-1"	2'-6"	2'-11"	3'-4"	4'-6"	4000
		2'-9"	3'-2"	3'-7"	4'-0"	4'-5"	4'-10"	5'-3"	5'-7"	6'-7"	6000
	50					2'-1"	2'-6"	2'-11"	3'-4"	4'-6"	4000
		2'-9"	3'-2"	3'-7"	4'-0"	4'-5"	4'-10"	5'-3"	5'-7"	6'-7"	6000
12	30						2'-2"	2'-7"	2'-11"	4'-0"	4000
						3'-11"	4'-3"	4'-8"	5'-0"	6'-1"	6000
	40						2'-2"	2'-7"	2'-11"	4'-0"	4000
		2'-5"	2'-10"	3'-2"	3'-6"	3'-11"	4'-3"	4'-8"	5'-0"	6'-1"	6000
	50						2'-2"	2'-7"	2'-11"	4'-0"	4000
		2'-5"	2'-10"	3'-2"	3'-6"	3'-11"	4'-3"	4'-8"	5'-0"	6'-1"	6000
14	30						2'-0"	2'-4"	2'-8"	3'-8"	4000
					3'-2"	3'-6"	3'-10"	4'-2"	4'-6"	5'-6"	6000
	40						2'-0"	2'-4"	2'-8"	3'-8"	4000
		2'-2"	2'-6"	2'-10"	3'-2"	3'-6"	3'-10"	4'-2"	4'-6"	5'-6"	6000
	50						2'-0"	2'-4"	2'-8"	3'-8"	4000
		2'-2"	2'-6"	2'-10"	3'-2"	3'-6"	3'-10"	4'-2"	4'-6"	5'-6"	6000
16	30							2'-1"	2'-5"	3'-4"	4000
					2'-11"	3'-2"	3'-6"	3'-10"	4'-1"	5'-0"	6000
	40							2'-1"	2'-5"	3'-4"	4000
		2'-0"	2'-4"	2'-7"	2'-11"	3'-2"	3'-6"	3'-10"	4'-1"	5'-0"	6000
	50							2'-1"	2'-5"	3'-4"	4000
		2'-0"	2'-4"	2'-7"	2'-11"	3'-2"	3'-6"	3'-10"	4'-1"	5'-0"	6000

TABLE 1-4

(FOR USE ON **OVER 3'-0" TO 3'-6" OVERHANG Ⓛ** & 54" HORIZONTAL LEG LENGTH OF THE OVERHANG BRACKET)

AVG. SLAB THICKNESS Ⓣ (In)	BRACKET Ⓚ DIMENSION (In)	SCREED LOAD PER BRACKET									45° HANGER SWL (lbs)
		2500 lbs.	2250 lbs.	2000 lbs.	1750 lbs.	1500 lbs.	1250 lbs.	1000 lbs.	750 lbs.	0 lbs.	
		BRACKET SPACING									
10	30						2'-1"	2'-5"	2'-9"	3'-10"	4000
						2'-3"	2'-11"	3'-7"	4'-3"	5'-9"	6000
	40						2'-1"	2'-5"	2'-9"	3'-10"	4000
				2'-4"	3'-0"	3'-7"	4'-1"	4'-5"	4'-9"	5'-9"	6000
	50						2'-1"	2'-5"	2'-9"	3'-10"	4000
		2'-4"	2'-8"	3'-0"	3'-4"	3'-8"	4'-1"	4'-5"	4'-9"	5'-9"	6000
12	30							2'-2"	2'-6"	3'-5"	4000
						2'-1"	2'-8"	3'-4"	3'-11"	5'-2"	6000
	40							2'-2"	2'-6"	3'-5"	4000
				2'-2"	2'-9"	3'-4"	3'-7"	3'-11"	4'-3"	5'-2"	6000
	50							2'-2"	2'-6"	3'-5"	4000
		2'-1"	2'-4"	2'-8"	3'-0"	3'-4"	3'-7"	3'-11"	4'-3"	5'-2"	6000
14	30								2'-3"	3'-1"	4000
						2'-0"	2'-6"	3'-1"	3'-8"	4'-8"	6000
	40								2'-3"	3'-1"	4000
				2'-0"	2'-7"	3'-0"	3'-3"	3'-6"	3'-10"	4'-8"	6000
	50								2'-3"	3'-1"	4000
			2'-2"	2'-5"	2'-8"	3'-0"	3'-3"	3'-6"	3'-10"	4'-8"	6000
16	30								2'-0"	2'-9"	4000
							2'-4"	2'-10"	3'-5"	4'-3"	6000
	40								2'-0"	2'-9"	4000
					2'-5"	2'-8"	2'-11"	3'-3"	3'-6"	4'-3"	6000
	50								2'-0"	2'-9"	4000
				2'-2"	2'-5"	2'-8"	2'-11"	3'-3"	3'-6"	4'-3"	6000

DEFINITIONS

SLPB = SCREED LOAD PER BRACKET (R × W)
R = SCREED LOAD FACTOR, OBTAINED FROM TABLE 2
W = WHEEL LOAD
S = BRACKET SPACING
T = AVERAGE SLAB THICKNESS
SWL = SAFE WORKING LOAD
K = DIMENSION DEFINED ON "BRIDGE OVERHANG BRACKET SUMMARY" ON SHEET 2
L = OVERHANG MEASURED FROM EDGE OF TOP FLANGE TO EDGE OF SUPERSTRUCTURE

PROJECT NO. R-2554BA
WAYNE COUNTY
STATION: 118+92.556 -L-

SHEET 1 OF 3

STATE OF NORTH CAROLINA
DEPARTMENT OF TRANSPORTATION
RALEIGH

STANDARD OVERHANG FALSEWORK

AASHTO TYPES
III, IV, V, AND VI

(LEFT LANE)

NORTH CAROLINA PROFESSIONAL SEAL 18788 ENGINEER CHANG-CHUAN VICTOR CHAO

Chang-Chuan Victor Chao
12-18-2007

REVISIONS						SHEET NO.
NO.	BY:	DATE:	NO.	BY:	DATE:	S-351
1			3			TOTAL SHEETS
2			4			478

ASSEMBLED BY:	DATE:
CHECKED BY:	DATE:
DRAWN BY: R. WRIGHT 06/04	REV.
CHECKED BY: C. V. CHAO 06/04	

18-DEC-2007 15:27
d:\wdlr\victor\overhangfalsework\tiebar&strut\r-2554bar&l_type_iv\r2554baleftoverhangsheets.dgn
vchao

BRIDGE OVERHANG BRACKET SUMMARY

TOTAL SCREED WEIGHT = _____ LBS.
NUMBER OF SCREED WHEELS = _____
SCREED WHEEL LOAD (W) = _____ LBS.
SCREED LOAD PER BRACKET = _____ LBS.

PROJECT No. : _____
COUNTY : _____
STATION : _____
DESCRIPTION : _____

DATE : _____
DESIGN BY : _____
CHECK BY : _____

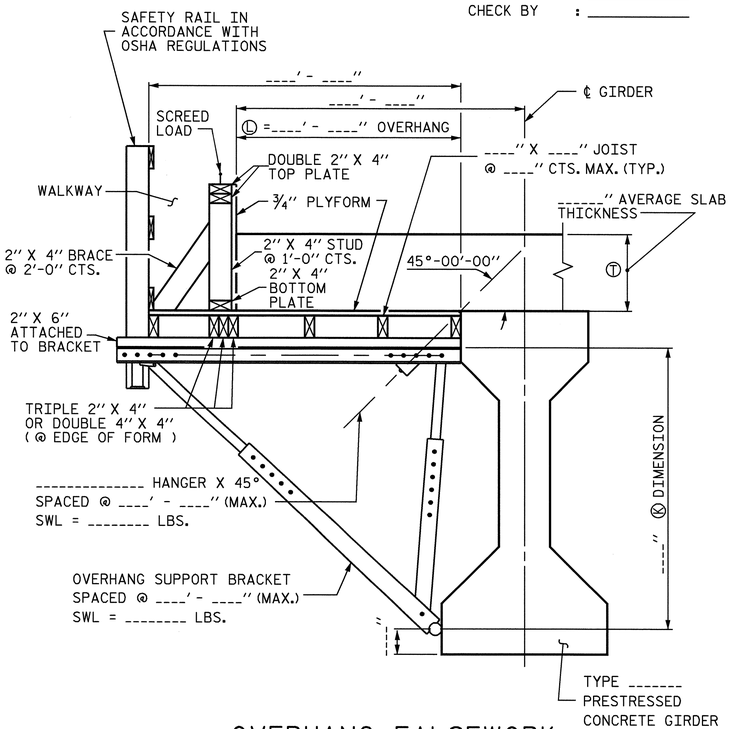

OVERHANG FALSEWORK

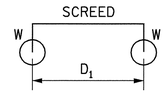

4-WHEEL MACHINE

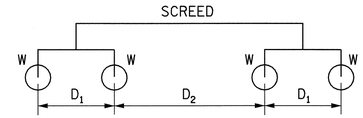

8-WHEEL MACHINE

4 WHEEL MACHINE	
S/D1	R
<= 1.0	1.00
1.1	1.09
1.2	1.17
1.3	1.23
1.4	1.29
1.5	1.33
1.6	1.38
1.7	1.41
1.8	1.44
1.9	1.47
2.0	1.50
2.2	1.55
2.4	1.58
2.6	1.62
2.8	1.64
3.0	1.67
3.5	1.71
4.0	1.75

TABLE 2: SCREED LOAD FACTOR "R"

	THE SCREED LOAD FACTOR R (FOR 8 WHEEL MACHINE)																	
	S/D_2																	
S/D_1	<= 1.0	1.1	1.2	1.3	1.4	1.5	1.6	1.7	1.8	1.9	2.0	2.2	2.4	2.6	2.8	3.0	3.5	4.0
<= 1.0	1.00	1.09	1.17	1.23	1.29	1.33	1.38	1.41	1.44	1.47	1.50	1.55	1.58	1.62	1.64	1.67	1.71	1.75
1.1	1.09	1.18	1.26	1.32	1.38	1.42	1.47	1.50	1.54	1.56	1.59	1.64	1.67	1.71	1.73	1.76	1.81	1.84
1.2	1.17	1.26	1.33	1.40	1.45	1.50	1.54	1.58	1.61	1.64	1.67	1.71	1.75	1.78	1.81	1.83	1.88	1.92
1.3	1.23	1.32	1.40	1.46	1.52	1.56	1.61	1.64	1.68	1.70	1.73	1.78	1.81	1.85	1.87	1.90	1.95	1.98
1.4	1.29	1.38	1.45	1.52	1.57	1.62	1.66	1.70	1.73	1.76	1.79	1.83	1.87	1.90	1.93	1.95	2.00	2.07
1.5	1.33	1.42	1.50	1.56	1.62	1.67	1.71	1.75	1.78	1.81	1.83	1.88	1.92	1.95	1.98	2.00	2.10	2.17
1.6	1.38	1.47	1.54	1.61	1.66	1.71	1.75	1.79	1.82	1.85	1.88	1.92	1.96	1.99	2.04	2.08	2.18	2.25
1.7	1.41	1.50	1.58	1.64	1.70	1.75	1.79	1.82	1.86	1.89	1.91	1.96	2.00	2.05	2.11	2.16	2.25	2.32
1.8	1.44	1.54	1.61	1.68	1.73	1.78	1.82	1.86	1.89	1.92	1.94	1.99	2.06	2.12	2.17	2.22	2.32	2.39
1.9	1.47	1.56	1.64	1.70	1.76	1.81	1.85	1.89	1.92	1.95	1.97	2.04	2.11	2.18	2.23	2.28	2.38	2.45
2.0	1.50	1.59	1.67	1.73	1.79	1.83	1.88	1.91	1.94	1.97	2.00	2.09	2.17	2.23	2.29	2.33	2.43	2.50
2.2	1.55	1.64	1.71	1.78	1.83	1.88	1.92	1.96	1.99	2.04	2.09	2.18	2.26	2.32	2.38	2.42	2.52	2.59
2.4	1.58	1.67	1.75	1.81	1.87	1.92	1.96	2.00	2.06	2.11	2.17	2.26	2.33	2.40	2.45	2.50	2.60	2.67
2.6	1.62	1.71	1.78	1.85	1.90	1.95	1.99	2.05	2.12	2.18	2.23	2.32	2.40	2.46	2.52	2.56	2.66	2.73
2.8	1.64	1.73	1.81	1.87	1.93	1.98	2.04	2.11	2.17	2.23	2.29	2.38	2.45	2.52	2.57	2.62	2.71	2.79
3.0	1.67	1.76	1.83	1.90	1.95	2.00	2.08	2.16	2.22	2.28	2.33	2.42	2.50	2.56	2.62	2.67	2.76	2.83
3.5	1.71	1.81	1.88	1.95	2.00	2.10	2.18	2.25	2.32	2.38	2.43	2.52	2.60	2.66	2.71	2.76	2.86	2.93
4.0	1.75	1.84	1.92	1.98	2.07	2.17	2.25	2.32	2.39	2.45	2.50	2.59	2.67	2.73	2.79	2.83	2.93	3.00

TABLE 3: ALLOWABLE SPAN LENGTH OF JOISTS AND JOIST SPACINGS

AVG. SLAB THICKNESS Ⓣ (IN)	LUMBER JOIST SIZE (IN X IN)	JOIST SPACINGS			
		15 IN	12 IN	10 IN	8 IN
		THE ALLOWABLE SPAN LENGTH OF JOISTS			
10	2 X 4	———	4' - 6"	4' - 9"	5' - 0"
	4 X 4	5' - 9"	6' - 3"	6' - 6"	6' - 7"
12	2 X 4	———	4' - 3"	4' - 9"	5' - 0"
	4 X 4	5' - 3"	6' - 0"	6' - 3"	6' - 5"
14	2 X 4	———	4' - 0"	4' - 6"	5' - 0"
	4 X 4	———	5' - 6"	6' - 0"	6' - 4"
16	2 X 4	———	4' - 0"	4' - 3"	4' - 9"
	4 X 4	———	5' - 3"	5' - 9"	6' - 3"

NOTES

DESIGN INCLUDES CONSTRUCTION LIVE LOAD 20 PSF ON THE AREA SUPPORTED AND 75 PLF AT THE OUTSIDE DECK OF OVERHANGS.

REQUIRED MINIMUM DIAGONAL LEG CAPACITY: 3600 LB WORKING LOAD

THE CONTRACTOR HAS THE OPTION OF SUBMITTING HIS OWN DESIGN FOR OVERHANG FALSEWORK IN ACCORDANCE WITH THE SPECIAL PROVISIONS.

SUBMITTALS UTILIZING THE INSTRUCTIONS AND PROCEDURES DESCRIBED ON SHEET 1 OF 3 SHALL BE IN ACCORDANCE WITH THE APPLICABLE SECTIONS OF THE SPECIFICATIONS AND SPECIAL PROVISIONS, EXCEPT THAT CALCULATIONS FOR OVERHANG FALSEWORK NEED NOT BE SEALED BY A REGISTERED ENGINEER.

FOR OVERHANG FALSEWORK BRACING DESIGN, SEE SHEET 3 OF 3.

PROJECT NO. R-2554BA
WAYNE COUNTY
STATION: 118+92.556 -L-

SHEET 2 OF 3

STATE OF NORTH CAROLINA
DEPARTMENT OF TRANSPORTATION
RALEIGH

STANDARD OVERHANG FALSEWORK

AASHTO TYPES
III, IV, V, AND VI

(LEFT LANE)

NORTH CAROLINA PROFESSIONAL SEAL 18788 ENGINEER CHANG-CHUAN VICTOR CHAO

Cheng-Chuan Victor Chao
12-18-2007

REVISIONS						SHEET NO.
NO.	BY:	DATE:	NO.	BY:	DATE:	S-352
1			3			TOTAL SHEETS
2			4			478

ASSEMBLED BY:	DATE:
CHECKED BY:	DATE:
DRAWN BY: R. WRIGHT 06/04	REV.
CHECKED BY: C. V. CHAO 06/04	

18-DEC-2007 15:28
d:\wdlr\victor\overhangfalsework\tlebar&strut\r-2554bar&l_type_iv\r2554baleftoverhangsheets.dgn
vchao

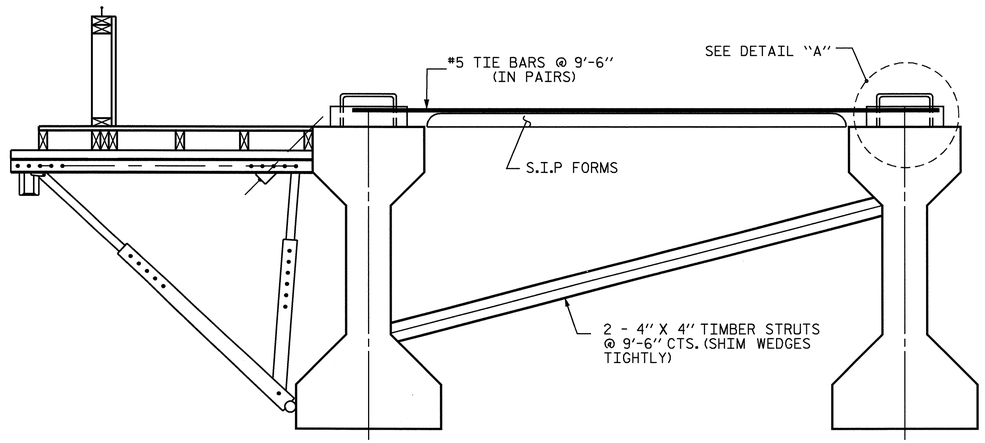

EXTERIOR GIRDER INTERIOR GIRDER

DETAIL OF REQUIRED OVERHANG FALSEWORK BRACING SYSTEM

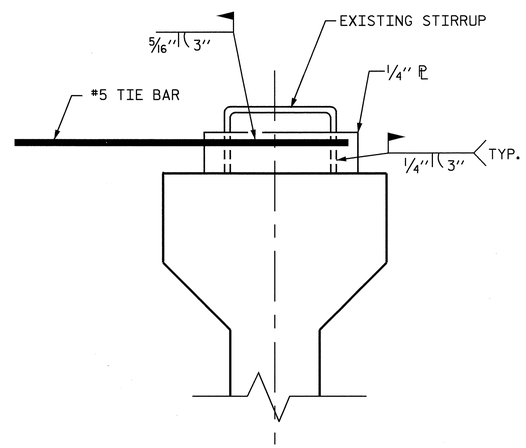

DETAIL "A"

NOTES:

EACH #5 TIE BAR SHALL BE WELDED TO ONE STIRRUP LOOP AS SHOWN IN DETAIL "A". #5 TIE BARS SHALL BE WELDED TO TWO ADJACENT STIRRUPS OF THE EXTERIOR GIRDER AND THE ADJACENT INTERIOR GIRDER BETWEEN PERMANENT DIAPHRAGMS. WELD STEEL PLATES IN BETWEEN THE TIE BARS AND THE STIRRUP LOOP. WELDING TWO TIE BARS TO THE SAME STIRRUP LOOP SHALL NOT BE PERMITTED.

MAXIMUM SPACING BETWEEN THE BRACING (TIE BARS-TIMBER STRUT) IS 9'-6" CTS. #5 TIE BARS SHALL BE LOCATED OVER A TIMBER STRUT.

INSTALL TIE BARS AND TIMBER STRUTS PRIOR TO PLACEMENT OF CONCRETE OR SCREED WEIGHT ONTO THE OVERHANG FALSEWORK.

PROJECT NO. R-2554BA
WAYNE COUNTY
STATION: 118+92.556 -L-

SHEET 3 OF 3

STATE OF NORTH CAROLINA
DEPARTMENT OF TRANSPORTATION
RALEIGH

STANDARD OVERHANG FALSEWORK

AASHTO TYPES
III, IV, V, AND VI

(LEFT LANE)

NORTH CAROLINA PROFESSIONAL SEAL 18788 ENGINEER CHANG-CHUAN VICTOR CHAO

Chang-Chuan Victor Chao
12-18-2007

REVISIONS						SHEET NO.
NO.	BY:	DATE:	NO.	BY:	DATE:	S-353
1			3			TOTAL SHEETS
2			4			478

DRAWN BY: R. WRIGHT 06/04 DATE :
CHECKED BY: C. V. CHAO 06/04 DATE :

18-DEC-2007 15:29
d:\wdlr\victor\overhangfalsework\tiebar&strut\r-2554bar&l_type_iv\r2554baleftoverhangsheets.dgn
vchao

F.A. PROJECT NHS-70(106)

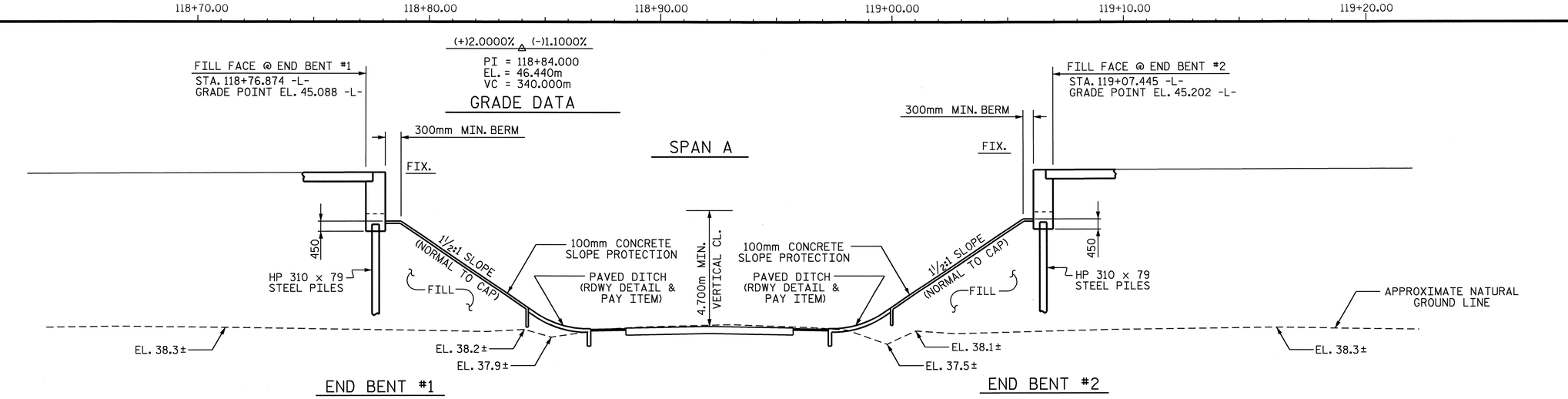

SECTION ALONG CONTROL LINE (RIGHT LANE)

(END BENTS ON SECTION ARE AT RIGHT ANGLES TO END BENTS.)

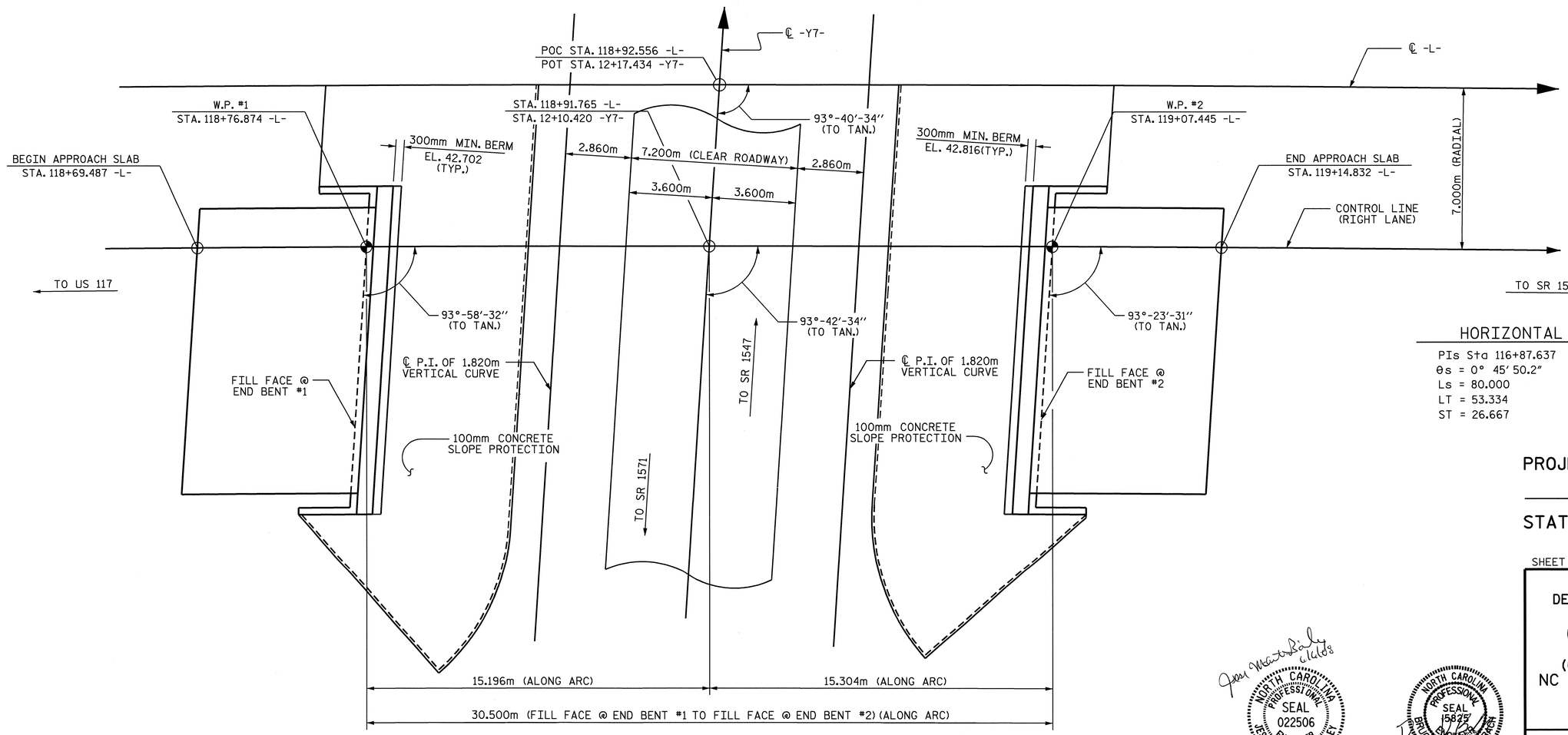

PLAN

PILES ARE NOT SHOWN FOR CLARITY

HORIZONTAL CURVE DATA

PIs Sta 116+87.637	PI Sta 123+83.422
θs = 0° 45′ 50.2″	Δ = 25° 08′ 48.6″(RT)
Ls = 80.000	L = 1,316.685
LT = 53.334	T = 669.118
ST = 26.667	R = 3,000.000

PROJECT NO. R-2554BA

WAYNE COUNTY

STATION: 118+92.556 -L-
12+17.434 -Y7-

SHEET 1 OF 4 BRIDGE #365

STATE OF NORTH CAROLINA
DEPARTMENT OF TRANSPORTATION
RALEIGH

GENERAL DRAWING
FOR BRIDGE ON US 70
(GOLDSBORO BYPASS) OVER
NC 111 (PATETOWN RD.) BETWEEN
US 117 AND SR 1556
(RIGHT LANE)

NORTH CAROLINA PROFESSIONAL SEAL 022506 ENGINEER JESSE McARTHUR BAILEY

NORTH CAROLINA PROFESSIONAL SEAL 15825 ENGINEER BRUCE D. KLAPPENBACH

REVISIONS						SHEET NO. S-354
NO.	BY:	DATE:	NO.	BY:	DATE:	TOTAL SHEETS 478
1			3			
2			4			

DRAWN BY : M. C. SHAIKH DATE : 5-3-06
CHECKED BY : A. SORSENGINH DATE : 2-05-08

06-JUN-2008 14:45
r:\structures\bailey\Str#13\mshaikh\Microstation\R-2554BA_sd_GD.dgn
tbarbour

STR. #13

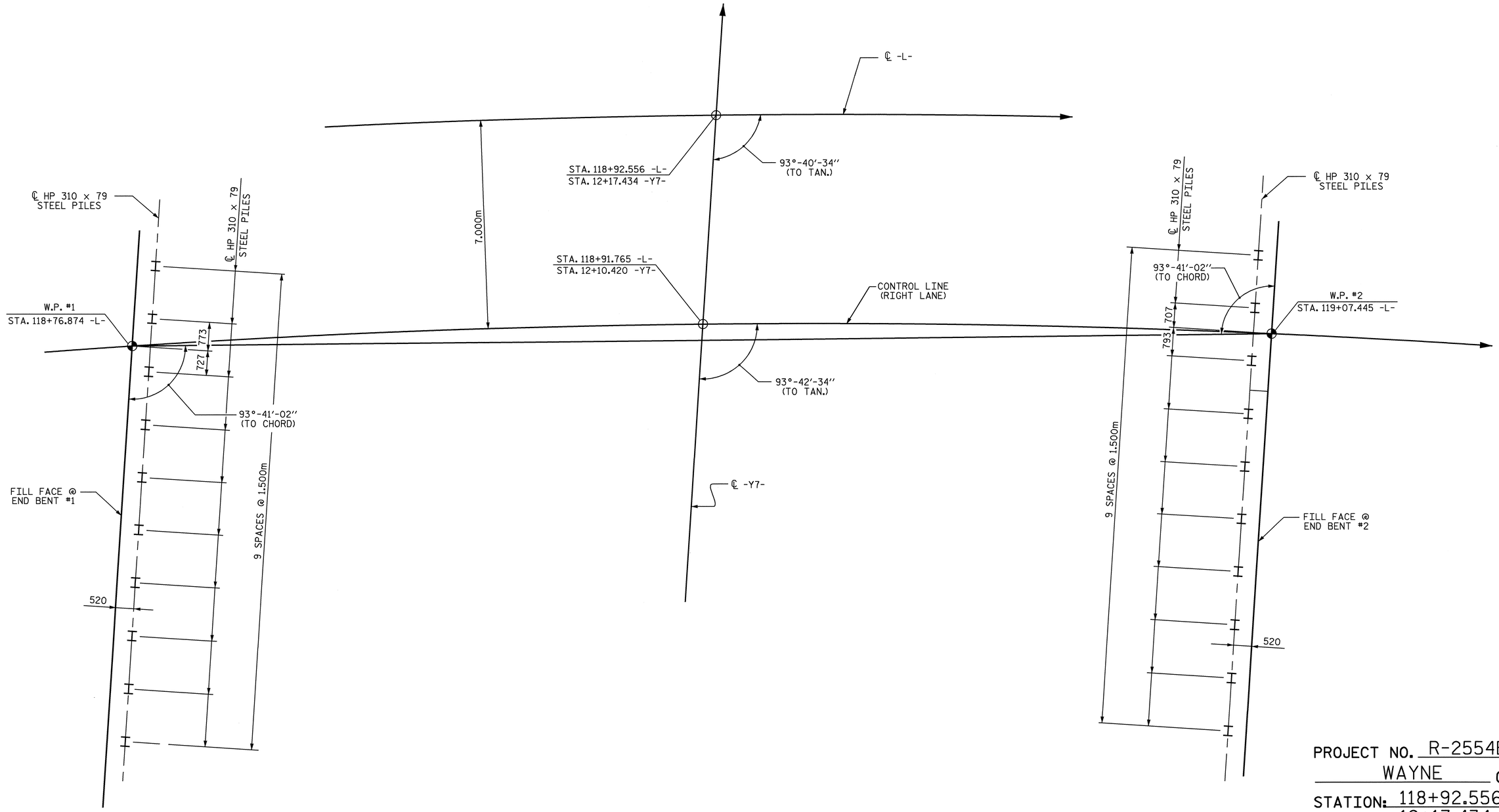

END BENT #1

END BENT #2

FOUNDATION LAYOUT

DIMENSIONS LOCATING PILES ARE TO PILE CENTERLINE

PROJECT NO. R-2554BA
WAYNE COUNTY
STATION: 118+92.556 -L-
12+17.434 -Y7-

SHEET 2 OF 4

STATE OF NORTH CAROLINA
DEPARTMENT OF TRANSPORTATION
RALEIGH

GENERAL DRAWING
FOR BRIDGE ON US 70
(GOLDSBORO BYPASS) OVER
NC 111 (PATETOWN RD.) BETWEEN
US 117 AND SR 1556
(RIGHT LANE)

NORTH CAROLINA PROFESSIONAL SEAL 19825 ENGINEER BRUCE D. KLAPPENBACH
6-6-08

REVISIONS						SHEET NO. S-355
NO.	BY:	DATE:	NO.	BY:	DATE:	TOTAL SHEETS 478
1			3			
2			4			

DRAWN BY : M. G. SHAIKH DATE : 12-10-07
CHECKED BY : A. SORSENGINH DATE : 2-05-08

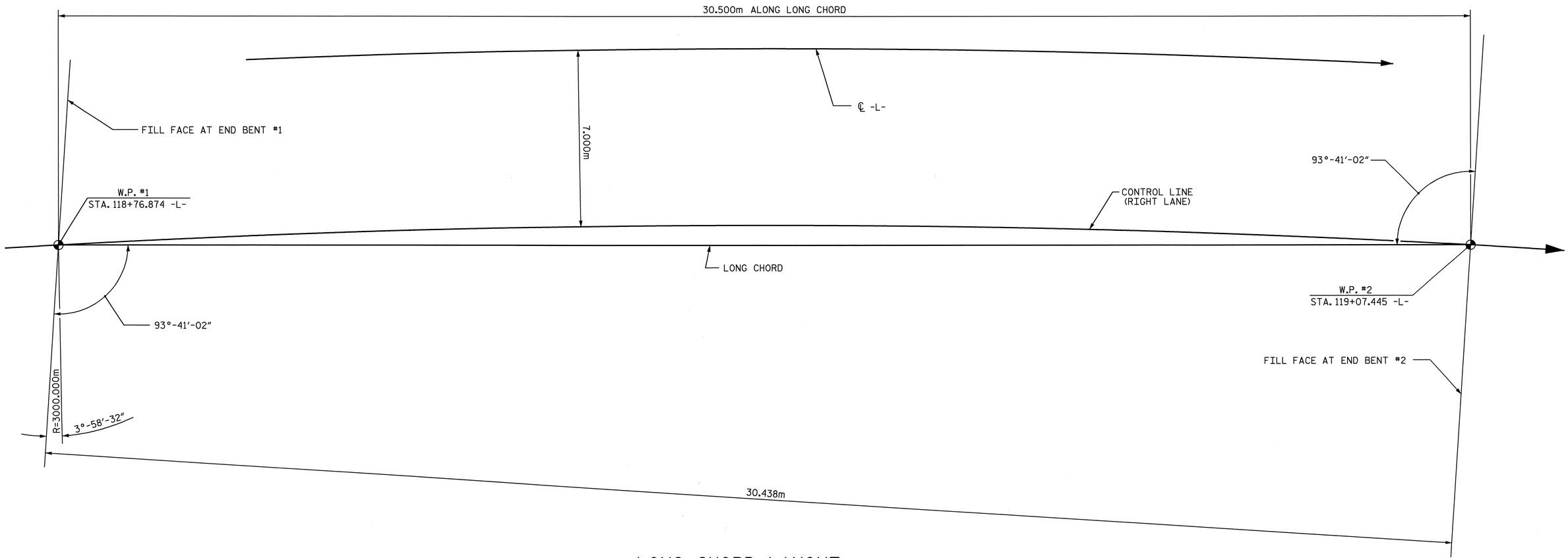

LONG CHORD LAYOUT

(END BENTS ARE PARALLEL)

HORIZONTAL CURVE DATA

PIs Sta 116+87.637	PI Sta 123+83.422
θs = 0° 45' 50.2"	Δ = 25° 08' 48.6" (RT)
Ls = 80.000	L = 1,316.685
LT = 53.334	T = 669.118
ST = 26.667	R = 3,000.000

PROJECT NO. R-2554BA
WAYNE COUNTY
STATION: 118+92.556 -L-
12+17.434 -Y7-
SHEET 3 OF 4

STATE OF NORTH CAROLINA
DEPARTMENT OF TRANSPORTATION
RALEIGH

GENERAL DRAWING

LONG CHORD LAYOUT
(RIGHT LANE)

NORTH CAROLINA PROFESSIONAL SEAL 15825 ENGINEER BRYCE D. KLAPPENBACH
6-6-08

REVISIONS						SHEET NO. S-356
NO.	BY:	DATE:	NO.	BY:	DATE:	TOTAL SHEETS 478
1			3			
2			4			

DRAWN BY : M. G. SHAIKH DATE : 11-14-07
CHECKED BY : A. SORSENGINH DATE : 2-05-08

STR. #13

B.M. #6: RAILROAD SPIKE IN BASE OF 660mm TWIN OAK 176.263m LT. OF -BL- STA. 35+55.047 EL. 38.557m

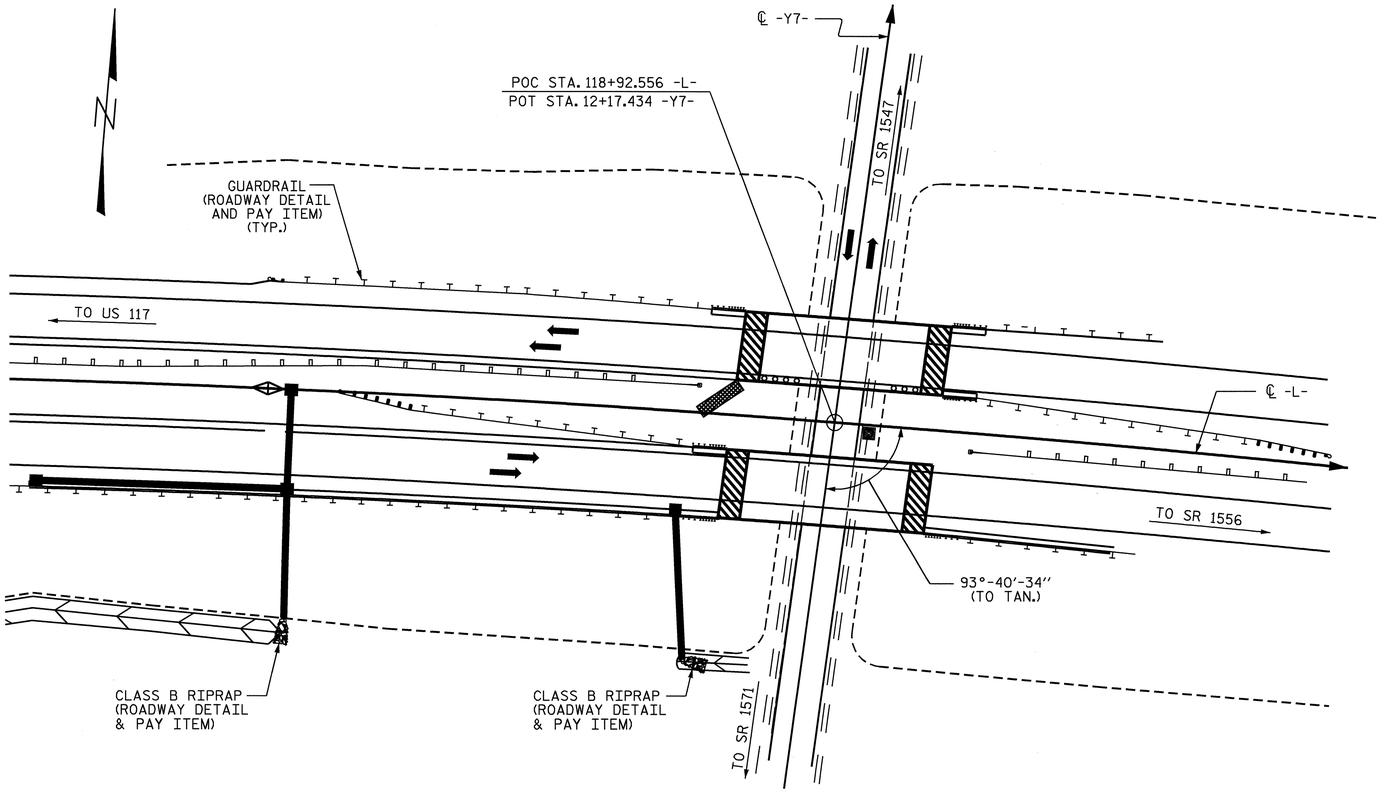

FOR UTILITY INFORMATION, SEE UTILITY PLANS AND SPECIAL PROVISIONS.

LOCATION SKETCH

NOTES

ALL DIMENSIONS ARE IN MILLIMETERS UNLESS OTHERWISE NOTED.

ALL ELEVATIONS ARE IN METERS.

ASSUMED LIVE LOAD = MS18 OR ALTERNATE LOADING. EXCEPT THE GIRDERS HAVE BEEN DESIGNED FOR MS22.5

FOR OTHER DESIGN DATA AND GENERAL NOTES, SEE SHEET SNSM.

THIS BRIDGE HAS BEEN DESIGNED BY THE STRENGTH DESIGN METHOD AS SPECIFIED IN AASHTO STANDARD SPECIFICATIONS.

PRESTRESSED CONCRETE DECK PANELS MAY BE USED IN LIEU OF METAL STAY-IN-PLACE FORMS IN ACCORDANCE WITH ARTICLE 420-3 OF THE STANDARD SPECIFICATIONS.

REMOVABLE FORMS MAY BE USED IN LIEU OF METAL STAY-IN-PLACE FORMS IN ACCORDANCE WITH ARTICLE 420-3 OF THE STANDARD SPECIFICATIONS.

FOR MAINTENANCE AND PROTECTION OF TRAFFIC BENEATH PROPOSED STRUCTURE, SEE SPECIAL PROVISIONS.

THIS BRIDGE HAS BEEN DESIGNED IN ACCORDANCE WITH THE REQUIREMENTS OF THE AASHTO STANDARD SPECIFICATIONS FOR SEISMIC DESIGN OF HIGHWAY BRIDGES FOR SEISMIC PERFORMANCE CATEGORY A.

FOR PRESTRESSED CONCRETE MEMBERS, SEE SPECIAL PROVISIONS.

DRIVE PILES AT END BENT NO. 1 AND END BENT NO. 2 TO A REQUIRED BEARING CAPACITY OF 1260 kN PER PILE. THE REQUIRED BEARING CAPACITY IS EQUAL TO THE ALLOWABLE BEARING CAPACITY WITH A MINIMUM FACTOR OF SAFETY OF TWO.

THE ALLOWABLE BEARING CAPACITY FOR PILES AT END BENT NO. 1 AND END BENT NO. 2 IS 630 kN PER PILE.

THE CONTRACTOR MAY CHOOSE TO UTILIZE THE STANDARD OVERHANGE FALSEWORK BRACING SYSTEM. SEE "STANDARD OVERHANGE FALSEWORK" SHEET.

FOR EROSION CONTROL MEASURES SEE EROSION CONTROL PLANS.

THE CONTRACTOR SHALL PROVIDE INDEPENDENT ASSURANCE SAMPLES OF REINFORCING STEEL AS FOLLOWS: FOR PROJECTS REQUIRING UP TO 360,000 kg OF REINFORCING STEEL, ONE 760mm SAMPLE OF EACH SIZE BAR USED, AND FOR PROJECTS REQUIRING OVER 360,000 kg OF REINFORCING STEEL, TWO 760mm SAMPLES OF EACH SIZE BAR USED. THE BARS FROM WHICH THE SAMPLES ARE TAKEN MUST THEN BE SPLICED WITH REPLACEMENT BARS OF THE SIZE AND LENGTH OF THE SAMPLE, PLUS A MINIMUM LAP SPLICE OF THIRTY BAR DIAMETERS.

FOR FALSEWORK AND FORMWORK, SEE SPECIAL PROVISIONS.

NEEDLE BEAMS WILL NOT BE ALLOWED UNLESS OTHERWISE CALLED FOR ON THE PLANS OR APPROVED BY THE ENGINEER.

FOR SUBMITTAL OF WORKING DRAWINGS, SEE SPECIAL PROVISIONS.

FOR CRANE SAFETY, SEE SPECIAL PROVISIONS.

FOR METRIC STRUCTURAL STEEL, SEE SPECIAL PROVISIONS.

FOR GROUT FOR STRUCTURES, SEE SPECIAL PROVISIONS.

TOTAL BILL OF MATERIAL

	REINFORCED CONCRETE DECK SLAB	GROOVING BRIDGE FLOORS	CLASS A CONCRETE	BRIDGE APPROACH SLABS	REINFORCING STEEL	1372 mm PRESTRESSED CONCRETE GIRDER		HP 310 X 79 STEEL PILES		PILE REDRIVES	CONCRETE BARRIER RAIL	100mm SLOPE PROTECTION	ELASTOMERIC BEARINGS	EVAZOTE JOINT SEALS
	SQ. METERS	SQ. METERS	CU. METERS	LUMP SUM	kg	NO.	METERS	NO.	METERS	EACH	METERS	SQ. METERS	LUMP SUM	LUMP SUM
SUPERSTRUCTURE	378	453.6				5	149.5				60.058		LUMP SUM	
END BENT 1			16.8		1807			10	240	5		264		
END BENT 2			16.8		1808			10	260	5		279		
TOTAL	378	453.6	33.6	LUMP SUM	3615	5	149.5	20	500	10	60.058	543	LUMP SUM	LUMP SUM

PROJECT NO. R-2554BA
WAYNE COUNTY
STATION: 118+92.556 -L-
12+17.434 -Y7-
SHEET 4 OF 4

STATE OF NORTH CAROLINA
DEPARTMENT OF TRANSPORTATION
RALEIGH

GENERAL DRAWING
FOR BRIDGE ON US 70 (GOLDSBORO BYPASS) OVER NC 111 (PATETOWN RD.) BETWEEN US 117 AND SR 1556 (RIGHT LANE)

NORTH CAROLINA PROFESSIONAL SEAL 15825 ENGINEER BRYCE D. KLAPPENBACH
6-6-08

REVISIONS						SHEET NO.
NO.	BY:	DATE:	NO.	BY:	DATE:	S-357
1			3			TOTAL SHEETS
2			4			478

DRAWN BY : M. G. SHAIKH DATE : 11-15-07
CHECKED BY : A. SORSENGINH DATE : 2-05-08

05-JUN-2008 11:10
r:\structures\bailey\Str#13\mshaikh\Microstation\R-2554BA_sd_GD.dgn
tbarbour

STR. #13

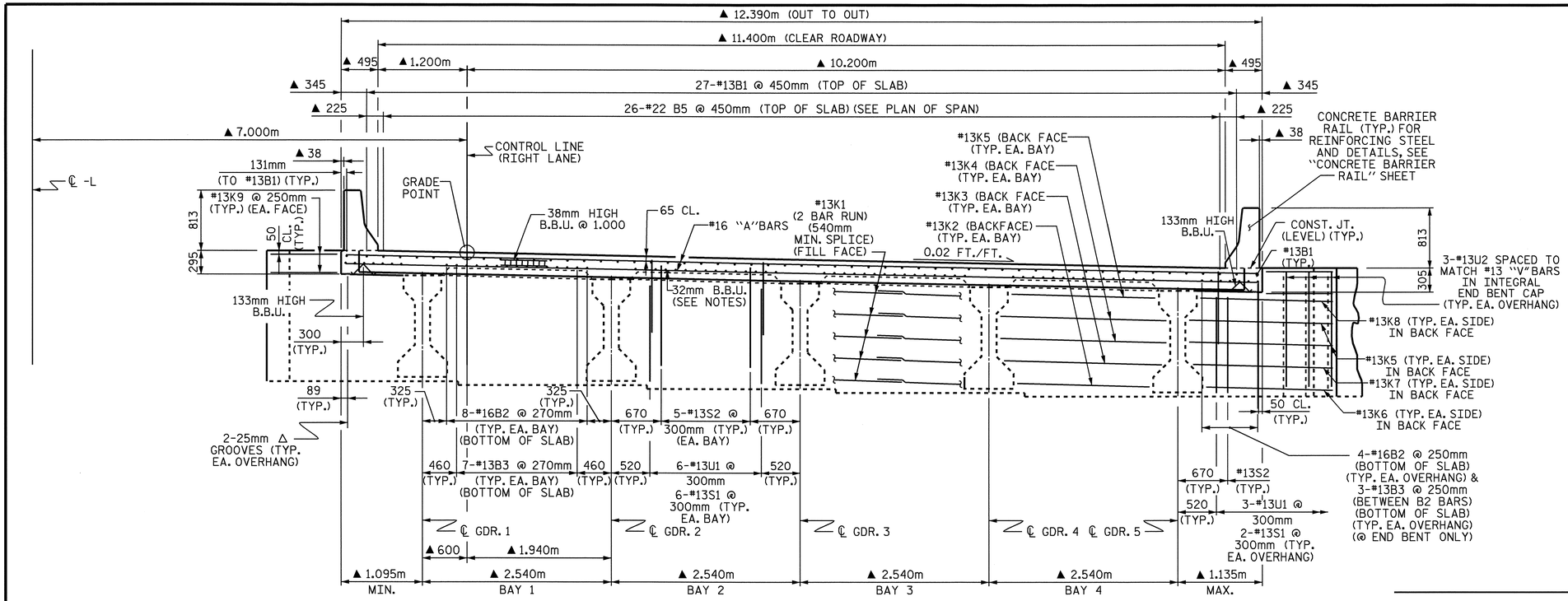

AT INTEGRAL END BENTS
TYPICAL SECTION

▲ DIMENSIONS ARE TO CURVES CONCENTRIC WITH ℄ -L.
GIRDERS ARE ON THE CHORDS OF THESE CONCENTRIC CIRCLES.

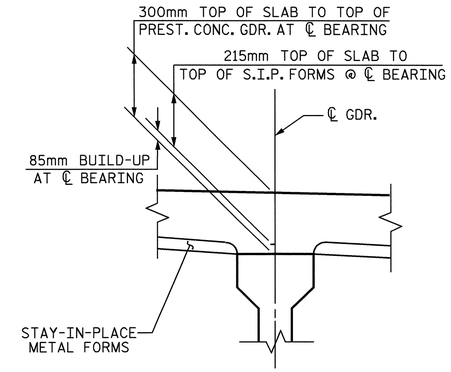

SLAB DETAIL

NOTES

PROVIDE 32mm HIGH BEAM BOLSTERS UPPER AT 1.2m CTS. ATOP THE METAL STAY-IN-PLACE FORMS TO SUPPORT THE BOTTOM MAT OF 'A' BARS. WHEN USING REMOVABLE FORMS, PROVIDE CONTINUOUS HIGH CHAIRS FOR METAL DECK (C.H.C.M.) @ 1.2m CTS. WITH A HEIGHT TO SUPPORT THE BOTTOM MAT OF 'A' BARS A CLEAR DISTANCE OF 65mm ABOVE THE TOP OF THE REMOVABLE FORM.

LONGITUDINAL STEEL MAY BE SHIFTED SLIGHTLY, AS NECESSARY, TO AVOID INTERFERENCE WITH STIRRUPS IN PRESTRESSED CONCRETE GIRDERS.

BARRIER RAIL IN SPAN A SHALL NOT BE CAST UNTIL ALL SLAB CONCRETE IN THE UNIT HAS BEEN CAST AND HAS REACHED A MINIMUM COMPRESSIVE STRENGTH OF 20.7 MPa.

PREVIOUSLY CAST CONCRETE IN SPAN A SHALL HAVE ATTAINED A MINIMUM COMPRESSESIVE STRENGTH OF 20.7 MPa BEFORE ADDITIONAL CONCRETE IS CAST IN THE UNIT.

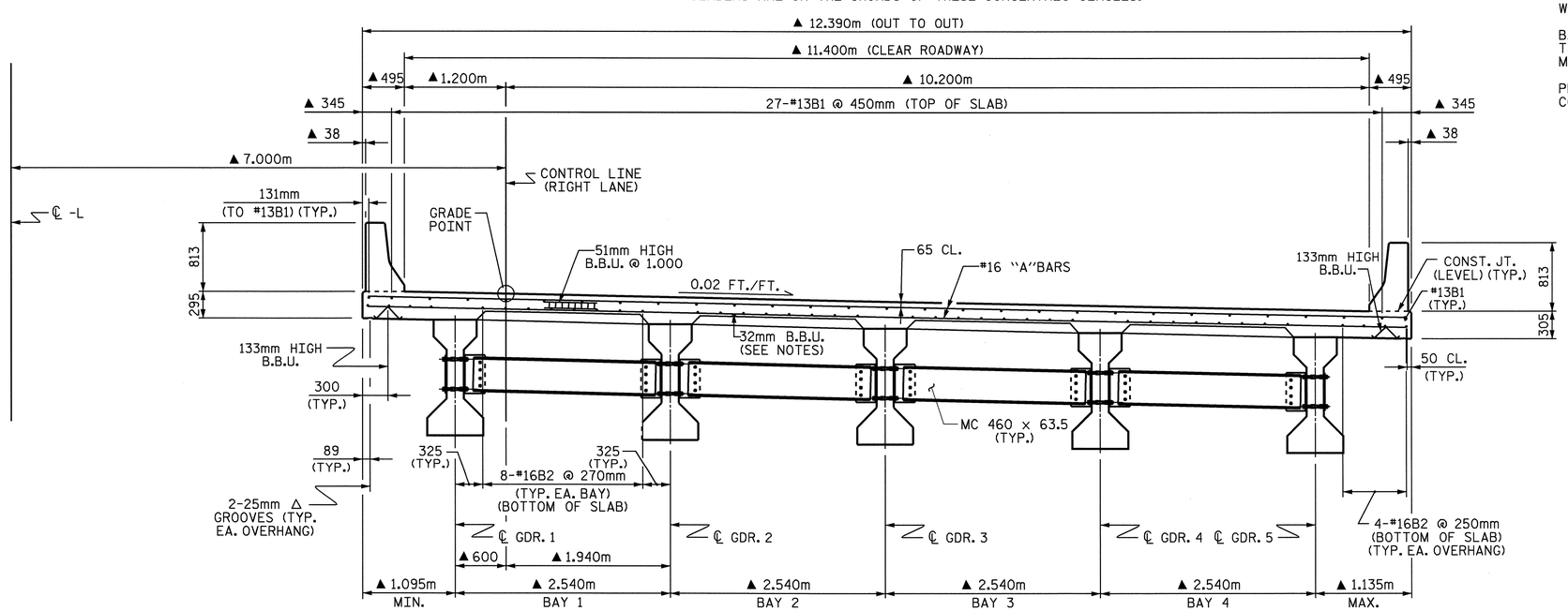

AT INTERMEDIATE DIAPHRAGMS
TYPICAL SECTION

▲ DIMENSIONS ARE TO CURVES CONCENTRIC WITH ℄ -L.
GIRDERS ARE ON THE CHORDS OF THESE CONCENTRIC CIRCLES.

PROJECT NO. R-2554BA
WAYNE COUNTY
STATION: 118+92.556 -L-

SHEET 1 OF 2

STATE OF NORTH CAROLINA
DEPARTMENT OF TRANSPORTATION
RALEIGH

SUPERSTRUCTURE

TYPICAL SECTION
(RIGHT LANE)

NORTH CAROLINA PROFESSIONAL SEAL 15825 ENGINEER BRUCE D. KLAPPENBACH
6-6-08

REVISIONS						SHEET NO. S-358
NO.	BY:	DATE:	NO.	BY:	DATE:	TOTAL SHEETS 478
1			3			
2			4			

STR. #13

DRAWN BY : H .T. BARBOUR DATE : 11-01-07
CHECKED BY : M. G. SHAIKH DATE : 3-08

05-JUN-2008 16:29
r:\structures\bailey\Str#13\tbarbour\R2554BA_sd_TS.dgn
tbarbour

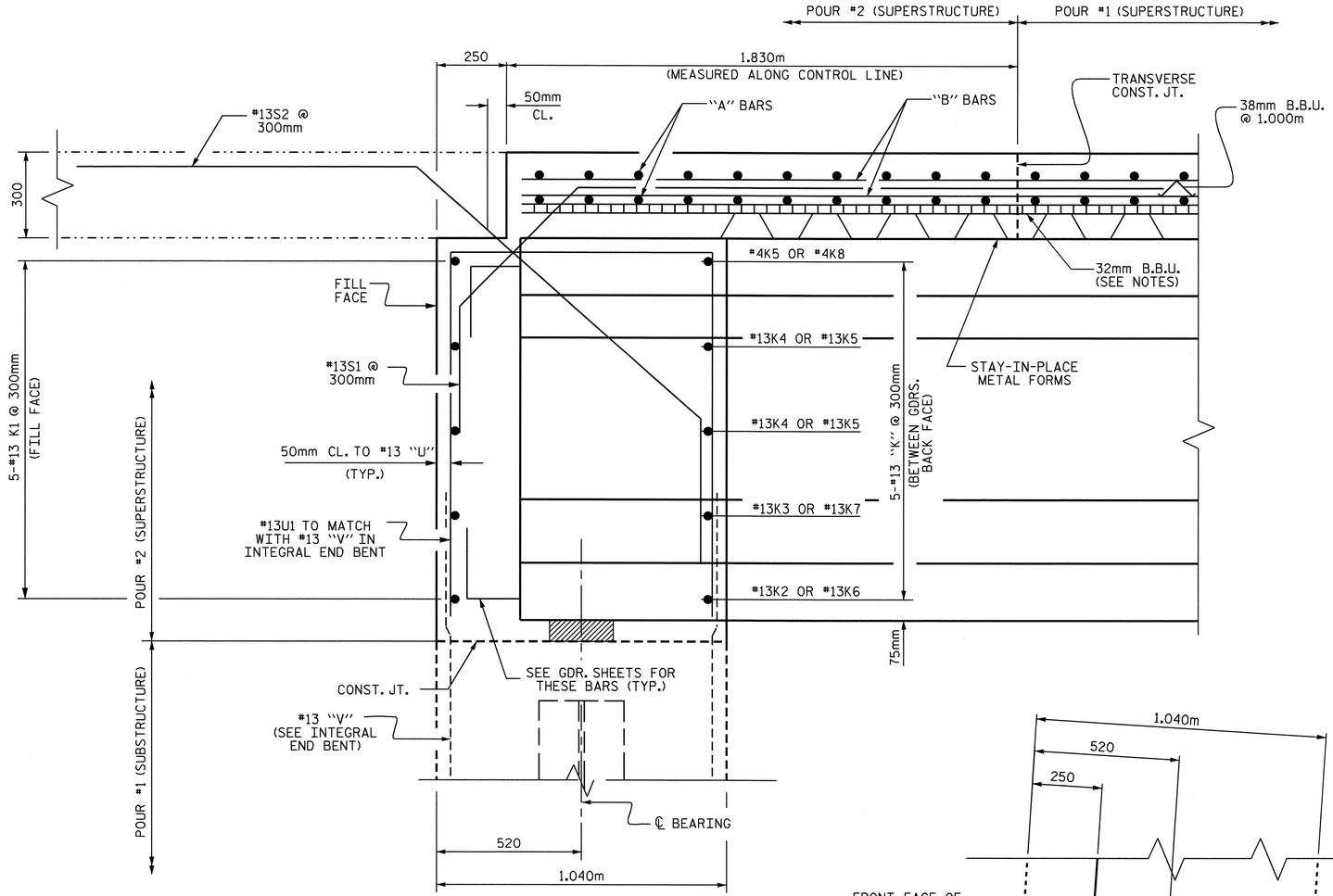

SECTION AT INTEGRAL END BENT

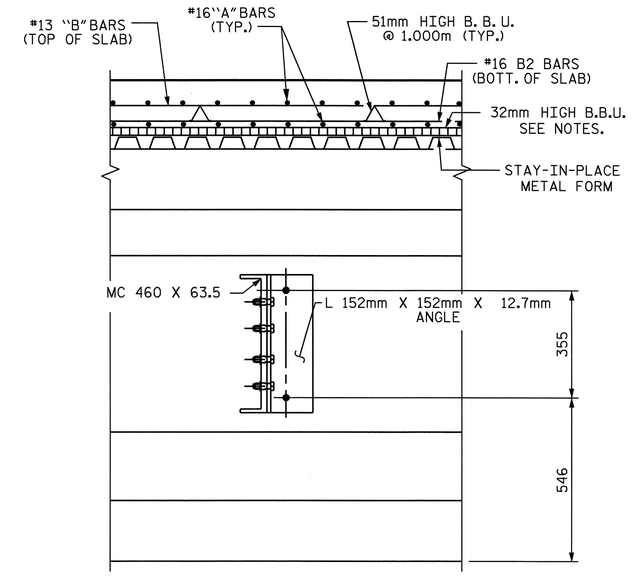

SECTION AT INTERMEDIATE DIAPHRAGM

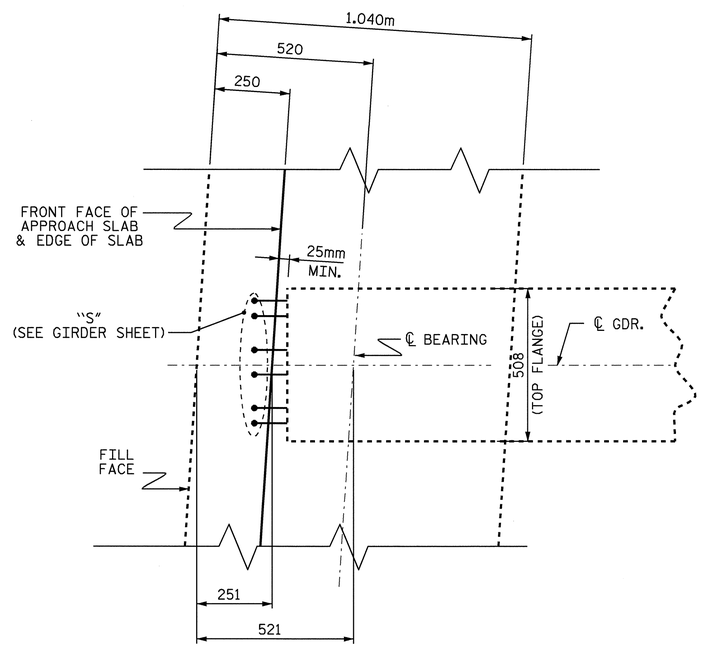

PLAN OF GIRDER AT INTEGRAL END BENT

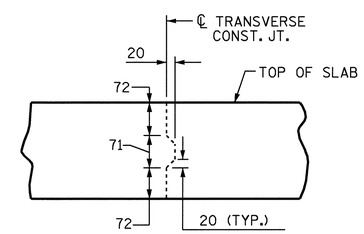

TRANSVERSE CONSTRUCTION JOINT DETAIL

NOTE: REINFORCING STEEL IN SLAB NOT SHOWN.
LONGITUDINAL REINFORCING STEEL SHALL BE
CONTINUOUS THRU JOINT

PROJECT NO. R-2554BA
WAYNE COUNTY
STATION: 118+92.556 -L-

SHEET 2 OF 2

STATE OF NORTH CAROLINA
DEPARTMENT OF TRANSPORTATION
RALEIGH

SUPERSTRUCTURE

TYPICAL SECTION
(RIGHT LANE)

NORTH CAROLINA PROFESSIONAL SEAL 15825 ENGINEER BRUCE D. KLAPPENBACH
6-6-08

REVISIONS						SHEET NO.
NO.	BY:	DATE:	NO.	BY:	DATE:	S-359
1			3			TOTAL SHEETS
2			4			478

DRAWN BY : H .T. BARBOUR DATE : 11-01-07
CHECKED BY : M. G. SHAIKH DATE : 11-07

05-JUN-2008 14:47
r:\structures\bailey\Str#13\tbarbour\R2554BA_sd_TS.dgn
tbarbour

STR. #13

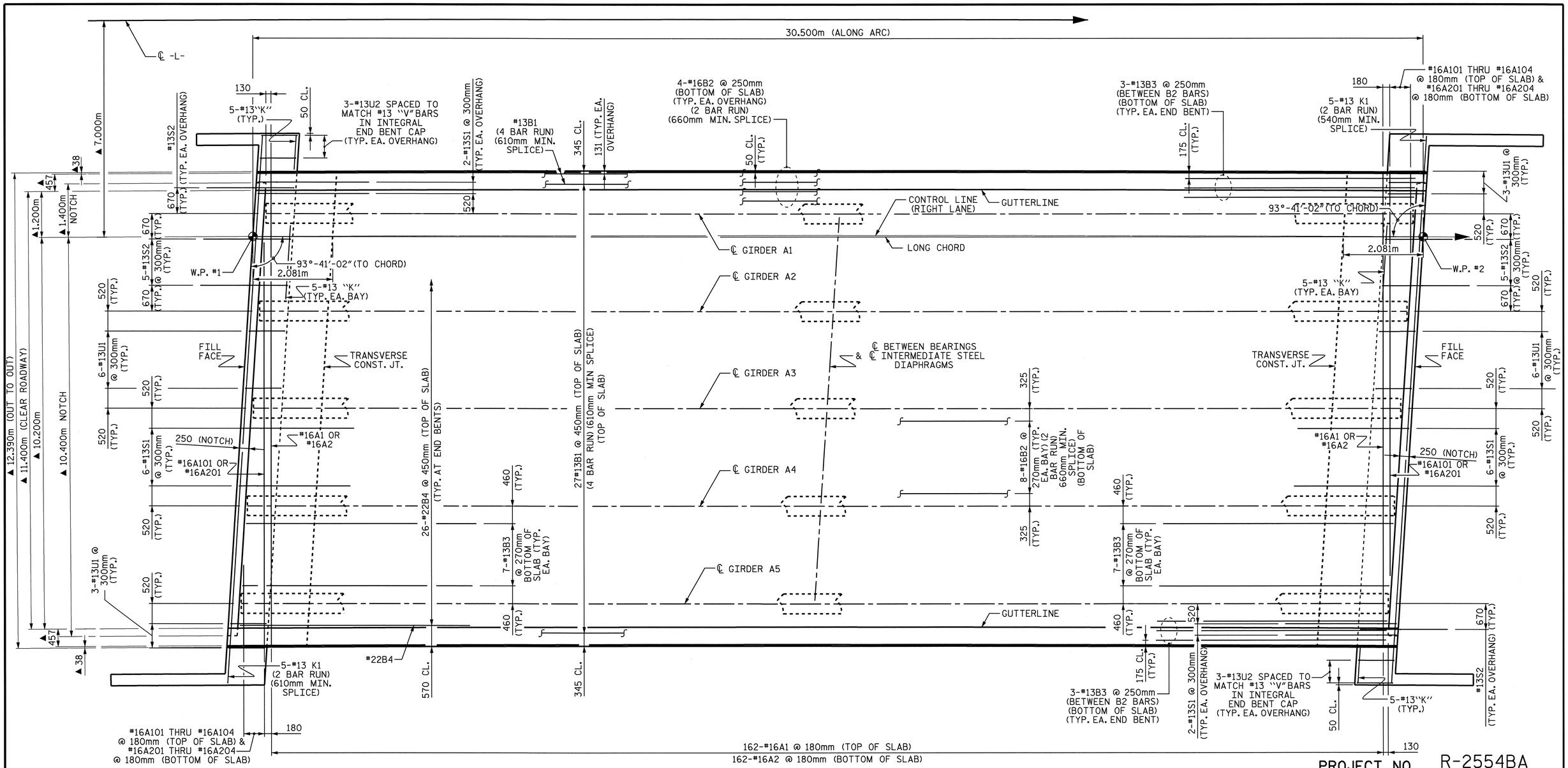

PROJECT NO. R-2554BA

WAYNE COUNTY

STATION: 118+92.556 -L-

SHEET 1 OF 2

PLAN OF SPAN

▲ DIMENSIONS ARE TO CURVES CONCENTRIC WITH ℄ -L.
GIRDERS ARE ON THE CHORDS OF THESE CONCENTRIC CIRCLES.

"A" BARS TO BE PLACED AT RIGHT ANGLES TO THE LONG CHORD.

STATE OF NORTH CAROLINA
DEPARTMENT OF TRANSPORTATION
RALEIGH

SUPERSTRUCTURE
PLAN OF SPAN
(RIGHT LANE)

NORTH CAROLINA PROFESSIONAL SEAL 15825 ENGINEER BRUCE D. KLAPPENBACH
6-6-08

REVISIONS						SHEET NO.
NO.	BY:	DATE:	NO.	BY:	DATE:	S-360
1			3			TOTAL SHEETS
2			4			478

STR. #13

DRAWN BY : H. T. BARBOUR DATE : 11-06-07
CHECKED BY : M. G. SHAIKH DATE : 11-07

05-JUN-2008 11:17
r:\structures\bailey\Str#13\tbarbour\R2554BA_sd_S*.dgn
tbarbour

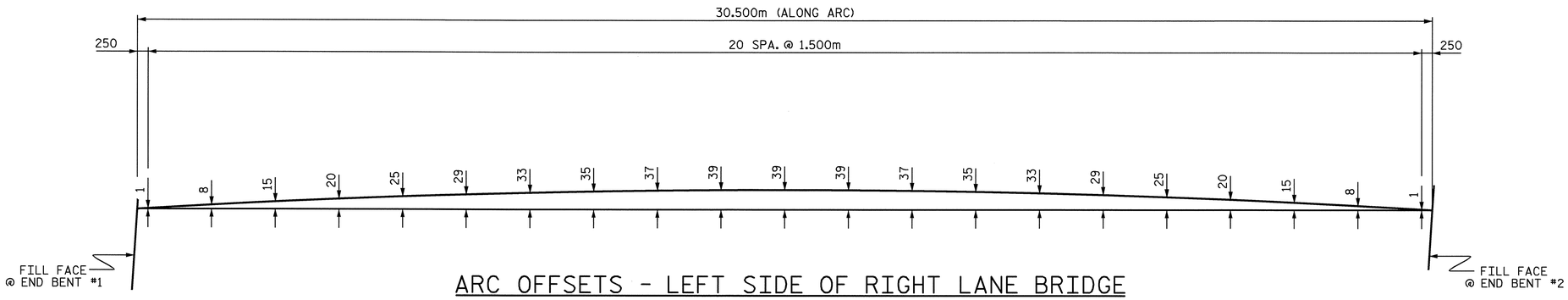

ARC OFFSETS - LEFT SIDE OF RIGHT LANE BRIDGE

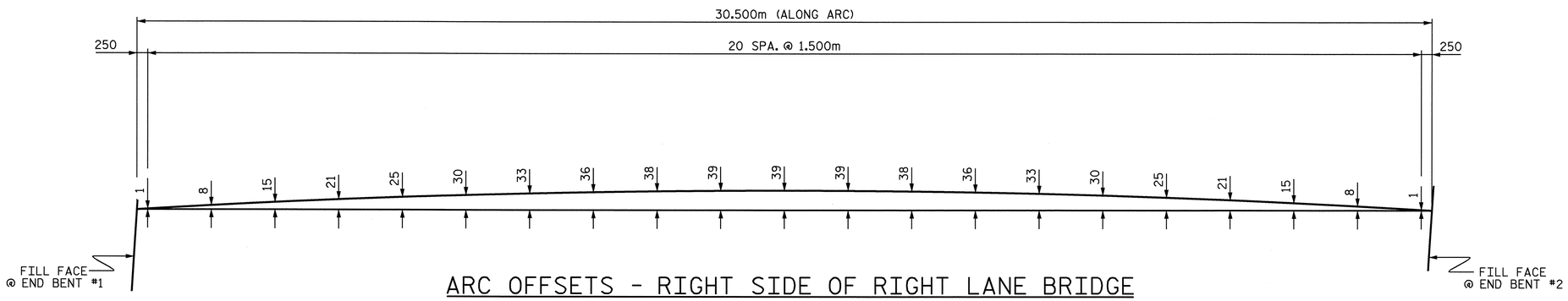

ARC OFFSETS - RIGHT SIDE OF RIGHT LANE BRIDGE

PROJECT NO. R-2554BA

WAYNE COUNTY

STATION: 118+92.556 -L-

SHEET 2 OF 2

STATE OF NORTH CAROLINA
DEPARTMENT OF TRANSPORTATION
RALEIGH

SUPERSTRUCTURE
ARC OFFSETS
(RIGHT LANE)

NORTH CAROLINA PROFESSIONAL SEAL 15625 ENGINEER BRUCE D. KLAPPENBACH

6-6-08

REVISIONS						SHEET NO.
NO.	BY:	DATE:	NO.	BY:	DATE:	S-361
1			3			TOTAL SHEETS
2			4			478

STR. #13

DRAWN BY : H .T. BARBOUR DATE : 11-08-07
CHECKED BY : M. G. SHAIKH DATE : 11-07

05-JUN-2008 16:08
r:\structures\bailey\Str#13\tbarbour\R2554BA_sd_S*.dgn
tbarbour

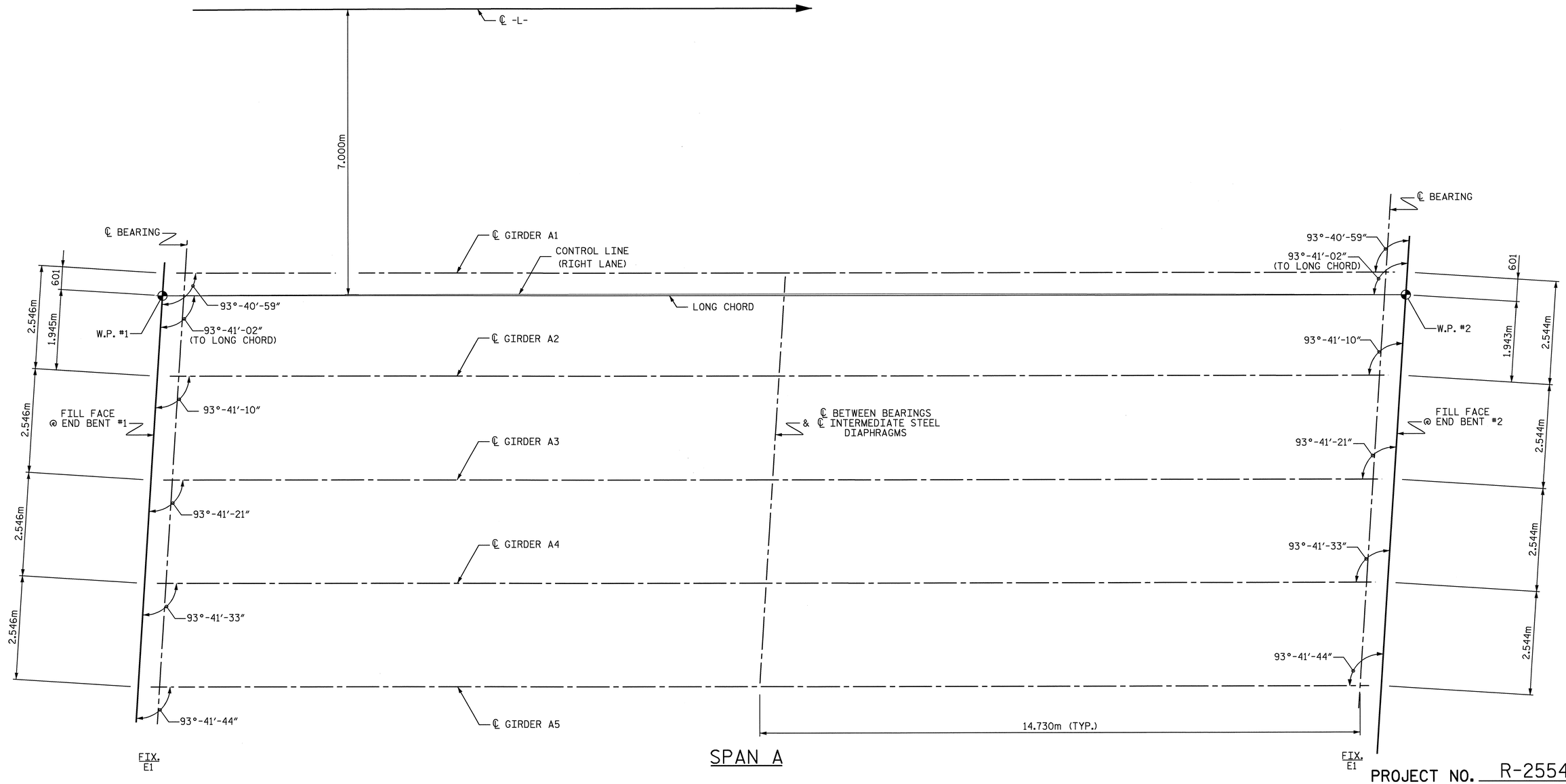

PROJECT NO. R-2554BA

WAYNE COUNTY

STATION: 118+92.556 -L-

STATE OF NORTH CAROLINA
DEPARTMENT OF TRANSPORTATION
RALEIGH

SUPERSTRUCTURE FRAMING PLAN (RIGHT LANE)

NORTH CAROLINA PROFESSIONAL SEAL 15825 ENGINEER BRUCE D. KLAPPENBACH

6-6-08

REVISIONS						SHEET NO.
NO.	BY:	DATE:	NO.	BY:	DATE:	S-362
1			3			TOTAL SHEETS
2			4			478

STR. #13

DRAWN BY : H. T. BARBOUR DATE : 11-05-07
CHECKED BY : M. G. SHAIKH DATE : 11-07

05-JUN-2008 11:21
r:\structures\balley\Str#13\tbarbour\R2554BA_sd_FP.dgn
tbarbour

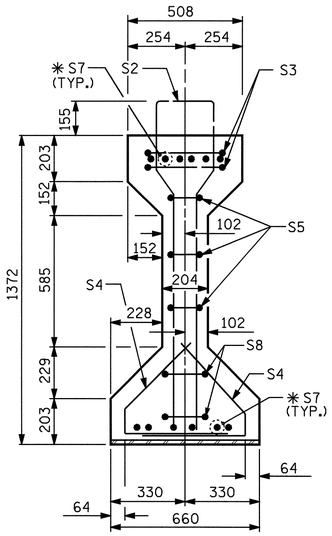

SECTION A-A

✱FOR S7 BARS SEE DETAIL A "PRESTRESSED CONCRETE GIRDER CONTINUOUS FOR LIVE LOAD DETAILS (RIGHT LANE)"

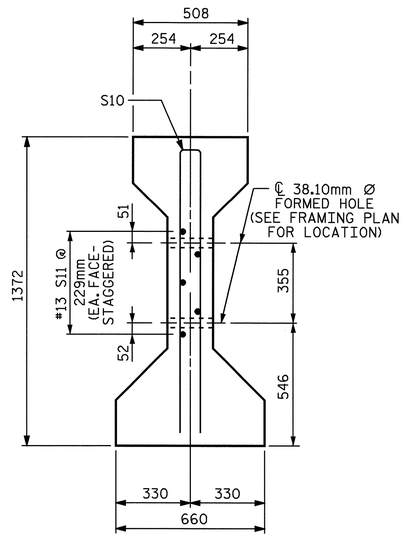

SECTION C-C

(S1 BARS NOT SHOWN)

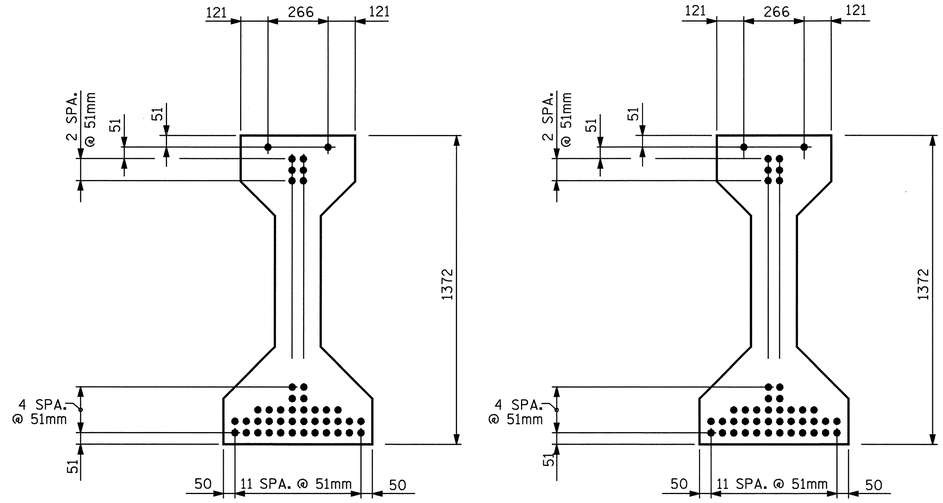

AT END OF GIRDER

AT ℄ OF GIRDER

15.24mm Ø LOW RELAXATION STRAND LAYOUT

15.24mm Ø L. R. GRADE 270 STRANDS		
AREA (mm^2)	ULTIMATE STRENGTH (kN PER STRAND)	APPLIED PRESTRESS (kN PER STRAND)
140.0	260.4	195.3

REINFORCING STEEL FOR ONE GIRDER

BAR	NUMBER	SIZE	TYPE	LENGTH	WEIGHT
S1	87	#13	1	3260	282
S2	12	#19	1	3260	87
S3	4	#13	2	2760	11
S4	80	#13	3	1040	83
S5	6	#13	2	2560	15
✱S7	24	#16	STR	1120	42
S8	4	#13	2	2620	10
S9	2	#10	STR	560	1
S10	2	#16	2	2640	8
S11	5	#13	STR	2140	11
S12	2	#10	STR	400	1

✱NOTE: S7 BARS SHALL BE BENT BEFORE SHIPMENT. HEAT BENDING SHALL NOT BE ALLOWED.

BAR TYPES

ALL BAR DIMENSIONS ARE OUT-TO-OUT

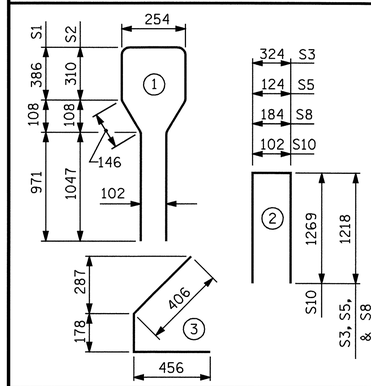

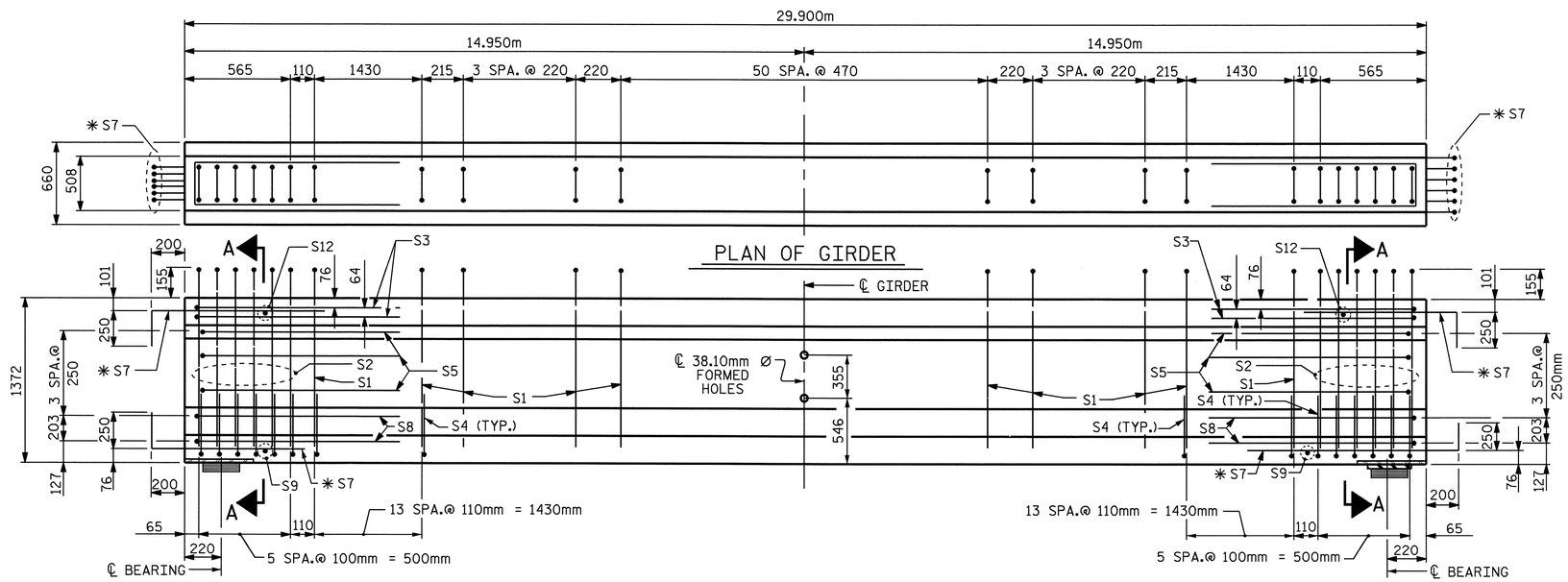

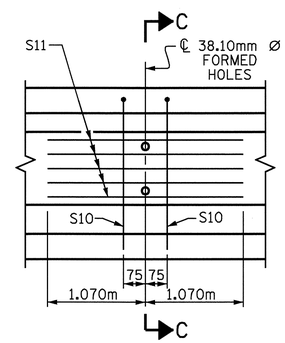

PARTIAL ELEVATION

SHOWING INTERMEDIATE DIAPHRAGM REINFORCING STEEL FOR ALL GIRDERS.

QUANTITIES FOR ONE GIRDER

	REINFORCING STEEL	64 MPa CONCRETE	15.24mm Ø L.R. STRANDS
	kg	m^3	No.
GIRDER	551	15.2	44

GIRDERS REQUIRED

NUMBER	LENGTH	TOTAL LENGTH
5	29.900m	149.500m

PROJECT NO. R-2554BA

WAYNE COUNTY

STATION: 118+92.556 -L-

SHEET 1 OF 2

STATE OF NORTH CAROLINA
DEPARTMENT OF TRANSPORTATION
RALEIGH

AASHTO TYPE IV PRESTRESSED CONCRETE GIRDER CONTINUOUS FOR LIVE LOAD (RIGHT LANE)

NORTH CAROLINA PROFESSIONAL SEAL 15825 ENGINEER BRUCE O. KLAPPENBACH
6-6-08

ASSEMBLED BY : H. T. BARBOUR	DATE : 11-01-07
CHECKED BY : M. G. SHAIKH	DATE : 3-08
DRAWN BY : ELR 8/91	REV. 7/17/98 RWW/LES
CHECKED BY : GRP 8/91	REV. 10/17/00R RWW/LES
	REV. 5/1/06 TLA/GM

REVISIONS

NO.	BY:	DATE:	NO.	BY:	DATE:
1			3		
2			4		

SHEET NO. S-363

TOTAL SHEETS 478

STR. #13

05-JUN-2008 11:27
r:\structures\bailey\Str#13\tbarbour\R2554BA_sd_G*.dgn
tbarbour

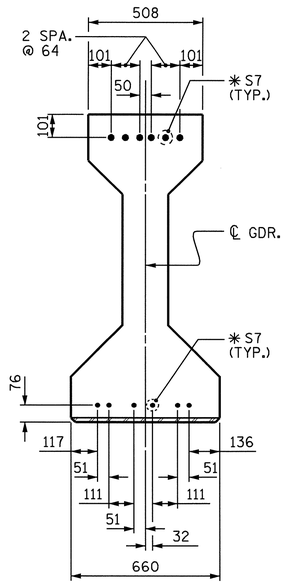

DETAIL "A"

(FOR AASHTO TYPE IV GIRDERS)

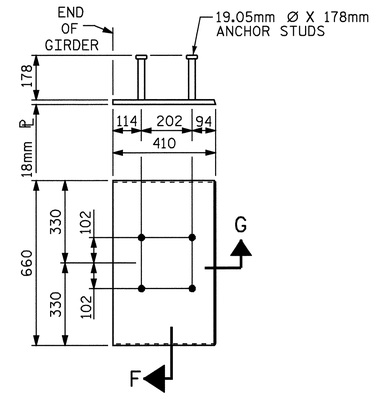

EMBEDDED PLATE "B-1" DETAILS FOR AASHTO TYPE IV GIRDER 1600mm & 1829mm MODIFIED BULB TEES

(2 REQ'D PER GIRDER)

NOTES

ALL PRESTRESSING STRANDS SHALL BE 7-WIRE LOW-RELAXATION GRADE 270 STRANDS AND SHALL CONFORM TO AASHTO M203M EXCEPT FOR SAMPLING REQUIREMENTS WHICH SHALL BE IN ACCORDANCE WITH THE STANDARD SPECIFICATIONS.

ALL REINFORCING STEEL SHALL BE GRADE 420.

EMBEDDED PLATE "B-1" SHALL BE GALVANIZED IN ACCORDANCE WITH THE SPECIFICATIONS. BEVEL EDGES OF PLATE "B-1" TO GIVE CLOSE FIT BUT NOT TIGHT FIT TO STEEL CASTING FORM.

ANCHOR STUDS SHALL CONFORM TO AASHTO M169 GRADES 1010 THROUGH 1020 OR APPROVED EQUAL, AND SHALL MEET THE TYPE "B" REQUIREMENTS OF SUBSECTION 7.3 OF THE ANSI/AASHTO/AWS D1.5 BRIDGE WELDING CODE.

AT ENDS OF GIRDERS TO BE EMBEDDED IN CONCRETE DIAPHRAGMS OR END WALLS, PRESTRESSING STRANDS MAY EXTEND A MAXIMUM OF 50mm BEYOND THE GIRDER ENDS. OTHERWISE, PRESTRESSING STRANDS SHALL BE CUT FLUSH WITH THE GIRDER ENDS.

THE TRANSFER OF LOAD FROM THE ANCHORAGES TO THE GIRDER SHALL BE DONE WHEN CONCRETE HAS REACHED A COMPRESSIVE STRENGTH OF NOT LESS THAN 51 MPa.

DEPENDING ON THE TYPE OF SYSTEM USED TO SUPPORT THE DECK SLAB FORMS, PRESET ANCHORS MAY BE NECESSARY IN THE PRESTRESSED CONCRETE GIRDER.

THE TOP SURFACE OF THE GIRDER, EXCLUDING THE OUTSIDE 100mm, SHALL BE RAKED TO A DEPTH OF 6mm.

FOR CRACK REPAIR OF PRESTRESSED CONCRETE GIRDERS, SEE SPECIAL PROVISIONS.

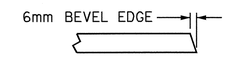

SECTION "G"

SECTION "F"

(SEE NOTES)

DEAD LOAD DEFLECTION TABLE FOR SPAN A

15.24mm Ø LOW RELAXATION	GIRDERS 1 & 5											GIRDERS 2, 3 & 4										
TENTH POINTS	0	.1	.2	.3	.4	.5	.6	.7	.8	.9	0	0	.1	.2	.3	.4	.5	.6	.7	.8	.9	0
CAMBER (GIRDER ALONE IN PLACE) ↑	0.0	0.029	0.055	0.075	0.088	0.092	0.088	0.075	0.055	0.029	0.0	0.0	0.029	0.055	0.075	0.088	0.092	0.088	0.075	0.055	0.029	0.0
✳ DEFLECTION DUE TO SUPERIMPOSED D.L. ↓	0.0	0.013	0.026	0.036	0.042	0.044	0.042	0.036	0.026	0.013	0.0	0.0	0.014	0.026	0.036	0.042	0.045	0.042	0.036	0.026	0.014	0.0
FINAL CAMBER ↑	0.0	16	29	39	46	48	46	39	29	16	0.0	0.0	15	29	39	46	47	46	39	29	15	0.0

✳ INCLUDES FUTURE WEARING SURFACE. ALL VALUES ARE SHOWN IN METERS, EXCEPT FINAL CAMBER, WHICH IS GIVEN IN MILLIMETERS.

PROJECT NO. R-2554BA
WAYNE COUNTY
STATION: 118+92.556 -L-

SHEET 2 OF 2

STATE OF NORTH CAROLINA
DEPARTMENT OF TRANSPORTATION
RALEIGH

PRESTRESSED CONCRETE GIRDER CONTINUOUS FOR LIVE LOAD DETAILS (RIGHT LANE)

NORTH CAROLINA PROFESSIONAL SEAL 15825 ENGINEER D. KLAPPENBACH BRIDGE ENGINEERING
6-6-08

REVISIONS						
NO.	BY:	DATE:	NO.	BY:	DATE:	
1			3			
2			4			

SHEET NO. S-364
TOTAL SHEETS 478

STR. #13

ASSEMBLED BY : H. T. BARBOUR		DATE : 11-01-07	
CHECKED BY : M. G. SHAIKH		DATE : 3-08	
DRAWN BY : ELR 11/91	REV. 10/17/00 RWW/LES		
CHECKED BY : GRP 11/91	REV. 7/10/01RR LES/RDR		
	REV. 5/1/06 TLA/GM		

05-JUN-2008 11:27
r:\structures\bailey\Str#13\tbarbour\R2554BA_sd_G*.dgn
tbarbour

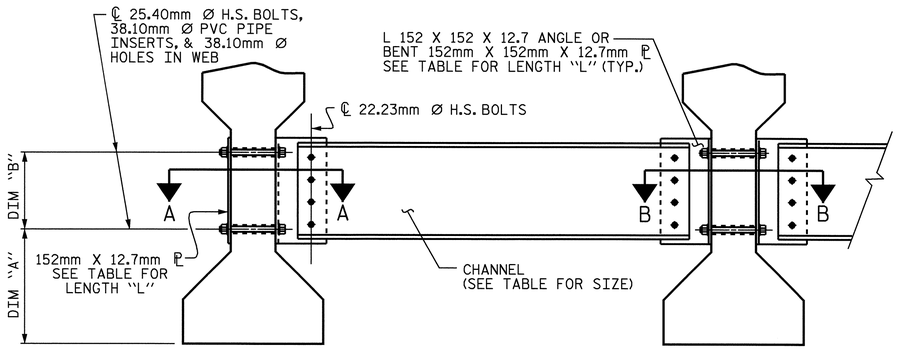

PART SECTION AT INTERMEDIATE DIAPHRAGM

(TYPE III OR TYPE IV GIRDER SHOWN)

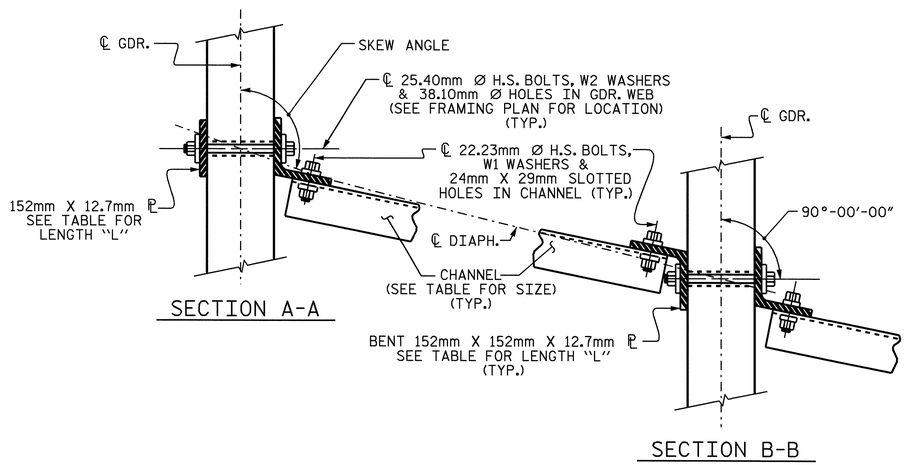

CONNECTION DETAILS

(FOR 70° ≤ SKEW < 90° OR 90° < SKEW ≤ 110°)

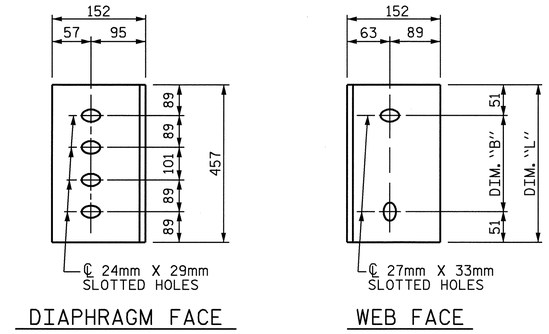

CONNECTOR PLATE DETAILS

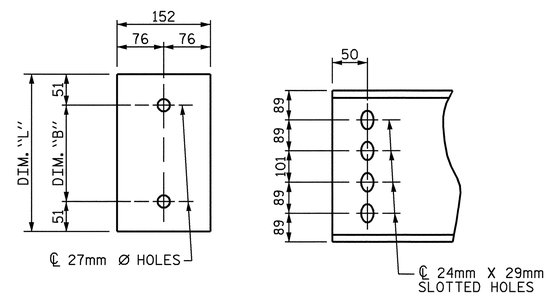

PLATE DETAILS CHANNEL END

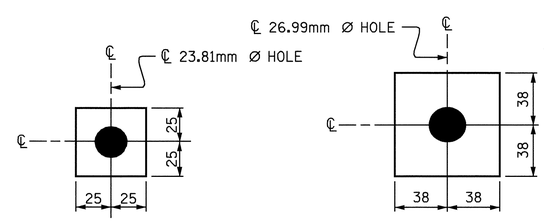

W1: ℙ 11.1 X 50 X 50

USE WITH 22.23mm Ø HVY. HEX NUTS & DIRECT TENSION INDICATOR WASHERS AT DIAPHRAGM CHANNEL TO CONNECTOR PLATE CONNECTIONS

W2: ℙ 11.1 X 76 X 76

USE WITH 25.40mm Ø HVY. HEX NUTS AT CONNECTOR PLATE TO GIRDER CONNECTIONS

WASHER DETAILS

STRUCTURAL STEEL NOTES

ALL INTERMEDIATE DIAPHRAGM STEEL, CONNECTOR PLATES AND PLATE WASHERS SHALL BE AASHTO M270 GRADE 345 OR APPROVED EQUAL.

TENSION ON THE AASHTO M164 BOLTS THROUGH THE CHANNEL MEMBER SHALL BE CALIBRATED USING DIRECT TENSION INDICATOR WASHERS IN ACCORDANCE WITH ARTICLE 440-8 OF THE STANDARD SPECIFICATIONS.

TENSION ON THE AASHTO M164 BOLTS THROUGH THE GIRDER WEB SHALL BE SNUG TIGHTENED FOLLOWED BY AN ADDITIONAL 1/4 TURN.

THE CHANNELS, ANGLES, WASHERS, PLATE WASHERS, AND DIRECT TENSION INDICATORS SHALL BE GALVANIZED OR METALLIZED IN ACCORDANCE WITH THE STANDARD SPECIFICATIONS. FOR THERMAL SPRAYED COATINGS (METALLIZATION), SEE SPECIAL PROVISIONS.

FOR METALLIZATION, APPLY AN 8 MIL THICK 99.99 PERCENT ZINC (W-Zn-1) THERMAL SPRAYED COATING WITH A 0.5 MIL THICK SEAL COAT TO ALL STEEL DIAPHRAGM SURFACES IN ACCORDANCE WITH THE THERMAL SPRAYED COATINGS SPECIAL PROVISIONS AND SECTION 442 OF THE STANDARD SPECIFICATIONS.

GALVANIZE THE HIGH STRENGTH BOLTS, NUTS, AND WASHERS IN ACCORDANCE WITH THE STANDARD SPECIFICATIONS. FOR HIGH STRENGTH BOLTS, SEE SPECIAL PROVISIONS.

USE A MINIMUM 11.1mm THICK PLATE WASHER WITH STANDARD HOLES UNDER EACH BOLT HEAD AND NUT. THE PLATE WASHERS SHALL HAVE SUFFICIENT SIZE TO COVER THE HOLES AFTER INSTALLATION. DIRECT TENSION INDICATORS ARE TO BE USED IN CONJUNCTION WITH THE PLATE WASHERS.

PROVIDE SUFFICIENT LENGTH OF ALL BOLTS TO ACCOMMODATE WASHERS, DIRECT TENSION INDICATORS, THE THICKNESS OF CONNECTING MEMBER PLUS AT LEAST 6mm PROJECTION BEYOND THE NUT.

INTERMEDIATE DIAPHRAGM ASSEMBLY SHALL COMPLY WITH SECTION 1072 OF THE STANDARD SPECIFICATIONS.

CONTRACTOR SHALL SUBMIT TWO SETS OF WORKING DRAWINGS FOR THE INTERMEDIATE DIAPHRAGM ASSEMBLY FOR REVIEW, COMMENTS AND ACCEPTANCE. AFTER REVIEW, COMMENTS, AND ACCEPTANCE, SUBMIT SEVEN SETS FOR DISTRIBUTION.

IN THE EXTERIOR BAYS, TEMPORARY STRUTS SHALL BE PLACED BETWEEN PRESTRESSED GIRDERS ADJACENT TO THE STEEL DIAPHRAGMS. STRUTS SHALL REMAIN IN PLACE 3 DAYS AFTER CONCRETE IS PLACED. ALL AASHTO M164 H.S. BOLTS SHALL BE FULLY TIGHTENED AFTER THE STRUTS HAVE BEEN REMOVED.

THE COST OF THE STEEL DIAPHRAGMS AND ASSEMBLIES SHALL BE INCLUDED IN THE UNIT PRICE BID FOR PRESTRESSED CONCRETE GIRDERS.

TABLE

GIRDER TYPE	CHANNEL SIZE	DIM "A"	DIM "B"	DIM "L"
IV	MC 460 x 63.5	546	355	457

PROJECT NO. R-2554BA

WAYNE COUNTY

STATION: 118+92.556 -L-

STATE OF NORTH CAROLINA
DEPARTMENT OF TRANSPORTATION
RALEIGH

INTERMEDIATE STEEL DIAPHRAGMS FOR TYPE IV PRESTRESSED CONCRETE GIRDERS (RIGHT LANE)

NORTH CAROLINA PROFESSIONAL SEAL 15825 ENGINEER D. KLAPPENBACH

6-6-08

REVISIONS						SHEET NO. S-365
NO.	BY:	DATE:	NO.	BY:	DATE:	TOTAL SHEETS 478
1			3			
2			4			

ASSEMBLED BY : H .T. BARBOUR DATE : 11-01-07	
CHECKED BY : M. G. SHAIKH DATE : 11-07	
DRAWN BY : TLA 6/05	ADDED 10/21/05
CHECKED BY : VC 6/05	REV. 5/1/06R KMM/GM

05-JUN-2008 11:21
r:\structures\bailey\Str#13\tbarbour\R2554BA_sd_FP.dgn
tbarbour

STR. #13

STD.No.PCG12SM

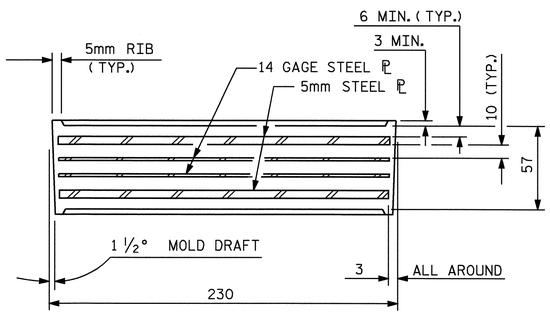

TYPICAL SECTION OF ELASTOMERIC BEARINGS

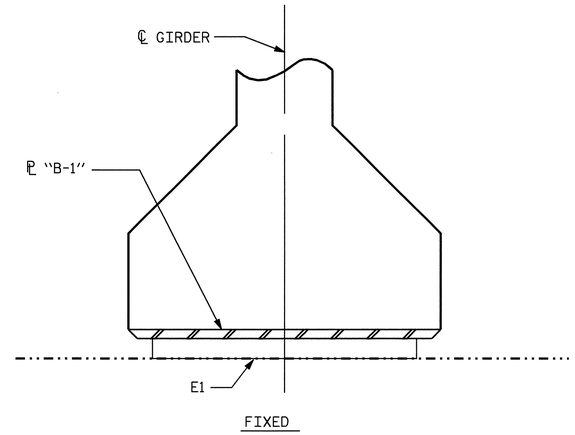

SECTION E-E

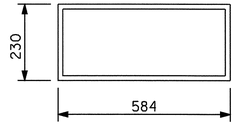

E1 (10 REQ'D)

PLAN VIEW OF ELASTOMERIC BEARING

TYPE V

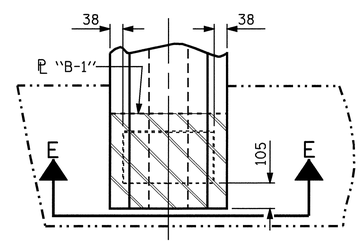

TYPICAL

LOAD RATINGS	
	MAX.D.L.+ L.L.
1372 PCG-TYPE V	801 kN

PROJECT NO. R-2554BA

WAYNE COUNTY

STATION: 118+92.556 -L-

STATE OF NORTH CAROLINA
DEPARTMENT OF TRANSPORTATION
RALEIGH

ELASTOMERIC BEARING DETAILS

PRESTRESSED CONCRETE GIRDER
SUPERSTRUCTURE
(RIGHT LANE)

NORTH CAROLINA PROFESSIONAL SEAL 15825 ENGINEER BRUCE D. KLAPPENBACH
6-6-08

REVISIONS							
NO.	BY:	DATE:	NO.	BY:	DATE:		SHEET NO. S-366
1			3				TOTAL SHEETS 478
2			4				

ASSEMBLED BY : H. T. BARBOUR		DATE :	11-01-07
CHECKED BY : M. G. SHAIKH		DATE :	11-07
DRAWN BY : EEM 2/97	REV. 8/16/99	RWW/LES	
CHECKED BY : VAP 2/97	REV. 10/17/00	RWW/LES	
	REV. 5/1/06	TLA/GM	

05-JUN-2008 11:29
r:\structures\bailey\Str#13\tbarbour\R2554BA_sd_BG.dgn
tbarbour

STR. #13

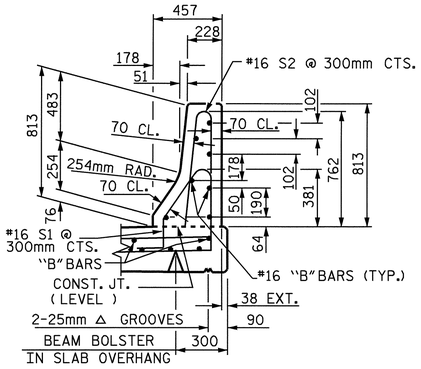

SECTION THRU RAIL

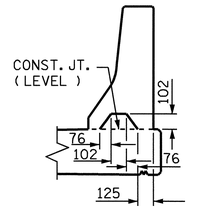

SECTION S-S

AT DAM IN OPEN JOINT
(THIS IS TO BE USED ONLY WHEN SLIP FORM IS USED)

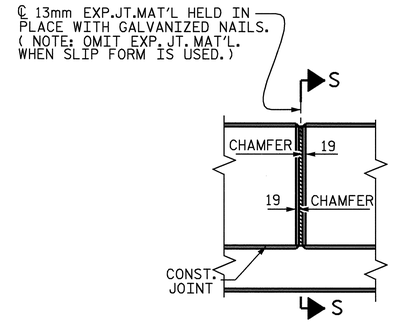

ELEVATION AT EXPANSION JOINTS

BARRIER RAIL DETAILS

NOTES

THE BARRIER RAIL IN EACH SPAN SHALL NOT BE CAST UNTIL ALL SLAB CONCRETE IN THAT SPAN HAS BEEN CAST AND HAS REACHED A MINIMUM COMPRESSIVE STRENGTH OF 20.7 MPa.

ALL REINFORCING STEEL IN BARRIER RAILS SHALL BE EPOXY COATED.

VERTICAL GROOVED CONTRACTION JOINTS, 12mm IN DEPTH, SHALL BE TOOLED IN ALL EXPOSED FACES OF THE BARRIER RAIL AND IN ACCORDANCE WITH ARTICLE 825-10(B) OF THE STANDARD SPECIFICATIONS. THE CONTRACTION JOINT SHALL BE LOCATED AT EACH THIRD POINT BETWEEN BARRIER RAIL EXPANSION JOINTS. ONLY ONE CONTRACTION JOINT IS REQUIRED AT MIDPOINT OF BARRIER RAIL SEGMENTS LESS THAN 6.1m IN LENGTH AND NO CONTRACTION JOINTS ARE REQUIRED FOR THOSE SEGMENTS LESS THAN 3.5m IN LENGTH.

BAR TYPES

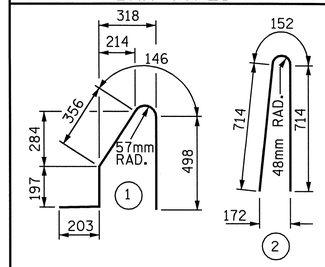

ALL BAR DIMENSIONS ARE OUT TO OUT

BILL OF MATERIAL

FOR CONCRETE BARRIER RAIL ONLY

BAR	NO.	SIZE	TYPE	LENGTH	WEIGHT
* B1	56	#16	STR.	3460	301
* B2	42	#16	STR.	5880	383
* S1	100	#16	1	1400	217
* S2	100	#16	2	1580	245

* EPOXY COATED REINFORCING STEEL	1146 kg
CLASS AA CONCRETE	15.1 CU. METER
CONCRETE BARRIER RAIL	60.058 METERS

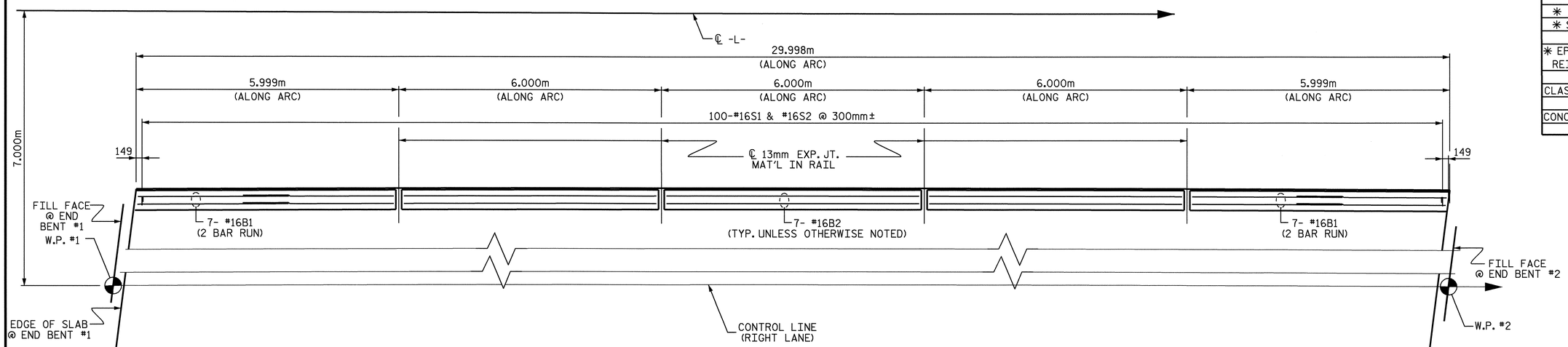

SPAN A

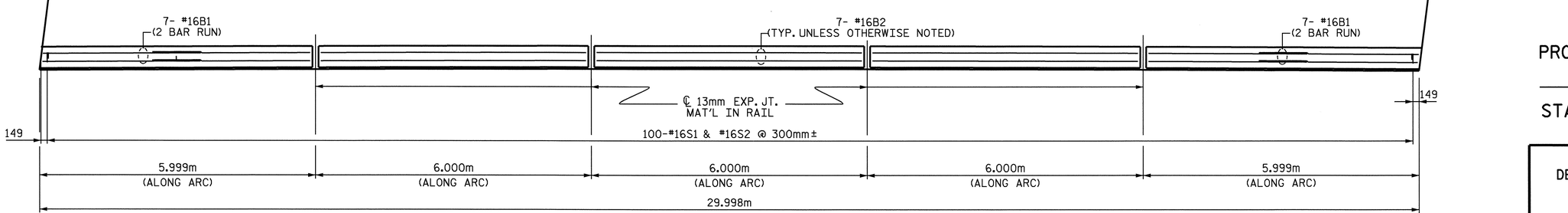

PLAN OF BARRIER RAIL

PROJECT NO. R-2554BA
WAYNE COUNTY
STATION: 118+92.556 -L-

STATE OF NORTH CAROLINA
DEPARTMENT OF TRANSPORTATION
RALEIGH

CONCRETE BARRIER RAIL (RIGHT LANE)

NORTH CAROLINA PROFESSIONAL SEAL 15825 ENGINEER BRUCE O. KLAPPENBACH
6-6-08

ASSEMBLED BY : H. T. BARBOUR	DATE : 11-05-07		
CHECKED BY : M. G. SHAIKH	DATE : 11-07		
DRAWN BY : ARB 5/87	REV. 10/17/00	RWW/LES	
CHECKED BY : SJD 9/87	REV. 5/7/03R	RWW/JTE	
	REV. 5/1/06	TLA/GM	

REVISIONS						SHEET NO. S-367
NO.	BY:	DATE:	NO.	BY:	DATE:	TOTAL SHEETS 478
1			3			
2			4			

STR. #13

05-JUN-2008 11:30
r:\structures\bailey\Str#13\tbarbour\R2554BA_sd_BR.dgn
tbarbour

NOTES

THE GUARDRAIL ANCHOR ASSEMBLY SHALL CONSIST OF A 6mm HOLD DOWN PLATE AND 4 - 22.23mm Ø BOLTS WITH NUTS AND WASHERS, RUBRAIL, AND ADHESIVELY ANCHORED BOLTS.

THE HOLD-DOWN PLATE SHALL CONFORM TO AASHTO M270 GRADE 36. AFTER FABRICATION, THE HOLD-DOWN PLATE SHALL BE HOT-DIP GALVANIZED IN ACCORDANCE WITH AASHTO M111.

BOLTS SHALL CONFORM TO THE REQUIREMENTS OF ASTM A307 AND NUTS SHALL CONFORM TO THE REQUIREMENTS OF AASHTO M291. BOLTS, NUTS AND WASHERS SHALL BE GALVANIZED. (AT THE CONTRACTOR'S OPTION, STAINLESS STEEL BOLTS, NUTS AND WASHERS MAY BE USED AS AN ALTERNATE FOR THE 22.23mm Ø GALVANIZED BOLTS, NUTS AND WASHERS. THEY SHALL CONFORM TO OR EXCEED THE MECHANICAL REQUIREMENTS OF ASTM A307. THE USE OF THIS ALTERNATE SHALL BE APPROVED BY THE ENGINEER.)

THE GUARDRAIL ANCHOR ASSEMBLY IS REQUIRED AT ALL POINTS WHERE APPROACH GUARDRAIL IS TO BE ATTACHED TO THE END OF BARRIER RAIL. FOR POINTS OF ATTACHMENT, SEE SKETCH.

AFTER INSTALLATION, THE EXPOSED THREAD OF THE BOLT SHALL BE BURRED WITH A SHARP POINTED TOOL.

THE COST OF THE GUARDRAIL ANCHOR ASSEMBLY SHALL BE INCLUDED IN THE UNIT CONTRACT PRICE BID FOR CONCRETE BARRIER RAIL.

THE 32mm Ø HOLES SHALL BE FORMED OR DRILLED WITH A CORE BIT. IMPACT TOOLS WILL NOT BE PERMITTED. ANY CONCRETE DAMAGED BY THIS WORK SHALL BE REPAIRED TO THE SATISFACTION OF THE ENGINEER.

THE C150 X 12 RUBRAIL IS TO BE ADHESIVELY ANCHORED TO THE RAIL USING THREE 19.05mm Ø X 150mm BOLTS WITH WASHERS. LEVEL ONE FIELD TESTING IF REQUIRED, AND THE YIELD LOAD OF THE 19.05mm Ø BOLTS IS 53.4kN. FOR ADHESIVELY ANCHORED ANCHOR BOLTS OR DOWELS, SEE SPECIAL PROVISIONS. SEE ROADWAY STANDARD 862.03 FOR DETAILS AND LOCATION OF THE RUBRAIL.

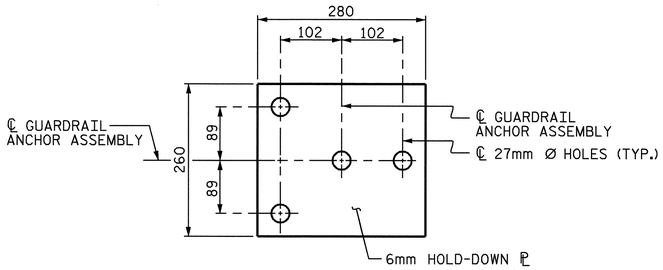

PLAN

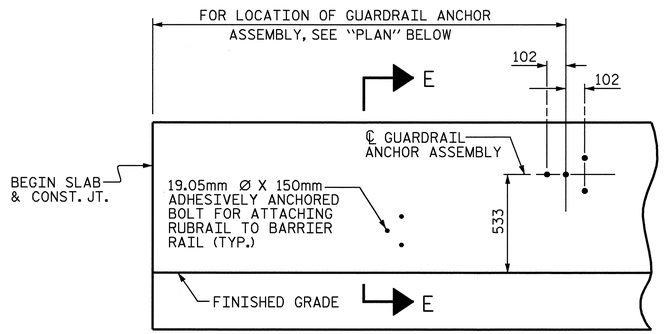

ELEVATION

FOR LOCATION OF RUBRAIL, SEE ROADWAY STD. 862.03

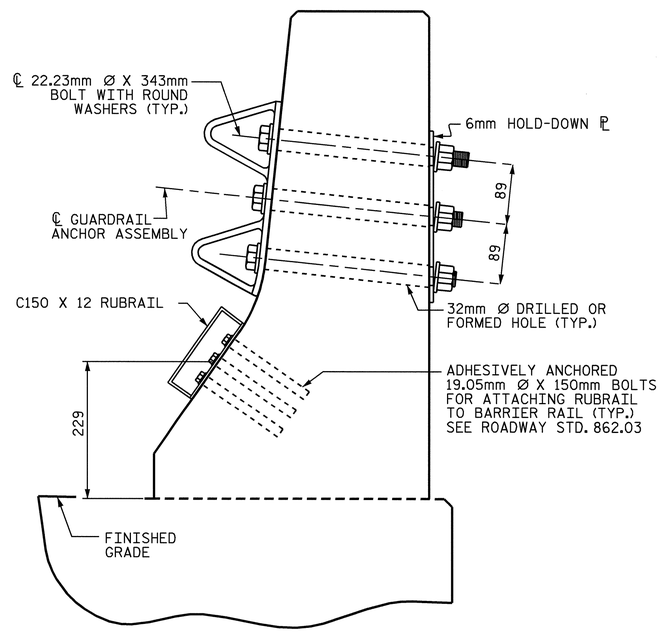

SECTION E-E

GUARDRAIL ANCHOR ASSEMBLY DETAILS

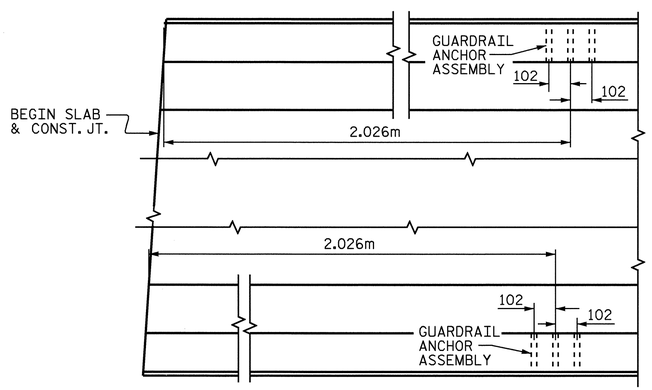

PLAN

LOCATION OF ANCHORS FOR GUARDRAIL

END BENT #1 SHOWN, END BENT #2 SIMILAR.

SKETCH SHOWING POINTS OF ATTACHMENTS

✳ DENOTES GUARDRAIL ANCHOR ASSEMBLY

PROJECT NO. R-2554BA

WAYNE COUNTY

STATION: 118+92.556 -L-

STATE OF NORTH CAROLINA
DEPARTMENT OF TRANSPORTATION
RALEIGH

STANDARD

GUARDRAIL ANCHORAGE FOR BARRIER RAIL (RIGHT LANE)

NORTH CAROLINA PROFESSIONAL SEAL 15825 ENGINEER BRUCE D. KLAPPENBACH

6-6-08

REVISIONS						SHEET NO. S-368
NO.	BY:	DATE:	NO.	BY:	DATE:	TOTAL SHEETS 478
1			3			
2			4			

STR. #13

STD. NO. GRA2SM

ASSEMBLED BY : H. T. BARBOUR		DATE : 11-01-07	
CHECKED BY : M. G. SHAIKH		DATE : 11-07	
DRAWN BY : TLA 5/06	ADDED 5/1/06R KMM/GM		
CHECKED BY : GM 5/06			

05-JUN-2008 11:31
r:\structures\bailey\Str#13\tbarbour\R2554BA_sd_GR.dgn
tbarbour

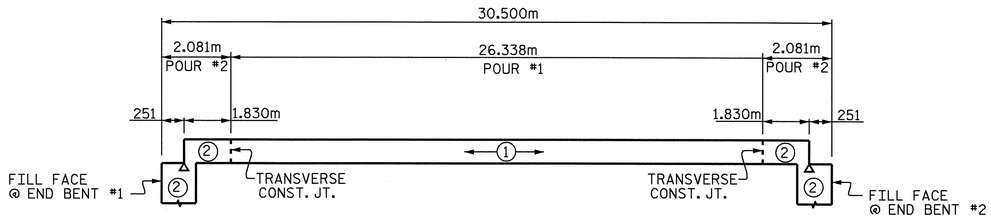

POURING SEQUENCE

ALL DIMENSIONS, ALONG ARC

UPPER PART OF WINGS ARE INCLUDED IN POUR #2

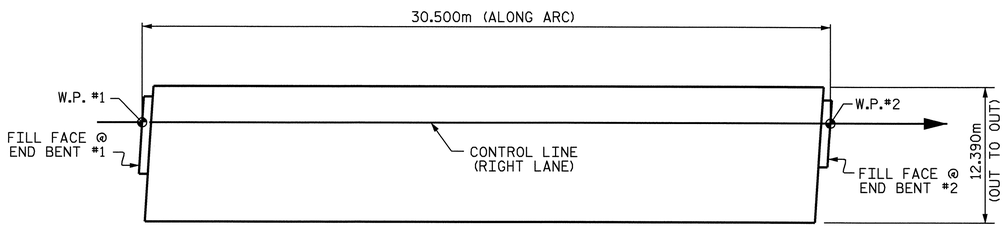

LAYOUT FOR COMPUTING AREA OF REINFORCED CONCRETE DECK SLAB (378 SQ. METER)

SUPERSTRUCTURE REINFORCING STEEL LENGTHS ARE BASED ON THE FOLLOWING MINIMUM SPLICE LENGTHS

BAR SIZE	SUPERSTRUCTURE EXCEPT APPROACH SLABS, PARAPET, AND BARRIER RAIL		APPROACH SLABS		PARAPET AND BARRIER RAIL
	EPOXY COATED	UNCOATED	EPOXY COATED	UNCOATED	
#13	610	540	610	540	840
#16	770	660	770	660	1050
#19	920	790	1190	790	1330
#22	1580	1060			
#25	2080	1390			

GROOVING BRIDGE FLOORS

BRIDGE DECK	318.6	SQ.METER
APPROACH SLABS	135.0	SQ.METER
TOTAL	453.6	SQ.METER

BILL OF MATERIAL
SPAN A

BAR	NO.	SIZE	TYPE	LENGTH	WEIGHT
* A1	162	#16	STR	12280	3087
A2	162	#16	STR	12280	3087
* A101	2	#16	STR	10480	33
* A102	2	#16	STR	7680	24
* A103	2	#16	STR	4880	15
* A104	2	#16	STR	2080	6
A201	2	#16	STR	10480	33
A202	2	#16	STR	7680	24
A203	2	#16	STR	4880	15
A204	2	#16	STR	2080	6
* B1	116	#13	STR	7940	916
B2	80	#16	STR	15280	1897
B3	68	#13	STR	6000	406
* B4	52	#22	STR	6000	949
K1	20	#13	STR	7440	148
K2	8	#13	STR	1780	14
K3	8	#13	STR	2080	17
K4	16	#13	STR	2240	36
K5	16	#13	STR	1920	31
K6	4	#13	STR	1700	7
K7	4	#13	STR	1860	7
K8	4	#13	STR	1780	7
K9	16	#13	STR	900	14
* S1	56	#13	1	3560	198
* S2	44	#13	1	3220	141
U1	60	#13	2	3580	214
U2	12	#13	2	4060	48

REINFORCING STEEL	= 6011	kg
*EPOXY COATED REINFORCING STEEL	= 5369	kg

BAR TYPES

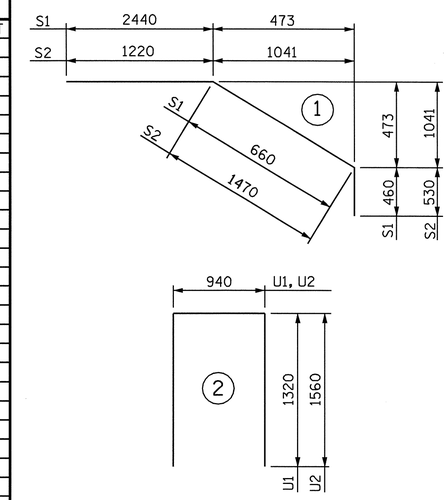

ALL BAR DIMENSIONS ARE OUT TO OUT.

—SUPERSTRUCTURE BILL OF MATERIAL—

	CLASS AA CONCRETE		REINFORCING STEEL	EPOXY COATED REINFORCING STEEL
	(CU. METER)		(kg)	(kg)
SPAN A	POUR 1	86.0	6011	5369
	POUR 2	55.2		
TOTALS **	TOTAL	141.2	6011	5369

** QUANTITIES FOR BARRIER RAIL ARE NOT INCLUDED

UPPER PART OF WINGS, AND INTEGRAL END BENTS ARE INCLUDED IN POUR #2

PROJECT NO. R-2554BA
WAYNE COUNTY
STATION: 118+92.556-L-

STATE OF NORTH CAROLINA
DEPARTMENT OF TRANSPORTATION
RALEIGH

SUPERSTRUCTURE BILL OF MATERIAL (RIGHT LANE)

NORTH CAROLINA PROFESSIONAL SEAL 15825 ENGINEER BRUCE D. KLAPPENBACH
6-6-05

REVISIONS						SHEET NO. S-369
NO.	BY:	DATE:	NO.	BY:	DATE:	TOTAL SHEETS 478
1			3			
2			4			

ASSEMBLED BY : H. T. BARBOUR DATE : 11-08-07
CHECKED BY : M. G. SHAIKH DATE : 11-07
DRAWN BY : JMB 5/87
CHECKED BY : SJD 9/87
REV. 5/16/97 EEM/RGW

05-JUN-2008 16:09
r:\structures\bailey\Str#13\tbarbour\R2554BA_sd_BM.dgn
tbarbour

STR. #13

NOTES

SEE SUPERSTRUCTURE SHEETS FOR UPPER PART OF INTEGRAL END BENT DETAILS.

THE CONTRACTORE SHALL PROVIDE FOR INSTALLATION OF THE 102mm DIAMETER DRAIN PIPE THROUGH THE WING WALL AS REQUIRED FOR REINFORCED BRIDGE APPROACH FILLS. SEE THE ROADWAY PLANS. REINFORCING STEEL IN THE WING WALL MAY BE SHIFTED AS NECESSARY TO CLEAR THE DRAIN PIPE.

THE CONTRACTOR'S ATTENTION IS CALLED TO THE FACT THAT THE UPPER PART OF WINGS IS TO BE POURED WITH SUPERSTRUCTURE.

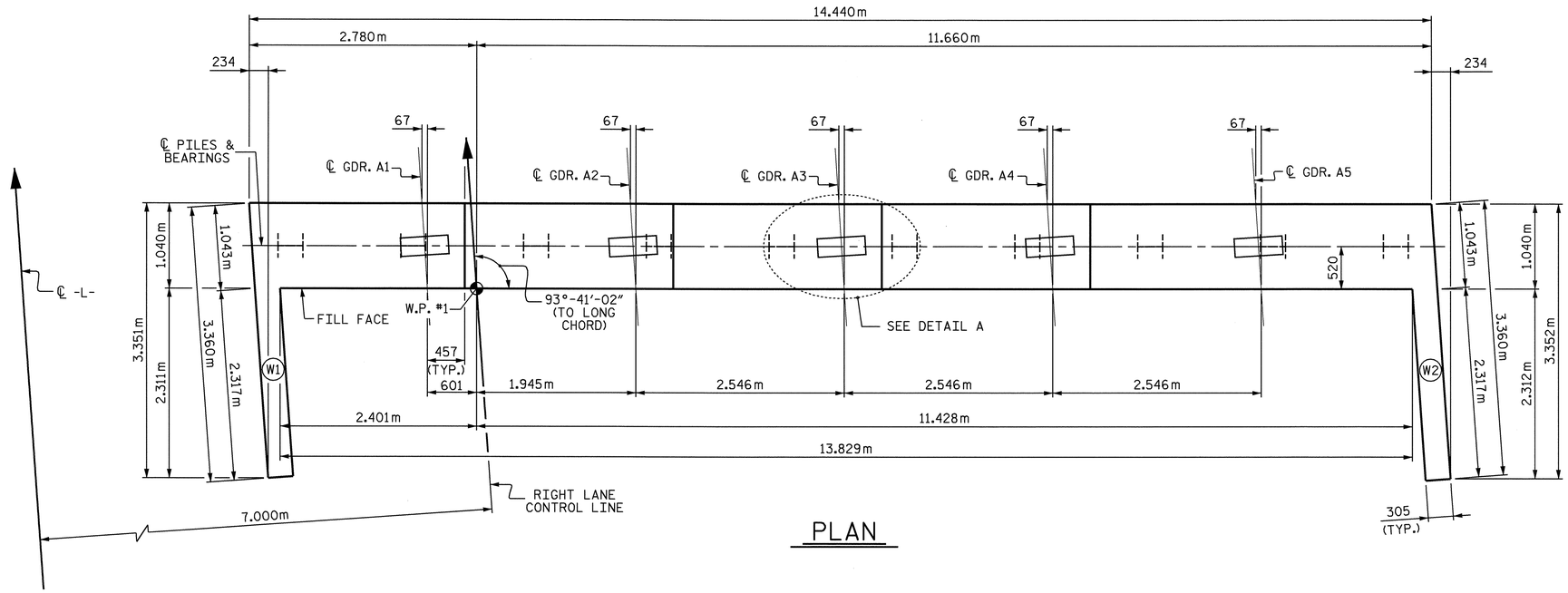

PLAN

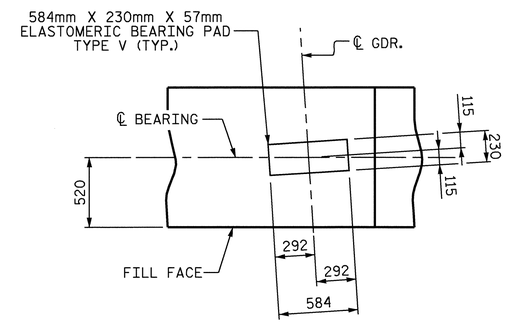

DETAIL A

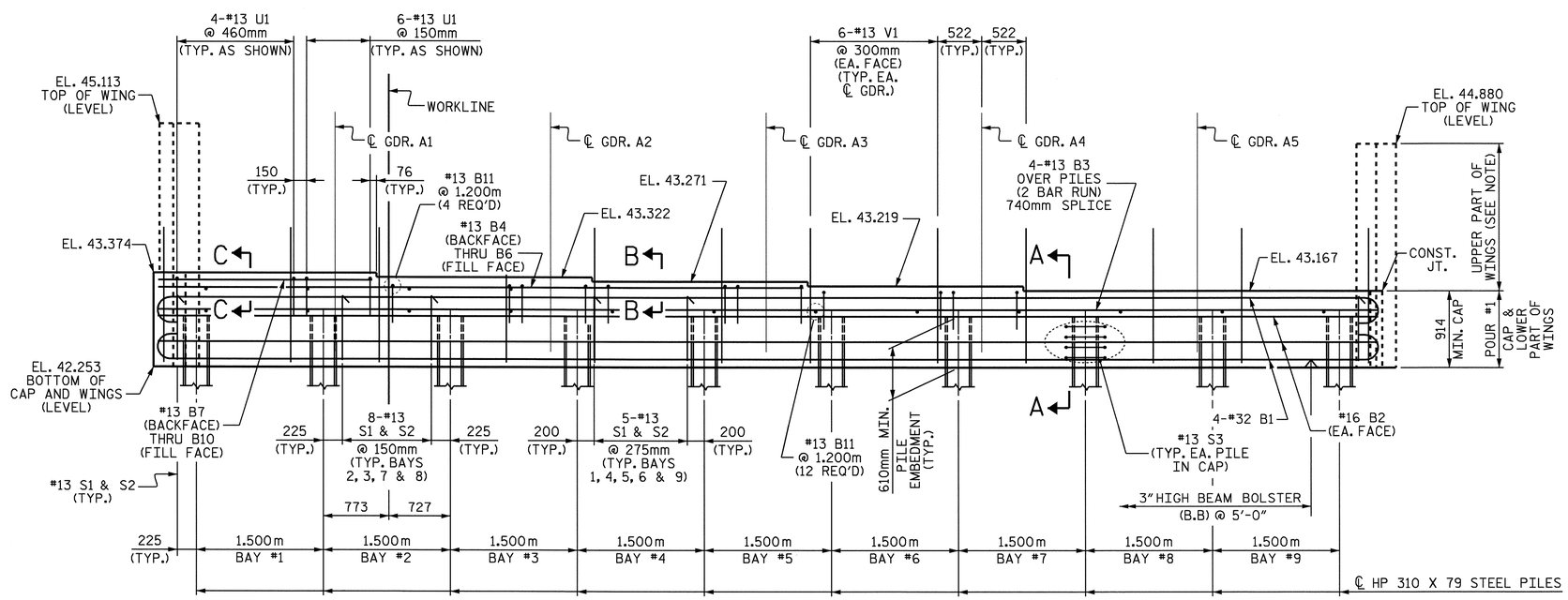

ELEVATION

PROJECT NO. R-2554BA

WAYNE COUNTY

STATION: 118+92.556 -L-

SHEET 1 OF 3

STATE OF NORTH CAROLINA
DEPARTMENT OF TRANSPORTATION
RALEIGH

SUBSTRUCTURE END BENT #1 (RIGHT LANE)

NORTH CAROLINA PROFESSIONAL SEAL 15825 ENGINEER BRUCE D. KLAPPENBACH
6-6-08

REVISIONS						SHEET NO. S-370
NO.	BY:	DATE:	NO.	BY:	DATE:	TOTAL SHEETS 478
1			3			
2			4			

STR. #13

DRAWN BY : A. SORSENGINH DATE : 12/5/07
CHECKED BY : H. T. BARBOUR DATE : 12/17/07

05-JUN-2008 12:03
r:\structures\bailey\Str#13\asorsenginh\R-2554BA_sd_E*.dgn
tbarbour

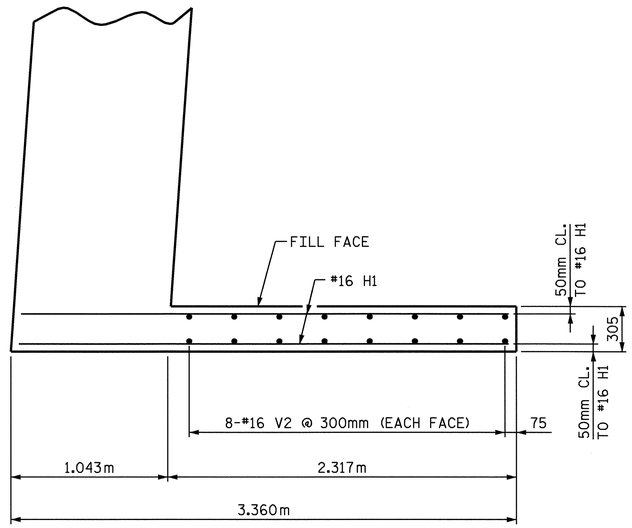

PLAN OF LEFT WING (W1)

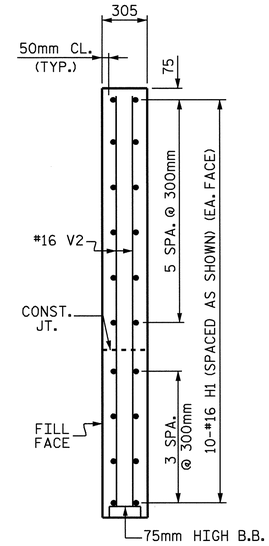

SECTION X-X

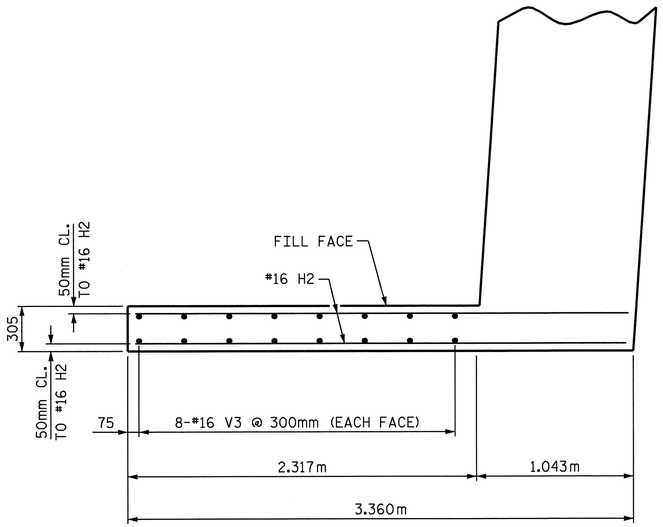

PLAN OF RIGHT RIGHT (W2)

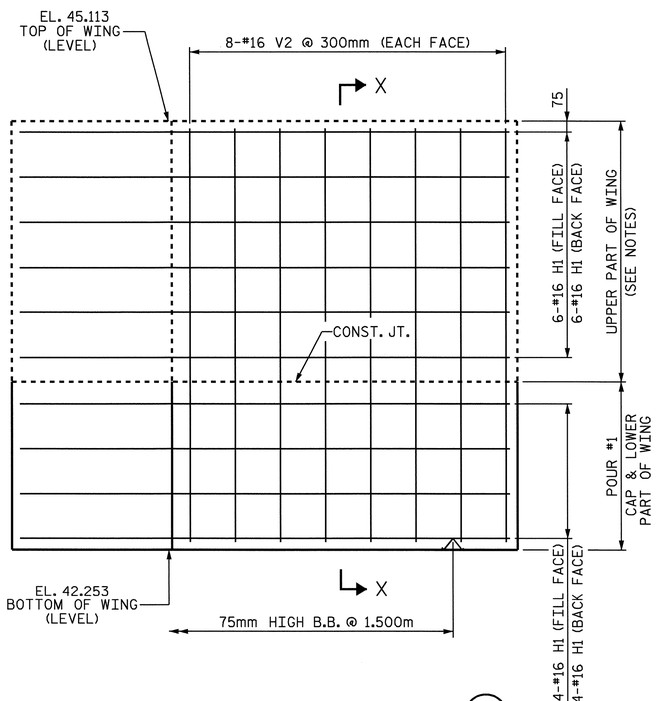

ELEVATION OF LEFT WING (W1)

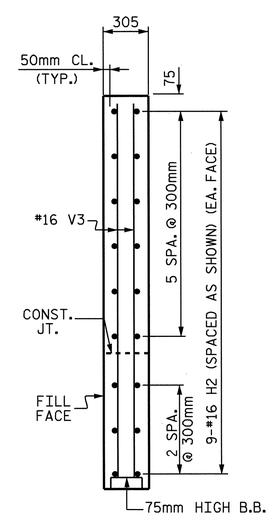

SECTION Y-Y

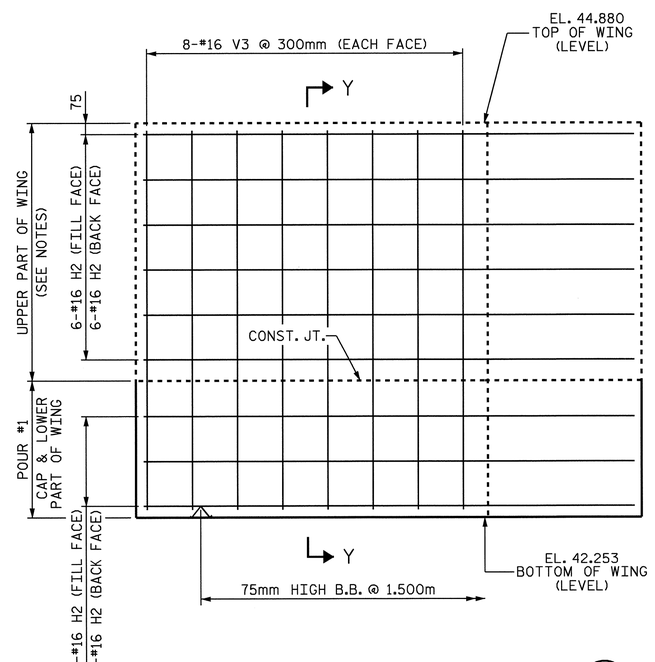

ELEVATION OF RIGHT WING (W2)

PROJECT NO. R-2554BA
WAYNE COUNTY
STATION: 118+92.556 -L-

SHEET 2 OF 3

STATE OF NORTH CAROLINA
DEPARTMENT OF TRANSPORTATION
RALEIGH

SUBSTRUCTURE
END BENT #1
(RIGHT LANE)

NORTH CAROLINA PROFESSIONAL SEAL 15825 ENGINEER BRUCE D. KLAPPENBACH
6-6-08

REVISIONS						SHEET NO.
NO.	BY:	DATE:	NO.	BY:	DATE:	S-371
1			3			TOTAL SHEETS
2			4			478

STR. #13

DRAWN BY : A. SORSENGINH DATE : 11/29/07
CHECKED BY : H. T. BARBOUR DATE : 12/17/07

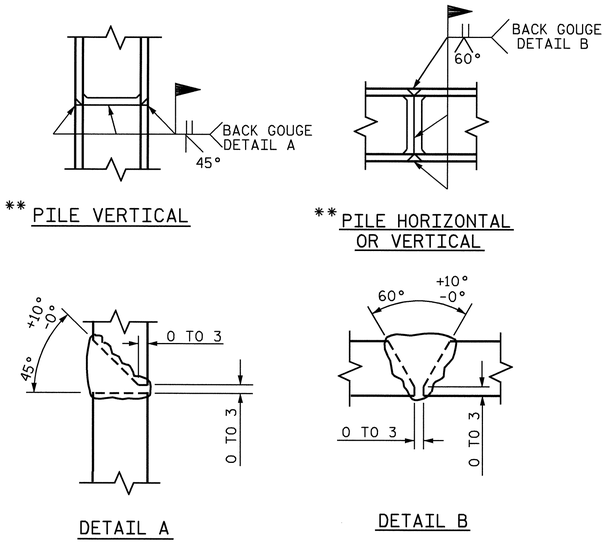

PILE SPLICE DETAILS

** POSITION OF PILE DURING WELDING.

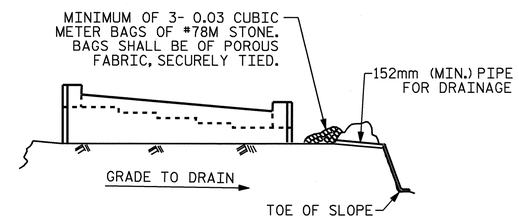

BAGGED STONE AND PIPE SHALL BE PLACED IMMEDIATELY AFTER COMPLETION OF END BENT EXCAVATION. PIPE MAY BE EITHER CONCRETE, CORRUGATED STEEL, CORRUGATED ALUMINUM ALLOY, OR CORRUGATED PLASTIC. PERFORATED PIPE WILL NOT BE ALLOWED.

BAGGED STONE SHALL REMAIN IN PLACE UNTIL THE ENGINEER DIRECTS THAT IT BE REMOVED. THE CONTRACTOR SHALL REMOVE AND DISPOSE OF SILT ACCUMULATIONS AT BAGGED STONE WHEN SO DIRECTED BY THE ENGINEER. BAGS SHALL BE REMOVED AND REPLACED WHENEVER THE ENGINEER DETERMINES THAT THEY HAVE DETERIORATED AND LOST THEIR EFFECTIVENESS.

NO SEPARATE PAYMENT WILL BE MADE FOR THIS WORK AND THE ENTIRE COST OF THIS WORK SHALL BE INCLUDED IN THE UNIT CONTRACT PRICE BID FOR THE SEVERAL PAY ITEMS.

TEMPORARY DRAINAGE AT END BENT

BAR TYPES

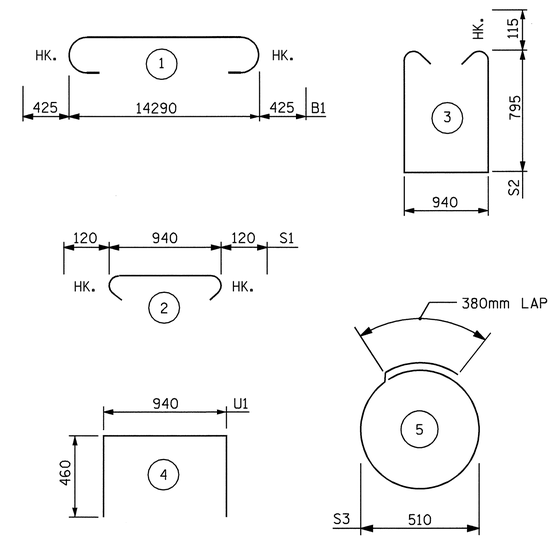

ALL BAR DIMENSIONS ARE OUT TO OUT.

BILL OF MATERIAL

END BENT #1

BAR	NO.	SIZE	TYPE	LENGTH	WEIGHT
B1	8	#32	1	15140	776
B2	4	#16	STR	14340	89
B3	8	#13	STR	7540	60
B4	1	#13	STR	7620	8
B5	2	#13	STR	7580	15
B6	1	#13	STR	7540	7
B7	1	#13	STR	2520	3
B8	1	#13	STR	2500	2
B9	1	#13	STR	2480	2
B10	1	#13	STR	2460	2
B11	16	#13	STR	940	15
H1	20	#16	STR	3240	101
H2	18	#16	STR	3260	91
S1	59	#13	2	1180	69
S2	59	#13	3	2760	162
S3	40	#13	5	1980	79
U1	40	#13	4	1860	74
V1	72	#13	STR	1680	120
V2	16	#16	STR	2760	69
V3	16	#16	STR	2520	63

REINFORCING STEEL = 1807 KG

CLASS A CONCRETE BREAKDOWN:

POUR #1
(CAP & LOWER PART OF WINGS)
CU. METERS 16.8
TOTAL CU. METERS 16.8

HP 310 X 79 STEEL PILES
NO. 10 METERS 240

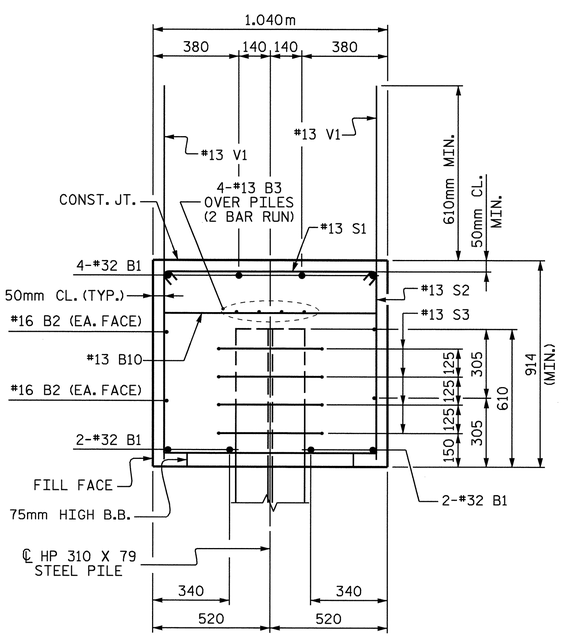

SECTION A-A

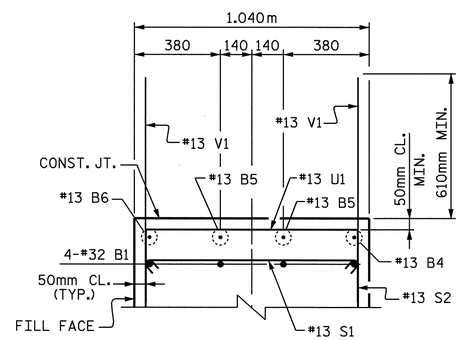

SECTION B-B

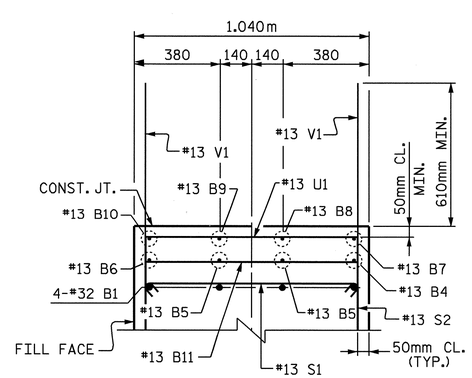

SECTION C-C

PROJECT NO. R-2554BA
WAYNE COUNTY
STATION: 118+92.556 -L-

SHEET 3 OF 3

STATE OF NORTH CAROLINA
DEPARTMENT OF TRANSPORTATION
RALEIGH

SUBSTRUCTURE END BENT #1 (RIGHT LANE)

NORTH CAROLINA PROFESSIONAL SEAL 15825 ENGINEER BRUCE D. KLAPPENBACH
6-6-08

REVISIONS						SHEET NO.
NO.	BY:	DATE:	NO.	BY:	DATE:	S-372
1			3			TOTAL SHEETS
2			4			478

DRAWN BY : A. SORSENGINH DATE : 11/29/07
CHECKED BY : H. T. BARBOUR DATE : 12/17/07

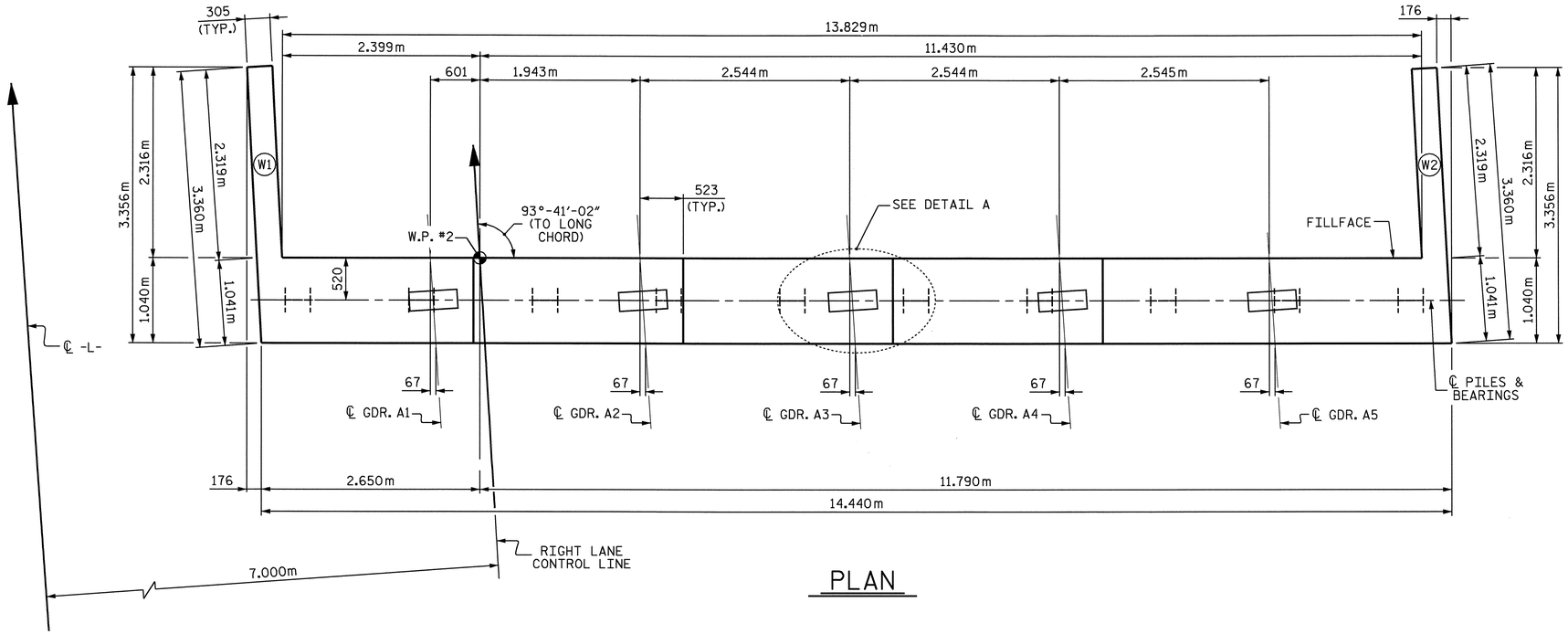

PLAN

NOTES

SEE SUPERSTRUCTURE SHEETS FOR UPPER PART OF INTEGRAL END BENT DETAILS.

THE CONTRACTORE SHALL PROVIDE FOR INSTALLATION OF THE 102mm DIAMETER DRAIN PIPE THROUGH THE WING WALL AS REQUIRED FOR REINFORCED BRIDGE APPROACH FILLS, SEE THE ROADWAY PLANS. REINFORCING STEEL IN THE WING WALL MAY BE SHIFTED AS NECESSARY TO CLEAR THE DRAIN PIPE.

THE CONTRACTOR'S ATTENTION IS CALLED TO THE FACT THAT THE UPPER PART OF WINGS IS TO BE POURED WITH SUPERSTRUCTURE.

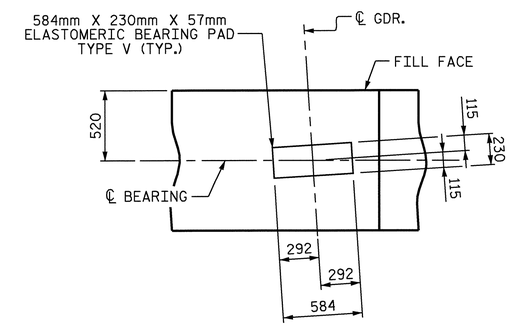

DETAIL A

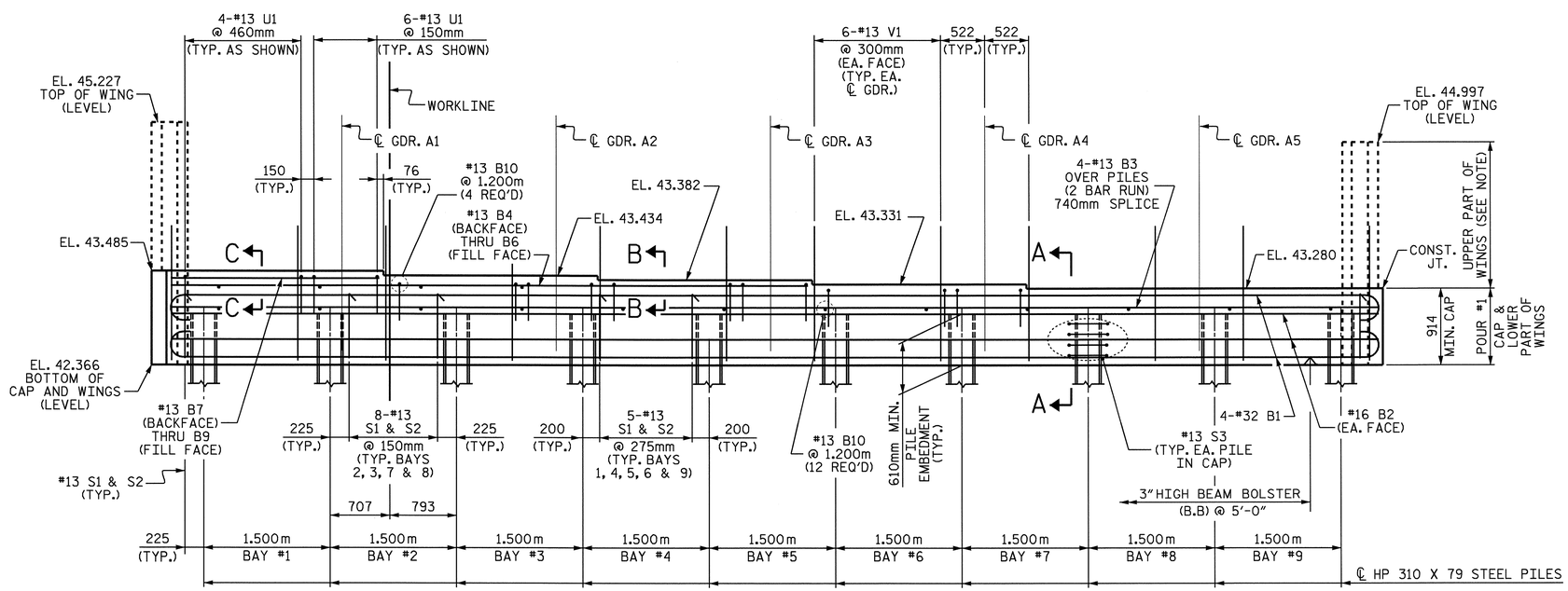

ELEVATION

PROJECT NO. R-2554BA
WAYNE COUNTY
STATION: 118+92.556 -L-

SHEET 1 OF 3

STATE OF NORTH CAROLINA
DEPARTMENT OF TRANSPORTATION
RALEIGH

SUBSTRUCTURE END BENT #2 (RIGHT LANE)

NORTH CAROLINA PROFESSIONAL SEAL 15825 ENGINEER BRUCE D. KLAPPENBACK
6-6-08

REVISIONS						SHEET NO.
NO.	BY:	DATE:	NO.	BY:	DATE:	S-373
1			3			TOTAL SHEETS
2			4			478

STR. #13

DRAWN BY : A. SORSENGINH DATE : 12/5/07
CHECKED BY : H. T. BARBOUR DATE : 12/17/07

05-JUN-2008 12:03
r:\structures\bailey\Str#13\asorsenginh\R-2554BA_sd_E*.dgn
tbarbour

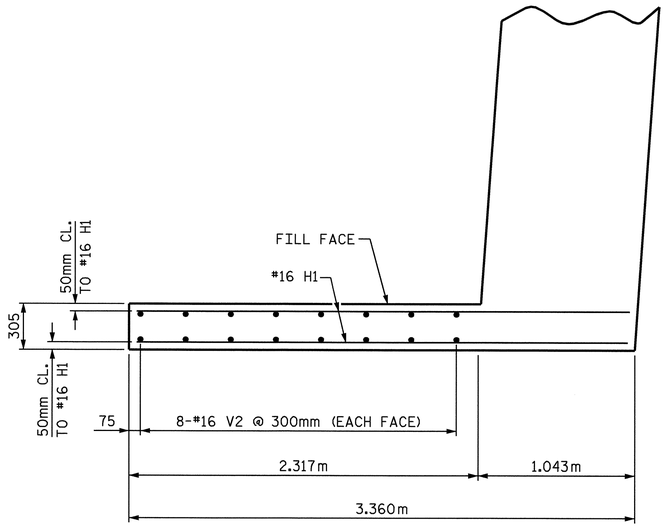

PLAN OF LEFT WING (W1)

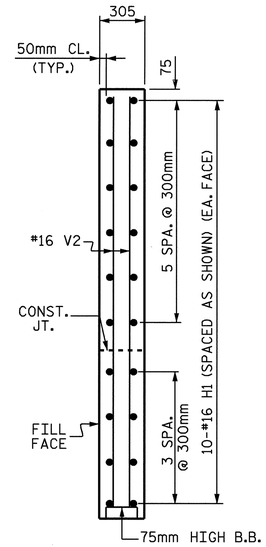

SECTION Y-Y

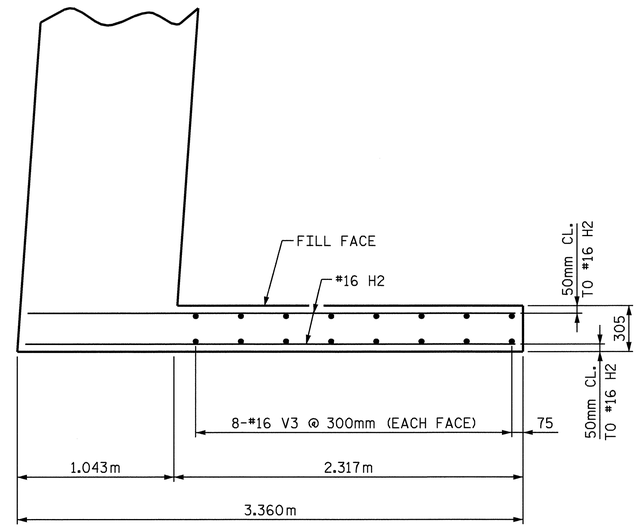

PLAN OF RIGHT RIGHT (W2)

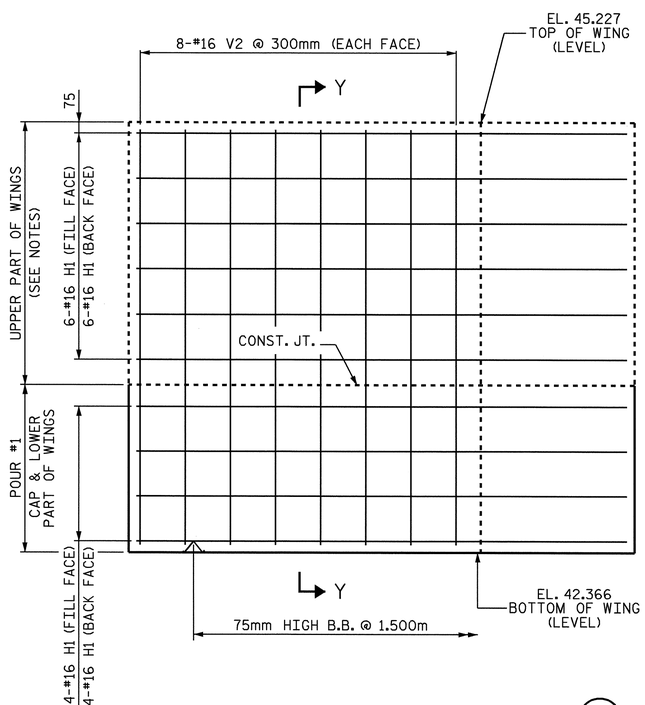

ELEVATION OF LEFT WING (W1)

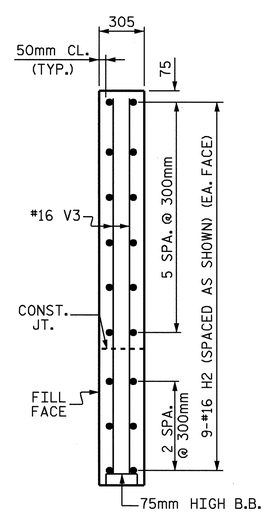

SECTION X-X

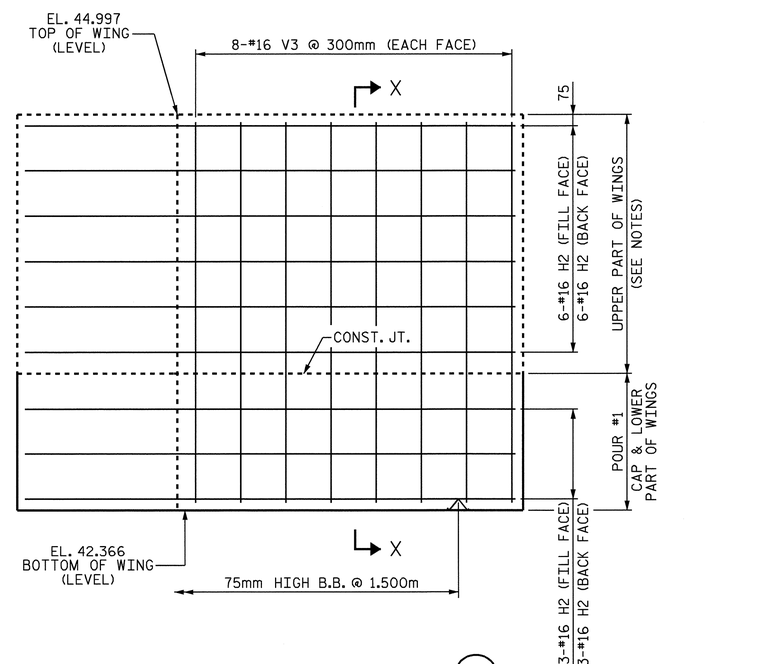

ELEVATION OF RIGHT WING (W2)

PROJECT NO. R-2554BA
WAYNE COUNTY
STATION: 118+92.556 -L-

SHEET 2 OF 3

STATE OF NORTH CAROLINA
DEPARTMENT OF TRANSPORTATION
RALEIGH

SUBSTRUCTURE
END BENT #2
(RIGHT LANE)

NORTH CAROLINA PROFESSIONAL SEAL 15825 ENGINEER BRUCE D. KLAPPENBACH
12-6-08

REVISIONS						SHEET NO. S-374
NO.	BY:	DATE:	NO.	BY:	DATE:	TOTAL SHEETS 478
1			3			
2			4			

DRAWN BY : A. SORSENGINH DATE : 11/29/07
CHECKED BY : H. T. BARBOUR DATE : 12/17/07

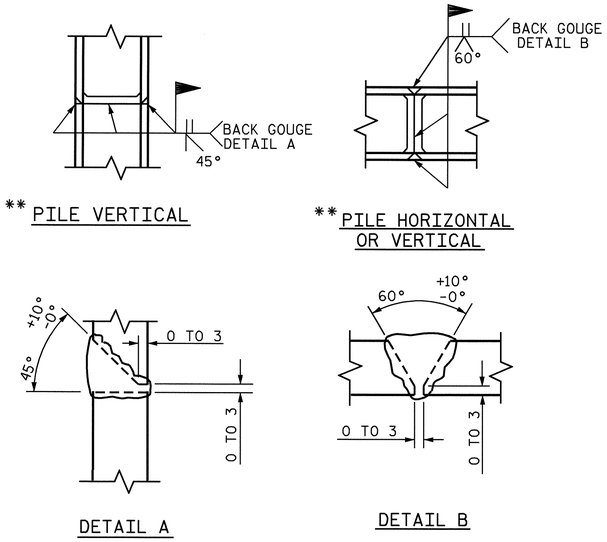

PILE SPLICE DETAILS

** POSITION OF PILE DURING WELDING.

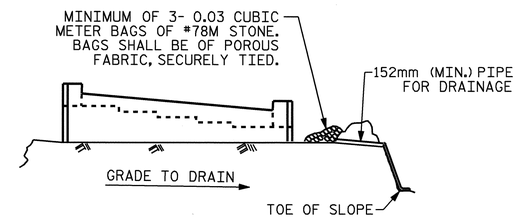

BAGGED STONE AND PIPE SHALL BE PLACED IMMEDIATELY AFTER COMPLETION OF END BENT EXCAVATION. PIPE MAY BE EITHER CONCRETE, CORRUGATED STEEL, CORRUGATED ALUMINUM ALLOY, OR CORRUGATED PLASTIC. PERFORATED PIPE WILL NOT BE ALLOWED.

BAGGED STONE SHALL REMAIN IN PLACE UNTIL THE ENGINEER DIRECTS THAT IT BE REMOVED. THE CONTRACTOR SHALL REMOVE AND DISPOSE OF SILT ACCUMULATIONS AT BAGGED STONE WHEN SO DIRECTED BY THE ENGINEER. BAGS SHALL BE REMOVED AND REPLACED WHENEVER THE ENGINEER DETERMINES THAT THEY HAVE DETERIORATED AND LOST THEIR EFFECTIVENESS.

NO SEPARATE PAYMENT WILL BE MADE FOR THIS WORK AND THE ENTIRE COST OF THIS WORK SHALL BE INCLUDED IN THE UNIT CONTRACT PRICE BID FOR THE SEVERAL PAY ITEMS.

TEMPORARY DRAINAGE AT END BENT

BAR TYPES

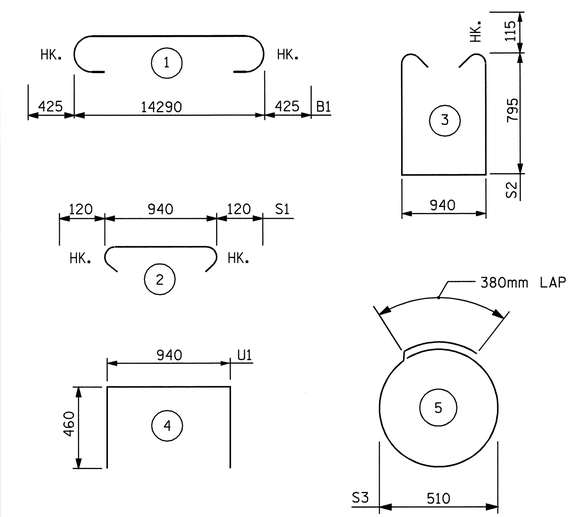

ALL BAR DIMENSIONS ARE OUT TO OUT.

BILL OF MATERIAL

END BENT #2

BAR	NO.	SIZE	TYPE	LENGTH	WEIGHT
B1	8	#32	1	15140	776
B2	4	#16	STR	14340	89
B3	8	#13	STR	7540	60
B4	1	#13	STR	7560	8
B5	2	#13	STR	7580	15
B6	1	#13	STR	7600	8
B7	1	#13	STR	2480	2
B8	1	#13	STR	2500	2
B9	2	#13	STR	2520	5
B10	16	#13	STR	940	15
H1	20	#16	3	3260	101
H2	18	#16	3	3240	91
S1	59	#13	2	1180	69
S2	59	#13	3	2760	162
S3	40	#13	5	1980	79
U1	40	#13	4	1860	74
V1	72	#13	STR	1680	120
V2	16	#16	STR	2760	69
V3	16	#16	STR	2520	63

REINFORCING STEEL = 1808 KG

CLASS A CONCRETE BREAKDOWN:

POUR #1
(CAP & LOWER PART OF WINGS)
CU. METERS 16.8
TOTAL CU. METERS 16.8

HP 310 X 79 STEEL PILES
NO. 10 METERS 260

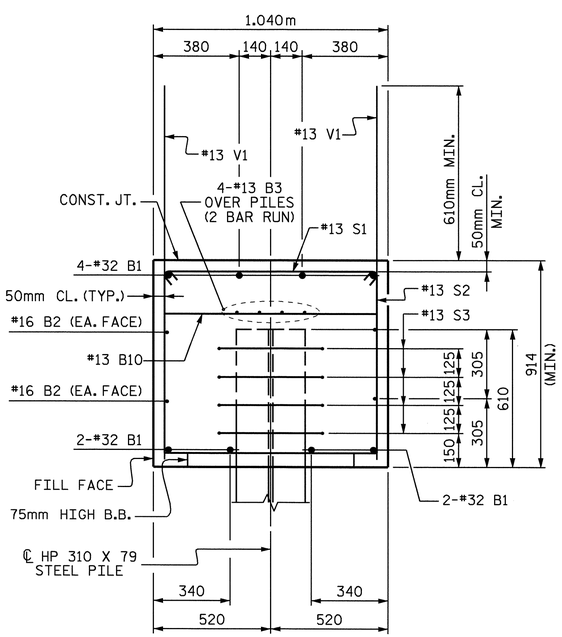

SECTION A-A

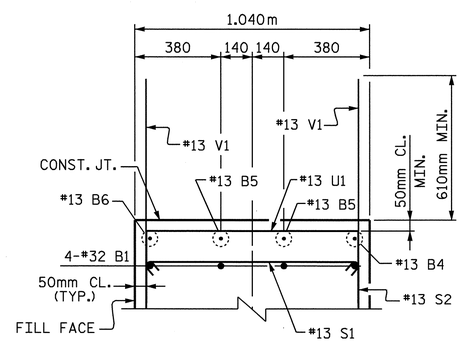

SECTION B-B

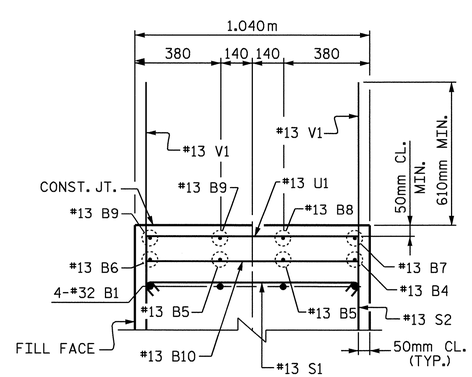

SECTION C-C

PROJECT NO. R-2554BA
WAYNE COUNTY
STATION: 118+92.556 -L-

SHEET 3 OF 3

STATE OF NORTH CAROLINA
DEPARTMENT OF TRANSPORTATION
RALEIGH

SUBSTRUCTURE
END BENT #2
(RIGHT LANE)

NORTH CAROLINA PROFESSIONAL SEAL 15825 ENGINEER BRUCE D. KLAPPENBACH
6-6-08

REVISIONS						
NO.	BY:	DATE:	NO.	BY:	DATE:	
1			3			
2			4			

SHEET NO. S-375
TOTAL SHEETS 478

DRAWN BY : A. SORSENGINH DATE : 12/5/07
CHECKED BY : H. T. BARBOUR DATE : 12/17/07

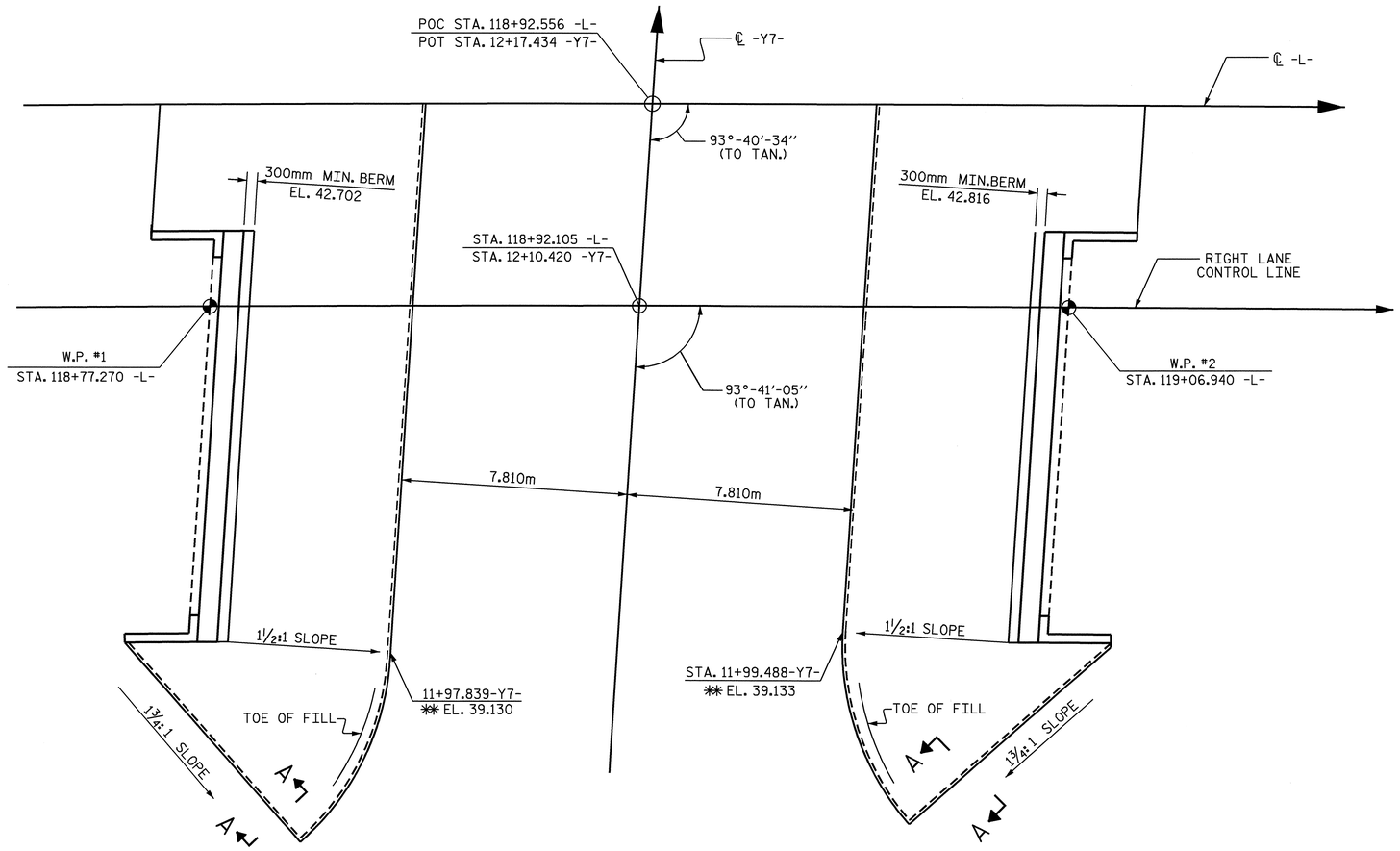

NOTES

SLOPE PROTECTION SHALL BE PLACED UNDER THE ENDS OF THE BRIDGE AS SHOWN IN THE DETAILS. THE CONTRACTOR, AT HIS OPTION, MAY USE ALTERNATE "B" ONLY FOR HIGHWAY OVER HIGHWAY GRADE SEPARATIONS WITH 2:1 END BENT SLOPE IN RURAL, UNPOPULATED AREAS. STRAIGHT EDGING WILL NOT BE REQUIRED UNLESS, IN THE OPINION OF THE ENGINEER, VISUAL INSPECTION INDICATES A NEED FOR IT. MEASUREMENT AND PAYMENT SHALL BE AS PRESCRIBED IN SECTION 462 OF THE STANDARD SPECIFICATIONS. FOR BERM WIDTH, SEE GENERAL DRAWING.

ALTERNATE "A" SHALL CONSIST OF 100mm POURED-IN-PLACE CONCRETE PAVING AS SHOWN IN THE DETAILS ON THIS SHEET. CONCRETE SHALL BE CLASS "B". THE CONCRETE SURFACE SHALL BE FLOATED WITH A WOODEN FLOAT AND FINISHED. WELDED WIRE FABRIC REINFORCING SHALL BE 152 X 152 - W9.1 X W9.1, 1520mm WIDE. SLOPE PROTECTION SHALL BE POURED IN 1520mm STRIPS AS SHOWN IN THE "POURING DETAIL" WITH 600mm LONG #13 BARS PLACED ALONG THE SLOPE BETWEEN STRIPS AT 450mm MAXIMUM SPACING. SLOPE PROTECTION MAY BE POURED IN ALTERNATE 1220mm AND 1520mm STRIPS AS SHOWN IN THE "OPTIONAL POURING DETAIL" WITH ADJACENT RUNS OF WELDED WIRE FABRIC LAPPING AT LEAST 152mm. THE COST OF THE WELDED WIRE FABRIC AND #13 BARS, IF USED, SHALL BE INCLUDED IN THE CONTRACT UNIT PRICE BID PER SQUARE METER FOR SLOPE PROTECTION.

BRIDGE @ STA. 118+92.556-L- (RIGHT LANE)	100 mm SLOPE PROTECTION	✱ WELDED WIRE FABRIC 1520mm WIDE
	SQUARE METERS	APPROX. METERS
END BENT 1	264	192
END BENT 2	279	203

✱ QUANTITY SHOWN IS BASED ON 1520mm POURS.

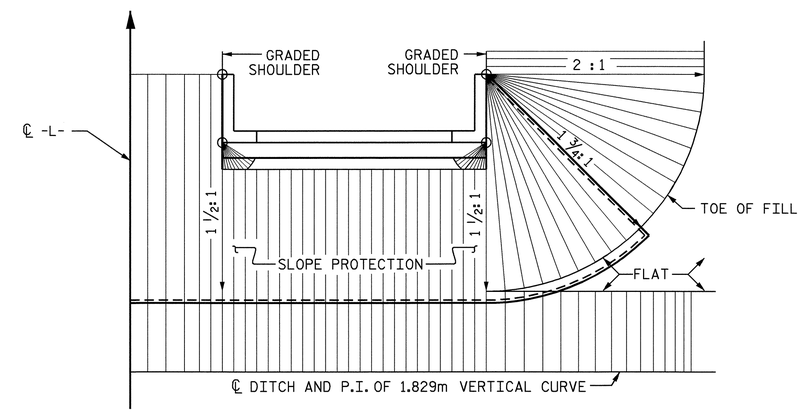

PLAN - END BENT WITH SWEPT BACK WINGS

(1 ½: 1 SLOPE)

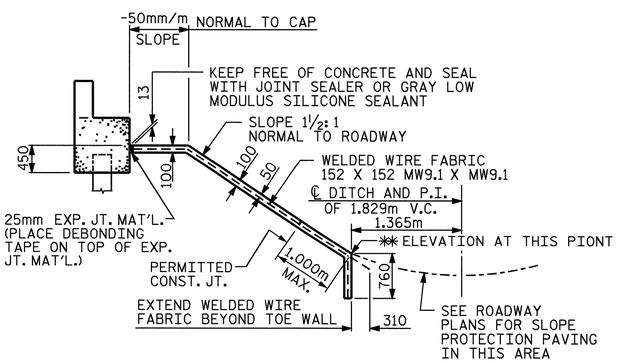

SECTION ALONG ℄ ROADWAY WHEN FILL CATCHES IN DITCH

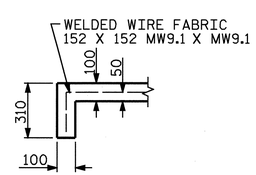

SECTION A-A

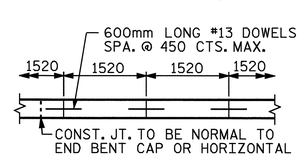

STRIP WIDTHS MAY VARY IN CURVED PORTION.

POURING DETAIL

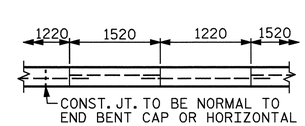

POUR A 1220mm STRIP FIRST. STRIP WIDTHS MAY VARY IN CURVED PORTION.

OPTIONAL POURING DETAIL

PROJECT NO. R-2554BA

WAYNE COUNTY

STATION: 118+92.556 -L-

STATE OF NORTH CAROLINA
DEPARTMENT OF TRANSPORTATION
RALEIGH

STANDARD
SLOPE PROTECTION
DETAILS
(RIGHT LANE)

NORTH CAROLINA PROFESSIONAL SEAL 15825 ENGINEER BRUCE D. KLAPPENBACH
6-6-08

REVISIONS						SHEET NO. S-376
NO.	BY:	DATE:	NO.	BY:	DATE:	TOTAL SHEETS 478
1			3			
2			4			

DRAWN BY : M. G. SHAIKH DATE : 11-07-07
CHECKED BY : B. D. KLAPPENBACH DATE : 04-24-08

05-JUN-2008 16:12
r:\structures\bailey\Str#13\mshaikh\Microstation\R-2554BA_sd_SP.dgn
tbarbour

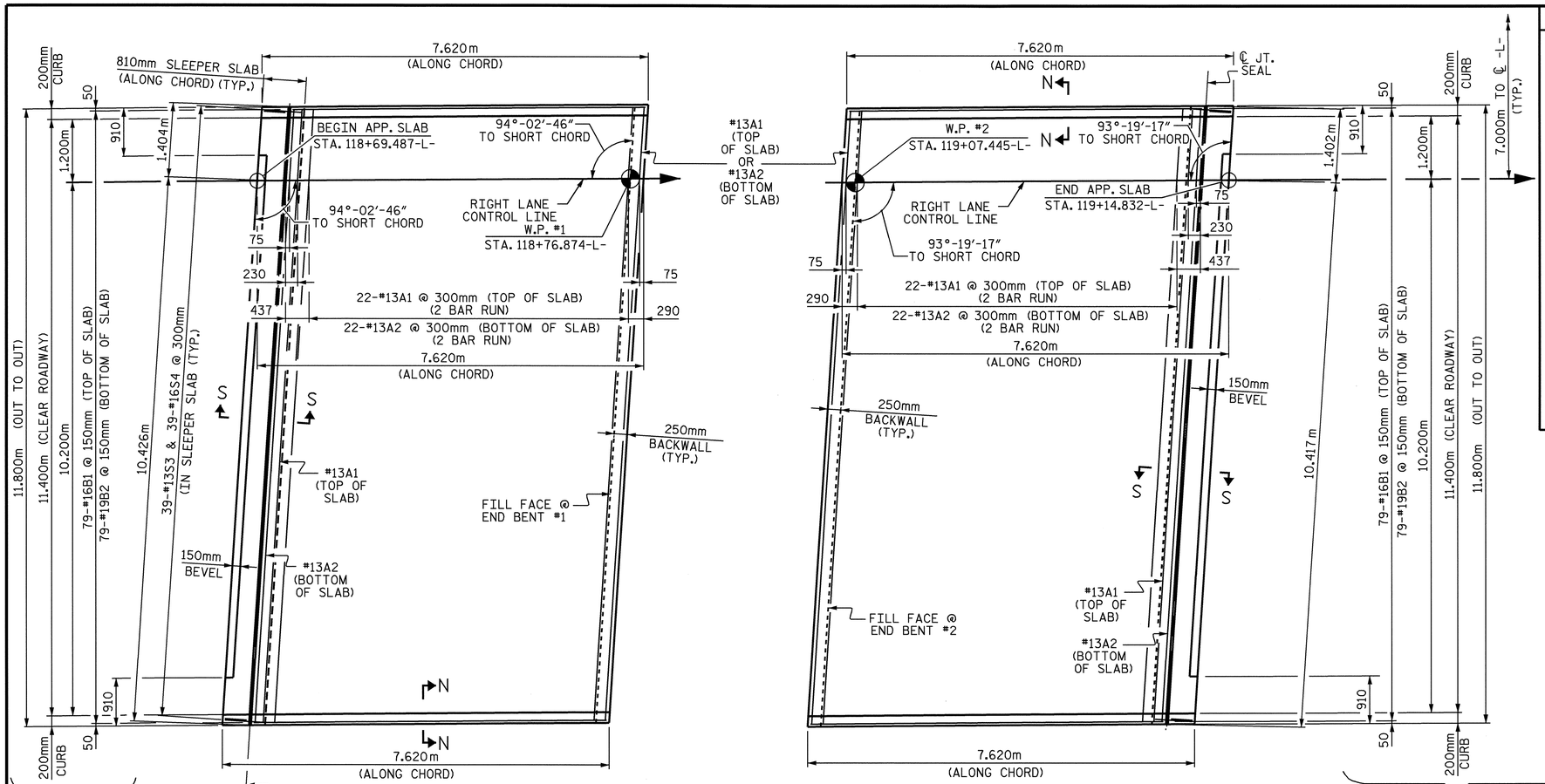

PLAN @ END BENT #1

PLAN @ END BENT #2

ARC OFFSETS ARE NEGLIGIBLE, THEREFORE NOT SHOWN.
"A" BARS IN SLEEPER SLAB NOT SHOWN FOR CLARITY.

BAR TYPES

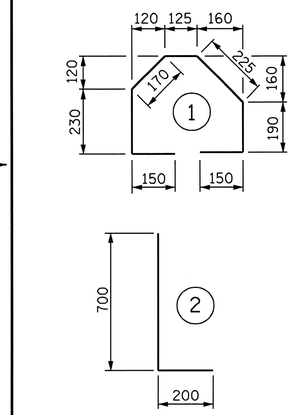

ALL BAR DIMENSIONS ARE OUT TO OUT

BILL OF MATERIAL

FOR ONE APPROACH SLAB (2 REQ'D)

BAR	NO.	SIZE	TYPE	LENGTH	WEIGHT
* A1	60	#13	STR	6160	367
A2	48	#13	STR	6140	293
* B1	79	#16	STR	6800	834
B2	79	#19	STR	7000	1236
* S4	39	#13	1	1240	48
S5	39	#16	2	900	54
REINFORCING STEEL				kg.	1583
* EPOXY COATED REINFORCING STEEL				kg.	1249
CLASS AA CONCRETE					
POUR #1 - SLEEPER SLAB				C.M.	3.0
POUR #2 - SLAB AND CURB				C.M.	25.8
TOTAL				C.M.	28.8

NOTES

APPROACH SLAB SHALL NOT BE CONSTRUCTED PRIOR TO COMPLETION OF THE BRIDGE DECK.

FOR REINFORCED BRIDGE APPROACH FILL INCLUDING FABRIC, IMPERMEABLE GEOMEMBRANE, 102mm Ø DRAINAGE PIPE, #78M STONE, AND SELECT MATERIAL, SEE ROADWAY PLANS.

AREA BETWEEN THE WINGWALL AND APPROACH SLAB SHALL BE GRADED TO DRAIN THE WATER AWAY FROM THE FILL FACE OF THE BRIDGE AND SHALL BE PAVED. SEE ROADWAY PLANS.

THE 150mm COMP. A.B.C. SHALL BE FLUSH WITH THE SLEEPER SLAB AND SHALL EXTEND 300mm OUTSIDE OF EACH EDGE OF THE APPROACH SLAB.

THE CONTRACTOR MAY USE 100mm TYPE B-25.0B ASPHALT CONCRETE BASE COURSE IN LIEU OF 150mm COMP. A.B.C. IF THIS OPTION IS USED, THE BASE COURSE SHALL BE FLUSH WITH THE SLEEPER SLAB, AND THE WIDTH SHALL BE THE SAME AS THAT OF THE APPROACH SLAB.

THE CONTRACTOR MAY USE 125mm CLASS "A" CONCRETE BASE IN LIEU OF 150mm COMP. A.B.C. IF THIS OPTION IS USED, THE CONCRETE BASE SHALL BE FLUSH WITH THE SLEEPER SLEB SLAB, AND THE WIDTH SHALL BE THE SAME AS THAT OF THE APPROACH SLAB. THE CONCRETE SHALL BE FINISHED TO A SMOOTH SURFACE AND A LAYER OF 13.6 kg ROOFING FELT SHALL BE PLACED BETWEEN THE CONCRETE BASE AND THE APPROACH SLAB TO PREVENT BOND. THE APPROACH SLAB SHALL NOT BE CAST UNTIL THE CONCRETE BASE HAS REACHED AN AGE OF THREE CURING DAYS.

THE VERTICAL JOINT ON THE RIGHT AND LEFT SIDE OF THE APPROACH SLAB AT THE ENDS OF THE EVAZOTE JOINT SHALL BE FILLED WITH SILICONE OR OTHER APPROVED MATERIAL IN ORDER TO PREVENT BACKFILL FROM ENTERING THE JOINT OPENING.

THE JOINT OPENING AT THE APPROACH SLAB/DECK INTERFACE SHALL BE SAWED NO MORE THAN 12 HOURS AFTER THE APPROACH SLAB IS CAST. THE JOINT SHALL BE CLEANED OF ALL DEBRIS BEFORE THE SEALANT IS APPLIED. THE JOINT SEALER MATERIAL SHALL CONFORM TO THE REQUIREMENTS OF TYPE SL LOW MODULUS SILICONE SEALANT.

FOR EVAZOTE JOINT SEALS, SEE SPECIAL PROVISIONS.

THE NOMINAL UNCOMPRESSED SEAL WIDTH OF THE EVAZOTE JOINT SEAL SHALL BE 64mm.

FOR ELASTOMERIC CONCRETE, SEE SPECIAL PROVISIONS.

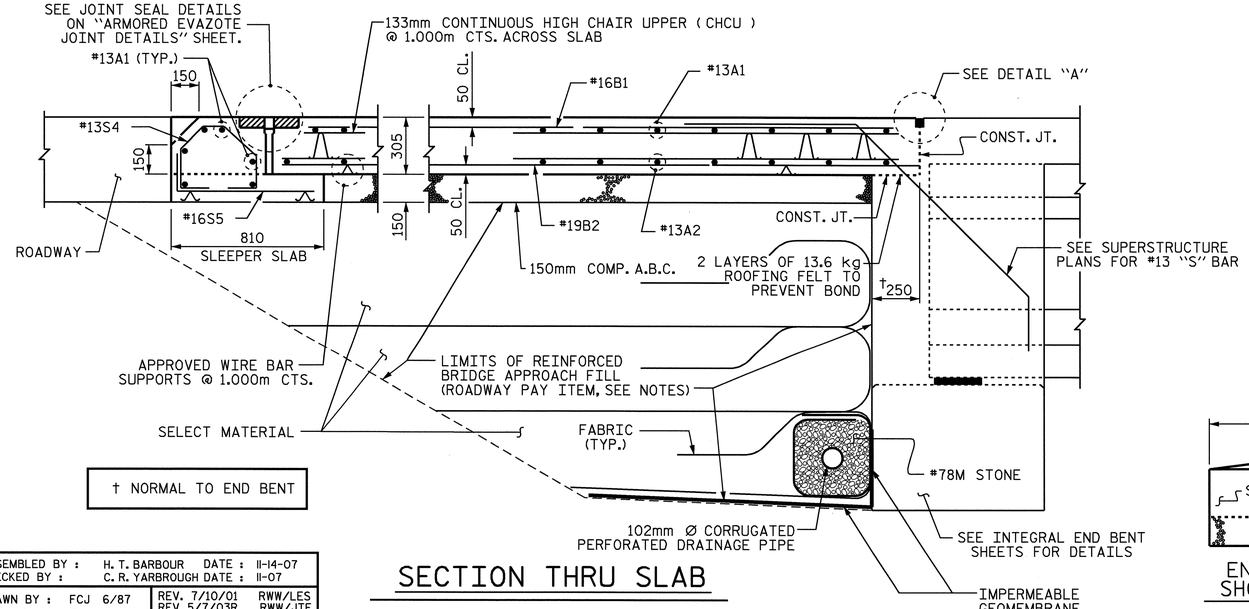

SECTION THRU SLAB

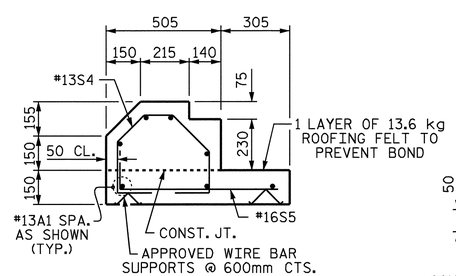

SECTION S-S
SHOWING SLEEPER SLAB

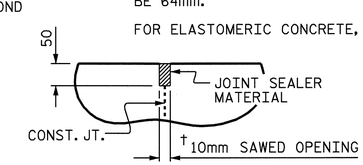

DETAIL "A"

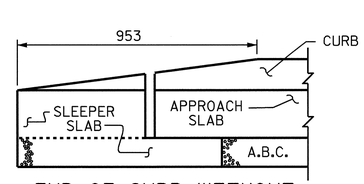

END OF CURB WITHOUT SHOULDER BERM GUTTER

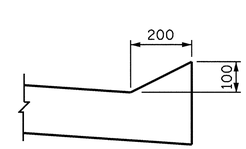

SECTION N-N

PROJECT NO. R-2554BA
WAYNE COUNTY
STATION: 118+92.556 -L-

SHEET 1 OF 3

STATE OF NORTH CAROLINA
DEPARTMENT OF TRANSPORTATION
RALEIGH

BRIDGE APPROACH SLAB FOR INTEGRAL ABUTMENT
(RIGHT LANE)

ASSEMBLED BY : H. T. BARBOUR DATE : 11-14-07					
CHECKED BY : C. R. YARBROUGH DATE : 11-07					
DRAWN BY : FCJ 6/87	REV. 7/10/01	RWW/LES			
CHECKED BY : EGA 6/87	REV. 5/7/03R	RWW/JTE			
	REV. 5/1/06	TLA/GM			

REVISIONS						SHEET NO.
NO.	BY:	DATE:	NO.	BY:	DATE:	S-377
1			3			TOTAL SHEETS
2			4			478

NORTH CAROLINA PROFESSIONAL SEAL 15825 ENGINEER BRUCE D. KLAPPENBACH
6-6-08

05-JUN-2008 12:22
r:\structures\bailey\Str#13\tbarbour\R-2554BA_sd_AS.dgn
tbarbour

STR. #13

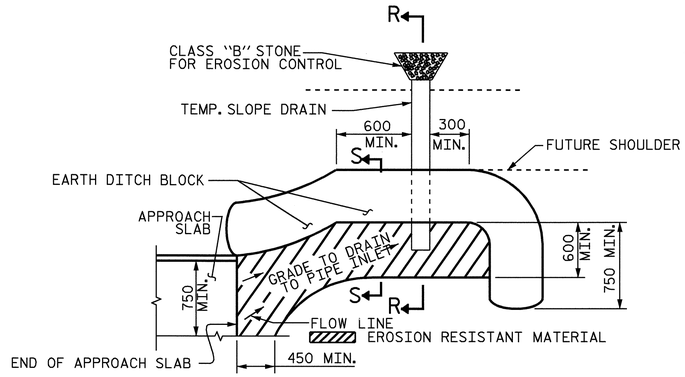

NOTE: IMMEDIATELY AFTER THE CONSTRUCTION OF THE APPROACH SLAB, THE CONTRACTOR SHALL PROVIDE TEMPORARY BERM AND SLOPE DRAIN. CONTRACTOR SHALL GRADE TO PIPE INLET AND PROVIDE EROSION RESISTANT MATERIAL AS SHOWN. THE EROSION RESISTANT MATERIAL SHALL BE EITHER 1) ASPHALT PLANT MIX, TYPE 1 OR TYPE 2, MIN. 50mm DEPTH, 2) EROSION CONTROL MAT, OR 3) CONCRETE, AS DIRECTED BY THE ENGINEER. THE SLOPE DRAIN SHALL CONSIST OF A NON-PERFORATED TEMPORARY DRAINAGE PIPE, 305mm IN DIAMETER.

PLAN VIEW

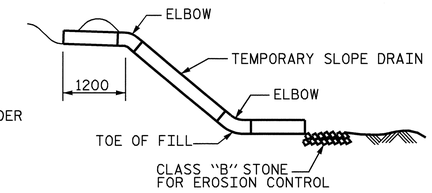

SECTION R-R

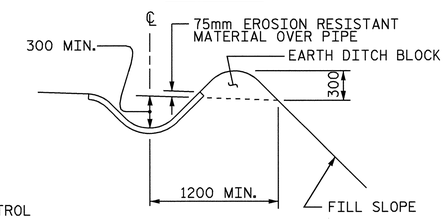

SECTION S-S

TEMPORARY BERM AND SLOPE DRAIN DETAILS

(TO BE USED WHEN SHOULDER BERM GUTTER IS REQUIRED)

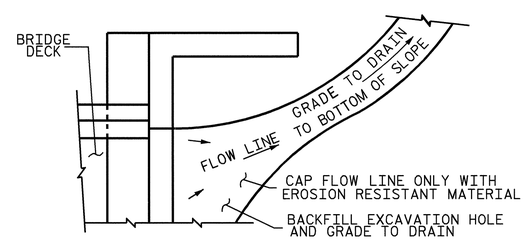

NOTE: IF THE APPROACH SLAB IS NOT CONSTRUCTED IMMEDIATELY AFTER THE BACKFILLING OF THE END BENT EXCAVATION, GRADE TO DRAIN TO THE BOTTOM OF THE SLOPE AND PROVIDE EROSION RESISTANT MATERIAL, SUCH AS FIBERGLASS ROVING OR AS DIRECTED BY THE ENGINEER TO PREVENT SOIL EROSION AND TO PROTECT THE AREA ADJACENT TO THE STRUCTURE. THE CONTRACTOR WILL BE REQUIRED TO REMOVE THESE MATERIALS PRIOR TO CONSTRUCTION OF THE APPROACH SLAB.

TEMPORARY DRAINAGE DETAIL

PROJECT NO. R-2554BA

WAYNE COUNTY

STATION: 118+92.556 -L-

SHEET 2 OF 3

STATE OF NORTH CAROLINA
DEPARTMENT OF TRANSPORTATION
RALEIGH

BRIDGE APPROACH SLAB DETAILS

(RIGHT LANE)

NORTH CAROLINA PROFESSIONAL SEAL 15825 ENGINEER BRUCE D. KLAPPENBACH
6-6-08

REVISIONS						SHEET NO.
NO.	BY:	DATE:	NO.	BY:	DATE:	S-378
1			3			TOTAL SHEETS
2			4			478

ASSEMBLED BY :	H. T. BARBOUR	DATE :	11-14-07
CHECKED BY :	C. R. YARBROUGH	DATE :	11-07
DRAWN BY : FCJ 11/88	REV. 10/17/00	RWW/LES	
CHECKED BY : ARB 11/88	REV. 5/7/03	RWW/JTE	
	REV. 5/1/06	TLA/GM	

05-JUN-2008 16:13
r:\structures\bailey\Str#13\tbarbour\R-2554BA_sd_AS.dgn
tbarbour

STR. #13

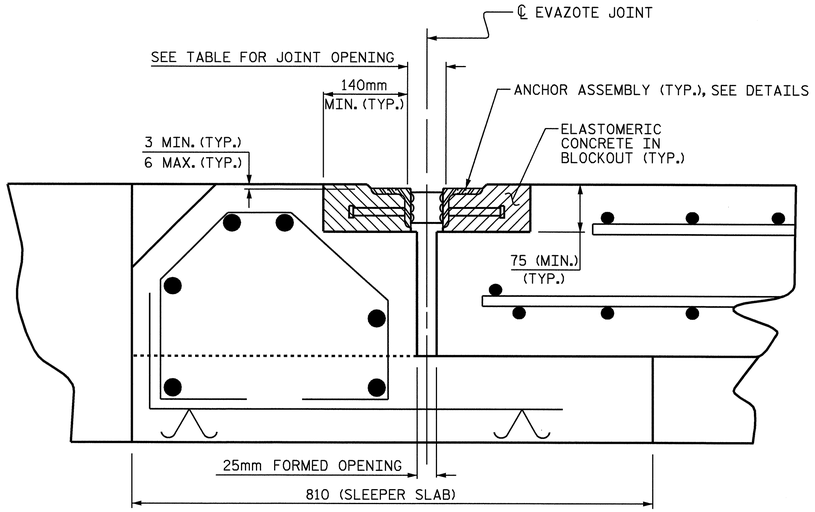

ARMORED JOINT DETAILS

SECTION NORMAL TO JOINT AT BENT

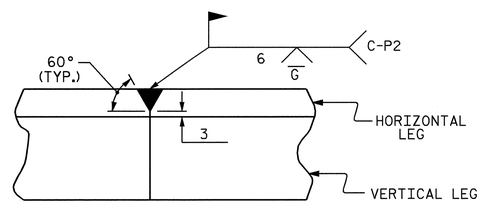

DETAIL- FIELD WELD SPLICE OF ANGLE

NOTES

ANGLES SHALL CONFORM TO AASHTO M270 GRADE 250 STEEL OR APPROVED EQUAL. ALL STUD ANCHORS SHALL CONFORM TO AASHTO M169 GRADES 1010 THRU 1020 OR APPROVED EQUAL.

STUD ANCHORS SHALL BE SHOP WELDED AND ALL HOLES SHALL BE SHOP DRILLED AS SHOWN ON THE PLANS. STUD ANCHORS SHALL BE ELECTRIC ARC END WELDED WITH COMPLETE FUSION.

UPON COMPLETION OF SHOP FABRICATION, THE ENTIRE ANCHOR ASSEMBLY SHALL BE METALLIZED. THE 12.70mm Ø STUD ANCHORS AND ANCHOR TABS NEED NOT BE METALLIZED. SEE SPECIAL PROVISION FOR THERMAL SPRAYED COATINGS (METALLIZATION).

ANCHOR ASSEMBLY SHALL BE MADE CONTINUOUS THE LENGTH OF THE JOINT FROM GUTTER TO GUTTER. FOR FIELD SPLICES AT ALL CROWN BREAK POINTS, THE ENDS OF THE STEEL ANGLES SHALL BE CUT PARALLEL TO THE BRIDGE CENTERLINE. FINISHED FIELD WELDS SHALL BE GROUND SMOOTH AND COATED WITH A MINIMUM THICKNESS OF 0.100mm OF ZINC-RICH PAINT IN ACCORDANCE WITH THE STANDARD SPECIFICATIONS.

ANCHOR ASSEMBLY SEGMENTS SHALL NOT BE LESS 3.6m NOR MORE THAN 6.1m IN LENGTH. SHORTER SEGMENTS MAY BE USED AT THE EDGE OF ROADWAY OR AT POINTS OF STAGED CONSTRUCTION.

THE ANCHOR ASSEMBLY SHALL BE SECURED AND LEVELED AS SHOWN IN THE "ARMORED JOINT ANCHOR ASSEMBLY DETAILS". NO SUBMITTALS ARE REQUIRED FOR 9.53mm Ø EXPANSION ANCHORS, NUTS OR WASHERS. THE CONTRACTOR MAY SUBMIT FOR APPROVAL AN ALTERNATE METHOD OF ALIGNING AND LEVELING THE ANGLES. THE ALTERNATE METHOD SHALL NOT INCLUDE ANY WELDING TO THE OUTSIDE FACE OF THE ANGLES.

AFTER THE ELASTOMERIC CONCRETE HAS BEEN CAST ON BOTH SIDES OF THE JOINT, REMOVE ANY EXCESS CONCRETE THAT COMES THROUGH THE WEEP HOLES AND THOROUGHLY CLEAN THE ANGLES. ANY DAMAGED STEEL SHALL BE COATED WITH A MINIMUM OF 0.100mm OF ZINC-RICH PAINT IN ACCORDANCE WITH THE STANDARD SPECIFICATIONS.

SEE SPECIAL PROVISIONS FOR EVAZOTE JOINT SEALS.

SEE SPECIAL PROVISIONS FOR ELASTOMERIC CONCRETE.

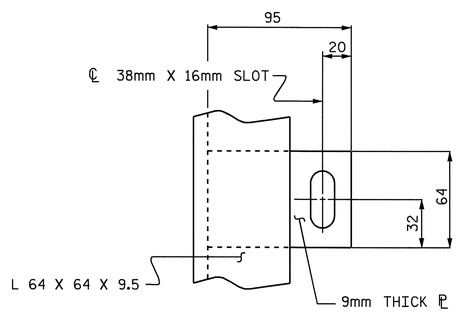

PLAN VIEW OF TAB

MOVEMENT AND SETTING AT EVAZOTE JOINT						
END BENT NO.	SKEW ANGLE	NOMINAL UNCOMPRESSED SEAL WIDTH	TOTAL MOVEMENT (ALONG ℄ RDWY)	PERPENDICULAR JOINT OPENING AT 7° C	PERPENDICULAR JOINT OPENING AT 16° C	PERPENDICULAR JOINT OPENING AT 32° C
1	93°-58'-32"	64mm	11mm	53mm	51mm	47mm
2	93°-23'-30"	64mm	11mm	53mm	51mm	47mm

TOTAL MOVEMENT IS CALCULATED ALONG THE CENTERLINE OF ROADWAY.
JOINT OPENINGS ARE MEASURED PERPENDICULAR TO THE JOINT.

BILL OF MATERIAL		
END BENT NO.	ELASTOMERIC CONCRETE ✳ (CU. m)	TOTAL LENGTH OF ANGLE (m)
1	0.2	22.855
2	0.2	22.840

✳ BASED ON THE MINIMUM BLOCKOUT SHOWN.

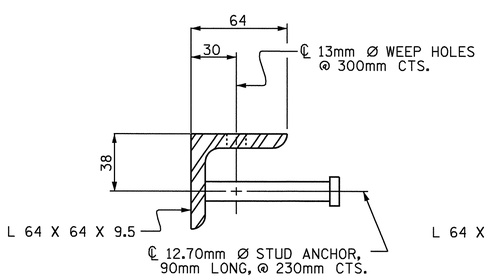

SECTION VIEW OF STUD

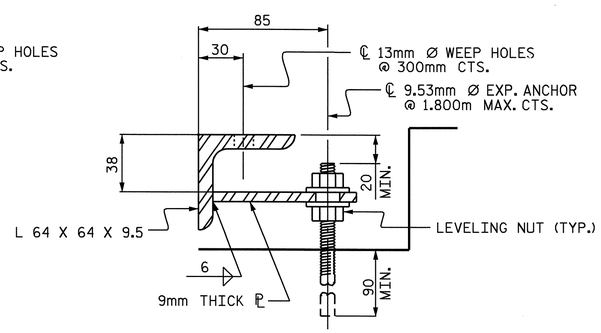

SECTION VIEW OF TAB

ARMORED JOINT ANCHOR ASSEMBLY DETAILS

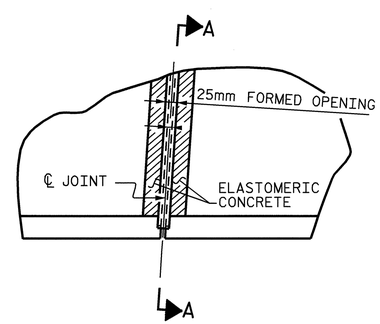

PLAN

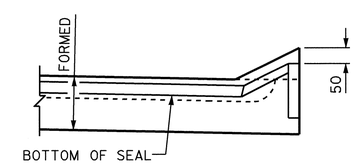

SECTION A-A

PROJECT NO. R-2554BA
WAYNE COUNTY
STATION: 118+92.556 -L-

SHEET 3 OF 3

STATE OF NORTH CAROLINA
DEPARTMENT OF TRANSPORTATION
RALEIGH

STANDARD ARMORED EVAZOTE JOINT DETAILS (RIGHT LANE)

NORTH CAROLINA PROFESSIONAL SEAL 15825 ENGINEER BRUCE D. KLAPPENBACH
6-6-08

REVISIONS						
NO.	BY:	DATE:	NO.	BY:	DATE:	
1			3			
2			4			

SHEET NO. S-379
TOTAL SHEETS 478

STD. NO. AEJ1SM

ASSEMBLED BY : H. T. BARBOUR	DATE : 1-07-08		
CHECKED BY : C. R. YARBROUGH	DATE : 4-08		
DRAWN BY : EEM 1/96	REV. 7/10/01	LES/RDR	
CHECKED BY : RGW 1/96	REV. 5/7/03	RR RWW/JTE	
	REV. 5/1/06	TLA/GM	

05-JUN-2008 16:13
r:\structures\bailey\Str#13\tbarbour\R-2554BA_sd_AS.dgn
tbarbour

STR. #13

OVERHANG BRACKET CALCULATION INSTRUCTIONS

AASHTO SHAPES - TYPES III, IV, V, AND VI

1. RECORD KNOWN INFORMATION ON "BRIDGE OVERHANG BRACKET SUMMARY" ON SHEET 2
2. CALCULATE THE MAXIMUM SCREED LOAD PER BRACKET (SLPB) WITH AN ESTIMATED R = 1.5. SLPB = R X W. ROUND VALUE UP TO NEAREST SLPB VALUE INDICATED ON APPROPRIATE TABLE 1-1, 1-2, 1-3, OR 1-4.
3. WITH THE ESTIMATED SLPB, OVERHANG SLAB THICKNESS, "K" VALUE, AND 45° HANGER SAFE WORKING LOAD (SWL), ENTER THE APPROPRIATE TABLE 1-1, 1-2, 1-3, OR 1-4 (BASED ON OVERHANG DIMENSION) AND DETERMINE THE BRACKET SPACING, S.
4. CALCULATE S/D1 AND S/D2, ROUNDING UP TO NEAREST VALUE IN TABLE 2. ENTER TABLE 2 AND DETERMINE R VALUE.
5. CALCULATE REVISED SLPB. ROUND VALUE UP TO NEAREST SLPB VALUE INDICATED ON APPROPRIATE TABLE 1-1, 1-2, 1-3, OR 1-4.
6. WITH THE REVISED SLPB, OVERHANG SLAB THICKNESS, "K" VALUE AND 45 HANGER SAFE WORKING LOAD (SWL), ENTER THE APPROPRIATE TABLE 1-1, 1-2, 1-3 OR 1-4 (BASED ON OVERHANG DIMENSION) AND DETERMINE REVISED BRACKET SPACING, S.
7. CONTINUE ITERATIONS OF STEPS 4-6 UNTIL THE REVISED BRACKET SPACING, S, IS THE SAME AS THE PREVIOUS S VALUE.
8. CHECK LUMBER JOIST SPACING: WITH BRACKET SPACING VALUE, S, ROUND THIS VALUE UP TO THE NEAREST VALUE OF ALLOWABLE SPAN LENGTH OF JOIST OF TABLE 3. USING THIS VALUE, ALONG WITH THE AVERAGE OVERHANG SLAB THICKNESS AND THE LUMBER JOIST SIZE, DETERMINE JOIST SPACING FROM TABLE 3. IF NECESSARY, ADJUST LUMBER JOIST SIZE AND/OR JOIST SPACING TO MEET ALLOWABLE SPAN LENGTH OF JOIST.
9. CONVERSELY, IF THE DESIRED JOIST SPACING IS KNOWN, USE THIS ALONG WITH THE AVERAGE OVERHANG SLAB THICKNESS AND THE LUMBER JOIST SIZE TO DETERMINE IF ALLOWABLE SPAN LENGTH OF JOIST IS GREATER THAN THE BRACKET SPACING, S. IF NECESSARY, ADJUST LUMBER JOIST SIZE TO MEET REQUIREMENTS OF ALLOWABLE SPAN LENGTH OF JOIST AND JOIST SPACING.
10. RECORD REMAINING INFORMATION ON "BRIDGE OVERHANG BRACKET SUMMARY" FORM.
11. SUBMIT FORM AND CALCULATIONS FOR REVIEW AND APPROVAL.

TABLE 1-1

(FOR USE ON **UP TO 2'-0" OVERHANG Ⓛ** & 54" HORIZONTAL LEG LENGTH OF THE OVERHANG BRACKET)

AVG. SLAB THICKNESS Ⓣ (In)	BRACKET Ⓚ DIMENSION (In)	SCREED LOAD PER BRACKET									45° HANGER SWL (lbs)
		2500 lbs.	2250 lbs.	2000 lbs.	1750 lbs.	1500 lbs.	1250 lbs.	1000 lbs.	750 lbs.	0 lbs.	
		BRACKET SPACING									
10	30				2'-1"	2'-7"	3'-2"	3'-8"	4'-2"	5'-9"	4000
		3'-6"	4'-0"	4'-5"	4'-9"	5'-1"	5'-3"	5'-5"	5'-7"	6'-7"	6000
	40				2'-1"	2'-7"	3'-2"	3'-8"	4'-2"	5'-9"	4000
		3'-6"	4'-0"	4'-5"	4'-9"	5'-1"	5'-3"	5'-5"	5'-7"	6'-7"	6000
	50				2'-1"	2'-7"	3'-2"	3'-8"	4'-2"	5'-9"	4000
		3'-6"	4'-0"	4'-5"	4'-9"	5'-1"	5'-3"	5'-5"	5'-7"	6'-7"	6000
12	30					2'-4"	2'-10"	3'-4"	3'-9"	5'-2"	4000
		3'-2"	3'-7"	4'-1"	4'-7"	5'-0"	5'-2"	5'-4"	5'-7"	6'-5"	6000
	40					2'-4"	2'-10"	3'-4"	3'-9"	5'-2"	4000
		3'-2"	3'-7"	4'-1"	4'-7"	5'-0"	5'-2"	5'-4"	5'-7"	6'-5"	6000
	50					2'-4"	2'-10"	3'-4"	3'-9"	5'-2"	4000
		3'-2"	3'-7"	4'-1"	4'-7"	5'-0"	5'-2"	5'-4"	5'-7"	6'-5"	6000
14	30					2'-2"	2'-7"	3'-0"	3'-5"	4'-9"	4000
		2'-10"	3'-4"	3'-9"	4'-2"	4'-7"	5'-0"	5'-4"	5'-7"	6'-4"	6000
	40					2'-2"	2'-7"	3'-0"	3'-5"	4'-9"	4000
		2'-10"	3'-4"	3'-9"	4'-2"	4'-7"	5'-0"	5'-4"	5'-7"	6'-4"	6000
	50					2'-2"	2'-7"	3'-0"	3'-5"	4'-9"	4000
		2'-10"	3'-4"	3'-9"	4'-2"	4'-7"	5'-0"	5'-4"	5'-7"	6'-4"	6000
16	30					2'-0"	2'-4"	2'-9"	3'-2"	4'-4"	4000
		2'-8"	3'-0"	3'-5"	3'-10"	4'-3"	4'-7"	5'-0"	5'-5"	6'-3"	6000
	40					2'-0"	2'-4"	2'-9"	3'-2"	4'-4"	4000
		2'-8"	3'-0"	3'-5"	3'-10"	4'-3"	4'-7"	5'-0"	5'-5"	6'-3"	6000
	50					2'-0"	2'-4"	2'-9"	3'-2"	4'-4"	4000
		2'-8"	3'-0"	3'-5"	3'-10"	4'-3"	4'-7"	5'-0"	5'-5"	6'-3"	6000

TABLE 1-2

(FOR USE ON **OVER 2'-0" TO 2'-6" OVERHANG Ⓛ** & 54" HORIZONTAL LEG LENGTH OF THE OVERHANG BRACKET)

AVG. SLAB THICKNESS Ⓣ (In)	BRACKET Ⓚ DIMENSION (In)	SCREED LOAD PER BRACKET									45° HANGER SWL (lbs)
		2500 lbs.	2250 lbs.	2000 lbs.	1750 lbs.	1500 lbs.	1250 lbs.	1000 lbs.	750 lbs.	0 lbs.	
		BRACKET SPACING									
10	30					2'-4"	2'-9"	3'-3"	3'-8"	5'-1"	4000
		3'-1"	3'-6"	4'-0"	4'-5"	4'-11"	5'-3"	5'-5"	5'-7"	6'-7"	6000
	40					2'-4"	2'-9"	3'-3"	3'-8"	5'-1"	4000
		3'-1"	3'-6"	4'-0"	4'-5"	4'-11"	5'-3"	5'-5"	5'-7"	6'-7"	6000
	50					2'-4"	2'-9"	3'-3"	3'-8"	5'-1"	4000
		3'-1"	3'-6"	4'-0"	4'-5"	4'-11"	5'-3"	5'-5"	5'-7"	6'-7"	6000
12	30					2'-1"	2'-6"	2'-11"	3'-4"	4'-6"	4000
		2'-9"	3'-2"	3'-7"	4'-0"	4'-5"	4'-10"	5'-3"	5'-7"	6'-5"	6000
	40					2'-1"	2'-6"	2'-11"	3'-4"	4'-6"	4000
		2'-9"	3'-2"	3'-7"	4'-0"	4'-5"	4'-10"	5'-3"	5'-7"	6'-5"	6000
	50					2'-1"	2'-6"	2'-11"	3'-4"	4'-6"	4000
		2'-9"	3'-2"	3'-7"	4'-0"	4'-5"	4'-10"	5'-3"	5'-7"	6'-5"	6000
14	30						2'-3"	2'-7"	3'-0"	4'-1"	4000
		2'-6"	2'-10"	3'-3"	3'-7"	4'-0"	4'-4"	4'-9"	5'-1"	6'-3"	6000
	40						2'-3"	2'-7"	3'-0"	4'-1"	4000
		2'-6"	2'-10"	3'-3"	3'-7"	4'-0"	4'-4"	4'-9"	5'-1"	6'-3"	6000
	50						2'-3"	2'-7"	3'-0"	4'-1"	4000
		2'-6"	2'-10"	3'-3"	3'-7"	4'-0"	4'-4"	4'-9"	5'-1"	6'-3"	6000
16	30						2'-1"	2'-5"	2'-9"	3'-9"	4000
		2'-3"	2'-7"	2'-11"	3'-4"	3'-8"	4'-0"	4'-4"	4'-8"	5'-8"	6000
	40						2'-1"	2'-5"	2'-9"	3'-9"	4000
		2'-3"	2'-7"	2'-11"	3'-4"	3'-8"	4'-0"	4'-4"	4'-8"	5'-8"	6000
	50						2'-1"	2'-5"	2'-9"	3'-9"	4000
		2'-3"	2'-7"	2'-11"	3'-4"	3'-8"	4'-0"	4'-4"	4'-8"	5'-8"	6000

TABLE 1-3

(FOR USE ON **OVER 2'-6" TO 3'-0" OVERHANG Ⓛ** & 54" HORIZONTAL LEG LENGTH OF THE OVERHANG BRACKET)

AVG. SLAB THICKNESS Ⓣ (In)	BRACKET Ⓚ DIMENSION (In)	SCREED LOAD PER BRACKET									45° HANGER SWL (lbs)
		2500 lbs.	2250 lbs.	2000 lbs.	1750 lbs.	1500 lbs.	1250 lbs.	1000 lbs.	750 lbs.	0 lbs.	
		BRACKET SPACING									
10	30					2'-1"	2'-6"	2'-11"	3'-4"	4'-6"	4000
						4'-5"	4'-10"	5'-3"	5'-7"	6'-7"	6000
	40					2'-1"	2'-6"	2'-11"	3'-4"	4'-6"	4000
		2'-9"	3'-2"	3'-7"	4'-0"	4'-5"	4'-10"	5'-3"	5'-7"	6'-7"	6000
	50					2'-1"	2'-6"	2'-11"	3'-4"	4'-6"	4000
		2'-9"	3'-2"	3'-7"	4'-0"	4'-5"	4'-10"	5'-3"	5'-7"	6'-7"	6000
12	30						2'-2"	2'-7"	2'-11"	4'-0"	4000
						3'-11"	4'-3"	4'-8"	5'-0"	6'-1"	6000
	40						2'-2"	2'-7"	2'-11"	4'-0"	4000
		2'-5"	2'-10"	3'-2"	3'-6"	3'-11"	4'-3"	4'-8"	5'-0"	6'-1"	6000
	50						2'-2"	2'-7"	2'-11"	4'-0"	4000
		2'-5"	2'-10"	3'-2"	3'-6"	3'-11"	4'-3"	4'-8"	5'-0"	6'-1"	6000
14	30						2'-0"	2'-4"	2'-8"	3'-8"	4000
					3'-2"	3'-6"	3'-10"	4'-2"	4'-6"	5'-6"	6000
	40						2'-0"	2'-4"	2'-8"	3'-8"	4000
		2'-2"	2'-6"	2'-10"	3'-2"	3'-6"	3'-10"	4'-2"	4'-6"	5'-6"	6000
	50						2'-0"	2'-4"	2'-8"	3'-8"	4000
		2'-2"	2'-6"	2'-10"	3'-2"	3'-6"	3'-10"	4'-2"	4'-6"	5'-6"	6000
16	30							2'-1"	2'-5"	3'-4"	4000
					2'-11"	3'-2"	3'-6"	3'-10"	4'-1"	5'-0"	6000
	40							2'-1"	2'-5"	3'-4"	4000
		2'-0"	2'-4"	2'-7"	2'-11"	3'-2"	3'-6"	3'-10"	4'-1"	5'-0"	6000
	50							2'-1"	2'-5"	3'-4"	4000
		2'-0"	2'-4"	2'-7"	2'-11"	3'-2"	3'-6"	3'-10"	4'-1"	5'-0"	6000

TABLE 1-4

(FOR USE ON **OVER 3'-0" TO 3'-6" OVERHANG Ⓛ** & 54" HORIZONTAL LEG LENGTH OF THE OVERHANG BRACKET)

AVG. SLAB THICKNESS Ⓣ (In)	BRACKET Ⓚ DIMENSION (In)	SCREED LOAD PER BRACKET									45° HANGER SWL (lbs)
		2500 lbs.	2250 lbs.	2000 lbs.	1750 lbs.	1500 lbs.	1250 lbs.	1000 lbs.	750 lbs.	0 lbs.	
		BRACKET SPACING									
10	30						2'-1"	2'-5"	2'-9"	3'-10"	4000
						2'-3"	2'-11"	3'-7"	4'-3"	5'-9"	6000
	40						2'-1"	2'-5"	2'-9"	3'-10"	4000
				2'-4"	3'-0"	3'-7"	4'-1"	4'-5"	4'-9"	5'-9"	6000
	50						2'-1"	2'-5"	2'-9"	3'-10"	4000
		2'-4"	2'-8"	3'-0"	3'-4"	3'-8"	4'-1"	4'-5"	4'-9"	5'-9"	6000
12	30							2'-2"	2'-6"	3'-5"	4000
						2'-1"	2'-8"	3'-4"	3'-11"	5'-2"	6000
	40							2'-2"	2'-6"	3'-5"	4000
				2'-2"	2'-9"	3'-4"	3'-7"	3'-11"	4'-3"	5'-2"	6000
	50							2'-2"	2'-6"	3'-5"	4000
		2'-1"	2'-4"	2'-8"	3'-0"	3'-4"	3'-7"	3'-11"	4'-3"	5'-2"	6000
14	30								2'-3"	3'-1"	4000
						2'-0"	2'-6"	3'-1"	3'-8"	4'-8"	6000
	40								2'-3"	3'-1"	4000
				2'-0"	2'-7"	3'-0"	3'-3"	3'-6"	3'-10"	4'-8"	6000
	50								2'-3"	3'-1"	4000
			2'-2"	2'-5"	2'-8"	3'-0"	3'-3"	3'-6"	3'-10"	4'-8"	6000
16	30								2'-0"	2'-9"	4000
							2'-4"	2'-10"	3'-5"	4'-3"	6000
	40								2'-0"	2'-9"	4000
					2'-5"	2'-8"	2'-11"	3'-3"	3'-6"	4'-3"	6000
	50								2'-0"	2'-9"	4000
				2'-2"	2'-5"	2'-8"	2'-11"	3'-3"	3'-6"	4'-3"	6000

DEFINITIONS

SLPB = SCREED LOAD PER BRACKET (R x W)
R = SCREED LOAD FACTOR, OBTAINED FROM TABLE 2
W = WHEEL LOAD
S = BRACKET SPACING
T = AVERAGE SLAB THICKNESS
SWL = SAFE WORKING LOAD
K = DIMENSION DEFINED ON "BRIDGE OVERHANG BRACKET SUMMARY" ON SHEET 2
L = OVERHANG MEASURED FROM EDGE OF TOP FLANGE TO EDGE OF SUPERSTRUCTURE

PROJECT NO. R-2554BA
WAYNE COUNTY
STATION: 118+92.556 -L-

SHEET 1 OF 3

STATE OF NORTH CAROLINA
DEPARTMENT OF TRANSPORTATION
RALEIGH

STANDARD OVERHANG FALSEWORK

AASHTO TYPES
III, IV, V, AND VI

(RIGHT LANE)

NORTH CAROLINA PROFESSIONAL SEAL 18788 ENGINEER CHANG-CHUAN VICTOR CHAO

Chang-Chuan Victor Chao
12-18-2007

REVISIONS						SHEET NO.
NO.	BY:	DATE:	NO.	BY:	DATE:	5-380
1			3			TOTAL SHEETS
2			4			478

ASSEMBLED BY:	DATE:
CHECKED BY:	DATE:
DRAWN BY: R. WRIGHT 06/04	REV.
CHECKED BY: C. V. CHAO 06/04	

18-DEC-2007 15:36
d:\wdlr\victor\overhangfalsework\tlebar&strut\r-2554bar&l_type_lv\r2554barlightoverhangsheets.dgn
vchao

BRIDGE OVERHANG BRACKET SUMMARY

TOTAL SCREED WEIGHT = _____ LBS.
NUMBER OF SCREED WHEELS = _____
SCREED WHEEL LOAD (W) = _____LBS.
SCREED LOAD PER BRACKET = _____ LBS.

PROJECT No. : _____
COUNTY : _____
STATION : _____
DESCRIPTION : _____

DATE : _____
DESIGN BY : _____
CHECK BY : _____

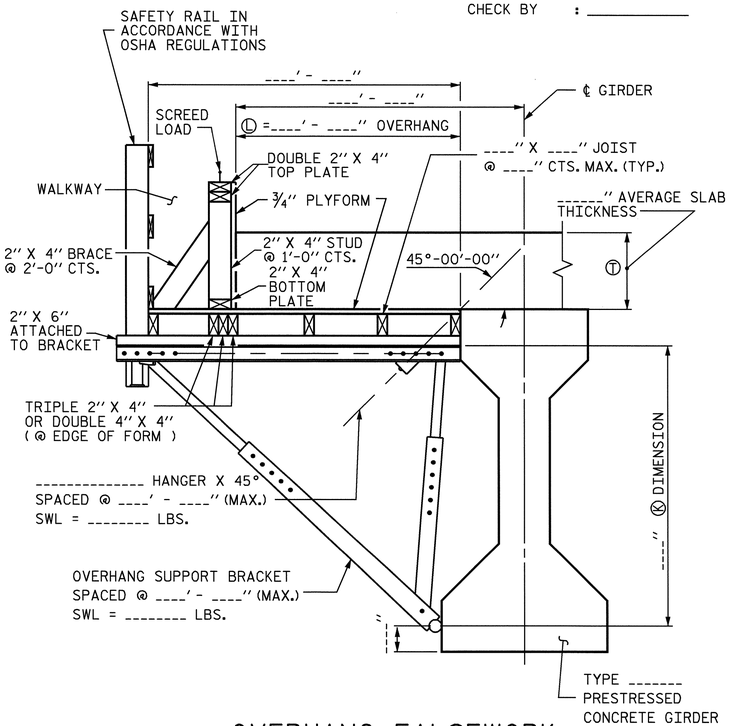

OVERHANG FALSEWORK

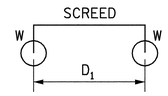

4-WHEEL MACHINE

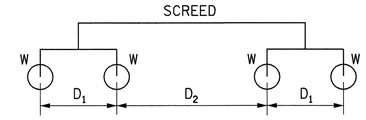

8-WHEEL MACHINE

4 WHEEL MACHINE	
S/D1	R
<= 1.0	1.00
1.1	1.09
1.2	1.17
1.3	1.23
1.4	1.29
1.5	1.33
1.6	1.38
1.7	1.41
1.8	1.44
1.9	1.47
2.0	1.50
2.2	1.55
2.4	1.58
2.6	1.62
2.8	1.64
3.0	1.67
3.5	1.71
4.0	1.75

TABLE 2: SCREED LOAD FACTOR "R"

		THE SCREED LOAD FACTOR R (FOR 8 WHEEL MACHINE)																	
		S/D_2																	
		<= 1.0	1.1	1.2	1.3	1.4	1.5	1.6	1.7	1.8	1.9	2.0	2.2	2.4	2.6	2.8	3.0	3.5	4.0
S/D_1	<= 1.0	1.00	1.09	1.17	1.23	1.29	1.33	1.38	1.41	1.44	1.47	1.50	1.55	1.58	1.62	1.64	1.67	1.71	1.75
	1.1	1.09	1.18	1.26	1.32	1.38	1.42	1.47	1.50	1.54	1.56	1.59	1.64	1.67	1.71	1.73	1.76	1.81	1.84
	1.2	1.17	1.26	1.33	1.40	1.45	1.50	1.54	1.58	1.61	1.64	1.67	1.71	1.75	1.78	1.81	1.83	1.88	1.92
	1.3	1.23	1.32	1.40	1.46	1.52	1.56	1.61	1.64	1.68	1.70	1.73	1.78	1.81	1.85	1.87	1.90	1.95	1.98
	1.4	1.29	1.38	1.45	1.52	1.57	1.62	1.66	1.70	1.73	1.76	1.79	1.83	1.87	1.90	1.93	1.95	2.00	2.07
	1.5	1.33	1.42	1.50	1.56	1.62	1.67	1.71	1.75	1.78	1.81	1.83	1.88	1.92	1.95	1.98	2.00	2.10	2.17
	1.6	1.38	1.47	1.54	1.61	1.66	1.71	1.75	1.79	1.82	1.85	1.88	1.92	1.96	1.99	2.04	2.08	2.18	2.25
	1.7	1.41	1.50	1.58	1.64	1.70	1.75	1.79	1.82	1.86	1.89	1.91	1.96	2.00	2.05	2.11	2.16	2.25	2.32
	1.8	1.44	1.54	1.61	1.68	1.73	1.78	1.82	1.86	1.89	1.92	1.94	1.99	2.06	2.12	2.17	2.22	2.32	2.39
	1.9	1.47	1.56	1.64	1.70	1.76	1.81	1.85	1.89	1.92	1.95	1.97	2.04	2.11	2.18	2.23	2.28	2.38	2.45
	2.0	1.50	1.59	1.67	1.73	1.79	1.83	1.88	1.91	1.94	1.97	2.00	2.09	2.17	2.23	2.29	2.33	2.43	2.50
	2.2	1.55	1.64	1.71	1.78	1.83	1.88	1.92	1.96	1.99	2.04	2.09	2.18	2.26	2.32	2.38	2.42	2.52	2.59
	2.4	1.58	1.67	1.75	1.81	1.87	1.92	1.96	2.00	2.06	2.11	2.17	2.26	2.33	2.40	2.45	2.50	2.60	2.67
	2.6	1.62	1.71	1.78	1.85	1.90	1.95	1.99	2.05	2.12	2.18	2.23	2.32	2.40	2.46	2.52	2.56	2.66	2.73
	2.8	1.64	1.73	1.81	1.87	1.93	1.98	2.04	2.11	2.17	2.23	2.29	2.38	2.45	2.52	2.57	2.62	2.71	2.79
	3.0	1.67	1.76	1.83	1.90	1.95	2.00	2.08	2.16	2.22	2.28	2.33	2.42	2.50	2.56	2.62	2.67	2.76	2.83
	3.5	1.71	1.81	1.88	1.95	2.00	2.10	2.18	2.25	2.32	2.38	2.43	2.52	2.60	2.66	2.71	2.76	2.86	2.93
	4.0	1.75	1.84	1.92	1.98	2.07	2.17	2.25	2.32	2.39	2.45	2.50	2.59	2.67	2.73	2.79	2.83	2.93	3.00

TABLE 3: ALLOWABLE SPAN LENGTH OF JOISTS AND JOIST SPACINGS

AVG. SLAB THICKNESS Ⓣ (IN)	LUMBER JOIST SIZE (IN X IN)	JOIST SPACINGS			
		15 IN	12 IN	10 IN	8 IN
		THE ALLOWABLE SPAN LENGTH OF JOISTS			
10	2 X 4	———	4' - 6"	4' - 9"	5' - 0"
	4 X 4	5' - 9"	6' - 3"	6' - 6"	6' - 7"
12	2 X 4	———	4' - 3"	4' - 9"	5' - 0"
	4 X 4	5' - 3"	6' - 0"	6' - 3"	6' - 5"
14	2 X 4	———	4' - 0"	4' - 6"	5' - 0"
	4 X 4	———	5' - 6"	6' - 0"	6' - 4"
16	2 X 4	———	4' - 0"	4' - 3"	4' - 9"
	4 X 4	———	5' - 3"	5' - 9"	6' - 3"

NOTES

DESIGN INCLUDES CONSTRUCTION LIVE LOAD 20 PSF ON THE AREA SUPPORTED AND 75 PLF AT THE OUTSIDE DECK OF OVERHANGS.

REQUIRED MINIMUM DIAGONAL LEG CAPACITY: 3600 LB WORKING LOAD

THE CONTRACTOR HAS THE OPTION OF SUBMITTING HIS OWN DESIGN FOR OVERHANG FALSEWORK IN ACCORDANCE WITH THE SPECIAL PROVISIONS.

SUBMITTALS UTILIZING THE INSTRUCTIONS AND PROCEDURES DESCRIBED ON SHEET 1 OF 3 SHALL BE IN ACCORDANCE WITH THE APPLICABLE SECTIONS OF THE SPECIFICATIONS AND SPECIAL PROVISIONS, EXCEPT THAT CALCULATIONS FOR OVERHANG FALSEWORK NEED NOT BE SEALED BY A REGISTERED ENGINEER.

FOR OVERHANG FALSEWORK BRACING DESIGN, SEE SHEET 3 OF 3.

PROJECT NO. R-2554BA
WAYNE COUNTY
STATION: 118+92.556 -L-

SHEET 2 OF 3

STATE OF NORTH CAROLINA
DEPARTMENT OF TRANSPORTATION
RALEIGH

STANDARD OVERHANG FALSEWORK

AASHTO TYPES
III, IV, V, AND VI

(RIGHT LANE)

NORTH CAROLINA PROFESSIONAL SEAL 18788 ENGINEER CHANG-CHUAN VICTOR CHAO

Chang-Chuan Victor Chao
12-18-2007

ASSEMBLED BY:	DATE:
CHECKED BY:	DATE:
DRAWN BY: R. WRIGHT 06/04	REV.
CHECKED BY: C. V. CHAO 06/04	

REVISIONS						SHEET NO.
NO.	BY:	DATE:	NO.	BY:	DATE:	5-381
1			3			TOTAL SHEETS
2			4			478

18-DEC-2007 15:37
d:\wdlr\victor\overhangfalsework\tiebar&strut\r-2554bar&l_type_iv\r2554barlightoverhangsheets.dgn
vchao

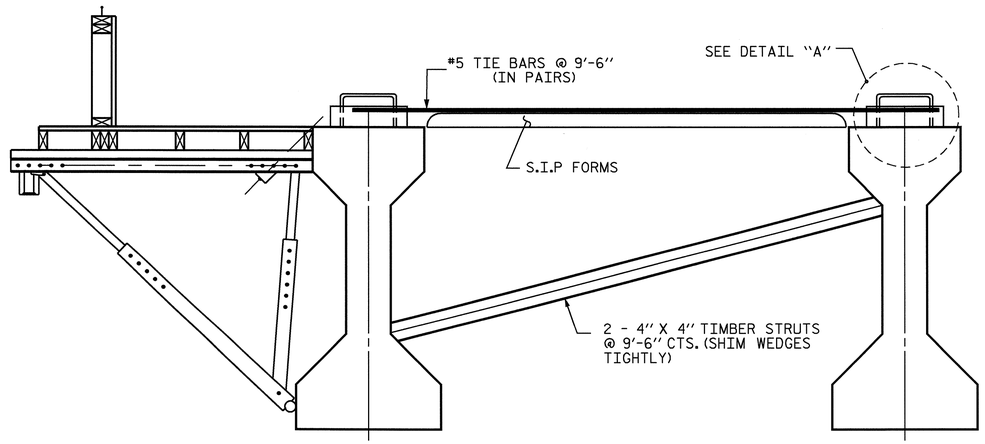

EXTERIOR GIRDER INTERIOR GIRDER

DETAIL OF REQUIRED OVERHANG FALSEWORK BRACING SYSTEM

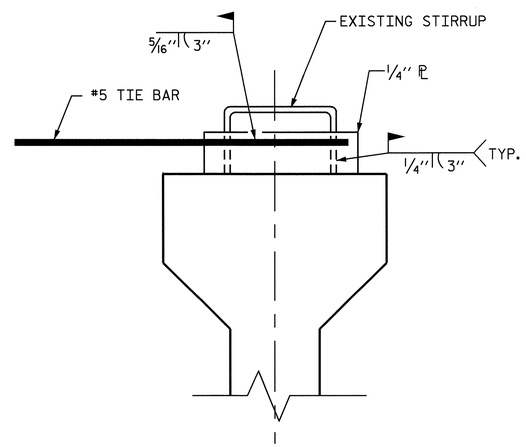

DETAIL "A"

NOTES:

EACH #5 TIE BAR SHALL BE WELDED TO ONE STIRRUP LOOP AS SHOWN IN DETAIL "A". #5 TIE BARS SHALL BE WELDED TO TWO ADJACENT STIRRUPS OF THE EXTERIOR GIRDER AND THE ADJACENT INTERIOR GIRDER BETWEEN PERMANENT DIAPHRAGMS. WELD STEEL PLATES IN BETWEEN THE TIE BARS AND THE STIRRUP LOOP. WELDING TWO TIE BARS TO THE SAME STIRRUP LOOP SHALL NOT BE PERMITTED.

MAXIMUM SPACING BETWEEN THE BRACING (TIE BARS-TIMBER STRUT) IS 9'-6" CTS. #5 TIE BARS SHALL BE LOCATED OVER A TIMBER STRUT.

INSTALL TIE BARS AND TIMBER STRUTS PRIOR TO PLACEMENT OF CONCRETE OR SCREED WEIGHT ONTO THE OVERHANG FALSEWORK.

PROJECT NO. R-2554BA
WAYNE COUNTY
STATION: 118+92.556 -L-

SHEET 3 OF 3

STATE OF NORTH CAROLINA
DEPARTMENT OF TRANSPORTATION
RALEIGH

STANDARD OVERHANG FALSEWORK

AASHTO TYPES
III, IV, V, AND VI

(RIGHT LANE)

NORTH CAROLINA PROFESSIONAL SEAL 18788 ENGINEER CHARNG-CHUAN VICTOR CHAO

Charng-Chuan Victor Chao
12-18-2007

REVISIONS						SHEET NO.
NO.	BY:	DATE:	NO.	BY:	DATE:	S-382
1			3			TOTAL SHEETS
2			4			478

DRAWN BY: R. WRIGHT 06/04 DATE :
CHECKED BY: C. V. CHAO 06/04 DATE :

18-DEC-2007 15:37
d:\wdlr\victor\overhangfalsework\tiebar&strut\r-2554bar&l_type_iv\r2554barlightoverhangsheets.dgn
vchao

F. A. PROJECT NO. NHS-70(106)

GRADE DATA

-0.7285% △ +0.3000%

PI = 130+87.000 -L-
EL. = 35.016m
VC = 200m

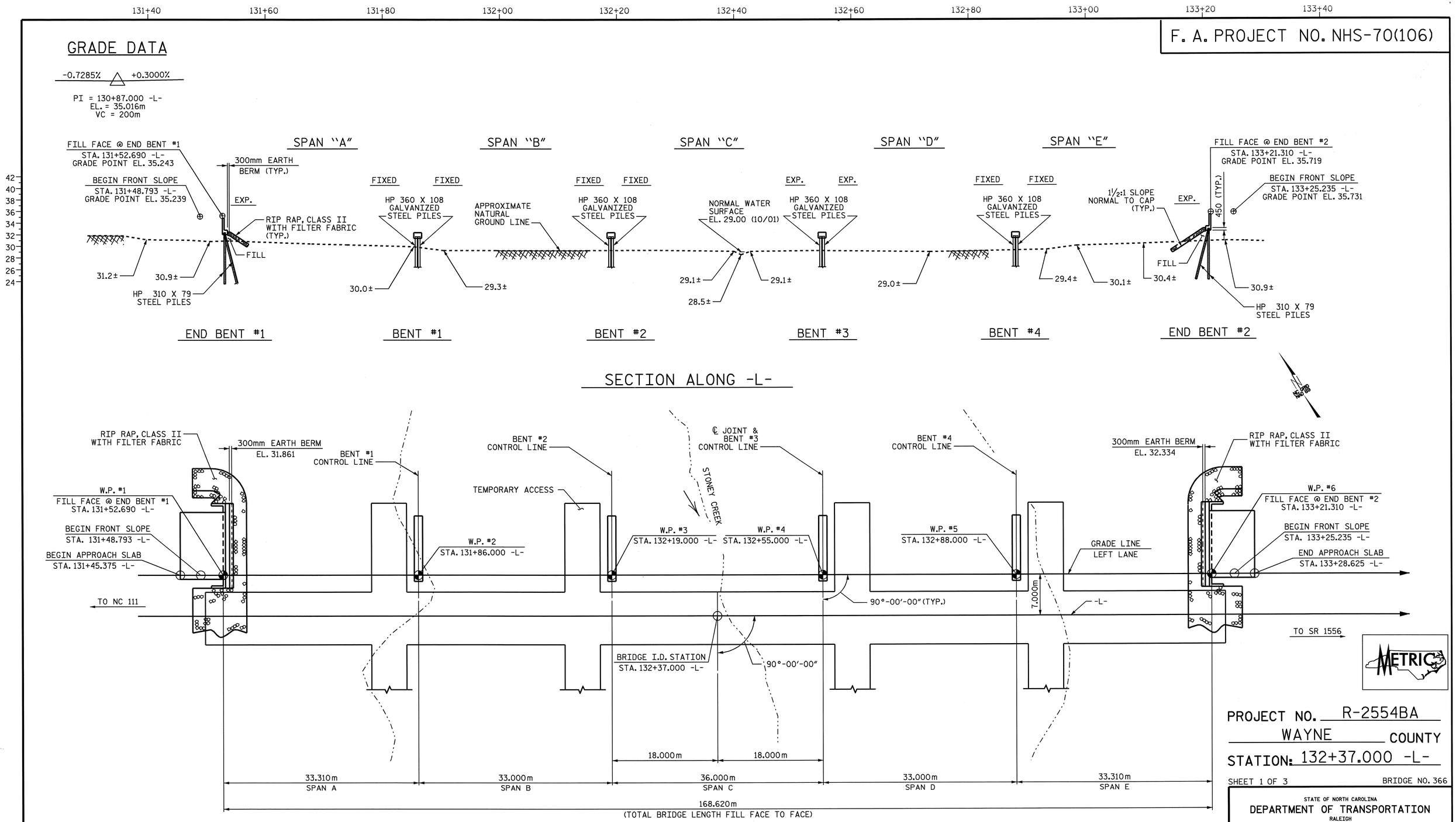

PROJECT NO. R-2554BA
WAYNE COUNTY
STATION: 132+37.000 -L-

SHEET 1 OF 3 BRIDGE NO. 366

STATE OF NORTH CAROLINA
DEPARTMENT OF TRANSPORTATION
RALEIGH

GENERAL DRAWING

FOR BRIDGE OVER STONEY CREEK ON US 70 BYPASS BETWEEN NC 111 AND SR 1556 (LEFT LANE)

NORTH CAROLINA PROFESSIONAL SEAL 12274 ENGINEER OMAR R. AZIZI 6/6/08

NORTH CAROLINA PROFESSIONAL SEAL 14045 ENGINEER TIMOTHY L. COGGINS 6/6/08

REVISIONS						SHEET NO.
NO.	BY:	DATE:	NO.	BY:	DATE:	S-383
1			3			TOTAL SHEETS
2			4			478

DRAWN BY : ZION RORIE DATE : 4/20/06
CHECKED BY : B. N. BARODAWALA DATE : 7/25/06

06-JUN-2008 11:53
r:\structures\azizi\Str#14\FINAL PLANS\R-2554BA_sd_GD_14.dgn
padkins

STR. #14

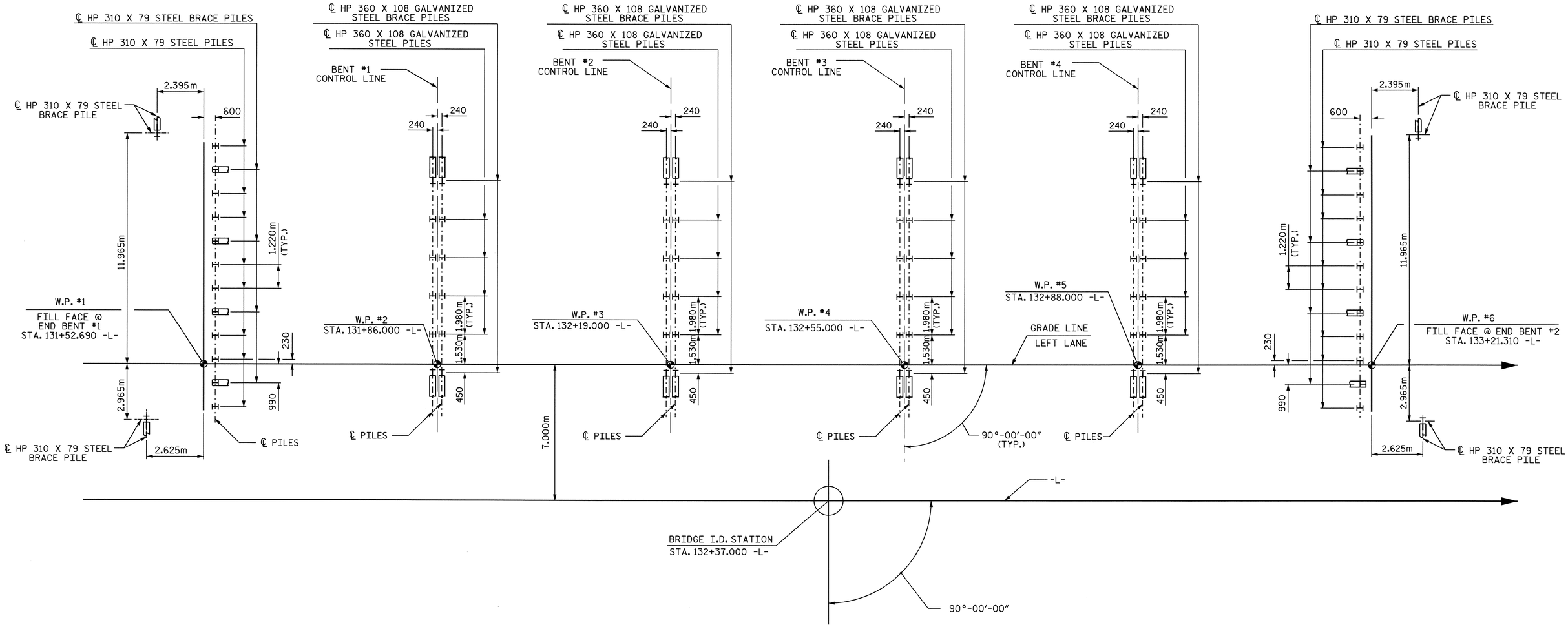

FOUNDATION LAYOUT

DIMENSIONS LOCATING END BENT PILES AND BENT PILES ARE SHOWN TO CENTERLINE OF PILES.

END BENT BRACE PILES ARE BATTERED AT 250:1000 WHERE SHOWN.

BENT BRACE PILES ARE BATTERED AT 125:1000 WHERE SHOWN.

PROJECT NO. R-2554BA

WAYNE COUNTY

STATION: 132+37.000 -L-

SHEET 2 OF 3

STATE OF NORTH CAROLINA
DEPARTMENT OF TRANSPORTATION
RALEIGH

GENERAL DRAWING

FOR BRIDGE OVER
STONEY CREEK ON
US 70 BYPASS BETWEEN
NC 111 AND SR 1556
(LEFT LANE)

NORTH CAROLINA PROFESSIONAL SEAL 14045 ENGINEER TIMOTHY W. COGGINS

Timothy W. Coggins 6/6/08

REVISIONS						SHEET NO.
NO.	BY:	DATE:	NO.	BY:	DATE:	S-384
1			3			TOTAL SHEETS
2			4			478

DRAWN BY : ZION RORIE DATE : 4/20/06
CHECKED BY : B. N. BARODAWALA DATE : 7/25/06

06-JUN-2008 11:08
r:\structures\azizi\Str#14\FINAL PLANS\R-2554BA_sd_GD_14.dgn
padkins

BM #9 RR SPIKE IN BASE OF 810mm PINE 45.754m LT OF -BL- STA. 51+28.360 ELEV. 32.631m

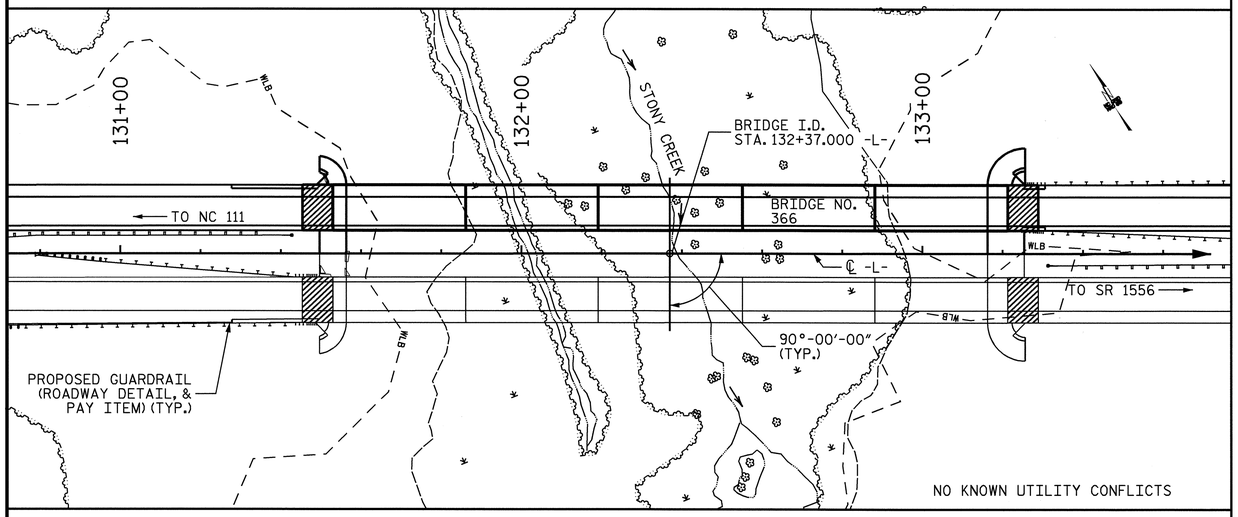

LOCATION SKETCH

HYDRAULIC DATA

DESIGN DISCHARGE	= 65.8 m³/s
FREQUENCY OF DESIGN FLOOD	= 50 YR.
DESIGN HIGH WATER ELEVATION	= 31.040
DRAINAGE AREA	= 13.7 SQ. KM.
BASIC DISCHARGE (Q100)	= 74.7 m³/s
BASIC HIGH WATER ELEVATION	= 31.140

OVERTOPPING FLOOD DATA

OVERTOPPING DISCHARGE	= 1,223.3 m³/s
FREQUENCY OF OVERTOPPING FLOOD	= >500 YR.
OVERTOPPING FLOOD ELEVATION	= 35.230 ✳

✳ OVERTOPPING ELEV. IS AT THE UPSTREAM BRIDGE SECTION. ALL OTHER ELEVATIONS ARE AT THE APPROACH SECTIONS.

NOTES:

ASSUMED LIVE LOAD = MS18 OR ALTERNATE LOADING, EXCEPT THAT THE GIRDERS HAVE BEEN DESIGNED FOR MS22.5.

THIS BRIDGE HAS BEEN DESIGNED IN ACCORDANCE WITH THE REQUIREMENTS OF AASHTO STANDARD SPECIFICATIONS FOR SEISMIC DESIGN OF HIGHWAY BRIDGES FOR SEISMIC PERFORMANCE CATEGORY A.

ALL DIMENSIONS ARE IN MILLIMETERS UNLESS OTHERWISE NOTED.

ALL ELEVATIONS ARE IN METERS.

FOR OTHER DESIGN DATA AND GENERAL NOTES, SEE SHEET SNSM.

FOR EROSION CONTROL MEASURES, SEE EROSION CONTROL PLANS.

THIS BRIDGE HAS BEEN DESIGNED BY THE STRENGTH DESIGN METHOD AS SPECIFIED IN AASHTO STANDARD SPECIFICATIONS.

REMOVABLE FORMS MAY BE USED IN LIEU OF METAL STAY-IN-PLACE FORMS IN ACCORDANCE WITH ARTICLE 420-3 OF THE STANDARD SPECIFICATIONS.

THE CONTRACTOR SHALL PROVIDE INDEPENDENT ASSURANCE SAMPLES OF REINFORCING STEEL AS FOLLOWS: FOR PROJECTS REQUIRING UP TO 360,000 kg OF REINFORCING STEEL, ONE 760mm SAMPLE OF EACH SIZE BAR USED, AND FOR PROJECTS REQUIRING OVER 360,000 kg OF REINFORCING STEEL, TWO 760mm SAMPLES OF EACH SIZE BAR USED. THE BARS FROM WHICH THE SAMPLES ARE TAKEN MUST THEN BE SPLICED WITH REPLACEMENT BARS OF THE SIZE AND LENGTH OF THE SAMPLE PLUS A MINIMUM LAP SPLICE OF THIRTY BAR DIAMETERS.

NEEDLE BEAMS WILL NOT BE ALLOWED UNLESS OTHERWISE CALLED FOR ON THE PLANS OR APPROVED BY THE ENGINEER.

FOR SUBMITTAL OF WORKING DRAWINGS, SEE SPECIAL PROVISIONS.

FOR METRIC STRUCTURAL STEEL, SEE SPECIAL PROVISIONS.

FOR FALSEWORK AND FORMWORK, SEE SPECIAL PROVISIONS.

FOR PRESTRESSED CONCRETE MEMBERS, SEE SPECIAL PROVISIONS.

FOR CONSTRUCTION, MAINTENANCE AND REMOVAL OF TEMPORARY ACCESS AT STATION 132+37.000 -L-, SEE SPECIAL PROVISIONS.

FOR CRANE SAFTEY, SEE SPECIAL PROVISIONS.

FOR CRACK REPAIR OF PRESTRESSED CONCRETE GIRDERS, SEE SPECIAL PROVISIONS.

FOR GROUT FOR STRUCTURES, SEE SPECIAL PROVISIONS.

DRIVE PILES AT END BENT NO. 1 AND END BENT NO. 2 TO A REQUIRED BEARING CAPACITY OF 1060 KN PER PILE. THE REQUIRED BEARING CAPACITY IS EQUAL TO THE ALLOWABLE BEARING CAPACITY WITH A MINIMUM FACTOR OF SAFETY OF TWO.

DRIVE PILES AT BENT NO. 1 THROUGH BENT NO. 4 TO A REQUIRED BEARING CAPACITY OF 1680 KN PER PILE. THE REQUIRED BEARING CAPACITY IS EQUAL TO THE ALLOWABLE BEARING CAPACITY WITH A MINIMUM FACTOR OF SAFETY OF TWO PLUS ANY ADDITIONAL CAPACITY TO ACCOUNT FOR DOWN DRAG OR NEGATIVE SKIN FRICTION AND SCOUR.

THE ALLOWABLE BEARING CAPACITY FOR PILES AT END BENT NO. 1 AND END BENT NO. 2 IS 530 KN PER PILE.

THE ALLOWABLE BEARING CAPACITY FOR PILES AT BENT NO. 1 THROUGH BENT NO. 4 IS 800 KN PER PILE.

THE SCOUR CRITICAL ELEVATION FOR BENT NO. 1 THROUGH BENT NO. 4 IS 26 METERS. SCOUR CRITICAL ELEVATIONS ARE USED TO MONITOR POSSIBLE SCOUR PROBLEMS DURING THE LIFE OF THE STRUCTURE.

TESTING PILES WITH THE PILE DRIVING ANALYZER (PDA) DURING DRIVING, RESTRIKING OR REDRIVING MAY BE REQUIRED. THE ENGINEER WILL DETERMINE THE NEED FOR PDA TESTING. SEE PILE DRIVING ANALYZER SPECIAL PROVISION.

PILE RESTRIKES FOR LRFD MAY BE REQUIRED. SEE PILE RESTRIKES FOR LRFD SPECIAL PROVISION.

THIS STRUCTURE HAS BEEN DESIGNED IN ACCORDANCE WITH HEC 18, "EVALUATING SCOUR AT BRIDGES", MAY, 2001.

TOTAL BILL OF MATERIAL

	CONSTRUCTION, MAINTENANCE AND REMOVAL OF TEMPORARY ACCESS	PDA TESTING	PDA ASSISTANCE	REINFORCED CONCRETE DECK SLAB	GROOVING BRIDGE FLOORS	CLASS A CONCRETE	BRIDGE APPROACH SLABS	REINFORCING STEEL	MODIFIED 1829mm PRESTRESSED CONCRETE GIRDERS		HP 310 X 79 STEEL PILES		HP 360 X 108 GALVANIZED STEEL PILES		PILE REDRIVES	CONCRETE BARRIER RAIL	RIP-RAP CLASS II (600mm THICK)	FILTER FABRIC FOR DRAINAGE	ELASTOMERIC BEARINGS	EVAZOTE JOINT SEALS	EXPANSION JOINT SEALS
	LUMP SUM	EACH	EACH	SQ. METERS	SQ. METERS	CU. METERS	LUMP SUM	kg	NO.	METERS	NO.	METERS	NO.	METERS	EACH	METERS	METRIC TON	SQ. METERS	LUMP SUM	LUMP SUM	LUMP SUM
SUPERSTRUCTURE				2080.9	1903.6		LUMP SUM		25	833.500						335.956			LUMP SUM	LUMP SUM	LUMP SUM
END BENT 1						28.4		2847			14	182.0			4		149	146			
BENT 1						14.8		1429					12	180.0	4						
BENT 2						14.8		1429					12	180.0	4						
BENT 3						14.8		1429					12	180.0	4						
BENT 4						14.8		1429					12	180.0	4						
END BENT 2						28.4		2847			14	182.0			4		177	174			
TOTAL	LUMP SUM	1	1	2080.9	1903.6	116.0	LUMP SUM	11410	25	833.500	28	364.0	48	720.0	24	335.956	326	320	LUMP SUM	LUMP SUM	LUMP SUM

PROJECT NO. R-2554BA
WAYNE COUNTY
STATION: 132+37.000 -L-

SHEET 3 OF 3

STATE OF NORTH CAROLINA
DEPARTMENT OF TRANSPORTATION
RALEIGH

GENERAL DRAWING

FOR BRIDGE OVER
STONEY CREEK ON
US 70 BYPASS BETWEEN
NC 111 AND SR 1556
(LEFT LANE)

NORTH CAROLINA PROFESSIONAL SEAL 14045 ENGINEER TIMOTHY L. COGGINS
6/6/08

REVISIONS						SHEET NO.
NO.	BY:	DATE:	NO.	BY:	DATE:	S-385
1			3			TOTAL SHEETS
2			4			478

DRAWN BY : ZION RORIE DATE : 4/20/06
CHECKED BY : B. N. BARODAWALA DATE : 7/25/06

06-JUN-2008 11:09
r:\structures\azizi\Str#14\FINAL PLANS\R-2554BA_sd_GD_14.dgn
padkins

STR. #14

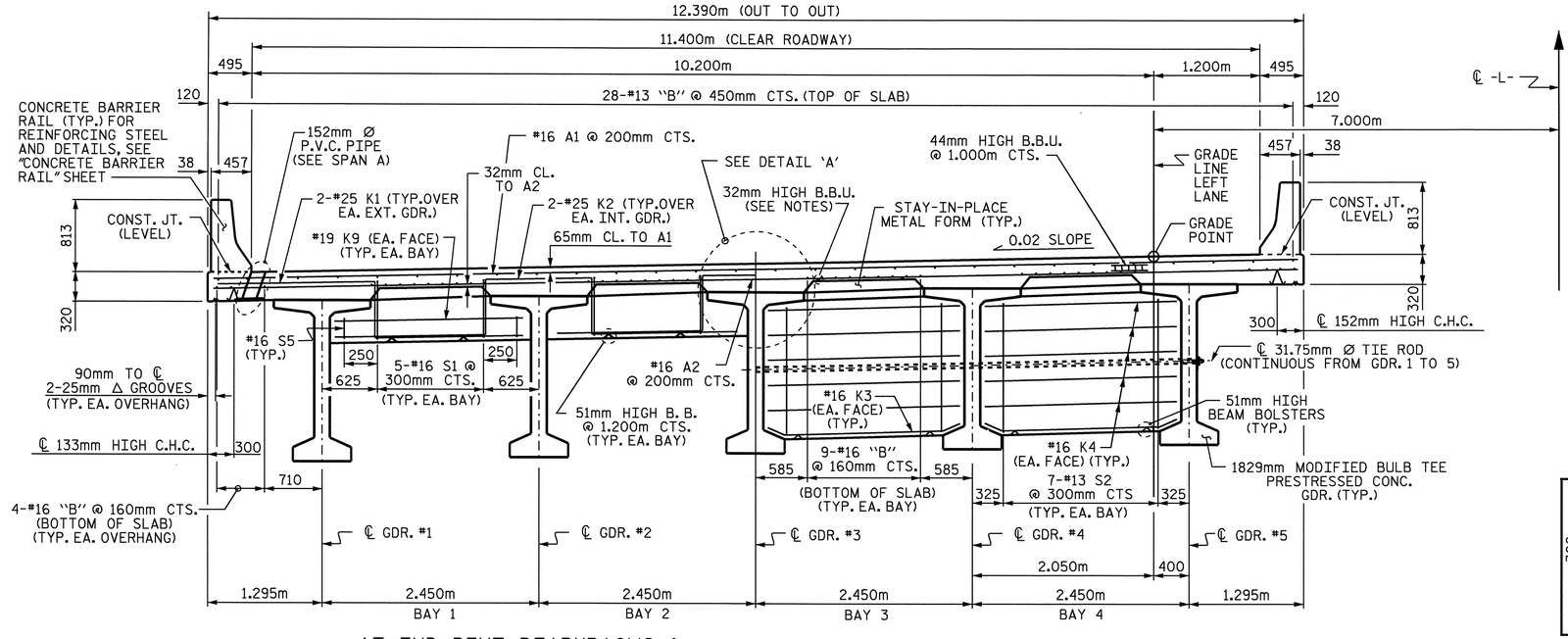

AT END BENT DIAPHRAGMS & BENT DIAPHRAGM @ BENT #3

AT INTERMEDIATE DIAPHRAGMS

TYPICAL SECTION

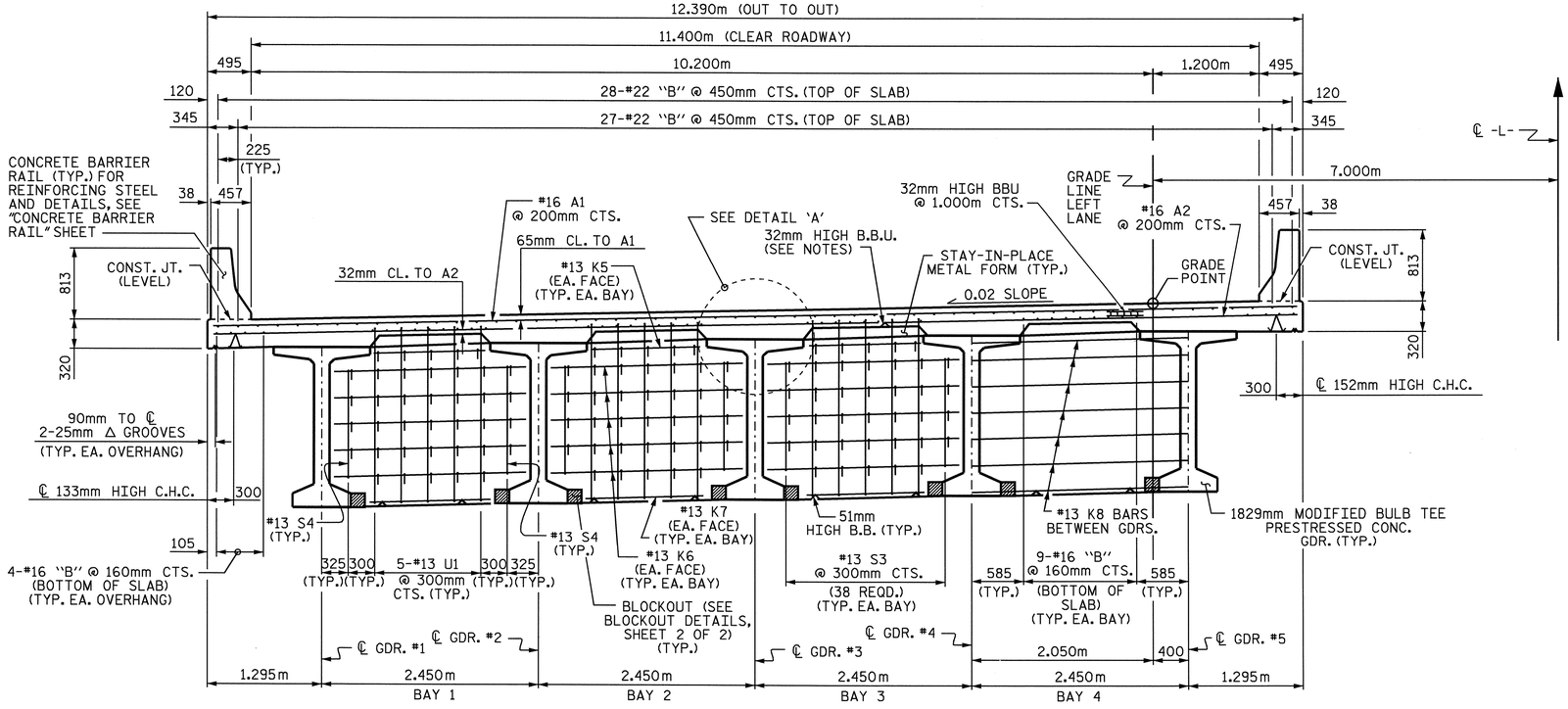

TYPICAL SECTION

SHOWING CONTINUOUS BENT DIAPHRAGMS @ BENT #1, #2 & #4

NOTES

PROVIDE 32mm HIGH BEAM BOLSTERS UPPER AT 1.2m CTS. ATOP THE METAL STAY-IN-PLACE FORMS TO SUPPORT THE BOTTOM MAT OF 'A' BARS. WHEN USING REMOVABLE FORMS, PROVIDE CONTINUOUS HIGH CHAIRS FOR METAL DECK (C.H.C.M.) @ 1.2m CTS. WITH A HEIGHT TO SUPPORT THE BOTTOM MAT OF 'A' BARS A CLEAR DISTANCE OF 65mm ABOVE THE TOP OF THE REMOVABLE FORM.

LONGITUDINAL STEEL MAY BE SHIFTED SLIGHTLY, AS NECESSARY, TO AVOID INTERFERENCE WITH STIRRUPS IN PRESTRESSED CONCRETE GIRDERS.

CONCRETE IN BENT #3 DIAPHRAGMS AND ALL INTERMEDIATE DIAPHRAGMS MAY BE CLASS A IN LIEU OF CLASS AA. PAYMENT SHALL BE MADE UNDER THE UNIT CONTRACT PRICE FOR REINFORCED CONCRETE DECK SLAB.

TEMPORARY STRUTS SHALL BE PLACED BETWEEN PRESTRESSED GIRDERS ADJACENT TO THE DIAPHRAGMS, AND THE NUTS ON THE 31.75mm DIA. TIE RODS SHALL BE FULLY TIGHTENED BEFORE THE DIAPHRAGMS ARE CAST. STRUTS SHALL REMAIN IN PLACE 3 DAYS AFTER CONCRETE IS PLACED. THE TIE RODS SHALL BE RE-TIGHTENED AFTER THE STRUTS HAVE BEEN REMOVED.

PREVIOUSLY CAST CONCRETE IN A CONTINUOUS UNIT SHALL HAVE ATTAINED A MINIMUM COMPRESSIVE STRENGTH OF 20.7 MPa BEFORE ADDITIONAL CONCRETE IS CAST IN THE UNIT.

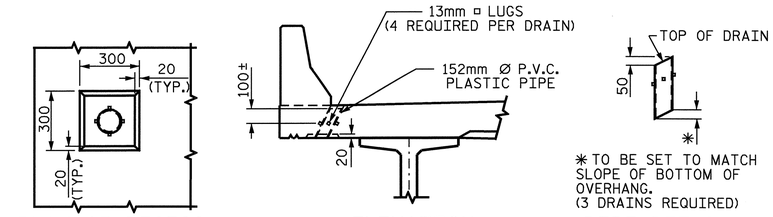

PLAN OF RECESS

ELEVATION

PIPE DETAIL

DRAIN DETAILS

TOP OF FLOOR DRAINS TO BE SET 10mm BELOW SURFACE OF SLAB.

4-13mm □ LUGS TO BE GLUED TO THE P.V.C. PLASTIC PIPE AT EQUAL SPACES AROUND THE PIPE DRAIN APPROXIMATELY 100mm FROM THE TOP OF THE PIPE.

THE 152mm Ø PVC PLASTIC PIPE AND FITTINGS SHALL BE SCHEDULE 40 AND CONFORM TO ASTM D1785.

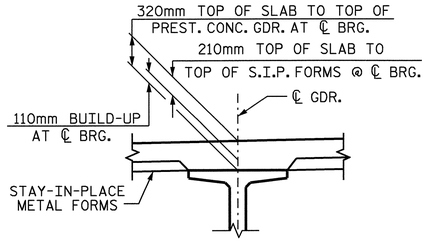

DETAIL 'A'

PROJECT NO. R-2554BA

WAYNE COUNTY

STATION: 132+37.000 -L-

SHEET 1 OF 2

STATE OF NORTH CAROLINA
DEPARTMENT OF TRANSPORTATION
RALEIGH

SUPERSTRUCTURE
TYPICAL SECTION
(LEFT LANE)

NORTH CAROLINA PROFESSIONAL SEAL 14045 ENGINEER TIMOTHY L. COGGINS
6/5/08

REVISIONS						SHEET NO.
NO.	BY:	DATE:	NO.	BY:	DATE:	S-386
1			3			TOTAL SHEETS
2			4			478

DRAWN BY : B.N.BARODAWALA DATE : 4-17-06
CHECKED BY : C. MILLER DATE : 7-06

25-APR-2008 16:06
k:\structures\azlzl\str#14\barodawala\r2554ba_sd_ts_14.dgn
jbwilson

STR. #14

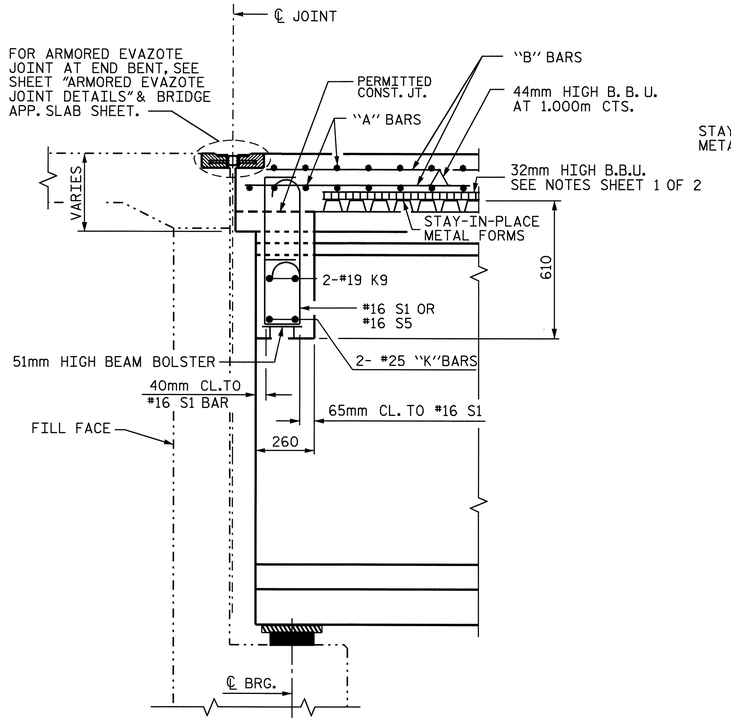

SECTION A-A

SECTION THRU END BENT DIAPHGRAMs

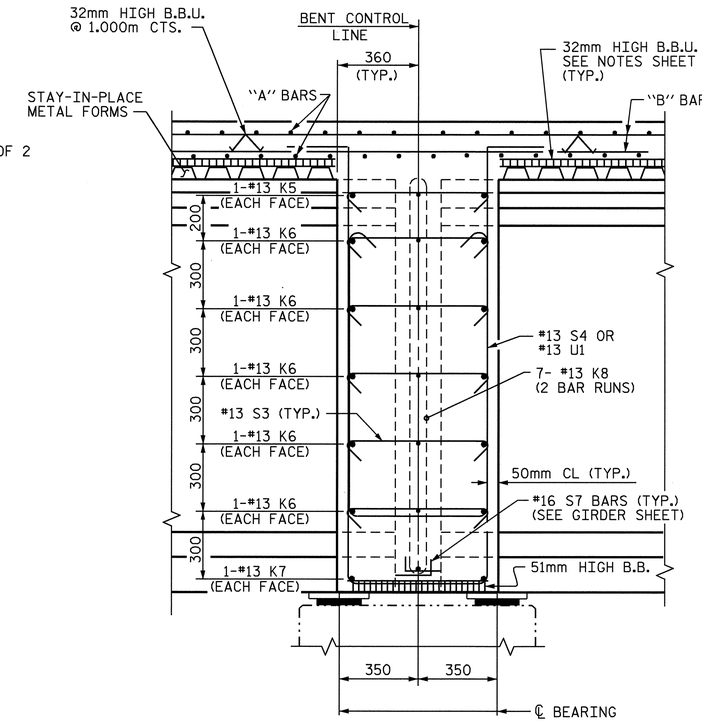

SECTION C-C

SECTION THRU BENT #1, #2 & #4 DIAPHGRAMS

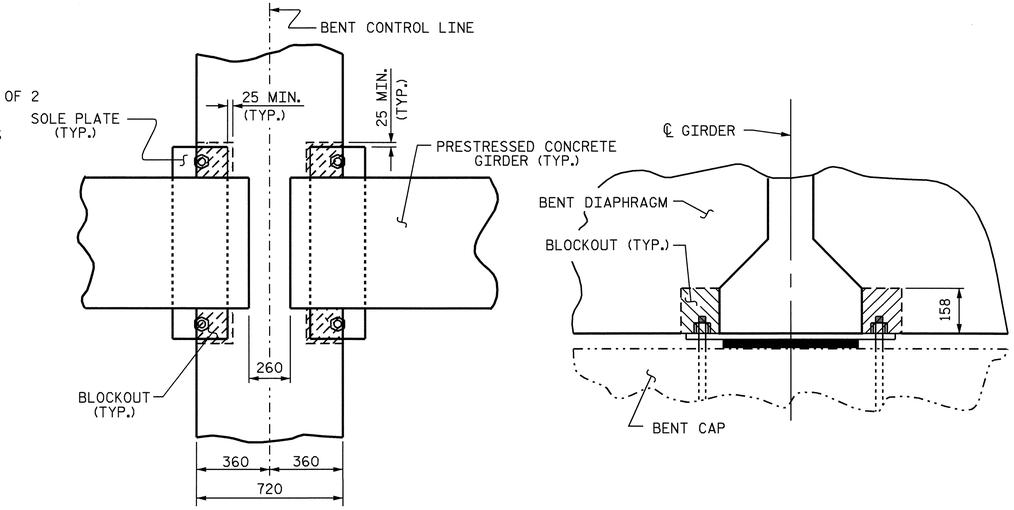

PLAN VIEW

SECTION

BENT DIAPHRAGM BLOCK-OUT DETAIL

(@ BENTS #1, #2 & #4)

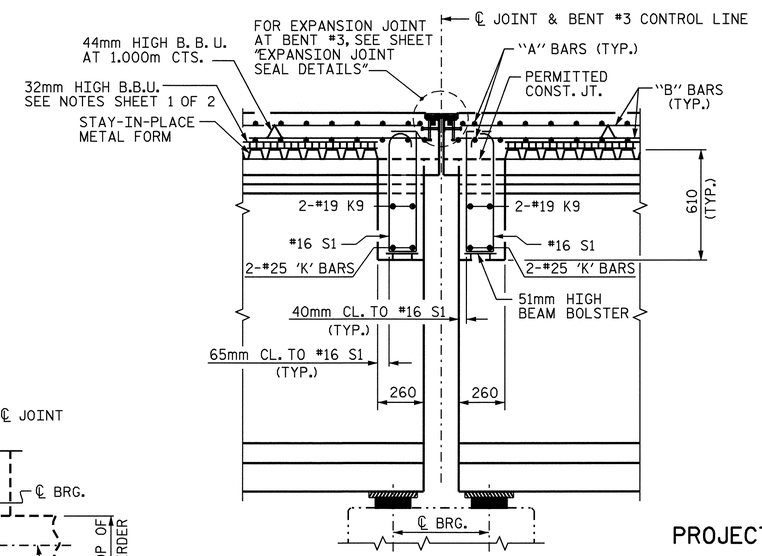

SECTION D-D

SECTION THRU BENT #3 DIAPHGRAMS

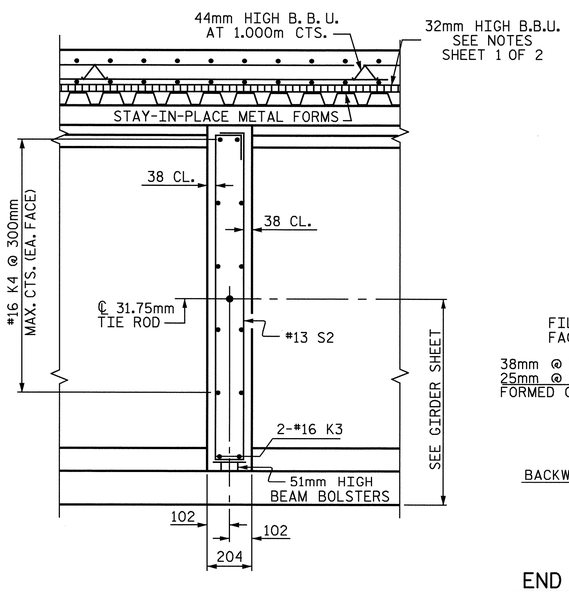

SECTION B-B

SECTION THRU INTERMEDIATE DIAPHGRAMS

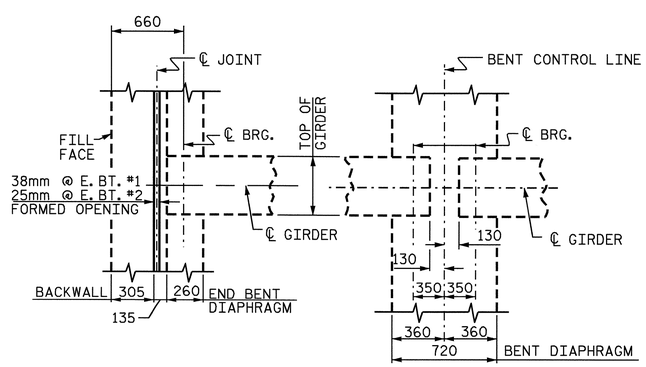

END BENT DIAPHRAGM

BENT DIAPHRAGM

@ BENTS #1, #2 & #4

PLAN

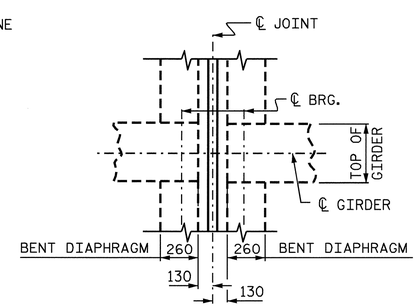

BENT DIAPHRAGM

@ BENT #3

PROJECT NO. R-2554BA

WAYNE COUNTY

STATION: 132+37.000 -L-

SHEET 2 OF 2

STATE OF NORTH CAROLINA
DEPARTMENT OF TRANSPORTATION
RALEIGH

SUPERSTRUCTURE

TYPICAL SECTION DETAILS

(LEFT LANE)

NORTH CAROLINA PROFESSIONAL SEAL 14045 ENGINEER TIMOTHY W. COGGINS
6/5/08

REVISIONS						SHEET NO.
NO.	BY:	DATE:	NO.	BY:	DATE:	S-387
1			3			TOTAL SHEETS
2			4			478

DRAWN BY : B.N.BARODAWALA DATE : 5-4-06
CHECKED BY : C. MILLER DATE : 8-06

05-JUN-2008 09:36
h:\structures\azlzl\str#14\finalplans\r2554ba_sd_ts_14.dgn
bbarodawala

STR. #14

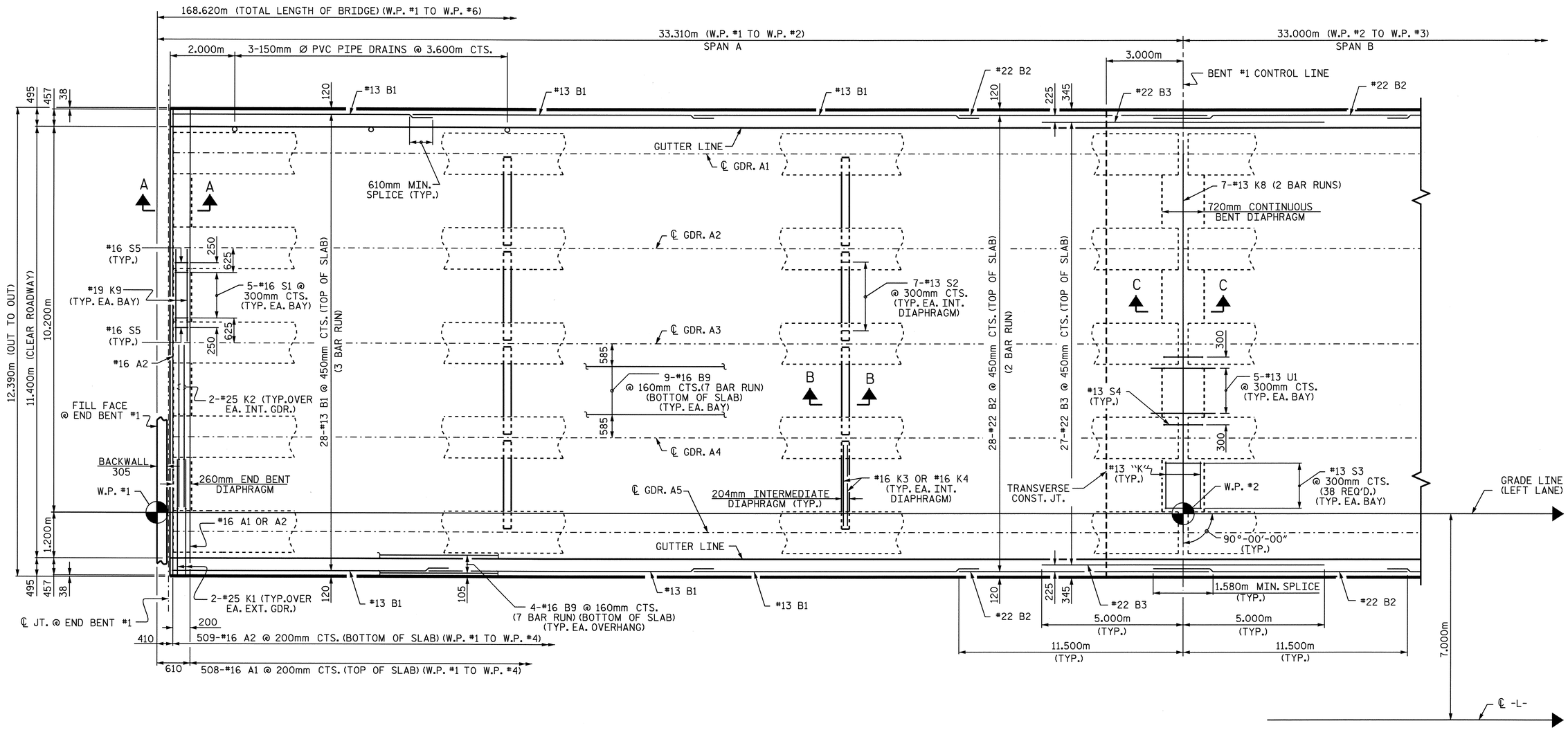

PLAN OF SPAN "A"

FOR LOCATION OF INTERMEDIATE DIAPHRAGMS, SEE "FRAMING PLAN."
FOR SECTIONS A-A, B-B AND C-C, SEE "TYPICAL SECTION" SHEET 2 OF 2.

PROJECT NO. R-2554BA
WAYNE COUNTY
STATION: 132+37.000 -L-

SHEET 1 OF 5

STATE OF NORTH CAROLINA
DEPARTMENT OF TRANSPORTATION
RALEIGH

SUPERSTRUCTURE

PLAN OF SPAN "A"

(LEFT LANE)

NORTH CAROLINA PROFESSIONAL SEAL 14045 ENGINEER TIMOTHY P. COGGINS
6/5/08

REVISIONS						SHEET NO.
NO.	BY:	DATE:	NO.	BY:	DATE:	S-388
1			3			TOTAL SHEETS
2			4			478

STR. #14

DRAWN BY : B.N.BARODAWALA DATE : 4-17-06
CHECKED BY : C. MILLER DATE : 7-06

25-APR-2008 16:05
k:\structures\azlzl\str#14\barodawala\r2554ba_sd_s#_14.dgn
jbwilson

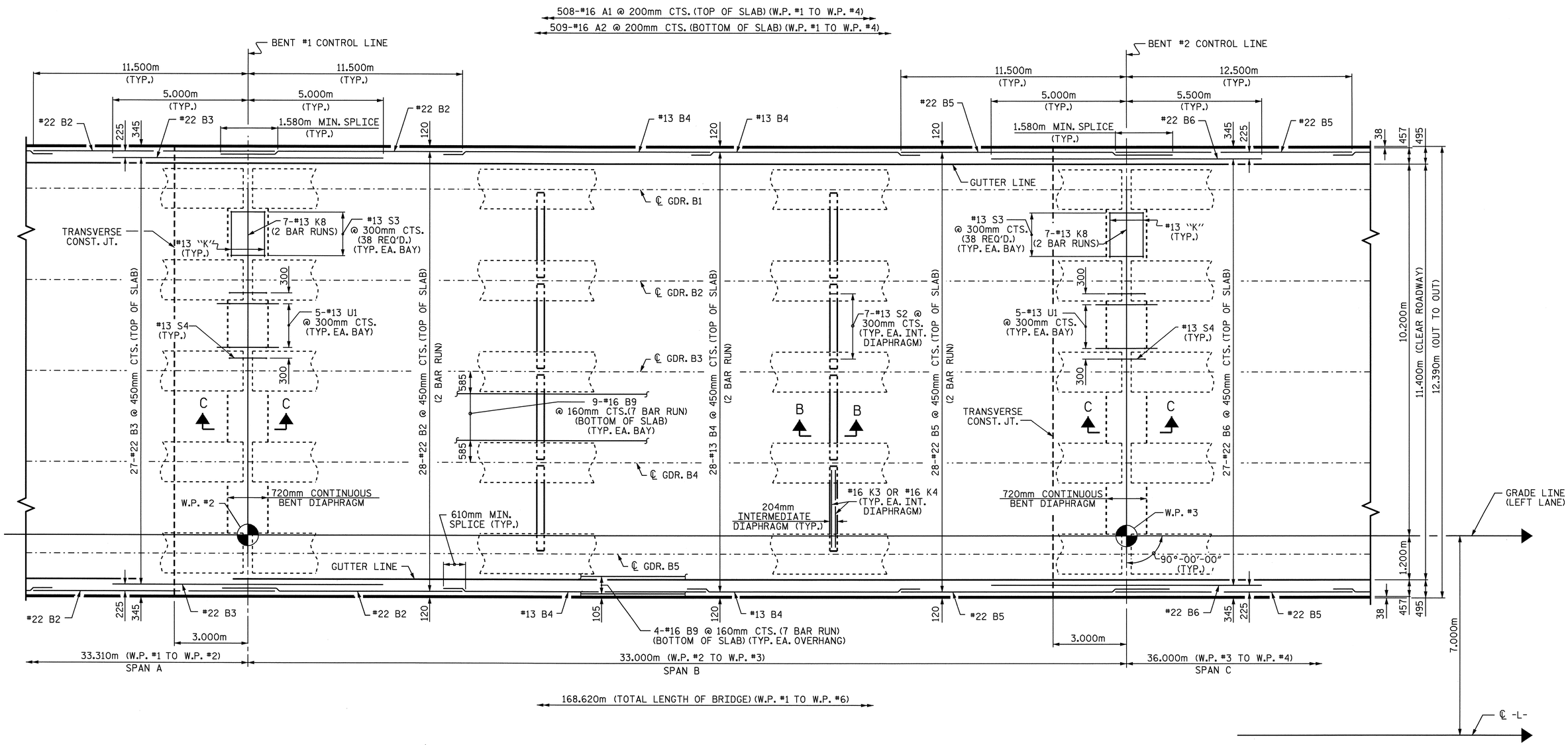

PLAN OF SPAN "B"

FOR LOCATION OF INTERMEDIATE DIAPHRAGMS, SEE "FRAMING PLAN."
FOR SECTIONS B-B AND C-C, SEE "TYPICAL SECTION" SHEET 2 OF 2.

PROJECT NO. R-2554BA
WAYNE COUNTY
STATION: 132+37.000 -L-

SHEET 2 OF 5

STATE OF NORTH CAROLINA
DEPARTMENT OF TRANSPORTATION
RALEIGH

SUPERSTRUCTURE

PLAN OF SPAN "B"
(LEFT LANE)

NORTH CAROLINA PROFESSIONAL SEAL 14045 ENGINEER TIMOTHY J. COGGINS
6/5/08

REVISIONS						SHEET NO.
NO.	BY:	DATE:	NO.	BY:	DATE:	S-389
1			3			TOTAL SHEETS
2			4			478

DRAWN BY : B.N.BARODAWALA DATE : 4-17-06
CHECKED BY : C. MILLER DATE : 7-06

25-APR-2008 16:05
k:\structures\azlzl\str#14\barodawala\r2554ba_sd_s#_14.dgn

STR. #14

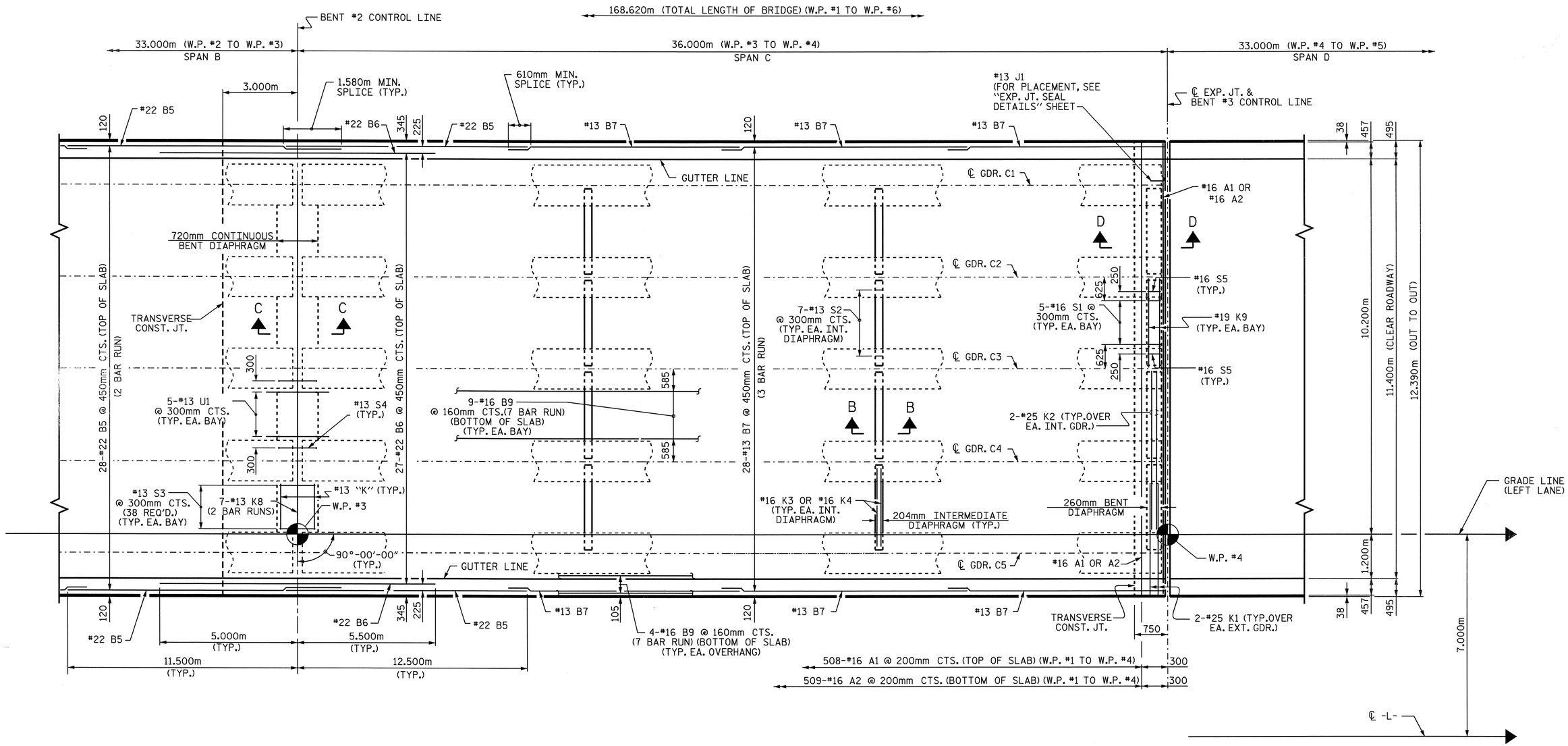

PLAN OF SPAN "C"

FOR LOCATION OF INTERMEDIATE DIAPHRAGMS, SEE "FRAMING PLAN."
FOR SECTIONS B-B, C-C AND D-D, SEE "TYPICAL SECTION" SHEET 2 OF 2.

PROJECT NO. R-2554BA
WAYNE COUNTY
STATION: 132+37.000 -L-

SHEET 3 OF 5

STATE OF NORTH CAROLINA
DEPARTMENT OF TRANSPORTATION
RALEIGH

SUPERSTRUCTURE

PLAN OF SPAN "C"

(LEFT LANE)

NORTH CAROLINA PROFESSIONAL SEAL 14045 ENGINEER TIMOTHY W. COGGINS
6/5/08

REVISIONS						SHEET NO.
NO.	BY:	DATE:	NO.	BY:	DATE:	S-390
1			3			TOTAL SHEETS
2			4			478

STR. #14

DRAWN BY : B.N.BARODAWALA DATE : 4-17-06
CHECKED BY : C. MILLER DATE : 7-06

25-APR-2008 16:05
k:\structures\azlzl\str#14\barodawala\r2554ba_sd_s#_14.dgn
jbwilson

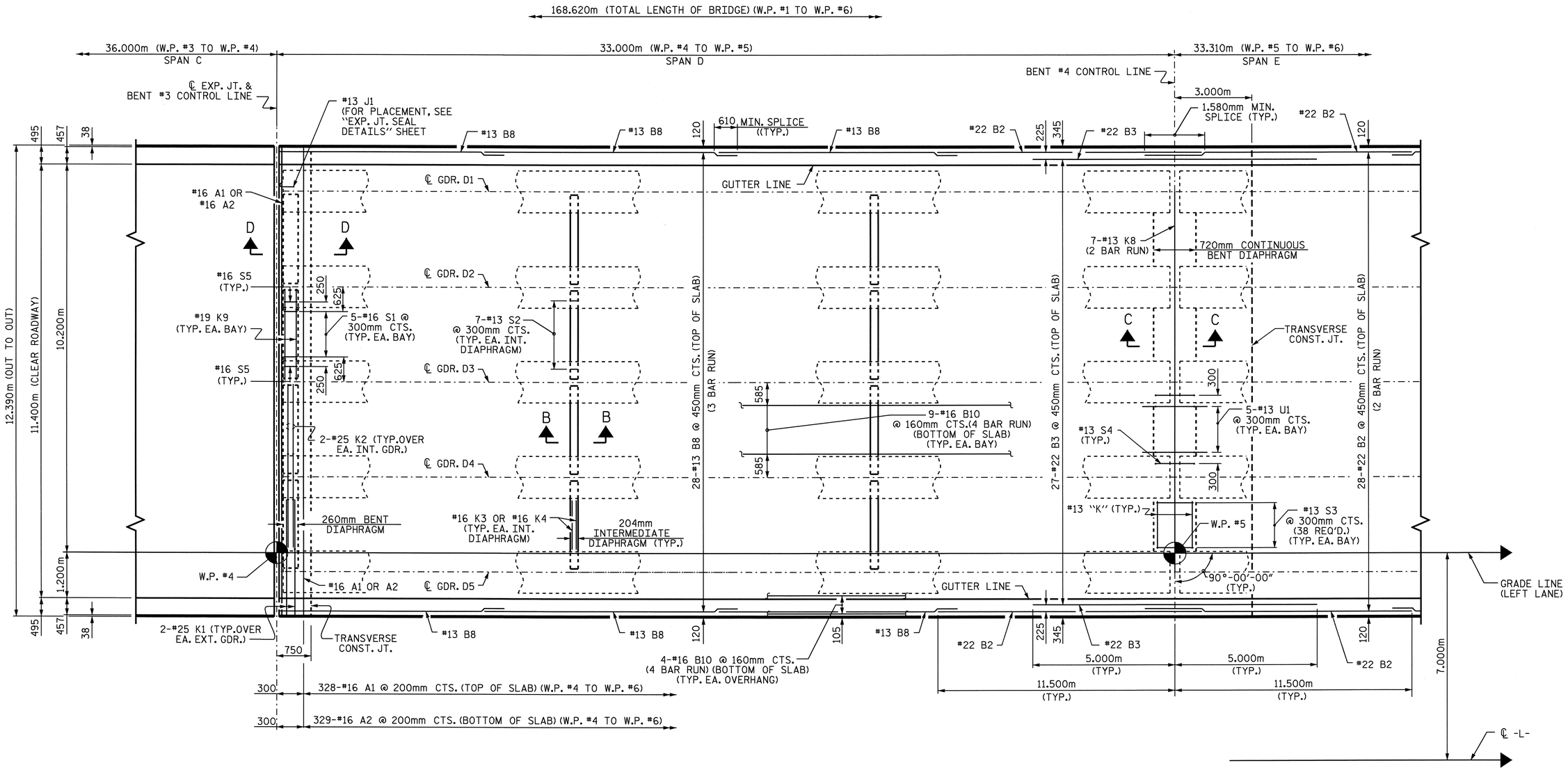

PLAN OF SPAN "D"

FOR LOCATION OF INTERMEDIATE DIAPHRAGMS, SEE "FRAMING PLAN."
FOR SECTIONS B-B, C-C AND D-D, SEE "TYPICAL SECTION" SHEET 2 OF 2.

PROJECT NO. R-2554BA
WAYNE COUNTY
STATION: 132+37.000 -L-

SHEET 4 OF 5

STATE OF NORTH CAROLINA
DEPARTMENT OF TRANSPORTATION
RALEIGH

SUPERSTRUCTURE

PLAN OF SPAN "D"

(LEFT LANE)

NORTH CAROLINA PROFESSIONAL SEAL 14045 ENGINEER TIMOTHY L. COGGINS
6/5/08

REVISIONS						SHEET NO.
NO.	BY:	DATE:	NO.	BY:	DATE:	S-391
1			3			TOTAL SHEETS
2			4			478

STR. #14

DRAWN BY : B.N.BARODAWALA DATE : 4-17-06
CHECKED BY : C. MILLER DATE : 7-06

25-APR-2008 STR#14
k:\structures\azlzl\str#14\barodawala\r2554ba_sd_s#_14.dgn
jbwilson

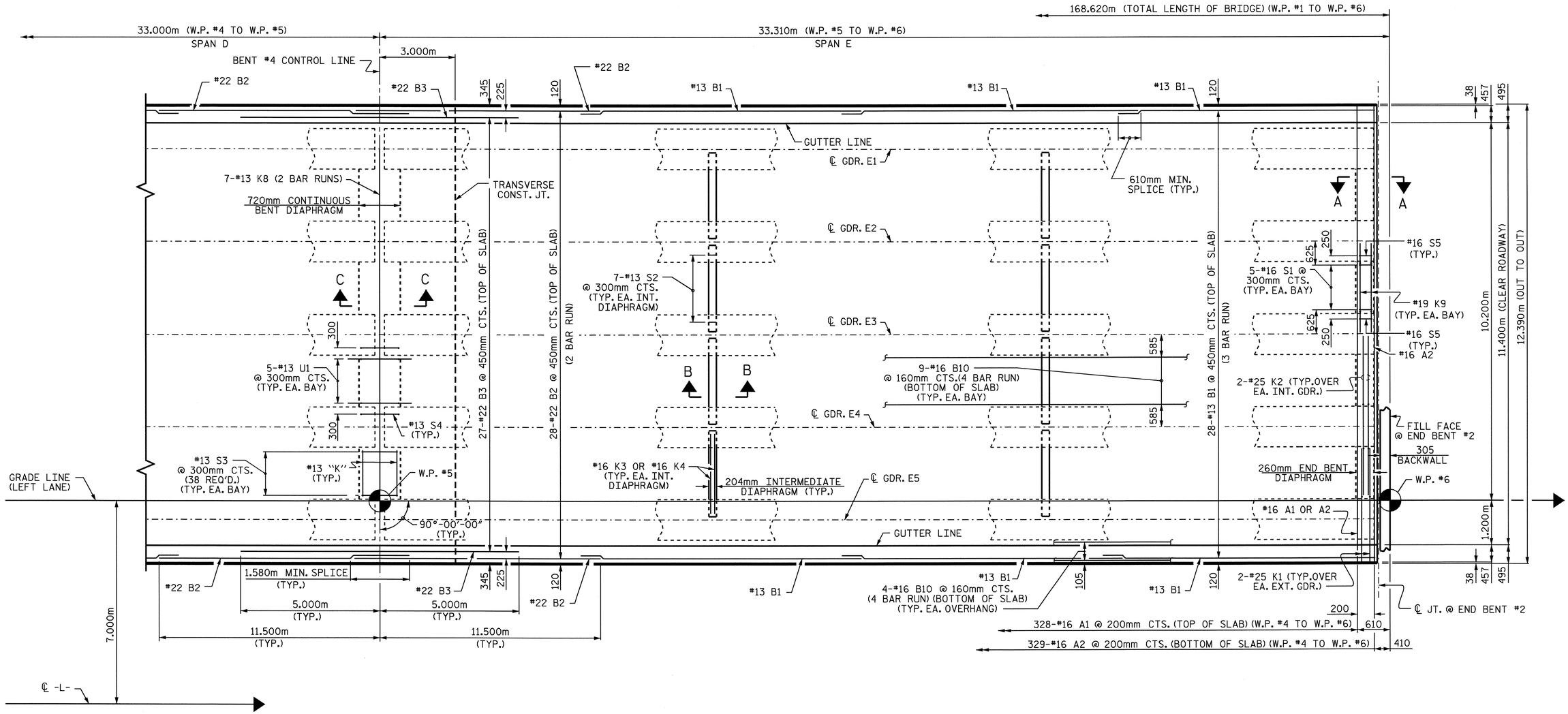

PLAN OF SPAN "E"

FOR LOCATION OF INTERMEDIATE DIAPHRAGMS, SEE "FRAMING PLAN."
FOR SECTIONS A-A, B-B AND C-C, SEE "TYPICAL SECTION" SHEET 2 OF 2.

PROJECT NO. R-2554BA
WAYNE COUNTY
STATION: 132+37.000 -L-

SHEET 5 OF 5

STATE OF NORTH CAROLINA
DEPARTMENT OF TRANSPORTATION
RALEIGH

SUPERSTRUCTURE

PLAN OF SPAN "E"
(LEFT LANE)

NORTH CAROLINA PROFESSIONAL SEAL 14045 ENGINEER TIMOTHY L. COBSINS
6/5/08

REVISIONS						SHEET NO.
NO.	BY:	DATE:	NO.	BY:	DATE:	S-392
1			3			TOTAL SHEETS
2			4			478

STR. #14

DRAWN BY : B.N.BARODAWALA DATE : 4-17-06
CHECKED BY : C. MILLER DATE : 7-06

25-APR-2008 16:04
k:\structures\azlzl\str#14\barodawala\r2554ba_sd_s#_14.dgn
jbwilson

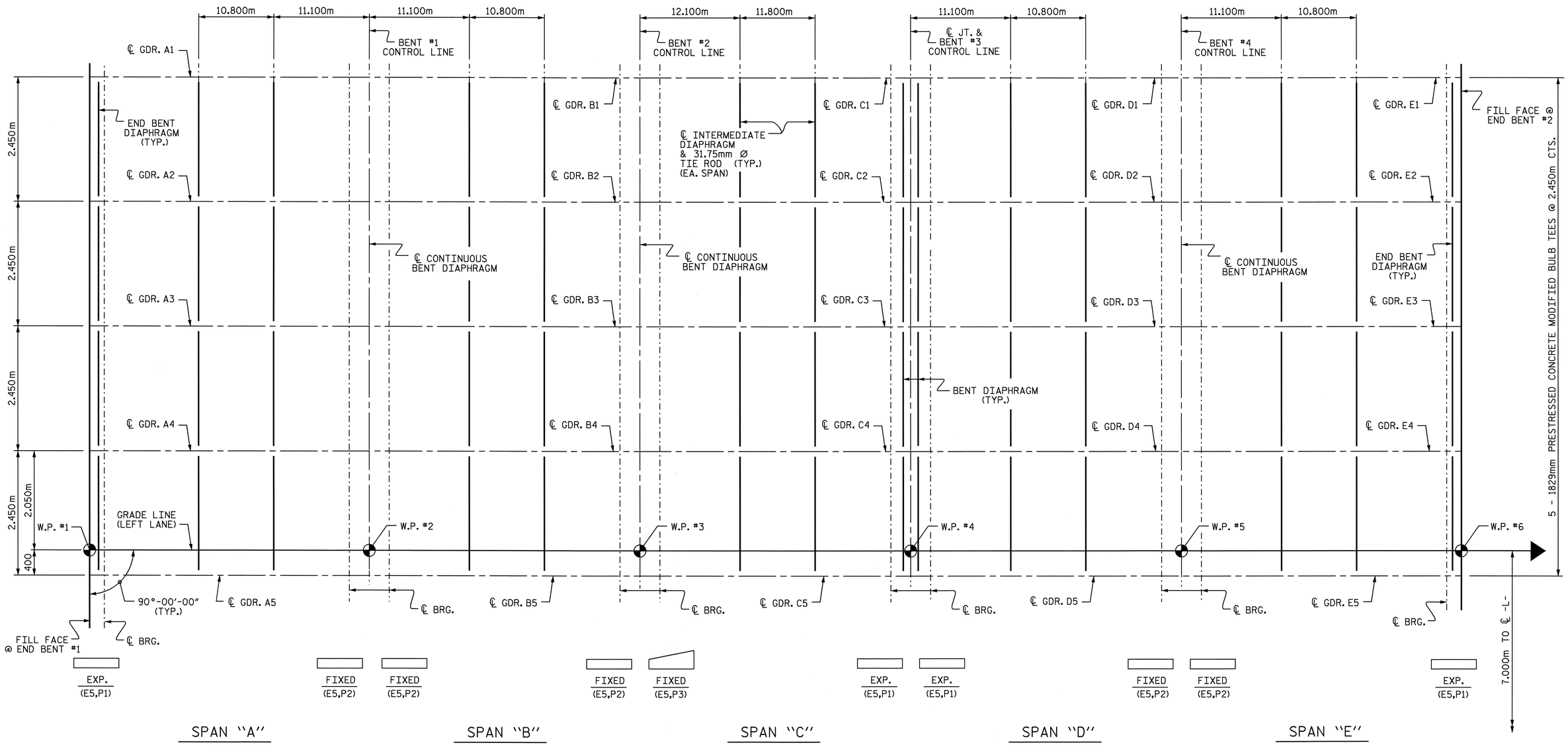

PROJECT NO. R-2554BA
WAYNE COUNTY
STATION: 132+37.000 -L-

GIRDER LAYOUT

STATE OF NORTH CAROLINA
DEPARTMENT OF TRANSPORTATION
RALEIGH

SUPERSTRUCTURE

GIRDER LAYOUT
(LEFT LANE)

NORTH CAROLINA PROFESSIONAL SEAL 14045 ENGINEER TIMOTHY L. COGGINS
6/5/08

REVISIONS						SHEET NO.
NO.	BY:	DATE:	NO.	BY:	DATE:	S-393
1			3			TOTAL SHEETS
2			4			478

DRAWN BY : B.N.BARODAWALA DATE : 4-17-06
CHECKED BY : C. MILLER DATE : 7-06

25-APR-2008 16:00
k:\structures\azlzl\str#14\barodawala\r2554ba_sd_fp_14.dgn
jbwilson

STR. #14

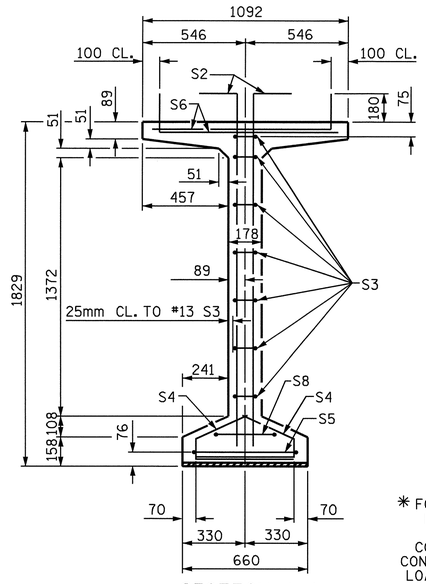

SECTION A-A

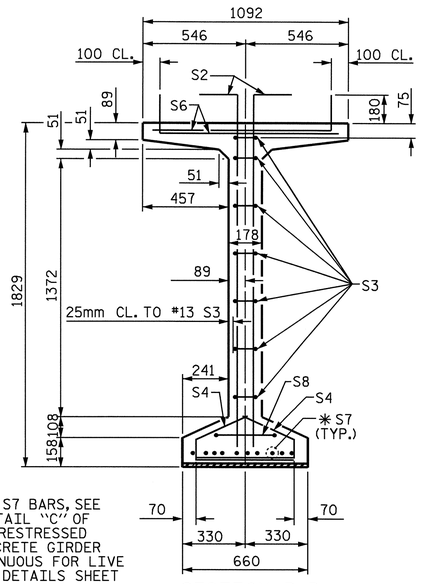

✳ FOR S7 BARS, SEE DETAIL "C" OF PRESTRESSED CONCRETE GIRDER CONTINUOUS FOR LIVE LOAD DETAILS SHEET

SECTION B-B

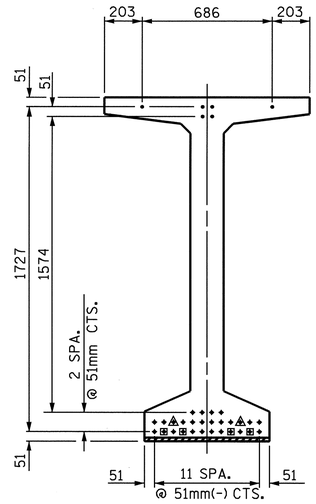

AT END OF GIRDERS

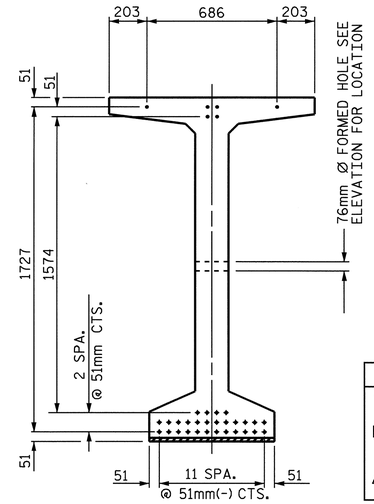

AT ℄ OF GIRDERS

15.24mm Ø LOW RELAXATION STRAND LAYOUT

DEBONDING LEGEND
• FULLY BONDED STRANDS
▣ STRANDS DEBONDED FOR 1.220m FROM END OF GIRDER
◬ STRANDS DEBONDED FOR 1.830m FROM END OF GIRDER

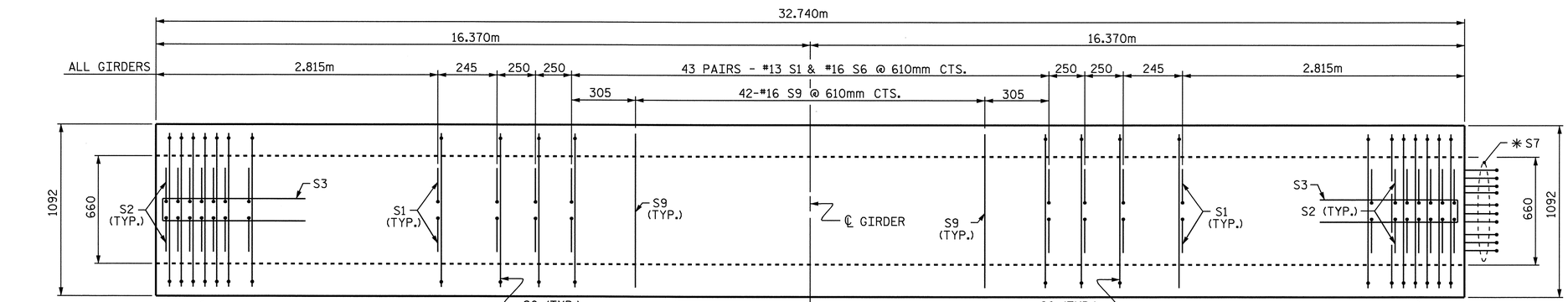

PLAN OF GIRDER

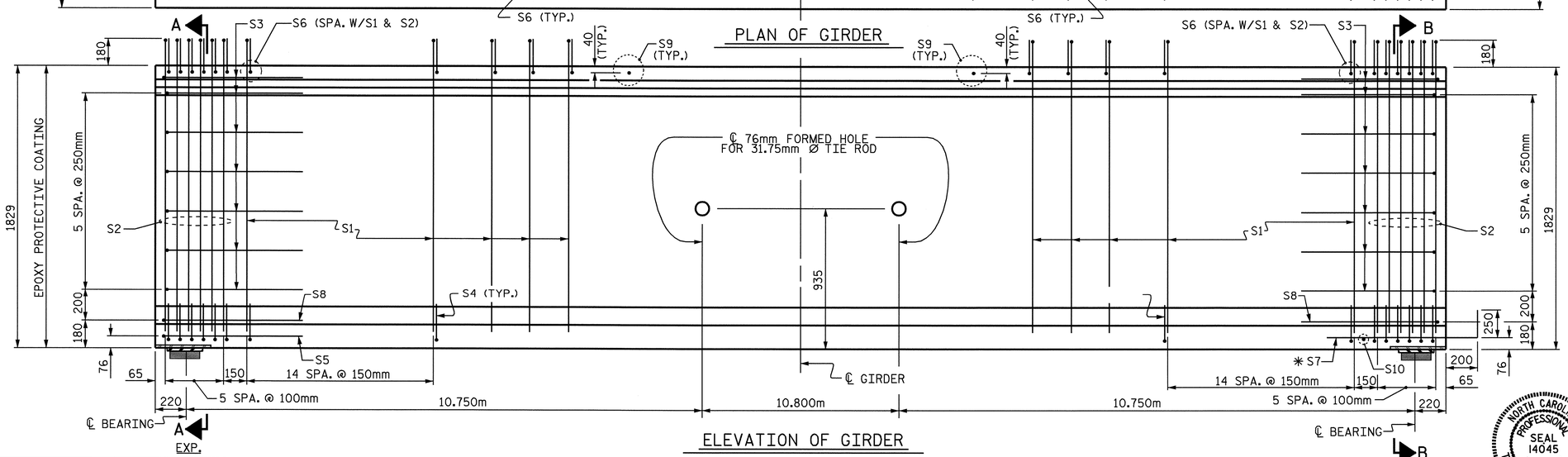

ELEVATION OF GIRDER

15.24mm Ø L.R. GRADE 270 STRANDS		
AREA (mm²)	ULTIMATE STRENGTH (kN PER STRAND)	APPLIED PRESTRESS (kN PER STRAND)
140.0	260.7	195.5

REINFORCING STEEL FOR ONE GIRDER

BAR	NUMBER	SIZE	TYPE	LENGTH	WEIGHT
S1	154	#13	1	2140	328
S2	24	#16	1	2140	80
S3	14	#13	2	2560	36
S4	84	#13	3	920	77
S5	1	#16	2	3000	5
S6	178	#16	1	1160	320
✳ S7	10	#16	STR	1120	17
S8	2	#16	2	2740	9
S9	42	#16	STR	980	64
S10	1	#10	STR	560	1

✳ NOTE: S7 BARS SHALL BE BENT BEFORE SHIPMENT. HEAT BENDING SHALL NOT BE ALLOWED.

BAR TYPES

ALL BAR DIMENSIONS ARE OUT-TO-OUT

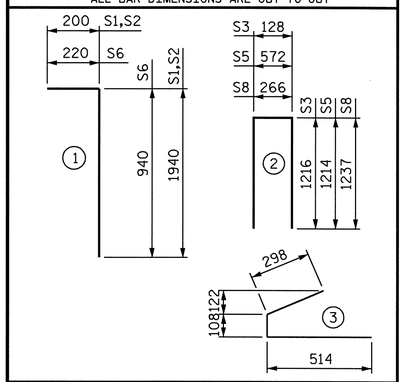

QUANTITIES FOR ONE GIRDER

	REINFORCING STEEL	51.7 MPa CONCRETE	15.24mm Ø L.R. STRANDS
	kg	m³	No.
GIRDER	937	17.6	34

GIRDERS REQUIRED

NUMBER	LENGTH	TOTAL LENGTH
15	32.740m	491.100m

PROJECT NO. R-2554BA

WAYNE COUNTY

STATION: 132+37.000 -L-

SHEET 1 OF 4

STATE OF NORTH CAROLINA
DEPARTMENT OF TRANSPORTATION
RALEIGH

1829mm PRESTRESSED CONCRETE MODIFIED BULB TEE CONTINUOUS FOR LIVE LOAD (WITH 15.24mm Ø PARTIALLY DEBONDED STRANDS) SPAN A, D & E

(LEFT LANE)

NORTH CAROLINA PROFESSIONAL SEAL 14045 ENGINEER TIMOTHY L. LOGGINS

Timothy L. Loggins 6/5/08

REVISIONS						SHEET NO.
NO.	BY:	DATE:	NO.	BY:	DATE:	S-394
1			3			TOTAL SHEETS
2			4			478

ASSEMBLED BY : B.N.BARODAWALA DATE : 7-12-06	
CHECKED BY : C. MILLER DATE : 8-06	
DRAWN BY : RWW 9/19/02	ADDED 9/19/02
CHECKED BY : GM 9/19/02	REV. 5/1/06 TLA/GM

05-JUN-2008 09:36
h:\structures\azizi\str#14\finalplans\R2554BA_sd_BK_14.dgn
bbarodawala

STR. #14

STD. NO. PCGD10SM

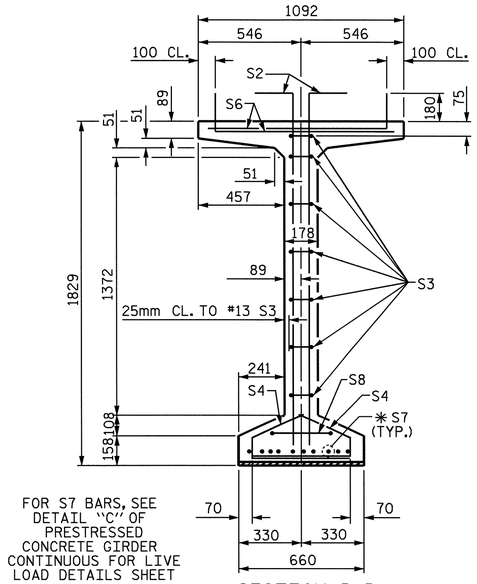

SECTION B-B

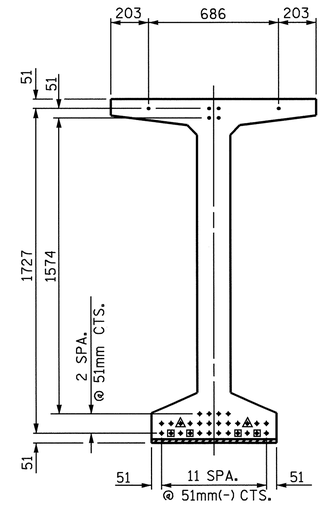

AT END OF GIRDERS

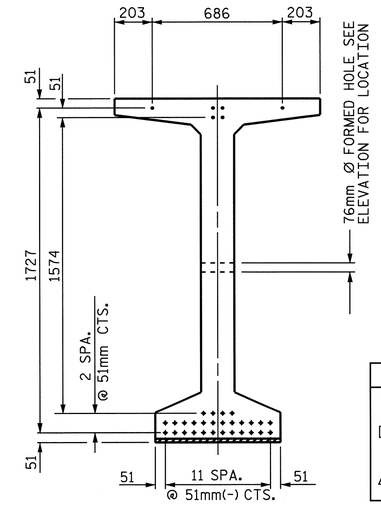

AT ℄ OF GIRDERS

15.24mm Ø LOW RELAXATION STRAND LAYOUT

DEBONDING LEGEND

- • FULLY BONDED STRANDS
- ▣ STRANDS DEBONDED FOR 1.220m FROM END OF GIRDER
- ◬ STRANDS DEBONDED FOR 1.830m FROM END OF GIRDER

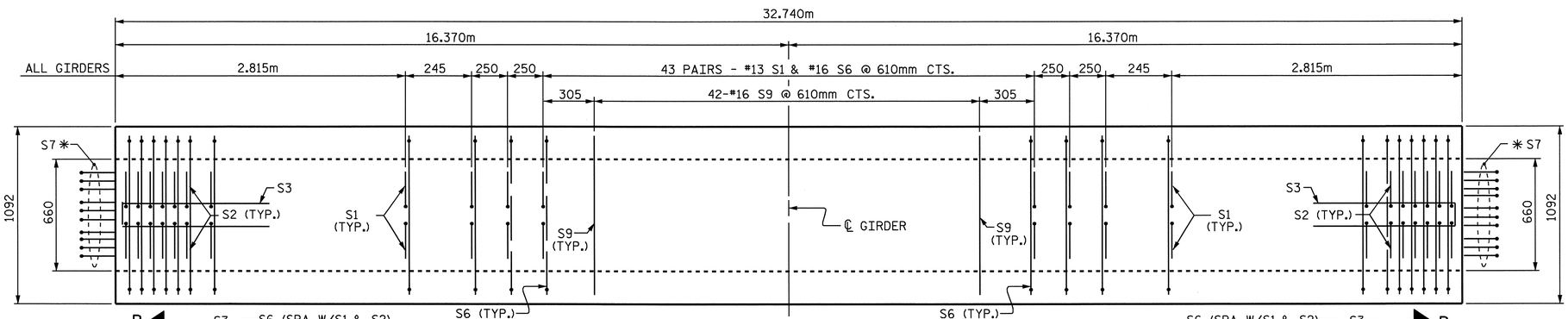

PLAN OF GIRDER

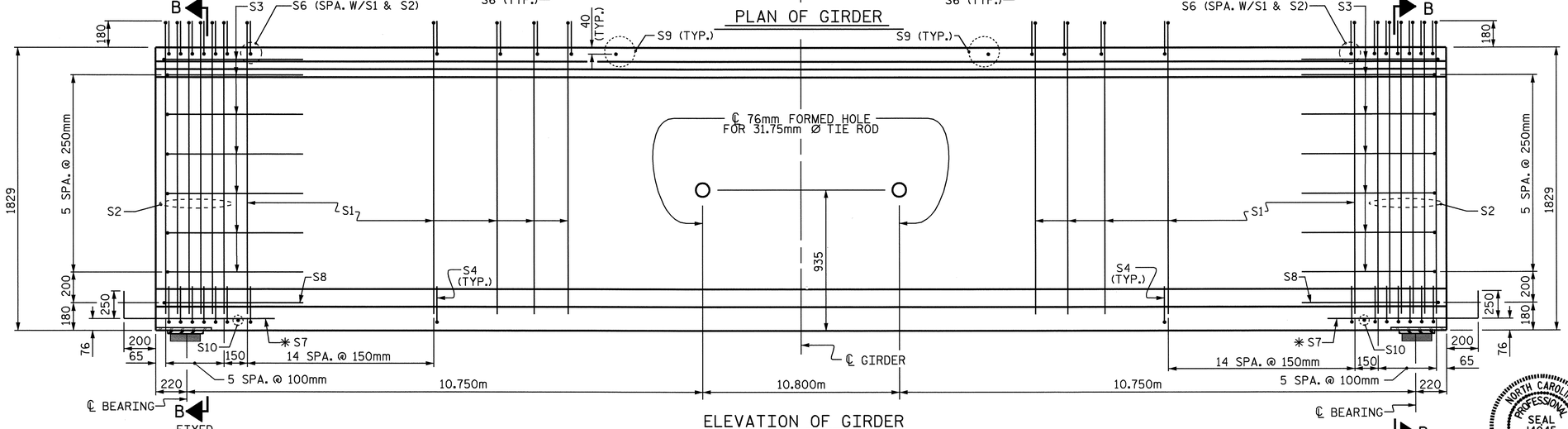

ELEVATION OF GIRDER

15.24mm Ø L.R. GRADE 270 STRANDS

AREA (mm^2)	ULTIMATE STRENGTH (kN PER STRAND)	APPLIED PRESTRESS (kN PER STRAND)
140.0	260.7	195.5

REINFORCING STEEL FOR ONE GIRDER

BAR	NUMBER	SIZE	TYPE	LENGTH	WEIGHT
S1	154	#13	1	2140	328
S2	24	#16	1	2140	80
S3	14	#13	2	2560	36
S4	84	#13	3	920	77
S6	178	#16	1	1160	320
✳ S7	20	#16	STR	1120	35
S8	2	#16	2	2740	9
S9	42	#16	STR	980	64
S10	2	#10	STR	560	1

✳ NOTE: S7 BARS SHALL BE BENT BEFORE SHIPMENT. HEAT BENDING SHALL NOT BE ALLOWED.

BAR TYPES

ALL BAR DIMENSIONS ARE OUT-TO-OUT

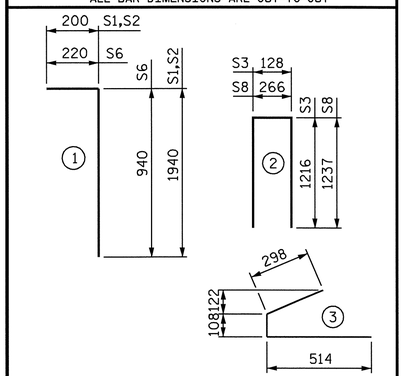

QUANTITIES FOR ONE GIRDER

	REINFORCING STEEL	51.7 MPa CONCRETE	15.24mm Ø L.R. STRANDS
	kg	m^3	No.
GIRDER	950	17.6	34

GIRDERS REQUIRED

NUMBER	LENGTH	TOTAL LENGTH
5	32.740m	163.700m

PROJECT NO. R-2554BA

WAYNE COUNTY

STATION: 132+37.000 -L-

SHEET 2 OF 4

STATE OF NORTH CAROLINA
DEPARTMENT OF TRANSPORTATION
RALEIGH

1829mm PRESTRESSED CONCRETE MODIFIED BULB TEE CONTINUOUS FOR LIVE LOAD (WITH 15.24mm Ø PARTIALLY DEBONDED STRANDS)

SPAN B
(LEFT LANE)

NORTH CAROLINA PROFESSIONAL SEAL 14045 ENGINEER TIMOTHY L. COGGINS

6/5/08

REVISIONS						SHEET NO.
NO.	BY:	DATE:	NO.	BY:	DATE:	S-395
1			3			TOTAL SHEETS
2			4			478

STR. #14

STD. NO. PCGD10SM

ASSEMBLED BY : B.N.BARODAWALA	DATE : 7-12-06
CHECKED BY : C. MILLER	DATE : 8-06
DRAWN BY : RWW 9/19/02	ADDED 9/19/02
CHECKED BY : GM 9/19/02	REV. 5/1/06 TLA/GM

05-JUN-2008 09:36
h:\structures\azizi\str#14\finalplans\R2554BA_sd_BK_14.dgn
bbarodawala

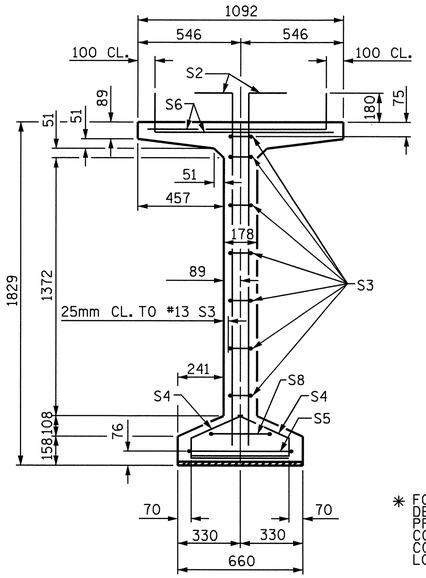

SECTION A-A

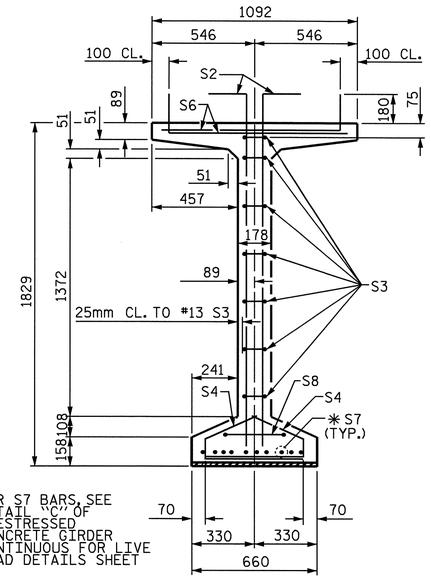

✱ FOR S7 BARS, SEE DETAIL "C" OF PRESTRESSED CONCRETE GIRDER CONTINUOUS FOR LIVE LOAD DETAILS SHEET

SECTION B-B

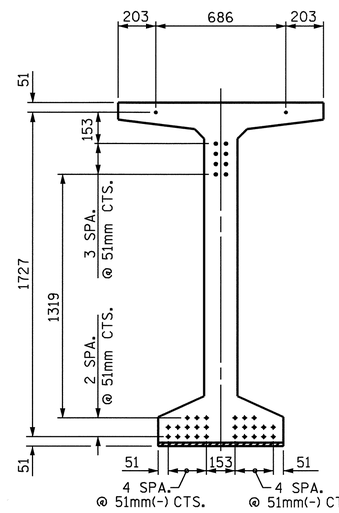

AT END OF GIRDERS

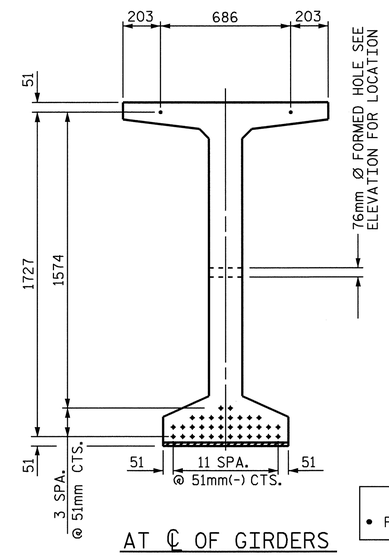

AT ℄ OF GIRDERS

15.24mm Ø LOW RELAXATION STRAND LAYOUT

DEBONDING LEGEND

- FULLY BONDED STRANDS

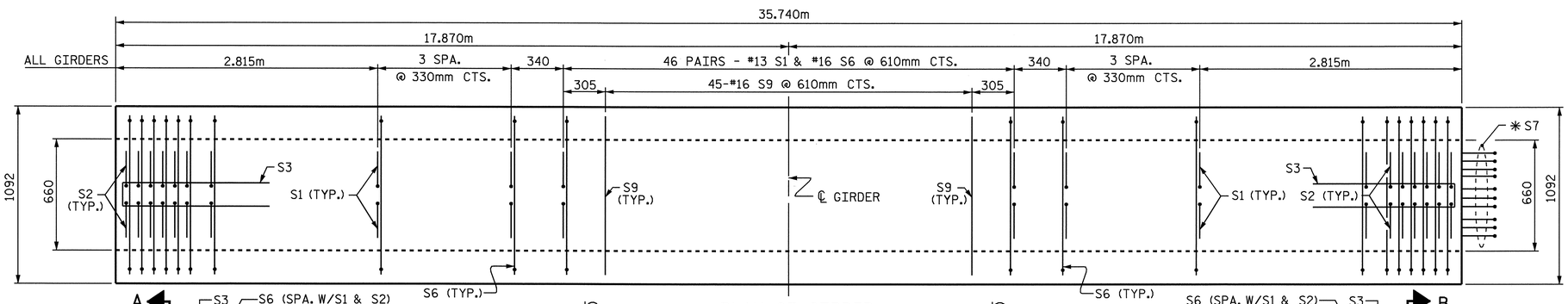

PLAN OF GIRDER

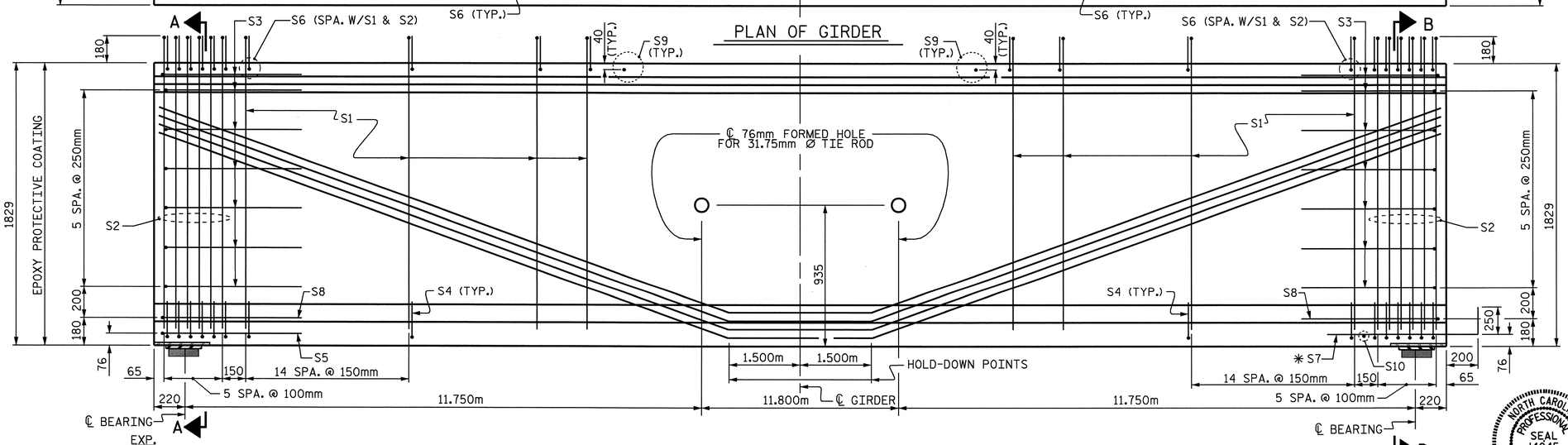

ELEVATION OF GIRDER

15.24mm Ø L.R. GRADE 270 STRANDS

AREA (mm^2)	ULTIMATE STRENGTH (kN PER STRAND)	APPLIED PRESTRESS (kN PER STRAND)
140.0	260.7	195.5

REINFORCING STEEL FOR ONE GIRDER

BAR	NUMBER	SIZE	TYPE	LENGTH	WEIGHT
S1	164	#13	1	2140	349
S2	24	#16	1	2140	80
S3	14	#13	2	2560	36
S4	84	#13	3	920	77
S5	1	#16	2	3000	5
S6	188	#16	1	1160	338
✱ S7	10	#16	STR	1120	17
S8	2	#16	2	2740	9
S9	45	#16	STR	980	68
S10	1	#10	STR	560	1

✱ NOTE: S7 BARS SHALL BE BENT BEFORE SHIPMENT. HEAT BENDING SHALL NOT BE ALLOWED.

BAR TYPES

ALL BAR DIMENSIONS ARE OUT-TO-OUT

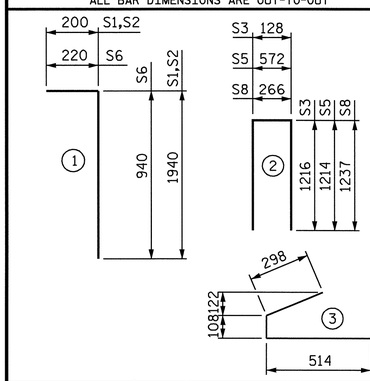

QUANTITIES FOR ONE GIRDER

	REINFORCING STEEL	51.7 MPa CONCRETE	15.24mm Ø L.R. STRANDS
	kg	m^3	No.
GIRDER	980	19.2	36

GIRDERS REQUIRED

NUMBER	LENGTH	TOTAL LENGTH
5	35.740m	178.700m

PROJECT NO. R-2554BA

WAYNE COUNTY

STATION: 132+37.000 -L-

SHEET 3 OF 4

STATE OF NORTH CAROLINA
DEPARTMENT OF TRANSPORTATION
RALEIGH

1829mm PRESTRESSED CONCRETE MODIFIED BULB TEE CONTINUOUS FOR LIVE LOAD

SPAN C
(LEFT LANE)

NORTH CAROLINA PROFESSIONAL SEAL 14045 ENGINEER TIMOTHY A. GOSCINS

6/5/08

REVISIONS						SHEET NO.
NO.	BY:	DATE:	NO.	BY:	DATE:	S-396
1			3			TOTAL SHEETS
2			4			478

STR. #14

ASSEMBLED BY : B.N.BARODAWALA	DATE : 7-12-06
CHECKED BY : C. MILLER	DATE : 8-06
DRAWN BY : RWW 9/19/02	ADDED 9/19/02
CHECKED BY : GM 9/19/02	REV. 5/1/06 TLA/GM

05-JUN-2008 09:36
h:\structures\azizi\str#14\final plans\R2554BA_sd_BK_14.dgn
bbarodawala

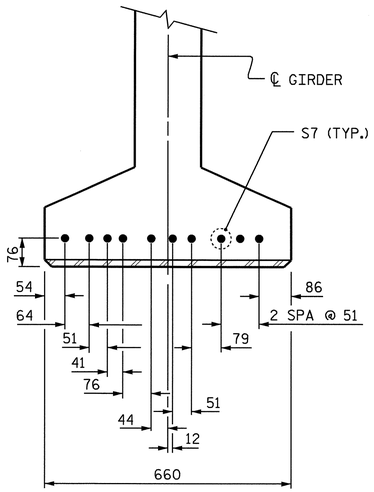

DETAIL "C"

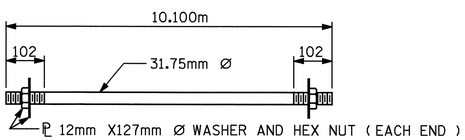

31.75mm Ø TIE ROD ASSEMBLY

(10 COMPLETE ASSEMBLIES REQUIRED)

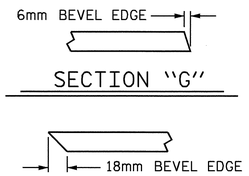

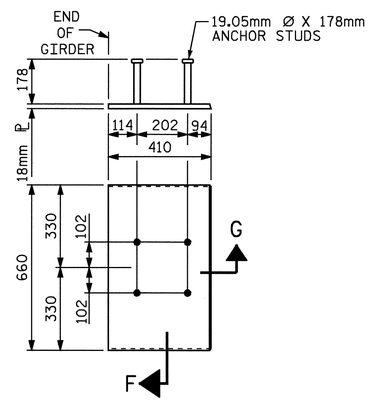

EMBEDDED PLATE "B-1" DETAILS FOR 1829mm MODIFIED BULB TEES

(2 REQ'D PER GIRDER)

NOTES

ALL PRESTRESSING STRANDS SHALL BE 7-WIRE LOW-RELAXATION GRADE 270 STRANDS AND SHALL CONFORM TO AASHTO M203M EXCEPT FOR SAMPLING REQUIREMENTS WHICH SHALL BE IN ACCORDANCE WITH THE STANDARD SPECIFICATIONS.

TIE ROD ASSEMBLY SHALL BE AASHTO M270 GRADE 250 STRUCTURAL STEEL.

ALL REINFORCING STEEL SHALL BE GRADE 420.

APPLY EPOXY PROTECTIVE COATING TO END OF GIRDER SURFACES INDICATED IN ELEVATION VIEW.

EMBEDDED PLATE "B-1" SHALL BE GALVANIZED IN ACCORDANCE WITH THE STANDARD SPECIFICATIONS. BEVEL EDGES OF PLATE "B-1" TO GIVE CLOSE FIT BUT NOT TIGHT FIT TO STEEL CASTING FORM.

ANCHOR STUDS SHALL CONFORM TO AASHTO M169 GRADES 1010 THROUGH 1020 OR APPROVED EQUAL, AND SHALL MEET THE TYPE "B" REQUIREMENTS OF SUBSECTION 7.3 OF THE ANSI/AASHTO/AWS D1.5 BRIDGE WELDING CODE.

AT ENDS OF GIRDERS TO BE EMBEDDED IN CONCRETE DIAPHRAGMS OR END WALLS, PRESTRESSING STRANDS MAY EXTEND A MAXIMUM OF 50mm BEYOND THE GIRDER ENDS. OTHERWISE, PRESTRESSING STRANDS SHALL BE CUT FLUSH WITH THE GIRDER ENDS.

THE TRANSFER OF LOAD FROM THE ANCHORAGES TO THE GIRDER SHALL BE DONE WHEN CONCRETE HAS REACHED A COMPRESSIVE STRENGTH OF NOT LESS THAN 38.6 MPa FOR GIRDERS IN SPANS A, B, D AND E.

THE TRANSFER OF LOAD FROM THE ANCHORAGES TO THE GIRDER SHALL BE DONE WHEN CONCRETE HAS REACHED A COMPRESSIVE STRENGTH OF NOT LESS THAN 41.3 MPa FOR SPAN C.

DEPENDING ON THE TYPE OF SYSTEM USED TO SUPPORT THE DECK SLAB FORMS, PRESET ANCHORS MAY BE NECESSARY IN THE PRESTRESSED CONCRETE GIRDER.

THE TOP SURFACE OF THE GIRDER, EXCLUDING THE OUTSIDE 100mm, SHALL BE RAKED TO A DEPTH OF 6mm.

WHEN DRAPED STRANDS ARE DETAILED, THE LONGITUDINAL LOCATION OF THE HOLD DOWN DEVICES SHALL BE WITHIN 150mm OF THE LOCATION SHOWN AND THE CENTER OF GRAVITY OF THE GROUP OF DRAPED STRANDS SHALL BE LOCATED WITHIN 13mm OF THE THEORETICAL LOCATION SHOWN.

A 51mm x 51mm CHAMFER IS ALLOWED AT THE INTERSECTION OF THE WEB AND THE BOTTOM FLANGE OF THE 1829mm MODIFIED BULB TEES ONLY.

THE CONTRACTOR HAS THE OPTION TO PROVIDE, AT NO ADDITIONAL COST TO THE DEPARTMENT, 2 ADDITIONAL STRANDS AT THE TOP OF THE GIRDER TO FACILITATE TYING OF THE REINFORCING STEEL. THESE STRANDS SHALL BE PULLED TO A LOAD OF 20 Kn.

FOR CRACK REPAIR OF PRESTRESSED CONCRETE GIRDERS, SEE SPECIAL PROVISIONS.

THE UPLIFT FORCE FOR GIRDERS IN SPAN "C" DUE TO DRAPED STRANDS IS 135.5 KN.

FOR PRESTRESSED CONCRETE MEMBERS, SEE SPECIAL PROVISIONS.

PROJECT NO. R-2554BA
WAYNE COUNTY
STATION: 132+37.000 -L-

SHEET 4 OF 4

STATE OF NORTH CAROLINA
DEPARTMENT OF TRANSPORTATION
RALEIGH

STANDARD
PRESTRESSED CONCRETE GIRDER
CONTINUOUS FOR LIVE LOAD
DETAILS
(LEFT LANE)

NORTH CAROLINA PROFESSIONAL SEAL 14045 ENGINEER TIMOTHY L. COGGINS
Timothy L. Coggins 6/5/08

REVISIONS						SHEET NO.
NO.	BY:	DATE:	NO.	BY:	DATE:	S-397
1			3			TOTAL SHEETS
2			4			478

ASSEMBLED BY : B.N.BARODAWALA DATE : 7-12-06	
CHECKED BY : C. MILLER DATE : 8-06	
DRAWN BY : ELR 11/91	REV. 10/17/00 RWW/LES
CHECKED BY : GRP 11/91	REV. 7/10/01RR LES/RDR
	REV. 5/1/06 TLA/GM

25-APR-2008 16:03
k:\structures\azlzl\str#14\barodawala\r2554ba_sd_bk_14.dgn
jbwilson

STR. #14

STD. NO. PCG11SM

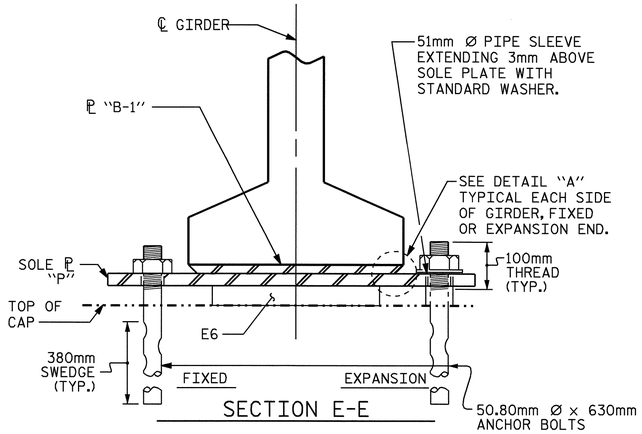

SECTION E-E

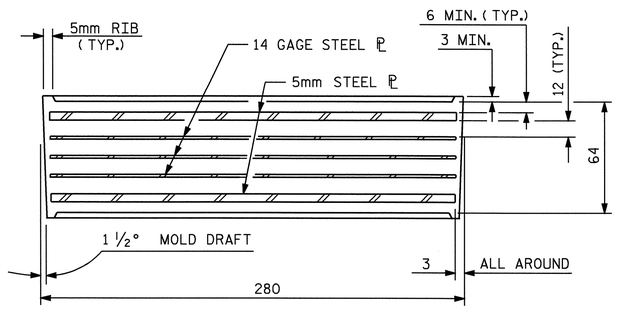

TYPICAL SECTION OF ELASTOMERIC BEARINGS

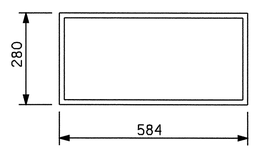

E5 (50 REQ'D)

PLAN VIEW OF ELASTOMERIC BEARING

TYPE VI

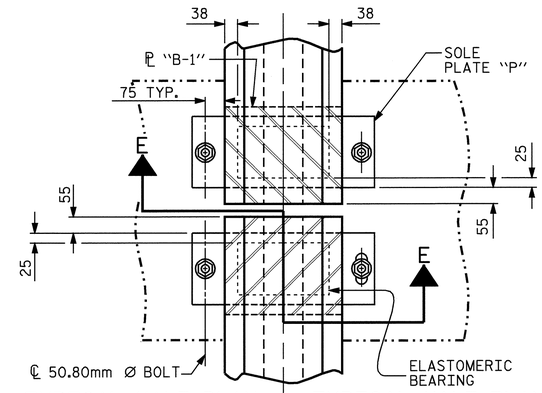

TYPICAL HALF-PLAN (SHOWING CONTINUOUS BENT)

TYPICAL HALF-PLAN (SHOWING SIMPLE SPAN BENT)

—LOAD RATINGS—	
	MAX.D.L.+ L.L.
TYPE VI	936 kN

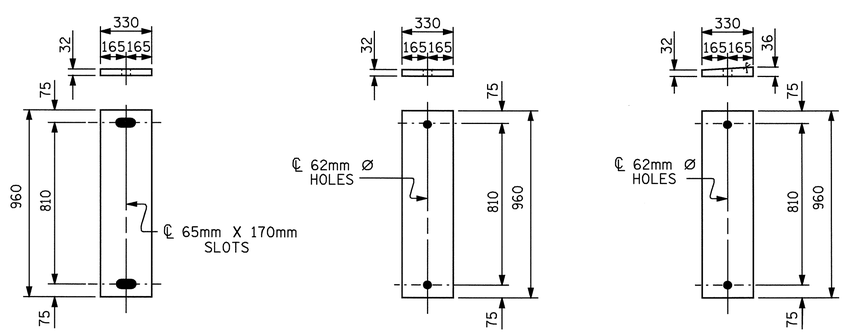

P1 (EXPANSION) (20 REQ'D)

P2 (FIXED) (25 REQ'D)

P3 (FIXED) (5 REQ'D)

SOLE PLATE DETAILS ("P")

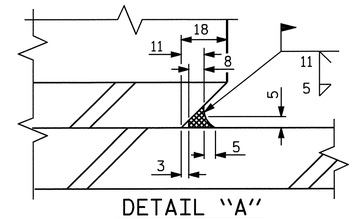

DETAIL "A"

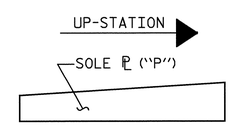

SOLE ℗ PLACEMENT DETAIL

NOTES

AT ALL FIXED POINTS OF SUPPORT, NUTS FOR ANCHOR BOLTS ARE TO BE TIGHTENED FINGER TIGHT AND THEN BACKED OFF 1/2 TURN. THE THREAD OF THE NUT AND BOLT SHALL THEN BE BURRED WITH A SHARP POINTED TOOL.

THE 51mm Ø PIPE SLEEVE SHALL BE CUT FROM SCHEDULE 40 PVC PLASTIC PIPE. THE PVC PLASTIC PIPE SHALL MEET THE REQUIREMENTS OF ASTM D1785.

STEEL SOLE PLATES, ANCHOR BOLTS, NUTS, AND WASHERS SHALL BE GALVANIZED IN ACCORDANCE WITH THE STANDARD SPECIFICATIONS.

PRIOR TO WELDING, GRIND THE GALVANIZED SURFACE OF THE PORTION OF THE EMBEDDED PLATE AND SOLE PLATE THAT ARE TO BE WELDED. AFTER WELDING, DAMAGED GALVANIZED SURFACES SHALL BE REPAIRED IN ACCORDANCE WITH THE STANDARD SPECIFICATIONS.

WHEN WELDING THE SOLE PLATE TO THE EMBEDDED PLATE IN THE GIRDER, USE TEMPERATURE INDICATING WAX PENS, OR OTHER SUITABLE MEANS, TO ENSURE THAT THE TEMPERATURE OF THE SOLE PLATE DOES NOT EXCEED 149°C. TEMPERATURES ABOVE THIS MAY DAMAGE THE ELASTOMER.

SOLE PLATE "P", BOLTS, NUTS, WASHERS, AND PIPE SLEEVE SHALL BE INCLUDED IN THE PAY ITEM FOR PRESTRESSED CONCRETE GIRDERS.

ANCHOR BOLTS SHALL MEET THE REQUIREMENTS OF ASTM A449. NUTS SHALL MEET THE REQUIREMENTS OF AASHTO M291M-12 OR AASHTO M292M-2H. WASHERS SHALL MEET THE REQUIREMENTS OF AASHTO M293M. SHOP DRAWINGS ARE NOT REQUIRED FOR ANCHOR BOLTS, NUTS AND WASHERS. SHOP INSPECTION IS REQUIRED.

ALL SURFACES OF BEARING PLATES SHALL BE SMOOTH AND STRAIGHT.

PROJECT NO. R-2554BA
WAYNE COUNTY
STATION: 132+37.000 -L-

STATE OF NORTH CAROLINA
DEPARTMENT OF TRANSPORTATION
RALEIGH

STANDARD ELASTOMERIC BEARING DETAILS

PRESTRESSED CONCRETE GIRDER SUPERSTRUCTURE (LEFT LANE)

NORTH CAROLINA PROFESSIONAL SEAL 14045 ENGINEER TIMOTHY L. COGGINS
Timothy L. Coggins 6/5/08

REVISIONS								SHEET NO.
NO.	BY:	DATE:	NO.	BY:	DATE:			S-398
1			3					TOTAL SHEETS
2			4					478

STR. #14

STD. NO. EB4SM

ASSEMBLED BY : B.N.BARODAWALA	DATE : 7-12-06
CHECKED BY : C. MILLER	DATE : 8-06
DRAWN BY : EEM 2/97	REV. 8/16/99 RWW/LES
CHECKED BY : VAP 2/97	REV. 10/17/00 RWW/LES
	REV. 5/1/06 TLA/GM

25-APR-2008 16:03
k:\structures\azlzl\str#14\barodawala\r2554ba_sd_bk_14.dgn
jbwilson

DEAD LOAD DEFLECTION TABLE FOR SPANS A, B, D AND E

15.24mm Ø LOW RELAXATION	GIRDER 1										
TENTH POINTS	0	.1	.2	.3	.4	.5	.6	.7	.8	.9	0
CAMBER (GIRDER ALONE IN PLACE) ↑	0.000	0.027	0.051	0.069	0.081	0.085	0.081	0.069	0.051	0.027	0.000
✱ DEFLECTION DUE TO SUPERIMPOSED D.L. ↓	0.000	0.011	0.021	0.029	0.034	0.037	0.034	0.029	0.021	0.011	0.000
FINAL CAMBER ↑	0	16	30	40	47	48	47	40	30	16	0

15.24mm Ø LOW RELAXATION	GIRDERS 2 & 3 & 4										
TENTH POINTS	0	.1	.2	.3	.4	.5	.6	.7	.8	.9	0
CAMBER (GIRDER ALONE IN PLACE) ↑	0.000	0.027	0.051	0.069	0.081	0.085	0.081	0.069	0.051	0.027	0.000
✱ DEFLECTION DUE TO SUPERIMPOSED D.L. ↓	0.000	0.010	0.020	0.027	0.032	0.034	0.032	0.027	0.020	0.010	0.000
FINAL CAMBER ↑	0	17	31	42	49	51	49	42	31	17	0

15.24mm Ø LOW RELAXATION	GIRDER 5										
TENTH POINTS	0	.1	.2	.3	.4	.5	.6	.7	.8	.9	0
CAMBER (GIRDER ALONE IN PLACE) ↑	0.000	0.027	0.051	0.069	0.081	0.085	0.081	0.069	0.051	0.027	0.000
✱ DEFLECTION DUE TO SUPERIMPOSED D.L. ↓	0.000	0.011	0.022	0.030	0.035	0.037	0.035	0.030	0.022	0.011	0.000
FINAL CAMBER ↑	0	16	29	39	46	48	46	39	29	16	0

✱ INCLUDES FUTURE WEARING SURFACE IN SUPERIMPOSED DEAD LOAD.
ALL VALUES ARE SHOWN IN METERS, EXCEPT "FINAL CAMBER" WHICH IS SHOWN IN MILLIMETERS.

DEAD LOAD DEFLECTION TABLE FOR SPAN C

15.24mm Ø LOW RELAXATION	GIRDER 1										
TENTH POINTS	0	.1	.2	.3	.4	.5	.6	.7	.8	.9	0
CAMBER (GIRDER ALONE IN PLACE) ↑	0.000	0.039	0.073	0.100	0.117	0.123	0.117	0.100	0.073	0.039	0.000
✱ DEFLECTION DUE TO SUPERIMPOSED D.L. ↓	0.000	0.016	0.030	0.042	0.049	0.052	0.049	0.042	0.030	0.016	0.000
FINAL CAMBER ↑	0	23	43	58	68	71	68	58	43	23	0

15.24mm Ø LOW RELAXATION	GIRDERS 2 & 3 & 4										
TENTH POINTS	0	.1	.2	.3	.4	.5	.6	.7	.8	.9	0
CAMBER (GIRDER ALONE IN PLACE) ↑	0.000	0.039	0.073	0.100	0.117	0.123	0.117	0.100	0.073	0.039	0.000
✱ DEFLECTION DUE TO SUPERIMPOSED D.L. ↓	0.000	0.015	0.028	0.039	0.046	0.049	0.046	0.039	0.028	0.015	0.000
FINAL CAMBER ↑	0	24	45	61	71	74	71	61	45	24	0

15.24mm Ø LOW RELAXATION	GIRDER 5										
TENTH POINTS	0	.1	.2	.3	.4	.5	.6	.7	.8	.9	0
CAMBER (GIRDER ALONE IN PLACE) ↑	0.000	0.039	0.073	0.100	0.117	0.123	0.117	0.100	0.073	0.039	0.000
✱ DEFLECTION DUE TO SUPERIMPOSED D.L. ↓	0.000	0.016	0.031	0.043	0.050	0.053	0.050	0.043	0.031	0.016	0.000
FINAL CAMBER ↑	0	23	42	57	67	70	67	57	42	23	0

✱ INCLUDES FUTURE WEARING SURFACE IN SUPERIMPOSED DEAD LOAD.
ALL VALUES ARE SHOWN IN METERS, EXCEPT "FINAL CAMBER" WHICH IS SHOWN IN MILLIMETERS.

PROJECT NO. R-2554BA
WAYNE COUNTY
STATION: 132+37.000 -L-

NORTH CAROLINA PROFESSIONAL SEAL 14045 ENGINEER TIMOTHY W. COGGINS
Timothy W. Coggins 6/5/08

STATE OF NORTH CAROLINA
DEPARTMENT OF TRANSPORTATION
RALEIGH

SUPERSTRUCTURE

DEAD LOAD DEFLECTIONS

(LEFT LANE)

REVISIONS						SHEET NO.
NO.	BY:	DATE:	NO.	BY:	DATE:	S-399
1			3			TOTAL SHEETS
2			4			478

DRAWN BY : B.N.BARODAWALA DATE : 6-16-06
CHECKED BY : C. MILLER DATE : 7-06

25-APR-2008 16:01
k:\structures\azlzl\str#14\barodawala\r2554ba_sd_dl_l4.dgn
jbwilson

STR. #14

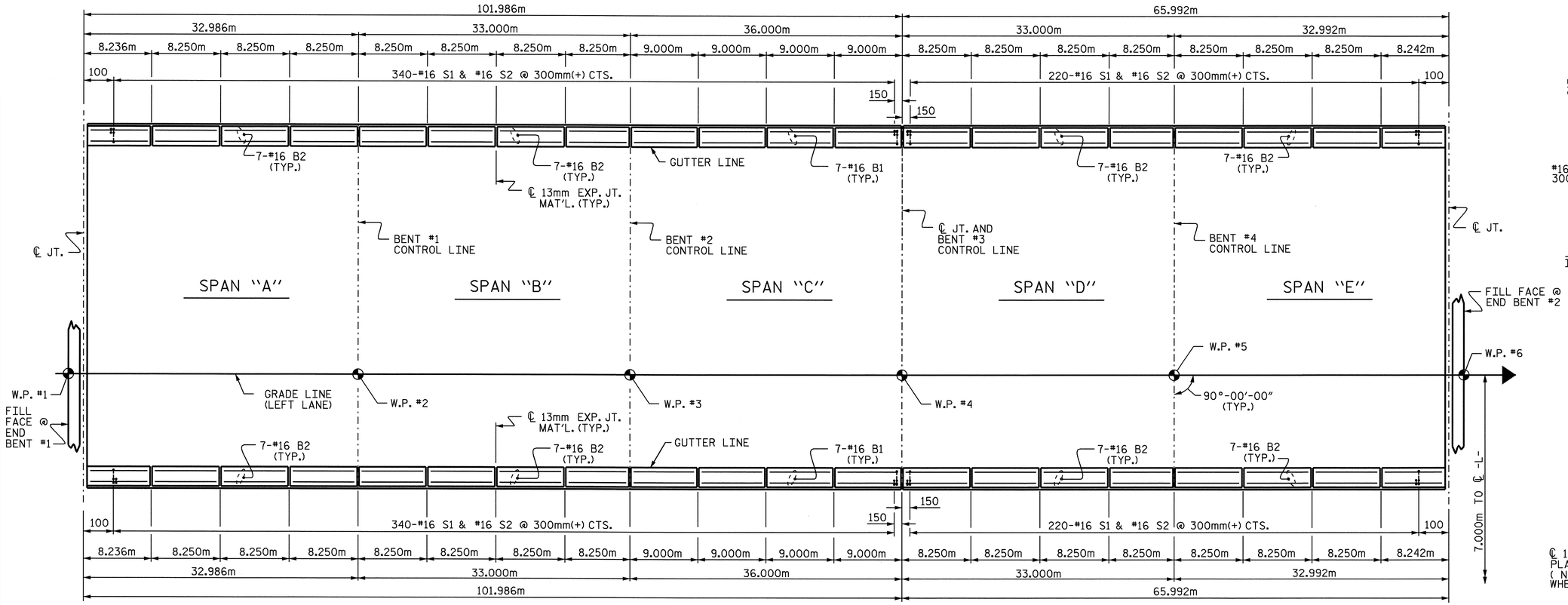

PLAN OF BARRIER RAIL

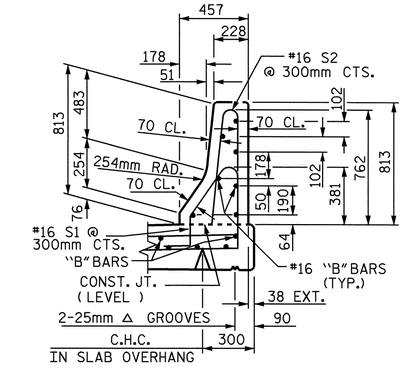

SECTION THRU RAIL

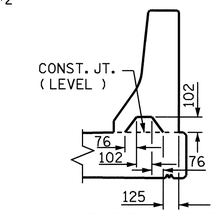

SECTION S-S

AT DAM IN OPEN JOINT
(THIS IS TO BE USED ONLY WHEN SLIP FORM IS USED)

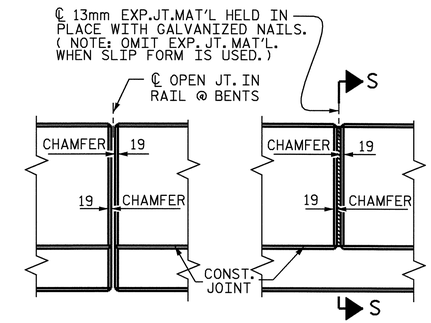

ELEVATION AT EXPANSION JOINTS

BARRIER RAIL DETAILS

BAR TYPES

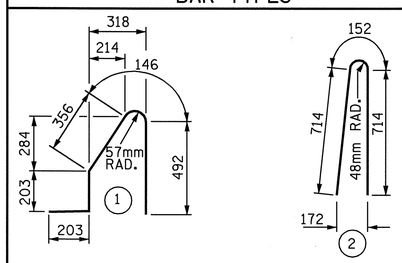

ALL BAR DIMENSIONS ARE OUT TO OUT

BILL OF MATERIAL

FOR CONCRETE BARRIER RAIL ONLY

BAR	NO.	SIZE	TYPE	LENGTH	WEIGHT
* B1	56	#16	STR	8860	770
* B2	224	#16	STR	8120	2823
* S1	1120	#16	1	1400	2434
* S2	1120	#16	2	1580	2746

* EPOXY COATED REINFORCING STEEL 8773 kg

CLASS AA CONCRETE 84.2 CU. METER

CONCRETE BARRIER RAIL 335.956 METERS

NOTES

ALL REINFORCING STEEL IN BARRIER RAILS SHALL BE EPOXY COATED.

VERTICAL GROOVED CONTRACTION JOINTS, 12mm IN DEPTH, SHALL BE TOOLED IN ALL EXPOSED FACES OF THE BARRIER RAIL AND IN ACCORDANCE WITH ARTICLE 825-10(B) OF THE STANDARD SPECIFICATIONS. THE CONTRACTION JOINT SHALL BE LOCATED AT EACH THIRD POINT BETWEEN BARRIER RAIL EXPANSION JOINTS. ONLY ONE CONTRACTION JOINT IS REQUIRED AT MIDPOINT OF BARRIER RAIL SEGMENTS LESS THAN 6.1m IN LENGTH AND NO CONTRACTION JOINTS ARE REQUIRED FOR THOSE SEGMENTS LESS THAN 3.5m IN LENGTH.

#16 S1 AND #16 S2 MAY BE SHIFTED SLIGHTLY AS NECESSARY TO MAINTAIN 50mm COVER AT 13mm EXPANSION JOINTS IN BARRIER RAIL.

BARRIER RAIL IN CONTINUOUS UNIT SHALL NOT BE CAST UNTIL ALL SLAB CONCRETE IN THE UNIT HAS BEEN CAST AND HAS REACHED A MINIMUM COMPRESSIVE STRENGTH OF 20.7 MPa.

PROJECT NO. R-2554BA
WAYNE COUNTY
STATION: 132+37.00 -L-

SHEET 1 OF 2

STATE OF NORTH CAROLINA
DEPARTMENT OF TRANSPORTATION
RALEIGH

CONCRETE BARRIER RAIL
(LEFT LANE)

NORTH CAROLINA PROFESSIONAL SEAL 14045 ENGINEER TIMOTHY L. COGGINS
6/5/08

REVISIONS						SHEET NO.
NO.	BY:	DATE:	NO.	BY:	DATE:	S-400
1			3			TOTAL SHEETS
2			4			478

STR. #14

STD. No. CBR1SM

ASSEMBLED BY : B.N.BARODAWALA	DATE : 7-12-06		
CHECKED BY : C. MILLER	DATE : 8-06		
DRAWN BY : ARB 5/87	REV. 10/17/00	RWW/LES	
CHECKED BY : SJD 9/87	REV. 5/7/03R	RWW/JTE	
	REV. 5/1/06	TLA/GM	

25-APR-2008 15:59
k:\structures\azlzl\str#14\barodawala\r2554ba_sd_br_14.dgn
jbwilson

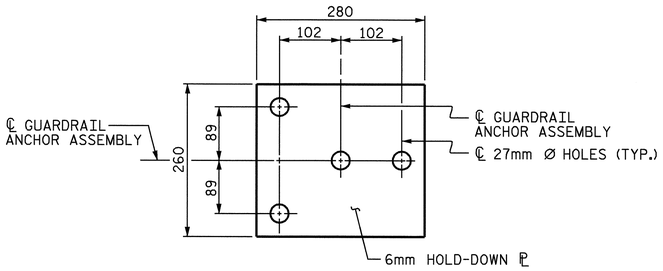

PLAN

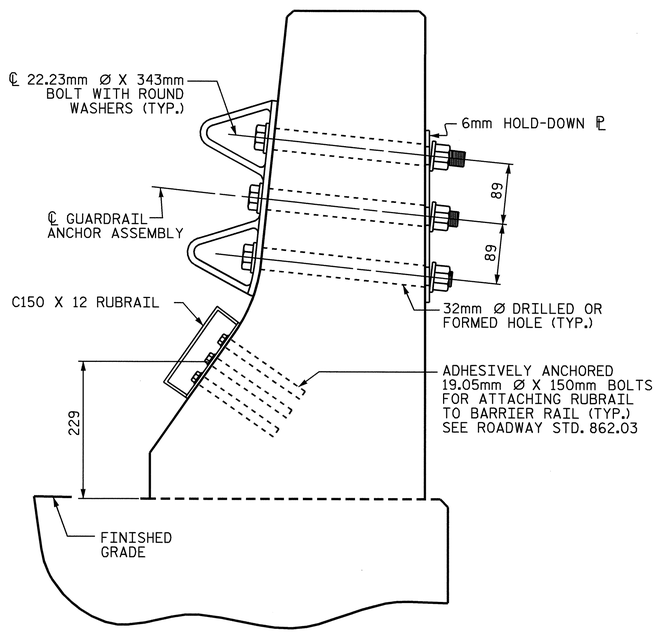

SECTION E-E

GUARDRAIL ANCHOR ASSEMBLY DETAILS

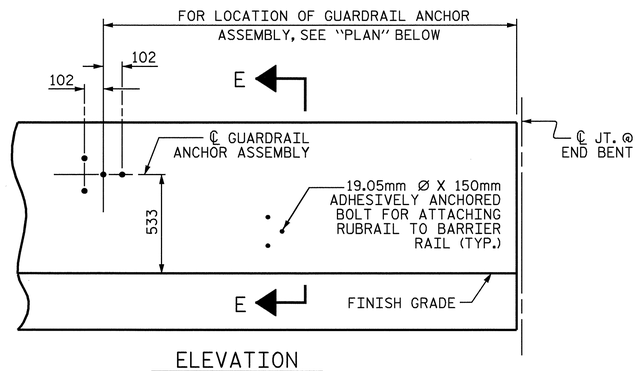

ELEVATION

FOR LOCATION OF RUBRAIL, SEE ROADWAY STD. 862.03

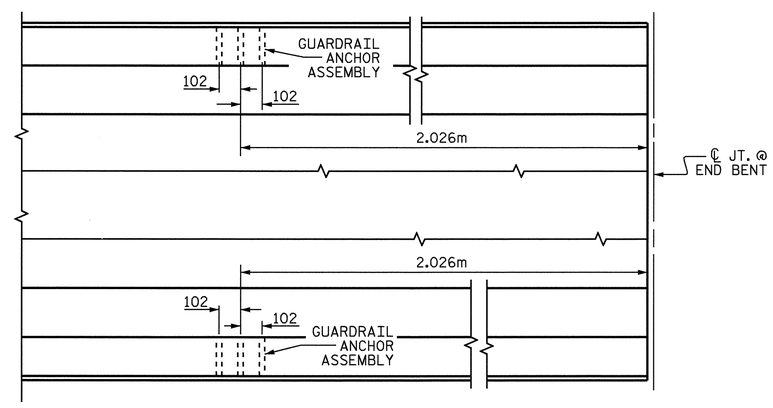

PLAN

LOCATION OF ANCHORS FOR GUARDRAIL

AT END BENT #2

NOTES

THE GUARDRAIL ANCHOR ASSEMBLY SHALL CONSIST OF A 6mm HOLD DOWN PLATE AND 4 - 22.23mm Ø BOLTS WITH NUTS AND WASHERS, RUBRAIL, AND ADHESIVELY ANCHORED BOLTS.

THE HOLD-DOWN PLATE SHALL CONFORM TO AASHTO M270 GRADE 36. AFTER FABRICATION, THE HOLD-DOWN PLATE SHALL BE HOT-DIP GALVANIZED IN ACCORDANCE WITH AASHTO M111.

BOLTS SHALL CONFORM TO THE REQUIREMENTS OF ASTM A307 AND NUTS SHALL CONFORM TO THE REQUIREMENTS OF AASHTO M291. BOLTS, NUTS AND WASHERS SHALL BE GALVANIZED. (AT THE CONTRACTOR'S OPTION, STAINLESS STEEL BOLTS, NUTS AND WASHERS MAY BE USED AS AN ALTERNATE FOR THE 22.23mm Ø GALVANIZED BOLTS, NUTS AND WASHERS. THEY SHALL CONFORM TO OR EXCEED THE MECHANICAL REQUIREMENTS OF ASTM A307. THE USE OF THIS ALTERNATE SHALL BE APPROVED BY THE ENGINEER.)

THE GUARDRAIL ANCHOR ASSEMBLY IS REQUIRED AT ALL POINTS WHERE APPROACH GUARDRAIL IS TO BE ATTACHED TO THE END OF BARRIER RAIL. FOR POINTS OF ATTACHMENT, SEE SKETCH.

AFTER INSTALLATION, THE EXPOSED THREAD OF THE BOLT SHALL BE BURRED WITH A SHARP POINTED TOOL.

THE COST OF THE GUARDRAIL ANCHOR ASSEMBLY SHALL BE INCLUDED IN THE UNIT CONTRACT PRICE BID FOR CONCRETE BARRIER RAIL.

THE 32mm Ø HOLES SHALL BE FORMED OR DRILLED WITH A CORE BIT. IMPACT TOOLS WILL NOT BE PERMITTED. ANY CONCRETE DAMAGED BY THIS WORK SHALL BE REPAIRED TO THE SATISFACTION OF THE ENGINEER.

THE C150 X 12 RUBRAIL IS TO BE ADHESIVELY ANCHORED TO THE RAIL USING THREE 19.05mm Ø X 150mm BOLTS WITH WASHERS. LEVEL ONE FIELD TESTING IF REQUIRED, AND THE YIELD LOAD OF THE 19.05mm Ø BOLTS IS 53.4kN. FOR ADHESIVELY ANCHORED ANCHOR BOLTS OR DOWELS, SEE SPECIAL PROVISIONS. SEE ROADWAY STANDARD 862.03 FOR DETAILS AND LOCATION OF THE RUBRAIL.

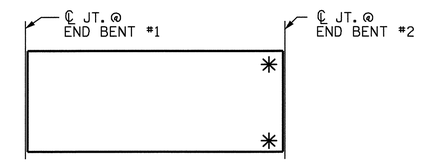

SKETCH SHOWING POINTS OF ATTACHMENTS

✳ DENOTES GUARDRAIL ANCHOR ASSEMBLY

PROJECT NO. R-2554BA
WAYNE COUNTY
STATION: 132+37.00 -L-

SHEET 2 OF 2

STATE OF NORTH CAROLINA
DEPARTMENT OF TRANSPORTATION
RALEIGH

STANDARD
GUARDRAIL ANCHORAGE FOR BARRIER RAIL
(LEFT LANE)

NORTH CAROLINA PROFESSIONAL SEAL 14045 ENGINEER TIMOTHY L. COGGINS
Timothy L. Coggins 6/6/08

REVISIONS						SHEET NO.
NO.	BY:	DATE:	NO.	BY:	DATE:	S-401
1			3			TOTAL SHEETS
2			4			478

ASSEMBLED BY : B.N.BARODAWALA	DATE : 7-12-06
CHECKED BY : C. MILLER	DATE : 8-06
DRAWN BY : TLA 5/06	ADDED 5/1/06R KMM/GM
CHECKED BY : GM 5/06	

06-JUN-2008 11:11
r:\structures\azlz1\Str#14\FINAL PLANS\R2554BA_sd_BR_14.dgn
rodkins

STR. #14 STD. NO. GRA2SM

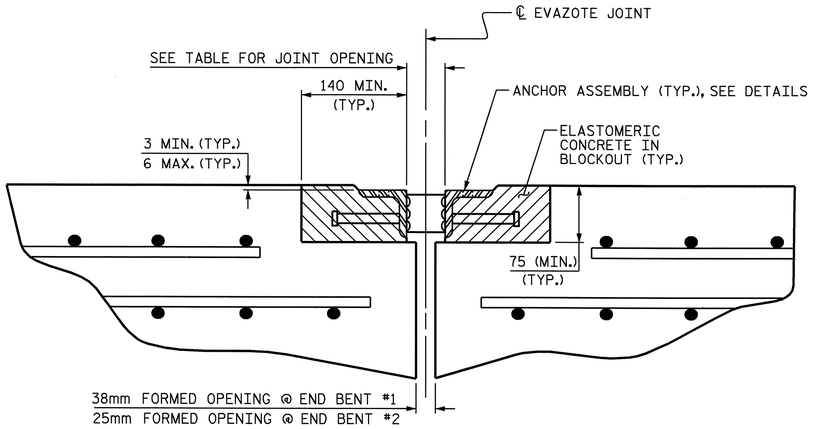

ARMORED JOINT DETAILS

SECTION NORMAL TO JOINT AT END BENT

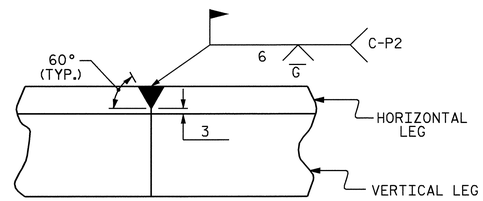

DETAIL- FIELD WELD SPLICE OF ANGLE

NOTES

ANGLES SHALL CONFORM TO AASHTO M270 GRADE 250 STEEL OR APPROVED EQUAL. ALL STUD ANCHORS SHALL CONFORM TO AASHTO M169 GRADES 1010 THRU 1020 OR APPROVED EQUAL.

STUD ANCHORS SHALL BE SHOP WELDED AND ALL HOLES SHALL BE SHOP DRILLED AS SHOWN ON THE PLANS. STUD ANCHORS SHALL BE ELECTRIC ARC END WELDED WITH COMPLETE FUSION.

UPON COMPLETION OF SHOP FABRICATION, THE ENTIRE ANCHOR ASSEMBLY SHALL BE METALLIZED. THE 12.70mm Ø STUD ANCHORS AND ANCHOR TABS NEED NOT BE METALLIZED. SEE SPECIAL PROVISION FOR THERMAL SPRAYED COATINGS (METALLIZATION).

ANCHOR ASSEMBLY SHALL BE MADE CONTINUOUS THE LENGTH OF THE JOINT FROM GUTTER TO GUTTER. FOR FIELD SPLICES AT ALL CROWN BREAK POINTS, THE ENDS OF THE STEEL ANGLES SHALL BE CUT PARALLEL TO THE BRIDGE CENTERLINE. FINISHED FIELD WELDS SHALL BE GROUND SMOOTH AND COATED WITH A MINIMUM THICKNESS OF 0.100mm OF ZINC-RICH PAINT IN ACCORDANCE WITH THE STANDARD SPECIFICATIONS.

ANCHOR ASSEMBLY SEGMENTS SHALL NOT BE LESS 3.6m NOR MORE THAN 6.1m IN LENGTH. SHORTER SEGMENTS MAY BE USED AT THE EDGE OF ROADWAY OR AT POINTS OF STAGED CONSTRUCTION.

THE ANCHOR ASSEMBLY SHALL BE SECURED AND LEVELED AS SHOWN IN THE "ARMORED JOINT ANCHOR ASSEMBLY DETAILS". NO SUBMITTALS ARE REQUIRED FOR 9.53mm Ø EXPANSION ANCHORS, NUTS OR WASHERS. THE CONTRACTOR MAY SUBMIT FOR APPROVAL AN ALTERNATE METHOD OF ALIGNING AND LEVELING THE ANGLES. THE ALTERNATE METHOD SHALL NOT INCLUDE ANY WELDING TO THE OUTSIDE FACE OF THE ANGLES.

AFTER THE ELASTOMERIC CONCRETE HAS BEEN CAST ON BOTH SIDES OF THE JOINT, REMOVE ANY EXCESS CONCRETE THAT COMES THROUGH THE WEEP HOLES AND THOROUGHLY CLEAN THE ANGLES. ANY DAMAGED STEEL SHALL BE COATED WITH A MINIMUM OF 0.100mm OF ZINC-RICH PAINT IN ACCORDANCE WITH THE STANDARD SPECIFICATIONS.

SEE SPECIAL PROVISIONS FOR EVAZOTE JOINT SEALS.

SEE SPECIAL PROVISIONS FOR ELASTOMERIC CONCRETE.

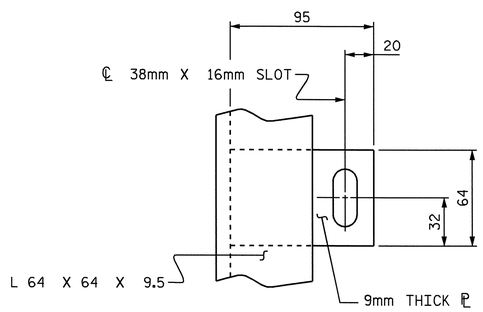

PLAN VIEW OF TAB

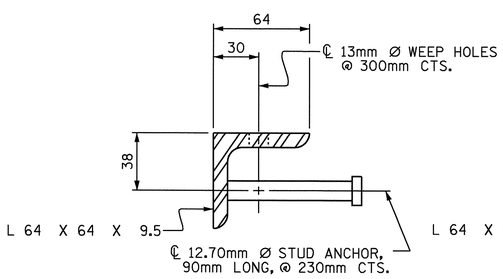

SECTION VIEW OF STUD

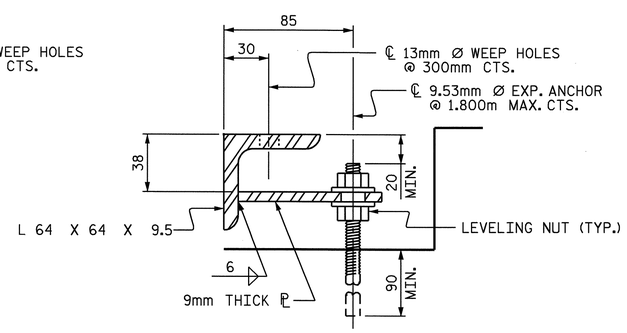

SECTION VIEW OF TAB

ARMORED JOINT ANCHOR ASSEMBLY DETAILS

MOVEMENT AND SETTING AT EVAZOTE JOINT						
BENT NO.	SKEW ANGLE	NOMINAL UNCOMPRESSED SEAL WIDTH	TOTAL MOVEMENT (ALONG ℄ RDWY)	PERPENDICULAR JOINT OPENING AT 7° C	PERPENDICULAR JOINT OPENING AT 16° C	PERPENDICULAR JOINT OPENING AT 32° C
END BENT #1	90°-00'-00"	87mm	36mm	77mm	70mm	58mm
END BENT #2	90°-00'-00"	64mm	23mm	55mm	51mm	43mm

TOTAL MOVEMENT IS CALCULATED ALONG THE CENTERLINE OF ROADWAY.
JOINT OPENINGS ARE MEASURED PERPENDICULAR TO THE JOINT.

BILL OF MATERIAL		
BENT NO.	ELASTOMERIC CONCRETE ✳ (CU. m)	TOTAL LENGTH OF ANGLE (m)
END BENT #1	0.24	22.800
END BENT #2	0.24	22.800

✳ BASED ON THE MINIMUM BLOCKOUT SHOWN.

PROJECT NO. R-2554BA
WAYNE COUNTY
STATION: 132+37.000 -L-

STATE OF NORTH CAROLINA
DEPARTMENT OF TRANSPORTATION
RALEIGH

STANDARD ARMORED EVAZOTE JOINT DETAILS

(LEFT LANE)

NORTH CAROLINA PROFESSIONAL SEAL 14045 ENGINEER TIMOTHY L. COGGINS
Timothy L. Coggins 6/5/08

REVISIONS							SHEET NO.
NO.	BY:	DATE:	NO.	BY:	DATE:		S-402
1			3				TOTAL SHEETS
2			4				478

STR. #14

STD. NO. AEJ1SM

ASSEMBLED BY : B.N.BARODAWALA		DATE : 7-12-06	
CHECKED BY : C. MILLER		DATE : 8-06	
DRAWN BY : EEM 1/96	REV. 7/10/01	LES/RDR	
CHECKED BY : RGW 1/96	REV. 5/7/03	RWW/JTE	
	REV. 5/1/06	TLA/GM	

25-APR-2008 16:00
k:\structures\azlzl\str#14\barodawala\r2554ba_sd_js_14.dgn
lbwilson

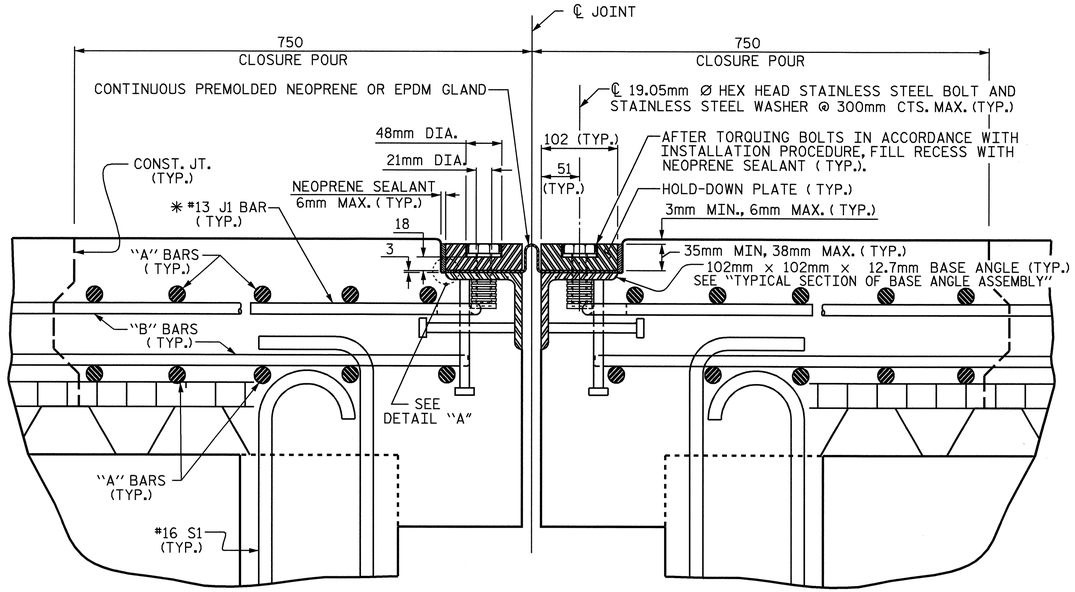

EXPANSION JOINT DETAILS

SECTION NORMAL TO JOINT -- PRESTRESSED GIRDER SUPERSTRUCTURE

✱ THE QUANTITY OF #13 J1 BARS ON THE BILL OF MATERIAL IS BASED ON 300mm CENTERS. J1 BARS SHALL BE PLACED AT EACH VERTICAL STUD ANCHOR BOLT. IN THE EVENT THAT THE NUMBER OF VERTICAL STUD ANCHOR BOLTS EXCEEDS THE NUMBER OF J1 BARS SPECIFIED, ADDITIONAL J1 BARS WILL NOT BE REQUIRED.

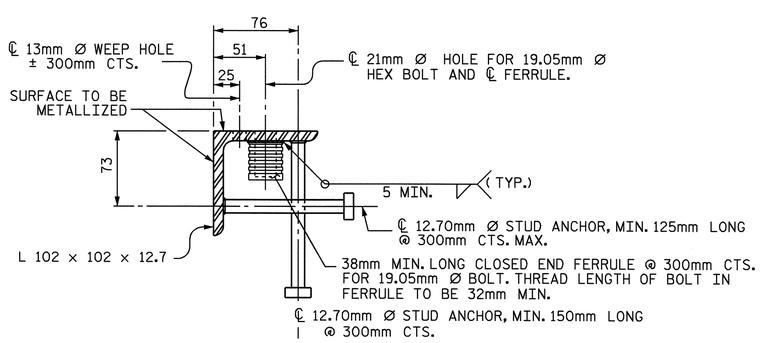

TYPICAL SECTION OF BASE ANGLE ASSEMBLY

INSTALLATION PROCEDURE

1. A TEMPLATE OR OTHER SUITABLE DEVICE SHALL BE USED TO FORM THE TOP OF THE EXPANSION JOINT SEAL BLOCKOUT TO THE PROPER DEPTH AND WIDTH. THE TEMPLATE SHALL BE 105mm TO 108mm WIDE AND OF SUCH THICKNESS AS TO PROVIDE FOR CORRECT FINAL ELEVATION OF TOP OF HOLD-DOWN PLATES. THE TEMPLATE SHALL BE ATTACHED TO THE BASE ANGLE ASSEMBLY WITH THE 19.05mm Ø HEX HEAD BOLTS PROVIDED FOR THE HOLD-DOWN PLATES. A 25mm Ø HOLE SHALL BE PROVIDED IN THE TEMPLATE CENTERED OVER EACH WEEP HOLE IN THE 102mm X 102mm X 12.7mm BASE ANGLE. OTHER METHODS OF INSURING DRAINAGE THROUGH WEEP HOLES MAY BE EMPLOYED SUBJECT TO ENGINEER'S APPROVAL.
2. AFTER THE CONCRETE HAS BEEN CAST ON BOTH SIDES OF THE JOINT, REMOVE THE TEMPLATE. THOROUGHLY CLEAN THE BOLT HOLES AND THE ANGLE PLATE. REMOVE ANY EXCESS CONCRETE THAT COMES OUT OF THE WEEP HOLES. ANY DAMAGED STEEL SHALL BE COATED WITH A MINIMUM THICKNESS OF 0.100mm (DRY) OF ZINC-RICH PAINT IN ACCORDANCE WITH THE STANDARD SPECIFICATIONS.
3. LAY THE GLAND ON THE BASE ANGLE AND FIELD MARK THE GLAND FOR THE BOLT HOLES. HOLES IN THE GLAND SHALL BE PUNCHED 22mm IN DIAMETER WITH A HAND PUNCH.
4. IN ORDER TO CHECK FOR PROPER ALIGNMENT, PLACE THE GLAND AND HOLD-DOWN PLATES ON THE BASE ANGLE. DO NOT APPLY NEOPRENE SEALANT. BOLT THE HOLD-DOWN PLATES TO THE BASE ANGLE BUT DO NOT TIGHTEN. THE ENGINEER SHALL INSPECT THE JOINT SEAL DEVICE FOR PROPER ALIGNMENT.
5. AFTER INSPECTION, REMOVE THE HOLD-DOWN PLATES AND GLAND. APPLY NEOPRENE SEALANT TO THE BASE ANGLE IN ACCORDANCE WITH THE "INSTALLATION SKETCH". PLACE GLAND AND HOLD-DOWN PLATES ON THE BASE ANGLE. BOLT THE HOLD-DOWN PLATES TO THE BASE ANGLE ASSEMBLY AND TORQUE THE BOLTS TO 119.3 N-m WITH A TORQUE WRENCH. THE TORQUE WRENCH SHALL BE CALIBRATED IN ACCORDANCE WITH SECTION 440-10 (D) OF THE STANDARD SPECIFICATIONS. CHECK THE TORQUE AFTER THREE (3) HOURS AND, IF NECESSARY, RETIGHTEN TO 119.3 N-m. A FINAL CHECK SHALL BE MADE AT SEVEN (7) DAYS. TORQUE SHALL NOT BE LESS THAN 108.5 N-m AFTER SEVEN (7) DAYS.
6. AFTER PROPER TORQUING, CLEAN THE BOLT HOLE RECESSES AND THE RECESS BETWEEN THE JOINT SEAL DEVICE AND CONCRETE, COMPLETELY FILL THESE RECESSES WITH NEOPRENE SEALANT.

GENERAL NOTES

1. FOR EXPANSION JOINT SEALS, SEE SPECIAL PROVISIONS.
2. ALL PLATES AND ANGLES SHALL CONFORM TO AASHTO M270 GRADE 250 STEEL OR APPROVED EQUAL. ALL HOLD-DOWN BOLTS SHALL CONFORM TO ASTM F593 ALLOY 304 STAINLESS STEEL. WASHERS SHALL CONFORM TO ASTM F844 EXCEPT THEY SHALL BE MADE FROM ALLOY 304 STAINLESS STEEL. ALL STUD ANCHORS SHALL CONFORM TO AASHTO M169, GRADES 1010 THRU 1020 OR APPROVED EQUAL. ALL CONCRETE INSERTS SHALL BE CLOSED END AND SHALL CONFORM TO AASHTO M169, GRADE 12L14. TENSILE CAPACITY SHALL BE 13.3 kN MIN.
3. A PREMOLDED CORRUGATED OR NON-CORRUGATED GLAND SHALL BE USED FOR JOINTS SKEWED BETWEEN 50° THRU 130° . FOR JOINTS SKEWED LESS THAN 50° OR MORE THAN 130° , ONLY A CORRUGATED GLAND SHALL BE USED.
4. CLOSED END FERRULES AND STUD ANCHORS SHALL BE SHOP WELDED AND ALL HOLES SHALL BE SHOP DRILLED AS SHOWN ON PLANS. STUD ANCHORS SHALL BE ELECTRIC ARC END WELDED WITH COMPLETE FUSION.
5. SURFACES COMING IN CONTACT WITH NEOPRENE SHALL BE GROUND SMOOTH PRIOR TO METALLIZING.
6. UPON COMPLETION OF SHOP FABRICATION, THE HOLD DOWN PLATE AND BASE ANGLE ASSEMBLY AS SHOWN IN THE "TYPICAL SECTION OF BASE ANGLE ASSEMBLY", SHALL BE METALLIZED. SEE SPECIAL PROVISION FOR THERMAL SPRAYED COATINGS (METALLIZATION).
7. BASE ANGLE ASSEMBLY SHALL BE CONTINUOUS FOR THE LENGTH OF THE JOINT. AT CROWN BREAKS, THE ENDS OF THE BASE ANGLE ASSEMBLY SHALL BE CUT PARALLEL TO THE BRIDGE CENTERLINE FOR SKEWS LESS THAN 80° AND GREATER THAN 100°. FINISHED WELD SHALL BE GROUND SMOOTH AND COATED WITH A MINIMUM THICKNESS OF 0.100mm (DRY) OF ZINC-RICH PAINT IN ACCORDANCE WITH THE STANDARD SPECIFICATIONS.
8. FIELD SPLICES OF HOLD-DOWN PLATES SHALL BE KEPT TO A MINIMUM. CONTRACTOR SHALL FURNISH DETAILED PLANS SHOWING PROPOSED SPLICE LOCATIONS FOR APPROVAL. HOLD-DOWN PLATES SHALL NOT EXCEED 6.1m LENGTHS UNLESS APPROVED BY THE ENGINEER.
9. NO ALTERNATE JOINT DETAILS SHALL BE PERMITTED IN LIEU OF THOSE SHOWN ON THESE PLANS.
10. THE CONTRACTOR MAY, AT HIS OPTION, USE ADHESIVELY ANCHORED ANCHOR BOLTS IN PLACE OF CONCRETE INSERTS FOR COVER PLATES. THE YIELD LOAD OF THE 19.05mm DIA. BOLT IS 44.5 kN. FIELD TESTING OF THE ADHESIVE BONDING SYSTEM IS NOT REQUIRED.

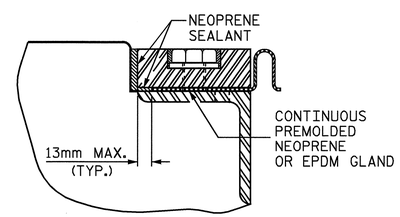

DETAIL "A"

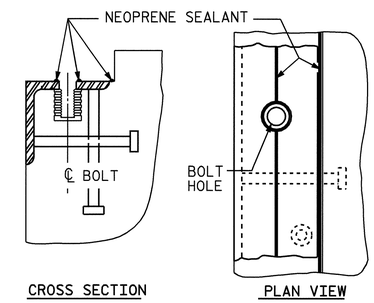

INSTALLATION SKETCH

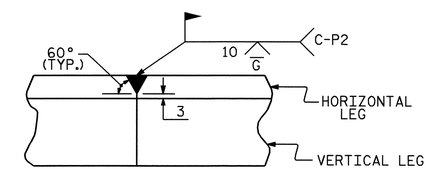

DETAIL- FIELD WELD SPLICE OF BASE ANGLE

MOVEMENT AND SETTING AT JOINT					
BENT NO.	SKEW ANGLE	TOTAL MOVEMENT (ALONG ℄ RDWY)	PERPENDICULAR JOINT OPENING AT 7° C	PERPENDICULAR JOINT OPENING AT 16° C	PERPENDICULAR JOINT OPENING AT 32° C
3	90°-00'-00"	53mm	59mm	51mm	36mm

PROJECT NO. R-2554BA

WAYNE COUNTY

STATION: 132+37.000 -L-

SHEET 1 OF 2

STATE OF NORTH CAROLINA
DEPARTMENT OF TRANSPORTATION
RALEIGH

STANDARD

EXPANSION JOINT SEAL DETAILS

(LEFT LANE)

NORTH CAROLINA PROFESSIONAL SEAL 14045 ENGINEER TIMOTHY V. COGGINS

6/5/08

REVISIONS						SHEET NO.
NO.	BY:	DATE:	NO.	BY:	DATE:	S-403
1			3			TOTAL SHEETS
2			4			478

STR. #14

STD. NO. EJS1SM

ASSEMBLED BY : B.N.BARODAWALA		DATE : 5-4-06	
CHECKED BY : C. MILLER		DATE : 8-06	
DRAWN BY : REK 9/87	REV. 10/17/00	RWW/LES	
CHECKED BY : CRK 10/87	REV. 5/7/03R	RWW/JTE	
	REV. 5/1/06	TLA/GM	

25-APR-2008 15:59
k:\structures\gz1z1\str#14\barodawala\r2554ba_sd_ls_14.dgn

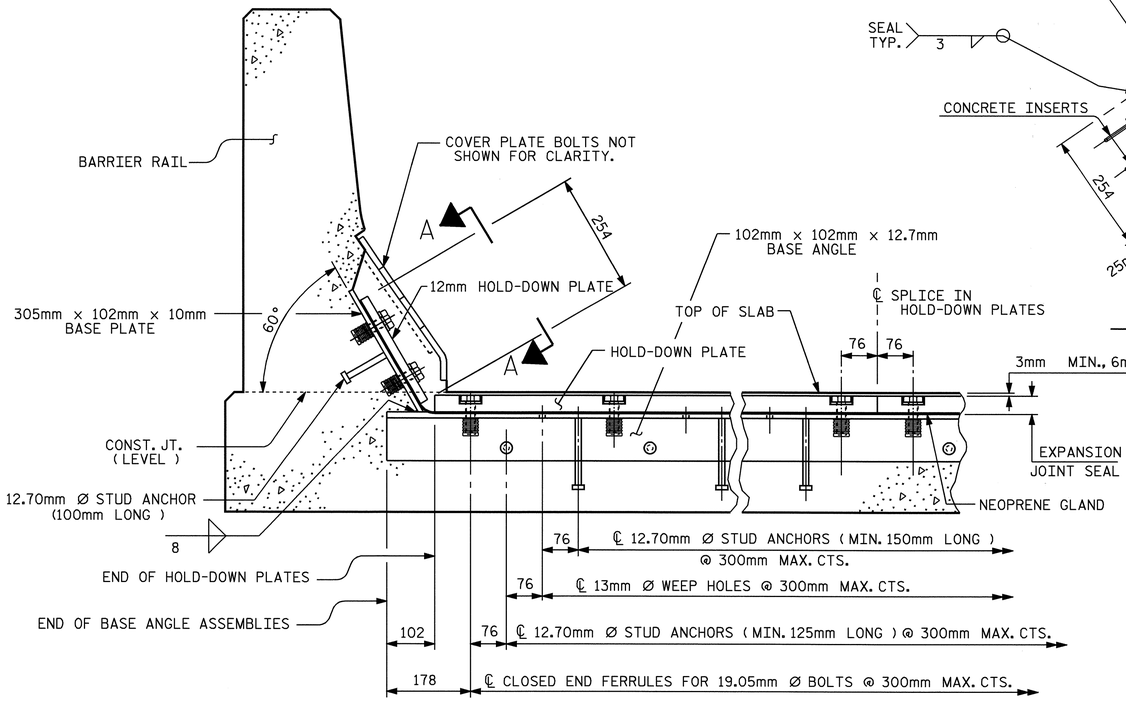

SECTION THRU RAIL NORMAL TO JOINT

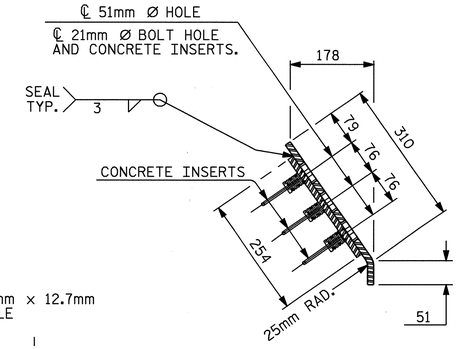

END VIEW

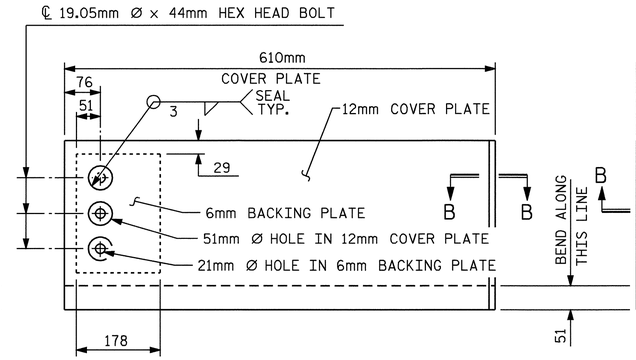

TYPE I - ELEVATION VIEW

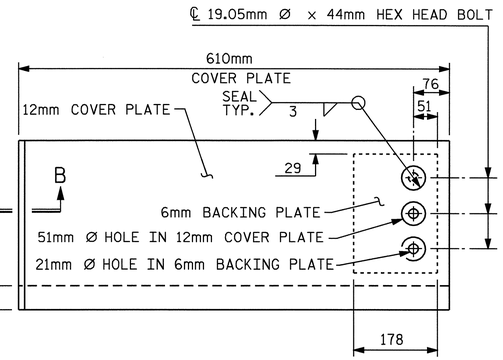

TYPE II - ELEVATION VIEW

COVER PLATE DETAILS

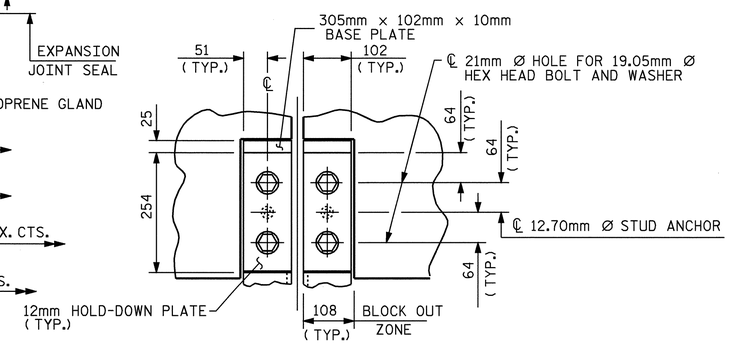

SECTION A - A

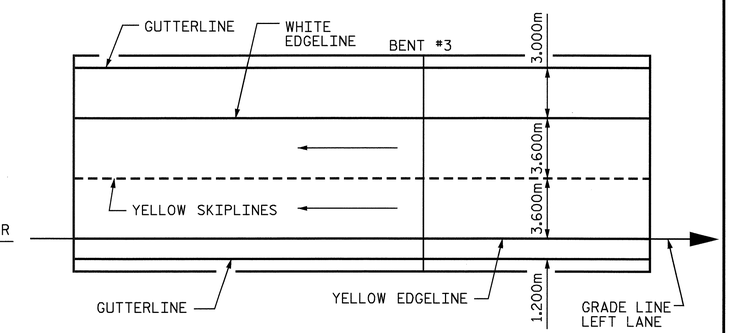

PAVEMENT MARKING ALIGNMENT

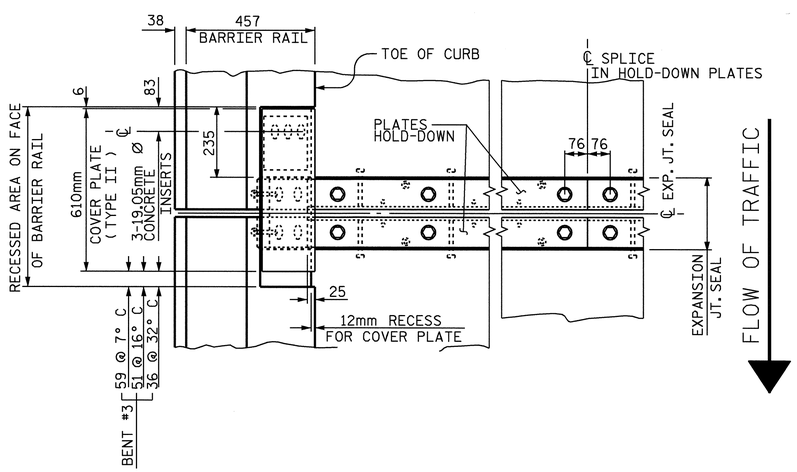

PLAN OF EXPANSION JOINT SEAL - LEFT SIDE

FLOW OF TRAFFIC

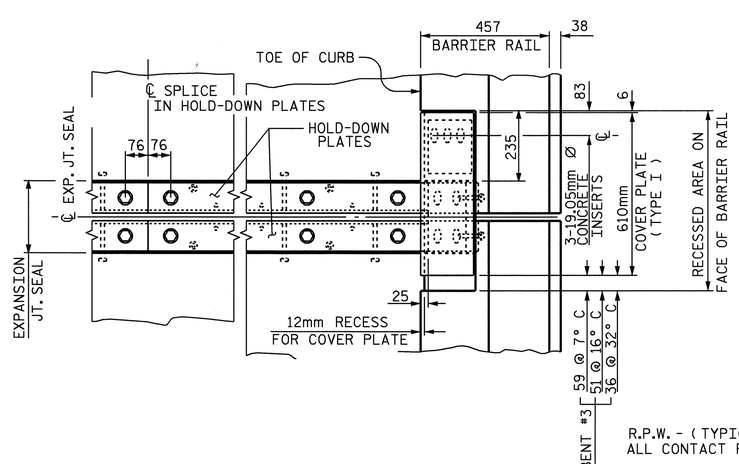

PLAN OF EXPANSION JOINT SEAL - RIGHT SIDE

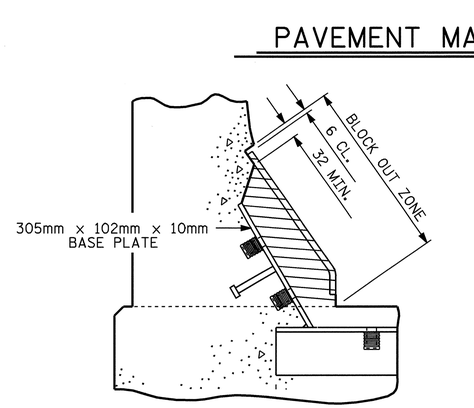

BLOCK OUT DETAIL

SEE "SECTION A - A" FOR OTHER DETAILS.

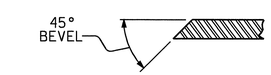

SECTION B - B

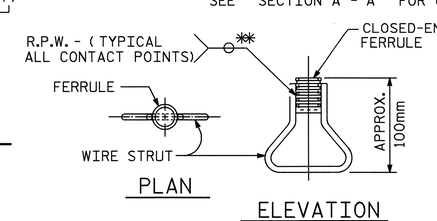

CONCRETE INSERT

** EACH WELDED ATTACHMENT OF WIRE TO FERRULE SHALL DEVELOP THE TENSILE STRENGTH OF THE WIRE.

PROJECT NO. R-2554BA
WAYNE COUNTY
STATION: 132+37.000 -L-

SHEET 2 OF 2

STATE OF NORTH CAROLINA
DEPARTMENT OF TRANSPORTATION
RALEIGH

STANDARD EXPANSION JOINT SEAL DETAILS FOR BARRIER RAIL

(LEFT LANE)

REVISIONS								SHEET NO.
NO.	BY:	DATE:	NO.	BY:	DATE:			S-404
1			3					TOTAL SHEETS
2			4					478

STR. #14

STD. NO. EJS2SM

ASSEMBLED BY : B.N.BARODAWALA	DATE : 10-31-07		
CHECKED BY : T.L. AVERETTE	DATE : 11-07		
DRAWN BY : REK 9/87	REV. 7/17/98	RWW/LES	
CHECKED BY : CRK 10/87	REV. 10/17/00	RWW/LES	
	REV. 5/1/06	TLA/GM	

09-JUN-2008 16:50
g:\tlpprojects-r\r2554ba\structures\azlzl\str#14\finalplans\r2554ba_sd_js_l4.dgn
taverette

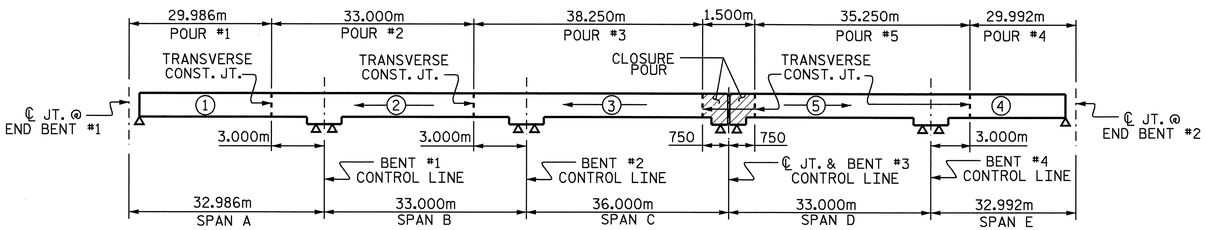

POURING SEQUENCE

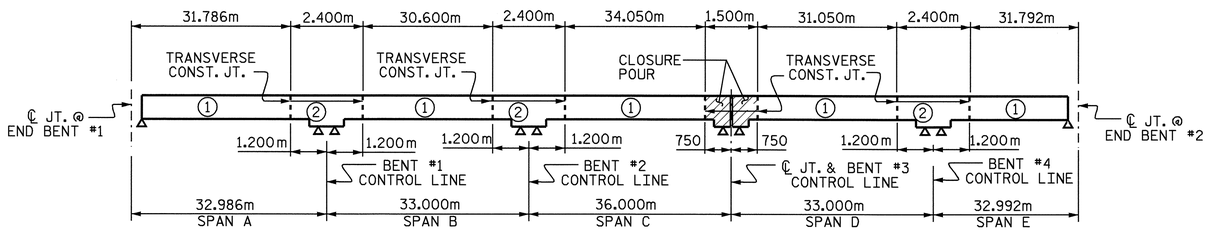

OPTIONAL POURING SEQUENCE

POUR ② CANNOT BE STARTED UNTIL BOTH ADJACENT ① POURS REACH A MIN. OF 20.7 MPA.

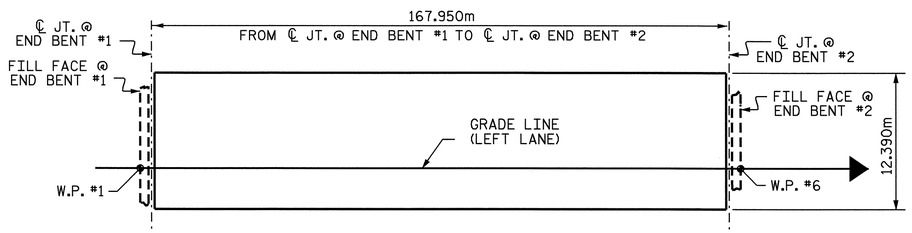

LAYOUT FOR COMPUTING AREA OF REINFORCED CONCRETE DECK SLAB (2080.9 SQ. METER)

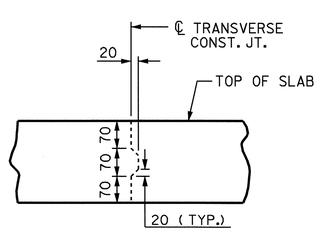

TRANSVERSE CONSTRUCTION JOINT DETAIL

NOTE: REINFORCING STEEL IN SLAB NOT SHOWN. LONGITUDINAL REINFORCING STEEL SHALL BE CONTINUOUS THRU JOINT.

BILL OF MATERIAL — SPANS A, B, C

BAR	NO.	SIZE	TYPE	LENGTH	WEIGHT
✳A1	509	#16	STR	12280	9701
A2	510	#16	STR	12280	9720
✳B1	84	#13	STR	7760	648
✳B2	56	#22	STR	12300	2095
✳B3	27	#22	STR	10000	821
✳B4	56	#13	STR	5920	330
✳B5	56	#22	STR	12800	2181
✳B6	27	#22	STR	10500	862
✳B7	84	#13	STR	8420	703
B9	308	#16	STR	15120	7228
✳J1	38	#13	9	440	17
✳K1	8	#25	1	4120	131
✳K2	12	#25	2	5760	275
K3	48	#16	5	2180	162
K4	240	#16	STR	2160	805
K5	16	#13	STR	1240	20
K6	80	#13	STR	2160	172
K7	16	#13	STR	1340	21
K8	28	#13	STR	5220	145
K9	16	#19	STR	2140	77
✳S1	40	#16	3	1780	111
S2	168	#13	4	3460	578
S3	304	#13	6	840	254
S4	16	#13	8	3300	52
S5	16	#16	3	1060	26
✳U1	40	#13	7	5440	216

REINFORCING STEEL = 19260 kg

✳EPOXY COATED REINFORCING STEEL = 18091 kg

BILL OF MATERIAL — SPANS D, E

BAR	NO.	SIZE	TYPE	LENGTH	WEIGHT
✳A1	329	#16	STR	12280	6270
A2	330	#16	STR	12280	6289
✳B1	84	#13	STR	7760	648
✳B2	56	#22	STR	12300	2095
✳B3	27	#22	STR	10000	821
✳B8	84	#13	STR	7760	648
B10	176	#16	STR	16980	4638
✳J1	38	#13	9	440	17
✳K1	8	#25	1	4120	131
✳K2	12	#25	2	5760	275
K3	32	#16	5	2180	108
K4	160	#16	STR	2160	536
K5	8	#13	STR	1240	10
K6	40	#13	STR	2160	86
K7	8	#13	STR	1340	11
K8	14	#13	STR	5220	73
K9	16	#19	STR	2140	77
✳S1	40	#16	3	1780	111
S2	112	#13	4	3460	385
S3	152	#13	6	840	127
S4	8	#13	8	3300	26
S5	16	#16	3	1060	26
✳U1	20	#13	7	5440	108

REINFORCING STEEL = 12392 kg

✳EPOXY COATED REINFORCING STEEL = 11124 kg

BAR TYPES

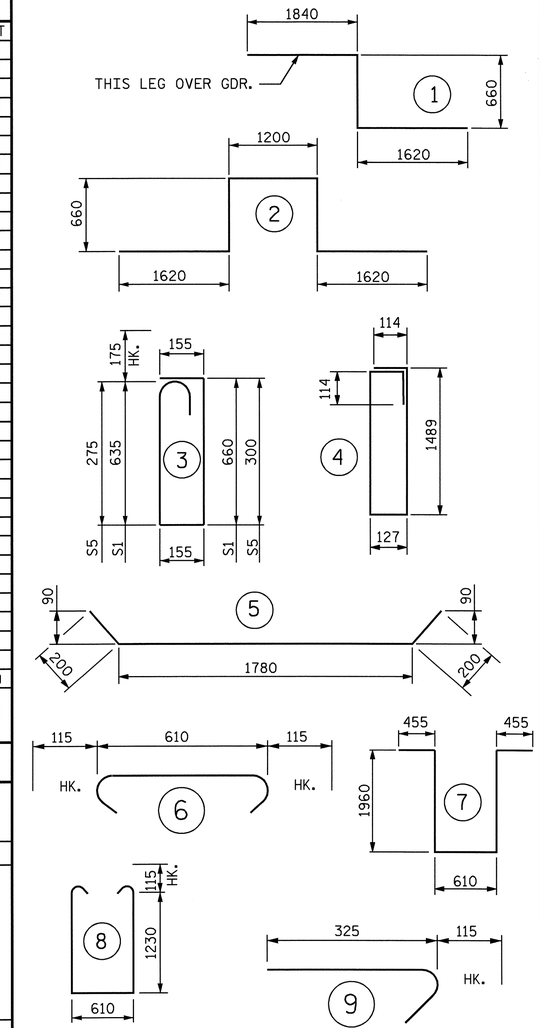

ALL BAR DIMENSIONS ARE OUT TO OUT.

SUPERSTRUCTURE BILL OF MATERIAL

	CLASS AA CONCRETE		REINFORCING STEEL	EPOXY COATED REINFORCING STEEL
	(CU. METER)		(kg)	(kg)
SPAN A, B, C, D AND E	POUR 1	113.4	31652	29215
	POUR 2	134.2		
	POUR 3	154.2		
	POUR 4	114.8		
	POUR 5	145.6		
	CLOSURE POUR	7.7		
TOTALS ✳✳	669.9		31652	29215

✳✳ QUANTITIES FOR BARRIER RAIL ARE NOT INCLUDED

SUPERSTRUCTURE REINFORCING STEEL LENGTHS ARE BASED ON THE FOLLOWING MINIMUM SPLICE LENGTHS

BAR SIZE	SUPERSTRUCTURE EXCEPT APPROACH SLABS, PARAPET, AND BARRIER RAIL		APPROACH SLABS		PARAPET AND BARRIER RAIL
	EPOXY COATED	UNCOATED	EPOXY COATED	UNCOATED	
#13	610	540	610	540	840
#16	770	660	770	660	1050
#19	920	790	1190	790	1330
#22	1580	1060			
#25	2080	1390			

GROOVING BRIDGE FLOORS

BRIDGE DECK	1752.1	SQ.METER
APPROACH SLABS	151.5	SQ.METER
TOTAL	1903.6	SQ.METER

PROJECT NO. R-2554BA
WAYNE COUNTY
STATION: 132+37.000 -L-

STATE OF NORTH CAROLINA
DEPARTMENT OF TRANSPORTATION
RALEIGH

STANDARD
SUPERSTRUCTURE BILL OF MATERIAL
(LEFT LANE)

NORTH CAROLINA PROFESSIONAL SEAL 14045 ENGINEER TIMOTHY W. COGGINS
Timothy W. Coggins 6/5/08

REVISIONS							SHEET NO.
NO.	BY:	DATE:	NO.	BY:	DATE:		S-405
1			3				TOTAL SHEETS
2			4				478

ASSEMBLED BY : B.N.BARODAWALA DATE : 5-4-06
CHECKED BY : C. MILLER DATE : 7-06

DRAWN BY : JMB 5/87
CHECKED BY : SJD 9/87

REV. 5/16/97 EEM/RGW
REV. 5/1/06 TLA/GM

25-APR-2008 16:01
k:\structures\azlzl\str#14\barodawala\r2554ba_sd_bm_14.dgn
jbwilson

STR. #14

STD. NO. BOM1SM

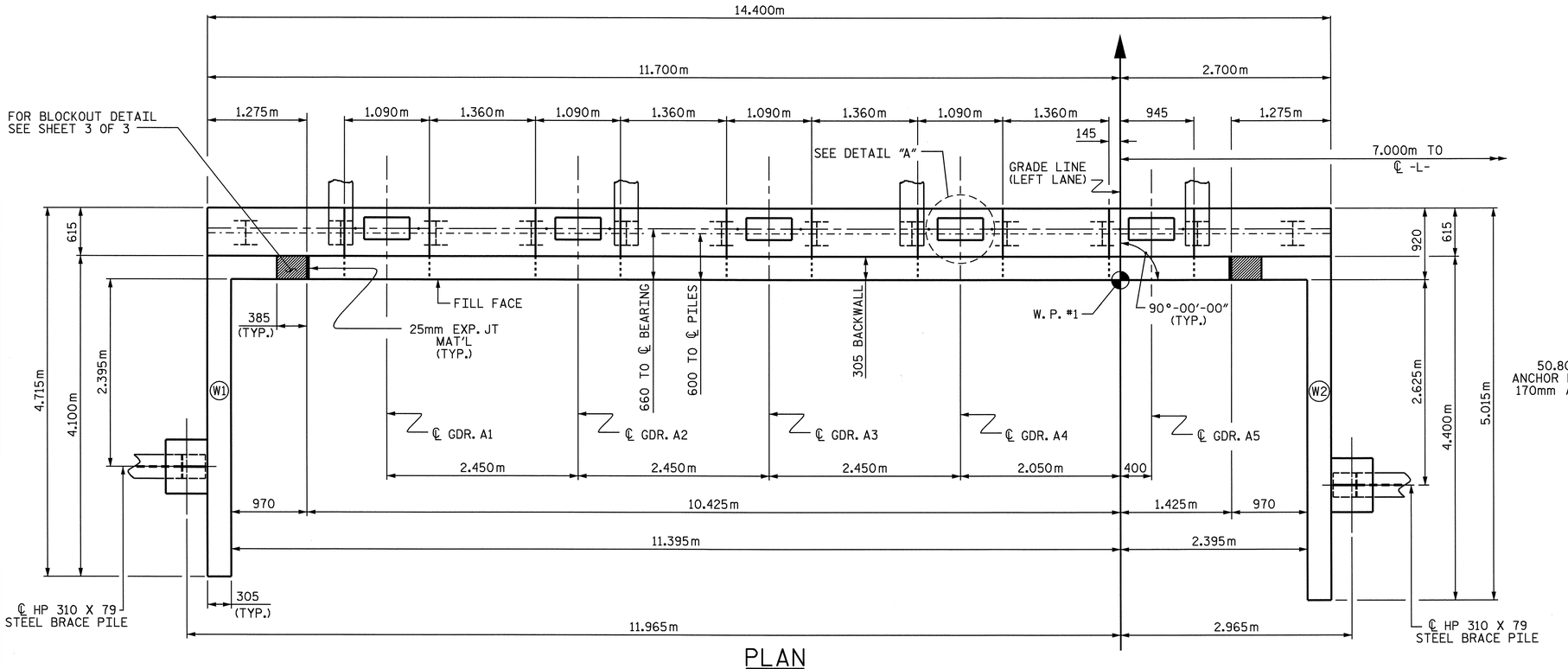

PLAN

NOTES

STIRRUPS IN CAP MAY BE SHIFTED AS NECESSARY TO CLEAR ANCHOR BOLTS.

BACKWALL SHALL BE PLACED BEFORE APPLYING THE EPOXY PROTECTIVE COATING.

THE TOP SURFACE OF THE END BENT CAP EXCEPT THE BRIDGE SEAT BUILDUPS SHALL BE SLOPED TRANSVERSELY FROM THE FILL FACE TO THE BACK FACE AT THE RATE OF 2 %.

THE CONTRACTOR SHALL PROVIDE FOR INSTALLATION OF THE 102mm DIAMETER DRAIN PIPE THROUGH THE WING WALL AS REQUIRED FOR REINFORCED BRIDGE APPROACH FILLS, SEE THE ROADWAY PLANS. REINFORCING STEEL IN THE WING WALL MAY BE SHIFTED AS NECESSARY TO CLEAR THE DRAIN PIPE.

THE TOP SURFACE AREAS OF THE END BENT CAP SHALL BE CURED IN ACCORDANCE WITH THE STANDARD SPECIFICATIONS EXCEPT THE MEMBRANE CURING COMPOUND METHOD SHALL NOT BE USED.

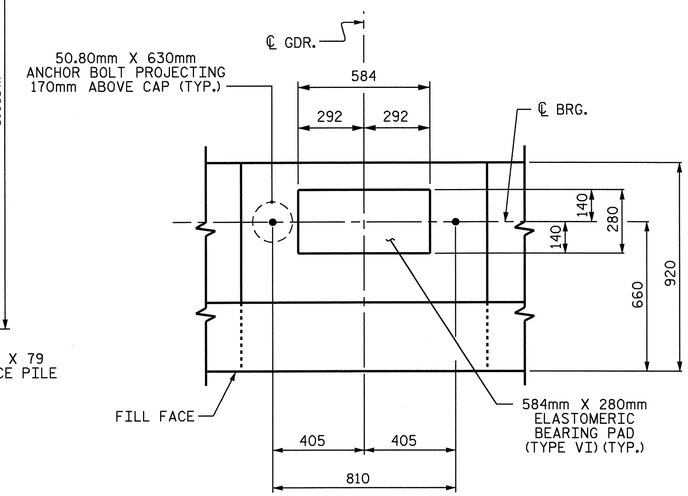

DETAIL "A"

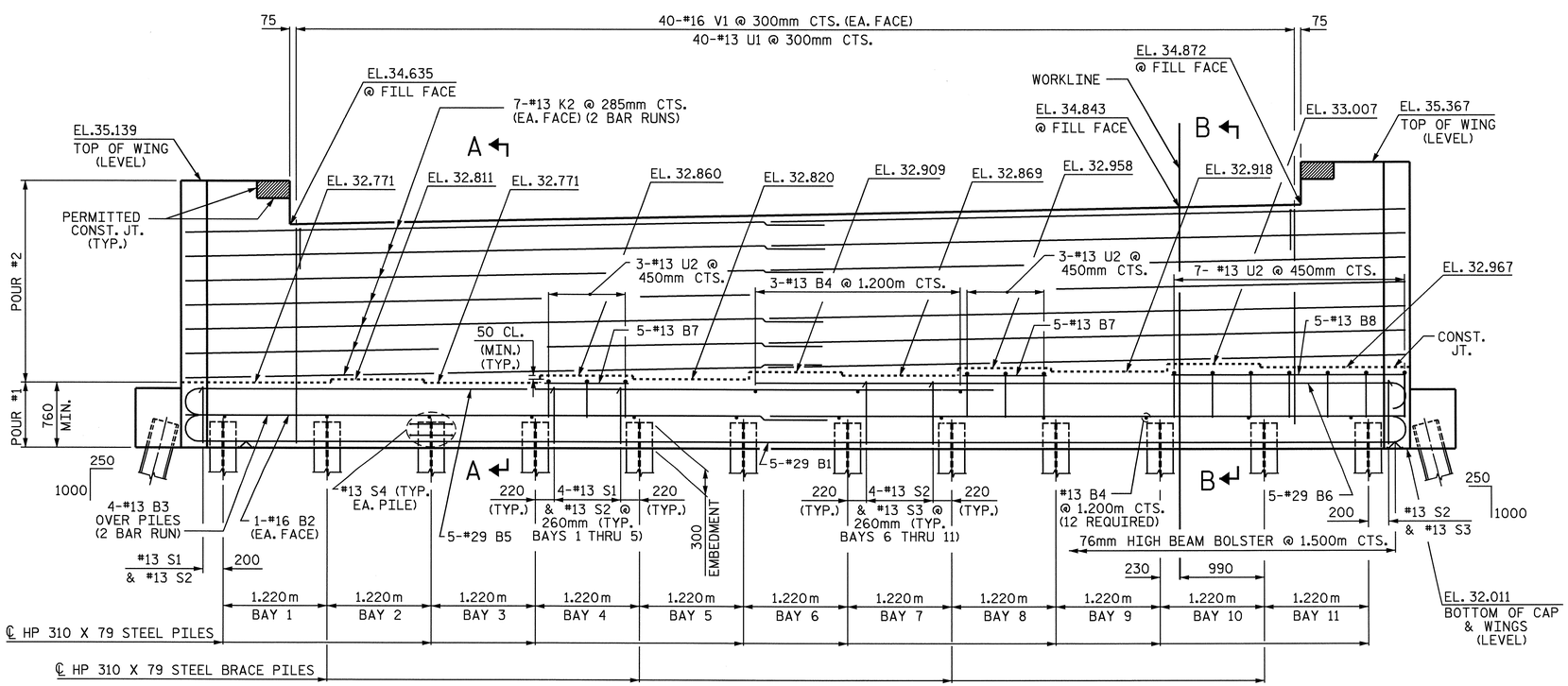

ELEVATION

PROJECT NO. R-2554BA

WAYNE COUNTY

STATION: 132+37.000 -L-

SHEET 1 OF 3

STATE OF NORTH CAROLINA
DEPARTMENT OF TRANSPORTATION
RALEIGH

SUBSTRUCTURE
END BENT #1
(LEFT LANE)

NORTH CAROLINA PROFESSIONAL SEAL 14045 ENGINEER TIMOTHY J. COGGINS

Timothy J. Coggins 6/5/08

REVISIONS								SHEET NO.
NO.	BY:	DATE:	NO.	BY:	DATE:			S-406
1			3					TOTAL SHEETS
2			4					478

DRAWN BY : M. GUDLAUGSSON DATE : 11/07
CHECKED BY : J. B. WILSON DATE : 12/07

25-APR-2008 15:57
k:\structures\dzlzl\str#14\mgudlaugsson\r2554ba_sd_eb.dgn

STR.#14

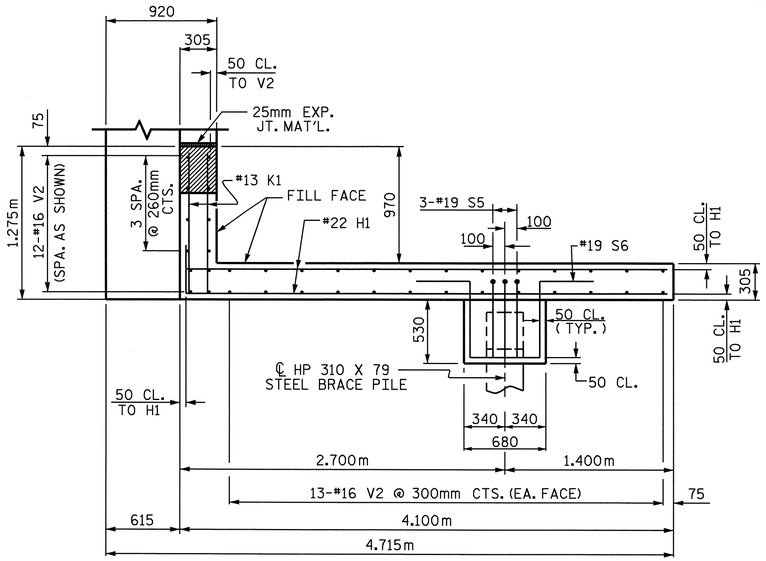

PLAN OF WING W1

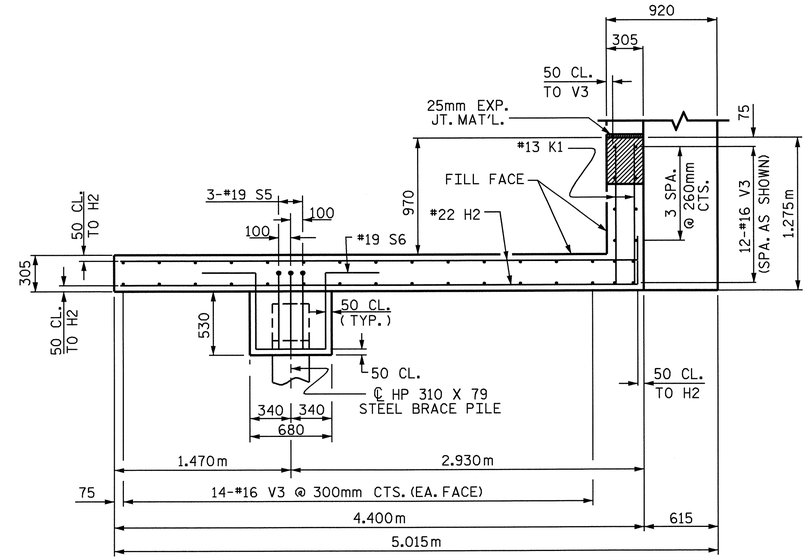

PLAN OF WING W2

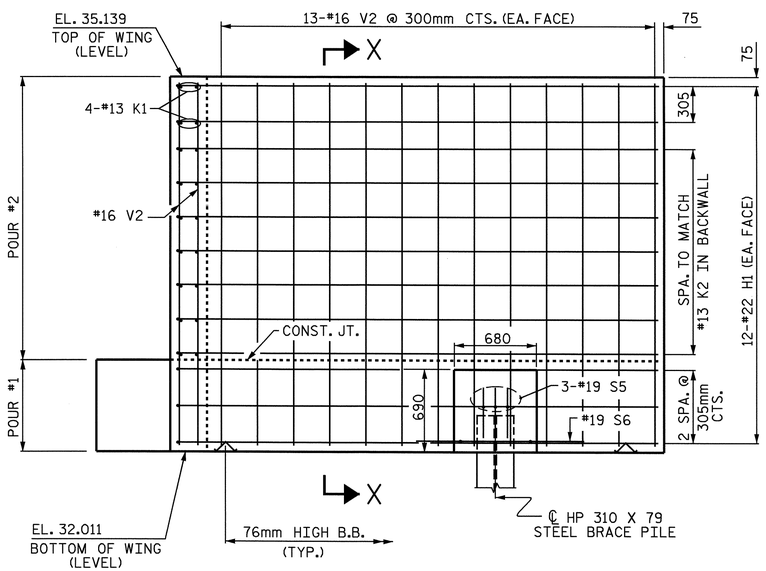

ELEVATION OF WING W1

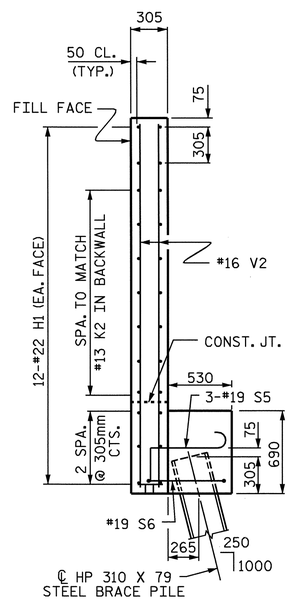

SECTION X-X

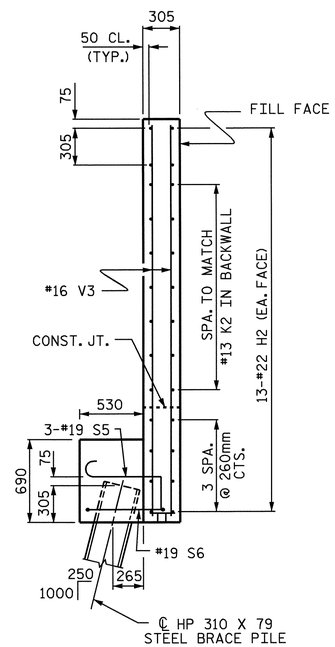

SECTION Y-Y

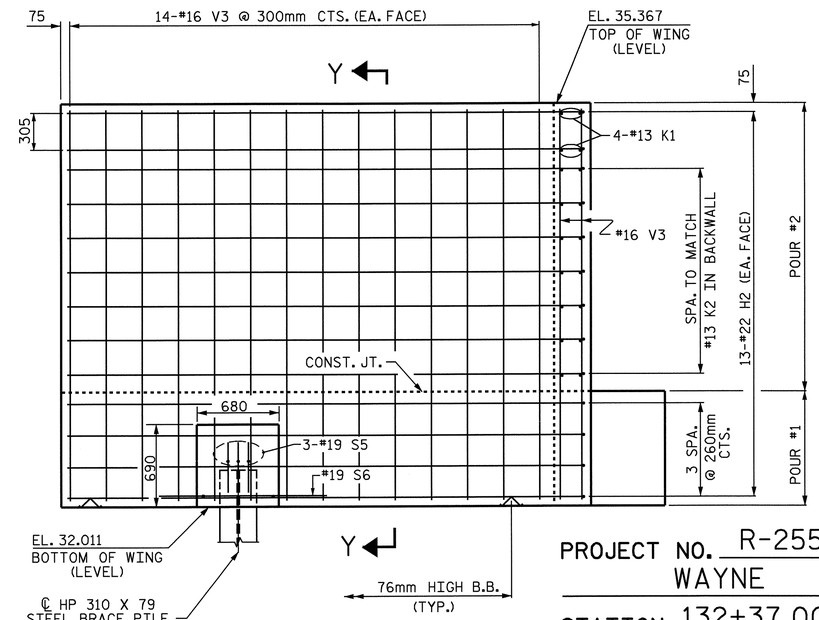

ELEVATION OF WING W2

PROJECT NO. R-2554BA
WAYNE COUNTY
STATION: 132+37.000 -L-

SHEET 2 OF 3

STATE OF NORTH CAROLINA
DEPARTMENT OF TRANSPORTATION
RALEIGH

SUBSTRUCTURE
END BENT #1
(LEFT LANE)

NORTH CAROLINA PROFESSIONAL SEAL 14045 ENGINEER TIMOTHY R. COGGINS
6/5/08

REVISIONS						SHEET NO.
NO.	BY:	DATE:	NO.	BY:	DATE:	S-407
1			3			TOTAL SHEETS
2			4			478

DRAWN BY : M. GUDLAUGSSON DATE : 11/07
CHECKED BY : J. B. WILSON DATE : 12/07

25-APR-2008 15:56
k:\structures\azlzl\str#14\mgudlaugsson\r2554ba_sd_eb.dgn
jbwilson

STR.#14

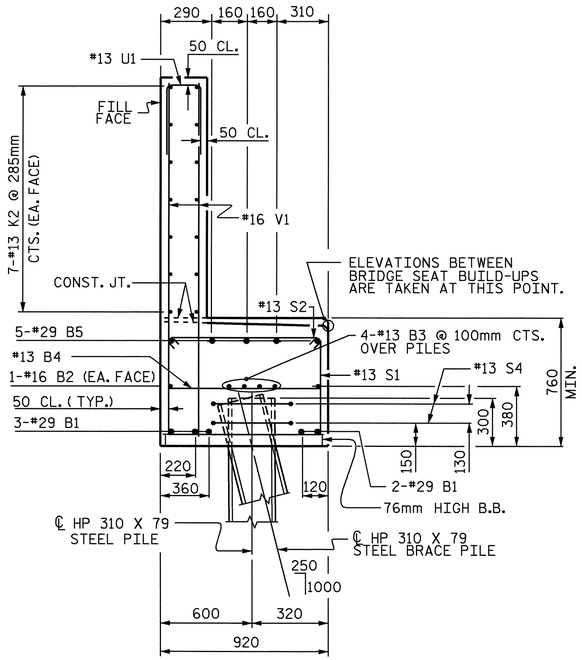

SECTION A-A

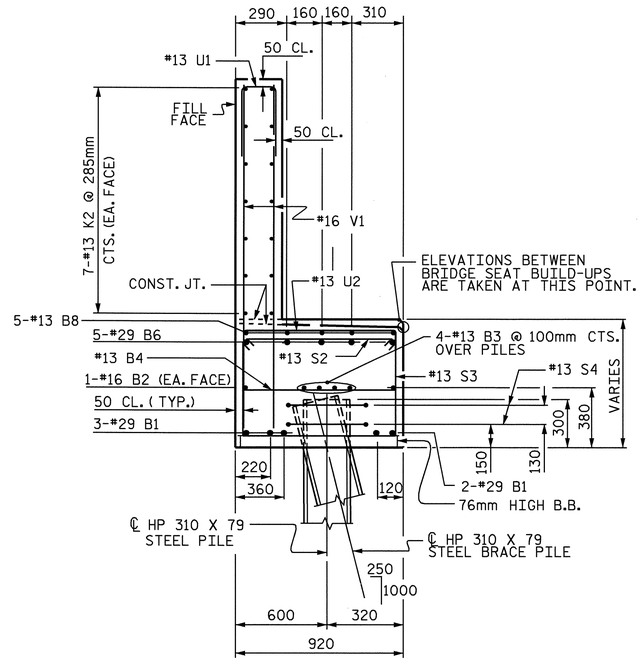

SECTION B-B

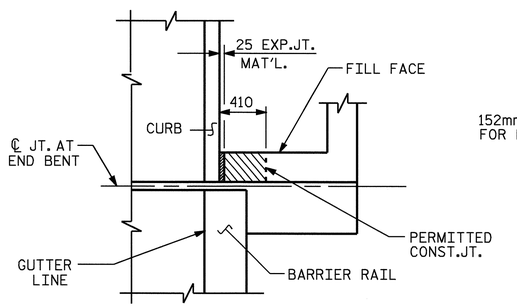

PLAN

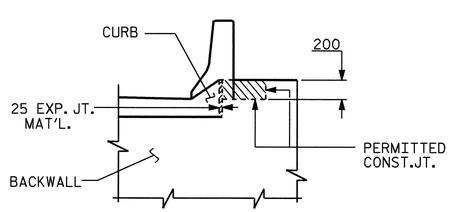

ELEVATION

BLOCKOUT IN WING WALL

NOTE: THE CONCRETE IN THE CROSS-HATCHED AREA OF THE WING SHALL BE POURED AFTER THE BARRIER RAIL IS CAST IF SLIP FORMING IS USED.

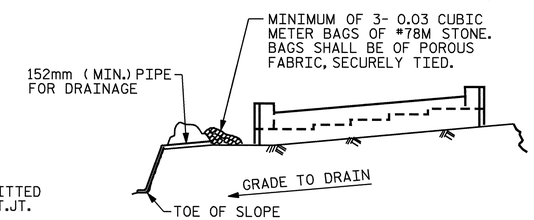

BAGGED STONE AND PIPE SHALL BE PLACED IMMEDIATELY AFTER COMPLETION OF END BENT EXCAVATION. PIPE MAY BE EITHER CONCRETE, CORRUGATED STEEL, CORRUGATED ALUMINUM ALLOY, OR CORRUGATED PLASTIC. PERFORATED PIPE WILL NOT BE ALLOWED.

BAGGED STONE SHALL REMAIN IN PLACE UNTIL THE ENGINEER DIRECTS THAT IT BE REMOVED. THE CONTRACTOR SHALL REMOVE AND DISPOSE OF SILT ACCUMULATIONS AT BAGGED STONE WHEN SO DIRECTED BY THE ENGINEER. BAGS SHALL BE REMOVED AND REPLACED WHENEVER THE ENGINEER DETERMINES THAT THEY HAVE DETERIORATED AND LOST THEIR EFFECTIVENESS.

NO SEPARATE PAYMENT WILL BE MADE FOR THIS WORK AND THE ENTIRE COST OF THIS WORK SHALL BE INCLUDED IN THE UNIT CONTRACT PRICE BID FOR THE SEVERAL PAY ITEMS.

TEMPORARY DRAINAGE AT END BENT

BAR TYPES

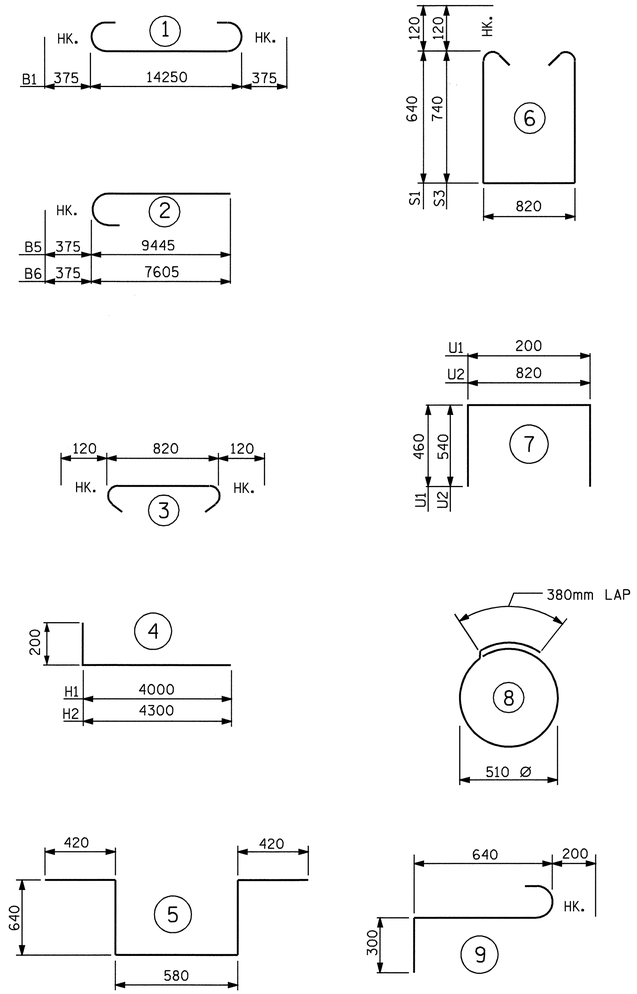

ALL BAR DIMENSIONS ARE OUT TO OUT.

BILL OF MATERIAL
END BENT NO. 1

BAR	NO.	SIZE	TYPE	LENGTH	WEIGHT
B1	5	#29	1	15000	380
B2	2	#16	STR	14300	44
B3	8	#13	STR	7520	60
B4	15	#13	STR	820	12
B5	5	#29	2	9820	248
B6	5	#29	2	7980	202
B7	10	#13	STR	980	10
B8	5	#13	STR	2740	14
H1	24	#22	4	4200	307
H2	26	#22	4	4500	356
K1	8	#13	STR	1160	9
K2	28	#13	STR	7520	209
S1	21	#13	6	2340	49
S2	46	#13	3	1060	48
S3	25	#13	6	2540	63
S4	24	#13	8	1980	47
S5	6	#19	9	1140	15
S6	2	#19	5	2700	12
U1	40	#13	7	1120	45
U2	13	#13	7	1900	25
V1	80	#16	STR	2520	313
V2	38	#16	STR	3020	178
V3	40	#16	STR	3240	201

REINFORCING STEEL kg. 2847

CLASS "A" CONCRETE

POUR #1 (CAP, LOWER WINGS & WING BRACE PILE FTGS.)	m3	14.0
POUR #2 (BACKWALL & UPPER WINGS)	m3	14.4
TOTAL	m3	28.4

HP 310 X 79 STEEL PILES

NO. 14	METERS	182.0
PILE REDRIVES	EACH	4

SPLICE LENGTH CHART

BAR	SIZE	LENGTH
K2,B3	#13	740mm
B5	#29	2670mm

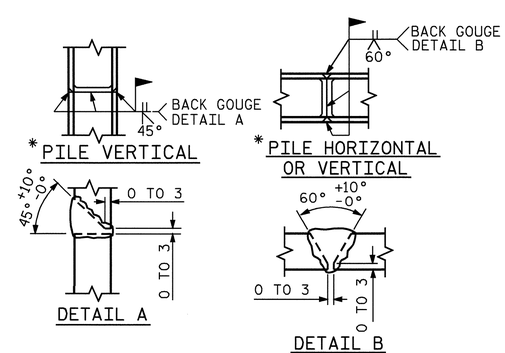

* POSITION OF PILE DURING WELDING.

PILE SPLICE DETAILS

NORTH CAROLINA PROFESSIONAL SEAL 14045 ENGINEER TIMOTHY W. COGGINS
6/6/08

PROJECT NO. R-2554BA
WAYNE COUNTY
STATION: 132+37.000 -L-

SHEET 3 OF 3

STATE OF NORTH CAROLINA
DEPARTMENT OF TRANSPORTATION
RALEIGH

SUBSTRUCTURE
END BENT #1
(LEFT LANE)

REVISIONS						SHEET NO.
NO.	BY:	DATE:	NO.	BY:	DATE:	S-408
1			3			TOTAL SHEETS
2			4			478

DRAWN BY : M. GUDLAUGSSON DATE : 11/07
CHECKED BY : J. B. WILSON DATE : 12/07

06-JUN-2008 11:36
r:\structures\azlz1\Str#14\FINAL PLANS\R2554BA_sd_EB.dgn
padkins

STR.#14

NOTES

STIRRUPS IN CAP MAY BE SHIFTED AS NECESSARY TO CLEAR ANCHOR BOLTS.

FOR PILE SPLICE DETAILS, SEE END BENT SHEETS 3 OF 3.

THE STEEL PILES SHALL BE GALVANIZED IN ACCORDANCE WITH SECTION 1076 OF THE STANDARD SPECIFICATIONS.

THE TOP SURFACE AREA OF BENT #3 CAP SHALL BE CURED IN ACCORDANCE WITH THE STANDARD SPECIFICATIONS EXCEPT THE MEMBRANE CURING COMPOUND METHOD SHALL NOT BE USED.

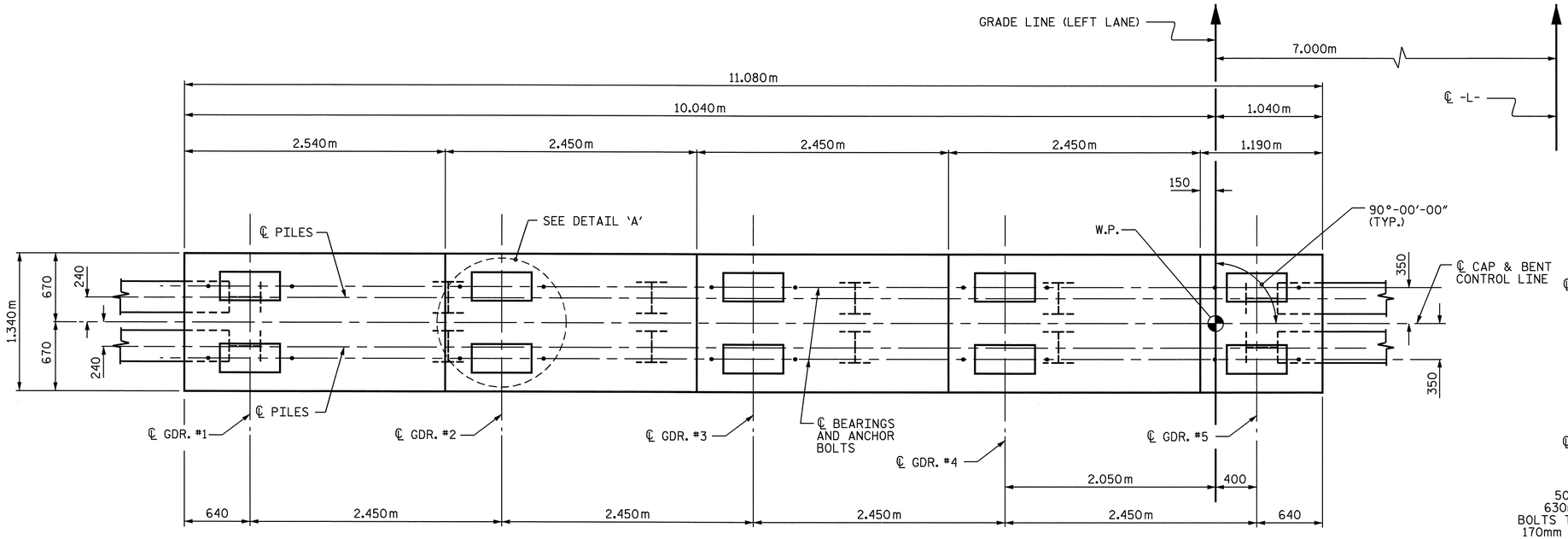

PLAN

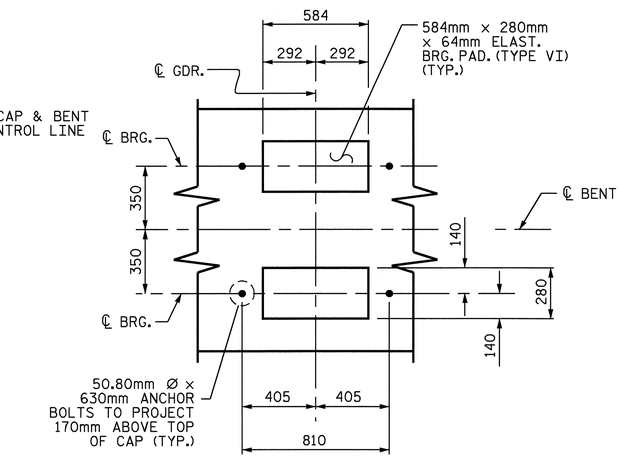

DETAIL 'A'

(DIM. TYP. FOR EA. BRG.)

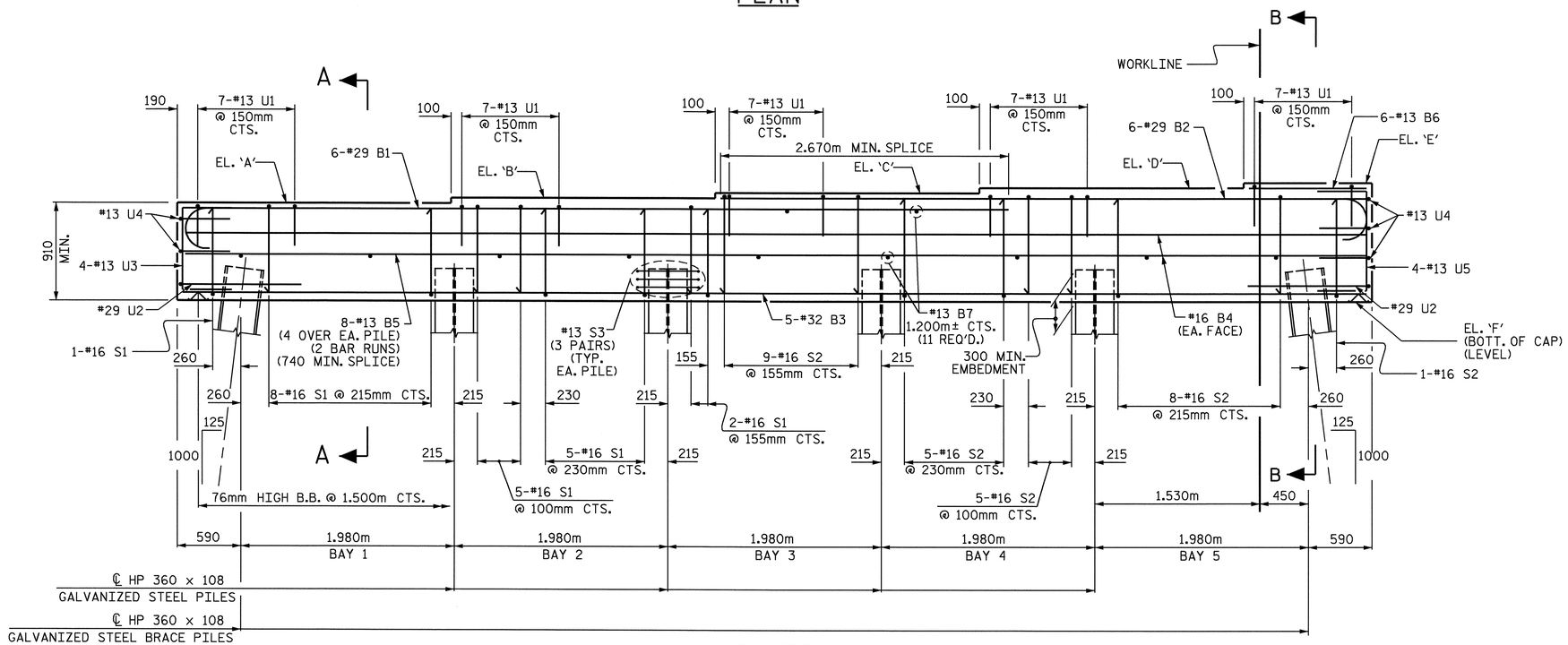

ELEVATION

(INVERT ALTERNATE STIRRUPS)

TABLE OF ELEVATIONS

BRIDGE SEATS	BENT#1	BENT#2	BENT#3	BENT#4
EL. 'A'	32.879	32.978	33.086	33.185
EL. 'B'	32.928	33.027	33.135	33.234
EL. 'C'	32.977	33.076	33.184	33.283
EL. 'D'	33.026	33.125	33.233	33.332
EL. 'E'	33.075	33.174	33.282	33.381
BOTT. OF CAP EL. 'F'	31.969	32.068	32.176	32.275

PROJECT NO. R-2554BA

WAYNE COUNTY

STATION: 132+37.000 -L-

SHEET 1 OF 2

STATE OF NORTH CAROLINA
DEPARTMENT OF TRANSPORTATION
RALEIGH

SUBSTRUCTURE

BENTS #1, #2, #3, & #4

(LEFT LANE)

NORTH CAROLINA PROFESSIONAL SEAL 14045 ENGINEER TIMOTHY W. COGGINS
Timothy W. Coggins 6/6/08

REVISIONS							SHEET NO.
NO.	BY:	DATE:	NO.	BY:	DATE:		S-409
1			3				TOTAL SHEETS
2			4				478

DRAWN BY : J.B. WILSON DATE : 2/2008
CHECKED BY : PEGGY ADKINS DATE : 2/2008

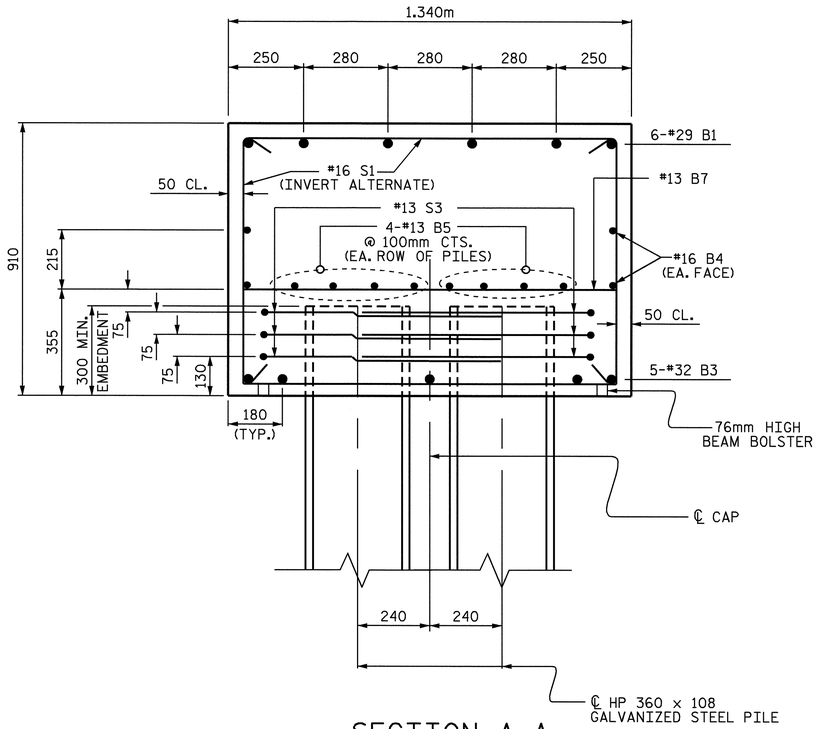

SECTION A-A

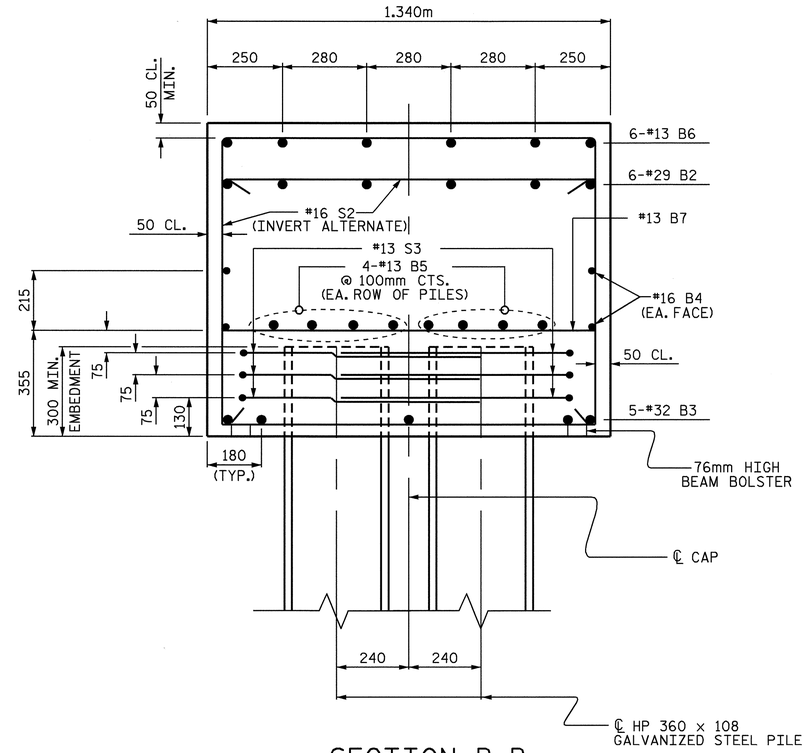

SECTION B-B

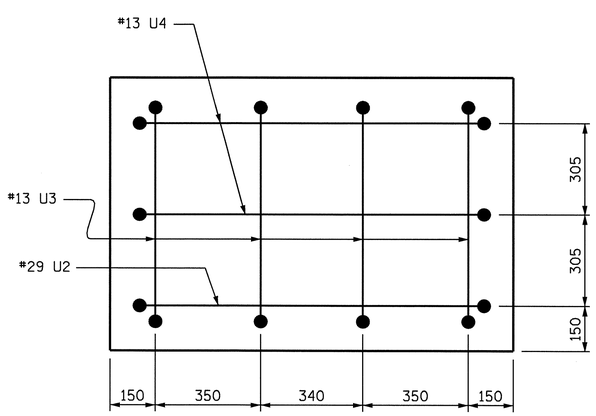

LEFT END VIEW

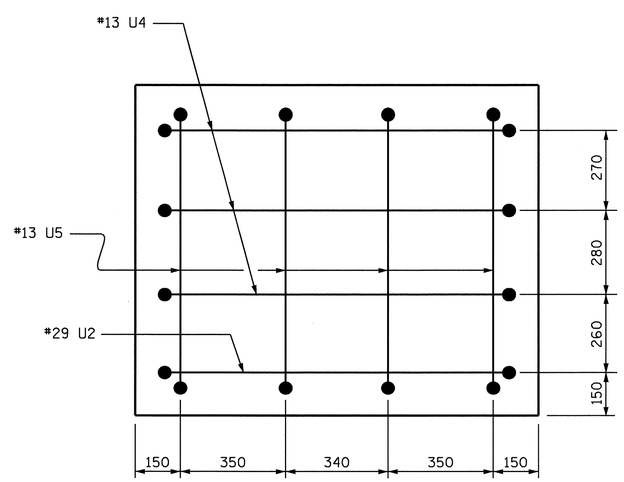

RIGHT END VIEW

BAR TYPES

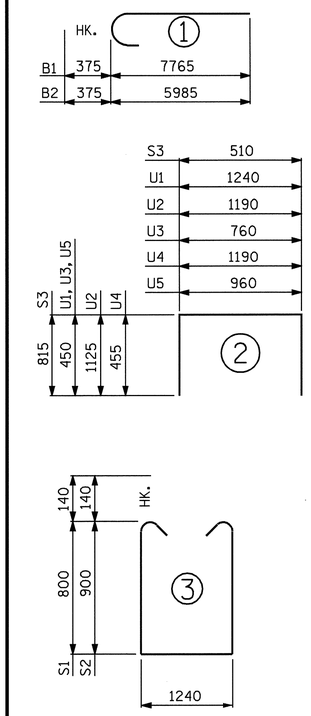

ALL BAR DIMENSIONS ARE OUT TO OUT.

BILL OF MATERIAL
FOR ONE BENT (4 REQ'D)

BAR	NO.	SIZE	TYPE	LENGTH	WEIGHT
B1	6	#29	1	8140	247
B2	6	#29	1	6360	193
B3	5	#32	STR.	10980	352
B4	4	#16	STR.	10980	68
B5	16	#13	STR.	5860	93
B6	6	#13	STR.	1080	6
B7	11	#13	STR.	1240	14
S1	21	#16	3	3120	102
S2	28	#16	3	3320	144
S3	36	#13	2	2140	77
U1	35	#13	2	2140	74
U2	2	#29	2	3440	35
U3	4	#13	2	1660	7
U4	5	#13	2	2100	10
U5	4	#13	2	1860	7

REINFORCING STEEL	KGS.	1429
CLASS "A" CONCRETE BREAKDOWN POUR #1 (CAP)	m3	14.8
HP 360 X 108 GALVANIZED STEEL PILE NO.12	METERS	180.0
PILE REDRIVES	EACH	4

PROJECT NO. R-2554BA
WAYNE COUNTY
STATION: 132+37.000 -L-

SHEET 2 OF 2

STATE OF NORTH CAROLINA
DEPARTMENT OF TRANSPORTATION
RALEIGH

SUBSTRUCTURE
BENTS #1, #2, #3 & #4
(LEFT LANE)

NORTH CAROLINA PROFESSIONAL SEAL 14045 ENGINEER TIMOTHY M. COGGINS
6/6/08

REVISIONS						SHEET NO.
NO.	BY:	DATE:	NO.	BY:	DATE:	S-410
1			3			TOTAL SHEETS
2			4			478

DRAWN BY : J.B. WILSON DATE : 2/2008
CHECKED BY : PEGGY ADKINS DATE : 2/2008

06-JUN-2008 11:10
r:\structures\azlz1\Str*14\FINAL PLANS\R-2554BA_sd_B*.dgn
padkins

STR. #14

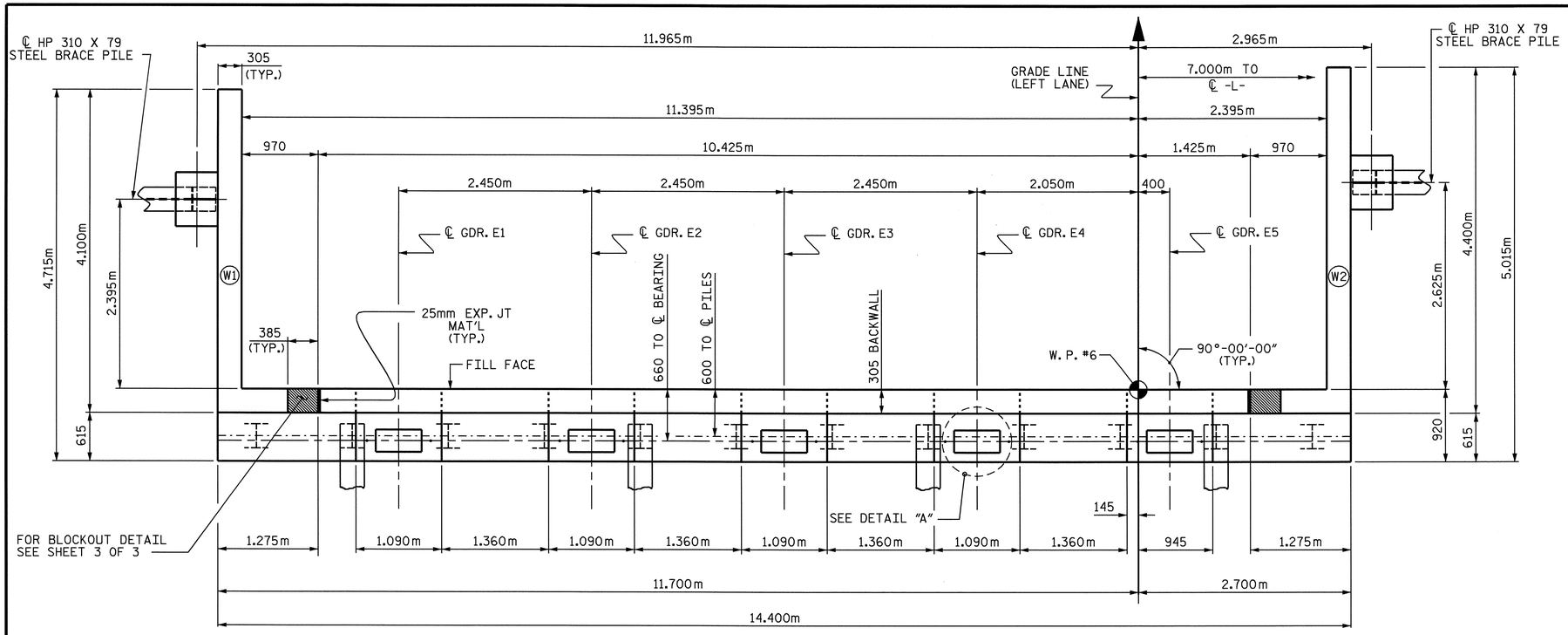

PLAN

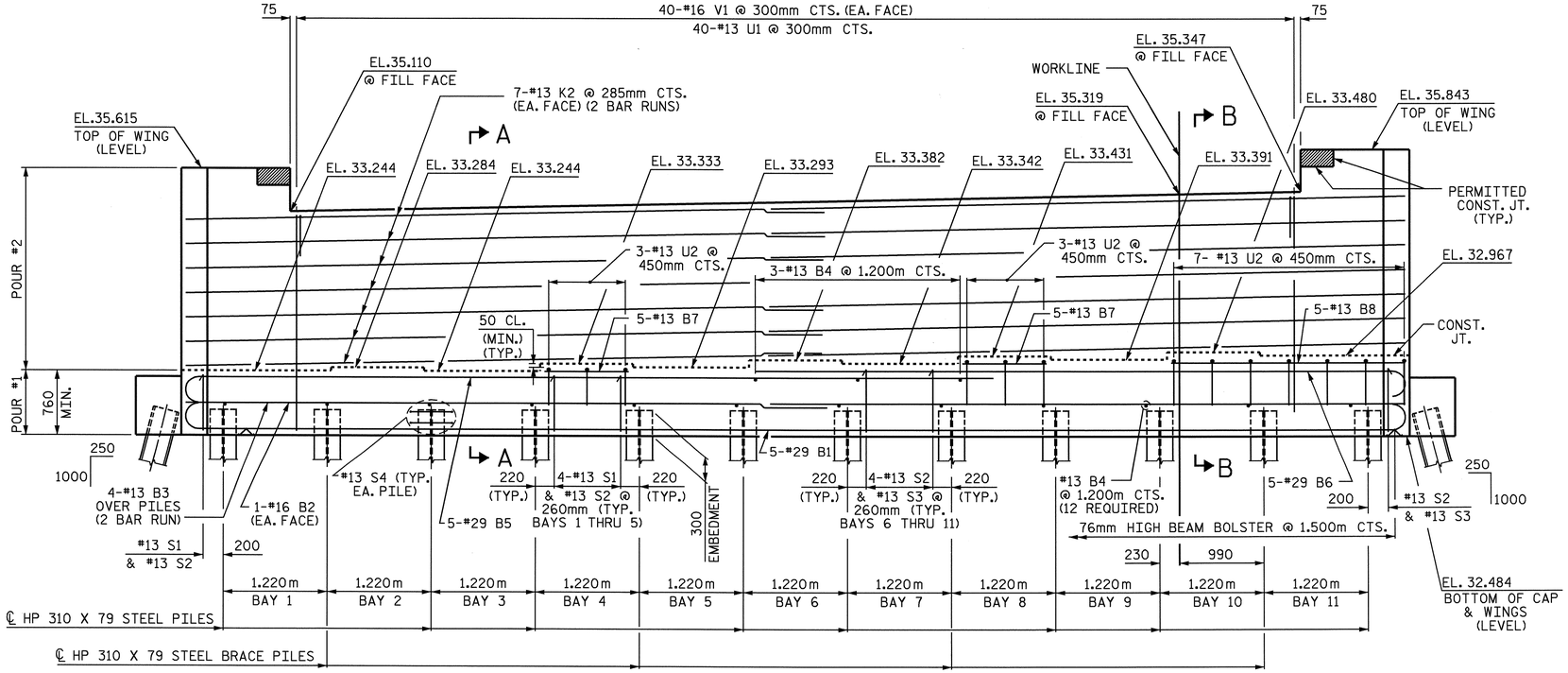

ELEVATION

NOTES

STIRRUPS IN CAP MAY BE SHIFTED AS NECESSARY TO CLEAR ANCHOR BOLTS.

BACKWALL SHALL BE PLACED BEFORE APPLYING THE EPOXY PROTECTIVE COATING.

THE TOP SURFACE OF THE END BENT CAP EXCEPT THE BRIDGE SEAT BUILDUPS SHALL BE SLOPED TRANSVERSELY FROM THE FILL FACE TO THE BACK FACE AT THE RATE OF 2 %.

THE CONTRACTOR SHALL PROVIDE FOR INSTALLATION OF THE 102mm DIAMETER DRAIN PIPE THROUGH THE WING WALL AS REQUIRED FOR REINFORCED BRIDGE APPROACH FILLS. SEE THE ROADWAY PLANS. REINFORCING STEEL IN THE WING WALL MAY BE SHIFTED AS NECESSARY TO CLEAR THE DRAIN PIPE.

THE TOP SURFACE AREAS OF THE END BENT CAP SHALL BE CURED IN ACCORDANCE WITH THE STANDARD SPECIFICATIONS EXCEPT THE MEMBRANE CURING COMPOUND METHOD SHALL NOT BE USED.

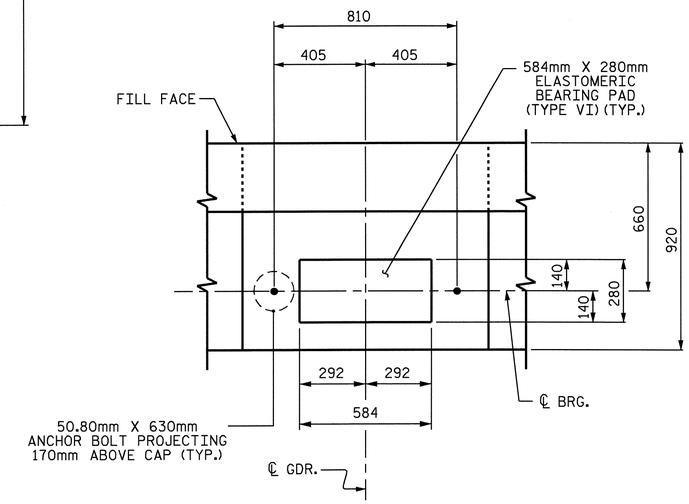

DETAIL "A"

PROJECT NO. R-2554BA

WAYNE COUNTY

STATION: 132+37.000 -L-

SHEET 1 OF 3

STATE OF NORTH CAROLINA
DEPARTMENT OF TRANSPORTATION
RALEIGH

SUBSTRUCTURE
END BENT #2
(LEFT LANE)

NORTH CAROLINA PROFESSIONAL SEAL 14045 ENGINEER TIMOTHY L. COGGINS

Timothy L. Coggins 6/5/08

REVISIONS						SHEET NO.
NO.	BY:	DATE:	NO.	BY:	DATE:	S-411
1			3			TOTAL SHEETS
2			4			478

STR.#14

DRAWN BY : M. GUDLAUGSSON DATE : 11/07
CHECKED BY : J. B. WILSON DATE : 12/07

25-APR-2008 15:56
k:\structures\azlzl\str#14\mgudlaugsson\r2554ba_sd_eb.dgn
jbwilson

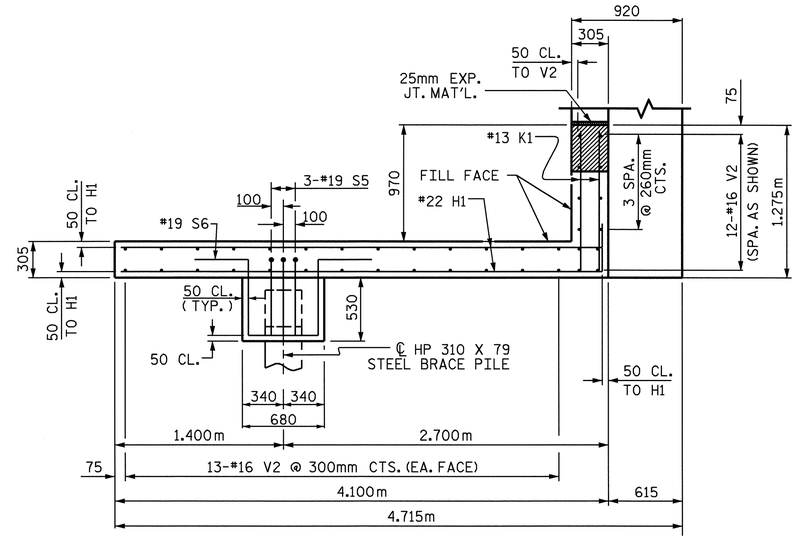

PLAN OF WING W1

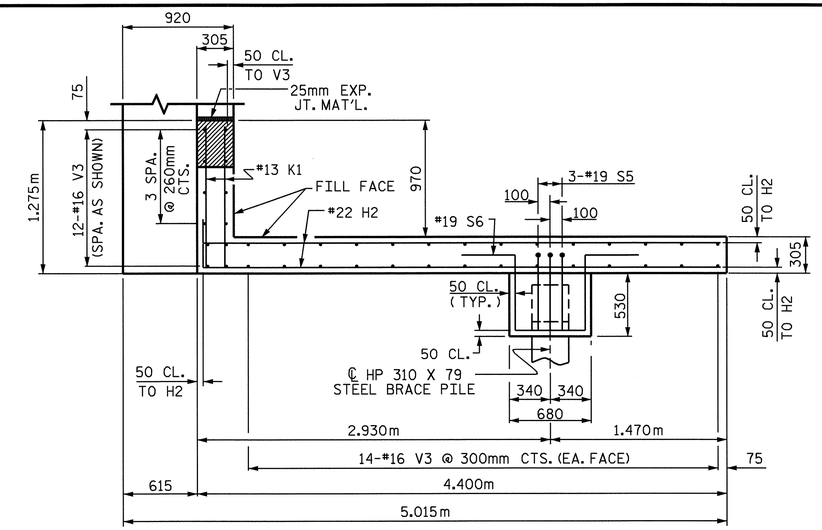

PLAN OF WING W2

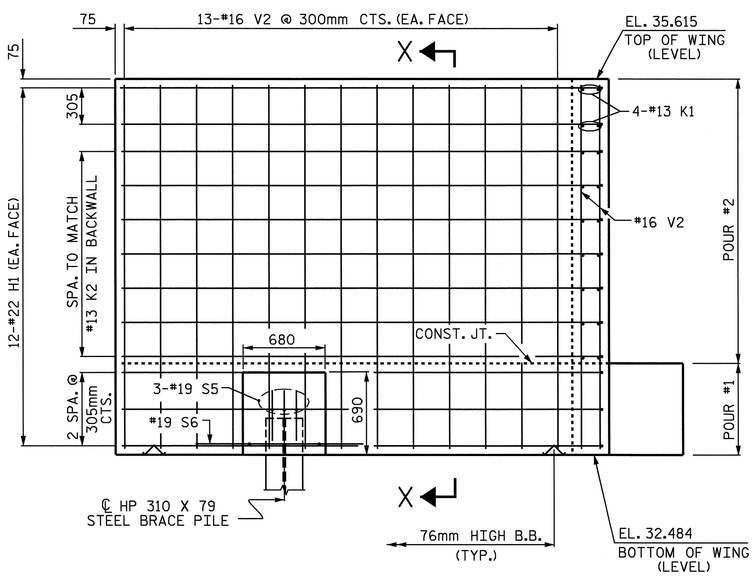

ELEVATION OF WING W1

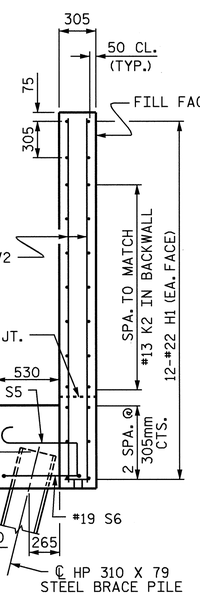

SECTION X-X

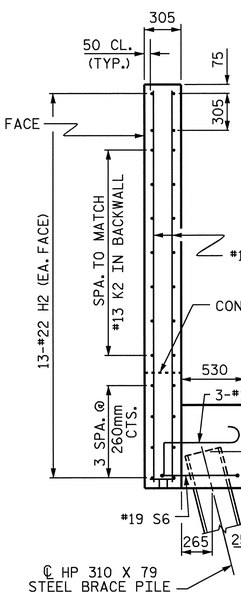

SECTION Y-Y

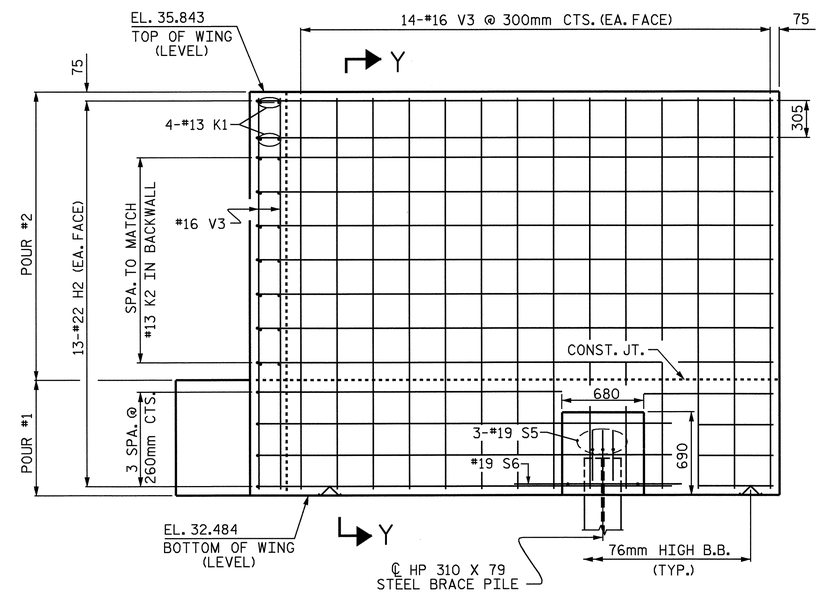

ELEVATION OF WING W2

PROJECT NO. R-2554BA

WAYNE COUNTY

STATION: 132+37.000 -L-

SHEET 2 OF 3

STATE OF NORTH CAROLINA
DEPARTMENT OF TRANSPORTATION
RALEIGH

SUBSTRUCTURE

END BENT #2
(LEFT LANE)

NORTH CAROLINA PROFESSIONAL SEAL 14045 ENGINEER TIMOTHY R. COGGINS
6/5/08

REVISIONS						SHEET NO.
NO.	BY:	DATE:	NO.	BY:	DATE:	S-412
1			3			TOTAL SHEETS
2			4			478

DRAWN BY : M. GUDLAUGSSON DATE : 11/07
CHECKED BY : J. B. WILSON DATE : 12/07

25-APR-2008 15:56
k:\structures\azlzl\str#14\mgudlaugsson\r2554ba_sd_eb.dgn
lbwilson

STR.#14

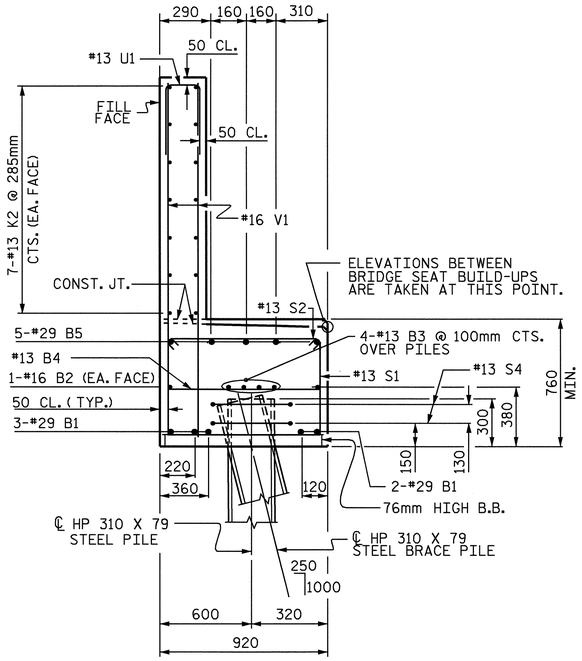

SECTION A-A

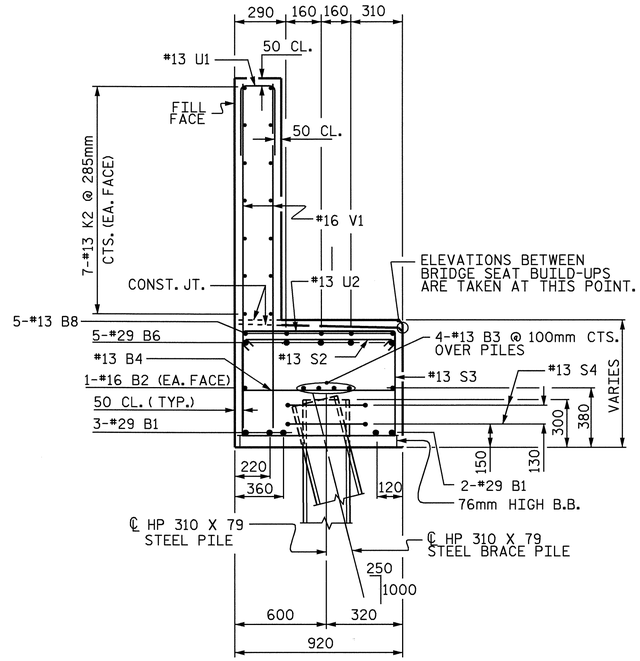

SECTION B-B

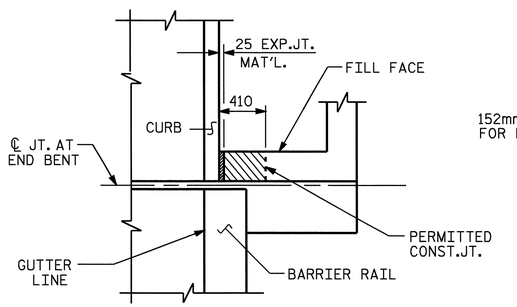

PLAN

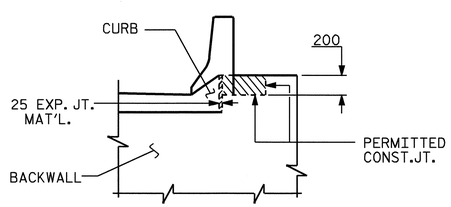

ELEVATION

BLOCKOUT IN WING WALL

NOTE: THE CONCRETE IN THE CROSS-HATCHED AREA OF THE WING SHALL BE POURED AFTER THE BARRIER RAIL IS CAST IF SLIP FORMING IS USED.

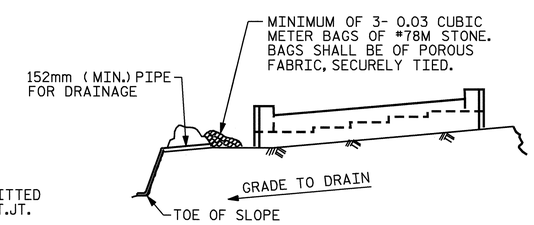

BAGGED STONE AND PIPE SHALL BE PLACED IMMEDIATELY AFTER COMPLETION OF END BENT EXCAVATION. PIPE MAY BE EITHER CONCRETE, CORRUGATED STEEL, CORRUGATED ALUMINUM ALLOY, OR CORRUGATED PLASTIC. PERFORATED PIPE WILL NOT BE ALLOWED.

BAGGED STONE SHALL REMAIN IN PLACE UNTIL THE ENGINEER DIRECTS THAT IT BE REMOVED. THE CONTRACTOR SHALL REMOVE AND DISPOSE OF SILT ACCUMULATIONS AT BAGGED STONE WHEN SO DIRECTED BY THE ENGINEER. BAGS SHALL BE REMOVED AND REPLACED WHENEVER THE ENGINEER DETERMINES THAT THEY HAVE DETERIORATED AND LOST THEIR EFFECTIVENESS.

NO SEPARATE PAYMENT WILL BE MADE FOR THIS WORK AND THE ENTIRE COST OF THIS WORK SHALL BE INCLUDED IN THE UNIT CONTRACT PRICE BID FOR THE SEVERAL PAY ITEMS.

TEMPORARY DRAINAGE AT END BENT

BAR TYPES

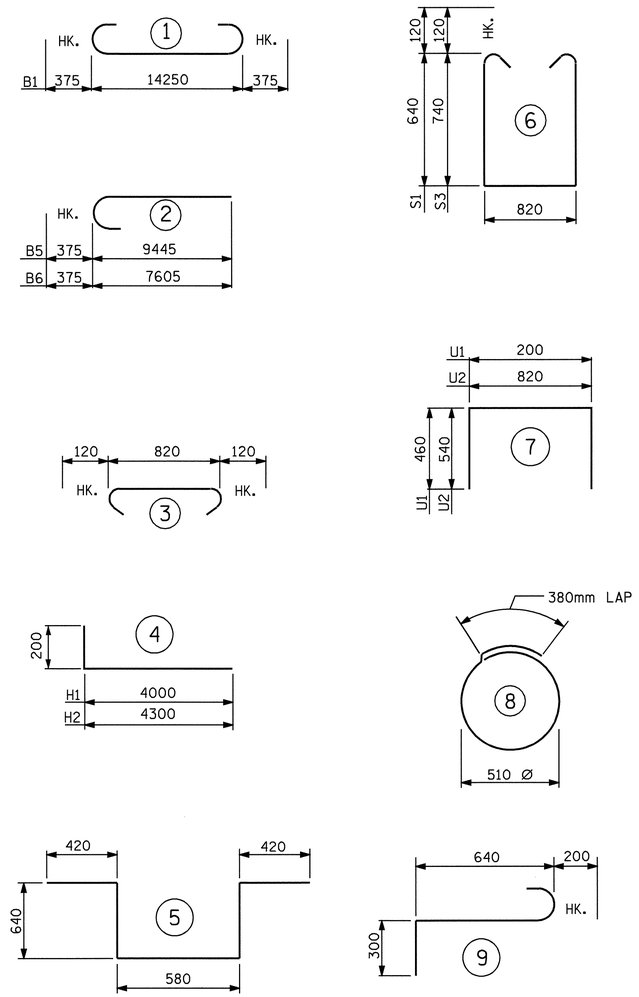

ALL BAR DIMENSIONS ARE OUT TO OUT.

BILL OF MATERIAL
END BENT NO. 2

BAR	NO.	SIZE	TYPE	LENGTH	WEIGHT
B1	5	#29	1	15000	380
B2	2	#16	STR	14300	44
B3	8	#13	STR	7520	60
B4	15	#13	STR	820	12
B5	5	#29	2	9820	248
B6	5	#29	2	7980	202
B7	10	#13	STR	980	10
B8	5	#13	STR	2740	14
H1	24	#22	4	4200	307
H2	26	#22	4	4500	356
K1	8	#13	STR	1160	9
K2	28	#13	STR	7520	209
S1	21	#13	6	2340	49
S2	46	#13	3	1060	48
S3	25	#13	6	2540	63
S4	24	#13	8	1980	47
S5	6	#19	9	1140	15
S6	2	#19	5	2700	12
U1	40	#13	7	1120	45
U2	13	#13	7	1900	25
V1	80	#16	STR	2520	313
V2	38	#16	STR	3020	178
V3	40	#16	STR	3240	201

REINFORCING STEEL		Kg. 2847
CLASS "A" CONCRETE		
POUR #1 (CAP, LOWER WINGS & WING BRACE PILE FTGS.)	m3	14.0
POUR #2 (BACKWALL & UPPER WINGS)	m3	14.4
TOTAL	m3	28.4
HP 310 X 79 STEEL PILES NO. 14	METERS	182.0
PILE REDRIVES	EACH	4

SPLICE LENGTH CHART

BAR	SIZE	LENGTH
K2,B3	#13	740mm
B5	#29	2670mm

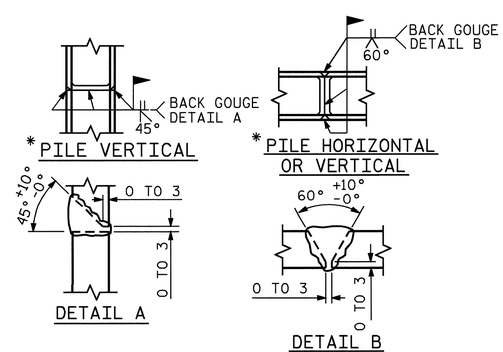

* POSITION OF PILE DURING WELDING.

PILE SPLICE DETAILS

PROJECT NO. R-2554BA
WAYNE COUNTY
STATION: 132+37.000 -L-

SHEET 3 OF 3

STATE OF NORTH CAROLINA
DEPARTMENT OF TRANSPORTATION
RALEIGH

SUBSTRUCTURE
END BENT #2
(LEFT LANE)

NORTH CAROLINA PROFESSIONAL SEAL 14045 ENGINEER TIMOTHY G. COGGINS
6/6/08

REVISIONS						SHEET NO.
NO.	BY:	DATE:	NO.	BY:	DATE:	S-413
1			3			TOTAL SHEETS
2			4			478

DRAWN BY : M. GUDLAUGSSON DATE : 11/07
CHECKED BY : J. B. WILSON DATE : 12/07

06-JUN-2008 11:37
r:\structures\azlzl\Str#14\FINAL PLANS\R2554BA_sd_EB.dgn
padkins

STR.#14

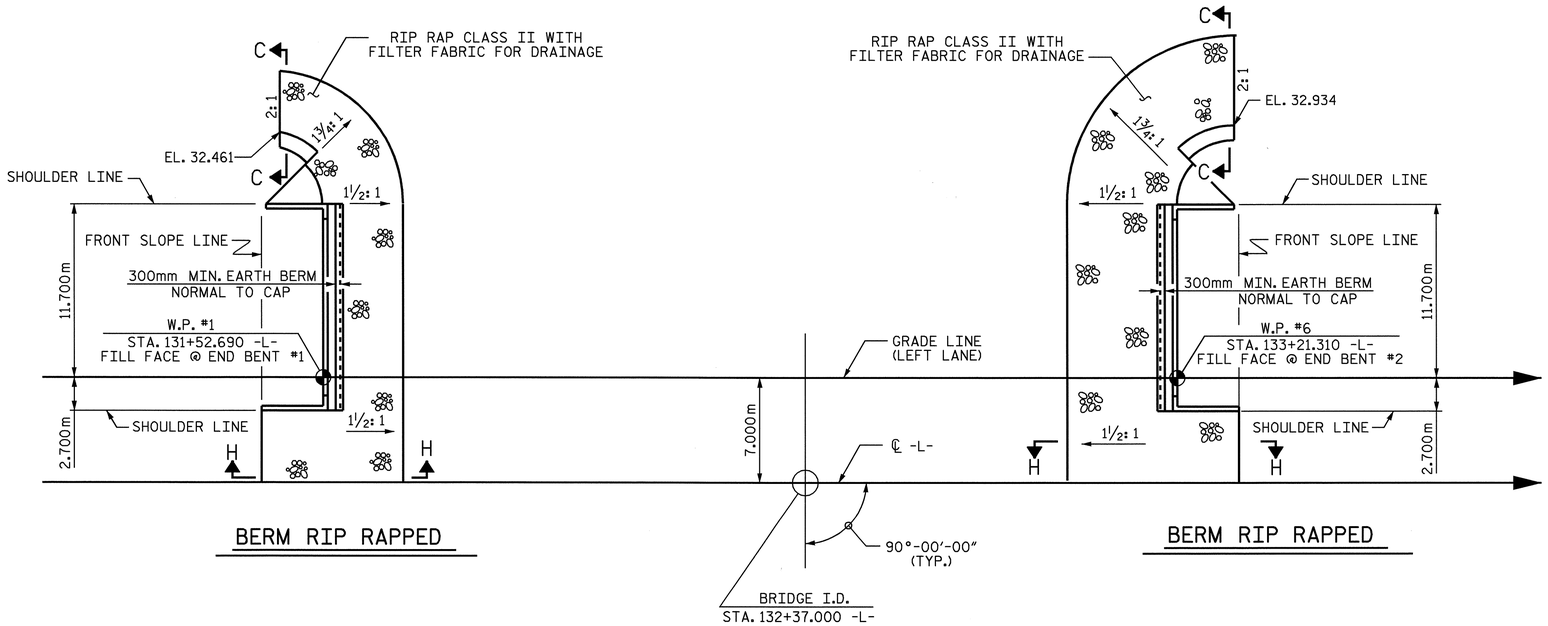

BERM RIP RAPPED

BERM RIP RAPPED

ESTIMATED QUANTITIES		
BRIDGE @ STA. 132+37.000 -L- (LEFT LANE)	RIP RAP CLASS II (600mm THICK)	FILTER FABRIC FOR DRAINAGE
	METRIC TON	SQUARE METERS
END BENT 1	149	146
END BENT 2	177	174

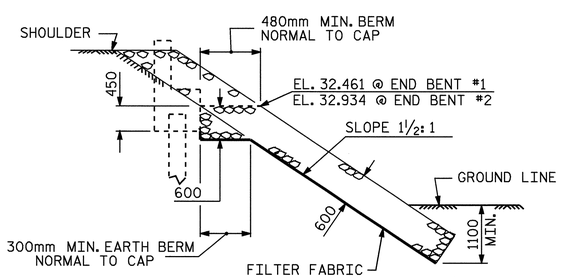

SECTION H-H

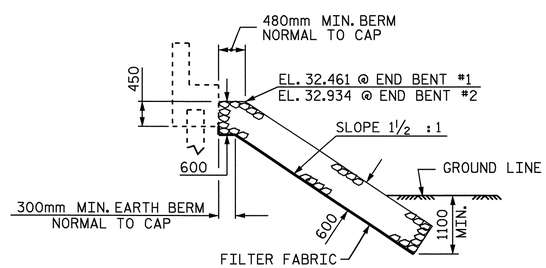

GRADE LINE SECTION
BERM RIP RAPPED

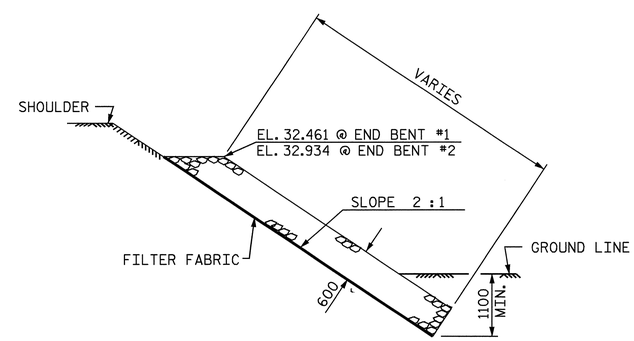

SECTION C-C

PROJECT NO. R-2554BA
WAYNE COUNTY
STATION: 132+37.000 -L-

STATE OF NORTH CAROLINA
DEPARTMENT OF TRANSPORTATION
RALEIGH

NORTH CAROLINA PROFESSIONAL SEAL 14045 ENGINEER TIMOTHY L. COGGINS
Timothy L. Coggins 6/6/08

RIP RAP DETAILS

(LEFT LANE)

REVISIONS						SHEET NO.
NO.	BY:	DATE:	NO.	BY:	DATE:	S-414
1			3			TOTAL SHEETS
2			4			478

STR. #14 SKEW 90°

DRAWN BY : B.N.BARODAWALA DATE : 6-7-06
CHECKED BY : T. L. COGGINS DATE : 11/07

06-JUN-2008 11:13
r:\structures\azlzl\Str#14\FINAL PLANS\R2554BA_sd_RR_14.dgn
padkins

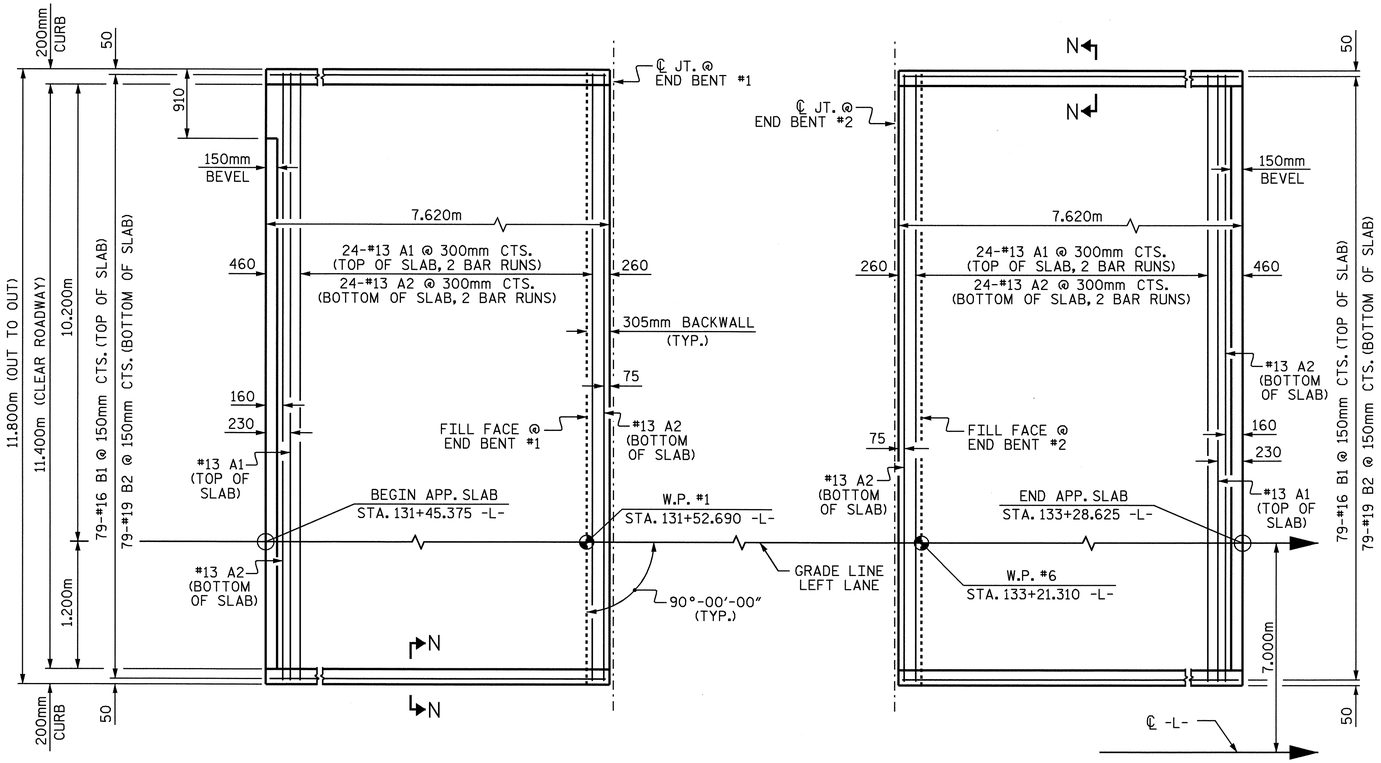

PLAN @ END BENT #1

PLAN @ END BENT #2

DIMENSIONS SHOWN ARE TYPICAL FOR BOTH APPROACH SLABS

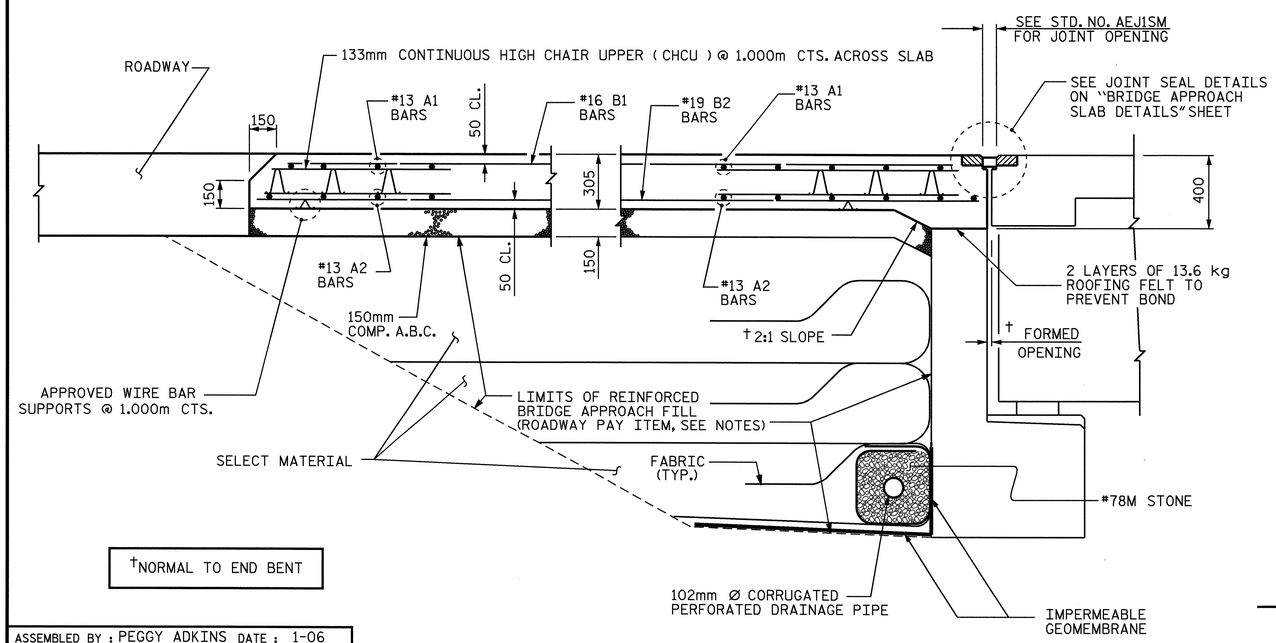

†NORMAL TO END BENT

SECTION THRU SLAB

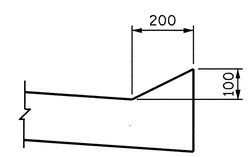

SECTION N-N

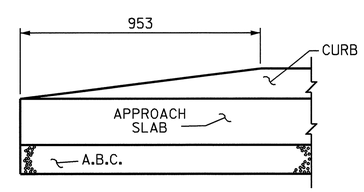

END OF CURB WITHOUT SHOULDER BERM GUTTER

CURB DETAILS

NOTES

APPROACH SLAB SHALL NOT BE CONSTRUCTED PRIOR TO COMPLETION OF THE BRIDGE DECK.

FOR REINFORCED BRIDGE APPROACH FILL INCLUDING FABRIC, IMPERMEABLE GEOMEMBRANE, 102mm Ø DRAINAGE PIPE, #78M STONE, AND SELECT MATERIAL, SEE ROADWAY PLANS.

AREA BETWEEN THE WINGWALL AND APPROACH SLAB SHALL BE GRADED TO DRAIN THE WATER AWAY FROM THE FILL FACE OF THE BRIDGE AND SHALL BE PAVED. SEE ROADWAY PLANS.

THE 150mm COMP. A.B.C. SHALL BE FLUSH WITH THE ROADWAY END OF THE APPROACH SLAB AND SHALL EXTEND 300mm OUTSIDE OF EACH EDGE OF THE APPROACH SLAB.

THE CONTRACTOR MAY USE 100mm TYPE B-25.0B ASPHALT CONCRETE COURSE IN LIEU OF 150mm COMP. A.B.C. IF THIS OPTION IS USED, THE BASE COURSE SHALL BE FLUSH WITH THE ROADWAY END OF THE APPROACH SLAB AND THE WIDTH SHALL BE THE SAME AS THAT OF THE APPROACH SLAB.

THE CONTRACTOR MAY USE 125mm CLASS "A" CONCRETE BASE IN LIEU OF 150mm COMP. A.B.C. IF THIS OPTION IS USED, THE CONCRETE BASE SHALL BE FLUSH WITH THE ROADWAY END OF THE APPROACH SLAB AND THE WIDTH SHALL BE THE SAME AS THAT OF THE APPROACH SLAB. THE CONCRETE SHALL BE FINISHED TO A SMOOTH SURFACE AND A LAYER OF 13.6 kg ROOFING FELT SHALL BE PLACED BETWEEN THE CONCRETE BASE AND THE APPROACH SLAB TO PREVENT BOND. THE APPROACH SLAB SHALL NOT BE CAST UNTIL THE CONCRETE BASE HAS REACHED AN AGE OF THREE CURING DAYS.

BILL OF MATERIAL

APPROACH SLAB AT EB #1

BAR	NO.	SIZE	TYPE	LENGTH	WEIGHT
✳ A1	50	#13	STR	6160	306
A2	52	#13	STR	6120	316
✳ B1	79	#16	STR	7200	883
B2	79	#19	STR	7520	1328
REINFORCING STEEL				kg.	1644
✳ EPOXY COATED REINFORCING STEEL				kg.	1189
CLASS AA CONCRETE				C.M.	27.8

APPROACH SLAB AT EB #2

BAR	NO.	SIZE	TYPE	LENGTH	WEIGHT
✳ A1	50	#13	STR	6160	306
A2	52	#13	STR	6120	316
✳ B1	79	#16	STR	7200	883
B2	79	#19	STR	7520	1328
REINFORCING STEEL				kg.	1644
✳ EPOXY COATED REINFORCING STEEL				kg.	1189
CLASS AA CONCRETE				C.M.	27.8

SPLICE CHART

BAR	SPLICE
#13 A1	610
#13 A2	540

PROJECT NO. R-2554BA
WAYNE COUNTY
STATION: 132+37.000 -L-

SHEET 1 OF 2

STATE OF NORTH CAROLINA
DEPARTMENT OF TRANSPORTATION
RALEIGH

STANDARD

BRIDGE APPROACH SLAB FOR FLEXIBLE PAVEMENT

(LEFT LANE)

NORTH CAROLINA PROFESSIONAL SEAL 14045 ENGINEER TIMOTHY L. COGGINS
6/5/08

REVISIONS						SHEET NO.
NO.	BY:	DATE:	NO.	BY:	DATE:	S-415
1			3			TOTAL SHEETS
2			4			478

ASSEMBLED BY : PEGGY ADKINS DATE : 1-06
CHECKED BY : B.N.BARODAWALA DATE : 7-06

DRAWN BY : FCJ 6/87
CHECKED BY : EGA 6/87

REV. 7/10/01 RWW/LES
REV. 5/7/03R RWW/JTE
REV. 5/1/06R TLA/GM

25-APR-2008 15:53
k:\structures\azlzl\str#14\padkins\microstation\r2554ba_sd_as_14.dgn
lbwilson

STR. #14

STD. NO. BAS4SM

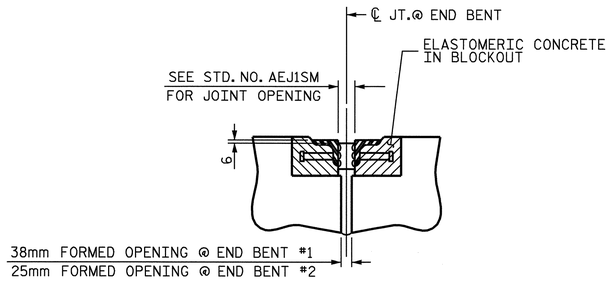

SECTION C-C

ARMORED EVAZOTE JOINT SEAL

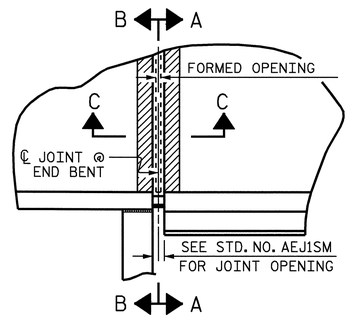

PLAN

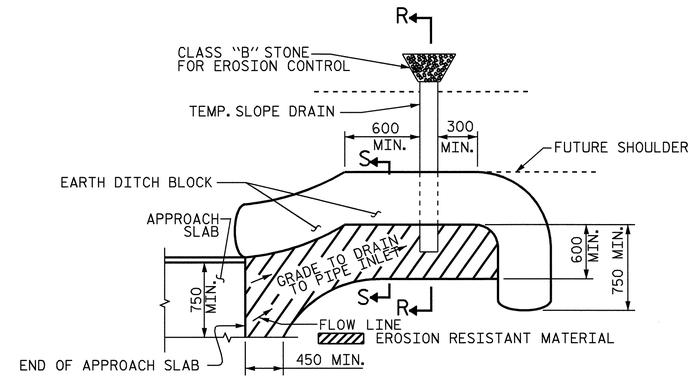

NOTE: IMMEDIATELY AFTER THE CONSTRUCTION OF THE APPROACH SLAB, THE CONTRACTOR SHALL PROVIDE TEMPORARY BERM AND SLOPE DRAIN. CONTRACTOR SHALL GRADE TO PIPE INLET AND PROVIDE EROSION RESISTANT MATERIAL AS SHOWN. THE EROSION RESISTANT MATERIAL SHALL BE EITHER 1) ASPHALT PLANT MIX, TYPE 1 OR TYPE 2, MIN. 50mm DEPTH, 2) EROSION CONTROL MAT, OR 3) CONCRETE, AS DIRECTED BY THE ENGINEER. THE SLOPE DRAIN SHALL CONSIST OF A NON-PERFORATED TEMPORARY DRAINAGE PIPE, 305mm IN DIAMETER.

PLAN VIEW

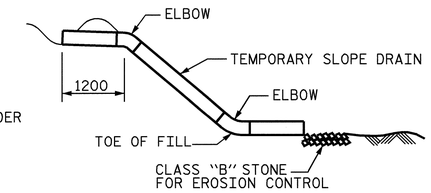

SECTION R-R

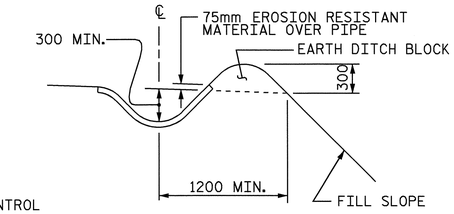

SECTION S-S

TEMPORARY BERM AND SLOPE DRAIN DETAILS

(TO BE USED WHEN SHOULDER BERM GUTTER IS REQUIRED)

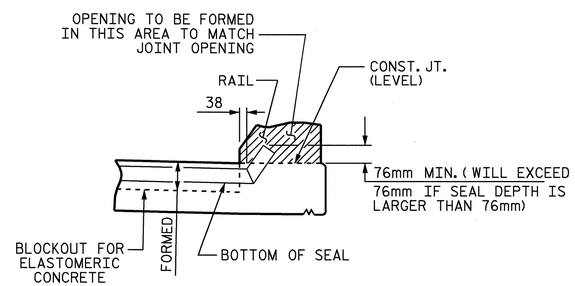

SECTION A-A

EVAZOTE JOINT SEAL TO BE CUT, HEAT WELDED AND TURNED UP PARALLEL TO SLOPED FACE OF THE BARRIER RAIL.

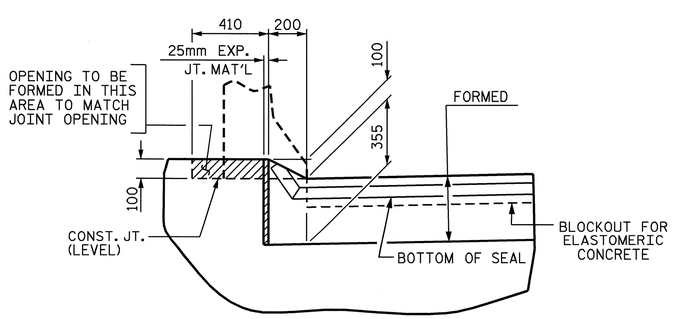

SECTION B-B

JOINT SEAL DETAILS @ END BENT

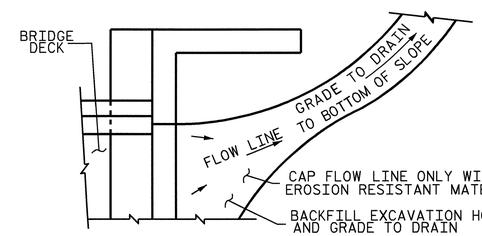

NOTE: IF THE APPROACH SLAB IS NOT CONSTRUCTED IMMEDIATELY AFTER THE BACKFILLING OF THE END BENT EXCAVATION, GRADE TO DRAIN TO THE BOTTOM OF THE SLOPE AND PROVIDE EROSION RESISTANT MATERIAL, SUCH AS FIBERGLASS ROVING OR AS DIRECTED BY THE ENGINEER TO PREVENT SOIL EROSION AND TO PROTECT THE AREA ADJACENT TO THE STRUCTURE. THE CONTRACTOR WILL BE REQUIRED TO REMOVE THESE MATERIALS PRIOR TO CONSTRUCTION OF THE APPROACH SLAB.

TEMPORARY DRAINAGE DETAIL

PROJECT NO. R-2554BA

WAYNE COUNTY

STATION: 132+37.000 -L-

SHEET 2 OF 2

STATE OF NORTH CAROLINA
DEPARTMENT OF TRANSPORTATION
RALEIGH

STANDARD
BRIDGE APPROACH
SLAB DETAILS

(LEFT LANE)

NORTH CAROLINA PROFESSIONAL SEAL 14045 ENGINEER TIMOTHY L. COGGINS
Timothy L. Coggins 6/5/08

REVISIONS						SHEET NO.
NO.	BY:	DATE:	NO.	BY:	DATE:	S-416
1			3			TOTAL SHEETS
2			4			478

ASSEMBLED BY : PEGGY ADKINS DATE : 1-06	
CHECKED BY : B.N.BARODAWALA DATE : 7-06	
DRAWN BY : FCJ 11/88	REV. 10/17/00 RWW/LES
CHECKED BY : ARB 11/88	REV. 5/7/03 RWW/JTE
	REV. 5/1/06R TLA/GM

STR. #14

STD. NO. BAS10SM

F. A. PROJECT NO. NHS-70(160)

GRADE DATA

-0.7285% △ +0.3000%

PI = 130+87.000 -L-
EL. = 35.016m
VC = 200m

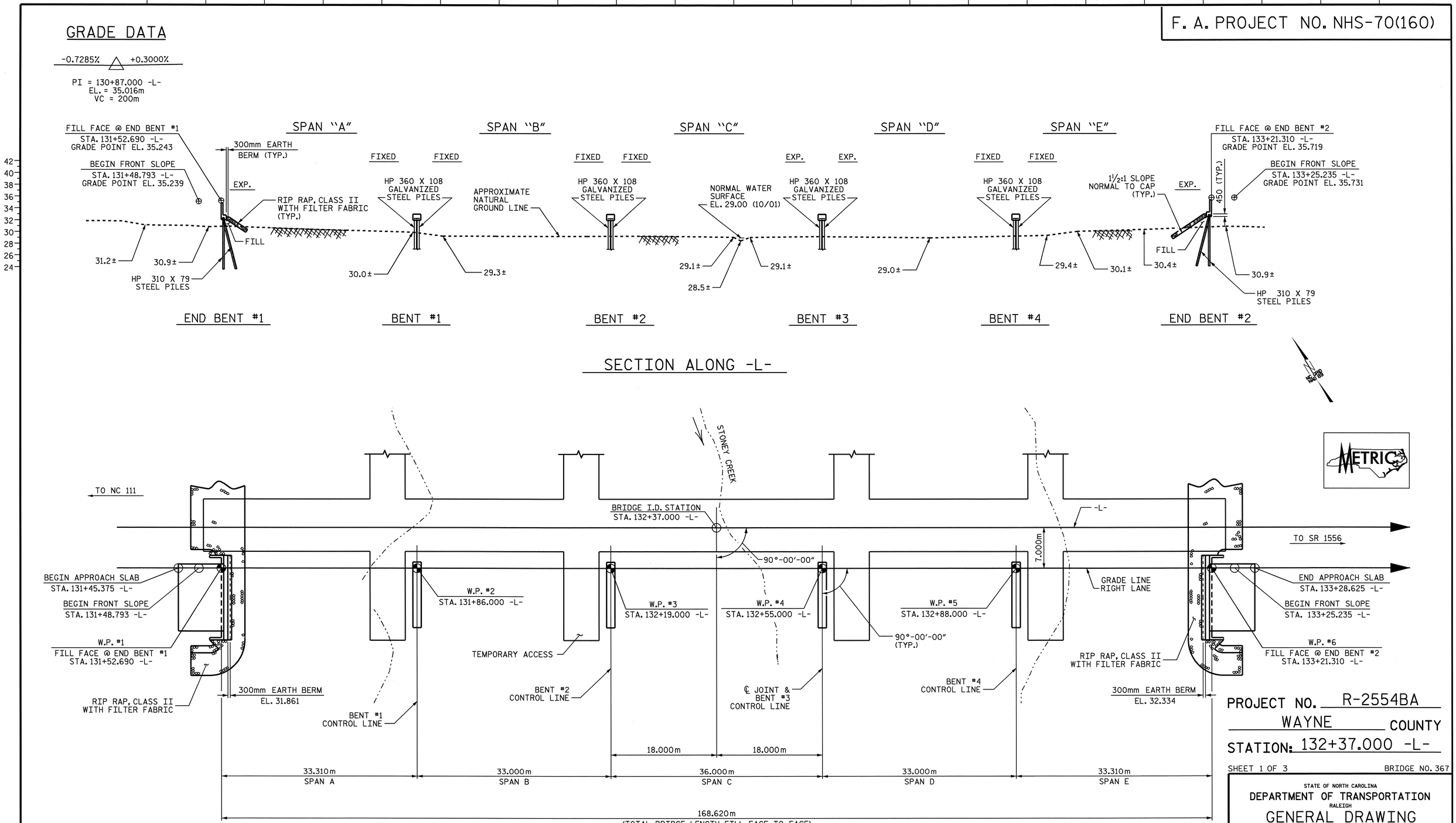

PROJECT NO. R-2554BA
WAYNE COUNTY
STATION: 132+37.000 -L-

SHEET 1 OF 3 BRIDGE NO. 367

STATE OF NORTH CAROLINA
DEPARTMENT OF TRANSPORTATION
RALEIGH

GENERAL DRAWING

FOR BRIDGE OVER
STONEY CREEK ON
US 70 BYPASS BETWEEN
NC 111 AND SR 1556

(RIGHT LANE)

NORTH CAROLINA PROFESSIONAL SEAL 12274 ENGINEER OMAR R. AZIZI
Omar R. Azizi 6/6/08

NORTH CAROLINA PROFESSIONAL SEAL 14045 ENGINEER TIMOTHY E. COGGINS
Timothy E. Coggins 6/6/08

REVISIONS								SHEET NO.
NO.	BY:	DATE:	NO.	BY:	DATE:			S-417
1			3					TOTAL SHEETS
2			4					478

DRAWN BY : ZION RORIE DATE : 4/20/06
CHECKED BY : B. N. BARODAWALA DATE : 7/25/06

06-JUN-2008 11:53
r:\structures\azizi\Str#15\FINAL PLANS\r-2554ba_sd_gd_15.dgn
pdkins

STR. #15

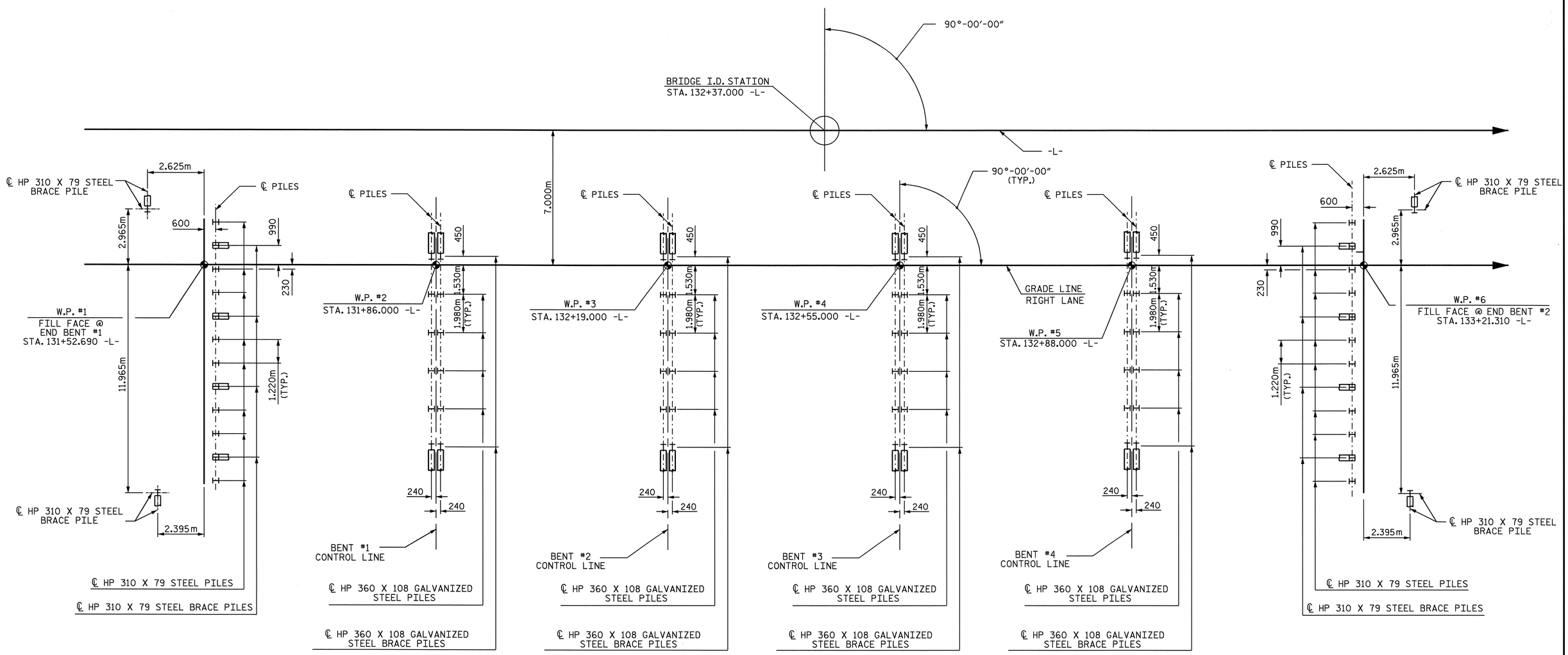

FOUNDATION LAYOUT

DIMENSIONS LOCATING END BENT PILES AND BENT PILES ARE SHOWN TO CENTERLINE OF PILES.

END BENT BRACE PILES ARE BATTERED AT 250:1000 WHERE SHOWN.

BENT BRACE PILES ARE BATTERED AT 125:1000 WHERE SHOWN.

PROJECT NO. R-2554BA

WAYNE COUNTY

STATION: 132+37.000 -L-

SHEET 2 OF 3

STATE OF NORTH CAROLINA
DEPARTMENT OF TRANSPORTATION
RALEIGH

GENERAL DRAWING

FOR BRIDGE OVER
STONEY CREEK ON
US 70 BYPASS BETWEEN
NC 111 AND SR 1556
(RIGHT LANE)

NORTH CAROLINA PROFESSIONAL SEAL 14045 ENGINEER TIMOTHY W. COGGINS
6/4/08

REVISIONS						SHEET NO.
NO.	BY:	DATE:	NO.	BY:	DATE:	S-418
1			3			TOTAL SHEETS
2			4			478

DRAWN BY : ZION RORIE DATE : 4/20/06
CHECKED BY : B. N. BARODAWALA DATE : 7/25/06

06-JUN-2008 11:13
r:\structures\azlz1\Str#15\FINAL PLANS\r-2554ba_sd_gd_15.dgn
padkins

STR. #15

BM #9 RR SPIKE IN BASE OF 810mm PINE 45.754m LT OF -BL- STA. 51+28.360 ELEV. 32.631m

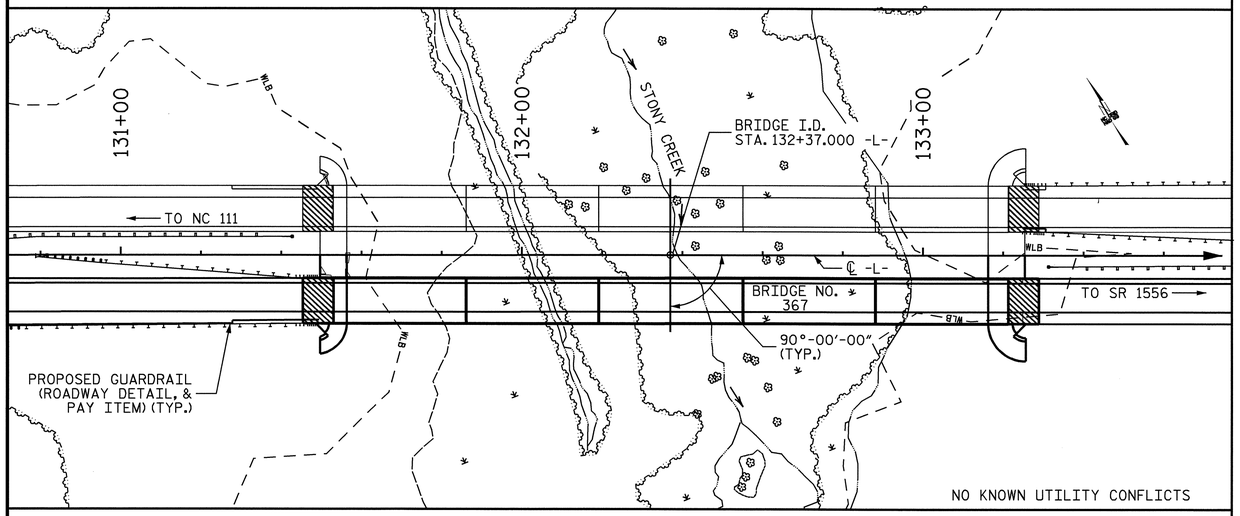

LOCATION SKETCH

HYDRAULIC DATA

DESIGN DISCHARGE	= 65.8 m³/s
FREQUENCY OF DESIGN FLOOD	= 50 YR.
DESIGN HIGH WATER ELEVATION	= 31.040
DRAINAGE AREA	= 13.7 SQ. KM.
BASIC DISCHARGE (Q100)	= 74.7 m³/s
BASIC HIGH WATER ELEVATION	= 31.140

OVERTOPPING FLOOD DATA

OVERTOPPING DISCHARGE	= 1223.3 m³/s
FREQUENCY OF OVERTOPPING FLOOD	= >500 YR.
OVERTOPPING FLOOD ELEVATION	= 35.230 ✳

✳ OVERTOPPING ELEV. IS AT THE UPSTREAM BRIDGE SECTION. ALL OTHER ELEVATIONS ARE AT THE APPROACH SECTIONS.

NOTES:

ASSUMED LIVE LOAD = MS18 OR ALTERNATE LOADING, EXCEPT THAT THE GIRDERS HAVE BEEN DESIGNED FOR MS22.5.

THIS BRIDGE HAS BEEN DESIGNED IN ACCORDANCE WITH THE REQUIREMENTS OF AASHTO STANDARD SPECIFICATIONS FOR SEISMIC DESIGN OF HIGHWAY BRIDGES FOR SEISMIC PERFORMANCE CATEGORY A.

ALL DIMENSIONS ARE IN MILLIMETERS UNLESS OTHERWISE NOTED.

ALL ELEVATIONS ARE IN METERS.

FOR OTHER DESIGN DATA AND GENERAL NOTES, SEE SHEET SNSM.

FOR EROSION CONTROL MEASURES, SEE EROSION CONTROL PLANS.

THIS BRIDGE HAS BEEN DESIGNED BY THE STRENGTH DESIGN METHOD AS SPECIFIED IN AASHTO STANDARD SPECIFICATIONS.

REMOVABLE FORMS MAY BE USED IN LIEU OF METAL STAY-IN-PLACE FORMS IN ACCORDANCE WITH ARTICLE 420-3 OF THE STANDARD SPECIFICATIONS.

THE CONTRACTOR SHALL PROVIDE INDEPENDENT ASSURANCE SAMPLES OF REINFORCING STEEL AS FOLLOWS: FOR PROJECTS REQUIRING UP TO 360,000 kg OF REINFORCING STEEL, ONE 760mm SAMPLE OF EACH SIZE BAR USED, AND FOR PROJECTS REQUIRING OVER 360,000 kg OF REINFORCING STEEL, TWO 760mm SAMPLES OF EACH SIZE BAR USED. THE BARS FROM WHICH THE SAMPLES ARE TAKEN MUST THEN BE SPLICED WITH REPLACEMENT BARS OF THE SIZE AND LENGTH OF THE SAMPLE PLUS A MINIMUM LAP SPLICE OF THIRTY BAR DIAMETERS.

NEEDLE BEAMS WILL NOT BE ALLOWED UNLESS OTHERWISE CALLED FOR ON THE PLANS OR APPROVED BY THE ENGINEER.

FOR SUBMITTAL OF WORKING DRAWINGS, SEE SPECIAL PROVISIONS.

FOR METRIC STRUCTURAL STEEL, SEE SPECIAL PROVISIONS.

FOR FALSEWORK AND FORMWORK, SEE SPECIAL PROVISIONS.

FOR PRESTRESSED CONCRETE MEMBERS, SEE SPECIAL PROVISIONS.

FOR CONSTRUCTION, MAINTENANCE AND REMOVAL OF TEMPORARY ACCESS AT STATION 132+37.000 -L-, SEE SPECIAL PROVISIONS.

FOR CRANE SAFTEY, SEE SPECIAL PROVISIONS.

FOR CRACK REPAIR OF PRESTRESSED CONCRETE GIRDERS, SEE SPECIAL PROVISIONS.

FOR GROUT FOR STRUCTURES, SEE SPECIAL PROVISIONS.

DRIVE PILES AT END BENT NO. 1 AND END BENT NO. 2 TO A REQUIRED BEARING CAPACITY OF 1060 KN PER PILE. THE REQUIRED BEARING CAPACITY IS EQUAL TO THE ALLOWABLE BEARING CAPACITY WITH A MINIMUM FACTOR OF SAFETY OF TWO.

DRIVE PILES AT BENT NO. 1, BENT NO. 2 AND BENT NO. 4 TO A REQUIRED BEARING CAPACITY OF 1680 KN PER PILE. THE REQUIRED BEARING CAPACITY IS EQUAL TO THE ALLOWABLE BEARING CAPACITY WITH A MINIMUM FACTOR OF SAFETY OF TWO PLUS ANY ADDITIONAL CAPACITY TO ACCOUNT FOR DOWN DRAG OR NEGATIVE SKIN FRICTION AND SCOUR.

DRIVE PILES AT BENT NO. 3 TO A REQUIRED BEARING CAPACITY OF 1780 KN PER PILE. THE REQUIRED BEARING CAPACITY IS EQUAL TO THE ALLOWABLE BEARING CAPACITY WITH A MINIMUM FACTOR OF SAFETY OF TWO PLUS ANY ADDITIONAL CAPACITY TO ACCOUNT FOR DOWN DRAG OR NEGATIVE SKIN FRICTION AND SCOUR.

THE ALLOWABLE BEARING CAPACITY FOR PILES AT END BENT NO. 1 AND END BENT NO. 2 IS 530 KN PER PILE.

THE ALLOWABLE BEARING CAPACITY FOR PILES AT BENT NO. 1 THROUGH BENT NO. 4 IS 800 KN PER PILE.

THE SCOUR CRITICAL ELEVATION FOR BENT NO. 1 THROUGH BENT NO. 4 IS 26 METERS. SCOUR CRITICAL ELEVATIONS ARE USED TO MONITOR POSSIBLE SCOUR PROBLEMS DURING THE LIFE OF THE STRUCTURE.

TESTING PILES WITH THE PILE DRIVING ANALYZER (PDA) DURING DRIVING, RESTRIKING OR REDRIVING MAY BE REQUIRED. THE ENGINEER WILL DETERMINE THE NEED FOR PDA TESTING. SEE PILE DRIVING ANALYZER SPECIAL PROVISION.

PILE RESTRIKES FOR LRFD MAY BE REQUIRED. SEE PILE RESTRIKES FOR LRFD SPECIAL PROVISION.

THIS STRUCTURE HAS BEEN DESIGNED IN ACCORDANCE WITH HEC 18, "EVALUATING SCOUR AT BRIDGES", MAY, 2001.

TOTAL BILL OF MATERIAL

	CONSTRUCTION, MAINTENANCE AND REMOVAL OF TEMPORARY ACCESS	PDA TESTING	PDA ASSISTANCE	REINFORCED CONCRETE DECK SLAB	GROOVING BRIDGE FLOORS	CLASS A CONCRETE	BRIDGE APPROACH SLABS	REINFORCING STEEL	MODIFIED 1829mm PRESTRESSED CONCRETE GIRDERS		HP 310 X 79 STEEL PILES		HP 360 X 108 GALVANIZED STEEL PILES		PILE REDRIVES	CONCRETE BARRIER RAIL	RIP-RAP CLASS II (600mm THICK)	FILTER FABRIC FOR DRAINAGE	ELASTOMERIC BEARINGS	EVAZOTE JOINT SEALS	EXPANSION JOINT SEALS
	LUMP SUM	EACH	EACH	SQ. METERS	SQ. METERS	CU. METERS	LUMP SUM	kg	NO.	METERS	NO.	METERS	NO.	METERS	EACH	METERS	METRIC TON	SQ. METERS	LUMP SUM	LUMP SUM	LUMP SUM
SUPERSTRUCTURE				2080.9	1903.6		LUMP SUM		25	833.500						335.956			LUMP SUM	LUMP SUM	LUMP SUM
END BENT 1						28.4		2847			14	210.0			4		149	146			
BENT 1						14.8		1429					12	192.0	4						
BENT 2						14.8		1429					12	180.0	4						
BENT 3						14.8		1429					12	180.0	4						
BENT 4						14.8		1429					12	180.0	4						
END BENT 2						28.4		2847			14	196.0			4		177	174			
TOTAL	LUMP SUM	1	1	2080.9	1903.6	116.0	LUMP SUM	11410	25	833.500	28	406.0	48	732.0	24	335.956	326	320	LUMP SUM	LUMP SUM	LUMP SUM

PROJECT NO. R-2554BA
WAYNE COUNTY
STATION: 132+37.000 -L-

SHEET 3 OF 3

STATE OF NORTH CAROLINA
DEPARTMENT OF TRANSPORTATION
RALEIGH

GENERAL DRAWING

FOR BRIDGE OVER STONEY CREEK ON US 70 BYPASS BETWEEN NC 111 AND SR 1556 (RIGHT LANE)

NORTH CAROLINA PROFESSIONAL SEAL 14045 ENGINEER TIMOTHY W. COGGINS
6/6/08

REVISIONS						SHEET NO.
NO.	BY:	DATE:	NO.	BY:	DATE:	S-419
1			3			TOTAL SHEETS
2			4			478

DRAWN BY : ZION RORIE DATE : 4/20/06
CHECKED BY : B.N. BARODAWALA DATE : 7/25/06

06-JUN-2008 12:17
G:\TIPProjects-R\R2554ba\Structures\AZIZI\Str#15\FINAL PLANS\r-2554ba_sd_gd_15.dgn
taverette

STR. #15

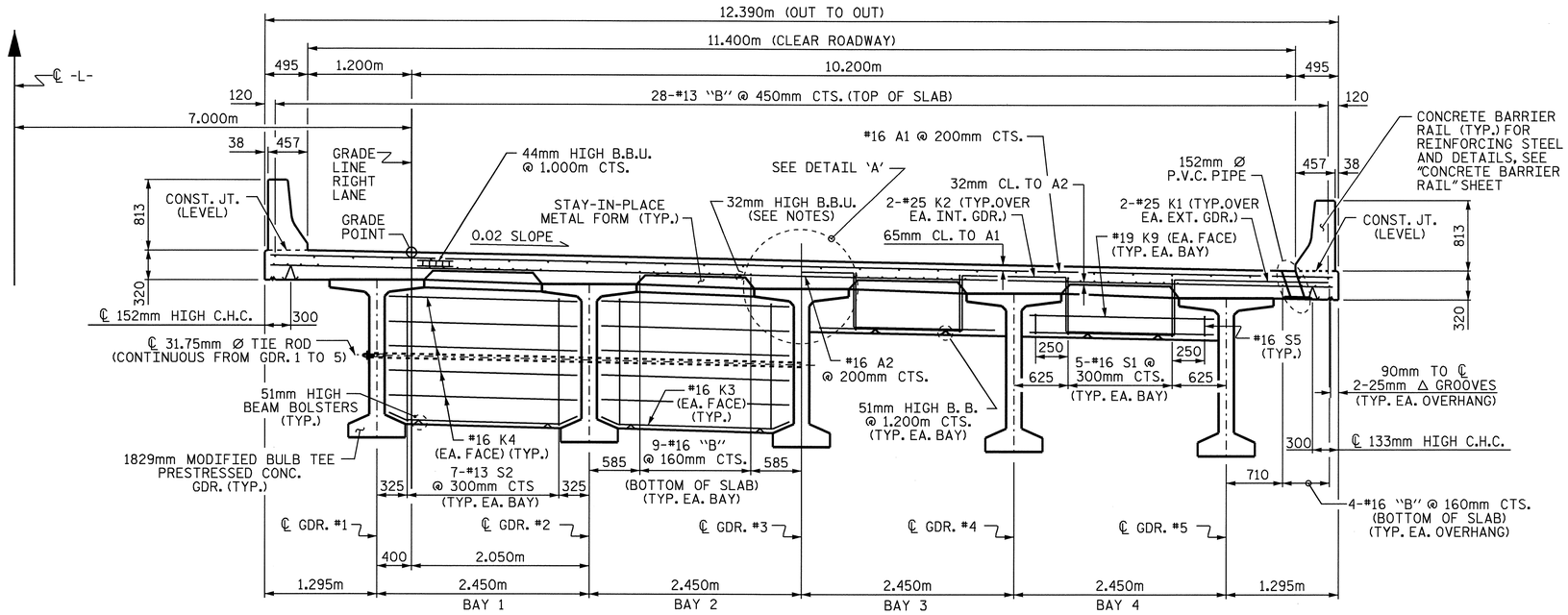

AT INTERMEDIATE DIAPHRAGMS

AT END BENT DIAPHRAGMS & BENT DIAPHRAGM @ BENT #3

TYPICAL SECTION

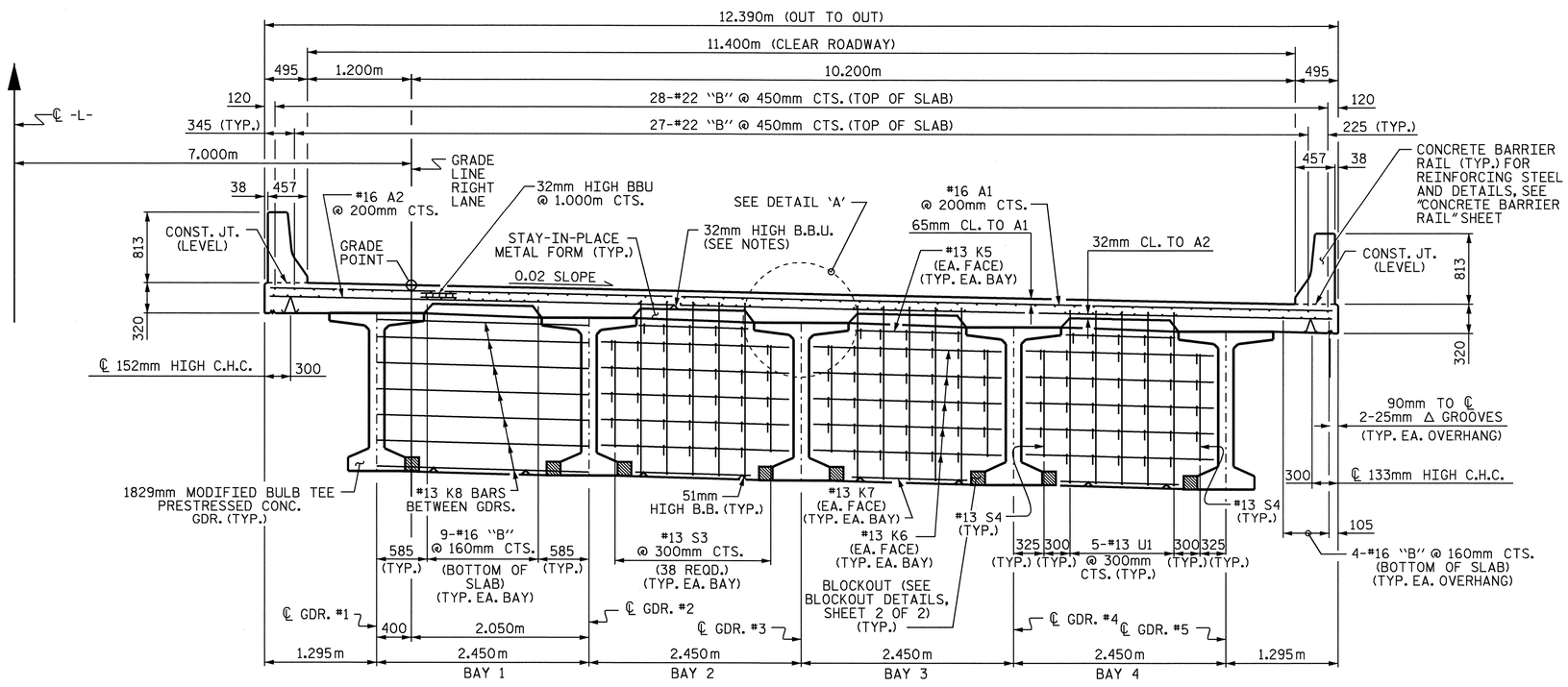

TYPICAL SECTION

SHOWING CONTINUOUS BENT DIAPHRAGMS @ BENT #1, #2 & #4

NOTES

PROVIDE 32mm HIGH BEAM BOLSTERS UPPER AT 1.2m CTS. ATOP THE METAL STAY-IN-PLACE FORMS TO SUPPORT THE BOTTOM MAT OF 'A' BARS. WHEN USING REMOVABLE FORMS, PROVIDE CONTINUOUS HIGH CHAIRS FOR METAL DECK (C.H.C.M.) @ 1.2m CTS. WITH A HEIGHT TO SUPPORT THE BOTTOM MAT OF 'A' BARS A CLEAR DISTANCE OF 65mm ABOVE THE TOP OF THE REMOVABLE FORM.

LONGITUDINAL STEEL MAY BE SHIFTED SLIGHTLY, AS NECESSARY, TO AVOID INTERFERENCE WITH STIRRUPS IN PRESTRESSED CONCRETE GIRDERS.

CONCRETE IN BENT #3 DIAPHRAGMS AND ALL INTERMEDIATE DIAPHRAGMS MAY BE CLASS A IN LIEU OF CLASS AA. PAYMENT SHALL BE MADE UNDER THE UNIT CONTRACT PRICE FOR REINFORCED CONCRETE DECK SLAB.

TEMPORARY STRUTS SHALL BE PLACED BETWEEN PRESTRESSED GIRDERS ADJACENT TO THE DIAPHRAGMS, AND THE NUTS ON THE 31.75mm DIA. TIE RODS SHALL BE FULLY TIGHTENED BEFORE THE DIAPHRAGMS ARE CAST. STRUTS SHALL REMAIN IN PLACE 3 DAYS AFTER CONCRETE IS PLACED. THE TIE RODS SHALL BE RE-TIGHTENED AFTER THE STRUTS HAVE BEEN REMOVED.

PREVIOUSLY CAST CONCRETE IN A CONTINUOUS UNIT SHALL HAVE ATTAINED A MINIMUM COMPRESSIVE STRENGTH OF 20.7 MPa BEFORE ADDITIONAL CONCRETE IS CAST IN THE UNIT.

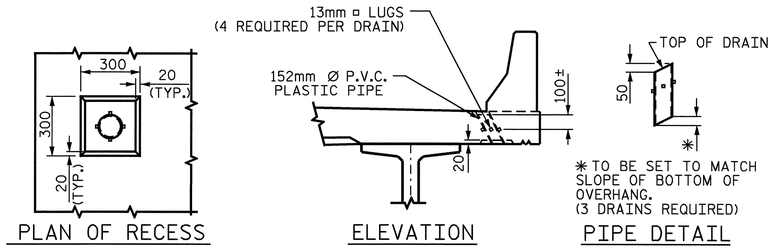

PLAN OF RECESS

ELEVATION

PIPE DETAIL

DRAIN DETAILS

TOP OF FLOOR DRAINS TO BE SET 10mm BELOW SURFACE OF SLAB.

4-13mm □ LUGS TO BE GLUED TO THE P.V.C. PLASTIC PIPE AT EQUAL SPACES AROUND THE PIPE DRAIN APPROXIMATELY 100mm FROM THE TOP OF THE PIPE.

THE 152mm Ø PVC PLASTIC PIPE AND FITTINGS SHALL BE SCHEDULE 40 AND CONFORM TO ASTM D1785.

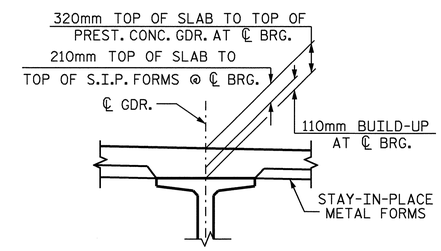

DETAIL 'A'

PROJECT NO. R-2554BA

WAYNE COUNTY

STATION: 132+37.000 -L-

SHEET 1 OF 2

STATE OF NORTH CAROLINA
DEPARTMENT OF TRANSPORTATION
RALEIGH

SUPERSTRUCTURE

TYPICAL SECTION

(RIGHT LANE)

NORTH CAROLINA PROFESSIONAL SEAL 14045 ENGINEER TIMOTHY L. COGGINS

Timothy L. Coggins 6/5/08

REVISIONS						SHEET NO.
NO.	BY:	DATE:	NO.	BY:	DATE:	S-420
1			3			TOTAL SHEETS
2			4			478

STR. #15

DRAWN BY : B.N.BARODAWALA DATE : 5-4-06
CHECKED BY : C. MILLER DATE : 8-06

25-APR-2008 17:02
g:\structures\azlzl\Str#15\BARODAWALA\R2554BA_sd_TS_15.dgn
tcoggins

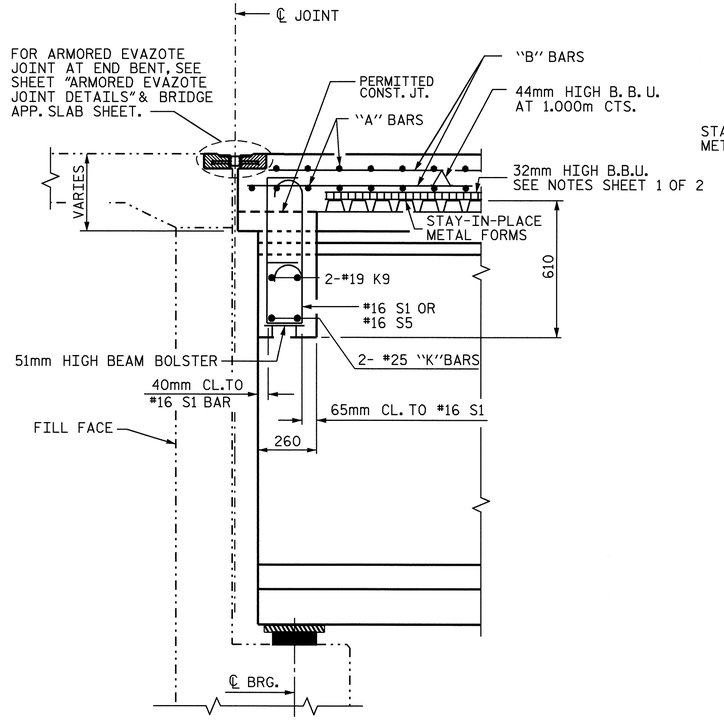

SECTION A-A

SECTION THRU END BENT DIAPHGRAMS

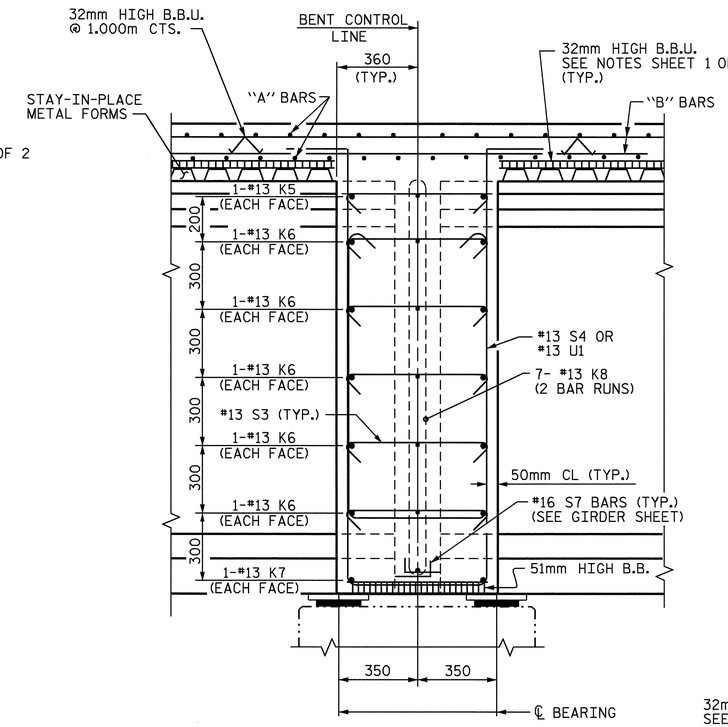

SECTION C-C

SECTION THRU BENT #1, #2 & #4 DIAPHGRAMS

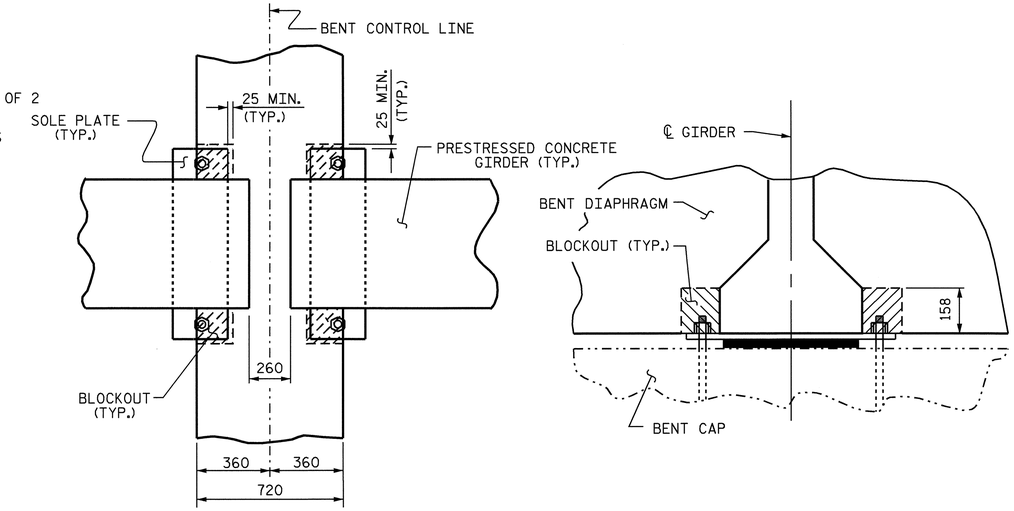

PLAN VIEW

SECTION

BENT DIAPHRAGM BLOCK-OUT DETAIL

(@ BENTS #1, #2 & #4)

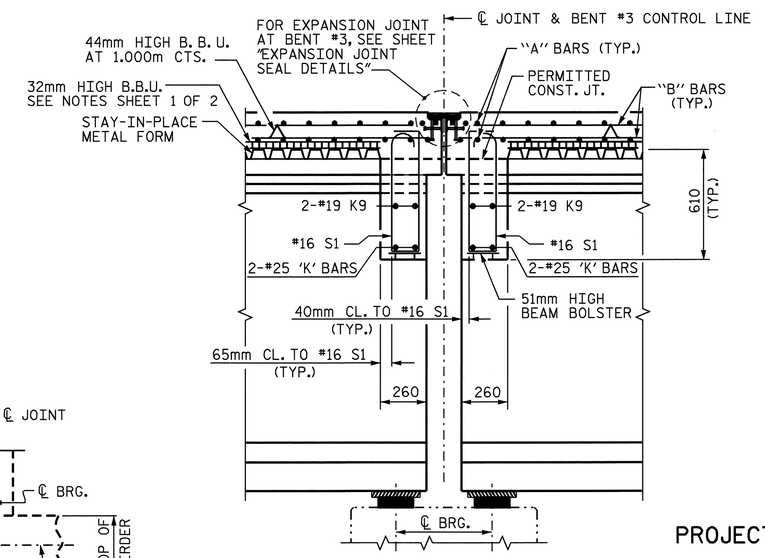

SECTION D-D

SECTION THRU BENT #3 DIAPHGRAMS

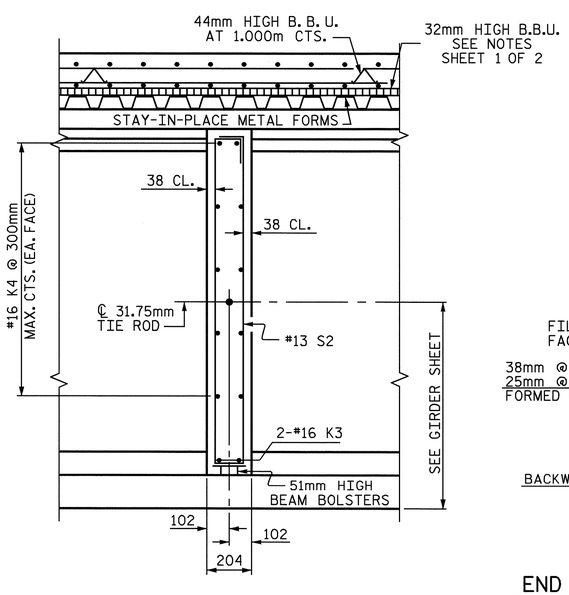

SECTION B-B

SECTION THRU INTERMEDIATE DIAPHGRAMS

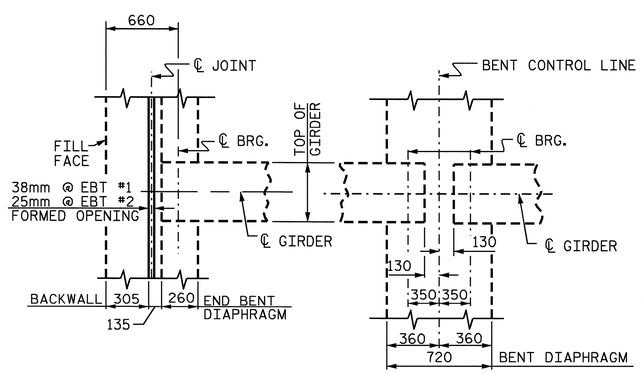

END BENT DIAPHRAGM

BENT DIAPHRAGM

@ BENTS #1, #2 & #4

PLAN

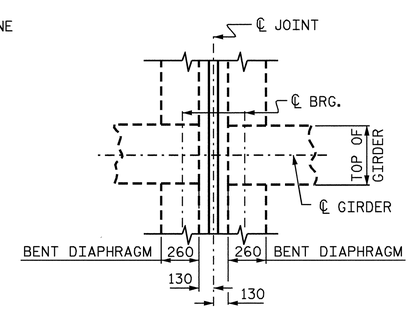

BENT DIAPHRAGM

@ BENT #3

PROJECT NO. R-2554BA

WAYNE COUNTY

STATION: 132+37.000 -L-

SHEET 2 OF 2

STATE OF NORTH CAROLINA
DEPARTMENT OF TRANSPORTATION
RALEIGH

SUPERSTRUCTURE

TYPICAL SECTION DETAILS

(RIGHT LANE)

NORTH CAROLINA PROFESSIONAL SEAL 14045 ENGINEER TIMOTHY W. COGGINS

Timothy W. Coggins 6/5/08

REVISIONS						SHEET NO.
NO.	BY:	DATE:	NO.	BY:	DATE:	S-421
1			3			TOTAL SHEETS
2			4			478

DRAWN BY : B.N.BARODAWALA DATE : 5-4-06
CHECKED BY : C. MILLER DATE : 8-06

05-JUN-2008 09:53
h:\structures\azlz1\Str#15\FINAL PLANS\R2554BA_sd_TS_15.dgn
bbarodawala

STR. #15

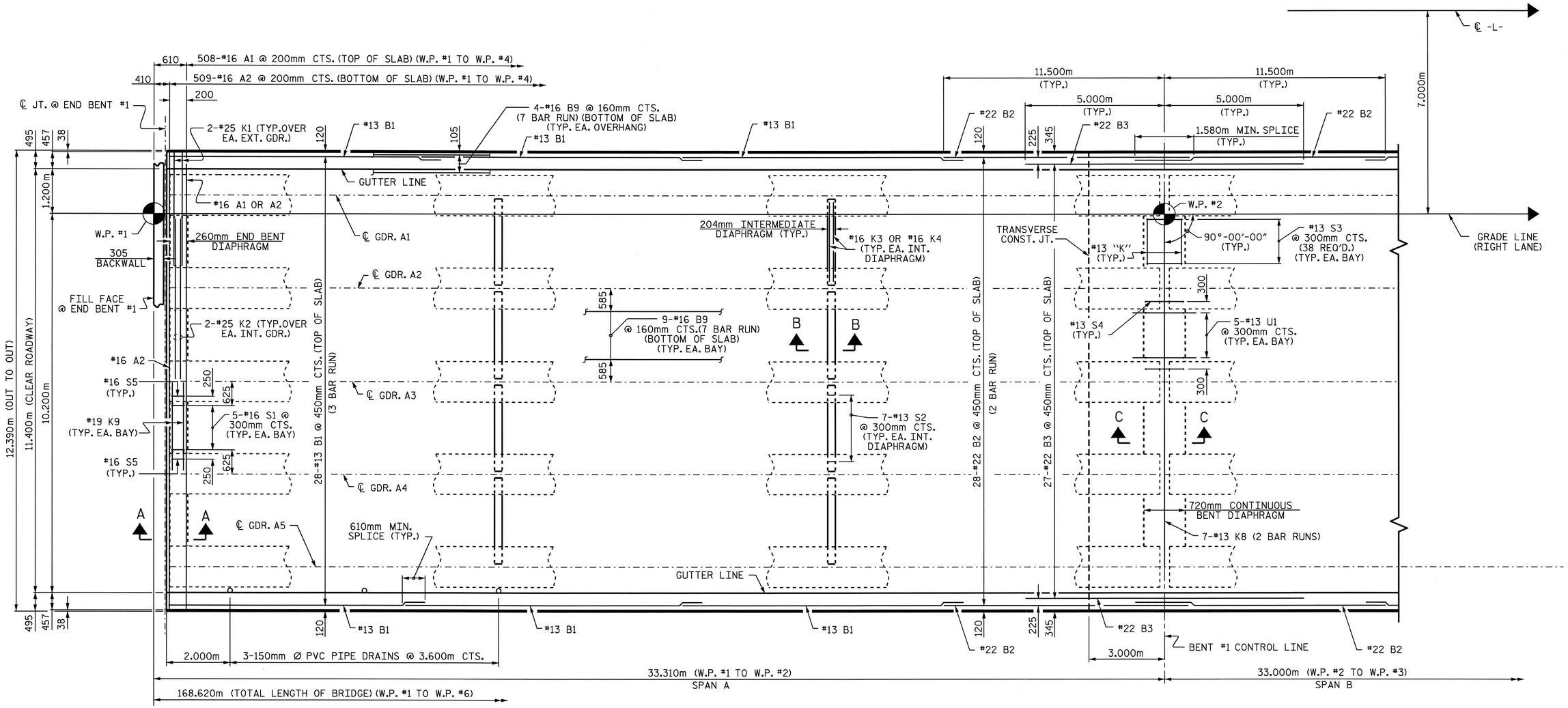

PLAN OF SPAN "A"

FOR LOCATION OF INTERMEDIATE DIAPHRAGMS, SEE "FRAMING PLAN."
FOR SECTIONS A-A, B-B AND C-C, SEE "TYPICAL SECTION" SHEET 2 OF 2.

PROJECT NO. R-2554BA
WAYNE COUNTY
STATION: 132+37.000 -L-

SHEET 1 OF 5

STATE OF NORTH CAROLINA
DEPARTMENT OF TRANSPORTATION
RALEIGH

SUPERSTRUCTURE

PLAN OF SPAN "A"

(RIGHT LANE)

NORTH CAROLINA PROFESSIONAL SEAL 14045 ENGINEER TIMOTHY M. COGGINS
Timothy M. Coggins 6/5/08

REVISIONS						SHEET NO.
NO.	BY:	DATE:	NO.	BY:	DATE:	S-422
1			3			TOTAL SHEETS
2			4			478

STR. #15

DRAWN BY : B.N.BARODAWALA DATE : 5-4-06
CHECKED BY : C. MILLER DATE : 8-06

25-APR-2008 17:06
g:\structures\azlzl\Str#15\BARODAWALA\R2554BA_sd_S*_15.dgn
tcoggins

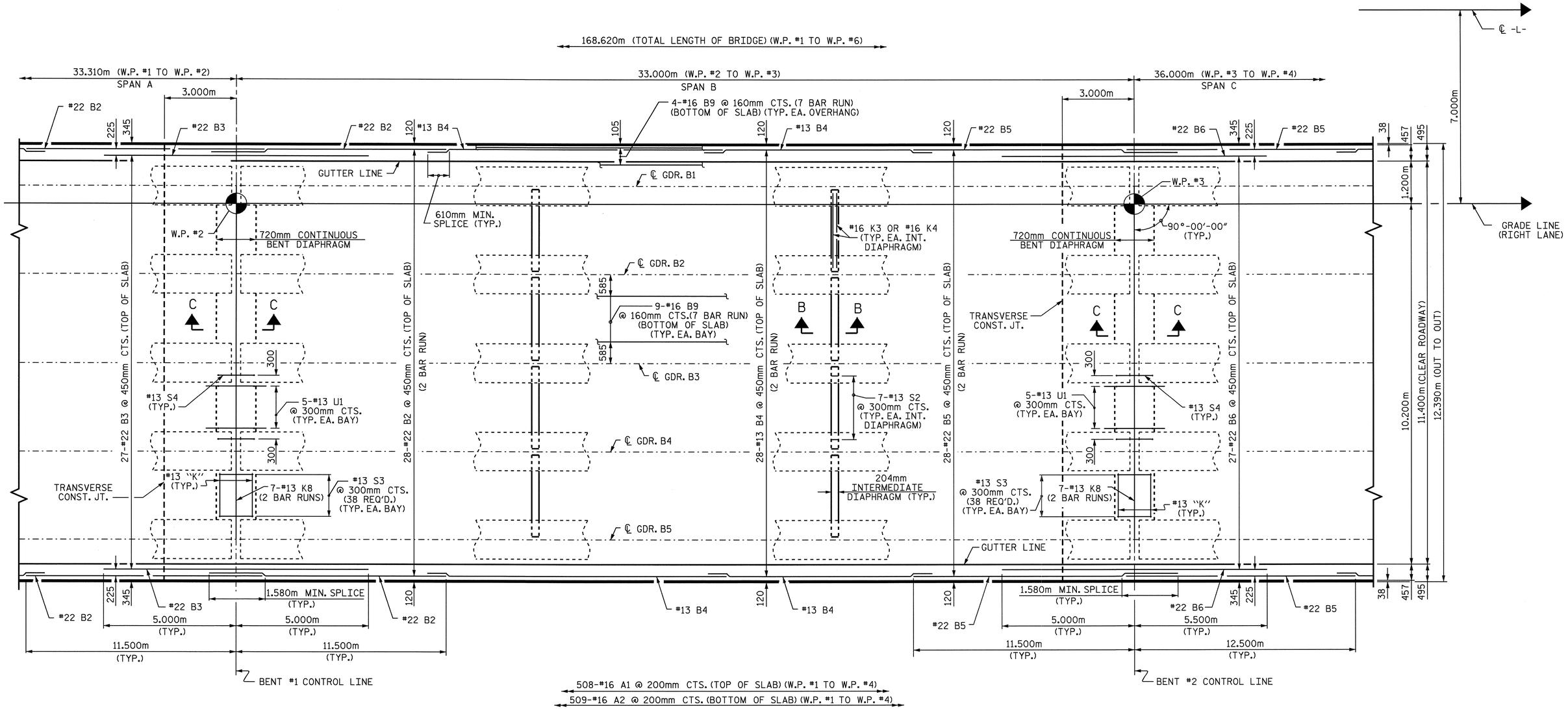

PLAN OF SPAN "B"

FOR LOCATION OF INTERMEDIATE DIAPHRAGMS, SEE "FRAMING PLAN."
FOR SECTIONS B-B AND C-C, SEE "TYPICAL SECTION" SHEET 2 OF 2.

PROJECT NO. R-2554BA
WAYNE COUNTY
STATION: 132+37.000 -L-

SHEET 2 OF 5

STATE OF NORTH CAROLINA
DEPARTMENT OF TRANSPORTATION
RALEIGH

SUPERSTRUCTURE

PLAN OF SPAN "B"

(RIGHT LANE)

NORTH CAROLINA PROFESSIONAL SEAL 14045 ENGINEER TIMOTHY A. COGGINS
Timothy A. Coggins 6/5/08

REVISIONS						SHEET NO.
NO.	BY:	DATE:	NO.	BY:	DATE:	S-423
1			3			TOTAL SHEETS
2			4			478

STR. #15

DRAWN BY : B.N.BARODAWALA DATE : 5-4-06
CHECKED BY : C. MILLER DATE : 8-06

25-APR-2008 17:07
g:\structures\azlzl\Str#15\BARODAWALA\R2554BA_sd_S*_15.dgn
tcoggins

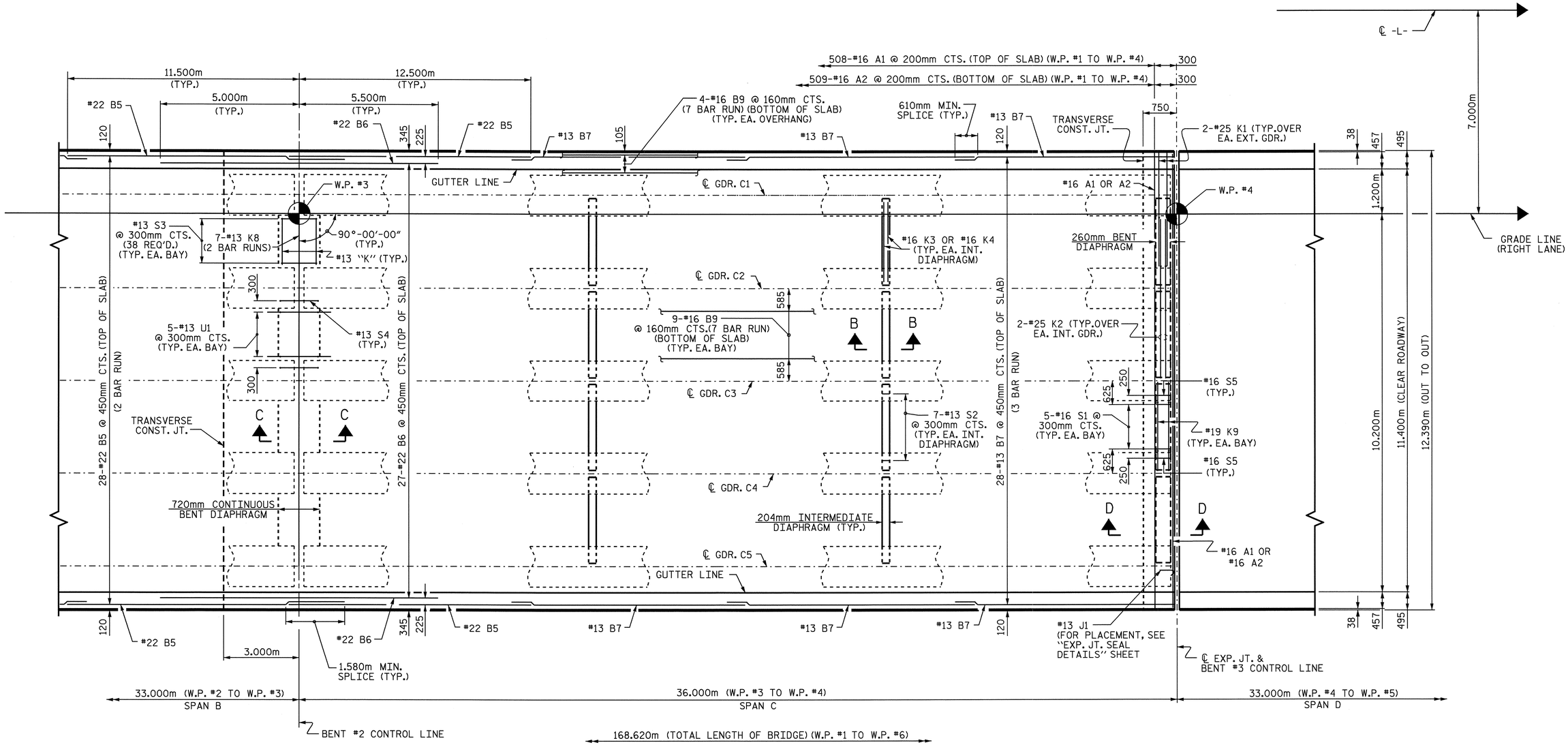

PLAN OF SPAN "C"

FOR LOCATION OF INTERMEDIATE DIAPHRAGMS, SEE "FRAMING PLAN."
FOR SECTIONS B-B, C-C AND D-D, SEE "TYPICAL SECTION" SHEET 2 OF 2.

PROJECT NO. R-2554BA
WAYNE COUNTY
STATION: 132+37.000 -L-

SHEET 3 OF 5

STATE OF NORTH CAROLINA
DEPARTMENT OF TRANSPORTATION
RALEIGH

SUPERSTRUCTURE

PLAN OF SPAN "C"

(RIGHT LANE)

NORTH CAROLINA PROFESSIONAL SEAL 14045 ENGINEER TIMOTHY L. COGGINS
Timothy L. Coggins 6/5/06

REVISIONS						SHEET NO.
NO.	BY:	DATE:	NO.	BY:	DATE:	S-424
1			3			TOTAL SHEETS
2			4			478

STR. #15

DRAWN BY : B.N.BARODAWALA DATE : 5-4-06
CHECKED BY : C. MILLER DATE : 8-06

25-APR-2008 17:07
g:\structures\azlzl\Str#15\BARODAWALA\R2554BA_sd_S*_15.dgn
tcoggins

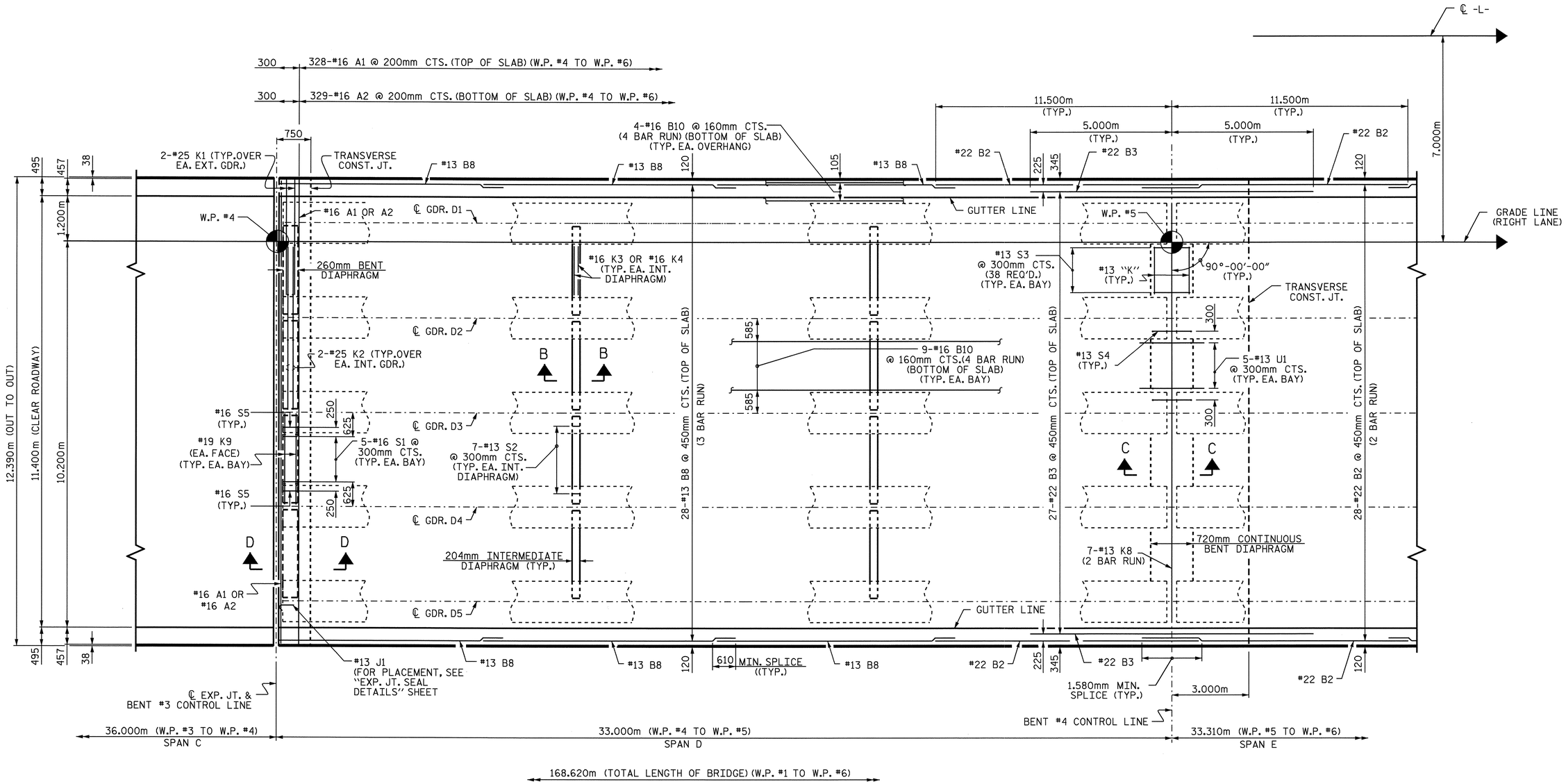

PLAN OF SPAN "D"

FOR LOCATION OF INTERMEDIATE DIAPHRAGMS, SEE "FRAMING PLAN."
FOR SECTIONS B-B, C-C AND D-D, SEE "TYPICAL SECTION" SHEET 2 OF 2.

PROJECT NO. R-2554BA
WAYNE COUNTY
STATION: 132+37.000 -L-

SHEET 4 OF 5

STATE OF NORTH CAROLINA
DEPARTMENT OF TRANSPORTATION
RALEIGH

SUPERSTRUCTURE

PLAN OF SPAN "D"

(RIGHT LANE)

NORTH CAROLINA PROFESSIONAL SEAL 14045 ENGINEER TIMOTHY L. COGGINS
Timothy L. Coggins 6/5/08

REVISIONS						SHEET NO.
NO.	BY:	DATE:	NO.	BY:	DATE:	S-425
1			3			TOTAL SHEETS
2			4			478

STR. #15

DRAWN BY : B.N.BARODAWALA DATE : 5-4-06
CHECKED BY : C. MILLER DATE : 8-06

25-APR-2008 17:07
g:\structures\azlzl\Str#15\BARODAWALA\R2554BA_sd_S#_15.dgn
tcoggins

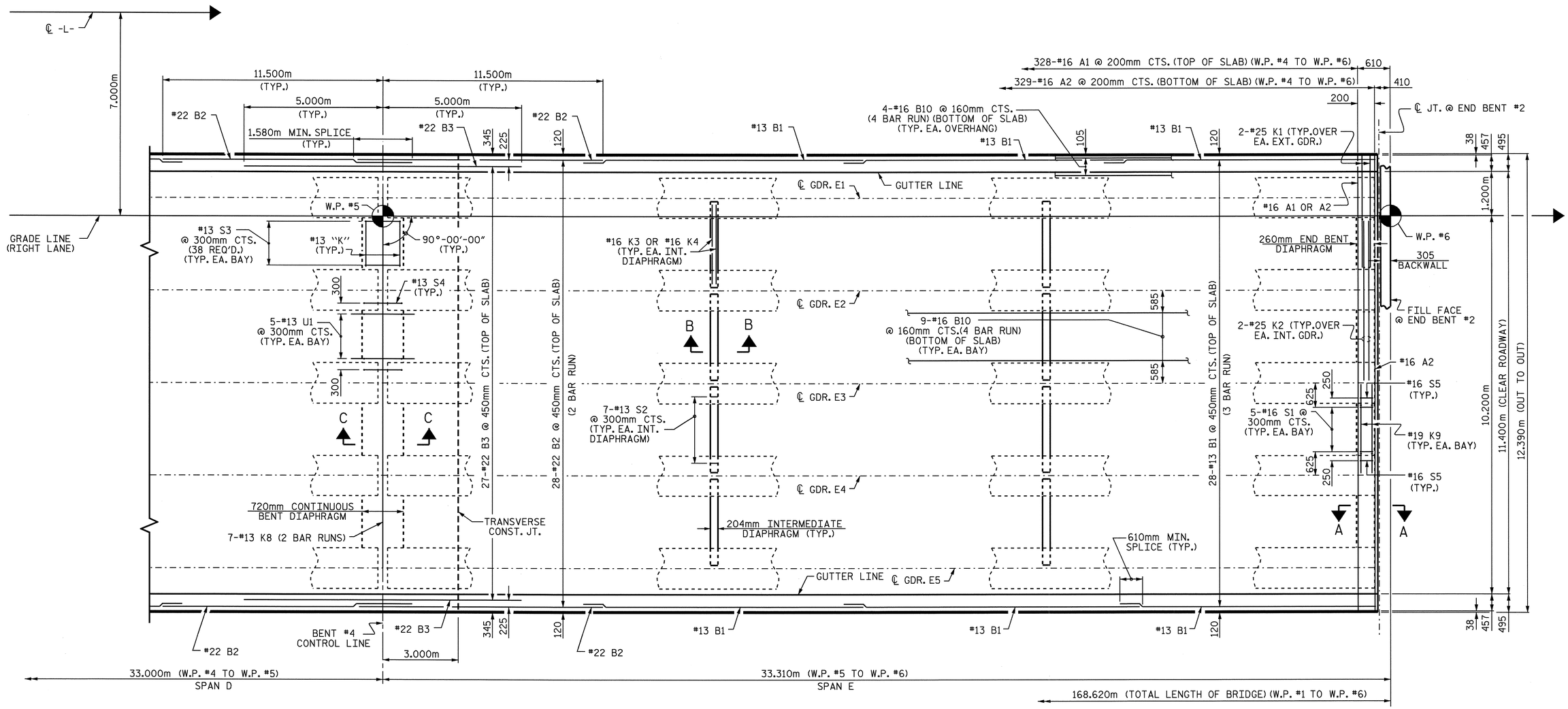

PLAN OF SPAN "E"

FOR LOCATION OF INTERMEDIATE DIAPHRAGMS, SEE "FRAMING PLAN."
FOR SECTIONS A-A, B-B AND C-C, SEE "TYPICAL SECTION" SHEET 2 OF 2.

PROJECT NO. R-2554BA
WAYNE COUNTY
STATION: 132+37.000 -L-

SHEET 5 OF 5

STATE OF NORTH CAROLINA
DEPARTMENT OF TRANSPORTATION
RALEIGH

SUPERSTRUCTURE

PLAN OF SPAN "E"
(RIGHT LANE)

NORTH CAROLINA PROFESSIONAL SEAL 14045 ENGINEER TIMOTHY W. BOSGINS
Timothy W. Bosgins 6/5/08

REVISIONS						SHEET NO.
NO.	BY:	DATE:	NO.	BY:	DATE:	S-426
1			3			TOTAL SHEETS
2			4			478

STR. #15

DRAWN BY : B.N.BARODAWALA DATE : 5-4-06
CHECKED BY : C. MILLER DATE : 8-06

25-APR-2008 17:07
g:\structures\azlz1\Str#15\BARODAWALA\R2554BA_sd_S*_15.dgn
tcoggins

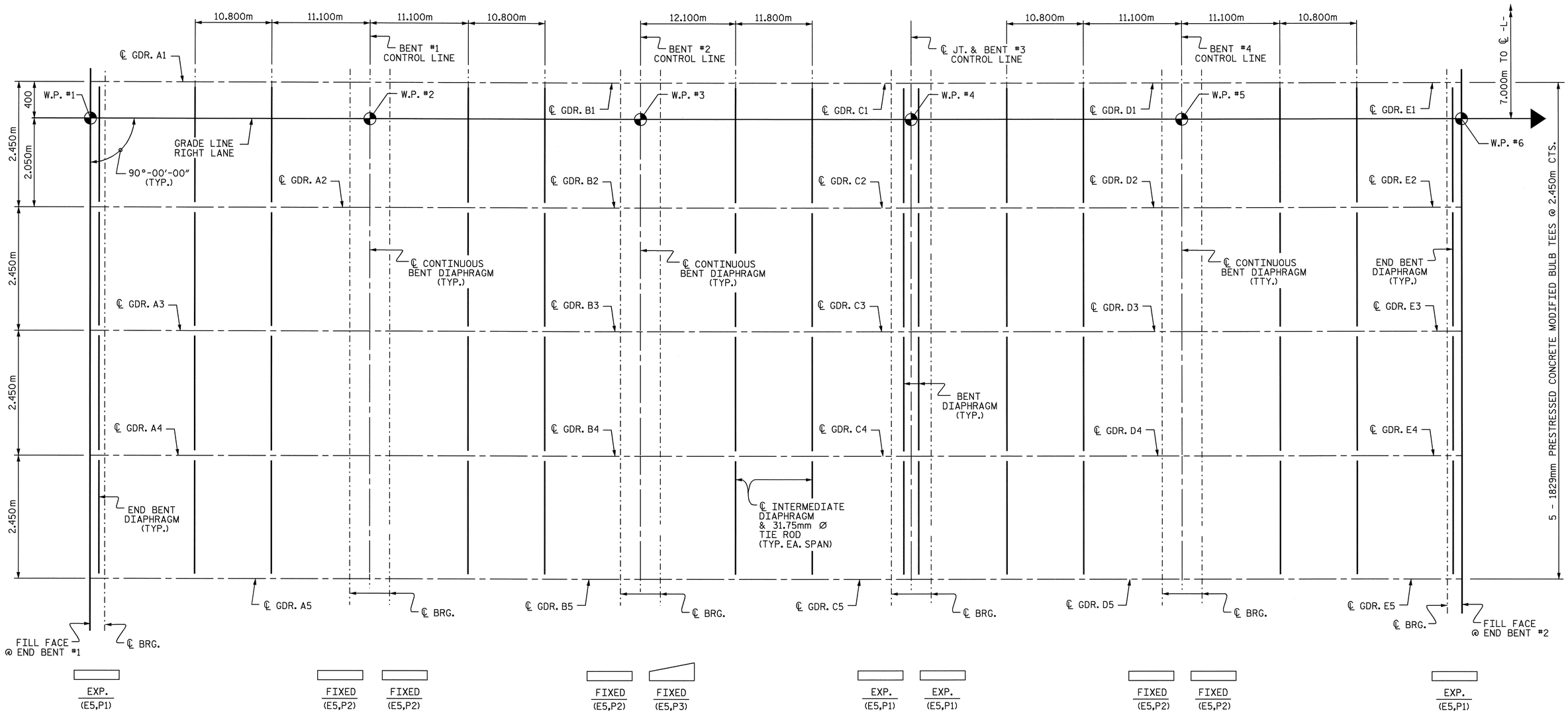

PROJECT NO. R-2554BA
WAYNE COUNTY
STATION: 132+37.000 -L-

GIRDER LAYOUT

STATE OF NORTH CAROLINA
DEPARTMENT OF TRANSPORTATION
RALEIGH

SUPERSTRUCTURE

GIRDER LAYOUT
(RIGHT LANE)

NORTH CAROLINA PROFESSIONAL SEAL 14045 ENGINEER TIMOTHY V. COGGINS
Timothy V. Coggins 6/5/08

REVISIONS						SHEET NO.
NO.	BY:	DATE:	NO.	BY:	DATE:	S-427
1			3			TOTAL SHEETS
2			4			478

DRAWN BY : B.N.BARODAWALA DATE : 5-4-06
CHECKED BY : C. MILLER DATE : 8-06

25-APR-2008 17:09
g:\structures\azlzl\Str#15\BARODAWALA\R2554BA_sd_FP_15.dgn
toggins

STR. #15

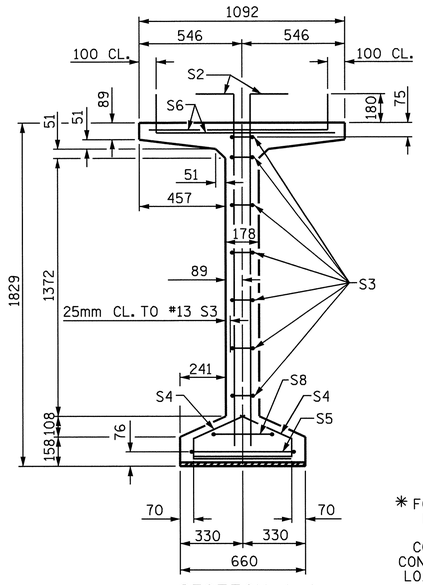

SECTION A-A

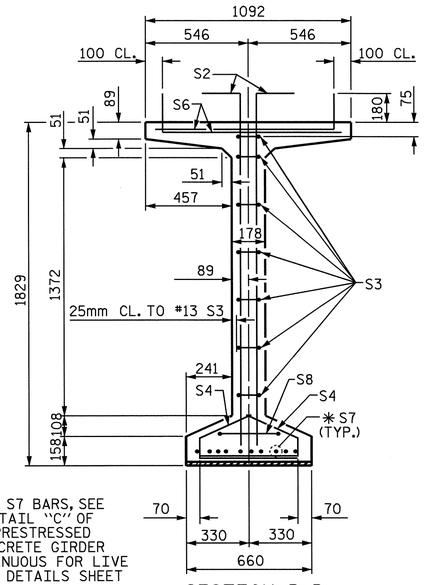

✳ FOR S7 BARS, SEE DETAIL "C" OF PRESTRESSED CONCRETE GIRDER CONTINUOUS FOR LIVE LOAD DETAILS SHEET

SECTION B-B

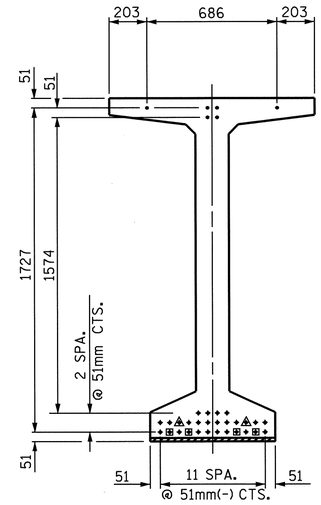

AT END OF GIRDERS

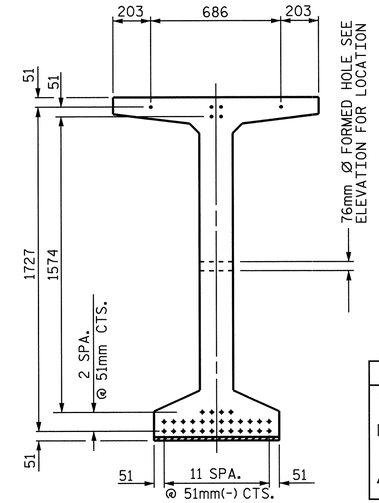

AT ℄ OF GIRDERS

15.24mm Ø LOW RELAXATION STRAND LAYOUT

DEBONDING LEGEND
• FULLY BONDED STRANDS
▣ STRANDS DEBONDED FOR 1.220m FROM END OF GIRDER
◬ STRANDS DEBONDED FOR 1.830m FROM END OF GIRDER

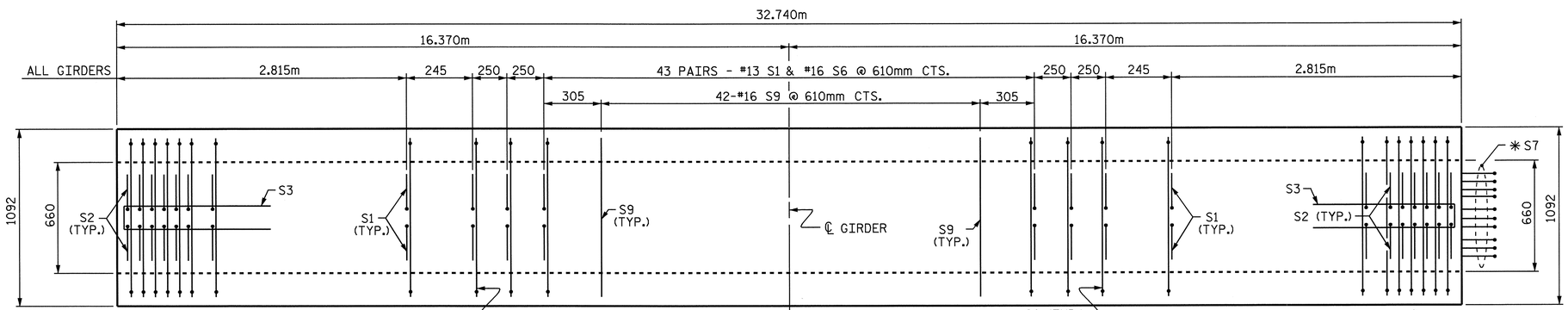

PLAN OF GIRDER

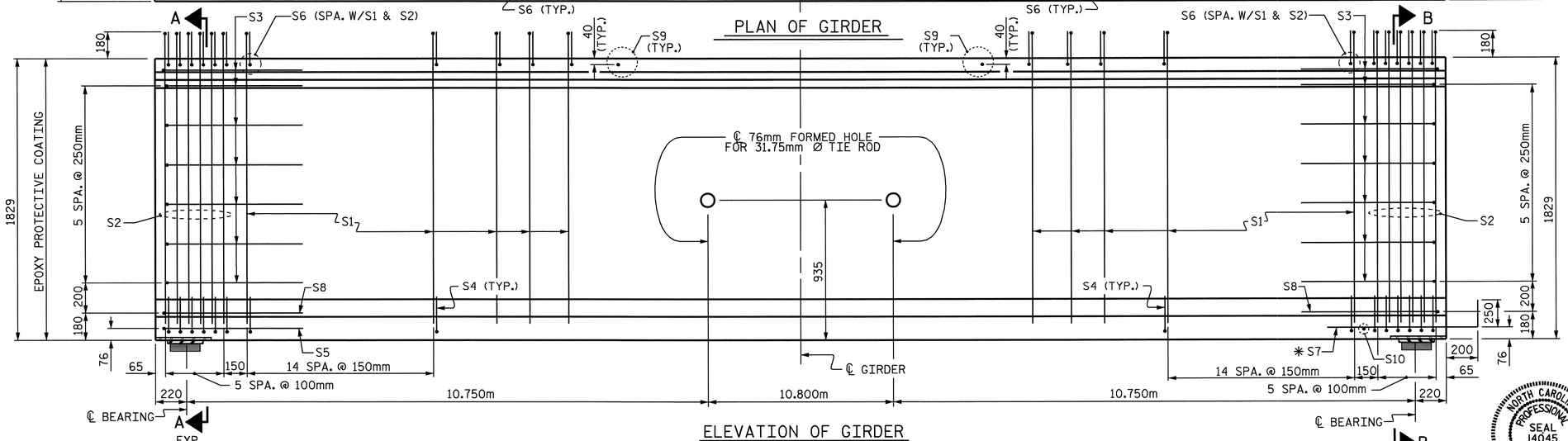

ELEVATION OF GIRDER

15.24mm Ø L.R. GRADE 270 STRANDS

AREA (mm²)	ULTIMATE STRENGTH (kN PER STRAND)	APPLIED PRESTRESS (kN PER STRAND)
140.0	260.7	195.5

REINFORCING STEEL FOR ONE GIRDER

BAR	NUMBER	SIZE	TYPE	LENGTH	WEIGHT
S1	154	#13	1	2140	328
S2	24	#16	1	2140	80
S3	14	#13	2	2560	36
S4	84	#13	3	920	77
S5	1	#16	2	3000	5
S6	178	#16	1	1160	320
✳ S7	10	#16	STR	1120	17
S8	2	#16	2	2740	9
S9	42	#16	STR	980	64
S10	1	#10	STR	560	1

✳ NOTE: S7 BARS SHALL BE BENT BEFORE SHIPMENT. HEAT BENDING SHALL NOT BE ALLOWED.

BAR TYPES

ALL BAR DIMENSIONS ARE OUT-TO-OUT

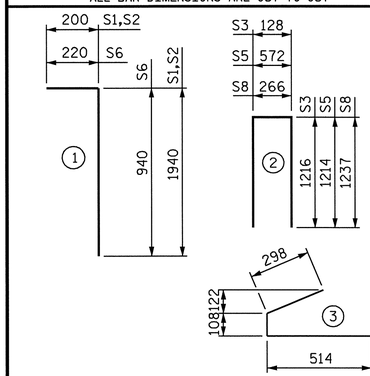

QUANTITIES FOR ONE GIRDER

	REINFORCING STEEL	51.7 MPa CONCRETE	15.24mm Ø L.R. STRANDS
	kg	m³	No.
GIRDER	937	17.6	34

GIRDERS REQUIRED

NUMBER	LENGTH	TOTAL LENGTH
15	32.740m	491.100m

PROJECT NO. R-2554BA

WAYNE COUNTY

STATION: 132+37.000 -L-

SHEET 1 OF 4

STATE OF NORTH CAROLINA
DEPARTMENT OF TRANSPORTATION
RALEIGH

1829mm PRESTRESSED CONCRETE MODIFIED BULB TEE CONTINUOUS FOR LIVE LOAD (WITH 15.24mm Ø PARTIALLY DEBONDED STRANDS) SPAN A, D & E (RIGHT LANE)

REVISIONS						SHEET NO.
NO.	BY:	DATE:	NO.	BY:	DATE:	S-428
1			3			TOTAL SHEETS
2			4			478

NORTH CAROLINA PROFESSIONAL SEAL 14045 ENGINEER TIMOTHY L. COGGINS

6/5/08

STR. #15

STD. NO. PCGD10SM

ASSEMBLED BY : B.N.BARODAWALA DATE : 7-12-06	
CHECKED BY : C. MILLER DATE : 8-06	
DRAWN BY : RWW 9/19/02	ADDED 9/19/02
CHECKED BY : GM 9/19/02	REV. 5/1/06 TLA/GM

05-JUN-2008 09:52
h:\structures\azlzl\Str#15\FINAL PLANS\R2554BA_sd_BK_15.dgn
bbarodawala

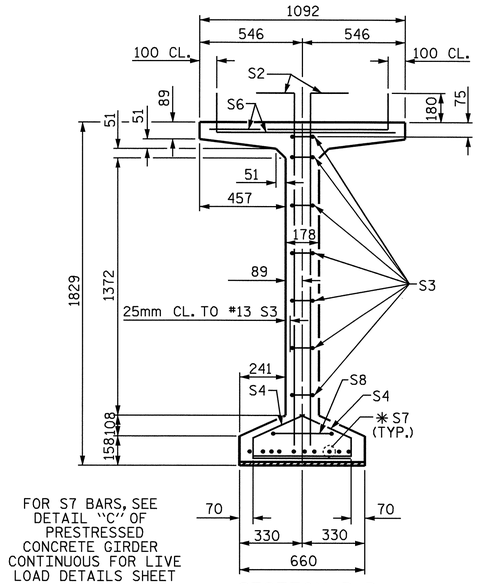

SECTION B-B

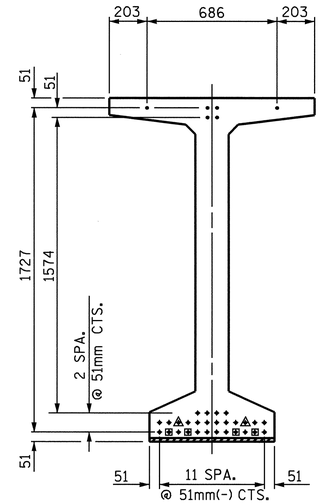

AT END OF GIRDERS

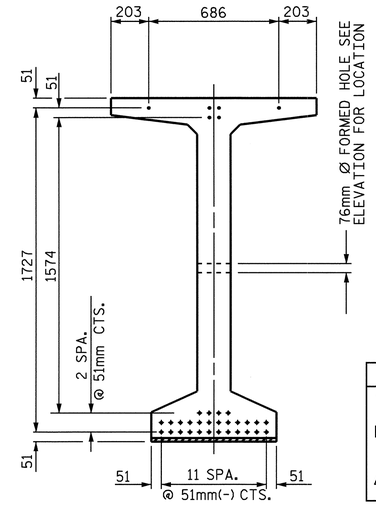

AT ℄ OF GIRDERS

15.24mm Ø LOW RELAXATION STRAND LAYOUT

DEBONDING LEGEND
• FULLY BONDED STRANDS
▣ STRANDS DEBONDED FOR 1.220m FROM END OF GIRDER
◬ STRANDS DEBONDED FOR 1.830m FROM END OF GIRDER

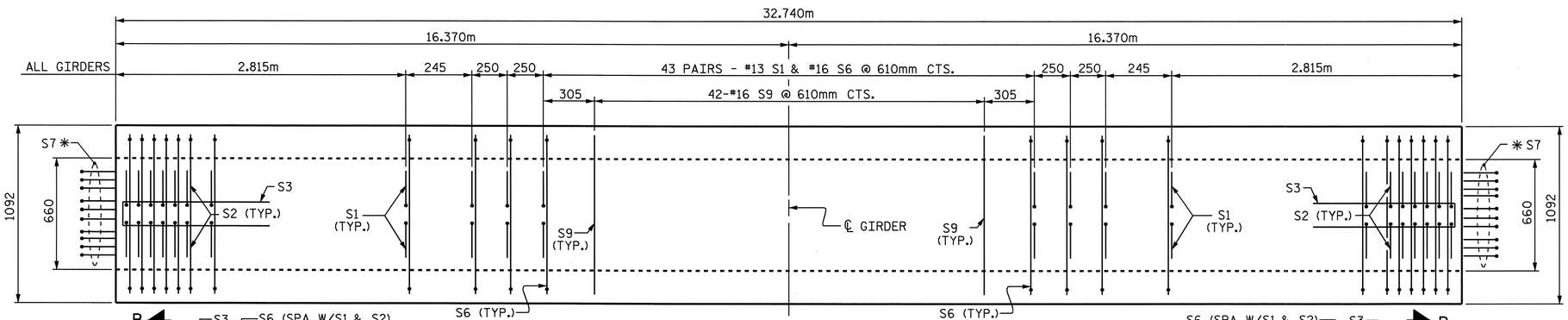

PLAN OF GIRDER

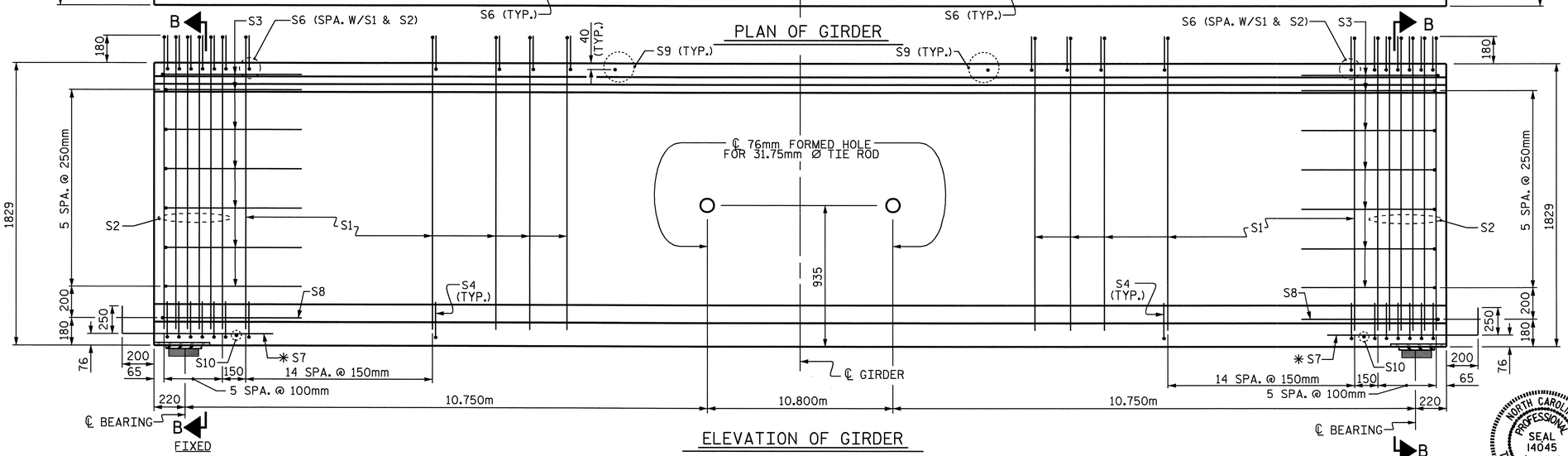

ELEVATION OF GIRDER

15.24mm Ø L.R. GRADE 270 STRANDS

AREA (mm²)	ULTIMATE STRENGTH (kN PER STRAND)	APPLIED PRESTRESS (kN PER STRAND)
140.0	260.7	195.5

REINFORCING STEEL FOR ONE GIRDER

BAR	NUMBER	SIZE	TYPE	LENGTH	WEIGHT
S1	154	#13	1	2140	328
S2	24	#16	1	2140	80
S3	14	#13	2	2560	36
S4	84	#13	3	920	77
S6	178	#16	1	1160	320
✱S7	20	#16	STR	1120	35
S8	2	#16	2	2740	9
S9	42	#16	STR	980	64
S10	2	#10	STR	560	1

✱NOTE: S7 BARS SHALL BE BENT BEFORE SHIPMENT. HEAT BENDING SHALL NOT BE ALLOWED.

BAR TYPES

ALL BAR DIMENSIONS ARE OUT-TO-OUT

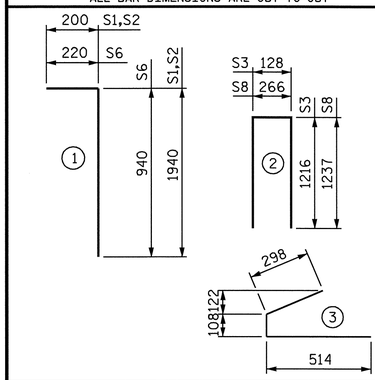

QUANTITIES FOR ONE GIRDER

	REINFORCING STEEL	51.7 MPa CONCRETE	15.24mm Ø L.R. STRANDS
	kg	m³	No.
GIRDER	950	17.6	34

GIRDERS REQUIRED

NUMBER	LENGTH	TOTAL LENGTH
5	32.740m	163.700m

PROJECT NO. R-2554BA

WAYNE COUNTY

STATION: 132+37.000 -L-

SHEET 2 OF 4

STATE OF NORTH CAROLINA
DEPARTMENT OF TRANSPORTATION
RALEIGH

1829mm PRESTRESSED CONCRETE MODIFIED BULB TEE CONTINUOUS FOR LIVE LOAD (WITH 15.24mm Ø PARTIALLY DEBONDED STRANDS)

SPAN B
(RIGHT LANE)

NORTH CAROLINA PROFESSIONAL SEAL 14045 ENGINEER TIMOTHY W. COGGINS

Timothy W. Coggins 6/5/08

REVISIONS						SHEET NO.
NO.	BY:	DATE:	NO.	BY:	DATE:	S-429
1			3			TOTAL SHEETS
2			4			478

ASSEMBLED BY : B.N.BARODAWALA DATE : 7-12-06
CHECKED BY : C. MILLER DATE : 8-06

DRAWN BY : RWW 9/19/02
CHECKED BY : GM 9/19/02

ADDED 9/19/02
REV. 5/1/06 TLA/GM

05-JUN-2008 09:52
h:\structures\azlzl\Str#15\FINAL PLANS\R2554BA_sd_BK_15.dgn
bbarodawala

STR. #15

STD. NO. PCGD10SM

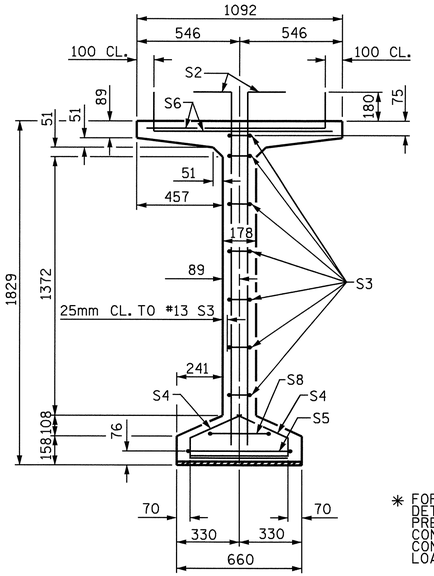

SECTION A-A

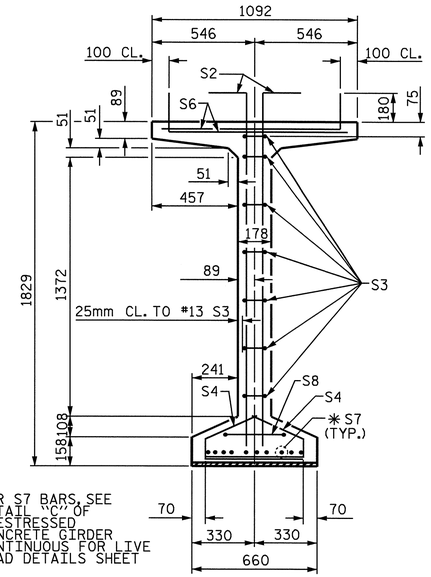

✱ FOR S7 BARS, SEE DETAIL "C" OF PRESTRESSED CONCRETE GIRDER CONTINUOUS FOR LIVE LOAD DETAILS SHEET

SECTION B-B

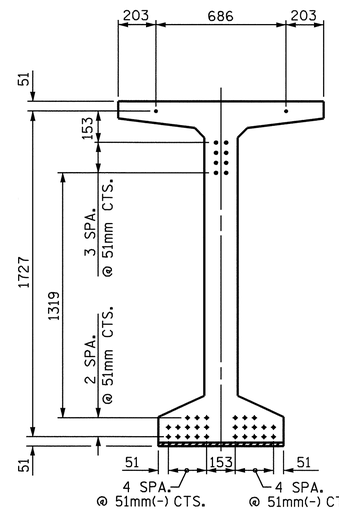

AT END OF GIRDERS

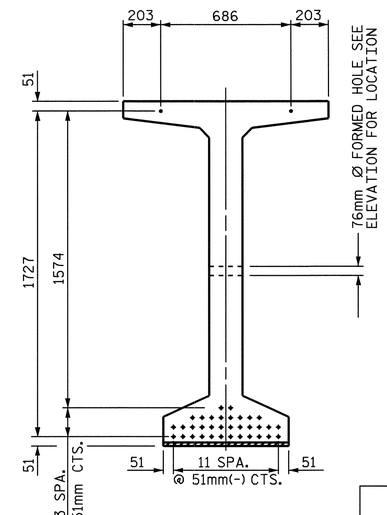

AT ℄ OF GIRDERS

15.24mm Ø LOW RELAXATION STRAND LAYOUT

DEBONDING LEGEND

- FULLY BONDED STRANDS

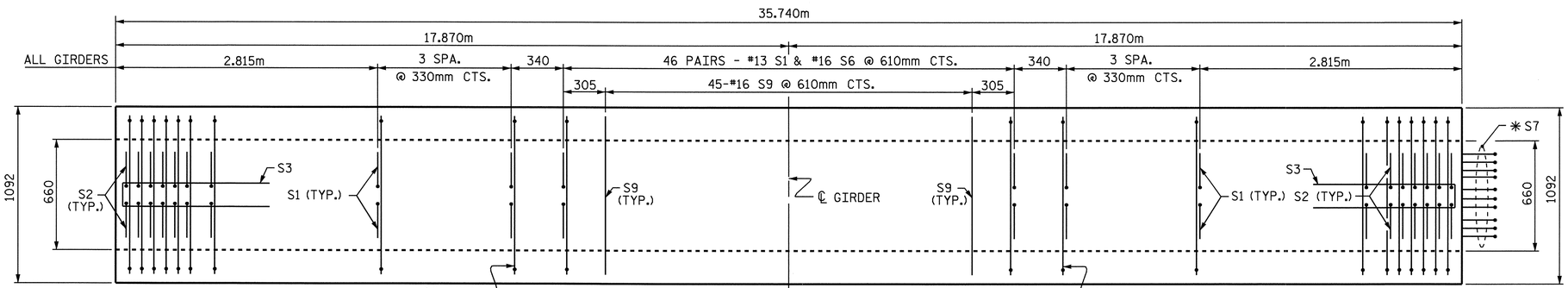

PLAN OF GIRDER

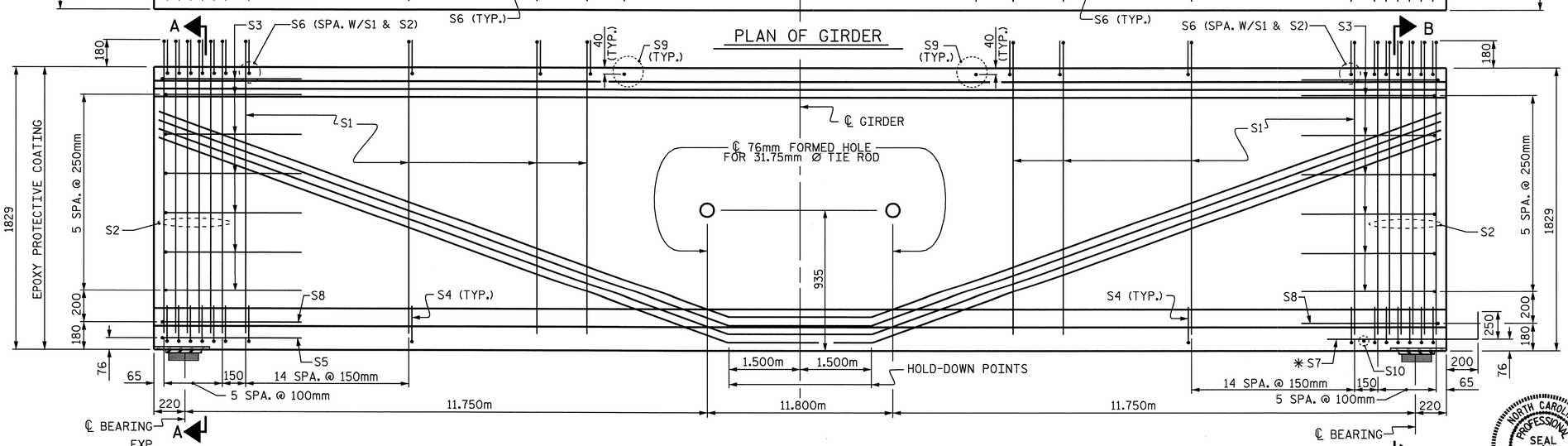

ELEVATION OF GIRDER

15.24mm Ø L.R. GRADE 270 STRANDS

AREA (mm^2)	ULTIMATE STRENGTH (kN PER STRAND)	APPLIED PRESTRESS (kN PER STRAND)
140.0	260.7	195.5

REINFORCING STEEL FOR ONE GIRDER

BAR	NUMBER	SIZE	TYPE	LENGTH	WEIGHT
S1	164	#13	1	2140	349
S2	24	#16	1	2140	80
S3	14	#13	2	2560	36
S4	84	#13	3	920	77
S5	1	#16	2	3000	5
S6	188	#16	1	1160	338
✱ S7	10	#16	STR	1120	17
S8	2	#16	2	2740	9
S9	45	#16	STR	980	68
S10	1	#10	STR	560	1

✱ NOTE: S7 BARS SHALL BE BENT BEFORE SHIPMENT. HEAT BENDING SHALL NOT BE ALLOWED.

BAR TYPES

ALL BAR DIMENSIONS ARE OUT-TO-OUT

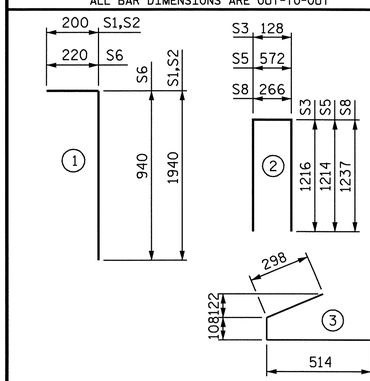

QUANTITIES FOR ONE GIRDER

	REINFORCING STEEL	51.7 MPa CONCRETE	15.24mm Ø L.R. STRANDS
	kg	m^3	No.
GIRDER	980	19.2	36

GIRDERS REQUIRED

NUMBER	LENGTH	TOTAL LENGTH
5	35.740m	178.700m

PROJECT NO. R-2554BA

WAYNE COUNTY

STATION: 132+37.000 -L-

SHEET 3 OF 4

STATE OF NORTH CAROLINA
DEPARTMENT OF TRANSPORTATION
RALEIGH

1829mm PRESTRESSED CONCRETE MODIFIED BULB TEE CONTINUOUS FOR LIVE LOAD

SPAN C
(RIGHT LANE)

NORTH CAROLINA PROFESSIONAL SEAL 14045 ENGINEER TIMOTHY L. COGGINS

Timothy L. Coggins 6/5/08

REVISIONS						SHEET NO.
NO.	BY:	DATE:	NO.	BY:	DATE:	S-430
1			3			TOTAL SHEETS
2			4			478

ASSEMBLED BY : B.N.BARODAWALA	DATE : 7-12-06
CHECKED BY : C. MILLER	DATE : 8-06
DRAWN BY : RWW 9/19/02	ADDED 9/19/02
CHECKED BY : GM 9/19/02	REV. 5/1/06 TLA/GM

05-JUN-2008 09:52
h:\structures\azlzl\Str#15\FINAL PLANS\R2554BA_sd_BK_15.dgn
bbarodawala

STR. #15

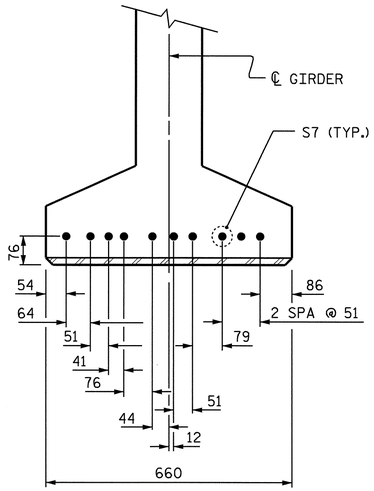

DETAIL "C"

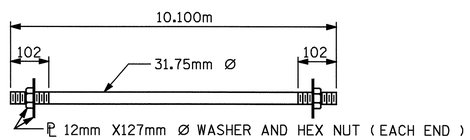

31.75mm Ø TIE ROD ASSEMBLY

(10 COMPLETE ASSEMBLIES REQUIRED)

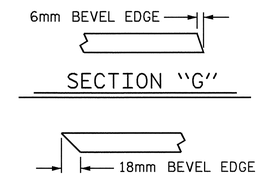

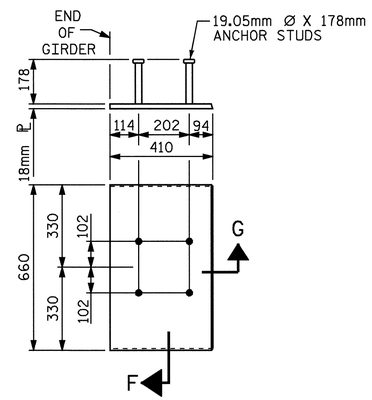

EMBEDDED PLATE "B-1" DETAILS FOR 1829mm MODIFIED BULB TEES

(2 REQ'D PER GIRDER)

NOTES

ALL PRESTRESSING STRANDS SHALL BE 7-WIRE LOW-RELAXATION GRADE 270 STRANDS AND SHALL CONFORM TO AASHTO M203M EXCEPT FOR SAMPLING REQUIREMENTS WHICH SHALL BE IN ACCORDANCE WITH THE STANDARD SPECIFICATIONS.

TIE ROD ASSEMBLY SHALL BE AASHTO M270 GRADE 250 STRUCTURAL STEEL.

ALL REINFORCING STEEL SHALL BE GRADE 420.

APPLY EPOXY PROTECTIVE COATING TO END OF GIRDER SURFACES INDICATED IN ELEVATION VIEW.

EMBEDDED PLATE "B-1" SHALL BE GALVANIZED IN ACCORDANCE WITH THE STANDARD SPECIFICATIONS. BEVEL EDGES OF PLATE "B-1" TO GIVE CLOSE FIT BUT NOT TIGHT FIT TO STEEL CASTING FORM.

ANCHOR STUDS SHALL CONFORM TO AASHTO M169 GRADES 1010 THROUGH 1020 OR APPROVED EQUAL, AND SHALL MEET THE TYPE "B" REQUIREMENTS OF SUBSECTION 7.3 OF THE ANSI/AASHTO/AWS D1.5 BRIDGE WELDING CODE.

AT ENDS OF GIRDERS TO BE EMBEDDED IN CONCRETE DIAPHRAGMS OR END WALLS, PRESTRESSING STRANDS MAY EXTEND A MAXIMUM OF 50mm BEYOND THE GIRDER ENDS. OTHERWISE, PRESTRESSING STRANDS SHALL BE CUT FLUSH WITH THE GIRDER ENDS.

THE TRANSFER OF LOAD FROM THE ANCHORAGES TO THE GIRDER SHALL BE DONE WHEN CONCRETE HAS REACHED A COMPRESSIVE STRENGTH OF NOT LESS THAN 38.6 MPa FOR GIRDERS IN SPANS A, B, D AND E.

THE TRANSFER OF LOAD FROM THE ANCHORAGES TO THE GIRDER SHALL BE DONE WHEN CONCRETE HAS REACHED A COMPRESSIVE STRENGTH OF NOT LESS THAN 41.3 MPa FOR GIRDERS IN SPAN C.

DEPENDING ON THE TYPE OF SYSTEM USED TO SUPPORT THE DECK SLAB FORMS, PRESET ANCHORS MAY BE NECESSARY IN THE PRESTRESSED CONCRETE GIRDER.

THE TOP SURFACE OF THE GIRDER, EXCLUDING THE OUTSIDE 100mm, SHALL BE RAKED TO A DEPTH OF 6mm.

WHEN DRAPED STRANDS ARE DETAILED, THE LONGITUDINAL LOCATION OF THE HOLD DOWN DEVICES SHALL BE WITHIN 150mm OF THE LOCATION SHOWN AND THE CENTER OF GRAVITY OF THE GROUP OF DRAPED STRANDS SHALL BE LOCATED WITHIN 13mm OF THE THEORETICAL LOCATION SHOWN.

A 51mm x 51mm CHAMFER IS ALLOWED AT THE INTERSECTION OF THE WEB AND THE BOTTOM FLANGE OF THE 1829mm MODIFIED BULB TEES ONLY.

THE CONTRACTOR HAS THE OPTION TO PROVIDE, AT NO ADDITIONAL COST TO THE DEPARTMENT, 2 ADDITIONAL STRANDS AT THE TOP OF THE GIRDER TO FACILITATE TYING OF THE REINFORCING STEEL. THESE STRANDS SHALL BE PULLED TO A LOAD OF 20 Kn.

FOR CRACK REPAIR OF PRESTRESSED CONCRETE GIRDERS, SEE SPECIAL PROVISIONS.

THE UPLIFT FORCE FOR GIRDERS IN SPAN "C" DUE TO DRAPED STRANDS IS 135.5 KN.

FOR PRESTRESSED CONCRETE MEMBERS, SEE SPECIAL PROVISIONS.

PROJECT NO. R-2554BA
WAYNE COUNTY
STATION: 132+37.000 -L-

SHEET 4 OF 4

STATE OF NORTH CAROLINA
DEPARTMENT OF TRANSPORTATION
RALEIGH

STANDARD
PRESTRESSED CONCRETE GIRDER
CONTINUOUS FOR LIVE LOAD
DETAILS
(RIGHT LANE)

NORTH CAROLINA PROFESSIONAL SEAL 14045 ENGINEER TIMOTHY L. COGGINS

Timothy L. Coggins 6/5/08

REVISIONS						SHEET NO.
NO.	BY:	DATE:	NO.	BY:	DATE:	S-431
1			3			TOTAL SHEETS
2			4			478

ASSEMBLED BY : B.N.BARODAWALA DATE : 7-12-06	
CHECKED BY : C. MILLER DATE : 8-06	
DRAWN BY : ELR 11/91	REV. 10/17/00 RWW/LES
CHECKED BY : GRP 11/91	REV. 7/10/01RR LES/RDR
	REV. 5/1/06 TLA/GM

28-APR-2008 07:55
g:\structures\azlzl\str#15\barodawala\r2554ba_sd_bk_15.dgn
toggins

STR. #15

STD. NO. PCG11SM

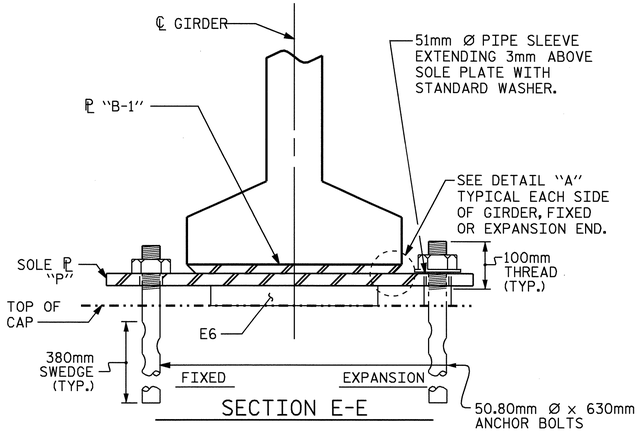

SECTION E-E

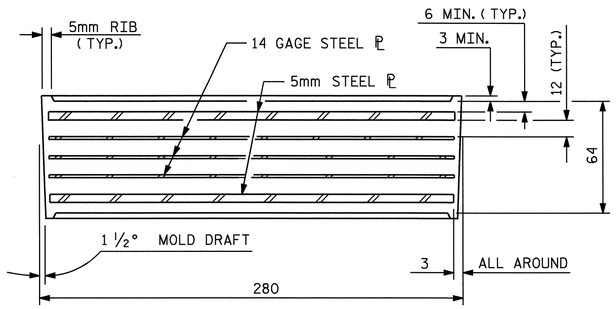

TYPICAL SECTION OF ELASTOMERIC BEARINGS

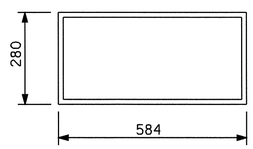

E5 (50 REQ'D)

PLAN VIEW OF ELASTOMERIC BEARING

TYPE VI

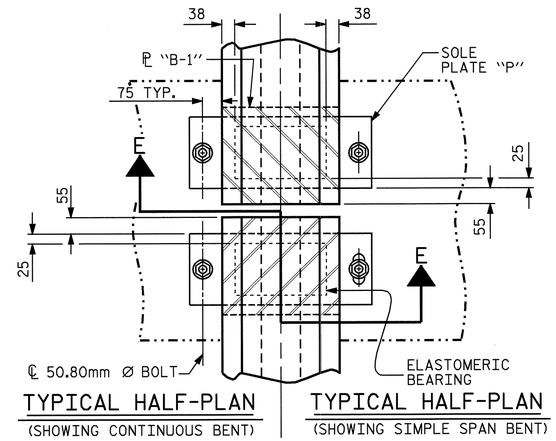

TYPICAL HALF-PLAN (SHOWING CONTINUOUS BENT)

TYPICAL HALF-PLAN (SHOWING SIMPLE SPAN BENT)

LOAD RATINGS	
	MAX.D.L.+ L.L.
TYPE VI	936 kN

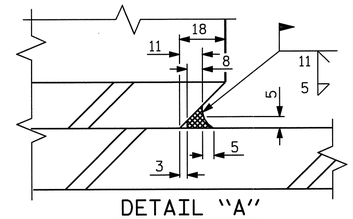

DETAIL "A"

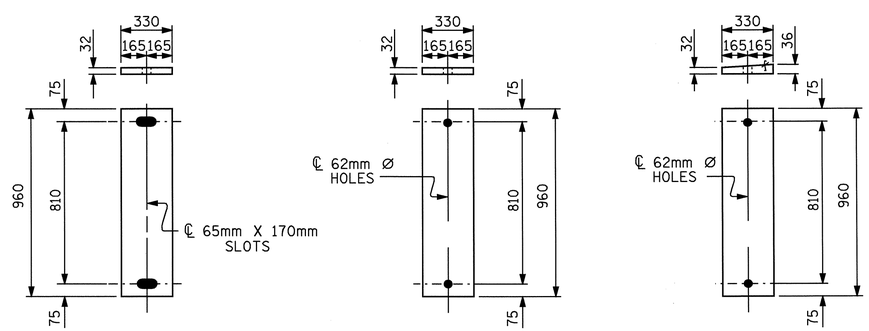

P1 (EXPANSION) (20 REQ'D)

P2 (FIXED) (25 REQ'D)

P3 (FIXED) (5 REQ'D)

SOLE PLATE DETAILS ("P")

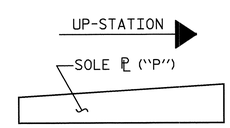

SOLE ℙ PLACEMENT DETAIL

NOTES

AT ALL FIXED POINTS OF SUPPORT, NUTS FOR ANCHOR BOLTS ARE TO BE TIGHTENED FINGER TIGHT AND THEN BACKED OFF 1/2 TURN. THE THREAD OF THE NUT AND BOLT SHALL THEN BE BURRED WITH A SHARP POINTED TOOL.

THE 51mm Ø PIPE SLEEVE SHALL BE CUT FROM SCHEDULE 40 PVC PLASTIC PIPE. THE PVC PLASTIC PIPE SHALL MEET THE REQUIREMENTS OF ASTM D1785.

STEEL SOLE PLATES, ANCHOR BOLTS, NUTS, AND WASHERS SHALL BE GALVANIZED IN ACCORDANCE WITH THE STANDARD SPECIFICATIONS.

PRIOR TO WELDING, GRIND THE GALVANIZED SURFACE OF THE PORTION OF THE EMBEDDED PLATE AND SOLE PLATE THAT ARE TO BE WELDED. AFTER WELDING, DAMAGED GALVANIZED SURFACES SHALL BE REPAIRED IN ACCORDANCE WITH THE STANDARD SPECIFICATIONS.

WHEN WELDING THE SOLE PLATE TO THE EMBEDDED PLATE IN THE GIRDER, USE TEMPERATURE INDICATING WAX PENS, OR OTHER SUITABLE MEANS, TO ENSURE THAT THE TEMPERATURE OF THE SOLE PLATE DOES NOT EXCEED 149°C. TEMPERATURES ABOVE THIS MAY DAMAGE THE ELASTOMER.

SOLE PLATE "P", BOLTS, NUTS, WASHERS, AND PIPE SLEEVE SHALL BE INCLUDED IN THE PAY ITEM FOR PRESTRESSED CONCRETE GIRDERS.

ANCHOR BOLTS SHALL MEET THE REQUIREMENTS OF ASTM A449. NUTS SHALL MEET THE REQUIREMENTS OF AASHTO M291M-12 OR AASHTO M292M-2H. WASHERS SHALL MEET THE REQUIREMENTS OF AASHTO M293M. SHOP DRAWINGS ARE NOT REQUIRED FOR ANCHOR BOLTS, NUTS AND WASHERS. SHOP INSPECTION IS REQUIRED.

ALL SURFACES OF BEARING PLATES SHALL BE SMOOTH AND STRAIGHT.

PROJECT NO. R-2554BA
WAYNE COUNTY
STATION: 132+37.000 -L-

STATE OF NORTH CAROLINA
DEPARTMENT OF TRANSPORTATION
RALEIGH

STANDARD ELASTOMERIC BEARING DETAILS

PRESTRESSED CONCRETE GIRDER SUPERSTRUCTURE (RIGHT LANE)

NORTH CAROLINA PROFESSIONAL SEAL 14045 ENGINEER TIMOTHY A. LOGGINS
Timothy A. Loggins 6/5/08

REVISIONS						SHEET NO.
NO.	BY:	DATE:	NO.	BY:	DATE:	S-432
1			3			TOTAL SHEETS
2			4			478

ASSEMBLED BY : B.N.BARODAWALA DATE : 7-12-06	
CHECKED BY : C. MILLER DATE : 8-06	
DRAWN BY : EEM 2/97	REV. 8/16/99 RWW/LES
CHECKED BY : VAP 2/97	REV. 10/17/00 RWW/LES
	REV. 5/1/06 TLA/GM

28-APR-2008 07:56
g:\structures\azizi\str#15\barodawala\r2554ba_sd_bk_15.dgn
tcoggins

STR. #15

STD. NO. EB4SM

DEAD LOAD DEFLECTION TABLE FOR SPANS A, B, D AND E

15.24mm Ø LOW RELAXATION	GIRDER 1										
TENTH POINTS	0	.1	.2	.3	.4	.5	.6	.7	.8	.9	0
CAMBER (GIRDER ALONE IN PLACE) ↑	0.000	0.027	0.051	0.069	0.081	0.085	0.081	0.069	0.051	0.027	0.000
✳ DEFLECTION DUE TO SUPERIMPOSED D.L. ↓	0.000	0.011	0.022	0.030	0.035	0.037	0.035	0.030	0.022	0.011	0.000
FINAL CAMBER ↑	0	16	29	39	46	48	46	39	29	16	0

15.24mm Ø LOW RELAXATION	GIRDERS 2 & 3 & 4										
TENTH POINTS	0	.1	.2	.3	.4	.5	.6	.7	.8	.9	0
CAMBER (GIRDER ALONE IN PLACE) ↑	0.000	0.027	0.051	0.069	0.081	0.085	0.081	0.069	0.051	0.027	0.000
✳ DEFLECTION DUE TO SUPERIMPOSED D.L. ↓	0.000	0.010	0.020	0.027	0.032	0.034	0.032	0.027	0.020	0.010	0.000
FINAL CAMBER ↑	0	17	31	42	49	51	49	42	31	17	0

15.24mm Ø LOW RELAXATION	GIRDER 5										
TENTH POINTS	0	.1	.2	.3	.4	.5	.6	.7	.8	.9	0
CAMBER (GIRDER ALONE IN PLACE) ↑	0.000	0.027	0.051	0.069	0.081	0.085	0.081	0.069	0.051	0.027	0.000
✳ DEFLECTION DUE TO SUPERIMPOSED D.L. ↓	0.000	0.011	0.021	0.029	0.034	0.037	0.034	0.029	0.021	0.011	0.000
FINAL CAMBER ↑	0	16	30	40	47	48	47	40	30	16	0

✳ INCLUDES FUTURE WEARING SURFACE IN SUPERIMPOSED DEAD LOAD.
ALL VALUES ARE SHOWN IN METERS, EXCEPT "FINAL CAMBER" WHICH IS SHOWN IN MILLIMETERS.

DEAD LOAD DEFLECTION TABLE FOR SPAN C

15.24mm Ø LOW RELAXATION	GIRDER 1										
TENTH POINTS	0	.1	.2	.3	.4	.5	.6	.7	.8	.9	0
CAMBER (GIRDER ALONE IN PLACE) ↑	0.000	0.039	0.073	0.100	0.117	0.123	0.117	0.100	0.073	0.039	0.000
✳ DEFLECTION DUE TO SUPERIMPOSED D.L. ↓	0.000	0.016	0.031	0.043	0.050	0.053	0.050	0.043	0.031	0.016	0.000
FINAL CAMBER ↑	0	23	42	57	67	70	67	57	42	23	0

15.24mm Ø LOW RELAXATION	GIRDERS 2 & 3 & 4										
TENTH POINTS	0	.1	.2	.3	.4	.5	.6	.7	.8	.9	0
CAMBER (GIRDER ALONE IN PLACE) ↑	0.000	0.039	0.073	0.100	0.117	0.123	0.117	0.100	0.073	0.039	0.000
✳ DEFLECTION DUE TO SUPERIMPOSED D.L. ↓	0.000	0.015	0.028	0.039	0.046	0.049	0.046	0.039	0.028	0.015	0.000
FINAL CAMBER ↑	0	24	45	61	71	74	71	61	45	24	0

15.24mm Ø LOW RELAXATION	GIRDER 5										
TENTH POINTS	0	.1	.2	.3	.4	.5	.6	.7	.8	.9	0
CAMBER (GIRDER ALONE IN PLACE) ↑	0.000	0.039	0.073	0.100	0.117	0.123	0.117	0.100	0.073	0.039	0.000
✳ DEFLECTION DUE TO SUPERIMPOSED D.L. ↓	0.000	0.016	0.030	0.042	0.049	0.052	0.049	0.042	0.030	0.016	0.000
FINAL CAMBER ↑	0	23	43	58	68	71	68	58	43	23	0

✳ INCLUDES FUTURE WEARING SURFACE IN SUPERIMPOSED DEAD LOAD.
ALL VALUES ARE SHOWN IN METERS, EXCEPT "FINAL CAMBER" WHICH IS SHOWN IN MILLIMETERS.

PROJECT NO. R-2554BA
WAYNE COUNTY
STATION: 132+37.000 -L-

NORTH CAROLINA PROFESSIONAL SEAL 14045 ENGINEER TIMOTHY W. COGGINS
Timothy W. Coggins 6/5/08

STATE OF NORTH CAROLINA
DEPARTMENT OF TRANSPORTATION
RALEIGH

SUPERSTRUCTURE

DEAD LOAD DEFLECTIONS
(RIGHT LANE)

REVISIONS						SHEET NO.
NO.	BY:	DATE:	NO.	BY:	DATE:	S-433
1			3			TOTAL SHEETS
2			4			478

STR. #15

DRAWN BY : B.N.BARODAWALA DATE : 6-16-06
CHECKED BY : C. MILLER DATE : 7-06

28-APR-2008 07:57
g:\structures\azlzl\str#15\barodawala\R2554BA_sd_DL_15.dgn
tcoggins

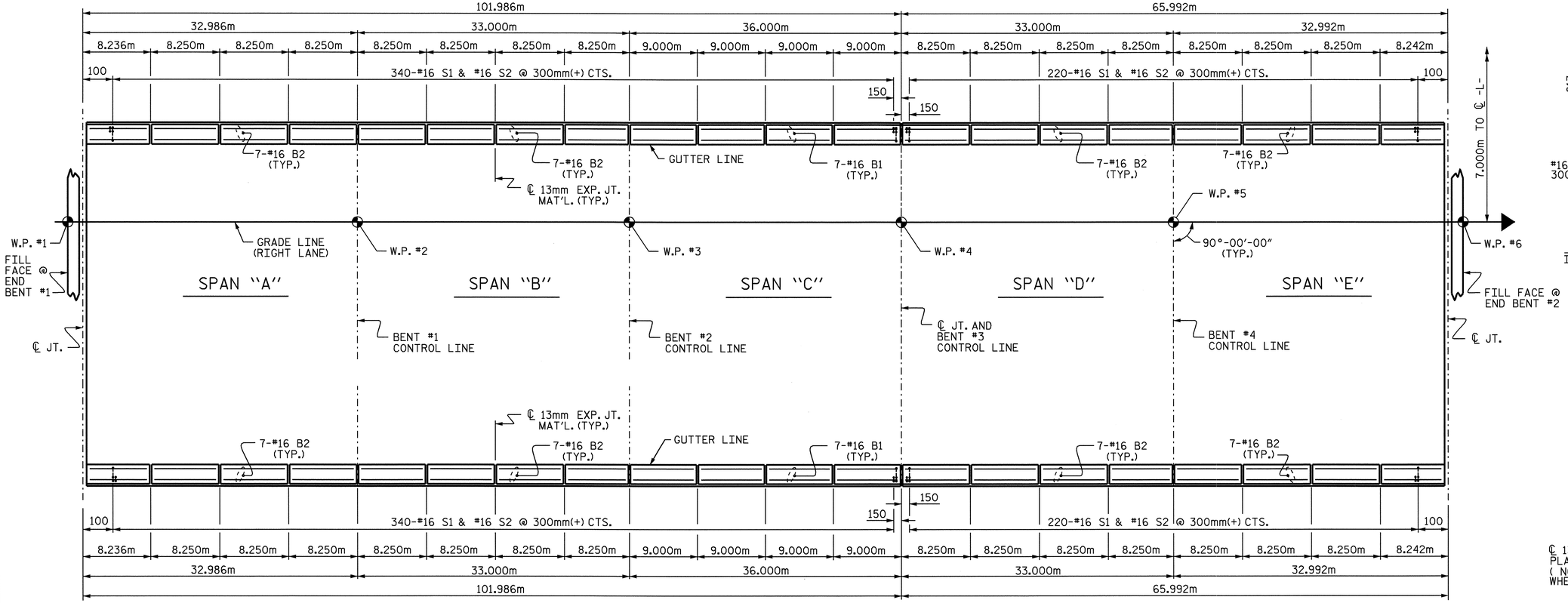

PLAN OF BARRIER RAIL

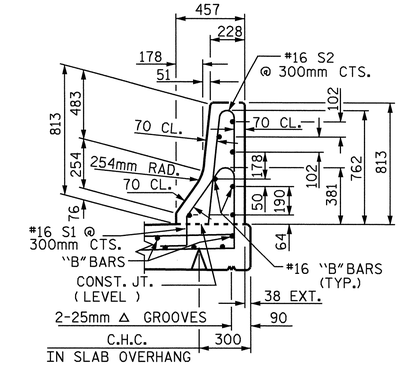

SECTION THRU RAIL

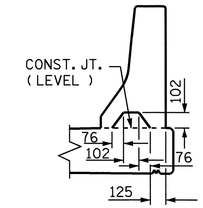

SECTION S-S

AT DAM IN OPEN JOINT
(THIS IS TO BE USED ONLY WHEN SLIP FORM IS USED)

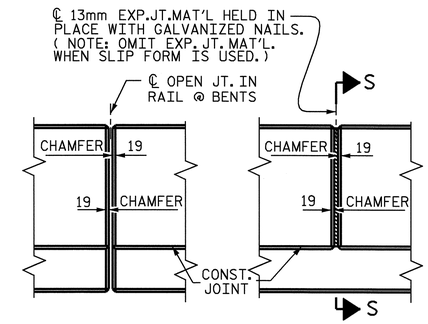

ELEVATION AT EXPANSION JOINTS

BARRIER RAIL DETAILS

BAR TYPES

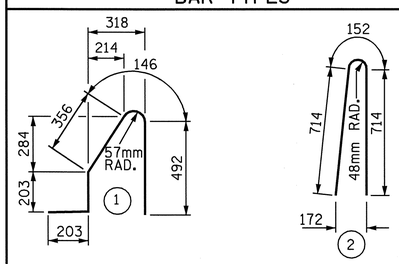

ALL BAR DIMENSIONS ARE OUT TO OUT

BILL OF MATERIAL

FOR CONCRETE BARRIER RAIL ONLY

BAR	NO.	SIZE	TYPE	LENGTH	WEIGHT
* B1	56	#16	STR	8860	770
* B2	224	#16	STR	8120	2823
* S1	1120	#16	1	1400	2434
* S2	1120	#16	2	1580	2746

* EPOXY COATED REINFORCING STEEL 8773 kg

CLASS AA CONCRETE 84.2 CU. METER

CONCRETE BARRIER RAIL 335.956 METERS

NOTES

ALL REINFORCING STEEL IN BARRIER RAILS SHALL BE EPOXY COATED.

VERTICAL GROOVED CONTRACTION JOINTS, 12mm IN DEPTH, SHALL BE TOOLED IN ALL EXPOSED FACES OF THE BARRIER RAIL AND IN ACCORDANCE WITH ARTICLE 825-10(B) OF THE STANDARD SPECIFICATIONS. THE CONTRACTION JOINT SHALL BE LOCATED AT EACH THIRD POINT BETWEEN BARRIER RAIL EXPANSION JOINTS. ONLY ONE CONTRACTION JOINT IS REQUIRED AT MIDPOINT OF BARRIER RAIL SEGMENTS LESS THAN 6.1m IN LENGTH AND NO CONTRACTION JOINTS ARE REQUIRED FOR THOSE SEGMENTS LESS THAN 3.5m IN LENGTH.

#16 S1 AND #16 S2 MAY BE SHIFTED SLIGHTLY AS NECESSARY TO MAINTAIN 50mm COVER AT 13mm EXPANSION JOINTS IN BARRIER RAIL.

BARRIER RAIL IN CONTINUOUS UNIT SHALL NOT BE CAST UNTIL ALL SLAB CONCRETE IN THE UNIT HAS BEEN CAST AND HAS REACHED A MINIMUM COMPRESSIVE STRENGTH OF 20.7 MPa.

PROJECT NO. R-2554BA
WAYNE COUNTY
STATION: 132+37.000 -L-

SHEET 1 OF 2

STATE OF NORTH CAROLINA
DEPARTMENT OF TRANSPORTATION
RALEIGH

CONCRETE BARRIER RAIL
(RIGHT LANE)

NORTH CAROLINA PROFESSIONAL SEAL 14045 ENGINEER TIMOTHY L. COGGINS
Timothy L. Coggins 6/5/08

REVISIONS						SHEET NO.
NO.	BY:	DATE:	NO.	BY:	DATE:	S-434
1			3			TOTAL SHEETS
2			4			478

STR. #15

STD. No. CBR1SM

ASSEMBLED BY : B.N.BARODAWALA	DATE : 7-12-06		
CHECKED BY : C. MILLER	DATE : 8-06		
DRAWN BY : ARB 5/87	REV. 10/17/00	RWW/LES	
CHECKED BY : SJD 9/87	REV. 5/7/03R	RWW/JTE	
	REV. 5/1/06	TLA/GM	

28-APR-2008 07:58
g:\structures\azlzl\str#15\barodawala\R2554BA_sd_BR_15.dgn
tcoggins

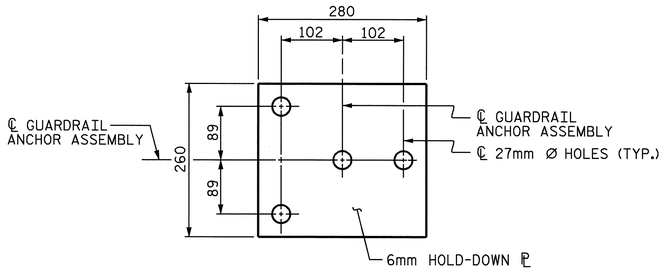

PLAN

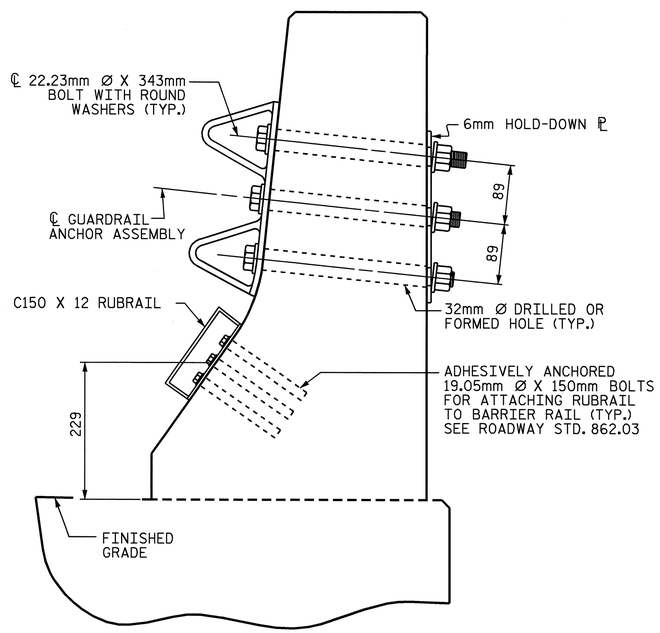

SECTION E-E

GUARDRAIL ANCHOR ASSEMBLY DETAILS

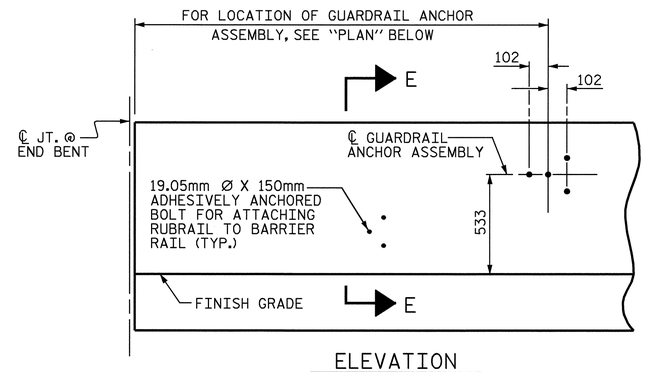

ELEVATION

FOR LOCATION OF RUBRAIL, SEE ROADWAY STD. 862.03

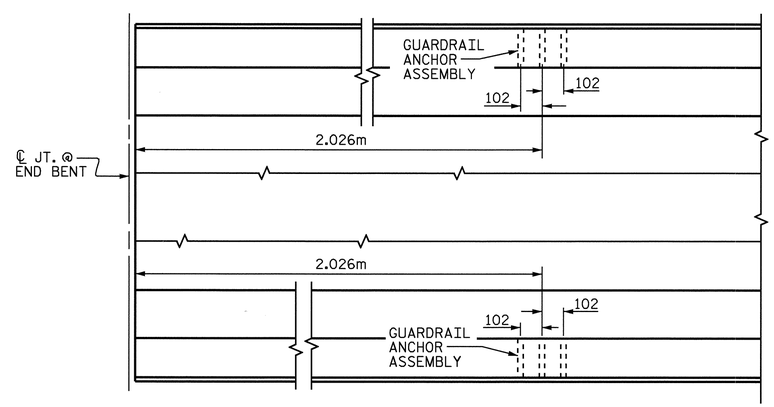

PLAN

LOCATION OF ANCHORS FOR GUARDRAIL

AT END BENT #1

NOTES

THE GUARDRAIL ANCHOR ASSEMBLY SHALL CONSIST OF A 6mm HOLD DOWN PLATE AND 4 - 22.23mm Ø BOLTS WITH NUTS AND WASHERS, RUBRAIL, AND ADHESIVELY ANCHORED BOLTS.

THE HOLD-DOWN PLATE SHALL CONFORM TO AASHTO M270 GRADE 36. AFTER FABRICATION, THE HOLD-DOWN PLATE SHALL BE HOT-DIP GALVANIZED IN ACCORDANCE WITH AASHTO M111.

BOLTS SHALL CONFORM TO THE REQUIREMENTS OF ASTM A307 AND NUTS SHALL CONFORM TO THE REQUIREMENTS OF AASHTO M291. BOLTS, NUTS AND WASHERS SHALL BE GALVANIZED. (AT THE CONTRACTOR'S OPTION, STAINLESS STEEL BOLTS, NUTS AND WASHERS MAY BE USED AS AN ALTERNATE FOR THE 22.23mm Ø GALVANIZED BOLTS, NUTS AND WASHERS. THEY SHALL CONFORM TO OR EXCEED THE MECHANICAL REQUIREMENTS OF ASTM A307. THE USE OF THIS ALTERNATE SHALL BE APPROVED BY THE ENGINEER.)

THE GUARDRAIL ANCHOR ASSEMBLY IS REQUIRED AT ALL POINTS WHERE APPROACH GUARDRAIL IS TO BE ATTACHED TO THE END OF BARRIER RAIL. FOR POINTS OF ATTACHMENT, SEE SKETCH.

AFTER INSTALLATION, THE EXPOSED THREAD OF THE BOLT SHALL BE BURRED WITH A SHARP POINTED TOOL.

THE COST OF THE GUARDRAIL ANCHOR ASSEMBLY SHALL BE INCLUDED IN THE UNIT CONTRACT PRICE BID FOR CONCRETE BARRIER RAIL.

THE 32mm Ø HOLES SHALL BE FORMED OR DRILLED WITH A CORE BIT. IMPACT TOOLS WILL NOT BE PERMITTED. ANY CONCRETE DAMAGED BY THIS WORK SHALL BE REPAIRED TO THE SATISFACTION OF THE ENGINEER.

THE C150 X 12 RUBRAIL IS TO BE ADHESIVELY ANCHORED TO THE RAIL USING THREE 19.05mm Ø X 150mm BOLTS WITH WASHERS. LEVEL ONE FIELD TESTING IF REQUIRED, AND THE YIELD LOAD OF THE 19.05mm Ø BOLTS IS 53.4kN. FOR ADHESIVELY ANCHORED ANCHOR BOLTS OR DOWELS, SEE SPECIAL PROVISIONS. SEE ROADWAY STANDARD 862.03 FOR DETAILS AND LOCATION OF THE RUBRAIL.

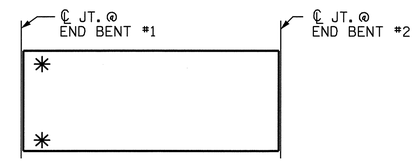

SKETCH SHOWING POINTS OF ATTACHMENTS

✳ DENOTES GUARDRAIL ANCHOR ASSEMBLY

PROJECT NO. R-2554BA
WAYNE COUNTY
STATION: 132+37.000 -L-

SHEET 2 OF 2

STATE OF NORTH CAROLINA
DEPARTMENT OF TRANSPORTATION
RALEIGH

STANDARD
GUARDRAIL ANCHORAGE FOR BARRIER RAIL
(RIGHT LANE)

NORTH CAROLINA PROFESSIONAL SEAL 14045 ENGINEER TIMOTHY L. COGGINS

Timothy L. Coggins 6/5/08

REVISIONS						SHEET NO.
NO.	BY:	DATE:	NO.	BY:	DATE:	S-435
1			3			TOTAL SHEETS
2			4			478

STR. #15 STD. NO. GRA2SM

ASSEMBLED BY : B.N.BARODAWALA	DATE : 7-12-06
CHECKED BY : C. MILLER	DATE : 8-06
DRAWN BY : TLA 5/06	ADDED 5/1/06R KMM/GM
CHECKED BY : GM 5/06	

05-JUN-2008 09:48
h:\structures\azlz1\Str#15\FINAL PLANS\R2554BA_sd_BR_15.dgn
bbarodawala

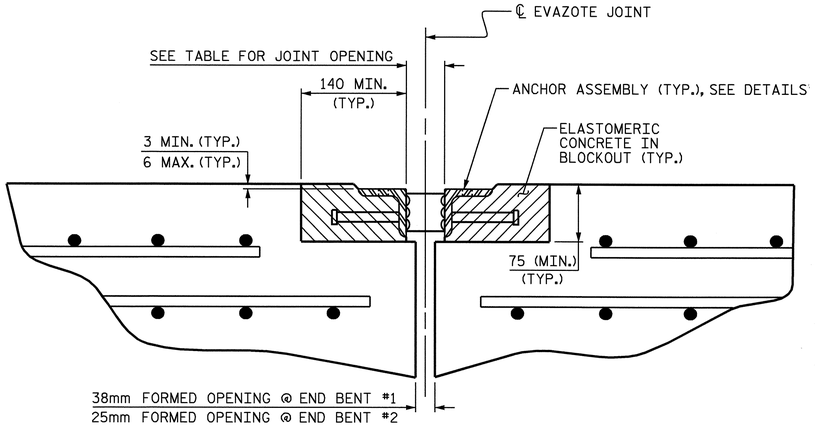

ARMORED JOINT DETAILS

SECTION NORMAL TO JOINT AT END BENT

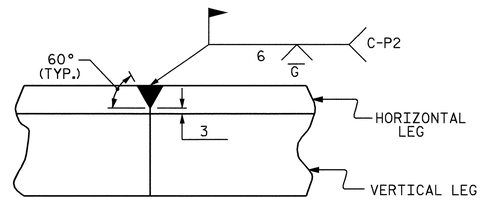

DETAIL- FIELD WELD SPLICE OF ANGLE

NOTES

ANGLES SHALL CONFORM TO AASHTO M270 GRADE 250 STEEL OR APPROVED EQUAL. ALL STUD ANCHORS SHALL CONFORM TO AASHTO M169 GRADES 1010 THRU 1020 OR APPROVED EQUAL.

STUD ANCHORS SHALL BE SHOP WELDED AND ALL HOLES SHALL BE SHOP DRILLED AS SHOWN ON THE PLANS. STUD ANCHORS SHALL BE ELECTRIC ARC END WELDED WITH COMPLETE FUSION.

UPON COMPLETION OF SHOP FABRICATION, THE ENTIRE ANCHOR ASSEMBLY SHALL BE METALLIZED. THE 12.70mm Ø STUD ANCHORS AND ANCHOR TABS NEED NOT BE METALLIZED. SEE SPECIAL PROVISION FOR THERMAL SPRAYED COATINGS (METALLIZATION).

ANCHOR ASSEMBLY SHALL BE MADE CONTINUOUS THE LENGTH OF THE JOINT FROM GUTTER TO GUTTER. FOR FIELD SPLICES AT ALL CROWN BREAK POINTS, THE ENDS OF THE STEEL ANGLES SHALL BE CUT PARALLEL TO THE BRIDGE CENTERLINE. FINISHED FIELD WELDS SHALL BE GROUND SMOOTH AND COATED WITH A MINIMUM THICKNESS OF 0.100mm OF ZINC-RICH PAINT IN ACCORDANCE WITH THE STANDARD SPECIFICATIONS.

ANCHOR ASSEMBLY SEGMENTS SHALL NOT BE LESS 3.6m NOR MORE THAN 6.1m IN LENGTH. SHORTER SEGMENTS MAY BE USED AT THE EDGE OF ROADWAY OR AT POINTS OF STAGED CONSTRUCTION.

THE ANCHOR ASSEMBLY SHALL BE SECURED AND LEVELED AS SHOWN IN THE "ARMORED JOINT ANCHOR ASSEMBLY DETAILS". NO SUBMITTALS ARE REQUIRED FOR 9.53mm Ø EXPANSION ANCHORS, NUTS OR WASHERS. THE CONTRACTOR MAY SUBMIT FOR APPROVAL AN ALTERNATE METHOD OF ALIGNING AND LEVELING THE ANGLES. THE ALTERNATE METHOD SHALL NOT INCLUDE ANY WELDING TO THE OUTSIDE FACE OF THE ANGLES.

AFTER THE ELASTOMERIC CONCRETE HAS BEEN CAST ON BOTH SIDES OF THE JOINT, REMOVE ANY EXCESS CONCRETE THAT COMES THROUGH THE WEEP HOLES AND THOROUGHLY CLEAN THE ANGLES. ANY DAMAGED STEEL SHALL BE COATED WITH A MINIMUM OF 0.100mm OF ZINC-RICH PAINT IN ACCORDANCE WITH THE STANDARD SPECIFICATIONS.

SEE SPECIAL PROVISIONS FOR EVAZOTE JOINT SEALS.

SEE SPECIAL PROVISIONS FOR ELASTOMERIC CONCRETE.

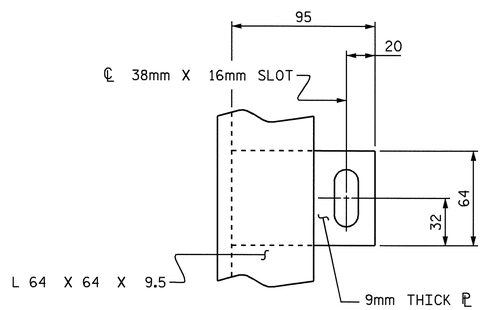

PLAN VIEW OF TAB

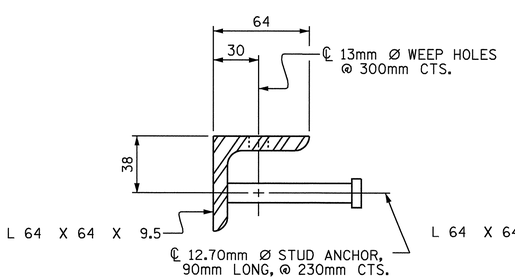

SECTION VIEW OF STUD

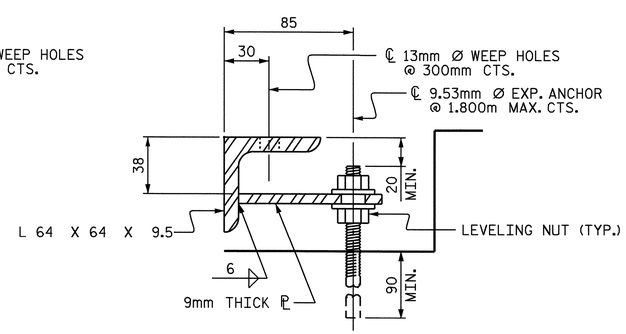

SECTION VIEW OF TAB

ARMORED JOINT ANCHOR ASSEMBLY DETAILS

MOVEMENT AND SETTING AT EVAZOTE JOINT

BENT NO.	SKEW ANGLE	NOMINAL UNCOMPRESSED SEAL WIDTH	TOTAL MOVEMENT (ALONG ℄ RDWY)	PERPENDICULAR JOINT OPENING AT 7° C	PERPENDICULAR JOINT OPENING AT 16° C	PERPENDICULAR JOINT OPENING AT 32° C
END BENT #1	90°-00'-00"	87mm	36mm	77mm	70mm	58mm
END BENT #2	90°-00'-00"	64mm	23mm	55mm	51mm	43mm

TOTAL MOVEMENT IS CALCULATED ALONG THE CENTERLINE OF ROADWAY.
JOINT OPENINGS ARE MEASURED PERPENDICULAR TO THE JOINT.

BILL OF MATERIAL

BENT NO.	ELASTOMERIC CONCRETE ✳ (CU. m)	TOTAL LENGTH OF ANGLE (m)
END BENT #1	0.24	22.800
END BENT #2	0.24	22.800

✳ BASED ON THE MINIMUM BLOCKOUT SHOWN.

PROJECT NO. R-2554BA
WAYNE COUNTY
STATION: 132+37.000 -L-

STATE OF NORTH CAROLINA
DEPARTMENT OF TRANSPORTATION
RALEIGH

STANDARD ARMORED EVAZOTE JOINT DETAILS

(RIGHT LANE)

NORTH CAROLINA PROFESSIONAL SEAL 14045 ENGINEER TIMOTHY L. LEDGGINS
Timothy L. Ledgins 6/5/08

REVISIONS						SHEET NO.
NO.	BY:	DATE:	NO.	BY:	DATE:	S-436
1			3			TOTAL SHEETS
2			4			478

STR. #15

STD. NO. AEJ1SM

ASSEMBLED BY : B.N.BARODAWALA		DATE : 7-12-06	
CHECKED BY : C. MILLER		DATE : 8-06	
DRAWN BY : EEM 1/96	REV. 7/10/01	LES/RDR	
CHECKED BY : RGW 1/96	REV. 5/7/03	RWW/JTE	
	REV. 5/1/06	TLA/GM	

28-APR-2008 07:59
gi\structures\azizi\str#15\barodawala\R2554BA_sd_JS_15.dgn
tcoggins

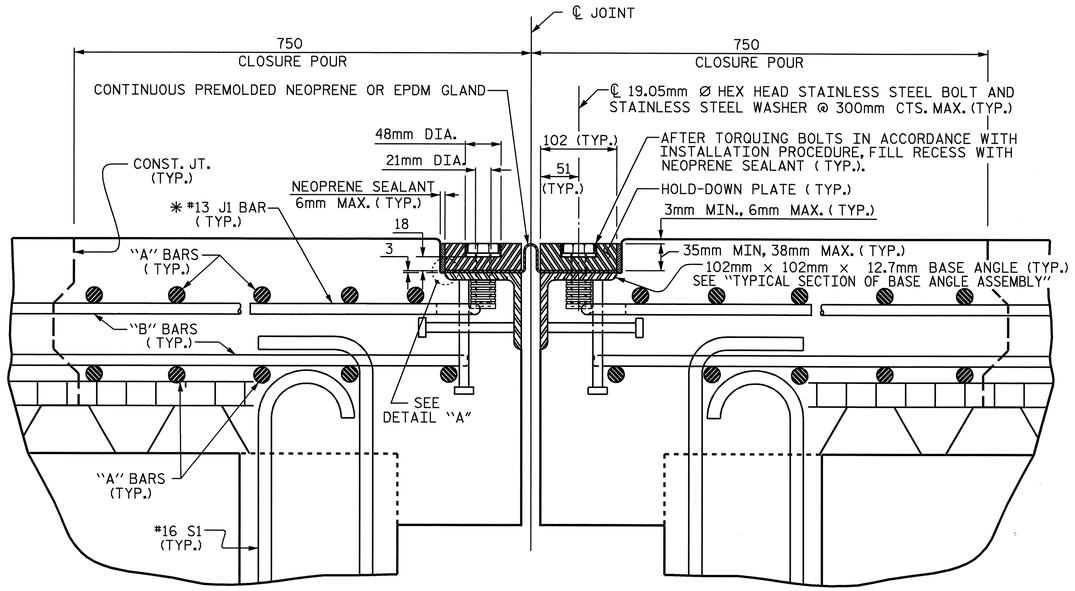

EXPANSION JOINT DETAILS

SECTION NORMAL TO JOINT -- PRESTRESSED GIRDER SUPERSTRUCTURE

✳ THE QUANTITY OF #13 J1 BARS ON THE BILL OF MATERIAL IS BASED ON 300mm CENTERS. J1 BARS SHALL BE PLACED AT EACH VERTICAL STUD ANCHOR BOLT. IN THE EVENT THAT THE NUMBER OF VERTICAL STUD ANCHOR BOLTS EXCEEDS THE NUMBER OF J1 BARS SPECIFIED, ADDITIONAL J1 BARS WILL NOT BE REQUIRED.

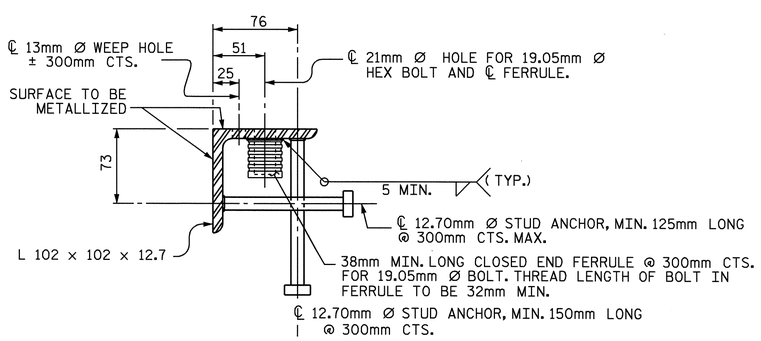

TYPICAL SECTION OF BASE ANGLE ASSEMBLY

INSTALLATION PROCEDURE

1. A TEMPLATE OR OTHER SUITABLE DEVICE SHALL BE USED TO FORM THE TOP OF THE EXPANSION JOINT SEAL BLOCKOUT TO THE PROPER DEPTH AND WIDTH. THE TEMPLATE SHALL BE 105mm TO 108mm WIDE AND OF SUCH THICKNESS AS TO PROVIDE FOR CORRECT FINAL ELEVATION OF TOP OF HOLD-DOWN PLATES. THE TEMPLATE SHALL BE ATTACHED TO THE BASE ANGLE ASSEMBLY WITH THE 19.05mm Ø HEX HEAD BOLTS PROVIDED FOR THE HOLD-DOWN PLATES. A 25mm Ø HOLE SHALL BE PROVIDED IN THE TEMPLATE CENTERED OVER EACH WEEP HOLE IN THE 102mm X 102mm X 12.7mm BASE ANGLE. OTHER METHODS OF INSURING DRAINAGE THROUGH WEEP HOLES MAY BE EMPLOYED SUBJECT TO ENGINEER'S APPROVAL.
2. AFTER THE CONCRETE HAS BEEN CAST ON BOTH SIDES OF THE JOINT, REMOVE THE TEMPLATE. THOROUGHLY CLEAN THE BOLT HOLES AND THE ANGLE PLATE. REMOVE ANY EXCESS CONCRETE THAT COMES OUT OF THE WEEP HOLES. ANY DAMAGED STEEL SHALL BE COATED WITH A MINIMUM THICKNESS OF 0.100mm (DRY) OF ZINC-RICH PAINT IN ACCORDANCE WITH THE STANDARD SPECIFICATIONS.
3. LAY THE GLAND ON THE BASE ANGLE AND FIELD MARK THE GLAND FOR THE BOLT HOLES. HOLES IN THE GLAND SHALL BE PUNCHED 22mm IN DIAMETER WITH A HAND PUNCH.
4. IN ORDER TO CHECK FOR PROPER ALIGNMENT, PLACE THE GLAND AND HOLD-DOWN PLATES ON THE BASE ANGLE. DO NOT APPLY NEOPRENE SEALANT. BOLT THE HOLD-DOWN PLATES TO THE BASE ANGLE BUT DO NOT TIGHTEN. THE ENGINEER SHALL INSPECT THE JOINT SEAL DEVICE FOR PROPER ALIGNMENT.
5. AFTER INSPECTION, REMOVE THE HOLD-DOWN PLATES AND GLAND. APPLY NEOPRENE SEALANT TO THE BASE ANGLE IN ACCORDANCE WITH THE "INSTALLATION SKETCH". PLACE GLAND AND HOLD-DOWN PLATES ON THE BASE ANGLE. BOLT THE HOLD-DOWN PLATES TO THE BASE ANGLE ASSEMBLY AND TORQUE THE BOLTS TO 119.3 N-m WITH A TORQUE WRENCH. THE TORQUE WRENCH SHALL BE CALIBRATED IN ACCORDANCE WITH SECTION 440-10 (D) OF THE STANDARD SPECIFICATIONS. CHECK THE TORQUE AFTER THREE (3) HOURS AND, IF NECESSARY, RETIGHTEN TO 119.3 N-m. A FINAL CHECK SHALL BE MADE AT SEVEN (7) DAYS. TORQUE SHALL NOT BE LESS THAN 108.5 N-m AFTER SEVEN (7) DAYS.
6. AFTER PROPER TORQUING, CLEAN THE BOLT HOLE RECESSES AND THE RECESS BETWEEN THE JOINT SEAL DEVICE AND CONCRETE, COMPLETELY FILL THESE RECESSES WITH NEOPRENE SEALANT.

GENERAL NOTES

1. FOR EXPANSION JOINT SEALS, SEE SPECIAL PROVISIONS.
2. ALL PLATES AND ANGLES SHALL CONFORM TO AASHTO M270 GRADE 250 STEEL OR APPROVED EQUAL. ALL HOLD-DOWN BOLTS SHALL CONFORM TO ASTM F593 ALLOY 304 STAINLESS STEEL. WASHERS SHALL CONFORM TO ASTM F844 EXCEPT THEY SHALL BE MADE FROM ALLOY 304 STAINLESS STEEL. ALL STUD ANCHORS SHALL CONFORM TO AASHTO M169, GRADES 1010 THRU 1020 OR APPROVED EQUAL. ALL CONCRETE INSERTS SHALL BE CLOSED END AND SHALL CONFORM TO AASHTO M169, GRADE 12L14. TENSILE CAPACITY SHALL BE 13.3 kN MIN.
3. A PREMOLDED CORRUGATED OR NON-CORRUGATED GLAND SHALL BE USED FOR JOINTS SKEWED BETWEEN 50° THRU 130° . FOR JOINTS SKEWED LESS THAN 50° OR MORE THAN 130° , ONLY A CORRUGATED GLAND SHALL BE USED.
4. CLOSED END FERRULES AND STUD ANCHORS SHALL BE SHOP WELDED AND ALL HOLES SHALL BE SHOP DRILLED AS SHOWN ON PLANS. STUD ANCHORS SHALL BE ELECTRIC ARC END WELDED WITH COMPLETE FUSION.
5. SURFACES COMING IN CONTACT WITH NEOPRENE SHALL BE GROUND SMOOTH PRIOR TO METALLIZING.
6. UPON COMPLETION OF SHOP FABRICATION, THE HOLD DOWN PLATE AND BASE ANGLE ASSEMBLY AS SHOWN IN THE "TYPICAL SECTION OF BASE ANGLE ASSEMBLY", SHALL BE METALLIZED. SEE SPECIAL PROVISION FOR THERMAL SPRAYED COATINGS (METALLIZATION).
7. BASE ANGLE ASSEMBLY SHALL BE CONTINUOUS FOR THE LENGTH OF THE JOINT. AT CROWN BREAKS, THE ENDS OF THE BASE ANGLE ASSEMBLY SHALL BE CUT PARALLEL TO THE BRIDGE CENTERLINE FOR SKEWS LESS THAN 80° AND GREATER THAN 100°. FINISHED WELD SHALL BE GROUND SMOOTH AND COATED WITH A MINIMUM THICKNESS OF 0.100mm (DRY) OF ZINC-RICH PAINT IN ACCORDANCE WITH THE STANDARD SPECIFICATIONS.
8. FIELD SPLICES OF HOLD-DOWN PLATES SHALL BE KEPT TO A MINIMUM. CONTRACTOR SHALL FURNISH DETAILED PLANS SHOWING PROPOSED SPLICE LOCATIONS FOR APPROVAL. HOLD-DOWN PLATES SHALL NOT EXCEED 6.1m LENGTHS UNLESS APPROVED BY THE ENGINEER.
9. NO ALTERNATE JOINT DETAILS SHALL BE PERMITTED IN LIEU OF THOSE SHOWN ON THESE PLANS.
10. THE CONTRACTOR MAY, AT HIS OPTION, USE ADHESIVELY ANCHORED ANCHOR BOLTS IN PLACE OF CONCRETE INSERTS FOR COVER PLATES. THE YIELD LOAD OF THE 19.05mm DIA. BOLT IS 44.5 kN. FIELD TESTING OF THE ADHESIVE BONDING SYSTEM IS NOT REQUIRED.

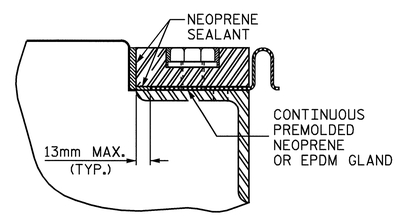

DETAIL "A"

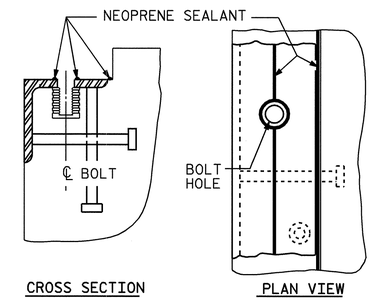

INSTALLATION SKETCH

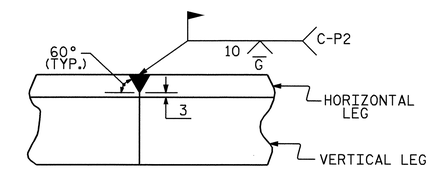

DETAIL- FIELD WELD SPLICE OF BASE ANGLE

MOVEMENT AND SETTING AT JOINT					
BENT NO.	SKEW ANGLE	TOTAL MOVEMENT (ALONG ℄ RDWY)	PERPENDICULAR JOINT OPENING AT 7° C	PERPENDICULAR JOINT OPENING AT 16° C	PERPENDICULAR JOINT OPENING AT 32° C
3	90°-00'-00"	53mm	59mm	51mm	36mm

PROJECT NO. R-2554BA

WAYNE COUNTY

STATION: 132+37.000 -L-

SHEET 1 OF 2

STATE OF NORTH CAROLINA
DEPARTMENT OF TRANSPORTATION
RALEIGH

STANDARD

EXPANSION JOINT SEAL DETAILS
(RIGHT LANE)

NORTH CAROLINA PROFESSIONAL SEAL 14045 ENGINEER TIMOTHY L. COGGINS

Timothy L. Coggins 6/5/08

ASSEMBLED BY : B.N.BARODAWALA	DATE : 5-4-06
CHECKED BY : C. MILLER	DATE : 8-06

DRAWN BY : REK	9/87	REV. 10/17/00	RWW/LES
CHECKED BY : CRK	10/87	REV. 5/7/03R	RWW/JTE
		REV. 5/1/06	TLA/GM

REVISIONS						SHEET NO.
NO.	BY:	DATE:	NO.	BY:	DATE:	S-437
1			3			TOTAL SHEETS
2			4			478

STR. #15

STD. NO. EJS1SM

28-APR-2008 07:59
g:\structures\azlzl\str#15\barodawala\R2554BA_sd_JS_15.dgn

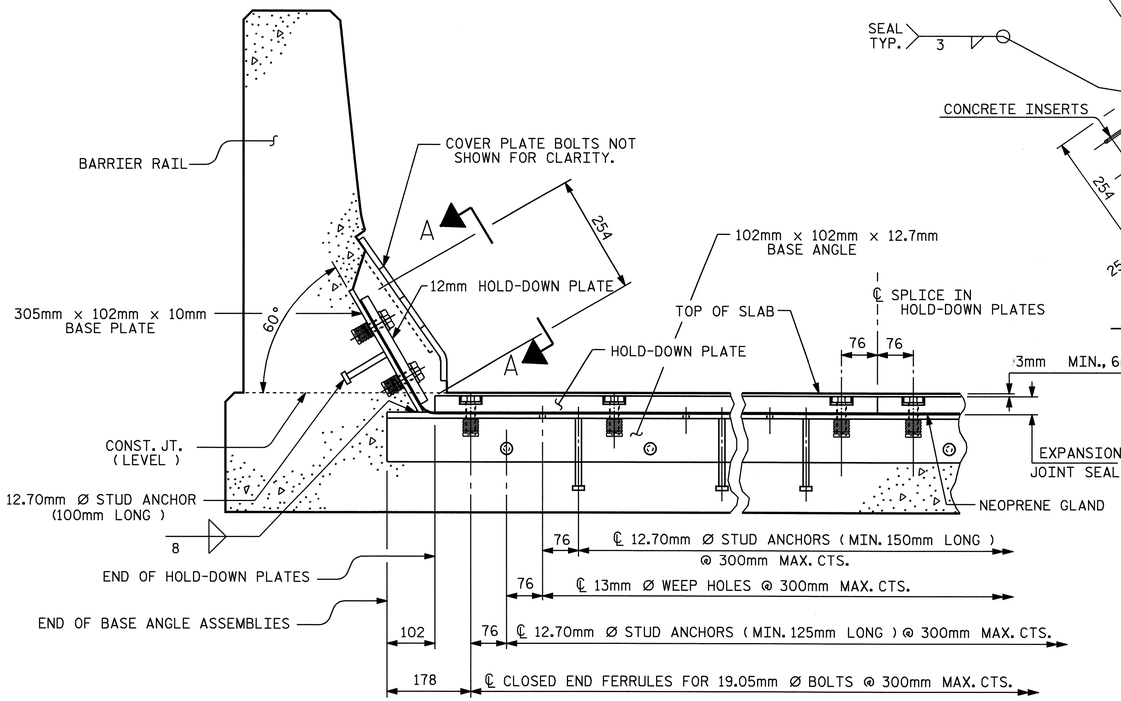

SECTION THRU RAIL NORMAL TO JOINT

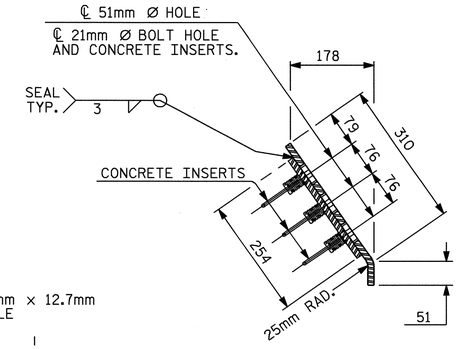

END VIEW

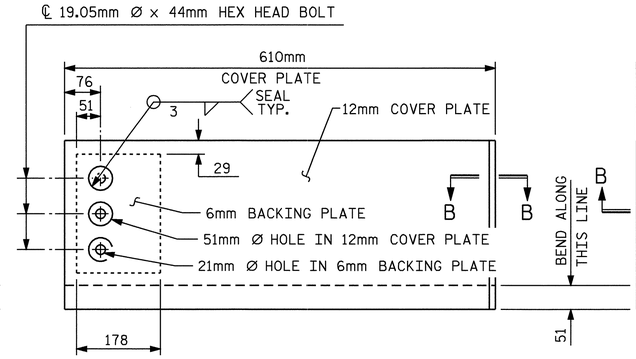

TYPE I - ELEVATION VIEW

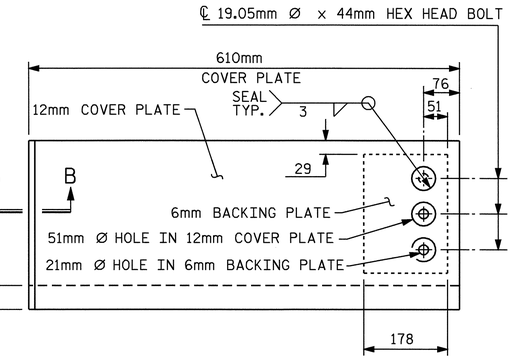

TYPE II - ELEVATION VIEW

COVER PLATE DETAILS

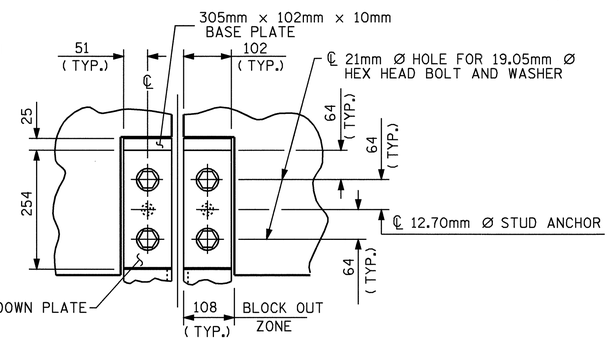

SECTION A - A

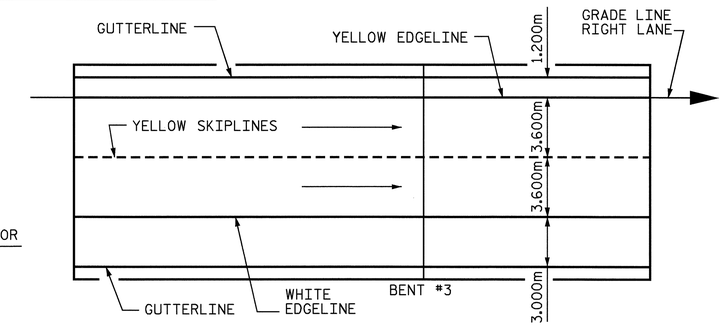

PAVEMENT MARKING ALIGNMENT

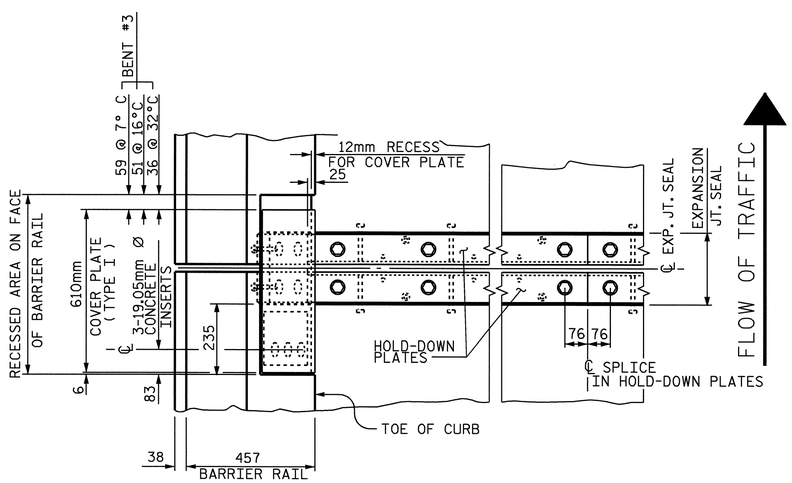

PLAN OF EXPANSION JOINT SEAL - LEFT SIDE

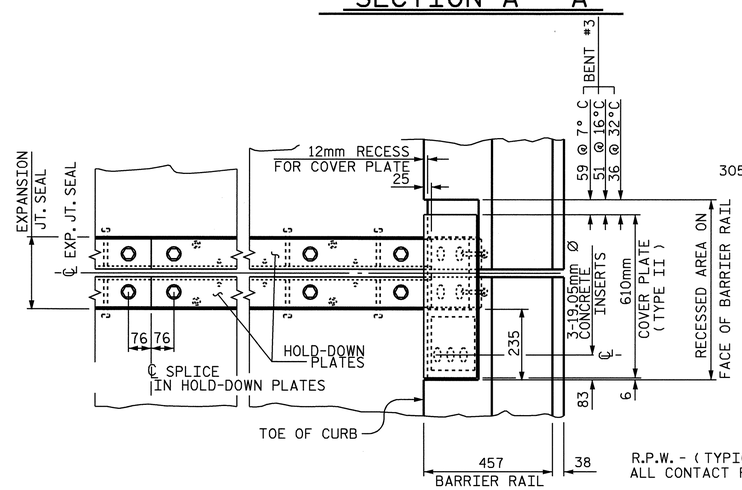

PLAN OF EXPANSION JOINT SEAL - RIGHT SIDE

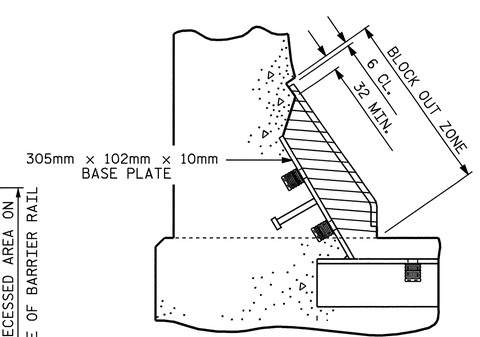

BLOCK OUT DETAIL

SEE "SECTION A - A" FOR OTHER DETAILS.

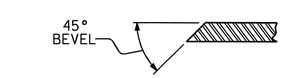

SECTION B - B

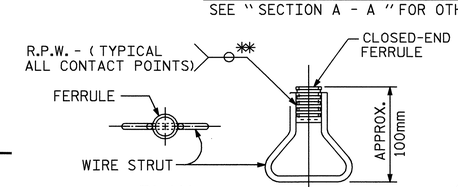

PLAN ELEVATION

CONCRETE INSERT

** EACH WELDED ATTACHMENT OF WIRE TO FERRULE SHALL DEVELOP THE TENSILE STRENGTH OF THE WIRE.

NORTH CAROLINA PROFESSIONAL SEAL 14045 ENGINEER TIMOTHY J. COGGINS 6/9/08

PROJECT NO. R-2554BA
WAYNE COUNTY
STATION: 132+37.000 -L-

SHEET 2 OF 2

STATE OF NORTH CAROLINA
DEPARTMENT OF TRANSPORTATION
RALEIGH

STANDARD EXPANSION JOINT SEAL DETAILS FOR BARRIER RAIL

(RIGHT LANE)

REVISIONS								SHEET NO.
NO.	BY:	DATE:	NO.	BY:	DATE:			S-438
1			3					TOTAL SHEETS
2			4					478

STR. #15

STD. NO. EJS2SM

ASSEMBLED BY : B.N.BARODAWALA		DATE : 10-31-07	
CHECKED BY : T.L. AVERETTE		DATE : 11-07	
DRAWN BY : REK 9/87	REV. 7/17/98	RWW/LES	
CHECKED BY : CRK 10/87	REV. 10/17/00	RWW/LES	
	REV. 5/1/06	TLA/GM	

09-JUN-2008 16:53
g:\tlprojects-r\r2554ba\structures\azlzl\Str#15\FINAL PLANS\R2554BA_sd_JS_15.dgn
taverette

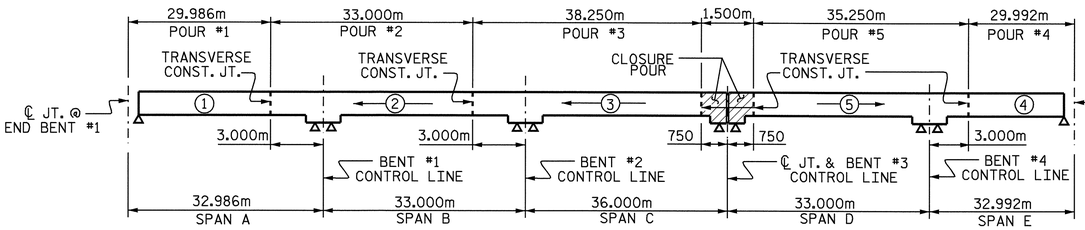

POURING SEQUENCE

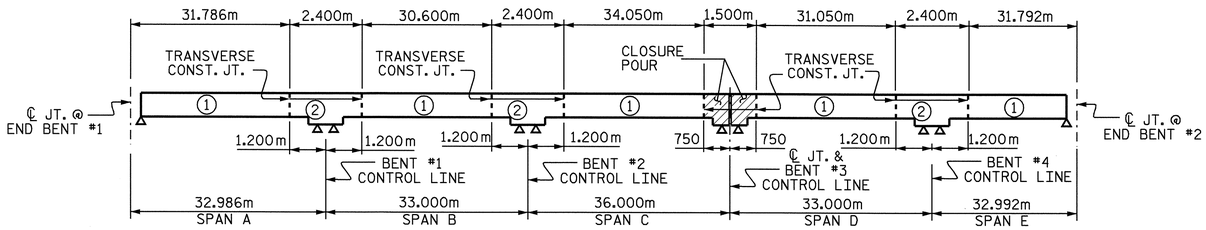

OPTIONAL POURING SEQUENCE

POUR ② CANNOT BE STARTED UNTIL BOTH ADJACENT ① POURS REACH A MIN. OF 20.7 MPA.

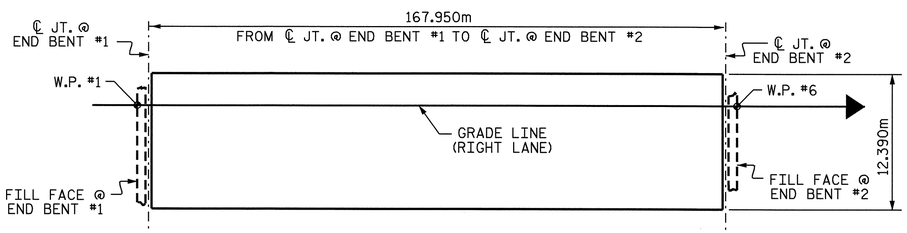

LAYOUT FOR COMPUTING AREA OF REINFORCED CONCRETE DECK SLAB (2080.9 SQ. METER)

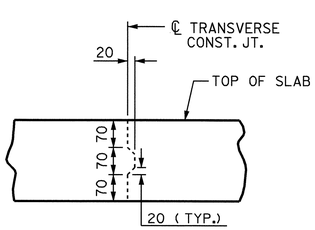

TRANSVERSE CONSTRUCTION JOINT DETAIL

NOTE: REINFORCING STEEL IN SLAB NOT SHOWN. LONGITUDINAL REINFORCING STEEL SHALL BE CONTINUOUS THRU JOINT.

BILL OF MATERIAL — SPANS A, B, C

BAR	NO.	SIZE	TYPE	LENGTH	WEIGHT
✳A1	509	#16	STR	12280	9701
A2	510	#16	STR	12280	9720
✳B1	84	#13	STR	7760	648
✳B2	56	#22	STR	12300	2095
✳B3	27	#22	STR	10000	821
✳B4	56	#13	STR	5920	330
✳B5	56	#22	STR	12800	2181
✳B6	27	#22	STR	10500	862
✳B7	84	#13	STR	8420	703
B9	308	#16	STR	15120	7228
✳J1	38	#13	9	440	17
✳K1	8	#25	1	4120	131
✳K2	12	#25	2	5760	275
K3	48	#16	5	2180	162
K4	240	#16	STR	2160	805
K5	16	#13	STR	1240	20
K6	80	#13	STR	2160	172
K7	16	#13	STR	1340	21
K8	28	#13	STR	5220	145
K9	16	#19	STR	2140	77
✳S1	40	#16	3	1780	111
S2	168	#13	4	3460	578
S3	304	#13	6	840	254
S4	16	#13	8	3300	52
S5	16	#16	3	1060	26
✳U1	40	#13	7	5440	216

REINFORCING STEEL = 19260 kg
✳EPOXY COATED REINFORCING STEEL = 18091 kg

BILL OF MATERIAL — SPANS D, E

BAR	NO.	SIZE	TYPE	LENGTH	WEIGHT
✳A1	329	#16	STR	12280	6270
A2	330	#16	STR	12280	6289
✳B1	84	#13	STR	7760	648
✳B2	56	#22	STR	12300	2095
✳B3	27	#22	STR	10000	821
✳B8	84	#13	STR	7760	648
B10	176	#16	STR	16980	4638
✳J1	38	#13	9	440	17
✳K1	8	#25	1	4120	131
✳K2	12	#25	2	5760	275
K3	32	#16	5	2180	108
K4	160	#16	STR	2160	536
K5	8	#13	STR	1240	10
K6	40	#13	STR	2160	86
K7	8	#13	STR	1340	11
K8	14	#13	STR	5220	73
K9	16	#19	STR	2140	77
✳S1	40	#16	3	1780	111
S2	112	#13	4	3460	385
S3	152	#13	6	840	127
S4	8	#13	8	3300	26
S5	16	#16	3	1060	26
✳U1	20	#13	7	5440	108

REINFORCING STEEL = 12392 kg
✳EPOXY COATED REINFORCING STEEL = 11124 kg

BAR TYPES

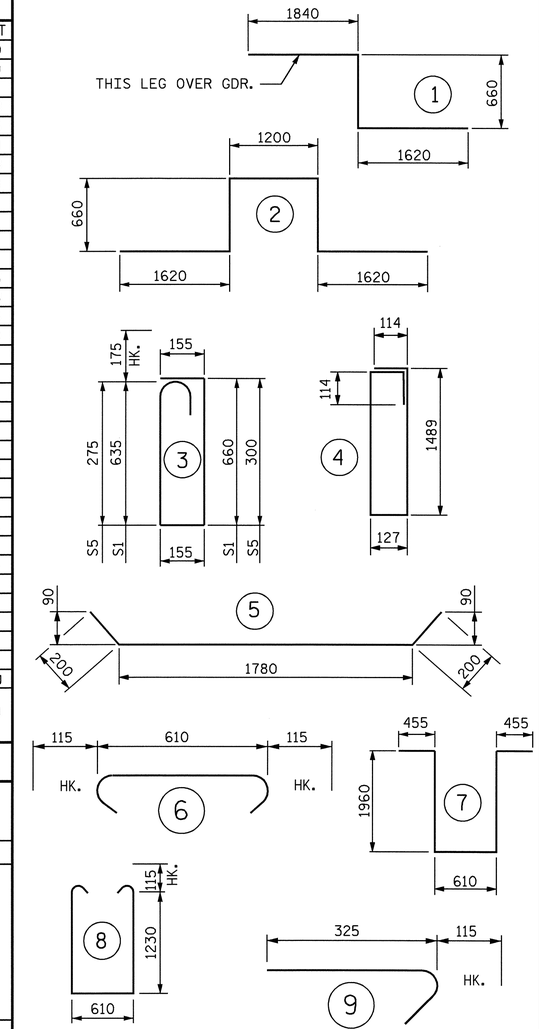

ALL BAR DIMENSIONS ARE OUT TO OUT.

SUPERSTRUCTURE BILL OF MATERIAL

	CLASS AA CONCRETE		REINFORCING STEEL	EPOXY COATED REINFORCING STEEL
	(CU. METER)		(kg)	(kg)
SPAN A, B, C, D AND E	POUR 1	113.4	31652	29215
	POUR 2	134.2		
	POUR 3	154.2		
	POUR 4	114.8		
	POUR 5	145.6		
	CLOSURE POUR	7.7		
TOTALS ✳✳	669.9		31652	29215

✳✳ QUANTITIES FOR BARRIER RAIL ARE NOT INCLUDED

SUPERSTRUCTURE REINFORCING STEEL LENGTHS ARE BASED ON THE FOLLOWING MINIMUM SPLICE LENGTHS

BAR SIZE	SUPERSTRUCTURE EXCEPT APPROACH SLABS, PARAPET, AND BARRIER RAIL		APPROACH SLABS		PARAPET AND BARRIER RAIL
	EPOXY COATED	UNCOATED	EPOXY COATED	UNCOATED	
#13	610	540	610	540	840
#16	770	660	770	660	1050
#19	920	790	1190	790	1330
#22	1580	1060			
#25	2080	1390			

GROOVING BRIDGE FLOORS

BRIDGE DECK	1752.1	SQ.METER
APPROACH SLABS	151.5	SQ.METER
TOTAL	1903.6	SQ.METER

PROJECT NO. R-2554BA
WAYNE COUNTY
STATION: 132+37.000 -L-

STATE OF NORTH CAROLINA
DEPARTMENT OF TRANSPORTATION
RALEIGH

STANDARD
SUPERSTRUCTURE BILL OF MATERIAL
(RIGHT LANE)

NORTH CAROLINA PROFESSIONAL SEAL 14045 ENGINEER TIMOTHY L. COGGINS

Timothy L. Coggins 6/5/08

REVISIONS						SHEET NO.
NO.	BY:	DATE:	NO.	BY:	DATE:	S-439
1			3			TOTAL SHEETS
2			4			478

ASSEMBLED BY : B.N.BARODAWALA DATE : 5-4-06
CHECKED BY : C. MILLER DATE : 7-06
DRAWN BY : JMB 5/87 REV. 5/16/97 EEM/RGW
CHECKED BY : SJD 9/87 REV. 5/1/06 TLA/GM

28-APR-2008 09:10
g:\structures\azlzl\str#15\barodawala\R2554BA_sd_BM_15.dgn
tcoggins

STR. #15

STD. NO. BOM1SM

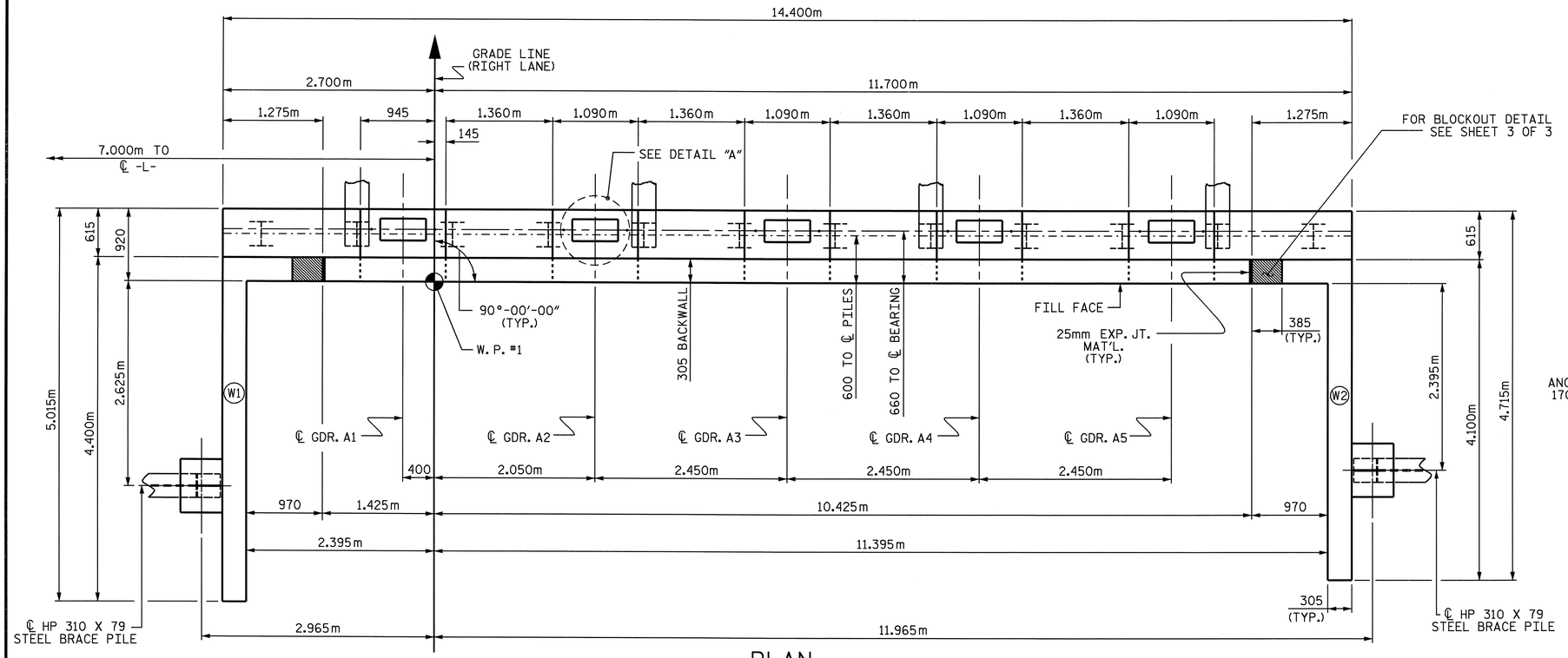

PLAN

NOTES

STIRRUPS IN CAP MAY BE SHIFTED AS NECESSARY TO CLEAR ANCHOR BOLTS.

BACKWALL SHALL BE PLACED BEFORE APPLYING THE EPOXY PROTECTIVE COATING.

THE TOP SURFACE OF THE END BENT CAP EXCEPT THE BRIDGE SEAT BUILDUPS SHALL BE SLOPED TRANSVERSELY FROM THE FILL FACE TO THE BACK FACE AT THE RATE OF 2 %.

THE CONTRACTOR SHALL PROVIDE FOR INSTALLATION OF THE 102mm DIAMETER DRAIN PIPE THROUGH THE WING WALL AS REQUIRED FOR REINFORCED BRIDGE APPROACH FILLS. SEE THE ROADWAY PLANS. REINFORCING STEEL IN THE WING WALL MAY BE SHIFTED AS NECESSARY TO CLEAR THE DRAIN PIPE.

THE TOP SURFACE AREAS OF THE END BENT CAP SHALL BE CURED IN ACCORDANCE WITH THE STANDARD SPECIFICATIONS EXCEPT THE MEMBRANE CURING COMPOUND METHOD SHALL NOT BE USED.

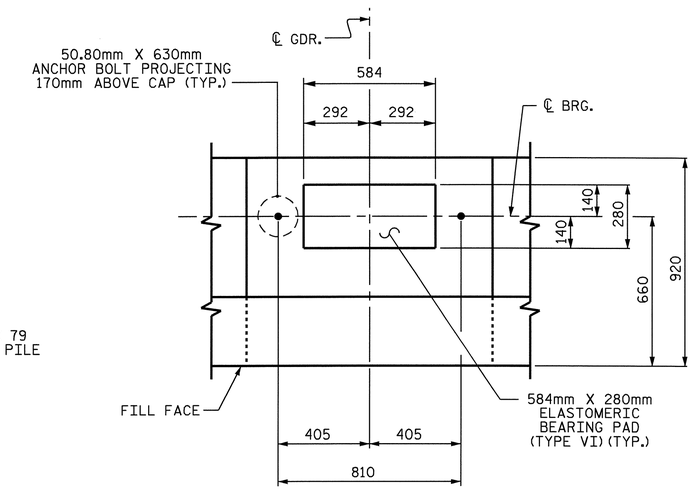

DETAIL "A"

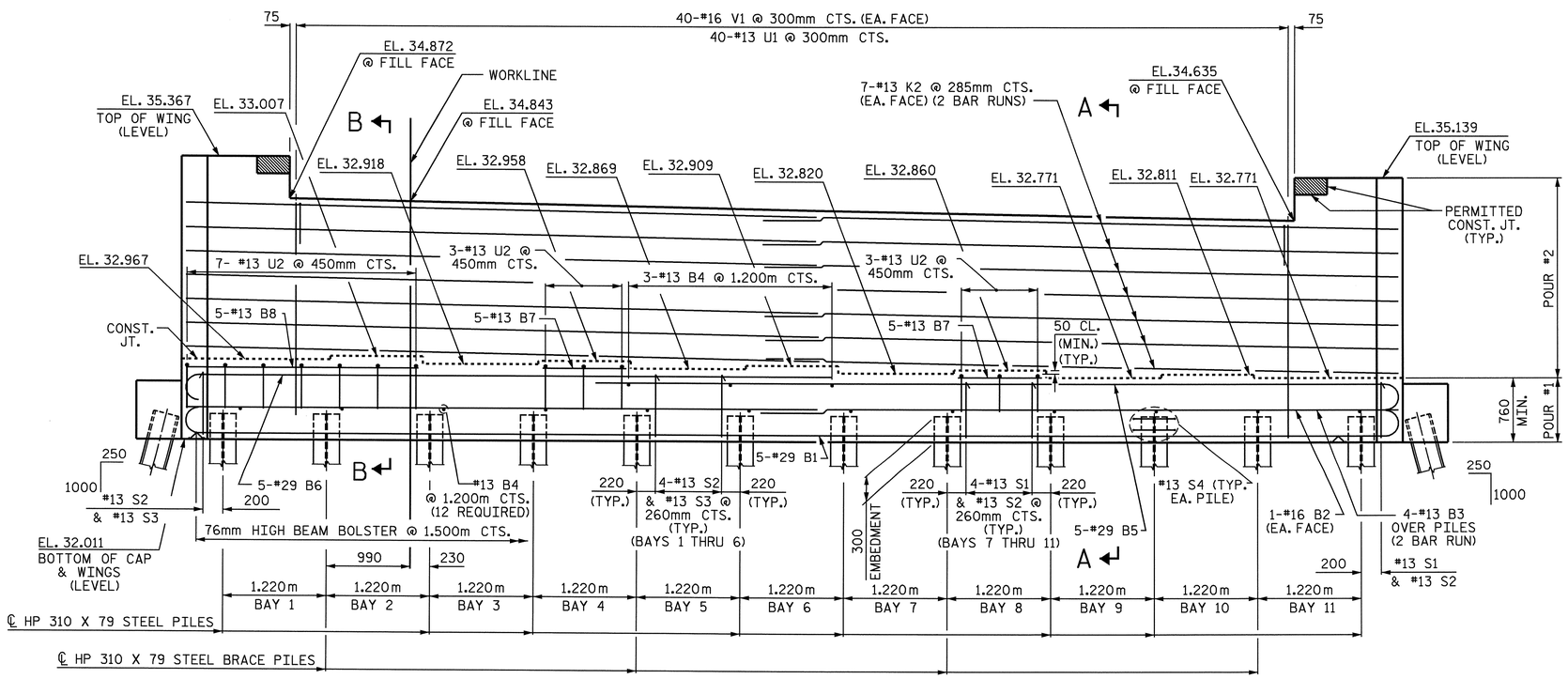

ELEVATION

PROJECT NO. R-2554BA

WAYNE COUNTY

STATION: 132+37.000 -L-

SHEET 1 OF 3

STATE OF NORTH CAROLINA
DEPARTMENT OF TRANSPORTATION
RALEIGH

SUBSTRUCTURE
END BENT #1
(RIGHT LANE)

NORTH CAROLINA PROFESSIONAL SEAL 14045 ENGINEER TIMOTHY R. COGGINS

Timothy R. Coggins 6/5/08

REVISIONS						SHEET NO.
NO.	BY:	DATE:	NO.	BY:	DATE:	S-440
1			3			TOTAL SHEETS
2			4			478

STR.#15

DRAWN BY : M. GUDLAUGSSON DATE : 11/07
CHECKED BY : J. B. WILSON DATE : 12/07

25-APR-2008 16:35
g:\structures\azlz1\Str#15\MGudlaugsson\R2554BA_sd_EB.dgn
tcoggins

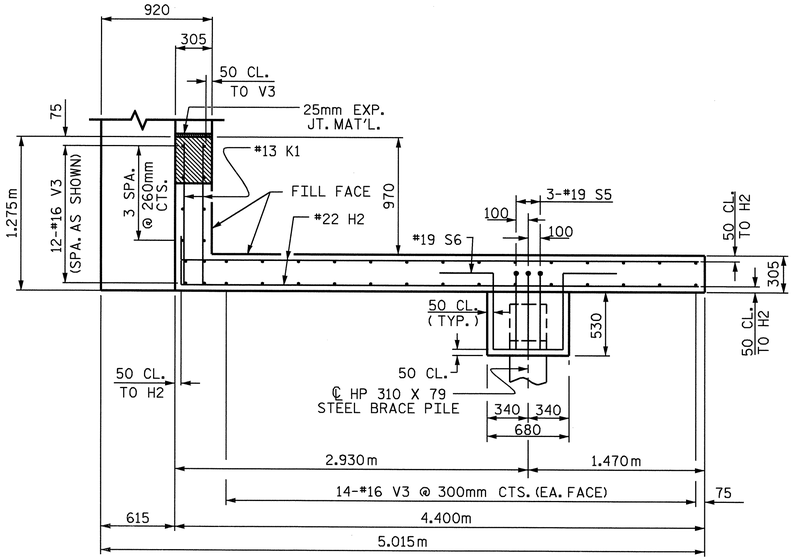

PLAN OF WING W1

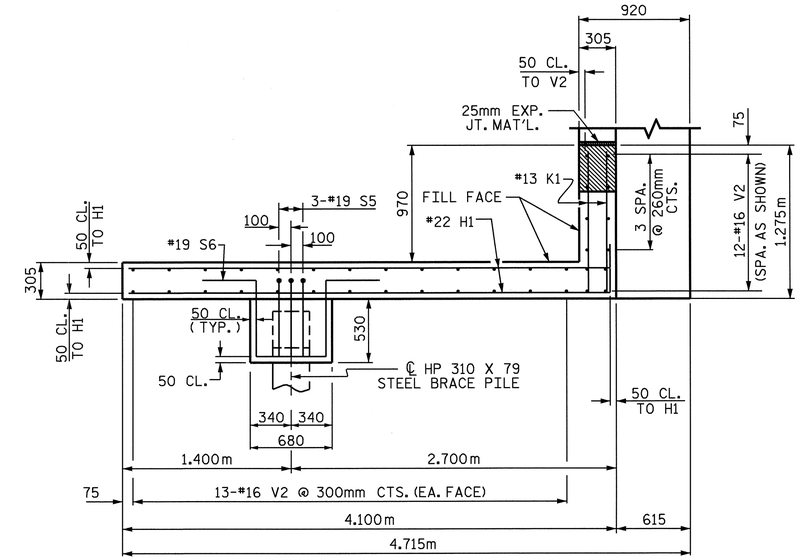

PLAN OF WING W2

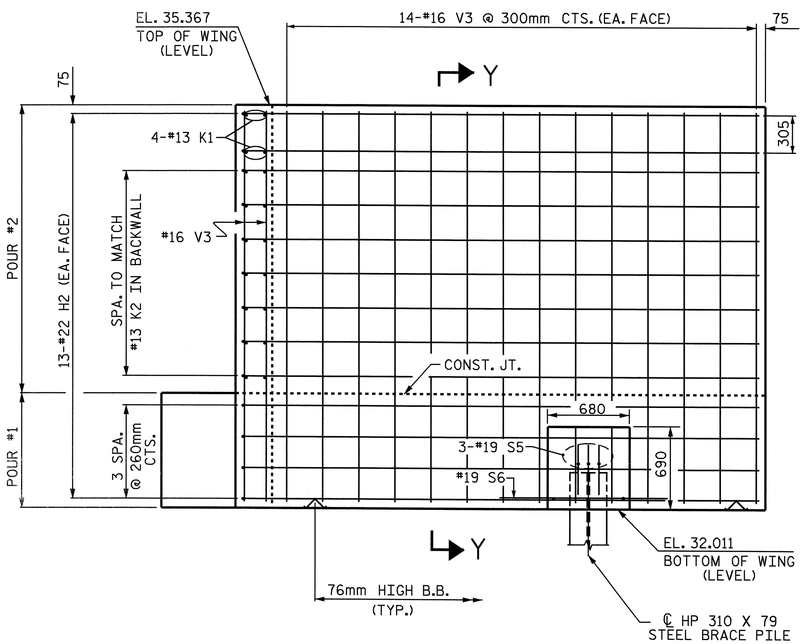

ELEVATION OF WING W1

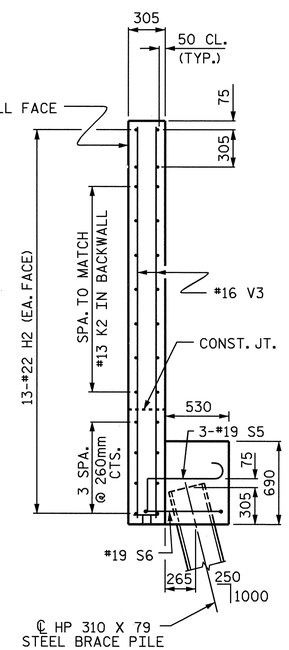

SECTION Y-Y

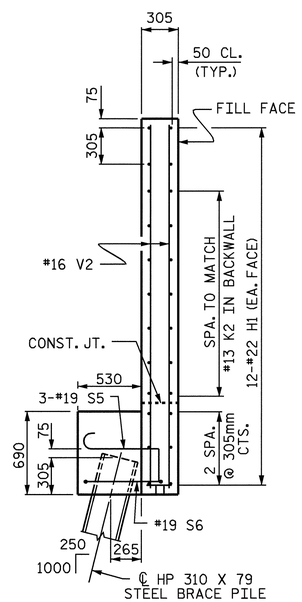

SECTION X-X

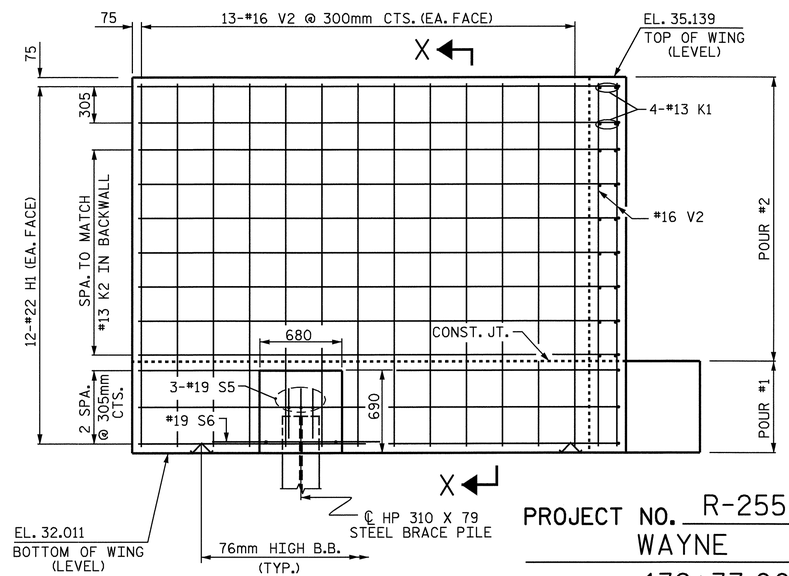

ELEVATION OF WING W2

PROJECT NO. R-2554BA

WAYNE COUNTY

STATION: 132+37.000 -L-

SHEET 2 OF 3

STATE OF NORTH CAROLINA
DEPARTMENT OF TRANSPORTATION
RALEIGH

SUBSTRUCTURE

END BENT #1
(RIGHT LANE)

NORTH CAROLINA PROFESSIONAL SEAL 14045 ENGINEER TIMOTHY W. COGGINS

Timothy W. Coggins 6/5/08

REVISIONS						SHEET NO.
NO.	BY:	DATE:	NO.	BY:	DATE:	S-441
1			3			TOTAL SHEETS
2			4			478

DRAWN BY : M. GUDLAUGSSON DATE : 11/07
CHECKED BY : J. B. WILSON DATE : 12/07

25-APR-2008 16:35
g:\structures\azlzl\Str#15\MGudlaugsson\R2554BA_sd_EB.dgn
tcoggins

STR.#15

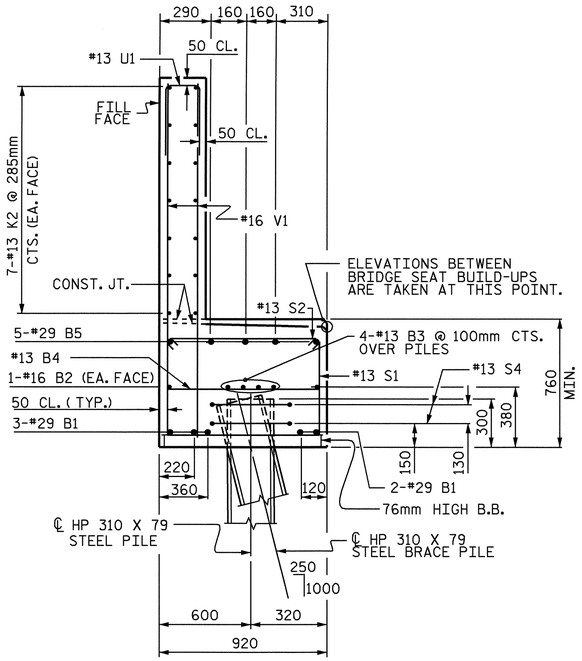

SECTION A-A

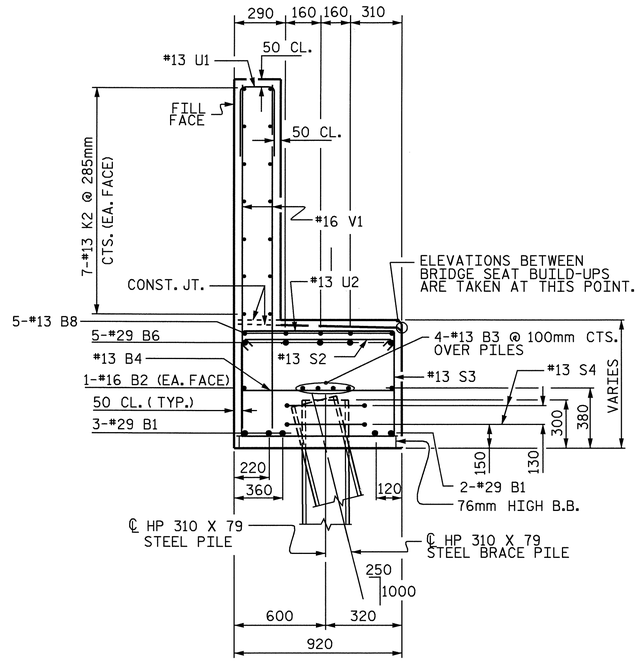

SECTION B-B

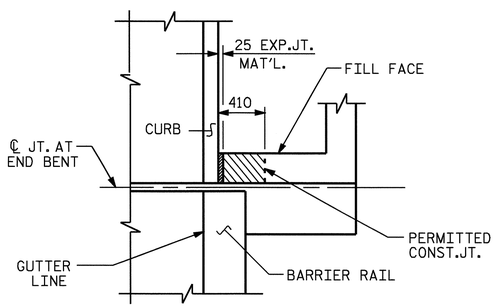

PLAN

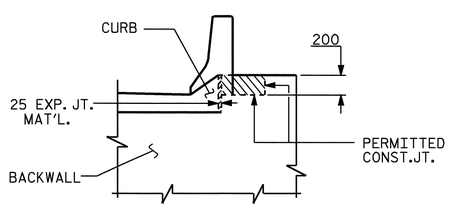

ELEVATION

BLOCKOUT IN WING WALL

NOTE: THE CONCRETE IN THE CROSS-HATCHED AREA OF THE WING SHALL BE POURED AFTER THE BARRIER RAIL IS CAST IF SLIP FORMING IS USED.

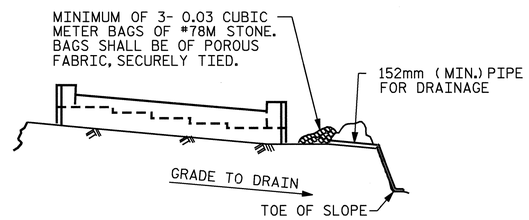

BAGGED STONE AND PIPE SHALL BE PLACED IMMEDIATELY AFTER COMPLETION OF END BENT EXCAVATION. PIPE MAY BE EITHER CONCRETE, CORRUGATED STEEL, CORRUGATED ALUMINUM ALLOY, OR CORRUGATED PLASTIC. PERFORATED PIPE WILL NOT BE ALLOWED.

BAGGED STONE SHALL REMAIN IN PLACE UNTIL THE ENGINEER DIRECTS THAT IT BE REMOVED. THE CONTRACTOR SHALL REMOVE AND DISPOSE OF SILT ACCUMULATIONS AT BAGGED STONE WHEN SO DIRECTED BY THE ENGINEER. BAGS SHALL BE REMOVED AND REPLACED WHENEVER THE ENGINEER DETERMINES THAT THEY HAVE DETERIORATED AND LOST THEIR EFFECTIVENESS.

NO SEPARATE PAYMENT WILL BE MADE FOR THIS WORK AND THE ENTIRE COST OF THIS WORK SHALL BE INCLUDED IN THE UNIT CONTRACT PRICE BID FOR THE SEVERAL PAY ITEMS.

TEMPORARY DRAINAGE AT END BENT

BAR TYPES

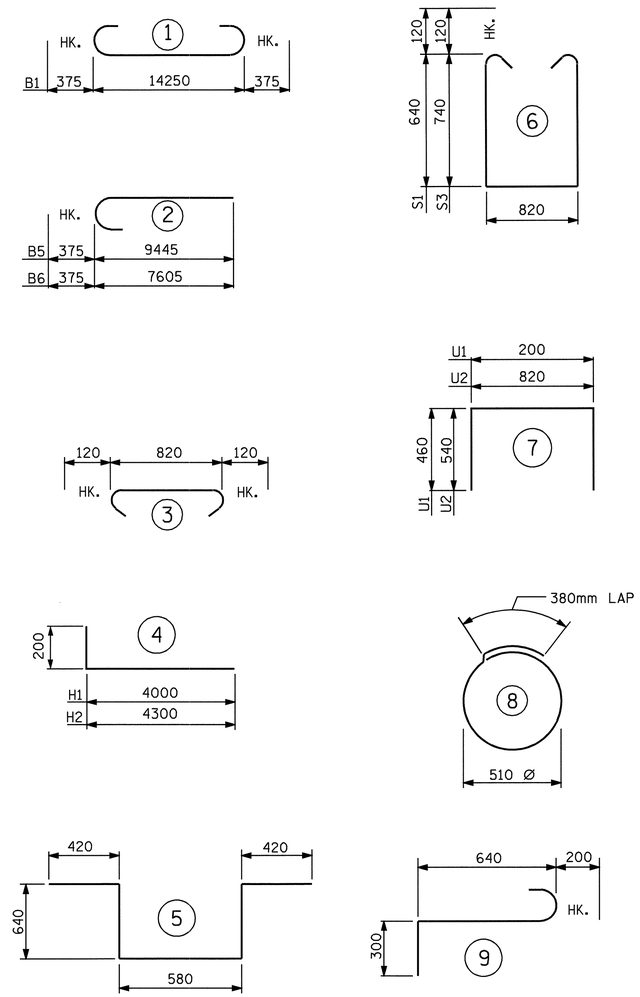

ALL BAR DIMENSIONS ARE OUT TO OUT.

BILL OF MATERIAL
END BENT NO. 1

BAR	NO.	SIZE	TYPE	LENGTH	WEIGHT
B1	5	#29	1	15000	380
B2	2	#16	STR	14300	44
B3	8	#13	STR	7520	60
B4	15	#13	STR	820	12
B5	5	#29	2	9820	248
B6	5	#29	2	7980	202
B7	10	#13	STR	980	10
B8	5	#13	STR	2740	14
H1	24	#22	4	4200	307
H2	26	#22	4	4500	356
K1	8	#13	STR	1160	9
K2	28	#13	STR	7520	209
S1	21	#13	6	2340	49
S2	46	#13	3	1060	48
S3	25	#13	6	2540	63
S4	24	#13	8	1980	47
S5	6	#19	9	1140	15
S6	2	#19	5	2700	12
U1	40	#13	7	1120	45
U2	13	#13	7	1900	25
V1	80	#16	STR	2520	313
V2	38	#16	STR	3020	178
V3	40	#16	STR	3240	201

REINFORCING STEEL kg. 2847

CLASS "A" CONCRETE
POUR #1 (CAP, LOWER WINGS & WING BRACE PILE FTGS.) m3 14.0
POUR #2 (BACKWALL & UPPER WINGS) m3 14.4
TOTAL m3 28.4

HP 310 X 79 STEEL PILES
NO. 14 METERS 210.0

PILE REDRIVES EACH 4

SPLICE LENGTH CHART

BAR	SIZE	LENGTH
K2,B3	#13	740mm
B5	#29	2670mm

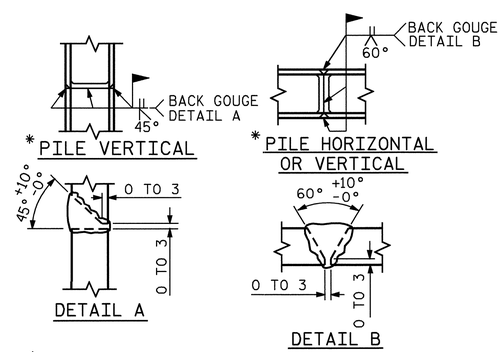

* POSITION OF PILE DURING WELDING.

PILE SPLICE DETAILS

PROJECT NO. R-2554BA
WAYNE COUNTY
STATION: 132+37.000 -L-

SHEET 3 OF 3

STATE OF NORTH CAROLINA
DEPARTMENT OF TRANSPORTATION
RALEIGH

SUBSTRUCTURE
END BENT #1
(RIGHT LANE)

NORTH CAROLINA PROFESSIONAL SEAL 14045 ENGINEER TIMOTHY L. COGGINS
6/6/08

REVISIONS						SHEET NO.
NO.	BY:	DATE:	NO.	BY:	DATE:	S-442
1			3			TOTAL SHEETS
2			4			478

DRAWN BY : M. GUDLAUGSSON DATE : 11/07
CHECKED BY : J. B. WILSON DATE : 12/07

06-JUN-2008 11:38
r:\structures\azlz\Str#15\FINAL PLANS\R2554BA_sd_EB.dgn
padkins

STR.#15

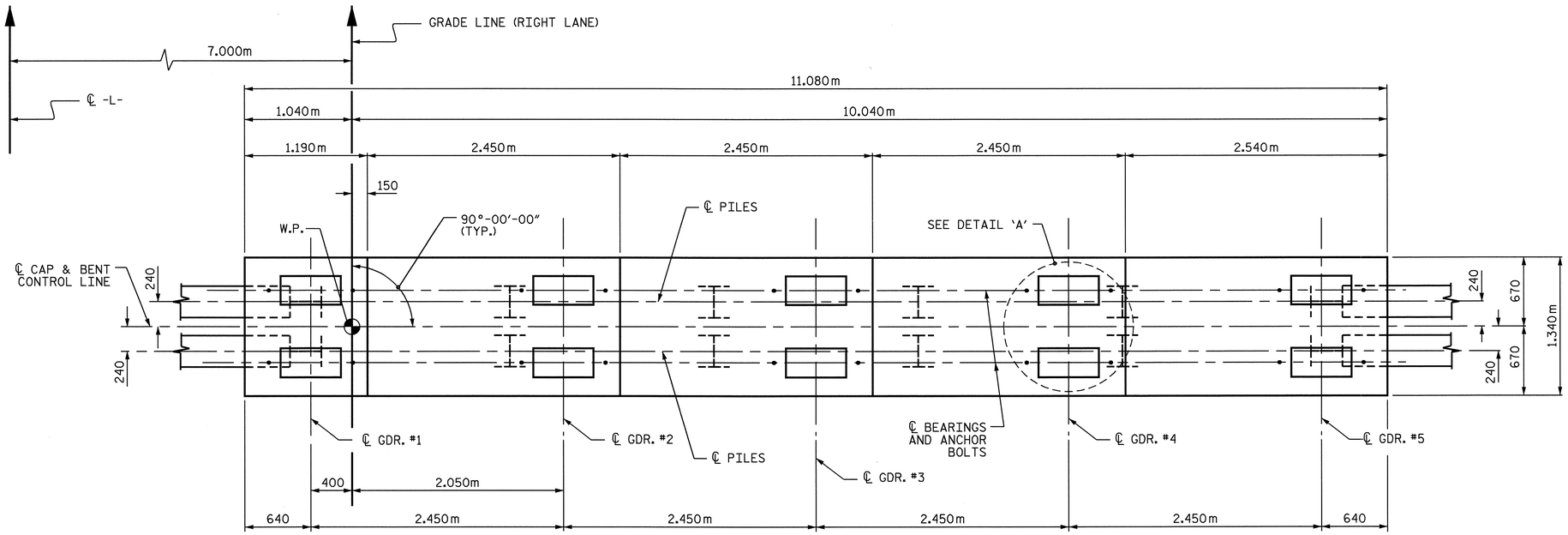

PLAN

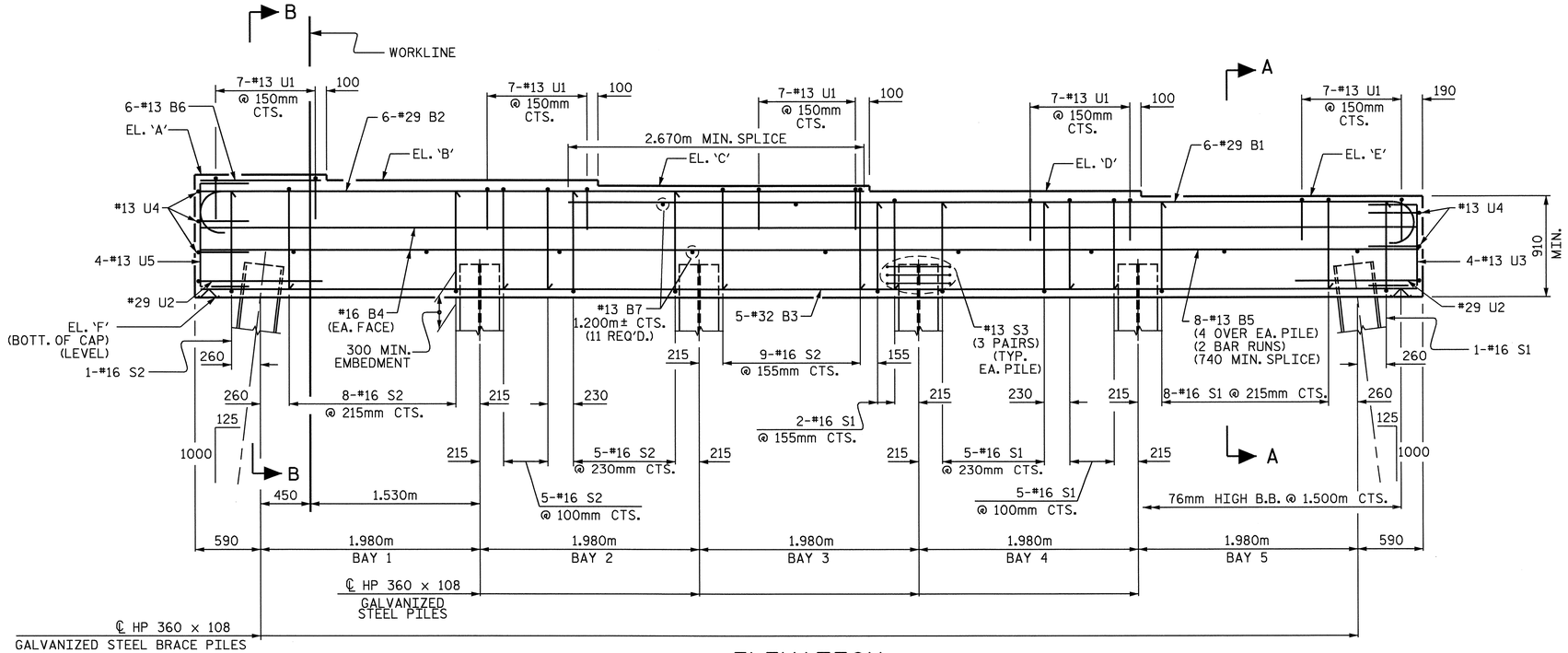

ELEVATION
(INVERT ALTERNATE STIRRUPS)

NOTES

STIRRUPS IN CAP MAY BE SHIFTED AS NECESSARY TO CLEAR ANCHOR BOLTS.

FOR PILE SPLICE DETAILS, SEE END BENT SHEETS 3 OF 3.

THE STEEL PILES SHALL BE GALVANIZED IN ACCORDANCE WITH SECTION 1076 OF THE STANDARD SPECIFICATIONS.

THE TOP SURFACE AREA OF BENT #3 CAP SHALL BE CURED IN ACCORDANCE WITH THE STANDARD SPECIFICATIONS EXCEPT THE MEMBRANE CURING COMPOUND METHOD SHALL NOT BE USED.

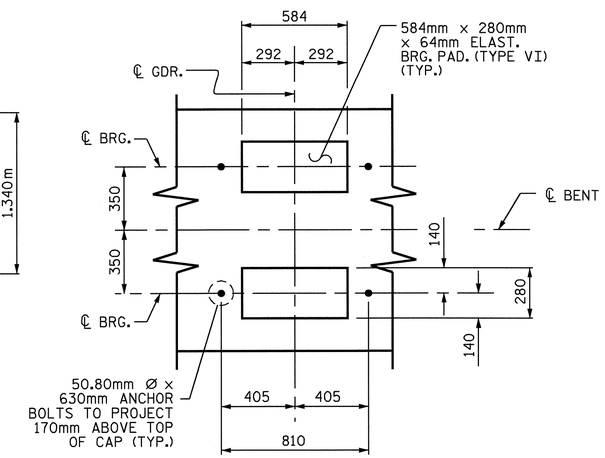

DETAIL 'A'
(DIM. TYP. FOR EA. BRG.)

TABLE OF ELEVATIONS

BRIDGE SEATS	BENT#1	BENT#2	BENT#3	BENT#4
EL. 'A'	33.075	33.174	33.282	33.381
EL. 'B'	33.026	33.125	33.233	33.332
EL. 'C'	32.977	33.076	33.184	33.283
EL. 'D'	32.928	33.027	33.135	33.234
EL. 'E'	32.879	32.978	33.086	33.185
BOTT. OF CAP EL. 'F'	31.969	32.068	32.176	32.275

PROJECT NO. R-2554BA
WAYNE COUNTY
STATION: 132+37.000 -L-

SHEET 1 OF 2

NORTH CAROLINA PROFESSIONAL SEAL 14045 ENGINEER TIMOTHY W. COGGINS
Timothy W. Coggins 6/6/08

STATE OF NORTH CAROLINA
DEPARTMENT OF TRANSPORTATION
RALEIGH

SUBSTRUCTURE
BENTS #1, #2, #3, & #4
(RIGHT LANE)

REVISIONS						SHEET NO.
NO.	BY:	DATE:	NO.	BY:	DATE:	S-443
1			3			TOTAL SHEETS
2			4			478

DRAWN BY : J.B. WILSON DATE : 2/2008
CHECKED BY : PEGGY ADKINS DATE : 2/2008

STR. #15

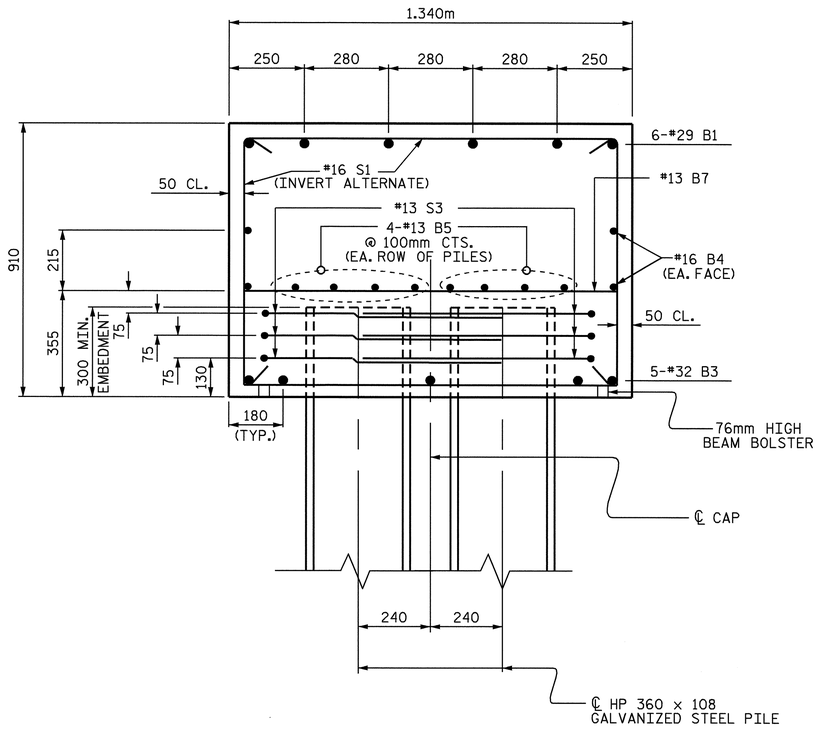

SECTION A-A

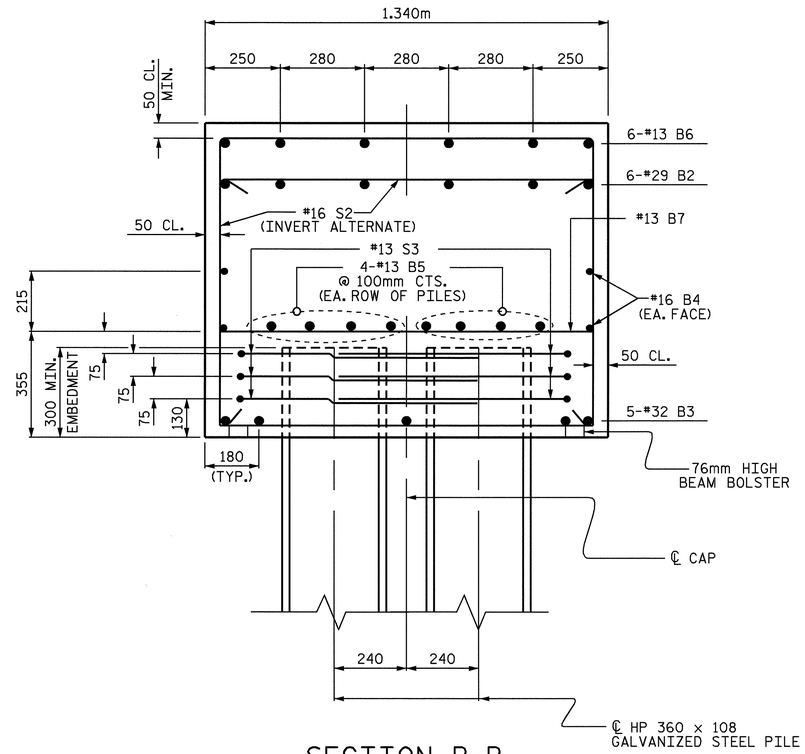

SECTION B-B

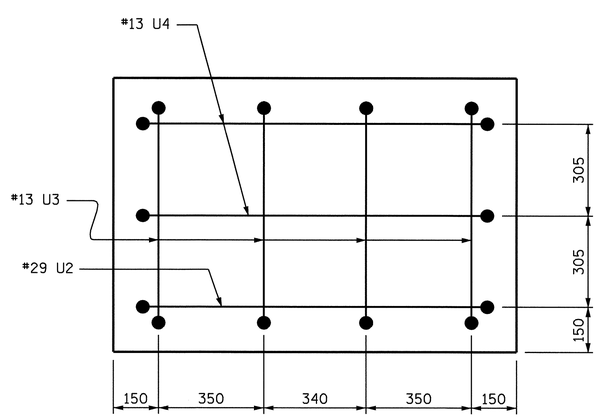

LEFT END VIEW

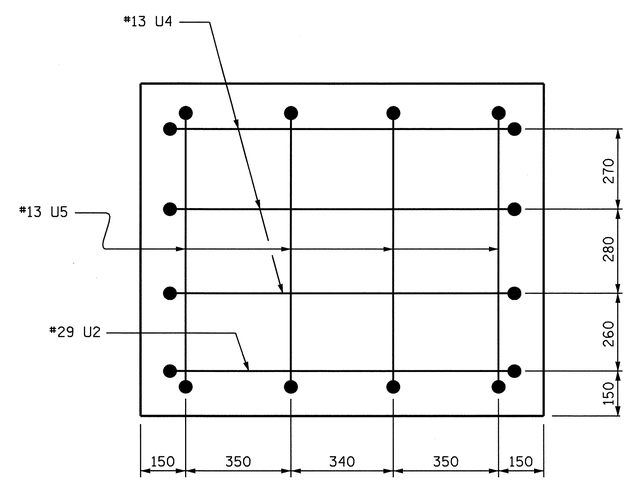

RIGHT END VIEW

— BAR TYPES —

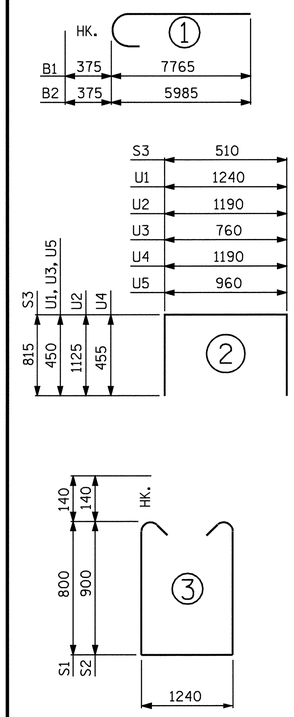

ALL BAR DIMENSIONS ARE OUT TO OUT.

BILL OF MATERIAL
FOR ONE BENT (4 REQ'D)

BAR	NO.	SIZE	TYPE	LENGTH	WEIGHT
B1	6	#29	1	8140	247
B2	6	#29	1	6360	193
B3	5	#32	STR.	10980	352
B4	4	#16	STR.	10980	68
B5	16	#13	STR.	5860	93
B6	6	#13	STR.	1080	6
B7	11	#13	STR.	1240	14
S1	21	#16	3	3120	102
S2	28	#16	3	3320	144
S3	36	#13	2	2140	77
U1	35	#13	2	2140	74
U2	2	#29	2	3440	35
U3	4	#13	2	1660	7
U4	5	#13	2	2100	10
U5	4	#13	2	1860	7

REINFORCING STEEL KGS. 1429

CLASS "A" CONCRETE BREAKDOWN
POUR #1 (CAP) m3 14.8

HP 360 X 108 GALVANIZED STEEL PILE
NO.12 METERS 192.0 @ BT #1
180.0 @ BT #2-4

PILE REDRIVE EACH 4

PROJECT NO. R-2554BA
WAYNE COUNTY
STATION: 132+37.000 -L-

SHEET 2 OF 2

STATE OF NORTH CAROLINA
DEPARTMENT OF TRANSPORTATION
RALEIGH

SUBSTRUCTURE

BENTS #1, #2, #3 & #4
(RIGHT LANE)

NORTH CAROLINA PROFESSIONAL SEAL 14045 ENGINEER TIMOTHY L. COGGINS
Timothy L. Coggins 6/6/08

REVISIONS						SHEET NO.
NO.	BY:	DATE:	NO.	BY:	DATE:	S-444
1			3			TOTAL SHEETS
2			4			478

STR. #15

DRAWN BY : J.B. WILSON DATE : 2/2008
CHECKED BY : PEGGY ADKINS DATE : 2/2008

06-JUN-2008 11:14
r:\structures\azlzl\Str#15\FINAL PLANS\R-2554BA_sd_B*.dgn
padkins

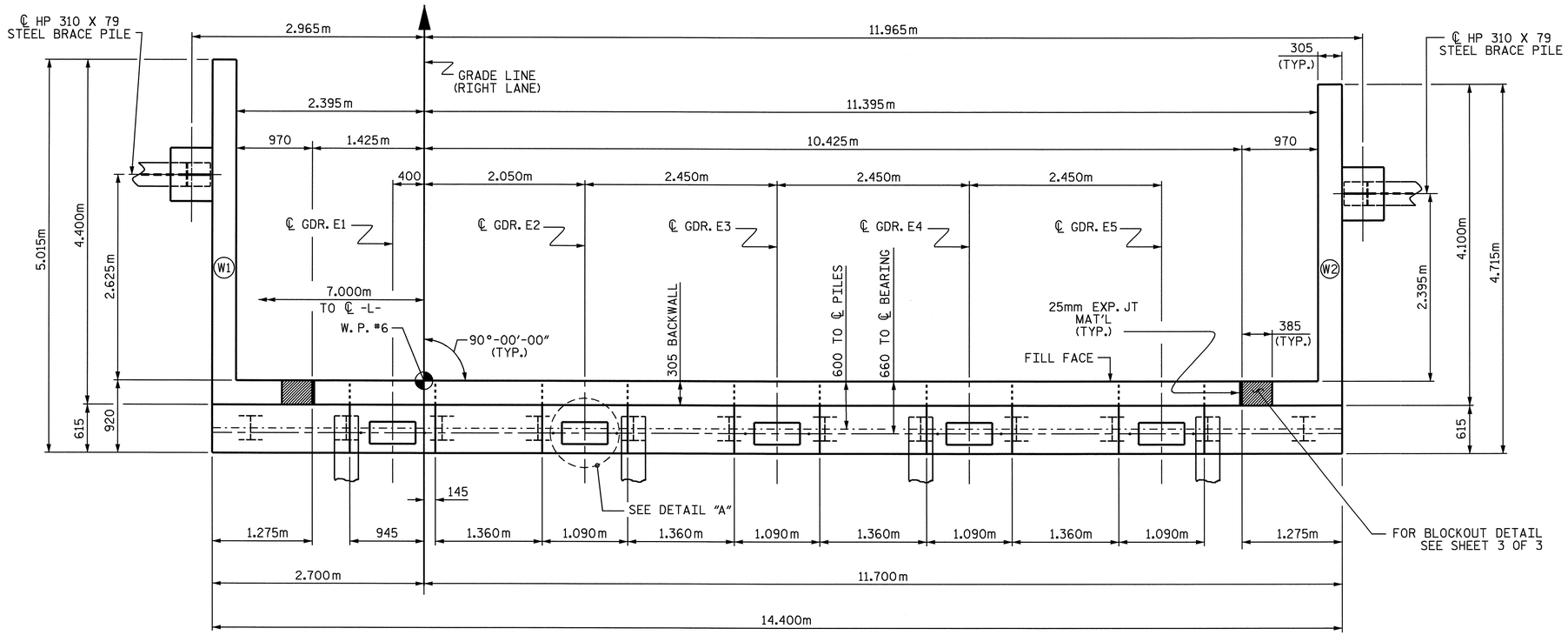

PLAN

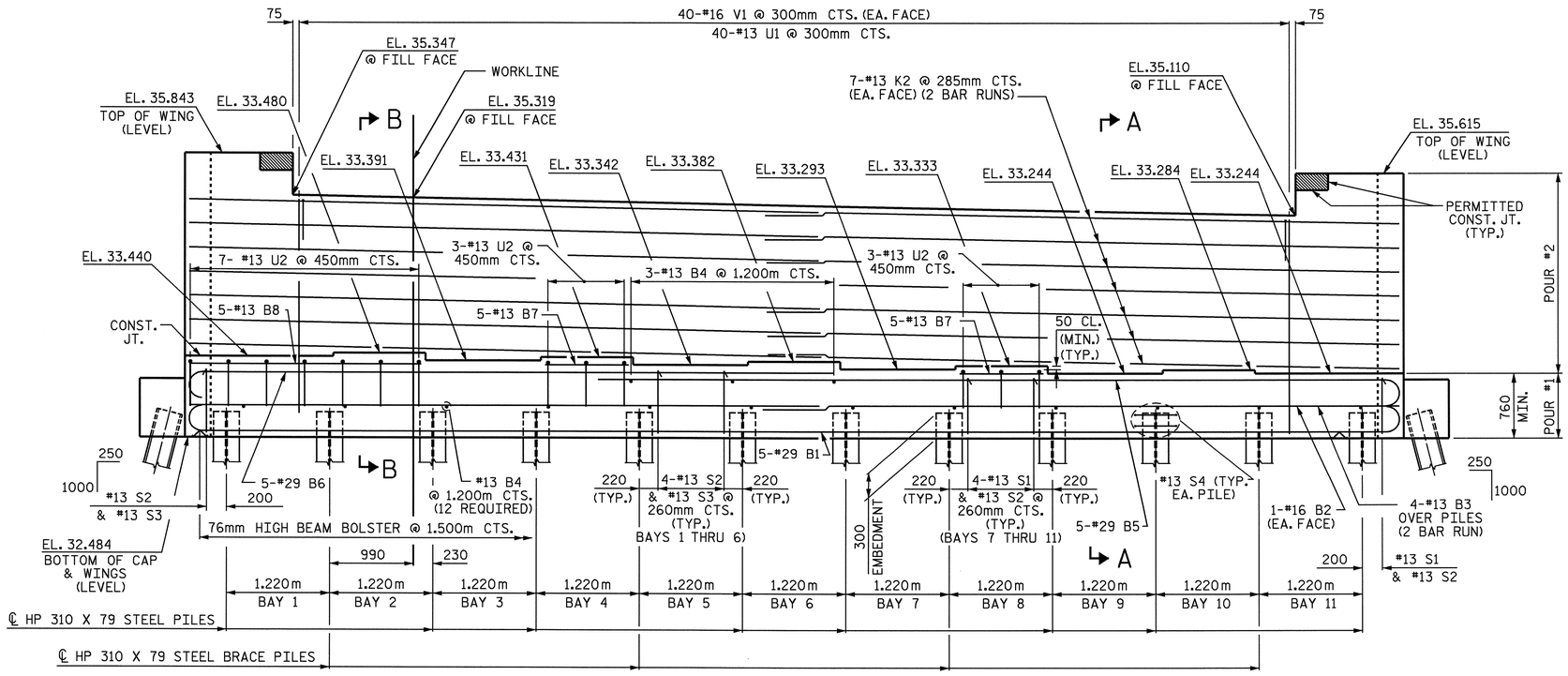

ELEVATION

NOTES

STIRRUPS IN CAP MAY BE SHIFTED AS NECESSARY TO CLEAR ANCHOR BOLTS.

BACKWALL SHALL BE PLACED BEFORE APPLYING THE EPOXY PROTECTIVE COATING.

THE TOP SURFACE OF THE END BENT CAP EXCEPT THE BRIDGE SEAT BUILDUPS SHALL BE SLOPED TRANSVERSELY FROM THE FILL FACE TO THE BACK FACE AT THE RATE OF 2 %.

THE CONTRACTOR SHALL PROVIDE FOR INSTALLATION OF THE 102mm DIAMETER DRAIN PIPE THROUGH THE WING WALL AS REQUIRED FOR REINFORCED BRIDGE APPROACH FILLS, SEE THE ROADWAY PLANS. REINFORCING STEEL IN THE WING WALL MAY BE SHIFTED AS NECESSARY TO CLEAR THE DRAIN PIPE.

THE TOP SURFACE AREAS OF THE END BENT CAP SHALL BE CURED IN ACCORDANCE WITH THE STANDARD SPECIFICATIONS EXCEPT THE MEMBRANE CURING COMPOUND METHOD SHALL NOT BE USED.

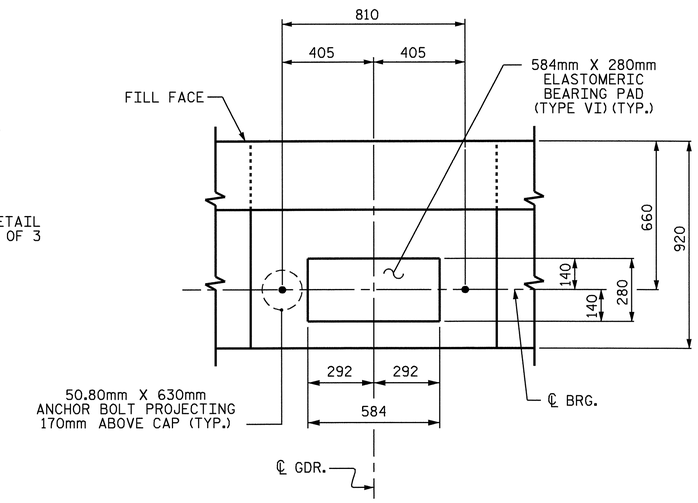

DETAIL "A"

PROJECT NO. R-2554BA

WAYNE COUNTY

STATION: 132+37.000 -L-

SHEET 1 OF 3

STATE OF NORTH CAROLINA
DEPARTMENT OF TRANSPORTATION
RALEIGH

SUBSTRUCTURE
END BENT #2
(RIGHT LANE)

NORTH CAROLINA PROFESSIONAL SEAL 14045 ENGINEER TIMOTHY L. COGGINS

Timothy L. Coggins 6/5/08

REVISIONS						SHEET NO.
NO.	BY:	DATE:	NO.	BY:	DATE:	S-445
1			3			TOTAL SHEETS
2			4			478

DRAWN BY : M. GUDLAUGSSON DATE : 11/07
CHECKED BY : J. B. WILSON DATE : 12/07

25-APR-2008 16:36
g:\structures\dzlzl\Str#15\MGudlaugsson\R2554BA_sd_EB.dgn
tcoggins

STR.#15

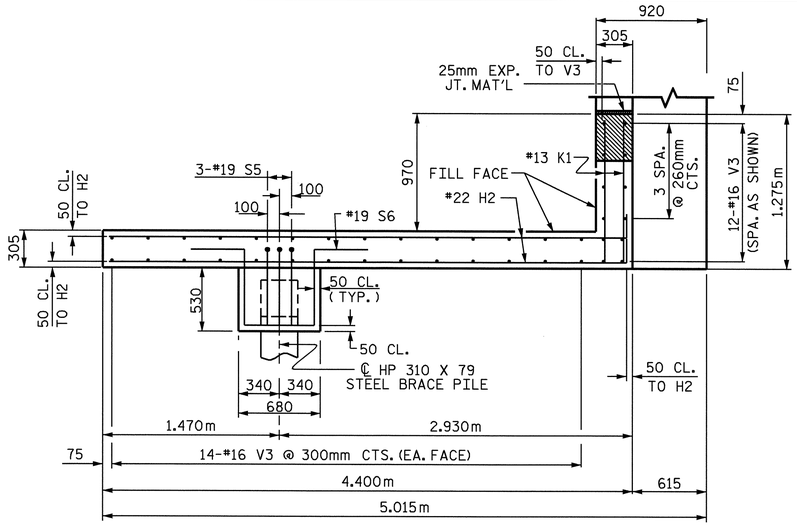

PLAN OF WING W1

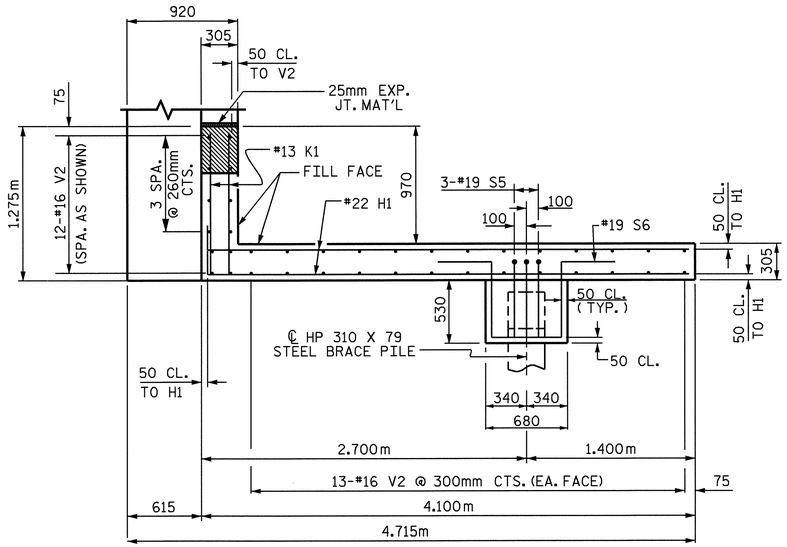

PLAN OF WING W2

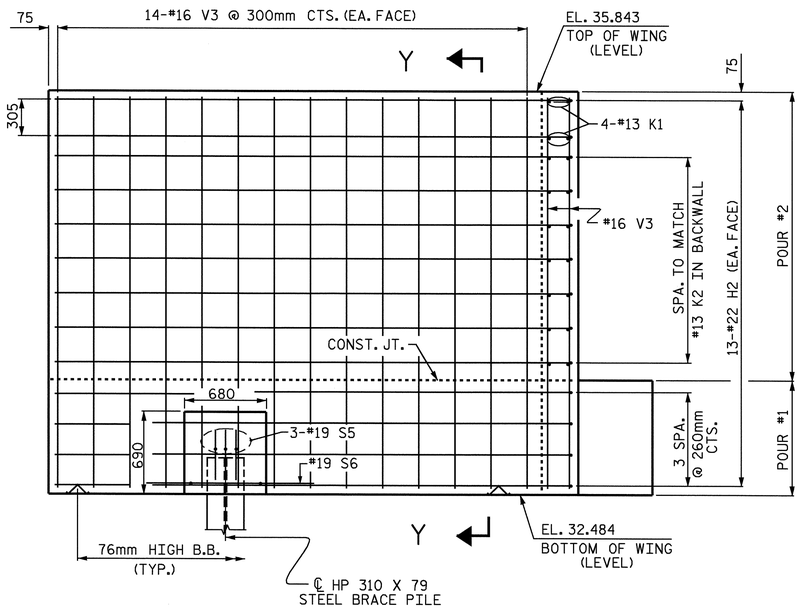

ELEVATION OF WING W1

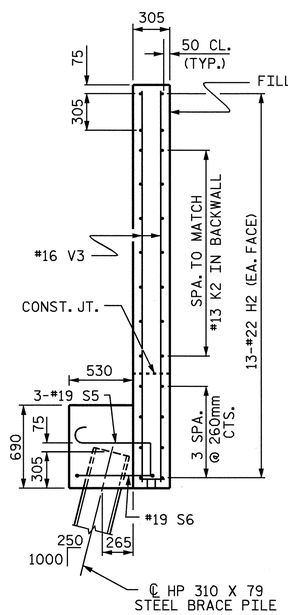

SECTION Y-Y

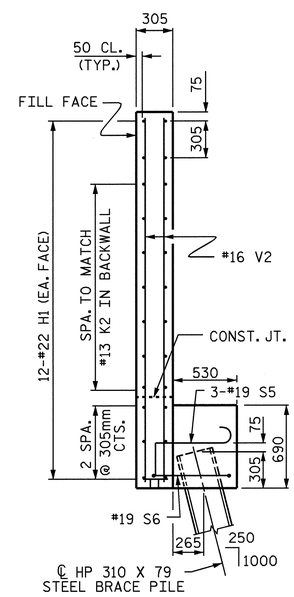

SECTION X-X

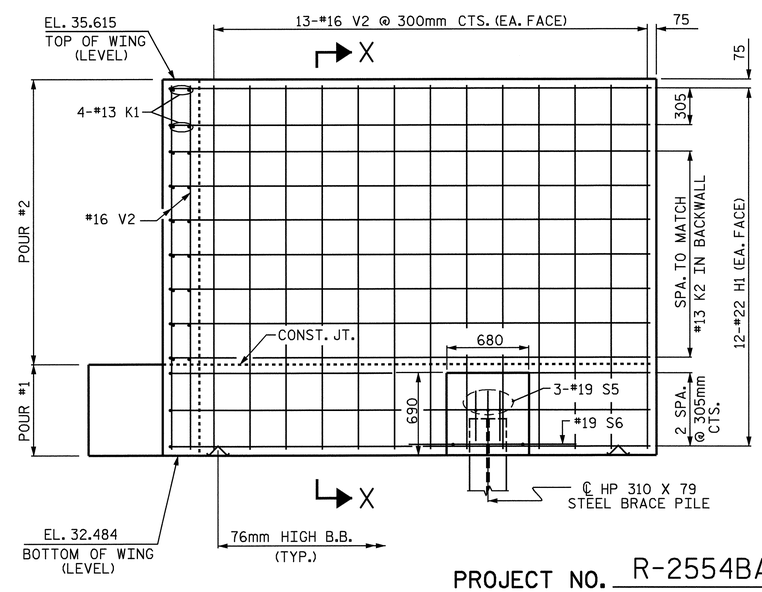

ELEVATION OF WING W2

PROJECT NO. R-2554BA

WAYNE COUNTY

STATION: 132+37.000 -L-

SHEET 2 OF 3

STATE OF NORTH CAROLINA
DEPARTMENT OF TRANSPORTATION
RALEIGH

SUBSTRUCTURE

END BENT #2
(RIGHT LANE)

NORTH CAROLINA PROFESSIONAL SEAL 14045 ENGINEER TIMOTHY W. COGGINS

Timothy W. Coggins 6/5/08

REVISIONS						SHEET NO.
NO.	BY:	DATE:	NO.	BY:	DATE:	S-446
1			3			TOTAL SHEETS
2			4			478

DRAWN BY : MGUDLAUGSSON DATE : 11/07
CHECKED BY : J. B. WILSON DATE : 12/07

25-APR-2008 16:36
q:\structures\gzlz1\Str#15\MGudlaugsson\R2554BA_sd_EB.dgn

STR.#15

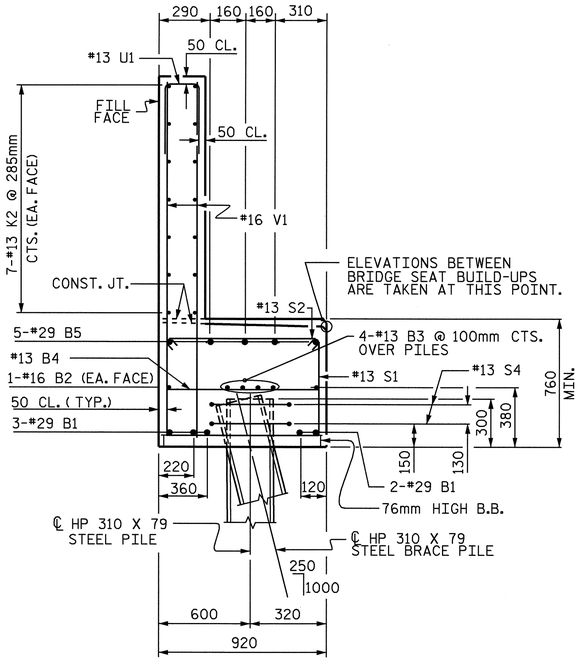

SECTION A-A

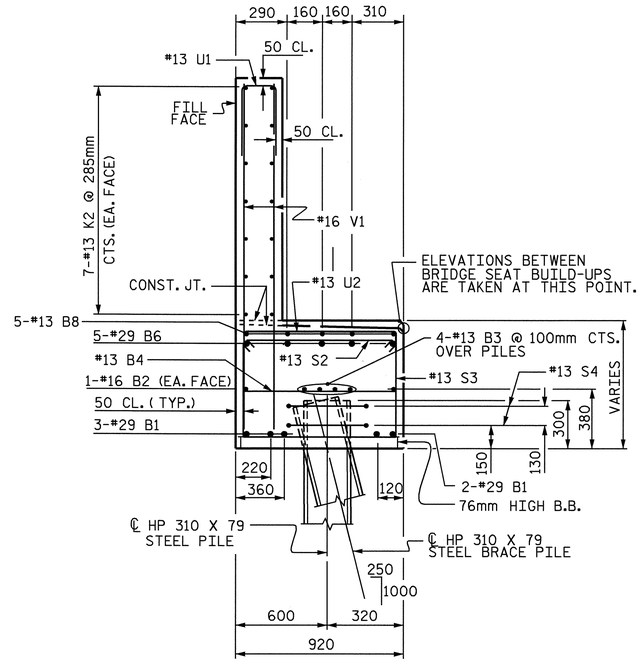

SECTION B-B

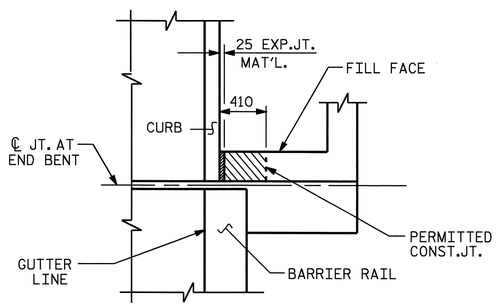

PLAN

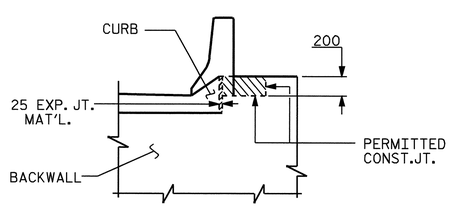

ELEVATION

BLOCKOUT IN WING WALL

NOTE: THE CONCRETE IN THE CROSS-HATCHED AREA OF THE WING SHALL BE POURED AFTER THE BARRIER RAIL IS CAST IF SLIP FORMING IS USED.

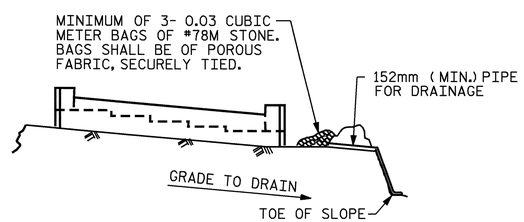

BAGGED STONE AND PIPE SHALL BE PLACED IMMEDIATELY AFTER COMPLETION OF END BENT EXCAVATION. PIPE MAY BE EITHER CONCRETE, CORRUGATED STEEL, CORRUGATED ALUMINUM ALLOY, OR CORRUGATED PLASTIC. PERFORATED PIPE WILL NOT BE ALLOWED.

BAGGED STONE SHALL REMAIN IN PLACE UNTIL THE ENGINEER DIRECTS THAT IT BE REMOVED. THE CONTRACTOR SHALL REMOVE AND DISPOSE OF SILT ACCUMULATIONS AT BAGGED STONE WHEN SO DIRECTED BY THE ENGINEER. BAGS SHALL BE REMOVED AND REPLACED WHENEVER THE ENGINEER DETERMINES THAT THEY HAVE DETERIORATED AND LOST THEIR EFFECTIVENESS.

NO SEPARATE PAYMENT WILL BE MADE FOR THIS WORK AND THE ENTIRE COST OF THIS WORK SHALL BE INCLUDED IN THE UNIT CONTRACT PRICE BID FOR THE SEVERAL PAY ITEMS.

TEMPORARY DRAINAGE AT END BENT

BAR TYPES

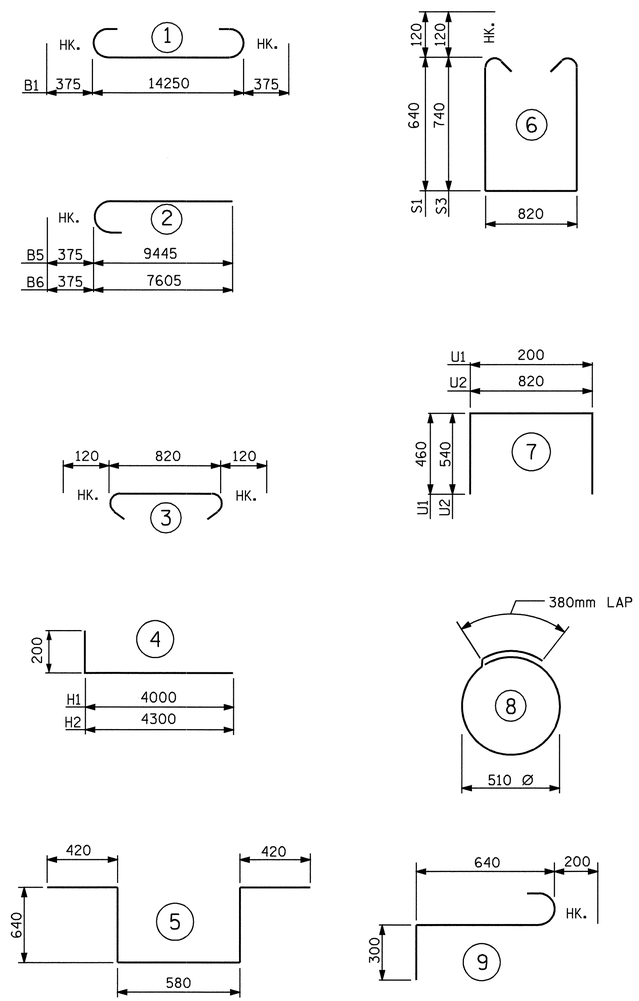

ALL BAR DIMENSIONS ARE OUT TO OUT.

BILL OF MATERIAL
END BENT NO. 2

BAR	NO.	SIZE	TYPE	LENGTH	WEIGHT
B1	5	#29	1	15000	380
B2	2	#16	STR	14300	44
B3	8	#13	STR	7520	60
B4	15	#13	STR	820	12
B5	5	#29	2	9820	248
B6	5	#29	2	7980	202
B7	10	#13	STR	980	10
B8	5	#13	STR	2740	14
H1	24	#22	4	4200	307
H2	26	#22	4	4500	356
K1	8	#13	STR	1160	9
K2	28	#13	STR	7520	209
S1	21	#13	6	2340	49
S2	46	#13	3	1060	48
S3	25	#13	6	2540	63
S4	24	#13	8	1980	47
S5	6	#19	9	1140	15
S6	2	#19	5	2700	12
U1	40	#13	7	1120	45
U2	13	#13	7	1900	25
V1	80	#16	STR	2520	313
V2	38	#16	STR	3020	178
V3	40	#16	STR	3240	201

REINFORCING STEEL kg. 2847

CLASS "A" CONCRETE

POUR #1 (CAP, LOWER WINGS & WING BRACE PILE FTGS.)	m3	14.0
POUR #2 (BACKWALL & UPPER WINGS)	m3	14.4
TOTAL	m3	28.4

HP 310 X 79 STEEL PILES

NO. 14	METERS	196.0
PILE REDRIVES	EACH	4

SPLICE LENGTH CHART

BAR	SIZE	LENGTH
K2,B3	#13	740mm
B5	#29	2670mm

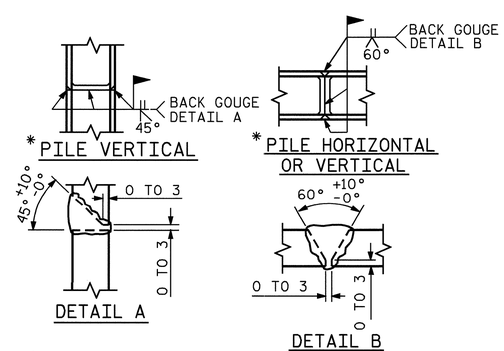

* POSITION OF PILE DURING WELDING.

PILE SPLICE DETAILS

NORTH CAROLINA PROFESSIONAL SEAL 14045 ENGINEER TIMOTHY L. COGGINS

Timothy L. Coggins 6/6/08

PROJECT NO. R-2554BA
WAYNE COUNTY
STATION: 132+37.000 -L-

SHEET 3 OF 3

STATE OF NORTH CAROLINA
DEPARTMENT OF TRANSPORTATION
RALEIGH

SUBSTRUCTURE
END BENT #2
(RIGHT LANE)

REVISIONS						SHEET NO.
NO.	BY:	DATE:	NO.	BY:	DATE:	S-447
1			3			TOTAL SHEETS
2			4			478

DRAWN BY : M. GUDLAUGSSON DATE : 11/07
CHECKED BY : J. B. WILSON DATE : 12/07

06-JUN-2008 11:39
r:\structures\azlz1\Str#15\FINAL PLANS\R2554BA_sd_EB.dgn
padkins

STR.#15

NOTES :

FOR BERM WIDTH DIMENSIONS, SEE GENERAL DRAWING.

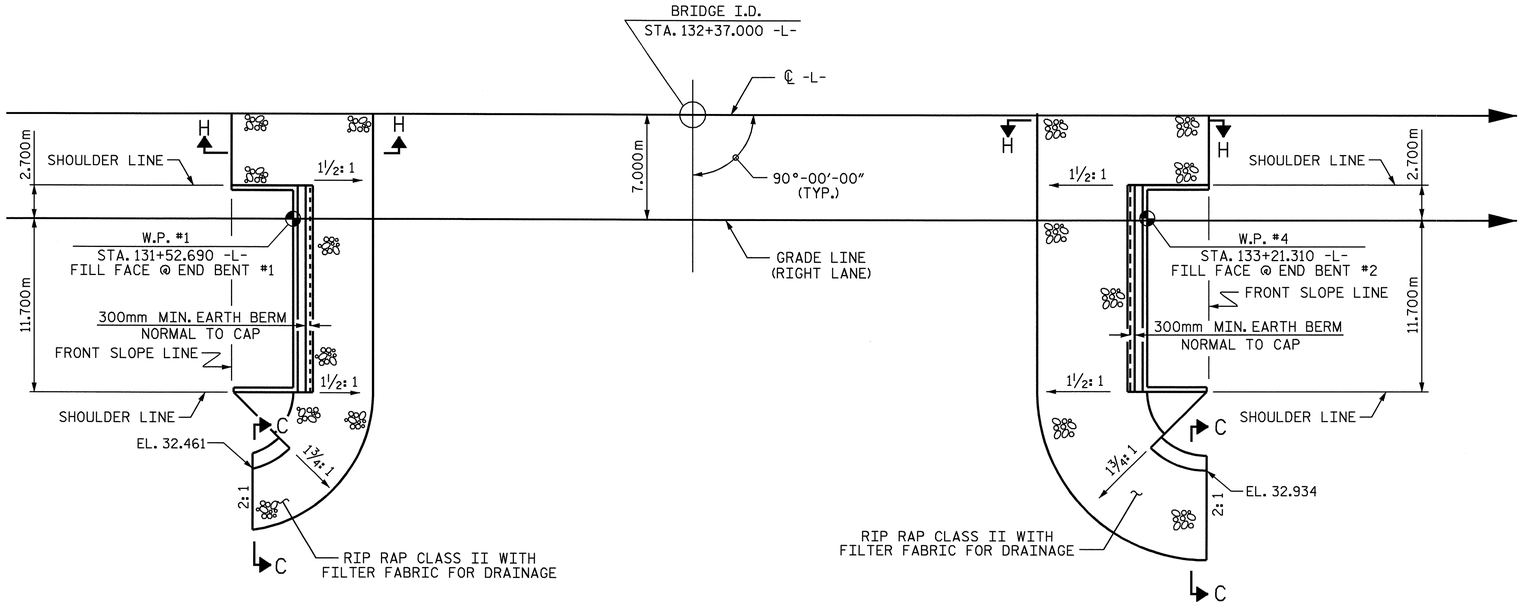

BERM RIP RAPPED

BERM RIP RAPPED

ESTIMATED QUANTITIES		
BRIDGE @ STA. 132+37.000 -L- (RIGHT LANE)	RIP RAP CLASS II (600mm THICK)	FILTER FABRIC FOR DRAINAGE
	METRIC TON	SQUARE METERS
END BENT 1	149	146
END BENT 2	177	174

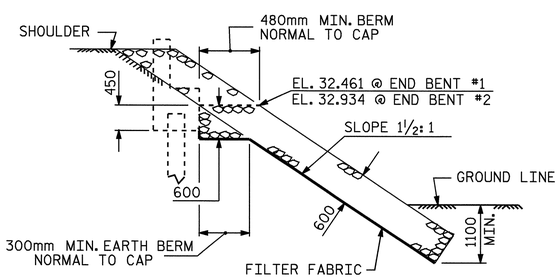

SECTION H-H

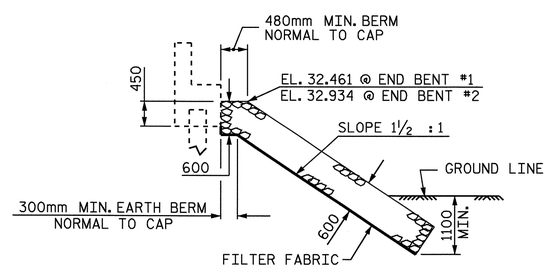

GRADE LINE SECTION

BERM RIP RAPPED

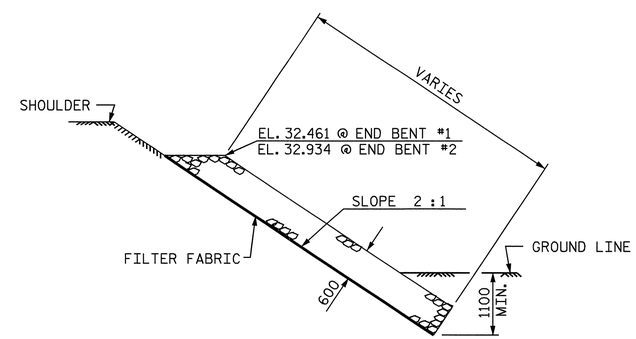

SECTION C-C

PROJECT NO. R-2554BA

WAYNE COUNTY

STATION: 132+37.000 -L-

STATE OF NORTH CAROLINA
DEPARTMENT OF TRANSPORTATION
RALEIGH

RIP RAP DETAILS

(RIGHT LANE)

NORTH CAROLINA PROFESSIONAL SEAL 14045 ENGINEER TIMOTHY L. COGGINS

Timothy L. Coggins 6/5/08

REVISIONS						SHEET NO.
NO.	BY:	DATE:	NO.	BY:	DATE:	S-448
1			3			TOTAL SHEETS
2			4			478

STR. #15 SKEW 90°

DRAWN BY : B.N.BARODAWALA DATE : 6-7-06
CHECKED BY : T. L. COGGINS DATE : 11/07

28-APR-2008 15:56
g:\structures\azlzl\Str#15\BARODAWALA\R2554BA_sd_RR_15.dgn
tcoggins

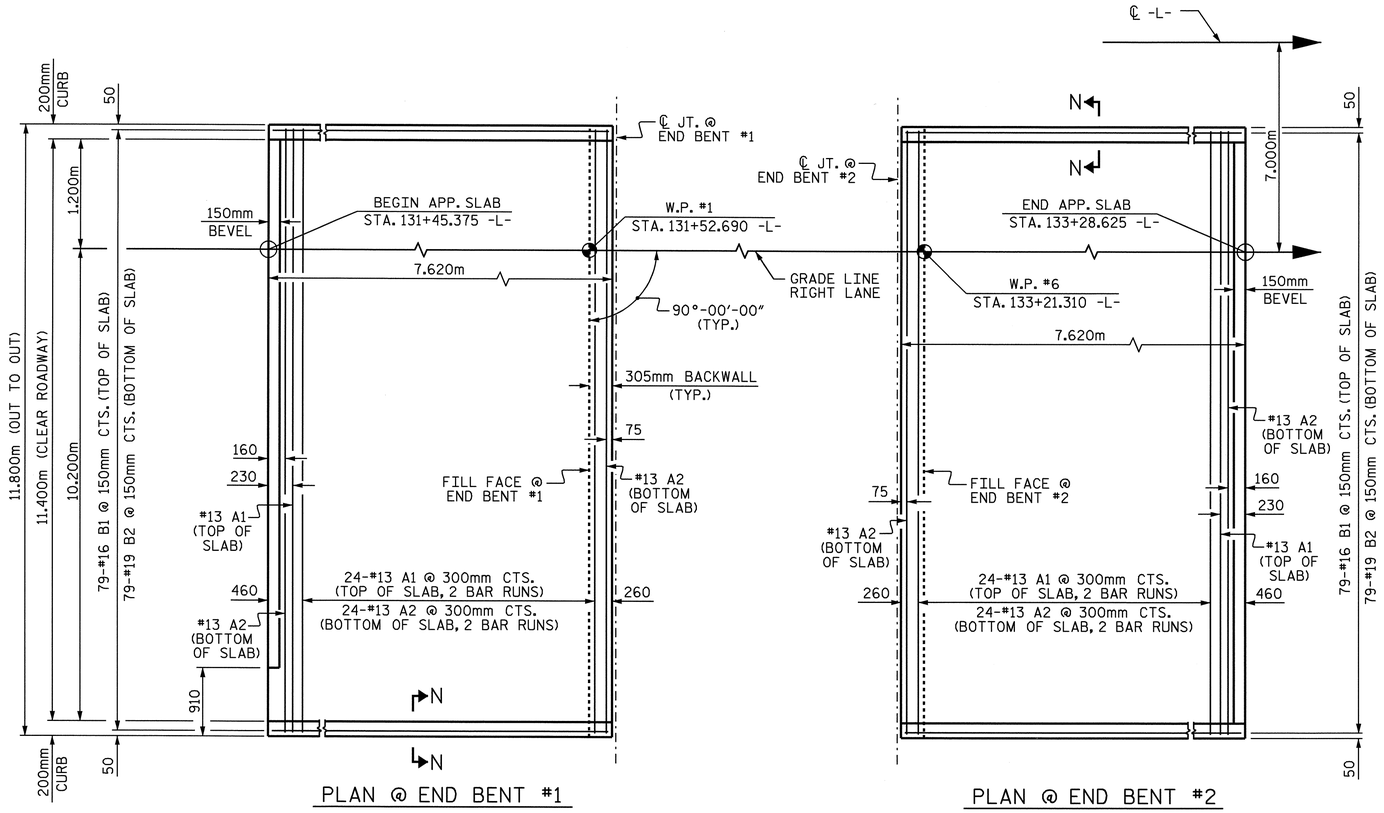

PLAN @ END BENT #1

PLAN @ END BENT #2

DIMENSIONS SHOWN ARE TYPICAL FOR BOTH APPROACH SLABS

NOTES

APPROACH SLAB SHALL NOT BE CONSTRUCTED PRIOR TO COMPLETION OF THE BRIDGE DECK.

FOR REINFORCED BRIDGE APPROACH FILL INCLUDING FABRIC, IMPERMEABLE GEOMEMBRANE, 102mm Ø DRAINAGE PIPE, #78M STONE, AND SELECT MATERIAL, SEE ROADWAY PLANS.

AREA BETWEEN THE WINGWALL AND APPROACH SLAB SHALL BE GRADED TO DRAIN THE WATER AWAY FROM THE FILL FACE OF THE BRIDGE AND SHALL BE PAVED. SEE ROADWAY PLANS.

THE 150mm COMP. A.B.C. SHALL BE FLUSH WITH THE ROADWAY END OF THE APPROACH SLAB AND SHALL EXTEND 300mm OUTSIDE OF EACH EDGE OF THE APPROACH SLAB.

THE CONTRACTOR MAY USE 100mm TYPE B-25.0B ASPHALT CONCRETE COURSE IN LIEU OF 150mm COMP. A.B.C. IF THIS OPTION IS USED, THE BASE COURSE SHALL BE FLUSH WITH THE ROADWAY END OF THE APPROACH SLAB AND THE WIDTH SHALL BE THE SAME AS THAT OF THE APPROACH SLAB.

THE CONTRACTOR MAY USE 125mm CLASS "A" CONCRETE BASE IN LIEU OF 150mm COMP. A.B.C. IF THIS OPTION IS USED, THE CONCRETE BASE SHALL BE FLUSH WITH THE ROADWAY END OF THE APPROACH SLAB AND THE WIDTH SHALL BE THE SAME AS THAT OF THE APPROACH SLAB. THE CONCRETE SHALL BE FINISHED TO A SMOOTH SURFACE AND A LAYER OF 13.6 kg ROOFING FELT SHALL BE PLACED BETWEEN THE CONCRETE BASE AND THE APPROACH SLAB TO PREVENT BOND. THE APPROACH SLAB SHALL NOT BE CAST UNTIL THE CONCRETE BASE HAS REACHED AN AGE OF THREE CURING DAYS.

BILL OF MATERIAL

APPROACH SLAB AT EB #1

BAR	NO.	SIZE	TYPE	LENGTH	WEIGHT
✳ A1	50	#13	STR	6160	306
A2	52	#13	STR	6120	316
✳ B1	79	#16	STR	7200	883
B2	79	#19	STR	7520	1328
REINFORCING STEEL				kg.	1644
✳ EPOXY COATED REINFORCING STEEL				kg.	1189
CLASS AA CONCRETE				C.M.	27.8

APPROACH SLAB AT EB #2

BAR	NO.	SIZE	TYPE	LENGTH	WEIGHT
✳ A1	50	#13	STR	6160	306
A2	52	#13	STR	6120	316
✳ B1	79	#16	STR	7200	883
B2	79	#19	STR	7520	1328
REINFORCING STEEL				kg.	1644
✳ EPOXY COATED REINFORCING STEEL				kg.	1189
CLASS AA CONCRETE				C.M.	27.8

SPLICE CHART

BAR	SPLICE
#13 A1	610
#13 A2	540

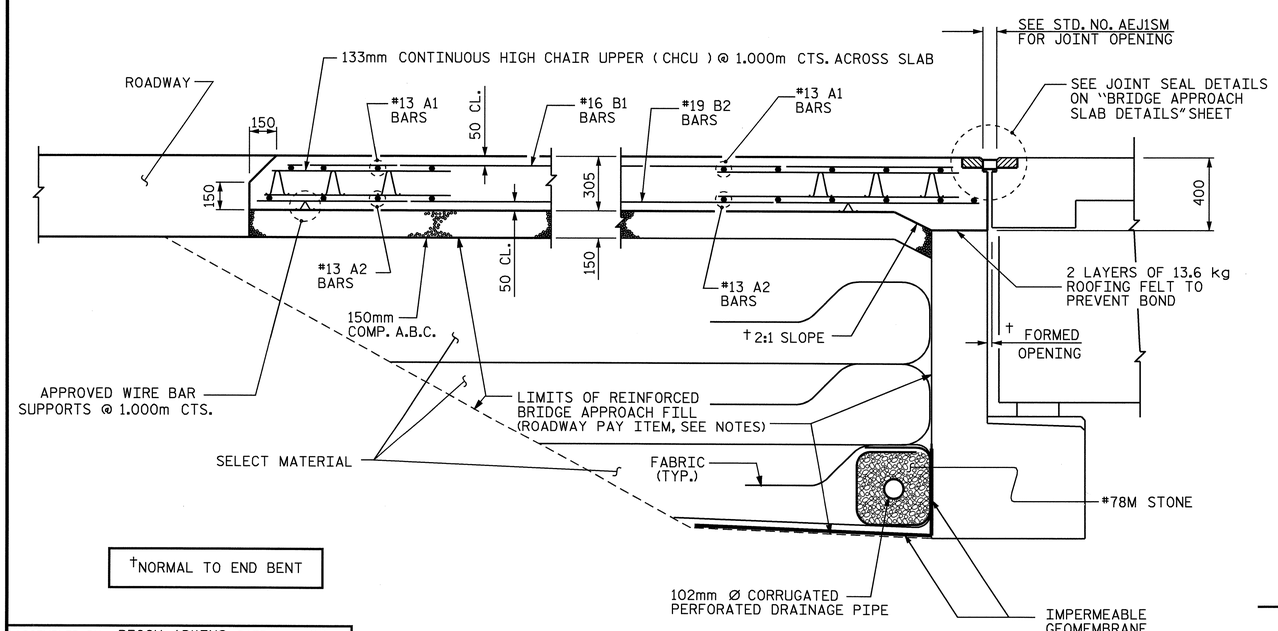

†NORMAL TO END BENT

SECTION THRU SLAB

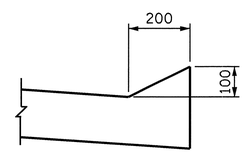

SECTION N-N

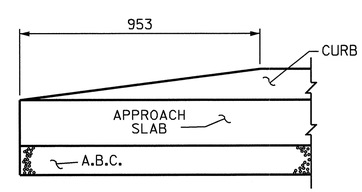

END OF CURB WITHOUT SHOULDER BERM GUTTER

CURB DETAILS

PROJECT NO. R-2554BA
WAYNE COUNTY
STATION: 132+37.000 -L-

SHEET 1 OF 2

STATE OF NORTH CAROLINA
DEPARTMENT OF TRANSPORTATION
RALEIGH

STANDARD

BRIDGE APPROACH SLAB FOR FLEXIBLE PAVEMENT

(RIGHT LANE)

NORTH CAROLINA PROFESSIONAL SEAL 14045 ENGINEER TIMOTHY L. COGGINS
Timothy L. Coggins 6/5/08

REVISIONS						SHEET NO.
NO.	BY:	DATE:	NO.	BY:	DATE:	S-449
1			3			TOTAL SHEETS
2			4			478

STR. #15 STD. NO. BAS4SM

ASSEMBLED BY : PEGGY ADKINS DATE : 7-06
CHECKED BY : B.N.BARODAWALA DATE : 7-06

DRAWN BY : FCJ 6/87
CHECKED BY : EGA 6/87

REV. 7/10/01 RWW/LES
REV. 5/7/03R RWW/JTE
REV. 5/1/06R TLA/GM

25-APR-2008 16:38
g:\structures\dzlzl\Str#15\PADKINS\MICROSTATION\R2554BA_sd_AS_15.dgn
tcoggins

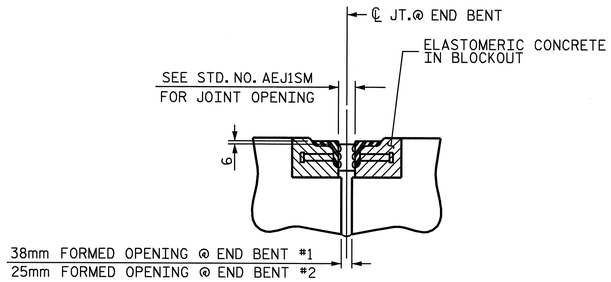

SECTION C-C

ARMORED EVAZOTE JOINT SEAL

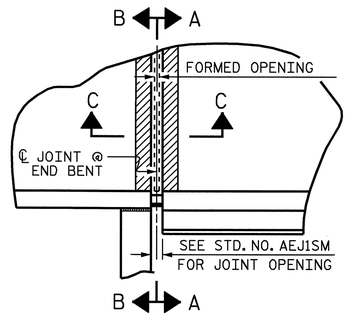

PLAN

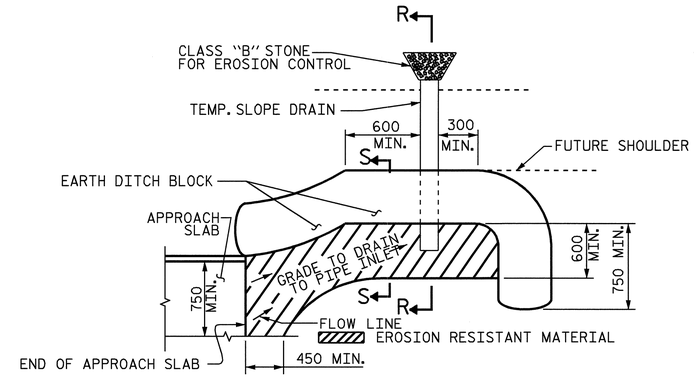

NOTE: IMMEDIATELY AFTER THE CONSTRUCTION OF THE APPROACH SLAB, THE CONTRACTOR SHALL PROVIDE TEMPORARY BERM AND SLOPE DRAIN. CONTRACTOR SHALL GRADE TO PIPE INLET AND PROVIDE EROSION RESISTANT MATERIAL AS SHOWN. THE EROSION RESISTANT MATERIAL SHALL BE EITHER 1) ASPHALT PLANT MIX, TYPE 1 OR TYPE 2, MIN. 50mm DEPTH, 2) EROSION CONTROL MAT, OR 3) CONCRETE, AS DIRECTED BY THE ENGINEER. THE SLOPE DRAIN SHALL CONSIST OF A NON-PERFORATED TEMPORARY DRAINAGE PIPE, 305mm IN DIAMETER.

PLAN VIEW

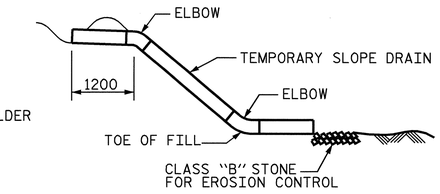

SECTION R-R

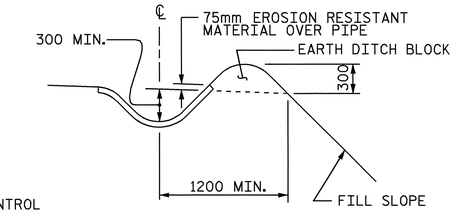

SECTION S-S

TEMPORARY BERM AND SLOPE DRAIN DETAILS

(TO BE USED WHEN SHOULDER BERM GUTTER IS REQUIRED)

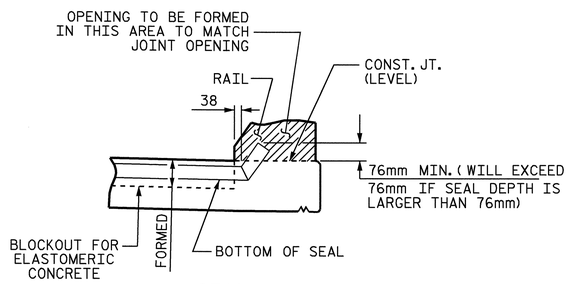

SECTION A-A

EVAZOTE JOINT SEAL TO BE CUT, HEAT WELDED AND TURNED UP PARALLEL TO SLOPED FACE OF THE BARRIER RAIL.

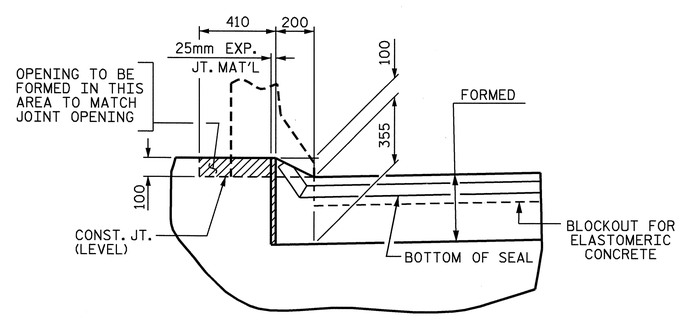

SECTION B-B

JOINT SEAL DETAILS @ END BENT

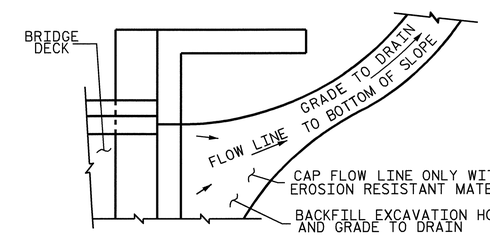

NOTE: IF THE APPROACH SLAB IS NOT CONSTRUCTED IMMEDIATELY AFTER THE BACKFILLING OF THE END BENT EXCAVATION, GRADE TO DRAIN TO THE BOTTOM OF THE SLOPE AND PROVIDE EROSION RESISTANT MATERIAL, SUCH AS FIBERGLASS ROVING OR AS DIRECTED BY THE ENGINEER TO PREVENT SOIL EROSION AND TO PROTECT THE AREA ADJACENT TO THE STRUCTURE. THE CONTRACTOR WILL BE REQUIRED TO REMOVE THESE MATERIALS PRIOR TO CONSTRUCTION OF THE APPROACH SLAB.

TEMPORARY DRAINAGE DETAIL

PROJECT NO. R-2554BA

WAYNE COUNTY

STATION: 132+37.000 -L-

SHEET 2 OF 2

STATE OF NORTH CAROLINA
DEPARTMENT OF TRANSPORTATION
RALEIGH

STANDARD
BRIDGE APPROACH
SLAB DETAILS

(RIGHT LANE)

NORTH CAROLINA PROFESSIONAL SEAL 14045 ENGINEER TIMOTHY J. COGGINS
6/5/08

REVISIONS						SHEET NO.
NO.	BY:	DATE:	NO.	BY:	DATE:	S-450
1			3			TOTAL SHEETS
2			4			478

ASSEMBLED BY : PEGGY ADKINS	DATE : 7-06	
CHECKED BY : B.N.BARODAWALA	DATE : 7-06	
DRAWN BY : FCJ 11/88	REV. 10/17/00	RWW/LES
CHECKED BY : ARB 11/88	REV. 5/7/03	RWW/JTE
	REV. 5/1/06R	TLA/GM

25-APR-2008 16:38
g:\structures\azlzl\Str#15\PADKINS\MICROSTATION\R2554BA_sd_AS_15.dgn
tcoggins

STR. #15

STD. NO. BAS10SM

F.A. PROJECT NO.: NHS-70(106)

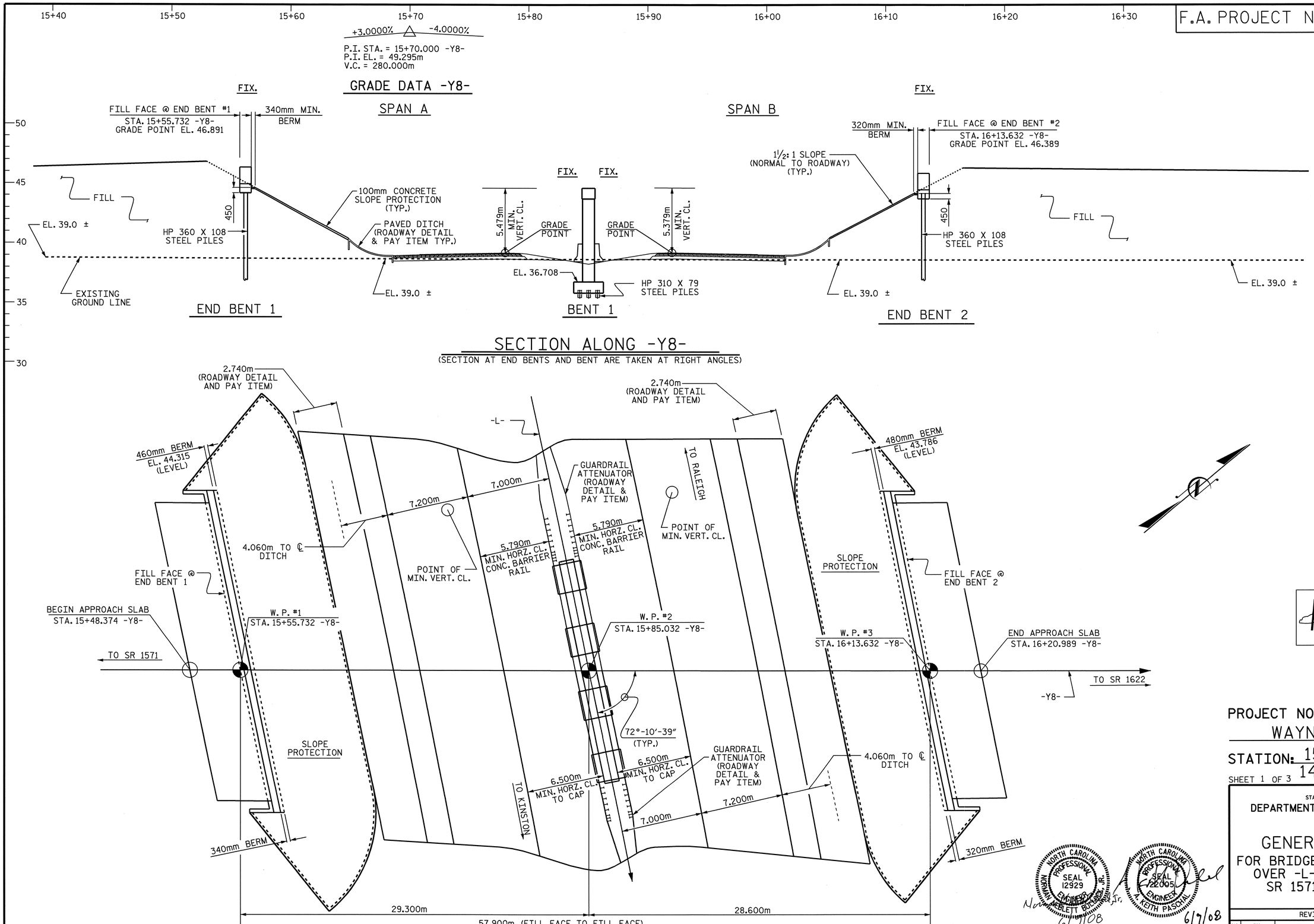

PROJECT NO. R-2554BA

WAYNE COUNTY

STATION: 15+85.032 -Y8-

146+62.803 -L-

SHEET 1 OF 3

BRIDGE NO. 368

STATE OF NORTH CAROLINA
DEPARTMENT OF TRANSPORTATION
RALEIGH

GENERAL DRAWING

FOR BRIDGE ON -Y8- (SR 1556) OVER -L- (US 70) BETWEEN SR 1571 AND SR 1622

NORTH CAROLINA PROFESSIONAL SEAL 12929 ENGINEER NORMAN NEBLETT BULLOCK, JR.
6/9/08

NORTH CAROLINA PROFESSIONAL SEAL 22005 ENGINEER A. KEITH PASCHAL
6/9/08

REVISIONS							SHEET NO.
NO.	BY:	DATE:	NO.	BY:	DATE:		S-451
1			3				TOTAL SHEETS
2			4				478

DRAWN BY : J. G. KHARVA DATE : 03-02-06
CHECKED BY : A. K. PASCHAL DATE : 04-25-08

06-JUN-2008 13:46
R:\Structures\BULLOCK\Str#16\FINAL PLANS\R-2554BA_sd_GD_16.dgn
bngrady

FOUNDATION NOTES

DRIVE PILES AT END BENT 1 AND END BENT 2 TO A REQUIRED BEARING CAPACITY OF 1340 KN PER PILE. THE REQUIRED BEARING CAPACITY IS EQUAL TO THE ALLOWABLE BEARING CAPACITY WITH A MINIMUM FACTOR OF SAFETY OF TWO.

DRIVE PILES AT BENT 1 TO A REQUIRED BEARING CAPACITY OF 1060 KN PER PILE. THE REQUIRED BEARING CAPACITY IS EQUAL TO THE ALLOWABLE BEARING CAPACITY WITH A MINIMUM FACTOR OF SAFETY OF TWO.

THE ALLOWABLE BEARING CAPACITY FOR PILES AT END BENT 1 AND END BENT 2 IS 670 KN PER PILE.

THE ALLOWABLE BEARING CAPACITY FOR PILES AT BENT 1 IS 530 KN PER PILE.

TESTING PILES WITH THE PILE DRIVING ANALYZER (PDA) DURING DRIVING, RESTRIKING OR REDRIVING MAY BE REQUIRED. THE ENGINEER WILL DETERMINE THE NEED FOR PDA TESTING. SEE PILE DRIVING ANALYZER SPECIAL PROVISION.

OBSERVE A ONE MONTH WAITING PERIOD AFTER CONSTRUCTING THE EMBANKMENT TO THE BOTTOM OF CAP ELEVATION BEFORE BEGINNING END BENT CONSTRUCTION AT END BENT 1.

PILE RESTRIKES FOR LRFD MAY BE REQUIRED. SEE PILE RESTRIKES FOR LRFD SPECIAL PROVISION.

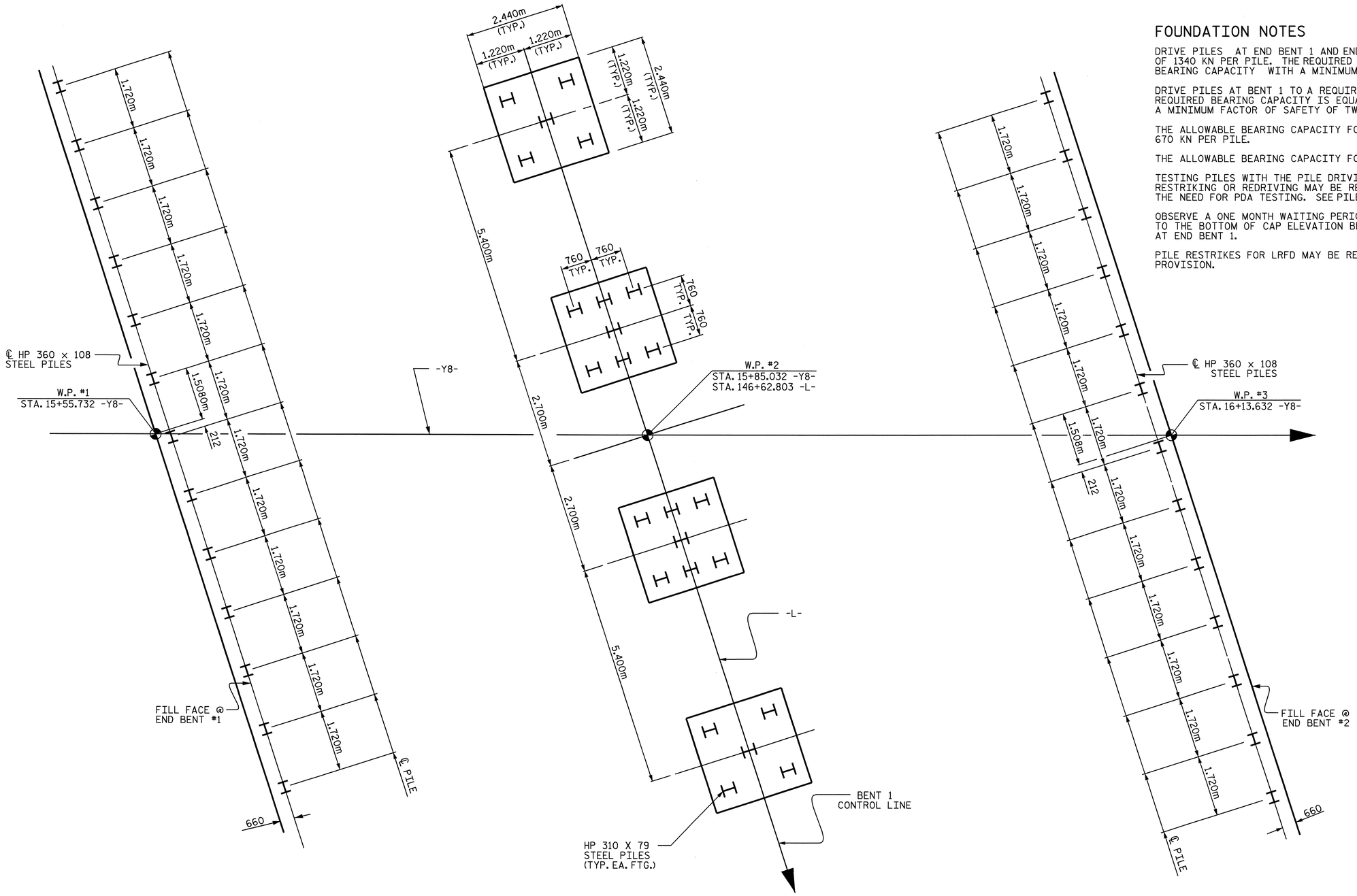

END BENT 1

BENT 1

END BENT 2

FOUNDATION LAYOUT

(DIMENSIONS LOCATING PILES ARE SHOWN TO THE CENTERLINE)

PROJECT NO. R-2554BA
WAYNE COUNTY
STATION: 15+85.032 -Y8-
146+62.803 -L-

SHEET 2 OF 3

STATE OF NORTH CAROLINA
DEPARTMENT OF TRANSPORTATION
RALEIGH

GENERAL DRAWING
FOR BRIDGE ON -Y8- (SR 1556)
OVER -L- (US 70) BETWEEN
SR 1571 AND SR 1622

NORTH CAROLINA PROFESSIONAL SEAL 22006 ENGINEER A. KEITH PASCHAL
6/9/08

REVISIONS						SHEET NO.
NO.	BY:	DATE:	NO.	BY:	DATE:	S-452
1			3			TOTAL SHEETS
2			4			478

DRAWN BY : J. G. KHARVA DATE : 10/02/07
CHECKED BY : A. K. PASCHAL DATE : 04-25-08

06-JUN-2008 13:46
R:\Structures\BULLOCK\Str#16\FINAL PLANS\R-2554BA_sd_GD_16.dgn
bngrady

B.M. : #12 RR SPIKE IN BASE OF 300mm GUM 86.721m RT OF -BL- STA. 67+15.356 EL.

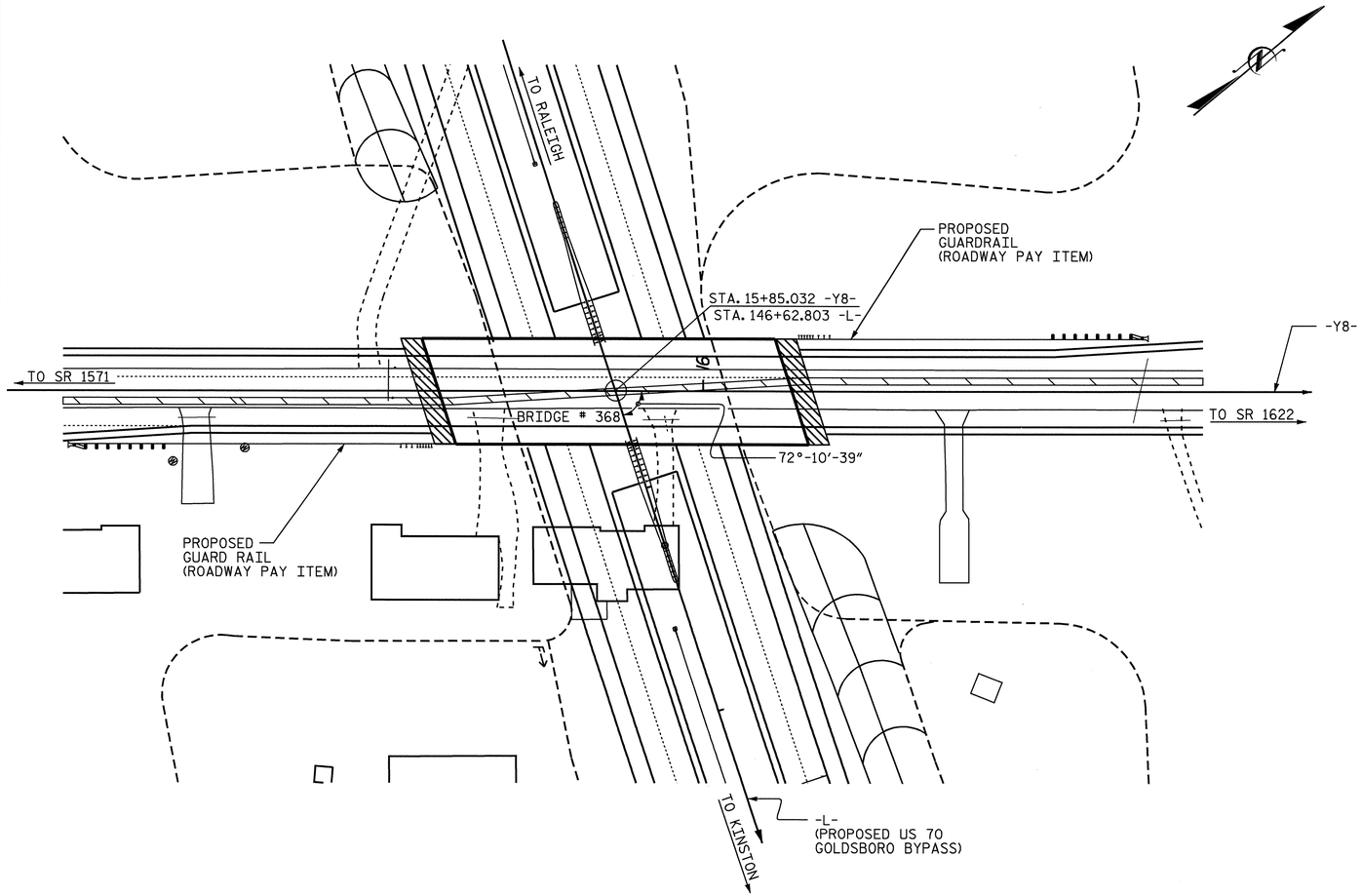

FOR UTILITY INFORMATION, SEE UTILITY PLANS AND SPECIAL PROVISIONS.

LOCATION SKETCH

NOTES:

ALL DIMENSIONS ARE IN MILLIMETERS UNLESS OTHERWISE NOTED.

ALL ELEVATIONS ARE IN METERS.

ASSUMED LIVE LOAD = MS18 OR ALTERNATE LOADING, EXCEPT THAT THE GIRDERS HAVE BEEN DESIGNED FOR MS22.5.

FOR OTHER DESIGN DATA AND GENERAL NOTES, SEE SHEET SNSM.

FOR EROSION CONTROL MEASURES SEE EROSION CONTROL PLANS.

THIS BRIDGE HAS BEEN DESIGNED BY THE STRENGTH DESIGN METHOD AS SPECIFIED IN AASHTO STANDARD SPECIFICATIONS.

THIS BRIDGE HAS BEEN DESIGNED IN ACCORDANCE WITH THE REQUIREMENTS OF THE AASHTO STANDARD SPECIFICATIONS FOR SEISMIC DESIGN OF HIGHWAY BRIDGES FOR SEISMIC PERFORMANCE CATEGORY A.

PRESTRESSED CONCRETE DECK PANELS MAY BE USED IN LIEU OF METAL STAY-IN-PLACE FORMS IN ACCORDANCE WITH ARTICLE 420-3 OF THE STANDARD SPECIFICATIONS.

REMOVABLE FORMS MAY BE USED IN LIEU OF METAL STAY-IN-PLACE FORMS IN ACCORDANCE WITH ARTICLE 420-3 OF THE STANDARD SPECIFICATIONS.

FOR MAINTENANCE AND PROTECTION OF TRAFFIC BENEATH PROPOSED STRUCTURE, SEE SPECIAL PROVISIONS.

THE CONTRACTOR SHALL PROVIDE INDEPENDENT ASSURANCE SAMPLES OF REINFORCING STEEL AS FOLLOWS: FOR PROJECTS REQUIRING UP TO 360,000 kg OF REINFORCING STEEL, ONE 760mm SAMPLE OF EACH SIZE BAR USED, AND FOR PROJECTS REQUIRING OVER 360,000 kg OF REINFORCING STEEL, TWO 760mm SAMPLES OF EACH SIZE BAR USED. THE BARS FROM WHICH THE SAMPLES ARE TAKEN MUST THEN BE SPLICED WITH REPLACEMENT BARS OF THE SIZE AND LENGTH OF THE SAMPLE PLUS A MINIMUM LAP SPLICE OF THIRTY BAR DIAMETERS.

FOR FALSEWORK AND FORMS OVER OR ADJACENT TO TRAFFIC, SEE SPECIAL PROVISIONS .

NEEDLE BEAMS WILL NOT BE ALLOWED UNLESS OTHERWISE CALLED FOR ON THE PLANS OR APPROVED BY THE ENGINEER.

FOR SUBMITTAL OF WORKING DRAWINGS, SEE SPECIAL PROVISIONS.

FOR METRIC STRUCTURAL STEEL, SEE SPECIAL PROVISIONS.

FOR FALSEWORK AND FORMWORK, SEE SPECIAL PROVISIONS.

FOR CRANE SAFETY, SEE SPECIAL PROVISIONS.

FOR GROUT FOR STRUCTURES, SEE SPECIAL PROVISIONS.

NORTH CAROLINA PROFESSIONAL SEAL 022005 ENGINEER A. KEITH PASCHAL

6/9/08

TOTAL BILL OF MATERIAL

	FOUNDATION EXCAVATION FOR BENT	PDA TESTING	PDA ASSISTANCE	REINFORCED CONCRETE DECK SLAB	GROOVING BRIDGE FLOORS	CLASS A CONCRETE	BRIDGE APPROACH SLABS	REINFORCING STEEL	SPIRAL REINFORCING STEEL	MODIFIED 1600mm PRESTRESSED CONCRETE GIRDERS		HP 360 X 108 STEEL PILES		HP 310 X 79 STEEL PILES		PILE REDRIVES	CONCRETE BARRIER RAIL	100mm SLOPE PROTECTION	ELASTOMERIC BEARING	EVAZOTE JOINT SEALS
	LUMP SUM	EACH	EACH	SQ. METER	SQ. METER	CU. METERS	LUMP SUM	KGS.	KGS.	NO.	METER	NO.	METER	NO.	METER	EACH	METER	SQ. METER	LUMP SUM	LUMP SUM
SUPERSTRUCTURE				1099.5	1062.6		LUMP SUM			14	396.844						114.750		LUMP SUM	LUMP SUM
END BENT 1						29.6		2141				13	364			5		364		
BENT 1	LUMP SUM					71.3		9401	1854					20	460	5				
END BENT 2						29.6		2153				13	364			5		344		
TOTAL	LUMP SUM	1	1	1099.5	1062.6	130.5	LUMP SUM	13695	1854	14	396.844	26	728	20	460	15	114.750	708	LUMP SUM	LUMP SUM

PROJECT NO. R-2554BA
WAYNE COUNTY
STATION: 15+85.032 -Y8-
146+62.803 -L-
SHEET 3 OF 3

STATE OF NORTH CAROLINA
DEPARTMENT OF TRANSPORTATION
RALEIGH

GENERAL DRAWING
FOR BRIDGE ON -Y8- (SR 1556)
OVER -L- (US 70) BETWEEN
SR 1575 AND SR 1622

REVISIONS						SHEET NO.
NO.	BY:	DATE:	NO.	BY:	DATE:	S-453
1			3			TOTAL SHEETS
2			4			478

DRAWN BY : J. G. KHARVA DATE : 03-02-06
CHECKED BY : A. K. PASCHAL DATE : 04-25-08

06-JUN-2008 13:46
R:\Structures\BULLOCK\Str#16\FINAL PLANS\R-2554BA_sd_GD_16.dgn
bngrady

FOR NOTES, SEE SHEET 2 OF 2.

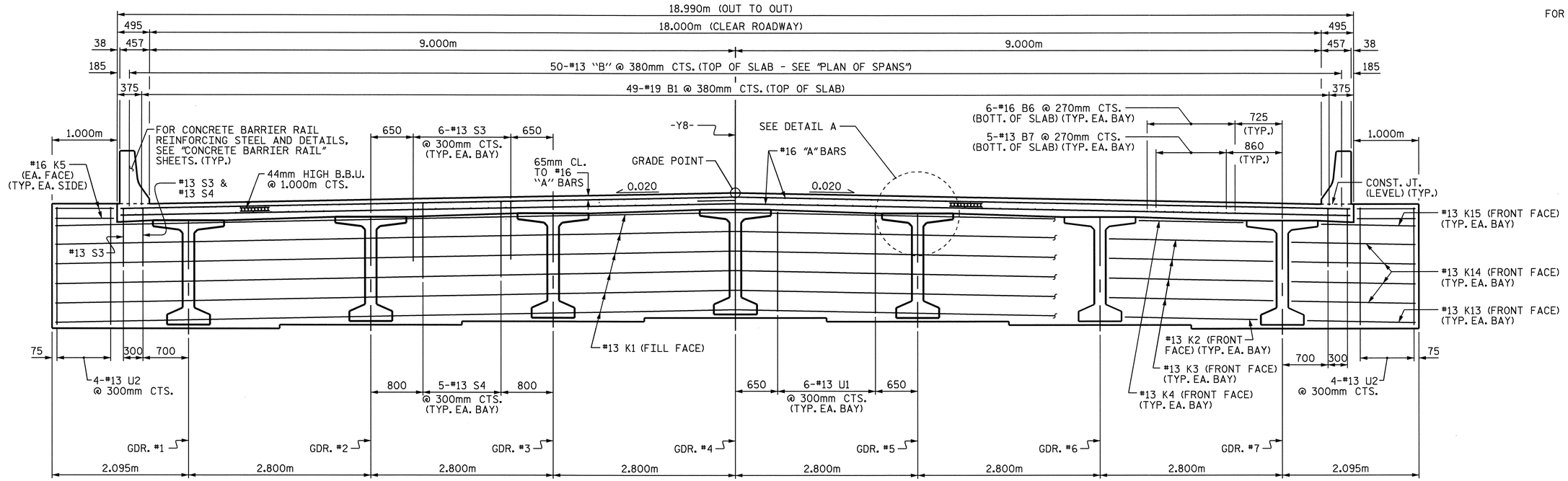

TYPICAL SECTION @ INTEGRAL END BENT

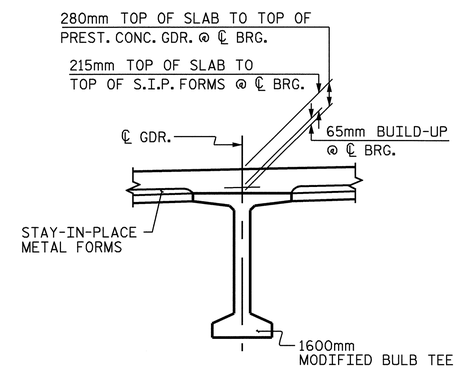

DETAIL A

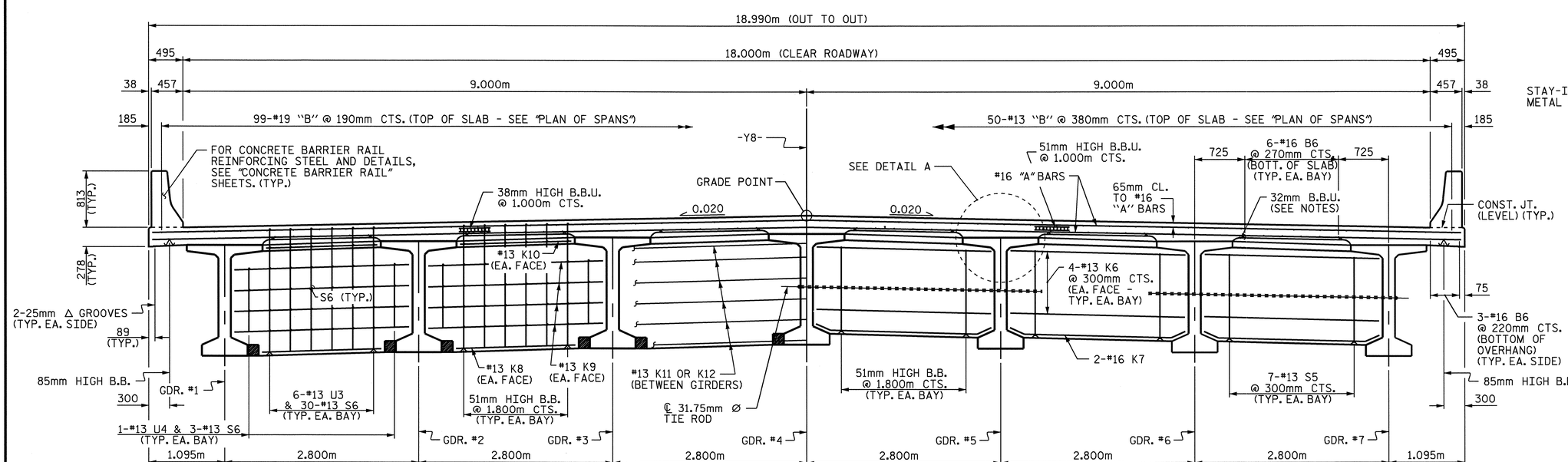

AT BENT DIAPHRAGM

AT INTERMEDIATE DIAPHRAGM

TYPICAL SECTION

PROJECT NO. R-2554BA

WAYNE COUNTY

STATION: 15+85.032 -Y8-

SHEET 1 OF 2

STATE OF NORTH CAROLINA
DEPARTMENT OF TRANSPORTATION
RALEIGH

SUPERSTRUCTURE
TYPICAL SECTION

NORTH CAROLINA PROFESSIONAL SEAL 22004 ENGINEER A. KEITH PASCHAL
6/9/08

REVISIONS							SHEET NO.
NO.	BY:	DATE:	NO.	BY:	DATE:		S-454
1			3				TOTAL SHEETS
2			4				478

DRAWN BY : B.N. GRADY DATE : 8/07
CHECKED BY : J.G. KHARVA DATE : 8/21/07

06-JUN-2008 13:45
R:\Structures\BULLOCK\Str#16\FINAL PLANS\R2554BA_sd_TS_16.dgn
bngrady

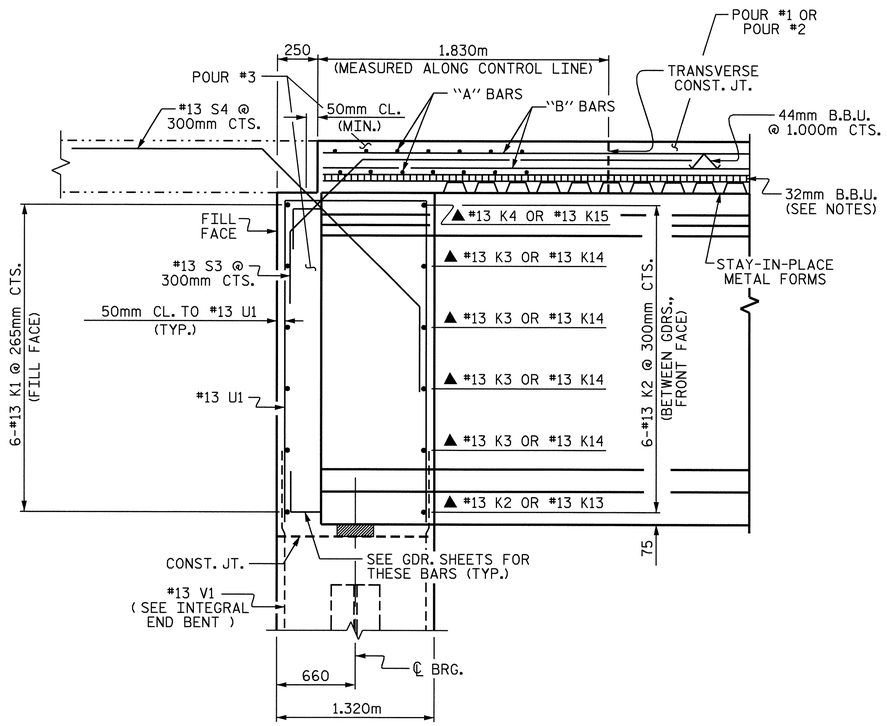

SECTION THRU INTEGRAL END BENT

▲ (#13 K2 THRU #13 K4 TYP. EA. BAY / #13 K12 THRU #13 K15 TYP. BOTH ENDS)

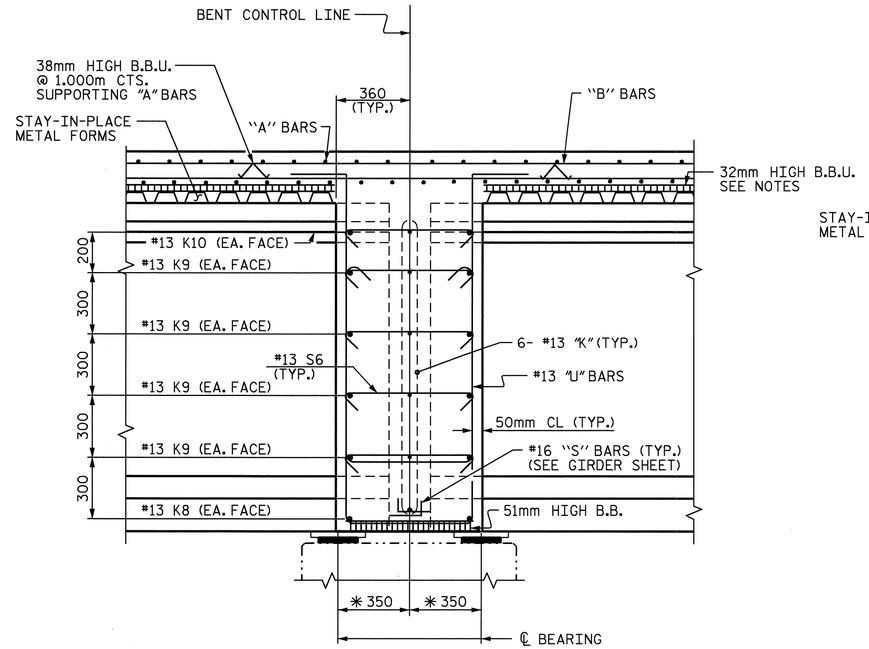

SECTION THRU BENT DIAPHRAGM

✱ MEASURED ALONG ℄ GIRDER

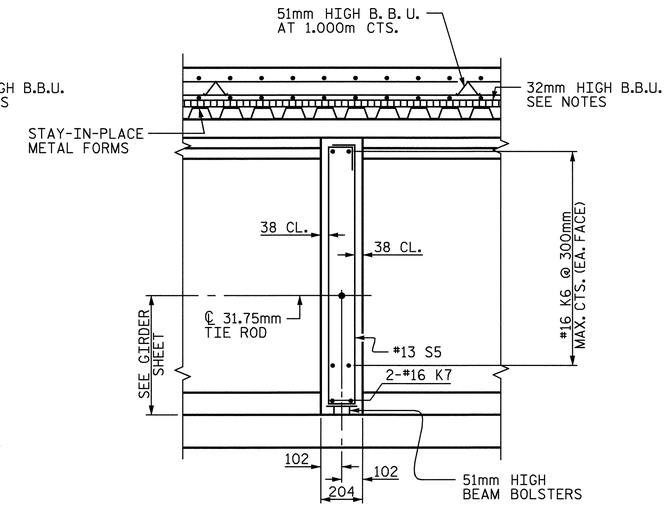

SECTION THRU INTERMEDIATE DIAPHRAGM

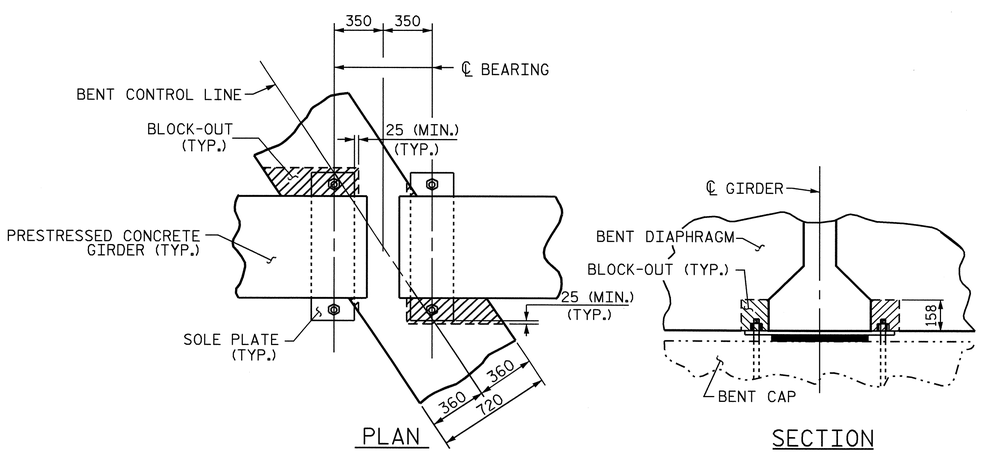

BENT DIAPHRAGM BLOCK-OUT DETAIL

NOTES:

PROVIDE 32mm HIGH BEAM BOLSTERS UPPER AT 1.200m CTS. ATOP THE METAL STAY-IN-PLACE FORMS TO SUPPORT THE BOTTOM MAT OF 'A' BARS. WHEN USING REMOVABLE FORMS, PROVIDE CONTINUOUS HIGH CHAIRS FOR METAL DECK (C.H.C.M.) @ 1.200m CTS. WITH A HEIGHT TO SUPPORT THE BOTTOM MAT OF 'A' BARS A CLEAR DISTANCE OF 65mm ABOVE THE TOP OF THE REMOVABLE FORM.

LONGITUDINAL STEEL MAY BE SHIFTED SLIGHTLY, AS NECESSARY, TO AVOID INTERFERENCE WITH STIRRUPS IN PRESTRESSED CONCRETE GIRDERS.

PREVIOUSLY CAST CONCRETE IN A CONTINUOUS UNIT SHALL HAVE ATTAINED A MINIMUM COMPRESSIVE STRENGTH OF 20.7 MPa BEFORE ADDITIONAL CONCRETE IS CAST IN THE UNIT.

TEMPORARY STRUTS SHALL BE PLACED BETWEEN PRESTRESSED GIRDERS ADJACENT TO THE DIAPHRAGMS, AND THE NUTS ON THE 31.75mm DIA. TIE RODS SHALL BE FULLY TIGHTENED BEFORE THE DIAPHRAGMS ARE CAST. STRUTS SHALL REMAIN IN PLACE 3 DAYS AFTER CONCRETE IS PLACED. THE TIE RODS SHALL BE RE-TIGHTENED AFTER THE STRUTS HAVE BEEN REMOVED.

CONCRETE IN INTERMEDIATE DIAPHRAGMS MAY BE CLASS A IN LIEU OF CLASS AA. PAYMENT SHALL BE MADE UNDER THE UNIT CONTRACT PRICE FOR REINFORCED CONCRETE DECK SLAB.

PROJECT NO. R-2554BA
WAYNE COUNTY
STATION: 15+85.032 -Y8-

SHEET 2 OF 2

STATE OF NORTH CAROLINA
DEPARTMENT OF TRANSPORTATION
RALEIGH

SUPERSTRUCTURE

TYPICAL SECTION DETAILS

NORTH CAROLINA PROFESSIONAL SEAL 22008 ENGINEER A. KEITH PASCHAL
6/17/08

REVISIONS						SHEET NO.
NO.	BY:	DATE:	NO.	BY:	DATE:	S-455
1			3			TOTAL SHEETS
2			4			478

DRAWN BY : A.M. KEETER DATE : 8/07
CHECKED BY : J.G. KHARVA DATE : 8/21/07

06-JUN-2008 13:45
R:\Structures\BULLOCK\Str#16\FINAL PLANS\R2554BA_sd_TS_16.dgn
bnagady

STR. #16

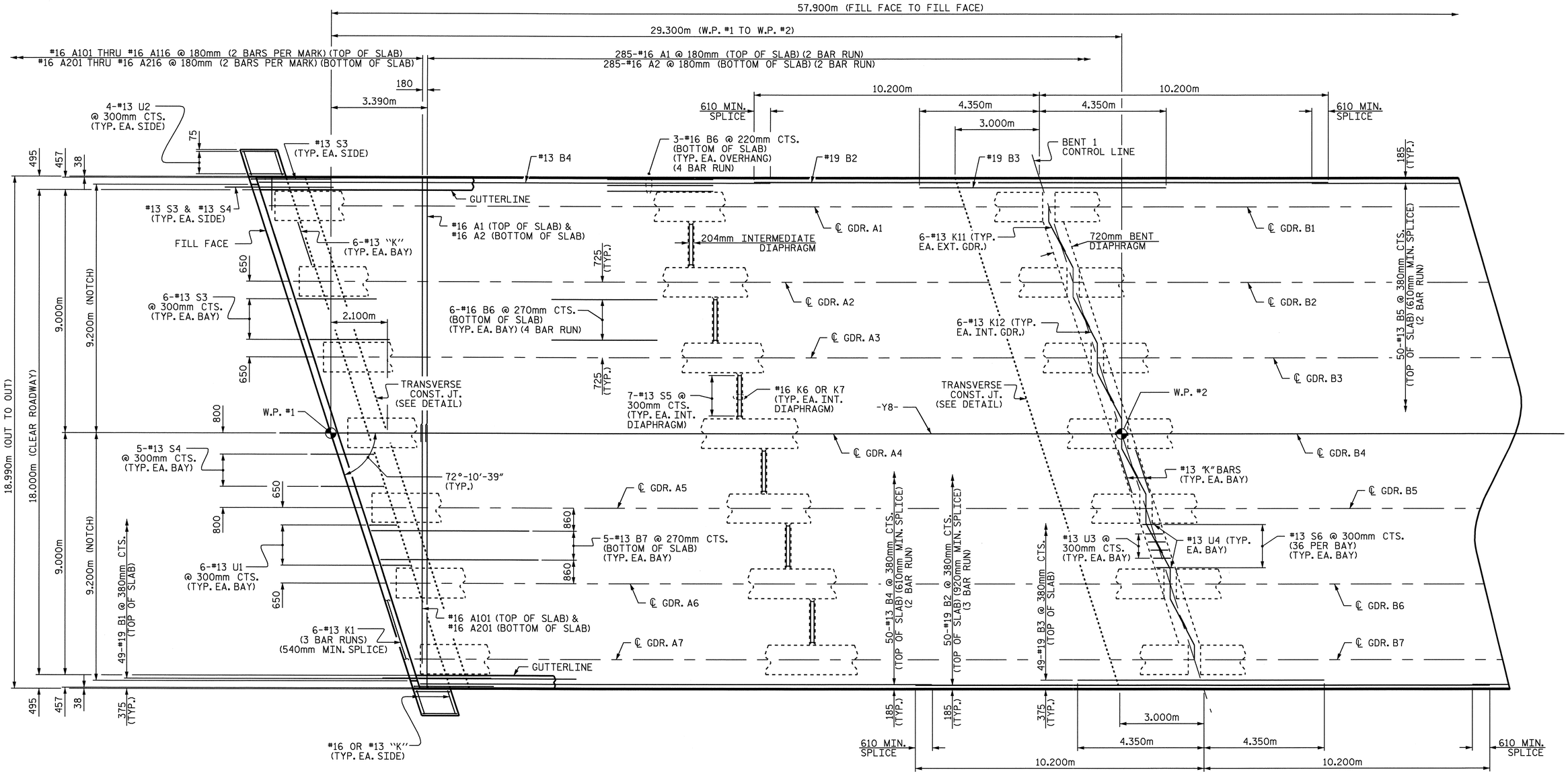

SPAN A

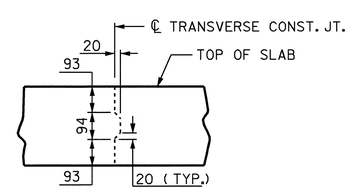

TRANSVERSE CONSTRUCTION JOINT DETAIL

NOTE: REINFORCING STEEL IN SLAB NOT SHOWN. LONGITUDINAL REINFORCING STEEL SHALL BE CONTINUOUS THRU JOINT.

PROJECT NO. R-2554BA
WAYNE COUNTY
STATION: 15+85.032 -Y8-

SHEET 1 OF 2

STATE OF NORTH CAROLINA
DEPARTMENT OF TRANSPORTATION
RALEIGH

SUPERSTRUCTURE
PLAN OF SPAN A

NORTH CAROLINA PROFESSIONAL SEAL 22008 ENGINEER KEITH PASCHAL
6/9/08

REVISIONS						SHEET NO.
NO.	BY:	DATE:	NO.	BY:	DATE:	S-456
1			3			TOTAL SHEETS
2			4			478

DRAWN BY : B.N. GRADY DATE : 8/07
CHECKED BY : J.G. KHARVA DATE : 8/22/07

06-JUN-2008 13:45
R:\Structures\BULLOCK\Str#16\FINAL PLANS\R2554BA_sd_S_16.dgn
bngrady

STR. #16

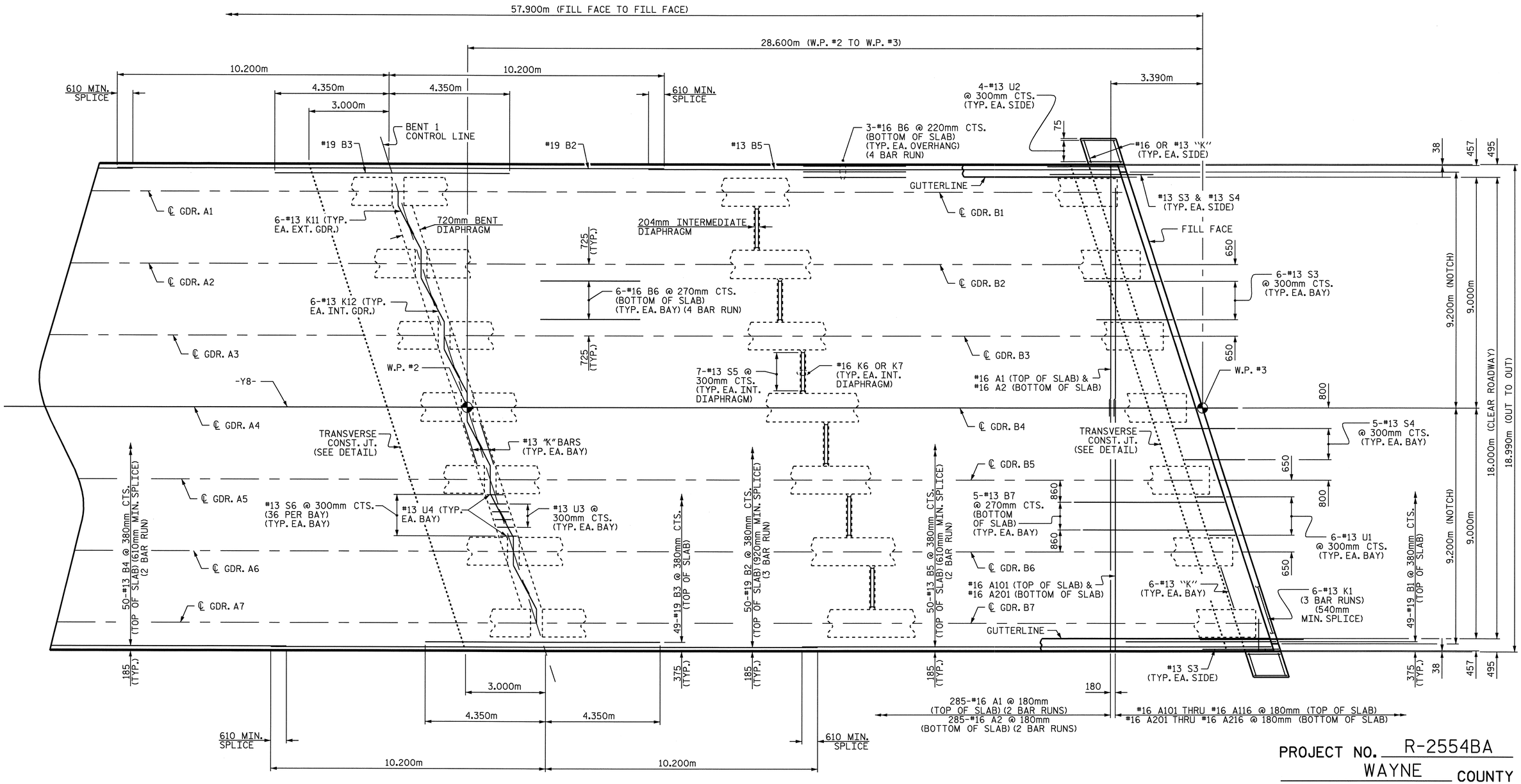

SPAN B

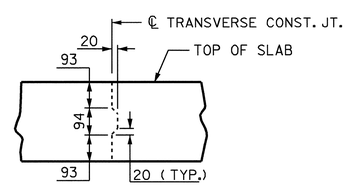

TRANSVERSE CONSTRUCTION JOINT DETAIL

NOTE: REINFORCING STEEL IN SLAB NOT SHOWN. LONGITUDINAL REINFORCING STEEL SHALL BE CONTINUOUS THRU JOINT.

PROJECT NO. R-2554BA
WAYNE COUNTY
STATION: 15+85.032 -Y8-

SHEET 2 OF 2

STATE OF NORTH CAROLINA
DEPARTMENT OF TRANSPORTATION
RALEIGH

SUPERSTRUCTURE
PLAN OF SPAN B

NORTH CAROLINA PROFESSIONAL SEAL 22005 ENGINEER A. KEITH PASCHAL
6/9/08

REVISIONS						SHEET NO.
NO.	BY:	DATE:	NO.	BY:	DATE:	S-457
1			3			TOTAL SHEETS
2			4			478

DRAWN BY : B.N. GRADY DATE : 8/07
CHECKED BY : J.G. KHARVA DATE : 8/22/07

06-JUN-2008 13:45
R:\Structures\BULLOCK\Str#16\FINAL PLANS\R2554BA_sd_S_16.dgn
bngrady

STR. #16

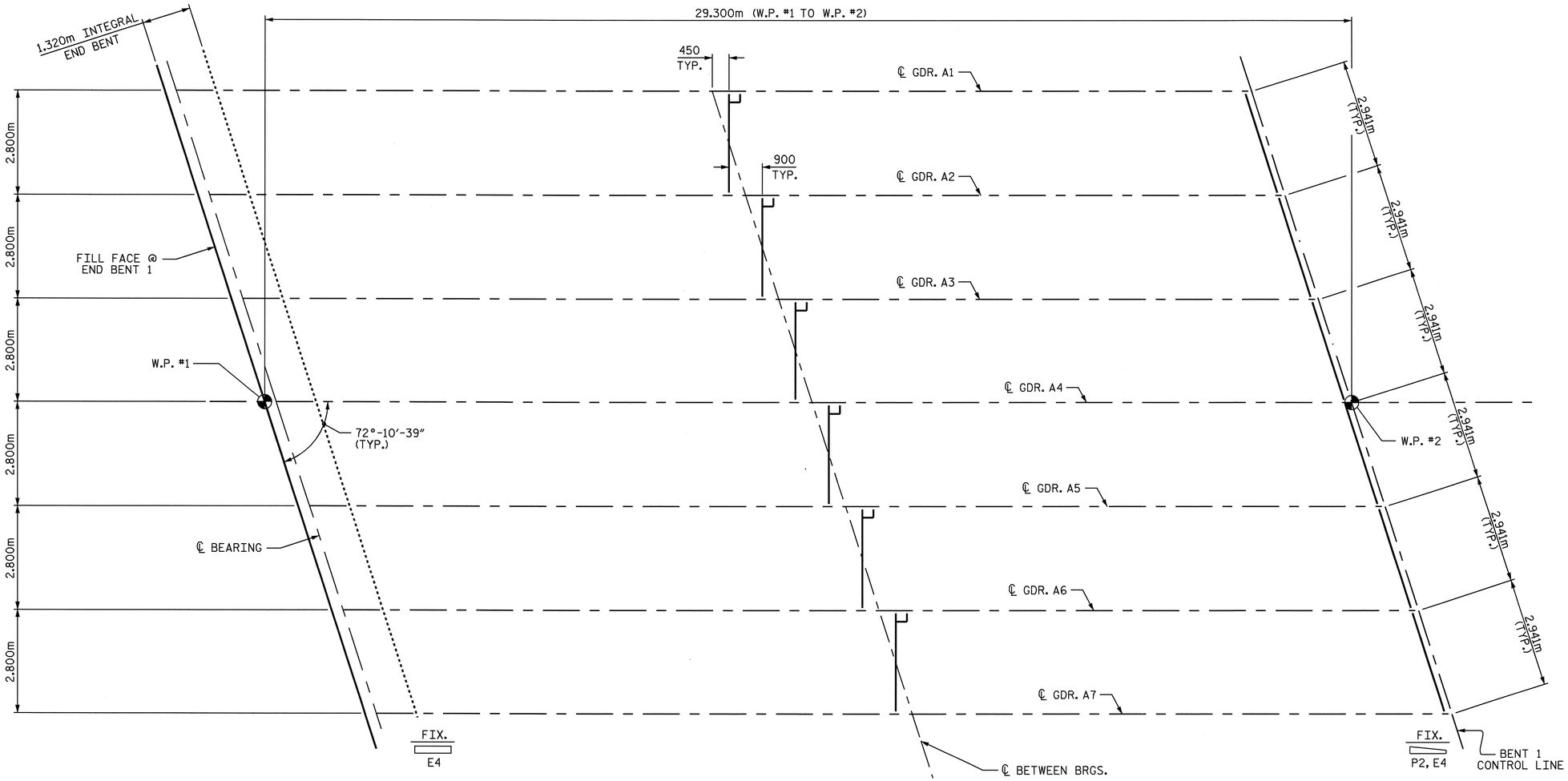

FRAMING PLAN

PROJECT NO. R-2554BA
WAYNE COUNTY
STATION: 15+85.032-Y8-

SHEET 1 OF 2

STATE OF NORTH CAROLINA
DEPARTMENT OF TRANSPORTATION
RALEIGH

SUPERSTRUCTURE
FRAMING PLAN
SPAN A

NORTH CAROLINA PROFESSIONAL SEAL 22005 ENGINEER A. KEITH PASCHAL
6/9/08

REVISIONS						SHEET NO.
NO.	BY:	DATE:	NO.	BY:	DATE:	S-458
1			3			TOTAL SHEETS
2			4			478

DRAWN BY : B.N. GRADY DATE : 8/07
CHECKED BY : J.G. KHARVA DATE : 8/22/07

06-JUN-2008 13:44
R:\Structures\BULLOCK\Str#16\FINAL PLANS\R2554BA_sd_FP_16.dgn
bngrady

STR. #16

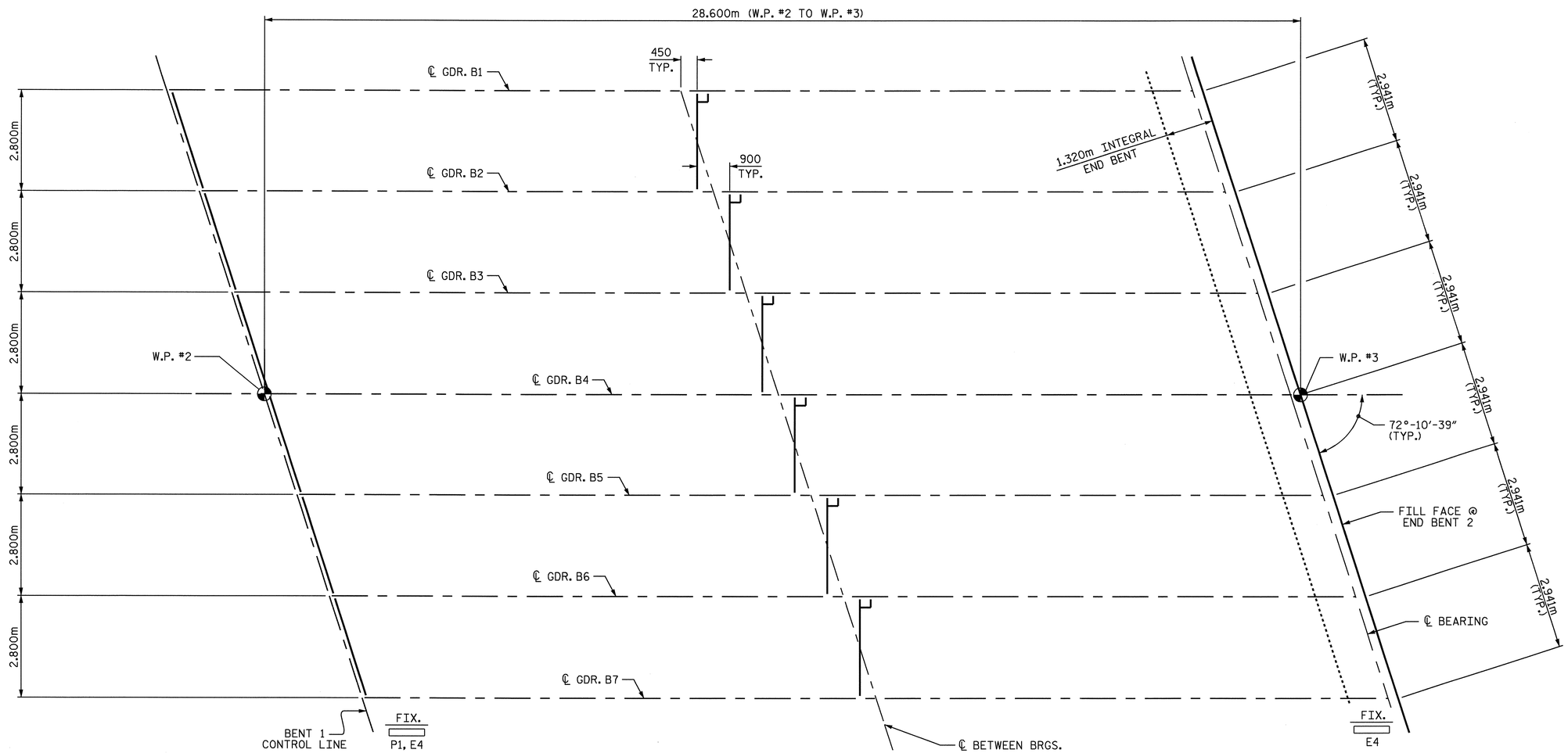

FRAMING PLAN

PROJECT NO. R-2554BA
WAYNE COUNTY
STATION: 15+85.032-Y8-

SHEET 2 OF 2

STATE OF NORTH CAROLINA
DEPARTMENT OF TRANSPORTATION
RALEIGH

SUPERSTRUCTURE
FRAMING PLAN
SPAN B

NORTH CAROLINA PROFESSIONAL SEAL 022005 ENGINEER A. KEITH PASCHAL
6/9/08

REVISIONS						SHEET NO.
NO.	BY:	DATE:	NO.	BY:	DATE:	S-459
1			3			TOTAL SHEETS
2			4			478

DRAWN BY : B.N. GRADY DATE : 8/07
CHECKED BY : J.G. KHARVA DATE : 8/22/07

06-JUN-2008 13:44
R:\Structures\BULLOCK\Str#16\FINAL PLANS\R2554BA_sd_FP_16.dgn
bngrady

STR. #16

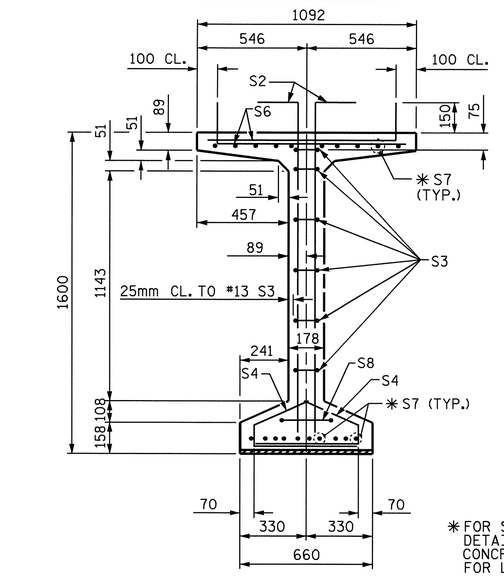

SECTION A-A

✱ FOR S7 BARS, SEE DETAIL "A" OF PRESTRESSED CONCRETE GIRDER CONTINUOUS FOR LIVE LOAD DETAILS SHEET

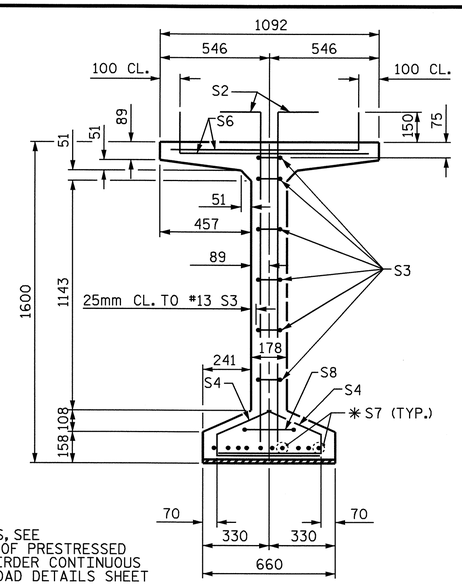

SECTION B-B

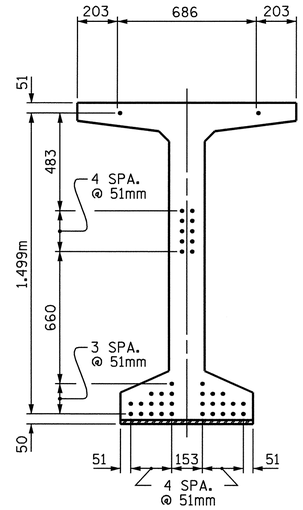

AT END OF GIRDER

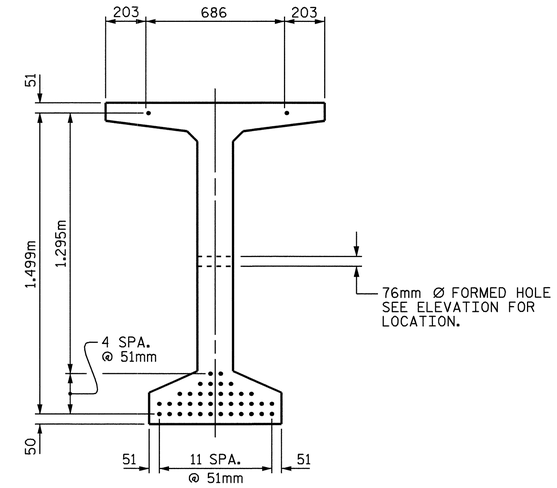

AT ℄ OF GIRDER

12.70mm Ø LOW RELAXATION STRAND LAYOUT

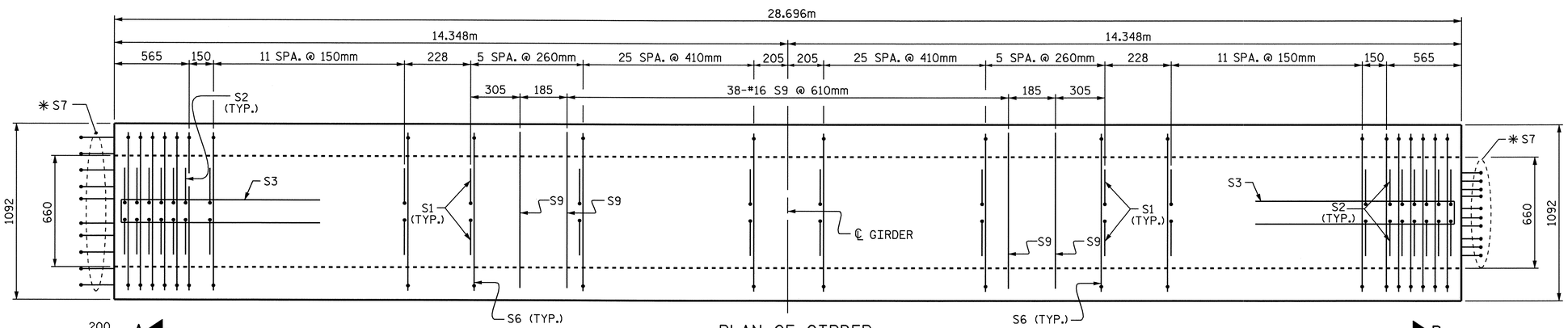

PLAN OF GIRDER

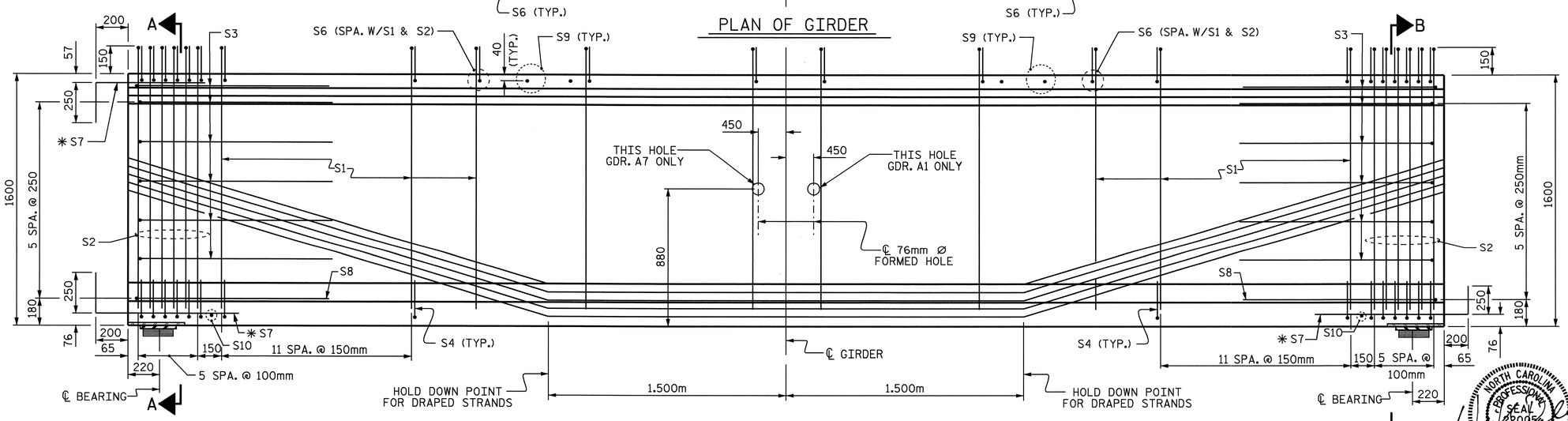

ELEVATION OF GIRDER

12.7 Ø L.R GRADE 1860 STRANDS

AREA (mm^2)	ULTIMATE STRENGTH (kN PER STRAND)	APPLIED PRESTRESS (kN PER STRAND)
98.71	183.7	137.8

REINFORCING STEEL FOR ONE GDR.

BAR	NUMBER	SIZE	TYPE	LENGTH	WEIGHT
S1	172	#13	1	1860	318
S2	24	#16	1	1860	69
S3	12	#13	2	2560	31
S4	72	#13	3	920	66
S5	1	#16	2	3000	5
S6	196	#16	1	1140	347
✱ S7	30	#16	STR	1120	52
S8	2	#16	2	2740	9
S9	40	#16	STR	980	61
S10	2	#10	STR	560	1

✱ NOTE: S7 BARS SHALL BE BENT BEFORE SHIPMENT. HEAT BENDING SHALL NOT BE ALLOWED.

BAR TYPES

ALL BAR DIMENSIONS ARE OUT-TO-OUT

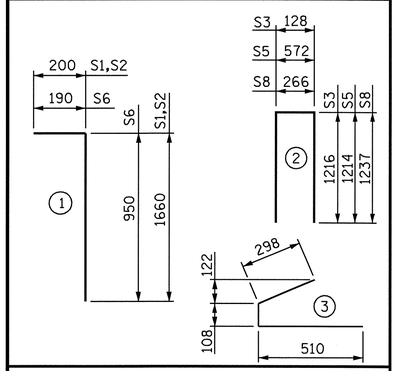

QUANTITIES FOR ONE GIRDER

REINFORCING STEEL	51.7 MPa CONCRETE	12.70mm Ø L.R. STRANDS
kg	m^3	No.
959	14.262	40

GIRDERS REQUIRED

NUMBER	LENGTH	TOTAL LENGTH
7	28.696	200.872

PROJECT NO. R-2554BA

WAYNE COUNTY

STATION: 15+85.032 -Y8-

SHEET 1 OF 6

STATE OF NORTH CAROLINA
DEPARTMENT OF TRANSPORTATION
RALEIGH

STANDARD
1600mm PRESTRESSED CONCRETE
MODIFIED BULB TEE
CONTINUOUS FOR LIVE LOAD
SPAN A

NORTH CAROLINA PROFESSIONAL SEAL 12005 ENGINEER A. KEITH PASCHAL 6/9/08

REVISIONS							SHEET NO.
NO.	BY:	DATE:	NO.	BY:	DATE:		S-460
1			3				TOTAL SHEETS
2			4				478

DRAWN BY : B.N. GRADY DATE : 8/07
CHECKED BY : J.G. KHARVA DATE : 8/23/07

06-JUN-2008 13:44
R:\Structures\BULLOCK\Str#16\FINAL PLANS\R2554BA_sd_G_16.dgn
bnagrady

STD. NO. PCG9SM

STR. #16

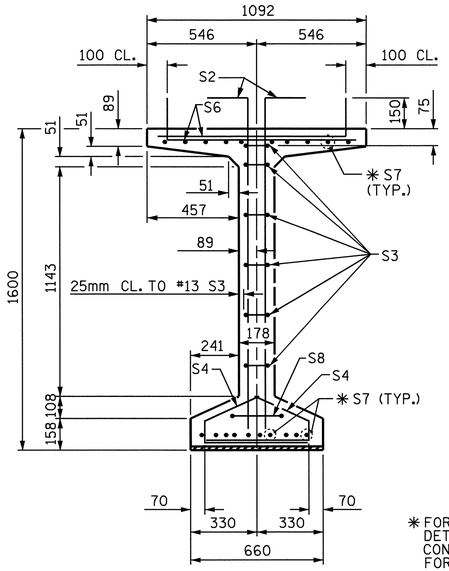

SECTION A-A

✱ FOR S7 BARS, SEE DETAIL "A" OF PRESTRESSED CONCRETE GIRDER CONTINUOUS FOR LIVE LOAD DETAILS SHEET

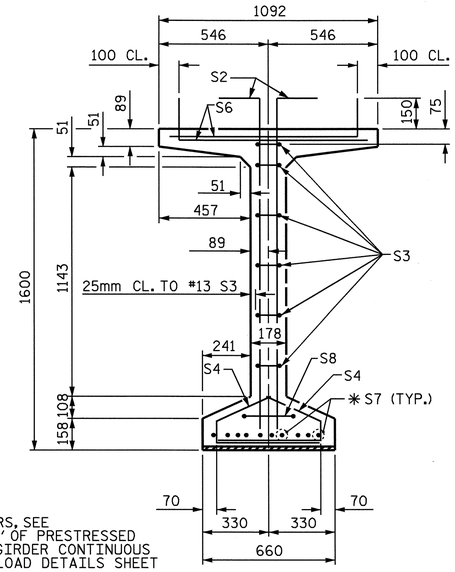

SECTION B-B

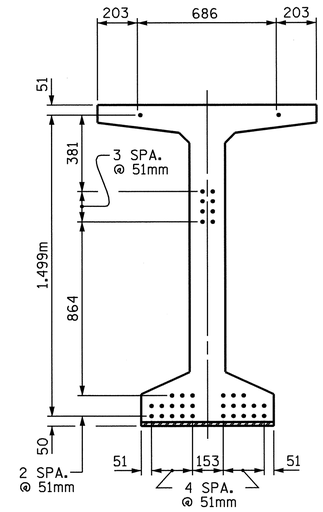

AT END OF GIRDER

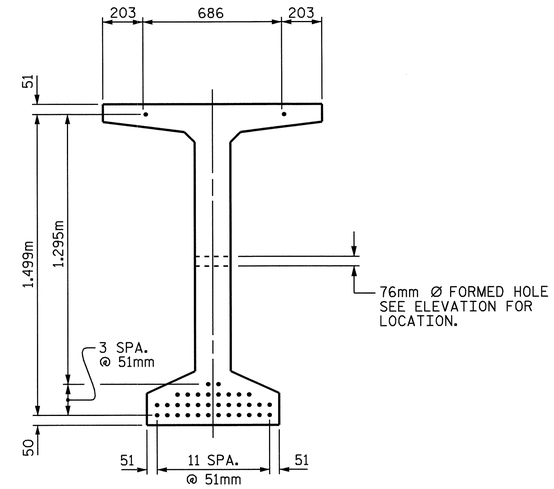

AT ℄ OF GIRDER

12.70mm Ø LOW RELAXATION STRAND LAYOUT

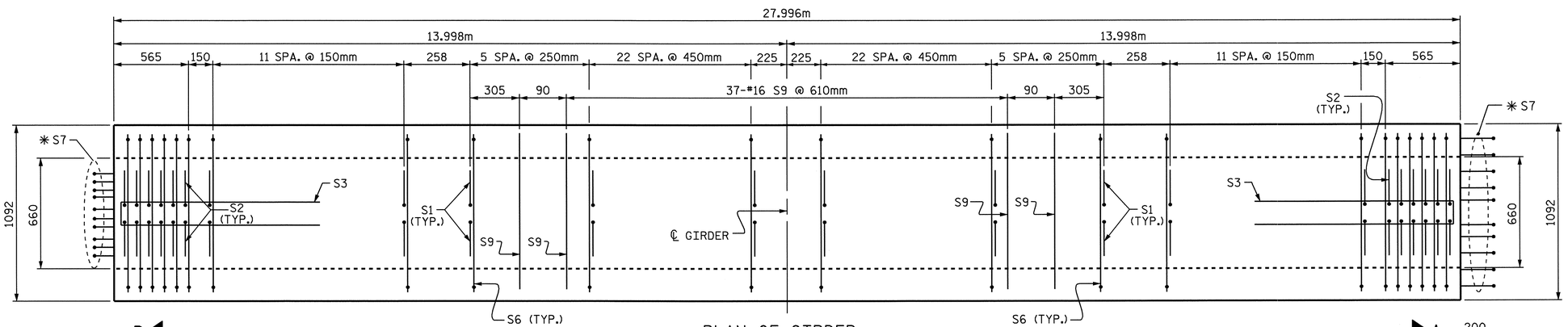

PLAN OF GIRDER

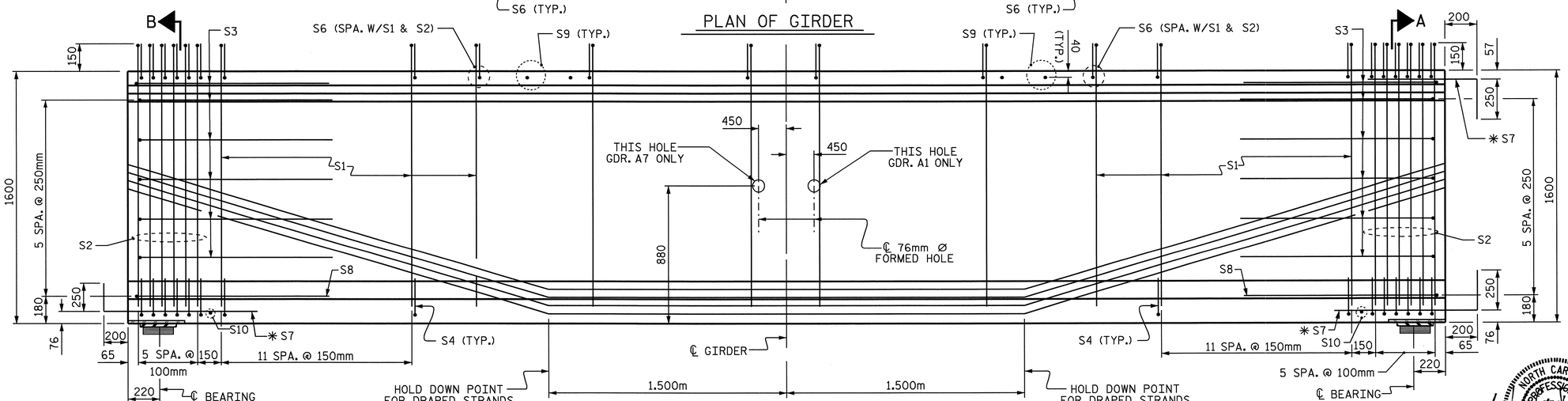

ELEVATION OF GIRDER

12.7 Ø L.R GRADE 1860 STRANDS

AREA (mm^2)	ULTIMATE STRENGTH (KN PER STRAND)	APPLIED PRESTRESS (KN PER STRAND)
98.71	183.7	137.8

REINFORCING STEEL FOR ONE GDR.

BAR	NUMBER	SIZE	TYPE	LENGTH	WEIGHT
S1	160	#13	1	1860	296
S2	24	#16	1	1860	69
S3	12	#13	2	2560	31
S4	72	#13	3	920	66
S5	1	#16	2	3000	5
S6	184	#16	1	1140	326
✱ S7	30	#16	STR	1120	52
S8	2	#16	2	2740	9
S9	39	#16	STR	980	59
S10	2	#10	STR	560	1

✱ NOTE: S7 BARS SHALL BE BENT BEFORE SHIPMENT. HEAT BENDING SHALL NOT BE ALLOWED.

BAR TYPES

ALL BAR DIMENSIONS ARE OUT-TO-OUT

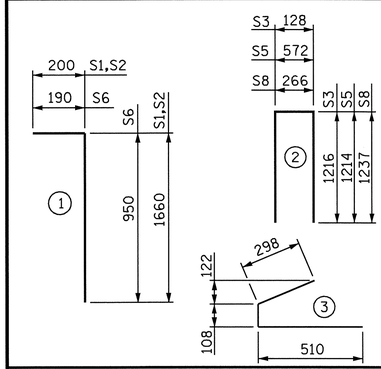

QUANTITIES FOR ONE GIRDER

REINFORCING STEEL	51.7 MPa CONCRETE	12.70mm Ø L.R. STRANDS
kg	m^3	No.
914	13.914	36

GIRDERS REQUIRED

NUMBER	LENGTH	TOTAL LENGTH
7	27.996	195.972

PROJECT NO. R-2554BA

WAYNE COUNTY

STATION: 15+85.032 -Y8-

SHEET 2 OF 6

STATE OF NORTH CAROLINA
DEPARTMENT OF TRANSPORTATION
RALEIGH

STANDARD
1600mm PRESTRESSED CONCRETE MODIFIED BULB TEE CONTINUOUS FOR LIVE LOAD SPAN B

NORTH CAROLINA PROFESSIONAL SEAL 22005 ENGINEER A. KEITH PASCHAL 6/9/08

REVISIONS							SHEET NO.
NO.	BY:	DATE:	NO.	BY:	DATE:		S-461
1			3				TOTAL SHEETS
2			4				478

STD. NO. PCG9SM

STR. #16

DRAWN BY : B.N. GRADY DATE : 8/07
CHECKED BY : J.G. KHARVA DATE : 8/23/07

06-JUN-2008 13:44
R:\Structures\BULLOCK\Str#16\FINAL PLANS\R2554BA_sd_G_16.dgn
bngrady

DEAD LOAD DEFLECTION TABLE FOR GIRDERS

12.700mm Ø LOW RELAXATION	SPAN A																					
	GIRDERS 1 & 7											GIRDERS 2, 3, 4, 5, & 6										
TENTH POINTS	0	.1	.2	.3	.4	.5	.6	.7	.8	.9	0	0	.1	.2	.3	.4	.5	.6	.7	.8	.9	0
CAMBER (GIRDER ALONE IN PLACE) ↑	0.000	0.027	0.051	0.070	0.082	0.086	0.082	0.070	0.051	0.027	0.000	0.000	0.027	0.051	0.070	0.082	0.086	0.082	0.070	0.051	0.027	0.000
✳ DEFLECTION DUE TO SUPERIMPOSED D.L. ↓	0.000	0.008	0.016	0.021	0.025	0.027	0.025	0.021	0.016	0.008	0.000	0.000	0.009	0.017	0.024	0.028	0.030	0.028	0.024	0.017	0.009	0.000
FINAL CAMBER ↑	0.000	19	35	49	57	59	57	49	35	19	0.000	0.000	18	34	46	54	56	54	46	34	18	0.000

✳ INCLUDES SLAB, BUILDUPS & STAY-IN-PLACE FORMS.
ALL VALUES ARE SHOWN IN METERS, EXCEPT "FINAL CAMBER" WHICH IS SHOWN IN MILLIMETERS.

DEAD LOAD DEFLECTION TABLE FOR GIRDERS

12.700mm Ø LOW RELAXATION	SPAN B																					
	GIRDERS 1 & 7											GIRDERS 2, 3, 4, 5, & 6										
TENTH POINTS	0	.1	.2	.3	.4	.5	.6	.7	.8	.9	0	0	.1	.2	.3	.4	.5	.6	.7	.8	.9	0
CAMBER (GIRDER ALONE IN PLACE) ↑	0.000	0.023	0.043	0.059	0.069	0.073	0.069	0.059	0.043	0.023	0.000	0.000	0.023	0.043	0.059	0.069	0.073	0.069	0.059	0.043	0.023	0.000
✳ DEFLECTION DUE TO SUPERIMPOSED D.L. ↓	0.000	0.007	0.014	0.019	0.023	0.024	0.023	0.019	0.014	0.007	0.000	0.000	0.008	0.016	0.021	0.025	0.027	0.025	0.021	0.016	0.008	0.000
FINAL CAMBER ↑	0.000	16	29	40	46	49	46	40	29	16	0.000	0.000	15	27	38	44	46	44	38	27	15	0.000

✳ INCLUDES SLAB, BUILDUPS & STAY-IN-PLACE FORMS.
ALL VALUES ARE SHOWN IN METERS, EXCEPT "FINAL CAMBER" WHICH IS SHOWN IN MILLIMETERS.

NOTES

ALL PRESTRESSING STRANDS SHALL BE 7-WIRE LOW-RELAXATION GRADE 270 STRANDS AND SHALL CONFORM TO AASHTO M203M EXCEPT FOR SAMPLING REQUIREMENTS WHICH SHALL BE IN ACCORDANCE WITH THE STANDARD SPECIFICATIONS.

TIE ROD ASSEMBLY SHALL BE AASHTO M270 GRADE 250 STRUCTURAL STEEL.

ALL REINFORCING STEEL SHALL BE GRADE 420.

APPLY EPOXY PROTECTIVE COATING TO END OF GIRDER SURFACES INDICATED IN ELEVATION VIEW.

EMBEDDED PLATE "B-1" SHALL BE GALVANIZED IN ACCORDANCE WITH THE SPECIFICATIONS. BEVEL EDGES OF PLATE "B-1" TO GIVE CLOSE FIT BUT NOT TIGHT FIT TO STEEL CASTING FORM.

ANCHOR STUDS SHALL CONFORM TO AASHTO M169 GRADES 1010 THROUGH 1020 OR APPROVED EQUAL, AND SHALL MEET THE TYPE "B" REQUIREMENTS OF SUBSECTION 7.3 OF THE ANSI/AASHTO/AWS D1.5 BRIDGE WELDING CODE.

AT ENDS OF GIRDERS TO BE EMBEDDED IN CONCRETE DIAPHRAGMS OR END WALLS, PRESTRESSING STRANDS MAY EXTEND A MAXIMUM OF 50mm BEYOND THE GIRDER ENDS. OTHERWISE, PRESTRESSING STRANDS SHALL BE CUT FLUSH WITH THE GIRDER ENDS.

THE TRANSFER OF LOAD FROM THE ANCHORAGES TO THE GIRDER SHALL BE DONE WHEN CONCRETE HAS REACHED A COMPRESSIVE STRENGTH OF NOT LESS THAN 41.4 MPa.

DEPENDING ON THE TYPE OF SYSTEM USED TO SUPPORT THE DECK SLAB FORMS, PRESET ANCHORS MAY BE NECESSARY IN THE PRESTRESSED CONCRETE GIRDER.

THE TOP SURFACE OF THE GIRDER, EXCLUDING THE OUTSIDE 100mm, SHALL BE RAKED TO A DEPTH OF 6mm.

WHEN DRAPED STRANDS ARE DETAILED, THE LONGITUDINAL LOCATION OF THE HOLD DOWN DEVICES SHALL BE WITHIN 150mm OF THE LOCATION SHOWN AND THE CENTER OF GRAVITY OF THE GROUP OF DRAPED STRANDS SHALL BE LOCATED WITHIN 13mm OF THE THEORETICAL LOCATION SHOWN.

A 50mm x 50mm CHAMFER IS ALLOWED AT THE INTERSECTION OF THE WEB AND THE BOTTOM FLANGE OF THE 1600mm AND 1829mm MODIFIED BULB TEES ONLY.

FOR VERTICAL CRACKS IN PRESTRESSED CONCRETE GIRDERS PRIOR TO DETENSIONING, SEE SPECIAL PROVISIONS.

THE CONTRACTOR HAS THE OPTION TO PROVIDE, AT NO ADDITIONAL COST TO THE DEPARTMENT, 2 ADDITIONAL STRANDS AT THE TOP OF THE GIRDER TO FACILITATE TYING OF THE REINFORCING STEEL. THESE STRANDS SHALL BE PULLED TO A LOAD OF 20 Kn.

FOR PRESTRESSED CONCRETE MEMBERS, SEE SPECIAL PROVISIONS.

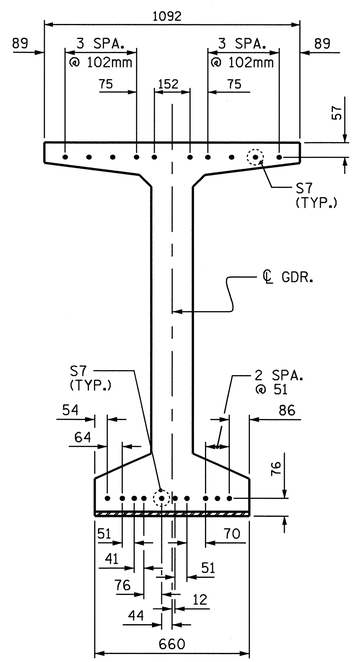

DETAIL "A"

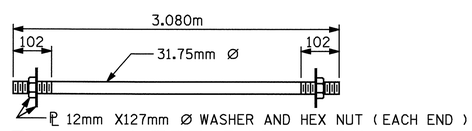

31.75mm Ø TIE ROD ASSEMBLY

(12 COMPLETE ASSEMBLIES REQUIRED)

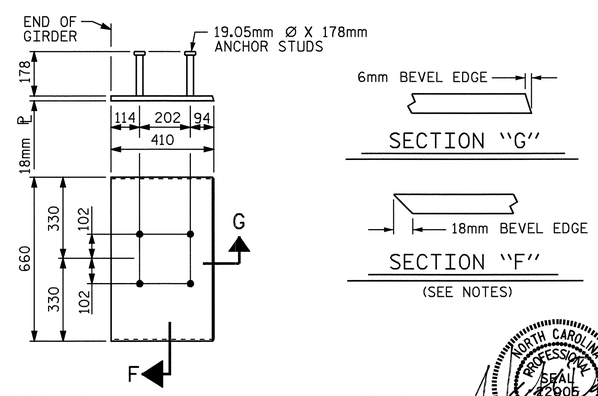

EMBEDDED PLATE "B-1" DETAILS FOR AASHTO TYPE IV GIRDER 1600mm MODIFIED BULB TEES

(2 REQ'D PER GIRDER)

NORTH CAROLINA PROFESSIONAL SEAL 42005 ENGINEER A. KEITH PASCHAL
6/9/08

PROJECT NO. R-2554BA
WAYNE COUNTY
STATION: 15+85.032 -Y8-

SHEET 3 OF 6

STATE OF NORTH CAROLINA
DEPARTMENT OF TRANSPORTATION
RALEIGH

STANDARD
PRESTRESSED CONCRETE GIRDER CONTINUOUS FOR LIVE LOAD DETAILS & DEAD LOAD DEFLECTION

ASSEMBLED BY : B.N. GRADY	DATE : 8/07
CHECKED BY : J.G. KHARVA	DATE : 8/23/07
DRAWN BY : ELR 11/91	REV. 8/16/99 MAB/LES
CHECKED BY : GRP 11/91	REV. 10/17/00 RWW/LES
	REV. 7/10/01RR LES/RDR

REVISIONS						SHEET NO.
NO.	BY:	DATE:	NO.	BY:	DATE:	S-462
1			3			TOTAL SHEETS
2			4			478

STD. NO. PCG11SM

STR. #16

06-JUN-2008 13:44
R:\Structures\BULLOCK\Str#16\FINAL PLANS\R2554BA_sd_G_16.dgn
bngrady

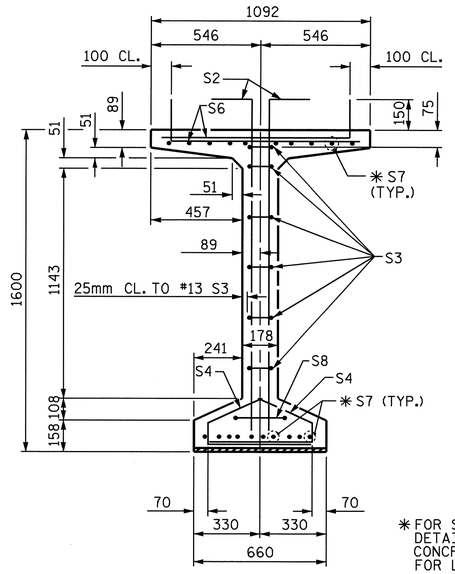

✱ FOR S7 BARS, SEE DETAIL "A" OF PRESTRESSED CONCRETE GIRDER CONTINUOUS FOR LIVE LOAD DETAILS SHEET

SECTION A-A

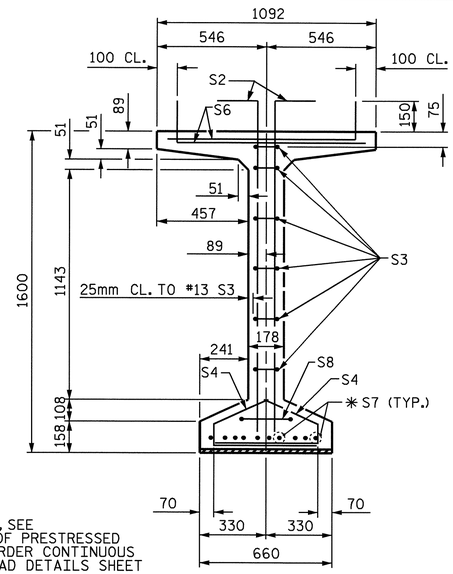

SECTION B-B

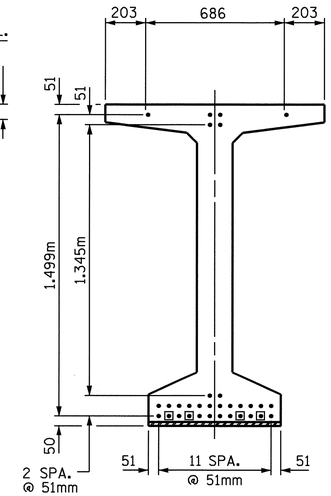

AT END OF GIRDER

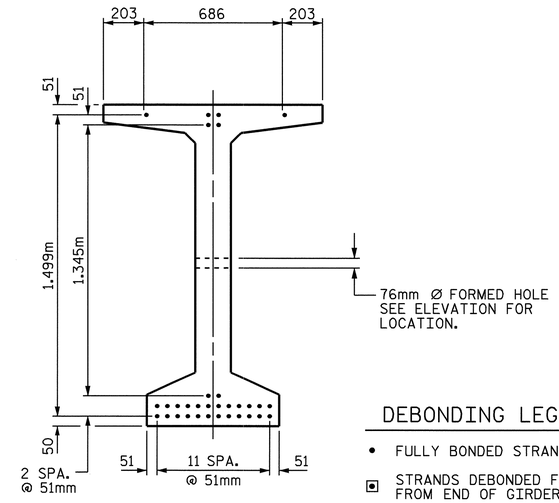

AT ℄ OF GIRDER

15.24mm Ø LOW RELAXATION STRAND LAYOUT

DEBONDING LEGEND

- • FULLY BONDED STRANDS
- ▣ STRANDS DEBONDED FOR 1.220m FROM END OF GIRDER

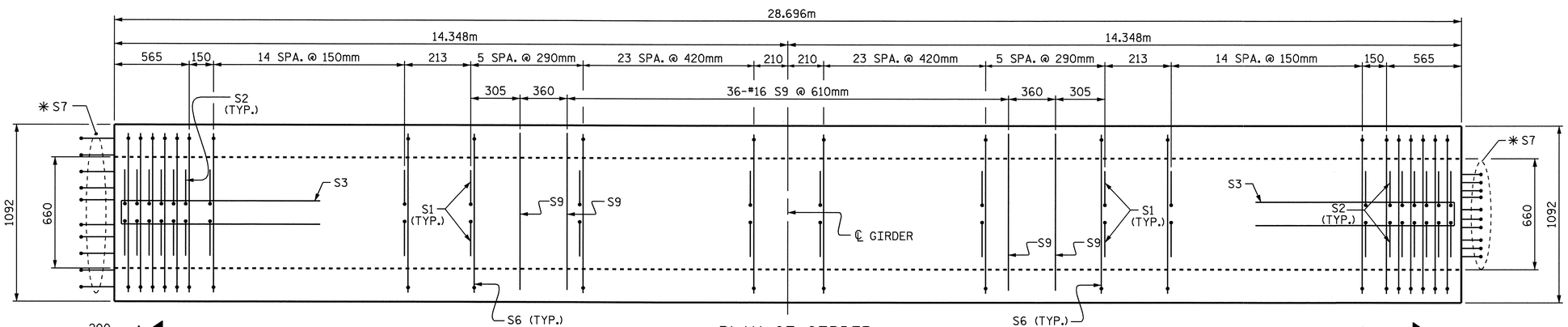

PLAN OF GIRDER

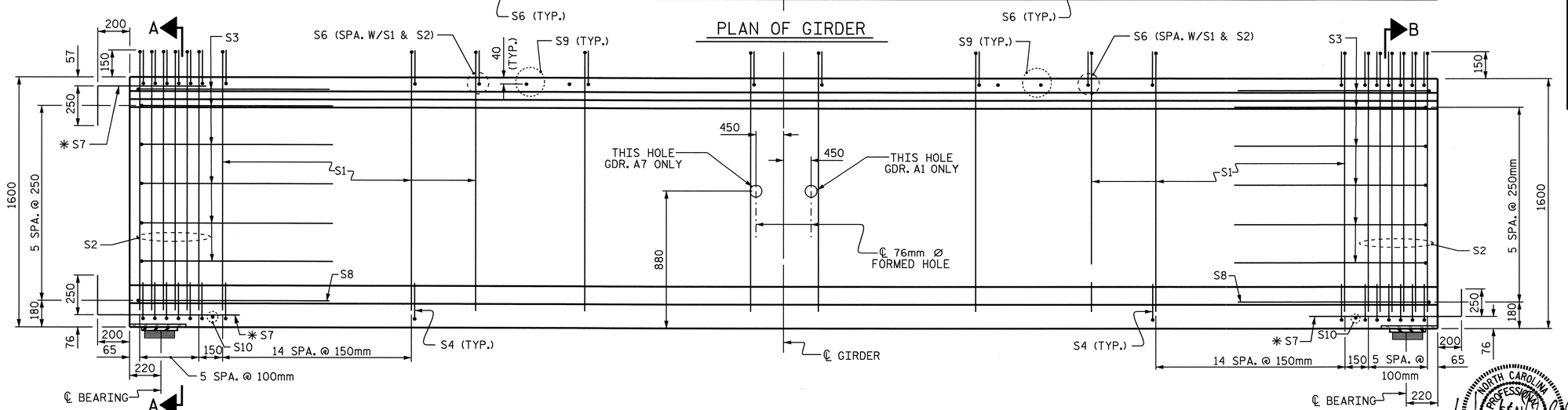

ELEVATION OF GIRDER

15.24 Ø L.R. GRADE 1860 STRANDS

AREA (mm^2)	ULTIMATE STRENGTH (kN PER STRAND)	APPLIED PRESTRESS (kN PER STRAND)
140.0	260.4	195.3

REINFORCING STEEL FOR ONE GDR.

BAR	NUMBER	SIZE	TYPE	LENGTH	WEIGHT
S1	176	#13	1	1860	325
S2	24	#16	1	1860	69
S3	12	#13	2	2560	31
S4	72	#13	3	920	66
S5	1	#16	2	3000	5
S6	200	#16	1	1140	354
✱ S7	30	#16	STR	1120	52
S8	2	#16	2	2740	9
S9	38	#16	STR	980	58
S10	2	#10	STR	560	1

✱ NOTE: S7 BARS SHALL BE BENT BEFORE SHIPMENT. HEAT BENDING SHALL NOT BE ALLOWED.

BAR TYPES

ALL BAR DIMENSIONS ARE OUT-TO-OUT

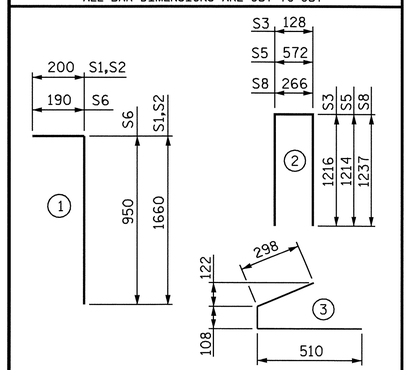

QUANTITIES FOR ONE GIRDER

REINFORCING STEEL	51.7 MPa CONCRETE	15.24mm Ø L.R. STRANDS
kg	m^3	No.
970	14.262	32

GIRDERS REQUIRED

NUMBER	LENGTH	TOTAL LENGTH
7	28.696	200.872

PROJECT NO. R-2554BA

WAYNE COUNTY

STATION: 15+85.032 -Y8-

SHEET 4 OF 6

STATE OF NORTH CAROLINA
DEPARTMENT OF TRANSPORTATION
RALEIGH

SPAN A

OPTIONAL
1600mm PRESTRESSED CONCRETE
MODIFIED BULB TEE
CONTINUOUS FOR LIVE LOAD
(WITH 15.24mm Ø PARTIALLY DEBONDED STRANDS)

NORTH CAROLINA PROFESSIONAL SEAL 22005 ENGINEER A. KEITH PASCHAL 6/2/08

REVISIONS								SHEET NO.
NO.	BY:	DATE:	NO.	BY:	DATE:			S-463
1			3					TOTAL SHEETS
2			4					478

DRAWN BY : B.N. GRADY DATE : 8/07
CHECKED BY : J.G. KHARVA DATE : 8/23/07

06-JUN-2008 13:44
R:\Structures\BULLOCK\Str#16\FINAL PLANS\R2554BA_sd_G_16.dgn
bngrady

STD. NO. PCG9SM

STR. #16

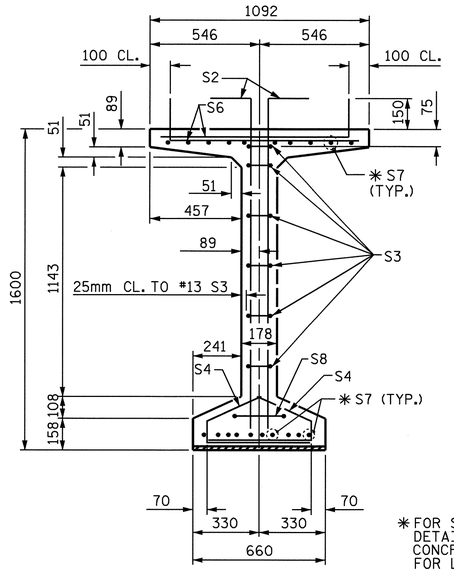

SECTION A-A

✱ FOR S7 BARS, SEE DETAIL "A" OF PRESTRESSED CONCRETE GIRDER CONTINUOUS FOR LIVE LOAD DETAILS SHEET

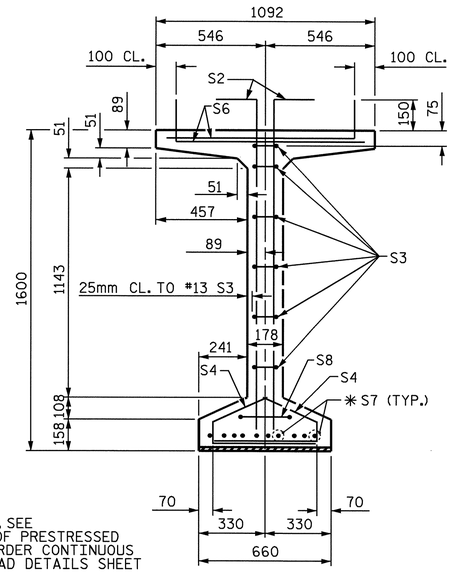

SECTION B-B

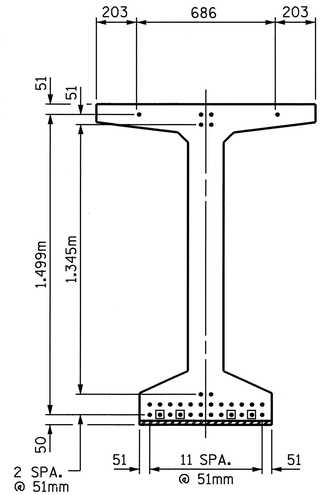

AT END OF GIRDER

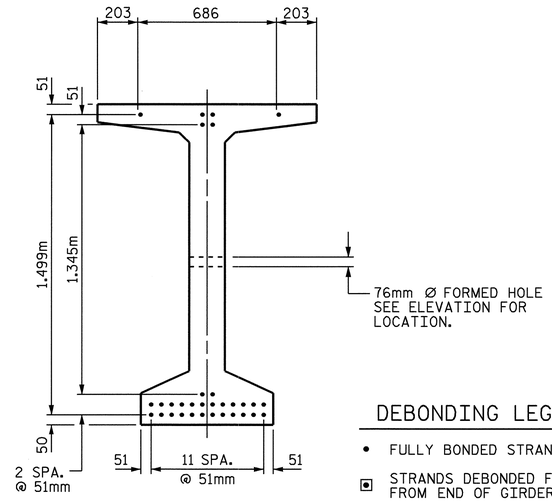

AT ℄ OF GIRDER

15.24mm Ø LOW RELAXATION STRAND LAYOUT

DEBONDING LEGEND

- • FULLY BONDED STRANDS
- ▣ STRANDS DEBONDED FOR 1.220m FROM END OF GIRDER

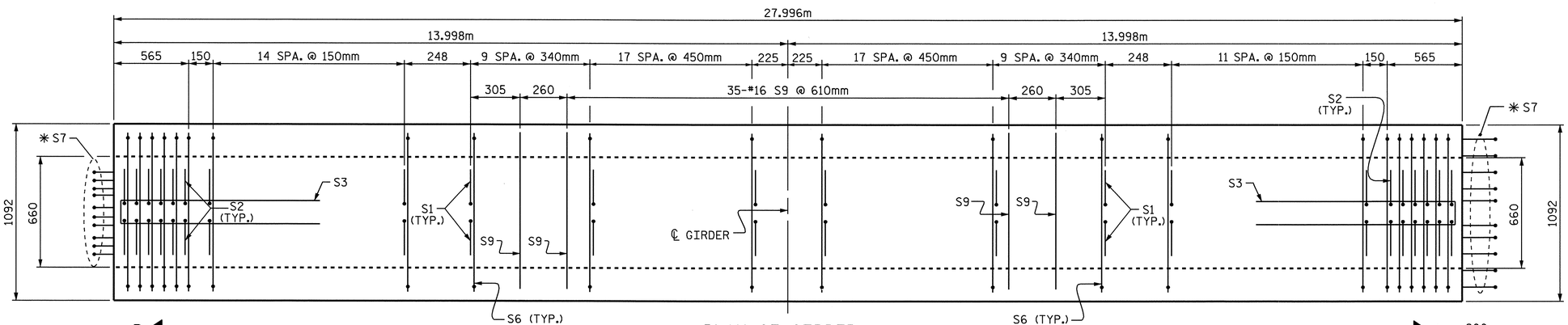

PLAN OF GIRDER

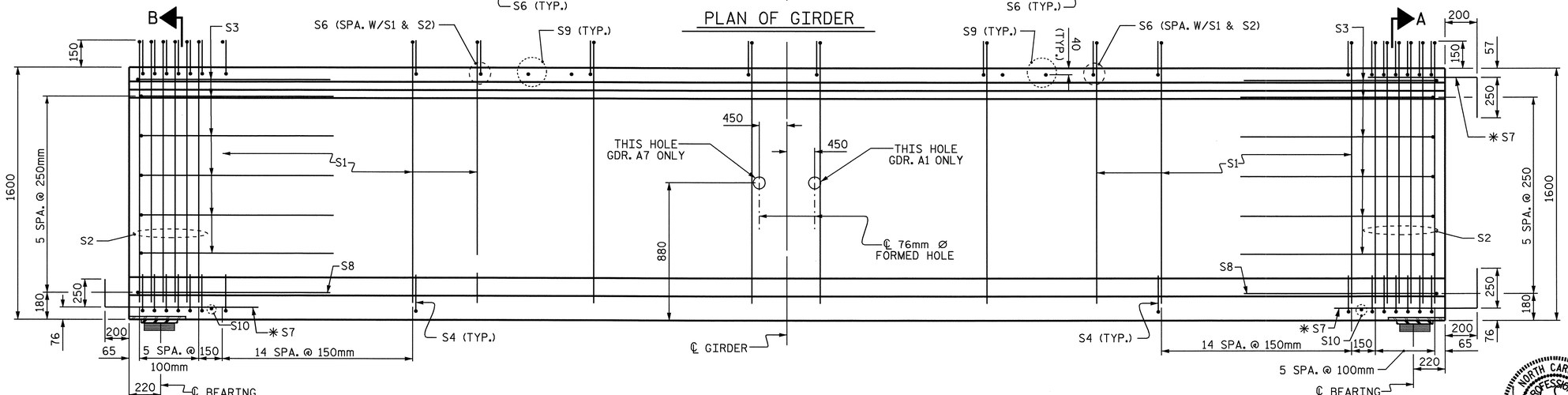

ELEVATION OF GIRDER

15.24 Ø L.R. GRADE 1860 STRANDS

AREA (mm²)	ULTIMATE STRENGTH (kN PER STRAND)	APPLIED PRESTRESS (kN PER STRAND)
140.0	260.4	195.3

REINFORCING STEEL FOR ONE GDR.

BAR	NUMBER	SIZE	TYPE	LENGTH	WEIGHT
S1	168	#13	1	1860	311
S2	24	#16	1	1860	69
S3	12	#13	2	2560	31
S4	72	#13	3	920	66
S5	1	#16	2	3000	5
S6	192	#16	1	1140	340
✱ S7	30	#16	STR	1120	52
S8	2	#16	2	2740	9
S9	37	#16	STR	980	56
S10	2	#10	STR	560	1

✱ NOTE: S7 BARS SHALL BE BENT BEFORE SHIPMENT. HEAT BENDING SHALL NOT BE ALLOWED.

BAR TYPES

ALL BAR DIMENSIONS ARE OUT-TO-OUT

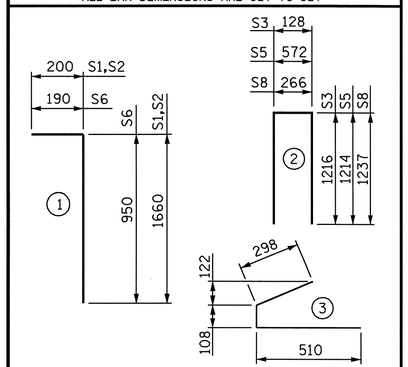

QUANTITIES FOR ONE GIRDER

REINFORCING STEEL	51.7 MPa CONCRETE	15.24mm Ø L.R. STRANDS
kg	m³	No.
940	13.914	32

GIRDERS REQUIRED

NUMBER	LENGTH	TOTAL LENGTH
7	27.996	195.972

PROJECT NO. R-2554BA

WAYNE COUNTY

STATION: 15+85.032 -Y8-

SHEET 5 OF 6

STATE OF NORTH CAROLINA
DEPARTMENT OF TRANSPORTATION
RALEIGH

SPAN B

OPTIONAL
1600mm PRESTRESSED CONCRETE
MODIFIED BULB TEE
CONTINUOUS FOR LIVE LOAD
(WITH 15.24mm Ø PARTIALLY DEBONDED STRANDS)

NORTH CAROLINA PROFESSIONAL SEAL 022006 ENGINEER A. KEITH PASCHAL 6/9/08

REVISIONS								SHEET NO.
NO.	BY:	DATE:	NO.	BY:	DATE:			S-464
1			3					TOTAL SHEETS
2			4					478

DRAWN BY : B.N. GRADY DATE : 8/07
CHECKED BY : J.G. KHARVA DATE : 8/23/07

06-JUN-2008 13:44
R:\Structures\BULLOCK\Str#16\FINAL PLANS\R2554BA_sd_G_16.dgn
bngrady

STD. NO. PCG9SM

STR. #16

DEAD LOAD DEFLECTION TABLE FOR GIRDERS

15.24mm Ø LOW RELAXATION	SPAN A																					
	GIRDERS 1 & 7											GIRDERS 2, 3, 4, 5, & 6										
TENTH POINTS	0	.1	.2	.3	.4	.5	.6	.7	.8	.9	0	0	.1	.2	.3	.4	.5	.6	.7	.8	.9	0
CAMBER (GIRDER ALONE IN PLACE) ↑	0.000	0.024	0.045	0.061	0.072	0.076	0.072	0.061	0.045	0.024	0.000	0.000	0.024	0.045	0.061	0.072	0.076	0.072	0.061	0.045	0.024	0.000
✳ DEFLECTION DUE TO SUPERIMPOSED D.L. ↓	0.000	0.008	0.016	0.021	0.025	0.027	0.025	0.021	0.016	0.008	0.000	0.000	0.009	0.017	0.024	0.028	0.030	0.028	0.024	0.017	0.009	0.000
FINAL CAMBER ↑	0.000	16	29	40	47	49	47	40	29	16	0.000	0.000	15	28	37	44	46	44	37	28	15	0.000

✳ INCLUDES SLAB, BUILDUPS & STAY-IN-PLACE FORMS.
ALL VALUES ARE SHOWN IN METERS, EXCEPT "FINAL CAMBER" WHICH IS SHOWN IN MILLIMETERS.

DEAD LOAD DEFLECTION TABLE FOR GIRDERS

15.24mm Ø LOW RELAXATION	SPAN B																					
	GIRDERS 1 & 7											GIRDERS 2, 3, 4, 5, & 6										
TENTH POINTS	0	.1	.2	.3	.4	.5	.6	.7	.8	.9	0	0	.1	.2	.3	.4	.5	.6	.7	.8	.9	0
CAMBER (GIRDER ALONE IN PLACE) ↑	0.000	0.023	0.044	0.060	0.070	0.074	0.070	0.060	0.044	0.023	0.000	0.000	0.023	0.044	0.060	0.070	0.074	0.070	0.060	0.044	0.023	0.000
✳ DEFLECTION DUE TO SUPERIMPOSED D.L. ↓	0.000	0.007	0.014	0.019	0.023	0.024	0.023	0.019	0.014	0.007	0.000	0.000	0.008	0.016	0.021	0.025	0.027	0.025	0.021	0.016	0.008	0.000
FINAL CAMBER ↑	0.000	16	30	41	47	50	47	41	30	16	0.000	0.000	15	28	39	45	47	45	39	28	15	0.000

✳ INCLUDES SLAB, BUILDUPS & STAY-IN-PLACE FORMS.
ALL VALUES ARE SHOWN IN METERS, EXCEPT "FINAL CAMBER" WHICH IS SHOWN IN MILLIMETERS.

NOTES

ALL PRESTRESSING STRANDS SHALL BE 7-WIRE LOW-RELAXATION GRADE 270 STRANDS AND SHALL CONFORM TO AASHTO M203M EXCEPT FOR SAMPLING REQUIREMENTS WHICH SHALL BE IN ACCORDANCE WITH THE STANDARD SPECIFICATIONS.

TIE ROD ASSEMBLY SHALL BE AASHTO M270 GRADE 250 STRUCTURAL STEEL.

ALL REINFORCING STEEL SHALL BE GRADE 420.

APPLY EPOXY PROTECTIVE COATING TO END OF GIRDER SURFACES INDICATED IN ELEVATION VIEW.

EMBEDDED PLATE "B-1" SHALL BE GALVANIZED IN ACCORDANCE WITH THE SPECIFICATIONS. BEVEL EDGES OF PLATE "B-1" TO GIVE CLOSE FIT BUT NOT TIGHT FIT TO STEEL CASTING FORM.

ANCHOR STUDS SHALL CONFORM TO AASHTO M169 GRADES 1010 THROUGH 1020 OR APPROVED EQUAL, AND SHALL MEET THE TYPE "B" REQUIREMENTS OF SUBSECTION 7.3 OF THE ANSI/AASHTO/AWS D1.5 BRIDGE WELDING CODE.

AT ENDS OF GIRDERS TO BE EMBEDDED IN CONCRETE DIAPHRAGMS OR END WALLS, PRESTRESSING STRANDS MAY EXTEND A MAXIMUM OF 50mm BEYOND THE GIRDER ENDS. OTHERWISE, PRESTRESSING STRANDS SHALL BE CUT FLUSH WITH THE GIRDER ENDS.

THE TRANSFER OF LOAD FROM THE ANCHORAGES TO THE GIRDER SHALL BE DONE WHEN CONCRETE HAS REACHED A COMPRESSIVE STRENGTH OF NOT LESS THAN 41.4 MPa.

DEPENDING ON THE TYPE OF SYSTEM USED TO SUPPORT THE DECK SLAB FORMS, PRESET ANCHORS MAY BE NECESSARY IN THE PRESTRESSED CONCRETE GIRDER.

THE TOP SURFACE OF THE GIRDER, EXCLUDING THE OUTSIDE 100mm, SHALL BE RAKED TO A DEPTH OF 6mm.

WHEN DRAPED STRANDS ARE DETAILED, THE LONGITUDINAL LOCATION OF THE HOLD DOWN DEVICES SHALL BE WITHIN 150mm OF THE LOCATION SHOWN AND THE CENTER OF GRAVITY OF THE GROUP OF DRAPED STRANDS SHALL BE LOCATED WITHIN 13mm OF THE THEORETICAL LOCATION SHOWN.

A 50mm × 50mm CHAMFER IS ALLOWED AT THE INTERSECTION OF THE WEB AND THE BOTTOM FLANGE OF THE 1600mm AND 1829mm MODIFIED BULB TEES ONLY.

FOR VERTICAL CRACKS IN PRESTRESSED CONCRETE GIRDERS PRIOR TO DETENSIONING, SEE SPECIAL PROVISIONS.

THE CONTRACTOR HAS THE OPTION TO PROVIDE, AT NO ADDITIONAL COST TO THE DEPARTMENT, 2 ADDITIONAL STRANDS AT THE TOP OF THE GIRDER TO FACILITATE TYING OF THE REINFORCING STEEL. THESE STRANDS SHALL BE PULLED TO A LOAD OF 20 Kn.

FOR PRESTRESSED CONCRETE MEMBERS, SEE SPECIAL PROVISIONS.

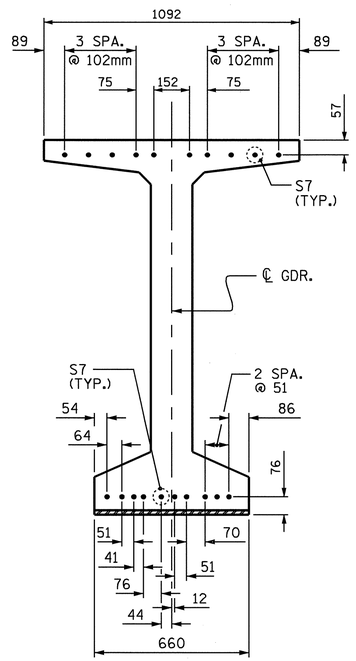

DETAIL "A"

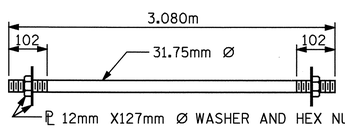

31.75mm Ø TIE ROD ASSEMBLY

(12 COMPLETE ASSEMBLIES REQUIRED)

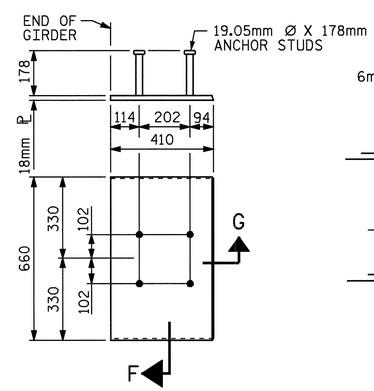

EMBEDDED PLATE "B-1" DETAILS FOR AASHTO TYPE IV GIRDER 1600mm MODIFIED BULB TEES

(2 REQ'D PER GIRDER)

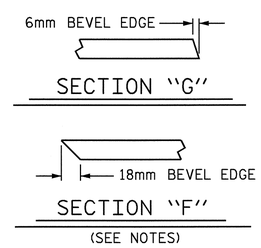

NORTH CAROLINA PROFESSIONAL SEAL 17122005 ENGINEER A. KEITH PASCHAL
6/9/08

PROJECT NO. R-2554BA
WAYNE COUNTY
STATION: 15+85.032 -Y8-

SHEET 6 OF 6

STATE OF NORTH CAROLINA
DEPARTMENT OF TRANSPORTATION
RALEIGH

STANDARD
PRESTRESSED CONCRETE GIRDER
CONTINUOUS FOR LIVE LOAD
DETAILS & DEAD LOAD
DEFLECTION

(OPTIONAL)

ASSEMBLED BY : B.N. GRADY	DATE : 8/07
CHECKED BY : J.G. KHARVA	DATE : 8/24/07
DRAWN BY : ELR 11/91	REV. 8/16/99 MAB/LES
CHECKED BY : GRP 11/91	REV. 10/17/00 RWW/LES
	REV. 7/10/01RR LES/RDR

REVISIONS						SHEET NO.
NO.	BY:	DATE:	NO.	BY:	DATE:	S-465
1			3			TOTAL SHEETS
2			4			478

STD. NO. PCG11SM

STR. #16

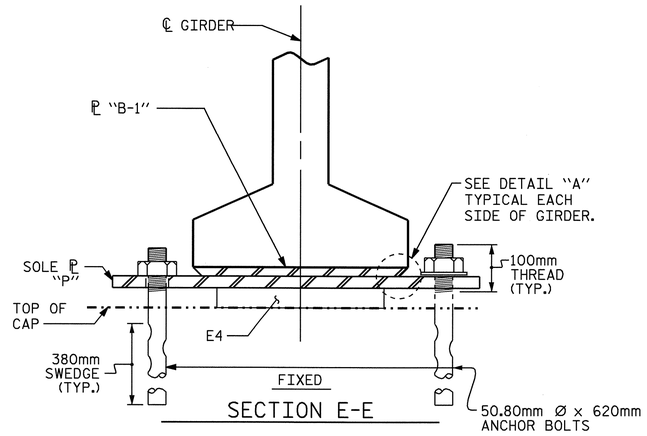

SECTION E-E

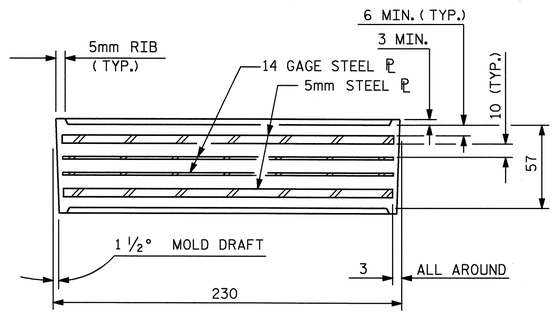

TYPICAL SECTION OF ELASTOMERIC BEARINGS

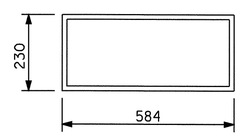

E4 (28 REQ'D)

PLAN VIEW OF ELASTOMERIC BEARING

TYPE V

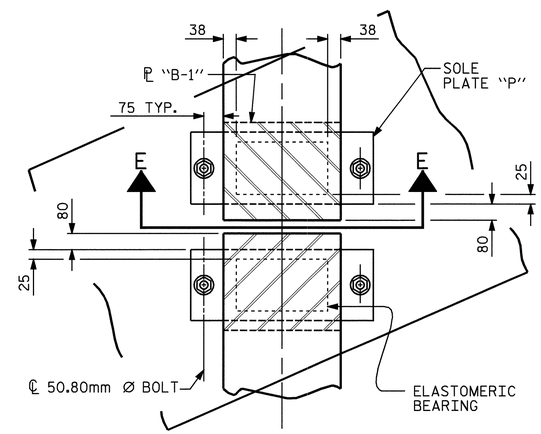

TYPICAL HALF-PLAN

(SHOWING CONTINUOUS BENT)

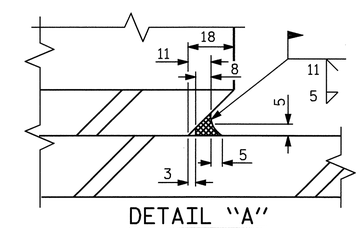

DETAIL "A"

NOTES

AT ALL FIXED POINTS OF SUPPORT, NUTS FOR ANCHOR BOLTS ARE TO BE TIGHTENED FINGER TIGHT AND THEN BACKED OFF 1/2 TURN. THE THREAD OF THE NUT AND BOLT SHALL THEN BE BURRED WITH A SHARP POINTED TOOL.

STEEL SOLE PLATES, ANCHOR BOLTS, NUTS, AND WASHERS SHALL BE GALVANIZED IN ACCORDANCE WITH THE STANDARD SPECIFICATIONS.

PRIOR TO WELDING, GRIND THE GALVANIZED SURFACE OF THE PORTION OF THE EMBEDDED PLATE AND SOLE PLATE THAT ARE TO BE WELDED. AFTER WELDING, DAMAGED GALVANIZED SURFACES SHALL BE REPAIRED IN ACCORDANCE WITH THE STANDARD SPECIFICATIONS.

WHEN WELDING THE SOLE PLATE TO THE EMBEDDED PLATE IN THE GIRDER, USE TEMPERATURE INDICATING WAX PENS, OR OTHER SUITABLE MEANS, TO ENSURE THAT THE TEMPERATURE OF THE SOLE PLATE DOES NOT EXCEED 149°C. TEMPERATURES ABOVE THIS MAY DAMAGE THE ELASTOMER.

SOLE PLATE "P", BOLTS, NUTS, WASHERS, AND PIPE SLEEVE SHALL BE INCLUDED IN THE PAY ITEM FOR PRESTRESSED CONCRETE GIRDERS.

ANCHOR BOLTS SHALL MEET THE REQUIREMENTS OF ASTM A449. NUTS SHALL MEET THE REQUIREMENTS OF AASHTO M291M-12 OR AASHTO M292M-2H. WASHERS SHALL MEET THE REQUIREMENTS OF AASHTO M293M. SHOP DRAWINGS ARE NOT REQUIRED FOR ANCHOR BOLTS, NUTS AND WASHERS. SHOP INSPECTION IS REQUIRED.

ALL SURFACES OF BEARING PLATES SHALL BE SMOOTH AND STRAIGHT.

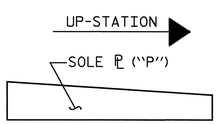

SOLE ℄ PLACEMENT DETAIL

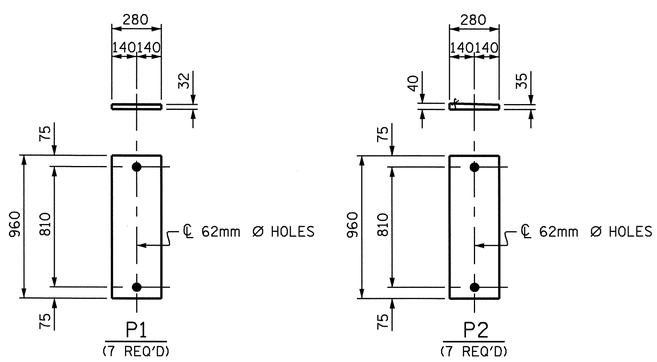

SOLE PLATE DETAILS ("P")

—LOAD RATINGS—	
	MAX.D.L.+ L.L.
TYPE V	801 kN

PROJECT NO. R-2554BA

WAYNE COUNTY

STATION: 15+85.032 -Y8-

STATE OF NORTH CAROLINA
DEPARTMENT OF TRANSPORTATION
RALEIGH

STANDARD
ELASTOMERIC BEARING
DETAILS

PRESTRESSED CONCRETE GIRDER
SUPERSTRUCTURE

NORTH CAROLINA PROFESSIONAL SEAL 12005 ENGINEER TIMOTHY KEITH PASCHAL
6/9/08

REVISIONS						SHEET NO.
NO.	BY:	DATE:	NO.	BY:	DATE:	S-466
1			3			TOTAL SHEETS
2			4			478

ASSEMBLED BY : B.N. GRADY	DATE : 8/07
CHECKED BY : J.G. KHARVA	DATE : 8/24/07
DRAWN BY : EEM 2/97	REV. 8/16/99 RWW/LES
CHECKED BY : VAP 2/97	REV. 10/17/00 RWW/LES
	REV. 5/1/06 TLA/GM

06-JUN-2008 13:43
R:\Structures\BULLOCK\Str#16\FINAL PLANS\R2554BA_sd_BG_16.dgn
bnagrady

STD. NO. EB4SM

STR. #16

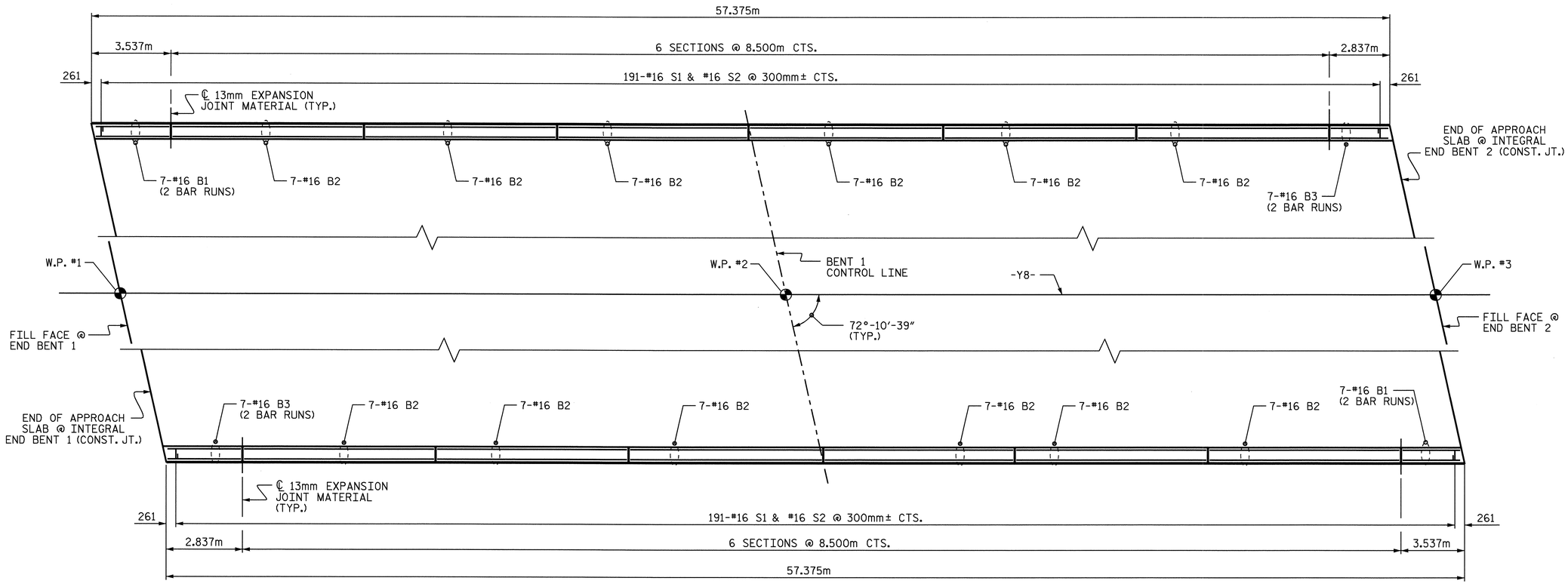

PLAN OF BARRIER RAIL

ALL DIMENSIONS ARE MEASURED ALONG OUTSIDE FACE OF BARRIER RAIL.

BAR TYPES

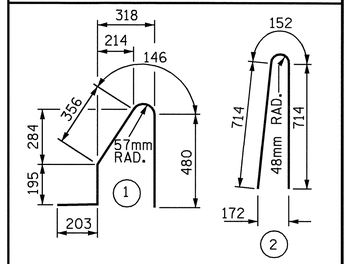

ALL BAR DIMENSIONS ARE OUT TO OUT

BILL OF MATERIAL

FOR CONCRETE BARRIER RAIL ONLY

BAR	NO.	SIZE	TYPE	LENGTH	WEIGHT
✳ S1	382	#16	1	1380	818
✳ S2	382	#16	2	1580	937
✳ B1	28	#16	STR	2240	97
✳ B2	84	#16	STR	8420	1097
✳ B3	28	#16	STR	1960	85

✳ EPOXY COATED REINFORCING STEEL 3034 kg

CLASS AA CONCRETE 28.8 CU. METERS

CONCRETE BARRIER RAIL 114.750 METERS

NOTES

THE BARRIER RAIL IN A CONTINUOUS UNIT SHALL NOT BE CAST UNTIL ALL SLAB CONCRETE IN THE UNIT HAS BEEN CAST AND HAS REACHED A MINIMUM COMPRESSIVE STRENGTH OF 20.7 MPa.

ALL REINFORCING STEEL IN BARRIER RAILS SHALL BE EPOXY COATED.

VERTICAL GROOVED CONTRACTION JOINTS, 12mm IN DEPTH, SHALL BE TOOLED IN ALL EXPOSED FACES OF THE BARRIER RAIL AND IN ACCORDANCE WITH ARTICLE 825-10(B) OF THE STANDARD SPECIFICATIONS. THE CONTRACTION JOINT SHALL BE LOCATED AT EACH THIRD POINT BETWEEN BARRIER RAIL EXPANSION JOINTS. ONLY ONE CONTRACTION JOINT IS REQUIRED AT MIDPOINT OF BARRIER RAIL SEGMENTS LESS THAN 6.1m IN LENGTH AND NO CONTRACTION JOINTS ARE REQUIRED FOR THOSE SEGMENTS LESS THAN 3.5m IN LENGTH.

THE #16 S1 & #16 S2 BARS MAY BE SHIFTED SLIGHTLY IN ORDER TO MAINTAIN A 50mm MINIMUM CLEARANCE TO THE 38mm EXPANSION JOINT MATERIAL IN THE BARRIER RAIL.

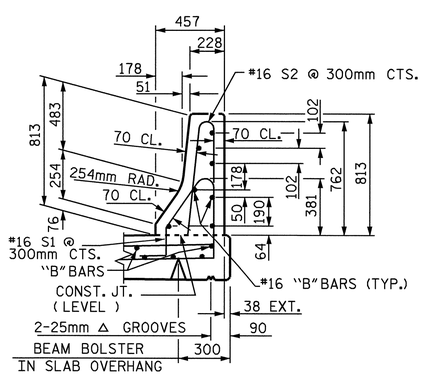

SECTION THRU RAIL

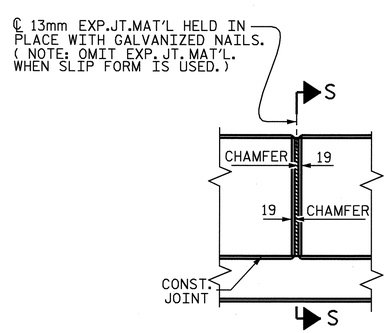

ELEVATION AT EXPANSION JOINTS

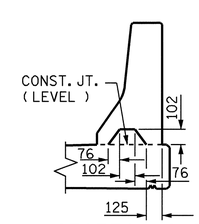

SECTION S-S

AT DAM IN OPEN JOINT
(THIS IS TO BE USED ONLY WHEN SLIP FORM IS USED)

BARRIER RAIL DETAILS

PROJECT NO. R-2554BA
WAYNE COUNTY
STATION: 15+85.032 -Y8-

SHEET 1 OF 2

STATE OF NORTH CAROLINA
DEPARTMENT OF TRANSPORTATION
RALEIGH

SUPERSTRUCTURE

CONCRETE BARRIER RAIL

NORTH CAROLINA PROFESSIONAL SEAL 22005 ENGINEER A. KEITH PASCHAL
6/9/08

REVISIONS						SHEET NO.
NO.	BY:	DATE:	NO.	BY:	DATE:	S-467
1			3			TOTAL SHEETS
2			4			478

DRAWN BY : AMK/BNG DATE : 8/07
CHECKED BY : J.G. KHARVA DATE : 8/24/07

06-JUN-2008 13:58
R:\Structures\BULLOCK\Str#16\FINAL PLANS\R2554BA_sd_BR_16.dgn
bngrady

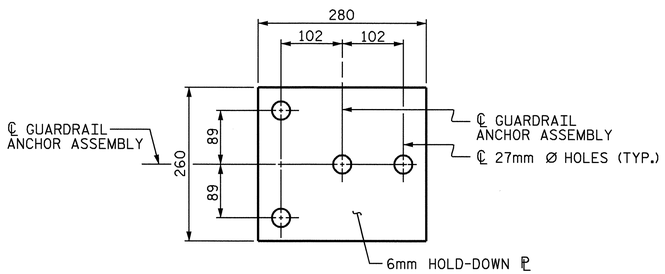

PLAN

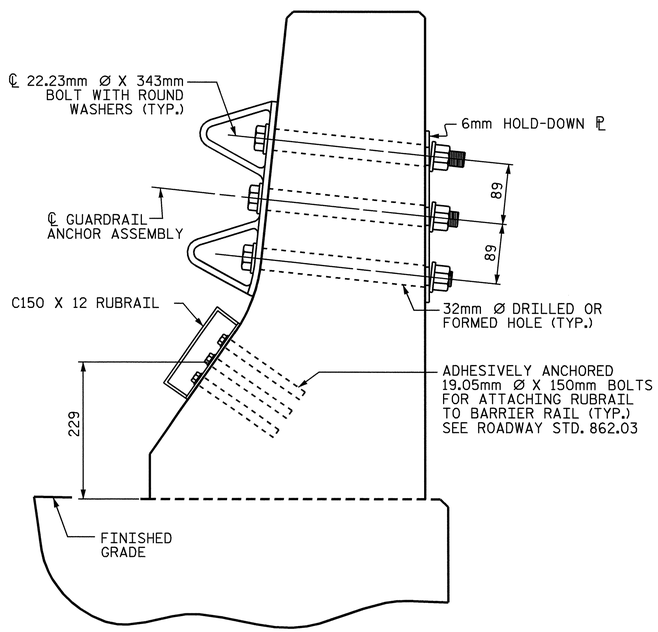

SECTION E-E

GUARDRAIL ANCHOR ASSEMBLY DETAILS

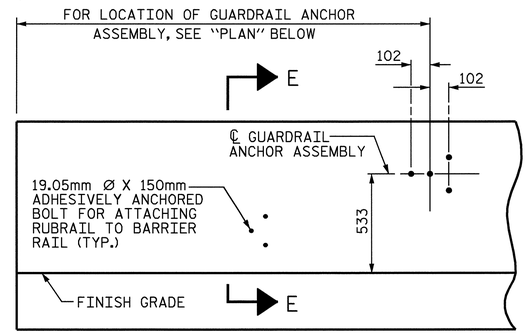

ELEVATION

FOR LOCATION OF RUBRAIL, SEE ROADWAY STD. 862.03

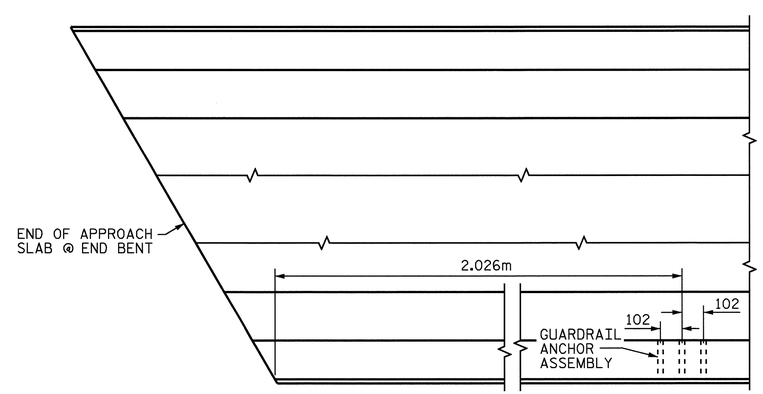

PLAN

LOCATION OF ANCHORS FOR GUARDRAIL

END BENT 1 SHOWN, END BENT 2 SIMILAR.

NOTES

THE GUARDRAIL ANCHOR ASSEMBLY SHALL CONSIST OF A 6mm HOLD DOWN PLATE AND 4 - 22.23mm Ø BOLTS WITH NUTS AND WASHERS, RUBRAIL, AND ADHESIVELY ANCHORED BOLTS.

THE HOLD-DOWN PLATE SHALL CONFORM TO AASHTO M270 GRADE 36. AFTER FABRICATION, THE HOLD-DOWN PLATE SHALL BE HOT-DIP GALVANIZED IN ACCORDANCE WITH AASHTO M111.

BOLTS SHALL CONFORM TO THE REQUIREMENTS OF ASTM A307 AND NUTS SHALL CONFORM TO THE REQUIREMENTS OF AASHTO M291. BOLTS, NUTS AND WASHERS SHALL BE GALVANIZED. (AT THE CONTRACTOR'S OPTION, STAINLESS STEEL BOLTS, NUTS AND WASHERS MAY BE USED AS AN ALTERNATE FOR THE 22.23mm Ø GALVANIZED BOLTS, NUTS AND WASHERS. THEY SHALL CONFORM TO OR EXCEED THE MECHANICAL REQUIREMENTS OF ASTM A307. THE USE OF THIS ALTERNATE SHALL BE APPROVED BY THE ENGINEER.)

THE GUARDRAIL ANCHOR ASSEMBLY IS REQUIRED AT ALL POINTS WHERE APPROACH GUARDRAIL IS TO BE ATTACHED TO THE END OF BARRIER RAIL. FOR POINTS OF ATTACHMENT, SEE SKETCH.

AFTER INSTALLATION, THE EXPOSED THREAD OF THE BOLT SHALL BE BURRED WITH A SHARP POINTED TOOL.

THE COST OF THE GUARDRAIL ANCHOR ASSEMBLY SHALL BE INCLUDED IN THE UNIT CONTRACT PRICE BID FOR CONCRETE BARRIER RAIL.

THE 32mm Ø HOLES SHALL BE FORMED OR DRILLED WITH A CORE BIT. IMPACT TOOLS WILL NOT BE PERMITTED. ANY CONCRETE DAMAGED BY THIS WORK SHALL BE REPAIRED TO THE SATISFACTION OF THE ENGINEER.

THE C150 X 12 RUBRAIL IS TO BE ADHESIVELY ANCHORED TO THE RAIL USING THREE 19.05mm Ø X 150mm BOLTS WITH WASHERS. LEVEL ONE FIELD TESTING IF REQUIRED, AND THE YIELD LOAD OF THE 19.05mm Ø BOLTS IS 53.4kN. FOR ADHESIVELY ANCHORED ANCHOR BOLTS OR DOWELS, SEE SPECIAL PROVISIONS. SEE ROADWAY STANDARD 862.03 FOR DETAILS AND LOCATION OF THE RUBRAIL.

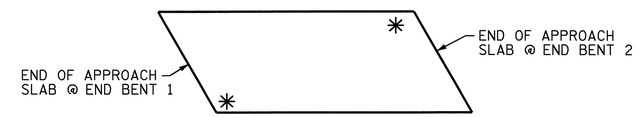

SKETCH SHOWING POINTS OF ATTACHMENTS

✳ DENOTES GUARDRAIL ANCHOR ASSEMBLY

PROJECT NO. R-2554BA
WAYNE COUNTY
STATION: 15+85.032 -Y8-

STATE OF NORTH CAROLINA
DEPARTMENT OF TRANSPORTATION
RALEIGH

STANDARD
GUARDRAIL ANCHORAGE FOR BARRIER RAIL

NORTH CAROLINA PROFESSIONAL SEAL 026005 ENGINEER A. KEITH PASCHAL
6/9/08

REVISIONS						SHEET NO.
NO.	BY:	DATE:	NO.	BY:	DATE:	S-468
1			3			TOTAL SHEETS
2			4			478

STD. NO. GRA2SM

ASSEMBLED BY : B.N. GRADY	DATE : 10/15/07
CHECKED BY : J. G. KHARVA	DATE : 10/24/07
DRAWN BY : TLA 5/06	ADDED 5/1/06R KMM/GM
CHECKED BY : GM 5/06	

06-JUN-2008 13:43
R:\Structures\BULLOCK\Str*16\FINAL PLANS\R2554BA_sd_BR_16.dgn
bngrady

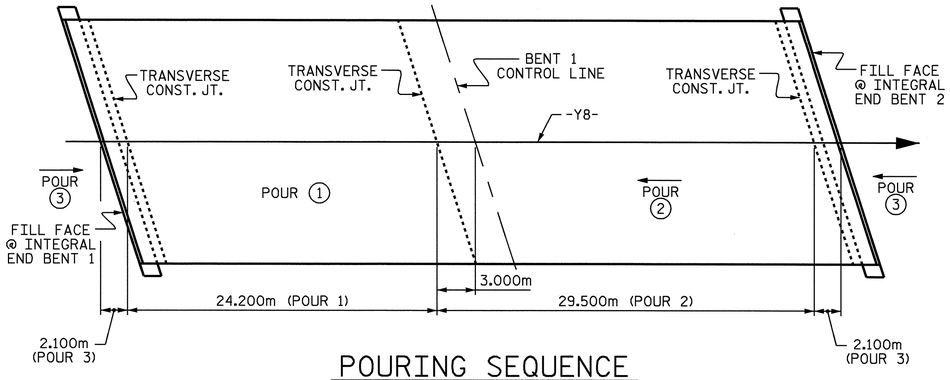

POURING SEQUENCE

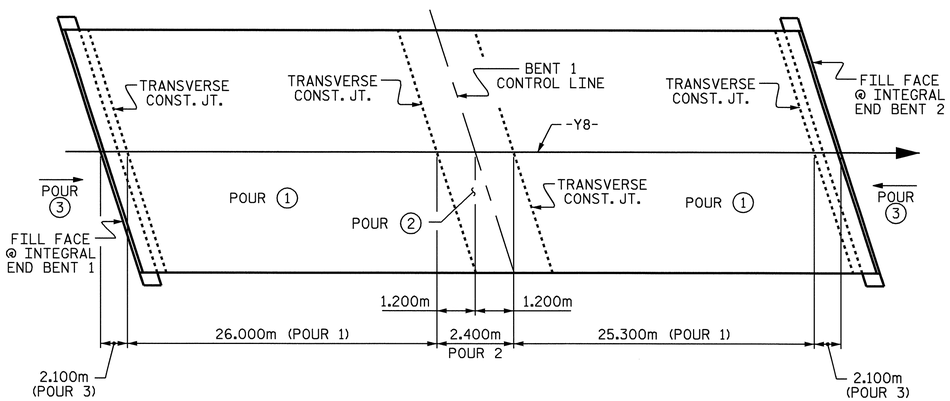

OPTIONAL POURING SEQUENCE

POUR 2 CAN NOT BE STARTED UNTIL BOTH ADJACENT POUR 1'S REACH A MINIMUM OF 20.7 MPa.

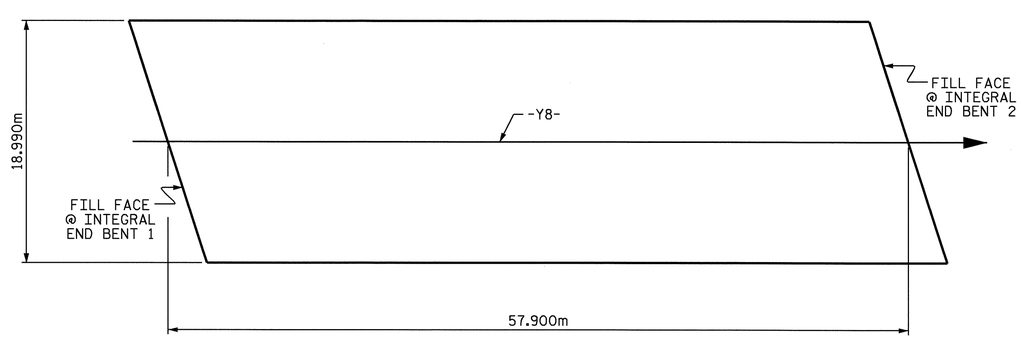

LAYOUT FOR COMPUTING AREA OF REINFORCED CONCRETE DECK SLAB (SQ. METER = 1099.5)

BILL OF MATERIAL

BAR	NO.	SIZE	TYPE	LENGTH	WEIGHT
✳ A1	570	#16	STR	9840	8705
A2	570	#16	STR	9780	8652
✳ A101	4	#16	STR	17880	111
✳ A102	4	#16	STR	16760	104
✳ A103	4	#16	STR	15640	97
✳ A104	4	#16	STR	14520	90
✳ A105	4	#16	STR	13440	83
✳ A106	4	#16	STR	12280	76
✳ A107	4	#16	STR	11160	69
✳ A108	4	#16	STR	10040	62
✳ A109	4	#16	STR	8920	55
✳ A110	4	#16	STR	7800	48
✳ A111	4	#16	STR	6680	41
✳ A112	4	#16	STR	5560	35
✳ A113	4	#16	STR	4440	28
✳ A114	4	#16	STR	3320	21
✳ A115	4	#16	STR	2220	14
✳ A116	4	#16	STR	1080	7
A201	4	#16	STR	17880	111
A202	4	#16	STR	16760	104
A203	4	#16	STR	15640	97
A204	4	#16	STR	14520	90
A205	4	#16	STR	13440	83
A206	4	#16	STR	12280	76
A207	4	#16	STR	11160	69
A208	4	#16	STR	10040	62
A209	4	#16	STR	8920	55
A210	4	#16	STR	7800	48
A211	4	#16	STR	6680	41
A212	4	#16	STR	5560	35
A213	4	#16	STR	4440	28
A214	4	#16	STR	3320	21
A215	4	#16	STR	2220	14
A216	4	#16	STR	1080	7
✳ B1	98	#19	STR	5860	1284
✳ B2	150	#19	STR	7420	2488
✳ B3	49	#19	STR	8700	953
✳ B4	150	#13	STR	6960	1038
✳ B5	150	#13	STR	6740	1005
B6	168	#16	STR	14820	3864
B7	60	#13	STR	5860	350
K1	36	#13	STR	7680	275
K2	12	#13	STR	2140	26
K3	48	#13	STR	2520	120
K4	12	#13	STR	1680	20
K5	16	#16	STR	940	23
K6	48	#13	STR	2520	120
K7	24	#16	5	2560	95
K8	12	#13	STR	1720	21
K9	48	#13	STR	2520	120
K10	12	#13	STR	1600	19
K11	12	#13	6	2160	26
K12	30	#13	8	3540	106
K13	4	#13	STR	1740	7
K14	16	#13	STR	2000	32
K15	4	#13	STR	1520	6
✳ S3	80	#13	3	3560	283
✳ S4	64	#13	3	3500	223
S5	84	#13	4	2960	247
S6	216	#13	7	860	185
U1	72	#13	1	4000	286
U2	16	#13	1	4920	78
✳ U3	36	#13	2	4700	168
U4	12	#13	1	2480	30
REINFORCING STEEL					15649 kg.
✳ EPOXY COATED REINFORCING STEEL					17088 kg.

BAR TYPES

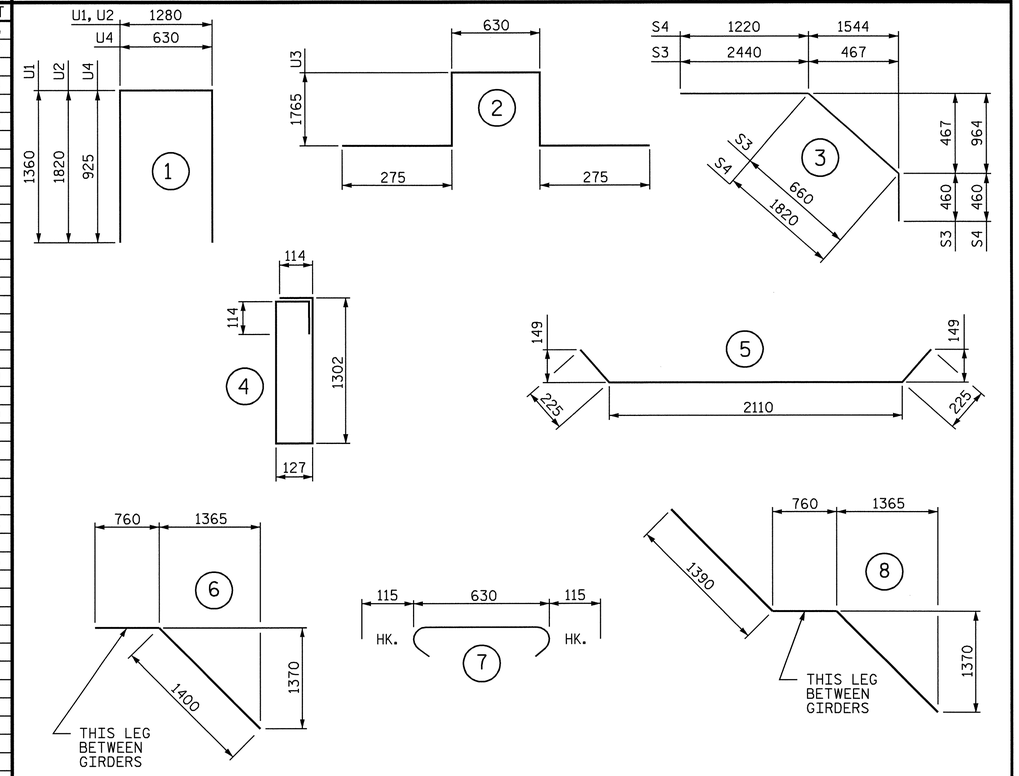

ALL BAR DIMENSIONS ARE OUT TO OUT

SUPERSTRUCTURE BILL OF MATERIAL

	CLASS AA CONCRETE			REINFORCING STEEL	EPOXY COATED REINFORCING STEEL
	(CU. METER)			(kg)	(kg)
	POUR #1	POUR #2	POUR #3		
TOTALS ✳✳	124.3	169.3	111.8	15649	17088

✳✳ QUANTITIES FOR BARRIER RAIL ARE NOT INCLUDED

SUPERSTRUCTURE REINFORCING STEEL LENGTHS ARE BASED ON THE FOLLOWING MINIMUM SPLICE LENGTHS

BAR SIZE	SUPERSTRUCTURE EXCEPT APPROACH SLABS, PARAPET, AND BARRIER RAIL		APPROACH SLABS		PARAPET AND BARRIER RAIL
	EPOXY COATED	UNCOATED	EPOXY COATED	UNCOATED	
#13	610	540	610	540	840
#16	770	660	770	660	1050
#19	920	790	1190	790	1330
#22	1580	1060			
#25	2080	1390			

GROOVING BRIDGE FLOORS

APPROACH SLABS	82.6 SQ.METER
BRIDGE DECK	980.0 SQ.METER
TOTAL	1062.6 SQ.METER

PROJECT NO. R-2554BA

WAYNE COUNTY

STATION: 15+85.032 -Y8-

STATE OF NORTH CAROLINA
DEPARTMENT OF TRANSPORTATION
RALEIGH

SUPERSTRUCTURE BILL OF MATERIAL

NORTH CAROLINA PROFESSIONAL SEAL 22004 ENGINEER W. KEITH PASCHAL
6/9/08

ASSEMBLED BY : AMK/BNG	DATE : 2/27/06
CHECKED BY : J.G. KHARVA	DATE : 4/03/06
DRAWN BY : JMB 5/87	REV. 5/16/97 EEM/RGW
CHECKED BY : SJD 9/87	

REVISIONS							SHEET NO.
NO.	BY:	DATE:	NO.	BY:	DATE:		S-469
1			3				TOTAL SHEETS
2			4				478

STD. NO. BOM2SM

STR. #16

06-JUN-2008 13:42
R:\Structures\BULLOCK\Str#16\FINAL PLANS\R2554BA_sd_BM_16.dgn
bngrady

NOTES:

THE CONTRACTOR SHALL PROVIDE FOR INSTALLATION OF THE 100mm DIAMETER DRAIN PIPE THROUGH THE WING WALL AS REQUIRED FOR REINFORCED BRIDGE APPROACH FILLS, SEE THE ROADWAY PLANS. REINFORCING STEEL IN THE WING WALL MAY BE SHIFTED AS NECESSARY TO CLEAR THE DRAIN PIPE.

THE CONTRACTOR'S ATTENTION IS CALLED TO THE FACT THAT THE UPPER PART OF WING IS TO BE POURED WITH SUPERSTRUCTURE.

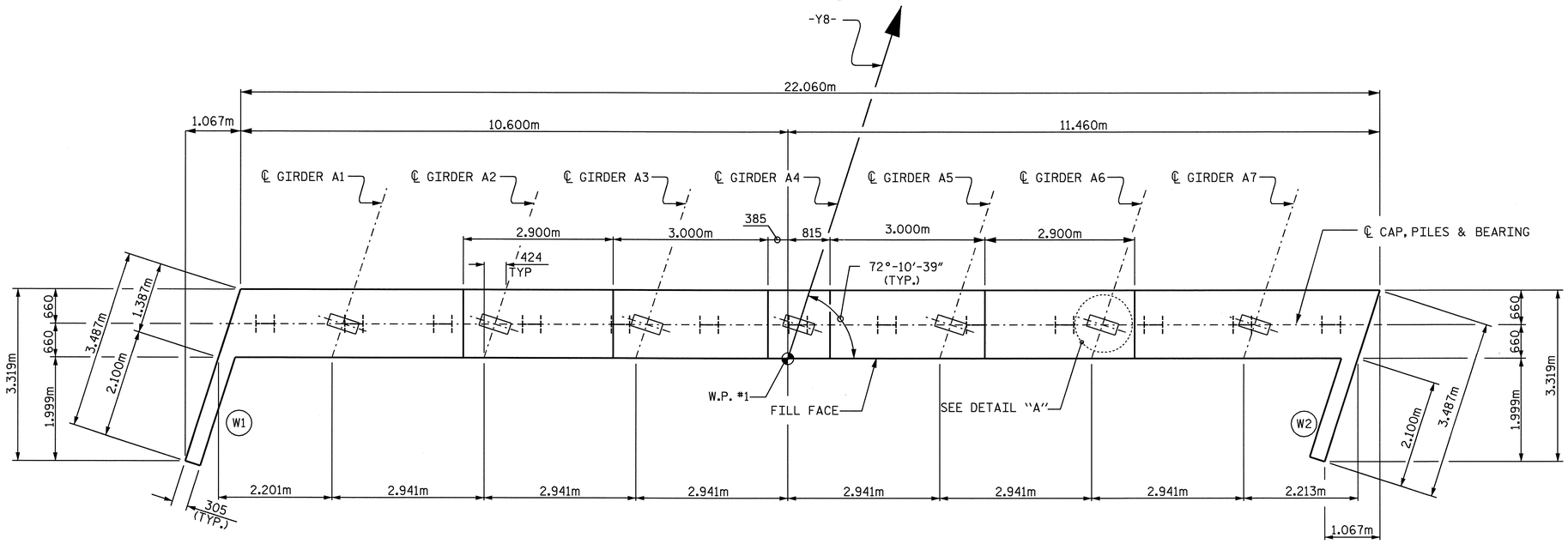

PLAN

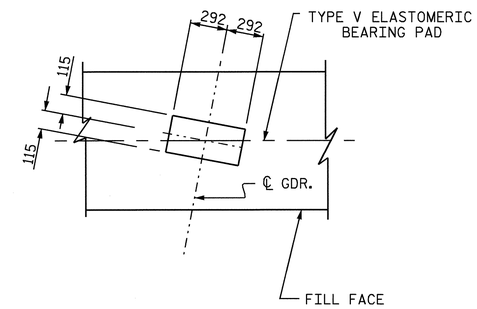

DETAIL A
(TYP. EA. GIRDER)

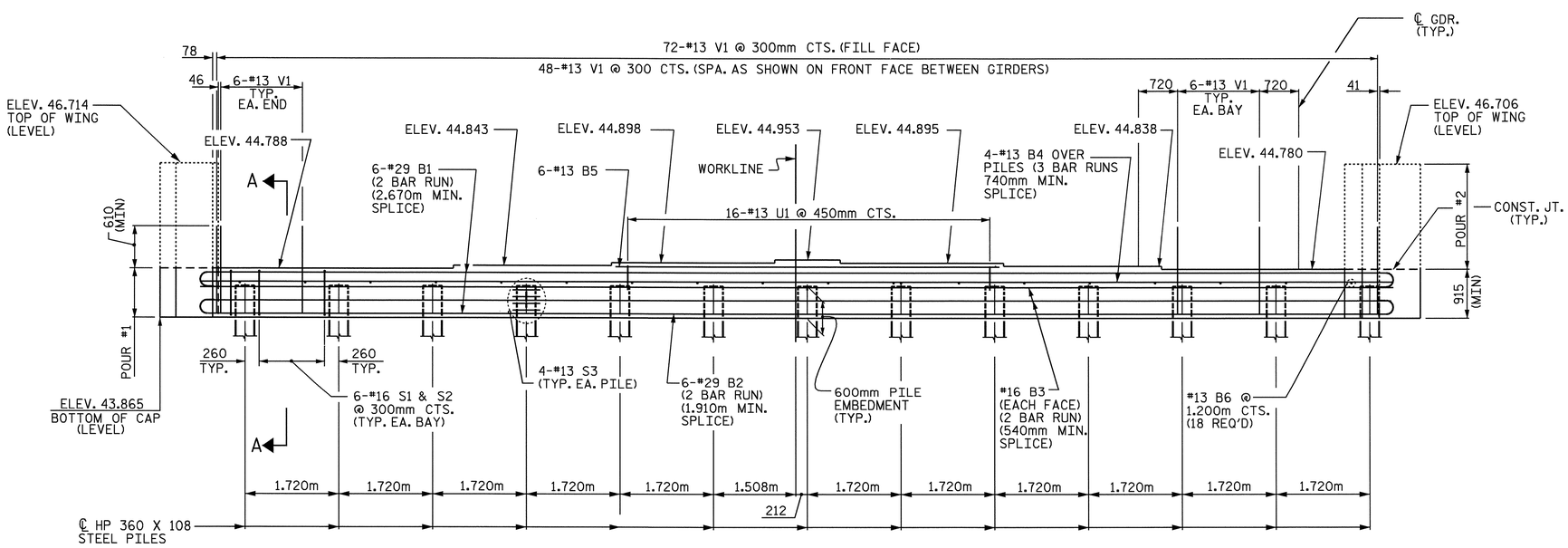

ELEVATION

PROJECT NO. R-2554BA
WAYNE COUNTY
STATION: 15+85.032 -Y8-

SHEET 1 OF 2

STATE OF NORTH CAROLINA
DEPARTMENT OF TRANSPORTATION
RALEIGH

SUBSTRUCTURE
INTEGRAL END BENT 1

NORTH CAROLINA PROFESSIONAL SEAL 22005 ENGINEER A. KEITH PASCHAL
6/9/08

REVISIONS						SHEET NO.
NO.	BY:	DATE:	NO.	BY:	DATE:	S-470
1			3			TOTAL SHEETS
2			4			478

DRAWN BY : J. G. KHARVA DATE : 10/08/07
CHECKED BY : A. K. PASCHAL DATE : 10/12/07

06-JUN-2008 13:42
R:\Structures\BULLOCK\Str#16\FINAL PLANS\R-2554BA_sd_EI_16.dgn
bnagady

str. #16

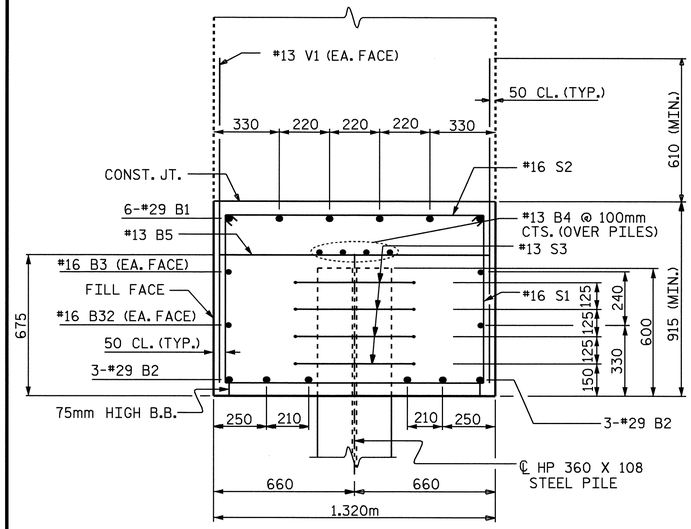

SECTION A-A

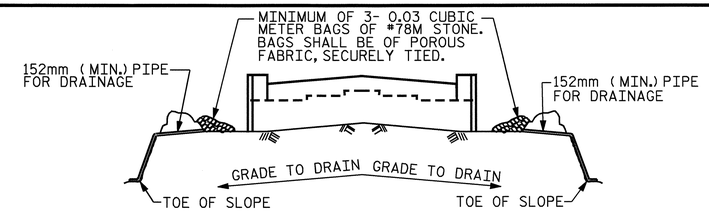

BAGGED STONE AND PIPE SHALL BE PLACED IMMEDIATELY AFTER COMPLETION OF END BENT EXCAVATION. PIPE MAY BE EITHER CONCRETE, CORRUGATED STEEL, CORRUGATED ALUMINUM ALLOY, OR CORRUGATED PLASTIC. PERFORATED PIPE WILL NOT BE ALLOWED.

BAGGED STONE SHALL REMAIN IN PLACE UNTIL THE ENGINEER DIRECTS THAT IT BE REMOVED. THE CONTRACTOR SHALL REMOVE AND DISPOSE OF SILT ACCUMULATIONS AT BAGGED STONE WHEN SO DIRECTED BY THE ENGINEER. BAGS SHALL BE REMOVED AND REPLACED WHENEVER THE ENGINEER DETERMINES THAT THEY HAVE DETERIORATED AND LOST THEIR EFFECTIVENESS.

NO SEPARATE PAYMENT WILL BE MADE FOR THIS WORK AND THE ENTIRE COST OF THIS WORK SHALL BE INCLUDED IN THE UNIT CONTRACT PRICE FOR THE SEVERAL PAY ITEMS.

TEMPORARY DRAINAGE AT END BENT

BAR TYPES

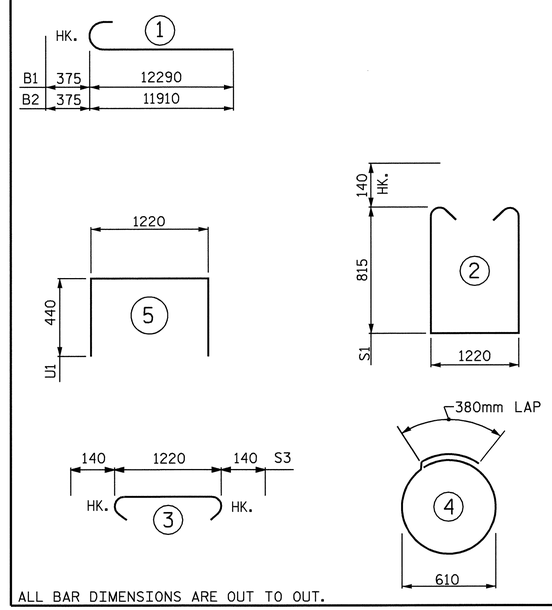

ALL BAR DIMENSIONS ARE OUT TO OUT.

BILL OF MATERIAL
END BENT 1

BAR	NO.	SIZE	TYPE	LENGTH	WEIGHT
B1	6	29	1	12680	385
B2	6	29	1	12300	373
B3	8	16	STR	11240	140
B4	8	13	STR	11240	89
B5	6	13	STR	7040	42
B6	18	13	STR	1220	22
H1	10	16	STR	2960	46
H2	10	16	STR	2940	46
H3	10	16	STR	2860	44
H4	10	16	STR	2900	45
S1	62	16	2	3140	302
S2	62	16	3	1500	144
S3	52	13	4	2300	119
U1	16	13	5	2100	33
V1	120	13	STR	1620	193
V2	14	16	STR	2700	59
V3	14	16	STR	2700	59
REINFORCING STEEL				kg.	2141

CLASS A CONCRETE BREAKDOWN

* POUR 1 (CAP AND LOWER PART OF WINGS)	29.6 m³
TOTAL	29.6 m³

HP 360 x 108 STEEL PILES

NO. 13	364 FT.
PILE REDRIVES	EACH 5

* UPPER WINGS (POUR 2) TO BE POURED WITH SUPERSTRUCTURE

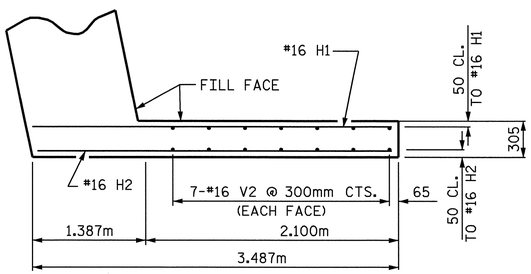

PLAN W1

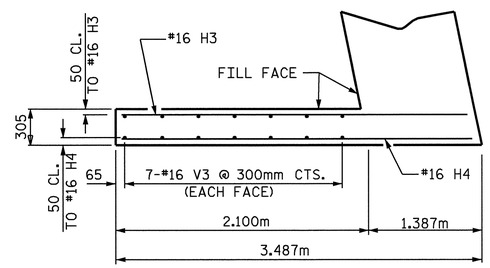

PLAN W2

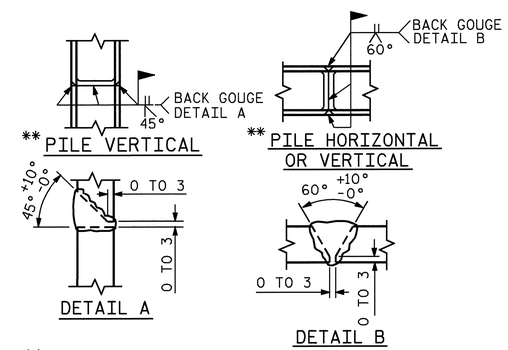

PILE SPLICE DETAILS

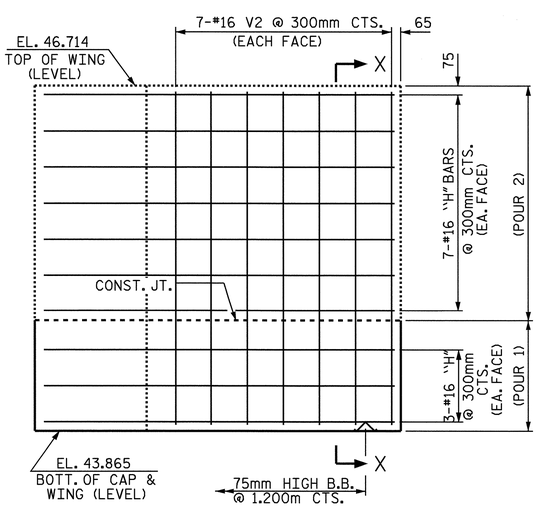

ELEVATION W1

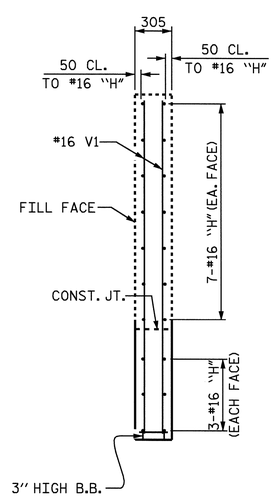

SECTION X-X

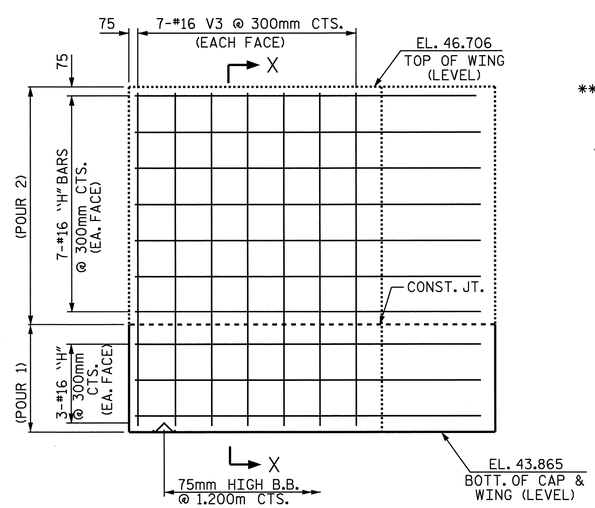

ELEVATION W2

PROJECT NO. R-2554BA
WAYNE COUNTY
STATION: 15+85.032 -Y8-

SHEET 2 OF 2

STATE OF NORTH CAROLINA
DEPARTMENT OF TRANSPORTATION
RALEIGH

SUBSTRUCTURE
INTEGRAL END BENT 1

NORTH CAROLINA PROFESSIONAL SEAL 17205 ENGINEER A. KEITH PASCHAL 6/9/08

REVISIONS						SHEET NO.
NO.	BY:	DATE:	NO.	BY:	DATE:	S-471
1			3			TOTAL SHEETS
2			4			478

DRAWN BY : J. G. KHARVA DATE : 10-10-07
CHECKED BY : A. K. PASCHAL DATE : 10-12-07

06-JUN-2008 13:42
R:\Structures\BULLOCK\Str#16\FINAL PLANS\R-2554BA_sd_EI_16.dgn
bngrady

STR. #16

NOTES

STIRRUPS IN CAP MAY BE SHIFTED AS NECESSARY TO CLEAR ANCHOR BOLTS.

HOOKS ON "V" BARS MAY BE TURNED AS NECESSARY FOR PLACING REINFORCING STEEL

FOR SPIRAL COLUMN REINFORCING STEEL, SEE SPECIAL PROVISIONS.

NO SEPERATE PAYMENT WILL BE MADE FOR PIER SCOUR PROTECTION. THE ENTIRE COST OF SAME SHALL BE INCLUDED IN THE LUMP SUM PRICE FOR "FOUNDATION EXCAVATION".

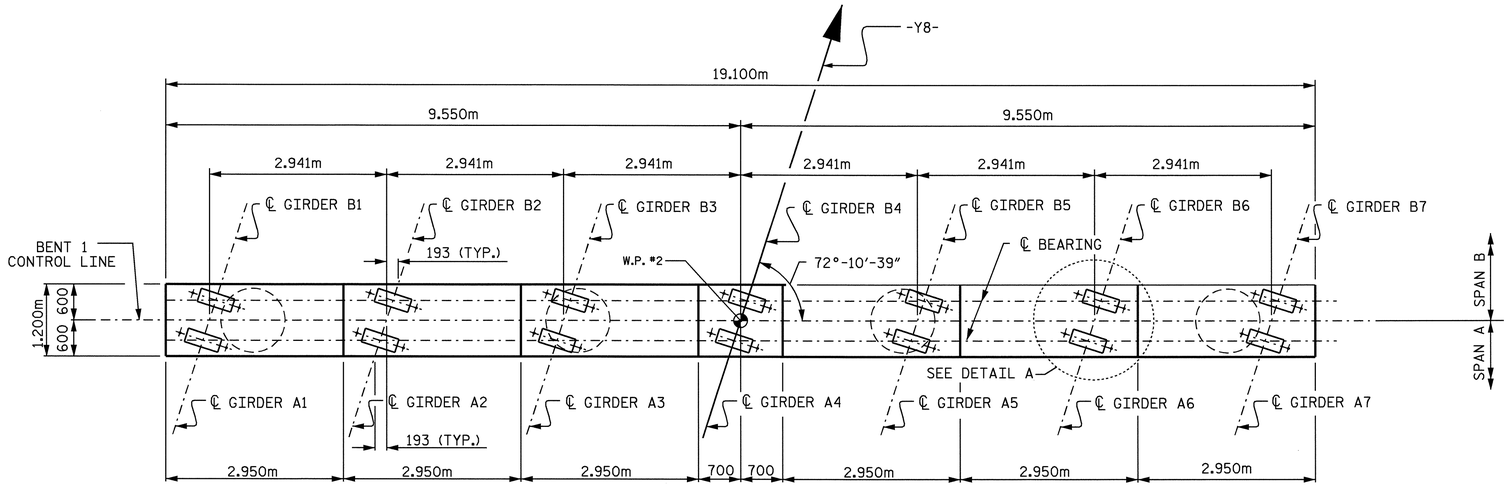

PLAN

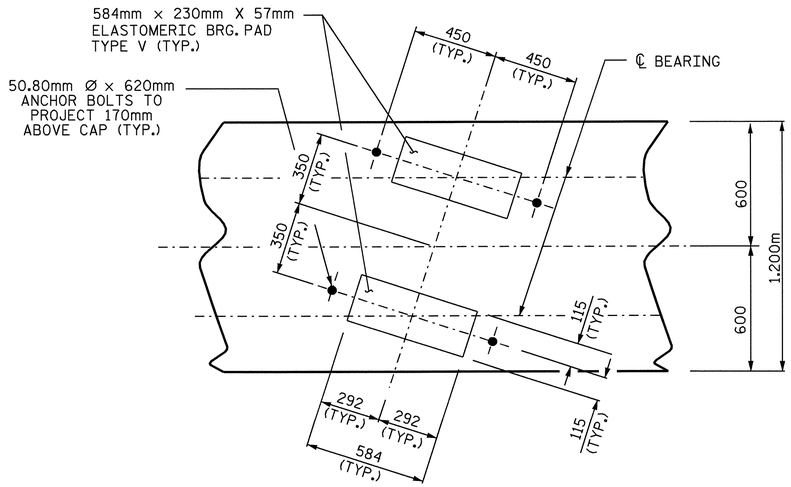

DETAIL A

(TYP. EA. GIRDER)

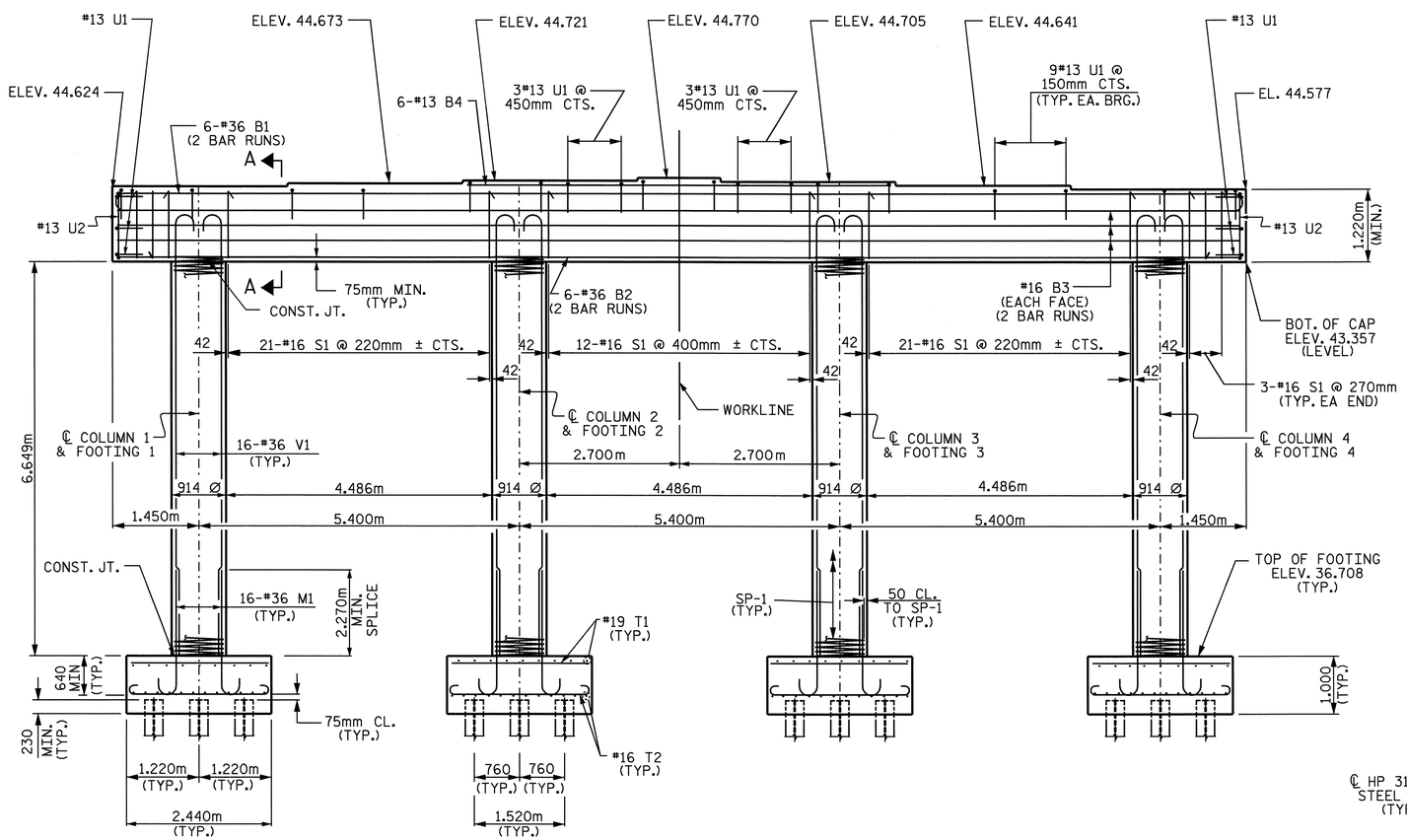

NOTE : INVERT ALTERNATE STIRRUPS

ELEVATION

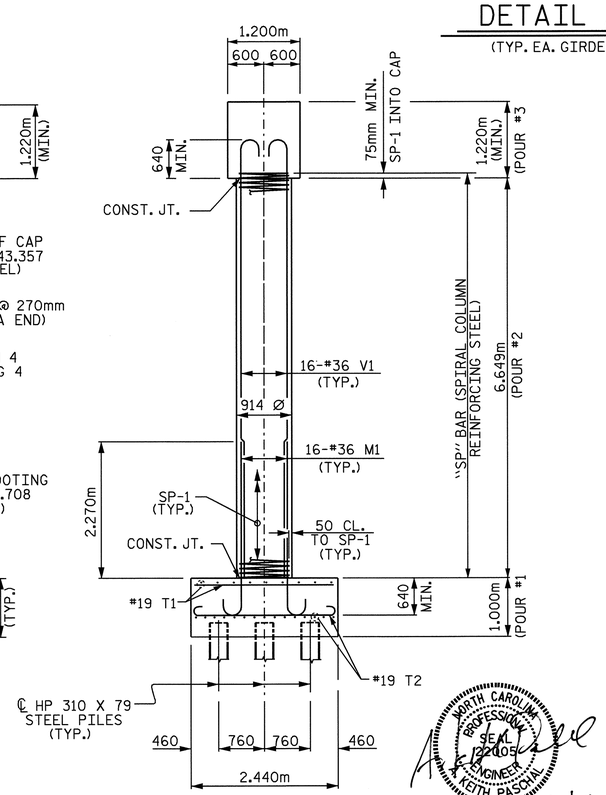

END SECTION

NORTH CAROLINA PROFESSIONAL SEAL 12205 ENGINEER A. KEITH PASCHAL

6/9/08

PROJECT NO. R-2554BA
WAYNE COUNTY
STATION: 15+85.032 -Y8-

SHEET 1 OF 2

STATE OF NORTH CAROLINA
DEPARTMENT OF TRANSPORTATION
RALEIGH

SUBSTRUCTURE
BENT 1

REVISIONS						SHEET NO.
NO.	BY:	DATE:	NO.	BY:	DATE:	S-472
1			3			TOTAL SHEETS
2			4			478

DRAWN BY : J. G. KHARVA DATE : 11/05/07
CHECKED BY : A. K. PASCHAL DATE : 04/01/08

06-JUN-2008 13:46
R:\Structures\BULLOCK\Str#16\FINAL PLANS\R-2554BA_sd_Bl_16.dgn
bngrady

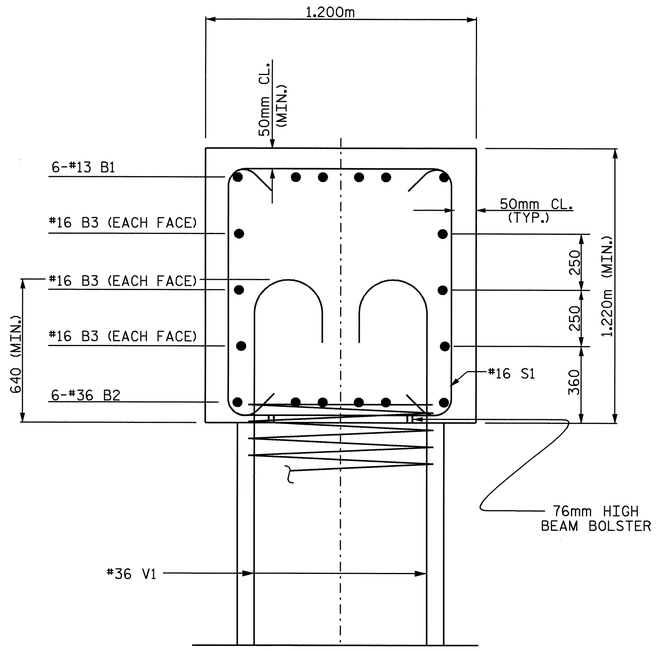

SECTION A-A

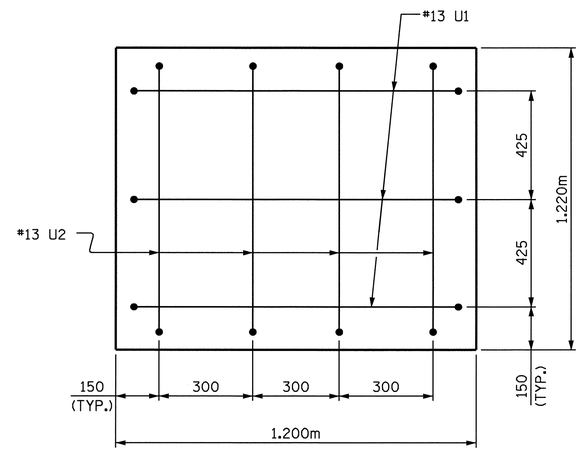

END VIEW

(TYP. BOTH ENDS)

50mm MIN. CONCRETE COVER FROM END OF CAP REQUIRED FOR ALL #13 U1 AND #13 U2 BARS.

#13 U1 AND #13 U2 BARS MAY BE SHIFTED UP TO 50mm TO CLEAR "B" BARS.

BAR TYPES

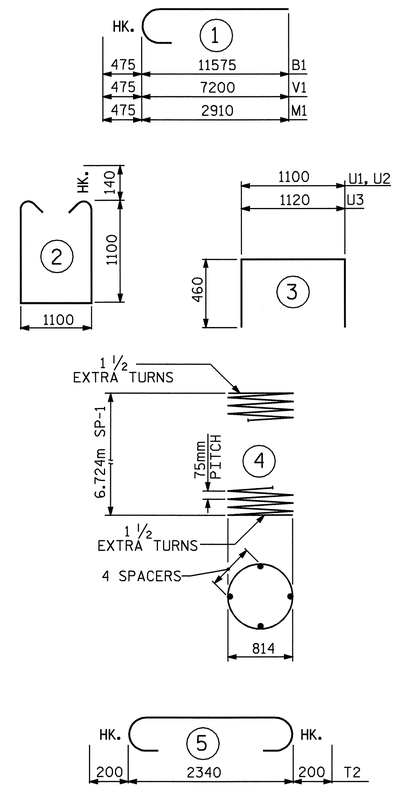

ALL BAR DIMENSIONS ARE OUT TO OUT.

BILL OF MATERIAL

BENT 1

BAR	NO.	SIZE	TYPE	LENGTH	WEIGHT
B1	12	36	1	12060	1144
B2	12	16	STR	9960	185
B3	12	36	STR	11000	1044
B4	6	13	STR	7140	43
M1	64	36	1	3400	1721
T1	72	19	STR	2340	377
T2	92	19	5	2740	563
V1	64	36	1	7480	3785
S1	67	16	2	3580	372
U1	77	13	3	2020	155
U2	6	13	3	2040	12

REINFORCING STEEL 9401 LBS.

SP-1	4	✱✱✱	4	582'-9"	608

SPIRAL COLUMN REINFORCING STEEL 1854 LBS.

CLASS A CONCRETE BREAKDOWN	m3
POUR 1 (FOOTINGCAP)	23.8 C.Y.
POUR 2 (COLUMNS)	17.5 C.Y.
POUR 3 (CAP)	30.0 C.Y.
TOTAL CLASS A CONCRETE	71.3 C.Y.

℄ HP 310 X 79 STEEL PILES

NO. = 20 LINEAR METERS = 460

PILE REDRIVES EACH 5

FOUNDATION EXCAVATION = LUMP SUM

✱✱✱ THE "SP" SPIRAL REINFORCING STEEL SHALL BE W20 OR D-20 COLD DRAWN WIRE OR #13 PLAIN OR DEFORMED BAR.

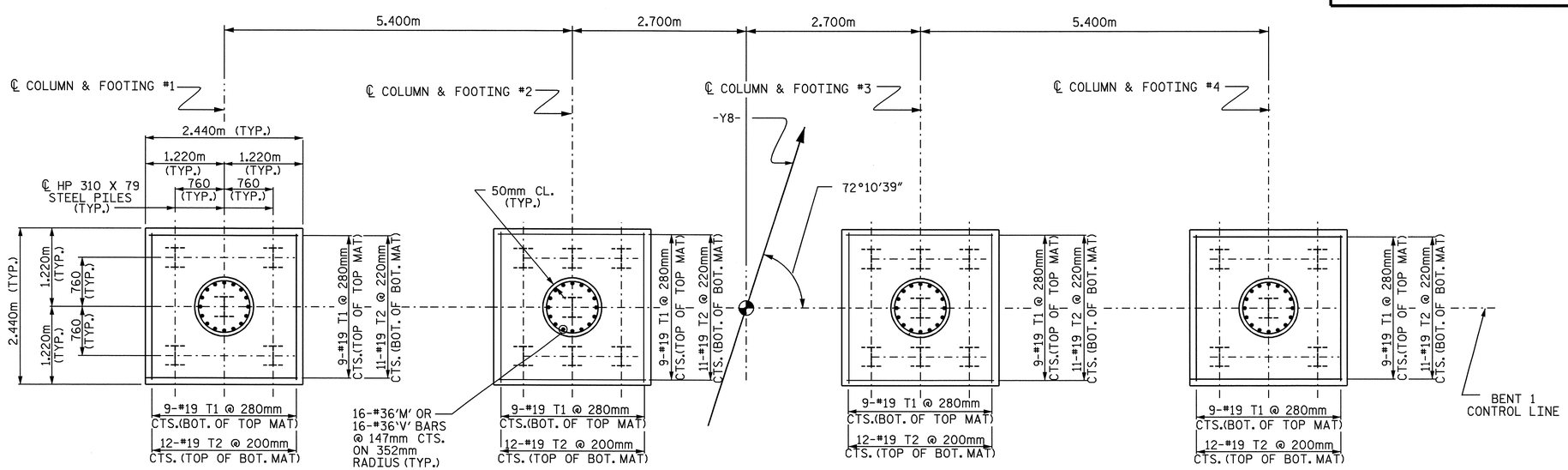

PLAN OF COLUMNS AND FOOTINGS

PROJECT NO. R-2554BA

WAYNE COUNTY

STATION: 15+85.032 -Y8-

SHEET 2 OF 2

STATE OF NORTH CAROLINA
DEPARTMENT OF TRANSPORTATION
RALEIGH

SUBSTRUCTURE

BENT 1

NORTH CAROLINA PROFESSIONAL SEAL 12005 ENGINEER A. KEITH PASCHAL

6/9/08

REVISIONS						SHEET NO.
NO.	BY:	DATE:	NO.	BY:	DATE:	S-473
1			3			TOTAL SHEETS
2			4			478

DRAWN BY : J. G. KHARVA DATE : 11/05/07
CHECKED BY : A. K. PASCHAL DATE : 04/01/08

06-JUN-2008 13:46
R:\Structures\BULLOCK\Str#16\FINAL PLANS\R-2554BA_sd_Bl_16.dgn
bngrady

NOTES:

THE CONTRACTOR SHALL PROVIDE FOR INSTALLATION OF THE 100mm DIAMETER DRAIN PIPE THROUGH THE WING WALL AS REQUIRED FOR REINFORCED BRIDGE APPROACH FILLS, SEE THE ROADWAY PLANS. REINFORCING STEEL IN THE WING WALL MAY BE SHIFTED AS NECESSARY TO CLEAR THE DRAIN PIPE.

THE CONTRACTOR'S ATTENTION IS CALLED TO THE FACT THAT THE UPPER PART OF WING IS TO BE POURED WITH SUPERSTRUCTURE.

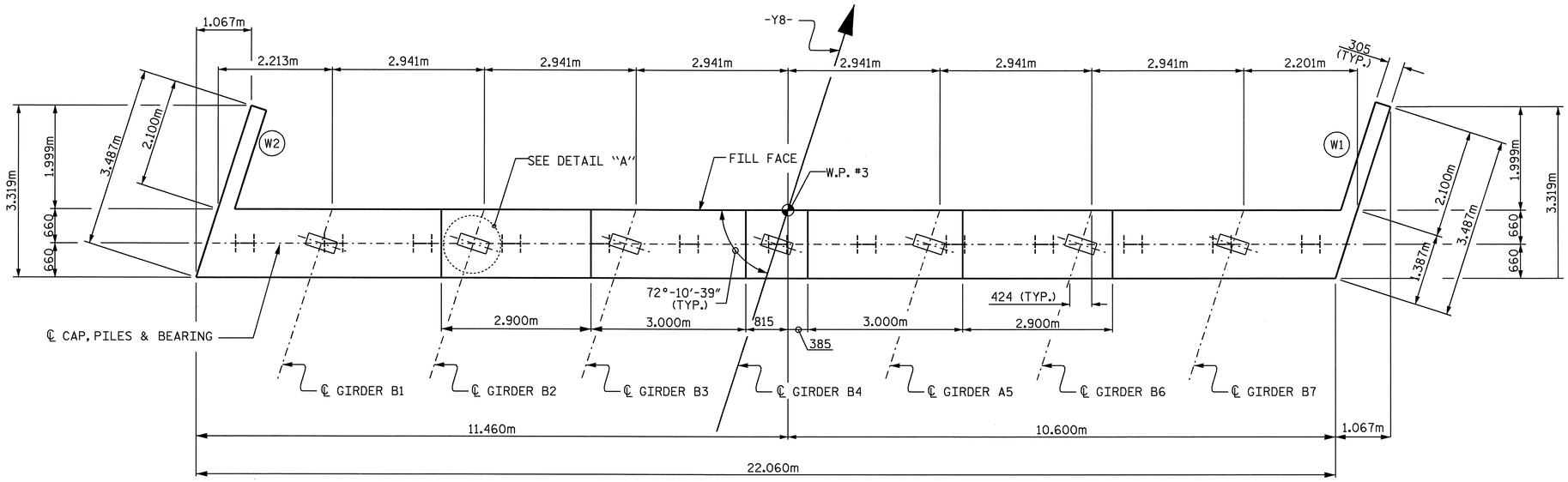

PLAN

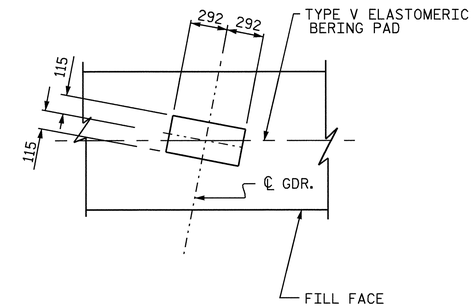

DETAIL A

(TYP. EA. GIRDER)

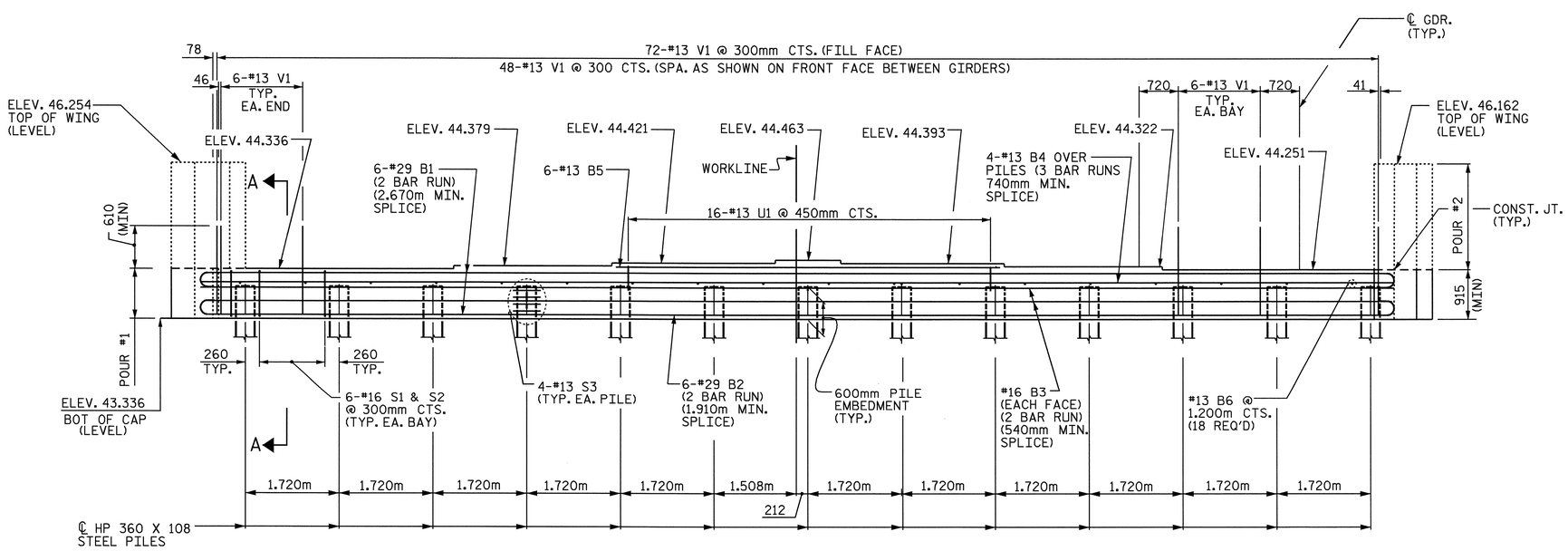

ELEVATION

PROJECT NO. R-2554BA

WAYNE COUNTY

STATION: 15+85.032 -Y8-

SHEET 1 OF 2

STATE OF NORTH CAROLINA
DEPARTMENT OF TRANSPORTATION
RALEIGH

SUBSTRUCTURE
INTEGRAL END BENT 2

NORTH CAROLINA PROFESSIONAL SEAL 2005 ENGINEER A. KEITH PASCHAL

6/9/08

REVISIONS						SHEET NO.
NO.	BY:	DATE:	NO.	BY:	DATE:	S-474
1			3			TOTAL SHEETS
2			4			478

DRAWN BY : J. G. KHARVA DATE : 10/08/07
CHECKED BY : A. K. PASCHAL DATE : 10/12/07

06-JUN-2008 13:42
R:\Structures\BULLOCK\Str#16\FINAL PLANS\R-2554BA_sd_E2_16.dgn
bngrady

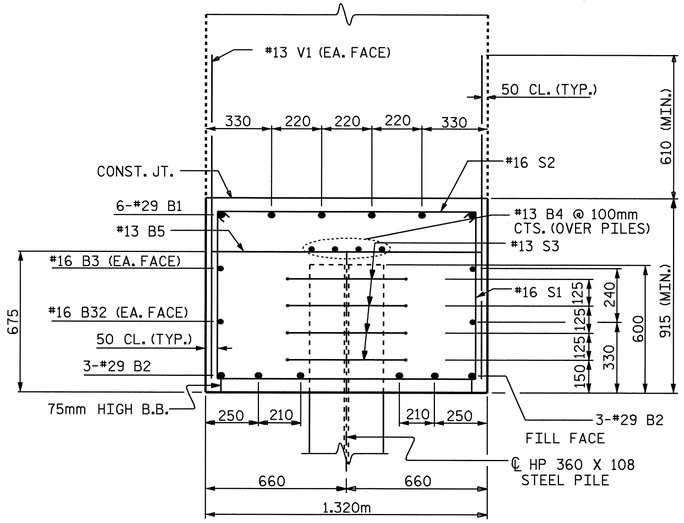

SECTION A-A

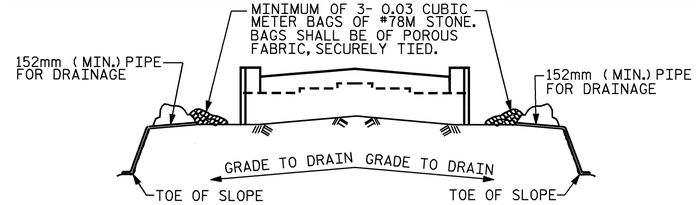

BAGGED STONE AND PIPE SHALL BE PLACED IMMEDIATELY AFTER COMPLETION OF END BENT EXCAVATION. PIPE MAY BE EITHER CONCRETE, CORRUGATED STEEL, CORRUGATED ALUMINUM ALLOY, OR CORRUGATED PLASTIC. PERFORATED PIPE WILL NOT BE ALLOWED.

BAGGED STONE SHALL REMAIN IN PLACE UNTIL THE ENGINEER DIRECTS THAT IT BE REMOVED. THE CONTRACTOR SHALL REMOVE AND DISPOSE OF SILT ACCUMULATIONS AT BAGGED STONE WHEN SO DIRECTED BY THE ENGINEER. BAGS SHALL BE REMOVED AND REPLACED WHENEVER THE ENGINEER DETERMINES THAT THEY HAVE DETERIORATED AND LOST THEIR EFFECTIVENESS.

NO SEPARATE PAYMENT WILL BE MADE FOR THIS WORK AND THE ENTIRE COST OF THIS WORK SHALL BE INCLUDED IN THE UNIT CONTRACT PRICE FOR THE SEVERAL PAY ITEMS.

TEMPORARY DRAINAGE AT END BENT

BAR TYPES

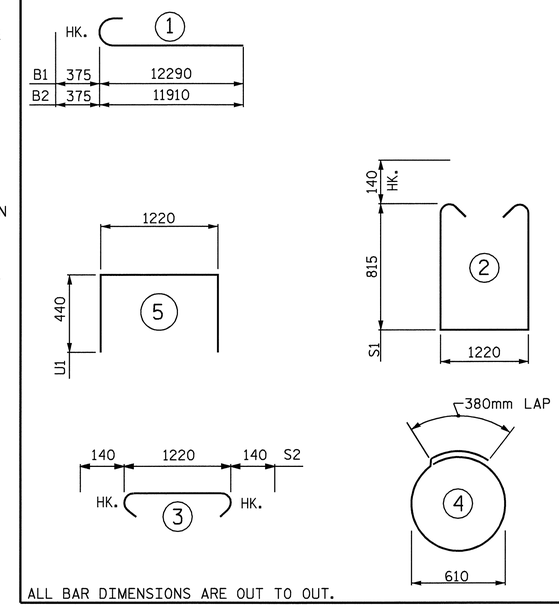

ALL BAR DIMENSIONS ARE OUT TO OUT.

BILL OF MATERIAL
END BENT 2

BAR	NO.	SIZE	TYPE	LENGTH	WEIGHT
B1	6	29	1	12680	385
B2	6	29	1	12300	373
B3	8	16	STR	11240	140
B4	8	13	STR	11240	89
B5	6	13	STR	7040	42
B6	18	13	STR	1220	22
H1	10	16	STR	2960	46
H2	10	16	STR	2940	46
H3	10	16	STR	2860	44
H4	10	16	STR	2900	45
S1	62	16	2	3140	302
S2	62	16	3	1500	144
S3	52	13	4	2300	119
U1	16	13	5	2100	33
V1	120	13	STR	1720	205
V2	14	16	STR	2700	59
V3	14	16	STR	2700	59
REINFORCING STEEL				Kg.	2153

CLASS A CONCRETE BREAKDOWN

* POUR 1 (CAP AND LOWER PART OF WINGS)	29.6 m³
TOTAL	29.6 m³

HP 360 x 108 STEEL PILES

NO. 13	364 FT.
PILE REDRIVES	EACH 5

* UPPER WINGS (POUR 2) TO BE POURED WITH SUPERSTRUCTURE

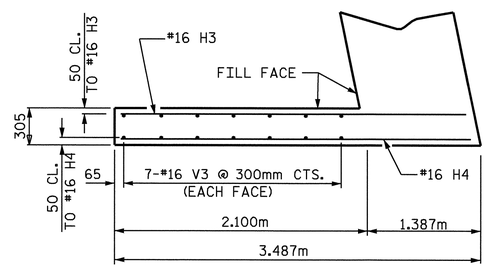

PLAN W2

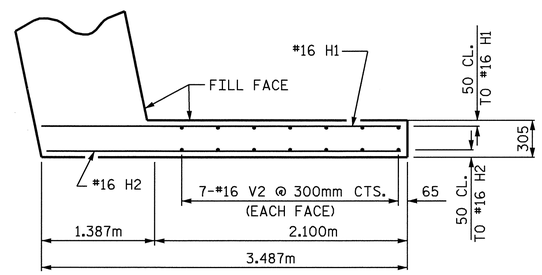

PLAN W1

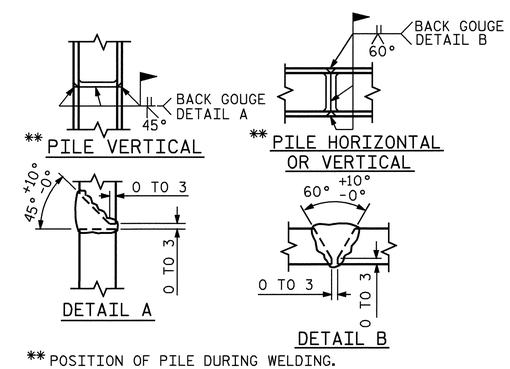

** POSITION OF PILE DURING WELDING.

PILE SPLICE DETAILS

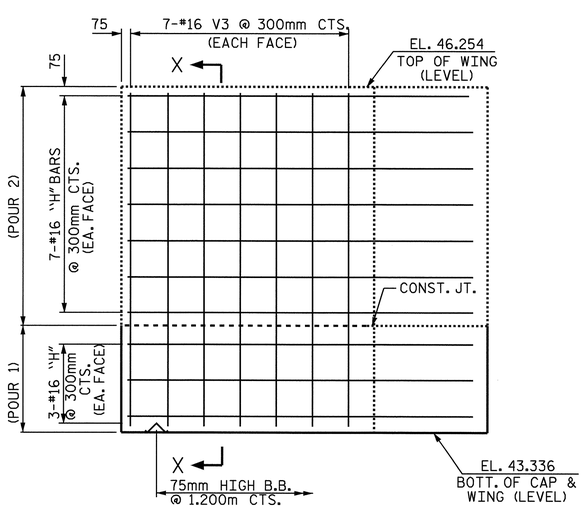

ELEVATION W2

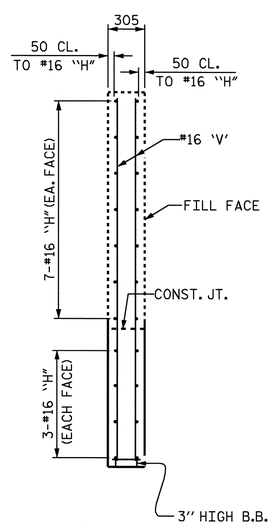

SECTION X-X

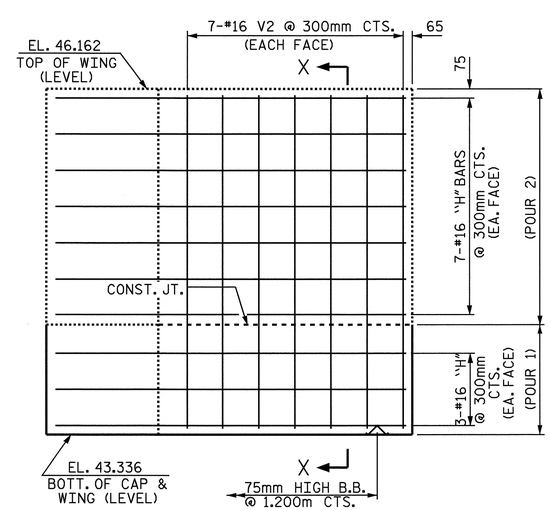

ELEVATION W1

PROJECT NO. R-2554BA
WAYNE COUNTY
STATION: 15+85.032 -Y8-

SHEET 2 OF 2

STATE OF NORTH CAROLINA
DEPARTMENT OF TRANSPORTATION
RALEIGH

SUBSTRUCTURE
INTEGRAL END BENT 2

NORTH CAROLINA PROFESSIONAL SEAL 42202 ENGINEER A. KEITH PASCHAL 6/9/08

REVISIONS						SHEET NO.
NO.	BY:	DATE:	NO.	BY:	DATE:	S-475
1			3			TOTAL SHEETS
2			4			478

DRAWN BY : J. G. KHARVA DATE : 10-10-07
CHECKED BY : A. K. PASCHAL DATE : 10-12-07

06-JUN-2008 13:42
R:\Structures\BULLOCK\Str#16\FINAL PLANS\R-2554BA_sd_E2_16.dgn
bngrady

STR. #16

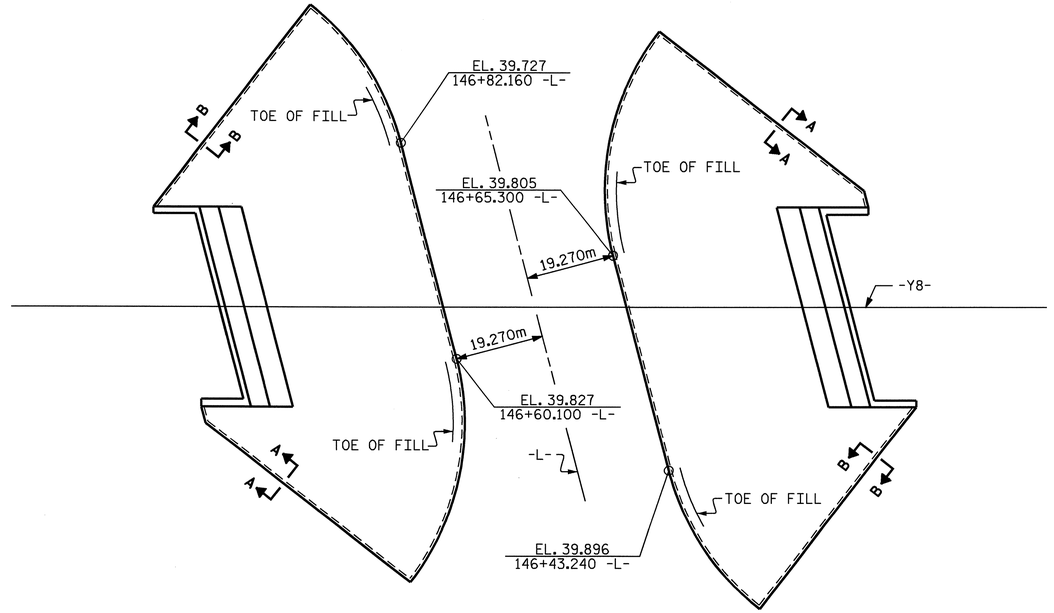

GENERAL NOTES

SLOPE PROTECTION SHALL BE PLACED UNDER THE ENDS OF THE BRIDGE AS SHOWN IN THE DETAILS. STRAIGHT EDGING WILL NOT BE REQUIRED UNLESS, IN THE OPINION OF THE ENGINEER, VISUAL INSPECTION INDICATES A NEED FOR IT. MEASUREMENT AND PAYMENT SHALL BE AS PRESCRIBED IN SECTION 462 OF THE STANDARD SPECIFICATIONS. FOR BERM WIDTH, SEE GENERAL DRAWING.

ALTERNATE "A"

ALTERNATE "A" SHALL CONSIST OF 100mm POURED-IN-PLACE CONCRETE PAVING AS SHOWN IN THE DETAILS ON THIS SHEET. CONCRETE SHALL BE CLASS "B". THE CONCRETE SURFACE SHALL BE FLOATED WITH A WOODEN FLOAT AND FINISHED. WELDED WIRE FABRIC REINFORCING SHALL BE 152 X 152 - W9.1 X W9.1, 1520mm WIDE. SLOPE PROTECTION SHALL BE POURED IN 1520mm STRIPS AS SHOWN IN THE "POURING DETAIL" WITH 600mm LONG #13 BARS PLACED ALONG THE SLOPE BETWEEN STRIPS AT 450mm MAXIMUM SPACING. SLOPE PROTECTION MAY BE POURED IN ALTERNATE 1220mm AND 1520mm STRIPS AS SHOWN IN THE "OPTIONAL POURING DETAIL" WITH ADJACENT RUNS OF WELDED WIRE FABRIC LAPPING AT LEAST 152mm. THE COST OF THE WELDED WIRE FABRIC AND #13 BARS, IF USED, SHALL BE INCLUDED IN THE CONTRACT UNIT PRICE BID PER SQUARE METER FOR SLOPE PROTECTION.

BRIDGE @ STA. 15+85.032 -Y8-	100 mm SLOPE PROTECTION	* WELDED WIRE FABRIC 1520mm WIDE
	SQUARE METERS	APPROX. METERS
END BENT 1	364.0	265.0
END BENT 2	344.0	251.0

* QUANTITY SHOWN IS BASED ON 1520mm POURS.

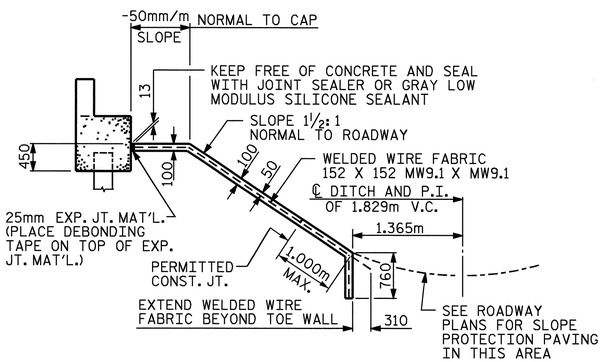

SECTION ALONG ℄ ROADWAY WHEN FILL CATCHES IN DITCH

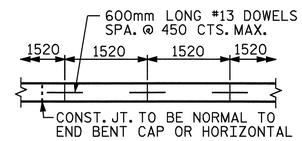

STRIP WIDTHS MAY VARY IN CURVED PORTION.

POURING DETAIL

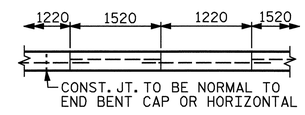

POUR A 1220mm STRIP FIRST. STRIP WIDTHS MAY VARY IN CURVED PORTION.

OPTIONAL POURING DETAIL

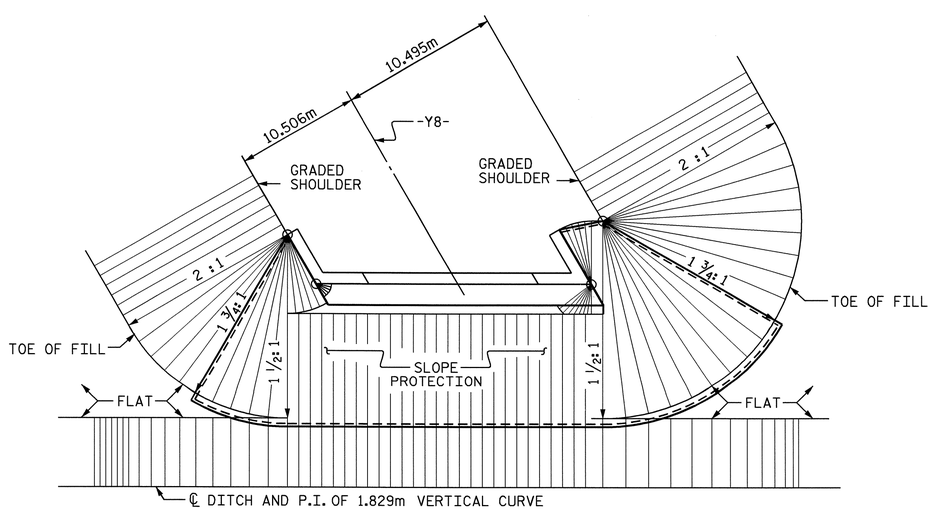

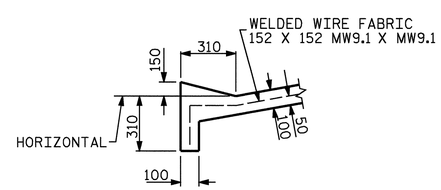

SECTION B-B

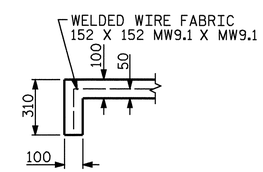

SECTION A-A

PROJECT NO. R-2554BA

WAYNE COUNTY

STATION: 15+85.032 -Y8-

NORTH CAROLINA PROFESSIONAL SEAL 22005 ENGINEER KEITH PASCHAL

6/9/08

STATE OF NORTH CAROLINA
DEPARTMENT OF TRANSPORTATION
RALEIGH

STANDARD
SLOPE PROTECTION DETAILS

ASSEMBLED BY : J. G. KHARVA	DATE : 11/06/07
CHECKED BY : J. D. HAWK	DATE : 01-07-08

DRAWN BY : ELR 5/92	REV. 7/10/01 LES/RDR
CHECKED BY : GRP 6/92	REV. 5/7/03 RWW/JTE
	REV. 5/1/06 TLA/GM

REVISIONS								SHEET NO.
NO.	BY:	DATE:	NO.	BY:	DATE:			S-476
1			3					TOTAL SHEETS
2			4					478

06-JUN-2008 13:41
R:\Structures\BULLOCK\Str#16\FINAL PLANS\R-2554BA_sd_SP_16.dgn
bngrady

STR. #16

STD. NO. SP1SM

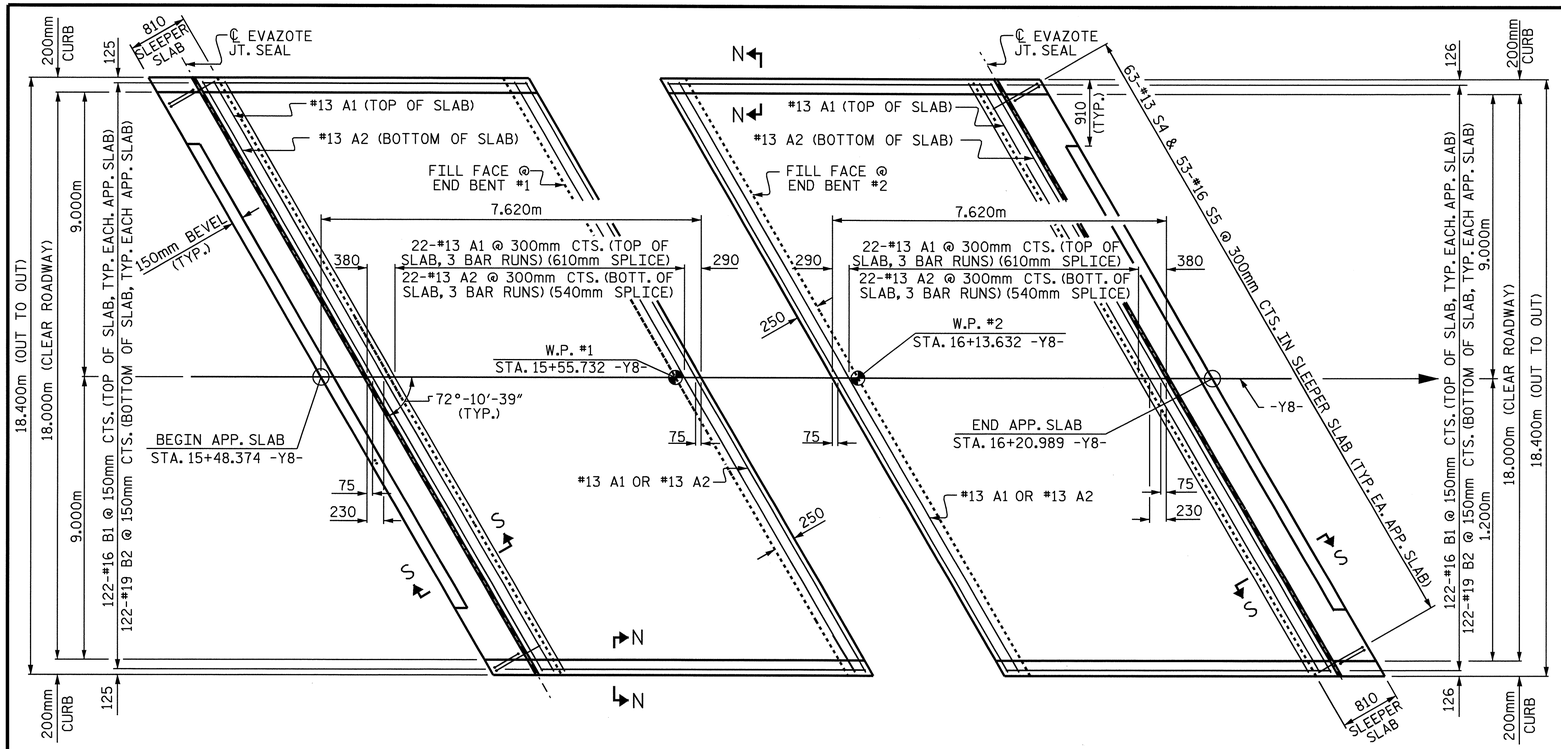

PLAN @ END BENT 1

PLAN @ END BENT 2

DIMENSIONS SHOWN ARE TYPICAL FOR BOTH APPROACH SLABS. #13 A1 BARS IN SLEEPER SLAB NOT SHOWN FOR CLARITY.

NOTES

APPROACH SLAB SHALL NOT BE CONSTRUCTED PRIOR TO COMPLETION OF THE BRIDGE DECK.

FOR REINFORCED BRIDGE APPROACH FILL INCLUDING FABRIC, IMPERMEABLE GEOMEMBRANE, 102mm Ø DRAINAGE PIPE, #78M STONE, AND SELECT MATERIAL, SEE ROADWAY PLANS.

AREA BETWEEN THE WINGWALL AND APPROACH SLAB SHALL BE GRADED TO DRAIN THE WATER AWAY FROM THE FILL FACE OF THE BRIDGE AND SHALL BE PAVED. SEE ROADWAY PLANS.

THE 150mm COMP. A.B.C. SHALL BE FLUSH WITH THE SLEEPER SLAB AND SHALL EXTEND 300mm OUTSIDE OF EACH EDGE OF THE APPROACH SLAB.

THE CONTRACTOR MAY USE 100mm TYPE B-25.0B ASPHALT CONCRETE BASE COURSE IN LIEU OF 150mm COMP. A.B.C. IF THIS OPTION IS USED, THE BASE COURSE SHALL BE FLUSH WITH THE SLEEPER SLAB, AND THE WIDTH SHALL BE THE SAME AS THAT OF THE APPROACH SLAB.

THE CONTRACTOR MAY USE 125mm CLASS "A" CONCRETE BASE IN LIEU OF 150mm COMP. A.B.C. IF THIS OPTION IS USED, THE CONCRETE BASE SHALL BE FLUSH WITH THE SLEEPER SLAB, AND THE WIDTH SHALL BE THE SAME AS THAT OF THE APPROACH SLAB. THE CONCRETE SHALL BE FINISHED TO A SMOOTH SURFACE AND A LAYER OF 13.6 kg ROOFING FELT SHALL BE PLACED BETWEEN THE CONCRETE BASE AND THE APPROACH SLAB TO PREVENT BOND. THE APPROACH SLAB SHALL NOT BE CAST UNTIL THE CONCRETE BASE HAS REACHED AN AGE OF THREE CURING DAYS.

THE VERTICAL JOINT ON THE RIGHT AND LEFT SIDE OF THE APPROACH SLAB AT THE ENDS OF THE EVAZOTE JOINT SHALL BE FILLED WITH SILICONE OR OTHER APPROVED MATERIAL IN ORDER TO PREVENT BACKFILL FROM ENTERING THE JOINT OPENING.

THE JOINT OPENING AT THE APPROACH SLAB/DECK INTERFACE SHALL BE SAWED NO MORE THAN 12 HOURS AFTER THE APPROACH SLAB IS CAST. THE JOINT SHALL BE CLEANED OF ALL DEBRIS BEFORE THE SEALANT IS APPLIED. THE JOINT SEALER MATERIAL SHALL CONFORM TO THE REQUIREMENTS OF TYPE SL LOW MODULUS SILICONE SEALANT.

FOR EVAZOTE JOINT SEALS, SEE SPECIAL PROVISIONS.

THE NOMINAL UNCOMPRESSED SEAL WIDTH OF THE EVAZOTE JOINT SEAL SHALL BE 64mm.

FOR ELASTOMERIC CONCRETE, SEE SPECIAL PROVISIONS.

BILL OF MATERIAL

FOR ONE APPROACH SLAB (2 REQ'D)

BAR	NO.	SIZE	TYPE	LENGTH	WEIGHT
* A1	58	#13	STR	9920	572
A2	44	#13	STR	9900	433
* B1	122	#16	STR	6860	1299
B2	122	#19	STR	6980	1903
* S4	63	#13	1	1240	78
S5	63	#16	2	900	88

REINFORCING STEEL	kg.	2424
* EPOXY COATED REINFORCING STEEL	kg.	1949
CLASS AA CONCRETE		
POUR #1 - SLEEPER SLAB	C.M.	3.0
POUR #2 - SLAB & CURB	C.M.	39.8
TOTAL	C.M.	42.8

BAR TYPES

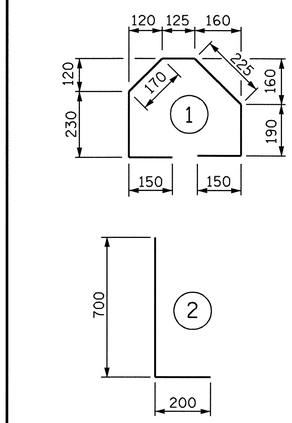

ALL BAR DIMENSIONS ARE OUT TO OUT

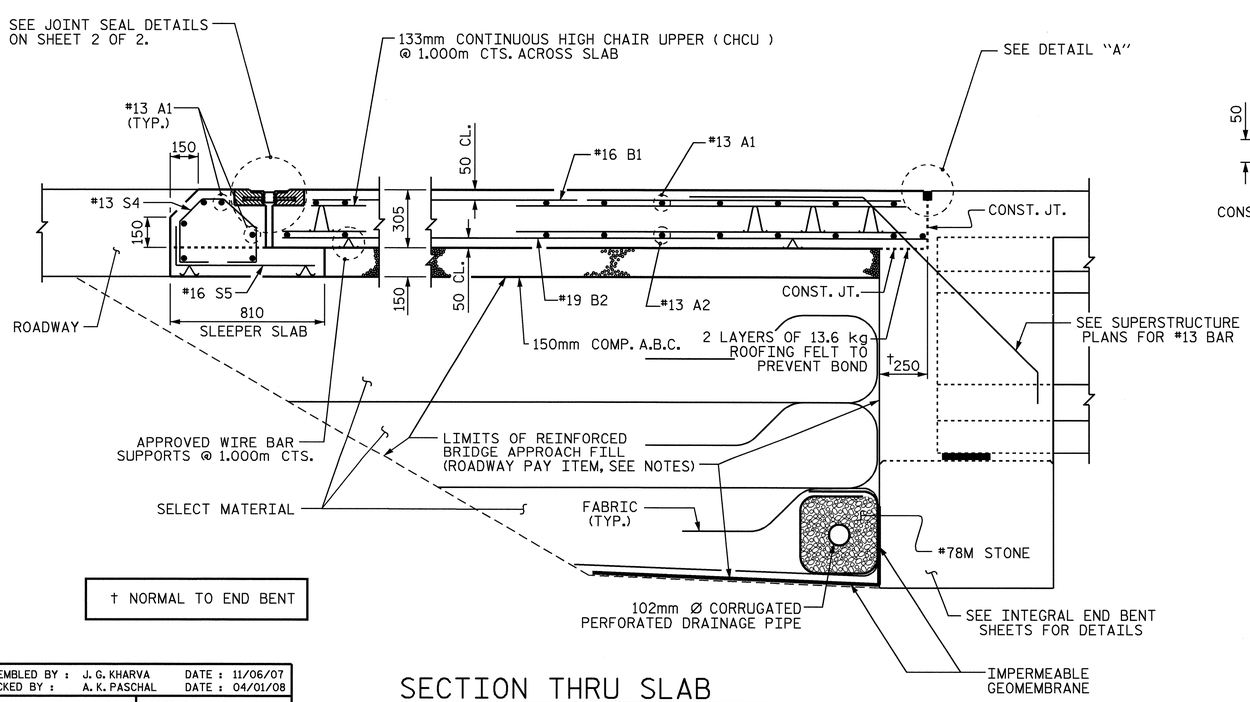

† NORMAL TO END BENT

SECTION THRU SLAB

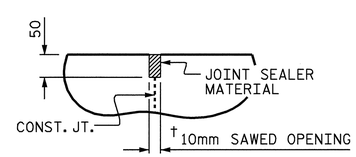

DETAIL "A"

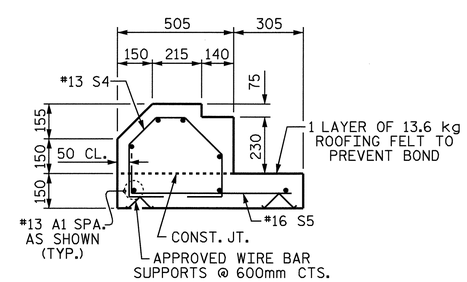

SECTION S-S

SHOWING SLEEPER SLAB

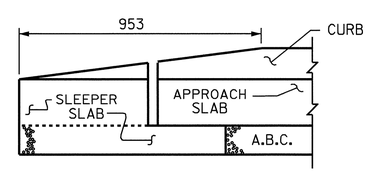

END OF CURB WITHOUT SHOULDER BERM GUTTER

(OMIT TAPER WHEN SHOULDER BERM GUTTER IS REQUIRED)

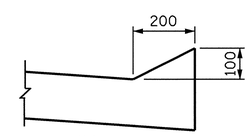

SECTION N-N

NORTH CAROLINA PROFESSIONAL SEAL 22005 ENGINEER KEITH PASCHAL

6/9/08

PROJECT NO. R-2554BA

WAYNE COUNTY

STATION: 15+85.032 -Y8-
146+62.803 -L-

SHEET 1 OF 2

STATE OF NORTH CAROLINA
DEPARTMENT OF TRANSPORTATION
RALEIGH

STANDARD

BRIDGE APPROACH SLAB FOR INTEGRAL ABUTMENT

REVISIONS						SHEET NO.
NO.	BY:	DATE:	NO.	BY:	DATE:	S-477
1			3			TOTAL SHEETS
2			4			478

ASSEMBLED BY : J. G. KHARVA	DATE : 11/06/07
CHECKED BY : A. K. PASCHAL	DATE : 04/01/08
DRAWN BY : TLA 6/06	ADDED 5/1/06R KMM/GM
CHECKED BY : GM 6/06	

06-JUN-2008 13:41
R:\Structures\BULLOCK\Str*16\FINAL PLANS\R-2554BA_sd_AS_16.dgn
bngrady

STR. #16

STD. NO. BAS11SM

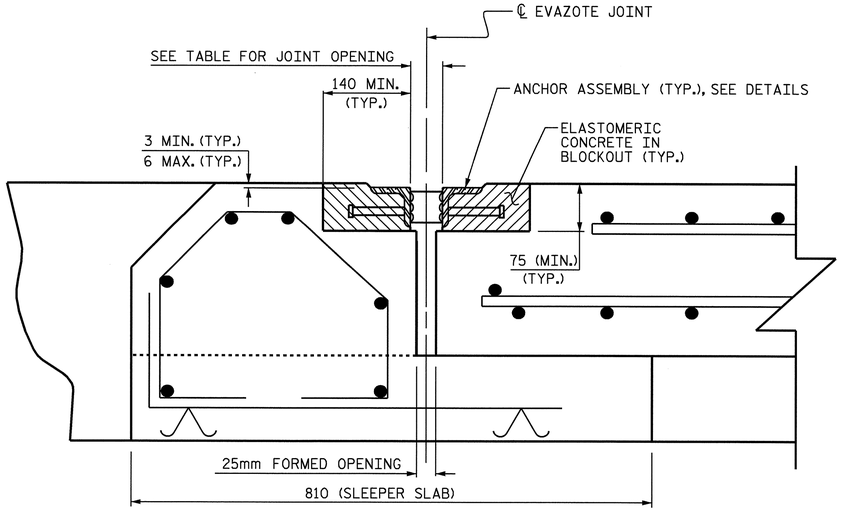

ARMORED JOINT DETAILS

SECTION NORMAL TO JOINT

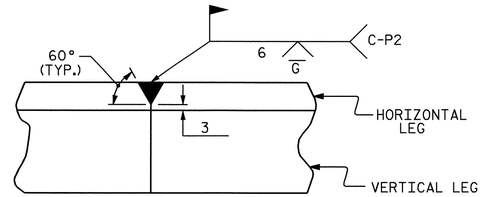

DETAIL- FIELD WELD SPLICE OF ANGLE

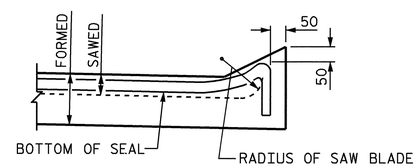

SECTION A-A

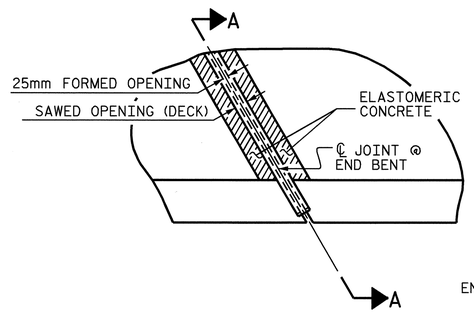

PLAN

NOTES

ANGLES SHALL CONFORM TO AASHTO M270 GRADE 250 STEEL OR APPROVED EQUAL. ALL STUD ANCHORS SHALL CONFORM TO AASHTO M169 GRADES 1010 THRU 1020 OR APPROVED EQUAL.

STUD ANCHORS SHALL BE SHOP WELDED AND ALL HOLES SHALL BE SHOP DRILLED AS SHOWN ON THE PLANS. STUD ANCHORS SHALL BE ELECTRIC ARC END WELDED WITH COMPLETE FUSION.

UPON COMPLETION OF SHOP FABRICATION, THE ENTIRE ANCHOR ASSEMBLY SHALL BE METALLIZED. THE 12.70mm Ø STUD ANCHORS AND ANCHOR TABS NEED NOT BE METALLIZED. SEE SPECIAL PROVISION FOR THERMAL SPRAYED COATINGS (METALLIZATION).

ANCHOR ASSEMBLY SHALL BE MADE CONTINUOUS THE LENGTH OF THE JOINT FROM GUTTER TO GUTTER. FOR FIELD SPLICES AT ALL CROWN BREAK POINTS, THE ENDS OF THE STEEL ANGLES SHALL BE CUT PARALLEL TO THE BRIDGE CENTERLINE. FINISHED FIELD WELDS SHALL BE GROUND SMOOTH AND COATED WITH A MINIMUM THICKNESS OF 0.100mm OF ZINC-RICH PAINT IN ACCORDANCE WITH THE STANDARD SPECIFICATIONS.

ANCHOR ASSEMBLY SEGMENTS SHALL NOT BE LESS 3.6m NOR MORE THAN 6.1m IN LENGTH. SHORTER SEGMENTS MAY BE USED AT THE EDGE OF ROADWAY OR AT POINTS OF STAGED CONSTRUCTION.

THE ANCHOR ASSEMBLY SHALL BE SECURED AND LEVELED AS SHOWN IN THE "ARMORED JOINT ANCHOR ASSEMBLY DETAILS". NO SUBMITTALS ARE REQUIRED FOR 9.53mm Ø EXPANSION ANCHORS, NUTS OR WASHERS. THE CONTRACTOR MAY SUBMIT FOR APPROVAL AN ALTERNATE METHOD OF ALIGNING AND LEVELING THE ANGLES. THE ALTERNATE METHOD SHALL NOT INCLUDE ANY WELDING TO THE OUTSIDE FACE OF THE ANGLES.

AFTER THE ELASTOMERIC CONCRETE HAS BEEN CAST ON BOTH SIDES OF THE JOINT, REMOVE ANY EXCESS CONCRETE THAT COMES THROUGH THE WEEP HOLES AND THOROUGHLY CLEAN THE ANGLES. ANY DAMAGED STEEL SHALL BE COATED WITH A MINIMUM OF 0.100mm OF ZINC-RICH PAINT IN ACCORDANCE WITH THE STANDARD SPECIFICATIONS.

SEE SPECIAL PROVISIONS FOR EVAZOTE JOINT SEALS.

SEE SPECIAL PROVISIONS FOR ELASTOMERIC CONCRETE.

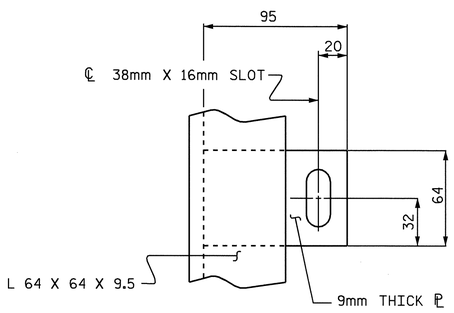

PLAN VIEW OF TAB

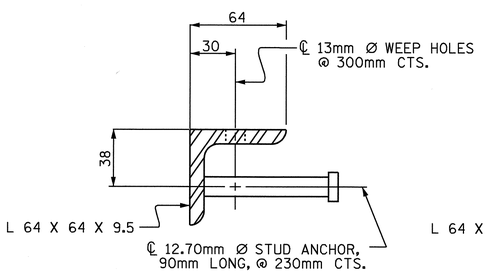

SECTION VIEW OF STUD

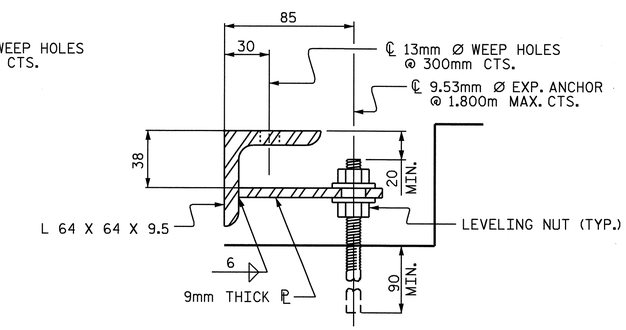

SECTION VIEW OF TAB

ARMORED JOINT ANCHOR ASSEMBLY DETAILS

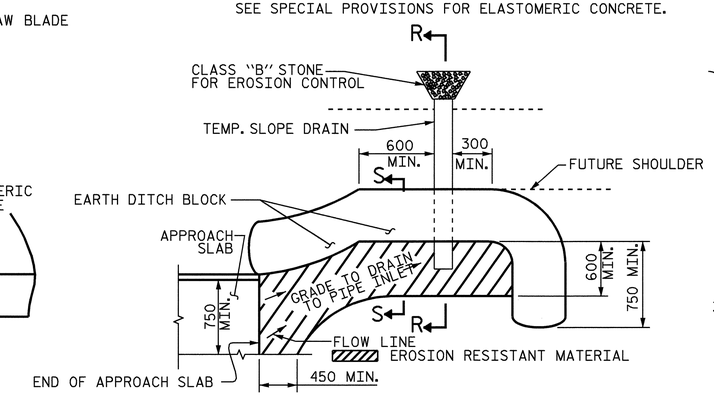

NOTE: IMMEDIATELY AFTER THE CONSTRUCTION OF THE APPROACH SLAB, THE CONTRACTOR SHALL PROVIDE TEMPORARY BERM AND SLOPE DRAIN. CONTRACTOR SHALL GRADE TO PIPE INLET AND PROVIDE EROSION RESISTANT MATERIAL AS SHOWN. THE EROSION RESISTANT MATERIAL SHALL BE EITHER 1) ASPHALT PLANT MIX, TYPE 1 OR TYPE 2, MIN. 50mm DEPTH, 2) EROSION CONTROL MAT, OR 3) CONCRETE, AS DIRECTED BY THE ENGINEER. THE SLOPE DRAIN SHALL CONSIST OF A NON-PERFORATED TEMPORARY DRAINAGE PIPE, 305mm IN DIAMETER.

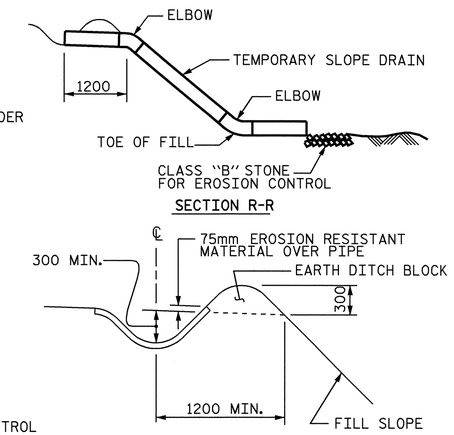

SECTION S-S

PLAN VIEW

TEMPORARY BERM AND SLOPE DRAIN DETAILS

(TO BE USED WHEN SHOULDER BERM GUTTER IS REQUIRED)

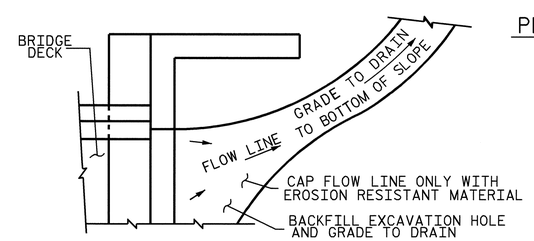

NOTE: IF THE APPROACH SLAB IS NOT CONSTRUCTED IMMEDIATELY AFTER THE BACKFILLING OF THE END BENT EXCAVATION, GRADE TO DRAIN TO THE BOTTOM OF THE SLOPE AND PROVIDE EROSION RESISTANT MATERIAL, SUCH AS FIBERGLASS ROVING OR AS DIRECTED BY THE ENGINEER TO PREVENT SOIL EROSION AND TO PROTECT THE AREA ADJACENT TO THE STRUCTURE. THE CONTRACTOR WILL BE REQUIRED TO REMOVE THESE MATERIALS PRIOR TO CONSTRUCTION OF THE APPROACH SLAB.

TEMPORARY DRAINAGE DETAIL

PROJECT NO. R-2554BA
WAYNE COUNTY
STATION: 15+85.032 -Y8-

SHEET 2 OF 2

STATE OF NORTH CAROLINA
DEPARTMENT OF TRANSPORTATION
RALEIGH

BRIDGE APPROACH SLAB DETAILS

MOVEMENT AND SETTING AT EVAZOTE JOINT

END BENT NO.	SKEW ANGLE	NOMINAL UNCOMPRESSED SEAL WIDTH	TOTAL MOVEMENT (ALONG ℄ RDWY)	PERPENDICULAR JOINT OPENING AT 7° C	PERPENDICULAR JOINT OPENING AT 16° C	PERPENDICULAR JOINT OPENING AT 32° C
1	72°-10'-39"	64mm	24mm	56mm	51mm	43mm
2	72°-10'-39"	64mm	24mm	56mm	51mm	43mm

TOTAL MOVEMENT IS CALCULATED ALONG THE CENTERLINE OF ROADWAY.
JOINT OPENINGS ARE MEASURED PERPENDICULAR TO THE JOINT.

BILL OF MATERIAL

END BENT NO.	ELASTOMERIC CONCRETE * (CU. m)	TOTAL LENGTH OF ANGLE (m)
1	0.4	38.655
2	0.4	38.655

* BASED ON THE MINIMUM BLOCKOUT SHOWN.

NORTH CAROLINA PROFESSIONAL SEAL 12005 ENGINEER A. KEITH PASCHAL
6/9/08

ASSEMBLED BY : J. G. KHARVA	DATE : 10/25/07		
CHECKED BY : A. K. PASCHAL	DATE : 04/01/08		
DRAWN BY : EEM 1/96	REV. 7/10/01	LES/RDR	
CHECKED BY : RGW 1/96	REV. 5/7/03RR	RWW/JTE	
	REV. 5/1/06	TLA/GM	

REVISIONS						SHEET NO.
NO.	BY:	DATE:	NO.	BY:	DATE:	S-478
1			3			TOTAL SHEETS
2			4			478

06-JUN-2008 13:40
R:\Structures\BULLOCK\Str#16\FINAL PLANS\R-2554BA_sd_AS_16.dgn
bnagady

STR. #16

F.A. PROJECT NO.: NHS-70(106)

BM-#4 R/R SPIKE SET IN BASE OF 18"POPLAR;
-BL- STA. 25+29.600 90.908m RT EL. 39.648, NGVD 1929

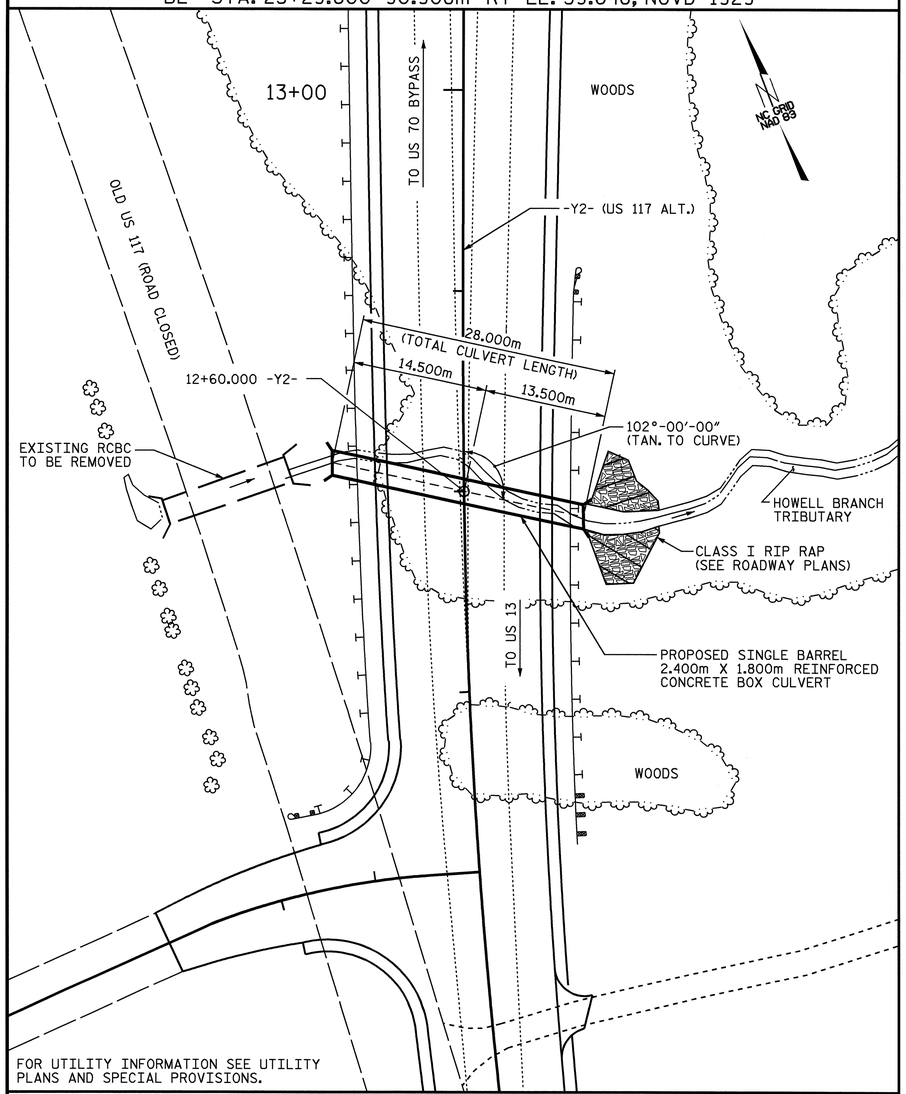

LOCATION SKETCH

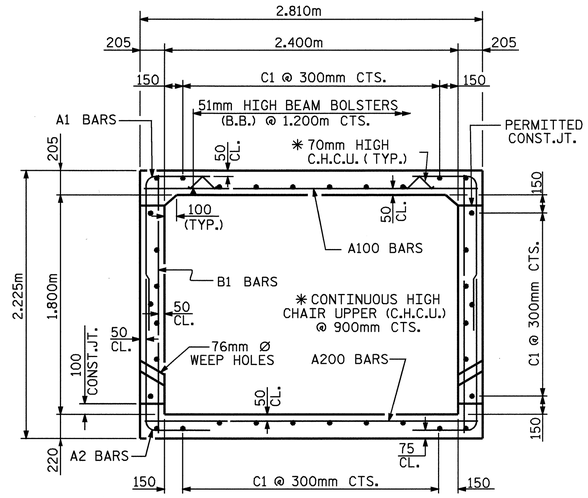

RIGHT ANGLE SECTION OF BARREL

THERE ARE 34 "C" BARS IN SECTION OF BARREL

TOTAL STRUCTURE QUANTITIES

CLASS A CONCRETE			
BARREL @	1.92 m^3/m	53.8	m^3
WINGS ETC.		17.1	m^3
TOTAL		70.9	m^3
REINFORCING STEEL			
BARREL		4515	kg
WINGS ETC.		597	kg
TOTAL		5112	kg
CULVERT EXCAVATION		LUMP SUM	
FOUNDATION COND. MAT'L		53 METRIC TONS	
REMOVAL OF EXISTING STRUCTURE		LUMP SUM	

NOTES:

ASSUMED LIVE LOAD ----------MS18 OR ALTERNATE LOADING.

MAX DESIGN FILL----------1.245m

MIN DESIGN FILL----------875mm

FOR OTHER DESIGN DATA AND NOTES SEE STANDARD NOTE SHEET.

76mm Ø WEEP HOLES INDICATED TO BE IN ACCORDANCE WITH THE SPECIFICATIONS.

CONCRETE IN CULVERTS TO BE POURED IN THE FOLLOWING ORDER:

1. WING FOOTINGS AND FLOOR SLAB INCLUDING 100mm OF ALL VERTICAL WALLS.
2. THE REMAINING PORTIONS OF THE WALLS AND WINGS FULL HEIGHT FOLLOWED BY ROOF SLAB AND HEADWALLS.

THE RESIDENT ENGINEER SHALL CHECK THE LENGTH OF CULVERT BEFORE STAKING IT OUT TO MAKE CERTAIN THAT IT WILL PROPERLY TAKE CARE OF THE FILL.

DIMENSIONS FOR WING LAYOUT AS WELL AS ADDITIONAL REINFORCING STEEL EMBEDDED IN BARREL ARE SHOWN ON WING SHEET.

TRANSVERSE CONSTRUCTION JOINTS SHALL BE USED IN THE BARREL, SPACED TO LIMIT THE POURS TO A MAXIMUM OF 21.0m. LOCATION OF JOINTS SHALL BE SUBJECT TO APPROVAL OF THE ENGINEER.

AT THE CONTRACTOR'S OPTION, HE MAY SPLICE THE VERTICAL REINFORCING STEEL IN THE INTERIOR FACE OF EXTERIOR WALL ABOVE LOWER WALL COSTRUCTION JOINT. THE SPLICE LENGTH SHALL BE AS PROVIDED IN THE SPLICE LENGTH CHART SHOWN ON THE PLANS. EXTRA WEIGHT OF STEEL DUE TO THE SPLICES SHALL BE PAID FOR BY THE CONTRACTOR.

AT THE CONTRACTOR'S OPTION HE MAY SUBMIT, TO THE ENGINEER FOR APPROVAL, DESIGN AND DETAIL DRAWINGS FOR A PRECAST REINFORCED CONCRETE BOX CULVERT IN LIEU OF THE CAST-IN-PLACE CULVERT SHOWN ON THE PLANS. THE DESIGN SHALL PROVIDE THE SAME SIZE AND NUMBER OF BARRELS AS USED ON THE CAST-IN-PLACE DESIGN. FOR OPTIONAL PRECAST REINFORCED CONCRETE BOX CULVERT, SEE SPECIAL PROVISIONS.

FOR SUBMITTAL OF WORKING DRAWINGS, SEE SPECIAL PROVISIONS.

FOR FALSEWORK AND FORMWORK, SEE SPECIAL PROVISIONS.

FOR CRANE SAFETY, SEE SPECIAL PROVISIONS.

FOR GROUT FOR STRUCTURES, SEE SPECIAL PROVISIONS.

ALL DIMENSIONS ARE IN MILLIMETERS UNLESS OTHERWISE NOTED.

ALL ELEVATIONS ARE IN METERS.

THE CONTRACTOR SHALL PROVIDE INDEPENDENT ASSURANCE SAMPLES OF REINFORCING STEEL AS FOLOWS: FOR PROJECTS REQUIRING UP TO 360,000kg OF REINFORCING STEEL, ONE 760mm SAMPLE OF EACH SIZE BAR USED, AND FOR PROJECTS REQUIRING OVER 360,000kg OF REINFORCING STEEL, TWO 760mm SAMPLES OF EACH SIZE BAR USED. THE BARS FROM WHICH THE SAMPLES ARE TAKEN MUST THEN BE SPLICED WITH REPLACEMENT BARS OF THE SIZE AND LENGTH OF THE SAMPLE, PLUS A MINIMUM LAP SPLICE OF THIRTY BAR DIAMETERS.

FOR CULVERT DIVERSION DETAILS AND PAY ITEM, SEE EROSION CONTROL PLANS.

A 900mm STRIP OF FILTER FABRIC SHALL BE ATTACHED TO THE FILL FACE OF THE WING COVERING THE ENTIRE LENGTH OF THE EXPANSION JOINT.

METRIC

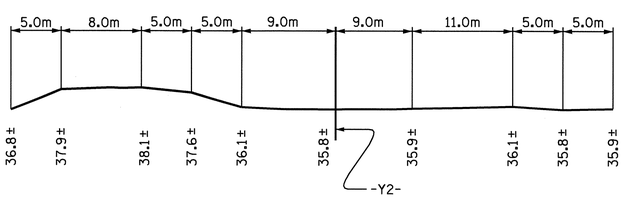

PROFILE ALONG ℄ CULVERT

ROADWAY DATA

GRADE POINT ELEV. @ STATION 12+60.000 -Y2-	=	38.393m
BED ELEV. @ STATION 12+60.000 -Y2-	=	35.290m
ROADWAY SLOPES	=	3:1

HYDRAULIC DATA

DESIGN DISCHARGE	=	6.0 m^3/sec.
FREQUENCY OF DESIGN FLOOD	=	50 YRS
DESIGN HIGH WATER ELEVATION	=	36.89m
DRAINAGE AREA	=	0.55 Sq. Km
BASIC DISCHARGE (Q100)	=	7.0 m^3/sec.
BASIC HIGH WATER ELEVATION	=	37.11m

OVERTOPPING FLOOD DATA

OVERTOPPING DISCHARGE	=	12.7 m^3/sec.
FREQUENCY OF OVERTOPPING FLOOD	=	500+ YR.
OVERTOPPING FLOOD ELEVATION	=	38.48m

PROJECT NO. R-2554BA
WAYNE COUNTY
STATION: 12+60.000 -Y2-

SHEET 1 OF 3

STATE OF NORTH CAROLINA
DEPARTMENT OF TRANSPORTATION
RALEIGH

BARREL STANDARD
SINGLE 2.400m X 1.800m
CONCRETE BOX CULVERT
102° SKEW

NORTH CAROLINA PROFESSIONAL SEAL 12274 ENGINEER OMAR R. AZIZI
6/6/08

NORTH CAROLINA PROFESSIONAL SEAL 14045 ENGINEER TIMOTHY L. COGGINS
6/6/08

REVISIONS							SHEET NO.
NO.	BY:	DATE:	NO.	BY:	DATE:		C-1
1			3				TOTAL SHEETS
2			4				3

ASSEMBLED BY :	Z. J. RORIE	DATE :	01/07
CHECKED BY :	J. B. WILSON	DATE :	10/07
DRAWN BY :	EEM		6/97
CHECKED BY :	ARB		7/97

29-APR-2008 14:20
r:\structures\azlzl\str#17\padkins\r-2554ba_sd_cu_17.dgn
PADKINS

STR. #17

STD. No. CB1105sm

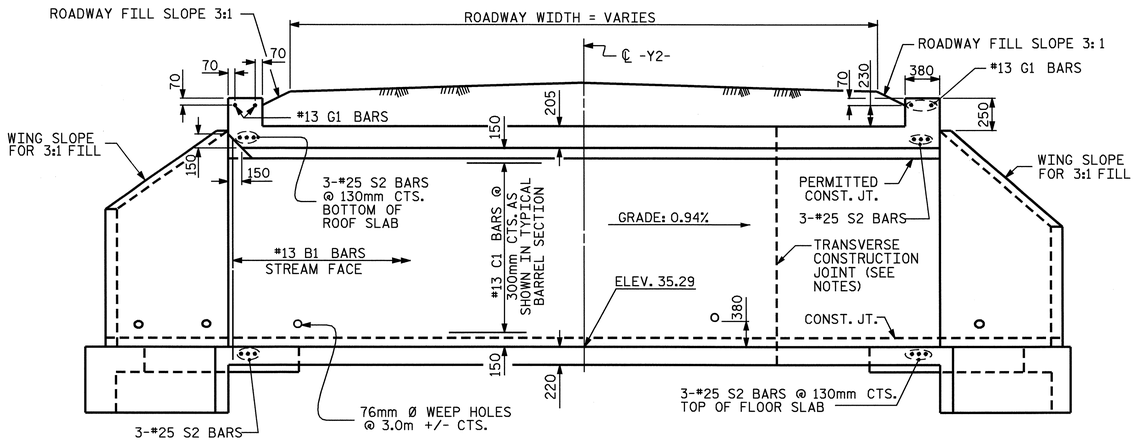

CULVERT SECTION NORMAL TO ROADWAY

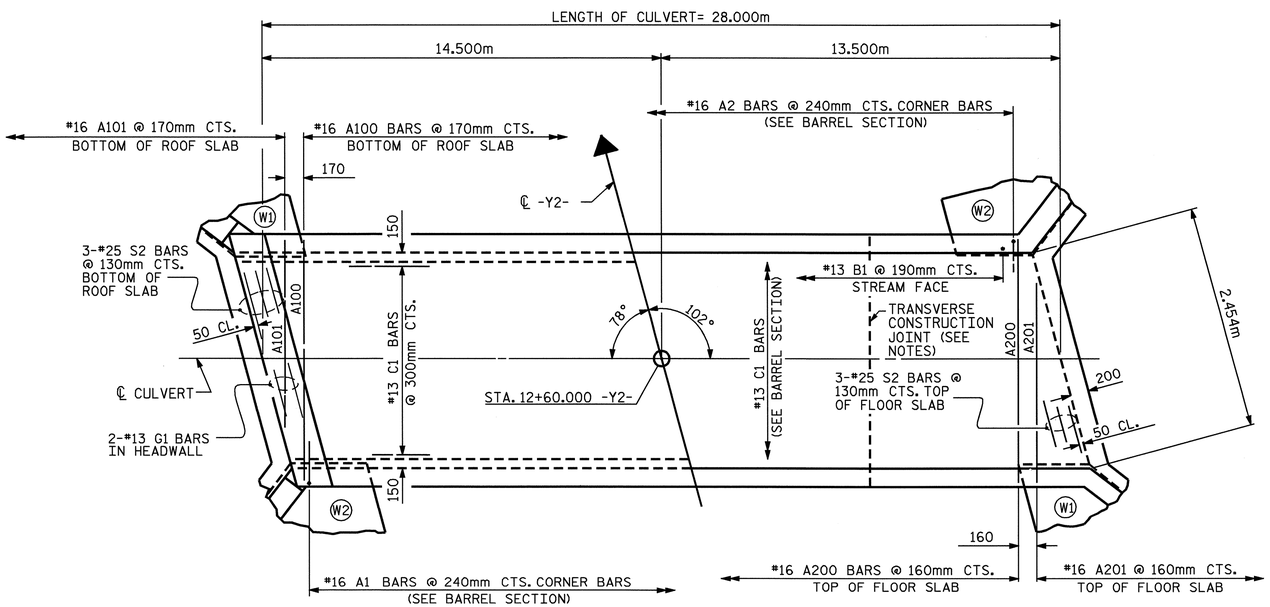

PART PLAN - ROOF SLAB

PART PLAN - FLOOR SLAB

BAR TYPE

BAR DIMENSIONS ARE OUT TO OUT

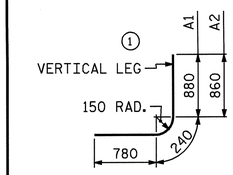

BILL OF MATERIAL

BAR	NO.	SIZE	TYPE	LENGTH	WEIGHT
A1	234	#16	1	1900	690
A2	234	#16	1	1880	683
A100	162	#16	STR	2660	669
A101	4	#16	STR	880	5
A200	172	#16	STR	2660	710
A201	4	#16	STR	1000	6
B1	296	#13	STR	2060	606
C1	136	#13	STR	7420	1003
G1	4	#13	STR	2760	11
S1	12	#25	STR	2760	132
REINFORCING STEEL				=	4515 KG

SPLICE CHART

BAR	SPLICE
B1	540
C1	590

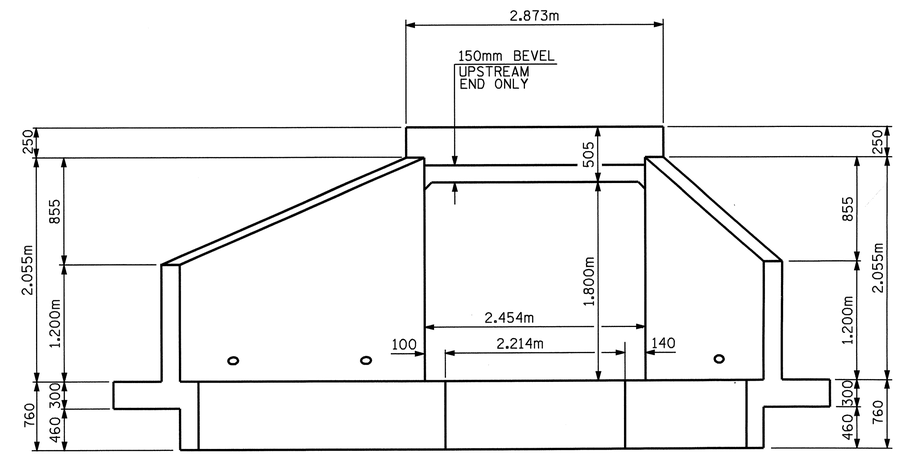

END ELEVATION - NORMAL TO SKEW

PROJECT NO. R-2554BA

WAYNE COUNTY

STATION: 12+60.000 -Y2-

SHEET 2 OF 3

STATE OF NORTH CAROLINA
DEPARTMENT OF TRANSPORTATION
RALEIGH

BARREL STANDARD SINGLE 2.400m X 1.800m CONCRETE BOX CULVERT 102° SKEW

NORTH CAROLINA PROFESSIONAL SEAL 14045 ENGINEER TIMOTHY L. COGGINS 6/6/08

REVISIONS						SHEET NO.
NO.	BY:	DATE:	NO.	BY:	DATE:	C-2
1			3			TOTAL SHEETS
2			4			3

ASSEMBLED BY : ZION J. RORIE	DATE : 1/03/07
CHECKED BY : J. B. WILSON	DATE : 10/07
DRAWN BY : EEM 6/97	
CHECKED BY : ARB 7/97	

29-APR-2008 14:20
r:\structures\azlzl\str#17\padkins\r-2554ba_sd_cu_17.dgn
PADKINS

STR. #17

STD. No. CBII05sm

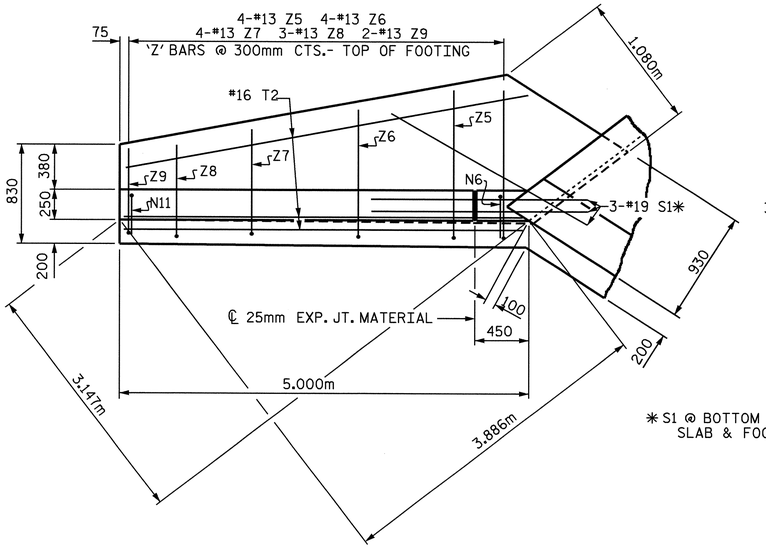

PLAN W1

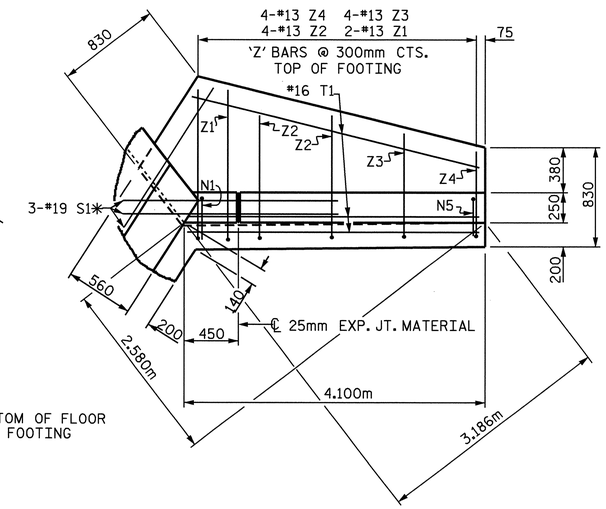

PLAN W2

* S1 @ BOTTOM OF FLOOR SLAB & FOOTING

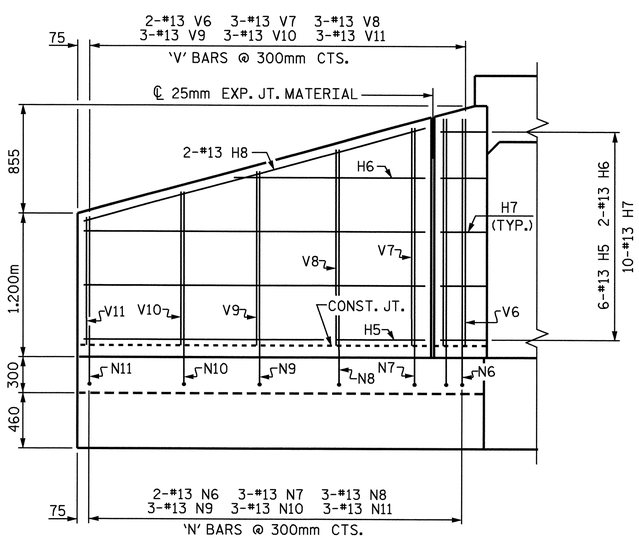

ELEVATION W1

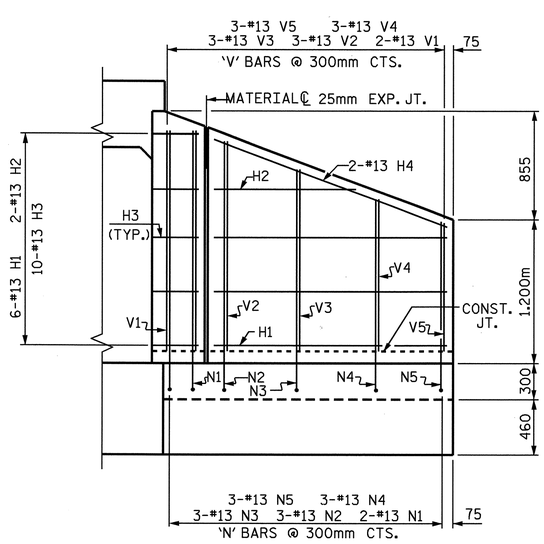

ELEVATION W2

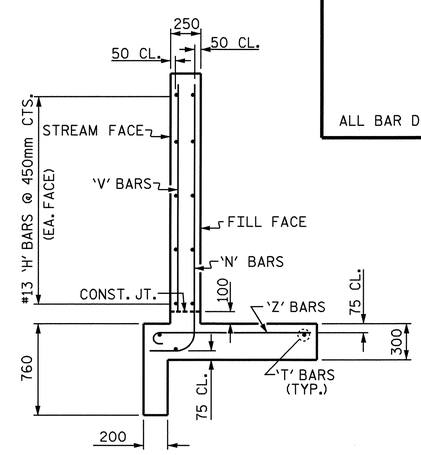

TYPICAL WING SECTION

FOR WING ORIENTATION, SEE BARREL STANDARD SHEET.

BAR TYPES

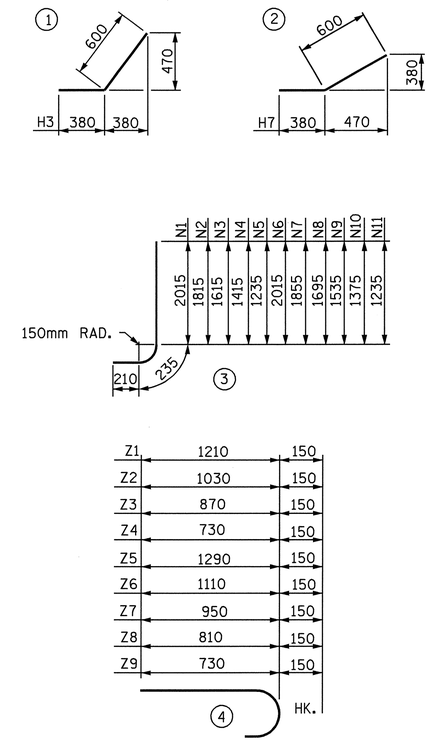

ALL BAR DIMENSIONS ARE OUT TO OUT.

BILL OF MATERIAL

BAR	NO.	SIZE	TYPE	LENGTH	WEIGHT
H1	12	13	STR	3520	42
H2	4	13	STR	1920	8
H3	20	13	1	980	19
H4	4	13	STR	3620	14
H5	12	13	STR	4440	53
H6	4	13	STR	2460	10
H7	20	13	2	980	19
H8	4	13	STR	4500	18
N1	4	13	3	2460	10
N2	6	13	3	2260	13
N3	6	13	3	2060	12
N4	6	13	3	1860	11
N5	6	13	3	1680	10
N6	4	13	3	2460	10
N7	6	13	3	2300	14
N8	6	13	3	2140	13
N9	6	13	3	1980	12
N10	6	13	3	1820	11
N11	6	13	3	1680	10
S1	12	19	STR	1800	48
T1	6	16	STR	4100	38
T2	6	16	STR	5000	47
V1	4	13	STR	1840	7
V2	6	13	STR	1640	10
V3	6	13	STR	1440	9
V4	6	13	STR	1240	7
V5	6	13	STR	1060	6
V6	4	13	STR	1840	7
V7	6	13	STR	1680	10
V8	6	13	STR	1520	9
V9	6	13	STR	1360	8
V10	6	13	STR	1200	7
V11	6	13	STR	1040	6
Z1	4	13	4	1360	5
Z2	8	13	4	1180	9
Z3	8	13	4	1020	8
Z4	8	13	4	880	7
Z5	8	13	4	1440	11
Z6	8	13	4	1260	10
Z7	8	13	4	1100	9
Z8	6	13	4	960	6
Z9	4	13	4	880	4

REINFORCING STEEL FOR 4 WINGS 597 kg

CLASS A CONCRETE

4 WINGS	15.7 m^3
2 HEADWALLS	0.7 m^3
2 END CURTAIN WALLS	0.7 m^3
TOTAL	17.1 m^3

PROJECT NO. R-2554BA

WAYNE COUNTY

STATION: 12+60.000 -Y2-

SHEET 3 OF 3

STATE OF NORTH CAROLINA
DEPARTMENT OF TRANSPORTATION
RALEIGH

WINGS FOR
CONCRETE BOX CULVERT
H = 1.800m SLOPE 3:1
102° SKEW

NORTH CAROLINA PROFESSIONAL SEAL 14045 ENGINEER TIMOTHY C. CORDINS
6/6/08

REVISIONS						SHEET NO.
NO.	BY:	DATE:	NO.	BY:	DATE:	C-3
1			3			TOTAL SHEETS
2			4			3

ASSEMBLED BY : ZION J. RORIE	DATE : 1/03/07
CHECKED BY : J. B. WILSON	DATE : 10/07
DRAWN BY : KJA 6/97	
CHECKED BY : VAP 12/97	

29-APR-2008 14:20
c:\structures\orlz1\str#17\podkins\r-2554ba_sd_gu_17.dgn

STR. #17

STANDARD NOTES

DESIGN DATA:

SPECIFICATIONS	A.A.S.H.T.O. (CURRENT)
LIVE LOAD	SEE PLANS
IMPACT ALLOWANCE	SEE A.A.S.H.T.O.
STRESS IN EXTREME FIBER OF	
STRUCTURAL STEEL - AASHTO M270 GRADE 250	140 MPa
- AASHTO M270 GRADE 345W	190 MPa
- AASHTO M270 GRADE 345	190 MPa
REINFORCING STEEL IN TENSION	
GRADE 420	165 MPa
CONCRETE IN COMPRESSION	8.3 MPa
CONCRETE IN SHEAR	SEE A.A.S.H.T.O.
STRUCTURAL TIMBER - TREATED OR	
UNTREATED - EXTREME FIBER STRESS	12 MPa
COMPRESSION PERPENDICULAR TO GRAIN OF TIMBER	2.6 MPa
EQUIVALENT FLUID PRESSURE OF EARTH	480 kg/m^3 (MINIMUM)

MATERIAL AND WORKMANSHIP:

EXCEPT AS MAY OTHERWISE BE SPECIFIED ON PLANS OR IN THE SPECIAL PROVISIONS, ALL MATERIAL AND WORKMANSHIP SHALL BE IN ACCORDANCE WITH THE 2002 STANDARD SPECIFICATIONS "FOR ROADS AND STRUCTURES" OF THE N. C. DEPARTMENT OF TRANSPORTATION.

STEEL SHEET PILING FOR PERMANENT OR TEMPORARY APPLICATIONS SHALL BE HOT ROLLED.

CONCRETE:

UNLESS OTHERWISE REQUIRED ON PLANS, CLASS A CONCRETE SHALL BE USED FOR ALL PORTIONS OF ALL STRUCTURES WITH THE EXCEPTION THAT: CLASS AA CONCRETE SHALL BE USED IN BRIDGE SUPERSTRUCTURES, ABUTMENT BACKWALLS, AND APPROACH SLABS; CLASS B CONCRETE SHALL BE USED FOR SLOPE PROTECTION AND RIP RAP; AND CLASS S SHALL BE USED FOR UNDERWATER FOOTING SEALS.

CONCRETE CHAMFERS:

UNLESS OTHERWISE NOTED ON THE PLANS, ALL EXPOSED CORNERS ON STRUCTURES SHALL BE CHAMFERED 19mm WITH THE FOLLOWING EXCEPTIONS: TOP CORNERS OF CURBS MAY BE ROUNDED TO 38mm RADIUS WHICH IS BUILT INTO CURB FORMS; CORNERS OF TRANSVERSE FLOOR EXPANSION JOINTS SHALL BE ROUNDED WITH A 6mm FINISHING TOOL UNLESS OTHERWISE REQUIRED ON PLANS; AND CORNERS OF EXPANSION JOINTS IN THE ROADWAY FACES AND TOPS OF CURBS AND SIDEWALKS SHALL BE ROUNDED TO A 6mm RADIUS WITH A FINISHING STONE OR TOOL UNLESS OTHERWISE REQUIRED ON PLANS.

DOWELS:

DOWELS WHEN INDICATED ON PLANS AS FOR CULVERT EXTENSIONS, SHALL BE EMBEDDED AT LEAST 300mm INTO THE OLD CONCRETE AND GROUTED INTO PLACE WITH 1:2 CEMENT MORTAR.

ALLOWANCE FOR DEAD LOAD DEFLECTION, SETTLEMENT, ETC. IN CASTING SUPERSTRUCTURES:

BRIDGES SHALL BE BUILT ON THE GRADE OR VERTICAL CURVE SHOWN ON PLANS. SLABS, CURBS AND PARAPETS SHALL CONFORM TO THE GRADE OR CURVE.

ALL DIMENSIONS WHICH ARE GIVEN IN SECTION AND ARE AFFECTED BY DEAD LOAD DEFLECTIONS ARE DIMENSIONS AT CENTER LINE OF BEARING UNLESS OTHERWISE NOTED ON PLANS. IN SETTING FORMS FOR STEEL BEAM BRIDGES AND PRESTRESSED CONCRETE GIRDER BRIDGES, ADJUSTMENTS SHALL BE MADE DUE TO THE DEAD LOAD DEFLECTIONS FOR THE ELEVATIONS SHOWN. WHERE BLOCKS ARE SHOWN OVER BEAMS FOR BUILDING UP TO THE SLAB, THE VERTICAL DIMENSIONS OF THE BLOCKS SHALL BE ADJUSTED BETWEEN BEARINGS TO COMPENSATE FOR DEAD LOAD DEFLECTIONS, VERTICAL CURVE ORDINATE, AND ACTUAL BEAM CAMBER. WHERE BOTTOM OF SLAB IS IN LINE WITH BOTTOM OF TOP FLANGES, DEPTH OF SLAB BETWEEN BEARINGS SHALL BE ADJUSTED TO COMPENSATE FOR DEAD LOAD DEFLECTION, VERTICAL CURVE ORDINATE, AND ACTUAL BEAM CAMBER.

IN SETTING FALSEWORK AND FORMS FOR REINFORCED CONCRETE SPANS, AN ALLOWANCE SHALL BE MADE FOR DEAD LOAD DEFLECTIONS, SETTLEMENT OF FALSEWORK, AND PERMANENT CAMBER WHICH SHALL BE PROVIDED FOR IN ADDITION TO THE ELEVATIONS SHOWN. AFTER REMOVAL OF THE FALSEWORK, THE FINISHED STRUCTURES SHALL CONFORM TO THE PROFILE AND ELEVATIONS SHOWN ON THE PLANS AND CONSTRUCTION ELEVATIONS FURNISHED BY THE ENGINEER.

DETAILED DRAWINGS FOR FALSEWORK OR FORMS FOR BRIDGE SUPERSTRUCTURE AND ANY STRUCTURE OR PARTS OF A STRUCTURE AS NOTED ON THE PLANS SHALL BE SUBMITTED TO THE ENGINEER FOR APPROVAL BEFORE CONSTRUCTION OF THE FALSEWORK OR FORMS IS STARTED.

REINFORCING STEEL:

ALL REINFORCING STEEL SHALL BE DEFORMED. DIMENSIONS RELATIVE TO PLACEMENT OF REINFORCING ARE TO CENTERS OF BARS UNLESS OTHERWISE INDICATED IN THE PLANS. DIMENSIONS ON BAR DETAILS ARE TO CENTERS OF BARS OR ARE OUT TO OUT AS INDICATED ON PLANS.

WIRE BAR SUPPORTS SHALL BE PROVIDED FOR REINFORCING STEEL WHERE INDICATED ON THE PLANS. WHEN BAR SUPPORT PIECES ARE PLACED IN CONTINUOUS LINES, THEY SHALL BE SO PLACED THAT THE ENDS OF THE SUPPORTING WIRES SHALL BE LAPPED TO LOCK LEGS ON ADJOINING PIECES.

STRUCTURAL STEEL:

AT THE CONTRACTOR'S OPTION, HE MAY SUBSTITUTE 22.23mm Ø SHEAR STUDS FOR THE 19.05mm Ø STUDS SPECIFIED ON THE PLANS. THIS SUBSTITUTION SHALL BE MADE AT THE RATE OF 3 -22.23mm Ø STUDS FOR 4 - 19.05mm Ø STUDS, AND STUD SPACING CHANGES SHALL BE MADE AS NECESSARY TO PROVIDE THE SAME EQUIVALENT NUMBER OF 22.23mm Ø STUDS ALONG THE BEAM AS SHOWN FOR 19.05mm Ø STUDS BASED ON THE RATIO OF 3 - 22.23mm Ø STUDS FOR 4 - 19.05mm Ø STUDS. STUDS OF THE LENGTH SPECIFIED ON THE PLANS MUST BE PROVIDED. THE MAXIMUM SPACING SHALL BE 610mm.

EXCEPT AT THE INTERIOR SUPPORTS OF CONTINUOUS BEAMS WHERE THE COVER PLATE IS IN CONTACT WITH BEARING PLATE, THE CONTRACTOR MAY, AT HIS OPTION, SUBSTITUTE FOR THE COVER PLATES DESIGNATED ON THE PLANS COVER PLATES OF THE EQUIVALENT AREA PROVIDED THESE PLATES ARE AT LEAST 8mm IN THICKNESS AND DO NOT EXCEED A WIDTH EQUAL TO THE FLANGE WIDTH LESS 50mm OR A THICKNESS EQUAL TO 2 TIMES THE FLANGE THICKNESS. THE SIZE OF FILLET WELDS SHALL CONFORM TO THE REQUIREMENTS OF THE CURRENT ANSI/AASHTO/AWS "BRIDGE WELDING CODE". ELECTROSLAG WELDING WILL NOT BE PERMITTED.

PLACEMENT OF BEAM OR GIRDER MEMBERS ON TRUCKS FOR HAULING SHALL BE DONE IN COMPLIANCE WITH LIMITS SHOWN ON SKETCHES PROVIDED TO THE MATERIALS AND TEST UNIT APPROVED BY THE STRUCTURE DESIGN UNIT DATED MAY 8, 1991. THESE SKETCHES PRIMARILY LIMIT THE UNSUPPORTED CANTILEVER LENGTH OF MEMBERS. WHEN THE CONTRACTOR WISHES TO PLACE MEMBERS ON TRUCKS NOT IN ACCORDANCE WITH THESE LIMITS, TO SHIP BY RAIL, TO ATTACH SHIPPING RESTRAINTS TO THE MEMBERS OR TO INVERT MEMBERS, HE SHALL SUBMIT A SKETCH FOR APPROVAL PRIOR TO SHIPPING. SEE ALSO ARTICLE 1072-11.

WITH THE SOLE EXCEPTION OF EDGES AT SURFACES WHICH BEAR ON OTHER SURFACES, ALL SHARP EDGES AND ENDS OF SHAPES AND PLATES SHALL BE SLIGHTLY ROUNDED BY SUITABLE MEANS TO A RADIUS OF APPROXIMATELY 2mm OR EQUIVALENT FLAT SURFACE AT A SUITABLE ANGLE PRIOR TO PAINTING, GALVANIZING, OR METALLIZING.

HANDRAILS AND POSTS:

METAL STANDARDS AND FACES OF THE CONCRETE END POSTS FOR THE METAL RAIL SHALL BE SET NORMAL TO THE GRADE OF THE CURB, UNLESS OTHERWISE SHOWN ON PLANS. THE METAL RAIL AND TOPS OF CONCRETE POSTS USED WITH THE ALUMINUM RAIL SHALL BE BUILT PARALLEL TO THE GRADE OF THE CURB.

METAL HANDRAILS SHALL BE IN ACCORDANCE WITH THE PLANS. RAILS SHALL BE AS MANUFACTURED FOR BRIDGE RAILING. CASTINGS SHALL BE OF A UNIFORM APPEARANCE. FINS AND OTHER DEFORMATIONS RESULTING FROM CASTING OR OTHERWISE SHALL BE REMOVED IN A MANNER SO THAT A UNIFORM COLORING OF THE COMPLETED CASTING SHALL BE OBTAINED. CASTINGS WITH DISCOLORATIONS OR OF NON-UNIFORM COLORING WILL NOT BE ACCEPTED. CERTIFIED MILL REPORTS ARE REQUIRED FOR METAL RAILS AND POSTS.

SPECIAL NOTES:

GENERALLY, IN CASE OF DISCREPANCY, THIS STANDARD SHEET OF NOTES SHALL GOVERN OVER THE SPECIFICATIONS, BUT THE REMAINDER OF THE PLANS SHALL GOVERN OVER NOTES HEREON, AND SPECIAL PROVISIONS SHALL GOVERN OVER ALL. SEE SPECIFICATIONS ARTICLE 105-4.

METRIC

JANUARY, 1990