CONTRACT: C201372 TIP PROJECT: R-2518A

STRUCTURES

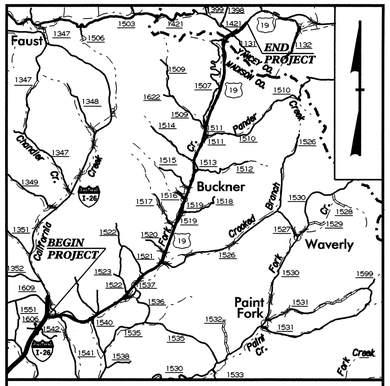

VICINITY MAP

STATE OF NORTH CAROLINA
DIVISION OF HIGHWAYS

MADISON / YANCEY COUNTIES

LOCATION: US 19 FROM I-26 TO 0.8 KM EAST OF THE YANCEY CO. LINE

TYPE OF WORK: GRADING, PAVING, DRAINAGE, STRUCTURES, GUARDRAIL AND SIGNING

METRIC

STATE	STATE PROJECT REFERENCE NO.	SHEET NO.	TOTAL SHEETS
N.C.	R-2518A		

STATE PROJ. NO.	F. A. PROJ. NO.	DESCRIPTION
34445.1.1		P.E.
34445.2.2		ROW & UTIL.
34445.4.1		CONSTR.

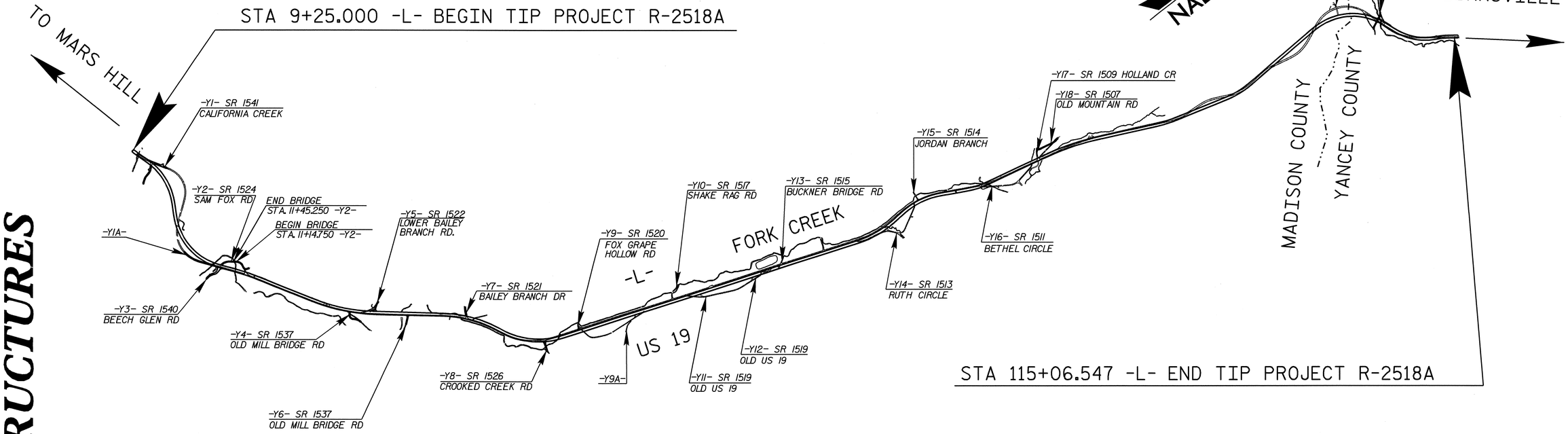

STATE OF NORTH CAROLINA DEPARTMENT OF TRANSPORTATION

DESIGN DATA

ADT 2008 = 10,860 – 12,080
ADT 2028 = 16,440 – 18,220
DHV = 10 %
D = 65 %
T = 10 % *
** V = 100 KPH

* TTST 6% DUAL 4%

PROJECT LENGTH

LENGTH ROADWAY TIP PROJECT R-2518A = 10.503 KM
LENGTH STRUCTURE TIP PROJECT R-2518A = 0.079 KM
TOTAL LENGTH STATE TIP PROJECT R-2518A = 10.582 KM

Prepared In the Office of:

DIVISION OF HIGHWAYS

2006 STANDARD SPECIFICATIONS

LETTING DATE :

July 15, 2008

Q.H. NGUYEN, P.E.
PROJECT ENGINEER

MARC G. CHEEK, P.E.
PROJECT DESIGN ENGINEER

STRUCTURE DESIGN UNIT
1000 BIRCH RIDGE DR.
RALEIGH, N.C. 27610

DIVISION OF HIGHWAYS
STATE OF NORTH CAROLINA

P.E.
STATE DESIGN ENGINEER

DEPARTMENT OF TRANSPORTATION
FEDERAL HIGHWAY ADMINISTRATION

APPROVED
DIVISION ADMINISTRATOR *DATE*

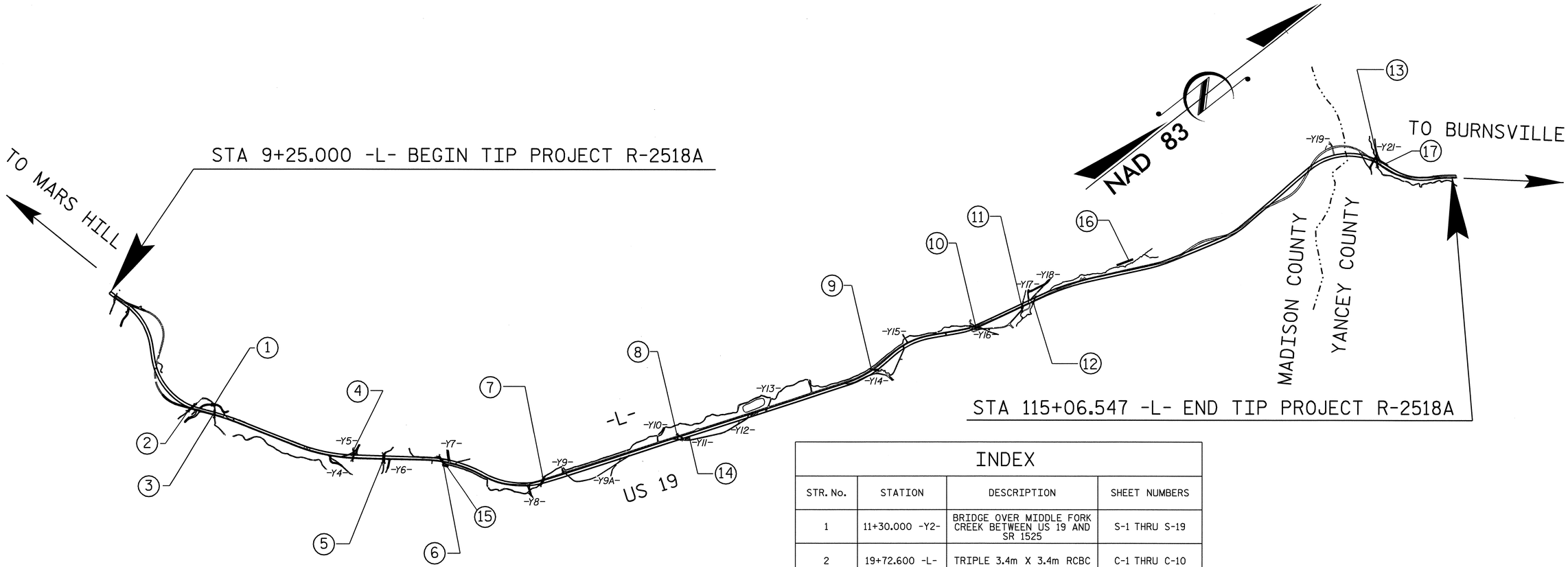

INDEX

STR. No.	STATION	DESCRIPTION	SHEET NUMBERS
1	11+30.000 -Y2-	BRIDGE OVER MIDDLE FORK CREEK BETWEEN US 19 AND SR 1525	S-1 THRU S-19
2	19+72.600 -L-	TRIPLE 3.4m X 3.4m RCBC	C-1 THRU C-10
3	21+37.796 -L-	TRIPLE 3.0m X 3.0m RCBC LEFT & RIGHT EXTENSIONS	C-11 THRU C-20
4	31+48.170 -L-	SINGLE 2.4m X 2.4m RCBC LEFT EXTENSION	C-21 THRU C-25
5	33+79.340 -L-	TRIPLE 2.7m X 3.0m RCBC LEFT EXTENSION	C-26 THRU C-32
6	37+94.390 -L-	TRIPLE 2.7m X 3.3m RCBC LEFT EXTENSION	C-33 THRU C-38
7	45+37.750 -L-	TRIPLE 2.7m X 2.7m RCBC RIGHT EXTENSION	C-39 THRU C-44
8	55+43.020 -L-	SINGLE 2.4m X 1.8m RCBC RIGHT EXTENSION	C-45 THRU C-49
9	70+03.790 -L-	SINGLE 2.7m X 2.1m RCBC RIGHT EXTENSION	C-50 THRU C-54
10	77+90.740 -L-	DOUBLE 2.7m X 2.7m RCBC LEFT & RIGHT EXTENSIONS W/ 3.6m X 2.7m RCBC	C-55 THRU C-70
11	81+55.180 -L-	DOUBLE 1.8m X 2.4m RCBC LEFT & RIGHT EXTENSIONS	C-71 THRU C-80
12	82+70.000 -L-	DOUBLE 2.4m X 2.7m RCBC	C-81 THRU C-88
13	109+35.310 -L-	DOUBLE 2.1m X 2.7m RCBC	C-89 THRU C-98
14	10+26.580 -Y11-	SINGLE 2.4m X 1.8m RCBC	C-99 THRU C-103
15	38+45.000 -L-	GRAVITY RETAINING WALL	W-1 THRU W-2
16	100+80.000 -L-	MSE RETAINING WALL	W-3 THRU W-5
17	112+30.000 -L-	PILE PANEL RETAINING WALL	W-6 THRU W-10

NORTH CAROLINA PROFESSIONAL SEAL 20125 ENGINEER MARSHALL G. PERRY JR.
10-12-07

PROJECT NO. R-2518A
MADISON/YANCEY COUNTY
STATION:

STATE OF NORTH CAROLINA
DEPARTMENT OF TRANSPORTATION
RALEIGH

STRUCTURE INDEX

REVISIONS						SHEET NO.
NO.	BY:	DATE:	NO.	BY:	DATE:	
1			3			TOTAL SHEETS
2			4			

R:\Structures\str*01\A.L.Figueroa\R-2518A_sd_GD.dgn
lmurphy

11+00 11+10 11+20 11+30 11+40 11+50 11+60

660 655 650

FIX SPAN A FIX

FILL FACE @ END BENT No. 1
STA. 11+14.750 TAN. EXT.
GRADE POINT EL. 657.362

BEGIN FRONT SLOPE
STA. 11+11.778 TAN. EXT.
EL. 657.331

480 BERM (TYP.)

1½:1 SLOPE NORMAL TO CAP (TYP.)

EL. 657.3±

HIGH WATER EL. 655.8±

EL. 657.1±

EL. 657.2±

EL. 654.8±

NORMAL WATER SURFACE EL. 653.7±

600 (TYP.)

EL. 655.4±

EL. 654.2±

EL. 653.5±

HP 310 X 79 STEEL PILES

300 EARTH BERM (TYP.)

EL. 652.8±

EL. 652.8±

EL. 653.0±

EL. 653.5±

EL. 653.4±

CLASS II RIPRAP (TYP.)

EL. 657.6±

FILL FACE @ END BENT No. 2
STA. 11+45.250 -Y2-
GRADE POINT EL. 657.667

BEGIN FRONT SLOPE
STA. 11+48.321 -Y2-
EL. 657.690

APPROXIMATE NATURAL GROUND

EL. 657.6±

450 (TYP.)

EL. 654.6±

EL. 653.7±

HP 310 X 79 STEEL PILES

UNCLASSIFIED STRUCTURE EXCAVATION

END BENT NO. 1

SECTION ALONG -Y2-

SECTION TAKEN AT RIGHT ANGLES TO END BENTS

END BENT NO. 2

+1.0463% +0.4595%

GRADE DATA

P.I. STA. = 11+48.000 -Y2-
EL. = 657.710
V.C. = 30.000

FILL FACE @ END BENT NO. 1

PT STA. 11+17.008 -Y2-

-Y2-

TANGENT EXTENDED

STA. 11+10.532 TAN. EXTENDED
BEGIN APPROACH SLAB

STA. 11+14.750 TAN. EXTENDED W.P. #1

2.258m

* IGNORE CURVE

DETAIL "A"

THE CONTRACTOR SHALL USE THE TANGENT EXTENDED FOR THE LAYOUT OF END BENT NO. 1 AND THE LAYOUT OF THE APPROACH SLAB AT END BENT 1 AND FOR COMPUTATIONS OF END BENT NO.1 AND APPROACH SLAB ELEVATIONS. IN ADDITION, THE CONTRACTOR SHALL ASSUME THAT ALL STATIONING OCCURS ALONG THE TANGENT EXTENDED.

CLASS II RIPRAP

MIDDLE FORK CREEK

EXISTING STRUCTURE (TYP.)

CLASS II RIPRAP

STA. 11+14.750 TAN. EXT.
W.P. #1

BEGIN FRONT SLOPE
STA. 11+11.778 TAN. EXT.

TO DEAD END

1: 1/2 NORMAL TO CAP)

PT STATION 11+17.008 -Y2-

STA. 11+30.000 -Y2-
BRIDGE IDENT.

-Y2-

FILL FACE @ END BENT NO. 2

STA. 11+45.250 -Y2-
W.P. #2

BEGIN FRONT SLOPE
STA. 11+48.321 -Y2-

TO US 19

1: 1/2 NORMAL TO CAP)

STA. 11+10.532 TAN. EXT
BEGIN APPROACH SLAB

60°-00'-00" TO TAN. EXTENDED (SEE DETAIL "A")

60°-00'-00" (TYP.)

STA. 11+49.468 -Y2-
END APPROACH SLAB

60°-00'-00" TO TAN. EXTENDED (SEE DETAIL 'A')

FILL FACE @ END BENT NO. 1

300 EARTH BERM EL. 655.208

15.250m

15.250m

300 EARTH BERM EL. 655.510

30.500m (FILL FACE TO FILL FACE)

PLAN

PILES NOT SHOWN IN PLAN VIEW FOR CLARITY

METRIC

PROJECT NO. R-2518A
MADISON/YANCEY COUNTY
STATION: 11+30.000 -Y2-

SHEET 1 OF 3 BRIDGE No. 319

STATE OF NORTH CAROLINA
DEPARTMENT OF TRANSPORTATION
RALEIGH

GENERAL DRAWING
FOR BRIDGE ON SR 1524 OVER MIDDLE FORK CREEK BETWEEN US 19 AND SR 1525

NORTH CAROLINA PROFESSIONAL SEAL 13014 ENGINEER QUANG H. NGUYEN
Quang H. Nguy 1-3-08

NORTH CAROLINA PROFESSIONAL SEAL 20125 ENGINEER MARSHALL GLENN CHEEK, JR.
4-3-08

REVISIONS						SHEET NO.
NO.	BY:	DATE:	NO.	BY:	DATE:	S-1
1			3			TOTAL SHEETS
2			4			19

DRAWN BY : A. S.\ ALF DATE : 4/09/07
CHECKED BY : MG CHEEK DATE : 4/10/07

STR. #1

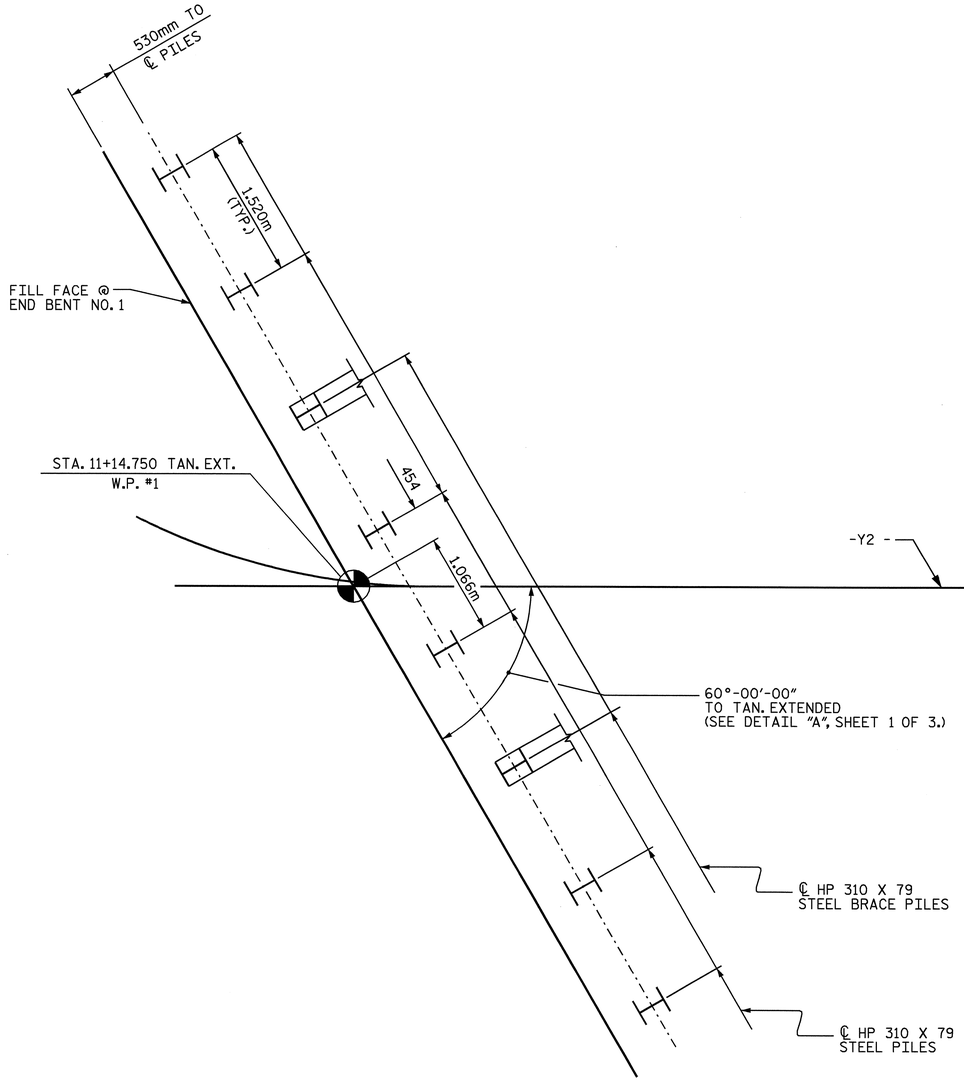

END BENT NO. 1

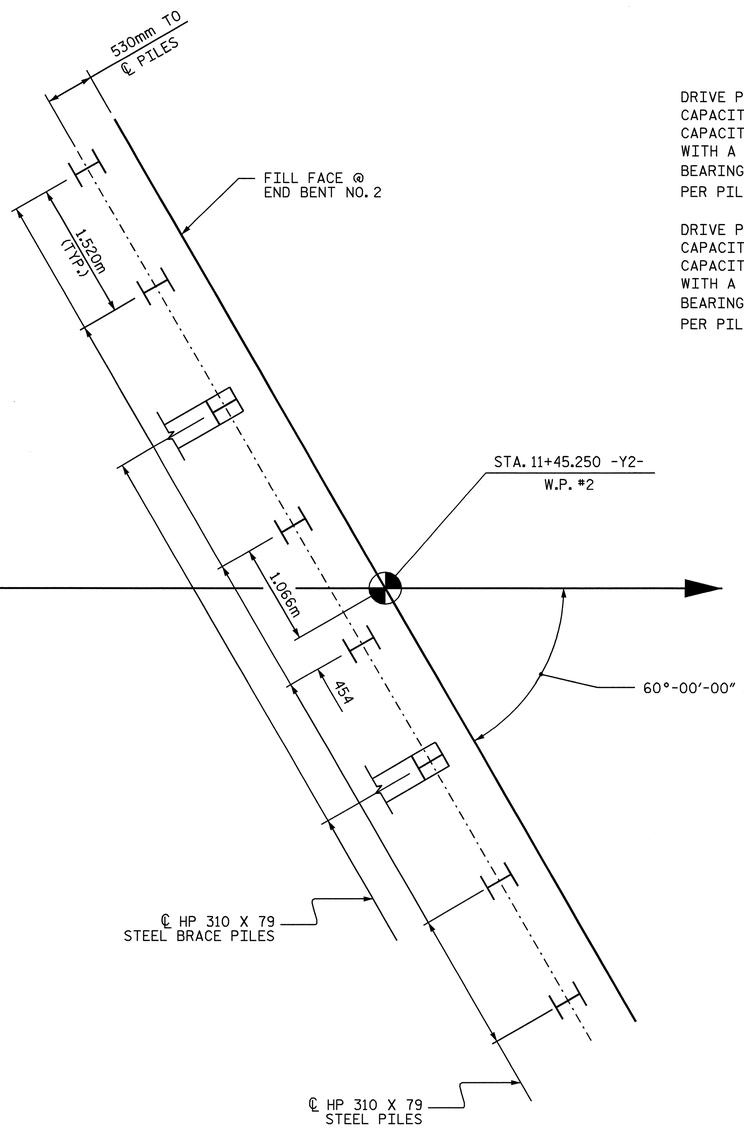

END BENT NO. 2

NOTES

DRIVE PILES AT BENT NO. 1 TO A REQUIRED BEARING CAPACITY OF 1,080 kN PER PILE. THE REQUIRED BEARING CAPACITY IS EQUAL TO THE ALLOWABLE BEARING CAPACITY WITH A MINIMUM FACTOR OF SAFETY OF TWO. THE ALLOWABLE BEARING CAPACITY FOR PILES AT END BENT NO. 1 IS 540kN PER PILE.

DRIVE PILES AT BENT NO. 2 TO A REQUIRED BEARING CAPACITY OF 1,080 kN PER PILE. THE REQUIRED BEARING CAPACITY IS EQUAL TO THE ALLOWABLE BEARING CAPACITY WITH A MINIMUM FACTOR OF SAFETY OF TWO. THE ALLOWABLE BEARING CAPACITY FOR PILES AT END BENT NO. 2 IS 540kN PER PILE.

FOUNDATION LAYOUT

ALL PILES ARE HP 310 X 79 STEEL PILES
DIMENSIONS LOCATING PILES ARE TO THE ℄ OF PILES
ALL BRACE PILES ARE BATTERED AT 250:1000

PROJECT NO. R-2518A
MADISON/YANCEY COUNTY
STATION: 11+30.000 -Y2-

SHEET 2 OF 3

STATE OF NORTH CAROLINA
DEPARTMENT OF TRANSPORTATION
RALEIGH

GENERAL DRAWING
FOR BRIDGE ON SR 1524 OVER MIDDLE FORK CREEK BETWEEN US 19 AND SR 1525

REVISIONS						SHEET NO.
NO.	BY:	DATE:	NO.	BY:	DATE:	S-2
1			3			TOTAL SHEETS
2			4			19

NORTH CAROLINA PROFESSIONAL SEAL 20125 ENGINEER M. G. CHEEK
4-3-08

DRAWN BY : V. X. NGUYEN DATE : 9-12-07
CHECKED BY : M.G. CHEEK DATE : 9-13-07

02-APR-2008 15:29
r:\structures\Str*01\vnguyen\Microstation\R2518A_sd_FL.dgn
lmurphy

STR. #1

r:\structures\str*01\a.l.figueroa\R-2518A_sd_GD.dgn
lmurphy

BENCH MARK No. 3: CHISELED SQUARE IN THE TOP OF A PARAPET WEST SIDE, NORTH END OF THE SAM COX BRIDGE, BEHIND P&E GROCERY, STA. 21+23.300 -L-, 63 METERS LEFT, EL. 658.442.

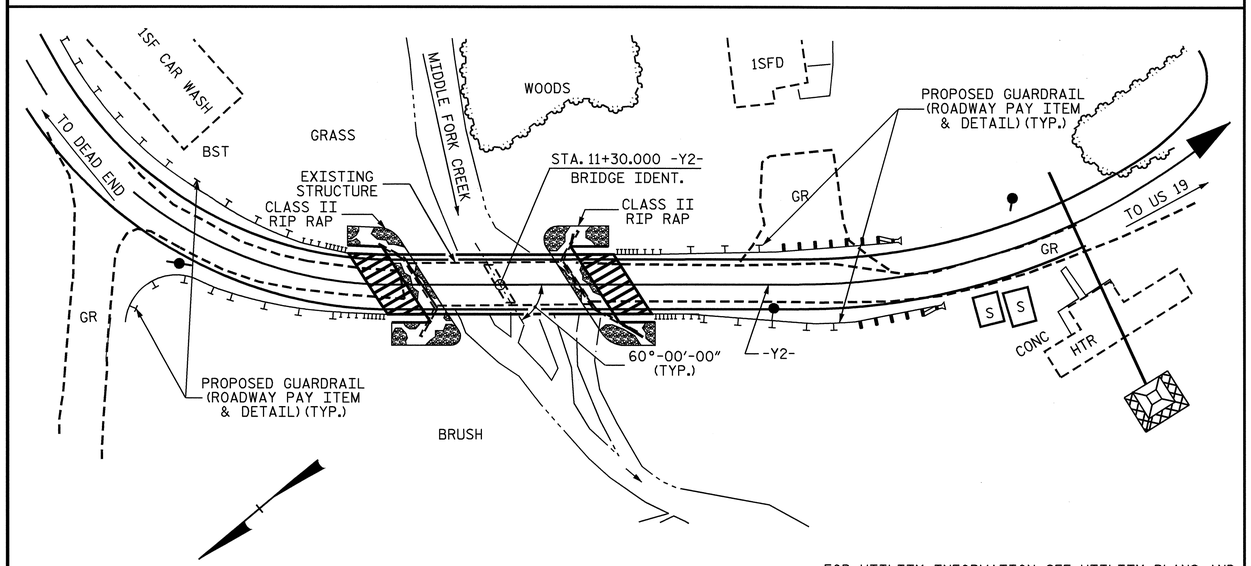

FOR UTILITY INFORMATION, SEE UTILITY PLANS AND SPECIAL PROVISIONS.

LOCATION SKETCH

HYDRAULIC DATA

DESIGN DISCHARGE	=	67 m^3/SEC
FREQUENCY OF DESIGN FLOOD	=	25 YRS.
DESIGN HIGH WATER ELEVATION	=	656.11
DRAINAGE AREA	=	32.8 SQ. km.
BASIC DISCHARGE (Q100)	=	100 m^3/SEC
BASIC HIGH WATER ELEVATION	=	656.53

OVERTOPPING FLOOD DATA

OVERTOPPING DISCHARGE	=	125 m^3/SEC
FREQUENCY OF OVERTOPPING FLOOD	=	200 YRS.
OVERTOPPING FLOOD ELEVATION	=	657.17

NOTES

ALL DIMENSIONS ARE IN MILLIMETERS UNLESS OTHERWISE NOTED.

ALL ELEVATIONS ARE IN METERS.

FOR ALL OTHER DESIGN DATA AND GENERAL NOTES, SEE SHEET SNSM.

FOR EROSION CONTROL MEASURES, SEE EROSION CONTROL PLANS.

THIS BRIDGE HAS BEEN DESIGNED BY THE STRENGTH DESIGN METHOD AS SPECIFIED IN AASHTO STANDARD SPECIFICATIONS.

REMOVAL OF THE EXISTING BRIDGE SHALL BE PERFORMED SO AS NOT TO ALLOW DEBRIS TO FALL INTO THE WATER. THE CONTRACTOR SHALL REMOVE THE BRIDGE AND SUBMIT PLANS FOR DEMOLITION IN ACCORDANCE WITH ARTICLE 402-2 OF THE STANDARD SPECIFICATIONS.

THE MATERIAL SHOWN IN THE CROSS-HATCHED AREA SHALL BE EXCAVATED FOR A DISTANCE OF 15m EACH SIDE OF CENTERLINE ROADWAY AS DIRECTED BY THE ENGINEER. THIS WORK WILL BE MEASURED AND PAID FOR AS UNCLASSIFIED STRUCTURE EXCAVATION.

THIS BRIDGE HAS BEEN DESIGNED IN ACCORDANCE WITH HEC 18, "EVALUATING SCOUR AT BRIDGES", MAY, 2001.

THIS BRIDGE HAS BEEN DESIGNED IN ACCORDANCE WITH THE REQUIREMENTS OF THE AASHTO STANDARD SPECIFICATIONS FOR SEISMIC DESIGN OF HIGHWAY BRIDGES FOR SEISMIC PERFORMANCE CATEGORY B.

FOR SUBMITTAL OF WORKING DRAWINGS, SEE SPECIAL PROVISIONS.

FOR FALSEWORK AND FORMWORK, SEE SPECIAL PROVISIONS.

ASSUMED LIVE LOAD = MS18 OR ALTERNATE LOADING, EXCEPT THAT BOX BEAM UNITS HAVE BEEN DESIGNED FOR MS22.5.

FOR PRESTRESSED CONCRETE MEMBERS, SEE SPECIAL PROVISIONS.

FOR CRANE SAFETY, SEE SPECIAL PROVISIONS.

THE EXISTING STRUCTURE CONSISTING OF 2-SPANS WITH AN APPROXIMATE TOTAL LENGTH OF 21m WITH A CONCRETE DECK GIRDER SUPERSTRUCTURE AND AN APPROXIMATE ROADWAY WIDTH OF 6m ON A SUBSTRUCTURE CONSISTING OF REINFORCED CONCRETE ABUTMENTS AND CONCRETE POST AND BEAM BENT SHALL BE REMOVED.

THE EXISTING STRUCTURE INFORMATION AND THE EXISTING SUBSTRUCTURE INDICATED ON THE PLANS ARE FROM THE BEST INFORMATION AVAILABLE. THE CONTRACTOR SHALL HAVE NO CLAIM WHATSOEVER AGAINST THE DEPARTMENT OF TRANSPOTATION FOR ANY DELAYS OR ADDITIONAL COST INCURRED BASED ON DIFFERENCES BETWEEN THE EXISTING BRIDGE INFORMATION SHOWN ON THE PLANS AND THE ACTUAL CONDITIONS AT THE PROJECT SITE.

FOR GROUT FOR STRUCTURES, SEE SPECIAL PROVISIONS.

FOR METRIC STRUCTURAL STEEL, SEE SPECIAL PROVISIONS.

TOTAL BILL OF MATERIAL

	CONSTRUCTION, MAINTENANCE, AND REMOVAL OF TEMPORARY ACCESS	REMOVAL OF EXISTING STRUCTURE	UNCLASSIFIED STRUCTURE EXCAVATION	CLASS A CONCRETE	BRIDGE APPROACH SLABS	REINFORCING STEEL	HP 310 X 79 STEEL PILES		VERTICAL CONCRETE BARRIER RAIL	RIP RAP CLASS II (600mm THICK)	FILTER FABRIC FOR DRAINAGE	ELASTOMERIC BEARINGS	914mm X 991mm PRESTRESSED CONCRETE BOX BEAMS
	LUMP SUM	LUMP SUM	CU. METERS	CU. METERS	LUMP SUM	kg	NO.	METERS	METERS	METRIC TONS	SQ. METERS	LUMP SUM	METERS
SUPERSTRUCTURE					LUMP SUM				59.416			LUMP SUM	267.372
END BENT 1			365	14.5		1398	8	40		90	92		
END BENT 2			383	14.6		1398	8	40		124	126		
TOTAL	LUMP SUM	LUMP SUM	748	29.1	LUMP SUM	2796	16	80	59.416	214	218	LUMP SUM	267.372

DRAWN BY : A. S. /A.L.F. DATE : 4/09/07
CHECKED BY : MG CHEEK DATE : 4/10/07

NORTH CAROLINA PROFESSIONAL SEAL 20125 ENGINEER MARSHALL G. CHEEK, JR.
4-3-08

PROJECT NO. R-2518A
MADISON/YANCEY COUNTY
STATION: 11+30.000 -Y2-

SHEET 3 OF 3

STATE OF NORTH CAROLINA
DEPARTMENT OF TRANSPORTATION
RALEIGH

GENERAL DRAWING
FOR BRIDGE ON SR 1524 OVER MIDDLE FORK CREEK BETWEEN US 19 AND SR 1525

REVISIONS						SHEET NO.
NO.	BY:	DATE:	NO.	BY:	DATE:	S-3
1			3			TOTAL SHEETS
2			4			19

STR. #1

r:\structures\str*01\a.l.figueroa\r2518a_sd_ta*01.dgn
afigueroa

11+00 11+10 11+20 11+30 11+40 11+50 11+60

660
655
650

SPAN A

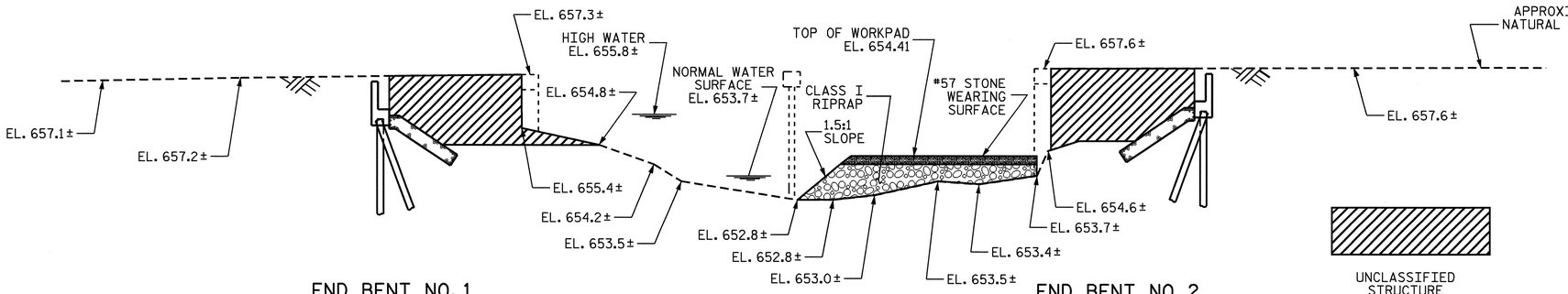

SECTION ALONG -Y2-

SECTION TAKEN AT RIGHT ANGLES TO END BENTS

UNCLASSIFIED
STRUCTURE
EXCAVATION

NOTES

FOR CONSTRUCTION, MAINTENANCE AND REMOVAL OF TEMPORARY ACCESS, SEE SPECIAL PROVISIONS.

ALL GRADING REQUIRED FOR ACCESS TO THE TEMPORARY ACCESS SHALL BE INCLUDED IN THE LUMP SUM BID PRICE FOR "CONSTRUCTION, MAINTENANCE, AND AND REMOVAL OF TEMPORARY ACCESS".

THE CONTRACTOR'S ATTENTION IS CALLED TO THE FACT THAT THE LOCATION AND PROFILE OF THE TEMPORARY WORK BRIDGE SHOWN ON THE PLANS IS FOR ESTIMATING PURPOSES ONLY. THE ACTUAL LOCATION AND PROFILE SHALL BE DETERMINED IN THE FIELD BY THE APPROVAL OF THE ENGINEER.

FOR CLASS I RIP RAP AND #57 STONE, SEE SPECIAL PROVISION, "CONSTRUCTION, MAINTENANCE, AND REMOVAL OF TEMPORARY ACCESS".

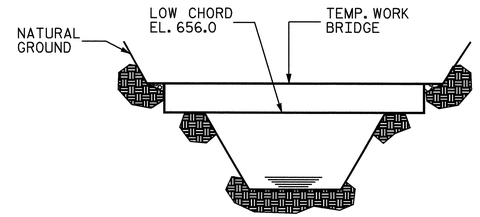

SECTION A-A

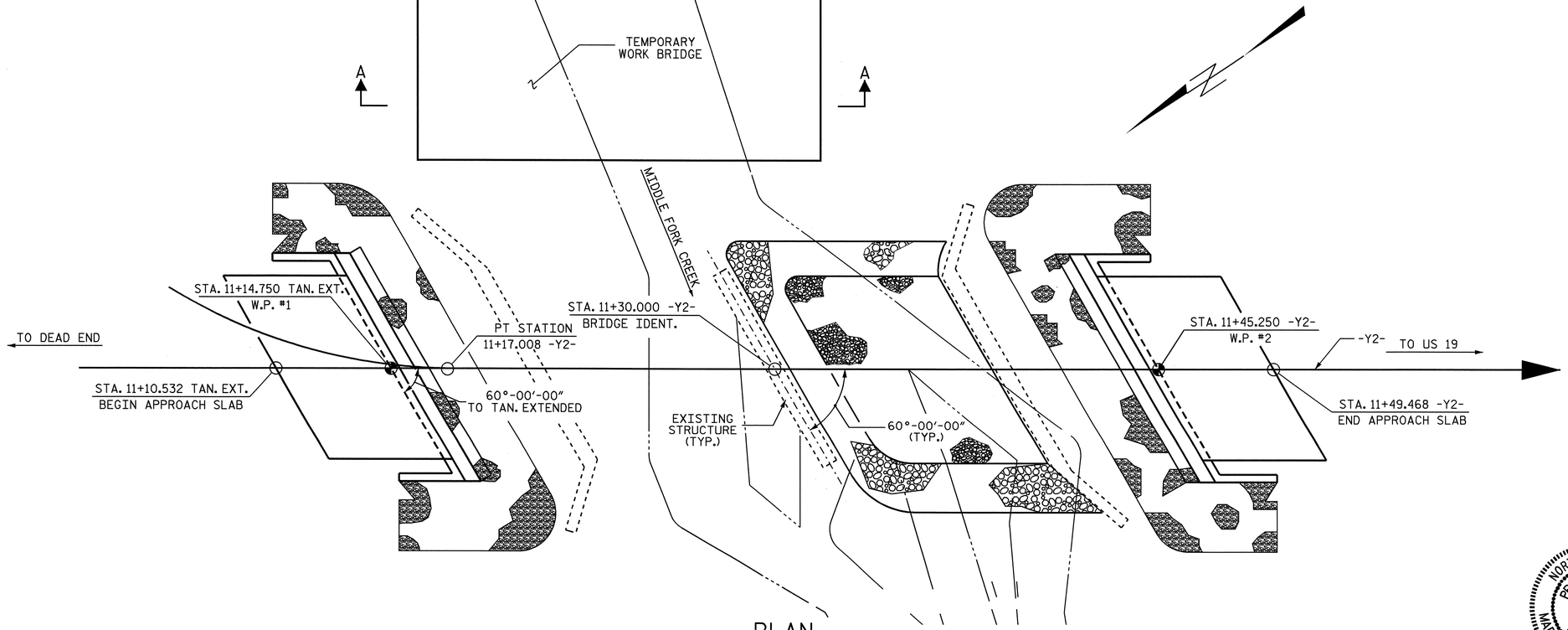

PLAN

PILES NOT SHOWN IN PLAN VIEW FOR CLARITY

DRAWN BY : A.L. FIGUEROA DATE : 7/13/07
CHECKED BY : M.G. CHEEK DATE : 9/10/07

PROJECT NO. R-2518A
MADISON/YANCEY COUNTY
STATION: 11+30.000 -Y2-

STATE OF NORTH CAROLINA
DEPARTMENT OF TRANSPORTATION
RALEIGH

TEMPORARY ACCESS

NORTH CAROLINA PROFESSIONAL SEAL 20125 ENGINEER MARSHALL G. CHEEK, JR.
10-17-07

REVISIONS						SHEET NO.
NO.	BY:	DATE:	NO.	BY:	DATE:	S-4
1			3			TOTAL SHEETS
2			4			19

STR. #1

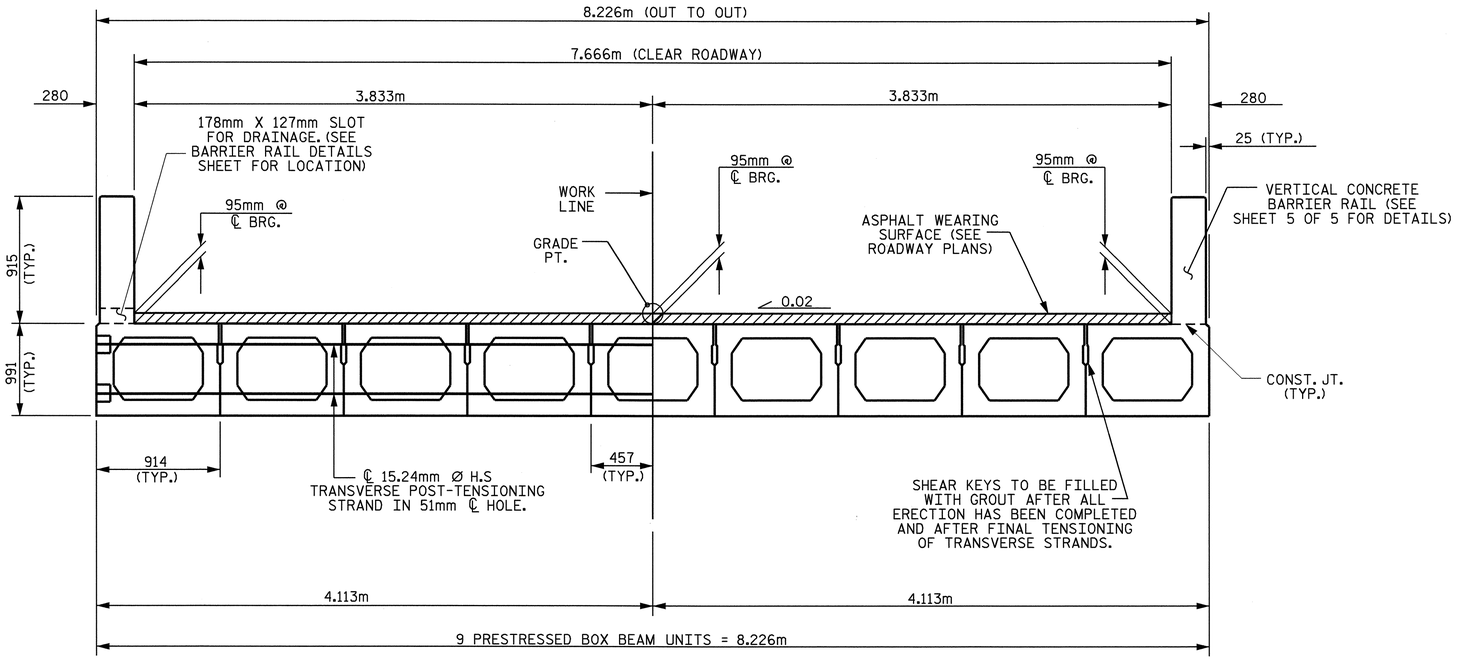

HALF SECTION AT INTERMEDIATE DIAPHRAGMS

HALF SECTION OF VOIDS

TYPICAL SECTION

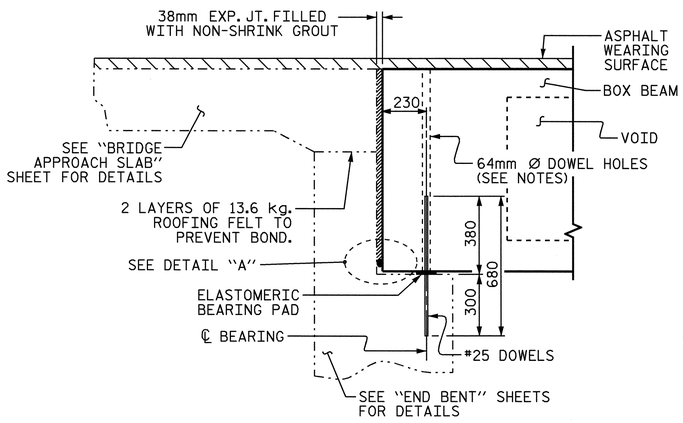

SECTION AT END BENT

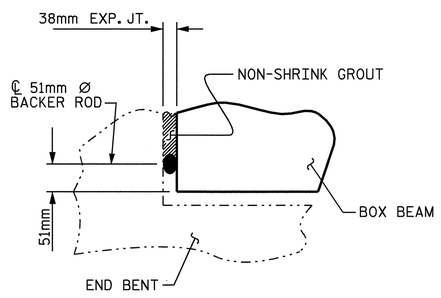

DETAIL "A"

NOTES

ALL PRESTRESSING STRANDS SHALL BE 7-WIRE LOW RELAXATION GRADE 270 STRANDS AND SHALL CONFORM TO AASHTO M203M EXCEPT FOR SAMPLING REQUIREMENTS WHICH SHALL BE IN ACCORDANCE WITH THE STANDARD SPECIFICATIONS.

ALL REINFORCING STEEL CAST WITH THE BOX BEAM SECTIONS SHALL BE GRADE 420 AND SHALL BE INCLUDED IN THE UNIT PRICE BID FOR PRESTRESSED CONCRETE BOX BEAMS.

RECESSES FOR TRANSVERSE STRANDS SHALL BE GROUTED AFTER THE TENSIONING OF THE STRANDS.

THE 64mm Ø DOWEL HOLES AT FIXED ENDS OF BOX BEAM SECTIONS SHALL BE FILLED WITH NON-SHRINK GROUT.

THE TRANSFER OF LOAD FROM THE ANCHORAGES TO THE BOX BEAM UNIT SHALL BE DONE WHEN THE CONCRETE HAS REACHED A COMPRESSIVE STRENGTH OF NOT LESS THAN 37.2 MPa.

ALL REINFORCING STEEL IN VERTICAL CONCRETE BARRIER RAILS SHALL BE EPOXY COATED.

PRESTRESSING STRANDS SHALL BE CUT FLUSH WITH THE BOX BEAM UNIT ENDS.

APPLY EPOXY PROTECTIVE COATING TO BOX BEAM UNIT ENDS.

VERTICAL GROOVED CONTRACTION JOINTS, 12mm IN DEPTH, SHALL BE TOOLED IN ALL EXPOSED FACES OF THE BARRIER RAIL AND IN ACCORDANCE WITH ARTICLE 825-10(B) OF THE STANDARD SPECIFICATIONS. A VERTICAL CONTRACTION JOINT SHALL BE LOCATED AT EACH THIRD POINT BETWEEN BARRIER RAIL EXPANSION JOINTS. ONLY ONE CONTRACTION JOINT IS REQUIRED AT MIDPOINT OF BARRIER RAIL SEGMENTS LESS THAN 6.1m IN LENGTH AND NO CONTRACTION JOINTS ARE REQUIRED FOR THOSE SEGMENTS LESS THAN 3.5m IN LENGTH.

THE LOCATION OF THE VOID DRAINS MAY BE SHIFTED SLIGHTLY WHERE NECESSARY TO CLEAR PRESTRESSING STRANDS OR TRANSVERSE REINFORCING STEEL.

THE 51mm Ø BACKER ROD SHALL CONFORM TO THE REQUIREMENTS OF TYPE M BOND BREAKER. SEE SECTION 1028 OF THE STANDARD SPECIFICATIONS.

THE JOINT OPENING BETWEEN THE BACKWALL AND BOX BEAM UNITS SHALL BE FILLED WITH GROUT.

FOR GROUT FOR STRUCTURES, SEE SPECIAL PROVISIONS.

FOR PRESTRESSED CONCRETE MEMBERS, SEE SPECIAL PROVISIONS.

PROJECT NO. R-2518A

MADISON/YANCEY COUNTY

STATION: 11+30.000 -Y2-

SHEET 1 OF 5

NORTH CAROLINA PROFESSIONAL SEAL 20125 ENGINEER MARSHALL G. CHEEK JR. 4-3-08

STATE OF NORTH CAROLINA
DEPARTMENT OF TRANSPORTATION
RALEIGH

SUPERSTRUCTURE
TYPICAL SECTION
914mm X 991 mm
PRESTRESSED CONCRETE
BOX BEAM UNIT

REVISIONS						SHEET NO.
NO.	BY:	DATE:	NO.	BY:	DATE:	S-5
1			3			TOTAL SHEETS
2			4			19

STR. #1

DRAWN BY : J. LAMBERT DATE : 5/07
CHECKED BY : M.G. CHEEK DATE : 8/07

02-APR-2008 12:42
r:\structures\str*01\jlambert\r-2518a_sd_ts.dgn
lmurphy

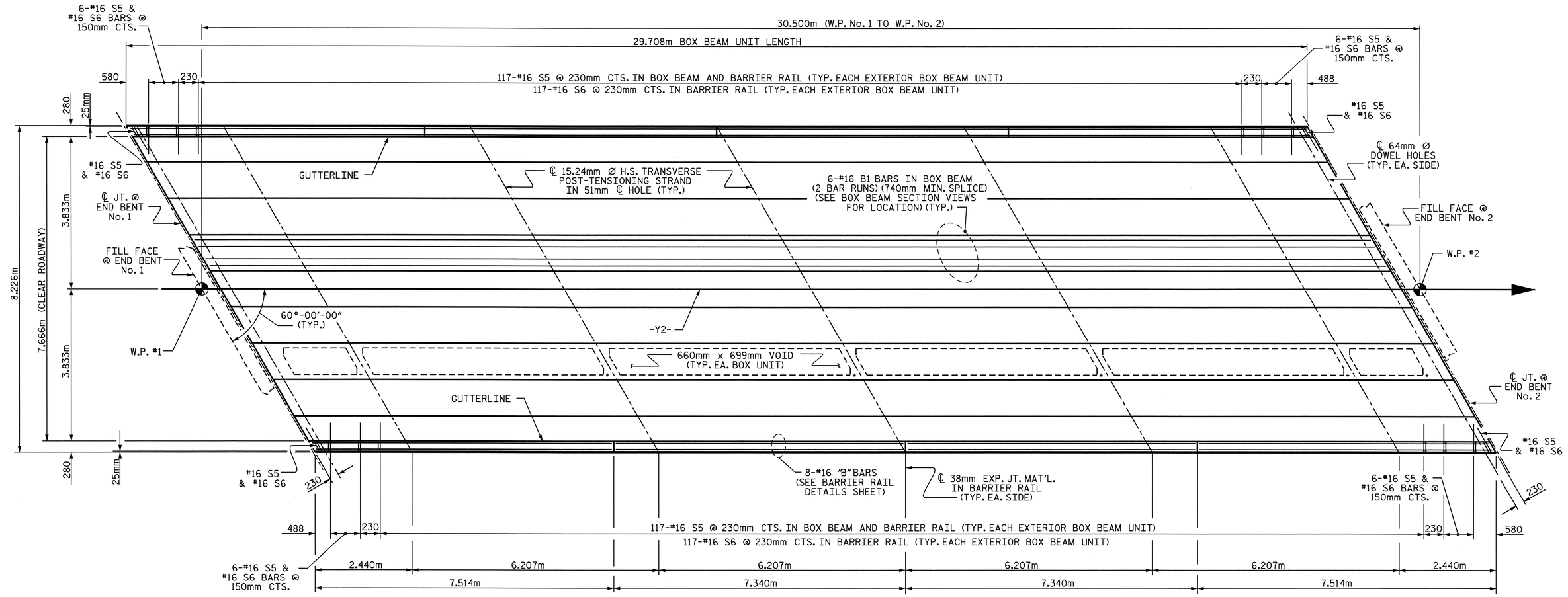

PLAN OF SPAN

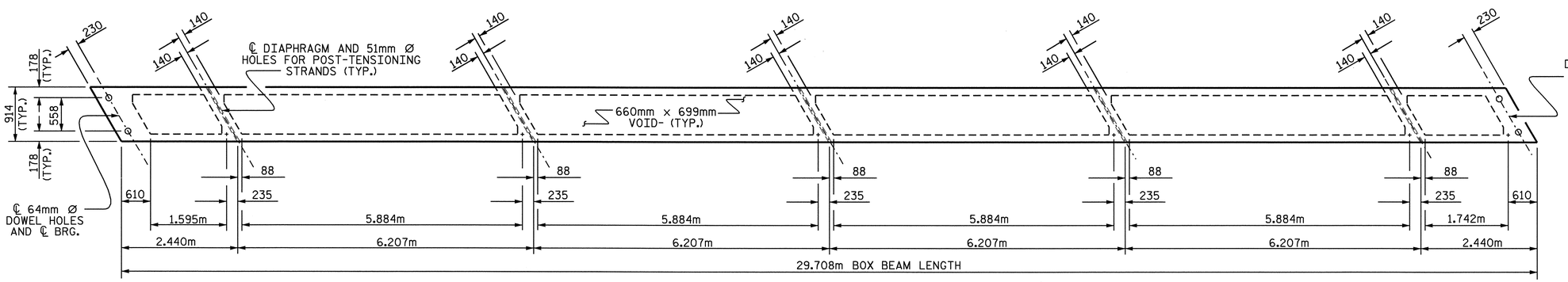

PLAN OF BOX BEAM UNIT

PROJECT NO. R-2518A

MADISON/YANCEY COUNTY

STATION: 11+30.000 -Y2-

SHEET 2 OF 5

STATE OF NORTH CAROLINA
DEPARTMENT OF TRANSPORTATION
RALEIGH

SUPERSTRUCTURE
PLAN OF SPAN

NORTH CAROLINA PROFESSIONAL SEAL 20125 ENGINEER MARSHALL G. CHEEK, JR.
10-1-07

REVISIONS						SHEET NO.
NO.	BY:	DATE:	NO.	BY:	DATE:	S-6
1			3			TOTAL SHEETS
2			4			19

DRAWN BY : J. LAMBERT DATE : 05/2007
CHECKED BY : M.G. CHEEK DATE : 08/2007

01-OCT-2007 10:34
r:\structures\str*01\jlambert\r-2518a_sd_ts.dgn
jlambert

STR. #1

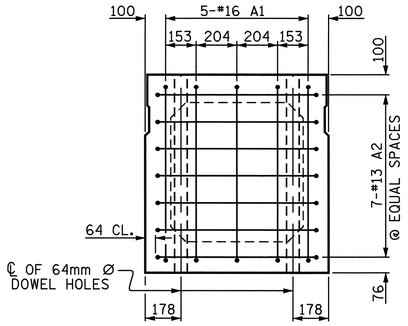

END ELEVATION

SHOWING PLACEMENT OF #16 & #13 "A" BARS AND LOCATION OF DOWEL HOLES.
(INTERIOR BOX BEAM SECTION SHOWN-EXTERIOR SECTION SIMILAR EXCEPT SHEAR KEY LOCATION. STRAND LAYOUT NOT SHOWN.)

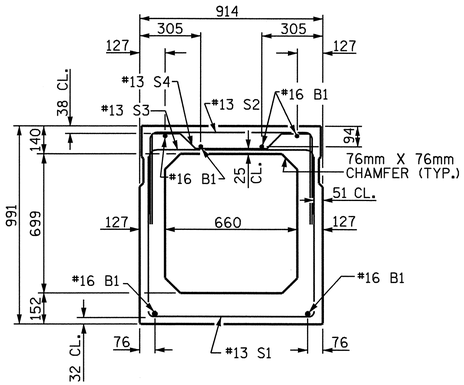

INTERIOR BOX BEAM SECTION

(STRAND LAYOUT NOT SHOWN)

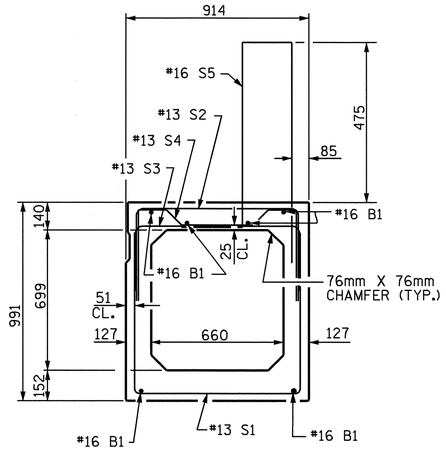

EXTERIOR BOX BEAM SECTION

(STRAND LAYOUT NOT SHOWN)

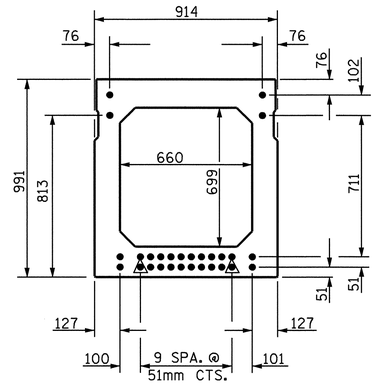

TYPICAL STRAND LOCATION

(28 STRANDS REQUIRED)

(INTERIOR BOX BEAM SECTION SHOWN-EXTERIOR SECTION SIMILAR EXCEPT SHEAR KEY LOCATION)

DEBONDING LEGEND

- ● FULLY BONDED STRANDS
- ◬ STRANDS DEBONDED FOR 1.220m FROM END OF GIRDER

BOND SHALL BE BROKEN ON STRANDS AS SHOWN FOR THE SPECIFIED LENGTH FROM EACH END OF THE BOX BEAM. SEE STANDARD SPECIFICATIONS ARTICLE 1078-7.

BAR TYPES

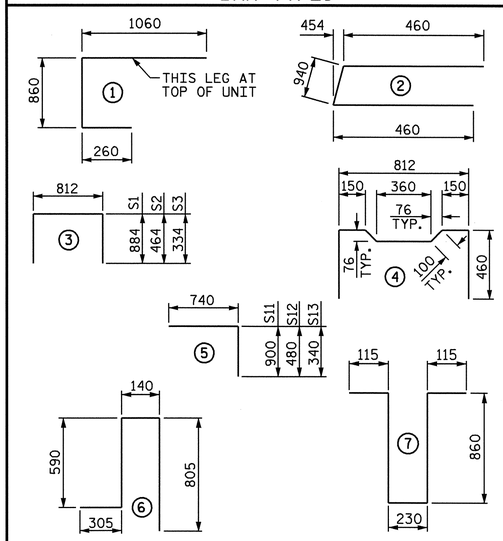

ALL BAR DIMENSIONS ARE OUT TO OUT

BILL OF MATERIAL FOR ONE BOX BEAM SECTION

BAR	NUMBER	SIZE	TYPE	EXTERIOR UNIT LENGTH	EXTERIOR UNIT WEIGHT	INTERIOR UNIT LENGTH	INTERIOR UNIT WEIGHT
A1	10	#16	1	2180	34	2180	34
A2	44	#13	2	1860	81	1860	81
B1	12	#16	STR	15260	284	15260	284
K1	15	#13	7	2180	33	2180	33
K2	10	#13	STR	800	8	800	8
S1	67	#13	3	2580	172	2580	172
S2	67	#13	3	1740	116	1740	116
S3	125	#13	3	1480	184	1480	184
S4	58	#13	4	1780	103	1780	103
S11	28	#13	5	1640	46	1640	46
S12	28	#13	5	1220	34	1220	34
S13	28	#13	5	1080	30	1080	30
✳ S5	131	#16	6	1840	374	--	--
REINFORCING STEEL					1125 kg		1125 kg
✳ EPOXY COATED REINF. STEEL					374 kg		
48.3 MPa CONCRETE					14.5 CU. METERS		14.5 CU. METERS
15.24mm Ø L.R. STRANDS					No. 28		No. 28

✳ THESE BARS ARE EPOXY COATED

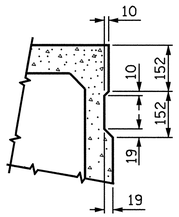

SHEAR KEY DETAIL

NOTE: OMIT SHEAR KEY ON OUTSIDE FACE OF EXTERIOR BOX BEAMS.

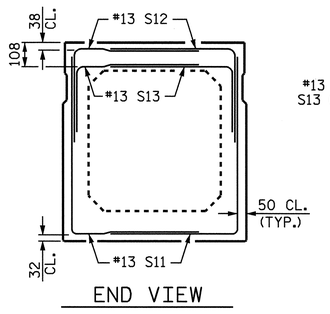

END VIEW

(SHOWING #13 "S" BARS IN END OF BEAM)

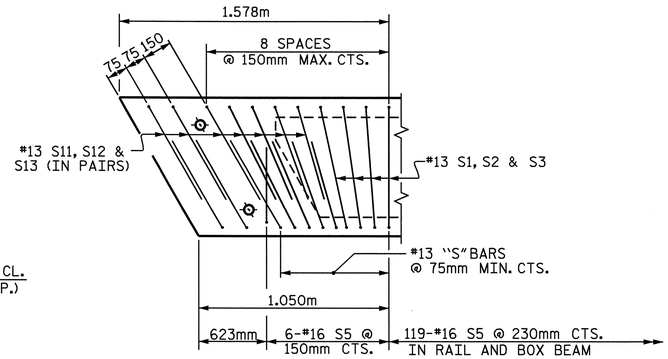

DETAIL "B"

EXTERIOR UNIT SHOWN, INTERIOR UNIT SIMILAR EXCEPT OMIT #16 S5 BARS.
"B" BARS AND "A" BARS NOT SHOWN.

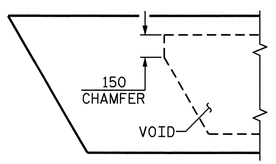

CHAMFER DETAIL

SHOWING 150mm VOID CHAMFER

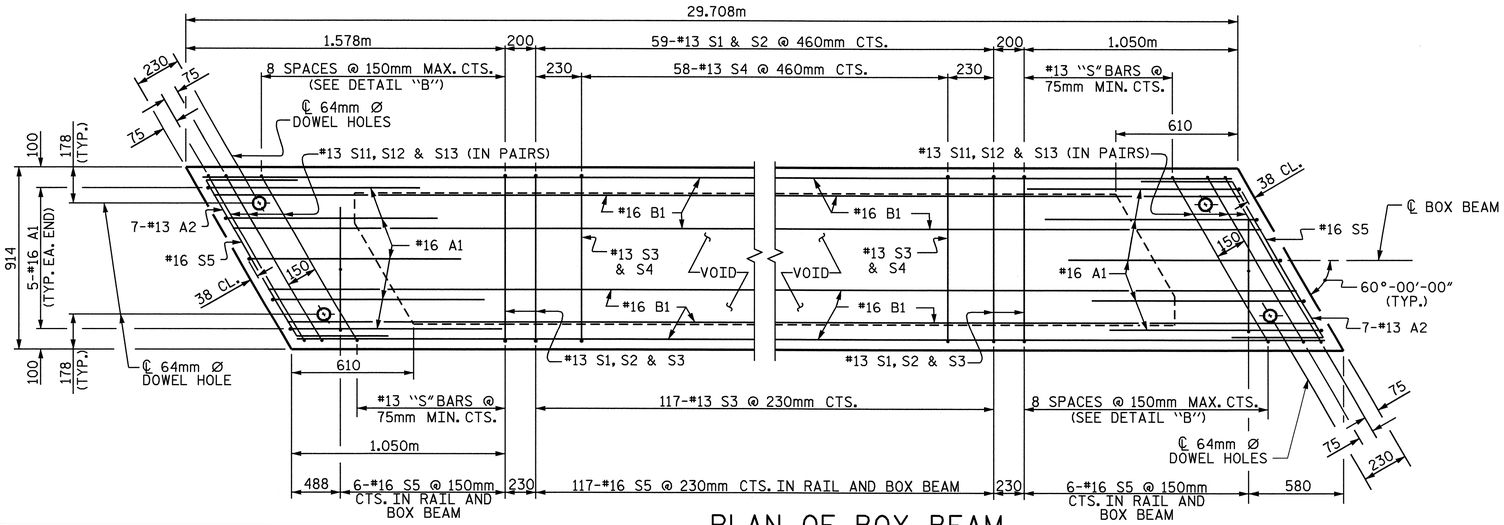

PLAN OF BOX BEAM

EXTERIOR UNIT SHOWN, INTERIOR UNIT SIMILAR EXCEPT OMIT #16 S5 BARS.
FOR LOCATION OF DIAPHRAGMS, SEE PLAN OF SPAN.
FOR REINFORCING STEEL IN DIAPHRAGMS, SEE DIAPHRAGM DETAILS, SHEET 4 OF 5.

15.24mm Ø LOW RELAXATION STRAND LAYOUT

GRADE 270 STRANDS	15.24mm Ø L.R.
AREA (mm²)	140.00
ULTIMATE STRENGTH (KN PER STRAND)	260.7
APPLIED PRESTRESS (KN PER STRAND)	195.5

PROJECT NO. R-2518A
MADISON/YANCEY COUNTY
STATION: 11+30.000 -Y2-

SHEET 3 OF 5

STATE OF NORTH CAROLINA
DEPARTMENT OF TRANSPORTATION
RALEIGH

STANDARD

914mm X 991mm
PRESTRESSED CONCRETE
BOX BEAM UNIT

REVISIONS NO.	BY:	DATE:	NO.	BY:	DATE:	SHEET NO.
1			3			S-7
2			4			TOTAL SHEETS 19

ASSEMBLED BY : J. LAMBERT	DATE : 05/07	ADDED 7/11/05	
CHECKED BY : MG CHEEK	DATE : 08/07	REV. 5/1/06	TLA/GM
DRAWN BY : TLA 5/05			
CHECKED BY : GM 6/05			

01-OCT-2007 10:33
r:\structures\str*01\jlambert\r-2518a_sd_ts.dgn
jlambert

STR. #1

STD. NO. PCBB6SM

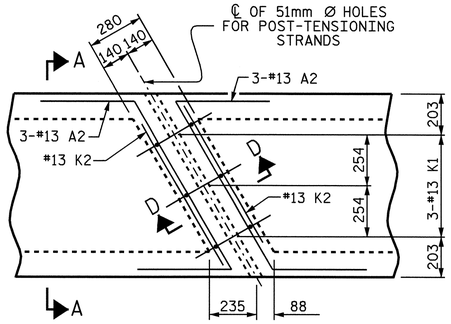

PLAN

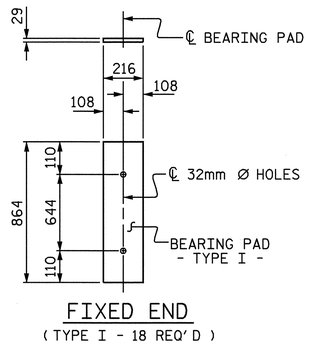

FIXED END

(TYPE I - 18 REQ'D)

ELASTOMERIC BEARING DETAILS

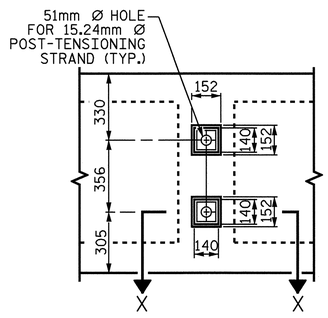

VIEW Y-Y

SHOWING ELEVATION VIEW OF GROUTED RECESS

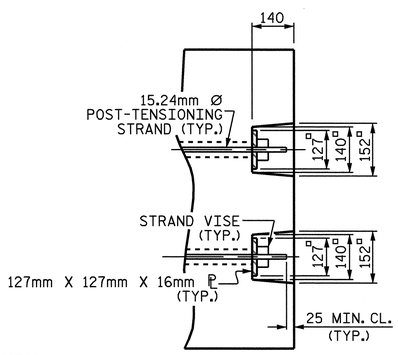

DETAIL "C"

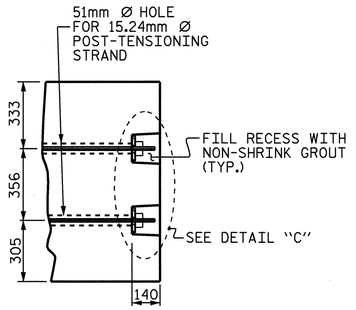

PART SECTION AT RECESS

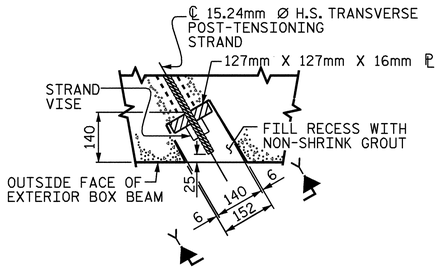

SECTION X-X

SHOWING PLAN VIEW OF GROUTED RECESS

GROUTED RECESS DETAIL AT END OF POST-TENSIONED STRAND OF EXTERIOR BOX BEAM

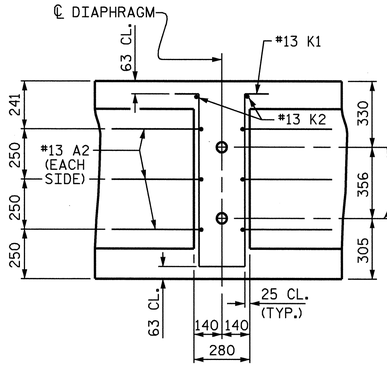

SECTION D-D

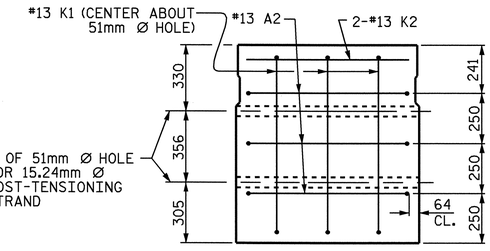

SECTION A-A

VOIDS NOT SHOWN

DOUBLE DIAPHRAGM DETAILS

#13 "S" BARS NOT SHOWN. #13 "S" BARS MAY BE SHIFTED SLIGHTLY TO CLEAR 51mm Ø HOLE.

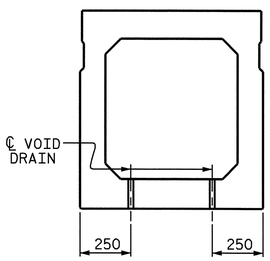

SECTION B-B

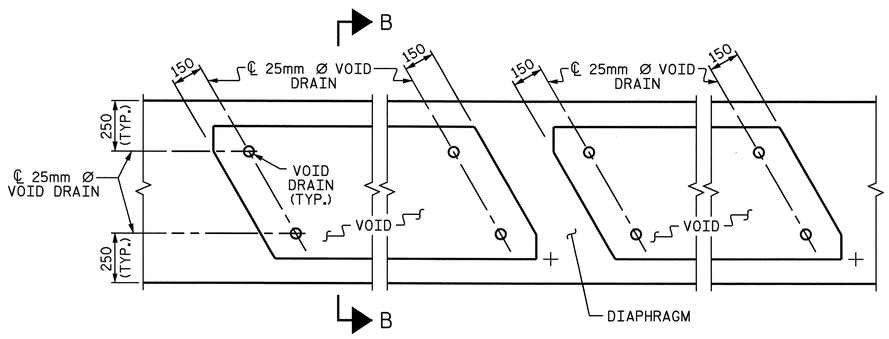

PART PLAN

VOID DRAIN DETAILS

(DIMENSIONS SHOWN ARE TYPICAL FOR EACH VOID)

DEAD LOAD DEFLECTION AND CAMBER	
	914mm x 991mm
	15.24mm Ø L.R. STRAND
	SPAN "A"
CAMBER (BEAM ALONE IN PLACE) ↑	75
✳DEFLECTION DUE TO ASPHALT WEARING SURFACE ↓	20
FINAL CAMBER ↑	55

✳INCLUDES FUTURE WEARING SURFACE

BOX BEAM UNITS REQUIRED			
	NUMBER	LENGTH	TOTAL LENGTH
EXTERIOR B.B.	2	29.708m	59.416m
INTERIOR B.B.	7	29.708m	207.956m
TOTAL	9	——	267.372m

PROJECT NO. R-2518A

MADISON/YANCEY COUNTY

STATION: 11+30.000 -Y2-

SHEET 4 OF 5

STATE OF NORTH CAROLINA
DEPARTMENT OF TRANSPORTATION
RALEIGH

STANDARD

914mm X 991mm
PRESTRESSED CONCRETE
BOX BEAM UNIT

REVISIONS						SHEET NO.
NO.	BY:	DATE:	NO.	BY:	DATE:	S-8
1			3			TOTAL SHEETS
2			4			19

ASSEMBLED BY : J. LAMBERT	DATE : 5/07	
CHECKED BY : M.G. CHEEK	DATE : 8/07	
DRAWN BY : TLA 5/05	ADDED 7/11/05	
CHECKED BY : GM 6/05	REV. 5/1/06 TLA/GM	

02-APR-2008 15:31
r:\structures\Str#01\jlambert\r-2518a_sd_ts.dgn
jmurphy

STR. #1

STD. NO. PCBB7SM

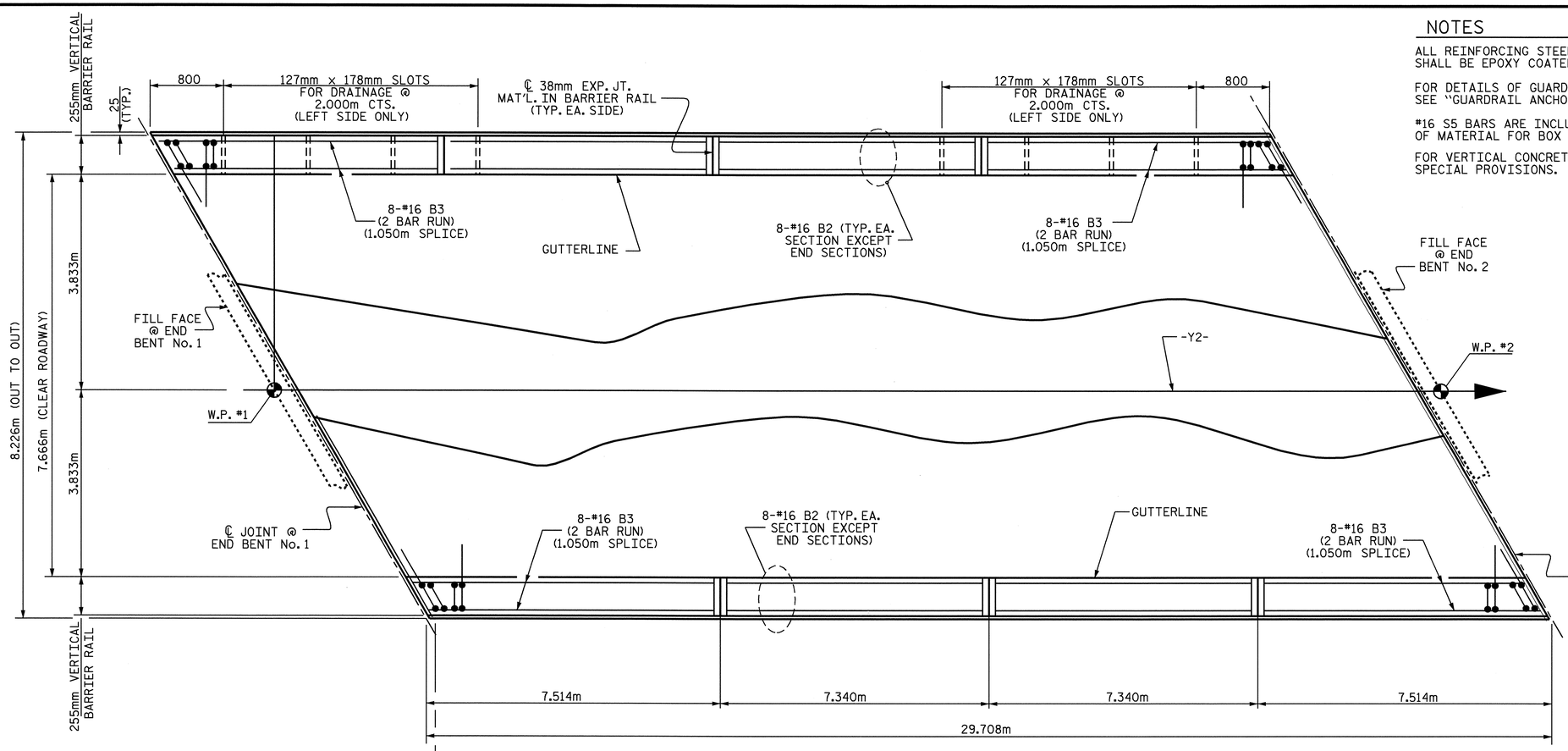

PLAN OF BARRIER RAIL

FOR #16 S5 BARS IN BARRIER RAIL AND BOX BEAM, SEE "914mm X 991mm PRESTRESSED CONCRETE BOX BEAM UNIT" SHEETS.

NOTES

ALL REINFORCING STEEL IN BARRIER RAILS SHALL BE EPOXY COATED.

FOR DETAILS OF GUARDRAIL ANCHOR ASSEMBLIES, SEE "GUARDRAIL ANCHORAGE DETAILS" SHEET.

#16 S5 BARS ARE INCLUDED IN THE BILL OF MATERIAL FOR BOX BEAM SECTION.

FOR VERTICAL CONCRETE BARRIER RAIL, SEE SPECIAL PROVISIONS.

BILL OF MATERIAL

FOR TWO VERTICAL CONCRETE BARRIER RAILS

BAR	NO.	SIZE	TYPE	LENGTH	WEIGHT
✳B2	32	#16	STR	7240	360
✳B3	64	#16	STR	4360	433
✳S6	262	#16	7	1680	683

✳EPOXY COATED REINFORCING STEEL 1476 kg

CLASS AA CONCRETE 13.9 CU. METERS

VERTICAL CONC. BARRIER RAIL 59.416 METERS

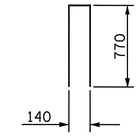

⑦

BAR TYPE

BAR DIMENSIONS ARE OUT TO OUT

✳THESE BARS ARE EPOXY COATED.

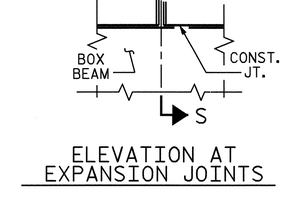

ELEVATION AT EXPANSION JOINTS

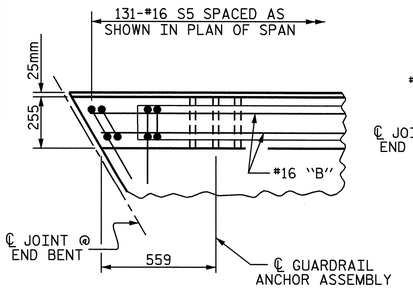

PLAN OF BARRIER RAIL

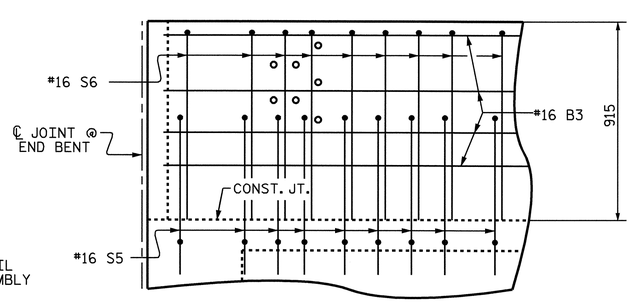

ELEVATION

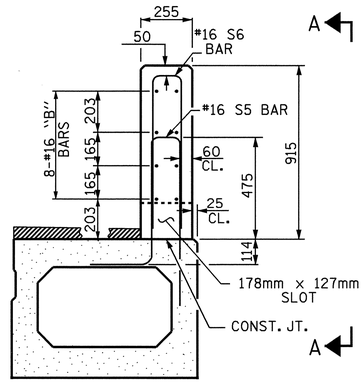

SECTION THRU BARRIER RAIL

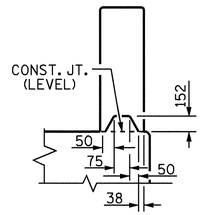

SECTION S-S

AT DAM IN OPEN JOINT (THIS IS TO BE USED ONLY WHEN SLIP FORM IS USED)

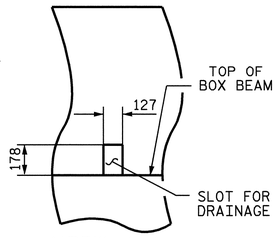

VIEW A-A

SEE PLAN OF BARRIER RAIL FOR SLOT LOCATIONS. (SLOT MAY BE SHIFTED SLIGHTLY AS NECESSARY TO CENTER SLOTS BETWEEN #16 S5 & #16 S6 BARS IN BARRIER RAIL)

VERTICAL CONCRETE BARRIER RAIL

DRAWN BY : J. LAMBERT DATE : 5/07
CHECKED BY : MG CHEEK DATE : 8/07

02-APR-2008 15:33
r:\structures\Str*01\jlambert\r-2518a_sd_ts.dgn
jmurphy

PROJECT NO. R-2518A
MADISON/YANCEY COUNTY
STATION: 11+30.000 -Y2-

SHEET 5 OF 5

STATE OF NORTH CAROLINA
DEPARTMENT OF TRANSPORTATION
RALEIGH

VERTICAL CONCRETE BARRIER RAIL DETAILS

REVISIONS						SHEET NO.
NO.	BY:	DATE:	NO.	BY:	DATE:	S-9
1			3			TOTAL SHEETS
2			4			19

NORTH CAROLINA PROFESSIONAL SEAL 20125 ENGINEER MARSHALL G. CHEEK, JR.
1-3-08

STR. #1

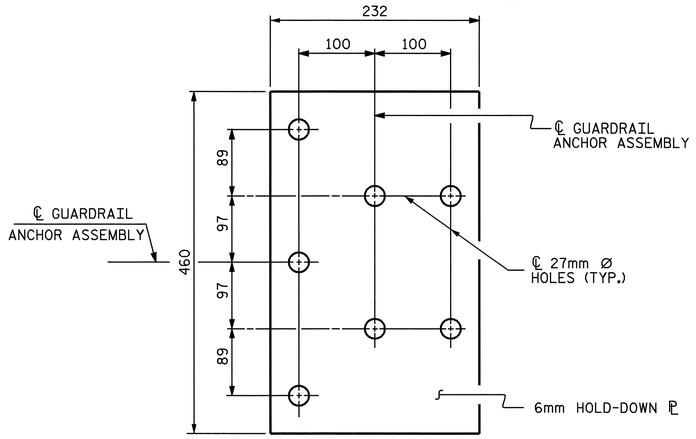

PLAN

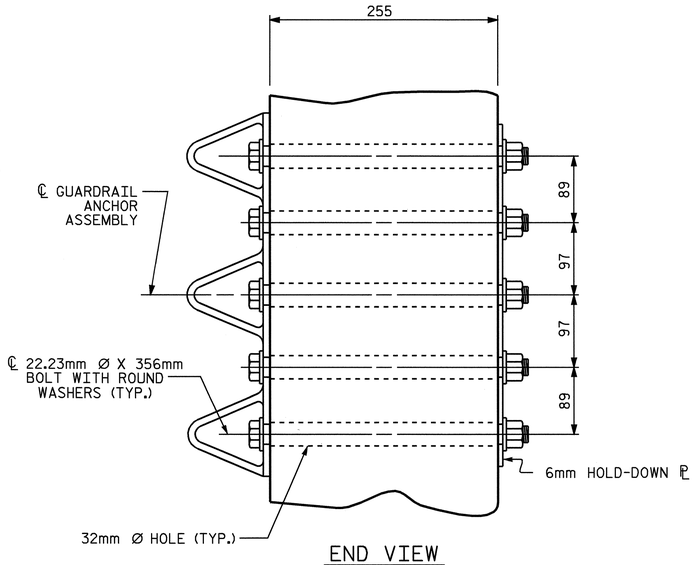

END VIEW

GUARDRAIL ANCHOR ASSEMBLY DETAILS

NOTES

THE GUARDRAIL ANCHOR ASSEMBLY SHALL CONSIST OF A 6mm HOLD DOWN PLATE AND 7 - 22.23mm Ø BOLTS WITH NUTS AND WASHERS.

THE HOLD-DOWN PLATE SHALL CONFORM TO AASHTO M270 GRADE 250. AFTER FABRICATION, THE HOLD-DOWN PLATE SHALL BE HOT-DIP GALVANIZED IN ACCORDANCE WITH AASHTO M111.

BOLTS SHALL CONFORM TO THE REQUIREMENTS OF ASTM A307 AND NUTS SHALL CONFORM TO THE REQUIREMENTS OF AASHTO M291M. BOLTS, NUTS AND WASHERS SHALL BE GALVANIZED. AT THE CONTRACTOR'S OPTION, STAINLESS STEEL BOLTS, NUTS AND WASHERS MAY BE USED AS AN ALTERNATE FOR THE 22.23mm Ø GALVANIZED BOLTS, NUTS AND WASHERS. THEY SHALL CONFORM TO OR EXCEED THE MECHANICAL REQUIREMENTS OF ASTM A307. THE USE OF THIS ALTERNATE SHALL BE APPROVED BY THE ENGINEER.

AFTER INSTALLATION, THE EXPOSED THREAD OF THE BOLT SHALL BE BURRED WITH A SHARP POINTED TOOL.

THE COST OF THE GUARDRAIL ANCHOR ASSEMBLIES WITH BOLTS, NUTS AND WASHERS COMPLETE IN PLACE, SHALL BE INCLUDED IN THE VARIOUS PAY ITEMS.

THE VERTICAL REINFORCING BARS MAY BE SHIFTED SLIGHTLY IN THE BARRIER RAIL TO CLEAR ASSEMBLY BOLTS.

THE 32mm Ø HOLES SHALL BE FORMED OR DRILLED WITH A CORE BIT. IMPACT TOOLS WILL NOT BE PERMITTED. ANY CONCRETE DAMAGED BY THIS WORK SHALL BE REPAIRED TO THE SATISFACTION OF THE ENGINEER.

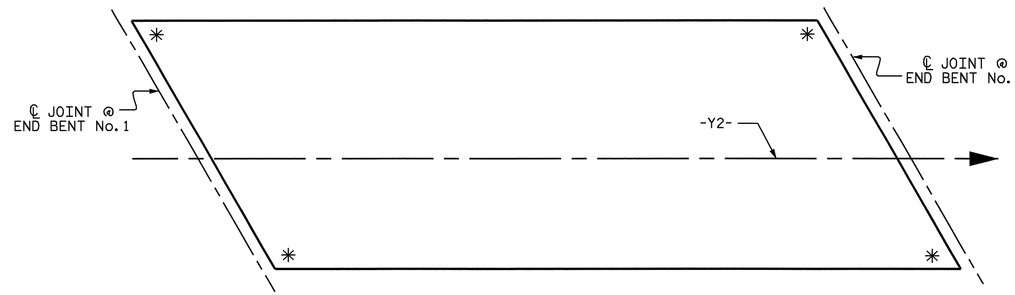

SKETCH SHOWING POINTS OF ATTACHMENT

✳LOCATION OF GUARDRAIL ATTACHMENT

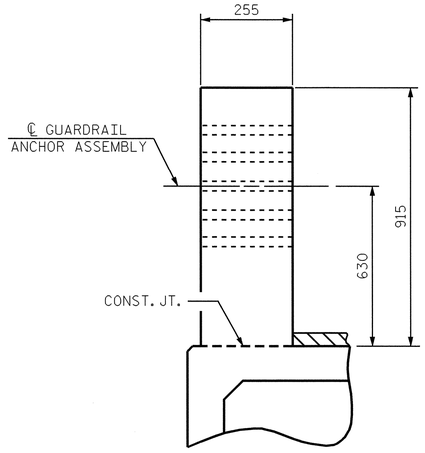

END VIEW

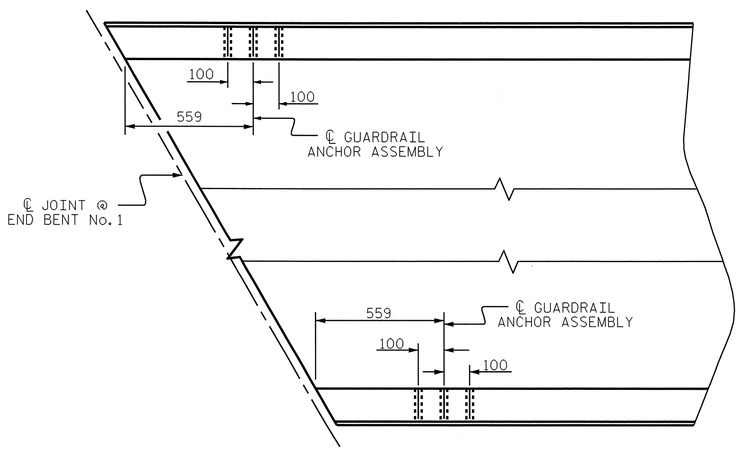

PLAN

LOCATION OF GUARDRAIL ANCHOR AT END POST

PROJECT NO. R-2518A
MADISON/YANCEY COUNTY
STATION: 11+30.000 -Y2-

NORTH CAROLINA PROFESSIONAL SEAL 20125 ENGINEER MARSHALL G. CHEEK, JR.
10-1-'07

STATE OF NORTH CAROLINA
DEPARTMENT OF TRANSPORTATION
RALEIGH
STANDARD

GUARDRAIL ANCHORAGE DETAILS

REVISIONS						SHEET NO.
NO.	BY:	DATE:	NO.	BY:	DATE:	S-10
1			3			TOTAL SHEETS
2			4			19

ASSEMBLED BY : J. LAMBERT	DATE : 5/07		
CHECKED BY : M.G. CHEEK	DATE : 8/07		
DRAWN BY : EEM 6/94	REV. 10/17/00	RWW/LES	
CHECKED BY : RGW 6/94	REV. 5/7/03	RWW/JTE	
	REV. 5/1/06	TLA/GM	

01-OCT-2007 10:32
r:\structures\str*01\jlambert\r-2518a_sd_ts.dgn
jlambert

STR. #1

STD. NO. BMR8SM

NOTES

STIRRUPS IN CAP MAY BE SHIFTED AS NECESSARY TO CLEAR ANCHOR BOLTS.

FOR PILE SPLICE DETAILS, SEE SHEET 3 OF 3.

THE CONTRACTOR SHALL PROVIDE FOR INSTALLATION OF THE 102mm DIAMETER DRAIN PIPE THROUGH THE WING WALL AS REQUIRED FOR REINFORCED BRIDGE APPROACH FILLS, SEE THE ROADWAY PLANS. REINFORCING STEEL IN THE WING WALL MAY BE SHIFTED AS NECESSARY TO CLEAR THE DRAIN PIPE.

THE LATERAL GUIDE AT EACH END OF THE CAP IS NOT TO BE POURED UNTIL AFTER THE BOX BEAM UNITS ARE IN PLACE.

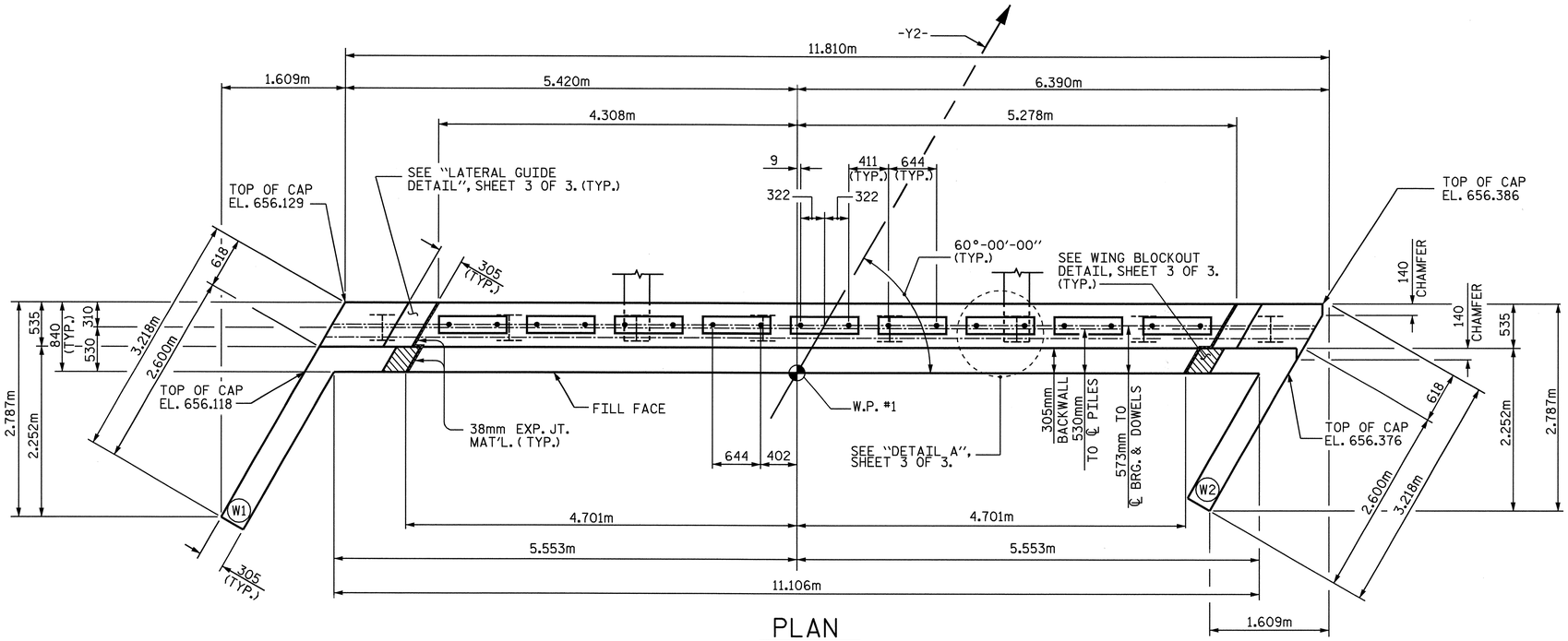

PLAN

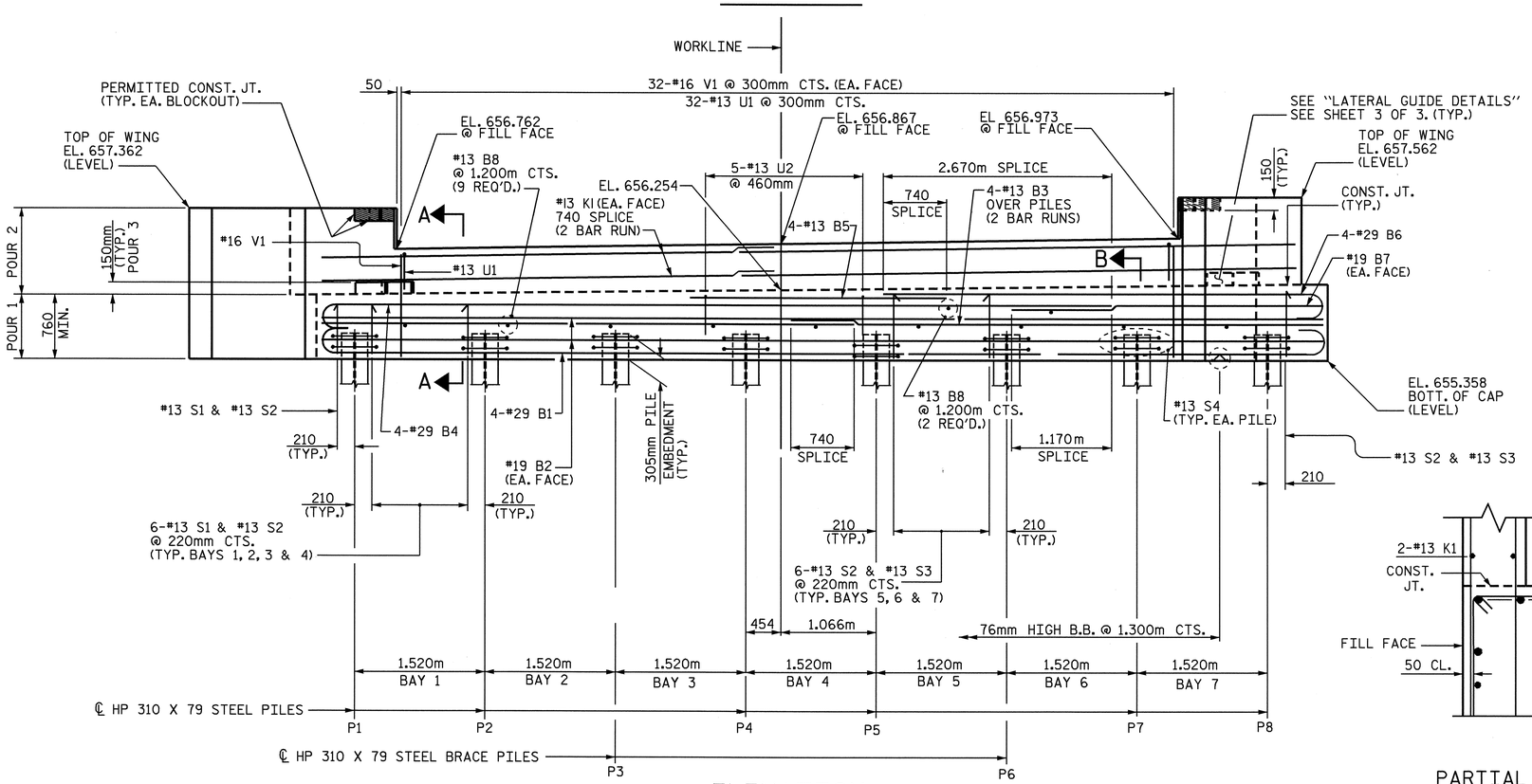

ELEVATION

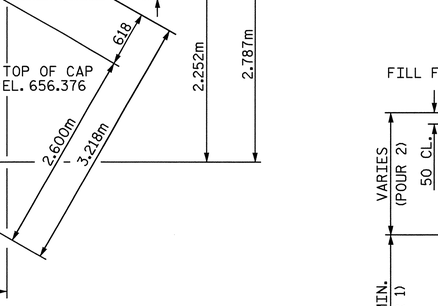

PARTIAL SECTION B

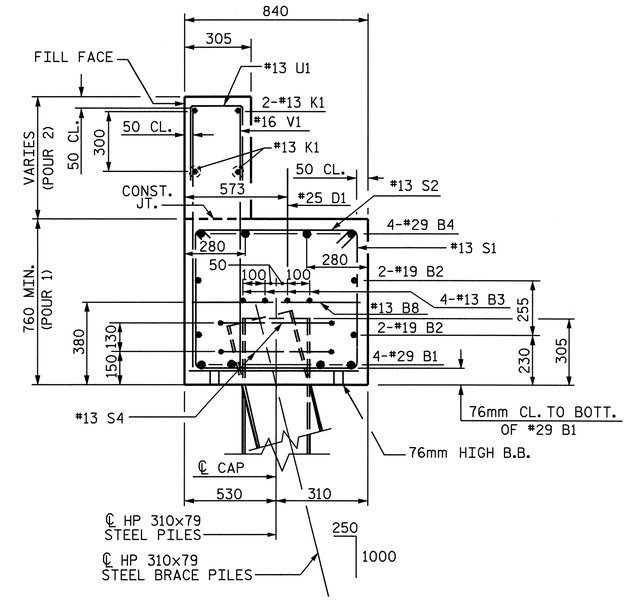

SECTION A-A

NORTH CAROLINA PROFESSIONAL SEAL 20125 ENGINEER MARSHALL H. SHEETS, JR.
4-3-08

PROJECT NO. R-2518A

MADISON/YANCEY COUNTY

STATION: 11+30.000 -Y2-

SHEET 1 OF 3

STATE OF NORTH CAROLINA
DEPARTMENT OF TRANSPORTATION
RALEIGH

SUBSTRUCTURE
END BENT No. 1

REVISIONS						SHEET NO.
NO.	BY:	DATE:	NO.	BY:	DATE:	S-11
1			3			TOTAL SHEETS
2			4			19

DRAWN BY : M. POOLE / WJH DATE : 7/07
CHECKED BY : R.D. MARTIN DATE : 9/26/07

02-APR-2008 15:07
r:\structures\Str*01\Jeff\Microstation\End Bents\R2518A_sd_El_01.dgn
lmurphy

STR. #1

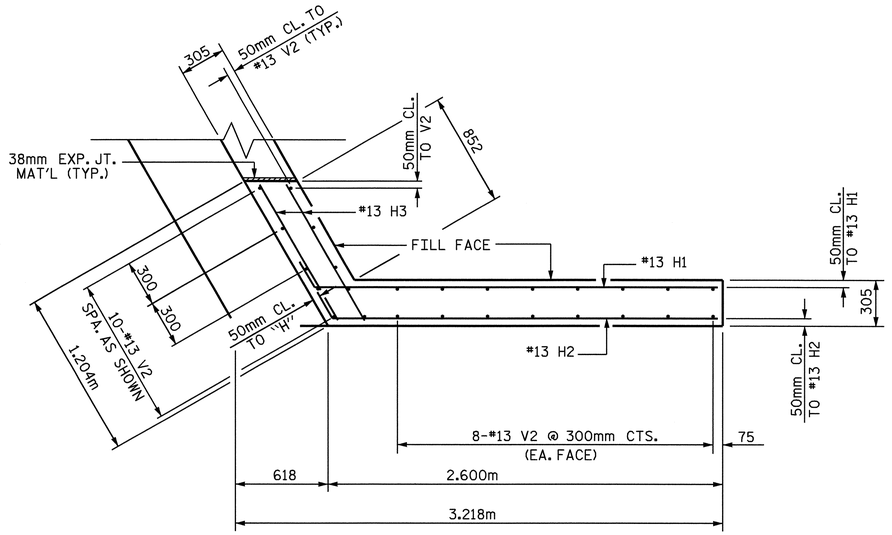

PLAN OF LEFT WING - W1

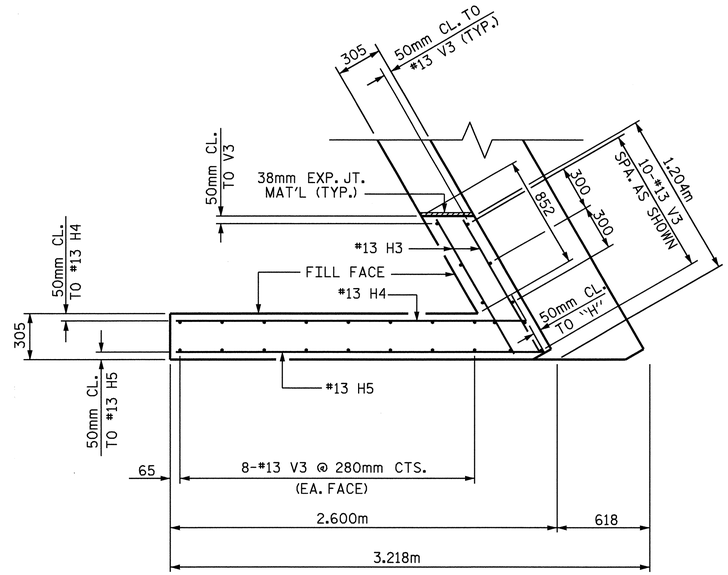

PLAN OF RIGHT WING - W2

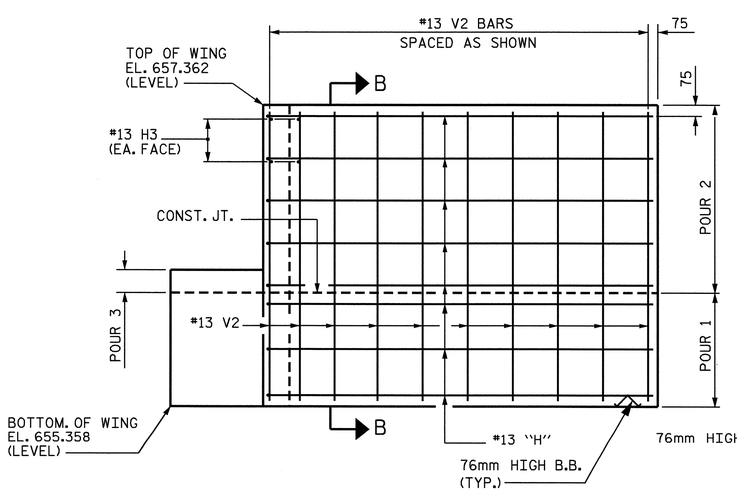

ELEVATION OF LEFT WING - W1

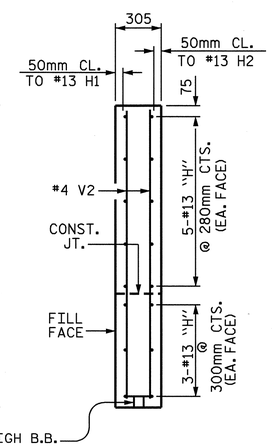

SECTION B-B

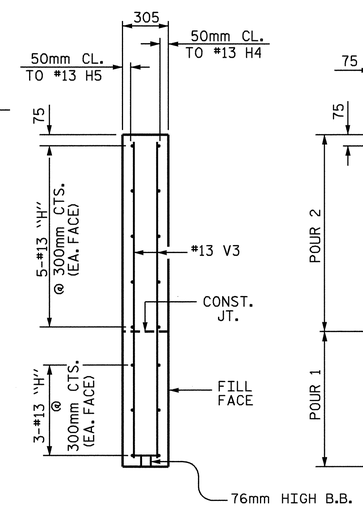

SECTION C-C

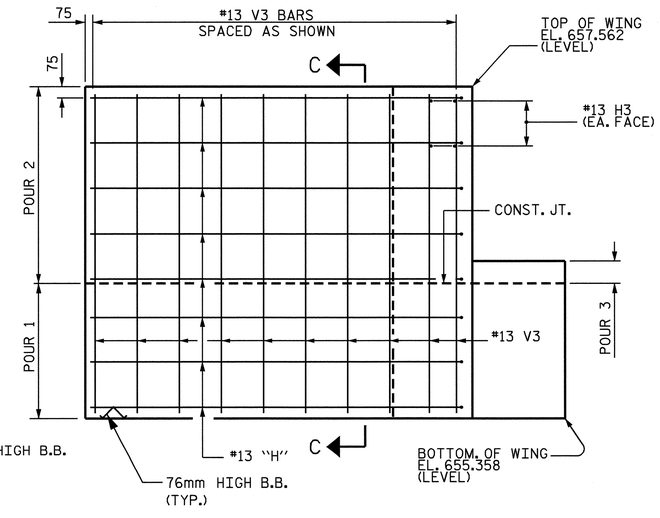

ELEVATION OF RIGHT WING - W2

PROJECT NO. R-2518A
MADISON/YANCEY COUNTY
STATION: 11+30.000 -Y2-

SHEET 2 OF 3

STATE OF NORTH CAROLINA
DEPARTMENT OF TRANSPORTATION
RALEIGH

SUBSTRUCTURE
END BENT No. 1

NORTH CAROLINA PROFESSIONAL SEAL 20125 ENGINEER MARSHALL L. GREEK, JR.
1-3-08

REVISIONS						SHEET NO.
NO.	BY:	DATE:	NO.	BY:	DATE:	S-12
1			3			TOTAL SHEETS
2			4			19

DRAWN BY : M. POOLE / WJH DATE : 7/07
CHECKED BY : R.D. MARTIN DATE : 9/26/07

02-APR-2008 15:08
r:\structures\Str#01\jeff\Microstation\End Bents\R2518A_sd_E1_01.dgn
lmurphy

STR #1

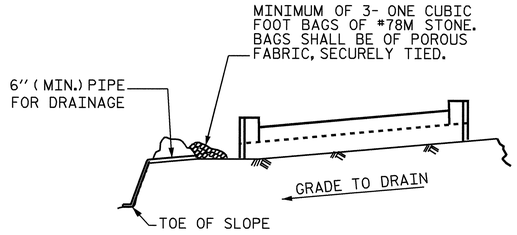

BAGGED STONE AND PIPE SHALL BE PLACED IMMEDIATELY AFTER COMPLETION OF END BENT EXCAVATION. PIPE MAY BE EITHER CONCRETE, CORRUGATED STEEL, CORRUGATED ALUMINUM ALLOY, OR CORRUGATED PLASTIC. PERFORATED PIPE WILL NOT BE ALLOWED.

BAGGED STONE SHALL REMAIN IN PLACE UNTIL THE ENGINEER DIRECTS THAT IT BE REMOVED. THE CONTRACTOR SHALL REMOVE AND DISPOSE OF SILT ACCUMULATIONS AT BAGGED STONE WHEN SO DIRECTED BY THE ENGINEER. BAGS SHALL BE REMOVED AND REPLACED WHENEVER THE ENGINEER DETERMINES THAT THEY HAVE DETERIORATED AND LOST THEIR EFFECTIVENESS.

NO SEPARATE PAYMENT WILL BE MADE FOR THIS WORK AND THE ENTIRE COST OF THIS WORK SHALL BE INCLUDED IN THE UNIT CONTRACT PRICE BID FOR THE SEVERAL PAY ITEMS.

TEMPORARY DRAINAGE AT END BENT

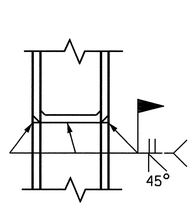

* PILE VERTICAL

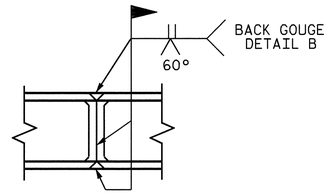

* PILE HORIZONTAL OR VERTICAL

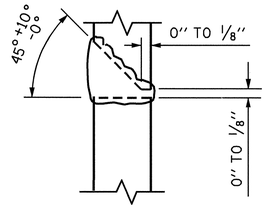

* DETAIL A

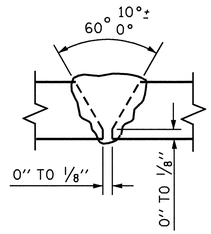

DETAIL B

* POSITION OF PILE DURING WELDING.

PILE SPLICE DETAILS

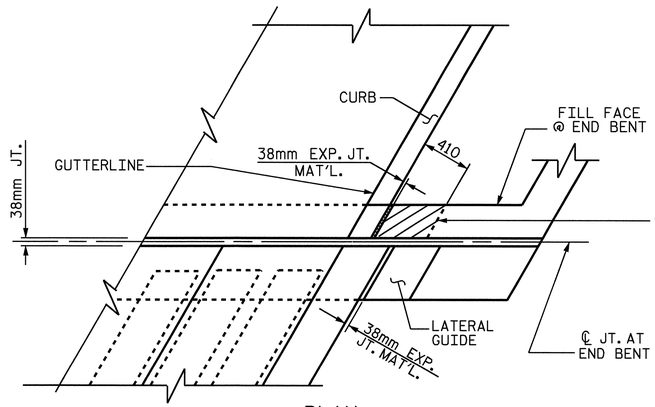

PLAN

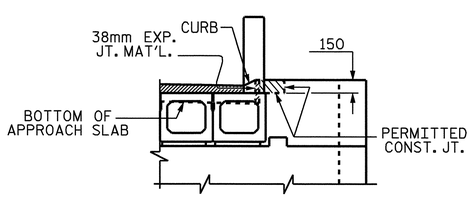

ELEVATION

BLOCKOUT IN WING WALL FOR FITTING COMPRESSION JOINT SEAL

NOTE: THE CONCRETE IN THE SHADED AREA OF THE WING SHALL BE POURED AFTER THE BARRIER RAIL IS CAST IF SLIP FORMING IS USED.

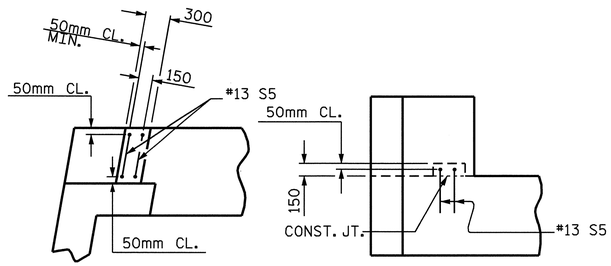

PLAN ELEVATION

LATERAL GUIDE DETAILS

(EACH END SIMILAR)

BAR TYPES

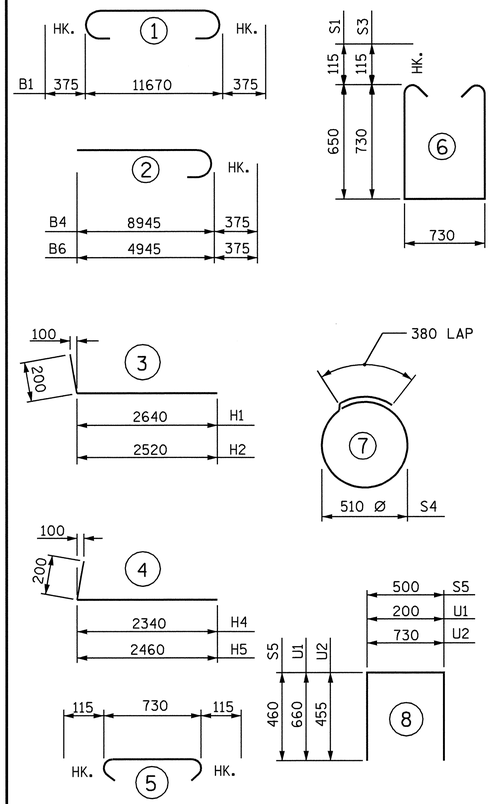

ALL BAR DIMENSIONS ARE OUT TO OUT.

BILL OF MATERIAL

END BENT No. 1

BAR	NO.	SIZE	TYPE	LENGTH	WEIGHT
B1	4	29	1	12420	251
B2	4	19	STR	11700	105
B3	8	13	STR	6220	49
B4	4	29	2	9320	189
B5	4	13	STR	3000	12
B6	4	29	2	5320	108
B7	2	19	STR	3460	15
B8	11	13	STR	740	8
D1	18	25	STR	680	49
H1	8	13	3	2840	23
H2	8	13	3	2720	22
H3	8	13	STR	1080	9
H4	8	13	4	2540	20
H5	8	13	4	2660	21
K1	8	13	STR	6220	49
S1	25	13	6	2260	56
S2	44	13	5	960	42
S3	19	13	6	2420	46
S4	16	13	7	1980	31
S5	4	13	8	1420	6
U1	32	13	8	1520	48
U2	5	13	8	1640	8
V1	64	16	STR	1300	129
V2	26	13	STR	1860	48
V3	26	13	STR	2060	53

REINFORCING STEEL 1398 kg

CLASS A CONCRETE BREAKDOWN
POUR 1
(CAP & LOWER WINGS) 10.0 C.M.
POUR 2
(BACKWALL & UPPER WINGS) 4.4 C.M.
POUR 3
LATERAL GUIDE 0.1 C.M.
TOTAL 14.5 C.M.

HP 310 x 79 STEEL PILES
NO. 8 40.0 METERS

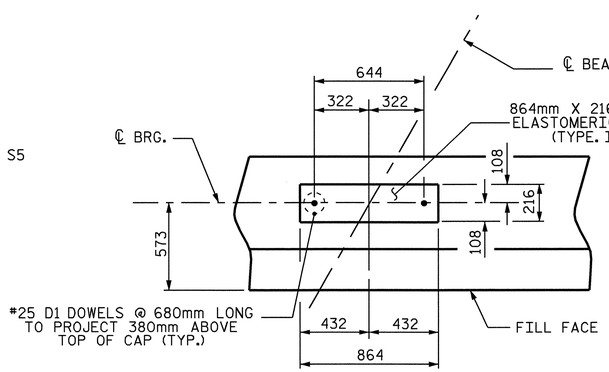

DETAIL A

PROJECT NO. R-2518A
MADISON/YANCEY COUNTY
STATION: 11+30.000 -Y2-

SHEET 3 OF 3

STATE OF NORTH CAROLINA
DEPARTMENT OF TRANSPORTATION
RALEIGH

SUBSTRUCTURE
END BENT No. 1

NORTH CAROLINA PROFESSIONAL SEAL 20125 ENGINEER MARSHALL G. CREECH, JR.
10-2-07

REVISIONS						SHEET NO.
NO.	BY:	DATE:	NO.	BY:	DATE:	S-13
1			3			TOTAL SHEETS
2			4			19

DRAWN BY : M. POOLE / WJH DATE : 7/07
CHECKED BY : R.D. MARTIN DATE : 9/26/07

02-OCT-2007 07:56
R:\Structures\Str*01\Jeff\Microstation\End Bents\R2518A_sd_E1_01.dgn
wjharris

STR. #1

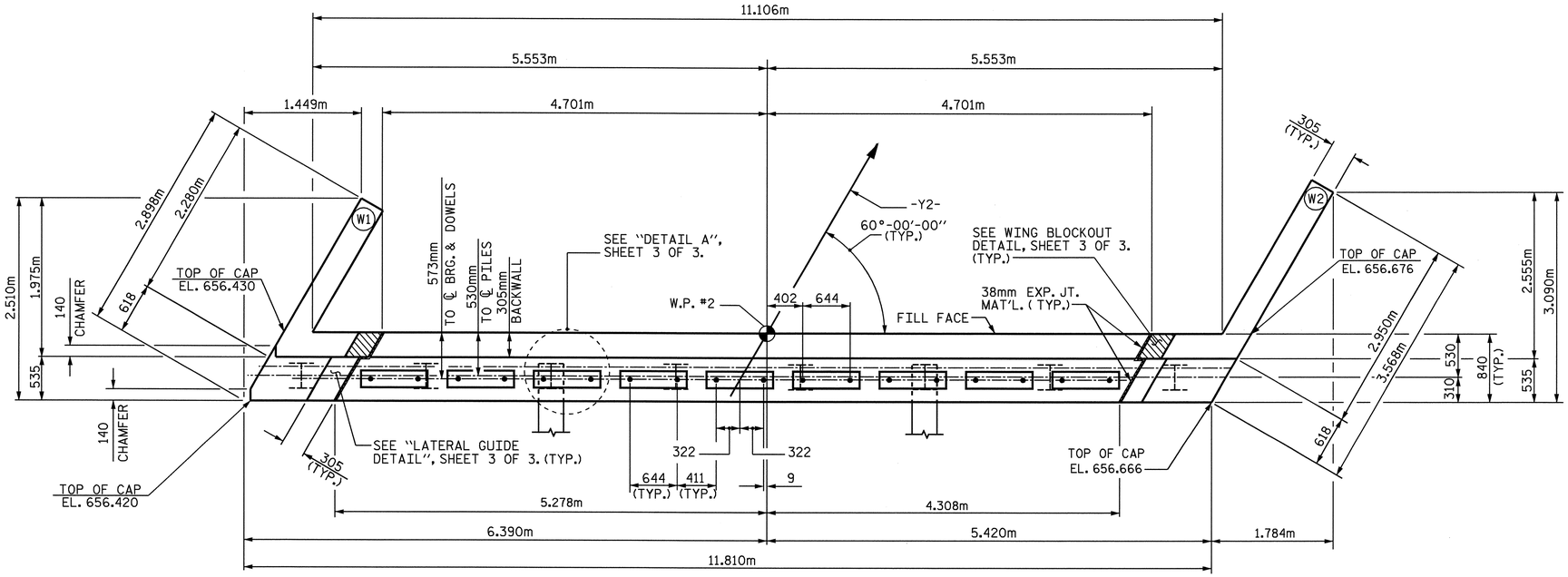

PLAN

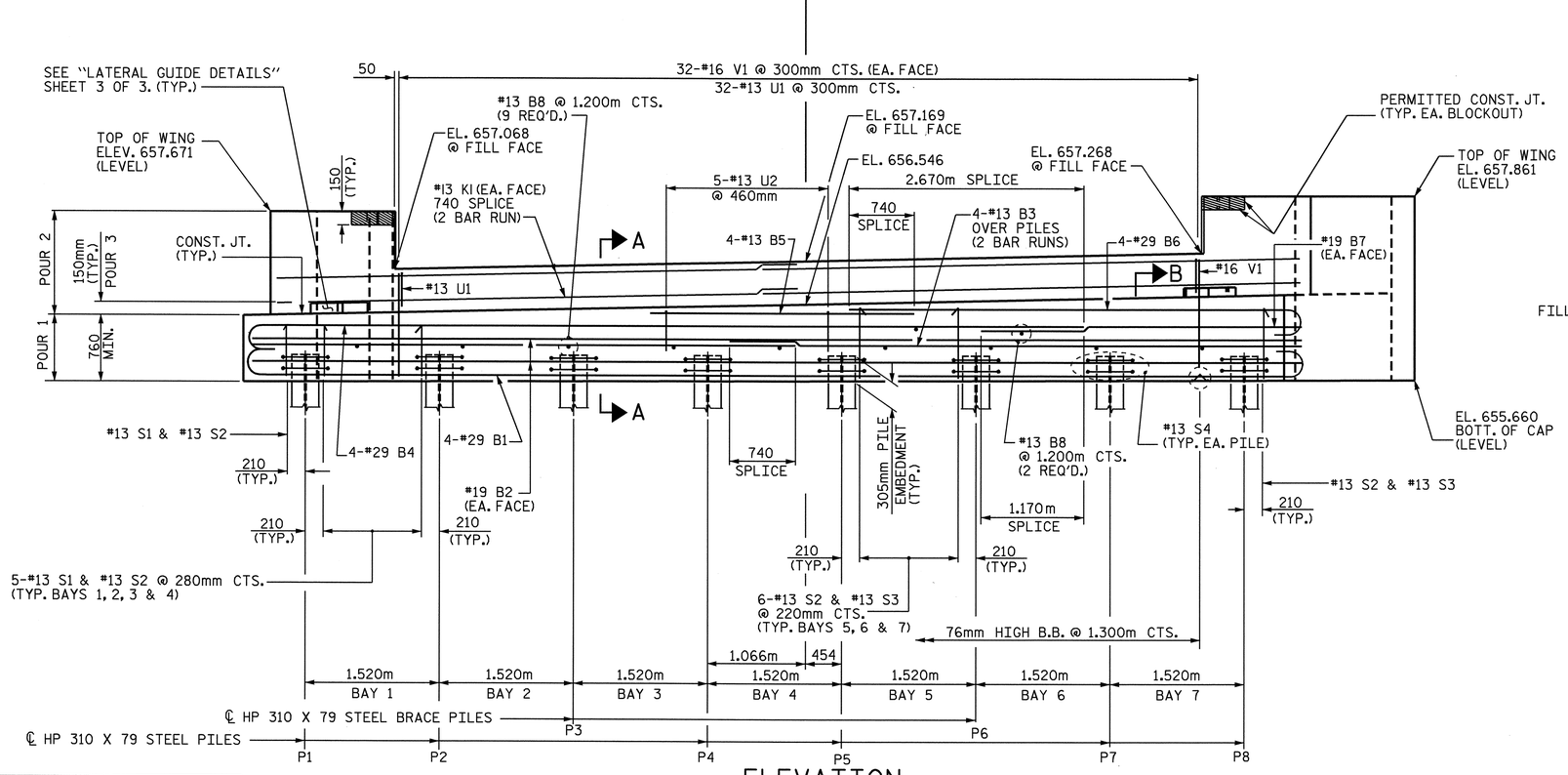

ELEVATION

NOTES

STIRRUPS IN CAP MAY BE SHIFTED AS NECESSARY TO CLEAR ANCHOR BOLTS.

FOR PILE SPLICE DETAILS, SEE SHEET 3 OF 3.

THE CONTRACTOR SHALL PROVIDE FOR INSTALLATION OF THE 102mm DIAMETER DRAIN PIPE THROUGH THE WING WALL AS REQUIRED FOR REINFORCED BRIDGE APPROACH FILLS, SEE THE ROADWAY PLANS. REINFORCING STEEL IN THE WING WALL MAY BE SHIFTED AS NECESSARY TO CLEAR THE DRAIN PIPE.

THE LATERAL GUIDE AT EACH END OF THE CAP IS NOT TO BE POURED UNTIL AFTER THE BOX BEAM UNITS ARE IN PLACE.

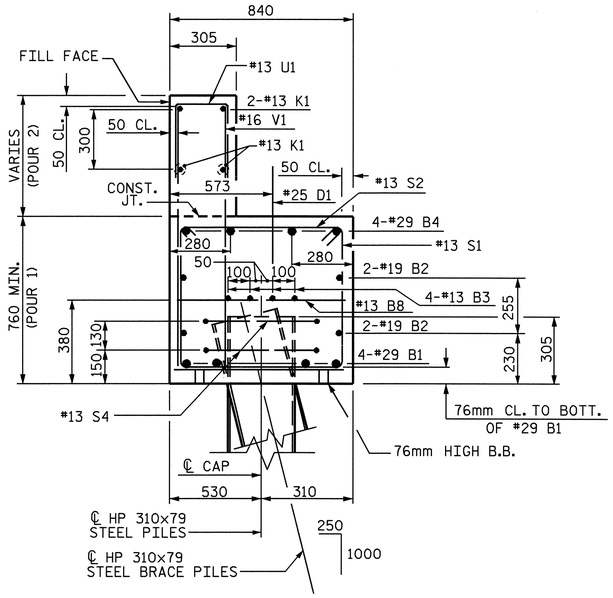

SECTION A-A

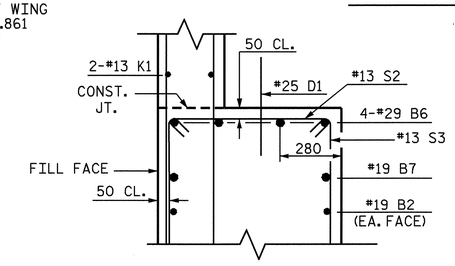

PARTIAL SECTION B

PROJECT NO. R-2518A

MADISON/YANCEY COUNTY

STATION: 11+30.000 -Y2-

SHEET 1 OF 3

STATE OF NORTH CAROLINA
DEPARTMENT OF TRANSPORTATION
RALEIGH

SUBSTRUCTURE
END BENT No. 2

REVISIONS						SHEET NO.
NO.	BY:	DATE:	NO.	BY:	DATE:	S-14
1			3			TOTAL SHEETS
2			4			19

NORTH CAROLINA PROFESSIONAL SEAL 20125 ENGINEER MARSHALL H. CHECK, JR.
1-3-08

DRAWN BY : M. POOLE DATE : 7/07
CHECKED BY : R.D. MARTIN DATE : 9/26/07

02-APR-2008 15:18
r:\structures\Str#01\Jeff\Microstation\End Bents\R2518A_sd_E2_01.dgn
lmurphy

STR. #1

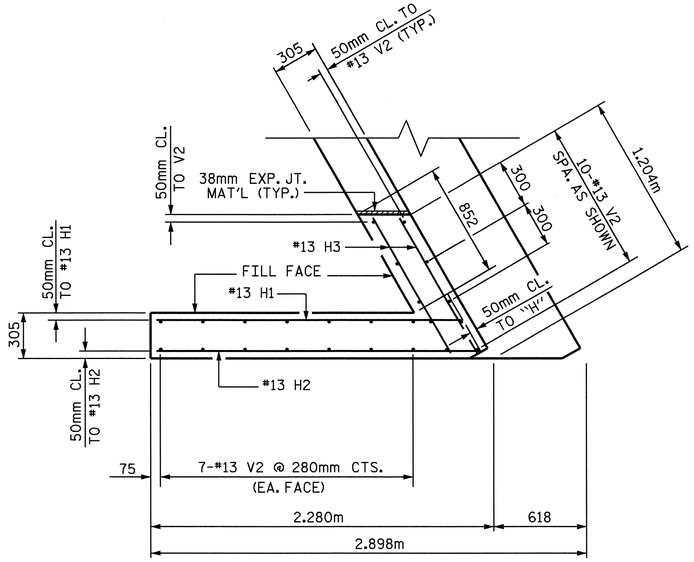

PLAN OF LEFT WING - W1

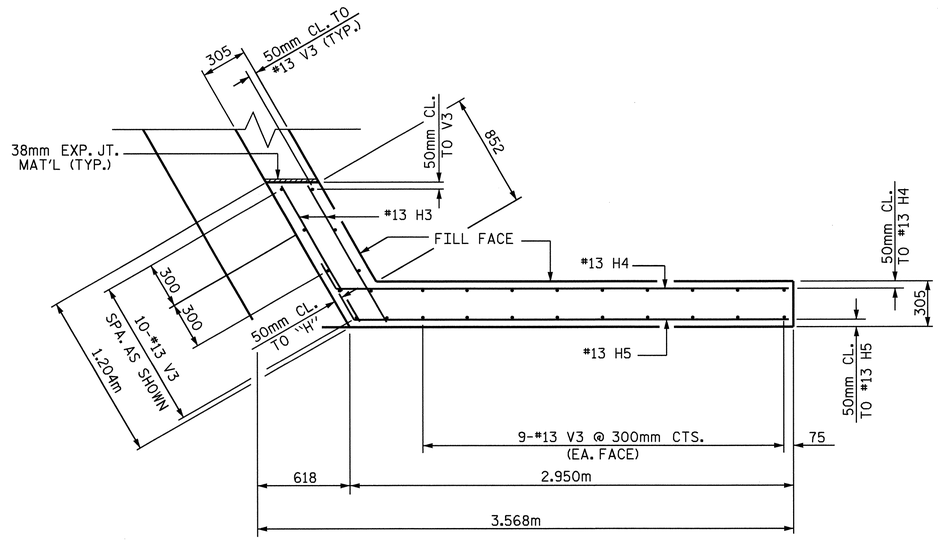

PLAN OF RIGHT WING - W2

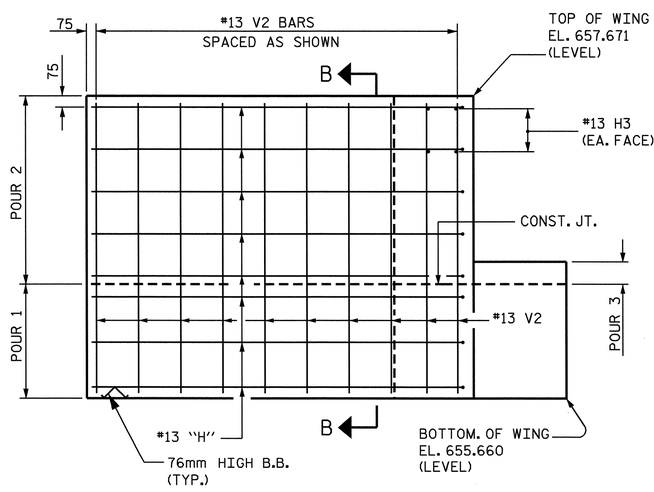

ELEVATION OF LEFT WING - W1

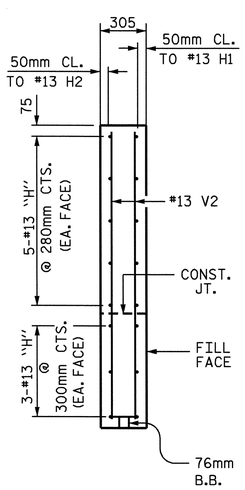

SECTION B-B

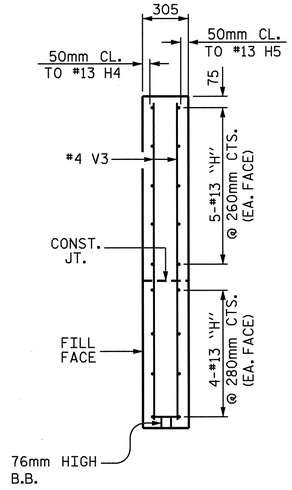

SECTION C-C

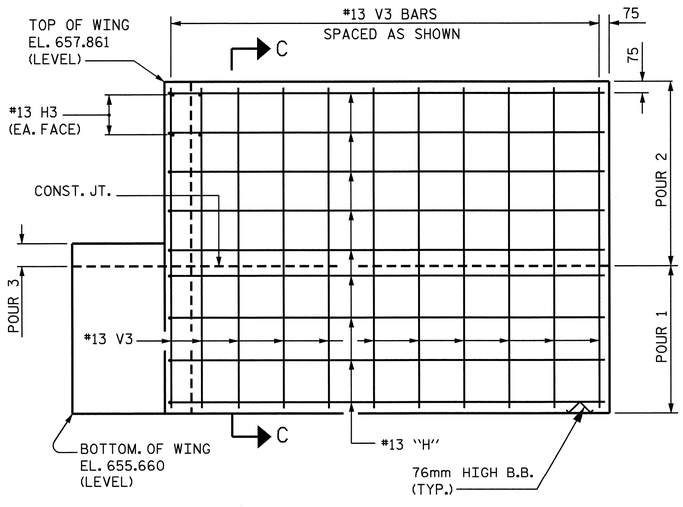

ELEVATION OF RIGHT WING - W2

PROJECT NO. R-2518A

MADISON/YANCEY COUNTY

STATION: 11+30.000 -Y2-

SHEET 2 OF 3

STATE OF NORTH CAROLINA
DEPARTMENT OF TRANSPORTATION
RALEIGH

SUBSTRUCTURE
END BENT No. 2

REVISIONS						SHEET NO.
NO.	BY:	DATE:	NO.	BY:	DATE:	S-15
1			3			TOTAL SHEETS
2			4			19

NORTH CAROLINA PROFESSIONAL SEAL 20125 ENGINEER MARSHALL H. GREEK, JR.
4-3-08

DRAWN BY : M. POOLE / WJH DATE : 7/07
CHECKED BY : R.D. MARTIN DATE : 9/26/07

02-APR-2008 15:19
r:\structures\Str*01\Jeff\Microstation\End Bents\R2518A_sd_E2_01.dgn
lmurphy

STR #1

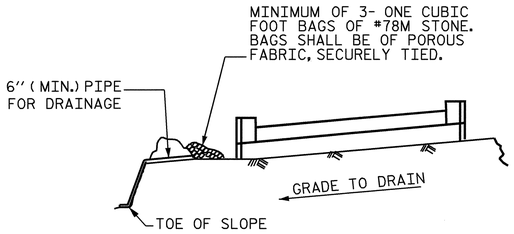

BAGGED STONE AND PIPE SHALL BE PLACED IMMEDIATELY AFTER COMPLETION OF END BENT EXCAVATION. PIPE MAY BE EITHER CONCRETE, CORRUGATED STEEL, CORRUGATED ALUMINUM ALLOY, OR CORRUGATED PLASTIC. PERFORATED PIPE WILL NOT BE ALLOWED.

BAGGED STONE SHALL REMAIN IN PLACE UNTIL THE ENGINEER DIRECTS THAT IT BE REMOVED. THE CONTRACTOR SHALL REMOVE AND DISPOSE OF SILT ACCUMULATIONS AT BAGGED STONE WHEN SO DIRECTED BY THE ENGINEER. BAGS SHALL BE REMOVED AND REPLACED WHENEVER THE ENGINEER DETERMINES THAT THEY HAVE DETERIORATED AND LOST THEIR EFFECTIVENESS.

NO SEPARATE PAYMENT WILL BE MADE FOR THIS WORK AND THE ENTIRE COST OF THIS WORK SHALL BE INCLUDED IN THE UNIT CONTRACT PRICE BID FOR THE SEVERAL PAY ITEMS.

TEMPORARY DRAINAGE AT END BENT

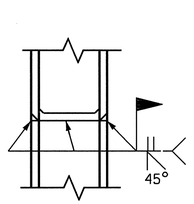

* PILE VERTICAL

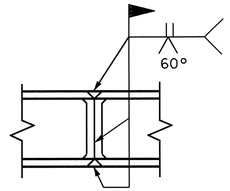

* PILE HORIZONTAL OR VERTICAL

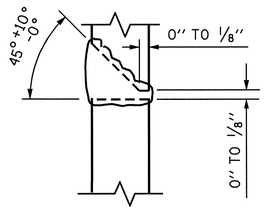

* DETAIL A

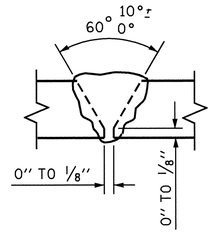

DETAIL B

* POSITION OF PILE DURING WELDING.

PILE SPLICE DETAILS

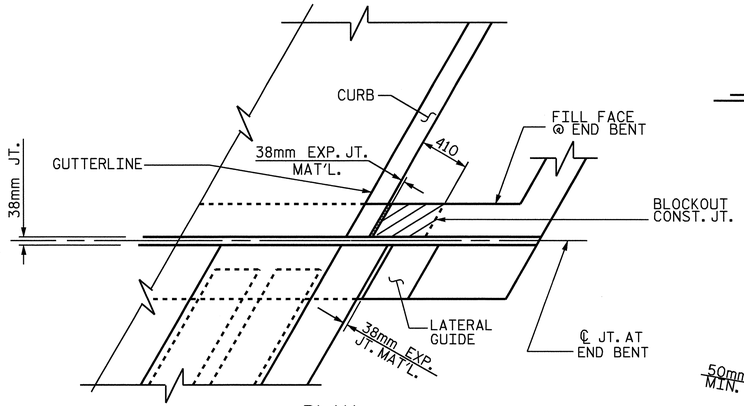

PLAN

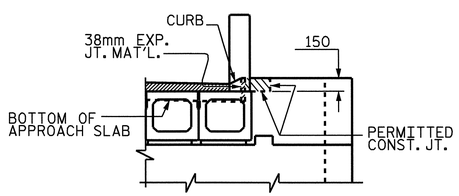

ELEVATION

BLOCKOUT IN WING WALL FOR FITTING COMPRESSION JOINT SEAL

NOTE: THE CONCRETE IN THE SHADED AREA OF THE WING SHALL BE POURED AFTER THE BARRIER RAIL IS CAST IF SLIP FORMING IS USED.

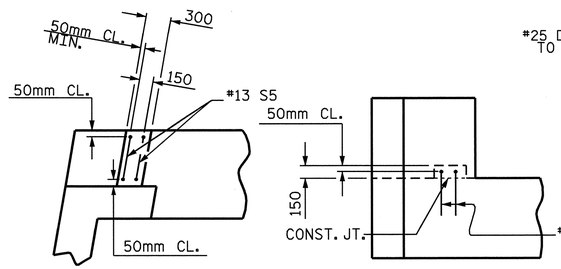

PLAN ELEVATION

LATERAL GUIDE DETAILS

(EACH END SIMILAR)

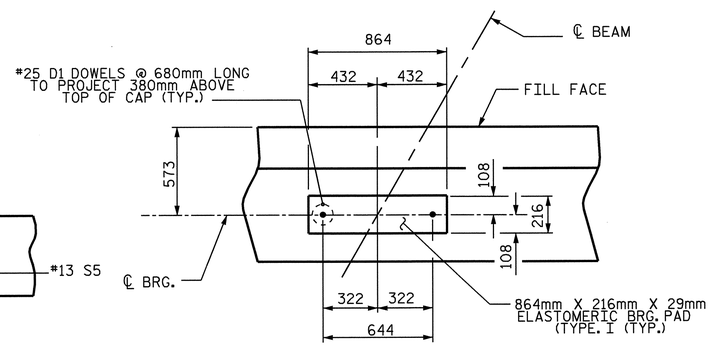

DETAIL A

BAR TYPES

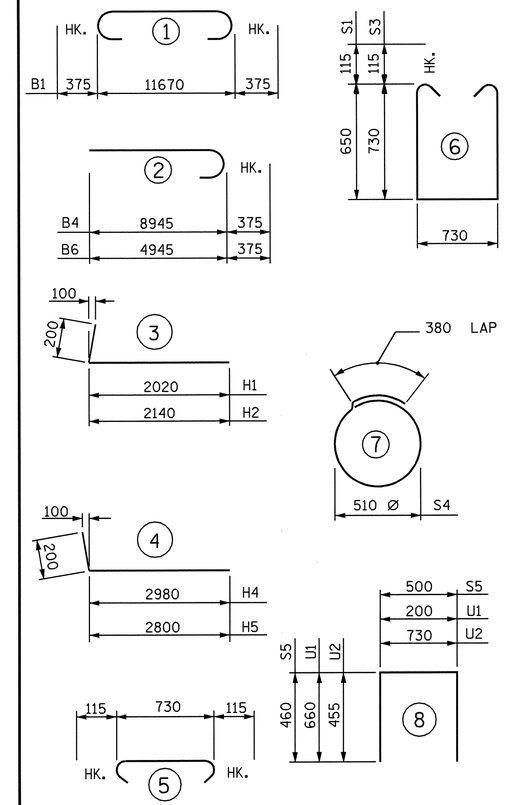

ALL BAR DIMENSIONS ARE OUT TO OUT.

BILL OF MATERIAL

END BENT No. 2

BAR	NO.	SIZE	TYPE	LENGTH	WEIGHT
B1	4	29	1	12420	251
B2	4	19	STR	11700	105
B3	8	13	STR	6220	49
B4	4	29	2	9320	189
B5	4	13	STR	3000	12
B6	4	29	2	5320	108
B7	2	19	STR	3460	15
B8	11	13	STR	740	8
D1	18	25	STR	680	49
H1	8	13	3	2200	18
H2	8	13	3	2340	19
H3	8	13	STR	1080	9
H4	8	13	4	3180	25
H5	8	13	4	3000	24
K1	8	13	STR	6220	49
S1	25	13	6	2260	56
S2	44	13	5	960	42
S3	19	13	6	2420	46
S4	16	13	7	1980	31
S5	4	13	8	1420	6
U1	32	13	8	1520	48
U2	5	13	8	1640	8
V1	64	16	STR	1300	129
V2	24	13	STR	1880	45
V3	28	13	STR	2060	57

REINFORCING STEEL 1398 kg

CLASS A CONCRETE BREAKDOWN

POUR 1 (CAP & LOWER WINGS)	10.1 C.M.
POUR 2 (BACKWALL & UPPER WINGS)	4.4 C.M.
POUR 3 LATERAL GUIDE	0.1 C.M.
TOTAL	14.6 C.M.

HP 310 x 79 STEEL PILES
NO. 8 40.0 METERS

PROJECT NO. R-2518A
MADISON/YANCEY COUNTY
STATION: 11+30.000 -Y2-

SHEET 3 OF 3

STATE OF NORTH CAROLINA
DEPARTMENT OF TRANSPORTATION
RALEIGH

SUBSTRUCTURE
END BENT No. 2

REVISIONS						SHEET NO.
NO.	BY:	DATE:	NO.	BY:	DATE:	S-16
1			3			TOTAL SHEETS
2			4			19

NORTH CAROLINA PROFESSIONAL SEAL 20125 ENGINEER MARSHALL E. ONEAL JR.
4-3-08

DRAWN BY : M. POOLE / WJH DATE : 7/07
CHECKED BY : R.D. MARTIN DATE : 9/26/07

02-APR-2008 15:35
r:\structures\Str*01\Jeff\Microstation\End Bents\R2518A_sd_E2_01.dgn
jmurphy

STR. #1

NOTES :
FOR BERM WIDTH DIMENSIONS,SEE GENERAL DRAWING.

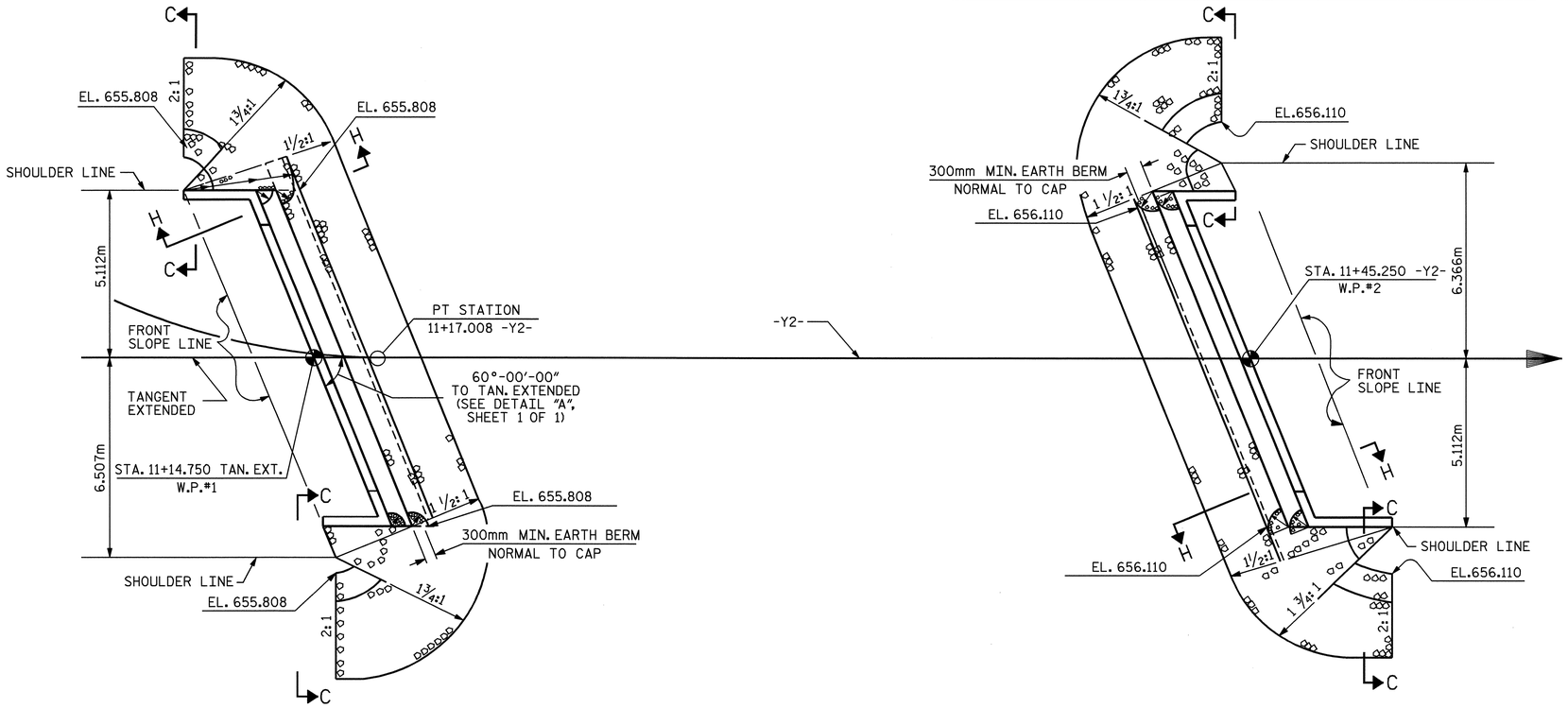

END BENT NO. 1

END BENT NO.2

PLAN

ESTIMATED QUANTITIES		
BRIDGE @ STA. 11+30.000 -Y2-	RIP RAP CLASS II	FILTER FABRIC FOR DRAINAGE
	METRIC TONS	SQUARE METERS
END BENT 1	90	92
END BENT 2	124	126

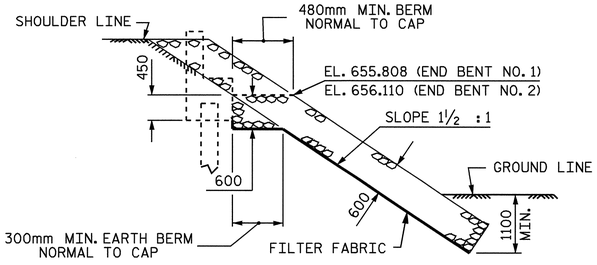

SECTION H-H

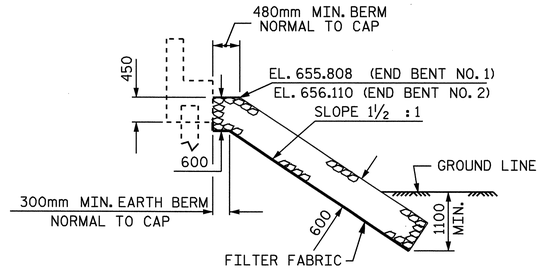

℄ SECTION
BERM RIP RAPPED

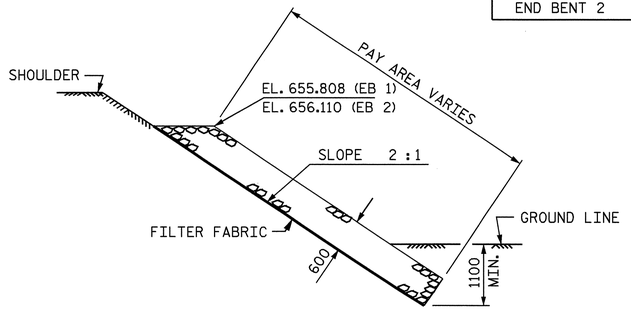

SECTION C-C

PROJECT NO. R-2518A
MADISON/YANCEY COUNTY
STATION: 11+30.000 -Y2-

STATE OF NORTH CAROLINA
DEPARTMENT OF TRANSPORTATION
RALEIGH

STANDARD
RIP RAP DETAILS

NORTH CAROLINA PROFESSIONAL SEAL 20125 ENGINEER MARSHALL C. CHEEK JR.
10-12-07

REVISIONS						SHEET NO.
NO.	BY:	DATE:	NO.	BY:	DATE:	S-17
1			3			TOTAL SHEETS
2			4			19

STR. #1 STD. NO. RR1SM

ASSEMBLED BY : A.L. FIGUEROA		DATE : 7-02-07	
CHECKED BY : W.J. HARRIS		DATE : 8-30-07	
DRAWN BY : REK 1/84	REV. 8/16/99	RWW/LES	
CHECKED BY : RDU 1/84	REV. 10/17/00	RWW/LES	
	REV. 5/1/06	TLA/GM	

02-OCT-2007 11:00
r:\structures\str#01\a.l.figueroa\r2518a_sd_sp#01.dgn
afigueroa

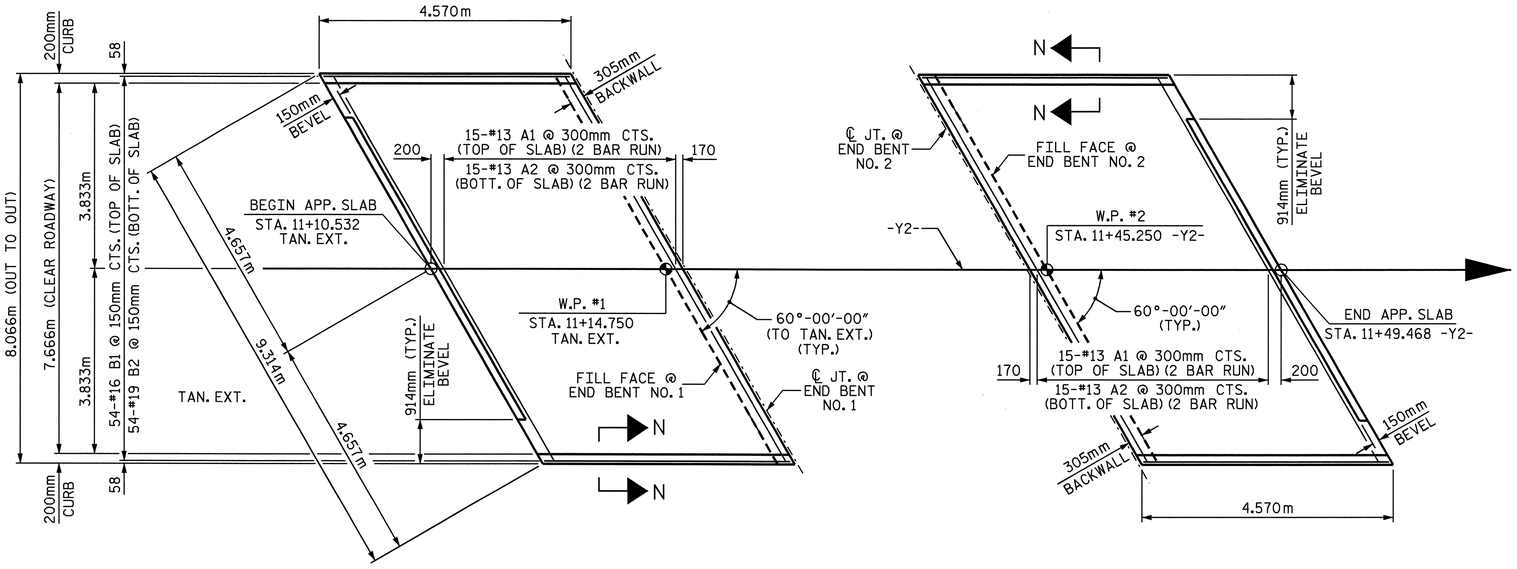

APPROACH SLAB @ END BENT NO. 1

APPROACH SLAB @ END BENT NO. 2

PLAN

SPLICE LENGTH CHART

BAR	SIZE	SPLICE LENGTH
A1	13	610
A2	13	540

BILL OF MATERIAL

APPROACH SLAB @ END BENT NO. 1						APPROACH SLAB @ END BENT NO. 2					
BAR	NO.	SIZE	TYPE	LENGTH	WEIGHT	BAR	NO.	SIZE	TYPE	LENGTH	WEIGHT
✳A1	30	#13	STR	4920	147	✳A1	30	#13	STR	4920	147
A2	30	#13	STR	4880	146	A2	30	#13	STR	4880	146
✳B1	54	#16	STR	4320	362	✳B1	54	#16	STR	4320	362
B2	54	#19	STR	4460	538	B2	54	#19	STR	4460	538
REINFORCING STEEL			kg		684	REINFORCING STEEL			kg		684
✳EPOXY COATED REINFORCING STEEL			kg		509	✳EPOXY COATED REINFORCING STEEL			kg		509
CLASS AA CONCRETE			C. M.		11.5	CLASS AA CONCRETE			C. M.		11.5

✳THESE BARS ARE EPOXY COATED

NOTES

APPROACH SLAB SHALL NOT BE CONSTRUCTED PRIOR TO COMPLETION OF THE BRIDGE DECK.

FOR REINFORCED BRIDGE APPROACH FILL INCLUDING FABRIC, IMPERMEABLE GEOMEMBRANE, 102mm Ø DRAINAGE PIPE, #78M STONE, AND SELECT MATERIAL, SEE ROADWAY PLANS.

TEMPORARY DRAINAGE AND TEMPORARY BERM AND SLOPE DRAINS WILL BE PAID FOR UNDER THE LUMP SUM PRICE FOR BRIDGE APPROACH SLAB.

AREA BETWEEN THE WINGWALL AND APPROACH SLAB SHALL BE GRADED TO DRAIN THE WATER AWAY FROM THE FILL FACE OF THE BRIDGE AND SHALL BE PAVED. SEE ROADWAY PLANS.

THE 150mm COMP. A.B.C. SHALL BE FLUSH WITH THE ROADWAY END OF THE APPROACH SLAB AND SHALL EXTEND 300mm OUTSIDE OF EACH EDGE OF THE APPROACH SLAB.

THE CONTRACTOR MAY USE 100mm TYPE B-25.0B ASPHALT CONCRETE COURSE IN LIEU OF 150mm COMP. A.B.C. IF THIS OPTION IS USED, THE BASE COURSE SHALL BE FLUSH WITH THE ROADWAY END OF THE APPROACH SLAB, AND THE WIDTH SHALL BE THE SAME AS THAT OF THE APPROACH SLAB.

THE CONTRACTOR MAY USE 125mm CLASS "A" CONCRETE BASE IN LIEU OF 150mm COMP. A.B.C. IF THIS OPTION IS USED, THE CONCRETE BASE SHALL BE FLUSH WITH THE ROADWAY END OF THE APPROACH SLAB, AND THE WIDTH SHALL BE THE SAME AS THAT OF THE APPROACH SLAB. THE CONCRETE SHALL BE FINISHED TO A SMOOTH SURFACE AND A LAYER OF 13.6 kg ROOFING FELT SHALL BE PLACED BETWEEN THE CONCRETE BASE AND THE APPROACH SLAB TO PREVENT BOND. THE APPROACH SLAB SHALL NOT BE CAST UNTIL THE CONCRETE BASE HAS REACHED AN AGE OF THREE CURING DAYS.

THE JOINT AT END BENT SHALL BE SEALED AS SOON AS PRACTICAL AFTER THE CONSTRUCTION OF THE APPROACH SLABS.

FOR JOINT DETAILS, SEE "PRESTRESSED CONCRETE BOX BEAM UNITS" SHEETS.

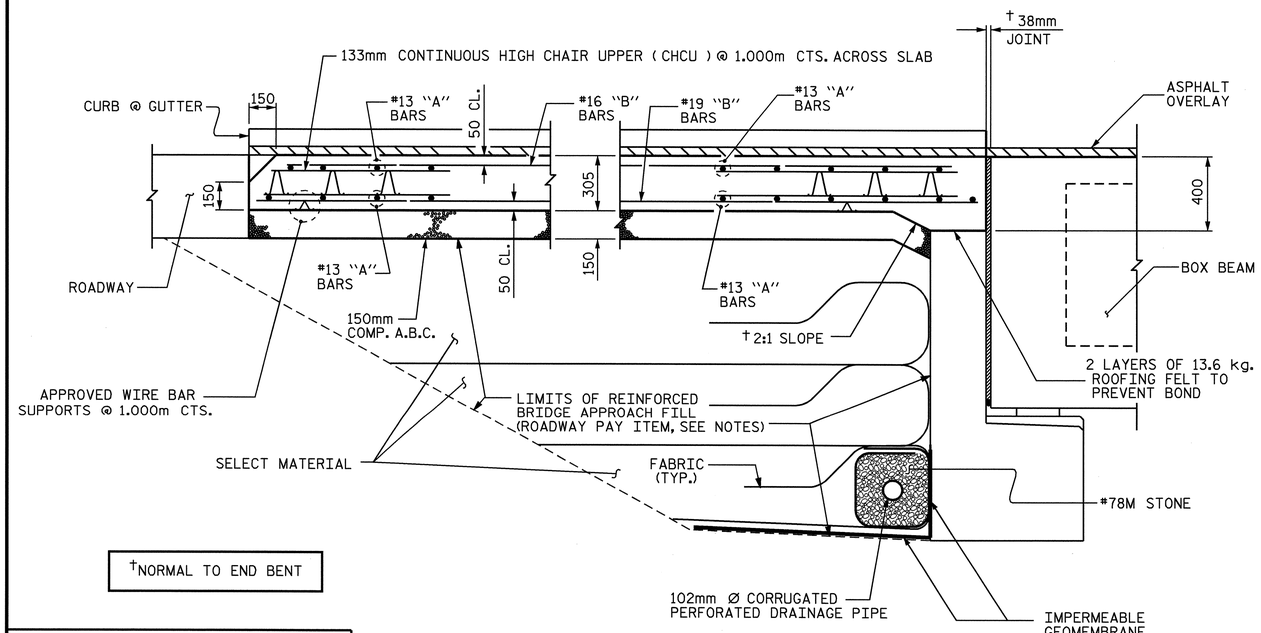

†NORMAL TO END BENT

SECTION THRU SLAB

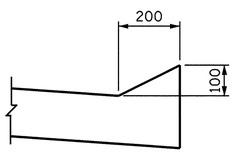

SECTION N-N

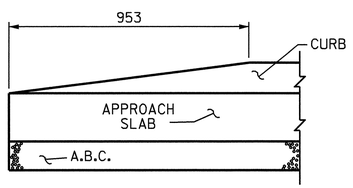

END OF CURB WITHOUT SHOULDER BERM GUTTER

CURB DETAILS

PROJECT NO. R-2518A

MADISON/YANCEY COUNTY

STATION: 11+30.000 -Y2-

SHEET 1 OF 2

STATE OF NORTH CAROLINA
DEPARTMENT OF TRANSPORTATION
RALEIGH

BRIDGE APPROACH SLAB FOR FLEXIBLE PAVEMENT

ASSEMBLED BY : A. SORSENGINH	DATE : 12/05
CHECKED BY : CR. YARBROUGH	DATE : 1/06
DRAWN BY : FCJ 6/87	REV. 7/10/01 RWW/LES
CHECKED BY : EGA 6/87	REV. 5/7/03R RWW/JTE
	REV. 5/1/06R KMM/GM

REVISIONS						SHEET NO.
NO.	BY:	DATE:	NO.	BY:	DATE:	S-18
1			3			TOTAL SHEETS
2			4			19

NORTH CAROLINA PROFESSIONAL SEAL 20125 ENGINEER MARSHALL W. CHEEK, JR. 4-3-08

STR. #1

02-APR-2008 15:37
r:\structures\Str#01\asorsenginh\R2518A_sd_AS.dgn

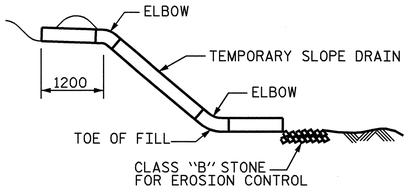

SECTION R-R

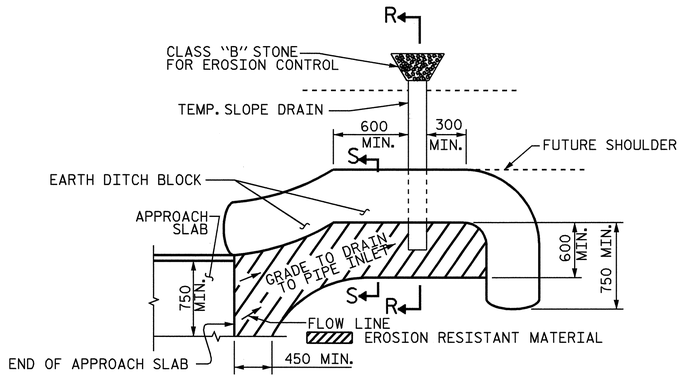

NOTE: IMMEDIATELY AFTER THE CONSTRUCTION OF THE APPROACH SLAB, THE CONTRACTOR SHALL PROVIDE TEMPORARY BERM AND SLOPE DRAIN. CONTRACTOR SHALL GRADE TO PIPE INLET AND PROVIDE EROSION RESISTANT MATERIAL AS SHOWN. THE EROSION RESISTANT MATERIAL SHALL BE EITHER 1) ASPHALT PLANT MIX, TYPE 1 OR TYPE 2, MIN. 50mm DEPTH, 2) EROSION CONTROL MAT, OR 3) CONCRETE, AS DIRECTED BY THE ENGINEER. THE SLOPE DRAIN SHALL CONSIST OF A NON-PERFORATED TEMPORARY DRAINAGE PIPE, 305mm IN DIAMETER.

PLAN VIEW

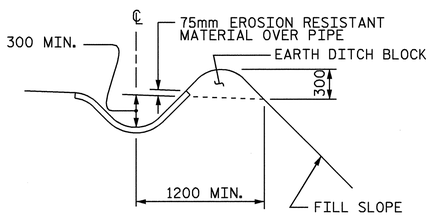

SECTION S-S

TEMPORARY BERM AND SLOPE DRAIN DETAILS

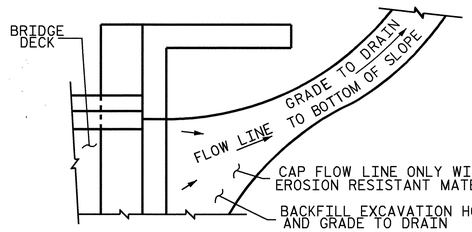

NOTE: IF THE APPROACH SLAB IS NOT CONSTRUCTED IMMEDIATELY AFTER THE BACKFILLING OF THE END BENT EXCAVATION, GRADE TO DRAIN TO THE BOTTOM OF THE SLOPE AND PROVIDE EROSION RESISTANT MATERIAL, SUCH AS FIBERGLASS ROVING OR AS DIRECTED BY THE ENGINEER TO PREVENT SOIL EROSION AND TO PROTECT THE AREA ADJACENT TO THE STRUCTURE. THE CONTRACTOR WILL BE REQUIRED TO REMOVE THESE MATERIALS PRIOR TO CONSTRUCTION OF THE APPROACH SLAB.

TEMPORARY DRAINAGE DETAIL

ASSEMBLED BY : A. SORSENGINH	DATE : 12/05		
CHECKED BY : CR. YARBROUGH	DATE : 1/06		
DRAWN BY : FCJ 11/88	REV. 8/16/99	RAL/LES	
CHECKED BY : ARB 11/88	REV. 10/17/00	RWW/LES	
	REV. 5/7/03	RWW/JTE	

11-SEP-2007 10:32
R:\Structures\Str*01\asorsenginh\R2518A_sd_AS.dgn

PROJECT NO. R-2518A
MADISON/YANCEY COUNTY
STATION: 11+30.000 -Y2-

SHEET 2 OF 2

STATE OF NORTH CAROLINA
DEPARTMENT OF TRANSPORTATION
RALEIGH

BRIDGE APPROACH SLAB DETAILS

NORTH CAROLINA PROFESSIONAL SEAL 20125 ENGINEER MARSHALL G. CREEK, JR.
4-3-08

REVISIONS						SHEET NO.
NO.	BY:	DATE:	NO.	BY:	DATE:	S-19
1			3			TOTAL SHEETS
2			4			19

STR. #1

02-APR-2008 15:26
r:\structures\Str*02\A.L.Figueroa\R-2518A_sd_CU*2.dgn
lmurphy

BENCHMARK #3: CHISELED SQUARE IN THE TOP OF A PARAPET WESTSIDE, NORTH END OF THE SAM COX BRIDGE, BEHIND P&E GROCERY STA. 21+23.000 -L-, 63 METERS LEFT, ELEV. = 658.442

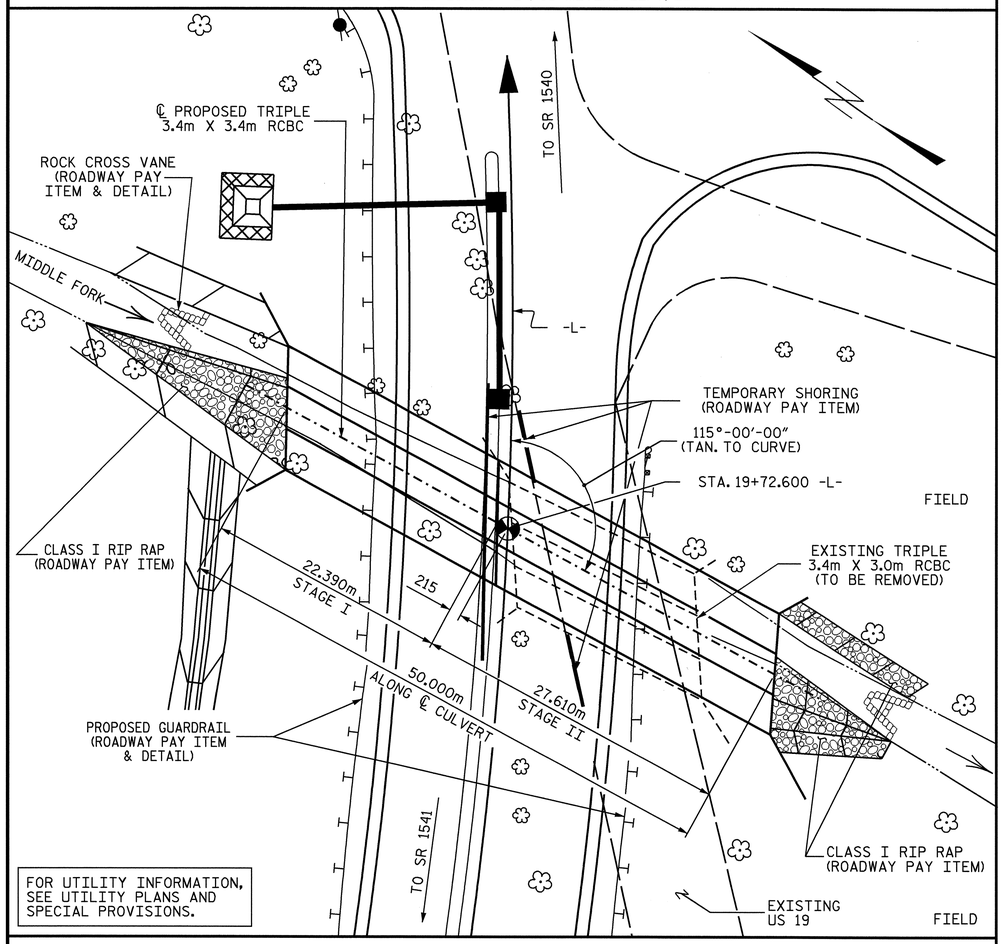

FOR UTILITY INFORMATION, SEE UTILITY PLANS AND SPECIAL PROVISIONS.

LOCATION SKETCH

HYDRAULIC DATA

DESIGN DISCHARGE	= 85.00 m^3/s
FREQUENCY OF DESIGN FLOOD	= 50 YEARS
DESIGN HIGH WATER ELEVATION	= 655.03
DRAINAGE AREA	= 32.8 Km^2
BASIC DISCHARGE (Q100)	= 105.00 m^3/s
BASIC HIGH WATER ELEVATION	= 655.57

OVERTOPPING FLOOD DATA

OVERTOPPING DISCHARGE	= 155.00 m^3/s
FREQUENCY OF OVERTOPPING FLOOD	= 500+ YEARS
OVERTOPPING FLOOD ELEVATION	= 659.40

ROADWAY DATA

GRADE POINT ELEV. @ STATION 19+72.600 -L-	= 659.647
BED ELEV. @ STATION 19+72.600 -L-	= 651.270
ROADWAY FILL SLOPE	= 2:1

TOTAL STRUCTURE QUANTITIES

CLASS A CONCRETE		
STAGE I	307.0	m^3
STAGE II	372.8	m^3
TOTAL	679.8	m^3
REINFORCING STEEL		
STAGE I	28,544	kg
STAGE II	35,130	kg
TOTAL	63,674	kg
CULVERT EXCAVATION ---------- LUMP SUM		
FOUNDATION COND. MAT'L		
STAGE I	167	METRIC TONS
STAGE II	206	METRIC TONS
STAGE II	373	METRIC TONS

NOTES

ASSUMED LIVE LOAD ----------MS18 OR ALTERNATE LOADING.

DESIGN FILL ---------- 6.030m

FOR OTHER DESIGN DATA AND NOTES, SEE STANDARD NOTE SHEET.

76mm Ø WEEP HOLES INDICATED TO BE IN ACCORDANCE WITH THE SPECIFICATIONS.

CONCRETE IN CULVERT TO BE POURED IN THE FOLLOWING ORDER:

1. PHASE I WING FOOTINGS AND FLOOR SLAB INCLUDING 100mm OF PHASE I VERTICAL WALLS.
2. THE REMAINING PORTIONS OF PHASE I WALLS AND PHASE I WINGS FULL HEIGHT.
3. PHASE II WING FOOTINGS AND FLOOR SLAB INCLUDING 100mm OF PHASE II VERTICAL WALLS.
4. THE REMAINING PORTIONS OF PHASE II WALLS AND PHASE II WINGS FULL HEIGHT.
5. ROOF SLAB IN IT'S ENTIRETY AND HEADWALLS.

THE RESIDENT ENGINEER SHALL CHECK THE LENGTH OF CULVERT BEFORE STAKING IT OUT TO MAKE CERTAIN THAT IT WILL PROPERLY TAKE CARE OF THE FILL.

DIMENSIONS FOR WING LAYOUT AS WELL AS ADDITIONAL REINFORCING STEEL EMBEDDED IN BARREL ARE SHOWN ON WING SHEET.

TRANSVERSE CONSTRUCTION JOINTS SHALL BE USED IN THE BARREL, SPACED TO LIMIT THE POURS TO A MAXIMUM OF 21.0m. LOCATION OF THE JOINTS SHALL BE SUBJECT TO APPROVAL OF THE ENGINEER.

AT THE CONTRACTOR'S OPTION, HE MAY SPLICE THE VERTICAL REINFORCING STEEL IN THE INTERIOR FACES OF THE EXTERIOR WALLS AND BOTH FACES OF INTERIOR WALLS ABOVE LOWER WALL CONSTRUCTION JOINT. THE SPLICE LENGTH SHALL BE AS PROVIDED IN THE SPLICE LENGTH CHART SHOWN ON THE PLANS. EXTRA WEIGHT OF STEEL DUE TO THE SPLICES SHALL BE PAID FOR BY THE CONTRACTOR.

MATERIAL EXCAVATED FROM THE EXISTING BED SHALL BE STOCKPILED FOR USE IN THE PROPOSED CULVERT. UPON COMPLETION OF THE CULVERT, THE MATERIAL SHALL BE PLACED IN THE EASTERNMOST AND CENTER BARRELS TO A DEPTH OF 0.3m AND IN THE WESTERNMOST BARREL TO A DEPTH OF 0.6m. BED MATERIAL MAY BE SUPPLEMENTED WITH CLASS 'B' RIP RAP IF SUITABLE MATERIAL IS NOT AVAILABLE IN SUFFICIENT QUANTITIES.

THE ENTIRE COST OF THE WORK REQUIRED TO PLACE THE EXCAVATED MATERIAL OR SUPPLEMENTAL MATERIAL SHALL BE INCLUDED IN THE CONTRACT LUMP SUM PRICE BID FOR CULVERT EXCAVATION.

REMOVAL OF THE EXISTING TRIPLE 3.4m X 3.0m RCBC SHALL BE CONSIDERED INCIDENTAL TO CULVERT EXCAVATION.

DOWELS SHALL BE USED TO CONNECT STAGE II CULVERT TO STAGE I CULVERT AS SHOWN. FOR NOTE REGARDING SETTING OF DOWELS, SEE STANDARD NOTES SHEET SNSM.

AFTER SERVING AS TEMPORARY STRUCTURE, THE EXISTING TRIPLE 3.4m X 3.0m REINFORCED CONCRETE BOX CULVERT SHALL BE REMOVED.

FOR MAINTENANCE OF TRAFFIC, SEE TRAFFIC CONTROL PLANS.

FOR LIMITS OF TEMPORARY SHORING FOR MAINTENANCE OF TRAFFIC, SEE TRAFFIC CONTROL PLANS.

FOR CONSTRUCTION SEQUENCE, SEE EROSION CONTROL PLANS.

FOR FALSEWORK AND FORMWORK, SEE SPECIAL PROVISIONS.

FOR GROUT FOR STRUCTURES, SEE SPECIAL PROVISIONS.

FOR SUBMITTAL OF WORKING DRAWINGS, SEE SPECIAL PROVISIONS.

FOR CULVERT DIVERSION DETAILS AND PAY ITEM, SEE EROSION CONTROL PLANS.

NO PRECAST REINFORCED BOX CULVERT OPTION WILL BE ALLOWED.

FOR CRANE SAFETY, SEE SPECIAL PROVISIONS.

ALL DIMENSIONS ARE IN MILLIMETERS UNLESS OTHERWISE NOTED.

ALL ELEVATIONS ARE IN METERS.

METRIC

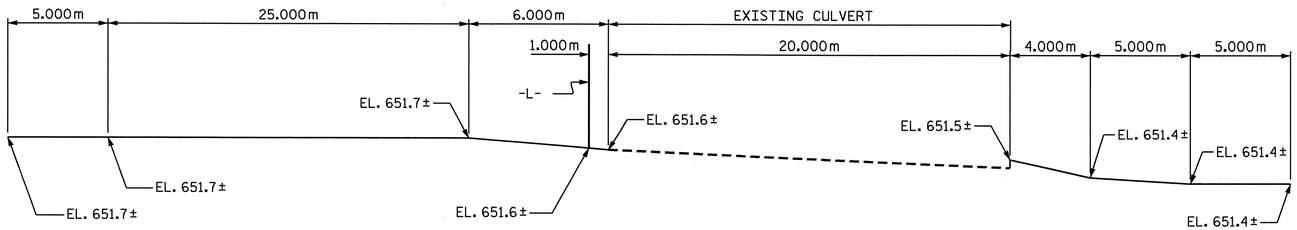

PROFILE ALONG ℄ CULVERT

ASSEMBLED BY : A. S./ A.L.F. DATE : 6/21/07
CHECKED BY : H.T. BARBOUR DATE : 7/16/07

NORTH CAROLINA PROFESSIONAL SEAL 13014 ENGINEER QUANG H. NGUYEN
Quang H. Nguyen 4-3-08

NORTH CAROLINA PROFESSIONAL SEAL 20125 ENGINEER MARSHALL A. CHEEK, JR.
4-3-08

PROJECT NO. R-2518A
MADISON/YANCEY COUNTY
STATION: 19+72.600 -L-

SHEET 1 OF 10 REPLACES CULVERT #C65

STATE OF NORTH CAROLINA
DEPARTMENT OF TRANSPORTATION
RALEIGH

TRIPLE 3.400m X 3.400m CONCRETE BOX CULVERT

REVISIONS						SHEET NO.
NO.	BY:	DATE:	NO.	BY:	DATE:	C-1
1			3			TOTAL SHEETS
2			4			103

STR #2

20-SEP-2007 09:06
R:\Structures\Str*02\A.L.Figueroa\R-2518A_sd_CU*2.dgn
dfigueroa

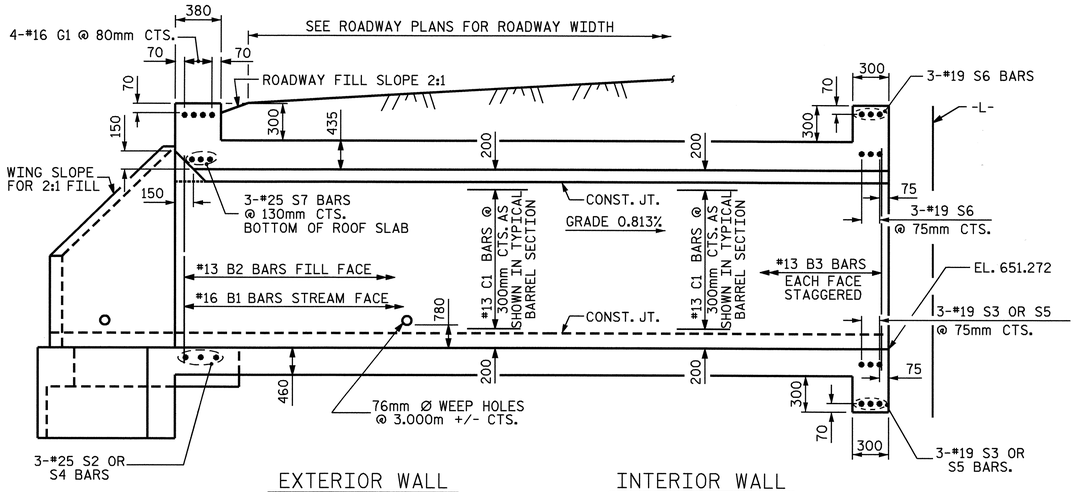

CULVERT SECTION NORMAL TO ROADWAY
STAGE I

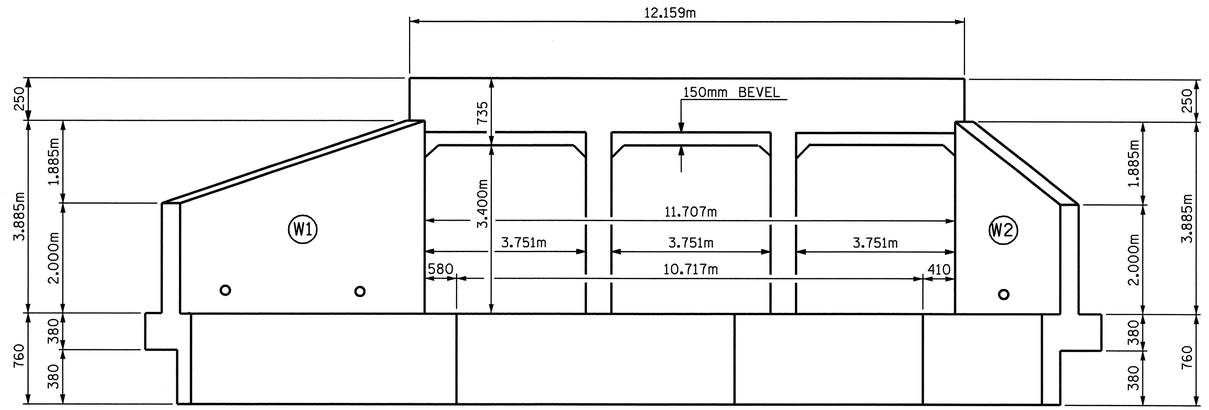

INLET END ELEVATION NORMAL TO SKEW
STAGE I

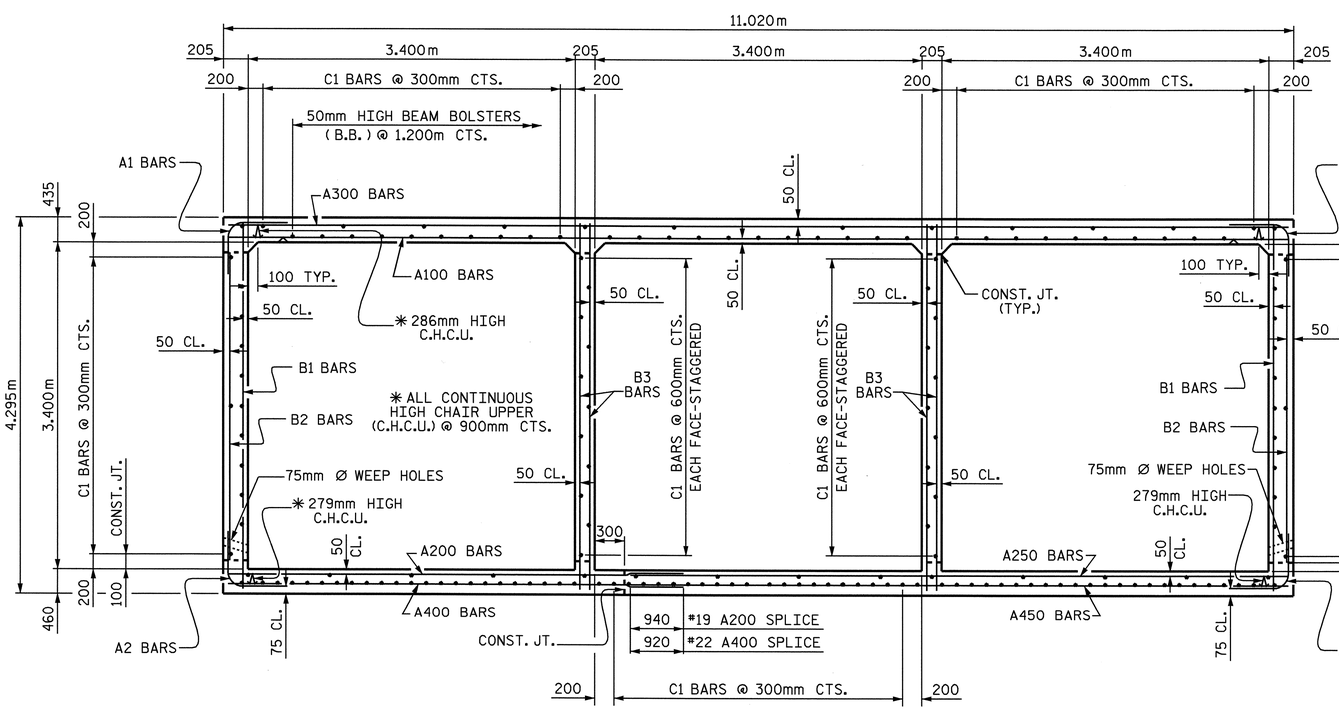

RIGHT ANGLE SECTION OF BARREL
THERE ARE 174 "C" BARS IN SECTION OF BARREL.
(LOOKING UPSTREAM)

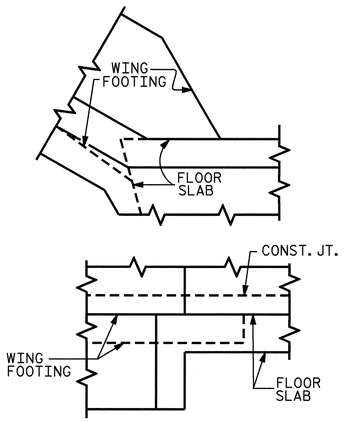

DETAIL
CONNECTION OF WING FOOTING AND FLOOR SLAB WHEN SLAB IS THICKER THAN FOOTING

PROJECT NO. R-2518A
MADISON/YANCEY COUNTY
STATION: 19+72.600 -L-

SHEET 2 OF 10

STATE OF NORTH CAROLINA
DEPARTMENT OF TRANSPORTATION
RALEIGH

TRIPLE 3.400m X 3.400m CONCRETE BOX CULVERT STAGE I

REVISIONS						SHEET NO.
NO.	BY:	DATE:	NO.	BY:	DATE:	C-2
1			3			TOTAL SHEETS
2			4			103

NORTH CAROLINA PROFESSIONAL SEAL 20125 ENGINEER MARSHALL L. CHEEK, JR.
9-25-07

ASSEMBLED BY : A. S./ A.L.F. DATE : 6/27/07
CHECKED BY : H.T. BARBOUR DATE : 7/16/07

20-SEP-2007 09:06
R:\Structures\Str*02\A.L.Figueroa\R-2518A_sd_CU*2.dgn
afigueroa

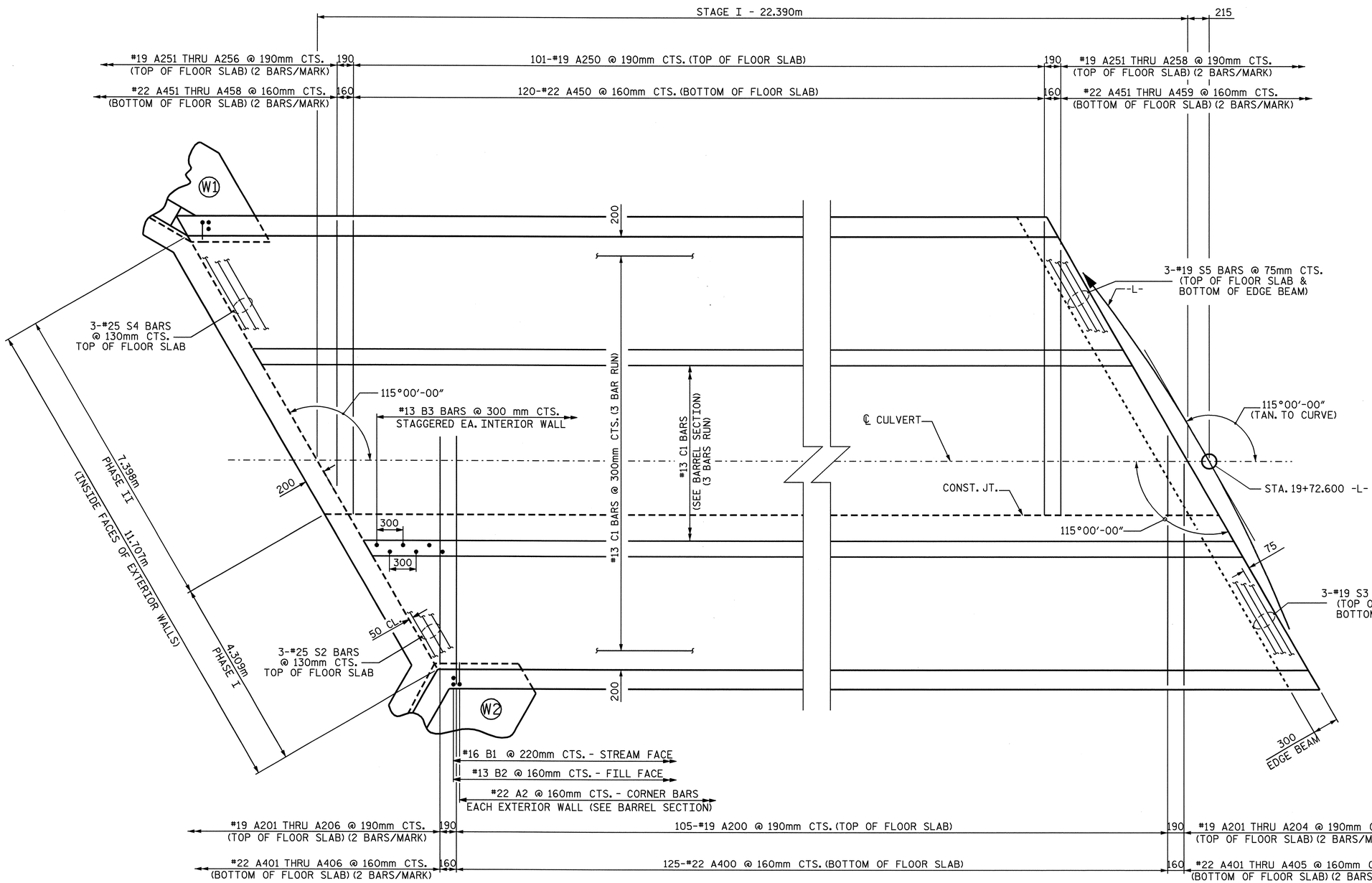

STAGE I
PLAN OF FLOOR SLAB

PROJECT NO. R-2518A
MADISON/YANCEY COUNTY
STATION: 19+72.600 -L-

SHEET 3 OF 10

STATE OF NORTH CAROLINA
DEPARTMENT OF TRANSPORTATION
RALEIGH

TRIPLE 3.400m X 3.400m CONCRETE BOX CULVERT STAGE I

NORTH CAROLINA PROFESSIONAL SEAL 20125 ENGINEER MARSHALL INGRAM SHEEK, JR.
9.25.07

REVISIONS						SHEET NO.
NO.	BY:	DATE:	NO.	BY:	DATE:	C-3
1			3			TOTAL SHEETS
2			4			103

ASSEMBLED BY : A.S./ A.L.F. DATE : 6/27/07
CHECKED BY : H.T. BARBOUR DATE : 7/16/07

STD. *2

20-SEP-2007 09:07
R:\Structures\Str*02\A.L.Figueroa\R-2518A_sd_CU*2.dgn
aflgueroa

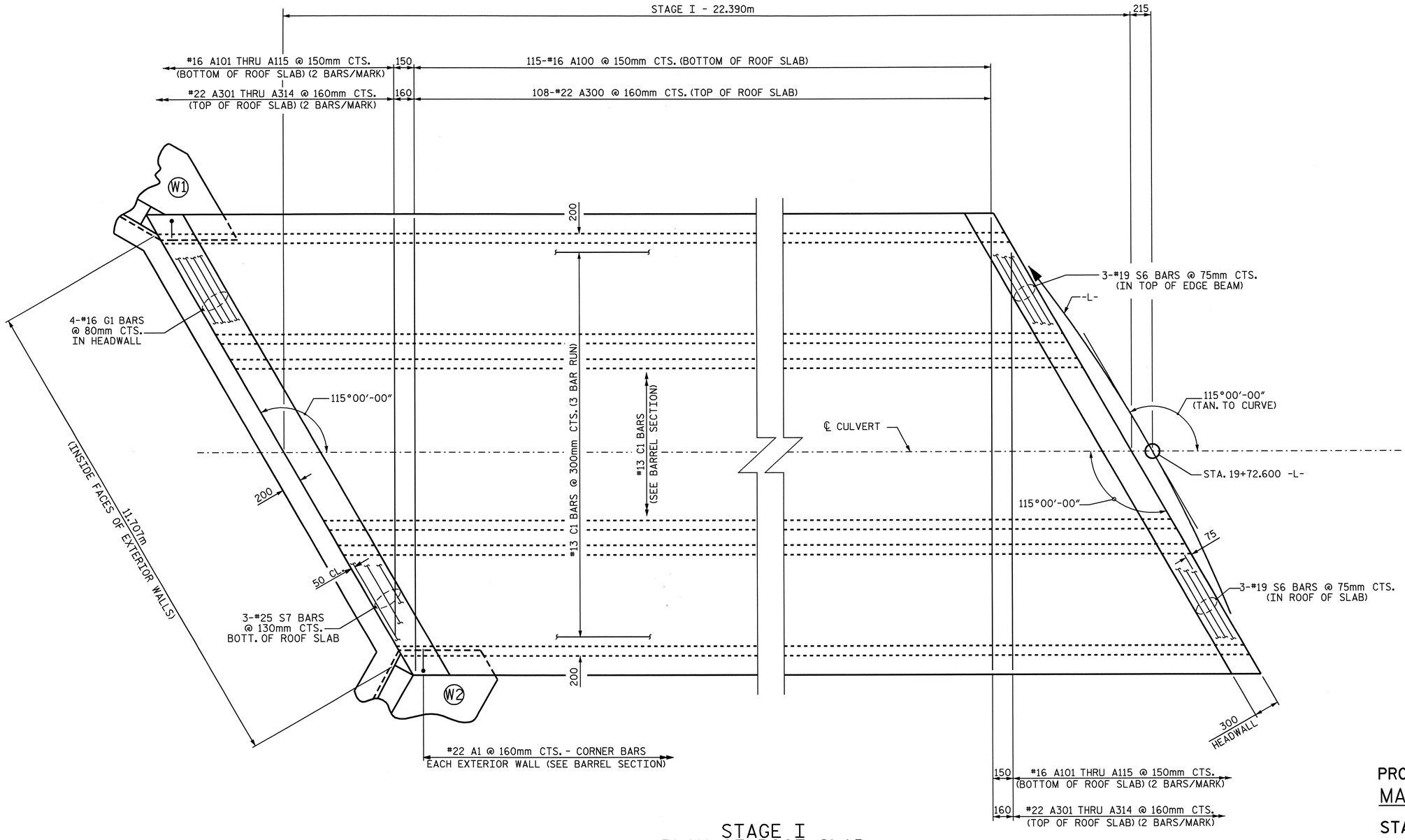

STAGE I
PLAN OF ROOF SLAB

ASSEMBLED BY : A.S./ A.L.F. DATE : 6/27/07
CHECKED BY : H.T. BARBOUR DATE : 7/16/07

PROJECT NO. R-2518A
MADISON/YANCEY COUNTY
STATION: 19+72.600 -L-

SHEET 4 OF 10

STATE OF NORTH CAROLINA
DEPARTMENT OF TRANSPORTATION
RALEIGH

TRIPLE 3.400m X 3.400m CONCRETE BOX CULVERT STAGE I

NORTH CAROLINA PROFESSIONAL SEAL 20125 ENGINEER MARSHALL G. PACK, JR.
9-25-07

REVISIONS						SHEET NO.
NO.	BY:	DATE:	NO.	BY:	DATE:	C-4
1			3			TOTAL SHEETS 103
2			4			

STR. #2

SPLICE LENGTH CHART

BAR	SIZE	SPLICE LENGTH
A200	19	940
A400	22	920
B1	16	540
B2	13	540
B3	13	540
C1	13	590
S2	25	1220
S3	19	940

BAR TYPE

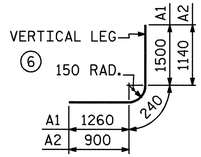

BAR DIMENSIONS ARE OUT TO OUT

BAR SCHEDULE

BAR	NO.	SIZE	TYPE	LENGTH	WEIGHT
A1	280	22	6	3000	2555
A2	280	22	6	2280	1942
A100	115	16	STR	10880	1942
A101	4	16	STR	10180	63
A102	4	16	STR	9520	59
A103	4	16	STR	8880	55
A104	4	16	STR	8260	51
A105	4	16	STR	7600	47
A106	4	16	STR	6960	43
A107	4	16	STR	6320	39
A108	4	16	STR	5660	35
A109	4	16	STR	5020	31
A110	4	16	STR	4400	27
A111	4	16	STR	3740	23
A112	4	16	STR	3100	19
A113	4	16	STR	2460	15
A114	4	16	STR	1800	11
A115	4	16	STR	1160	7
A200	105	19	STR	5000	1173
A201	4	19	STR	4380	39
A202	4	19	STR	3560	32
A203	4	19	STR	2740	24
A204	4	19	STR	1940	17
A205	2	19	STR	1120	5
A206	2	19	STR	300	1

BAR	NO.	SIZE	TYPE	LENGTH	WEIGHT
A250	101	19	STR	6860	1549
A251	4	19	STR	6120	55
A252	4	19	STR	5300	47
A253	4	19	STR	4500	40
A254	4	19	STR	3680	33
A255	4	19	STR	2860	26
A256	4	19	STR	2040	18
A257	2	19	STR	1240	6
A258	2	19	STR	420	2
A300	108	22	STR	10880	3574
A301	4	22	STR	10140	123
A302	4	22	STR	9440	115
A303	4	22	STR	8760	107
A304	4	22	STR	8080	98
A305	4	22	STR	7400	90
A306	4	22	STR	6700	82
A307	4	22	STR	6020	73
A308	4	22	STR	5340	65
A309	4	22	STR	4640	56
A310	4	22	STR	3960	48
A311	4	22	STR	3280	40
A312	4	22	STR	2600	32
A313	4	22	STR	1900	23
A314	4	22	STR	1220	15
A400	125	22	STR	4980	1894
A401	4	22	STR	4420	54
A402	4	22	STR	3720	45

BAR	NO.	SIZE	TYPE	LENGTH	WEIGHT
A403	4	22	STR	3040	37
A404	4	22	STR	2360	29
A405	4	22	STR	1660	20
A406	2	22	STR	980	6
A450	120	22	STR	6860	2504
A451	4	22	STR	6200	75
A452	4	22	STR	5520	67
A453	4	22	STR	4840	59
A454	4	22	STR	4160	51
A455	4	22	STR	3460	42
A456	4	22	STR	2780	34
A457	4	22	STR	2100	26
A458	4	22	STR	1400	17
A459	2	22	STR	720	4
B1	204	16	STR	4120	1304
B2	280	13	STR	3180	885
B3	300	13	STR	4120	1229
C1	522	13	STR	7820	4058
G1	4	16	STR	12040	75
S2	3	25	STR	5700	68
S3	6	19	STR	5420	73
S4	3	25	STR	7560	90
S5	6	19	STR	7560	101
S6	6	19	STR	12040	161
S7	3	25	STR	12040	144

REINFORCING STEEL = 27,724 kg

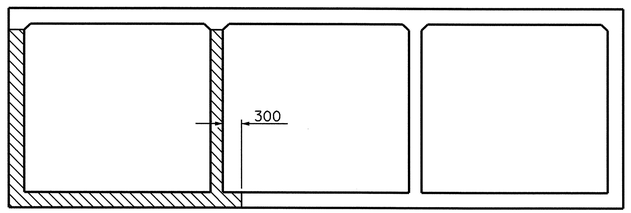

STAGE I CONSTRUCTION PHASING

(LOOKING UPSTREAM)

PHASE I CONSTRUCTION

PHASE II CONSTRUCTION

STAGE I QUANTITIES

CLASS A CONCRETE

BARREL @ 12.6 m^3/m 282.1 m^3

WINGS, ETC. 24.9 m^3

TOTAL 307.0 m^3

REINFORCING STEEL

BARREL 27,724 kg

WINGS, ETC. 820 kg

TOTAL 28,544 kg

CULVERT EXCAVATION ---------- LUMP SUM

FOUNDATION COND. MAT'L ---- 167 METRIC TONS

PROJECT NO. R-2518A

MADISON/YANCEY COUNTY

STATION: 19+72.600 -L-

SHEET 5 OF 10

STATE OF NORTH CAROLINA

DEPARTMENT OF TRANSPORTATION

RALEIGH

TRIPLE 3.400m X 3.400m CONCRETE BOX CULVERT STAGE I

NORTH CAROLINA PROFESSIONAL SEAL 20125 ENGINEER MARSHALL F. CREEK, JR.

9-25-07

REVISIONS						SHEET NO.
NO.	BY:	DATE:	NO.	BY:	DATE:	C-5
1			3			TOTAL SHEETS 103
2			4			

ASSEMBLED BY : A.S./ A.L.F. DATE : 6/28/07

CHECKED BY : H.T. BARBOUR DATE : 7/16/07

STR. #2

20-SEP-2007 09:06
R:\Structures\Str#02\A.L.Figueroa\R-2518A_sd_CU#2.dgn
aflgueroa

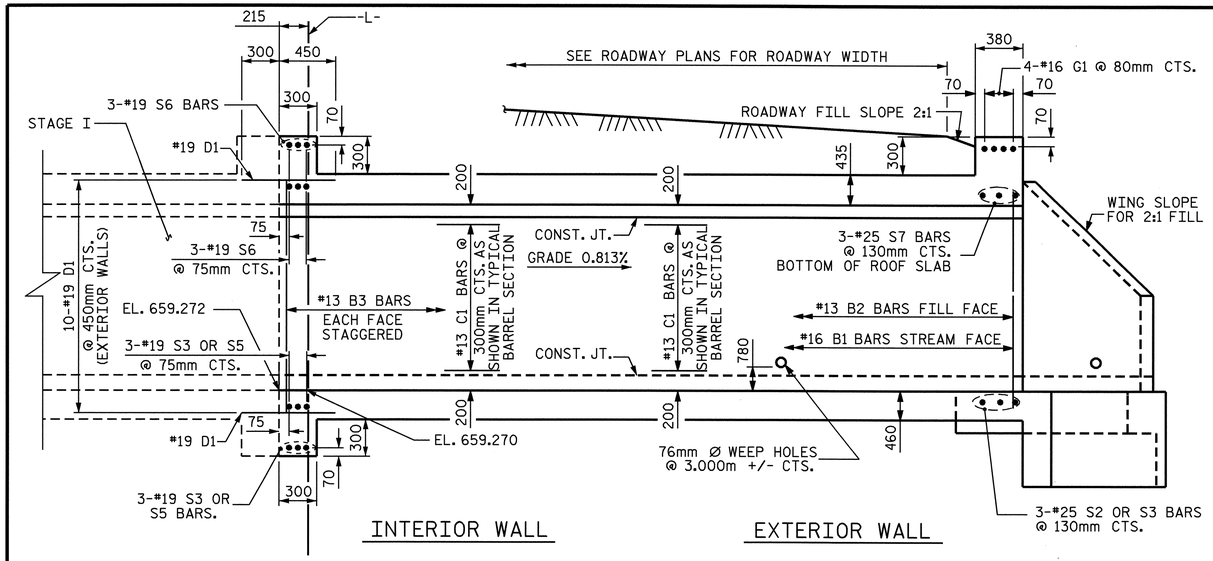

CULVERT SECTION NORMAL TO ROADWAY
STAGE II

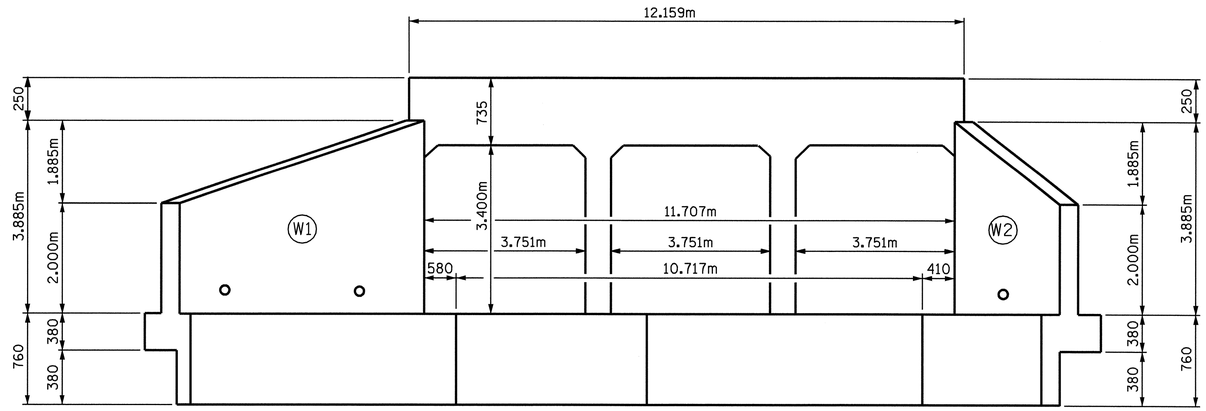

OUTLET END ELEVATION NORMAL TO SKEW
STAGE II

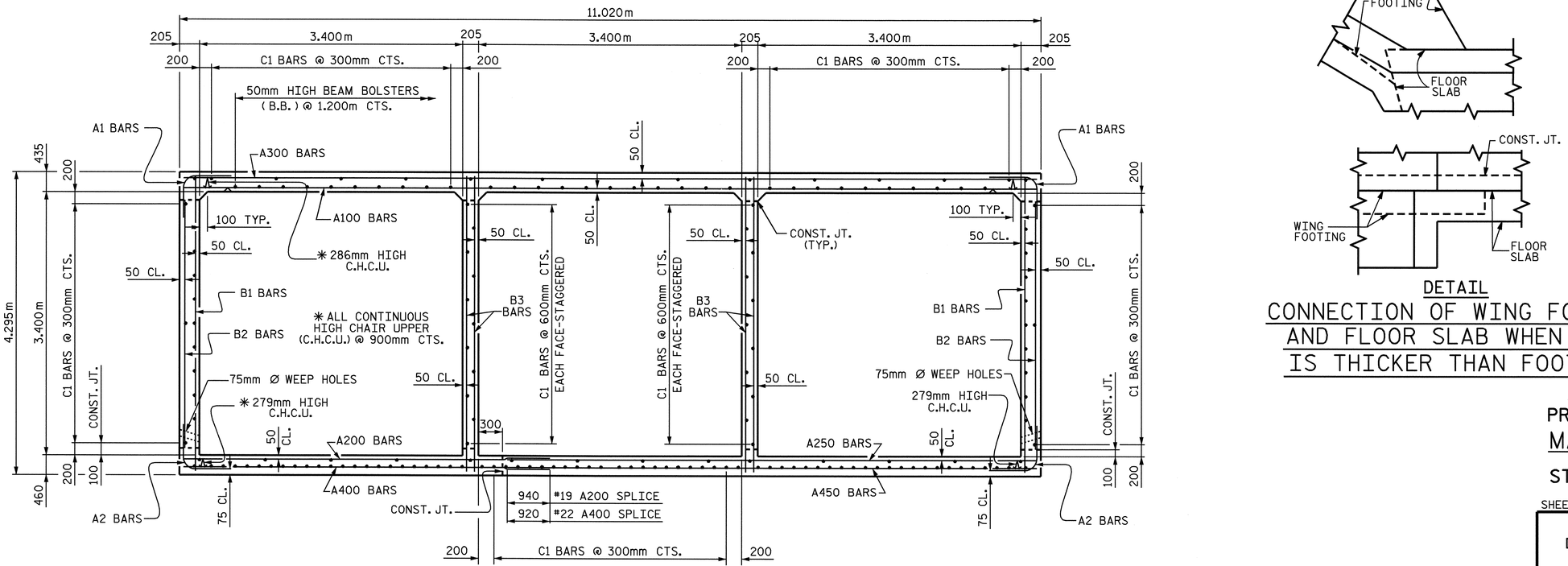

RIGHT ANGLE SECTION OF BARREL
THERE ARE 174 "C" BARS IN SECTION OF BARREL.
(LOOKING UPSTREAM)

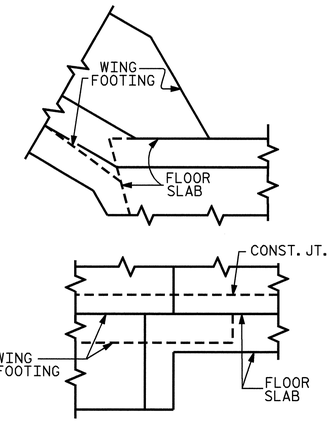

DETAIL
CONNECTION OF WING FOOTING AND FLOOR SLAB WHEN SLAB IS THICKER THAN FOOTING

PROJECT NO. R-2518A
MADISON/YANCEY COUNTY
STATION: 19+72.600 -L-

SHEET 6 OF 10

STATE OF NORTH CAROLINA
DEPARTMENT OF TRANSPORTATION
RALEIGH

TRIPLE 3.400m X 3.400m CONCRETE BOX CULVERT STAGE II

REVISIONS						SHEET NO.
NO.	BY:	DATE:	NO.	BY:	DATE:	C-6
1			3			TOTAL SHEETS
2			4			103

NORTH CAROLINA PROFESSIONAL SEAL 20125 ENGINEER MARSHALL GUICE WEEKS, JR.
9-25-07

ASSEMBLED BY : A. S./ A.L.F. DATE : 6/28/07
CHECKED BY : H.T. BARBOUR DATE : 7/16/07

STR #2

20-SEP-2007 09:06
R:\Structures\Str#02\A.L.Figueroa\R-2518A_sd_CU#2.dgn
afigueroa

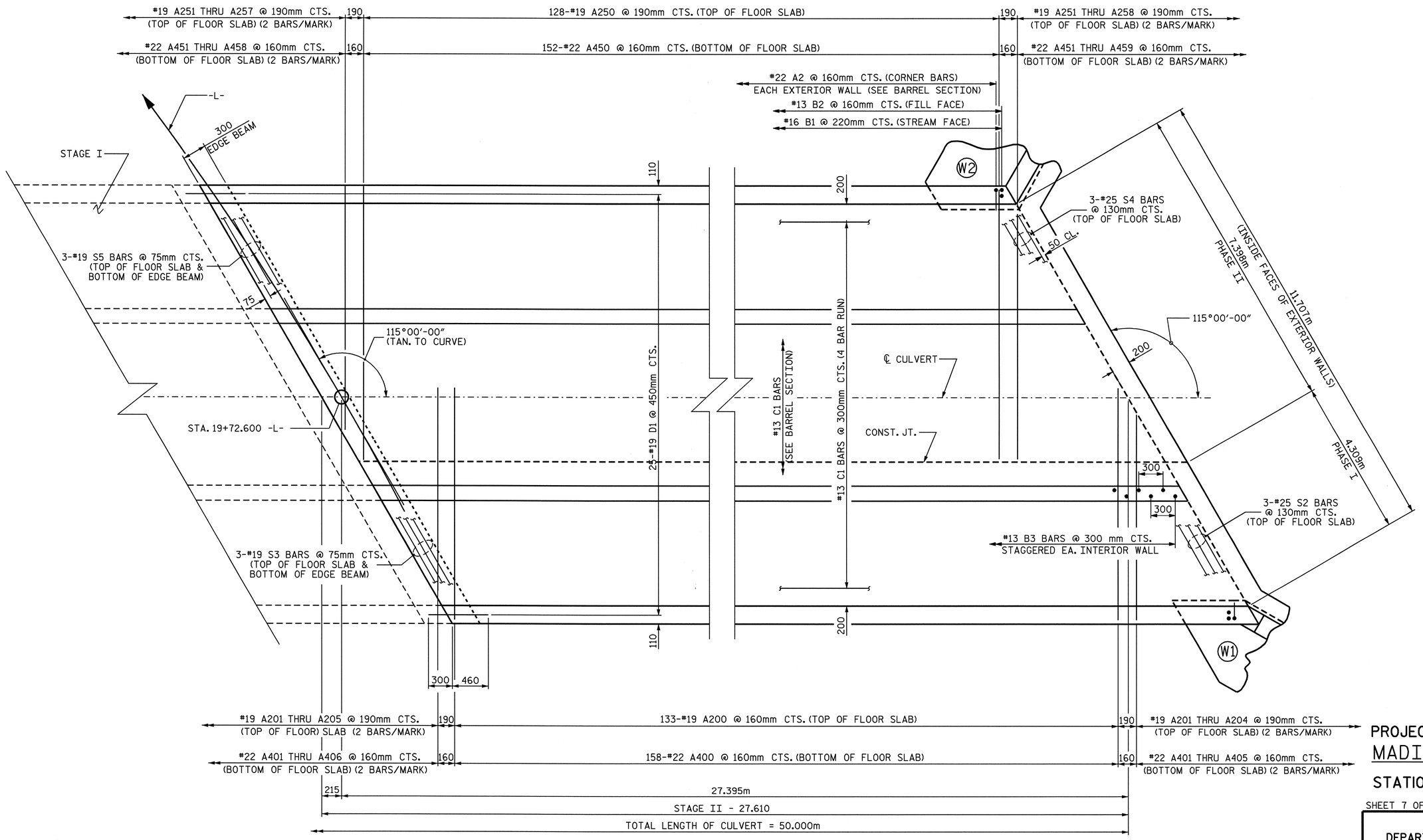

STAGE II
PLAN OF FLOOR SLAB

PROJECT NO. R-2518A
MADISON/YANCEY COUNTY
STATION: 19+72.600 -L-

SHEET 7 OF 10

STATE OF NORTH CAROLINA
DEPARTMENT OF TRANSPORTATION
RALEIGH

TRIPLE 3.400m X 3.400m
CONCRETE BOX CULVERT
STAGE II

NORTH CAROLINA PROFESSIONAL SEAL 20125 ENGINEER MARSHALL F. CHEEK, JR.
9-19-07

REVISIONS						SHEET NO.
NO.	BY:	DATE:	NO.	BY:	DATE:	C-7
1			3			TOTAL SHEETS
2			4			103

ASSEMBLED BY : A. S./ A.L.F. DATE : 6/28/07
CHECKED BY : H.T. BARBOUR DATE : 7/16/07

STR #2

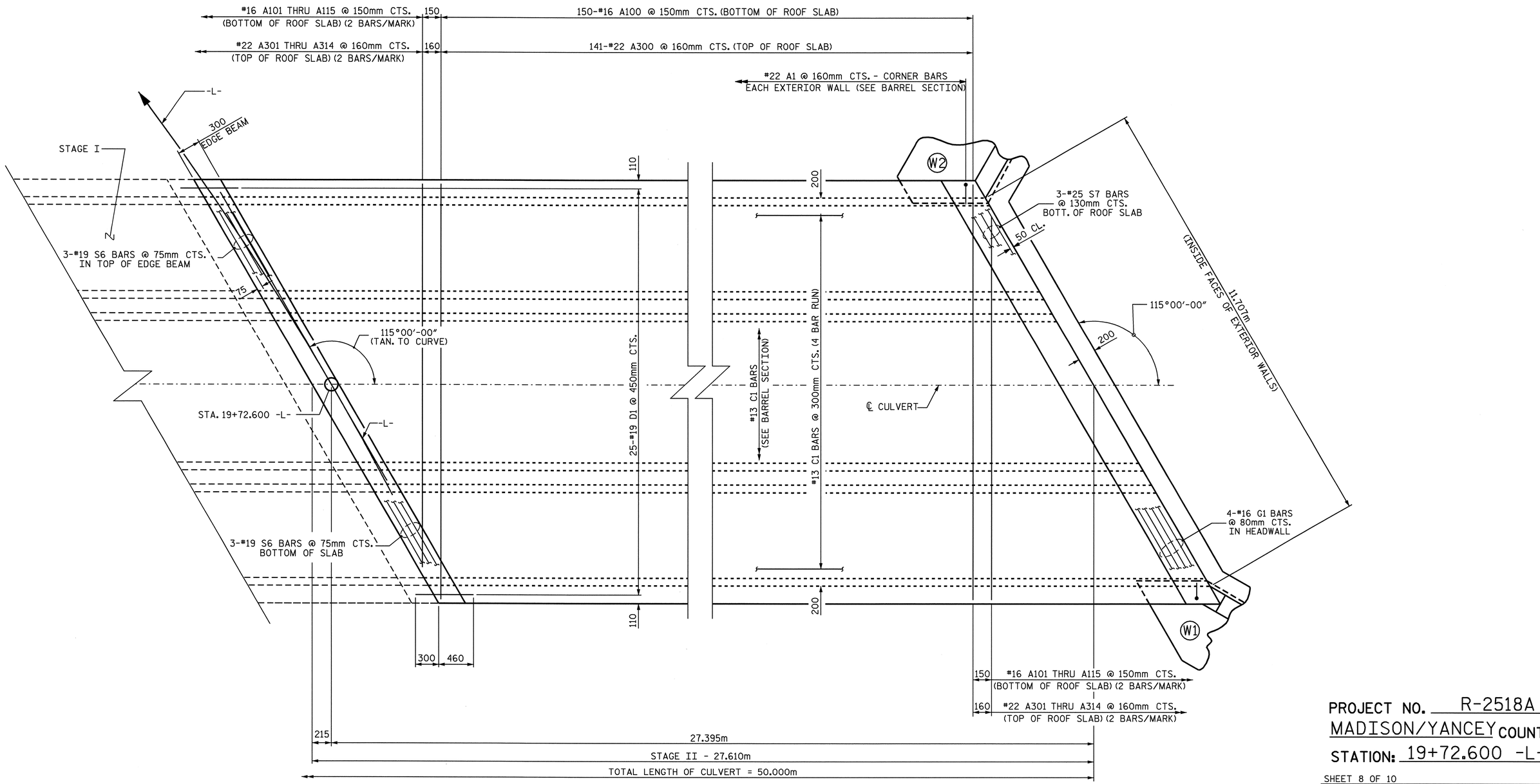

STAGE II
PLAN OF ROOF SLAB

ASSEMBLED BY : A. S./ A.L.F. DATE : 6/29/07
CHECKED BY : H.T. BARBOUR DATE : 7/16/07

NORTH CAROLINA PROFESSIONAL SEAL 20125 ENGINEER MARSHALL G. PECK, JR.
1-25-07

PROJECT NO. R-2518A
MADISON/YANCEY COUNTY
STATION: 19+72.600 -L-

SHEET 8 OF 10

STATE OF NORTH CAROLINA
DEPARTMENT OF TRANSPORTATION
RALEIGH

TRIPLE 3.400m X 3.400m CONCRETE BOX CULVERT STAGE II

REVISIONS						SHEET NO.
NO.	BY:	DATE:	NO.	BY:	DATE:	C-8
1			3			TOTAL SHEETS
2			4			103

STR #2

R:\Structures\Str#02\A.L.Figueroa\R-2518A_sd_CU#2.dgn
aflgueroa

SPLICE LENGTH CHART

BAR	SIZE	SPLICE LENGTH
A200	19	940
A400	22	920
B1	16	540
B2	13	540
B3	13	540
C1	13	590
S2	25	1220
S3	19	940

BAR TYPE

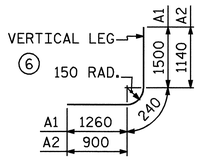

BAR DIMENSIONS ARE OUT TO OUT

BAR SCHEDULE

BAR	NO.	SIZE	TYPE	LENGTH	WEIGHT
A1	346	22	6	3000	3158
A2	346	22	6	2280	2400
A100	150	16	STR	10880	2533
A101	4	16	STR	10180	63
A102	4	16	STR	9520	59
A103	4	16	STR	8880	55
A104	4	16	STR	8260	51
A105	4	16	STR	7600	47
A106	4	16	STR	6960	43
A107	4	16	STR	6320	39
A108	4	16	STR	5660	35
A109	4	16	STR	5020	31
A110	4	16	STR	4400	27
A111	4	16	STR	3740	23
A112	4	16	STR	3100	19
A113	4	16	STR	2460	15
A114	4	16	STR	1800	11
A115	4	16	STR	1160	7
A200	133	19	STR	5000	1486
A201	4	19	STR	4280	38
A202	4	19	STR	3460	31
A203	4	19	STR	2660	24
A204	4	19	STR	1840	16
A205	2	19	STR	1020	5

BAR	NO.	SIZE	TYPE	LENGTH	WEIGHT
A250	128	19	STR	6860	1963
A251	4	19	STR	6220	56
A252	4	19	STR	5420	48
A253	4	19	STR	4600	41
A254	4	19	STR	3780	34
A255	4	19	STR	2980	27
A256	4	19	STR	2160	19
A257	4	19	STR	1340	12
A258	2	19	STR	520	2
A300	141	22	STR	10880	4667
A301	4	22	STR	10140	123
A302	4	22	STR	9440	115
A303	4	22	STR	8760	107
A304	4	22	STR	8080	98
A305	4	22	STR	7400	90
A306	4	22	STR	6700	82
A307	4	22	STR	6020	73
A308	4	22	STR	5340	65
A309	4	22	STR	4640	56
A310	4	22	STR	3960	48
A311	4	22	STR	3280	40
A312	4	22	STR	2600	32
A313	4	22	STR	1900	23
A314	4	22	STR	1220	15
A400	158	22	STR	5000	2403
A401	4	22	STR	4360	53
A402	4	22	STR	3680	45

BAR	NO.	SIZE	TYPE	LENGTH	WEIGHT
A403	4	22	STR	3000	37
A404	4	22	STR	2300	28
A405	4	22	STR	1620	20
A406	2	22	STR	940	6
A450	152	22	STR	6860	3172
A451	4	22	STR	6320	77
A452	4	22	STR	5640	69
A453	4	22	STR	4960	60
A454	4	22	STR	4260	52
A455	4	22	STR	3580	44
A456	4	22	STR	2900	35
A457	4	22	STR	2200	27
A458	4	22	STR	1520	18
A459	2	22	STR	840	5
B1	252	16	STR	4120	1611
B2	346	13	STR	3180	1094
B3	368	13	STR	4120	1507
C1	696	13	STR	7320	5064
D1	70	19	STR	760	119
G1	4	16	STR	12040	75
S2	3	25	STR	5700	68
S3	6	19	STR	5420	73
S4	3	25	STR	7560	90
S5	6	19	STR	7560	101
S6	6	19	STR	12040	161
S7	3	25	STR	12040	144

REINFORCING STEEL = 34,310 kg

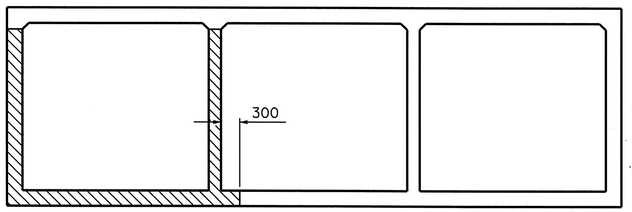

STAGE II CONSTRUCTION PHASING

(LOOKING UPSTREAM)

PHASE I CONSTRUCTION

PHASE II CONSTRUCTION

STAGE II QUANTITIES

CLASS A CONCRETE

BARREL @ 12.6 m^3/m 347.9 m^3

WINGS, ETC. 24.9 m^3

TOTAL 372.8 m^3

REINFORCING STEEL

BARREL 34,310 kg

WINGS, ETC. 820 kg

TOTAL 35,130 kg

CULVERT EXCAVATION ---------- LUMP SUM

FOUNDATION COND. MAT'L ---- 206 METRIC TONS

ASSEMBLED BY : A.S./ A.L.F. DATE : 6/29/07

CHECKED BY : H.T. BARBOUR DATE : 7/16/07

NORTH CAROLINA PROFESSIONAL SEAL 20125 ENGINEER MARSHALL H. CREEK, JR.
10-1-07

PROJECT NO. R-2518A

MADISON/YANCEY COUNTY

STATION: 19+72.600 -L-

SHEET 9 OF 10

STATE OF NORTH CAROLINA
DEPARTMENT OF TRANSPORTATION
RALEIGH

TRIPLE 3.400m X 3.400m CONCRETE BOX CULVERT STAGE II

REVISIONS						SHEET NO.
NO.	BY:	DATE:	NO.	BY:	DATE:	C-9
1			3			TOTAL SHEETS
2			4			103

STR #2

20-SEP-2007 09:07
R:\Structures\Str#02\A.L.Figueroa\R-2518A_sd_CU#2.dgn
afigueroa

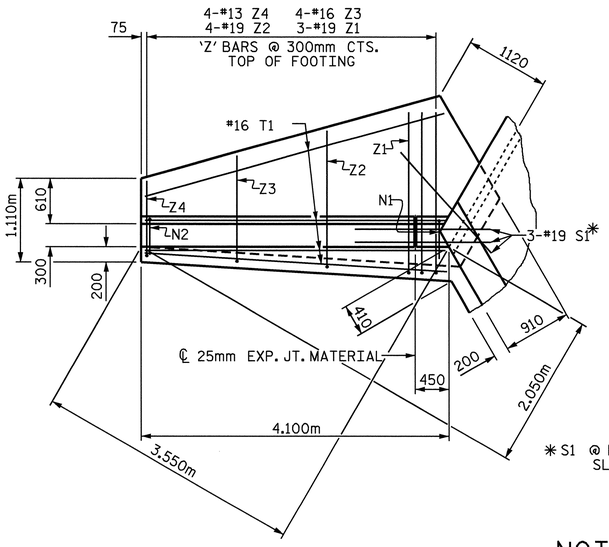

PLAN W2

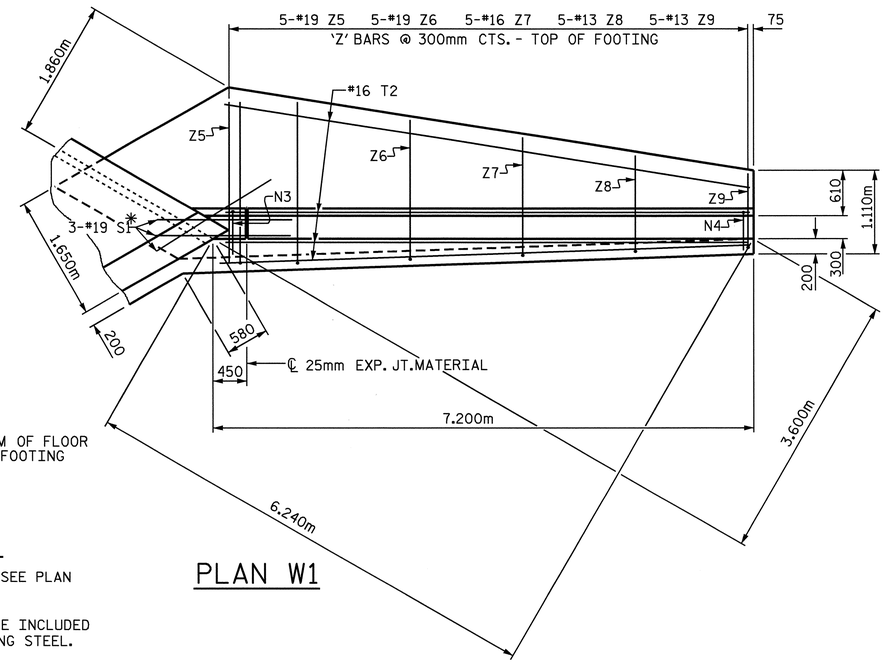

PLAN W1

* S1 @ BOTTOM OF FLOOR SLAB & FOOTING

NOTES

FOR WING ORIENTATION, SEE PLAN OF FLOOR SLAB.

G1 BARS IN HEADWALL ARE INCLUDED WITH BARREL REINFORCING STEEL.

A 900mm STRIP OF FILTER FABRIC SHALL BE ATTACHED TO THE FILL FACE OF THE WING COVERING THE ENTIRE LENGTH OF THE EXPANSION JOINT.

BAR TYPES

ALL BAR DIMENSIONS ARE OUT TO OUT.

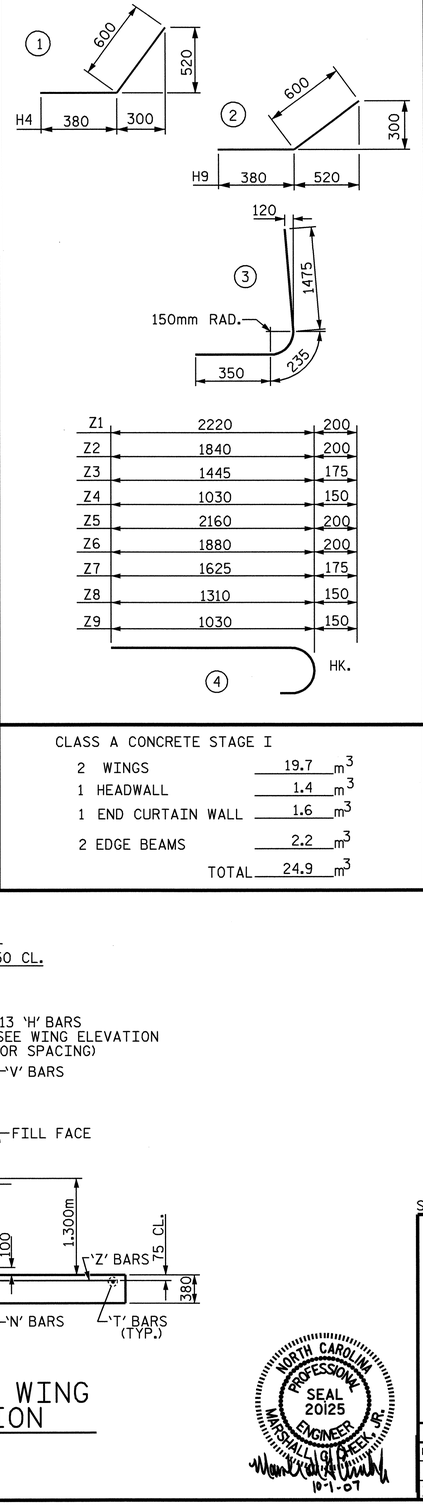

BILL OF MATERIAL

BAR	NO.	SIZE	TYPE	LENGTH	WEIGHT
H1	10	13	STR	3540	35
H2	2	13	STR	2520	5
H3	2	13	STR	1460	3
H4	18	13	1	980	18
H5	5	13	STR	3820	19
H6	10	13	STR	6640	66
H7	2	13	STR	4900	10
H8	2	13	STR	3040	6
H9	18	13	2	980	18
H10	5	13	STR	6820	34
N1	8	19	3	2060	37
N2	7	16	3	2060	22
N3	10	19	3	2060	46
N4	15	16	3	2060	48
S1	6	19	STR	1800	24
T1	4	16	STR	4100	25
T2	4	16	STR	7200	45
V1	2	16	STR	3440	11
V2	3	16	STR	3160	15
V3	6	13	STR	2760	16
V4	6	13	STR	2380	14
V5	8	13	STR	1880	15
V6	2	13	STR	3440	7
V7	3	13	STR	3160	9
V8	2	16	STR	3500	11
V9	3	16	STR	3320	15
V10	5	16	STR	2960	23
V11	10	13	STR	2600	26
V12	10	13	STR	2220	22
V13	10	13	STR	1860	18
V14	2	13	STR	3500	7
V15	3	13	STR	3320	10
V16	5	13	STR	2960	15
Z1	3	19	4	2440	16
Z2	4	19	4	2040	18
Z3	4	16	4	1620	10
Z4	4	13	4	1180	5
Z5	5	19	4	2360	26
Z6	5	19	4	2080	23
Z7	5	16	4	1800	14
Z8	5	13	4	1460	7
Z9	5	13	4	1180	6
REINFORCING STEEL FOR 2 WINGS					820 kg

CLASS A CONCRETE STAGE I

2 WINGS	19.7	m^3
1 HEADWALL	1.4	m^3
1 END CURTAIN WALL	1.6	m^3
2 EDGE BEAMS	2.2	m^3
TOTAL	24.9	m^3

CLASS A CONCRETE STAGE II

2 WINGS	19.7	m^3
1 HEADWALL	1.4	m^3
1 END CURTAIN WALL	1.6	m^3
2 EDGE BEAMS	2.2	m^3
TOTAL	24.9	m^3

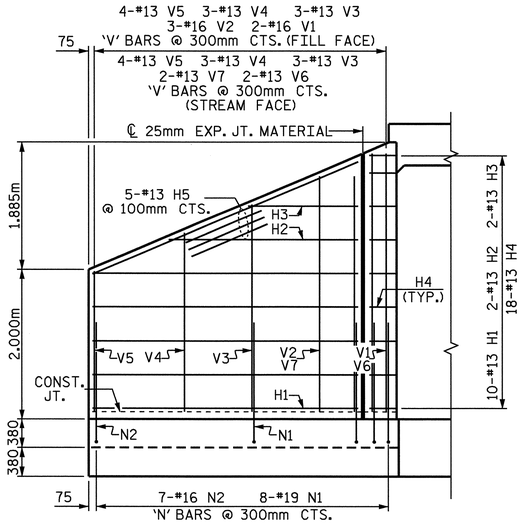

ELEVATION W2

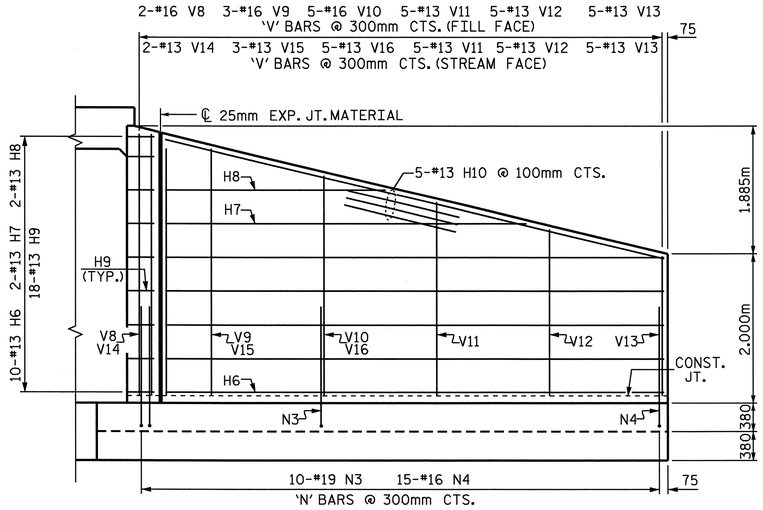

ELEVATION W1

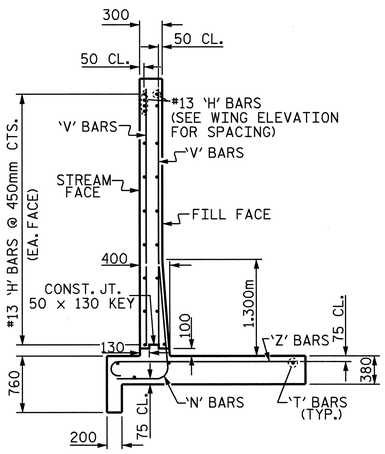

TYPICAL WING SECTION

PROJECT NO. R-2518A
MADISON COUNTY
STATION: 19+72.600 -L-

SHEET 10 OF 10

STATE OF NORTH CAROLINA
DEPARTMENT OF TRANSPORTATION
RALEIGH

WINGS FOR CONCRETE BOX CULVERT STAGE I OR II

ASSEMBLED BY : A. S./ A.L.F.	DATE : 6/29/07
CHECKED BY : H.T. BARBOUR	DATE : 7/16/07
DRAWN BY : FPP 06/97	
CHECKED BY : VAP 08/97	

REVISIONS						SHEET NO.
NO.	BY:	DATE:	NO.	BY:	DATE:	C-10
1			3			TOTAL SHEETS
2			4			103

SID #2 SID NO. CWC0234

02-APR-2008 15:28
ri\structures\Str#03\A.L.Figueroa\r2518a_sd_mcu#3.dgn
lmurphy

BENCHMARK #3: CHISELED SQUARE IN THE TOP OF A PARAPET WESTSIDE, NORTH END OF THE SAM COX BRIDGE, BEHIND P&E GROCERY STA. 21+23.000 -L-, 63 METERS LEFT, ELEV. = 658.442

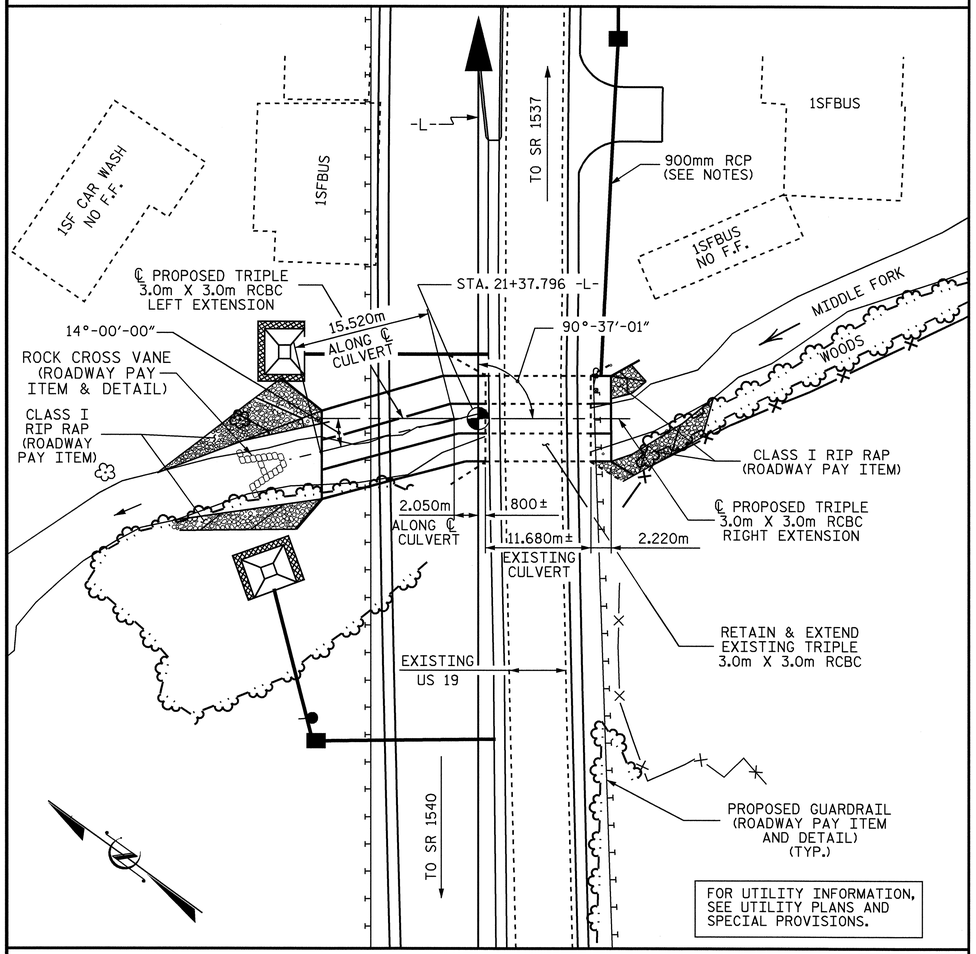

LOCATION SKETCH

HYDRAULIC DATA

DESIGN DISCHARGE	= 83.0 m³/s
FREQUENCY OF DESIGN FLOOD	= 50 yrs.
DESIGN HIGH WATER ELEVATION	= 657.20m
DRAINAGE AREA	= 31.2 sq.km
BASIC DISCHARGE (Q100)	= 100.0 m³/s
BASIC HIGH WATER ELEVATION	= 657.72m

OVERTOPPING FLOOD DATA

OVERTOPPING DISCHARGE	= 110.00 m³/s
FREQUENCY OF OVERTOPPING FLOOD	= 100+ yrs.
OVERTOPPING FLOOD ELEVATION	= 657.93 m

ROADWAY DATA

GRADE POINT ELEV. @ STATION 21+37.796 -L-	= 658.070m
BED ELEV. @ STATION 21+37.796 -L-	= 653.720m
ROADWAY SLOPE	= 2:1

TOTAL STRUCTURE QUANTITIES

CLASS A CONCRETE

LEFT EXTENSION	147.6	m³
RIGHT EXTENSION	30.3	m³
TOTAL	177.9	m³

REINFORCING STEEL

LEFT EXTENSION	19,395	kg
RIGHT EXTENSION	2,967	kg
TOTAL	22,362	kg

CULVERT EXCAVATION ---------- LUMP SUM

FOUNDATION COND. MAT'L

LEFT EXTENSION	117	METRIC TONS
RIGHT EXTENSION	15	METRIC TONS
TOTAL	132	METRIC TONS

NOTES

ASSUMED LIVE LOAD ----------MS18 OR ALTERNATE LOADING.

DESIGN FILL LEFT EXTENSION---------- 1.700m
DESIGN FILL RIGHT EXTENSION---------- 0.930m

FOR OTHER DESIGN DATA AND NOTES, SEE STANDARD NOTE SHEET.

76mm Ø WEEP HOLES INDICATED TO BE IN ACCORDANCE WITH THE SPECIFICATIONS.

CONCRETE IN CULVERT TO BE POURED IN THE FOLLOWING ORDER:

1. PHASE I WING FOOTINGS AND FLOOR SLAB INCLUDING 100mm OF PHASE I VERTICAL WALLS.
2. THE REMAINING PORTIONS OF PHASE I WALLS AND PHASE I WINGS FULL HEIGHT.
3. PHASE II WING FOOTINGS AND FLOOR SLAB INCLUDING 100mm OF PHASE II VERTICAL WALLS.
4. THE REMAINING PORTIONS OF PHASE II WALLS AND PHASE II WINGS FULL HEIGHT.
5. ROOF SLAB IN IT'S ENTIRETY AND HEADWALLS.

THE RESIDENT ENGINEER SHALL CHECK THE LENGTH OF CULVERT BEFORE STAKING IT OUT TO MAKE CERTAIN THAT IT WILL PROPERLY TAKE CARE OF THE FILL.

DIMENSIONS FOR WING LAYOUT AS WELL AS ADDITIONAL REINFORCING STEEL EMBEDDED IN BARREL ARE SHOWN ON WING SHEETS.

AT THE CONTRACTOR'S OPTION, HE MAY SPLICE THE VERTICAL REINFORCING STEEL IN THE INTERIOR FACES OF THE EXTERIOR WALLS AND BOTH FACES OF INTERIOR WALLS ABOVE LOWER WALL CONSTRUCTION JOINT. THE SPLICE LENGTH SHALL BE AS PROVIDED IN THE SPLICE LENGTH CHART SHOWN ON THE PLANS. EXTRA WEIGHT OF STEEL DUE TO THE SPLICES SHALL BE PAID FOR BY THE CONTRACTOR.

IF APPROVED BY THE ENGINEER, THE CONTRACTOR MAY USE THE EXISTING WINGS AS TEMPORARY SHORING FOR THE CONSTRUCTION OF THE CULVERT EXTENSION. IN THIS CASE, THE BOTTOM SLAB OF THE EXTENSION SHALL BE POURED A LEAST 72 HOURS PRIOR TO CUTTING THE WINGS. THE WINGS MAY BE CUT EARLIER PROVIDE THE SLAB CONCRETE STRENGTH HAS REACHED A MINIMUM COMPRESSIVE STRENGTH OF 10.3 MPa.

MATERIAL EXCAVATED FROM THE EXISTING BED SHALL BE STOCKPILED FOR USE IN THE PROPOSED CULVERT EXTENSIONS. UPON COMPLETION OF THE EXTENSIONS, THE MATERIAL SHALL BE PLACED IN THE NORTHEAST BARREL EXTENSIONS TO A DEPTH OF 0.3m. EXCESS SILT IN THE EXISTING CULVERT SHALL BE REMOVED LEAVING A 0.3m. DEPTH. BED MATERIAL MAY BE SUPPLEMENTED WITH CLASS 'B' RIP RAP IF SUITABLE MATERIAL IS NOT AVAILABLE IN SUFFICIENT QUANTITIES.

THE ENTIRE COST OF THE WORK REQUIRED TO PLACE THE EXCAVATED MATERIAL OR SUPPLEMENTAL MATERIAL SHALL BE INCLUDED IN THE CONTRACT LUMP SUM PRICE BID FOR CULVERT EXCAVATION.

THE 900mm DIA. PIPE THROUGH THE SIDEWALL OF THE CULVERT SHALL BE LOCATED BY THE ENGINEER. THE REINFORCING STEEL SHALL BE FIELD BENT AS NECESSARY TO CLEAR PIPE.

DOWELS SHALL BE USED TO CONNECT THE CULVERT EXTENSIONS TO THE EXISTING CULVERT AS SHOWN. FOR NOTE REGARDING SETTING OF DOWELS, SEE STANDARD NOTES SHEET SNSM.

FOR MAINTENANCE OF TRAFFIC, SEE TRAFFIC CONTROL PLANS.

FOR CONSTRUCTION SEQUENCE, SEE EROSION CONTROL PLANS.

FOR FALSEWORK AND FORMWORK, SEE SPECIAL PROVISIONS.

FOR GROUT FOR STRUCTURES, SEE SPECIAL PROVISIONS.

FOR SUBMITTAL OF WORKING DRAWINGS, SEE SPECIAL PROVISIONS.

FOR CULVERT DIVERSION DETAILS AND PAY ITEM, SEE EROSION CONTROL PLANS.

FOR CRANE SAFETY, SEE SPECIAL PROVISIONS.

ALL DIMENSIONS ARE IN MILLIMETERS UNLESS OTHERWISE NOTED.

ALL ELEVATIONS ARE IN METERS.

METRIC

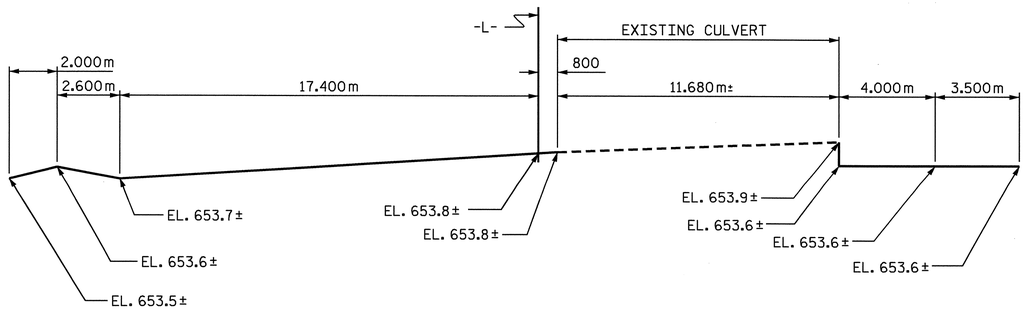

PROFILE ALONG ℄ CULVERT

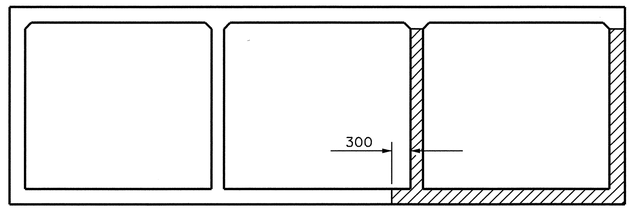

CONSTRUCTION PHASING

(LOOKING DOWNSTREAM)

PHASE I CONSTRUCTION

PHASE II CONSTRUCTION

NORTH CAROLINA PROFESSIONAL SEAL 13014 ENGINEER QUANG H. NGUYEN
Quang H. Nguyen 1-3-08

NORTH CAROLINA PROFESSIONAL SEAL 20125 ENGINEER HARRISON L. CHEEK, JR.
4-3-08

ADRAWN BY : A. S. / A.L.F. DATE : 5/13/05
CHECKED BY : L.L. MURPHY DATE : 10-5-05

PROJECT NO. R-2518A
MADISON/YANCEY COUNTY
STATION: 21+37.796 -L-

SHEET 1 OF 10 CULVERT #C99

STATE OF NORTH CAROLINA
DEPARTMENT OF TRANSPORTATION
RALEIGH

TRIPLE 3.000m X 3.000m CONCRETE BOX CULVERT LEFT & RIGHT EXTENSIONS

REVISIONS						SHEET NO.
NO.	BY:	DATE:	NO.	BY:	DATE:	C-11
1			3			TOTAL SHEETS
2			4			103

STP #3

20-SEP-2007 08:49
R:\Structures\Str*03\A.L.Figueroa\R2518A_sd_MCU*3.dgn
afigueroa

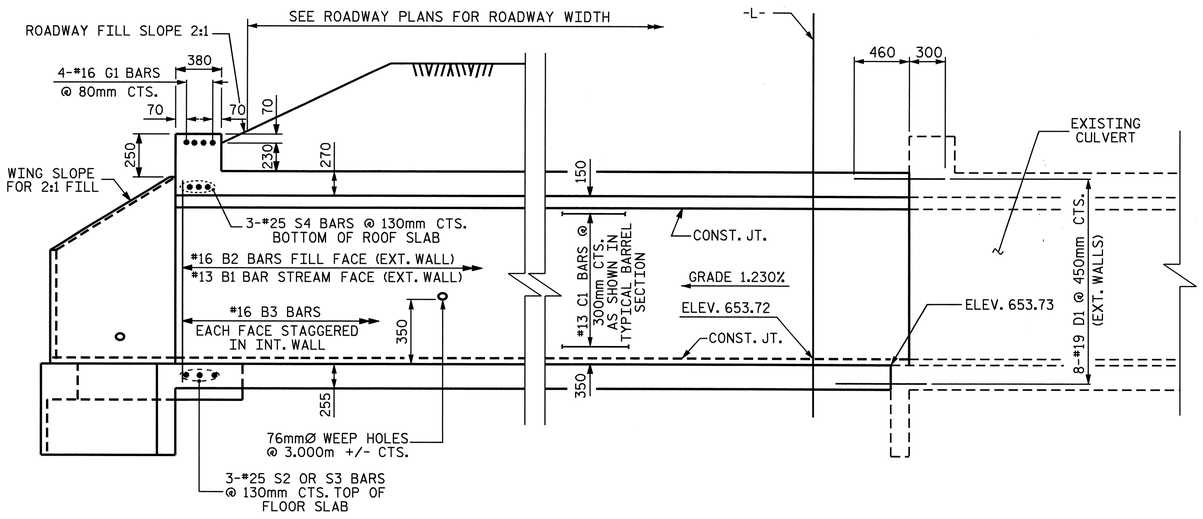

LEFT CULVERT EXTENSION SECTION NORMAL TO ROADWAY

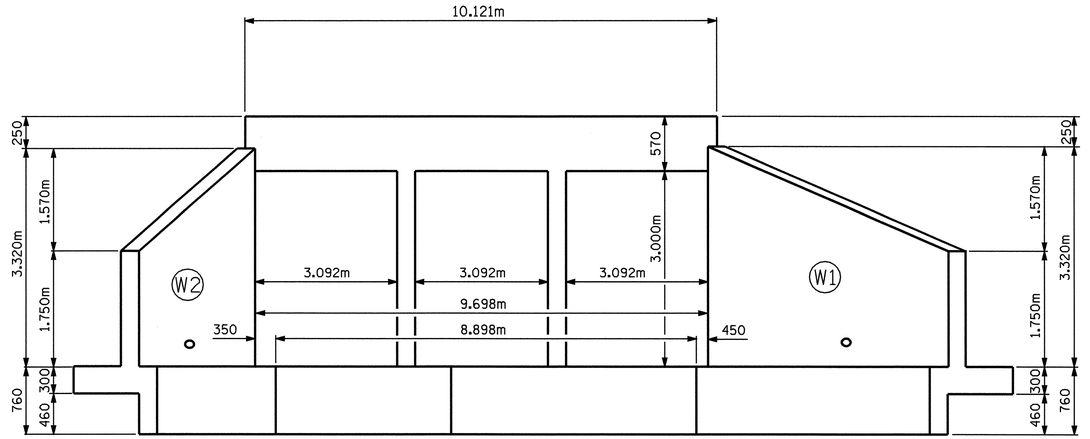

OUTLET END ELEVATION NORMAL TO SKEW

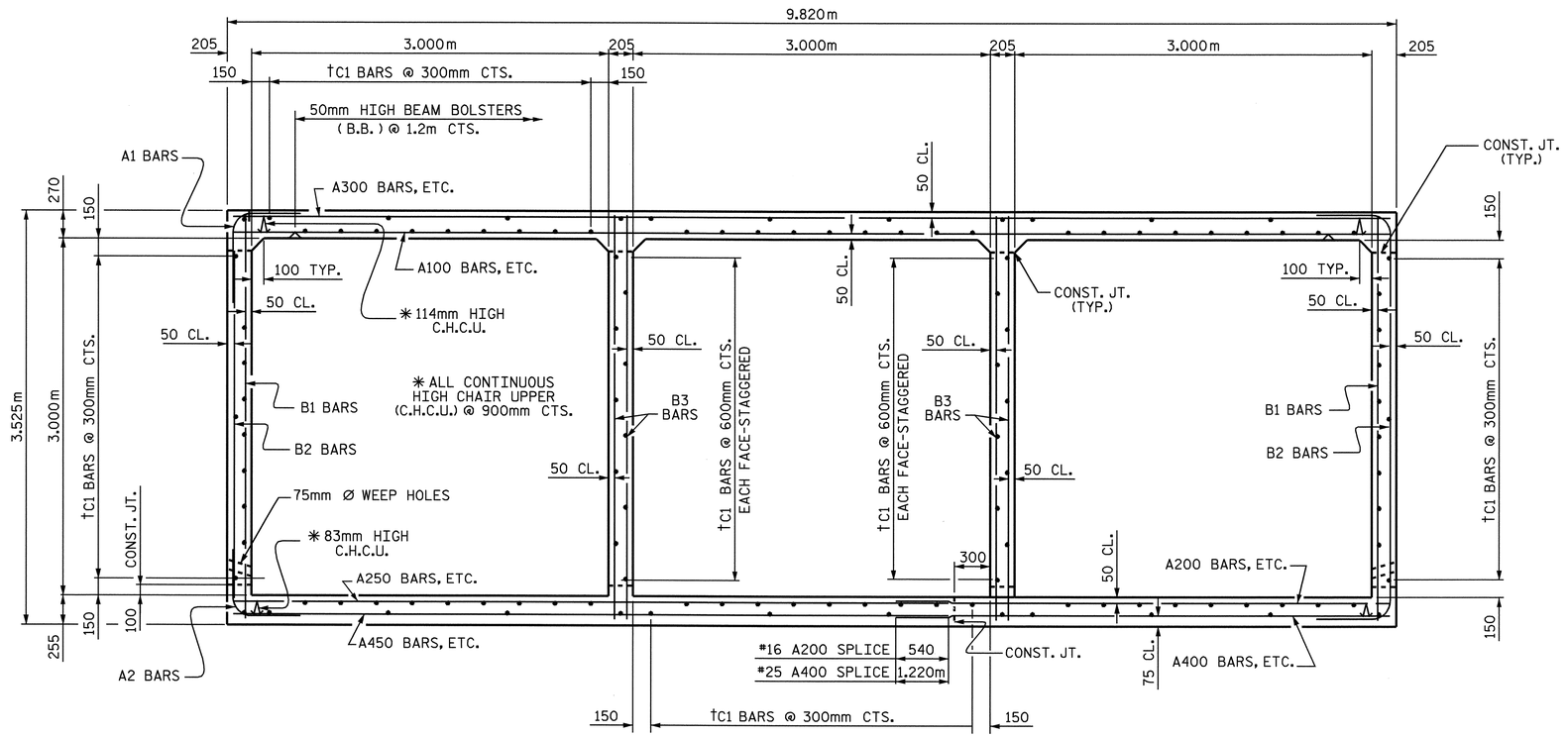

RIGHT ANGLE SECTION OF BARREL

THERE ARE 122 "C" BARS IN SECTION OF BARREL.
(LOOKING DOWNSTREAM)
†#13 C1 BARS SHALL BE FIELD BENT AS NECESSARY

LEFT EXTENSION STRUCTURE QUANTITIES

CLASS A CONCRETE		
BARREL @	7.58 m^3/m	133.2 m^3
WINGS, ETC.		14.4 m^3
TOTAL		147.6 m^3
REINFORCING STEEL		
BARREL		18,822 kg
WINGS, ETC.		573 kg
TOTAL		19,395 kg
CULVERT EXCAVATION		LUMP SUM
FOUNDATION COND. MAT'L		117 METRIC TONS

DRAWN BY : A. S. / A.L.F. DATE : 5/13/05
CHECKED BY : L.L. MURPHY DATE : 10-5-05

NORTH CAROLINA PROFESSIONAL SEAL 20125 ENGINEER MARSHALL G. CREEK, JR. 10-1-07

PROJECT NO. R-2518A
MADISON/YANCEY COUNTY
STATION: 21+37.796 -L-

SHEET 2 OF 10

STATE OF NORTH CAROLINA
DEPARTMENT OF TRANSPORTATION
RALEIGH

TRIPLE 3.000m X 3.000m CONCRETE BOX CULVERT LEFT EXTENSION

REVISIONS						SHEET NO.
NO.	BY:	DATE:	NO.	BY:	DATE:	C-12
1			3			TOTAL SHEETS
2			4			103

20-SEP-2007 09:19
R:\Structures\Str#03\A.L.Figueroa\R2518A_sd_MCU#3.dgn
afigueroa

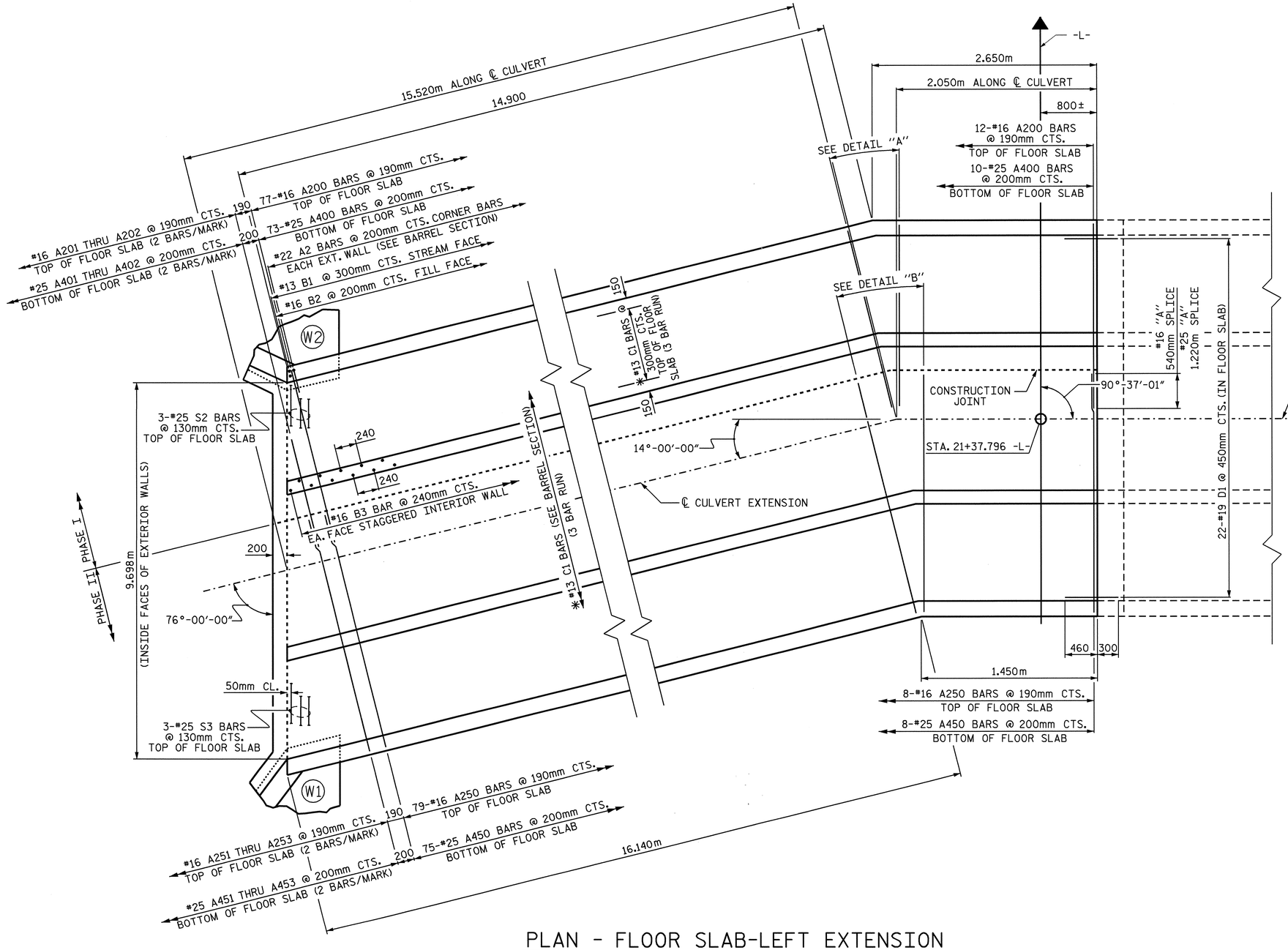

PLAN - FLOOR SLAB-LEFT EXTENSION

*#13 C1 BARS SHALL BE FIELD BENT AS NECESSARY

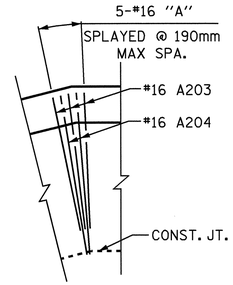

DETAIL "A"
TOP OF SLAB

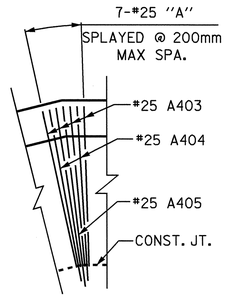

DETAIL "A"
BOTTOM OF SLAB

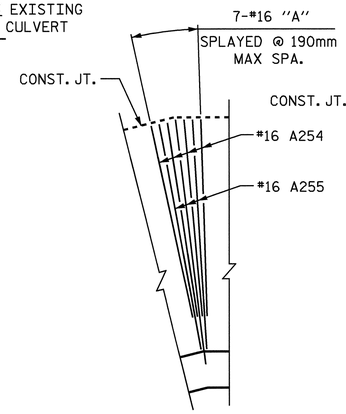

DETAIL "B"
TOP OF SLAB

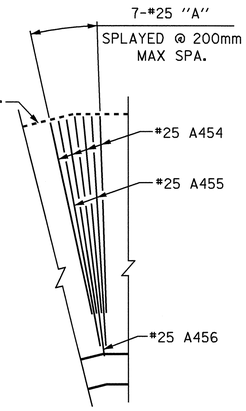

DETAIL "B"
BOTTOM OF SLAB

PROJECT NO. R-2518A
MADISON/YANCEY COUNTY
STATION: 21+37.796 -L-

SHEET 3 OF 10

STATE OF NORTH CAROLINA
DEPARTMENT OF TRANSPORTATION
RALEIGH

TRIPLE 3.000m X 3.000m CONCRETE BOX CULVERT LEFT EXTENSION

REVISIONS						SHEET NO.
NO.	BY:	DATE:	NO.	BY:	DATE:	C-13
1			3			TOTAL SHEETS
2			4			103

NORTH CAROLINA PROFESSIONAL SEAL 20125 ENGINEER MARSHALL L. MURPHY, JR.
10-1-07

DRAWN BY : A. S. / A.L.F. DATE : 5/13/05
CHECKED BY : L.L. MURPHY DATE : 10-5-05

STR. #3

R:\Structures\Str#03\A.L.Figueroa\R2518A_sd_MCU#3.dgn
afigueroa

SPLICE LENGTH CHART

BAR	SIZE	SPLICE LENGTH
A200	16	540
A400	25	1220
B1	13	540
B3	13	590
S2	25	1500
C1	13	590

BAR TYPE

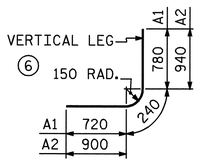

BAR DIMENSIONS ARE OUT TO OUT

BAR SCHEDULE

BAR	NO.	SIZE	TYPE	LENGTH	WEIGHT
A1	180	19	6	1740	700
A2	180	22	6	2080	1139
A100	71	22	STR	9720	2099
A101	2	22	STR	8040	49
A102	2	22	STR	6260	38
A103	2	22	STR	4500	27
A104	2	22	STR	2740	17
A105	2	22	STR	970	6
A106	6	22	STR	7380	135
A107	3	22	STR	8660	79
A108	2	22	STR	9360	57

BAR	NO.	SIZE	TYPE	LENGTH	WEIGHT
A200	89	16	STR	4200	580
A201	2	16	STR	2760	9
A202	2	16	STR	1240	4
A203	3	16	STR	3140	15
A204	2	16	STR	3740	12
A250	87	16	STR	6000	810
A251	2	16	STR	4540	14
A252	2	16	STR	3010	9
A253	2	16	STR	1480	5
A254	4	16	STR	4380	27
A255	3	16	STR	5360	25
A300	78	25	STR	9720	3012
A301	2	25	STR	8300	66
A302	2	25	STR	6700	53
A303	2	25	STR	5100	41
A304	2	25	STR	3500	28
A305	2	25	STR	1880	15
A306	6	25	STR	7400	176
A307	3	25	STR	8660	103
A308	2	25	STR	9300	74
A400	83	25	STR	4880	1609
A401	2	25	STR	3360	27
A402	2	25	STR	1760	14

BAR	NO.	SIZE	TYPE	LENGTH	WEIGHT
A403	4	25	STR	3780	60
A404	2	25	STR	4800	38
A405	1	25	STR	4920	20
A450	83	25	STR	6000	1979
A451	2	25	STR	4440	35
A452	2	25	STR	2840	23
A453	2	25	STR	1240	10
A454	4	25	STR	3080	49
A455	2	25	STR	4000	32
A456	1	25	STR	4460	18
B1	118	13	STR	3360	394
B2	180	16	STR	2800	782
B3	310	16	STR	3360	1617
C1	366	13	STR	6240	2270
D1	60	19	STR	760	102
G1	4	16	STR	10000	62
S2	3	25	STR	5340	64
S3	3	25	STR	6180	74
S4	3	25	STR	10000	119

REINFORCING STEEL = 18,822 kg

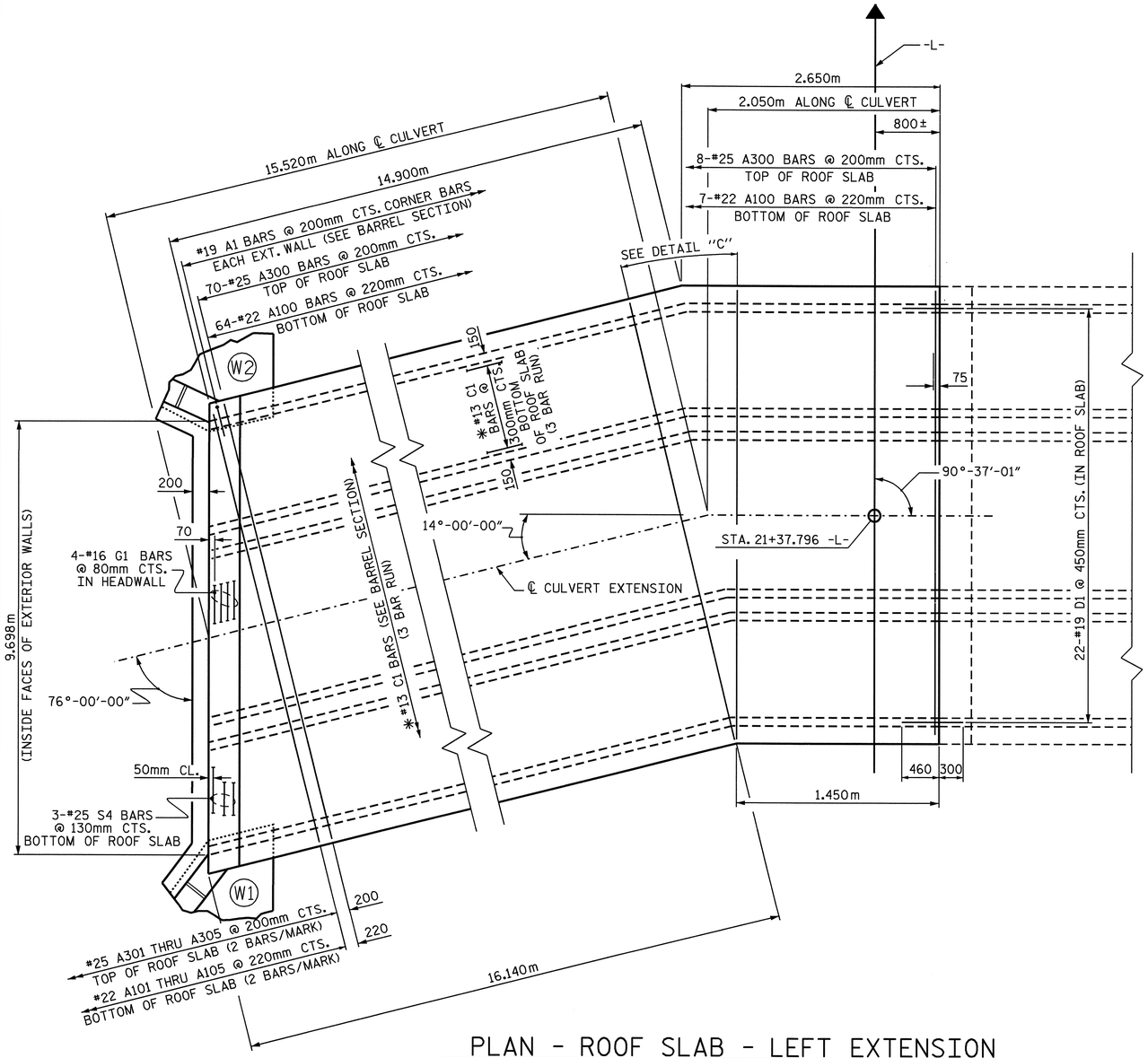

PLAN - ROOF SLAB - LEFT EXTENSION

*#13 C1 BARS SHALL BE FIELD BENT AS NECESSARY

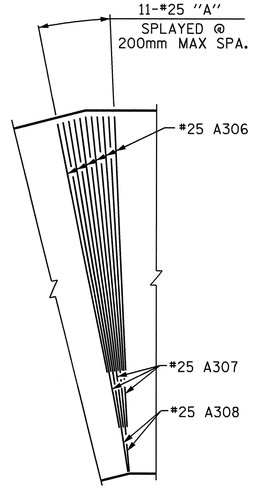

DETAIL "C"
TOP OF SLAB

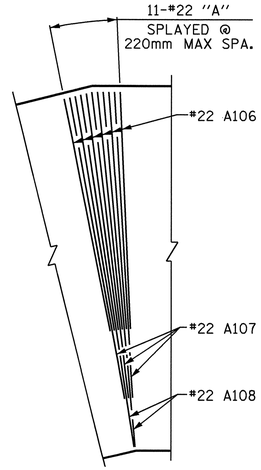

DETAIL "C"
BOTTOM OF SLAB

DRAWN BY : A. S. / A.L.F. DATE : 5/13/05
CHECKED BY : L.L. MURPHY DATE : 10-5-05

NORTH CAROLINA PROFESSIONAL SEAL 20125 ENGINEER MARSHALL GILCREEK, JR.
10-1-07

PROJECT NO. R-2518A
MADISON/YANCEY COUNTY
STATION: 21+37.796 -L-

SHEET 4 OF 10

STATE OF NORTH CAROLINA
DEPARTMENT OF TRANSPORTATION
RALEIGH

TRIPLE 3.000m X 3.000m CONCRETE BOX CULVERT LEFT EXTENSION

REVISIONS						SHEET NO.
NO.	BY:	DATE:	NO.	BY:	DATE:	C-14
1			3			TOTAL SHEETS
2			4			103

STR. #3

20-SEP-2007 09:19
aflgueroa R:\Structures\Str*03\A.L.Flgueroa\R2518A_sd_MCU*3.dgn

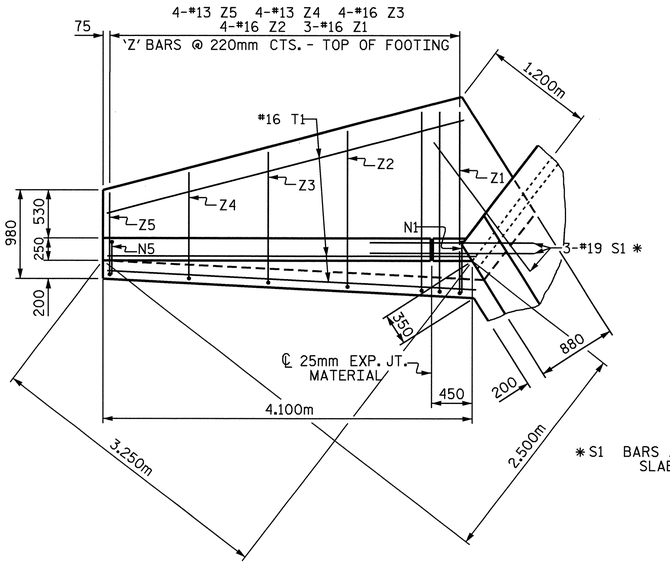

PLAN W2

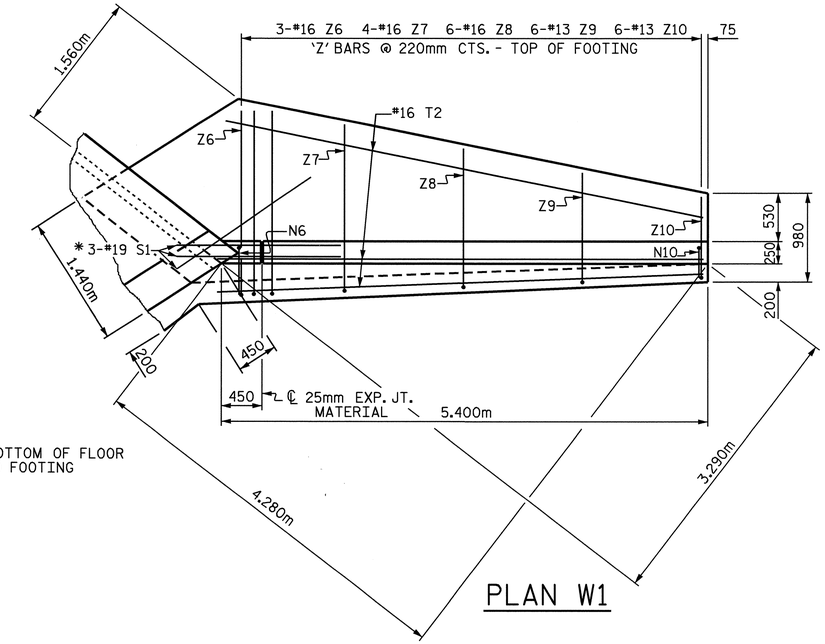

PLAN W1

* S1 BARS AT BOTTOM OF FLOOR SLAB AND FOOTING

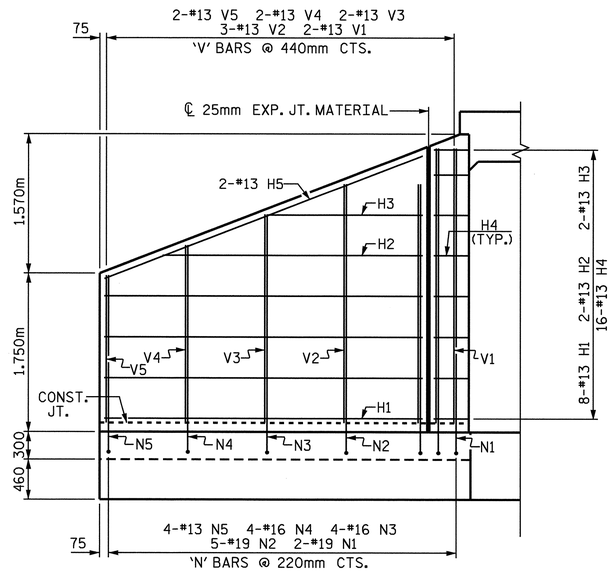

ELEVATION W2

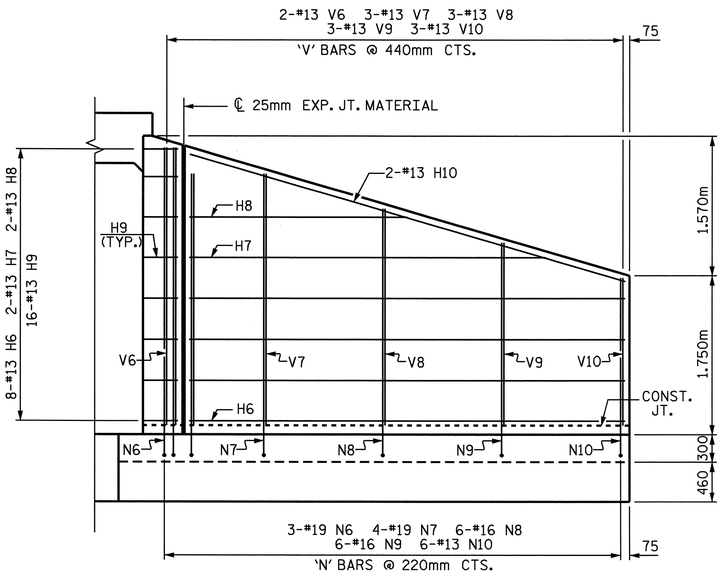

ELEVATION W1

NOTES

FOR WING ORIENTATION, SEE PLAN OF FLOOR SLAB.

A 900mm STRIP OF FILTER FABRIC SHALL BE ATTACHED TO THE FILL FACE OF THE WING COVERING THE ENTIRE LENGTH OF THE EXPANSION JOINT.

G1 BARS IN HEADWALL ARE INCLUDED WITH BARREL REINFORCING STEEL.

BAR TYPES

ALL BAR DIMENSIONS ARE OUT TO OUT.

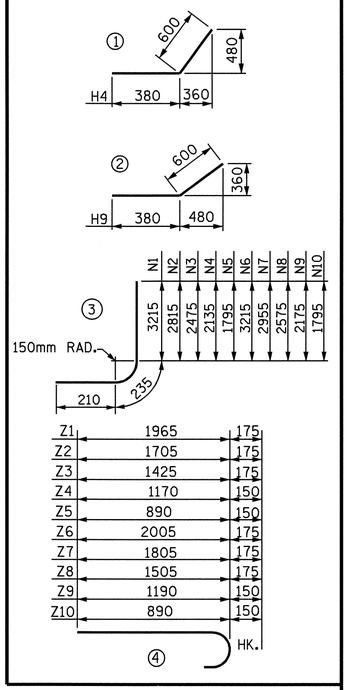

BILL OF MATERIAL

BAR	NO.	SIZE	TYPE	LENGTH	WEIGHT
H1	8	13	STR	3540	28
H2	2	13	STR	2940	6
H3	2	13	STR	1780	4
H4	16	13	1	980	16
H5	2	13	STR	3780	8
H6	8	13	STR	4840	38
H7	2	13	STR	4080	8
H8	2	13	STR	2540	5
H9	16	13	2	980	16
H10	2	13	STR	5040	10
N1	2	19	3	3660	16
N2	5	19	3	3260	36
N3	4	16	3	2920	18
N4	4	16	3	2580	16
N5	4	13	3	2240	9
N6	3	19	3	3660	25
N7	4	19	3	3400	30
N8	6	16	3	3020	28
N9	6	16	3	2620	24
N10	6	13	3	2240	13
S1	6	19	STR	1800	24
T1	3	16	STR	4100	19
T2	3	16	STR	5400	25
V1	2	13	STR	3040	6
V2	3	13	STR	2640	8
V3	2	13	STR	2300	5
V4	2	13	STR	1960	4
V5	2	13	STR	1620	3
V6	2	13	STR	3080	6
V7	3	13	STR	2780	8
V8	3	13	STR	2400	7
V9	3	13	STR	2000	6
V10	3	13	STR	1620	5
Z1	3	16	4	2140	10
Z2	4	16	4	1880	12
Z3	4	16	4	1600	10
Z4	4	13	4	1320	5
Z5	4	13	4	1040	4
Z6	3	16	4	2180	10
Z7	4	16	4	1980	12
Z8	6	16	4	1680	16
Z9	6	13	4	1340	8
Z10	6	13	4	1040	6

REINFORCING STEEL FOR 2 WING WALLS	573	kg
CLASS A CONCRETE		
2 WINGS	11.9	m^3
1 HEADWALL	1.1	m^3
1 END CURTAIN WALL	1.4	m^3
TOTAL	14.4	m^3

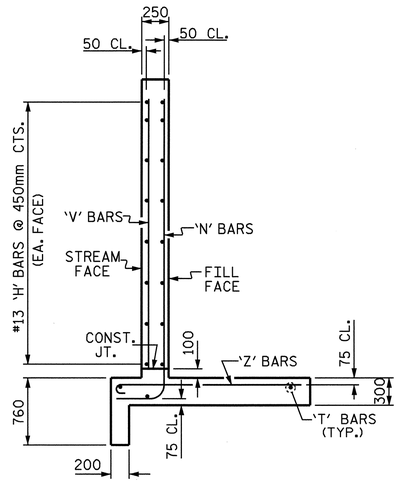

TYPICAL WING SECTION

PROJECT NO. R-2518A
MADISON/YANCEY COUNTY
STATION: 21+37.796 -L-

SHEET 5 OF 10

STATE OF NORTH CAROLINA
DEPARTMENT OF TRANSPORTATION
RALEIGH

STANDARD WINGS FOR CONCRETE BOX CULVERT LEFT EXTENSION

REVISIONS						SHEET NO.
NO.	BY:	DATE:	NO.	BY:	DATE:	C-15
1			3			TOTAL SHEETS
2			4			103

NORTH CAROLINA PROFESSIONAL SEAL 20125 ENGINEER MARSHALL G. WEEK, JR.
10-1-07

ASSEMBLED BY : A. S. / A.L.F.	DATE : 5/13/05		
CHECKED BY : L.L. MURPHY	DATE : 10-5-05		
DRAWN BY : JLR	6/97		
CHECKED BY : VAP	6/97		

STR. #3 STD. NO. CW7530

20-SEP-2007 09:44
R:\Structures\Str*03\A.L.Figueroa\R2518A_sd_MCU*3.dgn
afigueroa

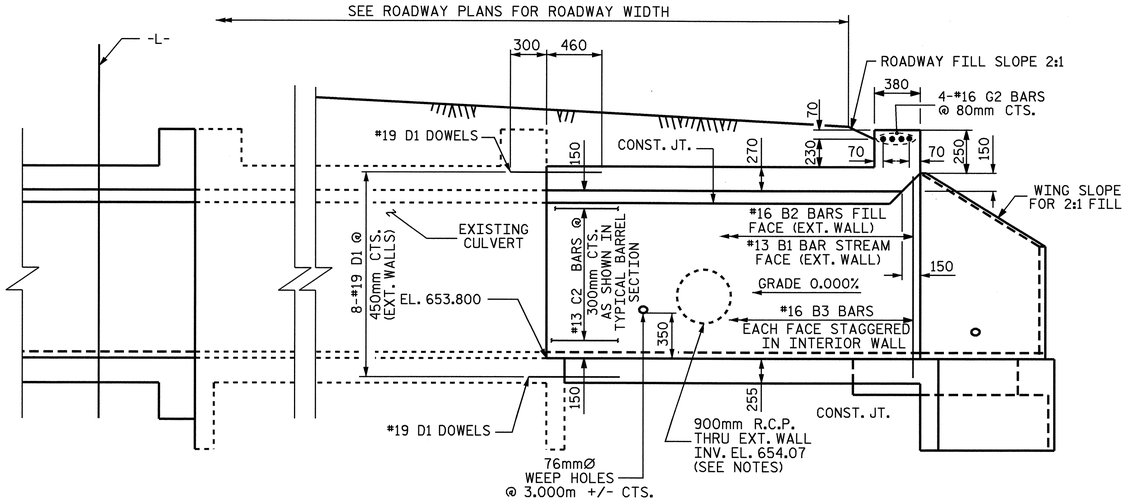

RIGHT CULVERT EXTENSION SECTION NORMAL TO ROADWAY

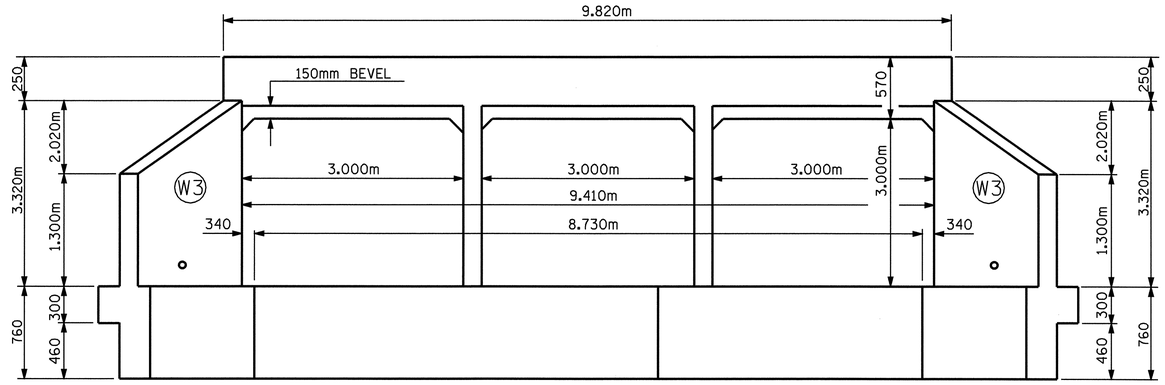

INLET END ELEVATION NORMAL TO SKEW

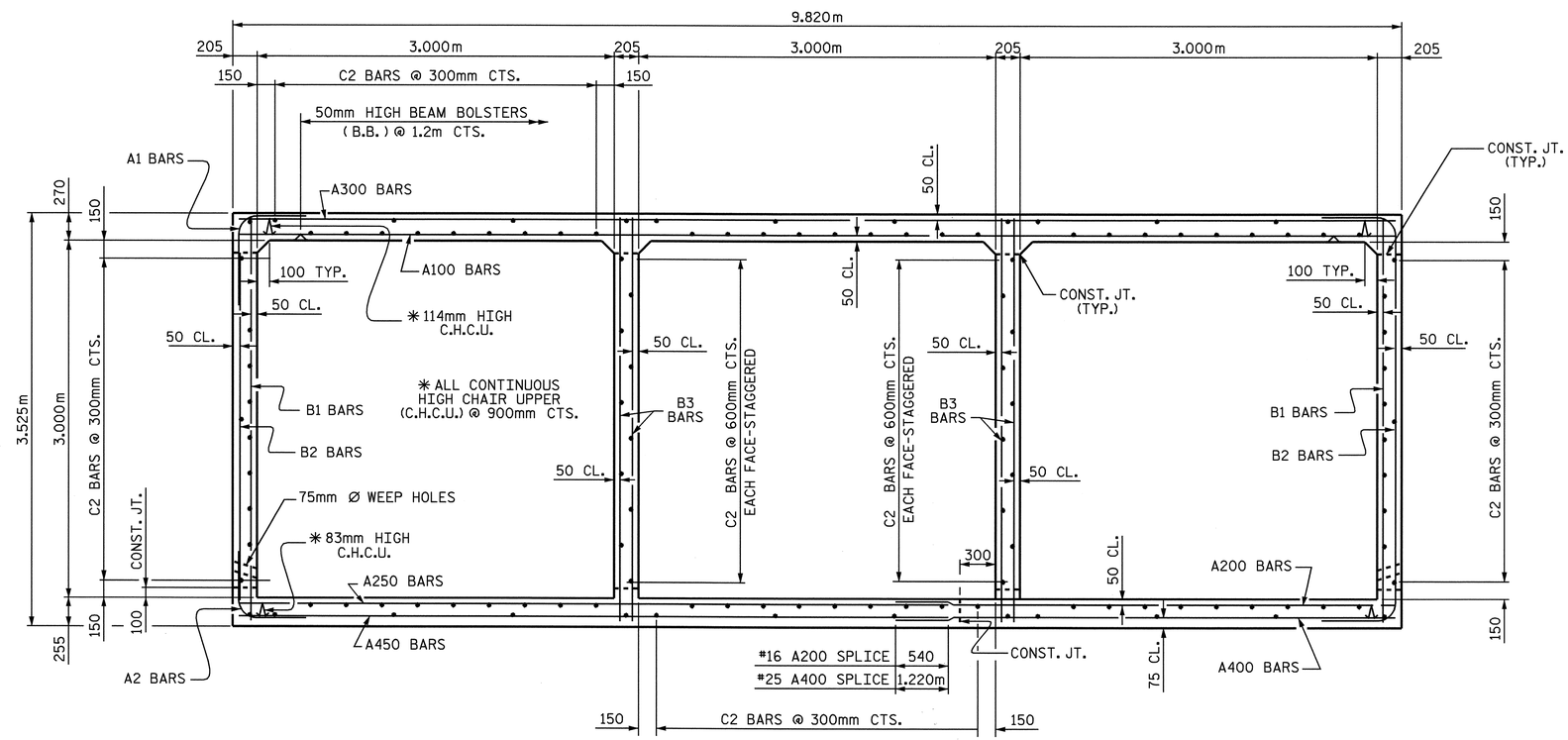

RIGHT ANGLE SECTION OF BARREL

THERE ARE 122 "C" BARS IN SECTION OF BARREL.
(LOOKING DOWNSTREAM)

RIGHT EXTENSION STRUCTURE QUANTITIES	
CLASS A CONCRETE	
BARREL @ 7.58 m^3/m	16.8 m^3
WINGS, ETC.	13.5 m^3
TOTAL	30.3 m^3
REINFORCING STEEL	
BARREL	2,425 kg
WINGS, ETC.	542 kg
TOTAL	2,967 kg
CULVERT EXCAVATION ----------	LUMP SUM
FOUNDATION COND. MAT'L -----	15 METRIC TONS

PROJECT NO. R-2518A
MADISON/YANCEY COUNTY
STATION: 21+37.796 -L-

SHEET 6 OF 10

STATE OF NORTH CAROLINA
DEPARTMENT OF TRANSPORTATION
RALEIGH

TRIPLE 3.000m X 3.000m CONCRETE BOX CULVERT RIGHT EXTENSION

NORTH CAROLINA PROFESSIONAL SEAL 20125 ENGINEER MARSHALL A. CHEEK, JR.
10-1-07

REVISIONS						SHEET NO.
NO.	BY:	DATE:	NO.	BY:	DATE:	C-16
1			3			TOTAL SHEETS
2			4			103

DRAWN BY : A. S. / A.L.F. DATE : 5/24/05
CHECKED BY : L.L. MURPHY DATE : 10-5-05

STR. #3

20-SEP-2007 09:19
R:\Structures\Str#03\A.L.Figueroa\R2518A_sd_MCU#3.dgn
afigueroa

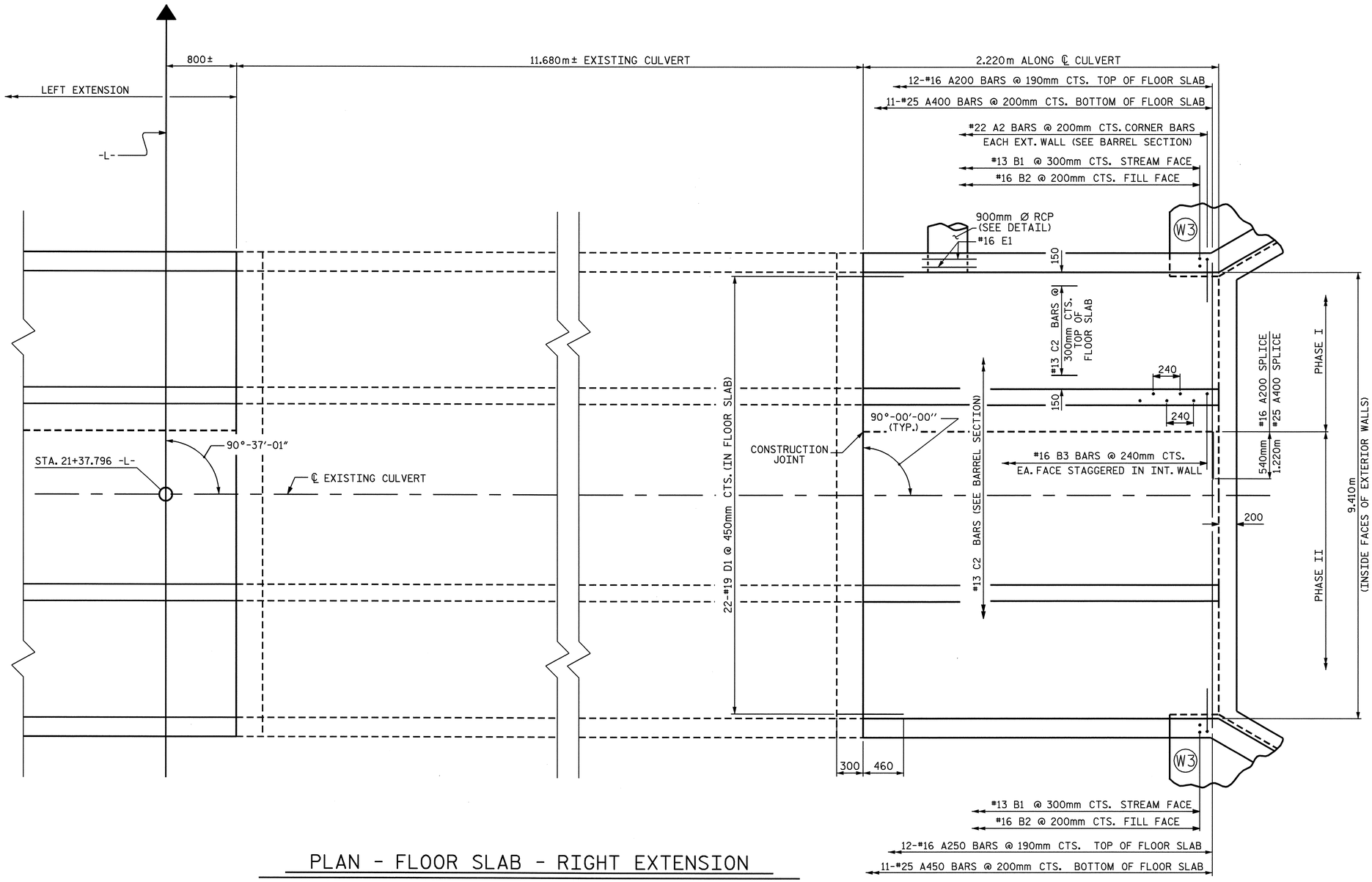

PLAN - FLOOR SLAB - RIGHT EXTENSION

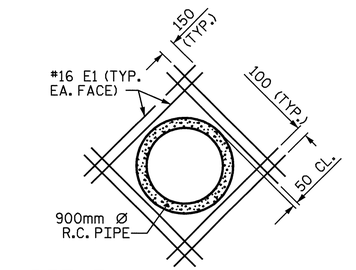

DETAIL OF REINFORCING AROUND 900mm Ø PIPE

(SEE NOTES)

PROJECT NO. R-2518A

MADISON/YANCEY COUNTY

STATION: 21+37.796 -L-

SHEET 7 OF 10

STATE OF NORTH CAROLINA
DEPARTMENT OF TRANSPORTATION
RALEIGH

TRIPLE 3.000m X 3.000m CONCRETE BOX CULVERT RIGHT EXTENSION

REVISIONS						SHEET NO.
NO.	BY:	DATE:	NO.	BY:	DATE:	C-17
1			3			TOTAL SHEETS
2			4			103

NORTH CAROLINA PROFESSIONAL SEAL 20125 ENGINEER MARSHALL L. MURPHY, JR.
10-1-07

DRAWN BY : A. S. / A.L.F. DATE : 5/24/05
CHECKED BY : L.L. MURPHY DATE : 10-5-05

STR. #3

20-SEP-2007 09:19
R:\Structures\Str*03\A.L.Figueroa\R2518A_sd_MCU*3.dgn
alfigueroa

SPLICE LENGTH CHART

BAR	SIZE	SPLICE LENGTH
A200	16	540
A400	25	1220
B1	13	540
B3	13	590

BAR TYPE

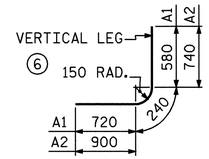

BAR DIMENSIONS ARE OUT TO OUT

BAR SCHEDULE

BAR	NO.	SIZE	TYPE	LENGTH	WEIGHT
A1	22	19	6	1740	86
A2	22	22	6	2080	139
A100	10	22	STR	9720	296
A200	12	16	STR	4200	78
A250	12	16	STR	6000	112
A300	11	25	STR	9720	425
A400	11	25	STR	4880	213
A450	11	25	STR	6000	262
B1	16	13	STR	3360	53
B2	22	16	STR	2800	96
B3	40	16	STR	3360	209
C2	122	13	STR	2100	255
D1	60	19	STR	760	102
E1	16	16	STR	1560	39
G2	4	16	STR	9700	60

REINFORCING STEEL = 2,425 kg

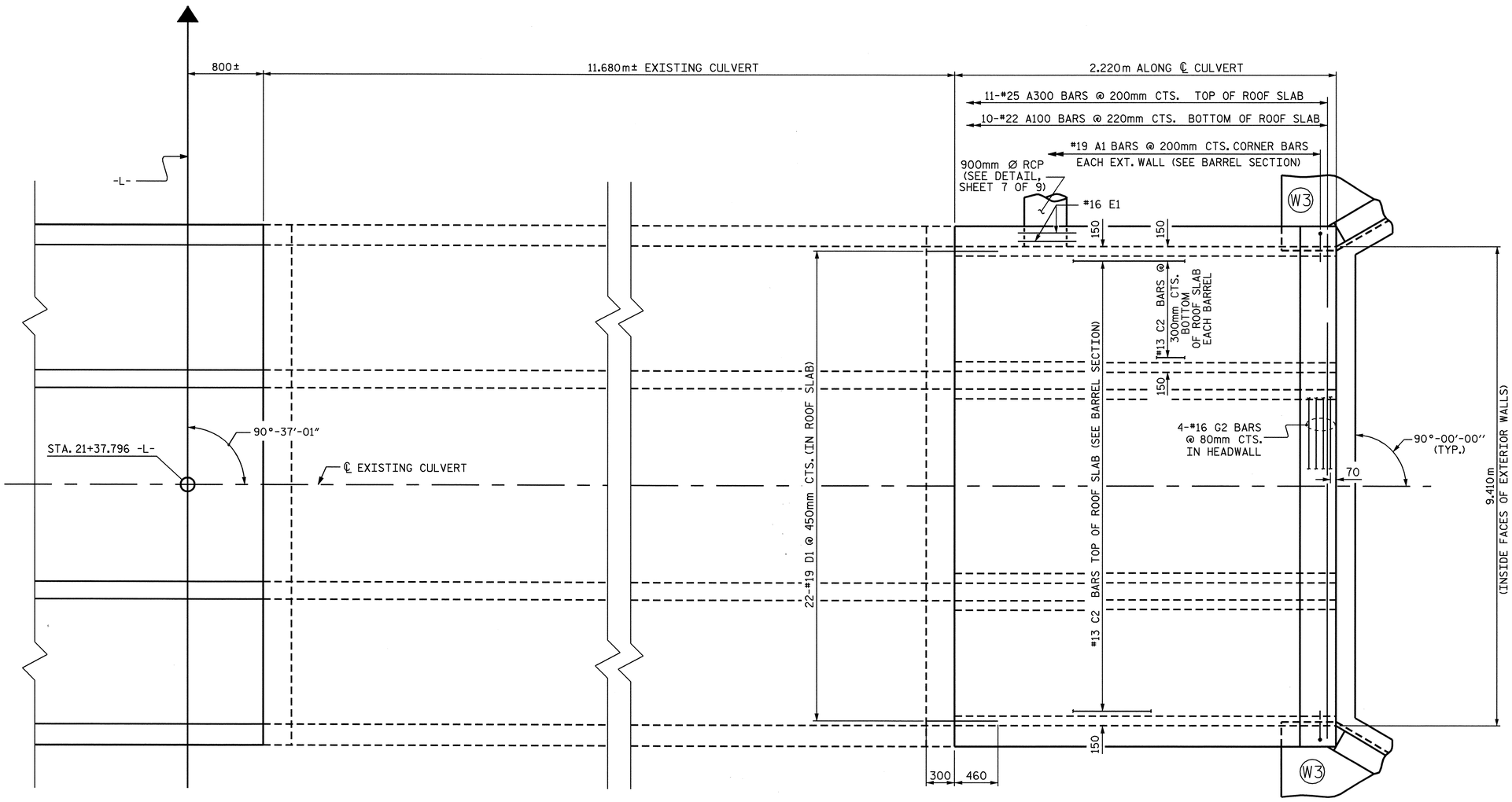

PLAN - ROOF SLAB-RIGHT EXTENSION

PROJECT NO. R-2518A

MADISON/YANCEY COUNTY

STATION: 21+37.796 -L-

SHEET 8 OF 10

STATE OF NORTH CAROLINA
DEPARTMENT OF TRANSPORTATION
RALEIGH

TRIPLE 3.000m X 3.000m
CONCRETE BOX CULVERT
RIGHT EXTENSION

NORTH CAROLINA PROFESSIONAL SEAL 20125 ENGINEER MARSHALL L. MURPHY, JR.
10-1-07

REVISIONS						SHEET NO.
NO.	BY:	DATE:	NO.	BY:	DATE:	C-18
1			3			TOTAL SHEETS
2			4			103

DRAWN BY : A. S. / A.L.F. DATE : 5/24/05
CHECKED BY : L.L. MURPHY DATE : 10-5-05

STR. #3

20-SEP-2007 09:19
R:\Structures\Str*03\A.L.Figueroa\R2518A_sd_MCU*3.dgn
dfigueroa

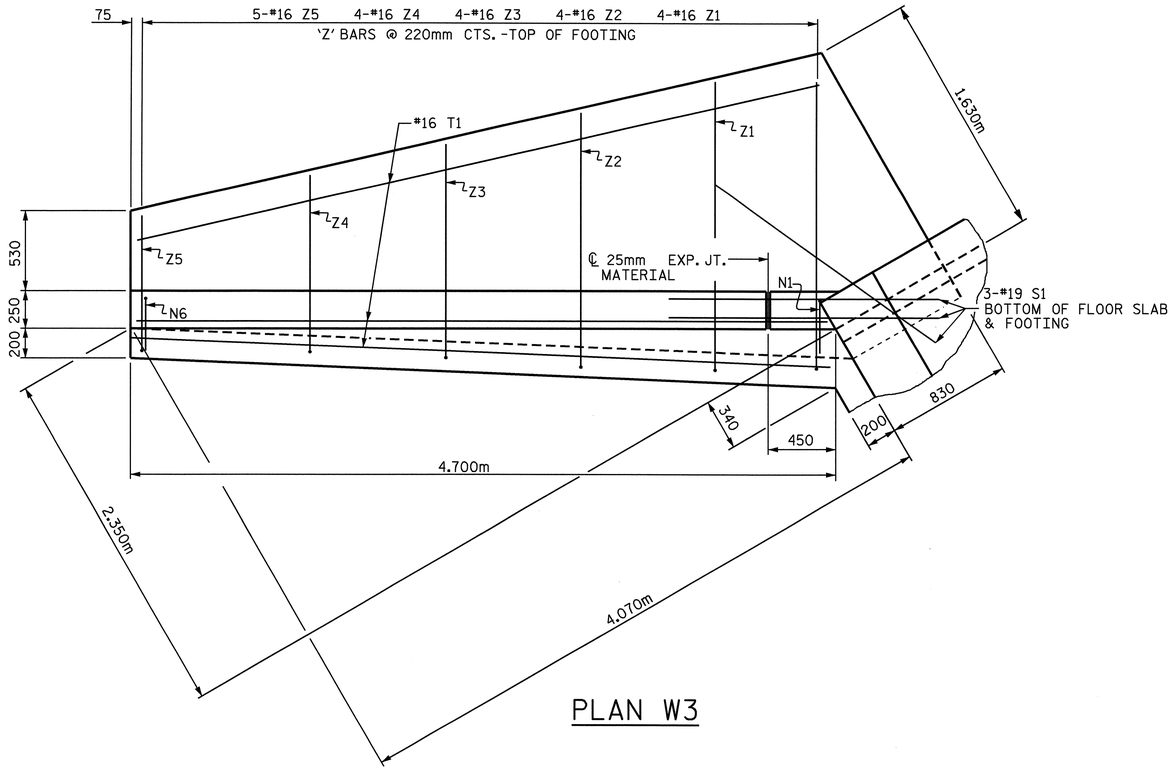

PLAN W3

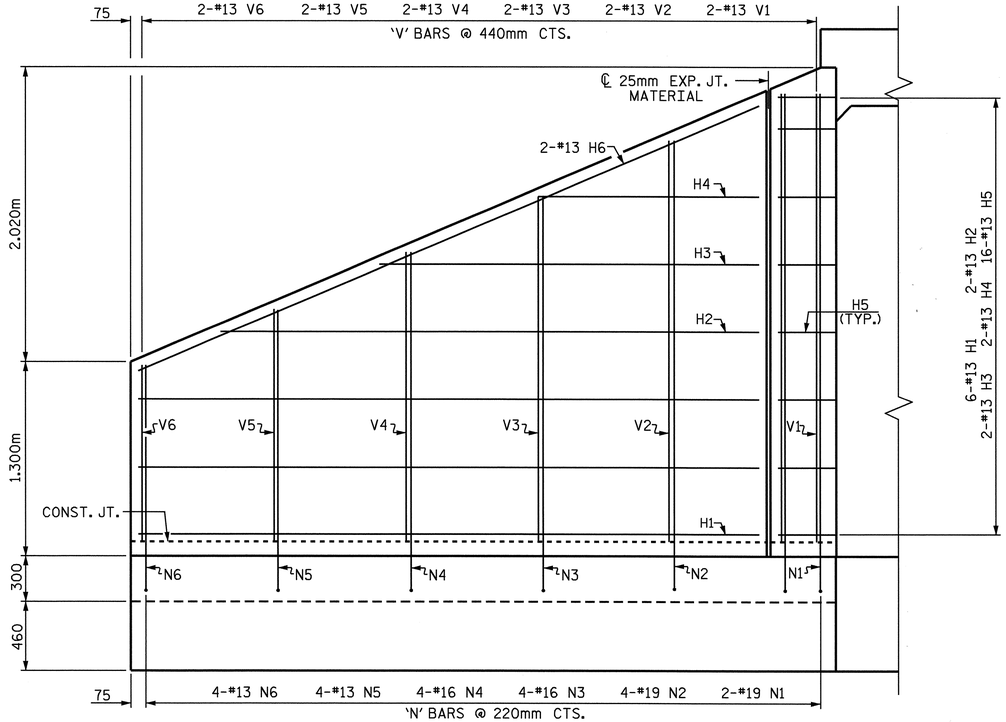

ELEVATION W3

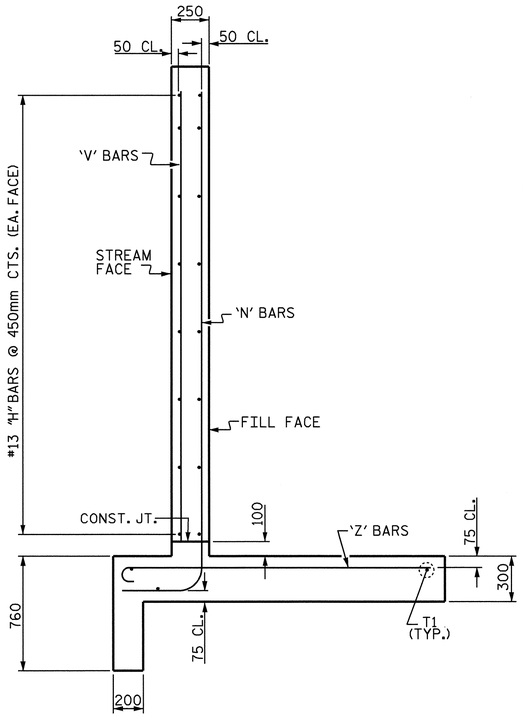

TYPICAL WING SECTION

BAR TYPES

ALL BAR DIMENSIONS ARE OUT TO OUT.

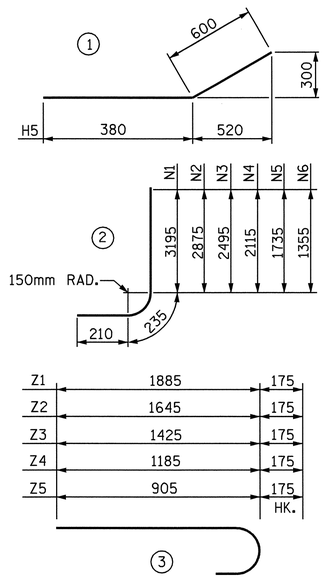

BILL OF MATERIAL

BAR	NO.	SIZE	TYPE	LENGTH	WEIGHT
H1	12	13	STR	4140	49
H2	4	13	STR	3600	14
H3	4	13	STR	2560	10
H4	4	13	STR	1520	6
H5	32	13	1	980	31
H6	4	13	STR	4500	18
N1	4	19	2	3640	33
N2	8	19	2	3320	59
N3	8	16	2	2940	37
N4	8	16	2	2560	32
N5	8	13	2	2180	17
N6	8	13	2	1800	14
S1	6	19	STR	1800	24
T1	6	16	STR	4700	44
V1	4	13	STR	3020	12
V2	4	13	STR	2700	11
V3	4	13	STR	2320	9
V4	4	13	STR	1940	8
V5	4	13	STR	1560	6
V6	4	13	STR	1180	5
Z1	8	16	3	2060	26
Z2	8	16	3	1820	23
Z3	8	16	3	1600	20
Z4	8	16	3	1360	17
Z5	10	16	3	1080	17

REINFORCING STEEL
FOR 2 WINGS 542 kg

CLASS A CONCRETE

2 WINGS	11.1	m^3
1 HEADWALL	1.1	m^3
1 END CURTAIN WALL	1.3	m^3
TOTAL	13.5	m^3

NOTES

FOR WING ORIENTATION, SEE PLAN OF FLOOR SLAB.

A 900mm STRIP OF FILTER FABRIC SHALL BE ATTACHED TO THE FILL FACE OF THE WING COVERING THE ENTIRE LENGTH OF THE EXPANSION JOINT.

G2 BARS IN HEADWALL ARE INCLUDED WITH BARREL REINFORCING STEEL.

PROJECT NO. R-2518A
MADISON/YANCEY COUNTY
STATION: 21+37.796 -L-

SHEET 9 OF 10

STATE OF NORTH CAROLINA
DEPARTMENT OF TRANSPORTATION
RALEIGH

STANDARD WINGS FOR CONCRETE BOX CULVERT RIGHT EXTENSION

REVISIONS						SHEET NO.
NO.	BY:	DATE:	NO.	BY:	DATE:	C-19
1			3			TOTAL SHEETS
2			4			103

STR. #3 STD. NO. CW9030

NORTH CAROLINA PROFESSIONAL SEAL 20125 ENGINEER MARSHALL L. CHEEK, JR.
10-1-07

DRAWN BY : A. S. / A.L.F. DATE : 5/24/05
CHECKED BY : L.L. MURPHY DATE : 10-5-05

DRAWN BY : FPP 06/97
CHECKED BY : VAP 06/97

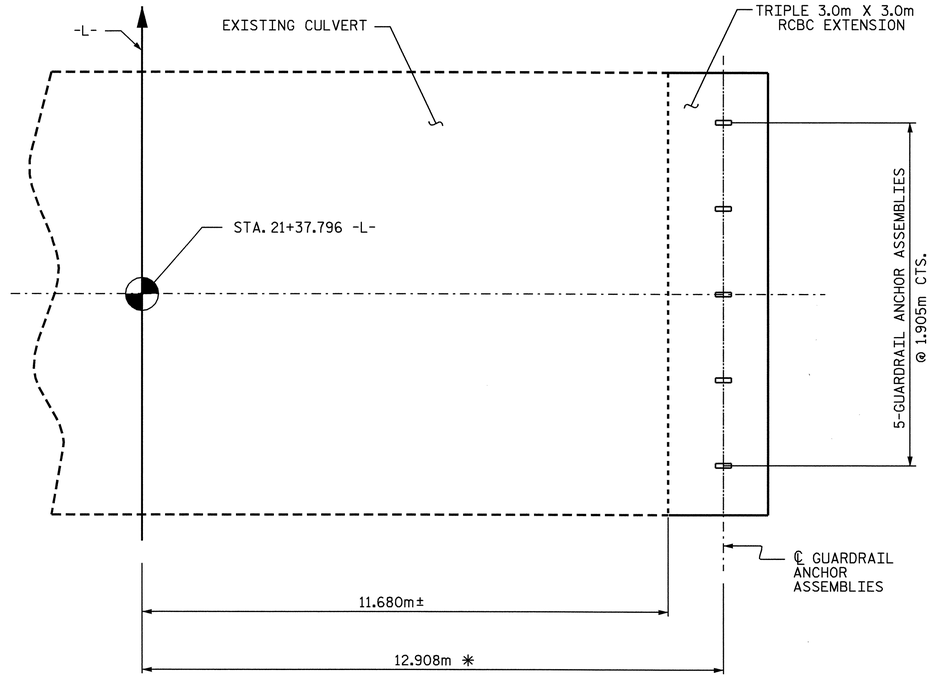

✳ THIS DIMENSION TO BE VERIFIED BY THE ENGINEER IN THE FIELD.

PLAN

SHOWING : GUARDRAIL ANCHOR ASSEMBLY SPACING.

NOTES

THE GUARDRAIL ANCHOR ASSEMBLY FOR CULVERTS SHALL CONSIST OF THE FOLLOWING COMPONENTS :

A. FERRULES SHALL BE MADE FROM STEEL MEETING THE REQUIREMENTS OF AASHTO M169, GRADE 12L14 AND SHALL HAVE A MINIMUM LENGTH OF THREADS OF 64mm.

B. 4 - 25.40mm DIA. X 57mm BOLTS WITH WASHERS. BOLTS SHALL CONFORM TO THE REQUIREMENTS OF ASTM A307. BOLTS AND WASHERS SHALL BE GALVANIZED. (AT THE CONTRACTOR'S OPTION, STAINLESS STEEL BOLTS AND WASHERS MAY BE USED AS AN ALTERNATE FOR THE 25.40mm DIA. X 57mm GALVANIZED BOLTS AND WASHERS. THEY SHALL CONFORM TO OR EXCEED THE MECHANICAL REQUIREMENTS OF ASTM A307. THE USE OF THIS ALTERNATE SHALL BE APPROVED BY THE ENGINEER.)

C. WIRE STRUTS SHOWN IN THE GUARDRAIL ANCHOR ASSEMBLY FOR CULVERTS DETAIL ARE MINIMUM ALLOWABLE SIZE AND SHALL HAVE A MINIMUM TENSILE STRENGTH OF 689 MPa. AS AN OPTION, A 11mm Ø WIRE STRUT WITH A MINIMUM TENSILE STRENGTH OF 620 MPa. IS ACCEPTABLE.

GUARDRAIL ANCHOR ASSEMBLY WITH BOLTS SHALL BE ASSEMBLED IN THE SHOP. BOLT THREADS MAY BE RECUT AS NECESSARY TO INSURE FIT.

THE COST OF THE GUARDRAIL ANCHOR ASSEMBLY FOR CULVERTS COMPLETE IN PLACE, SHALL BE INCLUDED IN THE UNIT CONTRACT PRICE BID FOR CLASS "A" CONCRETE.

FERRULES TO BE PLUGGED DURING POURING OF SLAB AS RECOMMENDED BY THE MANUFACTURER.

AT THE CONTRACTOR'S OPTION, FERRULES WITH OPEN OR CLOSED ENDS MAY BE USED.

PAYMENT FOR GUARDRAIL, POSTS, AND POST BASE PLATES IS INCLUDED IN ROADWAY PAY ITEMS.

SLAB REINFORCING STEEL MAY BE SHIFTED AS NECESSARY TO CLEAR GUARDRAIL ANCHOR ASSEMBLY. CARE SHOULD BE TAKEN TO KEEP THE SHIFTING OF REINFORCING STEEL TO A MINIMUM.

THE CONTRACTOR MAY USE ADHESIVELY ANCHORED ANCHOR BOLTS IN PLACE OF GUARDRAIL ANCHOR ASSEMBLY. LEVEL TWO FIELD TESTING IS REQUIRED, AND THE YIELD LOAD OF THE 25.40mm Ø BOLT IS 97.0 kN. FOR ADHESIVELY ANCHORED ANCHOR BOLTS OR DOWELS, SEE SPECIAL PROVISIONS.

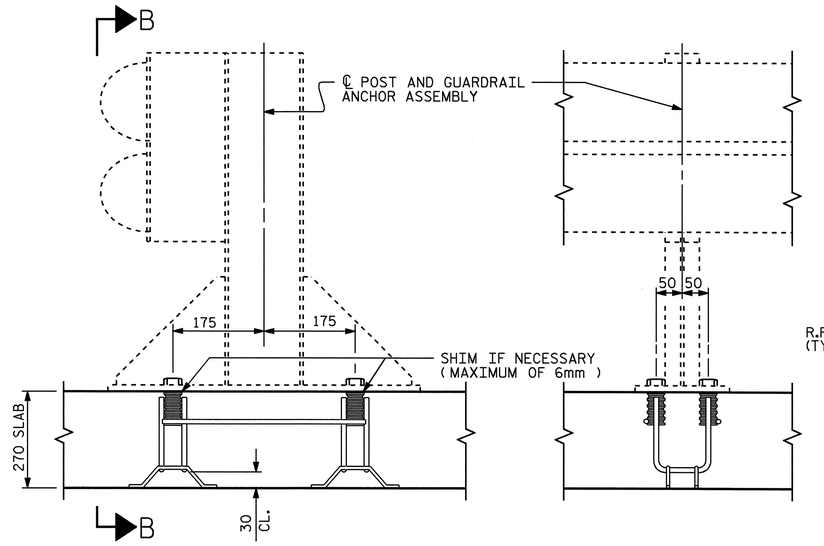

SECTION A-A

SECTION B-B

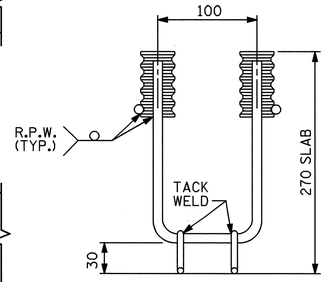

ELEVATION

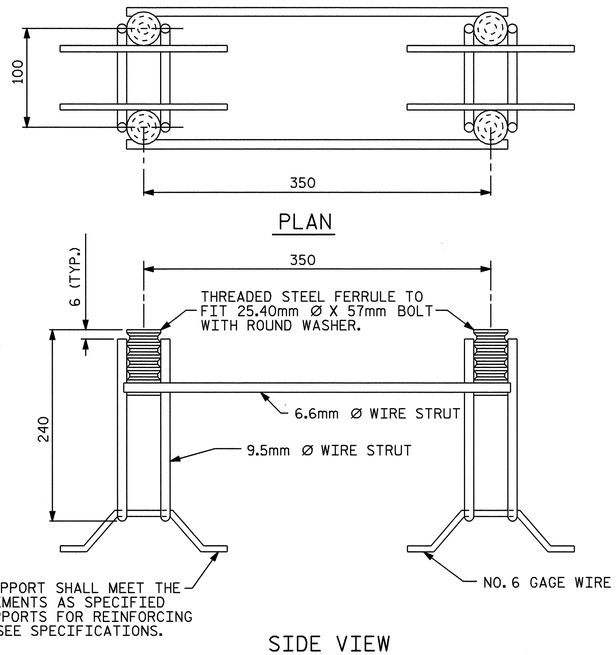

PLAN

SIDE VIEW

GUARDRAIL ANCHOR ASSEMBLY FOR CULVERTS

ASSEMBLED BY : V. X. NGUYEN	DATE : 9-24-07	REV. 7/10/01	LES/RDR
CHECKED BY : M. G. CHEEK	DATE : 9-24-07	REV. 5/7/03	RWW/JTE
DRAWN BY : FCJ 6/88		REV. 5/1/06R	KMM/GM
CHECKED BY : ARB 6/88			

PROJECT NO. R-2518A

MADISON/YANCEY COUNTY

STATION: 21+37.796 -L-

SHEET 10 OF 10

STATE OF NORTH CAROLINA
DEPARTMENT OF TRANSPORTATION
RALEIGH

STANDARD

ANCHORAGE DETAILS FOR GUARDRAIL ANCHOR ASSEMBLY FOR CULVERTS

REVISIONS						SHEET NO.
NO.	BY:	DATE:	NO.	BY:	DATE:	C-20
1			3			TOTAL SHEETS
2			4			103

NORTH CAROLINA PROFESSIONAL SEAL 20125 ENGINEER MARSHALL G. CHEEK
10-1-07

STR. #3

24-SEP-2007 14:18
R:\Structures\Str#03\vxnguyen\Microstation\R2518A_sd_CU.dgn
vnguyen

03-APR-2008 09:45
r:\structures\str#04\al.figueroa\r2518a_sd_mcu#4.dgn
lmurphy

BENCHMARK #4: CHISELED SQUARE ON THE S.E. CORNER WHEEL GUARD OF THE OLD MILL BRIDGE AT -Y8-, STA. 33+55.74-L-, 137 METERS RIGHT, ELEV. 671.089

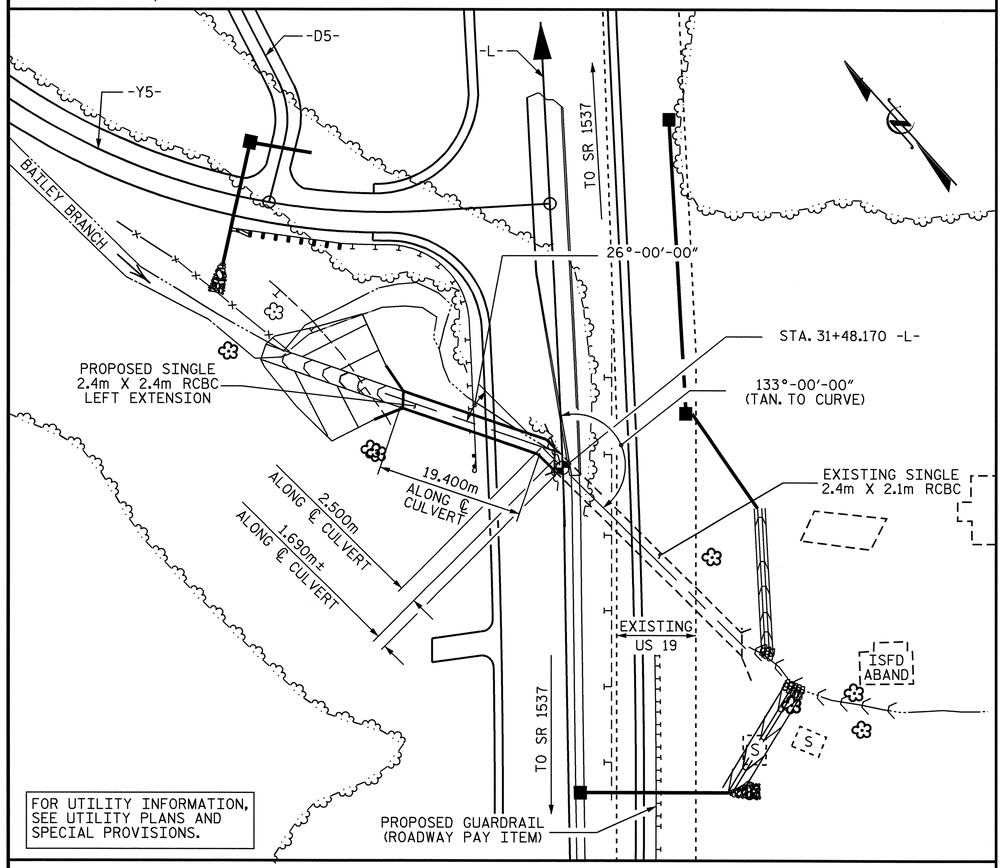

LOCATION SKETCH

HYDRAULIC DATA

DESIGN DISCHARGE	= 13.0 m^3/s
FREQUENCY OF DESIGN FLOOD	= 50 YEARS
DESIGN HIGH WATER ELEVATION	= 669.36
DRAINAGE AREA	= 2.46 km^2
BASIC DISCHARGE (Q100)	= 16.0 m^3/s
BASIC HIGH WATER ELEVATION	= 669.96

OVERTOPPING FLOOD DATA

OVERTOPPING DISCHARGE	= 24.0 m^3/s
FREQUENCY OF OVERTOPPING FLOOD	= 500+ YEARS
OVERTOPPING FLOOD ELEVATION	= 670.86

ROADWAY DATA

GRADE POINT ELEV. @ STATION 31+48.170 -L-	= 673.669
BED ELEV. @ STATION 31+48.170 -L-	= 666.35
ROADWAY FILL SLOPE	= 2:1

TOTAL STRUCTURE QUANTITIES

CLASS A CONCRETE

BARREL @	2.30 m^3/m	50.4	m^3
WINGS, ETC.		9.6	m^3
SILLS		2.8	m^3
TOTAL		62.8	m^3

REINFORCING STEEL

BARREL	5153 kg
WINGS, ETC.	346 kg
TOTAL	5499 kg

CULVERT EXCAVATION ----------	LUMP SUM
FOUNDATION COND. MAT'L ----	42 METRIC TONS

NOTES

ASSUMED LIVE LOAD ----------MS18 OR ALTERNATE LOADING.

DESIGN FILL LEFT EXTENSION---------- 5.300m

FOR OTHER DESIGN DATA AND NOTES, SEE STANDARD NOTE SHEET.

76mm Ø WEEP HOLES INDICATED TO BE IN ACCORDANCE WITH THE SPECIFICATIONS.

CONCRETE IN CULVERT TO BE POURED IN THE FOLLOWING ORDER:

1. WING FOOTING AND FLOOR SLAB INCLUDING 100mm OF ALL VERTICAL WALLS.
2. THE REMAINING PORTIONS OF THE WALLS AND WINGS FULL HEIGHT FOLLOWED BY ROOF SLAB AND HEADWALLS.

THE RESIDENT ENGINEER SHALL CHECK THE LENGTH OF CULVERT BEFORE STAKING IT OUT TO MAKE CERTAIN THAT IT WILL PROPERLY TAKE CARE OF THE FILL.

DIMENSIONS FOR WING LAYOUT AS WELL AS ADDITIONAL REINFORCING STEEL EMBEDDED IN BARREL ARE SHOWN ON WING SHEET.

TRANSVERSE CONSTRUCTION JOINTS SHALL BE USED IN THE BARREL, SPACED TO LIMIT THE POURS TO A MAXIMUM OF 21.0m. LOCATION OF THE JOINTS SHALL BE SUBJECT TO APPROVAL OF THE ENGINEER.

AT THE CONTRACTOR'S OPTION, HE MAY SPLICE THE VERTICAL REINFORCING STEEL IN THE INTERIOR FACES OF THE EXTERIOR WALLS ABOVE LOWER WALL CONSTRUCTION JOINT. THE SPLICE LENGTH SHALL BE AS PROVIDED IN THE SPLICE LENGTH CHART SHOWN ON THE PLANS. EXTRA WEIGHT OF STEEL DUE TO THE SPLICES SHALL BE PAID FOR BY THE CONTRACTOR.

IF APPROVED BY THE ENGINEER, THE CONTRACTOR MAY USE THE EXISTING WINGS AS TEMPORARY SHORING FOR THE CONSTRUCTION OF THE CULVERT EXTENSION. IN THIS CASE, THE BOTTOM SLAB OF THE EXTENSION SHALL BE POURED AT LEAST 72 HOURS PRIOR TO CUTTING THE WINGS. THE WINGS MAY BE CUT EARLIER PROVIDED THE SLAB CONCRETE STRENGTH HAS REACHED A MINIMUM COMPRESSIVE STRENGTH OF 10.3 MPa.

MATERIAL EXCAVATED FROM THE EXISTING BED SHALL BE STOCKPILED FOR USE IN THE PROPOSED CULVERT EXTENSION. UPON COMPLETION OF THE PROPOSED EXTENSION, THE MATERIAL SHALL BE PLACED IN THE BARREL TO A DEPTH OF 0.3m. BED MATERIAL MAY BE SUPPLEMENTED WITH CLASS 'B' RIP RAP IF SUITABLE MATERIAL IS NOT AVAILABLE IN SUFFICIENT QUANTITIES.

THE ENTIRE COST OF WORK REQUIRED TO PLACE THE EXCAVATED MATERIAL OR SUPPLEMENTAL MATERIAL SHALL BE INCLUDED IN THE CONTRACT LUMP SUM PRICE BID FOR CULVERT EXCAVATION.

THE ENTIRE COST OF WORK REQUIRED TO CONSTRUCT THE SILLS SHALL BE INCLUDED IN THE VARIOUS PAY ITEMS.

DOWELS SHALL BE USED TO CONNECT THE CULVERT EXTENSION TO THE EXISTING CULVERT AND THE SILLS TO THE EXISTING FLOOR SLAB AS SHOWN. FOR NOTE REGARDING SETTING OF DOWELS, SEE STANDARD NOTES SHEET SNSM.

FOR CONSTRUCTION SEQUENCE, SEE EROSION CONTROL PLANS.

FOR FALSEWORK AND FORMWORK, SEE SPECIAL PROVISIONS.

FOR GROUT FOR STRUCTURES, SEE SPECIAL PROVISIONS.

FOR SUBMITTAL OF WORKING DRAWINGS, SEE SPECIAL PROVISIONS.

FOR CULVERT DIVERSION DETAILS AND PAY ITEM, SEE EROSION CONTROL PLANS.

NO PRECAST REINFORCED BOX CULVERT OPTION WILL BE ALLOWED.

FOR CRANE SAFETY, SEE SPECIAL PROVISIONS.

ALL DIMENSIONS ARE IN MILLIMETERS UNLESS OTHERWISE NOTED.

ALL ELEVATIONS ARE IN METERS.

METRIC

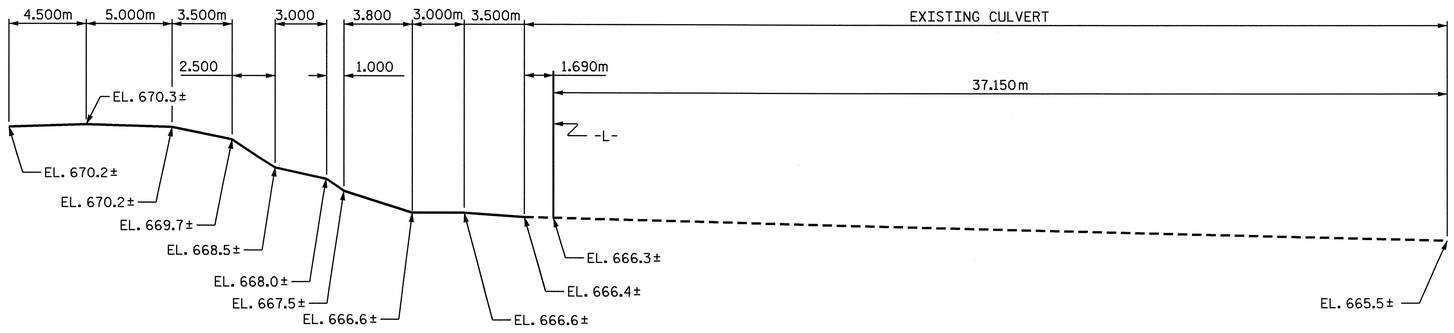

PROFILE ALONG ℄ CULVERT

PROJECT NO. R-2518A
MADISON/YANCEY COUNTY
STATION: 31+48.170 -L-

SHEET 1 OF 5

STATE OF NORTH CAROLINA
DEPARTMENT OF TRANSPORTATION
RALEIGH

SINGLE 2.400m X 2.400m CONCRETE BOX CULVERT LEFT EXTENSION

REVISIONS						SHEET NO.
NO.	BY:	DATE:	NO.	BY:	DATE:	C-21
1			3			TOTAL SHEETS
2			4			103

NORTH CAROLINA PROFESSIONAL SEAL 13014 ENGINEER QUANG H. NGUYEN
Quang H. Nguyen 4-3-08

NORTH CAROLINA PROFESSIONAL SEAL 20125 ENGINEER MARSHALL A. G. CREEK, JR.
Marshall A. G. Creek 4-3-08

DRAWN BY : A. S. / A.L.F. DATE : 11/08/05
CHECKED BY : L.L. MURPHY DATE : 28-2-06

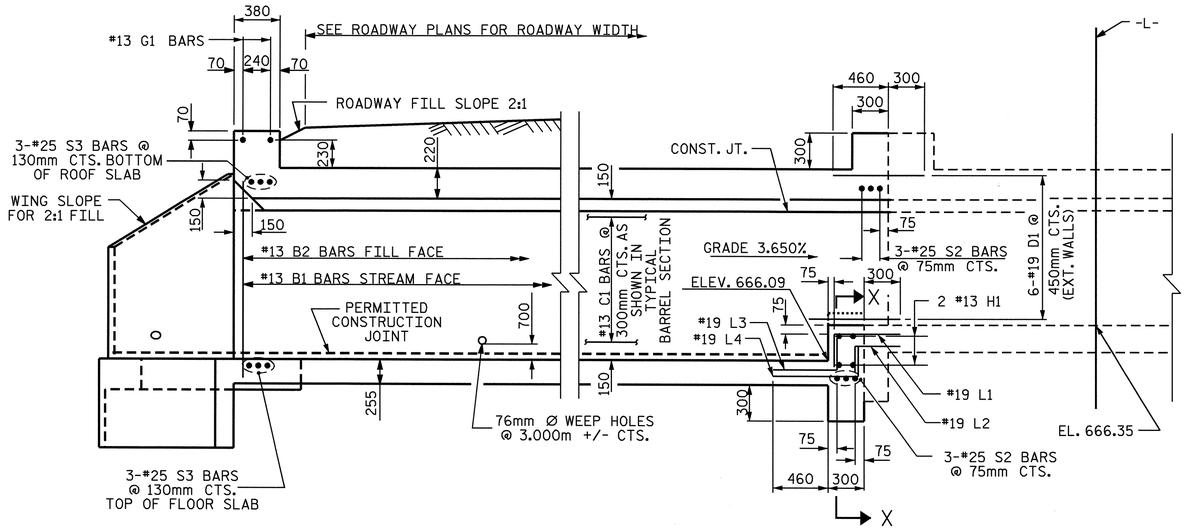

LEFT CULVERT EXTENSION SECTION NORMAL TO ROADWAY

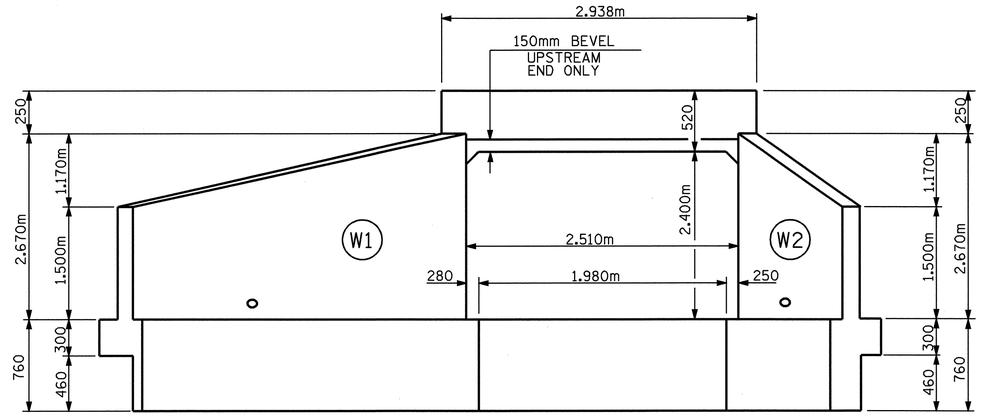

INLET END ELEVATION NORMAL TO SKEW

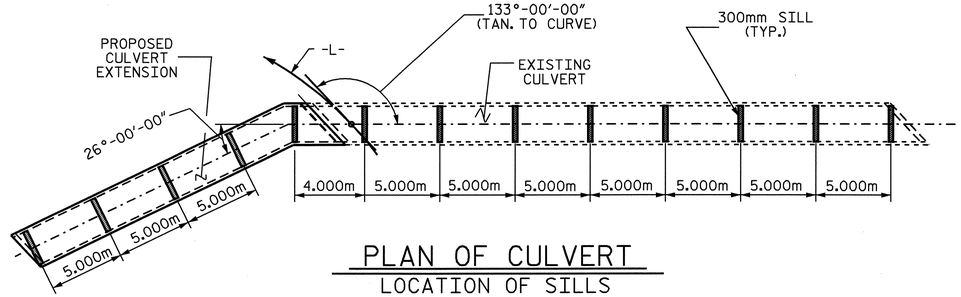

PLAN OF CULVERT
LOCATION OF SILLS

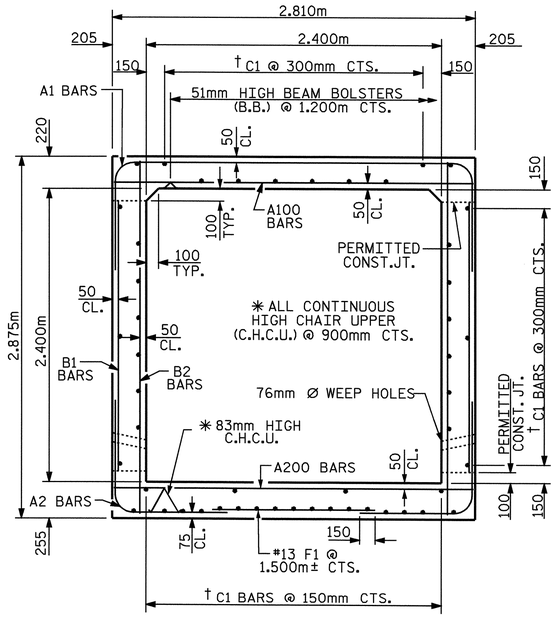

RIGHT ANGLE SECTION OF BARREL

THERE ARE 49 "C" BARS IN SECTION OF BARREL.
† #13 C1 BARS SHALL BE FIELD BENT AS NECESSARY

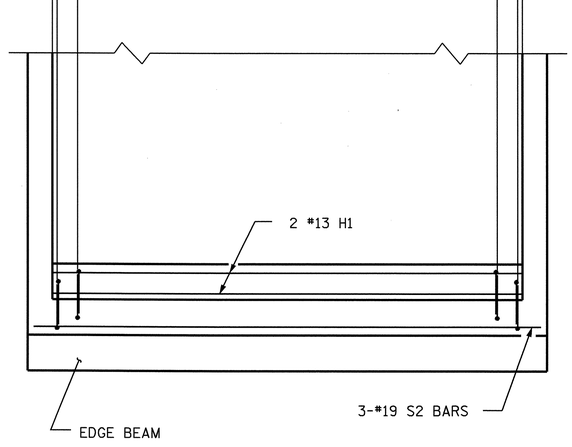

SECTION X-X

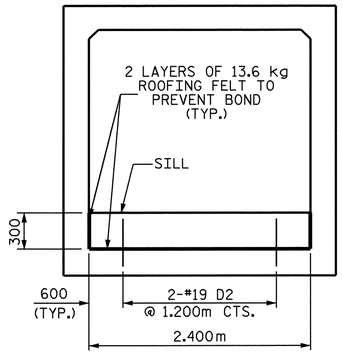

ELEVATION

CULVERT SILL DETAILS

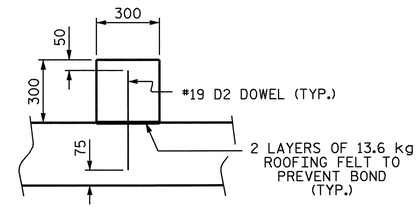

SECTION THRU SILL

PROJECT NO. R-2518A
MADISON/YANCEY COUNTY
STATION: 31+48.170 -L-

SHEET 2 OF 5

STATE OF NORTH CAROLINA
DEPARTMENT OF TRANSPORTATION
RALEIGH

SINGLE 2.400m X 2.4000m CONCRETE BOX CULVERT LEFT EXTENSION

REVISIONS						SHEET NO.
NO.	BY:	DATE:	NO.	BY:	DATE:	C-22
1			3			TOTAL SHEETS
2			4			103

NORTH CAROLINA PROFESSIONAL SEAL 20125 ENGINEER MARSHALL G. CHEEK, JR. 4-3-08

ADRAWN BY : A. S. / A.L.F. DATE : 11/08/05
CHECKED BY : L.L. MURPHY DATE : 28-2-06

STR. #4

R:\Structures\Str#04\A.L.Figueroa\R2518A_sd_MCU#4.dgn
afigueroa

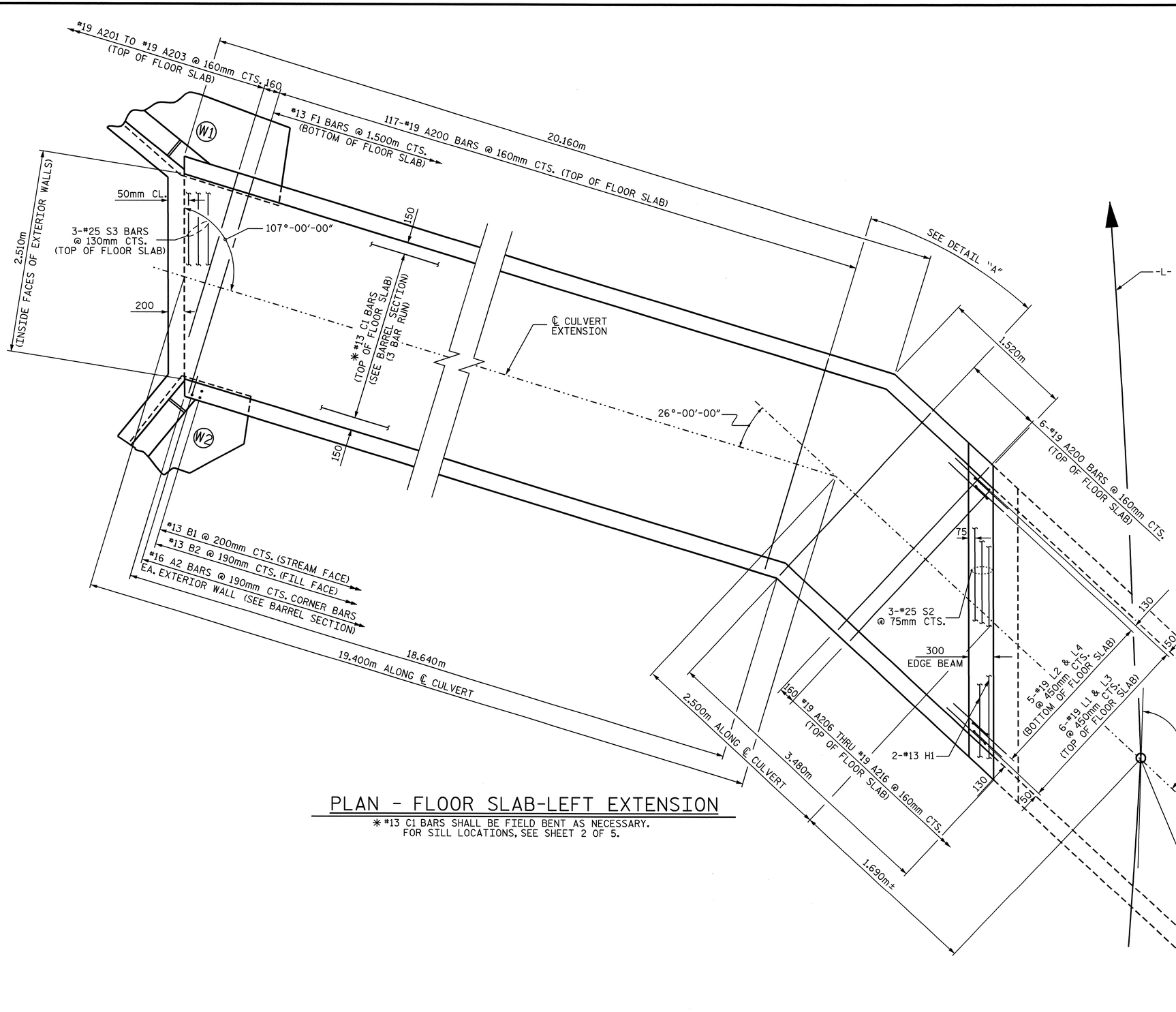

PLAN - FLOOR SLAB-LEFT EXTENSION

*#13 C1 BARS SHALL BE FIELD BENT AS NECESSARY.
FOR SILL LOCATIONS, SEE SHEET 2 OF 5.

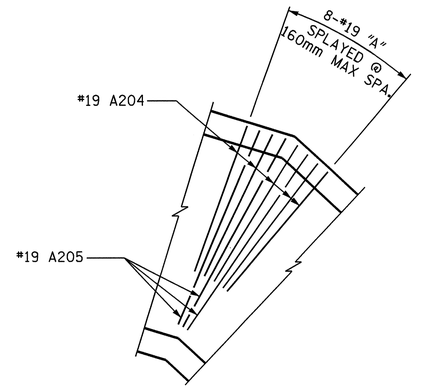

DETAIL "A" TOP OF SLAB

PROJECT NO. R-2518A
MADISON/YANCEY COUNTY
STATION: 31+48.170 -L-

SHEET 3 OF 5

STATE OF NORTH CAROLINA
DEPARTMENT OF TRANSPORTATION
RALEIGH

SINGLE 2.400m X 2.400m CONCRETE BOX CULVERT LEFT EXTENSION

REVISIONS						SHEET NO.
NO.	BY:	DATE:	NO.	BY:	DATE:	C-23
1			3			TOTAL SHEETS
2			4			103

NORTH CAROLINA PROFESSIONAL SEAL 20125 ENGINEER MARSHALL L. MURPHY, JR.
10-1-07

DRAWN BY : A. S. / A.L.F. DATE : 11/14/05
CHECKED BY : L.L. MURPHY DATE : 28-2-06

STR. #4

R:\Structures\Str#04\A.L.Figueroa\R2518A_sd_MCU#4.dgn
dfigueroa

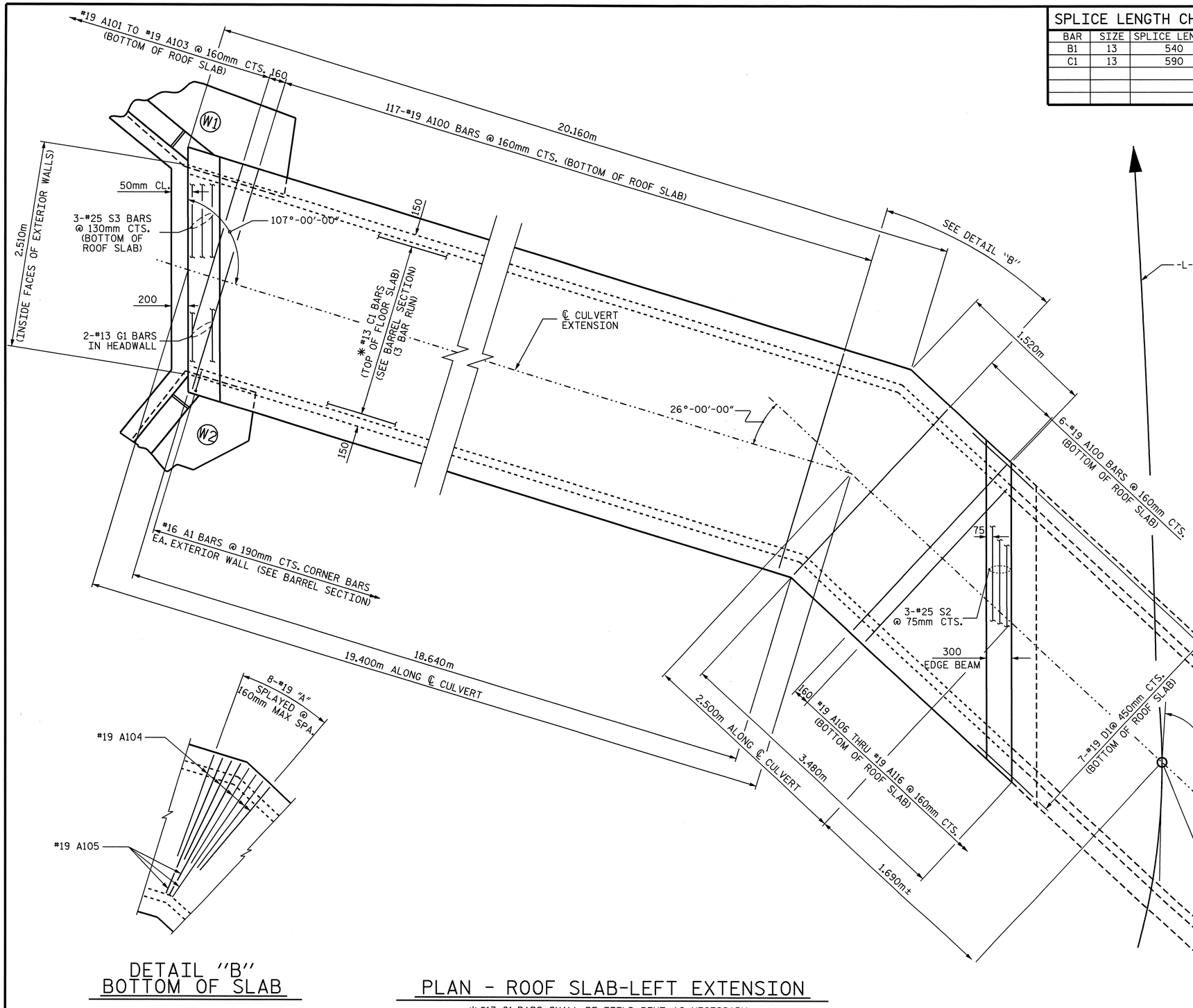

DETAIL "B" BOTTOM OF SLAB

PLAN - ROOF SLAB-LEFT EXTENSION

*#13 C1 BARS SHALL BE FIELD BENT AS NECESSARY.

SPLICE LENGTH CHART

BAR	SIZE	SPLICE LENGTH
B1	13	540
C1	13	590

BAR SCHEDULE

BAR	NO.	SIZE	TYPE	LENGTH	WEIGHT	BAR	NO.	SIZE	TYPE	LENGTH	WEIGHT
A1	234	16	3	1360	494	A209	1	19	STR	2020	5
A2	234	16	3	1360	494	A210	1	19	STR	1860	4
						A211	1	19	STR	1680	4
A100	123	19	STR	2660	731	A212	1	19	STR	1500	3
A101	1	19	STR	2200	5	A213	1	19	STR	1340	3
A102	1	19	STR	1680	4	A214	1	19	STR	1160	3
A103	1	19	STR	1180	3	A215	1	19	STR	1000	2
A104	5	19	STR	1720	19	A216	1	19	STR	820	2
A105	3	19	STR	2360	16						
A106	1	19	STR	2540	6	B1	220	13	STR	2700	590
A107	1	19	STR	2360	5	B2	234	13	STR	2180	507
A108	1	19	STR	2200	5						
A109	1	19	STR	2020	5	C1	147	13	STR	7740	1131
A110	1	19	STR	1860	4						
A111	1	19	STR	1680	4	D1	19	19	STR	760	32
A112	1	19	STR	1500	3	D2	26	19	STR	380	22
A113	1	19	STR	1340	3						
A114	1	19	STR	1160	3	F1	15	13	STR	1900	28
A115	1	19	STR	1000	2						
A116	1	19	STR	820	2	G1	2	13	STR	2820	6
A200	123	19	STR	2660	731	H1	4	13	STR	3140	12
A201	1	19	STR	2200	5						
A202	1	19	STR	1680	4	L1	6	19	1	820	11
A203	1	19	STR	1180	3	L2	5	19	1	720	8
A204	5	19	STR	1720	19	L3	6	19	2	840	11
A205	3	19	STR	2360	16	L4	5	19	2	1100	12
A206	1	19	STR	2540	6						
A207	1	19	STR	2360	5	S2	6	25	STR	3700	88
A208	1	19	STR	2200	5	S3	6	25	STR	2820	67

REINFORCING STEEL = 5153 kg

BAR TYPE

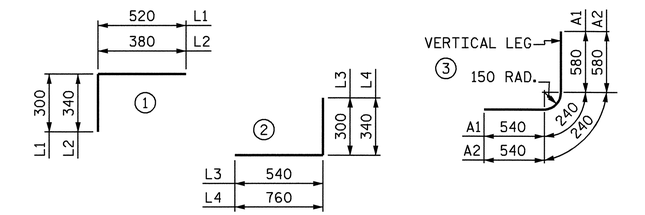

BAR DIMENSIONS ARE OUT TO OUT

PROJECT NO. R-2518A

MADISON/YANCEY COUNTY

STATION: 31+48.170 -L-

SHEET 4 OF 5

STATE OF NORTH CAROLINA
DEPARTMENT OF TRANSPORTATION
RALEIGH

SINGLE 2.400m X 2.400m CONCRETE BOX CULVERT LEFT EXTENSION

REVISIONS						SHEET NO.
NO.	BY:	DATE:	NO.	BY:	DATE:	C-24
1			3			TOTAL SHEETS
2			4			103

STR. #4

NORTH CAROLINA PROFESSIONAL SEAL 20125 ENGINEER L.L. MURPHY
10-1-07

ADRAWN BY : A. S. / A.L.F. DATE : 11/14/05
CHECKED BY : L.L. MURPHY DATE : 28-2-06

20-SEP-2007 10:23
R:\Structures\Str#04\A.L.Figueroa\R2518A_sd_MCU#4.dgn
afigueroa

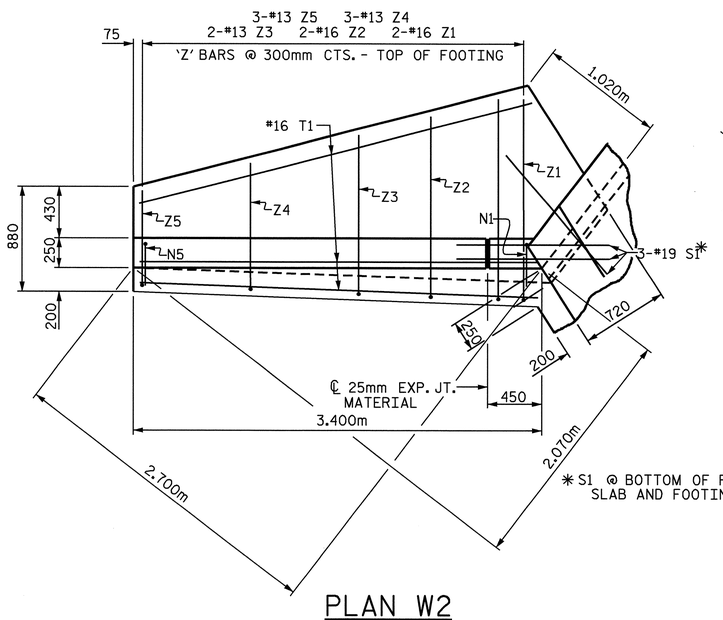

PLAN W2

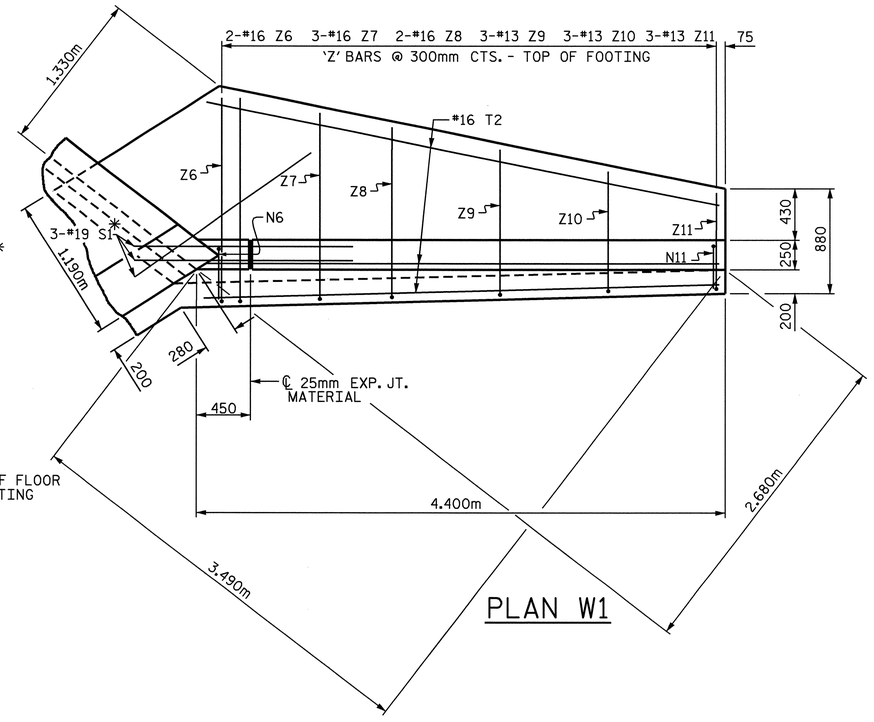

PLAN W1

BAR TYPES

ALL BAR DIMENSIONS ARE OUT TO OUT.

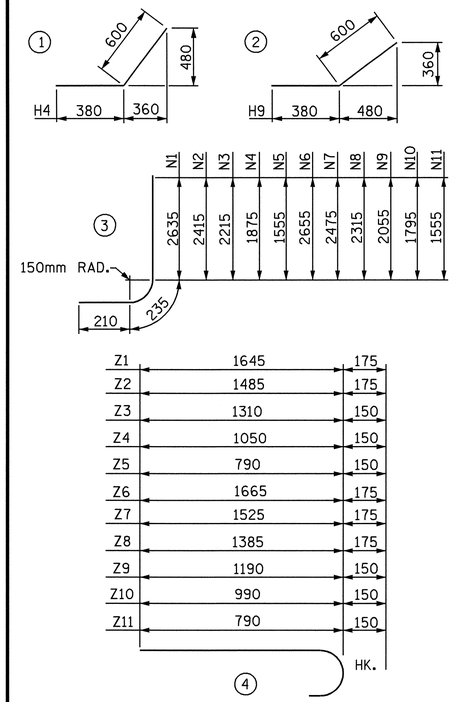

BILL OF MATERIAL

BAR	NO.	SIZE	TYPE	LENGTH	WEIGHT
H1	6	13	STR	2840	17
H2	2	13	STR	2760	5
H3	2	13	STR	1520	3
H4	12	13	1	980	12
H5	2	13	STR	3000	6
H6	6	13	STR	3840	23
H7	2	13	STR	3760	7
H8	2	13	STR	2160	4
H9	12	13	2	980	12
H10	2	13	STR	3980	8
N1	2	16	3	3080	10
N2	2	16	3	2860	9
N3	2	13	3	2660	5
N4	3	13	3	2320	7
N5	3	13	3	2000	6
N6	2	16	3	3100	10
N7	3	16	3	2920	14
N8	2	13	3	2760	5
N9	3	13	3	2500	7
N10	3	13	3	2240	7
N11	3	13	3	2000	6
S1	6	19	STR	1800	24
T1	3	16	STR	3400	16
T2	3	16	STR	4400	20
V1	2	13	STR	2460	5
V2	2	13	STR	2240	4
V3	2	13	STR	2040	4
V4	3	13	STR	1700	5
V5	3	13	STR	1380	4
V6	2	13	STR	2480	5
V7	3	13	STR	2300	7
V8	2	13	STR	2140	4
V9	3	13	STR	1880	6
V10	3	13	STR	1620	5
V11	3	13	STR	1380	4
Z1	2	16	4	1820	6
Z2	2	16	4	1660	5
Z3	2	13	4	1460	3
Z4	3	13	4	1200	4
Z5	3	13	4	940	3
Z6	2	16	4	1840	6
Z7	3	16	4	1700	8
Z8	2	16	4	1560	5
Z9	3	13	4	1340	4
Z10	3	13	4	1140	3
Z11	3	13	4	940	3

REINFORCING STEEL
FOR 2 WINGS 346 kg

CLASS A CONCRETE

2 WINGS	8.3	m^3
1 HEADWALL	0.3	m^3
1 END CURTAIN WALL	0.3	m^3
2 EDGE BEAMS	0.7	m^3
TOTAL	9.6	m^3

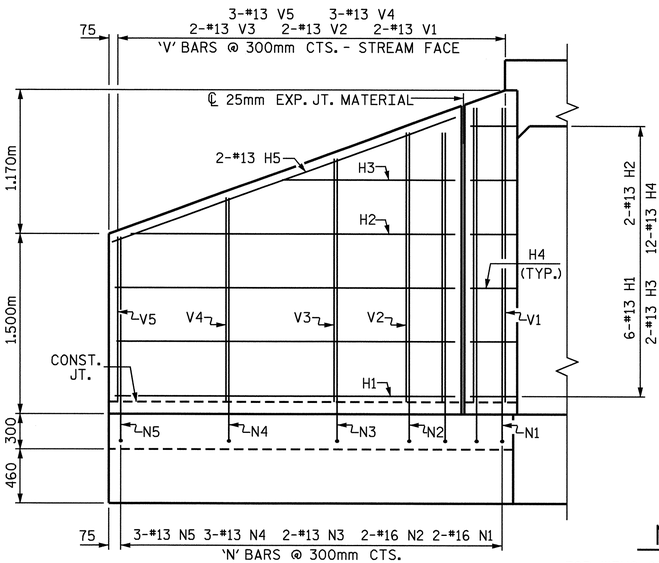

ELEVATION W2

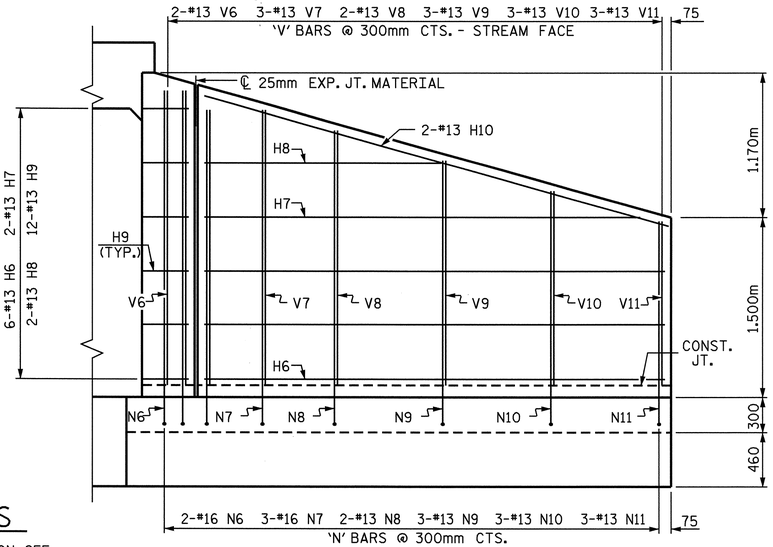

ELEVATION W1

NOTES

FOR WING ORIENTATION, SEE PLAN OF FLOOR SLAB.

G1 BARS IN HEADWALL ARE INCLUDED WITH BARREL REINFORCING STEEL.

A 900mm STRIP OF FILTER FABRIC SHALL BE ATTACHED TO THE FILL FACE OF THE WING COVERING THE ENTIRE LENGTH OF THE EXPANSION JOINT.

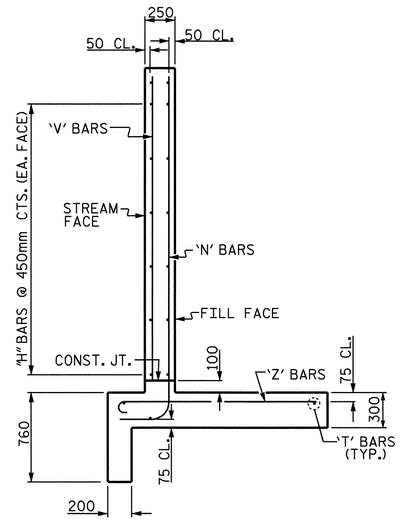

TYPICAL WING SECTION

ADRAWN BY : A. S. / A.L.F. DATE : 11/14/05
CHECKED BY : L.L. MURPHY DATE : 28-2-06

DRAWN BY : FPP 06/97
CHECKED BY : VAP 08/97

NORTH CAROLINA PROFESSIONAL SEAL 20125 ENGINEER MARSHALL L. MURPHY, JR.
10-1-07

PROJECT NO. R-2518A
MADISON/YANCEY COUNTY
STATION: 31+48.170 -L-

SHEET 5 OF 5

STATE OF NORTH CAROLINA
DEPARTMENT OF TRANSPORTATION
RALEIGH

STANDARD WINGS FOR CONCRETE BOX CULVERT LEFT EXTENSION

REVISIONS						SHEET NO.
NO.	BY:	DATE:	NO.	BY:	DATE:	C-25
1			3			TOTAL SHEETS
2			4			103

STR. #4 STD. NO. CW7524

02-APR-2008 16:31
r:\structures\Str*05\A.L.Figueroa\R-2518A_sd_CU*5.dgn
lmurphy

BENCHMARK #4: CHISLED SQUARE ON THE SE CORNER WHEEL GUARD OF THE OLD MILL BRIDGE AT -Y8-, STA. 33+55.74 -L-. 137 METERS RIGHT, ELEV. = 671.089

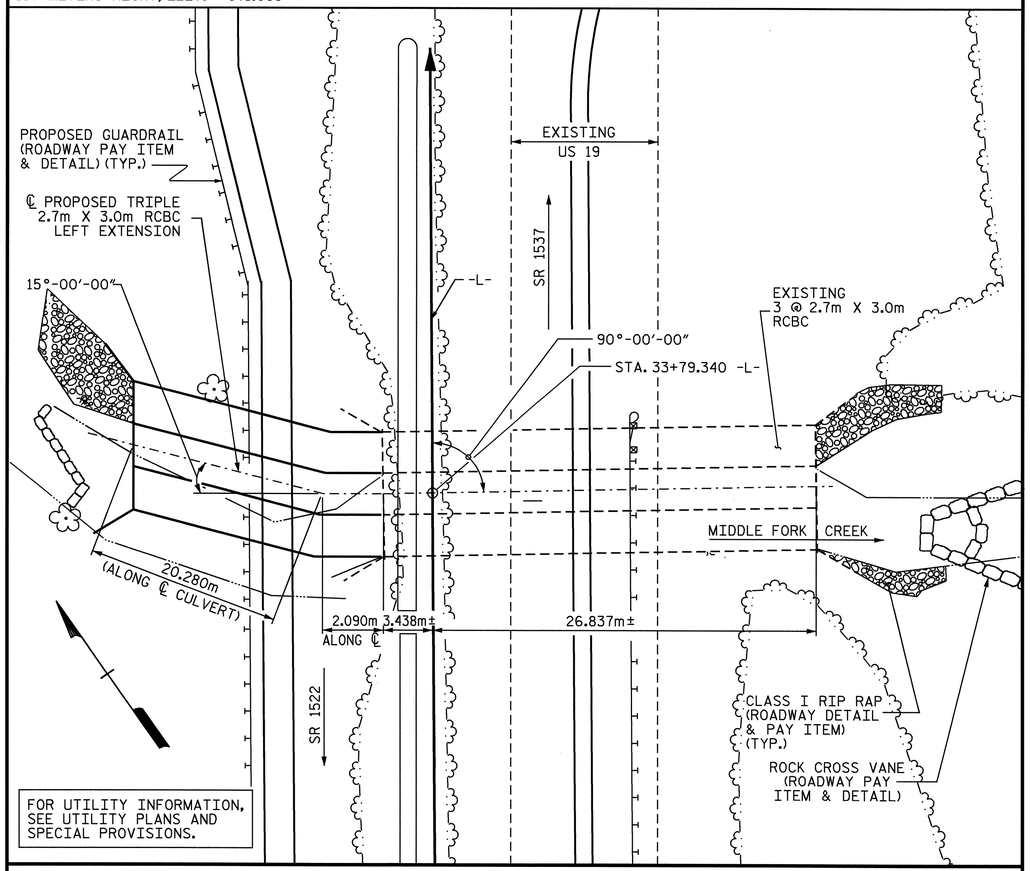

LOCATION SKETCH

HYDRAULIC DATA

DESIGN DISCHARGE	= 76.0 m³/s
FREQUENCY OF DESIGN FLOOD	= 50 YEARS
DESIGN HIGH WATER ELEVATION	= 670.26m
DRAINAGE AREA	= 27.46 SQ. Km
BASIC DISCHARGE (Q100)	= 92.0 m³/s
BASIC HIGH WATER ELEVATION	= 670.79m

OVERTOPPING FLOOD DATA

OVERTOPPING DISCHARGE	= 156.0 m³/s
FREQUENCY OF OVERTOPPING FLOOD	= 500 YEARS
OVERTOPPING FLOOD ELEVATION	= 673.61m

ROADWAY DATA

GRADE POINT ELEV. @ STA. 33+79.340 -L-	= 675.797
BED ELEV. @ STA. 33+79.340 -L-	= 666.599
ROADWAY FILL SLOPE	= 2:1

TOTAL STRUCTURE QUANTITIES

CLASS A CONCRETE

BARREL @	9.49 m³/m	212.3 m³
WINGS, ETC.		14.2 m³
TOTAL		226.5 m³

REINFORCING STEEL

BARREL	19,138 kg
WINGS, ETC.	573 kg
TOTAL	19,711 kg

CULVERT EXCAVATION ----------	LUMP SUM
FOUNDATION COND. MAT'L ----	42 METRIC TONS

NOTES

ASSUMED LIVE LOAD ----------MS18 OR ALTERNATE LOADING.

DESIGN FILL ---------- 6.52Om

FOR OTHER DESIGN DATA AND NOTES, SEE STANDARD NOTE SHEET.

76mm Ø WEEP HOLES INDICATED TO BE IN ACCORDANCE WITH THE SPECIFICATIONS.

CONCRETE IN CULVERT TO BE POURED IN THE FOLLOWING ORDER:

1. PHASE I WING FOOTINGS AND FLOOR SLAB INCLUDING 100mm OF PHASE I VERTICAL WALLS.
2. THE REMAINING PORTIONS OF PHASE I WALLS AND PHASE I WINGS FULL HEIGHT.
3. PHASE II WING FOOTINGS AND FLOOR SLAB INCLUDING 100mm OF PHASE II VERTICAL WALLS.
4. THE REMAINING PORTIONS OF PHASE II WALLS AND PHASE II WINGS FULL HEIGHT.
5. ROOF SLAB IN IT'S ENTIRETY AND HEADWALLS.

THE RESIDENT ENGINEER SHALL CHECK THE LENGTH OF CULVERT BEFORE STAKING IT OUT TO MAKE CERTAIN THAT IT WILL PROPERLY TAKE CARE OF THE FILL.

DIMENSIONS FOR WING LAYOUT AS WELL AS ADDITIONAL REINFORCING STEEL EMBEDDED IN BARREL ARE SHOWN ON WING SHEET.

TRANSVERSE CONSTRUCTION JOINTS SHALL BE USED IN THE BARREL, SPACED TO LIMIT THE POURS TO A MAXIMUM OF 21.0m. LOCATION OF THE JOINTS SHALL BE SUBJECT TO APPROVAL OF THE ENGINEER.

AT THE CONTRACTOR'S OPTION, HE MAY SPLICE THE VERTICAL REINFORCING STEEL IN THE INTERIOR FACES OF THE EXTERIOR WALLS AND BOTH FACES OF INTERIOR WALLS ABOVE LOWER WALL CONSTRUCTION JOINT. THE SPLICE LENGTH SHALL BE AS PROVIDED IN THE SPLICE LENGTH CHART SHOWN ON THE PLANS. EXTRA WEIGHT OF STEEL DUE TO THE SPLICES SHALL BE PAID FOR BY THE CONTRACTOR.

IF APPROVED BY THE ENGINEER, THE CONTRACTOR MAY USE THE EXISTING WINGS AS TEMPORARY SHORING FOR THE CONSTRUCTION OF THE CULVERT EXTENSION. IN THIS CASE, THE BOTTOM SLAB OF THE EXTENSION SHALL BE POURED AT LEAST 72 HOURS PRIOR TO CUTTING THE WINGS. THE WINGS MAY BE CUT EARLIER PROVIDE THE SLAB CONCRETE STRENGTH HAS REACHED A MINIMUM COMPRESSIVE STRENGTH OF 10.3 MPa.

MATERIAL EXCAVATED FROM THE EXISTING BED SHALL BE STOCKPILED FOR USE IN THE PROPOSED CULVERT. UPON COMPLETION OF THE CULVERT, THE MATERIAL SHALL BE PLACED IN THE WESTERNMOST BARREL EXTENSION TO A DEPTH OF 0.3m. BED MATERIAL MAY BE SUPPLEMENTED WITH CLASS 'B' RIP RAP IF SUITABLE MATERIAL IS NOT AVAILABLE IN SUFFICIENT QUANTITIES.

THE ENTIRE COST OF THE WORK REQUIRED TO PLACE THE EXCAVATED MATERIAL OR SUPPLEMENTAL MATERIAL SHALL BE INCLUDED IN THE CONTRACT LUMP SUM PRICE BID FOR CULVERT EXCAVATION.

DOWELS SHALL BE USED TO CONNECT THE CULVERT EXTENSION TO THE EXISTING CULVERT AS SHOWN. FOR NOTE REGARDING SETTING OF DOWELS, SEE STANDARD NOTES SHEET SNSM.

FOR CONSTRUCTION SEQUENCE, SEE EROSION CONTROL PLANS.

FOR FALSEWORK AND FORMWORK, SEE SPECIAL PROVISIONS.

FOR GROUT FOR STRUCTURES, SEE SPECIAL PROVISIONS.

FOR SUBMITTAL OF WORKING DRAWINGS, SEE SPECIAL PROVISIONS.

FOR CULVERT DIVERSION DETAILS AND PAY ITEM, SEE EROSION CONTROL PLANS.

NO PRECAST REINFORCED BOX CULVERT OPTION WILL BE ALLOWED.

FOR CRANE SAFETY, SEE SPECIAL PROVISIONS.

ALL DIMENSIONS ARE IN MILLIMETERS UNLESS OTHERWISE NOTED.

ALL ELEVATIONS ARE IN METERS.

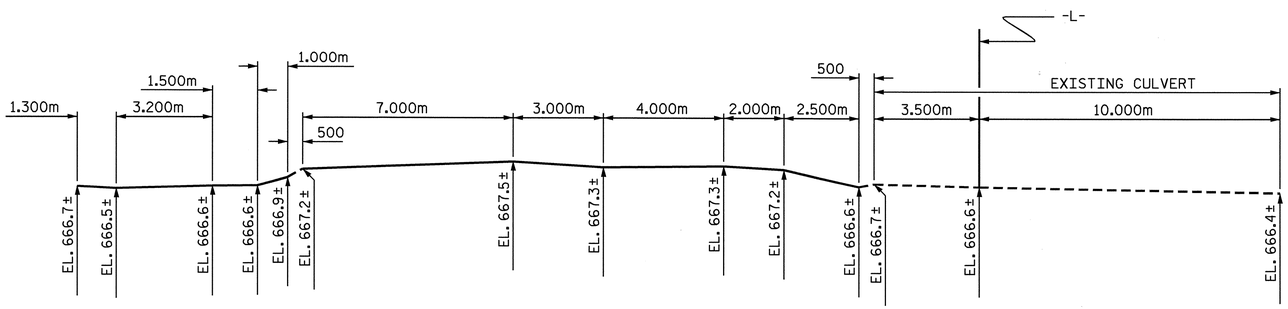

PROFILE ALONG ℄ CULVERT

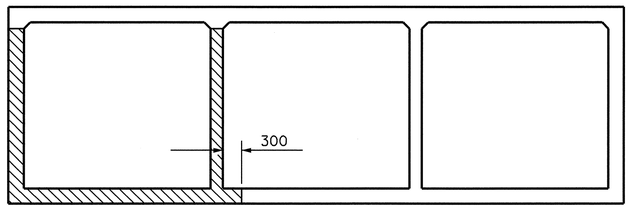

CONSTRUCTION PHASING

(LOOKING DOWNSTREAM)

PHASE I CONSTRUCTION

PHASE II CONSTRUCTION

NORTH CAROLINA PROFESSIONAL SEAL 13014 ENGINEER QUANG H. NGUYEN
Quang H. Nguyen 4-3-08

NORTH CAROLINA PROFESSIONAL SEAL 20125 ENGINEER MARSHALL L. CHECK, JR.
4-3-08

PROJECT NO. R-2518A
MADISON/YANCEY COUNTY
STATION: 33+79.340 -L-

SHEET 1 OF 7 CULVERT #C129

STATE OF NORTH CAROLINA
DEPARTMENT OF TRANSPORTATION
RALEIGH

TRIPLE 2.700m X 3.000m CONCRETE BOX CULVERT LEFT EXTENSION

REVISIONS						SHEET NO.
NO.	BY:	DATE:	NO.	BY:	DATE:	C-26
1			3			TOTAL SHEETS
2			4			103

STR #5

DRAWN BY : C.R.Y. / A.L.F. DATE : 8/31/05
CHECKED BY : A. SORSENGINH DATE : 9-31-05

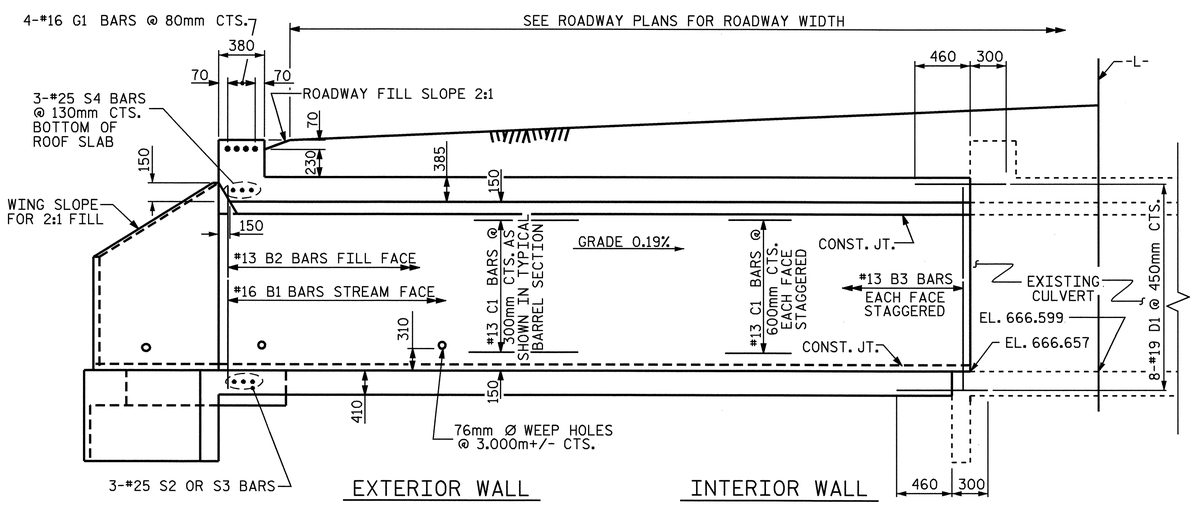

LEFT CULVERT EXTENSION SECTION NORMAL TO ROADWAY

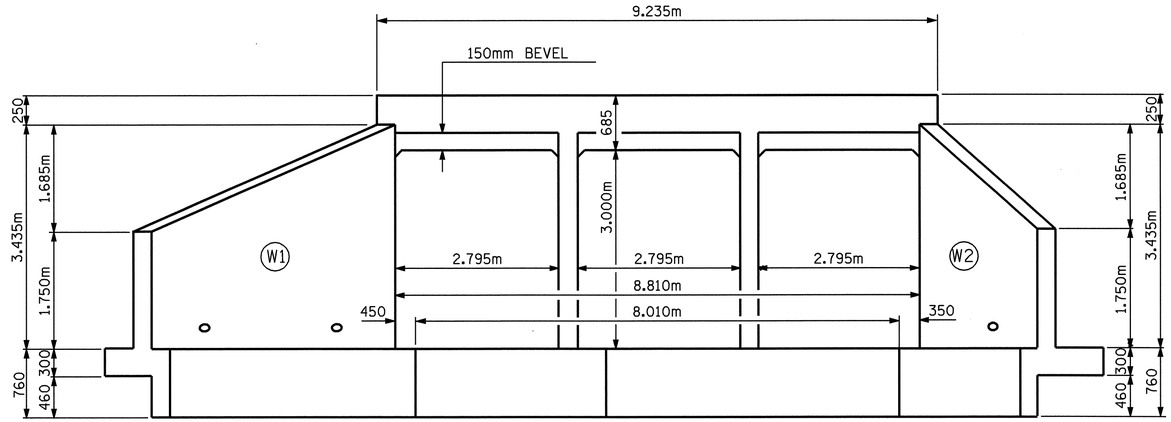

INLET END ELEVATION NORMAL TO SKEW

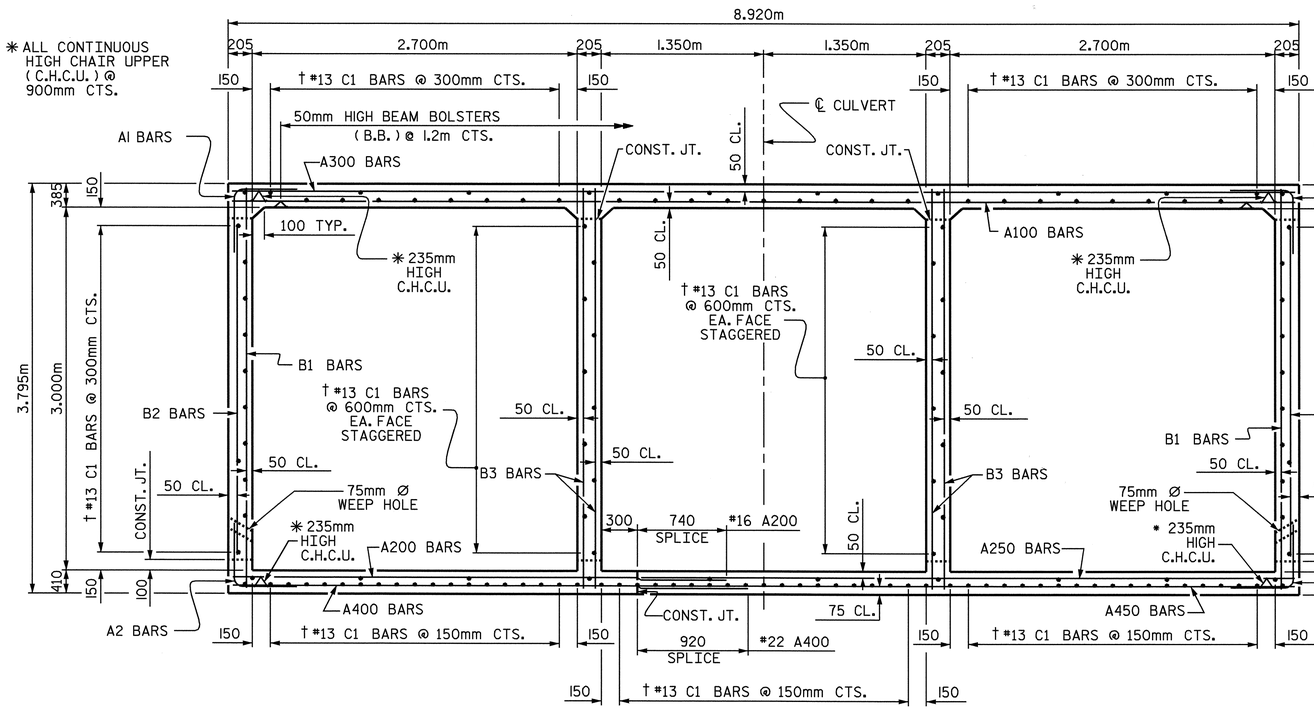

RIGHT ANGLE SECTION OF BARREL

THERE ARE 146 "C" BARS IN SECTION OF BARREL (LOOKING DOWNSTREAM)

† #13 C1 BARS SHALL BE FIELD BENT AS NECESSARY

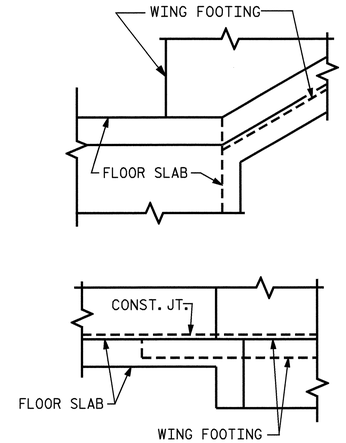

DETAIL

CONNECTION OF WING FOOTING AND FLOOR SLAB WHEN SLAB IS THICKER THAN FOOTING

ASSEMBLED BY : C.R.Y. / A.L.F. DATE : 8/31/05
CHECKED BY : A. SORSENGINH DATE : 9-31-05

PROJECT NO. R-2518A
MADISON/YANCEY COUNTY
STATION: 33+79.340 -L-

SHEET 2 OF 7

STATE OF NORTH CAROLINA
DEPARTMENT OF TRANSPORTATION
RALEIGH

TRIPLE 2.700m X 3.000m CONCRETE BOX CULVERT LEFT EXTENSION

REVISIONS						SHEET NO.
NO.	BY:	DATE:	NO.	BY:	DATE:	C-27
1			3			TOTAL SHEETS
2			4			103

NORTH CAROLINA PROFESSIONAL SEAL 20125 ENGINEER MARSHALL A. CREEK, JR.
1-3-08

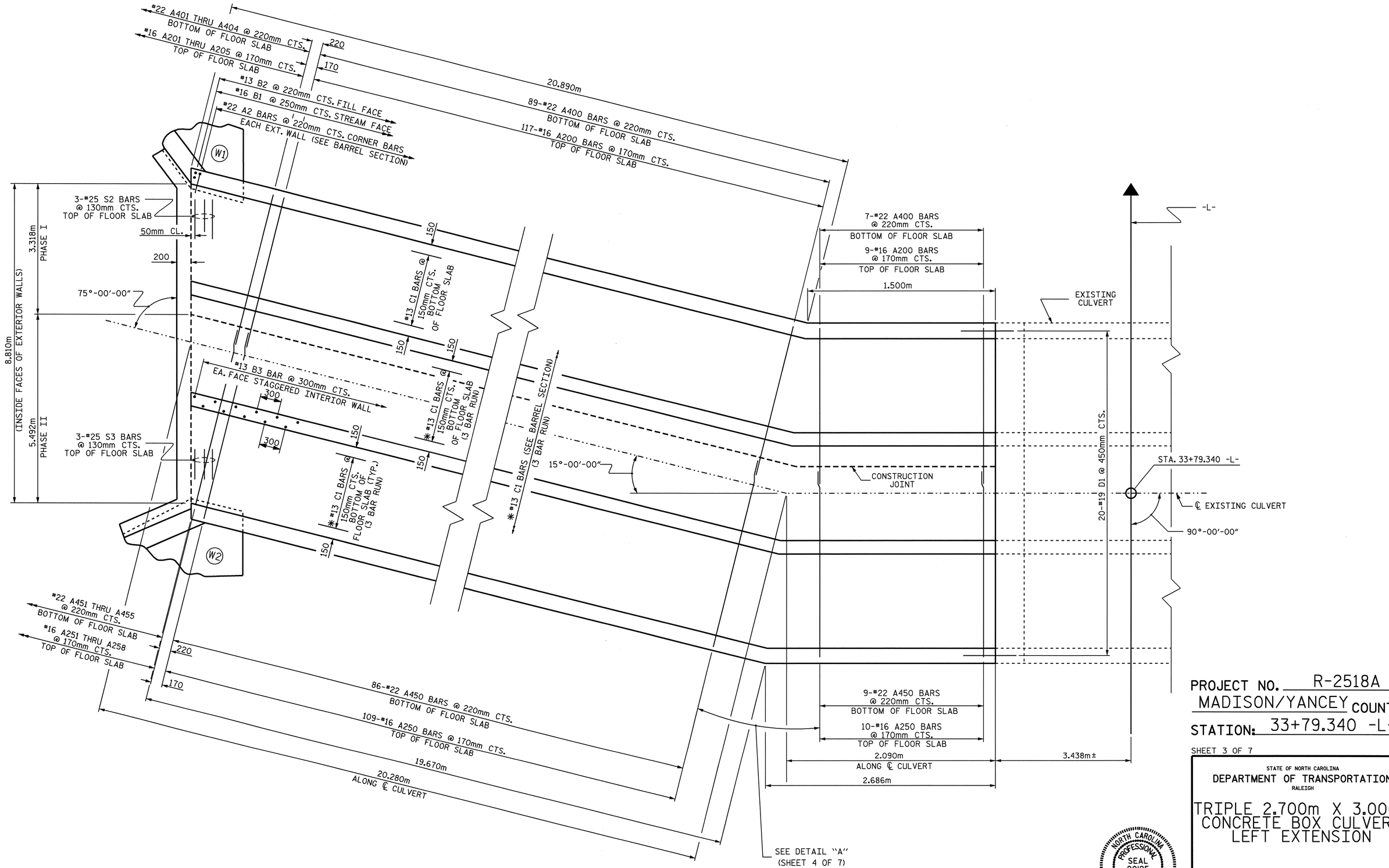

PLAN - FLOOR SLAB - LEFT EXTENSION

✱#13 C1 BARS SHALL BE FIELD BENT AS NECESSARY

PROJECT NO. R-2518A
MADISON/YANCEY COUNTY
STATION: 33+79.340 -L-

SHEET 3 OF 7

STATE OF NORTH CAROLINA
DEPARTMENT OF TRANSPORTATION
RALEIGH

TRIPLE 2.700m X 3.000m
CONCRETE BOX CULVERT
LEFT EXTENSION

NORTH CAROLINA PROFESSIONAL SEAL 20125 ENGINEER MARSHALL L. FRANCK, JR.
10-1-07

REVISIONS						SHEET NO.
NO.	BY:	DATE:	NO.	BY:	DATE:	C-28
1			3			TOTAL SHEETS
2			4			103

DRAWN BY : C.R.Y./A.L.F. DATE : 08/05
CHECKED BY : A. SORSENGINH DATE : 09/05

24-SEP-2007 10:07
R:\Structures\Str*05\A.L.Figueroa\R-2518A_sd_CU*5.dgn
afigueroa

STR. #5

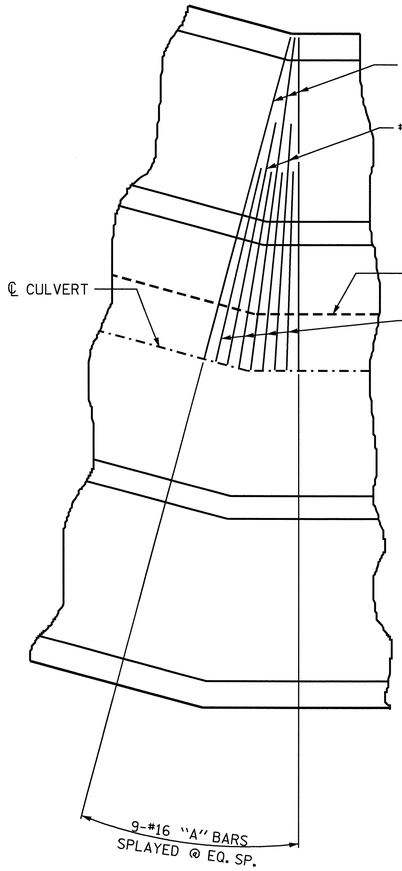

PHASE I
TOP OF FLOOR SLAB

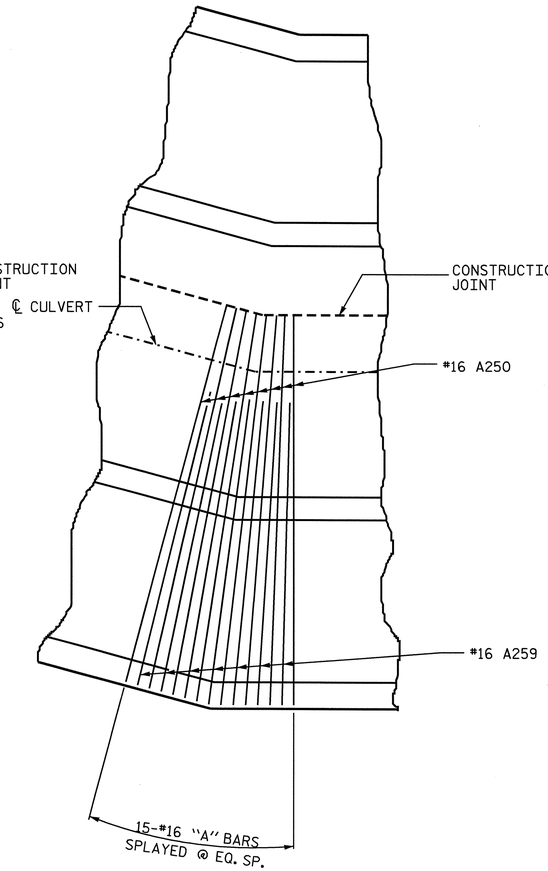

PHASE II
TOP OF FLOOR SLAB

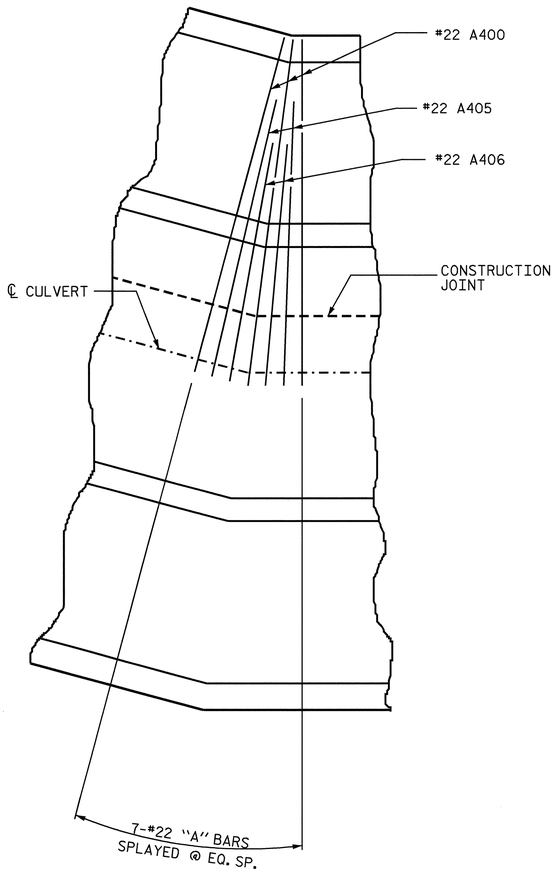

PHASE I
BOTT. OF FLOOR SLAB

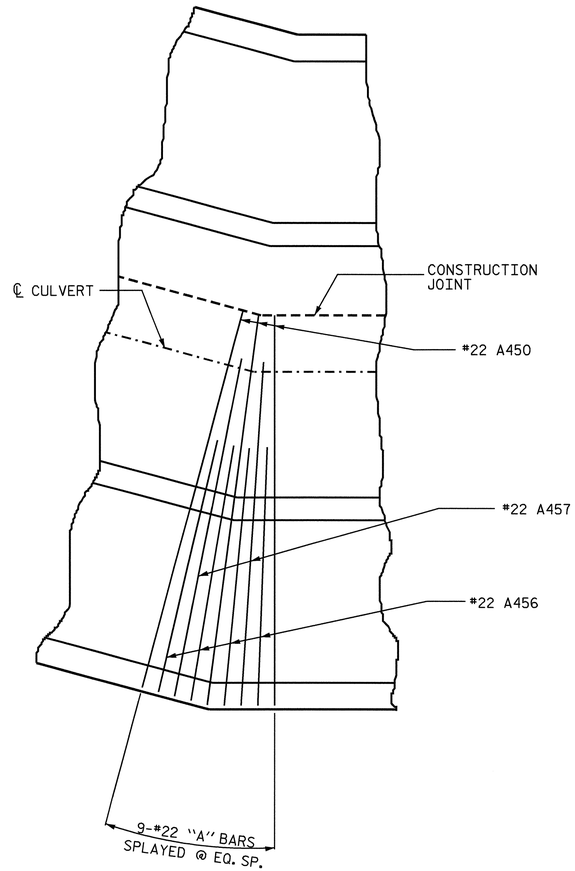

PHASE II
BOTT. OF FLOOR SLAB

DETAIL "A"

PROJECT NO. R-2518A
MADISON/YANCEY COUNTY
STATION: 33+79.340 -L-

SHEET 4 OF 7

STATE OF NORTH CAROLINA
DEPARTMENT OF TRANSPORTATION
RALEIGH

TRIPLE 2.700m X 3.000m CONCRETE BOX CULVERT LEFT EXTENSION

NORTH CAROLINA PROFESSIONAL SEAL 20125 ENGINEER MARSHALL L. GLOVER, JR.
18-1-07

REVISIONS						SHEET NO.
NO.	BY:	DATE:	NO.	BY:	DATE:	C-29
1			3			TOTAL SHEETS
2			4			103

STR. #5

DRAWN BY : C.R.Y./A.L.F. DATE : 08/05
CHECKED BY : A. SORSENGINH DATE : 09/05

24-SEP-2007 10:06
R:\Structures\Str*05\A.L.Figueroa\R-2518A_sd_CU*5.dgn
afigueroa

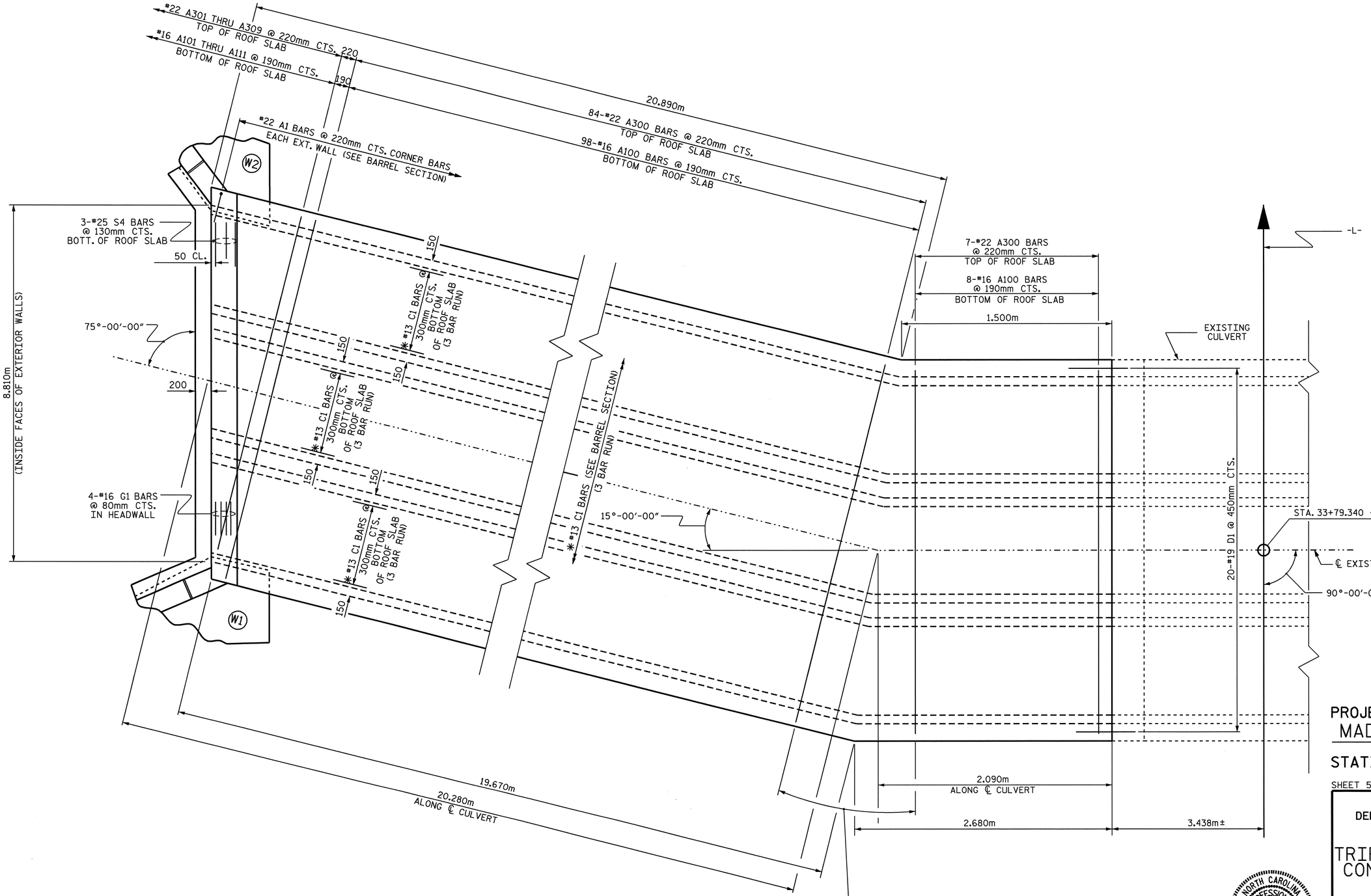

PLAN - ROOF SLAB - LEFT EXTENSION

✳ #13 C1 BARS SHALL BE FIELD BENT AS NECESSARY

NORTH CAROLINA PROFESSIONAL SEAL 20125 ENGINEER MARSHALL L. TREECE, JR.
10-1-07

PROJECT NO. R-2518A
MADISON/YANCEY COUNTY
STATION: 33+79.340 -L-

SHEET 5 OF 7

STATE OF NORTH CAROLINA
DEPARTMENT OF TRANSPORTATION
RALEIGH

TRIPLE 2.700m X 3.000m CONCRETE BOX CULVERT LEFT EXTENSION

REVISIONS						SHEET NO.
NO.	BY:	DATE:	NO.	BY:	DATE:	C-30
1			3			TOTAL SHEETS
2			4			103

STR. #5

DRAWN BY : C.R.Y./A.L.F. DATE : 08/05
CHECKED BY : A. SORSENGINH DATE : 09/05

24-SEP-2007 10:06
R:\Structures\Str#05\A.L.Figueroa\R-2518A_sd_CU#5.dgn
afigueroa

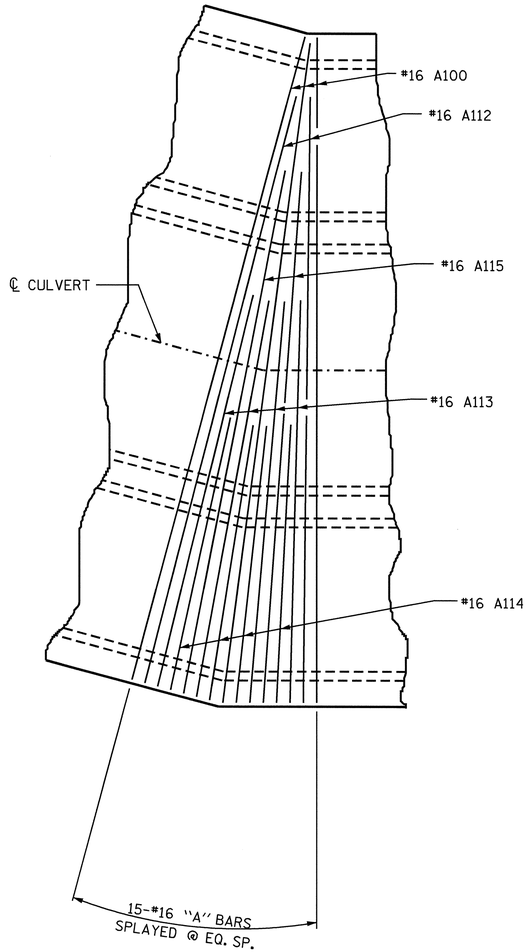

BOTTOM OF ROOF SLAB

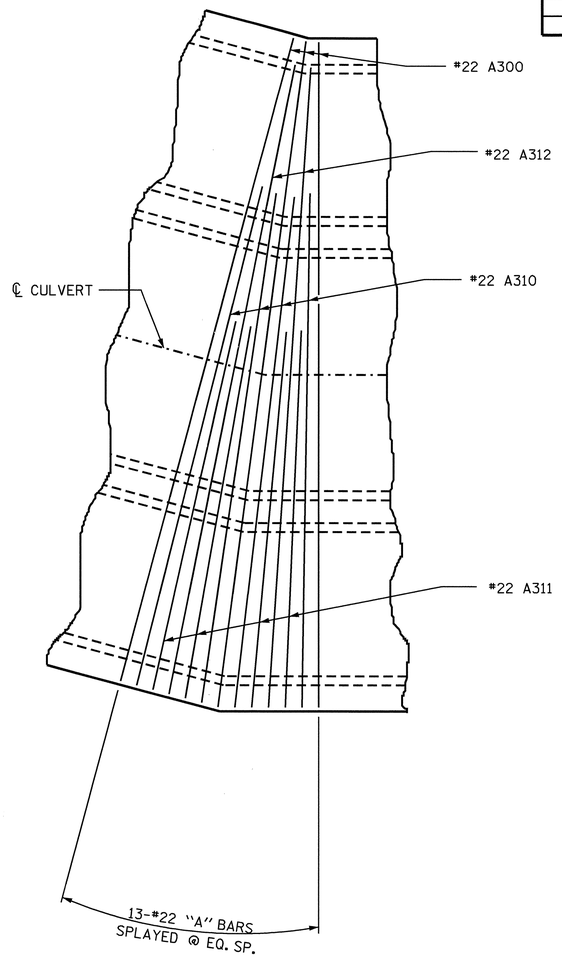

TOP OF ROOF SLAB

DETAIL "B"

SPLICE LENGTH CHART

BAR	SIZE	SPLICE LENGTH
A200	16	740
A400	22	920
B1	16	540
B3	13	540
C1	13	590
"S"	25	1220

BAR SCHEDULE

BAR	NO.	SIZE	TYPE	LENGTH	WEIGHT	BAR	NO.	SIZE	TYPE	LENGTH	WEIGHT
A1	204	#22	6	2940	1824	A400	97	#22	STR	4280	1263
A2	204	#22	6	2240	1390	A401	1	#22	STR	3460	11
						A402	1	#22	STR	2640	8
A100	107	#16	STR	8820	1465	A403	1	#22	STR	1820	6
A101	1	#16	STR	8100	13	A404	1	#22	STR	1000	3
A102	1	#16	STR	7400	11	A405	2	#22	STR	3480	21
A103	1	#16	STR	6680	10	A406	2	#22	STR	2900	18
A104	1	#16	STR	5980	9						
A105	1	#16	STR	5260	8	A450	96	#22	STR	5440	1589
A106	1	#16	STR	4560	7	A451	1	#22	STR	4640	14
A107	1	#16	STR	3860	6	A452	1	#22	STR	3820	12
A108	1	#16	STR	3140	5	A453	1	#22	STR	3000	9
A109	1	#16	STR	2440	4	A454	1	#22	STR	2160	7
A110	1	#16	STR	1720	3	A455	1	#22	STR	1340	4
A111	1	#16	STR	1020	2	A456	4	#22	STR	3420	42
A112	2	#16	STR	8020	25	A457	2	#22	STR	4560	28
A113	4	#16	STR	5340	33						
A114	4	#16	STR	3700	23	B1	180	#16	STR	3640	1017
A115	2	#16	STR	7040	22	B2	204	#13	STR	2800	568
						B3	298	#13	STR	3640	1078
A200	127	#16	STR	4100	808						
A201	1	#16	STR	3460	5	C1	438	#13	STR	7860	3422
A202	1	#16	STR	2820	4						
A203	1	#16	STR	2180	3	D1	56	#19	STR	760	95
A204	1	#16	STR	1560	2						
A205	1	#16	STR	920	1	G1	4	#16	STR	9120	57
A206	4	#16	STR	2320	14						
A207	2	#16	STR	2960	9	S2	3	#25	STR	4760	57
						S3	3	#25	STR	5640	67
A250	125	#16	STR	5440	1055	S4	3	#25	STR	9120	109
A251	1	#16	STR	5160	8						
A252	1	#16	STR	4540	7						
A253	1	#16	STR	3900	6	REINFORCING STEEL = 19138 kg					
A254	1	#16	STR	3260	5						
A255	1	#16	STR	2640	4						
A256	1	#16	STR	2000	3						
A257	1	#16	STR	1360	2						
A258	1	#16	STR	720	1						
A259	7	#16	STR	4080	44						
A300	92	#22	STR	8820	2468						
A301	1	#22	STR	8000	24						
A302	1	#22	STR	7180	22						
A303	1	#22	STR	6360	19						
A304	1	#22	STR	5540	17						
A305	1	#22	STR	4700	14						
A306	1	#22	STR	3880	12						
A307	1	#22	STR	3060	9						
A308	1	#22	STR	2240	7						
A309	1	#22	STR	1420	4						
A310	4	#22	STR	6800	83						
A311	4	#22	STR	5000	61						
A312	2	#22	STR	8500	52						

⑥

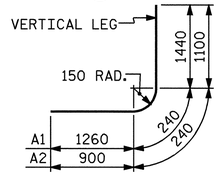

BAR TYPE

DIMENSIONS ARE OUT TO OUT

PROJECT NO. R-2518A

MADISON/YANCEY COUNTY

STATION: 33+79.340 -L-

SHEET 6 OF 7

STATE OF NORTH CAROLINA

DEPARTMENT OF TRANSPORTATION

RALEIGH

TRIPLE 2.700m X 3.000m CONCRETE BOX CULVERT LEFT EXTENSION

NORTH CAROLINA PROFESSIONAL SEAL 20125 ENGINEER MARSHALL L. HOMEK, JR.

10-1-07

REVISIONS						SHEET NO.
NO.	BY:	DATE:	NO.	BY:	DATE:	C-31
1			3			TOTAL SHEETS
2			4			103

DRAWN BY : C.R.Y./A.L.F. DATE : 08/05

CHECKED BY : A. SORSENGINH DATE : 08/05

24-SEP-2007 10:06

R:\Structures\Str*05\A.L.Figueroa\R-2518A_sd_CU*5.dgn

afigueroa

STR. #5

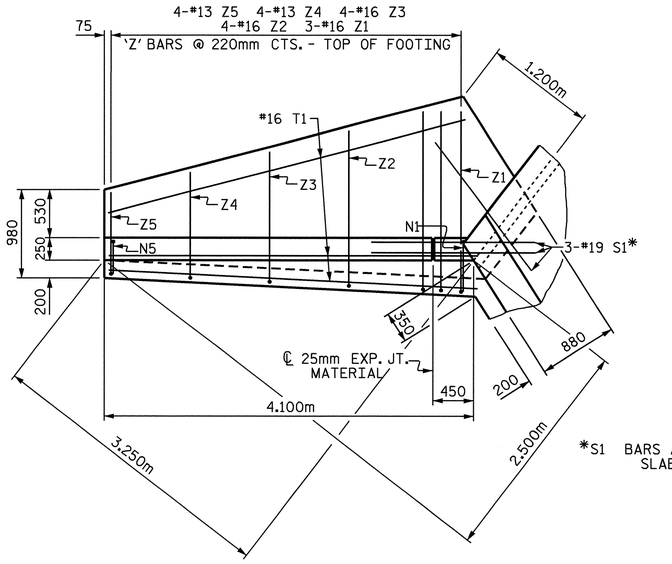

PLAN W2

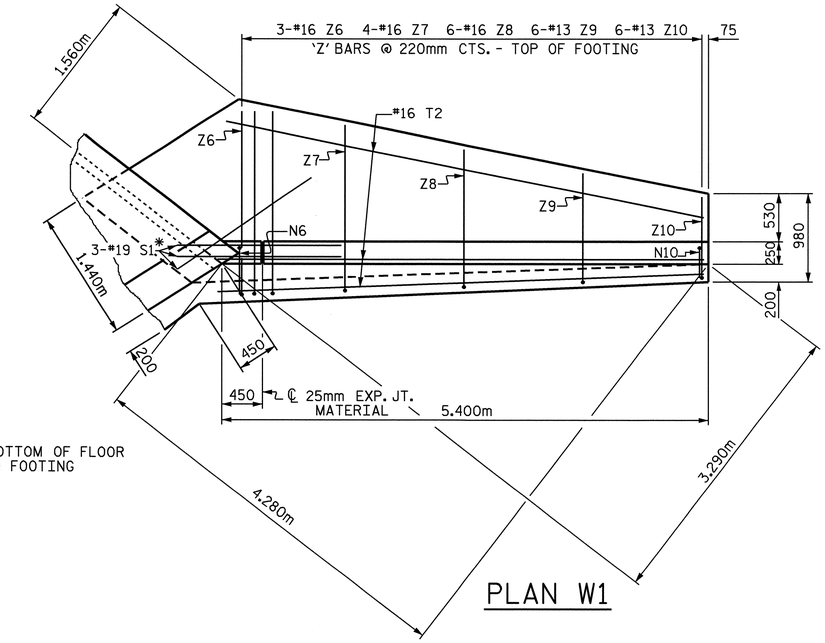

PLAN W1

*S1 BARS AT BOTTOM OF FLOOR SLAB AND FOOTING

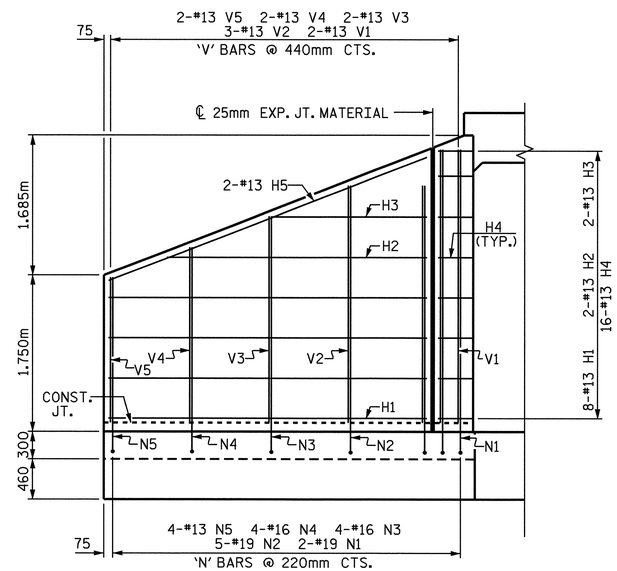

ELEVATION W2

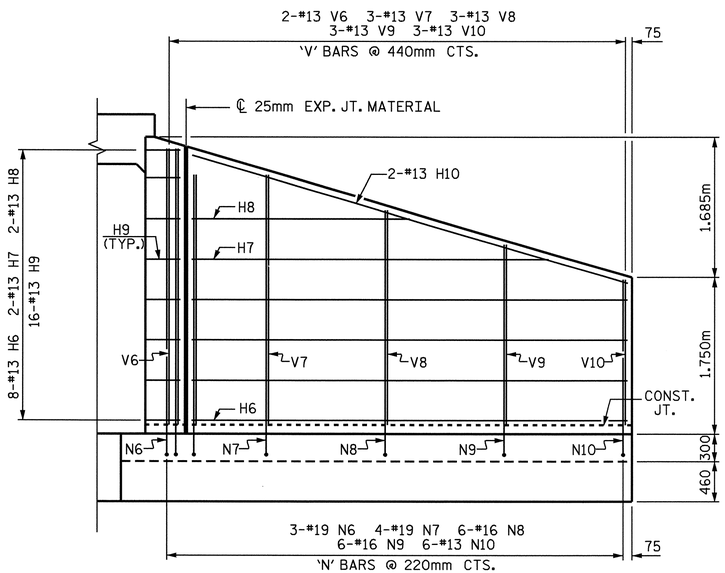

ELEVATION W1

NOTES

FOR WING ORIENTATION, SEE PLAN OF FLOOR SLAB.

A 900mm STRIP OF FILTER FABRIC SHALL BE ATTACHED TO THE FILL FACE OF THE WING COVERING THE ENTIRE LENGTH OF THE EXPANSION JOINT.

G1 BARS IN HEADWALL ARE INCLUDED WITH BARREL REINFORCING STEEL.

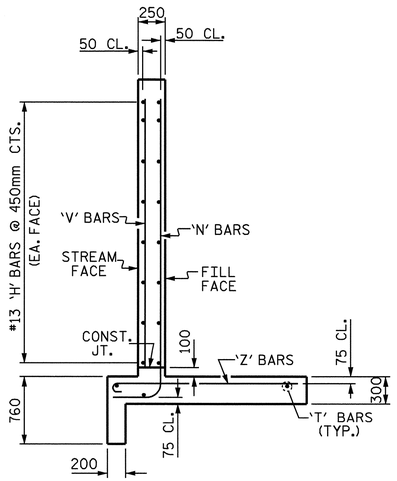

TYPICAL WING SECTION

BAR TYPES

ALL BAR DIMENSIONS ARE OUT TO OUT.

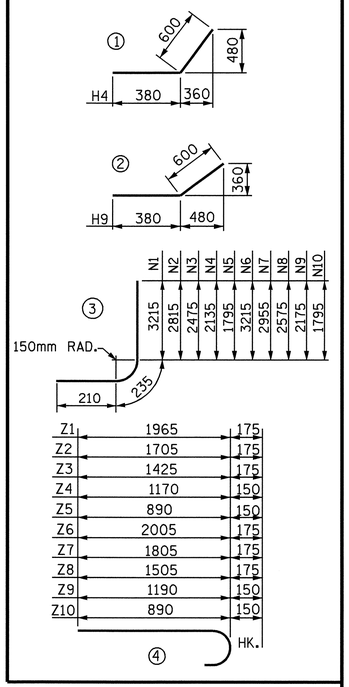

BILL OF MATERIAL

BAR	NO.	SIZE	TYPE	LENGTH	WEIGHT
H1	8	13	STR	3540	28
H2	2	13	STR	2940	6
H3	2	13	STR	1780	4
H4	16	13	1	980	16
H5	2	13	STR	3780	8
H6	8	13	STR	4840	38
H7	2	13	STR	4080	8
H8	2	13	STR	2540	5
H9	16	13	2	980	16
H10	2	13	STR	5040	10
N1	2	19	3	3660	16
N2	5	19	3	3260	36
N3	4	16	3	2920	18
N4	4	16	3	2580	16
N5	4	13	3	2240	9
N6	3	19	3	3660	25
N7	4	19	3	3400	30
N8	6	16	3	3020	28
N9	6	16	3	2620	24
N10	6	13	3	2240	13
S1	6	19	STR	1800	24
T1	3	16	STR	4100	19
T2	3	16	STR	5400	25
V1	2	13	STR	3040	6
V2	3	13	STR	2640	8
V3	2	13	STR	2300	5
V4	2	13	STR	1960	4
V5	2	13	STR	1620	3
V6	2	13	STR	3080	6
V7	3	13	STR	2780	8
V8	3	13	STR	2400	7
V9	3	13	STR	2000	6
V10	3	13	STR	1620	5
Z1	3	16	4	2140	10
Z2	4	16	4	1880	12
Z3	4	16	4	1600	10
Z4	4	13	4	1320	5
Z5	4	13	4	1040	4
Z6	3	16	4	2180	10
Z7	4	16	4	1980	12
Z8	6	16	4	1680	16
Z9	6	13	4	1340	8
Z10	6	13	4	1040	6

REINFORCING STEEL FOR 2 WING WALLS 573 kg

CLASS A CONCRETE

2 WINGS	11.9	m³
1 HEADWALL	1.1	m³
1 END CURTAIN WALL	1.2	m³
TOTAL	14.2	m³

PROJECT NO. R-2518A
MADISON/YANCEY COUNTY
STATION: 33+79.340 -L-

SHEET 7 OF 7

STATE OF NORTH CAROLINA
DEPARTMENT OF TRANSPORTATION
RALEIGH

STANDARD WINGS FOR CONCRETE BOX CULVERT LEFT EXTENSION

REVISIONS						SHEET NO.
NO.	BY:	DATE:	NO.	BY:	DATE:	C-32
1			3			TOTAL SHEETS
2			4			103

ASSEMBLED BY : C.R.Y. / A.L.F. DATE : 8/31/05
CHECKED BY : A. SORSENGINH DATE : 9-31-05
DRAWN BY : JLR 6/97
CHECKED BY : VAP 6/97

NORTH CAROLINA PROFESSIONAL SEAL 20125 ENGINEER MARSHALL L. GREEK, JR.
10-1-07

STR. #5 STD. NOS. CW7500 CW7530

02-APR-2008 16:33
r:\structures\Str#06\A.L.Figueroa\R2518A_sd_CU#6.dgn
lmurphy

BENCHMARK #4: CHISLED SQUARE ON THE SE CORNER WHEEL GUARD OF THE OLD MILL BRIDGE AT -Y8-, STA. 33+55.74-L-, 137 METERS RIGHT, ELEV.= 671.089

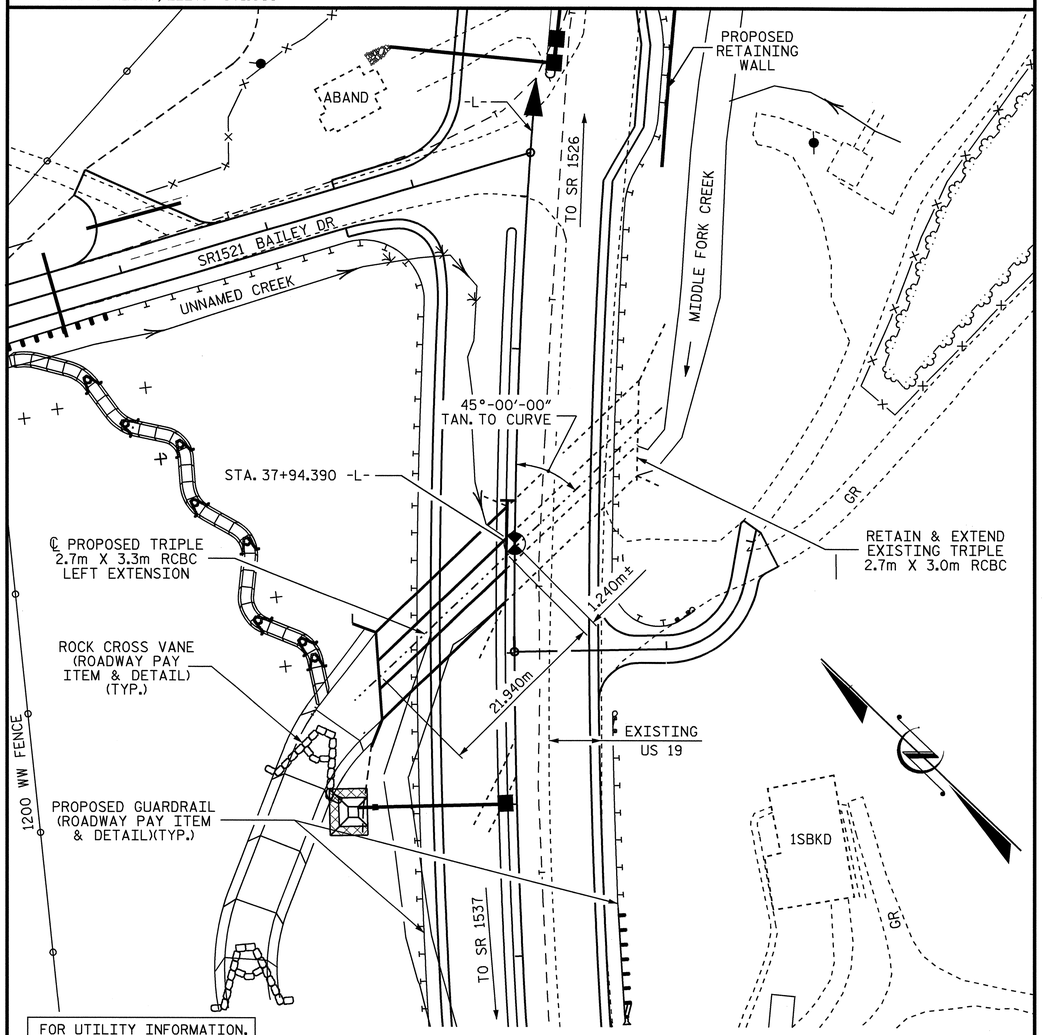

LOCATION SKETCH

HYDRAULIC DATA

DESIGN DISCHARGE	= 75.0 m3/s
FREQUENCY OF DESIGN FLOOD	= 50 YEARS
DESIGN HIGH WATER ELEVATION	= 673.210m
DRAINAGE AREA	= 26.722 SQ. Km
BASIC DISCHARGE (Q100)	= 90.0 m3/s
BASIC HIGH WATER ELEVATION	= 674.080m

OVERTOPPING FLOOD DATA

OVERTOPPING DISCHARGE	= 89.00 m3/s
FREQUENCY OF OVERTOPPING FLOOD	= 100 YEARS
OVERTOPPING FLOOD ELEVATION	= 674.010m

ROADWAY DATA

GRADE POINT ELEV. @ STA. 37+94.390 -L-	= 674.724m
BED ELEV. @ STA. 37+94.390 -L-	= 670.072m
ROADWAY FILL SLOPE	= 2:1

TOTAL STRUCTURE QUANTITIES

CLASS A CONCRETE		
BARREL @	6.90 m3/m	151.4 m3
WINGS, ETC.		36.5 m3
TOTAL		187.9 m3
REINFORCING STEEL		
BARREL		16,923 kg
WINGS, ETC.		1,610 kg
TOTAL		18,533 kg
CULVERT EXCAVATION	----------	LUMP SUM
FOUNDATION COND. MAT'L	----	133 METRIC TONS

NOTES

ASSUMED LIVE LOAD ----------MS18 OR ALTERNATE LOADING.

DESIGN FILL ---------- 1.950m

FOR OTHER DESIGN DATA AND NOTES, SEE STANDARD NOTE SHEET.

76mm Ø WEEP HOLES INDICATED TO BE IN ACCORDANCE WITH THE SPECIFICATIONS.

CONCRETE IN CULVERT TO BE POURED IN THE FOLLOWING ORDER:

1. PHASE I WING FOOTINGS AND FLOOR SLAB INCLUDING 100mm OF PHASE I VERTICAL WALLS.
2. THE REMAINING PORTIONS OF PHASE I WALLS AND PHASE I WINGS FULL HEIGHT.
3. PHASE II WING FOOTINGS AND FLOOR SLAB INCLUDING 100mm OF PHASE II VERTICAL WALLS.
4. THE REMAINING PORTIONS OF PHASE II WALLS AND PHASE II WINGS FULL HEIGHT.
5. ROOF SLAB IN IT'S ENTIRETY AND HEADWALLS.

THE RESIDENT ENGINEER SHALL CHECK THE LENGTH OF CULVERT BEFORE STAKING IT OUT TO MAKE CERTAIN THAT IT WILL PROPERLY TAKE CARE OF THE FILL.

DIMENSIONS FOR WING LAYOUT AS WELL AS ADDITIONAL REINFORCING STEEL EMBEDDED IN BARREL ARE SHOWN ON WING SHEET.

TRANSVERSE CONSTRUCTION JOINTS SHALL BE USED IN THE BARREL, SPACED TO LIMIT THE POURS TO A MAXIMUM OF 21.0m. LOCATION OF THE JOINTS SHALL BE SUBJECT TO APPROVAL OF THE ENGINEER.

AT THE CONTRACTOR'S OPTION, HE MAY SPLICE THE VERTICAL REINFORCING STEEL IN THE INTERIOR FACES OF THE EXTERIOR WALLS AND BOTH FACES OF INTERIOR WALLS ABOVE LOWER WALL CONSTRUCTION JOINT. THE SPLICE LENGTH SHALL BE AS PROVIDED IN THE SPLICE LENGTH CHART SHOWN ON THE PLANS. EXTRA WEIGHT OF STEEL DUE TO THE SPLICES SHALL BE PAID FOR BY THE CONTRACTOR.

IF APPROVED BY THE ENGINEER, THE CONTRACTOR MAY USE THE EXISTING WINGS AS TEMPORARY SHORING FOR THE CONSTRUCTION OF THE CULVERT EXTENSION. IN THIS CASE, THE BOTTOM SLAB OF THE EXTENSION SHALL BE POURED AT LEAST 72 HOURS PRIOR TO CUTTING THE WINGS. THE WINGS MAY BE CUT EARLIER PROVIDE THE SLAB CONCRETE STRENGTH HAS REACHED A MINIMUM COMPRESSIVE STRENGTH OF 10.3 MPa.

MATERIAL EXCAVATED FROM THE EXISTING BED SHALL BE STOCKPILED FOR USE IN THE PROPOSED CULVERT. UPON COMPLETION OF THE CULVERT, THE MATERIAL SHALL BE PLACED IN THE SOUTHERNMOST BARREL EXTENSION TO A DEPTH OF 0.3m. BED MATERIAL MAY BE SUPPLEMENTED WITH CLASS 'B' RIP RAP IF SUITABLE MATERIAL IS NOT AVAILABLE IN SUFFICIENT QUANTITIES.

THE ENTIRE COST OF THE WORK REQUIRED TO PLACE THE EXCAVATED MATERIAL OR SUPPLEMENTAL MATERIAL SHALL BE INCLUDED IN THE CONTRACT LUMP SUM PRICE BID FOR CULVERT EXCAVATION.

DOWELS SHALL BE USED TO CONNECT THE CULVERT EXTENSION TO THE EXISTING CULVERT AS SHOWN. FOR NOTE REGARDING SETTING OF DOWELS, SEE STANDARD NOTES SHEET SNSM.

FOR CONSTRUCTION SEQUENCE, SEE EROSION CONTROL PLANS.

FOR FALSEWORK AND FORMWORK, SEE SPECIAL PROVISIONS.

FOR GROUT FOR STRUCTURES, SEE SPECIAL PROVISIONS.

FOR SUBMITTAL OF WORKING DRAWINGS, SEE SPECIAL PROVISIONS.

FOR CULVERT DIVERSION DETAILS AND PAY ITEM, SEE EROSION CONTROL PLANS.

FOR CRANE SAFETY, SEE SPECIAL PROVISIONS.

ALL DIMENSIONS ARE IN MILLIMETERS UNLESS OTHERWISE NOTED.

ALL ELEVATIONS ARE IN METERS.

METRIC

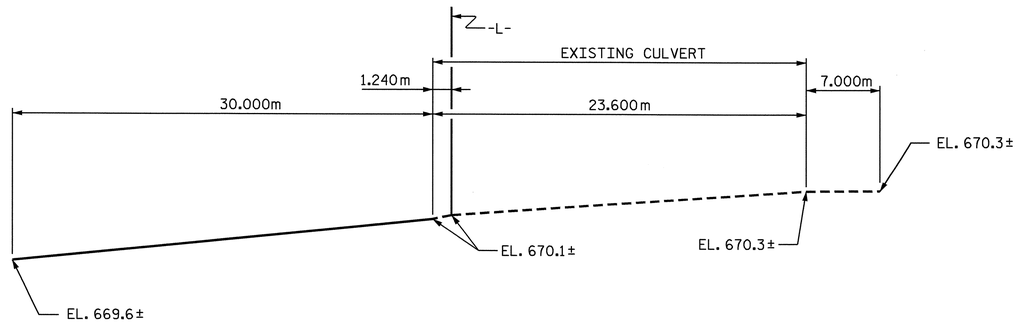

PROFILE ALONG ℄ CULVERT

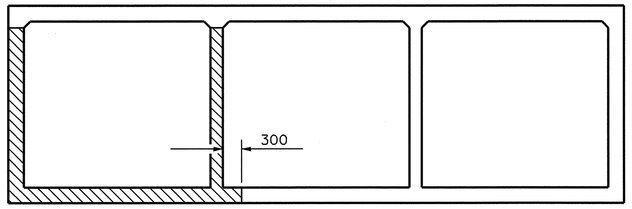

CONSTRUCTION PHASING

(LOOKING UPSTREAM)

PHASE I CONSTRUCTION

PHASE II CONSTRUCTION

NORTH CAROLINA PROFESSIONAL SEAL 13014 ENGINEER QUANG H. NGUYEN
Quang H. Nguyen 4-3-08

NORTH CAROLINA PROFESSIONAL SEAL 20125 ENGINEER MARSHALL L. CREEK, JR.
4-3-08

PROJECT NO. R-2518A
MADISON/YANCEY COUNTY
STATION: 37+94.390 -L-
CULVERT #C147

SHEET 1 OF 6

STATE OF NORTH CAROLINA
DEPARTMENT OF TRANSPORTATION
RALEIGH

TRIPLE 2.700m X 3.300m CONCRETE BOX CULVERT LEFT EXTENSION

REVISIONS						SHEET NO.
NO.	BY:	DATE:	NO.	BY:	DATE:	C-33
1			3			TOTAL SHEETS
2			4			103

DRAWN BY : A.S./ A.L.F. DATE : 8/01/05
CHECKED BY : V.X. NGUYEN DATE : 10-31-05

20-SEP-2007 15:33
R:\Structures\Str#06\A.L.Figueroa\R2518A_sd_CU#6.dgn
afigueroa

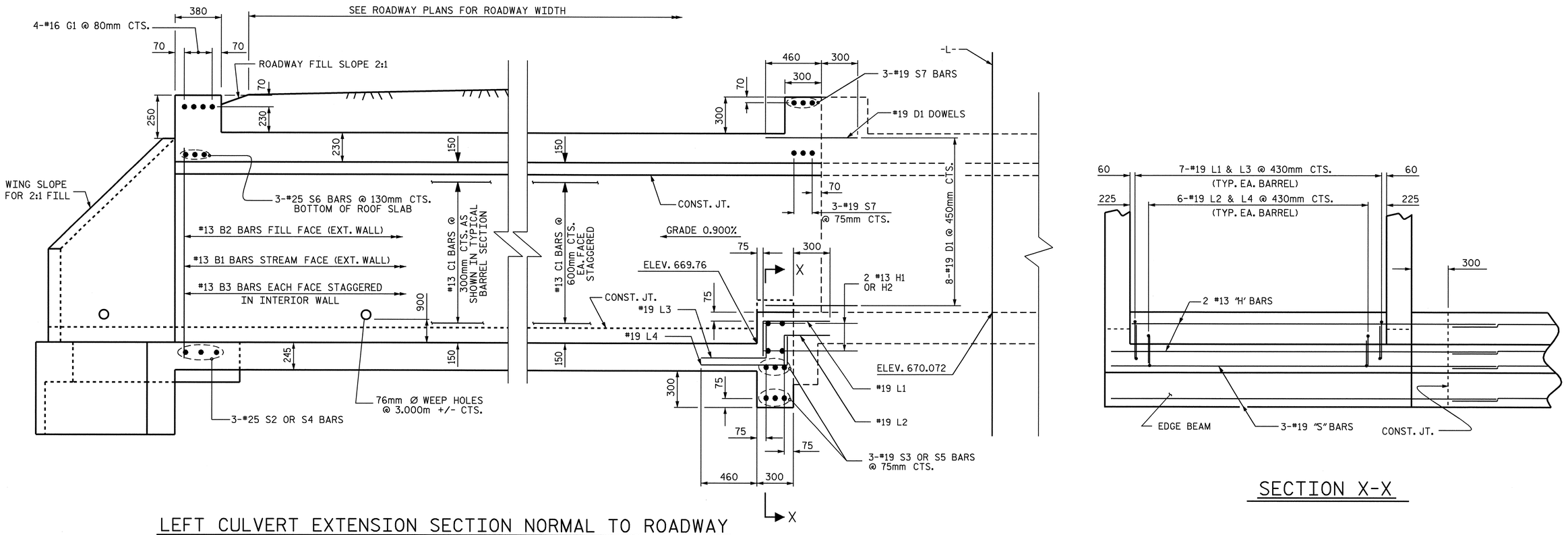

LEFT CULVERT EXTENSION SECTION NORMAL TO ROADWAY

SECTION X-X

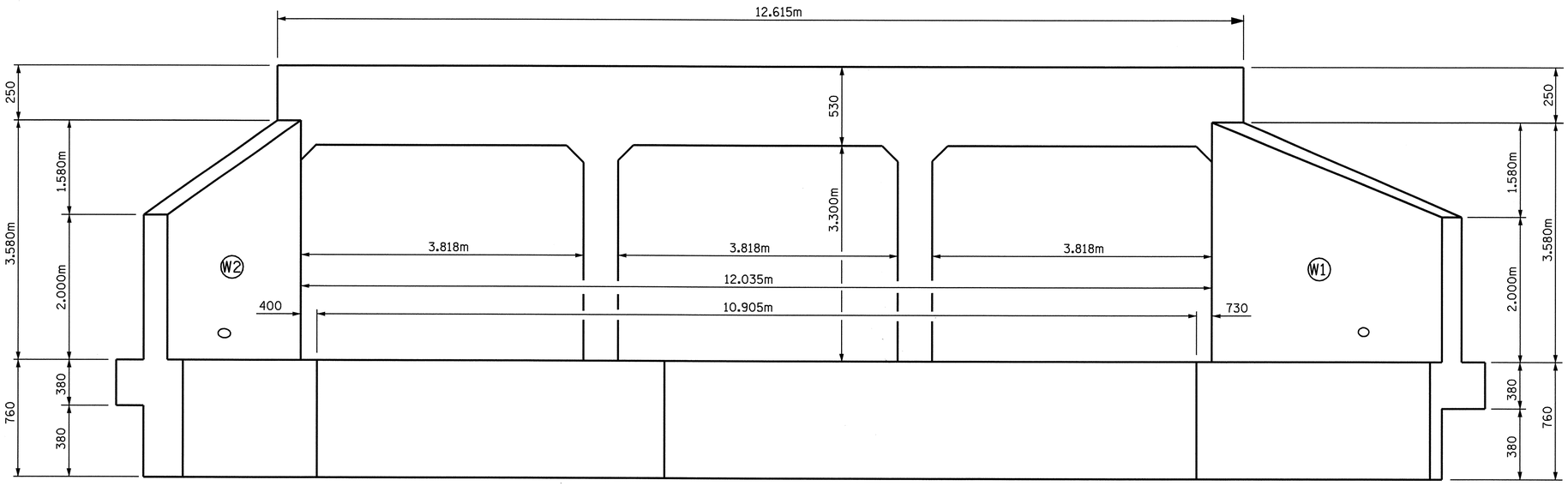

OUTLET END ELEVATION NORMAL TO SKEW

DRAWN BY : A.S./ A.L.F. DATE : 8/01/05
CHECKED BY : V.X. NGUYEN DATE : 10-31-05

NORTH CAROLINA PROFESSIONAL SEAL 20125 ENGINEER MARSHALL L. CHEEK, JR.
10-1-07

PROJECT NO. R-2518A
MADISON/YANCEY COUNTY
STATION: 37+94.390 -L-

SHEET 2 OF 6

STATE OF NORTH CAROLINA
DEPARTMENT OF TRANSPORTATION
RALEIGH

TRIPLE 2.700m X 3.300m
CONCRETE BOX CULVERT
LEFT EXTENSION

REVISIONS						SHEET NO.
NO.	BY:	DATE:	NO.	BY:	DATE:	C-34
1			3			TOTAL SHEETS
2			4			103

STR. #6

20-SEP-2007 15:35
R:\Structures\Str*06\A.L.Figueroa\R2518A_sd_CU*6.dgn
aflgueroa

BAR TYPE

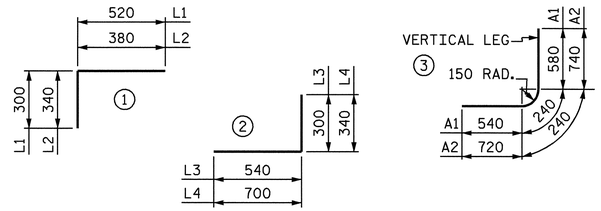

BAR DIMENSIONS ARE OUT TO OUT

SPLICE LENGTH CHART

BAR	SIZE	SPLICE LENGTH
A200	16	540
A400	19	690
B1	13	540
B3	13	540
C1	13	590
H1	13	540
"S"	19	840
"S"	25	1500

REINFORCING BAR SCHEDULE

BAR	NO.	SIZE	TYPE	LENGTH	WEIGHT
A1	294	16	3	1360	621
A2	294	19	3	1700	1117
A100	69	16	STR	8760	938
A101	4	16	STR	8380	52
A102	4	16	STR	8000	50
A103	4	16	STR	7620	47
A104	4	16	STR	7240	45
A105	4	16	STR	6860	43
A106	4	16	STR	6480	40
A107	4	16	STR	6100	38
A108	4	16	STR	5720	36
A109	4	16	STR	5340	33
A110	4	16	STR	4960	31
A111	4	16	STR	4600	29
A112	4	16	STR	4220	26
A113	4	16	STR	3840	24
A114	4	16	STR	3460	21
A115	4	16	STR	3080	19
A116	4	16	STR	2700	17
A117	4	16	STR	2320	14
A118	4	16	STR	1940	12
A119	4	16	STR	1540	10
A120	4	16	STR	1160	7
A121	4	16	STR	780	5

BAR	NO.	SIZE	TYPE	LENGTH	WEIGHT
A200	93	16	STR	3960	572
A201	4	16	STR	3660	23
A202	4	16	STR	3280	20
A203	4	16	STR	2900	18
A204	4	16	STR	2520	16
A205	4	16	STR	2140	13
A206	4	16	STR	1760	11
A207	4	16	STR	1380	9
A208	4	16	STR	1000	6
A250	86	16	STR	5420	723
A251	4	16	STR	5040	31
A252	4	16	STR	4660	29
A253	2	16	STR	4280	13
A254	4	16	STR	3900	24
A255	4	16	STR	3520	22
A256	4	16	STR	3140	19
A257	4	16	STR	2760	17
A258	4	16	STR	2380	15
A259	4	16	STR	2000	12
A260	4	16	STR	1620	10
A261	4	16	STR	1240	8
A262	4	16	STR	860	5

BAR	NO.	SIZE	TYPE	LENGTH	WEIGHT
A300	87	19	STR	8760	1703
A301	6	19	STR	8300	111
A302	6	19	STR	7880	106
A303	6	19	STR	7420	100
A304	6	19	STR	6960	93
A305	6	19	STR	6500	87
A306	6	19	STR	6080	82
A307	6	19	STR	5620	75
A308	6	19	STR	5160	69
A309	6	19	STR	4720	63
A310	6	19	STR	4260	57
A311	6	19	STR	3800	51
A312	6	19	STR	3360	45
A313	6	19	STR	2920	39
A314	6	19	STR	2460	33
A315	6	19	STR	2000	27
A316	6	19	STR	1580	21
A317	6	19	STR	1120	15
A318	6	19	STR	660	9
A400	117	19	STR	4100	1072
A401	4	19	STR	3860	35
A402	4	19	STR	3560	32
A403	4	19	STR	3260	29
A404	4	19	STR	2960	26
A405	4	19	STR	2660	24
A406	4	19	STR	2360	21
A407	4	19	STR	2060	18
A408	4	19	STR	1760	16
A409	4	19	STR	1460	13
A410	4	19	STR	1160	10

BAR	NO.	SIZE	TYPE	LENGTH	WEIGHT
A450	108	19	STR	5420	1308
A451	4	19	STR	5160	46
A452	4	19	STR	4860	43
A453	4	19	STR	4560	41
A454	4	19	STR	4260	38
A455	4	19	STR	3960	35
A456	4	19	STR	3660	33
A457	4	19	STR	3360	30
A458	4	19	STR	3060	27
A459	4	19	STR	2760	25
A460	4	19	STR	2460	22
A461	4	19	STR	2160	19
A462	4	19	STR	1860	17
A463	4	19	STR	1560	14
A464	4	19	STR	1260	11
A465	4	19	STR	960	9
B1	148	13	STR	3600	530
B2	294	13	STR	3080	900
B3	296	13	STR	3600	1059
C1	360	13	STR	7680	2748
D1	36	19	STR	760	61
G1	4	16	STR	12440	77
H1	4	13	STR	5300	21
H2	4	13	STR	7640	30
L1	21	19	1	820	38
L2	18	19	1	720	29
L3	21	19	2	840	39
L4	18	19	2	1040	42
S2	3	25	STR	6260	75
S3	6	19	STR	5600	75
S4	3	25	STR	7640	91
S5	6	19	STR	7640	102
S6	3	25	STR	12440	148
S7	6	19	STR	12440	167

REINFORCING STEEL = 16,923 kg

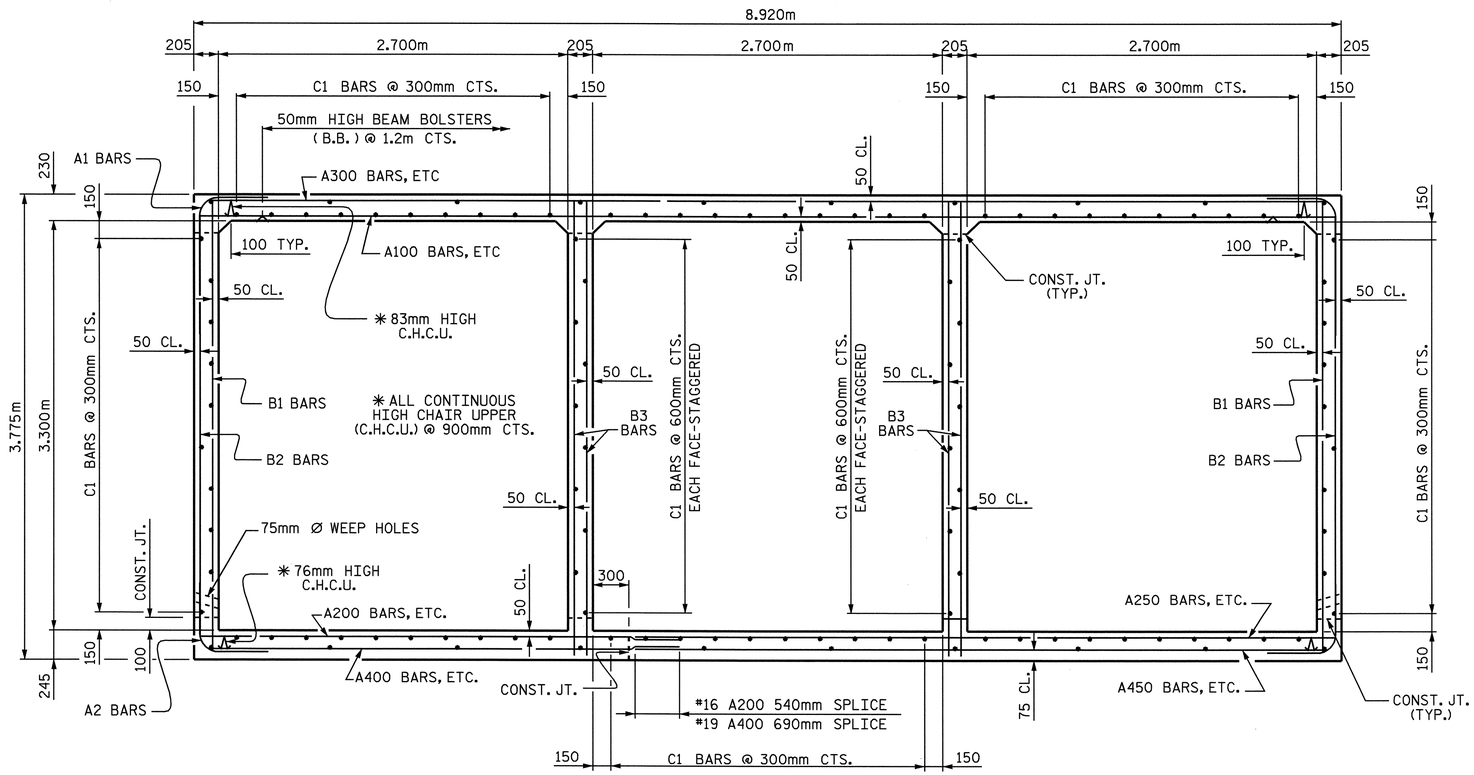

RIGHT ANGLE SECTION OF BARREL

THERE ARE 120 "C" BARS IN SECTION OF BARREL.
(LOOKING UPSTREAM)

DRAWN BY : A.S./ A.L.F. DATE : 8/02/05
CHECKED BY : V.X. NGUYEN DATE : 10-31-05

PROJECT NO. R-2518A
MADISON/YANCEY COUNTY
STATION: 37+94.390 -L-

SHEET 3 OF 6

STATE OF NORTH CAROLINA
DEPARTMENT OF TRANSPORTATION
RALEIGH

TRIPLE 2.700m X 3.300m CONCRETE BOX CULVERT LEFT EXTENSION

REVISIONS						SHEET NO.
NO.	BY:	DATE:	NO.	BY:	DATE:	C-35
1			3			TOTAL SHEETS
2			4			103

NORTH CAROLINA PROFESSIONAL SEAL 20125 ENGINEER MARSHALL A. CUTLIP
10-1-07

STR #6

20-SEP-2007 15:35
R:\Structures\Str*06\A.L.Figueroa\R2518A_sd_CU*6.dgn
aflgueroa

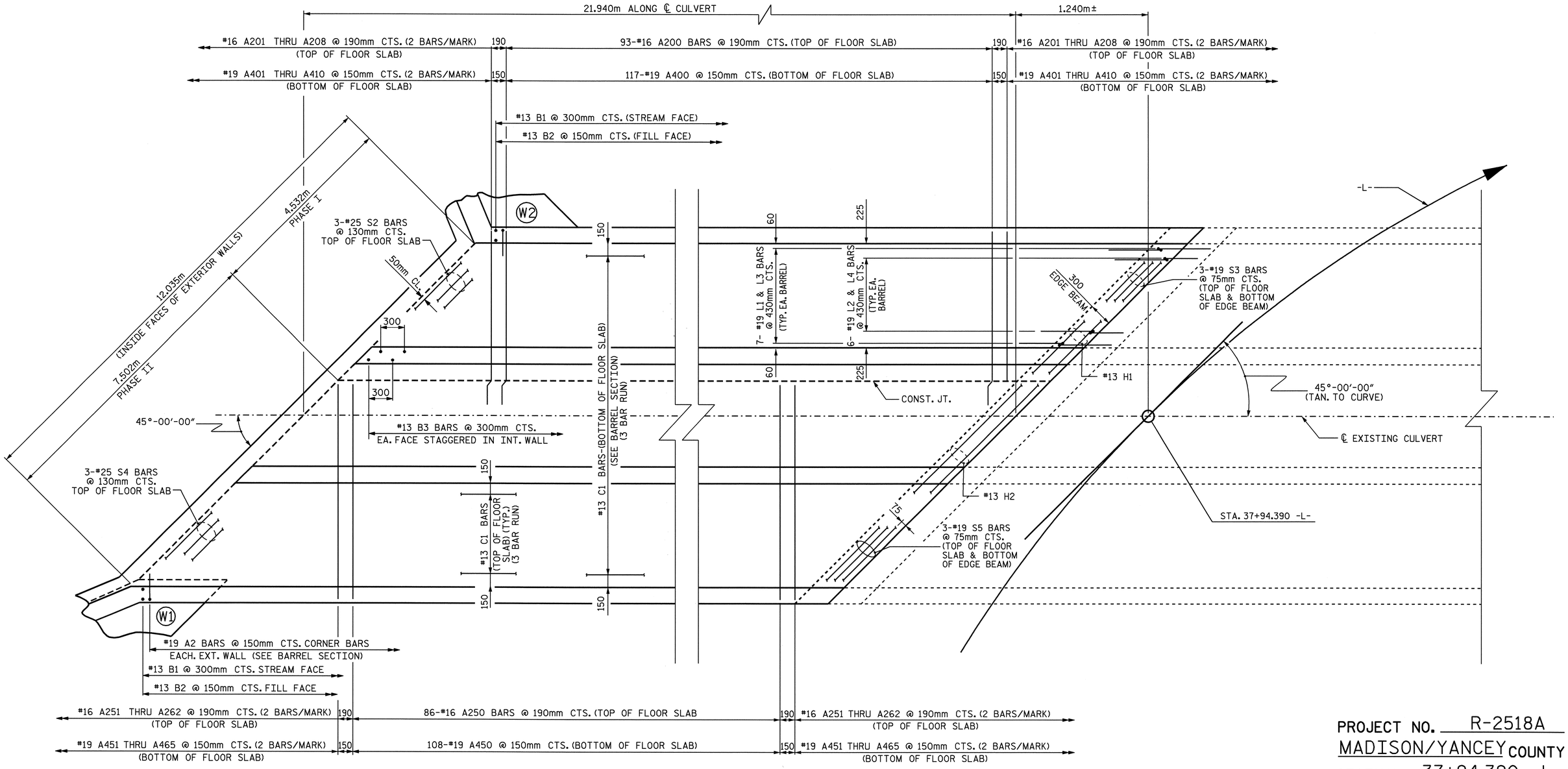

PLAN-FLOOR SLAB-LEFT EXTENSION

PROJECT NO. R-2518A
MADISON/YANCEY COUNTY
STATION: 37+94.390 -L-

SHEET 4 OF 6

STATE OF NORTH CAROLINA
DEPARTMENT OF TRANSPORTATION
RALEIGH

TRIPLE 2.700m X 3.300m CONCRETE BOX CULVERT LEFT EXTENSION

REVISIONS						SHEET NO.
NO.	BY:	DATE:	NO.	BY:	DATE:	C-36
1			3			TOTAL SHEETS
2			4			103

DRAWN BY : A.S./ A.L.F. DATE : 8/01/05
CHECKED BY : V.X. NGUYEN DATE : 10-31-05

NORTH CAROLINA PROFESSIONAL SEAL 20125 ENGINEER MARSHALL A. GRAY JR.
10-1-07

20-SEP-2007 15:35
R:\Structures\Str#06\A.L.Figueroa\R2518A_sd_CU#6.dgn
afigueroa

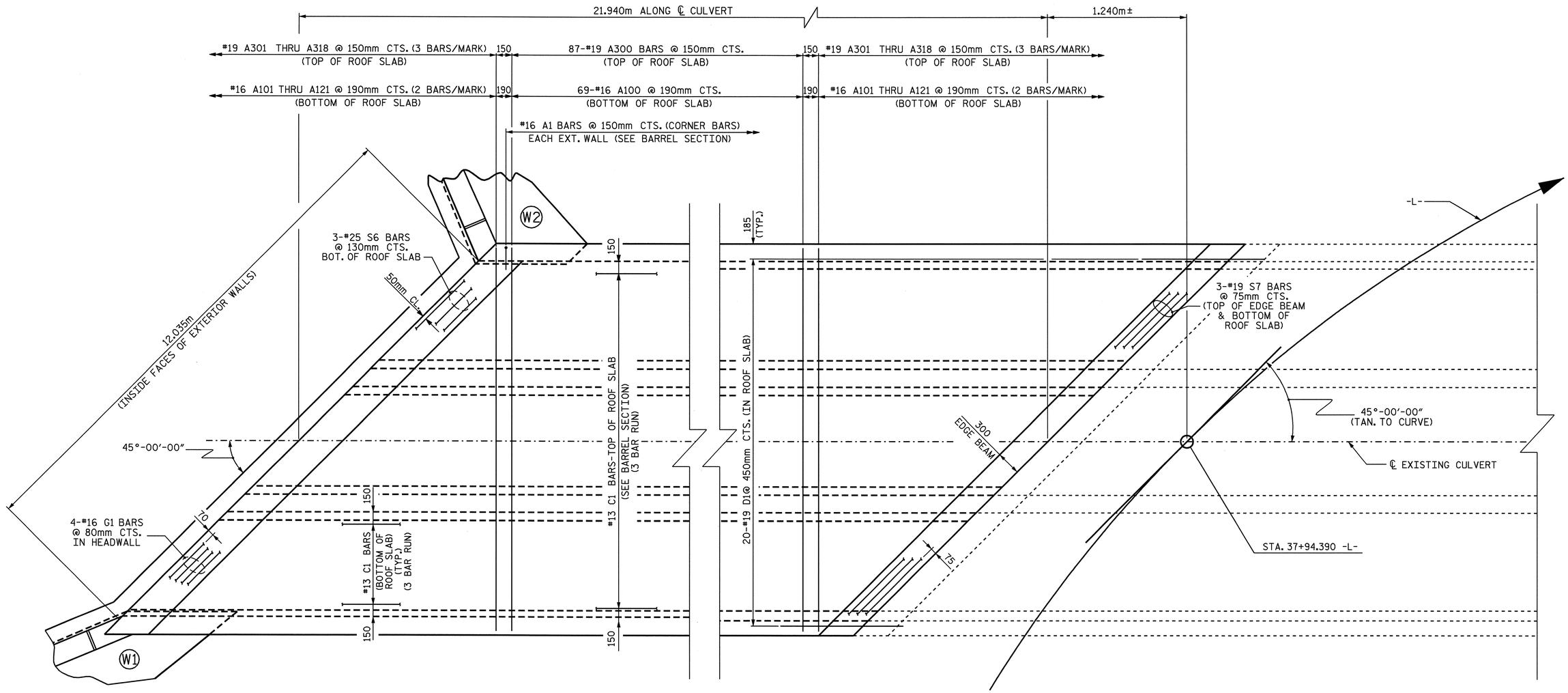

PLAN-ROOF SLAB LEFT EXTENSION

PROJECT NO. R-2518A
MADISON/YANCEY COUNTY
STATION: 37+94.390 -L-

SHEET 5 OF 6

STATE OF NORTH CAROLINA
DEPARTMENT OF TRANSPORTATION
RALEIGH

TRIPLE 2.700m X 3.300m
CONCRETE BOX CULVERT
LEFT EXTENSION

REVISIONS						SHEET NO.
NO.	BY:	DATE:	NO.	BY:	DATE:	C-37
1			3			TOTAL SHEETS
2			4			103

STR. #6

NORTH CAROLINA PROFESSIONAL SEAL 20125 ENGINEER
10-1-07

DRAWN BY : A.S./ A.L.F. DATE : 8/01/05
CHECKED BY : V.X. NGUYEN DATE : 10-31-05

20-SEP-2007 15:35
R:\Structures\Str#06\A.L.Figueroa\R2518A_sd_CU#6.dgn
afigueroa

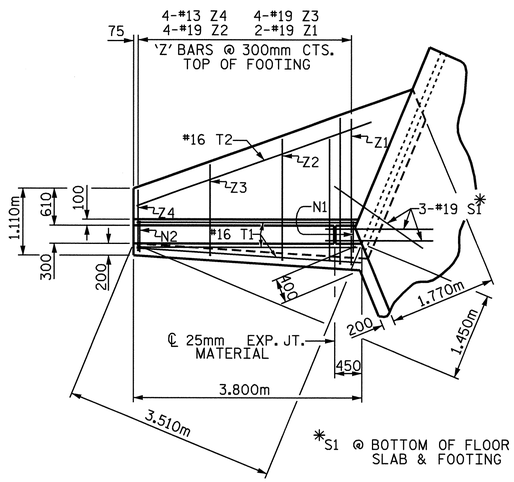

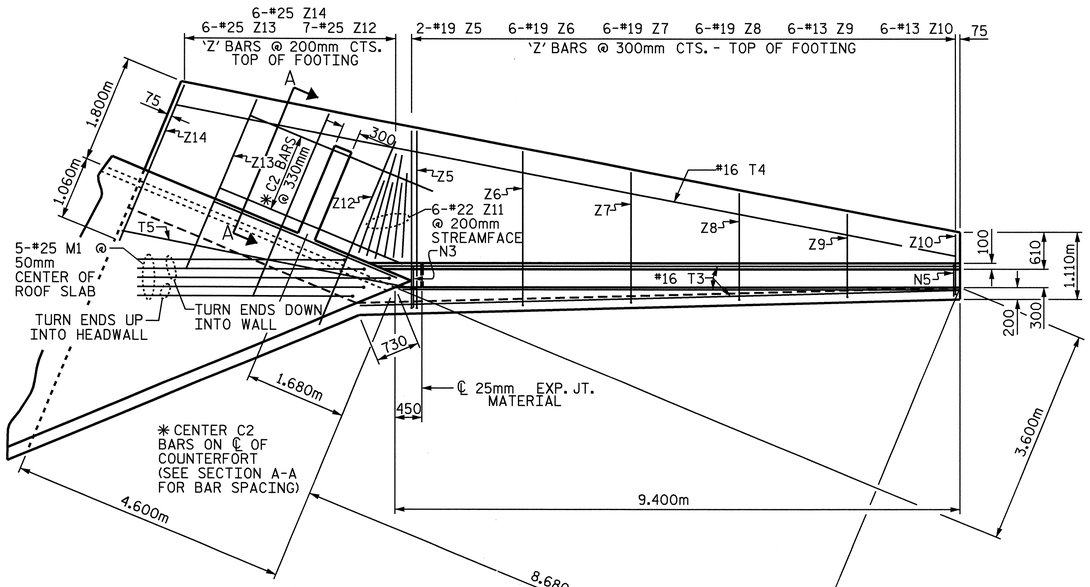

PLAN W2

PLAN W1

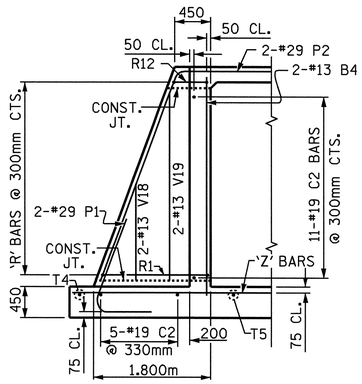

SECTION A-A

STANDARD REINFORCING STEEL IN BARREL NOT SHOWN

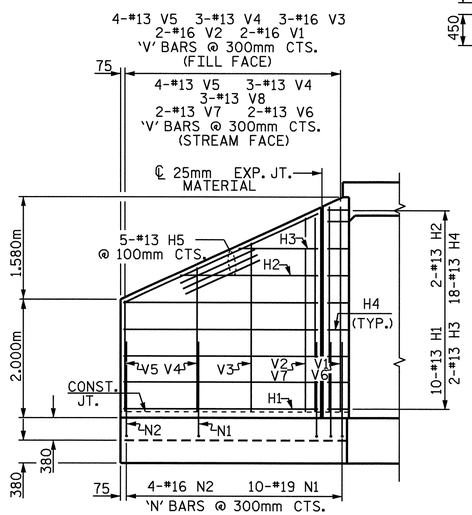

ELEVATION W2

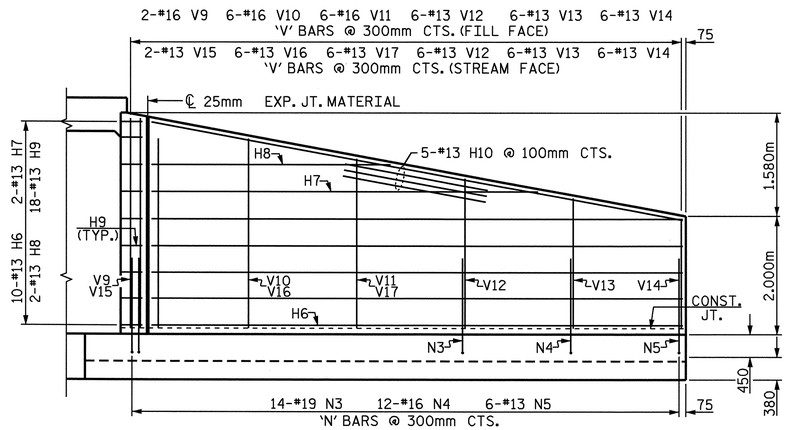

ELEVATION W1

NOTES

FOR WING ORIENTATION, SEE PLAN OF FLOOR SLAB.

A 900mm STRIP OF FILTER FABRIC SHALL BE ATTACHED TO THE FILL FACE OF THE WING COVERING THE ENTIRE LENGTH OF THE EXPANSION JOINT.

G1 BARS IN HEADWALL ARE INCLUDED WITH BARREL REINFORCING STEEL.

CLASS A CONCRETE		
2 WINGS	30.0	m^3
1 HEADWALL	1.4	m^3
1 END CURTAIN WALL	1.7	m^3
2 EDGE BEAMS	3.4	m^3
TOTAL	36.5	m^3

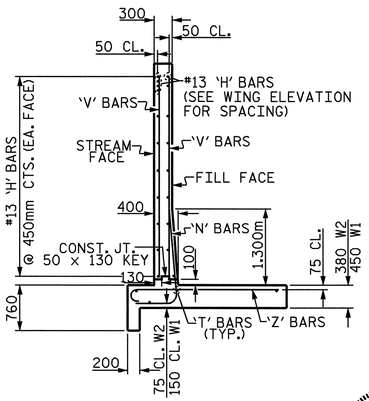

TYPICAL WING SECTION

BAR TYPES

ALL BAR DIMENSIONS ARE OUT TO OUT.

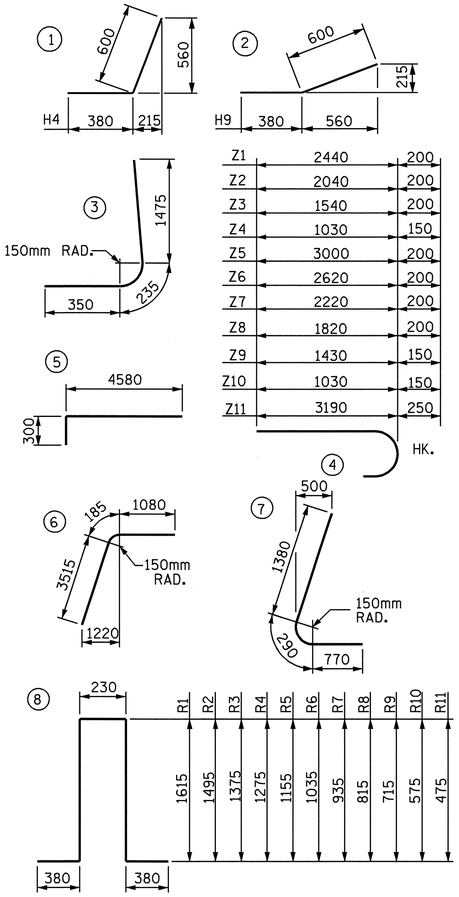

BILL OF MATERIAL

BAR	NO.	SIZE	TYPE	LENGTH	WEIGHT
B4	2	13	STR	3660	7
C2	16	19	STR	3360	120
H1	10	13	STR	3240	32
H2	2	13	STR	2280	5
H3	2	13	STR	1300	3
H4	18	13	1	980	18
H5	5	13	STR	3540	18
H6	10	13	STR	8840	88
H7	2	13	STR	6600	13
H8	2	13	STR	4160	8
H9	18	13	2	980	18
H10	5	13	STR	8980	45
M1	5	25	5	4880	97
N1	10	19	3	2060	46
N2	4	13	3	2060	8
N3	14	19	3	2060	64
N4	12	16	3	2060	38
N5	6	13	3	2060	12
P1	2	29	7	2440	25
P2	2	29	6	4780	48
S1	3	19	STR	1800	12
R1	1	13	8	4220	4
R2	1	13	8	3980	4
R3	1	13	8	3740	4
R4	1	13	8	3540	4
R5	1	13	8	3300	3
R6	1	13	8	3060	3
R7	1	13	8	2860	3
R8	1	13	8	2620	3
R9	1	13	8	2420	2
R10	1	13	8	2140	2
R11	1	13	8	1940	2
T1	3	16	STR	3800	18
T2	1	16	STR	4160	6
T3	3	16	STR	9400	44
T4	1	16	STR	13200	20
T5	1	16	STR	5000	8
V1	2	16	STR	3420	11
V2	2	16	STR	3260	10
V3	3	16	STR	2840	13
V4	6	13	STR	2420	14
V5	8	13	STR	1880	15
V6	2	13	STR	3420	7
V7	2	13	STR	3260	6
V8	3	13	STR	2840	8
V9	2	16	STR	3520	11
V10	6	16	STR	3200	30
V11	6	16	STR	2860	27
V12	12	13	STR	2520	30
V13	12	13	STR	2200	26
V14	12	13	STR	1860	22
V15	2	13	STR	3520	7
V16	6	13	STR	3200	19
V17	6	13	STR	2860	17
V18	2	13	STR	1580	3
V19	2	13	STR	3120	6
Z1	2	19	4	2640	12
Z2	4	19	4	2240	20
Z3	4	19	4	1740	16
Z4	4	13	4	1180	5
Z5	2	19	4	3200	14
Z6	6	19	4	2820	38
Z7	6	19	4	2420	32
Z8	6	19	4	2020	27
Z9	6	13	4	1580	9
Z10	6	13	4	1180	7
Z11	6	22	4	3440	63
Z12	7	25	STR	2820	78
Z13	6	25	STR	3060	73
Z14	6	25	STR	3320	79
REINFORCING STEEL FOR 2 WINGS				1610	kg

PROJECT NO. R-2518A
MADISON/YANCEY COUNTY
STATION: 37+94.390 -L-

SHEET 6 OF 6

STATE OF NORTH CAROLINA
DEPARTMENT OF TRANSPORTATION
RALEIGH

STANDARD WINGS FOR MULTIPLE BOX CULVERT LEFT EXTENSION

ASSEMBLED BY : A.S./ A.L.F.	DATE : 8/01/05
CHECKED BY : V.X. NGUYEN	DATE : 10-31-05
DRAWN BY : FPP 07/97	
CHECKED BY : VAP 07/97	

NORTH CAROLINA PROFESSIONAL SEAL 20125 ENGINEER MARSHALL F. LEE, JR.
10-1-07

REVISIONS						SHEET NO.
NO.	BY:	DATE:	NO.	BY:	DATE:	C-38
1			3			TOTAL SHEETS
2			4			103

STR. #6 STD. NO. MBCW4534

02-APR-2008 16:35
r:\structures\Str*07\A.L.Figueroa\R2518A_sd_CU*7.dgn
lmurphy

BENCHMARK #5 : RAILROAD SPIKE IN THE BASE OF ABANDONED POWER POLE, STA. 44+63.000 -L-, 85 METERS RIGHT, ELEV. = 680.299

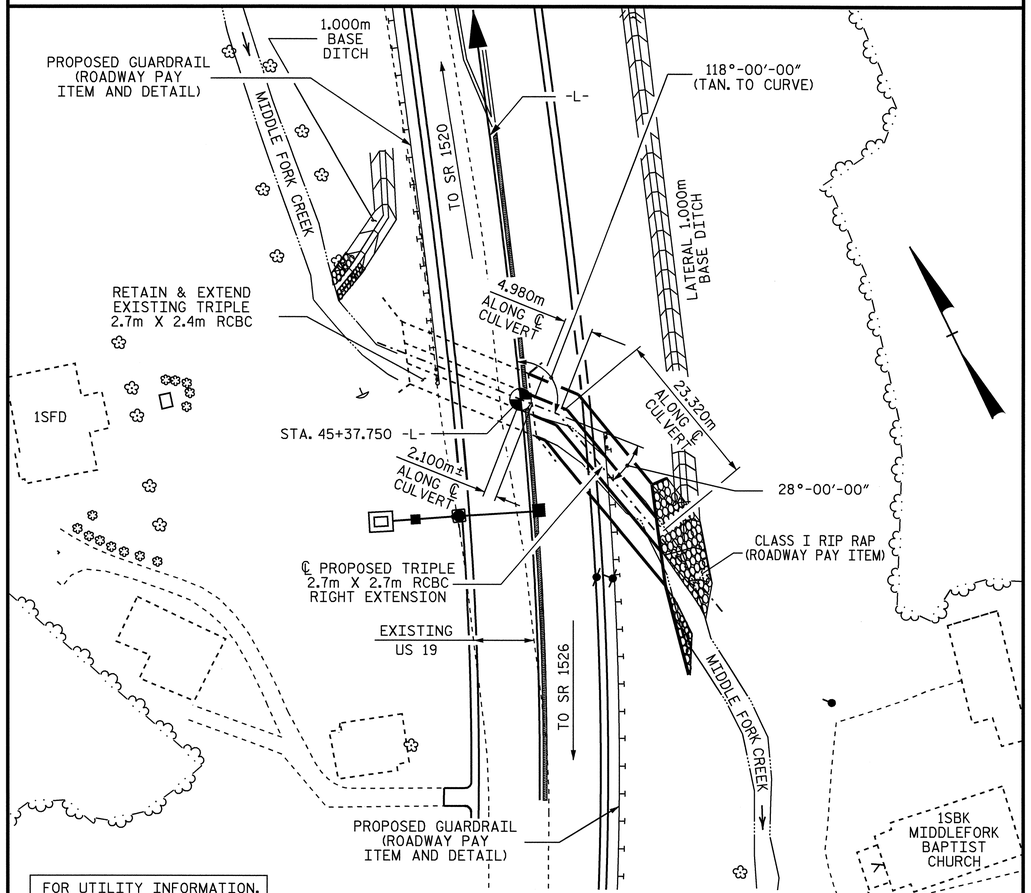

FOR UTILITY INFORMATION, SEE UTILITY PLANS AND SPECIAL PROVISIONS.

LOCATION SKETCH

HYDRAULIC DATA

DESIGN DISCHARGE	= 61.0 m^3/s
FREQUENCY OF DESIGN FLOOD	= 50 YEARS
DESIGN HIGH WATER ELEVATION	= 680.51m
DRAINAGE AREA	= 19.382 SQ. Km
BASIC DISCHARGE (Q100)	= 72.0 m^3/s
BASIC HIGH WATER ELEVATION	= 682.84m

OVERTOPPING FLOOD DATA

OVERTOPPING DISCHARGE	=	84.0 m^3/s
FREQUENCY OF OVERTOPPING FLOOD	=	100 YEARS
OVERTOPPING FLOOD ELEVATION	=	681.30m

ROADWAY DATA

GRADE POINT ELEV. @ STA. 45+37.750 -L-	=	682.733m
BED ELEV. @ STA. 45+37.750 -L-	=	677.580m
ROADWAY FILL SLOPE	=	2:1

TOTAL STRUCTURE QUANTITIES

CLASS A CONCRETE

BARREL @	7.09 m^3/m	200.6 m^3
WINGS, ETC.		23.7 m^3
TOTAL		224.3 m^3

REINFORCING STEEL

BARREL	19,031 kg
WINGS, ETC.	1,204 kg
TOTAL	20,235 kg

CULVERT EXCAVATION ---------- LUMP SUM

FOUNDATION COND. MAT'L ---- 171 METRIC TONS

NOTES

ASSUMED LIVE LOAD ----------MS18 OR ALTERNATE LOADING.

DESIGN FILL ---------- 3.420m

FOR OTHER DESIGN DATA AND NOTES, SEE STANDARD NOTE SHEET.

76mm Ø WEEP HOLES INDICATED TO BE IN ACCORDANCE WITH THE SPECIFICATIONS.

CONCRETE IN CULVERT TO BE POURED IN THE FOLLOWING ORDER:

1. PHASE I WING FOOTINGS AND FLOOR SLAB INCLUDING 100mm OF PHASE I VERTICAL WALLS.
2. THE REMAINING PORTIONS OF PHASE I WALLS AND PHASE I WINGS FULL HEIGHT.
3. PHASE II WING FOOTINGS AND FLOOR SLAB INCLUDING 100mm OF PHASE II VERTICAL WALLS.
4. THE REMAINING PORTIONS OF PHASE II WALLS AND PHASE II WINGS FULL HEIGHT.
5. ROOF SLAB IN IT'S ENTIRETY AND HEADWALLS.

THE RESIDENT ENGINEER SHALL CHECK THE LENGTH OF CULVERT BEFORE STAKING IT OUT TO MAKE CERTAIN THAT IT WILL PROPERLY TAKE CARE OF THE FILL.

DIMENSIONS FOR WING LAYOUT AS WELL AS ADDITIONAL REINFORCING STEEL EMBEDDED IN BARREL ARE SHOWN ON WING SHEET.

TRANSVERSE CONSTRUCTION JOINTS SHALL BE USED IN THE BARREL, SPACED TO LIMIT THE POURS TO A MAXIMUM OF 21.0m. LOCATION OF THE JOINTS SHALL BE SUBJECT TO APPROVAL OF THE ENGINEER.

AT THE CONTRACTOR'S OPTION, HE MAY SPLICE THE VERTICAL REINFORCING STEEL IN THE INTERIOR FACES OF THE EXTERIOR WALLS AND BOTH FACES OF INTERIOR WALLS ABOVE LOWER WALL CONSTRUCTION JOINT. THE SPLICE LENGTH SHALL BE AS PROVIDED IN THE SPLICE LENGTH CHART SHOWN ON THE PLANS. EXTRA WEIGHT OF STEEL DUE TO THE SPLICES SHALL BE PAID FOR BY THE CONTRACTOR.

IF APPROVED BY THE ENGINEER, THE CONTRACTOR MAY USE THE EXISTING WINGS AS TEMPORARY SHORING FOR THE CONSTRUCTION OF THE CULVERT EXTENSION. IN THIS CASE, THE BOTTOM SLAB OF THE EXTENSION SHALL BE POURED AT LEAST 72 HOURS PRIOR TO CUTTING THE WINGS. THE WINGS MAY BE CUT EARLIER PROVIDE THE SLAB CONCRETE STRENGTH HAS REACHED A MINIMUM COMPRESSIVE STRENGTH OF 10.3 MPa.

MATERIAL EXCAVATED FROM THE EXISTING BED SHALL BE STOCKPILED FOR USE IN THE PROPOSED CULVERT EXTENSION. UPON COMPLETION OF THE CULVERT EXTENSION, THE MATERIAL SHALL BE PLACED IN THE WESTERNMOST AND CENTER BARREL EXTENSION TO A DEPTH OF 0.3m. BED MATERIAL MAY BE SUPPLEMENTED WITH CLASS 'B' RIP RAP IF SUITABLE MATERIAL IS NOT AVAILABLE IN SUFFICIENT QUANTITIES.

THE ENTIRE COST OF THE WORK REQUIRED TO PLACE THE EXCAVATED MATERIAL OR SUPPLEMENTAL MATERIAL SHALL BE INCLUDED IN THE CONTRACT LUMP SUM PRICE BID FOR CULVERT EXCAVATION.

DOWELS SHALL BE USED TO CONNECT THE CULVERT EXTENSION TO THE EXISTING CULVERT AS SHOWN. FOR NOTE REGARDING SETTING OF DOWELS, SEE STANDARD NOTES SHEET SNSM.

FOR CONSTRUCTION SEQUENCE, SEE EROSION CONTROL PLANS.

FOR FALSEWORK AND FORMWORK, SEE SPECIAL PROVISIONS.

FOR GROUT FOR STRUCTURES, SEE SPECIAL PROVISIONS.

FOR SUBMITTAL OF WORKING DRAWINGS, SEE SPECIAL PROVISIONS.

FOR CULVERT DIVERSION DETAILS AND PAY ITEM, SEE EROSION CONTROL PLANS.

FOR CRANE SAFETY, SEE SPECIAL PROVISIONS.

ALL DIMENSIONS ARE IN MILLIMETERS UNLESS OTHERWISE NOTED.

ALL ELEVATIONS ARE IN METERS.

METRIC

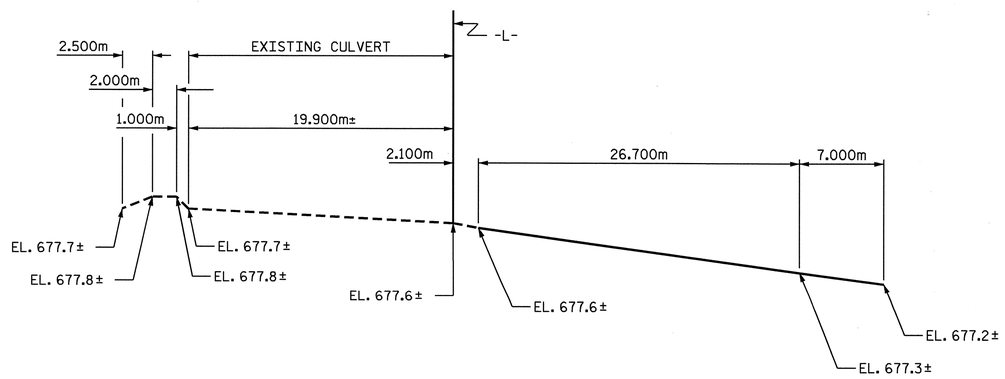

PROFILE ALONG ℄ CULVERT

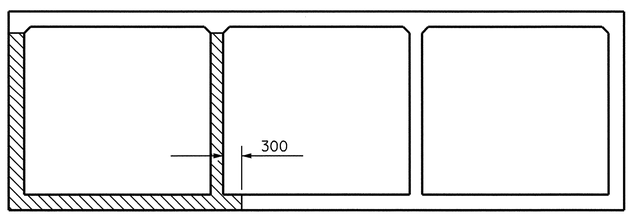

CONSTRUCTION PHASING

(LOOKING DOWNSTREAM)

PHASE I CONSTRUCTION

PHASE II CONSTRUCTION

NORTH CAROLINA PROFESSIONAL SEAL 13014 ENGINEER QUANG H. NGUYEN

Quang H. Nguy 4-3-08

NORTH CAROLINA PROFESSIONAL SEAL 20125 ENGINEER MARSHALL L. CHEEK, JR.

4-3-08

PROJECT NO. R-2518A

MADISON/YANCEY COUNTY

STATION: 45+37.750 -L-

SHEET 1 OF 6

STATE OF NORTH CAROLINA
DEPARTMENT OF TRANSPORTATION
RALEIGH

TRIPLE 2.700m X 2.700m CONCRETE BOX CULVERT RIGHT EXTENSION

REVISIONS						SHEET NO.
NO.	BY:	DATE:	NO.	BY:	DATE:	C-39
1			3			TOTAL SHEETS
2			4			103

STR #7

DRAWN BY : A.S. / A.L.F. DATE : 8/17/05

CHECKED BY : V.X. NGUYEN DATE : 10-31-05

02-APR-2008 16:35
r:\structures\Str*07\A.L.Figueroa\R2518A_sd_CU*7.dgn
lmurphy

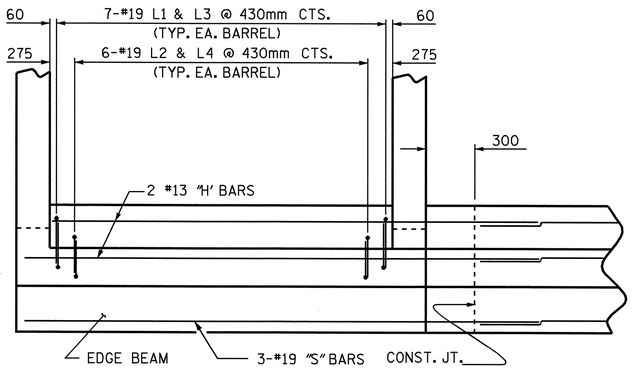

SECTION X-X

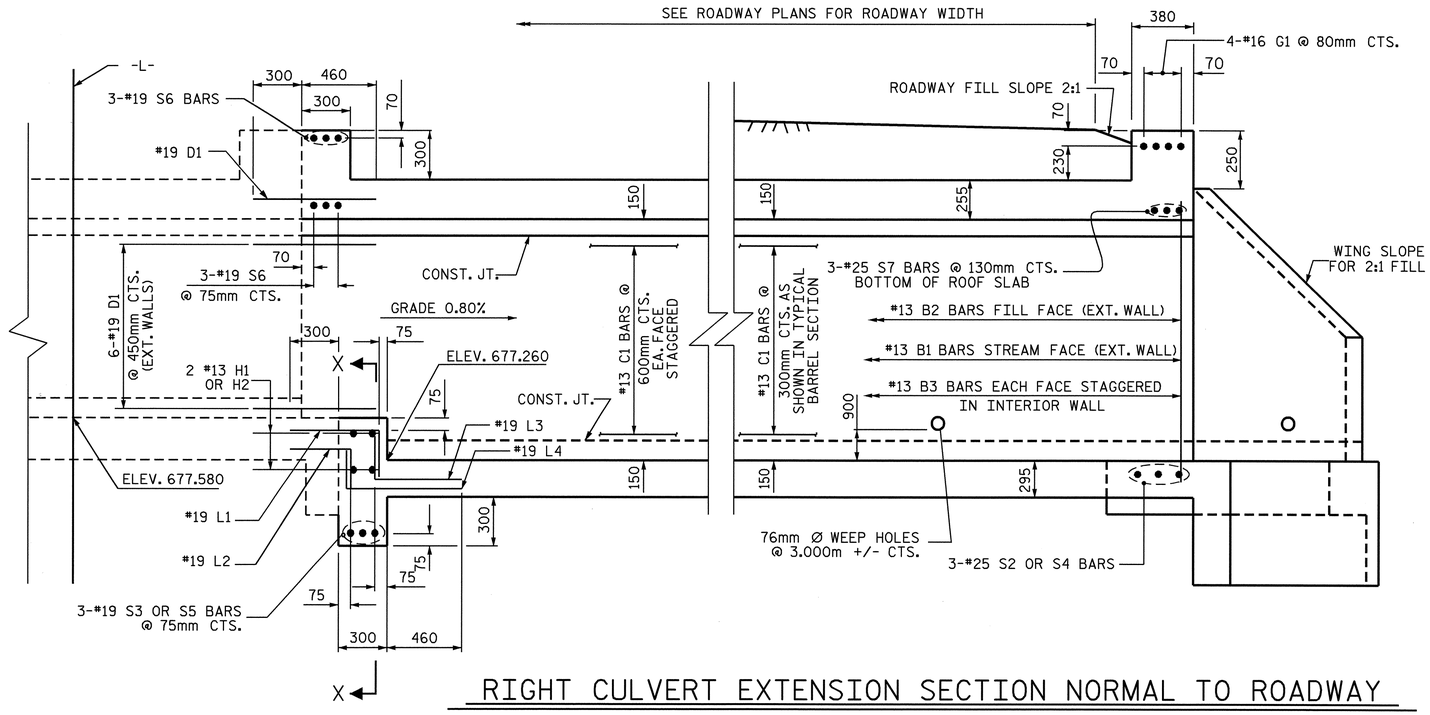

RIGHT CULVERT EXTENSION SECTION NORMAL TO ROADWAY

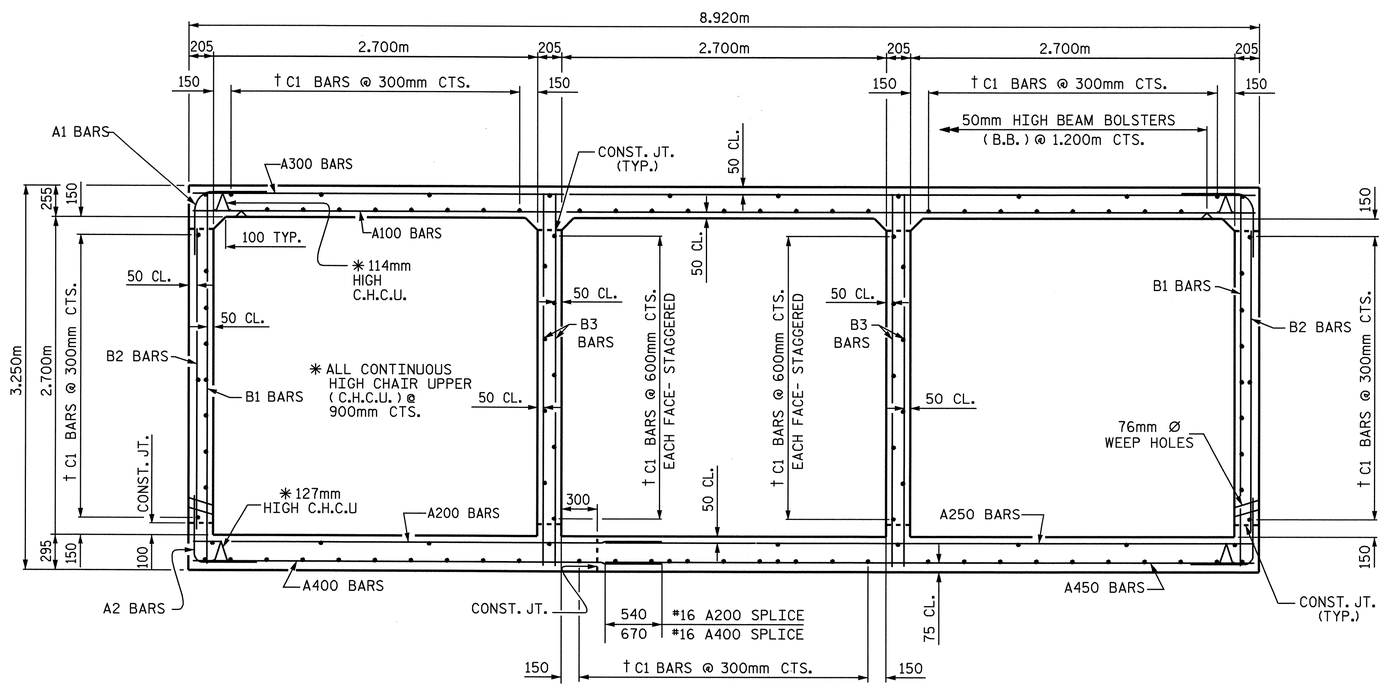

RIGHT ANGLE SECTION OF BARREL

THERE ARE 112 "C" BARS IN SECTION OF BARREL.
(LOOKING DOWNSTREAM)
† C1 BARS SHALL BE FIELD BENT AS NECESSARY.

PROJECT NO. R-2518A
MADISON/YANCEY COUNTY
STATION: 45+37.750 -L-

SHEET 2 OF 6

STATE OF NORTH CAROLINA
DEPARTMENT OF TRANSPORTATION
RALEIGH

TRIPLE 2.700m X 2.700m
CONCRETE BOX CULVERT
RIGHT EXTENSION

NORTH CAROLINA PROFESSIONAL SEAL 20125 ENGINEER MARSHALL G. CHEEK, JR.
4-3-08

REVISIONS						SHEET NO.
NO.	BY:	DATE:	NO.	BY:	DATE:	C-40
1			3			TOTAL SHEETS
2			4			103

DRAWN BY : A.S. / A.L.F. DATE : 8/17/05
CHECKED BY : V.X. NGUYEN DATE : 10-31-05

STR #7

PLAN-FLOOR SLAB-RIGHT EXTENSION

✱ #13 C1 BARS SHALL BE FIELD BENT AS NECESSARY

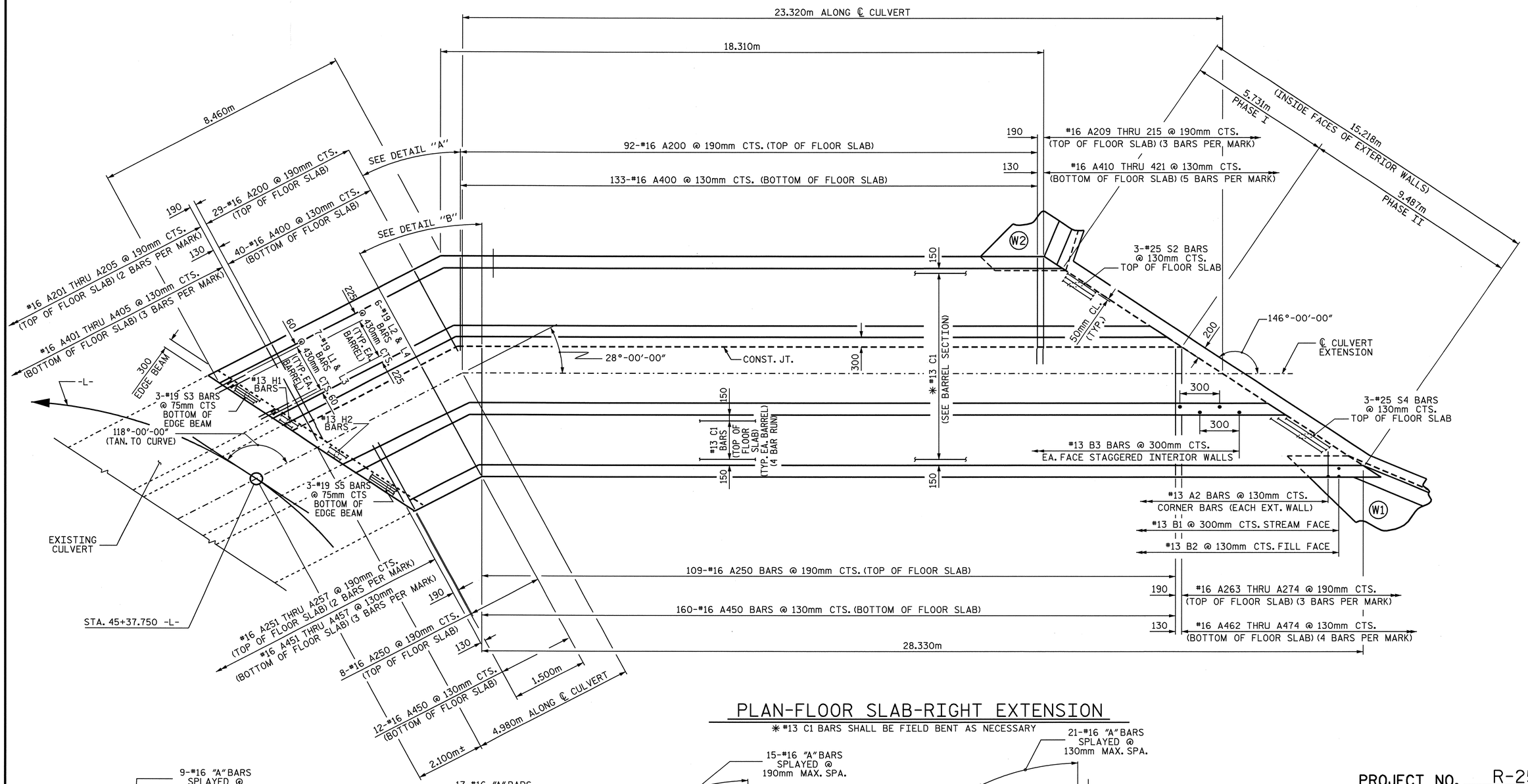

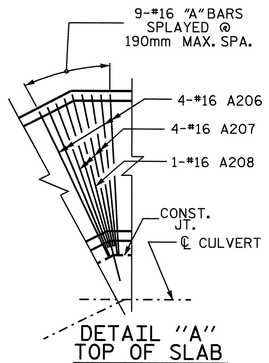

DETAIL "A"
TOP OF SLAB

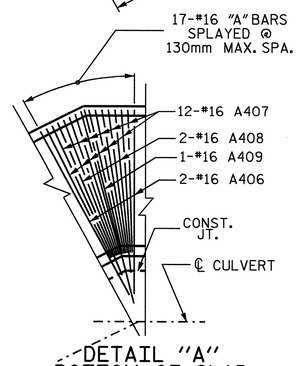

DETAIL "A"
BOTTOM OF SLAB

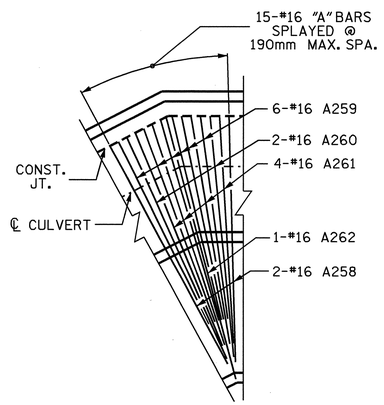

DETAIL "B"
TOP OF SLAB

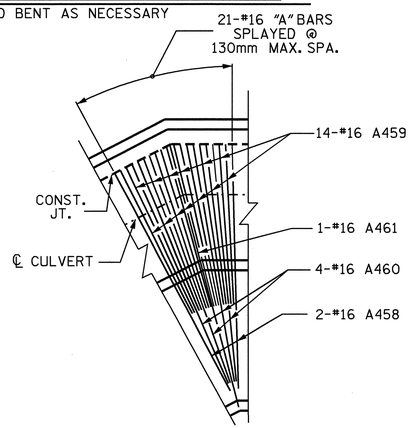

DETAIL "B"
BOTTOM OF SLAB

DRAWN BY : A.S. / A.L.F. DATE : 8/17/05
CHECKED BY : V.X. NGUYEN DATE : 10-31-05

NORTH CAROLINA PROFESSIONAL SEAL 20125 ENGINEER MARSHALL G. CHEEK
4-3-08

PROJECT NO. R-2518A
MADISON/YANCEY COUNTY
STATION: 45+37.750 -L-

SHEET 3 OF 6

STATE OF NORTH CAROLINA
DEPARTMENT OF TRANSPORTATION
RALEIGH

TRIPLE 2.700m X 2.700m CONCRETE BOX CULVERT RIGHT EXTENSION

REVISIONS						SHEET NO.
NO.	BY:	DATE:	NO.	BY:	DATE:	C-41
1			3			TOTAL SHEETS
2			4			103

SIP #7

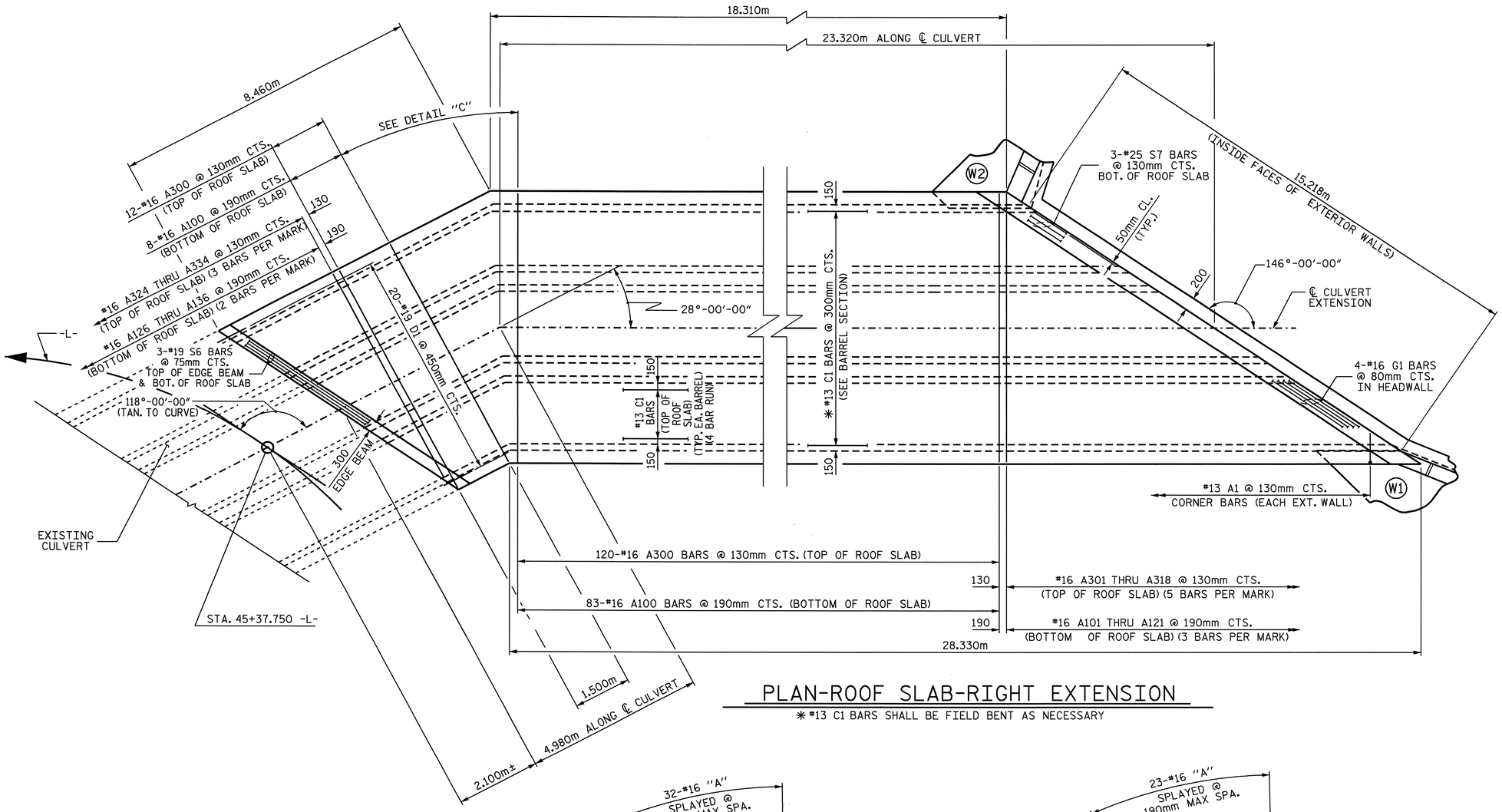

PLAN-ROOF SLAB-RIGHT EXTENSION

*#13 C1 BARS SHALL BE FIELD BENT AS NECESSARY

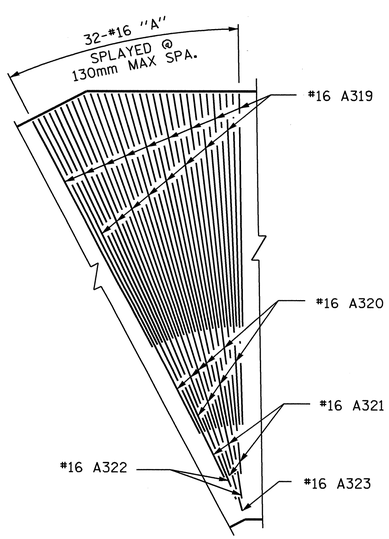

DETAIL "C" TOP OF SLAB

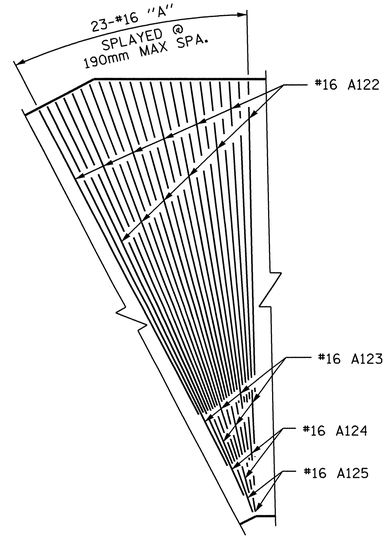

DETAIL "C" BOTTOM OF SLAB

DRAWN BY : A.S. / A.L.F. DATE : 8/17/05
CHECKED BY : V.X. NGUYEN DATE : 10-31-05

NORTH CAROLINA PROFESSIONAL SEAL 20125 ENGINEER MARSHALL G. CHEEK, JR.
10-1-07

PROJECT NO. R-2518A
MADISON/YANCEY COUNTY
STATION: 45+37.750 -L-

SHEET 4 OF 6

STATE OF NORTH CAROLINA
DEPARTMENT OF TRANSPORTATION
RALEIGH

TRIPLE 2.700m X 2.700m CONCRETE BOX CULVERT RIGHT EXTENSION

REVISIONS						SHEET NO.
NO.	BY:	DATE:	NO.	BY:	DATE:	C-42
1			3			TOTAL SHEETS
2			4			103

STR #7

r:\structures\Str*07\A.L.Figueroa\R2518A_sd_CU*7.dgn
lmurphy

BAR TYPE

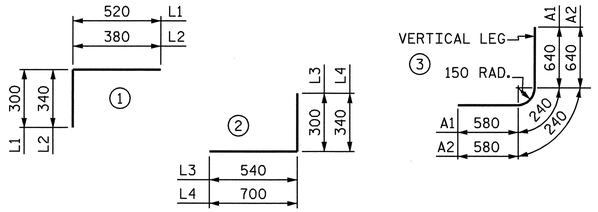

BAR DIMENSIONS ARE OUT TO OUT

SPLICE LENGTH CHART

BAR	SIZE	SPLICE LENGTH
A200	16	540
A400	16	670
B1	13	540
B3	13	540
C1	13	590
H1	13	540
"S"	19	840
"S"	25	1500

BAR SCHEDULE

BAR	NO.	SIZE	TYPE	LENGTH	WEIGHT
A1	438	13	3	1460	636
A2	438	13	3	1460	636
A100	91	16	STR	8760	1237
A101	3	16	STR	8380	39
A102	3	16	STR	8000	37
A103	3	16	STR	7620	35
A104	3	16	STR	7240	34
A105	3	16	STR	6860	32
A106	3	16	STR	6480	30
A107	3	16	STR	6100	28
A108	3	16	STR	5680	26
A109	3	16	STR	5300	25
A110	3	16	STR	4920	23
A111	3	16	STR	4540	21
A112	3	16	STR	4160	19
A113	3	16	STR	3780	18
A114	3	16	STR	3400	16
A115	3	16	STR	3000	14
A116	3	16	STR	2620	12
A117	3	16	STR	2240	10
A118	3	16	STR	1860	9
A119	3	16	STR	1480	7
A120	3	16	STR	1100	5
A121	3	16	STR	720	3
A122	12	16	STR	6940	129
A123	6	16	STR	8140	76
A124	3	16	STR	8760	41
A125	2	16	STR	9280	29
A126	2	16	STR	8020	25
A127	2	16	STR	7280	23
A128	2	16	STR	6580	20
A129	2	16	STR	5860	18
A130	2	16	STR	5160	16
A131	2	16	STR	4440	14
A132	2	16	STR	3740	12
A133	2	16	STR	3020	9
A134	2	16	STR	2280	7
A135	2	16	STR	1580	5
A136	2	16	STR	860	3

BAR	NO.	SIZE	TYPE	LENGTH	WEIGHT
A200	121	16	STR	3880	729
A201	2	16	STR	3160	10
A202	2	16	STR	2440	8
A203	2	16	STR	1720	5
A204	2	16	STR	1000	3
A205	1	16	STR	640	1
A206	4	16	STR	3160	20
A207	4	16	STR	3520	22
A208	1	16	STR	3980	6
A209	3	16	STR	3480	16
A210	3	16	STR	3060	14
A211	3	16	STR	2660	12
A212	3	16	STR	2240	10
A213	3	16	STR	1820	8
A214	3	16	STR	1400	7
A215	3	16	STR	980	5
A250	117	16	STR	5460	991
A251	2	16	STR	4720	15
A252	2	16	STR	4000	12
A253	2	16	STR	3280	10
A254	2	16	STR	2560	8
A255	2	16	STR	1840	6
A256	2	16	STR	1140	4
A257	1	16	STR	780	1
A258	2	16	STR	5080	16
A259	6	16	STR	4180	39
A260	2	16	STR	5000	16
A261	4	16	STR	4720	29
A262	1	16	STR	5600	9
A263	3	16	STR	5080	24
A264	3	16	STR	4660	22
A265	3	16	STR	4260	20
A266	3	16	STR	3840	18
A267	3	16	STR	3420	16
A268	3	16	STR	3000	14
A269	3	16	STR	2600	12
A270	3	16	STR	2180	10
A271	3	16	STR	1760	8
A272	3	16	STR	1340	6
A273	3	16	STR	940	4
A274	2	16	STR	640	2

BAR	NO.	SIZE	TYPE	LENGTH	WEIGHT
A300	132	16	STR	8760	1795
A301	5	16	STR	8320	65
A302	5	16	STR	7900	61
A303	5	16	STR	7460	58
A304	5	16	STR	7920	54
A305	5	16	STR	6580	51
A306	5	16	STR	6140	48
A307	5	16	STR	5720	44
A308	5	16	STR	5260	41
A309	5	16	STR	4820	37
A310	5	16	STR	4400	34
A311	5	16	STR	3960	31
A312	5	16	STR	3500	27
A313	5	16	STR	3080	24
A314	5	16	STR	2640	20
A315	5	16	STR	2200	17
A316	5	16	STR	1760	14
A317	5	16	STR	1320	10
A318	5	16	STR	880	7
A319	17	16	STR	5260	139
A320	8	16	STR	7320	91
A321	4	16	STR	8360	52
A322	2	16	STR	8920	28
A323	1	16	STR	8980	14
A324	3	16	STR	8000	37
A325	3	16	STR	7260	34
A326	3	16	STR	6520	30
A327	3	16	STR	5800	27
A328	3	16	STR	5060	24
A329	3	16	STR	4320	20
A330	3	16	STR	3580	17
A331	3	16	STR	2880	13
A332	3	16	STR	2140	10
A333	3	16	STR	1400	7
A334	3	16	STR	660	3
A400	173	16	STR	4020	1079
A401	3	16	STR	3260	15
A402	3	16	STR	2540	12
A403	3	16	STR	1800	8
A404	3	16	STR	1060	5
A405	2	16	STR	620	2
A406	2	16	STR	3800	12

BAR	NO.	SIZE	TYPE	LENGTH	WEIGHT
A407	12	16	STR	2960	55
A408	2	16	STR	3400	11
A409	1	16	STR	4120	6
A410	3	16	STR	3720	17
A411	3	16	STR	3440	16
A412	3	16	STR	3140	15
A413	3	16	STR	2860	13
A414	3	16	STR	2580	12
A415	3	16	STR	2300	11
A416	3	16	STR	2020	9
A417	3	16	STR	1720	8
A418	3	16	STR	1440	7
A419	3	16	STR	1160	5
A450	172	16	STR	5460	1458
A451	3	16	STR	4700	22
A452	3	16	STR	3960	18
A453	3	16	STR	3240	15
A454	3	16	STR	2500	12
A455	3	16	STR	1760	8
A456	2	16	STR	1260	4
A457	2	16	STR	780	2
A458	2	16	STR	4880	15
A459	14	16	STR	3300	72
A460	4	16	STR	4920	31
A461	1	16	STR	5600	9
A462	4	16	STR	5060	31
A463	4	16	STR	4680	29
A464	4	16	STR	4300	27
A465	4	16	STR	3920	24
A466	4	16	STR	3540	22
A467	4	16	STR	3140	19
A468	4	16	STR	2780	17
A469	4	16	STR	2400	15
A470	4	16	STR	2020	13
A471	4	16	STR	1640	10
A472	4	16	STR	1260	8
A473	4	16	STR	880	5
A474	3	16	STR	620	3

BAR	NO.	SIZE	TYPE	LENGTH	WEIGHT
B1	190	13	STR	3080	582
B2	438	13	STR	2480	1080
B3	380	13	STR	3080	1163
C1	448	13	STR	7880	3509
D1	32	19	STR	760	54
G1	4	16	STR	15760	98
H1	4	13	STR	4360	17
H2	4	13	STR	6120	24
L1	21	19	1	820	38
L2	18	19	1	720	29
L3	21	19	2	840	39
L4	18	19	2	1040	42
S2	3	25	STR	7520	90
S3	3	19	STR	4660	31
S4	3	25	STR	9660	115
S5	3	19	STR	6120	41
S6	6	19	STR	9940	133
S7	3	25	STR	15760	188

REINFORCING STEEL = 19,031 kg

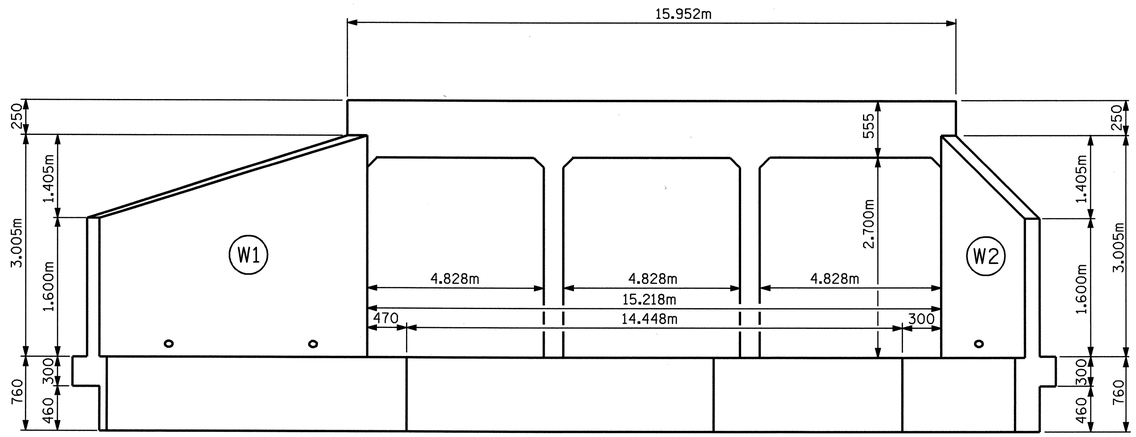

OUTLET END ELEVATION NORMAL TO SKEW

DRAWN BY : A.S. / A.L.F. DATE : 8/17/05
CHECKED BY : V.X. NGUYEN DATE : 10-31-05

PROJECT NO. R-2518A
MADISON/YANCEY COUNTY
STATION: 45+37.750 -L-

SHEET 5 OF 6

STATE OF NORTH CAROLINA
DEPARTMENT OF TRANSPORTATION
RALEIGH

TRIPLE 2.700m X 2.700m CONCRETE BOX CULVERT RIGHT EXTENSION

NORTH CAROLINA PROFESSIONAL SEAL 20125 ENGINEER
4-3-08

REVISIONS						SHEET NO.
NO.	BY:	DATE:	NO.	BY:	DATE:	C-43
1			3			TOTAL SHEETS
2			4			103

STR #7

R:\Structures\Str#07\A.L.Figueroa\R2518A_sd_CU#7.dgn
alfigueroa

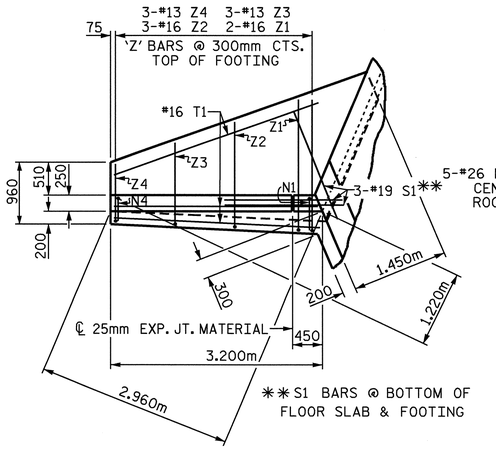

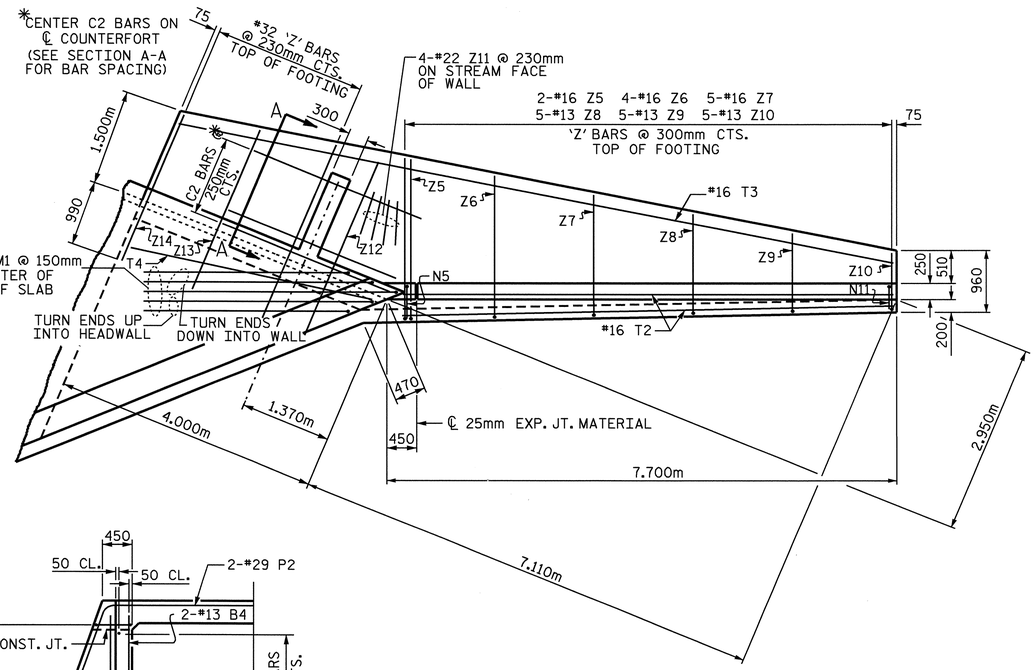

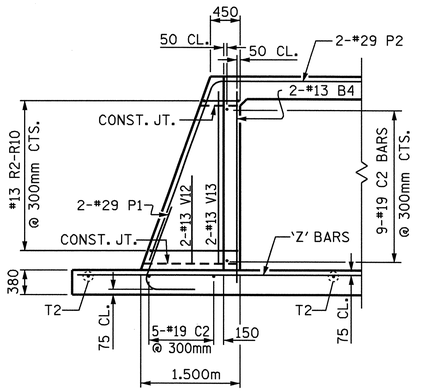

PLAN W2

PLAN W1

SECTION A-A

NOTE: REINFORCING STEEL IN BARREL NOT SHOWN

NOTES

FOR WING ORIENTATION, SEE PLAN OF FLOOR SLAB.

A 900mm STRIP OF FILTER FABRIC SHALL BE ATTACHED TO THE FILL FACE OF THE WING COVERING THE ENTIRE LENGTH OF THE EXPANSION JOINT.

G1 BARS IN HEADWALL ARE INCLUDED WITH BARREL REINFORCING STEEL.

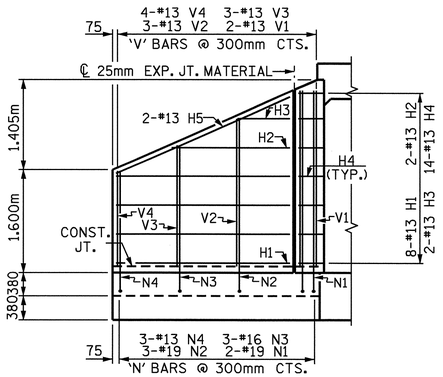

ELEVATION W2

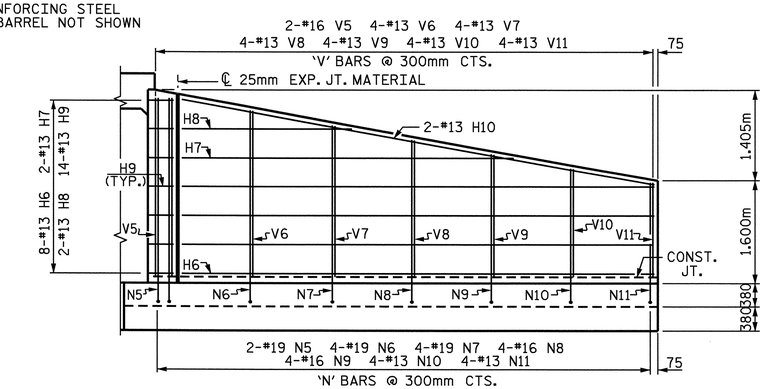

ELEVATION W1

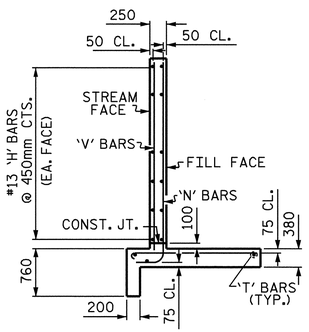

TYPICAL WING SECTION

BAR TYPES

ALL BAR DIMENSIONS ARE OUT TO OUT.

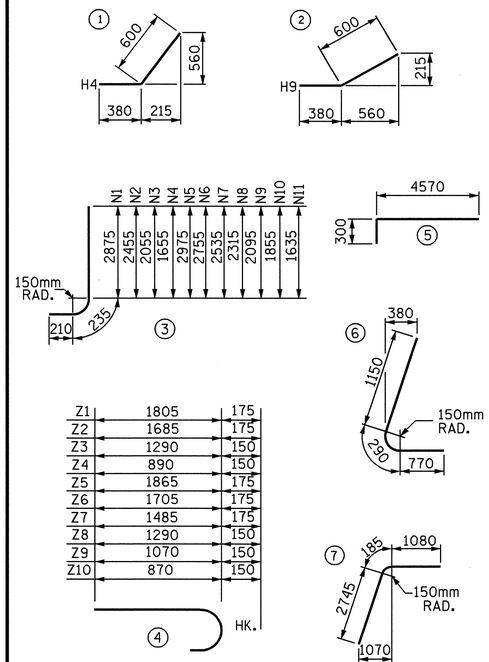

BILL OF MATERIAL

BAR	NO.	SIZE	TYPE	LENGTH	WEIGHT
B4	2	13	STR	3060	6
C2	14	19	STR	2740	86
H1	10	13	STR	2640	26
H3	2	13	STR	1780	4
H3	2	13	STR	780	2
H4	18	13	1	980	18
H5	5	13	STR	2880	14
H6	10	13	STR	7140	71
H7	2	13	STR	5180	10
H8	2	13	STR	2780	6
H9	18	13	2	980	18
H10	5	13	STR	7240	36
M1	5	25	5	4880	97
N1	2	19	3	3320	15
N2	3	19	3	2900	19
N3	3	16	3	2500	12
N4	3	13	3	2100	6
N5	2	19	3	3440	15
N6	4	19	3	3200	29
N7	4	19	3	2980	27
N8	4	16	3	2760	17
N9	4	16	3	2540	16
N10	4	13	3	2300	9
N11	4	13	3	2080	8
P1	2	29	6	2220	22
P2	2	29	7	4020	41
S1	3	19	8	1800	12
R2	1	13	8	3580	4
R3	1	13	8	3380	3
R4	1	13	8	3180	3
R5	1	13	8	2970	3
R6	1	13	8	2770	3
R7	1	13	8	2640	3
R8	1	13	8	2310	3
R9	1	13	8	2110	2
R10	1	13	8	1910	2
T1	3	16	STR	3200	15
T2	2	16	STR	7700	24
T3	1	16	STR	11010	17
T4	1	16	STR	3740	6
V1	2	13	STR	2700	5
V2	3	13	STR	2280	7
V3	3	13	STR	1880	6
V4	3	13	STR	1480	4
V5	2	16	STR	2800	9
V6	4	13	STR	2580	10
V7	4	13	STR	2360	9
V8	4	13	STR	2140	9
V9	4	13	STR	1920	8
V10	4	13	STR	1680	7
V11	4	13	STR	1460	6
V12	2	13	STR	1380	3
V13	2	13	STR	2660	5
Z1	2	16	4	1980	6
Z2	2	16	4	1860	6
Z3	4	13	4	1440	6
Z4	4	13	4	1040	4
Z5	2	16	4	2040	6
Z6	4	16	4	1880	12
Z7	5	16	4	1660	13
Z8	5	13	4	1440	7
Z9	5	13	4	1220	6
Z10	5	13	4	1020	5
Z11	4	32	STR	2880	74
Z12	4	32	STR	2920	75
Z13	5	32	STR	2680	86
Z14	5	32	STR	2460	79

CLASS A CONCRETE

2 WINGS	17.0 m³
1 HEADWALL	1.8 m³
1 END CURTAIN WALL	2.2 m³
2 EDGE BEAMS	2.7 m³
TOTAL	23.7 m³

REINFORCING STEEL
FOR 2 WINGS 1204 kg

PROJECT NO. R-2518A
MADISON/YANCEY COUNTY
STATION: 45+37.750 -L-

SHEET 6 OF 6

STATE OF NORTH CAROLINA
DEPARTMENT OF TRANSPORTATION
RALEIGH

STANDARD WINGS FOR CONCRETE BOX CULVERT RIGHT EXTENSION

NORTH CAROLINA PROFESSIONAL SEAL 20125 ENGINEER MARSHALL L. GREEK, JR.
10-1-07

REVISIONS						SHEET NO.
NO.	BY:	DATE:	NO.	BY:	DATE:	C-44
1			3			TOTAL SHEETS
2			4			103

ASSEMBLED BY : A.S. / A.L.F. DATE : 8/17/05
CHECKED BY : V.X. NGUYEN DATE : 10-31-05

DRAWN BY : KJA 8/97
CHECKED BY : VAP 8/97

STR #7 STD. NO. CW 4527

BENCHMARK #6 : RAILROAD SPIKE IN THE BASE OF A POWER POLE, WEST OF THE BRIDGE ON -Y12-, STA. 55+34.97 -L-, 115 METERS LEFT, ELEV. = 693.635.

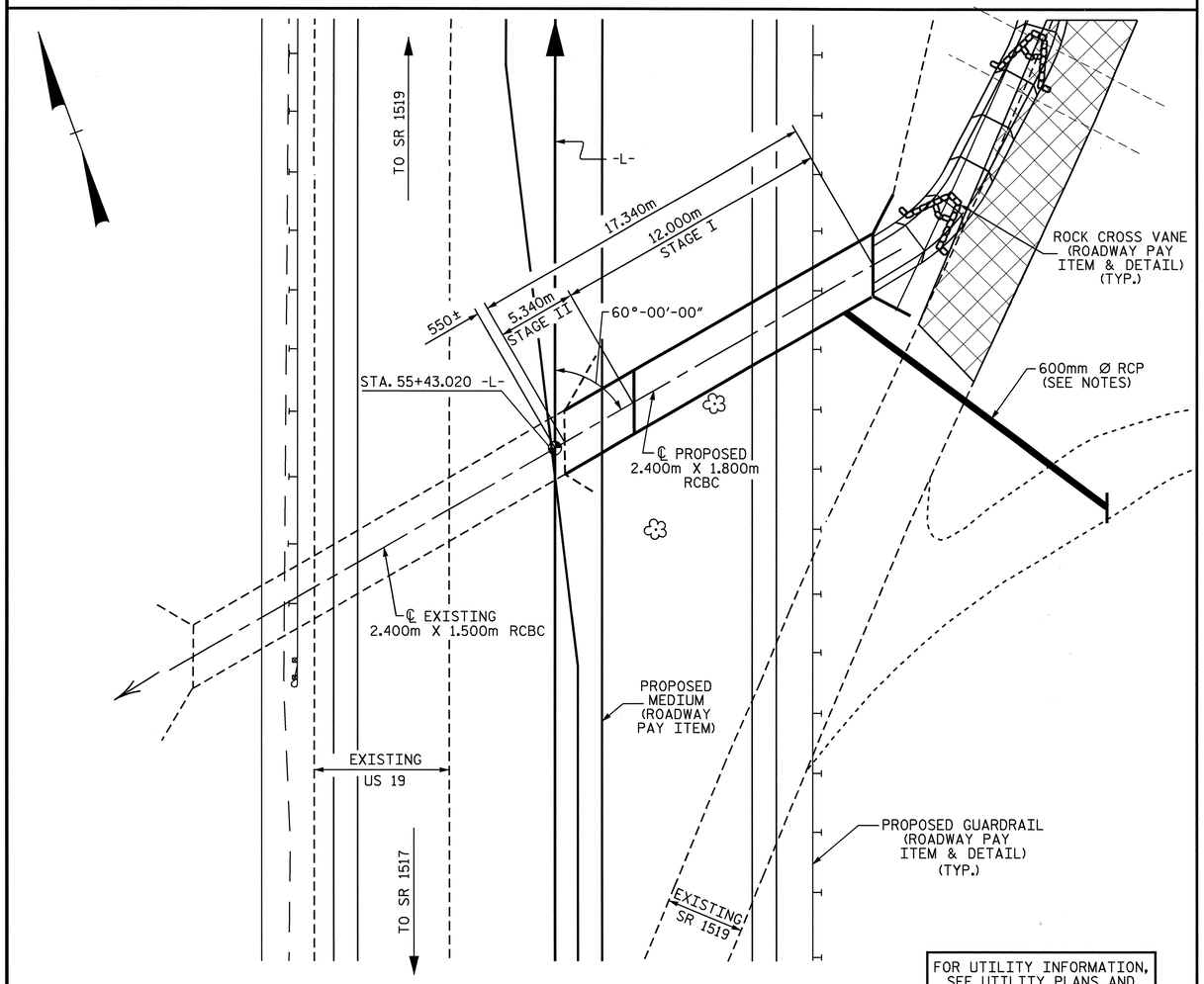

FOR UTILITY INFORMATION, SEE UTILITY PLANS AND SPECIAL PROVISIONS.

LOCATION SKETCH

HYDRAULIC DATA

DESIGN DISCHARGE	=	7.3 m³/s
FREQUENCY OF DESIGN FLOOD	=	50 yrs.
DESIGN HIGH WATER ELEVATION	=	691.74
DRAINAGE AREA	=	1.03 sq.km
BASIC DISCHARGE (Q100)	=	8.9 m³/s
BASIC HIGH WATER ELEVATION	=	691.95

OVERTOPPING FLOOD DATA

OVERTOPPING DISCHARGE	=	19.0 m³/s
FREQUENCY OF OVERTOPPING FLOOD	=	500+ yrs.
OVERTOPPING FLOOD ELEVATION	=	693.70

ROADWAY DATA

GRADE POINT ELEV. @	
STA. 55+43.020 -L-	= 693.441
BED ELEV. @ STA. 55+43.020 -L-	= 690.037
ROADWAY SLOPES	= 2:1

TOTAL STRUCTURE QUANTITIES

CLASS A CONCRETE	
STAGE I	29.3 m³
STAGE II	11.2 m³
TOTAL	40.5 m³
REINFORCING STEEL	
STAGE I	2,074 kg
STAGE II	1000 kg
TOTAL	3,074 kg
FOUNDATION COND. MAT'L	
STAGE I	33 METRIC TONS
STAGE II	10 METRIC TONS
TOTAL	43 METRIC TONS
CULVERT EXCAVATION ----------	LUMP SUM

NOTES

ASSUMED LIVE LOAD ----------MS18 OR ALTERNATE LOADING.

DESIGN FILL---1.61m

FOR OTHER DESIGN DATA AND NOTES, SEE STANDARD NOTES SHEET.

76mm Ø WEEP HOLES INDICATED TO BE IN ACCORDANCE WITH THE SPECIFICATIONS.

CONCRETE IN CULVERT TO BE POURED IN THE FOLLOWING ORDER:

1. WING FOOTINGS AND FLOOR SLAB INCLUDING 100mm OF ALL VERTICAL WALLS.
2. THE REMAINING PORTIONS OF THE WALLS AND WINGS FULL HEIGHT FOLLOWED BY ROOF SLAB AND HEADWALLS.

THE RESIDENT ENGINEER SHALL CHECK THE LENGTH OF CULVERT BEFORE STAKING IT OUT TO MAKE CERTAIN THAT IT WILL PROPERLY TAKE CARE OF THE FILL.

IF APPROVED BY THE ENGINEER, THE CONTRACTOR MAY USE THE EXISTING WINGS AS TEMPORARY SHORING FOR THE CONTRUCTION OF THE CULVERT EXTENSION. IN THIS CASE, THE BOTTOM SLAB OF THE EXTENSION SHALL BE POURED AT LEAST 72 HOURS PRIOR TO CUTTING THE WINGS. THE WINGS MAY BE CUT EARLIER PROVIDED THE SLAB CONCRETE STRENGTH HAS REACHED A MINIMUM COMPRESSIVE STRENGTH OF 10.3 MBa.

DOWELS SHALL BE USED TO CONNECT THE STAGE II CULVERT TO STAGE I AND THE EXISTING CULVERT AS SHOWN. FOR NOTE REGARDING SETTING OF THE DOWELS, SEE SHEET SNSM.

FOR CULVERT DIVERSION DETAILS AND PAY ITEM, SEE EROSION CONTROL PLANS.

FOR SUBMITTAL OF WORKING DRAWINGS, SEE SPECIAL PROVISIONS.

FOR FALSEWORK AND FORMWORK, SEE SPECIAL PROVISIONS.

FOR CRANE SAFETY, SEE SPECIAL PROVISIONS.

FOR CONSTRUCTION SEQUENCE, SEE EROSION CONTROL PLANS.

ALL DIMENSIONS ARE IN MILLIMETERS UNLESS OTHERWISE NOTED.

ALL ELEVATIONS ARE IN METERS.

FOR GROUT FOR STRUCTURES, SEE SPECIAL PROVISIONS.

AT THE CONTRACTOR'S OPTION, HE MAY SPLICE THE VERTICAL REINFORCING STEEL IN THE INTERIOR FACES OF THE EXTERIOR WALLS ABOVE THE LOWER WALL CONSTRUCTION JOINT THE SPLICE LENGTH SHALL BE AS PROVIDED IN THE SPLICE LENGTH CHART SHOWN ON THE PLANS. EXTRA WEIGHT OF STEEL DUE TO THE SPLICES SHALL BE PAID FOR BY THE CONTRACTOR.

MATERIAL EXCAVATED FROM THE EXISTING BED SHALL BE STOCKPILED FOR USE IN THE PROPOSED CULVERT EXTENSION. UPON COMPLETION OF THE EXTENSION, THE MATERIAL SHALL BE PLACED IN THE BARREL TO A DEPTH OF 0.3m. BED MATERIAL MAY BE SUPPLEMENTED WITH CLASS 'B' RIP RAP IF SUITABLE MATERIAL IS NOT AVAILABLE IN SUFFICIENT QUANTITIES.

THE ENTIRE COST OF WORK REQUIRED TO PLACE THE EXCAVATED MATERIAL OR SUPPLEMENTAL MATERIAL SHALL BE INCLUDED IN THE CONTRACT LUMP SUM PICE BID FOR CULVERT EXCAVATION.

THE 600mm DIA. PIPE THROUGH THE SIDEWALL OF THE CULVERT SHALL BE LOCATED BY THE ENGINEER. THE REINFORCING STEEL SHALL BE FIELD BENT AS NECESSARY TO CLEAR PIPE.

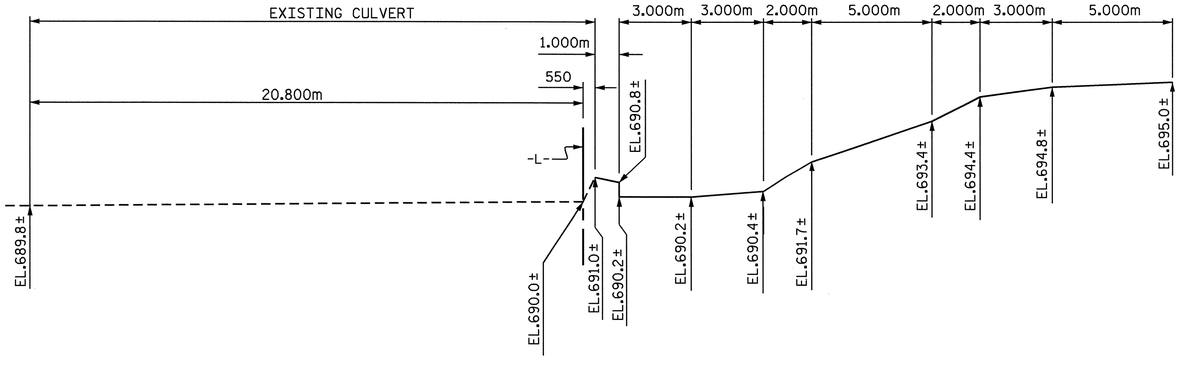

PROFILE ALONG ℄ CULVERT

METRIC

PROJECT NO. R-2518A
MADISON/YANCEY COUNTY
STATION: 55+43.020 -L-

SHEET 1 OF 5

STATE OF NORTH CAROLINA
DEPARTMENT OF TRANSPORTATION
RALEIGH

SINGLE 2.400m X 1.800m CONCRETE BOX CULVERT RIGHT EXTENSION

REVISIONS						SHEET NO.
NO.	BY:	DATE:	NO.	BY:	DATE:	C-45
1			3			TOTAL SHEETS
2			4			103

STR. #8

ASSEMBLED BY : V.X. NGUYEN DATE : 8-1-07
CHECKED BY : M.G. CHEEK DATE : 8-31-07

NORTH CAROLINA PROFESSIONAL SEAL 13014 ENGINEER QUANG H. NGUYEN
Quang H. Nguyen 1-3-08

NORTH CAROLINA PROFESSIONAL SEAL 20125 ENGINEER MARSHALL G. CHEEK, JR.
4-3-08

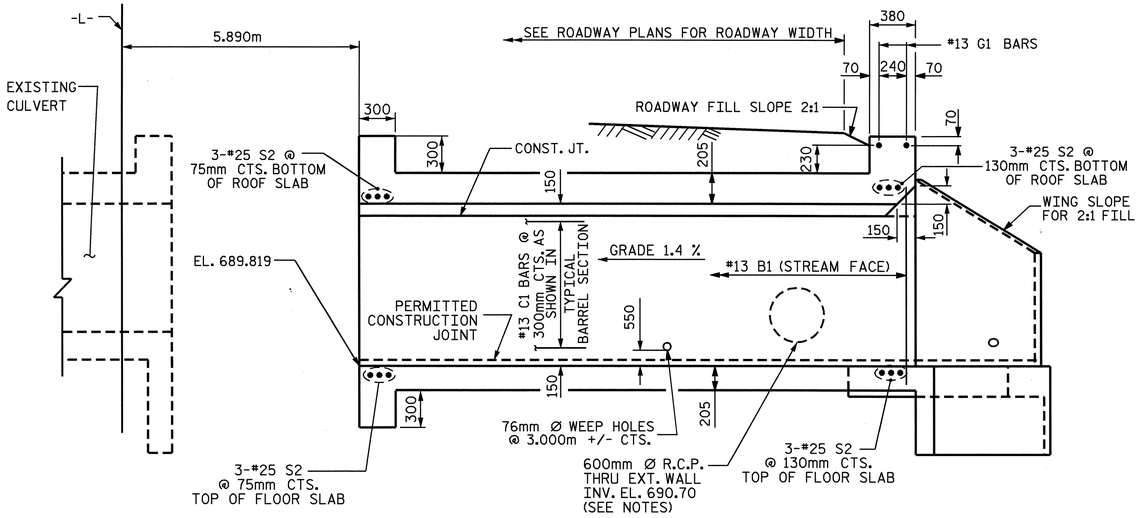

STAGE I CULVERT SECTION NORMAL TO ROADWAY

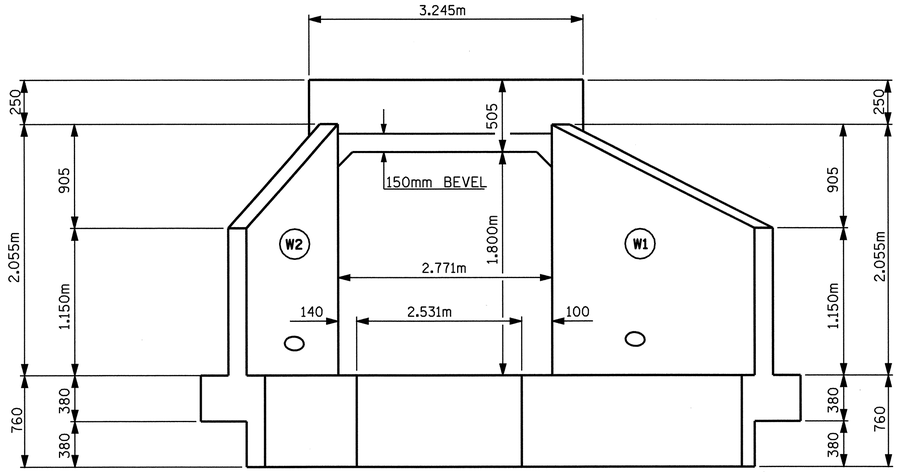

END ELEVATION NORMAL TO SKEW

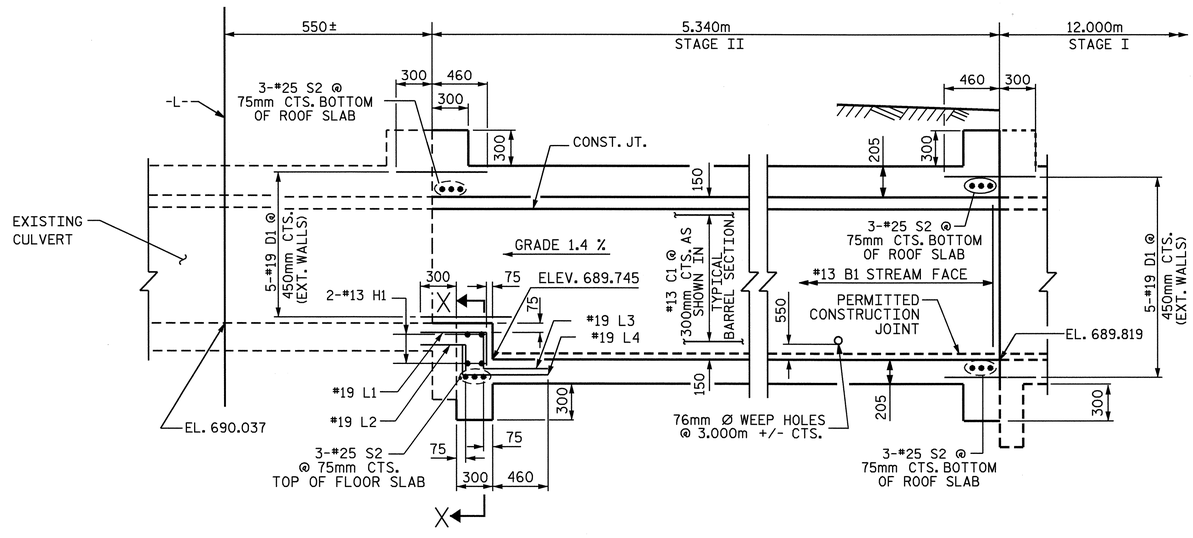

STAGE II CULVERT SECTION NORMAL TO ROADWAY

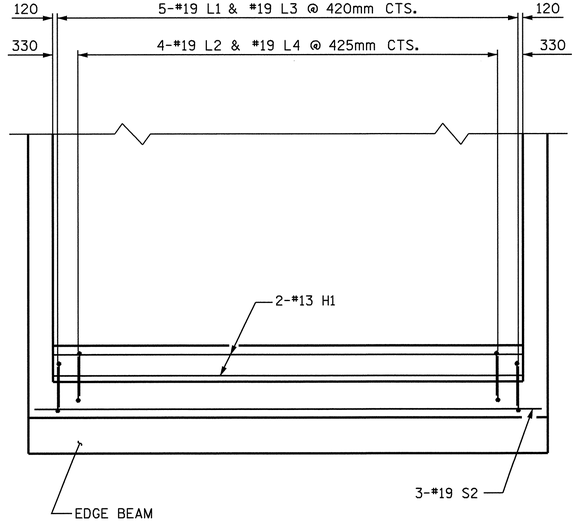

SECTION X-X

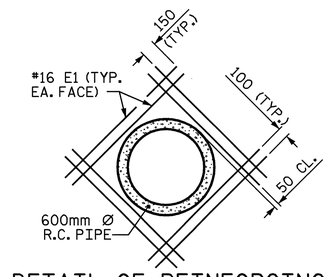

DETAIL OF REINFORCING AROUND 600mm Ø PIPE

(SEE NOTES)

PROJECT NO. R-2518A

MADISON/YANCEY COUNTY

STATION: 55+43.020 -L-

SHEET 2 OF 5

STATE OF NORTH CAROLINA
DEPARTMENT OF TRANSPORTATION
RALEIGH

SINGLE 2.400m X 1.800m CONCRETE BOX CULVERT RIGHT EXTENSION

REVISIONS						SHEET NO.
NO.	BY:	DATE:	NO.	BY:	DATE:	C-46
1			3			TOTAL SHEETS
2			4			103

STR. #8

NORTH CAROLINA PROFESSIONAL SEAL 20125 ENGINEER MARSHALL G. CHEEK, JR.
4-3-08

ASSEMBLED BY : V.X. NGUYEN DATE : 8-1-07
CHECKED BY : M.G. CHEEK DATE : 8-31-07

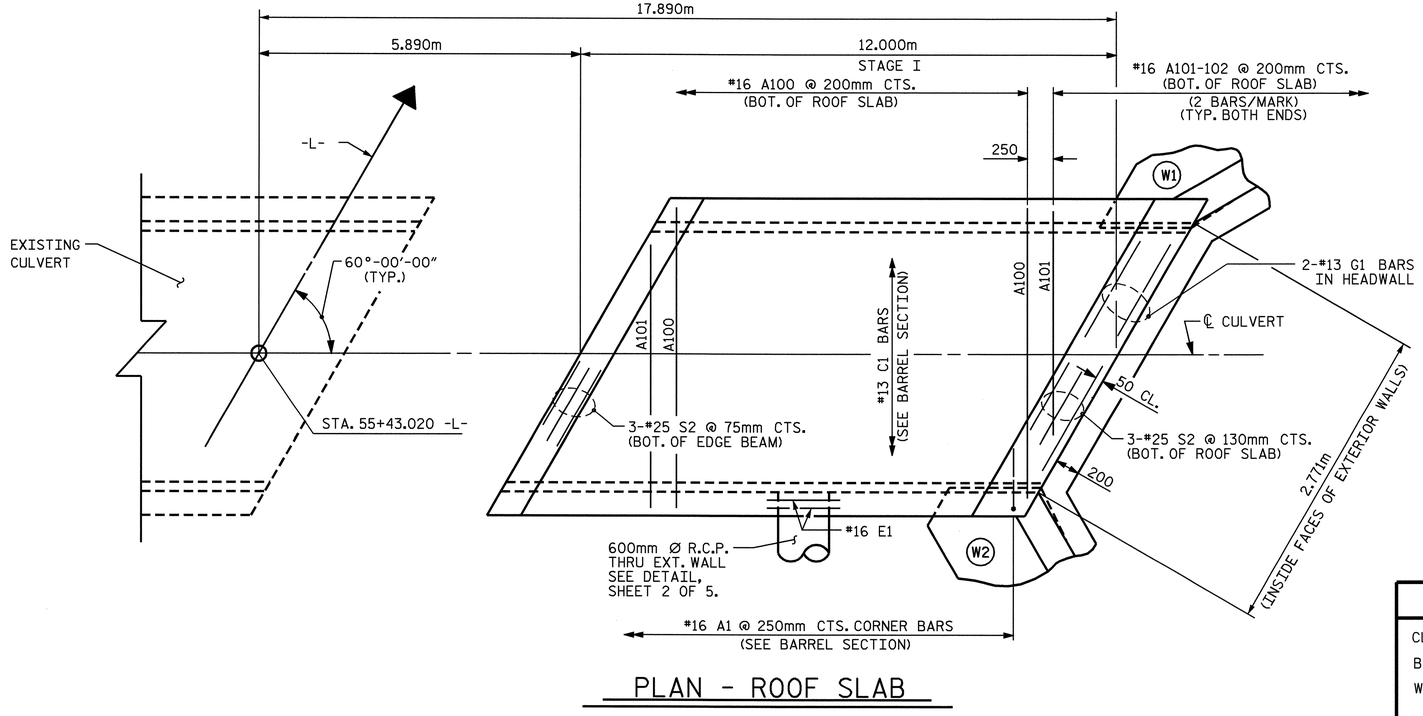

PLAN - ROOF SLAB

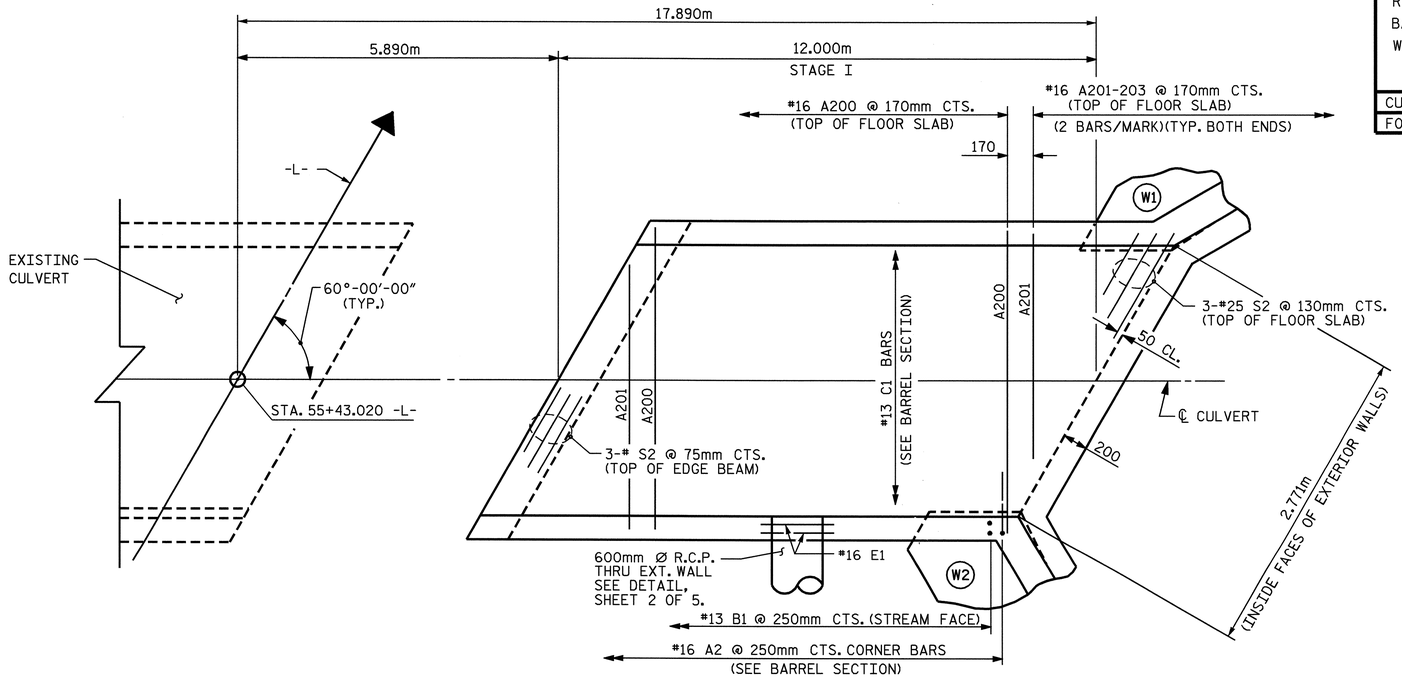

PLAN - FLOOR SLAB

BAR TYPE

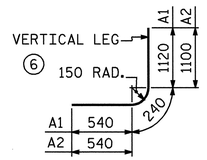

BAR DIMENSIONS ARE OUT TO OUT

SPLICE LENGTH CHART

BAR	SIZE	SPLICE LENGTH
B1	13	540
C1	13	590

STAGE I QUANTITIES

CLASS A CONCRETE

BARREL @ 1.88 m^3/m ____ 22.6 m^3

WINGS, ETC. ____ 6.7 m^3

TOTAL ____ 29.3 m^3

REINFORCING STEEL

BARREL ____ 1,879 kg

WINGS, ETC. ____ 195 kg

TOTAL ____ 2,074 kg

CULVERT EXCAVATION ---------- LUMP SUM

FOUNDATION COND. MAT'L 33 METRIC TONS

BAR SCHEDULE

STAGE I

BAR	NO.	SIZE	TYPE	LENGTH	WEIGHT
A1	96	16	6	1900	283
A2	96	16	6	1880	280
A100	52	16	STR	2660	215
A101	4	16	STR	1940	12
A102	4	16	STR	1240	8
A200	61	16	STR	2660	252
A201	4	16	STR	2040	13
A202	4	16	STR	1440	9
A203	4	16	STR	860	5
B1	96	13	STR	2040	195
C1	68	13	STR	6220	420
G1	2	13	STR	3120	6
E1	16	16	STR	1280	32
S2	12	25	STR	3120	149

REINFORCING STEEL = 1,879 kg

PROJECT NO. R-2518A

MADISON/YANCEY COUNTY

STATION: 55+43.020 -L-

SHEET 3 OF 5

STATE OF NORTH CAROLINA
DEPARTMENT OF TRANSPORTATION
RALEIGH

SINGLE 2.400m X 1.800m CONCRETE BOX CULVERT STAGE I

REVISIONS						SHEET NO.
NO.	BY:	DATE:	NO.	BY:	DATE:	C-47
1			3			TOTAL SHEETS
2			4			103

ASSEMBLED BY : V.X. NGUYEN DATE : 8-1-07
CHECKED BY : M.G. CHEEK DATE : 8-31-07

NORTH CAROLINA PROFESSIONAL SEAL 20125 ENGINEER MARSHALL G. CHEEK, JR.
10-1-07

STR. #8

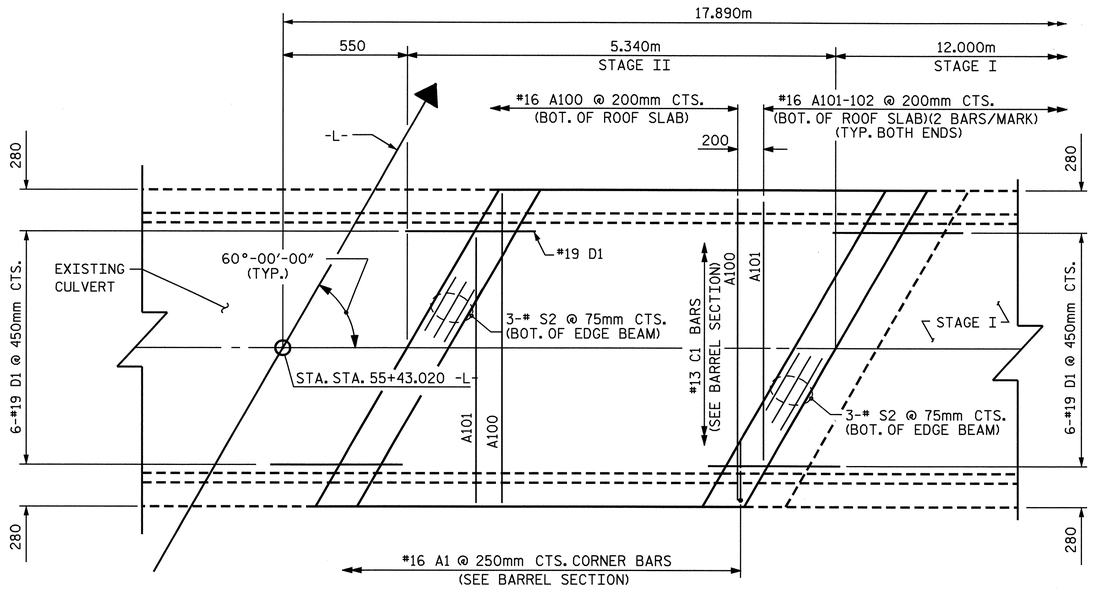

PLAN - ROOF SLAB

STAGE II

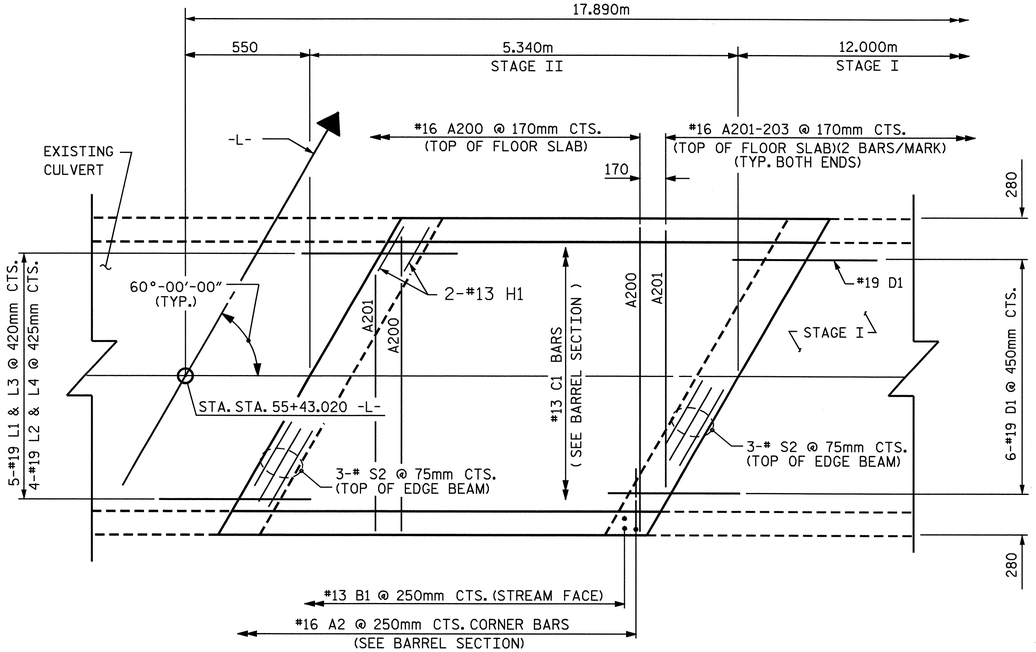

PLAN - FLOOR SLAB

STAGE II

STAGE II QUANTITIES

CLASS A CONCRETE

BARREL @ 1.88 m^3/m ____ 10.0 m^3

4 EDGE BEAMS ____ 1.2 m^3

TOTAL ____ 11.2 m^3

REINFORCING STEEL

BARREL ____ 1000 kg

TOTAL ____ 1000 kg

CULVERT EXCAVATION ---------- LUMP SUM

FOUNDATION COND. MAT'L 10 METRIC TONS

BAR TYPE

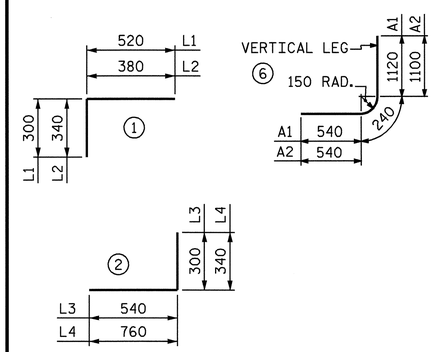

BAR DIMENSIONS ARE OUT TO OUT

SPLICE LENGTH CHART

BAR	SIZE	SPLICE LENGTH
B1	13	540
C1	13	590

BAR SCHEDULE

STAGE II

BAR	NO.	SIZE	TYPE	LENGTH	WEIGHT
A1	44	16	6	1900	130
A2	44	16	6	1880	128
A100	19	16	STR	2660	78
A101	4	16	STR	1940	12
A102	4	16	STR	1240	8
A200	22	16	STR	2660	91
A201	4	16	STR	2040	13
A202	4	16	STR	1440	9
A203	4	16	STR	860	5
B1	44	13	STR	2040	89
C1	34	13	STR	5240	177
D1	38	19	STR	760	65
H1	4	13	STR	3140	12
L1	5	19	1	820	9
L2	4	19	1	720	6
L3	5	19	2	840	9
L4	4	19	2	1100	10
S2	12	25	STR	3120	149

REINFORCING STEEL = 1000 kg

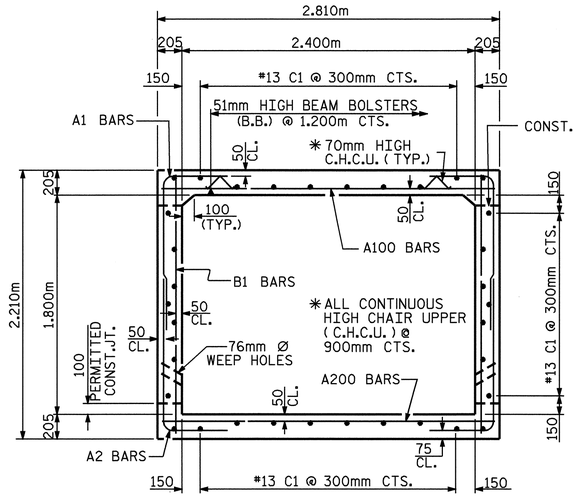

RIGHT ANGLE SECTION OF BARREL

THERE ARE 34 "C" BARS IN SECTION OF BARREL

PROJECT NO. R-2518A

MADISON/YANCEY COUNTY

STATION: 55+43.020 -L-

SHEET 4 OF 5

STATE OF NORTH CAROLINA
DEPARTMENT OF TRANSPORTATION
RALEIGH

SINGLE 2.400m X 1.800m CONCRETE BOX CULVERT STAGE II

ASSEMBLED BY : V.X. NGUYEN	DATE : 8-1-07
CHECKED BY : M.C. CHEEK	DATE : 8-31-07
DRAWN BY : EEM 6/97	
CHECKED BY : ARB 7/97	

NORTH CAROLINA PROFESSIONAL SEAL 20125 ENGINEER MARSHALL C. CHEEK, JR. 10-1-07

REVISIONS						SHEET NO.
NO.	BY:	DATE:	NO.	BY:	DATE:	C-48
1			3			TOTAL SHEETS
2			4			103

STR. #8

20-SEP-2007 14:55
R:\Structures\Str*08\vlnh\R2518A_sd_CU.dgn
vnguyen

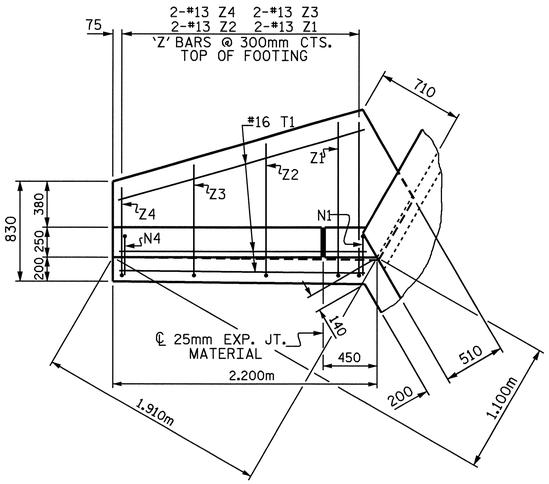

PLAN W2

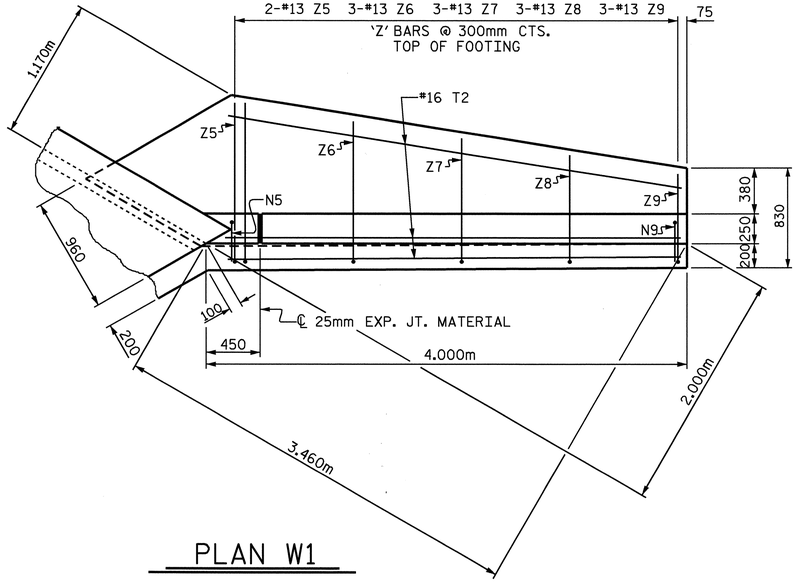

PLAN W1

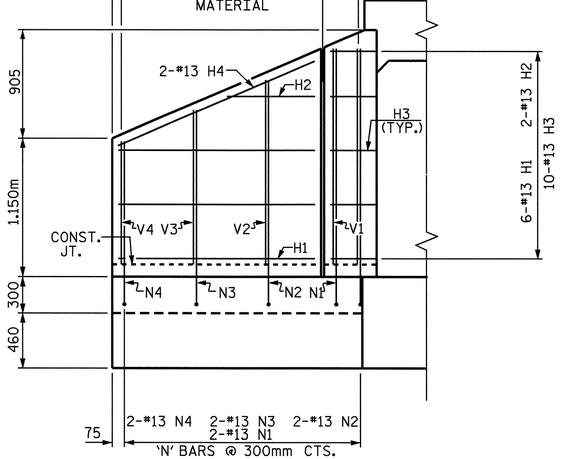

ELEVATION W2

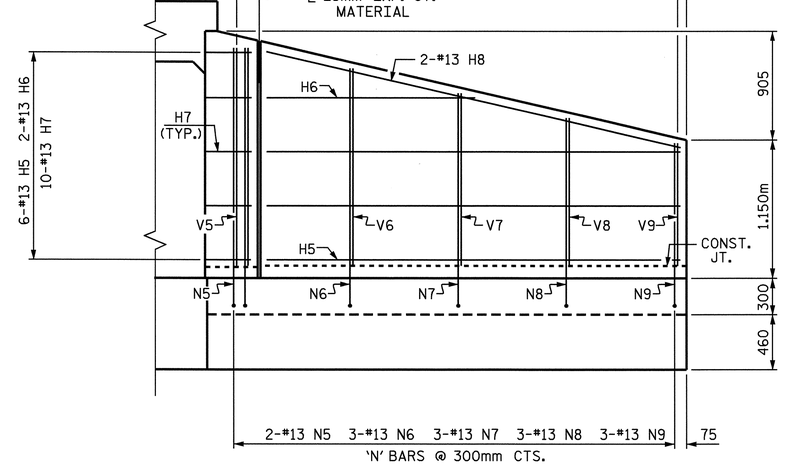

ELEVATION W1

NOTES

FOR WING ORIENTATION, SEE PLAN OF FLOOR SLAB.

A 900mm STRIP OF FILTER FABRIC SHALL BE ATTACHED TO THE FILL FACE OF THE WING COVERING THE ENTIRE LENGTH OF THE EXPANSION JOINT.

G1 BARS IN HEADWALL ARE INCLUDED WITH BARREL REINFORCING STEEL.

BAR TYPES

ALL BAR DIMENSIONS ARE OUT TO OUT.

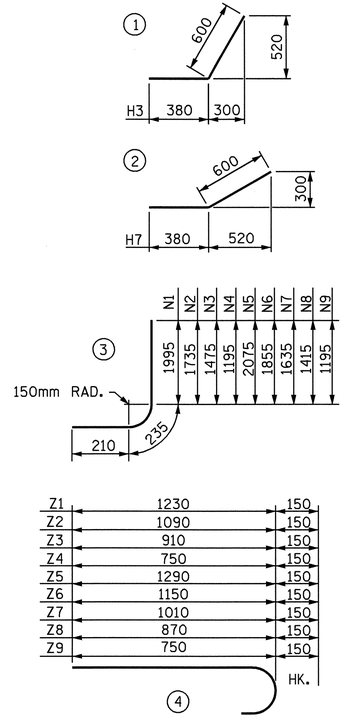

BILL OF MATERIAL

BAR	NO.	SIZE	TYPE	LENGTH	WEIGHT
H1	6	13	STR	1640	10
H2	2	13	STR	780	2
H3	10	13	1	980	10
H4	2	13	STR	1780	4
H5	6	13	STR	3440	21
H6	2	13	STR	1940	4
H7	10	13	2	980	10
H8	2	13	STR	3520	7
N1	2	13	3	2440	5
N2	2	13	3	2180	4
N3	2	13	3	1920	4
N4	2	13	3	1640	3
N5	2	13	3	2520	5
N6	3	13	3	2300	7
N7	3	13	3	2080	6
N8	3	13	3	1860	6
N9	3	13	3	1640	5
T1	3	16	STR	2200	10
T2	3	16	STR	4000	19
V1	2	13	STR	1820	4
V2	2	13	STR	1560	3
V3	2	13	STR	1300	3
V4	2	13	STR	1020	2
V5	2	13	STR	1900	4
V6	3	13	STR	1680	3
V7	3	13	STR	1460	3
V8	3	13	STR	1240	3
V9	3	13	STR	1020	2
Z1	2	13	4	1380	3
Z2	2	13	4	1240	3
Z3	2	13	4	1060	2
Z4	2	13	4	900	2
Z5	2	13	4	1440	3
Z6	3	13	4	1300	4
Z7	3	13	4	1160	3
Z8	3	13	4	1020	3
Z9	3	13	4	900	3

REINFORCING STEEL FOR 2 WING WALLS 195 kg

CLASS A CONCRETE

2 WINGS	5.3	m^3
1 HEADWALL	0.4	m^3
1 END CURTAIN WALL	0.4	m^3
2 EDGE BEAMS	0.6	m^3
TOTAL	6.7	m^3

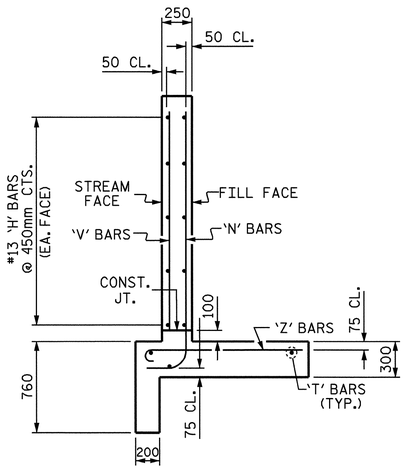

TYPICAL WING SECTION

PROJECT NO. R-2518A
MADISON/YANCEY COUNTY
STATION: 55+43.020 -L-

SHEET 5 OF 5

STATE OF NORTH CAROLINA
DEPARTMENT OF TRANSPORTATION
RALEIGH

STANDARD WINGS FOR CONCRETE BOX CULVERT STAGE I

ASSEMBLED BY : V.X. NGUYEN	DATE : 8-1-07
CHECKED BY : M.G. CHEEK	DATE : 8-31-07
DRAWN BY : JLR 6/97	
CHECKED BY : VAP 6/97	

REVISIONS						SHEET NO.
NO.	BY:	DATE:	NO.	BY:	DATE:	C-49
1			3			TOTAL SHEETS
2			4			103

STR. #8

r:\structures\Str#09\All_Figueroo\R2518A_ed_CUP9.dgn
ENGRDY

BENCHMARK #8: CHISLED SQUARE IN THE TOP OF HEADWALL ON THE N.E. CORNER OF THE CULVERT NEAR THE MOUTH OF POLLYS BRANCH RD. STA. 70+60.74 -L-, 99 METERS RIGHT, ELEV. = 711.550

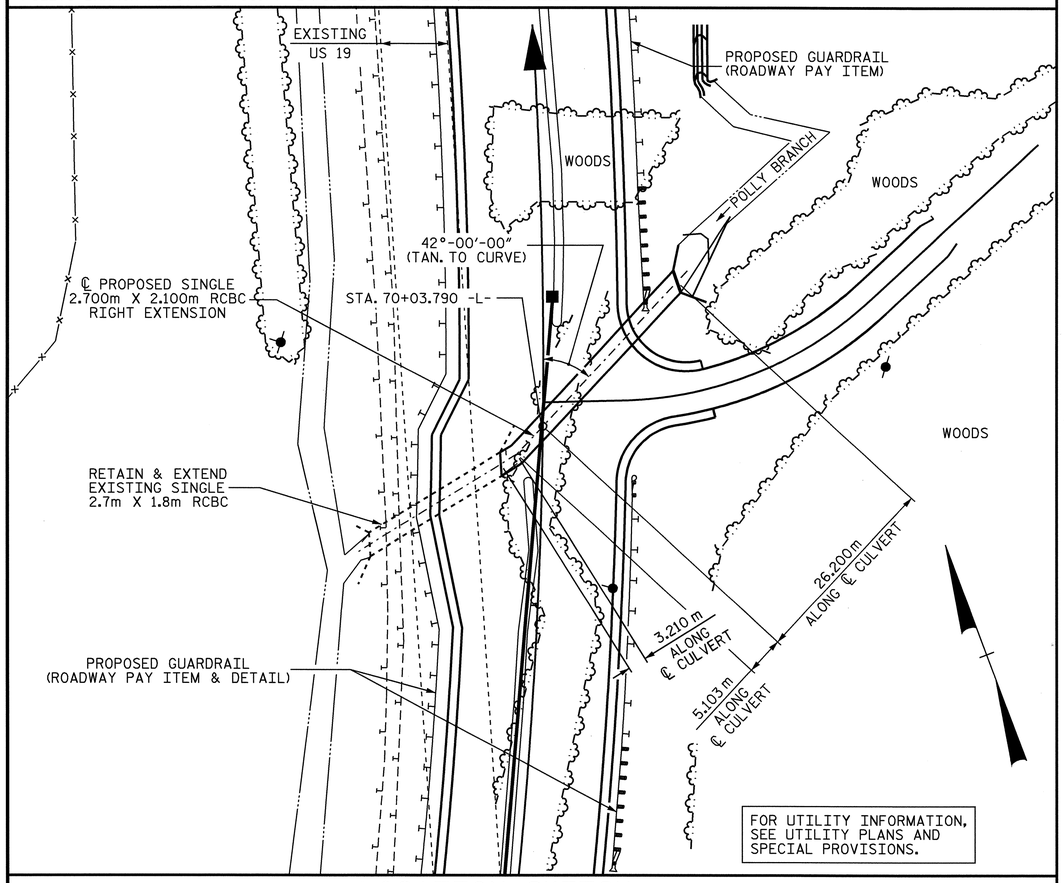

LOCATION SKETCH

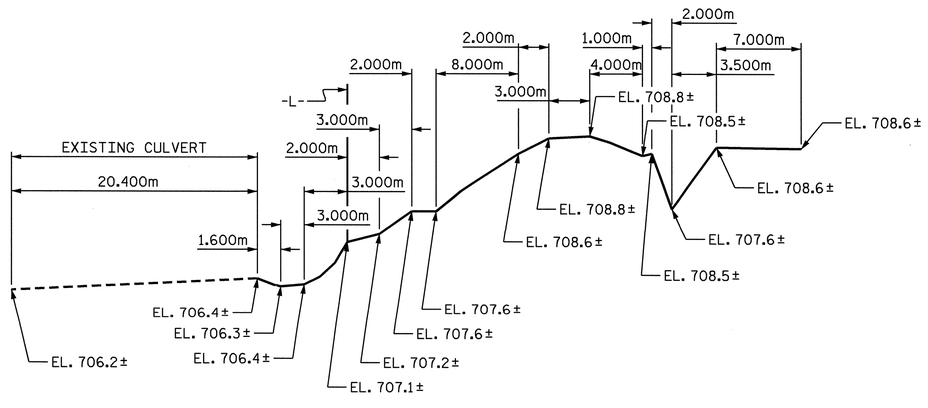

PROFILE ALONG ℄ CULVERT

HYDRAULIC DATA

DESIGN DISCHARGE	= 13.50 m³/s
FREQUENCY OF DESIGN FLOOD	= 50 yrs.
DESIGN HIGH WATER ELEVATION	= 709.10
DRAINAGE AREA	= 2.093 km²
BASIC DISCHARGE (Q100)	= 16.00 m³/s
BASIC HIGH WATER ELEVATION	= 709.40

OVERTOPPING FLOOD DATA

OVERTOPPING DISCHARGE	= 27.50 m³/s
FREQUENCY OF OVERTOPPING FLOOD	= 500 yr.+
OVERTOPPING FLOOD ELEVATION	= 711.42

ROADWAY DATA

GRADE POINT ELEV. @ STA. 70+03.790 -L-	= 710.384
BED ELEV. @ STA. 70+03.790 -L-	= 706.236
ROADWAY FILL SLOPES	= 2 : 1

TOTAL STRUCTURE QUANTITIES

CLASS A CONCRETE

BARREL @	2.17 m³/m	74.9 m³
WINGS, ETC.		10.4 m³
TOTAL		85.3 m³

REINFORCING STEEL

BARREL	7,187 kg
WINGS, ETC.	334 kg
TOTAL	7,521 kg

CULVERT EXCAVATION ---------- LUMP SUM

FOUNDATION COND. MAT'L ----- 73 METRIC TONS

NOTES

ASSUMED LIVE LOAD ----------MS18 OR ALTERNATE LOADING.

DESIGN FILL ---------- 2.690m

FOR OTHER DESIGN DATA AND NOTES, SEE STANDARD NOTE SHEET.

76mm Ø WEEP HOLES INDICATED TO BE IN ACCORDANCE WITH THE SPECIFICATIONS.

CONCRETE IN CULVERT TO BE POURED IN THE FOLLOWING ORDER:

1. WING FOOTING AND FLOOR SLAB INCLUDING 100mm OF ALL VERTICAL WALLS.
2. THE REMAINING PORTIONS OF THE WALLS AND WINGS FULL HEIGHT FOLLOWED BY ROOF SLAB AND HEADWALLS.

THE RESIDENT ENGINEER SHALL CHECK THE LENGTH OF CULVERT BEFORE STAKING IT OUT TO MAKE CERTAIN THAT IT WILL PROPERLY TAKE CARE OF THE FILL.

DIMENSIONS FOR WING LAYOUT AS WELL AS ADDITIONAL REINFORCING STEEL EMBEDDED IN BARREL ARE SHOWN ON WING SHEET.

TRANSVERSE CONSTRUCTION JOINTS SHALL BE USED IN THE BARREL, SPACED TO LIMIT THE POURS TO A MAXIMUM OF 21.0m. LOCATION OF THE JOINTS SHALL BE SUBJECT TO APPROVAL OF THE ENGINEER.

AT THE CONTRACTOR'S OPTION, HE MAY SPLICE THE VERTICAL REINFORCING STEEL IN THE INTERIOR FACE OF THE EXTERIOR WALLS ABOVE LOWER WALL CONSTRUCTION JOINT. THE SPLICE LENGTH SHALL BE AS PROVIDED IN THE SPLICE LENGTH CHART SHOWN ON THE PLANS. EXTRA WEIGHT OF STEEL DUE TO THE SPLICES SHALL BE PAID FOR BY THE CONTRACTOR.

IF APPROVED BY THE ENGINEER, THE CONTRACTOR MAY USE THE EXISTING WINGS AS TEMPORARY SHORING FOR THE CONSTRUCTION OF THE CULVERT EXTENSION. IN THIS CASE, THE BOTTOM SLAB OF THE EXTENSION SHALL BE POURED AT LEAST 72 HOURS PRIOR TO CUTTING THE WINGS. THE WINGS MAY BE CUT EARLIER PROVIDED THE SLAB CONCRETE STRENGTH HAS REACHED A MINIMUM COMPRESSIVE STRENGTH OF 10.3 MPa.

DOWELS SHALL BE USED TO CONNECT THE CULVERT EXTENSION TO THE EXISTING CULVERT AS SHOWN, FOR NOTE REGARDING SETTING OF DOWELS, SEE STANDARD NOTES SHEET SNSM.

FOR CONSTRUCTION SEQUENCE, SEE EROSION CONTROL PLANS.

FOR FALSEWORK AND FORMWORK, SEE SPECIAL PROVISIONS.

FOR GROUT FOR STRUCTURES, SEE SPECIAL PROVISIONS.

FOR SUBMITTAL OF WORKING DRAWINGS, SEE SPECIAL PROVISIONS.

FOR CULVERT DIVERSION DETAILS AND PAY ITEM, SEE EROSION CONTROL PLANS.

FOR CRANE SAFETY, SEE SPECIAL PROVISIONS.

ALL DIMENSIONS ARE IN MILLIMETERS UNLESS OTHERWISE NOTED.

ALL ELEVATIONS ARE IN METERS.

METRIC

PROJECT NO. R-2518A

MADISON/YANCEY COUNTY

STATION: 70+03.790 -L-

SHEET 1 OF 5

STATE OF NORTH CAROLINA
DEPARTMENT OF TRANSPORTATION
RALEIGH

SINGLE 2.700m X 2.100m CONCRETE BOX CULVERT RIGHT EXTENSION

NORTH CAROLINA PROFESSIONAL SEAL 13014 ENGINEER QUANG H. NGUYEN
Quang H. Nguyen 4-3-08

NORTH CAROLINA PROFESSIONAL SEAL 20125 ENGINEER MARSHALL A. CHEEK, JR.
4-3-08

REVISIONS						SHEET NO.
NO.	BY:	DATE:	NO.	BY:	DATE:	C-50
1			3			TOTAL SHEETS
2			4			103

ASSEMBLED BY : A.S./ A.L.F. DATE : 4/25/06
CHECKED BY : L.L. MURPHY DATE : 7/28/06

STR #9

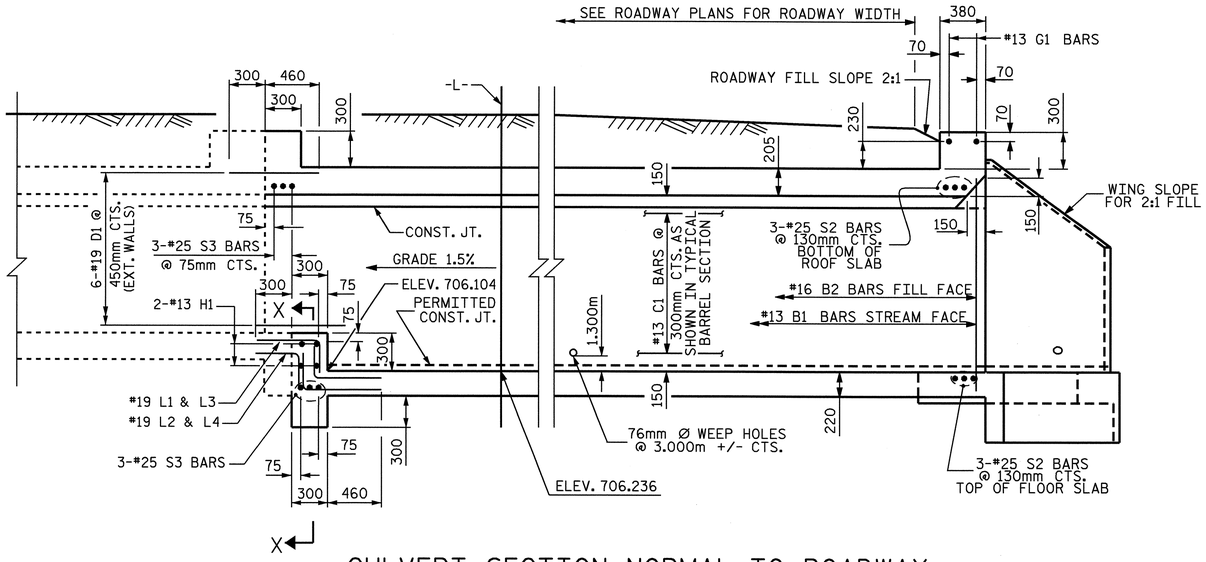

CULVERT SECTION NORMAL TO ROADWAY

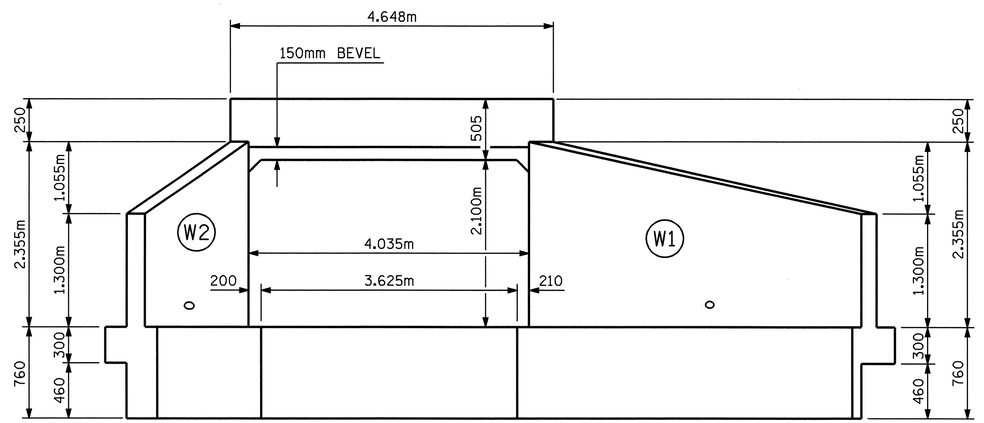

INLET END ELEVATION NORMAL TO SKEW

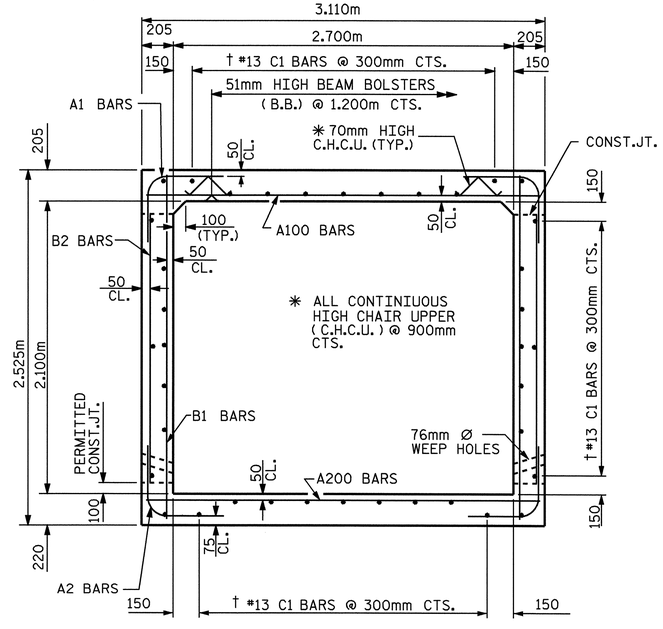

RIGHT ANGLE SECTION OF BARREL

THERE ARE 38 "C" BARS IN SECTION OF BARREL.
† #13 C1 BARS SHALL BE FIELD BENT AS NECESSARY

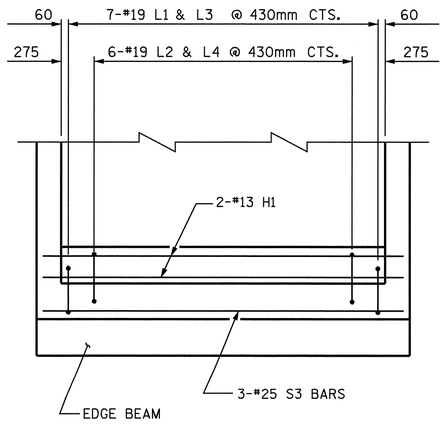

SECTION X-X

PROJECT NO. R-2518A
MADISON/YANCEY COUNTY
STATION: 70+03.790 -L-

SHEET 2 OF 5

STATE OF NORTH CAROLINA
DEPARTMENT OF TRANSPORTATION
RALEIGH

SINGLE 2.700m X 2.100m CONCRETE BOX CULVERT RIGHT EXTENSION

REVISIONS						SHEET NO.
NO.	BY:	DATE:	NO.	BY:	DATE:	C-51
1			3			TOTAL SHEETS
2			4			103

NORTH CAROLINA PROFESSIONAL SEAL 20125 ENGINEER MARSHALL L. MURPHY, JR.
10-1-07

ASSEMBLED BY : A.S./ A.L.F. DATE : 4/25/06
CHECKED BY : L.L. MURPHY DATE : 7/28/06

STR #9

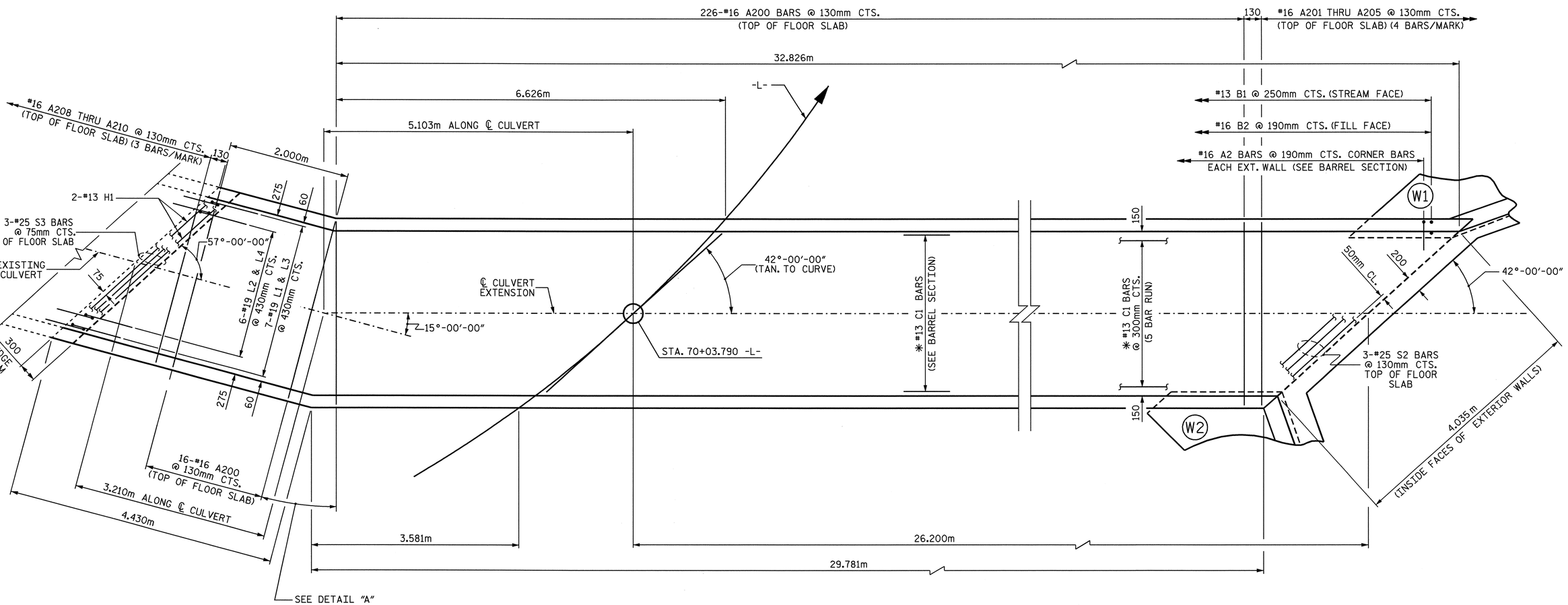

PLAN - FLOOR SLAB

* #13 C1 BARS SHALL BE FIELD BENT AS NECESSARY

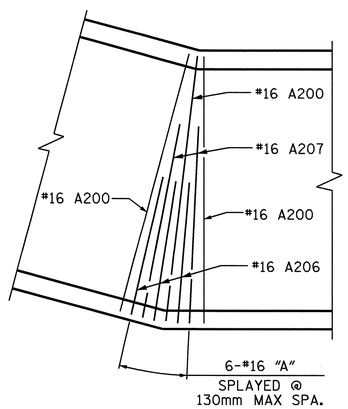

DETAIL "A" (TOP OF FLOOR SLAB)

ASSEMBLED BY : A. S./ A.L.F. DATE : 4/25/06
CHECKED BY : L.L. MURPHY DATE : 7/28/06

NORTH CAROLINA PROFESSIONAL SEAL 20125 ENGINEER MARSHALL L. MURPHY, JR.
10-1-07

PROJECT NO. R-2518A
MADISON/YANCEY COUNTY
STATION: 70+03.790 -L-

SHEET 3 OF 5

STATE OF NORTH CAROLINA
DEPARTMENT OF TRANSPORTATION
RALEIGH

SINGLE 2.700m X 2.100m CONCRETE BOX CULVERT RIGHT EXTENSION

REVISIONS						SHEET NO.
NO.	BY:	DATE:	NO.	BY:	DATE:	C-52
1			3			TOTAL SHEETS
2			4			103

STR #9

R:\Structures\Str#09\A.L.Figueroa\R2518A_sd_CU#9.dgn
afigueroa

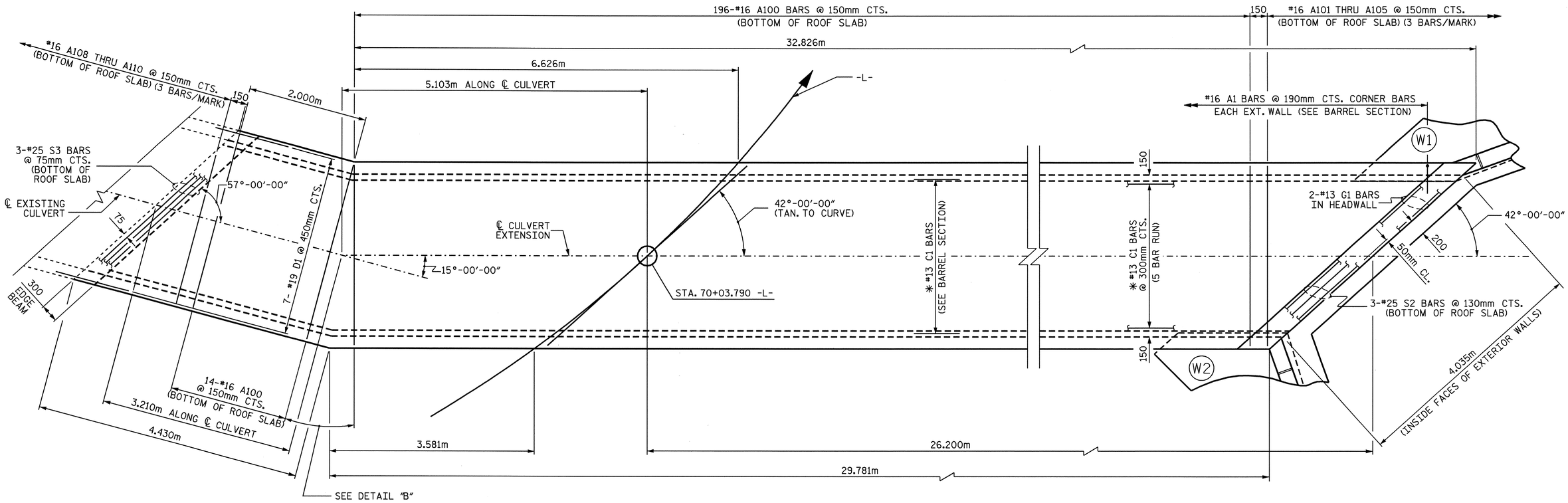

BAR SCHEDULE

BAR	NO.	SIZE	TYPE	LENGTH	WEIGHT	BAR	NO.	SIZE	TYPE	LENGTH	WEIGHT
A1	365	16	3	1340	759	B1	278	13	STR	2360	652
A2	365	16	3	1340	759	B2	364	16	STR	1880	1062
A100	210	16	STR	2980	971	C1	190	13	STR	7420	1401
A101	3	16	STR	2560	12						
A102	3	16	STR	2160	10	D1	19	19	STR	760	32
A103	3	16	STR	1760	8						
A104	3	16	STR	1340	6	G1	2	13	STR	4500	9
A105	3	16	STR	940	4						
A106	3	16	STR	1380	6	H1	4	13	STR	3580	14
A107	2	16	STR	2420	8						
A108	3	16	STR	2240	10	L1	7	19	1	820	13
A109	3	16	STR	1540	7	L2	6	19	1	720	10
A110	3	16	STR	860	4	L3	7	19	2	840	13
						L4	6	19	2	1040	14
A200	243	16	STR	2980	1124						
A201	4	16	STR	2480	15	S2	6	25	STR	4500	107
A202	4	16	STR	2040	13	S3	6	25	STR	3580	85
A203	4	16	STR	1540	10						
A204	4	16	STR	1100	7						
A205	4	16	STR	600	4						
A206	3	16	STR	1580	7						
A207	2	16	STR	2200	7						
A208	3	16	STR	2340	11						
A209	3	16	STR	1720	8						
A210	3	16	STR	1140	5						

REINFORCING STEEL = 7,187 kg

SPLICE LENGTH CHART

BAR		SIZE	SPLICE LENGTH
B1		13	540
C1		13	590

BAR TYPE

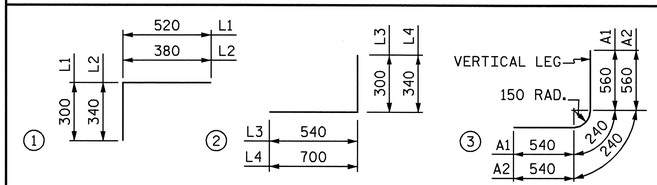

BAR DIMENSIONS ARE OUT TO OUT

PLAN - ROOF SLAB

*#13 C1 BARS SHALL BE FIELD BENT AS NECESSARY

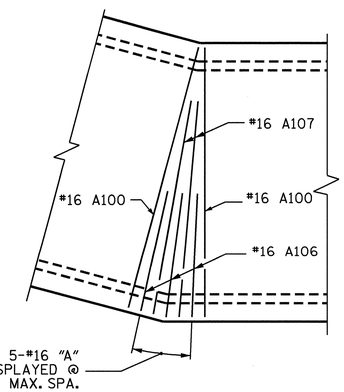

DETAIL "B" (BOTTOM ROOF OF SLAB)

ASSEMBLED BY : A.S./ A.L.F. DATE : 4/25/06
CHECKED BY : L.L. MURPHY DATE : 7/28/06

PROJECT NO. R-2518A
MADISON/YANCEY COUNTY
STATION: 70+03.790 -L-

SHEET 4 OF 5

STATE OF NORTH CAROLINA
DEPARTMENT OF TRANSPORTATION
RALEIGH

SINGLE 2.700m X 2.100m CONCRETE BOX CULVERT RIGHT EXTENSION

REVISIONS						SHEET NO.
NO.	BY:	DATE:	NO.	BY:	DATE:	C-53
1			3			TOTAL SHEETS
2			4			103

NORTH CAROLINA PROFESSIONAL SEAL 20125 ENGINEER MARSHALL L. MURPHY JR.
10-1-07

STR #9

24-SEP-2007 09:44
R:\Structures\Str#09\A.L.Figueroa\R2518A_sd_CU#9.dgn
afigueroa

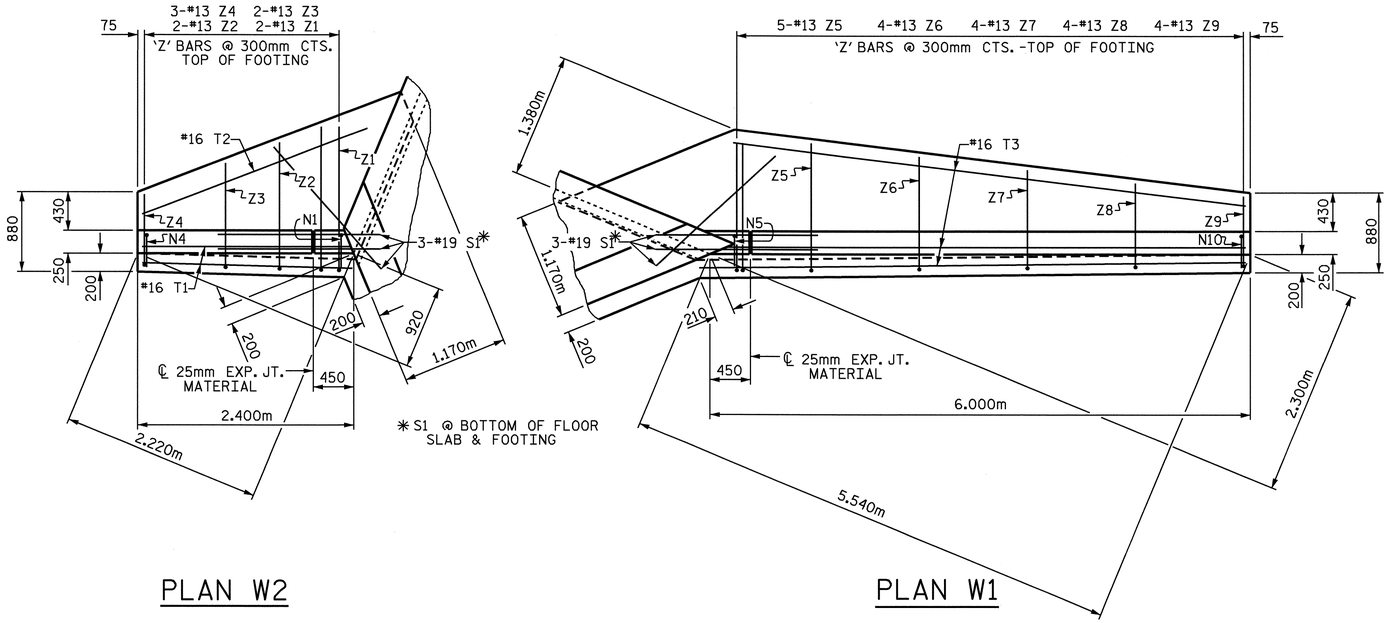

PLAN W2

PLAN W1

BAR TYPES

ALL BAR DIMENSIONS ARE OUT TO OUT.

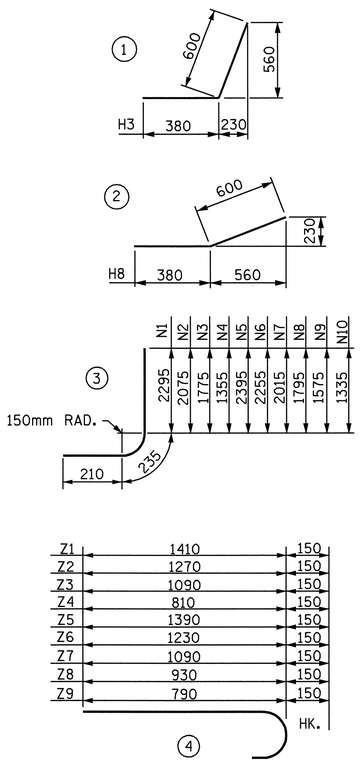

BILL OF MATERIAL

BAR	NO.	SIZE	TYPE	LENGTH	WEIGHT
H1	6	13	STR	1840	11
H2	2	13	STR	1340	3
H3	12	13	1	980	12
H4	2	13	STR	2020	4
H5	6	13	STR	5440	32
H6	2	13	STR	4300	9
H7	2	13	STR	1940	4
H8	12	13	2	980	12
H9	2	13	STR	5520	11
N1	2	16	3	2740	9
N2	2	16	3	2520	8
N3	2	13	3	2220	4
N4	3	13	3	1800	5
N5	2	16	3	2840	9
N6	3	16	3	2700	13
N7	4	16	3	2460	15
N8	4	13	3	2240	9
N9	4	13	3	2020	8
N10	4	13	3	1780	7
S1	6	19	STR	1800	24
T1	2	16	STR	2400	7
T2	1	16	STR	2680	4
T3	3	16	STR	6000	28
V1	2	13	STR	2120	4
V2	2	13	STR	1900	4
V3	2	13	STR	1600	3
V4	3	13	STR	1180	4
V5	2	13	STR	2220	4
V6	3	13	STR	2080	6
V7	4	13	STR	1840	7
V8	4	13	STR	1620	6
V9	4	13	STR	1400	6
V10	4	13	STR	1160	5
Z1	2	13	4	1560	3
Z2	2	13	4	1420	3
Z3	2	13	4	1240	2
Z4	3	13	4	960	3
Z5	5	13	4	1540	8
Z6	4	13	4	1380	5
Z7	4	13	4	1240	5
Z8	4	13	4	1080	4
Z9	4	13	4	940	4

REINFORCING STEEL
FOR 2 WINGS 334 kg

CLASS A CONCRETE

2 WINGS	8.3	m³
1 HEADWALL	0.5	m³
1 END CURTAIN WALL	0.6	m³
2 EDGE BEAMS	1.0	m³
TOTAL	10.4	m³

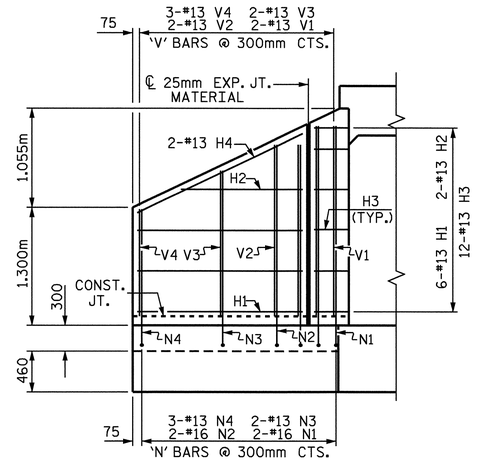

ELEVATION W2

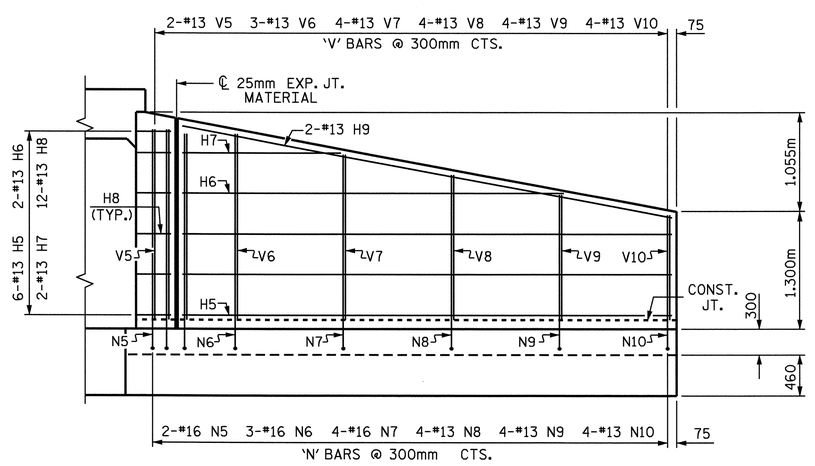

ELEVATION W1

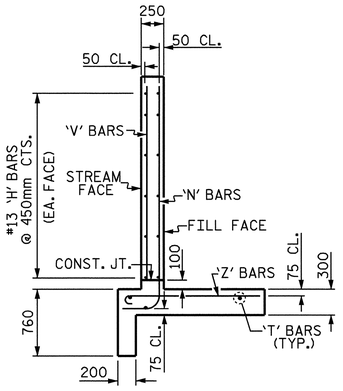

TYPICAL WING SECTION

NOTES

FOR WING ORIENTATION, SEE PLAN OF FLOOR SLAB.

A 900mm STRIP OF FILTER FABRIC SHALL BE ATTACHED TO THE FILL FACE OF THE WING COVERING THE ENTIRE LENGTH OF THE EXPANSION JOINT.

G1 BARS IN HEADWALL ARE INCLUDED WITH BARREL REINFORCING STEEL.

NORTH CAROLINA PROFESSIONAL SEAL 20125 ENGINEER MARSHALL L. MURPHY, JR.
10-1-07

PROJECT NO. R-2518A
MADISON/YANCEY COUNTY
STATION: 70+03.790 -L-

SHEET 5 OF 5

STATE OF NORTH CAROLINA
DEPARTMENT OF TRANSPORTATION
RALEIGH

STANDARD WINGS FOR CONCRETE BOX CULVERT RIGHT EXTENSION

REVISIONS						SHEET NO.
NO.	BY:	DATE:	NO.	BY:	DATE:	C-54
1			3			TOTAL SHEETS
2			4			103

STR #9 STD. NO. CW4521

ASSEMBLED BY : A. S./ A.L.F.	DATE : 4/25/06
CHECKED BY : L.L. MURPHY	DATE : 7/28/06
DRAWN BY : FPP 06/97	
CHECKED BY : VAP 11/97	

r:\structures\str#10\dhodge\r2518a_sd_cu-str 10-3.dgn
dahodge

BENCHMARK #8 : CHISLED SQUARE IN THE TOP OF PARAPET EAST SIDE, NORTH END OF BETHEL BRIDGE BEHIND BETHEL CHURCH, STA. 78+37.170-L- EL. = 726.467

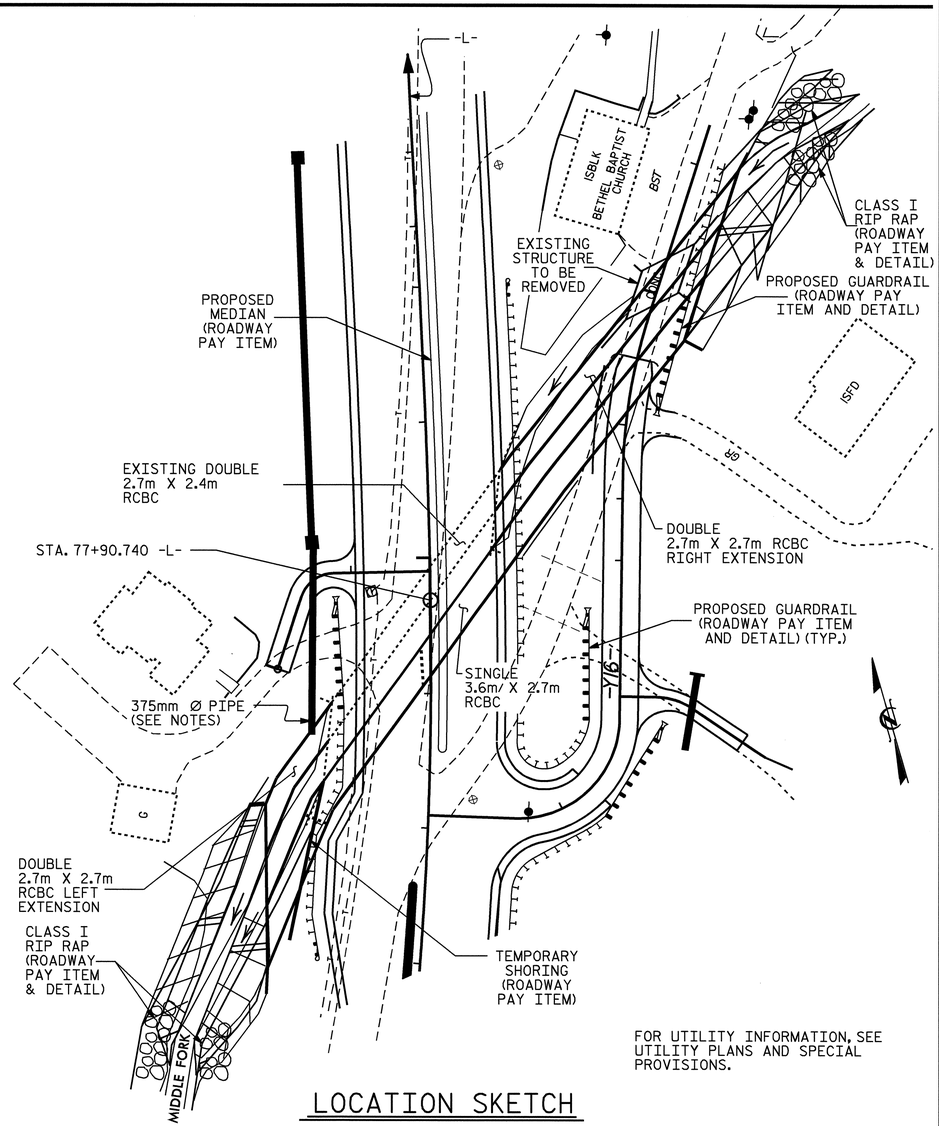

FOR UTILITY INFORMATION, SEE UTILITY PLANS AND SPECIAL PROVISIONS.

LOCATION SKETCH

NOTES

ASSUMED LIVE LOAD ----------MS18 OR ALTERNATE LOADING.

DESIGN FILL---------- 2.240m LEFT; 0.580m RIGHT

FOR OTHER DESIGN DATA AND NOTES, SEE STANDARD NOTE SHEET.

76mm Ø WEEP HOLES INDICATED TO BE IN ACCORDANCE WITH THE SPECIFICATIONS.

CONCRETE IN SINGLE 3.600m X 2.700m CULVERT TO BE POURED IN THE FOLLOWING ORDER:

1. WING FOOTINGS AND FLOOR SLAB INCLUDING 100mm OF ALL VERTICAL WALLS.
2. THE REMAINING PORTIONS OF THE WALLS AND WINGS FULL HEIGHT FOLLOWED BY ROOF SLAB AND HEADWALLS.

CONCRETE IN DOUBLE 2.700m X 2.700m CULVERT EXTENSIONS TO BE POURED IN THE FOLLOWING ORDER:

1. PHASE I WING FOOTINGS AND FLOOR SLAB INCLUDING 100mm OF PHASE I VERTICAL WALLS.
2. THE REMAINING PORTIONS OF PHASE I WALLS AND PHASE I WINGS FULL HEIGHT.
3. PHASE II WING FOOTINGS AND FLOOR SLAB INCLUDING 100mm OF PHASE II VERTICAL WALLS.
4. THE REMAINING PORTIONS OF PHASE II WALLS AND PHASE II WINGS FULL HEIGHT.
5. ROOF SLAB IN IT'S ENTIRETY AND HEADWALLS.

THE RESIDENT ENGINEER SHALL CHECK THE LENGTH OF CULVERT BEFORE STAKING IT OUT TO MAKE CERTAIN THAT IT WILL PROPERLY TAKE CARE OF THE FILL.

DIMENSIONS FOR WING LAYOUT AS WELL AS ADDITIONAL REINFORCING STEEL EMBEDDED IN BARREL ARE SHOWN ON WING SHEET.

TRANSVERSE CONSTRUCTION JOINTS SHALL BE USED IN THE BARREL, SPACED TO LIMIT THE POURS TO A MAXIMUM OF 21.0m. LOCATION OF JOINTS SHALL BE SUBJECT TO APPROVAL OF THE ENGINEER.

AT THE CONTRACTOR'S OPTION, HE MAY SPLICE THE VERTICAL REINFORCING STEEL IN THE INTERIOR FACES OF EXTERIOR WALLS AND BOTH FACES OF INTERIOR WALLS ABOVE LOWER WALL CONSTRUCTION JOINT. THE SPLICE LENGTH SHALL BE AS PROVIDED IN THE SPLICE LENGTH CHART SHOWN ON THE PLANS. EXTRA WEIGHT OF STEEL DUE TO THE SPLICES SHALL BE PAID FOR BY THE CONTRACTOR.

THE 375mm Ø PIPE THROUGH THE SIDEWALL OF THE CULVERT WILL BE LOCATED BY THE ENGINEER. THE REINFORCING STEEL WILL BE FIELD BENT AS NECESSARY TO CLEAR PIPE.

MATERIAL EXCAVATED FROM THE EXISTING BED SHALL BE STOCKPILED FOR USE IN THE PROPOSED CULVERT EXTENSIONS AND PROPOSED SUPPLEMENTAL CULVERT. UPON COMPLETION OF THE CULVERTS, THE MATERIAL SHALL BE PLACED IN THE SOUTHERNMOST AND CENTER BARRELS TO A DEPTH OF 0.45m AND IN THE NORTHERNMOST BARREL TO A DEPTH OF 0.30m. BED MATERIAL MAY BE SUPPLEMENTED WITH CLASS 'B' RIPRAP IF SUITABLE MATERIAL IS NOT AVAILABLE IN SUFFICIENT QUANTITIES.

THE ENTIRE COST OF THE WORK REQUIRED TO PLACE THE EXCAVATED MATERIAL OR SUPPLEMENTAL MATERIAL SHALL BE INCLUDED IN THE CONTRACT LUMP SUM PRICE BID FOR CULVERT EXCAVATION.

FOR MAINTENANCE OF TRAFFIC, SEE TRAFFIC CONTROL PLANS.

FOR LIMITS OF TEMPORARY SHORING FOR MAINTENANCE OF TRAFFIC, SEE TRAFFIC CONTROL PLANS.

IF APPROVED BY THE ENGINEER, THE CONTRACTOR MAY USE THE EXISTING WINGS AS TEMPORARY SHORING FOR THE CONSTRUCTION OF THE CULVERT EXTENSIONS. IN THIS CASE, THE BOTTOM SLAB OF THE EXTENSION SHALL BE POURED AT LEAST 72 HOURS PRIOR TO CUTTING THE WINGS. THE WINGS MAY BE CUT EARLIER PROVIDED THE SLAB CONCRETE STRENGTH HAS REACHED A MINIMUM COMPRESSIVE STRENGTH OF 10.3 MPa.

DOWELS SHALL BE USED TO CONNECT THE CULVERT EXTENSION TO THE EXISTING CULVERT AS SHOWN. FOR NOTE REGARDING SETTING OF DOWELS, SEE STANDARD NOTES SHEET SNSM.

FOR FALSEWORK AND FORMWORK, SEE SPECIAL PROVISIONS.

FOR SUBMITTAL OF WORKING DRAWINGS, SEE SPECIAL PROVISIONS.

FOR CULVERT DIVERSION DETAILS AND PAY ITEM, SEE EROSION CONTROL PLANS.

FOR CRANE SAFETY, SEE SPECIAL PROVISIONS.

FOR GROUT FOR STRUCTURES, SEE SPECIAL PROVISIONS.

ALL DIMENSIONS ARE IN MILLIMETERS UNLESS OTHERWISE NOTED.

ALL ELEVATIONS ARE IN METERS.

THE EXISTING STRUCTURE #492 CONSISTING OF 1 SPAN (27'-10") REINFORCED CONCRETE DECK GIRDERS ON A SUBSTRUCTURE OF REINFORCED CONCRETE ABUTMENTS AND LOCATED IN THE VICINITY OF THE PROPOSED CULVERT EXTENSION SHALL BE REMOVED. THE REMOVAL OF THE EXISTING STRUCTURE SHALL BE CONSIDERED INCIDENTAL TO THE CULVERT EXCAVATION.

ROADWAY DATA

GRADE POINT ELEVATION @
STA. 77+90.740 -L-_____= 724.947
℄ BED ELEV. @ STA. 77+90.740 -L- EXISTING
DOUBLE BARREL 2.7m X 2.4m RCBC_____= 719.200
℄ BED ELEV. @ -L- PROPOSED
SINGLE 3.6m X 2.7m RCBC_____= 718.900
ROADWAY FILL SLOPE _____= 2 :1

HYDRAULIC DATA

DESIGN DISCHARGE = 40.5m³/S
FREQUENCY OF DESIGN FLOOD ____= 50 YR.
DESIGN HIGH WATER ELEVATION __= 721.93
DRAINAGE AREA_____ = 10.08 Sq. Km.
BASIC DISCHARGE (Q100) _____= 49.0 m³/S
BASIC HIGH WATER ELEVATION ___= 722.17

OVERTOPPING FLOOD DATA

OVERTOPPING DISCHARGE = 100.0m³/S
FREQUENCY OF OVERTOPPING FLOOD ____= 500 YR.+
OVERTOPPING FLOOD ELEVATION _____= 723.15

TOTAL STRUCTURE QUANTITIES

CLASS A CONCRETE		
STAGE I	222.7	m^3
STAGE II	558.1	m^3
STAGE III	103.1	m^3
TOTAL	883.9	m^3
REINFORCING STEEL		
STAGE I	21,408	Kg
STAGE II	60,306	Kg
STAGE III	9,889	Kg
TOTAL	91,603	Kg
CULVERT EXCAVATION -- LUMP SUM		
FOUNDATION COND. MAT'L		
STAGE I	169	METRIC TONS
STAGE II	433	METRIC TONS
STAGE III	81	METRIC TONS
TOTAL	683	METRIC TONS

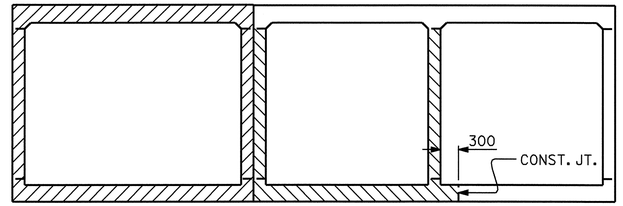

CONSTRUCTION SEQUENCE

LOOKING DOWNSTREAM

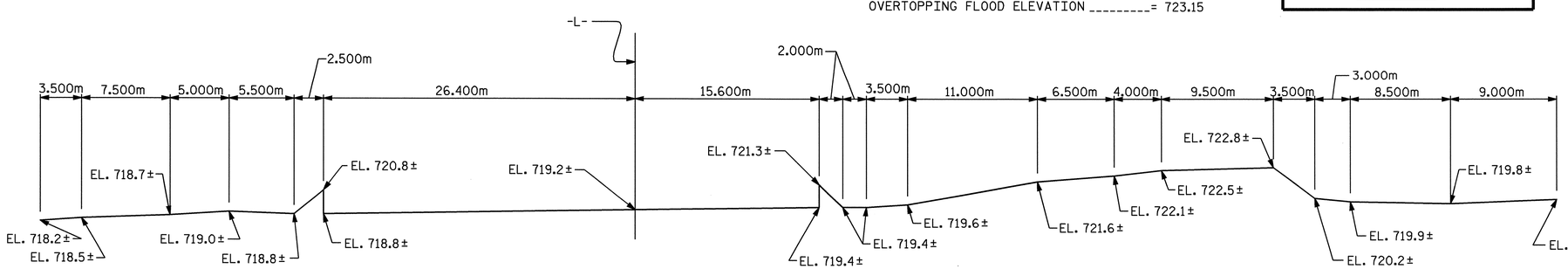

PROFILE ALONG ℄ CULVERT

METRIC

PROJECT NO. R-2518A
MADISON/YANCEY COUNTY
STATION: 77+90.740 -L-

SHEET 1 OF 16 CULVERT #C161

STATE OF NORTH CAROLINA
DEPARTMENT OF TRANSPORTATION
RALEIGH

DOUBLE 2.700m X 2.700m CONCRETE BOX CULVERT LEFT & RIGHT EXTENSIONS WITH SUPPLEMENTAL SINGLE 2.700m X 3.600m CONCRETE BOX CULVERT

REVISIONS						SHEET NO.
NO.	BY:	DATE:	NO.	BY:	DATE:	C-55
1			3			TOTAL SHEETS
2			4			103

DRAWN BY : D. HODGE/ L.L.M. DATE : 9/07
CHECKED BY : M.G. CHEEK DATE : 9/07

STR #10

r:\structures\str#10\dhodge\r2518a_sd_cu-str 10-3.dgn
lmurphy

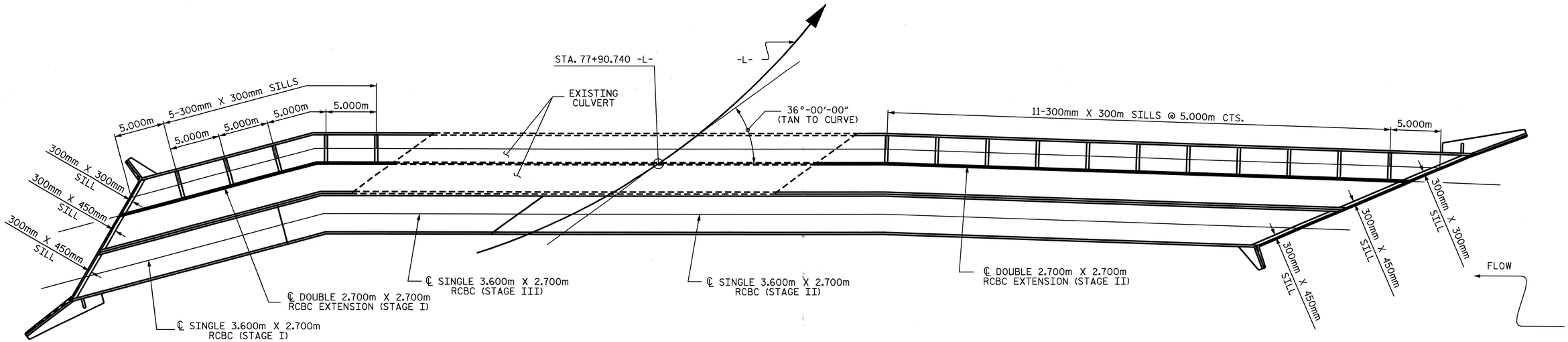

STAGING SEQUENCE & PLAN OF SILL LOCATION

STAGE I CONSTRUCTION SHALL CONSIST OF THE LEFT SIDE EXTENSION OF THE EXISTING DOUBLE 2.7m x 2.7m CULVERT AND THE PORTION OF THE PROPOSED 3.6m x 2.7m CULVERT AS SHOWN IN THE STAGING SEQUENCE SKETCH. THE PHASING OF THE PROPOSED EXTENSION OF THE EXISTING DOUBLE 2.7m x 2.7m CULVERT (PHASE I & II) SHALL FOLLOW THE CONSTRUCTION SEQUENCE SKETCH (SEE SHEET 1 OF 16), FOLLOWED BY THE CONSTRUCTION OF THE PROPOSED PORTION OF THE PROPOSED 3.6m x 2.7m CULVERT (PHASE III).

STAGE II CONSTRUCTION SHALL CONSIST OF THE RIGHT SIDE EXTENSION OF THE EXISTING DOUBLE 2.7m x 2.7m CULVERT AND THE PORTION OF THE PROPOSED SINGLE 3.6m x 2.7m CULVERT AS SHOWN IN THE STAGING SEQUENCE SKETCH. THE PHASING OF THE PROPOSED EXTENSION OF THE EXISTING DOUBLE 2.7m x 2.7m CULVERT (PHASE I & II) SHALL FOLLOW THE CONSTRUCTION SEQUENCE SKETCH (SEE SHEET 1 OF 16), FOLLOWED BY THE CONSTRUCTION OF THE PROPOSED PORTION OF THE PROPOSED 3.6m x 2.7m CULVERT (PHASE III).

STAGE III CONSTRUCTION SHALL CONSIST OF THE REMAINDER OF THE PROPOSED 3.6m x 2.7m CULVERT AS SHOWN IN THE STAGING SEQUENCE SKETCH.

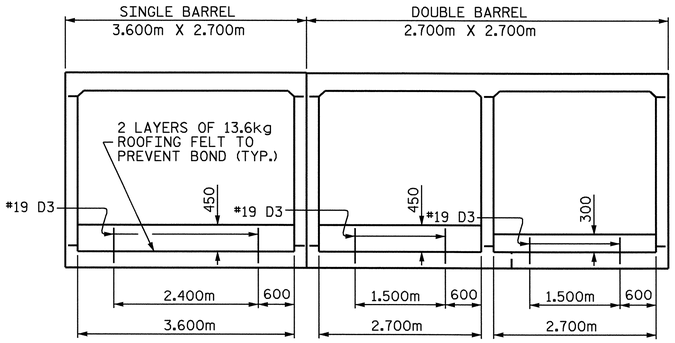

ELEVATION
(LOOKING DOWNSTREAM)

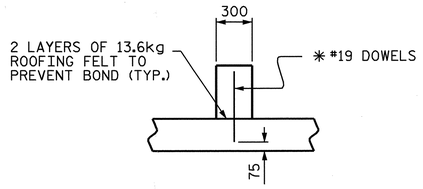

SECTION THRU SILL

* DOWELS MAY BE PUSHED INTO GREEN CONCRETE AFTER SLAB HAS BEEN FLOAT FINISHED.

CULVERT SILL DETAILS

STOCKPILE EXISTING BED MATERIAL FOR USE IN PROPOSED CULVERT. PLACE BED MATERIAL AT A DEPTH TO MATCH TOP OF SILL. BED MATERIAL MAY BE SUPPLEMENTED WITH CLASS B RIPRAP IF SUITABLE MATERIAL IS NOT AVAILABLE IN SUFFICIENT QUANTITY.

NORTH CAROLINA PROFESSIONAL SEAL 20125 ENGINEER MARSHALL G. CHEEK, JR.
4-3-08

DRAWN BY : D. HODGE/L.L.M. DATE : 9/07
CHECKED BY : M.G. CHEEK DATE : 10/07

PROJECT NO. R-2518A
MADISON/YANCEY COUNTY
STATION: 77+90.740 -L-

SHEET 2 OF 16

STATE OF NORTH CAROLINA
DEPARTMENT OF TRANSPORTATION
RALEIGH

DOUBLE 2.700m X 2.700m
CONCRETE BOX CULVERT
LEFT & RIGHT EXTENSIONS
WITH SUPPLEMENTAL
SINGLE 2.700m X 3.600m
CONCRETE BOX CULVERT

REVISIONS						SHEET NO.
NO.	BY:	DATE:	NO.	BY:	DATE:	C-56
1			3			TOTAL SHEETS
2			4			103

STR #10

02-NOV-2007 11:25
r:\struct-l\str#10\dhodge\r2518a-l.dgn
lmurphy

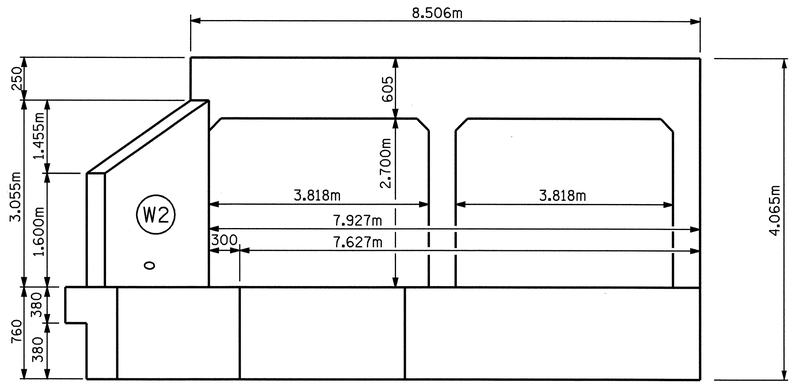

END ELEVATION NORMAL TO SKEW

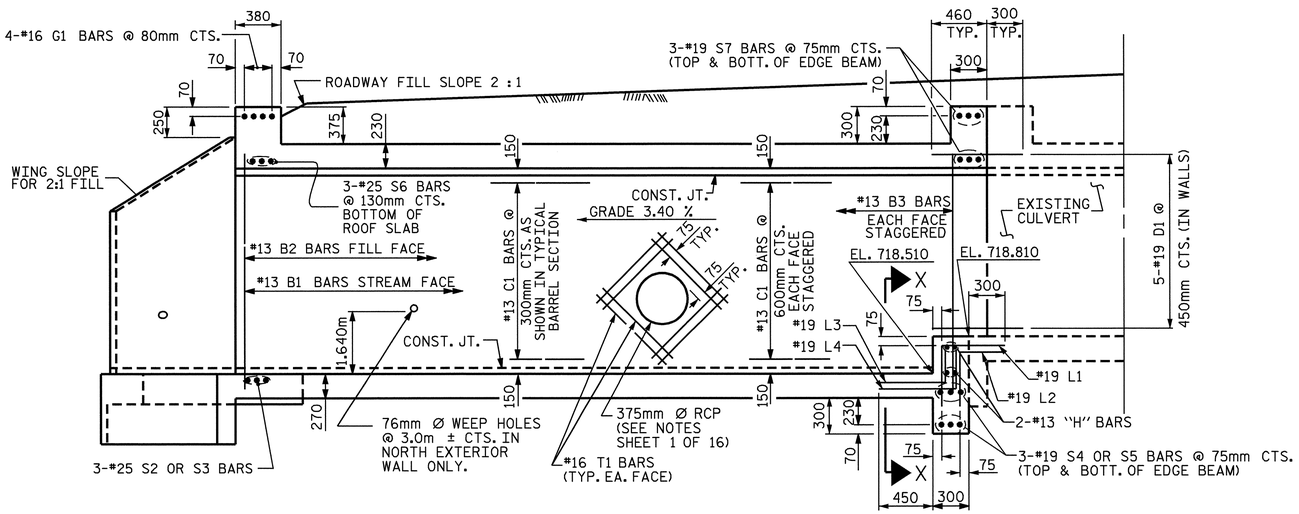

EXTERIOR WALL INTERIOR WALL

LEFT DOUBLE BARREL CULVERT EXTENSION SECTION NORMAL TO ROADWAY

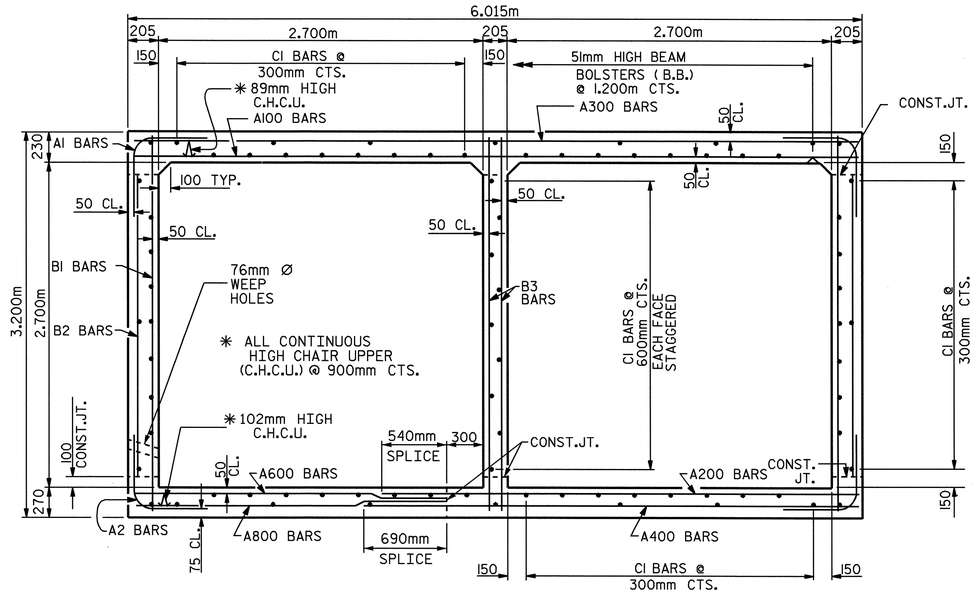

RIGHT ANGLE SECTION OF BARREL

THERE ARE 79 "C" BARS IN SECTION OF BARREL.
(LOOKING UPSTREAM)

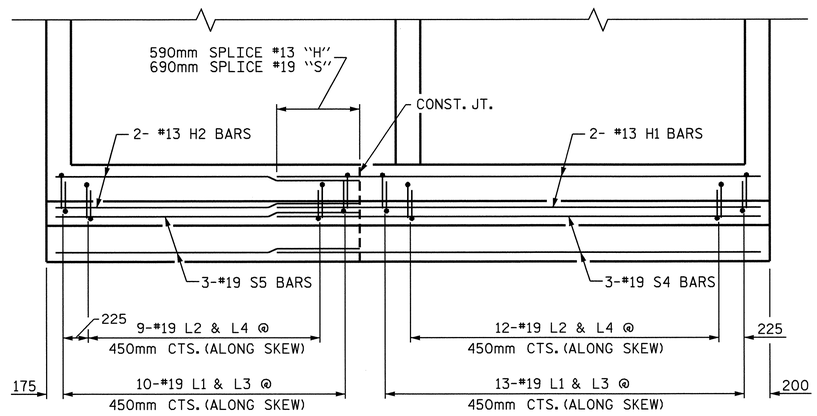

VIEW X-X

PROJECT NO. R-2518A
MADISON/YANCEY COUNTY
STATION: 77+90.740 -L-

SHEET 3 OF 16

STATE OF NORTH CAROLINA
DEPARTMENT OF TRANSPORTATION
RALEIGH

DOUBLE 2.700m X 2.700m CONCRETE BOX CULVERT (LEFT EXTENSION) STAGE I

REVISIONS						SHEET NO.
NO.	BY:	DATE:	NO.	BY:	DATE:	C-57
1			3			TOTAL SHEETS
2			4			103

NORTH CAROLINA PROFESSIONAL SEAL 20125 ENGINEER MARSHALL G. CHEEK, JR.
11-2-07

ASSEMBLED BY : D. HODGE/L.L.M. DATE : 8/07
CHECKED BY : M.G. CHEEK DATE : 9/07

STR #10

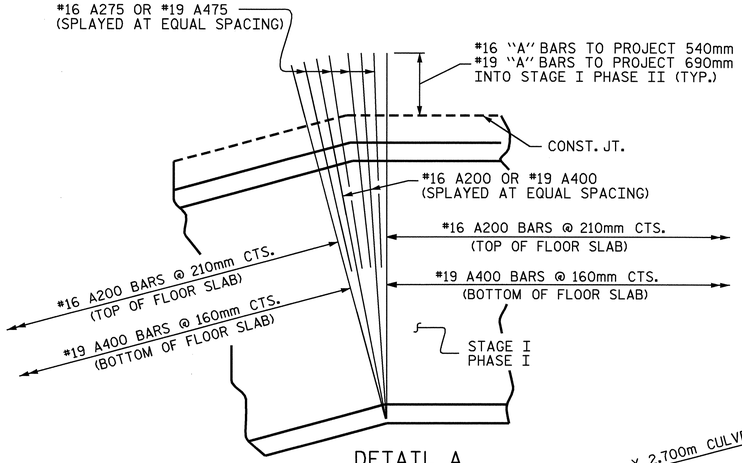

DETAIL A

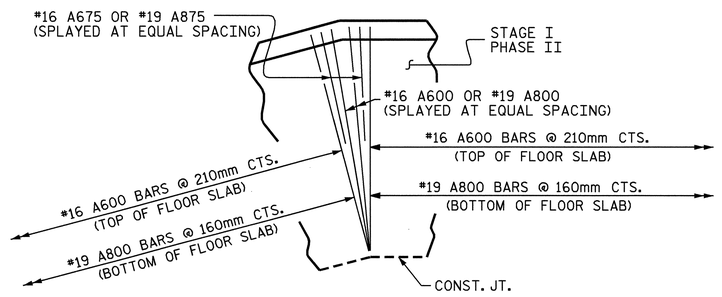

DETAIL B

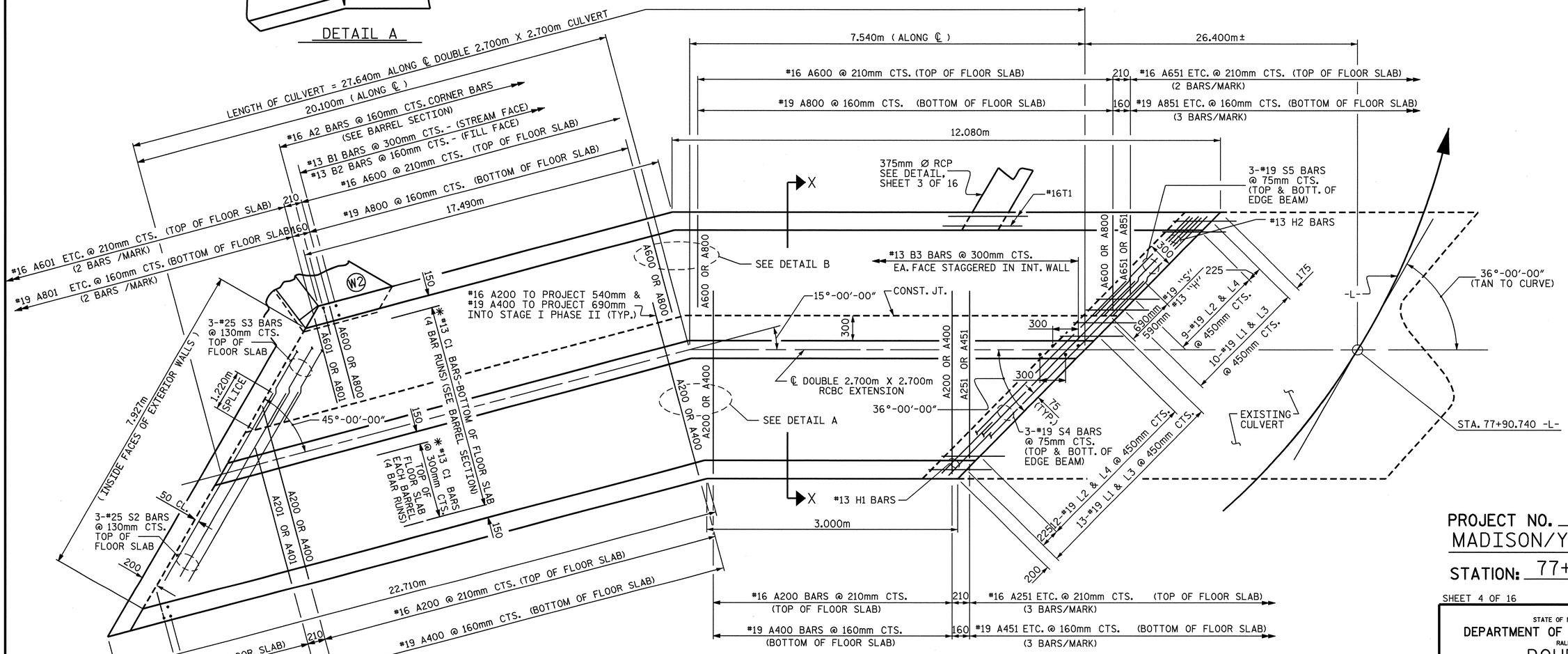

PLAN - FLOOR SLAB

*#13 C1 BARS SHALL BE FIELD BENT AS NECESSARY.

PROJECT NO. R-2518A
MADISON/YANCEY COUNTY
STATION: 77+90.740 -L-

SHEET 4 OF 16

STATE OF NORTH CAROLINA
DEPARTMENT OF TRANSPORTATION
RALEIGH

DOUBLE 2.700m X 2.700m CONCRETE BOX CULVERT (LEFT EXTENSION) STAGE I

REVISIONS						SHEET NO.
NO.	BY:	DATE:	NO.	BY:	DATE:	C-58
1			3			TOTAL SHEETS
2			4			103

NORTH CAROLINA PROFESSIONAL SEAL 20125 ENGINEER MARSHALL G. CHEEK JR.
11-2-07

ASSEMBLED BY : D. HODGE/L.L.M. DATE : 8/07
CHECKED BY : M.G. CHEEK DATE : 9/07

r:\structure\str#10\dhodge\r2518a01.dgn
lmurphy

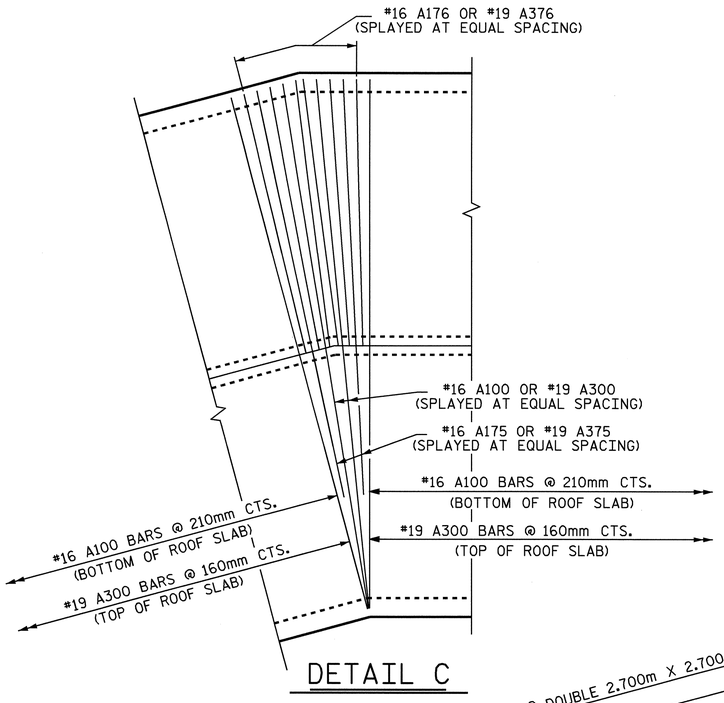

DETAIL C

STRUCTURE QUANTITIES STAGE I

CLASS A CONCRETE		
DOUBLE BARREL @	4.64 m³/m	128.2 m³
SINGLE BARREL @	3.41 m³/m	69.2 m³
EDGE BEAMS		1.8 m³
SILLS		2.8 m³
WINGS ETC.		20.7 m³
TOTAL		222.7 m³
REINFORCING STEEL		
DOUBLE BARREL		13,752 kg
SINGLE BARREL		6,548 kg
WINGS, ETC.		1,108 kg
TOTAL		21,408 kg
CULVERT EXCAVATION ---------- LUMP SUM		
FOUNDATION CONDITIONING MATERIAL		
DOUBLE BARREL		113 METRIC TONS
SINGLE BARREL		56 METRIC TONS
TOTAL		169 METRIC TONS

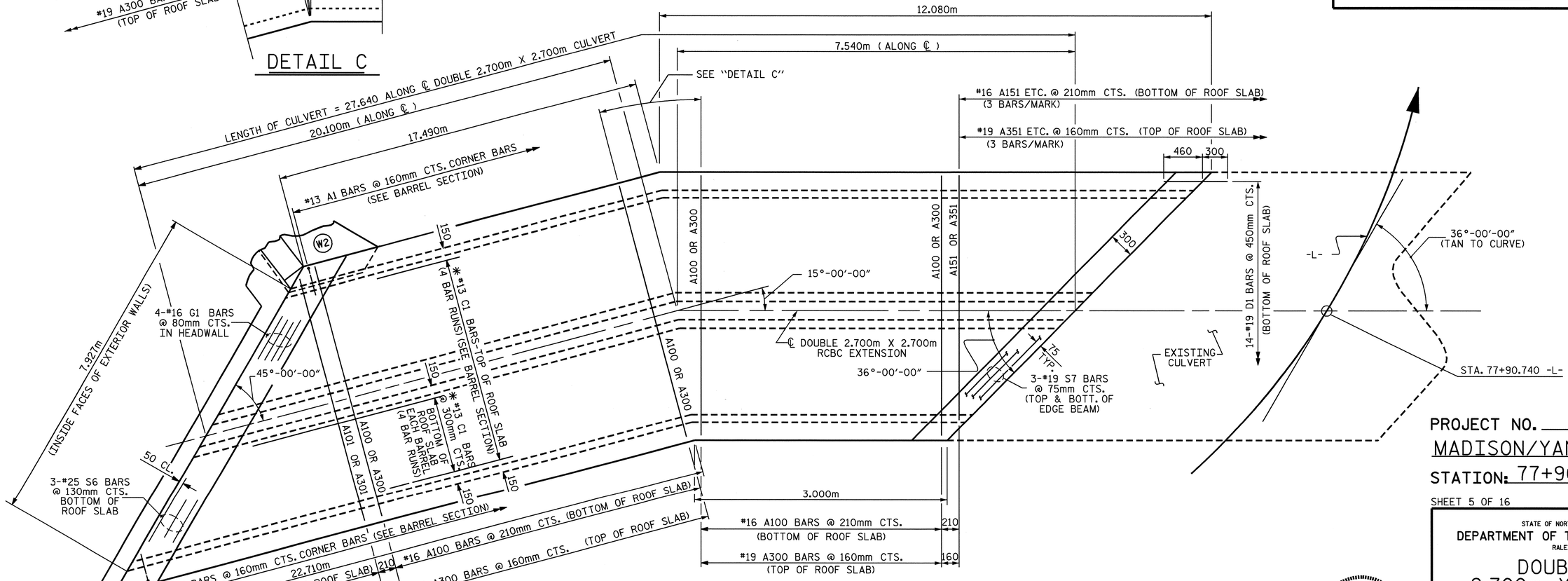

PLAN - ROOF SLAB

*#13 C1 BARS SHALL BE FIELD BENT AS NECESSARY.

PROJECT NO. R-2518A

MADISON/YANCEY COUNTY

STATION: 77+90.740 -L-

SHEET 5 OF 16

STATE OF NORTH CAROLINA
DEPARTMENT OF TRANSPORTATION
RALEIGH

DOUBLE 2.700m X 2.700m CONCRETE BOX CULVERT (LEFT EXTENSION) STAGE I

REVISIONS						SHEET NO.
NO.	BY:	DATE:	NO.	BY:	DATE:	C-59
1			3			TOTAL SHEETS
2			4			103

NORTH CAROLINA PROFESSIONAL SEAL 20125 ENGINEER MARSHALL G. CHEEK
11-2-07

DRAWN BY : D. HODGE/L.L.M. DATE : 8/07
CHECKED BY : M.G. CHEEK DATE : 9/07

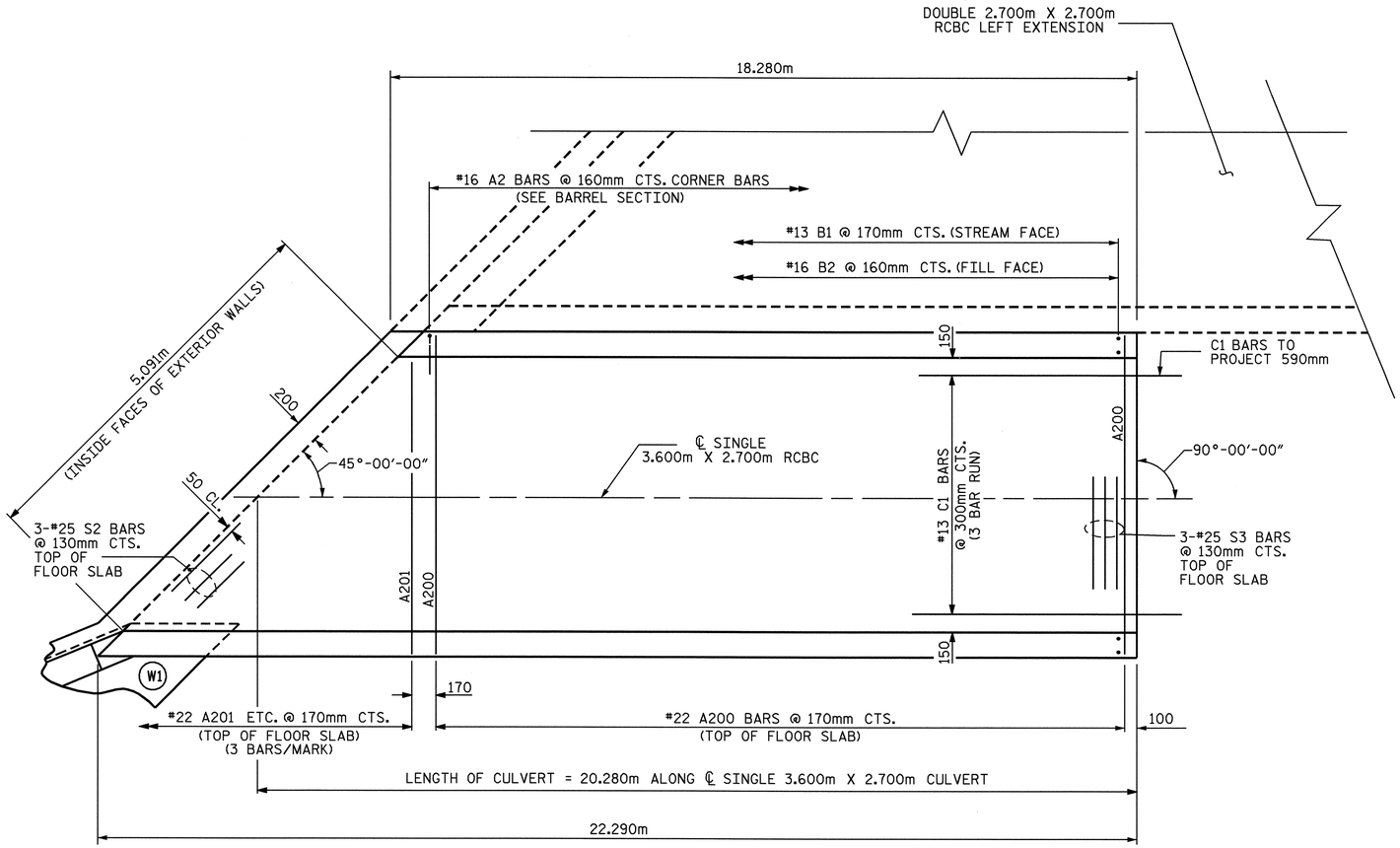

PLAN - FLOOR SLAB

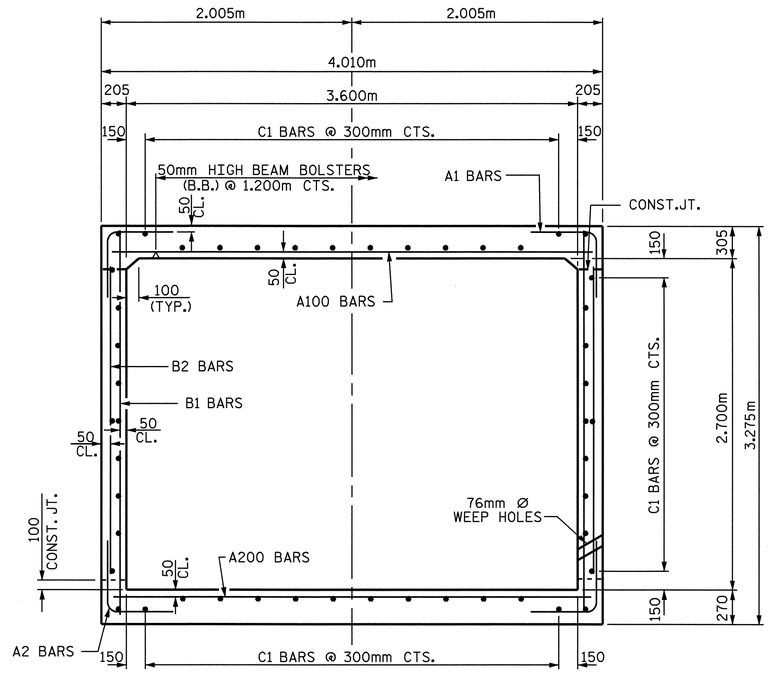

RIGHT ANGLE SECTION OF BARREL

THERE ARE 48 "C" BARS IN SECTION OF BARREL

PROJECT NO. R-2518A
MADISON/YANCEY COUNTY
STATION: 77+90.740 -L-

SHEET 6 OF 16

STATE OF NORTH CAROLINA
DEPARTMENT OF TRANSPORTATION
RALEIGH

SINGLE 3.600m X 2.700m CONCRETE BOX CULVERT STAGE I

REVISIONS						SHEET NO.
NO.	BY:	DATE:	NO.	BY:	DATE:	C-60
1			3			TOTAL SHEETS
2			4			103

NORTH CAROLINA PROFESSIONAL SEAL 20125 ENGINEER MARSHALL L. MURPHY, JR.
11-2-07

ASSEMBLED BY : D. HODGE/L.L.M. DATE : 8/07
CHECKED BY : M.G. CHEEK DATE : 9/07

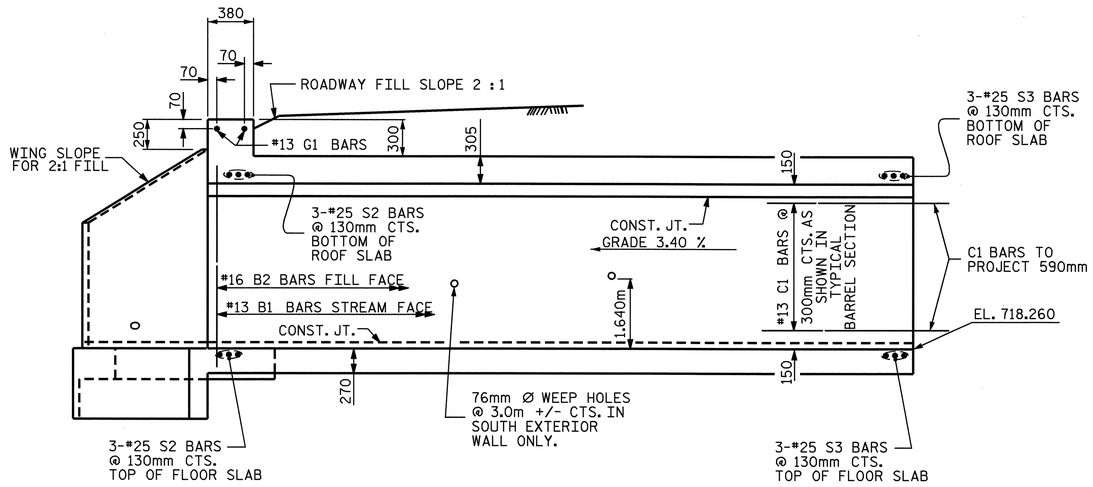

LEFT SINGLE BARREL CULVERT SECTION NORMAL TO ROADWAY

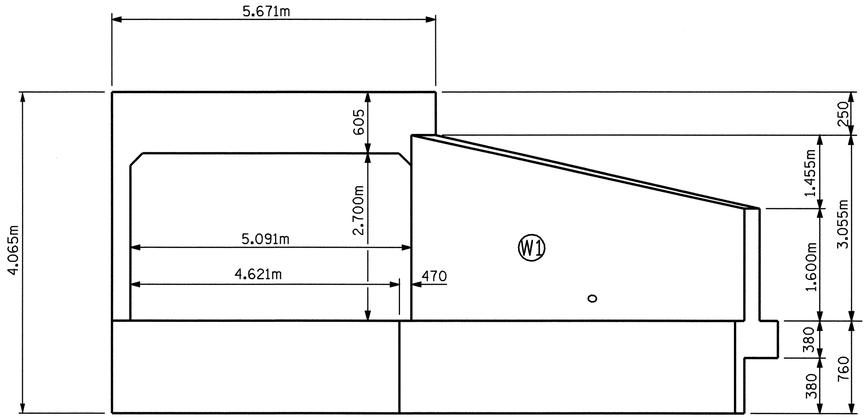

END ELEVATION NORMAL TO SKEW

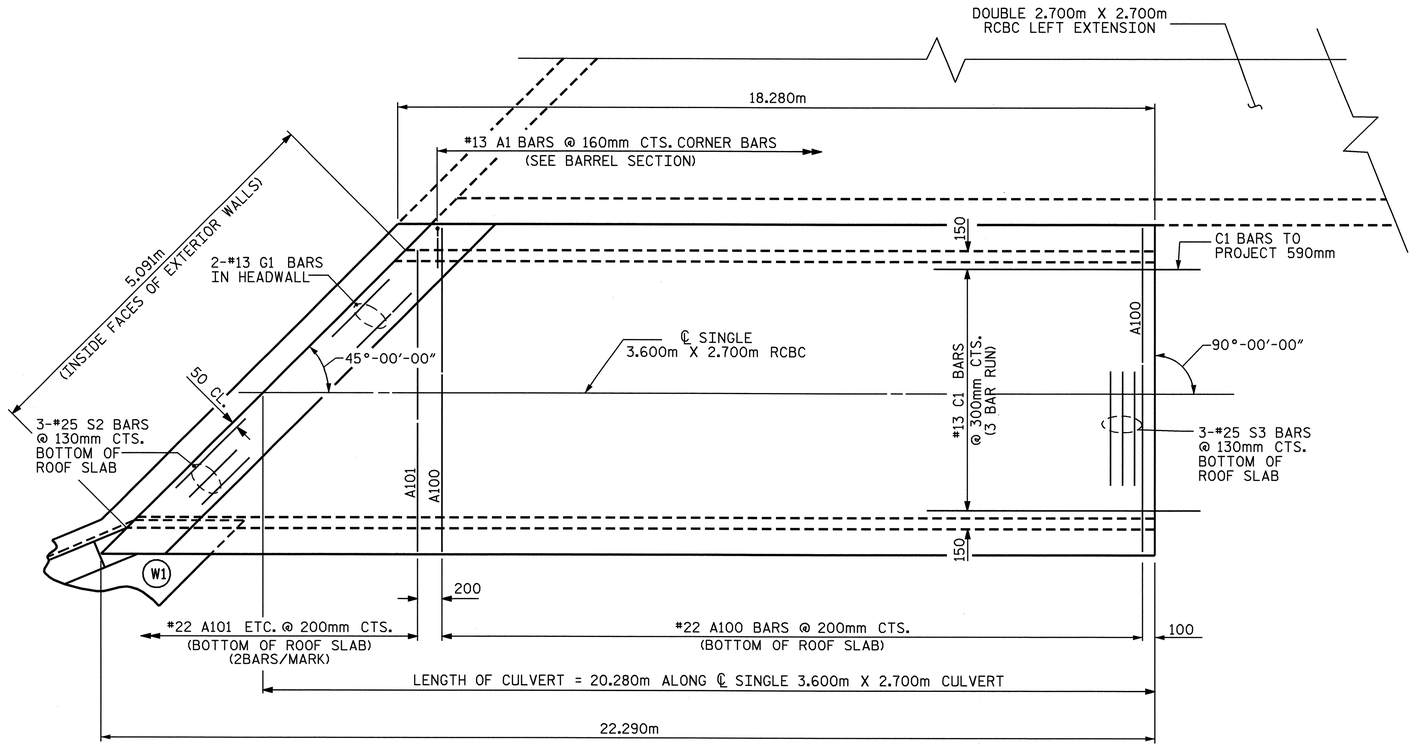

PLAN - ROOF SLAB

ASSEMBLED BY : D. HODGE/L.L.M. DATE : 8/07
CHECKED BY : M.G. CHEEK DATE : 9/07

PROJECT NO. R-2518A
MADISON/YANCEY COUNTY
STATION: 77+90.740 -L-

SHEET 7 OF 16

STATE OF NORTH CAROLINA
DEPARTMENT OF TRANSPORTATION
RALEIGH

SINGLE 3.600m X 2.700m CONCRETE BOX CULVERT STAGE I

REVISIONS						SHEET NO.
NO.	BY:	DATE:	NO.	BY:	DATE:	C-61
1			3			TOTAL SHEETS
2			4			103

NORTH CAROLINA PROFESSIONAL SEAL 20125 ENGINEER
11-2-07

STR #10

r:\structure\str#10\dhodge\r2518a01.dgn
lmurphy

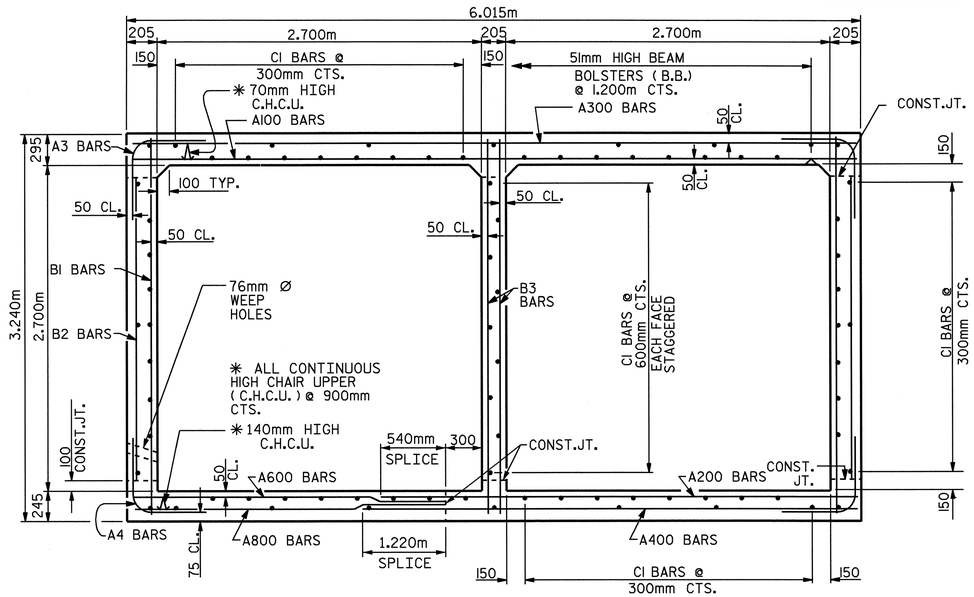

RIGHT ANGLE SECTION OF BARREL

THERE ARE 79 "C" BARS IN SECTION OF BARREL.
(LOOKING UPSTREAM)

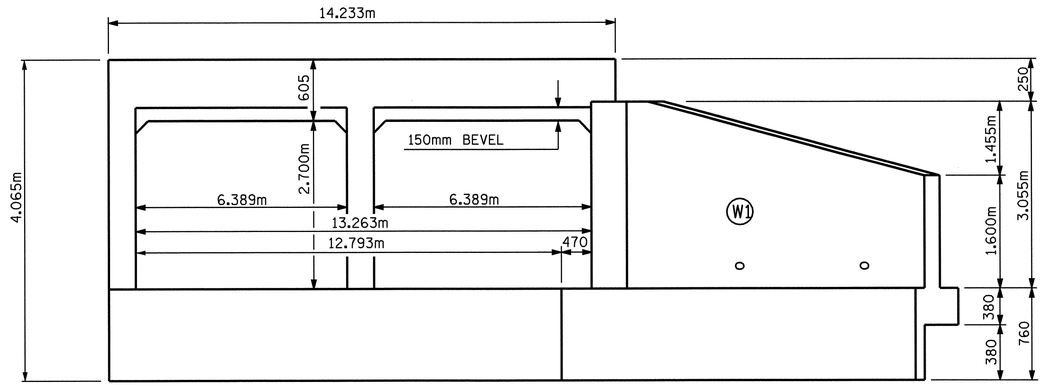

END ELEVATION NORMAL TO SKEW

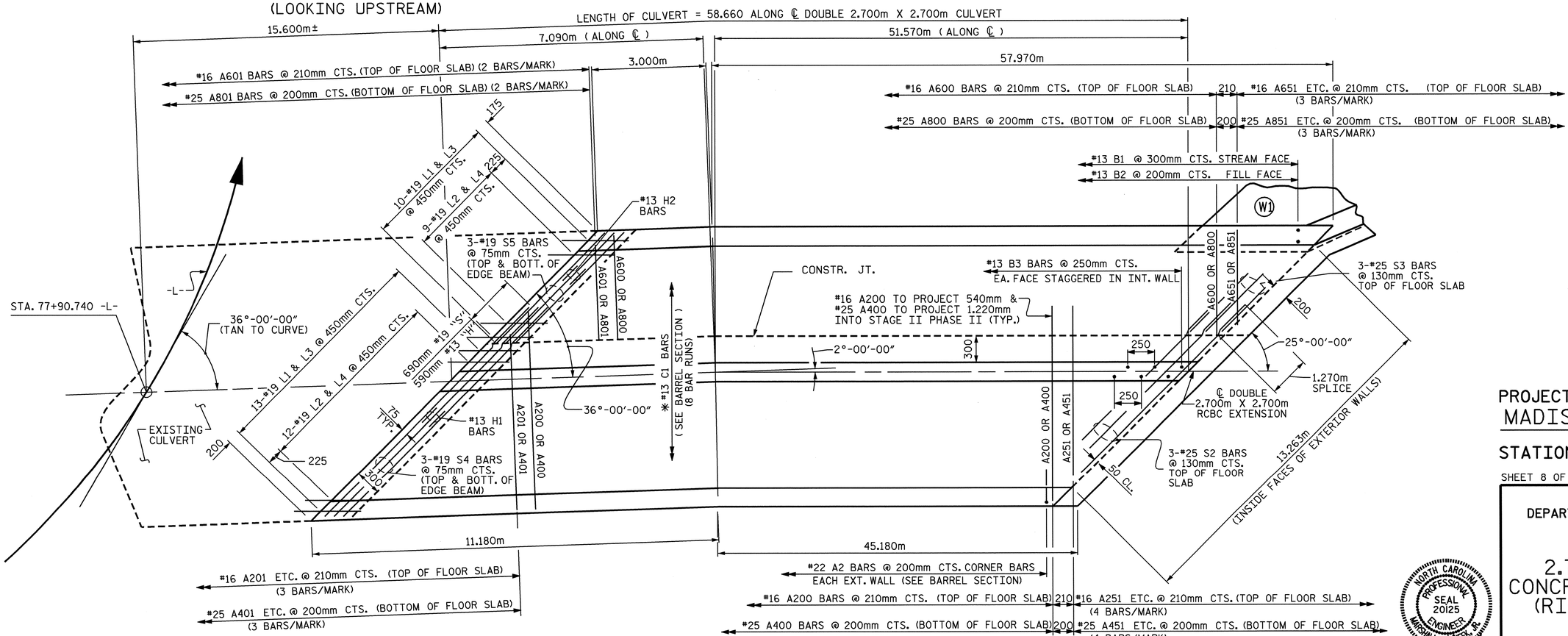

PLAN - FLOOR SLAB

*#13 C1 BARS SHALL BE FIELD BENT AS NECESSARY.

NORTH CAROLINA PROFESSIONAL SEAL 20125 ENGINEER MARSHALL G. CHEEK, JR. 11-2-07

PROJECT NO. R-2518A
MADISON/YANCEY COUNTY
STATION: 77+90.740 -L-

SHEET 8 OF 16

STATE OF NORTH CAROLINA
DEPARTMENT OF TRANSPORTATION
RALEIGH

DOUBLE 2.700m X 2.700m CONCRETE BOX CULVERT (RIGHT EXTENSION) STAGE II

REVISIONS						SHEET NO.
NO.	BY:	DATE:	NO.	BY:	DATE:	C-62
1			3			TOTAL SHEETS
2			4			103

DRAWN BY : D. HODGE/L.L.M. DATE : 9/07
CHECKED BY : M.G. CHEEK DATE : 9/07

STR #10

r:\structdl\str#10\dhodge\r2518adl.dgn
lmurphy

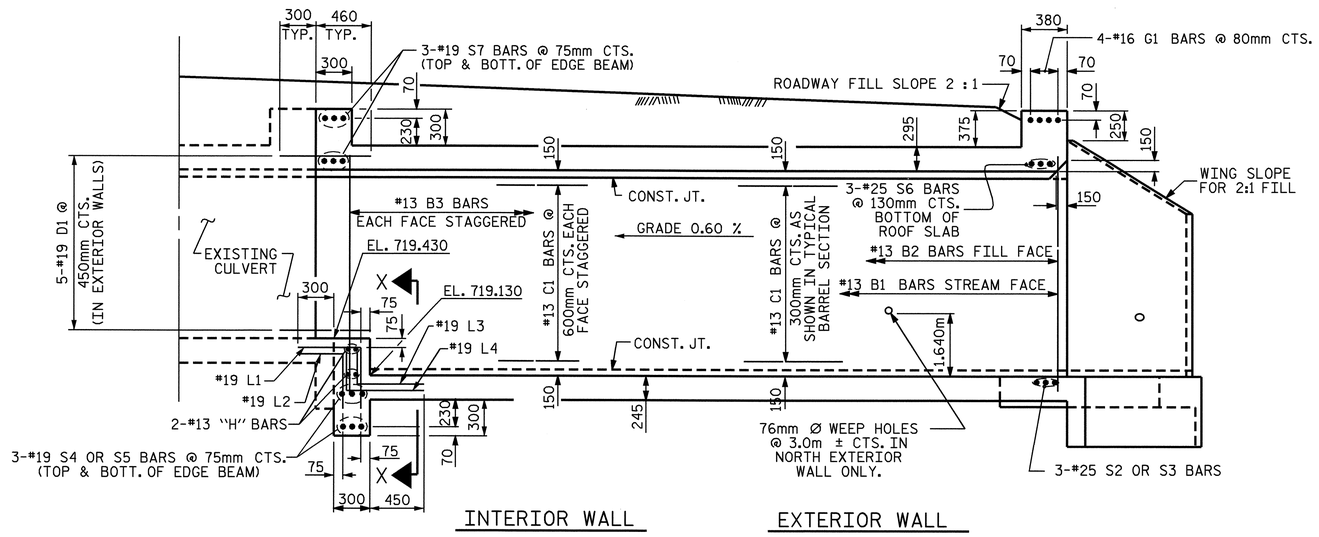

RIGHT DOUBLE BARREL CULVERT EXTENSION SECTION NORMAL TO ROADWAY

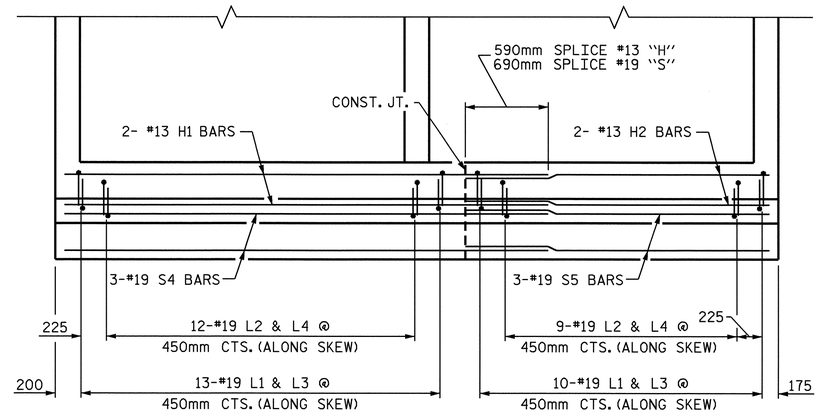

VIEW X-X

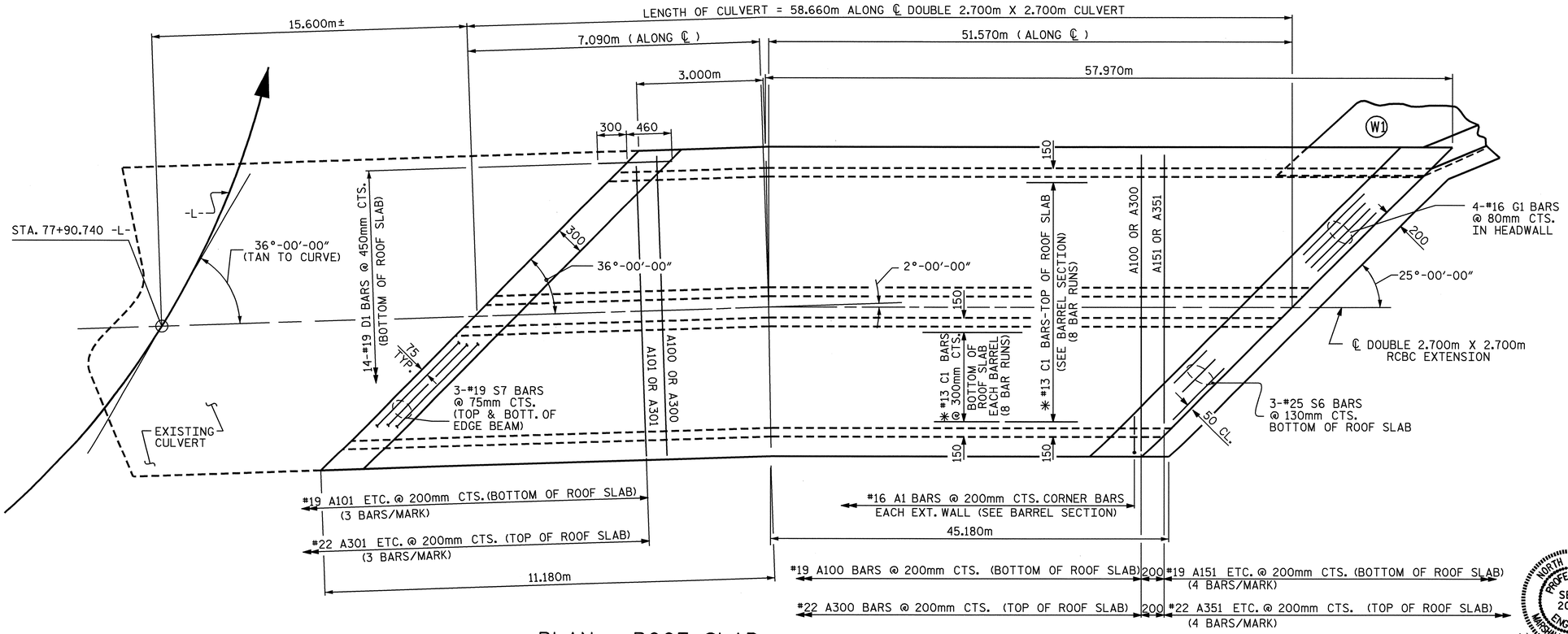

PLAN - ROOF SLAB

* #13 C1 BARS SHALL BE FIELD BENT AS NECESSARY.

NORTH CAROLINA PROFESSIONAL SEAL 20125 ENGINEER MARSHALL G. CHEEK, JR.
11-2-07

PROJECT NO. R-2518A
MADISON/YANCEY COUNTY
STATION: 77+90.740 -L-

SHEET 9 OF 16

STATE OF NORTH CAROLINA
DEPARTMENT OF TRANSPORTATION
RALEIGH

DOUBLE 2.700m X 2.700m CONCRETE BOX CULVERT (RIGHT EXTENSION) STAGE II

REVISIONS						SHEET NO.
NO.	BY:	DATE:	NO.	BY:	DATE:	C-63
1			3			TOTAL SHEETS
2			4			103

DRAWN BY : D. HODGE/L.L.M. DATE : 9/07
CHECKED BY : M.G. CHEEK DATE : 9/07

STR #10

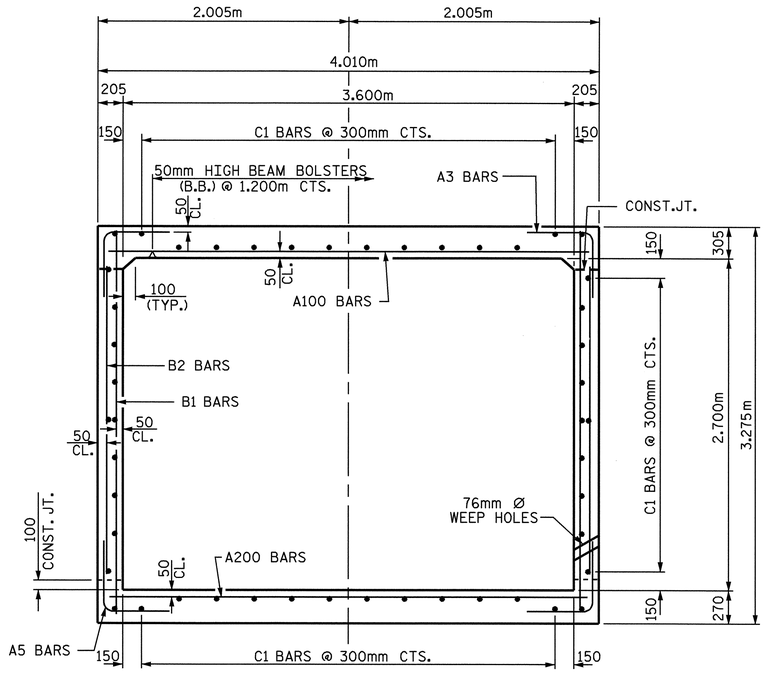

RIGHT ANGLE SECTION OF BARREL

THERE ARE 48 "C" BARS IN SECTION OF BARREL

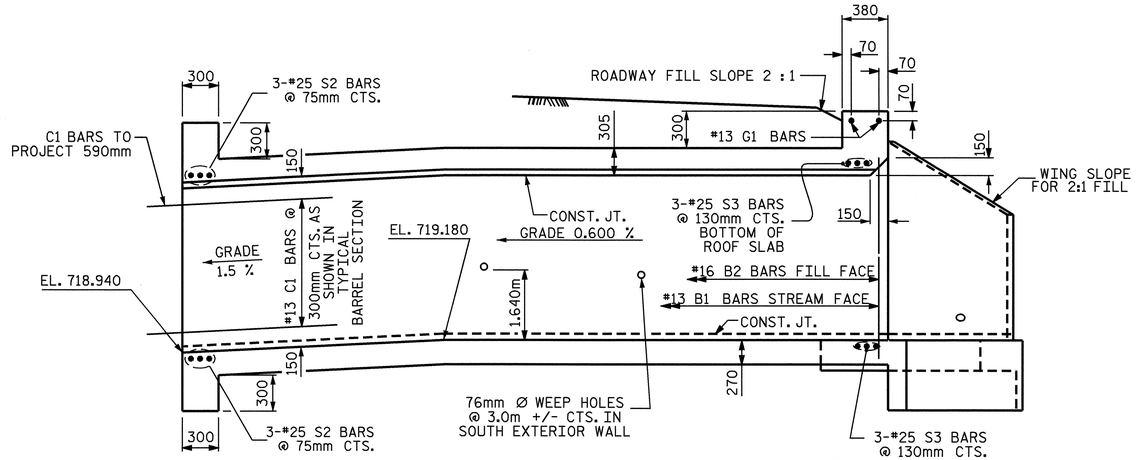

CULVERT SECTION NORMAL TO ROADWAY

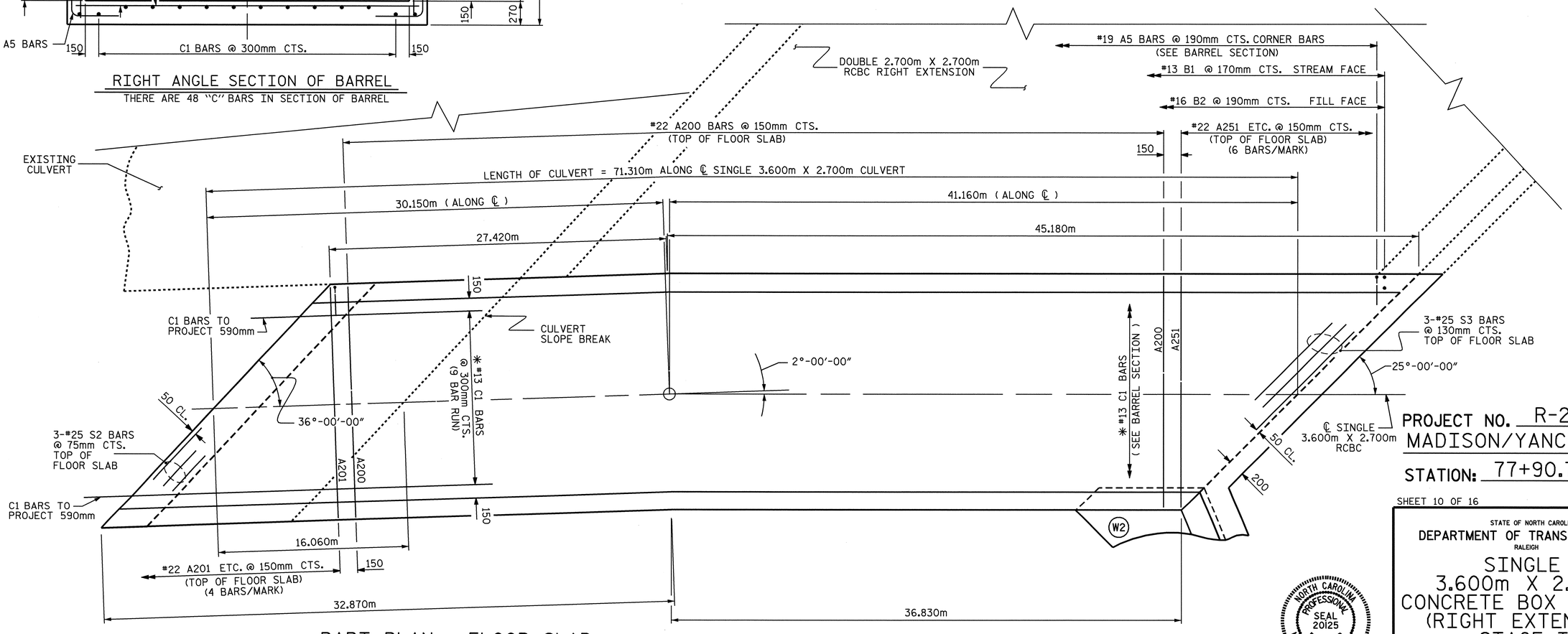

PART PLAN - FLOOR SLAB

*#13 C1 BARS SHALL BE FIELD BENT AS NECESSARY.

ASSEMBLED BY : D. HODGE/L.L.M. DATE : 8/07
CHECKED BY : M.G. CHEEK DATE : 9/07

PROJECT NO. R-2518A
MADISON/YANCEY COUNTY
STATION: 77+90.740 -L-

SHEET 10 OF 16

STATE OF NORTH CAROLINA
DEPARTMENT OF TRANSPORTATION
RALEIGH

SINGLE 3.600m X 2.700m CONCRETE BOX CULVERT (RIGHT EXTENSION) STAGE II

REVISIONS						SHEET NO.
NO.	BY:	DATE:	NO.	BY:	DATE:	C-64
1			3			TOTAL SHEETS
2			4			103

NORTH CAROLINA PROFESSIONAL SEAL 20125 ENGINEER MARSHALL G. CHEEK, JR.
11-2-07

STR #10

STRUCTURE QUANTITIES
STAGE II

CLASS A CONCRETE			
DOUBLE BARREL @	4.87 m³/m	285.7	m³
SINGLE BARREL @	3.41 m³/m	243.2	m³
(DOUBLE) EDGE BEAMS		1.8	m³
(SINGLE) EDGE BEAMS		0.6	m³
SILLS		5.2	m³
WINGS ETC.		21.6	m³
TOTAL		558.1	m³

REINFORCING STEEL		
DOUBLE BARREL	35,123	kg
SINGLE BARREL	24,075	kg
WINGS ETC.	1,108	kg
TOTAL	60,306	kg

CULVERT EXCAVATION ---------- LUMP SUM

FOUNDATION CONDITIONING MATERIAL		
DOUBLE BARREL	239	METRIC TONS
SINGLE BARREL	194	METRIC TONS
TOTAL	433	METRIC TONS

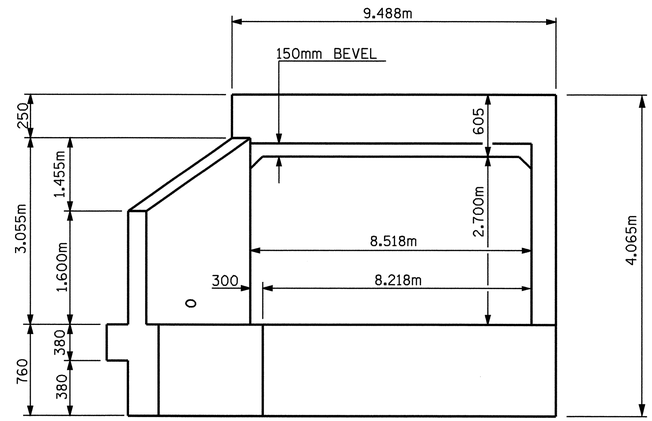

END ELEVATION NORMAL TO SKEW

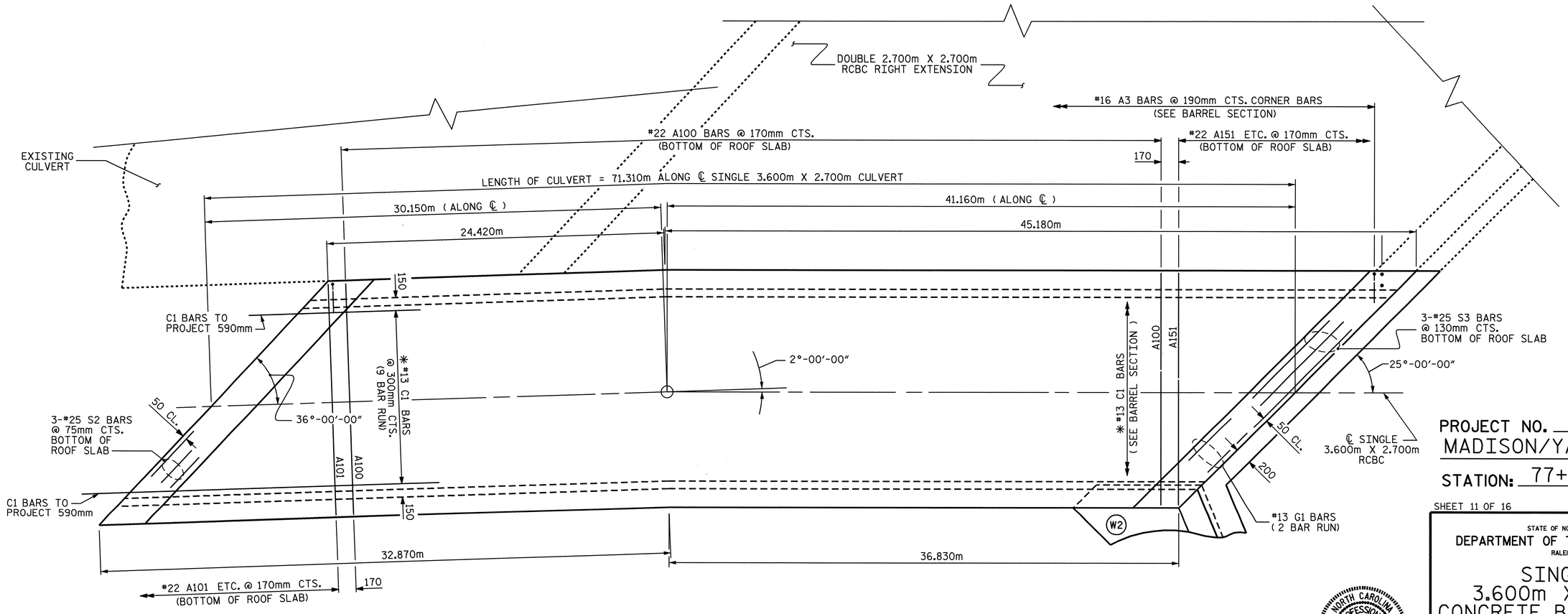

PART PLAN - ROOF SLAB

*#13 C1 BARS SHALL BE FIELD BENT AS NECESSARY.

PROJECT NO. R-2518A
MADISON/YANCEY COUNTY
STATION: 77+90.740 -L-

SHEET 11 OF 16

STATE OF NORTH CAROLINA
DEPARTMENT OF TRANSPORTATION
RALEIGH

SINGLE 3.600m X 2.700m CONCRETE BOX CULVERT (RIGHT EXTENSION) STAGE II

REVISIONS						SHEET NO.
NO.	BY:	DATE:	NO.	BY:	DATE:	C-65
1			3			TOTAL SHEETS
2			4			103

NORTH CAROLINA PROFESSIONAL SEAL 20125 ENGINEER MARSHALL G. CHEEK, JR.
11-2-07

ASSEMBLED BY : D. HODGE/L.L.M. DATE : 8/07
CHECKED BY : M.G. CHEEK DATE : 9/07

STR #10

02-NOV-2007 11:24
r:\struct~1\str#10\dhodge\r2518a~1.dgn
lmurphy

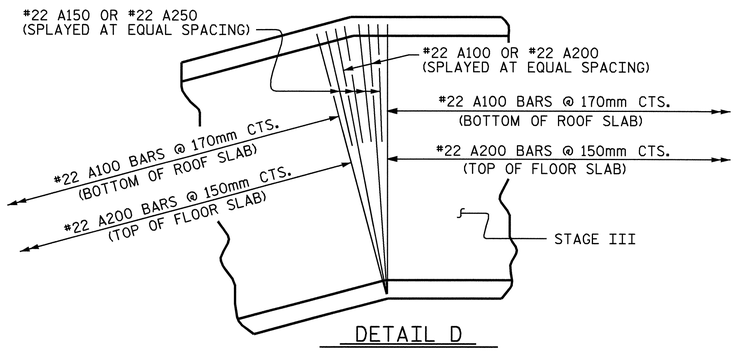

DETAIL D

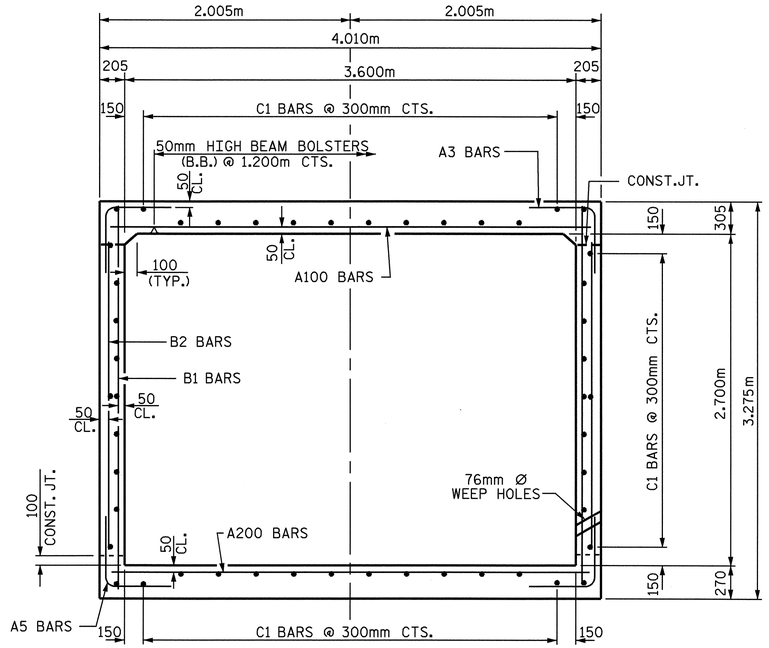

RIGHT ANGLE SECTION OF BARREL

THERE ARE 48 "C" BARS IN SECTION OF BARREL

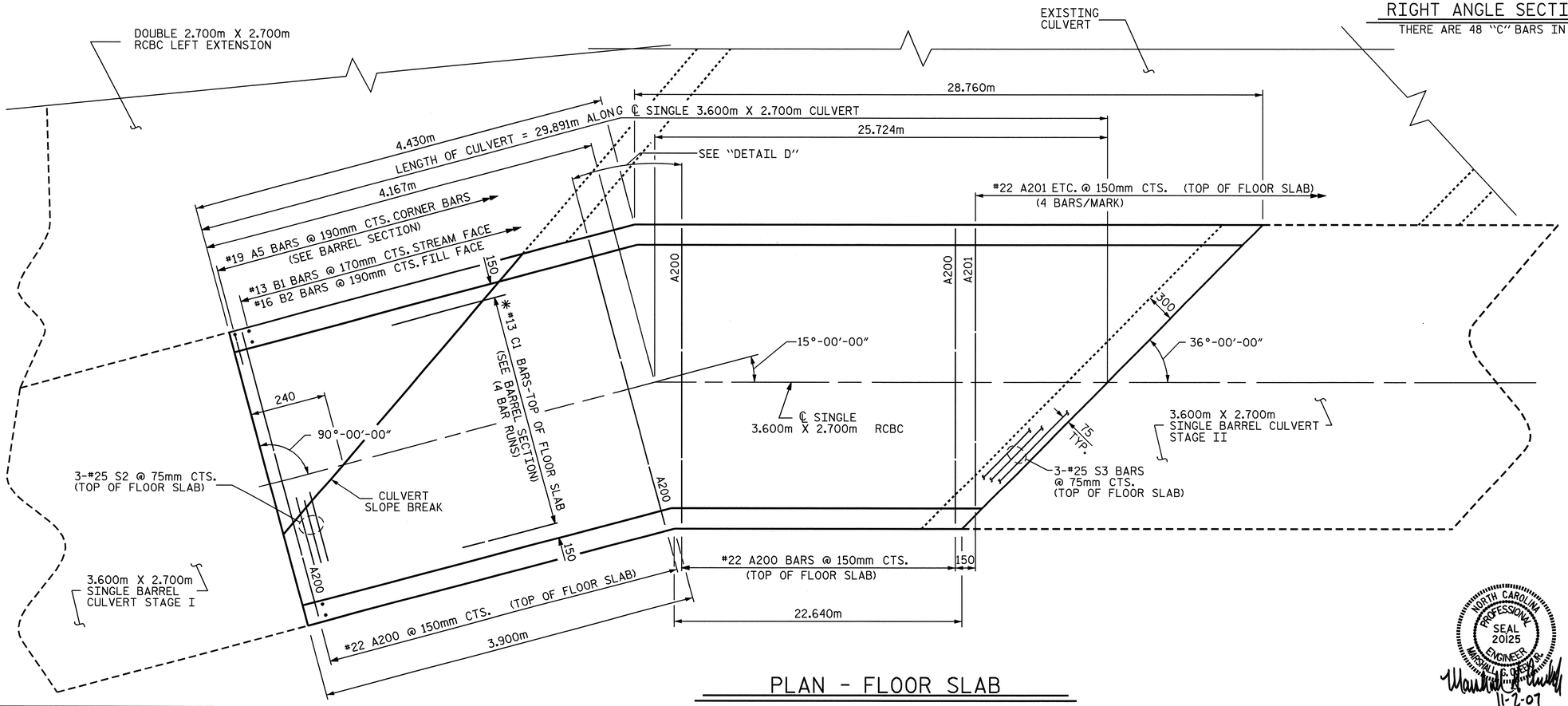

PLAN - FLOOR SLAB

*#13 C1 BARS SHALL BE FIELD BENT AS NECESSARY.

ASSEMBLED BY : D. HODGE/L.L.M. DATE : 8/07
CHECKED BY : M.G. CHEEK DATE : 9/07

NORTH CAROLINA PROFESSIONAL SEAL 20125 ENGINEER MARSHALL G. CHEEK, JR.
11-2-07

PROJECT NO. R-2518A
MADISON/YANCEY COUNTY
STATION: 77+90.740 -L-

SHEET 12 OF 16

STATE OF NORTH CAROLINA
DEPARTMENT OF TRANSPORTATION
RALEIGH

SINGLE 3.600m X 2.700m CONCRETE BOX CULVERT STAGE III

REVISIONS						SHEET NO.
NO.	BY:	DATE:	NO.	BY:	DATE:	C-66
1			3			TOTAL SHEETS
2			4			103

02-NOV-2007 11:25
ri\struct-l\str#10\dhodge\r2518a-l.dgn
lmurphy

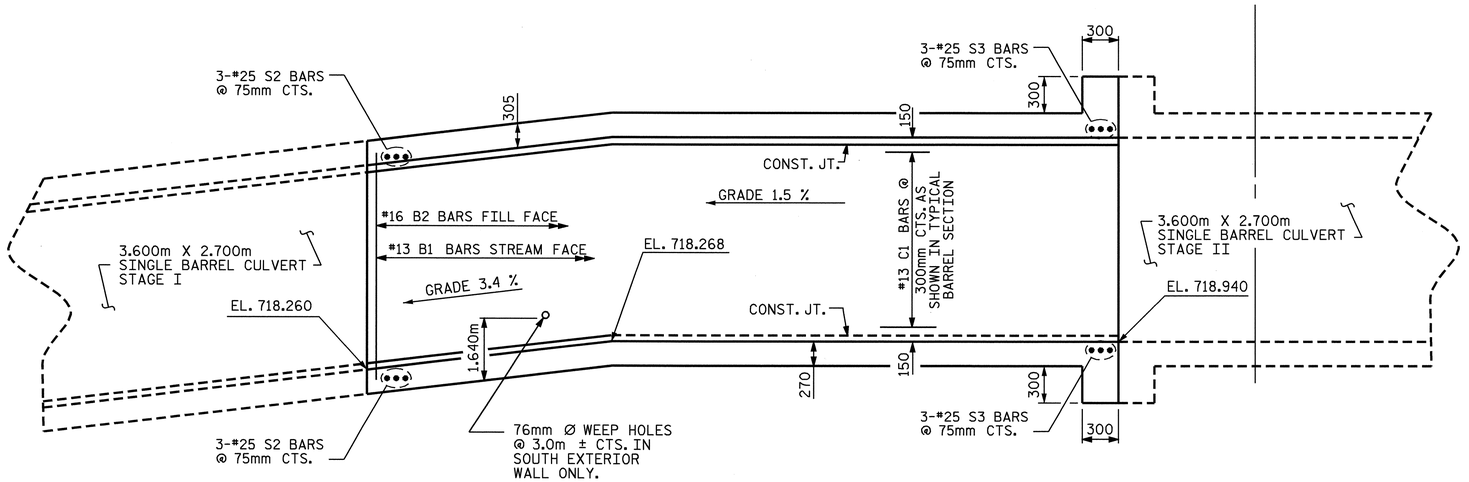

CULVERT SECTION NORMAL TO ROADWAY

STRUCTURE QUANTITIES STAGE III			
CLASS A CONCRETE			
SINGLE BARREL @	3.41 m^3 /m	101.9	m^3
EDGE BEAMS		1.2	m^3
TOTAL		103.1	m^3
REINFORCING STEEL			
BARREL		9889	kg
TOTAL		9889	kg
CULVERT EXCAVATION ---------- LUMP SUM			
FOUNDATION COND. MAT'L ---- 81 METRIC TONS			

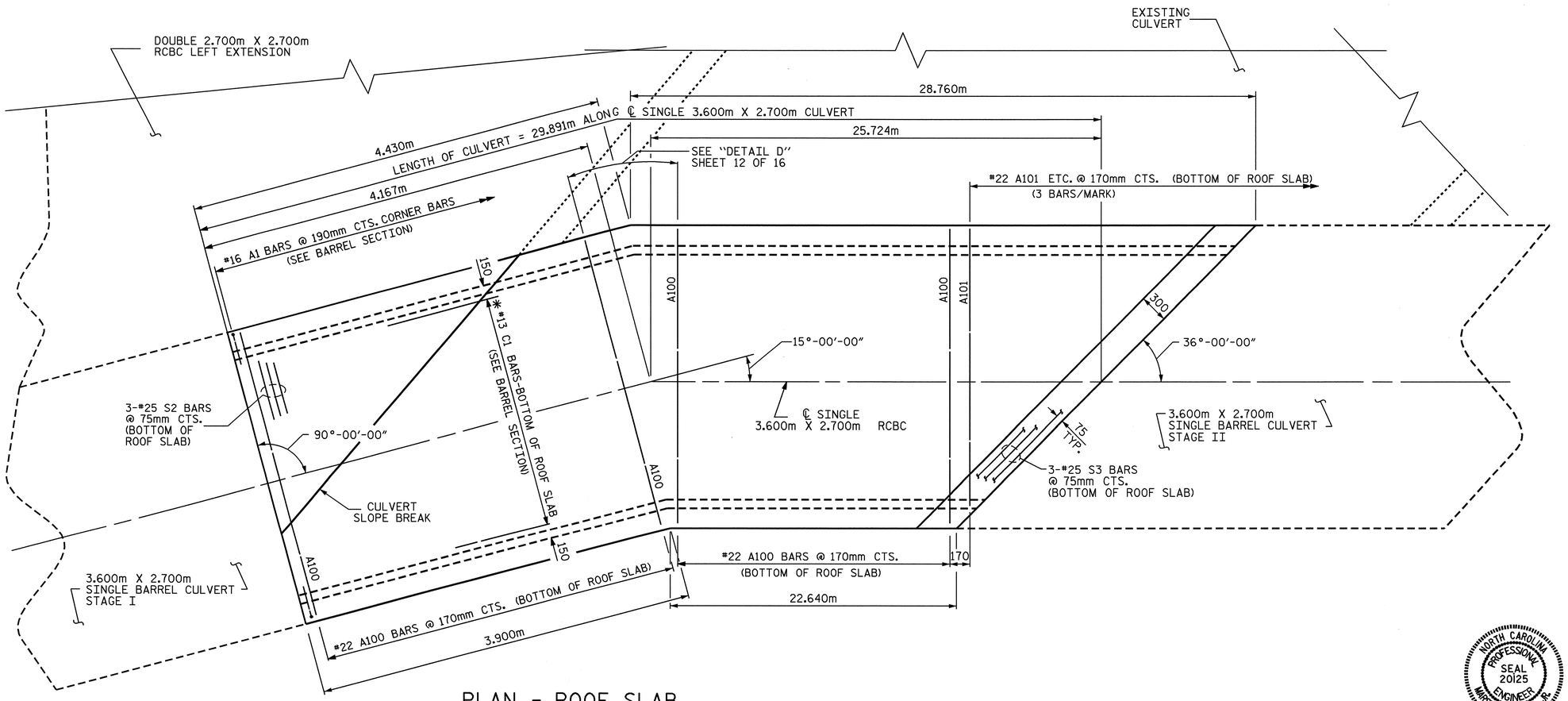

PLAN - ROOF SLAB

*#13 C1 BARS SHALL BE FIELD BENT AS NECESSARY.

ASSEMBLED BY : D. HODGE/L.L.M. DATE : 8/07
CHECKED BY : M.G. CHEEK DATE : 9/07

PROJECT NO. R-2518A
MADISON/YANCEY COUNTY
STATION: 77+90.740 -L-

SHEET 13 OF 16

STATE OF NORTH CAROLINA
DEPARTMENT OF TRANSPORTATION
RALEIGH

SINGLE 3.600m X 2.700m CONCRETE BOX CULVERT STAGE III

NORTH CAROLINA PROFESSIONAL SEAL 20125 ENGINEER MARSHALL G. CHEEK, JR.
11-2-07

REVISIONS						SHEET NO.
NO.	BY:	DATE:	NO.	BY:	DATE:	C-67
1			3			TOTAL SHEETS
2			4			103

r:\structure\str#10\dhodge\r2518a01.dgn
lmurphy

REINFORCING STEEL BAR SCHEDULE

3.600m X 2.700m SINGLE BARREL STAGE I

BAR	NO.	SIZE	TYPE	LENGTH	WEIGHT
A1	254	#13	1	1340	338
A2	254	#16	1	1380	544
A100	92	#22	STR	3860	1080
A101	2	#22	STR	3460	21
A102	2	#22	STR	3040	18
A103	2	#22	STR	2660	16
A104	2	#22	STR	2260	14
A105	2	#22	STR	1860	11
A106	2	#22	STR	1440	9
A107	2	#22	STR	1060	6
A108	2	#22	STR	660	4
A200	108	#22	STR	3860	1268
A201	3	#22	STR	3360	31
A202	3	#22	STR	2840	26
A203	3	#22	STR	2340	21
A204	3	#22	STR	1820	17
A205	3	#22	STR	1320	12
A206	3	#22	STR	780	7
B1	240	#13	STR	3100	740
B2	254	#16	STR	2480	978
C1	144	#13	STR	8020	1148
D3	2	#19	STR	560	3
G1	2	#13	STR	5520	11
S2	6	#25	STR	5520	132
S3	6	#25	STR	3900	93

REINFORCING STEEL = 6548 kg

3.600m X 2.700m SINGLE BARREL STAGE III

BAR	NO.	SIZE	TYPE	LENGTH	WEIGHT
A3	316	#16	1	1440	706
A6	316	#19	1	1720	1215
A100	133	#22	STR	3860	1562
A101	2	#22	STR	3500	21
A102	2	#22	STR	3120	19
A103	2	#22	STR	2740	17
A104	2	#22	STR	2380	14
A105	2	#22	STR	2000	12
A106	2	#22	STR	1660	10
A107	2	#22	STR	1260	8
A108	2	#22	STR	920	6
A150	4	#22	STR	2000	24
A200	157	#22	STR	3860	1844
A201	4	#22	STR	3420	42
A202	4	#22	STR	3000	37
A203	4	#22	STR	2560	31
A204	4	#22	STR	2140	26
A205	4	#22	STR	1680	20
A206	4	#22	STR	1240	15
A207	4	#22	STR	820	10
A250	4	#22	STR	2000	24
B1	354	#13	STR	3100	1091
B2	316	#16	STR	2480	1216
C1	192	#13	STR	8740	1668
S2	6	#25	STR	3900	93
S3	6	#25	STR	6640	158

REINFORCING STEEL = 9889 kg

2.700m X 2.700m DOUBLE BARREL STAGE I

BAR	NO.	SIZE	TYPE	LENGTH	WEIGHT
A1	348	#13	1	1340	464
A2	348	#16	1	1380	745
A100	96	#16	STR	5860	873
A101	2	#16	STR	5440	17
A102	2	#16	STR	5020	16
A103	2	#16	STR	4600	14
A104	2	#16	STR	4200	13
A105	2	#16	STR	3760	12
A106	2	#16	STR	3360	10
A107	2	#16	STR	2920	9
A108	2	#16	STR	2480	8
A109	2	#16	STR	2080	6
A110	2	#16	STR	1660	5
A111	2	#16	STR	1240	4
A112	2	#16	STR	820	3
A151	3	#16	STR	5480	26
A152	3	#16	STR	5020	23
A153	3	#16	STR	4560	21
A154	3	#16	STR	4100	19
A155	3	#16	STR	3640	17
A156	3	#16	STR	3180	15
A157	3	#16	STR	2720	13
A158	3	#16	STR	2260	11
A159	3	#16	STR	1820	8
A160	3	#16	STR	1360	6
A161	3	#16	STR	900	4
A175	2	#16	STR	4500	14
A176	6	#16	STR	3000	28
A200	106	#16	STR	3900	642
A201	2	#16	STR	3480	11
A202	2	#16	STR	3060	9
A203	2	#16	STR	2640	8
A204	2	#16	STR	2220	7
A205	2	#16	STR	1800	6
A206	2	#16	STR	1380	4
A207	2	#16	STR	960	3
A208	2	#16	STR	540	2
A251	3	#16	STR	3460	16
A252	3	#16	STR	3000	14
A253	3	#16	STR	2540	12
A254	3	#16	STR	2080	10
A255	3	#16	STR	1620	8
A256	3	#16	STR	1160	5
A275	4	#16	STR	2260	14
A300	125	#19	STR	5860	1637
A301	3	#19	STR	5380	36
A302	3	#19	STR	4900	33
A303	3	#19	STR	4420	30
A304	3	#19	STR	3940	26
A305	3	#19	STR	3460	23
A306	3	#19	STR	2980	20
A307	3	#19	STR	2480	17
A308	3	#19	STR	2040	14
A309	3	#19	STR	1540	10
A310	3	#19	STR	1060	7
A351	3	#19	STR	5580	37
A352	3	#19	STR	5240	35
A353	3	#19	STR	4880	33
A354	3	#19	STR	4540	30
A355	3	#19	STR	4180	28
A356	3	#19	STR	3840	26
A357	3	#19	STR	3480	23
A358	3	#19	STR	3140	21
A359	3	#19	STR	2800	19
A360	3	#19	STR	2440	16
A361	3	#19	STR	2100	14
A362	3	#19	STR	1740	12
A363	3	#19	STR	1400	9

BAR	NO.	SIZE	TYPE	LENGTH	WEIGHT
A364	3	#19	STR	1040	7
A365	3	#19	STR	700	5
A375	2	#19	STR	4500	20
A376	6	#19	STR	3000	40
A400	139	#19	STR	4060	1261
A401	3	#19	STR	3560	24
A402	3	#19	STR	3080	21
A403	3	#19	STR	2600	17
A404	3	#19	STR	2120	14
A405	3	#19	STR	1640	11
A406	3	#19	STR	1160	8
A407	3	#19	STR	680	5
A451	3	#19	STR	3720	25
A452	3	#19	STR	3360	23
A453	3	#19	STR	3020	20
A454	3	#19	STR	2680	18
A455	3	#19	STR	2320	16
A456	3	#19	STR	1980	13
A457	3	#19	STR	1620	11
A458	3	#19	STR	1280	9
A475	4	#19	STR	2400	21
A600	125	#16	STR	2540	493
A601	2	#16	STR	2160	7
A602	2	#16	STR	1740	5
A603	2	#16	STR	1320	4
A604	2	#16	STR	900	3
A605	2	#16	STR	480	1
A651	2	#16	STR	2220	7
A652	2	#16	STR	1900	6
A653	2	#16	STR	1600	5
A654	2	#16	STR	1300	4
A655	2	#16	STR	1000	3
A656	2	#16	STR	680	2
A675	2	#16	STR	1680	5
A800	162	#19	STR	2540	920
A801	2	#19	STR	2260	10
A802	2	#19	STR	1940	9
A803	2	#19	STR	1620	7
A804	2	#19	STR	1300	6
A805	2	#19	STR	980	4
A806	2	#19	STR	660	3
A851	3	#19	STR	2180	15
A852	3	#19	STR	1820	12
A853	3	#19	STR	1480	10
A854	3	#19	STR	1120	8
A855	3	#19	STR	780	5
A856	3	#19	STR	420	3
A875	2	#19	STR	1680	8
B1	186	#13	STR	3020	558
B2	348	#13	STR	2480	858
B3	186	#13	STR	3020	558
C1	316	#13	STR	7820	2456
D1	24	#19	STR	760	41
D2	12	#19	STR	420	11
D3	2	#19	STR	560	3
G1	4	#16	STR	8360	52
H1	4	#13	STR	6320	25
H2	4	#13	STR	4340	17
L1	23	#19	2	820	42
L2	21	#19	2	720	34

BAR	NO.	SIZE	TYPE	LENGTH	WEIGHT
L3	23	#19	3	840	43
L4	21	#19	3	1100	52
S2	3	#25	STR	5980	71
S3	3	#25	STR	3620	43
S4	6	#19	STR	6440	86
S5	6	#19	STR	4340	58
S6	3	#25	STR	8360	100
S7	6	#19	STR	10060	135
T1	16	#16	STR	980	24

REINFORCING STEEL = 13752 kg

3.600m X 2.700m SINGLE BARREL STAGE II

BAR	NO.	SIZE	TYPE	LENGTH	WEIGHT
A3	752	#16	1	1440	1681
A5	752	#19	1	1460	2454
A100	378	#22	STR	3860	4439
A101	3	#22	STR	3500	32
A102	3	#22	STR	3120	28
A103	3	#22	STR	2740	25
A104	3	#22	STR	2380	22
A105	3	#22	STR	2000	18
A106	3	#22	STR	1660	15
A107	3	#22	STR	1260	11
A108	3	#22	STR	920	8
A151	5	#22	STR	3480	53
A152	5	#22	STR	3080	47
A153	5	#22	STR	2700	41
A154	5	#22	STR	2280	35
A155	5	#22	STR	1900	29
A156	5	#22	STR	1500	23
A157	5	#22	STR	1100	17
A158	5	#22	STR	720	11
A200	429	#22	STR	3860	5037
A201	4	#22	STR	3420	42
A202	4	#22	STR	3000	37
A203	4	#22	STR	2560	31
A204	4	#22	STR	2140	26
A205	4	#22	STR	1680	20
A206	4	#22	STR	1240	15
A207	4	#22	STR	820	10
A251	6	#22	STR	3460	63
A252	6	#22	STR	3020	55
A253	6	#22	STR	2620	48
A254	6	#22	STR	2180	40
A255	6	#22	STR	1280	23
A256	6	#22	STR	1340	24
A257	6	#22	STR	780	14
B1	840	#13	STR	3100	2588
B2	752	#16	STR	2480	2894
C1	432	#13	STR	8620	3701
D3	2	#19	STR	560	3
G1	4	#13	STR	9240	37
S2	6	#25	STR	6640	158
S3	6	#25	STR	9240	220

REINFORCING STEEL = 24075 kg

2.700m X 2.700m DOUBLE BARREL STAGE II

BAR	NO.	SIZE	TYPE	LENGTH	WEIGHT
A3	586	#16	1	1440	1310
A4	586	#22	1	2080	3708
A100	241	#19	STR	5860	3156
A101	3	#19	STR	5440	36
A102	3	#19	STR	5000	34
A103	3	#19	STR	4580	31
A104	3	#19	STR	4120	28
A105	3	#19	STR	3680	25
A106	3	#19	STR	3260	22
A107	3	#19	STR	2820	19
A108	3	#19	STR	2380	16
A109	3	#19	STR	1960	13
A110	3	#19	STR	1520	10
A111	3	#19	STR	1060	7
A112	3	#19	STR	640	4
A151	4	#19	STR	5520	49
A152	4	#19	STR	5140	46
A153	4	#19	STR	4740	42
A154	4	#19	STR	4400	39
A155	4	#19	STR	4020	36
A156	4	#19	STR	3640	33
A157	4	#19	STR	3280	29
A158	4	#19	STR	2900	26
A159	4	#19	STR	2520	23
A160	4	#19	STR	2160	19
A161	4	#19	STR	1780	16
A162	4	#19	STR	1400	13
A163	4	#19	STR	1020	9
A164	4	#19	STR	660	6
A200	243	#16	STR	3900	1471
A201	3	#16	STR	3440	16
A202	3	#16	STR	2980	14
A203	3	#16	STR	2520	12
A204	3	#16	STR	2080	10
A205	3	#16	STR	1620	8
A206	3	#16	STR	1160	5
	3	#16	STR	700	3
A251	4	#16	STR	3520	22
A252	4	#16	STR	3140	19
A253	4	#16	STR	2740	17
A254	4	#16	STR	2360	15
A255	4	#16	STR	1960	12
A256	4	#16	STR	1580	10
A257	4	#16	STR	1180	7
A300	241	#22	STR	5860	4296
A301	3	#22	STR	5440	50
A302	3	#22	STR	5000	46
A303	3	#22	STR	4580	42

BAR	NO.	SIZE	TYPE	LENGTH	WEIGHT
A304	3	#22	STR	4120	38
A305	3	#22	STR	3680	34
A306	3	#22	STR	3260	30
A307	3	#22	STR	2820	26
A308	3	#22	STR	2380	22
A309	3	#22	STR	1960	18
A310	3	#22	STR	1520	14
A311	3	#22	STR	1060	10
A312	3	#22	STR	640	6
A351	4	#22	STR	5520	67
A352	4	#22	STR	5140	63
A353	4	#22	STR	4740	58
A354	4	#22	STR	4400	54
A355	4	#22	STR	4020	49
A356	4	#22	STR	3640	44
A357	4	#22	STR	3280	40
A358	4	#22	STR	2900	35
A359	4	#22	STR	2520	31
A360	4	#22	STR	2160	26
A361	4	#22	STR	1780	22
A362	4	#22	STR	1400	17
A363	4	#22	STR	1020	12
A364	4	#22	STR	660	8
A400	252	#25	STR	4580	4585
A401	3	#25	STR	4120	49
A402	3	#25	STR	3700	44
A403	3	#25	STR	3260	39
A404	3	#25	STR	2820	34
A405	3	#25	STR	2380	28
A406	3	#25	STR	1940	23
A407	3	#25	STR	1520	18
A408	3	#25	STR	1080	13
A451	4	#25	STR	4220	67
A452	4	#25	STR	3860	61
A453	4	#25	STR	3480	55
A454	4	#25	STR	3100	49
A455	4	#25	STR	2740	44
A456	4	#25	STR	2360	38
A457	4	#25	STR	1980	31
A458	4	#25	STR	1620	26
A600	264	#16	STR	2540	1041
A601	2	#16	STR	2280	7
A602	2	#16	STR	1980	6
A603	2	#16	STR	1680	5
A604	2	#16	STR	1360	4
A605	2	#16	STR	1060	3
A606	2	#16	STR	760	2
A607	2	#16	STR	460	1

BAR	NO.	SIZE	TYPE	LENGTH	WEIGHT
A651	3	#16	STR	2240	10
A652	3	#16	STR	1940	9
A653	3	#16	STR	1640	8
A654	3	#16	STR	1360	6
A655	3	#16	STR	1060	5
A656	3	#16	STR	760	4
A657	3	#16	STR	460	2
A800	278	#25	STR	2540	2805
A801	2	#25	STR	2300	18
A802	2	#25	STR	2000	16
A803	2	#25	STR	1720	14
A804	2	#25	STR	1420	11
A805	2	#25	STR	1140	9
A806	2	#25	STR	840	7
A807	2	#25	STR	560	4
A851	3	#25	STR	2240	27
A852	3	#25	STR	1960	23
A853	3	#25	STR	1680	20
A854	3	#25	STR	1400	17
A855	3	#25	STR	1120	13
A856	3	#25	STR	840	10
A857	3	#25	STR	560	7
B1	392	#13	STR	3080	1200
B2	586	#13	STR	2480	1445
B3	470	#13	STR	3080	1439
C1	632	#13	STR	8160	5126
D1	24	#19	STR	760	41
D2	24	#19	STR	420	23
D3	2	#19	STR	560	3
G1	4	#16	STR	13920	86
H1	4	#13	STR	6320	25
H2	4	#13	STR	4340	17
L1	23	#19	2	820	42
L2	21	#19	2	720	34
L3	23	#19	3	840	43
L4	21	#19	3	1100	52
S2	3	#25	STR	9120	109
S3	3	#25	STR	5980	71
S4	6	#19	STR	6440	86
S5	6	#19	STR	4340	58
S6	3	#25	STR	13920	166
S7	6	#19	STR	10060	135

REINFORCING STEEL = 35123 kg

BAR TYPES

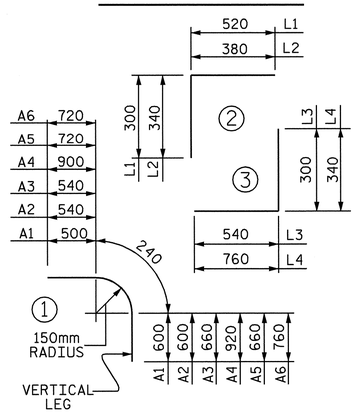

BAR DIMENSIONS ARE OUT TO OUT

DRAWN BY : L.L. MURPHY DATE : 10/07
CHECKED BY : M.G. CHEEK DATE : 10/07

PROJECT NO. R-2518A
MADISON/YANCEY COUNTY
STATION: 77+90.740 -L-

SHEET 14 OF 16

STATE OF NORTH CAROLINA
DEPARTMENT OF TRANSPORTATION
RALEIGH

BAR SCHEDULE

NORTH CAROLINA PROFESSIONAL SEAL 20125 ENGINEER MARSHALL G. CHEEK, JR.
11-2-07

REVISIONS						SHEET NO.
NO.	BY:	DATE:	NO.	BY:	DATE:	C-68
1			3			TOTAL SHEETS
2			4			103

STR #10

02-NOV-2007 11:25
r:\struct-1\str-10\dhodge\r-2518a-1.dgn
lmurphy

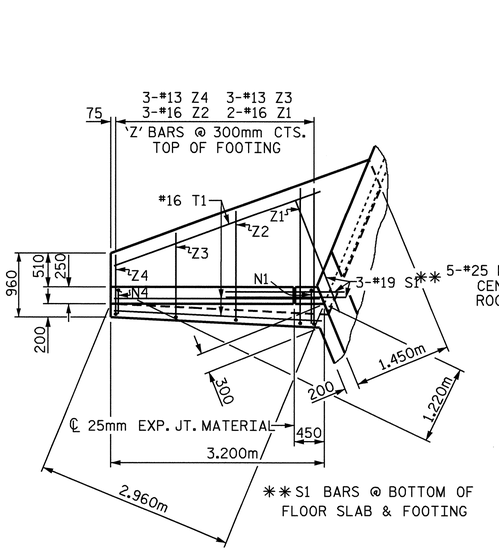

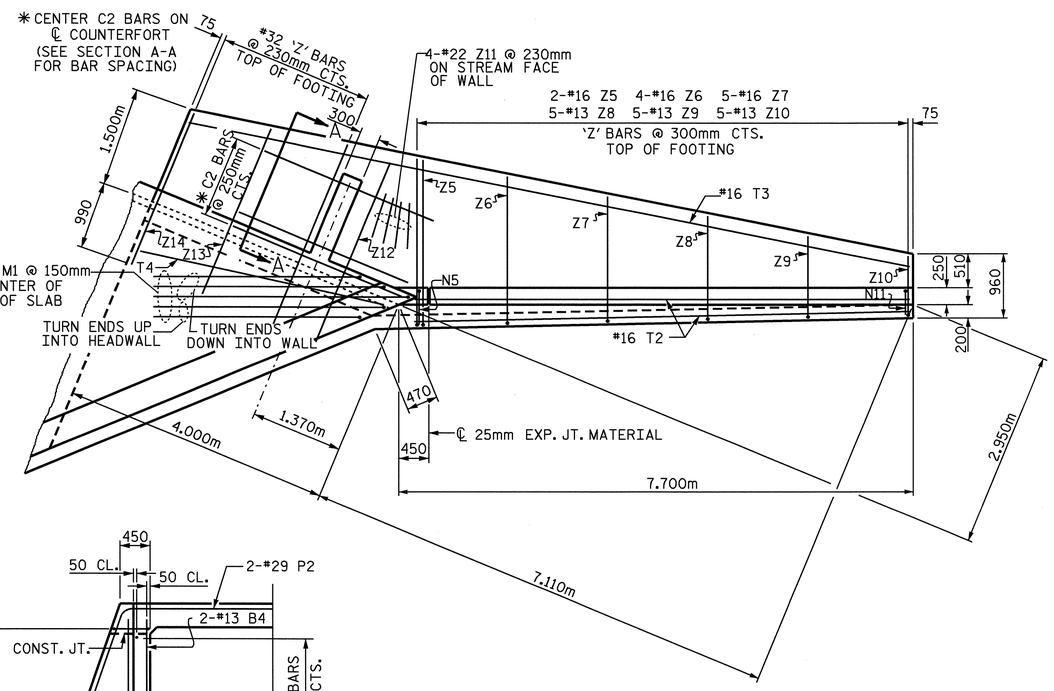

PLAN W2

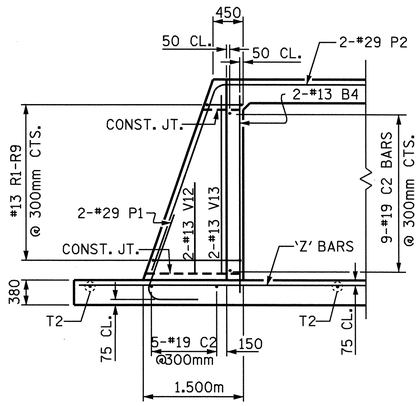

SECTION A-A

NOTE: STANDARD REINFORCING STEEL
IN BARREL NOT SHOWN

PLAN W1

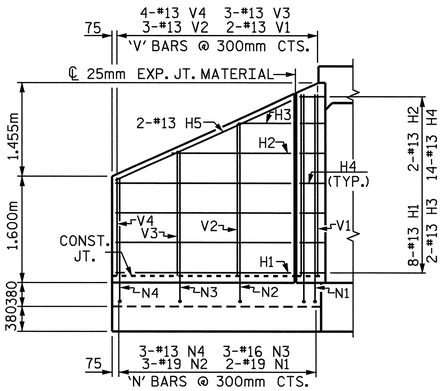

ELEVATION W2

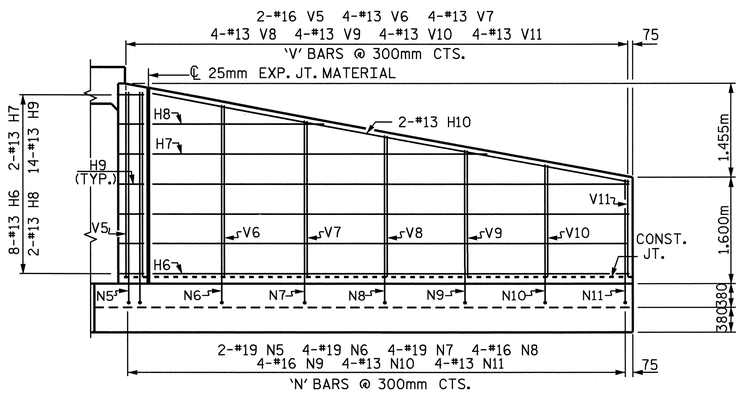

ELEVATION W1

NOTES

FOR WING ORIENTATION, SEE PLAN OF FLOOR SLAB.

G1 BARS IN HEADWALL ARE INCLUDED WITH BARREL REINFORCING STEEL.

A 900mm STRIP OF FILTER FABRIC SHALL BE ATTACHED TO THE FILL FACE OF THE WING COVERING THE ENTIRE LENGTH OF THE EXPANSION JOINT.

BAR TYPES

ALL BAR DIMENSIONS ARE OUT TO OUT.

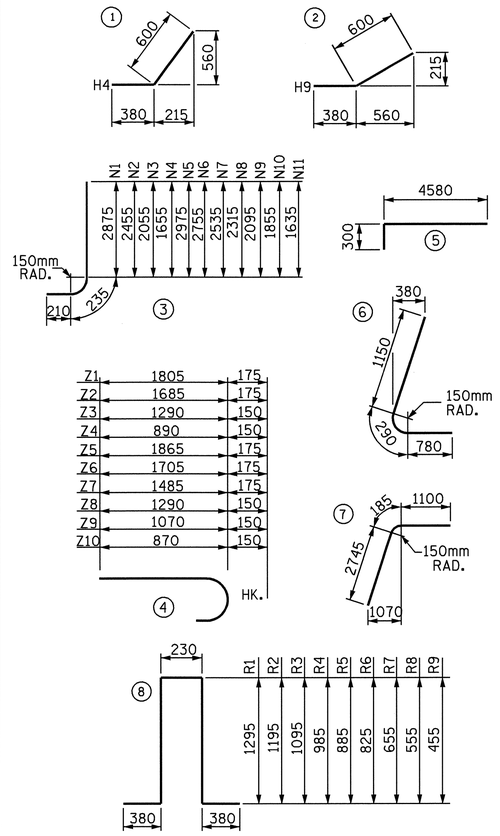

CLASS A CONCRETE STAGE I

2 WINGS	17.0 m^3
1 HEADWALL	1.8 m^3
1 END CURTAIN WALL	1.9 m^3
TOTAL	20.7 m^3

CLASS A CONCRETE STAGE II

2 WINGS	17.0 m^3
1 HEADWALL	2.1 m^3
1 END CURTAIN WALL	2.5 m^3
TOTAL	21.6 m^3

BILL OF MATERIAL

BAR	NO.	SIZE	TYPE	LENGTH	WEIGHT
B4	2	13	STR	3060	6
C2	14	19	STR	2740	86
H1	8	13	STR	2640	21
H2	2	13	STR	1780	4
H3	2	13	STR	780	2
H4	14	13	1	980	14
H5	2	13	STR	2880	6
H6	8	13	STR	7140	57
H7	2	13	STR	5180	10
H8	2	13	STR	2780	6
H9	14	13	2	980	14
H10	2	13	STR	7240	14
M1	5	25	5	4880	97
N1	2	19	3	3320	15
N2	3	19	3	2900	19
N3	3	16	3	2500	12
N4	3	13	3	2100	6
N5	2	19	3	3420	15
N6	4	19	3	3200	29
N7	4	19	3	2980	27
N8	4	16	3	2760	17
N9	4	16	3	2540	16
N10	4	13	3	2300	9
N11	4	13	3	2080	8
P1	2	29	6	2220	22
P2	2	29	7	4020	41
S1	3	19	STR	1800	12
R1	1	13	8	3580	4
R2	1	13	8	3380	3
R3	1	13	8	3180	3
R4	1	13	8	2960	3
R5	1	13	8	2760	3
R6	1	13	8	2640	3
R7	1	13	8	2300	2
R8	1	13	8	2100	2
R9	1	13	8	1900	2
T1	3	16	STR	3200	15
T2	2	16	STR	7700	24
T3	1	16	STR	11020	17
T4	1	16	STR	3740	6
V1	2	13	STR	2700	5
V2	3	13	STR	2280	7
V3	3	13	STR	1880	6
V4	4	13	STR	1480	6
V5	2	16	STR	2800	9
V6	4	13	STR	2580	10
V7	4	13	STR	2360	9
V8	4	13	STR	2140	9
V9	4	13	STR	1920	8
V10	4	13	STR	1680	7
V11	4	13	STR	1460	6
V12	2	13	STR	1380	3
V13	2	13	STR	2660	5
Z1	2	16	4	1980	6
Z2	3	16	4	1860	9
Z3	3	13	4	1440	4
Z4	3	13	4	1040	3
Z5	2	16	4	2040	6
Z6	4	16	4	1880	12
Z7	5	16	4	1660	13
Z8	5	13	4	1440	7
Z9	5	13	4	1220	6
Z10	5	13	4	1020	5
Z11	4	22	STR	2880	35
Z12	4	32	STR	2920	75
Z13	5	32	STR	2680	86
Z14	5	32	STR	2460	79

REINFORCING STEEL
FOR 2 WINGS 1108 kg

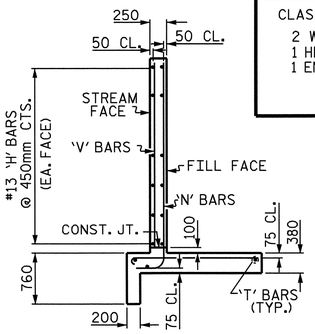

TYPICAL WING SECTION

PROJECT NO. R-2518A
MADISON/YANCEY COUNTY
STATION: 77+90.740 -L-

SHEET 15 OF 16

STATE OF NORTH CAROLINA
DEPARTMENT OF TRANSPORTATION
RALEIGH

STANDARD WINGS FOR CONCRETE BOX CULVERT STAGE I OR II

ASSEMBLED BY : L.L. MURPHY	DATE : 10/07		
CHECKED BY : M.G. CHEEK	DATE : 10/07		
DRAWN BY : KJA	8/97		
CHECKED BY : VAP	8/97		

REVISIONS						SHEET NO.
NO.	BY:	DATE:	NO.	BY:	DATE:	C-69
1			3			TOTAL SHEETS
2			4			103

NORTH CAROLINA PROFESSIONAL SEAL 20125 ENGINEER MARSHALL G. CHEEK, JR.
11-2-07

STR #10 SW 1507

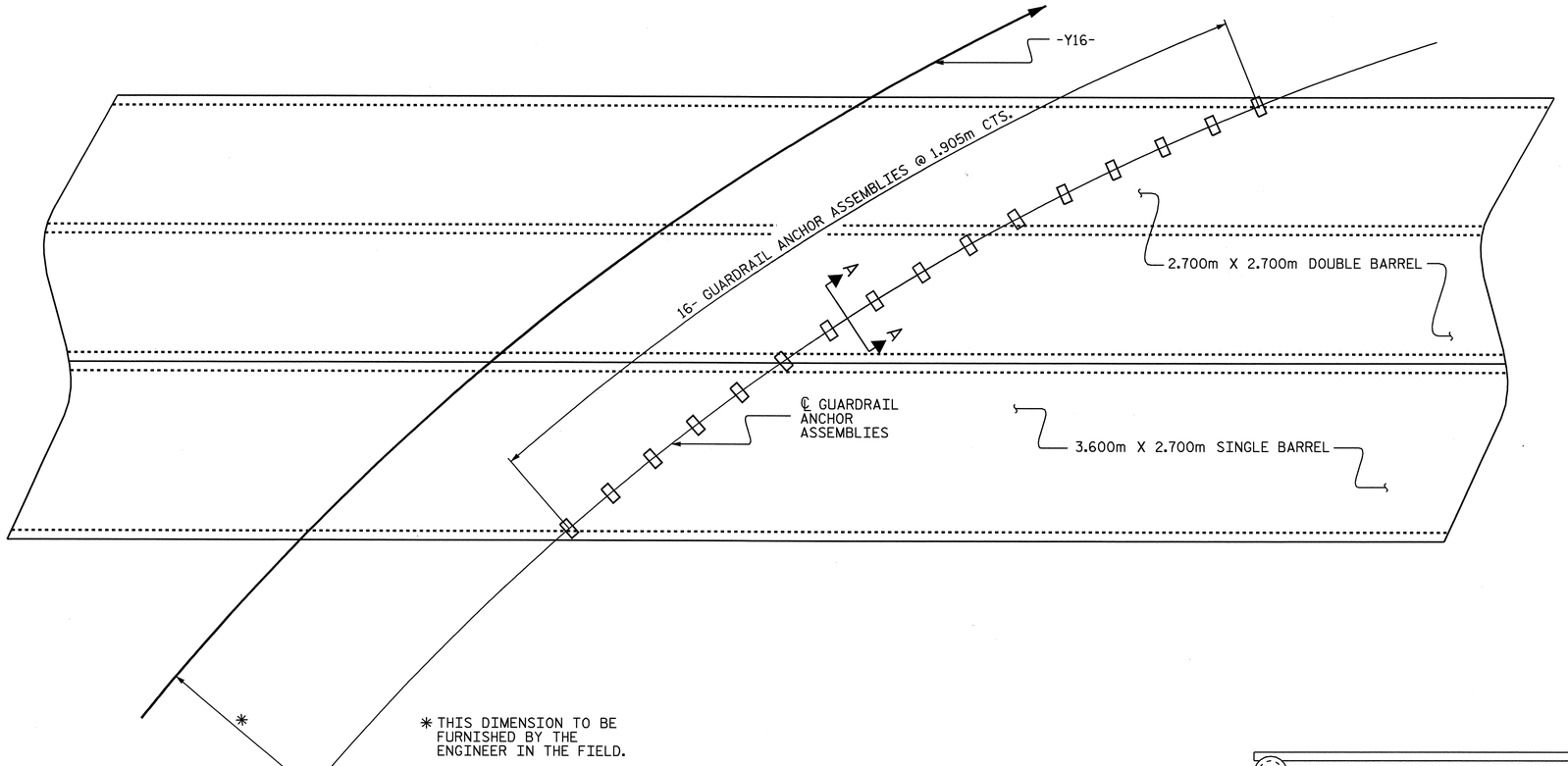

PLAN

SHOWING : GUARDRAIL ANCHOR ASSEMBLY SPACING.

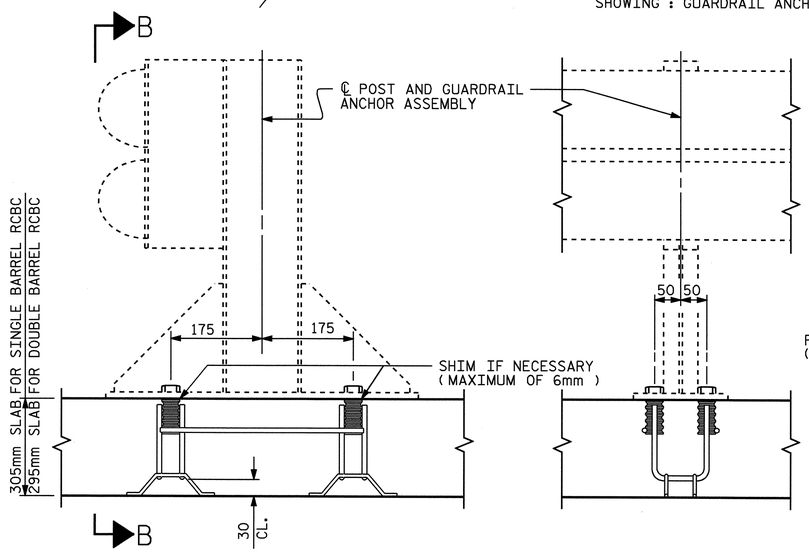

SECTION A-A

SECTION B-B

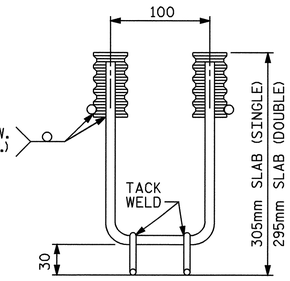

ELEVATION

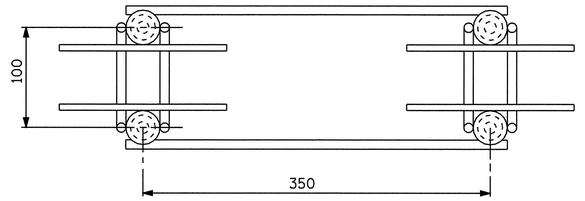

PLAN

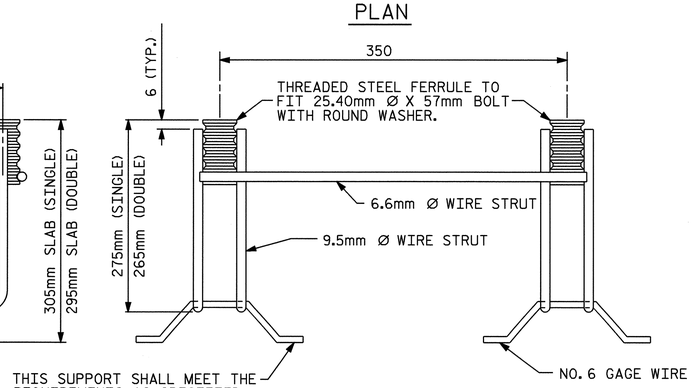

SIDE VIEW

NOTES

THE GUARDRAIL ANCHOR ASSEMBLY FOR CULVERTS SHALL CONSIST OF THE FOLLOWING COMPONENTS :

A. FERRULES SHALL BE MADE FROM STEEL MEETING THE REQUIREMENTS OF AASHTO M169, GRADE 12L14 AND SHALL HAVE A MINIMUM LENGTH OF THREADS OF 64mm.

B. 4 - 25.40mm DIA. X 57mm BOLTS WITH WASHERS, BOLTS SHALL CONFORM TO THE REQUIREMENTS OF ASTM A307. BOLTS AND WASHERS SHALL BE GALVANIZED. (AT THE CONTRACTOR'S OPTION, STAINLESS STEEL BOLTS AND WASHERS MAY BE USED AS AN ALTERNATE FOR THE 25.40mm DIA. X 57mm GALVANIZED BOLTS AND WASHERS. THEY SHALL CONFORM TO OR EXCEED THE MECHANICAL REQUIREMENTS OF ASTM A307. THE USE OF THIS ALTERNATE SHALL BE APPROVED BY THE ENGINEER.)

C. WIRE STRUTS SHOWN IN THE GUARDRAIL ANCHOR ASSEMBLY FOR CULVERTS DETAIL ARE MINIMUM ALLOWABLE SIZE AND SHALL HAVE A MINIMUM TENSILE STRENGTH OF 689 MPa. AS AN OPTION, A 11mm Ø WIRE STRUT WITH A MINIMUM TENSILE STRENGTH OF 620 MPa. IS ACCEPTABLE.

GUARDRAIL ANCHOR ASSEMBLY WITH BOLTS SHALL BE ASSEMBLED IN THE SHOP. BOLT THREADS MAY BE RECUT AS NECESSARY TO INSURE FIT.

THE COST OF THE GUARDRAIL ANCHOR ASSEMBLY FOR CULVERTS COMPLETE IN PLACE, SHALL BE INCLUDED IN THE UNIT CONTRACT PRICE BID FOR CLASS "A" CONCRETE.

FERRULES TO BE PLUGGED DURING POURING OF SLAB AS RECOMMENDED BY THE MANUFACTURER.
AT THE CONTRACTOR'S OPTION, FERRULES WITH OPEN OR CLOSED ENDS MAY BE USED.

PAYMENT FOR GUARDRAIL, POSTS, AND POST BASE PLATES IS INCLUDED IN ROADWAY PAY ITEMS.

SLAB REINFORCING STEEL MAY BE SHIFTED AS NECESSARY TO CLEAR GUARDRAIL ANCHOR ASSEMBLY. CARE SHOULD BE TAKEN TO KEEP THE SHIFTING OF REINFORCING STEEL TO A MINIMUM.

THE CONTRACTOR MAY USE ADHESIVELY ANCHORED ANCHOR BOLTS IN PLACE OF GUARDRAIL ANCHOR ASSEMBLY. LEVEL TWO FIELD TESTING IS REQUIRED, AND THE YIELD LOAD OF THE 25.40mm Ø BOLT IS 97.0 kN. FOR ADHESIVELY ANCHORED ANCHOR BOLTS OR DOWELS, SEE SPECIAL PROVISIONS.

GUARDRAIL ANCHOR ASSEMBLY FOR CULVERTS

ASSEMBLED BY : D. HODGE/L.L.M.	DATE : 9/07
CHECKED BY : M.G. CHEEK	DATE : 9/07
DRAWN BY : FCJ 6/88	REV. 7/10/01 LES/RDR
CHECKED BY : ARB 6/88	REV. 5/7/03 RWW/JTE
	REV. 5/1/06R KMM/GM

01-APR-2008 13:18
r:\structures\str#10\dhodge\r2518a_sd_cu-str 10-3.dgn
lmurphy

PROJECT NO. R-2518A
MADISON/YANCEY COUNTY
STATION: 77+90.740 -L-

SHEET 16 OF 16

STATE OF NORTH CAROLINA
DEPARTMENT OF TRANSPORTATION
RALEIGH

STANDARD

ANCHORAGE DETAILS FOR GUARDRAIL ANCHOR ASSEMBLY

REVISIONS						SHEET NO.
NO.	BY:	DATE:	NO.	BY:	DATE:	C-70
1			3			TOTAL SHEETS
2			4			103

NORTH CAROLINA PROFESSIONAL SEAL 20125 ENGINEER MARSHALL G. CHEEK
4-3-08

STR #10

STD. NO. GRA1SM

14-APR-2008 08:03
r:\structures\Str*II\A.L.Figueroa\R2518A_sd_CU*II.dgn
dahodge

BENCHMARK #10: CHISLED SQUARE IN THE SOUTHEAST CORNER OF A CONCRETE PAD ON THE SOUTH END OF OLD MILK BARN, STA. 84+67.33 -L-, 67 METERS LEFT, ELEV.=743.234.

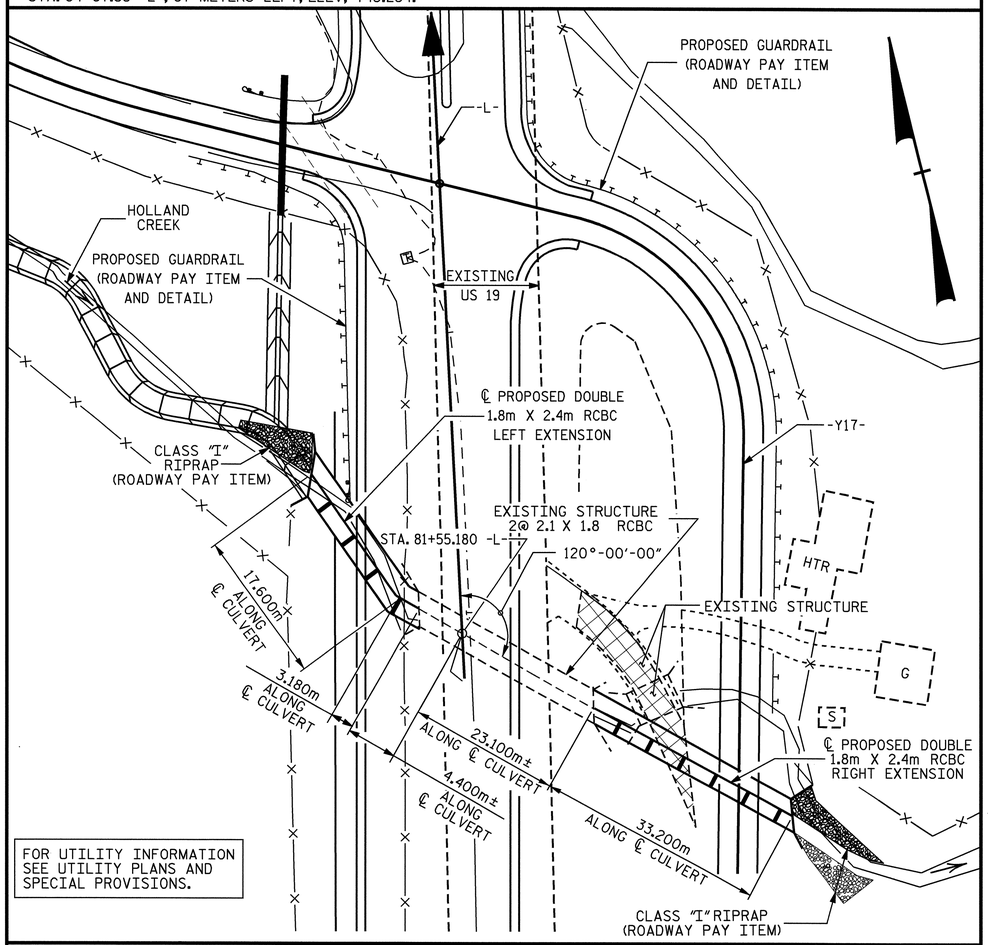

FOR UTILITY INFORMATION SEE UTILITY PLANS AND SPECIAL PROVISIONS.

LOCATION SKETCH

HYDRAULIC DATA

DESIGN DISCHARGE	= 20.0 m³/s
FREQUENCY OF DESIGN FLOOD	= 50 YEARS
DESIGN HIGH WATER ELEVATION	= 734.99m
DRAINAGE AREA	= 3.35 SQ. Km
BASIC DISCHARGE (Q100)	= 25.0 m³/s
BASIC HIGH WATER ELEVATION	= 735.35m

OVERTOPPING FLOOD DATA

OVERTOPPING DISCHARGE	= 26.0 m³/s
FREQUENCY OF OVERTOPPING FLOOD	= 200 YEARS
OVERTOPPING FLOOD ELEVATION	= 735.72m

ROADWAY DATA

GRADE POINT ELEV. @ STATION 81+55.180 -L-	= 736.773
BED ELEV. @ STATION 81+55.180 -L-	= 731.549
ROADWAY SLOPE	= 2:1

TOTAL STRUCTURE QUANTITIES

CLASS A CONCRETE		
LEFT EXTENSION	80.8	m³
RIGHT EXTENSION	119.3	m³
TOTAL	200.1	m³
REINFORCING STEEL		
LEFT EXTENSION	6,842	kg
RIGHT EXTENSION	10,066	kg
TOTAL	16,908	kg
CULVERT EXCAVATION	LUMP SUM	
FOUNDATION COND. MAT'L		
LEFT EXTENSION	59	METRIC TONS
RIGHT EXTENSION	95	METRIC TONS
TOTAL	154	METRIC TONS
REMOVAL OF EXISTING STRUCTURE	LUMP SUM	

NOTES

ASSUMED LIVE LOAD ----------MS18 OR ALTERNATE LOADING.

DESIGN FILL LEFT EXTENSION---------- 2.91m
DESIGN FILL RIGHT EXTENSION---------- 1.79m

FOR OTHER DESIGN DATA AND NOTES, SEE STANDARD NOTE SHEET.

76mm ⌀ WEEP HOLES INDICATED TO BE IN ACCORDANCE WITH THE SPECIFICATIONS.

CONCRETE IN CULVERT TO BE POURED IN THE FOLLOWING ORDER:

1. PHASE I WING FOOTINGS AND FLOOR SLAB INCLUDING 100mm OF PHASE I VERTICAL WALLS.
2. THE REMAINING PORTIONS OF PHASE I WALLS AND PHASE I WINGS FULL HEIGHT.
3. PHASE II WING FOOTINGS AND FLOOR SLAB INCLUDING 100mm OF PHASE II VERTICAL WALLS.
4. THE REMAINING PORTIONS OF PHASE II WALLS AND PHASE II WINGS FULL HEIGHT.
5. ROOF SLAB IN IT'S ENTIRETY AND HEADWALLS.

THE RESIDENT ENGINEER SHALL CHECK THE LENGTH OF CULVERT BEFORE STAKING IT OUT TO MAKE CERTAIN THAT IT WILL PROPERLY TAKE CARE OF THE FILL.

DIMENSIONS FOR WING LAYOUT AS WELL AS ADDITIONAL REINFORCING STEEL EMBEDDED IN BARREL ARE SHOWN ON WING SHEET.

TRANSVERSE CONSTRUCTION JOINTS SHALL BE USED IN THE BARREL, SPACED TO LIMIT THE POURS TO A MAXIMUM OF 21.0m. LOCATION OF THE JOINTS SHALL BE SUBJECT TO APPROVAL OF THE ENGINEER.

AT THE CONTRACTOR'S OPTION, HE MAY SPLICE THE VERTICAL REINFORCING STEEL IN THE INTERIOR FACES OF THE EXTERIOR WALLS AND BOTH FACES OF INTERIOR WALL ABOVE LOWER WALL CONSTRUCTION JOINT. THE SPLICE LENGTH SHALL BE AS PROVIDED IN THE SPLICE LENGTH CHART SHOWN ON THE PLANS. EXTRA WEIGHT OF STEEL DUE TO THE SPLICES SHALL BE PAID FOR BY THE CONTRACTOR.

IF APPROVED BY THE ENGINEER, THE CONTRACTOR MAY USE THE EXISTING WINGS AS TEMPORARY SHORING FOR THE CONSTRUCTION OF THE CULVERT EXTENSION. IN THIS CASE, THE BOTTOM SLAB OF THE EXTENSION SHALL BE POURED A LEAST 72 HOURS PRIOR TO CUTTING THE WINGS. THE WINGS MAY BE CUT EARLIER PROVIDE THE SLAB CONCRETE STRENGTH HAS REACHED A MINIMUM COMPRESSIVE STRENGTH OF 10.3 MPa.

MATERIAL EXCAVATED FROM THE EXISTING BED SHALL BE STOCKPILED FOR USE IN THE PROPOSED CULVERT EXTENSIONS. UPON COMPLETION OF THE CULVERT EXTENSIONS, THE MATERIAL SHALL BE PLACED IN THE SOUTHERNMOST BARREL TO A DEPTH OF 0.3m. BED MATERIAL MAY BE SUPPLEMENTED WITH CLASS 'B' RIP RAP IF SUITABLE MATERIAL IS NOT AVAILABLE IN SUFFICIENT QUANTITIES.

THE ENTIRE COST OF THE WORK REQUIRED TO PLACE THE EXCAVATED MATERIAL OR SUPPLEMENTAL MATERIAL SHALL BE INCLUDED IN THE CONTRACT LUMP SUM PRICE BID FOR CULVERT EXCAVATION.

DOWELS SHALL BE USED TO CONNECT THE CULVERT EXTENSIONS TO THE EXISTING CULVERT AS SHOWN. FOR NOTE REGARDING SETTING OF DOWELS, SEE STANDARD NOTES SHEET SNSM.

FOR CONSTRUCTION SEQUENCE, SEE EROSION CONTROL PLANS.

FOR FALSEWORK AND FORMWORK, SEE SPECIAL PROVISIONS.

FOR GROUT FOR STRUCTURES, SEE SPECIAL PROVISIONS.

FOR SUBMITTAL OF WORKING DRAWINGS, SEE SPECIAL PROVISIONS.

FOR CULVERT DIVERSION DETAILS AND PAY ITEM, SEE EROSION CONTROL PLANS.

FOR CRANE SAFETY, SEE SPECIAL PROVISIONS.

ALL DIMENSIONS ARE IN MILLIMETERS UNLESS OTHERWISE NOTED.

ALL ELEVATIONS ARE IN METERS.

THE EXISTING STRUCTURE #491 CONSISTING OF 1 SPAN (18'-0") REINFORCED CONCRETE DECK SLAB ON A SUBSTRUCTURE OF REINFORCED CONCRETE ABUTMENTS AND LOCATED IN THE VICINITY OF THE PROPOSED CULVERT EXTENSION SHALL BE REMOVED.

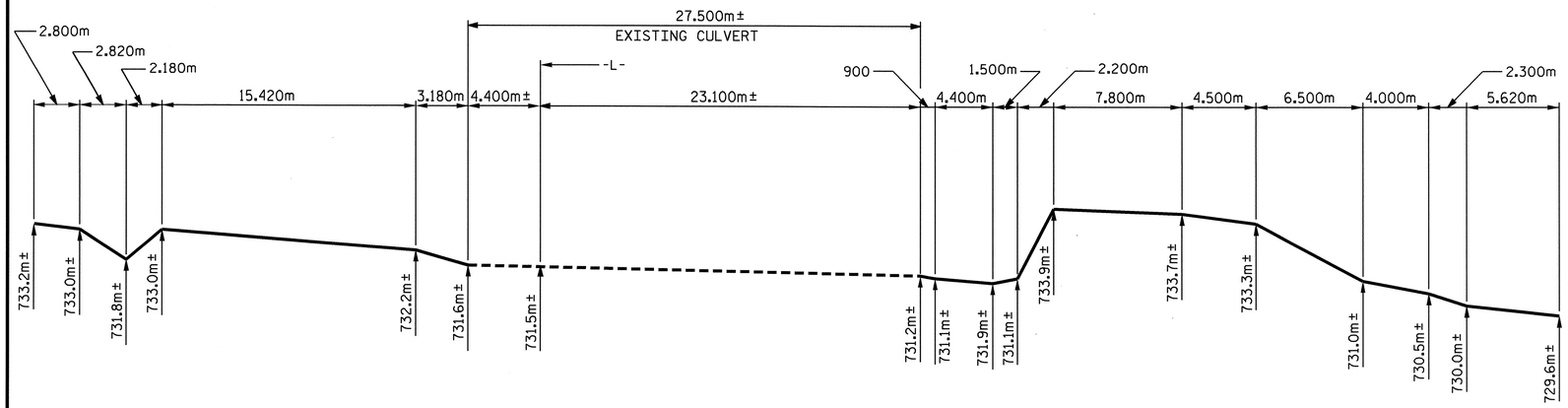

PROFILE ALONG ℄ CULVERT

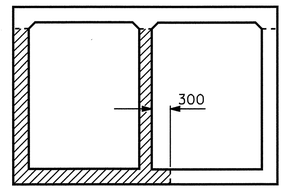

CONSTRUCTION PHASING

(LOOKING UPSTREAM)

PHASE I CONSTRUCTION

PHASE II CONSTRUCTION

NORTH CAROLINA PROFESSIONAL SEAL 13014 ENGINEER QUANG H. NGUYEN
Quang H. Nguyen 1-14-08

NORTH CAROLINA PROFESSIONAL SEAL 20125 ENGINEER MARSHALL B. CHEEK, JR.
Marshall B. Cheek 4-14-08

METRIC

PROJECT NO. R-2518A
MADISON/YANCEY COUNTY
STATION: 81+55.180 -L-

SHEET 1 OF 10

STATE OF NORTH CAROLINA
DEPARTMENT OF TRANSPORTATION
RALEIGH

DOUBLE 1.800m X 2.400m CONCRETE BOX CULVERT LEFT & RIGHT EXTENSIONS

REVISIONS						SHEET NO.
NO.	BY:	DATE:	NO.	BY:	DATE:	C-71
1			3			TOTAL SHEETS
2			4			103

STR. No. II

ASSEMBLED BY : A.L. FIGUEROA DATE : 08-8-06
CHECKED BY : L.L. MURPHY DATE : 08-8-06

29-SEP-2007 07:28
R:\Structures\Str*11\A.L.Figueroa\R2518A_sd_CU*11.dgn
afigueroa

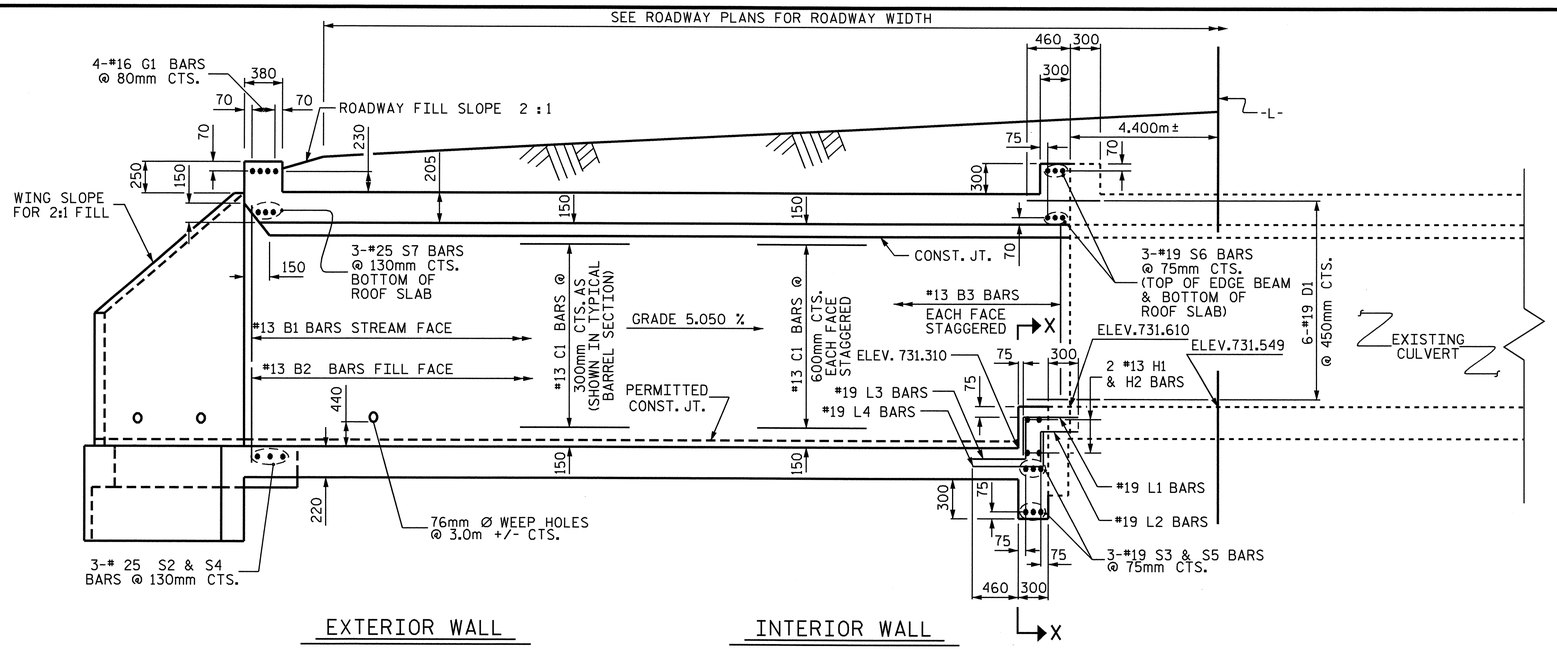

CULVERT SECTION NORMAL TO ROADWAY

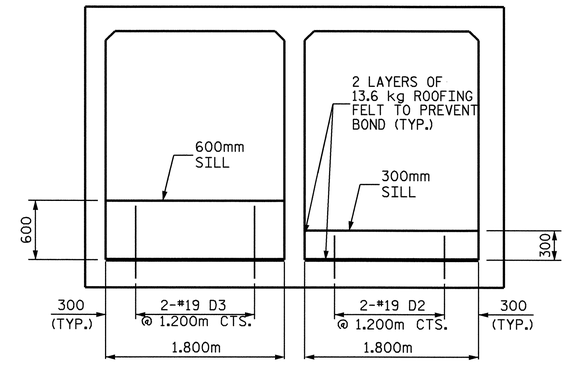

ELEVATION

CULVERT SILL DETAILS

(LOOKING DOWNSTREAM)

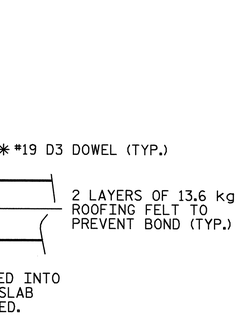

* DOWELS MAY BE PUSHED INTO GREEN CONCRETE AFTER SLAB HAS BEEN FLOAT FINISHED.

SECTION THRU 600mm SILL

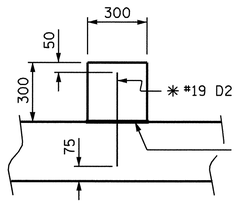

* DOWELS MAY BE PUSHED INTO GREEN CONCRETE AFTER SLAB HAS BEEN FLOAT FINISHED.

SECTION THRU 300mm SILL

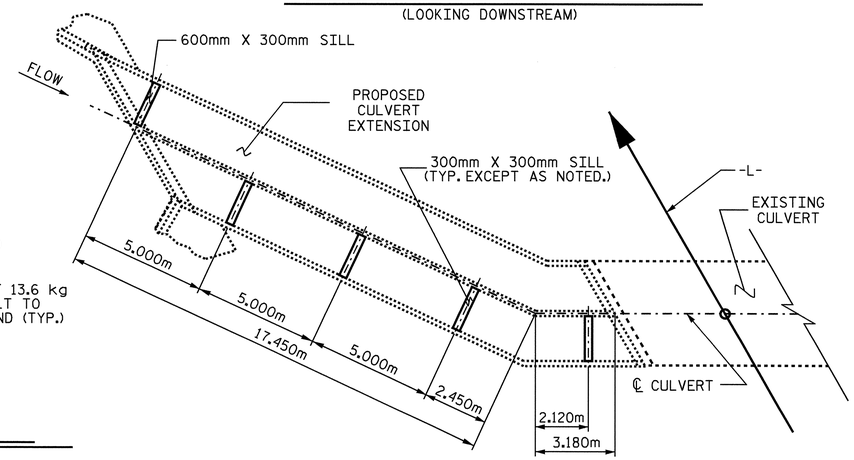

LOCATION OF SILLS LEFT EXTENSION

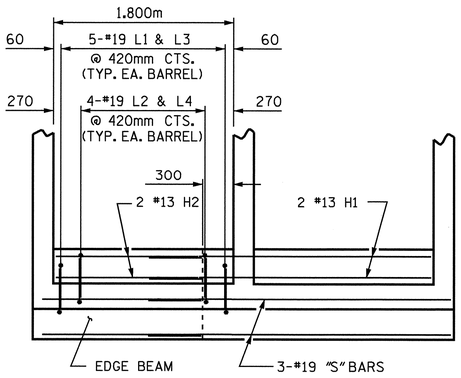

SECTION X-X

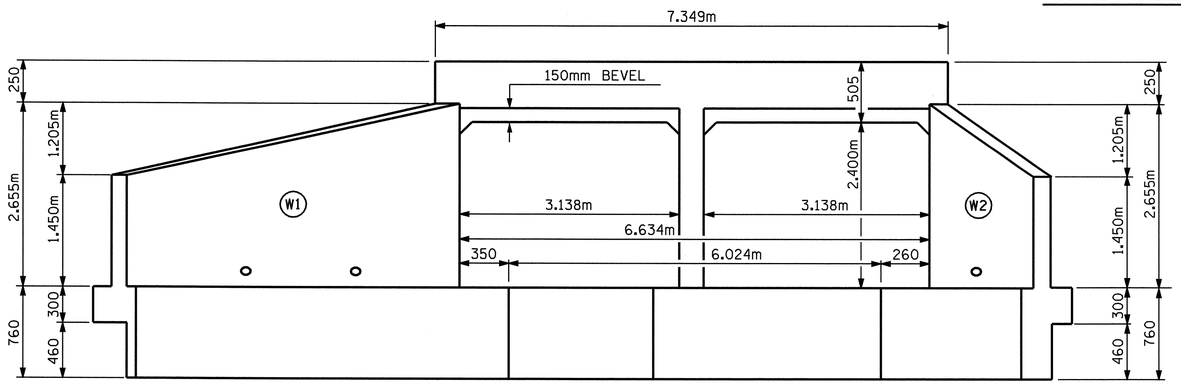

INLET END ELEVATION NORMAL TO SKEW

DRAWN BY : A.L. FIGUEROA DATE : 08-8-06
CHECKED BY : L.L. MURPHY DATE : 08-8-06

NORTH CAROLINA PROFESSIONAL SEAL 20125 ENGINEER MARSHALL G. MURPHY, JR. 10-1-07

PROJECT NO. R-2518A
MADISON/YANCEY COUNTY
STATION: 81+55.180 -L-

SHEET 2 OF 10

STATE OF NORTH CAROLINA
DEPARTMENT OF TRANSPORTATION
RALEIGH

DOUBLE 1.800m X 2.400m CONCRETE BOX CULVERT LEFT EXTENSION

REVISIONS						SHEET NO.
NO.	BY:	DATE:	NO.	BY:	DATE:	C-72
1			3			TOTAL SHEETS
2			4			103

STR. No. 11

23-SEP-2007 07:49
R:\Structures\Str#11\A.L.Figueroa\R2518A_sd_CU#11.dgn
dfigueroa

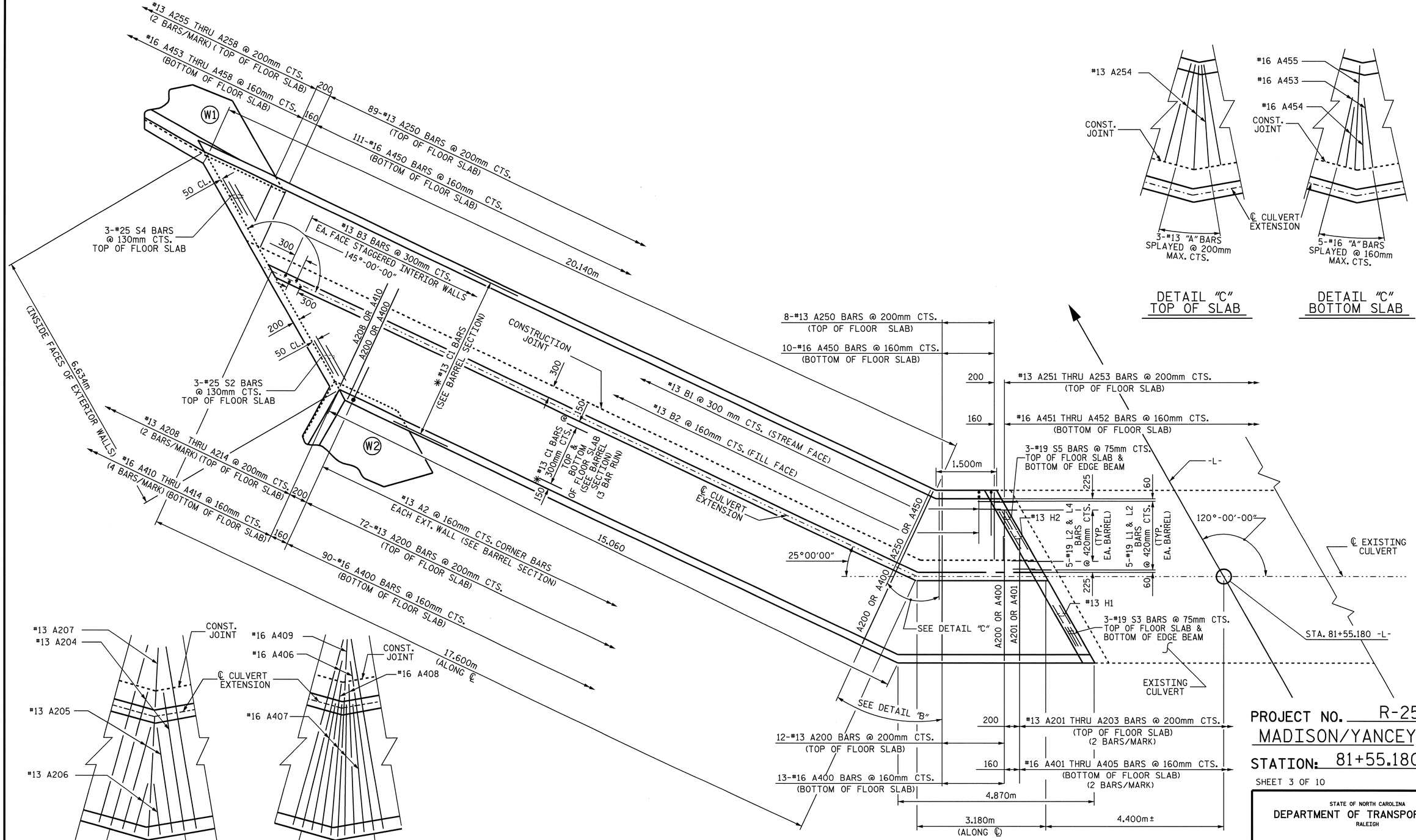

DETAIL "C" TOP OF SLAB

DETAIL "C" BOTTOM SLAB

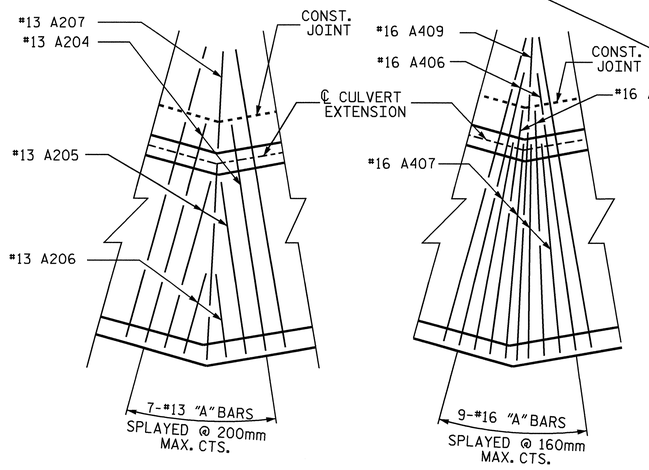

DETAIL "B" TOP OF SLAB

DETAIL "B" BOTTOM OF SLAB

PLAN-FLOOR SLAB LEFT EXTENSION

* #13 C1 BARS SHALL BE FIELD BENT AS NECESSARY

DRAWN BY : A.L. FIGUEROA DATE : 07-08-06
CHECKED BY : L.L. MURPHY DATE : 07-08-06

NORTH CAROLINA PROFESSIONAL SEAL 20125 ENGINEER MARSHALL G. GREEK, JR. 10-1-07

PROJECT NO. R-2518A
MADISON/YANCEY COUNTY
STATION: 81+55.180 -L-
SHEET 3 OF 10

STATE OF NORTH CAROLINA
DEPARTMENT OF TRANSPORTATION
RALEIGH

DOUBLE 1.800m X 2.400m CONCRETE BOX CULVERT LEFT EXTENSION

REVISIONS						SHEET NO.
NO.	BY:	DATE:	NO.	BY:	DATE:	C-73
1			3			TOTAL SHEETS
2			4			103

STR. No. 11

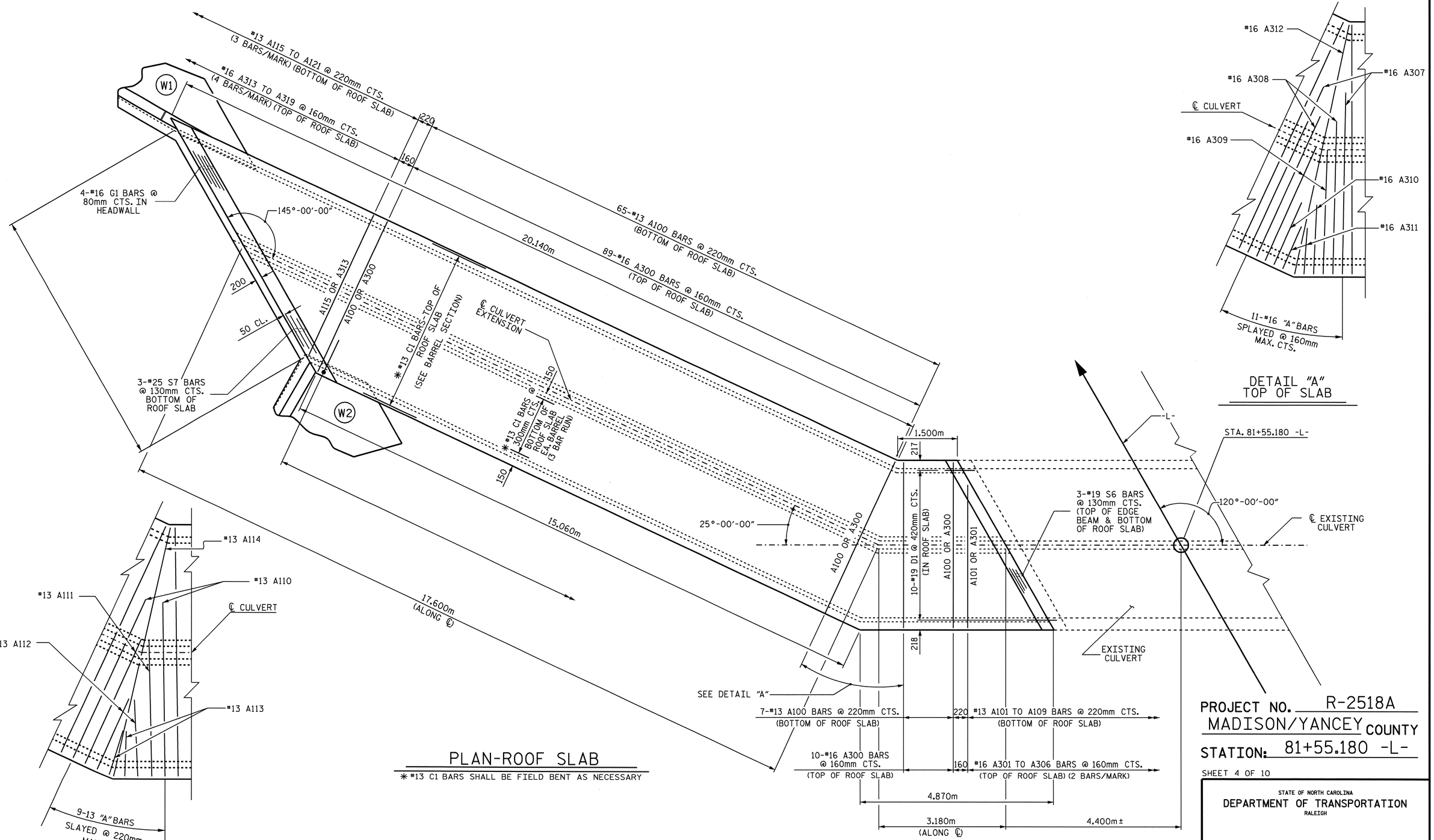

PLAN-ROOF SLAB

* *13 C1 BARS SHALL BE FIELD BENT AS NECESSARY

DETAIL "A" TOP OF SLAB

DETAIL "A" BOTTOM OF SLAB

PROJECT NO. R-2518A
MADISON/YANCEY COUNTY
STATION: 81+55.180 -L-

SHEET 4 OF 10

STATE OF NORTH CAROLINA
DEPARTMENT OF TRANSPORTATION
RALEIGH

DOUBLE 1.800m X 2.400m CONCRETE BOX CULVERT LEFT EXTENSION

REVISIONS						SHEET NO.
NO.	BY:	DATE:	NO.	BY:	DATE:	C-74
1			3			TOTAL SHEETS
2			4			103

STR. No. 11

NORTH CAROLINA PROFESSIONAL SEAL 20125 ENGINEER MARSHALL G. CREEK, JR.
10-1-07

DRAWN BY : A.L. FIGUEROA DATE : 08-8-06
CHECKED BY : L.L. MURPHY DATE : 08-8-06

25-SEP-2007 07:29
R:\Structures\Str*II\A.L.Figueroa\R2518A_sd_CU*II.dgn
aflagueroa

25-SEP-2007 07:29
R:\Structures\Str*ll\A.L.Figueroa\R2518A_sd_CU*ll.dgn
afigueroa

BAR SCHEDULE LEFT EXTENSION

BAR	NO.	SIZE	TYPE	LENGTH	WEIGHT	BAR	NO.	SIZE	TYPE	LENGTH	WEIGHT	BAR	NO.	SIZE	TYPE	LENGTH	WEIGHT	BAR	NO.	SIZE	TYPE	LENGTH	WEIGHT	BAR	NO.	SIZE	TYPE	LENGTH	WEIGHT
A1	260	#13	3	1240	320	A200	84	#13	STR	3060	255	A300	99	#16	STR	4060	624	A400	103	#16	STR	3180	508	B1	140	#13	STR	2640	367
A2	260	#13	3	1240	320	A201	2	#13	STR	2300	5	A301	2	#16	STR	3480	11	A401	2	#16	STR	3000	9	B2	260	#13	STR	2180	563
						A202	2	#13	STR	1600	3	A302	2	#16	STR	2920	9	A402	2	#16	STR	2440	8	B3	140	#13	STR	2640	367
A100	72	#13	STR	4060	291	A203	2	#13	STR	920	2	A303	2	#16	STR	2360	7	A403	2	#16	STR	1880	6						
A101	1	#13	STR	3660	4	A204	2	#13	STR	2380	5	A304	2	#16	STR	1800	6	A404	2	#16	STR	1340	4	C1	180	#13	STR	7580	1356
A102	1	#13	STR	3280	3	A205	2	#13	STR	1400	3	A305	2	#16	STR	1260	4	A405	2	#16	STR	780	2						
A103	1	#13	STR	2900	3	A206	2	#13	STR	780	2	A306	2	#16	STR	720	2	A406	2	#16	STR	2820	9	D1	22	#19	STR	760	37
A104	1	#13	STR	2520	3	A207	1	#13	STR	3080	3	A307	2	#16	STR	3060	9	A407	4	#16	STR	2080	13	D2	8	#19	STR	380	7
A105	1	#13	STR	2140	2	A208	2	#13	STR	2740	5	A308	2	#16	STR	2440	8	A408	2	#16	STR	2440	8	D3	2	#19	STR	680	3
A106	1	#13	STR	1760	2	A209	2	#13	STR	2440	5	A309	2	#16	STR	2000	6	A409	1	#16	STR	3200	5						
A107	1	#13	STR	1380	1	A210	2	#13	STR	2140	4	A310	2	#16	STR	1300	4	A410	4	#16	STR	2680	17	G1	4	#16	STR	7160	44
A108	1	#13	STR	1000	1	A211	2	#13	STR	1880	4	A311	2	#16	STR	620	2	A411	4	#16	STR	2260	14						
A109	1	#13	STR	600	1	A212	2	#13	STR	1600	3	A312	1	#16	STR	4200	7	A412	4	#16	STR	1880	12	H1	4	#13	STR	3380	13
A110	2	#13	STR	2700	5	A213	2	#13	STR	1320	3	A313	4	#16	STR	3640	23	A413	4	#16	STR	1440	9	H2	4	#13	STR	1900	8
A111	2	#13	STR	2280	5	A214	2	#13	STR	1040	2	A314	4	#16	STR	3180	20	A414	3	#16	STR	1000	5						
A112	2	#13	STR	1280	3							A315	4	#16	STR	2720	17							L1	10	#19	1	820	18
A113	2	#13	STR	760	2	A250	97	#13	STR	1640	158	A316	4	#16	STR	2280	14	A450	121	#16	STR	1640	308	L2	8	#19	1	720	13
A114	1	#13	STR	4200	4	A251	1	#13	STR	1300	1	A317	4	#16	STR	1820	11	A451	1	#16	STR	1360	2	L3	10	#19	2	840	19
A115	3	#13	STR	3600	11	A252	1	#13	STR	960	1	A318	4	#16	STR	1380	9	A452	2	#16	STR	820	3	L4	8	#19	2	1040	19
A116	3	#13	STR	3140	9	A253	1	#13	STR	600	1	A319	4	#16	STR	940	6	A453	2	#16	STR	1140	4						
A117	3	#13	STR	2700	8	A254	3	#13	STR	1660	5							A454	2	#16	STR	1000	3	S2	3	#25	STR	5800	69
A118	3	#13	STR	2240	7	A255	2	#13	STR	1380	3							A455	1	#16	STR	1680	3	S3	6	#19	STR	3680	49
A119	3	#13	STR	1760	5	A256	2	#13	STR	1100	2							A456	3	#16	STR	1300	6	S4	3	#25	STR	2880	34
A120	3	#13	STR	1300	4	A257	2	#13	STR	820	2							A457	3	#16	STR	960	4	S5	6	#19	STR	1900	25
A121	3	#13	STR	840	3	A258	2	#13	STR	600	1							A458	3	#16	STR	640	3	S6	6	#19	STR	4740	64
																								S7	3	#25	STR	7160	85

TOTAL REINFORCING STEEL = 6419 kg

BAR TYPE

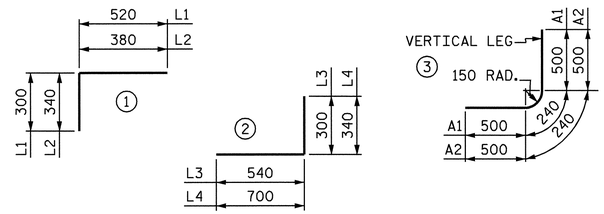

BAR DIMENSIONS ARE OUT TO OUT

LEFT EXTENSION QUANTITIES

CLASS A CONCRETE
BARREL @ 3.25 m³/m 67.5 m³
WINGS, ETC. 13.3 m³
TOTAL 80.8 m³

REINFORCING STEEL
BARREL & HEADWALL 6419 kg
WINGS, ETC. 423 kg
TOTAL 6842 kg

CULVERT EXCAVATION ---------- LUMP SUM
FOUNDATION COND. MAT'L ---- 59 METRIC TONS

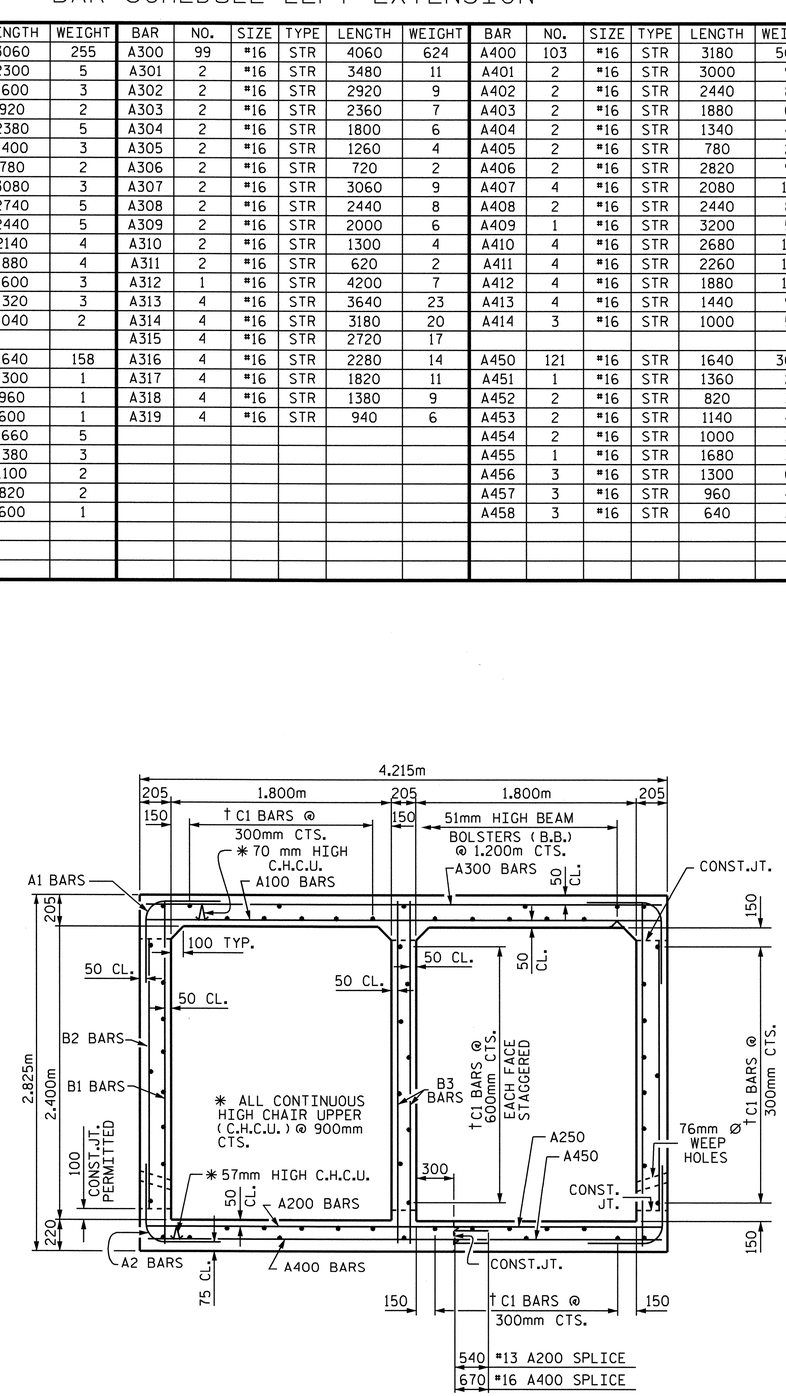

RIGHT ANGLE SECTION OF BARREL

THERE ARE 60 "C" BARS IN SECTION OF BARREL
(LOOKING UPSTREAM)

† #13 C1 BARS SHALL BE FIELD BENT AS NECESSARY

SPLICE LENGTH CHART

BAR	SIZE	SPLICE LENGTH
A200	#13	540
A400	#16	670
B1	#13	540
B3	#13	540
C1	#13	590
H1	#13	540
S3	#19	840
S2	#25	1500

PROJECT NO. R-2518A
MADISON/YANCEY COUNTY
STATION: 81+55.180 -L-

SHEET 5 OF 10

STATE OF NORTH CAROLINA
DEPARTMENT OF TRANSPORTATION
RALEIGH

DOUBLE 1.800m X 2.400m CONCRETE BOX CULVERT LEFT EXTENSION

NORTH CAROLINA PROFESSIONAL SEAL 20125 ENGINEER MARSHALL L. MURPHY, JR.
10-1-07

REVISIONS							SHEET NO.
NO.	BY:	DATE:	NO.	BY:	DATE:		C-75
1			3				TOTAL SHEETS
2			4				103

STR. No. 11

DRAWN BY : A.L. FIGUEROA DATE : 08-8-06
CHECKED BY : L.L. MURPHY DATE : 08-8-06

25-SEP-2007 07:29
R:\Structures\Str*II\A.L.Figueroa\R2518A_sd_CU*II.dgn
afigueroa

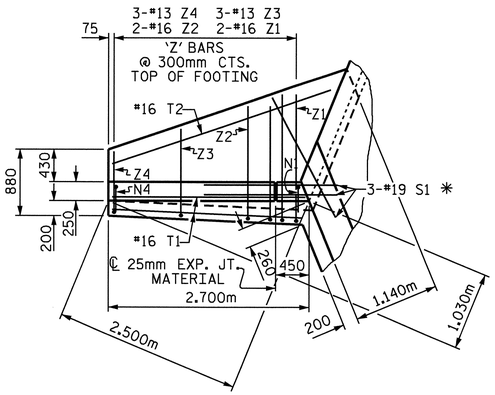

PLAN W2

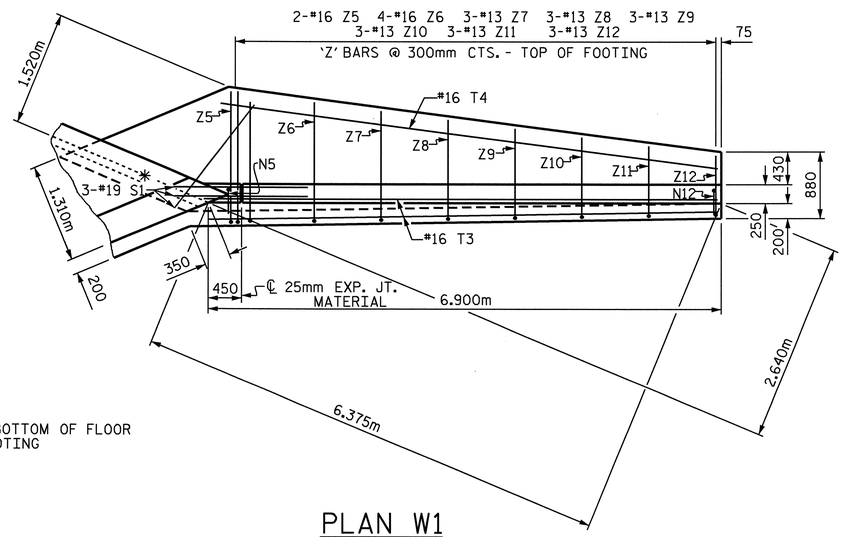

* S1 BARS @ BOTTOM OF FLOOR SLAB AND FOOTING

PLAN W1

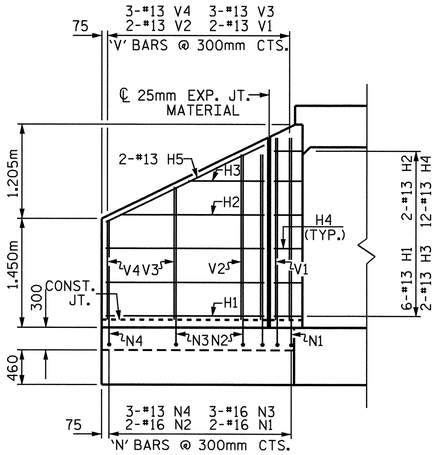

ELEVATION W2

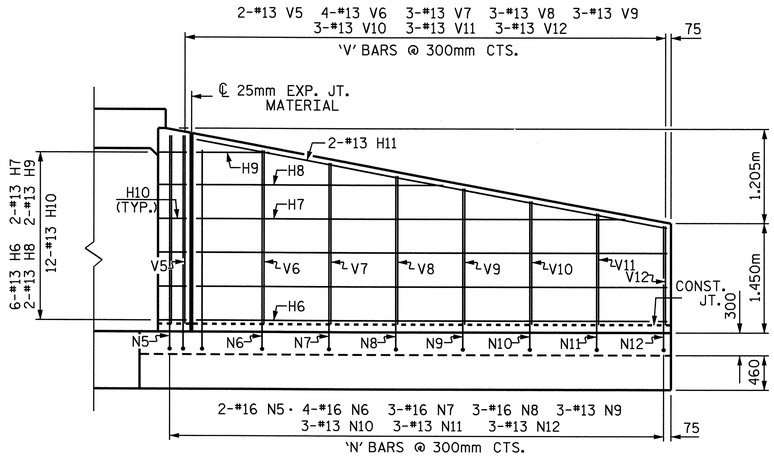

ELEVATION W1

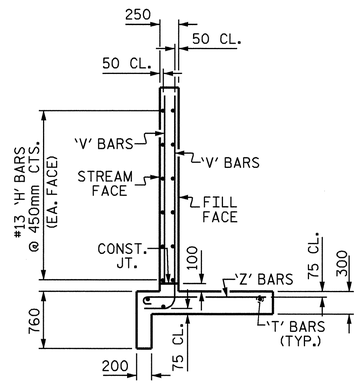

TYPICAL WING SECTION

BAR TYPES

ALL BAR DIMENSIONS ARE OUT TO OUT.

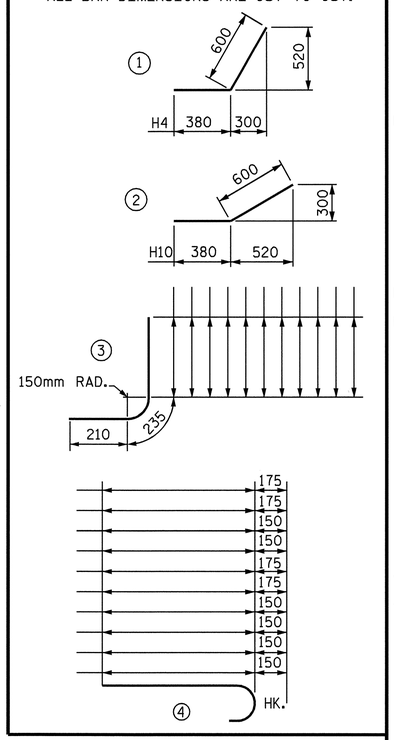

BILL OF MATERIAL

BAR	NO.	SIZE	TYPE	LENGTH	WEIGHT
H1	6	13	STR	2140	13
H2	2	13	STR	1960	4
H3	2	13	STR	1020	2
H4	12	13	1	980	12
H5	2	13	STR	2360	5
H6	6	13	STR	6340	38
H7	2	13	STR	6000	12
H8	2	13	STR	3580	7
H9	2	13	STR	1180	2
H10	12	13	2	980	12
H11	2	13	STR	6440	13
N1	2	16	3	3040	9
N2	2	16	3	2820	9
N3	3	16	3	2380	11
N4	3	13	3	1940	6
N5	2	16	3	3060	9
N6	4	16	3	2940	18
N7	3	16	3	2780	13
N8	3	16	3	2600	12
N9	3	13	3	2440	7
N10	3	13	3	2260	7
N11	3	13	3	2100	6
N12	3	13	3	1940	6
S1	3	19	STR	1800	24
T1	2	16	STR	2700	8
T2	1	16	STR	3100	5
T3	2	16	STR	6900	21
T4	1	16	STR	6700	10
V1	2	13	STR	2420	5
V2	2	13	STR	2200	4
V3	3	13	STR	1760	5
V4	3	13	STR	1320	4
V5	2	13	STR	2440	5
V6	4	13	STR	2320	9
V7	3	13	STR	2160	6
V8	3	13	STR	1980	6
V9	3	13	STR	1820	5
V10	3	13	STR	1640	5
V11	3	13	STR	1480	4
V12	3	13	STR	1320	4
Z1	2	16	4	1940	6
Z2	2	16	4	1740	5
Z3	3	13	4	1340	4
Z4	3	13	4	960	3
Z5	2	16	4	1940	6
Z6	4	16	4	1860	12
Z7	3	13	4	1680	5
Z8	3	13	4	1540	5
Z9	3	13	4	1380	4
Z10	3	13	4	1240	4
Z11	3	13	4	1100	3
Z12	3	13	4	960	3

REINFORCING STEEL FOR 2 WING WALLS	423	kg
CLASS A CONCRETE		
2 WINGS	10.3	m^3
1 HEADWALL	0.8	m^3
1 END CURTAIN WALLS	0.9	m^3
2 EDGE BEAMS	1.3	m^3
TOTAL	13.3	m^3

NOTES

FOR WING ORIENTATION, SEE PLAN OF FLOOR SLAB.

G1 BARS IN HEADWALL ARE INCLUDED WITH BARREL REINFORCING STEEL.

A 900mm STRIP OF FILTER FABRIC SHALL BE ATTACHED TO THE FILL FACE OF THE WING COVERING THE ENTIRE LENGTH OF THE EXPANSION JOINT.

PROJECT NO. R-2518A
MADISON/YANCEY COUNTY
STATION: 81+55.180 -L-

SHEET 6 OF 10

STATE OF NORTH CAROLINA
DEPARTMENT OF TRANSPORTATION
RALEIGH

STANDARD WINGS FOR CONCRETE BOX CULVERT LEFT EXTENSION

ASSEMBLED BY : A.L. FIGUEROA	DATE : 08-08-06
CHECKED BY : L.L. MURPHY	DATE : 08-08-06
DRAWN BY : JLR 6/97	
CHECKED BY : VAP 6/97	

NORTH CAROLINA PROFESSIONAL SEAL 20125 ENGINEER MARSHALL G. GREER, JR.
10-1-07

REVISIONS						SHEET NO.
NO.	BY:	DATE:	NO.	BY:	DATE:	C-76
1			3			TOTAL SHEETS
2			4			103

STR. NO. 11 STD. NO. CW4524

r:\structures\Str*11\A.L.Figueroa\R2518A_sd_CU*11.dgn
lmurphy

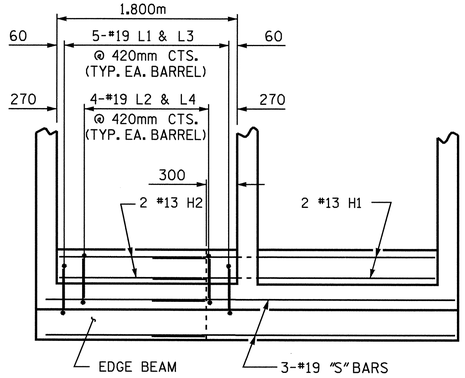

SECTION X-X

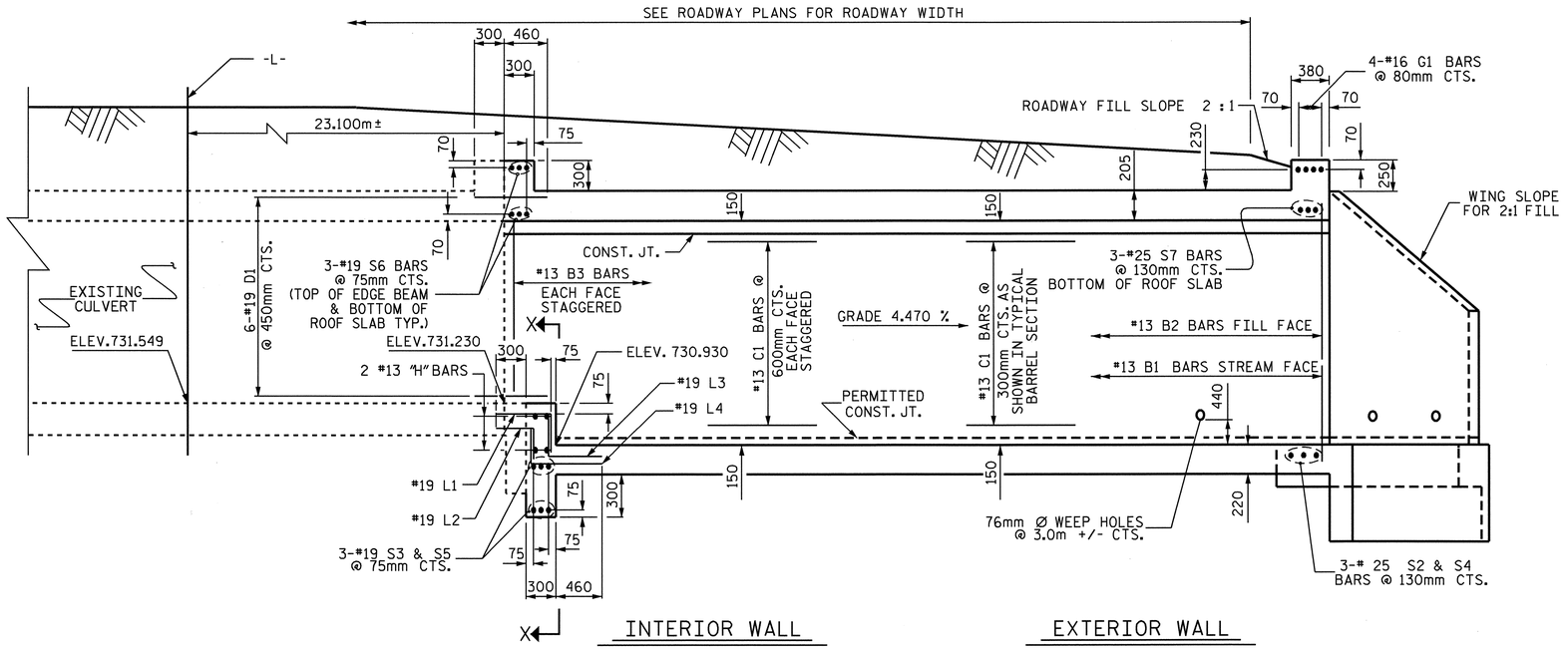

CULVERT SECTION NORMAL TO ROADWAY

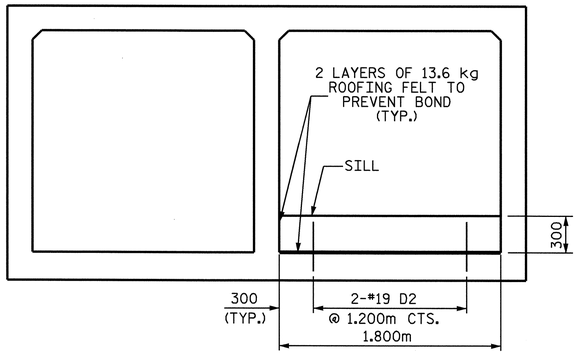

ELEVATION

CULVERT SILL DETAILS

(LOOKING DOWNSTREAM)

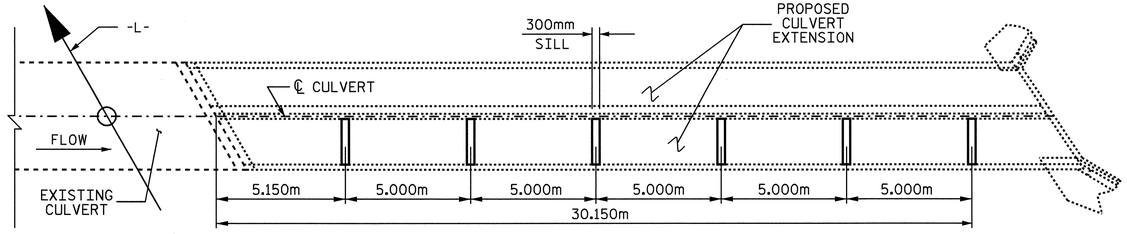

LOCATION OF SILLS-RIGHT EXTENSION

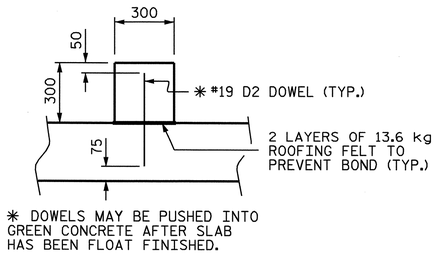

SECTION THRU 300mm SILL

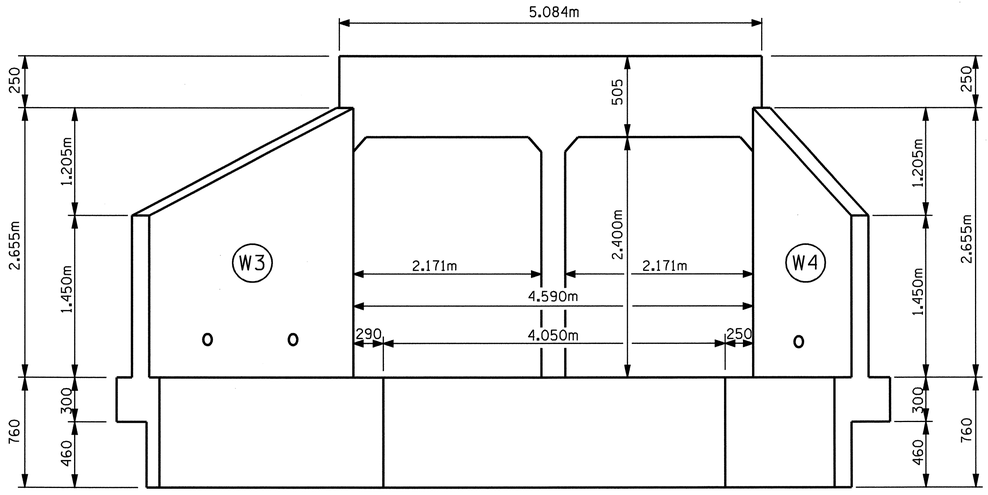

OUTLET END ELEVATION NORMAL TO SKEW

PROJECT NO. R-2518A

MADISON/YANCEY COUNTY

STATION: 81+55.180 -L-

SHEET 7 OF 10

STATE OF NORTH CAROLINA
DEPARTMENT OF TRANSPORTATION
RALEIGH

DOUBLE 1.800m X 2.400m CONCRETE BOX CULVERT RIGHT EXTENSION

REVISIONS						SHEET NO.
NO.	BY:	DATE:	NO.	BY:	DATE:	C-77
1			3			TOTAL SHEETS
2			4			103

STR NO. 11

NORTH CAROLINA PROFESSIONAL SEAL 20125 ENGINEER MARSHALL G. CREEK, JR.
4-3-08

DRAWN BY : A.L. FIGUEROA DATE : 08-08-06
CHECKED BY : L.L. MURPHY DATE : 08-08-06

25-SEP-2007 07:29
R:\Structures\Str*ll\A.L.Figueroa\R2518A_sd_CU*ll.dgn
afigueroa

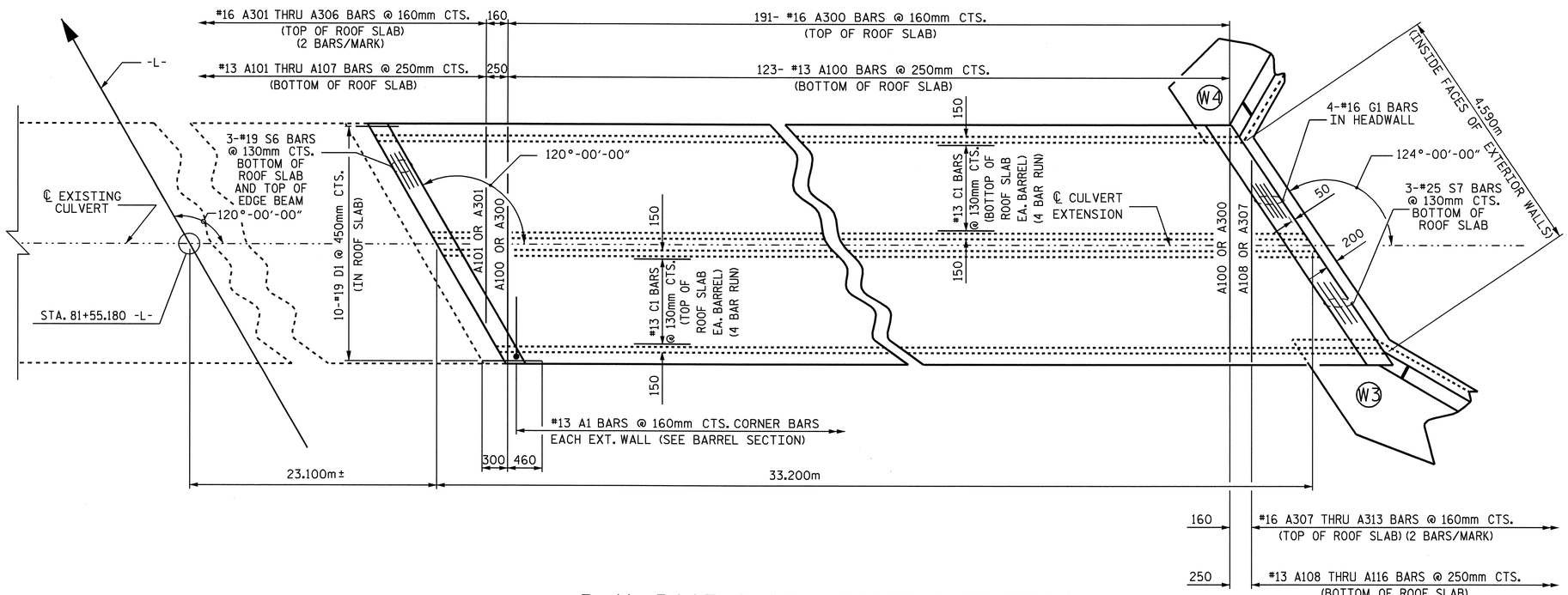

PLAN-ROOF SLAB - RIGHT EXTENSION

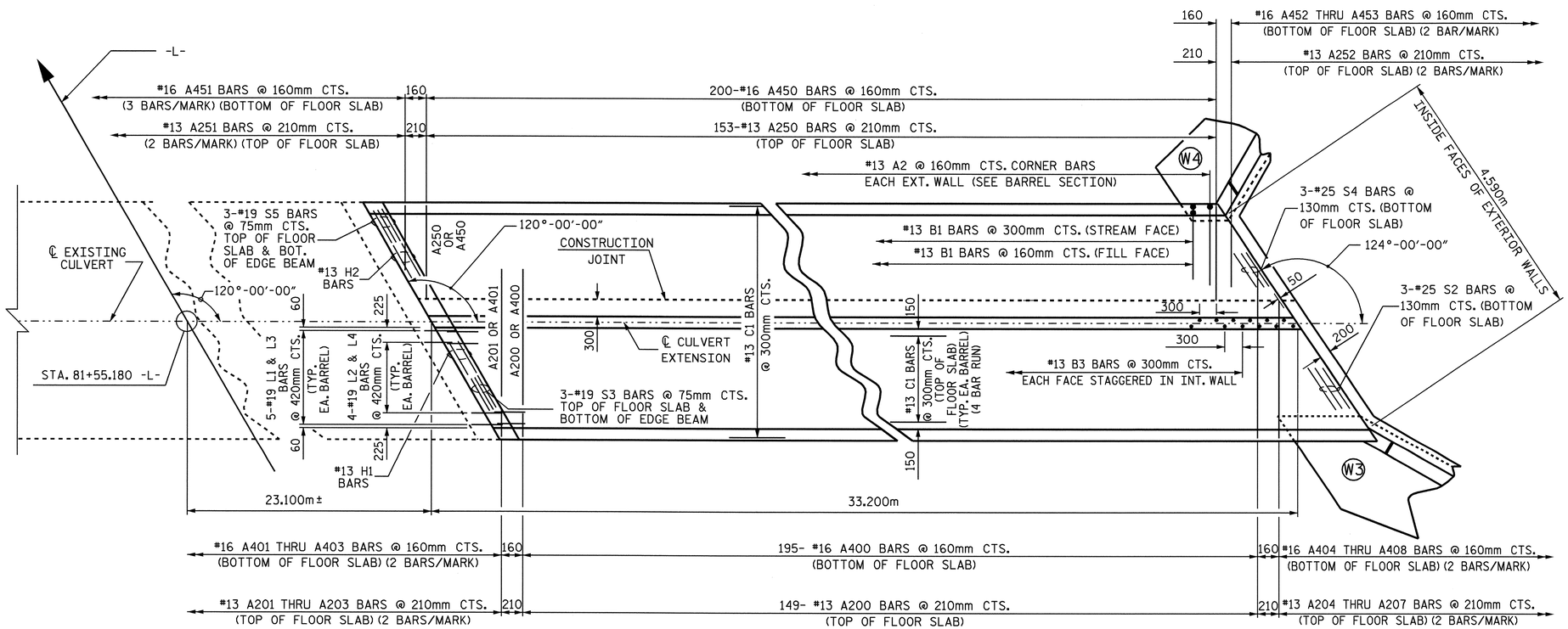

PLAN-FLOOR SLAB - RIGHT EXTENSION

ASSEMBLED BY : A.L. FIGUEROA DATE : 08-08-06
CHECKED BY : L.L. MURPHY DATE : 08-08-06

NORTH CAROLINA PROFESSIONAL SEAL 20125 ENGINEER MARSHALL L. CREEK, JR.
10-1-07

PROJECT NO. R-2518A
MADISON/YANCEY COUNTY
STATION: 81+55.180 -L-

SHEET 8 OF 10

STATE OF NORTH CAROLINA
DEPARTMENT OF TRANSPORTATION
RALEIGH

DOUBLE 1.800m X 2.400m CONCRETE BOX CULVERT RIGHT EXTENSION

REVISIONS						SHEET NO.
NO.	BY:	DATE:	NO.	BY:	DATE:	C-78
1			3			TOTAL SHEETS
2			4			103

STR No. 11

25-SEP-2007 07:29
R:\Structures\Str*ll\A.L.Figueroa\R2518A_sd_CU*ll.dgn
afigueroa

BAR SCHEDULE
RIGHT EXTENSION

BAR	NO.	SIZE	TYPE	LENGTH	WEIGHT
A1	416	#13	3	1240	513
A2	416	#13	3	1220	504
A100	123	#13	STR	4060	496
A101	1	#13	STR	3600	4
A102	1	#13	STR	3180	3
A103	1	#13	STR	2740	3
A104	1	#13	STR	2320	2
A105	1	#13	STR	1860	2
A106	1	#13	STR	1420	1
A107	1	#13	STR	1000	1
A108	1	#13	STR	3680	4
A109	1	#13	STR	3300	3
A110	1	#13	STR	2920	3
A111	1	#13	STR	2560	3
A112	1	#13	STR	2180	2
A113	1	#13	STR	1820	2
A114	1	#13	STR	1440	1
A115	1	#13	STR	1060	1
A116	1	#13	STR	720	1
A200	149	#13	STR	3060	453
A201	2	#13	STR	2180	4
A202	2	#13	STR	1540	3
A203	2	#13	STR	820	2
A204	2	#13	STR	2660	5
A205	2	#13	STR	2020	4
A206	2	#13	STR	1380	3
A207	2	#13	STR	720	1
A250	153	#13	STR	1640	249
A251	2	#13	STR	920	2
A252	2	#13	STR	1020	2

BAR	NO.	SIZE	TYPE	LENGTH	WEIGHT
A300	191	#16	STR	4060	1204
A301	2	#16	STR	3480	11
A302	2	#16	STR	2920	9
A303	2	#16	STR	2360	7
A304	2	#16	STR	1800	6
A305	2	#16	STR	1260	4
A306	2	#16	STR	720	2
A307	2	#16	STR	3560	11
A308	2	#16	STR	3100	10
A309	2	#16	STR	2620	8
A310	2	#16	STR	2140	7
A311	2	#16	STR	1680	5
A312	2	#16	STR	1200	4
A313	2	#16	STR	720	2
A400	195	#16	STR	3180	962
A401	2	#16	STR	2580	8
A402	2	#16	STR	2040	6
A403	2	#16	STR	1480	5
A404	2	#16	STR	2840	9
A405	2	#16	STR	2360	7
A406	2	#16	STR	1880	6
A407	2	#16	STR	1420	4
A408	2	#16	STR	960	3
A450	200	#16	STR	1640	509
A451	3	#16	STR	860	4
A452	2	#16	STR	1300	4
A453	2	#16	STR	820	3

BAR	NO.	SIZE	TYPE	LENGTH	WEIGHT
B1	222	#13	STR	2640	583
B2	416	#13	STR	2180	901
B3	222	#13	STR	2640	583
C1	240	#13	STR	8740	2085
D1	22	#19	STR	760	37
D2	12	#19	STR	380	10
G1	4	#16	STR	4960	31
H1	4	#13	STR	3380	13
H2	4	#13	STR	1900	8
L1	10	#19	1	820	18
L2	8	#19	1	720	13
L3	10	#19	2	840	19
L4	8	#19	2	1040	19
S2	3	#25	STR	4480	53
S3	6	#19	STR	3680	49
S4	3	#25	STR	1980	24
S5	6	#19	STR	1900	25
S6	6	#19	STR	4740	64
S7	3	#25	STR	4960	59

TOTAL REINFORCING STEEL = 9691 kg

BAR TYPE

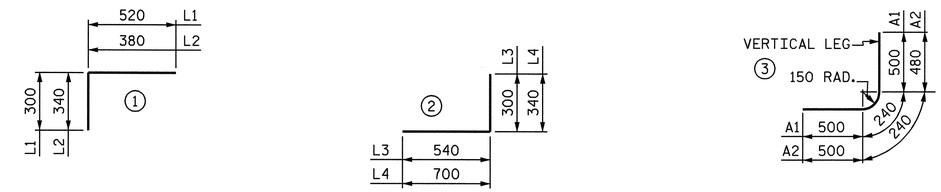

BAR DIMENSIONS ARE OUT TO OUT

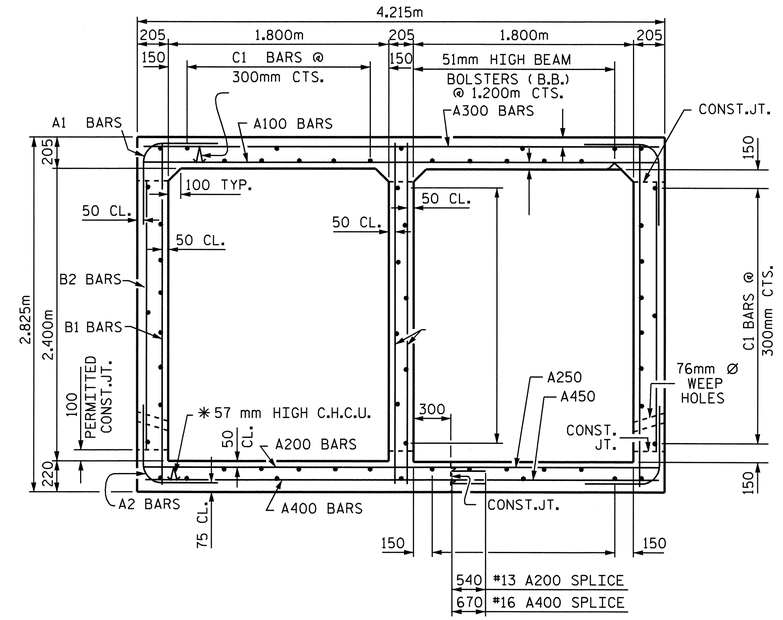

RIGHT ANGLE SECTION OF BARREL
THERE ARE 60 "C" BARS IN SECTION OF BARREL
(LOOKING UPSTREAM)

RIGHT EXTENSION QUANTITIES

CLASS A CONCRETE			
BARREL @	3.25 m/m^3	107.9	m^3
WINGS, ETC.		11.4	m^3
TOTAL		119.3	m^3
REINFORCING STEEL			
BARREL & HEADWALL		9,691	kg
WINGS, ETC.		375	kg
TOTAL		10,066	kg

CULVERT EXCAVATION ---------- LUMP SUM
FOUNDATION COND. MAT'L ---- 95 METRIC TONS

SPLICE LENGTH CHART

BAR	SIZE	SPLICE LENGTH
A200	#13	540
A400	#16	670
B1	#13	540
B3	#13	540
C1	#13	590
H1	#13	540
S3	#19	840
S2	#25	1500

PROJECT NO. R-2518A
MADISON/YANCEY COUNTY
STATION: 81+55.180 -L-

SHEET 9 OF 10

STATE OF NORTH CAROLINA
DEPARTMENT OF TRANSPORTATION
RALEIGH

DOUBLE 1.800m X 2.400m CONCRETE BOX CULVERT RIGHT EXTENSION

REVISIONS						SHEET NO.
NO.	BY:	DATE:	NO.	BY:	DATE:	C-79
1			3			TOTAL SHEETS
2			4			103

STR. No. 11

NORTH CAROLINA PROFESSIONAL SEAL 20125 ENGINEER MARSHALL G. CREEK, JR.
10-1-07

ASSEMBLED BY : A.L. FIGUEROA DATE : 08-08-06
CHECKED BY : L.L. MURPHY DATE : 08-08-06

25-SEP-2007 07:28
R:\Structures\Str*ll\A.L.Figueroa\R2518A_sd_CU*ll.dgn
afigueroa

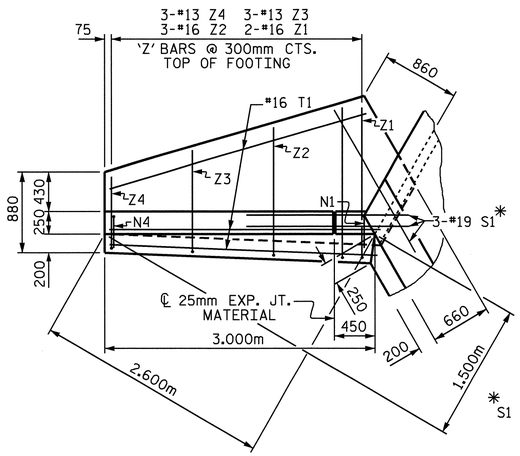

PLAN W4

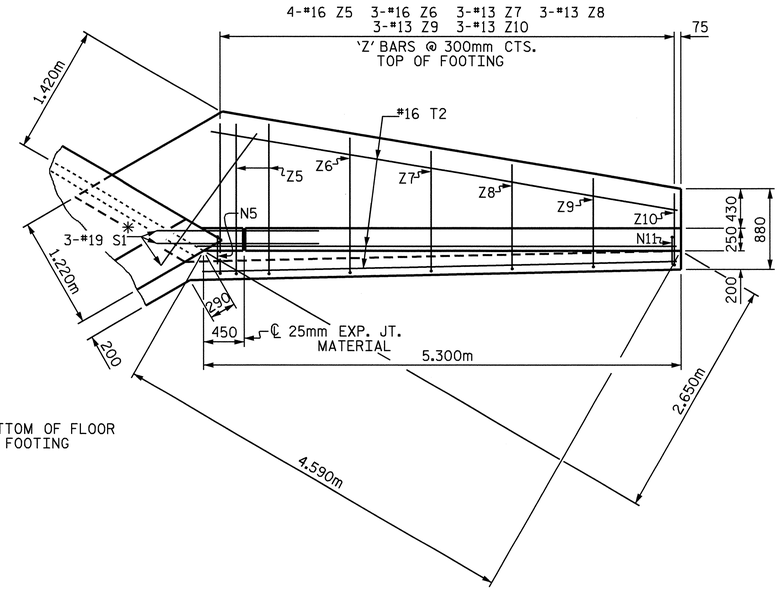

* S1 BARS @ BOTTOM OF FLOOR SLAB AND FOOTING

PLAN W3

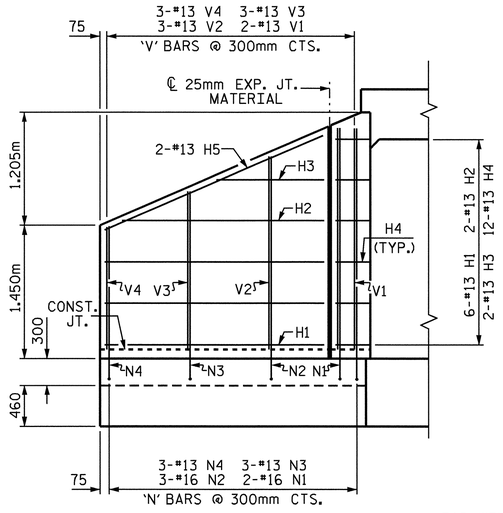

ELEVATION W4

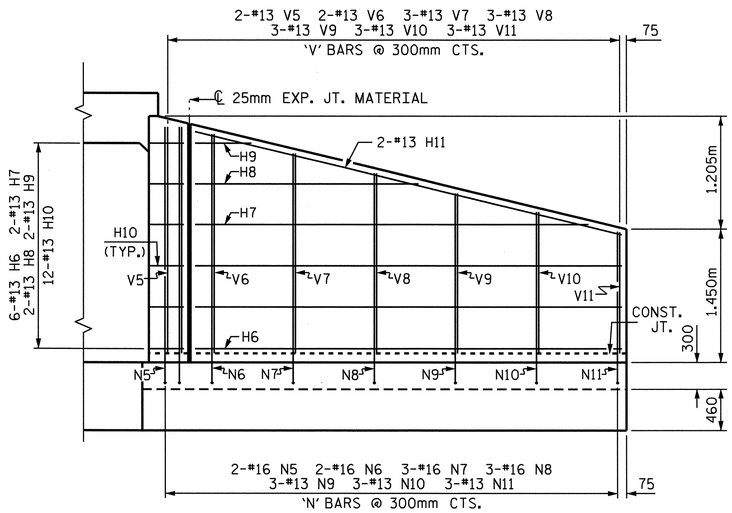

ELEVATION W3

NOTES

FOR WING ORIENTATION, SEE PLAN OF FLOOR SLAB.

G1 BARS IN HEADWALL ARE INCLUDED WITH BARREL REINFORCING STEEL.

A 900mm STRIP OF FILTER FABRIC SHALL BE ATTACHED TO THE FILL FACE OF THE WING COVERING THE ENTIRE LENGTH OF THE EXPANSION JOINT.

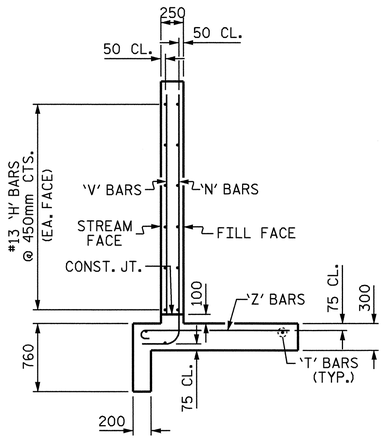

TYPICAL WING SECTION

BAR TYPES

ALL BAR DIMENSIONS ARE OUT TO OUT.

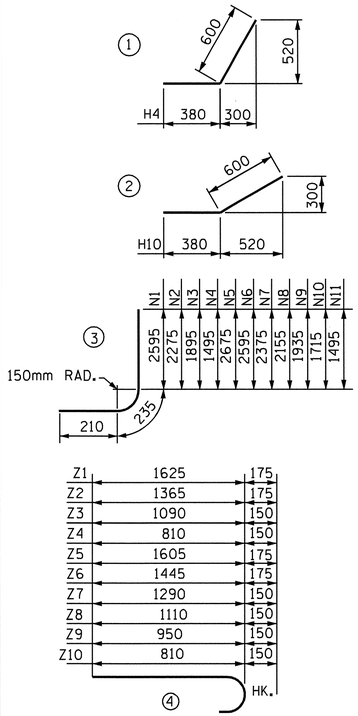

BILL OF MATERIAL

BAR	NO.	SIZE	TYPE	LENGTH	WEIGHT
H1	6	13	STR	2440	15
H2	2	13	STR	2240	4
H3	2	13	STR	1200	2
H4	12	13	1	980	12
H5	2	13	STR	2640	5
H6	6	13	STR	4740	28
H7	2	13	STR	4460	9
H8	2	13	STR	2600	5
H9	2	13	STR	760	2
H10	12	13	2	980	12
H11	2	13	STR	4860	10
N1	2	16	3	3040	9
N2	3	16	3	2720	13
N3	3	13	3	2340	7
N4	3	13	3	1940	6
N5	2	16	3	3120	10
N6	2	16	3	3040	9
N7	3	16	3	2820	13
N8	3	16	3	2600	12
N9	3	13	3	2380	7
N10	3	13	3	2160	6
N11	3	13	3	1940	6
S1	6	19	STR	1800	24
T1	3	16	STR	3000	14
T2	3	16	STR	5300	25
V1	2	13	STR	2420	5
V2	3	13	STR	2100	6
V3	3	13	STR	1720	5
V4	3	13	STR	1320	4
V5	2	13	STR	2500	5
V6	2	13	STR	2420	5
V7	3	13	STR	2200	7
V8	3	13	STR	1980	6
V9	3	13	STR	1760	5
V10	3	13	STR	1540	5
V11	3	13	STR	1320	4
Z1	2	16	4	1800	6
Z2	3	16	4	1540	7
Z3	3	13	4	1240	4
Z4	3	13	4	960	3
Z5	4	16	4	1780	11
Z6	3	16	4	1620	8
Z7	3	13	4	1440	4
Z8	3	13	4	1260	4
Z9	3	13	4	1100	3
Z10	3	13	4	960	3

REINFORCING STEEL FOR 2 WING WALLS	375	kg
CLASS A CONCRETE		
2 WINGS	8.8	m^3
1 HEADWALL	0.6	m^3
2 EDGE BEAMS	1.4	m^3
1 END CURTAIN WALLS	0.6	m^3
TOTAL	11.4	m^3

PROJECT NO. R-2518A
MADISON/YANCEY COUNTY
STATION: 81+55.180 -L-

SHEET 10 OF 10

STATE OF NORTH CAROLINA
DEPARTMENT OF TRANSPORTATION
RALEIGH

WINGS FOR CONCRETE BOX CULVERT RIGHT EXTENSION

REVISIONS						SHEET NO.
NO.	BY:	DATE:	NO.	BY:	DATE:	C-80
1			3			TOTAL SHEETS
2			4			103

STD. No. 11 STD. NO. CW6024

NORTH CAROLINA PROFESSIONAL SEAL 20125 ENGINEER MARSHALL L. MURPHY, JR.
10-1-97

ASSEMBLED BY : A.L. FIGUEROA	DATE : 08-08-06		
CHECKED BY : L.L. MURPHY	DATE : 08-08-06		
DRAWN BY : JLR 6/97			
CHECKED BY : VAP 6/97			

11-OCT-2007 08:05
r:\structures\str#12\a.l.figueroa\r2518a_sd_cu#12.dgn
afigueroa

BENCHMARK #10: CHISLED SQUARE IN THE S.E. CORNER OF A CONCRETE PAD ON THE SOUTH END OF AN OLD MILKING BARN. STA. 84+67.33 -L-, 67 METERS LEFT, ELEV. 743.23

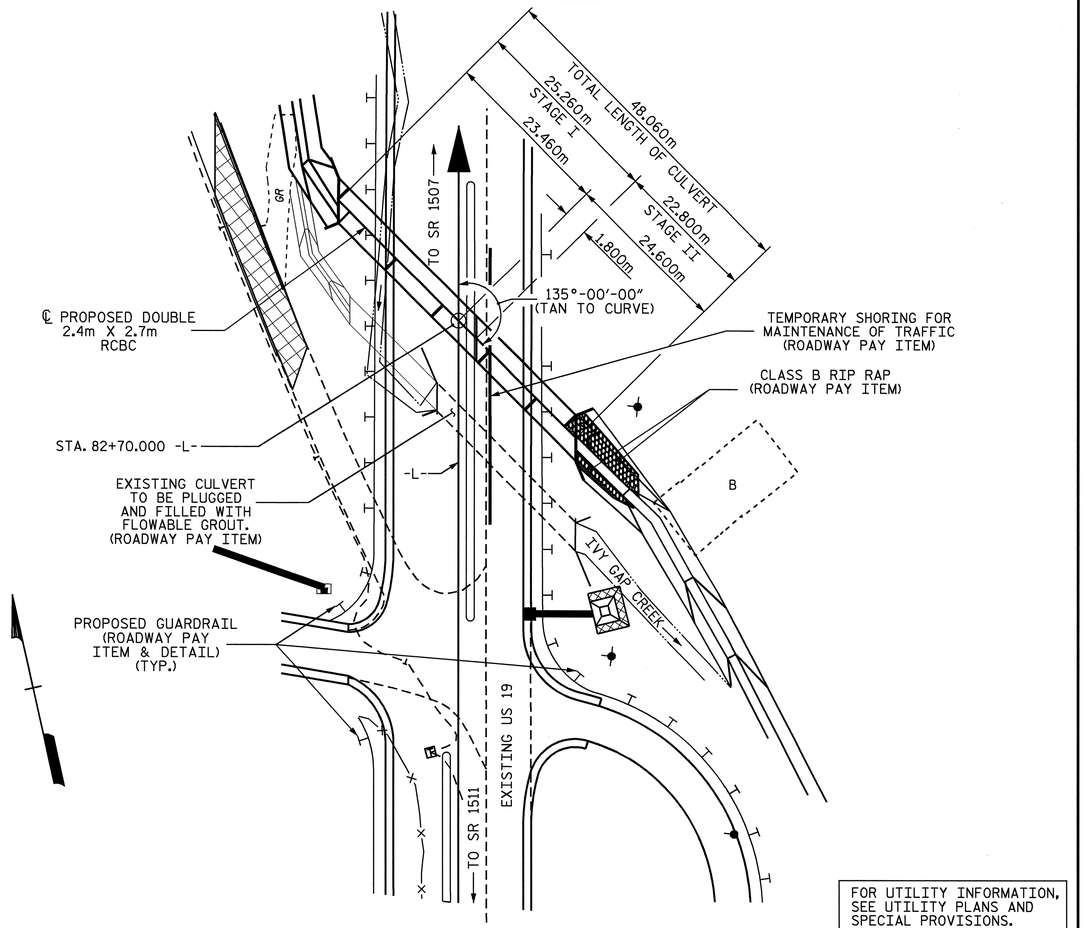

LOCATION SKETCH

HYDRAULIC DATA

DESIGN DISCHARGE	= 18.50 m^3/s
FREQUENCY OF DESIGN FLOOD	= 50 yrs.
DESIGN HIGH WATER ELEVATION	= 735.97
DRAINAGE AREA	= 2.909 sq.km
BASIC DISCHARGE (Q100)	= 22.50 m^3/s
BASIC HIGH WATER ELEVATION	= 736.14

OVERTOPPING FLOOD DATA

OVERTOPPING DISCHARGE	= 128.00m^3/s
FREQUENCY OF OVERTOPPING FLOOD	= 500+ yrs.
OVERTOPPING FLOOD ELEVATION	= 737.93

ROADWAY DATA

GRADE POINT ELEV. @ STA. 82+70.000 -L-	= 738.698
BED ELEV. @ STA. 82+70.000 -L-	= 733.885
ROADWAY FILL SLOPES	= 2 : 1

TOTAL STRUCTURE QUANTITIES

CLASS A CONCRETE	
STAGE I	120.3 m^3
STAGE II	110.1 m^3
TOTAL	230.4 m^3
REINFORCING STEEL	
STAGE I	10,703 kg
STAGE II	9,811 kg
TOTAL	20,514 kg
FOUNDATION CONDITIONING MATERIAL	
STAGE I	93 METRIC TONS
STAGE II	84 METRIC TONS
TOTAL	177 METRIC TONS
RIP RAP CLASS B	
STAGE I	81 METRIC TONS
STAGE II	73 METRIC TONS
TOTAL	154 METRIC TONS
CULVERT EXCAVATION	LUMP SUM

NOTES

ASSUMED LIVE LOAD ----------MS18 OR ALTERNATE LOADING.

DESIGN FILL ----------2.150m

FOR OTHER DESIGN DATA AND NOTES, SEE STANDARD NOTE SHEET.

76mm ∅ WEEP HOLES INDICATED TO BE IN ACCORDANCE WITH THE SPECIFICATIONS.

CONCRETE IN CULVERT TO BE POURED IN THE FOLLOWING ORDER:
1. WING FOOTINGS AND FLOOR SLAB INCLUDING 100mm OF ALL VERTICAL WALLS.
2. THE REMAINING PORTIONS OF THE WALL AND WINGS FULL HEIGHT FOLLOWED BY ROOF SLAB AND HEADWALLS.

THE RESIDENT ENGINEER SHALL CHECK THE LENGTH OF CULVERT BEFORE STAKING IT OUT TO MAKE CERTAIN THAT IT WILL PROPERLY TAKE CARE OF THE FILL.

DIMENSIONS FOR WING LAYOUT AS WELL AS ADDITIONAL REINFORCING STEEL EMBEDDED IN BARREL ARE SHOWN ON WING SHEET.

TRANSVERSE CONSTRUCTION JOINT SHALL BE USED IN THE BARREL, SPACED TO LIMIT THE POURS TO A MAXIMUM OF 21.0m. LOCATION OF JOINTS SHALL BE SUBJECT TO APPROVAL OF THE ENGINEER.

STEEL IN THE BOTTOM SLAB MAY BE SPLICED AT THE PERMITTED CONSTRUCTION JOINT AT THE CONTRACTOR'S OPTION. EXTRA WEIGHT OF STEEL DUE TO SPLICES SHALL BE PAID FOR BY THE CONTRACTOR.

AT THE CONTRACTOR'S OPTION, HE MAY SPLICE THE VERTICAL REINFORCING STEEL IN THE INTERIOR FACES OF EXTERIOR WALLS AND BOTH FACES OF INTERIOR WALL ABOVE LOWER WALL CONSTRUCTION JOINT. THE SPLICE LENGTH SHALL BE AS PROVIDED IN THE SPLICES LENGTH CHART SHOWN ON THE PLANS. EXTRA WEIGHT OF STEEL DUE TO THE SPLICES SHALL BE PAID FOR BY THE CONTRACTOR.

AT THE CONTRACTOR'S OPTION HE MAY SUBMIT, TO THE ENGINEER FOR APPROVAL, DESIGN AND DETAIL DRAWINGS FOR A PRECAST REINFORCED CONCRETE BOX CULVERT IN LIEU OF THE CAST-IN-PLACE CULVERT SHOWN ON THE PLANS. THE DESIGN SHALL PROVIDE THE SAME SIZE AND NUMBER OF BARRELS AS USED ON THE CASED-IN-PLACE DESIGN. FOR OPTIONAL PRECAST REINFORCED CONCRETE BOX CULVERT, SEE SPECIAL PROVISIONS.

DOWELS SHALL BE USED TO CONNECT STAGE II CULVERT TO STAGE I CULVERT AS SHOWN. FOR NOTE REGARDING SETTING OF DOWELS, SEE STANDARD NOTES SHEET SNSM.

AFTER SERVING AS A TEMPORARY STRUCTURE, THE EXISTING SINGLE 2.7m X 2.1m REINFORCED CONCRETE BOX CULVERT, AT THE DIRECTION OF THE ENGINEER, SHALL BE PLUGGED AND FILLED WITH FLOWABLE GROUT.

THE ENTIRE COST OF WORK REQUIRED TO CONSTRUCT THE SILLS SHALL BE INCLUDED IN THE VARIOUS PAY ITEMS.

FOLLOWING PLACEMENT OF THE SILLS, CLASS B RIP RAP SHALL BE PLACED THROUGHOUT THE ENTIRE CULVERT TO THE LEVEL OF THE SILLS.

FOR CULVERT DIVERSION DETAIL AND PAY ITEM, SEE EROSION CONTROL PLANS.

FOR LIMITS OF TEMPORARY SHORING FOR MAINTENANCE OF TRAFFIC, SEE TRAFFIC CONTROL PLANS.

FOR MAINTENANCE OF TRAFFIC, SEE TRAFFIC CONTROL PLANS.

FOR CONSTRUCTION SEQUENCE, SEE EROSION CONTROL PLANS.

FOR SUBMITTAL OF WORKING DRAWINGS, SEE SPECIAL PROVISIONS.

FOR FALSEWORK AND FORMWORK, SEE SPECIAL PROVISIONS.

FOR CRANE SAFETY, SEE SPECIAL PROVISIONS.

FOR GROUT FOR STRUCTURES, SEE SPECIAL PROVISIONS.

ALL DIMENSIONS ARE IN MILLIMETERS UNLESS OTHERWISE NOTED.

ALL ELEVATIONS ARE IN METERS.

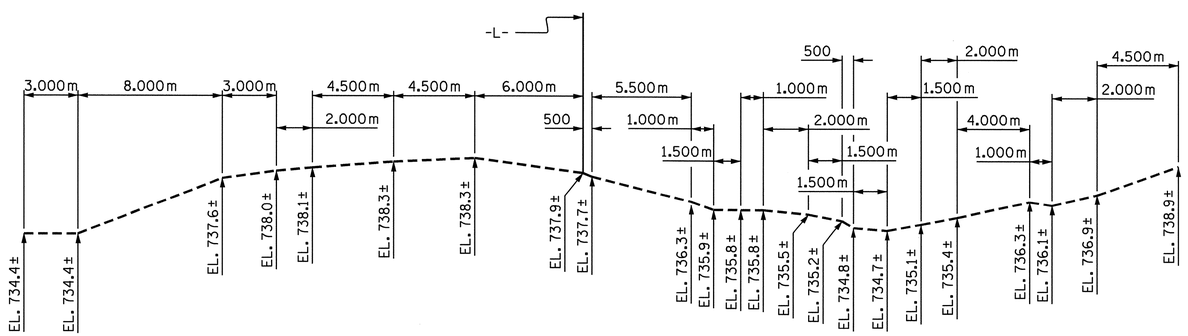

PROFILE ALONG ℄ CULVERT

PROJECT NO. R-2518A
MADISON/YANCEY COUNTY
STATION: 82+70.000 -L-

SHEET 1 OF 8

STATE OF NORTH CAROLINA
DEPARTMENT OF TRANSPORTATION
RALEIGH

DOUBLE 2.400m X 2.700m CONCRETE BOX CULVERT

REVISIONS						SHEET NO.
NO.	BY:	DATE:	NO.	BY:	DATE:	C-81
1			3			TOTAL SHEETS
2			4			103

ASSEMBLED BY : A. S. / A.L.F. DATE : 2/22/06
CHECKED BY : L.L. MURPHY DATE : 7/12/06

NORTH CAROLINA PROFESSIONAL SEAL 13014 ENGINEER QUANG H. NGUYEN
Quang H. Nguyen 10-17-07

NORTH CAROLINA PROFESSIONAL SEAL 20125 ENGINEER MARSHALL L. FIGUEROA, JR.
10-11-07

25-SEP-2007 07:11
R:\Structures\Str#12\A.L.Figueroa\R2518A_sd_CU#12.dgn
afigueroa

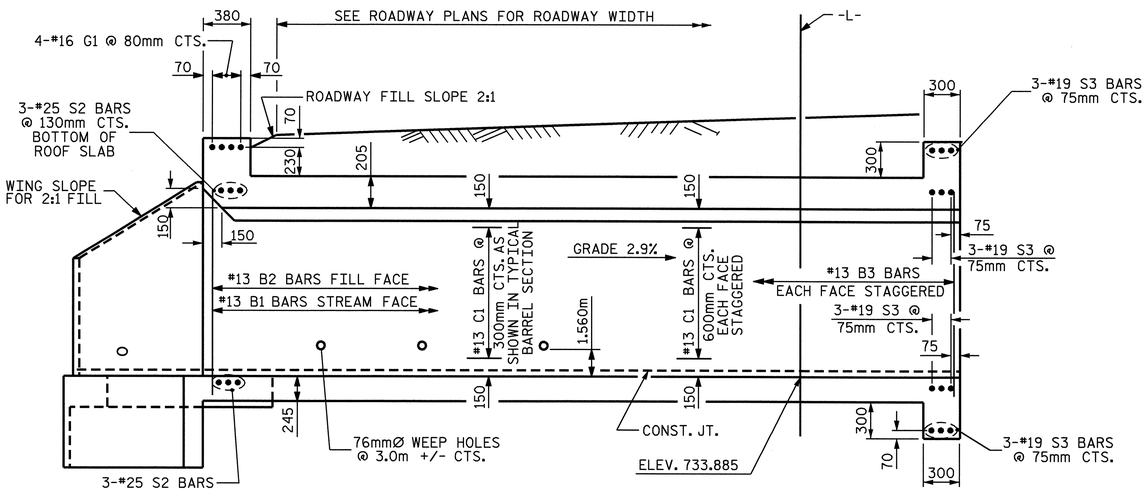

EXTERIOR WALL INTERIOR WALL

CULVERT SECTION NORMAL TO ROADWAY

(STAGE 1)

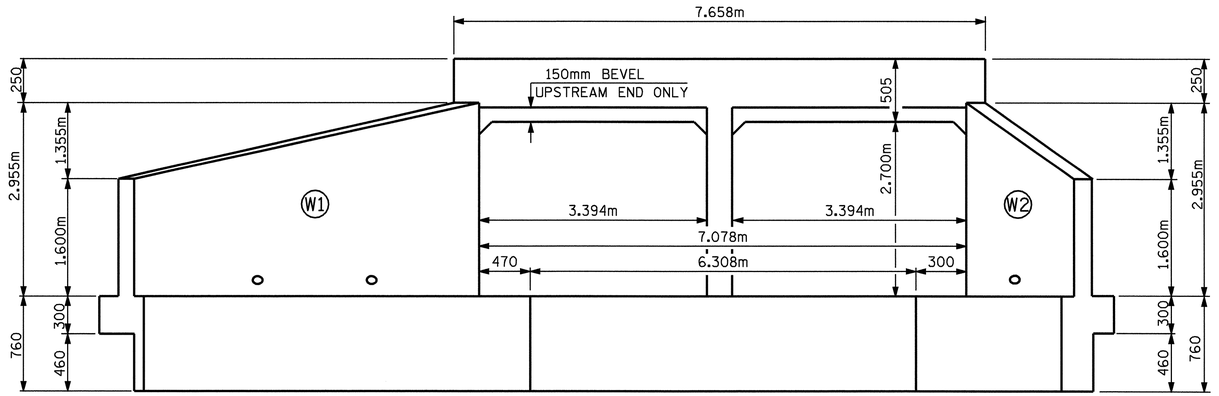

END ELEVATION NORMAL TO SKEW

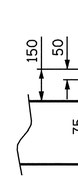

SECTION THRU 150mm SILL

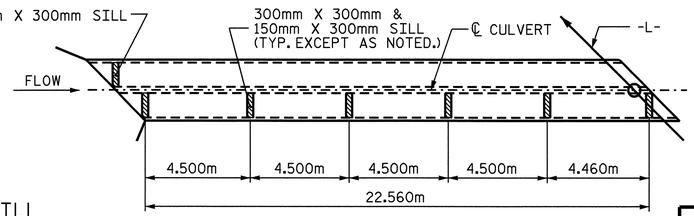

PLAN OF SILL LOCATION

(STAGE I)

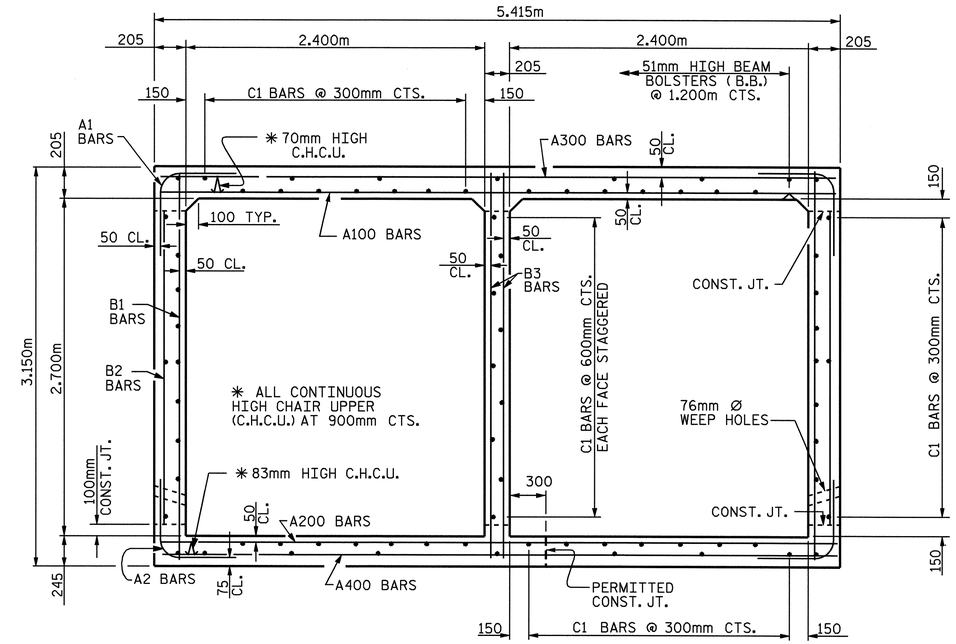

RIGHT ANGLE SECTION OF BARREL

THERE ARE 75 "C" BARS IN SECTION OF BARREL.

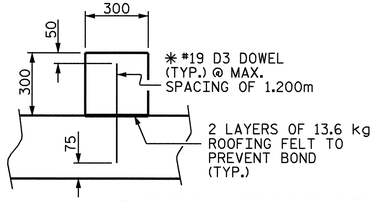

SECTION THRU 300mm SILL

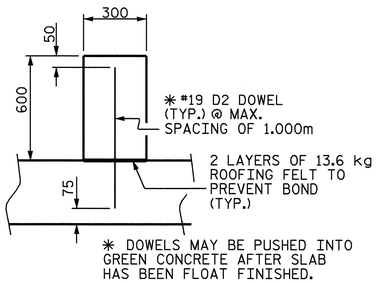

SECTION THRU 600mm SILL

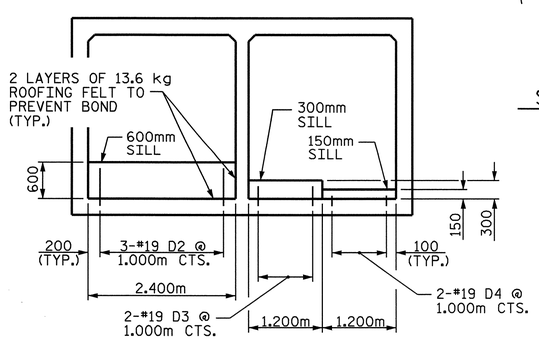

ELEVATION

(LOOKING DOWNSTREAM)

CULVERT SILL DETAILS

STAGE I QUANTITIES

CLASS A CONCRETE		
BARREL @ 4.07 m^3/m		102.8 m^3
WINGS, ETC.		16.1 m^3
SILLS		1.4 m^3
TOTAL		120.3 m^3
REINFORCING STEEL		
BARREL & SILLS		10,151 kg
WINGS, ETC.		552 kg
TOTAL		10,703 kg
CULVERT EXCAVATION	LUMP SUM	
FOUNDATION COND. MAT'L	93 METRIC TONS	
RIP RAP CLASS B	81 METRIC TONS	

PROJECT NO. R-2518A

MADISON/YANCEY COUNTY

STATION: 82+70.000 -L-

SHEET 2 OF 8

STATE OF NORTH CAROLINA
DEPARTMENT OF TRANSPORTATION
RALEIGH

DOUBLE 2.400m X 2.700m CONCRETE BOX CULVERT STAGE I

NORTH CAROLINA PROFESSIONAL SEAL 20125 ENGINEER MARSHALL G. MURPHY, JR.
10-1-07

REVISIONS						SHEET NO.
NO.	BY:	DATE:	NO.	BY:	DATE:	C-82
1			3			TOTAL SHEETS
2			4			103

STR. #12

ASSEMBLED BY : A. S. / A.L.F. DATE : 2/23/06
CHECKED BY : L.L. MURPHY DATE : 7/12/06

25-SEP-2007 07:11
R:\Structures\Str#12\A.L.Figueroa\R2518A_sd_CU#12.dgn
aflgueroa

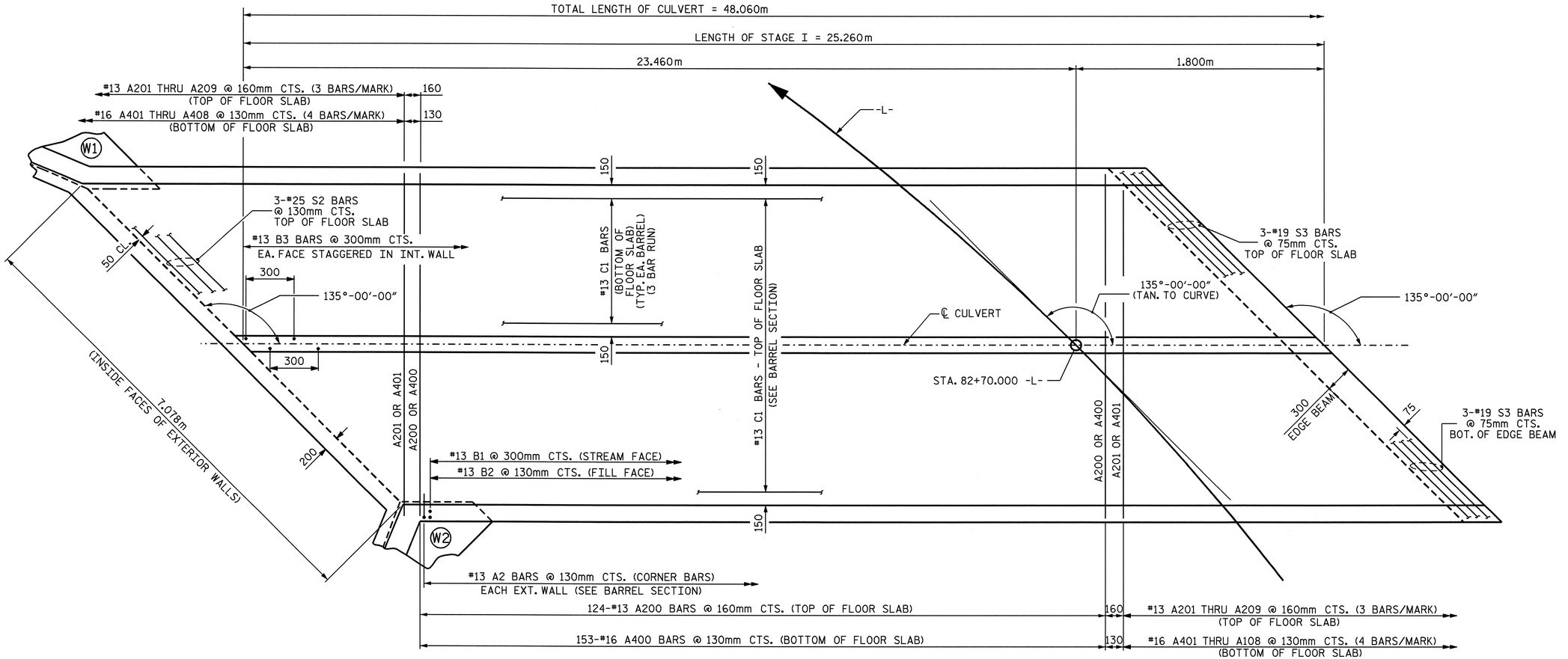

PLAN - FLOOR SLAB
STAGE I

ASSEMBLED BY : A.S. / A.L.F. DATE : 2/23/06
CHECKED BY : L.L. MURPHY DATE : 7/12/06

NORTH CAROLINA PROFESSIONAL SEAL 20125 ENGINEER MARSHALL L. CHEEK, JR.
10-2-07

PROJECT NO. R-2518A
MADISON/YANCEY COUNTY
STATION: 82+70.000 -L-

SHEET 3 OF 8

STATE OF NORTH CAROLINA
DEPARTMENT OF TRANSPORTATION
RALEIGH

DOUBLE 2.400m X 2.700m
CONCRETE BOX CULVERT
STAGE I

REVISIONS						SHEET NO.
NO.	BY:	DATE:	NO.	BY:	DATE:	C-83
1			3			TOTAL SHEETS
2			4			103

STR #12

25-SEP-2007 07:11
R:\Structures\Str#12\A.L.Figueroa\R2518A_sd_CU#12.dgn
afigueroa

SPLICE LENGTH CHART

BAR	SIZE	SPLICE LENGTH
A200	13	540
A400	16	670
B1	13	540
B3	13	540
C1	13	590

BAR TYPE

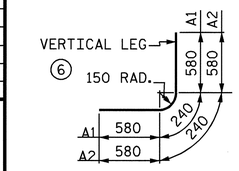

BAR DIMENSIONS ARE OUT TO OUT

BAR SCHEDULE-STAGE I

BAR	NO.	SIZE	TYPE	LENGTH	WEIGHT
A1	390	13	6	1400	543
A2	390	13	6	1400	543
A100	124	13	STR	5260	648
A101	6	13	STR	4780	29
A102	6	13	STR	4300	26
A103	6	13	STR	3800	23
A104	6	13	STR	3360	20
A105	6	13	STR	2880	17
A106	6	13	STR	2380	14
A107	6	13	STR	1900	11
A108	6	13	STR	1420	8
A109	6	13	STR	940	6
A200	124	13	STR	5260	648
A201	6	13	STR	4780	29

BAR	NO.	SIZE	TYPE	LENGTH	WEIGHT
A202	6	13	STR	4300	26
A203	6	13	STR	3800	23
A204	6	13	STR	3360	20
A205	6	13	STR	2880	17
A206	6	13	STR	2380	14
A207	6	13	STR	1900	11
A208	6	13	STR	1420	8
A209	6	13	STR	940	6
A300	153	16	STR	5260	1249
A301	8	16	STR	4740	59
A302	8	16	STR	4220	52
A303	8	16	STR	3700	46
A304	8	16	STR	3180	39
A305	8	16	STR	2660	33
A306	8	16	STR	2140	27
A307	8	16	STR	1620	20
A308	8	16	STR	1100	14

BAR	NO.	SIZE	TYPE	LENGTH	WEIGHT
A400	153	16	STR	5260	1249
A401	8	16	STR	4740	59
A402	8	16	STR	4220	52
A403	8	16	STR	3700	46
A404	8	16	STR	3180	39
A405	8	16	STR	2660	33
A406	8	16	STR	2140	27
A407	8	16	STR	1620	20
A408	8	16	STR	1100	14
B1	170	13	STR	2980	504
B2	390	13	STR	2480	961
B3	170	13	STR	2980	504
C1	225	13	STR	8780	1964
D2	3	19	STR	720	5
D3	12	19	STR	420	11
D4	12	19	STR	260	7
G1	4	16	STR	7500	47
S2	6	25	STR	7500	179
S3	12	19	STR	7500	201

REINFORCING STEEL = 10,151 kg

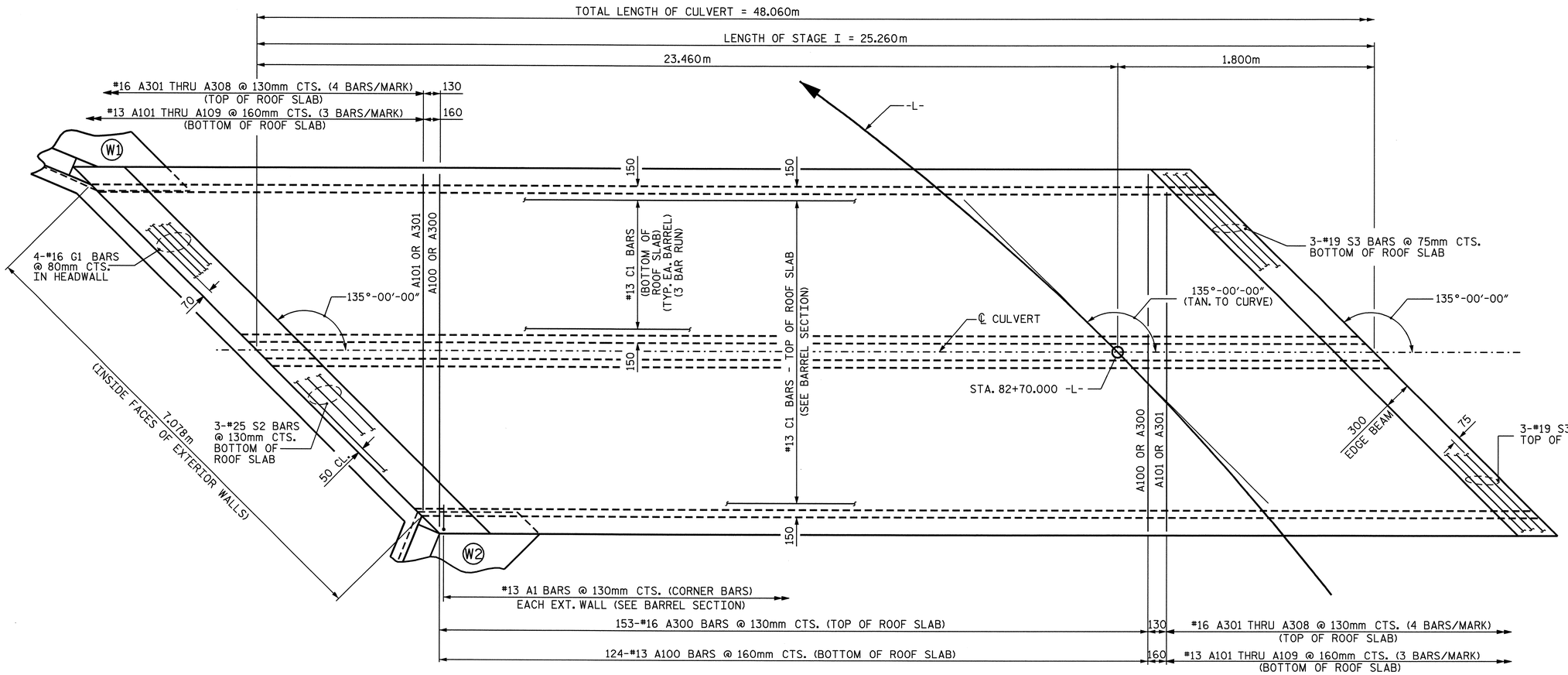

PLAN - ROOF SLAB
STAGE I

PROJECT NO. R-2518A
MADISON/YANCEY COUNTY
STATION: 82+70.000 -L-

SHEET 4 OF 8

STATE OF NORTH CAROLINA
DEPARTMENT OF TRANSPORTATION
RALEIGH

DOUBLE 2.400m X 2.700m CONCRETE BOX CULVERT STAGE I

NORTH CAROLINA PROFESSIONAL SEAL 20125 ENGINEER MARSHALL CURTIS WEEK, JR.
10-1-07

REVISIONS						SHEET NO.
NO.	BY:	DATE:	NO.	BY:	DATE:	C-84
1			3			TOTAL SHEETS
2			4			103

ASSEMBLED BY : A. S. / A.L.F. DATE : 2/24/06
CHECKED BY : L.L. MURPHY DATE : 7/12/06

STR #12

25-SEP-2007 07:11
R:\Structures\Str#12\A.L.Figueroa\R2518A_sd_CU#12.dgn
afigueroa

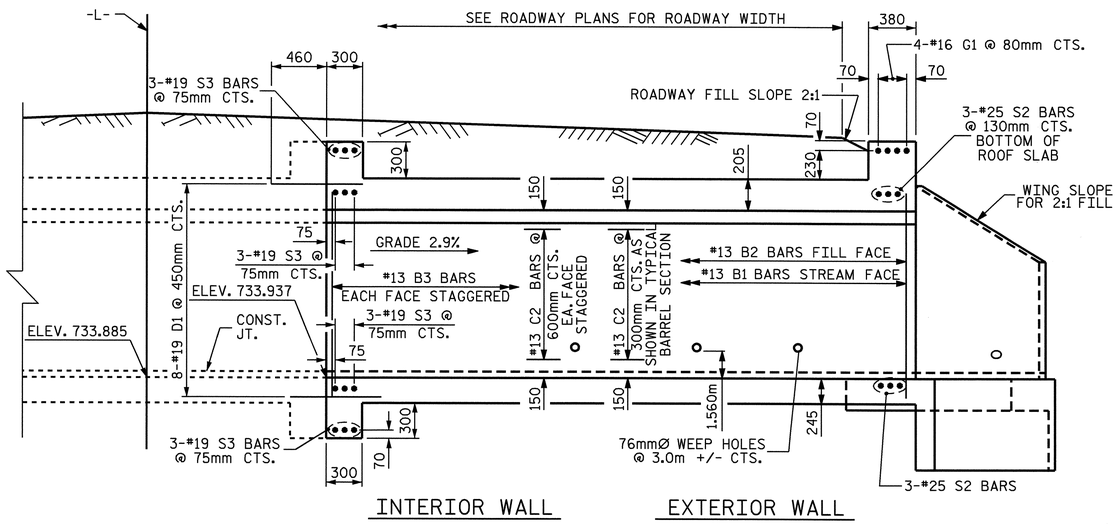

INTERIOR WALL EXTERIOR WALL

CULVERT SECTION NORMAL TO ROADWAY
(STAGE II)

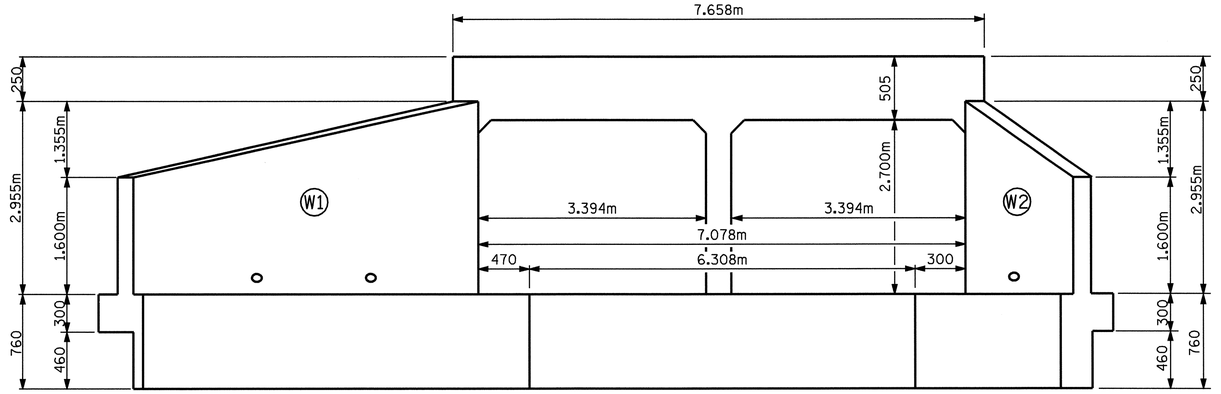

END ELEVATION NORMAL TO SKEW

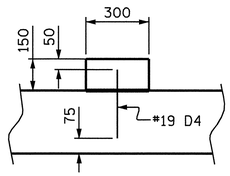

SECTION THRU 150mm SILL

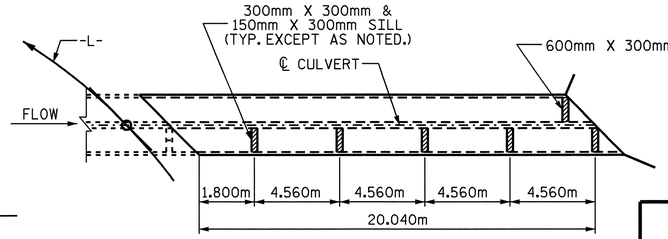

PLAN OF SILL LOCATION
(STAGE II)

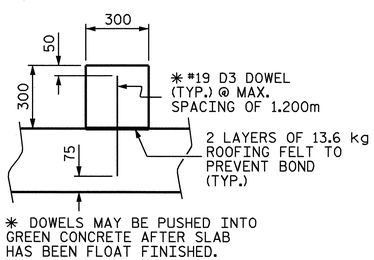

SECTION THRU 300mm SILL

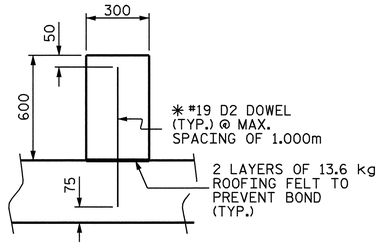

SECTION THRU 600mm SILL

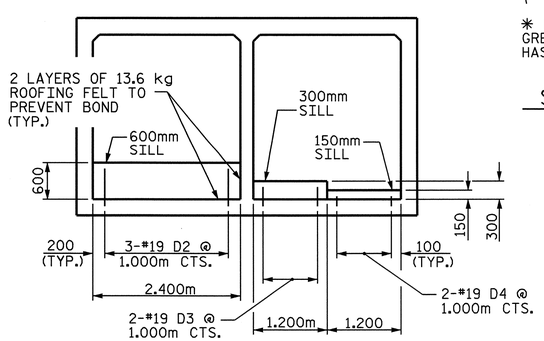

ELEVATION
(LOOKING DOWNSTREAM)

CULVERT SILL DETAILS

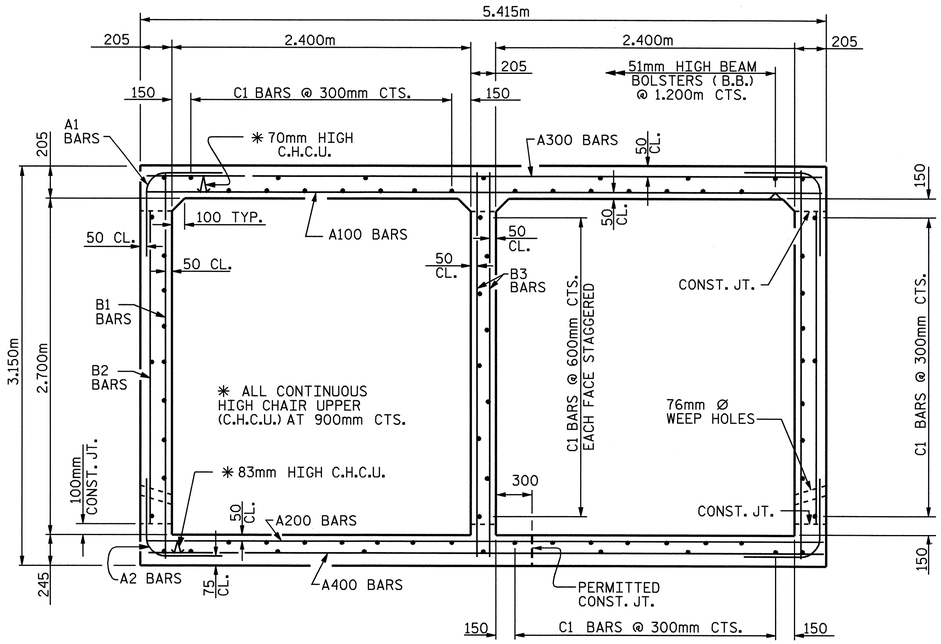

RIGHT ANGLE SECTION OF BARREL
THERE ARE 75 "C" BARS IN SECTION OF BARREL.

STAGE II QUANTITIES

CLASS A CONCRETE		
BARREL @	4.07 m^3/m	92.8 m^3
WINGS, ETC.		16.1 m^3
SILLS		1.2 m^3
TOTAL		110.1 m^3
REINFORCING STEEL		
BARREL & SILLS		9,259 kg
WINGS, ETC.		552 kg
TOTAL		9,811 kg

CULVERT EXCAVATION ---------- LUMP SUM
FOUNDATION COND. MAT'L ----- 84 METRIC TONS
RIP RAP CLASS B ---------- 73 METRIC TONS

PROJECT NO. R-2518A
MADISON/YANCEY COUNTY
STATION: 82+70.000 -L-

SHEET 5 OF 8

STATE OF NORTH CAROLINA
DEPARTMENT OF TRANSPORTATION
RALEIGH

DOUBLE 2.400m X 2.700m CONCRETE BOX CULVERT STAGE II

NORTH CAROLINA PROFESSIONAL SEAL 20125 ENGINEER MARSHALL L. MURPHY, JR.
10-1-07

REVISIONS						SHEET NO.
NO.	BY:	DATE:	NO.	BY:	DATE:	C-85
1			3			TOTAL SHEETS
2			4			103

STR. #12

ASSEMBLED BY : A. S. / A.L.F. DATE : 2/23/06
CHECKED BY : L.L. MURPHY DATE : 7/12/06

25-SEP-2007 07:11
R:\Structures\Str*12\A.L.Figueroa\R2518A_sd_CU*12.dgn
afigueroa

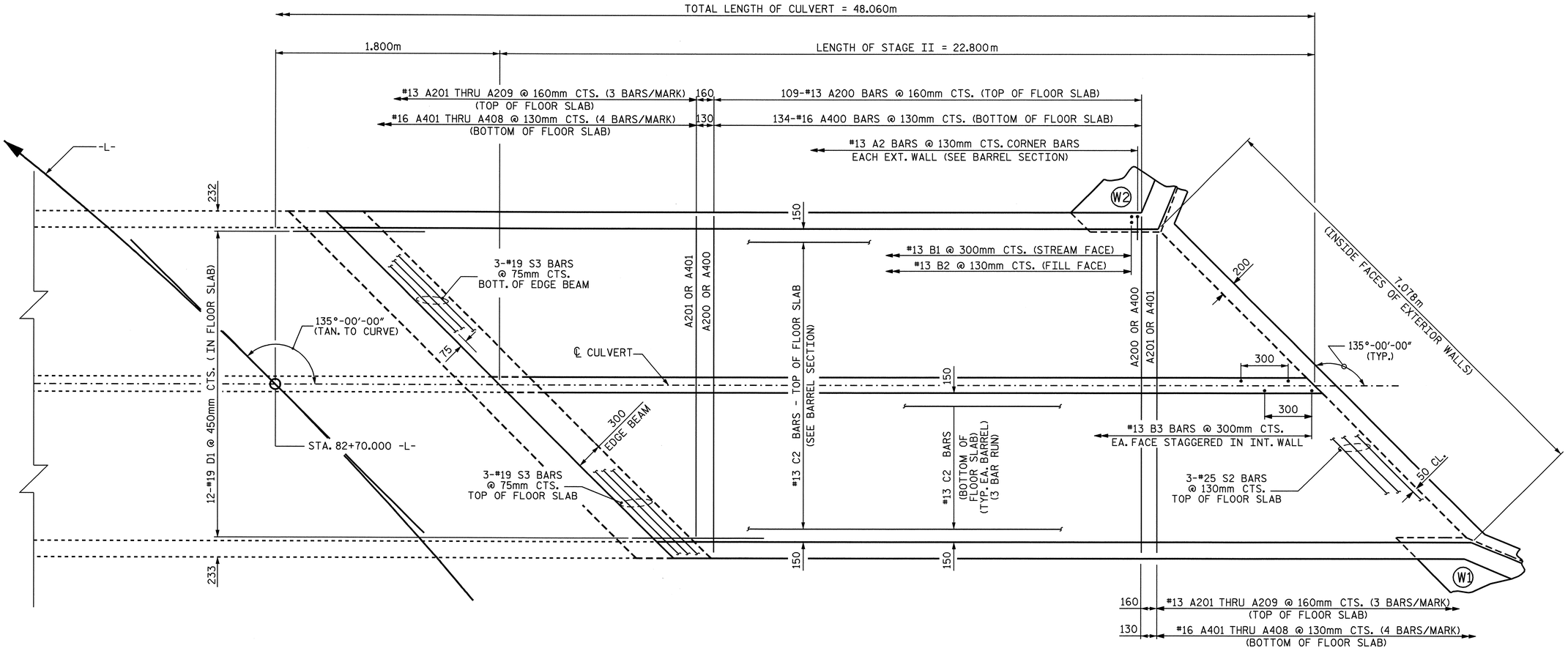

PLAN - FLOOR SLAB
STAGE II

PROJECT NO. R-2518A
MADISON/YANCEY COUNTY
STATION: 82+70.000 -L-

SHEET 6 OF 8

STATE OF NORTH CAROLINA
DEPARTMENT OF TRANSPORTATION
RALEIGH

DOUBLE 2.400m X 2.700m CONCRETE BOX CULVERT STAGE II

NORTH CAROLINA PROFESSIONAL SEAL 20125 ENGINEER MARSHALL A. CHEEK, JR.
10-1-07

REVISIONS						SHEET NO.
NO.	BY:	DATE:	NO.	BY:	DATE:	C-86
1			3			TOTAL SHEETS
2			4			103

STR #12

ASSEMBLED BY : A. S. / A.L.F. DATE : 2/23/06
CHECKED BY : L.L. MURPHY DATE : 7/12/06

25-SEP-2007 07:11
R:\Structures\Str#12\A.L.Figueroa\R2518A_sd_CU#12.dgn
afigueroa

SPLICE LENGTH CHART

BAR	SIZE	SPLICE LENGTH
A200	13	540
A400	16	670
B1	13	540
B3	13	540
C1	13	590

BAR TYPE

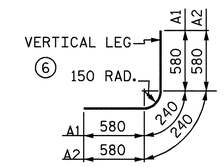

BAR DIMENSIONS ARE OUT TO OUT

BAR SCHEDULE-STAGE II

BAR	NO.	SIZE	TYPE	LENGTH	WEIGHT
A1	352	13	6	1400	490
A2	352	13	6	1400	490
A100	109	13	STR	5260	570
A101	6	13	STR	4780	29
A102	6	13	STR	4300	26
A103	6	13	STR	3800	23
A104	6	13	STR	3360	20
A105	6	13	STR	2880	17
A106	6	13	STR	2380	14
A107	6	13	STR	1900	11
A108	6	13	STR	1420	8
A109	6	13	STR	940	6
A200	109	13	STR	5260	570
A201	6	13	STR	4780	29

BAR	NO.	SIZE	TYPE	LENGTH	WEIGHT
A202	6	13	STR	4300	26
A203	6	13	STR	3800	23
A204	6	13	STR	3360	20
A205	6	13	STR	2880	17
A206	6	13	STR	2380	14
A207	6	13	STR	1900	11
A208	6	13	STR	1420	8
A209	6	13	STR	940	6
A300	134	16	STR	5260	1094
A301	8	16	STR	4740	59
A302	8	16	STR	4220	52
A303	8	16	STR	3700	46
A304	8	16	STR	3180	39
A305	8	16	STR	2660	33
A306	8	16	STR	2140	27
A307	8	16	STR	1620	20
A308	8	16	STR	1100	14

BAR	NO.	SIZE	TYPE	LENGTH	WEIGHT
A400	134	16	STR	5260	1094
A401	8	16	STR	4740	59
A402	8	16	STR	4220	52
A403	8	16	STR	3700	46
A404	8	16	STR	3180	39
A405	8	16	STR	2660	33
A406	8	16	STR	2140	27
A407	8	16	STR	1620	20
A408	8	16	STR	1100	14
B1	152	13	STR	2980	450
B2	352	13	STR	2480	868
B3	152	13	STR	2980	450
C2	225	13	STR	7960	1780
D1	40	19	STR	760	68
D2	3	19	STR	720	5
D3	10	19	STR	420	9
D4	10	19	STR	260	6
G1	4	16	STR	7500	47
S2	6	25	STR	7500	179
S3	12	19	STR	7500	201

REINFORCING STEEL = 9259 kg

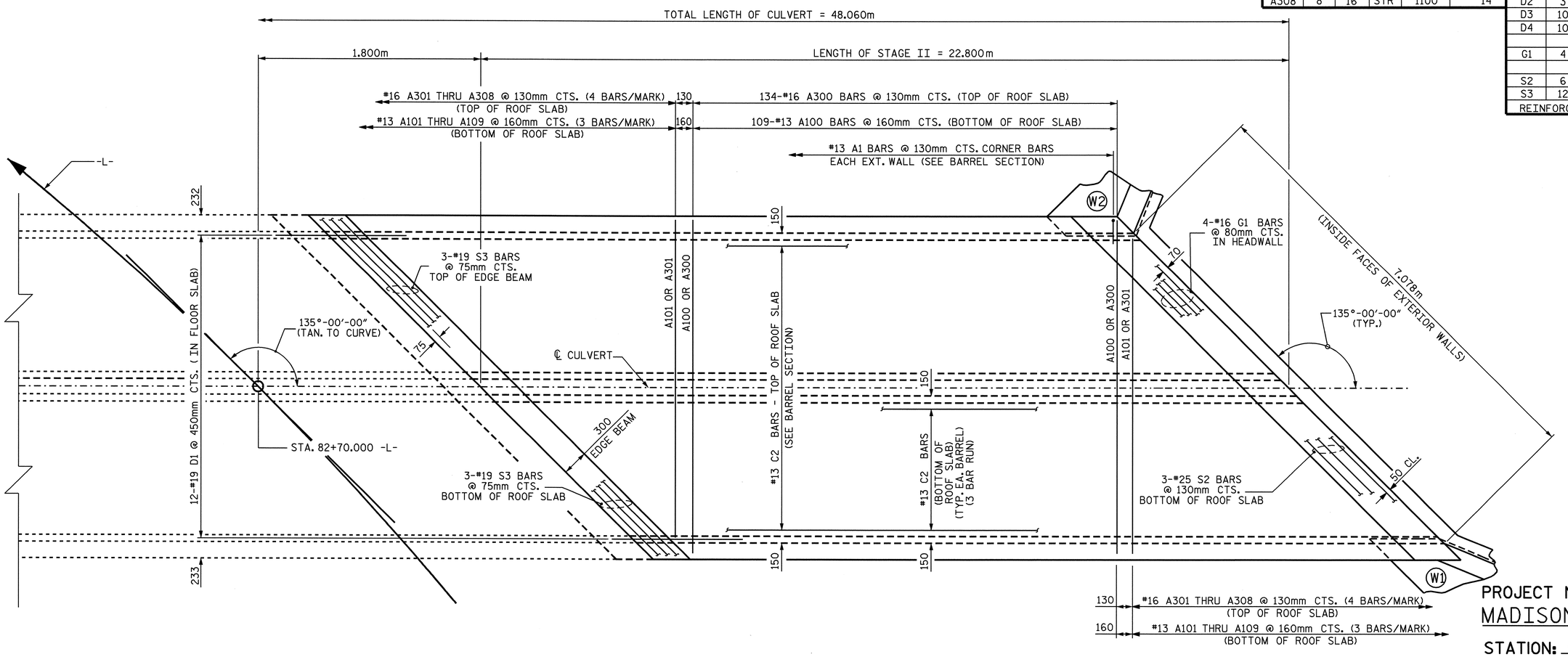

PLAN - ROOF SLAB
STAGE II

PROJECT NO. R-2518A
MADISON/YANCEY COUNTY
STATION: 82+70.000 -L-

SHEET 7 OF 8

STATE OF NORTH CAROLINA
DEPARTMENT OF TRANSPORTATION
RALEIGH

DOUBLE 2.400m X 2.700m CONCRETE BOX CULVERT STAGE II

NORTH CAROLINA PROFESSIONAL SEAL 20125 ENGINEER MARSHALL L. GRIDLEY, JR.
10-1-07

REVISIONS						SHEET NO.
NO.	BY:	DATE:	NO.	BY:	DATE:	C-87
1			3			TOTAL SHEETS
2			4			103

ASSEMBLED BY : A. S. / A.L.F. DATE : 2/22/06
CHECKED BY : L.L. MURPHY DATE : 7/12/06

CTP #12

RENAME DGN: C:\projects\2518A\Structures\Wings\2518A_WINGS_W1W2.dgn
afiguero

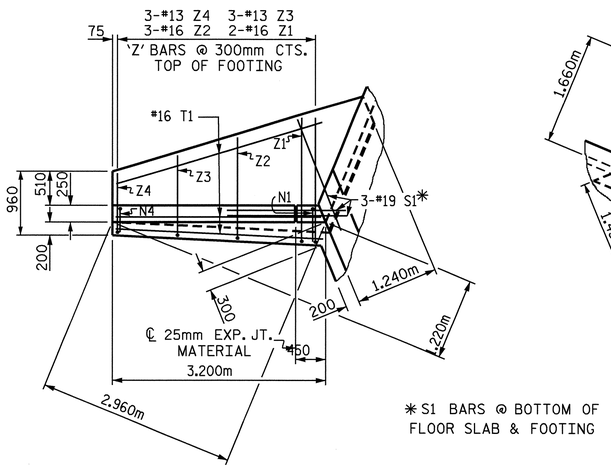

PLAN W2

*S1 BARS @ BOTTOM OF FLOOR SLAB & FOOTING

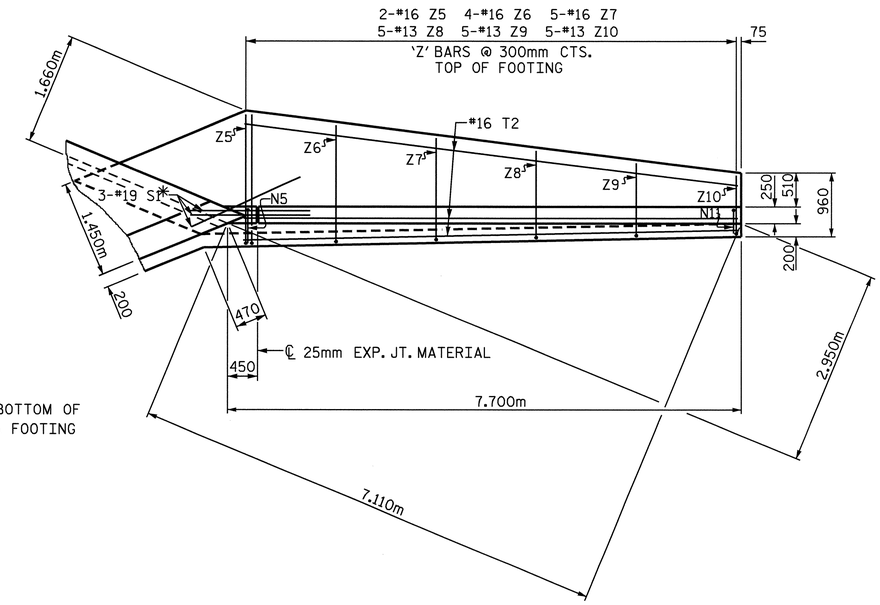

PLAN W1

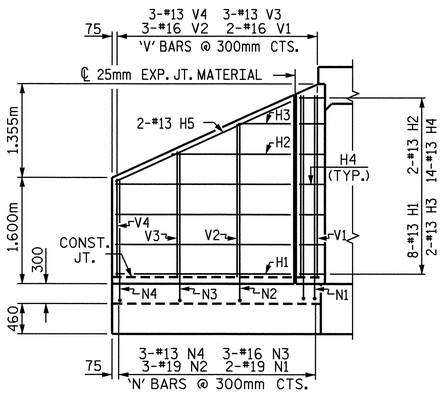

ELEVATION W2

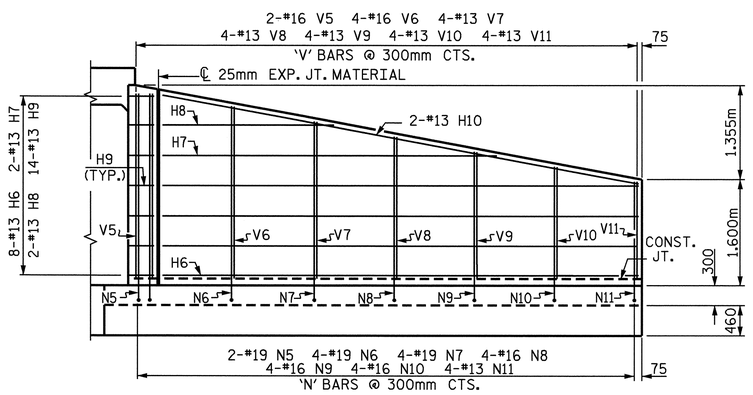

ELEVATION W1

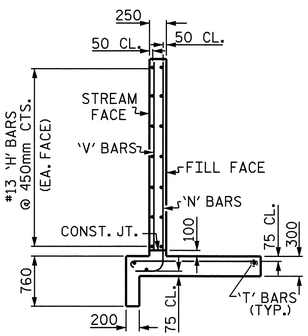

TYPICAL WING SECTION

NOTES

FOR WING ORIENTATION, SEE PLAN OF FLOOR SLABS.

A 900mm STRIP OF FILTER FABRIC SHALL BE ATTACHED TO THE FILL FACE OF THE WING COVERING THE ENTIRE LENGTH OF THE EXPANSION JOINT.

G1 BARS IN HEADWALL ARE INCLUDED WITH BARREL REINFORCING STEEL.

BAR TYPES

ALL BAR DIMENSIONS ARE OUT TO OUT.

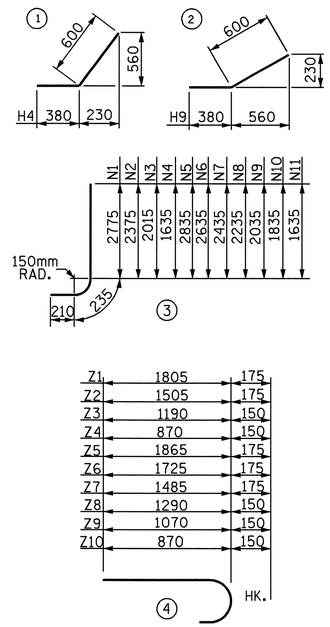

BILL OF MATERIAL FOR STAGE I OR II

BAR	NO.	SIZE	TYPE	LENGTH	WEIGHT
H1	8	13	STR	2640	21
H2	2	13	STR	1840	4
H3	2	13	STR	780	2
H4	14	13	1	980	14
H5	2	13	STR	2860	6
H6	8	13	STR	7140	57
H7	2	13	STR	5140	10
H8	2	13	STR	2480	5
H9	14	13	2	980	14
H10	2	13	STR	7240	14
N1	2	19	3	3220	14
N2	3	19	3	2820	19
N3	3	16	3	2460	11
N4	3	13	3	2080	6
N5	2	19	3	3280	15
N6	4	19	3	3080	28
N7	4	19	3	2880	26
N8	4	16	3	2680	17
N9	4	16	3	2480	15
N10	4	16	3	2280	14
N11	4	13	3	2080	8
S1	6	19	STR	1800	24
T1	3	16	STR	3200	15
T2	3	16	STR	7700	36
V1	2	16	STR	2600	8
V2	3	16	STR	2200	10
V3	3	13	STR	1840	5
V4	3	13	STR	1460	4
V5	2	16	STR	2660	8
V6	4	16	STR	2460	15
V7	4	13	STR	2260	9
V8	4	13	STR	2060	8
V9	4	13	STR	1860	7
V10	4	13	STR	1660	7
V11	4	13	STR	1460	6
Z1	2	16	4	1980	6
Z2	3	16	4	1680	8
Z3	3	13	4	1340	4
Z4	3	13	4	1020	3
Z5	2	16	4	2040	6
Z6	4	16	4	1900	12
Z7	5	16	4	1660	13
Z8	5	13	4	1440	7
Z9	5	13	4	1220	6
Z10	5	13	4	1020	5

REINFORCING STEEL 552 kg
FOR 2 WINGS
CLASS A CONCRETE

2 WINGS	12.8 m^3
1 HEADWALL	0.9 m^3
1 END CURTAIN WALL	1.0 m^3
2 EDGE BEAMS	1.4 m^3
TOTAL	16.1 m^3

PROJECT NO. R-2518A
MADISON/YANCEY COUNTY
STATION: 82+70.000 -L-

SHEET 8 OF 8

STATE OF NORTH CAROLINA
DEPARTMENT OF TRANSPORTATION
RALEIGH

WINGS FOR CONCRETE BOX CULVERT STAGE I OR II

ASSEMBLED BY : A. S. / A.L.F.	DATE : 2/24/06
CHECKED BY : L.L. MURPHY	DATE : 7/12/06
DRAWN BY : KJA 7/97	
CHECKED BY : RH 11/98	

NORTH CAROLINA PROFESSIONAL SEAL 20125 ENGINEER MARSHALL S. CHEEK, JR.

REVISIONS						SHEET NO.
NO.	BY:	DATE:	NO.	BY:	DATE:	C-88
1			3			TOTAL SHEETS
2			4			103

STR. #12 STD. NO. CW 4527

BENCHMARK #11: CHISELED SQUARE IN THE CORNER OF A CONCRETE PAD FOR A TELEPHONE AT RAYMOND'S CORNER STORE, CLOSEST CORNER TO STEEL GUARD POST, STA 106+02.460 -L-, 76 METERS LEFT, ELEV. = 889.447.

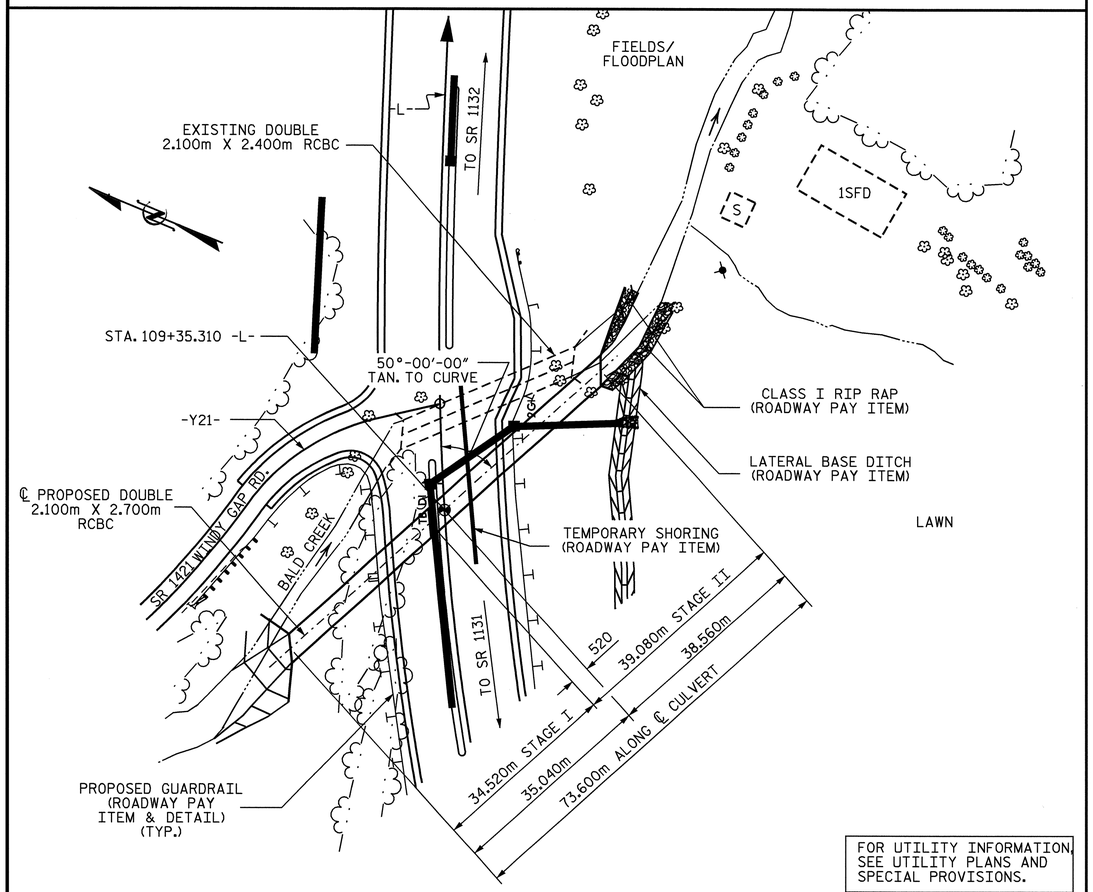

FOR UTILITY INFORMATION, SEE UTILITY PLANS AND SPECIAL PROVISIONS.

LOCATION SKETCH

HYDRAULIC DATA

DESIGN DISCHARGE	= 33.00 m^3/s
FREQUENCY OF DESIGN FLOOD	= 50 yrs.
DESIGN HIGH WATER ELEVATION	= 881.40
DRAINAGE AREA	= 7.250 sq.km
BASIC DISCHARGE (Q100)	= 40.00 m^3/s
BASIC HIGH WATER ELEVATION	= 881.88

OVERTOPPING FLOOD DATA

OVERTOPPING DISCHARGE	= 59.00 m^3/s
FREQUENCY OF OVERTOPPING FLOOD	= 500+ yrs.
OVERTOPPING FLOOD ELEVATION	= 885.90

ROADWAY DATA

GRADE POINT ELEV. @ STA. 109+35.310 -L-	= 887.663
BED ELEV. @ STA. 109+35.310 -L-	= 877.100
ROADWAY FILL SLOPES	= 2 : 1

TOTAL STRUCTURE QUANTITIES

CLASS A CONCRETE		
STAGE I	193.2	m^3
STAGE II	216.2	m^3
TOTAL	409.4	m^3
REINFORCING STEEL		
STAGE I	15170	kg
STAGE II	17009	kg
TOTAL	32179	kg
FOUNDATION CONDITIONING MATERIAL		
STAGE I	113	METRIC TONS
STAGE II	128	METRIC TONS
TOTAL	241	METRIC TONS
CULVERT EXCAVATION	LUMP SUM	
REMOVAL OF EXISTING STRUCTURE	LUMP SUM	

NOTES

ASSUMED LIVE LOAD ----------MS18 OR ALTERNATE LOADING.

DESIGN FILL ----------7.480m

FOR OTHER DESIGN DATA AND NOTES, SEE STANDARD NOTE SHEET.

76mm Ø WEEP HOLES INDICATED TO BE IN ACCORDANCE WITH THE SPECIFICATIONS.

CONCRETE IN CULVERT TO BE POURED IN THE FOLLOWING ORDER:
1. WING FOOTINGS AND FLOOR SLAB INCLUDING 100mm OF ALL VERTICAL WALLS.
2. THE REMAINING PORTIONS OF THE WALL AND WINGS FULL HEIGHT FOLLOWED BY ROOF SLAB AND HEADWALLS.

THE RESIDENT ENGINEER SHALL CHECK THE LENGTH OF CULVERT BEFORE STAKING IT OUT TO MAKE CERTAIN THAT IT WILL PROPERLY TAKE CARE OF THE FILL.

DIMENSIONS FOR WING LAYOUT AS WELL AS ADDITIONAL REINFORCING STEEL EMBEDDED IN BARREL ARE SHOWN ON WING SHEET.

TRANSVERSE CONSTRUCTION JOINT SHALL BE USED IN THE BARREL, SPACED TO LIMIT THE POURS TO A MAXIMUM OF 21.0m. LOCATION OF JOINTS SHALL BE SUBJECT TO APPROVAL OF THE ENGINEER.

STEEL IN THE BOTTOM SLAB MAY BE SPLICED AT THE PERMITTED CONSTRUCTION JOINT AT THE CONTRACTOR'S OPTION. EXTRA WEIGHT OF STEEL DUE TO SPLICES SHALL BE PAID FOR BY THE CONTRACTOR.

AT THE CONTRACTOR'S OPTION, HE MAY SPLICE THE VERTICAL REINFORCING STEEL IN THE INTERIOR FACES OF EXTERIOR WALLS AND BOTH FACES OF INTERIOR WALL ABOVE LOWER WALL CONSTRUCTION JOINT. THE SPLICE LENGTH SHALL BE AS PROVIDED IN THE SPLICES LENGTH CHART SHOWN ON THE PLANS. EXTRA WEIGHT OF STEEL DUE TO THE SPLICES SHALL BE PAID FOR BY THE CONTRACTOR.

MATERIAL EXCAVATED FROM THE EXISTING BED SHALL BE STOCKPILED FOR THE USE OF THE PROPOSED CULVERT. UPON COMPLETION OF THE CULVERT, THE MATERIAL SHALL BE PLACED IN BOTH BARRELS TO A DEPTH OF 0.3m. BED MATERIAL MAY BE SUPPLEMENTED WITH CLASS "B" RIP RAP IF SUITABLE MATERIAL IS NOT AVAILABLE IN SUFFICIENT QUANTITIES.

THE ENTIRE COST OF WORK REQUIRED TO PLACE THE EXCAVATED MATERIAL OR SUPPLEMENTAL MATERIAL SHALL BE INCLUDED IN THE CONTRACT LUMP SUM PRICE BID FOR CULVERT EXCAVATION.

DOWELS SHALL BE USED TO CONNECT STAGE II CULVERT TO STAGE I CULVERT AS SHOWN. FOR NOTE REGARDING SETTING OF DOWELS, SEE STANDARD NOTES SHEET SNSM.

AFTER SERVING AS A TEMPORARY STRUCTURE, THE EXISTING SINGLE 2.1m X 2.4m REINFORCED CONCRETE BOX CULVERT SHALL BE REMOVED.

THE ENTIRE COST OF WORK REQUIRED TO CONSTRUCT THE SILLS SHALL BE INCLUDED IN THE VARIOUS PAY ITEMS.

FOLLOWING PLACEMENT OF THE SILLS, CLASS B RIP RAP SHALL BE PLACED THROUGHOUT THE ENTIRE CULVERT TO THE LEVEL OF THE SILLS.

FOR CULVERT DIVERSION DETAIL AND PAY ITEM, SEE EROSION CONTROL PLANS.

FOR LIMITS OF TEMPORARY SHORING FOR MAINTENANCE OF TRAFFIC, SEE TRAFFIC CONTROL PLANS.

FOR MAINTENANCE OF TRAFFIC, SEE TRAFFIC CONTROL PLANS.

FOR CONSTRUCTION SEQUENCE, SEE EROSION CONTROL PLANS.

FOR SUBMITTAL OF WORKING DRAWINGS, SEE SPECIAL PROVISIONS.

NO PRECAST REINFORCED BOX CULVERT OPTION WILL BE ALLOWED.

FOR FALSEWORK AND FORMWORK, SEE SPECIAL PROVISIONS.

FOR CRANE SAFETY, SEE SPECIAL PROVISIONS.

FOR GROUT FOR STRUCTURES, SEE SPECIAL PROVISIONS.

ALL DIMENSIONS ARE IN MILLIMETERS UNLESS OTHERWISE NOTED.

ALL ELEVATIONS ARE IN METERS.

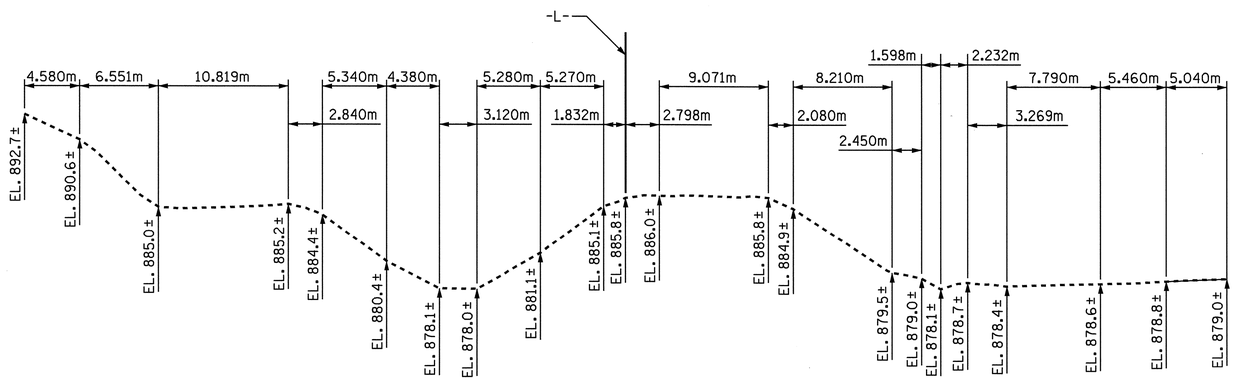

PROFILE ALONG ℄ CULVERT

PROJECT NO. R-2518A
MADISON/YANCEY COUNTY
STATION: 109+35.310 -L-

SHEET 1 OF 10

STATE OF NORTH CAROLINA
DEPARTMENT OF TRANSPORTATION
RALEIGH

DOUBLE 2.100m X 2.700m CONCRETE BOX CULVERT

NORTH CAROLINA PROFESSIONAL SEAL 13014 ENGINEER QUANG H. NGUYEN
Quang H. Nguyen 10-17-07

NORTH CAROLINA PROFESSIONAL SEAL 20125 ENGINEER MARSHALL G. CHEEK, JR.
10-11-07

REVISIONS						SHEET NO.
NO.	BY:	DATE:	NO.	BY:	DATE:	C-89
1			3			TOTAL SHEETS
2			4			103

STR #13

DRAWN BY : A. S. / A.L.F. DATE : 7/10/07
CHECKED BY : H. T. BARBOUR DATE : 8/14/07

25-SEP-2007 14:43
R:\Structures\Str#13\A.L.Figueroa\R-2518A_sd_CU#13.dgn
dfigueroa

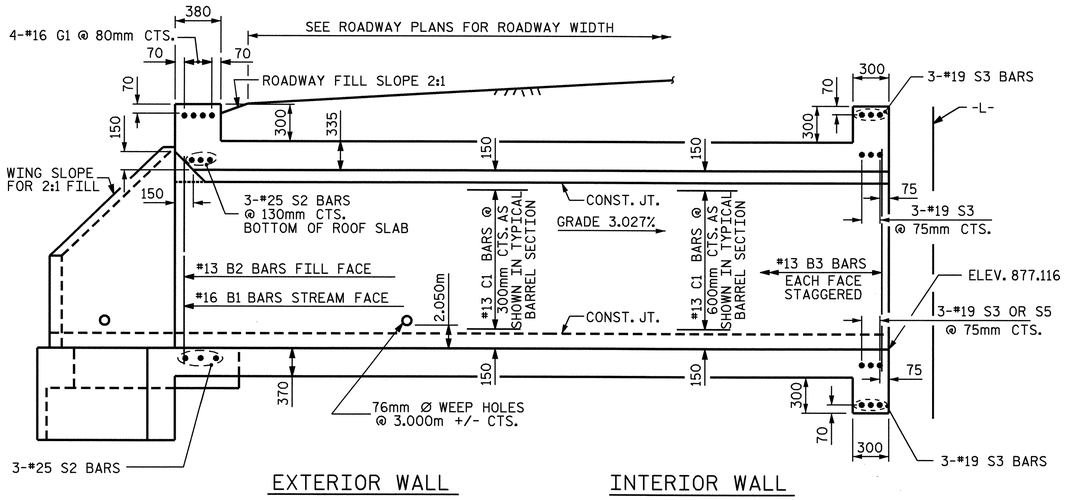

CULVERT SECTION NORMAL TO ROADWAY
STAGE I

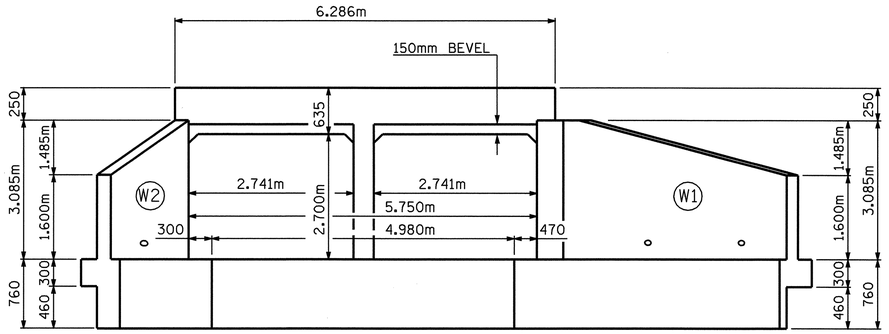

INLET END ELEVATION NORMAL TO SKEW
STAGE I

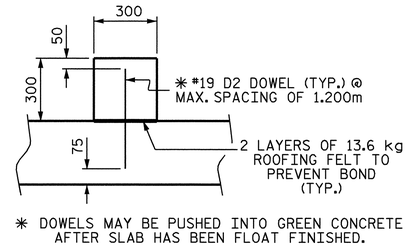

* DOWELS MAY BE PUSHED INTO GREEN CONCRETE AFTER SLAB HAS BEEN FLOAT FINISHED.

SECTION THRU SILL

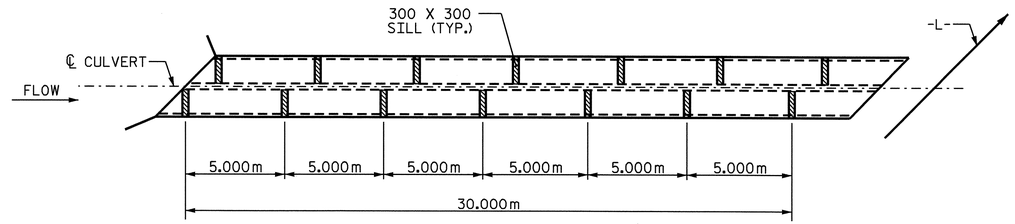

PLAN OF SILL LOCATION
STAGE I

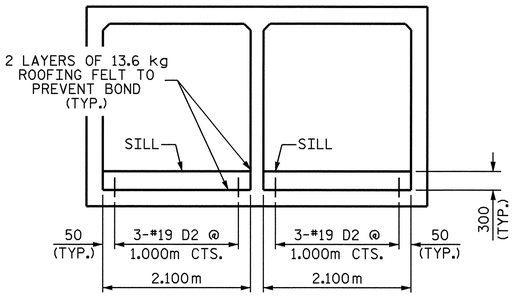

ELEVATION
(LOOKING DOWNSTREAM)

CULVERT SILL DETAILS

PROJECT NO. R-2518A
MADISON/YANCEY COUNTY
STATION: 109+35.310 -L-

SHEET 2 OF 10

STATE OF NORTH CAROLINA
DEPARTMENT OF TRANSPORTATION
RALEIGH

DOUBLE 2.100m X 2.700m CONCRETE BOX CULVERT STAGE I

REVISIONS						SHEET NO.
NO.	BY:	DATE:	NO.	BY:	DATE:	C-90
1			3			TOTAL SHEETS
2			4			103

STR. #13

NORTH CAROLINA PROFESSIONAL SEAL 20125 ENGINEER MARSHALL T. SMITH JR.
10-1-07

DRAWN BY : A. S. / A.L.F. DATE : 7/10/07
CHECKED BY : H. T. BARBOUR DATE : 8/14/07

25-SEP-2007 14:44
R:\Structures\Str#13\A.L.Figueroa\R-2518A_sd_CU#13.dgn
alfigueroa

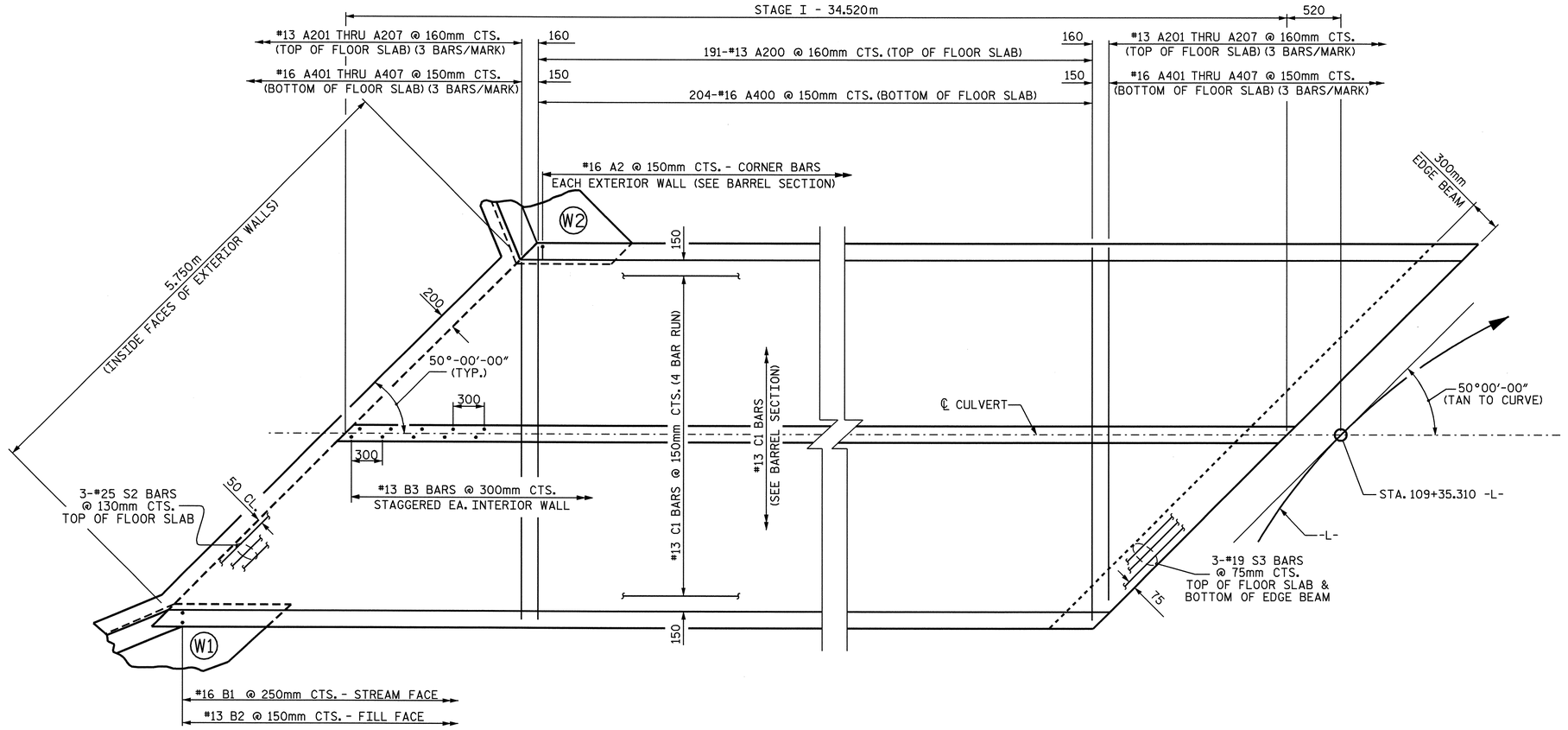

STAGE I
PLAN OF FLOOR SLAB

PROJECT NO. R-2518A
MADISON/YANCEY COUNTY
STATION: 109+35.310 -L-

SHEET 3 OF 10

STATE OF NORTH CAROLINA
DEPARTMENT OF TRANSPORTATION
RALEIGH

DOUBLE
2.100m X 2.700m
CONCRETE BOX CULVERT
STAGE I

REVISIONS						SHEET NO.
NO.	BY:	DATE:	NO.	BY:	DATE:	C-91
1			3			TOTAL SHEETS
2			4			103

STR. #13

NORTH CAROLINA PROFESSIONAL SEAL 20125 ENGINEER MARSHALL A. PEEL, JR.
10-1-07

DRAWN BY : A. S. / A.L.F. DATE : 7/10/07
CHECKED BY : H. T. BARBOUR DATE : 8/14/07

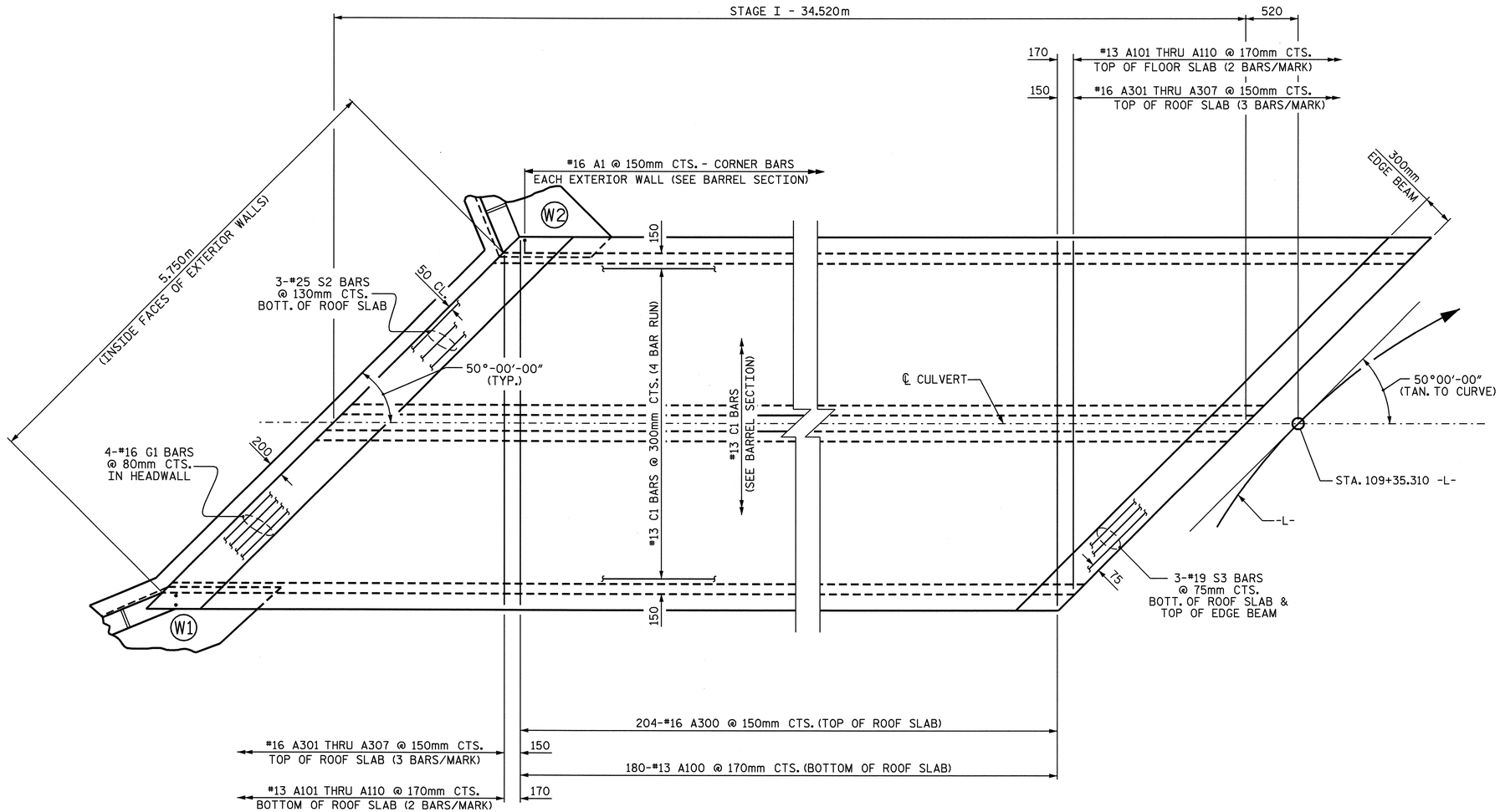

STAGE I
PLAN OF ROOF SLAB

PROJECT NO. R-2518A
MADISON/YANCEY COUNTY
STATION: 109+35.310 -L-

SHEET 4 OF 10

STATE OF NORTH CAROLINA
DEPARTMENT OF TRANSPORTATION
RALEIGH

DOUBLE 2.100m X 2.700m CONCRETE BOX CULVERT STAGE I

REVISIONS						SHEET NO.
NO.	BY:	DATE:	NO.	BY:	DATE:	C-92
1			3			TOTAL SHEETS
2			4			103

NORTH CAROLINA PROFESSIONAL SEAL 20125 ENGINEER MARSHAL G. PEEK, JR.
10-1-07

DRAWN BY : A. S. / A.L.F. DATE : 7/10/07
CHECKED BY : H. T. BARBOUR DATE : 8/14/07

STR #13

SPLICE LENGTH CHART

BAR	SIZE	SPLICE LENGTH
A200	13	540
A400	16	540
B1	16	540
B2	13	540
B3	13	540
C1	13	590
S2	25	1220
S3	19	940

BAR TYPE

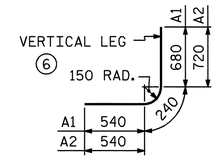

BAR DIMENSIONS ARE OUT TO OUT

BAR SCHEDULE

BARS	NO.	SIZE	TYPE	LENGTH	WEIGHT
A1	462	16	6	1460	1047
A2	462	16	6	1500	1076
A100	180	13	STR	4680	837
A101	4	13	STR	4240	17
A102	4	13	STR	3840	15
A103	4	13	STR	3420	14
A104	4	13	STR	3020	12
A105	4	13	STR	2620	10
A106	4	13	STR	2240	9
A107	4	13	STR	1820	7
A108	4	13	STR	1420	6
A109	4	13	STR	1020	4
A110	4	13	STR	600	2
A200	191	13	STR	4680	889
A201	6	13	STR	4080	24
A202	6	13	STR	3500	21
A203	6	13	STR	2940	18
A204	6	13	STR	2360	14
A205	6	13	STR	1800	11
A206	6	13	STR	1220	7
A207	6	13	STR	660	4

BARS	NO.	SIZE	TYPE	LENGTH	WEIGHT
A300	204	16	STR	4680	1482
A301	6	16	STR	4120	38
A302	6	16	STR	3580	33
A303	6	16	STR	3040	28
A304	6	16	STR	2520	23
A305	6	16	STR	1980	18
A306	6	16	STR	1440	13
A307	6	16	STR	880	8
A400	204	16	STR	4680	1482
A401	6	16	STR	4120	38
A402	6	16	STR	3580	33
A403	6	16	STR	3040	28
A404	6	16	STR	2520	23
A405	6	16	STR	1980	18
A406	6	16	STR	1440	13
A407	6	16	STR	880	8
B1	276	16	STR	3220	1379
B2	462	13	STR	2480	1139
B3	230	13	STR	3220	736
C1	332	13	STR	9040	2983
D2	42	19	STR	540	51
G1	4	16	STR	6140	38
S2	6	25	STR	6140	146
S3	12	19	STR	6140	165

REINFORCING STEEL = 13967 kg

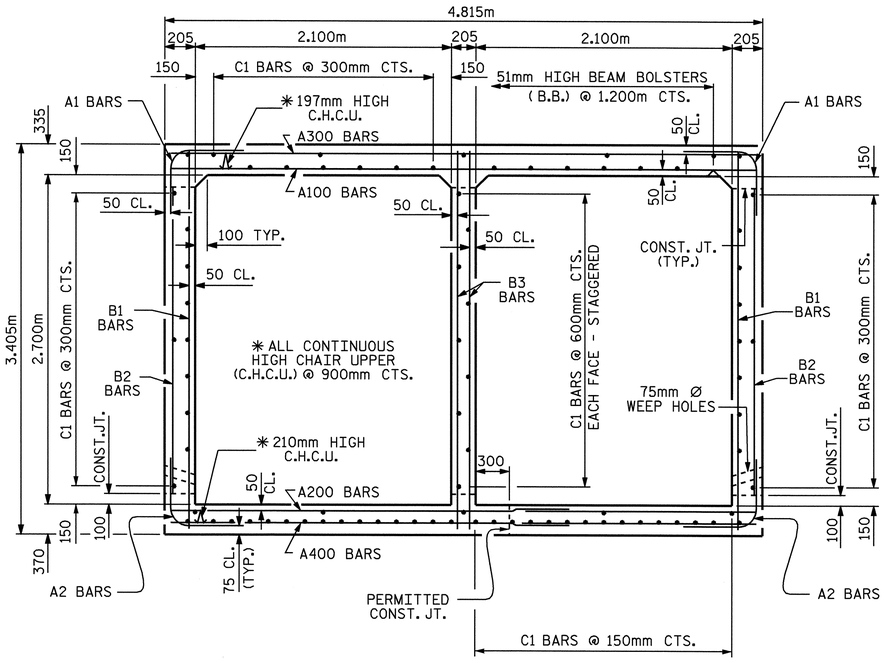

RIGHT ANGLE SECTION OF BARREL

THERE ARE 83 "C" BARS IN SECTION OF BARREL

STAGE I QUANTITIES

CLASS A CONCRETE

BARREL @ 5.03 m^3/m ____ 173.6 m^3

WINGS, ETC. ____ 19.6 m^3

TOTAL ____ 193.2 m^3

REINFORCING STEEL

BARREL ____ 13967 kg

WINGS, ETC. ____ 1203 kg

TOTAL ____ 15170 kg

CULVERT EXCAVATION ---------- LUMP SUM

FOUNDATION COND. MAT'L ---- 113 METRIC TONS

PROJECT NO. R-2518A

MADISON/YANCEY COUNTY

STATION: 109+35.310 -L-

SHEET 5 OF 10

STATE OF NORTH CAROLINA
DEPARTMENT OF TRANSPORTATION
RALEIGH

DOUBLE 2.100m X 2.700m CONCRETE BOX CULVERT STAGE I

REVISIONS						SHEET NO.
NO.	BY:	DATE:	NO.	BY:	DATE:	C-93
1			3			TOTAL SHEETS
2			4			103

STR. #13

NORTH CAROLINA PROFESSIONAL SEAL 20125 ENGINEER MARSHALL L. GREEK, JR.

12-1-07

DRAWN BY : A. S. / A.L.F. DATE : 7/10/07

CHECKED BY : H. T. BARBOUR DATE : 8/14/07

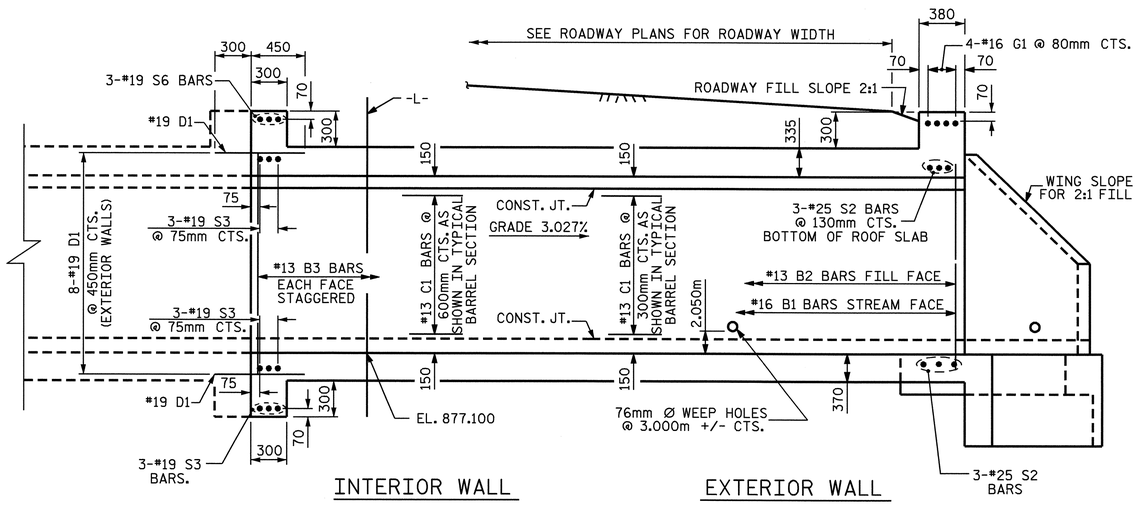

CULVERT SECTION NORMAL TO ROADWAY
STAGE II

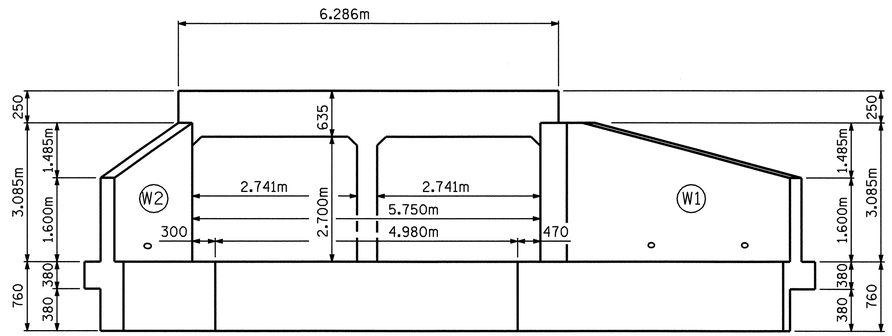

OUTLET END ELEVATION NORMAL TO SKEW
STAGE II

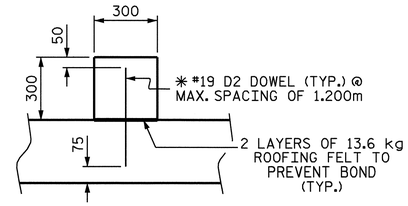

* DOWELS MAY BE PUSHED INTO GREEN CONCRETE AFTER SLAB HAS BEEN FLOAT FINISHED.

SECTION THRU SILL

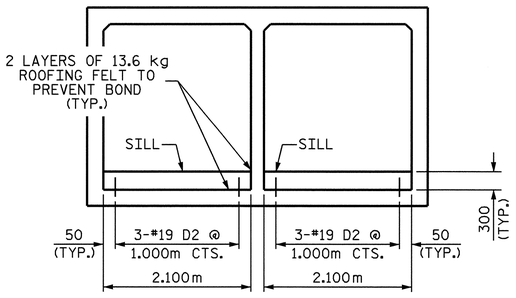

ELEVATION
(LOOKING DOWNSTREAM)

CULVERT SILL DETAILS

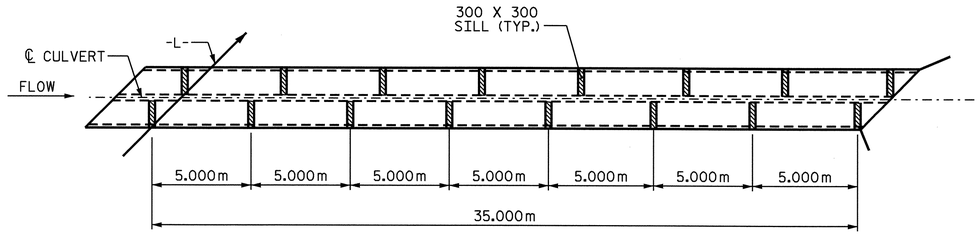

PLAN OF SILL LOCATION
STAGE II

ASSEMBLED BY : A. SORSENGINH DATE : 7/09/07
CHECKED BY : H. T. BARBOUR DATE : 8/14/07

PROJECT NO. R-2518A
MADISON/YANCEY COUNTY
STATION: 109+35.310 -L-

SHEET 6 OF 10

STATE OF NORTH CAROLINA
DEPARTMENT OF TRANSPORTATION
RALEIGH

DOUBLE 2.100m X 2.700m CONCRETE BOX CULVERT STAGE II

REVISIONS						SHEET NO.
NO.	BY:	DATE:	NO.	BY:	DATE:	C-94
1			3			TOTAL SHEETS
2			4			103

NORTH CAROLINA PROFESSIONAL SEAL 20125 ENGINEER MARSHALL L. PECK, JR.
10-1-07

STR. #13

25-SEP-2007 14:44
N:\Structures\Str#13\A.L.Figueroa\R-2518A_sd_CU#13.dgn
alfigueroa

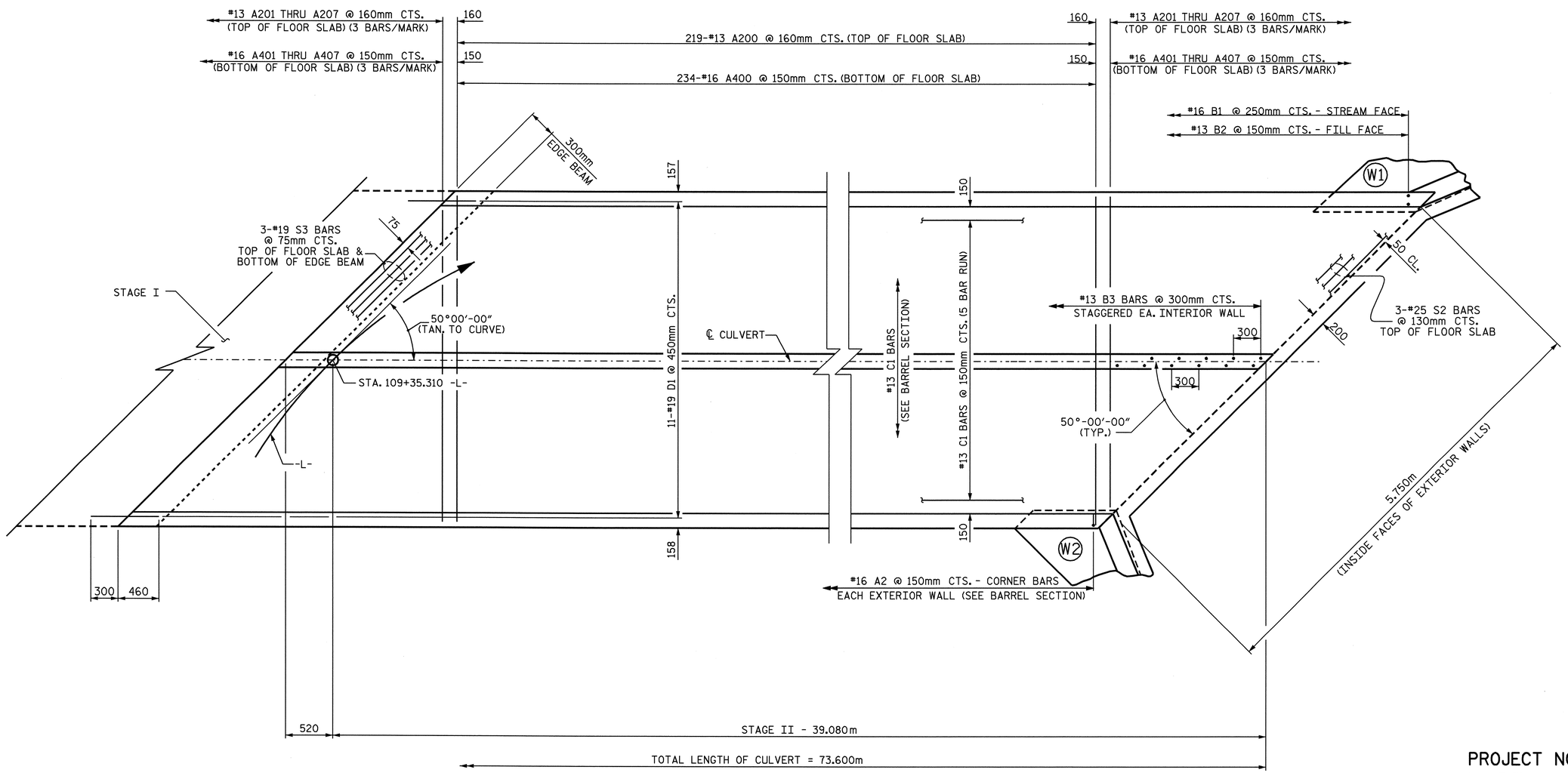

STAGE II
PLAN OF FLOOR SLAB

PROJECT NO. R-2518A
MADISON/YANCEY COUNTY
STATION: 109+35.310 -L-

SHEET 7 OF 10

STATE OF NORTH CAROLINA
DEPARTMENT OF TRANSPORTATION
RALEIGH

DOUBLE
2.100m X 2.700m
CONCRETE BOX CULVERT
STAGE II

REVISIONS						SHEET NO.
NO.	BY:	DATE:	NO.	BY:	DATE:	C-95
1			3			TOTAL SHEETS
2			4			103

NORTH CAROLINA PROFESSIONAL SEAL 20125 ENGINEER MARSHALL G. GREEK, JR.
10-1-07

DRAWN BY : A. S. / A.L.F. DATE : 7/10/07
CHECKED BY : H. T. BARBOUR DATE : 8/14/07

STR. #13

25-SEP-2007 14:44
R:\Structures\Str#13\A.L.Figueroa\R-2518A_sd_CU#13.dgn
gfigueroa

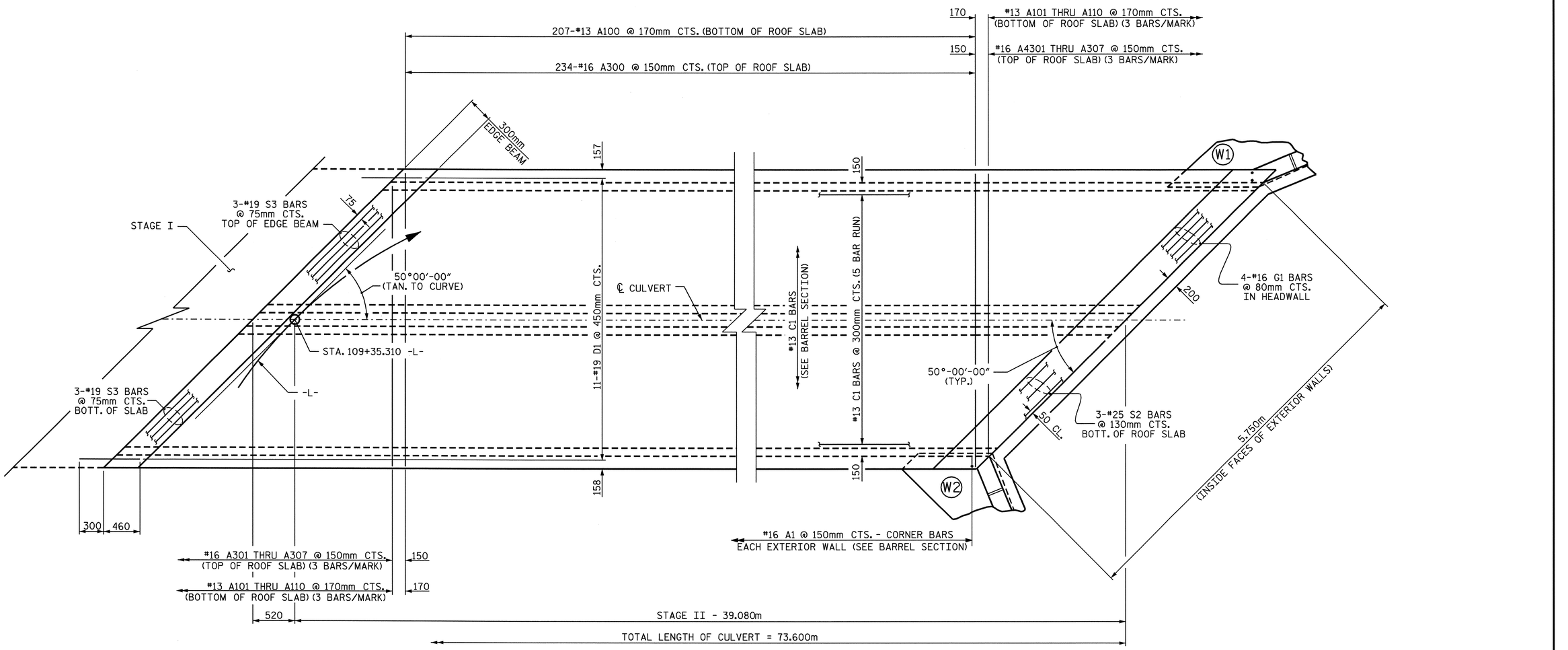

STAGE II
PLAN OF ROOF SLAB

PROJECT NO. R-2518A
MADISON/YANCEY COUNTY
STATION: 109+35.310 -L-

SHEET 8 OF 10

STATE OF NORTH CAROLINA
DEPARTMENT OF TRANSPORTATION
RALEIGH

DOUBLE
2.100m X 2.700m
CONCRETE BOX CULVERT
STAGE II

REVISIONS						SHEET NO.
NO.	BY:	DATE:	NO.	BY:	DATE:	C-96
1			3			TOTAL SHEETS
2			4			103

NORTH CAROLINA PROFESSIONAL SEAL 20125 ENGINEER MARSHALL L. GREEK, JR.
10-1-07

DRAWN BY : A. S. / A.L.F. DATE : 7/10/07
CHECKED BY : H. T. BARBOUR DATE : 8/14/07

STR. #13

25-SEP-2007 14:44
R:\Structures\Str*13\A.L.Figueroa\R-2518A_sd_CU*13.dgn
afigueroa

SPLICE LENGTH CHART

BAR	SIZE	SPLICE LENGTH
A200	13	540
A400	16	540
B1	16	540
B2	13	540
B3	13	540
C1	13	590
S2	25	1220
S3	19	940

BAR TYPE

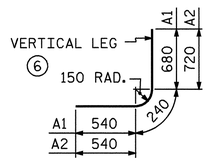

BAR DIMENSIONS ARE OUT TO OUT

BAR SCHEDULE

BARS	NO.	SIZE	TYPE	LENGTH	WEIGHT
A1	522	16	6	1460	1183
A2	522	16	6	1500	1215
A100	207	13	STR	4680	963
A101	4	13	STR	4240	17
A102	4	13	STR	3840	15
A103	4	13	STR	3420	14
A104	4	13	STR	3020	12
A105	4	13	STR	2620	10
A106	4	13	STR	2240	9
A107	4	13	STR	1820	7
A108	4	13	STR	1420	6
A109	4	13	STR	1020	4
A110	4	13	STR	600	2
A200	219	13	STR	4680	1019
A201	6	13	STR	4080	24
A202	6	13	STR	3500	21
A203	6	13	STR	2940	18
A204	6	13	STR	2360	14
A205	6	13	STR	1800	11
A206	6	13	STR	1220	7
A207	6	13	STR	660	4

BARS	NO.	SIZE	TYPE	LENGTH	WEIGHT
A300	234	16	STR	4680	1700
A301	6	16	STR	4120	38
A302	6	16	STR	3580	33
A303	6	16	STR	3040	28
A304	6	16	STR	2520	23
A305	6	16	STR	1980	18
A306	6	16	STR	1440	13
A307	6	16	STR	880	8
A400	234	16	STR	4680	1700
A401	6	16	STR	4120	38
A402	6	16	STR	3580	33
A403	6	16	STR	3040	28
A404	6	16	STR	2520	23
A405	6	16	STR	1980	18
A406	6	16	STR	1440	13
A407	6	16	STR	880	8
B1	314	16	STR	3220	1569
B2	522	13	STR	2480	1287
B3	262	13	STR	3220	839
C1	415	13	STR	8260	3407
D2	48	19	STR	540	58
G1	4	16	STR	6140	38
S2	6	25	STR	6140	146
S3	12	19	STR	6140	165

REINFORCING STEEL = 15806 kg

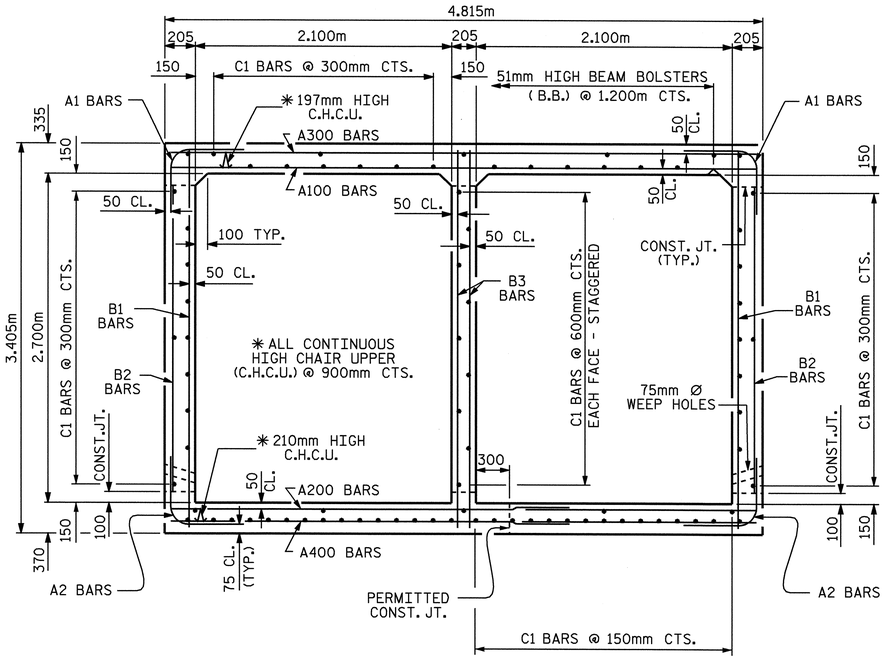

RIGHT ANGLE SECTION OF BARREL

THERE ARE 83 "C" BARS IN SECTION OF BARREL

STAGE II QUANTITIES

CLASS A CONCRETE

BARREL @ 5.03 m^3/m — 196.6 m^3

WINGS, ETC. — 19.6 m^3

TOTAL — 216.2 m^3

REINFORCING STEEL

BARREL — 15806 kg

WINGS, ETC. — 1203 kg

TOTAL — 17009 kg

CULVERT EXCAVATION ---------- LUMP SUM

FOUNDATION COND. MAT'L ---- 128 METRIC TONS

PROJECT NO. R-2518A

MADISON/YANCEY COUNTY

STATION: 109+35.310 -L-

SHEET 9 OF 10

STATE OF NORTH CAROLINA
DEPARTMENT OF TRANSPORTATION
RALEIGH

DOUBLE 2.100m X 2.700m CONCRETE BOX CULVERT STAGE II

REVISIONS						SHEET NO.
NO.	BY:	DATE:	NO.	BY:	DATE:	C-97
1			3			TOTAL SHEETS
2			4			103

STR. #13

NORTH CAROLINA PROFESSIONAL SEAL 20125 ENGINEER MARSHALL T. BRADLEY, JR.
10-1-07

DRAWN BY : A. S. / A.L.F. DATE : 7/10/07
CHECKED BY : H. T. BARBOUR DATE : 8/14/07

25-OCT-2007 14:58
r:\structures\str#13\a.l.figueroa\r-2518a_sd_cu#13.dgn
alfigueroa

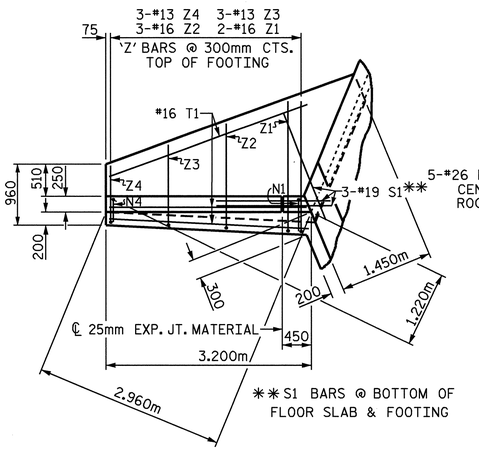

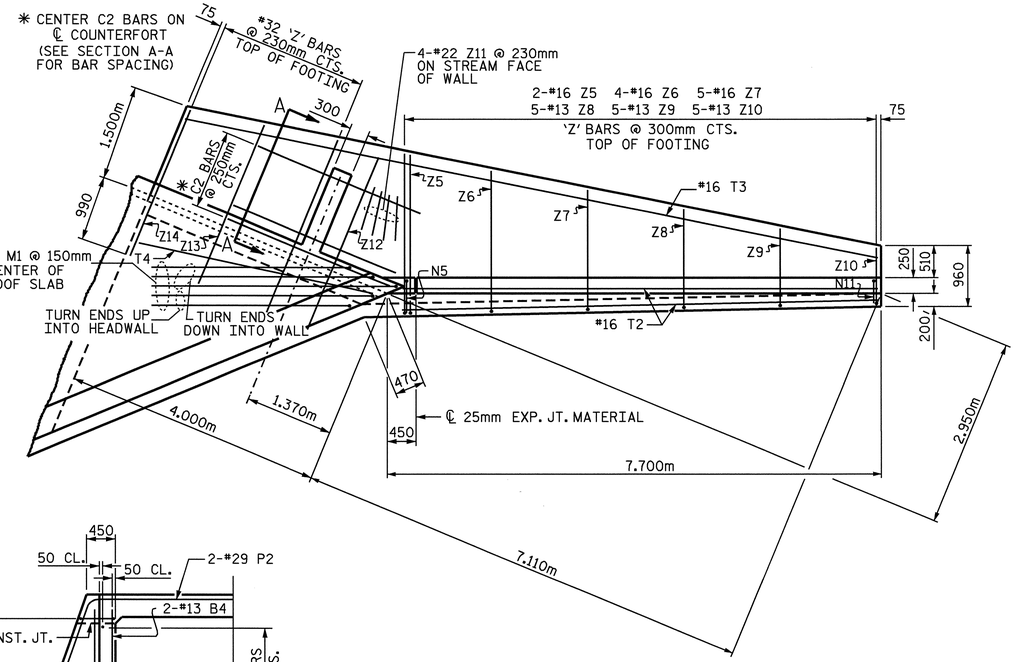

PLAN W2

PLAN W1

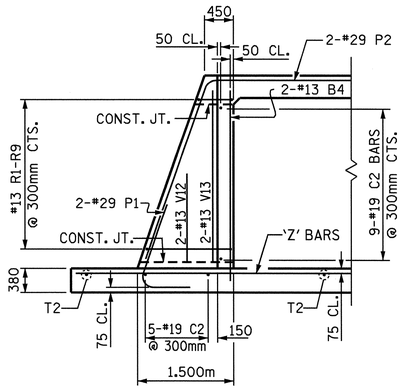

SECTION A-A

NOTE: REINFORCING STEEL
IN BARREL NOT SHOWN

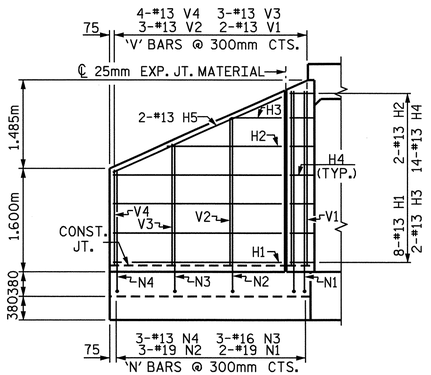

ELEVATION W2

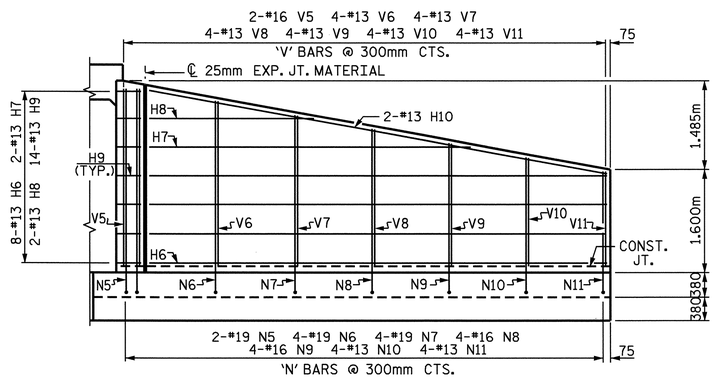

ELEVATION W1

NOTES

FOR WING ORIENTATION, SEE PLAN OF FLOOR SLAB.

A 900mm STRIP OF FILTER FABRIC SHALL BE ATTACHED TO THE FILL FACE OF THE WING COVERING THE ENTIRE LENGTH OF THE EXPANSION JOINT.

G1 BARS IN HEADWALL ARE INCLUDED WITH BARREL REINFORCING STEEL.

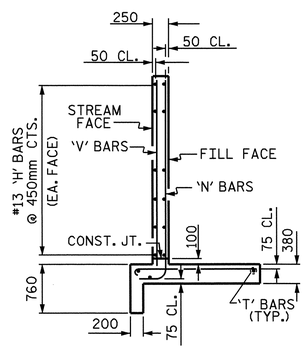

TYPICAL WING SECTION

BAR TYPES

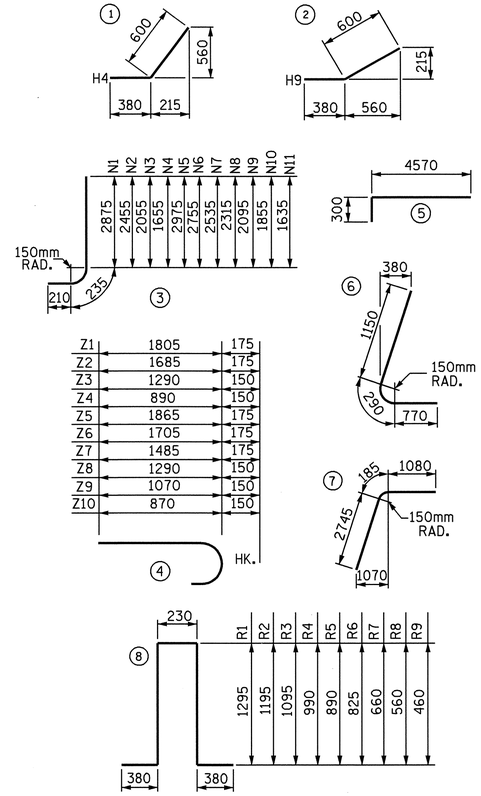

ALL BAR DIMENSIONS ARE OUT TO OUT.

CLASS A CONCRETE	STAGE I	STAGE II
2 WINGS	17.0 m^3	17.0 m^3
1 HEADWALL	0.7 m^3	0.7 m^3
1 END CURTAIN WALL	0.8 m^3	0.8 m^3
2 EDGE BEAMS	1.1 m^3	1.1 m^3
TOTAL	19.6 m^3	19.6 m^3

BILL OF MATERIAL

BAR	NO.	SIZE	TYPE	LENGTH	WEIGHT
B4	2	13	STR	3060	6
C2	14	19	STR	2740	86
H1	10	13	STR	2640	26
H3	2	13	STR	1780	4
H3	2	13	STR	780	2
H4	18	13	1	980	18
H5	5	13	STR	2880	14
H6	10	13	STR	7140	71
H7	2	13	STR	5180	10
H8	2	13	STR	2780	6
H9	18	13	2	980	18
H10	5	13	STR	7240	36
M1	5	25	5	4880	97
N1	2	19	3	3320	15
N2	3	19	3	2900	19
N3	3	16	3	2500	12
N4	3	13	3	2100	6
N5	2	19	3	3440	15
N6	4	19	3	3200	29
N7	4	19	3	2980	27
N8	4	16	3	2760	17
N9	4	16	3	2540	16
N10	4	13	3	2300	9
N11	4	13	3	2080	8
P1	2	29	6	2220	22
P2	2	29	7	4020	41
S1	3	19	8	1800	12
R1	1	13	8	3580	4
R2	1	13	8	3380	3
R3	1	13	8	3180	3
R4	1	13	8	2970	3
R5	1	13	8	2770	3
R6	1	13	8	2640	3
R7	1	13	8	2310	3
R8	1	13	8	2110	2
R9	1	13	8	1910	2
T1	3	16	STR	3200	15
T2	2	16	STR	7700	24
T3	1	16	STR	11010	17
T4	1	16	STR	3740	6
V1	2	13	STR	2700	5
V2	3	13	STR	2280	7
V3	3	13	STR	1880	6
V4	3	13	STR	1480	4
V5	2	16	STR	2800	9
V6	4	13	STR	2580	10
V7	4	13	STR	2360	9
V8	4	13	STR	2140	9
V9	4	13	STR	1920	8
V10	4	13	STR	1680	7
V11	4	13	STR	1460	6
V12	2	13	STR	1380	3
V13	2	13	STR	2660	5
Z1	2	16	4	1980	6
Z2	2	16	4	1860	6
Z3	4	13	4	1440	6
Z4	4	13	4	1040	4
Z5	2	16	4	2040	6
Z6	4	16	4	1880	12
Z7	5	16	4	1660	13
Z8	5	13	4	1440	7
Z9	5	13	4	1220	6
Z10	5	13	4	1020	5
Z11	4	32	STR	2880	74
Z12	4	32	STR	2920	75
Z13	5	32	STR	2680	86
Z14	5	32	STR	2460	79
REINFORCING STEEL FOR 2 WINGS					1203 kg

PROJECT NO. R-2518A

MADISON/YANCEY COUNTY

STATION: 109+35.310 -L-

SHEET 10 OF 10

STATE OF NORTH CAROLINA
DEPARTMENT OF TRANSPORTATION
RALEIGH

WINGS FOR CONCRETE BOX CULVERT STAGE I OR II

REVISIONS						SHEET NO.
NO.	BY:	DATE:	NO.	BY:	DATE:	C-98
1			3			TOTAL SHEETS
2			4			103

STR #13 STD. NO. CW 4527

NORTH CAROLINA PROFESSIONAL SEAL 20125 ENGINEER MARSHALL L. LIGHT
10-26-07

ASSEMBLED BY : A. S. /A.L.F. DATE : 7/09/07
CHECKED BY : H. T. BARBOUR DATE : 8/14/07

10-OCT-2007 16:43
r:\structures\str#14\a.l.figueroa\r2518a_sd_cu#14.dgn
aflgueroa

BENCHMARK #6: RAILROAD SPIKE IN THE BASE OF A POWER POLE, WEST OF -Y12- BRIDGE, STA. 55+34.97 -L-, 115 METERS LEFT, ELEV.= 693.635.

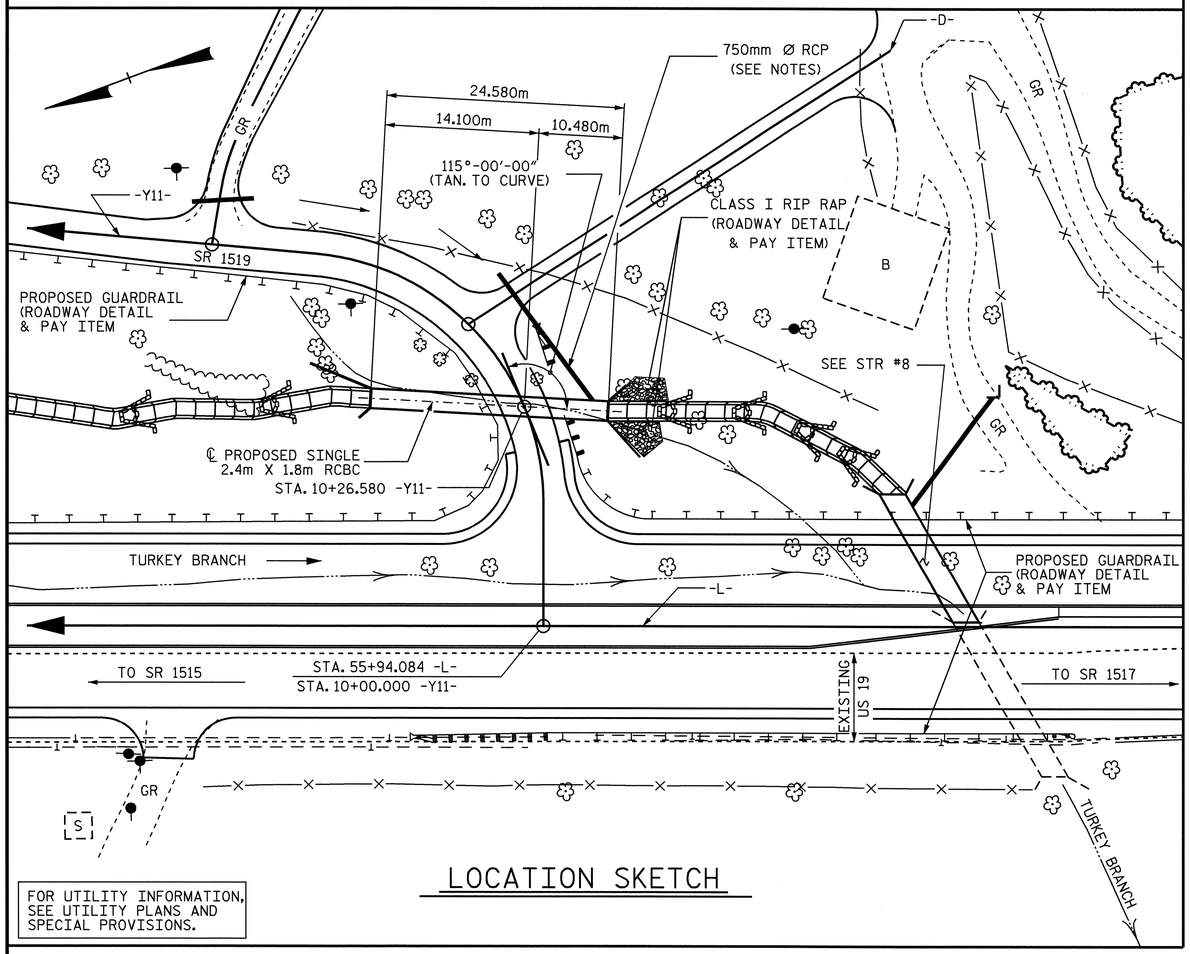

LOCATION SKETCH

FOR UTILITY INFORMATION,
SEE UTILITY PLANS AND
SPECIAL PROVISIONS.

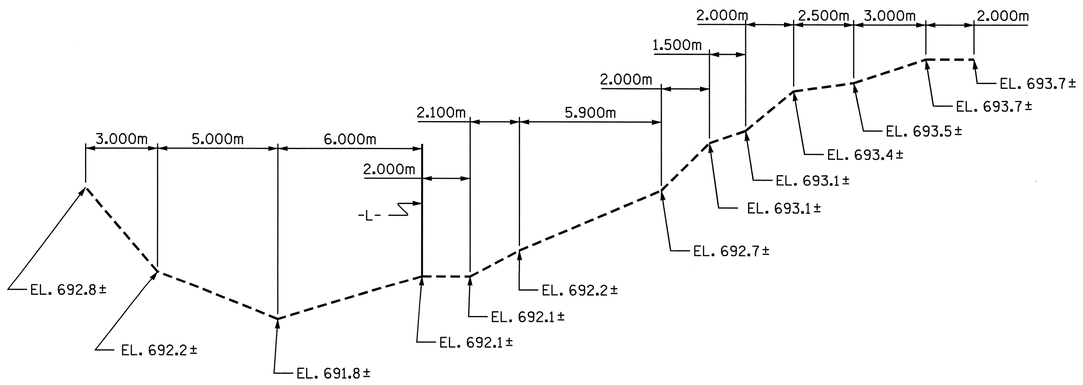

PROFILE ALONG ℄ CULVERT

HYDRAULIC DATA

DESIGN DISCHARGE	= 7.3 m³/s
FREQUENCY OF DESIGN FLOOD	= 50 yrs.
DESIGN HIGH WATER ELEVATION	= 691.74
DRAINAGE AREA	= 1.027 sq.km
BASIC DISCHARGE (Q100)	= 8.90 m³/s
BASIC HIGH WATER ELEVATION	= 691.95

OVERTOPPING FLOOD DATA

OVERTOPPING DISCHARGE	= 12.30 m³/s
FREQUENCY OF OVERTOPPING FLOOD	= 500 yrs.
OVERTOPPING FLOOD ELEVATION	= 693.7

ROADWAY DATA

GRADE POINT ELEV. @ STA. 10+26.580 -Y11-	= 694.509 m
BED ELEV. @ STA. 10+26.5800 -Y11-	= 690.160 m
ROADWAY SLOPES	= 2:1

TOTAL STRUCTURE QUANTITIES

CLASS A CONCRETE

BARREL @	1.88 m³/m	46.2	m³
WINGS, ETC.		15.9	m³
TOTAL		62.1	m³

REINFORCING STEEL

BARREL	3,842	kg
WINGS, ETC.	692	kg
TOTAL	4,534	kg

CULVERT EXCAVATION ---------- LUMP SUM

FOUNDATION COND. MAT'L ----- 47 METRIC TONS

NOTES

ASSUMED LIVE LOAD ----------MS18 OR ALTERNATE LOADING.

DESIGN FILL ---------- 2.700m.

FOR OTHER DESIGN DATA AND NOTES, SEE STANDARD NOTE SHEET.

76mm Ø WEEP HOLES INDICATED TO BE IN ACCORDANCE WITH THE SPECIFICATIONS.

CONCRETE IN CULVERT TO BE POURED IN THE FOLLOWING ORDER:

1. WING FOOTINGS AND FLOOR SLAB INCLUDING 100mm OF ALL VERTICAL WALLS.
2. THE REMAINING PORTIONS OF THE WALLS AND WINGS FULL HEIGHT FOLLOWED BY ROOF SLAB AND HEADWALLS.

THE RESIDENT ENGINEER SHALL CHECK THE LENGTH OF THE CULVERT BEFORE STAKING IT OUT TO MAKE CERTAIN THAT IT WILL PROPERLY TAKE CARE OF THE FILL.

DIMENSIONS FOR WING LAYOUT AS WELL AS ADDITIONAL REINFORCING STEEL EMBEDDED IN BARREL ARE SHOWN ON WING SHEET.

TRANSVERSE CONSTRUCTION JOINTS SHALL BE USED IN THE BARREL, SPACED TO LIMIT THE POURS TO A MAXIMUM OF 21.0m. LOCATION OF JOINTS SHALL BE SUBJECT TO APPROVAL OF THE ENGINEER.

AT THE CONTRACTOR'S OPTION, HE MAY SPLICE THE VERTICAL REINFORCING STEEL IN THE INTERIOR FACE OF THE EXTERIOR WALLS ABOVE LOWER WALL CONSTRUCTION JOINT. THE SPLICE LENGTH SHALL BE AS PROVIDED IN THE SPLICE LENGTH CHART SHOWN ON THE PLANS. EXTRA WEIGHT OF STEEL DUE TO THE SPLICES SHALL BE PAID FOR BY THE CONTRACTOR.

AT THE CONTRACTOR'S OPTION HE MAY SUBMIT, TO THE ENGINEER FOR APPROVAL, DESIGN AND DETAIL DRAWINGS FOR A PRECAST REINFORCED CONCRETE BOX CULVERT IN LIEU OF THE CAST-IN-PLACE CULVERT SHOWN ON THE PLANS. THE DESIGN SHALL PROVIDE THE SAME SIZE AND NUMBER OF BARRELS AS USED ON THE CAST-IN-PLACE DESIGN. FOR OPTIONAL PRECAST REINFORCED CONCRETE BOX CULVERT, SEE SPECIAL PROVISIONS.

THE 750mm Ø PIPE THROUGH THE SIDEWALL OF THE CULVERT SHALL BE LOCATED BY THE ENGINEER. THE REINFORCING STEEL SHALL BE FIELD BENT AS NECESSARY TO CLEAR THE PIPE.

FOR CONSTRUCTION SEQUENCE, SEE EROSION CONTROL PLANS.

FOR CULVERT DIVERSION DETAILS AND PAY ITEM, SEE EROSION CONTROL PLANS.

FOR SUBMITTAL OF WORKING DRAWINGS, SEE SPECIAL PROVISIONS.

FOR GROUT FOR STRUCTURES, SEE SPECIAL PROVISIONS.

FOR FALSEWORK AND FORMWORK, SEE SPECIAL PROVISIONS.

FOR CRANE SAFETY, SEE SPECIAL PROVISIONS.

ALL DIMENSIONS ARE IN MILLIMETERS UNLESS OTHERWISE NOTED.

ALL ELEVATIONS ARE IN METERS.

METRIC

BAR TYPE

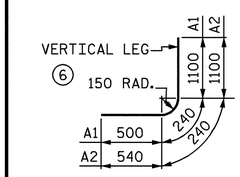

BAR DIMENSIONS ARE OUT TO OUT

SPLICE LENGTH CHART

BAR	SIZE	SPLICE LENGTH
B1	13	540
C1	13	590

BAR SCHEDULE

BAR	NO.	SIZE	TYPE	LENGTH	WEIGHT
A1	260	13	6	1840	476
A2	260	16	6	1880	759
A100	137	16	STR	2660	566
A101	4	16	STR	1880	12
A102	4	16	STR	1140	7
A200	146	16	STR	2660	603
A201	4	16	STR	1940	12
A202	4	16	STR	1240	8
B1	164	13	STR	2040	333
C1	102	13	STR	8540	866
D1	8	19	STR	380	7
D2	8	19	STR	230	4
G1	4	13	STR	2980	12
S2	12	25	STR	2980	142
E1	16	16	STR	1400	35
REINFORCING STEEL = 3,842 kg					

NORTH CAROLINA PROFESSIONAL SEAL 13014 ENGINEER QUANG H. NGUYEN
10-17-07

NORTH CAROLINA PROFESSIONAL SEAL 20125 ENGINEER MARSHALL C. YORK JR.
10-17-07

PROJECT NO. R-2518A
MADISON/YANCEY COUNTY
STATION: 10+26.580 -Y11-

SHEET 1 OF 5

STATE OF NORTH CAROLINA
DEPARTMENT OF TRANSPORTATION
RALEIGH

SINGLE 2.400m X 1.800m CONCRETE BOX CULVERT

REVISIONS						SHEET NO.
NO.	BY:	DATE:	NO.	BY:	DATE:	C-99
1			3			TOTAL SHEETS
2			4			103

DRAWN BY : A. S. / A.L.F. DATE : 12/13/05
CHECKED BY : C.R. YARBROUGH DATE : 01-31-06

STR #14

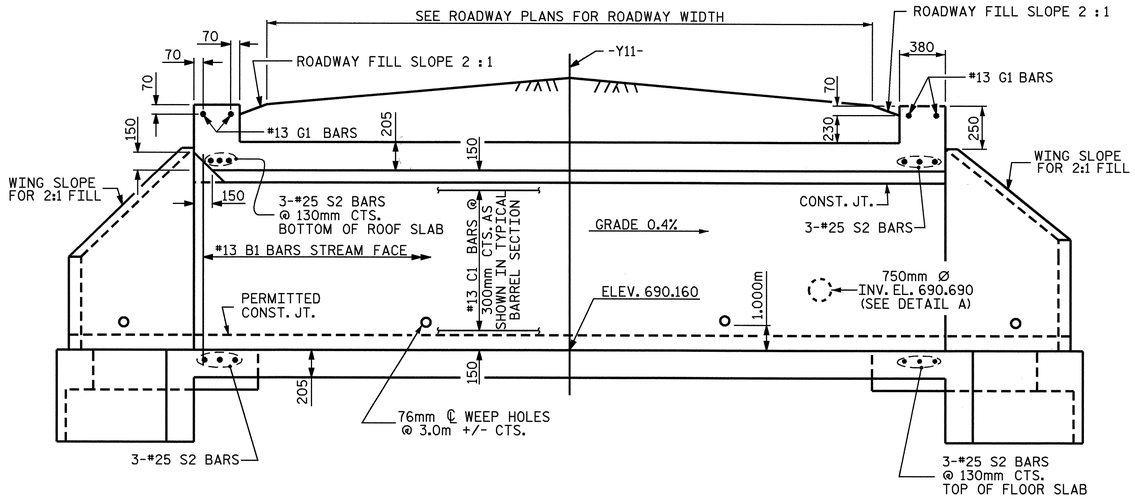

CULVERT SECTION NORMAL TO ROADWAY

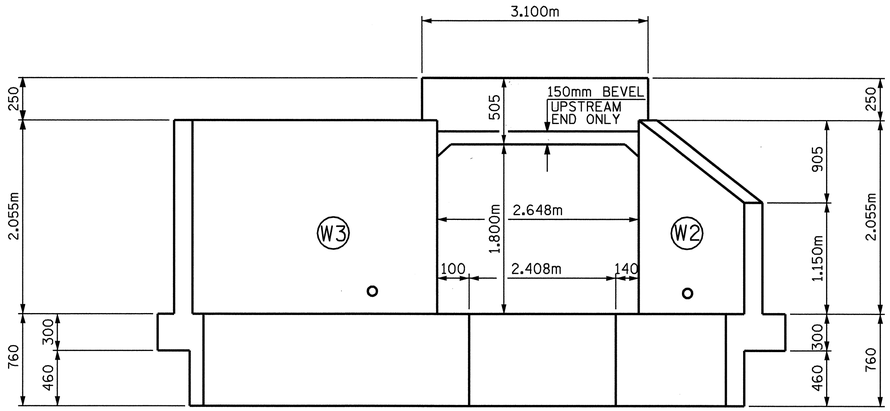

INLET END ELEVATION NORMAL TO SKEW

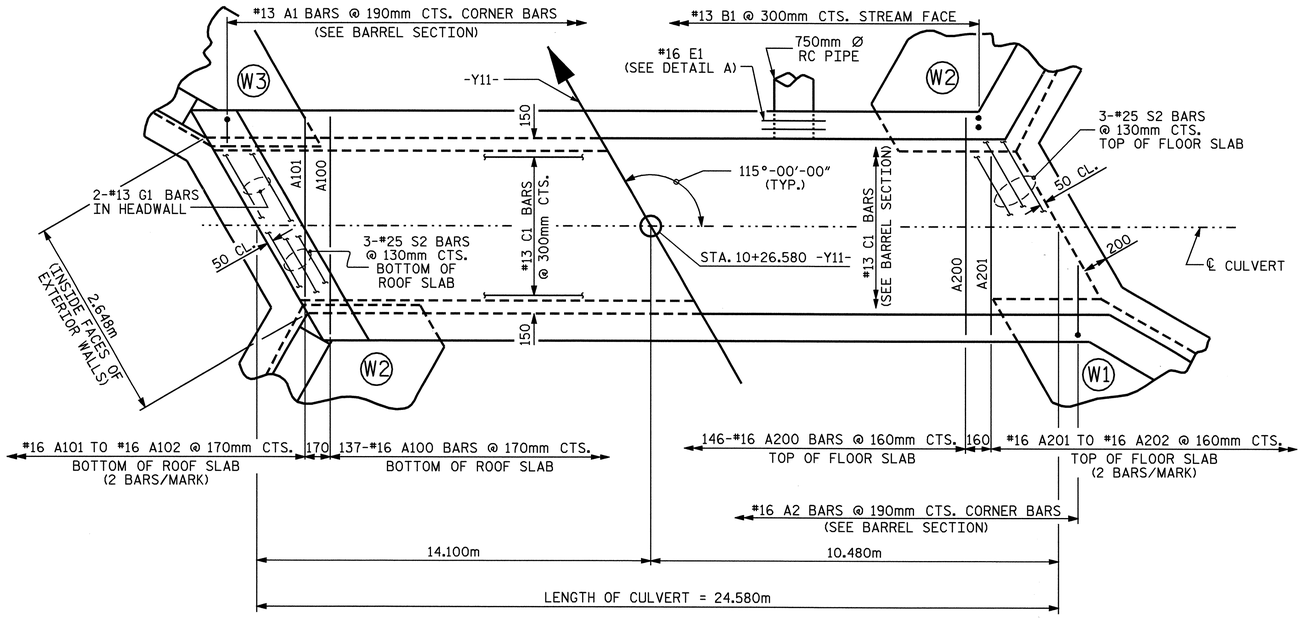

PART PLAN - ROOF SLAB

PART PLAN - FLOOR SLAB

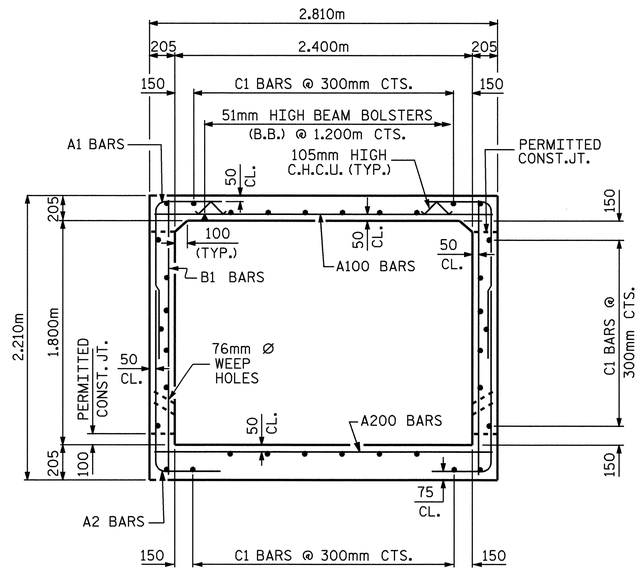

RIGHT ANGLE SECTION OF BARREL

THERE ARE 34 "C" BARS IN SECTION OF BARREL.
(LOOKING DOWNSTREAM)

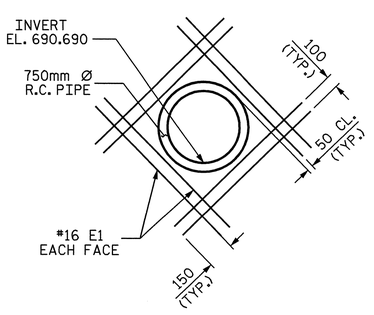

DETAIL A

PROJECT NO. R-2518A
MADISON/YANCEY COUNTY
STATION: 10+26.580 -Y11-

SHEET 2 OF 5

STATE OF NORTH CAROLINA
DEPARTMENT OF TRANSPORTATION
RALEIGH

SINGLE 2.400m X 1.800m CONCRETE BOX CULVERT

REVISIONS						SHEET NO.
NO.	BY:	DATE:	NO.	BY:	DATE:	C-100
1			3			TOTAL SHEETS
2			4			103

DRAWN BY : A. S. / A.L.F. DATE : 12/13/05
CHECKED BY : C.R. YARBROUGH DATE : 01-31-06

NORTH CAROLINA PROFESSIONAL SEAL 20125 ENGINEER MARSHALL G. GLOVER
10-12-07

STR #14

NOTES

MATERIAL EXCAVATED FROM THE EXISTING BED SHALL BE STOCKPILED FOR USE IN THE PROPOSED CULVERT AS SHOWN IN THE FLOOR SILL LAYOUT. BED MATERIAL SHALL BE SUPPLEMENTED WITH CLASS 'B' RIP RAP AS NECESSARY. STONE LARGER THAN 75mm SHALL NOT BE PLACED WITHIN THE LOW FLOW CHANNEL. BED MATERIAL SHALL BE SUBJECT TO APPROVAL BY THE ENGINEER.

THE ENTIRE COST OF WORK REQUIRED TO PLACE THE EXCAVATED MATERIAL OR SUPPLEMENTAL MATERIAL AS SHOWN ON THE PLANS SHALL BE INCLUDED IN THE CONTACT LUMP SUM PRICE BID FOR CULVERT EXCAVATION.

THE ENTIRE COST OF WORK REQUIRED TO CONSTRUCT THE SILLS SHALL BE INCLUDED IN THE VARIOUS PAY ITEMS.

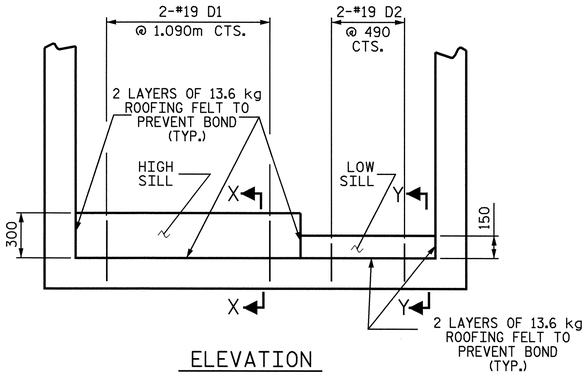

ELEVATION

SECTION THRU SILLS

✱ FOR LOCATION, SEE "FLOOR SILL LAYOUT"

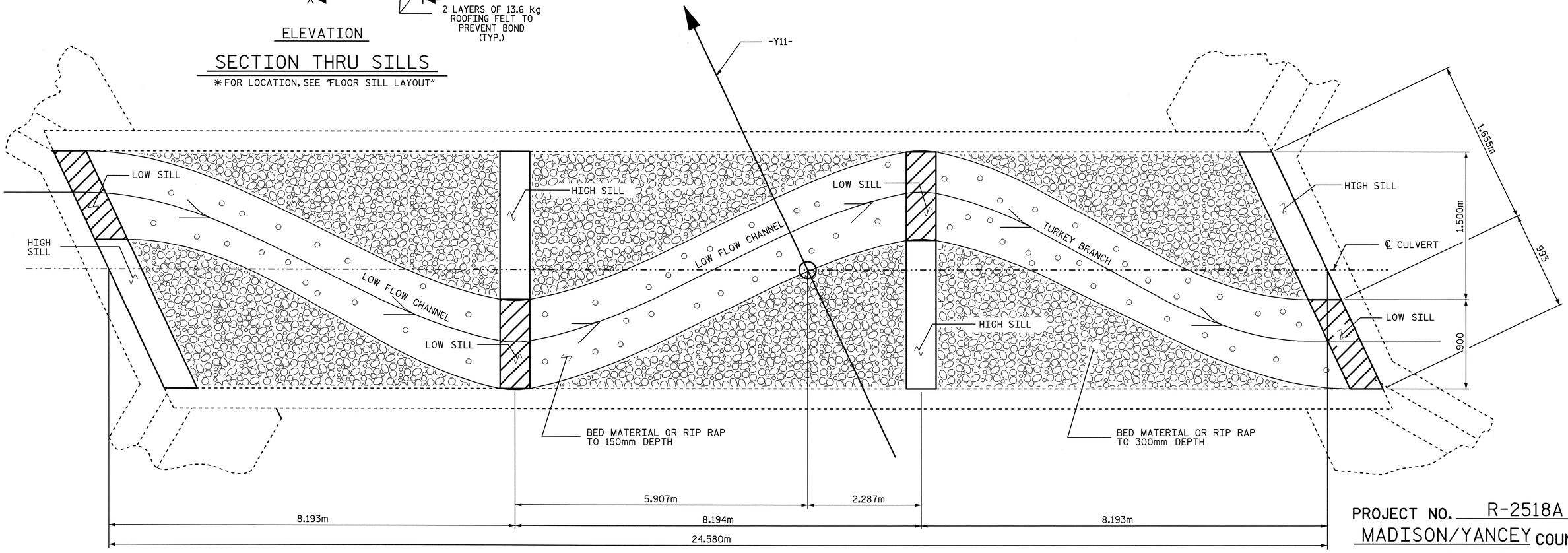

FLOOR SILL LAYOUT

✱ NOTE: LOW SILLS DENOTED BY CROSS-HATCHED AREA

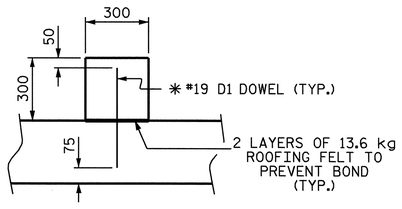

✱ DOWELS MAY BE PUSHED INTO GREEN CONCRETE AFTER SLAB HAS BEEN FLOAT FINISHED.

SECTION X-X

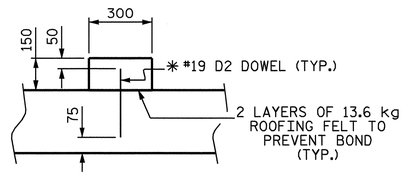

✱ DOWELS MAY BE PUSHED INTO GREEN CONCRETE AFTER SLAB HAS BEEN FLOAT FINISHED.

SECTION Y-Y

PROJECT NO. R-2518A

MADISON/YANCEY COUNTY

STATION: 10+26.580 -Y11-

SHEET 3 OF 5

STATE OF NORTH CAROLINA
DEPARTMENT OF TRANSPORTATION
RALEIGH

SINGLE 2.400m X 1.800m
CONCRETE BOX CULVERT

NORTH CAROLINA PROFESSIONAL SEAL 20125 ENGINEER MARSHALL L. CHEEK, JR.
10-12-07

REVISIONS						SHEET NO.
NO.	BY:	DATE:	NO.	BY:	DATE:	C-101
1			3			TOTAL SHEETS
2			4			103

STR # 14

DRAWN BY : A.L. FIGUEROA DATE : 07-12-07
CHECKED BY : MG CHEEK DATE : 07-17-06

10-OCT-2007 16:47
R:\Structures\Str#14\A.L.Figueroa\R2518A_sd_CU#14.dgn
afigueroa

10-OCT-2007 16:47
R:\Structures\Str#14\A.L.Figueroa\R2518A_sd_CU#14.dgn
afigueroa

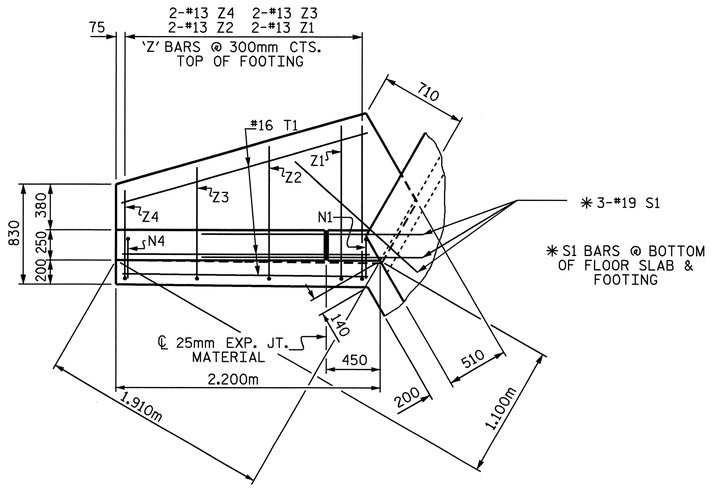

PLAN W2

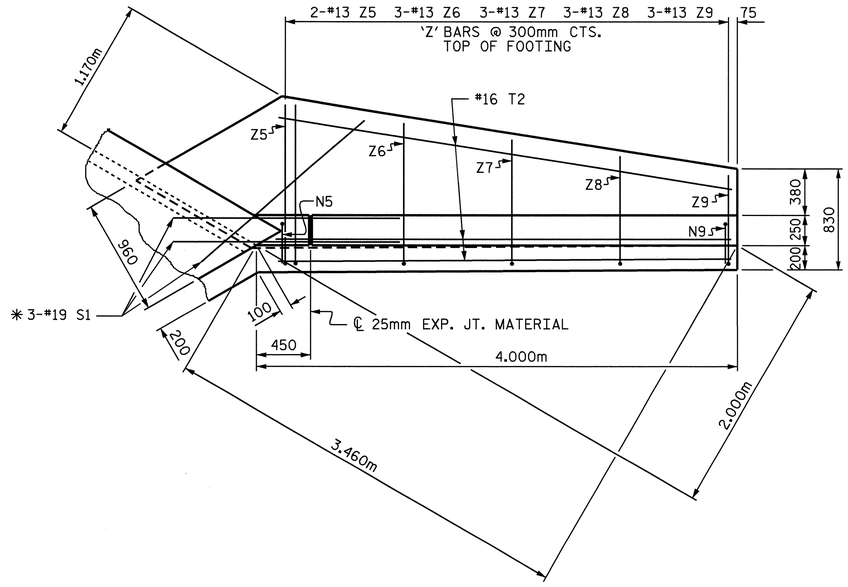

PLAN W1

NOTES

FOR WING ORIENTATION, SEE PLAN OF FLOOR SLAB.

G1 BARS IN HEADWALL ARE INCLUDED WITH BARREL REINFORCING STEEL.

A 900mm STRIP OF FILTER FABRIC SHALL BE ATTACHED TO THE FILL FACE OF THE WING COVERING THE ENTIRE LENGTH OF THE EXPANSION JOINT.

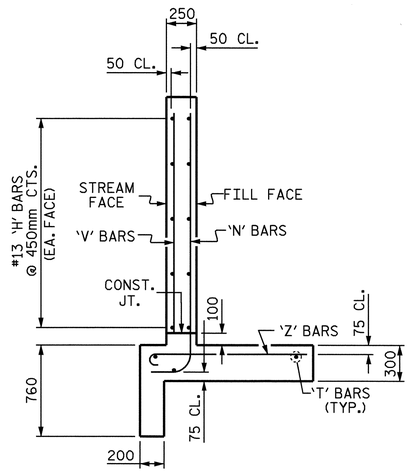

TYPICAL WING W1 OR W2 SECTION

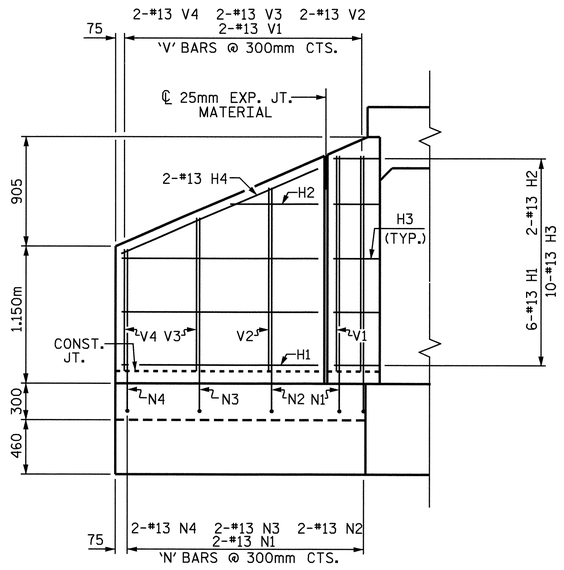

ELEVATION W2

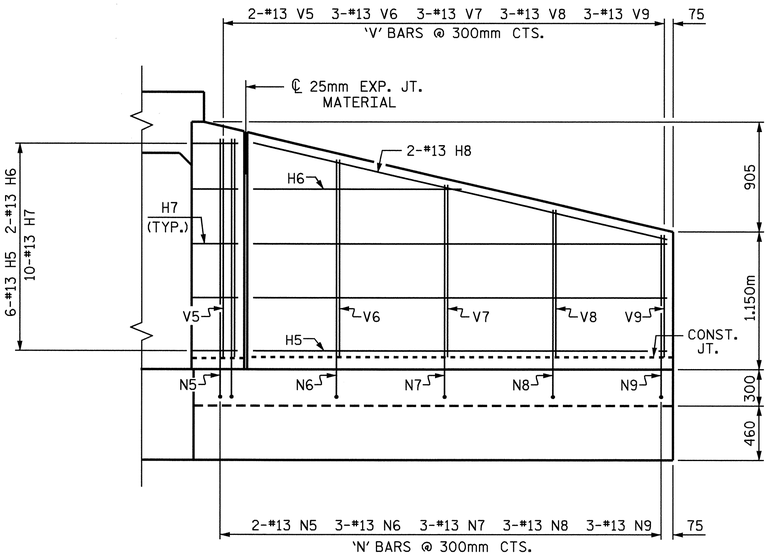

ELEVATION W1

PROJECT NO. R-2518A
MADISON/YANCEY COUNTY
STATION: 10+26.580 -Y11-

SHEET 4 OF 5

STATE OF NORTH CAROLINA
DEPARTMENT OF TRANSPORTATION
RALEIGH

STANDARD WINGS FOR CONCRETE BOX CULVERT

ASSEMBLED BY : A. S. / A.L.F.	DATE : 12/13/05
CHECKED BY : C.R. YARBROUGH	DATE : 01-31-06
DRAWN BY : JLR 6/97	
CHECKED BY : VAP 6/97	

NORTH CAROLINA PROFESSIONAL SEAL 20125 ENGINEER MARSHALL L. FIGUEROA, JR.
10-12-07

REVISIONS						SHEET NO.
NO.	BY:	DATE:	NO.	BY:	DATE:	C-102
1			3			TOTAL SHEETS
2			4			103

STR #14 STD. NO. CW6018

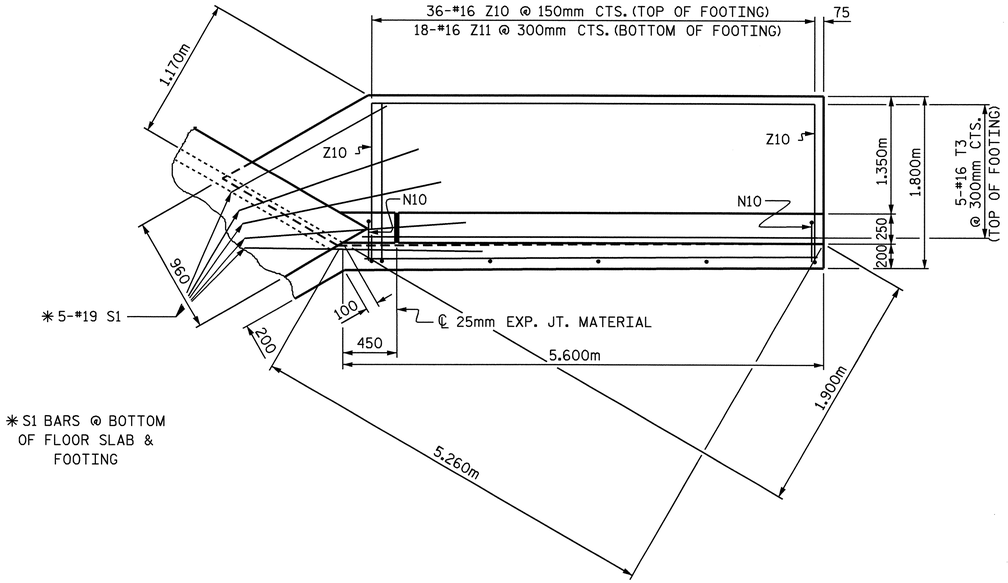

✳S1 BARS @ BOTTOM OF FLOOR SLAB & FOOTING

PLAN W3

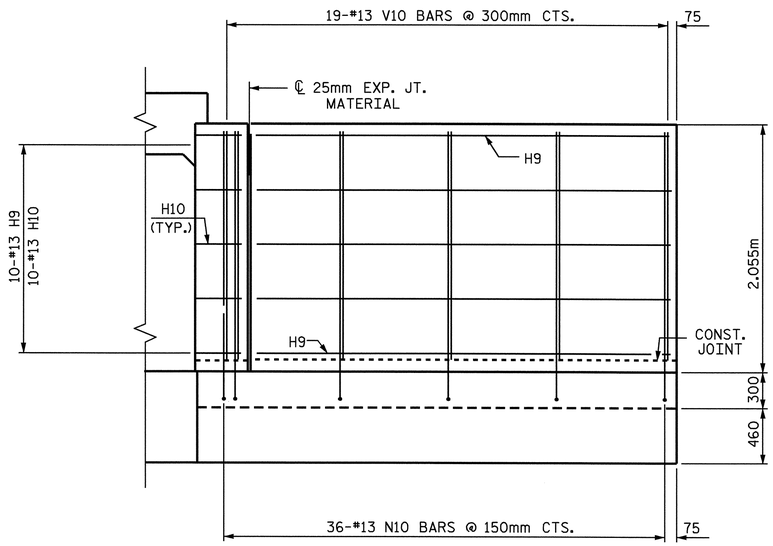

ELEVATION W3

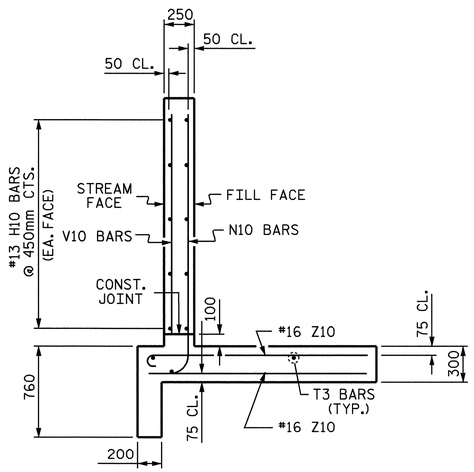

WING 3 SECTION

BAR TYPES

ALL BAR DIMENSIONS ARE OUT TO OUT.

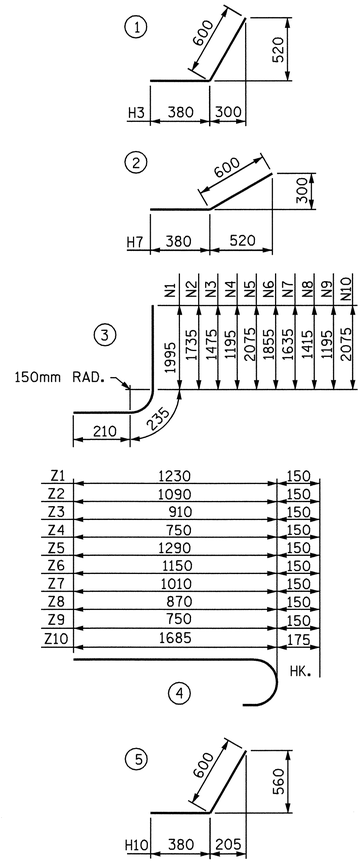

BILL OF MATERIAL

BAR	NO.	SIZE	TYPE	LENGTH	WEIGHT
H1	12	13	STR	1640	20
H2	4	13	STR	780	3
H3	20	13	1	980	19
H4	4	13	STR	1780	7
H5	6	13	STR	3440	21
H6	2	13	STR	1940	4
H7	10	13	2	980	10
H8	2	13	STR	3520	7
H9	10	13	STR	5040	50
H10	10	13	5	980	10
N1	4	13	3	2440	10
N2	4	13	3	2180	9
N3	4	13	3	1920	8
N4	4	13	3	1640	7
N5	2	13	3	2520	5
N6	3	13	3	2300	7
N7	3	13	3	2080	6
N8	3	13	3	1860	6
N9	3	13	3	1640	5
N10	36	13	3	2520	90
S1	11	19	STR	1800	44
T1	6	16	STR	2200	20
T2	3	16	STR	4000	19
T3	5	16	STR	5400	42
V1	4	13	STR	1820	7
V2	4	13	STR	1560	6
V3	4	13	STR	1300	5
V4	4	13	STR	1020	4
V5	2	13	STR	1900	4
V6	3	13	STR	1680	5
V7	3	13	STR	1460	4
V8	3	13	STR	1240	4
V9	3	13	STR	1020	3
V10	19	13	STR	1900	36
Z1	4	13	4	1380	5
Z2	4	13	4	1240	5
Z3	4	13	4	1060	4
Z4	4	13	4	900	4
Z5	2	13	4	1440	3
Z6	3	13	4	1300	4
Z7	3	13	4	1160	3
Z8	3	13	4	1020	3
Z9	3	13	4	900	3
Z10	36	16	4	1860	104
Z11	18	16	STR	1700	47

REINFORCING STEEL FOR 4 WING WALLS	692	kg
CLASS A CONCRETE		
4 WINGS	14.5	m^3
2 HEADWALLS	0.7	m^3
2 END CURTAIN WALLS	0.7	m^3
TOTAL	15.9	m^3

PROJECT NO. R-2518A
MADISON/YANCEY COUNTY
STATION: 10+26.580 -Y11-

SHEET 5 OF 5

STATE OF NORTH CAROLINA
DEPARTMENT OF TRANSPORTATION
RALEIGH

WING W3 FOR CONCRETE BOX CULVERT

NORTH CAROLINA PROFESSIONAL SEAL 20125 ENGINEER M.G. CHEEK
10-17-07

REVISIONS						SHEET NO.
NO.	BY:	DATE:	NO.	BY:	DATE:	C-103
1			3			TOTAL SHEETS
2			4			103

ASSEMBLED BY : A.L. FIGUEROA DATE : 10/01/07
CHECKED BY : M.G. CHEEK DATE : 10-01-07

BM - 6 RR SPIKE IN BASE OF POWER POLE STA. 55+35 -L- 115.00 M LT.
EL. = 693.635 M N 239974 E 294813

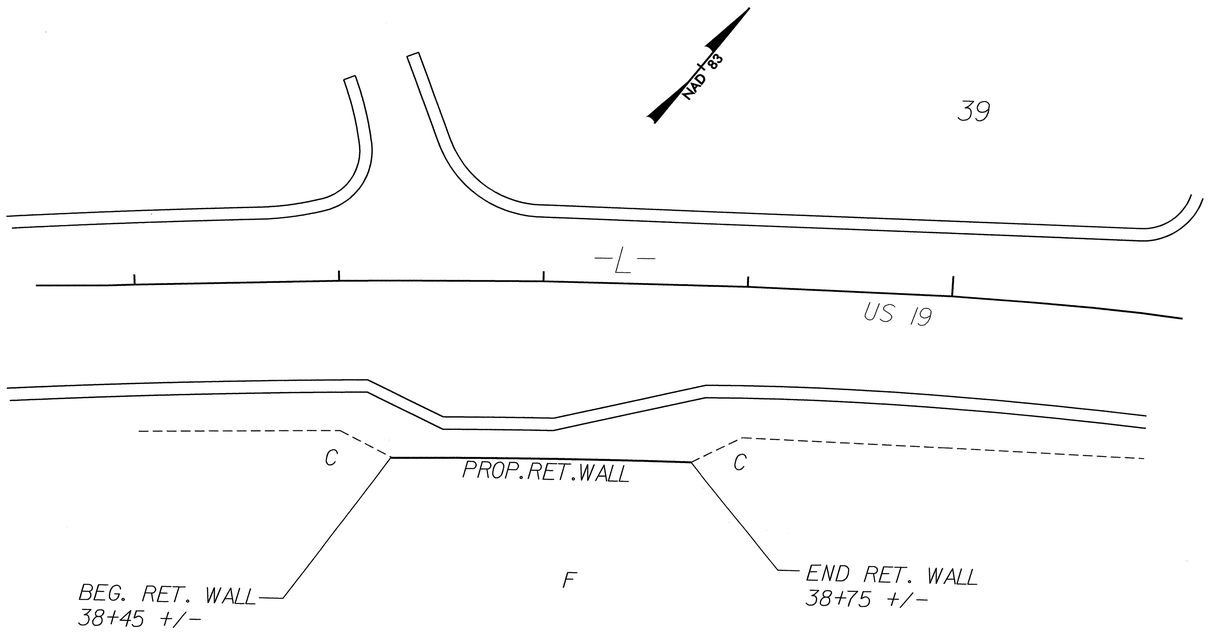

LOCATION SKETCH

METRIC

GEOTECHNICAL ENGINEER

NORTH CAROLINA PROFESSIONAL SEAL 29869 ENGINEER SHANE C CLARK

Shane Clark 9/13/7
SIGNATURE DATE

ENGINEER

SIGNATURE DATE

GRAVITY RETAINING WALL ELEVATIONS					
-L- STA	OFFSET FROM ℄ (RIGHT)	ELEV @ TOP OF WALL	* PROPOSED FINISHED GRADE	* EXPOSED WALL HEIGHT	** DESIGN WALL HEIGHT "H"
38+45.00	17.400	673.306	672.439	1.03	.87
38+60.00	17.400	674.372	672.581	1.96	1.80
38+75.00	17.400	673.423	672.556	1.03	.87

* EMBEDMENT DEPTH NOT INCLUDED IN THE ELEVATION TABLES

** FOR DESIGN WALL HEIGHT "H", SEE STANDARD DRAWING No. 453.01

-RETAINING WALL 1-
-L-

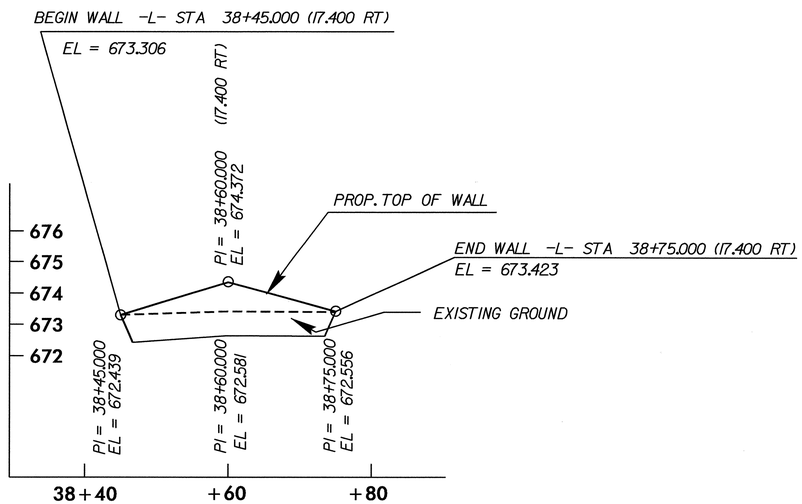

TOTAL STRUCTURE QUANTITIES		
GRAVITY RETAINING WALLS	39.25	SQ. M

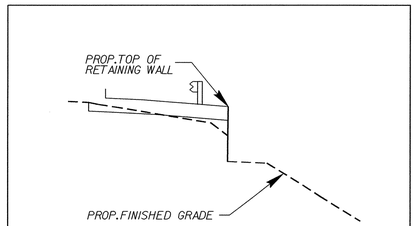

SECTION A

NOTES

NO BRICK VENEER WILL BE ALLOWED.

FLOW SOIL AROUND ENDS OF WALL AT A 2:1 (H:V) SLOPE AS NEEDED

PROJECT NO.: R-2518A
MADISON/YANCEY COUNTY
STATION: 38+45.00 -L- TO 38+75.00 -L-

SHEET 1 OF 2

PREPARED BY:	J.T. WILLIAMS	DATE: 8/07
REVIEWED BY:	S.C. CLARK	DATE: 8/07

GEOTECHNICAL ENGINEERING UNIT

☐ EASTERN REGIONAL OFFICE
☒ WESTERN REGIONAL OFFICE

STATE OF NORTH CAROLINA
DEPARTMENT OF TRANSPORTATION
RALEIGH

GRAVITY RETAINING WALL

REVISIONS						SHEET NO.
NO.	BY	DATE	NO.	BY	DATE	W-1
1	-	-	3	-	-	TOTAL SHEETS
2	-	-	4	-	-	10

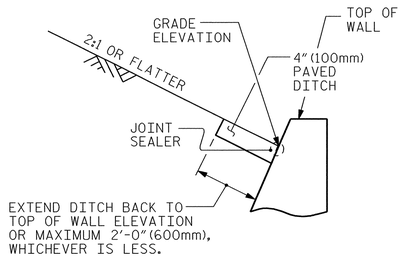

SLOPE CONDITION

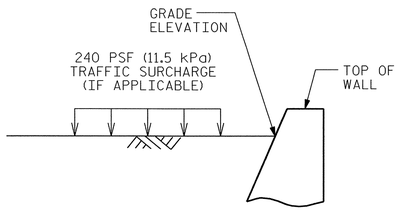

NO SLOPE CONDITION

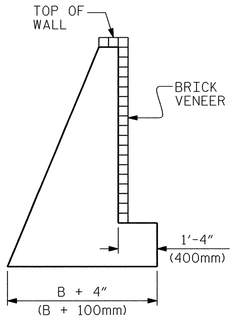

BRICK VENEER DETAIL

(WHEN APPLICABLE)

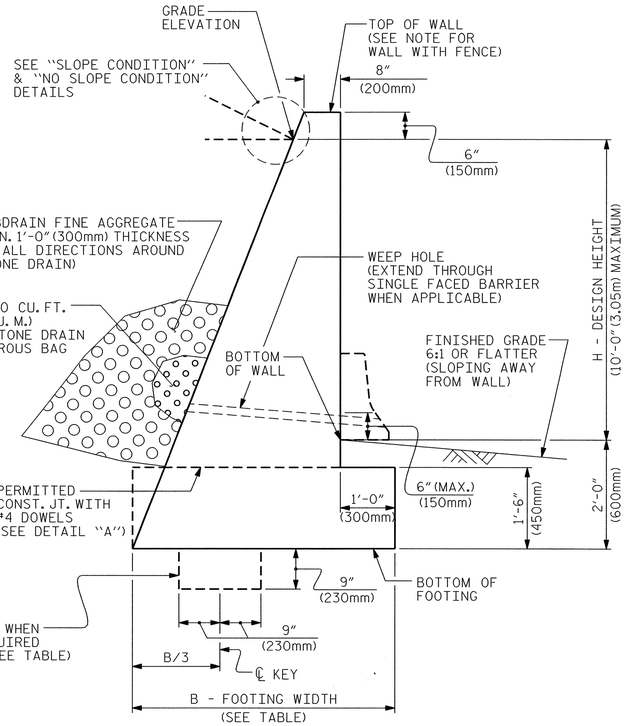

TYPICAL SECTION

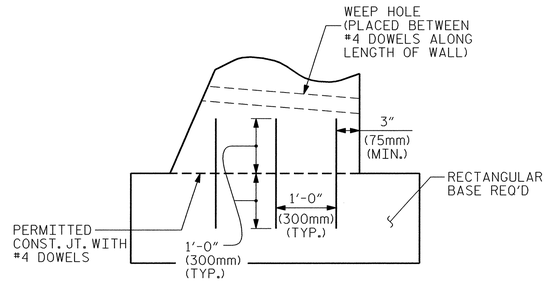

DETAIL "A"

H + 2 (ft)	< 6	6 - 9	> 9 - 12
H + 0.6 (m)	< 1.83	1.83 - 2.74	> 2.74 - 3.65
NO SLOPE CONDITION WITHOUT TRAFFIC SURCHARGE	.60	.60	.60
NO SLOPE CONDITION WITH TRAFFIC SURCHARGE	.80	.75 *	.70 *
SLOPE CONDITION	.66	.70 *	.75 *

B/(H + 2) RATIO

* KEY IS REQUIRED FOR SLOPE CONDITION OR NO SLOPE CONDITION WITH TRAFFIC SURCHARGE WHEN H + 2ft (H + 0.6m) IS 6'-0" (1.83m) OR GREATER.

METRIC

GEOTECHNICAL ENGINEER

NORTH CAROLINA PROFESSIONAL SEAL 29869 ENGINEER SHANE C CLARK

SIGNATURE 9/13/06 DATE

ENGINEER

SIGNATURE DATE

NOTES

FOR GRAVITY RETAINING WALLS, SEE SECTION 453 OF THE STANDARD SPECIFICATIONS.

THE STANDARD GRAVITY RETAINING WALL IS BASED ON THE FOLLOWING IN-SITU ASSUMED SOIL PARAMETERS:
TOTAL UNIT WEIGHT = 120 PCF (18.8 kN/m³)
COHESION = 0 PSF (0 kPa)
FRICTION ANGLE = 35 DEGREES
(GROUNDWATER WITHIN 5'-0" (1.5m) OF BOTTOM OF FOOTING)
FRICTION ANGLE = 30 DEGREES
(GROUNDWATER MORE THAN 5'-0" (1.5m) BELOW BOTTOM OF FOOTING)

DO NOT USE A STANDARD GRAVITY RETAINING WALL IF THE ASSUMED SOIL PARAMETERS ARE NOT APPLICABLE OR GROUNDWATER IS ABOVE THE BOTTOM OF FOOTING.

DO NOT USE A STANDARD GRAVITY RETAINING WALL WHEN VERY LOOSE OR SOFT SOIL OR MUCK IS PRESENT BELOW THE WALL.

DO NOT PLACE CONCRETE UNTIL OBTAINING APPROVAL OF THE EXCAVATION DEPTH AND CHECKING FOUNDATION MATERIAL FOR IN-SITU ASSUMED SOIL PARAMETERS.

USE CLASS "A" CONCRETE AND PROVIDE VERITCAL BROOMED SURFACE FINISH FOR ALL EXPOSED SURFACES.

PROVIDE 3" (75mm) DIAMETER WEEP HOLES ON 10'-0" (3m) CENTERS ALONG WALL. SLOPE WEEP HOLES ON A 1" (25mm) PER FOOT (300mm) SLOPE THROUGH THE WALL SO THAT WATER DRAINS OUT OF THE FRONT OF THE WALL.

CONSTRUCT A HORIZONTAL DRAIN IN SUBDRAIN FINE AGGREGATE AT LEAST 1'-0" (300mm) TALL AND 1'-0" (300mm) WIDE TO CONNECT ALL STONE DRAINS.

PROVIDE GROOVED CONTRACTION JOINTS EVERY 10'-0" (3m) AND EXPANSION JOINTS EVERY 30'-0" (9m) ALONG THE WALL.

DO NOT BACKFILL BEHIND WALL UNTIL CONCRETE DEVELOPS A MINIMUM COMPRESSIVE STRENGTH OF 3000 PSI (20.7 MPa). COMPACT BACKFILL IN ACCORDANCE WITH SUBARTICLE 235-4(C) OF THE STANDARD SPECIFICATIONS. PLACE BACKFILL WITHIN 3'-0" (1m) OF THE BACK OF THE WALL WITH HAND OPERATED EQUIPMENT. DO NOT OPERATE HEAVY EARTH MOVING EQUIPMENT WITHIN 10'-0" (3m) OF THE BACK OF WALL.

WHEN A CONSTRUCTION JOINT IS LOCATED AT THE BASE OF THE WALL, IN SECTION, PROVIDE A MINIMUM OF 3-#4 DOWELS AT AN EQUAL SPACING. SPACE ALL DOWELS AT 1'-6" (460mm) CENTERS ALONG THE LENGTH OF THE WALL.

SEE PREVIOUS SHEET(S) FOR PLAN AND PROFILE VIEW (WALL ENVELOPE) AND PROPOSED ELEVATIONS FOR GRAVITY RETAINING WALL(S).

SEE ROADWAY INVENTORY FOR APPLICABLE SUBSURFACE INFORMATION.

PROJECT NO.: R-2518A

MADISON/YANCEY ***COUNTY***

STATION: 38+45.00-L- TO 38+75.00-L-

SHEET 2 OF 2

GEOTECHNICAL ENGINEERING UNIT

STATE OF NORTH CAROLINA DEPARTMENT OF TRANSPORTATION RALEIGH

STANDARD DRAWING NO. 453.01

STANDARD GRAVITY RETAINING WALL

DATE: 7-18-06

SHEET NO. W-2

TOTAL SHEETS 10

BM - 11 CHISELED SQUARE ON CORNER OF CONCRETE PAD FOR TELEPHONE STA. 106+02 -L- 76.00 M LT.
EL. = 889.447 M N 244792 E 296137

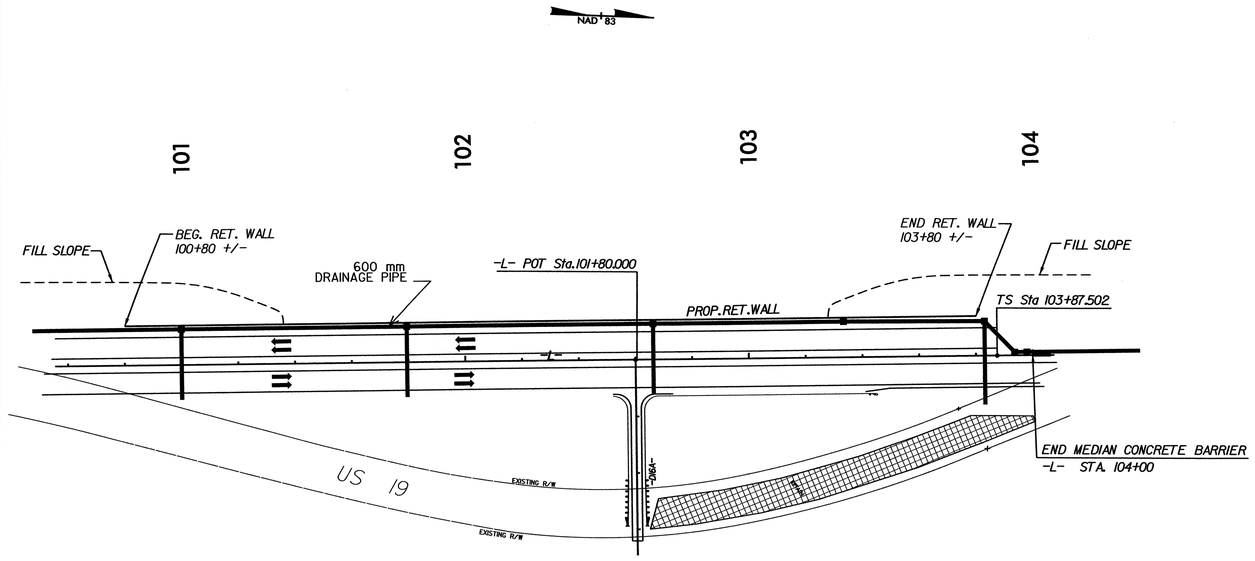

LOCATION SKETCH

1

TOTAL STRUCTURE QUANTITIES

MSE RETAINING WALL	3930	SQ. M

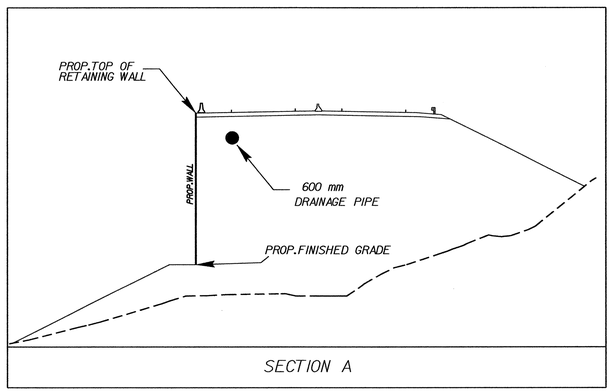

SECTION A

1

MSE RETAINING WALL ELEVATIONS

-L- STA	OFFSET FROM ℄ (LEFT)	ELEV @ TOP OF WALL	✳ PROPOSED FINISHED GRADE
100+80.00	13.825	851.467	851.467
101+00.00	13.825	852.945	839.144
101+20.00	13.825	854.423	842.270
101+40.00	13.825	855.901	846.504
101+60.00	13.825	857.379	846.535
101+80.00	13.825	858.857	848.611
102+00.00	13.825	860.335	846.992
102+20.00	13.825	861.813	849.032
102+40.00	13.825	863.291	848.195
102+60.00	13.825	864.769	849.114
102+80.00	13.825	866.247	850.139
103+00.00	13.825	867.725	850.718
103+20.00	13.825	869.203	851.020
103+40.00	13.825	870.681	852.759
103+52.998	13.825	871.657	857.779
103+80.00	13.825	873.781	873.781

✳ EMBEDMENT DEPTH NOT INCLUDED IN ELEVATION TABLES.

METRIC

GEOTECHNICAL ENGINEER

NORTH CAROLINA PROFESSIONAL SEAL 29869 ENGINEER SHANE C CLARK

SIGNATURE 7/9/08 DATE

ENGINEER

SIGNATURE DATE

PROJECT NO.: R-2518A
MADISON/YANCEY COUNTY
STATION: 100+80.00 -L- TO 103+80.00 -L-

PREPARED BY:	J.T. WILLIAMS	DATE:	8/07
REVIEWED BY:	S.C. CLARK	DATE:	7/08

GEOTECHNICAL ENGINEERING UNIT

☐ EASTERN REGIONAL OFFICE
☒ WESTERN REGIONAL OFFICE

STATE OF NORTH CAROLINA
DEPARTMENT OF TRANSPORTATION
RALEIGH

MSE RETAINING WALL

REVISIONS							SHEET NO.
NO.	BY	DATE	NO.	BY	DATE		W-3
1	SHANE CLARK	7/8/08	3				TOTAL SHEETS
2			4				

METRIC

GEOTECHNICAL ENGINEER	ENGINEER
NORTH CAROLINA PROFESSIONAL SEAL 29869 ENGINEER SHANE C CLARK	
SIGNATURE 7/9/8 DATE	SIGNATURE DATE

–RETAINING WALL 2–

–L–

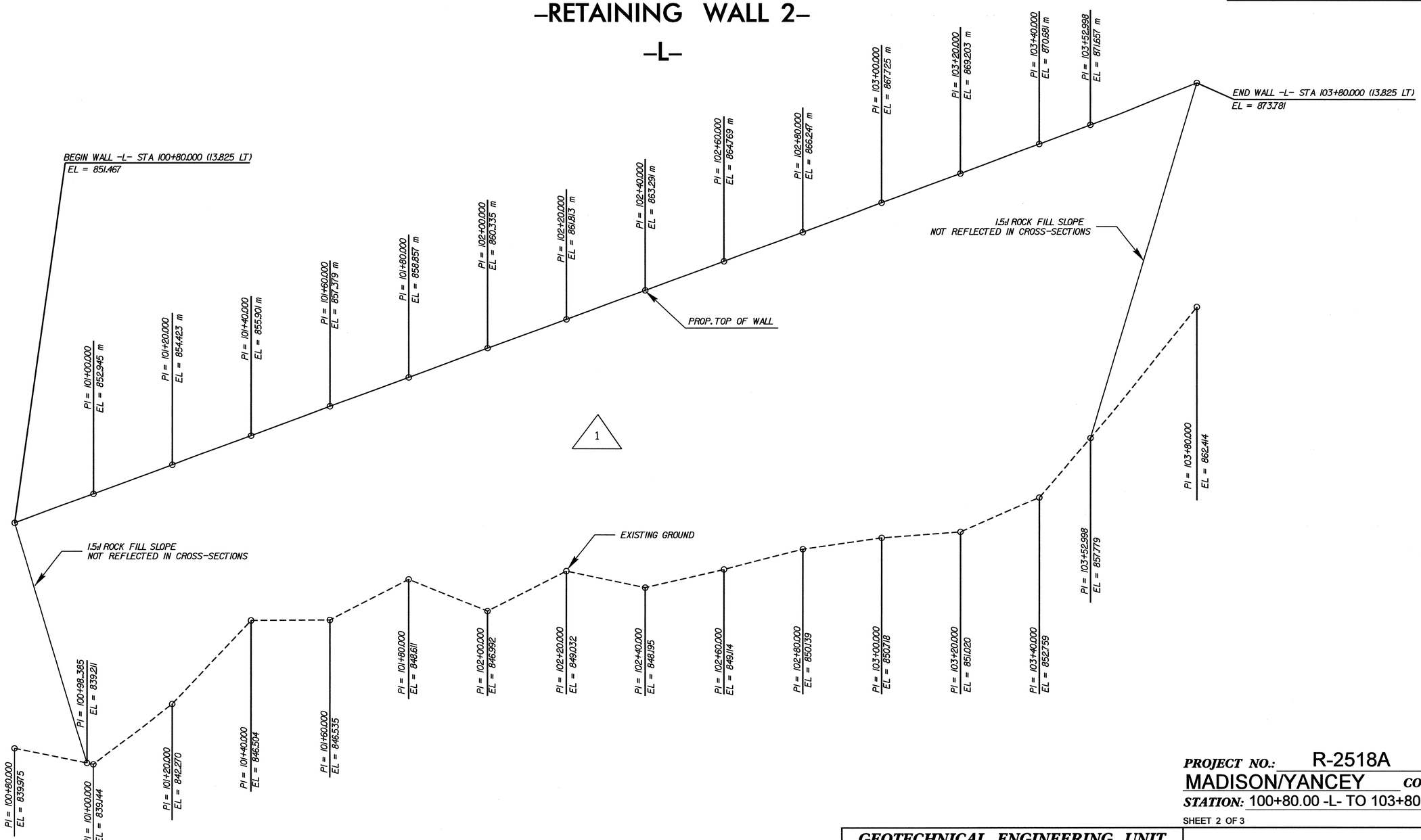

PROJECT NO.: R-2518A

MADISON/YANCEY ***COUNTY***

STATION: 100+80.00 -L- TO 103+80.00 -L-

SHEET 2 OF 3

PREPARED BY:	J.T. WILLIAMS	DATE:	08/27/07
REVIEWED BY:	S.C. CLARK	DATE:	7/08

GEOTECHNICAL ENGINEERING UNIT

☐ ***EASTERN REGIONAL OFFICE***

☒ ***WESTERN REGIONAL OFFICE***

STATE OF NORTH CAROLINA
DEPARTMENT OF TRANSPORTATION
RALEIGH

MSE RETAINING WALL

REVISIONS						SHEET NO.
NO.	BY	DATE	NO.	BY	DATE	W-4
1	SHANE CLARK	7/8/08	3	-	-	TOTAL SHEETS
2	-	-	4	-	-	-

WALL # 2 - MSE RETAINING WALL NOTES

DO NOT USE STANDARD SIZE NO. 2S OR 2MS FOR WALL BACKFILL FOR RETAINING WALL NO. 2.

DO NOT USE AN MSE WALL SYSTEM WITH SEGMENTAL RETAINING WALL UNITS FOR RETAINING WALL NO. 2.

BEFORE BEGINNING MSE WALL DESIGN FOR RETAINING WALL NO. 2, SURVEY FINAL FIELD ELEVATION OF THE BERM SHOWN ON THE PLANS AND SUBMIT A REVISED WALL ENVELOPE FOR REVIEW. DO NOT START WALL DESIGN OR CONSTRUCTION UNTIL THIS ENVELOPE IS ACCEPTED.

CAST-IN-PLACE CONCRETE COPING IS REQUIRED FOR RETAINING WALL NO. 2.

A BROOMED ARCHITECTURAL FINISH IS REQUIRED ON THE FRONT FACE OF THE PRECAST CONCRETE PANELS FOR RETAINING WALL NO. 2.

DESIGN RETAINING WALL NO. 2 FOR A WALL HEIGHT EQUAL TO THE DESIGN HEIGHT (DIFFERENCE BETWEEN GRADE ELEVATION AND BOTTOM OF WALL ELEVATION) PLUS EMBEDMENT (DIFFERENCE BETWEEN BOTTOM OF WALL ELEVATION AND TOP OF LEVELING PAD ELEVATION).

DESIGN RETAINING WALL NO. 2 FOR THE FOLLOWING:
1) MINIMUM SERVICE LIFE = 100 YEARS
2) ALLOWABLE BEARING CAPACITY = 450 kPa
3) WALL BACKFILL MATERIAL PARAMETERS:

MATERIAL STANDARD SIZE NO. (IN ACCORDANCE WITH SECTIONS 1005 AND 1014 OF THE STANDARD SPECIFICATIONS)	UNIT WEIGHT (γ) kN/m^3	FRICTION ANGLE (ϕ) DEGREES	COHESION (c) kPa
57, 67 AND 78M	17.25	38	0

4) IN-SITU ASSUMED MATERIAL PARAMETERS:

MATERIAL TYPE	UNIT WEIGHT (γ) kN/m^3	FRICTION ANGLE (ϕ) DEGREES	COHESION (c) kPa
RETAINED AND RANDOM BACKFILL	18.0	36	4.75

DESIGN RETAINING WALL NO. 2 FOR A LIVE LOAD (TRAFFIC) SURCHARGE.

DESIGN RETAINING WALL NO. 2 FOR A NEAR SURFACE DRAINAGE PIPE RUNNING PARALLEL TO THE WALL AS SHOWN IN THE DRAINAGE PLANS.

VERIFY PIPE LOCATION AND ELEVATION BEFORE BEGINNING MSE WALL DESIGN OR CONSTRUCTION.

EXISTING OR FUTURE STRUCTURES SUCH AS FOUNDATIONS, GUARDRAIL POSTS, PAVEMENTS, PIPES, INLETS OR UTILITIES MAY INTERFERE WITH REINFORCEMENT FOR RETAINING WALL NO 2.

DO NOT PLACE LEVELING PAD CONCRETE, WALL BACKFILL OR FIRST REINFORCEMENT LAYER FOR RETAINING WALL NO. 2 UNTIL OBTAINING APPROVAL OF THE EXCAVATION DEPTH AND FOUNDATION MATERIAL.

TEMPORARY SHORING FOR WALL CONSTRUCTION MAY BE REQUIRED FOR RETAINING WALL NO. 2, AT THE DISCRETION OF THE CONTRACTOR. NO SEPARATE PAYMENT WILL BE MADE FOR TEMPORARY SHORING FOR WALL CONSTRUCTION.

THE CONTRACTOR MUST WAIT 90 DAYS AFTER COMPLETING THE WALL BERM CONSTRUCTION BEFORE BEGINNING WALL OR FILL CONSTRUCTION.

THE WALL FILL AND UNCLASSIFIED BACK FILL ARE TO BE CONSTRUCTED SIMULTANEOUSLY.

CONSTRUCT THE 1.5:1 (H:V) ROCK EMBANKMENT, BEFORE AND AFTER THE WALL AROUND THE FRONT FACE OF THE WALL AS SHOWN.

THE ESTIMATED WALL FACING QUANTITY IS BASED ON THE EXPOSED FACE ONLY.

1

METRIC

GEOTECHNICAL ENGINEER

NORTH CAROLINA PROFESSIONAL SEAL 29869 ENGINEER SHANE C CLARK

SIGNATURE 7/9/08 DATE

ENGINEER

SIGNATURE DATE

DETAIL A

TOE BENCHING DETAIL AS DIRECTED BY THE ENGINEER

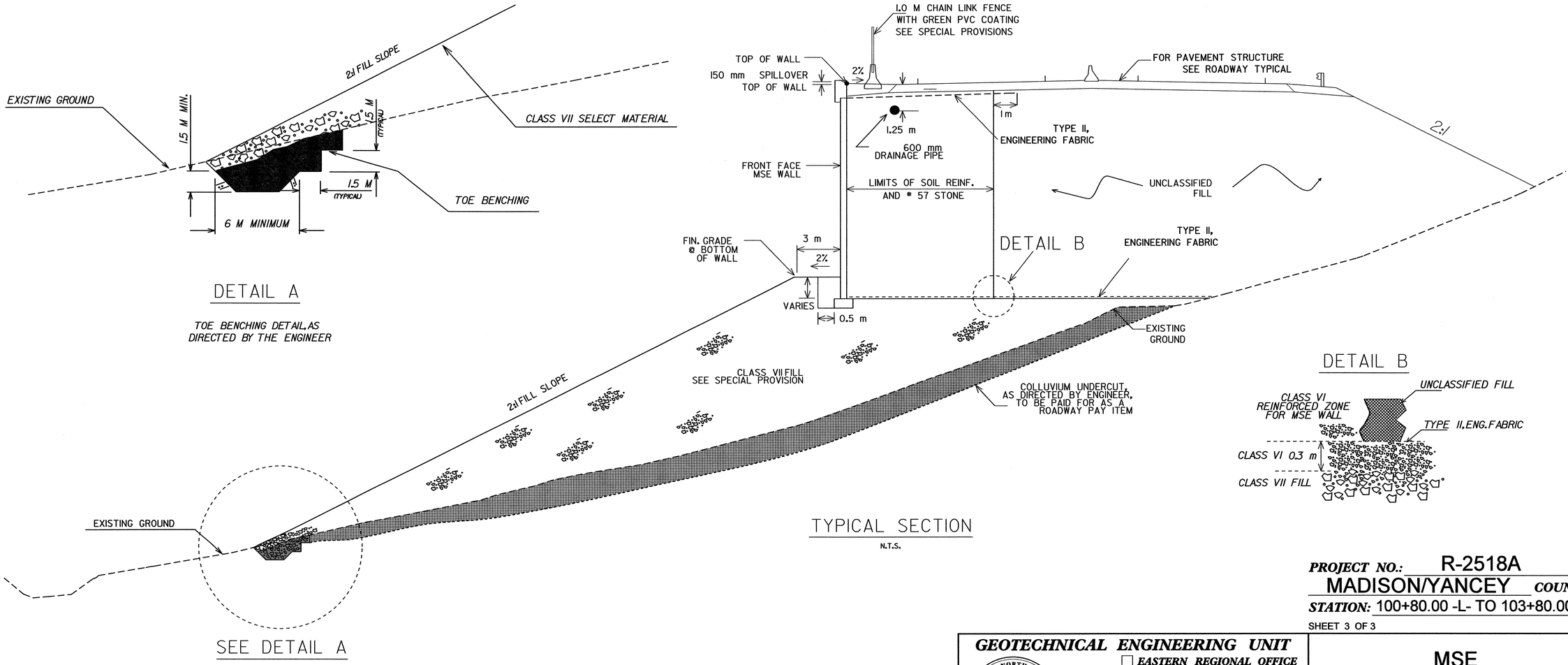

TYPICAL SECTION

N.T.S.

DETAIL B

PROJECT NO.: R-2518A

MADISON/YANCEY ***COUNTY***

STATION: 100+80.00 -L- TO 103+80.00 -L-

SHEET 3 OF 3

PREPARED BY:	J.T. WILLIAMS	DATE:	09/12/07
REVIEWED BY:	S.C. CLARK	DATE:	7/08

GEOTECHNICAL ENGINEERING UNIT

☐ ***EASTERN REGIONAL OFFICE***

☒ ***WESTERN REGIONAL OFFICE***

STATE OF NORTH CAROLINA
DEPARTMENT OF TRANSPORTATION
RALEIGH

MSE RETAINING WALL

REVISIONS

NO.	BY	DATE	NO.	BY	DATE
1	SHANE CLARK	7/8/08	3	-	-
2	-	-	4	-	-

SHEET NO. W-5

TOTAL SHEETS -

BM - 11 CHISELED SQUARE ON CORNER OF CONCRETE PAD FOR TELEPHONE STA. 106+02 -L- 76.00 M LT.
EL. = 889.447 M N 244792 E 296137

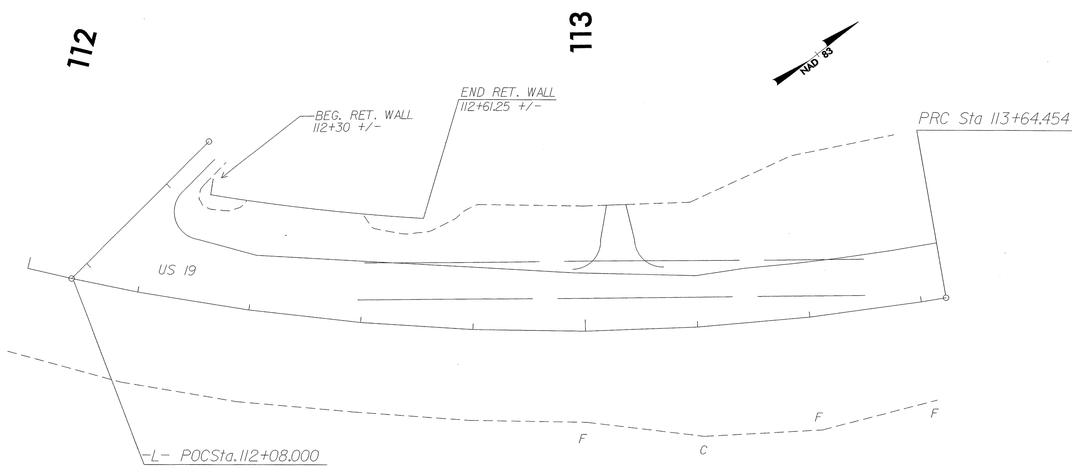

LOCATION SKETCH

METRIC

GEOTECHNICAL ENGINEER	ENGINEER
NORTH CAROLINA PROFESSIONAL SEAL 29869 ENGINEER SHANE C CLARK SIGNATURE 9/10/12 DATE	SIGNATURE DATE

–RETAINING WALL 3–

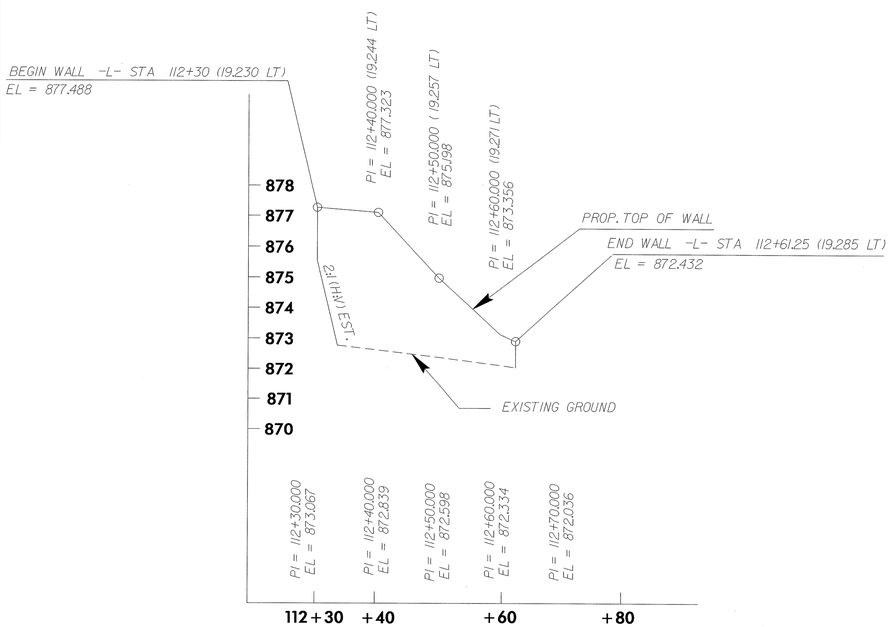

TOTAL STRUCTURE QUANTITIES

PILE PANEL RETAINING WALL	118.32	SQ. M

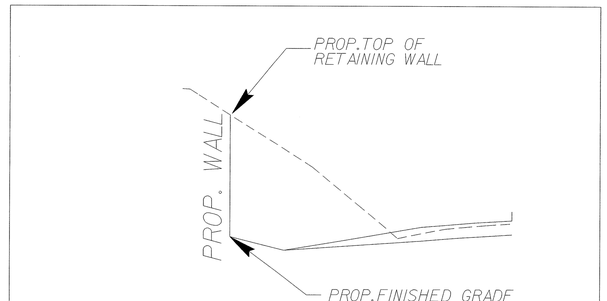

SECTION A

NOTES

SET APPROVED SLEEVES IN RETAINING WALL IN ACCORDANCE WITH THE DETAILS IN THE PLANS. AFTER THE POSTS HAVE BEEN SET, FILL SLEEVES WITH GROUT.

PREPARED BY:	J. SALVO	DATE:	08/07
REVIEWED BY:	S.C. CLARK	DATE:	08/07

PROJECT NO.: R-2518A
MADISON/YANCEY **COUNTY**
STATION: 112+30.00 -L- TO 112+61.25 -L-
SHEET 1 OF 5

GEOTECHNICAL ENGINEERING UNIT
☐ *EASTERN REGIONAL OFFICE*
☒ *WESTERN REGIONAL OFFICE*

STATE OF NORTH CAROLINA
DEPARTMENT OF TRANSPORTATION
RALEIGH

PILE PANEL RETAINING WALL

REVISIONS						SHEET NO.
NO.	BY	DATE	NO.	BY	DATE	W-6
1			3			TOTAL SHEETS
2			4			10

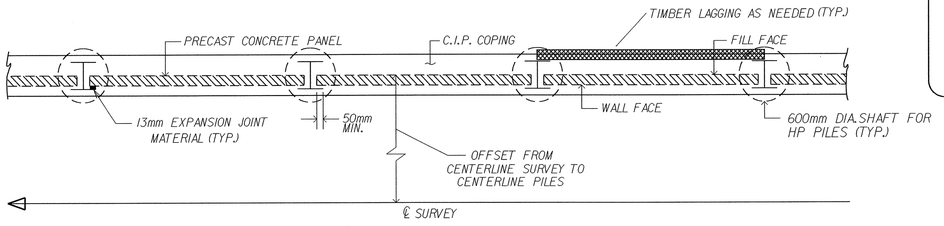

PLAN VIEW
N.T.S.

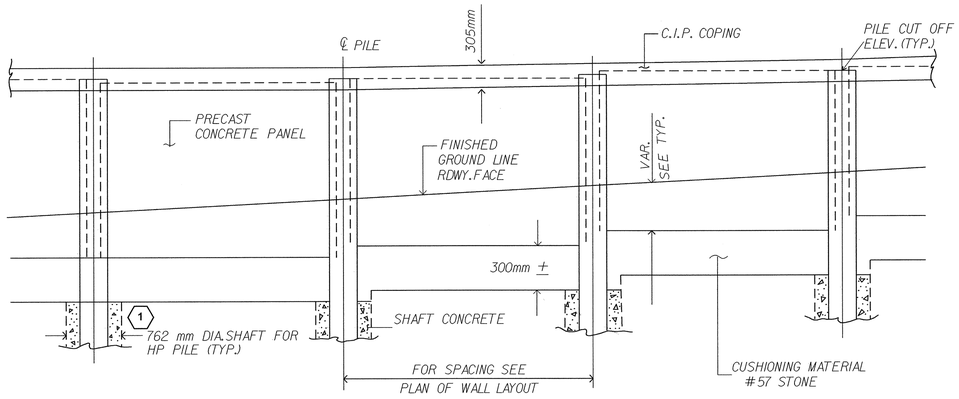

ELEVATION VIEW
N.T.S.

METRIC

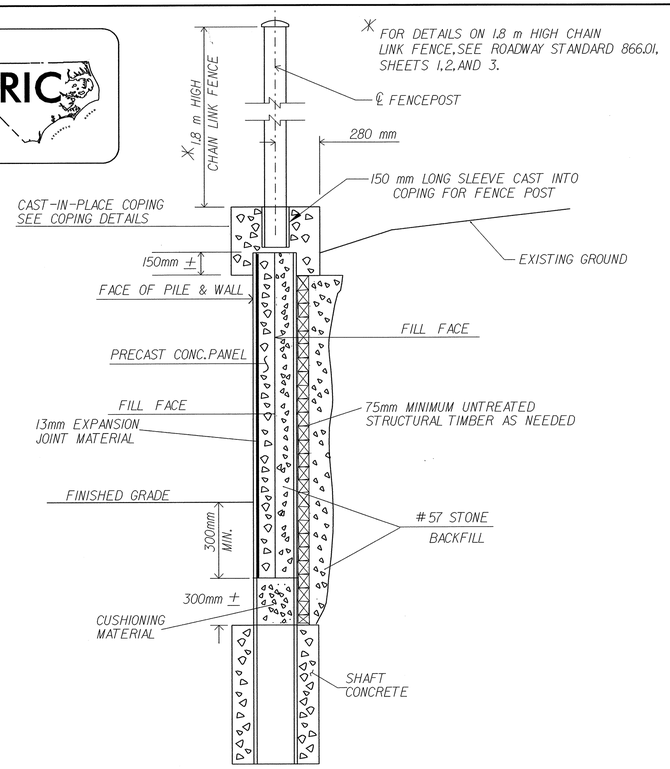

TYPICAL SECTION
N.T.S.

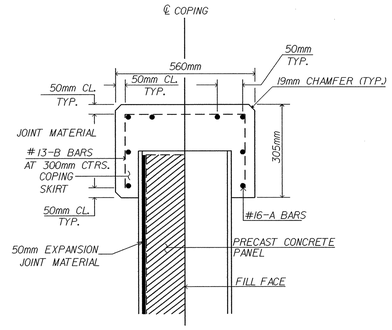

FULL COPING DETAIL
N.T.S.

NOTE: A-BARS IN COPING AT CORNER LOCATION SHALL BE FIELD BENT AS NECESSARY.

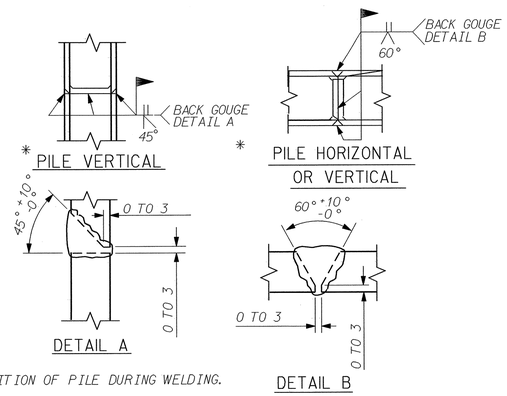

* POSITION OF PILE DURING WELDING.

PILE SPLICE DETAILS
N.T.S.

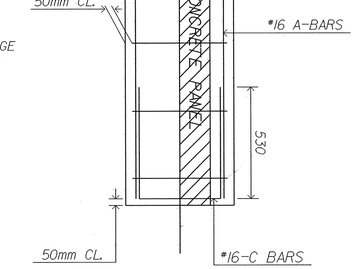

SIDE VIEW
END OF COPING DETAILS
N.T.S.

NOTES:

1. PILES SHALL BE INSTALLED TO THE CUT OFF ELEVATIONS AND LENGTHS SHOWN ON THE PLANS BY PRE-AUGERING OR DRILLING. THE EXCAVATED HOLE SHALL BE 762mm MINIMUM DIAMETER AND BACKFILLED WITH CONCRETE TO THE BOTTOM OF THE CUSHIONING MATERIAL.
2. PILES SHALL BE ASTM GRADE 345 STEEL WITH THE ADDITION OF 0.2% MINIMUM COPPER.
3. PILES SHALL BE PAINTED TO MATCH COLOR OF PANELS FROM THE TOP OF THE PILE TO 460mm BELOW FINISHED GRADE.
4. SPLICING OF PILES IS ONLY ALLOWED IN THE PORTION OF THE PILE PERMANENTLY BELOW GROUND.
5. THE TOP OF THE INSTALLED PILES SHALL BE WITHIN 50mm OF THEIR PLAN LOCATION IN ANY DIRECTION.
6. CONCRETE PANELS SHALL HAVE A MINIMUM BEARING DISTANCE OF 50mm ON THE PILE FLANGE. 50mm THICK EXPANSION JOINT MATERIAL SHALL BE PLACED BETWEEN THE CONCRETE PANELS AND PILE FLANGES FOR THE WIDTH OF THE BEARING SURFACE.
7. THE CONCRETE PANELS SHALL HAVE A DARK GRAY COLOR FACE. SEE SPECIAL PROVISIONS FOR COLOR, TEXTURE AND AGGREGATE REQUIREMENTS.
8. EXCAVATION TO INSTALL PANELS AND TIMBER LAGGING SHALL BE LIMITED TO 150mm BEHIND THE PILES. ANY OVEREXCAVATION SHALL BE BACKFILLED WITH NO.57 STONE.
9. CONCRETE PANELS SHALL BE HELD SECURELY AGAINST PILES UNTIL BACKFILL IS PLACED.
10. BOTH CUSHIONING MATERIAL AND BACKFILL MATERIAL BEHIND THE PANELS SHALL BE NO.57 STONE AND COMPACTED AS REQUIRED BY THE ENGINEER. THE STONE SHALL BE RODDED AND SPREAD IN ORDER TO FILL ALL VOIDS AND INSURE MAXIMUM DENSITY. FLUSHING THE STONE WITH WATER TO AID COMPACTION WILL NOT BE ALLOWED.
11. BACKFILLING SHALL BE COMPLETED PRIOR TO FORMING THE COPING.
12. THE TOP OF COPING IS TO BE ADJUSTED BY THE ENGINEER TO GIVE A UNIFORM APPEARANCE.
13. CONSTRUCTION JOINTS IN COPING ARE PERMITTED AT LOCATIONS WHERE COPING CHANGES SLOPE AND AT 27m CENTERS. EXPANSION JOINTS ARE NOT PERMITTED.
14. THE CONTRACTOR SHALL VERIFY THE LOCATION OF DRAINAGE STRUCTURES AND UTILITIES PRIOR TO INSTALLING PILES.

1 15. EXCAVATION SEQUENCE:
- DRILL MINIMUM 762mm DIA. SHAFTS FOR HP PILES FROM NATURAL GROUND, INSTALL PILES AND BACKFILL WITH CONCRETE TO THE TOP OF SHAFT ELEVATIONS BEFORE EXCAVATING TO INSTALL PANELS OR TIMBER LAGGING.
- EXCAVATION TO INSTALL THE PANELS OR LAGGING SHALL BE VERTICAL, HAVE A MAXIMUM LIFT HEIGHT OF 1.2189m AND BE LIMITED IN EXTENT TO ONLY WHAT IS NECESSARY.
- TIMBER LAGGING IS NEEDED ONLY TO MEET OSHA REQUIREMENTS FOR SAFE EXCAVATION HEIGHTS. IF CUT IS LESS THAN 1.219m HIGH, LAGGING IS NOT REQUIRED.
- THE LAGGING SHALL HAVE A MINIMUM BEARING DISTANCE OF 75mm ON THE PILE FLANGE.
- UNTREATED STRUCTURAL TIMBERS SHALL BE A MINIMUM OF 75mm THICK AND SHALL CONFORM TO THE APPLICABLE PARTS OF SECTIONS 445 AND 1082 OF THE STANDARD SPECIFICATIONS.
- PLACE BACKFILL BEHIND THE LAGGING IMMEDIATELY AFTER INSTALLATION.
- WHERE PRACTICAL, THE TOP FEW PIECES OF LAGGING SHALL BE REMOVED PRIOR TO BACKFILLING BEHIND PANELS. ALL OTHER LAGGING SHALL BE LEFT IN PLACE.
- THE CONTRACTOR MAY ELECT TO USE AN ALTERNATE METHOD OF PROVIDING A SAFE EXCAVATION. HOWEVER, THE ALTERNATE METHOD MUST BE SUBMITTED TO THE ENGINEER FOR REVIEW AND APPROVAL.

16. IF NECESSARY, SPECIAL MEASURES SHALL BE TAKEN TO INSURE THE STABILITY OF THE SHAFT SUCH AS INSTALLING TEMPORARY CASINGS PRIOR TO DRILLING, INSTALLING THE PILE AND PLACING CONCRETE IMMEDIATELY AFTER A SHAFT IS EXCAVATED BEFORE CAVING OCCURS, INSTALLING WELL POINTS, OR OTHER MEASURES. IF CAVING OCCURS, THE SHAFT EXCAVATION OPERATION SHALL BE HALTED UNTIL SPECIAL MEASURES ARE IMPLEMENTED.

17. SHAFT EXCAVATION MAY REQUIRE SPECIALTY DRILLING EQUIPMENT TO PENETRATE INTO WEATHERED ROCK AND FRESH ROCK.

18. THE CONTRACTOR'S ATTENTION IS CALLED TO THE FACT THAT THE PILES AT STATION 112+300 -L- ARE TO BE INTALLED SEPARATLY AND THEN WELDED TOGETHER.

19. THE CONTRACTOR'S ATTENTION IS CALLED TO THE FACT THAT THE PRECAST CONCRETE PANELS ARE TO BE PICKED UP FROM THE END WITH THE FILL FACE FACING UP. THEN THE PANELS CAN BE LOWERED INTO PLACE BETWEEN THE PILES.

GEOTECHNICAL ENGINEER	ENGINEER
NORTH CAROLINA PROFESSIONAL SEAL 29869 ENGINEER SHANE C CLARK	
SIGNATURE 6/4/18 DATE	SIGNATURE DATE

1 REVISED 6-4-8

PREPARED BY: J. SALVO	DATE: 08/07
REVIEWED BY: S.C. CLARK	DATE: 08/07

GEOTECHNICAL ENGINEERING UNIT

☐ EASTERN REGIONAL OFFICE

☒ WESTERN REGIONAL OFFICE

STATE OF NORTH CAROLINA
DEPARTMENT OF TRANSPORTATION
RALEIGH

PILE PANEL RETAINING WALL

PROJECT NO.: R-2518A

MADISON/YANCEY **COUNTY**

STATION: 112+30.00 -L- TO 112+61.25-L-

SHEET 2 OF 5

REVISIONS						SHEET NO.
NO.	BY	DATE	NO.	BY	DATE	W-7
1	SHANE CLARK	6-4-8	3			TOTAL SHEETS
2			4			10

NOTE: FOR SPACING OF 75MM FORMED OPENINGS IN COPING FOR PROPOSED FENCE, SEE NCDOT ROADWAY STD.866.01.

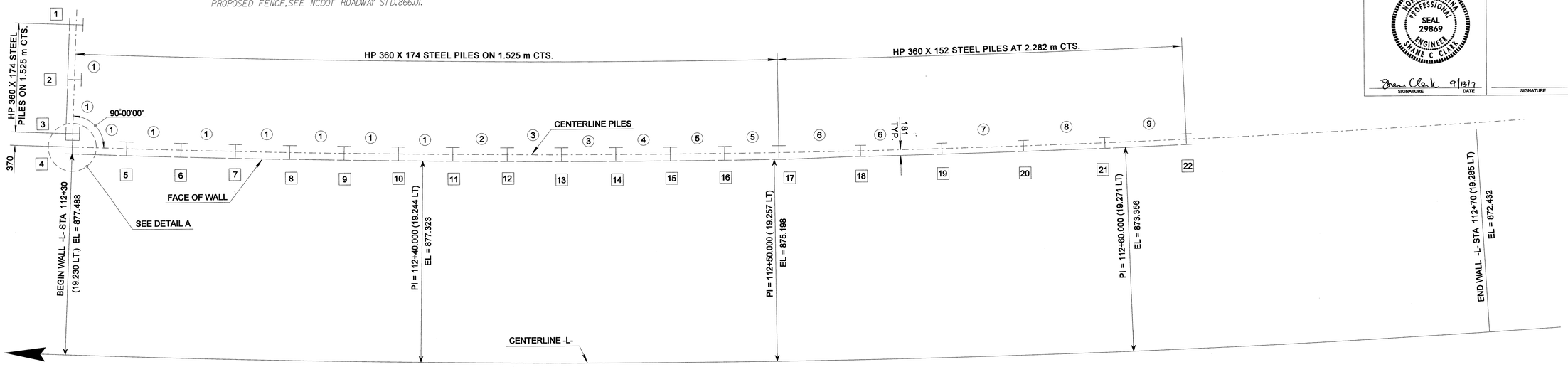

PLAN OF WALL LAYOUT

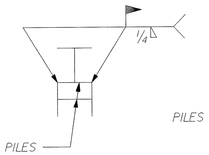

PILES TO INSTALLED SEPARATLY, AND THEN WELDED TOGETHER AFTER INSTALLATION.

DETAIL "A"

THE CONTRACTOR'S ATTENTION IS CALLED TO THE FACT THAT THE HOLE NEEDED FOR THE INSTALLATION OF THE PILES IN DETAIL "A" NEEDS TO BE LARGE ENOUGH TO ACCOMMODATE 2 PILES.

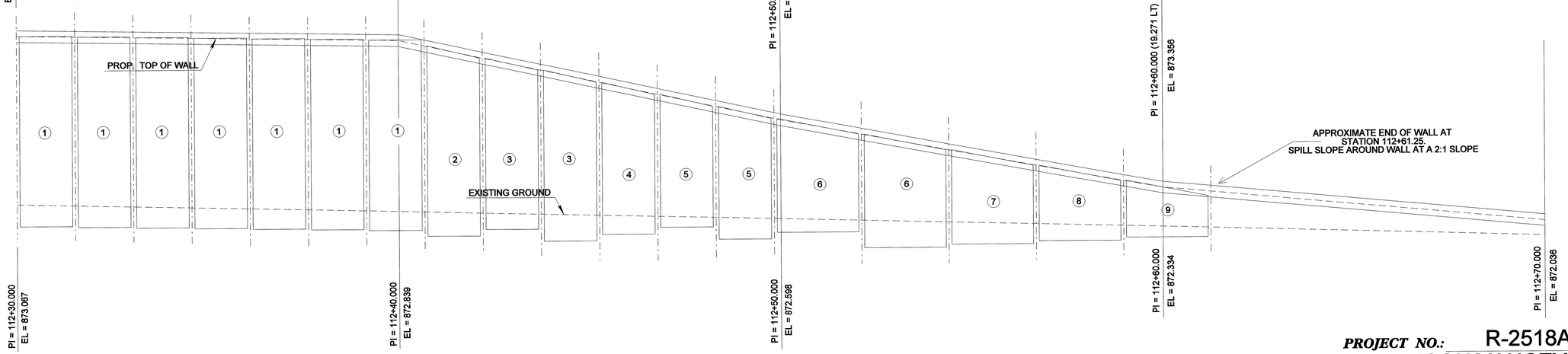

NOTE: NUMBER IN CIRCLE DENOTES PANEL TYPE AND LOCATION

NOTE: NUMBER IN SQUARE DENOTES PILE TYPE AND LOCATION, SEE SHEET 5 OF 5.

ELEVATION OF WALL LAYOUT

GEOTECHNICAL ENGINEER

NORTH CAROLINA PROFESSIONAL SEAL 29869 ENGINEER SHANE C CLARK

SIGNATURE 9/13/17 DATE

ENGINEER

SIGNATURE DATE

PROJECT NO.: R-2518A

MADISON/YANCEY COUNTY

STATION: 112+30.00 -L- TO 112+61.25 -L-

SHEET 3 OF 5

METRIC

GEOTECHNICAL ENGINEERING UNIT

☐ EASTERN REGIONAL OFFICE

☒ WESTERN REGIONAL OFFICE

STATE OF NORTH CAROLINA
DEPARTMENT OF TRANSPORTATION
RALEIGH

PILE PANEL RETAINING WALL

REVISIONS						SHEET NO.
NO.	BY	DATE	NO.	BY	DATE	W-8
1	-	-	3	-	-	TOTAL SHEETS
2	-	-	4	-	-	10

PREPARED BY:	J. SALVO	DATE: 08/07
REVIEWED BY:	S.C. CLARK	DATE: 08/07

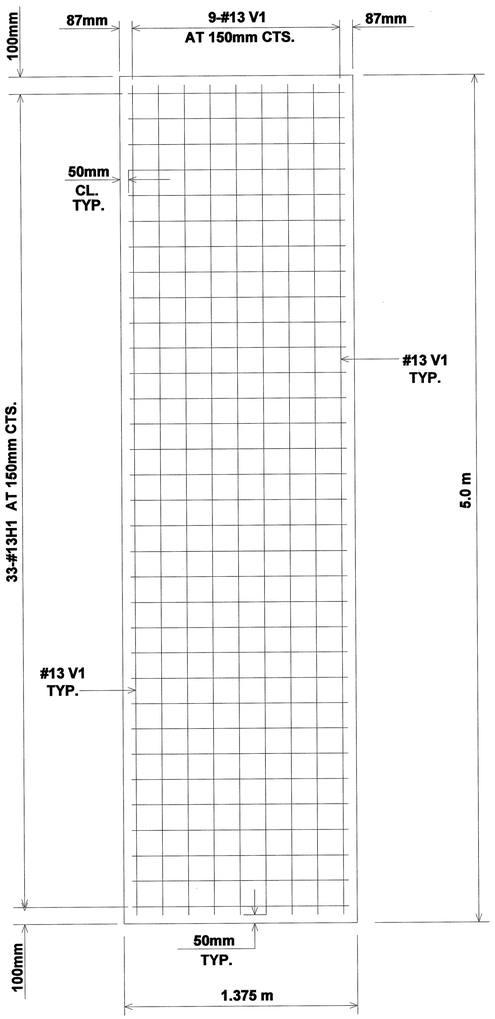

PANEL TYPE 1

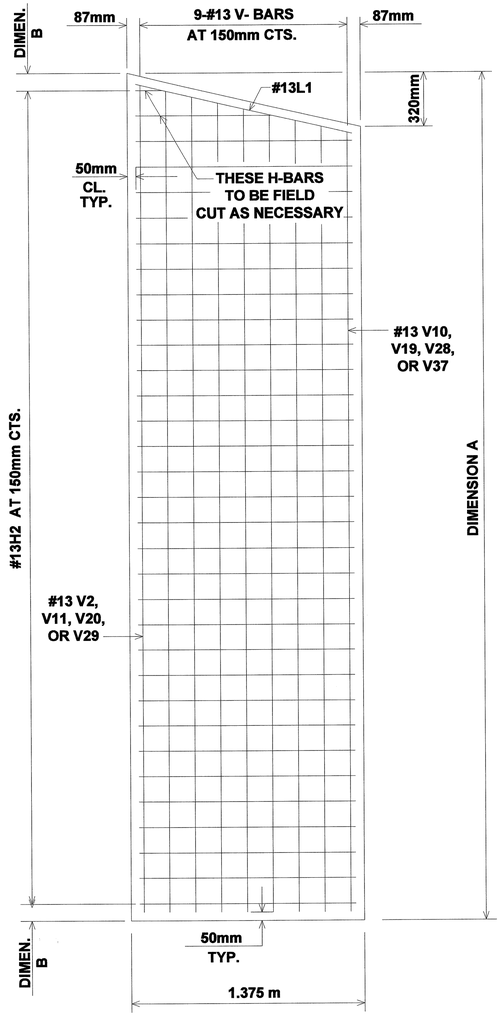

TYPICAL FOR PANEL TYPES 2 - 5

SEE PANEL DETAILS
AND QUANTITY
CHART FOR INFORMATION

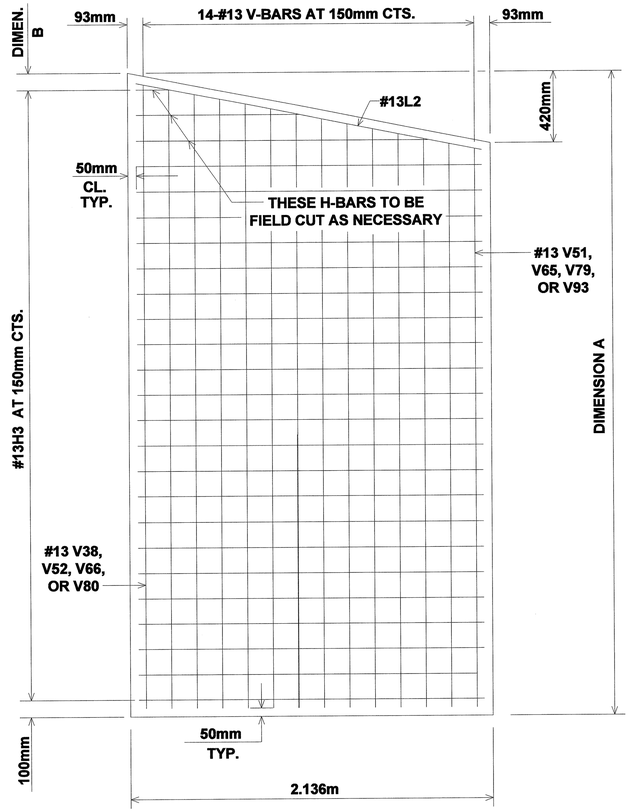

TYPICAL FOR PANEL TYPES 6 - 9

SEE PANEL DETAILS
AND QUANTITY
CHART FOR INFORMATION

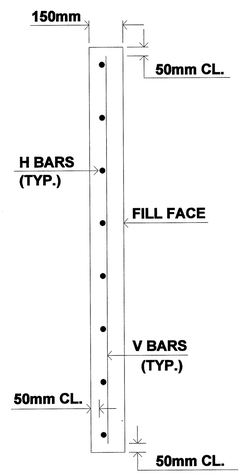

SECTION THRU PANELS

PRECAST PANEL DETAILS

GEOTECHNICAL ENGINEER

NORTH CAROLINA PROFESSIONAL SEAL 29869 ENGINEER SHANE C CLARK

SIGNATURE 9/8/17 DATE

ENGINEER

SIGNATURE DATE

PREPARED BY:	J.T. WILLIAMS	DATE:	06/01/07
REVIEWED BY:	S.C. CLARK	DATE:	06/01/07

METRIC

GEOTECHNICAL ENGINEERING UNIT

☐ EASTERN REGIONAL OFFICE
☒ WESTERN REGIONAL OFFICE

STATE OF NORTH CAROLINA
DEPARTMENT OF TRANSPORTATION
RALEIGH

PILE PANEL
RETAINING WALL

REVISIONS						SHEET NO.
NO.	BY	DATE	NO.	BY	DATE	W-9
1	-	-	3	-	-	TOTAL SHEETS
2	-	-	4	-	-	10

PROJECT NO.: R-2518A
MADISON/YANCEY COUNTY
STATION: 112+30.00 -L- TO 112+61.25-L-
SHEET 4 OF 5

BILL OF MATERIALS FOR RETAINING WALL

PRECAST CONCRETE PANELS

BAR	NO.	SIZE	TYPE	LENGTH	WEIGHT (KG)
H1	307	#13	STR	1275	389
H2	170	#13	STR	1275	215
H3	79	#13	STR	2030	159
V1	81	#13	STR	4900	395
V2	1	#13	STR	4880	5
V3	1	#13	STR	4840	5
V4	1	#13	STR	4810	5
V5	1	#13	STR	4760	5
V6	1	#13	STR	4720	5
V7	1	#13	STR	4700	5
V8	1	#13	STR	4660	5
V9	1	#13	STR	4620	5
V10	1	#13	STR	4580	5
V11	2	#13	STR	4380	8
V12	2	#13	STR	4340	8
V13	2	#13	STR	4310	8
V14	2	#13	STR	4260	8
V15	2	#13	STR	4220	8
V16	2	#13	STR	4200	8
V17	2	#13	STR	4160	8
V18	2	#13	STR	4120	8
V19	2	#13	STR	4080	8
V20	1	#13	STR	3880	4
V21	1	#13	STR	3840	4
V22	1	#13	STR	3810	4
V23	1	#13	STR	3760	4
V24	1	#13	STR	3720	4
V25	1	#13	STR	3700	4
V26	1	#13	STR	3660	4
V27	1	#13	STR	3620	4
V28	1	#13	STR	3580	4
V29	2	#13	STR	3380	6
V30	2	#13	STR	3340	6
V31	2	#13	STR	3310	6
V32	2	#13	STR	3260	6
V33	2	#13	STR	3220	6
V34	2	#13	STR	3200	6
V35	2	#13	STR	3160	6
V36	2	#13	STR	3120	6
V37	2	#13	STR	3080	6
V38	2	#13	STR	2880	6
V39	2	#13	STR	2850	6
V40	2	#13	STR	2820	6
V41	2	#13	STR	2790	6
V42	2	#13	STR	2760	6
V43	2	#13	STR	2730	6
V44	2	#13	STR	2700	6
V45	2	#13	STR	2670	6
V46	2	#13	STR	2640	6
V47	2	#13	STR	2610	6
V48	2	#13	STR	2580	6
V49	2	#13	STR	2550	6
V50	2	#13	STR	2530	6
V51	2	#13	STR	2500	4
V52	1	#13	STR	2380	2
V53	1	#13	STR	2350	2
V54	1	#13	STR	2320	2
V55	1	#13	STR	2290	2
V56	1	#13	STR	2260	2
V57	1	#13	STR	2230	2
V58	1	#13	STR	2200	2
V59	1	#13	STR	2170	2
V60	1	#13	STR	2140	2
V61	1	#13	STR	2110	2
V62	1	#13	STR	2080	2
V63	1	#13	STR	2050	2
V64	1	#13	STR	2030	2
V65	1	#13	STR	2000	2
V66	1	#13	STR	1880	2
V67	1	#13	STR	1850	2
V68	1	#13	STR	1820	2
V69	1	#13	STR	1790	2
V70	1	#13	STR	1760	2
V71	1	#13	STR	1730	2
V72	1	#13	STR	1700	2
V73	1	#13	STR	1670	2
V74	1	#13	STR	1640	2
V75	1	#13	STR	1610	2
V76	1	#13	STR	1580	2
V77	1	#13	STR	1550	2
V78	1	#13	STR	1530	2
V79	1	#13	STR	1500	1

BILL OF MATERIALS FOR RETAINING WALL

PRECAST CONCRETE PANELS

BAR	NO.	SIZE	TYPE	LENGTH	WEIGHT (KG)
V80	1	#13	STR	1380	1
V81	1	#13	STR	1350	1
V82	1	#13	STR	1320	1
V83	1	#13	STR	1290	1
V84	1	#13	STR	1260	1
V85	1	#13	STR	1230	1
V86	1	#13	STR	1200	1
V87	1	#13	STR	1170	1
V88	1	#13	STR	1140	1
V89	1	#13	STR	1110	1
V90	1	#13	STR	1080	1
V91	1	#13	STR	1050	1
V92	1	#13	STR	1030	1
V93	1	#13	STR	1000	1
L1	15	#13	STR	1300	19
L2	5	#13	STR	2060	10

REINFORCING STEEL (PANELS)	KG.	1526
CLASS "A" CONCRETE (PANELS)	CU.METERS	17.8

BILL OF MATERIALS FOR RETAINING WALL

CAST-IN-PLACE (C.I.P.) COPING

A	16	#16	STR	18000	447
B	117	#13	1	860	100
C	4	#16	1	1475	9

REINFORCING STEEL (COPING)	KGS.	556
CLASS "A" CONCRETE (COPING)	CU METERS.	6.0

ESTIMATED QUANTITIES (1)

PRECAST CONCRETE PANEL TYPE 1 -------- NO.	9
PRECAST CONCRETE PANEL TYPE 2 -------- NO.	1
PRECAST CONCRETE PANEL TYPE 3 -------- NO.	2
PRECAST CONCRETE PANEL TYPE 4 -------- NO.	1
PRECAST CONCRETE PANEL TYPE 5 -------- NO.	2
PRECAST CONCRETE PANEL TYPE 6 -------- NO.	2
PRECAST CONCRETE PANEL TYPE 7 -------- NO.	1
PRECAST CONCRETE PANEL TYPE 8 -------- NO.	1
PRECAST CONCRETE PANEL TYPE 9 -------- NO.	1

HP 360X174 STEEL PILES	NO.= 17	LF = 306.0 m
HP 360X152 STEEL PILES	NO.= 5	LF = 48.0 m
C.I.P. COPING	LIN.METER	34.9
NO.57 STONE	CU METER	15.0
SHAFT EXCAVATION	LIN.METER	255.0
SHAFT CONCRETE, CLASS 'A'	CU METER	116.0
TOTAL AREA OF PANELS	SQ.METER	118.32

NOTE : ALL HP STEEL PILES ARE ASTM GRADE 345 STEEL

PILE ELEVATIONS, STATIONS, AND PILE LENGTHS FOR RETAINING WALL

PILE NUMBER	PILE SIZE	PILE LENGTH (m) (1)	TOP OF SHAFT CONC. ELEV.	△ CUTOFF ELEV.
1	HP 360 X 174	18.0	872.188	877.488
2	HP 360 X 174	18.0	872.188	877.488
3	HP 360 X 174	18.0	872.188	877.488
4	HP 360 X 174	18.0	872.188	877.488
5	HP 360 X 174	18.0	872.163	877.488
6	HP 360 X 174	18.0	872.138	877.463
7	HP 360 X 174	18.0	872.113	877.438
8	HP 360 X 174	18.0	872.087	877.413
9	HP 360 X 174	18.0	872.062	877.387
10	HP 360 X 174	18.0	872.037	877.362
11	HP 360 X 174	18.0	871.88	877.337
12	HP 360 X 174	18.0	871.88	877.180
13	HP 360 X 174	18.0	871.731	876.856
14	HP 360 X 174	18.0	871.731	876.531
15	HP 360 X 174	18.0	871.586	876.207
16	HP 360 X 174	18.0	871.586	875.886
17	HP 360 X 174	18.0	871.759	875.559
18	HP 360 X 152	12.0	871.935	875.235
19	HP 360 X 152	10.0	871.509	874.809
20	HP 360 X 152	10.0	871.588	874.388
21	HP 360 X 152	8.0	871.667	873.546
22	HP 360 X 152	8.0	871.746	873.546

△ THE CUTOFF ELEVATION IS THE TOP OF PILE ELEVATION

COPING BAR TYPES

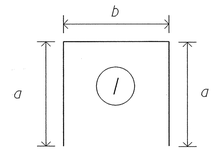

ALL DIMENSIONS OUT TO OUT

BAR	COPING TYPE	PILE SIZE	DIMENSION a	DIMENSION b
B	FULL COPING	ALL PILES	200	460
C			535	405

NOTE: ALL BAR DIMENSIONS ARE SHOWN IN MILLIMETERS.

PANEL DETAILS AND QUANTITIES (PER PANEL)

	DIMENSION "A" (m)	DIMENSION "B" (mm)	V-BAR No. AND SPA. (mm)	H-BAR No. AND SPA. (mm)
TYPE 1	-	-	9 @ 150	43 @ 115
TYPE 2	5.0	100	9 @ 150	38 @ 120
TYPE 3	4.5	75	9 @ 150	30 @ 150
TYPE 4	4.0	125	9 @ 150	26 @ 150
TYPE 5	3.5	100	9 @ 150	23 @ 150
TYPE 6	3.0	75	14 @ 150	20 @ 150
TYPE 7	2.5	125	14 @ 150	16 @ 150
TYPE 8	2.0	100	14 @ 150	13 @ 150
TYPE 9	1.5	75	14 @ 150	10 @ 150

(1) REVISED 6-4-8

GEOTECHNICAL ENGINEER

NORTH CAROLINA PROFESSIONAL SEAL 29869 ENGINEER SHANE C CLARK

SIGNATURE 6/4/18 DATE

ENGINEER

SIGNATURE DATE

PROJECT NO.: R-2518A

MADISON/YANCEY COUNTY

STATION: 112+30.00 -L- TO 112+61.25-L-

SHEET 5 OF 5

METRIC

GEOTECHNICAL ENGINEERING UNIT

☐ EASTERN REGIONAL OFFICE

☒ WESTERN REGIONAL OFFICE

STATE OF NORTH CAROLINA DEPARTMENT OF TRANSPORTATION RALEIGH

PILE PANEL RETAINING WALL

REVISIONS						SHEET NO.
NO.	BY	DATE	NO.	BY	DATE	W-10
1	SHANE CLARK	6-4-8	3			TOTAL SHEETS
2			4			10

PREPARED BY:	J. SALVO	DATE:	08/07
REVIEWED BY:	S.C. CLARK	DATE:	08/07

STANDARD NOTES

DESIGN DATA:

SPECIFICATIONS	A.A.S.H.T.O. (CURRENT)
LIVE LOAD	SEE PLANS
IMPACT ALLOWANCE	SEE A.A.S.H.T.O.
STRESS IN EXTREME FIBER OF	
STRUCTURAL STEEL - AASHTO M270 GRADE 250	140 MPa
- AASHTO M270 GRADE 345W	190 MPa
- AASHTO M270 GRADE 345	190 MPa
REINFORCING STEEL IN TENSION	
GRADE 420	165 MPa
CONCRETE IN COMPRESSION	8.3 MPa
CONCRETE IN SHEAR	SEE A.A.S.H.T.O.
STRUCTURAL TIMBER - TREATED OR	
UNTREATED - EXTREME FIBER STRESS	12 MPa
COMPRESSION PERPENDICULAR TO GRAIN OF TIMBER	2.6 MPa
EQUIVALENT FLUID PRESSURE OF EARTH	480 kg/m^3 (MINIMUM)

MATERIAL AND WORKMANSHIP:

EXCEPT AS MAY OTHERWISE BE SPECIFIED ON PLANS OR IN THE SPECIAL PROVISIONS, ALL MATERIAL AND WORKMANSHIP SHALL BE IN ACCORDANCE WITH THE 2002 STANDARD SPECIFICATIONS "FOR ROADS AND STRUCTURES" OF THE N. C. DEPARTMENT OF TRANSPORTATION.

STEEL SHEET PILING FOR PERMANENT OR TEMPORARY APPLICATIONS SHALL BE HOT ROLLED.

CONCRETE:

UNLESS OTHERWISE REQUIRED ON PLANS, CLASS A CONCRETE SHALL BE USED FOR ALL PORTIONS OF ALL STRUCTURES WITH THE EXCEPTION THAT: CLASS AA CONCRETE SHALL BE USED IN BRIDGE SUPERSTRUCTURES, ABUTMENT BACKWALLS, AND APPROACH SLABS; CLASS B CONCRETE SHALL BE USED FOR SLOPE PROTECTION AND RIP RAP; AND CLASS S SHALL BE USED FOR UNDERWATER FOOTING SEALS.

CONCRETE CHAMFERS:

UNLESS OTHERWISE NOTED ON THE PLANS, ALL EXPOSED CORNERS ON STRUCTURES SHALL BE CHAMFERED 19mm WITH THE FOLLOWING EXCEPTIONS: TOP CORNERS OF CURBS MAY BE ROUNDED TO 38mm RADIUS WHICH IS BUILT INTO CURB FORMS; CORNERS OF TRANSVERSE FLOOR EXPANSION JOINTS SHALL BE ROUNDED WITH A 6mm FINISHING TOOL UNLESS OTHERWISE REQUIRED ON PLANS; AND CORNERS OF EXPANSION JOINTS IN THE ROADWAY FACES AND TOPS OF CURBS AND SIDEWALKS SHALL BE ROUNDED TO A 6mm RADIUS WITH A FINISHING STONE OR TOOL UNLESS OTHERWISE REQUIRED ON PLANS.

DOWELS:

DOWELS WHEN INDICATED ON PLANS AS FOR CULVERT EXTENSIONS, SHALL BE EMBEDDED AT LEAST 300mm INTO THE OLD CONCRETE AND GROUTED INTO PLACE WITH 1 :2 CEMENT MORTAR.

ALLOWANCE FOR DEAD LOAD DEFLECTION, SETTLEMENT, ETC. IN CASTING SUPERSTRUCTURES:

BRIDGES SHALL BE BUILT ON THE GRADE OR VERTICAL CURVE SHOWN ON PLANS. SLABS, CURBS AND PARAPETS SHALL CONFORM TO THE GRADE OR CURVE.

ALL DIMENSIONS WHICH ARE GIVEN IN SECTION AND ARE AFFECTED BY DEAD LOAD DEFLECTIONS ARE DIMENSIONS AT CENTER LINE OF BEARING UNLESS OTHERWISE NOTED ON PLANS. IN SETTING FORMS FOR STEEL BEAM BRIDGES AND PRESTRESSED CONCRETE GIRDER BRIDGES, ADJUSTMENTS SHALL BE MADE DUE TO THE DEAD LOAD DEFLECTIONS FOR THE ELEVATIONS SHOWN. WHERE BLOCKS ARE SHOWN OVER BEAMS FOR BUILDING UP TO THE SLAB, THE VERTICAL DIMENSIONS OF THE BLOCKS SHALL BE ADJUSTED BETWEEN BEARINGS TO COMPENSATE FOR DEAD LOAD DEFLECTIONS, VERTICAL CURVE ORDINATE, AND ACTUAL BEAM CAMBER. WHERE BOTTOM OF SLAB IS IN LINE WITH BOTTOM OF TOP FLANGES, DEPTH OF SLAB BETWEEN BEARINGS SHALL BE ADJUSTED TO COMPENSATE FOR DEAD LOAD DEFLECTION, VERTICAL CURVE ORDINATE, AND ACTUAL BEAM CAMBER.

IN SETTING FALSEWORK AND FORMS FOR REINFORCED CONCRETE SPANS, AN ALLOWANCE SHALL BE MADE FOR DEAD LOAD DEFLECTIONS, SETTLEMENT OF FALSEWORK, AND PERMANENT CAMBER WHICH SHALL BE PROVIDED FOR IN ADDITION TO THE ELEVATIONS SHOWN. AFTER REMOVAL OF THE FALSEWORK, THE FINISHED STRUCTURES SHALL CONFORM TO THE PROFILE AND ELEVATIONS SHOWN ON THE PLANS AND CONSTRUCTION ELEVATIONS FURNISHED BY THE ENGINEER.

DETAILED DRAWINGS FOR FALSEWORK OR FORMS FOR BRIDGE SUPERSTRUCTURE AND ANY STRUCTURE OR PARTS OF A STRUCTURE AS NOTED ON THE PLANS SHALL BE SUBMITTED TO THE ENGINEER FOR APPROVAL BEFORE CONSTRUCTION OF THE FALSEWORK OR FORMS IS STARTED.

REINFORCING STEEL:

ALL REINFORCING STEEL SHALL BE DEFORMED. DIMENSIONS RELATIVE TO PLACEMENT OF REINFORCING ARE TO CENTERS OF BARS UNLESS OTHERWISE INDICATED IN THE PLANS. DIMENSIONS ON BAR DETAILS ARE TO CENTERS OF BARS OR ARE OUT TO OUT AS INDICATED ON PLANS.

WIRE BAR SUPPORTS SHALL BE PROVIDED FOR REINFORCING STEEL WHERE INDICATED ON THE PLANS. WHEN BAR SUPPORT PIECES ARE PLACED IN CONTINUOUS LINES, THEY SHALL BE SO PLACED THAT THE ENDS OF THE SUPPORTING WIRES SHALL BE LAPPED TO LOCK LEGS ON ADJOINING PIECES.

STRUCTURAL STEEL:

AT THE CONTRACTOR'S OPTION, HE MAY SUBSTITUTE 22.23mm Ø SHEAR STUDS FOR THE 19.05mm Ø STUDS SPECIFIED ON THE PLANS. THIS SUBSTITUTION SHALL BE MADE AT THE RATE OF 3 -22.23mm Ø STUDS FOR 4 - 19.05mm Ø STUDS, AND STUD SPACING CHANGES SHALL BE MADE AS NECESSARY TO PROVIDE THE SAME EQUIVALENT NUMBER OF 22.23mm Ø STUDS ALONG THE BEAM AS SHOWN FOR 19.05mm Ø STUDS BASED ON THE RATIO OF 3 - 22.23mm Ø STUDS FOR 4 - 19.05mm Ø STUDS. STUDS OF THE LENGTH SPECIFIED ON THE PLANS MUST BE PROVIDED. THE MAXIMUM SPACING SHALL BE 610mm.

EXCEPT AT THE INTERIOR SUPPORTS OF CONTINUOUS BEAMS WHERE THE COVER PLATE IS IN CONTACT WITH BEARING PLATE, THE CONTRACTOR MAY, AT HIS OPTION, SUBSTITUTE FOR THE COVER PLATES DESIGNATED ON THE PLANS COVER PLATES OF THE EQUIVALENT AREA PROVIDED THESE PLATES ARE AT LEAST 8mm IN THICKNESS AND DO NOT EXCEED A WIDTH EQUAL TO THE FLANGE WIDTH LESS 50mm OR A THICKNESS EQUAL TO 2 TIMES THE FLANGE THICKNESS. THE SIZE OF FILLET WELDS SHALL CONFORM TO THE REQUIREMENTS OF THE CURRENT ANSI/AASHTO/AWS "BRIDGE WELDING CODE". ELECTROSLAG WELDING WILL NOT BE PERMITTED.

PLACEMENT OF BEAM OR GIRDER MEMBERS ON TRUCKS FOR HAULING SHALL BE DONE IN COMPLIANCE WITH LIMITS SHOWN ON SKETCHES PROVIDED TO THE MATERIALS AND TEST UNIT APPROVED BY THE STRUCTURE DESIGN UNIT DATED MAY 8, 1991. THESE SKETCHES PRIMARILY LIMIT THE UNSUPPORTED CANTILEVER LENGTH OF MEMBERS. WHEN THE CONTRACTOR WISHES TO PLACE MEMBERS ON TRUCKS NOT IN ACCORDANCE WITH THESE LIMITS, TO SHIP BY RAIL, TO ATTACH SHIPPING RESTRAINTS TO THE MEMBERS OR TO INVERT MEMBERS, HE SHALL SUBMIT A SKETCH FOR APPROVAL PRIOR TO SHIPPING. SEE ALSO ARTICLE 1072-11.

WITH THE SOLE EXCEPTION OF EDGES AT SURFACES WHICH BEAR ON OTHER SURFACES, ALL SHARP EDGES AND ENDS OF SHAPES AND PLATES SHALL BE SLIGHTLY ROUNDED BY SUITABLE MEANS TO A RADIUS OF APPROXIMATELY 2mm OR EQUIVALENT FLAT SURFACE AT A SUITABLE ANGLE PRIOR TO PAINTING, GALVANIZING, OR METALLIZING.

HANDRAILS AND POSTS:

METAL STANDARDS AND FACES OF THE CONCRETE END POSTS FOR THE METAL RAIL SHALL BE SET NORMAL TO THE GRADE OF THE CURB, UNLESS OTHERWISE SHOWN ON PLANS. THE METAL RAIL AND TOPS OF CONCRETE POSTS USED WITH THE ALUMINUM RAIL SHALL BE BUILT PARALLEL TO THE GRADE OF THE CURB.

METAL HANDRAILS SHALL BE IN ACCORDANCE WITH THE PLANS. RAILS SHALL BE AS MANUFACTURED FOR BRIDGE RAILING. CASTINGS SHALL BE OF A UNIFORM APPEARANCE. FINS AND OTHER DEFORMATIONS RESULTING FROM CASTING OR OTHERWISE SHALL BE REMOVED IN A MANNER SO THAT A UNIFORM COLORING OF THE COMPLETED CASTING SHALL BE OBTAINED. CASTINGS WITH DISCOLORATIONS OR OF NON-UNIFORM COLORING WILL NOT BE ACCEPTED. CERTIFIED MILL REPORTS ARE REQUIRED FOR METAL RAILS AND POSTS.

SPECIAL NOTES:

GENERALLY, IN CASE OF DISCREPANCY, THIS STANDARD SHEET OF NOTES SHALL GOVERN OVER THE SPECIFICATIONS, BUT THE REMAINDER OF THE PLANS SHALL GOVERN OVER NOTES HEREON, AND SPECIAL PROVISIONS SHALL GOVERN OVER ALL. SEE SPECIFICATIONS ARTICLE 105-4.

METRIC

JANUARY, 1990