R-2518 A

TIP PROJECT:

STATE OF NORTH CAROLINA
DIVISION OF HIGHWAYS

METRIC

STATE PROJECT REFERENCE NO.	SHEET NO.
R-2518 A	TCP-1

PLAN FOR PROPOSED TRAFFIC CONTROL, MARKING & DELINEATION

MADISON \ YANCEY COUNTY

ROADWAY STANDARD DRAWINGS

THE FOLLOWING ROADWAY STANDARDS AS APPEAR IN "ROADWAY STANDARD DRAWINGS"-ROADWAY DESIGN UNIT-N.C. DEPARTMENT OF TRANSPORTATION-RALEIGH, N.C., DATED JULY 2006, EFFECTIVE JANUARY 2008 ARE APPLICABLE TO THIS PROJECT AND BY REFERENCE HEREBY ARE CONSIDERED A PART OF THESE PLANS:

STD. NO.	TITLE
1101.02	TEMPORARY LANE CLOSURES
1101.03	TEMPORARY ROAD CLOSURES
1101.05	WORK ZONE VEHICLE ACCESSES
1101.06	WARNING SIGNS FOR BLASTING ZONES
1101.11	TRAFFIC CONTROL DESIGN TABLES
1110.01	STATIONARY WORK ZONE SIGNS
1110.02	PORTABLE WORK ZONE SIGNS
1115.01	FLASHING ARROW PANELS
1130.01	DRUM
1135.01	CONES
1145.01	BARRICADES
1150.01	FLAGGING DEVICES
1160.01	TEMPORARY CRASH CUSHION
1165.01	TRUCK MOUNTED IMPACT ATTENUATOR
1170.01	PORTABLE CONCRETE BARRIER
1205.01	PAVEMENT MARKINGS - LINE TYPES & OFFSETS
1205.02	PAVEMENT MARKINGS - 2 LANE & MULTILANE ROADWAYS
1205.04	PAVEMENT MARKINGS - INTERSECTIONS
1205.05	PAVEMENT MARKINGS - TURN LANES
1205.06	PAVEMENT MARKINGS - THRU LANE DROPS
1205.08	PAVEMENT MARKINGS - SYMBOLS & WORD MESSAGES
1205.09	PAVEMENT MARKINGS - PAINTED ISLANDS
1250.01	PAVEMENT MARKER SPACING
1251.01	RAISED PAVEMENT MARKERS (TEMPORARY & PERMANENT)
1253.01	SNOWPLOWABLE RAISED PAVEMENT MARKERS
1261.01	GUARDRAIL & BARRIER DELINEATOR SPACING
1261.02	GUARDRAIL & BARRIER DELINEATOR TYPES
1262.01	GUARDRAIL END DELINEATION
1264.01	OBJECT MARKERS
1264.02	PLACEMENT OF OBJECT MARKERS

INDEX OF SHEETS

SHEET NO.	TITLE
TCP-1	LIST OF APPLICABLE ROADWAY STANDARD DRAWINGS, LEGEND AND INDEX OF SHEETS
TCP-2 & TCP-2A	PROJECT NOTES
TCP-2B	TEMPORARY PAVEMENT MARKING / MARKER SCHEDULE
TCP-2C - TRCP-2G	TEMPORARY SHORING DATA
TCP-3,TCP-3A, TCP-3B,TCP-3C & 3D	PHASING
TCP-4- TCP-9	PHASE I OVERVIEWS
TCP-10 - TCP-21	PHASE I DETAILS
TCP-22 - TCP-25	PHASE I SECTIONS
TCP-26 - TCP-28	TEMPORARY CROSSOVERS FOR PHASE II CONSTRUCTION
TCP-29 - TCP-34	PHASE II OVERVIEWS
TCP-35 - TCP-45	PHASE II DETAILS
TCP-46 - TCP-49	PHASE II SECTIONS
TCP-50 - TCP-53	PHASE III OVERVIEWS
TCP-54 - TCP-56	PHASE III DETAILS
TCP-57	PHASE III SECTIONS
TCP-58	ADVANCE WORK ZONE WARNING SIGNS
TCP-59	CMS MESSAGES / LOCATIONS DURING BLASTING OPERATIONS
TCP-60 - TCP-61	TYP. SIGNS / TRAFFIC CONTROL @ D/W'S AND -Y- LINES
TCP-62	PCB @ TEMPORARY SHORING LOCATIONS
PMP-1	FINAL PAVEMENT MARKING / MARKER SCHEDULE
PMP-2 - PMP-18	FINAL PAVEMENT MARKING AND MARKER PLANS

LEGEND

GENERAL

- DIRECTION OF TRAFFIC FLOW
- NORTH ARROW
- PROPOSED PVMT. --------- EXIST. PVMT.
- WORK AREA
- REMOVAL OF EXISTING PAVEMENT

TRAFFIC CONTROL DEVICES

- TYPE I BARRICADE
- TYPE II BARRICADE
- TYPE III BARRICADE
- CONE
- DRUM
- SKINNY DRUM
- FLASHING ARROW PANEL (TYPE C)
- STATIONARY SIGN
- PORTABLE SIGN
- STATIONARY OR PORTABLE SIGN
- CRASH CUSHION
- CHANGEABLE MESSAGE SIGN
- TRUCK MOUNTED IMPACT ATTENUATOR (TMIA)
- POLICE
- FLAGGER

PAVEMENT MARKINGS

- CRYSTAL/CRYSTAL PAVEMENT MARKER
- YELLOW/YELLOW PAVEMENT MARKER
- CRYSTAL/RED PAVEMENT MARKER
- PAVEMENT MARKING SYMBOLS

APPROVED: Jessica Kuse
DATE: 8/9/07

SEAL

NORTH CAROLINA PROFESSIONAL SEAL 027811 ENGINEER JESSICA D. KUSE

PLAN PREPARED BY: N.C.D.O.T. WORK ZONE TRAFFIC CONTROL UNIT

J. S. BOURNE, P.E. — TRAFFIC CONTROL ENGINEER
J. S. KITE, P.E. — TRAFFIC CONTROL PROJECT ENGINEER
J. D. KUSE, P.E. — TRAFFIC CONTROL PROJECT DESIGN ENGINEER
R. M. GARRETT — TRAFFIC CONTROL DESIGN ENGINEER

09-AUG-2007 13:41
\\dot\dfsroot0\proj\tipprojects-r\r2518a\traffic\trafficcontrol\tcpr-2518a_tc_tcp_title1.dgn
rmgarrett AT WZTC22291

PROJ. REFERENCE NO.	SHEET NO.
R-2518A	TCP-2

PROJECT NOTES

GENERAL NOTES

CHANGES MAY BE REQUIRED WHEN PHYSICAL DIMENSIONS IN THE DETAIL DRAWINGS, STANDARD DETAILS AND ROADWAY DETAILS ARE NOT ATTAINABLE TO MEET FIELD CONDITIONS, OR RESULT IN DUPLICATE, OR UNDESIRED OVERLAPPING OF DEVICES. MODIFICATION MAY INCLUDE: MOVING, SUPPLEMENTING, COVERING OR REMOVAL OF DEVICES, AS DIRECTED BY THE ENGINEER.

THE FOLLOWING GENERAL NOTES APPLY AT ALL TIMES FOR THE DURATION OF THE CONSTRUCTION PROJECT, EXCEPT WHEN OTHERWISE NOTED IN THE PLAN,OR DIRECTED BY THE ENGINEER.

TIME RESTRICTIONS

A) DO NOT CLOSE OR NARROW TRAVEL LANES OR STOP TRAFFIC AS FOLLOWS:

ROAD NAME	DAY AND TIME RESTRICTIONS
US 19	MONDAY THRU FRIDAY 6:00 AM TO 9:00 AM MONDAY THRU FRIDAY 4:00 PM TO 7:00 PM

B) DO NOT CLOSE OR NARROW TRAVEL LANES OR STOP TRAFFIC DURING HOLIDAYS AND SPECIAL EVENTS AS FOLLOWS:

ROAD NAME

US 19

HOLIDAY

1. FOR ANY UNEXPECTED OCCURRENCE THAT CREATES UNUSUALLY HIGH TRAFFIC VOLUMES, AS DIRECTED BY THE ENGINEER.

2. FOR NEW YEAR'S, BETWEEN THE HOURS OF 7:00 P.M. DECEMBER 31st TO 6:00 A.M. JANUARY 2ND. IF NEW YEAR'S DAY IS ON A FRIDAY, SATURDAY, SUNDAY, OR MONDAY THEN UNTIL 6:00 A.M. THE FOLLOWING TUESDAY.

3. FOR EASTER, BETWEEN THE HOURS OF 7:00 P.M. THURSDAY AND 6:00 A.M. MONDAY.

4. FOR MEMORIAL DAY, BETWEEN THE HOURS OF 7:00 P.M. FRIDAY TO 6:00 A.M. TUESDAY.

5. FOR INDEPENDENCE DAY, BETWEEN THE HOURS OF 7:00 P.M. THE DAY BEFORE INDEPENDENCE DAY AND 6:00 A.M. THE DAY AFTER INDEPENDENCE DAY.

   IF INDEPENDENCE DAY IS ON A FRIDAY, SATURDAY, SUNDAY OR MONDAY THEN BETWEEN THE HOURS OF 7:00 P.M. THE THURSDAY BEFORE INDEPENDENCE DAY AND 6:00 A.M. THE TUESDAY AFTER INDEPENDENCE DAY.

6. FOR LABOR DAY, BETWEEN THE HOURS OF 7:00 P.M. FRIDAY AND 6:00 A.M. TUESDAY.

7. FOR THANKSGIVING DAY, BETWEEN THE HOURS OF 7:00 P.M. TUESDAY TO 6:00 A.M. MONDAY.

8. FOR CHRISTMAS, BETWEEN THE HOURS OF 7:00 P.M. THE FRIDAY BEFORE THE WEEK OF CHRISTMAS DAY AND 6:00 A.M. THE FOLLOWING TUESDAY AFTER THE WEEK OF CHRISTMAS.

C) DO NOT STOP TRAFFIC ON US 19 FOR MORE THAN 20 MINUTE INTERVALS FOR ANY OPERATION INCLUDING BUT, NOT LIMITED TO BLASTING AND TRAFFIC SHIFTS.

   DEPLETE ALL QUEUES BEFORE STOPPING TRAFFIC AGAIN.

D) DO NOT CONDUCT ANY HAULING OPERATIONS AGAINST THE FLOW OF TRAFFIC OF AN OPEN TRAVELWAY UNLESS THE HAULING OPERATION IS PROTECTED BY BARRIER OR GUARDRAIL OR AS DIRECTED BY THE ENGINEER.

LANE AND SHOULDER CLOSURE REQUIREMENTS

E) REMOVE LANE CLOSURE DEVICES FROM THE LANE WHEN WORK IS NOT BEING PERFORMED BEHIND THE LANE CLOSURE OR WHEN A LANE CLOSURE IS NO LONGER NEEDED, OR AS DIRECTED BY THE ENGINEER.

F) WHEN PERSONNEL AND/OR EQUIPMENT ARE WORKING ON THE SHOULDER ADJACENT TO AN UNDIVIDED FACILITY AND WITHIN 1.5m OF AN OPEN TRAVEL LANE, CLOSE THE NEAREST OPEN TRAVEL LANE USING ROADWAY STANDARD DRAWING NO. 1101.02 UNLESS THE WORK AREA IS PROTECTED BY BARRIER OR GUARDRAIL.

G) WHEN PERSONNEL AND/OR EQUIPMENT ARE WORKING WITHIN A LANE OF TRAVEL OF AN UNDIVIDED OR DIVIDED FACILITY, CLOSE THE LANE ACCORDING TO THE TRAFFIC CONTROL PLANS, ROADWAY STANDARD DRAWINGS OR AS DIRECTED BY THE ENGINEER. CONDUCT THE WORK SO THAT ALL PERSONNEL AND/OR EQUIPMENT REMAIN WITHIN THE CLOSED TRAVEL LANE.

H) DO NOT WORK SIMULTANEOUSLY WITHIN 5 M ON BOTH SIDES OF AN OPEN TRAVELWAY, RAMP OR LOOP WITHIN THE SAME LOCATION UNLESS PROTECTED WITH GUARDRAIL OR BARRIER.

I) PROVIDE A MINIMUM OF 2 KM BETWEEN LANE CLOSURES, MEASURED FROM THE END OF ONE CLOSURE TO THE FIRST SIGN OF THE NEXT LANE CLOSURE.

PAVEMENT EDGE DROP OFF REQUIREMENTS

J) BACKFILL AT A 6:1 SLOPE UP TO THE EDGE AND ELEVATION OF EXISTING PAVEMENT IN AREAS ADJACENT TO AN OPENED TRAVEL LANE THAT HAS AN EDGE OF PAVEMENT DROP-OFF AS FOLLOWS:

   BACKFILL DROP-OFFS THAT EXCEED 50mm ON ROADWAYS WITH POSTED SPEED LIMITS OF 45 MPH OR GREATER.

   BACKFILL DROP-OFFS THAT EXCEED 75mm ON ROADWAYS WITH POSTED SPEED LIMITS LESS THAN 45 MPH.

   BACKFILL WITH SUITABLE COMPACTED MATERIAL, AS APPROVED BY THE ENGINEER, AT NO EXPENSE TO THE DEPARTMENT.

K) DO NOT EXCEED A DIFFERENCE OF 50mm IN ELEVATION BETWEEN OPEN LANES OF TRAFFIC FOR NOMINAL LIFTS OF 40mm. INSTALL ADVANCE WARNING "UNEVEN LANES" SIGNS (W8-11) 30 M IN ADVANCE AND A MINIMUM OF EVERY HALF MILE THROUGHOUT THE UNEVEN AREA.

TRAFFIC PATTERN ALTERATIONS

L) NOTIFY THE ENGINEER TWENTY ONE (21) CALENDAR DAYS PRIOR TO ANY TRAFFIC PATTERN ALTERATION.

SIGNING

M) PROVIDE PERMANENT SIGNING.

N) PROVIDE DETOUR SIGNING WITHIN AND OFF THE PROJECT LIMITS.

O) COVER OR REMOVE ALL DETOUR SIGNS WITHIN AND OFF THE PROJECT LIMITS WHEN A DETOUR IS NOT IN OPERATION.

P) ENSURE ALL NECESSARY SIGNING IS IN PLACE PRIOR TO ALTERING ANY TRAFFIC PATTERN.

Q) INSTALL BLACK ON ORANGE "DIP" SIGNS (W8-2) AND/OR "BUMP" SIGNS (W8-1) 30 M IN ADVANCE OF THE UNEVEN AREA, OR AS DIRECTED BY THE ENGINEER.

TRAFFIC BARRIER

R) INSTALL TEMPORARY BARRIER ACCORDING TO THE TRAFFIC CONTROL PLANS A MAXIMUM OF TWO (2) WEEKS PRIOR TO BEGINNING WORK IN ANY LOCATION. ONCE TEMPORARY BARRIER IS INSTALLED AT ANY LOCATION, PROCEED IN A CONTINUOUS MANNER TO COMPLETE THE PROPOSED WORK IN THAT LOCATION UNLESS OTHERWISE STATED IN THE TRAFFIC CONTROL PLANS OR AS DIRECTED BY THE ENGINEER.

   DO NOT PLACE BARRIER DIRECTLY ON ANY SURFACE OTHER THAN ASPHALT OR CONCRETE.

   ONCE TEMPORARY BARRIER IS INSTALLED AT ANY LOCATION AND NO WORK IS PERFORMED BEHIND THE TEMPORARY BARRIER FOR A PERIOD LONGER THAN TWO (2) MONTHS, REMOVE/RESET TEMPORARY BARRIER AT NO COST TO THE DEPARTMENT UNLESS OTHERWISE STATED IN THE TRAFFIC CONTROL PLANS, TEMPORARY BARRIER IS PROTECTING A HAZARD, OR AS DIRECTED BY THE ENGINEER.

   INSTALL TEMPORARY BARRIER WITH THE TRAFFIC FLOW, BEGINNING WITH THE UPSTREAM SIDE OF TRAFFIC. REMOVE TEMPORARY BARRIER AGAINST THE TRAFFIC FLOW, BEGINNING WITH THE DOWNSTREAM SIDE OF TRAFFIC.

   INSTALL AND SPACE DRUMS NO GREATER THAN TWICE THE POSTED SPEED LIMIT (MPH) TO CLOSE OR KEEP THE SECTION OF THE ROADWAY CLOSED UNTIL THE TEMPORARY BARRIER CAN BE PLACED OR AFTER THE TEMPORARY BARRIER IS REMOVED.

S) PROTECT THE APPROACH END OF PORTABLE CONCRETE BARRIER AT ALL TIMES DURING THE INSTALLATION AND REMOVAL OF THE BARRIER BY EITHER A TRUCK MOUNTED IMPACT ATTENUATOR (MAXIMUM 72 HOURS)OR A TEMPORARY CRASH CUSHION.

   PROTECT THE APPROACH END OF PORTABLE CONCRETE BARRIER FROM ONCOMING TRAFFIC AT ALL TIMES BY A TEMPORARY CRASH CUSHION UNLESS THE APPROACH END OF PORTABLE CONCRETE BARRIER IS OFFSET FROM ONCOMING TRAFFIC AS SHOWN IN THE PLANS.

APPROVED: Jessica Kuse DATE: 8/16/07

SEAL

NORTH CAROLINA PROFESSIONAL SEAL 027811 ENGINEER JESSICA D. KUSE

PROJECT NOTES

SCALE:	NONE
DATE:	04/07
DWG. BY:	RMG
DESIGN BY:	RMG
REVIEWED BY:	JDK

DIVISION OF HIGHWAYS STATE OF NORTH CAROLINA DEPARTMENT OF TRANSPORTATION TRAFFIC CONTROL

REVISIONS

CADD FILE

15-AUG-2007 15:43
\\dot\dfsroot\Uproj\Uprojects-r\r-2518a\traffic\trafficcontrol\TapYr-2518a_to_Tap_gennotes.dgn
rmgarrett AT WZTC22291

PROJECT NOTES

PROJ. REFERENCE NO.	SHEET NO.
R-2518A	TCP-2A

GENERAL NOTES

TRAFFIC CONTROL DEVICES

T) SPACE CHANNELIZING DEVICES IN WORK AREAS EQUAL IN METERS TO 2/3rds THE POSTED SPEED LIMIT (MPH), EXCEPT 3m ON-CENTER IN RADII, AND 1m OFF THE EDGE OF AN OPEN TRAVELWAY, WHEN LANE CLOSURES ARE NOT IN EFFECT. WHEN SKINNY DRUMS ARE ALLOWED, REFER TO SECTION 1180 OF STANDARD SPECIFICATIONS FOR ROADS AND STRUCTURES OR AS SHOWN IN THE PLANS.

U) PLACE TYPE III BARRICADES, WITH "ROAD CLOSED" SIGN R11-2 ATTACHED, OF SUFFICIENT LENGTH TO CLOSE ENTIRE ROADWAY.

V) PLACE ADDITIONAL SETS OF THREE CHANNELIZING DEVICES DRUMS PERPENDICULAR TO THE EDGE OF TRAVELWAY ON 150m CENTERS WHEN UNOPENED LANES ARE CLOSED TO TRAFFIC.

PAVEMENT MARKINGS AND MARKERS

W) INSTALL PAVEMENT MARKINGS AND PAVEMENT MARKERS ON THE FINAL SURFACE AS FOLLOWS:

ROAD NAME	MARKING	MARKER
US 19	THERMOPLASTIC	SNOWPLOWABLE
ALL -Y- LINES	THERMOPLASTIC	SNOWPLOWABLE

X) INSTALL TEMPORARY PAVEMENT MARKINGS AND TEMPORARY PAVEMENT MARKERS ON INTERIM LAYERS OF PAVEMENT AS FOLLOWS:

ROAD NAME	MARKING	MARKER
US 19	PAINT	TEMPORARY RAISED
ALL -Y- LINES	PAINT	TEMPORARY RAISED

Y) PLACE ONE APPLICATION OF PAINT FOR TEMPORARY TRAFFIC PATTERNS. PLACE A SECOND APPLICATION OF PAINT SIX (6) MONTHS AFTER THE INITIAL APPLICATION AND EVERY SIX MONTHS AS DIRECTED BY THE ENGINEER.

Z) TIE PROPOSED PAVEMENT MARKING LINES TO EXISTING PAVEMENT MARKING LINES.

AA) REMOVE/REPLACE ANY CONFLICTING/DAMAGED PAVEMENT MARKINGS AND MARKERS BY THE END OF EACH DAY'S OPERATION.

BB) TRACE THE PROPOSED MONOLITHIC ISLAND LOCATIONS WITH PROPER COLOR PAVEMENT MARKINGS PRIOR TO INSTALLATION. PLACE DRUMS TO DELINEATE ANY PROPOSED MONOLITHIC ISLANDS BEFORE INSTALLATION.

MISCELLANEOUS

CC) POLICE MAY BE USED TO MAINTAIN TRAFFIC THROUGH THE WORK AREA AND/OR INTERSECTIONS, AS DIRECTED BY THE ENGINEER.

DD) IN THE EVENT A TIE-IN CANNOT BE MADE IN ONE DAYS TIME, BRING THE TIE-IN AREA TO AN APPROPRIATE ROADWAY ELEVATION, AS DETERMINED BY THE ENGINEER. PLACE BLACK ON ORANGE "LOOSE GRAVEL" SIGNS (W8-7)152 M RESPECTIVELY IN ADVANCE OF THE UNEVEN AREAS. USE DRUMS TO DELINEATE THE EDGE OF ROADWAY ALONG UNPAVED AREAS.

LOCAL NOTES

A) CLOSE US 19 (-L-) TO BOTH NORTHBOUND AND SOUTHBOUND TRAFFIC AND ANY INTERSECTING -Y- LINES DURING ALL BLASTING OPERATIONS AND THE REMOVAL OF DEBRIS FROM THE ROADWAY CREATED BY THE BLASTING. THE DAYS AND TIMES THAT US 19 MAY NOT BE CLOSED FOR BLASTING OPERATIONS ARE LISTED IN NOTES A), B) & C) OF THE GENERAL NOTES. (SEE INTERMEDIATE CONTRACT TIME AND LIQUIDATED DAMAGES).

BLASTING OPERATIONS MAY BE CONDUCTED WITHIN THE RESTRICTED TIME FRAMES LISTED IN NOTES A), B) & C) OF THE GENERAL NOTES ONLY IF THE SPECIFIC BLASTING OPERATION WILL IN NO WAY IMPACT TRAFFIC ON US 19 (-L-) OR ANY INTERSECTING -Y- LINE AS DIRECTED BY THE ENGINEER.

PERFORM BLASTING OPERATIONS IN THE FOLLOWING SEQUENCE:

1. NOTIFY THE ENGINEER 10 BUSINESS DAYS PRIOR TO THE FIRST BLASTING OPERATION ON THE PROJECT. NOTIFY THE ENGINEER 2 BUSINESS DAYS PRIOR TO SUBSEQUENT BLASTING OPERATIONS.
2. ACTIVATE CHANGEABLE MESSAGES SIGNS ALONG US 19 AND ANY OTHER ROADWAYS IN ACCORDANCE WITH SHEET TCP-59 AND/OR AS DIRECTED BY THE ENGINEER.
3. CLOSE US 19 AND INTERSECTING -Y- LINES WITHIN THE BLASTING ZONE TO TRAFFIC IN ACCORDANCE WITH RSD 1101.06.
4. PERFORM BLASTING OPERATION AND DEBRIS REMOVAL. MULTIPLE BLASTING OPERATIONS AT MULTIPLE LOCATIONS ARE PERMITTED PROVIDED US 19 (-L-) AND ANY INTERSECTING -Y- LINES ARE REOPENED TO TRAFFIC WITHIN THE SAME TIME FRAMES LISTED IN NOTES A), B) & C)OF THE GENERAL NOTES.
5. OPEN US 19 (-L-) AND ANY INTERSECTING -Y- LINES WITHIN THE BLASTING ZONE TO TRAFFIC.
6. IMMEDIATELY DEACTIVATE THE CHANGABLE MESSAGE SIGNS OR CHANGE MESSAGES AS INDICATED ON SHEET TCP-59 OR AS DIRECTED BY THE ENGINEER.

B) ENSURE THE OVERSIZE/OVERWEIGHT PERMIT UNIT (919)733-4740 HAS BEEN ADVISED OF THE ONGOING TRAFFIC OPERATIONS THROUGH THE DIVISION OFFICE.

AREAS OF CONCERN:

1. ONGOING CLOSURES / DELAYS DUE TO BLASTING OPERATIONS
2. AREAS OF CONSTRICTED HORIZONTAL CLEARANCES (NARROW LANES) OR (LANES BORDERED ALONG THE OUTSIDE IN BOTH DIRECTIONS WITH EITHER PCB OR GUARDRAIL)

C) FIELD ADJUST PLACEMENT OF STATIONARY AND PORTABLE SIGNS AS NEEDED TO MAXIMIZE SITE DISTANCE AS DIRECTED BY THE ENGINEER.

APPROVED: DDZ DATE: 8/9/07

SEAL

NORTH CAROLINA PROFESSIONAL SEAL 027811 ENGINEER JESSICA D. KUSE

PROJECT NOTES

SCALE:	NONE
DATE:	04/07
DWG. BY:	RMG
DESIGN BY:	RMG
REVIEWED BY:	JDK

REVISIONS

CADD FILE

07-AUG-2007 17:34
\\dot\fsroot01\proj\tipprojects-r\r2518a\traffic\trafficcontrol\tcp\r-2518a_tc_tcp_gennotes.dgn
rngarrett AT WZ7022229

PROJ. REFERENCE NO.	SHEET NO.
R-2518A	TCP-2B

TEMPORARY PAVEMENT MARKING / MARKERS SCHEDULE

SYMBOL	DESCRIPTION	PAY ITEM QUANTITY BREAKDOWN		TOTAL QUANTITY	
	PAINT(100MM)				
PA	WHITE EDGELINE(2X)	85030	M		
PD	0.5 M. WHITE MINISKIP(2X)	100	M		
PE	WHITE SOLID LANE LINE(2X)	544	M		
PI	YELLOW DOUBLE CENTER(2X)	78876	M		
			TOTAL	164550	M
	PAINT(200MM)				
PV	YELLOW DIAGONAL(2X)	1126	M		
			TOTAL	1126	M
	PAINT(300MM)				
P1	WHITE GORELINE(2X)	54	M		
			TOTAL	54	M
	PAINT(600MM)				
P4	WHITE STOPBAR(2X)	147	M		
			TOTAL	147	M
	PAINT MARKING SYMBOLS				
QA	LEFT TURN ARROW(2X)	10	EA		
QC	STRAIGHT ARROW(2X)	10	EA		
			TOTAL	20	EA
	MARKERS				
	TEMPORARY RAISED PAVEMENT MARKERS				
MH	YELLOW & YELLOW	971	EA		
MI	CRYSTAL & RED	45	EA		
			TOTAL	1016	EA

NOTE: FOR EACH PAINT PAVEMENT MARKING ITEM, 2X IMPLIES TWO APPLICATIONS.

APPROVED: Jessica Kuse DATE: 8/7/07

SEAL

NORTH CAROLINA PROFESSIONAL SEAL 027811 ENGINEER JESSICA D. KUSE

TEMPORARY PAVEMENT MARKING / MARKERS SCHEDULE

SCALE:	NONE
DATE:	07/07
DWG. BY:	RMG
DESIGN BY:	RMG
REVIEWED BY:	JDK

REVISIONS

CADD FILE

06-AUG-2007 15:46
\\dot\dfsroot01\proj\tipprojects-r\r2518a\traffic\trafficcontrol\tcp\R-2518A_TC_TCP_TEMP_MARK_SCHED.dgn
rmgarrett AT WZTC222291

PROJ. REFERENCE NO.	SHEET NO.
R-2518A	TCP-2C

TEMPORARY SHORING DATA

TEMPORARY SHORING NO. 1 (SEE SHEET TCP-12)

FOR TEMPORARY SHORING, SEE TEMPORARY SHORING SPECIAL PROVISION.

USE A TEMPORARY MSE WALL FROM STATION 19+58+/- -L-, 0.54 m LEFT, TO STATION 19+88+/- -L-, 0.83 m LEFT. SEE TEMPORARY SHORING SPECIAL PROVISION AND STANDARD TEMPORARY MSE WALL DETAILS.

NO SUBSURFACE INFORMATION IS AVAILABLE IN THE VICINITY OF THE TEMPORARY SHORING. THE INFORMATION PROVIDED FOR DESIGN WAS ASSUMED AND MAY NOT BE APPLICABLE TO THE ACTUAL SITE CONDITIONS ENCOUNTERED DURING CONSTRUCTION. SEE SUBSURFACE INVENTORY REPORTS FOR ANY ADDITIONAL INFORMATION.

DRIVEN PILING FOR TEMPORARY SHORING FROM STATION 19+58+/- -L-, 0.54 m LEFT, TO STATION 19+88+/- -L-, 0.83 m LEFT MAY NOT PENETRATE BELOW ELEVATION 650 m DUE TO THE PRESENCE OF AN OBSTRUCTION. VERY DENSE OR HARD SOIL, WEATHERED OR HARD ROCK. SEE SUBSURFACE INFORMATION FOR ADDITIONAL DETAILS.

FOR CONTRACTOR DESIGNED SHORING, SURVEY THE SHORING LOCATION TO DETERMINE EXISTING ELEVATIONS AND ACTUAL DESIGN HEIGHTS BEFORE BEGINNING DESIGN.

WHEN USING CONTRACTOR DESIGNED SHORING, USE THE FOLLOWING SOIL PARAMETERS:

UNIT WEIGHT OF SOIL ABOVE WATER TABLE, γ = 120 PCF
UNIT WEIGHT OF SOIL BELOW WATER TABLE, γ = 60 PCF
FRICTION ANGLE, ϕ = 30 DEGREES
COHESION, c = 0 PSF

FOR PORTABLE CONCRETE BARRIERS ABOVE AND BEHIND TEMPORARY SHORING, USE AN NCDOT PORTABLE CONCRETE BARRIER (UNANCHORED OR ANCHORED) OR AN OREGON TALL F-SHAPE CONCRETE BARRIER IN ACCORDANCE WITH THE TRAFFIC CONTROL PLANS.

TEMPORARY SHORING NO. 2 (SEE SHEET TCP-12)

FOR TEMPORARY SHORING, SEE TEMPORARY SHORING SPECIAL PROVISION.

DO NOT USE STANDARD SHORING FROM STATION 19+53+/- -L-, 5.6 m RIGHT, TO STATION 19+85+/- -L-, 1.8 m RIGHT. CONTRACTOR DESIGNED SHORING IS REQUIRED. SEE TEMPORARY SHORING SPECIAL PROVISION.

IT MAY BE PREFERRED OR NECESSARY TO ANCHOR THE TEMPORARY SHORING FROM 19+53+/- -L-, 5.6 m RIGHT, TO STATION 19+85+/- -L-, 1.8 m RIGHT. THE TEMPORARY SHORING SPECIAL PROVISION DOES NOT APPLY TO ANCHORED TEMPORARY SHORING. IF ANCHORED TEMPORARY SHORING IS PROPOSED, THE ENGINEER WILL PROVIDE AN APPLICABLE SPECIAL PROVISION.

NO SUBSURFACE INFORMATION IS AVAILABLE IN THE VICINITY OF THE TEMPORARY SHORING. THE INFORMATION PROVIDED FOR DESIGN WAS ASSUMED AND MAY NOT BE APPLICABLE TO THE ACTUAL SITE CONDITIONS ENCOUNTERED DURING CONSTRUCTION. SEE SUBSURFACE INVENTORY REPORTS FOR ANY ADDITIONAL INFORMATION.

DRIVEN PILING FOR TEMPORARY SHORING FROM STATION 19+53+/- -L-, 5.6 m RIGHT, TO STATION 19+85+/- -L-, 1.8 m RIGHT MAY NOT PENETRATE BELOW ELEVATION 650 m DUE TO THE PRESENCE OF AN OBSTRUCTION. VERY DENSE OR HARD SOIL, WEATHERED OR HARD ROCK. SEE SUBSURFACE INFORMATION FOR ADDITIONAL DETAILS.

FOR CONTRACTOR DESIGNED SHORING, SURVEY THE SHORING LOCATION TO DETERMINE EXISTING ELEVATIONS AND ACTUAL DESIGN HEIGHTS BEFORE BEGINNING DESIGN.

WHEN USING CONTRACTOR DESIGNED SHORING, USE THE FOLLOWING SOIL PARAMETERS:

UNIT WEIGHT OF SOIL ABOVE WATER TABLE, γ = 120 PCF
UNIT WEIGHT OF SOIL BELOW WATER TABLE, γ = 60 PCF
FRICTION ANGLE, ϕ = 30 DEGREES
COHESION, c = 0 PSF

FOR PORTABLE CONCRETE BARRIERS ABOVE AND BEHIND TEMPORARY SHORING, USE AN NCDOT PORTABLE CONCRETE BARRIER (UNANCHORED OR ANCHORED) OR AN OREGON TALL F-SHAPE CONCRETE BARRIER IN ACCORDANCE WITH THE TRAFFIC CONTROL PLANS.

TEMPORARY SHORING NO. 3 (SEE SHEET TCP-13)

FOR TEMPORARY SHORING, SEE TEMPORARY SHORING SPECIAL PROVISION.

USE A TEMPORARY MSE WALL FROM 21+24+/- -L-, 0.54 m LEFT, TO STATION 21+51+/- -L-, 0.86 m LEFT. SEE TEMPORARY SHORING SPECIAL PROVISION AND STANDARD TEMPORARY MSE WALL DETAILS.

NO SUBSURFACE INFORMATION IS AVAILABLE IN THE VICINITY OF THE TEMPORARY SHORING. THE INFORMATION PROVIDED FOR DESIGN WAS ASSUMED AND MAY NOT BE APPLICABLE TO THE ACTUAL SITE CONDITIONS ENCOUNTERED DURING CONSTRUCTION. SEE SUBSURFACE INVENTORY REPORTS FOR ANY ADDITIONAL INFORMATION.

DRIVEN PILING FOR TEMPORARY SHORING FROM STATION 21+24+/- -L-, 0.54 m LEFT, TO STATION 21+51+/- -L-, 0.86 m LEFT MAY NOT PENETRATE BELOW ELEVATION 655 m DUE TO THE PRESENCE OF AN OBSTRUCTION. VERY DENSE OR HARD SOIL, WEATHERED OR HARD ROCK. SEE SUBSURFACE INFORMATION FOR ADDITIONAL DETAILS.

FOR CONTRACTOR DESIGNED SHORING, SURVEY THE SHORING LOCATION TO DETERMINE EXISTING ELEVATIONS AND ACTUAL DESIGN HEIGHTS BEFORE BEGINNING DESIGN.

WHEN USING CONTRACTOR DESIGNED SHORING, USE THE FOLLOWING SOIL PARAMETERS:

UNIT WEIGHT OF SOIL ABOVE WATER TABLE, γ = 120 PCF
UNIT WEIGHT OF SOIL BELOW WATER TABLE, γ = 60 PCF
FRICTION ANGLE, ϕ = 30 DEGREES
COHESION, c = 0 PSF

FOR PORTABLE CONCRETE BARRIERS ABOVE AND BEHIND TEMPORARY SHORING, USE AN NCDOT PORTABLE CONCRETE BARRIER (UNANCHORED OR ANCHORED) OR AN OREGON TALL F-SHAPE CONCRETE BARRIER IN ACCORDANCE WITH THE TRAFFIC CONTROL PLANS.

APPROVED: S. C. Clark DATE: 10/12/07

SEAL

NORTH CAROLINA PROFESSIONAL SEAL 029869 ENGINEER SHANE C. CLARK

TEMPORARY SHORING DATA

SCALE:	NONE
DATE:	07/07
DWG. BY:	RMG
DESIGN BY:	RMG
REVIEWED BY:	JDK

REVISIONS

CADD FILE

10-OCT-2007 08:37
\\dot\ofs\octo\proj\tipprojects-r\r2518a\traffic\trafficcontrol\tcp\r-2518a_tc_tcp_2c.dgn
rmgarrett AT WZT022291

PROJ. REFERENCE NO.	SHEET NO.
R-2518A	TCP-2D

TEMPORARY SHORING DATA

TEMPORARY SHORING NO. 4 (SEE SHEET TCP-13)

FOR TEMPORARY SHORING, SEE TEMPORARY SHORING SPECIAL PROVISION.

DO NOT USE A TEMPORARY MSE WALL FROM STATION 21+24+/- -L-, 1.5 m RIGHT, TO STATION 21+51+/- -L-, 1.4 m RIGHT.

IT MAY BE PREFERRED OR NECESSARY TO ANCHOR THE TEMPORARY SHORING FROM 21+24+/- -L-, 1.5 m RIGHT, TO STATION 21+51+/- -L-, 1.4 m RIGHT. THE TEMPORARY SHORING SPECIAL PROVISION DOES NOT APPLY TO ANCHORED TEMPORARY SHORING. IF ANCHORED TEMPORARY SHORING IS PROPOSED, THE ENGINEER WILL PROVIDE AN APPLICABLE SPECIAL PROVISION.

NO SUBSURFACE INFORMATION IS AVAILABLE IN THE VICINITY OF THE TEMPORARY SHORING. THE INFORMATION PROVIDED FOR DESIGN WAS ASSUMED AND MAY NOT BE APPLICABLE TO THE ACTUAL SITE CONDITIONS ENCOUNTERED DURING CONSTRUCTION. SEE SUBSURFACE INVENTORY REPORTS FOR ANY ADDITIONAL INFORMATION.

DRIVEN PILING FOR TEMPORARY SHORING FROM STATION 21+24+/- -L-, 1.5 m RIGHT, TO STATION 21+51+/- -L-, 1.4 m RIGHT MAY NOT PENETRATE BELOW ELEVATION 655 m DUE TO THE PRESENCE OF AN OBSTRUCTION. VERY DENSE OR HARD SOIL, WEATHERED OR HARD ROCK. SEE SUBSURFACE INFORMATION FOR ADDITIONAL DETAILS.

FOR CONTRACTOR DESIGNED SHORING, SURVEY THE SHORING LOCATION TO DETERMINE EXISTING ELEVATIONS AND ACTUAL DESIGN HEIGHTS BEFORE BEGINNING DESIGN.

WHEN USING CONTRACTOR DESIGNED SHORING, USE THE FOLLOWING SOIL PARAMETERS:

UNIT WEIGHT OF SOIL ABOVE WATER TABLE, γ = 120 PCF
UNIT WEIGHT OF SOIL BELOW WATER TABLE, γ = 60 PCF
FRICTION ANGLE, ϕ = 30 DEGREES
COHESION, c = 0 PSF

FOR PORTABLE CONCRETE BARRIERS ABOVE AND BEHIND TEMPORARY SHORING, USE AN NCDOT PORTABLE CONCRETE BARRIER (UNANCHORED OR ANCHORED) OR AN OREGON TALL F-SHAPE CONCRETE BARRIER IN ACCORDANCE WITH THE TRAFFIC CONTROL PLANS.

TEMPORARY SHORING NO. 5 (SEE SHEET TCP-19)

FOR TEMPORARY SHORING, SEE TEMPORARY SHORING SPECIAL PROVISION.

USE A TEMPORARY MSE WALL FROM 77+57+/- -L-, 13.0 m LEFT, TO STATION 77+74+/- -L-, 13.4 m LEFT. SEE TEMPORARY SHORING SPECIAL PROVISION AND STANDARD TEMPORARY MSE WALL DETAILS. NO SUBSURFACE INFORMATION IS AVAILABLE IN THE VICINITY OF THE TEMPORARY SHORING. THE INFORMATION PROVIDED FOR DESIGN WAS ASSUMED AND MAY NOT BE APPLICABLE TO THE ACTUAL SITE CONDITIONS ENCOUNTERED DURING CONSTRUCTION. SEE SUBSURFACE INVENTORY REPORTS FOR ANY ADDITIONAL INFORMATION.

DRIVEN PILING FOR TEMPORARY SHORING FROM STATION 77+57+/- -L-, 13.0 m LEFT, TO STATION 77+74+/- -L-, 13.4 m LEFT MAY NOT PENETRATE BELOW ELEVATION 717 m DUE TO THE PRESENCE OF AN OBSTRUCTION. VERY DENSE OR HARD SOIL, WEATHERED OR HARD ROCK. SEE SUBSURFACE INFORMATION FOR ADDITIONAL DETAILS.

FOR CONTRACTOR DESIGNED SHORING, SURVEY THE SHORING LOCATION TO DETERMINE EXISTING ELEVATIONS AND ACTUAL DESIGN HEIGHTS BEFORE BEGINNING DESIGN.

WHEN USING CONTRACTOR DESIGNED SHORING, USE THE FOLLOWING SOIL PARAMETERS:

UNIT WEIGHT OF SOIL ABOVE WATER TABLE, γ = 120 PCF
UNIT WEIGHT OF SOIL BELOW WATER TABLE, γ = 60 PCF
FRICTION ANGLE, ϕ = 30 DEGREES
COHESION, c = 0 PSF

FOR PORTABLE CONCRETE BARRIERS ABOVE AND BEHIND TEMPORARY SHORING, USE AN NCDOT PORTABLE CONCRETE BARRIER (UNANCHORED OR ANCHORED) OR AN OREGON TALL F-SHAPE CONCRETE BARRIER IN ACCORDANCE WITH THE TRAFFIC CONTROL PLANS.

TEMPORARY SHORING NO. 6 (SEE SHEET TCP-20)

FOR TEMPORARY SHORING, SEE TEMPORARY SHORING SPECIAL PROVISION.

DO NOT USE STANDARD SHORING FROM STATION 82+58+/- -L-, 2.0 m RIGHT, TO STATION 82+80+/- -L-, 2.0 m RIGHT. CONTRACTOR DESIGNED SHORING IS REQUIRED. SEE TEMPORARY SHORING SPECIAL PROVISION.

IT MAY BE PREFERRED OR NECESSARY TO ANCHOR THE TEMPORARY SHORING FROM 82+58+/- -L-, 2.0 m RIGHT, TO STATION 82+80+/- -L-, 2.0 m RIGHT. THE TEMPORARY SHORING SPECIAL PROVISION DOES NOT APPLY TO ANCHORED TEMPORARY SHORING. IF ANCHORED TEMPORARY SHORING IS PROPOSED, THE ENGINEER WILL PROVIDE AN APPLICABLE SPECIAL PROVISION.

NO SUBSURFACE INFORMATION IS AVAILABLE IN THE VICINITY OF THE TEMPORARY SHORING. THE INFORMATION PROVIDED FOR DESIGN WAS ASSUMED AND MAY NOT BE APPLICABLE TO THE ACTUAL SITE CONDITIONS ENCOUNTERED DURING CONSTRUCTION. SEE SUBSURFACE INVENTORY REPORTS FOR ANY ADDITIONAL INFORMATION.

DRIVEN PILING FOR TEMPORARY SHORING FROM STATION 82+58+/- -L-, 2.0 m RIGHT, TO STATION 82+80+/- -L-, 2.0 m RIGHT MAY NOT PENETRATE BELOW ELEVATION 730.5 m DUE TO THE PRESENCE OF AN OBSTRUCTION. VERY DENSE OR HARD SOIL, WEATHERED OR HARD ROCK. SEE SUBSURFACE INFORMATION FOR ADDITIONAL DETAILS.

FOR CONTRACTOR DESIGNED SHORING, SURVEY THE SHORING LOCATION TO DETERMINE EXISTING ELEVATIONS AND ACTUAL DESIGN HEIGHTS BEFORE BEGINNING DESIGN.

WHEN USING CONTRACTOR DESIGNED SHORING, USE THE FOLLOWING SOIL PARAMETERS:

UNIT WEIGHT OF SOIL ABOVE WATER TABLE, γ = 120 PCF
UNIT WEIGHT OF SOIL BELOW WATER TABLE, γ = 60 PCF
FRICTION ANGLE, ϕ = 30 DEGREES
COHESION, c = 0 PSF

FOR PORTABLE CONCRETE BARRIERS ABOVE AND BEHIND TEMPORARY SHORING, USE AN NCDOT PORTABLE CONCRETE BARRIER (UNANCHORED OR ANCHORED) OR AN OREGON TALL F-SHAPE CONCRETE BARRIER IN ACCORDANCE WITH THE TRAFFIC CONTROL PLANS.

APPROVED: Shane Clark DATE: 10/17/07

SEAL

NORTH CAROLINA PROFESSIONAL SEAL 029869 ENGINEER SHANE C. CLARK

TEMPORARY SHORING DATA

SCALE:	NONE
DATE:	07/07
DWG. BY:	RMG
DESIGN BY:	RMG
REVIEWED BY:	JDK

REVISIONS

CADD FILE

10-OCT-2007 08:39
\\cdot\dept\proj\tipprojects-r\r2518a\traffic\trafficcontrol\tcp\R-2518A_TC_TCP_2E.dgn
rngarrett AT WZTC22229

TEMPORARY SHORING DATA

TEMPORARY SHORING NO. 7 (SEE SHEET TCP-21)

FOR TEMPORARY SHORING, SEE TEMPORARY SHORING SPECIAL PROVISION.

DO NOT USE STANDARD SHORING FROM STATION 109+30+/- -L-, 1.8 m RIGHT, TO STATION 109+47+/- -L-, 4.3 m RIGHT. CONTRACTOR DESIGNED SHORING IS REQUIRED. SEE TEMPORARY SHORING SPECIAL PROVISION.

IT MAY BE PREFERRED OR NECESSARY TO ANCHOR THE TEMPORARY SHORING FROM 109+30+/- -L-, 1.8 m RIGHT, TO STATION 109+47+/- -L-, 4.3 m RIGHT. THE TEMPORARY SHORING SPECIAL PROVISION DOES NOT APPLY TO ANCHORED TEMPORARY SHORING. IF ANCHORED TEMPORARY SHORING IS PROPOSED, THE ENGINEER WILL PROVIDE AN APPLICABLE SPECIAL PROVISION.

NO SUBSURFACE INFORMATION IS AVAILABLE IN THE VICINITY OF THE TEMPORARY SHORING. THE INFORMATION PROVIDED FOR DESIGN WAS ASSUMED AND MAY NOT BE APPLICABLE TO THE ACTUAL SITE CONDITIONS ENCOUNTERED DURING CONSTRUCTION. SEE SUBSURFACE INVENTORY REPORTS FOR ANY ADDITIONAL INFORMATION.

FOR CONTRACTOR DESIGNED SHORING, SURVEY THE SHORING LOCATION TO DETERMINE EXISTING ELEVATIONS AND ACTUAL DESIGN HEIGHTS BEFORE BEGINNING DESIGN.

WHEN USING CONTRACTOR DESIGNED SHORING, USE THE FOLLOWING SOIL PARAMETERS:

UNIT WEIGHT OF SOIL ABOVE WATER TABLE, γ = 120 PCF
UNIT WEIGHT OF SOIL BELOW WATER TABLE, γ = 60 PCF
FRICTION ANGLE, ϕ = 30 DEGREES
COHESION, c = 0 PSF

FOR PORTABLE CONCRETE BARRIERS ABOVE AND BEHIND TEMPORARY SHORING, USE AN NCDOT PORTABLE CONCRETE BARRIER (UNANCHORED OR ANCHORED) OR AN OREGON TALL F-SHAPE CONCRETE BARRIER IN ACCORDANCE WITH THE TRAFFIC CONTROL PLANS.

TEMPORARY SHORING NO. 8 (SEE SHEET TCP-37)

FOR TEMPORARY SHORING, SEE TEMPORARY SHORING SPECIAL PROVISION.

DO NOT USE STANDARD SHORING FROM STATION 19+58+/- -L-, 0.83 m LEFT, TO STATION 19+88+/- -L-, 0.83 m LEFT. CONTRACTOR DESIGNED SHORING IS REQUIRED. SEE TEMPORARY SHORING SPECIAL PROVISION.

IT MAY BE PREFERRED OR NECESSARY TO ANCHOR THE TEMPORARY SHORING FROM 19+58+/- -L-, 0.83 m LEFT, TO STATION 19+88+/- -L-, 0.83 m LEFT. THE TEMPORARY SHORING SPECIAL PROVISION DOES NOT APPLY TO ANCHORED TEMPORARY SHORING. IF ANCHORED TEMPORARY SHORING IS PROPOSED, THE ENGINEER WILL PROVIDE AN APPLICABLE SPECIAL PROVISION.

NO SUBSURFACE INFORMATION IS AVAILABLE IN THE VICINITY OF THE TEMPORARY SHORING. THE INFORMATION PROVIDED FOR DESIGN WAS ASSUMED AND MAY NOT BE APPLICABLE TO THE ACTUAL SITE CONDITIONS ENCOUNTERED DURING CONSTRUCTION. SEE SUBSURFACE INVENTORY REPORTS FOR ANY ADDITIONAL INFORMATION.

DRIVEN PILING FOR TEMPORARY SHORING FROM STATION 19+58+/- -L-, 0.83 m LEFT, TO STATION 19+88+/- -L-, 0.83 m LEFT MAY NOT PENETRATE BELOW ELEVATION 650 m DUE TO THE PRESENCE OF AN OBSTRUCTION. VERY DENSE OR HARD SOIL, WEATHERED OR HARD ROCK. SEE SUBSURFACE INFORMATION FOR ADDITIONAL DETAILS.

FOR CONTRACTOR DESIGNED SHORING, SURVEY THE SHORING LOCATION TO DETERMINE EXISTING ELEVATIONS AND ACTUAL DESIGN HEIGHTS BEFORE BEGINNING DESIGN.

WHEN USING CONTRACTOR DESIGNED SHORING, USE THE FOLLOWING SOIL PARAMETERS:

UNIT WEIGHT OF SOIL ABOVE WATER TABLE, γ = 120 PCF
UNIT WEIGHT OF SOIL BELOW WATER TABLE, γ = 60 PCF
FRICTION ANGLE, ϕ = 30 DEGREES
COHESION, c = 0 PSF

FOR PORTABLE CONCRETE BARRIERS ABOVE AND BEHIND TEMPORARY SHORING, USE AN NCDOT PORTABLE CONCRETE BARRIER (UNANCHORED OR ANCHORED) OR AN OREGON TALL F-SHAPE CONCRETE BARRIER IN ACCORDANCE WITH THE TRAFFIC CONTROL PLANS.

TEMPORARY SHORING NO. 9 (SEE SHEET TCP-40)

FOR TEMPORARY SHORING, SEE TEMPORARY SHORING SPECIAL PROVISION.

DO NOT USE STANDARD SHORING FROM STATION 77+77+/- -L-, 0.84 m LEFT, TO STATION 77+91+/- -L-, 0.84 m LEFT. CONTRACTOR DESIGNED SHORING IS REQUIRED. SEE TEMPORARY SHORING SPECIAL PROVISION.

IT MAY BE PREFERRED OR NECESSARY TO ANCHOR THE TEMPORARY SHORING FROM 77+77+/- -L-, 0.84 m LEFT, TO STATION 77+91+/- -L-, 0.84 m LEFT. THE TEMPORARY SHORING SPECIAL PROVISION DOES NOT APPLY TO ANCHORED TEMPORARY SHORING. IF ANCHORED TEMPORARY SHORING IS PROPOSED, THE ENGINEER WILL PROVIDE AN APPLICABLE SPECIAL PROVISION.

NO SUBSURFACE INFORMATION IS AVAILABLE IN THE VICINITY OF THE TEMPORARY SHORING. THE INFORMATION PROVIDED FOR DESIGN WAS ASSUMED AND MAY NOT BE APPLICABLE TO THE ACTUAL SITE CONDITIONS ENCOUNTERED DURING CONSTRUCTION. SEE SUBSURFACE INVENTORY REPORTS FOR ANY ADDITIONAL INFORMATION.

DRIVEN PILING FOR TEMPORARY SHORING FROM STATION 77+77+/- -L-, 0.84 m LEFT, TO STATION 77+91+/- -L-, 0.84 m LEFT MAY NOT PENETRATE BELOW ELEVATION 717 m DUE TO THE PRESENCE OF AN OBSTRUCTION. VERY DENSE OR HARD SOIL, WEATHERED OR HARD ROCK. SEE SUBSURFACE INFORMATION FOR ADDITIONAL DETAILS.

FOR CONTRACTOR DESIGNED SHORING, SURVEY THE SHORING LOCATION TO DETERMINE EXISTING ELEVATIONS AND ACTUAL DESIGN HEIGHTS BEFORE BEGINNING DESIGN.

WHEN USING CONTRACTOR DESIGNED SHORING, USE THE FOLLOWING SOIL PARAMETERS:

UNIT WEIGHT OF SOIL ABOVE WATER TABLE, γ = 120 PCF
UNIT WEIGHT OF SOIL BELOW WATER TABLE, γ = 60 PCF
FRICTION ANGLE, ϕ = 30 DEGREES
COHESION, c = 0 PSF

FOR PORTABLE CONCRETE BARRIERS ABOVE AND BEHIND TEMPORARY SHORING, USE AN NCDOT PORTABLE CONCRETE BARRIER (UNANCHORED OR ANCHORED) OR AN OREGON TALL F-SHAPE CONCRETE BARRIER IN ACCORDANCE WITH THE TRAFFIC CONTROL PLANS.

APPROVED: S. Clark DATE: 10/17/07

SEAL

NORTH CAROLINA PROFESSIONAL SEAL 029869 ENGINEER SHANE C. CLARK

TEMPORARY SHORING DATA

SCALE:	NONE
DATE:	07/07
DWG. BY:	RMG
DESIGN BY:	RMG
REVIEWED BY:	JDK

REVISIONS

CADD FILE

10-OCT-2007 08:38
\\dot\dfsroot\proj\tipprojects-r\r2518a\traffic\trafficcontrol\tcp\R-2518A_TC_TCP_2D.dgn
rmgarrett AT WZ1022291

PROJ. REFERENCE NO.	SHEET NO.
R-2518A	TCP-2F

TEMPORARY SHORING DATA

TEMPORARY SHORING NO. 10 (SEE SHEET TCP-41)

FOR TEMPORARY SHORING, SEE TEMPORARY SHORING SPECIAL PROVISION.

DO NOT USE STANDARD SHORING FROM STATION 82+50+/- -L-, 0.29 m LEFT, TO STATION 82+60+/- -L-, 0.28 m RIGHT. CONTRACTOR DESIGNED SHORING IS REQUIRED. SEE TEMPORARY SHORING SPECIAL PROVISION.

IT MAY BE PREFERRED OR NECESSARY TO ANCHOR THE TEMPORARY SHORING FROM 82+50+/- -L-, 0.29 m LEFT, TO STATION 82+60+/- -L-, 0.28 m RIGHT. THE TEMPORARY SHORING SPECIAL PROVISION DOES NOT APPLY TO ANCHORED TEMPORARY SHORING. IF ANCHORED TEMPORARY SHORING IS PROPOSED, THE ENGINEER WILL PROVIDE AN APPLICABLE SPECIAL PROVISION.

NO SUBSURFACE INFORMATION IS AVAILABLE IN THE VICINITY OF THE TEMPORARY SHORING. THE INFORMATION PROVIDED FOR DESIGN WAS ASSUMED AND MAY NOT BE APPLICABLE TO THE ACTUAL SITE CONDITIONS ENCOUNTERED DURING CONSTRUCTION. SEE SUBSURFACE INVENTORY REPORTS FOR ANY ADDITIONAL INFORMATION.

DRIVEN PILING FOR TEMPORARY SHORING FROM STATION 82+50+/- -L-, 0.29 m LEFT, TO STATION 82+60+/- -L-, 0.28 m RIGHT MAY NOT PENETRATE BELOW ELEVATION 730.5 m DUE TO THE PRESENCE OF AN OBSTRUCTION. VERY DENSE OR HARD SOIL, WEATHERED OR HARD ROCK. SEE SUBSURFACE INFORMATION FOR ADDITIONAL DETAILS.

FOR CONTRACTOR DESIGNED SHORING, SURVEY THE SHORING LOCATION TO DETERMINE EXISTING ELEVATIONS AND ACTUAL DESIGN HEIGHTS BEFORE BEGINNING DESIGN.

WHEN USING CONTRACTOR DESIGNED SHORING, USE THE FOLLOWING SOIL PARAMETERS:

UNIT WEIGHT OF SOIL ABOVE WATER TABLE, γ = 120 PCF
UNIT WEIGHT OF SOIL BELOW WATER TABLE, γ = 60 PCF
FRICTION ANGLE, ϕ = 30 DEGREES
COHESION, c = 0 PSF

FOR PORTABLE CONCRETE BARRIERS ABOVE AND BEHIND TEMPORARY SHORING, USE AN NCDOT PORTABLE CONCRETE BARRIER (UNANCHORED OR ANCHORED) OR AN OREGON TALL F-SHAPE CONCRETE BARRIER IN ACCORDANCE WITH THE TRAFFIC CONTROL PLANS.

TEMPORARY SHORING NO. 11 (SEE SHEET TCP-41)

FOR TEMPORARY SHORING, SEE TEMPORARY SHORING SPECIAL PROVISION.

DO NOT USE STANDARD SHORING FROM STATION 82+58+/- -L-, 0.81 m RIGHT, TO STATION 82+80+/- -L-, 0.79 m RIGHT. CONTRACTOR DESIGNED SHORING IS REQUIRED. SEE TEMPORARY SHORING SPECIAL PROVISION.

IT MAY BE PREFERRED OR NECESSARY TO ANCHOR THE TEMPORARY SHORING FROM 82+58+/- -L-, 0.81 m RIGHT, TO STATION 82+80+/- -L-, 0.79 m RIGHT. THE TEMPORARY SHORING SPECIAL PROVISION DOES NOT APPLY TO ANCHORED TEMPORARY SHORING. IF ANCHORED TEMPORARY SHORING IS PROPOSED, THE ENGINEER WILL PROVIDE AN APPLICABLE SPECIAL PROVISION.

NO SUBSURFACE INFORMATION IS AVAILABLE IN THE VICINITY OF THE TEMPORARY SHORING. THE INFORMATION PROVIDED FOR DESIGN WAS ASSUMED AND MAY NOT BE APPLICABLE TO THE ACTUAL SITE CONDITIONS ENCOUNTERED DURING CONSTRUCTION. SEE SUBSURFACE INVENTORY REPORTS FOR ANY ADDITIONAL INFORMATION.

DRIVEN PILING FOR TEMPORARY SHORING FROM STATION 82+58+/- -L-, 0.81 m RIGHT, TO STATION 82+80+/- -L-, 0.79 m RIGHT MAY NOT PENETRATE BELOW ELEVATION 730.5 m DUE TO THE PRESENCE OF AN OBSTRUCTION. VERY DENSE OR HARD SOIL, WEATHERED OR HARD ROCK. SEE SUBSURFACE INFORMATION FOR ADDITIONAL DETAILS.

FOR CONTRACTOR DESIGNED SHORING, SURVEY THE SHORING LOCATION TO DETERMINE EXISTING ELEVATIONS AND ACTUAL DESIGN HEIGHTS BEFORE BEGINNING DESIGN.

WHEN USING CONTRACTOR DESIGNED SHORING, USE THE FOLLOWING SOIL PARAMETERS:

UNIT WEIGHT OF SOIL ABOVE WATER TABLE, γ = 120 PCF
UNIT WEIGHT OF SOIL BELOW WATER TABLE, γ = 60 PCF
FRICTION ANGLE, ϕ = 30 DEGREES
COHESION, c = 0 PSF

FOR PORTABLE CONCRETE BARRIERS ABOVE AND BEHIND TEMPORARY SHORING, USE AN NCDOT PORTABLE CONCRETE BARRIER (UNANCHORED OR ANCHORED) OR AN OREGON TALL F-SHAPE CONCRETE BARRIER IN ACCORDANCE WITH THE TRAFFIC CONTROL PLANS.

TEMPORARY SHORING NO. 12 (SEE SHEET TCP-42)

FOR TEMPORARY SHORING, SEE TEMPORARY SHORING SPECIAL PROVISION.

USE A TEMPORARY MSE WALL FROM 109+23+/- -L-, 2.4 m RIGHT, TO STATION 109+46+/- -L-, 2.4 m RIGHT. SEE TEMPORARY SHORING SPECIAL PROVISION AND STANDARD TEMPORARY MSE WALL DETAILS.

NO SUBSURFACE INFORMATION IS AVAILABLE IN THE VICINITY OF THE TEMPORARY SHORING. THE INFORMATION PROVIDED FOR DESIGN WAS ASSUMED AND MAY NOT BE APPLICABLE TO THE ACTUAL SITE CONDITIONS ENCOUNTERED DURING CONSTRUCTION. SEE SUBSURFACE INVENTORY REPORTS FOR ANY ADDITIONAL INFORMATION.

FOR CONTRACTOR DESIGNED SHORING, SURVEY THE SHORING LOCATION TO DETERMINE EXISTING ELEVATIONS AND ACTUAL DESIGN HEIGHTS BEFORE BEGINNING DESIGN.

WHEN USING CONTRACTOR DESIGNED SHORING, USE THE FOLLOWING SOIL PARAMETERS:

UNIT WEIGHT OF SOIL ABOVE WATER TABLE, γ = 120 PCF
UNIT WEIGHT OF SOIL BELOW WATER TABLE, γ = 60 PCF
FRICTION ANGLE, ϕ = 30 DEGREES
COHESION, c = 0 PSF

FOR PORTABLE CONCRETE BARRIERS ABOVE AND BEHIND TEMPORARY SHORING, USE AN NCDOT PORTABLE CONCRETE BARRIER (UNANCHORED OR ANCHORED) OR AN OREGON TALL F-SHAPE CONCRETE BARRIER IN ACCORDANCE WITH THE TRAFFIC CONTROL PLANS.

APPROVED: B. Clark DATE: 10/31/07

SEAL

NORTH CAROLINA PROFESSIONAL SEAL 029869 ENGINEER SHANE C. CLARK

TEMPORARY SHORING DATA

SCALE:	NONE
DATE:	07/07
DWG. BY:	RMG
DESIGN BY:	RMG
REVIEWED BY:	JDK

REVISIONS

CADD FILE

10-OCT-2007 08:39
\\dot\dfsroot\proj\tlprojects-r\r2518a\traffic\trafficcontrol\tcp\R-2518A_TC_TCP_2F.dgn
rmgarrett AT WZTC22229

PROJ. REFERENCE NO.	SHEET NO.
R-2518A	TCP-2G

TEMPORARY SHORING DATA

TEMPORARY SHORING NO. 13 (SEE SHEET TCP-42)

FOR TEMPORARY SHORING, SEE TEMPORARY SHORING SPECIAL PROVISION.

USE A TEMPORARY MSE WALL FROM 109+48+/- -L-, 2.8 m RIGHT, TO STATION 109+58+/- -L-, 4.6 m RIGHT. SEE TEMPORARY SHORING SPECIAL PROVISION AND STANDARD TEMPORARY MSE WALL DETAILS.

NO SUBSURFACE INFORMATION IS AVAILABLE IN THE VICINITY OF THE TEMPORARY SHORING. THE INFORMATION PROVIDED FOR DESIGN WAS ASSUMED AND MAY NOT BE APPLICABLE TO THE ACTUAL SITE CONDITIONS ENCOUNTERED DURING CONSTRUCTION. SEE SUBSURFACE INVENTORY REPORTS FOR ANY ADDITIONAL INFORMATION.

FOR CONTRACTOR DESIGNED SHORING, SURVEY THE SHORING LOCATION TO DETERMINE EXISTING ELEVATIONS AND ACTUAL DESIGN HEIGHTS BEFORE BEGINNING DESIGN.

WHEN USING CONTRACTOR DESIGNED SHORING, USE THE FOLLOWING SOIL PARAMETERS:

UNIT WEIGHT OF SOIL ABOVE WATER TABLE, γ = 120 PCF
UNIT WEIGHT OF SOIL BELOW WATER TABLE, γ = 60 PCF
FRICTION ANGLE, ϕ = 30 DEGREES
COHESION, c = 0 PSF

FOR PORTABLE CONCRETE BARRIERS ABOVE AND BEHIND TEMPORARY SHORING, USE AN NCDOT PORTABLE CONCRETE BARRIER (UNANCHORED OR ANCHORED) OR AN OREGON TALL F-SHAPE CONCRETE BARRIER IN ACCORDANCE WITH THE TRAFFIC CONTROL PLANS.

TEMPORARY SHORING NO. 14 (SEE SHEET TCP-43)

FOR TEMPORARY SHORING, SEE TEMPORARY SHORING SPECIAL PROVISION.

DO NOT USE STANDARD SHORING FROM STATION 109+48+/- -L-, 4.0 m RIGHT, TO STATION 109+58+/- -L-, 5.8 m RIGHT. CONTRACTOR DESIGNED SHORING IS REQUIRED. SEE TEMPORARY SHORING SPECIAL PROVISION.

IT MAY BE PREFERRED OR NECESSARY TO ANCHOR THE TEMPORARY SHORING FROM 109+48+/- -L-, 4.0 m RIGHT, TO STATION 109+58+/- -L-, 5.8 m RIGHT. THE TEMPORARY SHORING SPECIAL PROVISION DOES NOT APPLY TO ANCHORED TEMPORARY SHORING. IF ANCHORED TEMPORARY SHORING IS PROPOSED, THE ENGINEER WILL PROVIDE AN APPLICABLE SPECIAL PROVISION.

NO SUBSURFACE INFORMATION IS AVAILABLE IN THE VICINITY OF THE TEMPORARY SHORING. THE INFORMATION PROVIDED FOR DESIGN WAS ASSUMED AND MAY NOT BE APPLICABLE TO THE ACTUAL SITE CONDITIONS ENCOUNTERED DURING CONSTRUCTION. SEE SUBSURFACE INVENTORY REPORTS FOR ANY ADDITIONAL INFORMATION.

FOR CONTRACTOR DESIGNED SHORING, SURVEY THE SHORING LOCATION TO DETERMINE EXISTING ELEVATIONS AND ACTUAL DESIGN HEIGHTS BEFORE BEGINNING DESIGN.

WHEN USING CONTRACTOR DESIGNED SHORING, USE THE FOLLOWING SOIL PARAMETERS:

UNIT WEIGHT OF SOIL ABOVE WATER TABLE, γ = 120 PCF
UNIT WEIGHT OF SOIL BELOW WATER TABLE, γ = 60 PCF
FRICTION ANGLE, ϕ = 30 DEGREES
COHESION, c = 0 PSF

FOR PORTABLE CONCRETE BARRIERS ABOVE AND BEHIND TEMPORARY SHORING, USE AN NCDOT PORTABLE CONCRETE BARRIER (UNANCHORED OR ANCHORED) OR AN OREGON TALL F-SHAPE CONCRETE BARRIER IN ACCORDANCE WITH THE TRAFFIC CONTROL PLANS.

TEMPORARY SHORING NO. 15 (SEE SHEET TCP-54)

FOR TEMPORARY SHORING, SEE TEMPORARY SHORING SPECIAL PROVISION.

DO NOT USE STANDARD SHORING FROM STATION 77+75+/- -L-, 0.4 m RIGHT, TO STATION 77+92+/- -Y-, 0.3 m RIGHT. CONTRACTOR DESIGNED SHORING IS REQUIRED. SEE TEMPORARY SHORING SPECIAL PROVISION.

IT MAY BE PREFERRED OR NECESSARY TO ANCHOR THE TEMPORARY SHORING FROM 77+75+/- -L-, 0.4 m RIGHT, TO STATION 77+92+/- -Y-, 0.3 m RIGHT. THE TEMPORARY SHORING SPECIAL PROVISION DOES NOT APPLY TO ANCHORED TEMPORARY SHORING. IF ANCHORED TEMPORARY SHORING IS PROPOSED, THE ENGINEER WILL PROVIDE AN APPLICABLE SPECIAL PROVISION.

NO SUBSURFACE INFORMATION IS AVAILABLE IN THE VICINITY OF THE TEMPORARY SHORING. THE INFORMATION PROVIDED FOR DESIGN WAS ASSUMED AND MAY NOT BE APPLICABLE TO THE ACTUAL SITE CONDITIONS ENCOUNTERED DURING CONSTRUCTION. SEE SUBSURFACE INVENTORY REPORTS FOR ANY ADDITIONAL INFORMATION.

DRIVEN PILING FOR TEMPORARY SHORING FROM STATION 77+75+/- -L-, 0.4 m RIGHT, TO STATION 77+92+/- -Y-, 0.3 m RIGHT MAY NOT PENETRATE BELOW ELEVATION 717 m DUE TO THE PRESENCE OF AN OBSTRUCTION. VERY DENSE OR HARD SOIL, WEATHERED OR HARD ROCK. SEE SUBSURFACE INFORMATION FOR ADDITIONAL DETAILS.

FOR CONTRACTOR DESIGNED SHORING, SURVEY THE SHORING LOCATION TO DETERMINE EXISTING ELEVATIONS AND ACTUAL DESIGN HEIGHTS BEFORE BEGINNING DESIGN.

WHEN USING CONTRACTOR DESIGNED SHORING, USE THE FOLLOWING SOIL PARAMETERS:

UNIT WEIGHT OF SOIL ABOVE WATER TABLE, γ = 120 PCF
UNIT WEIGHT OF SOIL BELOW WATER TABLE, γ = 60 PCF
FRICTION ANGLE, ϕ = 30 DEGREES
COHESION, c = 0 PSF

FOR PORTABLE CONCRETE BARRIERS ABOVE AND BEHIND TEMPORARY SHORING, USE AN NCDOT PORTABLE CONCRETE BARRIER (UNANCHORED OR ANCHORED) OR AN OREGON TALL F-SHAPE CONCRETE BARRIER IN ACCORDANCE WITH THE TRAFFIC CONTROL PLANS.

APPROVED: DATE: 10/17/07

SEAL

NORTH CAROLINA PROFESSIONAL SEAL 029869 ENGINEER SHANE C. CLARK

TEMPORARY SHORING DATA

SCALE:	NONE
DATE:	07/07
DWG. BY:	RMG
DESIGN BY:	RMG
REVIEWED BY:	JDK

REVISIONS

CADD FILE

10-OCT-2007 08:40
\\dot\dfsroot01\proj\tipprojects-r\r2518a\traffic\trafficcontrol\tcp\R-2518A_TC_TCP_2G.dgn
rmgarrett AT WZTC222291

PROJ. REFERENCE NO.	SHEET NO.
R-2518A	TCP-3

NOTES:
THE CONTRACTOR IS TO FURNISH, INSTALL, MAINTAIN, RELOCATE AND REMOVE CHANGEABLE MESSAGE BOARDS DURING VARIOUS STAGES OF CONSTRUCTION AT THE DESCRETION OF THE ENGINEER TO ADEQUATELY INFORM MOTORISTS OF CHANGING WORK ZONE CONDITIONS.

COMPLETE ANY PROPOSED OR TEMPORARY WIDENING IN SUCH A MANNER THAT PONDING OF WATER WILL NOT OCCUR IN THE TRAVEL LANE.

USING INCIDENTAL STONE AS NECESSARY, MAINTAIN VEHICULAR ACCESSS TO ALL DRIVEWAYS DURING THE LIFE OF THE CONTRACT UNLESS OTHERWISE NOTED IN THE PHASING OR DIRECTED BY THE ENGINEER.

REMOVE TEMPORARY LANE CLOSURES AT THE END OF EACH WORKDAY AND RESTORE TRAFFIC TO EXISTING PATTERNS.

ENSURE ALL STREAM RELOCATIONS ARE COMPLETE AND STABILIZED BEFORE DIVERTING FLOW INTO SAME.

PLACE ALL CHANGEABLE MESSAGE BOARDS AS NEEDED IN THE LOCATIONS SHOWN ON SHEET TCP-59 AND WORD MESSAGES AS SHOWN THEREON OR AS DIRECTED BY THE ENGINEER TO PROVIDE ADVANCE WARNING TO THE PUBLIC DURING CONSTRUCTION.

PHASE I

NOTE: TRAFFIC TO BE MAINTAINED IN THE EXISTING 2L, 2W PATTERN. (SEE SHEETS TCP-4 THROUGH TCP-9)

STEP 1 - INSTALL WORK ZONE ADVANCE WARNING SIGNS ON -L- AND ALL -Y- LINES AS SHOWN ON SHEET TCP-58.

- AWAY FROM TRAFFIC BEGIN CLEARING AND GRUBBING AND UTILITY RELOCATIONS.

- BEGIN CONSTRUCTION OF ALL STREAM RELOCATIONS THROUGHOUT PROJECT.

- USING ROADWAY STANDARD DRAWING 1101.02, SHEET 1 OF 9 AND FLAGGERS, BEGIN CONSTRUCTION OF TEMPORARY PAVEMENT ALONG -L- IN THE FOLLOWING LOCATIONS: (SEE ROADWAY PLANS AND SHEETS TCP-12, TCP-13, TCP-20 AND TCP-21).

  -L- STA. 18+87+/- TO STA. 20+03+/-
  -L- STA. 20+32+/- TO STA. 22+02+/-
  -L- STA. 82+39+/- TO STA. 83+20+/-
  -L- STA. 108+31+/- TO STA. 110+68+/-

WHENEVER THE WORK OF PHASE I STEPS 2 THROUGH 10 REQUIRES A BLASTING OPERATION, SEE LOCAL NOTE 1 ON SHEET TCP-2A, INTERMEDIATE CONTRACT TIME AND LIQUIDATED DAMAGES.

STEP 2 - USING ROADWAY STANDARD DRAWING 1101.02, SHEET 1 OF 9 AND FLAGGERS BEGIN CONSTRUCTION OF PROPOSED DRAINAGE, UTILITY RELOCATIONS AND ANY RETAINING WALLS RELATIVE TO PHASE I CONSTRUCTION AREAS. (SEE ROADWAY AND STRUCTURE DESIGN PLANS AND SHEETS TCP-4 THROUGH TCP-9).

- USING ROADWAY STANDARD DRAWING 1101.02, SHEET 1 OF 9 AND FLAGGERS BEGIN CONSTRUCTION OF ALL PHASE I CULVERT EXTENSIONS NOT REQUIRING TEMPORARY SHORING OR -Y- LINE CLOSURES AT THE FOLLOWING LOCATIONS:

  -L- STA. 33+80+/- LT
  -L- STA. 37+90+/- LT
  -L- STA. 45+40+/- RT
  -L- STA. 70+00+/- RT
  -L- STA. 81+60+/- LT

- USING TYPE III BARRICADES WITH R11-2 (ROAD CLOSED) PANEL CLOSE -Y2- TO THROUGH TRAFFIC AT -Y2- STA. 10+90+/- MAINTAINING ACCESS TO -L- AT -L- STA. 22+20+/-. (SEE SHEETS TCP-12 AND TCP-13)

- BEGIN CONSTRUCTION OF PROPOSED BRIDGE REPLACEMENT ALONG -Y2- FROM STA. 11+14+/- TO STA. 11+45+/-. (SEE ROADWAY AND STRUCTURE DESIGN PLANS AND SHEETS TCP-5, TCP-12 AND TCP-13).

NOTE: COMPLETE TEMPORARY PAVEMENT PRIOR TO PCB INSTALLATION.

- INSTALL TEMPORARY SHORING, PCB, CRASH CUSHIONS AND BEGIN CONSTRUCTION OF PROPOSED PHASE I CULVERT EXTENSIONS OR NEW CULVERTS IN THE FOLLOWING LOCATIONS: (SEE ROADWAY PLANS AND SHEETS TCP-2C THROUGH TCP-2G AND TCP-5, TCP-12, TCP-13 & TCP-22)

  -L- STA. 19+72+/- LT
  -L- STA. 21+35+/- LT

- USING ROADWAY STANDARD DRAWING 1101.02, SHEET 1 OF 9 AND FLAGGERS BEGIN CONSTRUCTION OF THE -Y3- (SR 1540) REALIGNMENT UP TO BUT NOT INCLUDING THE FINAL SURFACE LAYER WHILE MAINTAINING TRAFFIC ON BOTH EXISTING -Y3- AND US 19 ROADWAYS. (SEE ROADWAY PLANS AND SHEETS TCP-5 AND TCP-12)

- CLOSE -Y5- (SR 1522) TO TRAFFIC. INSTALL TYPE III BARRICADES WITH R11-4 (ROAD CLOSED TO THRU TRAFFIC) AND M4-10L(LEFT DETOUR ARROW)SIGN PANELS AT THE -Y7- (SR 1521) -Y5- (SR 1522)INTERSECTION DIVERTING TRAFFIC ONTO -Y7- AS SHOWN ON TCP-14.

- BEGIN CONSTRUCTION OF THE PROPOSED CULVERT EXTENSION AT THE FOLLOWING LOCATION:(SEE ROADWAY AND STRUCTURE DESIGN PLANS AND SHEETS TCP-5 AND TCP-14)

  -L- STA. 31+50+/- LT

- USING ROADWAY STANDARD DRAWING 1101.02, SHEET 1 OF 9 AND FLAGGERS CONSTRUCT DRIVEWAY -D7- TO THE EDGE AND ELEVATION OF EXISTING -Y11-(SR 1519)(SEE ROADWAY PLANS AND SHEET TCP-17)

- PLACE TYPE III BARRICADES WITH R11-2 (ROAD CLOSED) AND W1-6L (LEFT ARROW)PANELS AS APPLICABLE CLOSING -Y11- (SR 1519) AT -L- (US 19) AND -D7- DIVERTING TRAFFIC TO THE -Y12- (SR 1519) INTERSECTION WITH -L- (US 19). (SEE SHEETS TCP-6 AND TCP-17)

- BEGIN CONSTRUCTION OF PROPOSED CULVERT EXTENSION OR NEW CULVERT AT THE FOLLOWING LOCATION: (SEE ROADWAY AND STRUCTURE DESIGN PLANS AND SHEETS TCP-6 AND TCP-17)

  -L- STA. 55+22+/- RT
  -Y11- STA. 10+25+/-

- USING ROADWAY STANDARD DRAWING 1101.02, SHEET 1 OF 9 AND FLAGGERS CONSTRUCT DRIVEWAY -D13- REALIGNMENT TO THE EDGE AND ELEVATION OF EXISTING -L-(US 19) (SEE ROADWAY PLANS AND SHEET TCP-19)

NOTE: OPEN -D13- REALIGNMENT TO TRAFFIC PRIOR TO PLACING THE FOLLOWING TRAFFIC CONTROL DEVICES AND CONSTRUCTING THE CULVERT.

- INSTALL TEMPORARY SHORING, PCB, CRASH CUSHIONS AND CONSTRUCT PROPOSED PHASE I CULVERT EXTENSION IN THE FOLLOWING LOCATION: (SEE ROADWAY PLANS AND SHEETS TCP-2C THROUGH TCP-2G, TCP-7 AND TCP-19)

  -L- STA. 77+88+/- LT

COMPLETE THE PHASE I CONSTRUCTION OF CULVERT -L- STATION 82+62+/- IN THE FOLLOWING SEQUENCE.

- INSTALL TEMPORARY 2.62m x 1.8m CSP PIPE ARCH TO EXTEND THE EXISTING CULVERT AT -L- STA. 82+62+/- (SEE SHEET TCP-19)

- CONSTRUCT A TEMPORARY DIVERSION CHANNEL LEADING FROM THE NEW STREAM RELOCATION BETWEEN -L- STATIONS 83+00+/- TO 84+10+/- LT TO THE TEMPORARY 2.62m x 1.8m CSP PIPE ARCH.(SEE SHEET TCP-19)

- DIVERT THE FLOW OF THE RELATED STREAM INTO THE RELOCATED STREAM AND TEMPORARY DIVERSION CHANNEL.

NOTE: COMPLETE TEMPORARY PAVEMENT PRIOR TO PCB INSTALLATION.

- INSTALL TEMPORARY SHORING, PCB, CRASH CUSHIONS AND CONSTRUCT PROPOSED PHASE I CULVERT AT -L- STA. 82+62+/-.(SEE ROADWAY AND STRUCTURE DESIGN PLANS AND SHEETS TCP-2C THROUGH TCP-2G, TCP-8,TCP-20 AND TCP-24)

COMPLETE THE PHASE I CONSTRUCTION OF CULVERT -L- STATION 109+37+/- IN THE FOLLOWING SEQUENCE.

NOTE: COMPLETE TEMPORARY PAVEMENT PRIOR TO SHIFTING OF TRAFFIC AND PCB INSTALLATION.

APPROVED: Jessica Kuse DATE: 8/9/07

SEAL

NORTH CAROLINA PROFESSIONAL SEAL 027811 ENGINEER JESSICA D. KUSE

PHASING

SCALE:	NONE
DATE:	07/07
DWG. BY:	RMG
DESIGN BY:	RMG
REVIEWED BY:	JDK

DIVISION OF HIGHWAYS STATE OF NORTH CAROLINA DEPARTMENT OF TRANSPORTATION WORK ZONE TRAFFIC CONTROL UNIT

REVISIONS

CADD FILE

09-AUG-2007 10:24
\\s-dot-dfs01\prolj\tipprojects-r\r2518a\traffic\trafficcontrol\top\r-2518a_tc_top_phasing.dgn
rmgarrett AT WZTC22229j

- USING ROADWAY STANDARD DRAWING 1101.02, SHEET 1 OF 9 AND FLAGGERS INSTALL TEMPORARY PAVEMENT MARKINGS AND MARKERS AND SHIFT US 19 TRAFFIC TO THE RIGHT ONTO THE TEMPORARY PAVEMENT PREVIOUSLY CONSTRUCTED FROM -L- STA. 108+31+/- TO STA. 110+68+/-. (SEE SHEETS TCP-9, TCP-21 AND TCP-25)

- INSTALL TEMPORARY SHORING, PCB, CRASH CUSHIONS, TEMPORARY GUARDRAIL, (2)TEMPORARY 1700 CSP AND BEGIN CONSTRUCTION OF THE PROPOSED PHASE I CULVERT EXTENSION IN THE FOLLOWING LOCATION: (SEE ROADWAY AND STRUCTURE DESIGN PLANS AND SHEETS TCP-2C THROUGH TCP-2G, TCP-9, TCP-21 AND TCP-25)

  -L- STA. 109+37+/- LT

- BEGIN CONSTRUCTION -L- FULL WIDTH AWAY FROM TRAFFIC UP TO BUT NOT INCLUDING THE FINAL SURFACE LAYER TOGETHER WITH -Y1A- IN THE FOLLOWING LOCATIONS: (SEE ROADWAY PLANS AND SHEETS TCP-4 THROUGH TCP-25)

  -L- STA. 11+00+/- TO STA. 15+60+/-
  -L- STA. 16+40+/- TO STA. 18+80+/-
  -Y1A- STA. 10+00+/- TO THE EDGE AND ELEVATION OF THE EXISTING PAVEMENT OF -Y1A-
  -L- STA. 94+00+/- TO STA. 97+40+/- PAVING UP THE EDGE AND ELEVATION OF EXISTING US 19
  -L- STA. 100+00+/- TO STA. 104+00+/- PAVING UP THE EDGE AND ELEVATION OF EXISTING US 19
  -L- STA. 104+80+/- TO STA. 107+80+/- PAVING UP THE EDGE AND ELEVATION OF EXISTING US 19

- USING ROADWAY STANDARD DRAWING 1101.02, SHEET 1 OF 9 AND FLAGGERS BEGIN CONSTRUCTION OF -DET2- FROM STA. 10+00+/- TO STA. 15+29+/- (SEE ROADWAY PLANS AND SHEETS TCP-4 AND TCP-11A)

- USING ROADWAY STANDARD DRAWING 1101.02, SHEET 1 OF 9 AND FLAGGERS BEGIN CONSTRUCTION OF -L- SOUTHBOUND LANES INCLUDING ALL DRIVEWAY AND -Y- LINE CONNECTIONS ALONG THE SOUTHBOUND LANES UP TO BUT NOT INCLUDING THE FINAL SURFACE LAYER IN THE FOLLOWING LOCATIONS:(SEE ROADWAY PLANS AND SHEETS TCP-4 THROUGH TCP-6 AND TCP-11 THROUGH TCP-15, TCP-60 AND TCP-61)

  -L- STA. 16+00+/- TO STA. 38+30+/-
  -L- STA. 38+60+/- TO STA. 45+00+/- PAVING TO THE EDGE AND ELEVATION OF EXISTING US 19 BETWEEN STATIONS 44+00+/- AND 45+00+/-
  -L- STA. 77+34+/- TO STA. 85+78+/-
  -L- STA. 97+00+/- TO STA. 100+00+/-

- USING ROADWAY STANDARD DRAWING 1101.02, SHEET 1 OF 9 AND FLAGGERS BEGIN CONSTRUCTION OF -L- NORTHBOUND LANES INCLUDING ALL DRIVEWAY AND -Y- LINE CONNECTIONS ALONG THE NORTHBOUND LANES UP TO BUT NOT INCLUDING THE FINAL SURFACE LAYER IN THE FOLLOWING LOCATIONS: (SEE ROADWAY PLANS AND SHEETS TCP-6 THROUGH TCP-8, SHEETS TCP-15 THROUGH TCP-20, TCP-60 AND TCP-61)

  -L- STA. 43+30+/- AT -Y8- TO STA. 59+60+/-
  -L- STA. 60+00+/- TO STA. 72+55+/-
  -L- STA. 72+80+/- TO STA. 77+40+/- PAVING TO THE EDGE AND ELEVATION OF EXISTING US 19 BETWEEN -Y8- AT -L- STA. 43+40+/- TO STA. 45+00+/-
  -L- STA. 83+56+/- TO STA. 85+03+/- PAVING TO THE EDGE AND ELEVATION OF EXISTING US 19
  -L- STA 85+03+/- TO STA. 94+00+/- PAVING UP TO THE EDGE AND ELEVATION OF EXISTING US 19
  -L- STA. 97+40+/- TO STA. 100+26+/- PAVING UP THE EDGE AND ELEVATION OF EXISTING US 19

STEP 3 - USING ROADWAY STANDARD DRAWING 1101.02, SHEET 1 OF 9 AND FLAGGERS CONSTRUCT -Y18- (SR 1507)REALIGNMENT UP TO BUT NOT INCLUDING THE FINAL SURFACE LAYER TOGETHER WITH TEMPORARY PAVEMENT MARKINGS AND MARKERS AND OPEN TO TRAFFIC. (SEE ROADWAY PLANS AND SHEETS TCP-8 AND TCP-20)

- USING ROADWAY STANDARD DRAWING 1101.02, SHEET 1 OF 9 AND FLAGGERS CONSTRUCT DRIVEWAYS -D2- AND -D2A- TO DIVERT LOCAL TRAFFIC BACK TO EXISTING US 19 AT -L- STA. 15+40+/-. (SEE ROADWAY PLANS AND SHEETS TCP-4 AND TCP-11)

STEP 4 - USING ROADWAY STANDARD DRAWING 1101.02, SHEET 1 OF 9 AND FLAGGERS BEGIN CONSTRUCTION OF PROPOSED -Y5- (SR 1522) REALIGNMENT AND DRIVEWAY -D5-. MAINTAIN ACCESS TO -Y7-(SR 1521) WHILE -Y5- REMAINS CLOSED. (SEE ROADWAY PLANS AND SHEETS TCP-5 AND TCP-14)

STEP 5 - COMPLETE THE BRIDGE REPLACEMENT AND RECONSTRUCT THAT PORTION OF -Y2- CLOSED, UP TO BUT NOT INCLUDING THE FINAL SURFACE LAYER BETWEEN -Y2- STA. 10+90+/- TO STA. 12+45+/-.

- USING ROADWAY STANDARD DRAWING 1101.02, SHEET 1 OF 9 AND FLAGGERS CONSTRUCT TEMPORARY WEDGING OF SUFFICIENT AMOUNT TO ALLOW ACCESS FROM -Y2- TO EXISTING US 19 PAVEMENT AT -Y2- STA. 12+45+/-.

- INSTALL TEMPORARY PAVEMENT MARKINGS AND MARKERS ALONG -Y2- AND REOPEN -Y2- TO TRAFFIC.

- USING TYPE III BARRICADES WITH R11-2 (ROAD CLOSED), R11-4 (ROAD CLOSED TO THRU TRAFFIC) AND M4-10R (DETOUR ARROW) PANELS AS SHOWN ON SHEET TCP-13, CLOSE -Y2- TO THROUGH TRAFFIC AT -L- STA. 22+20+/-.

- USING ROADWAY STANDARD DRAWING 1101.02, SHEET 1 OF 9 AND FLAGGERS CONSTRUCT REMAINDER OF -Y2- FROM STA. 10+00+/- TO STA. 10+90+/- (SEE ROADWAY PLANS AND SHEET TCP-13)

- COMPLETE CONSTRUCTION OF ALL CULVERTS BEGUN IN PHASE I, STEP 2 WITHIN THE SOUTHBOUND LANES OF -L-.

- USING ROADWAY STANDARD DRAWING 1101.02, SHEET 1 OF 9 AND FLAGGERS COMPLETE CONSTRUCTION OF -L- SOUTHBOUND LANES INCLUDING ALL DRIVEWAY AND -Y- LINE CONNECTIONS ALONG THE SOUTHBOUND LANES UP TO BUT NOT INCLUDING THE FINAL SURFACE LAYER IN THE FOLLOWING LOCATIONS:(SEE ROADWAY PLANS AND SHEETS TCP-4 THROUGH TCP-6 AND TCP-11 THROUGH TCP-15, TCP-60 AND TCP-61)

  -L- STA. 16+00+/- TO STA. 38+30+/-
  -L- STA. 38+60+/- TO STA. 45+00+/- PAVING TO THE EDGE AND ELEVATION OF EXISTING US 19 BETWEEN STATIONS 44+00+/- AND 45+00+/-
  -L- STA. 77+34+/- TO STA. 85+78+/-
  -L- STA. 97+00+/- TO STA. 100+00+/-

- USING ROADWAY STANDARD DRAWING 1101.02, SHEET 1 OF 9 AND FLAGGERS CONSTRUCT REMAINDER OF PROPOSED -Y5- TOGETHER WITH THE TEMPORARY WEDGING OF SUFFICIENT AMOUNT TO ALLOW ACCESS FROM -Y5- TO EXISTING US 19 PAVEMENT.

- PLACE TEMPORARY MARKINGS AND MARKERS ALONG -Y5-. REMOVE DEVICES AND REOPEN -Y5- TO TRAFFIC.

NOTE: -Y5- AND -Y7- ARE NOT TO BE CLOSED AT THE SAME TIME.

- INSTALL TYPE III BARRICADES WITH R11-4 (ROAD CLOSED TO THRU TRAFFIC) SIGN PANEL AT THE -Y7- (SR 1521) -Y5- (SR 1522)INTERSECTION DIVERTING THROUGH TRAFFIC ONTO -Y5- AND CLOSE -Y7- (SR 1521) AT -L- TO TRAFFIC. (SEE SHEET TCP-14)

- CONSTRUCT -Y7- UP TO BUT NOT INCLUDING THE FINAL SURFACE LAYER TOGETHER WITH THE PROPOSED SOUTHBOUND LANES OF -L- FROM STA. 38+30+/- TO STA. 38+60+/-.

STEP 6 - CLOSE -Y14- AS SHOWN ON SHEET TCP-18 TO TRAFFIC MAINTAINING ACCESS THROUGH -BY17- AND CONSTRUCT THE PROPOSED REALIGNMENT OF -Y14- UP TO BUT NOT INCLUDING THE FINAL SURFACE LAYER. (SEE ROADWAY PLANS)

- CONSTRUCT -Y11- UP TO BUT NOT INCLUDING THE FINAL SURFACE LAYER AND DRIVEWAY -D8- WHILE -Y11- TRAFFIC IS BEING DIVERTED TO THE -Y12- INTERSECTION WITH -L- PER PHASE I, STEP 2. (SEE ROADWAY PLANS AND SHEETS TCP-6 AND TCP-17)

- COMPLETE CONSTRUCTION OF ALL CULVERTS BEGUN IN PHASE I, STEP 2 WITHIN THE NORTHBOUND LANES OF -L-.

APPROVED: Jessica Kuse DATE: 8/9/07

SEAL

NORTH CAROLINA PROFESSIONAL SEAL 027811 ENGINEER JESSICA D. KUSE

PHASING

SCALE:	NONE
DATE:	07/07
DWG. BY:	RMG
DESIGN BY:	RMG
REVIEWED BY:	JDK

DIVISION OF HIGHWAYS STATE OF NORTH CAROLINA DEPARTMENT OF TRANSPORTATION TRAFFIC CONTROL UNIT

REVISIONS

CADD FILE

09-AUG-2007 10:23
\\dot\fsroot\proj\tipprojects-r\r2518a\traffic\trafficontrol\tcp\r-2518a_tc_tcp_phasing.dgn
rmgarrett AT WZTC22229

PROJ. REFERENCE NO.	SHEET NO.
R-2518A	TCP-3B

METRIC

- USING ROADWAY STANDARD DRAWING 1101.02, SHEET 1 OF 9 AND FLAGGERS COMPLETE CONSTRUCTION OF -L- NORTHBOUND LANES INCLUDING ALL DRIVEWAY AND -Y- LINE CONNECTIONS ALONG THE NORTHBOUND LANES UP TO BUT NOT INCLUDING THE FINAL SURFACE LAYER IN THE FOLLOWING LOCATIONS: (SEE ROADWAY PLANS AND SHEETS TCP-6 THROUGH TCP-8, SHEETS TCP-15 THROUGH TCP-20, TCP-60 AND TCP-61)

  -L- STA. 43+30+/- AT -Y8- TO STA. 59+60+/-
  -L- STA. 60+00+/- TO STA. 72+55+/-
  -L- STA. 72+80+/- TO STA. 77+40+/-
  PAVING TO THE EDGE AND ELEVATION OF EXISTING US 19 BETWEEN
  -L- STA. 43+30+/- TO STA. 77+40+/-
  -L- STA. 83+56+/- TO STA. 85+03+/-
  PAVING TO THE EDGE AND ELEVATION OF EXISTING US 19
  -L- STA 85+03+/- TO STA. 94+00+/-
  PAVING UP TO THE EDGE AND ELEVATION OF EXISTING US 19
  -L- STA. 97+40+/- TO STA. 100+26+/-
  PAVING UP THE EDGE AND ELEVATION OF EXISTING US 19

- USING ROADWAY STANDARD DRAWING 1101.02, SHEET 1 OF 9 AND FLAGGERS INSTALL TEMPORARY WEDGING AT -BY17- OF A SUFFICIENT AMOUNT TO ALLOW ACCESS FROM -BY17- TO EXISTING US 19 PAVEMENT WHILE CONSTRUCTING PROPOSED -L- NORTHBOUND LANES FROM -L- STA. 72+55+/- TO STA. 72+80+/-.

STEP 7 - USING ROADWAY STANDARD DRAWING 1101.02, SHEET 1 OF 9 AND FLAGGERS INSTALL TEMPORARY WEDGING AT -Y11- OF SUFFICIENT AMOUNT TO ALLOW ACCESS FROM -Y11- TO EXISTING US 19 PAVEMENT.

- PLACE TEMPORARY MARKINGS AND MARKERS ALONG -Y11-. REMOVE DEVICES AND REOPEN -Y11- TO TRAFFIC.

- INSTALL TYPE III BARRICADES WITH R11-2 (ROAD CLOSED) SIGN AND M4-10R (RT DETOUR ARROW) AS APPLICABLE TO CLOSE -Y12- TO TRAFFIC DIVERTING TRAFFIC TO -Y11-. (SEE SHEET TCP-17)

- CONSTRUCT -Y12- UP TO BUT NOT INCLUDING THE FINAL SURFACE LAYER TOGETHER WITH THE PROPOSED NORTHBOUND LANES OF -L- FROM -L- STA. 59+60+/- TO STA. 60+00/-.

- USING ROADWAY STANDARD DRAWING 1101.02, SHEET 1 OF 9 AND FLAGGERS BEGIN CONSTRUCTION OF -Y1- (SR 1541) AND DRIVEWAYS -D1A- AND -D1B- WHILE MAINTAINING TRAFFIC ON EXISTING -Y1- IN EXISTING PATTERN AND ACCESS TO DRIVEWAYS. (SEE ROADWAY PLANS AND TCP-4 AND TCP-10)

STEP 8 - USING ROADWAY STANDARD DRAWING 1101.02, SHEET 1 OF 9 AND FLAGGERS INSTALL PROPOSED CROSS-DRAINS TEMPORARILY SEALING AS DIRECTED BY THE ENGINEER IN ANTICIPATION OF THE PHASE II TRAFFIC PATTERN AS SHOWN ON SHEETS TCP- 26 THROUGH TCP-28.

- USING ROADWAY STANDARD DRAWING 1101.02, SHEET 1 OF 9 AND FLAGGERS INSTALL A SUFFICIENT AMOUNT OF WEDGING TO TRANSITION BETWEEN THE EXISTING EDGE OF PAVEMENT OF US 19 TO THAT OF THE PROPOSED NORTHBOUND LANES OF -L- IN THE FOLLOWING LOCATIONS:(SEE SHEETS TCP-26 AND TCP-27)

  -L- STA. 44+80+/- TO STA. 45+80+/-
  -L- STA. 77+20+/- TO STA. 78+50+/-

STEP 9 - USING ROADWAY STANDARD DRAWING 1101.02, SHEET 1 OF 9 AND FLAGGERS COMPLETE CONSTRUCTION OF -DET2- FROM STA. 10+00+/- TO STA. 15+29+/- (SEE ROADWAY PLANS AND SHEETS TCP-4 AND TCP-11A)

- BEGIN PLACEMENT OF TEMPORARY PAVEMENT MARKINGS AND MARKERS ALONG THOSE PORTIONS OF THE NEWLY CONSTRUCTED -L- AND -DET2- ROADWAYS OUTSIDE OF EXISTING TRAVEL LANES IN PREPARATION OF THE SHIFTING OF TRAFFIC INTO THE PHASE II PATTERNS. (SEE SHEETS TCP-29 THROUGH TCP-33, TCP-35, TCP-35A AND TCP-37 THROUGH TCP-41)

- INSTALL OFF-SITE DETOUR SIGNS FOR -Y3- (SR 1540) CLOSURE AND COVER AS SHOWN ON SHEETS TCP-44 AND TCP-45.

STEP 10 - USING ROADWAY STANDARD DRAWING 1101.02, SHEET 1 OF 9 AND FLAGGERS CONSTRUCT OR COMPLETE THE FOLLOWING: (SEE ROADWAY PLANS AND SHEETS TCP- 4 THROUGH TCP-8 AND TCP-10)

  -L- STA. 9+25+/- TO STA. 11+00+/-
  -Y1- STA. 10+20+/- TO STA. 11+75+/-
  -D1- STA. 10+09+/- TO STA. 10+25+/-
  -D1A- STA. 10+00+/- TO STA. 10+85+/-
  -D1B- STA. 10+00+/- TO STA. 10+34+/-

- USING ROADWAY STANDARD DRAWING 1101.02, SHEET 1 OF 9 AND FLAGGERS COMPLETE CONSTRUCTION OF PROPOSED DRAINAGE, UTILITY RELOCATIONS AND ANY RETAINING WALLS RELATIVE TO PHASE I CONSTRUCTION AREAS. (SEE ROADWAY AND STRUCTURE DESIGN PLANS AND SHEETS TCP-4 THROUGH TCP-9).

- UNCOVER OFF-SITE DETOUR SIGNS AND CLOSE -Y3- (SR 1540)PLACING TRAFFIC ONTO THE OFF-SITE DETOUR ROUTE.(SEE SHEETS TCP-43 AND TCP-44)

- USING ROADWAY STANDARD DRAWING 1101.02, SHEET 1 OF 9 AND FLAGGERS INSTALL ALL TRAFFIC CONTROL DEVICES AND REMAINDER OF TEMPORARY PAVEMENT MARKINGS AND MARKERS NECESSARY TO ROUTE -Y1- AND -L- TRAFFIC INTO THE PHASE II PATTERN. (SEE SHEETS TCP-29 THROUGH TCP-33 TCP-35, TCP-35A AND TCP-37 THROUGH TCP-41)

- USING ROADWAY STANDARD DRAWING 1101.02, SHEET 1 OF 9 AND FLAGGERS SHIFT -Y1-, -Y1A- AND -L- TRAFFIC INTO THE INTERIM PHASE II TRAFFIC PATTERN WHILE SIMULTANEOUSLY CLOSING EXISTING US 19 USING TYPE III BARRICADES WITH R11-2(ROAD CLOSED) SIGN PANELS AS NECESSARY AT THE LOCATIONS SHOWN ON SHEETS TCP-35A AND TCP-37.

PHASE II

WHENEVER THE WORK OF PHASE II STEPS 1 THROUGH 12 REQUIRES A BLASTING OPERATION, SEE LOCAL NOTE 1 ON SHEET TCP-2A, INTERMEDIATE CONTRACT TIME AND LIQUIDATED DAMAGES.

STEP 1 - COMPLETE THE REMAINDER OF -L- AND DRIVEWAYS -D2A- AND -Y1A- CONSTRUCTION UP TO BUT, NOT INCLUDING THE FINAL SURFACE LAYER IN THE FOLLOWING LOCATIONS: (SEE ROADWAY PLANS AND SHEETS TCP-29 AND TCP-35A)

  -L- STA. 15+60+/- TO STA. 16+40+/-
  -D2A- STA. 10+82+/- TO STA. 11+50+/-
  -Y1A- STA. 10+00+/- TO STA. 12+75+/-

- INSTALL ALL TRAFFIC CONTROL DEVICES AND REMAINDER OF TEMPORARY PAVEMENT MARKINGS AND MARKERS AND SHIFT -L- TRAFFIC INTO THE PHASE II PATTERN DEPICTED ON SHEETS TCP-29A THROUGH TCP-33 TCP-35, TCP-36 AND TCP-37 THROUGH TCP-41)

- REMOVE THAT PORTION OF EXISTING -Y3- (SR 1540) DEPICTED IN ROADWAY PLANS AND COMPLETE CONSTRUCTION OF -Y3- INCLUDING TIEINS UP TO BUT NOT INCLUDING THE FINAL SURFACE LAYER TO ALLOW ACCESS TO THE PHASE II TRAFFIC PATTERN OF -L- US 19.

- INSTALL -Y3- TEMPORARY PAVEMENT MARKINGS AND MARKERS AS SHOWN ON SHEETS TCP-30 AND TCP-37.

- REMOVE -Y3- OFF-SITE DETOUR SIGNS AND OPEN -Y3- TO TRAFFIC.

STEP 2 - USING ROADWAY STANDARD DRAWING 1101.02, SHEET 1 OF 9 AND FLAGGERS BEGIN CONSTRUCTION OF PROPOSED DRAINAGE, UTILITY RELOCATIONS AND ANY RETAINING WALLS RELATIVE TO PHASE II CONSTRUCTION AREAS. (SEE ROADWAY AND STRUCTURE DESIGN PLANS AND SHEETS TCP-29 THROUGH TCP-34).

- INSTALL TEMPORARY SHORING, PCB, CRASH CUSHIONS AS APPLICABLE AND BEGIN CONSTRUCTION OF PROPOSED PHASE II CULVERT EXTENSIONS OR NEW CULVERTS IN THE FOLLOWING LOCATIONS: (SEE ROADWAY PLANS AND SHEETS TCP-2C THROUGH TCP-2G AND TCP-30 AND TCP-46)

  -L- STA. 19+72+/- RT
  -L- STA. 21+35+/- RT
  -L- STA. 82+62+/- RT

- REMOVE TEMPORARY SHORING PUT INTO PLACE DURING PHASE I AT -L- STA. 82+62+/-.

APPROVED: DATE: 2/25/08

SEAL

NORTH CAROLINA PROFESSIONAL SEAL 027811 ENGINEER JESSICA D. KUSE

PHASING

SCALE:	NONE
DATE:	07/07
DWG. BY:	RMG
DESIGN BY:	RMG
REVIEWED BY:	JDK

DIVISION OF HIGHWAYS STATE OF NORTH CAROLINA DEPARTMENT OF TRANSPORTATION TRAFFIC CONTROL

REVISIONS

CADD FILE

22-FEB-2008 08:32
\\dot\dfsroot0\proj\tipprojects-r\r2518a\traffic\trafficcontrol\tcp\R-2518A_TC_TCP_3B.dgn
rmgarrett AT WZTC22229i

- REMOVE TEMPORARY DIVERSION CHANNEL LEADING TO TEMPORARY 2.62m x 1.8m CSP PIPE ARCH PUT INTO PLACE DURING CONSTRUCTION PHASE I, STEP 2.

- PLACE TEMPORARY MARKINGS AND MARKERS ALONG -Y14- AND REMOVE DEVICES PLACED DURING PHASE I, STEP 6 TO REOPEN -Y14- TO TRAFFIC.

- INSTALL TYPE III BARRICADES WITH R11-2 (ROAD CLOSED) SIGN AND CLOSE -BY17- TO TRAFFIC DIVERTING TRAFFIC TO -Y14-. (SEE SHEET TCP-32)

- CONSTRUCT -BY17- CUL-DE-SAC UP TO BUT NOT INCLUDING THE FINAL SURFACE LAYER TOGETHER WITH THE PROPOSED GUARDRAIL AND END OF ROAD MARKERS. (SEE ROADWAY PLANS AND SHEET PMP-12)

- OPEN -BY17- TO CUL-DE-SAC ONCE COMPLETED.

- USING ROADWAY STANDARD DRAWING 1101.02, SHEET 1 OF 9 AND FLAGGERS CONSTRUCT PROPOSED ON-SITE DETOUR -DET- FROM STA. 10+00+/- TO STA. 12+43+/-. (SEE ROADWAY PLANS AND SHEETS TCP-34 AND TCP-42)

- USING ROADWAY STANDARD DRAWING 1101.02, SHEET 1 OF 9 AND FLAGGERS INSTALL TEMPORARY PAVEMENT MARKINGS AND MARKERS AS SHOWN ON TCP-42 AND SHIFT -L- TRAFFIC ONTO DETOUR -DET-.

STEP 3 - INSTALL TEMPORARY SHORING, PCB, CRASH CUSHIONS AS APPLICABLE AND CONSTRUCT PROPOSED PHASE II CULVERT EXTENSION OR NEW CULVERT IN THE FOLLOWING LOCATION: (SEE ROADWAY PLANS AND SHEETS TCP-2C THROUGH TCP-2G AND TCP-32, TCP-42 AND TCP-49)

-L- STA. 109+37+/- RT

- BACKFILL AND RESTORE PAVEMENT AND ANY TEMPORARY PAVEMENT MARKINGS AND MARKERS REMOVED.

- INSTALL TYPE III BARRICADES WITH R11-2 (ROAD CLOSED) AND W1-6L (LEFT ARROW)PANELS AS APPLICABLE AT -L- AND ALONG -Y17- AND CLOSE -Y17- TO TRAFFIC DIVERTING TRAFFIC TO -Y16-. (SEE SHEETS TCP-32 AND TCP-33)

- REMOVE EXISTING BRIDGE ALONG -Y17- AND CONSTRUCT PROPOSED CULVERT EXTENSION AT -Y17- STA. 11+90+/- AND -Y17- ROADWAY UP TO BUT NOT INCLUDING THE FINAL SURFACE LAYER TO THE PROPOSED NORTHBOUND LANES OF -L- US 19. (SEE ROADWAY AND STRUCTURE DESIGN PLANS)

- USING ROADWAY STANDARD DRAWING 1101.02, SHEET 1 OF 9 AND FLAGGERS BEGIN CONSTRUCTION OF PROPOSED -L- LANES TOGETHER WITH ALL DRIVEWAY CONNECTIONS AND OTHER -Y- LINES UP TO BUT NOT INCLUDING THE FINAL SURFACE LAYER IN THE FOLLOWING LOCATIONS:(SEE ROADWAY PLANS AND SHEETS TCP-29 THROUGH TCP-31 THROUGH 34, TCP-36 THROUGH TCP-42 AND TCP-60 AND TCP-61)

-L- STA. 15+60+/- TO 16+40+/- (NB)
-L- STA. 18+80+/- TO STA. 44+30+/- AT -Y8- (SR 1526)(NB)
-L- STA. 46+00+/- TO 76+10+/- (SB)
-L- STA. 77+40+/- TO 84+40+/- (NB)
-L- STA. 84+40+/- TO 94+000+/- (SB)
-L- STA. 107+80+/- TO STA. 109+40+/- (NB)
-L- STA. 109+80+/- TO STA. 115+07+/- (NB & SB)

STEP 4 - USING ROADWAY STANDARD DRAWING 1101.02, SHEET 1 OF 9 AND FLAGGERS CONSTRUCT DRIVEWAYS -D12- AND -D12A- AND A SUFFICIENT AMOUNT OF -Y16- TO MAINTAIN ACCESS TO -L- (US 19) IN THE PHASE II PATTERN AS SHOWN ON SHEET TCP-40. (SEE ROADWAY PLANS)

NOTE: ACCESS TO DRIVEWAYS -D12- AND -D12A- ARE TO BE MAINTAINED TO EXISTING -Y16- DURING THIS CONSTRUCTION SEQUENCE.

STEP 5 - INSTALL TEMPORARY PAVEMENT MARKINGS AND MARKERS ALONG -Y17-. REMOVE DEVICES AND REOPEN -Y17- TO TRAFFIC.

STEP 6 - INSTALL TYPE III BARRICADES WITH R11-2 (ROAD CLOSED) AND W1-6L(LEFT ARROW)PANELS AS APPLICABLE AT -L- AND ALONG -Y16- AND CLOSE -Y16- TO TRAFFIC DIVERTING TRAFFIC TO -Y17-. (SEE SHEETS TCP-32, TCP-33 AND TCP-40)

NOTE: ACCESS TO DRIVEWAYS -D12- AND -D12A- ARE TO BE MAINTAINED TO -L- (US 19) ALONG THAT PORTION OF -Y16- CONSTRUCTED DURING PHASE II, STEP 4.

STEP 7 - REMOVE EXISTING STRUCTURE ALONG -Y16- AT STA. 11+00+/-

- INSTALL TEMPORARY SHORING, PCB, CRASH CUSHIONS AS APPLICABLE AND CONSTRUCT PROPOSED PHASE II CULVERT EXTENSION AND OR NEW CULVERT IN THE FOLLOWING LOCATION: (SEE ROADWAY PLANS AND SHEETS TCP-2C THROUGH TCP-2G AND TCP-32, TCP-40 AND TCP-47)

-L- STA. 78+88+/- RT

- COMPLETE CONSTRUCTION OF ALL CULVERTS BEGUN IN PHASE II, STEP 2.

STEP 8 - USING ROADWAY STANDARD DRAWING 1101.02, SHEET 1 OF 9 AND FLAGGERS COMPLETE CONSTRUCTION OF PROPOSED -L- LANES TOGETHER WITH ALL DRIVEWAY CONNECTIONS AND OTHER -Y- LINES UP TO BUT NOT INCLUDING FINAL SURFACE LAYER IN THE FOLLOWING LOCATIONS:(SEE ROADWAY PLANS AND SHEETS TCP-29 THROUGH TCP-31 THROUGH 34, TCP-36 THROUGH TCP-42 AND TCP-60 AND TCP-61)

-L- STA. 15+60+/- TO 16+40+/- (NB)
-L- STA. 18+80+/- TO STA. 44+30+/- AT -Y8- (SR 1526)(NB)
-L- STA. 46+00+/- TO 76+10+/- (SB)
-L- STA. 77+40+/- TO 84+40+/- (NB)
-L- STA. 84+40+/- TO 94+000+/- (SB)
-L- STA. 107+80+/- TO STA. 109+40+/- (NB)
-L- STA. 109+80+/- TO STA. 115+07+/- (NB & SB)
-Y16- STA. 10+00+/- TO STA. 11+32+/-

- REOPEN -Y16- TO TRAFFIC.

NOTE: US 19 TRAFFIC TO BE MAINTAINED IN A 2L, 2W PATTERN ALONG THE EXISTING ALIGNMENT OR AS DIRECTED BY THE ENGINEER DURING THIS CONSTRUCTION SEQUENCE.

STEP 9 - USING ROADWAY STANDARD DRAWING 1101.02, SHEET 1 OF 9 AND FLAGGERS SHIFT US 19 TRAFFIC BACK INTO THE PHASE I TRAFFIC PATTERN ALONG EXISTING US 19 FROM -L- STA. 108+00 TO STA. 110+00+/- AS DEPICTED ON SHEET TCP-21.

STEP 10 - INSTALL TEMPORARY SHORING, PCB, CRASH CUSHIONS AND TEMPORARY GUARDRAIL AS APPLICABLE AND REMOVE TEMPORARY 1700 CSP AND REMAINDER OF EXISTING CULVERT IN THE FOLLOWING LOCATION: (SEE ROADWAY PLANS AND SHEETS TCP-2C THROUGH TCP-2G AND TCP-43)

-L- STA. 109+50+/- LT

- USING ROADWAY STANDARD DRAWING 1101.02, SHEET 1 OF 9 AND FLAGGERS COMPLETE CONSTRUCTION OF PROPOSED DRAINAGE, UTILITY RELOCATIONS AND ANY RETAINING WALLS RELATIVE TO PHASE II CONSTRUCTION AREAS. (SEE ROADWAY AND STRUCTURE DESIGN PLANS AND SHEETS TCP-29 THROUGH TCP-34).

STEP 11 - PLACE TEMPORARY PAVEMENT MARKINGS AND MARKERS ALONG THOSE PORTIONS OF THE NEWLY CONSTRUCTED NORTHBOUND -L- ROADWAY OUTSIDE OF EXISTING TRAVEL LANES IN PREPARATION OF THE SHIFTING OF TRAFFIC INTO THE PHASE III PATTERN FROM -L- STA. 75+00+/- TO STA. 115+07+/-. (SEE SHEETS TCP-50 THROUGH TCP-55)

STEP 12 - USING ROADWAY STANDARD DRAWING 1101.02, SHEET 1 OF 9 AND FLAGGERS WEDGE TRANSITIONAL PAVEMENT CONNECTING THE PROPOSED NORTHBOUND LANES OF -L- FROM STA. 109+00+/- TO 110+80+/- UP TO THE EDGE AND ELEVATION OF US 19 AS CONSTRUCTED IN PHASE II, STEP 8. (SEE SHEET TCP-43)

- INSTALL ALL TRAFFIC CONTROL DEVICES AND REMAINDER OF TEMPORARY PAVEMENT MARKINGS AND MARKERS NECESSARY TO ROUTE -L- TRAFFIC INTO THE PHASE III PATTERN. (SEE SHEETS TCP-50 THROUGH TCP-55)

- USING ROADWAY STANDARD DRAWING 1101.02, SHEET 1 OF 9 AND FLAGGERS SHIFT -L- (US 19) TRAFFIC INTO THE PHASE III PATTERN AS SHOWN ON SHEETS TCP-50 THROUGH TCP-55.

APPROVED: Jessica Kuse DATE: 8/9/07

SEAL

NORTH CAROLINA PROFESSIONAL SEAL 027811 ENGINEER JESSICA D. KUSE

PHASING

SCALE:	NONE
DATE:	07/07
DWG. BY:	RMG
DESIGN BY:	RMG
REVIEWED BY:	JDK

DIVISION OF HIGHWAYS STATE OF NORTH CAROLINA DEPARTMENT OF TRANSPORTATION TRAFFIC ENGINEERING BRANCH

REVISIONS

CADD FILE

09-AUG-2007 10:23
\\cdot\dfs\root\proj\tipprojects\r2518a\traffic\trafficcontrol\tcp\r-2518a_tc_tcp_phasing.dgn
rmgarrett AT WZTC22229j

PROJ. REFERENCE NO.	SHEET NO.
R-2518A	TCP-3D

PHASE III

STEP 1 - INSTALL TEMPORARY SHORING, PCB, CRASH CUSHIONS AS APPLICABLE AND CONSTRUCT THE REMAINING SECTION OF THE NEW CULVERT BARREL AT -L- STA. 77+88+/-. (SEE ROADWAY AND STRUCTURE PLANS AND SHEETS TCP-2C THROUGH TCP-2G AND TCP-51 AND TCP-54)

- INSTALL TEMPORARY SHORING, PCB, CRASH CUSHIONS AS APPLICABLE AND REMOVE TEMPORARY 2.62m X 1.8m CSP PIPE ARCH AND REMAINDER OF EXISTING CULVERT IN THE FOLLOWING LOCATION: (SEE ROADWAY PLANS AND SHEETS TCP-2C THROUGH TCP-2G AND TCP-43)

  -L- STA. 82+60+/-

NOTE: THE CONTRACTOR HAS THE OPTION OF EITHER REMOVING THE REMAINING PORTION OF THE EXISTING CULVERT OR LEAVING IT IN PLACE FILLING WITH FLOWABLE FILL.

STEP 2 - USING ROADWAY STANDARD DRAWING 1101.02, SHEET 1 OF 9 AND FLAGGERS CONSTRUCT PROPOSED -L- TOGETHER WITH ANY REMAINING DRIVEWAY CONNECTIONS AND OTHER -Y- LINES UP TO BUT NOT INCLUDING FINAL SURFACE LAYER IN THE FOLLOWING LOCATIONS:(SEE ROADWAY PLANS AND SHEETS TCP-51 THROUGH TCP-54)

  -L- STA. 76+08+/- TO STA. 87+38+/-
  -L- STA. 104+30+/- TO STA. 104+80+/-
  -L- STA. 108+60+/- TO STA. 109+80+/-
  -L- STA. 112+05+/- TO STA. 113+43+/-

STEP 3 - USING ROADWAY STANDARD DRAWING 1101.02, SHEET 1 OF 9 AND FLAGGERS CONSTRUCT PROPOSED TEMPORARY CROSSOVER AS SHOWN ON TCP-53 AND TCP-55 FOR THE INTERIM TRAFFIC PATTERN LEADING TO EXISTING 2L, 2W US 19 PATTERN AT PROJECT'S END IF NEEDED.

- INSTALL TEMPORARY PAVEMENT MARKINGS AND MARKERS IN THE INTERIM PATTERN AS SHOWN ON SHEET TCP-56.

- USING DRUMS CLOSE THE PROPOSED US 19 MEDIAN LANES FROM STATION 9+00+/ TO 113+00+/- AND SHIFT SOUTHBOUND US 19 TRAFFIC INTO THE OUTERMOST TRAVEL LANE.

- USING DRUMS CLOSE THE PROPOSED US 19 NORTHBOUND MEDIAN LANE FROM STATION 9+00+/ TO 113+00+/- . NORTHBOUND TRAFFIC TO REMAIN IN THE OUTERMOST TRAVEL LANE.

STEP 4 - USING ROADWAY STANDARD DRAWING 1101.02, SHEET 1 OF 9 AND FLAGGERS AS NEEDED CONSTRUCT PROPOSED MEDIANS AND MEDIAN BARRIER ALONG -L- FROM STATION 9+25 TO END OF PROJECT AT STATION 115+07+/- LESS THAT PORTION NEEDED FOR THE TEMPORARY CROSSOVER AS DEPICTED ON SHEET TCP-56.

STEP 5 - USING ROADWAY STANDARD DRAWING 1101.02, SHEET 1 OF 9 AND FLAGGERS INSTALL THE FINAL SURFACE LAYER AND PLACE ALL FINAL PAVEMENT MARKINGS AND MARKERS AS SHOWN ON SHEETS PMP-02 THROUGH PMP-18.

STEP 6 - REMOVE ALL TRAFFIC CONTROL DEVICES AND OPEN -L- TO THE FINAL TRAFFIC PATTERN.

APPROVED: Jessica Kuse DATE: 8/9/07

SEAL

NORTH CAROLINA PROFESSIONAL SEAL 027811 ENGINEER JESSICA D. KUSE

PHASING

SCALE:	NONE
DATE:	07/07
DWG. BY:	RMG
DESIGN BY:	RMG
REVIEWED BY:	JDK

DIVISION OF HIGHWAYS STATE OF NORTH CAROLINA DEPT. OF TRANSPORTATION HDQR. TRAFFIC CONTROL

REVISIONS

CADD FILE

09-AUG-2007 10:23
\\cdot\dfsroot\DivProj\tipprojects-r\r2518a\traffic\trafficcontrol\tcp\r-2518a_tc_tcp_phasing.dgn
rmgarrett AT WZTC22229

PROJ. REFERENCE NO.	SHEET NO.
R-2518A	TCP-4

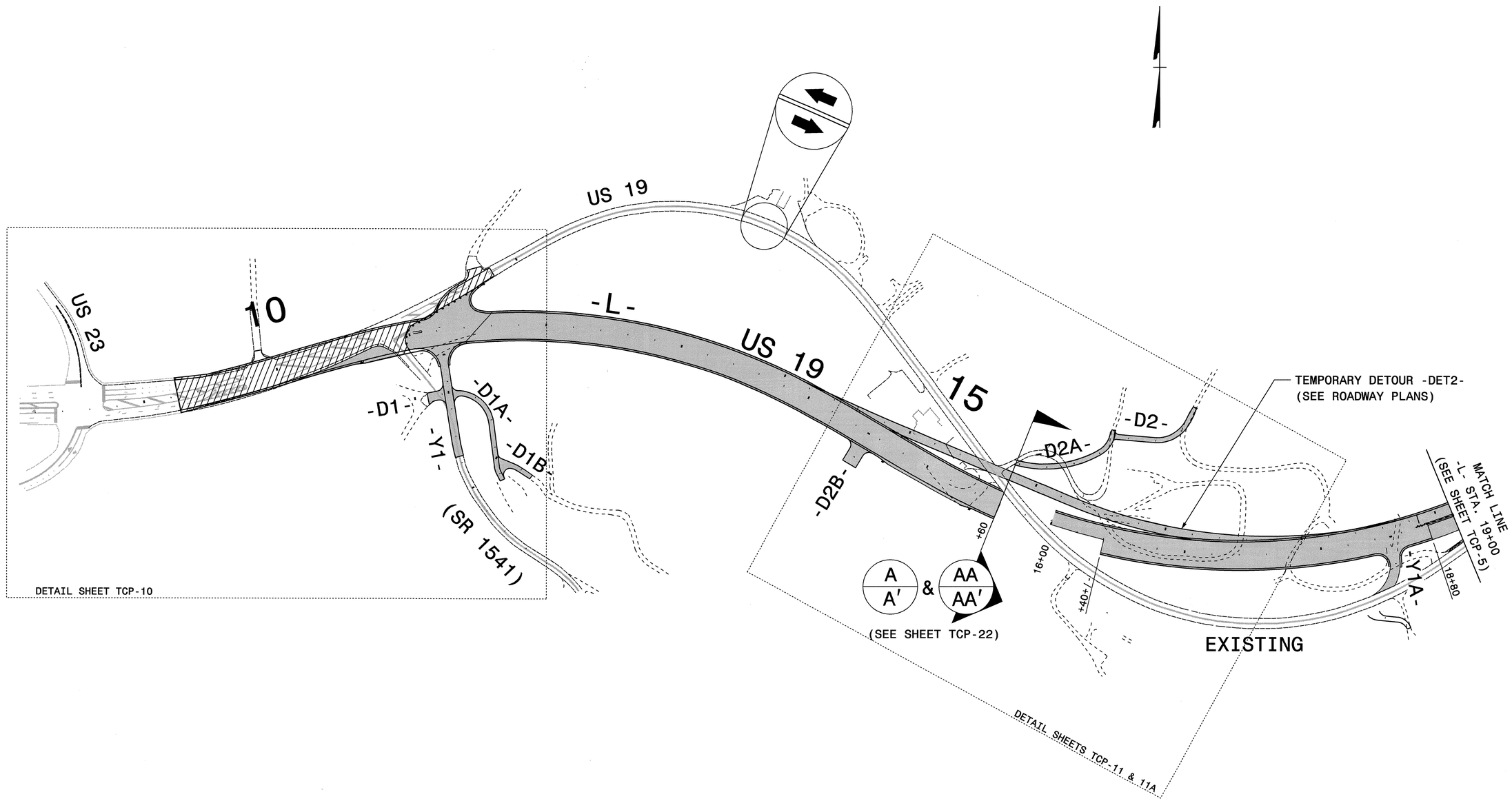

NOTES:

- MARKINGS SHOWN ARE APPROXIMATE.
- SPACE DRUMS NO MORE THAN 20m APART.
- SPACE DRUMS 5m APART IN RADII.
- SPACE DRUMS 5m APART AT DRIVEWAY ENTRANCES.
- SEE SHEETS TCP-60 & TCP-61 FOR TYPICAL SIGN / DEVICE SETUP AT -Y- LINES AND DRIVEWAYS CROSSING CONSTRUCTION AREAS.

APPROVED: Jessica Kuse DATE: 8/7/07

SEAL

NORTH CAROLINA PROFESSIONAL SEAL 027811 ENGINEER JESSICA D. KUSE

OVERVIEW PHASE I

SCALE:	NONE
DATE:	04/07
DWG. BY:	RMG
DESIGN BY:	RMG
REVIEWED BY:	JDK

DIVISION OF HIGHWAYS STATE OF NORTH CAROLINA TRAFFIC CONTROL

REVISIONS

CADD FILE

07-AUG-2007 09:34
\\dot\dfsroot01\proj\hpprojects-r\r2518a\traffic\trafficontrol\tcp\R-2518A_TC_TCP_OVR_PHI_01.dgn
rmgarrett AT WZTC22291

PROJ. REFERENCE NO.	SHEET NO.
R-2518A	TCP-5

METRIC

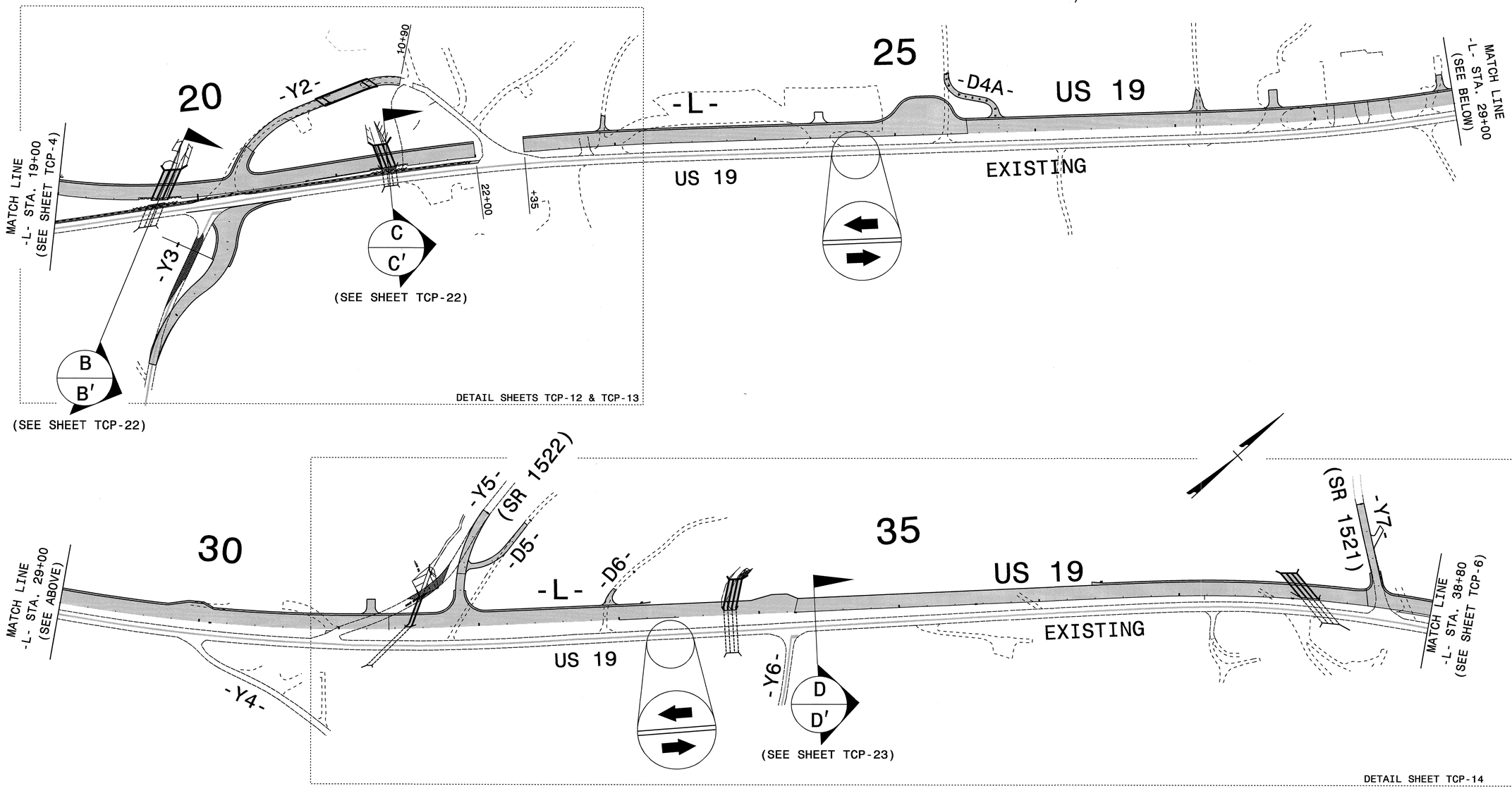

NOTES:

- MARKINGS SHOWN ARE APPROXIMATE.
- SPACE DRUMS NO MORE THAN 20m APART.
- SPACE DRUMS 5m APART IN RADII.
- SPACE DRUMS 5m APART AT DRIVEWAY ENTRANCES.
- SEE SHEETS TCP-60 & TCP-61 FOR TYPICAL SIGN / DEVICE SETUP AT -Y- LINES AND DRIVEWAYS CROSSING CONSTRUCTION AREAS.

APPROVED: Jessica Kuse DATE: 8/7/07

SEAL

NORTH CAROLINA PROFESSIONAL SEAL 027811 ENGINEER JESSICA D. KUSE

OVERVIEW PHASE I

SCALE:	NONE
DATE:	04/07
DWG. BY:	RMG
DESIGN BY:	RMG
REVIEWED BY:	JDK

DIVISION OF HIGHWAYS · STATE OF NORTH CAROLINA · DEPARTMENT OF TRANSPORTATION · TRAFFIC CONTROL

REVISIONS

CADD FILE

07-AUG-2007 09:34
\\dot\dfsroot01\proj\tipprojects-r\r2518a\traffic\trafficontrol\top\R-2518A_TC_TCP_OVR_PHI_02.dgn
rmgarrett AT WZ1C22291

PROJ. REFERENCE NO.	SHEET NO.
R-2518A	TCP-6

METRIC

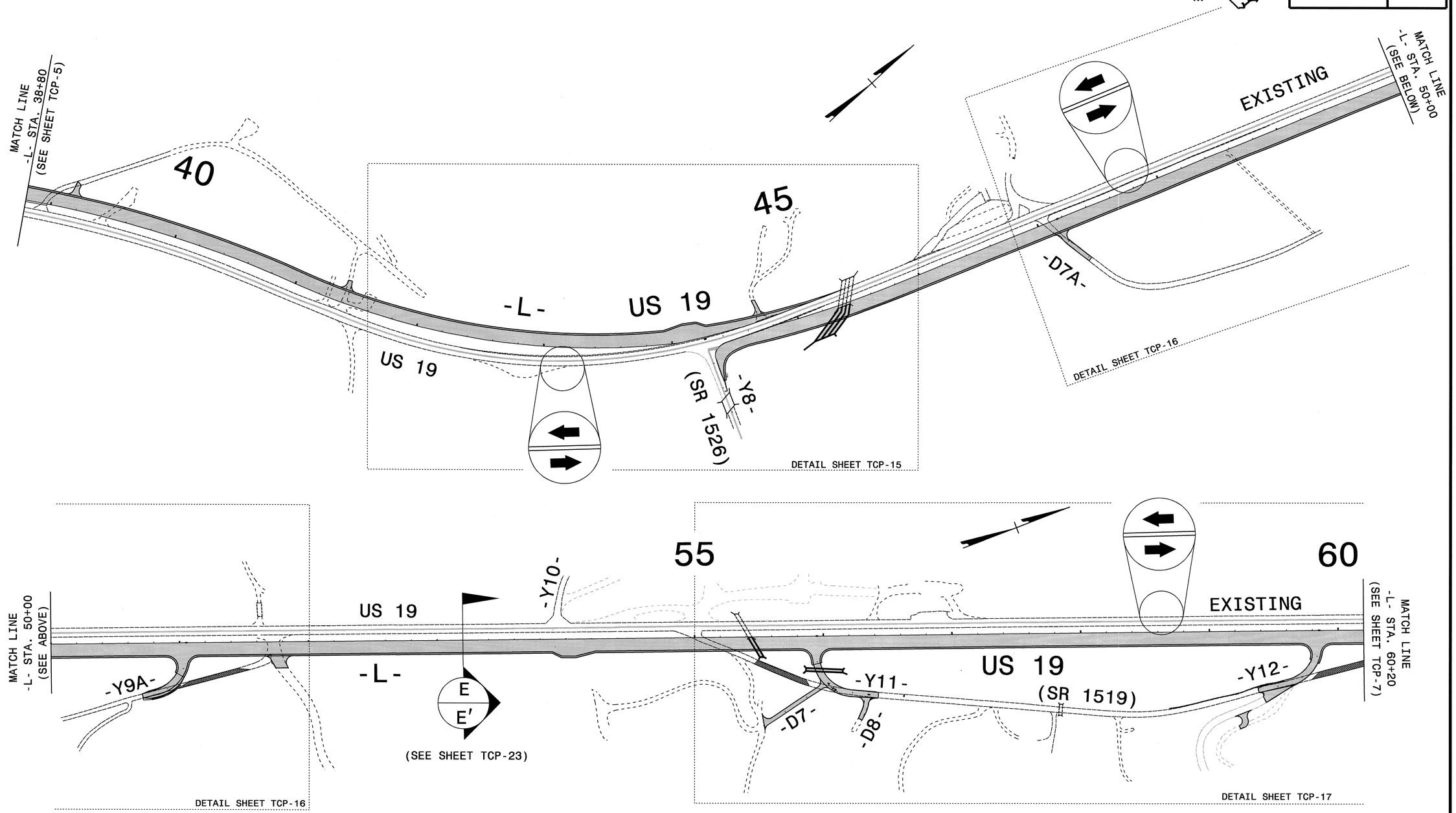

NOTES:

- MARKINGS SHOWN ARE APPROXIMATE.
- SPACE DRUMS NO MORE THAN 20m APART.
- SPACE DRUMS 5m APART IN RADII.
- SPACE DRUMS 5m APART AT DRIVEWAY ENTRANCES.
- SEE SHEETS TCP-60 & TCP-61 FOR TYPICAL SIGN / DEVICE SETUP AT -Y- LINES AND DRIVEWAYS CROSSING CONSTRUCTION AREAS.

APPROVED: Jessica Kuse DATE: 8/7/07

SEAL

NORTH CAROLINA PROFESSIONAL SEAL 027811 ENGINEER JESSICA D. KUSE

OVERVIEW PHASE I

SCALE:	NONE
DATE:	04/07
DWG. BY:	RMG
DESIGN BY:	RMG
REVIEWED BY:	JDK

DIVISION OF HIGHWAYS TRAFFIC ENGINEERING BRANCH

REVISIONS

CADD FILE

07-AUG-2007 09:35
\\dot\dfsroot01\proj\tipprojects-r\r2518a\traffic\trafficontrol\tcp\R-2518A_TC_TCP_OVR_PHL_03.dgn
rmgarrett AT WZTC222291

PROJ. REFERENCE NO.	SHEET NO.
R-2518A	TCP-7

METRIC

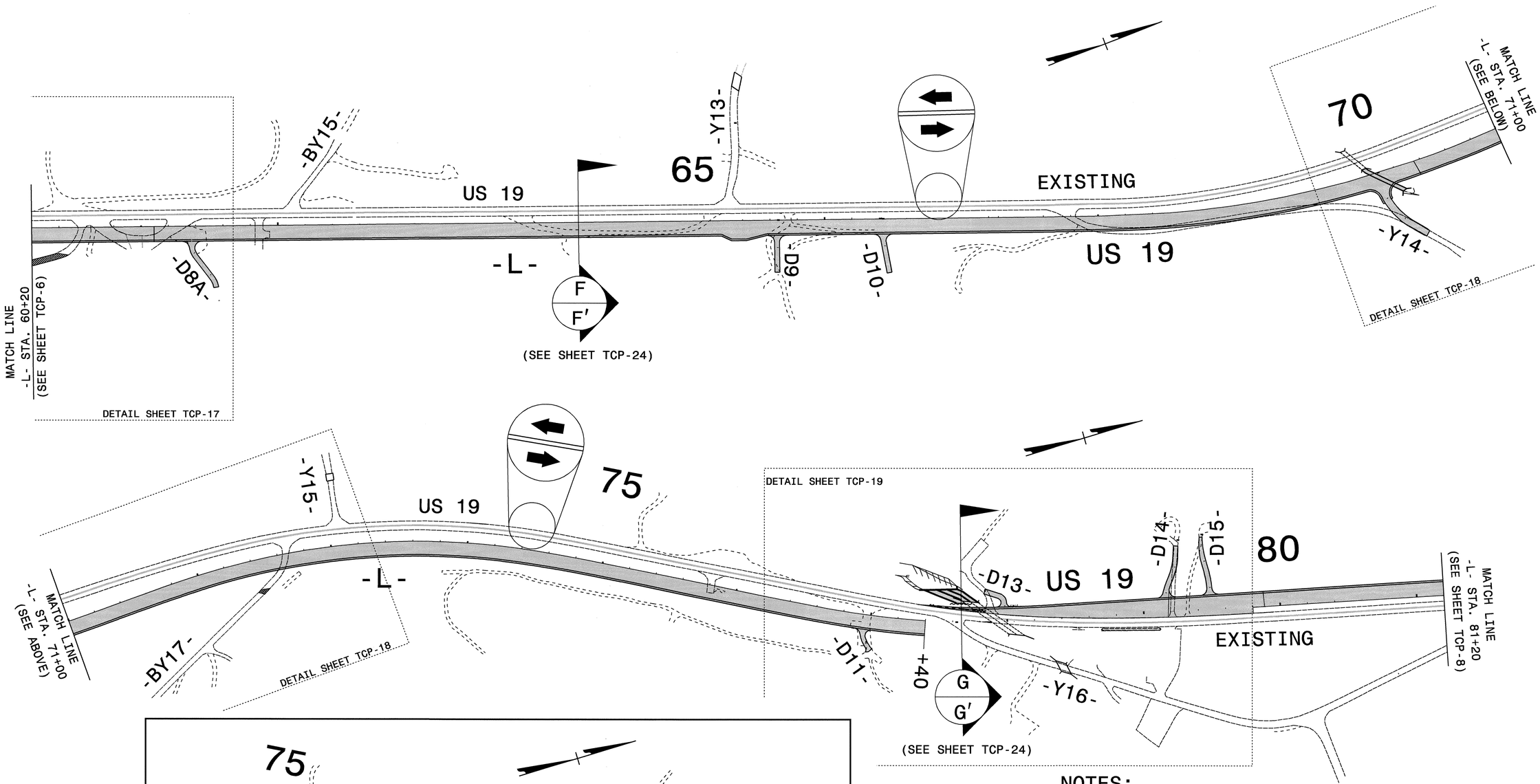

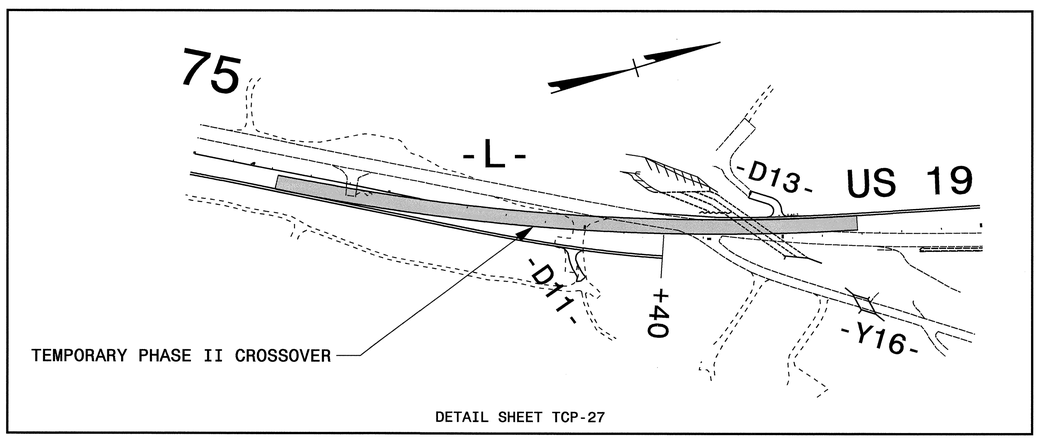

NOTES:

- MARKINGS SHOWN ARE APPROXIMATE.
- SPACE DRUMS NO MORE THAN 20m APART.
- SPACE DRUMS 5m APART IN RADII.
- SPACE DRUMS 5m APART AT DRIVEWAY ENTRANCES.
- SEE SHEETS TCP-60 & TCP-61 FOR TYPICAL SIGN / DEVICE SETUP AT -Y- LINES AND DRIVEWAYS CROSSING CONSTRUCTION AREAS.

APPROVED: Jessica Kuse DATE: 8/7/07

SEAL

NORTH CAROLINA PROFESSIONAL SEAL 027811 ENGINEER JESSICA D. KUSE

OVERVIEW PHASE I

SCALE:	NONE
DATE:	04/07
DWG. BY:	RMG
DESIGN BY:	RMG
REVIEWED BY:	JDK

DIVISION OF HIGHWAYS · NORTH CAROLINA DEPARTMENT OF TRANSPORTATION · TRAFFIC CONTROL

REVISIONS

CADD FILE

07-AUG-2007 09:35
\\dot\dfsroot0\proj\tipprojects-r\r2518a\traffic\trafficcontrol\tcp\R-2518A_TC_TCP_OVR_PHI_04.dgn
rmgarrett AT WZTC22291

PROJ. REFERENCE NO.	SHEET NO.
R-2518A	TCP-8

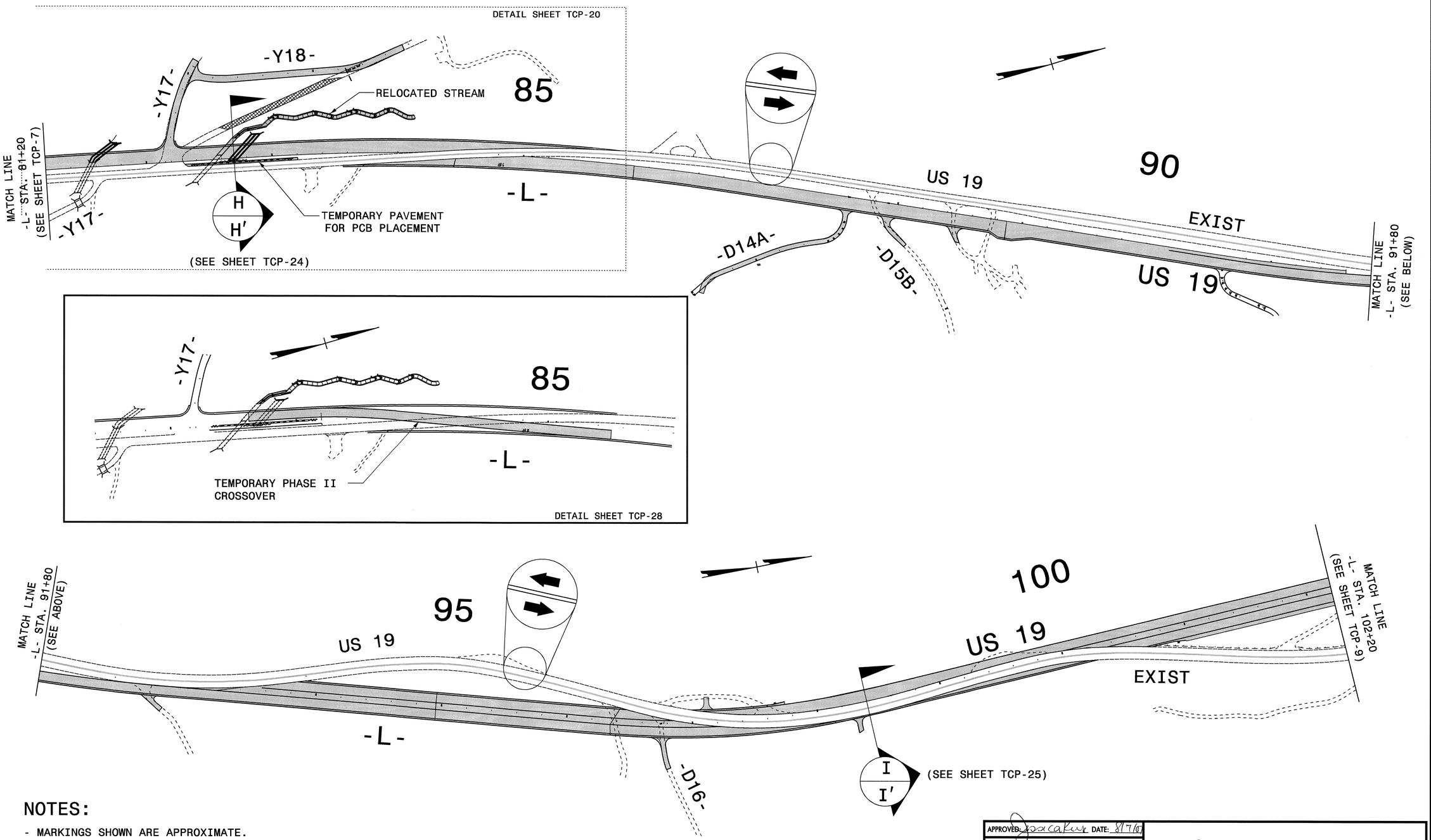

NOTES:

- MARKINGS SHOWN ARE APPROXIMATE.
- SPACE DRUMS NO MORE THAN 20m APART.
- SPACE DRUMS 5m APART IN RADII.
- SPACE DRUMS 5m APART AT DRIVEWAY ENTRANCES.
- SEE SHEETS TCP-60 & TCP-61 FOR TYPICAL SIGN / DEVICE SETUP AT -Y- LINES AND DRIVEWAYS CROSSING CONSTRUCTION AREAS.

APPROVED: Jessica Kuse DATE: 8/7/07

SEAL

NORTH CAROLINA PROFESSIONAL SEAL 027811 ENGINEER JESSICA D. KUSE

OVERVIEW PHASE I

SCALE:	NONE
DATE:	04/07
DWG. BY:	RMG
DESIGN BY:	RMG
REVIEWED BY:	JDK

REVISIONS

CADD FILE

07-AUG-2007 12:17
\\dot\dfsroot01\proj\tipprojects-r\r2518a\traffic\trafficcontrol\tcp\R-2518A_TC_TCP_OVR_PHI_05.dgn
rmgarrett AT WZTC22229I

PROJ. REFERENCE NO.	SHEET NO.
R-2518A	TCP-9

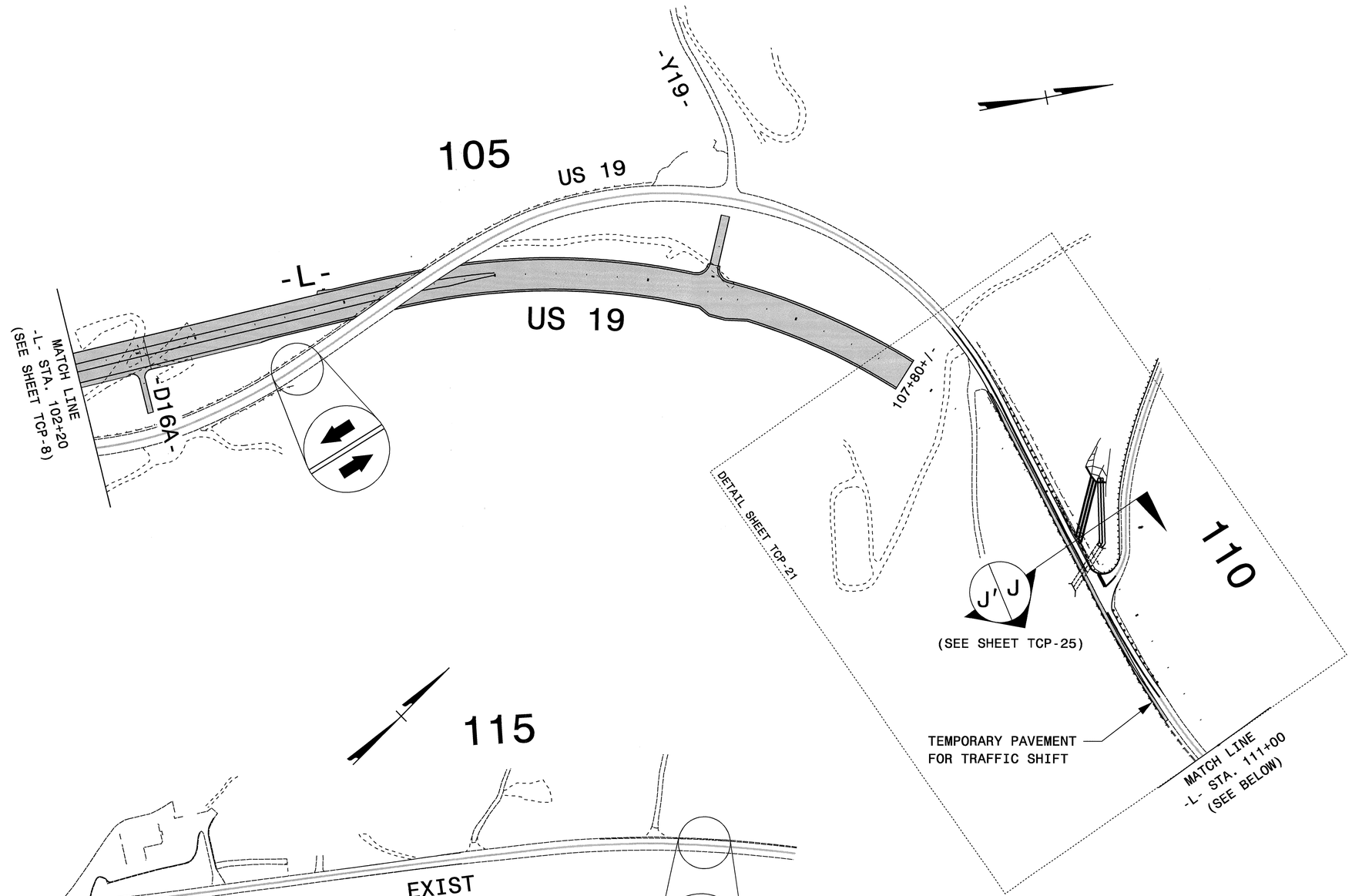

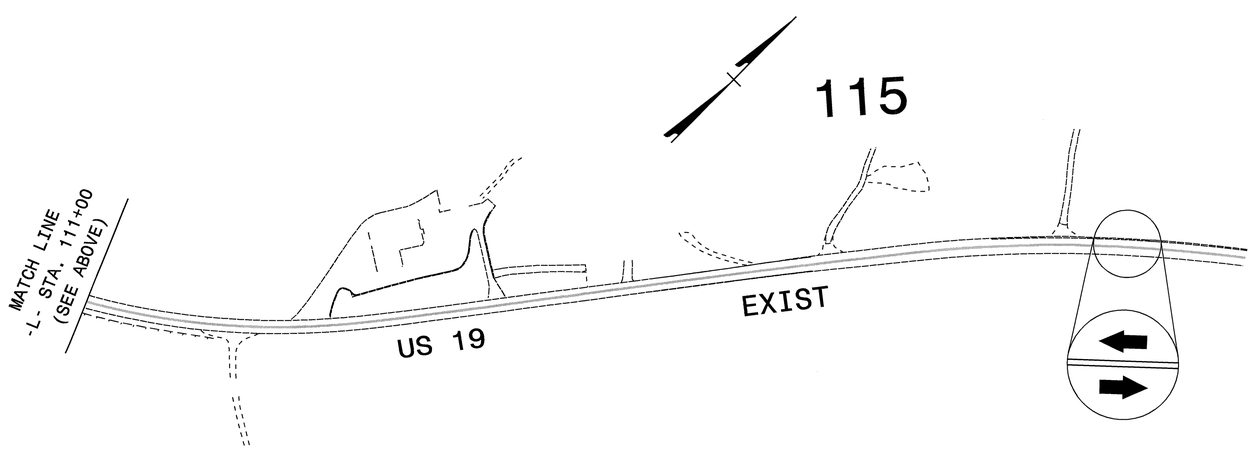

NOTES:

- MARKINGS SHOWN ARE APPROXIMATE.
- SPACE DRUMS NO MORE THAN 20m APART.
- SPACE DRUMS 5m APART IN RADII.
- SPACE DRUMS 5m APART AT DRIVEWAY ENTRANCES.
- SEE SHEETS TCP-60 & TCP-61 FOR TYPICAL SIGN / DEVICE SETUP AT -Y- LINES AND DRIVEWAYS CROSSING CONSTRUCTION AREAS.

APPROVED: DATE: 8/7/07

SEAL

NORTH CAROLINA PROFESSIONAL SEAL 027811 ENGINEER JESSICA D. KUSS

OVERVIEW PHASE I

SCALE:	NONE
DATE:	04/07
DWG. BY:	RMG
DESIGN BY:	RMG
REVIEWED BY:	JDK

DIVISION OF HIGHWAYS STATE OF NORTH CAROLINA DEPARTMENT OF TRANSPORTATION TRAFFIC CONTROL

REVISIONS

CADD FILE

07-AUG-2007 09:35
\\dot\dfsroot01\proj\hpprojects-r\r2518a\traffic\trafficontrol\tcp\R-2518A_TC_TCP_OVR_PHL06.dgn
rmgarrett AT WZTC22291

PROJ. REFERENCE NO.	SHEET NO.
R-2518A	TCP-10

METRIC

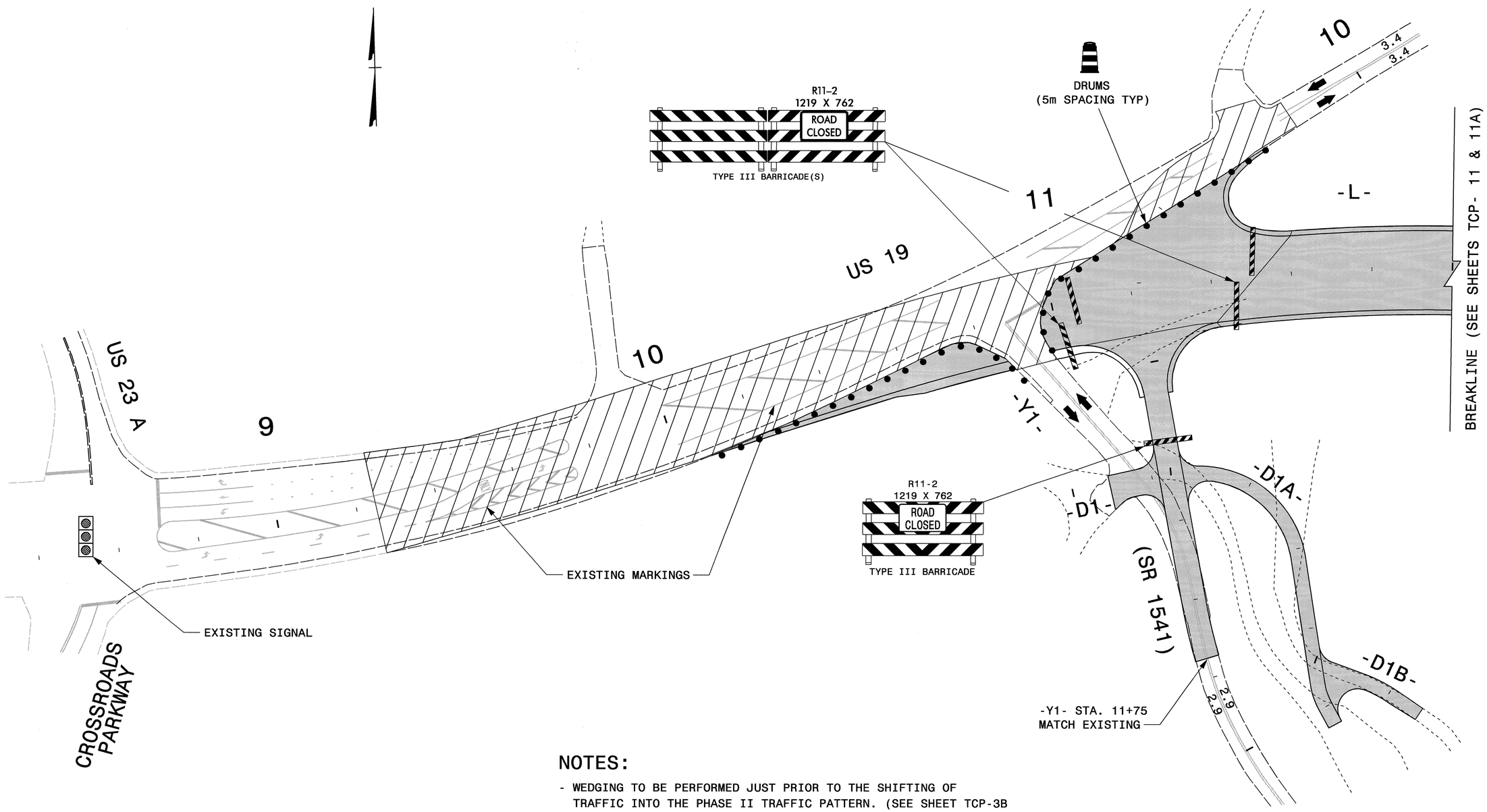

NOTES:

- WEDGING TO BE PERFORMED JUST PRIOR TO THE SHIFTING OF TRAFFIC INTO THE PHASE II TRAFFIC PATTERN. (SEE SHEET TCP-3B PHASE I, STEP 31)
- EXISTING MARKINGS SHOWN ARE APPROXIMATE.
- SPACE DRUMS NO MORE THAN 20m APART.
- SPACE DRUMS 5m APART IN RADII.
- SPACE DRUMS 5m APART AT DRIVEWAY ENTRANCES.
- SEE SHEET TCP-60 & TCP-61 FOR TYPICAL SIGN / DEVICE SETUP AT -Y- LINES AND DRIVEWAYS CROSSING CONSTRUCTION AREAS.

LEGEND

PROPOSED WEDGING

APPROVED: Jessica Kuse DATE: 8/7/07

SEAL

NORTH CAROLINA PROFESSIONAL SEAL 027811 ENGINEER JESSICA D. KUSSE

PHASE I

SCALE:	NONE
DATE:	05/07
DWG. BY:	RMG
DESIGN BY:	RMG
REVIEWED BY:	JDK

REVISIONS

CADD FILE

07-AUG-2007 09:32
\\dot\dfsroot0\proj\tipprojects-r\r2518a\traffic\trafficontrol\tcp\R-2518A_TC_TCP_01.dgn
rmgarrett AT WZTC22291

PROJ. REFERENCE NO.	SHEET NO.
R-2518A	TCP-11

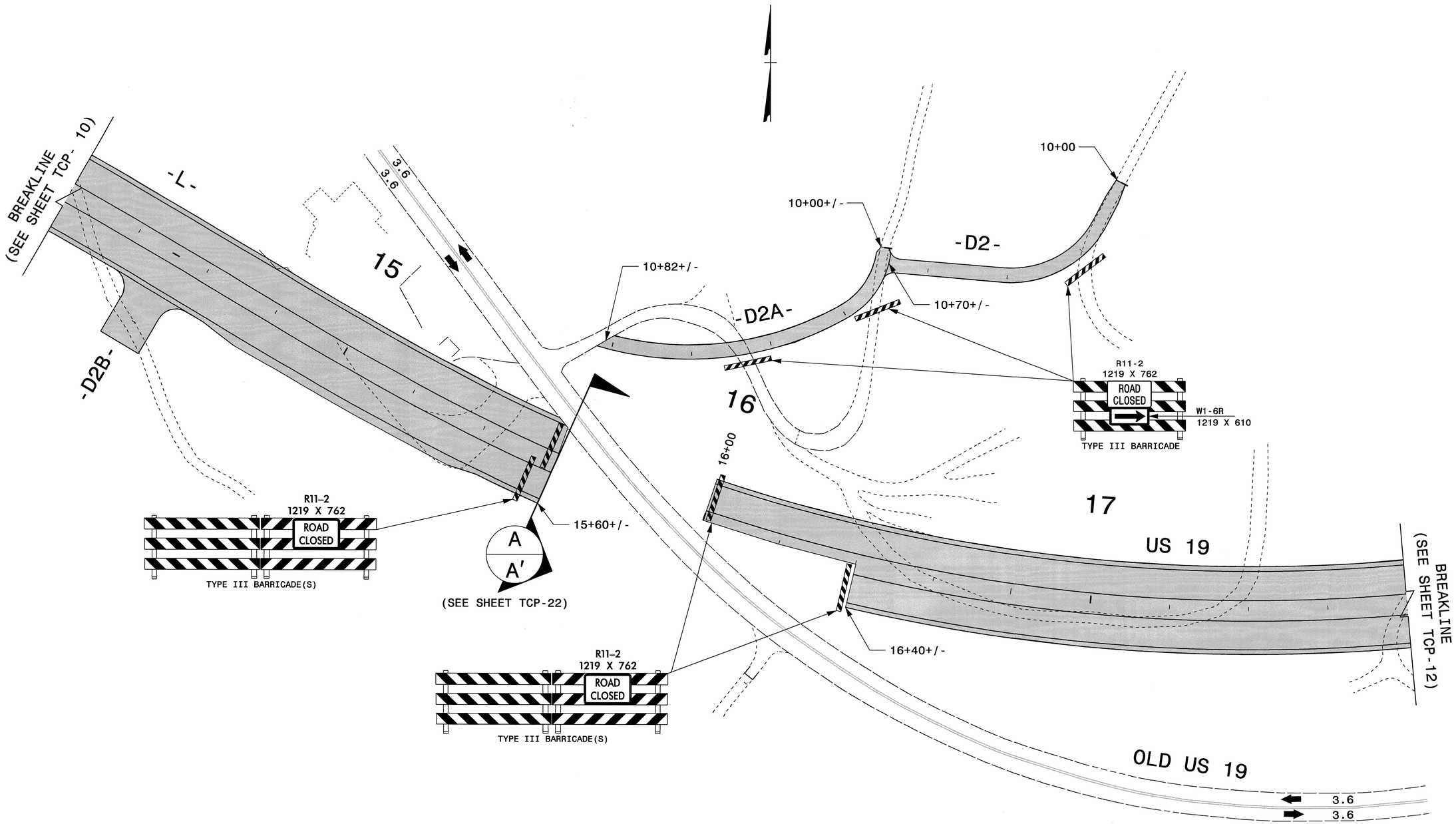

NOTES:

- MARKINGS SHOWN ARE APPROXIMATE.
- SPACE DRUMS NO MORE THAN 20m APART.
- SPACE DRUMS 5m APART IN RADII.
- SPACE DRUMS 5m APART AT DRIVEWAY ENTRANCES.
- SEE SHEET TCP-60 & TCP-61 FOR TYPICAL SIGN / DEVICE SETUP AT -Y- LINES AND DRIVEWAYS CROSSING CONSTRUCTION AREAS.

APPROVED: Jessica Lusk DATE: 8/7/07

SEAL

NORTH CAROLINA PROFESSIONAL SEAL 027811 ENGINEER JESSICA D. LUSK

PHASE I

SCALE:	NONE
DATE:	05/07
DWG. BY:	RMG
DESIGN BY:	RMG
REVIEWED BY:	JDK

REVISIONS

CADD FILE

07-AUG-2007 09:32
\\dot\dfsroot\proj\tipprojects-r\r2518a\traffic\trafficcontrol\tcp\R-2518A_TC_TCP_02.dgn
rmgarrett AT WZTC22229

PROJ. REFERENCE NO.	SHEET NO.
R-2518A	TCP-11A

METRIC

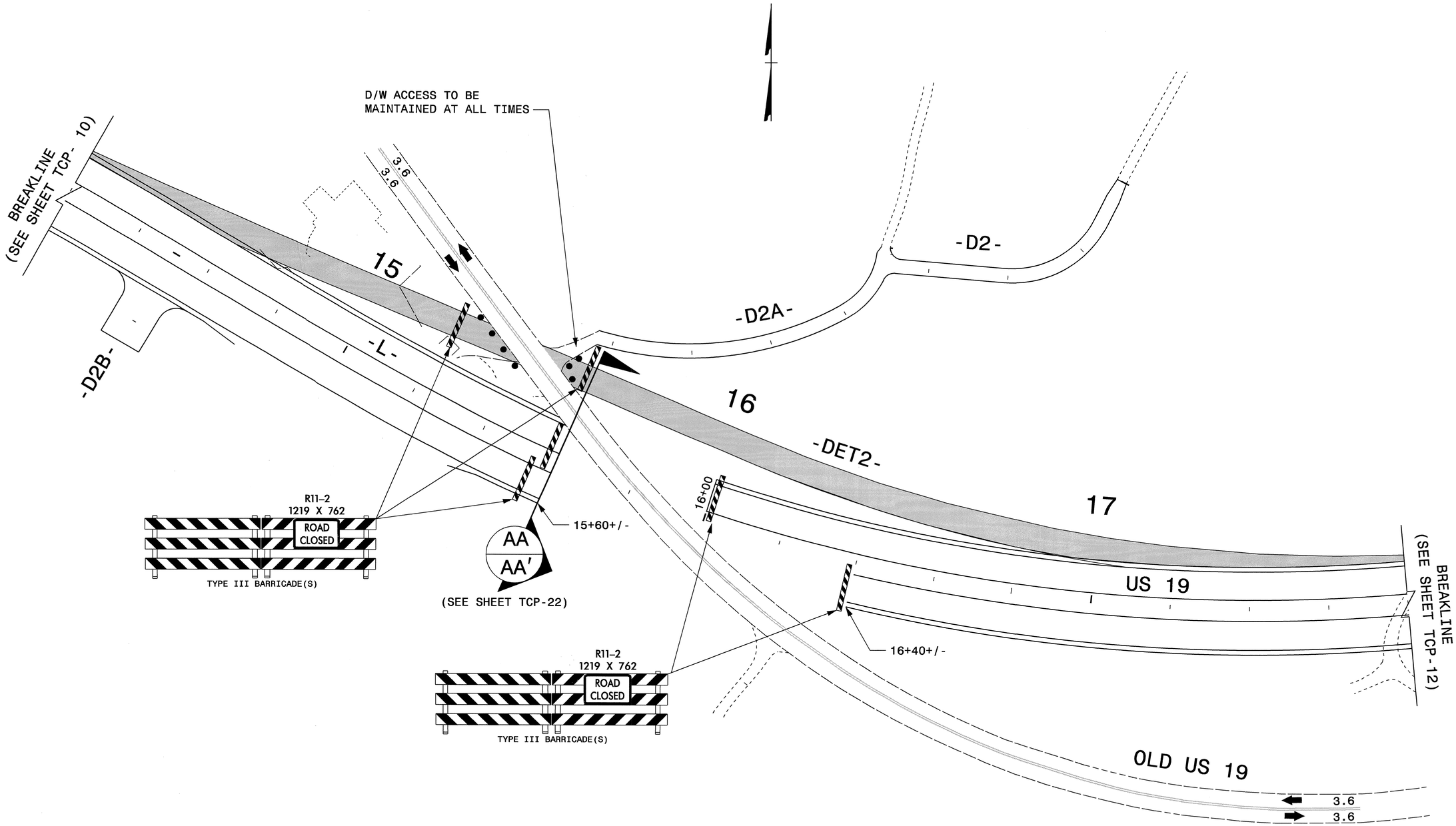

NOTES:

- MARKINGS SHOWN ARE APPROXIMATE.
- SPACE DRUMS NO MORE THAN 20m APART.
- SPACE DRUMS 5m APART IN RADII.
- SPACE DRUMS 5m APART AT DRIVEWAY ENTRANCES.
- SEE SHEET TCP-60 & TCP-61 FOR TYPICAL SIGN / DEVICE SETUP AT -Y- LINES AND DRIVEWAYS CROSSING CONSTRUCTION AREAS.

APPROVED: Jessica Kusk DATE: 8/7/07

SEAL

NORTH CAROLINA PROFESSIONAL SEAL 027811 ENGINEER JESSICA D. KUSK

PHASE I

SCALE:	NONE
DATE:	05/07
DWG. BY:	RMG
DESIGN BY:	RMG
REVIEWED BY:	JDK

DIVISION OF HIGHWAYS · STATE OF NORTH CAROLINA · WORK ZONE TRAFFIC CONTROL UNIT

REVISIONS

CADD FILE

07-AUG-2007 09:33
\\dot\dfsroot0\proj\tipprojects-r\r2518a\trafficontrol\tcp\R-2518A_TC_TCP_11A.dgn
rmgarrett AT WZTC22229

PROJ. REFERENCE NO.	SHEET NO.
R-2518A	TCP-12

METRIC

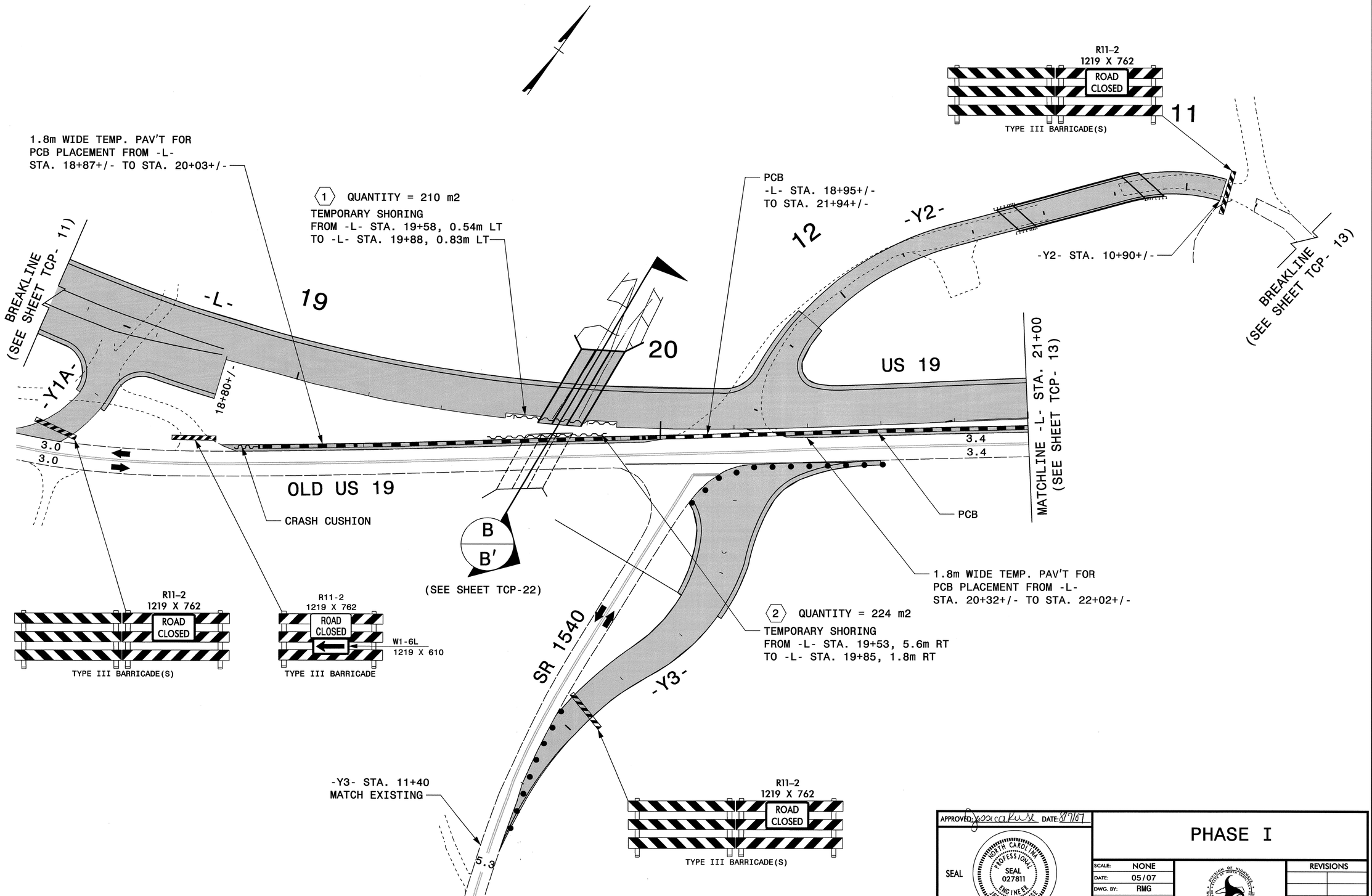

APPROVED: DATE: 8/7/07

SEAL

NORTH CAROLINA PROFESSIONAL SEAL 027811 ENGINEER JESSICA D. KUST

PHASE I

SCALE:	NONE
DATE:	05/07
DWG. BY:	RMG
DESIGN BY:	RMG
REVIEWED BY:	JDK

REVISIONS

CADD FILE

07-AUG-2007 09:32
\\dot\dfsroot01\proj\tipprojects-r\r2518a\traffic\traffiocontrol\tcp\R-2518A_TC_TCP_03.dgn
rmgarrett AT WZTC22291

PROJ. REFERENCE NO.	SHEET NO.
R-2518A	TCP-13

METRIC

PHASE I, STEP 5

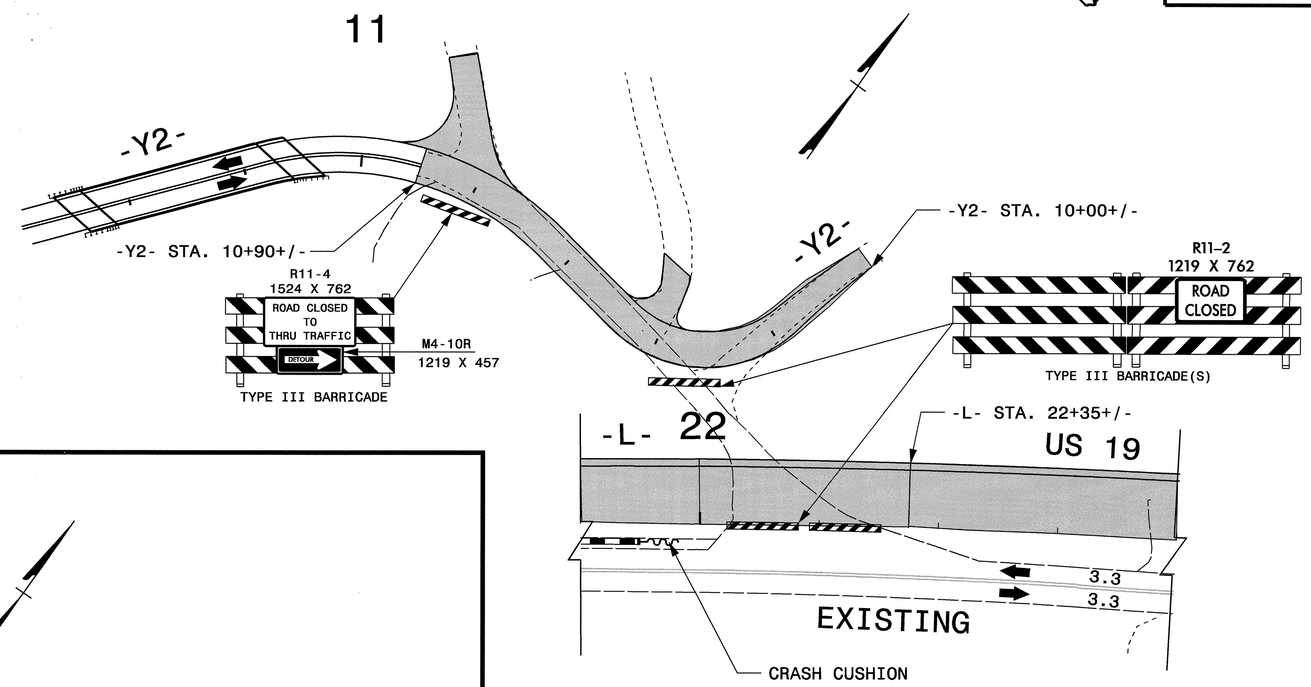

PHASE I, STEP 2

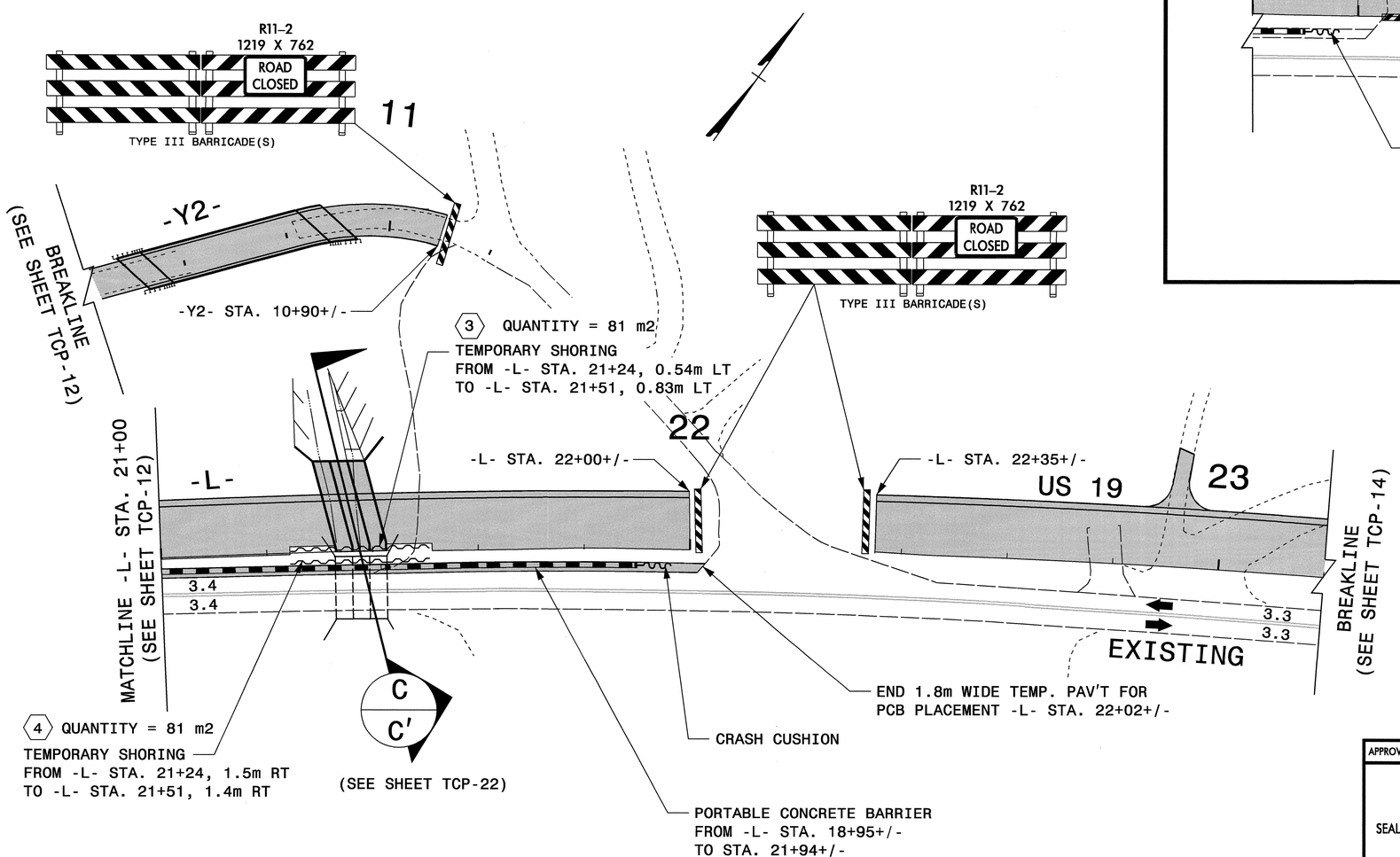

APPROVED: Jessica Kuse DATE: 8/7/07

SEAL

NORTH CAROLINA PROFESSIONAL SEAL 027811 ENGINEER JESSICA D. KUSE

PHASE I

SCALE:	NONE
DATE:	05/07
DWG. BY:	RMG
DESIGN BY:	RMG
REVIEWED BY:	JDK

REVISIONS

CADD FILE

07-AUG-2007 09:32
\\dot\dfsroot01\proj\tipprojects-r\2518a\traffic\trafficcontrol\tcp\R-2518A_TC_TCP_04.dgn
rmgarrett AT WZTC22229

PROJ. REFERENCE NO.	SHEET NO.
R-2518A	TCP-14

METRIC

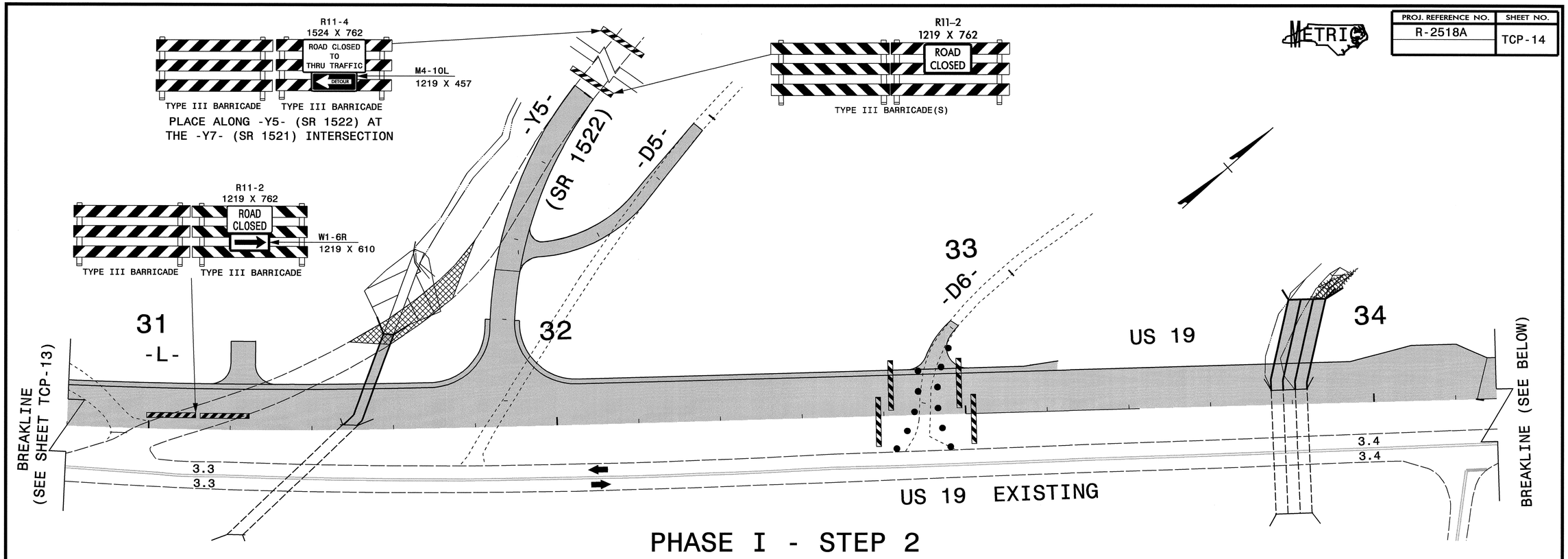

PHASE I - STEP 2

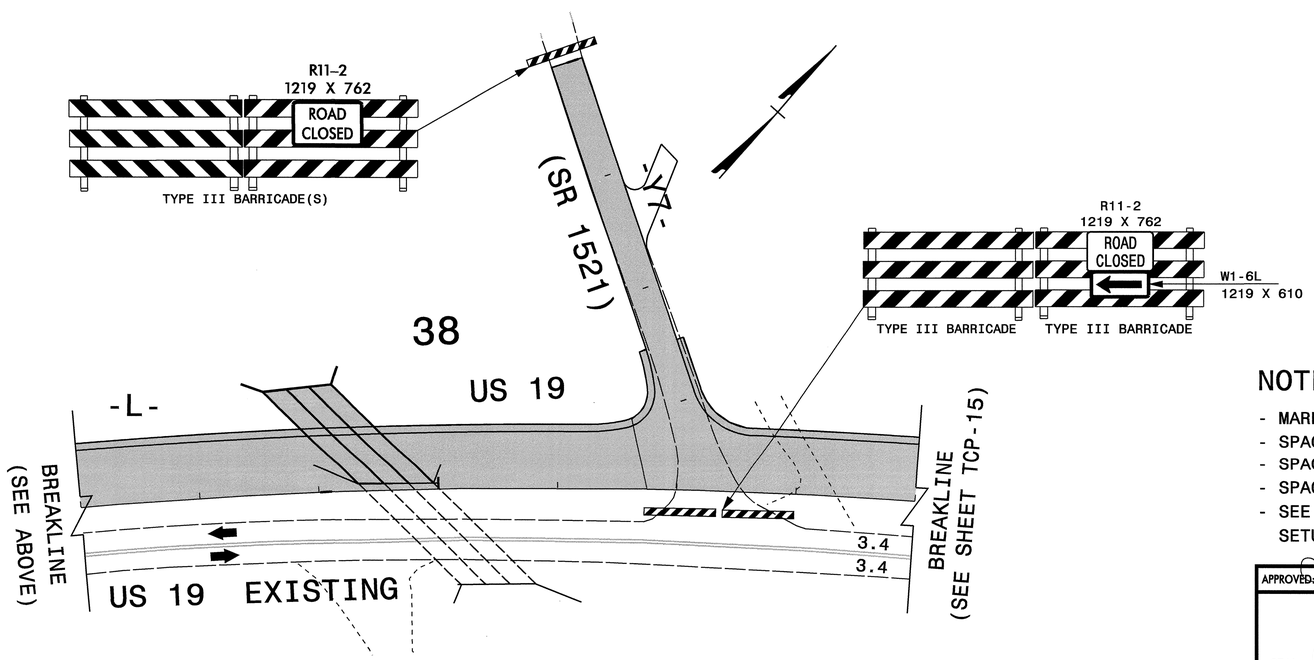

PHASE I - STEP 5

NOTES:

- MARKINGS SHOWN ARE APPROXIMATE.
- SPACE DRUMS NO MORE THAN 20m APART.
- SPACE DRUMS 5m APART IN RADII.
- SPACE DRUMS 5m APART AT DRIVEWAY ENTRANCES.
- SEE SHEETS TCP-60 & TCP-61 FOR TYPICAL SIGN / DEVICE SETUP AT -Y- LINES AND DRIVEWAYS CROSSING CONSTRUCTION AREAS.

APPROVED: Jessica Kuse DATE: 8/7/07

SEAL

NORTH CAROLINA PROFESSIONAL SEAL 027811 ENGINEER JESSICA D. KUSE

PHASE I

SCALE:	NONE
DATE:	06/07
DWG. BY:	RMG
DESIGN BY:	RMG
REVIEWED BY:	JDK

DIVISION OF HIGHWAYS STATE OF NORTH CAROLINA TRAFFIC CONTROL UNIT

REVISIONS

CADD FILE

07-AUG-2007 09:32
\\dot\dfsroot01\proj\tipprojects-r\r2518a\traffic\trafficontrol\tcp\R-2518A_TC_TCP_05.dgn
rmgarrett AT WZTC22229

PROJ. REFERENCE NO.	SHEET NO.
R-2518A	TCP-15

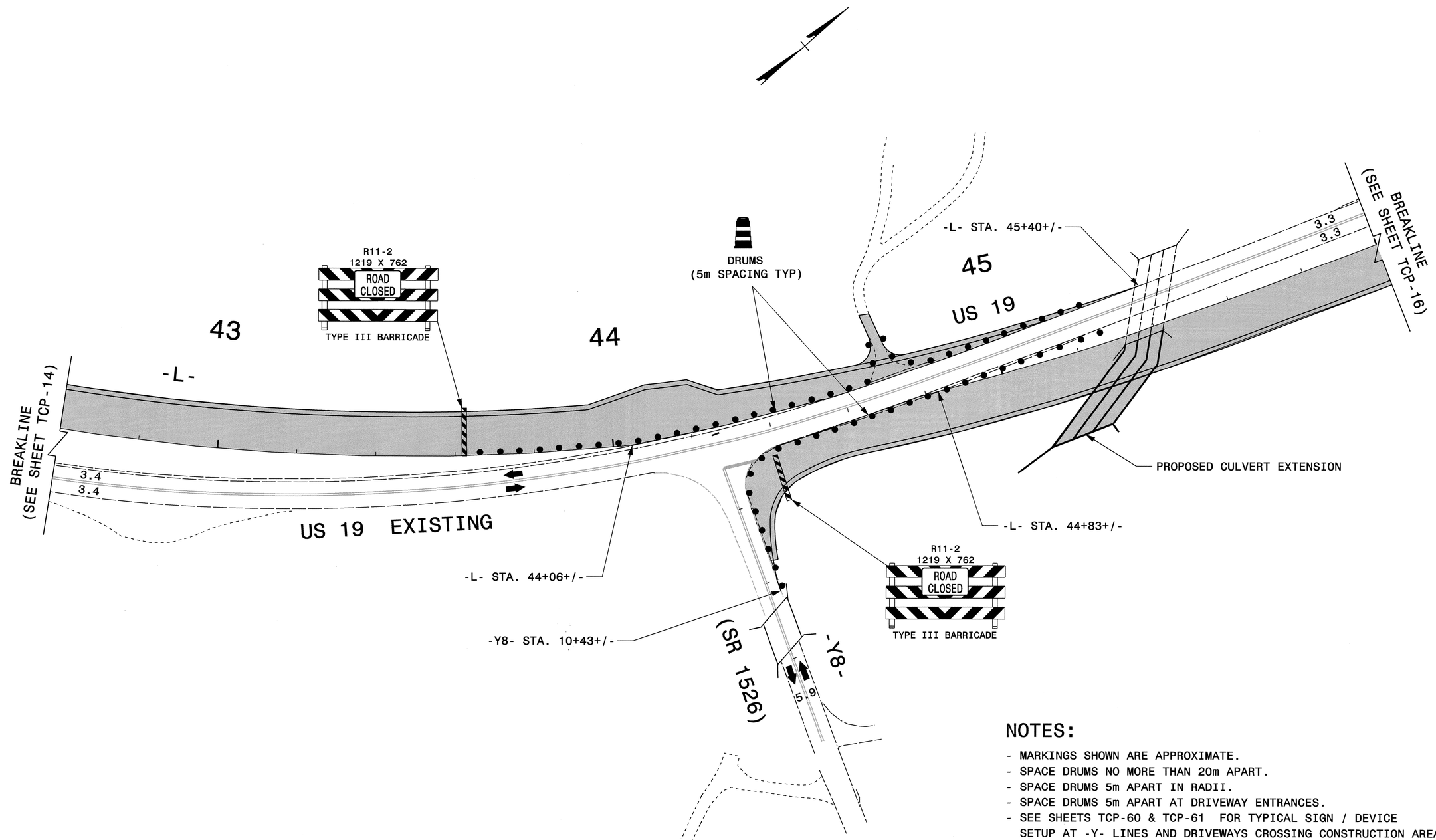

NOTES:

- MARKINGS SHOWN ARE APPROXIMATE.
- SPACE DRUMS NO MORE THAN 20m APART.
- SPACE DRUMS 5m APART IN RADII.
- SPACE DRUMS 5m APART AT DRIVEWAY ENTRANCES.
- SEE SHEETS TCP-60 & TCP-61 FOR TYPICAL SIGN / DEVICE SETUP AT -Y- LINES AND DRIVEWAYS CROSSING CONSTRUCTION AREAS.

APPROVED: Jessica Dunn DATE: 8/7/07

SEAL

NORTH CAROLINA PROFESSIONAL SEAL 027811 ENGINEER JESSICA D. NUNN

PHASE I

SCALE:	NONE
DATE:	06/07
DWG. BY:	RMG
DESIGN BY:	RMG
REVIEWED BY:	JDK

REVISIONS

CADD FILE

07-AUG-2007 09:32
\\dot\dfsroot01\proj\tipprojects-r\r2518a\traffic\trafficcontrol\tcp\R-2518A_TC_TCP_06.dgn
rmgarrett AT WZTC22229i

PROJ. REFERENCE NO.	SHEET NO.
R-2518A	TCP-16

METRIC

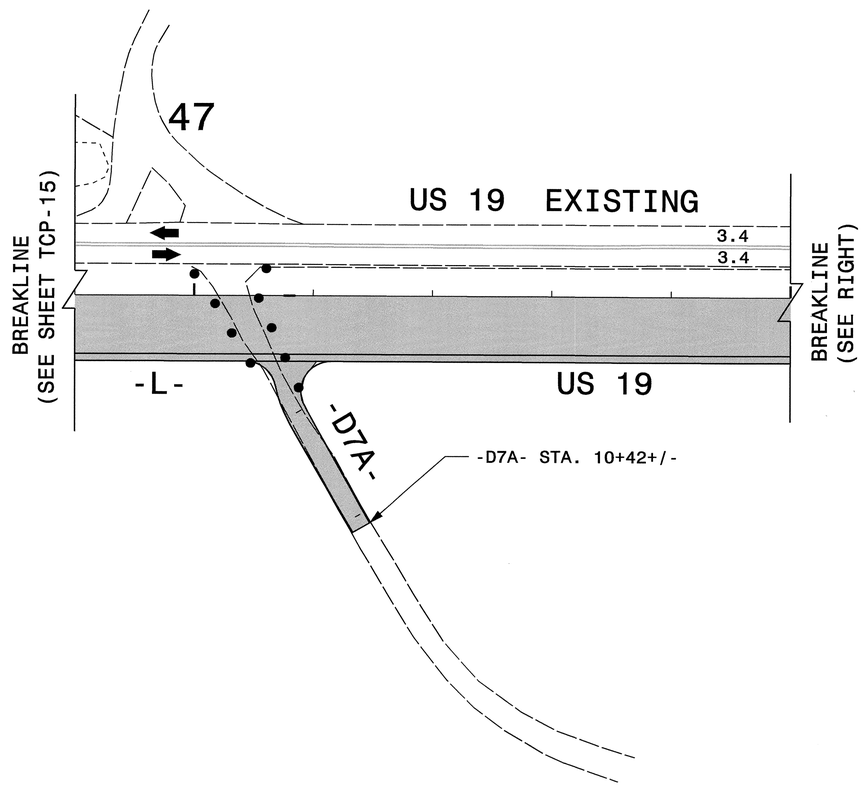

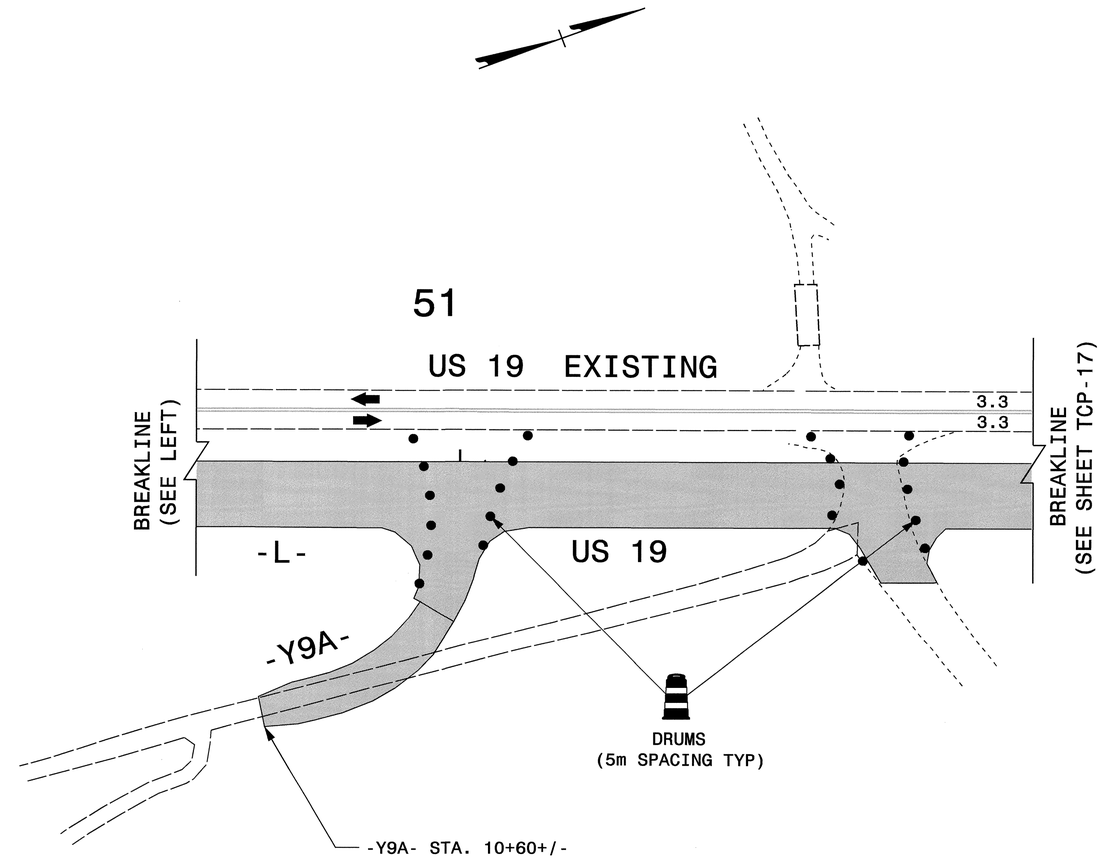

NOTES:

- MARKINGS SHOWN ARE APPROXIMATE.
- SPACE DRUMS NO MORE THAN 20m APART.
- SPACE DRUMS 5m APART IN RADII.
- SPACE DRUMS 5m APART AT DRIVEWAY ENTRANCES.
- SEE SHEETS TCP-60 & TCP-61 FOR TYPICAL SIGN / DEVICE SETUP AT -Y- LINES AND DRIVEWAYS CROSSING CONSTRUCTION AREAS.

APPROVED: Jessica Kuse DATE: 8/7/07

SEAL

NORTH CAROLINA PROFESSIONAL SEAL 027811 ENGINEER JESSICA D. KUSE

PHASE I

SCALE:	NONE
DATE:	06/07
DWG. BY:	RMG
DESIGN BY:	RMG
REVIEWED BY:	JDK

DIVISION OF HIGHWAYS STATE OF NORTH CAROLINA TRAFFIC ENGINEERING BRANCH

REVISIONS

CADD FILE

07-AUG-2007 09:32
\\dot\dfsroot0\proj\tipprojects-r\r2518a\traffic\trafficcontrol\tcp\R-2518A_TC_TCP_07.dgn
rmgarrett AT WZTC222291

PROJ. REFERENCE NO.	SHEET NO.
R-2518A	TCP-17

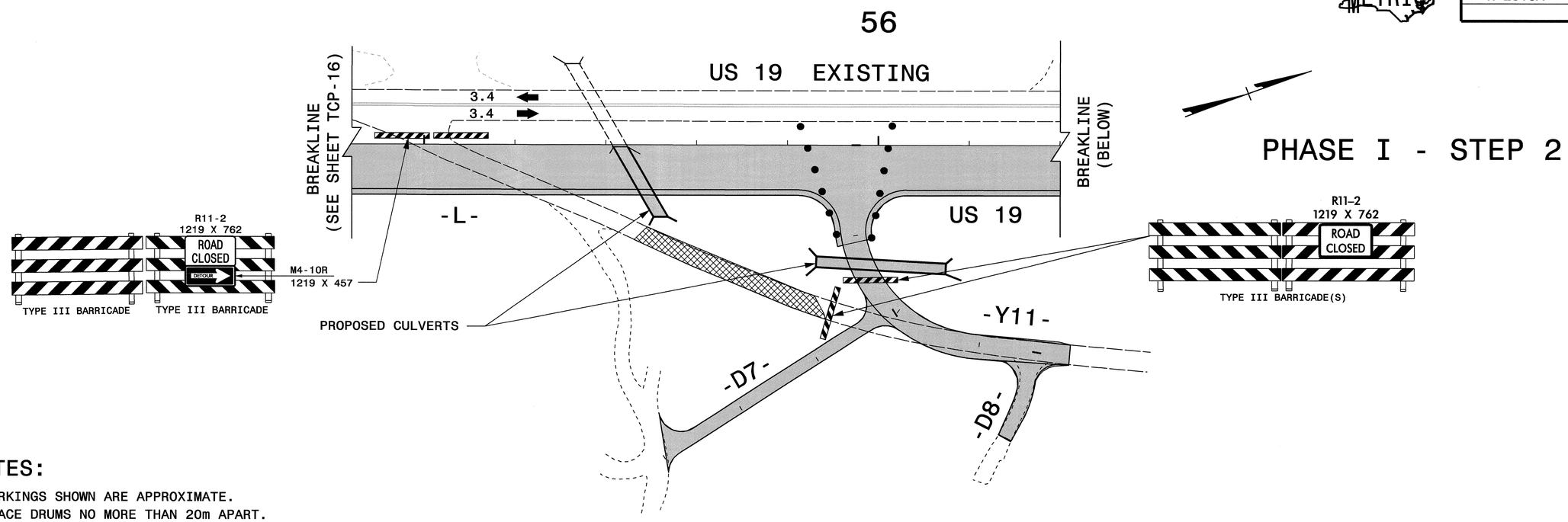

PHASE I - STEP 2

NOTES:

- MARKINGS SHOWN ARE APPROXIMATE.
- SPACE DRUMS NO MORE THAN 20m APART.
- SPACE DRUMS 5m APART IN RADII.
- SPACE DRUMS 5m APART AT DRIVEWAY ENTRANCES.
- SEE SHEETS TCP-60 & TCP-61 FOR TYPICAL SIGN / DEVICE SETUP AT -Y- LINES AND DRIVEWAYS CROSSING CONSTRUCTION AREAS.

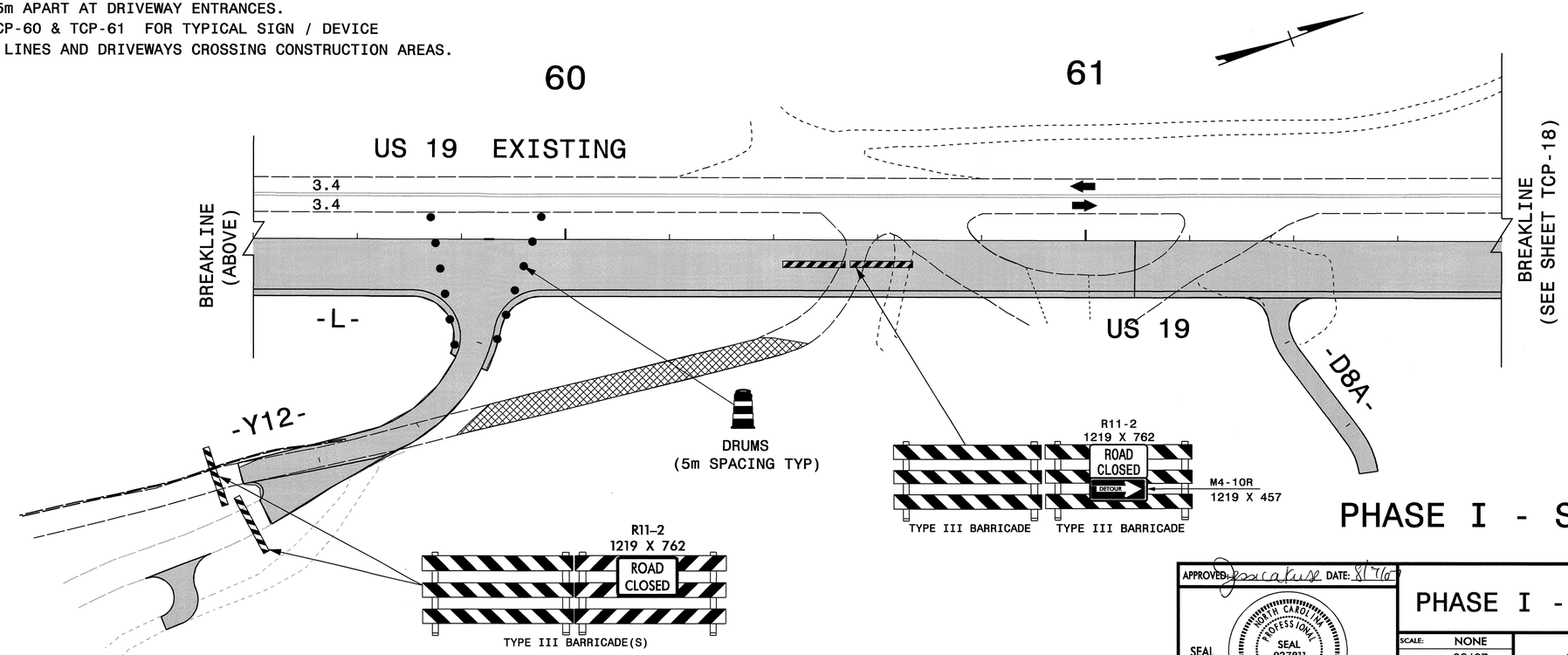

PHASE I - STEP 7

APPROVED: Jessica Kuse DATE: 8/7/07

SEAL

NORTH CAROLINA PROFESSIONAL SEAL 027811 ENGINEER JESSICA D. KUSE

PHASE I - STEPS 2 & 7

SCALE:	NONE
DATE:	06/07
DWG. BY:	RMG
DESIGN BY:	RMG
REVIEWED BY:	JDK

DIVISION OF HIGHWAYS · TRAFFIC ENGINEERING BRANCH · TRAFFIC CONTROL UNIT

REVISIONS

CADD FILE

07-AUG-2007 12:31
\\adot\ffpocl01\proj\tipprojects-r\r2518a\traffic\trafficcontrol\tcp\R-2518A_TC_TCP_08.dgn
rmgarrett AT WZTC22229

PROJ. REFERENCE NO.	SHEET NO.
R-2518A	TCP-18

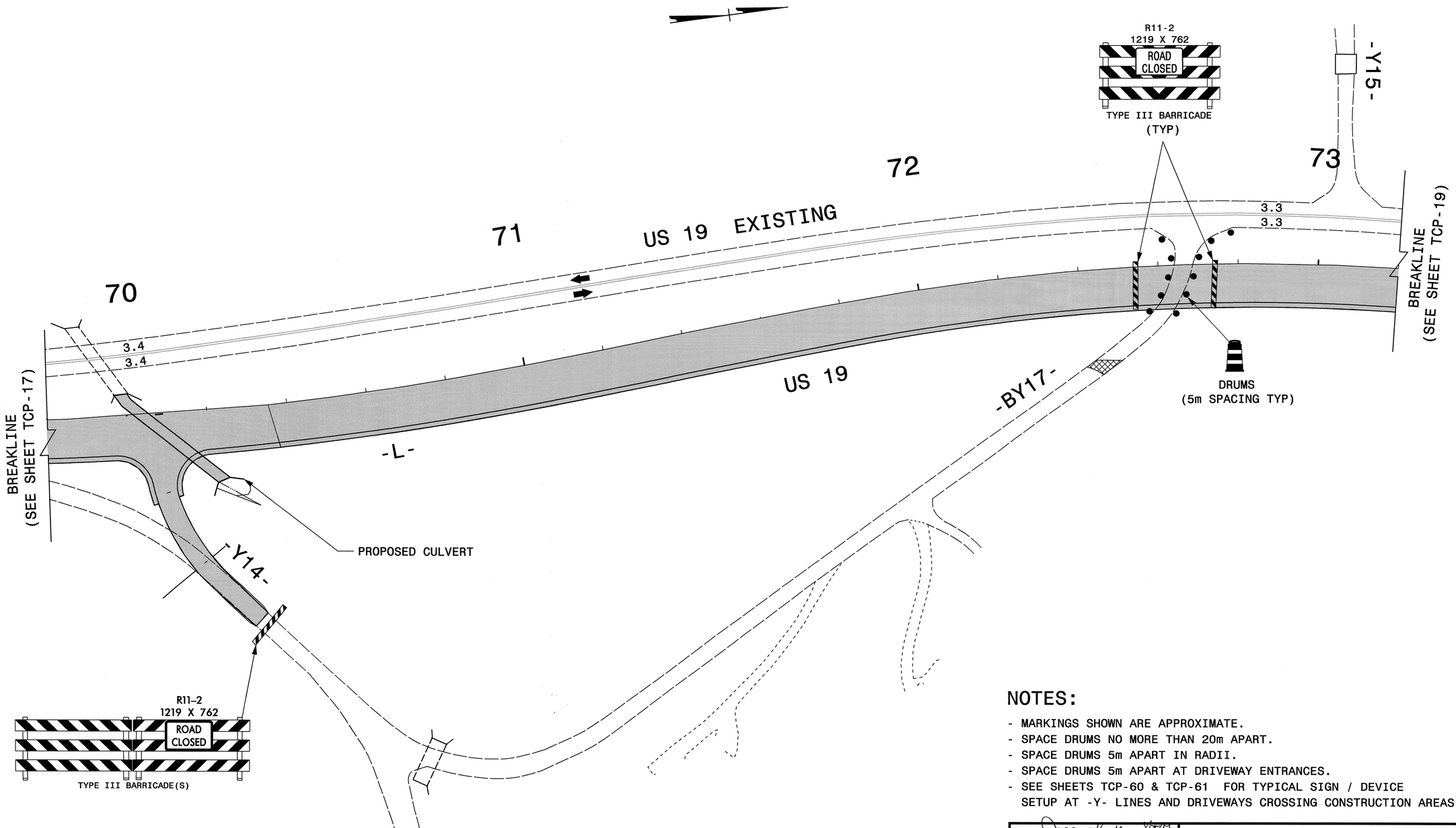

NOTES:

- MARKINGS SHOWN ARE APPROXIMATE.
- SPACE DRUMS NO MORE THAN 20m APART.
- SPACE DRUMS 5m APART IN RADII.
- SPACE DRUMS 5m APART AT DRIVEWAY ENTRANCES.
- SEE SHEETS TCP-60 & TCP-61 FOR TYPICAL SIGN / DEVICE SETUP AT -Y- LINES AND DRIVEWAYS CROSSING CONSTRUCTION AREAS.

APPROVED: Jessica Kuss DATE: 8/7/07

SEAL

NORTH CAROLINA PROFESSIONAL SEAL 027811 ENGINEER JESSICA D. KUSS

PHASE I

SCALE:	NONE
DATE:	06/07
DWG. BY:	RMG
DESIGN BY:	RMG
REVIEWED BY:	JDK

DIVISION OF HIGHWAYS · STATE OF NORTH CAROLINA · TRAFFIC CONTROL

REVISIONS

CADD FILE

07-AUG-2007 09:33
\\dot\dfsroot\proj\tipprojects-r\r2518a\traffic\trafficcontrol\tcp\R-2518A_TC_TCP_09.dgn
rmgarrett AT WZTC22291

PROJ. REFERENCE NO.	SHEET NO.
R-2518A	TCP-19

METRIC

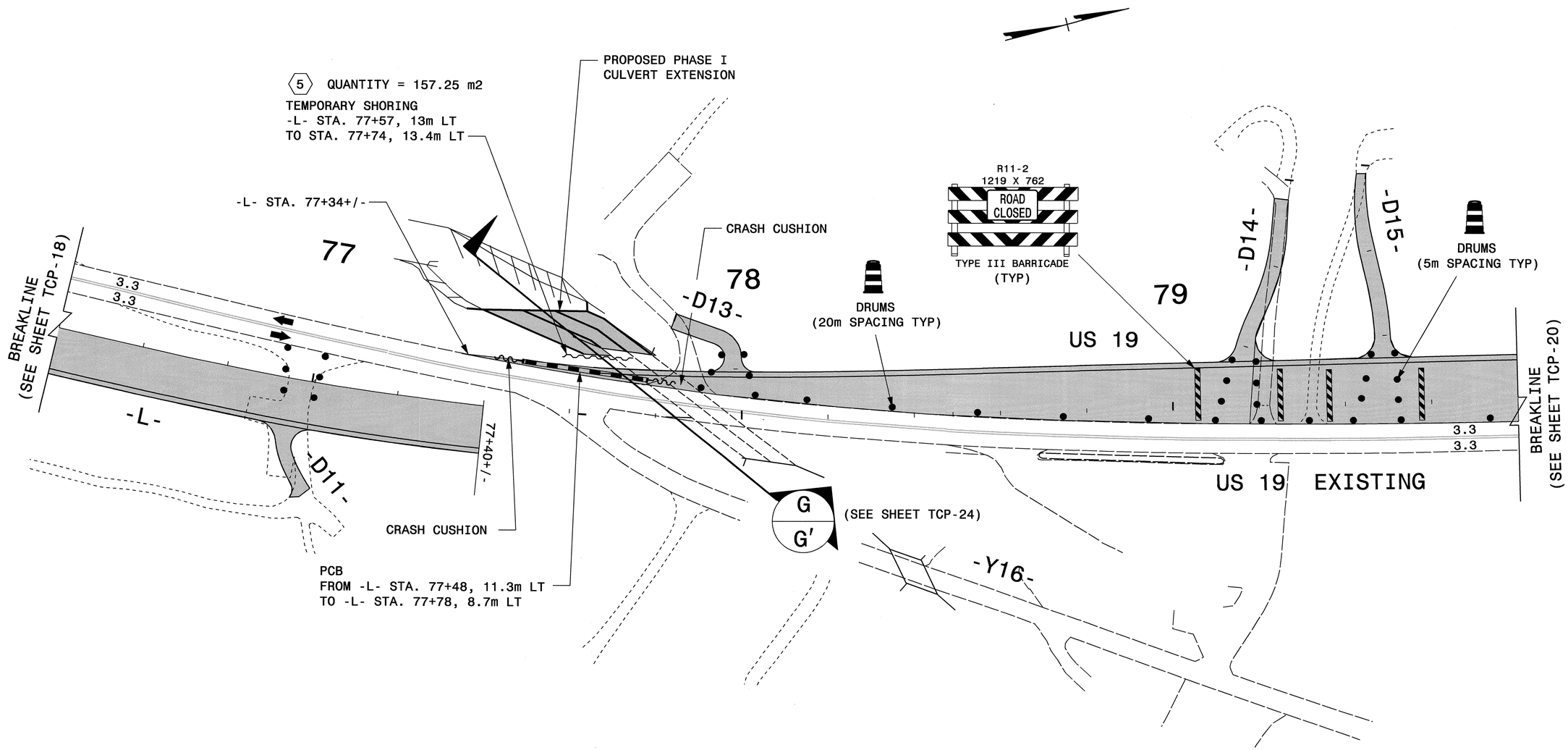

NOTES:

- MARKINGS SHOWN ARE APPROXIMATE.
- SPACE DRUMS NO MORE THAN 20m APART.
- SPACE DRUMS 5m APART IN RADII.
- SPACE DRUMS 5m APART AT DRIVEWAY ENTRANCES.
- SEE SHEETS TCP-60 & TCP-61 FOR TYPICAL SIGN / DEVICE SETUP AT -Y- LINES AND DRIVEWAYS CROSSING CONSTRUCTION AREAS.

APPROVED: DATE: 8/7/07

SEAL

NORTH CAROLINA PROFESSIONAL SEAL 027811 ENGINEER JESSICA D. KUSS

PHASE I

SCALE:	NONE
DATE:	06/07
DWG. BY:	RMG
DESIGN BY:	RMG
REVIEWED BY:	JDK

DIVISION OF HIGHWAYS · STATE OF NORTH CAROLINA · DEPARTMENT OF TRANSPORTATION · TRAFFIC CONTROL

REVISIONS

CADD FILE

07-AUG-2007 09:33
\\dot\dfsroot\proj\tipprojects-r\r2518a\traffic\trafficontrol\tcp\R-2518A_TC_TCP_10.dgn
rmgarrett AT WZ1C22291

PROJ. REFERENCE NO.	SHEET NO.
R-2518A	TCP-20

METRIC

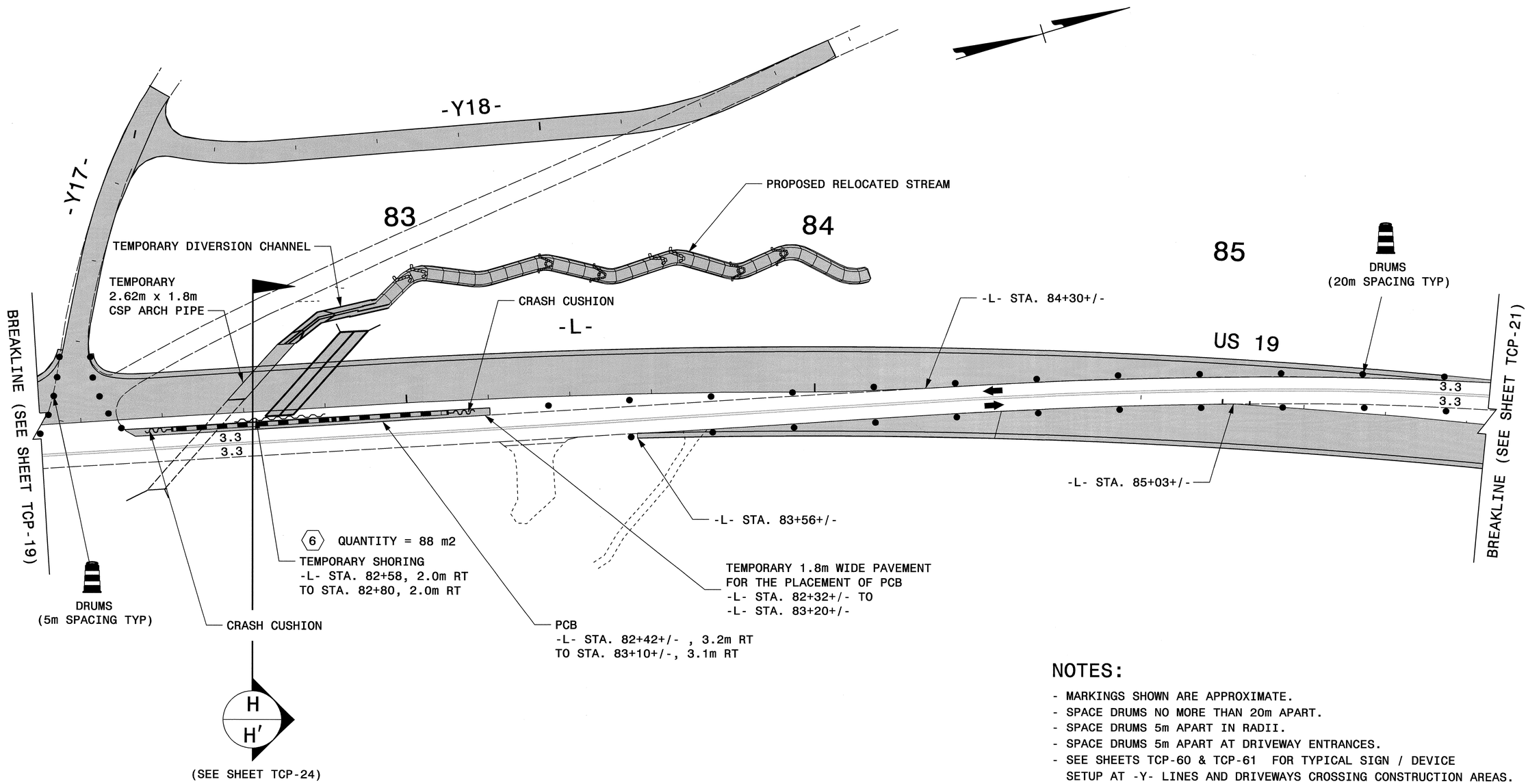

NOTES:

- MARKINGS SHOWN ARE APPROXIMATE.
- SPACE DRUMS NO MORE THAN 20m APART.
- SPACE DRUMS 5m APART IN RADII.
- SPACE DRUMS 5m APART AT DRIVEWAY ENTRANCES.
- SEE SHEETS TCP-60 & TCP-61 FOR TYPICAL SIGN / DEVICE SETUP AT -Y- LINES AND DRIVEWAYS CROSSING CONSTRUCTION AREAS.

APPROVED: Jessica Kuse DATE: 8/7/07

SEAL

NORTH CAROLINA PROFESSIONAL SEAL 027811 ENGINEER JESSICA D. KUSE

PHASE I

SCALE:	NONE
DATE:	06/07
DWG. BY:	RMG
DESIGN BY:	RMG
REVIEWED BY:	JDK

DIVISION OF HIGHWAYS STATE OF NORTH CAROLINA DEPARTMENT OF TRANSPORTATION TRAFFIC CONTROL

REVISIONS

CADD FILE

07-AUG-2007 09:33
\\dot\dfsroot01\proj\tipprojects-r\r2518a\traffic\trafficontrol\tcp\R-2518A_TC_TCP_18.dgn
rmgarrett AT WZTC22291

PROJ. REFERENCE NO.	SHEET NO.
R-2518A	TCP-21

METRIC

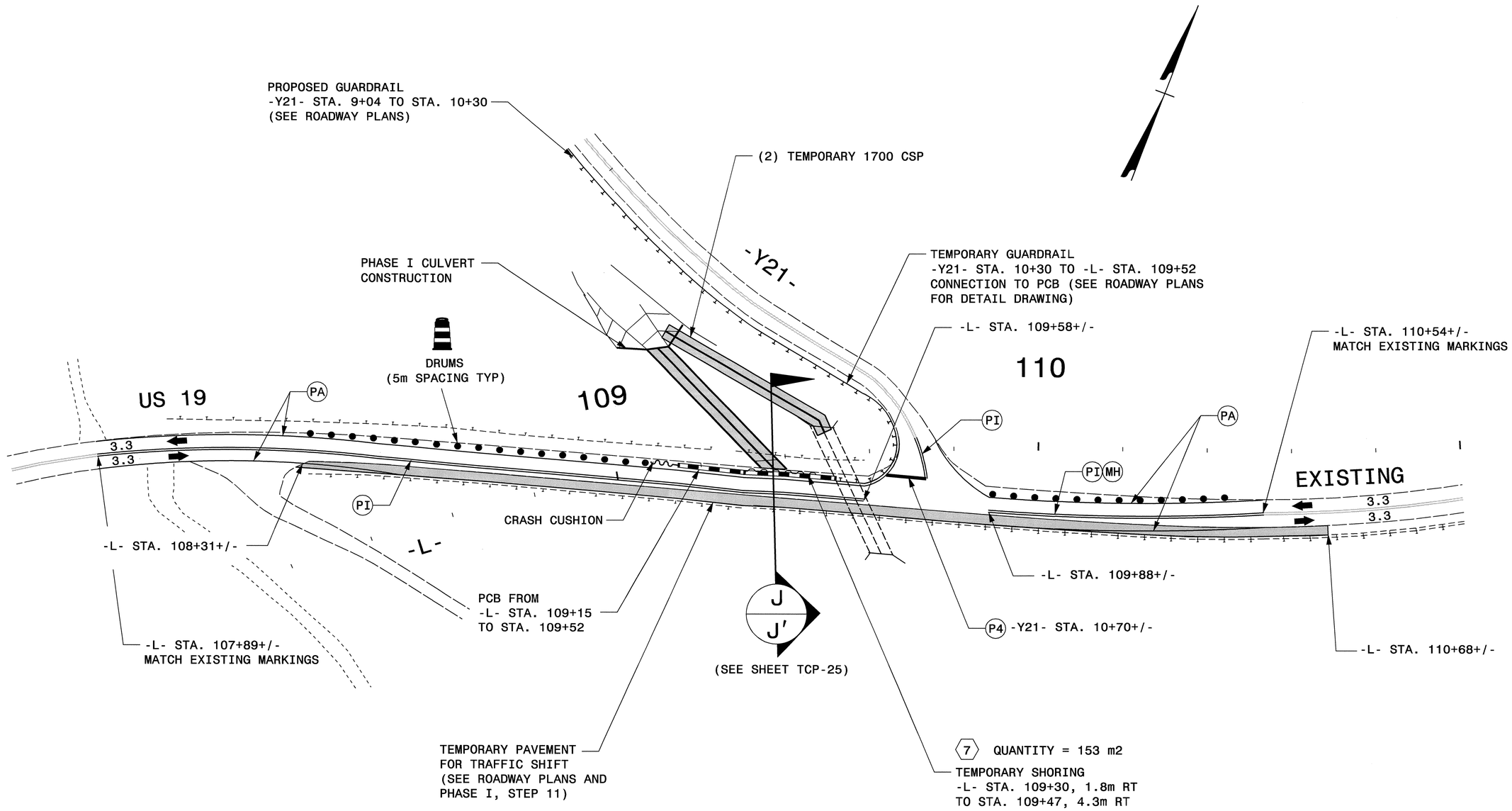

APPROVED: Jessica Kuse DATE: 8/7/07

SEAL

NORTH CAROLINA PROFESSIONAL SEAL 027811 ENGINEER JESSICA D. KUSE

PHASE I - STEP 2

SCALE:	NONE
DATE:	06/07
DWG. BY:	RMG
DESIGN BY:	RMG
REVIEWED BY:	JDK

DIVISION OF HIGHWAYS STATE OF NORTH CAROLINA DEPARTMENT OF TRANSPORTATION NORTH ZONE TRAFFIC CONTROL UNIT

REVISIONS

CADD FILE

07-AUG-2007 11:05
\\dot\dfsroot01\proj\tipprojects-r\r2518a\traffic\trafficcontrol\tcp\R-2518A_TC_TCP_21.dgn
rmgarrett AT WZTC22229I

PROJ. REFERENCE NO.	SHEET NO.
R-2518A	TCP-22

METRIC

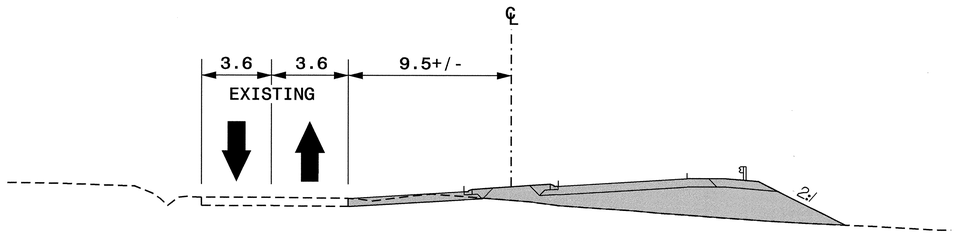

SECTION A-A′

-L- STA. 15+60+/-

(SEE SHEETS TCP-4 & TCP-11)

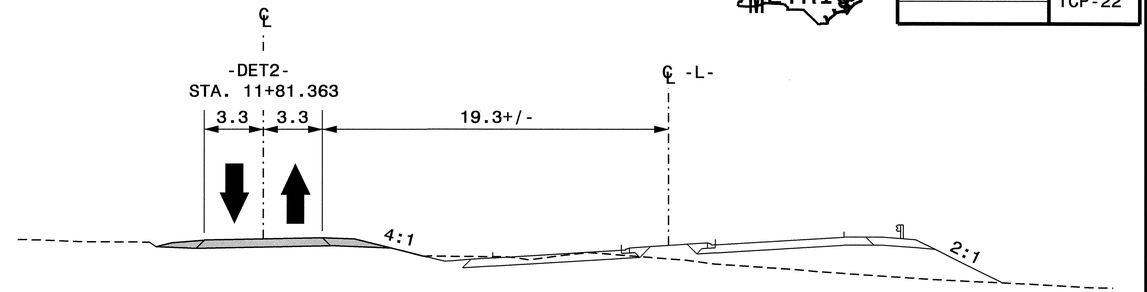

SECTION AA-AA′

-L- STA. 15+60+/-

(SEE SHEETS TCP-4 & TCP-11A)

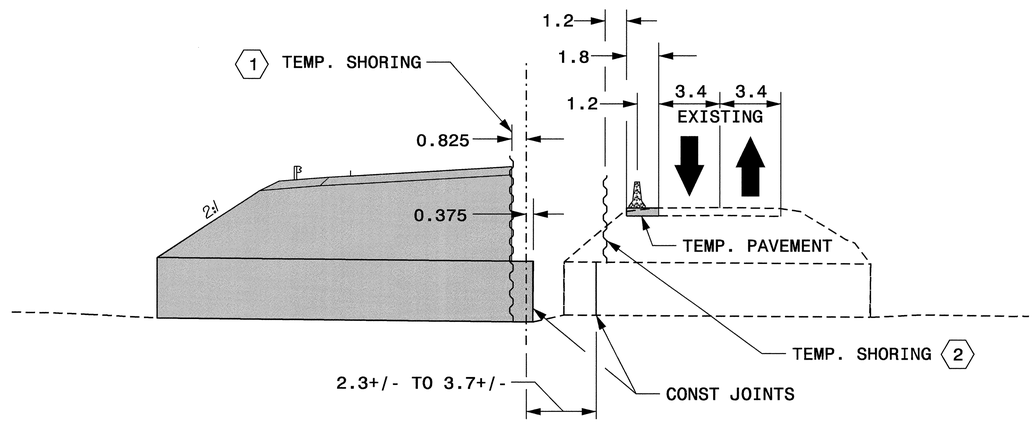

SECTION B-B′

-L- STA. 19+72+/-

(SEE SHEETS TCP-5 & TCP-12)

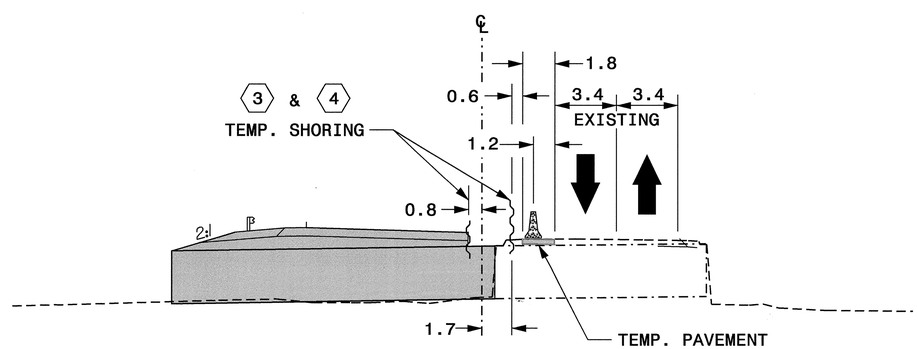

SECTION C-C′

-L- STA. 21+35+/-

(SEE SHEETS TCP-5 & TCP-13)

APPROVED: Jessica Kuse DATE: 8/7/07

SEAL

NORTH CAROLINA PROFESSIONAL SEAL 027811 ENGINEER JESSICA D. KUSE

PHASE I - SECTIONS

SCALE:	NONE
DATE:	04/07
DWG. BY:	RMG
DESIGN BY:	RMG
REVIEWED BY:	JDK

DIVISION OF HIGHWAYS STATE OF NORTH CAROLINA DEPARTMENT OF TRANSPORTATION TRAFFIC CONTROL

REVISIONS

CADD FILE

07-AUG-2007 09:37
\\dot\dfsroot0\proj\tipprojects-r\r2518a\traffic\trafficcontrol\tap\r-2518a_tc_tap_xsl.dgn
rmgarrett AT WZTC22291

PROJ. REFERENCE NO.	SHEET NO.
R-2518A	TCP-23

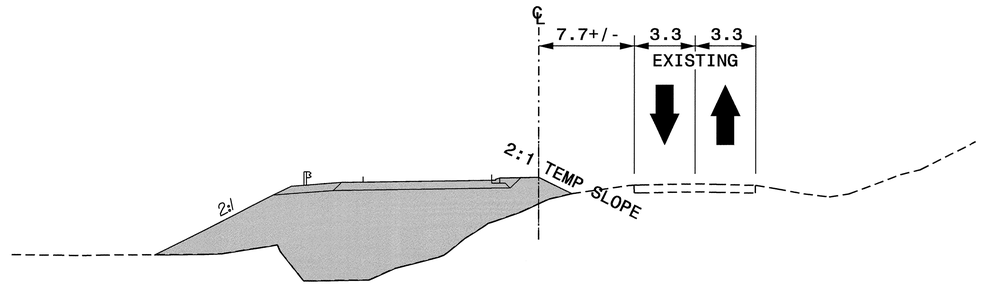

SECTION D-D′

-L- STA. 34+40+/-

(SEE SHEETS TCP-5)

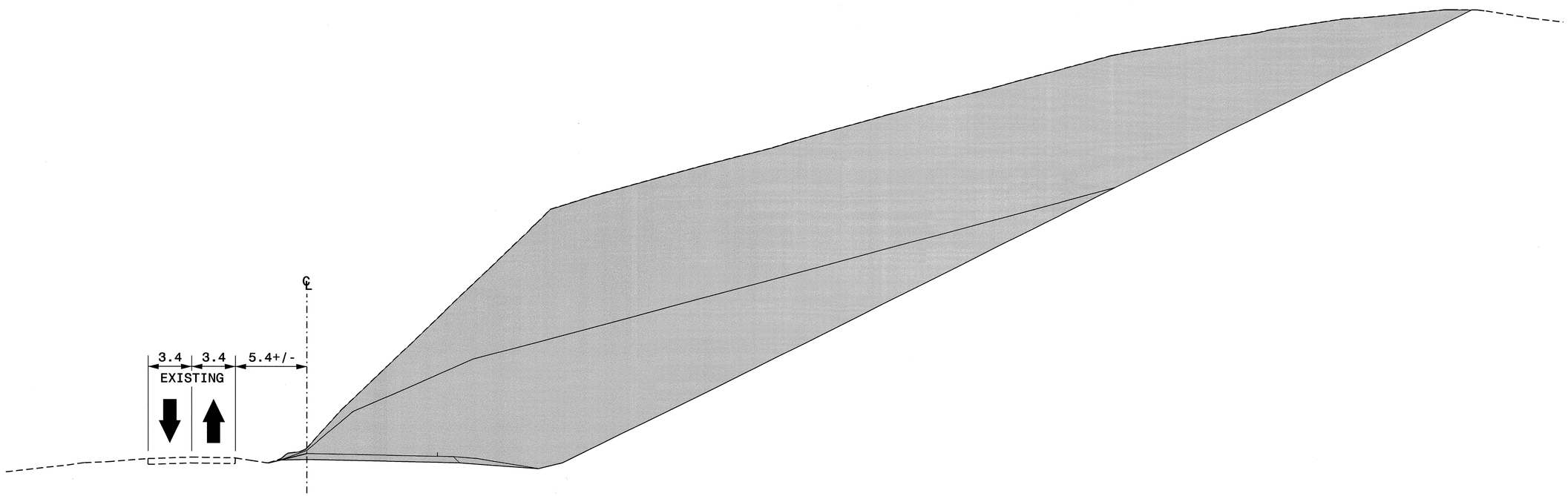

SECTION E-E′

-L- STA. 53+20+/-

(SEE SHEETS TCP-6)

APPROVED: Jessica Kuse DATE: 8/7/07

SEAL

NORTH CAROLINA PROFESSIONAL SEAL 027811 ENGINEER JESSICA D. KUSE

PHASE I - SECTIONS

SCALE:	NONE
DATE:	04/07
DWG. BY:	RMG
DESIGN BY:	RMG
REVIEWED BY:	JDK

REVISIONS

CADD FILE

07-AUG-2007 09:37
\\dot\dfsroot01\proj\tipprojects-r\r2518a\traffic\trafficcontrol\tcp\r-2518a_tc_tcp_xsl.dgn
rmgarrett AT WZTC222291

PROJ. REFERENCE NO.	SHEET NO.
R-2518A	TCP-24

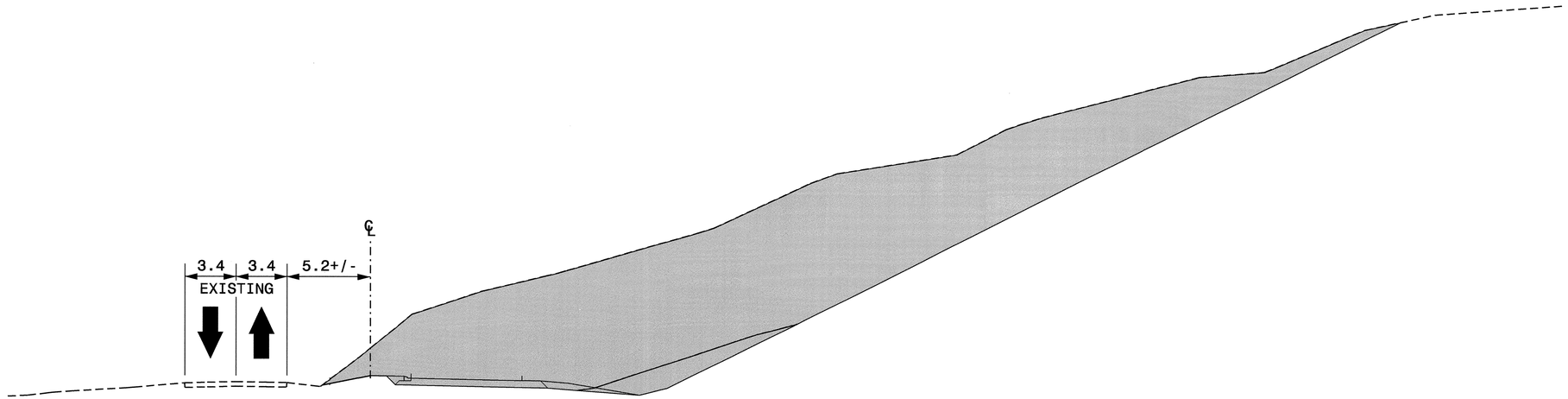

SECTION F-F′

-L- STA. 64+20+/-

(SEE SHEETS TCP-7)

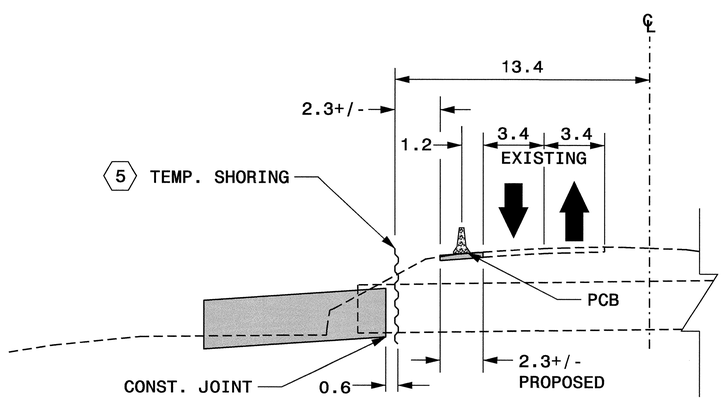

SECTION G-G′

-L- STA. 77+88+/-

(SEE SHEETS TCP-7 & TCP-24)

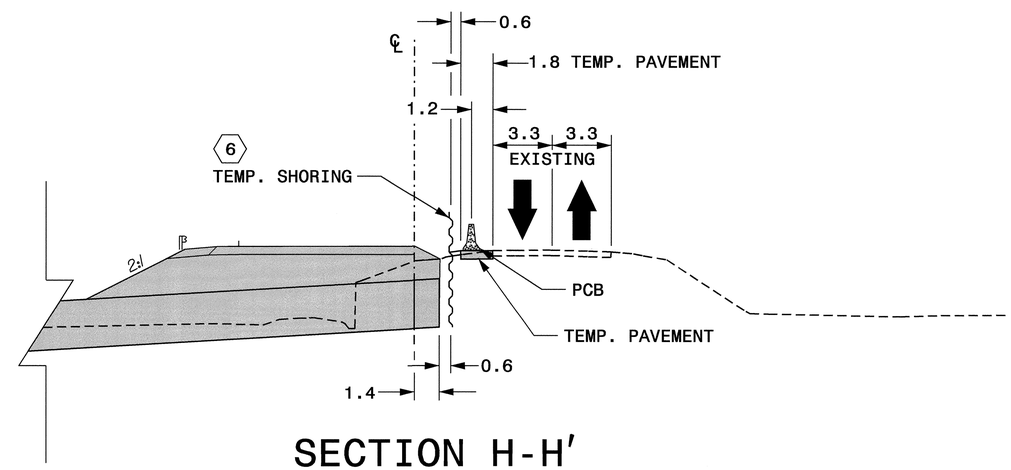

SECTION H-H′

-L- STA. 82+62+/-

(SEE SHEETS TCP-8 & TCP-24)

APPROVED: Jessica Kuse DATE: 8/7/07

SEAL

NORTH CAROLINA PROFESSIONAL SEAL 027811 ENGINEER JESSICA D. KUSE

PHASE I - SECTIONS

SCALE:	NONE
DATE:	04/07
DWG. BY:	RMG
DESIGN BY:	RMG
REVIEWED BY:	JDK

REVISIONS

CADD FILE

07-AUG-2007 09:37
\\dot\dfsroot01\proj\tipprojects-r\r2518a\traffic\trafficcontrol\tcp\r-2518a_tc_tcp_xsl.dgn
rmgarrett AT WZTC22229I

PROJ. REFERENCE NO.	SHEET NO.
R-2518A	TCP-25

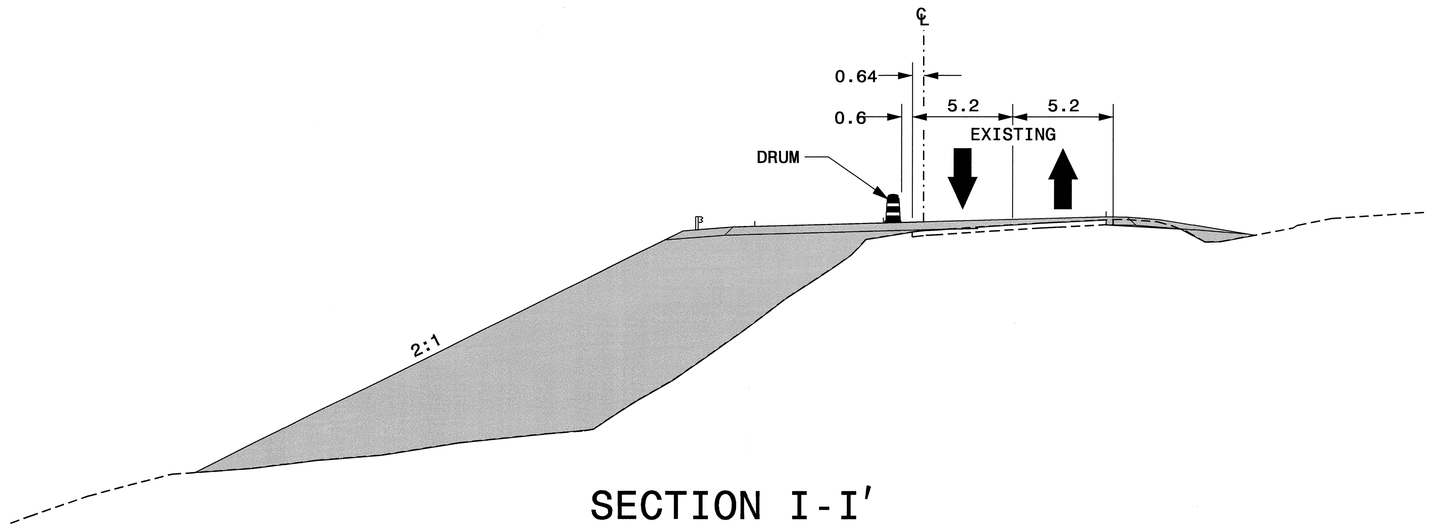

SECTION I-I′

-L- STA. 98+40+/-

(SEE SHEETS TCP-8)

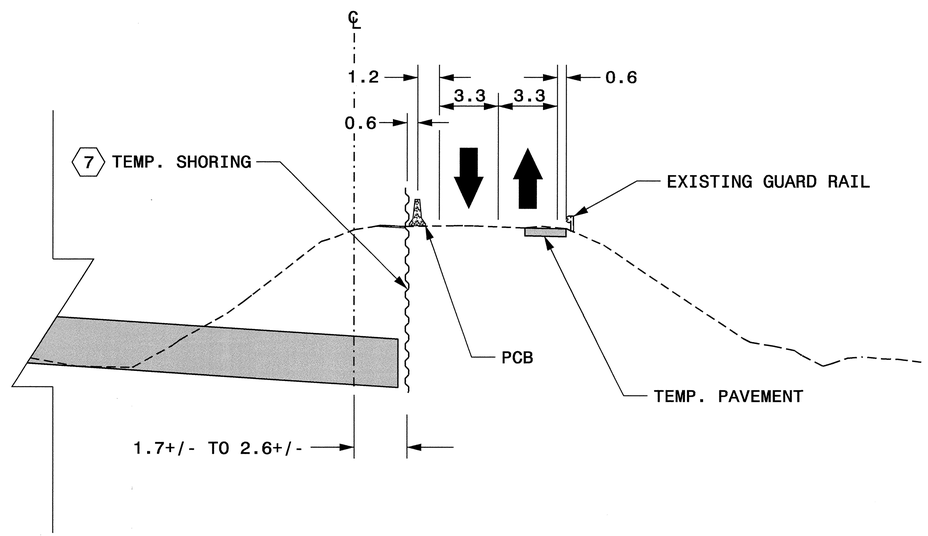

SECTION J-J′

-L- STA. 109+37+/-

(SEE SHEETS TCP-9 & TCP-25)

APPROVED: Jessica Kuk DATE: 8/9/07

SEAL

NORTH CAROLINA PROFESSIONAL SEAL 027811 ENGINEER JESSICA D. KUK

PHASE I - SECTIONS

SCALE:	NONE
DATE:	04/07
DWG. BY:	RMG
DESIGN BY:	RMG
REVIEWED BY:	JDK

REVISIONS

CADD FILE

07-AUG-2007 09:37
\\dot\dfsroot01\proj\tipprojects-r\r-2518a\traffic\trafficcontrol\tcpr-2518a_tc_tcp_xsl.dgn
rmgarrett AT WZTC22291

PROJ. REFERENCE NO.	SHEET NO.
R-2518A	TCP-26

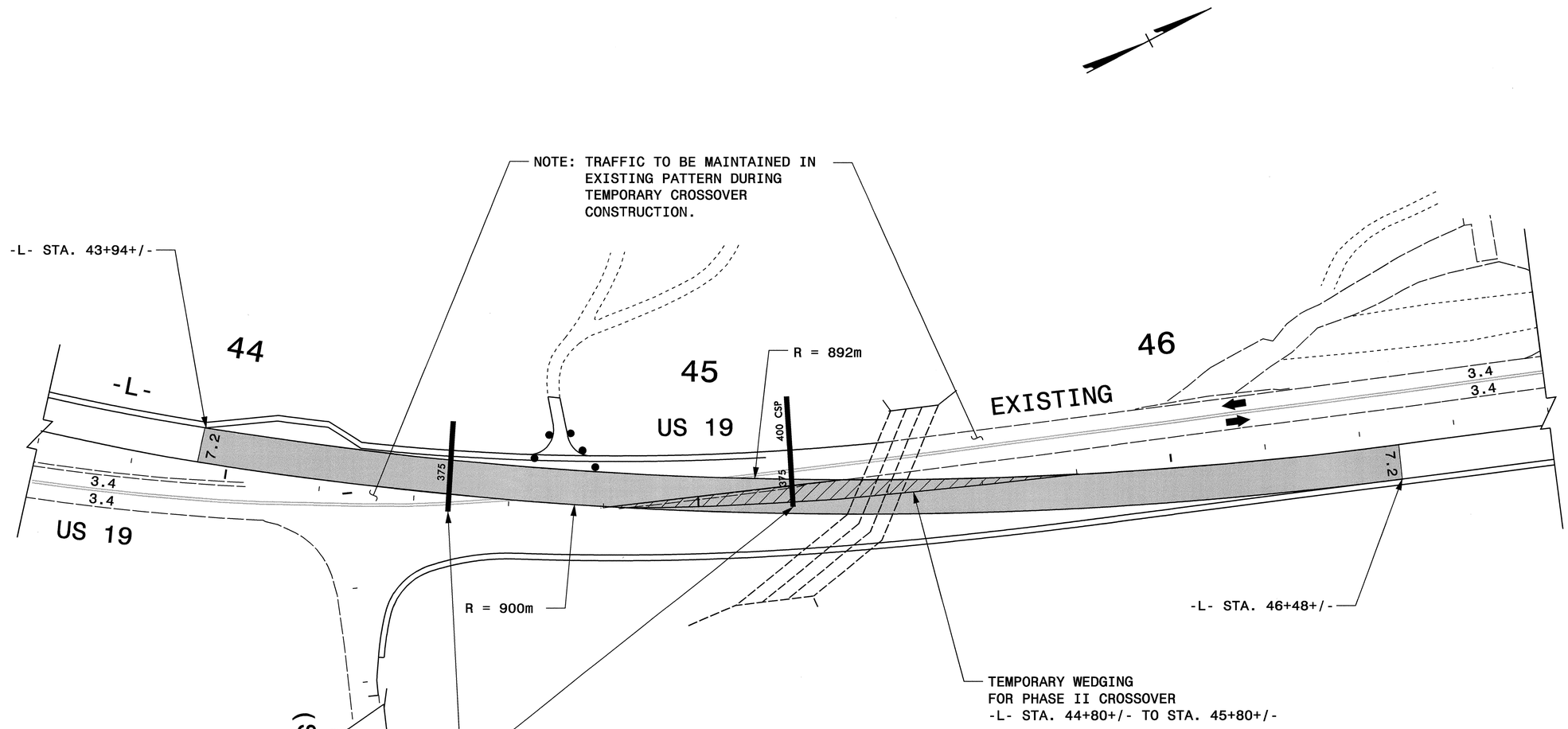

CROSS-DRAINS PROPOSED IN ROADWAY PLANS AT THESE LOCATIONS ARE TO BE INSTALLED AND TEMPORARILY SEALED AS DIRECTED BY THE ENGINEER DURING PHASE II CROSSOVER TRAFFIC PATTERN.

NOTE:
ANY TEMPORARY DRAINAGE REQUIRED TO PREVENT PONDING WHILE TRAFFIC IS IN THIS PATTERN IS TO BE FILLED WITH FLOWABLE FILL AND REMAIN IN PLACE ONCE NO LONGER NEEDED.

NOTES:

- MARKINGS SHOWN ARE APPROXIMATE.
- SPACE DRUMS NO MORE THAN 20m APART.
- SPACE DRUMS 5m APART IN RADII.
- SPACE DRUMS 5m APART AT DRIVEWAY ENTRANCES.
- SEE SHEETS TCP-60 & TCP-61 FOR TYPICAL SIGN / DEVICE SETUP AT -Y- LINES AND DRIVEWAYS CROSSING CONSTRUCTION AREAS.
- GRADE AND SUPERELEVATION RATE MAY BE ADJUSTED AS NECESSARY BY THE ENGINEER TO SECURE A PROPER TRANSITION THROUGH THE TEMPORARY CROSSOVER.

LEGEND

PROPOSED WEDGING

APPROVED: Jessica Kuse DATE: 4/25/08

SEAL

NORTH CAROLINA PROFESSIONAL SEAL 027811 ENGINEER JESSICA D. KUSE

TEMPORARY CROSSOVER FOR PHASE II
-L- STA. 43+94+/- TO STA. 46+48+/-

SCALE:	NONE
DATE:	06/07
DWG. BY:	RMG
DESIGN BY:	RMG
REVIEWED BY:	JDK

REVISIONS

CADD FILE

22-FEB-2008 08:31
\\dot\dfsroot0\proj\tipprojects-r\r2518a\traffic\trafficcontrol\tcpr-2518a_tc_tcp_26.dgn
rmgarrett AT WZTC22229

PROJ. REFERENCE NO.	SHEET NO.
R-2518A	TCP-27

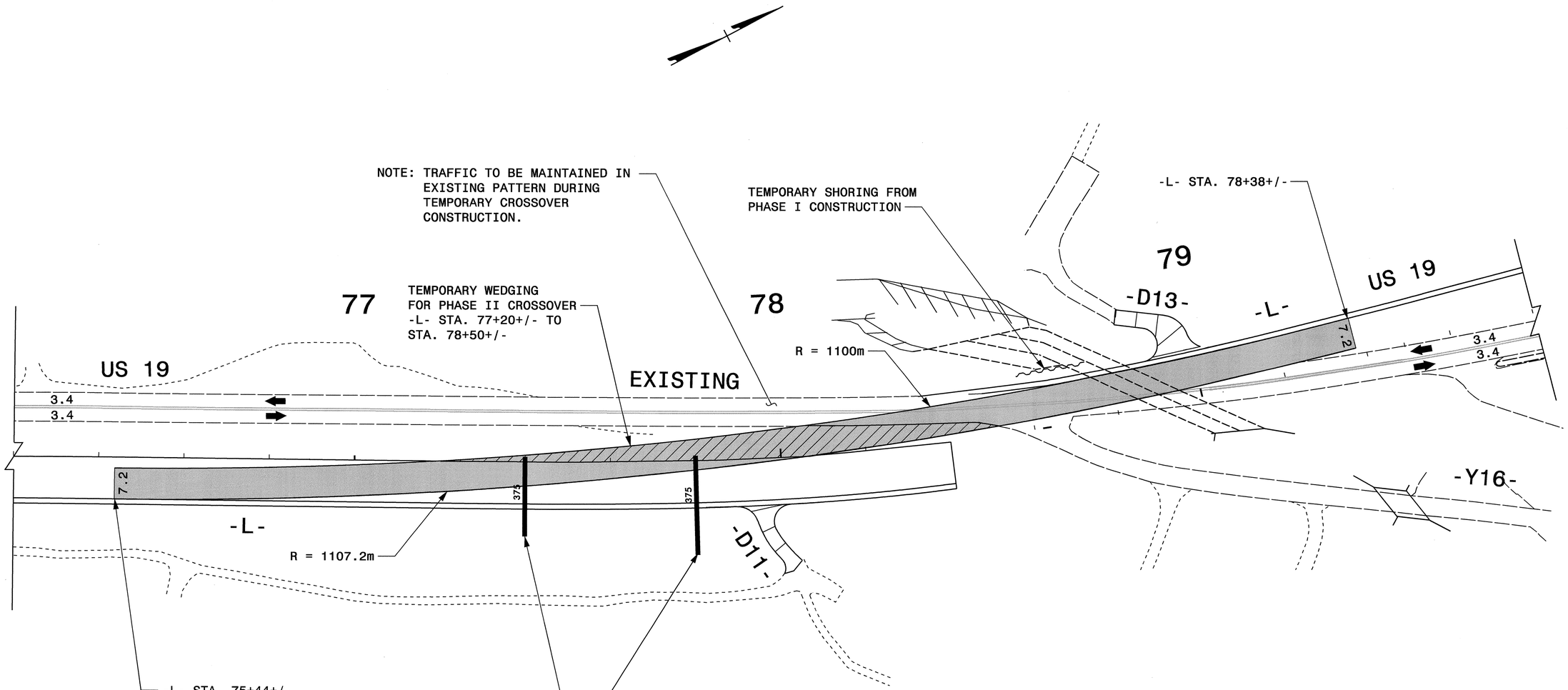

CROSS-DRAINS PROPOSED IN ROADWAY PLANS AT THESE LOCATIONS ARE TO BE INSTALLED AND TEMPORARILY SEALED AS DIRECTED BY THE ENGINEER DURING PHASE II CROSSOVER TRAFFIC PATTERN.

NOTE:
ANY TEMPORARY DRAINAGE REQUIRED TO PREVENT PONDING WHILE TRAFFIC IS IN THIS PATTERN IS TO BE FILLED WITH FLOWABLE FILL AND REMAIN IN PLACE ONCE NO LONGER NEEDED.

NOTES:

- MARKINGS SHOWN ARE APPROXIMATE.
- SPACE DRUMS NO MORE THAN 20m APART.
- SPACE DRUMS 5m APART IN RADII.
- SPACE DRUMS 5m APART AT DRIVEWAY ENTRANCES.
- SEE SHEETS TCP-60 & TCP-61 FOR TYPICAL SIGN / DEVICE SETUP AT -Y- LINES AND DRIVEWAYS CROSSING CONSTRUCTION AREAS.
- GRADE AND SUPERELEVATION RATE MAY BE ADJUSTED AS NECESSARY BY THE ENGINEER TO SECURE A PROPER TRANSITION THROUGH THE TEMPORARY CROSSOVER.

LEGEND

PROPOSED WEDGING

APPROVED: Jessica Kuse DATE: 4/25/08

SEAL

NORTH CAROLINA PROFESSIONAL SEAL 027811 ENGINEER JESSICA D. KUSE

TEMPORARY CROSSOVER FOR PHASE II
-L- STA. 75+44+/- TO STA. 78+38+/-

SCALE:	NONE
DATE:	06/07
DWG. BY:	RMG
DESIGN BY:	RMG
REVIEWED BY:	JDK

REVISIONS

CADD FILE

22-FEB-2008 08:32
\\dot\dfsroot01\proj\tipprojects-r\r2518a\traffic\trafficcontrol\tcp\R-2518A_TC_TCP_27.dgn
rmgarrett AT WZTC22229I

PROJ. REFERENCE NO.	SHEET NO.
R-2518A	TCP-28

METRIC

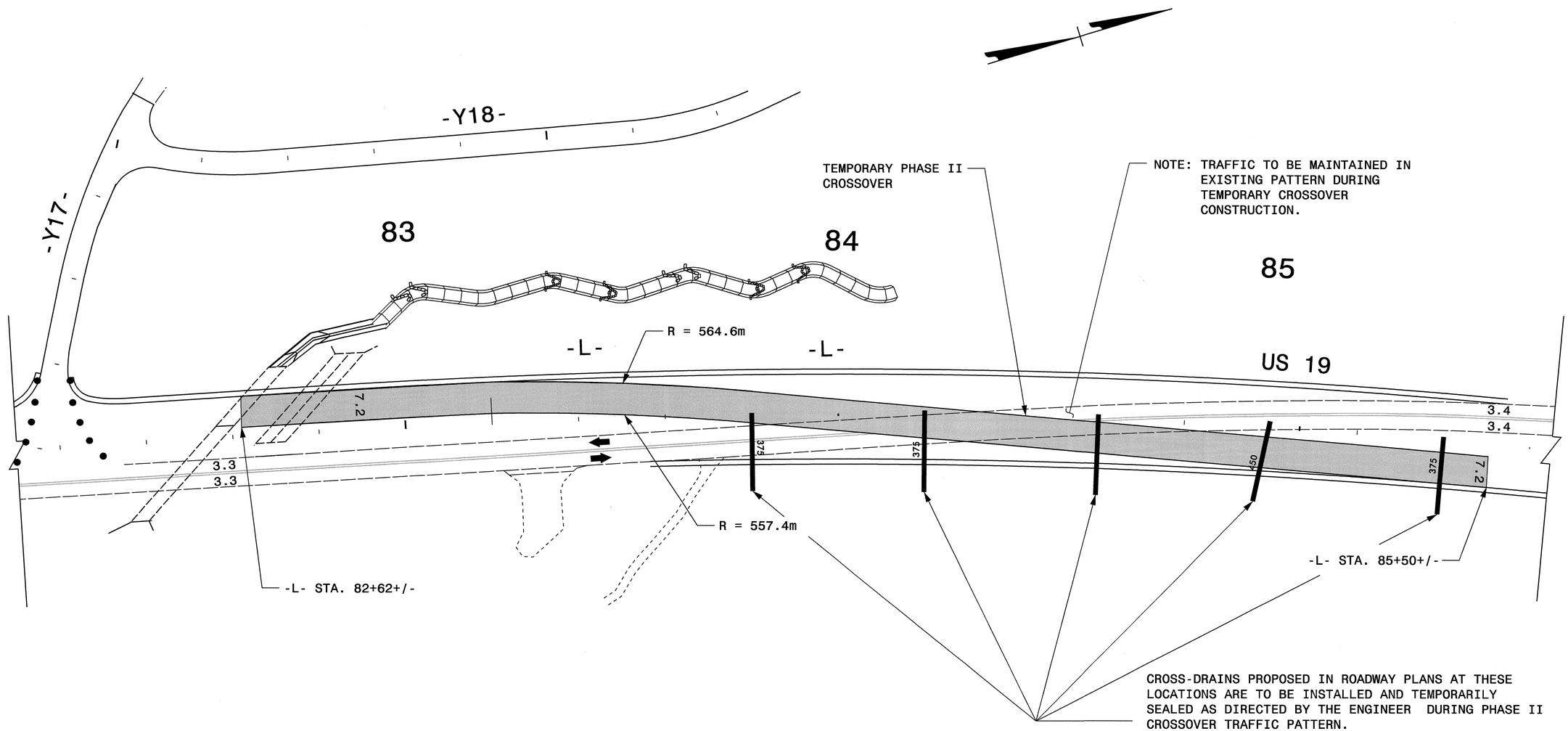

NOTE:
ANY TEMPORARY DRAINAGE REQUIRED TO PREVENT PONDING WHILE TRAFFIC IS IN THIS PATTERN IS TO BE FILLED WITH FLOWABLE FILL AND REMAIN IN PLACE ONCE NO LONGER NEEDED.

NOTES:

- MARKINGS SHOWN ARE APPROXIMATE.
- SPACE DRUMS NO MORE THAN 20m APART.
- SPACE DRUMS 5m APART IN RADII.
- SPACE DRUMS 5m APART AT DRIVEWAY ENTRANCES.
- SEE SHEETS TCP-60 & TCP-61 FOR TYPICAL SIGN / DEVICE SETUP AT -Y- LINES AND DRIVEWAYS CROSSING CONSTRUCTION AREAS.
- GRADE AND SUPERELEVATION RATE MAY BE ADJUSTED AS NECESSARY BY THE ENGINEER TO SECURE A PROPER TRANSITION THROUGH THE TEMPORARY CROSSOVER.

APPROVED: Jessica Duke DATE: 8/9/07

SEAL

NORTH CAROLINA PROFESSIONAL SEAL 027811 ENGINEER JESSICA D. KUSE

TEMPORARY CROSSOVER FOR PHASE II
-L- STA. 82+62+/- TO STA. 85+50+/-

SCALE:	NONE
DATE:	06/07
DWG. BY:	RMG
DESIGN BY:	RMG
REVIEWED BY:	JDK

DIVISION OF HIGHWAYS · STATE OF NORTH CAROLINA · DEPARTMENT OF TRANSPORTATION · WORK ZONE TRAFFIC CONTROL

REVISIONS

CADD FILE

07-AUG-2007 09:33
\\dot\dfsroot\proj\tipprojects-r\r2518a\traffic\trafficontrol\tcp\R-2518A_TC_TCP_19.dgn
rmgarrett AT WZTC22229

PROJ. REFERENCE NO.	SHEET NO.
R-2518A	TCP-29

METRIC

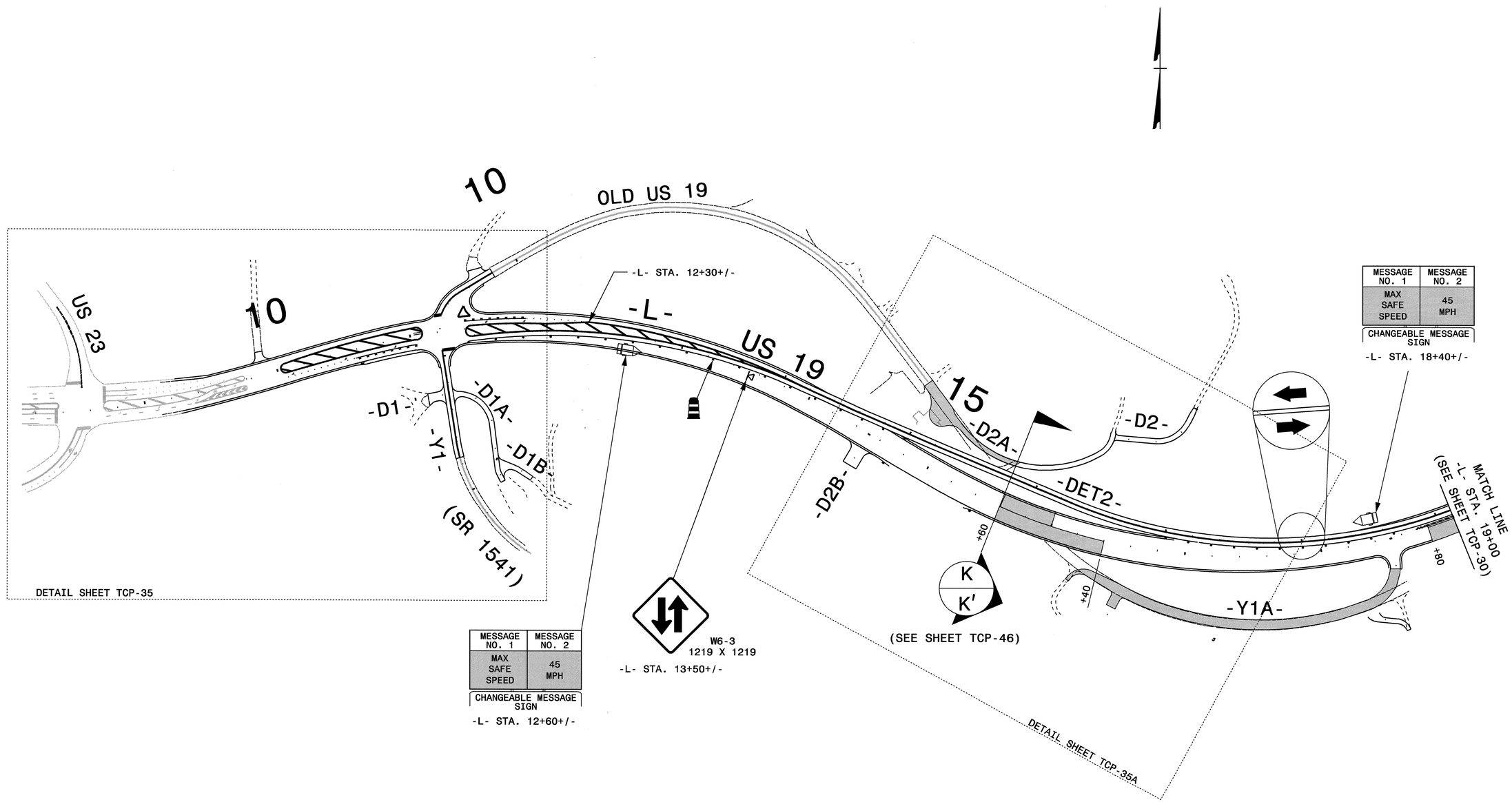

NOTES:

- MARKINGS SHOWN ARE APPROXIMATE.
- SPACE DRUMS NO MORE THAN 20m APART.
- SPACE DRUMS 5m APART IN RADII.
- SPACE DRUMS 5m APART AT DRIVEWAY ENTRANCES.
- SEE SHEETS TCP-60 & TCP-61 FOR TYPICAL SIGN / DEVICE SETUP AT -Y- LINES AND DRIVEWAYS CROSSING CONSTRUCTION AREAS.

APPROVED: Jessica Kuse DATE: 8/7/07

SEAL

NORTH CAROLINA PROFESSIONAL SEAL 027811 ENGINEER JESSICA D. KUSE

OVERVIEW PHASE II

SCALE:	NONE
DATE:	04/07
DWG. BY:	RMG
DESIGN BY:	RMG
REVIEWED BY:	JDK

DIVISION OF HIGHWAYS STATE OF NORTH CAROLINA DEPARTMENT OF TRANSPORTATION TRAFFIC CONTROL

REVISIONS

CADD FILE

07-AUG-2007 09:35
\\dot\dfsroot\proj\tipprojects-r\r-2518a\traffic\trafficcontrol\tcp\R-2518A_TC_TCP_OVR_PH2_01A.dgn
rmgarrett AT WZTC222291

PROJ. REFERENCE NO.	SHEET NO.
R-2518A	TCP-29A

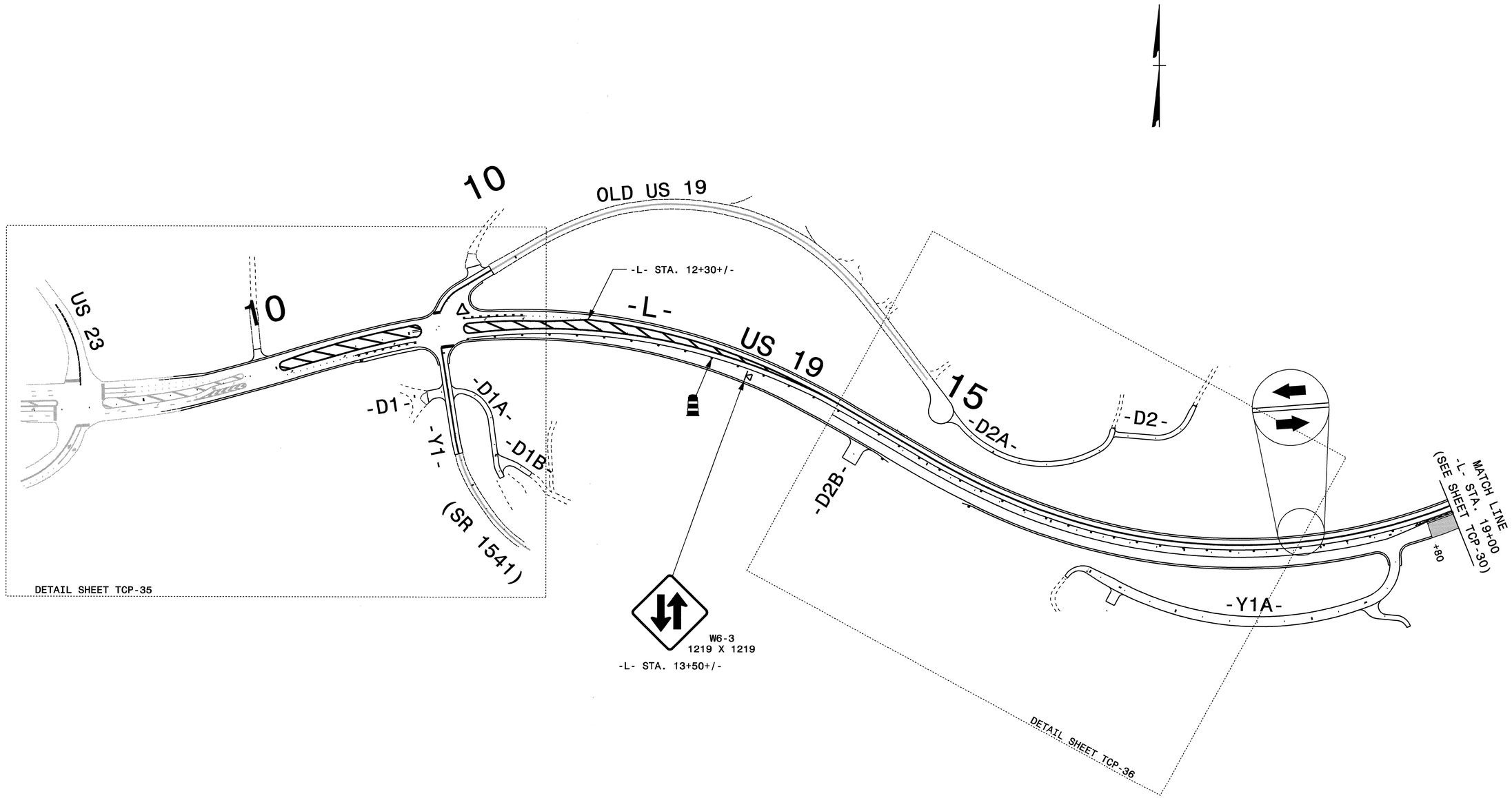

NOTES:

- MARKINGS SHOWN ARE APPROXIMATE.
- SPACE DRUMS NO MORE THAN 20m APART.
- SPACE DRUMS 5m APART IN RADII.
- SPACE DRUMS 5m APART AT DRIVEWAY ENTRANCES.
- SEE SHEETS TCP-60 & TCP-61 FOR TYPICAL SIGN / DEVICE SETUP AT -Y- LINES AND DRIVEWAYS CROSSING CONSTRUCTION AREAS.

APPROVED: Jessica Kuse DATE: 8/7/07

SEAL

NORTH CAROLINA PROFESSIONAL SEAL 027811 ENGINEER JESSICA D. KUSE

OVERVIEW PHASE II

SCALE:	NONE
DATE:	04/07
DWG. BY:	RMG
DESIGN BY:	RMG
REVIEWED BY:	JDK

REVISIONS

CADD FILE

07-AUG-2007 09:35
\\dot\dfsroot01\proj\tipprojects-r\r2518a\traffic\trafficcontrol\tcp\R-2518A_TC_TCP_OVR_PH2_01.dgn
rmgarrett AT WZTC22229I

PROJ. REFERENCE NO.	SHEET NO.
R-2518A	TCP-30

METRIC

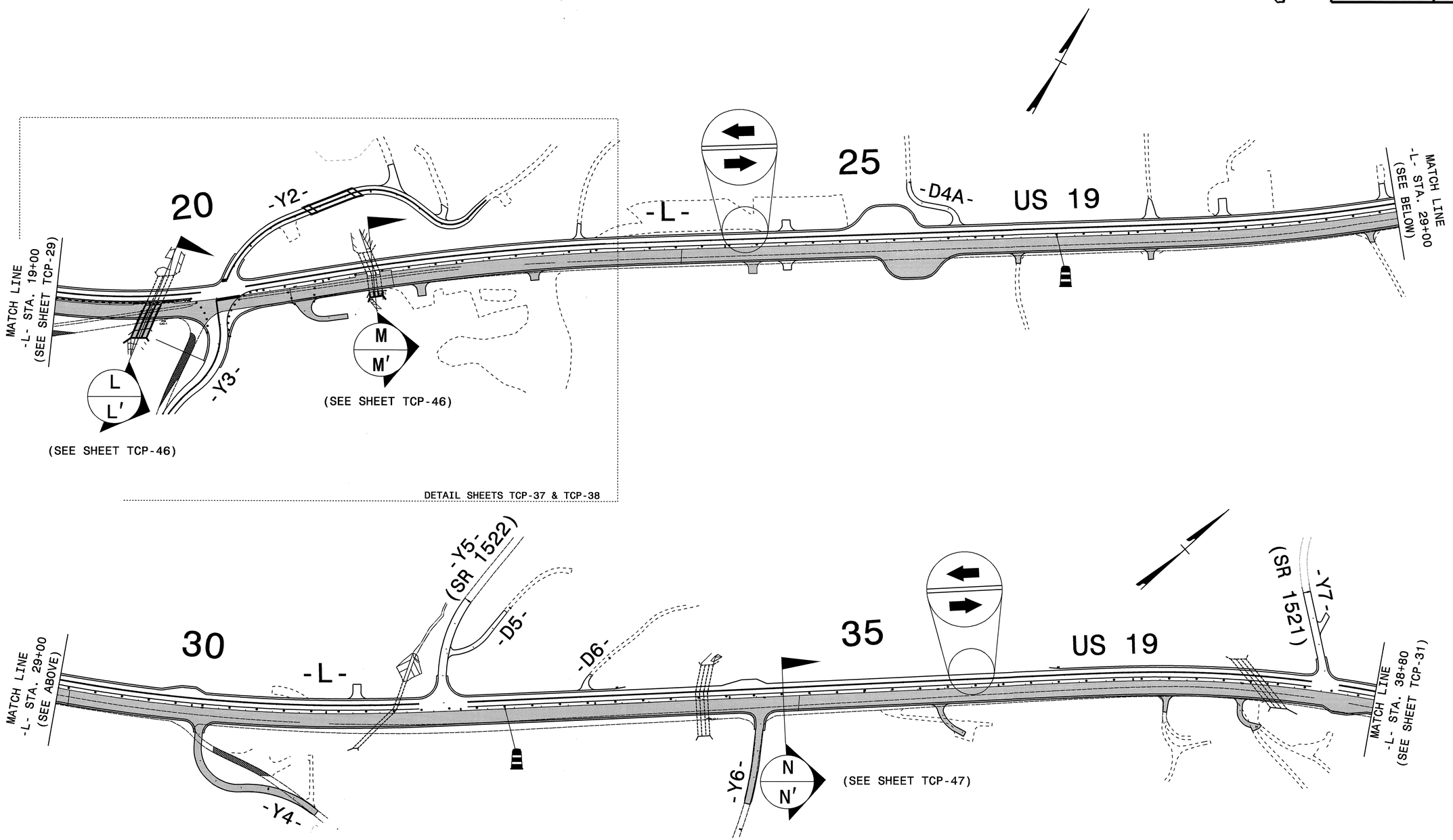

NOTES:

- MARKINGS SHOWN ARE APPROXIMATE.
- SPACE DRUMS NO MORE THAN 20m APART.
- SPACE DRUMS 5m APART IN RADII.
- SPACE DRUMS 5m APART AT DRIVEWAY ENTRANCES.
- SEE SHEETS TCP-60 & TCP-61 FOR TYPICAL SIGN / DEVICE SETUP AT -Y- LINES AND DRIVEWAYS CROSSING CONSTRUCTION AREAS.

APPROVED: Jessica D. Kuse DATE: 8/7/07

SEAL

NORTH CAROLINA PROFESSIONAL SEAL 027811 ENGINEER JESSICA D. KUSE

OVERVIEW PHASE II

SCALE:	NONE
DATE:	04/07
DWG. BY:	RMG
DESIGN BY:	RMG
REVIEWED BY:	JDK

DIVISION OF HIGHWAYS STATE OF NORTH CAROLINA DEPARTMENT OF TRANSPORTATION TRAFFIC CONTROL

REVISIONS

CADD FILE

07-AUG-2007 09:35
\\dot\dfsroot\proj\tipprojects-r\r2518a\traffic\trafficcontrol\tcp\R-2518A_TC_TCP_OVR_PH2_02.dgn
rmgarrett AT WZTC22291

PROJ. REFERENCE NO.	SHEET NO.
R-2518A	TCP-31

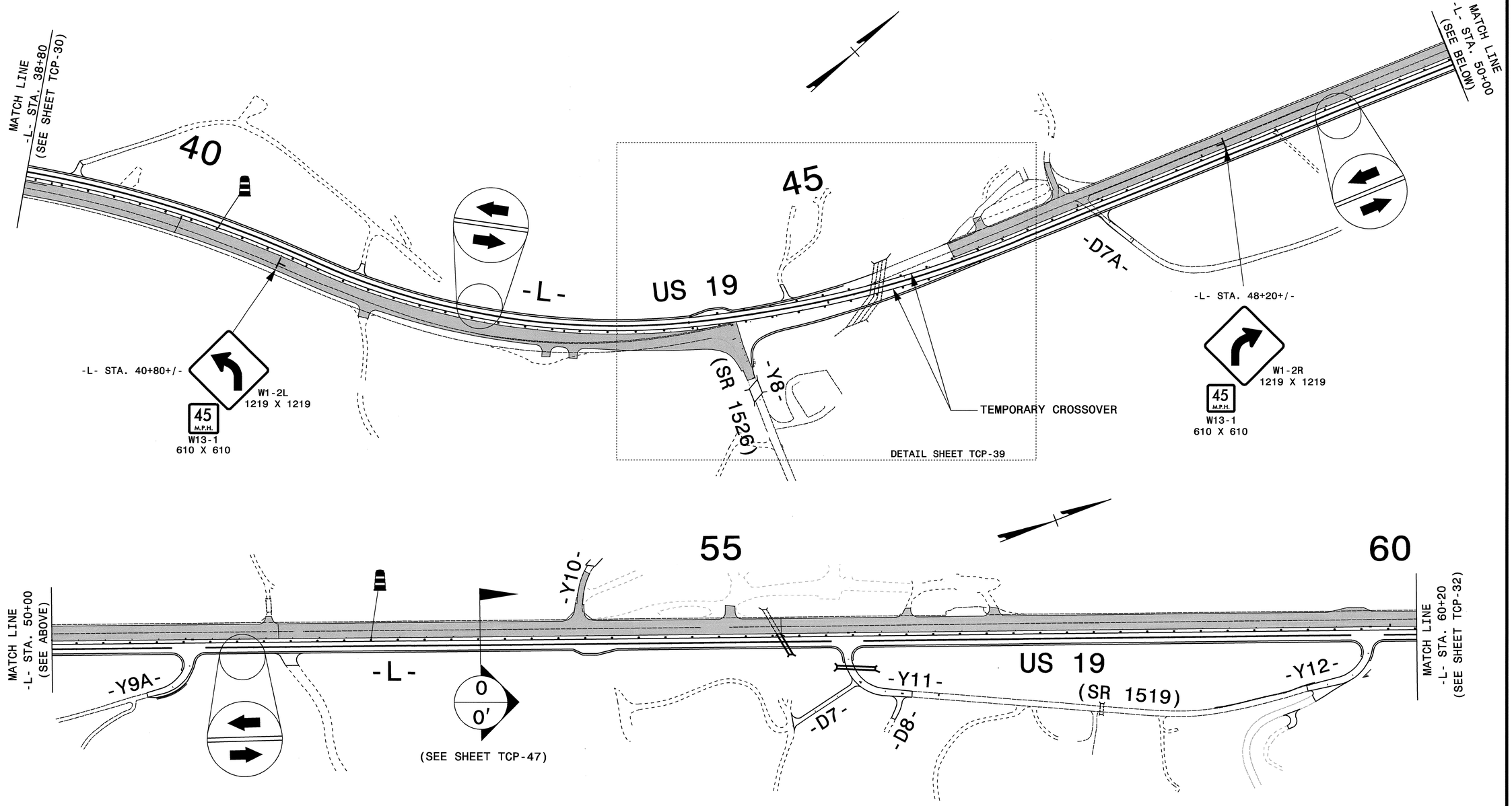

NOTES:

- MARKINGS SHOWN ARE APPROXIMATE.
- SPACE DRUMS NO MORE THAN 20m APART.
- SPACE DRUMS 5m APART IN RADII.
- SPACE DRUMS 5m APART AT DRIVEWAY ENTRANCES.
- SEE SHEETS TCP-60 & TCP-61 FOR TYPICAL SIGN / DEVICE SETUP AT -Y- LINES AND DRIVEWAYS CROSSING CONSTRUCTION AREAS.

APPROVED: Jessica Kusk DATE: 8/7/07

SEAL

NORTH CAROLINA PROFESSIONAL SEAL 027811 ENGINEER JESSICA D. KUSK

OVERVIEW PHASE II

SCALE:	NONE
DATE:	04/07
DWG. BY:	RMG
DESIGN BY:	RMG
REVIEWED BY:	JDK

REVISIONS

CADD FILE

07-AUG-2007 09:35
\\dot\dfsroot\proj\tipprojects-r\r2518a\traffic\trafficcontrol\tcp\R-2518A_TC_TCP_OVR_PH2_03.dgn
rmgarrett AT WZTC22291

PROJ. REFERENCE NO.	SHEET NO.
R-2518A	TCP-32

METRIC

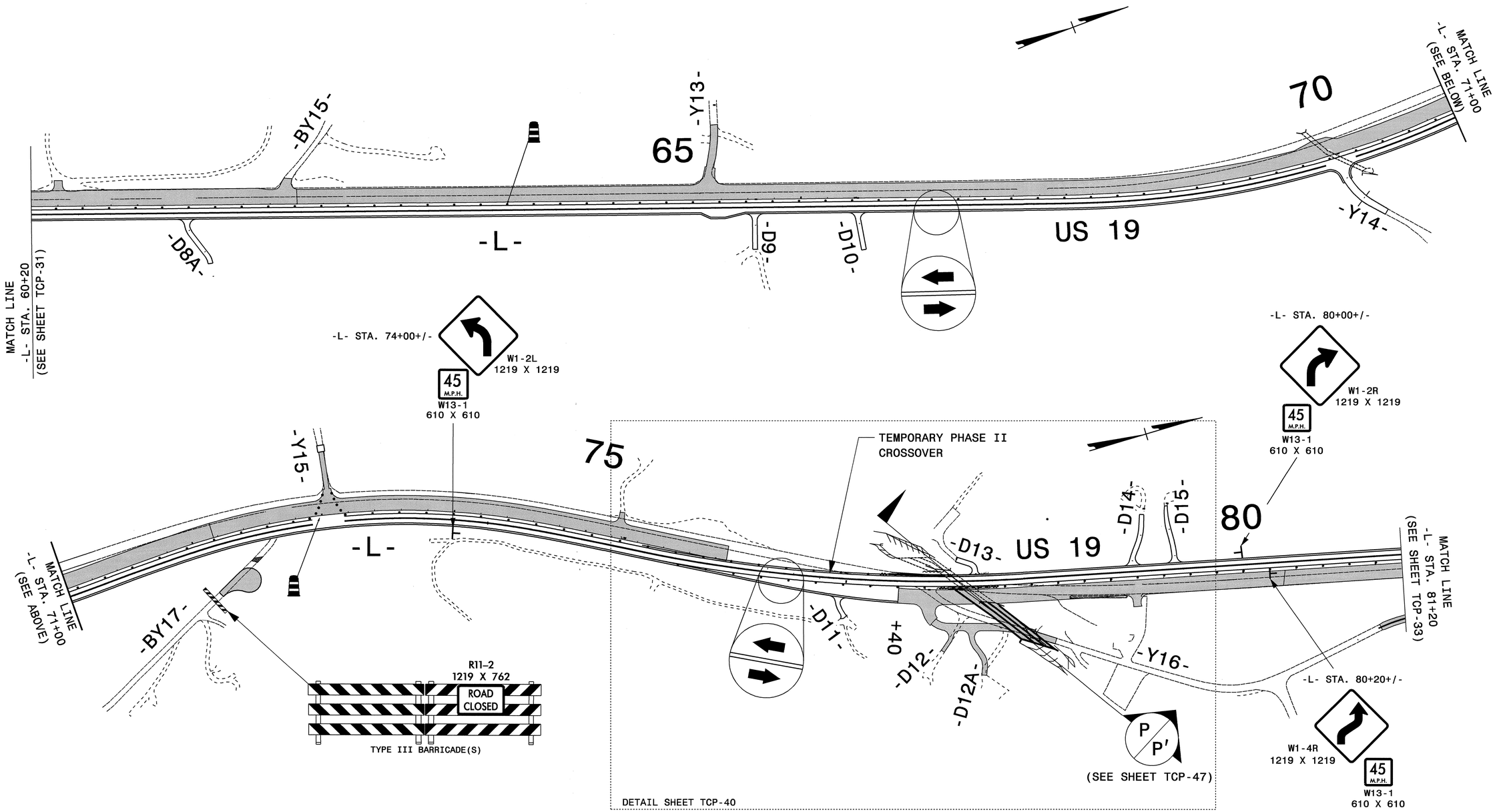

NOTES:

- MARKINGS SHOWN ARE APPROXIMATE.
- SPACE DRUMS NO MORE THAN 20m APART.
- SPACE DRUMS 5m APART IN RADII.
- SPACE DRUMS 5m APART AT DRIVEWAY ENTRANCES.
- SEE SHEETS TCP-60 & TCP-61 FOR TYPICAL SIGN / DEVICE SETUP AT -Y- LINES AND DRIVEWAYS CROSSING CONSTRUCTION AREAS.

APPROVED: Jessica Kuse DATE: 8/7/07

SEAL

NORTH CAROLINA PROFESSIONAL SEAL 027811 ENGINEER JESSICA D. KUSE

OVERVIEW PHASE II

SCALE:	NONE
DATE:	04/07
DWG. BY:	RMG
DESIGN BY:	RMG
REVIEWED BY:	JDK

DIVISION OF HIGHWAYS STATE OF NORTH CAROLINA TRANSPORTATION MOBILITY & SAFETY DIVISION TRAFFIC ENGINEERING

REVISIONS

CADD FILE

07-AUG-2007 09:37
\\dot\dfsroot01\proj\tipprojects-r\r2518a\trafficontrol\tcp\R-2518A_TC_TCP_OVR_PH2_04.dgn
rmgarrett AT WZTC22229

PROJ. REFERENCE NO.	SHEET NO.
R-2518A	TCP-33

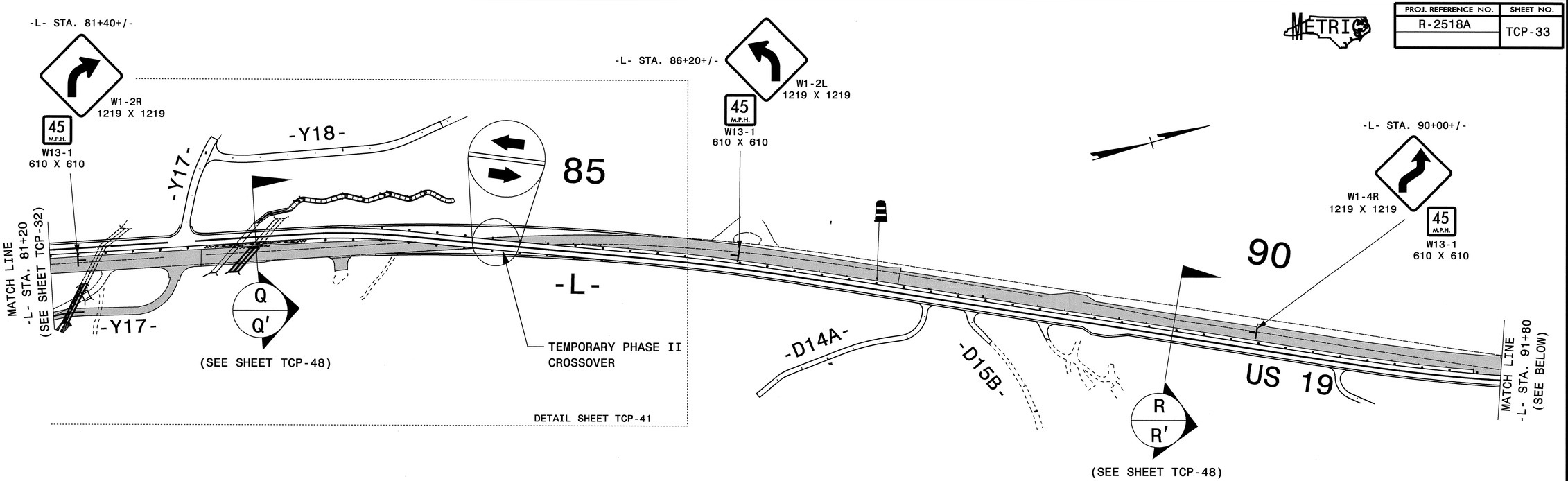

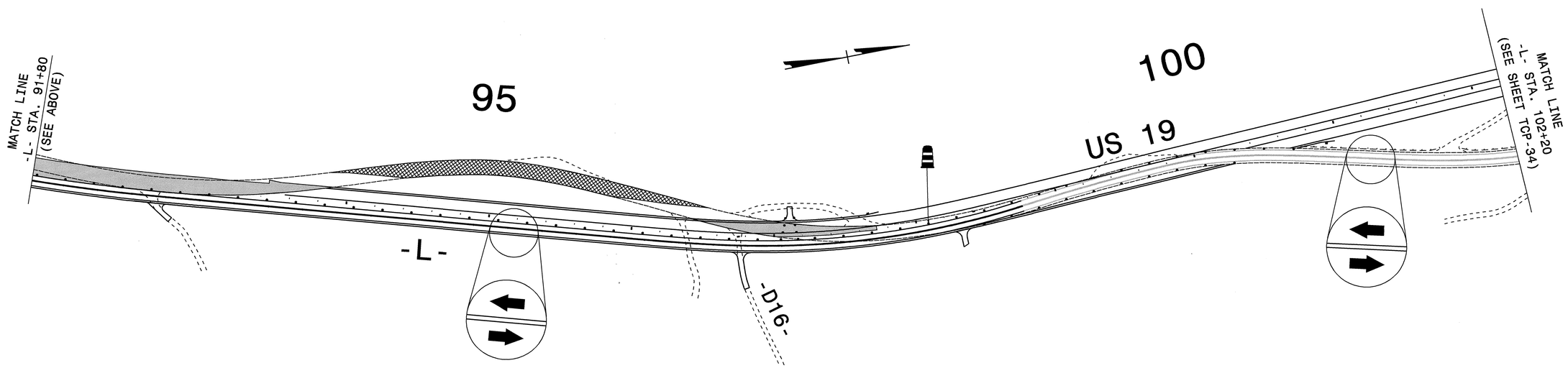

NOTES:

- MARKINGS SHOWN ARE APPROXIMATE.
- SPACE DRUMS NO MORE THAN 20m APART.
- SPACE DRUMS 5m APART IN RADII.
- SPACE DRUMS 5m APART AT DRIVEWAY ENTRANCES.
- SEE SHEETS TCP-60 & TCP-61 FOR TYPICAL SIGN / DEVICE SETUP AT -Y- LINES AND DRIVEWAYS CROSSING CONSTRUCTION AREAS.

APPROVED: DATE: 8/7/07

SEAL

NORTH CAROLINA PROFESSIONAL SEAL 027811 ENGINEER JESSICA D. KUSS

OVERVIEW PHASE II

SCALE:	NONE
DATE:	04/07
DWG. BY:	RMG
DESIGN BY:	RMG
REVIEWED BY:	JDK

REVISIONS

CADD FILE

07-AUG-2007 09:36
\\dot\dfsroot0\proj\tipprojects-r\r2518a\traffic\trafficontrol\tcp\R-2518A_TC_TCP_OVR_PH2_05.dgn
rmgarrett AT WZTC22229j

PROJ. REFERENCE NO.	SHEET NO.
R-2518A	TCP-34

METRIC

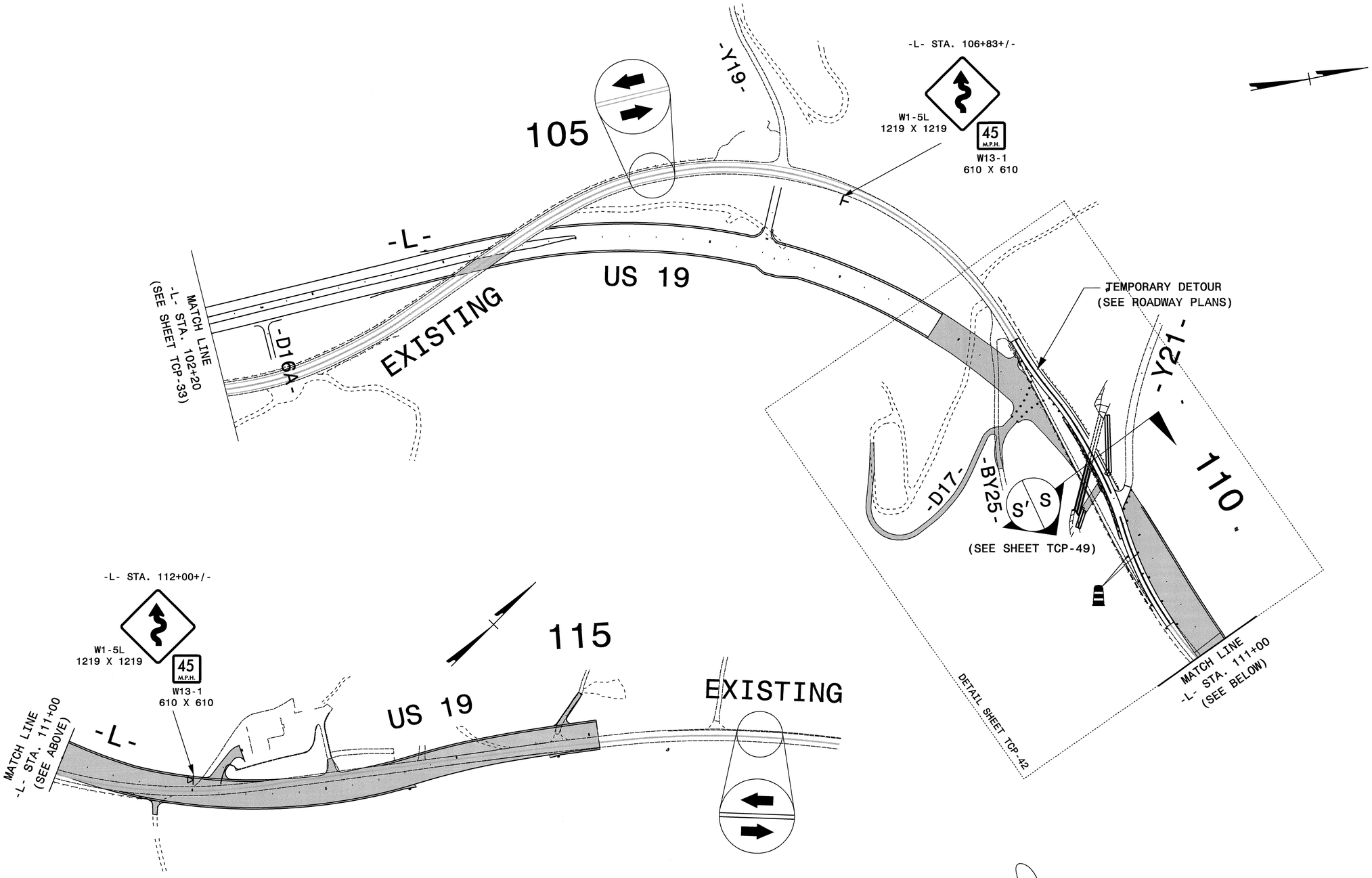

NOTES:

- MARKINGS SHOWN ARE APPROXIMATE.
- SPACE DRUMS NO MORE THAN 20m APART.
- SPACE DRUMS 5m APART IN RADII.
- SPACE DRUMS 5m APART AT DRIVEWAY ENTRANCES.
- SEE SHEETS TCP-60 & TCP-61 FOR TYPICAL SIGN / DEVICE SETUP AT -Y- LINES AND DRIVEWAYS CROSSING CONSTRUCTION AREAS.

APPROVED: Jessica Kuss DATE: 8/9/07

SEAL

NORTH CAROLINA PROFESSIONAL SEAL 027811 ENGINEER JESSICA D. KUSS

OVERVIEW PHASE II

SCALE:	NONE
DATE:	04/07
DWG. BY:	RMG
DESIGN BY:	RMG
REVIEWED BY:	JDK

REVISIONS

CADD FILE

07-AUG-2007 18:56
\\dot\dfsroot01\proj\tipprojects-r\r2518a\traffic\trafficcontrol\tcp\R-2518A_TC_TCP_OVR_PH2_06.dgn
rmgarrett AT WZTC222291

PROJ. REFERENCE NO.	SHEET NO.
R-2518A	TCP-35

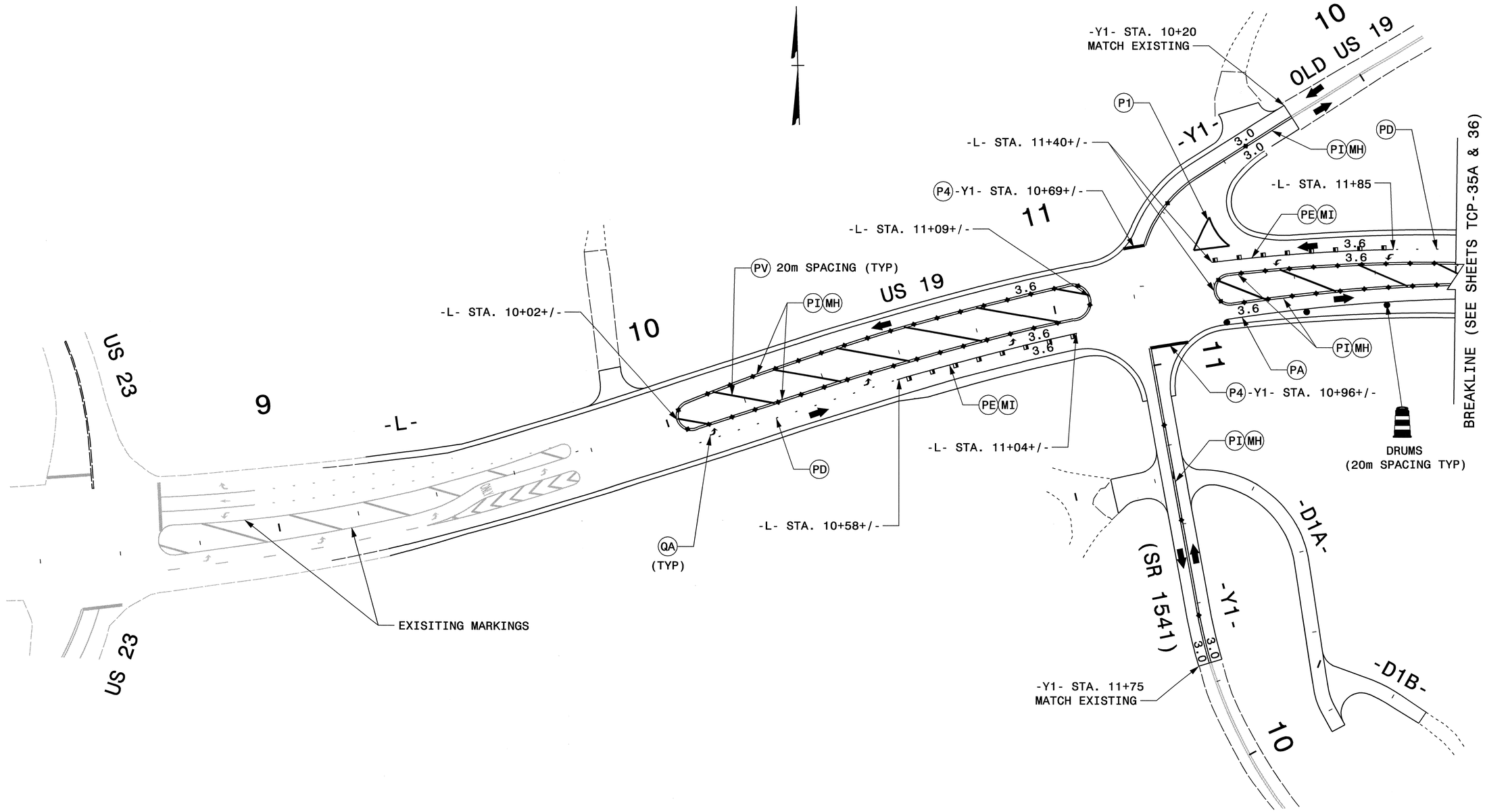

APPROVED: Jessica Kuse DATE: 8/7/07

SEAL

NORTH CAROLINA PROFESSIONAL SEAL 027811 ENGINEER JESSICA D. KUSE

PHASE II

SCALE:	NONE
DATE:	06/07
DWG. BY:	RMG
DESIGN BY:	RMG
REVIEWED BY:	JDK

REVISIONS

CADD FILE

07-AUG-2007 09:33
\\dot\dfsroot01\proj\tipprojects-r\r2518a\traffic\trafficcontrol\tcp\R-2518A_TC_TCP_II.dgn
rmgarrett AT WZTC222291

PROJ. REFERENCE NO.	SHEET NO.
R-2518A	TCP-35A

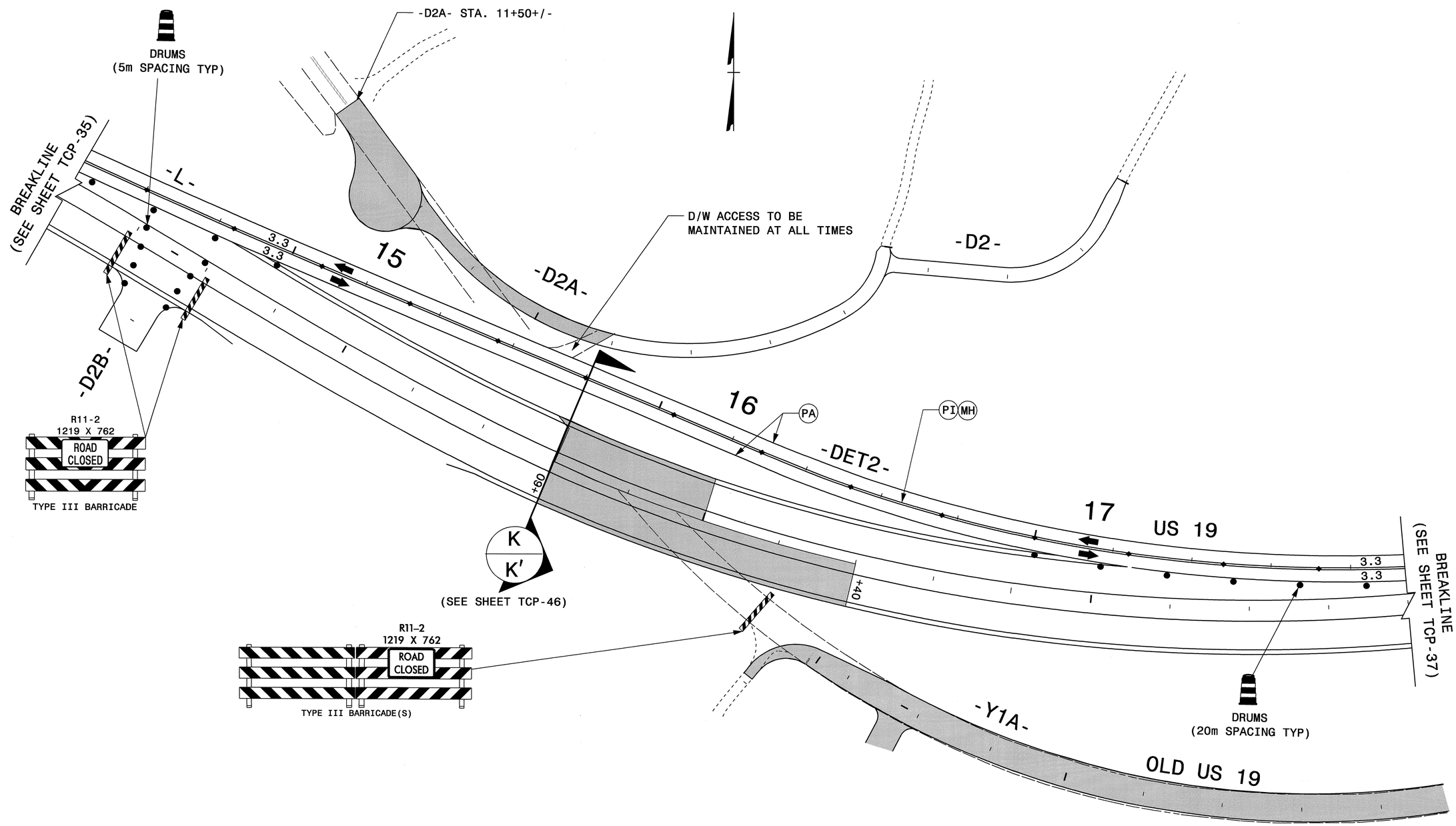

NOTES:

- MARKINGS SHOWN ARE APPROXIMATE.
- SPACE DRUMS NO MORE THAN 20m APART.
- SPACE DRUMS 5m APART IN RADII.
- SPACE DRUMS 5m APART AT DRIVEWAY ENTRANCES.
- SEE SHEETS TCP-60 & TCP-61 FOR TYPICAL SIGN / DEVICE SETUP AT -Y- LINES AND DRIVEWAYS CROSSING CONSTRUCTION AREAS.

APPROVED: Jessica Kuse DATE: 8/7/07

SEAL

NORTH CAROLINA PROFESSIONAL SEAL 027811 ENGINEER JESSICA D. KUSE

PHASE II

SCALE:	NONE
DATE:	06/07
DWG. BY:	RMG
DESIGN BY:	RMG
REVIEWED BY:	JDK

REVISIONS

CADD FILE

07-AUG-2007 09:34
\\dot\dfsroot\proj\tipprojects-r\r2518a\traffic\trafficcontrol\tcp\R-2518A_TC_TCP_35a.dgn
rmgarrett AT WZTC22229

PROJ. REFERENCE NO.	SHEET NO.
R-2518A	TCP-36

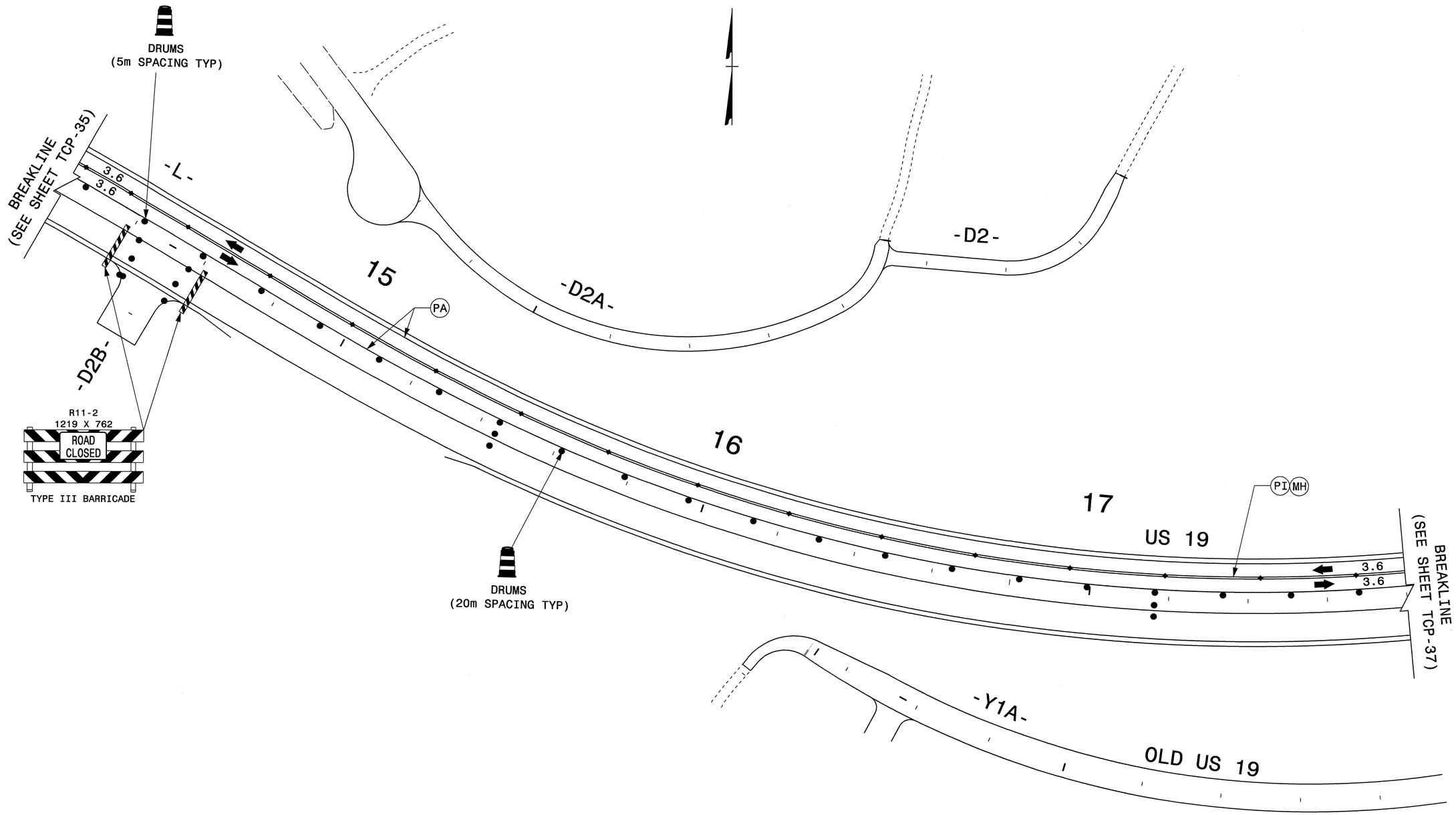

NOTES:

- MARKINGS SHOWN ARE APPROXIMATE.
- SPACE DRUMS NO MORE THAN 20m APART.
- SPACE DRUMS 5m APART IN RADII.
- SPACE DRUMS 5m APART AT DRIVEWAY ENTRANCES.
- SEE SHEETS TCP-60 & TCP-61 FOR TYPICAL SIGN / DEVICE SETUP AT -Y- LINES AND DRIVEWAYS CROSSING CONSTRUCTION AREAS.

APPROVED: Jessica Kuse DATE: 8/7/07

SEAL

NORTH CAROLINA PROFESSIONAL SEAL 027811 ENGINEER JESSICA D. KUSE

PHASE II

SCALE:	NONE
DATE:	06/07
DWG. BY:	RMG
DESIGN BY:	RMG
REVIEWED BY:	JDK

REVISIONS

CADD FILE

07-AUG-2007 11:04
\\dot\dfsroot01\proj\tipprojects-r\r2518a\traffic\trafficcontrol\tcp\R-2518A_TC_TCP_12.dgn
rmgarrett AT WZTC22229I

PROJ. REFERENCE NO.	SHEET NO.
R-2518A	TCP-37

METRIC

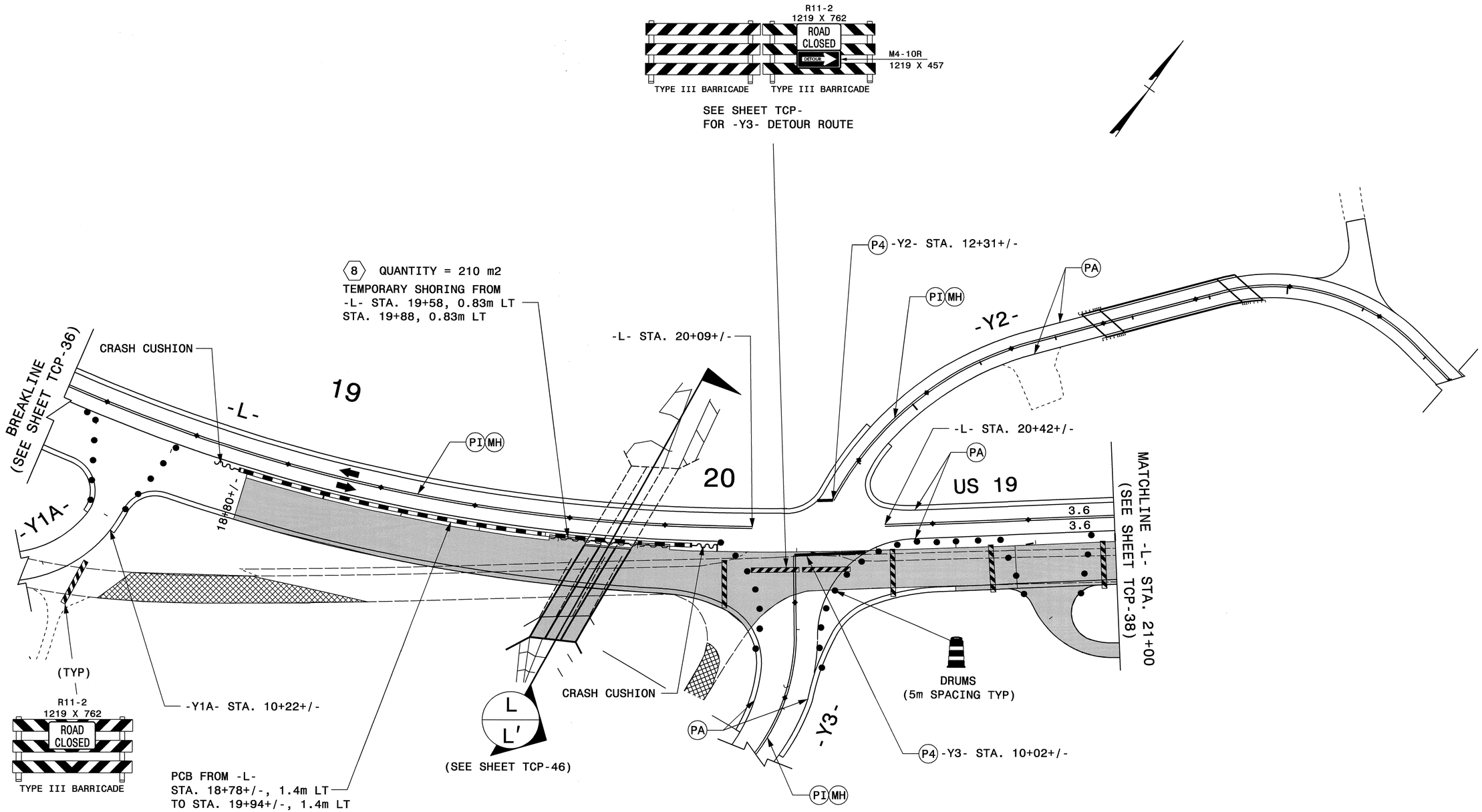

NOTES:

- MARKINGS SHOWN ARE APPROXIMATE.
- SPACE DRUMS NO MORE THAN 20m APART.
- SPACE DRUMS 5m APART IN RADII.
- SPACE DRUMS 5m APART AT DRIVEWAY ENTRANCES.
- SEE SHEETS TCP-60 & TCP-61 FOR TYPICAL SIGN / DEVICE SETUP AT -Y- LINES AND DRIVEWAYS CROSSING CONSTRUCTION AREAS.

APPROVED: DATE: 8/7/07

SEAL

NORTH CAROLINA PROFESSIONAL SEAL 027817 ENGINEER JESSICA D. KUSE

PHASE II

SCALE:	NONE
DATE:	06/07
DWG. BY:	RMG
DESIGN BY:	RMG
REVIEWED BY:	JDK

REVISIONS

CADD FILE

07-AUG-2007 09:33
\\dot\dfsroot01\proj\tipprojects-r\r2518a\traffic\trafficcontrol\tcp\R-2518A_TC_TCP_13.dgn
rmgarrett AT WZTC222291

PROJ. REFERENCE NO.	SHEET NO.
R-2518A	TCP-38

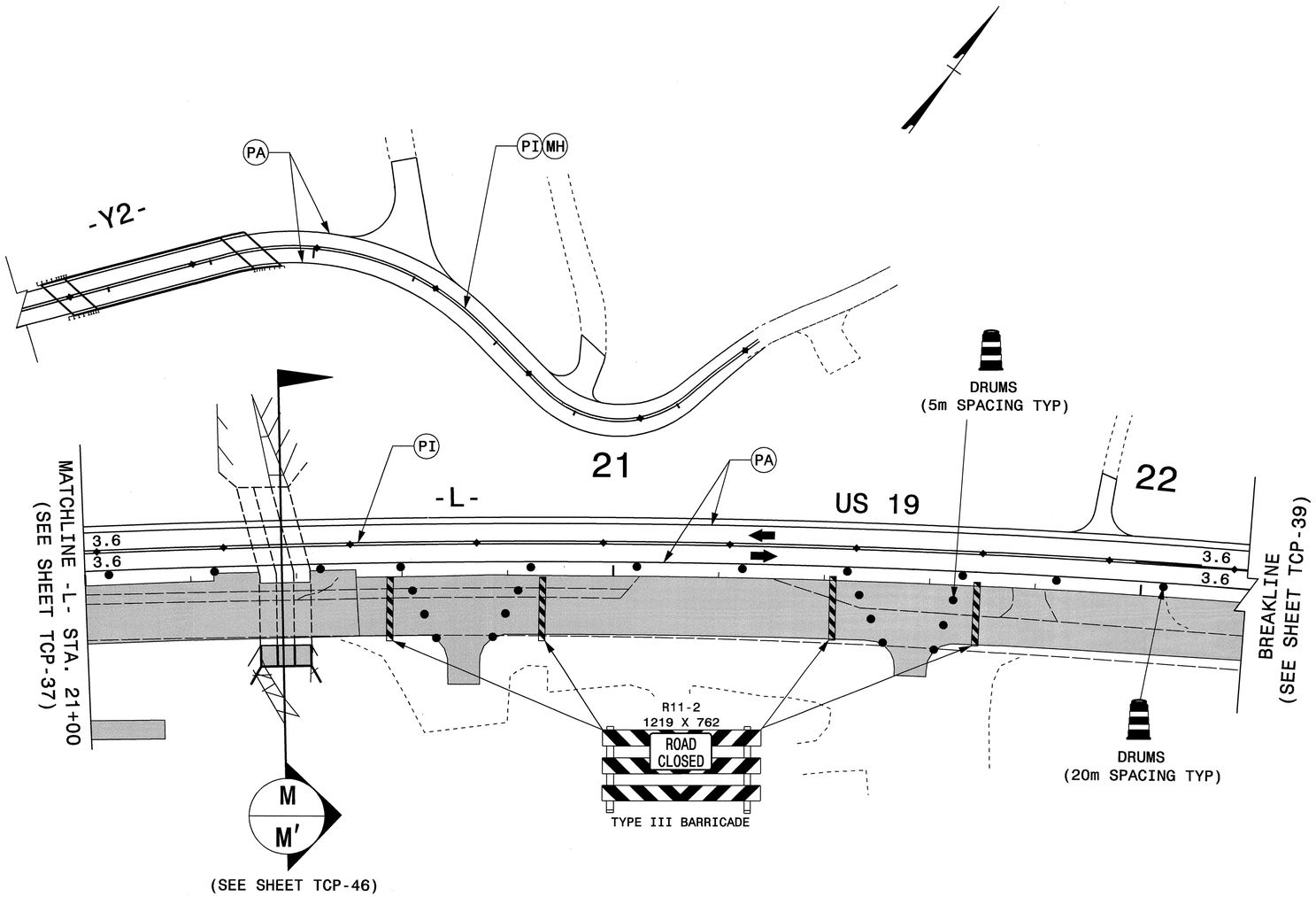

NOTES:

- MARKINGS SHOWN ARE APPROXIMATE.
- SPACE DRUMS NO MORE THAN 20m APART.
- SPACE DRUMS 5m APART IN RADII.
- SPACE DRUMS 5m APART AT DRIVEWAY ENTRANCES.
- SEE SHEETS TCP-60 & TCP-61 FOR TYPICAL SIGN / DEVICE SETUP AT -Y- LINES AND DRIVEWAYS CROSSING CONSTRUCTION AREAS.

APPROVED: Jpacakusa DATE: 8/7/07

SEAL

NORTH CAROLINA PROFESSIONAL SEAL 027811 ENGINEER JESSICA D. KUS

PHASE II

SCALE:	NONE
DATE:	06/07
DWG. BY:	RMG
DESIGN BY:	RMG
REVIEWED BY:	JDK

DIVISION OF HIGHWAYS STATE OF NORTH CAROLINA TRANSPORTATION MANAGEMENT UNIT TRAFFIC CONTROL

REVISIONS

CADD FILE

07-AUG-2007 09:33
\\dot\dfsroot01\proj\tipprojects-r\r2518a\traffic\trafficontrol\tcp\R-2518A_TC_TCP_14.dgn
rmgarrett AT WZTC22291

PROJ. REFERENCE NO.	SHEET NO.
R-2518A	TCP-39

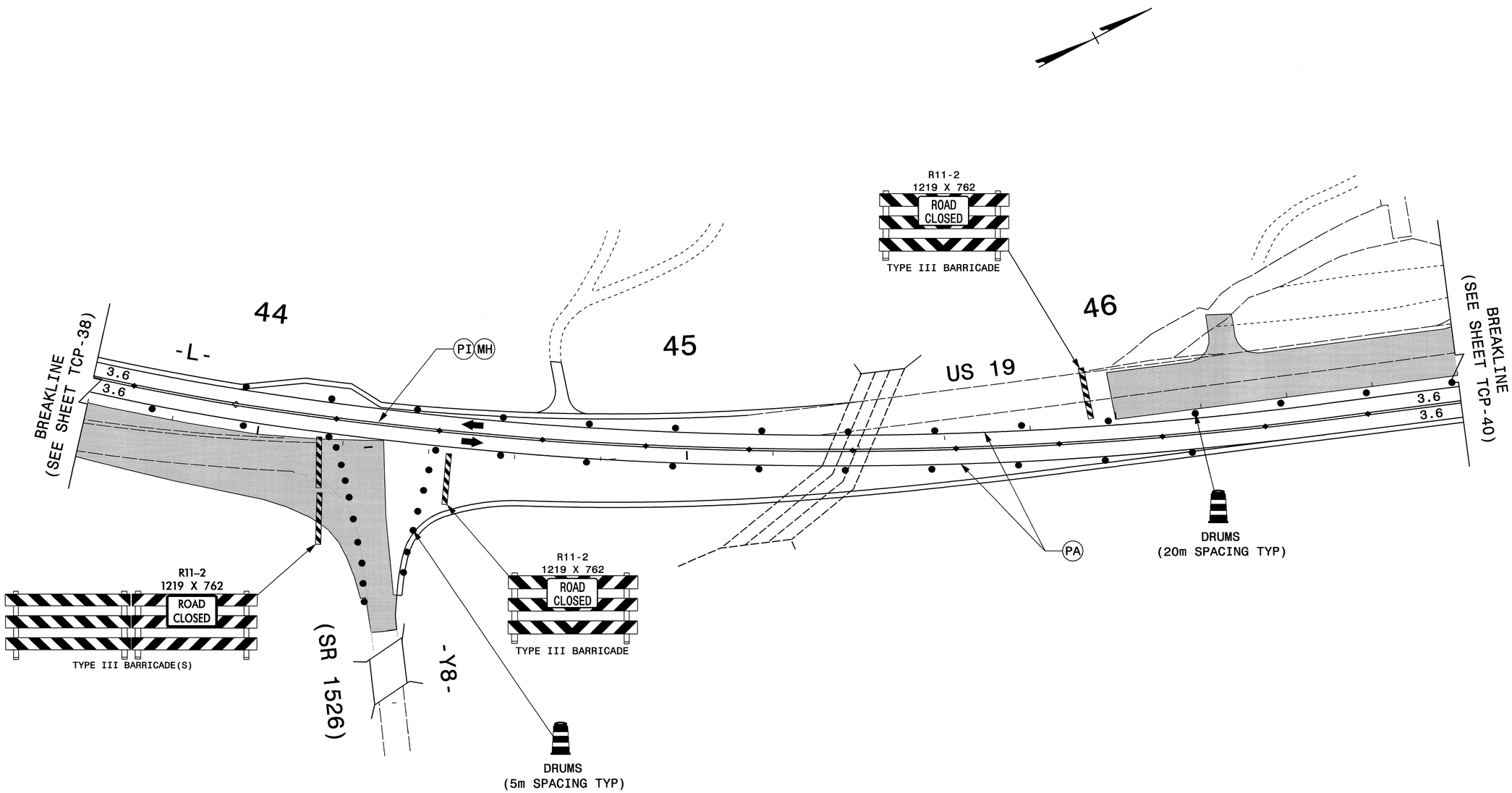

NOTES:

- MARKINGS SHOWN ARE APPROXIMATE.
- SPACE DRUMS NO MORE THAN 20m APART.
- SPACE DRUMS 5m APART IN RADII.
- SPACE DRUMS 5m APART AT DRIVEWAY ENTRANCES.
- SEE SHEETS TCP-60 & TCP-61 FOR TYPICAL SIGN / DEVICE SETUP AT -Y- LINES AND DRIVEWAYS CROSSING CONSTRUCTION AREAS.

APPROVED: Jessica Kuse DATE: 8/7/07

SEAL

NORTH CAROLINA PROFESSIONAL SEAL 027811 ENGINEER JESSICA D. KUSE

PHASE II

SCALE:	NONE
DATE:	06/07
DWG. BY:	RMG
DESIGN BY:	RMG
REVIEWED BY:	JDK

REVISIONS

CADD FILE

07-AUG-2007 11:07
\\dot\dfsroot01\proj\tipprojects-r\r2518a\traffic\trafficcontrol\tcp\R-2518A_TC_TCP_16.dgn
rmgarrett AT WZTC222291

PROJ. REFERENCE NO.	SHEET NO.
R-2518A	TCP-40

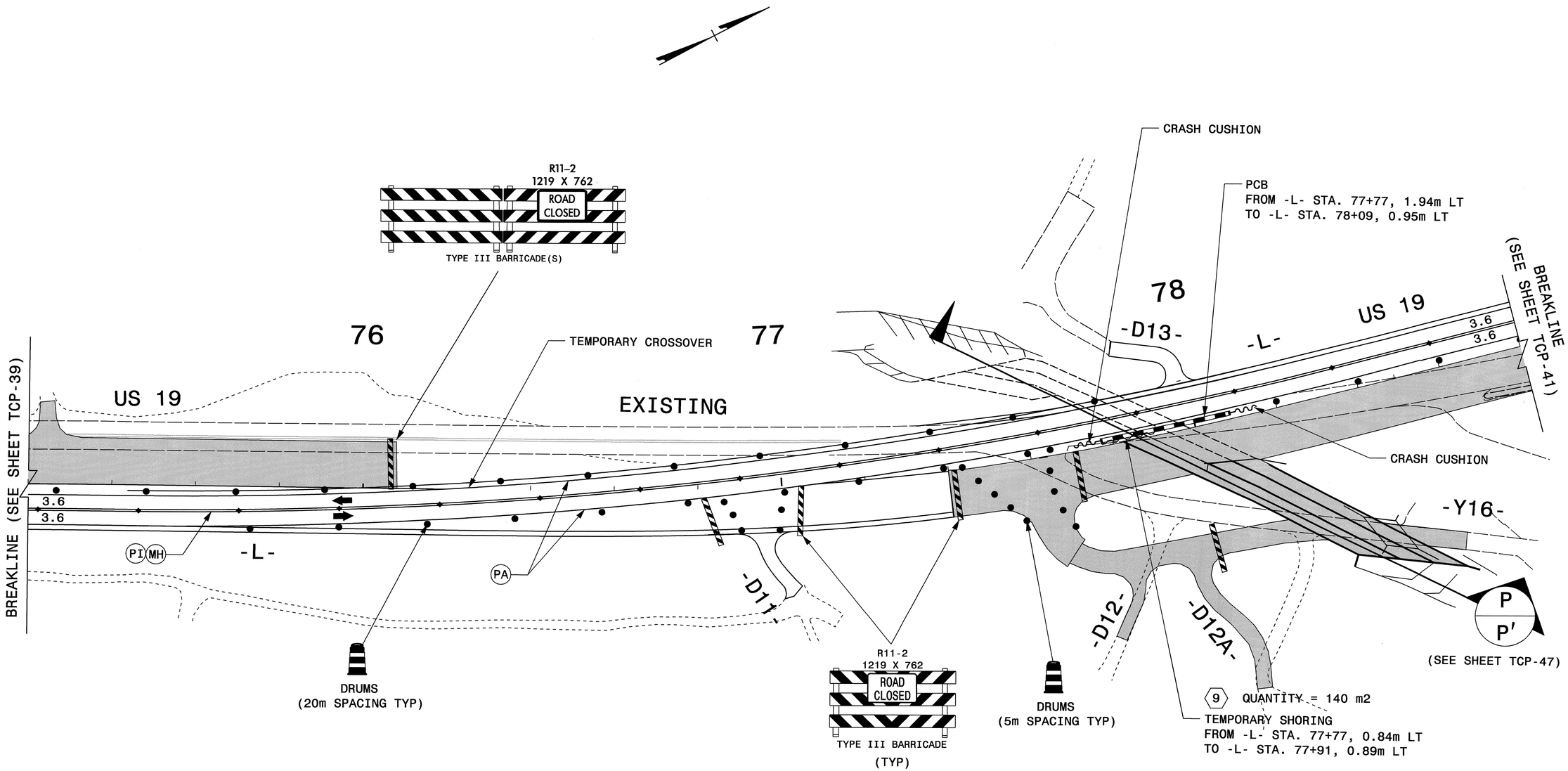

NOTES:

- MARKINGS SHOWN ARE APPROXIMATE.
- SPACE DRUMS NO MORE THAN 20m APART.
- SPACE DRUMS 5m APART IN RADII.
- SPACE DRUMS 5m APART AT DRIVEWAY ENTRANCES.
- SEE SHEETS TCP-60 & TCP-61 FOR TYPICAL SIGN / DEVICE SETUP AT -Y- LINES AND DRIVEWAYS CROSSING CONSTRUCTION AREAS.

APPROVED: Jessica Kuse DATE: 8/7/07

SEAL

NORTH CAROLINA PROFESSIONAL SEAL 027811 ENGINEER JESSICA D. KUSE

PHASE II

SCALE:	NONE
DATE:	06/07
DWG. BY:	RMG
DESIGN BY:	RMG
REVIEWED BY:	JDK

REVISIONS

CADD FILE

07-AUG-2007 11:47
\\dot\dfsroot01\proj\tipprojects-r\r2518a\traffic\trafficcontrol\tcp\R-2518A_TC_TCP_28.dgn
rmgarrett AT WZTC22229I

PROJ. REFERENCE NO.	SHEET NO.
R-2518A	TCP-41

METRIC

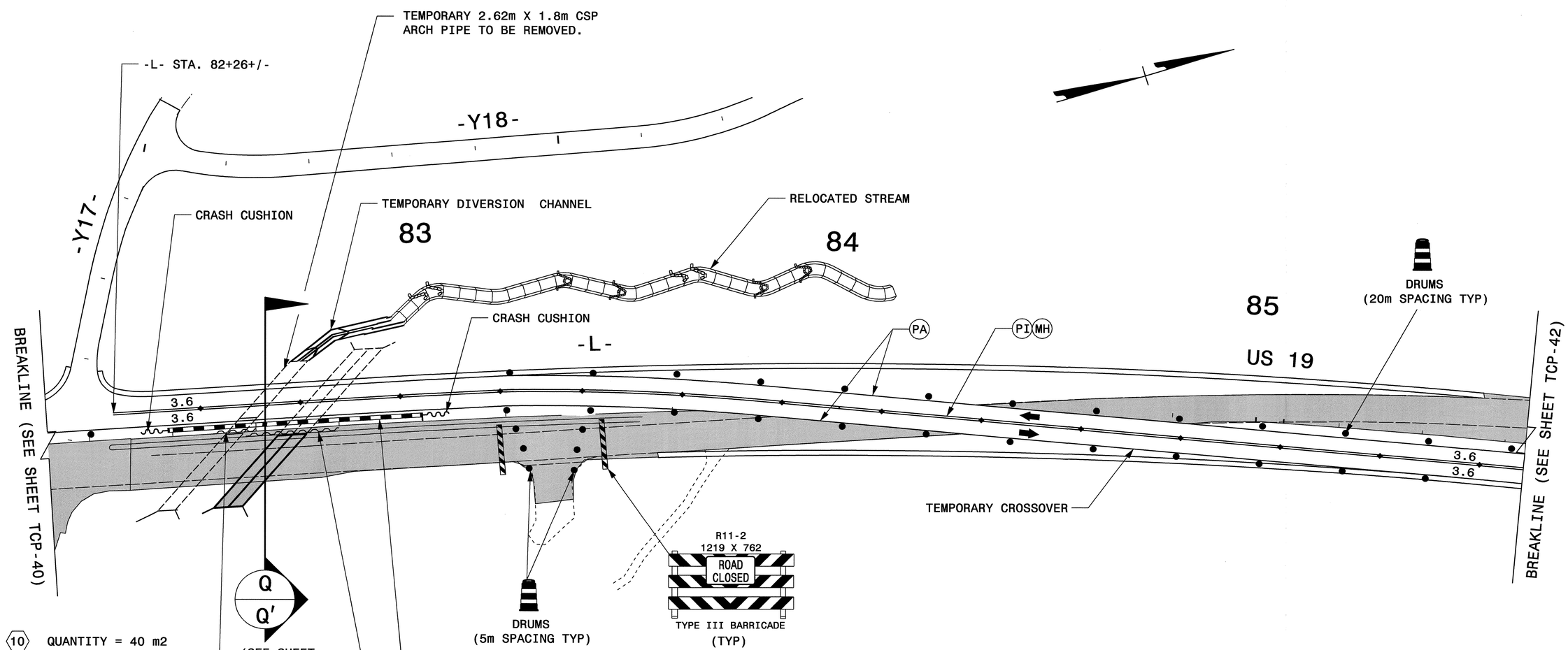

10 QUANTITY = 40 m2
TEMPORARY SHORING
FROM -L- STA. 82+50, 0.29 LT
TO -L- STA. 82+60, 0.28 LT

PCB
FROM -L- STA. 82+39, 1.42m LT
TO -L- STA. 83+00, 1.42m LT

11 QUANTITY = 88 m2
TEMPORARY SHORING
FROM -L- STA. 82+58, 0.81 RT
TO -L- STA. 82+80, 0.79 RT

NOTES:

- MARKINGS SHOWN ARE APPROXIMATE.
- SPACE DRUMS NO MORE THAN 20m APART.
- SPACE DRUMS 5m APART IN RADII.
- SPACE DRUMS 5m APART AT DRIVEWAY ENTRANCES.
- SEE SHEETS TCP-60 & TCP-61 FOR TYPICAL SIGN / DEVICE SETUP AT -Y- LINES AND DRIVEWAYS CROSSING CONSTRUCTION AREAS.

APPROVED: Jessica Kiser DATE: 8/7/07

SEAL

NORTH CAROLINA PROFESSIONAL SEAL 027811 ENGINEER JESSICA D. KISER

PHASE II

SCALE:	NONE
DATE:	06/07
DWG. BY:	RMG
DESIGN BY:	RMG
REVIEWED BY:	JDK

DIVISION OF HIGHWAYS STATE OF NORTH CAROLINA DEPARTMENT OF TRANSPORTATION TRAFFIC CONTROL

REVISIONS

CADD FILE

06-AUG-2007 15:41
\\dot\dfsroot01\proj\tipprojects-r\r2518a\traffic\trafficontrol\tcp\R-2518A_TC_TCP_20.dgn
rmgarrett AT WZ1022229

PROJ. REFERENCE NO.	SHEET NO.
R-2518A	TCP-42

METRIC

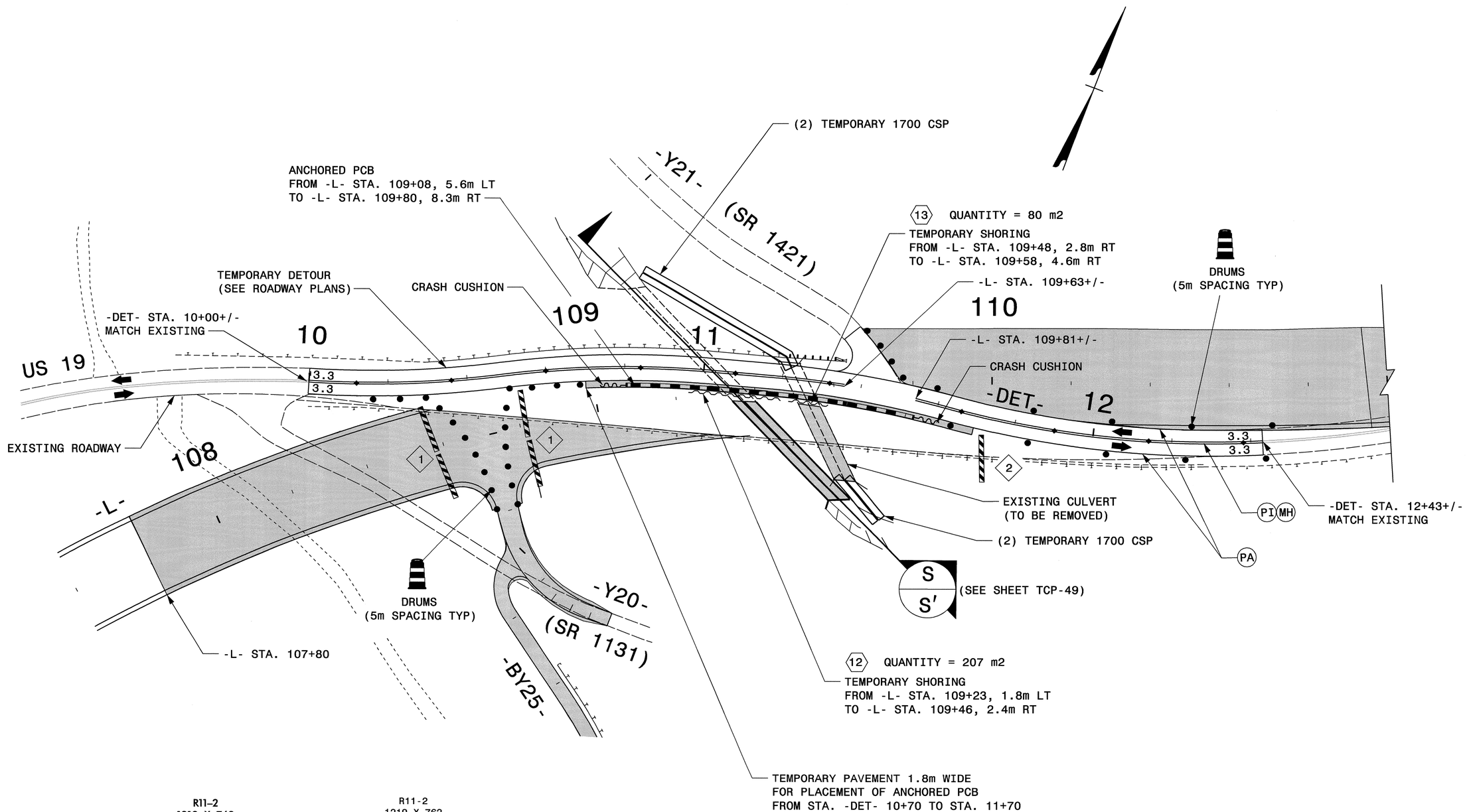

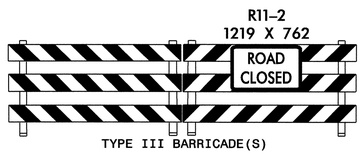

TYPE III BARRICADE(S)

1

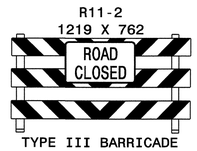

TYPE III BARRICADE

2

NOTES:

- MARKINGS SHOWN ARE APPROXIMATE.
- SPACE DRUMS NO MORE THAN 20m APART.
- SPACE DRUMS 5m APART IN RADII.
- SPACE DRUMS 5m APART AT DRIVEWAY ENTRANCES.
- SEE SHEETS TCP-60 & TCP-61 FOR TYPICAL SIGN / DEVICE SETUP AT -Y- LINES AND DRIVEWAYS CROSSING CONSTRUCTION AREAS.

APPROVED: Jessica Kuse DATE: 8/7/07

SEAL

NORTH CAROLINA PROFESSIONAL SEAL 027811 ENGINEER JESSICA D. KUSE

PHASE II
STEPS 5 & 6

SCALE:	NONE
DATE:	05/07
DWG. BY:	RMG
DESIGN BY:	RMG
REVIEWED BY:	JDK

DIVISION OF HIGHWAYS
TRAFFIC ENGINEERING BRANCH
STATE OF NORTH CAROLINA DEPARTMENT OF TRANSPORTATION

REVISIONS

CADD FILE

07-AUG-2007 HHO
\\dot-ftscc1-cluster\proj\tiprojects-r\r2518a\traffic\trafficcontrol\tcp\R-2518A_TC_TCP_22.dgn
rmgarrett AT WZTC22229

PROJ. REFERENCE NO.	SHEET NO.
R-2518A	TCP-43

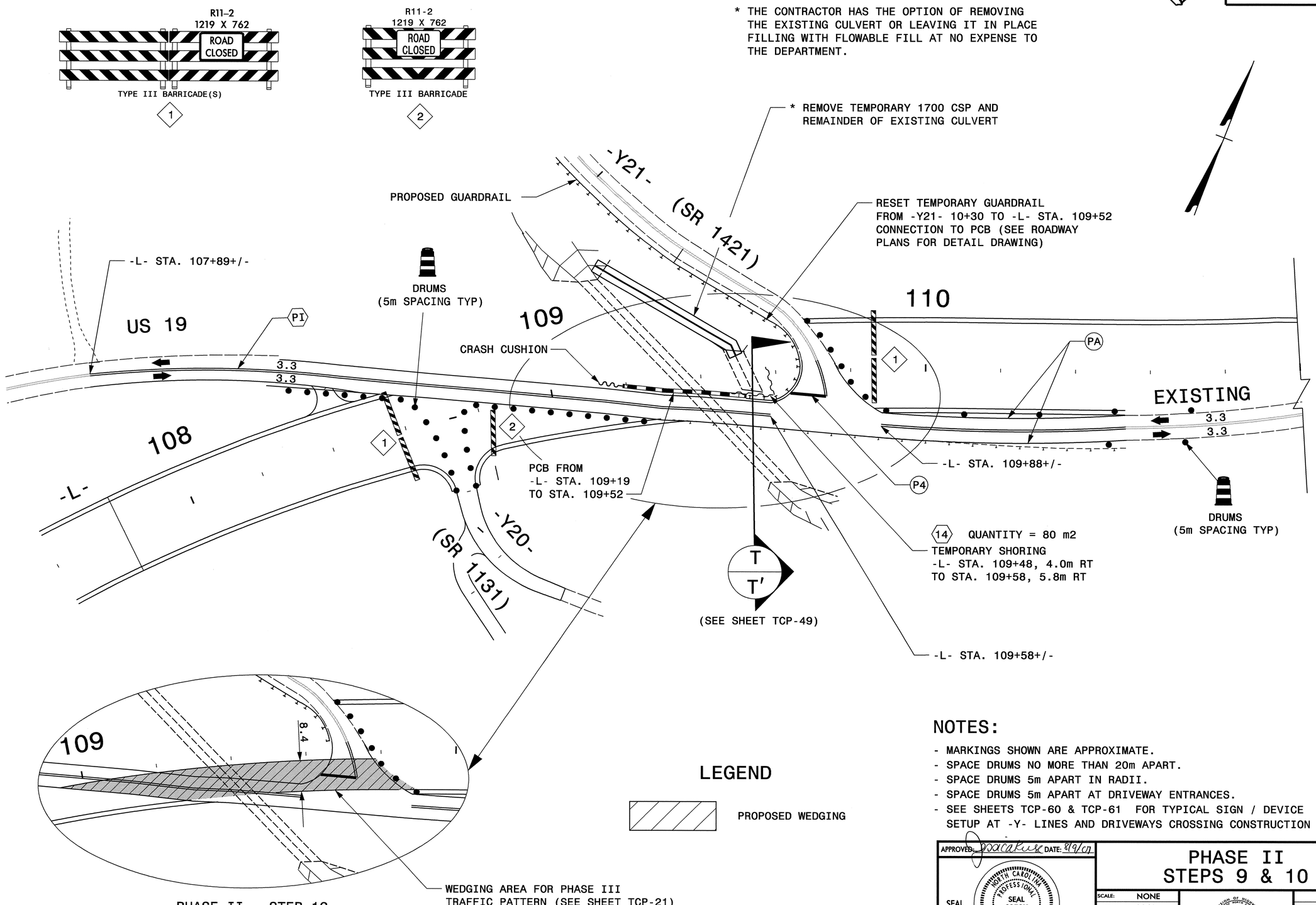

PHASE II - STEP 12
TEMPORARY WEDGING

LEGEND

PROPOSED WEDGING

NOTES:

- MARKINGS SHOWN ARE APPROXIMATE.
- SPACE DRUMS NO MORE THAN 20m APART.
- SPACE DRUMS 5m APART IN RADII.
- SPACE DRUMS 5m APART AT DRIVEWAY ENTRANCES.
- SEE SHEETS TCP-60 & TCP-61 FOR TYPICAL SIGN / DEVICE SETUP AT -Y- LINES AND DRIVEWAYS CROSSING CONSTRUCTION AREAS.

APPROVED: [signature] DATE: 8/9/07

SEAL

NORTH CAROLINA PROFESSIONAL SEAL 027811 ENGINEER JESSICA D. KUSE

PHASE II
STEPS 9 & 10

SCALE:	NONE
DATE:	06/07
DWG. BY:	RMG
DESIGN BY:	RMG
REVIEWED BY:	JDK

REVISIONS

CADD FILE

07-AUG-2007 18:58
\\dot\dfsroot01\proj\tipprojects-r\r2518a\traffic\trafficcontrol\tcp\R-2518A_TC_TCP_23.dgn
rmgarrett AT WZTC22229I

PROJ. REFERENCE NO.	SHEET NO.
R-2518A	TCP-44

METRIC

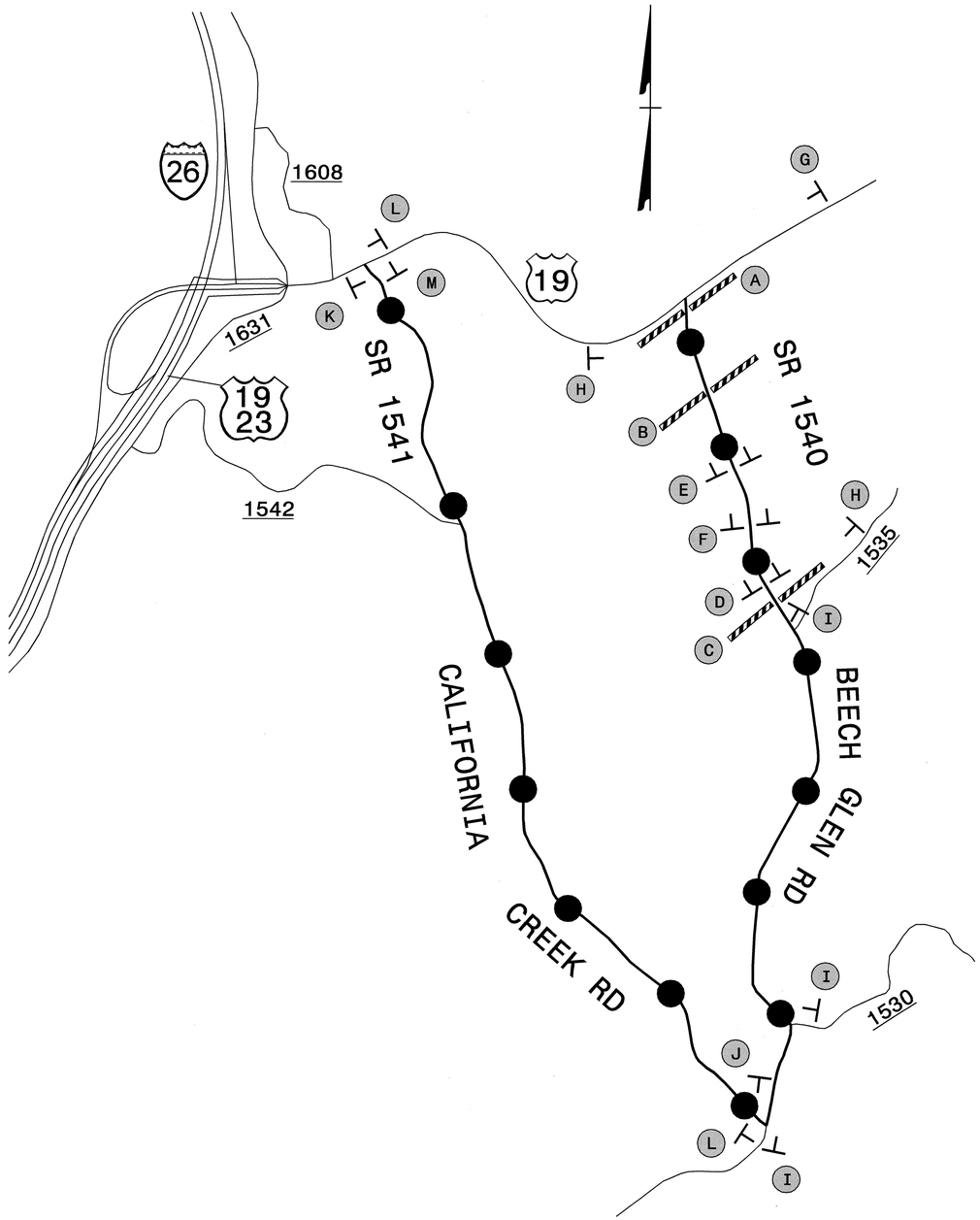

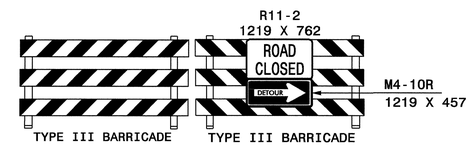

A

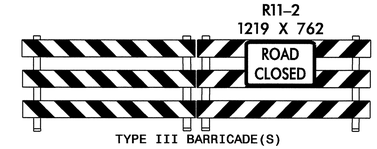

B

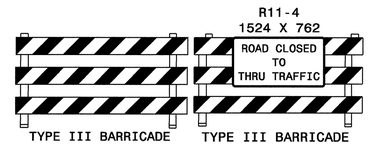

C

D

E

F

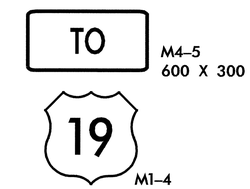

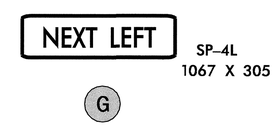

G

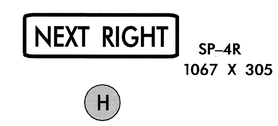

H

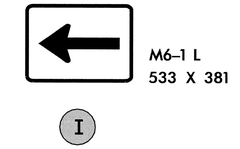

I

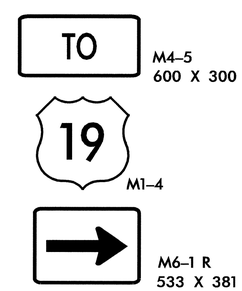

J

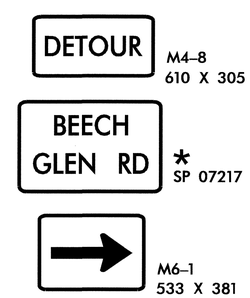

K

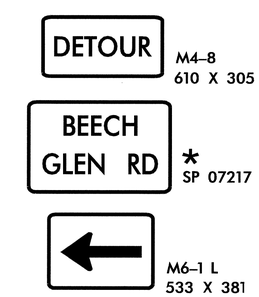

L

M

* SEE SHEET TCP-45 FOR SPECIAL SIGN DESIGN

APPROVED: Jessica Kuse DATE: 8/7/07

SEAL

NORTH CAROLINA PROFESSIONAL SEAL 027811 ENGINEER JESSICA D. KUSE

-Y3- (BEECH GLEN RD) DETOUR

SCALE:	NONE
DATE:	07/07
DWG. BY:	RMG
DESIGN BY:	RMG
REVIEWED BY:	JDK

DIVISION OF HIGHWAYS · STATE OF NORTH CAROLINA · DEPARTMENT OF TRANSPORTATION · TRAFFIC CONTROL

REVISIONS

CADD FILE

07-AUG-2007 09:34
\\dot\dfsroot01\proj\tipprojects-r\r-2518a\traffic\trafficcontrol\tcp\R-2518A_TC_TCP_33.dgn
rmgarrett AT WZTC22291

PROJ. REFERENCE NO.	SHEET NO.
R-2518A	TCP-45

SIGN NUMBER: SP07217
TYPE: D
QUANTITY: 1

SIGN WIDTH: 900mm
HEIGHT: 600mm
TOTAL AREA: 0.5 Sq.m

BORDER TYPE: RECESSED
RECESS: 10mm
WIDTH: 15mm
RADII: 40mm

NO. Z BARS:
LENGTH:

BACKG COLOR: Fluorescent Orange
COPY COLOR: Black

SYMBOL	X	Y	WID	HT

MAT'L: 0.080" (2.0 mm) ALUMINUM
0.079" COMPOSITE

DESIGN BY: R. HENNEIN
PROJECT ID: R-2518A
CHECKED BY: RMC
DIV: 13
DATE: Jul 11, 2007

USE NOTES:
1. Legend and border shall be direct applied non-reflective sheeting.
2. Background shall be Type VII, VIII, or IX (prismatic) retroreflective sheeting.

BORDER
R=40mm
TH=15mm
IN=10mm

Spacing Factor is 1 unless specified otherwise

LETTER POSITIONS

Letter spacings are to start of next letter

																											Series/Size Text Length
		B	E	E	C	H																					C 2000
	196	110	102	99	114	84	196																				509
		G	L	E	N		R	D																			C 2000
	80	114	98	102	84	150	108	84	80																		740

FILENAME: SP07217_beechglenrd

NORTH CAROLINA D.O.T. SIGN DETAIL

APPROVED: [signature] DATE: 7/31/07

SEAL

NORTH CAROLINA PROFESSIONAL SEAL 022959 ENGINEER RONALD W. KING

SPECIAL SIGN DESIGN

SCALE:	NONE
DATE:	07/07
DWG. BY:	RMG
DESIGN BY:	RMG
REVIEWED BY:	JDK

REVISIONS

CADD FILE

30-JUL-2007 15:01
\\dot\dfsroot01\proj\tipprojects-r\r2518a\traffic\trafficcontrol\roadway\tcp\r-2518a_tc_tcp_34.dgn
rmgarrett AT WZTC22229I

PROJ. REFERENCE NO.	SHEET NO.
R-2518A	TCP-46

METRIC

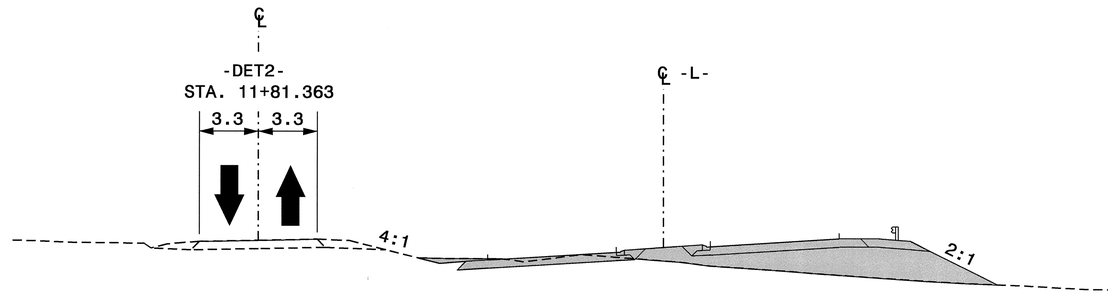

SECTION K-K′

-L- STA. 15+60+/-

(SEE SHEETS TCP-29 & TCP-36)

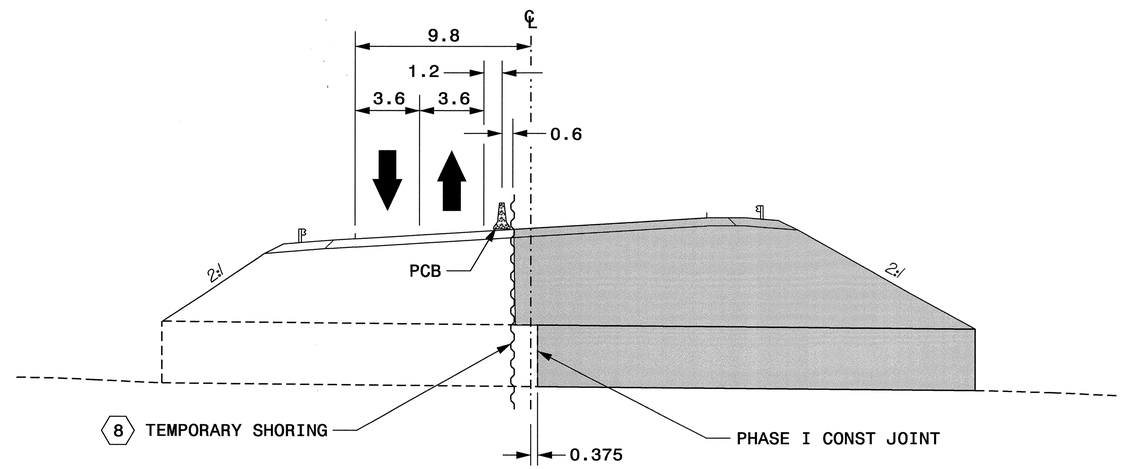

SECTION L-L′

-L- STA. 19+72+/-

(SEE SHEETS TCP-30 & TCP-37)

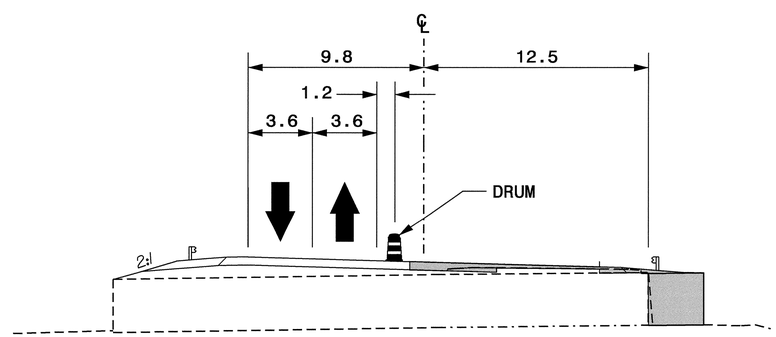

SECTION M-M′

-L- STA. 21+35+/-

(SEE SHEETS TCP-30 & TCP-38)

APPROVED: Jessica Kuse DATE: 8/7/07

SEAL

NORTH CAROLINA PROFESSIONAL SEAL 027811 ENGINEER JESSICA D. KUSE

PHASE II - SECTIONS

SCALE:	NONE
DATE:	04/07
DWG. BY:	RMG
DESIGN BY:	RMG
REVIEWED BY:	JDK

DIVISION OF HIGHWAYS STATE OF NORTH CAROLINA DEPARTMENT OF TRANSPORTATION RALEIGH, NORTH CAROLINA

REVISIONS

CADD FILE

07-AUG-2007 09:37
\\dot\dfsroot01\proj\tipprojects-r\r2518a\traffic\trafficontrol\tcp\r-2518a_tc_tcp_xsl.dgn
rmgarrett AT WZTC22229j

PROJ. REFERENCE NO.	SHEET NO.
R-2518A	TCP-47

METRIC

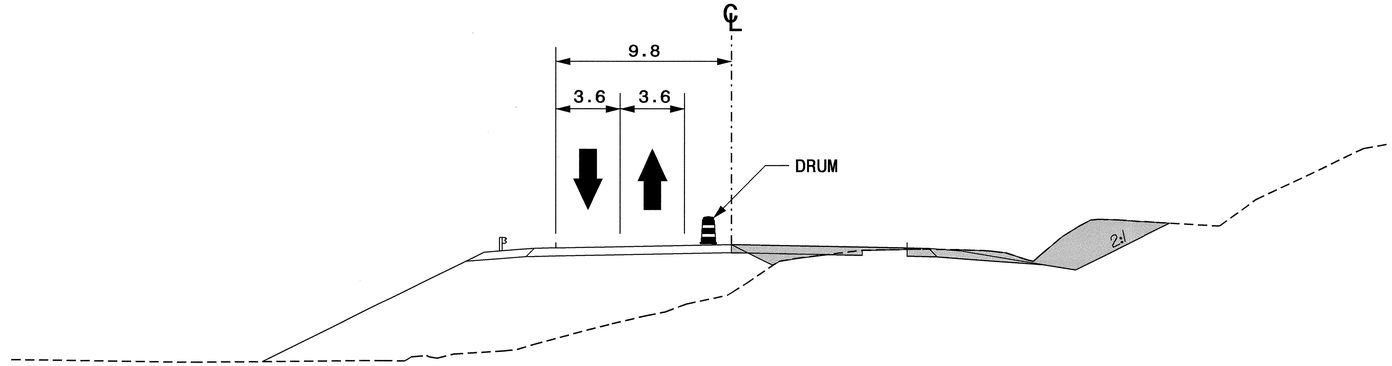

SECTION N-N′

-L- STA. 34+40+/-

(SEE SHEETS TCP-30)

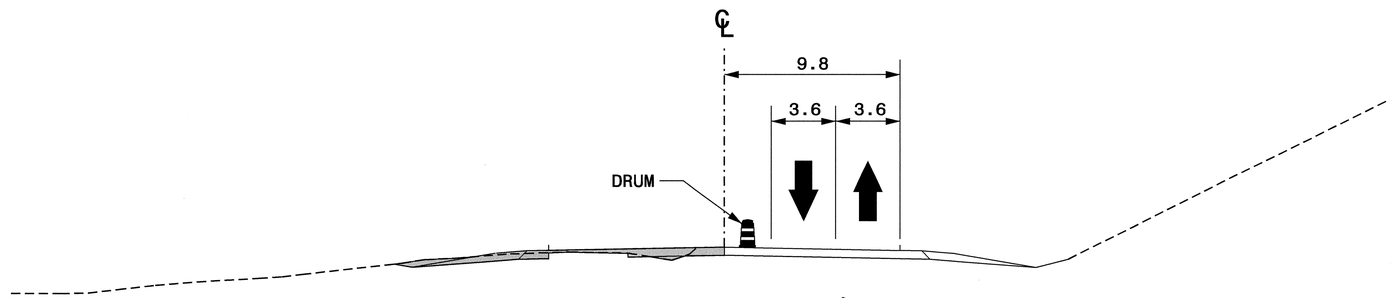

SECTION O-O′

-L- STA. 53+20+/-

(SEE SHEETS TCP-31)

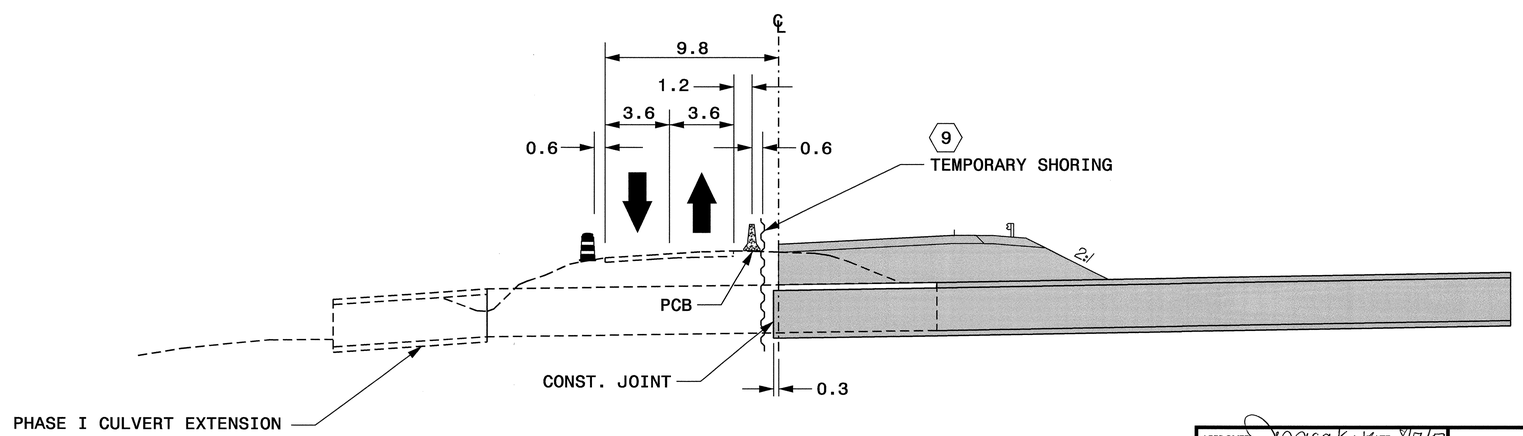

SECTION P-P′

-L- STA. 78+88+/-

(SEE SHEETS TCP-32 & TCP-40)

APPROVED: JDK DATE: 8/7/07

SEAL

NORTH CAROLINA PROFESSIONAL SEAL 027811 ENGINEER JESSICA D. KUSE

PHASE II - SECTIONS

SCALE:	NONE
DATE:	04/07
DWG. BY:	RMG
DESIGN BY:	RMG
REVIEWED BY:	JDK

DIVISION OF HIGHWAYS STATE OF NORTH CAROLINA DEPARTMENT OF TRANSPORTATION TRAFFIC CONTROL

REVISIONS

CADD FILE

07-AUG-2007 09:37
\\dot\dfsroot0\proj\tipprojects-r\r2518a\traffic\trafficcontrol\tcp\r-2518a_tc_tcp_xsl.dgn
rmgarrett AT WZTC22229

PROJ. REFERENCE NO.	SHEET NO.
R-2518A	TCP-48

METRIC

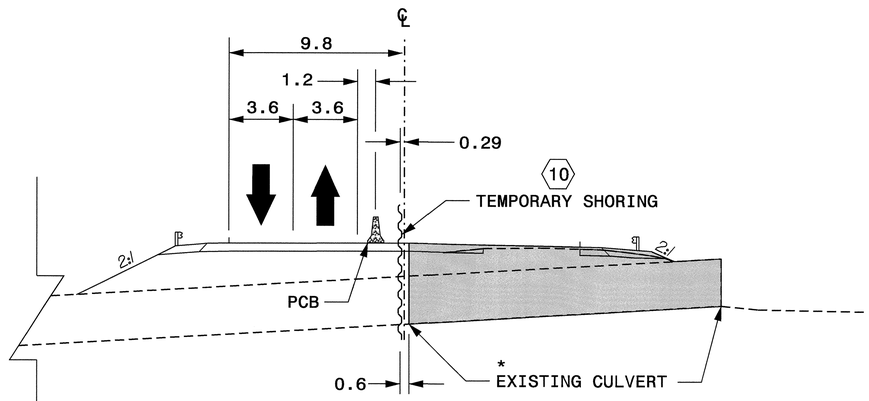

* THE CONTRACTOR HAS THE OPTION OF REMOVING THE EXISTING CULVERT OR LEAVING IT IN PLACE FILLING WITH FLOWABLE FILL AT NO EXPENSE TO THE DEPARTMENT.

SECTION Q-Q′

-L- STA. 82+62+/- (EXISTING CULVERT)

(SEE SHEETS TCP-33 & TCP-41)

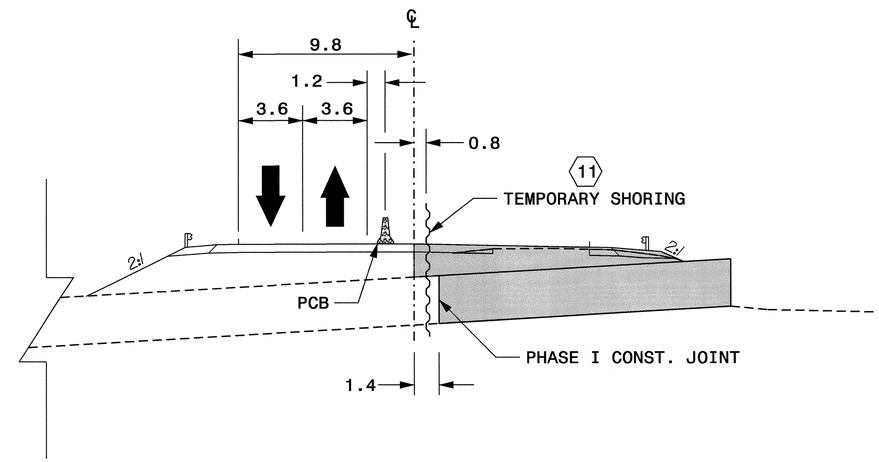

SECTION Q-Q′

-L- STA. 82+62+/- (PROPOSED CULVERT)

(SEE SHEETS TCP-33 & TCP-41)

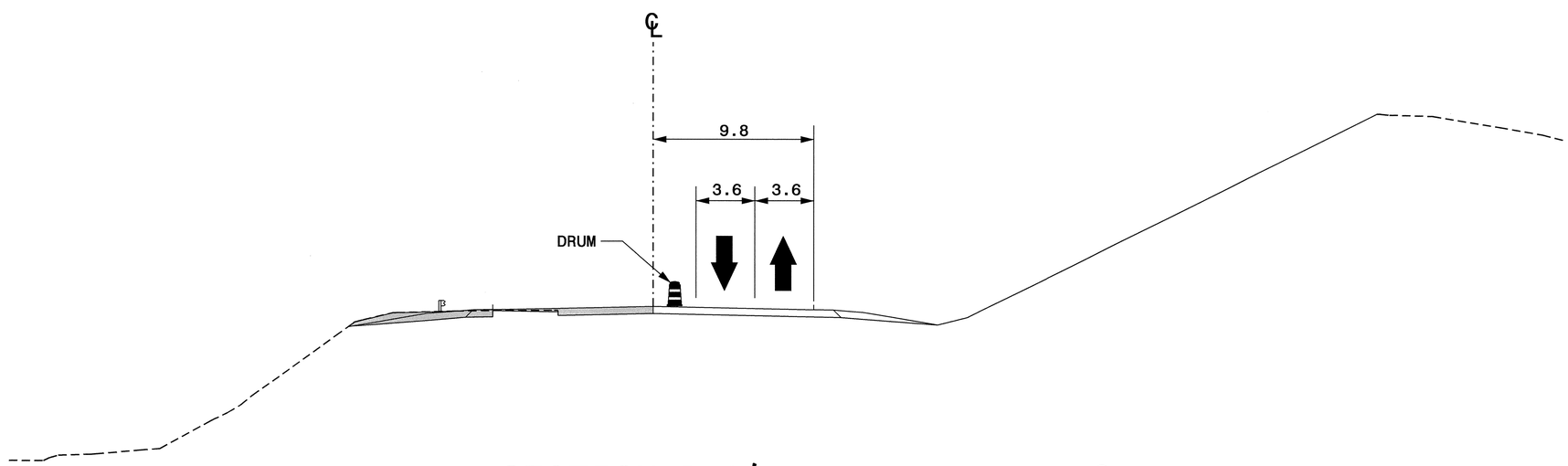

SECTION R-R′

-L- STA. 98+40+/-

(SEE SHEETS TCP-33)

APPROVED: DATE: 8/7/07

SEAL

NORTH CAROLINA PROFESSIONAL SEAL 027811 ENGINEER JESSICA D. KUSE

PHASE II - SECTIONS

SCALE:	NONE
DATE:	04/07
DWG. BY:	RMG
DESIGN BY:	RMG
REVIEWED BY:	JDK

DIVISION OF HIGHWAYS STATE OF NORTH CAROLINA DEPARTMENT OF TRANSPORTATION WORK ZONE TRAFFIC CONTROL UNIT

REVISIONS

CADD FILE

07-AUG-2007 11:14
\\dot\dfsroot01\proj\tipprojects-r\r2518a\traffic\trafficontrol\tcp\r-2518a_tc_tcp_xsl.dgn
rmgarrett AT WZ10222291

PROJ. REFERENCE NO.	SHEET NO.
R-2518A	TCP-49

METRIC

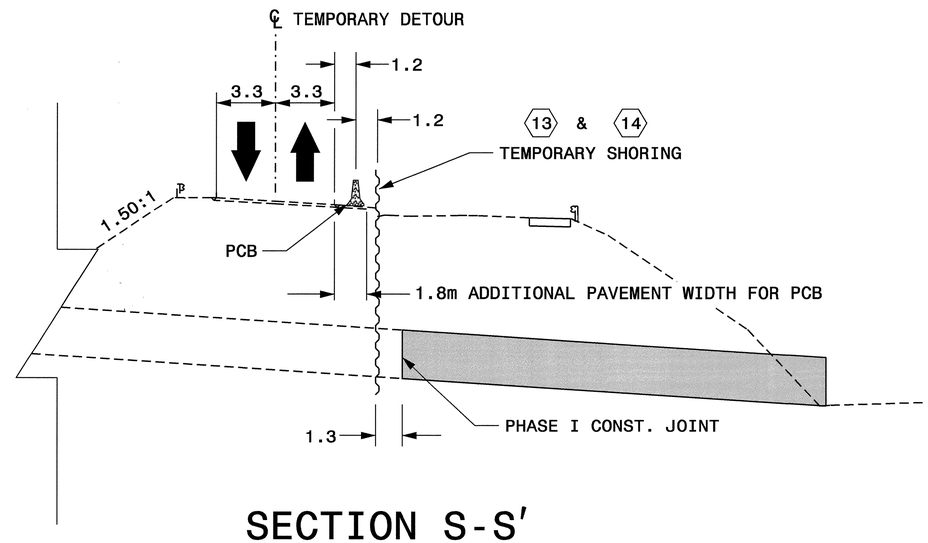

SECTION S-S′

-L- STA. 109+37+/-

(SEE SHEETS TCP-34 & TCP-42)

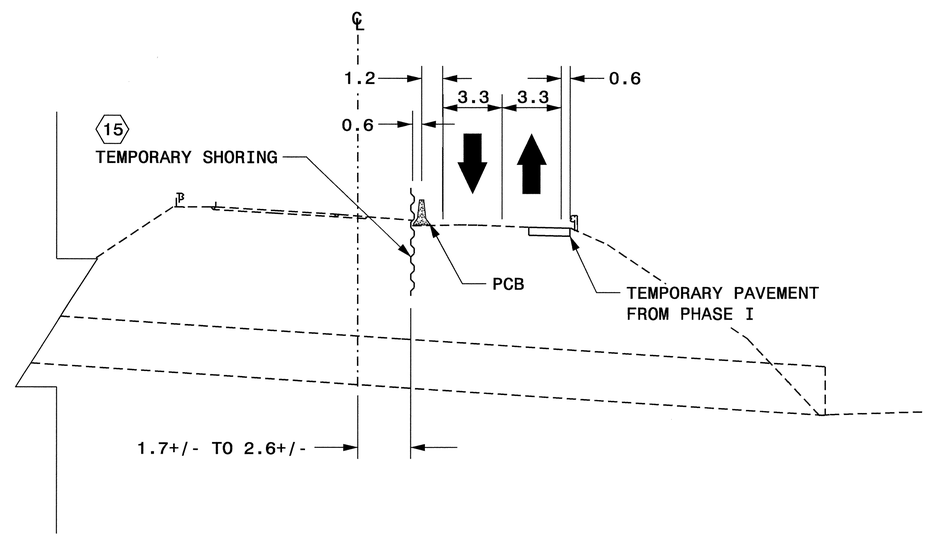

SECTION T-T′

-L- STA. 109+37+/-

(SEE SHEETS TCP-43)

APPROVED: Jessica Kuse DATE: 8/7/07

SEAL

NORTH CAROLINA PROFESSIONAL SEAL 027811 ENGINEER JESSICA D. KUSE

PHASE II - SECTIONS

SCALE:	NONE
DATE:	04/07
DWG. BY:	RMG
DESIGN BY:	RMG
REVIEWED BY:	JDK

DIVISION OF HIGHWAYS STATE OF NORTH CAROLINA DEPARTMENT OF TRANSPORTATION TRAFFIC CONTROL

REVISIONS

CADD FILE

07-AUG-2007 09:37
\\dot\dfsroot0\proj\tipprojects-r\r2518a\traffic\trafficcontrol\tcpyr-2518a_to_tcp_xsl.dgn
rmgarrett AT WZTC22229

PROJ. REFERENCE NO.	SHEET NO.
R-2518A	TCP-50

METRIC

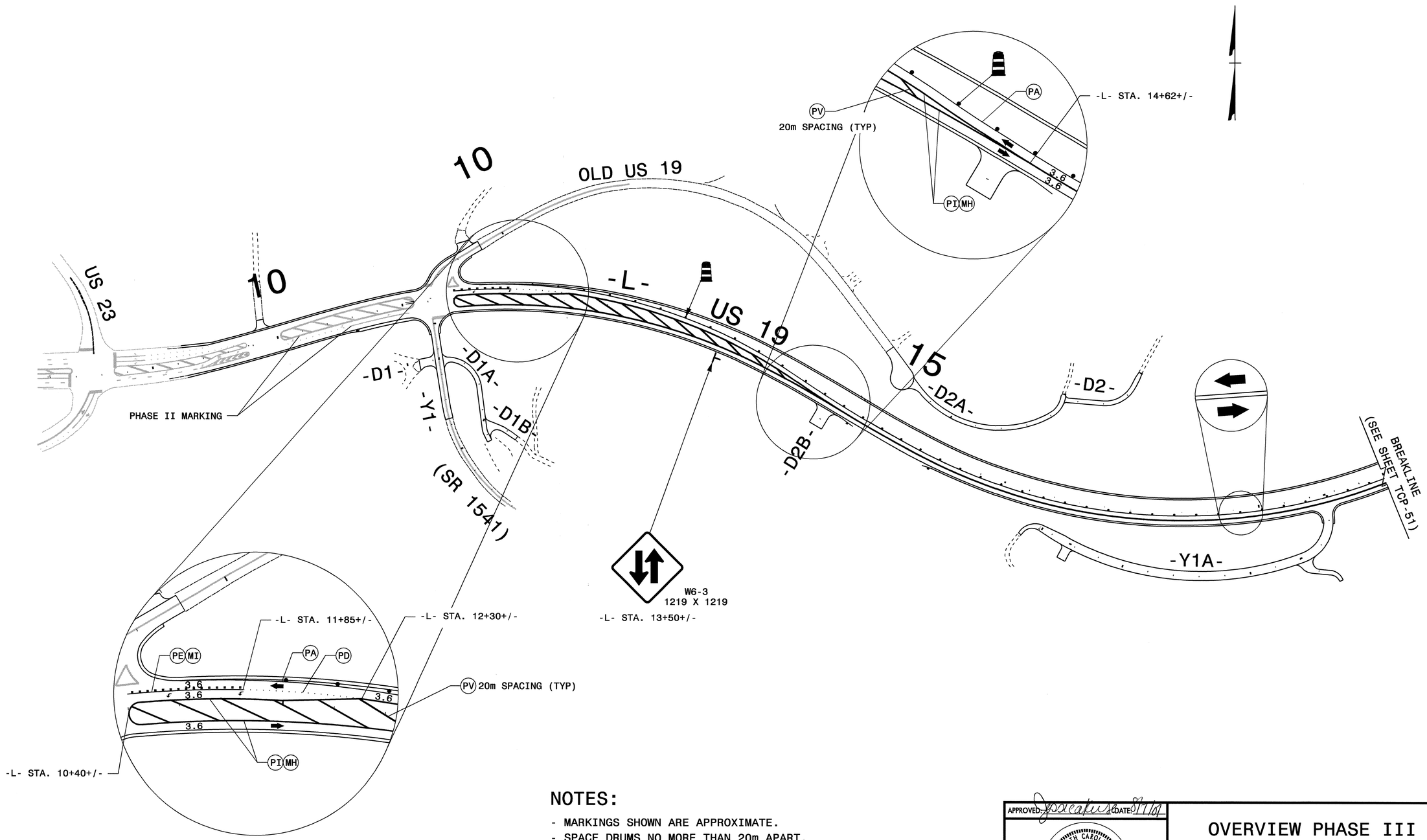

NOTES:

- MARKINGS SHOWN ARE APPROXIMATE.
- SPACE DRUMS NO MORE THAN 20m APART.
- SPACE DRUMS 5m APART IN RADII.
- SPACE DRUMS 5m APART AT DRIVEWAY ENTRANCES.
- SEE SHEETS TCP-60 & TCP-61 FOR TYPICAL SIGN / DEVICE SETUP AT -Y- LINES AND DRIVEWAYS CROSSING CONSTRUCTION AREAS.

APPROVED: Jessica Kuse DATE: 8/16/07

SEAL

NORTH CAROLINA PROFESSIONAL SEAL 027811 ENGINEER JESSICA D. KUSE

OVERVIEW PHASE III

SCALE:	NONE
DATE:	04/07
DWG. BY:	RMG
DESIGN BY:	RMG
REVIEWED BY:	JDK

REVISIONS

CADD FILE

07-AUG-2007 09:36
\\dot\dfsroot0\proj\tipprojects-r\r-2518a\traffic\trafficcontrol\tcp\R-2518A_TC_TCP_OVR_PH3_01a.dgn
rmgarrett AT WZTC222291

PROJ. REFERENCE NO.	SHEET NO.
R-2518A	TCP-51

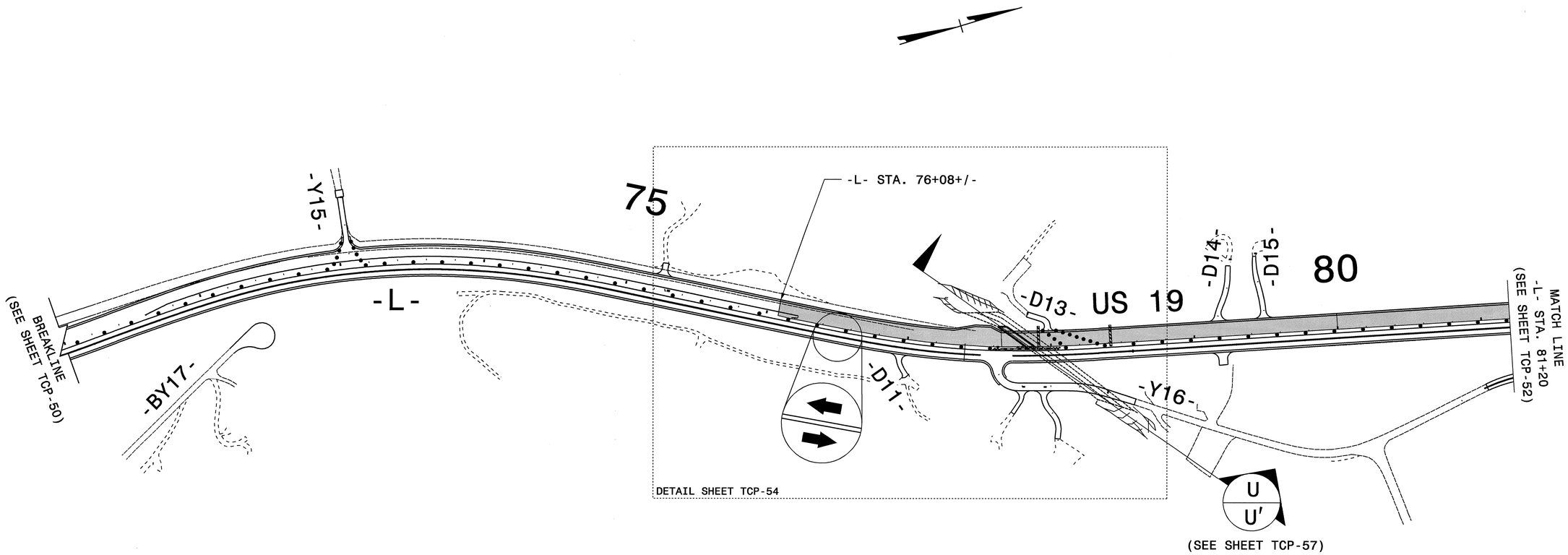

NOTES:

- MARKINGS SHOWN ARE APPROXIMATE.
- SPACE DRUMS NO MORE THAN 20m APART.
- SPACE DRUMS 5m APART IN RADII.
- SPACE DRUMS 5m APART AT DRIVEWAY ENTRANCES.
- SEE SHEETS TCP-60 & TCP-61 FOR TYPICAL SIGN / DEVICE SETUP AT -Y- LINES AND DRIVEWAYS CROSSING CONSTRUCTION AREAS.

APPROVED: Jessica Kuse DATE: 8/7/07

SEAL

NORTH CAROLINA PROFESSIONAL SEAL 027811 ENGINEER JESSICA D. KUSE

OVERVIEW PHASE III

SCALE:	NONE
DATE:	04/07
DWG. BY:	RMG
DESIGN BY:	RMG
REVIEWED BY:	JDK

REVISIONS

CADD FILE

07-AUG-2007 09:36
\\dot\dfsroot01\proj\tipprojects-r\r2518a\traffic\trafficcontrol\tcp\R-2518A_TC_TCP_OVR_PH3_01.dgn
rmgarrett AT WZTC22229I

PROJ. REFERENCE NO.	SHEET NO.
R-2518A	TCP-52

METRIC

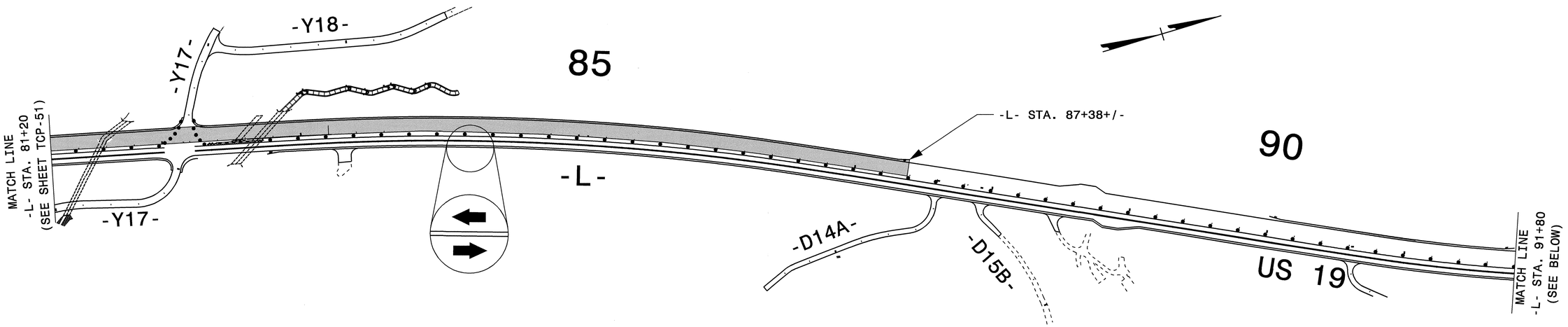

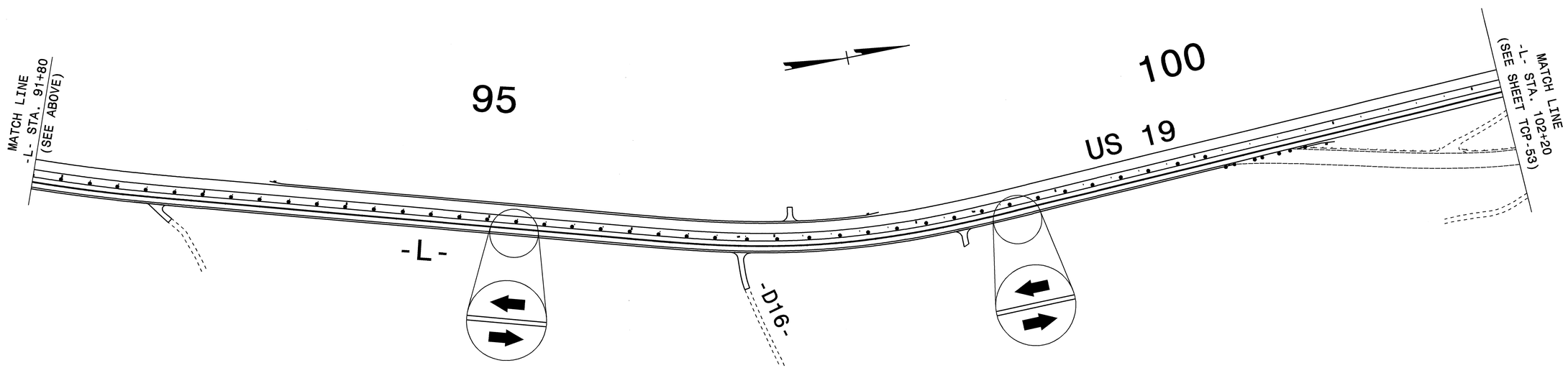

NOTES:

- MARKINGS SHOWN ARE APPROXIMATE.
- SPACE DRUMS NO MORE THAN 20m APART.
- SPACE DRUMS 5m APART IN RADII.
- SPACE DRUMS 5m APART AT DRIVEWAY ENTRANCES.
- SEE SHEETS TCP-60 & TCP-61 FOR TYPICAL SIGN / DEVICE SETUP AT -Y- LINES AND DRIVEWAYS CROSSING CONSTRUCTION AREAS.

APPROVED: Jessica Kuse DATE: 8/7/07

SEAL

NORTH CAROLINA PROFESSIONAL SEAL 027811 ENGINEER JESSICA D. KUSE

OVERVIEW PHASE III

SCALE:	NONE
DATE:	05/31
DWG. BY:	RMG
DESIGN BY:	RMG
REVIEWED BY:	JDK

DIVISION OF HIGHWAYS · STATE OF NORTH CAROLINA · DEPARTMENT OF TRANSPORTATION · TRAFFIC CONTROL

REVISIONS

CADD FILE

07-AUG-2007 09:36
\\dot\dfsroot01\proj\tipprojects-r\r2518a\traffic\trafficontrol\tcp\R-2518A_TC_TCP_OVR_PH3_02.dgn
rmgarrett AT WZTC22229

PROJ. REFERENCE NO.	SHEET NO.
R-2518A	TCP-53

METRIC

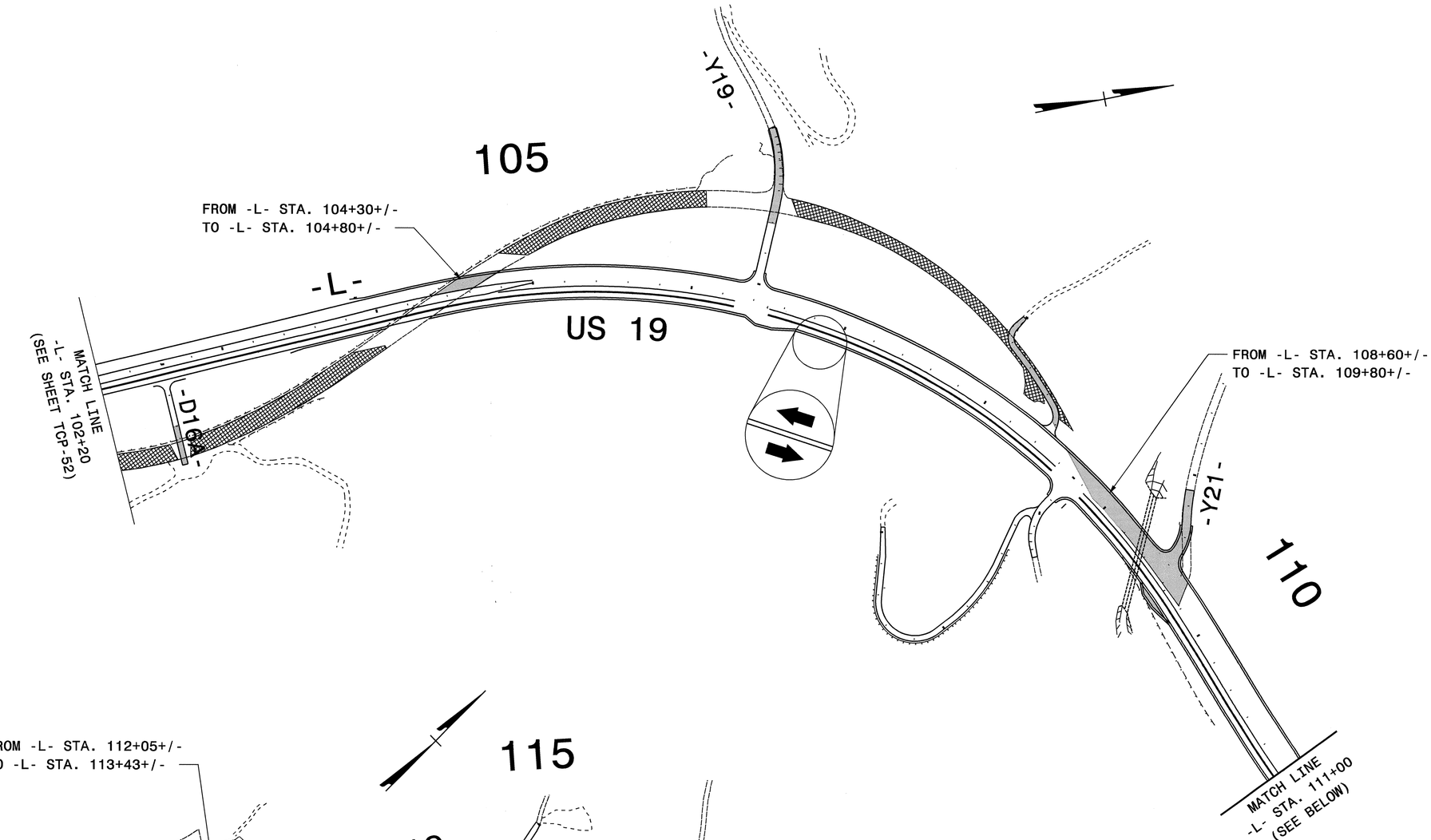

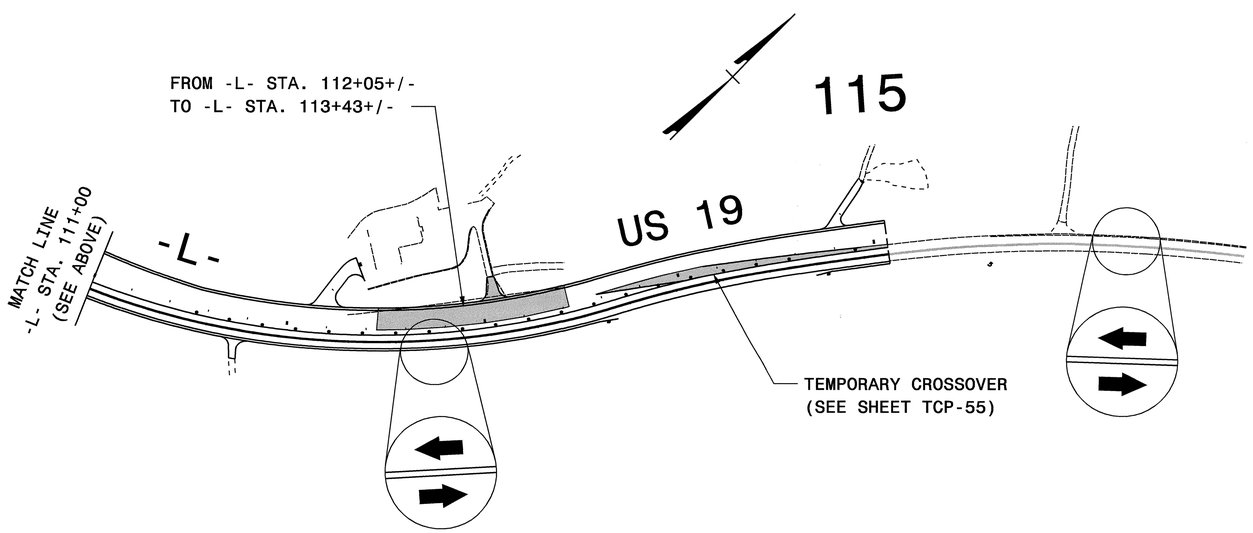

NOTES:

- MARKINGS SHOWN ARE APPROXIMATE.
- SPACE DRUMS NO MORE THAN 20m APART.
- SPACE DRUMS 5m APART IN RADII.
- SPACE DRUMS 5m APART AT DRIVEWAY ENTRANCES.
- SEE SHEETS TCP-60 & TCP-61 FOR TYPICAL SIGN / DEVICE SETUP AT -Y- LINES AND DRIVEWAYS CROSSING CONSTRUCTION AREAS.

APPROVED: Joacakux DATE: 8/7/07

SEAL

NORTH CAROLINA PROFESSIONAL SEAL 027811 ENGINEER JESSICA D. KUS

OVERVIEW PHASE III

SCALE:	NONE
DATE:	04/07
DWG. BY:	RMG
DESIGN BY:	RMG
REVIEWED BY:	JDK

DIVISION OF HIGHWAYS · STATE OF NORTH CAROLINA · DEPARTMENT OF TRANSPORTATION · HIGHWAY TRAFFIC CONTROL UNIT

REVISIONS

CADD FILE

07-AUG-2007 09:36
\\dot\dfsroot0\proj\tipprojects-r\r2518a\traffic\trafficontrol\tcp\R-2518A_TC_TCP_OVR_PH3_03.dgn
rmgarrett AT WZTC222291

PROJ. REFERENCE NO.	SHEET NO.
R-2518A	TCP-54

METRIC

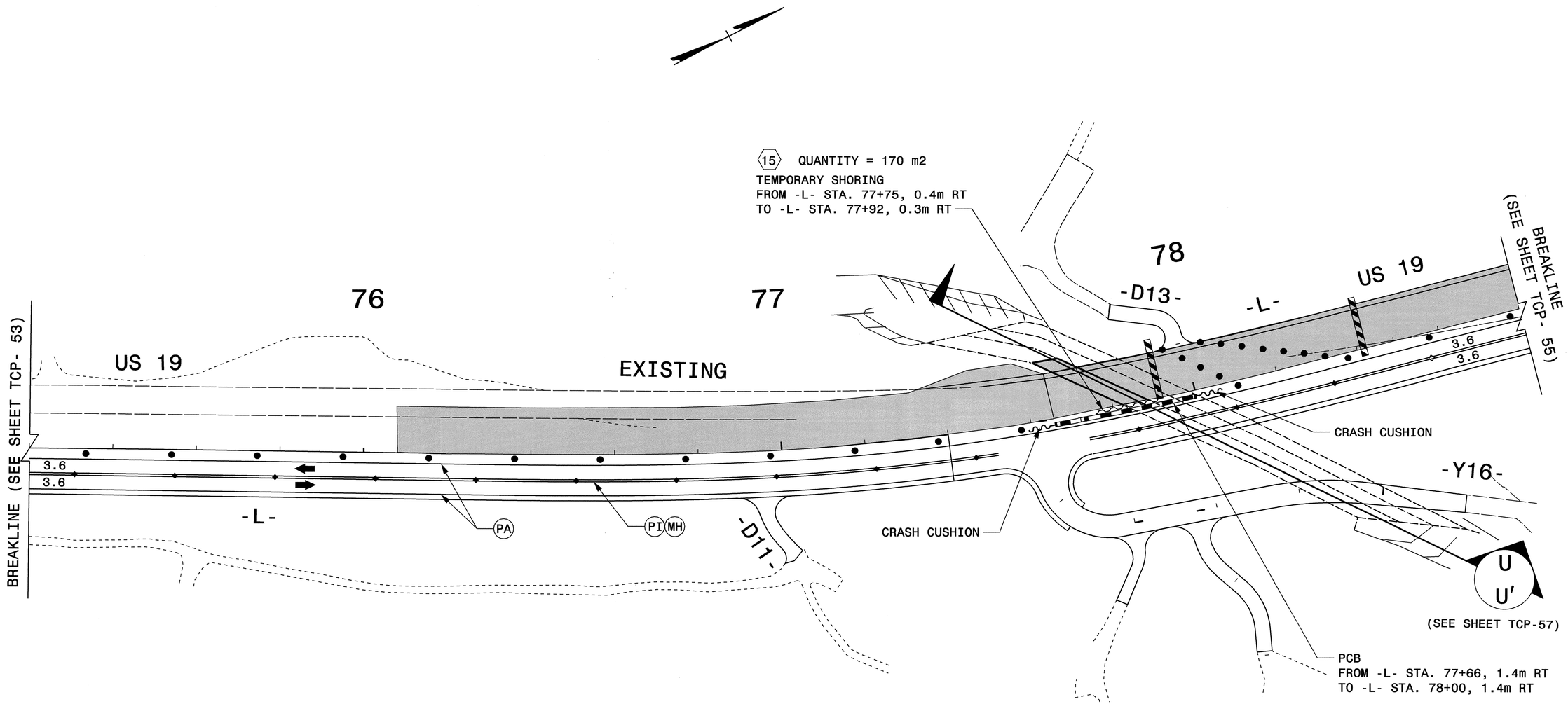

NOTES:

- MARKINGS SHOWN ARE APPROXIMATE.
- SPACE DRUMS NO MORE THAN 20m APART.
- SPACE DRUMS 5m APART IN RADII.
- SPACE DRUMS 5m APART AT DRIVEWAY ENTRANCES.
- SEE SHEETS TCP-60 & TCP-61 FOR TYPICAL SIGN / DEVICE SETUP AT -Y- LINES AND DRIVEWAYS CROSSING CONSTRUCTION AREAS.

APPROVED: Jpacakus DATE: 8/7/07

SEAL

NORTH CAROLINA PROFESSIONAL SEAL 027811 ENGINEER JESSICA D. KUSE

PHASE III - CULVERT

SCALE:	NONE
DATE:	05/07
DWG. BY:	RMG
DESIGN BY:	RMG
REVIEWED BY:	JDK

REVISIONS

CADD FILE

07-AUG-2007 09:34
\\dot\dfsroot01\proj\tipprojects-r\r2518a\traffic\trafficcontrol\tcp\R-2518A_TC_TCP_26.dgn
rmgarrett AT WZTC22229I

PROJ. REFERENCE NO.	SHEET NO.
R-2518A	TCP-55

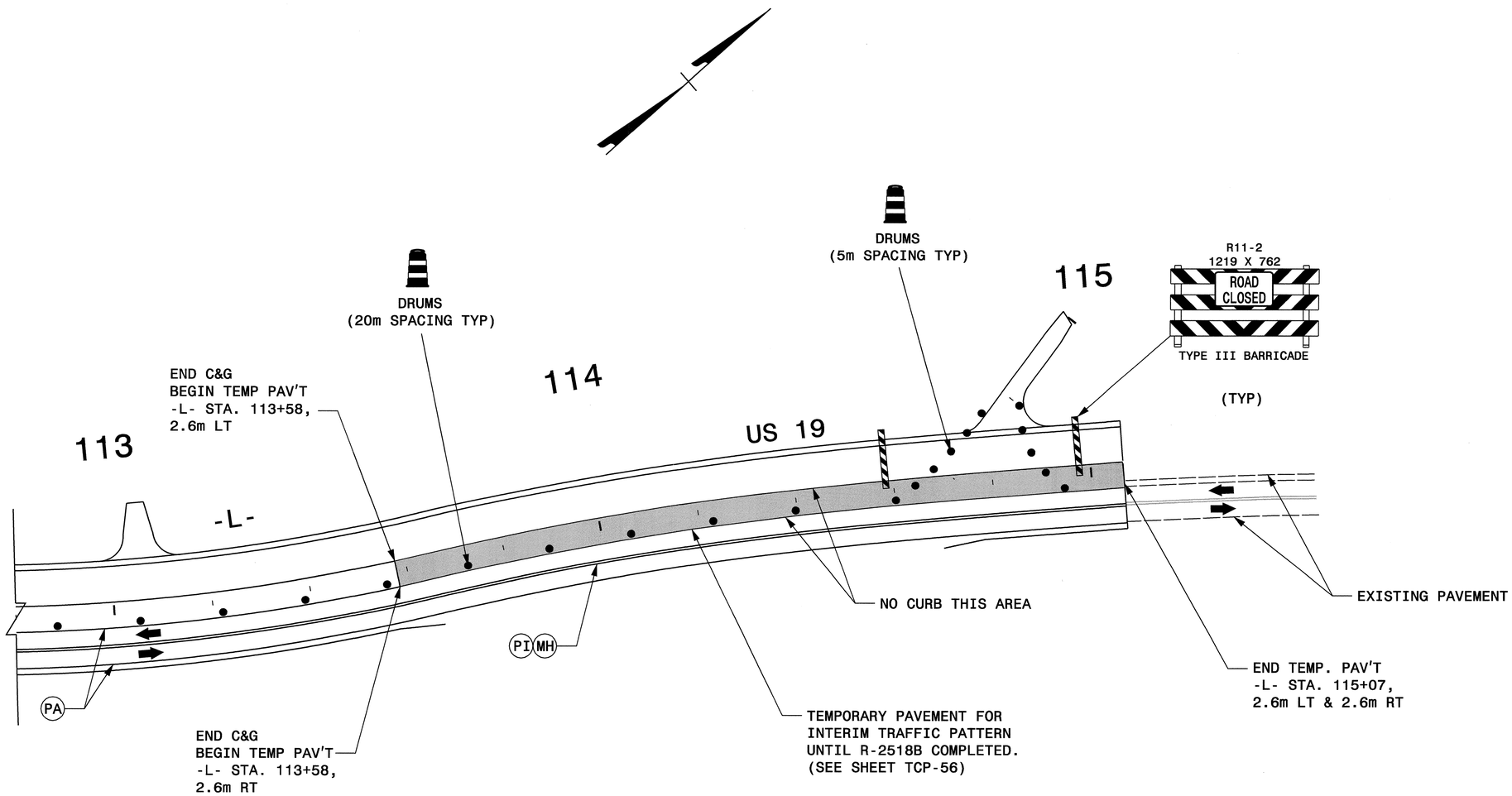

NOTES:

- MARKINGS SHOWN ARE APPROXIMATE.
- SPACE DRUMS NO MORE THAN 20m APART.
- SPACE DRUMS 5m APART IN RADII.
- SPACE DRUMS 5m APART AT DRIVEWAY ENTRANCES.
- SEE SHEETS TCP-60 & TCP-61 FOR TYPICAL SIGN / DEVICE SETUP AT -Y- LINES AND DRIVEWAYS CROSSING CONSTRUCTION AREAS.

APPROVED: Jessica Kuse DATE: 1/29/08

SEAL

NORTH CAROLINA PROFESSIONAL SEAL 027811 ENGINEER JESSICA D. KUSE

PHASE III

SCALE:	NONE
DATE:	06/07
DWG. BY:	RMG
DESIGN BY:	RMG
REVIEWED BY:	JDK

DIVISION OF HIGHWAYS · STATE OF NORTH CAROLINA · DEPARTMENT OF TRANSPORTATION · TRAFFIC CONTROL

REVISIONS

CADD FILE

29-JAN-2008 10:44
\\dot\dfsroot0\proj\tlpprojects-r\r2518a\traffic\trafficcontrol\tcpYr-2518a_tc_tcp_55.dgn
rmgarrett AT WZTC22229

PROJ. REFERENCE NO.	SHEET NO.
R-2518A	TCP-56

METRIC

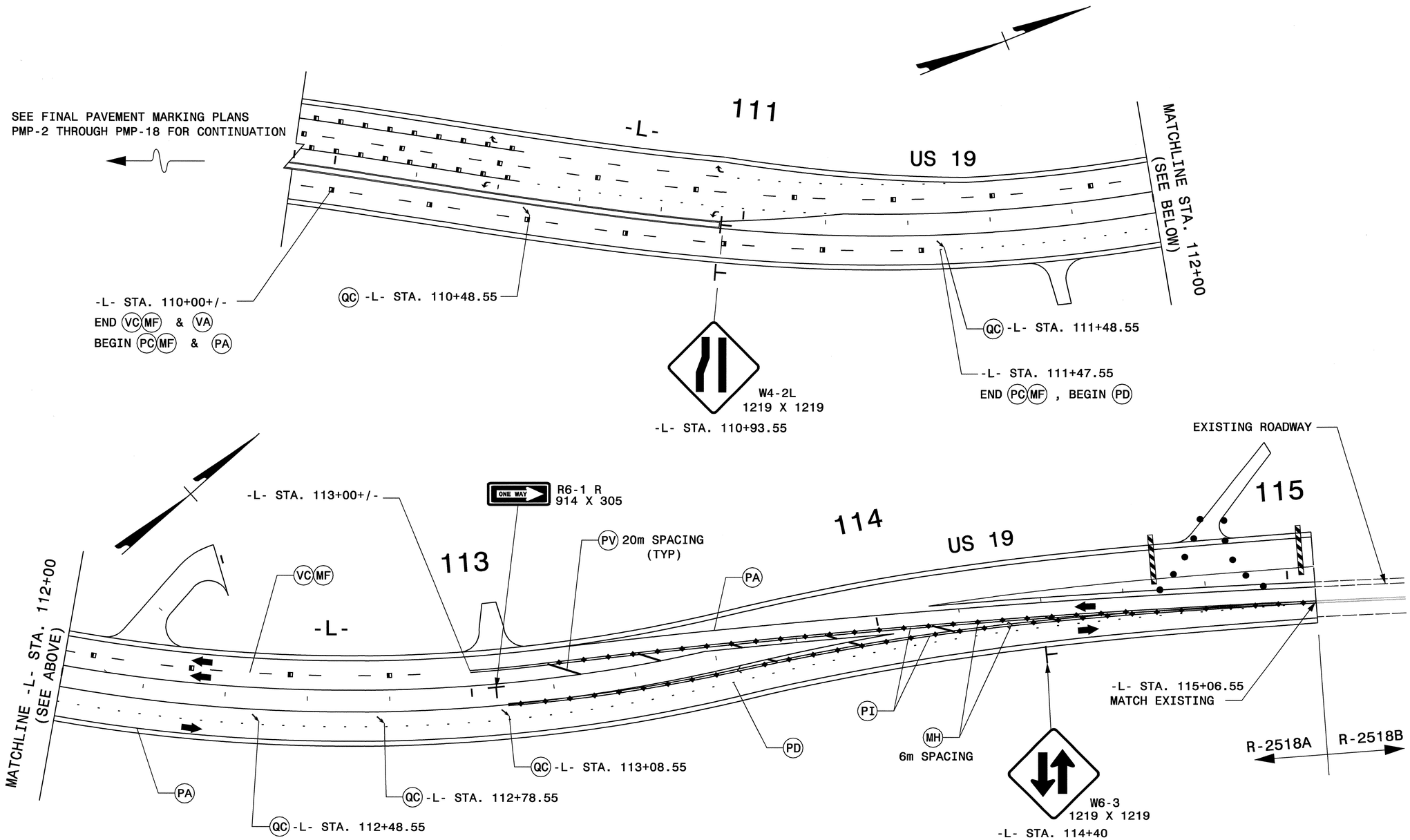

APPROVED: Jessica Kuse DATE: 1/30/08

SEAL

NORTH CAROLINA PROFESSIONAL SEAL 027811 ENGINEER JESSICA D. KUSE

INTERIM MARKING / MARKERS UNTIL R-2518B COMPLETED

SCALE:	NONE
DATE:	01/07
DWG. BY:	RMG
DESIGN BY:	RMG
REVIEWED BY:	JDK

DIVISION OF HIGHWAYS · NORTH CAROLINA DEPARTMENT OF TRANSPORTATION · TRAFFIC CONTROL

REVISIONS

CADD FILE

29-JAN-2008 15:43
\\dot\dfsroot01\proj\tipprojects-r\r-2518a\traffic\trafficcontrol\tcp\r-2518a_tc_tcp_56.dgn
rmgarrett AT WZTC222291

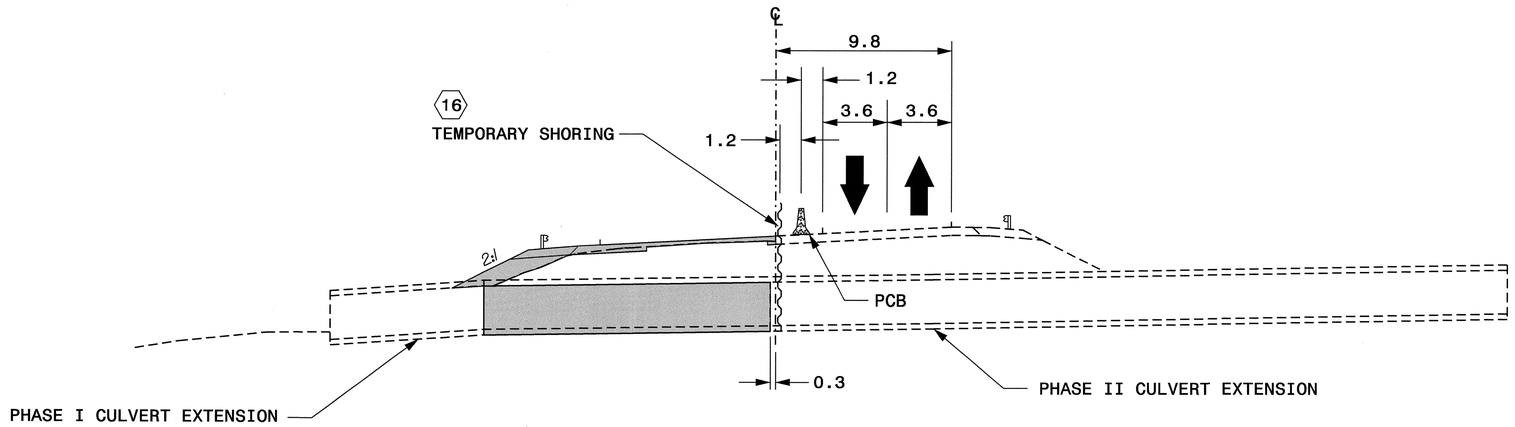

SECTION U-U′

-L- STA. 78+88+/-

(SEE SHEETS TCP-51 & TCP-54)

APPROVED: DATE: 8/7/07

SEAL

NORTH CAROLINA PROFESSIONAL SEAL 027811 ENGINEER JESSICA D. KUSE

PHASE III - SECTIONS

SCALE:	NONE
DATE:	04/07
DWG. BY:	RMG
DESIGN BY:	RMG
REVIEWED BY:	JDK

DIVISION OF HIGHWAYS · NORTH CAROLINA DEPARTMENT OF TRANSPORTATION · TRAFFIC CONTROL

REVISIONS

CADD FILE

07-AUG-2007 09:37
\\dot\dfsroot01\proj\tipprojects-r\r2518a\traffic\trafficcontrol\tcp\r-2518a_tc_tcp_xsl.dgn
rmgarrett AT WZTC222291

PROJ. REFERENCE NO.	SHEET NO.
R-2518A	TCP-58

TWO-WAY UNDIVIDED ** (L-LINES)

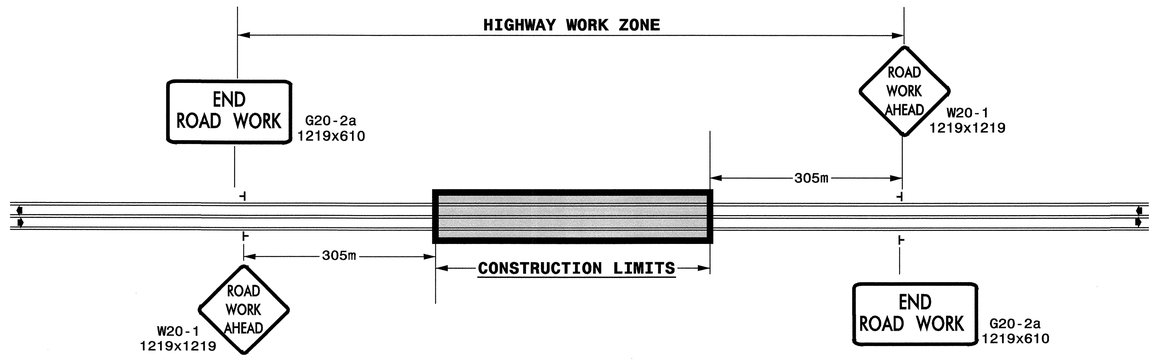

ROADWAYS INTERSECTING ALONG 2 WAY UNDIVIDED WORK ZONE (Y-LINES)

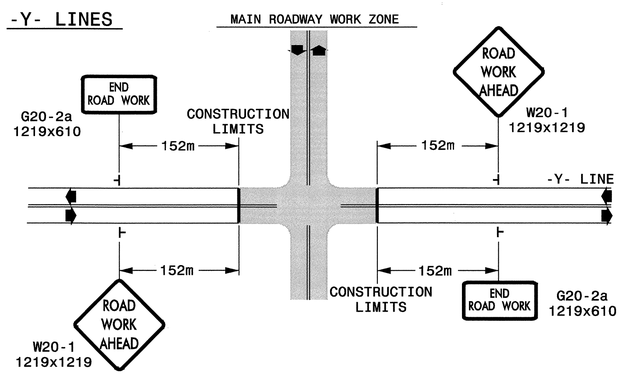

GENERAL NOTES

- USE FLUORESCENT ORANGE SHEETING (TYPE VII OR HIGHER) ON ALL ADVANCED WORK ZONE SIGNS.
- DO NOT INSTALL ADVANCE WARNING SIGNS MORE THAN 3 DAYS PRIOR TO BEGINNING OF WORK.
- SIGNS SHOWN ARE REQUIRED FOR WORK ZONES THAT WILL REMAIN IN EFFECT OVERNIGHT. FOR SHORT-TERM DAILY MAINTENANCE TYPE OPERATIONS, THIS SIGNING APPLICATION IS OPTIONAL; MAY USE ONLY APPLICABLE ROADWAY STANDARD DRAWINGS INSTEAD. HOWEVER, IF THIS SIGNING APPLICATION IS USED, SIGNS MAY BE PORTABLE MOUNTED.
- ALL SIGN SPACING DIMENSIONS ARE APPROXIMATE, FIELD ADJUST AS NECESSARY OR AS DIRECTED.
- USE 1.4Kg STEEL U-CHANNEL POST OR 90mm X 90mm WOOD POST FOR ALL WORK ZONE SIGNS. 1.4Kg STEEL U-CHANNEL POSTS MUST MEET THE REQUIREMENTS OF STANDARD SPECIFICATION SECTION 1094-1(B), MAY BE GALVANIZED STEEL, OR MAY BE PAINTED GREEN BY THE POST MANUFACTURER. SQUARE STEEL TUBING POSTS HAVING EQUIVALENT STRENGTH OF THE 1.4Kg STEEL U-CHANNEL POST ARE ALSO ACCEPTABLE FOR USE. ERECT SIGNS PER ROADWAY STANDARD DRAWING 1110.01. PAYMENT FOR WOOD POSTS, 1.4Kg STEEL U-CHANNEL AND SQUARE STEEL TUBING POSTS WITH SIGNS WILL BE MADE ACCORDING TO STANDARD SPECIFICATION "WORK ZONE SIGNS" SECTION 1110.
- WHEN NECESSARY, USE SPLICING IN ACCORDANCE WITH ROADWAY STANDARD DRAWING NO. 1110.01. REMOVE ENTIRE POST WHEN REMOVING SIGNS WITH SPLICED POSTS.
- DO NOT BACK BRACE SIGN SUPPORTS.
- ** TWO-WAY UNDIVIDED ADVANCE WARNING SIGN CONFIGURATION MAY BE USED ON URBAN MULTI-LANE FACILITIES WHERE CONDITIONS LIMIT THE USE OF DUAL MOUNTED SIGNS AS DETERMINED BY THE ENGINEER.

LEGEND

- STATIONARY SIGN
- DIRECTION OF TRAFFIC FLOW

STATE OF NORTH CAROLINA
DEPT. OF TRANSPORTATION
DIVISION OF HIGHWAYS
RALEIGH, N.C.

DETAIL DRAWING FOR TWO-WAY UNDIVIDED WORK ZONE WARNING SIGNS

SHEET 1 OF 1

APPROVED: Jessica Kuse DATE: 8/7/07

SEAL

NORTH CAROLINA PROFESSIONAL SEAL 027811 ENGINEER JESSICA D. KUSE

DETAIL DRAWING FOR TWO-WAY UNDIVIDED AND URBAN FREEWAYS ADVANCED WORK ZONE WARNING SIGNS

SCALE:	NONE
DATE:	08/07
DWG. BY:	RMG
DESIGN BY:	RMG
REVIEWED BY:	JDK

REVISIONS	
7-98	10/01
10-98	03/04
01/01	11/04
CADD FILE	

07-AUG-2007 11:24
\\dot\dfsroot01\proj\tipprojects-r\r2518a\traffic\trafficcontrol\tcp\2way_Undiv_&_Urban_Frwys_Met.dgn
rmgarrett AT WZTC22229I

PROJ. REFERENCE NO.	SHEET NO.
R-2518A	TCP-59

METRIC

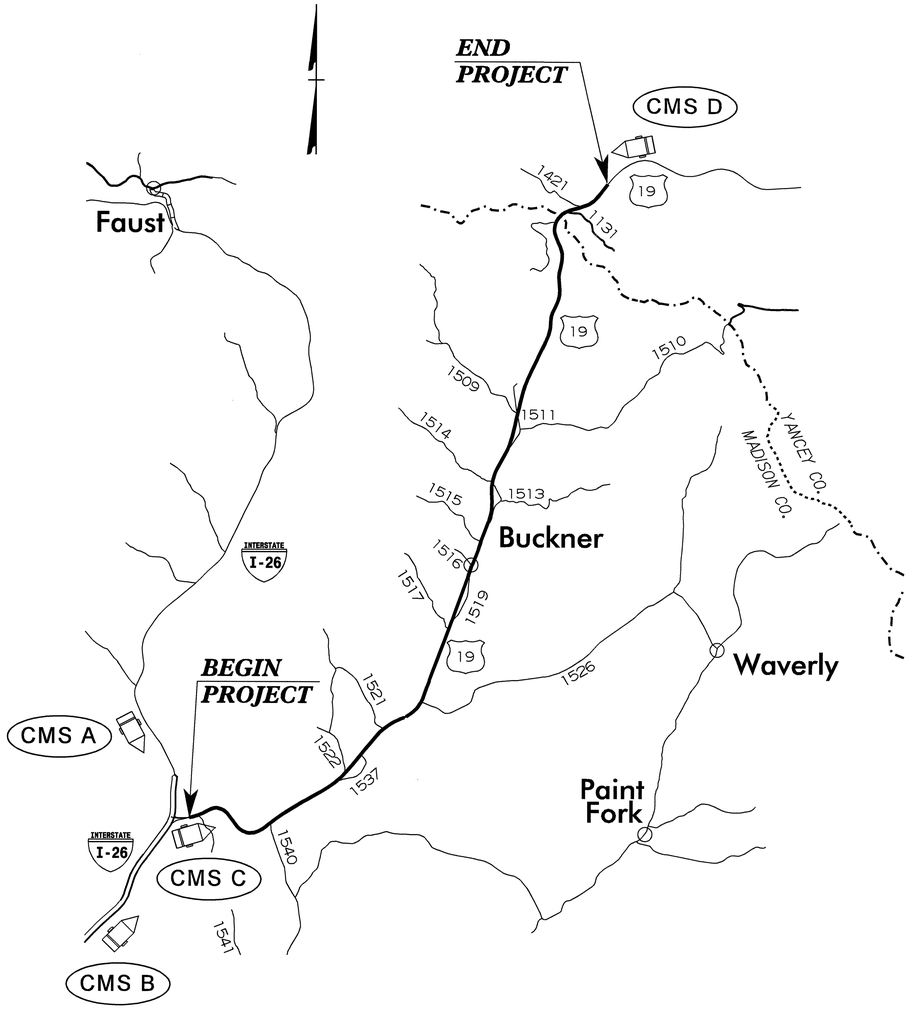

CHOOSE THE APPROPRIATE WORDING FOR CHANGEABLE MESSAGE SIGNS FROM THE FOLLOWING LIST, OR WORD THE SIGNS AS DIRECTED BY THE ENGINEER

CMS A		CMS B		CMS C		CMS D	
MSG. NO. 1	MSG. NO. 2	MSG. NO. 1	MSG. NO. 2	MSG. NO. 1	MSG. NO. 2	MSG. NO. 1	MSG. NO. 2
US 19 BLASTING ZONE	DATE TO DATE	US 19 BLASTING ZONE	DATE TO DATE	US 19 BLASTING ZONE	DATE TO DATE	US 19 BLASTING ZONE	DATE TO DATE
MSG. NO. 1	MSG. NO. 2	MSG. NO. 1	MSG. NO. 2	MSG. NO. 1	MSG. NO. 2	MSG. NO. 1	MSG. NO. 2
US 19 BLASTING ZONE	EXPECT DELAYS	US 19 BLASTING ZONE	EXPECT DELAYS	US 19 BLASTING ZONE	EXPECT DELAYS	US 19 BLASTING ZONE	EXPECT DELAYS

CMS E		CMS F	
MSG. NO. 1	MSG. NO. 2	MSG. NO. 1	MSG. NO. 2
US 19 BLASTING ZONE	PREPARE TO STOP	US 19 BLASTING ZONE	PREPARE TO STOP

NOTES:

1) SEE RSD 1101.06 FOR ADDITIONAL WORKZONE SIGNS RELATIVE TO BLASTING OPERATIONS.

2) CMS E & CMS F ARE TO BE PLACED ALONG US 19 152 m IN ADVANCE OF EACH ACTIVE BLASTING ZONE.

3) CMS A & CMS B ARE TO BE PLACED ALONG I -26 305m IN ADVANCE OF US 19.

4) CMS D IS TO BE PLACED ALONG US 19 152m IN ADVANCE OF PROJECT.

5) CMS C IS TO BE PLACED ALONG US 19 BETWEEN US 23A AND -Y1- (SR 1541).

6) TWO ADDITIONAL CHANGEABLE MESSAGE SIGNS HAVE BEEN INCLUDED IN THE ESTIMATE TO BE USED AS DIRECTED BY THE ENGINEER OR FOR MULTIPLE BLASTING OPERATIONS.

APPROVED: [signature] DATE: 8/7/07

SEAL

NORTH CAROLINA PROFESSIONAL SEAL 027811 ENGINEER JESSICA D. KUSE

CMS MESSAGES / LOCATIONS DURING BLASTING OPERATIONS

SCALE:	NONE
DATE:	07/07
DWG. BY:	RMG
DESIGN BY:	RMG
REVIEWED BY:	JDK

REVISIONS

CADD FILE

07-AUG-2007 11:50
\\dot\dfsroot01\proj\tipprojects-r\r2518a\traffic\trafficcontrol\tcp\R-2518A_TC_TCP_CMS.dgn
rmgarrett AT WZTC22229I

PROJ. REFERENCE NO.	SHEET NO.
R-2518A	TCP-60

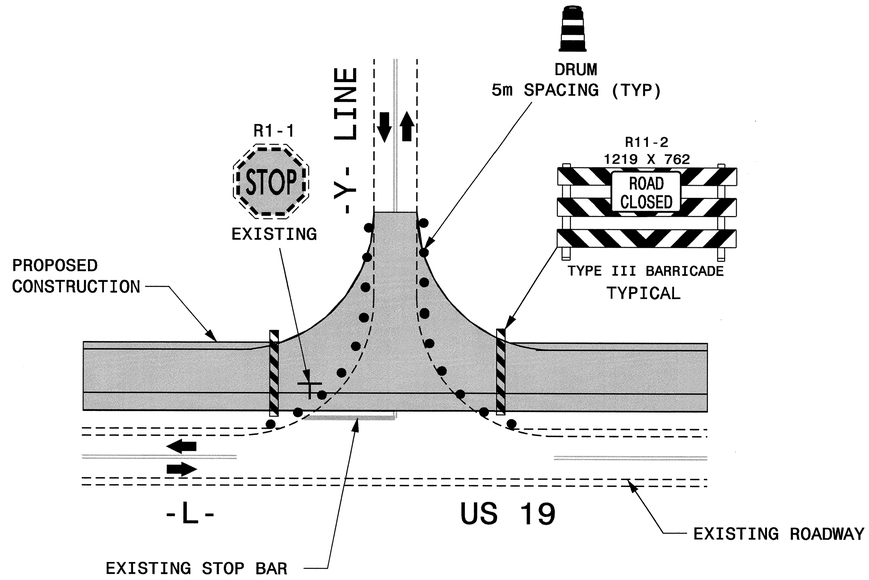

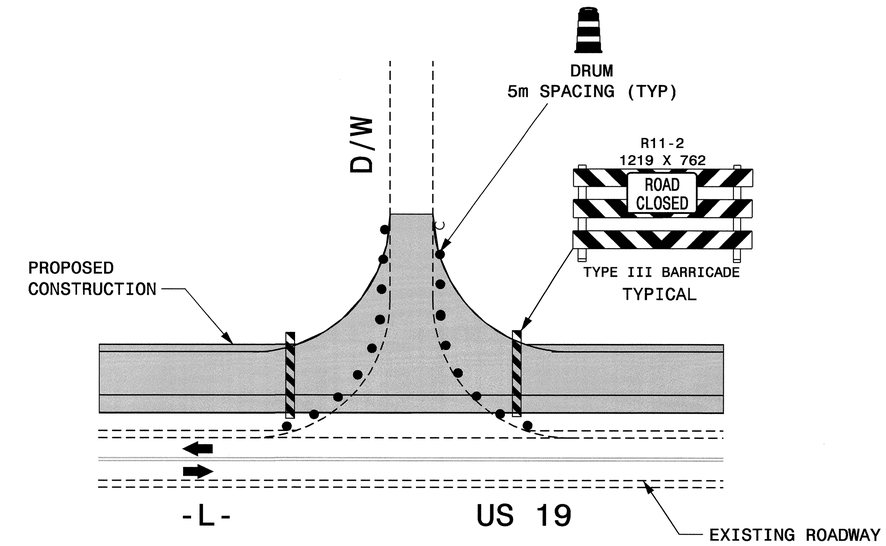

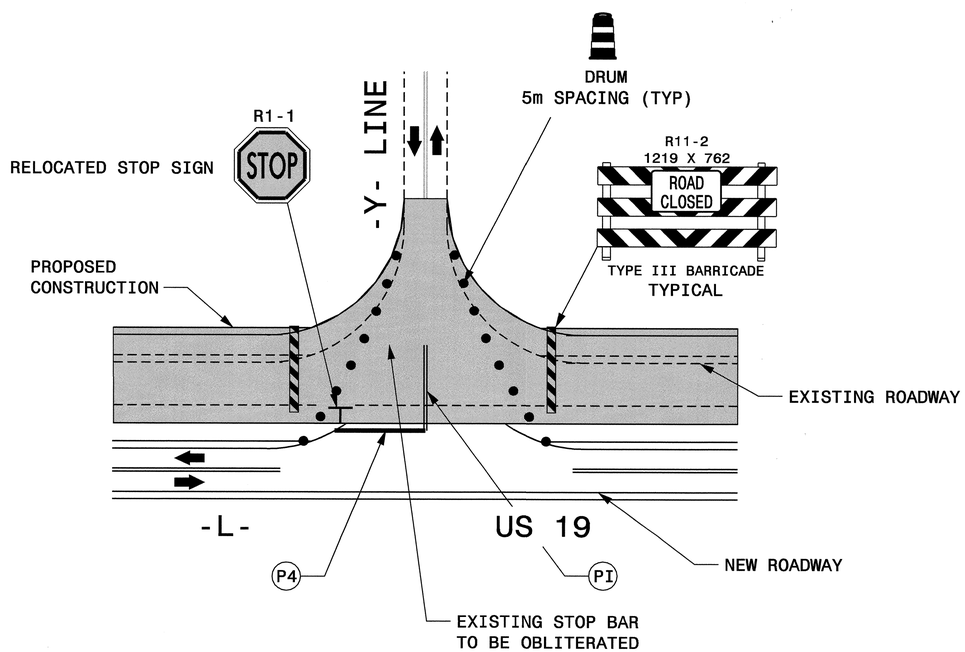

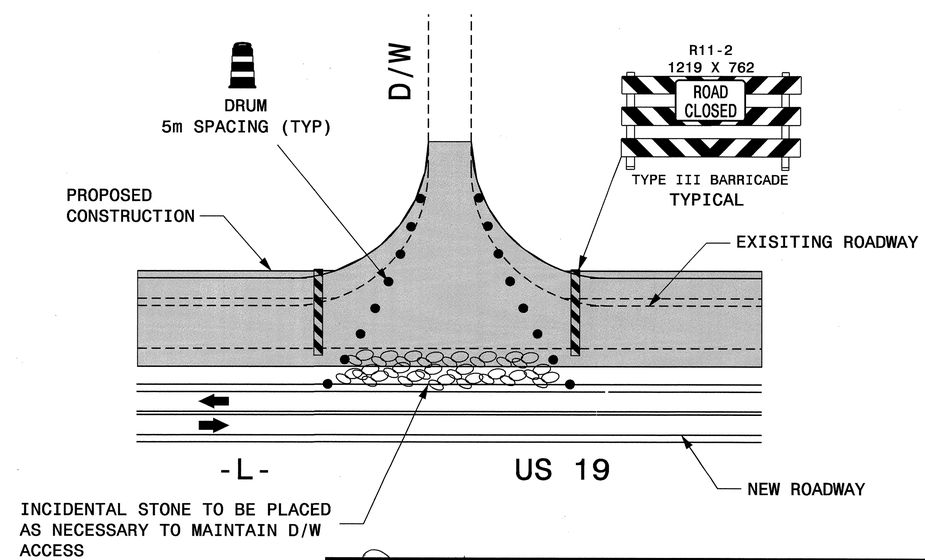

** NOTE: SEE SHEET TCP-61 CONCERNING TRAFFIC CONTROL
FOR NEW STOP LOCATIONS FOR -Y- LINES

APPROVED: DATE: 8/7/07

SEAL

NORTH CAROLINA PROFESSIONAL SEAL 027811 ENGINEER JESSICA D. KLUSE

TYPICAL SIGN / DEVICES AT -Y- LINES AND DRIVEWAYS

SCALE:	NONE
DATE:	06/07
DWG. BY:	RMG
DESIGN BY:	RMG
REVIEWED BY:	JDK

REVISIONS

CADD FILE

07-AUG-2007 09:34
\\dot\dfsroot0\proj\tipprojects-r\r-2518a\traffic\trafficontrol\tcp\R-2518A_TC_TCP_3i.dgn
rmgarrett AT WZ\C222291

PROJ. REFERENCE NO.	SHEET NO.
R-2518A	TCP-61

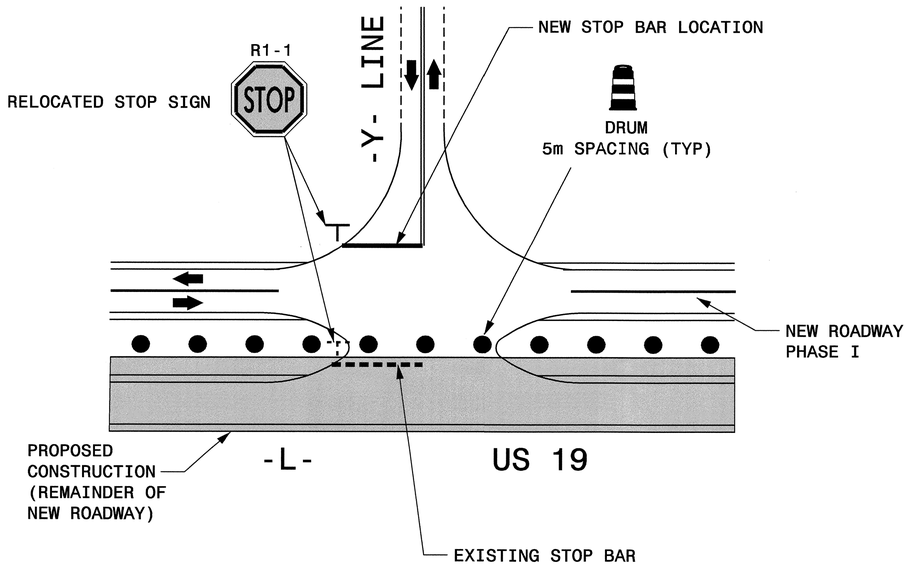

TRAFFIC CONTROL TREATMENT FOR NEW STOP LOCATION FOR MEDIUM TO HIGH VOLUME ROAD

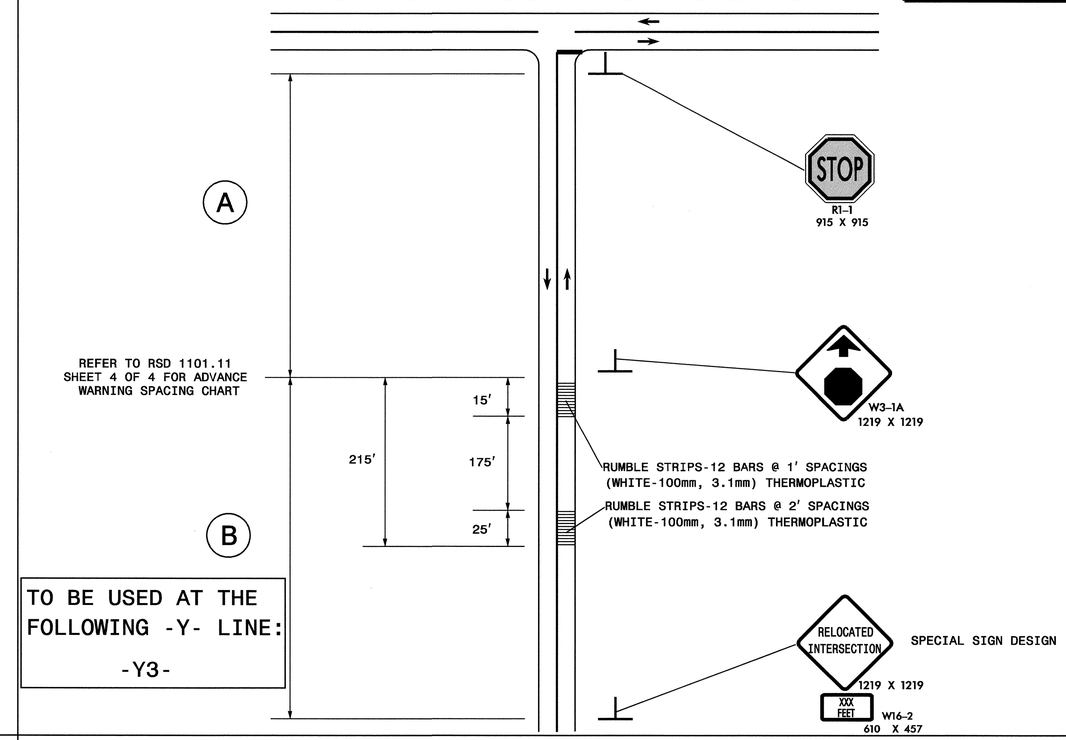

TO BE USED AT THE
FOLLOWING -Y- LINE:

-Y3-

TRAFFIC CONTROL TREATMENT FOR NEW STOP LOCATION FOR MEDIUM VOLUME ROAD

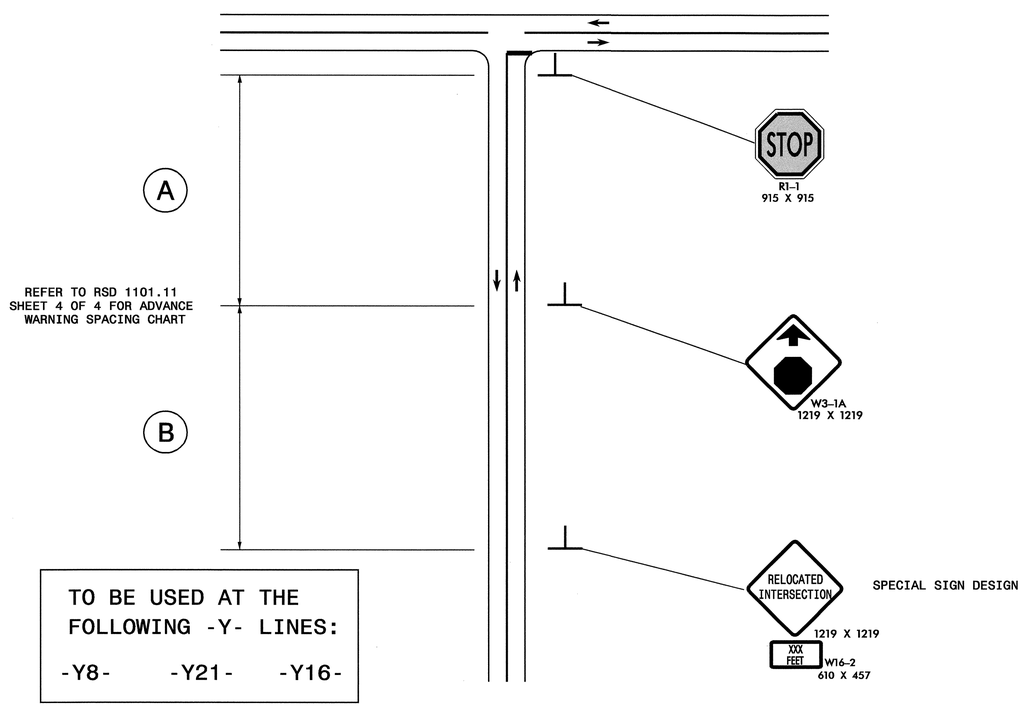

TO BE USED AT THE
FOLLOWING -Y- LINES:

-Y8- -Y21- -Y16-

TRAFFIC CONTROL TREATMENT FOR NEW STOP LOCATION FOR LOW VOLUME ROAD

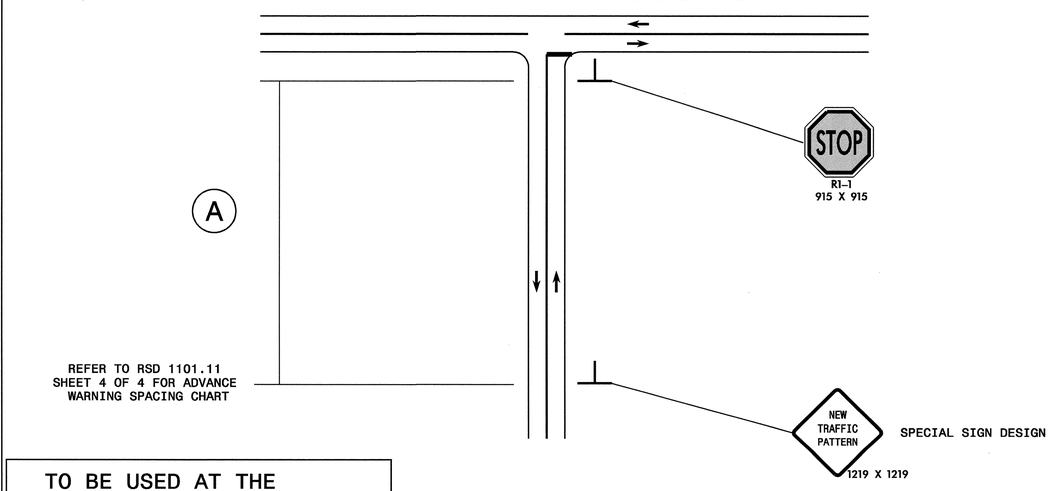

TO BE USED AT THE
FOLLOWING -Y- LINES:

-Y1-	-Y7-	-Y13-	-Y19-
-Y2-	-Y9-	-Y14-	-Y20-
-Y4-	-Y10-	-Y15-	
-Y5-	-Y11-	-Y17-	
-Y6-	-Y12-	-Y18-	

NOTE: MAY ADD CHANGEABLE MESSAGE SIGN IN ADVANCE OF "NEW TRAFFIC PATTERN" SIGN FOR ADDITIONAL ADVANCE WARNING.

APPROVED: Jessica Kuse DATE: 9/19/07

SEAL

NORTH CAROLINA PROFESSIONAL SEAL 027811 ENGINEER JESSICA D. KUSE

TRAFFIC CONTROL FOR NEW STOP LOCATIONS FOR -Y- LINES

SCALE:	NONE
DATE:	06/07
DWG. BY:	RMG
DESIGN BY:	RMG
REVIEWED BY:	JDK

DIVISION OF HIGHWAYS STATE OF NORTH CAROLINA TRAFFIC ENGINEERING BRANCH

REVISIONS

CADD FILE

19-SEP-2007 09:29
\\dot\dfsroot0\proj\tlpprojects-r\r2518a\traffic\trafficcontrol\tcp\R-2518A_TC_TCP_61.dgn
rmgarrett AT WZTC22229

PROJ. REFERENCE NO.	SHEET NO.
R-2518A	TCP - 62

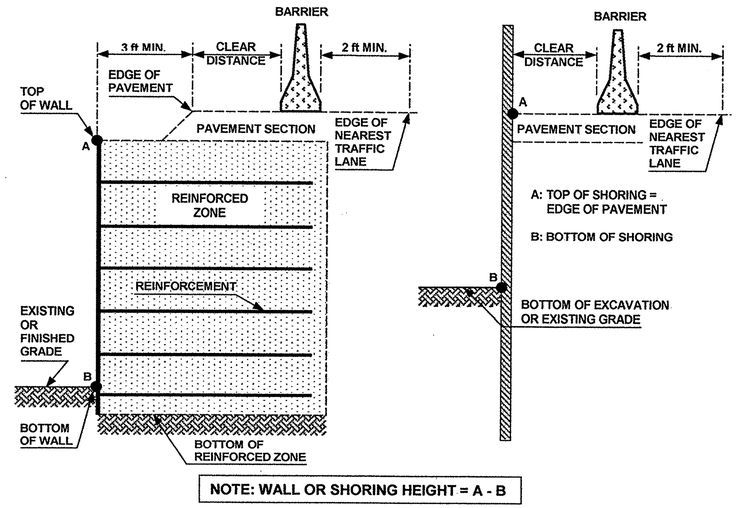

FIGURE A

NOTES

1- REFER TO THE TRAFFIC CONTROL PLANS FOR SHORING LOCATIONS AND SOIL PARAMETERS.

2- REFER TO THE "TEMPORARY SHORING" PROJECT SPECIAL PROVISION FOR MORE INFORMATION ABOUT TEMPORARY SHORING, MEASUREMENT AND PAYMENT.

3- PROVIDE PORTABLE CONCRETE BARRIER TO PROTECT TEMPORARY SHORING IF SHORING IS LOCATED WITHIN THE CLEAR ZONE AS DEFINED IN THE AASHTO ROADSIDE DESIGN GUIDE.

4- BASED ON THE CLEAR DISTANCE, OFFSET, DESIGN SPEED AND PAVEMENT TYPE, CHOOSE AN UNANCHORED PCB, ANCHORED PCB OR AN OREGON BARRIER FROM THE TABLE SHOWN IN FIGURE B. FOR TRAFFIC LANES AND PORTABLE CONCRETE BARRIER LOCATED ABOVE AND BEHIND TEMPORARY SHORING, THE FOLLOWING ARE DEFINED AS:

CLEAR DISTANCE - HORIZONTAL DISTANCE FROM THE BACK FACE OF THE BARRIER TO THE EDGE OF PAVEMENT FOR TEMPORARY MSE WALL OR TO THE FACE OF NON-ANCHORED TEMPORARY SHORING AS SHOWN IN FIGURE A.

OFFSET - HORIZONTAL DISTANCE FROM THE FRONT FACE OF THE BARRIER TO CENTERLINE OF THE FURTHEST TRAFFIC LANE AS SHOWN IN FIGURE B FOR 3 TRAFFIC LANES.

5- AT THE CONTRACTOR'S OPTION OR IF THE MINIMUM REQUIRED CLEAR DISTANCE IS NOT AVAILABLE, SET AN UNANCHORED PCB AGAINST THE TRAFFIC SIDE OF THE SHORING AND DESIGN SHORING FOR TRAFFIC IMPACT OR USE THE "SURCHARGE CASE WITH TRAFFIC IMPACT" FOR THE STANDARD TEMPORARY SHORING.

6- USE NCDOT PORTABLE CONCRETE BARRIER (PCB) IN ACCORDANCE WITH ROADWAY STANDARD DRAWING NO. 1170.01 AND SECTION 1170 OF THE STANDARD SPECIFICATIONS.

7- USE OREGON TALL F-SHAPE CONCRETE BARRIER IN ACCORDANCE WITH DETAIL DRAWING AND SPECIAL PROVISION OBTAINED FROM: HTTP://WWW.NCDOT.ORG/DOH/PRECONSTRUCT/WZTC/DESRES/ENGLISH/DESRESENG.HTML

8- UNLESS NOTED OTHERWISE ON THE PLANS, SET PORTABLE CONCRETE BARRIER WITH A MINIMUM DISTANCE OF 2 FT BETWEEN THE FRONT FACE OF THE BARRIER AND THE EDGE OF THE NEAREST TRAFFIC LANE AS SHOWN IN FIGURE A.

9- FOR PORTABLE CONCRETE BARRIER ABOVE AND BEHIND TEMPORARY MSE WALLS, PROVIDE A MINIMUM DISTANCE OF 3 FT BETWEEN THE EDGE OF PAVEMENT AND THE WALL FACE AS SHOWN IN FIGURE A. IF THESE MINIMUM REQUIRED DISTANCES ARE NOT AVAILABLE, CONTACT THE ENGINEER.

10- TABLE SHOWN IN FIGURE B IS BASED ON NCDOT RESEARCH PROJECT NO. 2005-010 WITH VEHICLE TYPE USED FOR NCHRP 350 CRASH TESTS. BARRIER DEFLECTIONS AND RESULTING MINIMUM REQUIRED CLEAR DISTANCES MIGHT VARY SIGNIFICANTLY FOR LARGER HEAVIER VEHICLES, RUNS OF BARRIER LESS THAN 200' IN LENGTH AND WET OR DRY PAVEMENT.

MINIMUM REQUIRED CLEAR DISTANCE, inches

Barrier Type	Pavement Type	Offset * ft	Design Speed, mph <30	31-40	41-50	51-60	61-70	71-80
Unanchored PCB	Asphalt	<8	24	26	29	32	36	40
		8-14	26	28	31	35	38	42
		14-20	27	29	34	36	39	43
		20-26	28	31	35	38	40	44
		26-32	29	32	36	39	42	45
		32-38	30	34	38	41	43	46
		38-44	31	34	41	43	45	48
		44-50	31	35	41	43	46	49
		50-56	32	36	42	44	47	50
		>56	32	36	42	45	47	51
	Concrete	<8	17	18	21	22	25	26
		8-14	19	20	23	25	26	29
		14-20	22	22	24	26	28	31
		20-26	23	24	26	27	30	34
		26-32	24	25	27	28	32	35
		32-38	24	26	27	30	33	36
		38-44	25	26	28	30	34	37
		44-50	26	26	28	32	35	37
		50-56	26	26	28	32	35	38
		>56	26	27	29	32	36	38
Anchored PCB or Oregon Barrier	Asphalt	All Offsets	24 for All Design Speeds					
Anchored PCB or Oregon Barrier	Concrete (including bridge approach slabs)	All Offsets	12 for All Design Speeds					

* See Figure Below

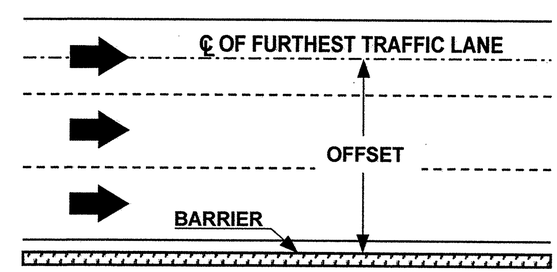

FIGURE B

APPROVED: _____ DATE: _____

SEAL

NORTH CAROLINA PROFESSIONAL SEAL 028380 ENGINEER JOSEPH JIVIK

March 12, 07

PORTABLE CONCRETE BARRIER AT TEMPORARY SHORING LOCATIONS

SCALE:	NONE
DATE:	3/07
DWG. BY:	JI
DESIGN BY:	JI
REVIEWED BY:	JI

REVISIONS

CADD FILE

22-MAR-2007 10:14
\\DOT\DFSROOT01\GROUPS-WZTCCC\share\share\stds_in_progress\barrierstd.dgn
mgarrett AT WZTC22291