STATE	PROJECT NO.	SHEET NO.
N.C.	U-3601	Sig. 1
F.A. PROJ. NO.		
PROJECT ID. NO.		

STATE OF NORTH CAROLINA
DIVISION OF HIGHWAYS

BUNCOMBE COUNTY

LOCATION: ASHEVILLE – NC 191 (BREVARD ROAD) FROM I–26 TO I–40

TYPE OF WORK: TRAFFIC SIGNALS

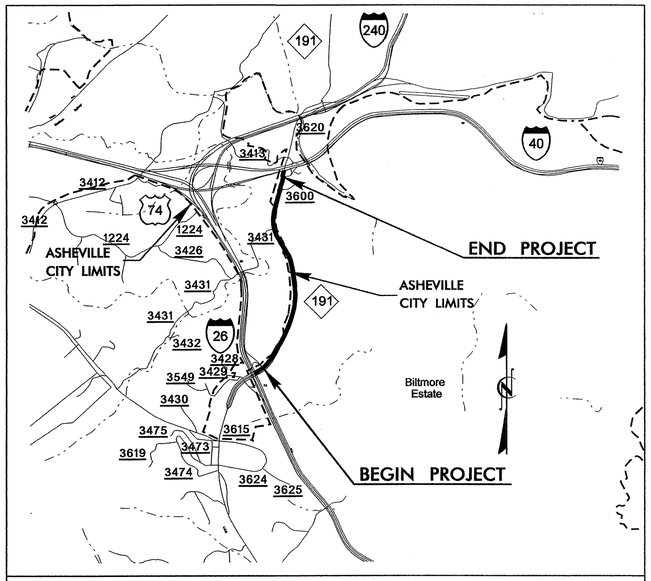

VICINITY MAP

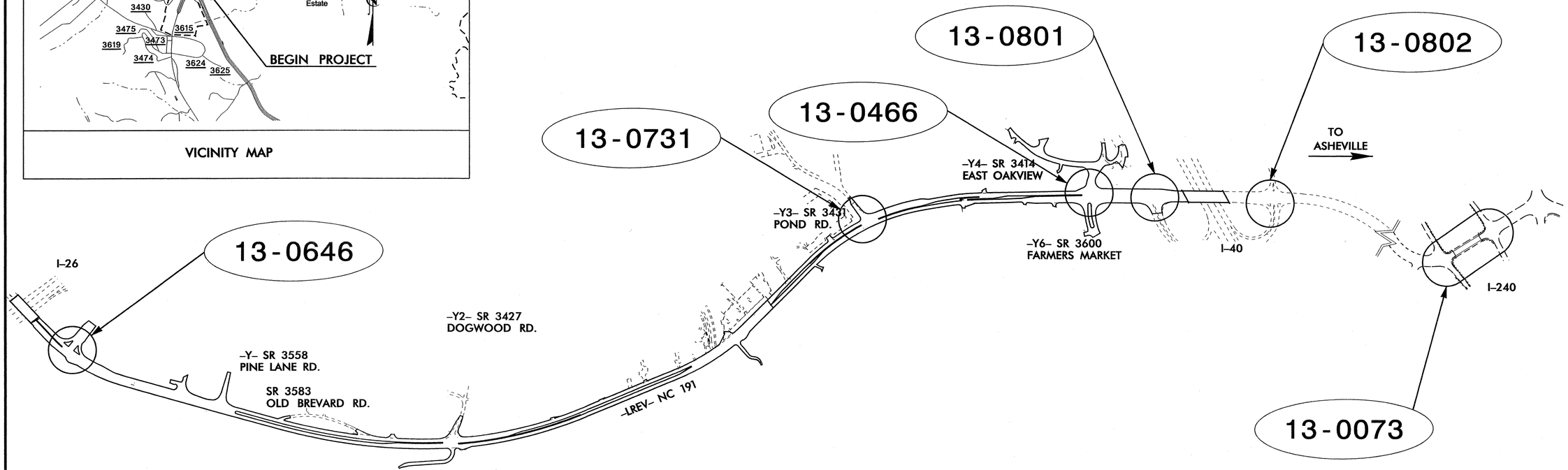

PROJECT: U–3601

INDEX OF PLANS

SHEET NO.	*SIGNAL INVENTORY NO.*	*LOCATION /DESCRIPTION*
SIG. 1	*N/A*	*Title Sheet*
SIG. 2–9	*13–0646*	*NC 191 (Brevard Road) At I–26 Westbound Ramps*
SIG. 10–20	*13–0731*	*NC 191 (Brevard Road) At SR 3431 (Pond Road)*
SIG. 21–28	*13–0466*	*NC 191 (Brevard Road) At SR 3600 (Farmers Market) /SR 3414 (East Oakview Road)*
SIG. 29–32	*13–0801*	*NC 191 (Brevard Road) At I–40 Eastbound Ramps*
SIG. 33–36	*13–0802*	*NC 191 (Brevard Road) At I–40 Westbound Ramps /SR 3413 (South Bear Creek Road)*
SIG. 37–38	*13–0073*	*NC 191 (Brevard Road) At I–240 Accses Ramps*
SIG. 39–43	*N/A*	*Standard Drawings for Metal Poles*
SIG. 44–56	*N/A*	*Communications Cable and Conduit Routing Plans*
SIG. 57–59	*N/A*	*Inductive Detection Loops Details*

LEGEND

(##-####) SIGNAL INVENTORY NUMBER

NCDOT CONTACTS:

INTELLIGENT TRANSPORTATION SYSTEMS & SIGNALS UNIT

Timothy J. Williams, PE – Signals & Geometrics Contracts Engineer

John T. Rowe Jr., PE – Signal Equipment Design Engineer

G. G. Murr, Jr., PE – ITS Engineer

Prepared in the Offices of:

Traffic Engineering and Safety Systems Branch
STATE OF NORTH CAROLINA DEPARTMENT OF TRANSPORTATION
ITS and Signals Unit

750 N. Greenfield Parkway, Garner, NC 27529

PROJECT REFERENCE NO.	SHEET NO.
U-3601	Sig.2

3 Phase
Fully Actuated
(NC 191 Closed Loop System)

PHASING DIAGRAM

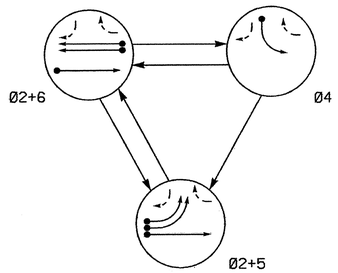

PHASING DIAGRAM DETECTION LEGEND

- DETECTED MOVEMENT
- UNDETECTED MOVEMENT (OVERLAP)
- UNSIGNALIZED MOVEMENT
- PEDESTRIAN MOVEMENT

TABLE OF OPERATION

SIGNAL FACE	PHASE 02+5	PHASE 02+6	PHASE 04	FLASH
21, 22	G	G	R	Y
41, 42	R	R	G	R
51, 52	~~←~~	~~R~~	~~R~~	~~R~~
61, 62	R	G	R	Y

SIGNAL FACE I.D.

Denotes L.E.D.

51, 52 — 21, 22, 41, 42, 61, 62

2070L LOOP & DETECTOR INSTALLATION

INDUCTIVE LOOPS					DETECTOR PROGRAMMING						
LOOP	SIZE (FT)	DISTANCE FROM STOPBAR (FT)	TURNS	NEW LOOP	PHASE	CALLING	EXTENSION	FULL TIME DELAY	STRETCH TIME	DELAY TIME	SYSTEM LOOP	NEW CARD
2A	6X6	230	5	–	2	Y	Y	–	0.5	–	–	–
2B	6X6	90	4	–	2	Y	Y	–	–	–	–	–
4A	6X60	0	2-4-2	–	4	Y	Y	–	–	5	–	–
5A	6X60	0	2-4-2	–	5	Y	Y	–	–	–	–	–
5B	6X60	0	2-4-2	–	5	Y	Y	–	–	–	–	–
6B	6X6	300	5	–	6	Y	Y	–	1.8	–	–	–
6C, 6D	6X6	90	4	–	6	Y	Y	–	–	–	–	–
S1	6X6	+150	4	–	–	–	–	–	–	–	Y	–
S2	6X6	+150	4	–	–	–	–	–	–	–	Y	–

NOTES

1. Refer to "Roadway Standard Drawings NCDOT" dated July 2006 and "Standard Specifications for Roads and Structures" dated July 2006.
2. Do not program signal for late night flashing operation unless otherwise directed by the Engineer.
3. Phase 5 may be lagged.
4. Reposition existing signal heads numbered 21 & 22.
5. Set all detector units to presence mode.
6. Maximum times shown in timing chart are for free-run operation only. Coordinated signal system timing values supersede these values.
7. Closed loop system data: Master Asset #11302, Controller Asset #0646.

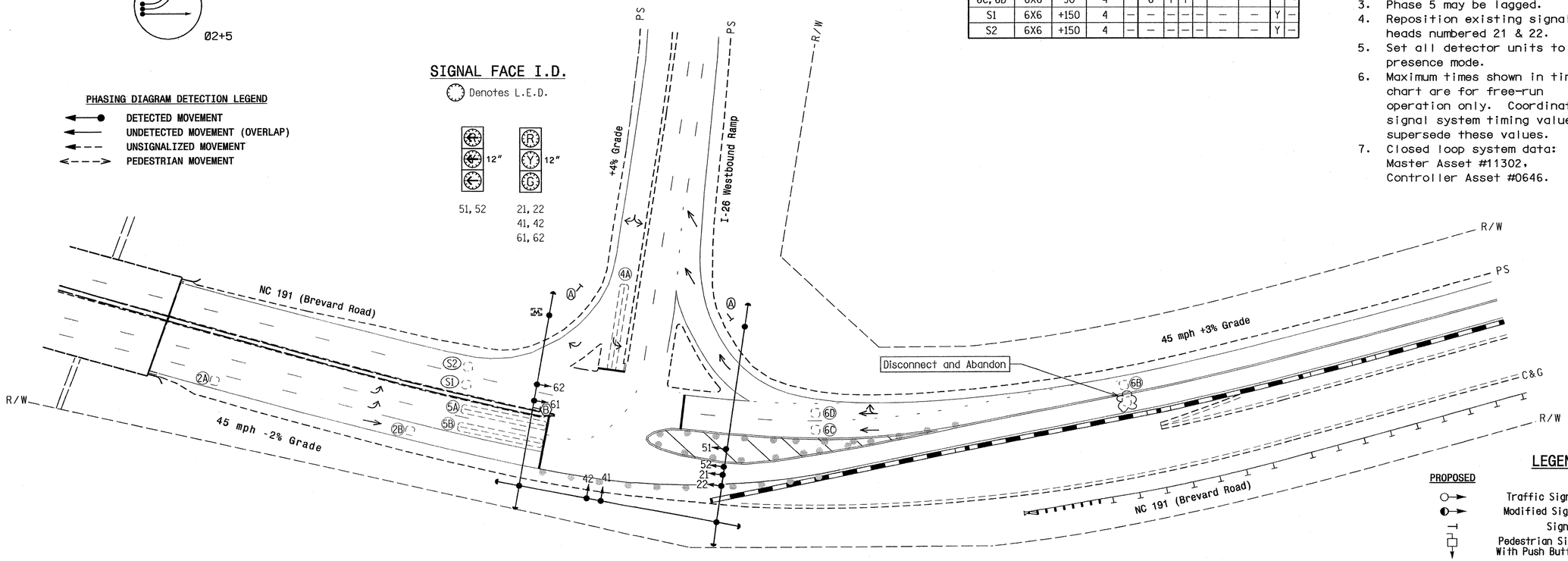

LEGEND

PROPOSED		EXISTING
	Traffic Signal Head	
	Modified Signal Head	N/A
	Sign	
	Pedestrian Signal Head With Push Button & Sign	
	Signal Pole with Guy	
	Signal Pole with Sidewalk Guy	
	Inductive Loop Detector	
	Controller & Cabinet	
	Junction Box	
	2-in Underground Conduit	
N/A	Right of Way	
	Directional Arrow	
	Pavement Marking Arrow	
	Construction Zone Drums	
	Type III Barricade	
N/A	Guardrail	
Ⓐ	"YIELD" Sign (R1-2)	Ⓐ
Ⓑ	No U-Turn Sign (R3-4)	Ⓑ

2070L TIMING CHART

FEATURE	PHASE 2	PHASE 4	PHASE 5	PHASE 6
Min Green 1 *	12	7	7	12
Extension 1 *	2.0	1.0	1.0	2.0
Max Green 1 *	60	25	15	60
Yellow Clearance	4.7	3.0	3.0	4.3
Red Clearance	1.1	2.4	2.9	1.3
Walk 1 *	–	–	–	–
Don't Walk 1	–	–	–	–
Seconds Per Actuation *	–	–	–	–
Max Variable Initial *	–	–	–	–
Time Before Reduction *	–	–	–	–
Time To Reduce *	–	–	–	–
Minimum Gap	–	–	–	–
Recall Mode	MIN RECALL	–	–	MIN RECALL
Vehicle Call Memory	YELLOW	–	–	YELLOW
Dual Entry	–	–	–	–
Simultaneous Gap	ON	ON	ON	ON

* These values may be field adjusted. Do not adjust Min Green and Extension times for phases 2 and 6 lower than what is shown. Min Green for all other phases should not be lower than 4 seconds.

Signal Upgrade - Temporary Signal 1 - TCP Phase II

Prepared in the Offices of: Traffic Engineering and Safety Systems Branch, Signal and Geometrics Section, Division of Highways, State of North Carolina, Department of Transportation
122 N. McDowell St., Raleigh, NC 27603

SCALE 1"=40' (0 – 40)

NC 191 (Brevard Road) at I-26 Westbound Ramp

Division 13 Buncombe County Asheville

PLAN DATE: February 2008 REVIEWED BY:
PREPARED BY: I. O. Umozurike REVIEWED BY:

REVISIONS	INIT.	DATE

SEAL: NORTH CAROLINA PROFESSIONAL SEAL 24393 ENGINEER TIMOTHY J. WILLIAMS

SIGNATURE T. J. Williams DATE 2/20/08

SIG. INVENTORY NO. 13-0646 T1

19-FEB-2008 13:47
s:\ts_signals\workgroups\ip projects\u3601\signals\designs\signals\13-0646\13-0646_sig_dsn_2008mmdd.dgn
ioumozurike

PROJECT REFERENCE NO.	SHEET NO.
U-3601	Sig.3

EDI MODEL 2010ECL-NC CONFLICT MONITOR PROGRAMMING DETAIL

(remove jumpers and set switches as shown)

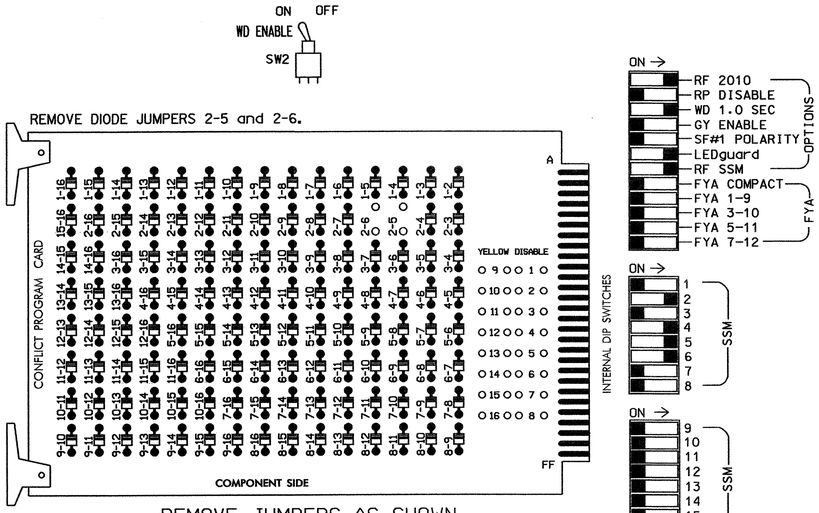

REMOVE JUMPERS AS SHOWN

NOTES:

1. Card is provided with all diode jumpers in place. Removal of any jumper allows its channels to run concurrently.
2. Make sure jumpers SEL2-SEL5 are present on the monitor board.

■ = DENOTES POSITION OF SWITCH

NOTES

1. To prevent "flash-conflict" problems, insert red flash program blocks for all unused vehicle load switches in the output file. The installer shall verify that signal heads flash in accordance with the Signal Plans.
2. Ensure that Red Enable is active at all times during normal operation. To prevent Red Failures on unused monitor channels, tie unused red monitor inputs 1,3,7,8, 9,10,11,12,13,14,15 and 16 to load switch AC+ per the cabinet manufacturer's instructions.
3. Program phases 2 and 6, on the controller unit, for Start Up In Green.
4. Enable Simultaneous Gap-Out, on the controller unit, for all phases.
5. The cabinet and controller are part of the NC 191 Brevard Closed Loop System.

EQUIPMENT INFORMATION

CONTROLLER.....CONTRACTOR SUPPLIED 2070L
CABINET.....CONTRACTOR SUPPLIED 332
SOFTWARE.....ECONOLITE OASIS
CABINET MOUNT.....BASE
OUTPUT FILE POSITIONS...12
LOAD SWITCHES USED.....S2,S4,S5,S6
PHASES USED.....2,4,5,6
OVERLAPS.....NONE

SIGNAL HEAD HOOK-UP CHART

LOAD SWITCH NO.	S1	S2	S2P	S3	S4	S4P	S5	S6	S6P	S7	S8	S8P
PHASE	1	2	2 PED	3	4	4 PED	5	6	6 PED	7	8	8 PED
SIGNAL HEAD NO.	NU	21,22	NU	NU	41,42	NU	51,52	61,62	NU	NU	NU	NU
RED		128			101			134				
YELLOW		129			102			135				
GREEN		130			103			136				
RED ARROW							131					
YELLOW ARROW							132					
GREEN ARROW							133					

NU = Not Used

INPUT FILE POSITION LAYOUT

(front view)

		1	2	3	4	5	6	7	8	9	10	11	12	13	14
FILE "I"	U	SLOT	ø2 2A	SLOT	SLOT	SLOT	ø4 4A	SLOT	SLOT	SYS. DET. S1	SLOT	SLOT	SLOT	SLOT	FS DC ISOLATOR
	L	EMPTY	ø2 2B	EMPTY	EMPTY	EMPTY	NOT USED	EMPTY	EMPTY	SYS. DET. S2	EMPTY	EMPTY	EMPTY	EMPTY	ST DC ISOLATOR
FILE "J"	U	SLOT	ø5 5A	NOT USED	ø6 6C,6D	SLOT	SLOT	SLOT	SLOT	SLOT	SLOT	SLOT	SLOT	SLOT	SLOT
	L	EMPTY	ø5 5B	ø6 6B	NOT USED	EMPTY	EMPTY	EMPTY	EMPTY	EMPTY	EMPTY	EMPTY	EMPTY	EMPTY	EMPTY

EX.: 1A, 2A, ETC. = LOOP NO.'S

FS = FLASH SENSE
ST = STOP TIME

INPUT FILE CONNECTION & PROGRAMMING CHART

LOOP NO.	LOOP TERMINAL	INPUT FILE POS.	PIN NO.	INPUT ASSIGNMENT NO.	DETECTOR NO.	NEMA PHASE	CALL	EXTEND	FULL TIME DELAY	STRETCH TIME	DELAY TIME
2A	TB2-5,6	I2U	39	1	2	2	Y	Y		0.5	
2B	TB2-7,8	I2L	43	5	12	2	Y	Y			
4A	TB4-9,10	I6U	41	3	4	4	Y	Y			5
* S1	TB6-9,10	I9U	60	22	11	SYS					
* S2	TB6-11,12	I9L	62	24	13	SYS					
5A	TB3-5,6	J2U	40	2	6	5	Y	Y			
5B	TB3-7,8	J2L	44	6	16	5	Y	Y			
6B	TB3-11,12	J3L	77	39	46	6	Y	Y		1.8	
6C,6D	TB5-1,2	J4U	48	10	26	6	Y	Y			

* SYSTEM DETECTOR ONLY. REMOVE THE VEHICLE PHASE ASSIGNED TO THIS DETECTOR IN THE DEFAULT PROGRAMMING.

INPUT FILE POSITION LEGEND: J2L
FILE J
SLOT 2
LOWER

THIS ELECTRICAL DETAIL IS FOR
THE SIGNAL DESIGN: 13-0646 T1
DESIGNED: February 2008
SEALED: 02-20-08
REVISED: N/A

Signal Upgrade - Temp. 1

ELECTRICAL AND PROGRAMMING DETAILS FOR:

Prepared in the Offices of:
Traffic Engineering and Safety Systems Branch
Signal Management Section
750 N. Greenfield Pwky, Garner, NC 27529

NC 191 (Brevard Road)
at
I-26 Westbound Ramp

Division 13 Buncombe County Asheville

PLAN DATE: February 2008	REVIEWED BY: JTR		
PREPARED BY: James Peterson	REVIEWED BY:		
REVISIONS		INIT.	DATE

SEAL
NORTH CAROLINA PROFESSIONAL SEAL 008453 ENGINEER JOHN T. ROWE, JR.
SIGNATURE DATE 2-28-08
SIG. INVENTORY NO. 13-0646 T1

28-FEB-2008 11:41
s:\traffic_control\work\groups\sig mon\peterson\13064 6_sm_ele_xxx.dgn
jpeterson

PROJECT REFERENCE NO.	SHEET NO.
U-3601	Sig.4

3 Phase
Fully Actuated
(NC 191 Closed Loop System)

PHASING DIAGRAM

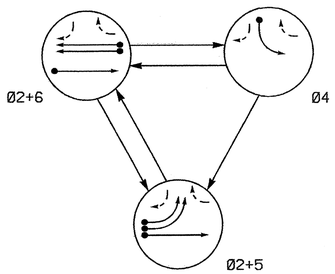

PHASING DIAGRAM DETECTION LEGEND

- DETECTED MOVEMENT
- UNDETECTED MOVEMENT (OVERLAP)
- UNSIGNALIZED MOVEMENT
- PEDESTRIAN MOVEMENT

TABLE OF OPERATION

SIGNAL FACE	PHASE 02+5	PHASE 02+6	PHASE 04	FLASH
21, 22	G	G	R	Y
41, 42	R	R	G	R
51, 52	~~R~~	~~R~~	~~R~~	~~R~~
61, 62	R	G	R	Y

SIGNAL FACE I.D.

Denotes L.E.D.

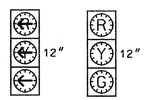

51, 52 — 21, 22, 41, 42, 61, 62

2070L LOOP & DETECTOR INSTALLATION

INDUCTIVE LOOPS					DETECTOR PROGRAMMING							
LOOP	SIZE (FT)	DISTANCE FROM STOPBAR (FT)	TURNS	NEW LOOP	PHASE	CALLING	EXTENSION	FULL TIME DELAY	STRETCH TIME	DELAY TIME	SYSTEM LOOP	NEW CARD
2A	6X6	230	5	–	2	Y	Y	–	0.5	–	–	–
2B	6X6	90	4	–	2	Y	Y	–	–	–	–	–
4A	6X60	0	2-4-2	–	4	Y	Y	–	–	5	–	–
5A	6X60	0	2-4-2	–	5	Y	Y	–	–	–	–	–
5B	6X60	0	2-4-2	–	5	Y	Y	–	–	–	–	–
6A	6X6	300	5	Y	6	Y	Y	–	–	–	–	–
S1	6X6	+150	4	–	–	–	–	–	–	–	Y	–
S2	6X6	+150	4	–	–	–	–	–	–	–	Y	–

NOTES

1. Refer to "Roadway Standard Drawings NCDOT" dated July 2006 and "Standard Specifications for Roads and Structures" dated July 2006.
2. Do not program signal for late night flashing operation unless otherwise directed by the Engineer.
3. Phase 5 may be lagged.
4. Reposition existing signal heads numbered 61 & 62.
5. Set all detector units to presence mode.
6. Maximum times shown in timing chart are for free-run operation only. Coordinated signal system timing values supersede these values.
7. Closed loop system data: Master Asset #11302, Controller Asset #0646.

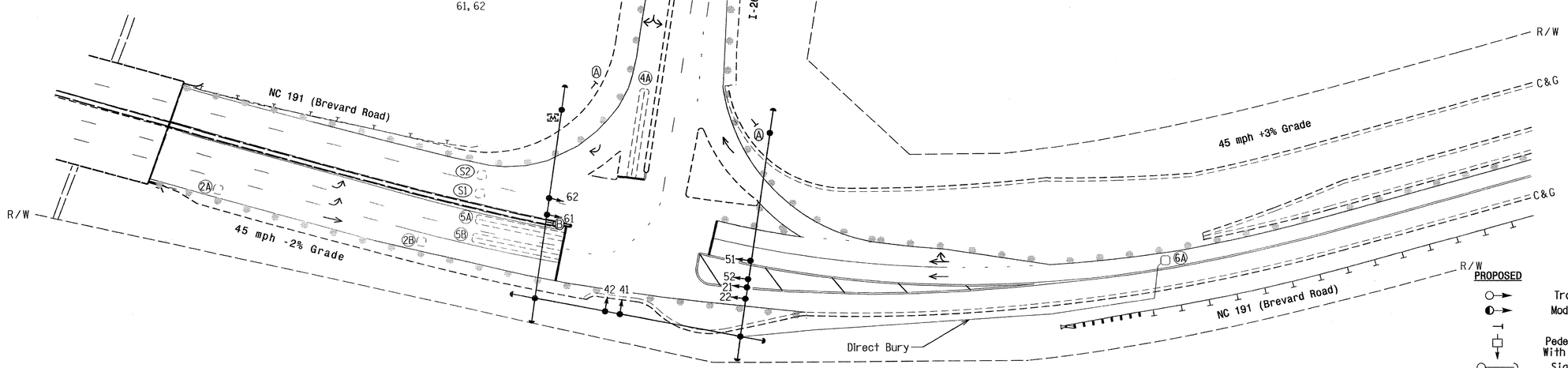

LEGEND

PROPOSED		EXISTING
	Traffic Signal Head	
	Modified Signal Head	N/A
	Sign	
	Pedestrian Signal Head With Push Button & Sign	
	Signal Pole with Guy	
	Signal Pole with Sidewalk Guy	
	Inductive Loop Detector	
	Controller & Cabinet	
	Junction Box	
	2-in Underground Conduit	
N/A	Right of Way with Marker	
	Directional Arrow	
	Pavement Marking Arrow	
	Construction Zone Drums	
	Type III Barricade	
N/A	Guardrail	
Ⓐ	"YIELD" Sign (R1-2)	Ⓐ
Ⓑ	No U-Turn Sign (R3-4)	Ⓑ

2070L TIMING CHART

FEATURE	PHASE 2	PHASE 4	PHASE 5	PHASE 6
Min Green 1 *	12	7	7	12
Extension 1 *	2.0	1.0	1.0	6.0
Max Green 1 *	60	25	15	60
Yellow Clearance	4.7	3.0	3.0	4.3
Red Clearance	1.4	3.1	3.1	1.4
Walk 1 *	-	-	-	-
Don't Walk 1	-	-	-	-
Seconds Per Actuation *	-	-	-	2.5
Max Variable Initial *	-	-	-	34
Time Before Reduction *	-	-	-	15
Time To Reduce *	-	-	-	30
Minimum Gap	-	-	-	3.0
Recall Mode	MIN RECALL	-	-	MIN RECALL
Vehicle Call Memory	YELLOW	-	-	YELLOW
Dual Entry	-	-	-	-
Simultaneous Gap	ON	ON	ON	ON

* These values may be field adjusted. Do not adjust Min Green and Extension times for phases 2 and 6 lower than what is shown. Min Green for all other phases should not be lower than 4 seconds.

Signal Upgrade - Temporary Signal 2 - TCP Phase II

Prepared in the Offices of:
Traffic Engineering and Safety Systems Branch
Signals and Geometrics Section
122 N. McDowell St., Raleigh, NC 27603

NC 191 (Brevard Road)
at
I-26 Westbound Ramp

Division 13 Buncombe County Asheville

PLAN DATE: February 2008 REVIEWED BY:
PREPARED BY: I. O. Umozurike REVIEWED BY:

SCALE 0 40 1"=40'

REVISIONS	INIT.	DATE

SEAL
NORTH CAROLINA PROFESSIONAL SEAL 24393 ENGINEER TIMOTHY J. WILLIAMS
SIGNATURE 2/20/08 DATE
SIG. INVENTORY NO. 13-0646 T2

13-FEB-2008 13:48
s:\its signals\workgroups\tip projects\u-3601\signals\designsignals\13-0646\13-0646_sig_dsn_2008mod.dgn
io.umozurike

PROJECT REFERENCE NO.	SHEET NO.
U-3601	Sig. 5

EDI MODEL 2010ECL-NC CONFLICT MONITOR PROGRAMMING DETAIL

(remove jumpers and set switches as shown)

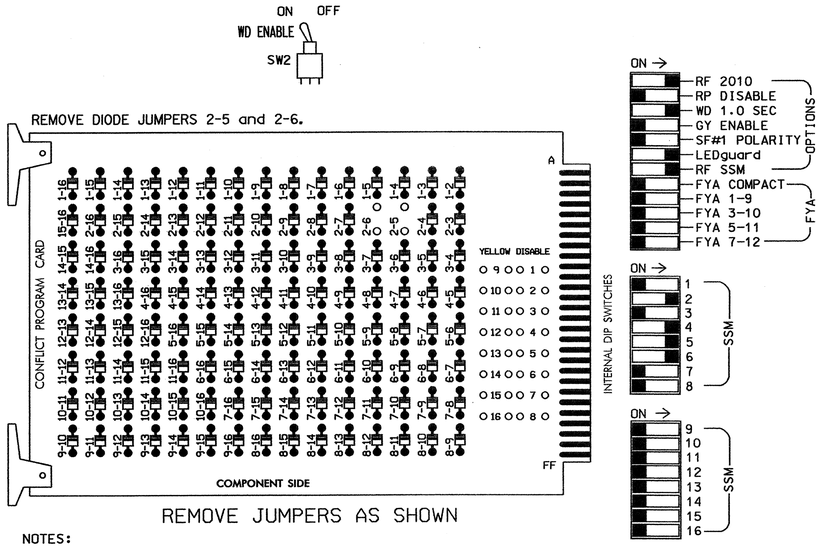

REMOVE JUMPERS AS SHOWN

NOTES:

1. Card is provided with all diode jumpers in place. Removal of any jumper allows its channels to run concurrently.
2. Make sure jumpers SEL2-SEL5 are present on the monitor board.

■ = DENOTES POSITION OF SWITCH

NOTES

1. To prevent "flash-conflict" problems, insert red flash program blocks for all unused vehicle load switches in the output file. The installer shall verify that signal heads flash in accordance with the Signal Plans.
2. Ensure that Red Enable is active at all times during normal operation. To prevent Red Failures on unused monitor channels, tie unused red monitor inputs 1,3,7,8, 9,10,11,12,13,14,15 and 16 to load switch AC+ per the cabinet manufacturer's instructions.
3. Program phases 2 and 6, on the controller unit, for Start Up In Green.
4. Enable Simultaneous Gap-Out, on the controller unit, for all phases.
5. Program phase 6, on the controller unit, for Variable Initial and Gap Reduction.
6. The cabinet and controller are part of the NC 191 Brevard Closed Loop System.

EQUIPMENT INFORMATION

CONTROLLER.....CONTRACTOR SUPPLIED 2070L
CABINET.....CONTRACTOR SUPPLIED 332
SOFTWARE.....ECONOLITE OASIS
CABINET MOUNT.....BASE
OUTPUT FILE POSITIONS...12
LOAD SWITCHES USED.....S2,S4,S5,S6
PHASES USED.....2,4,5,6
OVERLAPS.....NONE

SIGNAL HEAD HOOK-UP CHART

LOAD SWITCH NO.	S1	S2	S2P	S3	S4	S4P	S5	S6	S6P	S7	S8	S8P
PHASE	1	2	2 PED	3	4	4 PED	5	6	6 PED	7	8	8 PED
SIGNAL HEAD NO.	NU	21,22	NU	NU	41,42	NU	51,52	61,62	NU	NU	NU	NU
RED		128			101			134				
YELLOW		129			102			135				
GREEN		130			103			136				
RED ARROW							131					
YELLOW ARROW							132					
GREEN ARROW							133					

NU = Not Used

INPUT FILE POSITION LAYOUT

(front view)

		1	2	3	4	5	6	7	8	9	10	11	12	13	14
FILE "I"	U	SLOT	ø2 2A	SLOT	SLOT	SLOT	ø4 4A	SLOT	SLOT	SYS. DET. S1	SLOT	SLOT	SLOT	SLOT	FS DC ISOLATOR
	L	EMPTY	ø2 2B	EMPTY	EMPTY	EMPTY	NOT USED	EMPTY	EMPTY	SYS. DET. S2	EMPTY	EMPTY	EMPTY	EMPTY	ST DC ISOLATOR
FILE "J"	U	SLOT	ø5 5A	ø6 6A	SLOT	SLOT	SLOT	SLOT	SLOT	SLOT	SLOT	SLOT	SLOT	SLOT	SLOT
	L	EMPTY	ø5 5B	NOT USED	EMPTY	EMPTY	EMPTY	EMPTY	EMPTY	EMPTY	EMPTY	EMPTY	EMPTY	EMPTY	EMPTY

EX.: 1A, 2A, ETC. = LOOP NO.'S

FS = FLASH SENSE
ST = STOP TIME

INPUT FILE CONNECTION & PROGRAMMING CHART

LOOP NO.	LOOP TERMINAL	INPUT FILE POS.	PIN NO.	INPUT ASSIGNMENT NO.	DETECTOR NO.	NEMA PHASE	CALL	EXTEND	FULL TIME DELAY	STRETCH TIME	DELAY TIME
2A	TB2-5,6	I2U	39	1	2	2	Y	Y		0.5	
2B	TB2-7,8	I2L	43	5	12	2	Y	Y			
4A	TB4-9,10	I6U	41	3	4	4	Y	Y			5
* S1	TB6-9,10	I9U	60	22	11	SYS					
* S2	TB6-11,12	I9L	62	24	13	SYS					
5A	TB3-5,6	J2U	40	2	6	5	Y	Y			
5B	TB3-7,8	J2L	44	6	16	5	Y	Y			
6A	TB3-9,10	J3U	64	26	36	6	Y	Y			

* SYSTEM DETECTOR ONLY. REMOVE THE VEHICLE PHASE ASSIGNED TO THIS DETECTOR IN THE DEFAULT PROGRAMMING.

INPUT FILE POSITION LEGEND: J2L
- FILE J
- SLOT 2
- LOWER

THIS ELECTRICAL DETAIL IS FOR
THE SIGNAL DESIGN: 13-0646 T2
DESIGNED: February 2008
SEALED: 02-20-08
REVISED: N/A

Signal Upgrade - Temp. 2

ELECTRICAL AND PROGRAMMING DETAILS FOR:

Prepared in the Offices of:

Public Transportation and Safety Services Division
STATE OF NORTH CAROLINA
DEPARTMENT OF TRANSPORTATION
Signal Management Section

750 N. Greenfield Pwky, Garner, NC 27529

NC 191 (Brevard Road) at I-26 Westbound Ramp

Division 13 Buncombe County Asheville

PLAN DATE: February 2008 REVIEWED BY: JTR

PREPARED BY: James Peterson REVIEWED BY:

REVISIONS	INIT.	DATE

SEAL

NORTH CAROLINA PROFESSIONAL SEAL 008453 ENGINEER JOHN T. ROWE, JR.

SIGNATURE 2-28-08 DATE

SIG. INVENTORY NO. 13-0646 T2

28-FEB-2008 11:42
smith: signals\workgroups\sig mgm\peterson\13064G_smlele_xxx.dgn
jtpeterson

PROJECT REFERENCE NO.	SHEET NO.
U-3601	Sig.6

PHASING DIAGRAM

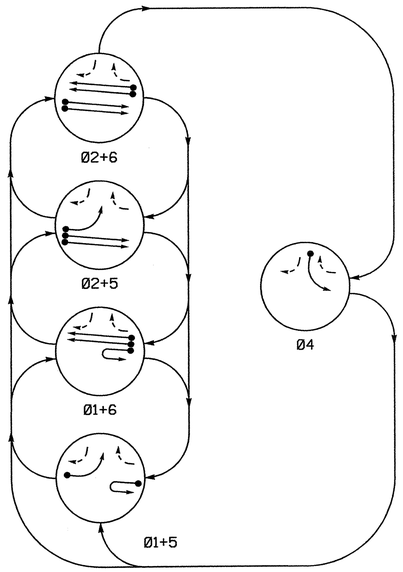

PHASING DIAGRAM DETECTION LEGEND

- DETECTED MOVEMENT
- UNDETECTED MOVEMENT (OVERLAP)
- UNSIGNALIZED MOVEMENT
- PEDESTRIAN MOVEMENT

TABLE OF OPERATION

SIGNAL FACE	PHASE Ø1+5	Ø1+6	Ø2+5	Ø2+6	Ø4	FLASH
11	←-	←-	~~R~~	~~R~~	~~R~~	~~R~~
21, 22	R	R	G	G	R	Y
41, 42	R	R	R	R	G	R
51	←-	~~R~~	←-	~~R~~	~~R~~	~~R~~
61, 62	R	G	R	G	R	Y

SIGNAL FACE I.D.

Denotes L.E.D.

11 — 21, 22
51 — 41, 42
61, 62

2070L LOOP & DETECTOR INSTALLATION

INDUCTIVE LOOPS					DETECTOR PROGRAMMING						
LOOP	SIZE (FT)	DISTANCE FROM STOPBAR (FT)	TURNS	NEW LOOP	PHASE	CALLING	EXTENSION	FULL TIME DELAY	STRETCH TIME	DELAY TIME	SYSTEM LOOP	NEW CARD
1A	6X40	0	2-4-2	Y	1	Y	Y	—	—	—	—	Y
2A	6X6	250	5	Y	2	Y	Y	—	—	—	—	Y
2B	6X6	250	5	Y	2	Y	Y	—	—	—	—	Y
4A	6X40	0	2-4-2	Y	4	Y	Y	—	—	—	—	Y
5A	6X40	0	2-4-2	Y	5	Y	Y	—	—	—	—	Y
5B	6X6	250	5	Y	5	-	Y	—	—	—	—	Y
6A	6X6	355	5	Y	6	Y	Y	—	—	—	—	Y
6B	6X6	355	5	Y	6	Y	Y	—	—	—	—	Y
S1	6X6	+150	4	—	—	—	—	—	—	—	Y	—
S2	6X6	+150	4	—	—	—	—	—	—	—	Y	—

5 Phase
Fully Actuated
(NC 191 Brevard Road CLS)

NOTES

1. Refer to "Roadway Standard Drawings NCDOT" dated July 2006 and "Standard Specifications for Roads and Structures" dated July 2006.
2. Do not program signal for late night flashing operation unless otherwise directed by the Engineer.
3. Phase 1 or phase 5 may be lagged.
4. Set all detector units to presence mode.
5. Maximum times shown in timing chart are for free-run operation only. Coordinated signal system timing values supersede these values.
6. Closed loop system data: Master Asset #11302. Controller Asset #0646.

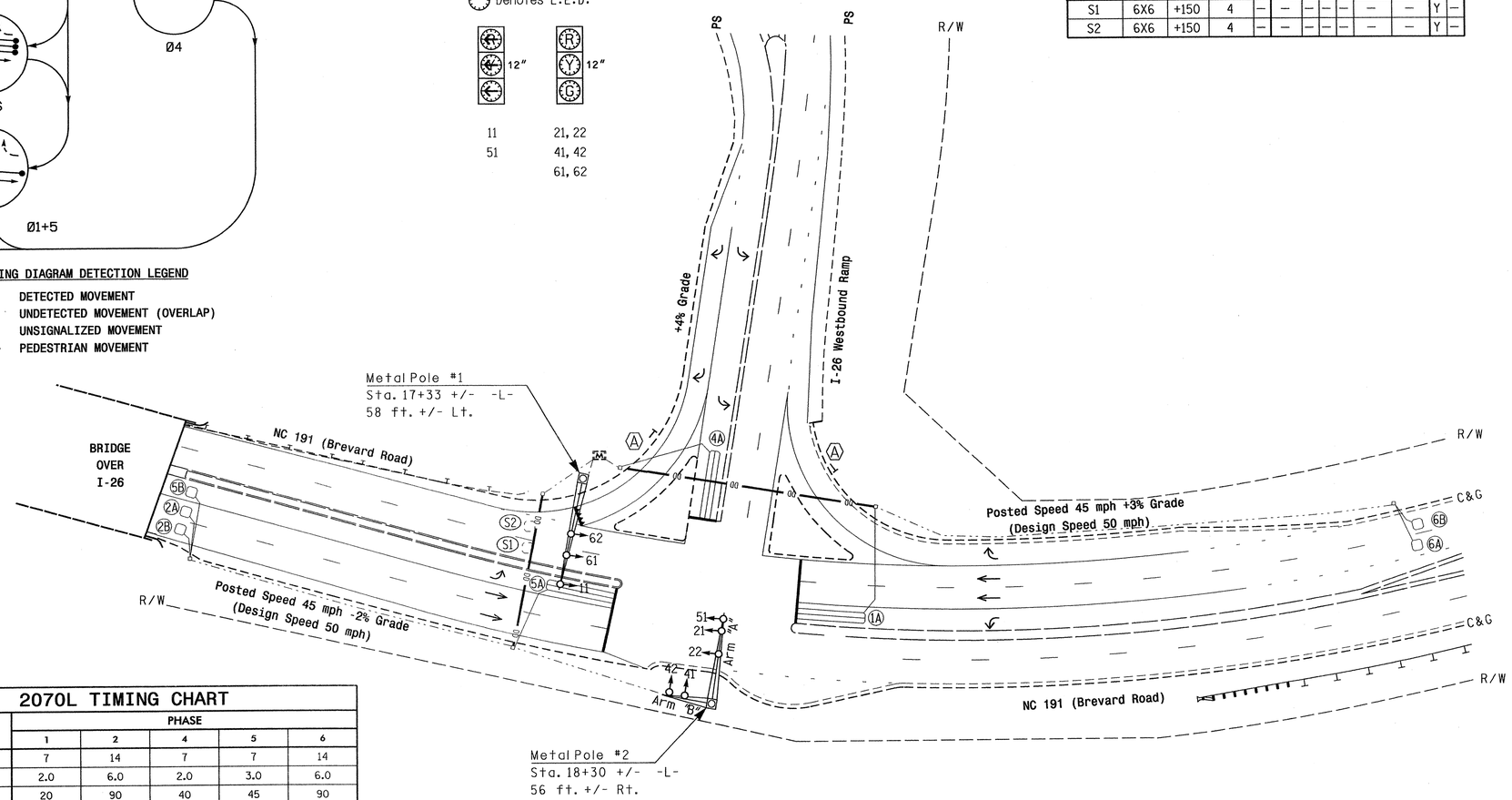

LEGEND

PROPOSED		EXISTING
	Traffic Signal Head	
	Modified Signal Head	N/A
	Sign	
	Pedestrian Signal Head With Push Button & Sign	
	Signal Pole with Guy	
	Signal Pole with Sidewalk Guy	
	Inductive Loop Detector	
	Controller & Cabinet	
	Junction Box	
	2-in Underground Conduit	
N/A	Right of Way	
	Directional Arrow	
	Pavement Marking Arrow	
DD	Directional Drill (2-2" Polyethylene Conduits)	N/A
	Metal Pole with Mastarm	
	"YIELD" Sign (R1-2)	

2070L TIMING CHART

FEATURE	PHASE 1	2	4	5	6
Min Green 1 *	7	14	7	7	14
Extension 1 *	2.0	6.0	2.0	3.0	6.0
Max Green 1 *	20	90	40	45	90
Yellow Clearance	3.0	5.0	3.0	3.0	4.6
Red Clearance	2.8	1.5	2.9	2.4	1.4
Walk 1 *	-	-	-	-	-
Don't Walk 1	-	-	-	-	-
Seconds Per Actuation *	-	1.5	-	-	1.5
Max Variable Initial *	-	30	-	-	40
Time Before Reduction *	-	20	-	-	20
Time To Reduce *	-	40	-	-	40
Minimum Gap	-	2.2	-	-	3.0
Recall Mode	-	MIN RECALL	-	-	MIN RECALL
Vehicle Call Memory	-	YELLOW	-	-	YELLOW
Dual Entry	-	-	-	-	-
Simultaneous Gap	ON	ON	ON	ON	ON

* These values may be field adjusted. Do not adjust Min Green and Extension times for phases 2 and 6 lower than what is shown. Min Green for all other phases should not be lower than 4 seconds.

Signal Upgrade - Final

Prepared in the Offices of:
Traffic Engineering and Safety Systems Branch
STATE OF NORTH CAROLINA DEPARTMENT OF TRANSPORTATION
Signals and Geometrics Section
750 N. Greenfield Pkwy, Garner, NC 27529

SCALE 0 40 1"=40'

NC 191 (Brevard Road)
At
I-26 Westbound Ramp

Division 13 Buncombe County Asheville

PLAN DATE: January 2008 REVIEWED BY:
PREPARED BY: I. O. Umozurike REVIEWED BY:

REVISIONS	INIT.	DATE

SEAL
NORTH CAROLINA PROFESSIONAL SEAL 24393 ENGINEER TIMOTHY D. WILLIAMS
SIGNATURE 2/20/08 DATE
SIG. INVENTORY NO. 13-0646

27-FEB-2008 11:03
s:\its signals\workgroups\tip projects\u-3601\signals\designs\signals\13-0646\13-0646_sig_dsn_2008mmdd.dgn
iumozurike

PROJECT REFERENCE NO.	SHEET NO.
U-3601	Sig.7

EDI MODEL 2010ECL-NC CONFLICT MONITOR PROGRAMMING DETAIL

(remove jumpers and set switches as shown)

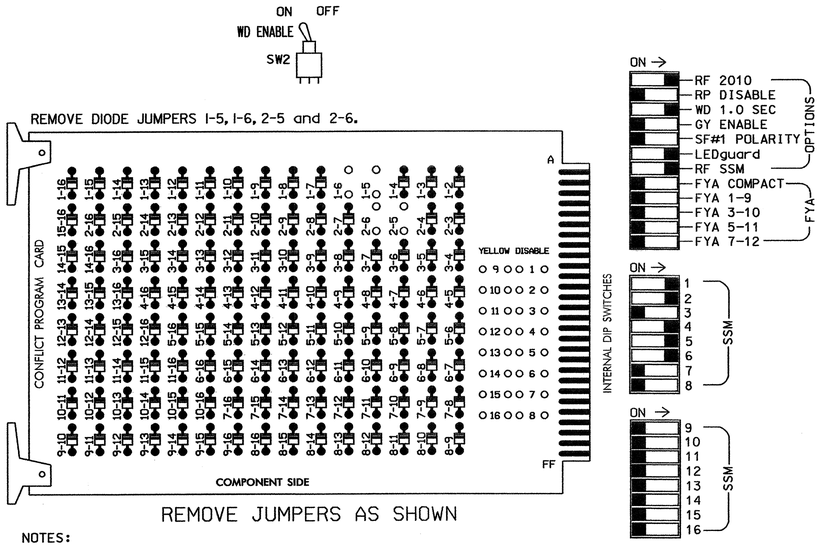

NOTES:

1. Card is provided with all diode jumpers in place. Removal of any jumper allows its channels to run concurrently.
2. Make sure jumpers SEL2–SEL5 are present on the monitor board.

■ = DENOTES POSITION OF SWITCH

NOTES

1. To prevent "flash-conflict" problems, insert red flash program blocks for all unused vehicle load switches in the output file. The installer shall verify that signal heads flash in accordance with the Signal Plans.
2. Ensure that Red Enable is active at all times during normal operation. To prevent Red Failures on unused monitor channels, tie unused red monitor inputs 3,7,8, 9,10,11,12,13,14,15 and 16 to load switch AC+ per the cabinet manufacturer's instructions.
3. Program phases 2 and 6, on the controller unit, for Start Up In Green.
4. Enable Simultaneous Gap-Out, on the controller unit, for all phases.
6. Program phases 2 and 6, on the controller unit, for Variable Initial and Gap Reduction.
7. The cabinet and controller are part of the NC 191 Brevard Closed Loop System.

EQUIPMENT INFORMATION

CONTROLLER.....CONTRACTOR SUPPLIED 2070L
CABINET.....CONTRACTOR SUPPLIED 332
SOFTWARE.....ECONOLITE OASIS
CABINET MOUNT.....BASE
OUTPUT FILE POSITIONS...12
LOAD SWITCHES USED.....S1,S2,S4,S5,S6
PHASES USED.....1,2,4,5,6
OVERLAPS.....NONE

SIGNAL HEAD HOOK-UP CHART

LOAD SWITCH NO.	S1	S2	S2P	S3	S4	S4P	S5	S6	S6P	S7	S8	S8P
PHASE	1	2	2 PED	3	4	4 PED	5	6	6 PED	7	8	8 PED
SIGNAL HEAD NO.	11	21,22	NU	NU	41,42	NU	51	61,62	NU	NU	NU	NU
RED		128			101			134				
YELLOW		129			102			135				
GREEN		130			103			136				
RED ARROW	125						131					
YELLOW ARROW	126						132					
GREEN ARROW	127						133					

NU = Not Used

INPUT FILE POSITION LAYOUT

(front view)

		1	2	3	4	5	6	7	8	9	10	11	12	13	14
FILE "I"	U	Ø 1	Ø 2	SLOT	SLOT	SLOT	Ø 4	SLOT	SLOT	SYS. DET. S1	SLOT	SLOT	SLOT	SLOT	FS
		1A	2A				4A								DC ISOLATOR
	L	NOT USED	Ø 2	EMPTY	EMPTY	EMPTY	NOT USED	EMPTY	EMPTY	SYS. DET. S2	EMPTY	EMPTY	EMPTY	EMPTY	ST
			2B												DC ISOLATOR
FILE "J"	U	SLOT	Ø 5	Ø 6	SLOT	SLOT	SLOT	SLOT	SLOT	SLOT	SLOT	SLOT	SLOT	SLOT	SLOT
		EMPTY	5A	6A											
	L		Ø 5	Ø 6	EMPTY	EMPTY	EMPTY	EMPTY	EMPTY	EMPTY	EMPTY	EMPTY	EMPTY	EMPTY	EMPTY
			5B	6B											

EX.: 1A, 2A, ETC. = LOOP NO.'S

FS = FLASH SENSE
ST = STOP TIME

INPUT FILE CONNECTION & PROGRAMMING CHART

LOOP NO.	LOOP TERMINAL	INPUT FILE POS.	PIN NO.	INPUT ASSIGNMENT NO.	DETECTOR NO.	NEMA PHASE	CALL	EXTEND	FULL TIME DELAY	STRETCH TIME	DELAY TIME
1A	TB2-1,2	I1U	56	18	1	1	Y	Y			
2A	TB2-5,6	I2U	39	1	2	2	Y	Y			
2B	TB2-7,8	I2L	43	5	12	2	Y	Y			
4A	TB4-9,10	I6U	41	3	4	4	Y	Y			
* S1	TB6-9,10	I9U	60	22	11	SYS					
* S2	TB6-11,12	I9L	62	24	13	SYS					
5A	TB3-5,6	J2U	40	2	6	5	Y	Y			
5B	TB3-7,8	J2L	44	6	16	5		Y			
6A	TB3-9,10	J3U	64	26	36	6	Y	Y			
6B	TB3-11,12	J3L	77	39	46	6	Y	Y			

* SYSTEM DETECTOR ONLY. REMOVE THE VEHICLE PHASE ASSIGNED TO THIS DETECTOR IN THE DEFAULT PROGRAMMING.

INPUT FILE POSITION LEGEND: J2L
FILE J
SLOT 2
LOWER

THIS ELECTRICAL DETAIL IS FOR
THE SIGNAL DESIGN: 13-0646
DESIGNED: January 2008
SEALED: 02-20-08
REVISED: N/A

Signal Upgrade - Final

ELECTRICAL AND PROGRAMMING DETAILS FOR:

Prepared in the Offices of:
Traffic Engineering and Safety Systems Branch
Signal Management Section
750 N. Greenfield Pwky, Garner, NC 27529

NC 191 (Brevard Road)
at
I-26 Westbound Ramp

Division 13 Buncombe County Asheville

PLAN DATE: February 2008 REVIEWED BY: JTR
PREPARED BY: James Peterson REVIEWED BY:

REVISIONS	INIT.	DATE

SEAL
NORTH CAROLINA PROFESSIONAL SEAL 008453 ENGINEER JOHN T. ROWE, JR.
John T. Rowe Jr. 2-28-08
SIGNATURE DATE
SIG. INVENTORY NO. 13-0646

26-FEB-2008 11:43
s:\eng_ts\traffic\networkgroups\sig mon\petersonj\13-0646_sample_xxx.dgn
jpeterson

SPECIAL NOTE

The contractor is responsible for verifying that the mast arm attachment height (H1) will provide the "Design Height" clearance from the roadway before submitting final shop drawings for approval. Verify elevation data below which was obtained by field measurement or from available project survey data.

Elevation Data for Mast Arm Attachment (H1)

Elevation Differences for:	Pole 1
Baseline reference point at ℄ Foundation @ ground level	0.0 ft.
Elevation difference at High point of roadway surface	+3.1 ft.
Elevation difference at Edge of travelway or face of curb	N/A

MAST ARM LOADING SCHEDULE

LOADING SYMBOL	DESCRIPTION	AREA	SIZE	WEIGHT
	SIGNAL HEAD 12"-5 SECTION-WITH BACKPLATE AND ASTRO-BRAC	16.3 S.F.	42.0" W X 56.0" L	103 LBS
	SIGNAL HEAD 12"-4 SECTION (VERTICAL)-WITH BACKPLATE AND ASTRO-BRAC	11.5 S.F.	25.5" W X 66.0" L	74 LBS
	SIGNAL HEAD 12"-3 SECTION-WITH BACKPLATE AND ASTRO-BRAC	9.3 S.F.	25.5" W X 52.5" L	60 LBS
STREET NAME SIGN	STREET NAME SIGN RIGID MOUNTED WITH ASTRO-SIGN-BRAC	12.0 S.F.	18.0" W X 96.0" L	27 LBS

Design Loading for METAL POLE NO. 1

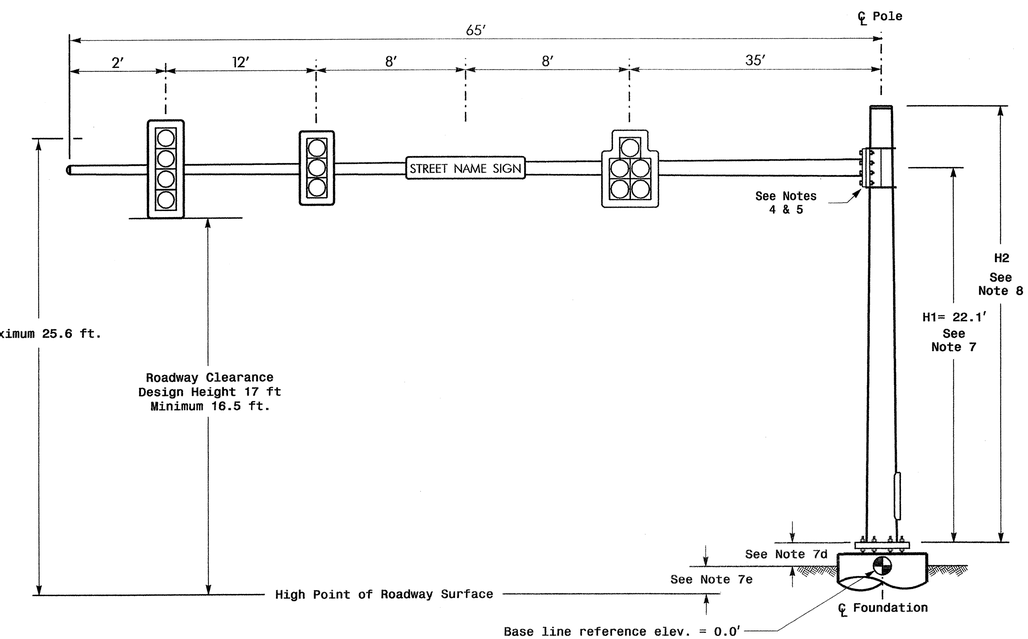

Elevation View

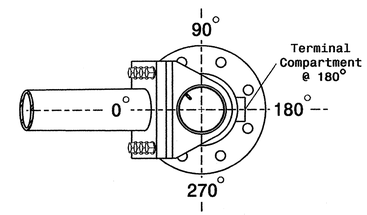

POLE RADIAL ORIENTATION

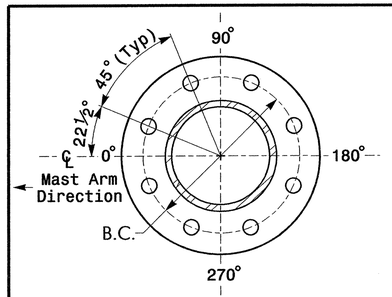

8 BOLT BASE PLATE DETAIL

See Note 6

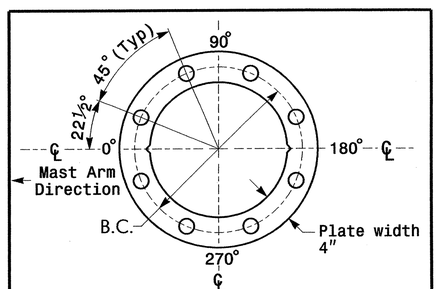

BASE PLATE TEMPLATE & ANCHOR BOLT LOCK PLATE DETAIL

For 8 Bolt Base Plate

NOTES

Design Reference Material

1. Design the traffic signal structure and foundation in accordance with:
   - The 4th Edition 2001 AASHTO "Standard Specifications for Structural Supports for Highway Signs, Luminaires, and Traffic Signals, including all of the latest interim revisions.
   - The 2006 NCDOT "Standard Specifications for Roads and Structures". The latest addenda to these specifications can be found in the traffic signal project special provisions.
   - The 2006 NCDOT Roadway Standard Drawings.
   - The traffic signal project plans and special provisions.

Design Requirements

2. Design the traffic signal structure using the loading conditions shown in the elevation views. These are anticipated worst case "Design loads" and may not represent the actual loads that will be applied at the time of the installation. The contractor should refer to the traffic signal plans for the actual loads that will be applied at the time of the installation.
3. Design all signal supports using stress ratios that do not exceed 0.9.
4. The camber design for mast arm deflection should provide an appearance of a low pitched arch where the tip or the free end of the mast arm does not deflect below horizontal when fully loaded.
5. A clamp-type bolted mast arm-to-pole connection may be used instead of the welded ring stiffened box connection shown as long as the connection meets all of the design requirements.
6. Design base plate with 8 anchor bolt holes. Provide 2 inch x 60 inch anchor bolts.
7. The mast arm attachment height (H1) shown is based on the following design assumptions:
   a. Mast arm slope and deflection are not considered in determining the arm attachment height as they are assumed to offset each other.
   b. Signal heads attached to the mast arm are rigid mounted and vertically centered on the arm.
   c. The roadway clearance height for design is as shown in the elevation views.
   d. The top of the pole base plate is .75 feet above the ground elevation.
   e. Refer to the Elevation Data chart for elevation differences between the proposed foundation ground level and the high point on the roadway.
8. The pole manufacturer will determine the total height (H2) of each pole using the greater of the following:
   - Mast arm attachment height (H1) plus 2 feet, or
   - H1 plus ½ of the total height of the mast arm attachment assembly plus 1 foot.
9. If pole location adjustments are required, the contractor must gain approval from the engineer as this may affect the mast arm lengths and arm attachment heights. The contractor may contact the Signals & Geometrics Structural Engineer for assistance at (919) 773-2800.
10. The contractor is responsible for verifying that the mast arm length shown will allow proper positioning of the signal heads over the roadway.
11. The contractor is responsible for providing soil penetration testing data (SPT) to the pole manufacturer so site specific foundations can be designed.

NCDOT Wind Zone 4 (90 mph)

Prepared in the Offices of:
Traffic Engineering and Safety Systems Branch
Signals and Geometrics Section
750 N. Greenfield Pkwy, Garner, NC 27529

NC 191 (Brevard Road)
At
I-26 Westbound Ramp

Division 13 Buncombe County Asheville

PLAN DATE: February 2008 REVIEWED BY:
PREPARED BY: I.O.Umozurike REVIEWED BY:

SCALE 0 N/A N/A

REVISIONS	INIT.	DATE

SEAL
NORTH CAROLINA PROFESSIONAL SEAL 24393 ENGINEER TIMOTHY W. WILLIAMS

SIGNATURE T. D. Williams DATE 3/4/08.

SIG. INVENTORY NO. 13-0646

04-MAR-2008 09:37
s:\ws_group\signals\projects\u-3601\signals\designsignals\13-0646\13-0646_sig_mp_2008xxxx.dgn
tiumozurike

Design Loading for METAL POLE NO. 2, MAST ARM A

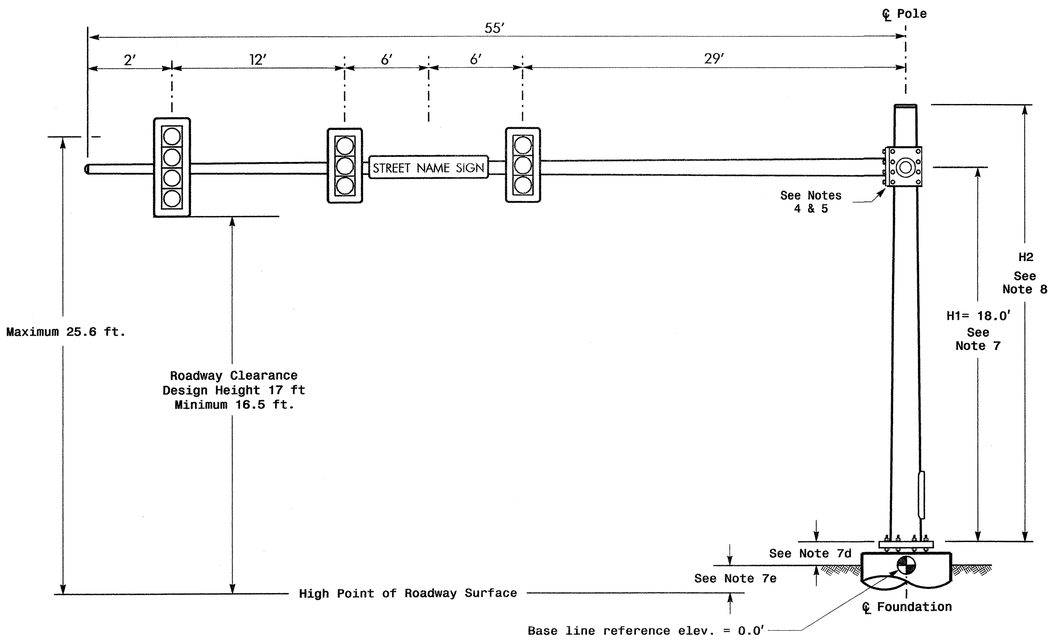

Elevation View @ 270°

Design Loading for METAL POLE NO. 2, MAST ARM B

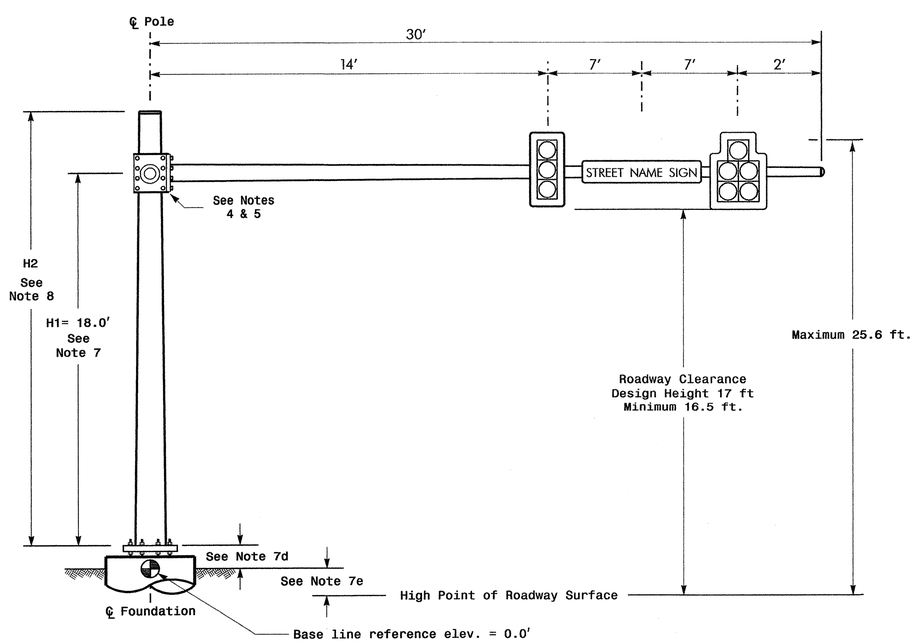

Elevation View @ 0°

SPECIAL NOTE

The contractor is responsible for verifying that the mast arm attachment height (H1) will provide the "Design Height" clearance from the roadway before submitting final shop drawings for approval. Verify elevation data below which was obtained by field measurement or from available project survey data.

Elevation Data for Mast Arm Attachment (H1)

Elevation Differences for:	Arm "A"	Arm "B"
Baseline reference point at ℄ Foundation @ ground level	0.0 ft.	0.0 ft.
Elevation difference at High point of roadway surface	-1.0 ft.	0.0 ft.
Elevation difference at Edge of travelway or face of curb	N/A	N/A

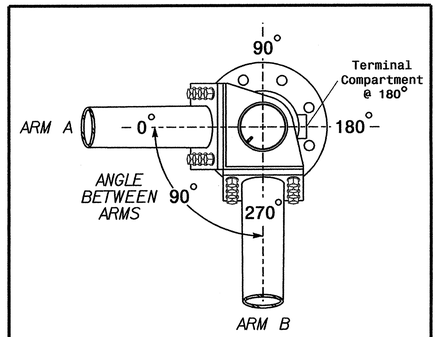

POLE RADIAL ORIENTATION

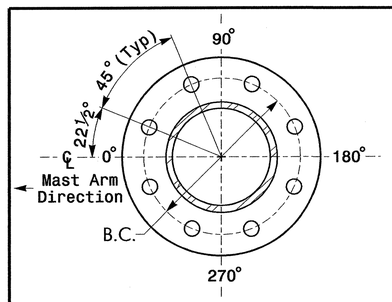

8 BOLT BASE PLATE DETAIL

See Note 6

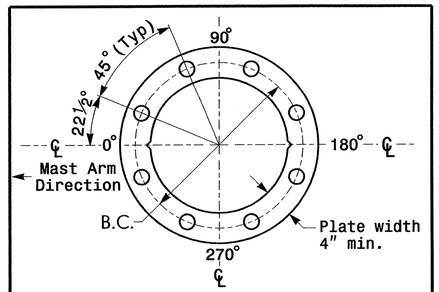

BASE PLATE TEMPLATE & ANCHOR BOLT LOCK PLATE DETAIL

For 8 Bolt Base Plate

MAST ARM LOADING SCHEDULE

LOADING SYMBOL	DESCRIPTION	AREA	SIZE	WEIGHT
	SIGNAL HEAD 12"-5 SECTION-WITH BACKPLATE AND ASTRO-BRAC	16.3 S.F.	42.0" W X 56.0" L	103 LBS
	SIGNAL HEAD 12"-4 SECTION (VERTICAL)-WITH BACKPLATE AND ASTRO-BRAC	11.5 S.F.	25.5" W X 66.0" L	74 LBS
	SIGNAL HEAD 12"-3 SECTION-WITH BACKPLATE AND ASTRO-BRAC	9.3 S.F.	25.5" W X 52.5" L	60 LBS
STREET NAME SIGN	STREET NAME SIGN RIGID MOUNTED WITH ASTRO-SIGN-BRAC	12.0 S.F.	18.0" W X 96.0" L	27 LBS

NOTES

Design Reference Material

1. Design the traffic signal structure and foundation in accordance with:
   - The 4th Edition 2001 AASHTO "Standard Specifications for Structural Supports for Highway Signs, Luminaires, and Traffic Signals, including all of the latest interim revisions.
   - The 2006 NCDOT "Standard Specifications for Roads and Structures". The latest addenda to these specifications can be found in the traffic signal project special provisions.
   - The 2006 NCDOT Roadway Standard Drawings.
   - The traffic signal project plans and special provisions.

Design Requirements

2. Design the traffic signal structure using the loading conditions shown in the elevation views. These are anticipated worst case "Design loads" and may not represent the actual loads that will be applied at the time of the installation. The contractor should refer to the traffic signal plans for the actual loads that will be applied at the time of the installation.
3. Design all signal supports using stress ratios that do not exceed 0.9.
4. The camber design for mast arm deflection should provide an appearance of a low pitched arch where the tip or the free end of the mast arm does not deflect below horizontal when fully loaded.
5. A clamp-type bolted mast arm-to-pole connection may be used instead of the welded ring stiffened box connection shown as long as the connection meets all of the design requirements. This requires staggering the connections. Use elevation data for each arm to determine appropriate arm connection points.
6. Design base plate with 8 anchor bolt holes. Provide 2 inch x 60 inch anchor bolts.
7. The mast arm attachment height (H1) shown is based on the following design assumptions:
   a. Mast arm slope and deflection are not considered in determining the arm attachment height as they are assumed to offset each other.
   b. Signal heads attached to the mast arm are rigid mounted and vertically centered on the arm.
   c. The roadway clearance height for design is as shown in the elevation views.
   d. The top of the pole base plate is .75 feet above the ground elevation.
   e. Refer to the Elevation Data chart for elevation differences between the proposed foundation ground level and the high point on the roadway.
8. The pole manufacturer will determine the total height (H2) of the pole using the greater of the following:
   - Mast arm attachment height (H1) plus 2 feet, or
   - H1 plus ½ of the total height of the mast arm attachment assembly plus 1 foot.
9. If pole location adjustments are required, the contractor must gain approval from the engineer as this may affect the mast arm lengths and arm attachment heights. The contractor may contact the Signals & Geometrics Structural Engineer for assistance at (919) 773-2800.
10. The contractor is responsible for verifying that the mast arm lengths shown will allow proper positioning of the signal heads over the roadway.
11. The contractor is responsible for providing soil penetration testing data (SPT) to the pole manufacturer so site specific foundations can be designed.

NCDOT Wind Zone 4 (90 mph)

Prepared in the Offices of: Traffic Engineering and Safety Systems Branch, Signals and Geometric Section, Department of Transportation, State of North Carolina
750 N. Greenfield Pkwy, Garner, NC 27529

NC 191 (Brevard Road)
At
I-26 Westbound Ramp

Division 13 Buncombe County Asheville

PLAN DATE: February 2008 REVIEWED BY:
PREPARED BY: I.O. Umozurike REVIEWED BY:

SCALE 0 N/A N/A

REVISIONS	INIT.	DATE

SEAL
NORTH CAROLINA PROFESSIONAL SEAL 24393 ENGINEER TIMOTHY D. WILLIAMS
T.D. Williams 3/4/08
SIGNATURE DATE
SIG. INVENTORY NO. 13-0646

04-MAR-2008 09:40
s:\its signals\workgroups\tip projects\u-3601\signals\design\signals\13-0646\130646.sig_mp_2008xxx.dgn
iomozurike

PROJECT REFERENCE NO.	SHEET NO.
U-3601	Sig.10

PHASING DIAGRAM

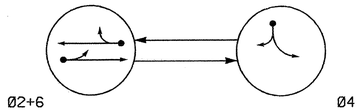

PHASING DIAGRAM DETECTION LEGEND

- DETECTED MOVEMENT
- UNDETECTED MOVEMENT (OVERLAP)
- UNSIGNALIZED MOVEMENT
- PEDESTRIAN MOVEMENT

TABLE OF OPERATION

SIGNAL FACE	PHASE Ø2+6	PHASE Ø4	PHASE FLASH
21, 22, 23	G	R	Y
41, 42	R	G	R
61,62	G	R	Y

2070L LOOP & DETECTOR INSTALLATION

INDUCTIVE LOOPS					DETECTOR PROGRAMMING							
LOOP	SIZE (FT)	DISTANCE FROM STOPBAR (FT)	TURNS	NEW LOOP	PHASE	CALLING	EXTENSION	FULL TIME DELAY	STRETCH TIME	DELAY TIME	SYSTEM LOOP	NEW CARD
2A	6X6	300	5	Y	2	Y	Y	-	-	-	-	Y
2B	6X40	0	2-4-2	Y	2	Y	Y	Y	2	5	-	Y
4A	6X60	+5	2-4-2	-	4	Y	Y	-	-	5	-	Y
6A	6X6	300	5	Y	6	Y	Y	-	-	-	-	Y

2 Phase
Fully Actuated
(Isolated)

NOTES

1. Refer to "Roadway Standard Drawings NCDOT" dated July 2006 and "Standard Specifications for Roads and Structures" dated July 2006.
2. Do not program signal for late night flashing operation unless otherwise directed by the Engineer.
3. Set all detector units to presence mode.
4. Locate new cabinet so as not to obstruct sight distance of vehicles turning right on red.

SIGNAL FACE I.D.

Denotes L.E.D.

21, 22, 23
41, 42
61,62

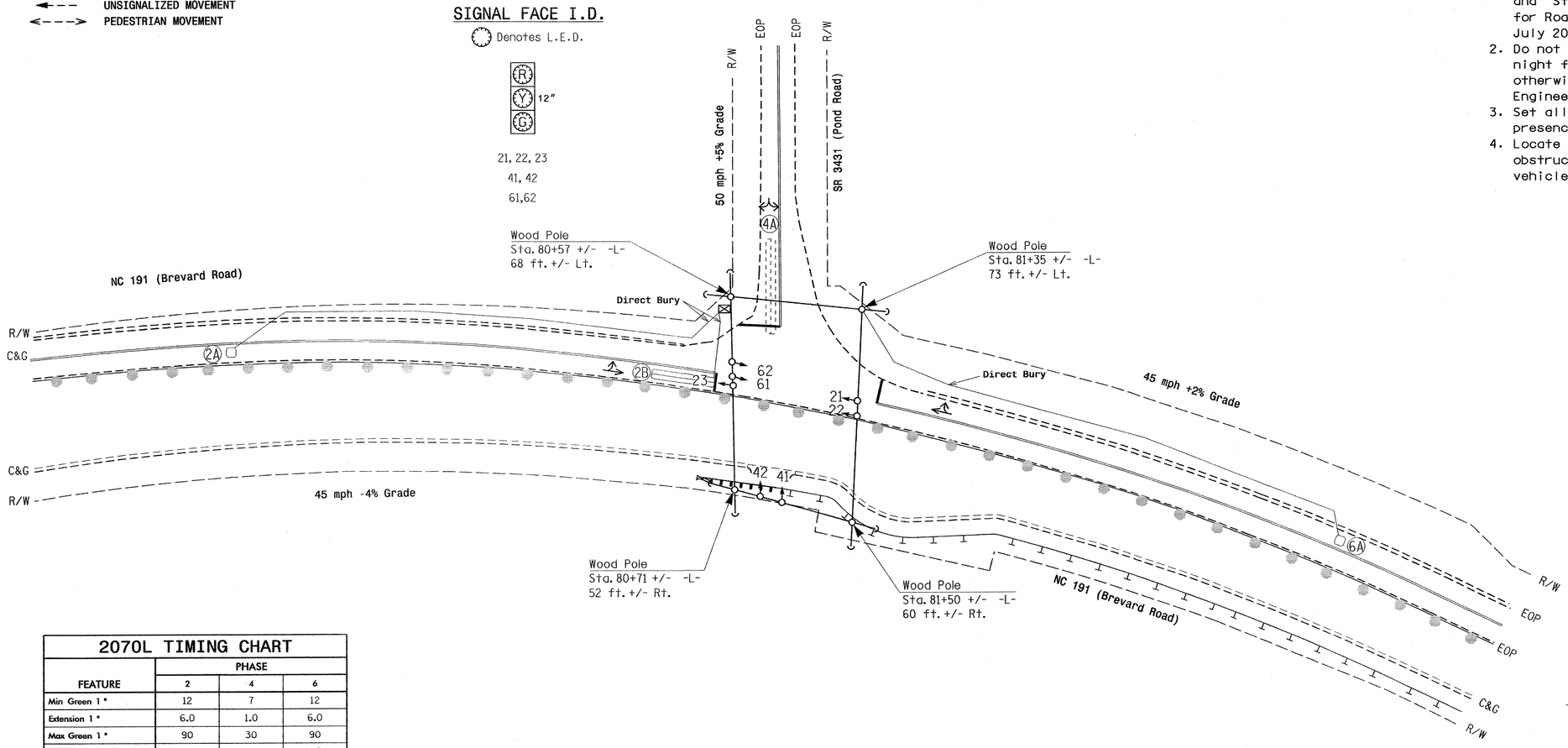

LEGEND

PROPOSED		EXISTING
	Traffic Signal Head	
	Modified Signal Head	N/A
	Sign	
	Pedestrian Signal Head With Push Button & Sign	
	Signal Pole with Guy	
	Signal Pole with Sidewalk Guy	
	Inductive Loop Detector	
	Controller & Cabinet	
	Junction Box	
	2-in Underground Conduit	
N/A	Right of Way	
	Directional Arrow	
	Pavement Marking Arrow	
	Construction Zone Drums	

2070L TIMING CHART

FEATURE	PHASE 2	PHASE 4	PHASE 6
Min Green 1 *	12	7	12
Extension 1 *	6.0	1.0	6.0
Max Green 1 *	90	30	90
Yellow Clearance	4.9	3.0	4.3
Red Clearance	1.1	2.1	1.3
Walk 1 *	-	-	-
Don't Walk 1	-	-	-
Seconds Per Actuation *	-	-	2.5
Max Variable Initial *	-	-	34
Time Before Reduction *	20	-	20
Time To Reduce *	40	-	40
Minimum Gap	3.0	-	3.0
Recall Mode	MIN RECALL	-	MIN RECALL
Vehicle Call Memory	NON-LOCK	-	YELLOW
Dual Entry	-	-	-
Simultaneous Gap	ON	ON	ON

* These values may be field adjusted. Do not adjust Min Green and Extension times for phases 2 and 6 lower than what is shown. Min Green for all other phases should not be lower than 4 seconds.

Signal Upgrade - Temporary Signal 1 - TCP Phase I

Prepared in the Offices of:
Traffic Engineering and Safety Systems Branch
STATE OF NORTH CAROLINA
DEPARTMENT OF TRANSPORTATION
Signals and Geometrics Section
750 N. Greenfield Pkwy, Garner, NC 27529

SCALE 0 40 1"=40'

NC 191 (Brevard Road)
at
SR 3431 (Pond Road)

Division 13 Buncombe County Asheville

PLAN DATE: February 2008 REVIEWED BY:
PREPARED BY: I.O. Umozurike REVIEWED BY:

REVISIONS	INIT.	DATE

SEAL
NORTH CAROLINA PROFESSIONAL SEAL 24393 ENGINEER TIMOTHY J. WILLIAMS
SIGNATURE T. J. Williams DATE 2/20/08
SIG. INVENTORY NO. 13-0731 T1

PROJECT REFERENCE NO.	SHEET NO.
U-3601	Sig.11

PHASING DIAGRAM

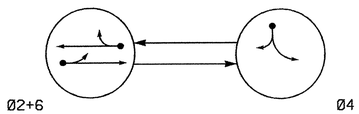

PHASING DIAGRAM DETECTION LEGEND

- DETECTED MOVEMENT
- UNDETECTED MOVEMENT (OVERLAP)
- UNSIGNALIZED MOVEMENT
- PEDESTRIAN MOVEMENT

TABLE OF OPERATION

SIGNAL FACE	PHASE Ø2+6	PHASE Ø4	FLASH
21, 22, 23	G	R	Y
41, 42	R	G	R
61,62	G	R	Y

SIGNAL FACE I.D.

Denotes L.E.D.

21, 22, 23

41, 42

61,62

2070L LOOP & DETECTOR INSTALLATION

INDUCTIVE LOOPS					DETECTOR PROGRAMMING							
LOOP	SIZE (FT)	DISTANCE FROM STOPBAR (FT)	TURNS	NEW LOOP	PHASE	CALLING	EXTENSION	FULL TIME DELAY	STRETCH TIME	DELAY TIME	SYSTEM LOOP	NEW CARD
2A	6X6	300	5	Y	2	Y	Y	-	-	-	-	-
2B	6X40	0	2-4-2	Y	2	Y	Y	Y	2	5	-	-
4A	6X60	+5	2-4-2	Y	4	Y	Y	-	-	5	-	-
6A	6X6	300	5	Y	6	Y	Y	-	-	-	-	-

2 Phase
Fully Actuated
(Isolated)

NOTES

1. Refer to "Roadway Standard Drawings NCDOT" dated July 2006 and "Standard Specifications for Roads and Structures" dated July 2006.
2. Do not program signal for late night flashing operation unless otherwise directed by the Engineer.
3. Reposition existing signal heads numbered 21, 22, 23, 61 and 62.
4. Set all detector units to presence mode.

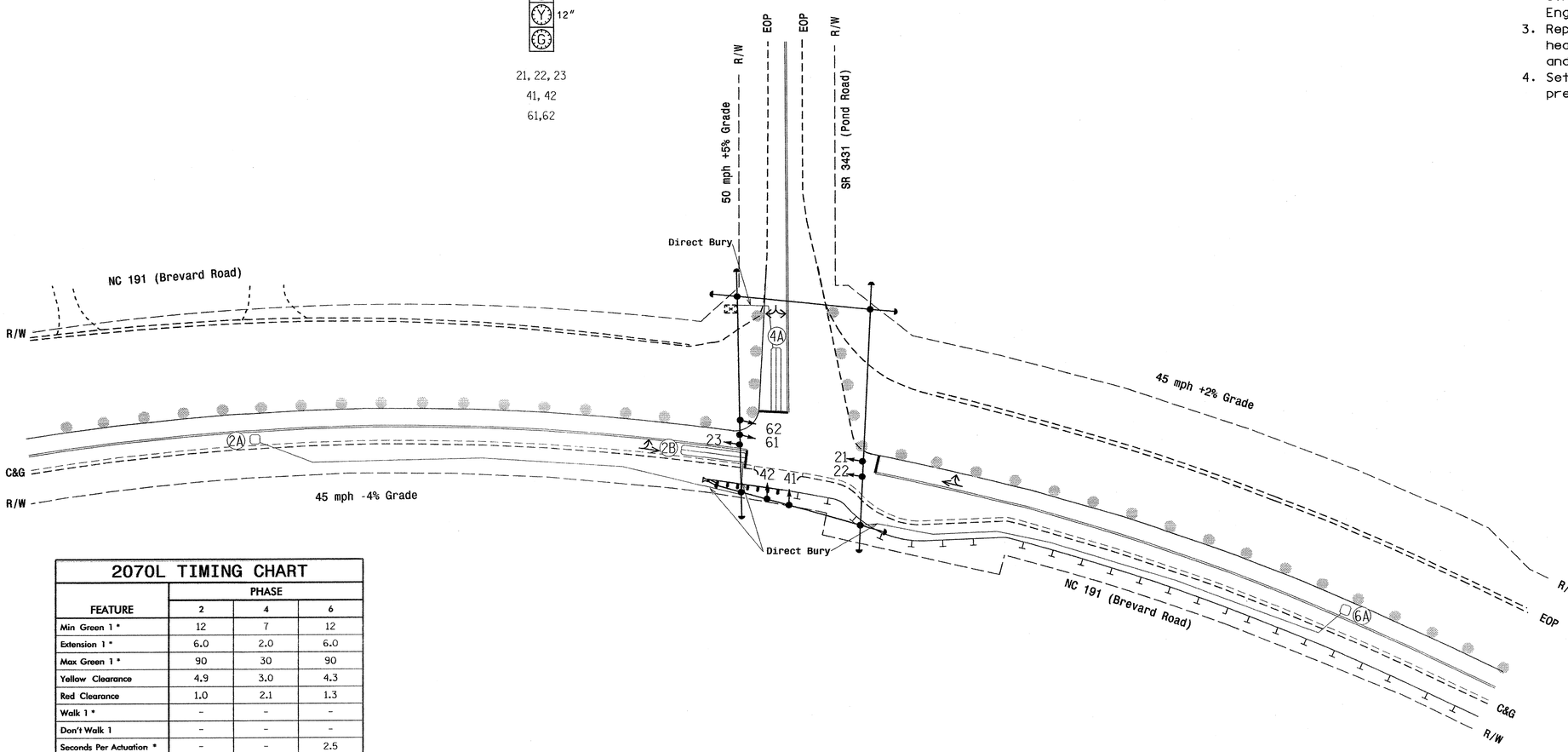

LEGEND

PROPOSED		EXISTING
	Traffic Signal Head	
	Modified Signal Head	N/A
	Sign	
	Pedestrian Signal Head With Push Button & Sign	
	Signal Pole with Guy	
	Signal Pole with Sidewalk Guy	
	Inductive Loop Detector	
	Controller & Cabinet	
	Junction Box	
	2-in Underground Conduit	
N/A	Right of Way	
	Directional Arrow	
	Pavement Marking Arrow	
	Construction Zone Drums	

2070L TIMING CHART

FEATURE	PHASE 2	PHASE 4	PHASE 6
Min Green 1 *	12	7	12
Extension 1 *	6.0	2.0	6.0
Max Green 1 *	90	30	90
Yellow Clearance	4.9	3.0	4.3
Red Clearance	1.0	2.1	1.3
Walk 1 *	-	-	-
Don't Walk 1	-	-	-
Seconds Per Actuation *	-	-	2.5
Max Variable Initial *	-	-	34
Time Before Reduction *	20	-	20
Time To Reduce *	40	-	40
Minimum Gap	3.0	-	3.0
Recall Mode	MIN RECALL	-	MIN RECALL
Vehicle Call Memory	NON-LOCK	-	YELLOW
Dual Entry	-	-	-
Simultaneous Gap	ON	ON	ON

* These values may be field adjusted. Do not adjust Min Green and Extension times for phases 2 and 6 lower than what is shown. Min Green for all other phases should not be lower than 4 seconds.

Signal Upgrade - Temporary Signal 2 - TCP Phase I

Prepared in the Offices of:
Traffic Engineering and Safety Systems Branch
Signals and Geometrics Section
750 N. Greenfield Pkwy, Garner, NC 27529

SCALE 0 40
1"=40'

NC 191 (Brevard Road)
at
SR 3431 (Pond Road)

Division 13 Buncombe County Asheville

PLAN DATE: February 2008 REVIEWED BY:
PREPARED BY: I.O. Umozurike REVIEWED BY:

REVISIONS	INIT.	DATE

SEAL
NORTH CAROLINA PROFESSIONAL SEAL 24393 ENGINEER TIMOTHY D. WILLIAMS

T.D. Williams 2/20/08
SIGNATURE DATE

SIG. INVENTORY NO. 13-0731 T2

PROJECT REFERENCE NO.	SHEET NO.
U-3601	Sig.12

EDI MODEL 2010ECL-NC CONFLICT MONITOR PROGRAMMING DETAIL

(remove jumpers and set switches as shown)

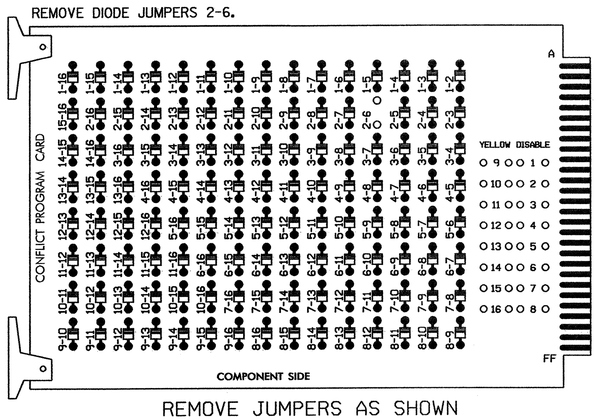

REMOVE JUMPERS AS SHOWN

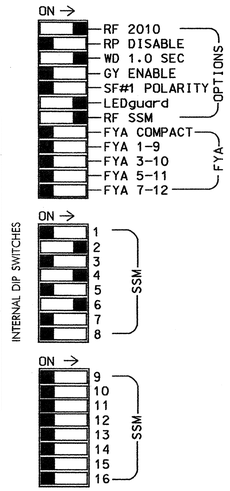

■ = DENOTES POSITION OF SWITCH

NOTES:

1. Card is provided with all diode jumpers in place. Removal of any jumper allows its channels to run concurrently.
2. Make sure jumpers SEL2-SEL5 are present on the monitor board.

NOTES

1. To prevent "flash-conflict" problems, insert red flash program blocks for all unused vehicle load switches in the output file. The installer shall verify that signal heads flash in accordance with the Signal Plans.
2. Ensure that Red Enable is active at all times during normal operation. To prevent Red Failures on unused monitor channels, tie unused red monitor inputs 1,3,5,7, 8,9,10,11,12,13,14,15 & 16 to load switch AC+ per the cabinet manufacturer's instructions.
3. Program phases 2 and 6, on the controller unit, for Start Up In Green.
4. Enable Simultaneous Gap-Out, on the controller unit, for all phases.
5. Program phase 6, on the controller unit, for Variable Initial.
6. Program phases 2 and 6, on the controller unit, for Gap Reduction.

EQUIPMENT INFORMATION

CONTROLLER.....CONTRACTOR SUPPLIED 2070L
CABINET.....CONTRACTOR SUPPLIED 332
SOFTWARE.....ECONOLITE OASIS
CABINET MOUNT.....BASE
OUTPUT FILE POSITIONS...12
LOAD SWITCHES USED.....S2,S4,S6
PHASES USED.....2,4,6
OVERLAPS.....NONE

SIGNAL HEAD HOOK-UP CHART

LOAD SWITCH NO.	S1	S2	S2P	S3	S4	S4P	S5	S6	S6P	S7	S8	S8P
PHASE	1	2	2 PED	3	4	4 PED	5	6	6 PED	7	8	8 PED
SIGNAL HEAD NO.	NU	21, 22,23	NU	NU	41,42	NU	NU	61,62	NU	NU	NU	NU
RED		128			101			134				
YELLOW		129			102			135				
GREEN		130			103			136				
RED ARROW												
YELLOW ARROW												
GREEN ARROW												

NU = Not Used

INPUT FILE POSITION LAYOUT

(front view)

		1	2	3	4	5	6	7	8	9	10	11	12	13	14
FILE "I"	U	SLOT	Ø2 2A	SLOT	SLOT	SLOT	Ø4 4A	SLOT	SLOT	SLOT	SLOT	SLOT	SLOT	SLOT	FS DC ISOLATOR
	L	EMPTY	Ø2 2B	EMPTY	EMPTY	EMPTY	NOT USED	EMPTY	EMPTY	EMPTY	EMPTY	EMPTY	EMPTY	EMPTY	ST DC ISOLATOR
FILE "J"	U	SLOT	SLOT	Ø6 6A	SLOT	SLOT	SLOT	SLOT	SLOT	SLOT	SLOT	SLOT	SLOT	SLOT	SLOT
	L	EMPTY	EMPTY	NOT USED	EMPTY	EMPTY	EMPTY	EMPTY	EMPTY	EMPTY	EMPTY	EMPTY	EMPTY	EMPTY	EMPTY

EX.: 1A, 2A, ETC. = LOOP NO.'S

FS = FLASH SENSE
ST = STOP TIME

INPUT FILE CONNECTION & PROGRAMMING CHART

LOOP NO.	LOOP TERMINAL	INPUT FILE POS.	PIN NO.	INPUT ASSIGNMENT NO.	DETECTOR NO.	NEMA PHASE	CALL	EXTEND	FULL TIME DELAY	STRETCH TIME	DELAY TIME
2A	TB2-5,6	I2U	39	1	2	2	Y	Y			
2B	TB2-7,8	I2L	43	5	12	2	Y	Y	Y	2	5
4A	TB4-9,10	I6U	41	3	4	4	Y	Y			5
6A	TB3-9,10	J3U	64	26	36	6	Y	Y			

INPUT FILE POSITION LEGEND: J2L
FILE J
SLOT 2
LOWER

THIS ELECTRICAL DETAIL IS FOR
THE SIGNAL DESIGN: 13-0731 T1
and 13-0731 T2
DESIGNED: February 2008
SEALED: 02-20-08
REVISED: N/A

Signal Upgrade - Temp. 1 and Temp. 2

ELECTRICAL AND PROGRAMMING DETAILS FOR:

Prepared in the Offices of:
Traffic Engineering and Safety Systems Branch
STATE OF NORTH CAROLINA DEPARTMENT OF TRANSPORTATION
Signals Management Section
750 N. Greenfield Pwky, Garner, NC 27529

NC 191 (Brevard Road)
at
SR 3431 (Pond Road)

Division 13 Buncombe County Asheville

PLAN DATE: February 2008 REVIEWED BY: JTR
PREPARED BY: James Peterson REVIEWED BY:

REVISIONS	INIT.	DATE

SEAL
NORTH CAROLINA PROFESSIONAL SEAL 008453 ENGINEER JOHN T. ROWE, JR.
John T. Rowe Jr. 2-28-08
SIGNATURE DATE
SIG. INVENTORY NO. 13-0731 T

26-FEB-2008 10:40
s:\mite signals\workgroups\sig mon\petersons\13731_smlele_xxx.dgn
jpeterson

PROJECT REFERENCE NO.	SHEET NO.
U-3601	Sig.13

PHASING DIAGRAM

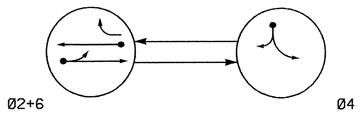

PHASING DIAGRAM DETECTION LEGEND

- DETECTED MOVEMENT
- UNDETECTED MOVEMENT (OVERLAP)
- UNSIGNALIZED MOVEMENT
- PEDESTRIAN MOVEMENT

TABLE OF OPERATION			
SIGNAL FACE	PHASE Ø2+6	PHASE Ø4	FLASH
21, 22, 23	G	R	Y
41, 42	R	G	R
61,62	G	R	Y

SIGNAL FACE I.D.

Denotes L.E.D.

21, 22, 23
41, 42
61,62

2070L LOOP & DETECTOR INSTALLATION											
INDUCTIVE LOOPS					DETECTOR PROGRAMMING						
LOOP	SIZE (FT)	DISTANCE FROM STOPBAR (FT)	TURNS	NEW LOOP	PHASE	CALLING	EXTENSION	FULL TIME DELAY	STRETCH TIME	DELAY TIME	SYSTEM LOOP	NEW CARD
2A	6X6	300	5	Y	2	Y	Y	-	-	-	-	-
2B	6X40	0	2-4-2	Y	2	Y	Y	Y	2	5	-	-
4A	6X40	0	2-4-2	Y	4	Y	Y	-	-	3	-	-
4B	6X40	0	2-4-2	Y	4	Y	Y	-	-	15	-	-
6A	6X6	300	5	Y	6	Y	Y	-	-	-	-	-

2 Phase
Fully Actuated
(Isolated)

NOTES

1. Refer to "Roadway Standard Drawings NCDOT" dated July 2006 and "Standard Specifications for Roads and Structures" dated July 2006.
2. Do not program signal for late night flashing operation unless otherwise directed by the Engineer.
3. Reposition existing signal heads numbered 21, 22, 23, 61 and 62.
4. Set all detector units to presence mode.

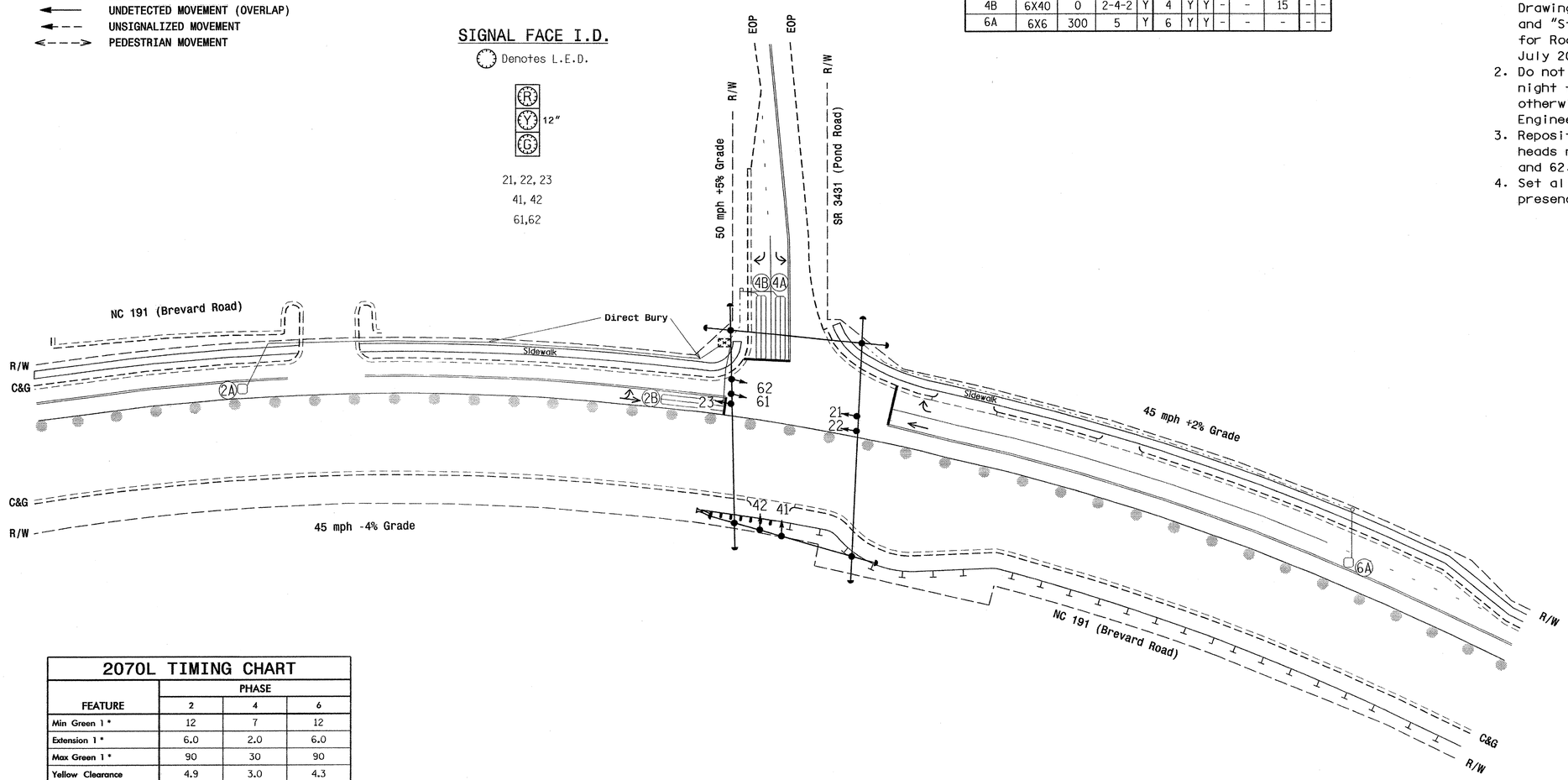

LEGEND

PROPOSED		EXISTING
	Traffic Signal Head	
	Modified Signal Head	N/A
	Sign	
	Pedestrian Signal Head With Push Button & Sign	
	Signal Pole with Guy	
	Signal Pole with Sidewalk Guy	
	Inductive Loop Detector	
	Controller & Cabinet	
	Junction Box	
	2-in Underground Conduit	
N/A	Right of Way	
	Directional Arrow	
	Pavement Marking Arrow	
	Construction Zone Drums	

2070L TIMING CHART			
FEATURE	PHASE 2	PHASE 4	PHASE 6
Min Green 1 *	12	7	12
Extension 1 *	6.0	2.0	6.0
Max Green 1 *	90	30	90
Yellow Clearance	4.9	3.0	4.3
Red Clearance	1.0	1.8	1.6
Walk 1 *	-	-	-
Don't Walk 1	-	-	-
Seconds Per Actuation *	-	-	2.5
Max Variable Initial *	-	-	34
Time Before Reduction *	20	-	20
Time To Reduce *	40	-	40
Minimum Gap	3.0	-	3.0
Recall Mode	MIN RECALL	-	MIN RECALL
Vehicle Call Memory	NON-LOCK	-	YELLOW
Dual Entry	-	-	-
Simultaneous Gap	ON	ON	ON

* These values may be field adjusted. Do not adjust Min Green and Extension times for phases 2 and 6 lower than what is shown. Min Green for all other phases should not be lower than 4 seconds.

Signal Upgrade - Temporary Signal 3 - TCP Phase II

Prepared in the Offices of:
Traffic Engineering and Safety Systems Branch
STATE OF NORTH CAROLINA DEPARTMENT OF TRANSPORTATION
Signals and Geometrics Section
750 N. Greenfield Pkwy, Garner, NC 27529

SCALE 0 40 1"=40'

NC 191 (Brevard Road)
at
SR 3431 (Pond Road)

Division 13 Buncombe County Asheville

PLAN DATE: February 2008 REVIEWED BY:
PREPARED BY: I.O. Umozurike REVIEWED BY:

REVISIONS	INIT.	DATE

SEAL
NORTH CAROLINA PROFESSIONAL SEAL 24393 ENGINEER TIMOTHY A. WILLIAMS
SIGNATURE 2/20/08 DATE
SIG. INVENTORY NO. 13-0731 T3

PROJECT REFERENCE NO.	SHEET NO.
U-3601	Sig.14

EDI MODEL 2010ECL-NC CONFLICT MONITOR PROGRAMMING DETAIL

(remove jumpers and set switches as shown)

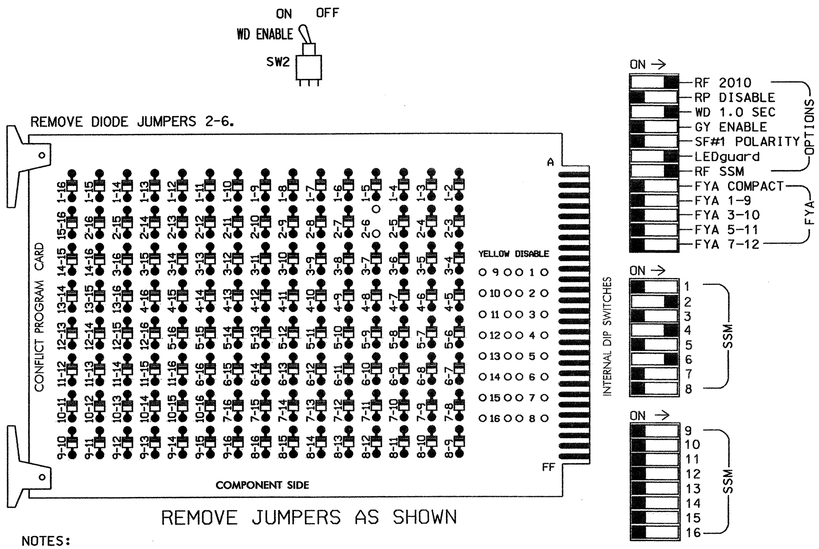

REMOVE JUMPERS AS SHOWN

NOTES:

1. Card is provided with all diode jumpers in place. Removal of any jumper allows its channels to run concurrently.
2. Make sure jumpers SEL2-SEL5 are present on the monitor board.

■ = DENOTES POSITION OF SWITCH

NOTES

1. To prevent "flash-conflict" problems, insert red flash program blocks for all unused vehicle load switches in the output file. The installer shall verify that signal heads flash in accordance with the Signal Plans.
2. Ensure that Red Enable is active at all times during normal operation. To prevent Red Failures on unused monitor channels, tie unused red monitor inputs 1,3,5,7, 8,9,10,11,12,13,14,15 & 16 to load switch AC+ per the cabinet manufacturer's instructions.
3. Program phases 2 and 6, on the controller unit, for Start Up In Green.
4. Enable Simultaneous Gap-Out, on the controller unit, for all phases.
5. Program phase 6, on the controller unit, for Variable Initial.
6. Program phases 2 and 6, on the controller unit, for Gap Reduction.

EQUIPMENT INFORMATION

CONTROLLER.....CONTRACTOR SUPPLIED 2070L
CABINET.....CONTRACTOR SUPPLIED 332
SOFTWARE.....ECONOLITE OASIS
CABINET MOUNT.....BASE
OUTPUT FILE POSITIONS...12
LOAD SWITCHES USED.....S2,S4,S6
PHASES USED.....2,4,6
OVERLAPS.....NONE

SIGNAL HEAD HOOK-UP CHART

LOAD SWITCH NO.	S1	S2	S2P	S3	S4	S4P	S5	S6	S6P	S7	S8	S8P
PHASE	1	2	2 PED	3	4	4 PED	5	6	6 PED	7	8	8 PED
SIGNAL HEAD NO.	NU	21, 22,23	NU	NU	41,42	NU	NU	61,62	NU	NU	NU	NU
RED		128			101			134				
YELLOW		129			102			135				
GREEN		130			103			136				
RED ARROW												
YELLOW ARROW												
GREEN ARROW												

NU = Not Used

INPUT FILE POSITION LAYOUT

(front view)

		1	2	3	4	5	6	7	8	9	10	11	12	13	14
FILE "I"	U	SLOT	ø 2 2A	SLOT	SLOT	SLOT	ø 4 4A	SLOT	SLOT	SLOT	SLOT	SLOT	SLOT	SLOT	FS DC ISOLATOR
	L	EMPTY	ø 2 2B	EMPTY	EMPTY	EMPTY	ø 4 4B	EMPTY	EMPTY	EMPTY	EMPTY	EMPTY	EMPTY	EMPTY	ST DC ISOLATOR
FILE "J"	U	SLOT	SLOT	ø 6 6A	SLOT	SLOT	SLOT	SLOT	SLOT	SLOT	SLOT	SLOT	SLOT	SLOT	SLOT
	L	EMPTY	EMPTY	NOT USED	EMPTY	EMPTY	EMPTY	EMPTY	EMPTY	EMPTY	EMPTY	EMPTY	EMPTY	EMPTY	EMPTY

EX.: 1A, 2A, ETC. = LOOP NO.'S

FS = FLASH SENSE
ST = STOP TIME

INPUT FILE CONNECTION & PROGRAMMING CHART

LOOP NO.	LOOP TERMINAL	INPUT FILE POS.	PIN NO.	INPUT ASSIGNMENT NO.	DETECTOR NO.	NEMA PHASE	CALL	EXTEND	FULL TIME DELAY	STRETCH TIME	DELAY TIME
2A	TB2-5,6	I2U	39	1	2	2	Y	Y			
2B	TB2-7,8	I2L	43	5	12	2	Y	Y	Y	2	5
4A	TB4-9,10	I6U	41	3	4	4	Y	Y			3
4B	TB4-11,12	I6L	45	7	14	4	Y	Y			15
6A	TB3-9,10	J3U	64	26	36	6	Y	Y			

INPUT FILE POSITION LEGEND: J2L
FILE J
SLOT 2
LOWER

THIS ELECTRICAL DETAIL IS FOR
THE SIGNAL DESIGN: 13-0731 T3
DESIGNED: February 2008
SEALED: 02-20-08
REVISED: N/A

Signal Upgrade - Temp. 3

ELECTRICAL AND PROGRAMMING DETAILS FOR:

Prepared in the Offices of:

Traffic Engineering and Safety Systems Branch
STATE OF NORTH CAROLINA DEPARTMENT OF TRANSPORTATION
Signals Management Section

750 N. Greenfield Pwky, Garner, NC 27529

NC 191 (Brevard Road)
at
SR 3431 (Pond Road)

Division 13 Buncombe County Asheville

PLAN DATE: February 2008	REVIEWED BY: JTR		
PREPARED BY: James Peterson	REVIEWED BY:		
REVISIONS		INIT.	DATE

SEAL

NORTH CAROLINA PROFESSIONAL SEAL 008453 ENGINEER JOHN T. ROWE, JR.

John T. Rowe Jr. 2-28-08
SIGNATURE DATE

SIG. INVENTORY NO. 13-0731 T3

26-FEB-2008 10:41
s:\TIS SIGNALS\workgroups\sig mon\petersonw\13731_sml_ele_xxx.dgn
jtpeterson

PROJECT REFERENCE NO.	SHEET NO.
U-3601	Sig.15

PHASING DIAGRAM

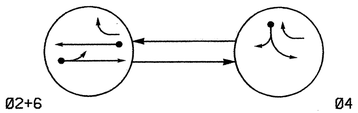

PHASING DIAGRAM DETECTION LEGEND

- DETECTED MOVEMENT
- UNDETECTED MOVEMENT (OVERLAP)
- UNSIGNALIZED MOVEMENT
- PEDESTRIAN MOVEMENT

TABLE OF OPERATION

SIGNAL FACE	PHASE Ø2+6	PHASE Ø4	FLASH
21, 22, 23	G	R	Y
41, 42	R	G	R
61,62	G	R	Y
63	G	R/	Y

SIGNAL FACE I.D.

Denotes L.E.D.

21, 22, 23 63
41, 42
61,62

2070L LOOP & DETECTOR INSTALLATION

INDUCTIVE LOOPS					DETECTOR PROGRAMMING							
LOOP	SIZE (FT)	DISTANCE FROM STOPBAR (FT)	TURNS	NEW LOOP	PHASE	CALLING	EXTENSION	FULL TIME DELAY	STRETCH TIME	DELAY TIME	SYSTEM LOOP	NEW CARD
2A	6X6	300	5	Y	2	Y	Y	-	-	-	-	-
2B	6X40	0	2-4-2	Y	2	Y	Y	Y	2	5	-	-
4A	6X40	0	2-4-2	-	4	Y	Y	-	-	3	-	-
4B	6X40	0	2-4-2	-	4	Y	Y	-	-	15	-	-
6A	6X6	300	5	Y	6	Y	Y	-	-	-	-	-

2 Phase
Fully Actuated
(Isolated)

NOTES

1. Refer to "Roadway Standard Drawings NCDOT" dated July 2006 and "Standard Specifications for Roads and Structures" dated July 2006.
2. Do not program signal for late night flashing operation unless otherwise directed by the Engineer.
3. Reposition existing signal heads numbered 21, 22, 23, 61 and 62.
4. Set all detector units to presence mode.

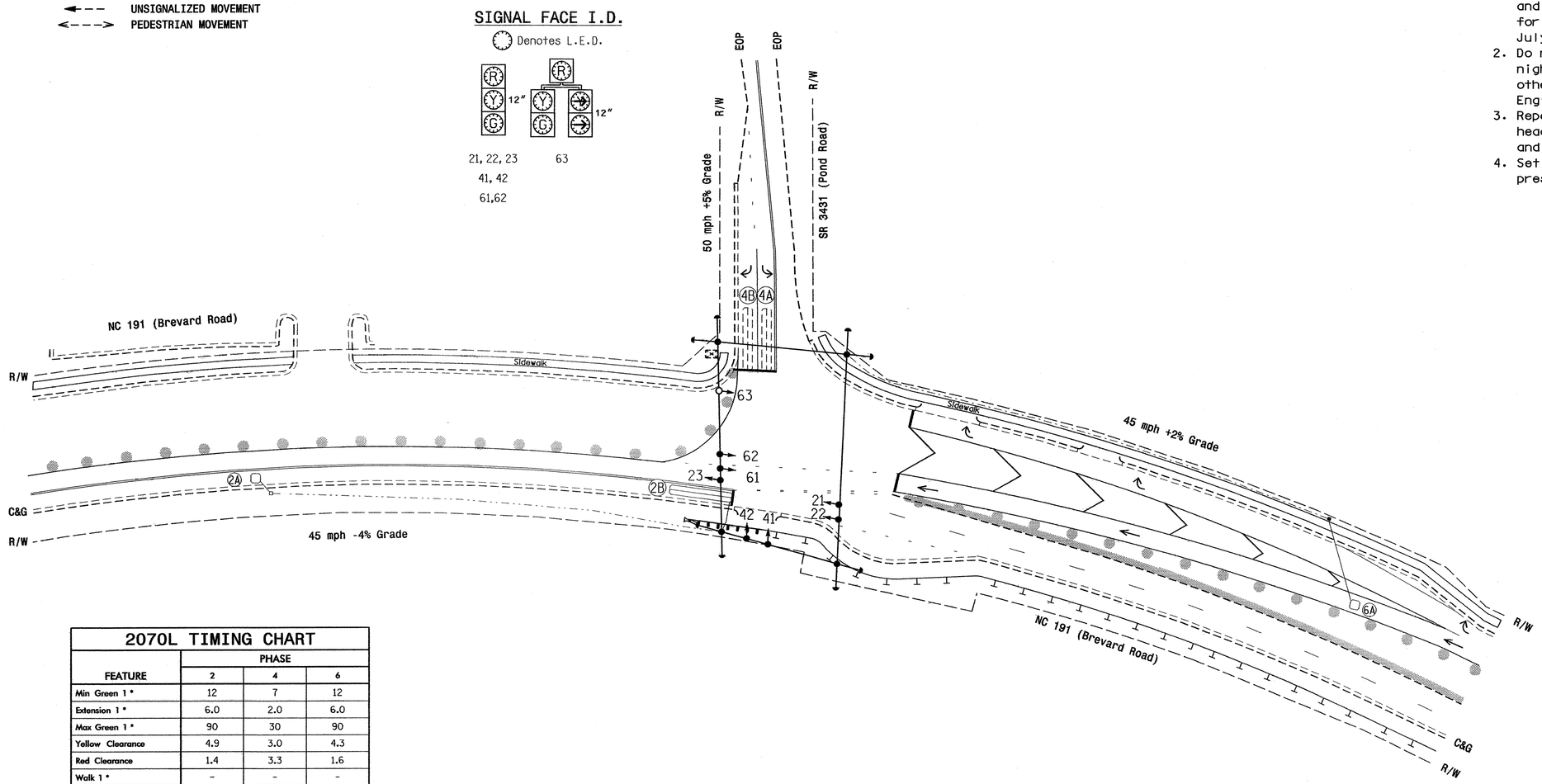

LEGEND

PROPOSED		EXISTING
	Traffic Signal Head	
	Modified Signal Head	N/A
	Sign	
	Pedestrian Signal Head With Push Button & Sign	
	Signal Pole with Guy	
	Signal Pole with Sidewalk Guy	
	Inductive Loop Detector	
	Controller & Cabinet	
	Junction Box	
	2-in Underground Conduit	
N/A	Right of Way	
	Directional Arrow	
	Pavement Marking Arrow	
	Construction Zone Drums	

2070L TIMING CHART

FEATURE	PHASE 2	PHASE 4	PHASE 6
Min Green 1 *	12	7	12
Extension 1 *	6.0	2.0	6.0
Max Green 1 *	90	30	90
Yellow Clearance	4.9	3.0	4.3
Red Clearance	1.4	3.3	1.6
Walk 1 *	-	-	-
Don't Walk 1	-	-	-
Seconds Per Actuation *	-	-	2.5
Max Variable Initial *	-	-	34
Time Before Reduction *	20	-	20
Time To Reduce *	40	-	40
Minimum Gap	3.0	-	3.0
Recall Mode	MIN RECALL	-	MIN RECALL
Vehicle Call Memory	NON-LOCK	-	YELLOW
Dual Entry	-	-	-
Simultaneous Gap	ON	ON	ON

* These values may be field adjusted. Do not adjust Min Green and Extension times for phases 2 and 6 lower than what is shown. Min Green for all other phases should not be lower than 4 seconds.

Signal Upgrade - Temporary Signal 4 - TCP Phase III

Prepared in the Offices of:
Traffic Engineering and Safety Systems Branch
Signal and Geometric Section
DIVISION OF HIGHWAYS
DEPARTMENT OF TRANSPORTATION
STATE OF NORTH CAROLINA
750 N. Greenfield Pkwy, Garner, NC 27529

SCALE 0 40
1"=40'

NC 191 (Brevard Road)
at
SR 3431 (Pond Road)

Division 13 Buncombe County Asheville

PLAN DATE: February 2008 REVIEWED BY:
PREPARED BY: I.O. Umozurike REVIEWED BY:

REVISIONS	INIT.	DATE

SEAL
NORTH CAROLINA PROFESSIONAL SEAL 24393 ENGINEER TIMOTHY J. WILLIAMS
T. J. Williams 2/20/08.
SIGNATURE DATE
SIG. INVENTORY NO. 13-0731 T4

PROJECT REFERENCE NO.	SHEET NO.
U-3601	Sig.16

EDI MODEL 2010ECL-NC CONFLICT MONITOR PROGRAMMING DETAIL

(remove jumpers and set switches as shown)

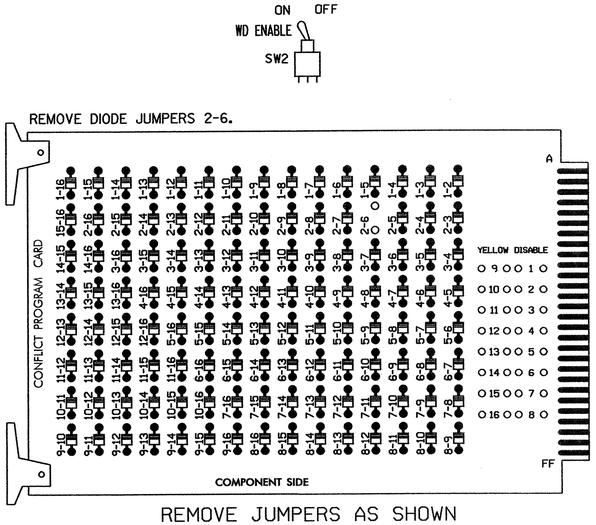

REMOVE JUMPERS AS SHOWN

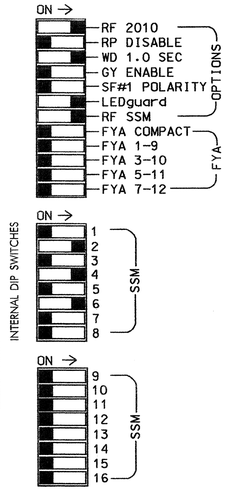

■ = DENOTES POSITION OF SWITCH

NOTES:

1. Card is provided with all diode jumpers in place. Removal of any jumper allows its channels to run concurrently.
2. Make sure jumpers SEL2-SEL5 are present on the monitor board.

NOTES

1. To prevent "flash-conflict" problems, insert red flash program blocks for all unused vehicle load switches in the output file. The installer shall verify that signal heads flash in accordance with the Signal Plans.
2. Ensure that Red Enable is active at all times during normal operation. To prevent Red Failures on unused monitor channels, tie unused red monitor inputs 1,3,5,7, 8,9,10,11,12,13,14,15 & 16 to load switch AC+ per the cabinet manufacturer's instructions.
3. Program phases 2 and 6, on the controller unit, for Start Up In Green.
4. Enable Simultaneous Gap-Out, on the controller unit, for all phases.
5. Program phase 6, on the controller unit, for Variable Initial.
6. Program phases 2 and 6, on the controller unit, for Gap Reduction.

EQUIPMENT INFORMATION

CONTROLLER.....CONTRACTOR SUPPLIED 2070L
CABINET.....CONTRACTOR SUPPLIED 332
SOFTWARE.....ECONOLITE OASIS
CABINET MOUNT.....BASE
OUTPUT FILE POSITIONS...12
LOAD SWITCHES USED.....S2,S4,S6
PHASES USED.....2,4,6
OVERLAPS.....NONE

SIGNAL HEAD HOOK-UP CHART

LOAD SWITCH NO.	S1	S2	S2P	S3	S4		S4P	S5	S6	S6P	S7	S8	S8P
PHASE	1	2	2 PED	3	4		4 PED	5	6	6 PED	7	8	8 PED
SIGNAL HEAD NO.	NU	21, 22,23	NU	NU	41,42	63	NU	NU	61, 62,63	NU	NU	NU	NU
RED		128			101				134				
YELLOW		129			102				135				
GREEN		130			103				136				
RED ARROW													
YELLOW ARROW						102							
GREEN ARROW						103							

NU = Not Used

INPUT FILE POSITION LAYOUT

(front view)

		1	2	3	4	5	6	7	8	9	10	11	12	13	14
FILE "I"	U	SLOT EMPTY	ø2 2A	SLOT EMPTY	SLOT EMPTY	SLOT EMPTY	ø4 4A	SLOT EMPTY	SLOT EMPTY	SLOT EMPTY	SLOT EMPTY	SLOT EMPTY	SLOT EMPTY	SLOT EMPTY	FS DC ISOLATOR
	L		ø2 2B				ø4 4B								ST DC ISOLATOR
FILE "J"	U	SLOT EMPTY	SLOT EMPTY	ø6 6A	SLOT EMPTY	SLOT EMPTY	SLOT EMPTY	SLOT EMPTY	SLOT EMPTY	SLOT EMPTY	SLOT EMPTY	SLOT EMPTY	SLOT EMPTY	SLOT EMPTY	SLOT EMPTY
	L			NOT USED											

EX.: 1A, 2A, ETC. = LOOP NO.'S

FS = FLASH SENSE
ST = STOP TIME

INPUT FILE CONNECTION & PROGRAMMING CHART

LOOP NO.	LOOP TERMINAL	INPUT FILE POS.	PIN NO.	INPUT ASSIGNMENT NO.	DETECTOR NO.	NEMA PHASE	CALL	EXTEND	FULL TIME DELAY	STRETCH TIME	DELAY TIME
2A	TB2-5,6	I2U	39	1	2	2	Y	Y			
2B	TB2-7,8	I2L	43	5	12	2	Y	Y	Y	2	5
4A	TB4-9,10	I6U	41	3	4	4	Y	Y			3
4B	TB4-11,12	I6L	45	7	14	4	Y	Y			15
6A	TB3-9,10	J3U	64	26	36	6	Y	Y			

INPUT FILE POSITION LEGEND: J2L
FILE J
SLOT 2
LOWER

THIS ELECTRICAL DETAIL IS FOR
THE SIGNAL DESIGN: 13-0731 T4
DESIGNED: February 2008
SEALED: 02-20-08
REVISED: N/A

Signal Upgrade - Temp. 4

ELECTRICAL AND PROGRAMMING DETAILS FOR:

Prepared in the Offices of:
Traffic Engineering and Safety Systems Branch
STATE OF NORTH CAROLINA DEPARTMENT OF TRANSPORTATION
Signals Management Section
750 N. Greenfield Pwky, Garner, NC 27529

NC 191 (Brevard Road)
at
SR 3431 (Pond Road)

Division 13 Buncombe County Asheville

PLAN DATE: February 2008	REVIEWED BY: JTR
PREPARED BY: James Peterson	REVIEWED BY:

REVISIONS	INIT.	DATE

SEAL
NORTH CAROLINA PROFESSIONAL SEAL 008453 ENGINEER JOHN T. ROWE, JR.
SIGNATURE DATE 2-28-08
SIG. INVENTORY NO. 13-0731 T4

26-FEB-2008 10:41
s:\its signals\workgroups\sig mon\peterson\13731_sml_ele_xxx.dgn
jipeterson

PROJECT REFERENCE NO.	SHEET NO.
U-3601	Sig.17

PHASING DIAGRAM

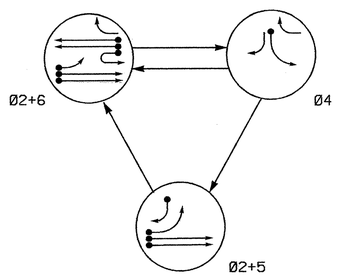

PHASING DIAGRAM DETECTION LEGEND

- DETECTED MOVEMENT
- UNDETECTED MOVEMENT (OVERLAP)
- UNSIGNALIZED MOVEMENT
- PEDESTRIAN MOVEMENT

TABLE OF OPERATION

SIGNAL FACE	PHASE Ø2+5	PHASE Ø2+6	PHASE Ø4	FLASH
21	G	G	R	Y
22	G	G	R	Y
41	R	R	G	R
42	R	R	G	R
61,62	R	G	R	Y
63	R	G	R	Y

SIGNAL FACE I.D.

Denotes L.E.D.

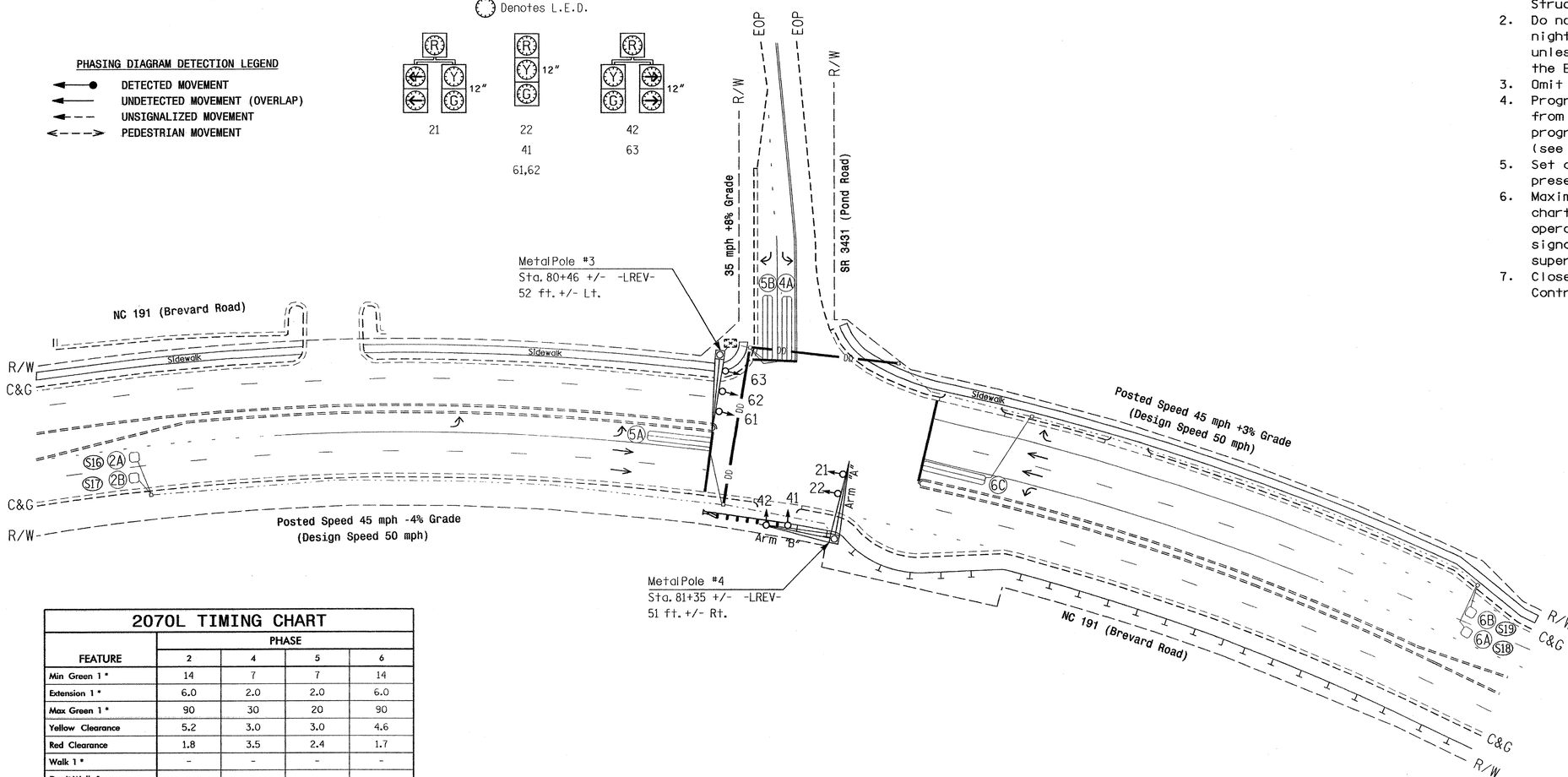

2070L LOOP & DETECTOR INSTALLATION

INDUCTIVE LOOPS					DETECTOR PROGRAMMING							
LOOP	SIZE (FT)	DISTANCE FROM STOPBAR (FT)	TURNS	NEW LOOP	PHASE	CALLING	EXTENSION	FULL TIME DELAY	STRETCH TIME	DELAY TIME	SYSTEM LOOP	NEW CARD
2A/S16	6X6	355	5	Y	2	Y	Y	-	-	-	Y	Y
2B/S17	6X6	355	5	Y	2	Y	Y	-	-	-	Y	Y
4A	6X40	0	2-4-2	Y	4	Y	Y	-	-	3	-	Y
5A	6X40	0	2-4-2	Y	5	Y	Y	-	-	15	-	Y
					2	Y	Y	Y	-	3	-	Y
5B	6X40	0	2-4-2	Y	5	Y	Y	-	-	15	-	Y
6A/S18	6X6	355	6	Y	6	Y	Y	-	-	-	Y	Y
6B/S19	6X6	355	6	Y	6	Y	Y	-	-	-	Y	Y
6C	6X40	0	2-4-2	Y	6	Y	Y	Y	-	3	-	Y

3 Phase
Fully Actuated
(NC 191 Closed Loop System)

NOTES

1. Refer to "Roadway Standard Drawings NCDOT" dated July 2006 and "Standard Specifications for Roads and Structures" dated July 2006.
2. Do not program signal for late night flashing operation unless otherwise directed by the Engineer.
3. Omit phase 5 during phase 6 on.
4. Program controller to clear from phase 2+6 to phase 2+5 by progressing through phase 4 (see Electrical Details).
5. Set all detector units to presence mode.
6. Maximum times shown in timing chart are for free-run operation only. Coordinated signal system timing values supersede these values.
7. Closed loop system data: Controller Asset #0731.

LEGEND

PROPOSED		EXISTING
	Traffic Signal Head	
	Modified Signal Head	N/A
	Sign	
	Pedestrian Signal Head With Push Button & Sign	
	Signal Pole with Guy	
	Signal Pole with Sidewalk Guy	
	Inductive Loop Detector	
	Controller & Cabinet	
	Junction Box	
	2-in Underground Conduit	
N/A	Right of Way	
	Directional Arrow	
	Pavement Marking Arrow	
DD	Directional Drill (2-2" Polyethylene Conduits)	N/A
	Metal Pole with Mastarm	

2070L TIMING CHART

FEATURE	PHASE 2	PHASE 4	PHASE 5	PHASE 6
Min Green 1 *	14	7	7	14
Extension 1 *	6.0	2.0	2.0	6.0
Max Green 1 *	90	30	20	90
Yellow Clearance	5.2	3.0	3.0	4.6
Red Clearance	1.8	3.5	2.4	1.7
Walk 1 *	-	-	-	-
Don't Walk 1	-	-	-	-
Seconds Per Actuation *	1.5	-	-	1.5
Max Variable Initial *	40	-	-	40
Time Before Reduction *	20	-	-	20
Time To Reduce *	40	-	-	40
Minimum Gap	3.0	-	-	3.0
Recall Mode	MIN RECALL	-	-	MIN RECALL
Vehicle Call Memory	YELLOW	-	-	YELLOW
Dual Entry	-	-	-	-
Simultaneous Gap	ON	ON	ON	ON

* These values may be field adjusted. Do not adjust Min Green and Extension times for phases 2 and 6 lower than what is shown. Min Green for all other phases should not be lower than 4 seconds.

Signal Upgrade - Final

Prepared in the Offices of:
Traffic Engineering and Safety Systems Branch
Signals and Geometrics Section
750 N. Greenfield Pkwy, Garner, NC 27529

SCALE 0 40 1"=40'

NC 191 (Brevard Road) at SR 3431 (Pond Road)

Division 13 Buncombe County Asheville

PLAN DATE: January 2008 REVIEWED BY:
PREPARED BY: I.O. Umozurike REVIEWED BY:

REVISIONS	INIT.	DATE

SEAL
NORTH CAROLINA PROFESSIONAL SEAL 24393 ENGINEER TIMOTHY J. WILLIAMS
T.J. Williams 2/20/08
SIGNATURE DATE
SIG. INVENTORY NO. 13-0731

19-FEB-2008 13:51
st-ffb signalsworkgroups#1p projects#u-3601#signals#designsignals#13-0731#13-0731.2008xxxx.dgn
iumozurike

PROJECT REFERENCE NO.	SHEET NO.
U-3601	Sig.18

EDI MODEL 2010ECL-NC CONFLICT MONITOR PROGRAMMING DETAIL

(remove jumpers and set switches as shown)

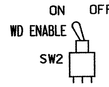

REMOVE DIODE JUMPERS 2-5 and 2-6.

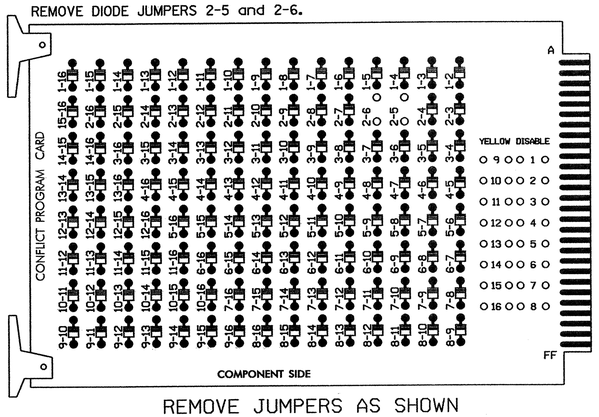

REMOVE JUMPERS AS SHOWN

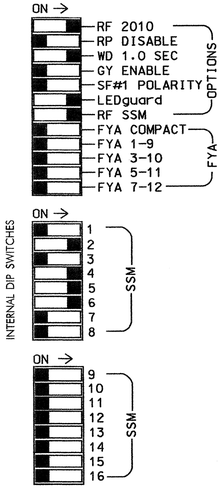

■ = DENOTES POSITION OF SWITCH

NOTES:

1. Card is provided with all diode jumpers in place. Removal of any jumper allows its channels to run concurrently.
2. Make sure jumpers SEL2-SEL5 are present on the monitor board.

NOTES

1. To prevent "flash-conflict" problems, insert red flash program blocks for all unused vehicle load switches in the output file. The installer shall verify that signal heads flash in accordance with the Signal Plans.
2. Ensure that Red Enable is active at all times during normal operation. To prevent Red Failures on unused monitor channels, tie unused red monitor inputs 1,3,7, 8,9,10,11,12,13,14,15 & 16 to load switch AC+ per the cabinet manufacturer's instructions.
3. Program phases 2 and 6, on the controller unit, for Start Up In Green.
4. Enable Simultaneous Gap-Out, on the controller unit, for all phases.
5. Program phases 2 and 6, on the controller unit, for Variable Initial and Gap Reduction.
6. The cabinet and controller are part of the NC 191 Closed Loop System.

EQUIPMENT INFORMATION

CONTROLLER.....CONTRACTOR SUPPLIED 2070L
CABINET.....CONTRACTOR SUPPLIED 332
SOFTWARE.....ECONOLITE OASIS
CABINET MOUNT.....BASE
OUTPUT FILE POSITIONS...12
LOAD SWITCHES USED.....S2,S4,S5,S6
PHASES USED.....2,4,5,6
OVERLAPS.....NONE

SIGNAL HEAD HOOK-UP CHART

LOAD SWITCH NO.	S1	S2	S2P	S3	S4		S4P	S5	S6	S6P	S7	S8	S8P
PHASE	1	2	2 PED	3	4		4 PED	5	6	6 PED	7	8	8 PED
SIGNAL HEAD NO.	NU	21,22	NU	NU	41,42	63	NU	21,42	61, 62,63	NU	NU	NU	NU
RED		128			101			*	134				
YELLOW		129			102				135				
GREEN		130			103				136				
RED ARROW													
YELLOW ARROW						102		132					
GREEN ARROW						103		133					

NU = Not Used

* Denotes install load resistor. See load resistor installation detail this sheet.

DYNAMIC BACK-UP CONTROL PROGRAMMING

(program controller as shown below)

1. From Main Menu press '2' (Phase Control), then '1' (Phase Control Functions). Scroll to the bottom of the menu and enable Dynamic/Backup Control Function 1.
2. From Phase Control Functions Menu press '2' (Dynamic/Backup Control Functions).

```
DYNAMIC/BACKUP CONTROL FUNCTION #01
              OVERLAPS:¦ABCDEFGHIJKLMNOP
IF OVERLAPS ARE ACTIVE ¦
OR        PHASES:¦123456789101112131415 16
IF PHASES ARE ON¦     X
OMIT PHASES     ¦    X
CALL PHASES     ¦   X
```

BACKUP PROTECTION PROGRAMMING COMPLETE

INPUT FILE POSITION LAYOUT

(front view)

		1	2	3	4	5	6	7	8	9	10	11	12	13	14
FILE "I"	U	SLOT EMPTY	Ø2/SYS 2A/S16	SLOT EMPTY	SLOT EMPTY	SLOT EMPTY	Ø4 4A	SLOT EMPTY	SLOT EMPTY	SLOT EMPTY	SLOT EMPTY	SLOT EMPTY	SLOT EMPTY	SLOT EMPTY	FS DC ISOLATOR
	L		Ø2/SYS 2B/S17				NOT USED								ST DC ISOLATOR
FILE "J"	U	Ø5 5B	Ø5 5A	Ø6/SYS 6A/S18	Ø6 6C	SLOT EMPTY	SLOT EMPTY	SLOT EMPTY	SLOT EMPTY	SLOT EMPTY	SLOT EMPTY	SLOT EMPTY	SLOT EMPTY	SLOT EMPTY	SLOT EMPTY
	L	NOT USED	Ø2 5A	Ø6/SYS 6B/S19	NOT USED										

EX.: 1A, 2A, ETC. = LOOP NO.'S

FS = FLASH SENSE
ST = STOP TIME

INPUT FILE CONNECTION & PROGRAMMING CHART

LOOP NO.	LOOP TERMINAL	INPUT FILE POS.	PIN NO.	INPUT ASSIGNMENT NO.	DETECTOR NO.	NEMA PHASE	CALL	EXTEND	FULL TIME DELAY	STRETCH TIME	DELAY TIME
2A/S16	TB2-5,6	I2U	39	1	2	2/SYS	Y	Y			
2B/S17	TB2-7,8	I2L	43	5	12	2/SYS	Y	Y			
4A	TB4-9,10	I6U	41	3	4	4	Y	Y			3
5B	TB3-1,2	J1U	55	17	5	5	Y	Y			15
5A[1]	TB3-5,6	J2U	40	2	6	5	Y	Y			15
	TB3-7,8	J2L	44	6	16	2	Y	Y	Y		3
6A/S18	TB3-9,10	J3U	64	26	36	6/SYS	Y	Y			
6B/S19	TB3-11,12	J3L	77	39	46	6/SYS	Y	Y			
6C	TB5-1,2	J4U	48	10	26	6	Y	Y	Y		3

[1]Add jumpers from TB3-5 to TB3-7, and from TB3-6 to TB3-8.

INPUT FILE POSITION LEGEND: J2L
FILE J
SLOT 2
LOWER

LOAD RESISTOR INSTALLATION DETAIL

ACCEPTABLE VALUES

VALUE (ohms)	WATTAGE
1.5K - 1.9K	25W (min)
2.0K - 3.0K	10W (min)

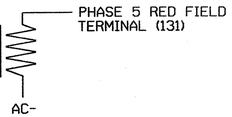

NOTE: The purpose of this resistor is to load the channel red monitor input in order for the Signal Sequence Monitor to use the full signal sequence monitoring capability on channels that do not use the red display in the field.

THIS ELECTRICAL DETAIL IS FOR
THE SIGNAL DESIGN: 13-0731
DESIGNED: January 2008
SEALED: 02-20-08
REVISED: N/A

Signal Upgrade - Final

ELECTRICAL AND PROGRAMMING DETAILS FOR:

Prepared in the Offices of:
Traffic Engineering and Safety Systems Branch
STATE OF NORTH CAROLINA DEPARTMENT OF TRANSPORTATION
Signals Management Section
750 N. Greenfield Pwky, Garner, NC 27529

NC 191 (Brevard Road)
at
SR 3431 (Pond Road)

Division 13 Buncombe County Asheville

PLAN DATE: February 2008 REVIEWED BY: JTR
PREPARED BY: James Peterson REVIEWED BY:

REVISIONS	INIT.	DATE

SEAL
NORTH CAROLINA PROFESSIONAL SEAL 008453 ENGINEER JOHN T. ROWE, JR.
SIGNATURE 2-28-08 DATE
SIG. INVENTORY NO. 13-0731

26-FEB-2008 10:42
s:\its signals\workgroups\sig management\13731_sml_ele_xxx.dgn
jlpeterson

SPECIAL NOTE

The contractor is responsible for verifying that the mast arm attachment height (H1) will provide the "Design Height" clearance from the roadway before submitting final shop drawings for approval. Verify elevation data below which was obtained by field measurement or from available project survey data.

Elevation Data for Mast Arm Attachment (H1)

Elevation Differences for:	Pole 3
Baseline reference point at ℄ Foundation @ ground level	0.0 ft.
Elevation difference at High point of roadway surface	0.8 ft.
Elevation difference at Edge of travelway or face of curb	N/A

MAST ARM LOADING SCHEDULE

LOADING SYMBOL	DESCRIPTION	AREA	SIZE	WEIGHT
	SIGNAL HEAD 12"-5 SECTION-WITH BACKPLATE AND ASTRO-BRAC	16.3 S.F.	42.0" W X 56.0" L	103 LBS
	SIGNAL HEAD 12"-4 SECTION (VERTICAL)-WITH BACKPLATE AND ASTRO-BRAC	11.5 S.F.	25.5" W X 66.0" L	74 LBS
	SIGNAL HEAD 12"-3 SECTION-WITH BACKPLATE AND ASTRO-BRAC	9.3 S.F.	25.5" W X 52.5" L	60 LBS
STREET NAME SIGN	STREET NAME SIGN RIGID MOUNTED WITH ASTRO-SIGN-BRAC	12.0 S.F.	18.0" W X 96.0" L	27 LBS

Design Loading for METAL POLE NO. 3

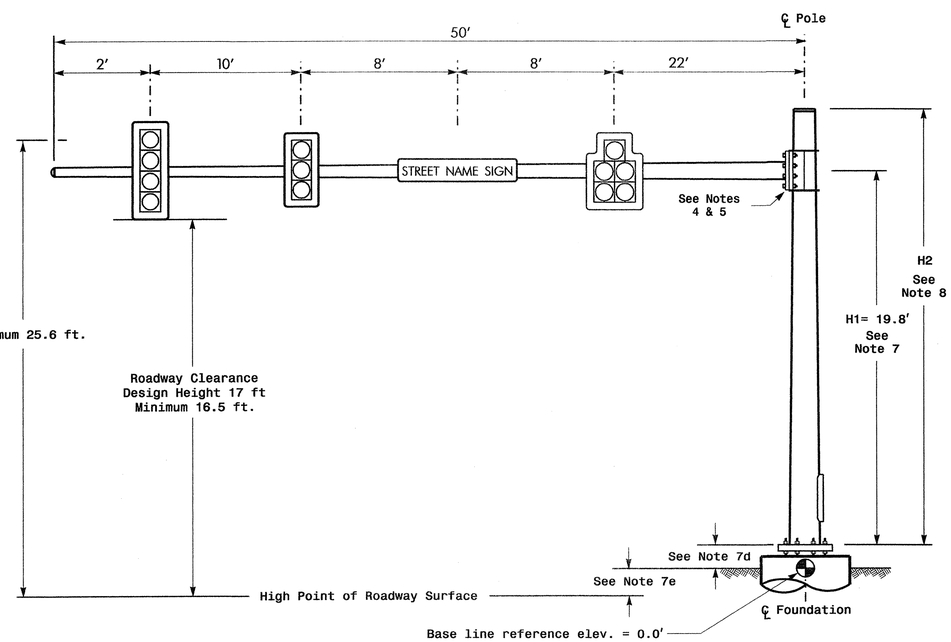

Elevation View

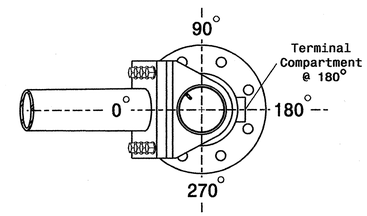

POLE RADIAL ORIENTATION

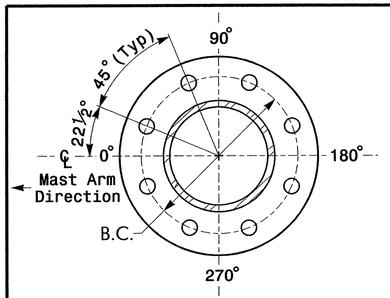

8 BOLT BASE PLATE DETAIL

See Note 6

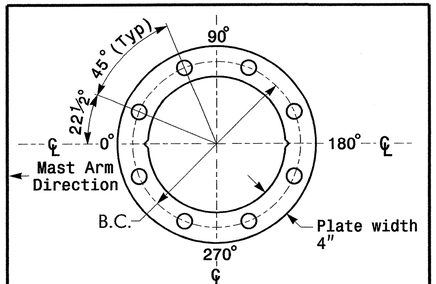

BASE PLATE TEMPLATE & ANCHOR BOLT LOCK PLATE DETAIL

For 8 Bolt Base Plate

NOTES

Design Reference Material

1. Design the traffic signal structure and foundation in accordance with:
   - The 4th Edition 2001 AASHTO "Standard Specifications for Structural Supports for Highway Signs, Luminaires, and Traffic Signals, including all of the latest interim revisions.
   - The 2006 NCDOT "Standard Specifications for Roads and Structures". The latest addenda to these specifications can be found in the traffic signal project special provisions.
   - The 2006 NCDOT Roadway Standard Drawings.
   - The traffic signal project plans and special provisions.

Design Requirements

2. Design the traffic signal structure using the loading conditions shown in the elevation views. These are anticipated worst case "Design loads" and may not represent the actual loads that will be applied at the time of the installation. The contractor should refer to the traffic signal plans for the actual loads that will be applied at the time of the installation.
3. Design all signal supports using stress ratios that do not exceed 0.9.
4. The camber design for mast arm deflection should provide an appearance of a low pitched arch where the tip or the free end of the mast arm does not deflect below horizontal when fully loaded.
5. A clamp-type bolted mast arm-to-pole connection may be used instead of the welded ring stiffened box connection shown as long as the connection meets all of the design requirements.
6. Design base plate with 8 anchor bolt holes. Provide 2 inch x 60 inch anchor bolts.
7. The mast arm attachment height (H1) shown is based on the following design assumptions:
   a. Mast arm slope and deflection are not considered in determining the arm attachment height as they are assumed to offset each other.
   b. Signal heads attached to the mast arm are rigid mounted and vertically centered on the arm.
   c. The roadway clearance height for design is as shown in the elevation views.
   d. The top of the pole base plate is .75 feet above the ground elevation.
   e. Refer to the Elevation Data chart for elevation differences between the proposed foundation ground level and the high point on the roadway.
8. The pole manufacturer will determine the total height (H2) of each pole using the greater of the following:
   - Mast arm attachment height (H1) plus 2 feet, or
   - H1 plus ½ of the total height of the mast arm attachment assembly plus 1 foot.
9. If pole location adjustments are required, the contractor must gain approval from the engineer as this may affect the mast arm lengths and arm attachment heights. The contractor may contact the Signals & Geometrics Structural Engineer for assistance at (919) 773-2800.
10. The contractor is responsible for verifying that the mast arm length shown will allow proper positioning of the signal heads over the roadway.
11. The contractor is responsible for providing soil penetration testing data (SPT) to the pole manufacturer so site specific foundations can be designed.

NCDOT Wind Zone 4 (90 mph)

Prepared in the Offices of:
Traffic Engineering and Safety Systems Branch
Signals and Geometrics Section
DIVISION OF HIGHWAYS · STATE OF NORTH CAROLINA · DEPARTMENT OF TRANSPORTATION
750 N. Greenfield Pkwy, Garner, NC 27529

NC 191 (Brevard Road)
At
SR 3431 (Pond Road)

Division 13 Buncombe County Asheville

PLAN DATE: February 2008 REVIEWED BY:
PREPARED BY: I.O.Umozurike REVIEWED BY:

SCALE 0 N/A N/A

REVISIONS	INIT.	DATE

SEAL
NORTH CAROLINA PROFESSIONAL SEAL 24393 ENGINEER TIMOTHY J. WILLIAMS

T.J. Williams 3/4/08.
SIGNATURE DATE

SIG. INVENTORY NO. 13-0731

04-MAR-2008 19:53
s:\traffic_signal\Working\projects\u-3601\signals\designs\signals\13-0731\13-0731_sig_mp_2008xxxx.dgn
Iumozurike

PROJECT REFERENCE NO.	SHEET NO.
U-3601	Sig.20

METAL POLE No. 4

Design Loading for METAL POLE NO. 4, MAST ARM A

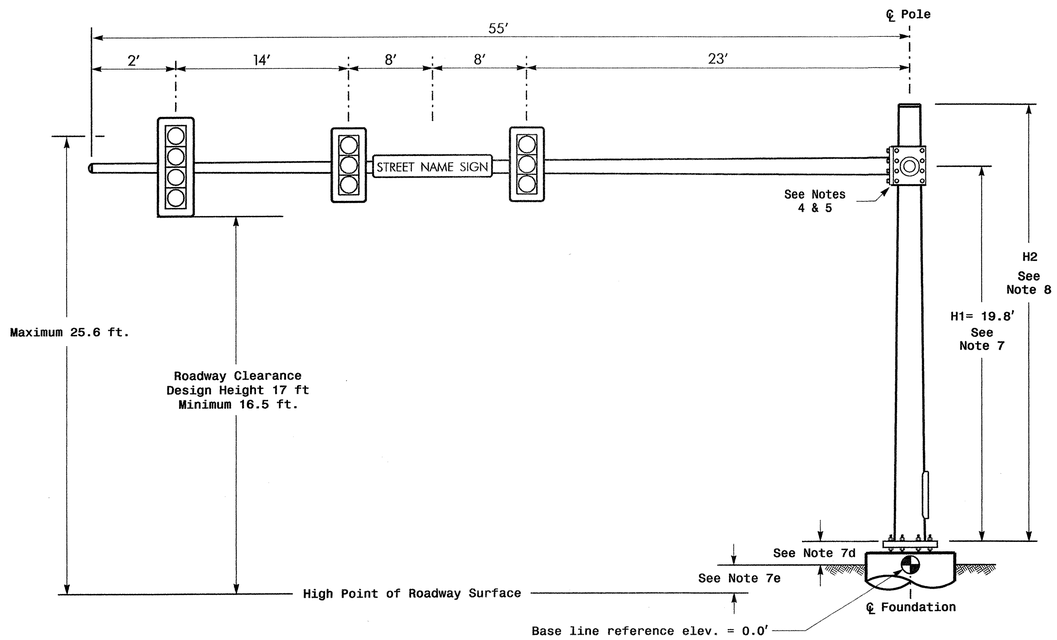

Elevation View @ 270°

Design Loading for METAL POLE NO. 4, MAST ARM B

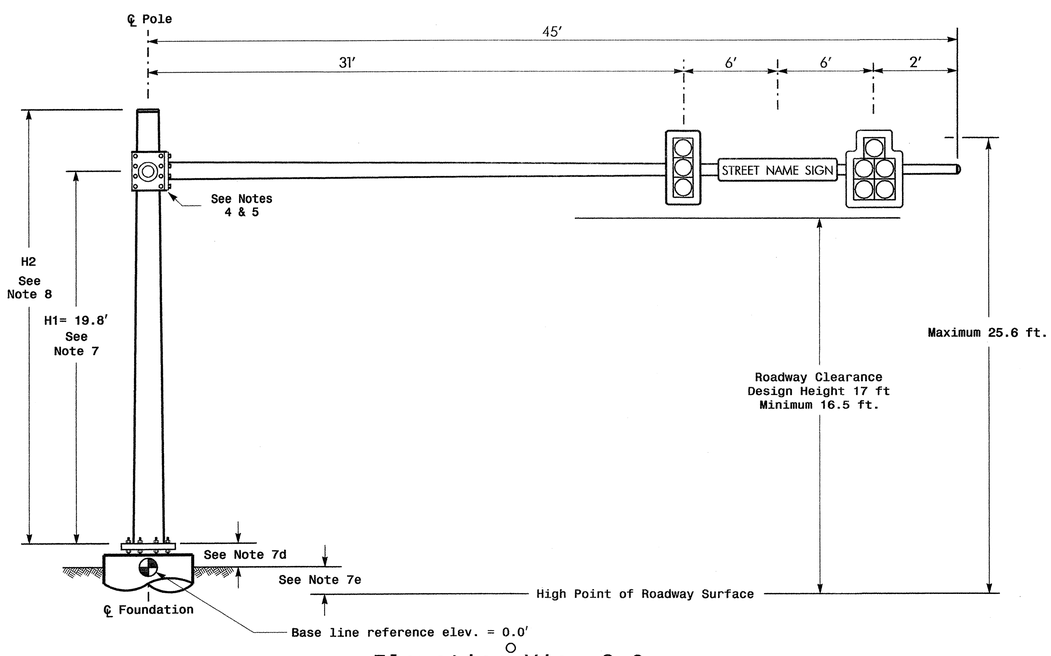

Elevation View @ 0°

SPECIAL NOTE

The contractor is responsible for verifying that the mast arm attachment height (H1) will provide the "Design Height" clearance from the roadway before submitting final shop drawings for approval. Verify elevation data below which was obtained by field measurement or from available project survey data.

Elevation Data for Mast Arm Attachment (H1)

Elevation Differences for:	Arm "A"	Arm "B"
Baseline reference point at ℄ Foundation @ ground level	0.0 ft.	0.0 ft.
Elevation difference at High point of roadway surface	+0.8 ft.	0.0 ft.
Elevation difference at Edge of travelway or face of curb	N/A	N/A

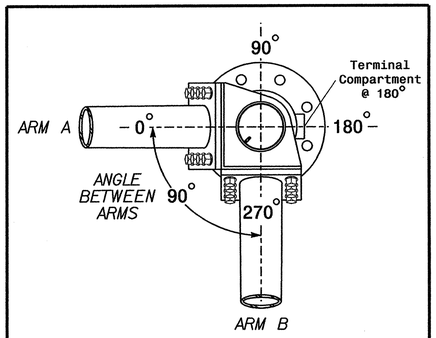

POLE RADIAL ORIENTATION

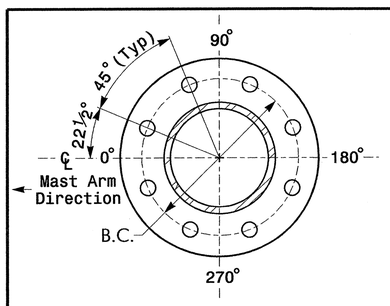

8 BOLT BASE PLATE DETAIL

See Note 6

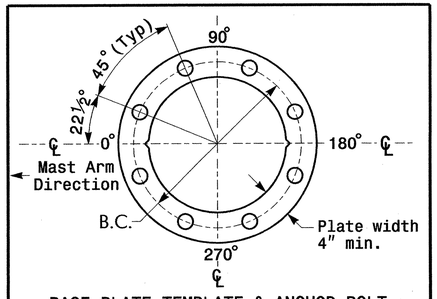

BASE PLATE TEMPLATE & ANCHOR BOLT LOCK PLATE DETAIL

For 8 Bolt Base Plate

MAST ARM LOADING SCHEDULE

LOADING SYMBOL	DESCRIPTION	AREA	SIZE	WEIGHT
	SIGNAL HEAD 12″–5 SECTION–WITH BACKPLATE AND ASTRO–BRAC	16.3 S.F.	42.0″ W X 56.0″ L	103 LBS
	SIGNAL HEAD 12″–4 SECTION (VERTICAL)–WITH BACKPLATE AND ASTRO–BRAC	11.5 S.F.	25.5″ W X 66.0″ L	74 LBS
	SIGNAL HEAD 12″–3 SECTION–WITH BACKPLATE AND ASTRO–BRAC	9.3 S.F.	25.5″ W X 52.5″ L	60 LBS
STREET NAME SIGN	STREET NAME SIGN RIGID MOUNTED WITH ASTRO–SIGN–BRAC	12.0 S.F.	18.0″ W X 96.0″ L	27 LBS

NOTES

Design Reference Material

1. Design the traffic signal structure and foundation in accordance with:
   - The 4th Edition 2001 AASHTO "Standard Specifications for Structural Supports for Highway Signs, Luminaires, and Traffic Signals, including all of the latest interim revisions.
   - The 2006 NCDOT "Standard Specifications for Roads and Structures". The latest addenda to these specifications can be found in the traffic signal project special provisions.
   - The 2006 NCDOT Roadway Standard Drawings.
   - The traffic signal project plans and special provisions.

Design Requirements

2. Design the traffic signal structure using the loading conditions shown in the elevation views. These are anticipated worst case "Design loads" and may not represent the actual loads that will be applied at the time of the installation. The contractor should refer to the traffic signal plans for the actual loads that will be applied at the time of the installation.
3. Design all signal supports using stress ratios that do not exceed 0.9.
4. The camber design for mast arm deflection should provide an appearance of a low pitched arch where the tip or the free end of the mast arm does not deflect below horizontal when fully loaded.
5. A clamp-type bolted mast arm-to-pole connection may be used instead of the welded ring stiffened box connection shown as long as the connection meets all of the design requirements. This requires staggering the connections. Use elevation data for each arm to determine appropriate arm connection points.
6. Design base plate with 8 anchor bolt holes. Provide 2 inch x 60 inch anchor bolts.
7. The mast arm attachment height (H1) shown is based on the following design assumptions:
   a. Mast arm slope and deflection are not considered in determining the arm attachment height as they are assumed to offset each other.
   b. Signal heads attached to the mast arm are rigid mounted and vertically centered on the arm.
   c. The roadway clearance height for design is as shown in the elevation views.
   d. The top of the pole base plate is .75 feet above the ground elevation.
   e. Refer to the Elevation Data chart for elevation differences between the proposed foundation ground level and the high point on the roadway.
8. The pole manufacturer will determine the total height (H2) of the pole using the greater of the following:
   - Mast arm attachment height (H1) plus 2 feet, or
   - H1 plus ½ of the total height of the mast arm attachment assembly plus 1 foot.
9. If pole location adjustments are required, the contractor must gain approval from the engineer as this may affect the mast arm lengths and arm attachment heights. The contractor may contact the Signals & Geometrics Structural Engineer for assistance at (919) 773-2800.
10. The contractor is responsible for verifying that the mast arm lengths shown will allow proper positioning of the signal heads over the roadway.
11. The contractor is responsible for providing soil penetration testing data (SPT) to the pole manufacturer so site specific foundations can be designed.

NCDOT Wind Zone 4 (90 mph)

Prepared in the Offices of:
Traffic Engineering and Safety Systems Branch
Signals and Geometrics Section
DEPARTMENT OF TRANSPORTATION
750 N. Greenfield Pkwy, Garner, NC 27529

NC 191 (Brevard Road)
At
SR 3431 (Pond Road)

Division 13 Buncombe County Asheville

PLAN DATE: February 2008 REVIEWED BY:
PREPARED BY: I.O.Umozurike REVIEWED BY:

SCALE 0 N/A N/A

REVISIONS	INIT.	DATE

SEAL
NORTH CAROLINA PROFESSIONAL SEAL 24393 ENGINEER TIMOTHY WILLIAMS
SIGNATURE 3/4/08 DATE
SIG. INVENTORY NO. 13-0731

04-MAR-2008 10:50
s:\its signals\workgroups\tip projects\u-3601\signals\designs\13-0731\13-0731_sig_mp_2008xxxx.dgn
iumozurike

PROJECT REFERENCE NO.	SHEET NO.
U-3601	Sig.21

PHASING DIAGRAM

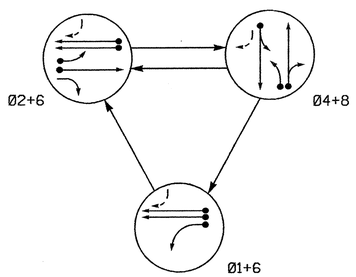

PHASING DIAGRAM DETECTION LEGEND

- DETECTED MOVEMENT
- UNDETECTED MOVEMENT (OVERLAP)
- UNSIGNALIZED MOVEMENT
- PEDESTRIAN MOVEMENT

TABLE OF OPERATION

SIGNAL FACE	PHASE 01+6	PHASE 02+6	PHASE 04+8	FLASH
21, 22	R	G	R	Y
41, 42, 43	R	R	G	R
61	G	G	R	Y
62	G	G	R	Y
81,82, 83	R	R	G	R

SIGNAL FACE I.D.

Denotes L.E.D.

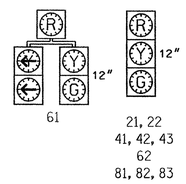

2070L LOOP & DETECTOR INSTALLATION

INDUCTIVE LOOPS					DETECTOR PROGRAMMING						
LOOP	SIZE (FT)	DISTANCE FROM STOPBAR (FT)	TURNS	NEW LOOP	PHASE	CALLING	EXTENSION	FULL TIME DELAY	STRETCH TIME	DELAY TIME	SYSTEM LOOP	NEW CARD
1A	6X40	0	2-4-2	Y	1	Y	Y	-	-	15	-	Y
					6	Y	Y	Y	-	3	-	Y
2A	6X6	300	4	Y	2	Y	Y	-	-	-	-	Y
2B	6X40	0	2-4-2	Y	2	Y	Y	Y	-	3	-	Y
4A	6X40	0	2-4-2	Y	4	Y	Y	-	-	3	-	Y
6A	6X6	300	6	Y	6	Y	Y	-	-	-	-	Y
6B	6X6	300	6	Y	6	Y	Y	-	-	-	-	Y
8A	6X40	0	2-4-2	Y	8	Y	Y	-	-	-	-	Y
8B	6X40	0	2-4-2	Y	8	Y	Y	-	-	10	-	Y
8C	6X15	0	2-4-2	Y	8	Y	Y	-	-	15	-	Y

3 Phase Fully Actuated (Isolated)

NOTES

1. Refer to "Roadway Standard Drawings NCDOT" dated July 2006 and "Standard Specifications for Roads and Structures" dated July 2006.
2. Do not program signal for late night flashing operation unless otherwise directed by the Engineer.
3. Omit phase 1 during phase 2 on.
4. Program controller to clear from phase 2+6 to phase 1+6 by progressing through phase 4+8 (see Electrical Details).
5. Set all detector units to presence mode.
6. Locate new cabinet so as not to obstruct sight distance of vehicles turning right on red.

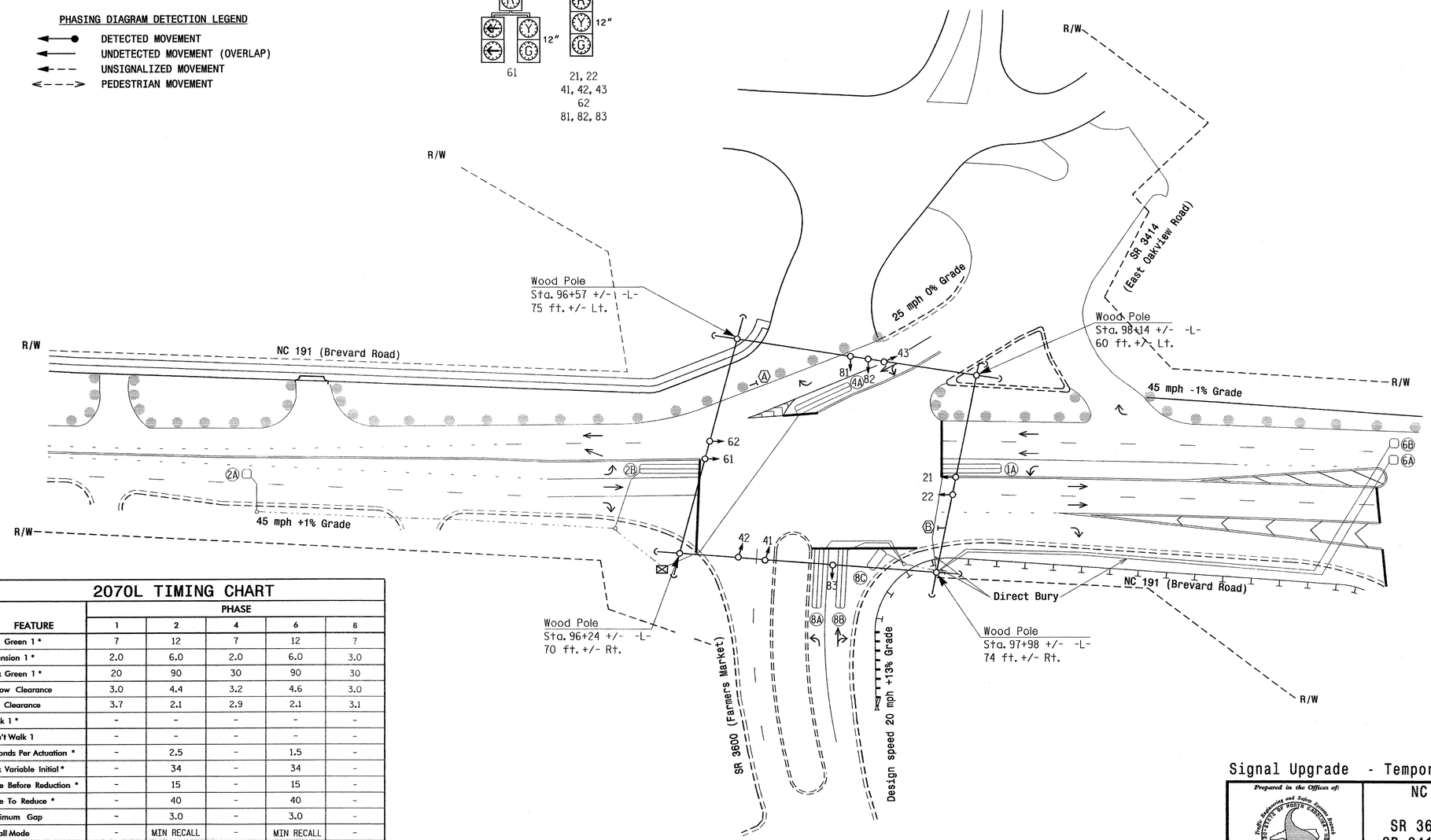

LEGEND

PROPOSED		EXISTING
	Traffic Signal Head	
	Modified Signal Head	N/A
	Sign	
	Pedestrian Signal Head With Push Button & Sign	
	Signal Pole with Guy	
	Signal Pole with Sidewalk Guy	
	Inductive Loop Detector	
	Controller & Cabinet	
	Junction Box	
	2-in Underground Conduit	
N/A	Right of Way	
	Directional Arrow	
	Pavement Marking Arrow	
	Construction Zone Drums	
A	"YIELD" Sign (R1-2)	A
B	Right Arrow "ONLY" Sign (R3-5R)	B

2070L TIMING CHART

FEATURE	PHASE 1	PHASE 2	PHASE 4	PHASE 6	PHASE 8
Min Green 1 *	7	12	7	12	7
Extension 1 *	2.0	6.0	2.0	6.0	3.0
Max Green 1 *	20	90	30	90	30
Yellow Clearance	3.0	4.4	3.2	4.6	3.0
Red Clearance	3.7	2.1	2.9	2.1	3.1
Walk 1 *	-	-	-	-	-
Don't Walk 1	-	-	-	-	-
Seconds Per Actuation *	-	2.5	-	1.5	-
Max Variable Initial *	-	34	-	34	-
Time Before Reduction *	-	15	-	15	-
Time To Reduce *	-	40	-	40	-
Minimum Gap	-	3.0	-	3.0	-
Recall Mode	-	MIN RECALL	-	MIN RECALL	-
Vehicle Call Memory	-	YELLOW	-	YELLOW	-
Dual Entry	-	-	ON	-	ON
Simultaneous Gap	ON	ON	ON	ON	ON

* These values may be field adjusted. Do not adjust Min Green and Extension times for phases 2 and 6 lower than what is shown. Min Green for all other phases should not be lower than 4 seconds.

Signal Upgrade - Temporary Signal 1 - TCP Phase I

Prepared in the Offices of: Traffic Engineering and Safety Systems Branch, Signals and Geometrics Section, Division of Highways, State of North Carolina, Department of Transportation
750 N. Greenfield Pkwy, Garner, NC 27529

SCALE 0 40 1"=40'

NC 191 (Brevard Road) at SR 3600 (Farmers Market)/ SR 3414 (East Oakview Road)

Division 13 Buncombe County Asheville

PLAN DATE: February 2008 REVIEWED BY:
PREPARED BY: I.O. Umozurike REVIEWED BY:

REVISIONS	INIT.	DATE

SEAL: NORTH CAROLINA PROFESSIONAL SEAL 24393 ENGINEER TIMOTHY J. WILLIAMS

T.J. Williams 2/20/08
SIGNATURE DATE

SIG. INVENTORY NO. 13-0466 T1

19-FEB-2008 17:31
s:\ite\signals\workgroups\tip projects\u-3601\signals\designs\signals\13-0466\13-0466_2008xxxx.dgn
iomozurike

PROJECT REFERENCE NO.	SHEET NO.
U-3601	Sig.22

EDI MODEL 2010ECL-NC CONFLICT MONITOR PROGRAMMING DETAIL

(remove jumpers and set switches as shown)

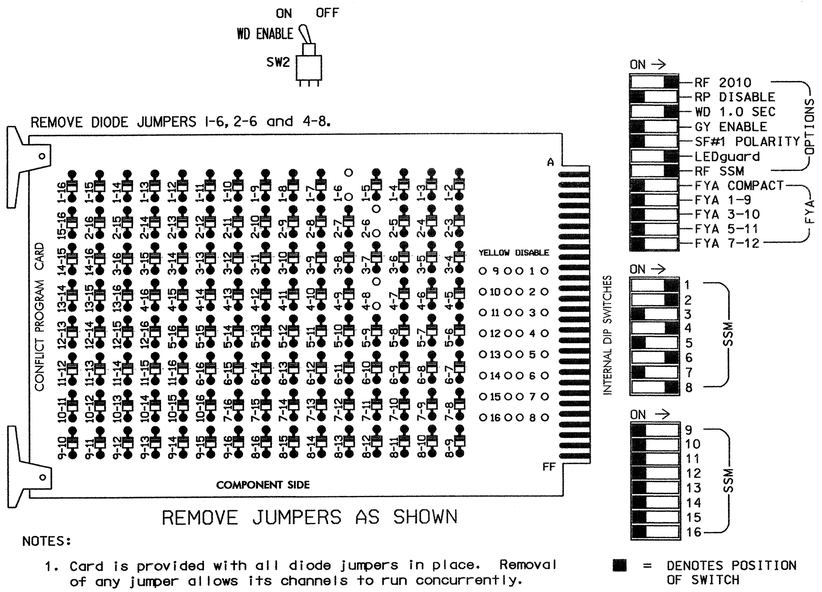

■ = DENOTES POSITION OF SWITCH

NOTES:

1. Card is provided with all diode jumpers in place. Removal of any jumper allows its channels to run concurrently.
2. Make sure jumpers SEL2-SEL5 are present on the monitor board.

NOTES

1. To prevent "flash-conflict" problems, insert red flash program blocks for all unused vehicle load switches in the output file. The installer shall verify that signal heads flash in accordance with the Signal Plans.
2. Ensure that Red Enable is active at all times during normal operation. To prevent Red Failures on unused monitor channels, tie unused red monitor inputs 3,5,7, 9,10,11,12,13,14,15 & 16 to load switch AC+ per the cabinet manufacturer's instructions.
3. Program phases 2 and 6, on the controller unit, for Start Up In Green.
4. Enable Simultaneous Gap-Out, on the controller unit, for all phases.
5. Program phases 4 and 8, on the controller unit, for Dual Entry.
6. Program phases 2 and 6, on the controller unit, for Variable Initial and Gap Reduction.

SIGNAL HEAD HOOK-UP CHART

LOAD SWITCH NO.	S1	S2	S2P	S3	S4	S4P	S5	S6	S6P	S7	S8	S8P
PHASE	1	2	2 PED	3	4	4 PED	5	6	6 PED	7	8	8 PED
SIGNAL HEAD NO.	61	21,22	NU	NU	41, 42,43	NU	NU	61,62	NU	NU	81, 82,83	NU
RED	*	128			101			134			107	
YELLOW		129			102			135			108	
GREEN		130			103			136			109	
RED ARROW												
YELLOW ARROW	126											
GREEN ARROW	127											

NU = Not Used

*Denotes install load resistor. See load resistor installation detail this sheet.

EQUIPMENT INFORMATION

CONTROLLER.....CONTRACTOR SUPPLIED 2070L
CABINET.....CONTRACTOR SUPPLIED 332
SOFTWARE.....ECONOLITE OASIS
CABINET MOUNT.....BASE
OUTPUT FILE POSITIONS...12
LOAD SWITCHES USED.....S1,S2,S4,S6,S8
PHASES USED.....1,2,4,6,8
OVERLAPS.....NONE

DYNAMIC BACK-UP CONTROL PROGRAMMING

(program controller as shown below)

1. From Main Menu press '2' (Phase Control), then '1' (Phase Control Functions). Scroll to the bottom of the menu and enable Dynamic/Backup Control Function 1.
2. From Phase Control Functions Menu press '2' (Dynamic/Backup Control Functions).

```
 DYNAMIC/BACKUP CONTROL FUNCTION #01
              OVERLAPS:¦ABCDEFGHIJKLMNOP
IF OVERLAPS ARE ACTIVE ¦
OR        PHASES:¦123456789101112131415 16
IF PHASES ARE ON¦ X
OMIT PHASES     ¦X
CALL PHASES     ¦  X
```

BACKUP PROTECTION PROGRAMMING COMPLETE

INPUT FILE POSITION LAYOUT

(front view)

		1	2	3	4	5	6	7	8	9	10	11	12	13	14
FILE "I"	U	SLOT	Ø1 1A	Ø2 2A	SLOT	SLOT	Ø4 4A	SLOT	SLOT	SLOT	SLOT	SLOT	SLOT	SLOT	FS DC ISOLATOR
	L	EMPTY	Ø6 1A	Ø2 2B	EMPTY	EMPTY	NOT USED	EMPTY	EMPTY	EMPTY	EMPTY	EMPTY	EMPTY	EMPTY	ST DC ISOLATOR
FILE "J"	U	SLOT	Ø6 6A	SLOT	SLOT	SLOT	Ø8 8A	Ø8 8C	SLOT	SLOT	SLOT	SLOT	SLOT	SLOT	SLOT
	L	EMPTY	Ø6 6B	EMPTY	EMPTY	EMPTY	Ø8 8B	NOT USED	EMPTY	EMPTY	EMPTY	EMPTY	EMPTY	EMPTY	EMPTY

EX.: 1A, 2A, ETC. = LOOP NO.'S

FS = FLASH SENSE
ST = STOP TIME

INPUT FILE CONNECTION & PROGRAMMING CHART

LOOP NO.	LOOP TERMINAL	INPUT FILE POS.	PIN NO.	INPUT ASSIGNMENT NO.	DETECTOR NO.	NEMA PHASE	CALL	EXTEND	FULL TIME DELAY	STRETCH TIME	DELAY TIME
1A[1]	TB2-5,6	I2U	39	1	2	1	Y	Y			15
	TB2-7,8	I2L	43	5	12	6	Y	Y	Y		3
2A	TB2-9,10	I3U	63	25	32	2	Y	Y			
2B	TB2-11,12	I3L	76	38	42	2	Y	Y	Y		3
4A	TB4-9,10	I6U	41	3	4	4	Y	Y			3
6A	TB3-5,6	J2U	40	2	6	6	Y	Y			
6B	TB3-7,8	J2L	44	6	16	6	Y	Y			
8A	TB5-9,10	J6U	42	4	8	8	Y	Y			
8B	TB5-11,12	J6L	46	8	18	8	Y	Y			10
8C	TB7-1,2	J7U	66	28	38	8	Y	Y			15

[1] Add jumpers from TB2-5 to TB2-7, and from TB2-6 to TB2-8.

INPUT FILE POSITION LEGEND: J2L
FILE J
SLOT 2
LOWER

THIS ELECTRICAL DETAIL IS FOR
THE SIGNAL DESIGN: 13-0466 T1
DESIGNED: February 2008
SEALED: 02-20-08
REVISED: N/A

LOAD RESISTOR INSTALLATION DETAIL

ACCEPTABLE VALUES

VALUE (ohms)	WATTAGE
1.5K - 1.9K	25W (min)
2.0K - 3.0K	10W (min)

PHASE 1 RED FIELD TERMINAL (125)

AC-

NOTE: The purpose of this resistor is to load the channel red monitor input in order for the Signal Sequence Monitor to use the full signal sequence monitoring capability on channels that do not use the red display in the field.

Signal Upgrade - Temp. 1

ELECTRICAL AND PROGRAMMING DETAILS FOR:

Prepared in the Offices of:
Traffic Engineering and Safety Systems Branch
STATE OF NORTH CAROLINA DEPARTMENT OF TRANSPORTATION
Signals Management Section
750 N. Greenfield Pwky, Garner, NC 27529

NC 191 (Brevard Road)
at
SR 3600 (Farmers Market)/
SR 3414 (East Oakview Road)

Division 13 Buncombe County Asheville

PLAN DATE: February 2008 REVIEWED BY: JTR
PREPARED BY: James Peterson REVIEWED BY:

REVISIONS	INIT.	DATE

SEAL
NORTH CAROLINA PROFESSIONAL SEAL 008453 ENGINEER JOHN T. ROWE, JR.

John T. Rowe, Jr. 2-28-08
SIGNATURE DATE

SIG. INVENTORY NO. 13-0466 T1

26-FEB-2008 14:02
z:\ess\signals\work\groups\sig mon\peterson\#13466_sm_ele_xxx.dgn
jtpeterson

PROJECT REFERENCE NO.	SHEET NO.
U-3601	Sig.23

PHASING DIAGRAM

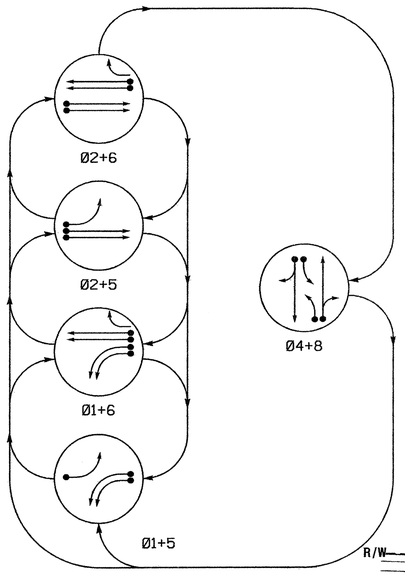

PHASING DIAGRAM DETECTION LEGEND

- DETECTED MOVEMENT
- UNDETECTED MOVEMENT (OVERLAP)
- UNSIGNALIZED MOVEMENT
- PEDESTRIAN MOVEMENT

TABLE OF OPERATION

SIGNAL FACE	PHASE 01+5	PHASE 01+6	PHASE 02+5	PHASE 02+6	PHASE 04+8	FLASH
11,12	~~←~~	~~←~~	~~R~~	~~R~~	~~R~~	~~R~~
21,22	R	R	G	G	R	Y
41,42	R	R	R	R	G	R
51	~~←~~	~~R~~	~~←~~	~~R~~	~~R~~	~~R~~
61,62	R	G	R	G	R	Y
81,82,83	R	R	R	R	G	R

SIGNAL FACE I.D.

Denotes L.E.D.

11,12
51

21,22
41,42
61,62
81,82,83

2070L LOOP & DETECTOR INSTALLATION

INDUCTIVE LOOPS					DETECTOR PROGRAMMING							
LOOP	SIZE (FT)	DISTANCE FROM STOPBAR (FT)	TURNS	NEW LOOP	PHASE	CALLING	EXTENSION	FULL TIME DELAY	STRETCH TIME	DELAY TIME	SYSTEM LOOP	NEW CARD
1A	6X40	0	2-4-2	Y	1	Y	Y	-	-	3	-	-
1B	6X40	0	2-4-2	Y	1	Y	Y	-	-	-	-	Y
2A	6X6	300	5	Y	2	Y	Y	-	-	-	-	-
4A	6X40	0	2-4-2	Y	4	Y	Y	-	-	-	-	-
4B	6X40	0	2-4-2	Y	4	Y	Y	-	-	10	-	Y
5A	6X40	0	2-4-2	-	5	Y	Y	-	-	3	-	-
6A	6X6	300	6	Y	6	Y	Y	-	-	-	-	-
6B	6X6	300	6	Y	6	Y	Y	-	-	-	-	-
8A	6X40	0	2-4-2	-	8	Y	Y	-	-	-	-	-
8B	6X40	0	2-4-2	-	8	Y	Y	-	-	10	-	-
8C	6X15	0	4	-	8	Y	Y	-	-	15	-	-

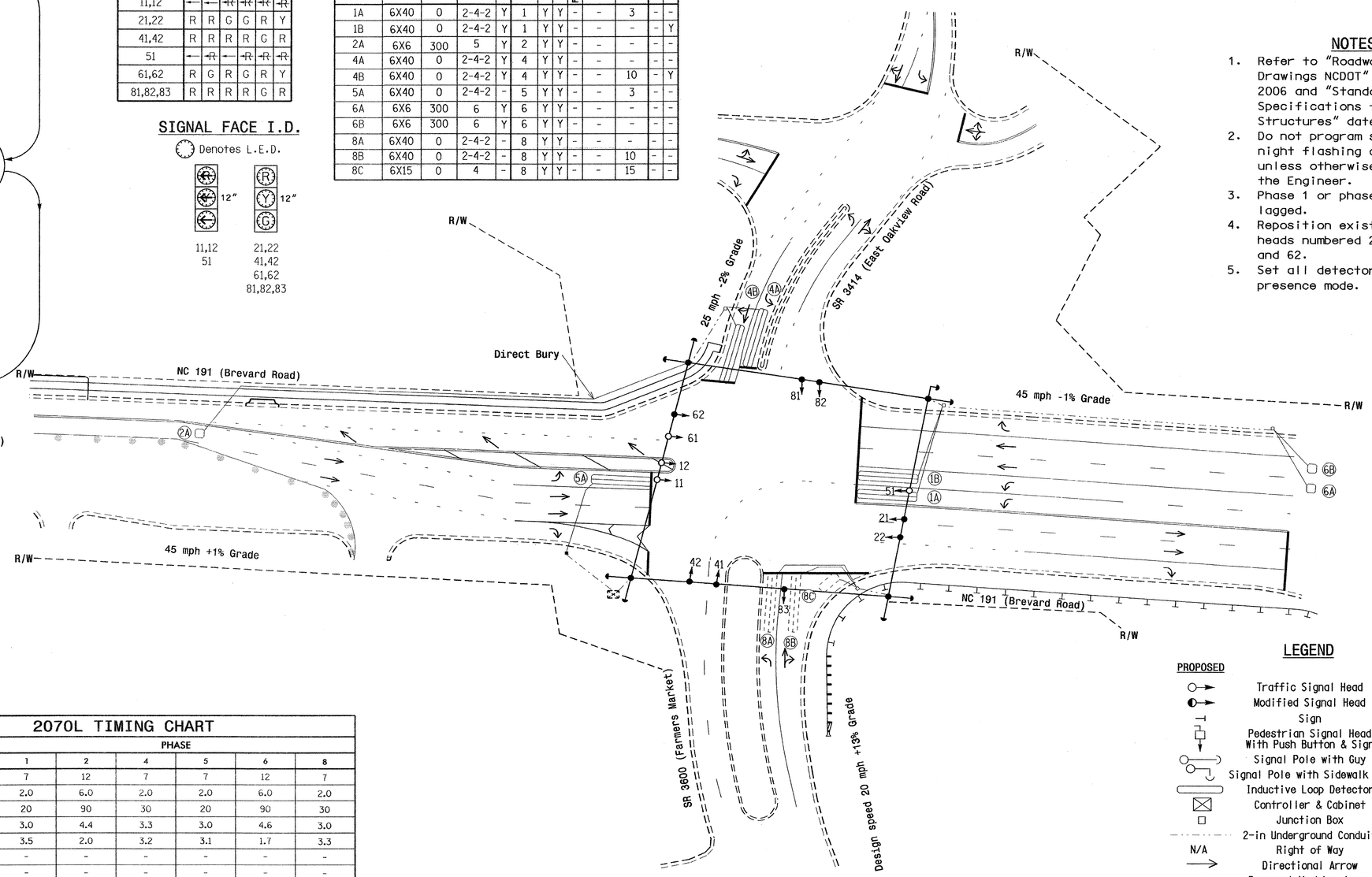

2070L TIMING CHART

FEATURE	PHASE 1	PHASE 2	PHASE 4	PHASE 5	PHASE 6	PHASE 8
Min Green 1 *	7	12	7	7	12	7
Extension 1 *	2.0	6.0	2.0	2.0	6.0	2.0
Max Green 1 *	20	90	30	20	90	30
Yellow Clearance	3.0	4.4	3.3	3.0	4.6	3.0
Red Clearance	3.5	2.0	3.2	3.1	1.7	3.3
Walk 1 *	-	-	-	-	-	-
Don't Walk 1	-	-	-	-	-	-
Seconds Per Actuation *	-	2.5	-	-	1.5	-
Max Variable Initial *	-	40	-	-	34	-
Time Before Reduction *	-	20	-	-	20	-
Time To Reduce *	-	40	-	-	40	-
Minimum Gap	-	3.0	-	-	3.0	-
Recall Mode	-	MIN RECALL	-	-	MIN RECALL	-
Vehicle Call Memory	-	YELLOW	-	-	YELLOW	-
Dual Entry	-	-	ON	-	-	ON
Simultaneous Gap	ON	ON	ON	ON	ON	ON

* These values may be field adjusted. Do not adjust Min Green and Extension times for phases 2 and 6 lower than what is shown. Min Green for all other phases should not be lower than 4 seconds.

5 Phase
Fully Actuated
(Isolated)

NOTES

1. Refer to "Roadway Standard Drawings NCDOT" dated July 2006 and "Standard Specifications for Roads and Structures" dated July 2006.
2. Do not program signal for late night flashing operation unless otherwise directed by the Engineer.
3. Phase 1 or phase 5 may be lagged.
4. Reposition existing signal heads numbered 21, 22, 41, 42 and 62.
5. Set all detector units to presence mode.

LEGEND

PROPOSED		EXISTING
	Traffic Signal Head	
	Modified Signal Head	N/A
	Sign	
	Pedestrian Signal Head With Push Button & Sign	
	Signal Pole with Guy	
	Signal Pole with Sidewalk Guy	
	Inductive Loop Detector	
	Controller & Cabinet	
	Junction Box	
	2-in Underground Conduit	
N/A	Right of Way	
	Directional Arrow	
	Pavement Marking Arrow	
	Construction Zone Drums	

Signal Upgrade - Temporary Signal 2 - TCP Phase II

Prepared in the Offices of:
Traffic Engineering and Safety Systems Branch
Signals and Geometrics Section
750 N. Greenfield Pkwy, Garner, NC 27529

NC 191 (Brevard Road)
at
SR 3600 (Farmers Market)/
SR 3414 (East Oakview Road)
Division 13 Buncombe County Asheville

PLAN DATE: February 2008	REVIEWED BY:
PREPARED BY: I.O. Umozurike	REVIEWED BY:

REVISIONS	INIT.	DATE

SCALE 0 40 1"=40'

SEAL
NORTH CAROLINA PROFESSIONAL SEAL 24393 ENGINEER TIMOTHY J. WILLIAMS
SIGNATURE T.J. Williams DATE 2/20/08.
SIG. INVENTORY NO. 13-0466 T2

18-FEB-2008 16:35
s:\traffic\Signals\workgroups\tip projects\u-3601\signals\designs\signals\13-0466\13-0466_2008xxxx.dgn
iumozurike

PROJECT REFERENCE NO.	SHEET NO.
U-3601	Sig. 24

EDI MODEL 2010ECL-NC CONFLICT MONITOR PROGRAMMING DETAIL

(remove jumpers and set switches as shown)

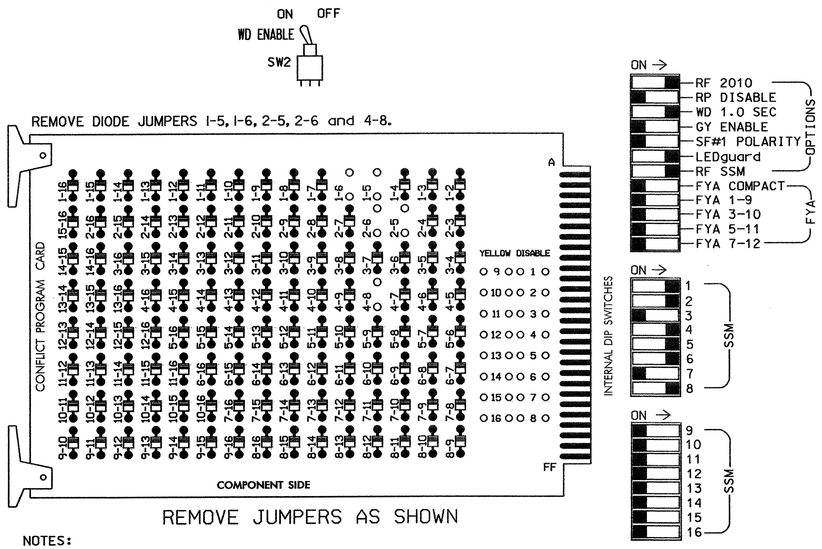

■ = DENOTES POSITION OF SWITCH

NOTES:

1. Card is provided with all diode jumpers in place. Removal of any jumper allows its channels to run concurrently.
2. Make sure jumpers SEL2-SEL5 are present on the monitor board.

NOTES

1. To prevent "flash-conflict" problems, insert red flash program blocks for all unused vehicle load switches in the output file. The installer shall verify that signal heads flash in accordance with the Signal Plans.
2. Ensure that Red Enable is active at all times during normal operation. To prevent Red Failures on unused monitor channels, tie unused red monitor inputs 3,7, 9,10,11,12,13,14,15 & 16 to load switch AC+ per the cabinet manufacturer's instructions.
3. Program phases 2 and 6, on the controller unit, for Start Up In Green.
4. Enable Simultaneous Gap-Out, on the controller unit, for all phases.
5. Program phases 4 and 8, on the controller unit, for Dual Entry.
6. Program phases 2 and 6, on the controller unit, for Variable Initial and Gap Reduction.

SIGNAL HEAD HOOK-UP CHART

LOAD SWITCH NO.	S1	S2	S2P	S3	S4	S4P	S5	S6	S6P	S7	S8	S8P
PHASE	1	2	2 PED	3	4	4 PED	5	6	6 PED	7	8	8 PED
SIGNAL HEAD NO.	11,12	21,22	NU	NU	41,42	NU	51	61,62	NU	NU	81, 82,83	NU
RED		128			101			134			107	
YELLOW		129			102			135			108	
GREEN		130			103			136			109	
RED ARROW	125						131					
YELLOW ARROW	126						132					
GREEN ARROW	127						133					

NU = Not Used

EQUIPMENT INFORMATION

CONTROLLER.....CONTRACTOR SUPPLIED 2070L
CABINET.....CONTRACTOR SUPPLIED 332
SOFTWARE.....ECONOLITE OASIS
CABINET MOUNT.....BASE
OUTPUT FILE POSITIONS...12
LOAD SWITCHES USED.....S1,S2,S4,S5,S6,S8
PHASES USED.....1,2,4,5,6,8
OVERLAPS.....NONE

INPUT FILE POSITION LAYOUT

(front view)

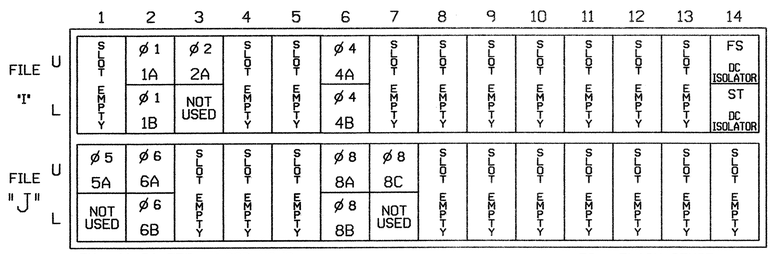

EX.: 1A, 2A, ETC. = LOOP NO.'S

FS = FLASH SENSE
ST = STOP TIME

INPUT FILE CONNECTION & PROGRAMMING CHART

LOOP NO.	LOOP TERMINAL	INPUT FILE POS.	PIN NO.	INPUT ASSIGNMENT NO.	DETECTOR NO.	NEMA PHASE	CALL	EXTEND	FULL TIME DELAY	STRETCH TIME	DELAY TIME
1A	TB2-5,6	I2U	39	1	2	1	Y	Y			3
1B	TB2-7,8	I2L	43	5	12	1	Y	Y			
2A	TB2-9,10	I3U	63	25	32	2	Y	Y			
4A	TB4-9,10	I6U	41	3	4	4	Y	Y			
4B	TB4-11,12	I6L	45	7	14	4	Y	Y			10
5A	TB3-1,2	J1U	55	17	5	5	Y	Y			3
6A	TB3-5,6	J2U	40	2	6	6	Y	Y			
6B	TB3-7,8	J2L	44	6	16	6	Y	Y			
8A	TB5-9,10	J6U	42	4	8	8	Y	Y			
8B	TB5-11,12	J6L	46	8	18	8	Y	Y			10
8C	TB7-1,2	J7U	66	28	38	8	Y	Y			15

INPUT FILE POSITION LEGEND: J2L
FILE J
SLOT 2
LOWER

THIS ELECTRICAL DETAIL IS FOR
THE SIGNAL DESIGN: 13-0466 T2
DESIGNED: February 2008
SEALED: 02-20-08
REVISED: N/A

Signal Upgrade - Temp. 2

ELECTRICAL AND PROGRAMMING DETAILS FOR:

Prepared in the Offices of:
Traffic Engineering and Safety Systems Branch
Signals Management Section
750 N. Greenfield Pwky, Garner, NC 27529

NC 191 (Brevard Road)
at
SR 3600 (Farmers Market)/
SR 3414 (East Oakview Road)

Division 13 Buncombe County Asheville

PLAN DATE: February 2008 REVIEWED BY: JTR
PREPARED BY: James Peterson REVIEWED BY:

REVISIONS	INIT.	DATE

SEAL
NORTH CAROLINA PROFESSIONAL SEAL 008453 ENGINEER JOHN T. ROWE, JR.
SIGNATURE DATE 2-28-08
SIG. INVENTORY NO. 13-0466 T2

26-FEB-2008 14:06
S:\TMS\Signals\Workgroups\sig mon\petersonc\13046c_sm_ele_xxx.dgn
jtpeterson

PROJECT REFERENCE NO.	SHEET NO.
U-3601	Sig.25

PHASING DIAGRAM

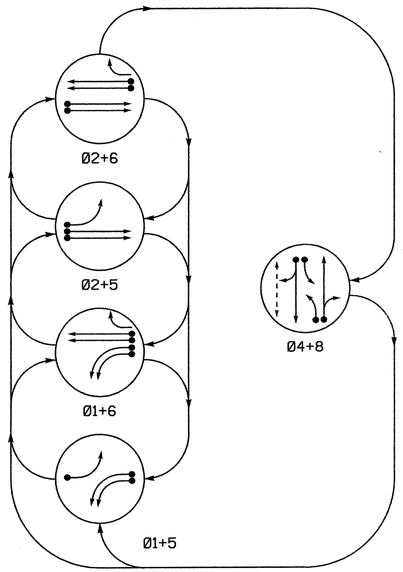

PHASING DIAGRAM DETECTION LEGEND

- DETECTED MOVEMENT
- UNDETECTED MOVEMENT (OVERLAP)
- UNSIGNALIZED MOVEMENT
- PEDESTRIAN MOVEMENT

TABLE OF OPERATION

SIGNAL FACE	PHASE 01+5	01+6	02+5	02+6	04+8	FLASH
11,12	←	←	~~R~~	~~R~~	~~R~~	~~R~~
21,22	R	R	G	G	R	Y
41,42	R	R	R	R	G	R
51	←	~~R~~	←	~~R~~	~~R~~	~~R~~
61,62	R	G	R	G	R	Y
81,82	R	R	R	R	G	R
P41, P42	DW	DW	DW	DW	W	DRK

W - Walk
DW - Don't Walk
DRK - Dark

SIGNAL FACE I.D.

Denotes L.E.D.

2070L LOOP & DETECTOR INSTALLATION

INDUCTIVE LOOPS					DETECTOR PROGRAMMING						
LOOP	SIZE (FT)	DISTANCE FROM STOPBAR (FT)	TURNS	NEW LOOP	PHASE	CALLING	EXTENSION	FULL TIME DELAY	STRETCH TIME	DELAY TIME	SYSTEM LOOP	NEW CARD
1A	6X40	0	2-4-2	-	1	Y	Y	-	-	3	-	-
1B	6X40	0	2-4-2	-	1	Y	Y	-	-	-	-	-
2A/S20	6X6	355	4	Y	2	Y	Y	-	-	-	Y	-
2B/S21	6X6	355	4	Y	2	Y	Y	-	-	-	Y	-
4A	6X40	0	2-4-2	-	4	Y	Y	-	-	-	-	-
4B	6X40	0	2-4-2	-	4	Y	Y	-	-	10	-	-
5A	6X40	0	2-4-2	Y	5	Y	Y	-	-	-	-	-
6A/S22	6X6	300	6	-	6	Y	Y	-	-	-	Y	-
6B/S23	6X6	300	6	-	6	Y	Y	-	-	-	Y	-
8A	6X40	0	2-4-2	-	8	Y	Y	-	-	-	-	-
8B	6X40	0	2-4-2	-	8	Y	Y	-	-	10	-	-
8C	6X15	0	4	-	8	Y	Y	-	-	15	-	-

5 Phase
Fully Actuated
(NC 191 Closed Loop System)

NOTES

1. Refer to "Roadway Standard Drawings NCDOT" dated July 2006 and "Standard Specifications for Roads and Structures" dated July 2006.
2. Do not program signal for late night flashing operation unless otherwise directed by the Engineer.
3. Phase 1 or phase 5 may be lagged.
4. Set all detector units to presence mode.
5. Omit "WALK" and flashing "DON'T WALK" with no pedestrian calls.
6. Program pedestrian heads to countdown the flashing "Don't Walk" time only.
7. Maximum times shown in timing chart are for free-run operation only. Coordinated signal system timing values supersede these values.
8. Closed loop system data: Controller Asset #0466.

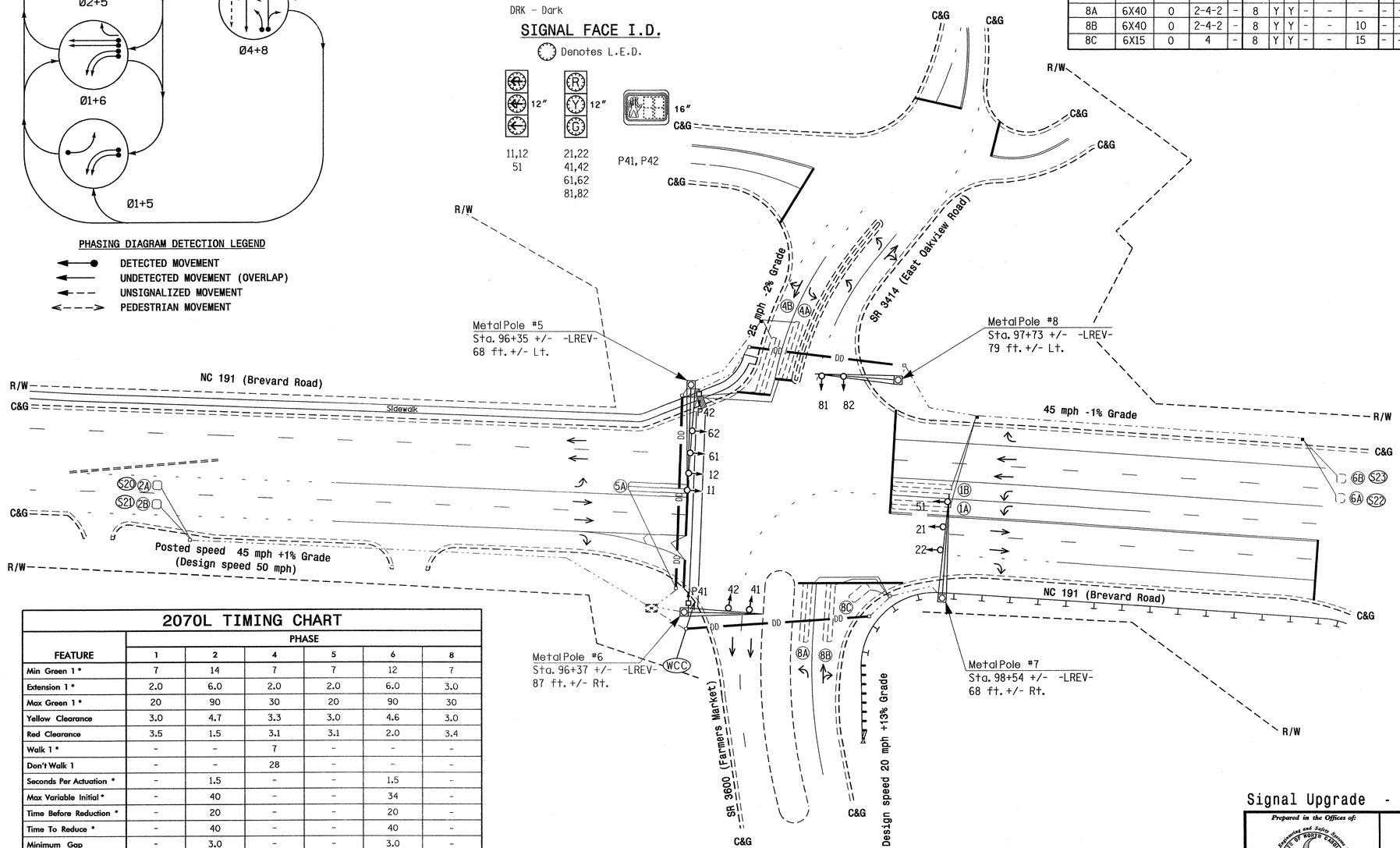

2070L TIMING CHART

FEATURE	PHASE 1	2	4	5	6	8
Min Green 1 *	7	14	7	7	12	7
Extension 1 *	2.0	6.0	2.0	2.0	6.0	3.0
Max Green 1 *	20	90	30	20	90	30
Yellow Clearance	3.0	4.7	3.3	3.0	4.6	3.0
Red Clearance	3.5	1.5	3.1	3.1	2.0	3.4
Walk 1 *	-	-	7	-	-	-
Don't Walk 1	-	-	28	-	-	-
Seconds Per Actuation *	-	1.5	-	-	1.5	-
Max Variable Initial *	-	40	-	-	34	-
Time Before Reduction *	-	20	-	-	20	-
Time To Reduce *	-	40	-	-	40	-
Minimum Gap	-	3.0	-	-	3.0	-
Recall Mode	-	MIN RECALL	-	-	MIN RECALL	-
Vehicle Call Memory	-	YELLOW	-	-	YELLOW	-
Dual Entry	-	-	ON	-	-	ON
Simultaneous Gap	ON	ON	ON	ON	ON	ON

* These values may be field adjusted. Do not adjust Min Green and Extension times for phases 2 and 6 lower than what is shown. Min Green for all other phases should not be lower than 4 seconds.

LEGEND

PROPOSED		EXISTING
	Traffic Signal Head	
	Modified Signal Head	N/A
	Sign	
	Pedestrian Signal Head With Push Button & Sign	
	Signal Pole with Guy	
	Signal Pole with Sidewalk Guy	
	Inductive Loop Detector	
	Controller & Cabinet	
	Junction Box	
	2-in Underground Conduit	
N/A	Right of Way	
	Directional Arrow	
	Pavement Marking Arrow	
DD	Directional Drill (2-2" Polyethylene Conduits)	N/A
	Metal Pole with Mastarm	
N/A	Wheel Chair Ramp Curb Cut	WCC
N/A	Wheelchair Ramp	

Signal Upgrade - Final

Prepared in the Offices of:
Traffic Engineering and Safety Systems Branch
Signals and Geometrics Section
750 N. Greenfield Pkwy, Garner, NC 27529

SCALE 0 40 1"=40'

NC 191 (Brevard Road)
at
SR 3600 (Farmers Market)/
SR 3414 (East Oakview Road)
Division 13 Buncombe County Asheville

PLAN DATE: Janaury 2008	REVIEWED BY:
PREPARED BY: I.O. Umozurike	REVIEWED BY:

REVISIONS	INIT.	DATE

SEAL
NORTH CAROLINA PROFESSIONAL SEAL 24393 ENGINEER TIMOTHY A. WILLIAMS
SIGNATURE 2/20/08 DATE
SIG. INVENTORY NO. 13-0466

27-FEB-2008 15:01
S:\traffic\Signal&Wkgroups\tip projects\u-3601\signals\designs\signals\13-0466\13-0466_2008xxxx.dgn
lfoumozurike

PROJECT REFERENCE NO.	SHEET NO.
U-3601	Sig. 26

EDI MODEL 2010ECL-NC CONFLICT MONITOR PROGRAMMING DETAIL

(remove jumpers and set switches as shown)

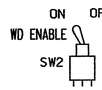

REMOVE DIODE JUMPERS 1-5, 1-6, 2-5, 2-6, 4-8, 4-14 and 8-14.

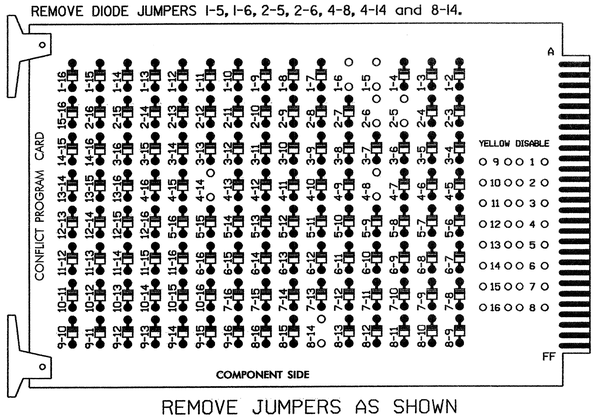

REMOVE JUMPERS AS SHOWN

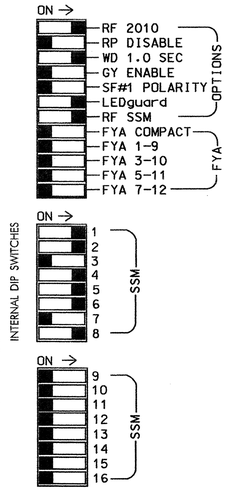

■ = DENOTES POSITION OF SWITCH

NOTES:

1. Card is provided with all diode jumpers in place. Removal of any jumper allows its channels to run concurrently.
2. Make sure jumpers SEL2-SEL5 are present on the monitor board.

NOTES

1. To prevent "flash-conflict" problems, insert red flash program blocks for all unused vehicle load switches in the output file. The installer shall verify that signal heads flash in accordance with the Signal Plans.
2. Ensure that Red Enable is active at all times during normal operation. To prevent Red Failures on unused monitor channels, tie unused red monitor inputs 3,7, 9,10,11,12,13,14,15 & 16 to load switch AC+ per the cabinet manufacturer's instructions.
3. Program phases 2 and 6, on the controller unit, for Start Up In Green.
4. Enable Simultaneous Gap-Out, on the controller unit, for all phases.
5. Program phases 4 and 8, on the controller unit, for Dual Entry.
6. Program phases 2 and 6, on the controller unit, for Variable Initial and Gap Reduction.
7. Program phase 4, for 'STARTUP PED CALL'.
8. The cabinet and controller are part of the NC 191 Close Loop System.

SIGNAL HEAD HOOK-UP CHART

LOAD SWITCH NO.	S1	S2	S2P	S3	S4	S4P	S5	S6	S6P	S7	S8	S8P
PHASE	1	2	2 PED	3	4	4 PED	5	6	6 PED	7	8	8 PED
SIGNAL HEAD NO.	11,12	21,22	NU	NU	41,42	P41, P42	51	61,62	NU	NU	81,82	NU
RED		128			101			134			107	
YELLOW		129			102			135			108	
GREEN		130			103			136			109	
RED ARROW	125						131					
YELLOW ARROW	126						132					
GREEN ARROW	127						133					
✋						104						
🚶						106						

NU = Not Used

EQUIPMENT INFORMATION

CONTROLLER.....CONTRACTOR SUPPLIED 2070L
CABINET.....CONTRACTOR SUPPLIED 332
SOFTWARE.....ECONOLITE OASIS
CABINET MOUNT.....BASE
OUTPUT FILE POSITIONS...12
LOAD SWITCHES USED.....S1,S2,S4,S4P,S5,S6,S8
PHASES USED.....1,2,4,5,6,8,4 PED
OVERLAPS.....NONE

COUNTDOWN PEDESTRIAN SIGNAL OPERATION

Countdown Ped Signals are required to display timing only during Ped Clearance Interval. Consult Ped Signal Module user's manual for instructions on selecting this feature.

INPUT FILE POSITION LAYOUT

(front view)

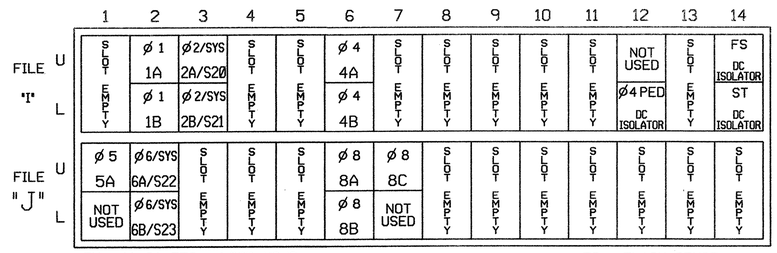

EX.: 1A, 2A, ETC. = LOOP NO.'S

FS = FLASH SENSE
ST = STOP TIME

INPUT FILE CONNECTION & PROGRAMMING CHART

LOOP NO.	LOOP TERMINAL	INPUT FILE POS.	PIN NO.	INPUT ASSIGNMENT NO.	DETECTOR NO.	NEMA PHASE	CALL	EXTEND	FULL TIME DELAY	STRETCH TIME	DELAY TIME
1A	TB2-5,6	I2U	39	1	2	1	Y	Y			3
1B	TB2-7,8	I2L	43	5	12	1	Y	Y			
2A/S20	TB2-9,10	I3U	63	25	32	2/SYS	Y	Y			
2B/S21	TB2-11,12	I3L	76	38	42	2/SYS	Y	Y			
4A	TB4-9,10	I6U	41	3	4	4	Y	Y			
4B	TB4-11,12	I6L	45	7	14	4	Y	Y			10
5A	TB3-1,2	J1U	55	17	5	5	Y	Y			
6A/S22	TB3-5,6	J2U	40	2	6	6/SYS	Y	Y			
6B/S23	TB3-7,8	J2L	44	6	16	6/SYS	Y	Y			
8A	TB5-9,10	J6U	42	4	8	8	Y	Y			
8B	TB5-11,12	J6L	46	8	18	8	Y	Y			10
8C	TB7-1,2	J7U	66	28	38	8	Y	Y			15
PED PUSH BUTTONS											
P41,P42	TB8-5,6	I12L	69	31	PED 4	4 PED					

NOTE:
INSTALL DC ISOLATOR IN INPUT FILE SLOTS I12.

INPUT FILE POSITION LEGEND: J2L
FILE J
SLOT 2
LOWER

THIS ELECTRICAL DETAIL IS FOR
THE SIGNAL DESIGN: 13-0466
DESIGNED: January 2008
SEALED: 02-20-08
REVISED: N/A

Signal Upgrade - Final

ELECTRICAL AND PROGRAMMING DETAILS FOR:

Prepared in the Offices of:
Traffic Engineering and Safety Systems Branch
Signal Management Section
750 N. Greenfield Pwky, Garner, NC 27529

NC 191 (Brevard Road)
at
SR 3600 (Farmers Market)/
SR 3414 (East Oakview Road)

Division 13 Buncombe County Asheville

PLAN DATE: February 2008 REVIEWED BY: JTR
PREPARED BY: James Peterson REVIEWED BY:

REVISIONS	INIT.	DATE

SEAL
NORTH CAROLINA PROFESSIONAL SEAL 008453 ENGINEER JOHN T. ROWE, JR.

John T. Rowe Jr. 2-28-08
SIGNATURE DATE
SIG. INVENTORY NO. 13-0466

26-FEB-2008 14:39
s:\traffic\ed&s\working\cupsmsig mpmpeterson\13046s_sm.ele.xxx.dgn
jtpeterson

METAL POLE No. 5 and 6

PROJECT REFERENCE NO.	SHEET NO.
U-3601	Sig.27

Design Loading for METAL POLE NO. 5

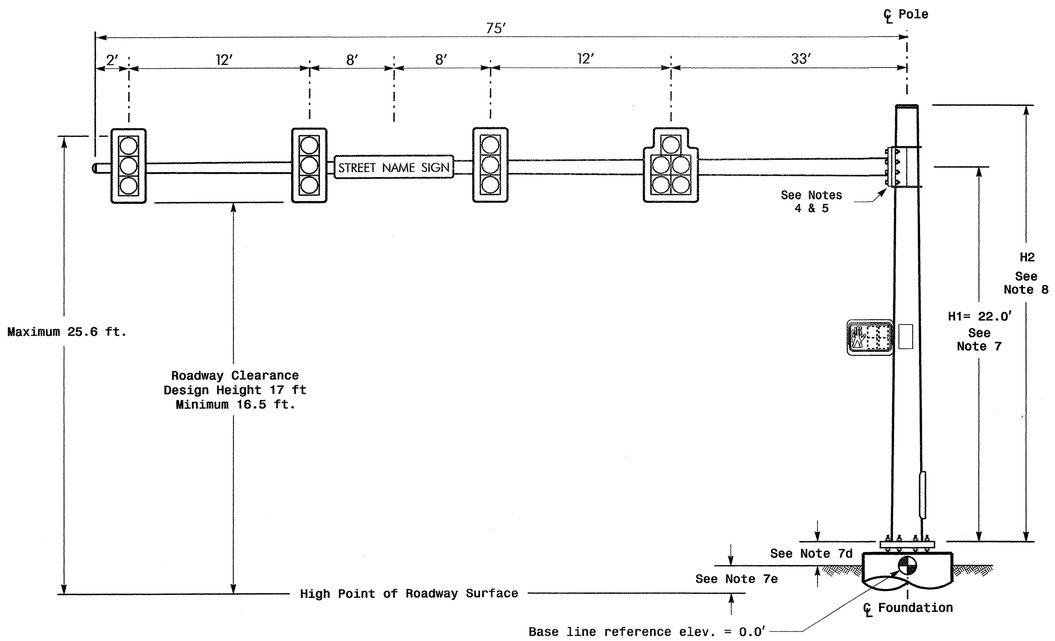

Elevation View

Design Loading for METAL POLE NO. 6

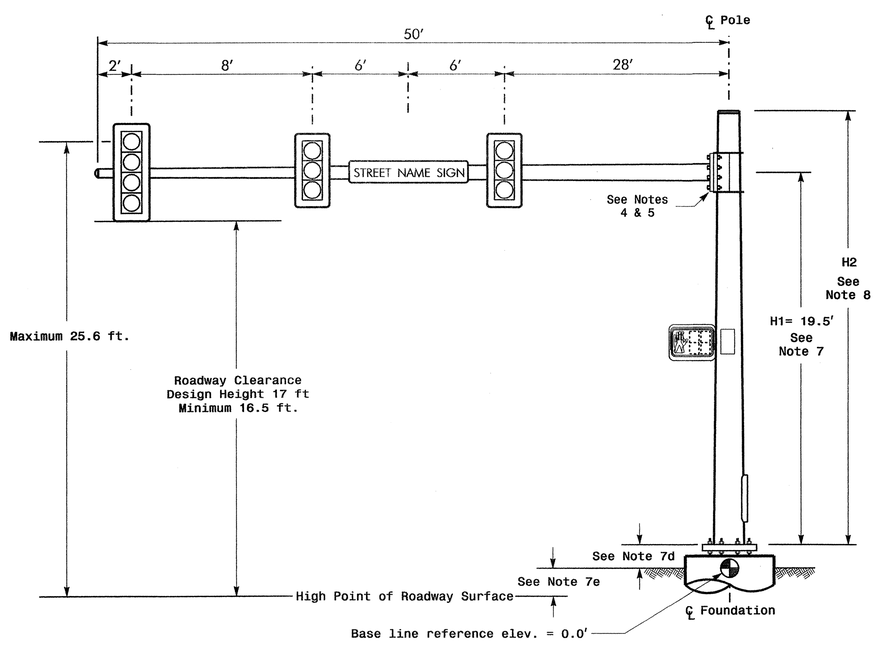

Elevation View

SPECIAL NOTE

The contractor is responsible for verifying that the mast arm attachment height (H1) will provide the "Design Height" clearance from the roadway before submitting final shop drawings for approval. Verify elevation data below which was obtained by field measurement or from available project survey data.

Elevation Data for Mast Arm Attachment (H1)

Elevation Differences for:	Pole 5	Pole 6
Baseline reference point at ℄ Foundation @ ground level	0.0 ft.	0.0 ft.
Elevation difference at High point of roadway surface	+3.0 ft.	+0.5 ft.
Elevation difference at Edge of travelway or face of curb	N/A	N/A

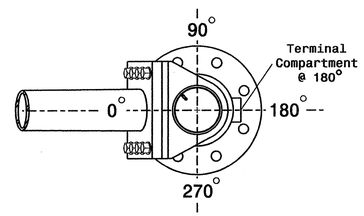

POLE RADIAL ORIENTATION

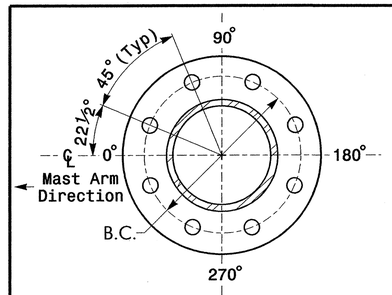

8 BOLT BASE PLATE DETAIL

See Note 6

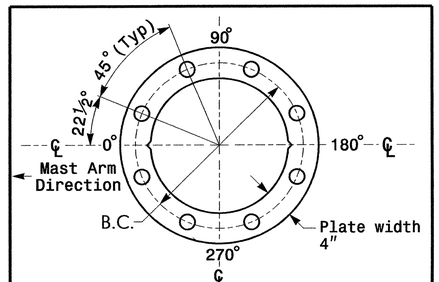

BASE PLATE TEMPLATE & ANCHOR BOLT LOCK PLATE DETAIL

For 8 Bolt Base Plate

MAST ARM LOADING SCHEDULE

LOADING SYMBOL	DESCRIPTION	AREA	SIZE	WEIGHT
	SIGNAL HEAD 12"–5 SECTION–WITH BACKPLATE AND ASTRO–BRAC	16.3 S.F.	42.0" W X 56.0" L	103 LBS
	SIGNAL HEAD 12"–4 SECTION (VERTICAL)–WITH BACKPLATE AND ASTRO–BRAC	11.5 S.F.	25.5" W X 66.0" L	74 LBS
	SIGNAL HEAD 12"–3 SECTION–WITH BACKPLATE AND ASTRO–BRAC	9.3 S.F.	25.5" W X 52.5" L	60 LBS
STREET NAME SIGN	STREET NAME SIGN RIGID MOUNTED WITH ASTRO–SIGN–BRAC	12.0 S.F.	18.0" W X 96.0" L	27 LBS
	PEDESTRIAN SIGNAL HEAD WITH MOUNTING HARDWARE	2.2 S.F.	18.5" W X 17.0" L	21 LBS

NOTES

Design Reference Material

1. Design the traffic signal structure and foundation in accordance with:
   - The 4th Edition 2001 AASHTO "Standard Specifications for Structural Supports for Highway Signs, Luminaires, and Traffic Signals, including all of the latest interim revisions.
   - The 2006 NCDOT "Standard Specifications for Roads and Structures". The latest addenda to these specifications can be found in the traffic signal project special provisions.
   - The 2006 NCDOT Roadway Standard Drawings.
   - The traffic signal project plans and special provisions.

Design Requirements

2. Design the traffic signal structure using the loading conditions shown in the elevation views. These are anticipated worst case "Design loads" and may not represent the actual loads that will be applied at the time of the installation. The contractor should refer to the traffic signal plans for the actual loads that will be applied at the time of the installation.
3. Design all signal supports using stress ratios that do not exceed 0.9.
4. The camber design for mast arm deflection should provide an appearance of a low pitched arch where the tip or the free end of the mast arm does not deflect below horizontal when fully loaded.
5. A clamp-type bolted mast arm-to-pole connection may be used instead of the welded ring stiffened box connection shown as long as the connection meets all of the design requirements.
6. Design base plate with 8 anchor bolt holes. Provide 2 inch x 60 inch anchor bolts.
7. The mast arm attachment height (H1) shown is based on the following design assumptions:
   a. Mast arm slope and deflection are not considered in determining the arm attachment height as they are assumed to offset each other.
   b. Signal heads attached to the mast arm are rigid mounted and vertically centered on the arm.
   c. The roadway clearance height for design is as shown in the elevation views.
   d. The top of the pole base plate is .75 feet above the ground elevation.
   e. Refer to the Elevation Data chart for elevation differences between the proposed foundation ground level and the high point on the roadway.
8. The pole manufacturer will determine the total height (H2) of each pole using the greater of the following:
   - Mast arm attachment height (H1) plus 2 feet, or
   - H1 plus ½ of the total height of the mast arm attachment assembly plus 1 foot.
9. If pole location adjustments are required, the contractor must gain approval from the engineer as this may affect the mast arm lengths and arm attachment heights. The contractor may contact the Signals & Geometrics Structural Engineer for assistance at (919) 773-2800.
10. The contractor is responsible for verifying that the mast arm length shown will allow proper positioning of the signal heads over the roadway.
11. The contractor is responsible for providing soil penetration testing data (SPT) to the pole manufacturer so site specific foundations can be designed.

NCDOT Wind Zone 4 (90 mph)

Prepared in the Offices of:
Traffic Engineering and Safety Systems Branch
STATE OF NORTH CAROLINA DEPARTMENT OF TRANSPORTATION
Signals and Geometrics Section
750 N. Greenfield Pkwy, Garner, NC 27529

NC 191 (Brevard Road)
At
SR 3600 (Farmers Market)/
SR 3414 (East Oakview Road)

Division 13 Buncombe County Asheville

PLAN DATE: February 2008 REVIEWED BY:
PREPARED BY: I.O.Umozurike REVIEWED BY:

SCALE 0 N/A N/A

REVISIONS	INIT.	DATE

SEAL
NORTH CAROLINA PROFESSIONAL SEAL 24393 ENGINEER TIMOTHY R. WILLIAMS
SIGNATURE T.R. Williams DATE 3/4/08
SIG. INVENTORY NO. 13-0466

04-MAR-2008 12:19
s:\traffic\Signals\Workgroups\ftp projects\u-3601\signals\designs\signals\13-0466\13-0466_sig_mp_2008xxxx.dgn
iomozurike

METAL POLE No. 7 and 8

PROJECT REFERENCE NO.	SHEET NO.
U-3601	Sig.28

Design Loading for METAL POLE NO. 7

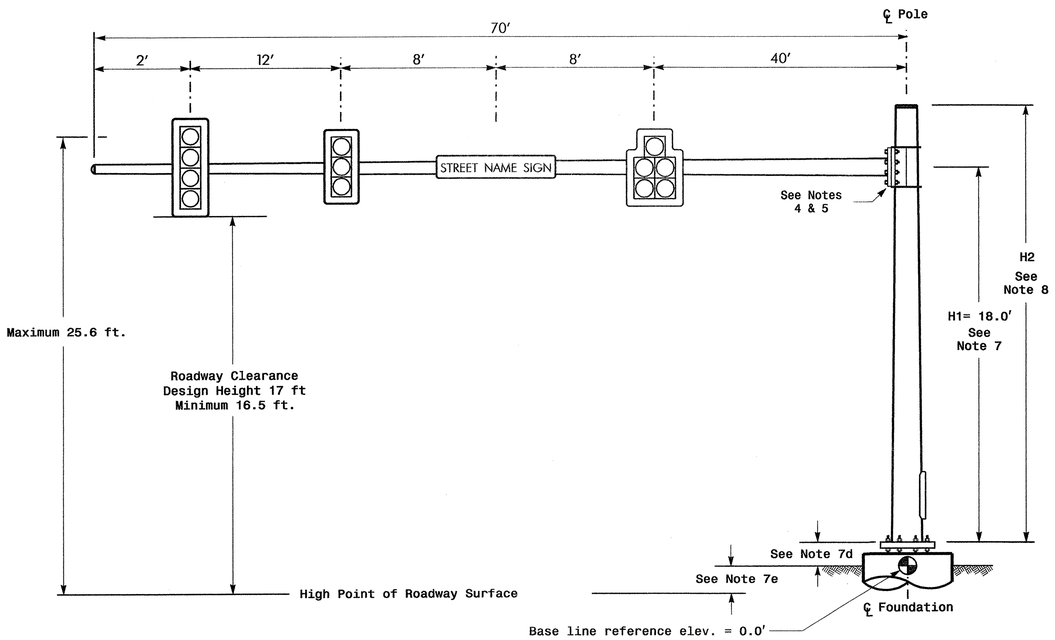

Elevation View

Design Loading for METAL POLE NO. 8

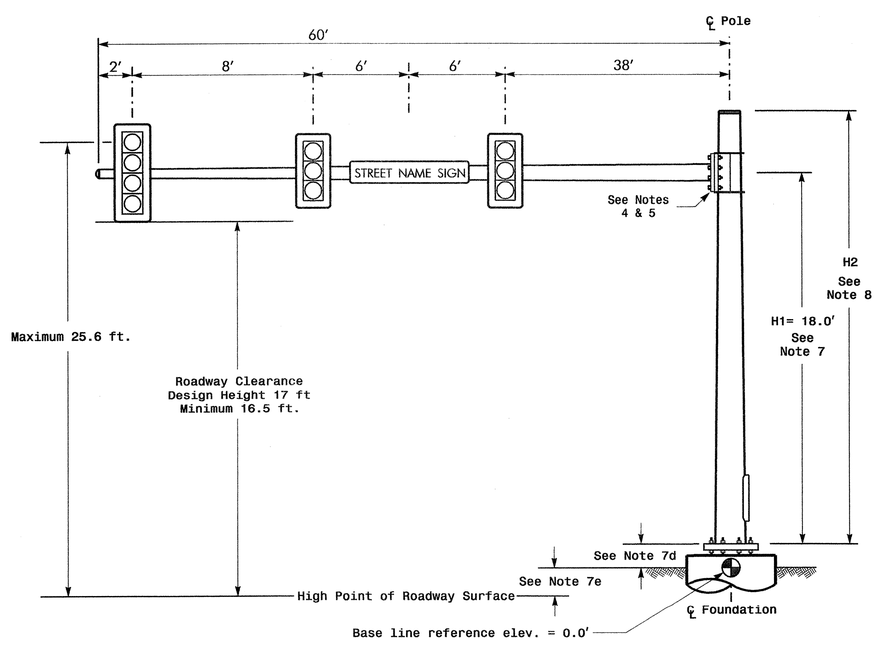

Elevation View

SPECIAL NOTE

The contractor is responsible for verifying that the mast arm attachment height (H1) will provide the "Design Height" clearance from the roadway before submitting final shop drawings for approval. Verify elevation data below which was obtained by field measurement or from available project survey data.

Elevation Data for Mast Arm Attachment (H1)

Elevation Differences for:	Pole 7	Pole 8
Baseline reference point at ℄ Foundation @ ground level	0.0 ft.	0.0 ft.
Elevation difference at High point of roadway surface	-1.0 ft.	-1.0 ft.
Elevation difference at Edge of travelway or face of curb	N/A	N/A

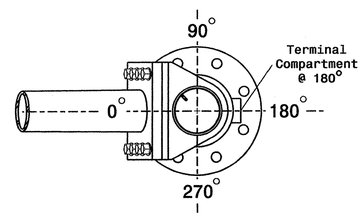

POLE RADIAL ORIENTATION

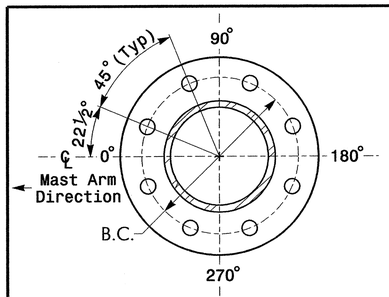

8 BOLT BASE PLATE DETAIL

See Note 6

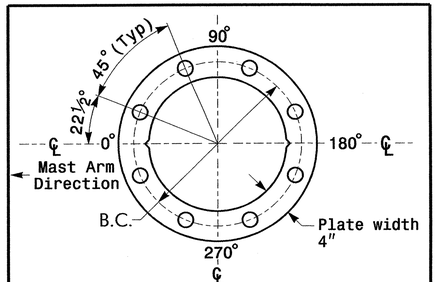

BASE PLATE TEMPLATE & ANCHOR BOLT LOCK PLATE DETAIL

For 8 Bolt Base Plate

MAST ARM LOADING SCHEDULE

LOADING SYMBOL	DESCRIPTION	AREA	SIZE	WEIGHT
	SIGNAL HEAD 12″–5 SECTION–WITH BACKPLATE AND ASTRO–BRAC	16.3 S.F.	42.0″ W X 56.0″ L	103 LBS
	SIGNAL HEAD 12″–4 SECTION (VERTICAL)–WITH BACKPLATE AND ASTRO–BRAC	11.5 S.F.	25.5″ W X 66.0″ L	74 LBS
	SIGNAL HEAD 12″–3 SECTION–WITH BACKPLATE AND ASTRO–BRAC	9.3 S.F.	25.5″ W X 52.5″ L	60 LBS
STREET NAME SIGN	STREET NAME SIGN RIGID MOUNTED WITH ASTRO–SIGN–BRAC	12.0 S.F.	18.0″ W X 96.0″ L	27 LBS

NOTES

Design Reference Material

1. Design the traffic signal structure and foundation in accordance with:
   - The 4th Edition 2001 AASHTO "Standard Specifications for Structural Supports for Highway Signs, Luminaires, and Traffic Signals, including all of the latest interim revisions.
   - The 2006 NCDOT "Standard Specifications for Roads and Structures". The latest addenda to these specifications can be found in the traffic signal project special provisions.
   - The 2006 NCDOT Roadway Standard Drawings.
   - The traffic signal project plans and special provisions.

Design Requirements

2. Design the traffic signal structure using the loading conditions shown in the elevation views. These are anticipated worst case "Design loads" and may not represent the actual loads that will be applied at the time of the installation. The contractor should refer to the traffic signal plans for the actual loads that will be applied at the time of the installation.
3. Design all signal supports using stress ratios that do not exceed 0.9.
4. The camber design for mast arm deflection should provide an appearance of a low pitched arch where the tip or the free end of the mast arm does not deflect below horizontal when fully loaded.
5. A clamp-type bolted mast arm-to-pole connection may be used instead of the welded ring stiffened box connection shown as long as the connection meets all of the design requirements.
6. Design base plate with 8 anchor bolt holes. Provide 2 inch x 60 inch anchor bolts.
7. The mast arm attachment height (H1) shown is based on the following design assumptions:
   a. Mast arm slope and deflection are not considered in determining the arm attachment height as they are assumed to offset each other.
   b. Signal heads attached to the mast arm are rigid mounted and vertically centered on the arm.
   c. The roadway clearance height for design is as shown in the elevation views.
   d. The top of the pole base plate is .75 feet above the ground elevation.
   e. Refer to the Elevation Data chart for elevation differences between the proposed foundation ground level and the high point on the roadway.
8. The pole manufacturer will determine the total height (H2) of each pole using the greater of the following:
   - Mast arm attachment height (H1) plus 2 feet, or
   - H1 plus ½ of the total height of the mast arm attachment assembly plus 1 foot.
9. If pole location adjustments are required, the contractor must gain approval from the engineer as this may affect the mast arm lengths and arm attachment heights. The contractor may contact the Signals & Geometrics Structural Engineer for assistance at (919) 773-2800.
10. The contractor is responsible for verifying that the mast arm length shown will allow proper positioning of the signal heads over the roadway.
11. The contractor is responsible for providing soil penetration testing data (SPT) to the pole manufacturer so site specific foundations can be designed.

NCDOT Wind Zone 4 (90 mph)

Prepared in the Offices of:
Traffic Engineering and Safety Systems Branch
Signals and Geometrics Section
750 N. Greenfield Pkwy, Garner, NC 27529

NC 191 (Brevard Road)
At
SR 3600 (Farmers Market)/
SR 3414 (East Oakview Road)

Division 13 Buncombe County Asheville

PLAN DATE: February 2008 REVIEWED BY:
PREPARED BY: I.O.Umozurike REVIEWED BY:

SCALE 0 N/A N/A

REVISIONS	INIT.	DATE

SEAL
NORTH CAROLINA PROFESSIONAL SEAL 24393 ENGINEER TIMOTHY A. WILLIAMS
SIGNATURE 3/4/08 DATE
SIG. INVENTORY NO. 13-0466

04-MAR-2008 13:59
s:\traffic\Signal\Work Groups\tip projects\u-3601\signals\design\signals\13-0466\13046fs_sig_mp_2008xxxx.dgn
iomozurike

PROJECT REFERENCE NO.	SHEET NO.
U-3601	Sig.29

PHASING DIAGRAM

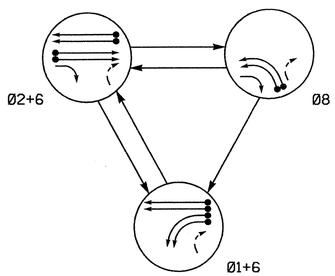

TABLE OF OPERATION

SIGNAL FACE	PHASE Ø1+6	PHASE Ø2+6	PHASE Ø8	FLASH
11,12	←	~~R~~	~~R~~	~~R~~
21	R	G	R	Y
22	R	G	R/←	Y
61,62	G	G	R	Y
81,82	~~R~~	~~R~~	←	~~R~~

2070L LOOP & DETECTOR INSTALLATION

INDUCTIVE LOOPS					DETECTOR PROGRAMMING							
LOOP	SIZE (FT)	DISTANCE FROM STOPBAR (FT)	TURNS	NEW LOOP	PHASE	CALLING	EXTENSION	FULL TIME DELAY	STRETCH TIME	DELAY TIME	SYSTEM LOOP	NEW CARD
1A	6X40	0	2-4-2	Y	1	Y	Y	-	-	-	-	Y
1B	6X40	0	2-4-2	Y	1	Y	Y	-	-	-	-	Y
2A/S24	6X6	300	5	Y	2	Y	Y	-	-	-	Y	Y
2B/S25	6X6	300	5	Y	2	Y	Y	-	-	-	Y	Y
6A	✳✳	300	✳✳	Y	6	Y	Y	-	-	-	-	Y
8A	6X40	0	2-4-2	Y	8	Y	Y	-	-	-	-	Y
8B	6X40	0	2-4-2	Y	8	Y	Y	-	-	5	-	Y

✳✳ Microwave Detection Zone

3 Phase
Fully Actuated
(NC 191 Closed Loop System)

NOTES

1. Refer to "Roadway Standard Drawings NCDOT" dated July 2006 and "Standard Specifications for Roads and Structures" dated July 2006.
2. Do not program signal for late night flashing operation unless otherwise directed by the Engineer.
3. Phase 1 may be lagged.
4. Set all detector units to presence mode.
5. Locate new cabinet so as not to obstruct sight distance of vehicles turning right on red.
6. Maximum times shown in timing chart are for free-run operation only. Coordinated signal system timing values supersede these values.
7. Closed loop system data: Controller Asset #0801.

PHASING DIAGRAM DETECTION LEGEND

- DETECTED MOVEMENT
- UNDETECTED MOVEMENT (OVERLAP)
- UNSIGNALIZED MOVEMENT
- PEDESTRIAN MOVEMENT

SIGNAL FACE I.D.

Denotes L.E.D.

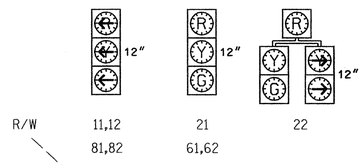

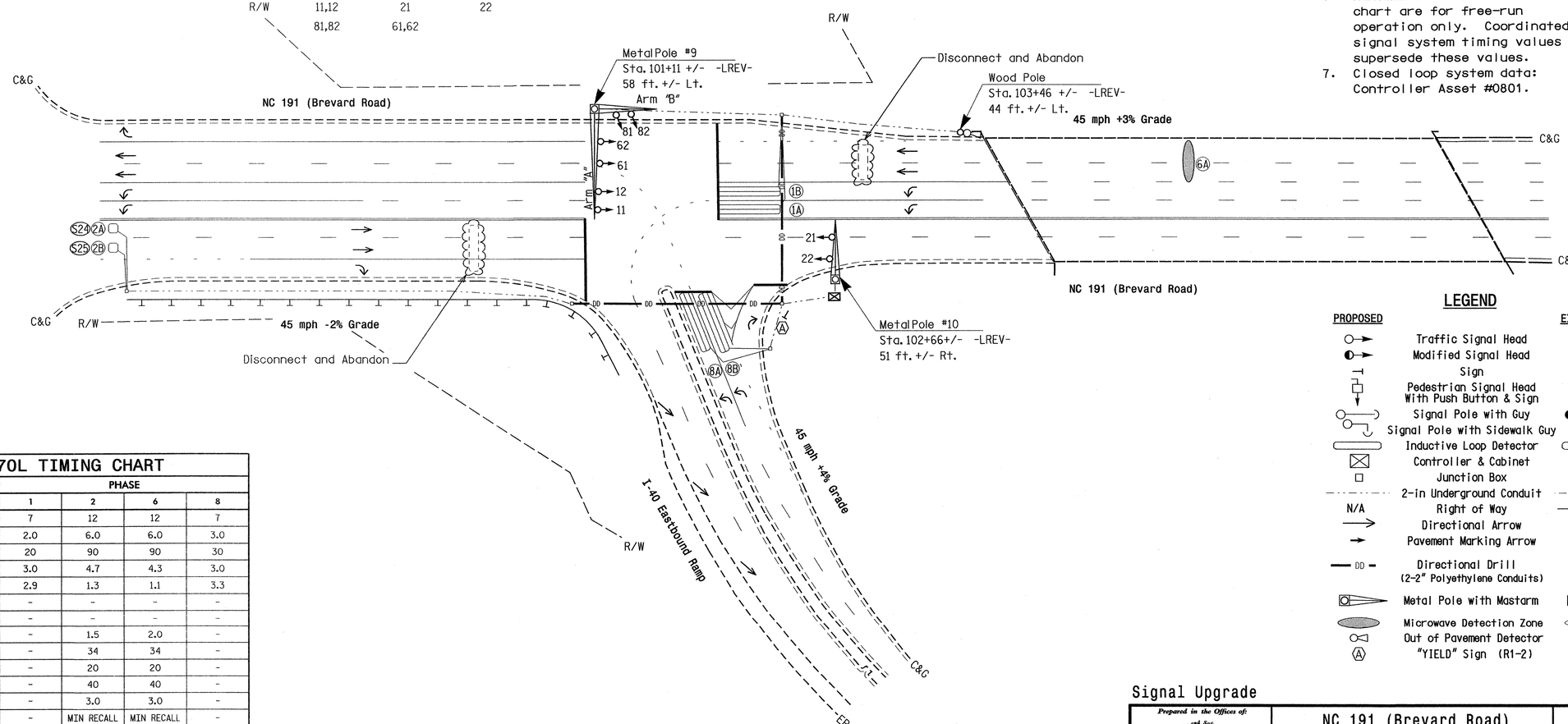

LEGEND

PROPOSED		EXISTING
	Traffic Signal Head	
	Modified Signal Head	N/A
	Sign	
	Pedestrian Signal Head With Push Button & Sign	
	Signal Pole with Guy	
	Signal Pole with Sidewalk Guy	
	Inductive Loop Detector	
	Controller & Cabinet	
	Junction Box	
	2-in Underground Conduit	
N/A	Right of Way	
	Directional Arrow	
	Pavement Marking Arrow	
DD	Directional Drill (2-2" Polyethylene Conduits)	N/A
	Metal Pole with Mastarm	
	Microwave Detection Zone	
	Out of Pavement Detector	
A	"YIELD" Sign (R1-2)	A

2070L TIMING CHART

FEATURE	PHASE 1	PHASE 2	PHASE 6	PHASE 8
Min Green 1 *	7	12	12	7
Extension 1 *	2.0	6.0	6.0	3.0
Max Green 1 *	20	90	90	30
Yellow Clearance	3.0	4.7	4.3	3.0
Red Clearance	2.9	1.3	1.1	3.3
Walk 1 *	-	-	-	-
Don't Walk 1	-	-	-	-
Seconds Per Actuation *	-	1.5	2.0	-
Max Variable Initial *	-	34	34	-
Time Before Reduction *	-	20	20	-
Time To Reduce *	-	40	40	-
Minimum Gap	-	3.0	3.0	-
Recall Mode	-	MIN RECALL	MIN RECALL	-
Vehicle Call Memory	-	YELLOW	YELLOW	-
Dual Entry	-	-	-	-
Simultaneous Gap	ON	ON	ON	ON

* These values may be field adjusted. Do not adjust Min Green and Extension times for phases 2 and 6 lower than what is shown. Min Green for all other phases should not be lower than 4 seconds.

Signal Upgrade

Prepared in the Offices of:
Traffic Engineering and Safety Systems Branch
Signals and Geometrics Section
STATE OF NORTH CAROLINA DEPARTMENT OF TRANSPORTATION
122 N. McDowell St., Raleigh, NC 27603

SCALE 0 40 1"=40'

NC 191 (Brevard Road) at I-40 Eastbound Ramps

Division 13 Buncombe County Asheville

PLAN DATE: January 2008 REVIEWED BY:
PREPARED BY: I.O. Umozurike REVIEWED BY:

REVISIONS	INIT.	DATE

SEAL
NORTH CAROLINA PROFESSIONAL SEAL 24393 ENGINEER TIMOTHY A. WILLIAMS
SIGNATURE 2/20/08. DATE
SIG. INVENTORY NO. 13-0801

04-MAR-2008 11:17
S:\TEB\Sig_Inventory\signals\design\signals\13-0801\130801_sig_dsn_2007mod.dgn
U-3601 Buncombe
Iumozurike

PROJECT REFERENCE NO.	SHEET NO.
U-3601	Sig.30

EDI MODEL 2010ECL-NC CONFLICT MONITOR PROGRAMMING DETAIL

(remove jumpers and set switches as shown)

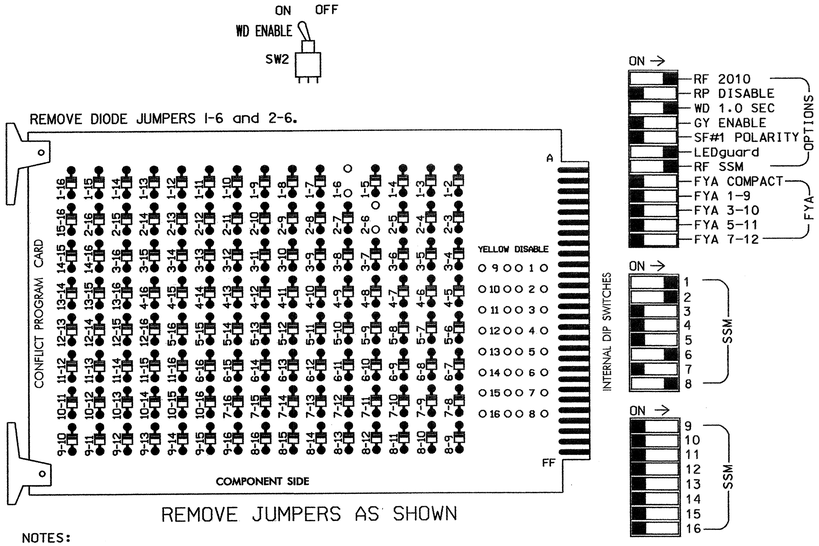

■ = DENOTES POSITION OF SWITCH

NOTES:

1. Card is provided with all diode jumpers in place. Removal of any jumper allows its channels to run concurrently.
2. Make sure jumpers SEL2-SEL5 are present on the monitor board.

NOTES

1. To prevent "flash-conflict" problems, insert red flash program blocks for all unused vehicle load switches in the output file. The installer shall verify that signal heads flash in accordance with the Signal Plans.
2. Ensure that Red Enable is active at all times during normal operation. To prevent Red Failures on unused monitor channels, tie unused red monitor inputs 3,4,5, 7,9,10,11,12,13,14,15 & 16 to load switch AC+ per the cabinet manufacturer's instructions.
3. Program phases 2 and 6, on the controller unit, for Start Up In Green.
4. Enable Simultaneous Gap-Out, on the controller unit, for all phases.
5. Program phases 2 and 6, on the controller unit, for Variable Initial and Gap Reduction.
6. The cabinet and controller are part of the NC 191 Closed Loop System.

EQUIPMENT INFORMATION

CONTROLLER.....CONTRACTOR SUPPLIED 2070L
CABINET.....CONTRACTOR SUPPLIED 332
SOFTWARE.....ECONOLITE OASIS
CABINET MOUNT.....BASE
OUTPUT FILE POSITIONS...12
LOAD SWITCHES USED.....S1,S2,S6,S8
PHASES USED.....1,2,6,8
OVERLAPS.....NONE

SIGNAL HEAD HOOK-UP CHART

LOAD SWITCH NO.	S1	S2	S2P	S3	S4	S4P	S5	S6	S6P	S7	S8		S8P
PHASE	1	2	2 PED	3	4	4 PED	5	6	6 PED	7	8		8 PED
SIGNAL HEAD NO.	11,12	21,22	NU	NU	NU	NU	NU	61,62	NU	NU	22	81,82	NU
RED		128						134					
YELLOW		129						135					
GREEN		130						136					
RED ARROW	125											107	
YELLOW ARROW	126										108	108	
GREEN ARROW	127										109	109	

NU = Not Used

INPUT FILE POSITION LAYOUT

(front view)

		1	2	3	4	5	6	7	8	9	10	11	12	13	14
FILE "I"	U	SLOT EMPTY	Ø 1 1A	Ø2/SYS 2A/S24	SLOT EMPTY	SLOT EMPTY	SLOT EMPTY	SLOT EMPTY	SLOT EMPTY	SLOT EMPTY	SLOT EMPTY	SLOT EMPTY	SLOT EMPTY	SLOT EMPTY	FS DC ISOLATOR
	L		Ø 1 1B	Ø2/SYS 2B/S25											ST DC ISOLATOR
FILE "J"	U	SLOT EMPTY	Ø 6 6A AC ISOLATOR	SLOT EMPTY	SLOT EMPTY	SLOT EMPTY	Ø 8 8A	SLOT EMPTY	SLOT EMPTY	SLOT EMPTY	SLOT EMPTY	SLOT EMPTY	SLOT EMPTY	SLOT EMPTY	SLOT EMPTY
	L		NOT USED				Ø 8 8B								

EX.: 1A, 2A, ETC. = LOOP NO.'S

FS = FLASH SENSE
ST = STOP TIME

NOTE: INSTALL MODEL 252 AC ISOLATOR IN SLOT J2 FOR USE WITH MICROWAVE DETECTOR. SEE MICROWAVE DETECTOR WIRING ON THIS PAGE.

! IMPORTANT: For proper operation of the microwave detector, remove surge protection from TB3-5 and TB3-6. A DIRECT SHORT WILL OCCUR IF THIS IS NOT DONE. Tie TB3-6 to AC neutral.

INPUT FILE CONNECTION & PROGRAMMING CHART

LOOP NO.	LOOP TERMINAL	INPUT FILE POS.	PIN NO.	INPUT ASSIGNMENT NO.	DETECTOR NO.	NEMA PHASE	CALL	EXTEND	FULL TIME DELAY	STRETCH TIME	DELAY TIME
1A	TB2-5,6	I2U	39	1	2	1	Y	Y			
1B	TB2-7,8	I2L	43	5	12	1	Y	Y			
2A/S24	TB2-9,10	I3U	63	25	32	2/SYS	Y	Y			
2B/S25	TB2-11,12	I3L	76	38	42	2/SYS	Y	Y			
* 6A	TB3-5,6	J2U	40	2	6	6	Y	Y			
8A	TB5-9,10	J6U	42	4	8	8	Y	Y			
8B	TB5-11,12	J6L	46	8	18	8	Y	Y			5

*Microwave Detector (see wiring detail this page)

INPUT FILE POSITION LEGEND: J2L
FILE J
SLOT 2
LOWER

MICROWAVE DETECTOR WIRING DETAIL for '6A'

(wire as shown)

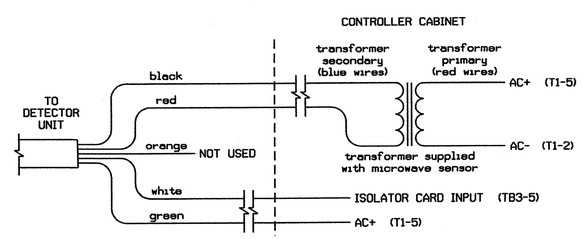

TC26B WIRE LIST

COLOR	FUNCTION
black	12V to 24V AC/DC (no polarity)
red	12V to 24V AC/DC (no polarity)
orange	Output Relay Normally Open
white	Output Relay Normally Closed
green	Output Relay Common

NOTES:

1. Sensor is a Microwave Sensors, Inc. Model TC-26B microwave motion detector mounted on poles as indicated on the Signal Design Plans.
2. Configure model 252 AC isolator card to place call upon removal of AC+ from the input. This is accomplished by setting a "Dip" switch on the isolator circuit board.
3. Important: For proper operation of the microwave detector, remove surge protection from TB3-5 and TB3-6. Tie TB3-6 to AC neutral.

THIS ELECTRICAL DETAIL IS FOR
THE SIGNAL DESIGN: 13-0801
DESIGNED: January 2008
SEALED: 02-20-08
REVISED: N/A

Signal Upgrade

ELECTRICAL AND PROGRAMMING DETAILS FOR:

Prepared in the Offices of:
Traffic Engineering and Safety Systems Branch
STATE OF NORTH CAROLINA DEPARTMENT OF TRANSPORTATION
Signals Management Section
750 N. Greenfield Pwky, Garner, NC 27529

NC 191 (Brevard Road) at I-40 Eastbound Ramps

Division 13 Buncombe County Asheville

PLAN DATE: February 2008	REVIEWED BY: JTR		
PREPARED BY: James Peterson	REVIEWED BY:		
REVISIONS		INIT.	DATE

SEAL
NORTH CAROLINA PROFESSIONAL SEAL 008453 ENGINEER JOHN T. ROWE, JR.

John T. Rowe 2-28-08
SIGNATURE DATE

SIG. INVENTORY NO. 13-0801

27-FEB-2008 08:49
s:\its\signals\workgroups\sig management\13801_sm_ele_xxx.dgn
jpeterson

Design Loading for METAL POLE NO. 9, MAST ARM A

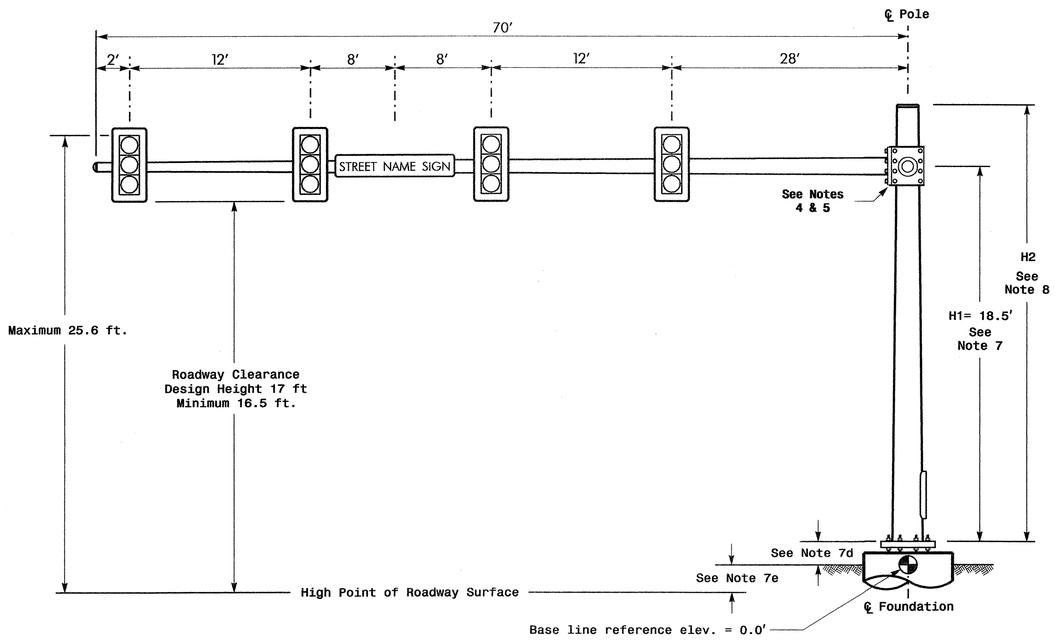

Elevation View @ 270°

Design Loading for METAL POLE NO. 9, MAST ARM B

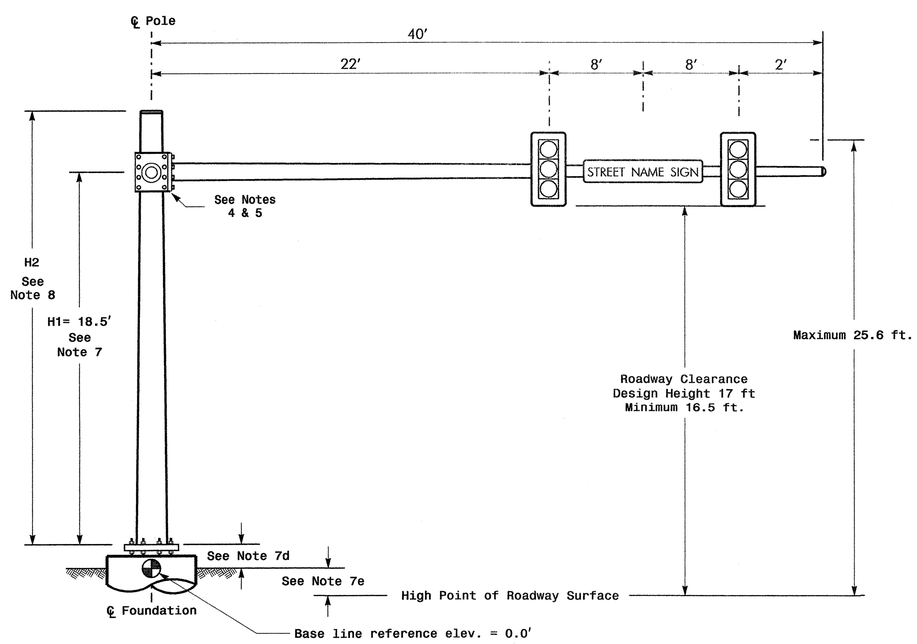

Elevation View @ 0°

SPECIAL NOTE

The contractor is responsible for verifying that the mast arm attachment height (H1) will provide the "Design Height" clearance from the roadway before submitting final shop drawings for approval. Verify elevation data below which was obtained by field measurement or from available project survey data.

Elevation Data for Mast Arm Attachment (H1)

Elevation Differences for:	Arm "A"	Arm "B"
Baseline reference point at ⊕ ℄ Foundation @ ground level	0.0 ft.	0.0 ft.
Elevation difference at High point of roadway surface	-0.5 ft.	N/A
Elevation difference at Edge of travelway or face of curb	N/A	N/A

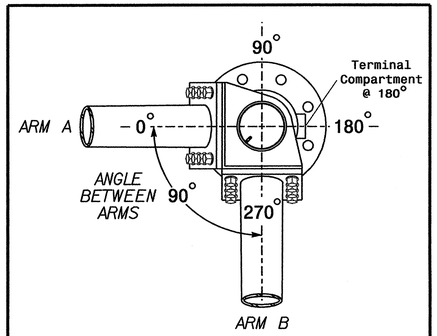

POLE RADIAL ORIENTATION

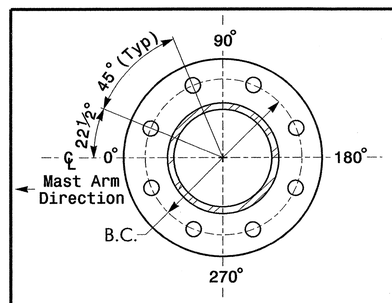

8 BOLT BASE PLATE DETAIL

See Note 6

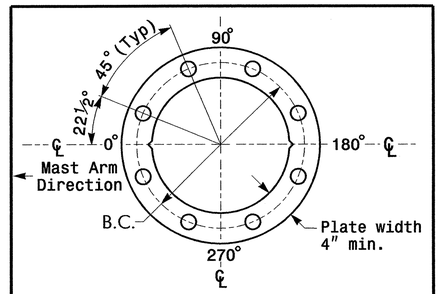

BASE PLATE TEMPLATE & ANCHOR BOLT LOCK PLATE DETAIL

For 8 Bolt Base Plate

MAST ARM LOADING SCHEDULE

LOADING SYMBOL	DESCRIPTION	AREA	SIZE	WEIGHT
	SIGNAL HEAD 12″-3 SECTION-WITH BACKPLATE AND ASTRO-BRAC	9.3 S.F.	25.5″ W X 52.5″ L	60 LBS
STREET NAME SIGN	STREET NAME SIGN RIGID MOUNTED WITH ASTRO-SIGN-BRAC	12.0 S.F.	18.0″ W X 96.0″ L	27 LBS

NOTES

Design Reference Material

1. Design the traffic signal structure and foundation in accordance with:
   - The 4th Edition 2001 AASHTO "Standard Specifications for Structural Supports for Highway Signs, Luminaires, and Traffic Signals, including all of the latest interim revisions.
   - The 2006 NCDOT "Standard Specifications for Roads and Structures". The latest addenda to these specifications can be found in the traffic signal project special provisions.
   - The 2006 NCDOT Roadway Standard Drawings.
   - The traffic signal project plans and special provisions.

Design Requirements

2. Design the traffic signal structure using the loading conditions shown in the elevation views. These are anticipated worst case "Design loads" and may not represent the actual loads that will be applied at the time of the installation. The contractor should refer to the traffic signal plans for the actual loads that will be applied at the time of the installation.
3. Design all signal supports using stress ratios that do not exceed 0.9.
4. The camber design for mast arm deflection should provide an appearance of a low pitched arch where the tip or the free end of the mast arm does not deflect below horizontal when fully loaded.
5. A clamp-type bolted mast arm-to-pole connection may be used instead of the welded ring stiffened box connection shown as long as the connection meets all of the design requirements. This requires staggering the connections. Use elevation data for each arm to determine appropriate arm connection points.
6. Design base plate with 8 anchor bolt holes. Provide 2 inch x 60 inch anchor bolts.
7. The mast arm attachment height (H1) shown is based on the following design assumptions:
   a. Mast arm slope and deflection are not considered in determining the arm attachment height as they are assumed to offset each other.
   b. Signal heads attached to the mast arm are rigid mounted and vertically centered on the arm.
   c. The roadway clearance height for design is as shown in the elevation views.
   d. The top of the pole base plate is .75 feet above the ground elevation.
   e. Refer to the Elevation Data chart for elevation differences between the proposed foundation ground level and the high point on the roadway.
8. The pole manufacturer will determine the total height (H2) of the pole using the greater of the following:
   - Mast arm attachment height (H1) plus 2 feet, or
   - H1 plus ½ of the total height of the mast arm attachment assembly plus 1 foot.
9. If pole location adjustments are required, the contractor must gain approval from the engineer as this may affect the mast arm lengths and arm attachment heights. The contractor may contact the Signals & Geometrics Structural Engineer for assistance at (919) 773-2800.
10. The contractor is responsible for verifying that the mast arm lengths shown will allow proper positioning of the signal heads over the roadway.
11. The contractor is responsible for providing soil penetration testing data (SPT) to the pole manufacturer so site specific foundations can be designed.

NCDOT Wind Zone 4 (90 mph)

Prepared in the Offices of: Traffic Engineering and Safety Systems Branch, Signals and Geometrics Section, Division of Highways, State of North Carolina, Department of Transportation
750 N. Greenfield Pkwy, Garner, NC 27529

NC 191 (Brevard Road)
At
I-40 Eastbound Ramps

Division 13 Buncombe County Asheville

PLAN DATE: February 2008 REVIEWED BY:
PREPARED BY: I.O.Umozurike REVIEWED BY:

SCALE 0 N/A N/A

REVISIONS	INIT.	DATE

SEAL
NORTH CAROLINA PROFESSIONAL SEAL 24393 ENGINEER TIMOTHY A. WILLIAMS

SIGNATURE T.A. Williams DATE 3/4/08

SIG. INVENTORY NO. 13-0801

04-MAR-2008 13:09
s:\traffic signals\workgroups\tip projects\u-3601\signals\designs\signals\13-0801\13801_sig_mp_2008xxxx.dgn
iumozurike

METAL POLE No. 10

PROJECT REFERENCE NO.	SHEET NO.
U-3601	Sig.32

SPECIAL NOTE

The contractor is responsible for verifying that the mast arm attachment height (H1) will provide the "Design Height" clearance from the roadway before submitting final shop drawings for approval. Verify elevation data below which was obtained by field measurement or from available project survey data.

Elevation Data for Mast Arm Attachment (H1)

Elevation Differences for:	Pole 10
Baseline reference point at ℄ Foundation @ ground level	0.0 ft.
Elevation difference at High point of roadway surface	0.0 ft.
Elevation difference at Edge of travelway or face of curb	N/A

MAST ARM LOADING SCHEDULE

LOADING SYMBOL	DESCRIPTION	AREA	SIZE	WEIGHT
	SIGNAL HEAD 12"-5 SECTION-WITH BACKPLATE AND ASTRO-BRAC	16.3 S.F.	42.0" W X 56.0" L	103 LBS
	SIGNAL HEAD 12"-3 SECTION-WITH BACKPLATE AND ASTRO-BRAC	9.3 S.F.	25.5" W X 52.5" L	60 LBS
STREET NAME SIGN	STREET NAME SIGN RIGID MOUNTED WITH ASTRO-SIGN-BRAC	12.0 S.F.	18.0" W X 96.0" L	27 LBS

Design Loading for METAL POLE NO. 10

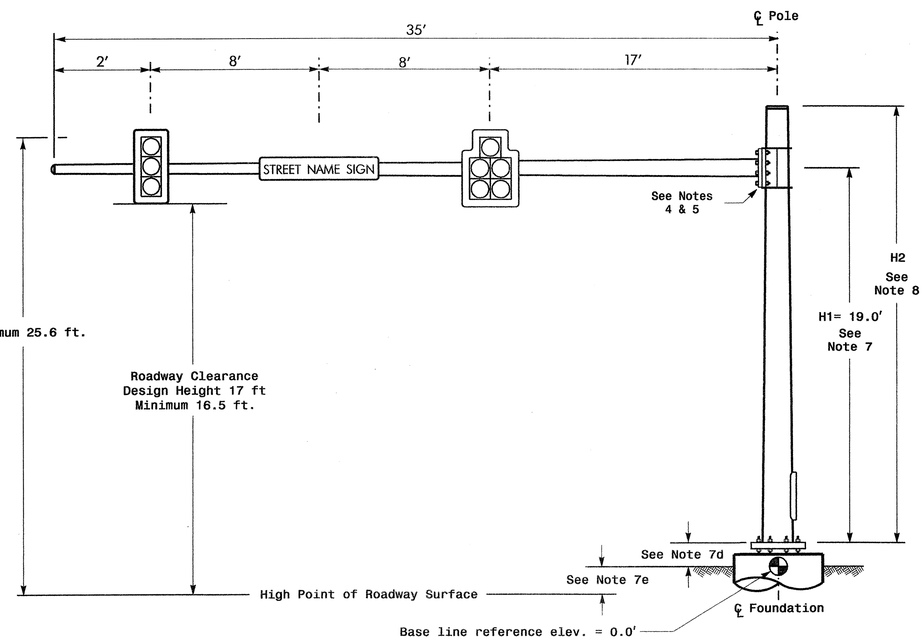

Elevation View

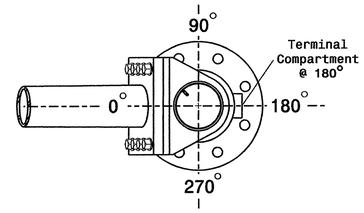

POLE RADIAL ORIENTATION

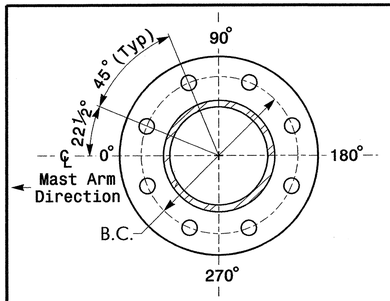

8 BOLT BASE PLATE DETAIL

See Note 6

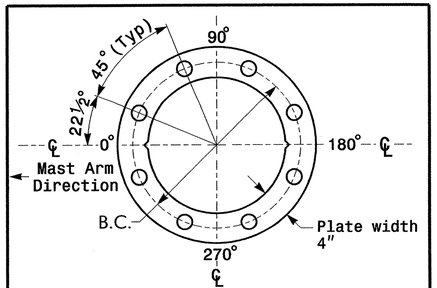

BASE PLATE TEMPLATE & ANCHOR BOLT LOCK PLATE DETAIL

For 8 Bolt Base Plate

NOTES

Design Reference Material

1. Design the traffic signal structure and foundation in accordance with:
   - The 4th Edition 2001 AASHTO "Standard Specifications for Structural Supports for Highway Signs, Luminaires, and Traffic Signals, including all of the latest interim revisions.
   - The 2006 NCDOT "Standard Specifications for Roads and Structures". The latest addenda to these specifications can be found in the traffic signal project special provisions.
   - The 2006 NCDOT Roadway Standard Drawings.
   - The traffic signal project plans and special provisions.

Design Requirements

2. Design the traffic signal structure using the loading conditions shown in the elevation views. These are anticipated worst case "Design loads" and may not represent the actual loads that will be applied at the time of the installation. The contractor should refer to the traffic signal plans for the actual loads that will be applied at the time of the installation.
3. Design all signal supports using stress ratios that do not exceed 0.9.
4. The camber design for mast arm deflection should provide an appearance of a low pitched arch where the tip or the free end of the mast arm does not deflect below horizontal when fully loaded.
5. A clamp-type bolted mast arm-to-pole connection may be used instead of the welded ring stiffened box connection shown as long as the connection meets all of the design requirements.
6. Design base plate with 8 anchor bolt holes. Provide 2 inch x 60 inch anchor bolts.
7. The mast arm attachment height (H1) shown is based on the following design assumptions:
   a. Mast arm slope and deflection are not considered in determining the arm attachment height as they are assumed to offset each other.
   b. Signal heads attached to the mast arm are rigid mounted and vertically centered on the arm.
   c. The roadway clearance height for design is as shown in the elevation views.
   d. The top of the pole base plate is .75 feet above the ground elevation.
   e. Refer to the Elevation Data chart for elevation differences between the proposed foundation ground level and the high point on the roadway.
8. The pole manufacturer will determine the total height (H2) of each pole using the greater of the following:
   - Mast arm attachment height (H1) plus 2 feet, or
   - H1 plus ½ of the total height of the mast arm attachment assembly plus 1 foot.
9. If pole location adjustments are required, the contractor must gain approval from the engineer as this may affect the mast arm lengths and arm attachment heights. The contractor may contact the Signals & Geometrics Structural Engineer for assistance at (919) 773-2800.
10. The contractor is responsible for verifying that the mast arm length shown will allow proper positioning of the signal heads over the roadway.
11. The contractor is responsible for providing soil penetration testing data (SPT) to the pole manufacturer so site specific foundations can be designed.

NCDOT Wind Zone 4 (90 mph)

Prepared in the Offices of: Traffic Engineering and Safety Systems Branch, Signals and Geometrics Section, Division of Highways, State of North Carolina, 750 N. Greenfield Pkwy, Garner, NC 27529

NC 191 (Brevard Road) At I-40 Eastbound Ramps

Division 13 Buncombe County Asheville

PLAN DATE: February 2008 REVIEWED BY:

PREPARED BY: I.O.Umozurike REVIEWED BY:

SCALE 0 N/A N/A

REVISIONS	INIT.	DATE

SEAL: NORTH CAROLINA PROFESSIONAL SEAL 24393 ENGINEER TIMOTHY J. WILLIAMS

SIGNATURE T.J. Williams DATE 3/4/08.

SIG. INVENTORY NO. 13-0801

04-MAR-2008 13:15
s:\traffic\signal\workgroups\rtp projects\u-3601\signals\designsignals\13-0801\13080l_sig_mp_2008xxxx.dgn
t.umozurike

PROJECT REFERENCE NO.	SHEET NO.
U-3601	Sig.33

PHASING DIAGRAM

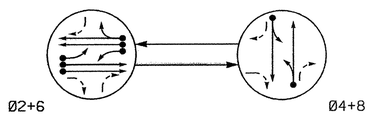

PHASING DIAGRAM DETECTION LEGEND

- DETECTED MOVEMENT
- UNDETECTED MOVEMENT (OVERLAP)
- UNSIGNALIZED MOVEMENT
- PEDESTRIAN MOVEMENT

TABLE OF OPERATION

SIGNAL FACE	PHASE Ø2+6	PHASE Ø4+8	FLASH
21,22	G	R	Y
41,42	R	G	R
61,62	G	R	Y
81,82	R	G	R

SIGNAL FACE I.D.

Denotes L.E.D.

12"

21,22
41,42
61,62
81,82

2070L LOOP & DETECTOR INSTALLATION

INDUCTIVE LOOPS					DETECTOR PROGRAMMING							
LOOP	SIZE (FT)	DISTANCE FROM STOPBAR (FT)	TURNS	NEW LOOP	PHASE	CALLING	EXTENSION	FULL TIME DELAY	STRETCH TIME	DELAY TIME	SYSTEM LOOP	NEW CARD
2A/S26	6X6	300	4	-	2	Y	Y	-	-	-	Y	Y
2B/S27	6X6	300	4	-	2	Y	Y	-	-	-	Y	Y
2C	6X60	0	2-4-2	-	2	Y	Y	Y	-	3	-	Y
4A	6X60	0	2-4-2	-	4	Y	Y	-	-	5	-	Y
6A/S28	6X6	300	6	-	6	Y	Y	-	-	-	Y	Y
6B/S29	6X6	300	6	-	6	Y	Y	-	-	-	Y	Y
6C	6X60	0	2-4-2	-	6	Y	Y	Y	-	3	-	Y
8A	6X60	0	2-4-2	-	8	Y	Y	-	-	-	-	Y

2 Phase
Fully Actuated
(NC 191 Closed Loop System)

NOTES

1. Refer to "Roadway Standard Drawings NCDOT" dated July 2006 and "Standard Specifications for Roads and Structures" dated July 2006.
2. Do not program signal for late night flashing operation unless otherwise directed by the Engineer.
3. Set all detector units to presence mode.
4. Locate new cabinet so as not to obstruct sight distance of vehicles turning right on red.
5. Pavement markings are existing.
6. Maximum times shown in timing chart are for free-run operation only. Coordinated signal system timing values supersede these values.
7. Closed loop system data: Controller Asset #0802.

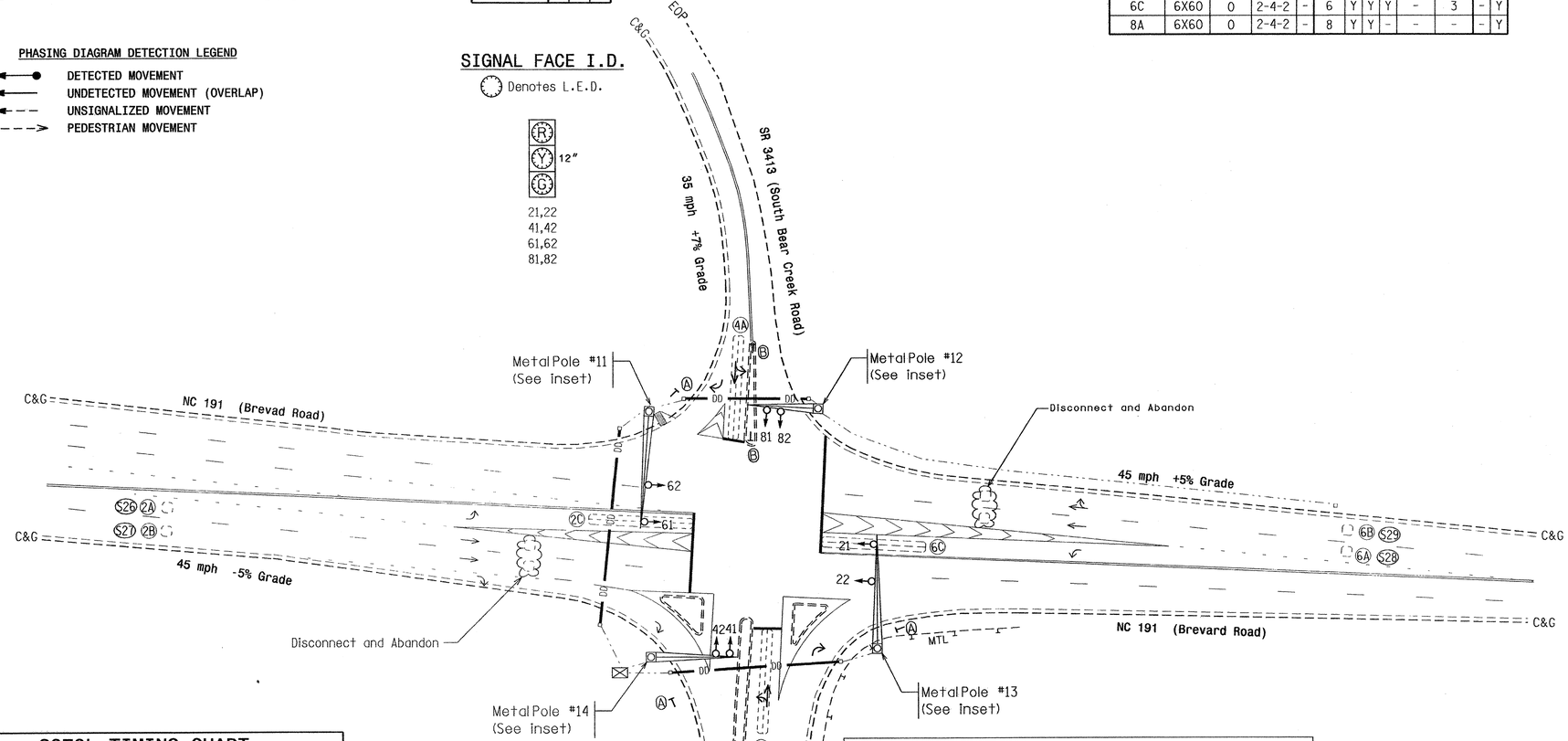

Proposed Metal Pole Locations

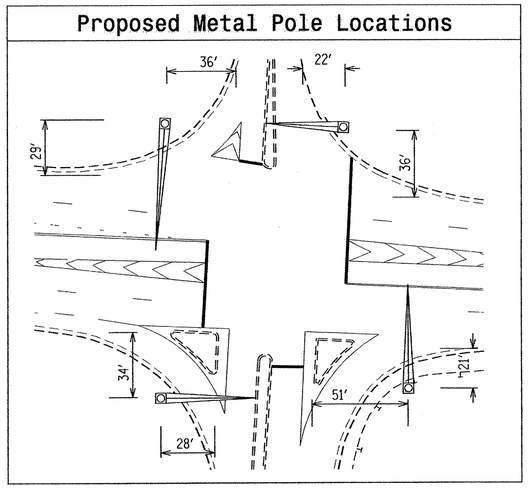

LEGEND

PROPOSED		EXISTING
	Traffic Signal Head	
	Modified Signal Head	N/A
	Sign	
	Pedestrian Signal Head With Push Button & Sign	
	Signal Pole with Guy	
	Signal Pole with Sidewalk Guy	
	Inductive Loop Detector	
	Controller & Cabinet	
	Junction Box	
	2-in Underground Conduit	
N/A	Right of Way	
	Directional Arrow	
	Pavement Marking Arrow	
DD	Directional Drill	N/A
	Metal Pole with Mastarm	
A	"YIELD" Sign (R1-2)	A
B	Keep Right Sign (R4-7A)	B
N/A	Wheelchair Ramp	

2070L TIMING CHART

FEATURE	PHASE 2	PHASE 4	PHASE 6	PHASE 8
Min Green 1 *	12	7	12	7
Extension 1 *	6.0	3.0	6.0	3.0
Max Green 1 *	90	30	90	30
Yellow Clearance	5.0	3.5	4.1	4.1
Red Clearance	1.0	2.1	1.0	1.7
Walk 1 *	-	-	-	-
Don't Walk 1	-	-	-	-
Seconds Per Actuation *	1.5	-	1.5	-
Max Variable Initial *	34	-	34	-
Time Before Reduction *	20	-	20	-
Time To Reduce *	40	-	40	-
Minimum Gap	3.0	-	3.0	-
Recall Mode	MIN RECALL	-	MIN RECALL	-
Vehicle Call Memory	YELLOW	-	YELLOW	-
Dual Entry	-	ON	-	ON
Simultaneous Gap	ON	ON	ON	ON

* These values may be field adjusted. Do not adjust Min Green and Extension times for phases 2 and 6 lower than what is shown. Min Green for all other phases should not be lower than 4 seconds.

Signal Upgrade

Prepared in the Offices of:
Traffic Engineering and Safety Systems Branch
Signals and Geometrics Section
122 N. McDowell St., Raleigh, NC 27603

NC 191 (Brevard Road)
at
I-40 Westbound Ramps/
SR 3413 (South Bear Creek Road)
Division 13 Buncombe County Asheville

PLAN DATE: January 2008	REVIEWED BY:
PREPARED BY: I. O. Umozurike	REVIEWED BY:

SCALE 0 40 1"=40'

REVISIONS	INIT.	DATE

SEAL
NORTH CAROLINA PROFESSIONAL SEAL 24393 ENGINEER TIMOTHY J. WILLIAMS
SIGNATURE DATE 2/20/08.
SIG. INVENTORY NO. 13-0802

19-FEB-2008 16:11
s:#TIS sig\ou\workgroups#tip projects#u-3601#signals#designsignals#13-0802#13-0802_2008xxxx.dgn
iouzurike

PROJECT REFERENCE NO.	SHEET NO.
U-3601	Sig.34

EDI MODEL 2010ECL-NC CONFLICT MONITOR PROGRAMMING DETAIL

(remove jumpers and set switches as shown)

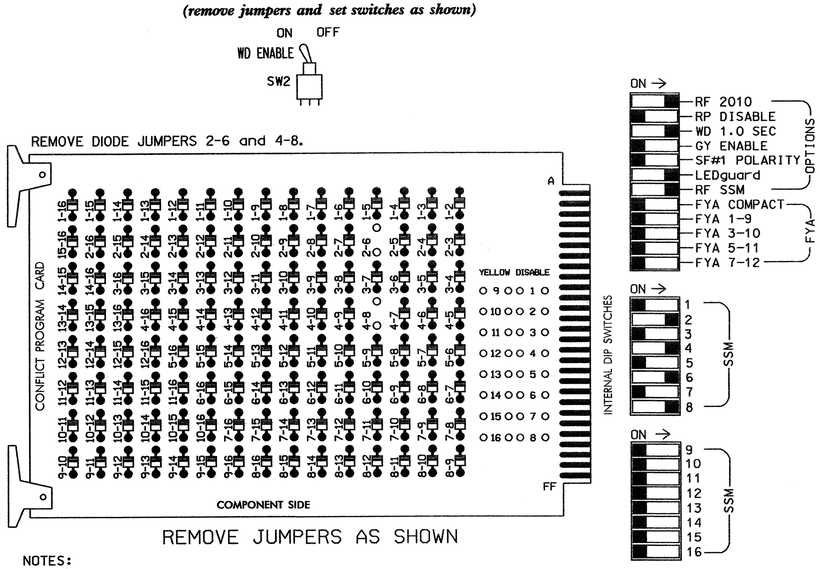

NOTES:

1. Card is provided with all diode jumpers in place. Removal of any jumper allows its channels to run concurrently.
2. Make sure jumpers SEL2-SEL5 are present on the monitor board.

■ = DENOTES POSITION OF SWITCH

NOTES

1. To prevent "flash-conflict" problems, insert red flash program blocks for all unused vehicle load switches in the output file. The installer shall verify that signal heads flash in accordance with the Signal Plans.
2. Ensure that Red Enable is active at all times during normal operation. To prevent Red Failures on unused monitor channels, tie unused red monitor inputs 1,3,5, 7,9,10,11,12,13,14,15 & 16 to load switch AC+ per the cabinet manufacturer's instructions.
3. Program phases 2 and 6, on the controller unit, for Start Up In Green.
4. Enable Simultaneous Gap-Out, on the controller unit, for all phases.
5. Program phases 4 and 8, on the controller unit, for Dual Entry.
6. Program phases 2 and 6, on the controller unit, for Variable Initial and Gap Reduction.
7. The cabinet and controller are part of the NC 191 Closed Loop System.

EQUIPMENT INFORMATION

CONTROLLER.....CONTRACTOR SUPPLIED 2070L
CABINET.....CONTRACTOR SUPPLIED 332
SOFTWARE.....ECONOLITE OASIS
CABINET MOUNT.....BASE
OUTPUT FILE POSITIONS...12
LOAD SWITCHES USED.....S2,S4,S6,S8
PHASES USED.....2,4,6,8
OVERLAPS.....NONE

SIGNAL HEAD HOOK-UP CHART

LOAD SWITCH NO.	S1	S2	S2P	S3	S4	S4P	S5	S6	S6P	S7	S8	S8P
PHASE	1	2	2 PED	3	4	4 PED	5	6	6 PED	7	8	8 PED
SIGNAL HEAD NO.	NU	21,22	NU	NU	41,42	NU	NU	61,62	NU	NU	81,82	NU
RED		128			101			134			107	
YELLOW		129			102			135			108	
GREEN		130			103			136			109	
RED ARROW												
YELLOW ARROW												
GREEN ARROW												

NU = Not Used

INPUT FILE POSITION LAYOUT

(front view)

		1	2	3	4	5	6	7	8	9	10	11	12	13	14
FILE "I"	U	SLOT	Ø2/SYS	Ø 2	SLOT	SLOT	Ø 4	SLOT	SLOT	SLOT	SLOT	SLOT	SLOT	SLOT	FS
		EMPTY	2A/S26	2C	EMPTY	EMPTY	4A	EMPTY	EMPTY	EMPTY	EMPTY	EMPTY	EMPTY	EMPTY	DC ISOLATOR
	L		Ø2/SYS	NOT USED			NOT USED								ST
			2B/S27												DC ISOLATOR
FILE "J"	U	SLOT	Ø6/SYS	Ø 6	SLOT	SLOT	Ø 8	SLOT	SLOT	SLOT	SLOT	SLOT	SLOT	SLOT	SLOT
		EMPTY	6A/S28	6C	EMPTY	EMPTY	8A	EMPTY	EMPTY	EMPTY	EMPTY	EMPTY	EMPTY	EMPTY	EMPTY
	L		Ø6/SYS	NOT USED			NOT USED								
			6B/S29												

EX.: 1A, 2A, ETC. = LOOP NO.'S

FS = FLASH SENSE
ST = STOP TIME

INPUT FILE CONNECTION & PROGRAMMING CHART

LOOP NO.	LOOP TERMINAL	INPUT FILE POS.	PIN NO.	INPUT ASSIGNMENT NO.	DETECTOR NO.	NEMA PHASE	CALL	EXTEND	FULL TIME DELAY	STRETCH TIME	DELAY TIME
2A/S26	TB2-5,6	I2U	39	1	2	2/SYS	Y	Y			
2B/S27	TB2-7,8	I2L	43	5	12	2/SYS	Y	Y			
2C	TB2-9,10	I3U	63	25	32	2	Y	Y	Y		3
4A	TB4-9,10	I6U	41	3	4	4	Y	Y			5
6A/S28	TB3-5,6	J2U	40	2	6	6/SYS	Y	Y			
6B/S29	TB3-7,8	J2L	44	6	16	6/SYS	Y	Y			
6C	TB3-9,10	J3U	64	26	36	6	Y	Y	Y		3
8A	TB5-9,10	J6U	42	4	8	8	Y	Y			

INPUT FILE POSITION LEGEND: J2L
FILE J
SLOT 2
LOWER

THIS ELECTRICAL DETAIL IS FOR
THE SIGNAL DESIGN: 13-0802
DESIGNED: January 2008
SEALED: 02-20-08
REVISED: N/A

ELECTRICAL AND PROGRAMMING DETAILS FOR:

Prepared in the Offices of:
Traffic Engineering and Safety Systems Branch
Signals Management Section
750 N. Greenfield Pwky, Garner, NC 27529

NC 191 (Brevard Road)
at
I-40 Westbound Ramps/
SR 3413 (South Bear Creek Road)

Division 13 Buncombe County Asheville

PLAN DATE: January 2008 REVIEWED BY: JTR
PREPARED BY: James Peterson REVIEWED BY:

REVISIONS	INIT.	DATE

SEAL
NORTH CAROLINA PROFESSIONAL SEAL 008453 ENGINEER JOHN T. ROWE, JR.
John T. Rowe, Jr. 2-28-08
SIGNATURE DATE
SIG. INVENTORY NO. 13-0802

21-FEB-2008 08:14
s:\traffic\signals\workgroups\sig nomepeterson\13802_sm.dgn
jlpeterson

Design Loading for METAL POLE NO. 11

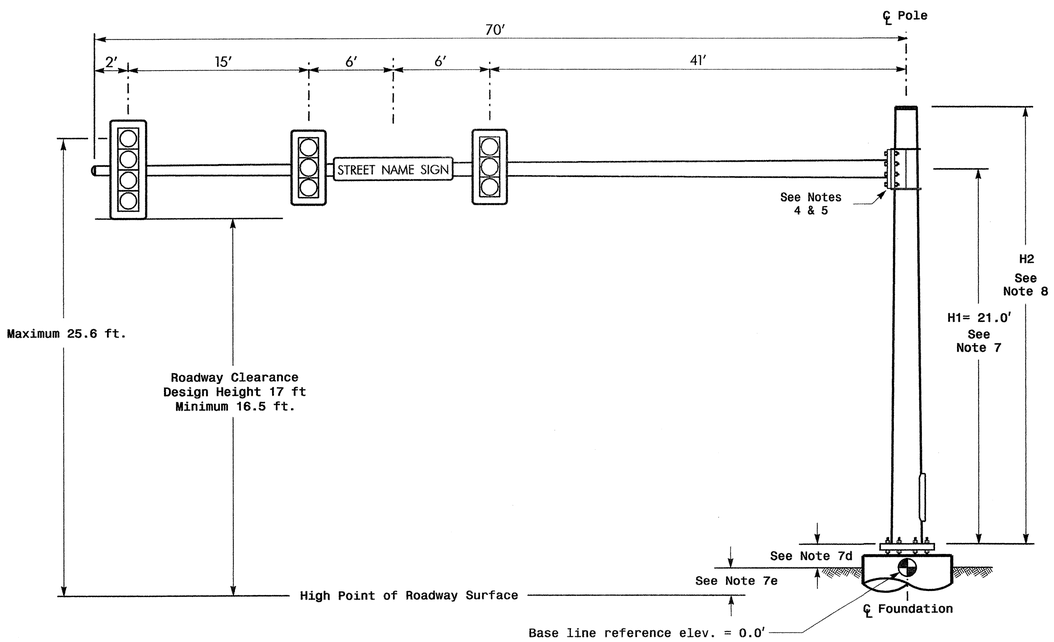

Elevation View

Design Loading for METAL POLE NO. 12

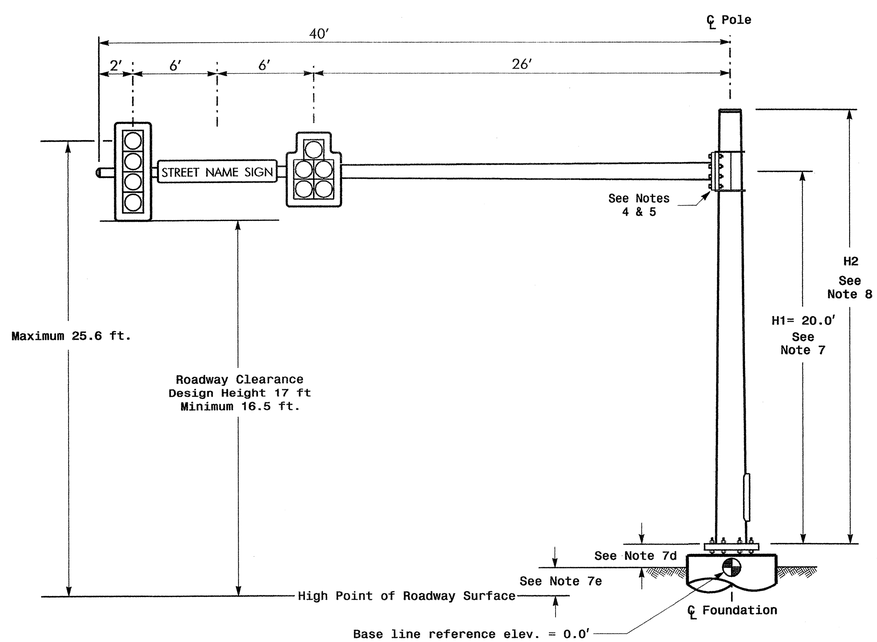

Elevation View

SPECIAL NOTE

The contractor is responsible for verifying that the mast arm attachment height (H1) will provide the "Design Height" clearance from the roadway before submitting final shop drawings for approval. Verify elevation data below which was obtained by field measurement or from available project survey data.

Elevation Data for Mast Arm Attachment (H1)

Elevation Differences for:	Pole 11	Pole 12
Baseline reference point at ℄ Foundation @ ground level	0.0 ft.	0.0 ft.
Elevation difference at High point of roadway surface	+2.0 ft.	+1.0 ft.
Elevation difference at Edge of travelway or face of curb	N/A	N/A

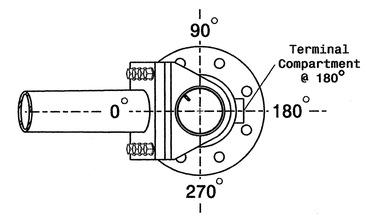

POLE RADIAL ORIENTATION

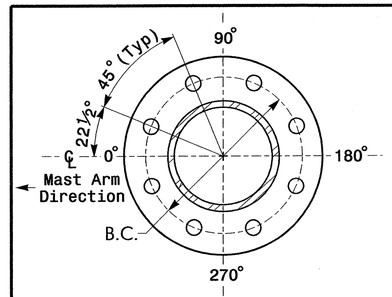

8 BOLT BASE PLATE DETAIL

See Note 6

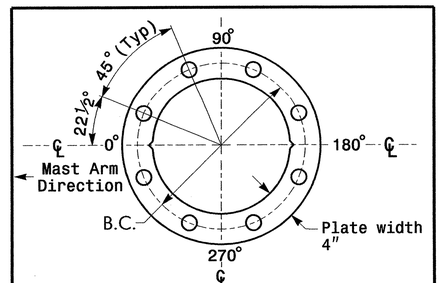

BASE PLATE TEMPLATE & ANCHOR BOLT LOCK PLATE DETAIL

For 8 Bolt Base Plate

MAST ARM LOADING SCHEDULE

LOADING SYMBOL	DESCRIPTION	AREA	SIZE	WEIGHT
	SIGNAL HEAD 12″–5 SECTION–WITH BACKPLATE AND ASTRO–BRAC	16.3 S.F.	42.0″ W X 56.0″ L	103 LBS
	SIGNAL HEAD 12″–4 SECTION (VERTICAL)–WITH BACKPLATE AND ASTRO–BRAC	11.5 S.F.	25.5″ W X 66.0″ L	74 LBS
	SIGNAL HEAD 12″–3 SECTION–WITH BACKPLATE AND ASTRO–BRAC	9.3 S.F.	25.5″ W X 52.5″ L	60 LBS
STREET NAME SIGN	STREET NAME SIGN RIGID MOUNTED WITH ASTRO–SIGN–BRAC	12.0 S.F.	18.0″ W X 96.0″ L	27 LBS

NOTES

Design Reference Material

1. Design the traffic signal structure and foundation in accordance with:
   - The 4th Edition 2001 AASHTO "Standard Specifications for Structural Supports for Highway Signs, Luminaires, and Traffic Signals, including all of the latest interim revisions.
   - The 2006 NCDOT "Standard Specifications for Roads and Structures". The latest addenda to these specifications can be found in the traffic signal project special provisions.
   - The 2006 NCDOT Roadway Standard Drawings.
   - The traffic signal project plans and special provisions.

Design Requirements

2. Design the traffic signal structure using the loading conditions shown in the elevation views. These are anticipated worst case "Design loads" and may not represent the actual loads that will be applied at the time of the installation. The contractor should refer to the traffic signal plans for the actual loads that will be applied at the time of the installation.
3. Design all signal supports using stress ratios that do not exceed 0.9.
4. The camber design for mast arm deflection should provide an appearance of a low pitched arch where the tip or the free end of the mast arm does not deflect below horizontal when fully loaded.
5. A clamp-type bolted mast arm-to-pole connection may be used instead of the welded ring stiffened box connection shown as long as the connection meets all of the design requirements.
6. Design base plate with 8 anchor bolt holes. Provide 2 inch x 60 inch anchor bolts.
7. The mast arm attachment height (H1) shown is based on the following design assumptions:
   a. Mast arm slope and deflection are not considered in determining the arm attachment height as they are assumed to offset each other.
   b. Signal heads attached to the mast arm are rigid mounted and vertically centered on the arm.
   c. The roadway clearance height for design is as shown in the elevation views.
   d. The top of the pole base plate is .75 feet above the ground elevation.
   e. Refer to the Elevation Data chart for elevation differences between the proposed foundation ground level and the high point on the roadway.
8. The pole manufacturer will determine the total height (H2) of each pole using the greater of the following:
   - Mast arm attachment height (H1) plus 2 feet, or
   - H1 plus ½ of the total height of the mast arm attachment assembly plus 1 foot.
9. If pole location adjustments are required, the contractor must gain approval from the engineer as this may affect the mast arm lengths and arm attachment heights. The contractor may contact the Signals & Geometrics Structural Engineer for assistance at (919) 773-2800.
10. The contractor is responsible for verifying that the mast arm length shown will allow proper positioning of the signal heads over the roadway.
11. The contractor is responsible for providing soil penetration testing data (SPT) to the pole manufacturer so site specific foundations can be designed.

NCDOT Wind Zone 4 (90 mph)

Prepared in the Offices of: Traffic Engineering and Safety Systems Branch, Signals and Geometrics Section, Department of Transportation, State of North Carolina
750 N. Greenfield Pkwy, Garner, NC 27529

SCALE: 0 N/A — N/A

NC 191 (Brevard Road)
At
I-40 Westbound Ramps/
SR 3413 (South Bear Creek Road)

Division 13 Buncombe County Asheville

PLAN DATE: February 2008 | REVIEWED BY:
PREPARED BY: I.O.Umozurike | REVIEWED BY:

REVISIONS	INIT.	DATE

SEAL: NORTH CAROLINA PROFESSIONAL SEAL 24393 ENGINEER TIMOTHY J. WILLIAMS

SIGNATURE T. J. Williams DATE 3/4/08.

SIG. INVENTORY NO. 13-0802

04-MAR-2008 14:10
s:*rtg signals*workgroups*tip projects*u-3601*signals*designs*signals*13-0802*13802_sig_mp_2008xxxx.dgn
iomozurike

Design Loading for METAL POLE NO. 13

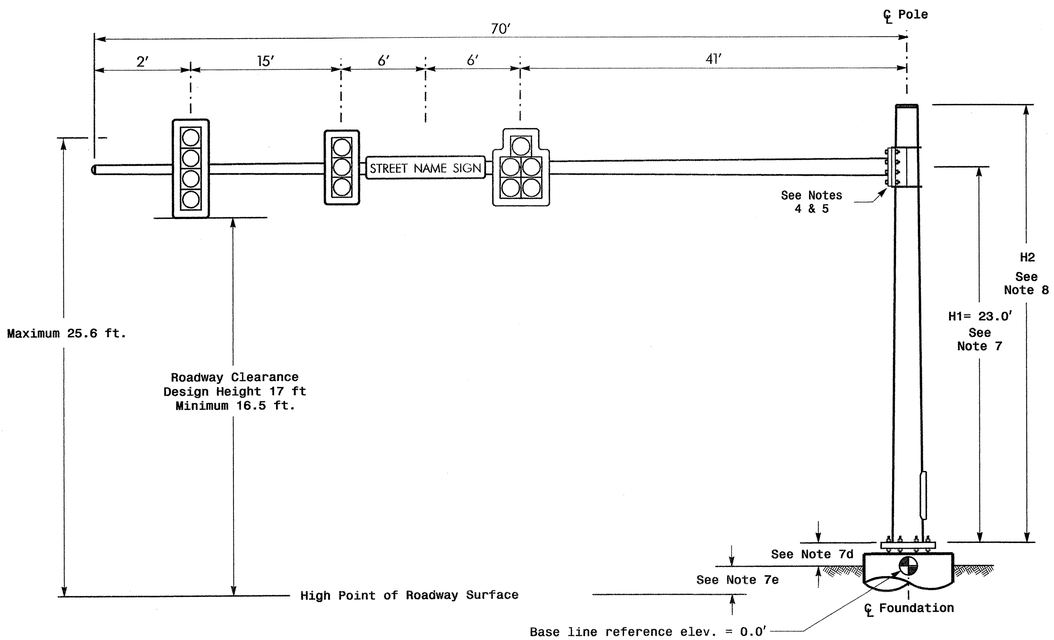

Elevation View

Design Loading for METAL POLE NO. 14

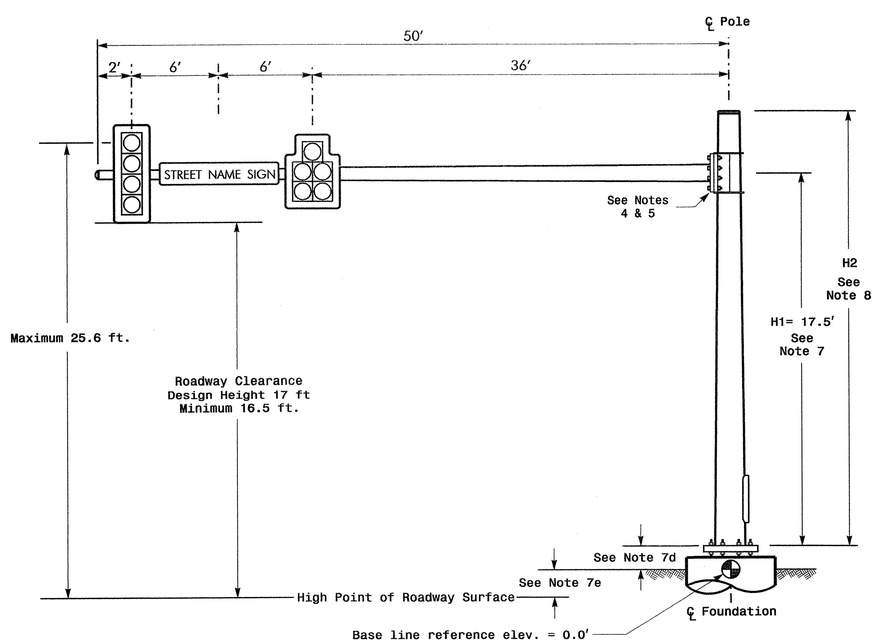

Elevation View

SPECIAL NOTE

The contractor is responsible for verifying that the mast arm attachment height (H1) will provide the "Design Height" clearance from the roadway before submitting final shop drawings for approval. Verify elevation data below which was obtained by field measurement or from available project survey data.

Elevation Data for Mast Arm Attachment (H1)

Elevation Differences for:	Pole 13	Pole 14
Baseline reference point at ⊕ ℄ Foundation @ ground level	0.0 ft.	0.0 ft.
Elevation difference at High point of roadway surface	+4.0 ft.	-1.5 ft.
Elevation difference at Edge of travelway or face of curb	N/A	N/A

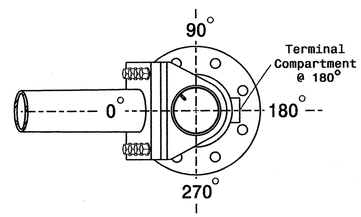

POLE RADIAL ORIENTATION

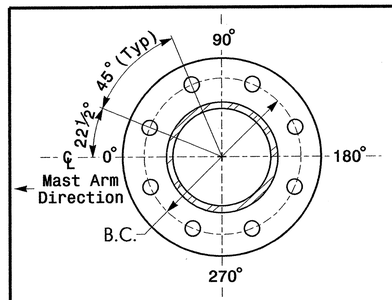

8 BOLT BASE PLATE DETAIL

See Note 6

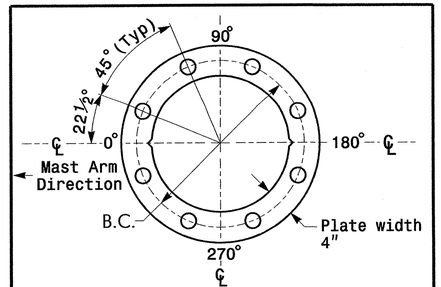

BASE PLATE TEMPLATE & ANCHOR BOLT LOCK PLATE DETAIL

For 8 Bolt Base Plate

MAST ARM LOADING SCHEDULE

LOADING SYMBOL	DESCRIPTION	AREA	SIZE	WEIGHT
	SIGNAL HEAD 12″-5 SECTION-WITH BACKPLATE AND ASTRO-BRAC	16.3 S.F.	42.0″ W X 56.0″ L	103 LBS
	SIGNAL HEAD 12″-4 SECTION (VERTICAL)-WITH BACKPLATE AND ASTRO-BRAC	11.5 S.F.	25.5″ W X 66.0″ L	74 LBS
	SIGNAL HEAD 12″-3 SECTION-WITH BACKPLATE AND ASTRO-BRAC	9.3 S.F.	25.5″ W X 52.5″ L	60 LBS
STREET NAME SIGN	STREET NAME SIGN RIGID MOUNTED WITH ASTRO-SIGN-BRAC	12.0 S.F.	18.0″ W X 96.0″ L	27 LBS

NOTES

Design Reference Material

1. Design the traffic signal structure and foundation in accordance with:
   - The 4th Edition 2001 AASHTO "Standard Specifications for Structural Supports for Highway Signs, Luminaires, and Traffic Signals, including all of the latest interim revisions.
   - The 2006 NCDOT "Standard Specifications for Roads and Structures". The latest addenda to these specifications can be found in the traffic signal project special provisions.
   - The 2006 NCDOT Roadway Standard Drawings.
   - The traffic signal project plans and special provisions.

Design Requirements

2. Design the traffic signal structure using the loading conditions shown in the elevation views. These are anticipated worst case "Design loads" and may not represent the actual loads that will be applied at the time of the installation. The contractor should refer to the traffic signal plans for the actual loads that will be applied at the time of the installation.
3. Design all signal supports using stress ratios that do not exceed 0.9.
4. The camber design for mast arm deflection should provide an appearance of a low pitched arch where the tip or the free end of the mast arm does not deflect below horizontal when fully loaded.
5. A clamp-type bolted mast arm-to-pole connection may be used instead of the welded ring stiffened box connection shown as long as the connection meets all of the design requirements.
6. Design base plate with 8 anchor bolt holes. Provide 2 inch x 60 inch anchor bolts.
7. The mast arm attachment height (H1) shown is based on the following design assumptions:
   a. Mast arm slope and deflection are not considered in determining the arm attachment height as they are assumed to offset each other.
   b. Signal heads attached to the mast arm are rigid mounted and vertically centered on the arm.
   c. The roadway clearance height for design is as shown in the elevation views.
   d. The top of the pole base plate is .75 feet above the ground elevation.
   e. Refer to the Elevation Data chart for elevation differences between the proposed foundation ground level and the high point on the roadway.
8. The pole manufacturer will determine the total height (H2) of each pole using the greater of the following:
   - Mast arm attachment height (H1) plus 2 feet, or
   - H1 plus ½ of the total height of the mast arm attachment assembly plus 1 foot.
9. If pole location adjustments are required, the contractor must gain approval from the engineer as this may affect the mast arm lengths and arm attachment heights. The contractor may contact the Signals & Geometrics Structural Engineer for assistance at (919) 773-2800.
10. The contractor is responsible for verifying that the mast arm length shown will allow proper positioning of the signal heads over the roadway.
11. The contractor is responsible for providing soil penetration testing data (SPT) to the pole manufacturer so site specific foundations can be designed.

NCDOT Wind Zone 4 (90 mph)

Prepared in the Offices of: Traffic Engineering and Safety Systems Branch, Signals and Geometrics Section, Department of Transportation, State of North Carolina
750 N. Greenfield Pkwy, Garner, NC 27529

NC 191 (Brevard Road)
At
I-40 Westbound Ramps/
SR 3413 (South Bear Creek Road)

Division 13 Buncombe County Asheville

PLAN DATE: February 2008 REVIEWED BY:
PREPARED BY: I.O.Umozurike REVIEWED BY:

SCALE 0 N/A N/A

REVISIONS	INIT.	DATE

SEAL
NORTH CAROLINA PROFESSIONAL SEAL 24393 ENGINEER TIMOTHY J. WILLIAMS
SIGNATURE 3/4/08 DATE
SIG. INVENTORY NO. 13-0802

01-MAR-2008 14:09
S:\TEA\ S:\Traffic\Signals\Workgroups\tip projects\u-3601\signals\design\signals\13-0802\13080 2_sig_mp_2008xxxx.dgn
iumozurike

PROJECT REFERENCE NO.	SHEET NO.
U-3601	Sig.37

PHASING DIAGRAM

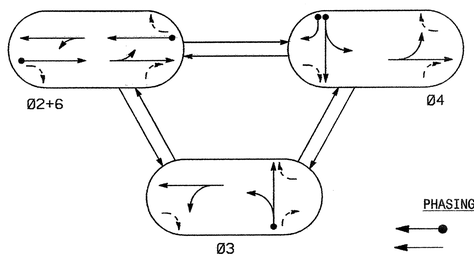

PHASING DIAGRAM DETECTION LEGEND

- DETECTED MOVEMENT
- UNDETECTED MOVEMENT (OVERLAP)
- UNSIGNALIZED MOVEMENT
- PEDESTRIAN MOVEMENT

TABLE OF OPERATION

SIGNAL FACE	PHASE Ø2+6	Ø3	Ø4	FLASH
21,22,23	G	R	R	Y
24	G	R	G	Y
25	G	R	G	Y
31,32	R	G	R	R
41,42	R	R	G	R
61,62	G	R	R	Y
63	G	G	R	Y
64	G	G	R	Y

SIGNAL FACE I.D.

Denotes L.E.D.

24
63

21,22,23,25
31,32
41,42
61,62,64

2070L LOOP & DETECTOR INSTALLATION

INDUCTIVE LOOPS					DETECTOR PROGRAMMING						
LOOP	SIZE (FT)	DISTANCE FROM STOPBAR (FT)	TURNS	NEW LOOP	PHASE	CALLING	EXTENSION	FULL TIME DELAY	STRETCH TIME	DELAY TIME	SYSTEM LOOP	NEW CARD
2A/S30	6X6	300	4	-	2	-	-	-	1.8	-	Y	Y
2B	6X6	90	4	-	2	-	-	-	-	-	-	Y
3A	6X60	0	2-4-2	-	3	-	-	-	-	-	-	Y
3B	6X60	0	2-4-2	-	3	-	-	-	-	15	-	Y
4A	6X60	0	2-4-2	-	4	-	-	-	-	5	-	Y
6A	6X6	300	4	-	6	-	-	-	1.8	-	-	Y
6B	6X6	90	4	-	6	-	-	-	-	-	-	Y
S31	6X6	+70	4	Y	-	-	-	-	-	-	Y	Y

3 Phase
Fully Actuated
(NC 191 Closed Loop System)

NOTES

1. Refer to "Roadway Standard Drawings NCDOT" dated July 2006 and "Standard Specifications for Roads and Structures" dated July 2006.
2. Do not program signal for late night flashing operation unless otherwise directed by the Engineer.
3. Set all detector units to presence mode.
4. Locate new cabinet so as not to obstruct sight distance of vehicles turning right on red.
5. Maximum times shown in timing chart are for free-run operation only. Coordinated signal system timing values supersede these values.
6. Closed loop system data: Controller Asset #0073.

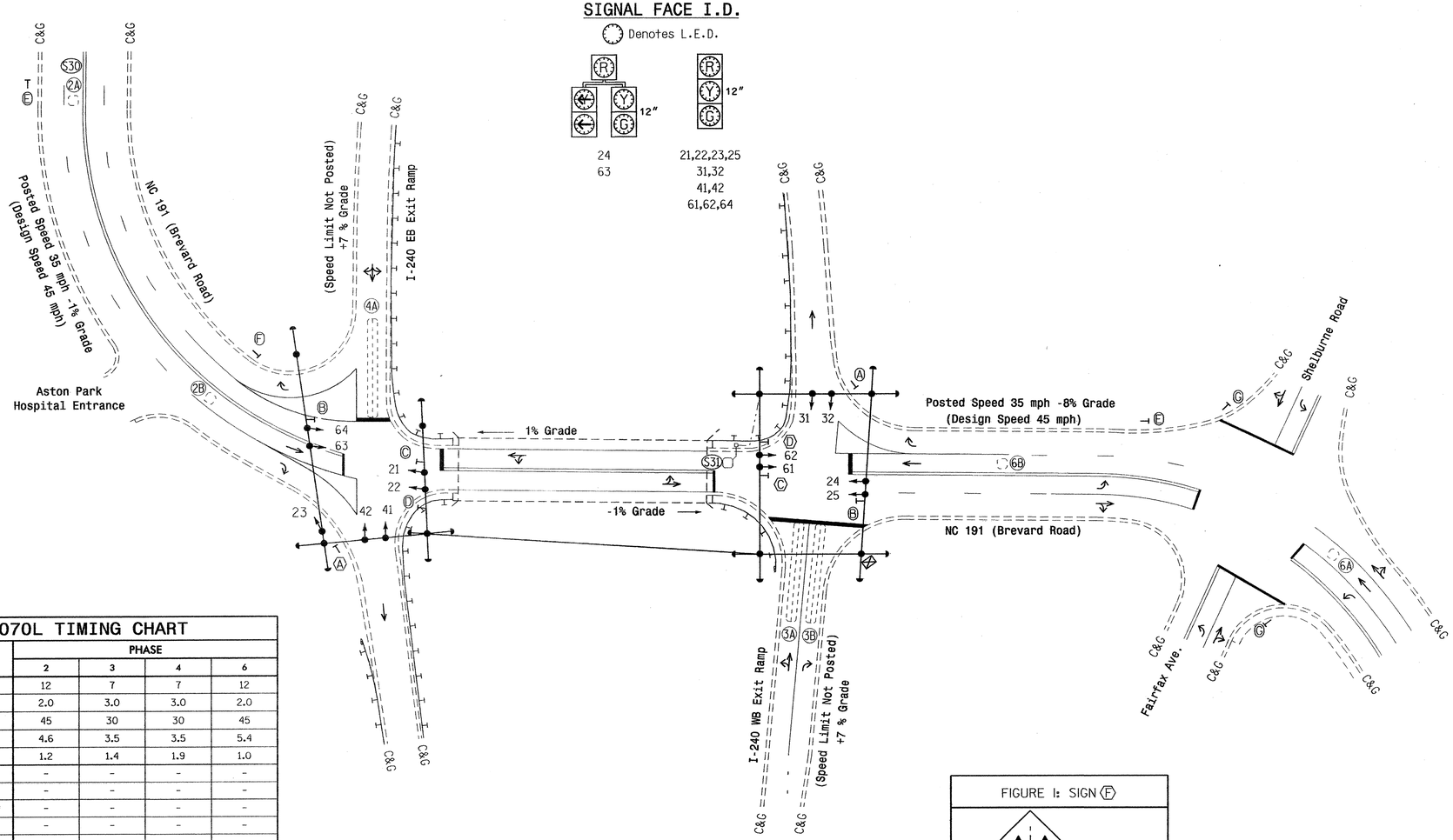

2070L TIMING CHART

FEATURE	PHASE 2	3	4	6
Min Green 1 *	12	7	7	12
Extension 1 *	2.0	3.0	3.0	2.0
Max Green 1 *	45	30	30	45
Yellow Clearance	4.6	3.5	3.5	5.4
Red Clearance	1.2	1.4	1.9	1.0
Walk 1 *	-	-	-	-
Don't Walk 1	-	-	-	-
Seconds Per Actuation *	-	-	-	-
Max Variable Initial *	-	-	-	-
Time Before Reduction *	-	-	-	-
Time To Reduce *	-	-	-	-
Minimum Gap	-	-	-	-
Recall Mode	SOFT RECALL	-	-	SOFT RECALL
Vehicle Call Memory	LOCK	-	-	LOCK
Dual Entry	-	-	-	-
Simultaneous Gap	ON	ON	ON	ON

* These values may be field adjusted. Do not adjust Min Green and Extension times for phases 2 and 6 lower than what is shown. Min Green for all other phases should not be lower than 4 seconds.

FIGURE 1: SIGN (F)

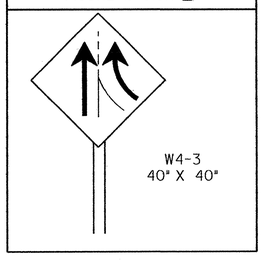

LEGEND

PROPOSED		EXISTING
	Traffic Signal Head	
	Modified Signal Head	N/A
	Sign	
	Pedestrian Signal Head With Push Button & Sign	
	Signal Pole with Guy	
	Signal Pole with Sidewalk Guy	
	Inductive Loop Detector	
	Controller & Cabinet	
	Junction Box	
	2-in Underground Conduit	
N/A	Right of Way	
	Directional Arrow	
	Pavement Marking Arrow	
A	"YIELD" Sign (R1-2)	A
B	No Right Turn Sign (R3-1)	B
C	No Left Turn Sign (R3-2)	C
D	Right Arrow "ONLY" Sign (R3-5R)	D
E	"Right Lane Must Turn Right" Sign (R3-7R)	E
G	"STOP" Sign (R1-1)	G
F	Added Lane Sign (W4-3) (See Figure 1)	

Signal Upgrade

Prepared in the Offices of:
Traffic Engineering and Safety Systems Branch
Signals and Geometrics Section
DIVISION OF HIGHWAYS
DEPARTMENT OF TRANSPORTATION
750 N. Greenfield Pkwy, Garner, NC 27529

NC 191 (Brevard Road) at I-240 Access Ramps

Division 13 Buncombe County Asheville

PLAN DATE: January 2008	REVIEWED BY:
PREPARED BY: I. O. Umozurike	REVIEWED BY:

SCALE 0 40 1"=40'

REVISIONS	INIT.	DATE

SEAL
NORTH CAROLINA PROFESSIONAL SEAL 24393 ENGINEER TIMOTHY J. WILLIAMS

T. J. Williams 2/20/08
SIGNATURE DATE

SIG. INVENTORY NO. 13-0073

19-FEB-2008 15:30
s:\traffic\Operations\Signals\Designs\13-0073\13-0073_2008xxxx.dgn
I.Umozurike

PROJECT REFERENCE NO.	SHEET NO.
U-3601	Sig.38

EDI MODEL 2010ECL-NC CONFLICT MONITOR PROGRAMMING DETAIL

(remove jumpers and set switches as shown)

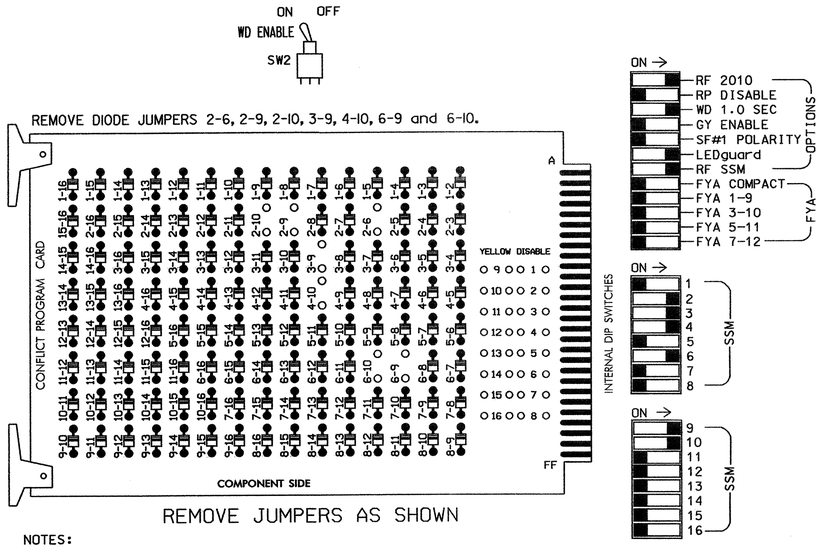

NOTES:

1. Card is provided with all diode jumpers in place. Removal of any jumper allows its channels to run concurrently.
2. Make sure jumpers SEL2-SEL5 are present on the monitor board.

NOTES

1. To prevent "flash-conflict" problems, insert red flash program blocks for all unused vehicle load switches in the output file. The installer shall verify that signal heads flash in accordance with the Signal Plans.
2. Ensure that Red Enable is active at all times during normal operation. To prevent Red Failures on unused monitor channels, tie unused red monitor inputs 1,5,7, 8,11,12,13,14,15 & 16 to load switch AC+ per the cabinet manufacturer's instructions.
3. Program phases 2 and 6, on the controller unit, for Start Up In Green.
4. Enable Simultaneous Gap-Out, on the controller unit, for all phases.
5. The cabinet and controller are part of the NC 191 Closed Loop System.

EQUIPMENT INFORMATION

CONTROLLER.....CONTRACTOR SUPPLIED 2070L
CABINET .....CONTRACTOR SUPPLIED 332
SOFTWARE .....ECONOLITE OASIS
CABINET MOUNT.....BASE

LOAD SWITCHES USED.....S2,S3,S4,S6,S9,S10
PHASES USED.....2,3,4,6
OVERLAP A:.....3+6
OVERLAP B:.....4+6
OVERLAP C:.....NOT USED
OVERLAP D:.....NOT USED

SIGNAL HEAD HOOK-UP CHART

LOAD SWITCH NO.	S1	S2	S2P	S3		S4		S4P	S5	S6	S6P	S7	S8	S8P	S9	S10	S11	S12	S13	S14
PHASE	1	2	2 PED	3		4		4 PED	5	6	6 PED	7	8	8 PED	OLA	OLB	SPARE	OLC	OLD	SPARE
SIGNAL HEAD NO.	NU	21, 22,23	NU	31,32	63	24	41,42	NU	NU	61,62	NU	NU	NU	NU	63,64	24,25	NU	NU	NU	NU
RED		128		116			101			134					A121	A124				
YELLOW		129		117			102			135					A122	A125				
GREEN		130		118			103			136					A123	A126				
RED ARROW																				
YELLOW ARROW					117	102														
GREEN ARROW					118	103														

NU = NOT USED

OVERLAP PROGRAMMING DETAIL

(program controller as shown below)

FROM MAIN MENU PRESS '8' (OVERLAPS), THEN '1' (VEHICLE OVERLAP SETTINGS).

```
PAGE 1: VEHICLE OVERLAP 'A' SETTINGS
 PHASE:            ¦123456789101112131415 16
VEH OVL PARENTS:¦   X  X
VEH OVL NOT VEH:¦
VEH OVL NOT PED:¦
VEH OVL GRN EXT:¦
STARTUP COLOR: _ RED  _ YELLOW  _ GREEN
FLASH COLORS:  _ RED  _ YELLOW  _ GREEN
SELECT VEHICLE OVERLAP OPTIONS:   (Y/N)
FLASH YELLOW IN CONTROLLER FLASH?...Y
GREEN EXTENSION (0-255 SEC).........0
YELLOW CLEAR (0=PARENT,3-25.5 SEC)..0.0
RED CLEAR (0=PARENT,0.1-25.5 SEC)...0.0
OUTPUT AS PHASE # (0=NONE, 1-16)....0
```

PRESS 'NEXT'

```
PAGE 1: VEHICLE OVERLAP 'B' SETTINGS
 PHASE:            ¦123456789101112131415 16
VEH OVL PARENTS:¦   X X
VEH OVL NOT VEH:¦
VEH OVL NOT PED:¦
VEH OVL GRN EXT:¦
STARTUP COLOR: _ RED  _ YELLOW  _ GREEN
FLASH COLORS:  _ RED  _ YELLOW  _ GREEN
SELECT VEHICLE OVERLAP OPTIONS:   (Y/N)
FLASH YELLOW IN CONTROLLER FLASH?...Y
GREEN EXTENSION (0-255 SEC).........0
YELLOW CLEAR (0=PARENT,3-25.5 SEC)..0.0
RED CLEAR (0=PARENT,0.1-25.5 SEC)...0.0
OUTPUT AS PHASE # (0=NONE, 1-16)....0
```

OVERLAP PROGRAMMING COMPLETE

INPUT FILE POSITION LAYOUT

(front view)

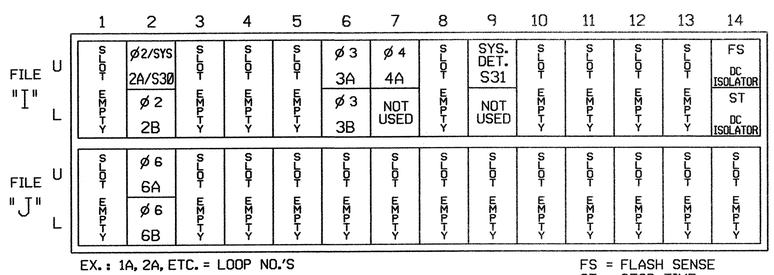

EX.: 1A, 2A, ETC. = LOOP NO.'S

FS = FLASH SENSE
ST = STOP TIME

INPUT FILE CONNECTION & PROGRAMMING CHART

LOOP NO.	LOOP TERMINAL	INPUT FILE POS.	PIN NO.	INPUT ASSIGNMENT NO.	DETECTOR NO.	NEMA PHASE	CALL	EXTEND	FULL TIME DELAY	STRETCH TIME	DELAY TIME
2A/S30	TB2-5,6	I2U	39	1	2	2/SYS	Y	Y		1.8	
2B	TB2-7,8	I2L	43	5	12	2	Y	Y			
3A	TB4-9,10	I6U	41	3	4	3	Y	Y			
3B	TB4-11,12	I6L	45	7	14	3	Y	Y			15
4A	TB6-1,2	I7U	65	27	34	4	Y	Y			5
* S31	TB6-9,10	I9U	60	22	11	SYS					
6A	TB3-5,6	J2U	40	2	6	6	Y	Y		1.8	
6B	TB3-7,8	J2L	44	6	16	6	Y	Y			

* SYSTEM DETECTOR ONLY. REMOVE THE VEHICLE PHASE ASSIGNED TO THIS DETECTOR IN THE DEFAULT PROGRAMMING.

INPUT FILE POSITION LEGEND: J2L
FILE J
SLOT 2
LOWER

THIS ELECTRICAL DETAIL IS FOR
THE SIGNAL DESIGN: 13-0073
DESIGNED: January 2008
SEALED: 02-20-08
REVISED: N/A

Signal Upgrade

ELECTRICAL AND PROGRAMMING DETAILS FOR:

Prepared in the Offices of:
Traffic Engineering and Safety Systems Branch
Signal Management Section
750 N. Greenfield Parkway, Garner, NC 27529

NC 191 (Brevard Road) at I-240 Access Ramps

Division 13 Buncombe County Asheville

PLAN DATE: February 2008 REVIEWED BY: JTR
PREPARED BY: James Peterson REVIEWED BY:

REVISIONS	INIT.	DATE

SEAL
NORTH CAROLINA PROFESSIONAL SEAL 008453 ENGINEER JOHN T. ROWE, JR.
SIGNATURE 2-28-08 DATE
SIG. INVENTORY NO. 13-0073

28-FEB-2008 11:45
s:\eis\signals\workgroups\sig\mpeterson\13073_smu_ele_xxx.dgn
jpeterson

STATE	PROJECT NO.	SHEET NO.
N.C.	U-3601	Sig.39
F. A. PROJ. NO.		M 1
PROJECT ID. NO.		

STATE OF NORTH CAROLINA
DIVISION OF HIGHWAYS

STANDARD DRAWINGS FOR METAL POLES

POLE STANDARDS

NCDOT METAL

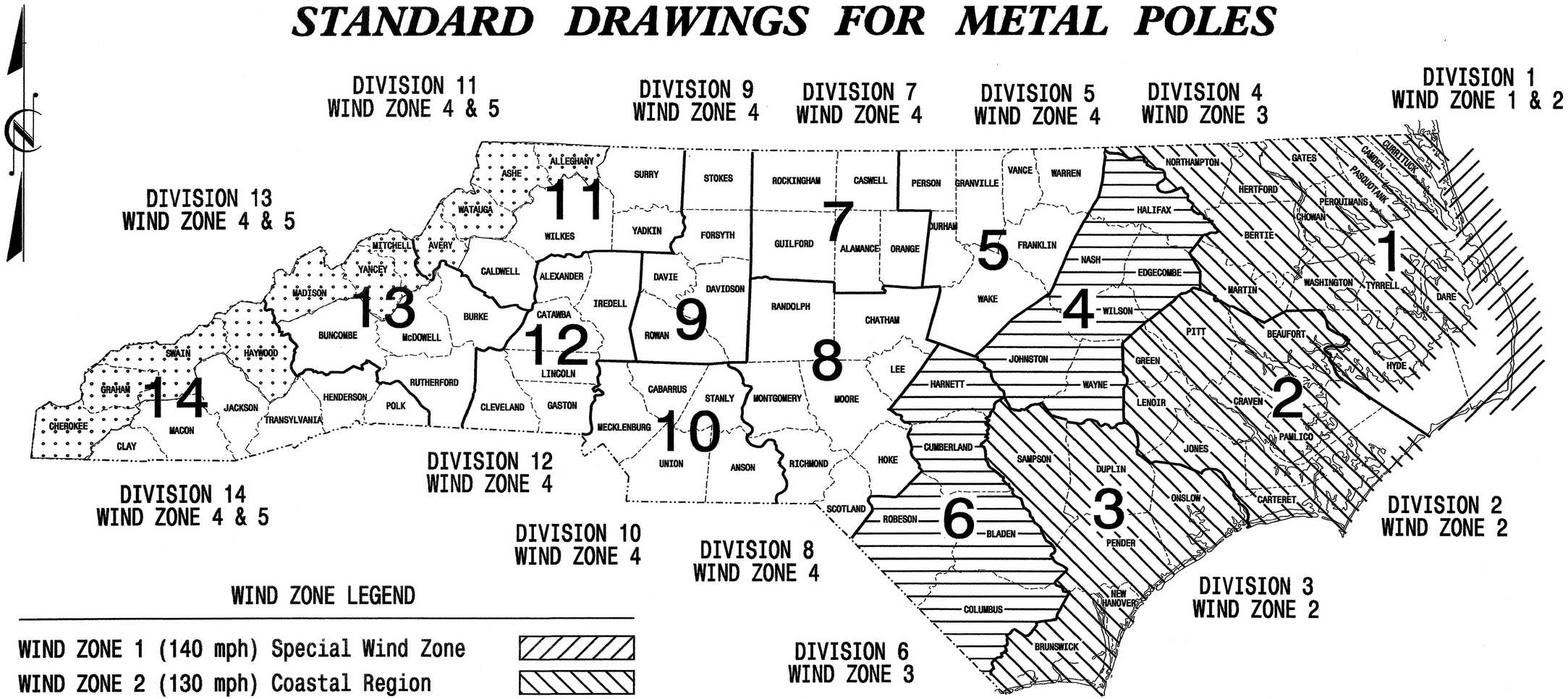

WIND ZONE LEGEND

WIND ZONE 1 (140 mph) Special Wind Zone	
WIND ZONE 2 (130 mph) Coastal Region	
WIND ZONE 3 (110 mph) Eastern Region	
WIND ZONE 4 (90 mph) Central & Mtn. Region	
WIND ZONE 5 (120 mph) Special Wind Zone	

http://www.ncdot.org/doh/preconstruct/traffic/tmssu/ws/default.htm

Prepared in the Offices of:

Traffic Engineering and Safety Systems Branch
STATE OF NORTH CAROLINA DEPARTMENT OF TRANSPORTATION
Signals and Geometrics Section

1122 N. McDowell St., Raleigh, NC 27603

Designed in conformance with the 2002 Interim to the 4th Edition 2001

AASHTO

Standard Specifications for Structural Supports for Highway Signs, Luminares, and Traffic Signals

INDEX OF PLANS

DRAWING NUMBER	DESCRIPTION
M 1	Title Sheet
M 2	Fabrication Details – All Poles
M 3	Fabrication Details – Strain Poles
M 4,5	Fabrication Details – Mast Arm Poles
M 6	Construction Details – Strain Poles
M 7	Construction Details – Foundations
M 8	Standard Strain Poles

NCDOT CONTACTS:

TRAFFIC ENGINEERING AND SAFETY SYSTEMS BRANCH

G. A. Fuller, P.E. – State ITS and Signals Engineer
R. E. Mullinax, P.E. – Signals and Geometrics Engineer
P. L. Alexander, P.E. – Signals and Geometrics Special Projects Engineer
D. C. Sarkar, P.E. – Signals and Geometrics Structural Engineer
A. M. Esposito, P.E. – Signals and Geometrics Project Engineer
C. F. Andrews, Jr. – Signals and Geometrics Project Engineer

SEAL

NORTH CAROLINA PROFESSIONAL SEAL 028094 ENGINEER DEBESH C. SARKAR

D. Sarkar — SIGNATURE
9.2.2005 — DATE

PROJECT REFERENCE NO.	SHEET NO.
U-3601	Sig.40 M 2

Fabrication Details – All Poles

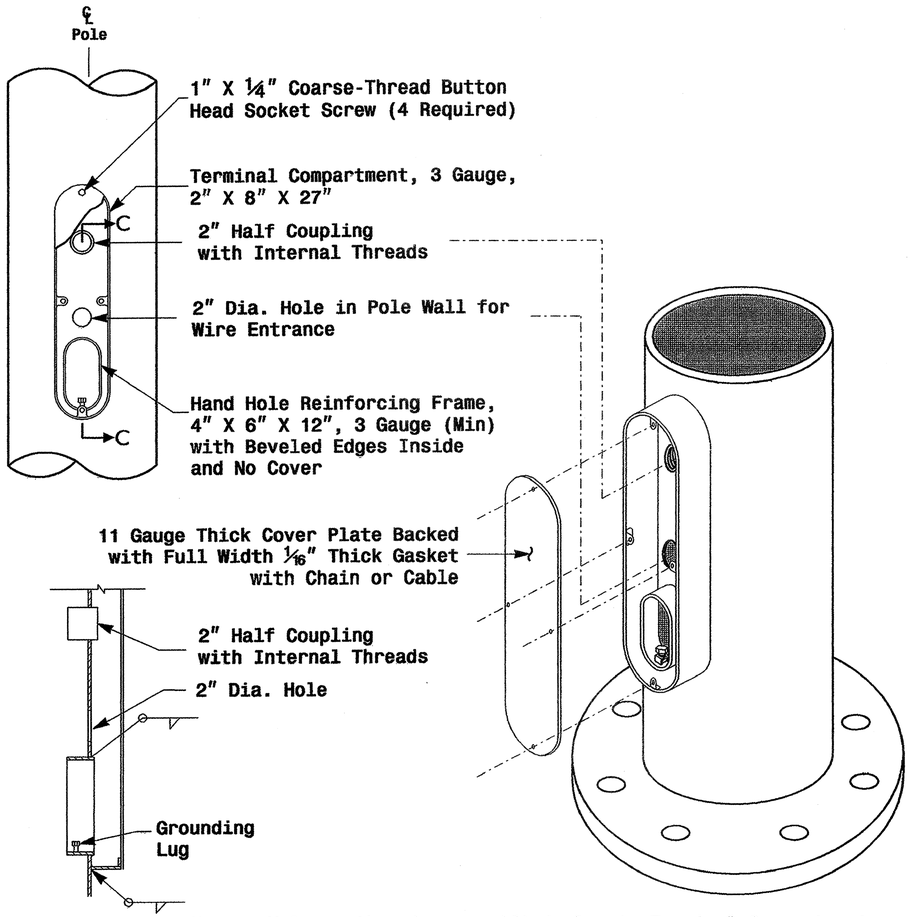

Section C-C

Note: Unless otherwise specified, locate Terminal Compartment 1 foot above the pole base plate at 180 degrees on the pole's radial index.

Terminal Compartment Detail

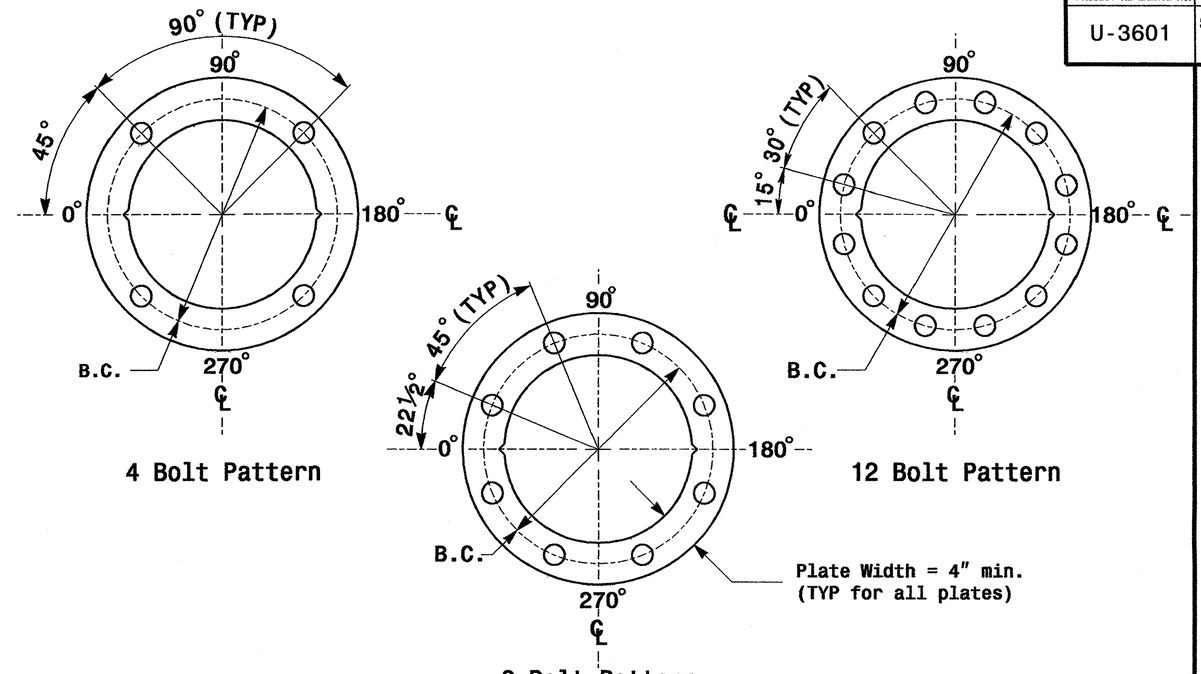

Construct Templates and Plates from ¼" min. thick Steel. Galvanizing is not required.

Base Plate Template and Anchor Bolt Lock Plate Details

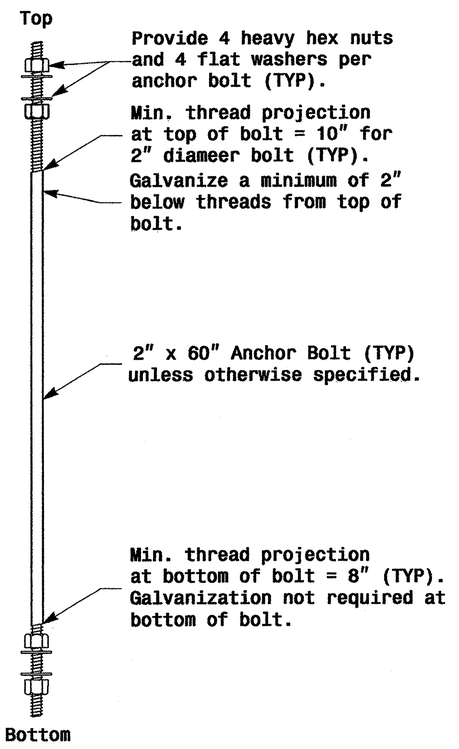

Anchor Bolt Detail

Note: See Strain Pole drawing M3 and Mast arm drawing M4 for base plate weld details.

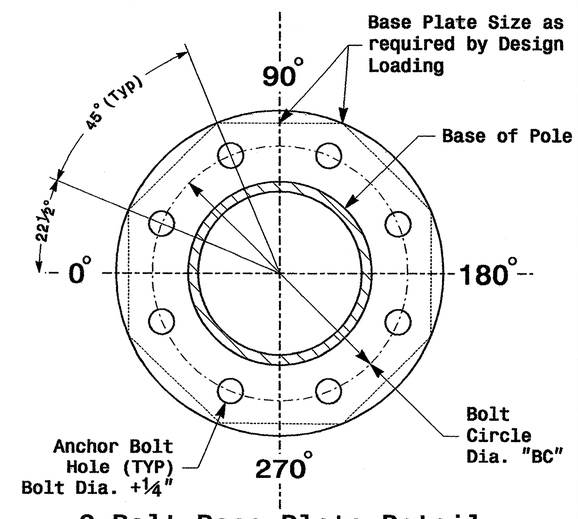

8 Bolt Base Plate Detail

MFG _____ MFG. DATE: MM/YY
SHAFT D/T/L/Y ----/----/----/----
ARM-A D/T/L/Y ----/----/----/----
----/----/----/----
ARM-B D/T/L/Y ----/----/----/----
----/----/----/----
A.B. DIA./B.C./L/Y ----/----/----/----
NCDOT STANDARD ----------

Shaft I.D. Tag
(Provide on Strain Poles and Mast Arm Poles)

MFG _____ MFG. DATE: MM/YY
SECTION D/T/L/Y ----/----/----/----
NCDOT STANDARD ----------

Arm I.D. Tag
(Provide on each section of a multi-section mast arm)

Notes:
1) D= Diameter, T= Thickness, L= Length, Y= Yield Strength
2) A.B. = Anchor Bolt
3) B.C. = Bolt Circle of Anchor Bolts
4) If Custom Design, use "NCDOT STANDARD" line for plan pole I.D.
5) See drawing M4 for mounting positions of I.D. tags.

Identification Tag Details

Prepared in the Offices of: Traffic Engineering and Signal System Unit, Division of Highways, Department of Transportation, State of North Carolina, Raleigh, NC 27603

Typical Fabrication Details Common To All Metal Poles

PLAN DATE: May 2005	REVIEWED BY: C.F. Andrews
PREPARED BY: P.L. Alexander	REVIEWED BY: A.W. Esposito

REVISIONS	INIT.	DATE

SCALE 0 NA NONE

SEAL: NORTH CAROLINA PROFESSIONAL SEAL 028094 ENGINEER DEBESH C. SARKAR

D. Sarkar 9.2.2005
SIGNATURE DATE

SIG. INVENTORY NO.

01-SEP-2005 18:22
D:\2004 Metal Pole Standards\2004 m2 thru m5.dgn
cardfews

PROJECT REFERENCE NO.	SHEET NO.
U-3601	Sig.41 M 4

Fabrication Details – Mast Arm Poles

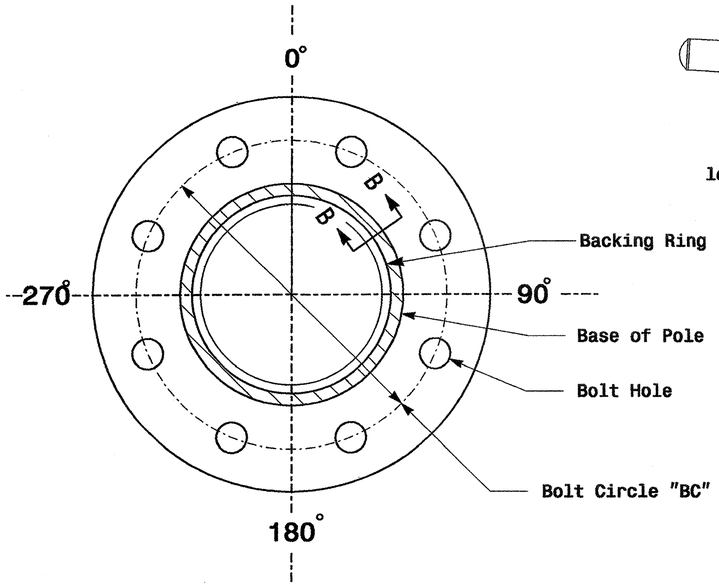

Section A-A
(See drawing M 2)

Pole Base Plate

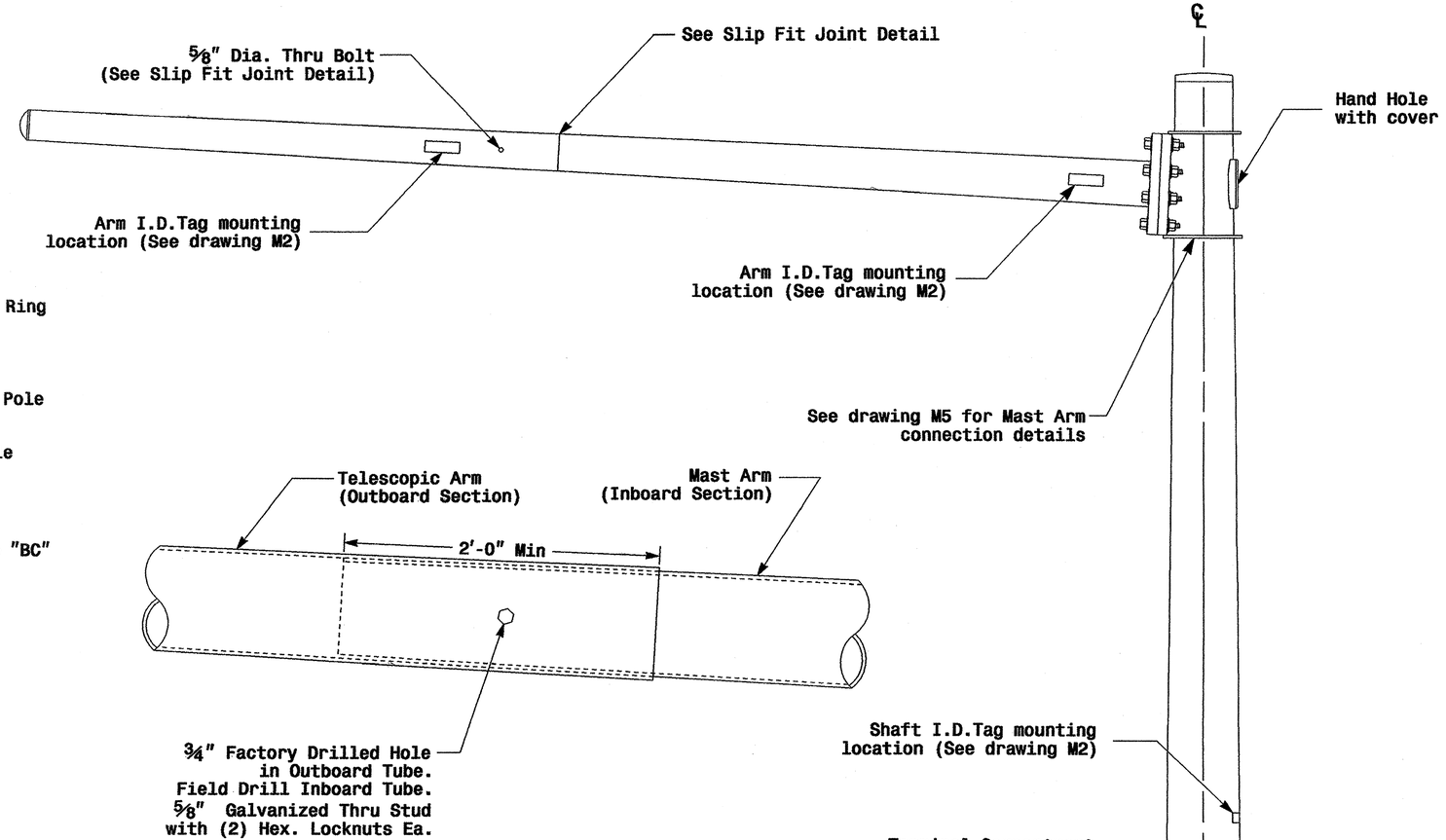

Slip Fit Joint Detail for Mast Arm

Monotube Mast Arm Pole
(.14in./ft. taper)

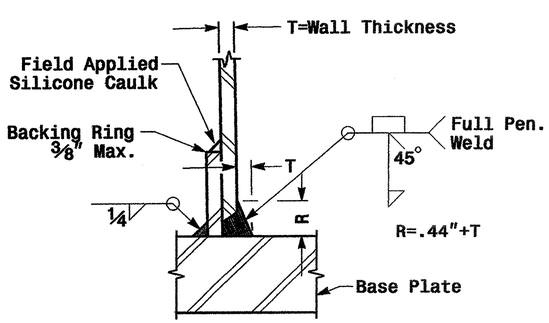

Section B-B
(Pole Attachment to Base Plate)

Full-Penetration Groove Weld Detail

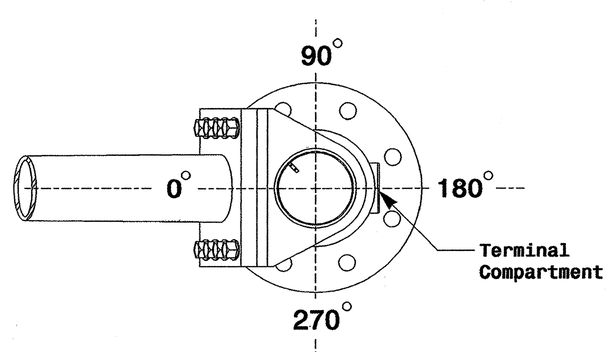

Mast Arm Radial Orientation

Prepared in the Offices of:
Public Transportation and Safety Division
Signals and Geometrics Section
122 N. McDowell St., Raleigh, NC 27603

Typical Fabrication Details
for Mast Arm Poles

PLAN DATE:	May 2005	REVIEWED BY:	C.F. Andrews
PREPARED BY:	P.L. Alexander	REVIEWED BY:	A.W. Esposito

SCALE: 0 NA — NONE

REVISIONS	INIT.	DATE

SEAL: NORTH CAROLINA PROFESSIONAL SEAL 028094 ENGINEER DEBASH C. SARKAR

D. Sarkar 9.2.2005
SIGNATURE DATE

SIG. INVENTORY NO.

01-SEP-2005 14:08
w:\epsc\pl\ess-unit\workgroups\2004 metal pole standards\2004 m4.dgn
pal\exander

PROJECT REFERENCE NO.	SHEET NO.
U-3601	Sig.42 M 5

Fabrication Details – Mast Arm Poles

Adjustable Clamp Type Bolted Mast Arm Connection

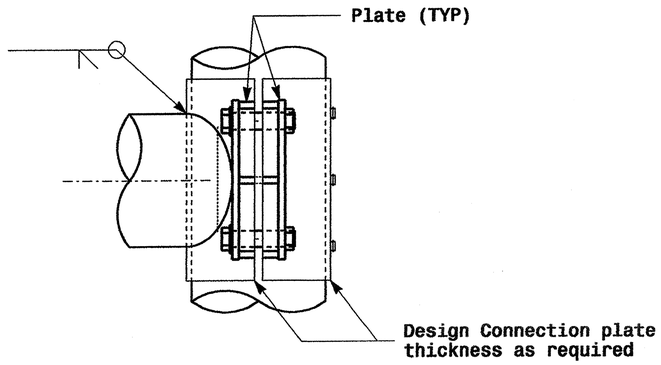

Side Elevation View

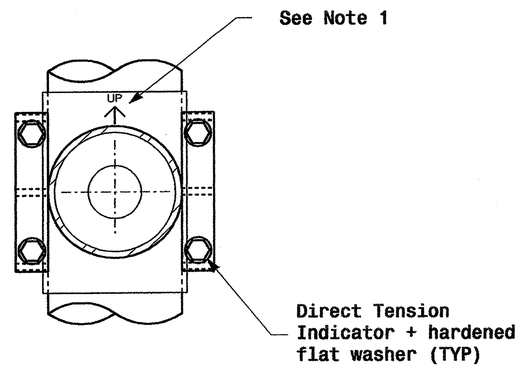

Front Elevation View

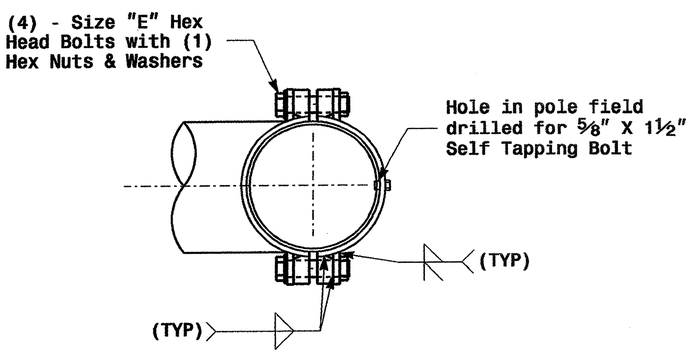

Plan View

Welded Ring Stiffened Mast Arm Connection

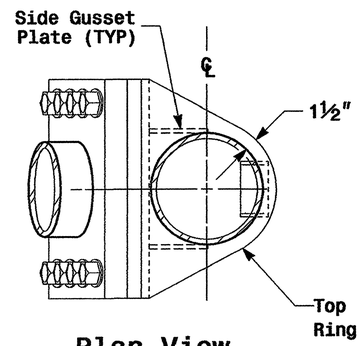

Plan View

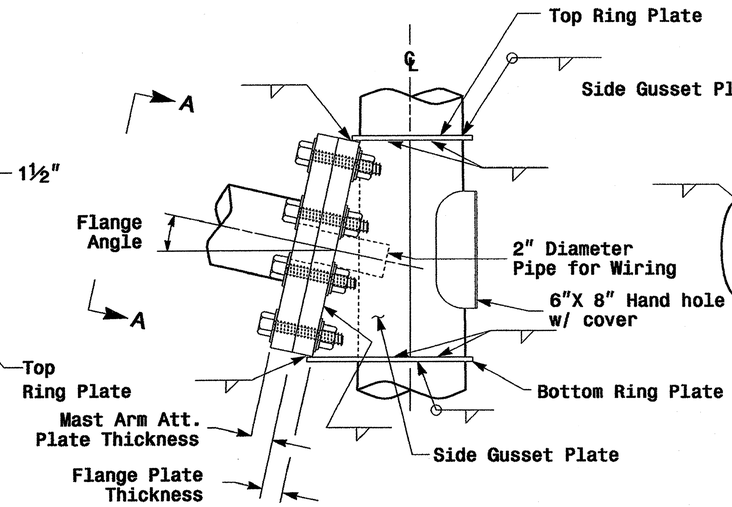

Side Elevation View

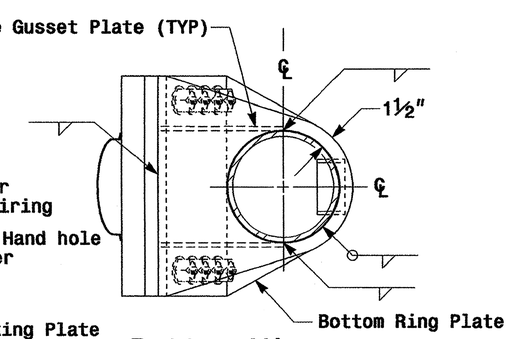

Bottom View

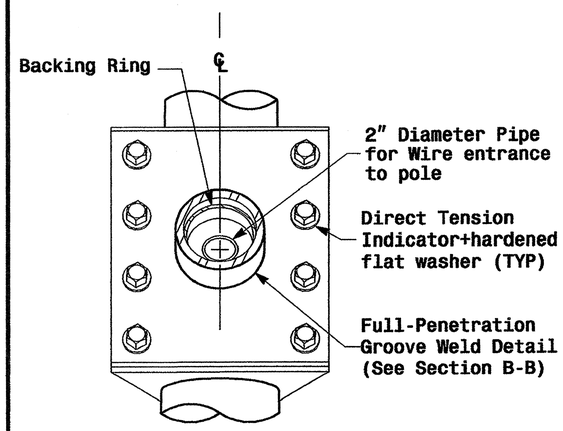

Front Elevation View

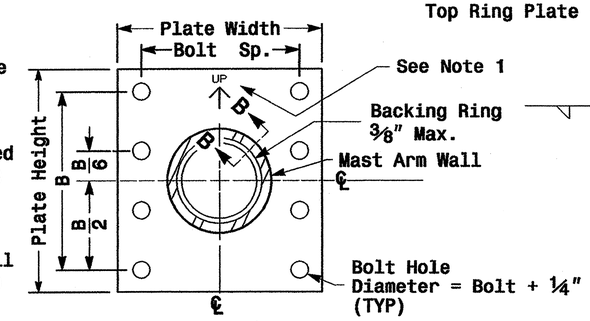

Section View A-A

Mast Arm Attachment Plate

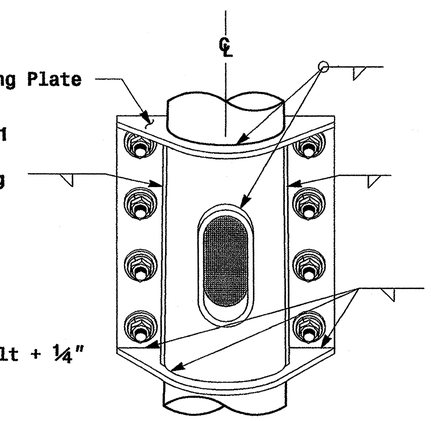

Back Elevation View

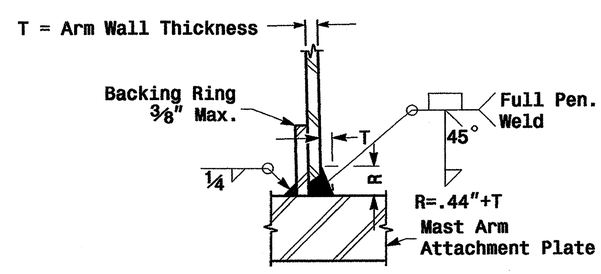

Section B-B

Full-Penetration Groove Weld Detail

Notes:

1. Provide a permanent means of identification above the mast arm to indicate proper attachment orientation of the mast arm.
2. Designer will determine the size of all structural components, plates, fasteners, and welds shown unless they are already specified.
3. Designer is responsible for providing appropriate drainage points.

Prepared in the Offices of: Traffic Engineering and Safety Systems Branch, Signals and Geometrics Section, Department of Transportation, 122 N. McDowell St., Raleigh, NC 27603

Fabrication Details For Mast Arm Connection To Pole

PLAN DATE: May 2005	REVIEWED BY: C.F. Andrews
PREPARED BY: P.L. Alexander	REVIEWED BY: A.M. Esposito

REVISIONS	INIT.	DATE

SCALE: 0 NA — NONE

SEAL: NORTH CAROLINA PROFESSIONAL SEAL 028094 ENGINEER DEBASH C. SARKAR

D. Sarkar 9.2.2005
SIGNATURE DATE

SIG. INVENTORY NO.

01-SEP-2005 14:11
w:\peoples-unit\workgroups\2004 metal pole standards\2004 m5.dgn
pbalexander

PROJECT REFERENCE NO.	SHEET NO.
U-3601	Sig.43 M 7

Construction Details – Foundations

Reinforcing Steel Bars

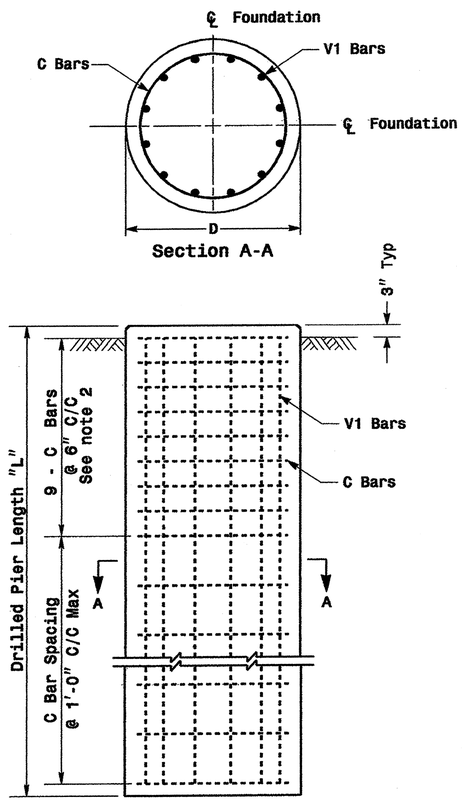

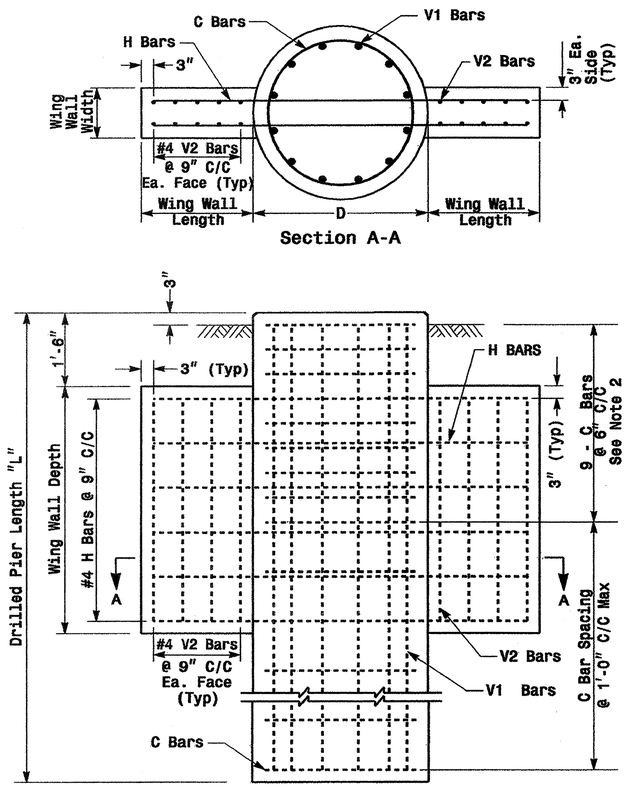

REINFORCING STEEL TABLE FOR STANDARD DRILL PIER SHAFT (42" & 48" DIAMETER)						
Shaft Dia (in.)	Conc. Volume (cu. yds.)	Bar Name	No.	Size	Type	Length
42"	.356 x L	V1	9	#8	STR.	**
		C	*	#4	CIR.	10'-9"
48"	.465 x L	V1	12	#8	STR.	**
		C	*	#4	CIR.	12'-6"

* See Note No. 1
** See Note No. 3

REINFORCING STEEL TABLE FOR STANDARD 42" and 48" DRILL PIER SHAFT WITH TYPE 1 AND TYPE 2 WING WALLS						
Wing Wall Type	Drill Pier Shaft Dia. (in.)	Reinforcing Steel				
		Bar Name	No.	Size	Type	Length
TYPE 1	42"	V1	9	#8	STR.	**
		V2	12	#4	STR.	2'-6"
		H	8	#4	STR.	6'-0"
		C	*	#4	CIR.	10'-9"
TYPE 2	42"	V1	9	#8	STR.	**
		V2	16	#4	STR.	4'-6"
		H	12	#4	STR.	9'-0"
		C	*	#4	CIR.	10'-9"
TYPE 2	48"	V1	12	#8	STR.	**
		V2	16	#4	STR.	4'-6"
		H	12	#4	STR.	9'-6"
		C	*	#4	CIR.	12'-6"

* See Note No. 1
** See Note No. 3

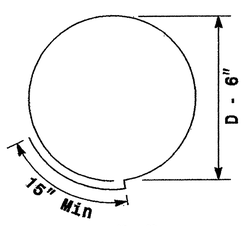

Typical "C" Bars

WING WALL DETAILS				
Wing Wall Type	Wing Wall Length (Ft.)	Wing Wall Width (Ft.)	Wing Wall Depth (Ft.)	Concrete Volume (Cu. Yds.)
TYPE 1	1'-6"	1'-0"	3'-0"	.4
TYPE 2	3'-0"	1'-0"	5'-0"	1.2

See Note No. 4

Typical Foundation Anchor Bolt Details

(Reinforcing Cage Not Shown for Clarity)

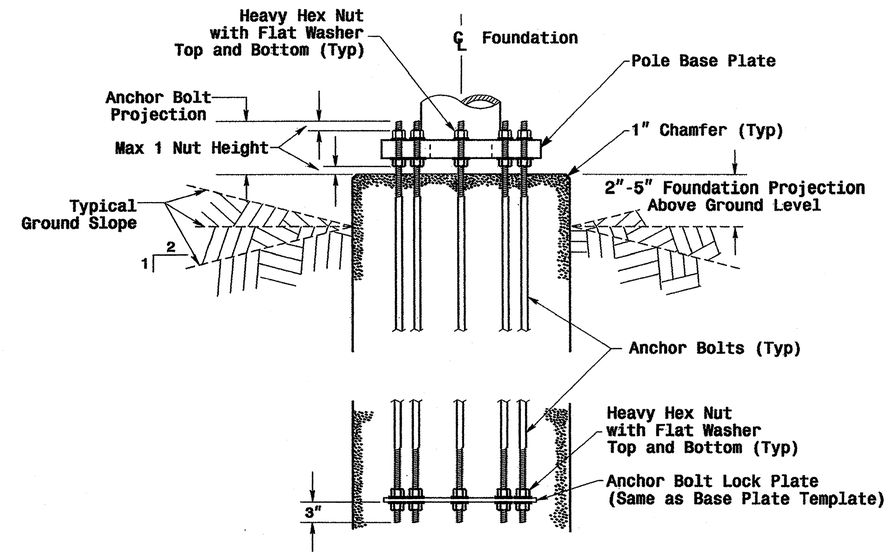

Typical Foundation Conduit Details

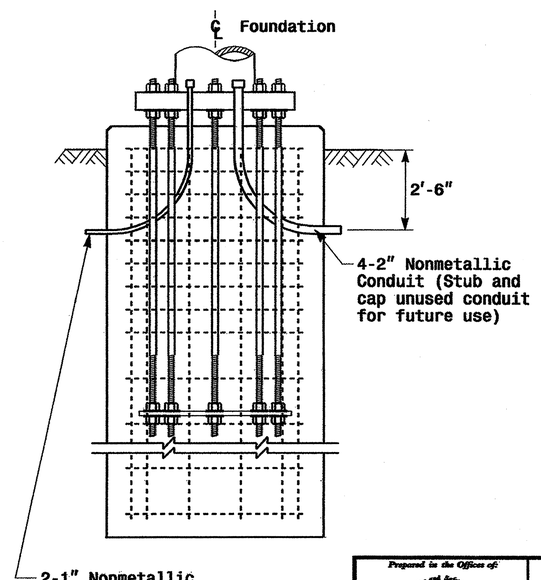

Notes

1. The number of C-bars is based on foundation depth. For standard foundations, see sheet M 8.
2. Circular tie reinforcing rings may be vertically adjusted by +/- 3" at a depth between 2'-0" and 3'-0" to facilitate the installation of electrical conduit entering in the cage.
3. The length of V1-bars is based on foundation depth. For standard foundations, see sheet M 8.
4. The quantities for steel and concrete shown in the Wing Wall Details Chart reflect the amount of material for 1 pair of wing walls (2 wing walls per drilled pier shaft.)

Prepared in the Offices of: Traffic Engineering and Safety Systems Branch, Signals and Geometrics Section, Division of Highways, Department of Transportation, 122 N. McDowell St., Raleigh, NC 27603

Construction Details Foundations

PLAN DATE: May 2005	REVIEWED BY: P.L. ALEXANDER
PREPARED BY: C.F. ANDREWS	REVIEWED BY: A.M. ESPOSITO

SCALE: 0 NA NONE

REVISIONS	INIT.	DATE

SEAL: NORTH CAROLINA PROFESSIONAL SEAL 028094 ENGINEER DEBASH C. SARKAR

D. Sarkar 9.2.2005
SIGNATURE DATE

SIG. INVENTORY NO.

01-SEP-2005 11:48
w:\epcoplas-unl\workgroups\2004 metal pole standards\2004 mft.dgn
pu16xander

PROJECT REFERENCE NO.	SHEET NO.
U-3601	SIG.44

1. INSTALL REA, PE – 22, SHIELDED, TWISTED PAIR COMMUNICATIONS CABLE
2. INSTALL REA, PE – 38, (FIGURE 8) SHIELDED, TWISTED PAIR COMMUNICATIONS CABLE
3. INSTALL REA, PE – 39, (UNDERGROUND) SHIELDED, TWISTED PAIR COMMUNICATIONS CABLE
4. INSTALL SMFO CABLE
5. INSTALL MMFO CABLE
6. INSTALL FIBER OPTIC DROP CABLE
7. INSTALL TRACER WIRE
8. TRENCH
9. INSTALL PVC CONDUIT
10. INSTALL RIGID, GALVANIZED STEEL CONDUIT
11. INSTALL RIGID, GALVANIZED STEEL RISER WITH WEATHERHEAD
12. INSTALL RIGID, GALVANIZED STEEL RISER WITH FIBER OPTIC CABLE SEAL
13. INSTALL OUTER-DUCT POLYETHYLENE CONDUIT
14. INSTALL POLYETHYLENE CONDUIT
15. DIRECTIONAL DRILL CONDUIT
16. BORE AND JACK CONDUIT
17. INSTALL CABLE(S) IN EXISTING CONDUIT
18. INSTALL CABLE(S) IN NEW CONDUIT
19. INSTALL CABLE(S) IN EXISTING RISER
20. INSTALL CABLE(S) IN NEW RISER
21. INSTALL CABLE(S) IN EXISTING CONDUIT STUB-OUTS
22. INSTALL NEW CONDUIT INTO EXISTING CABINET BASE (USE EXISTING CONDUIT STUB-OUTS WHEN AVAILABLE)
23. INSTALL NEW RISER INTO EXISTING CABINET BASE (USE EXISTING CONDUIT STUB-OUTS WHEN AVAILABLE)
24. INSTALL NEW CONDUIT INTO EXISTING POLE MOUNTED CABINET
25. INSTALL NEW RISER INTO EXISTING POLE MOUNTED CABINET
26. TERMINATE COMMUNICATIONS CABLE ON EXISTING TELEMETRY INTERFACE PANEL IN TRAFFIC SIGNAL CONTROLLER CABINET
27. INSTALL NEW TELEMETRY INTERFACE PANEL IN TRAFFIC SIGNAL CONTROLLER CABINET
28. INSTALL INTERCONNECT CENTER, PATCH PANEL, JUMPERS AND FUSION SPLICE CABLE IN CABINET
29. INSTALL UNDERGROUND SPLICE ENCLOSURE
30. INSTALL AERIAL SPLICE ENCLOSURE
31. INSTALL POLE MOUNTED SPLICE CABINET
32. INSTALL BASE MOUNTED SPLICE CABINET
33. REMOVE EXISTING SPLICE CABINET
34. INSTALL CABINET FOUNDATION
35. REMOVE EXISTING CABINET FOUNDATION
36. INSTALL CCTV CAMERA ASSEMBLY
37. INSTALL CCTV CAMERA WOOD POLE
38. INSTALL CCTV CAMERA METAL POLE AND FOUNDATION
39. INSTALL JUNCTION BOX
40. INSTALL OVERSIZED JUNCTION BOX
41. REMOVE EXISTING JUNCTION BOX
42. INSTALL WOOD POLE
43. REMOVE EXISTING WOOD POLE
44. INSTALL AERIAL GUY ASSEMBLY
45. INSTALL STANDARD GUY ASSEMBLY
46. INSTALL SIDEWALK GUY ASSEMBLY
47. INSTALL MESSENGER CABLE
48. REMOVE EXISTING COMMUNICATIONS AND MESSENGER CABLE
49. REMOVE EXISTING MESSENGER CABLE
50. INSTALL TELEPHONE SERVICE
51. INSTALL CABLE STORAGE RACKS (SNOW SHOES) AND STORE 100 FEET OF CABLE
52. INSTALL DELINEATOR MARKER
53. STORE 20 FEET OF COMMUNICATIONS CABLE
54. LASH CABLE(S) TO EXISTING SIGNAL/COMMUNICATIONS CABLE
55. LASH CABLE(S) TO EXISTING MESSENGER CABLE
56. LASH CABLE(S) TO NEW MESSENGER CABLE
57. MODIFY EXISTING ELECTRICAL SERVICE
58. INSTALL NEW ELECTRICAL SERVICE

LEGEND

FO	NEW FIBER OPTIC COMMUNICATIONS CABLE
TWIST PR	NEW TWISTED PAIR COMMUNICATIONS CABLE
EXI	EXISTING COMMUNICATIONS CABLE
REM	EXISTING COMMUNICATIONS CABLE TO BE REMOVED
	NEW AERIAL GUY ASSEMBLY
	NEW CONDUIT
	EXISTING CONDUIT
DD	NEW DIRECTIONAL DRILLED CONDUIT
B&J	NEW BORED AND JACKED CONDUIT
	NEW JUNCTION BOX
	EXISTING JUNCTION BOX
	NEW WOOD POLE
	EXISTING WOOD POLE
S	AERIAL SPLICE ENCLOSURE
	NEW METAL POLE
	EXISTING METAL POLE
	NEW CCTV ASSEMBLY
	NEW STANDARD GUY ASSEMBLY
	NEW SIDEWALK GUY ASSEMBLY
	NEW CABLE STORAGE RACKS (SNOW SHOES)
	EXISTING CONTROLLER AND CABINET
S	EXISTING SPLICE CABINET
S	NEW SPLICE CABINET
SP	SIGNAL POLE
XX-XXXX	SIGNAL INVENTORY NUMBER

CONSTRUCTION NOTE SYMBOLOGY KEY

XX	INDICATES NUMBER OF CABLES, LOOPS, ETC.
XX	INDICATES NUMBER OF FIBERS PER CABLE, TWISTED PAIRS PER CABLE, ETC.
XX	INDICATES NUMBER OF RISER(S)/CONDUIT(S)
XX	INDICATES DIAMETER OF RISER(S)/CONDUIT(S) (INCH)

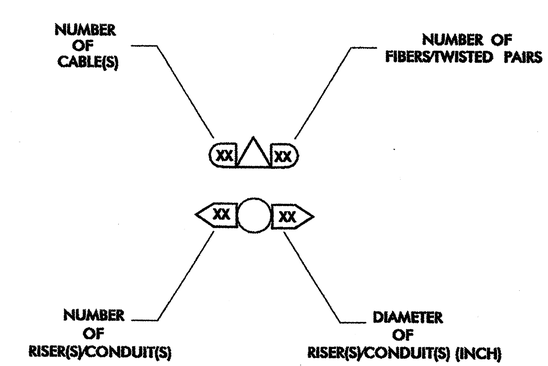

Prepared in the Offices of:
Traffic Engineering and Safety Systems Branch
Traffic Management Systems
STATE OF NORTH CAROLINA DEPARTMENT OF TRANSPORTATION
122 N. McDowell St., Raleigh, NC 27603

CONSTRUCTION NOTES

PLAN DATE:	REVIEWED BY:
PREPARED BY:	REVIEWED BY: G. A. FULLER

SCALE 0

REVISIONS	INIT.	DATE

SEAL
NORTH CAROLINA PROFESSIONAL SEAL 023919 ENGINEER GREGORY A. FULLER

Gregory A. Fuller 10/31/02
SIGNATURE DATE

CADD File: nocost

PROJECT REFERENCE NO.	SHEET NO.
U-3601	Sig.45

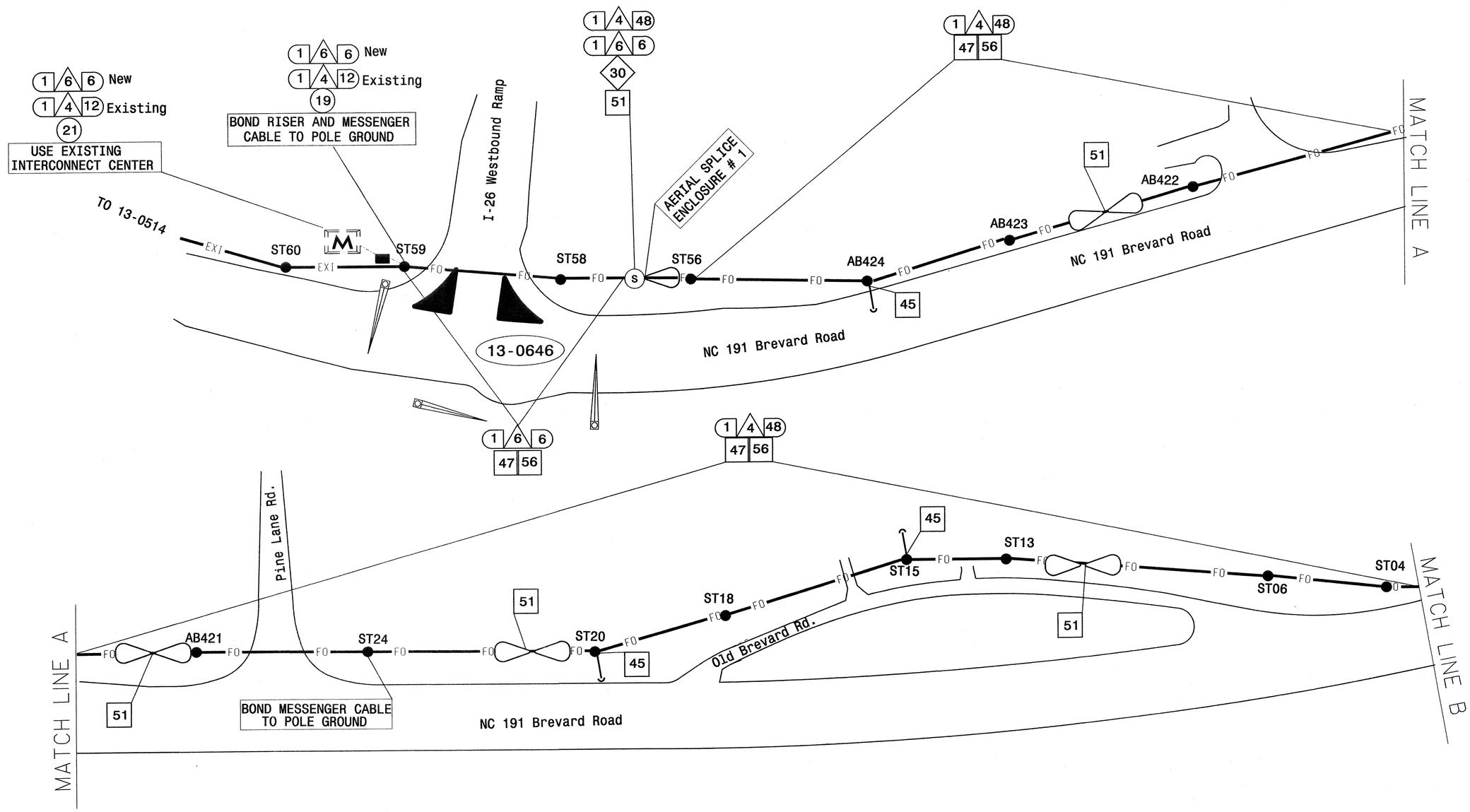

NOTE: ALL NCDOT ATTACHMENT POINTS ARE 40" BELOW POWER, FRONT SIDE OF POLE

Prepared in the Offices of:
Traffic Engineering and Safety Systems Branch
STATE OF NORTH CAROLINA DEPARTMENT OF TRANSPORTATION
Intelligent Transportation Systems
750 N. Greenfield Pkwy., Garner, NC 27529

SCALE 0

COMMUNICATIONS CABLE AND CONDUIT ROUTING PLANS
NC 191 (BREVARD ROAD)
DIVISION 13 BUNCOMBE COUNTY ASHEVILLE

PLAN DATE:	FEBRUARY 2008	REVIEWED BY:	I. N. AVERY
PREPARED BY:	P. C. LOUDER	REVIEWED BY:	G.G.MURR,JR.,PE

REVISIONS	INIT.	DATE

SEAL
NORTH CAROLINA PROFESSIONAL SEAL 14543 ENGINEER GENE G. MURR, JR.
SIGNATURE 3-3-08 DATE
CADD Filename

PROJECT REFERENCE NO.	SHEET NO.
U-3601	Sig. 46

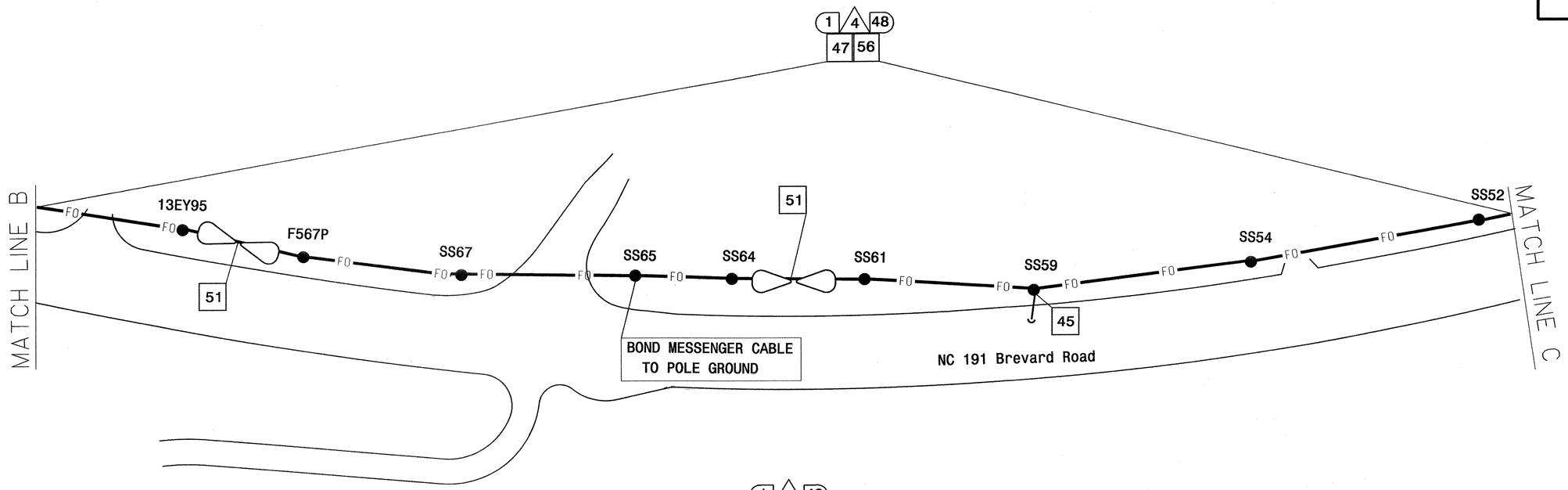

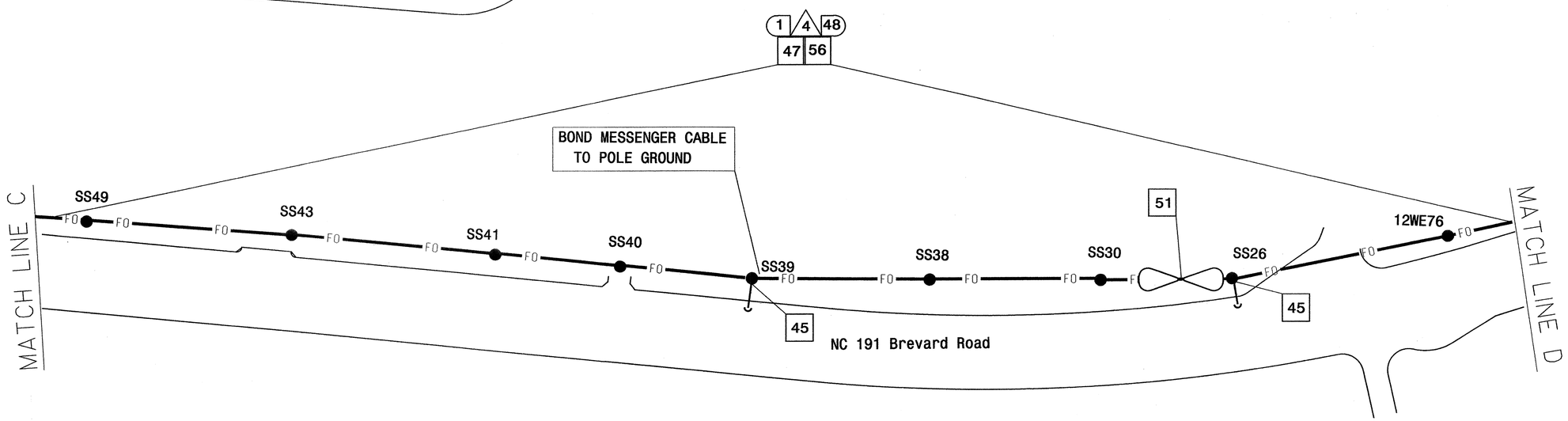

NOTE: ALL NCDOT ATTACHMENT POINTS ARE 40" BELOW POWER, FRONT SIDE OF POLE

Prepared in the Offices of:
Public, Rail, Aviation and Safety Systems Branch
Intelligent Transportation Systems
STATE OF NORTH CAROLINA DEPARTMENT OF TRANSPORTATION
750 N. Greenfield Pkwy., Garner, NC 27529

COMMUNICATIONS CABLE AND
CONDUIT ROUTING PLANS
NC 191 (BREVARD ROAD)

DIVISION 13 BUNCOMBE COUNTY ASHEVILLE

PLAN DATE:	FEBRUARY 2008	REVIEWED BY:	I. N. AVERY
PREPARED BY:	P. C. LOUDER	REVIEWED BY:	G.G.MURR,JR.,PE

SCALE 0

REVISIONS	INIT.	DATE

SEAL
NORTH CAROLINA PROFESSIONAL SEAL 14543 ENGINEER GENE G. MURR, JR.
3-3-08
SIGNATURE DATE
CADD Filename:

PROJECT REFERENCE NO.	SHEET NO.
U-3601	Sig.47

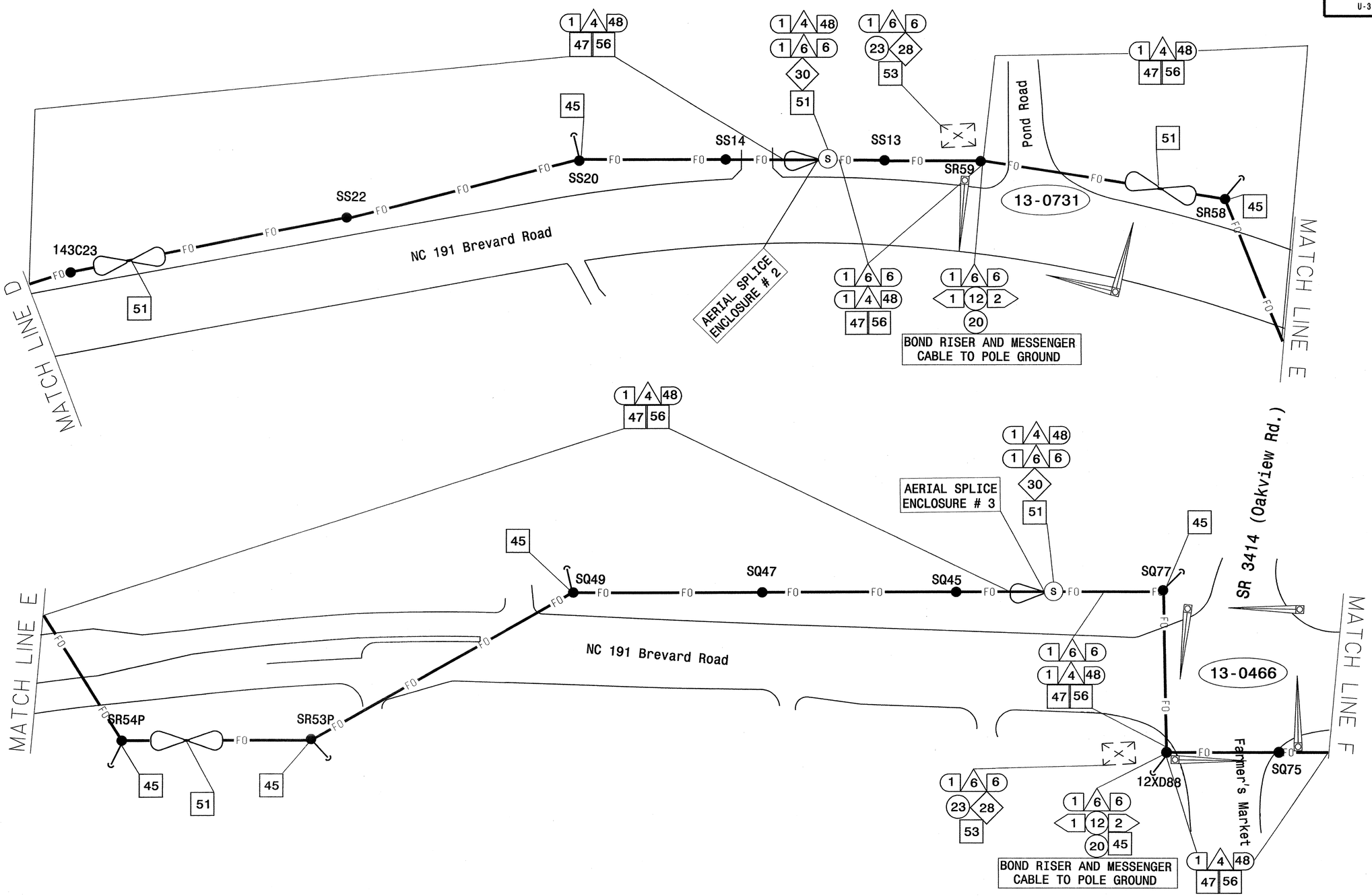

NOTE: ALL NCDOT ATTACHMENT POINTS ARE 40" BELOW POWER, FRONT SIDE OF POLE

Prepared in the Offices of:
Traffic Engineering and Safety Systems Branch
STATE OF NORTH CAROLINA DEPARTMENT OF TRANSPORTATION
Intelligent Transportation Systems
750 N. Greenfield Pkwy., Garner, NC 27529

SCALE 0

COMMUNICATIONS CABLE AND CONDUIT ROUTING PLANS
NC 191 (BREVARD ROAD)

DIVISION 13 BUNCOMBE COUNTY ASHEVILLE

PLAN DATE:	FEBRUARY 2008	REVIEWED BY:	I. N. AVERY
PREPARED BY:	P. C. LOUDER	REVIEWED BY:	G.G.MURR,JR.,PE

REVISIONS	INIT.	DATE

SEAL
NORTH CAROLINA PROFESSIONAL SEAL 14543 ENGINEER GENE G. MURR, JR.
SIGNATURE 3-3-08 DATE
CADD Filename:

PROJECT REFERENCE NO.	SHEET NO.
U-3601	Sig.48

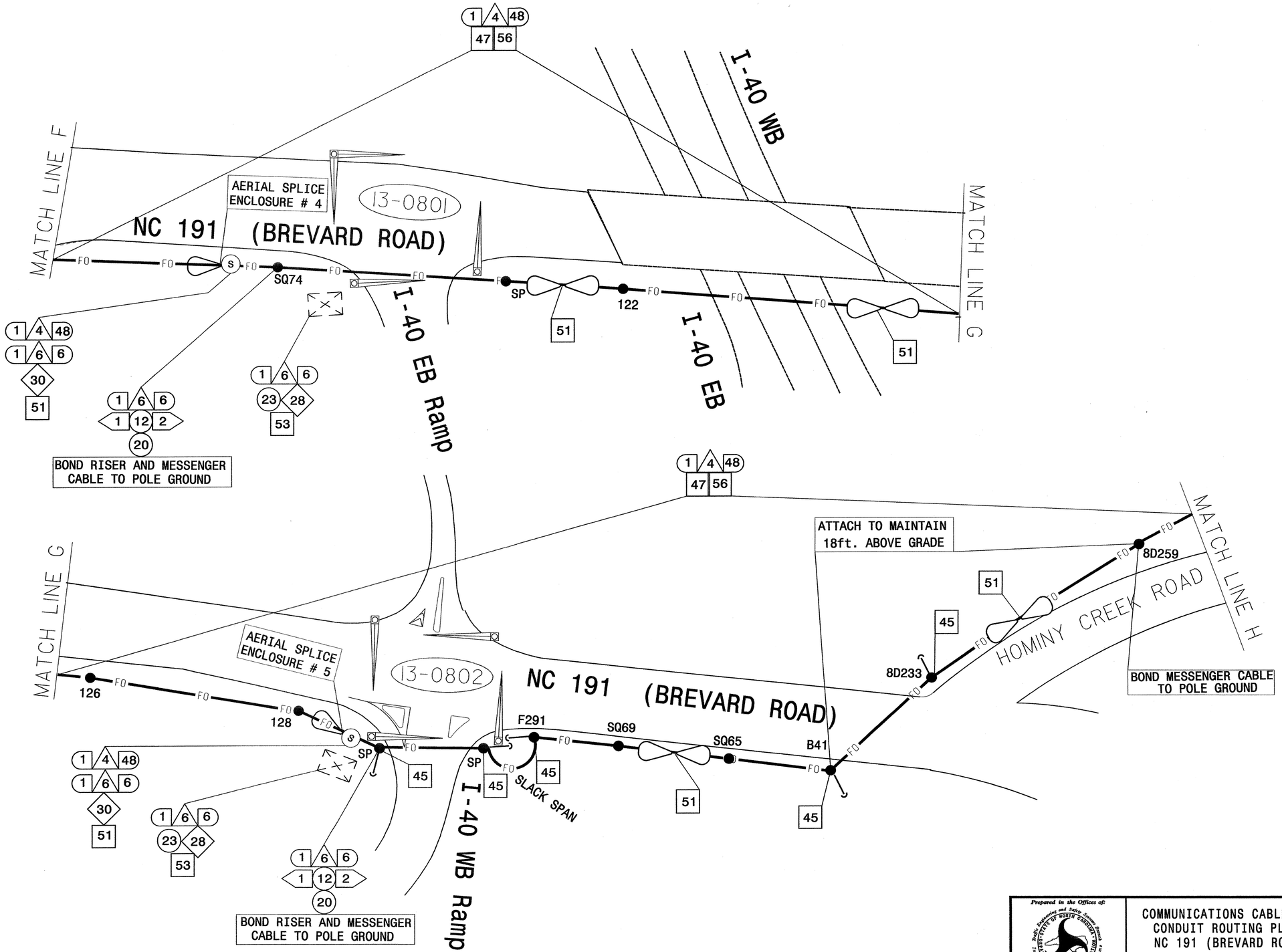

NOTE: ALL NCDOT ATTACHMENT POINTS ARE 40" BELOW POWER, FRONT SIDE OF POLE

Prepared in the Offices of:
Traffic Engineering and Safety Systems Branch
STATE OF NORTH CAROLINA DEPARTMENT OF TRANSPORTATION
Intelligent Transportation Systems
750 N. Greenfield Pkwy., Garner, NC 27529

SCALE 0

COMMUNICATIONS CABLE AND CONDUIT ROUTING PLANS NC 191 (BREVARD ROAD)

DIVISION 13 BUNCOMBE COUNTY ASHEVILLE

PLAN DATE:	FEBRUARY 2008	REVIEWED BY:	I. N. AVERY
PREPARED BY:	P. C. LOUDER	REVIEWED BY:	G.G.MURR,JR.,PE

REVISIONS	INIT.	DATE

SEAL
NORTH CAROLINA PROFESSIONAL SEAL 14543 ENGINEER GENE G. MURR, JR.
SIGNATURE 3-3-08 DATE
CADD Filename:

PROJECT REFERENCE NO.	SHEET NO.
U-3601	Sig.49

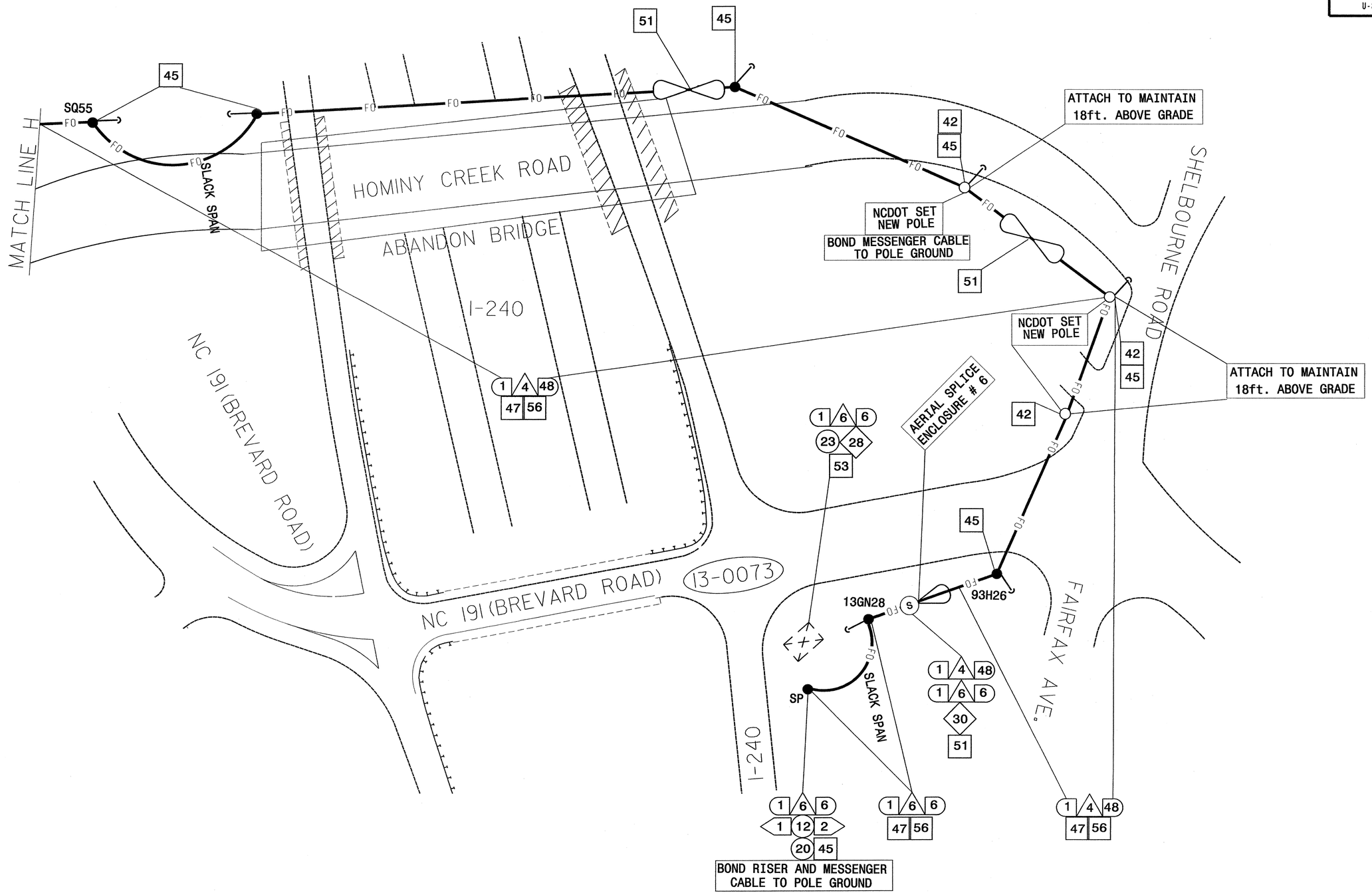

NOTE: ALL NCDOT ATTACHMENT POINTS ARE 40" BELOW POWER, FRONT SIDE OF POLE

Prepared in the Offices of:
Traffic Engineering and Safety Systems Branch
STATE OF NORTH CAROLINA DEPARTMENT OF TRANSPORTATION
Intermodal Transportation Division
750 N. Greenfield Pkwy., Garner, NC 27529

SCALE 0

COMMUNICATIONS CABLE AND CONDUIT ROUTING PLANS
NC 191 (BREVARD ROAD)

DIVISION 13 BUNCOMBE COUNTY ASHEVILLE

PLAN DATE:	FEBRUARY 2008	REVIEWED BY:	I. N. AVERY
PREPARED BY:	P. C. LOUDER	REVIEWED BY:	G.G.MURR,JR.,PE

REVISIONS	INIT.	DATE

SEAL
NORTH CAROLINA PROFESSIONAL SEAL 14543 ENGINEER GENE G. MURR, JR.
SIGNATURE 3-3-08 DATE
CADD Filename:

PROJECT REFERENCE NO.	SHEET NO.
U-3601	Sig.50

FIBER OPTIC SPLICE PLAN
DROP & REPEAT

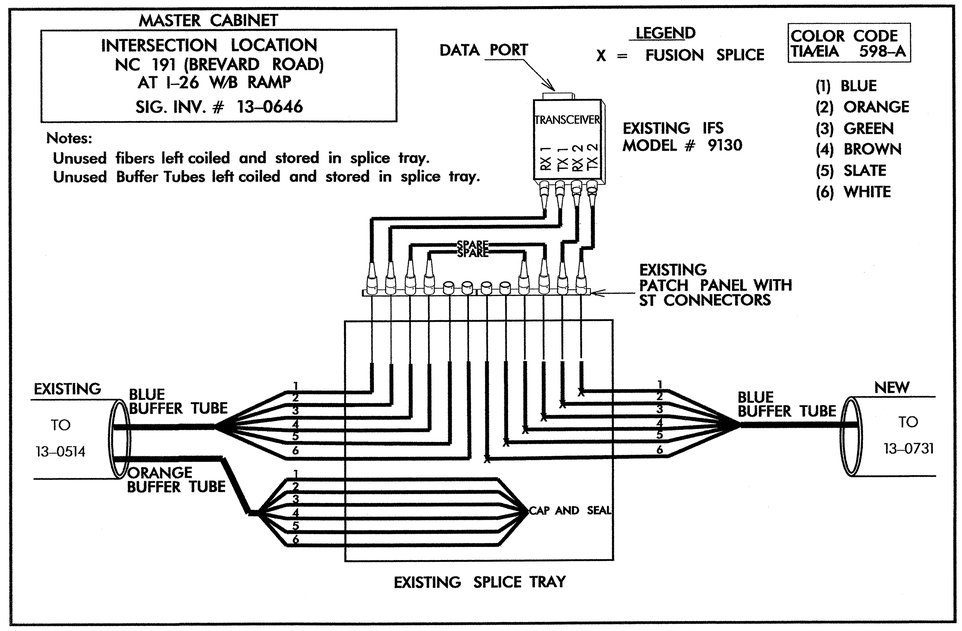

NOTE:

FIBER INTERCONNECT CENTER IS SCHEMATIC ONLY.
CONTRACTOR IS RESPONSIBLE FOR DETERMINING/ENSURING
PROPER TERMINATION OF FIBER OPTIC CONNECTIONS

Prepared in the Offices of:
Traffic Engineering and Safety Systems Branch
Transportation Mobility and Safety Division
STATE OF NORTH CAROLINA DEPARTMENT OF TRANSPORTATION
750 N. Greenfield Pkwy., Garner, NC 27529

SCALE
0

SPLICE PLAN
NC 191 (BREVARD ROAD)

DIVISION 13 BUNCOMBE COUNTY ASHEVILLE

PLAN DATE:	FEBRUARY 2008	REVIEWED BY:	I. N. AVERY
PREPARED BY:	P. C. LOUDER	REVIEWED BY:	G.G.MURR,JR.,PE

REVISIONS	INIT.	DATE

SEAL
NORTH CAROLINA PROFESSIONAL SEAL 14543 ENGINEER GENE G. MURR, JR.
SIGNATURE 3-3-08 DATE
CADD Filename:

PROJECT REFERENCE NO.	SHEET NO.
U-3601	Sig.51

AERIAL SPLICE ENCLOSURE #1
AT NC 191 (BREVARD RD.)
AND I-26 WB RAMP.
(13-0646)

LEGEND

COLOR CODE
TIA/EIA 598-A

(1) BLUE	(7) RED
(2) ORANGE	(8) BLACK
(3) GREEN	(9) YELLOW
(4) BROWN	(10) VIOLET
(5) SLATE	(11) ROSE
(6) WHITE	(12) AQUA

X - FUSION SPLICE INDIVIDUAL FIBER

BUFFER TUBE SPLICE OR EXPRESS ENTIRE BUFFER TUBE AS NOTED

CAP AND SEAL CAP AND SEAL UNUSED FIBER

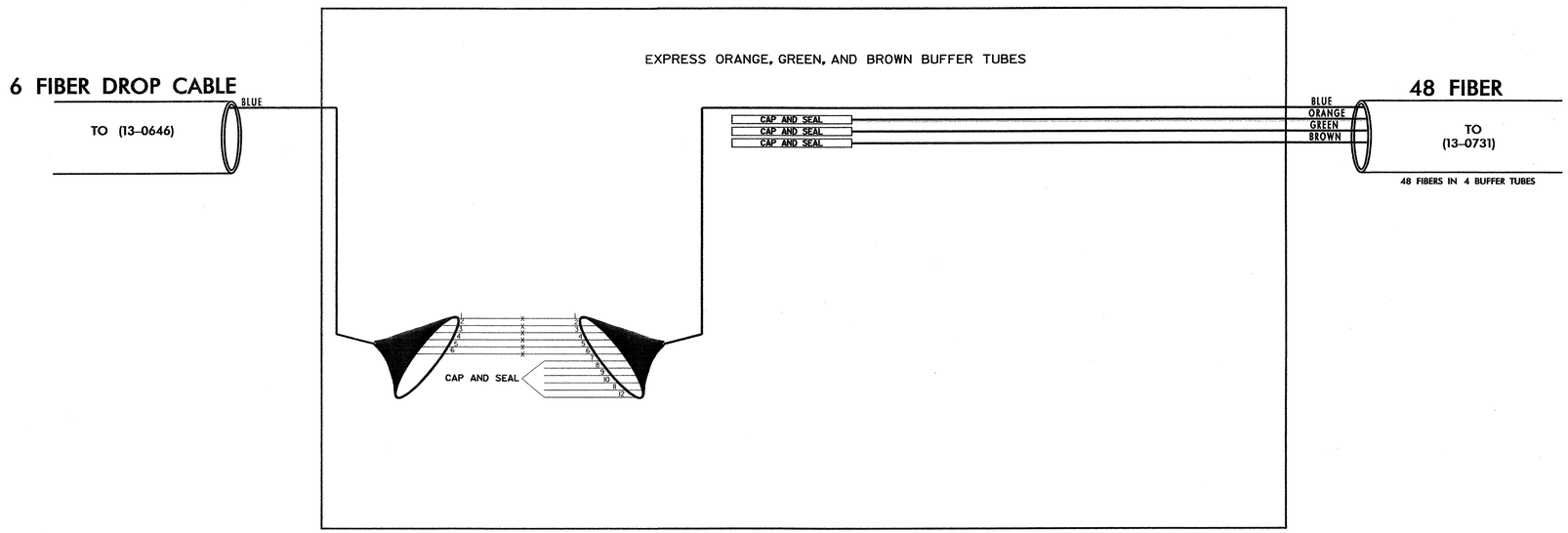

NOTE:

FIBER INTERCONNECT CENTER IS SCHEMATIC ONLY.
CONTRACTOR IS RESPONSIBLE FOR DETERMINING/ENSURING
PROPER TERMINATION OF FIBER OPTIC CONNECTIONS

Prepared in the Offices of:
Traffic Engineering and Safety Systems Branch
STATE OF NORTH CAROLINA DEPARTMENT OF TRANSPORTATION
Intelligent Transportation Systems
759 N. Greenfield Pkwy., Garner, NC 27529

SCALE

SPLICE PLAN
NC 191 (BREVARD RD.)

DIVISION 13 BUNCOMBE COUNTY ASHEVILLE

PLAN DATE:	FEBRUARY 2008	REVIEWED BY:	I. N. AVERY
PREPARED BY:	P.C. LOUDER	REVIEWED BY:	G.G.MURR,JR.,PE

REVISIONS	INIT.	DATE

SEAL
NORTH CAROLINA PROFESSIONAL SEAL 14543 ENGINEER GENE G. MURR, JR.
SIGNATURE 3-3-08 DATE
CADD Filename:

PROJECT REFERENCE NO.	SHEET NO.
U-3601	Sig. 52

AERIAL SPLICE ENCLOSURE # 2
AT NC 191 (BREVARD RD.)
AND POND RD.
(13-0731)

LEGEND

COLOR CODE
TIA/EIA 598-A

(1) BLUE	(7) RED
(2) ORANGE	(8) BLACK
(3) GREEN	(9) YELLOW
(4) BROWN	(10) VIOLET
(5) SLATE	(11) ROSE
(6) WHITE	(12) AQUA

X - FUSION SPLICE INDIVIDUAL FIBER

BUFFER TUBE SPLICE OR EXPRESS ENTIRE BUFFER TUBE AS NOTED

CAP AND SEAL CAP AND SEAL UNUSED FIBER

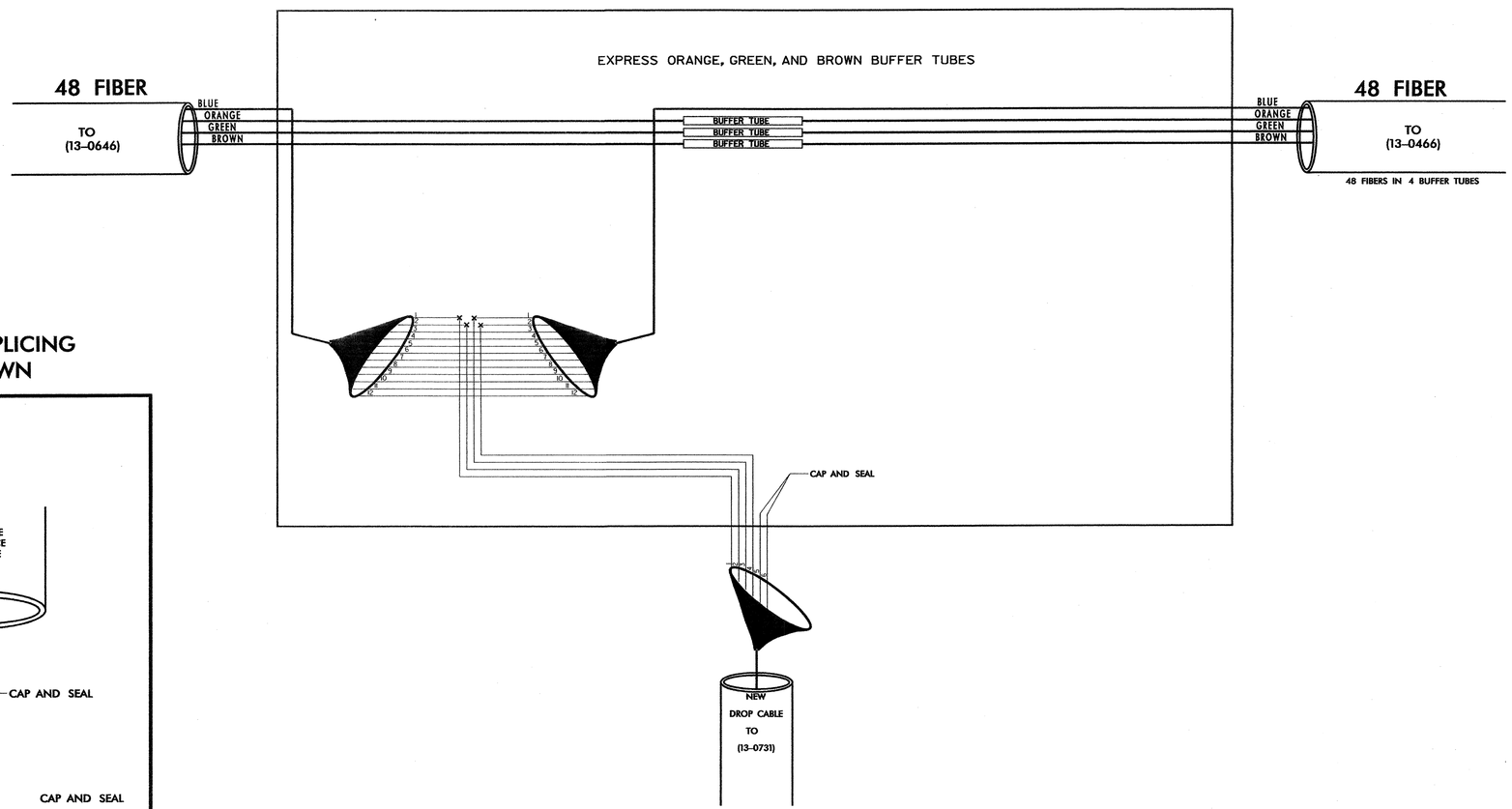

PERFORM SPLICING
AS SHOWN

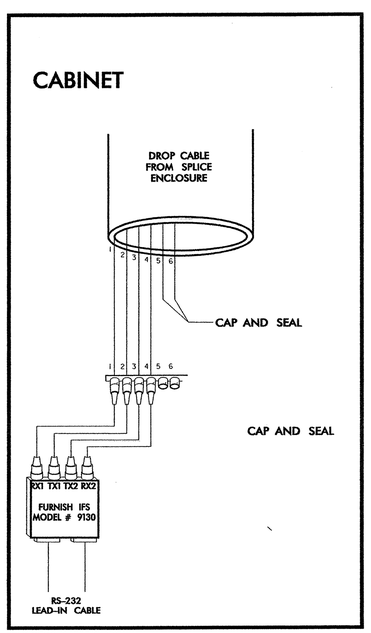

NOTE:

FIBER INTERCONNECT CENTER IS SCHEMATIC ONLY.
CONTRACTOR IS RESPONSIBLE FOR DETERMINING/ENSURING
PROPER TERMINATION OF FIBER OPTIC CONNECTIONS

Prepared in the Offices of:
Traffic Engineering and Safety Systems Branch
STATE OF NORTH CAROLINA DEPARTMENT OF TRANSPORTATION
Intelligent Transportation Systems
750 N. Greenfield Pkwy., Garner, NC 27529

SCALE

SPLICE PLAN
NC 191 (BREVARD RD.)

DIVISION 13 BUNCOMBE COUNTY ASHEVILLE

PLAN DATE:	FEBRUARY 2008	REVIEWED BY:	I. N. AVERY
PREPARED BY:	P.C. LOUDER	REVIEWED BY:	G.G.MURR,JR.,PE

REVISIONS	INIT.	DATE

SEAL
NORTH CAROLINA PROFESSIONAL SEAL 14543 ENGINEER GENE G. MURR, JR.
SIGNATURE 3-3-08 DATE
CADD Filename:

PROJECT REFERENCE NO.	SHEET NO.
U-3601	Sig.53

AERIAL SPLICE ENCLOSURE # 3
AT NC 191 (BREVARD RD.)
AND OAKVIEW RD.
(13-0466)

LEGEND

COLOR CODE
TIA/EIA 598-A

(1) BLUE	(7) RED
(2) ORANGE	(8) BLACK
(3) GREEN	(9) YELLOW
(4) BROWN	(10) VIOLET
(5) SLATE	(11) ROSE
(6) WHITE	(12) AQUA

X - FUSION SPLICE INDIVIDUAL FIBER

BUFFER TUBE SPLICE OR EXPRESS ENTIRE BUFFER TUBE AS NOTED

CAP AND SEAL CAP AND SEAL UNUSED FIBER

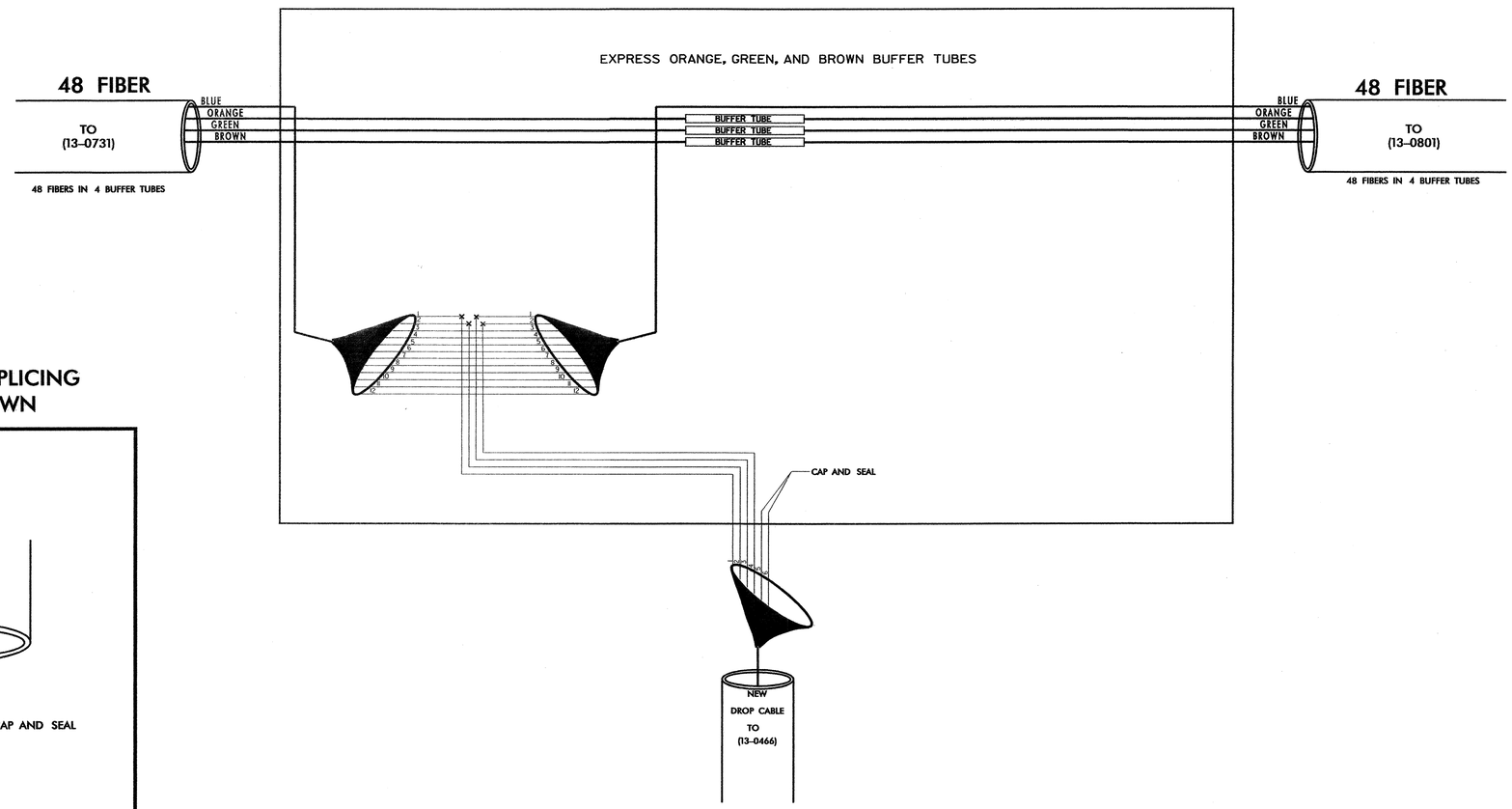

PERFORM SPLICING
AS SHOWN

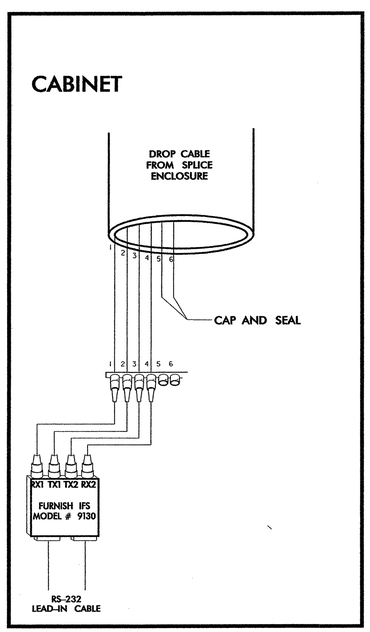

NOTE:

FIBER INTERCONNECT CENTER IS SCHEMATIC ONLY.
CONTRACTOR IS RESPONSIBLE FOR DETERMINING/ENSURING
PROPER TERMINATION OF FIBER OPTIC CONNECTIONS

Prepared in the Offices of:
Traffic Engineering and Safety Systems Branch
STATE OF NORTH CAROLINA DEPARTMENT OF TRANSPORTATION
Intelligent Transportation Systems
759 N. Greenfield Pkwy., Garner, NC 27529

SCALE

SPLICE PLAN
NC 191 (BREVARD RD.)

DIVISION 13 BUNCOMBE COUNTY ASHEVILLE

PLAN DATE:	FEBRUARY 2008	REVIEWED BY:	I. N. AVERY
PREPARED BY:	P.C. LOUDER	REVIEWED BY:	G.G.MURR,JR.,PE

REVISIONS	INIT.	DATE

SEAL
NORTH CAROLINA PROFESSIONAL SEAL 14543 ENGINEER GENE G. MURR, JR.

SIGNATURE 3-3-08 DATE

CADD Filename:

PROJECT REFERENCE NO.	SHEET NO.
U-3601	Sig.54

AERIAL SPLICE ENCLOSURE # 4
AT NC 191 (BREVARD RD.)
AND I-40 EB RAMP
(13-0801)

LEGEND

COLOR CODE
TIA/EIA 598-A

(1) BLUE	(7) RED
(2) ORANGE	(8) BLACK
(3) GREEN	(9) YELLOW
(4) BROWN	(10) VIOLET
(5) SLATE	(11) ROSE
(6) WHITE	(12) AQUA

X - FUSION SPLICE INDIVIDUAL FIBER

BUFFER TUBE SPLICE OR EXPRESS ENTIRE BUFFER TUBE AS NOTED

CAP AND SEAL CAP AND SEAL UNUSED FIBER

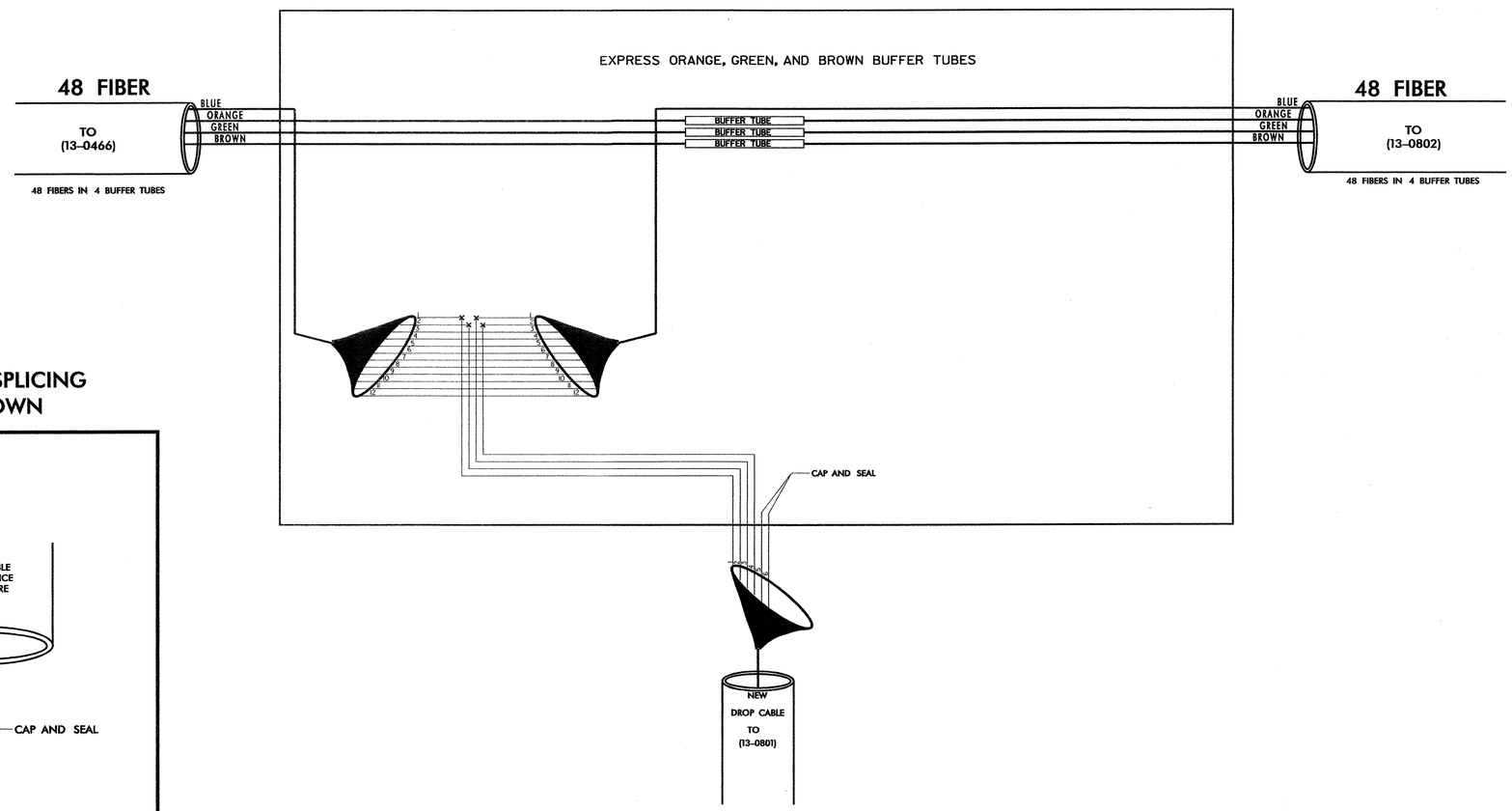

PERFORM SPLICING AS SHOWN

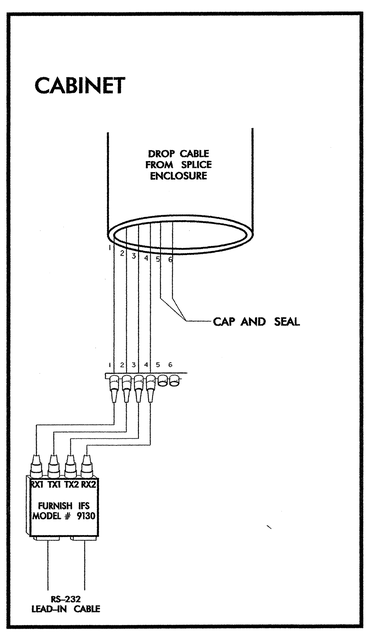

NOTE:
FIBER INTERCONNECT CENTER IS SCHEMATIC ONLY.
CONTRACTOR IS RESPONSIBLE FOR DETERMINING/ENSURING
PROPER TERMINATION OF FIBER OPTIC CONNECTIONS

Prepared in the Offices of:
STATE OF NORTH CAROLINA DEPARTMENT OF TRANSPORTATION
Intelligent Transportation Systems
750 N. Greenfield Pkwy., Garner, NC 27529

SCALE

SPLICE PLAN
NC 191 (BREVARD RD.)

DIVISION 13 BUNCOMBE COUNTY ASHEVILLE

PLAN DATE:	FEBRUARY 2008	REVIEWED BY:	I. N. AVERY
PREPARED BY:	P.C. LOUDER	REVIEWED BY:	G.G.MURR,JR.,PE

REVISIONS	INIT.	DATE

SEAL
NORTH CAROLINA PROFESSIONAL SEAL 14543 ENGINEER GENE G. MURR, JR.
SIGNATURE 3-3-08 DATE
CADD Filename:

PROJECT REFERENCE NO.	SHEET NO.
U-3601	Sig.55

AERIAL SPLICE ENCLOSURE # 5
AT NC 191 (BREVARD RD.)
AND I-40 WB RAMP
(13-0802)

LEGEND

COLOR CODE
TIA/EIA 598-A

(1) BLUE	(7) RED
(2) ORANGE	(8) BLACK
(3) GREEN	(9) YELLOW
(4) BROWN	(10) VIOLET
(5) SLATE	(11) ROSE
(6) WHITE	(12) AQUA

X - FUSION SPLICE INDIVIDUAL FIBER

BUFFER TUBE SPLICE OR EXPRESS ENTIRE BUFFER TUBE AS NOTED

CAP AND SEAL CAP AND SEAL UNUSED FIBER

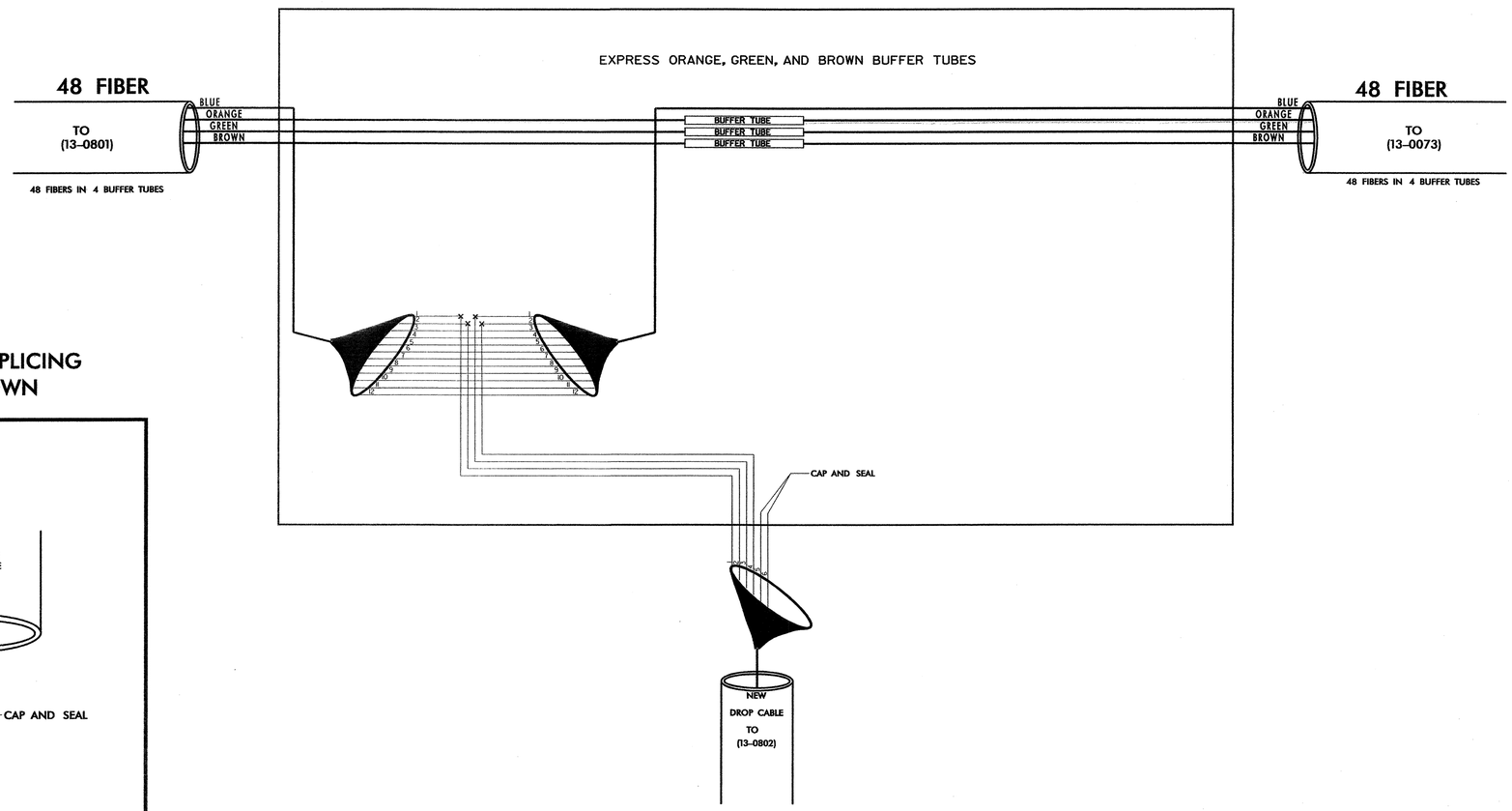

PERFORM SPLICING
AS SHOWN

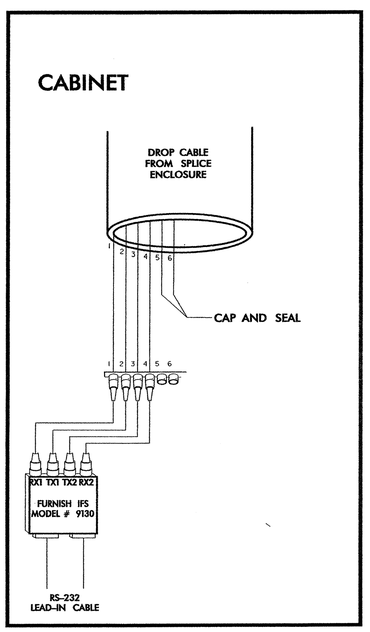

NOTE:

FIBER INTERCONNECT CENTER IS SCHEMATIC ONLY.
CONTRACTOR IS RESPONSIBLE FOR DETERMINING/ENSURING
PROPER TERMINATION OF FIBER OPTIC CONNECTIONS

Prepared in the Offices of:
Traffic Engineering and Safety Systems Branch
STATE OF NORTH CAROLINA DEPARTMENT OF TRANSPORTATION
Intermodal Transportation Systems
750 N. Greenfield Pkwy., Garner, NC 27529

SCALE

SPLICE PLAN
NC 191 (BREVARD RD.)

DIVISION 13 BUNCOMBE COUNTY ASHEVILLE

PLAN DATE:	FEBRUARY 2008	REVIEWED BY:	I. N. AVERY
PREPARED BY:	P.C. LOUDER	REVIEWED BY:	G.G.MURR,JR.,PE

REVISIONS	INIT.	DATE

SEAL
NORTH CAROLINA PROFESSIONAL SEAL 14543 ENGINEER GENE G. MURR, JR.
SIGNATURE 3-3-08 DATE
CADD Filename:

PROJECT REFERENCE NO.	SHEET NO.
U-3601	Sig.56

AERIAL SPLICE ENCLOSURE # 6
AT NC 191 (BREVARD RD.)
AND I-240 WB RAMP
(13-0073)

LEGEND

COLOR CODE
TIA/EIA 598-A

(1) BLUE	(7) RED
(2) ORANGE	(8) BLACK
(3) GREEN	(9) YELLOW
(4) BROWN	(10) VIOLET
(5) SLATE	(11) ROSE
(6) WHITE	(12) AQUA

X - FUSION SPLICE INDIVIDUAL FIBER

BUFFER TUBE SPLICE OR EXPRESS ENTIRE BUFFER TUBE AS NOTED

CAP AND SEAL CAP AND SEAL UNUSED FIBER

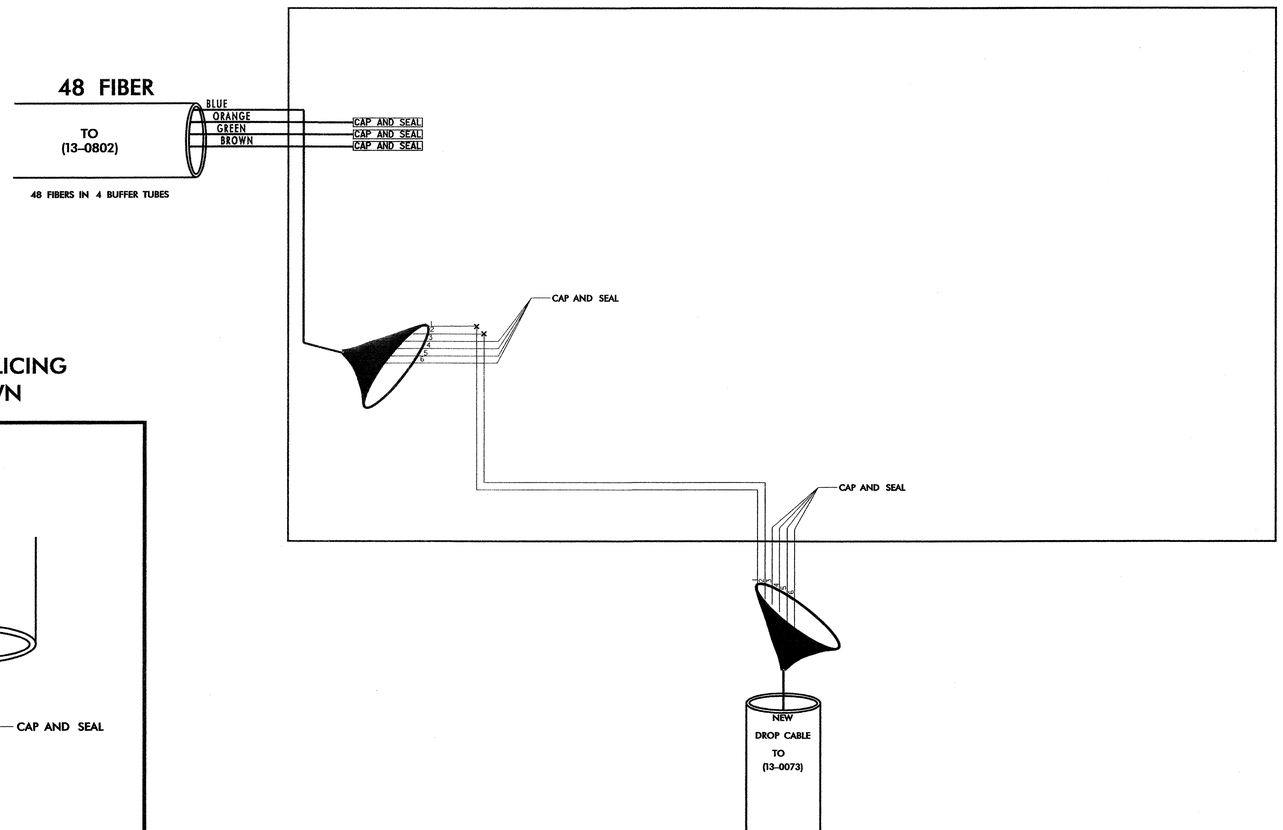

PERFORM SPLICING AS SHOWN

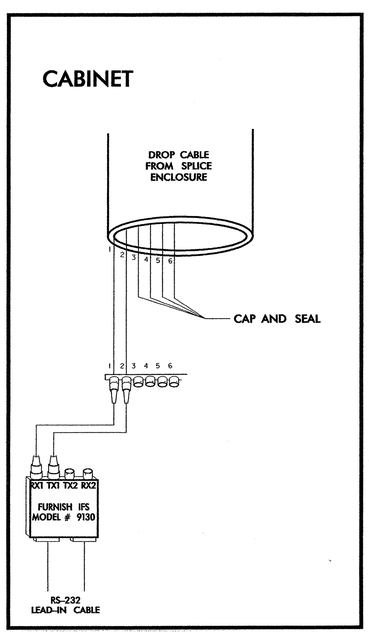

NOTE:

FIBER INTERCONNECT CENTER IS SCHEMATIC ONLY.
CONTRACTOR IS RESPONSIBLE FOR DETERMINING/ENSURING
PROPER TERMINATION OF FIBER OPTIC CONNECTIONS

Prepared in the Offices of:
Traffic Engineering and Safety Systems Branch
Intelligent Transportation Systems
STATE OF NORTH CAROLINA DEPARTMENT OF TRANSPORTATION
750 N. Greenfield Pkwy., Garner, NC 27529

SCALE

SPLICE PLAN
NC 191 (BREVARD RD.)

DIVISION 13 BUNCOMBE COUNTY ASHEVILLE

PLAN DATE:	FEBRUARY 2008	REVIEWED BY:	I. N. AVERY
PREPARED BY:	P.C. LOUDER	REVIEWED BY:	G.G.MURR,JR.,PE

REVISIONS	INIT.	DATE

SEAL
NORTH CAROLINA PROFESSIONAL SEAL 14543 ENGINEER GENE G. MURR, JR.
3-3-08
SIGNATURE DATE
CADD Filename:

STATE OF NORTH CAROLINA
DEPT. OF TRANSPORTATION
DIVISION OF HIGHWAYS
RALEIGH, N.C.

5-07

ENGLISH DETAIL DRAWING FOR
INDUCTIVE DETECTION LOOPS

SHEET 1 OF 3
1725D01

CONVENTIONAL 4-SIDED LOOP

SAW SLOT DEPTH CHART

DEPTH (IN)	NO. OF WIRE TURNS				
	2	3	4	5	6
CONCRETE	2.0	2.0	2.5	2.5	3.0
ASPHALT	2.0	2.5	3.0	3.0	3.0

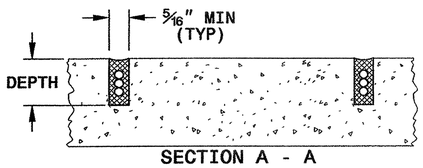

SAW CUT OPTIONS

OPTION 1

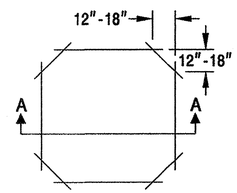

OPTION 2
(POOR PAVEMENT)

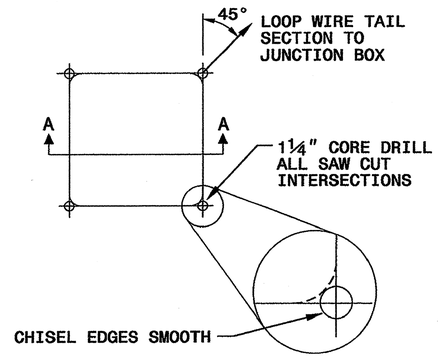

LOOP WINDING METHOD

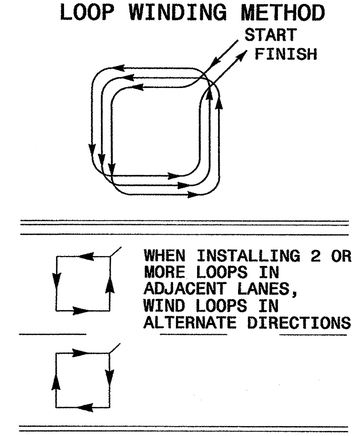

LOOP WIRE TWISTING METHOD

INCORRECT WAY TO TWIST WIRE

CORRECT WAY TO TWIST WIRE

NOTES

1. OVERLAP SAW CUTS AT CORNERS AND INTERSECTION POINTS TO ENSURE UNIFORM SAW SLOT DEPTH.
2. MAINTAIN 12" SPACING BETWEEN LOOP WIRE TAIL SECTIONS.
3. WIRE LOOPS CONNECTED TO THE SAME DETECTOR CHANNEL IN SERIES.
4. LOCATE LOOPS IN CENTER OF LANES UNLESS OTHERWISE SHOWN ON PLANS OR APPROVED BY ENGINEER.

QUADRUPOLE LOOP

SAW CUT OPTIONS

OPTION 1

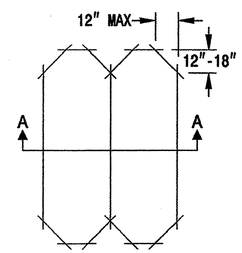

OPTION 2
(POOR PAVEMENT)

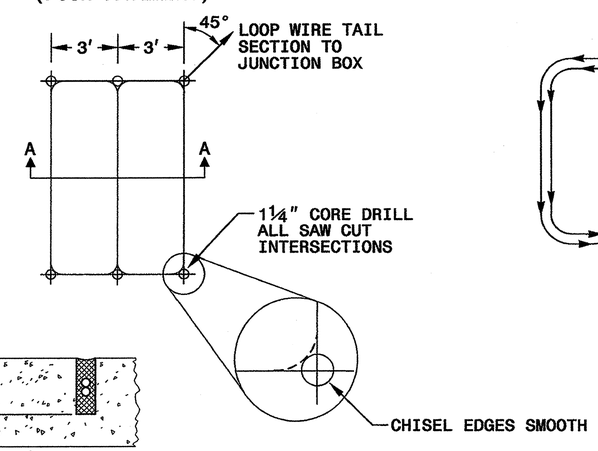

LOOP WINDING METHOD

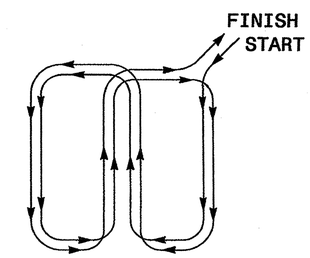

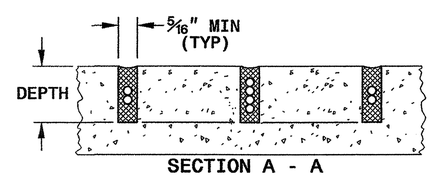

DEPTH IS 2.5" FOR CONCRETE AND 3.0" FOR ASPHALT

STATE OF NORTH CAROLINA
DEPT. OF TRANSPORTATION
DIVISION OF HIGHWAYS
RALEIGH, N.C.

5-07

ENGLISH DETAIL DRAWING FOR
INDUCTIVE DETECTION LOOPS

SHEET 1 OF 3
1725D01

See Plate for Title

Prepared in the Offices of:
Intelligent Transportation Systems & Signals Unit
750 N. Greenfield Parkway
Garner, NC 27529

SEAL
NORTH CAROLINA PROFESSIONAL SEAL 016286 ENGINEER MILTON I. DEAN
SIGNATURE: Milton I. Dean
DATE: 9/5/07

05-SEP-2007 14:00
c:\mdocuments and settings\zmilittle.dot\desktop\standard metal pole sheets\1725D01_mxy2307.dgn
zmilittle

STATE OF NORTH CAROLINA
DEPT. OF TRANSPORTATION
DIVISION OF HIGHWAYS
RALEIGH, N.C.

5-07

ENGLISH DETAIL DRAWING FOR
INDUCTIVE DETECTION LOOPS
LOOP WIRE DETAILS

SHEET 2 OF 3
1725D01

LOOP WIRE SPLICE POINT DETAILS

LOOP WIRE AT JUNCTION BOX

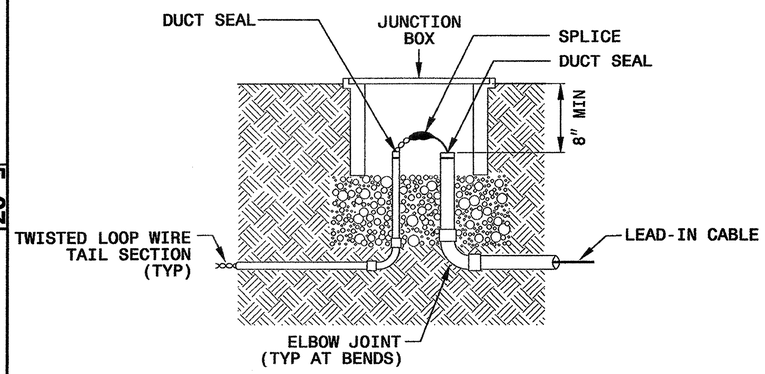

LOOP WIRE AT POLE

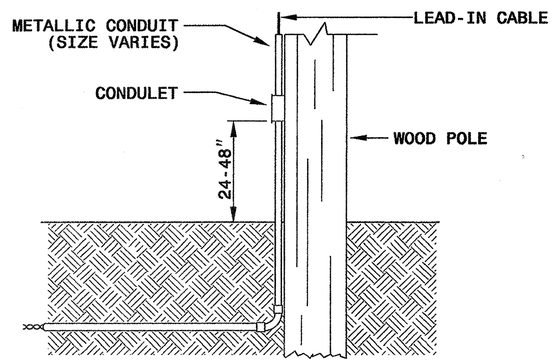

NOTE

SPLICE ALL LOOP WIRE TAIL SECTIONS/LEAD-IN CABLE IN JUNCTION BOXES OR APPROVED CONDULETS.

LOOP WIRE PAVEMENT EDGE DETAILS

LOOP WIRE AT CURB & GUTTER SECTION

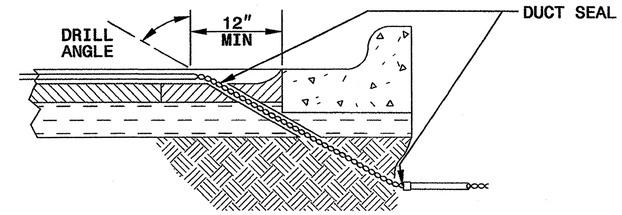

LOOP WIRE AT PAVEMENT SECTION

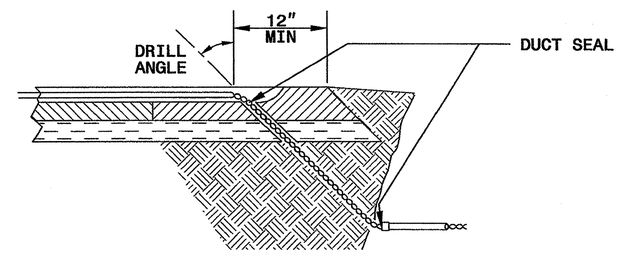

NOTES

1. DO NOT EXCAVATE UNDER CURB AND GUTTER SECTIONS FOR CONDUIT INSTALLATION.
2. TWIST LOOP WIRE TAIL SECTIONS FROM WHERE LOOP WIRE TAIL LEAVES SAW CUT TO JUNCTION BOX, INCLUDING THROUGH CONDUIT.
3. BEFORE SEALING LOOPS, INSTALL DUCT SEAL WHERE LOOP WIRE TAIL SECTION LEAVES SAW CUT IN PAVEMENT AND AT ENTRANCE OF CONDUIT TO JUNCTION BOX.

STATE OF NORTH CAROLINA
DEPT. OF TRANSPORTATION
DIVISION OF HIGHWAYS
RALEIGH, N.C.

5-07

ENGLISH DETAIL DRAWING FOR
INDUCTIVE DETECTION LOOPS
LOOP WIRE DETAILS

SHEET 2 OF 3
1725D01

See Plate for Title

Prepared in the Offices of:

Intelligent Transportation Systems & Signals Unit
STATE OF NORTH CAROLINA DEPARTMENT OF TRANSPORTATION

750 N. Greenfield Parkway
Garner, NC 27529

SEAL

NORTH CAROLINA PROFESSIONAL SEAL 016286 ENGINEER MILTON I. DEAN

SIGNATURE: Milton I. Dean
DATE: 9/5/07

05-SEP-2007 14:00
c:\documents and settings\zmillitte.dot\desktop\standard metal pole sheets\1725D02_mod2307.dgn
zmillitte

PROJECT REFERENCE NO.	SHEET NO.
U-3601	Sig.59

STATE OF
NORTH CAROLINA
DEPT. OF TRANSPORTATION
DIVISION OF HIGHWAYS
RALEIGH, N.C.

5-07

ENGLISH DETAIL DRAWING FOR
INDUCTION DETECTION LOOPS
SPLICING FOR LEAD-IN CABLE AND LOOP WIRE

SHEET 3 OF 3
1725D01

STEP 1. STRIP LOOP WIRE AND LEAD-IN CABLE

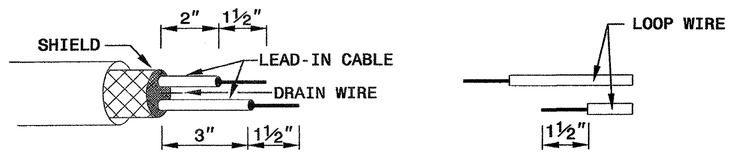

STEP 2. CONNECT AND SOLDER

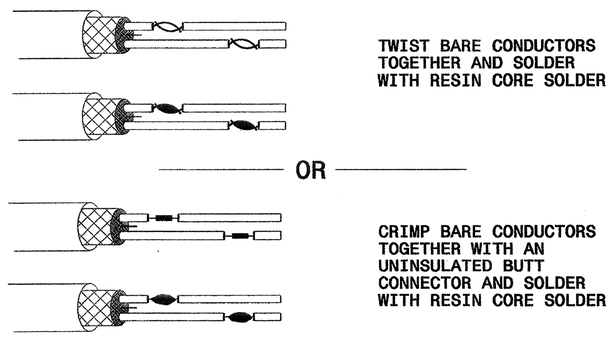

BOND SHIELD DRAIN WIRE AT SPLICE SECTIONS (DO NOT GROUND)

LOOP WIRE AND LEAD-IN CABLE CONNECTION DETAILS

SINGLE CONNECTION SERIES CONNECTION

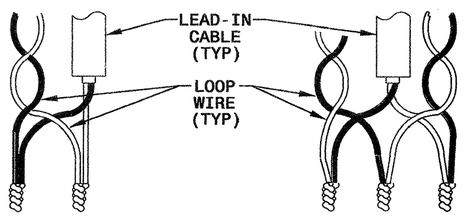

STEP 3. INSULATE EACH SOLDER JOINT SEPARATELY

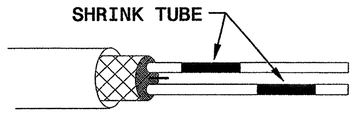

STEP 4. ENVIRONMENTALLY PROTECT SPLICE

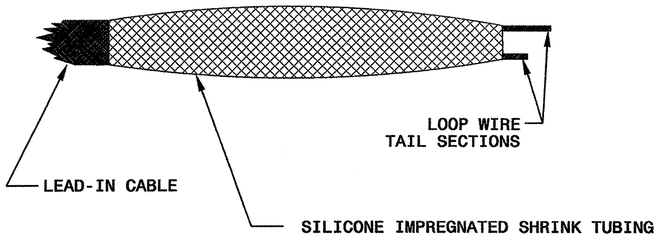

STATE OF
NORTH CAROLINA
DEPT. OF TRANSPORTATION
DIVISION OF HIGHWAYS
RALEIGH, N.C.

5-07

ENGLISH DETAIL DRAWING FOR
INDUCTIVE DETECTION LOOPS
SPLICING FOR LEAD-IN CABLE AND LOOP WIRE

SHEET 3 OF 3
1725D01

See Plate for Title

Prepared in the Offices of:

Intelligent Transportation Systems & Signals Unit
STATE OF NORTH CAROLINA DEPARTMENT OF TRANSPORTATION

750 N. Greenfield Parkway
Garner, NC 27529

SEAL

NORTH CAROLINA PROFESSIONAL SEAL 016286 ENGINEER MILTON I. DEAN

Milton I. Dean 9/5/07
SIGNATURE DATE

05-SEP-2007 14:01
c:\MCdocuments and settings\zmilitite.dot\desktop\standard metal pole sheets\1725D103_may2307.dgn
zmilitite