CONTRACT: C202012 ___ NCMA /TIP PROJECTS: 37581/B-3813

STATE	STATE PROJECT REFERENCE NO.	SHEET NO.	TOTAL SHEETS
N.C.	37581 / B-3813		

STATE PROJ. NO.	F.A. PROJ. NO.	DESCRIPTION
37581	N/A	CONSTRUCTION
33268 B-3813	BRSTP-1742(1)	CONSTRUCTION

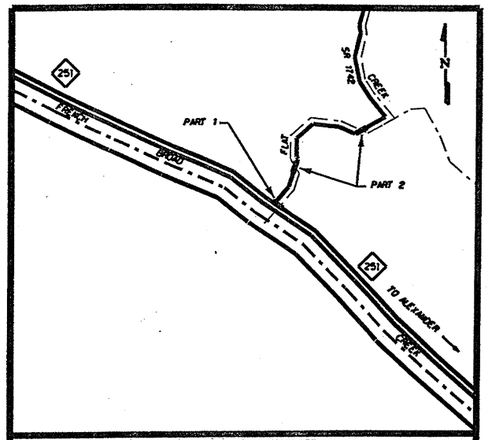

LOCATION SKETCH

STATE OF NORTH CAROLINA
DIVISION OF HIGHWAYS

BUNCOMBE COUNTY

LOCATION:
BRIDGE NO. 193 ON NC 251 OVER FLAT CREEK
BRIDGE NO. 249 & 250 ON SR 1742 OVER FLAT CREEK
BETWEEN NC 251 & SR 1743

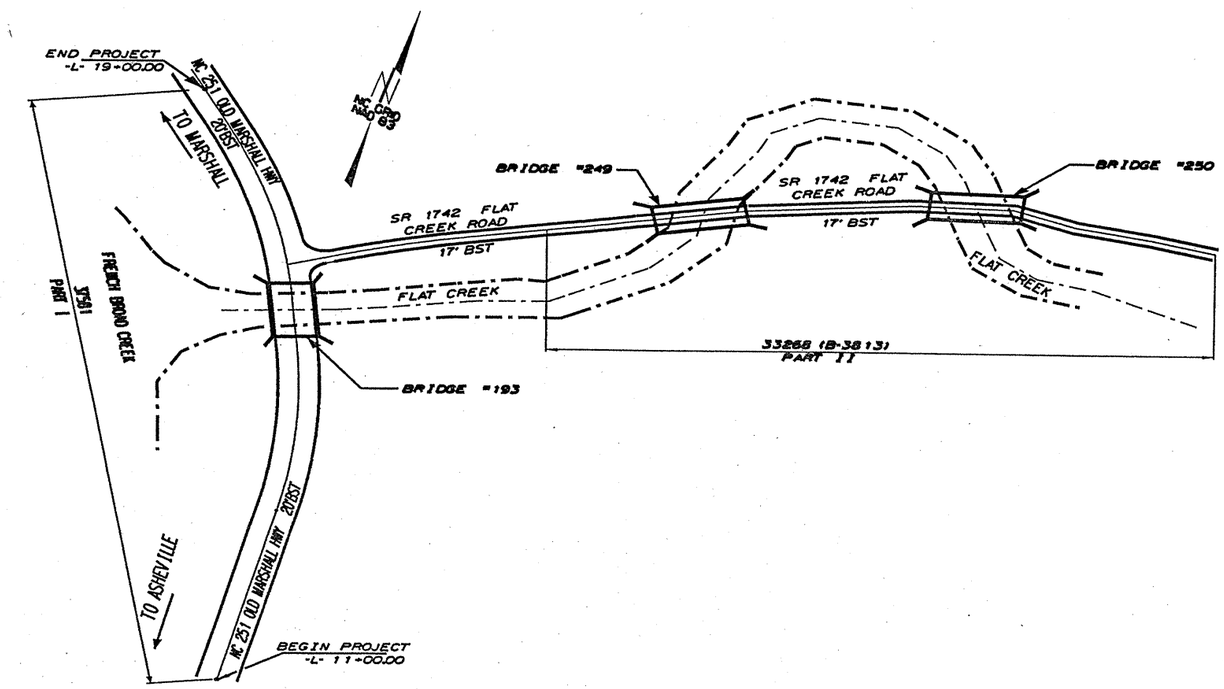

PROJECT LENGTH

LENGTH ROADWAY NCMA PROJECTS 37581 - 0.22 MI.

LENGTH ROADWAY TIP PROJECTS 33268 - 0.13 MI.

TOTAL LENGTH OF NCMA/TIP PROJECTS - 0.35 MI.

Prepared in the Office of:
DIVISION OF HIGHWAYS
1000 Birch Ridge Dr., Raleigh NC, 27610
2006 STANDARD SPECIFICATIONS

RIGHT OF WAY DATE: _____
RIGHT OF WAY DAT
LETTING DATE: APRIL 15,2008

DIVISION OF HIGHWAYS
STATE OF NORTH CAROLINA

P.E.
STATE HIGHWAY DESIGN ENGINEER

DEPARTMENT OF TRANSPORTATION
FEDERAL HIGHWAY ADMINISTRATION

APPROVED
DIVISION ADMINISTRATOR DATE

$$$$$$SYSTIME$$$$$
$$$$$$$$$$$$$$$$$$DGN$$$$$$$$$$$$$$$$$$$$
$$$$USERNAME$$$$

bxxxx_rdy_buncombe.dgn 2/29/2008 2:10:13 PM

STATE	STATE PROJECT REFERENCE NO.	SHEET NO.	TOTAL SHEETS
N.C.	37581		

STATE PROJ. NO.	F.A. PROJ. NO.	DESCRIPTION
37581	N/A	CONSTRUCTION

STATE OF NORTH CAROLINA
DIVISION OF HIGHWAYS

BUNCOMBE COUNTY

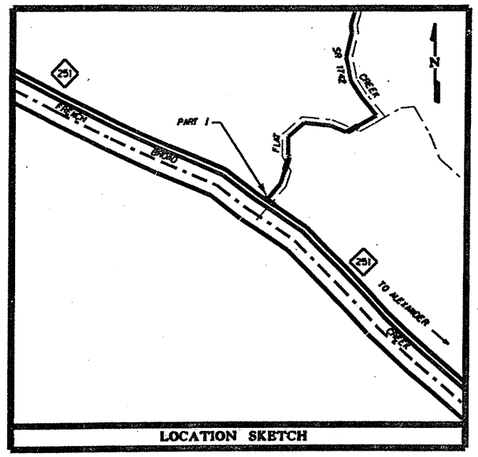

LOCATION SKETCH

LOCATION:
BRIDGE NO. 193 ON NC 251 OVER FLAT CREEK

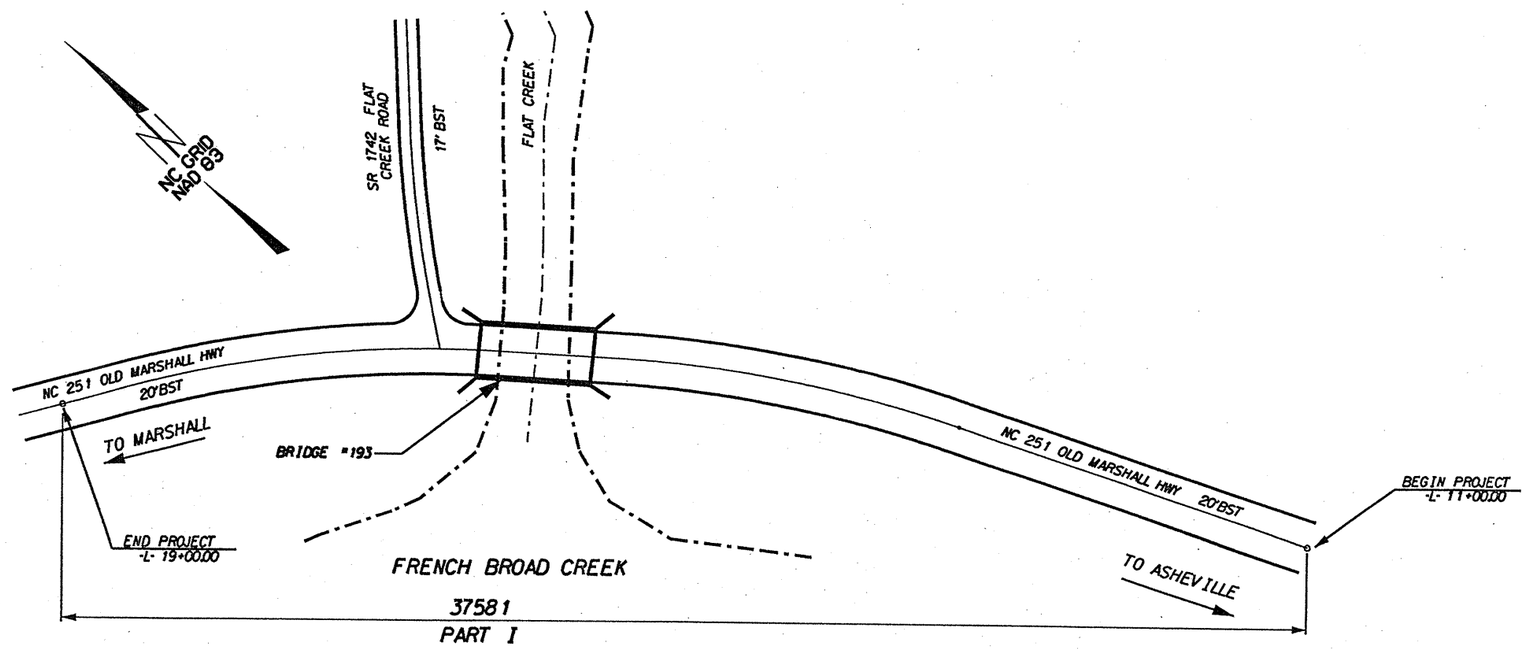

NCMA PROJECTS: 37581

CONTRACT: C202012

$$$$$$SYSTIME$$$$$
$$$$$$$$$$$$$$$$$$$$DGN$$$$$$$$$$$$$$$$$$$$
$$$$USERNAME$$$$

PROJECT LENGTH

LENGTH ROADWAY NCMA PROJECTS 37581 - 0.22 MI.

Prepared in the Office of:
DIVISION OF HIGHWAYS
1000 Birch Ridge Dr., Raleigh NC, 27610
2006 STANDARD SPECIFICATIONS

RIGHT OF WAY DATE: _____
RIGHT OF WAY DAT.
LETTING DATE: APRIL 15,2008

DIVISION OF HIGHWAYS
STATE OF NORTH CAROLINA

P.E.
STATE HIGHWAY DESIGN ENGINEER

DEPARTMENT OF TRANSPORTATION
FEDERAL HIGHWAY ADMINISTRATION

APPROVED
DIVISION ADMINISTRATOR DATE

xxx_rdy_buncombe.dgn 2/29/2008 2:10:31 PM

PROJ. NO. MA1310B

193 BUNCOMBE COUNTY

B.M. #1 - RR SPIKE IN BASE OF 28" WALNUT
56.0' LT OF STA. 16+97.00 -L- ELEV. 1772.65

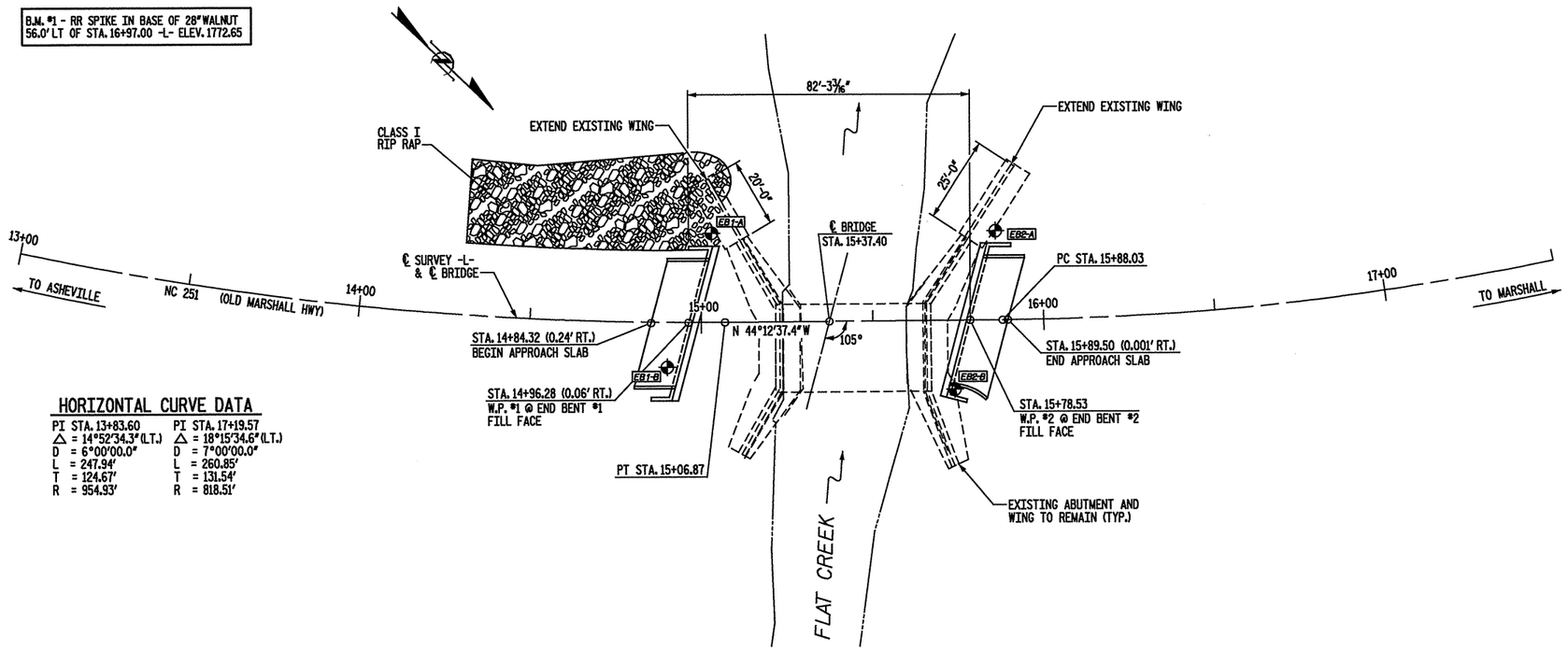

PLAN

SCALE: 1" = 20'-0"

HORIZONTAL CURVE DATA

PI STA. 13+83.60	PI STA. 17+19.57
△ = 14°52'34.3" (L.T.)	△ = 18°15'34.6" (L.T.)
D = 6°00'00.0"	D = 7°00'00.0"
L = 247.94'	L = 260.85'
T = 124.67'	T = 131.54'
R = 954.93'	R = 818.51'

NOTES

1. ALL PILES SHALL BE DRIVEN TO A MINIMUM BEARING CAPACITY OF 50 TONS EACH.
2. LIVE LOAD: HS25 LOADING OR ALTERNATE MILITARY LOADING
3. THE QUANTITY OF RIP RAP TO BE PAID FOR WILL BE THE ACTUAL NUMBER OF TONS OF EACH CLASS OF RIP RAP WHICH HAS BEEN INCORPORATED INTO THE COMPLETED AND ACCEPTED WORK. THE RIP RAP WILL BE MEASURED BY BEING WEIGHED IN TRUCKS ON CERTIFIED PLATFORM SCALES OR OTHER CERTIFIED WEIGHING DEVICES. THE QUANTITY OF RIP RAP WILL BE PAID FOR AT THE CONTRACT UNIT PRICE PER TON. PAYMENT FOR FILTER FABRIC WILL BE INCLUDED IN THE CONTRACT PRICE BID FOR PLAIN RIP RAP CLASS I.

	PLAIN RIP RAP CLASS I (1'-6" THICK)	FILTER FABRIC
END BENT NO. 1	200 TONS	190 SQUARE YARDS

4. THIS STRUCTURE HAS BEEN DESIGNED IN ACCORDANCE WITH FHWA'S TECHNICAL ADVISORY T5140.20 (SCOUR AT BRIDGES).
5. THE CONTRACTOR MAY BEGIN THE REINFORCEMENT BRIDGE APPROACH FILL CONSTRUCTION AFTER COMPLETION OF END BENTS NO. 1 AND NO. 2. NO OTHER WAITING PERIOD WILL BE REQUIRED FOR THE APPROACH SLAB CONSTRUCTION AT END BENTS NO. 1 AND NO. 2.
6. PILES AT END BENT NO. 1 SHALL BE DRIVEN TO AN ELEVATION NO HIGHER THAN EL. 1754.0 FT. AND SATISFY THE BEARING CAPACITY OF 50 TONS EACH.
7. PILES AT END BENT NO. 2 SHALL BE DRIVEN TO AN ELEVATION NO HIGHER THAN EL. 1751.0 FT. AND SATISFY THE BEARING CAPACITY OF 50 TONS EACH.
8. THE STEEL PILES SHALL BE GALVANIZED IN ACCORDANCE WITH SECTION 1076 OF THE STANDARD SPECIFICATIONS. FOR GALVANIZING STEEL PILES, SEE SPECIAL PROVISIONS.
9. STEEL PIPE POINTS ARE REQUIRED FOR PILES AT END BENT NO. 1 AND END BENT NO. 2. SEE SPECIAL PROVISIONS FOR STEEL PILE POINTS.
10. WHEN DRIVING PILES, THE MAXIMUM BLOW COUNT SHALL NOT BE EXCEEDED.
11. THE REQUIRED BEARING CAPACITY OF THE SPREAD FOOTINGS FOR WINGWALLS AT END BENT NO. 1 AND END BENT NO. 2 IS 4 TSF. THE REQUIRED BEARING CAPACITY SHALL BE VERIFIED.
12. ADT 7200 FOR YEAR 2010.
13. DELINEATORS IN BARRIER RAIL AND ON STEEL BEAM GUARDRAIL SHALL BE INCLUDED IN THE PRICE BID FOR STEEL BEAM GUARDRAIL.
14. CONTRACTOR TO INSTALL EXISTING AND NEW BRIDGE INFORMATION PLAQUE ON BRIDGE PARAPET AS DIRECTED BY THE BRIDGE ENGINEER. EXISTING PLAQUE WILL BE PROVIDED BY NCDOT. COST OF NEW PLAQUE AND INSTALLATION OF BOTH PLAQUES SHALL BE INCLUDED IN THE CONTRACT PRICE BID FOR "1'-2" x 2'-6" CONCRETE PARAPET".
15. SEPTIC TANK LOCATED ON PARCEL 1 SHALL BE PUMPED, CLEANED, DEMOLISHED AND REMOVED AS PART OF THIS PROJECT

◆ GEOTECH BORE HOLES LOCATION

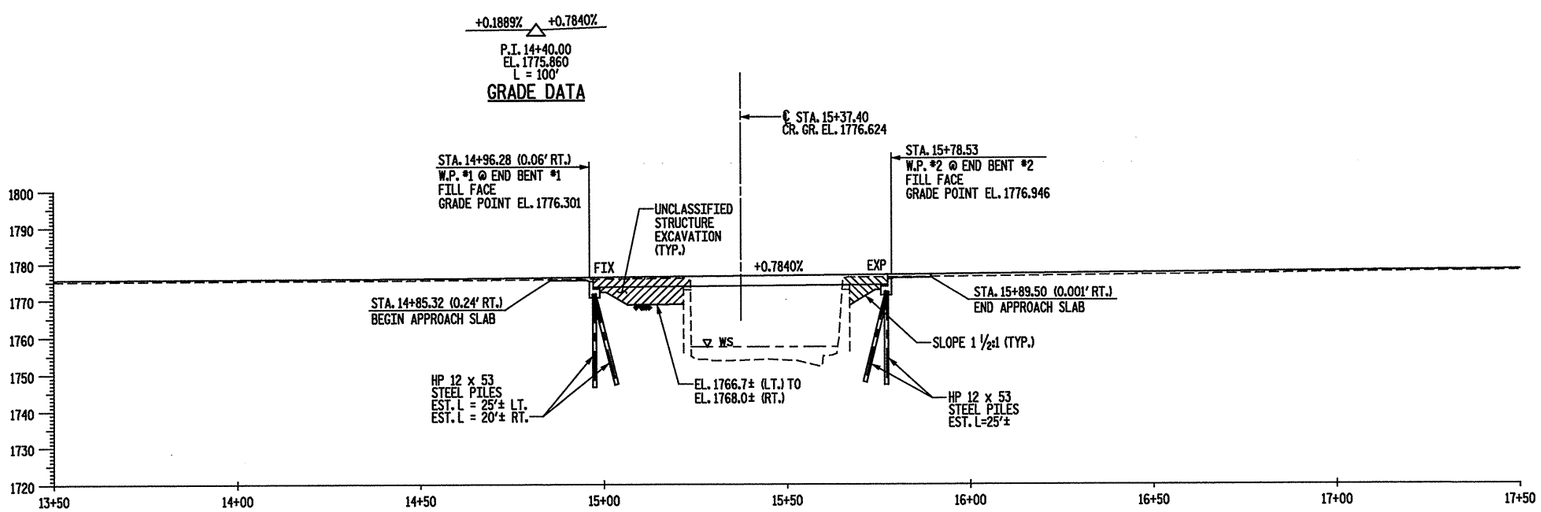

PROFILE ALONG ℄ SURVEY

SCALE: 1" = 20'

DESCRIPTION OF EXISTING BRIDGE

1 SPAN @ 41'-8"; REINFORCED CONCRETE FLOOR / 6.5" ASPHALT WEARING SURFACE ON REINFORCED CONCRETE THROUGH GIRDER ON REINFORCED CONCRETE ABUTMENTS; 20'-0" CLEAR ROADWAY WIDTH SHALL BE REMOVED.

PROJECT NO. 37581
COUNTY: BUNCOMBE
STATION: 15+37.40
REPLACES BRIDGE NO. 193

STATE OF NORTH CAROLINA
DEPARTMENT OF TRANSPORTATION
RALEIGH

BRIDGE NO. 193 ON NC 251
OVER FLAT CREEK

KO & ASSOCIATES, P.C.
Consulting Engineers
5121 KINGDOM WAY, SUITE 100 RALEIGH, N.C. 27607
(919) 851-6066

NORTH CAROLINA PROFESSIONAL SEAL 29530 ENGINEER JAMES E. MONDOLFI
3-20-08

REVISIONS								
NO.	BY	DATE	NO.	BY	DATE	SHEET NO.	TOTAL SHEETS
1			3			1	53
2			4				

DRAWN BY: C.L. SMITH DATE: NOV. 2005
CHECKED BY: J.E. MONDOLFI DATE: NOV. 2005

PLOT: 3/18/2008 3:21:45 PM Ko & Associates, P.C. FILE NAME: r:\Structures\193_sht1.dgn

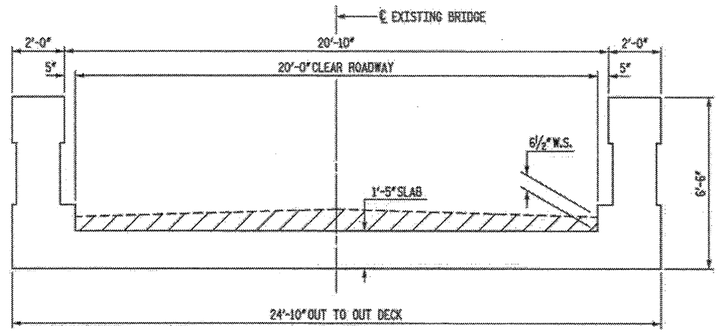

EXISTING BRIDGE SECTION

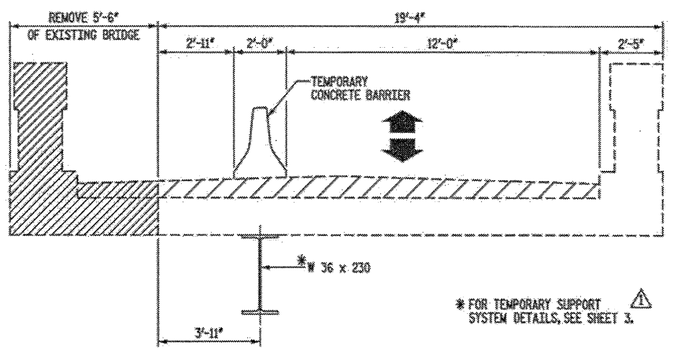

* FOR TEMPORARY SUPPORT SYSTEM DETAILS, SEE SHEET 3. △1

STAGE 1

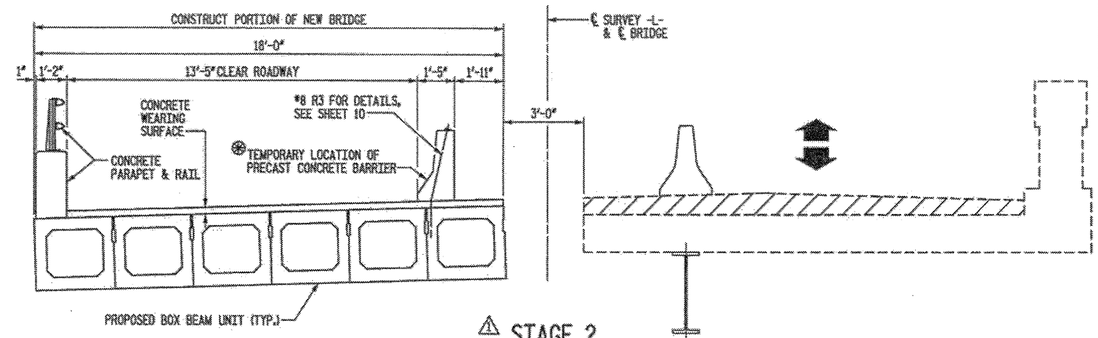

* PLACE BARRIER OVER REBARS EXTENDING OUT OF BOX BEAM UNIT. DO NOT GROUT HOLES IN BARRIER SECTIONS. SNUG TIGHT REBAR ANCHOR RODS.

△1 STAGE 2

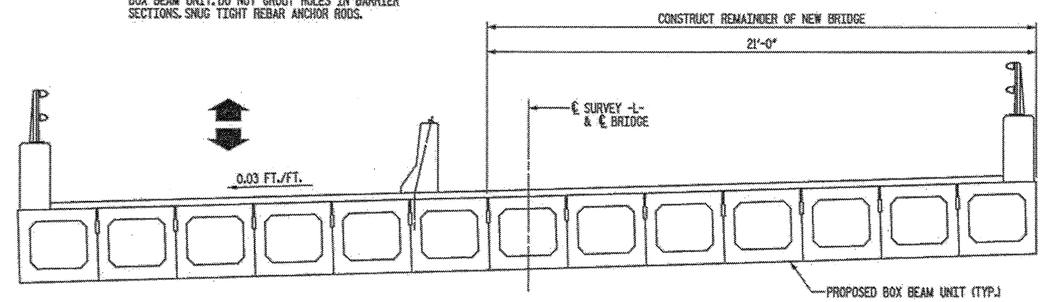

△1 STAGE 3

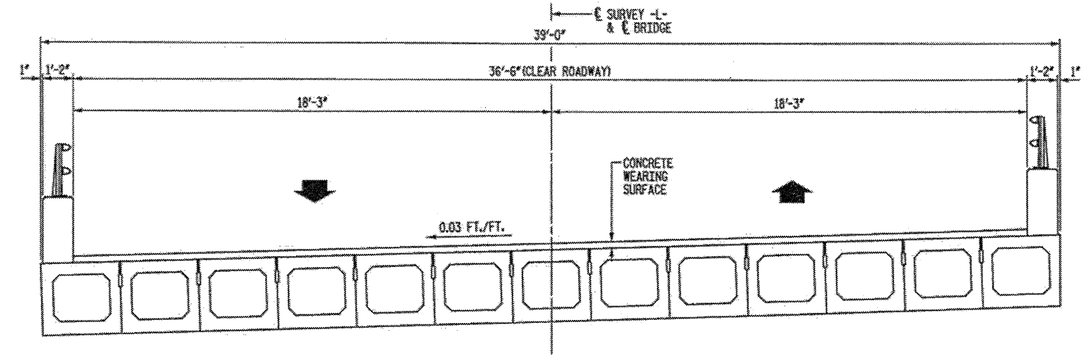

STAGE 4

△1 NOTES

STAGE 1:

1. INSTALL TEMPORARY CONCRETE BARRIER ON EXISTING BRIDGE AND APPROACHES.
2. REDUCE TWO LANE TRAFFIC PATTERN TO ALTERNATING SINGLE LANE TRAFFIC PATTERN ON EXISTING BRIDGE.

STAGE 2

1. INSTALL STEEL BEAM AND COLUMN BELOW THE EXISTING BIRDGE DECK TO ACT AS A TEMPORARY SUPPORT SYSTEM.
2. REMOVE THE EXISTING NORTH CONCRETE THROUGH GIRDER, PART OF THE EXISTING BRIDGE DECK AND A PORTION OF THE TOP OF THE EXISTING BACKWALLS OF BOTH EXISTING ABUTMENTS.
3. EXTEND AND MODIFY THE EXISTING SOUTH WINGS OF BOTH EXISTING ABUTMENTS.
4. CONSTRUCT A PORTION OF THE NEW END BENTS AND SOUTH FASCIA WINGS.
5. INSTALL SIX PRECAST CONCRETE BOX BEAMS.
6. CONSTRUCT THE SOUTH FASCIA, CAST-IN-PLACE CONCRETE PARAPET, INSTALL THE SOUTH FASCIA, TWO BAR METAL RAIL AND INSTALL THE TEMPORARY PRECAST CONCRETE BARRIER.
7. PLACE THE CONCRETE WEARING SURFACE BETWEEN THE NEW CONCRETE PARAPET AND THE TEMPORARY CONCRETE BARRIER.

STAGE 3:

1. MOVE ALTERNATING SINGLE LANE TRAFFIC TO THE CONSTRUCTED PORTION OF THE NEW BRIDGE.
2. REMOVE THE REMAINDER OF THE EXISTING BRIDGE AND THE TEMPORARY STEEL BEAMS AND COLUMNS BELOW.
3. REMOVE A PORTION OF THE TOP OF THE EXISTING REMAINING BACKWALLS OF BOTH EXISTING ABUTMENTS.
4. CONSTRUCT THE REMAINDER OF THE NEW END BENTS AND NORTH FASCIA WINGS.
5. INSTALL THE REMAINING SEVEN PRECAST CONCRETE BOX BEAMS.
6. CONSTRUCT THE NORTH FASCIA, CONCRETE PARAPET AND INSTALL THE NORTH FASCIA, TWO BAR METAL RAIL.
7. PRIOR TO PLACING THE CONCRETE WEARING SURFACE INSTALLED IN STAGE 3, NC 251 WILL BE CLOSED TO TRAFFIC ON THURSDAY EVENING AT 6:00 PM AND REOPENED TO TRAFFIC AT 6:00 AM THE FOLLOWING MONDAY. COORDINATE WITH DIVISION 13 PERSONNEL FOR SPECIFIC DATES.
8. PLACE REMAINING CONCRETE WEARING SURFACE TO THE NEW, NORTH FASCIA CONCRETE PARAPET.

STAGE 4

1. REMOVE TEMPORARY BARRIER AND RESTORE TWO LANE TRAFFIC PATTERN.

PROJECT NO. 37581
COUNTY: BUNCOMBE
STATION: 15+37.40
REPLACES BRIDGE NO. 193

△1 PLACEMENT OF TEMPORARY PRECAST CONCRETE BARRIER ON TOP OF CONCRETE WEARING SURFACE.

REVISE LIMIT OF CONCRETE WEARING SURFACE.

REVISE TEMPORARY SUPPORT NOTE.

REVISE NOTES.

STATE OF NORTH CAROLINA
DEPARTMENT OF TRANSPORTATION
RALEIGH

CONSTRUCTION STAGING LAYOUT
36'-6" CLEAR ROADWAY - 105° SKEW

KO & ASSOCIATES, P.C.
Consulting Engineers
5121 KINGDOM WAY, SUITE 100 RALEIGH, N.C. 27607
(919) 851-6066

NORTH CAROLINA PROFESSIONAL SEAL 025 ENGINEER JAMES E. MONDOLFI
4-7-08

REVISIONS						
NO.	BY	DATE	NO.	BY	DATE	
1	JEM	04/07/08	3			
2			4			

SHEET NO. 2
TOTAL SHEETS 53

NOT TO SCALE

DRAWN BY: C.L. SMITH DATE: NOV. 2005
CHECKED BY: J.E. MONDOLFI DATE: NOV. 2005

PLOT: 4/7/2008 2:08:41 PM K. & Associates, P.C.
FILE NAME: r:\Structures\125_a\125_stg1.dgn

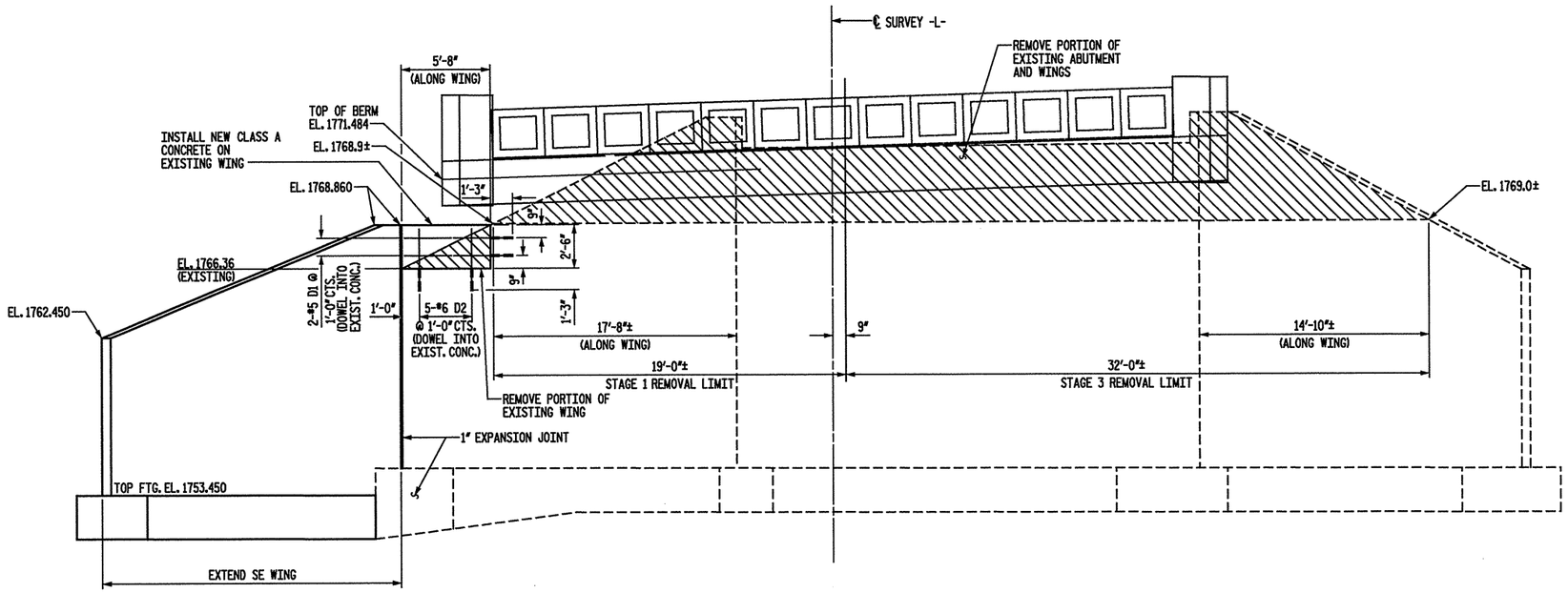

ELEVATION

(LOOKING AHEAD STATION)

REMOVAL LIMITS

NOTES:

ALL STRUCTURAL STEEL FOR TEMP SUPPORT SYSTEM SHALL BE AASHTO M270, GRADE 50.

PAYMENT FOR THE TEMPORARY SUPPORT SYSTEM SHALL BE INCLUDED IN THE LUMP SUM PRICE BID FOR "REMOVAL OF EXISTING STRUCTURES".

BILL OF MATERIAL

EAST ABUTMENT

BAR	NO.	SIZE	TYPE	LENGTH	WEIGHT
D1	2	5	STR	6'-9"	14
D2	5	6	STR	3'-7"	27

REINFORCING STEEL TOTAL	41 LBS.
CONCRETE REMOVAL	8.3 CYS.
CLASS "A" CONCRETE ON EXISTING WING	0.6 CYS.

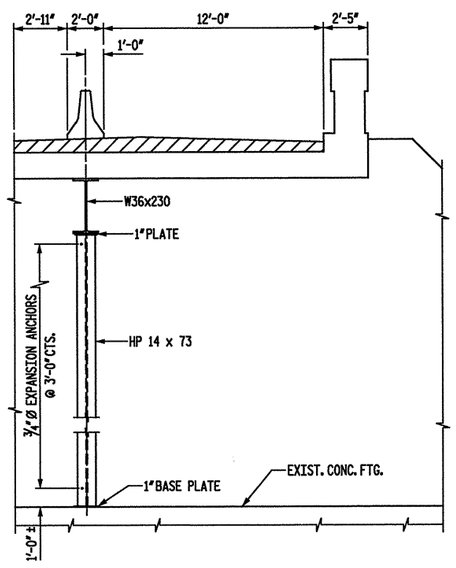

LOOKING STATION AHEAD

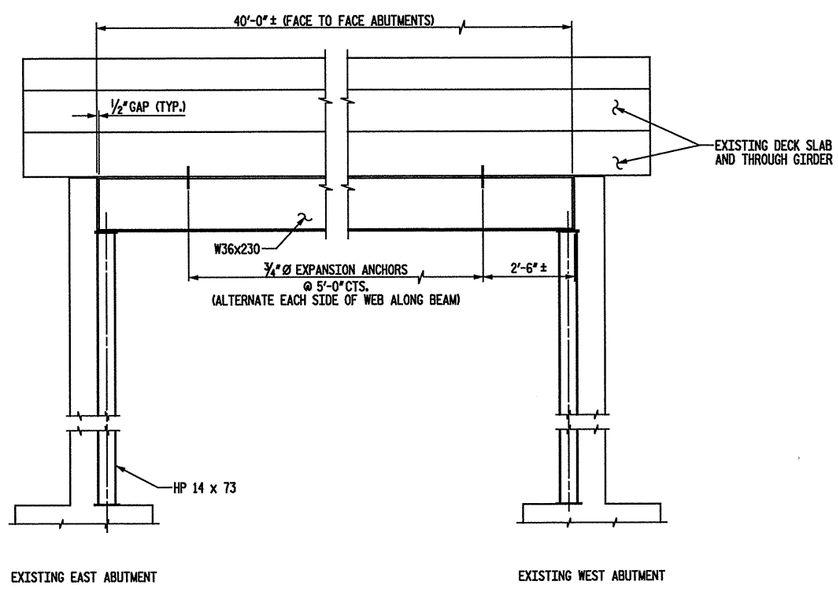

LOOKING DOWNSTREAM

TEMPORARY SUPPORT SYSTEM

NOT TO SCALE

PROJECT NO. 37581
COUNTY: BUNCOMBE
STATION: 15+37.40
REPLACES BRIDGE NO. 193

STATE OF NORTH CAROLINA
DEPARTMENT OF TRANSPORTATION
RALEIGH

EAST ABUTMENT MODIFICATIONS AND TEMPORARY SUPPORT SYSTEM

36'-6" CLEAR ROADWAY - 105° SKEW

KO & ASSOCIATES, P.C.
Consulting Engineers
5121 KINGDOM WAY, SUITE 100 RALEIGH, N.C. 27607
(919) 851-6066

NORTH CAROLINA PROFESSIONAL SEAL 20637 ENGINEER JAMES E. MONDOLFI
3-20-08

REVISIONS						SHEET NO.
NO.	BY	DATE	NO.	BY	DATE	3
1			3			TOTAL SHEETS
2			4			53

DRAWN BY: C.L. SMITH DATE: NOV. 2005
CHECKED BY: J.E. MONDOLFI DATE: NOV. 2005

FILE NAME: n:\Structures\V10_Lrk13.dgn
PLOT: 3/18/2008 2:07:34 PM Ko & Associates, P.C.

BILL OF MATERIAL
WEST ABUTMENT

BAR	NO.	SIZE	TYPE	LENGTH	WEIGHT
D1	4	5	STR	9'-4"	39
D2	7	6	STR	5'-7"	59

REINFORCING STEEL TOTAL 98 LBS.

CONCRETE REMOVAL 4.9 CYS.

CLASS "A" CONCRETE ON EXISTING WING 1.4 CYS.

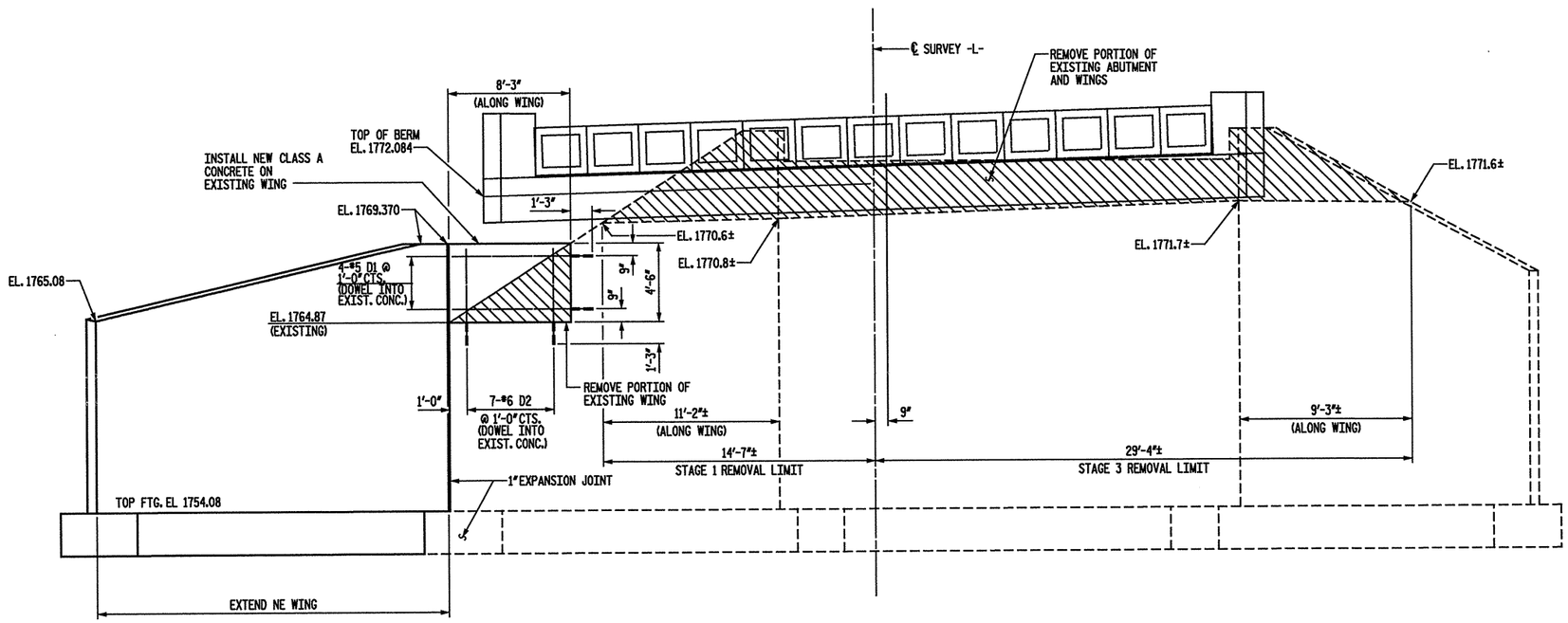

ELEVATION
(LOOKING AHEAD STATION)

REMOVAL LIMITS

PROJECT NO. 37581
COUNTY: BUNCOMBE
STATION: 15+37.40
REPLACES BRIDGE NO. 193

STATE OF NORTH CAROLINA
DEPARTMENT OF TRANSPORTATION
RALEIGH

WEST ABUTMENT MODIFICATIONS

KO & ASSOCIATES, P.C.
Consulting Engineers
5121 KINGDOM WAY, SUITE 100 RALEIGH, N.C. 27607
(919) 851-6066

NORTH CAROLINA PROFESSIONAL SEAL ENGINEER JAMES E. MONDOLFI
3-20-08

REVISIONS						
NO.	BY	DATE	NO.	BY	DATE	
1			3			
2			4			

SHEET NO. 4
TOTAL SHEETS 53

NOT TO SCALE

DRAWN BY: C.L. SMITH DATE: NOV. 2005
CHECKED BY: J.E. MONDOLFI DATE: NOV. 2005

PLOT: 3/20/2008 2:46:42 PM Ko & Associates, P.C.
FILE NAME: n:\Structures\US25_Jim4.dgn

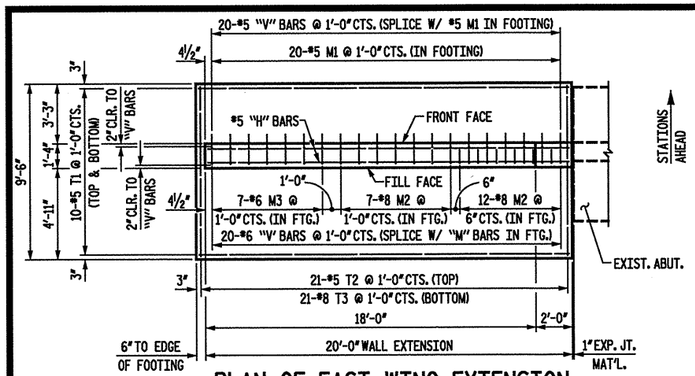

PLAN OF EAST WING EXTENSION

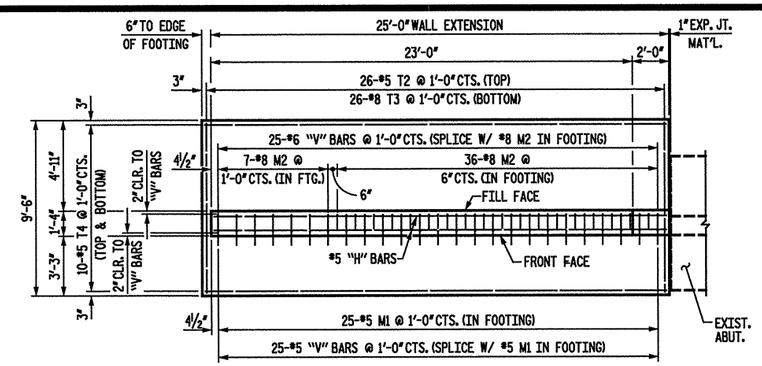

PLAN OF WEST WING EXTENSION

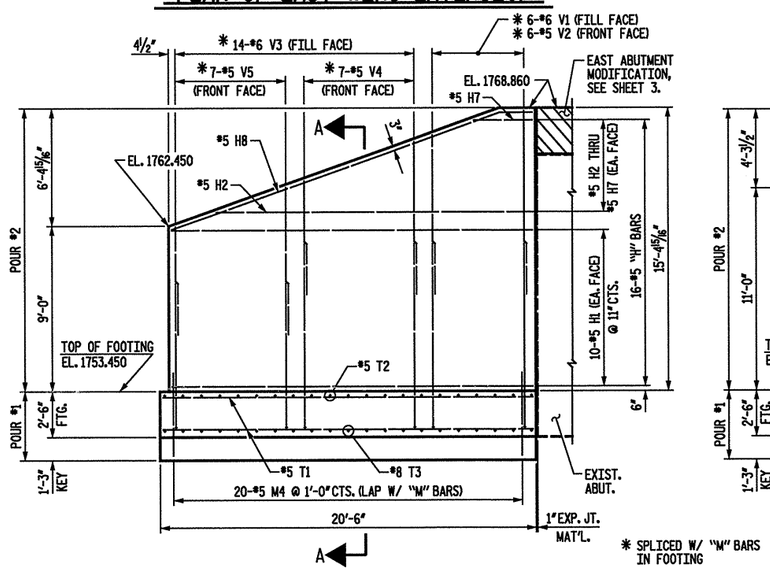

ELEVATION OF EAST WING EXTENSION

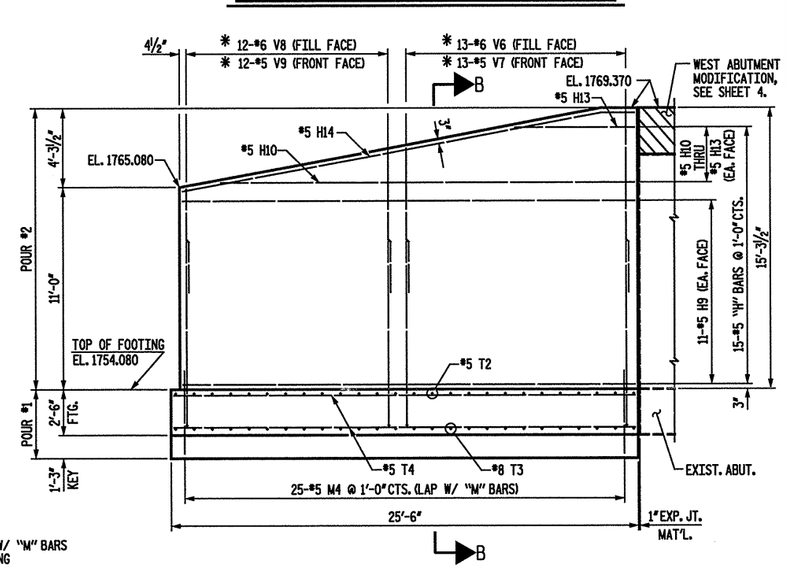

ELEVATION OF WEST WING EXTENSION

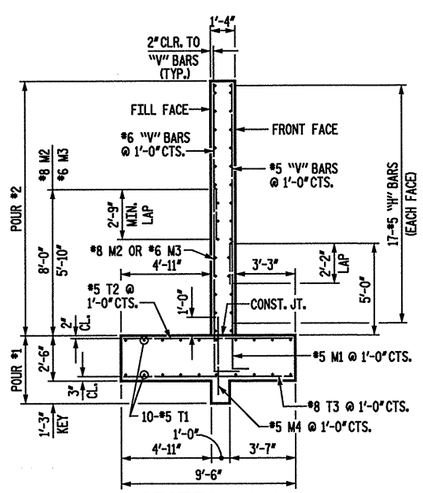

SECTION A-A

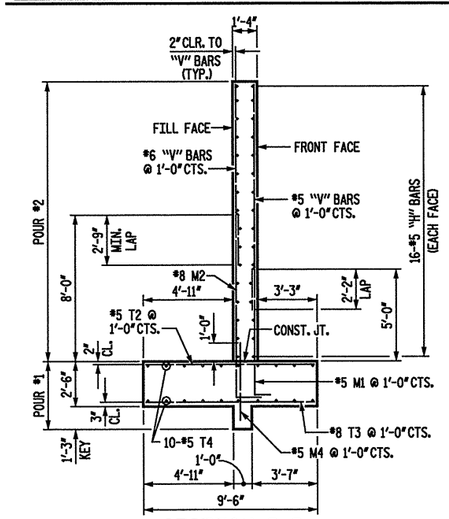

SECTION B-B

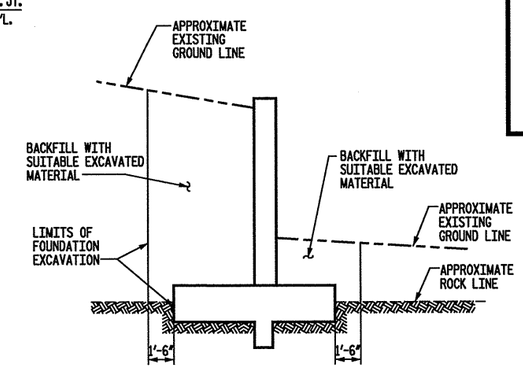

EXCAVATION AND EMBANKMENT AT WINGS

BILL OF MATERIAL

EAST ABUTMENT EXTENSION

BAR	NO.	SIZE	TYPE	LENGTH	WEIGHT
H1	20	5	STR	19'-8"	410
H2	2	5	STR	17'-2"	36
H3	2	5	STR	14'-5"	30
H4	2	5	STR	11'-7"	24
H5	2	5	STR	8'-9"	18
H6	2	5	STR	5'-11"	12
H7	2	5	STR	3'-2"	7
H8	2	5	2	20'-8"	43
M1	20	5	1	8'-0"	167
M2	19	8	1	11'-6"	583
M3	7	6	1	9'-0"	95
M4	20	5	STR	4'-6"	94
T1	20	5	STR	20'-2"	421
T2	21	5	STR	9'-2"	201
T3	21	8	STR	9'-2"	514
V1	6	6	STR	10'-0"	90
V2	6	5	STR	12'-5"	78
V3	14	6	STR	8'-4"	175
V4	7	5	STR	10'-9"	78
V5	7	5	STR	8'-4"	61

REINFORCING STEEL TOTAL 3,137 LBS.

CLASS "A" CONCRETE

POUR 1	19.0 CYS.
POUR 2	12.4 CYS.
TOTAL	31.4 CYS.

WEST ABUTMENT EXTENSION

BAR	NO.	SIZE	TYPE	LENGTH	WEIGHT
H9	22	5	STR	24'-8"	566
H10	2	5	STR	22'-7"	47
H11	2	5	STR	17'-2"	36
H12	2	5	STR	11'-10"	25
H13	2	5	STR	6'-6"	14
H14	2	5	2	25'-0"	52
M1	25	5	1	8'-0"	209
M2	43	8	1	11'-6"	1320
M4	25	5	STR	4'-6"	117
T2	26	5	STR	9'-2"	249
T3	26	8	STR	9'-2"	636
T4	20	5	STR	25'-2"	525
V6	13	6	STR	9'-11"	194
V7	13	5	STR	12'-3"	166
V8	12	6	STR	7'-9"	140
V9	12	5	STR	10'-2"	127

REINFORCING STEEL TOTAL 4,423 LBS.

CLASS "A" CONCRETE

POUR 1	23.6 CYS.
POUR 2	16.4 CYS.
TOTAL	40.0 CYS.

BAR TYPES

ALL BAR DIMENSIONS ARE OUT TO OUT

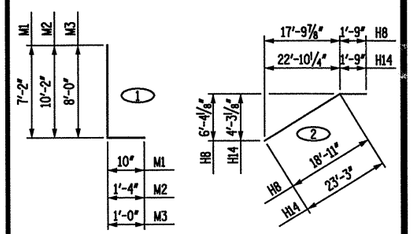

PROJECT NO. 37581
COUNTY: BUNCOMBE
STATION: 15+37.40
REPLACES BRIDGE NO. 193

STATE OF NORTH CAROLINA
DEPARTMENT OF TRANSPORTATION
RALEIGH

ABUTMENT WING EXTENSION DETAILS

KO & ASSOCIATES, P.C.
Consulting Engineers
5121 KINGDOM WAY, SUITE 100 RALEIGH, N.C. 27607
(919) 851-6066

NORTH CAROLINA PROFESSIONAL SEAL 025253 JOSEPH E. MONDOLFI
3-20-08

REVISIONS						SHEET NO.
NO.	BY	DATE	NO.	BY	DATE	5
1			3			TOTAL SHEETS
2			4			53

DRAWN BY: B.E. ATKINSON DATE: NOV. 2005
CHECKED BY: J.E. MONDOLFI DATE: NOV. 2005

NOT TO SCALE

FILE NAME: r:\Structures\195_ah05.dgn
PLOT: 3/20/2008 2:48:23 PM Ko & Associates, P.C.

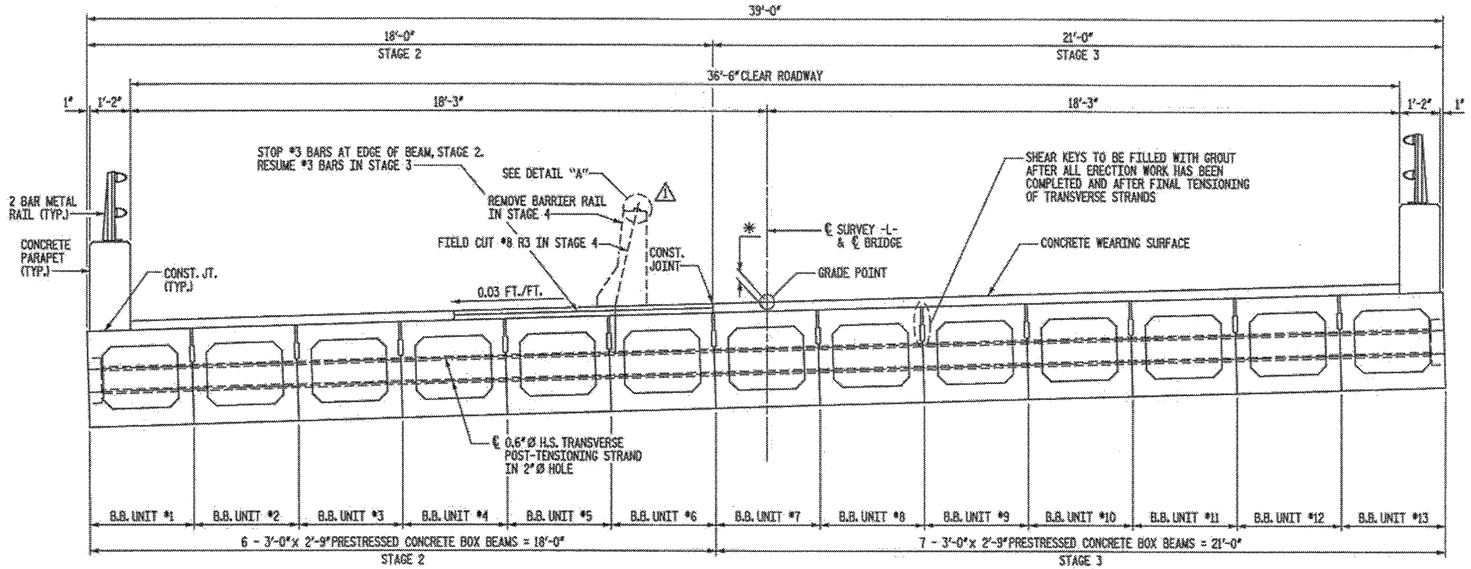

TYPICAL SECTION

✱ 3½" AT MIDSPAN (VARIES TO 5⅝"± AT END BENTS)

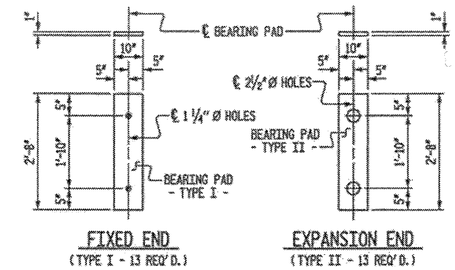

ELASTOMERIC BEARING DETAILS

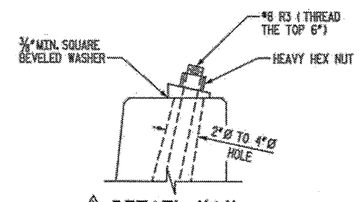

⚠ DETAIL "A"

(NOTE: DO NOT GROUT HOLE)
(SEE SHEET 8 FOR BARRIER RAIL DETAILS)

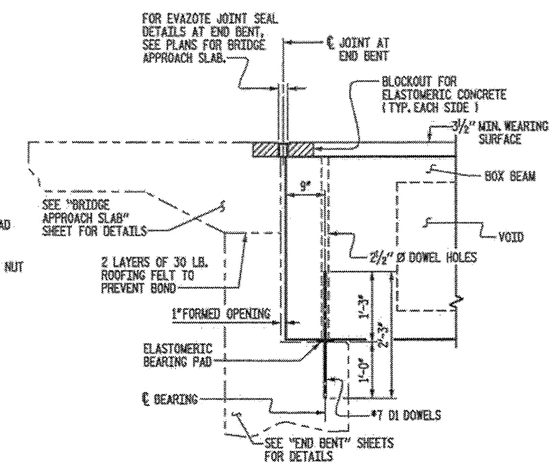

SECTION AT END BENT

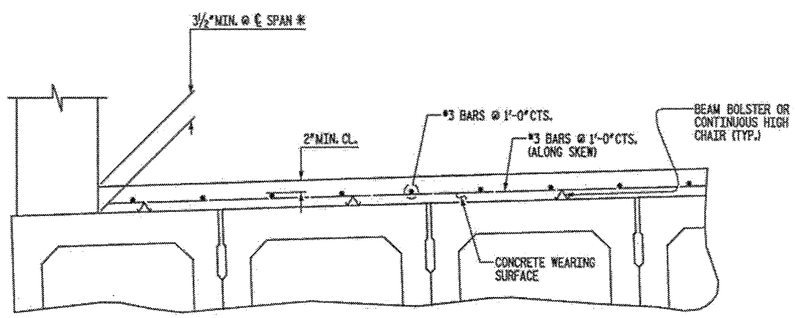

REINFORCING FOR CONCRETE WEARING SURFACE

CONCRETE WEARING SURFACE		EPOXY COATED REINFORCING STEEL (FOR WEARING SURFACE)	
SQUARE FEET		APPROX. LBS.	
STAGE 2	STAGE 3	STAGE 2	STAGE 3
1340	1580	1077	1270

⚠ PLACE TEMPORARY PRECAST CONCRETE BARRIER ON TOP OF CONCRETE WEARING SURFACE.

REVISE DETAIL "A".

REVISE QUANTITIES.

PROJECT NO. 37581
COUNTY: BUNCOMBE
STATION: 15+37.40
REPLACES BRIDGE NO. 193

STATE OF NORTH CAROLINA
DEPARTMENT OF TRANSPORTATION
RALEIGH

3'-0" x 2'-9"
PRESTRESSED CONCRETE
BOX BEAM UNIT
36'-6" CLEAR ROADWAY - 105° SKEW

NOT TO SCALE

KO & ASSOCIATES, P.C.
Consulting Engineers
5121 KINGDOM WAY, SUITE 100 RALEIGH, N.C. 27607
(919) 851-6066

NORTH CAROLINA PROFESSIONAL SEAL ENGINEER J. E. MONDOLFI
4-7-08

REVISIONS						SHEET NO.
NO.	BY	DATE	NO.	BY	DATE	6
1	JEM	04/07/08	3			TOTAL SHEETS
2			4			53

DRAWN BY: B.E. LANNING DATE: JUNE 2007
CHECKED BY: J.E. MONDOLFI DATE: JUNE 2007

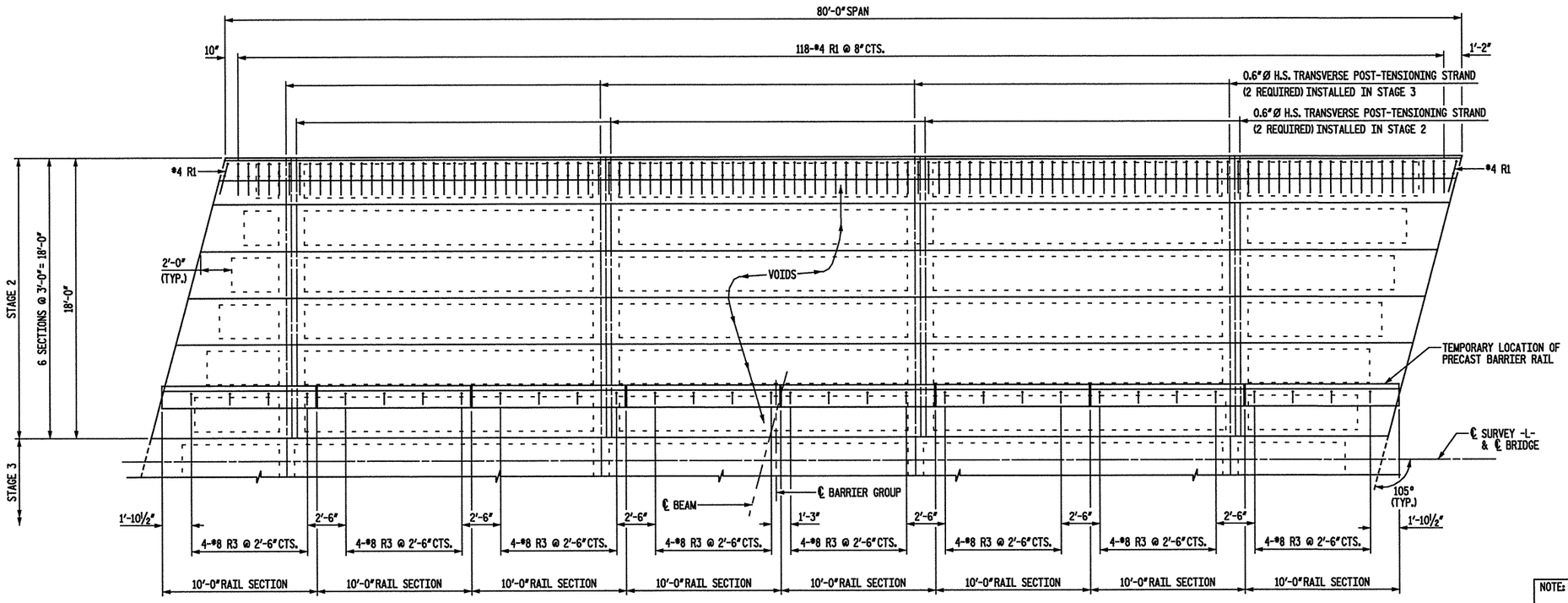

STAGE 2 PLAN VIEW - 80' SPAN

NOTE: FOR LOCATION OF 0.6" Ø H.S. TRANSVERSE POST-TENSIONING STRAND, SEE "PLAN OF BOX BEAM" ON SHEET 12.

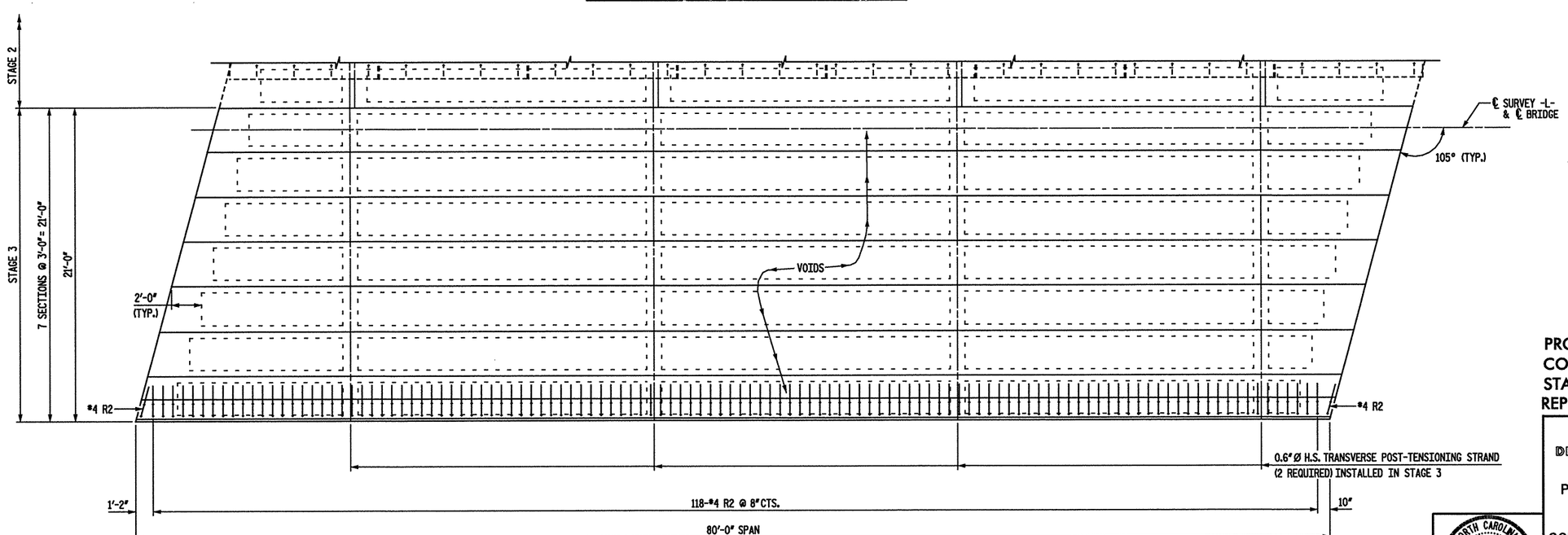

STAGE 3 PLAN VIEW - 80' SPAN

NOT TO SCALE

DRAWN BY: B.E. LANNING DATE: JUNE 2007
CHECKED BY: J.E. MONDOLFI DATE: JUNE 2007

KO & ASSOCIATES, P.C.
Consulting Engineers
5121 KINGDOM WAY, SUITE 100 RALEIGH, N.C. 27607
(919) 851-6066

NORTH CAROLINA PROFESSIONAL SEAL 019239 ENGINEER JAMES E. MONDOLFI
3-20-08

PROJECT NO. 37581
COUNTY: BUNCOMBE
STATION: 15+37.40
REPLACES BRIDGE NO. 193

STATE OF NORTH CAROLINA
DEPARTMENT OF TRANSPORTATION
RALEIGH

PRESTRESSED CONCRETE BOX BEAM
PLAN OF SPAN
80' SPAN
36'-6" CLEAR ROADWAY - 105° SKEW

REVISIONS						SHEET NO.
NO.	BY	DATE	NO.	BY	DATE	7
1			3			TOTAL SHEETS
2			4			53

FILE NAME: n:\Structure\V5Lim7_new.dgn
PLOT: 3/19/2008 2:05:03 PM Ko & Associates, P.C.

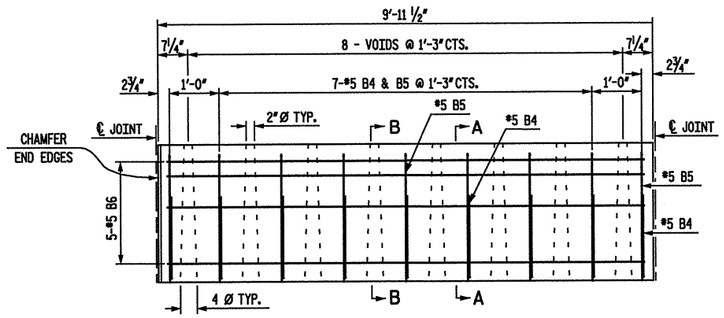

TYPICAL 10'-0" PRECAST UNIT

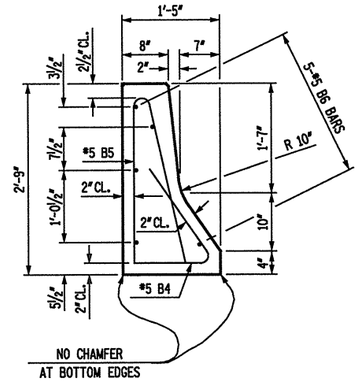

SECTION A-A

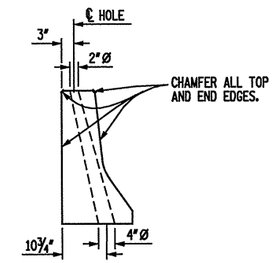

SECTION B-B

BILL OF MATERIAL					
FOR ONE 10'-0" RAIL SECTION					
BAR	NO.	SIZE	TYPE	LENGTH	WEIGHT
B4	9	#5	1	4'-11"	46
B5	9	#5	2	2'-8"	25
B6	5	#5	STR	9'-7"	50
REINFORCING STEEL LBS. = 121					
CLASS AA CONCRETE CU. YDS. = 1.0					

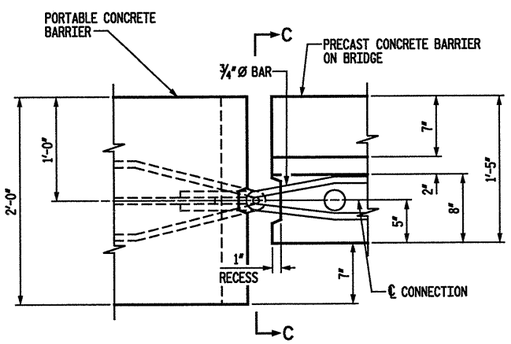

PLAN

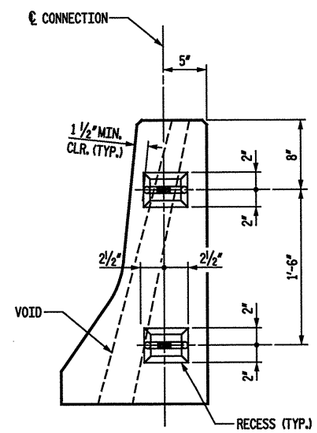

SECTION C-C

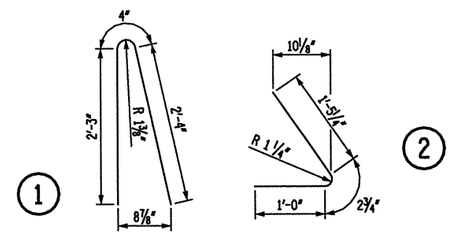

REINFORCING BAR TYPES
BAR DIMENSIONS ARE OUT TO OUT

NOTES

EACH PRECAST RAIL UNIT SHALL BE CAST WITH CLASS AA CONCRETE.

EACH PRECAST RAIL UNIT SHALL BE SUPPLIED WITH LIFTING DEVICE(S). NO CABLES ARE TO BE WRAPPED AROUND THE RAIL UNITS FOR LIFTING.

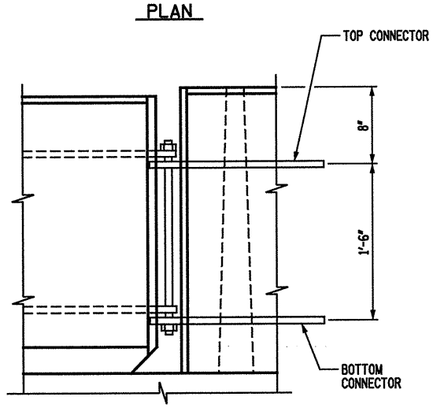

ELEVATION

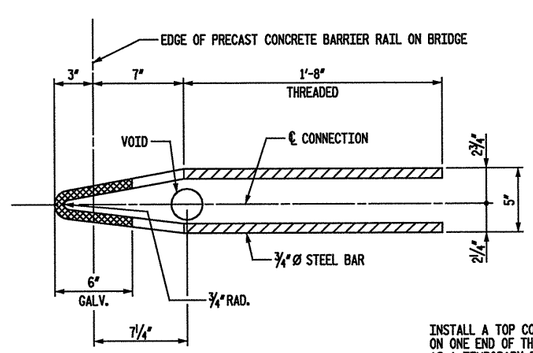

CONNECTOR DETAIL

INSTALL A TOP CONNECTOR AND A BOTTOM CONNECTOR ON ONE END OF THE BRIDGE BARRIER RAIL UNIT, USED AS A TEMPORARY BARRIER RAIL FOR STAGE 2 CONSTRUCTION, LOCATED AT THE BEGINNIG AND AT THE END OF THE BRIDGE.

CONNECTION DETAIL

(PORTABLE CONCRETE BARRIER AT END OF BRIDGE)

NOT TO SCALE

PROJECT NO. 37581
COUNTY: BUNCOMBE
STATION: 15+37.40
REPLACES BRIDGE NO. 193

STATE OF NORTH CAROLINA
DEPARTMENT OF TRANSPORTATION
RALEIGH

STANDARD PRECAST CONCRETE
BARRIER RAIL SECTIONS
80' SPAN
36'-6" CLEAR ROADWAY - 105° SKEW

KO & ASSOCIATES, P.C.
Consulting Engineers
5121 KINGDOM WAY, SUITE 100 RALEIGH, N.C. 27607
(919) 851-6066

NORTH CAROLINA PROFESSIONAL SEAL 22625 ENGINEER JAMES E. MONDOLF
3-20-08

REVISIONS						SHEET NO.
NO.	BY	DATE	NO.	BY	DATE	8
1			3			TOTAL SHEETS
2			4			53

DRAWN BY: C.L. SMITH DATE: NOV. 2005
CHECKED BY: B.E. ATKINSON DATE: NOV. 2005

PLOT: 3/19/2008 3:08:43 PM Ko & Associates, P.C.
FILE NAME: n:\Structural\CRL.dgn

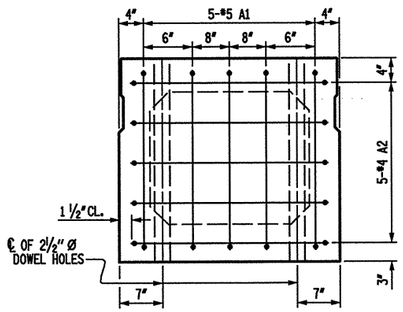

END ELEVATION

SHOWING PLACEMENT OF #5 & #4 "A" BARS AND LOCATION OF DOWEL HOLES.
(INTERIOR BOX BEAM SECTION SHOWN-EXTERIOR SECTION SIMILAR EXCEPT SHEAR KEY LOCATION. STRAND LAYOUT NOT SHOWN.)

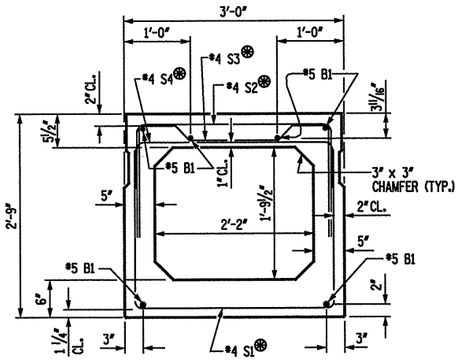

TYPICAL INTERIOR BOX BEAM SECTION

(STRAND LAYOUT NOT SHOWN)
⊛ FOR REINFORCING AT END OF BEAM, SEE DETAIL "B".

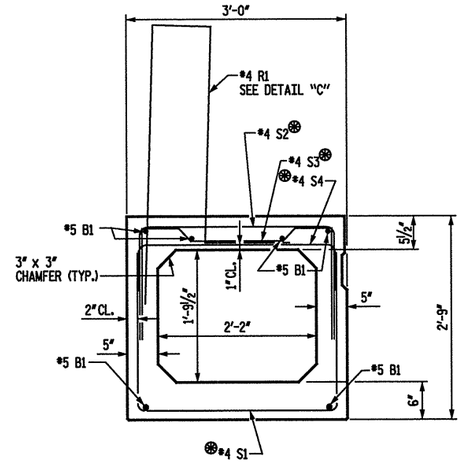

BOX BEAM #1 SECTION

(STRAND LAYOUT NOT SHOWN)
⊛ FOR REINFORCING AT END OF BEAM, SEE DETAIL "B".

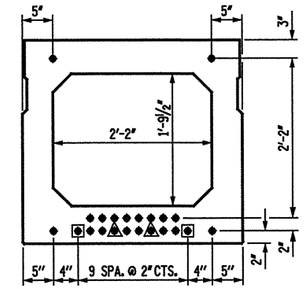

TYPICAL STRAND LOCATION

(22 STRANDS REQUIRED)

(INTERIOR BOX BEAM SECTION SHOWN-EXTERIOR SECTION SIMILAR EXCEPT SHEAR KEY LOCATION)

0.6" Ø LOW RELAXATION STRAND LAYOUT

DEBONDING LEGEND

- ● FULLY BONDED STRANDS
- △ STRANDS DEBONDED FOR 2'-0" FROM END OF BEAM.
- ▣ STRANDS DEBONDED FOR 8'-0" FROM END OF BEAM.

BAR TYPES

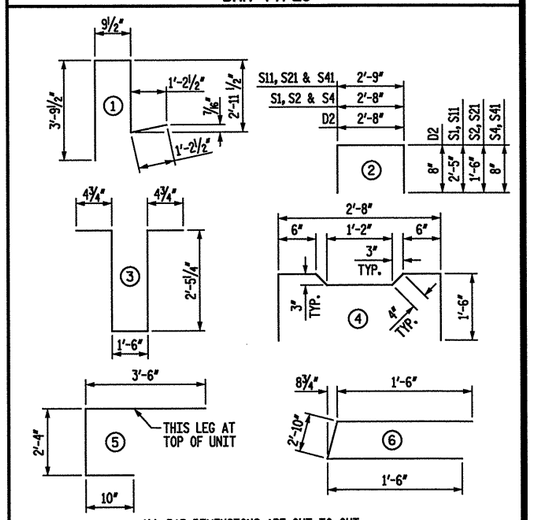

ALL BAR DIMENSIONS ARE OUT TO OUT.

BILL OF MATERIAL FOR ONE BOX BEAM SECTION

				EXTERIOR UNIT		INTERIOR UNIT	
BAR	NUMBER	SIZE	TYPE	LENGTH	WEIGHT	LENGTH	WEIGHT
A1	10	5	5	6'- 8"	70	6'- 8"	70
A2	10	4	6	5'-10"	39	5'-10"	39
B1	12	5	STR	40'-11"	512	40'-11"	512
D1	12	4	3	7'- 2"	57	7'- 2"	57
D2	24	4	2	4'- 0"	64	4'- 0"	64
D3	8	4	STR	2'- 8"	14	2'- 8"	14
S1	62	4	2	7'- 6"	311	7'- 6"	311
S2	62	4	2	5'- 8"	235	5'- 8"	235
S3	47	4	4	5'-10"	183	5'-10"	183
S4	109	4	2	4'- 0"	291	4'- 0"	291
S11	6	4	2	7'- 7"	30	7'- 7"	30
S21	6	4	2	5'- 9"	23	5'- 9"	23
S41	6	4	2	4'- 1"	16	4'- 1"	16
✱R1	120	4	1	8'- 9"	701	--	--
REINFORCING STEEL					1845 LBS.		1845 LBS.
✱EPOXY COATED REINF. STEEL					701 LBS.		
6000 P.S.I. CONCRETE					15.6 CU. YDS.		15.5 CU. YDS.
0.6" Ø L.R. STRANDS					No. 22		No. 22

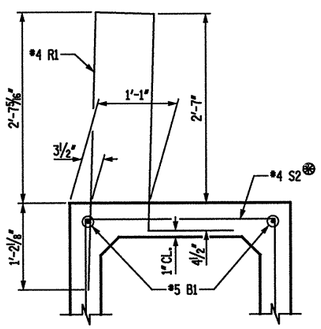

DETAIL "C"

⊛ FOR REINFORCING AT END OF BEAM, SEE DETAIL "B".

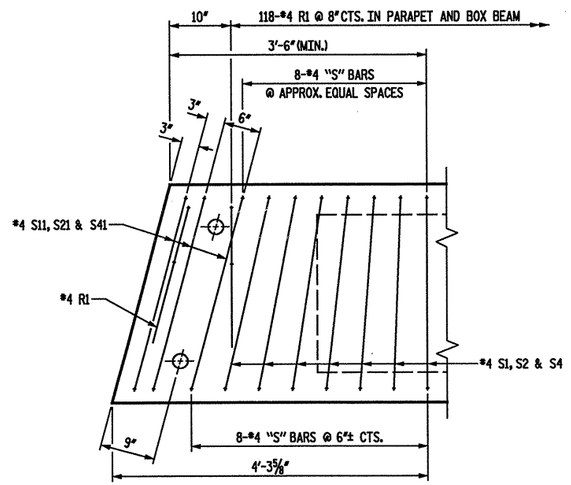

DETAIL "B"

BOX BEAM #1 SHOWN, INTERIOR UNITS SIMILAR EXCEPT OMIT #4 R1 BARS.
"B" BARS AND "A" BARS NOT SHOWN.

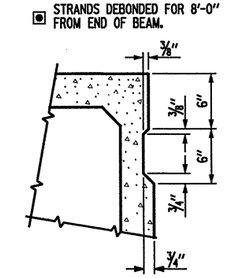

TYPICAL SHEAR KEY DETAIL

NOTE: OMIT SHEAR KEY ON OUTSIDE FACE OF EXTERIOR BOX BEAMS.

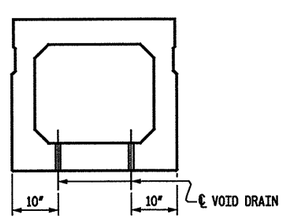

SECTION B-B

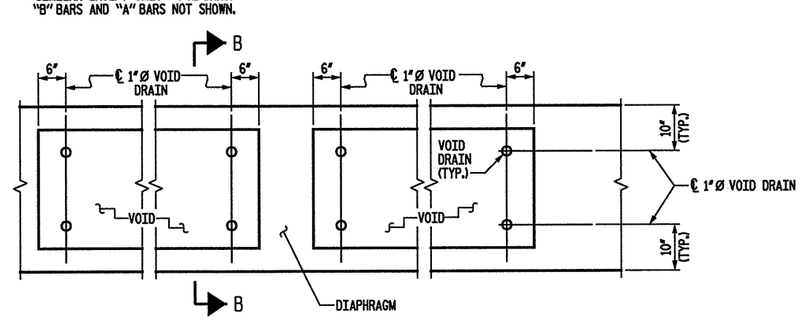

PART PLAN

VOID DRAIN DETAILS

(DIMENSIONS SHOWN ARE TYPICAL FOR EACH VOID)

NOT TO SCALE

PROJECT NO. 37581
COUNTY: BUNCOMBE
STATION: 15+37.40
REPLACES BRIDGE NO. 193

STATE OF NORTH CAROLINA
DEPARTMENT OF TRANSPORTATION
RALEIGH

3'-0" x 2'-9"
PRESTRESSED CONCRETE
BOX BEAM UNITS #1 THRU #5

STAGE 2

KO & ASSOCIATES, P.C.
Consulting Engineers
5121 KINGDOM WAY, SUITE 100 RALEIGH, N.C. 27607
(919) 851-6066

NORTH CAROLINA PROFESSIONAL SEAL ENGINEER JAMES E. MONDOLFI
3-20-08

REVISIONS						SHEET NO.
NO.	BY	DATE	NO.	BY	DATE	9
1			3			TOTAL SHEETS
2			4			53

DRAWN BY: B.E. LANNING DATE: JUNE 2007
CHECKED BY: J.E. MONDOLFI DATE: JUNE 2007

PLOT: 3/19/2008 3dBlk44 PM Ko & Associates, P.C.
FILE NAME: r:\Structures\VBS_Art\Layout

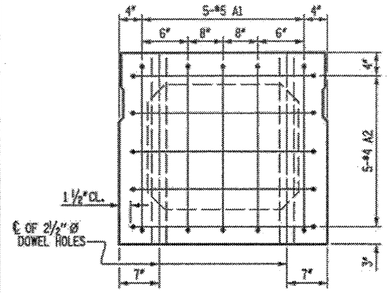

END ELEVATION

SHOWING PLACEMENT OF #5 & #4 "A" BARS AND LOCATION OF DOWEL HOLES. (STRAND LAYOUT NOT SHOWN)

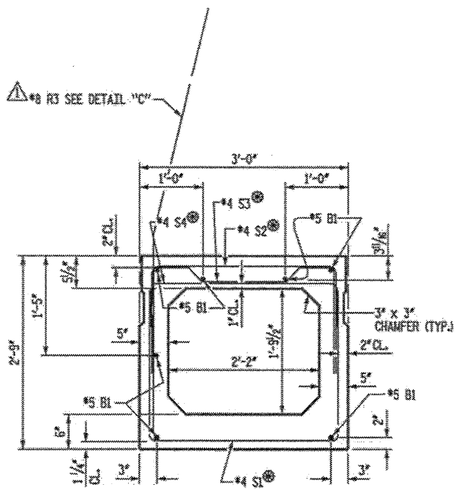

BOX BEAM #6 SECTION

(STRAND LAYOUT NOT SHOWN)

⊕ FOR REINFORCING AT END OF BEAM, SEE DETAIL "B".

SPECIAL FOR TEMPORARY BARRIER RAIL

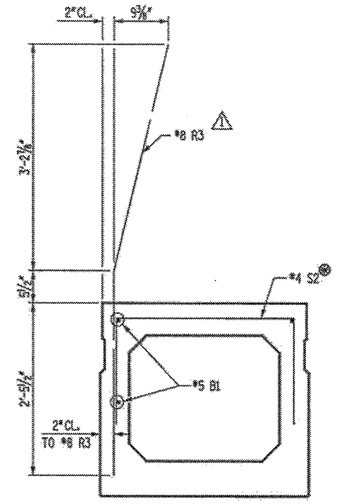

DETAIL "C"

⊕ FOR REINFORCING AT END OF BEAM, SEE DETAIL "B".

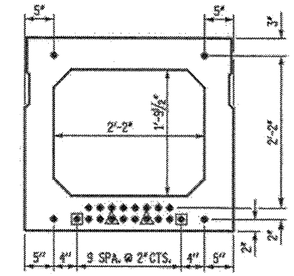

TYPICAL STRAND LOCATION

(22 STRANDS REQUIRED)

(INTERIOR BOX BEAM SECTION SHOWN-EXTERIOR SECTION SIMILAR EXCEPT SHEAR KEY LOCATION)

0.6" Ø LOW RELAXATION STRAND LAYOUT

DEBONDING LEGEND

- ● FULLY BONDED STRANDS
- △ STRANDS DEBONDED FOR 2'-0" FROM END OF BEAM.
- ▣ STRANDS DEBONDED FOR 8'-0" FROM END OF BEAM.

BAR TYPES

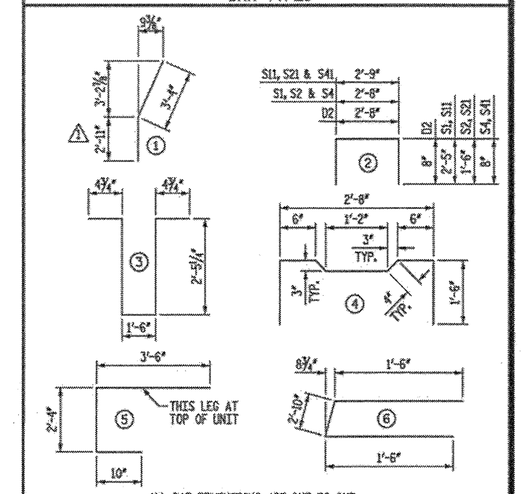

ALL BAR DIMENSIONS ARE OUT TO OUT.

BILL OF MATERIAL FOR BOX BEAM UNIT #6

BAR	NUMBER	SIZE	TYPE	LENGTH	WEIGHT
A1	10	5	5	6'- 8"	70
A2	10	4	6	5'-10"	39
B1	14	5	STR	40'-11"	597
D1	12	4	3	7'- 2"	57
D2	24	4	2	4'- 0"	64
D3	8	4	STR	2'- 8"	14
S1	62	4	2	7'- 6"	311
S2	62	4	2	5'- 8"	235
S3	47	4	4	5'-10"	183
S4	109	4	2	4'- 0"	291
S11	6	4	2	7'- 7"	30
S21	6	4	2	5'- 9"	23
S41	6	4	2	4'- 1"	16
✱R3	32	8	1	6'- 3"	534

REINFORCING STEEL	1930 LBS.
✱EPOXY COATED REINF. STEEL	534 LBS.
6000 P.S.I. CONCRETE	15.5 CU. YDS.
0.6"Ø L.R. STRANDS	No. 22

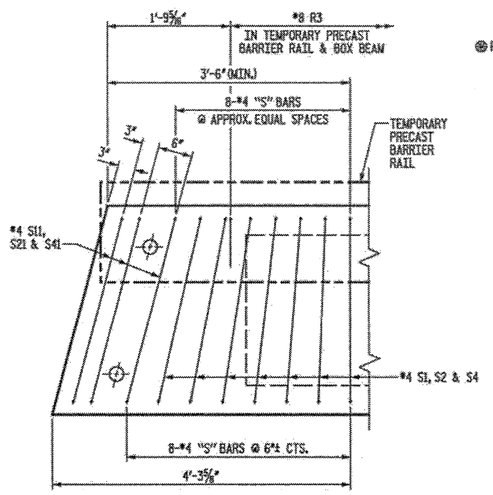

DETAIL "B"

"B" BARS AND "A" BARS NOT SHOWN FOR CLARITY

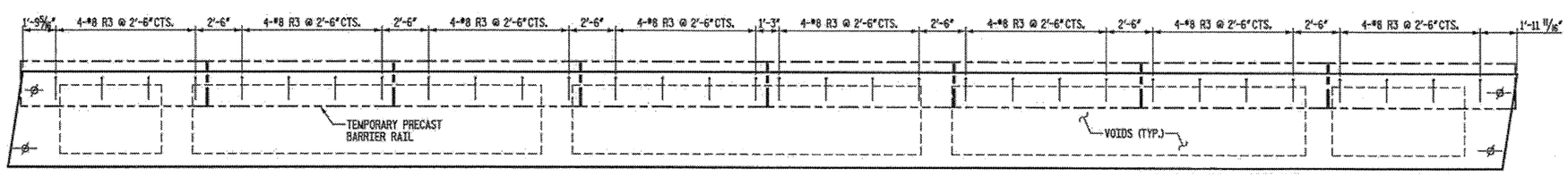

PLAN LAYOUT OF #8 R3

△1 REVISE LOCATION AND LENGTH OF #8 R3 BAR.

NOT TO SCALE

PROJECT NO. 37581
COUNTY: BUNCOMBE
STATION: 15+37.40
REPLACES BRIDGE NO. 193

STATE OF NORTH CAROLINA
DEPARTMENT OF TRANSPORTATION
RALEIGH

3'-0" x 2'-9"
PRESTRESSED CONCRETE
BOX BEAM UNIT #6

STAGE 2

KO & ASSOCIATES, P.C.
Consulting Engineers
5121 KINGDOM WAY, SUITE 100 RALEIGH, N.C. 27607
(919) 851-6066

NORTH CAROLINA PROFESSIONAL SEAL 20630 ENGINEER JAMES E. MONDOLFI
4-7-08

REVISIONS						SHEET NO.
NO.	BY	DATE	NO.	BY	DATE	10
1	JEM	04/07/08	3			TOTAL SHEETS
2			4			53

DRAWN BY: B.E. LANNING DATE: JUNE 2007
CHECKED BY: J.E. MONDOLFI DATE: JUNE 2007

FILE NAME: n:\projects\ent\37581_ent08_mon.dgn
PLOTTED: 4/7/2008 9:40:48 AM Ko & Associates, P.C.

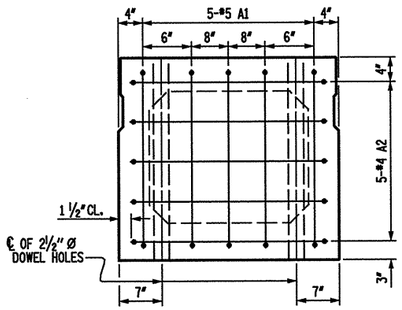

END ELEVATION

SHOWING PLACEMENT OF #5 & #4 "A" BARS AND LOCATION OF DOWEL HOLES. (INTERIOR BOX BEAM SECTION SHOWN-EXTERIOR SECTION SIMILAR EXCEPT SHEAR KEY LOCATION. STRAND LAYOUT NOT SHOWN.)

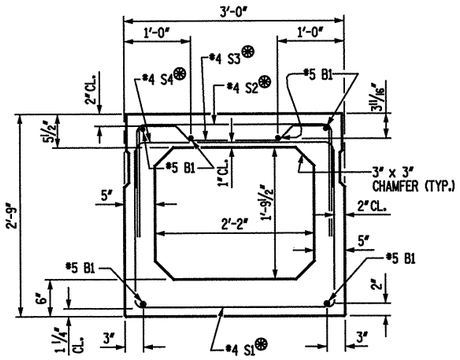

INTERIOR BOX BEAM SECTION

(STRAND LAYOUT NOT SHOWN)
⊛ FOR REINFORCING AT END OF BEAM, SEE DETAIL "B".

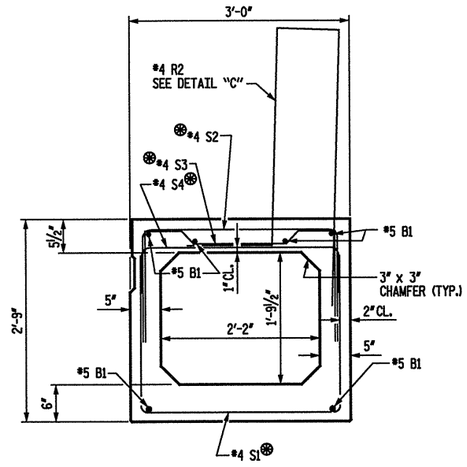

BOX BEAM #13 SECTION

(STRAND LAYOUT NOT SHOWN)
⊛ FOR REINFORCING AT END OF BEAM, SEE DETAIL "B".

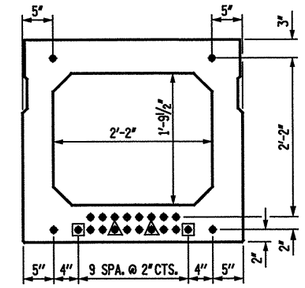

TYPICAL STRAND LOCATION

(22 STRANDS REQUIRED)

(INTERIOR BOX BEAM SECTION SHOWN-EXTERIOR SECTION SIMILAR EXCEPT SHEAR KEY LOCATION)

0.6" Ø LOW RELAXATION STRAND LAYOUT

DEBONDING LEGEND

- ● FULLY BONDED STRANDS
- ▲ STRANDS DEBONDED FOR 2'-0" FROM END OF BEAM.
- ▣ STRANDS DEBONDED FOR 8'-0" FROM END OF BEAM.

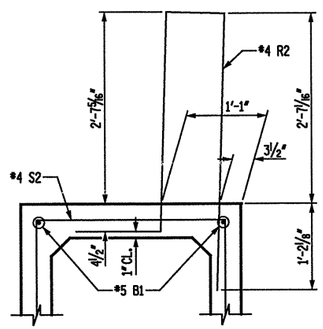

DETAIL "C"

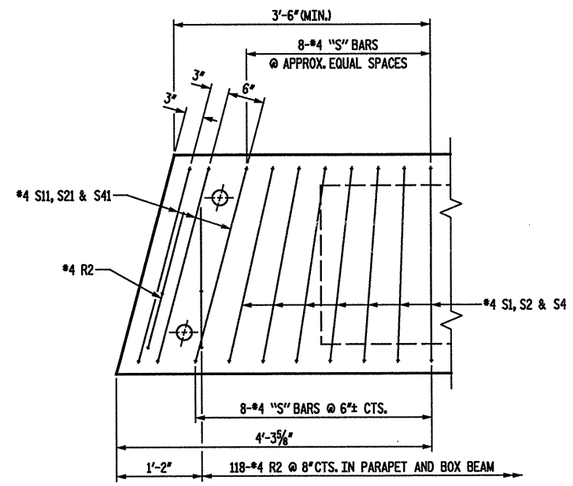

DETAIL "B"

BOX BEAM #13 SHOWN, INTERIOR UNITS SIMILAR EXCEPT OMIT #4 R2 BARS. "B" BARS AND "A" BARS NOT SHOWN.

BAR TYPES

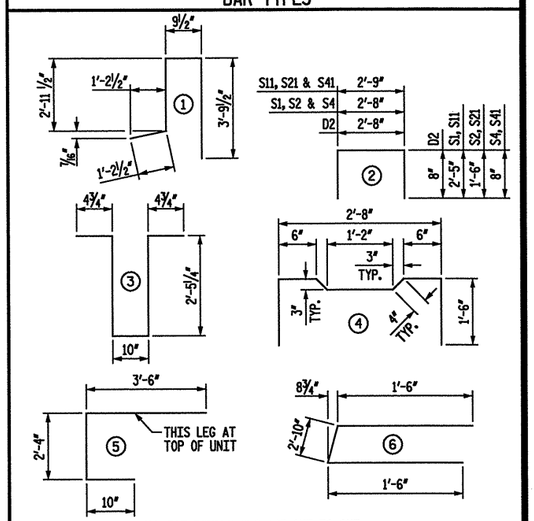

ALL BAR DIMENSIONS ARE OUT TO OUT.

BILL OF MATERIAL FOR ONE BOX BEAM SECTION

				EXTERIOR UNIT		INTERIOR UNIT	
BAR	NUMBER	SIZE	TYPE	LENGTH	WEIGHT	LENGTH	WEIGHT
A1	10	5	5	6'- 8"	70	6'- 8"	70
A2	10	4	6	5'-10"	39	5'-10"	39
B1	12	5	STR	40'-11"	512	40'-11"	512
D2	24	4	2	4'- 0"	64	4'- 0"	64
D3	8	4	STR	2'- 8"	14	2'- 8"	14
D4	12	4	3	6'- 6"	52	6'- 6"	52
S1	62	4	2	7'- 6"	311	7'- 6"	311
S2	62	4	2	5'- 8"	235	5'- 8"	235
S3	47	4	4	5'-10"	183	5'-10"	183
S4	109	4	2	4'- 0"	291	4'- 0"	291
S11	6	4	2	7'- 7"	30	7'- 7"	30
S21	6	4	2	5'- 9"	23	5'- 9"	23
S41	6	4	2	4'- 1"	16	4'- 1"	16
✱R2	120	4	1	8'- 9"	701	—	—
REINFORCING STEEL					1840 LBS.		1840 LBS.
✱EPOXY COATED REINF. STEEL					701 LBS.		
6000 P.S.I. CONCRETE					14.8 CU. YDS.		14.7 CU. YDS.
0.6" Ø L.R. STRANDS					No. 22		No. 22

PROJECT NO. 37581
COUNTY: BUNCOMBE
STATION: 15+37.40
REPLACES BRIDGE NO. 193

STATE OF NORTH CAROLINA
DEPARTMENT OF TRANSPORTATION
RALEIGH

3'-0" x 2'-9"
PRESTRESSED CONCRETE
BOX BEAM UNITS #7 THRU #13

STAGE 3

NOT TO SCALE

KO & ASSOCIATES, P.C.
Consulting Engineers
5121 KINGDOM WAY, SUITE 100 RALEIGH, N.C. 27607
(919) 851-6066

NORTH CAROLINA PROFESSIONAL ENGINEER SEAL 024841 JAMES E. MONDOLFI
3-20-08

REVISIONS						SHEET NO.
NO.	BY	DATE	NO.	BY	DATE	11
1			3			TOTAL SHEETS
2			4			53

DRAWN BY: B.E. LANNING DATE: JUNE 2007
CHECKED BY: J.E. MONDOLFI DATE: JUNE 2007

PLOT: 3/20/2008 3:40:42 PM Ko & Associates, P.C.
FILE NAME: n:\drawings\VSL\bh11_new.dgn

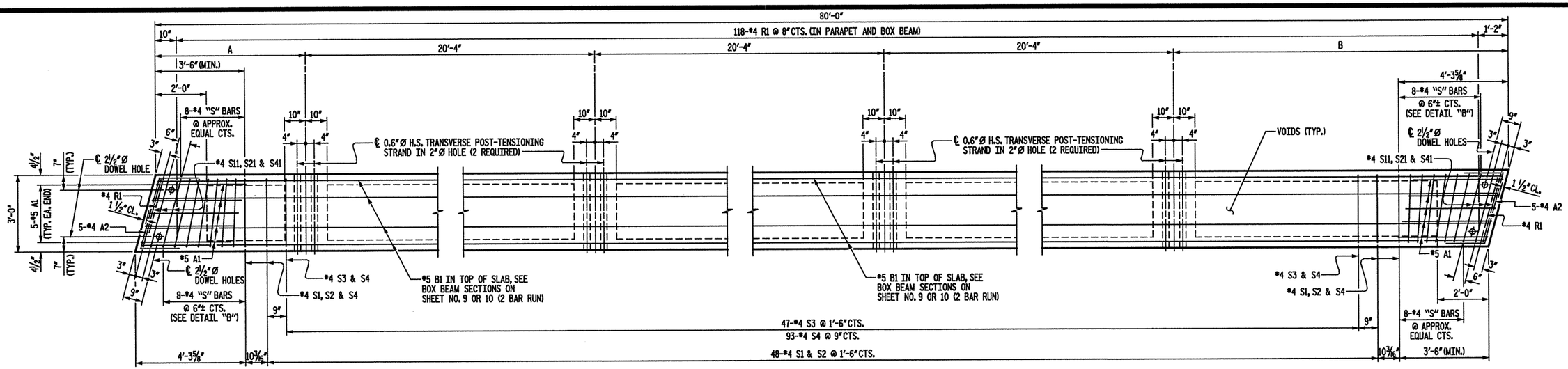

PLAN OF BOX BEAM - STAGE 2

EXTERIOR UNIT SHOWN, INTERIOR UNIT SIMILAR EXCEPT OMIT #4 R1 BARS.
FOR REINFORCING STEEL IN DIAPHRAGMS, SEE DIAPHRAGM DETAILS.
FOR LOCATION OF #8 R3 BARS IN B.B. UNIT #6, SEE SHEET 10.

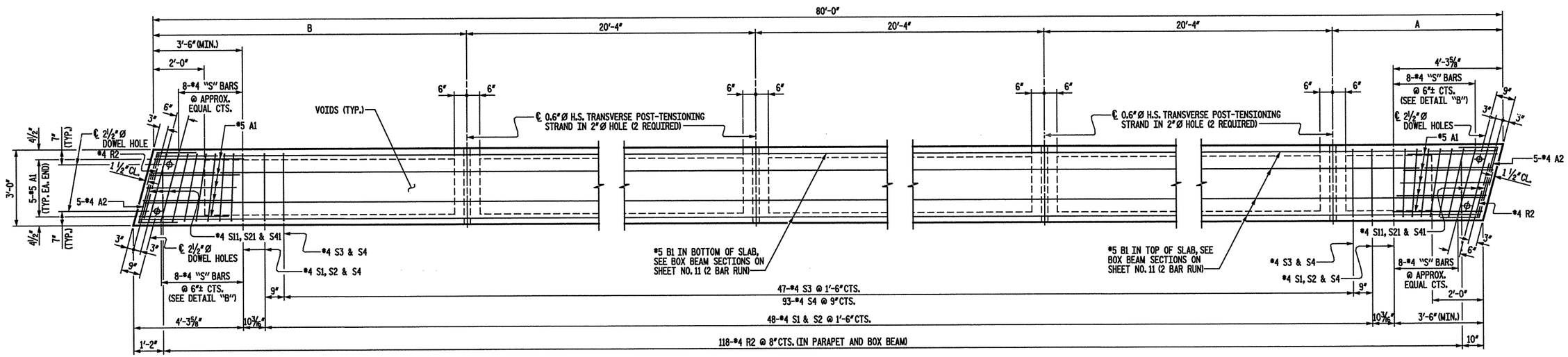

PLAN OF BOX BEAM - STAGE 3

EXTERIOR UNIT SHOWN, INTERIOR UNIT SIMILAR EXCEPT OMIT #4 R2 BARS.
FOR REINFORCING STEEL IN DIAPHRAGNS, SEE DIAPHRAGM DETAILS.

STAGE 2 BOX BEAM DIMENSIONS		
BOX BEAM	A	B
B.B. UNIT #1	4'-3 5/16"	14'-8 11/16"
B.B. UNIT #2	5'-0 15/16"	13'-11 1/16"
B.B. UNIT #3	5'-10 9/16"	13'-1 7/16"
B.B. UNIT #4	6'-8 1/4"	12'-3 3/4"
B.B. UNIT #5	7'-5 7/8"	11'-6 1/8"
B.B. UNIT #6	8'-3 1/2"	10'-8 1/2"

STAGE 3 BOX BEAM DIMENSIONS		
BOX BEAM	A	B
B.B. UNIT #7	8'-9 3/16"	10'-2 13/16"
B.B. UNIT #8	9'-6 13/16"	9'-5 7/16"
B.B. UNIT #9	10'-4 1/2"	8'-7 1/2"
B.B. UNIT #10	11'-2 1/8"	7'-9 7/8"
B.B. UNIT #11	11'-11 3/4"	7'-0 1/4"
B.B. UNIT #12	12'-9 7/16"	6'-2 9/16"
B.B. UNIT #13	13'-7 1/16"	5'-4 15/16"

PROJECT NO. 37581
COUNTY: BUNCOMBE
STATION: 15+37.40
REPLACES BRIDGE NO. 193

STATE OF NORTH CAROLINA
DEPARTMENT OF TRANSPORTATION
RALEIGH

PRESTRESSED CONCRETE BOX BEAM
PLAN OF BOX BEAM
80' SPAN
36'-6" CLEAR ROADWAY - 105° SKEW

NOT TO SCALE

KO & ASSOCIATES, P.C.
Consulting Engineers
5121 KINGDOM WAY, SUITE 100 RALEIGH, N.C. 27607
(919) 851-6066

NORTH CAROLINA PROFESSIONAL SEAL 20532 ENGINEER JAMES E. MONDOLFI
3-20-08

REVISIONS					
NO.	BY	DATE	NO.	BY	DATE
1			3		
2			4		

SHEET NO. 12
TOTAL SHEETS 53

DRAWN BY: B.E. LANNING DATE: JUNE 2007
CHECKED BY: J.E. MONDOLFI DATE: JUNE 2007

PLOT: 3/19/2008 3:40:01 PM Ko & Associates, P.C.
FILE NAME: n:\Structures\1783_sht12_new.dgn

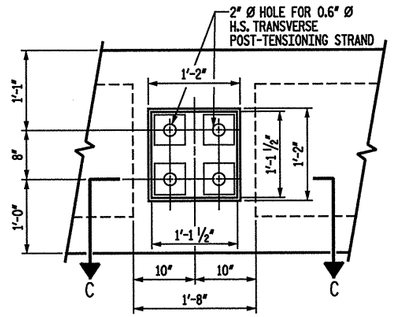

B.B. UNIT #1
ELEVATION VIEW
(STAGE 2)

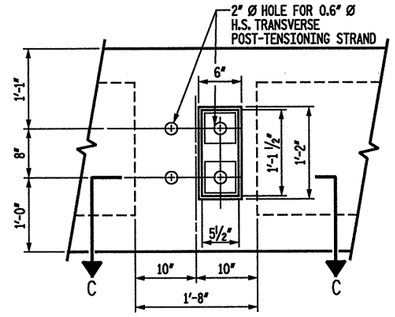

B.B. UNIT #6
ELEVATION VIEW
(STAGE 2)

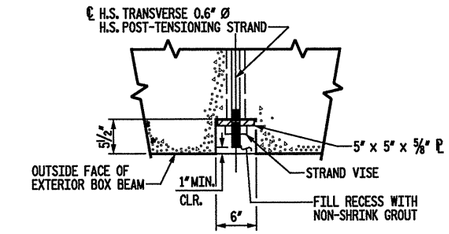

SECTION B-B

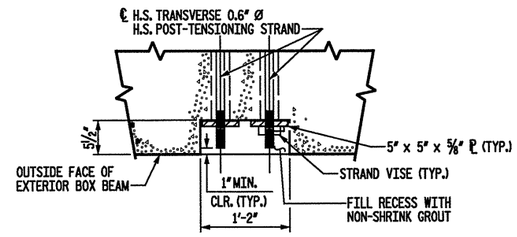

SECTION C-C
(B.B. UNIT #6 SIMILAR)

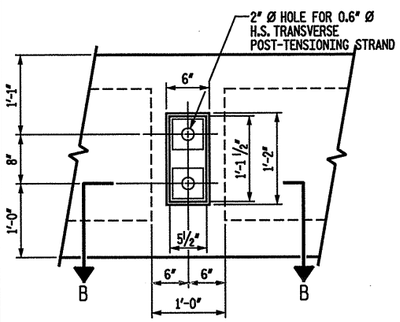

B.B. UNIT #13
ELEVATION VIEW
(STAGE 3)

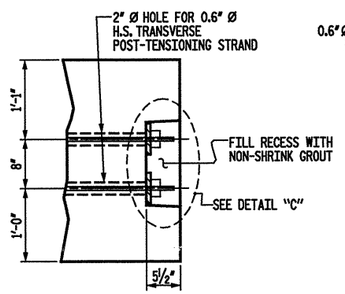

PART SECTION AT RECESS

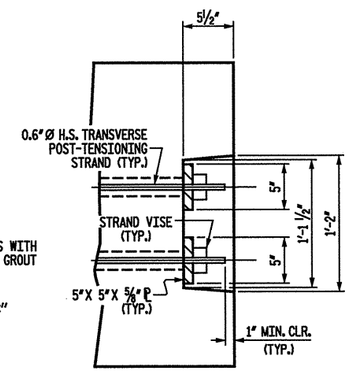

DETAIL "C"

GROUTED RECESS DETAILS AT ENDS OF POST-TENSIONING STRANDS

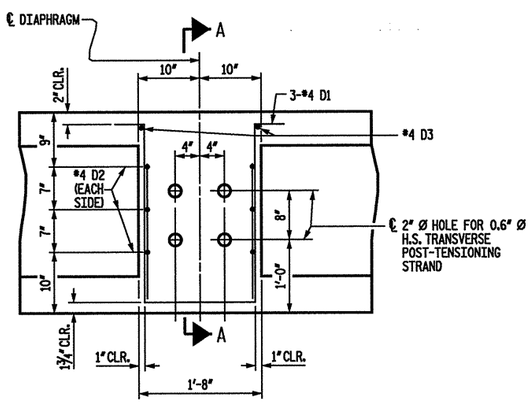

B.B. UNITS #2 THRU #5
ELEVATION VIEW
(STAGE 2)

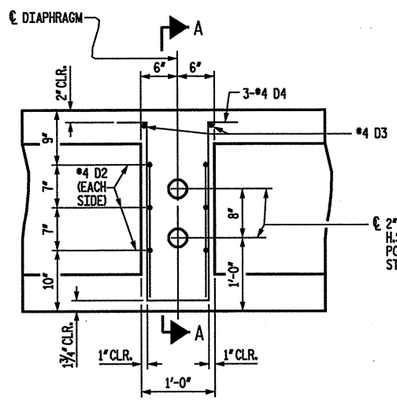

B.B. UNITS #7 THRU #12
ELEVATION VIEW
(STAGE 3)

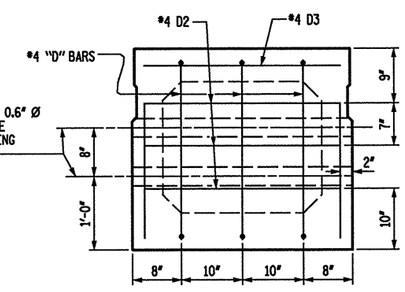

SECTION A-A

DOUBLE DIAPHRAGM FOR 33" BOX BEAM

NOTES

ALL PRESTRESSING STRANDS SHALL BE 7-WIRE LOW RELAXATION GRADE 270 STRANDS AND SHALL CONFORM TO AASHTO M203 EXCEPT FOR SAMPLING REQUIREMENTS WHICH SHALL BE IN ACCORDANCE WITH THE STANDARD SPECIFICATIONS.

ALL REINFORCING STEEL CAST WITH THE BOX BEAM SECTIONS SHALL BE GRADE 60 AND SHALL BE INCLUDED IN THE UNIT PRICE BID FOR PRESTRESSED CONCRETE BOX BEAMS.

RECESSES FOR TRANSVERSE STRANDS SHALL BE GROUTED AFTER THE TENSIONING OF THE STRANDS.

THE 2 1/2" Ø DOWEL HOLES AT FIXED ENDS OF BOX BEAM SECTIONS SHALL BE FILLED WITH NON-SHRINK GROUT. THE 2 1/2" Ø DOWEL HOLES AT EXPANSION ENDS OF BOX BEAM SECTIONS SHALL BE FILLED WITH JOINT SEALER MATERIAL TO 1 1/2" ABOVE THE TOP OF DOWELS AND THEN FILLED WITH GROUT.

THE JOINT SEALER MATERIAL SHALL CONFORM TO THE REQUIREMENTS OF TYPE SL LOW MODULUS SILICONE SEALANT. THE 2" Ø BACKER ROD SHALL CONFORM TO THE REQUIREMENTS OF TYPE M BOND BREAKER. SEE SECTION 1028 OF THE STANDARD SPECIFICATIONS.

THE TRANSFER OF LOAD FROM THE ANCHORAGES TO THE BOX BEAM UNIT SHALL BE DONE WHEN THE CONCRETE HAS REACHED A COMPRESSIVE STRENGTH OF NOT LESS THAN 4500 PSI.

PRESTRESSING STRANDS SHALL BE CUT FLUSH WITH THE BOX BEAM UNIT ENDS.

APPLY EPOXY PROTECTIVE COATING TO BOX BEAM UNIT ENDS.

FOR EVAZOTE JOINT SEALS, SEE SPECIAL PROVISIONS.

PLACEMENT OF THE CONCRETE WEARING SURFACE SHALL OCCUR AFTER CASTING THE CONCRETE PARAPET. THE COST OF THE #3 BARS CAST WITH THE CONCRETE WEARING SURFACE SHALL BE INCLUDED IN THE UNIT PRICE BID FOR CONCRETE WEARING SURFACE. FOR CONCRETE WEARING SURFACE, SEE SPECIAL PROVISIONS.

FOR PRESTRESSED CONCRETE MEMBERS, SEE SPECIAL PROVISIONS.

THE LOCATION OF THE VOID DRAINS MAY BE SHIFTED SLIGHTLY WHERE NECESSARY TO CLEAR PRESTRESSING STRANDS OR TRANSVERSE REINFORCING STEEL.

BOX BEAMS REQUIRED

	NUMBER	LENGTH
STAGE 2		
B.B. UNIT 1	1	80'-0"
B.B. UNIT 2	1	80'-0"
B.B. UNIT 3	1	80'-0"
B.B. UNIT 4	1	80'-0"
B.B. UNIT 5	1	80'-0"
B.B. UNIT 6	1	80'-0"
TOTAL (STAGE 2)	6	480'-0"
STAGE 3		
B.B. UNIT 7	1	80'-0"
B.B. UNIT 8	1	80'-0"
B.B. UNIT 9	1	80'-0"
B.B. UNIT 10	1	80'-0"
B.B. UNIT 11	1	80'-0"
B.B. UNIT 12	1	80'-0"
B.B. UNIT 13	1	80'-0"
TOTAL (STAGE 3)	7	560'-0"

GRADE 270 STRANDS

	0.6" Ø L.R.
AREA (SQUARE INCHES)	0.217
ULTIMATE STRENGTH (LBS. PER STRAND)	58,600
APPLIED PRESTRESS (LBS. PER STRAND)	43,950

GROOVING BRIDGE FLOORS
(SQUARE FEET)

	APPROACH SLABS	BRIDGE DECK	TOTAL
STAGE 2	232	830	1062
STAGE 3	537	1839	2376

SPLICE CHART

B1	2'-2"

DEAD LOAD DEFLECTION AND CAMBER

	3'-0" x 2'-9"
	0.6" Ø L.R. STRAND
	SPAN "A"
CAMBER (BEAM ALONE IN PLACE)	2 7/16" (UP)
DEFLECTION DUE TO CONCRETE WEARING SURFACE **	9/16" (DOWN)
FINAL CAMBER	1 7/8" (UP)

**DOES NOT INCLUDE FUTURE WEARING SURFACE

PROJECT NO. 37581
COUNTY: BUNCOMBE
STATION: 15+37.40
REPLACES BRIDGE NO. 193

STATE OF NORTH CAROLINA
DEPARTMENT OF TRANSPORTATION
RALEIGH

3'-0" x 2'-9"
PRESTRESSED CONCRETE
BOX BEAM UNIT DETAILS

KO & ASSOCIATES, P.C.
Consulting Engineers
5121 KINGDOM WAY, SUITE 100 RALEIGH, N.C. 27607
(919) 851-6066

NORTH CAROLINA PROFESSIONAL SEAL ENGINEER JAMES E. MONDOLFI
3-20-08

REVISIONS						SHEET NO.
NO.	BY	DATE	NO.	BY	DATE	13
1			3			TOTAL SHEETS
2			4			53

DRAWN BY: B.E. LANNING DATE: JUNE 2007
CHECKED BY: J.E. MONDOLFI DATE: JUNE 2007

NOT TO SCALE

FILE NAME: n:\Structures\37581_sht13_new.dgn
PLOT: 3/20/2008 3:05:05 PM Ko & Associates, P.C.

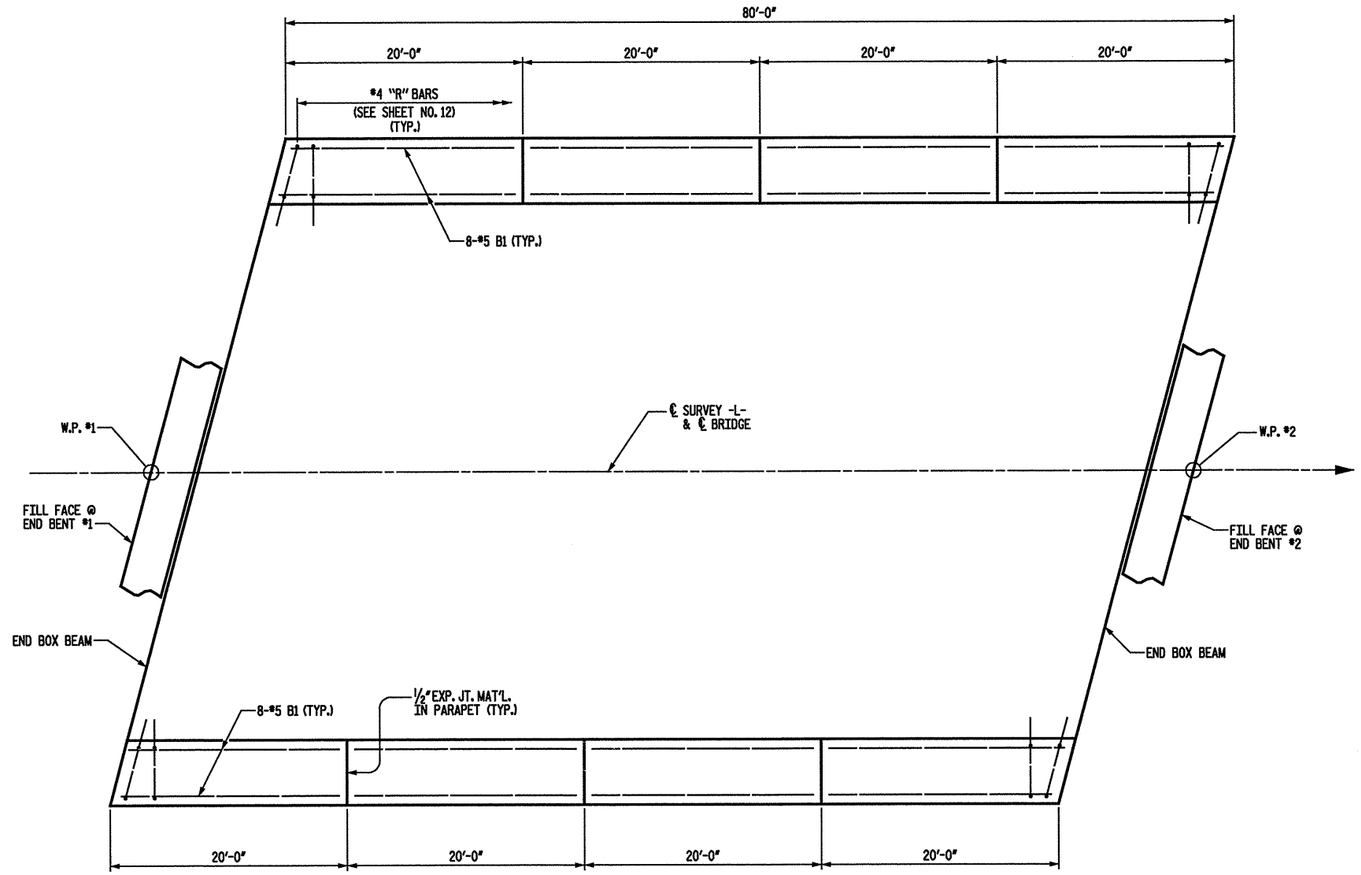

PLAN OF PARAPET

FOR END POST DETAILS, SEE SHEET NO. 16

BILL OF MATERIAL					
PARAPET AND FOUR END POSTS					
BAR	NO.	SIZE	TYPE	LENGTH	WEIGHT
*B1	64	5	STR	19'-8"	1313
*E1	8	7	STR	2'-9"	45
*E2	8	7	STR	3'-3"	53
*E3	8	7	STR	3'-9"	61
*E4	8	7	STR	4'-3"	69
*E5	8	7	STR	4'-9"	78
*F1	8	6	STR	1'-10"	22
*F2	8	6	STR	3'-0"	36
*F3	8	6	STR	3'-8"	44
* EPOXY COATED REINFORCING STEEL					1,721 LBS.
CLASS "AA" CONCRETE					19.1 CYS.
PARAPET LENGTH					160 L.F.

NOTES

VERTICAL GROOVED CONTRACTION JOINTS, 1/2" IN DEPTH, SHALL BE TOOLED IN ALL EXPOSED FACES OF THE PARAPET IN ACCORDANCE WITH ARTICLE 825-10(B) OF THE STANDARD SPECIFICATIONS. THE CONTRACTION JOINT SHALL BE LOCATED AT EACH THIRD POINT BETWEEN PARAPET EXPANSION JOINTS.

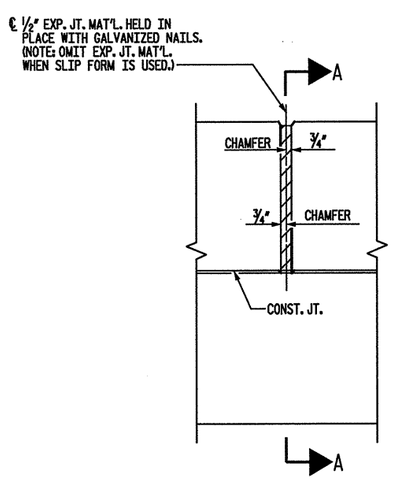

ELEVATION AT EXPANSION JOINTS

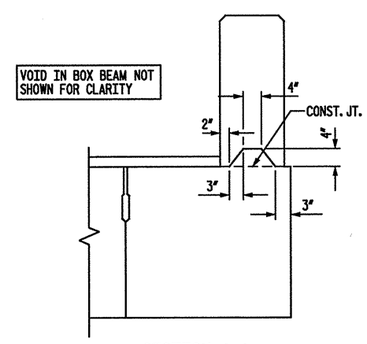

SECTION A-A
AT DAM IN OPEN JOINT
(THIS IS TO BE USED ONLY WHEN SLIP FORM IS USED.)

PARAPET DETAILS

NOT TO SCALE

PROJECT NO. 37581
COUNTY: BUNCOMBE
STATION: 15+37.40
REPLACES BRIDGE NO. 193

STATE OF NORTH CAROLINA
DEPARTMENT OF TRANSPORTATION
RALEIGH

CAST - IN - PLACE
REINFORCED CONCRETE
PARAPET

KO & ASSOCIATES, P.C.
Consulting Engineers
5121 KINGDOM WAY, SUITE 100 RALEIGH, N.C. 27607
(919) 851-6066

NORTH CAROLINA PROFESSIONAL SEAL ENGINEER JAMES E. MONDOLFI
3-20-08

REVISIONS						SHEET NO.
NO.	BY	DATE	NO.	BY	DATE	14
1			3			TOTAL SHEETS
2			4			53

DRAWN BY: C.L. SMITH DATE: NOV. 2005
CHECKED BY: J.E. MONDOLFI DATE: NOV. 2005

FILE NAME: n:\Structures\37581_Art14.dgn
PLOT: 3/20/2008 3:40AM PM Ko & Associates, P.C.

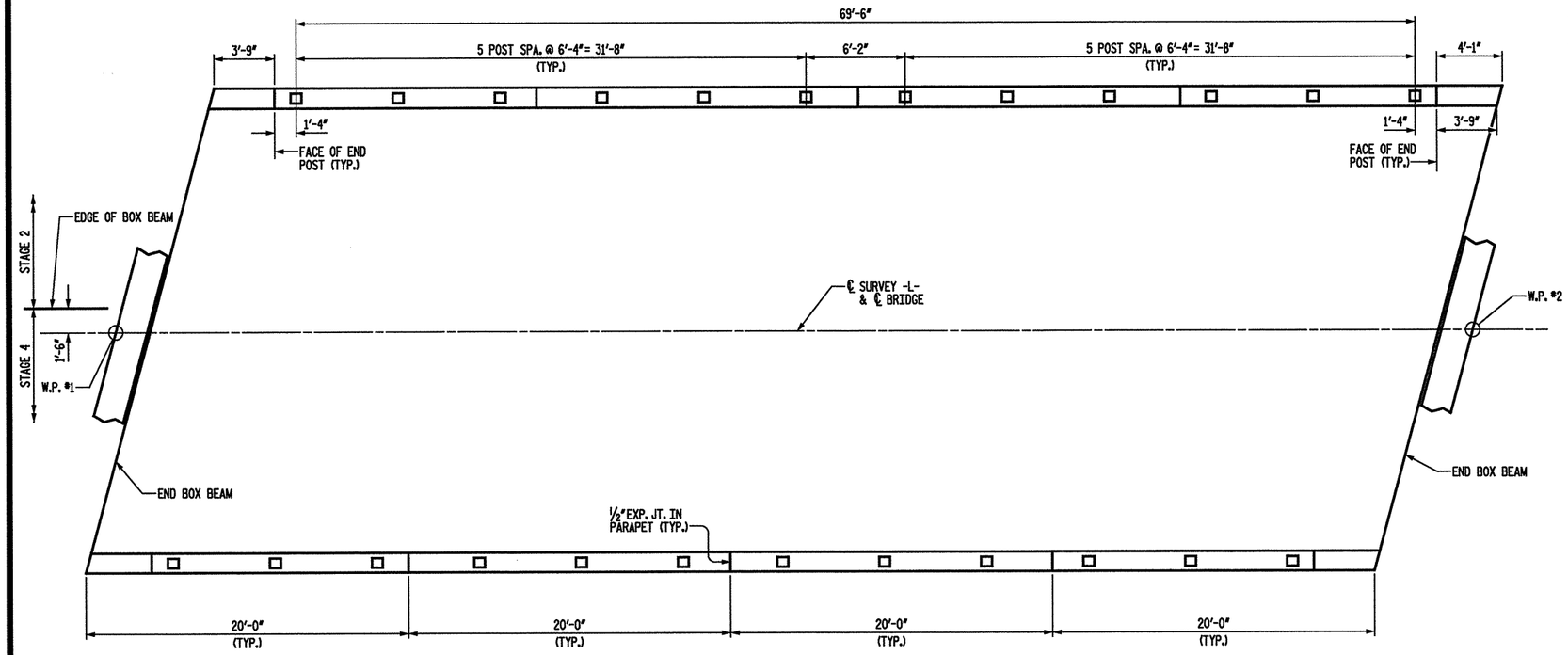

PLAN OF RAIL POST SPACINGS

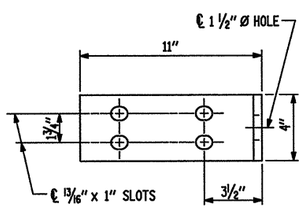

ELEVATION

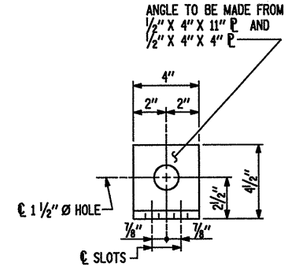

END VIEW (FIX AND EXP.)

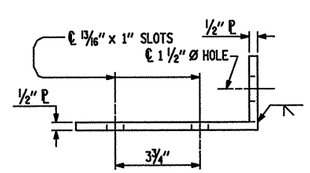

TOP VIEW

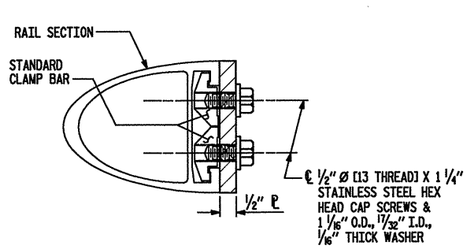

SECTION H-H (FIX)

FIXED

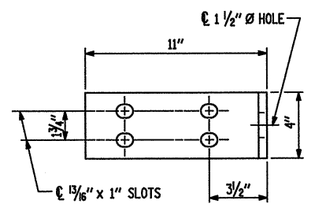

ELEVATION

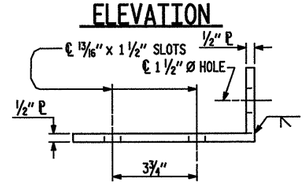

TOP VIEW

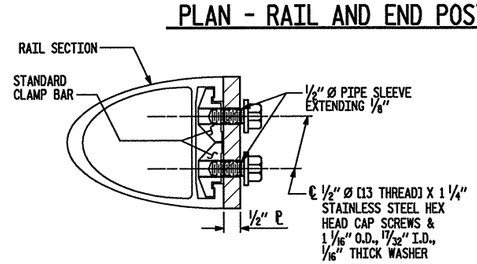

SECTION H-H (EXP.)

EXPANSION

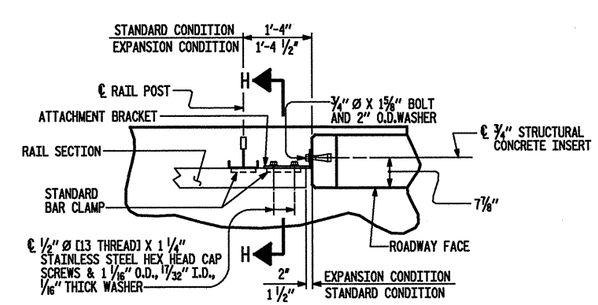

PLAN - RAIL AND END POST

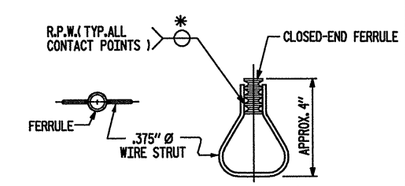

PLAN ELEVATION

STRUCTURAL CONCRETE INSERT

*EACH WELDED ATTACHMENT OF WIRE TO FERRULE SHALL DEVELOP THE TENSILE STRENGTH OF THE WIRE.

NOTES

STRUCTURAL CONCRETE INSERT

THE STRUCTURAL CONCRETE INSERT ASSEMBLY SHALL CONSIST OF THE FOLLOWING COMPONENTS:

A. FERRULES SHALL BE MADE FROM STEEL MEETING THE REQUIREMENTS OF AASHTO M169, GRADE 12L14 AND SHALL HAVE A MINIMUM LENGTH OF THREADS OF 1 1/2".

B. 1 - 3/4" Ø X 1 5/8" BOLT WITH WASHER. BOLT SHALL CONFORM TO THE REQUIREMENTS OF ASTM A307. BOLT AND WASHER SHALL BE GALVANIZED. (AT THE CONTRACTOR'S OPTION, STAINLESS STEEL BOLT AND WASHER MAY BE USED AS AN ALTERNATE FOR THE 3/4" Ø X 1 5/8" GALVANIZED BOLT AND WASHER. THEY SHALL CONFORM TO OR EXCEED THE MECHANICAL REQUIREMENTS OF ASTM A307. THE USE OF THIS ALTERNATE SHALL BE APPROVED BY THE ENGINEER.)

C. WIRE STRUT SHOWN IN THE CONCRETE INSERT ASSEMBLY DETAIL IS THE MINIMUM ALLOWABLE SIZE AND SHALL HAVE A MINIMUM TENSILE STRENGTH OF 100,000 PSI. AS AN OPTION, A 7/16" Ø WIRE STRUT WITH A MINIMUM TENSILE STRENGTH OF 90,000 PSI IS ACCEPTABLE.

NOTES

METAL RAIL TO END POST CONNECTION

THE METAL RAIL TO END POST CONNECTION SHALL CONSIST OF THE FOLLOWING COMPONENTS:

A. 1/2" PLATES SHALL CONFORM TO AASHTO M270 GRADE 36 AND SHALL BE GALVANIZED AFTER FABRICATION.

B. 3/4" STRUCTURAL CONCRETE INSERT SHALL HAVE A WORKING LOAD SHEAR CAPACITY OF 4800 LBS. THE FERRULES SHALL ENGAGE A 3/4"Ø x 1 5/8" BOLT WITH 2" O.D. WASHER IN PLACE. THE 3/4"Ø x 1 5/8" BOLT SHALL HAVE N.C. THREADS.

C. CAP SCREWS FOR RAIL ATTACHMENT TO ANGLE SHALL CONFORM TO THE REQUIREMENTS OF ASTM F593 ALLOY 305 STAINLESS STEEL. CAP SCREWS TO BE CENTERED IN SLOTS AT 60°F.

D. STANDARD CLAMP BARS (SEE 2 BAR METAL RAIL, SHEET NO. 18).

E. 1/2" Ø PIPE SLEEVES (IF REQUIRED) TO BE GALVANIZED.

THE COST OF THE STANDARD CLAMP BARS AND CAP SCREWS USED IN THE METAL RAIL TO END POST CONNECTION SHALL BE INCLUDED IN THE UNIT CONTRACT PRICE BID FOR LINEAR FEET OF "2 BAR METAL RAIL."

THE 3/4" STRUCTURAL CONCRETE INSERT WITH BOLT SHALL BE ASSEMBLED IN THE SHOP.

THE COST OF THE 3/4" STRUCTURAL CONCRETE INSERT ASSEMBLY, AND THE 1/2" PLATES COMPLETE IN PLACE SHALL BE INCLUDED IN THE VARIOUS PAY ITEMS.

THE CONTRACTOR, AT HIS OPTION, MAY USE AN ADHESIVE BONDING SYSTEM IN LIEU OF THE STRUCTURAL CONCRETE INSERT EMBEDDED IN THE END POST. IF THE ADHESIVE BONDING SYSTEM IS USED, THE 3/4" Ø x 1 5/8" BOLT WITH WASHER SHALL BE REPLACED WITH A 3/4"Ø x 6 1/2" BOLT AND 2" O.D. WASHER. ALL SPECIFICATIONS THAT APPLY TO THE 3/4" Ø x 1 5/8" BOLT SHALL APPLY TO THE 3/4"Ø x 6 1/2" BOLT. SEE SPECIAL PROVISIONS FOR ADHESIVELY ANCHORED ANCHOR BOLTS OR DOWELS. FIELD TESTING OF THE ADHESIVE BONDING SYSTEM IS NOT REQUIRED.

PROJECT NO. 37581
COUNTY: BUNCOMBE
STATION: 15+37.40
REPLACES BRIDGE NO. 193

STATE OF NORTH CAROLINA
DEPARTMENT OF TRANSPORTATION
RALEIGH
STANDARD
RAIL POST SPACINGS
AND
END OF RAIL DETAILS
FOR ONE OR TWO BAR METAL RAILS
DECEMBER 1988

DETAILS FOR ATTACHING METAL RAIL TO END POST

NOT TO SCALE

DRAWN BY: C.L. SMITH DATE: NOV. 2005
CHECKED BY: J.E. MONDOLFI DATE: NOV. 2005

DRAWN BY : FCJ 1/88	REV. 8/16/99	RWW/LES
CHECKED BY : CRK 3/89	REV. 10/17/00	LES/RDR
	REV. 5/7/03	RWW/JTE

KO & ASSOCIATES, P.C.
Consulting Engineers
5121 KINGDOM WAY, SUITE 100 RALEIGH, N.C. 27607
(919) 851-6066

NORTH CAROLINA PROFESSIONAL SEAL 20659 JOHN E. MONDOLFI
3-20-08

REVISIONS						SHEET NO.
NO.	BY	DATE	NO.	BY	DATE	15
1			3			TOTAL SHEETS
2			4			53

FILE NAME: r:\Structures\170_sht15.dgn
PLOT: 3/18/2008 3:48:21 PM Ko & Associates, P.C.

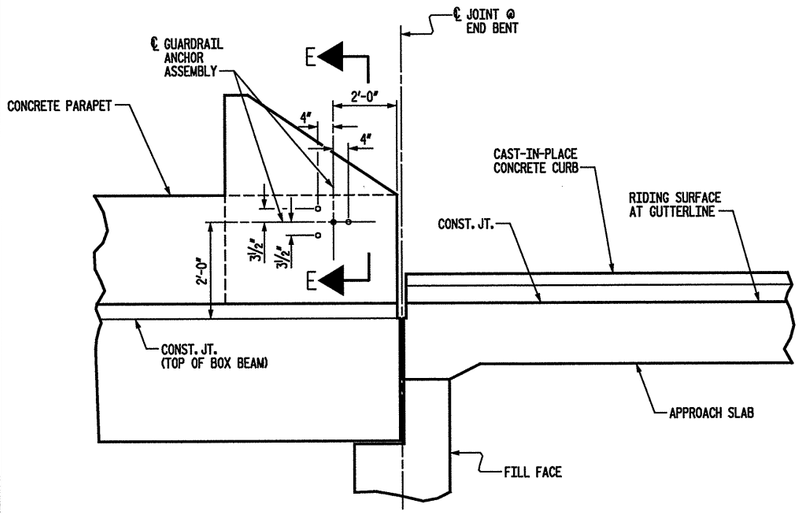

ELEVATION

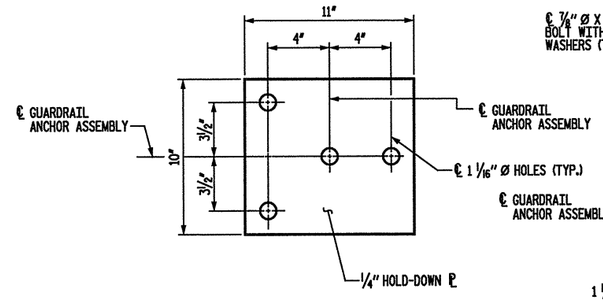

PLAN

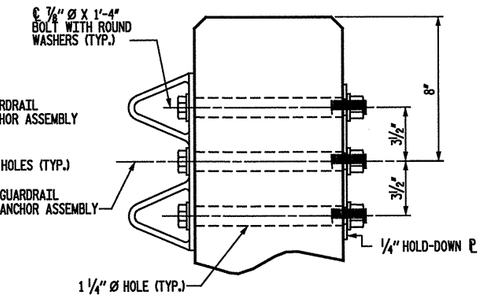

SECTION E-E

GUARDRAIL ANCHOR ASSEMBLY DETAILS

NOTES

THE GUARDRAIL ANCHOR ASSEMBLY SHALL CONSIST OF A ¼" HOLD DOWN PLATE AND 4 - ⅞" Ø BOLTS WITH NUTS AND WASHERS.

THE HOLD-DOWN PLATE SHALL CONFORM TO AASHTO M270 GRADE 36. AFTER FABRICATION, THE HOLD-DOWN PLATE SHALL BE HOT-DIP GALVANIZED IN ACCORDANCE WITH AASHTO M111.

BOLTS SHALL CONFORM TO THE REQUIREMENTS OF ASTM A307 AND NUTS SHALL CONFORM TO THE REQUIREMENTS OF AASHTO M291. BOLTS, NUTS AND WASHERS SHALL BE GALVANIZED. AT THE CONTRACTOR'S OPTION, STAINLESS STEEL BOLTS, NUTS AND WASHERS MAY BE USED AS AN ALTERNATE FOR THE ⅞" Ø GALVANIZED BOLTS, NUTS AND WASHERS. THEY SHALL CONFORM TO OR EXCEED THE MECHANICAL REQUIREMENTS OF ASTM A307. THE USE OF THIS ALTERNATE SHALL BE APPROVED BY THE ENGINEER.

AFTER INSTALLATION, THE EXPOSED THREAD OF THE BOLT SHALL BE BURRED WITH A SHARP POINTED TOOL.

THE COST OF THE GUARDRAIL ANCHOR ASSEMBLIES WITH BOLTS, NUTS AND WASHERS COMPLETE IN PLACE, SHALL BE INCLUDED IN THE LUMP SUM CONTRACT PRICE BID FOR GUARDRAIL ANCHOR TYPE III.

THE 1 ¼" Ø HOLES SHALL BE FORMED OR DRILLED WITH A CORE BIT. IMPACT TOOLS WILL NOT BE PERMITTED. ANY CONCRETE DAMAGED BY THIS WORK SHALL BE REPAIRED TO THE SATISFACTION OF THE ENGINEER.

THE REINFORCING STEEL IN PARAPETS AND END POSTS SHALL BE EPOXY COATED.

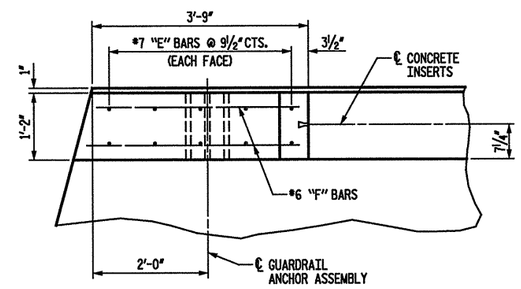

PLAN OF END POST

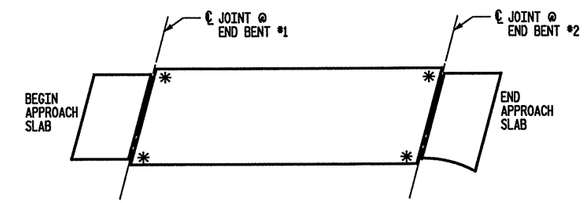

SKETCH SHOWING POINTS OF ATTACHMENT

*INDICATES POINTS OF ATTACHMENT

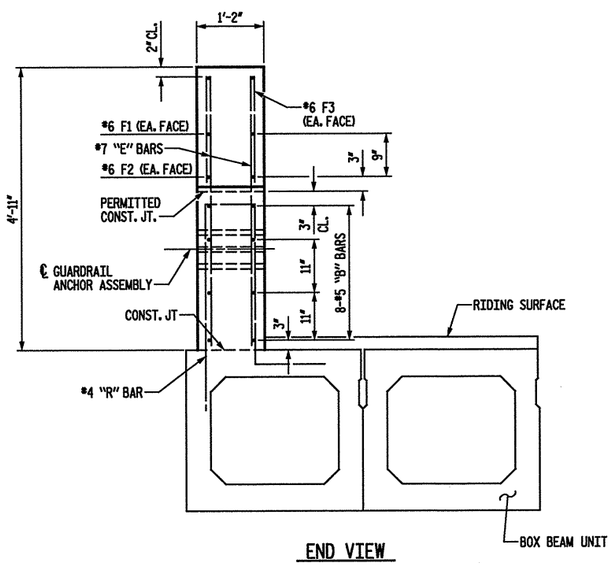

END VIEW

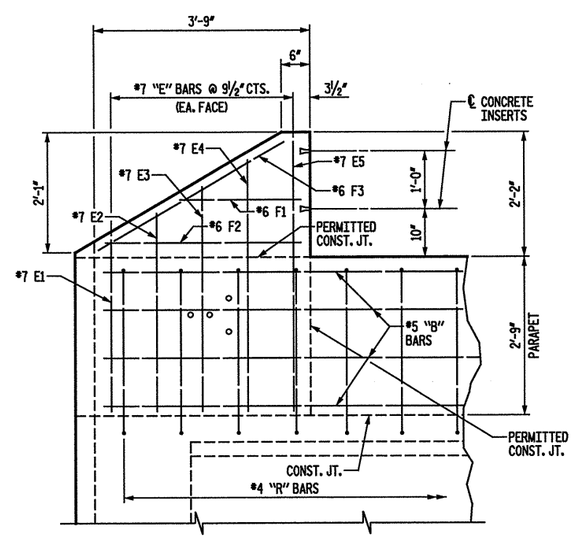

ELEVATION

PARAPET AND END POST FOR TWO BAR RAIL

NOT TO SCALE

PROJECT NO. 37581
COUNTY: BUNCOMBE
STATION: 15+37.40
REPLACES BRIDGE NO. 193

STATE OF NORTH CAROLINA
DEPARTMENT OF TRANSPORTATION
RALEIGH

PARAPET, END POST, AND GUARDRAIL ANCHORAGE DETAILS

KO & ASSOCIATES, P.C.
Consulting Engineers
5121 KINGDOM WAY, SUITE 100 RALEIGH, N.C. 27607
(919) 851-6066

NORTH CAROLINA PROFESSIONAL SEAL ENGINEER JAMES E. MONDOLFI
3-20-08

REVISIONS						SHEET NO.
NO.	BY	DATE	NO.	BY	DATE	16
1			3			TOTAL SHEETS
2			4			53

DRAWN BY: C.L. SMITH DATE: NOV. 2005
CHECKED BY: J.E. MONDOLFI DATE: NOV. 2005

FILE NAME: n:\Structure\VR\Arttl.dgn
PLOT: 3/19/2008 3:07:07 PM Ko & Associates, P.C.

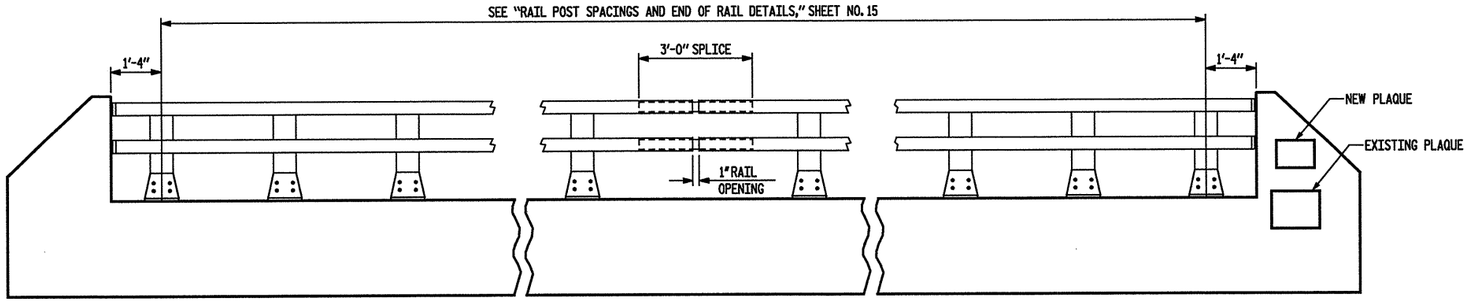

ELEVATION

NOTE : FOR ATTACHMENT OF METAL RAIL TO END POST, SEE SHEET NO. 15.

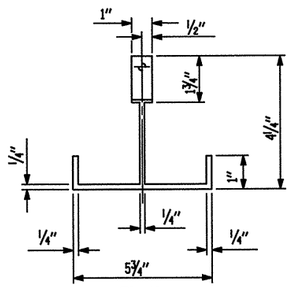

PLAN

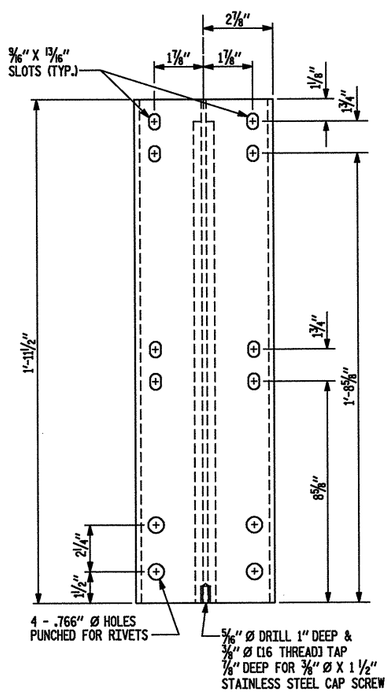

FRONT ELEVATION

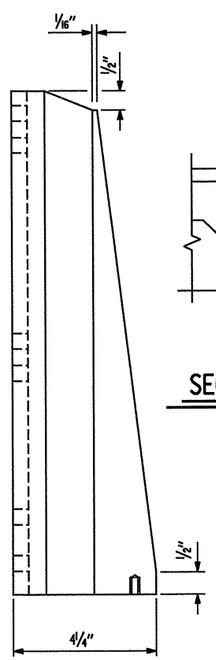

SIDE ELEVATION

DETAILS OF POST

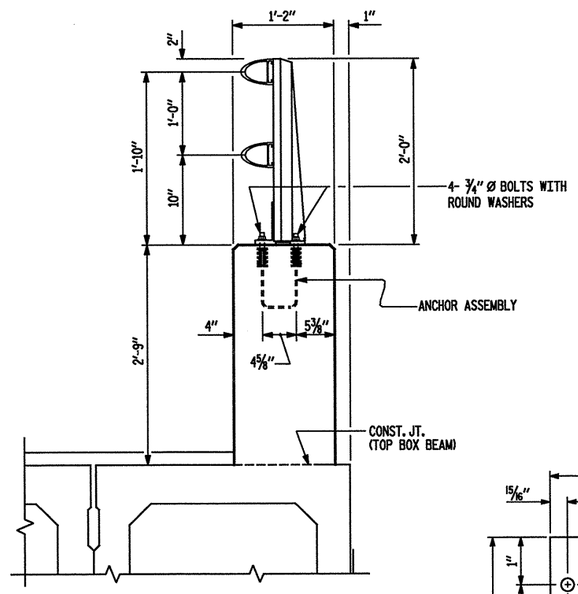

SECTION THRU PARAPET AND RAIL

FLAT CREEK BRIDGE
BUNCOMBE COUNTY
STATE PROJECT NO 800
BUILT BY
NORTH CARILINA
STATE HIGHWAY COMMISSION
1924

EXISTING PLAQUE

BRIDGE NO 193
YEAR 2008
NCDOT
EASTERN BRANCH
OF DIXIE HIGHWAY

7" ±

10" ±

NEW PLAQUE

PLAQUE DETAILS

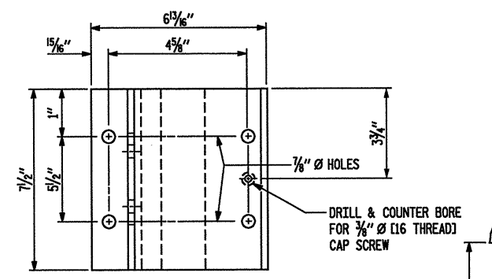

PLAN

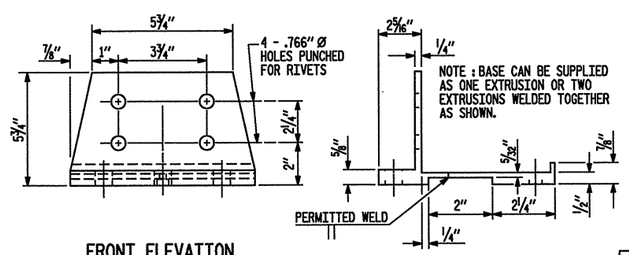

FRONT ELEVATION

SIDE ELEVATION

POST BASE DETAILS

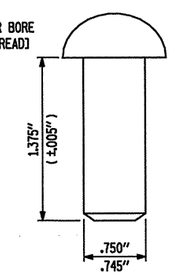

RIVET DETAIL

NOTES

AT THE CONTRACTOR'S OPTION, METAL RAIL MAY BE EITHER ALUMINUM OR GALVANIZED STEEL IN ACCORDANCE WITH THE REQUIREMENTS OF THE GENERAL NOTES AND THE FOLLOWING SPECIFICATIONS FOR THE ALTERNATE MATERIALS; HOWEVER, THE CONTRACTOR WILL BE REQUIRED TO USE THE SAME RAIL MATERIAL ON ALL STRUCTURES ON THE PROJECT FOR WHICH METAL RAIL IS DESIGNATED.

ALUMINUM RAILS

MATERIAL FOR POSTS, BASES AND RAILS, EXPANSION BARS AND CLAMP BARS SHALL BE ASTM B-221 ALLOY 6061-T6.

MATERIAL FOR RIVETS SHALL BE ASTM B316 ALLOY 6061-T6. RIVETS SHALL BE STANDARD BUTTON HEAD AND CONE POINT COLD DRIVEN AS PER DRAWING.

THE BASE OF RAIL POSTS, OR ANY OTHER ALUMINUM SURFACE IN CONTACT WITH CONCRETE SHALL BE THOROUGHLY COATED WITH AN ALUMINUM IMPREGNATED CAULKING COMPOUND OF APPROVED QUALITY.

MATERIAL FOR SHIMS TO BE ASTM B209 ALLOY 6061-T6.

GALVANIZED STEEL RAILS

MATERIAL AND GALVANIZING ARE TO CONFORM TO THE FOLLOWING SPECIFICATIONS:

POST, POST BASES, RAILS, EXPANSION BARS AND CLAMP BARS: AASHTO M270 GRADE 36 STRUCTURAL STEEL - GALVANIZED TO AASHTO M111.

RIVETS: RIVETS SHALL MEET THE REQUIREMENTS OF ASTM A502 FOR GRADE 1 RIVETS.

THE CUT ENDS OF GALVANIZED STEEL RAILING, AFTER GRINDING SMOOTH SHALL BE GIVEN TWO COATS OF ZINC RICH PAINT MEETING THE REQUIREMENTS OF FEDERAL SPECIFICATION MIL-P-26915 USAF TYPE 1, OR OF FEDERAL SPECIFICATIONS TT-P-641.

SHIMS: SHIMS SHALL MEET THE REQUIREMENTS OF ASTM A570 FOR GRADE 33 OR A611 FOR GRADE C AND SHALL BE GALVANIZED IN ACCORDANCE WITH AASHTO M111.

RAIL CAPS: RAIL CAPS SHALL MEET THE REQUIREMENTS OF ASTM A570 FOR GRADE 33 OR A611 FOR GRADE C AND SHALL BE GALVANIZED IN ACCORDANCE WITH AASHTO M111.

GENERAL NOTES

RAILING SHALL BE CONTINUOUS FROM END POST TO END POST OF BRIDGE. EACH JOINT IN RAIL LENGTH SHALL BE SPLICED AS DETAILED. PANEL LENGTHS OF RAIL SHALL BE ATTACHED TO A MINIMUM OF THREE POSTS.

FOR END OF RAIL TO CLEAR FACE OF CONCRETE END POST DIMENSION, SEE SHEET NO. 15.

CAP SCREWS SHALL BE ASTM F593 ALLOY 305 STAINLESS STEEL. WASHERS SHALL MEET THE REQUIREMENTS OF ASTM F844 EXCEPT THEY SHALL BE MADE FROM ALLOY 304 STAINLESS STEEL.

CERTIFIED MILL REPORTS ARE REQUIRED FOR RAILS AND POSTS. SHOP INSPECTION IS NOT REQUIRED.

METAL RAIL POSTS SHALL BE SET NORMAL TO PARAPET GRADE.

METHOD OF MEASUREMENT FOR METAL RAILS: FOR LENGTH OF METAL RAILS TO BE PAID FOR, SEE THE STANDARD SPECIFICATIONS.

CURVED RAIL USAGE: WHERE RAILS ARE TO BE USED ON BRIDGES ON HORIZONTAL AND/OR VERTICAL CURVATURE THE CONTRACTOR MAY, AT HIS OPTION, HAVE THE REQUIRED CURVATURE IN THE RAIL FORMED IN THE SHOP OR IN THE FIELD. IN EITHER EVENT, THE RAIL SHALL CONFORM WITHOUT BUCKLING OR KINKING TO THE REQUIRED CURVATURE IN A UNIFORM MANNER ACCEPTABLE TO THE ENGINEER.

TO INSURE FUTURE IDENTIFICATION OF THE FABRICATOR, A PERMANENT IDENTIFYING MARK SHALL BE PLACED ON EACH POST. THE METHOD OF MARKING AND LOCATION SHALL BE SUCH THAT IT DOES NOT DETRACT FROM THE APPEARANCE OF THE POST, BUT REMAINS VISIBLE AFTER RAIL PLACEMENT.

SHIMS SHALL BE USED AS NECESSARY FOR POST ALIGNMENT.

ALLOY 6351-T5 MAY BE SUBSTITUTED FOR ALLOY 6061-T6 WHERE APPLICABLE.

MINOR VARIATIONS IN DETAILS OF METAL RAIL WILL BE CONSIDERED. DETAILS OF SUCH VARIATIONS, IF DESIRED, SHALL BE SUBMITTED FOR APPROVAL.

PAY LENGTH : 144.00 LIN. FT. (2 BAR METAL RAIL)
160.00 LIN. FT. (CONCRETE PARAPET)

PROJECT NO. 37581
COUNTY: BUNCOMBE
STATION: 15+37.40
REPLACES BRIDGE NO. 193

STATE OF NORTH CAROLINA
DEPARTMENT OF TRANSPORTATION
RALEIGH
STANDARD

2 BAR METAL RAIL

JUNE 1994

REVISIONS						SHEET NO.
NO.	BY	DATE	NO.	BY	DATE	17
1			3			TOTAL SHEETS
2			4			53

DRAWN BY: C.L. SMITH DATE: NOV. 2005
CHECKED BY: J.E. MONDOLFI DATE: NOV. 2005

DRAWN BY :	EEM	6/94	REV. 8/16/99	RWW/LES
CHECKED BY :	RGW	6/94	REV. 10/17/00	LES/RDR
			REV. 5/7/03	RWW/JTE

NOT TO SCALE

KO & ASSOCIATES, P.C.
Consulting Engineers
5121 KINGDOM WAY, SUITE 300 RALEIGH, N.C. 27607
(919) 851-6066

NORTH CAROLINA PROFESSIONAL SEAL 19402 JAMES E. MONDOLFI
3-20-08

FILE NAME: n:\Structures\V8\Lib\07.dgn
PLOT: 3/19/2008 3:07:08 PM Ko & Associates, P.C.

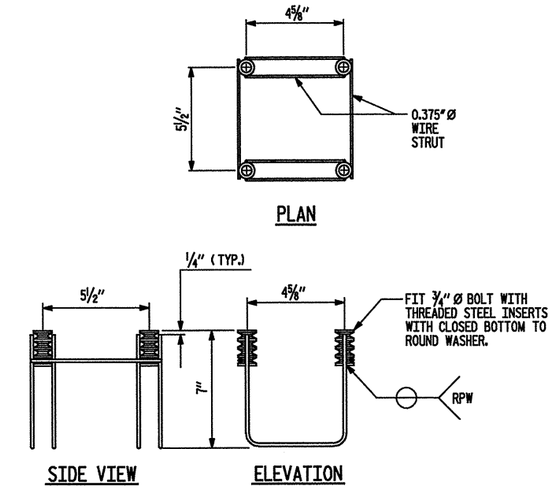

MINIMUM LENGTH OF THREADS IN INSERT (FERRULE): 1 3/4"

4-BOLT METAL RAIL ANCHOR ASSEMBLY

(24 ASSEMBLIES REQUIRED)

NOTES

STRUCTURAL CONCRETE ANCHOR ASSEMBLY

THE STRUCTURAL CONCRETE ANCHOR ASSEMBLY SHALL CONSIST OF THE FOLLOWING COMPONENTS :

A. FERRULES SHALL BE MADE FROM STEEL MEETING THE REQUIREMENTS OF AASHTO M169, GRADE 12L14 AND SHALL HAVE A MINIMUM LENGTH OF THREADS OF 2" FOR 3/4" FERRULES.

B. 4 - 3/4" Ø X 2 1/2" BOLTS WITH WASHERS. BOLTS SHALL CONFORM TO THE REQUIREMENTS OF ASTM A307. BOLTS AND WASHERS SHALL BE GALVANIZED. AT THE CONTRACTOR'S OPTION, STAINLESS STEEL BOLTS AND WASHERS MAY BE USED AS AN ALTERNATE FOR THE 3/4" Ø X 2 1/2" GALVANIZED BOLTS AND WASHERS. THEY SHALL CONFORM TO OR EXCEED THE MECHANICAL REQUIREMENTS OF ASTM A307. THE USE OF THIS ALTERNATE SHALL BE APPROVED BY THE ENGINEER.

C. WIRE STRUT SHOWN IN THE CONCRETE ANCHOR ASSEMBLY DETAIL IS THE MINIMUM ALLOWABLE SIZE AND SHALL HAVE A MINIMUM TENSILE STRENGTH OF 100,000 PSI. AS AN OPTION, A 7/16" Ø WIRE STRUT WITH A MINIMUM TENSILE STRENGTH OF 90,000 PSI IS ACCEPTABLE.

D. THE METAL RAIL ANCHOR ASSEMBLIES TO BE HOT DIPPED GALVANIZED TO CONFORM TO REQUIREMENTS OF AASHTO M111.

E. THE COST OF THE METAL RAIL ANCHOR ASSEMBLY WITH BOLTS AND WASHERS COMPLETE IN PLACE SHALL BE INCLUDED IN THE PRICE BID FOR LINEAR FEET OF METAL RAIL.

F. BOLTS TO BE TIGHTENED ONE-HALF TURN WITH A WRENCH FROM A FINGER-TIGHT POSITION.

THE CONTRACTOR, AT HIS OPTION, MAY USE ADHESIVELY ANCHORED ANCHOR BOLTS IN LIEU OF THE METAL RAIL ANCHOR ASSEMBLY. THE YIELD LOAD OF THE 3/4" Ø BOLT IS 10 KIPS. FIELD TESTING OF THE ADHESIVE BONDING SYSTEM IS REQUIRED. SEE SPECIAL PROVISIONS FOR "ADHESIVELY ANCHORED ANCHOR BOLTS OR DOWELS".

WHEN ADHESIVELY ANCHORED ANCHOR BOLTS ARE USED, BOLTS SHALL MEET THE REQUIREMENTS OF ASTM F593 ALLOY 304 STAINLESS STEEL WITH MINIMUM 75,000 PSI ULTIMATE STRENGTH. NUTS SHALL MEET THE REQUIREMENTS OF ASTM F594 ALLOY 304 STAINLESS STEEL AND WASHERS SHALL MEET THE REQUIREMENTS OF ASTM F844 EXCEPT THEY SHALL BE MADE FROM ALLOY 304 STAINLESS STEEL.

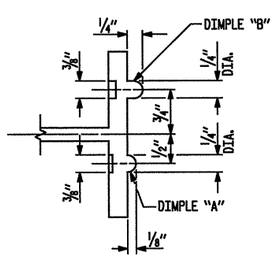

SECTION B - B

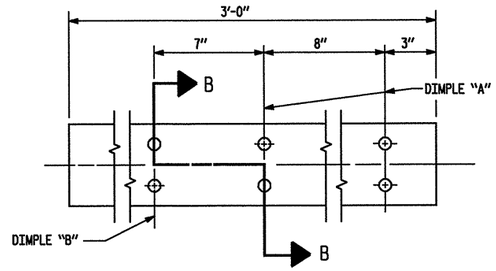

EXPANSION BAR DETAILS

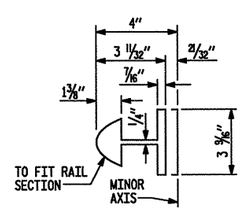

BAR SECTION

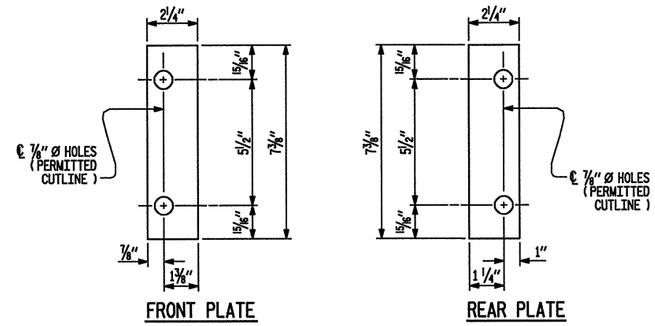

SHIM DETAILS

NOTE :
SHIMS MAY BE CUT ALONG PERMITTED CUTLINE OR SLOTTED TO EDGE OF PLATE TO FACILITATE PLACEMENT.

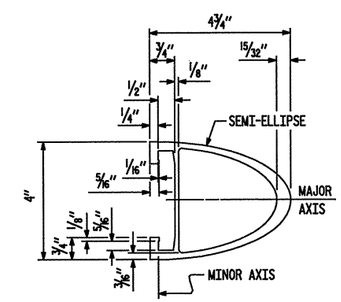

RAIL SECTION

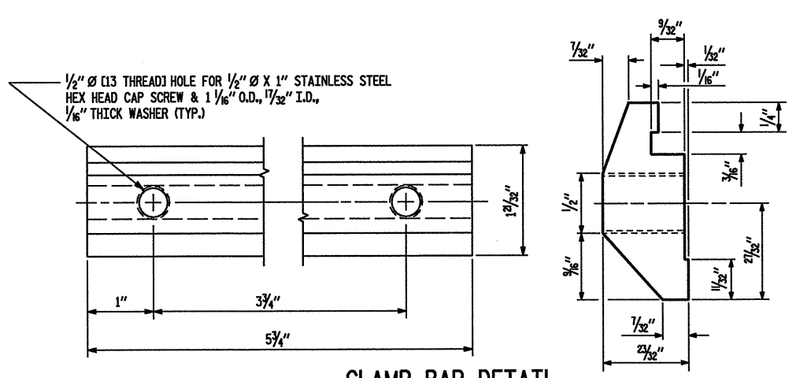

CLAMP BAR DETAIL

(4 REQUIRED PER POST)

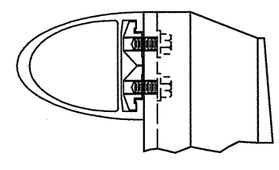

CLAMP ASSEMBLY

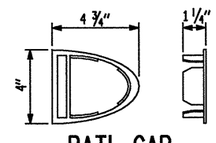

RAIL CAP

PROJECT NO. 37581
COUNTY: BUNCOMBE
STATION: 15+37.40
REPLACES BRIDGE NO. 193

STATE OF NORTH CAROLINA
DEPARTMENT OF TRANSPORTATION
RALEIGH
STANDARD

2 BAR METAL RAIL

JUNE 1994

REVISIONS						SHEET NO.
NO.	BY	DATE	NO.	BY	DATE	18
1			3			TOTAL SHEETS
2			4			53

DRAWN BY: C.L. SMITH DATE: NOV. 2005
CHECKED BY: J.E. MONDOLFI DATE: NOV. 2005

DRAWN BY :	EEM	6/94	REV. 2/6/97	EEM/RGW
CHECKED BY :	RGW	6/94	REV. 8/16/99	MAB/LES
			REV. 5/7/03	RWW/JTE

KO & ASSOCIATES, P.C.
Consulting Engineers
5121 KINGDOM WAY, SUITE 100 RALEIGH, N.C. 27607
(919) 851-6066

NORTH CAROLINA PROFESSIONAL SEAL ENGINEER JAMES E. MONDOLFI
3-20-08

NOT TO SCALE

FILE NAME: n:\Structures\1193_sht18.dgn
PLOT: 3/20/2008 Sub0008 PM Ko & Associates, P.C.

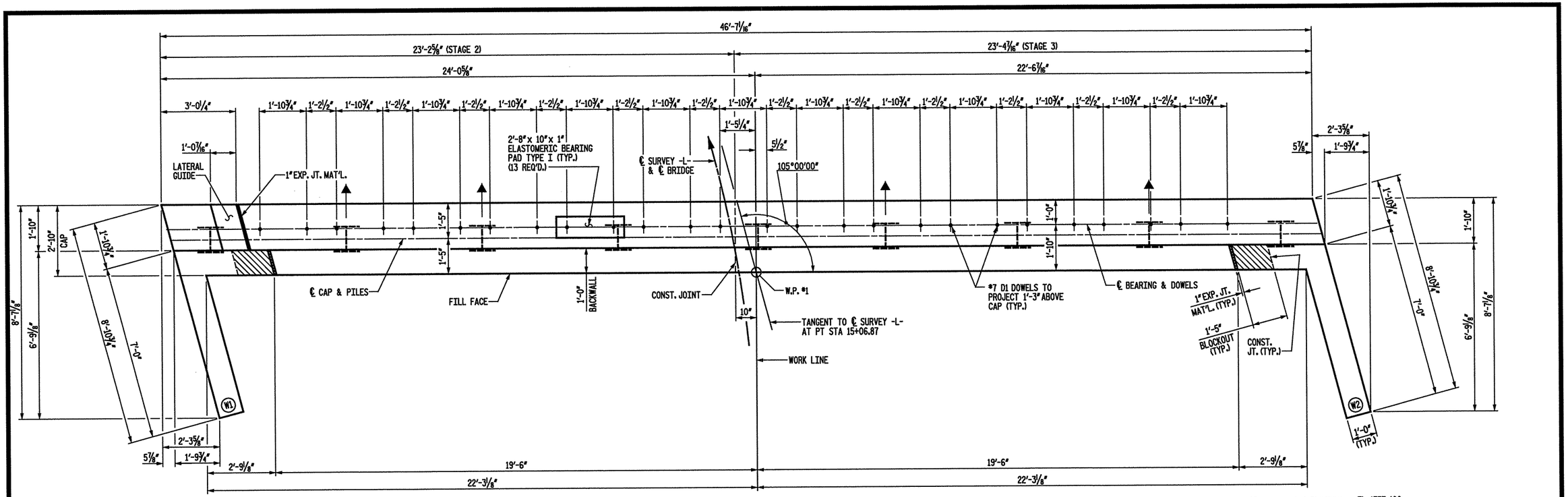

PLAN

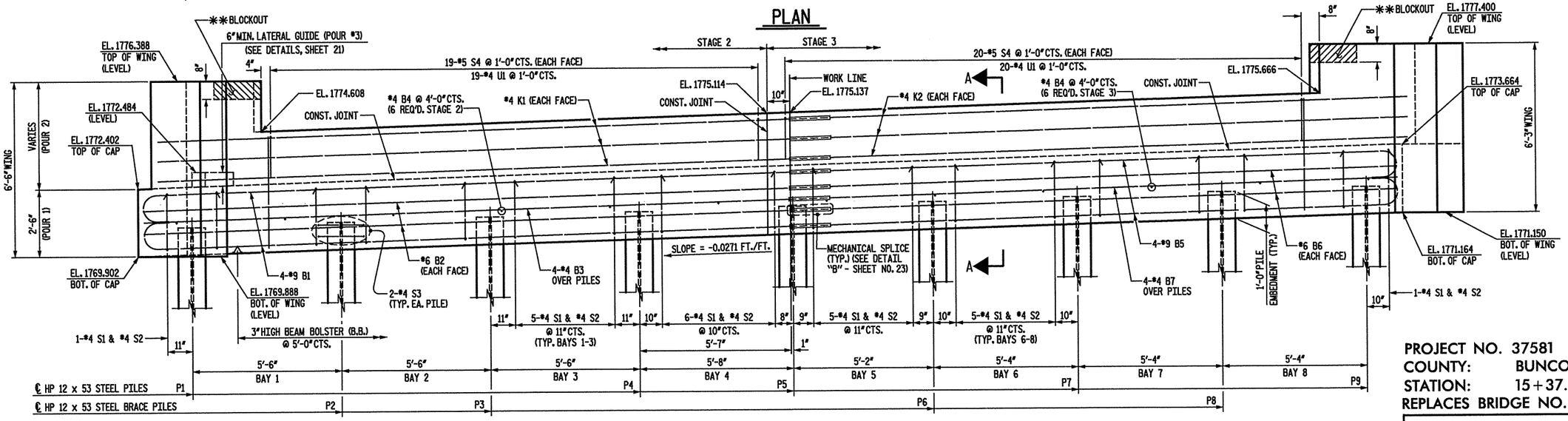

ELEVATION

**THE CONCRETE IN THIS REGION SHALL BE POURED AFTER THE PARAPET IS CAST IF SLIP FORMING IS USED.

TOP OF PILE ELEVATIONS	
PILE	ELEVATION
P1	1770.969
P2	1771.118
P3	1771.267
P4	1771.416
P5	1771.569
P6	1771.709
P7	1771.854
P8	1771.998
P9	1772.143

NOTES:

STIRRUPS IN CAP MAY BE SHIFTED SLIGHTLY AS NECESSARY TO CLEAR DOWELS AND TO MAINTAIN A MINIMUM 2" CLEARANCE AT CONSTRUCTION JOINT.

THE LATERAL GUIDE SHALL NOT BE POURED UNTIL AFTER BOX BEAM UNITS ARE IN PLACE.

THE CONTRACTOR SHALL PROVIDE FOR INSTALLATION OF THE 4" DIAMETER DRAIN PIPE THROUGH THE WING WALL AS REQUIRED FOR REINFORCED BRIDGE APPROACH FILLS, SEE THE ROADWAY PLANS. REINFORCING STEEL IN THE WING WALL MAY BE SHIFTED AS NECESSARY TO CLEAR THE DRAIN PIPE.

INDICATES BRACE PILE (BATTER: 3:12)

NOT TO SCALE

KO & ASSOCIATES, P.C.
Consulting Engineers
5121 KINGDOM WAY, SUITE 100 RALEIGH, N.C. 27607
(919) 851-6066

NORTH CAROLINA PROFESSIONAL SEAL ENGINEER JAMES E. MONDOLFI
3-20-08

PROJECT NO. 37581
COUNTY: BUNCOMBE
STATION: 15+37.40
REPLACES BRIDGE NO. 193

STATE OF NORTH CAROLINA
DEPARTMENT OF TRANSPORTATION
RALEIGH

SUBSTRUCTURE
END BENT NO. 1

REVISIONS						SHEET NO.
NO.	BY	DATE	NO.	BY	DATE	19
1			3			TOTAL SHEETS
2			4			53

DRAWN BY: B.E. LANNING DATE: JUNE 2007
CHECKED BY: J.E. MONDOLFI DATE: JUNE 2007

PLOT: 3/20/2008 3:19:23 PM Ko & Associates, P.C.
FILE NAME: n:\Structures\VSS_ab15_new.dgn

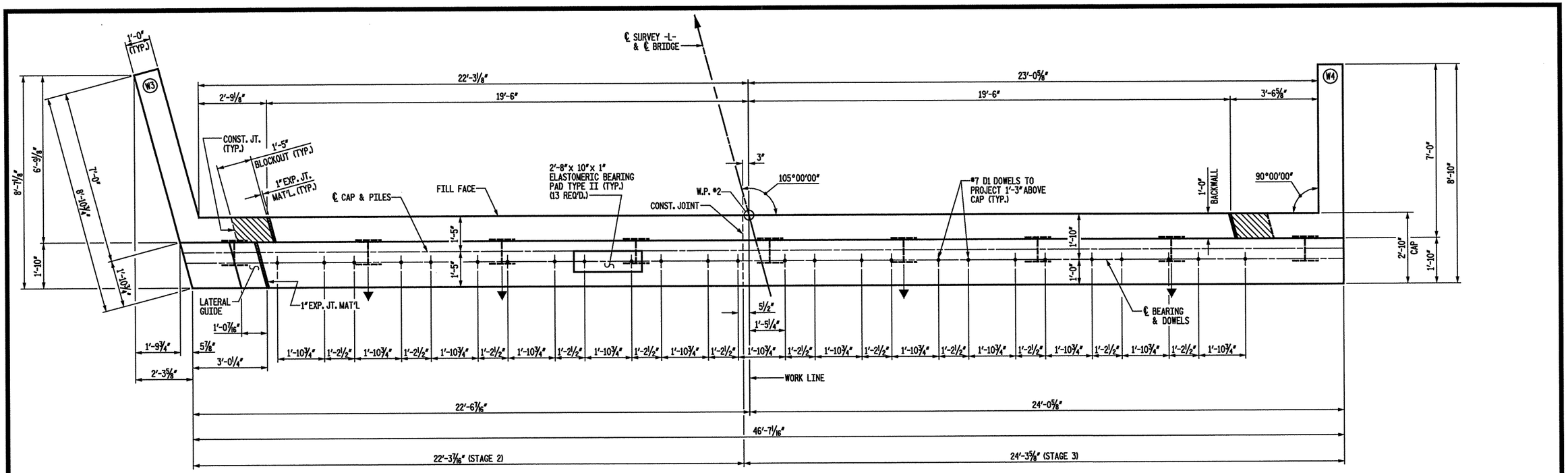

PLAN

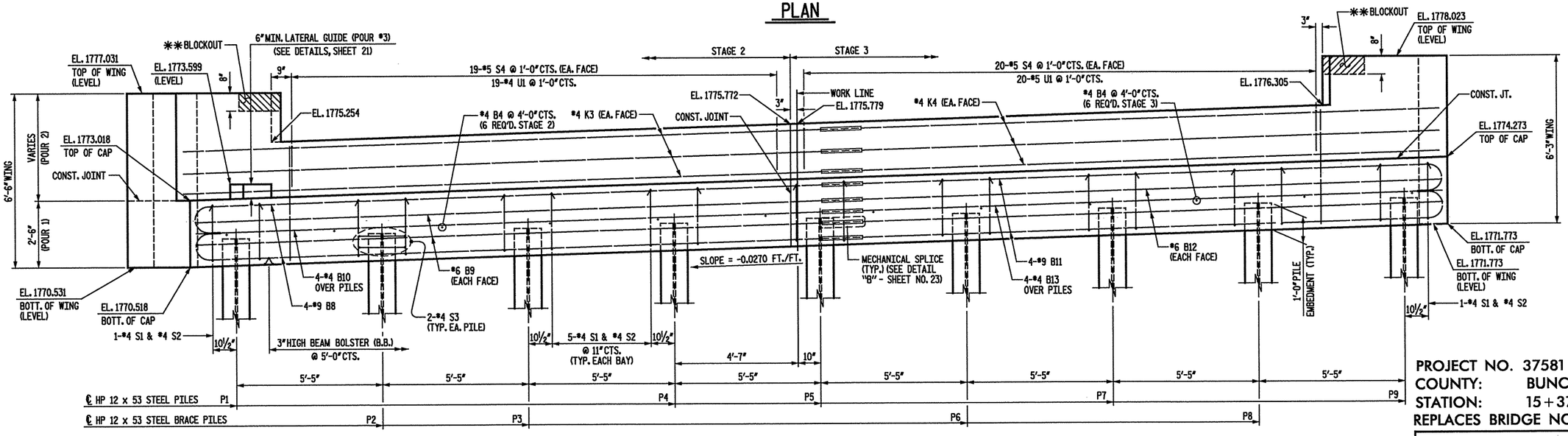

ELEVATION

** THE CONCRETE IN THIS REGION SHALL BE POURED AFTER THE PARAPET IS CAST IF SLIP FORMING IS USED.

TOP OF PILE ELEVATIONS	
PILE	ELEVATION
P1	1771.577
P2	1771.723
P3	1771.869
P4	1772.015
P5	1772.161
P6	1772.307
P7	1772.453
P8	1772.599
P9	1772.745

NOTES:

STIRRUPS IN CAP MAY BE SHIFTED SLIGHTLY AS NECESSARY TO CLEAR DOWELS AND TO MAINTAIN A MINIMUM 2" CLEARANCE AT CONSTRUCTION JOINT.

THE LATERAL GUIDE SHALL NOT BE POURED UNTIL AFTER BOX BEAM UNITS ARE IN PLACE.

THE CONTRACTOR SHALL PROVIDE FOR INSTALLATION OF THE 4" DIAMETER DRAIN PIPE THROUGH THE WING WALL AS REQUIRED FOR REINFORCED BRIDGE APPROACH FILLS, SEE THE ROADWAY PLANS. REINFORCING STEEL IN THE WING WALL MAY BE SHIFTED AS NECESSARY TO CLEAR THE DRAIN PIPE.

INDICATES BRACE PILE (BATTER: 3:12)

NOT TO SCALE

KO & ASSOCIATES, P.C.
Consulting Engineers
5121 KINGDOM WAY, SUITE 100 RALEIGH, N.C. 27606
(919) 851-6066

NORTH CAROLINA PROFESSIONAL SEAL ENGINEER J. E. MONDOLFI
3-20-08

PROJECT NO. 37581
COUNTY: BUNCOMBE
STATION: 15+37.40
REPLACES BRIDGE NO. 193

STATE OF NORTH CAROLINA
DEPARTMENT OF TRANSPORTATION
RALEIGH

SUBSTRUCTURE
END BENT NO. 2

REVISIONS					
NO.	BY	DATE	NO.	BY	DATE
1			3		
2			4		

SHEET NO. 20
TOTAL SHEETS 53

DRAWN BY: B.E. LANNING DATE: JUNE 2007
CHECKED BY: J.E. MONDOLFI DATE: JUNE 2007

FILE NAME: n:\Structures\V15_sh08_end2.dgn
PLOT: 3/20/2008 3:08:05 PM Ko & Associates, P.C.

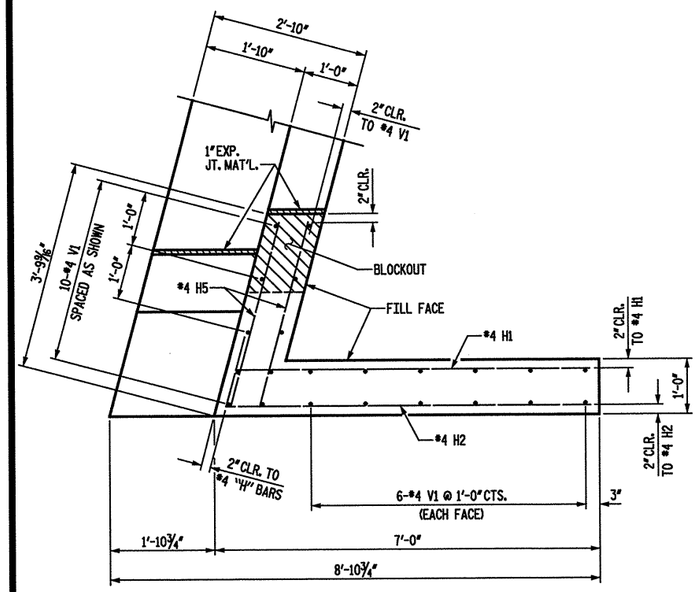

PLAN OF WING - W1

(STAGE 2)

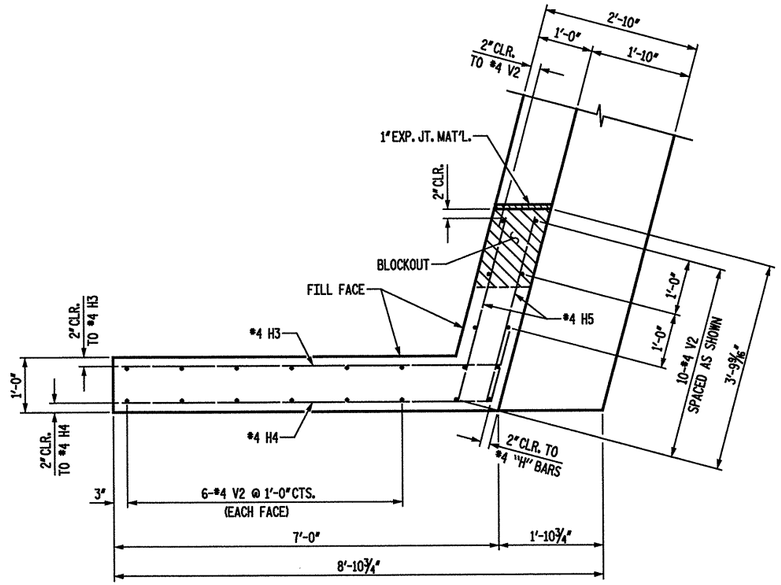

PLAN OF WING - W2

(STAGE 3)

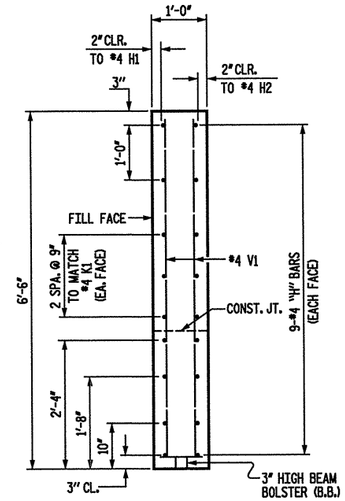

SECTION B-B

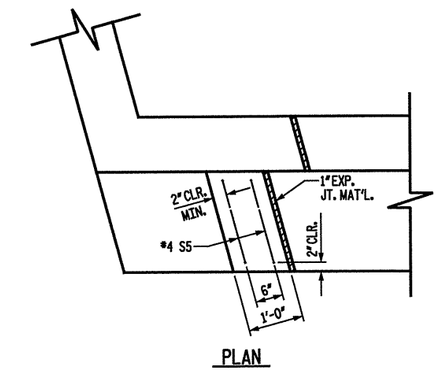

PLAN

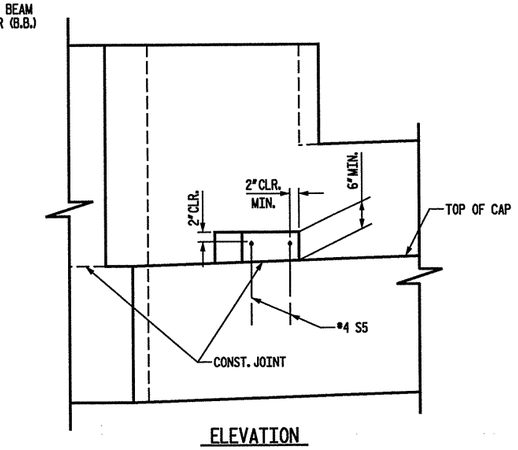

ELEVATION

LATERAL GUIDE DETAILS

(END BENT NO. 1 SHOWN, END BENT NO. 2 SIMILAR)

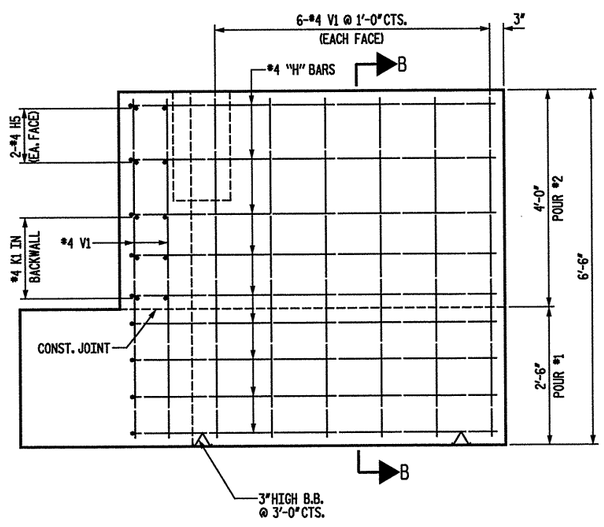

ELEVATION OF WING - W1

(STAGE 2)

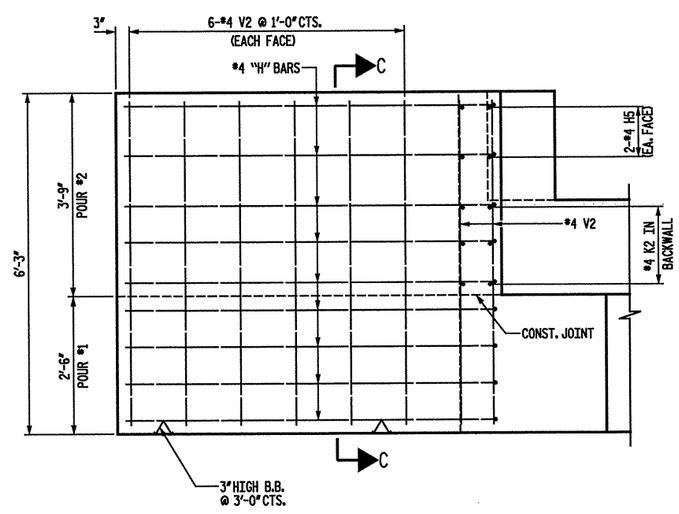

ELEVATION OF WING - W2

(STAGE 3)

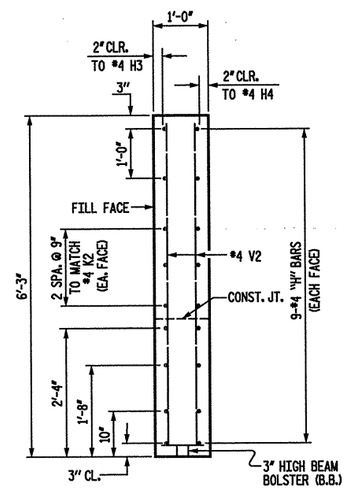

SECTION C-C

PROJECT NO. 37581
COUNTY: BUNCOMBE
STATION: 15+37.40
REPLACES BRIDGE NO. 193

STATE OF NORTH CAROLINA
DEPARTMENT OF TRANSPORTATION
RALEIGH

SUBSTRUCTURE
END BENT NO. 1 DETAILS

REVISIONS						SHEET NO.
NO.	BY	DATE	NO.	BY	DATE	21
1			3			TOTAL SHEETS
2			4			53

KO & ASSOCIATES, P.C.
Consulting Engineers
5121 KINGDOM WAY, SUITE 100 RALEIGH, N.C. 27607
(919) 851-6066

NORTH CAROLINA PROFESSIONAL SEAL ENGINEER JAMES E. MONDOLFI
3-20-08

NOT TO SCALE

DRAWN BY: C.L. SMITH DATE: NOV. 2005
CHECKED BY: B.E. ATKINSON DATE: NOV. 2005

FILE NAME: n:\Structures\193_sh21.dgn
PLOT: 3/20/2008 3:07:09 PM Ko & Associates, P.C.

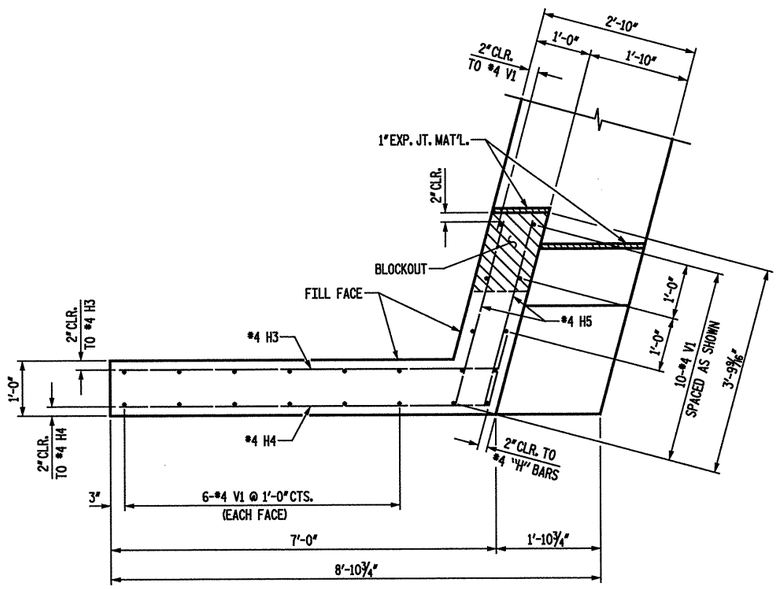

PLAN OF WING - W3

(STAGE 2)

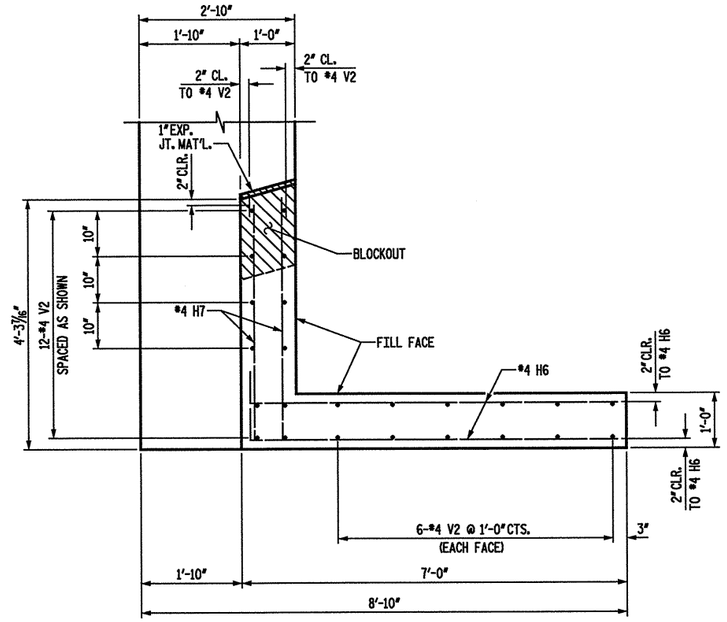

PLAN OF WING - W4

(STAGE 3)

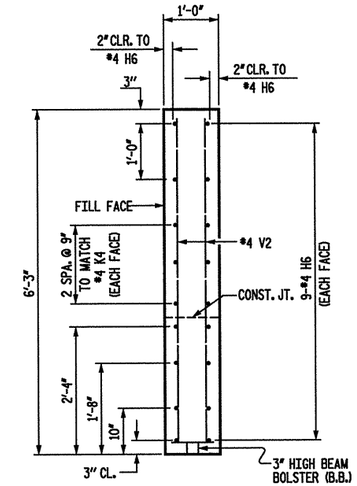

SECTION B-B

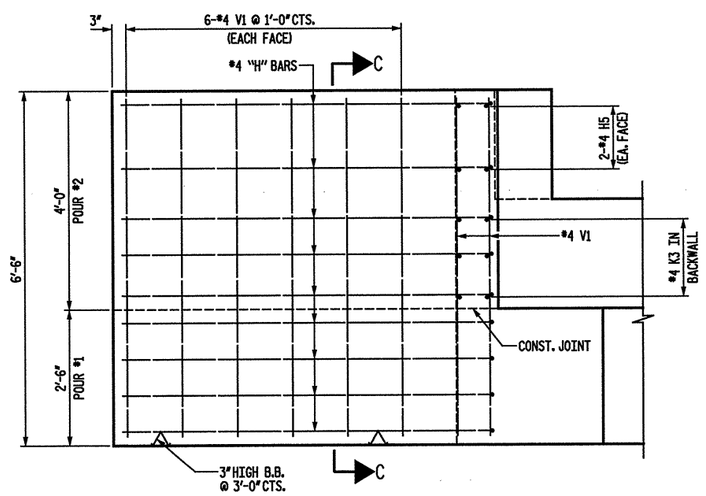

ELEVATION OF WING - W3

(STAGE 2)

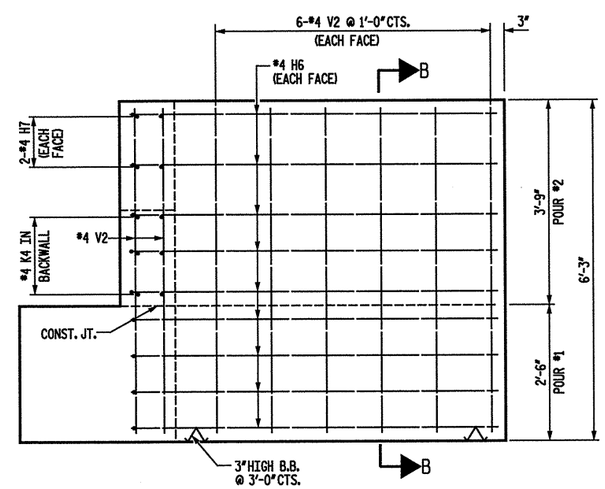

ELEVATION OF WING - W4

(STAGE 3)

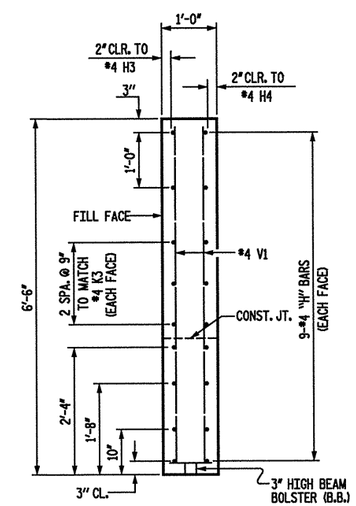

SECTION C-C

PROJECT NO. 37581
COUNTY: BUNCOMBE
STATION: 15+37.40
REPLACES BRIDGE NO. 193

STATE OF NORTH CAROLINA
DEPARTMENT OF TRANSPORTATION
RALEIGH

SUBSTRUCTURE
END BENT NO. 2 DETAILS

NOT TO SCALE

KO & ASSOCIATES, P.C.
Consulting Engineers
5121 KINGDOM WAY, SUITE 100 RALEIGH, N.C. 27607
(919) 851-6066

NORTH CAROLINA PROFESSIONAL SEAL ENGINEER JAMES E. MONDOLEK
9-20-08

REVISIONS						SHEET NO.
NO.	BY	DATE	NO.	BY	DATE	22
1			3			TOTAL SHEETS
2			4			53

DRAWN BY: C.L. SMITH DATE: NOV. 2005
CHECKED BY: B.E. ATKINSON DATE: NOV. 2005

FILE NWG n:\structure\YSLsh22.dgn
PLOT: 3/20/2008 3:49:28 PM Ko & Associates, P.C.

BAR TYPES

ALL BAR DIMENSIONS ARE OUT TO OUT.

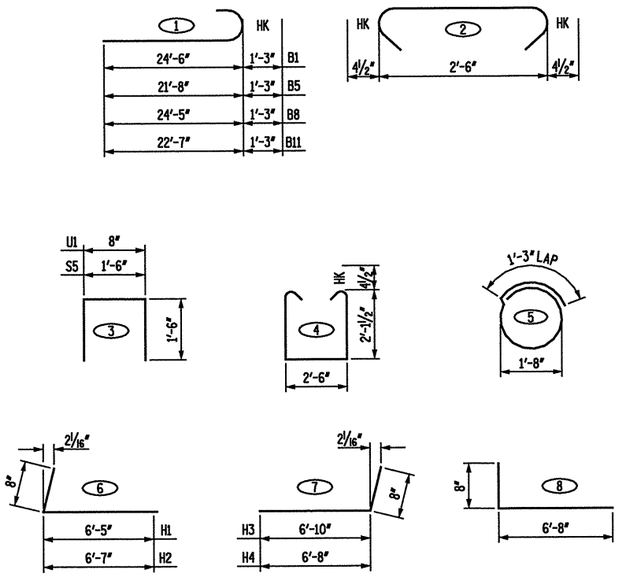

BILL OF MATERIAL

END BENT #1 (STAGE 2)

BAR	NO.	SIZE	TYPE	LENGTH	WEIGHT
B1	8	9	1	25'- 9"	700
B2	4	6	STR	24'- 6"	147
B3	4	4	STR	24'- 6"	65
B4	6	4	STR	2'- 5"	10
D1	13	7	STR	2'- 3"	60
H1	9	4	6	7'- 1"	43
H2	9	4	6	7'- 3"	44
H5	4	4	STR	3'- 5"	9
K1	6	4	STR	23'-10"	96
S1	21	4	4	7'- 6"	105
S2	21	4	2	3'- 3"	46
S3	8	4	5	6'- 6"	35
S4	38	5	STR	4'- 2"	165
S5	2	4	3	4'- 6"	6
U1	19	4	3	3'- 8"	47
V1	22	4	STR	6'- 2"	91

REINFORCING STEEL TOTAL 1,669 LBS.

CLASS "A" CONCRETE
- POUR 1 6.5 CYS.
- POUR 2 2.8 CYS.
- POUR 3 0.1 CYS.

TOTAL (CLASS "A") 9.4 CYS.

END BENT #1 (STAGE 3)

BAR	NO.	SIZE	TYPE	LENGTH	WEIGHT
B4	6	4	STR	2'- 5"	10
B5	8	9	1	22'-11"	623
B6	4	6	STR	21'- 8"	130
B7	4	4	STR	21'- 8"	58
D1	13	7	STR	2'- 3"	60
H3	9	4	7	7'- 6"	45
H4	9	4	7	7'- 4"	44
H5	4	4	STR	3'- 5"	9
K2	6	4	STR	22'- 5"	90
S1	22	4	4	7'- 6"	110
S2	22	4	2	3'- 3"	48
S3	10	4	5	6'- 6"	43
S4	40	5	STR	4'- 2"	174
U1	20	4	3	3'- 8"	49
V2	22	4	STR	5'-11"	87

REINFORCING STEEL TOTAL 1,580 LBS.

CLASS "A" CONCRETE
- POUR 1 6.8 CYS.
- POUR 2 2.9 CYS.

TOTAL (CLASS "A") 9.7 CYS.

END BENT #2 (STAGE 2)

BAR	NO.	SIZE	TYPE	LENGTH	WEIGHT
B4	6	4	STR	2'- 5"	10
B8	8	9	1	25'- 8"	698
B9	4	6	STR	24'- 5"	147
B10	4	4	STR	24'- 5"	65
D1	13	7	STR	2'- 3"	60
H3	9	4	7	7'- 6"	45
H4	9	4	7	7'- 4"	44
H5	4	4	STR	3'- 5"	9
K3	6	4	STR	24'- 5"	98
S1	20	4	4	7'- 6"	100
S2	20	4	2	3'- 3"	43
S3	8	4	5	6'- 6"	35
S4	38	5	STR	4'- 2"	165
S5	2	4	3	4'- 6"	6
U1	19	4	3	3'- 8"	47
V1	22	4	STR	6'- 2"	91

REINFORCING STEEL TOTAL 1,663 LBS.

CLASS "A" CONCRETE
- POUR 1 6.5 CYS.
- POUR 2 2.9 CYS.
- POUR 3 0.1 CYS.

TOTAL (CLASS "A") 9.5 CYS.

END BENT #2 (STAGE 3)

BAR	NO.	SIZE	TYPE	LENGTH	WEIGHT
B4	6	4	STR	2'- 5"	10
B11	8	9	1	23'-10"	648
B12	4	6	STR	22'- 7"	136
B13	4	4	STR	22'- 7"	60
D1	13	7	STR	2'- 3"	60
H6	18	4	8	7'- 4"	88
H7	4	4	STR	4'- 0"	11
K4	6	4	STR	22'- 7"	91
S1	22	4	4	7'- 6"	110
S2	22	4	2	3'- 3"	48
S3	10	4	5	6'- 6"	43
S4	40	5	STR	4'- 2"	174
U1	20	4	3	3'- 8"	49
V2	24	4	STR	5'-11"	95

REINFORCING STEEL TOTAL 1,623 LBS.

CLASS "A" CONCRETE
- POUR 1 6.9 CYS.
- POUR 2 3.0 CYS.

TOTAL (CLASS "A") 9.9 CYS.

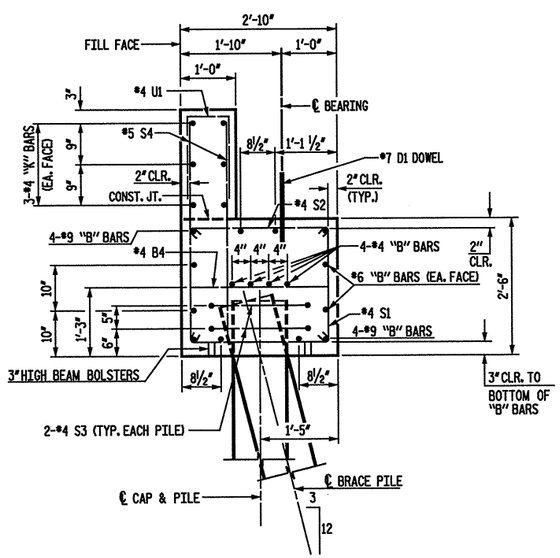

SECTION A-A

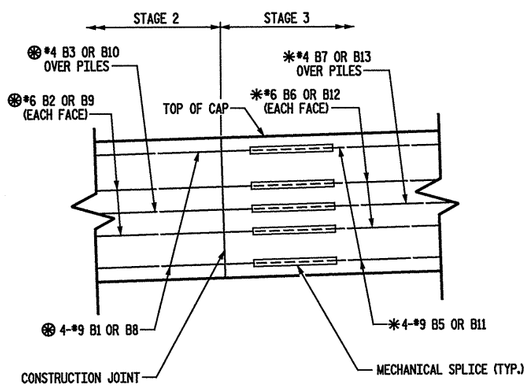

DETAIL "B"

⊛ EXTEND ALL BARS IN STAGE 2 1'-6" MIN. BEYOND CONST. JOINT

✳ PLACE ALL BARS IN STAGE 3 AT OR NEAR THE END OF BARS EXTENDING FROM STAGE 2.

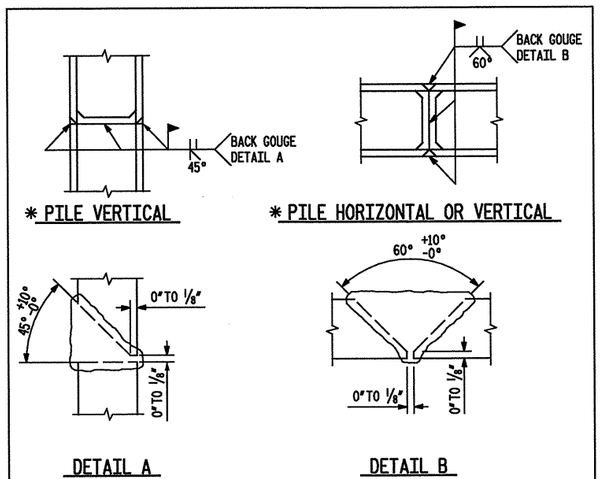

✳ POSITION OF PILE DURING WELDING

PILE SPLICE DETAILS

PROJECT NO. 37581
COUNTY: BUNCOMBE
STATION: 15+37.40
REPLACES BRIDGE NO. 193

STATE OF NORTH CAROLINA
DEPARTMENT OF TRANSPORTATION
RALEIGH

SUBSTRUCTURE
END BENT DETAILS

KO & ASSOCIATES, P.C.
Consulting Engineers
5121 KINGDOM WAY, SUITE 100 RALEIGH, N.C. 27607
(919) 851-6066

NORTH CAROLINA PROFESSIONAL SEAL ENGINEER JAMES E. MONDOLFI
3-20-08

NOT TO SCALE

DRAWN BY: B.E. LANNING DATE: JUNE 2007
CHECKED BY: J.E. MONDOLFI DATE: JUNE 2007

REVISIONS						SHEET NO.
NO.	BY	DATE	NO.	BY	DATE	23
1			3			TOTAL SHEETS
2			4			53

FILE NAME: n:\Structure\1751_sh23_end.dgn
PLOT: 3/20/2008 3:49:47 PM Ko & Associates, P.C.

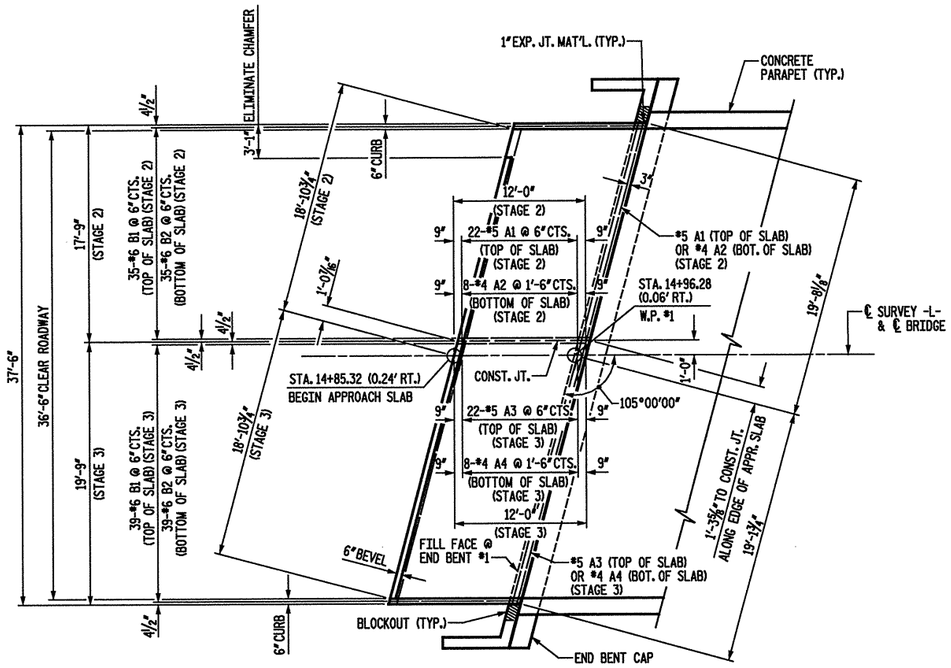

AT END BENT #1

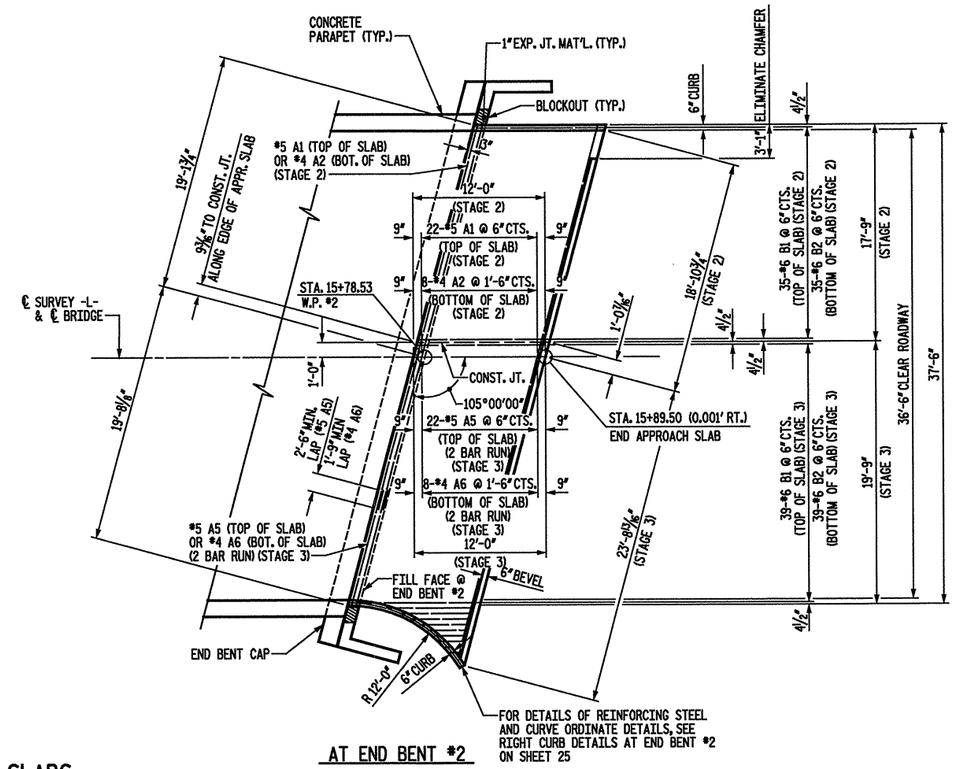

AT END BENT #2

PLAN OF APPROACH SLABS

NOTE: FOR REINFORCING STEEL IN CURB, SEE DETAILS ON SHEET 25.

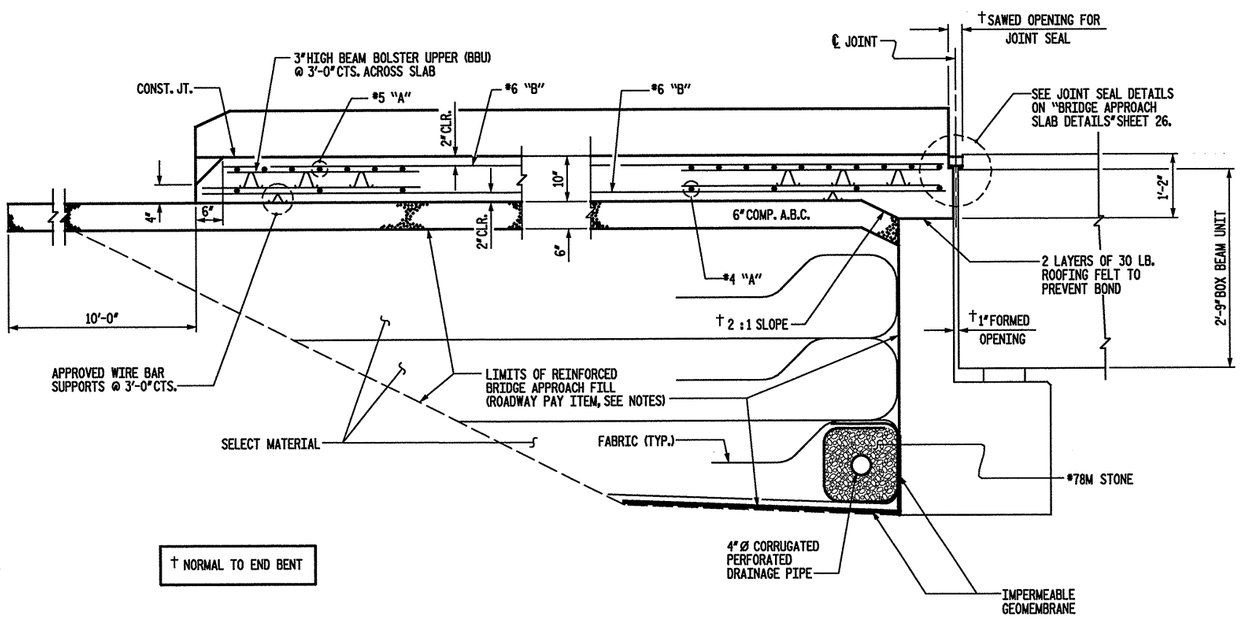

† NORMAL TO END BENT

SECTION THRU SLAB

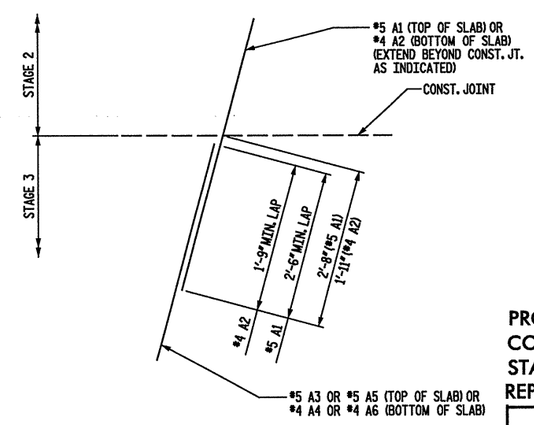

"A" BAR SPLICE DETAIL

PROJECT NO. 37581
COUNTY: BUNCOMBE
STATION: 15+37.40
REPLACES BRIDGE NO. 193

STATE OF NORTH CAROLINA
DEPARTMENT OF TRANSPORTATION
RALEIGH

APPROACH SLAB
36'-6" CLEAR ROADWAY
105° SKEW

NOT TO SCALE

KO & ASSOCIATES, P.C.
Consulting Engineers
5121 KINGDOM WAY, SUITE 100 RALEIGH, N.C. 27602
(919) 851-6066

NORTH CAROLINA PROFESSIONAL SEAL ENGINEER JAMES E. MONDOLFO
3-20-08

REVISIONS						
NO.	BY	DATE	NO.	BY	DATE	
1			3			
2			4			

SHEET NO. 24
TOTAL SHEETS 53

DRAWN BY: C.L. SMITH DATE: NOV. 2005
CHECKED BY: B.E. ATKINSON DATE: NOV. 2005

FILE NAME: n:\Structure\VES_24162.dgn
PLOT: 3/20/2008 3:41:59 PM Ko & Associates, P.C.

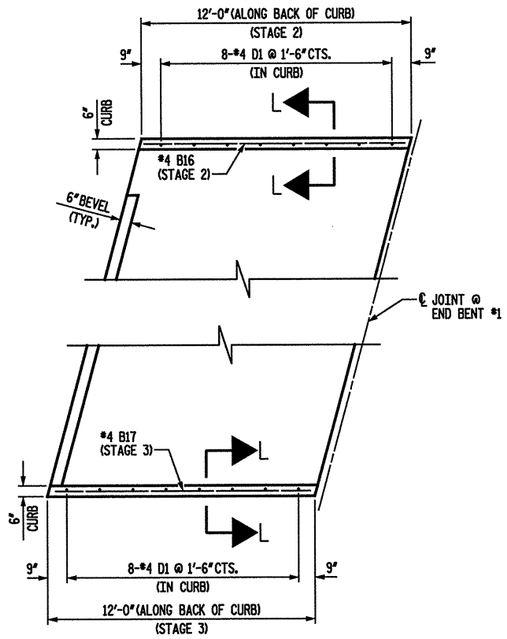

AT END BENT #1

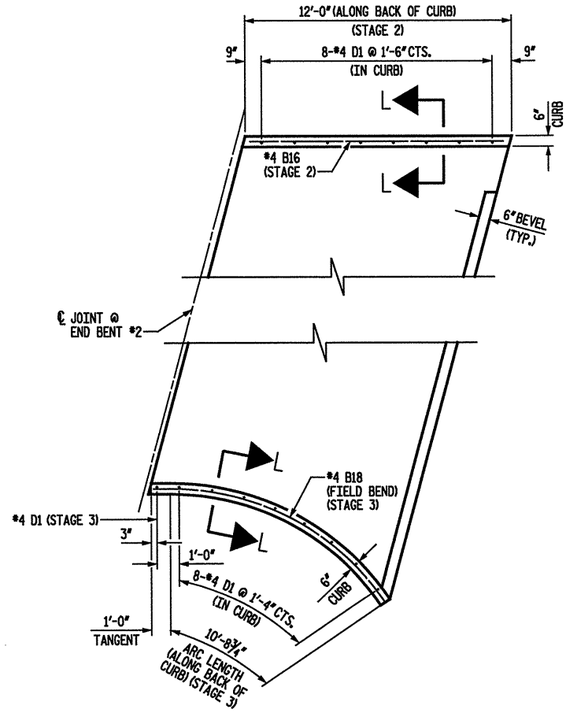

AT END BENT #2

PLAN

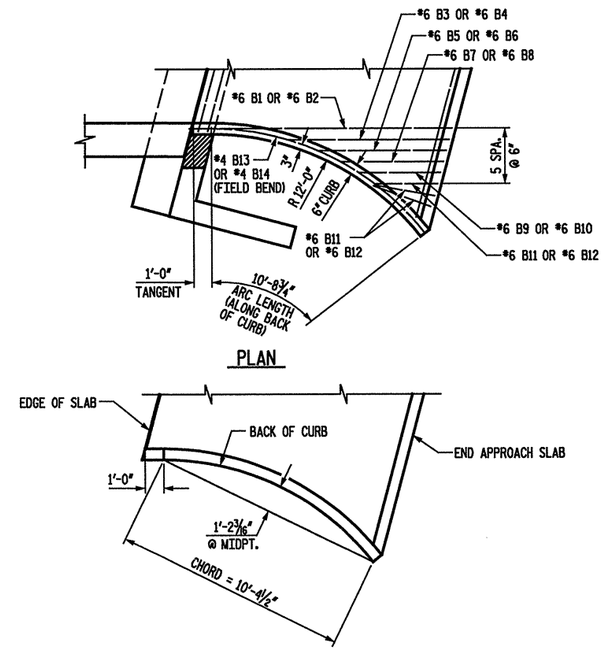

PLAN

CURVE ORDINATE

RIGHT CURB DETAILS

AT END BENT #2

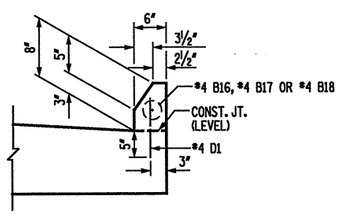

SECTION L-L

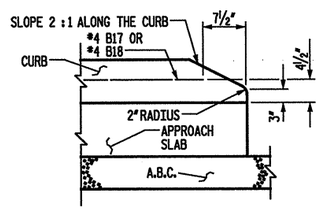

DETAIL AT END OF CURB
(STAGE 3 CURBS ONLY)

CURB DETAILS

PROJECT NO. 37581
COUNTY: BUNCOMBE
STATION: 15+37.40
REPLACES BRIDGE NO. 193

STATE OF NORTH CAROLINA
DEPARTMENT OF TRANSPORTATION
RALEIGH

APPROACH SLAB CURB DETAILS
36'-6" CLEAR ROADWAY
105° SKEW

REVISIONS						SHEET NO.
NO.	BY	DATE	NO.	BY	DATE	25
1			3			TOTAL SHEETS
2			4			53

KO & ASSOCIATES, P.C.
Consulting Engineers
5121 KINGDOM WAY, SUITE 100 RALEIGH, N.C. 27607
(919) 851-6066

NORTH CAROLINA PROFESSIONAL SEAL 19832 ENGINEER JAMES E. MONDOR
3-20-07

NOT TO SCALE

DRAWN BY: C.L. SMITH DATE: NOV. 2005
CHECKED BY: B.E. ATKINSON DATE: NOV. 2005

FILE NAME: n:\Structural\B193_sh25.dgn
PLOT: 3/19/2009 3:05:03 PM Ko & Associates, P.C.

BILL OF MATERIAL

END BENT #1 - STAGE 2

BAR	NO.	SIZE	TYPE	LENGTH	WEIGHT
✻ A1	23	#5	STR	20'-11"	502
A2	9	#4	STR	20'-2"	121
✻ B1	35	#6	STR	11'-1"	583
B2	35	#6	STR	11'-7"	609
✻ B16	1	#4	STR	11'-8"	8
✻ D1	8	#4	STR	10"	4

REINFORCING STEEL	LBS.	730
✻ EPOXY COATED REINFORCING STEEL	LBS.	1,097
CLASS AA CONCRETE BREAKDOWN		
POUR 1 SLAB	C. Y.	6.8
POUR 2 CURB	C. Y.	0.1
CLASS AA CONCRETE	C. Y.	6.9

END BENT #1 - STAGE 3

BAR	NO.	SIZE	TYPE	LENGTH	WEIGHT
✻ A3	23	#5	STR	20'-1"	482
A4	9	#4	STR	20'-1"	121
✻ B1	39	#6	STR	11'-1"	649
B2	39	#6	STR	11'-7"	679
✻ B17	1	#4	STR	11'-2"	8
✻ D1	8	#4	STR	10"	4

REINFORCING STEEL	LBS.	800
✻ EPOXY COATED REINFORCING STEEL	LBS.	1,143
CLASS AA CONCRETE BREAKDOWN		
POUR 1 SLAB	C. Y.	7.6
POUR 2 CURB	C. Y.	0.1
CLASS AA CONCRETE	C. Y.	7.7

END BENT #2 - STAGE 2

BAR	NO.	SIZE	TYPE	LENGTH	WEIGHT
✻ A1	23	#5	STR	20'-11"	502
A2	9	#4	STR	20'-2"	121
✻ B1	35	#6	STR	11'-1"	583
B2	35	#6	STR	11'-7"	609
✻ B16	1	#4	STR	11'-8"	8
✻ D1	8	#4	STR	10"	4

REINFORCING STEEL	LBS.	730
✻ EPOXY COATED REINFORCING STEEL	LBS.	1,097
CLASS AA CONCRETE BREAKDOWN		
POUR 1 SLAB	C. Y.	6.8
POUR 2 CURB	C. Y.	0.1
CLASS AA CONCRETE	C. Y.	6.9

END BENT #2 - STAGE 3

BAR	NO.	SIZE	TYPE	LENGTH	WEIGHT
✻ A5	46	#5	STR	13'-5"	644
A6	18	#4	STR	13'-1"	157
✻ B1	39	#6	STR	11'-1"	649
B2	39	#6	STR	11'-7"	679
✻ B3	1	#6	STR	7'-8"	12
B4	1	#6	STR	8'-0"	12
✻ B5	1	#6	STR	5'-10"	9
B6	1	#6	STR	6'-2"	9
✻ B7	1	#6	STR	4'-7"	7
B8	1	#6	STR	4'-11"	7
✻ B9	1	#6	STR	3'-6"	5
B10	1	#6	STR	3'-10"	6
✻ B11	3	#6	STR	2'-8"	12
B12	3	#6	STR	3'-0"	14
✻ B13	1	#4	STR	11'-7"	8
B14	1	#4	STR	11'-7"	8
✻ B18	1	#4	STR	11'-2"	7
✻ D1	9	#4	STR	10"	5

REINFORCING STEEL	LBS.	892
✻ EPOXY COATED REINFORCING STEEL	LBS.	1,358
CLASS AA CONCRETE BREAKDOWN		
POUR 1 SLAB	C. Y.	8.1
POUR 2 CURB	C. Y.	0.1
CLASS AA CONCRETE	C. Y.	8.2

NOTES

FOR REINFORCED BRIDGE APPROACH FILL INCLUDING FABRIC, IMPERMEABLE GEOMEMBRANE, 4"Ø DRAINAGE PIPE, #78M STONE, AND SELECT MATERIAL, SEE STD. DWG. 422.10.

AREA BETWEEN THE WINGWALL AND APPROACH SLAB SHALL BE GRADED TO DRAIN THE WATER AWAY FROM THE FILL FACE OF THE BRIDGE AND SHALL BE PAVED.

THE 6" COMP. A.B.C. SHALL EXTEND 10'-0" BEYOND THE SLAB AS SHOWN AND 1'-0" OUTSIDE OF EACH EDGE OF SLAB.

THE CONTRACTOR MAY USE 4" TYPE B-25.0B ASPHALT CONCRETE BASE COURSE IN LIEU OF 6" COMP. A.B.C. IF THIS OPTION IS USED, THE BASE COURSE SHALL EXTEND 1'-0" BEYOND THE END OF THE APPROACH SLAB AND THE WIDTH SHALL BE THE SAME AS THAT OF THE APPROACH SLAB.

THE CONTRACTOR MAY USE 5" CLASS "A" CONCRETE BASE IN LIEU OF 6" COMP. A.B.C. IF THIS OPTION IS USED, THE CONCRETE BASE SHALL EXTEND 1'-0" BEYOND THE END OF THE APPROACH SLAB AND THE WIDTH SHALL BE THE SAME AS THAT OF THE APPROACH SLAB. THE CONCRETE SHALL BE FINISHED TO A SMOOTH SURFACE AND A LAYER OF 30 LB ROOFING FELT SHALL BE PLACED BETWEEN THE CONCRETE BASE AND THE APPROACH SLAB TO PREVENT BOND. THE APPROACH SLAB SHALL NOT BE CAST UNTIL THE CONCRETE BASE HAS REACHED AN AGE OF THREE CURING DAYS.

APPROACH SLAB SHALL NOT BE CONSTRUCTED PRIOR TO COMPLETION OF THE CONCRETE WEARING SURFACE.

FOR EVAZOTE JOINT SEALS, SEE SPECIAL PROVISIONS.

THE NOMINAL UNCOMPRESSED SEAL WIDTH OF THE EVAZOTE JOINT SEAL SHALL BE 2½".

FOR ELASTOMERIC CONCRETE, SEE SPECIAL PROVISIONS.

THE COST OF THE ELASTOMERIC CONCRETE WILL BE INCLUDED IN THE PAY ITEM FOR "EVAZOTE JOINT SEALS".

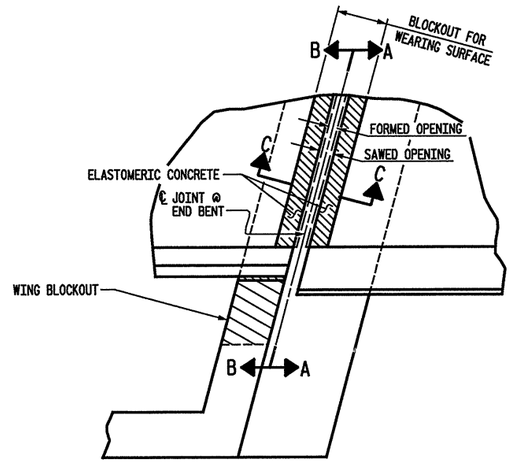

PLAN

✻✻ ELASTOMERIC CONCRETE (CUBIC FEET)			
	END BENT #1	END BENT #2	TOTAL
STAGE 2	3.7	3.7	7.4
STAGE 3	6.4	6.4	12.8

✻✻ BASED ON THE MINIMUM BLOCKOUT SHOWN FOR WEARING SURFACE.

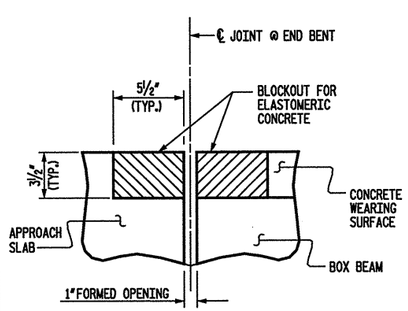

SECTION C-C
EVAZOTE JOINT SEAL
(PRE-SAWED ELASTOMERIC CONCRETE DIMENSIONS)

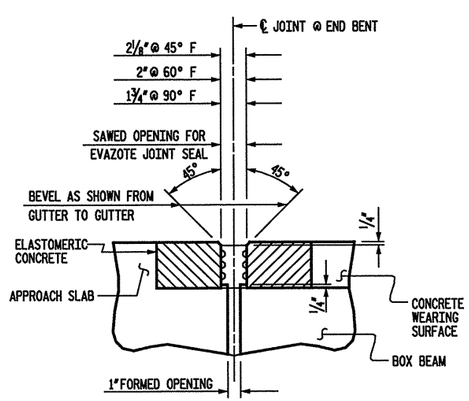

SECTION C-C
EVAZOTE JOINT SEAL

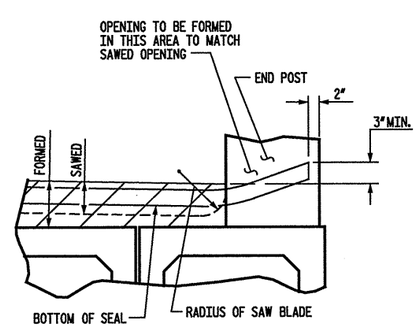

SECTION A-A

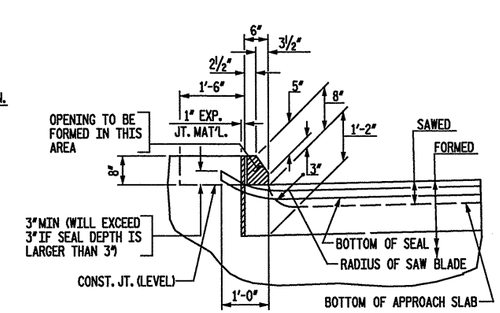

SECTION B-B

JOINT SEAL DETAILS AT END BENT

NOT TO SCALE

DRAWN BY: C.L. SMITH DATE: NOV. 2005
CHECKED BY: B.E. ATKINSON DATE: NOV. 2005

KO & ASSOCIATES, P.C.
Consulting Engineers
5121 KINGDOM WAY, SUITE 100 RALEIGH, N.C. 27607
(919) 851-6066

NORTH CAROLINA PROFESSIONAL SEAL ENGINEER JAMES E. MONDOLFI
3-20-05

PROJECT NO. 37581
COUNTY: BUNCOMBE
STATION: 15+37.40
REPLACES BRIDGE NO. 193

STATE OF NORTH CAROLINA
DEPARTMENT OF TRANSPORTATION
RALEIGH

APPROACH SLAB DETAILS
36'-6" CLEAR ROADWAY
105° SKEW

REVISIONS						SHEET NO.
NO.	BY	DATE	NO.	BY	DATE	26
1			3			TOTAL SHEETS
2			4			53

FILE NAME: n:\structures\VSLab\BSLdgn
PLOT: 3/30/2005 3:15:59 PM Ko & Associates, P.C.

8/17/99

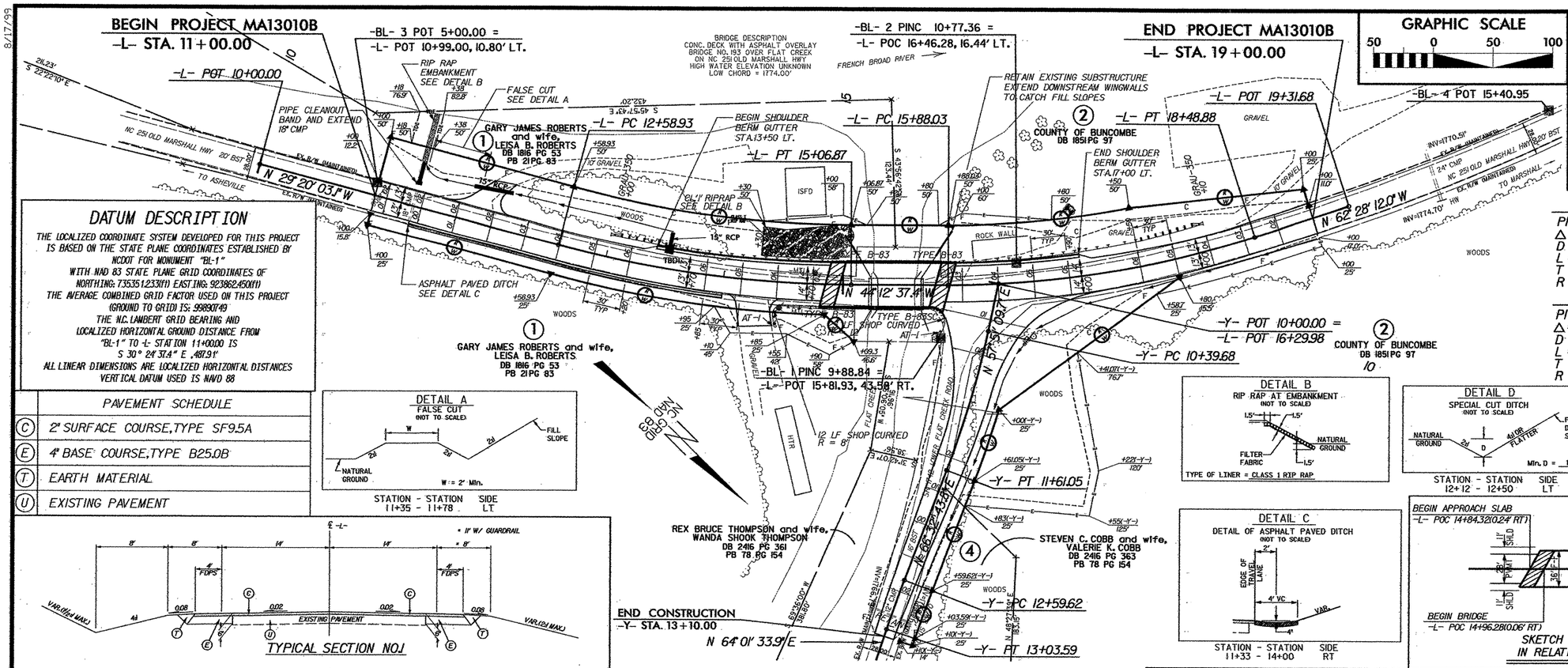

DATUM DESCRIPTION

THE LOCALIZED COORDINATE SYSTEM DEVELOPED FOR THIS PROJECT IS BASED ON THE STATE PLANE COORDINATES ESTABLISHED BY NCDOT FOR MONUMENT "BL-1"
WITH NAD 83 STATE PLANE GRID COORDINATES OF NORTHING: 735351.233(ft) EASTING: 923862.450(ft)
THE AVERAGE COMBINED GRID FACTOR USED ON THIS PROJECT (GROUND TO GRID) IS: 0.99890749
THE N.C. LAMBERT GRID BEARING AND LOCALIZED HORIZONTAL GROUND DISTANCE FROM "BL-1" TO -L- STATION 11+00.00 IS S 30° 24' 37.4" E, 487.91'
ALL LINEAR DIMENSIONS ARE LOCALIZED HORIZONTAL DISTANCES
VERTICAL DATUM USED IS NAVD 88

	PAVEMENT SCHEDULE
C	2" SURFACE COURSE, TYPE SF9.5A
E	4" BASE COURSE, TYPE B25.0B
T	EARTH MATERIAL
U	EXISTING PAVEMENT

-L-

PI Sta 13+83.60	PI Sta 17+19.57
Δ = 14° 52' 34.3" (LT)	Δ = 18° 15' 34.6" (LT)
D = 6° 00' 00.0"	D = 7° 00' 00.0"
L = 247.94'	L = 260.85'
T = 124.67'	T = 131.54'
R = 954.93'	R = 818.51'

-Y-

PI Sta 11+00.48	PI Sta 12+81.61
Δ = 8° 41' 34.1" (RT)	Δ = 2° 31' 09.9" (LT)
D = 7° 09' 43.1"	D = 5° 43' 46.5"
L = 121.37'	L = 43.97'
T = 60.80'	T = 21.99'
R = 800.00'	R = 1,000.00'

DETAIL A
FALSE CUT
(NOT TO SCALE)
W = 2' Min.
STATION - STATION 11+35 - 11+78 SIDE LT

DETAIL B
RIP RAP AT EMBANKMENT
(NOT TO SCALE)
TYPE OF LINER = CLASS I RIP RAP

DETAIL D
SPECIAL CUT DITCH
(NOT TO SCALE)
Min. D = 1 Ft.
STATION - STATION 12+12 - 12+50 SIDE LT

DETAIL C
DETAIL OF ASPHALT PAVED DITCH
(NOT TO SCALE)
STATION - STATION 11+33 - 14+00 SIDE RT

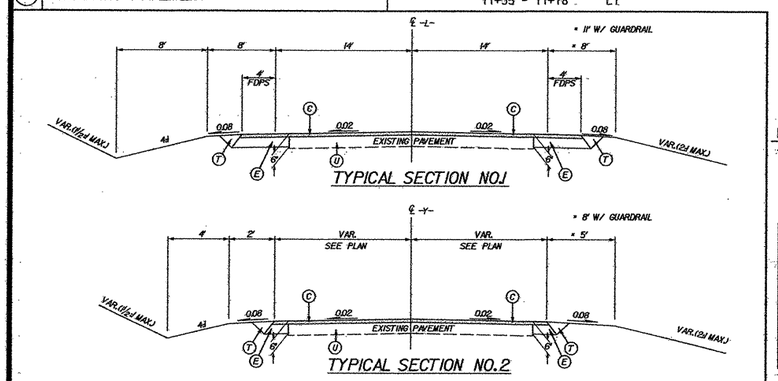

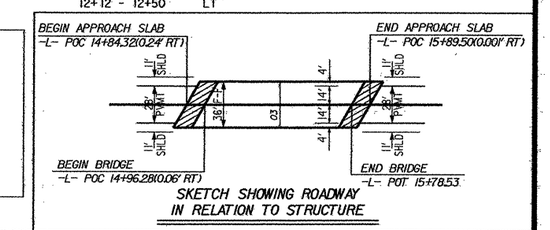

RIGHT OF WAY AREA DATA

PARCEL NO.	PROPERTY OWNERS NAME	TOTAL ACREAGE	AREA TAKEN	AREA REMAINING RIGHT	AREA REMAINING LEFT	CONSTR. EASEMENT	PERMANENT DRAINAGE EASEMENT	TEMPORARY DRAINAGE EASEMENT
1	GARY JAMES ROBERTS and wife, LEISA B. ROBERTS		19934 sf 0.46 ac			2560 sf 0.06 ac		597 sf 0.01 ac
2	COUNTY OF BUNCOMBE		20406 sf 0.47 ac			11386 sf 0.26 ac		
4	STEVEN C. COBB and wife, VALERIE K. COBB		1865 sf 0.04 ac					

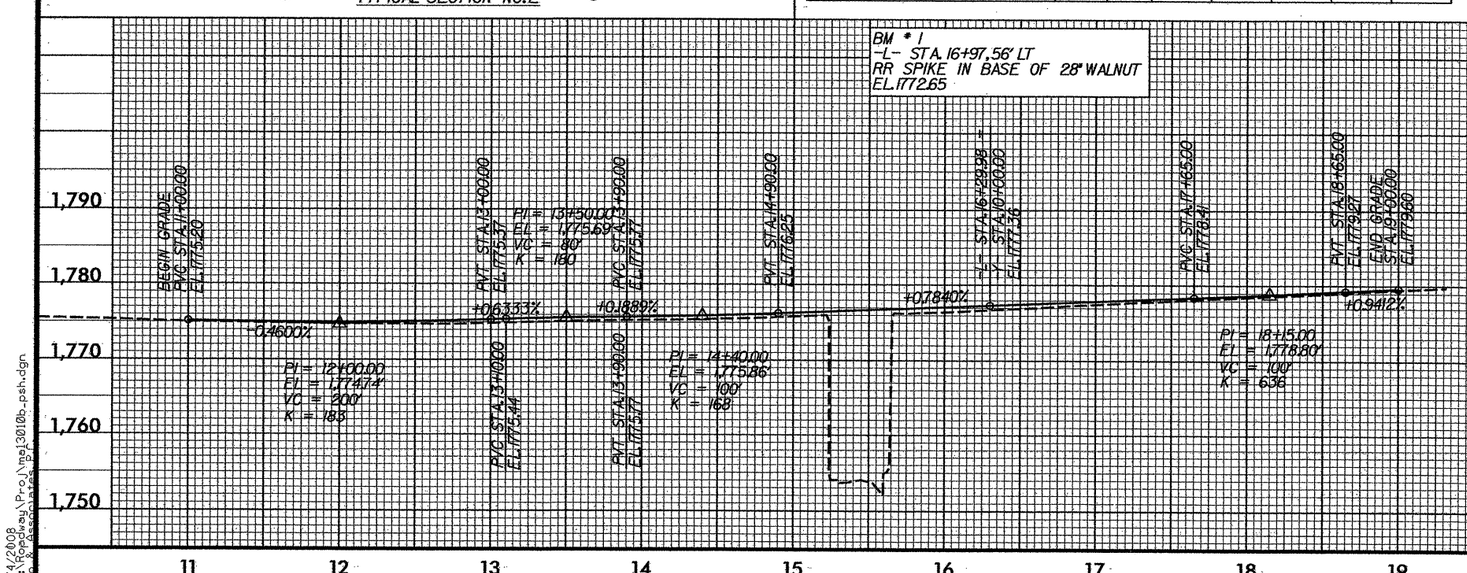

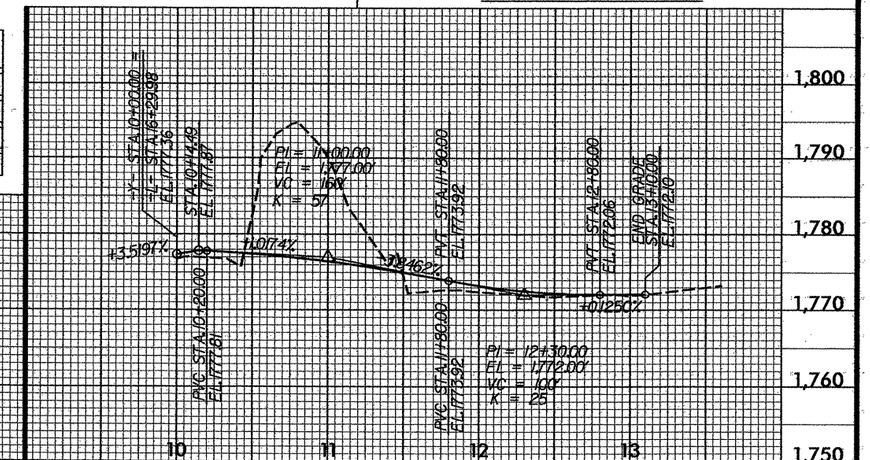

PROJECT NO. 37581
COUNTY: BUNCOMBE
STATION: 15+37.50
REPLACES BRIDGE NO. 193

STATE OF NORTH CAROLINA
DEPARTMENT OF TRANSPORTATION
RALEIGH

BRIDGE NO. 193 ON NC 251 OVER FLAT CREEK

Plans prepared by:
KO & ASSOCIATES, P.C.
Consulting Engineers
5121 KINGDOM WAY, SUITE 100
RALEIGH, N.C. 27607
For Division of Highways

REVISIONS						SHEET NO.
NO.	BY	DATE	NO.	BY	DATE	27
1			3			TOTAL SHEETS
2			4			53

1/4/2008
B:\Roadway\Proj\ma13010b_psh.dgn

PROJECT REFERENCE NO.	SHEET NO.
BMU-220113	

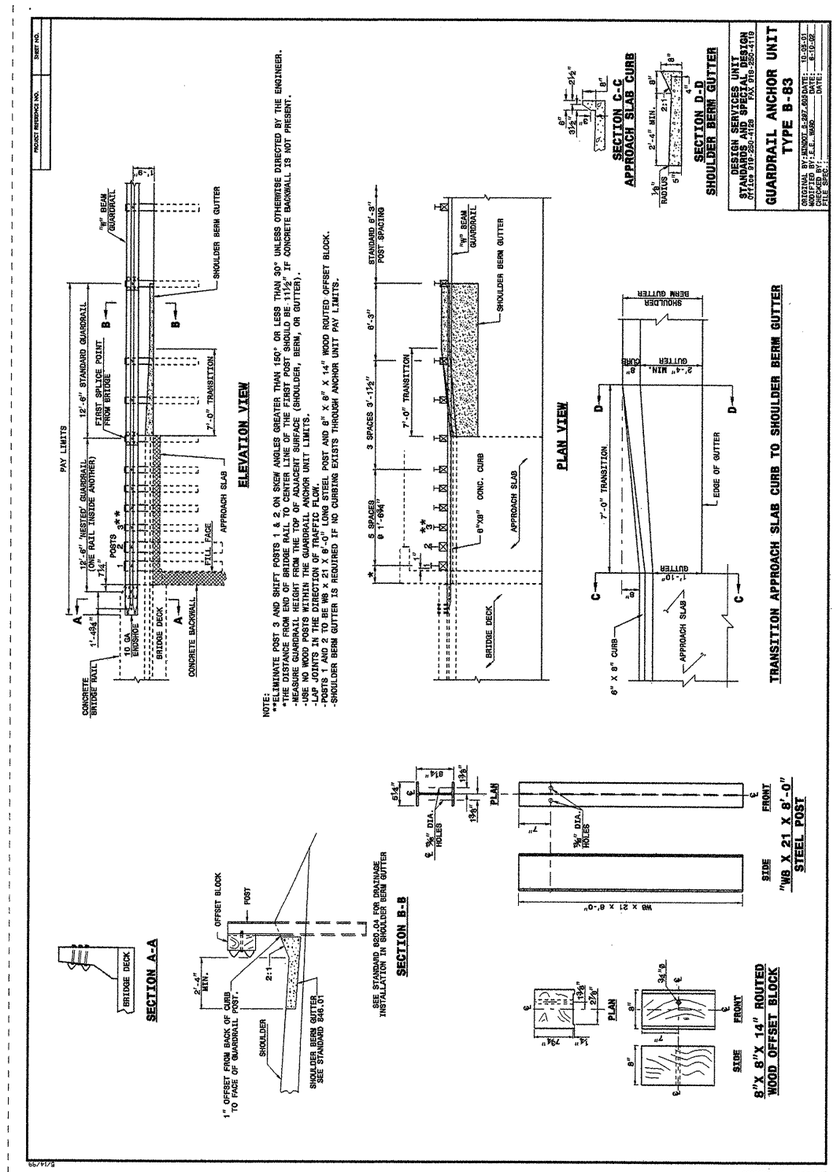

NOTE:
**ELIMINATE POST 3 AND SHIFT POSTS 1 & 2 ON SKEW ANGLES GREATER THAN 150° OR LESS THAN 30° UNLESS OTHERWISE DIRECTED BY THE ENGINEER.
*THE DISTANCE FROM END OF BRIDGE RAIL TO CENTER LINE OF THE FIRST POST SHOULD BE 11½" IF CONCRETE BACKWALL IS NOT PRESENT.
-MEASURE GUARDRAIL HEIGHT FROM THE TOP OF ADJACENT SURFACE (SHOULDER, BERM, OR GUTTER).
-USE NO WOOD POSTS WITHIN THE GUARDRAIL ANCHOR UNIT LIMITS.
-LAP JOINTS IN THE DIRECTION OF TRAFFIC FLOW.
-POSTS 1 AND 2 TO BE W8 X 21 X 8'-0" LONG STEEL POST AND 8" X 8" X 14" WOOD ROUTED OFFSET BLOCK.
-SHOULDER BERM GUTTER IS REQUIRED IF NO CURBING EXISTS THROUGH ANCHOR UNIT PAY LIMITS.

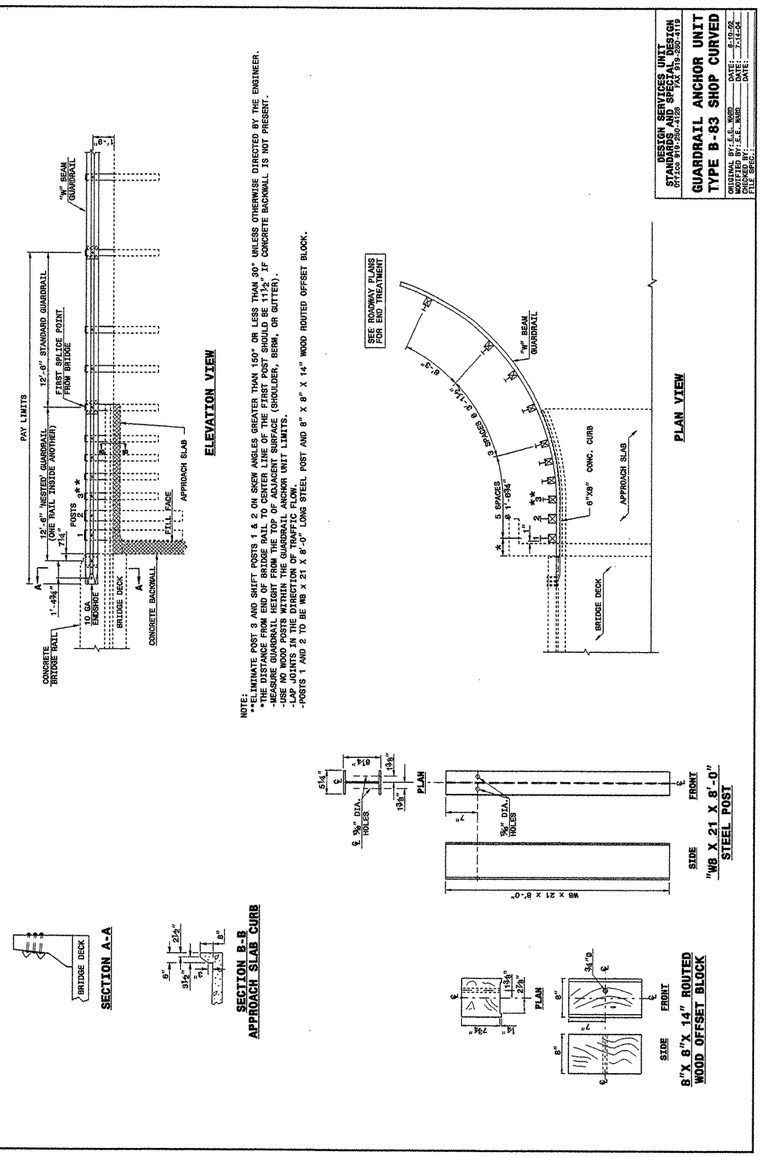

NOTE:
**ELIMINATE POST 3 AND SHIFT POSTS 1 & 2 ON SKEW ANGLES GREATER THAN 150° OR LESS THAN 30° UNLESS OTHERWISE DIRECTED BY THE ENGINEER.
*THE DISTANCE FROM END OF BRIDGE RAIL TO CENTER LINE OF THE FIRST POST SHOULD BE 11½" IF CONCRETE BACKWALL IS NOT PRESENT.
-MEASURE GUARDRAIL HEIGHT FROM THE TOP OF ADJACENT SURFACE (SHOULDER, BERM, OR GUTTER).
-USE NO WOOD POSTS WITHIN THE GUARDRAIL ANCHOR UNIT LIMITS.
-LAP JOINTS IN THE DIRECTION OF TRAFFIC FLOW.
-POSTS 1 AND 2 TO BE W8 X 21 X 8'-0" LONG STEEL POST AND 8" X 8" X 14" WOOD ROUTED OFFSET BLOCK.

PROJECT NO. 37581
COUNTY: BUNCOMBE
STATION: 15+37.50
REPLACES BRIDGE NO. 193

STATE OF NORTH CAROLINA
DEPARTMENT OF TRANSPORTATION
RALEIGH

BRIDGE NO. 193 ON NC 251 OVER FLAT CREEK

KO & ASSOCIATES, P.C.
Consulting Engineers
5121 KINGDOM WAY, SUITE 100 RALEIGH, N.C. 27607
(919) 851-6066

REVISIONS						SHEET NO.
NO.	BY	DATE	NO.	BY	DATE	28
1			3			TOTAL SHEETS
2			4			53

5/14/99
r:\Roadway\Proj\193_grdetails.dgn
5/14/2008
ko & Associates, p.a.

NOTE: ANY DEVIATION FROM OPTIONS GIVEN WILL REQUIRE PRIOR APPROVAL BY ENGINEER.

ROADSIDE ENVIRONMENTAL UNIT
DEPARTMENT OF TRANSPORTATION
DIVISION OF HIGHWAYS
RALEIGH, N.C.

2006 STANDARD SPECIFICATIONS

EROSION CONTROL PLAN

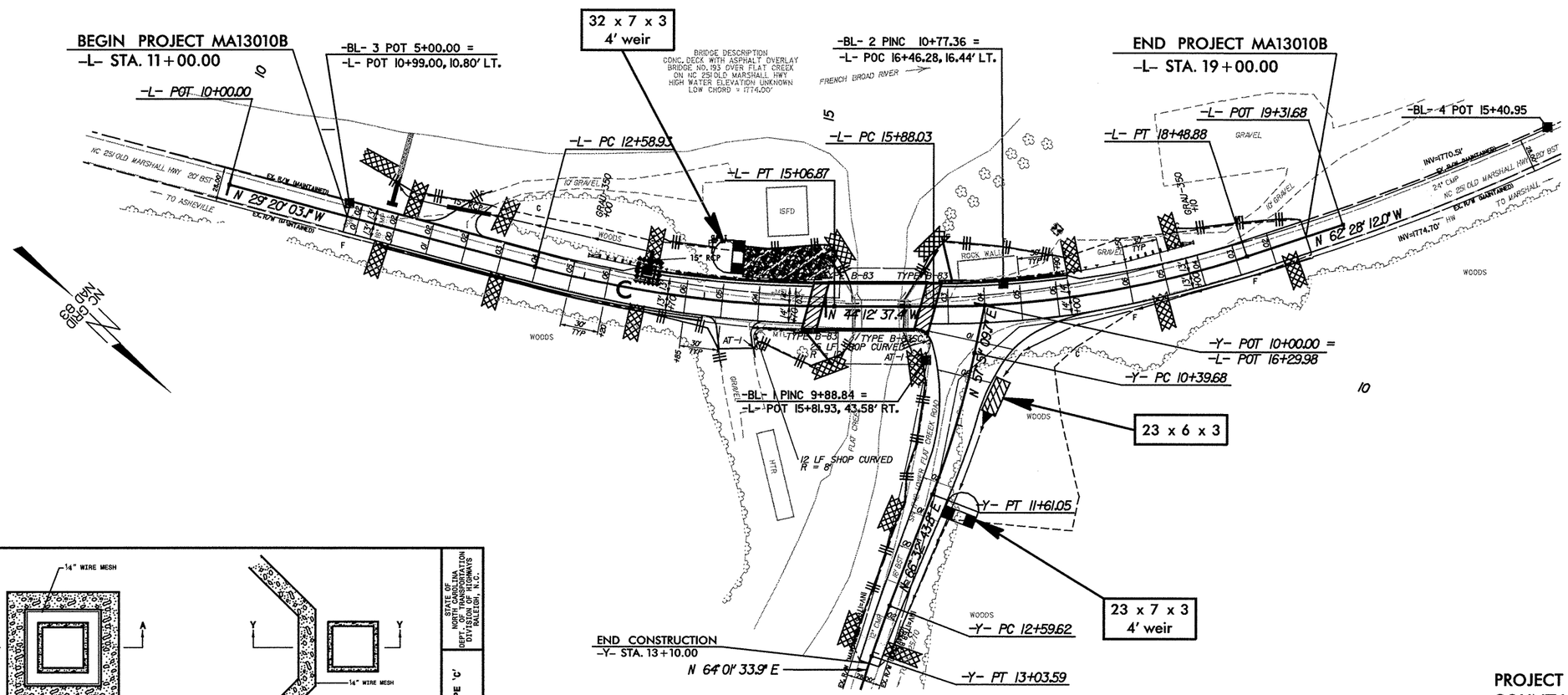

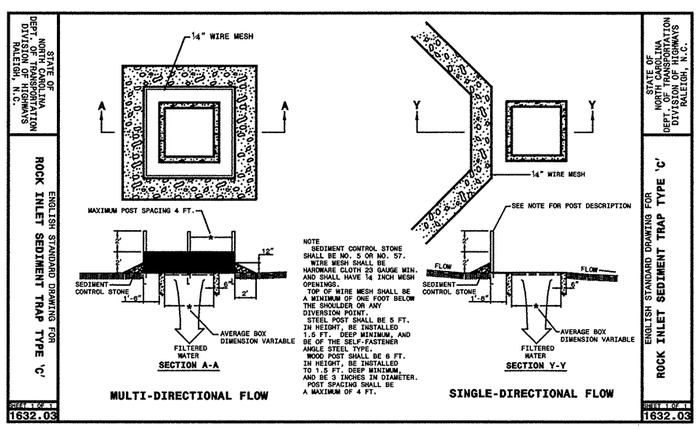

STD.#	
1605.01	Temporary Silt Fence
1622.01	Temporary Berms and Slope Drains
1630.02	Silt Basin Type B
1632.03	Rock Inlet Sediment Trap Type C
1633.01	Temporary Rock Silt Check Type A
	Temporary Rock Silt Check Type B
1634.02	Temporary Rock Sediment Dam Type B

PROJECT NO. 37581
COUNTY: BUNCOMBE
STATION: 15+37.40
REPLACES BRIDGE NO. 193

EROSION CONTROL PLAN AND DETAILS ARE PROVIDED BY THE NCDOT ROADSIDE ENVIROMENTAL UNIT

STATE OF NORTH CAROLINA
DEPARTMENT OF TRANSPORTATION
RALEIGH

BRIDGE NO. 193 ON NC 251 OVER FLAT CREEK

REVISIONS						SHEET NO.
NO.	BY	DATE	NO.	BY	DATE	29
1			3			TOTAL SHEETS
2			4			53

PLOT: 3/24/2009 11:29:02 AM Ks & Associates, P.C.
FILE NAME: R:\Structures\193_erosion.dgn

ROADSIDE ENVIRONMENTAL UNIT
DEPARTMENT OF TRANSPORTATION
DIVISION OF HIGHWAYS
RALEIGH, N.C.

2006 STANDARD SPECIFICATIONS

EROSION CONTROL PLAN

NOTE: ANY DEVIATION FROM OPTIONS GIVEN WILL REQUIRE PRIOR APPROVAL BY ENGINEER.

STATE OF NORTH CAROLINA DEPT. OF TRANSPORTATION DIVISION OF HIGHWAYS RALEIGH, N.C.

ENGLISH STANDARD DRAWING FOR
TEMPORARY ROCK SEDIMENT DAM TYPE 'B'

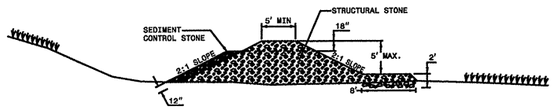

PROFILE SECTION

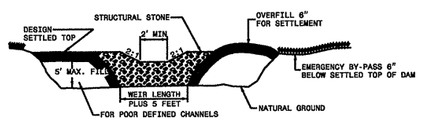

CROSS SECTION

DRAINAGE AREA (ACRES)	WEIR LENGTH (FT)
1	4.0
2	6.0
3	8.0
4	10.0
5	12.0

NOTES:
STRUCTURAL STONE SHALL BE STONE FOR EROSION CONTROL CLASS "B" AND SHALL BE PAID FOR AT THE CONTRACT BID PRICE FOR "LUMP SUM FOR EROSION CONTROL".
SEDIMENT CONTROL STONE SHALL BE NO. 5 OR NO. 57 STONE AND SHALL BE PAID FOR AT THE CONTRACT UNIT PRICE PER TON "SEDIMENT CONTROL STONE."
DIKE MAY EXTEND ALONG MORE THAN ONE SIDE OF THE TRAP AREA. A TOTAL SEDIMENT STORAGE VOLUME OF 1800± CUBIC FEET PER ACRE OF DISTURBED AREA SHOULD BE PROVIDED. SOME OF THE REQUIRED VOLUME MAY BE PROVIDED BY OTHER UP OR DOWNSTREAM CONTROLS.
AN UNDERLAY OF STRUCTURAL STONE WITH FILTER FABRIC MAY BE REQUIRED BY THE ENGINEER. PAYMENT SHALL BE MADE AT THE CONTRACT BID UNIT PRICE PER SQUARE YARD.

STATE OF NORTH CAROLINA DEPT. OF TRANSPORTATION DIVISION OF HIGHWAYS RALEIGH, N.C.

SHEET 1 OF 1 — 1634.02

STATE OF NORTH CAROLINA DEPT. OF TRANSPORTATION DIVISION OF HIGHWAYS RALEIGH, N.C.

ENGLISH STANDARD DRAWING FOR
TEMPORARY ROCK SILT CHECK TYPE 'A'

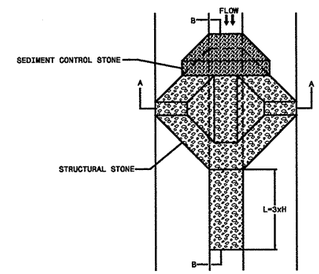

PLAN

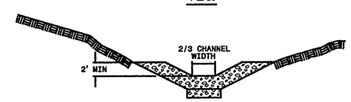

SECTION A-A

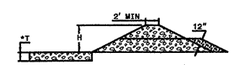

SECTION B-B
*T = 12" MIN., 18" MAX.

NOTE
STRUCTURAL STONE SHALL BE STONE FOR EROSION CONTROL (CLASS "B").
SEDIMENT CONTROL STONE SHALL BE NO. 5 OR NO. 57 STONE.

STATE OF NORTH CAROLINA DEPT. OF TRANSPORTATION DIVISION OF HIGHWAYS RALEIGH, N.C.

SHEET 1 OF 1 — 1633.01

STATE OF NORTH CAROLINA DEPT. OF TRANSPORTATION DIVISION OF HIGHWAYS RALEIGH, N.C.

ENGLISH STANDARD DRAWING FOR
GUIDE FOR TEMPORARY BERMS AND SLOPE DRAIN

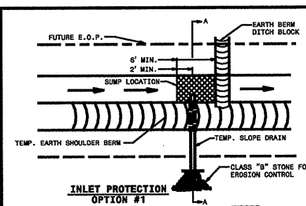

INLET PROTECTION OPTION #1

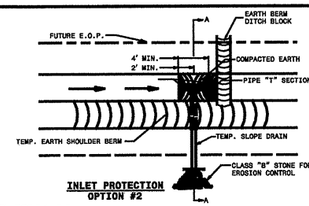

INLET PROTECTION OPTION #2

ASPHALT CONCRETE PLANT MIX, TYPE I-1, I-2 OR HSB, MINIMUM 2" DEPTH OR CLASS "B" STONE. USE AS DIRECTED BY THE ENGINEER.

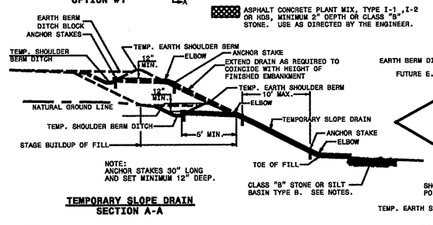

NOTE:
ANCHOR STAKES 30" LONG AND SET MINIMUM 12" DEEP.

TEMPORARY SLOPE DRAIN
SECTION A-A

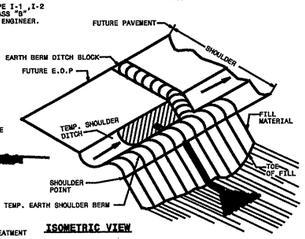

ISOMETRIC VIEW

NOTES:
1. OPEN END PIPE WITH MINIMUM SETBACK AND PROPER COMPACTION IS AN ACCEPTABLE INLET TREATMENT FOR STAGED CONSTRUCTION WHEN NOT LEFT IN PLACE FOR MORE THAN 30 DAYS.
2. WHEN A LONG DELAY IS EXPECTED BETWEEN FINAL GRADE AND PLACEMENT OF A PERMANENT DRAINAGE SYSTEM THE INLET SHALL BE PROTECTED BY PLACEMENT OF A TEE SECTION ON THE INLET AND/OR BY LINING THE INLET AREA WITH CLASS "B" STONE OR ASPHALT CONCRETE PLANT MIX AS DIRECTED BY THE ENGINEER.
3. THE INLET FOR SINGLE DIRECTION FLOW SHALL BE PLACED IN A SUMP.
4. CLASS "B" STONE FOR EROSION CONTROL IS TO BE USED AT OUTLET LOCATIONS SUBJECT TO SCOURING. SILT BASIN TYPE B MAY ALSO BE UTILIZED TO CONTAIN SEDIMENT.

STATE OF NORTH CAROLINA DEPT. OF TRANSPORTATION DIVISION OF HIGHWAYS RALEIGH, N.C.

SHEET 1 OF 1 — 1622.01

STATE OF NORTH CAROLINA DEPT. OF TRANSPORTATION DIVISION OF HIGHWAYS RALEIGH, N.C.

ENGLISH STANDARD DRAWING FOR
TEMPORARY SILT FENCE

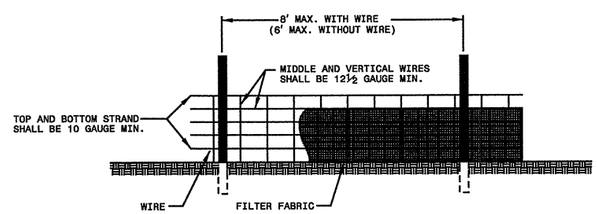

NOTES
WIRE SHALL BE A MINIMUM OF 32" IN WIDTH AND SHALL HAVE A MINIMUM OF 6 LINE WIRES WITH 12" STAY SPACING.
FILTER FABRIC SHALL BE A MINIMUM OF 36" IN WIDTH AND SHALL BE FASTENED ADEQUATELY TO THE WIRE AS DIRECTED BY THE ENGINEER.
STEEL POST SHALL BE 5'-0" IN HEIGHT AND BE OF THE SELF-FASTENER ANGLE STEEL TYPE.

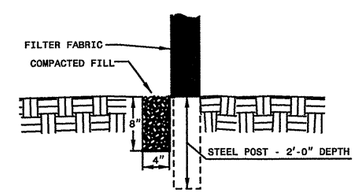

EXTENSION OF FABRIC AND WIRE INTO TRENCH

STATE OF NORTH CAROLINA DEPT. OF TRANSPORTATION DIVISION OF HIGHWAYS RALEIGH, N.C.

SHEET 1 OF 1 — 1605.01

PROJECT NO. 37581
COUNTY: BUNCOMBE
STATION: 15+37.40
REPLACES BRIDGE NO. 193

STATE OF NORTH CAROLINA
DEPARTMENT OF TRANSPORTATION
RALEIGH

BRIDGE NO. 193 ON NC 251
OVER FLAT CREEK

EROSION CONTROL PLAN AND DETAILS ARE PROVIDED BY THE NCDOT ROADSIDE ENVIROMENTAL UNIT

REVISIONS						SHEET NO.
NO.	BY	DATE	NO.	BY	DATE	30
1			3			TOTAL SHEETS
2			4			53

FILE NAME: R:\Structures\VRS_eo2.dgn
PLOT: 3/24/2006 11:20:22 AM Ko & Associates, P.C.

ROADSIDE ENVIRONMENTAL UNIT
DEPARTMENT OF TRANSPORTATION
DIVISION OF HIGHWAYS
RALEIGH, N.C.

2006 STANDARD SPECIFICATIONS

EROSION CONTROL PLAN

NOTE: ANY DEVIATION FROM OPTIONS GIVEN WILL REQUIRE PRIOR APPROVAL BY ENGINEER.

STATE OF NORTH CAROLINA
DEPT. OF TRANSPORTATION
DIVISION OF HIGHWAYS
RALEIGH, N.C.

ENGLISH STANDARD DRAWING FOR
SILT BASIN TYPE 'B'

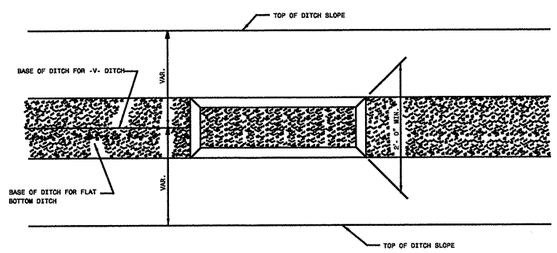

PLAN

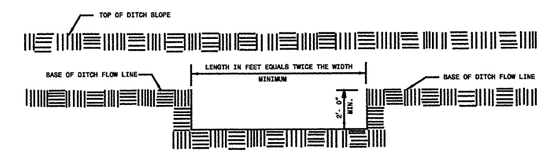

ELEVATION

SHEET 1 OF 1
1630.02

STATE OF NORTH CAROLINA
DEPT. OF TRANSPORTATION
DIVISION OF HIGHWAYS
RALEIGH, N.C.

ENGLISH STANDARD DRAWING FOR
TEMPORARY ROCK SILT CHECK TYPE 'B'

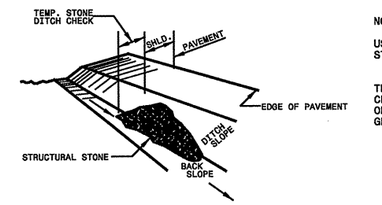

ISOMETRIC VIEW

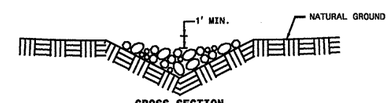

CROSS SECTION
VEE DITCH

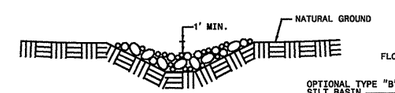

CROSS SECTION
TRAPEZOIDAL DITCH

NOTES:

USE CLASS 'B' EROSION CONTROL STONE FOR STRUCTURAL STONE.

THE ENGINEER MAY DIRECT THE OPTION OF CLASS "A" STONE FOR SITES HAVING LESS THAN ONE (1) ACRE DRAINAGE AREA AND A DITCH GRADE LESS THAN 3%.

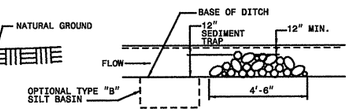

ELEVATION VIEW

SHEET 1 OF 1
1633.02

PROJECT NO. 37581
COUNTY: BUNCOMBE
STATION: 15+37.40
REPLACES BRIDGE NO. 193

STATE OF NORTH CAROLINA
DEPARTMENT OF TRANSPORTATION
RALEIGH

BRIDGE NO. 193 ON NC 251
OVER FLAT CREEK

EROSION CONTROL PLAN AND DETAILS ARE PROVIDED BY THE NCDOT ROADSIDE ENVIROMENTAL UNIT

REVISIONS						SHEET NO.
NO.	BY	DATE	NO.	BY	DATE	31
1			3			TOTAL SHEETS
2			4			53

PLOT: 3/24/2009 12:02:21 AM Ko & Associates, P.C.
FILE NAME: R:\Structures\170_sed.dgn

PROJECT REFERENCE NO.	SHEET NO.
MA13010B	
R/W SHEET NO.	

NORTH CAROLINA PROFESSIONAL SEAL 12323 ENGINEER MORRIS ISRAELNAIM 1/4/08

ROADWAY STANDARD DRAWINGS

THE FOLLOWING ROADWAY STANDARDS AS APPEAR IN "ROADWAY STANDARD DRAWINGS"-ROADWAY DESIGN UNIT-N.C. DEPARTMENT OF TRANSPORTATION-RALEIGH, N.C., DATED JULY 2006 ARE APPLICABLE TO THIS PROJECT AND BY REFERENCE HEREBY ARE CONSIDERED A PART OF THESE PLANS:

STD. NO.	TITLE
1101.03	TEMPORARY ROAD CLOSURES
1101.11	TRAFFIC CONTROL DESIGN TABLES
1101.06	WARNING SIGNS FOR BLASTING ZONES
1110.01	STATIONARY WORK ZONE SIGNS
1110.02	PORTABLE WORK ZONE SIGNS
1150.01	FLAGGERS
1160.01	TEMPORARY CRASH CUSHION
1170.01	PORTABLE CONCRETE BARRIER
1205.01	PAVEMENT MARKINGS - LINE TYPES & OFFSETS
1205.02	PAVEMENT MARKINGS - 2 LANE & MULTILANE ROADWAYS
1205.12	PAVEMENT MARKINGS - BRIDGES
1250.01	PAVEMENT MARKER SPACING
1251.01	RAISED PAVEMENT MARKERS (TEMPORARY & PERMANENT)
1261.01	GUARDRAIL & BARRIER DELINEATOR SPACING
1261.02	GUARDRAIL & BARRIER DELINEATOR TYPES
1262.01	GUARDRAIL END DELINEATION

INDEX OF SHEETS

SHEET NO.	TITLE
31	LIST OF APPLICABLE ROADWAY STANDARD DRAWINGS, LEGEND, PAV'T MARKING SCHEDULE AND INDEX OF SHEETS
32	GENERAL NOTES
33	PHASE I PHASING AND OVERVIEW
34	PHASE II PHASING AND OVERVIEW
35	DETOUR ROUTE
36	PHASE III PHASING AND OVERVIEW
37	ADVANCE WARNING WORK ZONE SIGNS FOR "MOVING AHEAD"
38	SIGN DESIGN FOR CONTRACTORS COMPANY NAME
39	SIGN DESIGN FOR DETOUR ROUTE
40	STANDARD DRAWING FOR DRUMS
41	STANDARD DRAWING FOR TYPE III BARRICADES

PAV'T MARKING SCHEDULE

SYMBOL	DESCRIPTION	QUANTITY BREAKDOWN	PAY ITEM	TOTAL QUANTITY
		PAVEMENT MARKING LINES		
			THERMOPLASTIC (4", 90mils)	
TA	WHITE EDGELINE	2,220 LF		
			TOTAL	2,220 LF
			THERMOPLASTIC (4", 120mils)	
TI	YELLOW DOUBLE CENTER LINE	2,220 LF		
TD	2 ft WHITE MINISKIP	19 LF		
			TOTAL	2,239 LF
			THERMOPLASTIC (24", 120mils)	
T2	WHITE STOP BAR	48 LF		
			TOTAL	48 LF
			PAINT (4")	
PA	WHITE EDGELINE 2X	5,420 LF		
PD	2 ft WHITE MINISKIP 2X	38 LF		
PI	YELLOW DOUBLE CENTER LINE 2X	2,220 LF		
			TOTAL	7,678 LF
			PAINT (24")	
P4	WHITE STOP BAR 2X	75 LF		
			TOTAL	75 LF
		PAVEMENT MARKERS (FINAL)		
			RAISED (PERMANENT)	
MA	YELLOW & YELLOW	14 EA		
			TOTAL	14 EA
		PAVEMENT MARKERS (TEMPORARY)		
			RAISED (TEMPORARY)	
MH	YELLOW & YELLOW	14 EA		
MP	CRYSTAL & CRYSTAL	160 EA		
			TOTAL	174 EA

LEGEND

GENERAL

- DIRECTION OF TRAFFIC FLOW
- NORTH ARROW
- PROPOSED PVMT.
- EXIST. PVMT.
- PROPOSED CONSTRUCTION

TRAFFIC CONTROL DEVICES

- TYPE I BARRICADE
- TYPE II BARRICADE
- TYPE III BARRICADE
- CONE
- DRUM
- FLASHING ARROW PANEL (TYPE C)
- TYPE 'B' WARNING LIGHT
- STATIONARY SIGN
- PORTABLE SIGN
- WARNING FLAGS
- CRASH CUSHION
- CHANGEABLE MESSAGE SIGN
- TRUCK MOUNTED IMPACT ATTENUATOR (TMIA)
- POLICE
- FLAGGER
- DRUM (PROFILE)

PAVEMENT MARKINGS

- CRYSTAL PAVEMENT MARKER
- YELLOW/YELLOW PAVEMENT MARKER
- CRYSTAL/RED PAVEMENT MARKER
- PAVEMENT MARKING SYMBOLS

PROJECT NO. 37581
COUNTY: BUNCOMBE
STATION: 15+37.40
REPLACES BRIDGE NO. 193

STATE OF NORTH CAROLINA
DEPARTMENT OF TRANSPORTATION
RALEIGH

BRIDGE NO. 193 ON NC 251
OVER FLAT CREEK

KO & ASSOCIATES, P.C.
Consulting Engineers
5121 KINGDOM WAY, SUITE 100 RALEIGH, N.C. 27607
(919) 851-6066

REVISIONS						
NO.	BY	DATE	NO.	BY	DATE	
1			3			
2			4			

SHEET NO. 32
TOTAL SHEETS 53

7/2/99
$$$$$$SYSTIME$$$$$$
$$$$$$$$$$$$$$$$DGN$$$$$$$$$$$$$$$$$$$$
$$$$$$USERNAME$$$$

PROJECT REFERENCE NO.	SHEET NO.
MA13010B	
R/W SHEET NO.	

NORTH CAROLINA PROFESSIONAL SEAL 12323 ENGINEER MORRIS ISRAELNAM
01-04-08

PROJECT NOTES

GENERAL NOTES

ADAPT THE TRAFFIC CONTROL PLANS, WHEN DIRECTED BY THE ENGINEER, TO MEET FIELD CONDITIONS TO PROVIDE SAFE AND EFFICIENT TRAFFIC MOVEMENT. CHANGES MAY BE REQUIRED WHEN PHYSICAL DIMENSIONS IN THE DETAIL DRAWINGS, STANDARD DETAILS AND ROADWAY DETAILS ARE NOT ATTAINABLE, OR RESULT IN DUPLICATE, OR UNDESIRED OVERLAPPING OF DEVICES. MODIFICATION MAY INCLUDE: MOVING, SUPPLEMENTING, COVERING OR REMOVAL OF DEVICES.

THE FOLLOWING GENERAL NOTES APPLY AT ALL TIMES FOR THE DURATION OF THE CONSTRUCTION PROJECT, EXCEPT WHEN OTHERWISE NOTED IN THE PLAN, OR DIRECTED BY THE ENGINEER.

LANE AND SHOULDER CLOSURE REQUIREMENTS

A) REMOVE LANE CLOSURE DEVICES FROM THE LANE WHEN WORK IS NOT BEING PERFORMED BEHIND THE LANE CLOSURE OR WHEN A LANE CLOSURE IS NO LONGER NEEDED, OR AS DIRECTED BY THE ENGINEER.

B) WHEN PERSONNEL AND/OR EQUIPMENT ARE WORKING ON THE SHOULDER ADJACENT TO AN UNDIVIDED FACILITY AND WITHIN 5 FT OF AN OPEN TRAVEL LANE, CLOSE THE NEAREST OPEN TRAVEL LANE USING ROADWAY STANDARD DRAWING NO. 1101.02 UNLESS THE WORK AREA IS PROTECTED BY BARRIER OR GUARDRAIL.

C) WHEN PERSONNEL AND/OR EQUIPMENT ARE WORKING WITHIN A LANE OF TRAVEL OF AN UNDIVIDED FACILITY, CLOSE THE LANE ACCORDING TO THE TRAFFIC CONTROL PLANS, ROADWAY STANDARD DRAWINGS OR AS DIRECTED BY THE ENGINEER. CONDUCT THE WORK SO THAT ALL PERSONNEL AND/OR EQUIPMENT REMAIN WITHIN THE CLOSED TRAVEL LANE.

PAVEMENT EDGE DROP OFF REQUIREMENTS

D) BACKFILL AT A 6:1 SLOPE UP TO THE EDGE AND ELEVATION OF EXISTING PAVEMENT IN AREAS ADJACENT TO AN OPENED TRAVEL LANE THAT HAS A DROP-OFF AS FOLLOWS:

BACKFILL DROP-OFFS THAT EXCEED 2 INCHES ON ROADWAYS WITH POSTED SPEED LIMITS OF 45 MPH OR GREATER.

BACKFILL DROP-OFFS THAT EXCEED 3 INCHES ON ROADWAYS WITH POSTED SPEED LIMITS LESS THAN 45 MPH.

BACKFILL WITH SUITABLE COMPACTED MATERIAL, AS APPROVED BY THE ENGINEER, AT NO EXPENSE TO THE DEPARTMENT.

E) DO NOT EXCEED A DIFFERENCE OF 1.5 inches IN ELEVATION BETWEEN OPEN LANES OF TRAFFIC. INSTALL ADVANCE WARNING "UNEVEN LANES" SIGNS (W8-11) 500 FT IN ADVANCE AND A MINIMUM OF ONCE EVERY MILE THROUGHOUT THE UNEVEN AREA.

TRAFFIC PATTERN ALTERATIONS

F) NOTIFY THE ENGINEER TWENTY ONE (21) CALENDAR DAYS PRIOR TO ANY TRAFFIC PATTERN ALTERATION.

SIGNING

G) INSTALL ADVANCE WORK ZONE WARNING SIGNS WHEN WORK IS WITHIN 100 FT (31m) FROM THE EDGE OF TRAVEL LANE AND NO MORE THAN THREE (3) DAYS PRIOR TO THE BEGINNING OF CONSTRUCTION.

WHEN NO WORK IS BEING CONDUCTED FOR A PERIOD LONGER THAN ONE WEEK, REMOVE OR COVER ALL ADVANCE WORK ZONE WARNING SIGNS, AS DIRECTED BY THE ENGINEER, AT NO COST TO THE DEPARTMENT.

H) ENSURE ALL NECESSARY SIGNING IS IN PLACE PRIOR TO ALTERING ANY TRAFFIC PATTERN.

TRAFFIC BARRIER

I) INSTALL PORTABLE CONCRETE BARRIER ACCORDING TO THE TRAFFIC CONTROL PLANS A MAXIMUM OF TWO (2) WEEKS PRIOR TO BEGINNING WORK IN ANY LOCATION. ONCE PORTABLE CONCRETE BARRIER IS INSTALLED AT ANY LOCATION, PROCEED IN A CONTINUOUS MANNER TO COMPLETE THE PROPOSED WORK IN THAT LOCATION UNLESS OTHERWISE STATED IN THE TRAFFIC CONTROL PLANS OR AS DIRECTED BY THE ENGINEER.

ONCE PORTABLE CONCRETE BARRIER IS INSTALLED AT ANY LOCATION AND NO WORK IS PERFORMED BEHIND THE PORTABLE CONCRETE BARRIER FOR A PERIOD LONGER THAN TWO (2) MONTHS, REMOVE/RESET PORTABLE CONCRETE BARRIER AT NO COST TO THE DEPARTMENT UNLESS OTHERWISE STATED IN THE TRAFFIC CONTROL PLANS, BARRIER IS PROTECTING A HAZARD, OR AS DIRECTED BY THE ENGINEER.

J) PROTECT THE APPROACH END OF PORTABLE CONCRETE BARRIER AT ALL TIMES DURING THE INSTALLATION AND REMOVAL OF THE BARRIER BY EITHER A TRUCK MOUNTED IMPACT ATTENUATOR (MAXIMUM 72 HOURS) OR A TEMPORARY CRASH CUSHION.

OFFSET THE APPROACH END OF PORTABLE CONCRETE BARRIER A MINIMUM OF 40 FT FROM ONCOMING TRAFFIC OR PROTECT AT ALL TIMES BY A TEMPORARY CRASH CUSHION.

INSTALL PORTABLE CONCRETE BARRIER WITH THE TRAFFIC FLOW, BEGINNING WITH THE UPSTREAM SIDE OF TRAFFIC. REMOVE PORTABLE CONCRETE BARRIER AGAINST THE TRAFFIC FLOW, BEGINNING WITH THE DOWNSTREAM SIDE OF TRAFFIC.

INSTALL AND SPACE DRUMS NO GREATER THAN TWICE THE POSTED SPEED LIMIT (MPH) TO CLOSE OR KEEP CLOSED THE SECTION OF THE ROADWAY UNTIL THE BARRIER CAN BE PLACED OR AFTER BARRIER IS REMOVED.

TRAFFIC CONTROL DEVICES

K) SPACE DRUMS IN WORK AREAS NO GREATER THAN TWICE THE POSTED SPEED LIMIT (MPH), EXCEPT 10 FT ON-CENTER IN RADII, AND 3 FT OFF THE EDGE OF AN OPEN TRAVELWAY, WHEN LANE CLOSURES ARE NOT IN EFFECT.

PAVEMENT MARKINGS AND MARKERS

L) INSTALL PAVEMENT MARKINGS AND PAVEMENT MARKERS ON THE FINAL SURFACE AS FOLLOWS:

ROAD NAME	MARKING	MARKER
NC 251 (OLD MARSHALL HWY.)	THERMOPLASTIC	SNOWPLOWABLE RAISED

M) INSTALL TEMPORARY PAVEMENT MARKINGS AND TEMPORARY PAVEMENT MARKERS ON INTERIM LAYERS OF PAVEMENT AS FOLLOWS:

ROAD NAME	MARKING	MARKER
NC 251 (OLD MARSHALL HWY.)	PAINT	TEMPORARY RAISED

N) PLACE AT LEAST TWO APPLICATIONS OF PAINT PAVEMENT MARKINGS ON THE FINAL WEARING SURFACE ON NEW ASPHALT PAVEMENT. PLACE ADDITIONAL APPLICATIONS OF PAINT UPON SUFFICIENT DRYING TIME, AS DETERMINED BY THE ENGINEER.

O) TIE PROPOSED PAVEMENT MARKING LINES TO EXISTING PAVEMENT MARKING LINES.

P) PLACE AT LEAST TWO APPLICATIONS OF PAINT ON NEW ASPHALT WITH TEMPORARY TRAFFIC PATTERNS WHICH WILL REMAIN IN PLACE OVER THREE (3) MONTHS. PLACE ADDITIONAL APPLICATIONS OF PAINT UPON SUFFICIENT DRYING TIME, AS DETERMINED BY THE ENGINEER.

LOCAL NOTES

1) CONTRACTOR TO MAINTAIN ACCESS TO ALL DRIVEWAYS, WITHIN THE PROJECT LIMITS, AT ALL TIMES.

PROJECT NO. 37581
COUNTY: BUNCOMBE
STATION: 15+37.40
REPLACES BRIDGE NO. 193

STATE OF NORTH CAROLINA
DEPARTMENT OF TRANSPORTATION
RALEIGH

BRIDGE NO. 193 ON NC 251
OVER FLAT CREEK

KO & ASSOCIATES, P.C.
Consulting Engineers
5121 KINGDOM WAY, SUITE 100 RALEIGH, N.C. 27607
(919) 851-6066

REVISIONS								SHEET NO.
NO.	BY	DATE	NO.	BY	DATE			33
1			3					TOTAL SHEETS
2			4					53

7/2/99
$$$$$$SYSTIME$$$$$$
$$$$$$$$$$$$$$$$DGN$$$$$$$$$$$$$$$$$$$$
$$$$$$USERNAME$$$$$$

PROJECT REFERENCE NO.	SHEET NO.
MA13010B	
R/W SHEET NO.	

NORTH CAROLINA PROFESSIONAL SEAL 12323 ENGINEER MORRIS ISRAELNAIN 01-09-08

PHASE I OVERVIEW

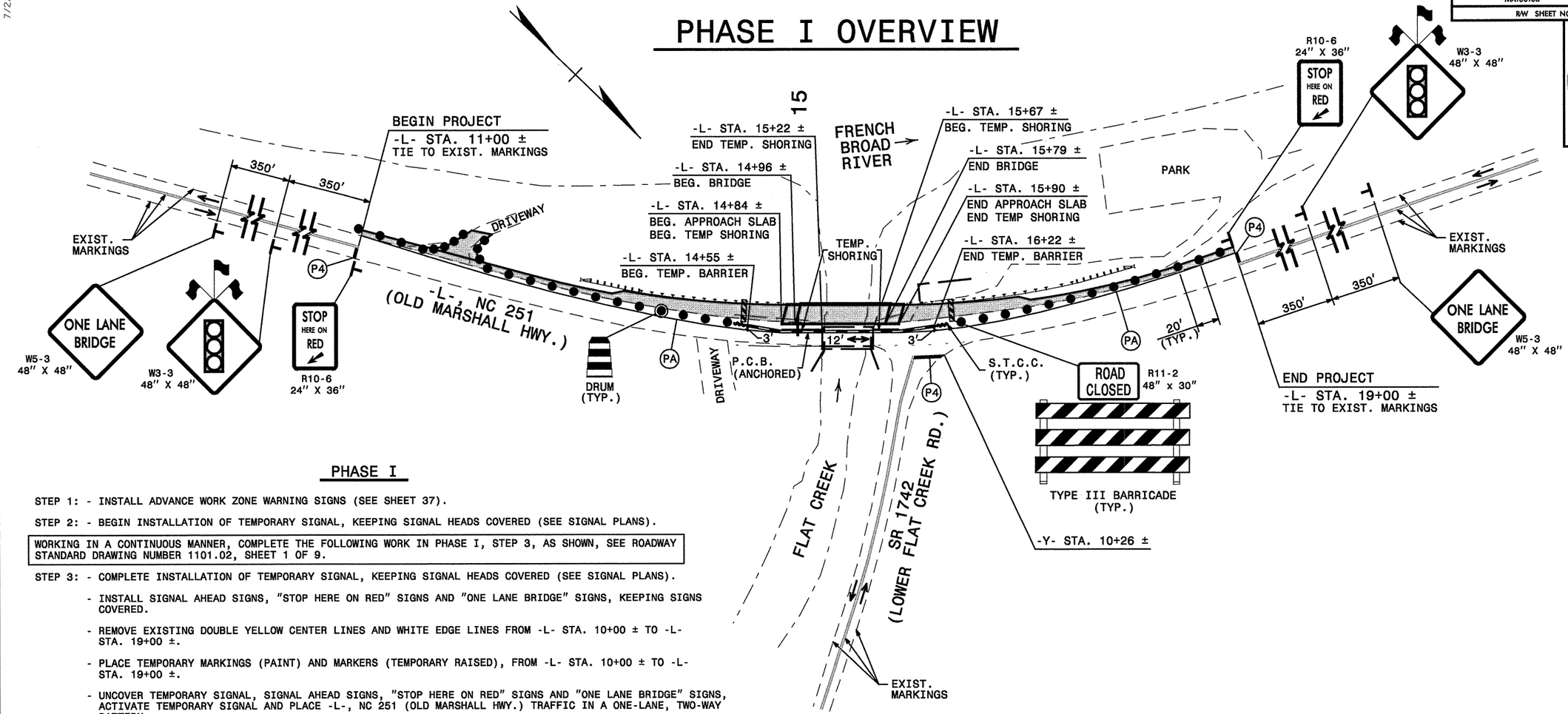

PHASE I

STEP 1: - INSTALL ADVANCE WORK ZONE WARNING SIGNS (SEE SHEET 37).

STEP 2: - BEGIN INSTALLATION OF TEMPORARY SIGNAL, KEEPING SIGNAL HEADS COVERED (SEE SIGNAL PLANS).

WORKING IN A CONTINUOUS MANNER, COMPLETE THE FOLLOWING WORK IN PHASE I, STEP 3, AS SHOWN, SEE ROADWAY STANDARD DRAWING NUMBER 1101.02, SHEET 1 OF 9.

STEP 3: - COMPLETE INSTALLATION OF TEMPORARY SIGNAL, KEEPING SIGNAL HEADS COVERED (SEE SIGNAL PLANS).

- INSTALL SIGNAL AHEAD SIGNS, "STOP HERE ON RED" SIGNS AND "ONE LANE BRIDGE" SIGNS, KEEPING SIGNS COVERED.

- REMOVE EXISTING DOUBLE YELLOW CENTER LINES AND WHITE EDGE LINES FROM -L- STA. 10+00 ± TO -L- STA. 19+00 ±.

- PLACE TEMPORARY MARKINGS (PAINT) AND MARKERS (TEMPORARY RAISED), FROM -L- STA. 10+00 ± TO -L- STA. 19+00 ±.

- UNCOVER TEMPORARY SIGNAL, SIGNAL AHEAD SIGNS, "STOP HERE ON RED" SIGNS AND "ONE LANE BRIDGE" SIGNS, ACTIVATE TEMPORARY SIGNAL AND PLACE -L-, NC 251 (OLD MARSHALL HWY.) TRAFFIC IN A ONE-LANE, TWO-WAY PATTERN.

STEP 4: - USING FLAGGERS, FLAGGER AHEAD SIGNS AND DRUMS, PLACE TEMPORARY BARRIER LEFT OF -L- FROM -L- STA. 14+55 ± TO -L- STA. 16+22 ±, AS SHOWN (SEE SHEET 2, STAGE 1).

STEP 5: - BEHIND TEMPORARY BARRIER, REMOVE LEFT PORTION OF EXISTING STRUCTURE, (SEE SHEET 2, STAGE 1).

STEP 6: - BEHIND TEMPORARY BARRIER, PLACE TEMPORARY SHORING-BARRIER SUPPORTED LEFT OF -L- AT THE FOLLOWING LOCATIONS, AS SHOWN:

-L- STA. 14+84 ± TO -L- STA. 15+22 ±
-L- STA. 15+67 ± TO -L- STA. 15+90 ±

STEP 7: - BEHIND TEMPORARY BARRIER, BEGIN CONSTRUCTION OF PROPOSED STRUCTURE, LEFT OF -L- FROM -L- STA. 14+84 ± TO -L- STA. 15+90 ±, AS SHOWN (SEE STRUCTURE PLANS AND SHEET 2, STAGE 2).

STEP 8: - BEHIND TEMPORARY BARRIER AND USING FLAGGERS, FLAGGER AHEAD SIGNS AND DRUMS, CONSTRUCT LEFT OF -L-, UP TO THE EXISTING EDGE AND ELEVATION, BUT NOT INCLUDING THE FINAL LAYER OF SURFACE COURSE, EXCLUDING SHOULDER BERM GUTTERS FROM -L- STA. 11+00 ± TO -L- STA. 19+00 ±, AS SHOWN (SEE ROADWAY PLANS).

STEP 9: - BEHIND TEMPORARY BARRIER, COMPLETE CONSTRUCTION OF PROPOSED STRUCTURE, LEFT OF -L- FROM -L- STA. 14+84 ± TO -L- STA. 15+90 ±, AS SHOWN (SEE STRUCTURE PLANS AND SHEET 2, STAGE 2).

NOTES:

1) REPLACE ANY DAMAGED OR MISSING TYPE 3 OBJECT MARKER ON THE NORTH SIDE OF THE EXIST. BRIDGE.

2) PLACE TEMPORARY RAISED PAVEMENT MARKERS ON THE EXIST. BRIDGE AND APPROACHES IN ACCORDANCE WITH ROADWAY STANDARD DRAWING NUMBER 1205.12, SHEET 1 OF 1 (ONE LANE BRIDGE).

LEGEND

PROPOSED CONSTRUCTION

PROJECT NO. 37581
COUNTY: BUNCOMBE
STATION: 15+37.40
REPLACES BRIDGE NO. 193

STATE OF NORTH CAROLINA
DEPARTMENT OF TRANSPORTATION
RALEIGH

BRIDGE NO. 193 ON NC 251
OVER FLAT CREEK

KO & ASSOCIATES, P.C.
Consulting Engineers
5121 KINGDOM WAY, SUITE 100 RALEIGH, N.C. 27607
(919) 851-6056

REVISIONS						SHEET NO.
NO.	BY	DATE	NO.	BY	DATE	34
1			3			TOTAL SHEETS
2			4			53

7/2/99
$$$$$$$$SYSTIME$$$$$$$$
$$$$$$$$$$$$$$$$DGN$$$$$$$$$$$$$$$$$$$$
$$$$$$$$$$$$$$$$USERNAME$$$$$$$$$$$$$$$$

PROJECT REFERENCE NO.	SHEET NO.
MA13010B	
R/W SHEET NO.	

PHASE II OVERVIEW

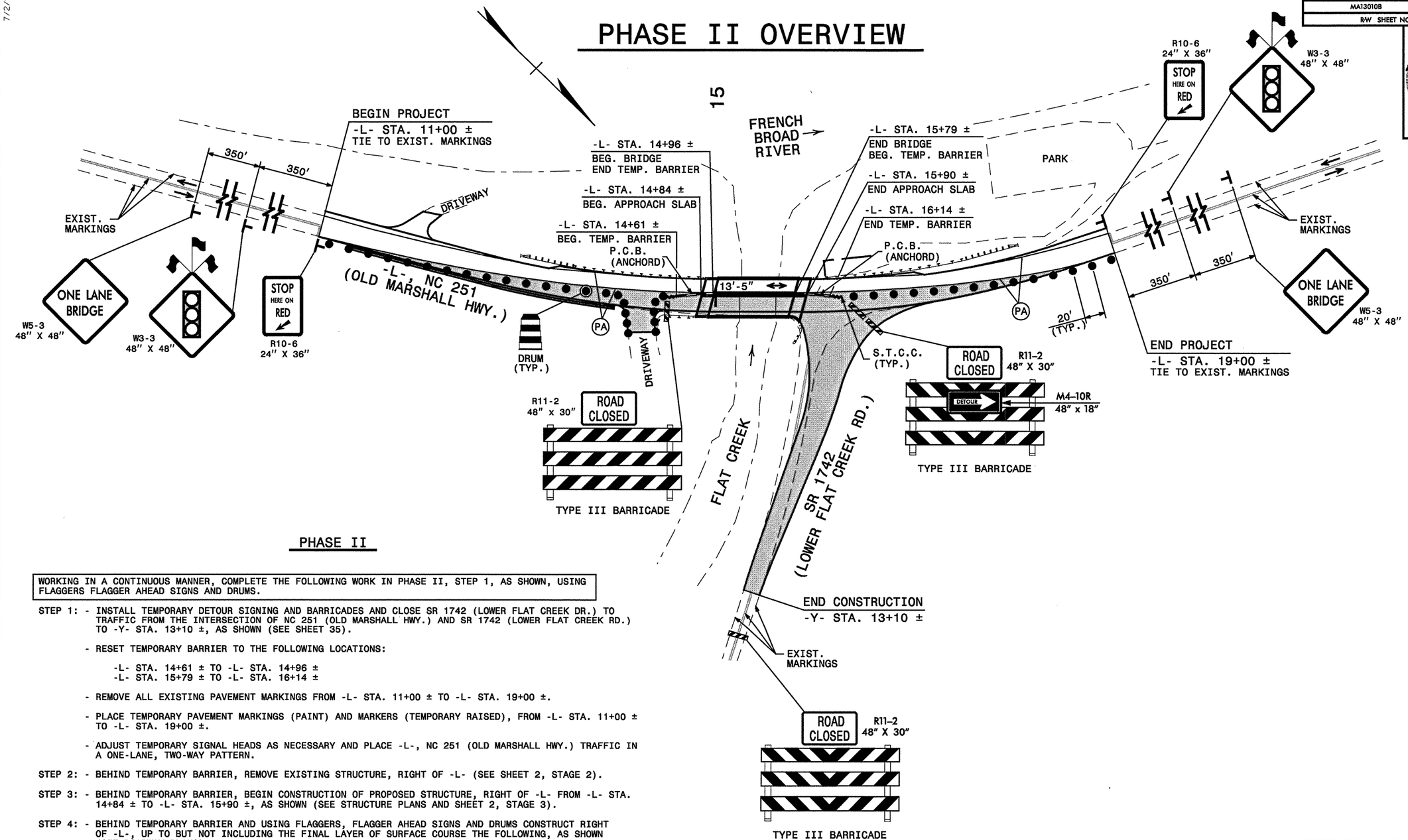

PHASE II

WORKING IN A CONTINUOUS MANNER, COMPLETE THE FOLLOWING WORK IN PHASE II, STEP 1, AS SHOWN, USING FLAGGERS FLAGGER AHEAD SIGNS AND DRUMS.

STEP 1: - INSTALL TEMPORARY DETOUR SIGNING AND BARRICADES AND CLOSE SR 1742 (LOWER FLAT CREEK DR.) TO TRAFFIC FROM THE INTERSECTION OF NC 251 (OLD MARSHALL HWY.) AND SR 1742 (LOWER FLAT CREEK RD.) TO -Y- STA. 13+10 ±, AS SHOWN (SEE SHEET 35).

- RESET TEMPORARY BARRIER TO THE FOLLOWING LOCATIONS:

  -L- STA. 14+61 ± TO -L- STA. 14+96 ±
  -L- STA. 15+79 ± TO -L- STA. 16+14 ±

- REMOVE ALL EXISTING PAVEMENT MARKINGS FROM -L- STA. 11+00 ± TO -L- STA. 19+00 ±.

- PLACE TEMPORARY PAVEMENT MARKINGS (PAINT) AND MARKERS (TEMPORARY RAISED), FROM -L- STA. 11+00 ± TO -L- STA. 19+00 ±.

- ADJUST TEMPORARY SIGNAL HEADS AS NECESSARY AND PLACE -L-, NC 251 (OLD MARSHALL HWY.) TRAFFIC IN A ONE-LANE, TWO-WAY PATTERN.

STEP 2: - BEHIND TEMPORARY BARRIER, REMOVE EXISTING STRUCTURE, RIGHT OF -L- (SEE SHEET 2, STAGE 2).

STEP 3: - BEHIND TEMPORARY BARRIER, BEGIN CONSTRUCTION OF PROPOSED STRUCTURE, RIGHT OF -L- FROM -L- STA. 14+84 ± TO -L- STA. 15+90 ±, AS SHOWN (SEE STRUCTURE PLANS AND SHEET 2, STAGE 3).

STEP 4: - BEHIND TEMPORARY BARRIER AND USING FLAGGERS, FLAGGER AHEAD SIGNS AND DRUMS CONSTRUCT RIGHT OF -L-, UP TO BUT NOT INCLUDING THE FINAL LAYER OF SURFACE COURSE THE FOLLOWING, AS SHOWN (SEE ROADWAY PLANS):

  -L- FROM STA. 11+00 ± TO STA. 19+00 ±
  -Y- FROM STA. 10+00 ± TO STA. 13+10 ±

STEP 5: - BEHIND TEMPORARY BARRIER, COMPLETE CONSTRUCTION OF PROPOSED STRUCTURE RIGHT OF -L- FROM -L- STA. 14+84 ± TO -L- STA. 15+90 ± (SEE STRUCTURE PLANS AND SHEET 2, STAGE 3).

NOTE:

1) PLACE TEMPORARY RAISED PAVEMENT MARKERS ON THE PROPOSED BRIDGE AND APPROACHES IN ACCORDANCE WITH ROADWAY STANDARD DRAWING NUMBER 1205.12, SHEET 1 OF 1 (ONE LANE BRIDGE).

LEGEND

PROPOSED CONSTRUCTION

PROJECT NO. 37581
COUNTY: BUNCOMBE
STATION: 15+37.40
REPLACES BRIDGE NO. 193

STATE OF NORTH CAROLINA
DEPARTMENT OF TRANSPORTATION
RALEIGH

BRIDGE NO. 193 ON NC 251
OVER FLAT CREEK

KO & ASSOCIATES, P.C.
Consulting Engineers
5121 KINGDOM WAY, SUITE 100 RALEIGH, N.C. 27607
(919) 851-5066

REVISIONS						SHEET NO.
NO.	BY	DATE	NO.	BY	DATE	35
1			3			TOTAL SHEETS
2			4			53

NORTH CAROLINA PROFESSIONAL SEAL 12323 ENGINEER MORRIS ISRAELWAM
01-04-08

7/2/99

$$$$$$$SYSTIME$$$$$
$$$$$$$$$$$$$$$DGN$$$$$$$$$$$$$$$$$$$$
$$$$$USERNAME$$$$

PROJECT REFERENCE NO.	SHEET NO.
MA13010B	
R/W SHEET NO.	

NORTH CAROLINA PROFESSIONAL SEAL 12323 ENGINEER MORRIS ISRAELNAIM

01-04-08

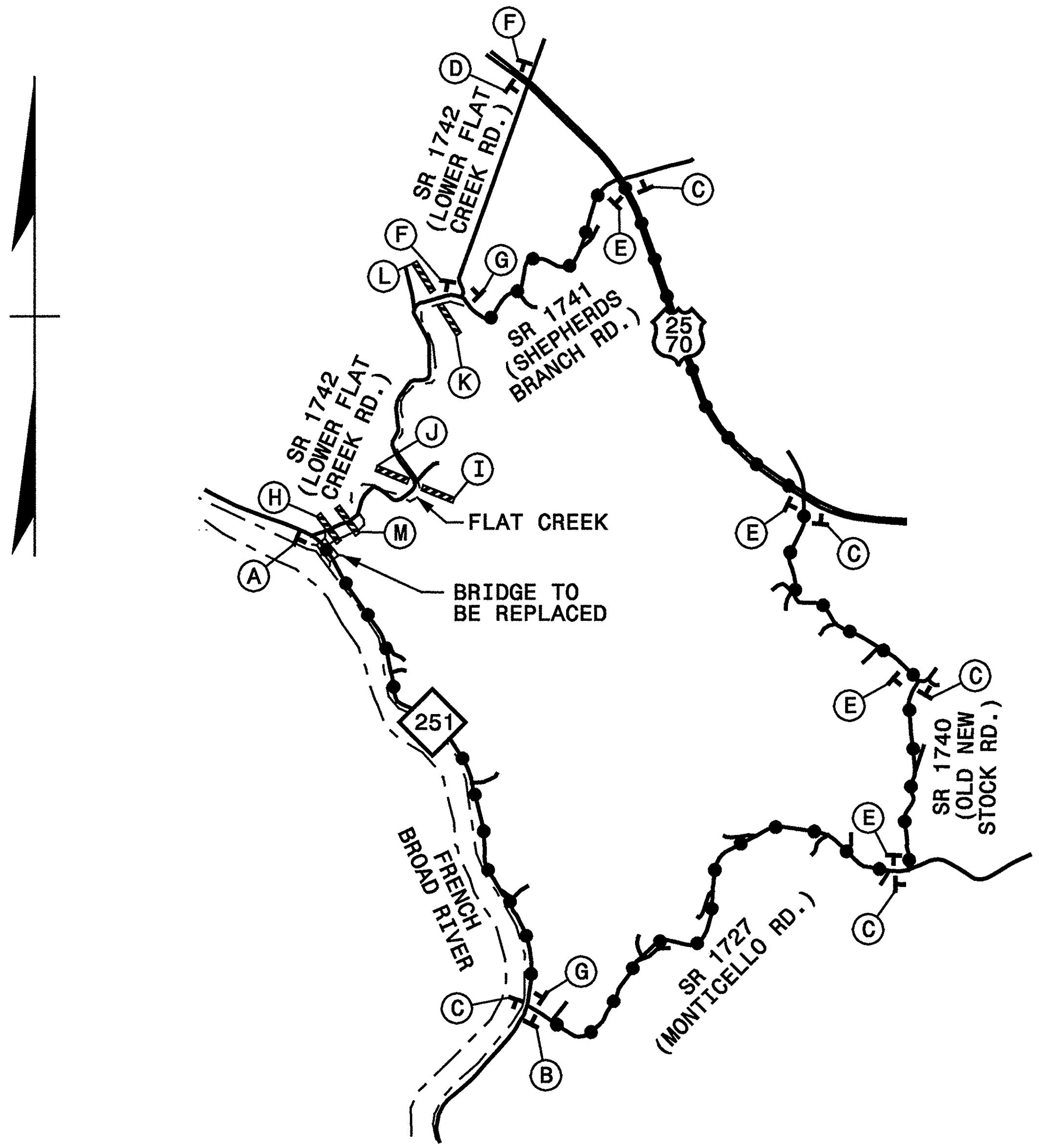

DETOUR — M4-8 24" x 12"
LOWER FLAT CREEK RD
↑ — M6-3 21" x 15"

(A)

DETOUR — M4-8 24" x 12"
LOWER FLAT CREEK RD
→ — M6-1R 21" x 15"

(B)

DETOUR — M4-8 24" x 12"
LOWER FLAT CREEK RD
← — M6-1L 21" x 15"

(C)

DETOUR — M4-8 24" x 12"
NC 251
↑ — M6-3 21" x 15"

(D)

DETOUR — M4-8 24" x 12"
NC 251
→ — M6-1R 21" x 15"

(E)

DETOUR — M4-8 24" x 12"
NC 251
← — M6-1L 21" x 15"

(F)

M4-8 A 24" x 18"
END DETOUR

(G)

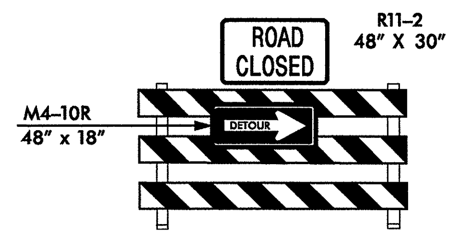

TYPE III BARRICADE

(H)

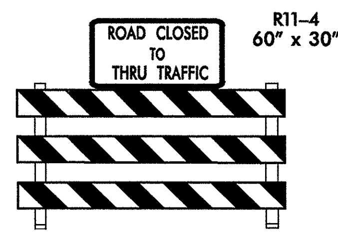

TYPE III BARRICADE

(I)

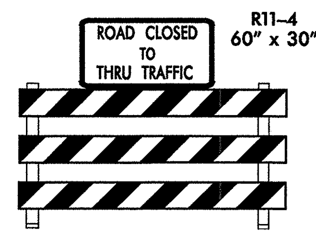

TYPE III BARRICADE

(J)

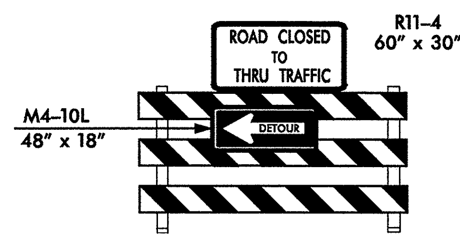

TYPE III BARRICADE

(K)

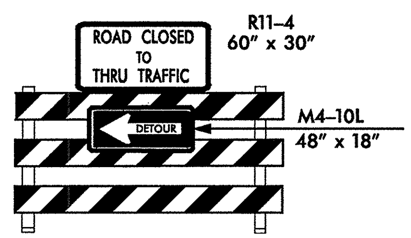

TYPE III BARRICADE

(L)

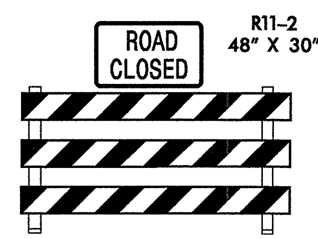

TYPE III BARRICADE

(M)

LEGEND

—●—●—●—●— DETOUR ROUTE

PROJECT NO. 37581
COUNTY: BUNCOMBE
STATION: 15+37.40
REPLACES BRIDGE NO. 193

STATE OF NORTH CAROLINA
DEPARTMENT OF TRANSPORTATION
RALEIGH

BRIDGE NO. 193 ON NC 251
OVER FLAT CREEK

KO & ASSOCIATES, P.C.
Consulting Engineers
5121 KINGDOM WAY, SUITE 100 RALEIGH, N.C. 27607
(919) 851-6066

REVISIONS						SHEET NO.
NO.	BY	DATE	NO.	BY	DATE	36
1			3			TOTAL SHEETS
2			4			53

$$$$$SYSTIME$$$$$
$$$$$$$$DGN$$$$$$$$$$$$$$$$
$$$$$USERNAME$$$$

PROJECT REFERENCE NO.	SHEET NO.
MA13010B	
R/W SHEET NO.	

PHASE III OVERVIEW

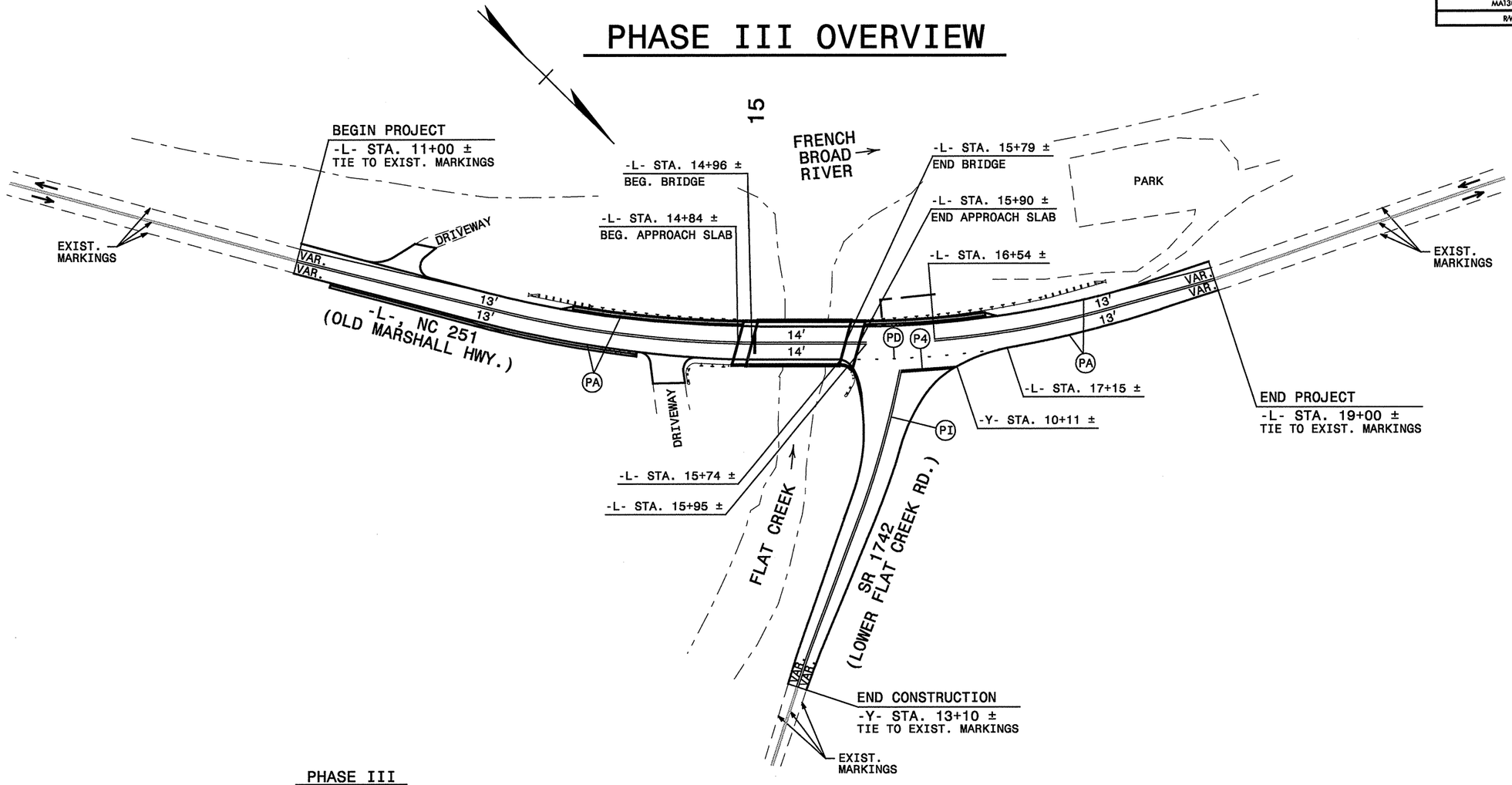

PHASE III

WORKING IN A CONTINUOUS MANNER, COMPLETE THE FOLLOWING WORK IN PHASE III, STEP 1, USING FLAGGERS, FLAGGER AHEAD SIGNS AND DRUMS, AS SHOWN.

STEP 1: - REMOVE TEMPORARY BARRIER AND TEMPORARY BRIDGE RAIL.

- REMOVE ANY CONFLICTING PAVEMENT MARKING LINES AND MARKERS.

- PLACE PAVEMENT MARKINGS (PAINT) AND MARKERS (TEMPORARY RAISED) IN THE FINAL PATTERN AT THE FOLLOWING LOCATIONS:

  -L- FROM STA. 11+00 ± TO -L- STA. 19+00 ±
  -Y- FROM STA. 10+00 ± TO -Y- STA. 13+10 ±

- PLACE NC 251 (OLD MARSHALL HWY.) TRAFFIC IN THE FINAL TWO-LANE, TWO-WAY PATTERN.

- REMOVE ALL DETOUR SIGNING AND BARRICADES AND OPEN SR 1742 (LOWER FLAT CREEK RD.) TO TRAFFIC.

STEP 2: - USING ROADWAY STANDARD DRAWING NUMBER 1101.02, SHEET 1 OF 9, CONSTRUCT LEFT OF -L-, SHOULDER BERM GUTTERS, AT EACH END OF THE STRUCTURE (SEE ROADWAY PLANS).

STEP 3: - USING ROADWAY STANDARD DRAWING NUMBER 1101.02, SHEET 1 OF 9, PLACE THE FINAL LAYER OF SURFACE COURSE, FINAL PAVEMENT MARKINGS (THERMOPLASTIC) AND MARKERS (SNOWPLOWABLE RAISED) IN THE FINAL PATTERN, AT THE FOLLOWING LOCATIONS:

  -L- FROM STA. 11+00 ± TO -L- STA. 19+00 ±
  -Y- FROM STA. 10+00 ± TO -Y- STA. 13+10 ±

STEP 4: - REMOVE ALL TRAFFIC CONTROL DEVICES.

LEGEND

PROPOSED CONSTRUCTION

NORTH CAROLINA PROFESSIONAL SEAL 12323 ENGINEER MORRIS ISRAELIAN
01-04-08

PROJECT NO. 37581
COUNTY: BUNCOMBE
STATION: 15+37.40
REPLACES BRIDGE NO. 193

STATE OF NORTH CAROLINA
DEPARTMENT OF TRANSPORTATION
RALEIGH

BRIDGE NO. 193 ON NC 251
OVER FLAT CREEK

KO & ASSOCIATES, P.C.
Consulting Engineers
6121 KINGDOM WAY, SUITE 100 RALEIGH, N.C. 27607
(919) 851-6066

REVISIONS						SHEET NO.
NO.	BY	DATE	NO.	BY	DATE	37
1			3			TOTAL SHEETS
2			4			53

7/2/96

$$$$$$SYSTIME$$$$$
$$$$$$$$$$$$$$$$DGN$$$$$$$$$$$$$$$$$$
$$$$$$$$USERNAME$$$$

7/2/99

PROJECT REFERENCE NO.	SHEET NO.
MA13010B	
R/W SHEET NO.	

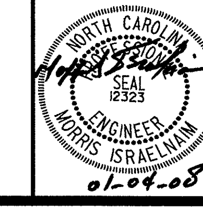

STATE OF NORTH CAROLINA
DEPT. OF TRANSPORTATION
DIVISION OF HIGHWAYS
RALEIGH, N.C.

TWO LANE, TWO WAY WORK ZONE (L-LINES)

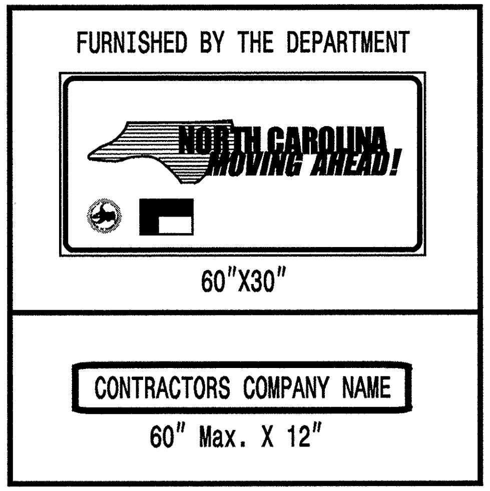

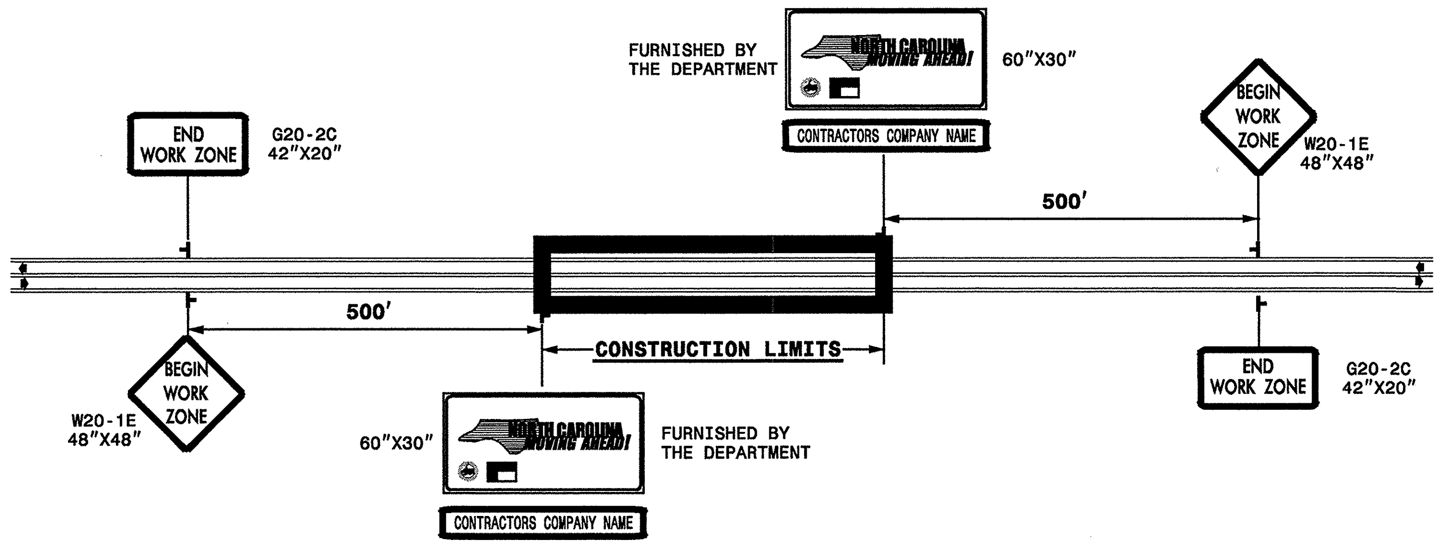

INTERSECTIONS (-Y- LINES)

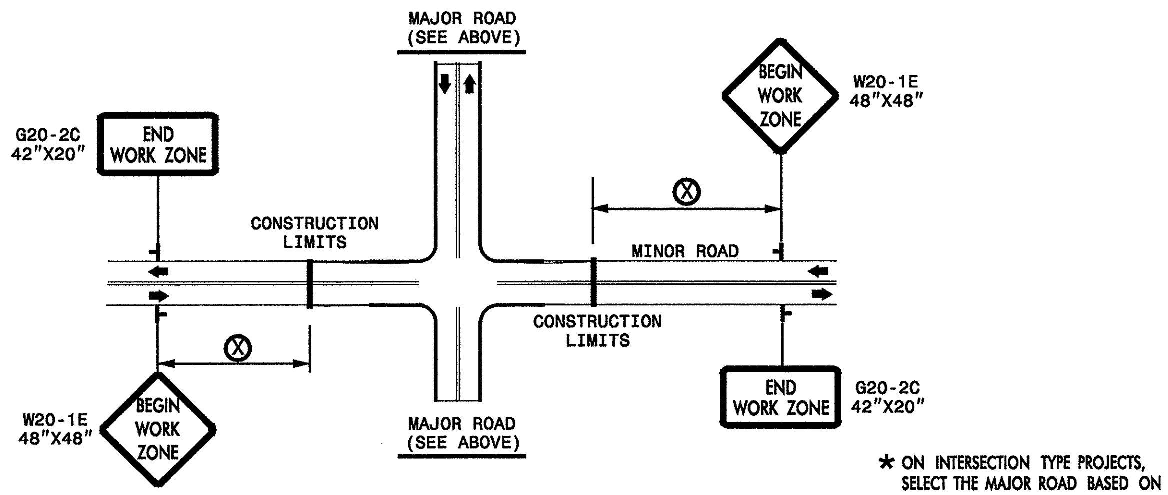

* ON INTERSECTION TYPE PROJECTS, SELECT THE MAJOR ROAD BASED ON THE HIGHER ADT.

FREEWAYS/INTERSTATES

DUAL MOUNT "BEGIN WORK ZONE" SIGNS 1,000' IN ADVANCE OF PROJECT LIMITS

DUAL MOUNT "MOVING AHEAD" SIGNS 500' IN ADVANCE OF PROJECT LIMITS

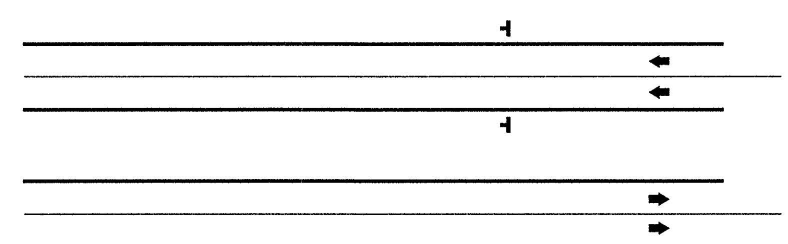

DETAIL DRAWING FOR ADVANCE WARNING WORK ZONE SIGNS

SHEET 1 OF 1

GENERAL NOTES

SEE SPECIAL PROVISIONS FOR "NORTH CAROLINA MOVING AHEAD" REQUIREMENTS.

LEGEND

├ STATIONARY SIGN

◀ DIRECTION OF TRAFFIC FLOW

PROJECT NO. 37581
COUNTY: BUNCOMBE
STATION: 15+37.40
REPLACES BRIDGE NO. 193

STATE OF NORTH CAROLINA
DEPARTMENT OF TRANSPORTATION
RALEIGH

BRIDGE NO. 193 ON NC 251
OVER FLAT CREEK

KO & ASSOCIATES, P.C.
Consulting Engineers
5121 KINGDOM WAY, SUITE 100 RALEIGH, N.C. 27607
(919) 851-6066

REVISIONS					
NO.	BY	DATE	NO.	BY	DATE
1			3		
2			4		

SHEET NO. 38
TOTAL SHEETS 53

$$$$$$SYSTIME$$$$
$$$$$$$$$$DGN$$$$$$$$$$$$$$$$$$$$$
$$$$$$USERNAME$$$$

7/2/99

PROJECT REFERENCE NO.	SHEET NO.
MA13010B	
R/W SHEET NO.	

NORTH CAROLINA PROFESSIONAL SEAL 12323 ENGINEER MORRIS ISRAELNAIM
01-04-08

SIGN DETAIL

SCALE 1:15

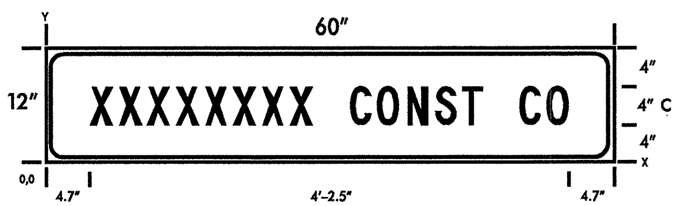

N. C. DEPARTMENT OF TRANSPORTATION DIVISION OF HIGHWAYS TRAFFIC ENGINEERING BRANCH	
SIGN NUMBER:SP03331	DESIGN BY: D IVES DATE:8-11-03
TYPE:D	CHECKED BY: STD. #:0
QUANTITY:N/A	PROJECT ID: DIV:N/A
WIDTHxHEIGHT:60" x 12"	BACKGROUND COLOR:ORANGE
SIGN AREA:5.00 SQ.FT.	COPY COLOR:BLACK
BORDER TYPE:FLUSH	MAJ COPY SERIES:C
RECESS:0.375	
BORDER WIDTH:0.375"	2 U CHANNEL POST(S)
RADII:1.5"	MAT'L: 0.125" ALUMINUM

NOTES:
- Legend and border shall be direct applied non-reflective sheeting.
- Background shall be Type I reflective sheeting.
- If needed, letter size for contractor's name shall be reduced so sign shall not exceed 60 inches in width.
- To be mounted beneath "NC Moving Ahead" sign.

DIMENSIONS IN INCHES

SPACINGS ARE TO START OF NEXT LETTER

Y FONT	LETTER SPACINGS																							HT LEN
4.0		X	X	X	X	X	X	X	X		C	O	N	S	T		C	O						4.0
C	4.7	3.0	3.0	3.0	3.0	3.0	3.0	3.0	2.3	4.0	2.9	3.1	3.0	2.9	2.0	4.0	2.9	2.3	4.7					50.5

file: Const Co Demo.dgn

PROJECT NO. 37581
COUNTY: BUNCOMBE
STATION: 15+37.40
REPLACES BRIDGE NO. 193

STATE OF NORTH CAROLINA
DEPARTMENT OF TRANSPORTATION
RALEIGH

BRIDGE NO. 193 ON NC 251
OVER FLAT CREEK

KO & ASSOCIATES, P.C.
Consulting Engineers
5121 KINGDOM WAY, SUITE 100 RALEIGH, N.C. 27607
(919) 851-6066

REVISIONS						SHEET NO.
NO.	BY	DATE	NO.	BY	DATE	39
1			3			TOTAL SHEETS
2			4			53

$$$$$SYSTIME$$$$
$$$$$$$$$DGN$$$$$$$$$$$$$$$$
$$$$$USERNAME$$$$

PROJECT REFERENCE NO.	SHEET NO.
MA13010B	
R/W SHEET NO.	

NORTH CAROLINA SEAL 12323 ENGINEER MORRIS ISRAELIAN
01-04-08

SIGN NUMR:
TYPE: B or D
QUANTITY:

BACKG COLOR: ORANGE
COPY COLOR: BLACK

DESIGN BY: BLM
PROJECT ID: MA13010B

CK BY:
DIV: 13

STD #: 196
DATE: 1-24-05

MAJOR COPY SERIES: D

SIGN WIDTH: 108 INCHES
HEIGHT: 16 INCHES
TOTAL AREA:(S.F.) 12.00

BORDR TYPE: FLUSH
RECESS: 0.00 INCHES
WIDTH: 0.75 INCHES
RADII: 3.00 INCHES

NO. Z BARS: #N/A VHB:
LENGTH: #N/A INCHES

MAT'L: 0.125 " ALUMINUM

USE NOTES: 1,4
1.Legend and border shall be direct applied Type III reflective sheeting.
2.Legend and border shall be direct applied Type I reflective sheeting.
3.Shields shall be Type III reflective sheeting on .032" aluminum and demountable.
4.Background shall be Type III refl. shtg.
5.Background shall be Type I refl. sheeting.
6.Center arrow(s) vertically on sign.

LOWER FLAT CREEK RD

VERTICAL SPACING INCHES	[y]
5.00	SPACE
6.00	LINE 1
D	11.0
5.00	SPACE
0.00	
0.00	
0.00	
0.00	
0.00	
0.00	
0.00	
0.00	
0.00	
TOTAL: 16	0.00

SIZE/ SERIES		LT MARGIN		SIGN COPY														RT	MARGIN
CHAR:	6.00 INCH			L	O	W	E	R		F	L	A	T		C	R	E		
TYPE:	D		7.36	4.78	5.34	6.37	4.78	4.03	5.46	4.78	4.03	5.40	3.65	5.46	5.16	5.44	4.78		
#/LC:	0.00 INCH		[x]	7.36	12.13	17.48	23.85	28.63	32.66	38.12	42.90	46.93	52.33	55.99	61.45	66.60	72.04		
SPCE:	1.00 FACTOR			E	K		R	D											
	LINE 1			4.78	4.12	5.46	5.44	4.03	0.00	0.00	0.00	0.00	0.00	0.00	0.00	0.00	0.00	7.36	
				76.82	81.59	85.72	91.18	96.61	100.64	0.00	0.00	0.00	0.00	0.00	0.00	0.00	0.00	0.00	

SIGN NUMR:
TYPE: B or D
QUANTITY:

BACKG COLOR: ORANGE
COPY COLOR: BLACK

DESIGN BY: BLM
PROJECT ID: MA13010B

CK BY:
DIV: 1

STD #: 196
DATE: 1-24-05

MAJOR COPY SERIES: D

SIGN WIDTH: 42 INCHES
HEIGHT: 16 INCHES
TOTAL AREA:(S.F.) 4.67

BORDR TYPE: FLUSH
RECESS: 0.00 INCHES
WIDTH: 0.75 INCHES
RADII: 3.00 INCHES

NO. Z BARS: #N/A VHB:
LENGTH: #N/A INCHES

MAT'L: 0.080 " ALUMINUM

USE NOTES: 1,4
1.Legend and border shall be direct applied Type III reflective sheeting.
2.Legend and border shall be direct applied Type I reflective sheeting.
3.Shields shall be Type III reflective sheeting on .032" aluminum and demountable.
4.Background shall be Type III refl. shtg.
5.Background shall be Type I refl. sheeting.
6.Center arrow(s) vertically on sign.

NC 251

VERTICAL SPACING INCHES	[y]
5.00	SPACE
6.00	LINE 1
D	11.0
5.00	SPACE
0.00	
0.00	
0.00	
0.00	
0.00	
0.00	
0.00	
0.00	
0.00	
0.00	
TOTAL: 16	0.00

SIZE/ SERIES		LT MARGIN		SIGN COPY														RT	MARGIN
CHAR:	6.00 INCH			N	C		2	5	1										
TYPE:	D		7.37	5.44	4.03	5.46	5.44	5.44	1.46	0.00	0.00	0.00	0.00	0.00	0.00	0.00	0.00		
#/LC:	0.00 INCH		[x]	7.37	12.81	16.84	22.30	27.73	33.17	34.63	0.00	0.00	0.00	0.00	0.00	0.00	0.00		
SPCE:	1.00 FACTOR																		
	LINE 1			0.00	0.00	0.00	0.00	0.00	0.00	0.00	0.00	0.00	0.00	0.00	0.00	0.00	0.00	7.37	
				0.00	0.00	0.00	0.00	0.00	0.00	0.00	0.00	0.00	0.00	0.00	0.00	0.00	0.00	0.00	

PROJECT NO. 37581
COUNTY: BUNCOMBE
STATION: 15+37.40
REPLACES BRIDGE NO. 193

STATE OF NORTH CAROLINA
DEPARTMENT OF TRANSPORTATION
RALEIGH

BRIDGE NO. 193 ON NC 251
OVER FLAT CREEK

KO & ASSOCIATES, P.C.
Consulting Engineers
5121 KINGDOM WAY, SUITE 100 RALEIGH, N.C. 27607
(919) 851-6066

REVISIONS									
NO.	BY	DATE	NO.	BY	DATE	NO.	BY	DATE	
1			3						
2			4						

SHEET NO. 40
TOTAL SHEETS 53

$$$$$$SYSTIME$$$$$
$$$$$$$$$$$$$$$$DGN$$$$$$$$$$$$$$$$$$$$
$$$$$USERNAME$$$$

PROJECT REFERENCE NO.	SHEET NO.
MA13010B	
R/W SHEET NO.	

NORTH CAROLINA PROFESSIONAL SEAL 12323 ENGINEER MORRIS ISRAELNAIM
01-04-08

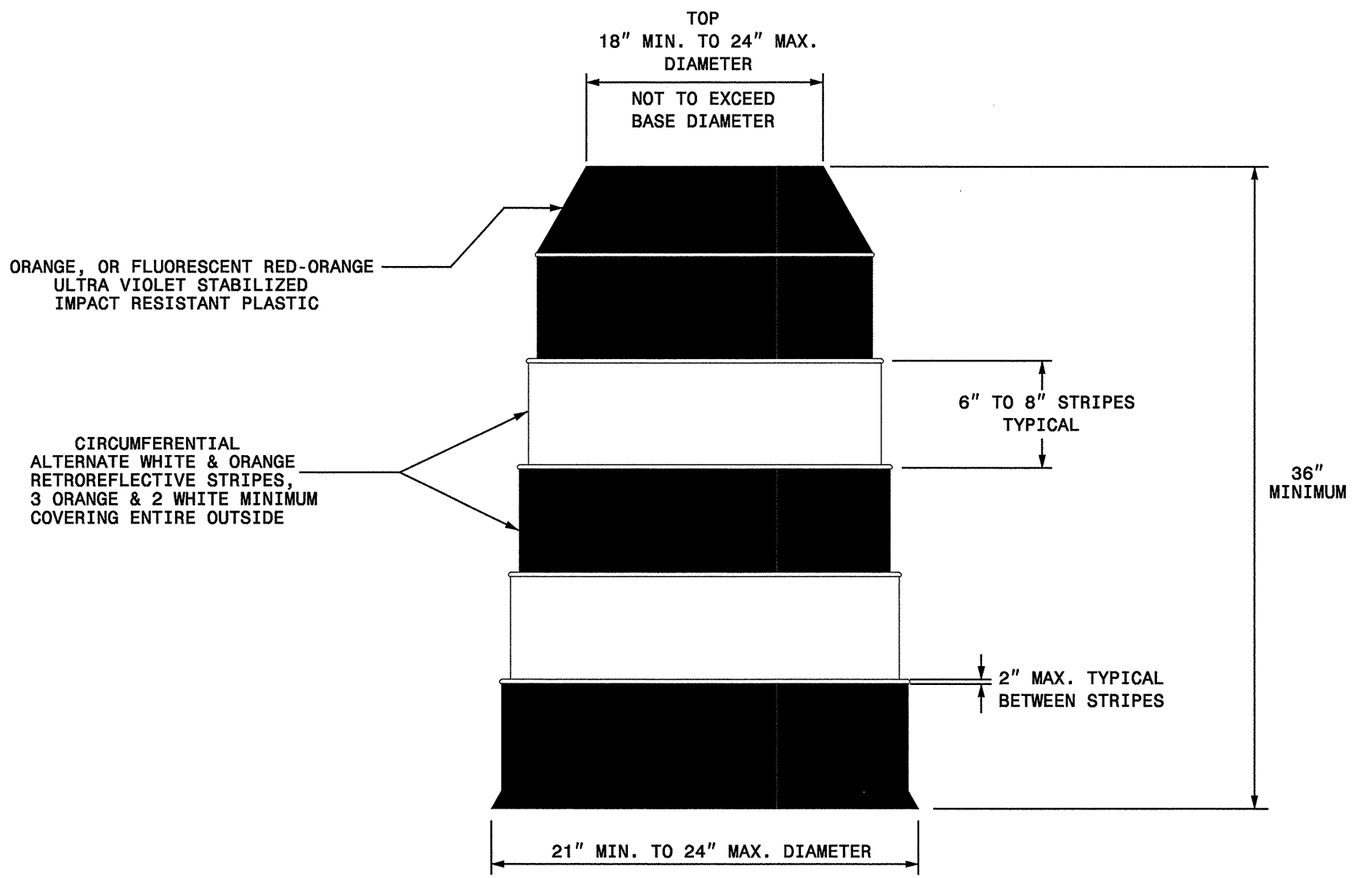

GENERAL NOTES

-BALLASTING SHALL BE ACHIEVED BY THE SAND BAG, TIRE-SIDEWALL BALLAST, OR PREFORMED WEIGHTED BASE BALLASTING METHODS. DO NOT PLACE BALLAST ON TOP OF THE DRUM, NOR AS TO PRESENT A HAZARD WHEN STRUCK.

-IF NECESSARY PLACE THE NAME OF THE AGENCY, CONTRACTOR, OR SUPPLIER ON NON-RETROREFLECTIVE DRUM SURFACES. SHOW THE LETTERS AND NUMBERS USING A NON-RETROREFLECTIVE COLOR AND NOT OVER 2" IN HEIGHT.

STATE OF
NORTH CAROLINA
DEPT. OF TRANSPORTATION
DIVISION OF HIGHWAYS
RALEIGH, N.C.

ENGLISH STANDARD DRAWING FOR
DRUMS

SHEET 1 OF 1

1130D01

PROJECT NO. 37581
COUNTY: BUNCOMBE
STATION: 15+37.40
REPLACES BRIDGE NO. 193

STATE OF NORTH CAROLINA
DEPARTMENT OF TRANSPORTATION
RALEIGH

BRIDGE NO. 193 ON NC 251
OVER FLAT CREEK

KO & ASSOCIATES, P.C.
Consulting Engineers
5121 KINGDOM WAY, SUITE 100 RALEIGH, N.C. 27607
(919) 851-6066

REVISIONS						SHEET NO.
NO.	BY	DATE	NO.	BY	DATE	41
1			3			TOTAL SHEETS
2			4			53

7/2/99

$$$$$$SYSTIME$$$$$
$$$$$$$$$$$$$$$$$$DGN$$$$$$$$$$$$$$$$$$$$
$$$$$$USERNAME$$$$

PROJECT REFERENCE NO.	SHEET NO.
MA130108	
R/W SHEET NO.	

NORTH CAROLINA PROFESSIONAL SEAL 12323 ENGINEER MORRIS ISRAELNAIM
01-04-08

STATE OF NORTH CAROLINA
DEPT. OF TRANSPORTATION
DIVISION OF HIGHWAYS
RALEIGH, N.C.

1-05

ENGLISH STANDARD DRAWING FOR
BARRICADES
TYPE-III

SHEET 1 OF 1
1145D01

TYPE III BARRICADE

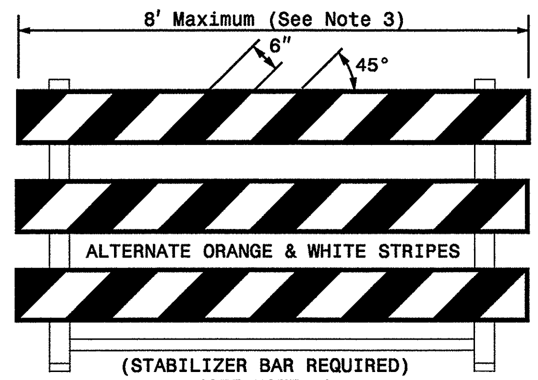

TYPE III BARRICADE

END-OF-ROADWAY APPLICATIONS

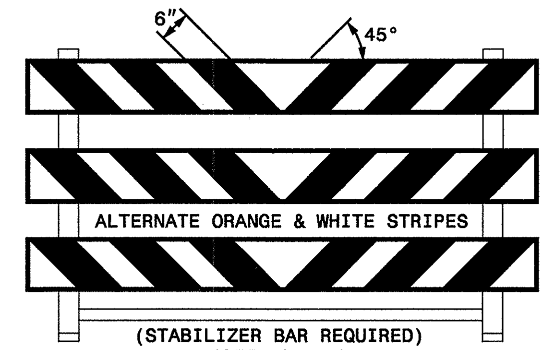

GENERAL NOTES

1) HORIZONTAL RAILS FOR TYPE-III BARRICADES MAY BE HOLLOW/CORRUGATED EXTRUDED RIGID POLYOLEFIN, HIGH DENSITY POLYETHYLENE, OR OTHER NCDOT APPROVED RAILS. BARRICADE RAILS OF FRANGIBLE PLASTICS SUCH AS PVC MAY NOT BE USED. IF APPROVED PLASTIC TYPE RAILS ARE USED, THEY MUST BE FLAME TREATED BY THE MANUFACTURER SO THAT REFLECTIVE SHEETING MAY ADHERE PROPERLY.

2) BARRICADES AND BARRICADE RAILS ARE APPROVED AS A SINGLE UNIT.

3) BARRICADE SHALL BE LIMITED TO A MAXIMUM LENGTH OF 8 FT UNLESS NCHRP 350 CRASH TESTED AND NCDOT APPROVED.

4) ONLY NCDOT APPROVED COMPOSITE AND ROLL-UP SIGNS MAY BE MOUNTED ON THE BARRICADE.

5) SIGNS MOUNTED ON BARRICADES SHOULD NOT COVER MORE THAN 50 PERCENT OF THE TOP TWO RAILS OR 33 PERCENT OF THE TOTAL AREA OF THE THREE RAILS.

6) USE TYPE VII, VIII OR IX SHEETING ON BOTH SIDES OF THE RAILS.

7) BARRICADE MUST BE NCHRP 350 AND NCDOT APPROVED WITH STABILIZER BAR OR ADEQUATE LATERAL BRACING.

8) ASSEMBLY OF THE GENERIC BARRICADES MUST BE SELF CERTIFIED BY THE ASSEMBLER.

9) BARRICADES USED TO CLOSE A ROADWAY SHALL EXTEND ACROSS THE ENTIRE ROADWAY. WHERE LOCAL TRAFFIC MUST BE MAINTAINED, THEY MAY BE PLACED IN A STAGGERED PATTERN.

10) STRIPES ON WORK ZONE BARRICADE RAILS SHALL BE ALTERNATE ORANGE AND WHITE RETROREFLECTIVE STRIPES, SLOPED DOWNWARD TOWARDS THE SIDE WHICH TRAFFIC IS TO PASS OR TURN IN DETOURING. WHERE NO TURNS ARE INTENDED, THE STRIPES SHOULD SLOPE DOWNWARD TOWARD THE CENTER OF THE BARRICADE OR BARRICADES. USE RED AND WHITE STRIPES FOR PERMANENT BARRICADES.

11) SEE APPROVED PRODUCTS LIST FOR MANUFACTURERS OF APPROVED BARRICADES.

12) PLACE MANUFACTURER'S NAME AND FEDERAL HIGHWAY ADMINISTRATION'S NCHRP 350 APPROVAL LETTER NUMBER ON BARRICADE.

13) USE SANDBAGS PLACED ON THE LOWER PART OF THE FRAME FOR BALLASTING. DO NOT PLACE SANDBAGS ON TOP OF A STRIPED RAIL. DO NOT BALLAST BARRICADES BY HEAVY OBJECTS SUCH AS ROCKS, CHUNKS OF CONCRETE OR OTHER ITEMS THAT WOULD CAUSE DAMAGE IF THE BARRICADE IS STRUCK BY A VEHICLE.

STATE OF NORTH CAROLINA
DEPT. OF TRANSPORTATION
DIVISION OF HIGHWAYS
RALEIGH, N.C.

1-05

ENGLISH STANDARD DRAWING FOR
BARRICADES
TYPE-III

SHEET 1 OF 1
1145D01

PROJECT NO. 37581
COUNTY: BUNCOMBE
STATION: 15+37.40
REPLACES BRIDGE NO. 193

STATE OF NORTH CAROLINA
DEPARTMENT OF TRANSPORTATION
RALEIGH

BRIDGE NO. 193 ON NC 251
OVER FLAT CREEK

KO & ASSOCIATES, P.C.
Consulting Engineers
5121 KINGDOM WAY, SUITE 100 RALEIGH, N.C. 27607
(919) 851-6066

REVISIONS						SHEET NO.
NO.	BY	DATE	NO.	BY	DATE	42
1			3			TOTAL SHEETS
2			4			53

7/2/99

$$$$$$SYSTIME$$$$$ $$$$$$$$$DGN$$$$$$$$$$$$$$$$ $$$$USERNAME$$$$

PROJECT REFERENCE NO.	SHEET NO.
37581	Sig. 1

PHASING DIAGRAM

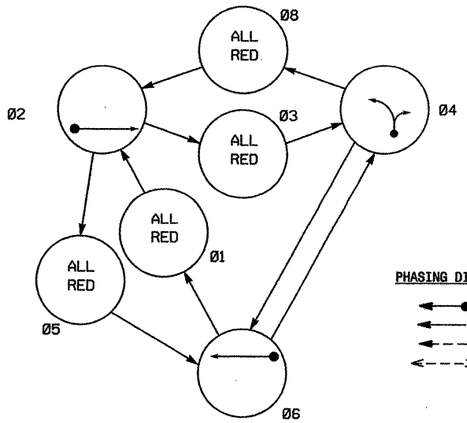

TABLE OF OPERATION

SIGNAL FACE	PHASE Ø1	Ø2	Ø3	Ø4	Ø5	Ø6	Ø8	FLASH
21, 22	R	G	R	R	R	R	R	R
41, 42	R	R	R	G	R	R	R	R
61, 62	R	R	R	R	R	G	R	R

SIGNAL FACE I.D.

Denotes L.E.D.

21, 22
41, 42
61, 62

2070L LOOP & DETECTOR INSTALLATION

INDUCTIVE LOOPS					DETECTOR PROGRAMMING						
LOOP	SIZE (FT)	DISTANCE FROM STOPBAR (FT)	TURNS	NEW LOOP	PHASE	CALLING	EXTENSION	FULL TIME DELAY	STRETCH TIME	DELAY TIME	SYSTEM LOOP	NEW CARD
2A	6X40	0	2-4-2	Y	2	Y	Y	-	——	——	-	Y
4A	6X40	0	2-4-2	Y	4	Y	Y	-	——	3	-	Y
4B	6X6	0	2-4-2	Y	4	Y	Y	-	——	——	-	Y
6A	6X40	0	2-4-2	Y	6	Y	Y	-	——	——	-	Y

3 Phase
Fully Actuated
(Isolated)

NOTES

1. Refer to "Roadway Standard Drawings NCDOT" dated January 2002 and "Standard Specifications for Roads and Structures" dated January 2002.
2. Do not program signal for late night flashing operation unless otherwise directed by the Engineer.
3. Program controller to start-up in Phase 6 red clearance. Program "First Phases" as Phase 1.
4. In the absence of vehicle calls, program controller for Red Rest after phase 2, 4, or 6.
5. Set all detector units to presence mode.

PHASING DIAGRAM DETECTION LEGEND

- DETECTED MOVEMENT
- UNDETECTED MOVEMENT (OVERLAP)
- UNSIGNALIZED MOVEMENT
- PEDESTRIAN MOVEMENT

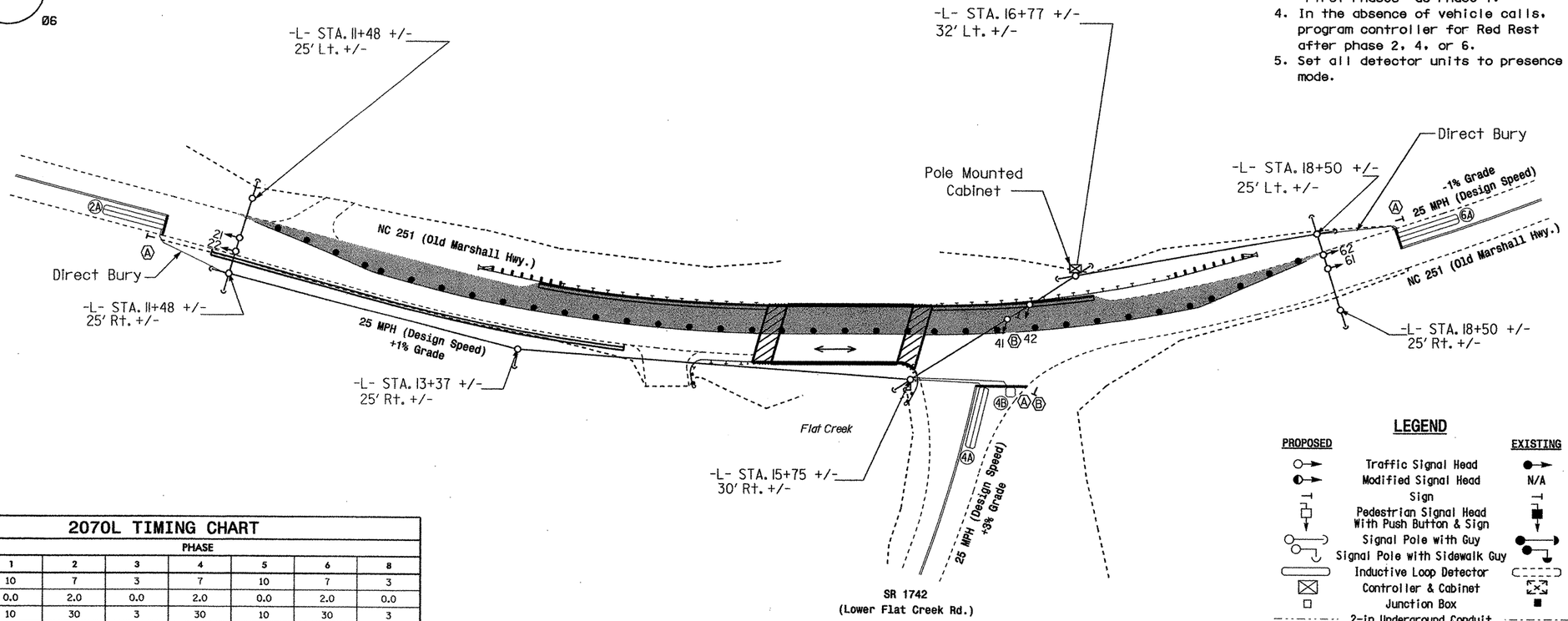

LEGEND

PROPOSED		EXISTING
	Traffic Signal Head	
	Modified Signal Head	N/A
	Sign	
	Pedestrian Signal Head With Push Button & Sign	
	Signal Pole with Guy	
	Signal Pole with Sidewalk Guy	
	Inductive Loop Detector	
	Controller & Cabinet	
	Junction Box	
	2-in Underground Conduit	
N/A	Right of Way	
	Directional Arrow	
	Guardrail	N/A
	Construction Zone	
	Construction Barrels	N/A
A	"STOP HERE ON RED" Sign (R10-6)	A
B	"NO TURN ON RED" Sign (R10-11)	B

2070L TIMING CHART

FEATURE	PHASE 1	2	3	4	5	6	8
Min Green 1 *	10	7	3	7	10	7	3
Extension 1 *	0.0	2.0	0.0	2.0	0.0	2.0	0.0
Max Green 1 *	10	30	3	30	10	30	3
Yellow Clearance	3.0	3.5	3.0	3.5	3.0	3.5	3.0
Red Clearance	1.0	7.0	1.0	7.0	1.0	7.0	1.0
Walk 1 *	-	-	-	-	-	-	-
Don't Walk 1	-	-	-	-	-	-	-
Seconds Per Actuation *	-	-	-	-	-	-	-
Max Variable Initial *	-	-	-	-	-	-	-
Time Before Reduction *	-	-	-	-	-	-	-
Time To Reduce *	-	-	-	-	-	-	-
Minimum Gap	-	-	-	-	-	-	-
Recall Mode	-	-	-	-	-	-	-
Vehicle Call Memory	-	-	-	-	-	-	-
Dual Entry	-	-	-	-	-	-	-
Simultaneous Gap	ON	ON	ON	ON	ON	ON	ON

* These values may be field adjusted. Min Green for phase 4 should not be lower than 4 sec. Do not adjust Min Green and Extension times for all other phases lower than what is shown.

PLAN QUANTITIES

Pay Item	Feet
Signal Cable	875
Messenger Cable	865
Lead-in Cable	860

Temporary Installation — Temporary Design 1

SHEET NO.	TOTAL SHEETS
43	53

Prepared in the Offices of:
State Traffic Engineering and Safety Systems Branch
Signals and Geometrics Section
NORTH CAROLINA DEPARTMENT OF TRANSPORTATION
122 N. McDowell St., Raleigh, NC 27603

SCALE 0 40 — 1"=40'

NC 251 (Old Marshall Hwy.)
at
SR 1742 (Lower Flat Creek Road)
and Bridge 193 Over Flat Creek
Division 13 Buncombe County Near Alexander

PLAN DATE: September 2005 REVIEWED BY:
PREPARED BY: Sterling REVIEWED BY:

REVISIONS	INIT.	DATE

SEAL
NORTH CAROLINA PROFESSIONAL SEAL 026486 ENGINEER ROBERT J. ZIEMBA
SIGNATURE Robert J. Ziemba DATE 10/3/05
SIG. INVENTORY NO. 13-1212T1

03-03-2005 13:19
s:\traffic\Signals\workgroups\alexander\13-1212\13121 2_sig_dsn_2005xxxx.dgn
wosterling

PROJECT REFERENCE NO.	SHEET NO.
37581	Sig. 2

NOTES

1. To prevent "flash-conflict" problems, insert red flash program blocks for all unused vehicle load switches in the output file. The installer shall verify that signal heads flash in accordance with the Signal Plans.
2. Ensure that Red Enable is active at all times during normal operation. To prevent Red Failures on unused monitor channels, tie unused red monitor inputs 1,3,5, 7,8,9,10,11,12,13,14,15 & 16 to load switch AC+ per the cabinet manufacturer's instructions.
3. Program phase 6, on the controller unit, for Start Up In Red Clearance.
4. Enable Simultaneous Gap-Out, on the controller unit, for all phases.
5. Program phase 1, on the controller unit, as First Phase.
6. Program phases 2, 4 and 6 for Red Rest.

EDI MODEL 2010ECL CONFLICT MONITOR PROGRAMMING DETAIL

(remove jumpers and set switches as shown)

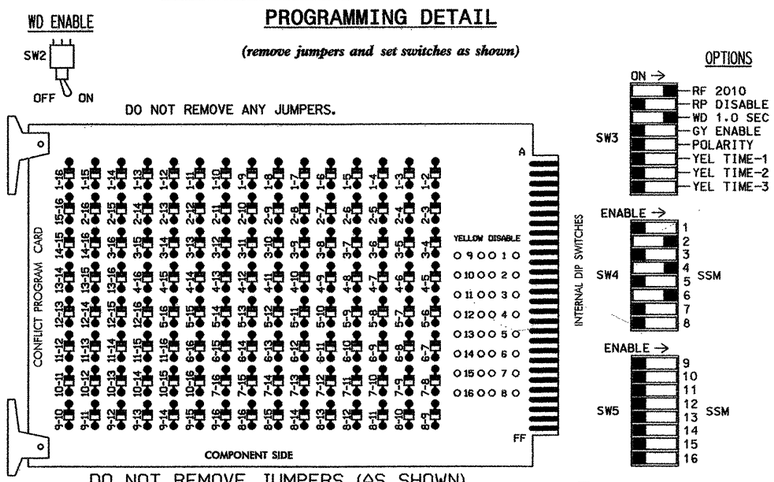

DO NOT REMOVE JUMPERS (AS SHOWN)

■ = DENOTES POSITION OF SWITCH

NOTES:

1. CARD IS PROVIDED WITH ALL DIODE JUMPERS IN PLACE. REMOVAL OF ANY JUMPER ALLOWS ITS CHANNELS TO RUN CONCURRENTLY.
2. MAKE SURE JUMPERS SEL1-SEL5 ARE PRESENT ON THE MONITOR BOARD.

INPUT FILE POSITION LAYOUT

(front view)

FILE "I"	1	2	3	4	5	6	7	8	9	10	11	12	13	14
U	SLOT	Ø2	SLOT	Ø4	SLOT	Ø6	SLOT	SLOT	SLOT	SLOT	SLOT	SLOT	SLOT	FS DC ISOLATOR
		2A		4A		6A								
L	EMPTY	NOT USED	EMPTY	Ø4 4B	EMPTY	NOT USED	EMPTY	EMPTY	EMPTY	EMPTY	EMPTY	EMPTY	EMPTY	ST DC ISOLATOR

EX.: 1A, 2A, ETC. = LOOP NO.'S

FS = FLASH SENSE
ST = STOP TIME

INPUT FILE CONNECTION & PROGRAMMING CHART

LOOP NO.	LOOP TERMINAL	INPUT FILE POS.	PIN NO.	INPUT ASSIGNMENT NO.	DETECTOR NO.	NEMA PHASE	CALL	EXTEND	FULL TIME DELAY	STRETCH TIME	DELAY TIME
2A	TB21-3,4	I2U	39	1	2	2	Y	Y			
4A	TB21-7,8	I4U	41	3	4	4	Y	Y			3
4B	TB23-7,8	I4L	45	7	14	4	Y	Y			
6A	TB21-11,12	I6U	40	2	6	6	Y	Y			

INPUT FILE POSITION LEGEND: I2L

FILE I
SLOT 2
LOWER

BACK-UP PROTECTION PROGRAMMING DETAIL

(program controller as shown below)

1. FROM MAIN MENU PRESS '2' (PHASE CONTROL), THEN '1' (PHASE CONTROL FUNCTIONS). SCROLL TO THE BOTTOM OF THE MENU AND ENABLE DYNAMIC/BACKUP CONTROL FUNCTIONS 1,2,3,4,5,6,7,8,9,10 AND 11.
2. FROM PHASE CONTROL FUNCTIONS MENU PRESS '2' (DYNAMIC/BACKUP CONTROL FUNCTIONS).

```
DYNAMIC/BACKUP CONTROL FUNCTION #01
                    OVERLAPS:¦ABCDEFGHIJKLMNOP
IF OVERLAPS ARE ACTIVE ¦
OR          PHASES:¦123456789101112131415 16
IF PHASES ARE ON¦X
OMIT PHASES     ¦  XXXX X
CALL PHASES     ¦
```

PRESS 'NEXT'

```
DYNAMIC/BACKUP CONTROL FUNCTION #02
                    OVERLAPS:¦ABCDEFGHIJKLMNOP
IF OVERLAPS ARE ACTIVE ¦
OR          PHASES:¦123456789101112131415 16
IF PHASES ARE ON¦ X
OMIT PHASES     ¦X  X X X
CALL PHASES     ¦
```

PRESS 'NEXT'

```
DYNAMIC/BACKUP CONTROL FUNCTION #03
                    OVERLAPS:¦ABCDEFGHIJKLMNOP
IF OVERLAPS ARE ACTIVE ¦
OR          PHASES:¦123456789101112131415 16
IF PHASES ARE ON¦  X
OMIT PHASES     ¦XX  XX X
CALL PHASES     ¦
```

PRESS 'NEXT'

```
DYNAMIC/BACKUP CONTROL FUNCTION #04
                    OVERLAPS:¦ABCDEFGHIJKLMNOP
IF OVERLAPS ARE ACTIVE ¦
OR          PHASES:¦123456789101112131415 16
IF PHASES ARE ON¦   X
OMIT PHASES     ¦XXX X
CALL PHASES     ¦
```

PRESS 'NEXT'

```
DYNAMIC/BACKUP CONTROL FUNCTION #05
                    OVERLAPS:¦ABCDEFGHIJKLMNOP
IF OVERLAPS ARE ACTIVE ¦
OR          PHASES:¦123456789101112131415 16
IF PHASES ARE ON¦     X
OMIT PHASES     ¦ XX X  X
CALL PHASES     ¦
```

PRESS 'NEXT'

```
DYNAMIC/BACKUP CONTROL FUNCTION #06
                    OVERLAPS:¦ABCDEFGHIJKLMNOP
IF OVERLAPS ARE ACTIVE ¦
OR          PHASES:¦123456789101112131415 16
IF PHASES ARE ON¦    X
OMIT PHASES     ¦XXXX   X
CALL PHASES     ¦
```

PRESS 'NEXT'

```
DYNAMIC/BACKUP CONTROL FUNCTION #07
                    OVERLAPS:¦ABCDEFGHIJKLMNOP
IF OVERLAPS ARE ACTIVE ¦
OR          PHASES:¦123456789101112131415 16
IF PHASES ARE ON¦        X
OMIT PHASES     ¦X XXXX
CALL PHASES     ¦
```

PRESS 'NEXT'

```
DYNAMIC/BACKUP CONTROL FUNCTION #08
                    OVERLAPS:¦ABCDEFGHIJKLMNOP
IF OVERLAPS ARE ACTIVE ¦
OR          PHASES:¦123456789101112131415 16
IF PHASES ARE ON¦X
OMIT PHASES     ¦
CALL PHASES     ¦ X
```

PRESS 'NEXT'

```
DYNAMIC/BACKUP CONTROL FUNCTION #09
                    OVERLAPS:¦ABCDEFGHIJKLMNOP
IF OVERLAPS ARE ACTIVE ¦
OR          PHASES:¦123456789101112131415 16
IF PHASES ARE ON¦  X
OMIT PHASES     ¦
CALL PHASES     ¦   X
```

PRESS 'NEXT'

```
DYNAMIC/BACKUP CONTROL FUNCTION #10
                    OVERLAPS:¦ABCDEFGHIJKLMNOP
IF OVERLAPS ARE ACTIVE ¦
OR          PHASES:¦123456789101112131415 16
IF PHASES ARE ON¦     X
OMIT PHASES     ¦
CALL PHASES     ¦      X
```

PRESS 'NEXT'

```
DYNAMIC/BACKUP CONTROL FUNCTION #11
                    OVERLAPS:¦ABCDEFGHIJKLMNOP
IF OVERLAPS ARE ACTIVE ¦
OR          PHASES:¦123456789101112131415 16
IF PHASES ARE ON¦        X
OMIT PHASES     ¦
CALL PHASES     ¦ X
```

BACKUP PROTECTION PROGRAMMING COMPLETE

LOGICAL I/O PROCESSOR PROGRAMMING DETAIL

(program controller as shown below)

1. FROM MAIN MENU PRESS '2' (PHASE CONTROL), THEN '1' (PHASE CONTROL FUNCTIONS). SCROLL TO THE BOTTOM OF THE MENU AND ENABLE ACT LOGIC COMMANDS 1, 2, 3 AND 4.
2. FROM MAIN MENU PRESS '6' (OUTPUTS), THEN '3' (LOGICAL I/O PROCESSOR).
3. THE PROGRAMMING SHOWN BELOW IS NECESSARY FOR SIGNALS TO OPERATE AS SHOWN ON THE SIGNAL DESIGN PLANS.

```
LOGICAL I/O COMMAND #1  (+/-COMMAND#)
IF  ACTIVE PHASE          #2   IS ON
AND VEHICLE CALL ON PHASE #4   IS ON

SCROLL DOWN

THEN:
SET  INPUT ASSIGNMENT     #20  ON
```

PRESS '+'

```
LOGICAL I/O COMMAND #2  (+/-COMMAND#)
IF  ACTIVE PHASE          #2   IS ON
AND VEHICLE CALL ON PHASE #6   IS ON

SCROLL DOWN

THEN:
SET INPUT ASSIGNMENT      #17  ON
```

PRESS '+'

```
LOGICAL I/O COMMAND #3  (+/-COMMAND#)
IF  ACTIVE PHASE          #4   IS ON
AND VEHICLE CALL ON PHASE #2   IS ON

SCROLL DOWN

THEN:
SET INPUT ASSIGNMENT      #4   ON
```

PRESS '+'

```
LOGICAL I/O COMMAND #4  (+/-COMMAND#)
IF  ACTIVE PHASE          #6   IS ON
AND VEHICLE CALL ON PHASE #2   IS ON

SCROLL DOWN

THEN:
SET INPUT ASSIGNMENT      #18  ON
```

LOGIC I/O PROCESSOR PROGRAMMING COMPLETE

SIGNAL HEAD HOOK-UP CHART

LOAD SWITCH NO.	S1	S2	S2P	S3	S4	S4P	S5	S6	S6P	S7	S8	S8P
PHASE	1	2	2 PED	3	4	4 PED	5	6	6 PED	7	8	8 PED
SIGNAL HEAD NO.	NC	21,22	NU	NC	41,42	NU	NC	61,62	NU	NU	NC	NU
RED		128			101			134				
YELLOW		129			102			135				
GREEN		130			103			136				
RED ARROW												
YELLOW ARROW												
GREEN ARROW												

NU = Not Used

EQUIPMENT INFORMATION

CONTROLLER.....CONTRACTOR SUPPLIED 2070L
CABINET.....CONTRACTOR SUPPLIED 336
SOFTWARE.....ECONOLITE OASIS
CABINET MOUNT.....POLE
OUTPUT FILE POSITIONS...12
LOAD SWITCHES USED.....S2,S4,S6
PHASES USED.....1,2,3,4,5,6,8
OVERLAPS.....NONE

PHASE SEQUENCE PROGRAMMING DETAIL

(program controller as shown below)

FROM OASIS LOCAL CONTROLLER MAIN MENU
SELECT: 4 PHASE SEQUENCE

```
PHASE SEQUENCE: PAGE 1  NEXT: PAGES)   ↘
RNG¦LEAD    BARRIER 1   X-LAG¦LEAD    BARRIER 2   X-LAG
1  ¦1     2     3     4    ¦5     6     8     0
2  ¦0     0     0     0    ¦0     0     0     0
3  ¦0     0     0     0    ¦0     0     0     0
4  ¦0     0     0     0    ¦0     0     0     0
```

THIS ELECTRICAL DETAIL IS FOR
THE SIGNAL DESIGN: 13-1212T1
DESIGNED: September 2005
SEALED: 10-03-05
REVISED: NA

Temporary Installation

ELECTRICAL AND PROGRAMMING DETAILS FOR:

NC 251 (Old Marshall Hwy.)
at
SR 1742 (Lower Flat Creek Road)
and Bridge 193 Over Flat Creek

Division 13 Buncombe County Alexander

PLAN DATE: September 2005 REVIEWED BY: MWH
PREPARED BY: James Peterson REVIEWED BY:

REVISIONS	INIT.	DATE

Prepared in the Offices of: Traffic Engineering and Safety Systems Branch, Division of Highways, State of North Carolina, Department of Transportation, Signal Management Section, 122 N. McDowell St., Raleigh, NC 27603

SEAL: NORTH CAROLINA PROFESSIONAL SEAL 008453 ENGINEER JOHN T. ROWE JR.

John T. Rowe Jr. 10-26-05
SIGNATURE DATE

SIG. INVENTORY NO. 13-1212T1

SHEET NO.	TOTAL SHEETS
44	53

20-OCT-2005 12:19
U:\13212e.sm.e16.xxx.dgn
jtpeterson

PROJECT REFERENCE NO.	SHEET NO.
37581	Sig. 3

PHASING DIAGRAM

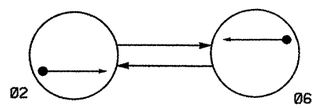

PHASING DIAGRAM DETECTION LEGEND

- DETECTED MOVEMENT
- UNDETECTED MOVEMENT (OVERLAP)
- UNSIGNALIZED MOVEMENT
- PEDESTRIAN MOVEMENT

TABLE OF OPERATION

SIGNAL FACE	PHASE Ø2	PHASE Ø6	FLASH
21, 22	G	R	R
61, 62	R	G	R

SIGNAL FACE I.D.

Denotes L.E.D.

21, 22
61, 62

2070L LOOP & DETECTOR INSTALLATION

INDUCTIVE LOOPS					DETECTOR PROGRAMMING							
LOOP	SIZE (FT)	DISTANCE FROM STOPBAR (FT)	TURNS	NEW LOOP	PHASE	CALLING	EXTENSION	FULL TIME DELAY	STRETCH TIME	DELAY TIME	SYSTEM LOOP	NEW CARD
2A	6X40	0	2-4-2	-	2	Y	Y	-	——	——	-	-
6A	6X40	0	2-4-2	-	6	Y	Y	-	——	——	-	-

2 Phase
Fully Actuated
(Isolated)

NOTES

1. Refer to "Roadway Standard Drawings NCDOT" dated January 2002 and "Standard Specifications for Roads and Structures" dated January 2002.
2. Do not program signal for late night flashing operation unless otherwise directed by the Engineer.
3. Program controller to start-up in phase 2 red clearance. Program "First Phases" as phase 2.
4. Program all phases for "Red Rest".
5. Disconnect and remove signal heads 41 and 42.
6. Disconnect and abandon loops 4A and 4B.
7. Set all detector units to presence mode.
8. Remove existing "NO TURN ON RED" signs (R10-11).
9. Pavement markings are existing.

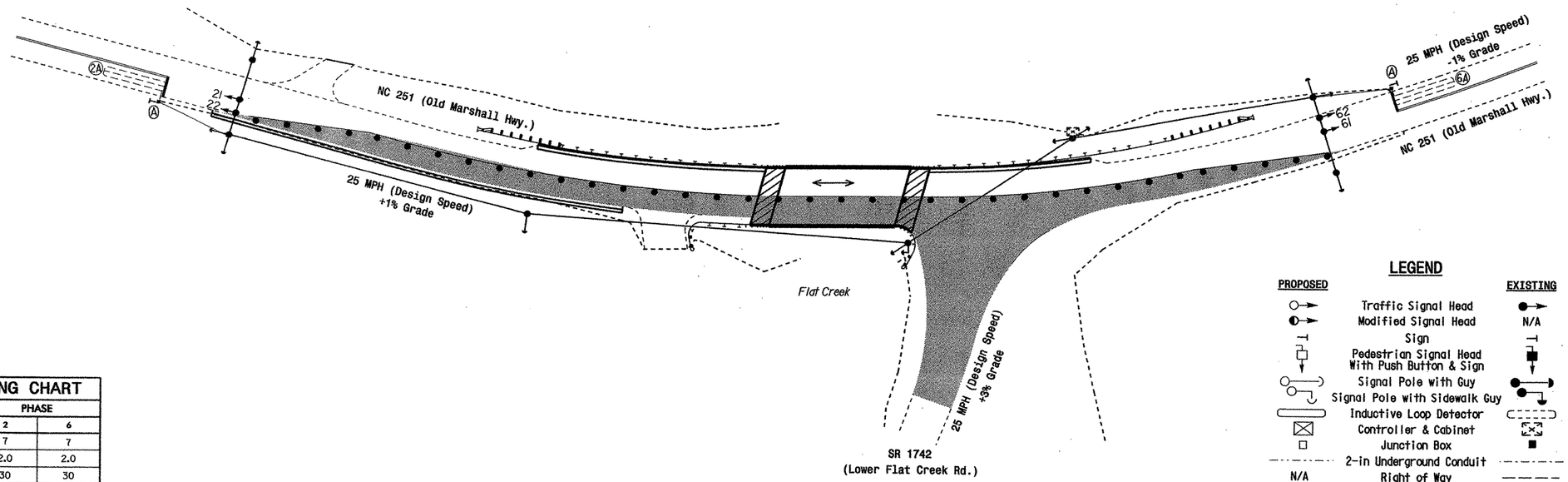

LEGEND

PROPOSED		EXISTING
	Traffic Signal Head	
	Modified Signal Head	N/A
	Sign	
	Pedestrian Signal Head With Push Button & Sign	
	Signal Pole with Guy	
	Signal Pole with Sidewalk Guy	
	Inductive Loop Detector	
	Controller & Cabinet	
	Junction Box	
	2-in Underground Conduit	
N/A	Right of Way	
	Directional Arrow	
	Guardrail	N/A
	Construction Zone	
	Construction Barrels	N/A
	"STOP HERE ON RED" Sign (R10-6)	

2070L TIMING CHART

FEATURE	PHASE 2	PHASE 6
Min Green 1 *	7	7
Extension 1 *	2.0	2.0
Max Green 1 *	30	30
Yellow Clearance	3.5	3.5
Red Clearance	22.0	22.0
Walk 1 *	-	-
Don't Walk 1	-	-
Seconds Per Actuation *	-	-
Max Variable Initial *	-	-
Time Before Reduction *	-	-
Time To Reduce *	-	-
Minimum Gap	-	-
Recall Mode	-	-
Vehicle Call Memory	-	-
Dual Entry	-	-
Simultaneous Gap	ON	ON

* These values may be field adjusted. Do not adjust Min Green and Extension times for phases 2 and 6 lower than what is shown.

Temporary Installation Temporary Design 2

SHEET NO.	TOTAL SHEETS
45	53

Prepared in the Offices of:
Traffic Engineering and Safety Systems Branch
STATE OF NORTH CAROLINA DEPARTMENT OF TRANSPORTATION
Signal and Geometrics Section
122 N. McDowell St., Raleigh, NC 27603

NC 251 (Old Marshall Hwy.)
at
SR 1742 (Lower Flat Creek Road)
and Bridge 193 Over Flat Creek
Division 13 Buncombe County Near Alexander

PLAN DATE: September 2005 REVIEWED BY:
PREPARED BY: Sterling REVIEWED BY:

SCALE 0 40 1"=40'

REVISIONS	INIT.	DATE

SEAL
NORTH CAROLINA PROFESSIONAL SEAL 026486 ENGINEER ROBERT J. ZIEMBA
SIGNATURE DATE 10/3/05
SIG. INVENTORY NO. 13-1212T2

03-OCT-2005 13:18
s:\ts signals\workgroups\alexander\t3-1212\t31212_sig_dsn_2005xxxx.dgn
sesterling

EDI MODEL 2010ECL CONFLICT MONITOR
PROGRAMMING DETAIL

(remove jumpers and set switches as shown)

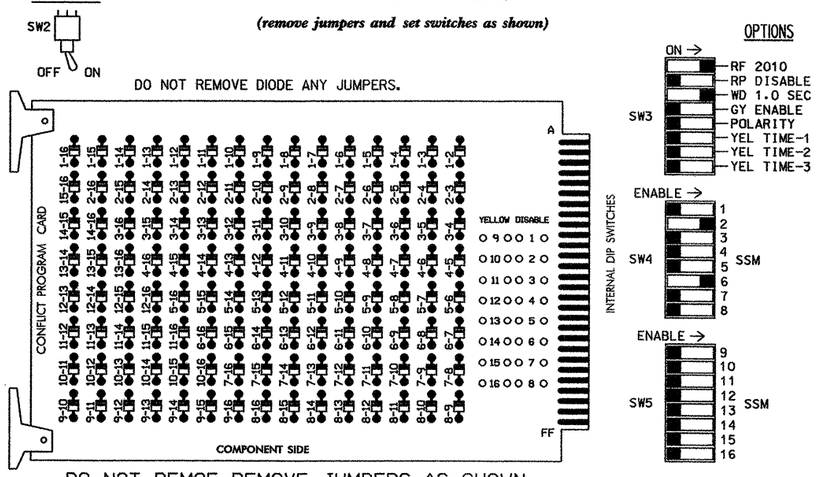

DO NOT REMOE REMOVE JUMPERS AS SHOWN

NOTES:

1. CARD IS PROVIDED WITH ALL DIODE JUMPERS IN PLACE. REMOVAL OF ANY JUMPER ALLOWS ITS CHANNELS TO RUN CONCURRENTLY.
2. MAKE SURE JUMPERS SEL1-SEL5 ARE PRESENT ON THE MONITOR BOARD.

NOTES

1. To prevent "flash-conflict" problems, insert red flash program blocks for all unused vehicle load switches in the output file. The installer shall verify that signal heads flash in accordance with the Signal Plans.
2. Ensure that Red Enable is active at all times during normal operation. To prevent Red Failures on unused monitor channels, tie unused red monitor inputs 1,3,4,5, 7,8,9,10,11,12,13,14,15 & 16 to load switch AC+ per the cabinet manufacturer's instructions.
3. Program phase 2, on the controller unit, for Start Up In Red Clearance.
4. Enable Simultaneous Gap-Out, on the controller unit, for all phases.
5. Program phase 2, on the controller unit, as First Phase.
6. Program phases 2 and 6 for Red Rest.

SIGNAL HEAD HOOK-UP CHART

LOAD SWITCH NO.	S1	S2	S2P	S3	S4	S4P	S5	S6	S6P	S7	S8	S8P
PHASE	1	2	2 PED	3	4	4 PED	5	6	6 PED	7	8	8 PED
SIGNAL HEAD NO.	NU	21,22	NU	NU	NU	NU	NU	61,62	NU	NU	NU	NU
RED		128						134				
YELLOW		129						135				
GREEN		130						136				
RED ARROW												
YELLOW ARROW												
GREEN ARROW												

NU = Not Used

EQUIPMENT INFORMATION

CONTROLLER.....CONTRACTOR SUPPLIED 2070L
CABINET.....CONTRACTOR SUPPLIED 336
SOFTWARE.....ECONOLITE OASIS
CABINET MOUNT.....POLE
OUTPUT FILE POSITIONS...12
LOAD SWITCHES USED.....S2,S6
PHASES USED.....2,6
OVERLAPS.....NONE

INPUT FILE POSITION LAYOUT

(front view)

FILE "I"	1	2	3	4	5	6	7	8	9	10	11	12	13	14
U	SLOT EMPTY	ø2 2A	SLOT EMPTY	SLOT EMPTY	SLOT EMPTY	ø6 6A	SLOT EMPTY	SLOT EMPTY	SLOT EMPTY	SLOT EMPTY	SLOT EMPTY	SLOT EMPTY	SLOT EMPTY	FS DC ISOLATOR
L		NOT USED				NOT USED								ST DC ISOLATOR

EX.: 1A, 2A, ETC. = LOOP NO.'S

FS = FLASH SENSE
ST = STOP TIME

INPUT FILE CONNECTION & PROGRAMMING CHART

LOOP NO.	LOOP TERMINAL	INPUT FILE POS.	PIN NO.	INPUT ASSIGNMENT NO.	DETECTOR NO.	NEMA PHASE	CALL	EXTEND	FULL TIME DELAY	STRETCH TIME	DELAY TIME
2A	TB21-3,4	I2U	39	1	2	2	Y	Y			
6A	TB21-11,12	I6U	40	2	6	6	Y	Y			

INPUT FILE POSITION LEGEND: I2L
FILE I
SLOT 2
LOWER

THIS ELECTRICAL DETAIL IS FOR
THE SIGNAL DESIGN: 13-1212T2
DESIGNED: September 2005
SEALED: 10-03-05
REVISED: NA

Temporary Installation Temp. Design 2

SHEET NO.	TOTAL SHEETS
46	53

ELECTRICAL AND PROGRAMMING DETAILS FOR:

NC 251 (Old Marshall Hwy.
at
SR 1742 (Lower Flat Creek Road)
and Bridge 193 Over Flat Creek

Division 13 Buncombe County Alexander

PLAN DATE: September 2005 REVIEWED BY:
PREPARED BY: James Peterson REVIEWED BY:

REVISIONS	INIT.	DATE

Prepared in the Offices of:
Traffic Engineering and Safety Systems Branch
Signals Management Section
122 N. McDowell St., Raleigh, NC 27603

SEAL
NORTH CAROLINA PROFESSIONAL SEAL 008453 ENGINEER JOHN T. ROWE, JR.
SIGNATURE DATE 10-26-05

SIG. INVENTORY NO. 13-1212T2

20-OCT-2005 12:20
u:\ws13212.sm.ele.xxx.dgn
jtpeterson

8/23/99

0 10	PROJ. REFERENCE NO.	SHEET NO.
	MA13010B	47

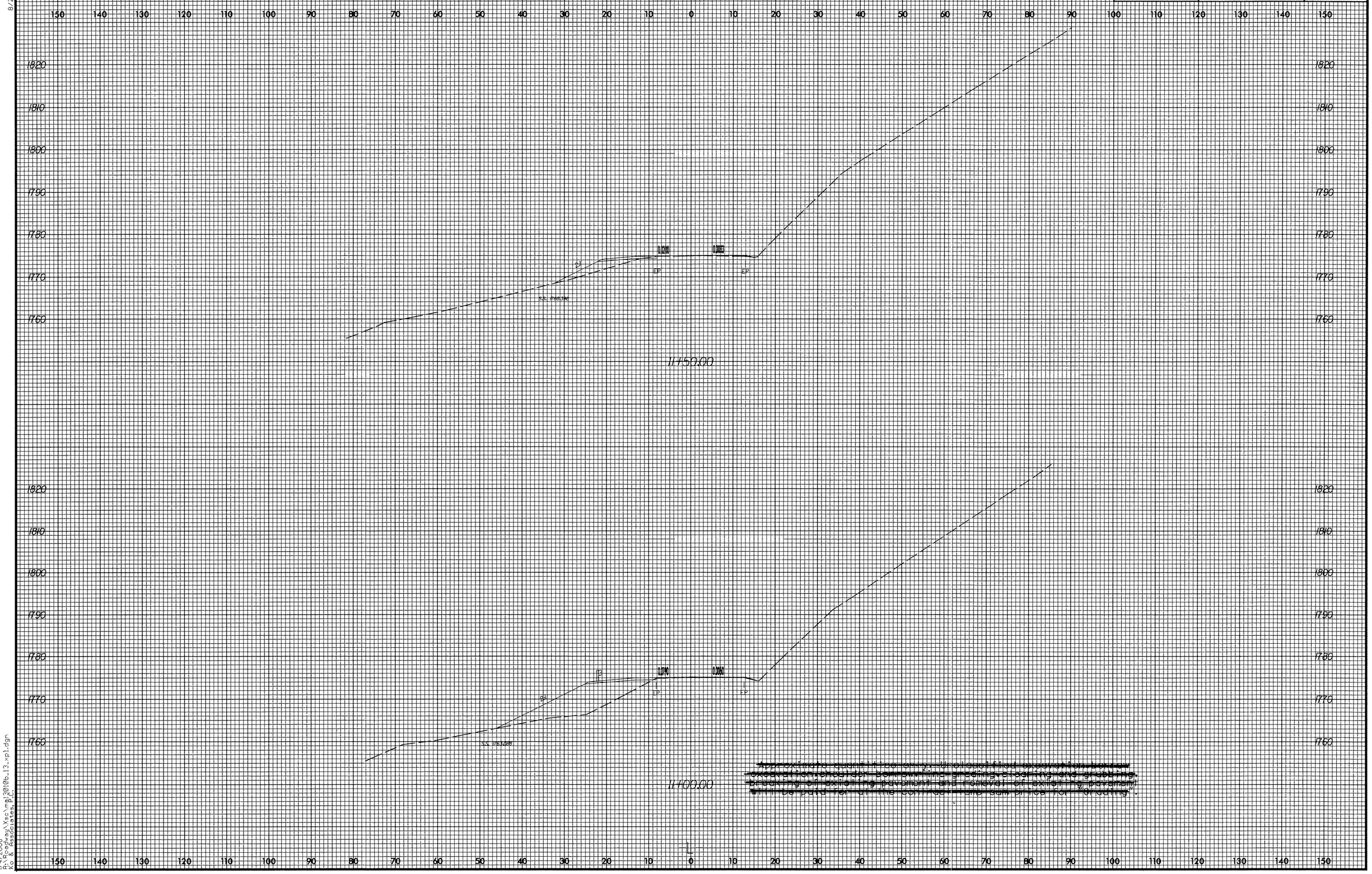

~~Approximate quantities only. Unclassified excavation, borrow excavation, embankment, bank shaping, adjusting and grubbing, breaking of existing pavement and removal of existing pavement will be paid for at the contract unit prices for grading.~~

1/4/2008
R:\Projects\Xes\ma13010b_13_pl.dgn
Ko & Associates, P.A.

8/23/99

PROJ. REFERENCE NO.	SHEET NO.
MA13010B	48

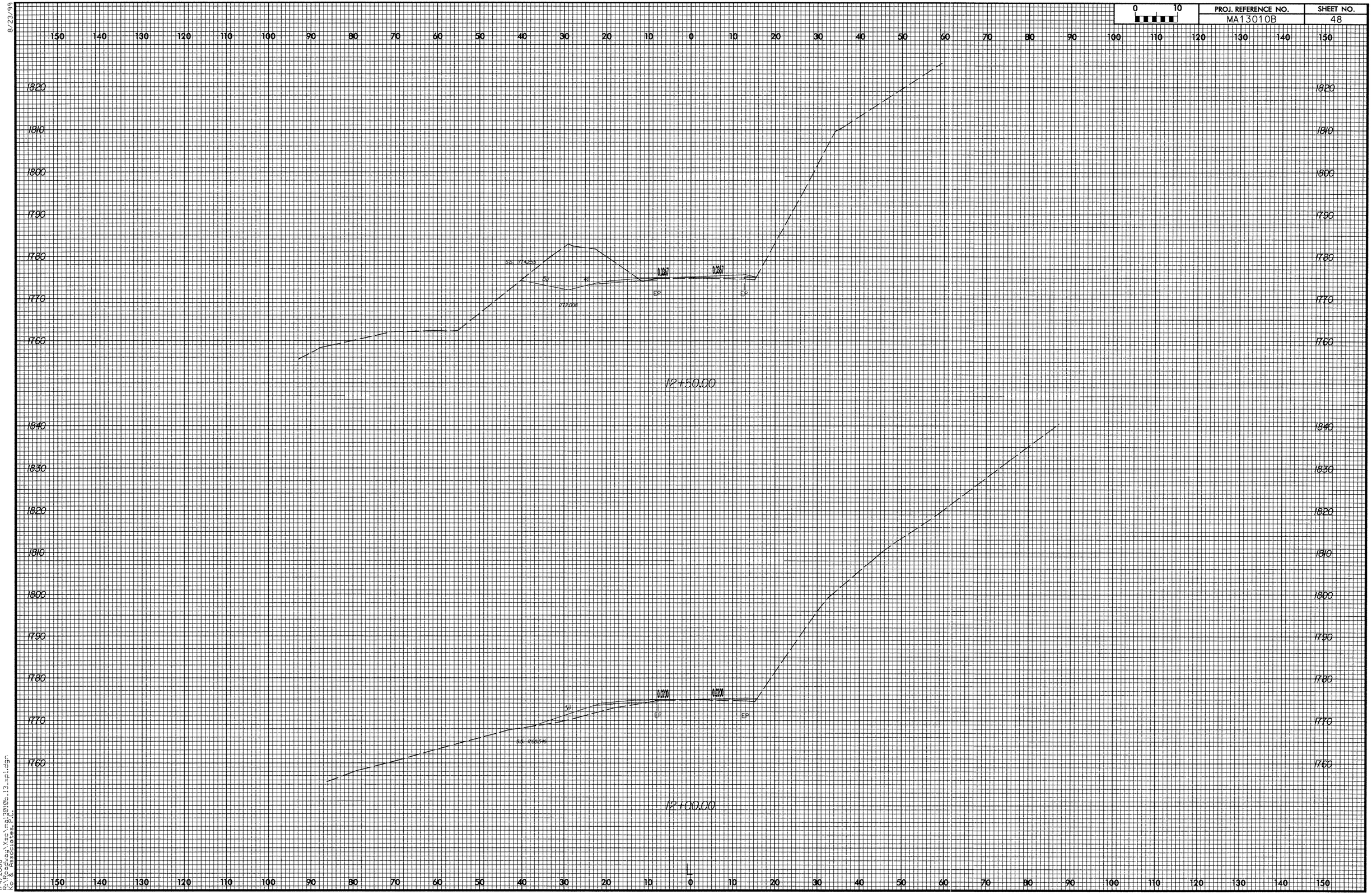

1/4/2008
R:\Ma2dwg\Xes\mg\2010b_13_xpl.dgn
R:\Ma2dwg\Xes\mg\2010b_13_xpl.dgn

8/23/99

0 10	PROJ. REFERENCE NO.	SHEET NO.
	MA13010B	49

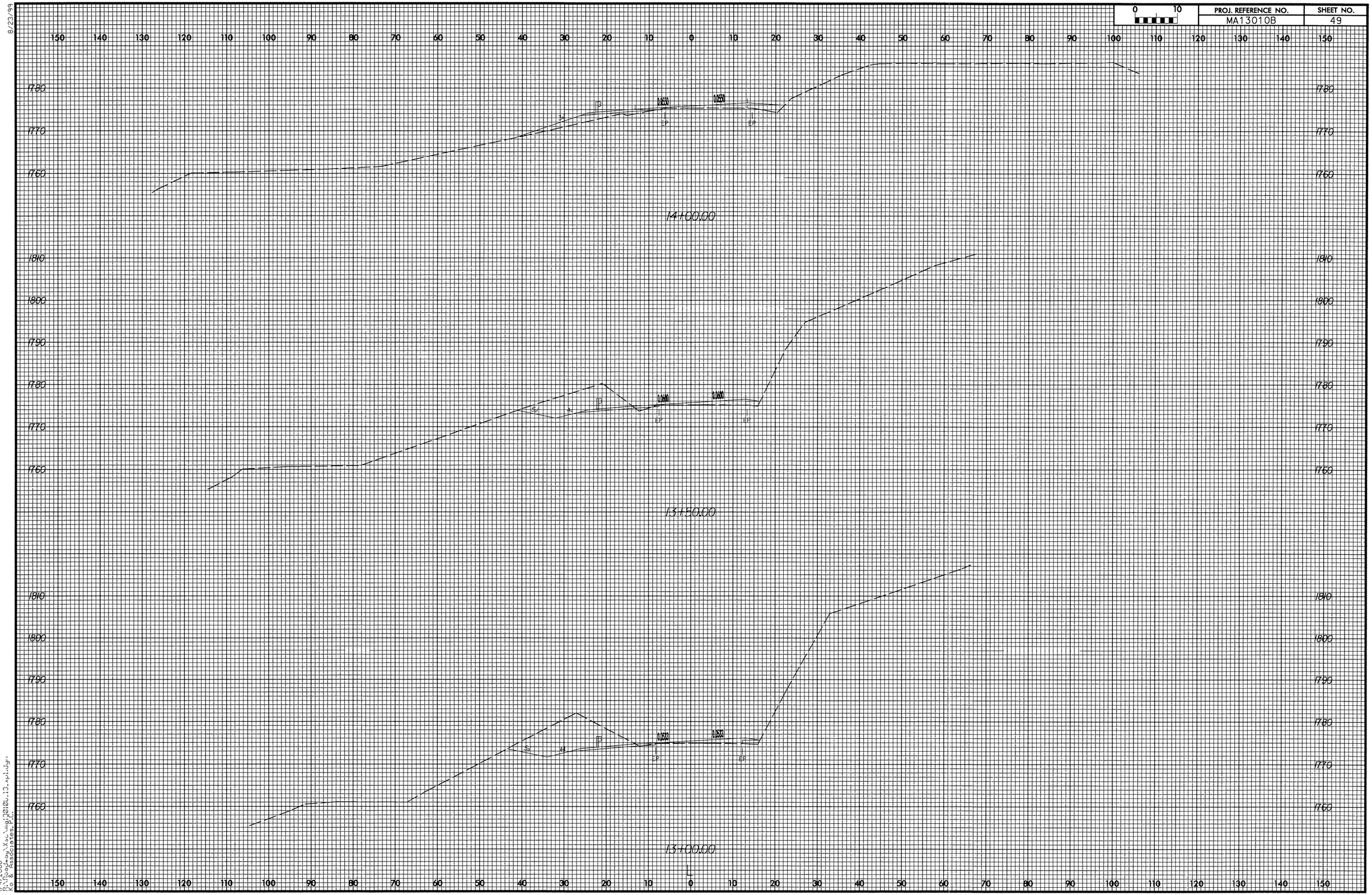

1/4/2008
R:\Roadway\Xsections\2010b13_apl.dgn
10:08 ssoobsss.pl

PROJ. REFERENCE NO.	SHEET NO.
MA13010B	50

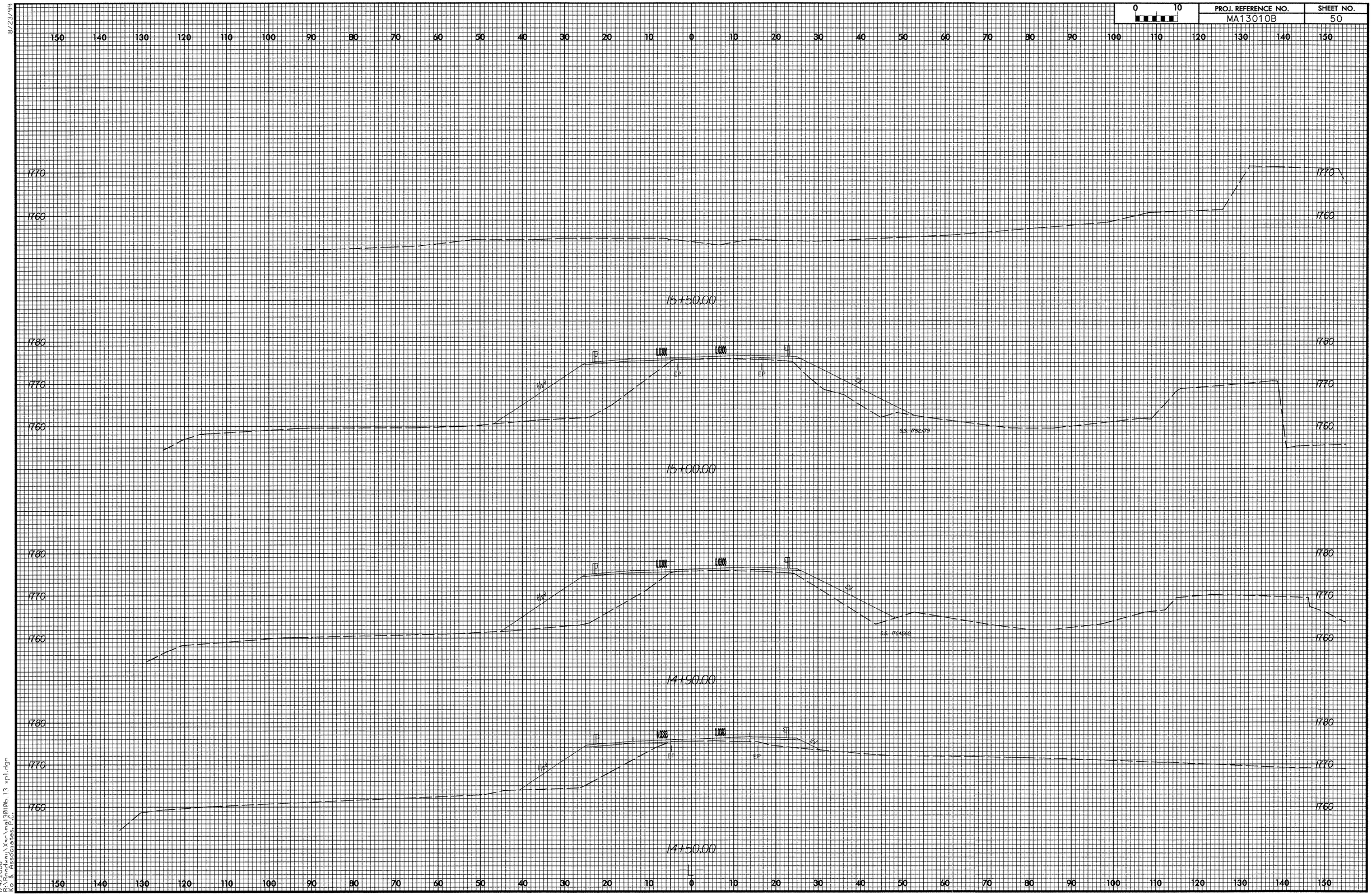

8/23/99

1/4/2008
P:\Projects\Xr-Vms\13010h 13 xpl.dgn
Ko & Associates, P.C.

PROJ. REFERENCE NO.	SHEET NO.
MA13010B	51

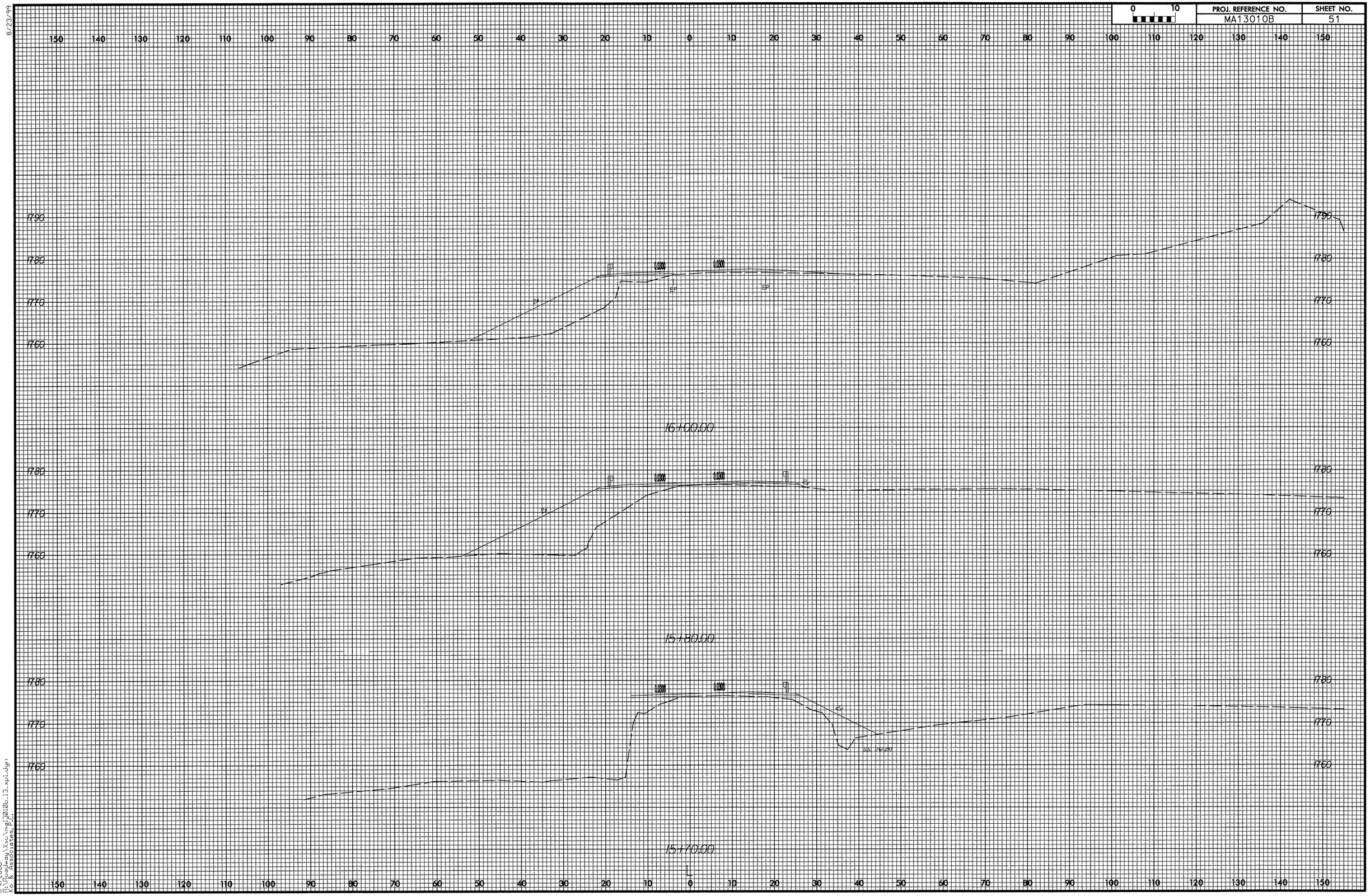

8/23/99

1/4/2008
R:\Roadway\Sc\mga13010b_13_xpl.dgn
cos & associates, inc.

8/23/99

0 10	PROJ. REFERENCE NO.	SHEET NO.
	MA13010B	52

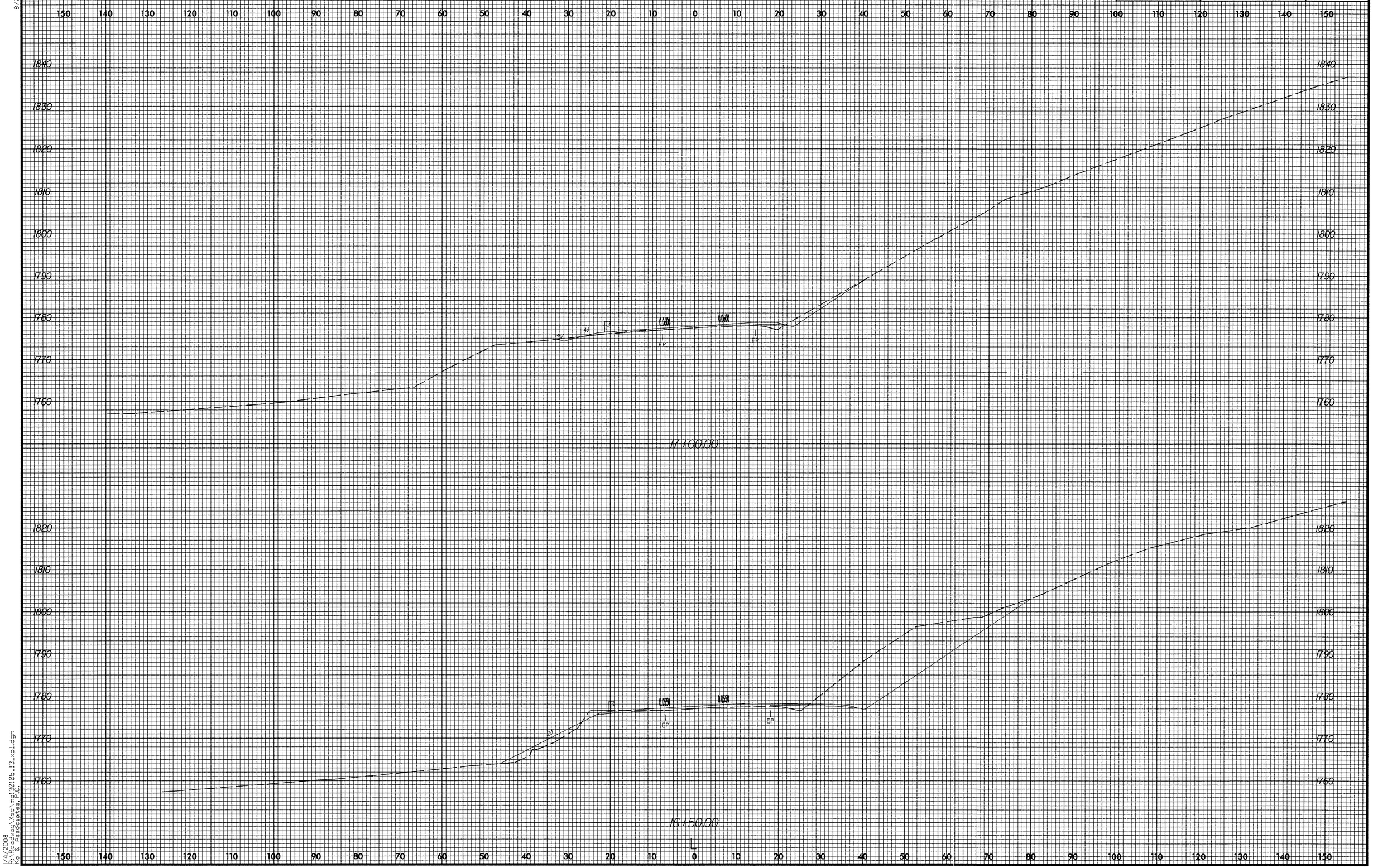

1/4/2008
K:\Geo_Survey\Xsec\ma13010b_13_xp1.dgn
K:\Geo_Survey\Xsec\ma13010b_13_xp1.dgn

PROJ. REFERENCE NO.	SHEET NO.
MA13010B	52A

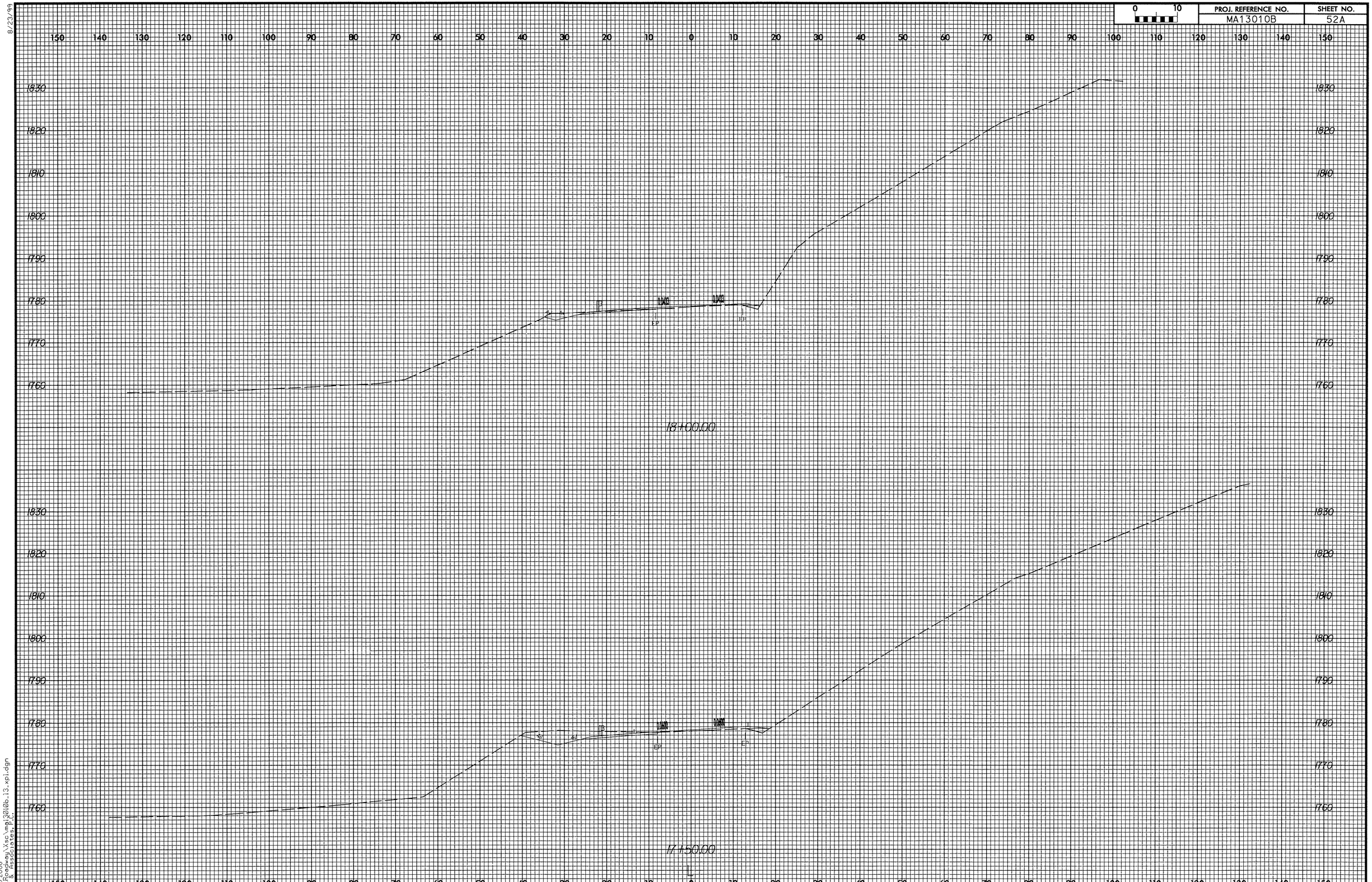

8/23/99

1/4/2008
R:\Roadway\Xsc\mai30106_13_xpl.dgn
Rio & Associates, P.C.

8/23/99

0 10	PROJ. REFERENCE NO.	SHEET NO.
	MA13010B	52B

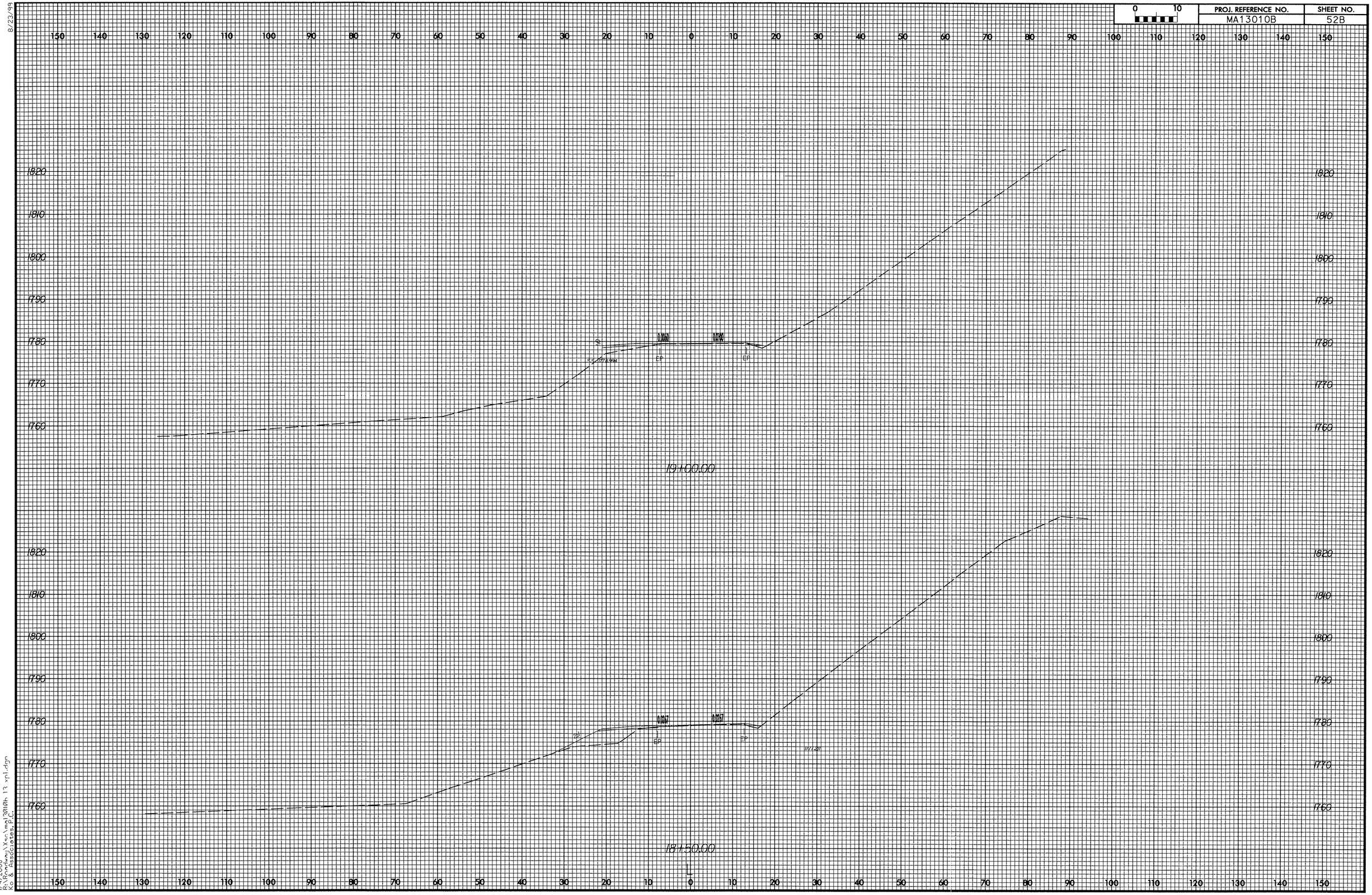

1/4/2008
R:\Projects\Xc\ma13010h 13 vp1.dgn
Ko & Associates, P.C.

PROJ. REFERENCE NO.	SHEET NO.
MA13010B	52C

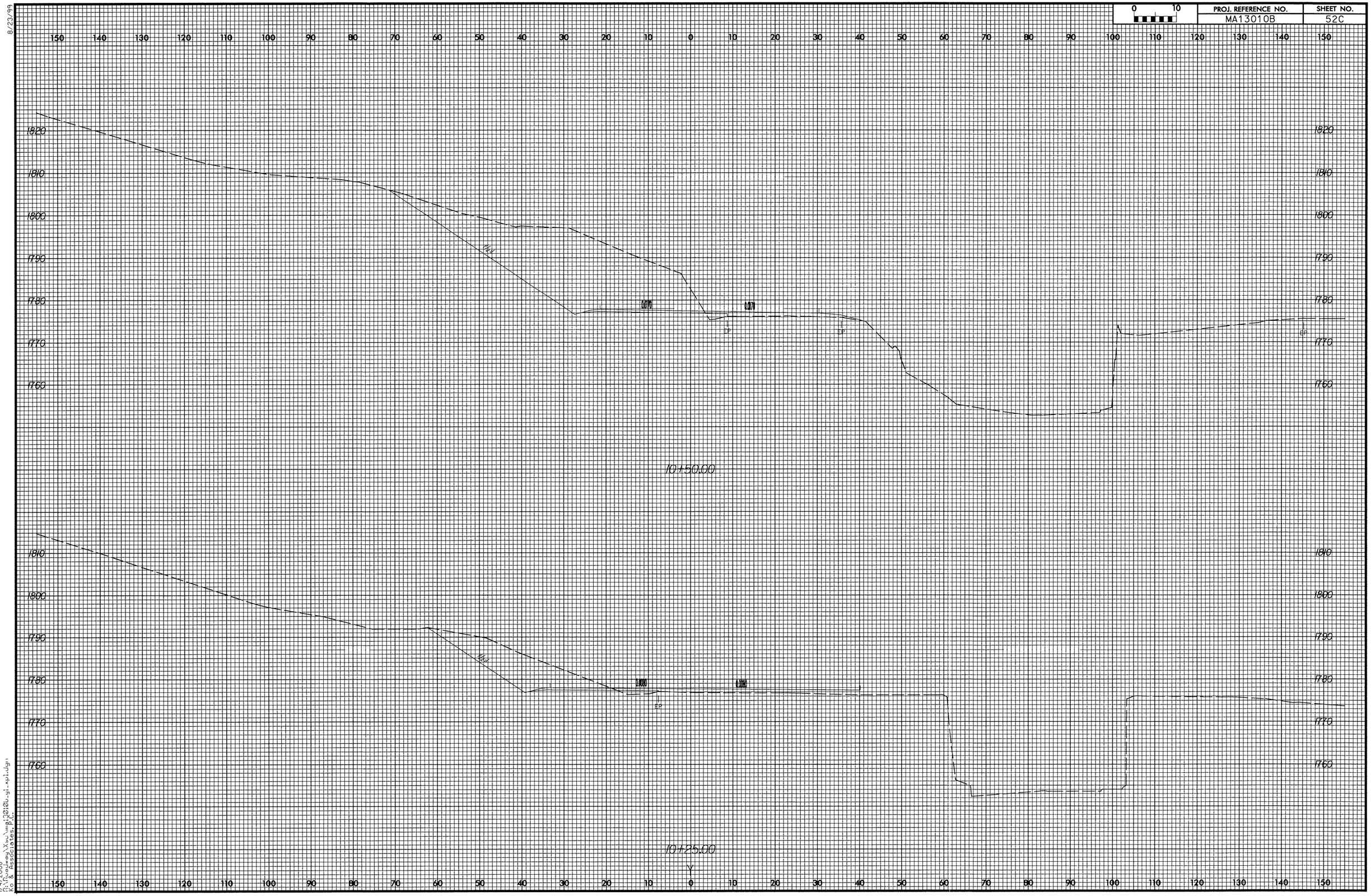

8/23/99

1/4/2008
R:\Roadway\Xsec\mg12026_yi-xp1.dgn
Rio & Associates, P.C.

8/23/99

0 10	PROJ. REFERENCE NO.	SHEET NO.
	MA13010B	52D

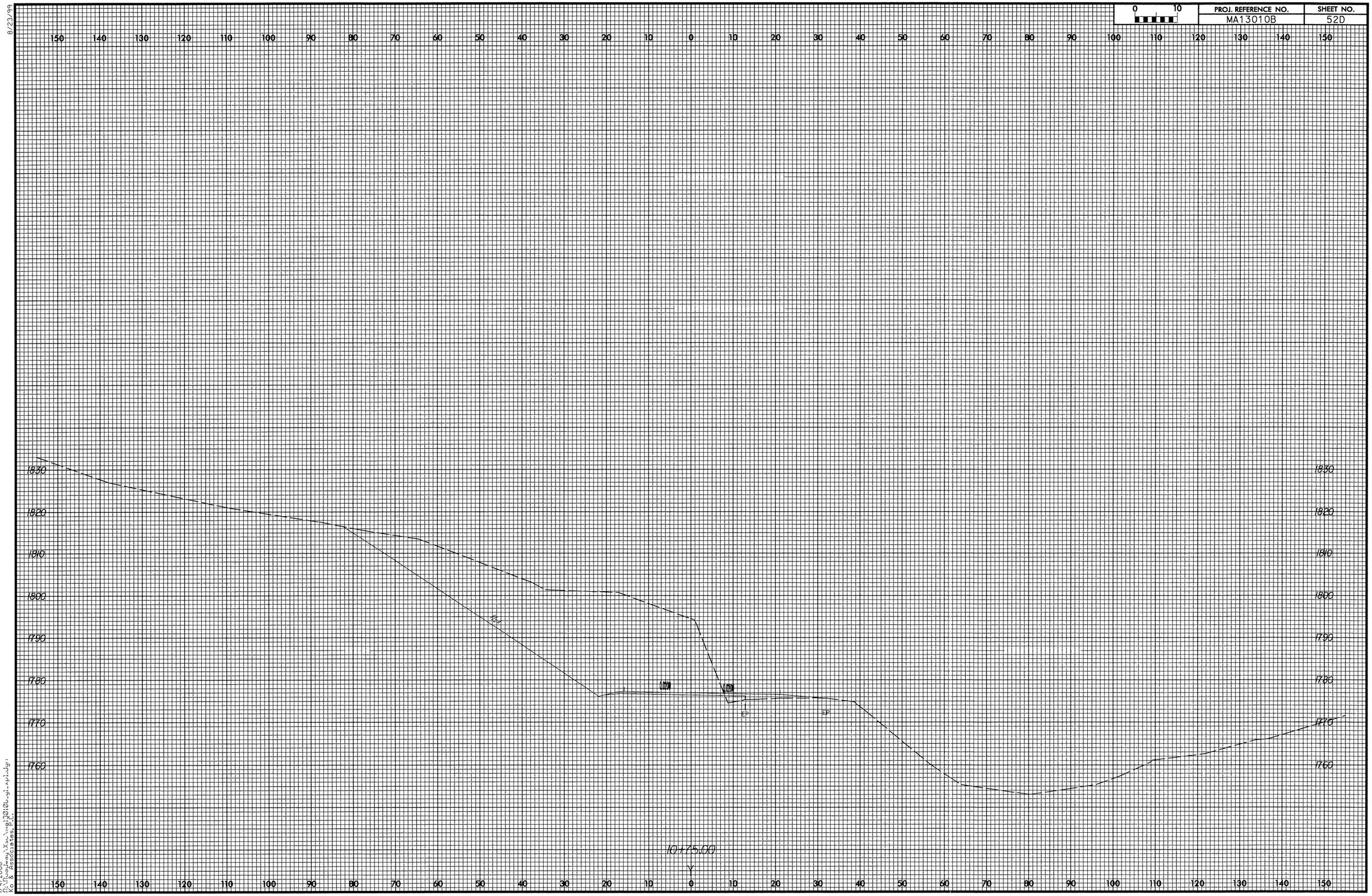

1/4/2008
R:\Projects\Ky\mgi\2010u-gi-rpt.dgn
KC8 PSS0198SS,CL

8/23/99

PROJ. REFERENCE NO.	SHEET NO.
MA13010B	52E

1/4/2008
15:10:09 mayYac\ma13010b_gl_xpl.dgn
$$$$ psc0ness_pc

8/23/99

0 10	PROJ. REFERENCE NO.	SHEET NO.
	MA13010B	52F

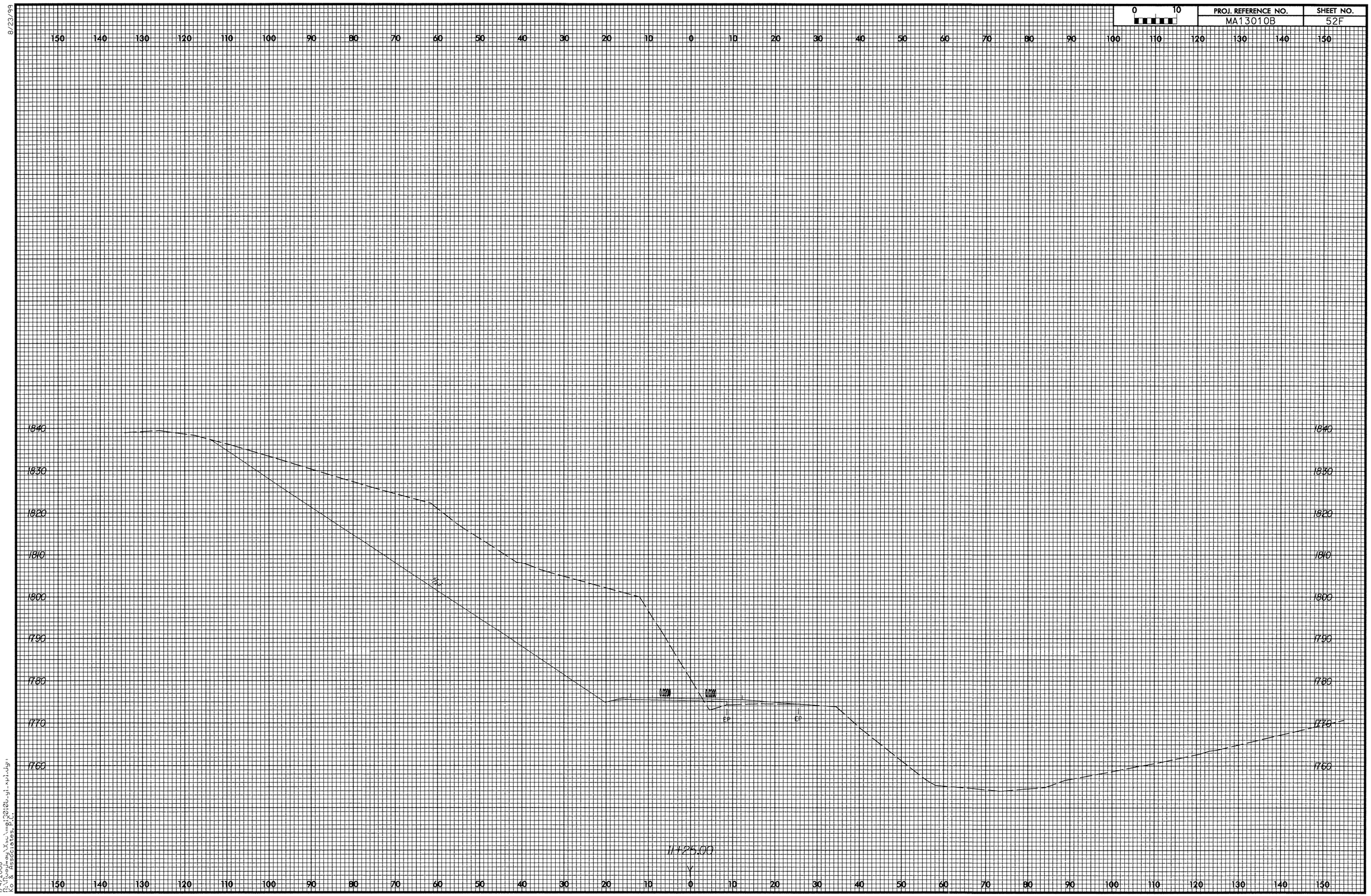

1/4/2008
R:\Highway\Vsc\ing\2010u_gi_xpl.dgn
Kio & Associates, P.C.

PROJ. REFERENCE NO.	SHEET NO.
MA13010B	52G

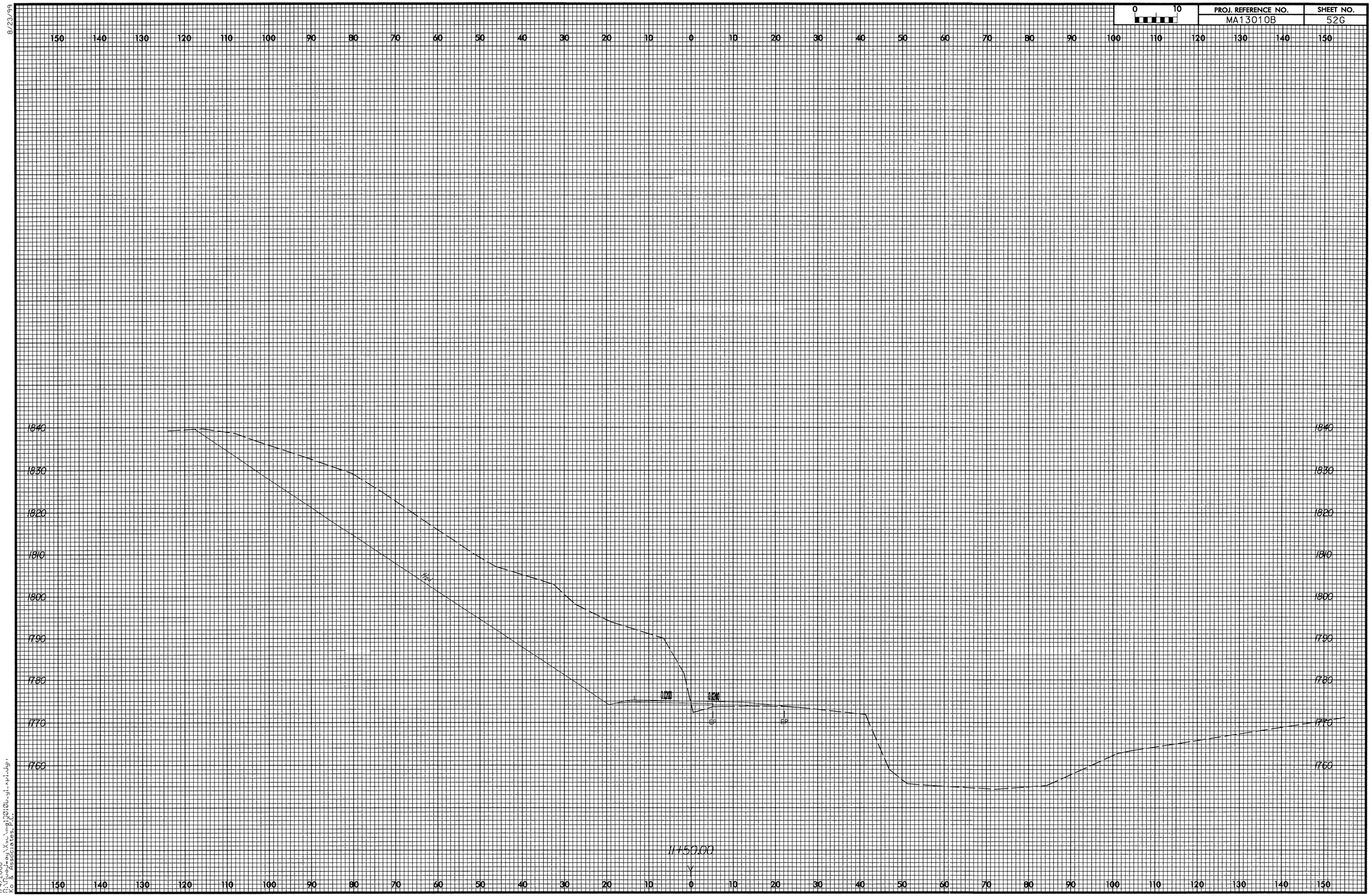

8/23/99

1/4/2008
P:\Todney\Xsc\mig12010u-yi.xplidgn
Ko & Associates, P.C.

8/23/99

0 10	PROJ. REFERENCE NO.	SHEET NO.
	MA13010B	52H

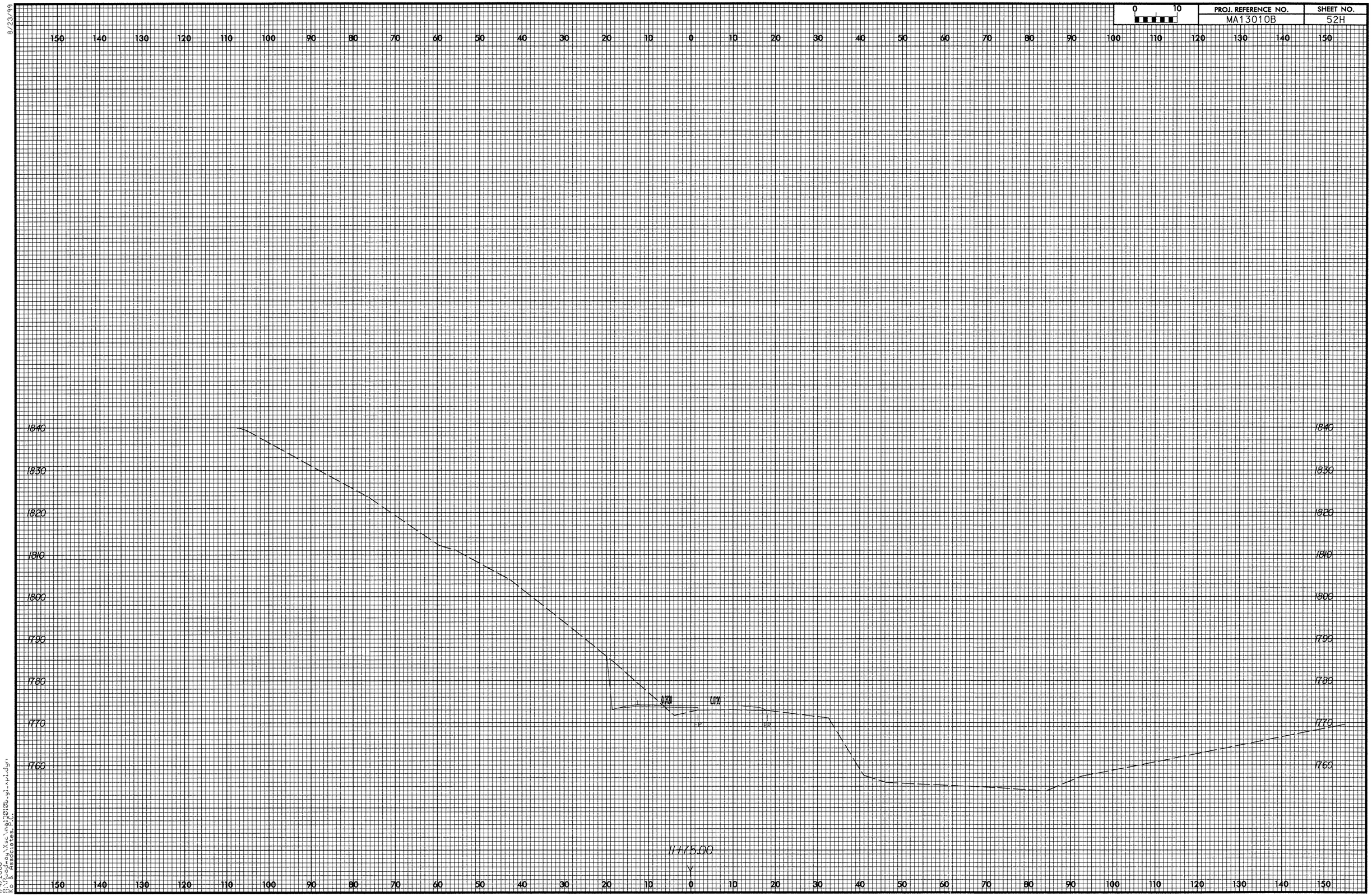

1/4/2008
R:\Proj*eng\Vsc\mpi\2010u_gi_xpl.dgn
k:\8 Rescoites\C.

8/23/99

0 10	PROJ. REFERENCE NO.	SHEET NO.
	MA13010B	52J

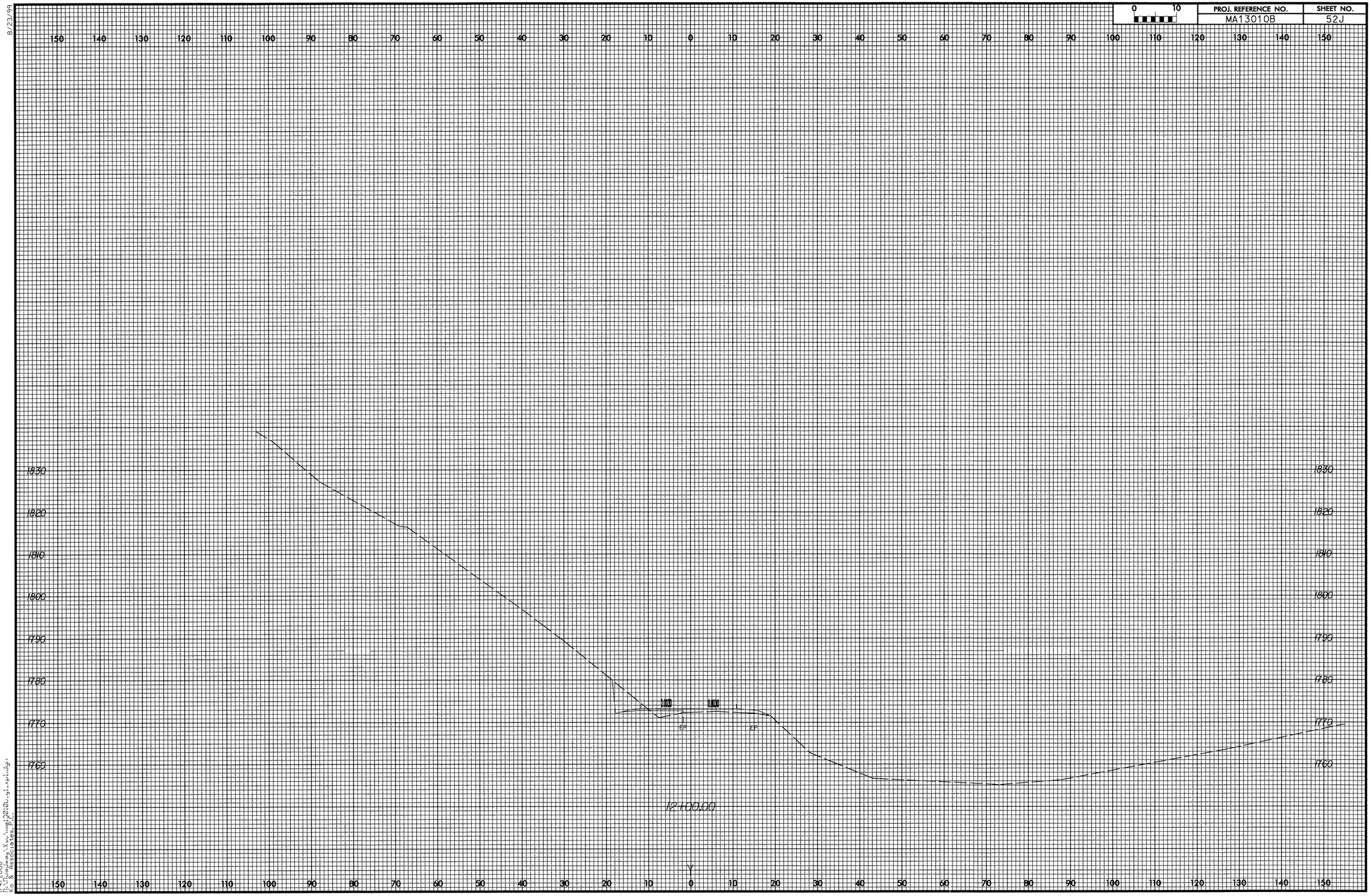

1/4/2008
R:\Hoadley\Xsc\Ma13010u_gi_xpl.dgn
Geo & Associates, L.C.

8/23/99

0 10	PROJ. REFERENCE NO.	SHEET NO.
	MA13010B	52K

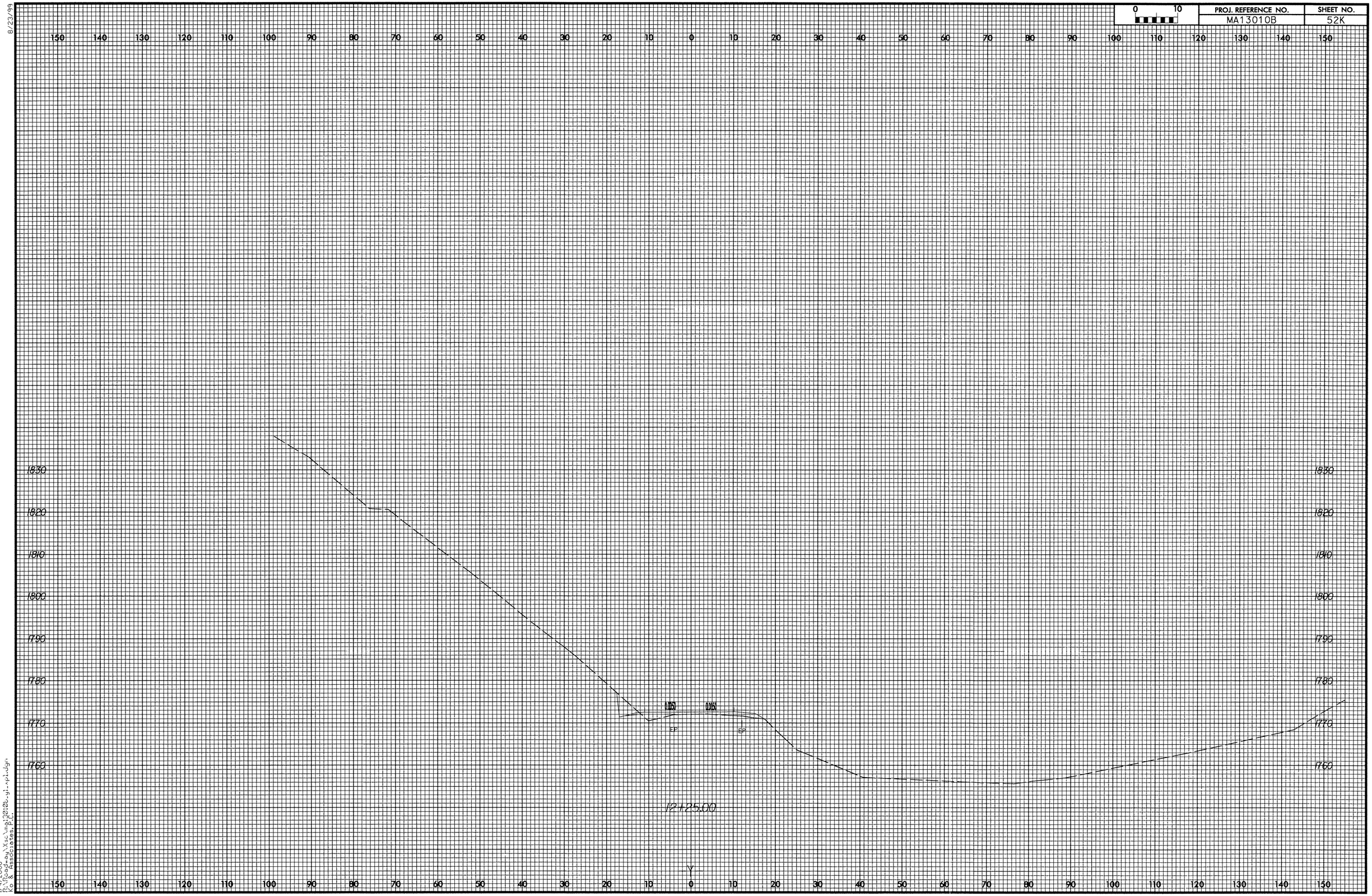

1/4/2008
R:\Proj+by\Xsc\mpi\2010b-yl-rpl.dgn
bc8 resources,inc.

8/23/99

0 10	PROJ. REFERENCE NO.	SHEET NO.
	MA13010B	52L

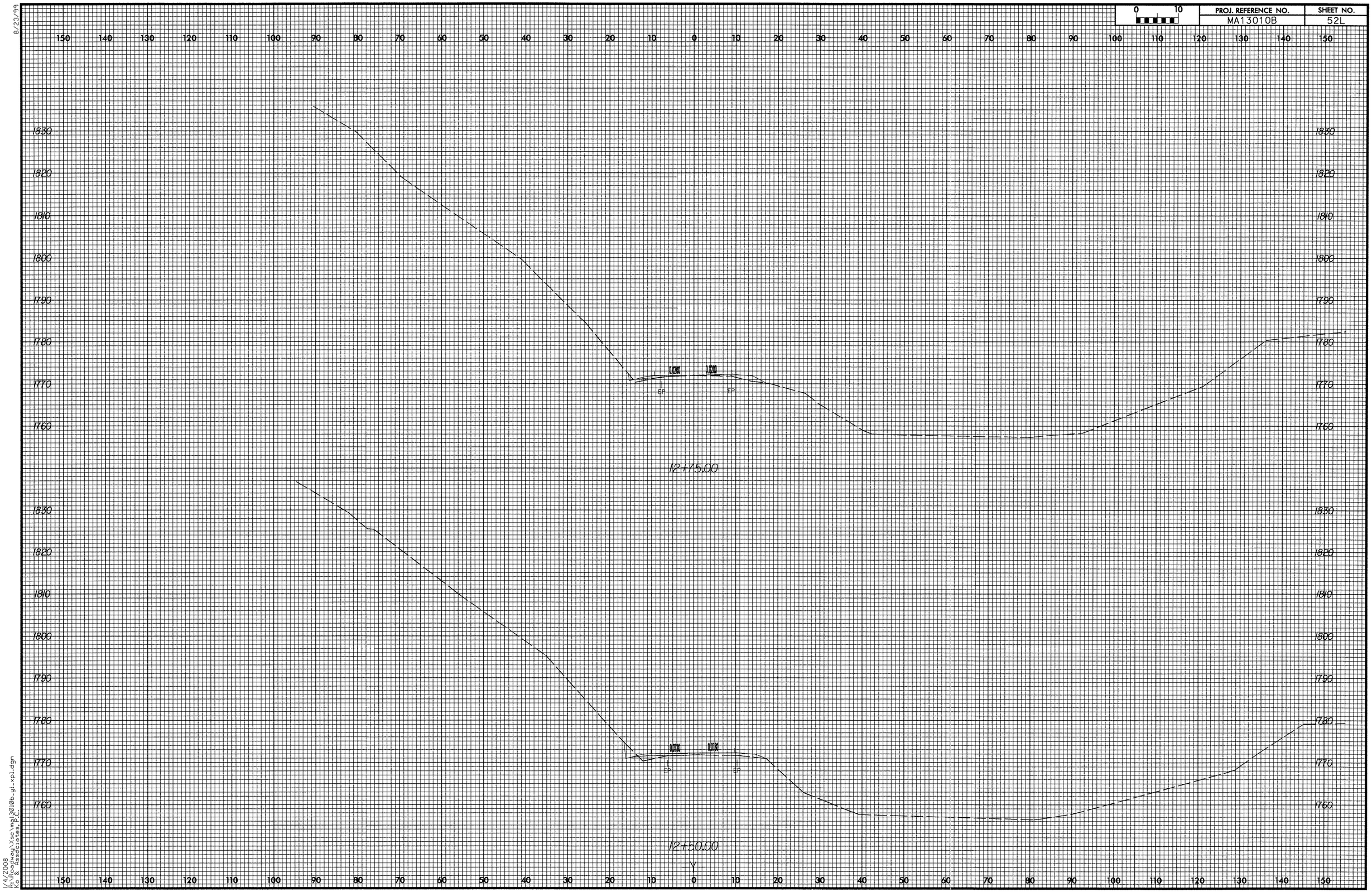

1/4/2008
R:\Roadway\Xsc\mg13010b_yi_xpi.dgn
Kci & Associates, P.C.

8/23/99

0 10	PROJ. REFERENCE NO.	SHEET NO.
	MA13010B	53

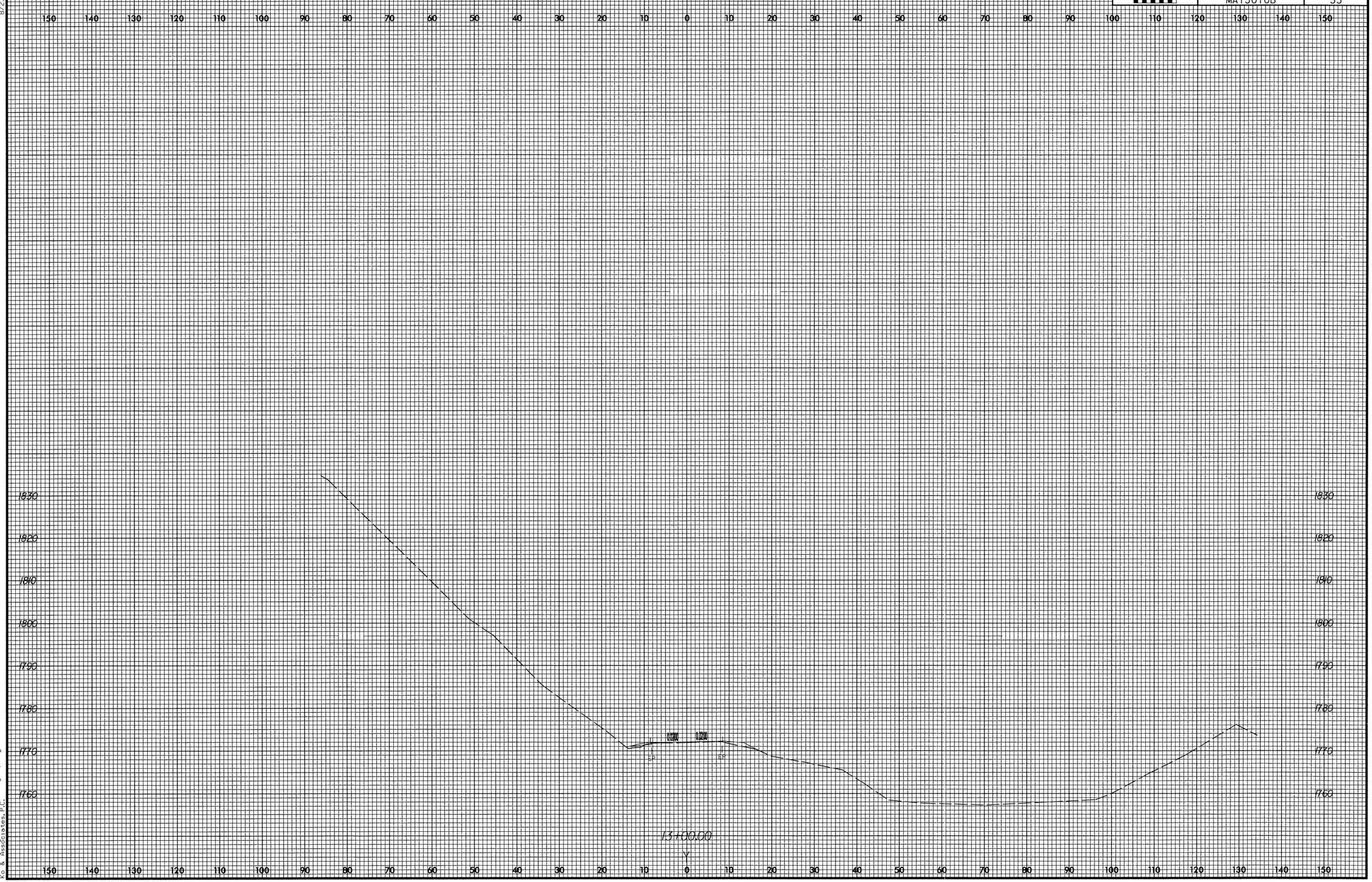

1/4/2008
R:\Roadway\Xsc\ma13010b-y1-xp1.dgn
Ko & Associates, P.C.

STATE	STATE PROJECT REFERENCE NO.	SHEET NO.	TOTAL SHEETS
N.C.	B-3813		

STATE PROJ. NO.	F. A. PROJ. NO.	DESCRIPTION
33268.3.1	BRSTP-1742(1)	CONSTRUCTION

STATE OF NORTH CAROLINA
DIVISION OF HIGHWAYS

BUNCOMBE COUNTY

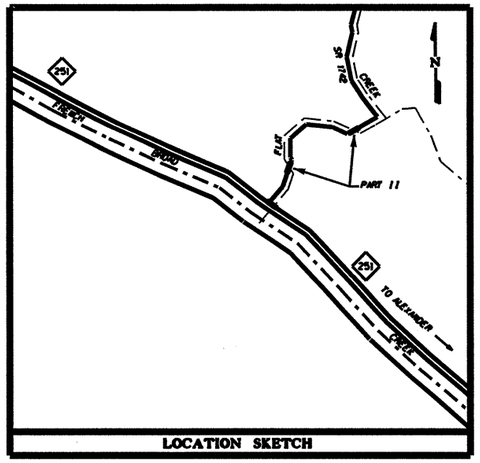

LOCATION SKETCH

LOCATION:
BRIDGE NO.249 & 250 ON SR 1742 OVER FLAT CREEK
BETWEEN NC 251 & SR 1743

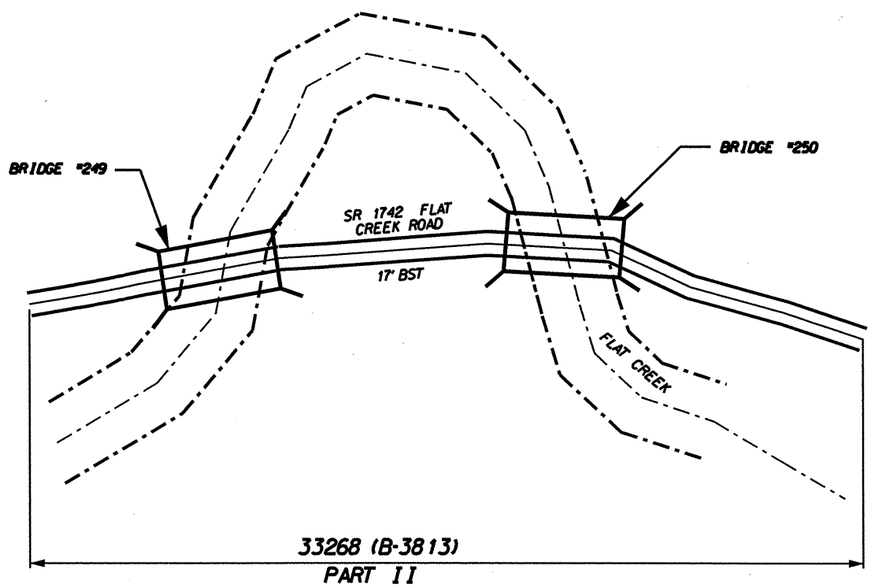

NC GRID NAD 83

CONTRACT: C202012 TIP PROJECTS: B-3813

$$$$SYSTIME$$$$
$$$$USERNAME$$$$
$$$$DGN$$$$

PROJECT LENGTH

LENGTH ROADWAY TIP PROJECTS 33268 - 0.13 MI.

Prepared in the Office of:
DIVISION OF HIGHWAYS
1000 Birch Ridge Dr., Raleigh NC, 27610
2006 STANDARD SPECIFICATIONS

RIGHT OF WAY DATE: _____
RIGHT OF WAY DATE: _____
LETTING DATE: MAY 20, 2008

DIVISION OF HIGHWAYS
STATE OF NORTH CAROLINA

P.E.
STATE HIGHWAY DESIGN ENGINEER

DEPARTMENT OF TRANSPORTATION
FEDERAL HIGHWAY ADMINISTRATION

APPROVED
DIVISION ADMINISTRATOR DATE

bxxxx_rdy_buncombe.dgn 2/29/2008 2:10:55 PM

B-3813

#250 BUNCOMBE

F. A. PROJ. NO. BRSTP-1742(1)

EXISTING BRIDGE No. 250
19'-1" CLEAR ROADWAY
SPANS: 1 @ 41'
TIMBER FLOOR ON I-BEAMS
END BENT 1 ABUTMENT RUBBLE MASONRY
END BENT 2 ABUTMENT YOUNT MASONRY

TBM #1:
NAIL SET IN POWER POLE
30.21' RT. OF STA. 5+85.47 -L-
ELEV. = 1806.61

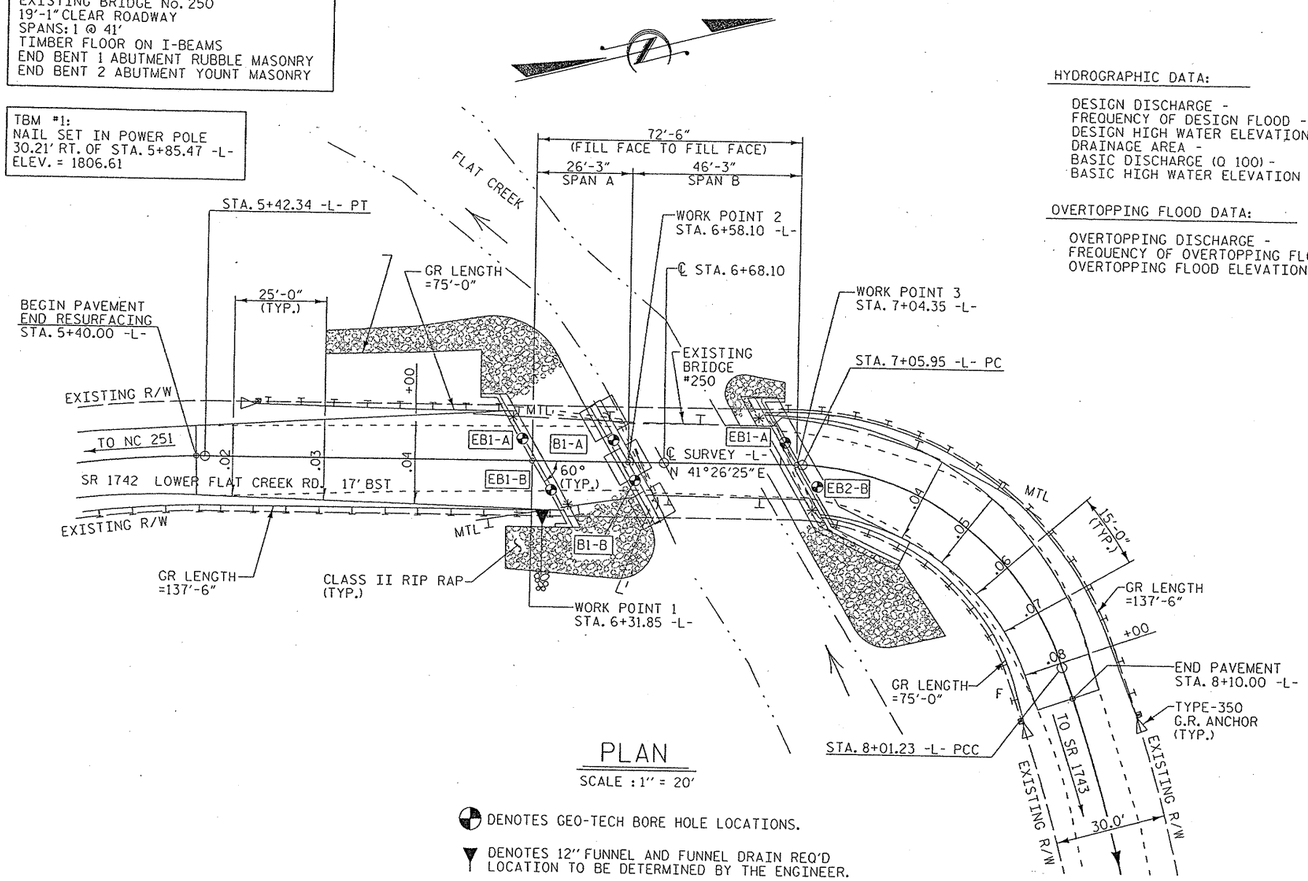

PLAN
SCALE : 1" = 20'

DENOTES GEO-TECH BORE HOLE LOCATIONS.

DENOTES 12" FUNNEL AND FUNNEL DRAIN REQ'D LOCATION TO BE DETERMINED BY THE ENGINEER.

* DENOTES B-77 GUARDRAIL CONNECTION REQ'D., SEE SHEET 7 U.O.N. - UNLESS OTHERWISE NOTED

FOR PAVEMENT LAYOUT, PROP. R/W & CONST. EASEMENTS, SEE SHEET 2

HYDROGRAPHIC DATA:

DESIGN DISCHARGE -	3800 CFS
FREQUENCY OF DESIGN FLOOD -	25 YEAR
DESIGN HIGH WATER ELEVATION -	1794.9
DRAINAGE AREA -	24.5 SQ. MI.
BASIC DISCHARGE (Q 100) -	5500 CFS
BASIC HIGH WATER ELEVATION -	1797.0

OVERTOPPING FLOOD DATA:

OVERTOPPING DISCHARGE -	8000+ CFS
FREQUENCY OF OVERTOPPING FLOOD -	500 YEAR +
OVERTOPPING FLOOD ELEVATION -	1802.6 +/-

NOTES

FOR EROSION CONTROL MEASURES SEE EROSION CONTROL PLANS.

REMOVAL OF THE EXISTING BRIDGE SHALL BE PERFORMED SO AS NOT TO ALLOW DEBRIS TO FALL INTO THE WATER. THE CONTRACTOR SHALL REMOVE THE BRIDGE AND SUBMIT PLANS FOR THE DEMOLITION IN ACCORDANCE WITH ARTICLE 402-2 OF THE STANDARD SPECIFICATIONS.

THE SUBSTRUCTURE OF THE EXISTING BRIDGE INDICATED ON THE PLANS IS FROM THE BEST INFORMATION AVAILABLE. SINCE THIS INFORMATION IS SHOWN FOR THE CONVENIENCE OF THE CONTRACTOR, THE CONTRACTOR SHALL HAVE NO CLAIM WHATSOEVER AGAINST THE DEPARTMENT OF TRANSPORTATION FOR ANY DELAYS OR ADDITIONAL COST INCURRED BASED ON DIFFFERENCES BETWEEN THE EXISTING BRIDGE SUBSTRUCTURE SHOWN ON THE PLANS AND THE ACTUAL CONDITIONS AT THE PROJECT SITE.

THIS STRUCTURE HAS BEEN DESIGNED IN ACCORDANCE WITH HEC 18, "EVALUATING SCOUR AT BRIDGES", NOVEMBER 1995.

THIS BRIDGE HAS BEEN DESIGNED IN ACCORDANCE WITH THE REQUIREMENTS OF THE STANDARD SPECIFICATIONS FOR SEISMIC DESIGN OF HIGHWAY BRIDGES FOR SEISMIC CATEGORY A.

INASMUCH AS THE PAINT SYSTEM ON THE EXISTING STRUCTURAL STEEL CONTAINS LEAD, THE CONTRACTOR'S ATTENTION IS DIRECTED TO ARTICLE 107-1, OF THE STANDARD SPECIFICATIONS. ANY COSTS RESULTING FROM COMPLIANCE WITH APPLICABLE STATE OR FEDERAL REGULATIONS PERTAINING TO HANDLING OF MATERIALS CONTAINING LEAD BASED PAINT SHALL BE INCLUDED IN THE BID PRICE FOR "REMOVAL OF EXISTING STRUCTURE AT STATION 2+29.00"

WHEN DRIVING PILES, THE MAXIMUM BLOW COUNT SHALL NOT BE EXCEEDED.

PILES FOR END BENT No. 1 SHALL BE DRIVEN TO A MINIMUM BEARING CAPACITY OF 45 TONS EACH.

THE SCOUR CRITICAL ELEVATION FOR BENT No. 1 AND END BENT 2 IS THE BOTTOM OF FOOTING THE SCOUR CRITICAL ELEVATIONS ARE FOR USE BY MAINTENANCE FORCES TO MONITOR POSSIBLE SCOUR PROBLEMS DURING THE LIFE OF THE STRUCTURE.

THE REQUIRED BEARING CAPACITY OF THE FOOTINGS AT BENT NO. 1 AND END BENT NO. 2 IS 5 TONS PER SQ. FT. THE REQUIRED BEARING CAPACITY SHALL BE VERIFIED.

FOOTINGS SHALL BE KEYED AT LEAST 12" INTO ROCK WITH MINIMUM THICKNESS AS SHOWN ON PLANS.

THIS STRUCTURE HAS BEEN DESIGNED IN ACCORDANCE WITH FHWA'S TECHNICAL ADVISORY T5140.20 (SCOUR AT BRIDGES).

ADT = 430 FOR YEAR 1999.

THE QUANTITY OF RIP RAP TO BE PAID FOR WILL BE THE ACTUAL NUMBER OF TONS OF EACH CLASS OF RIP RAP WHICH HAS BEEN INCORPORATED INTO THE COMPLETED AND ACCEPTED WORK. THE RIP RAP WILL BE MEASURED BY BEING WEIGHED IN TRUCKS ON CERTIFIED PLATFORM SCALES OR OTHER CERTIFIED WEIGHING DEVICES. THE QUANTITY OF RIP RAP WILL BE PAID FOR AT THE CONTRACT UNIT PRICE PER TON:

PLAIN RIP RAP CLASS II (2'-0" THICK)

END BENT No. 1	240	TONS
END BENT No. 2	115	TONS
TOTAL	355	TONS

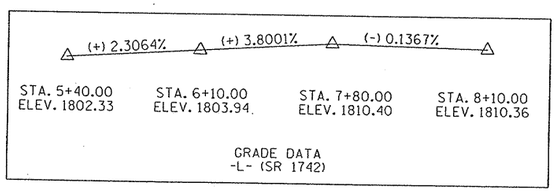

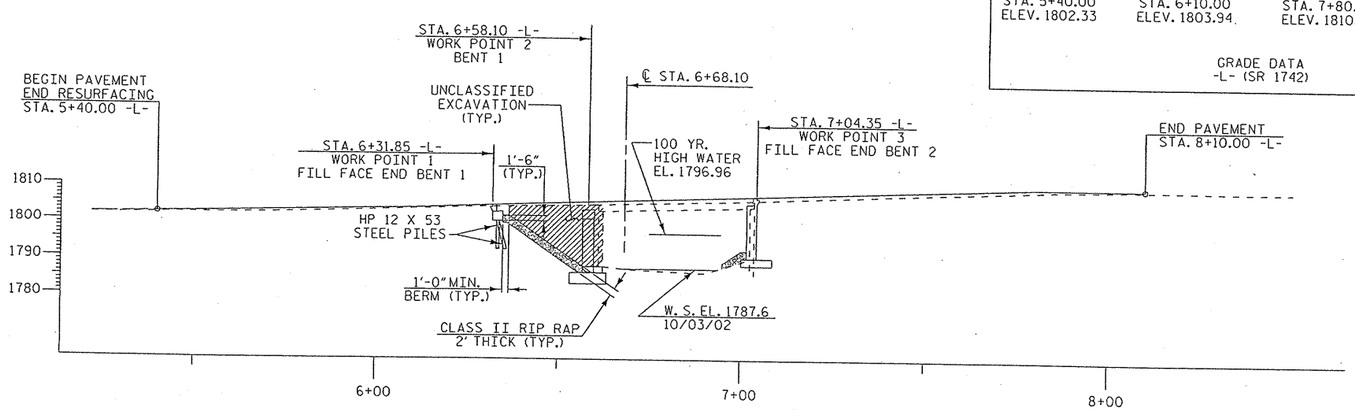

PROFILE ALONG ℄ SURVEY
SCALE : 1" = 20'

DENOTES ROADWAY FILL TO BE REMOVED

PROJECT NO. 33268.1.1
BUNCOMBE COUNTY
STATION: 6+68.10 -L-

REPLACES BRIDGE NO. 250

STATE OF NORTH CAROLINA
DEPARTMENT OF TRANSPORTATION
RALEIGH

BRIDGE ON SR 1742 OVER
FLAT CREEK BETWEEN
NC 251 & SR 1743

27' CLEAR ROADWAY - 60° SKEW

NORTH CAROLINA PROFESSIONAL SEAL 19661 ENGINEER L. KEVIN AUSTIN 3/6/08

PLANS PREPARED BY:
MULKEY ENGINEERS & CONSULTANTS
PO BOX 33127
RALEIGH, N.C. 27636
(919) 851-1912
(919) 851-1918 (FAX)
WWW.MULKEYINC.COM

REVISIONS						SHEET NO.
NO.	BY:	DATE:	NO.	BY:	DATE:	1
1			3			TOTAL SHEETS
2			4			18

DRAWN BY : W. B. ALLEN DATE : 12/03
CHECKED BY : R. C. LARSON DATE : 8/04

3/6/2008 35934 PM G:\project\2002\290.02\B-3813\Structures\Bridge*250\B3813-250_SD_01.dgn

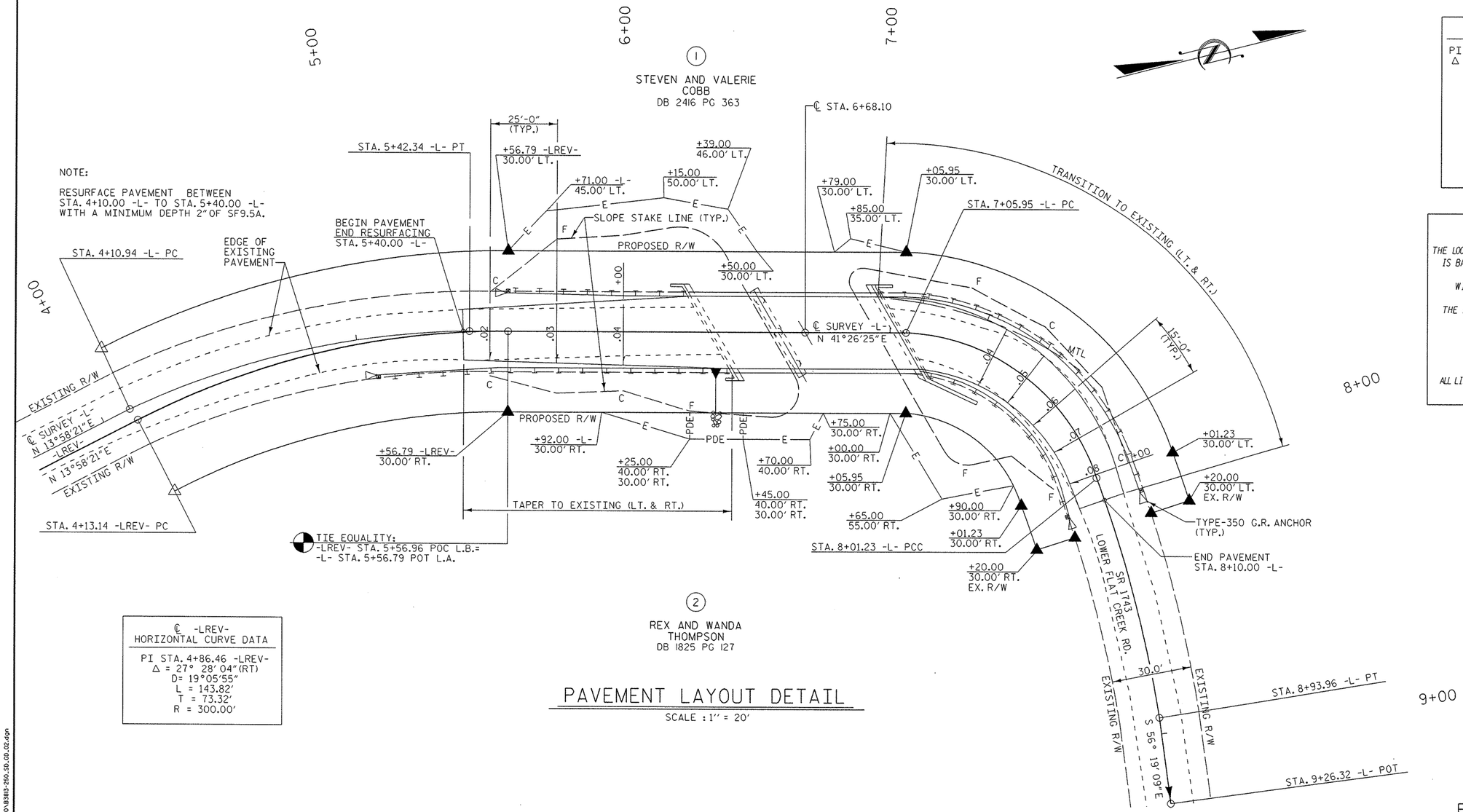

PAVEMENT LAYOUT DETAIL

SCALE : 1" = 20'

NOTE:

RESURFACE PAVEMENT BETWEEN STA. 4+10.00 -L- TO STA. 5+40.00 -L- WITH A MINIMUM DEPTH 2" OF SF9.5A.

HORIZONTAL CURVE DATA	
PI STA. 4+77.65 -L-	PI STA. 7+60.36 -L-
Δ = 24° 21' 49" (RT)	Δ = 69° 08' 19" (RT)
D= 18°32'28"	D= 72°33'47"
L = 131.40'	L = 95.28'
T = 66.71'	T = 54.41'
R = 309.02'	R = 78.96'

PI STA. 8+47.74 -L-
Δ = 11° 16' 20" (RT)
D= 12°09'24"
L = 92.73'
T = 46.51'
R = 471.31'

℄ -LREV- HORIZONTAL CURVE DATA
PI STA. 4+86.46 -LREV-
Δ = 27° 28' 04" (RT)
D= 19°05'55"
L = 143.82'
T = 73.32'
R = 300.00'

DATUM DESCRIPTION

THE LOCALIZED COORDINATE SYSTEM DEVELOPED FOR THIS PROJECT IS BASED ON THE STATE PLANE COORDINATES ESTABLISHED BY NCDOT FOR MONUMENT "B-3813 BL-1" WITH NAD 1983/95 STATE PLANE GRID COORDINATES OF NORTHING: 736087.6084(ft) EASTING: 924492.5136(ft) THE AVERAGE COMBINED GRID FACTOR USED ON THIS PROJECT (GROUND TO GRID) IS: 99982434 THE N.C. LAMBERT GRID BEARING AND LOCALIZED HORIZONTAL GROUND DISTANCE FROM "B-3813 BL-1" TO -L- STATION 5+42.34 IS N 50°27'05" E 74.40' ALL LINEAR DIMENSIONS ARE LOCALIZED HORIZONTAL DISTANCES VERTICAL DATUM USED IS NAVD 88

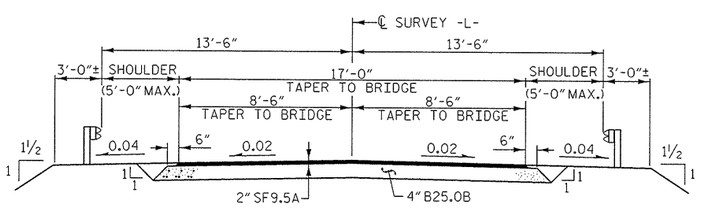

TYPICAL ROADWAY SECTION

WITHIN CONSTRUCTION LIMITS

RIGHT OF WAY AREA DATA

PARCEL NO.	PROPERTY OWNERS NAMES	TOTAL AREA	AREA TAKEN	AREA REMAINING RT.	AREA REMAINING LT.	CONST. EASE.	PERM. DRAIN. EASE.	TEMP. DRAIN. EASE.
1	STEVEN AND VALERIE COBB	22.71 AC	0.15 AC		22.56 AC	1364 SF		
2	REX AND WANDA THOMPSON	2.97 AC	0.13 AC	2.84 AC		1211 SF	200 SF	

PROJECT NO. 33268.1.1

BUNCOMBE COUNTY

STATION: 6+68.10 -L-

REPLACES BRIDGE NO. 250

STATE OF NORTH CAROLINA
DEPARTMENT OF TRANSPORTATION
RALEIGH

ROADWAY DETAILS

27' CLEAR ROADWAY - 60° SKEW

NORTH CAROLINA PROFESSIONAL SEAL 19661 ENGINEER L. KEVIN AUSTIN 3/6/08

PLANS PREPARED BY:

MULKEY ENGINEERS & CONSULTANTS
PO Box 33127
RALEIGH, N.C. 27636
(919) 851-1912
(919) 851-1918 (FAX)
WWW.MULKEYINC.COM

REVISIONS							SHEET NO.
NO.	BY:	DATE:	NO.	BY:	DATE:		2
1			3				TOTAL SHEETS
2			4				18

DRAWN BY : W. B. ALLEN DATE : 12/03
CHECKED BY : R. C. LARSON DATE : 8/04

3/6/2008 3:48:37 PM G:\projects\2002\290.02\B-3813\Structures\Bridge#250\B3813-250_S0_G0_02.dgn

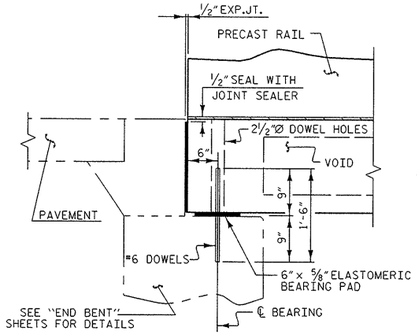

SECTION AT END BENT

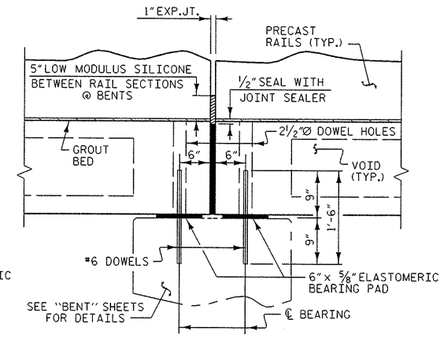

SECTION AT BENT

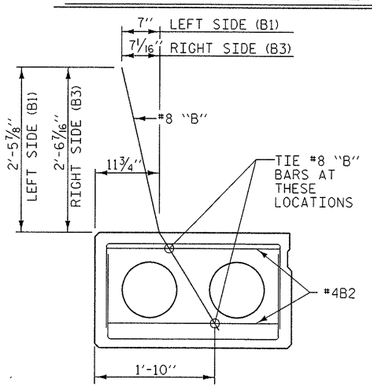

TIE LOCATION FOR #8B1

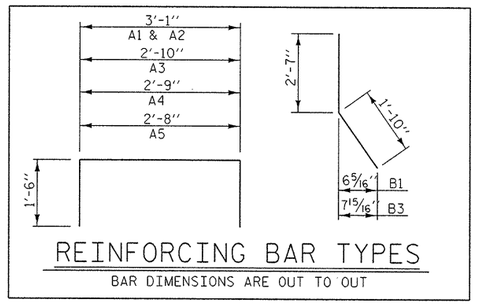

REINFORCING BAR TYPES

BAR DIMENSIONS ARE OUT TO OUT

SHEATH CHART		
SPAN LENGTH	NUMBER OF SHEATHED STRANDS PER EXTERIOR SLAB SECTIONS	NUMBER OF SHEATHED STRANDS PER INTERIOR SLAB SECTIONS
45'	4	3
25'	0	0

BOND SHALL BE BROKEN ON THESE STRANDS FOR A DISTANCE OF 4'-0" FROM END OF SLAB

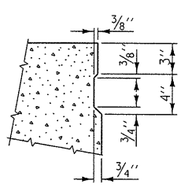

SHEAR KEY DETAIL

NOTE: OMIT SHEAR KEY ON OUTSIDE OF EXTERIOR CORED SLAB

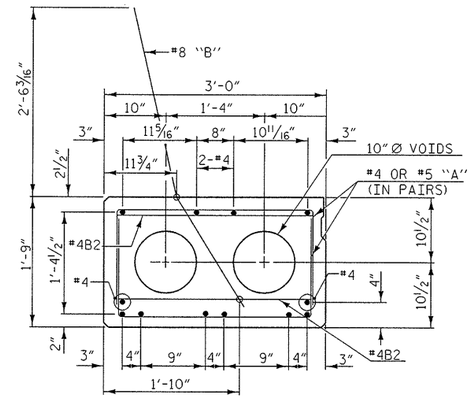

25' SPAN

8 - 1/2" Ø H.S. STRANDS
EXTERIOR SLAB SECTIONS

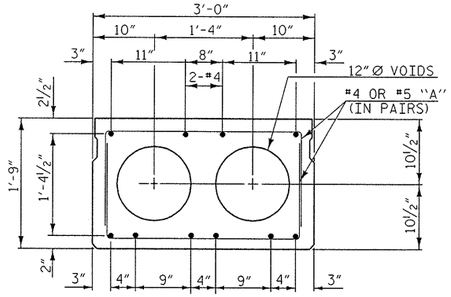

25' SPAN

8 - 1/2" Ø H.S. STRANDS
INTERIOR SLAB SECTIONS

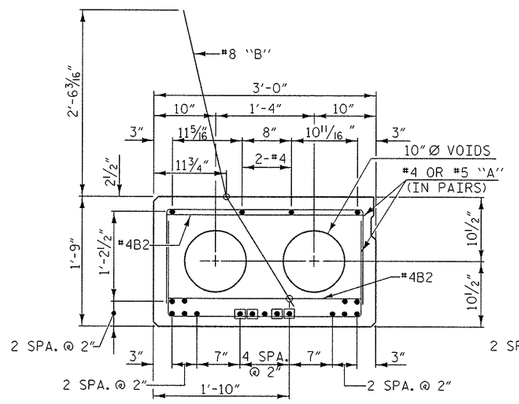

45' SPAN

17 - 1/2" Ø H.S. STRANDS
EXTERIOR SLAB SECTIONS

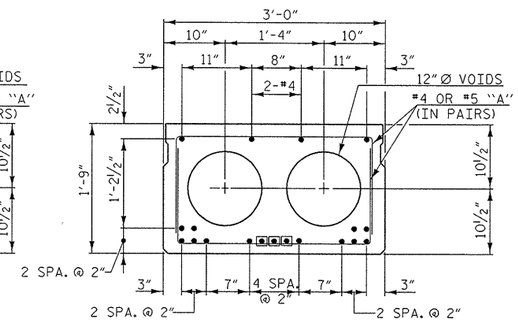

45' SPAN

17 - 1/2" Ø H.S. STRANDS
INTERIOR SLAB SECTIONS

■ DENOTES SHEATHED STRAND
(SEE SHEATH CHART)

GENERAL NOTES

ASSUMED LIVE LOAD = HS 20 OR ALTERNATE LOADING.

CONCRETE = f'c - 5000psi 25' SPAN ONLY (MIN. COMP. STRENGTH @ 28 DAYS).
f'ci - 4000psi 25' SPAN ONLY (MIN. COMP. STRENGTH @ TRANSFER OF STRESSING FORCE).

CONCRETE = f'c - 7000psi 45' SPAN ONLY (MIN. COMP. STRENGTH @ 28 DAYS).
f'ci - 4500psi 45' SPAN ONLY (MIN. COMP. STRENGTH @ TRANSFER OF STRESSING FORCE).

ALL PRESTRESSING STRANDS SHALL MEET THE REQUIREMENTS OF ASTM A416.

ALL PRESTRESSING STRANDS SHALL BE 7-WIRE LOW RELAXATION GRADE HIGH STRENGTH CABLES IN ACCORDANCE WITH THE STANDARD SPECIFICATIONS.

SIZE	TYPE	AREA	ULTIMATE STR.	APPLIED FORCE
1/2" Ø	HIGH STR.	0.153 SQ. IN. PER CABLE	41,300 LBS.	30,980 LBS. PER CABLE

EXP. JT. MAT'L. SHALL MEET THE REQUIREMENTS OF AASHTO SPECIFICATION M153 TYPE I, II, OR III.

JOINT SEALER SHALL BE LOW MODULUS SILICONE SEALANT. SEE SECTION 1028-4 OF THE STANDARD SPECIFICATIONS.

STRUCTURAL STEEL ITEMS SHALL BE OF A GRADE CONFORMING TO EITHER ASTM A36 OR A373. EXCEPT HIGH STRENGTH BOLTS. HIGH STRENGTH BOLTS SHALL BE ASTM A325. ALL STRUCTURAL STEEL SHALL BE GALVANIZED AS PER THE SPECIFICATION.

ALL MATERIAL AND WORKMANSHIP SHALL COMPLY WITH THE APPLICABLE REQUIREMEMNTS OF THE STANDARD SPECIFICATIONS FOR ROADS AND STRUCTURES OF THE NC DEPARTMENT OF TRANSPORTATION DATED JANUARY 2006 AND WITH THE SPECIAL PROVISIONS.

THE CONTRACTOR, AT HIS OPTION, MAY USE STRESS RELIEVED STRANDS IN LIEU OF LOW RELAXATION STRANDS. DESIGN AND STRAND PATTERN MUST PROVIDE AT LEAST THE SAME NET COMPRESSIVE STRESS AFTER THE LOSSES.

THE ULTIMATE STRENGTH OF THE CORED SLAB UNIT MUST MEET THE REQUIREMENTS OF THE APPLICABLE AASHTO SPECIFICATIONS. STRESS RELIEVED STRANDS SHALL BE TENSIONED AND ANCHORED AT A LOAD EQUAL TO 70% OF ITS ULTIMATE STRENGTH. THIS APPLIED PRESTRESSED FORCE SHALL BE SHOWN ON THE PLANS. SIZE OF STRESS RELIEVED STRANDS SHALL NOT BE SMALLER THAN THOSE SHOWN FOR LOW RELAXATION STRANDS. DESIGN AND DETAIL PLANS USING STRESS RELIEVED STRANDS MUST BE SUBMITTED TO THE ENGINEER. ANY ADDITIONAL COST DUE TO THE USE OF STRESS RELIEVED STRANDS WILL BE PAID FOR BY THE CONTRACTOR. STRANDS SHALL BE CUT FLUSH WITH THE ENDS OF THE SLABS AND EPOXY COATED. SEE SPECIAL PROVISIONS.

A POSITIVE HOLD-DOWN SYSTEM MUST BE EMPLOYED TO PREVENT VOIDS FROM RISING.

SPIRAL WIRE REINFORCEMENT MAY BE USED IN LIEU OF DEFORMED BARS FOR STIRRUPS. (MIN. W3.5 x 6" PITCH).

UNLESS OTHERWISE NOTED ON THE PLANS, ALL EXPOSED CORNERS ON STRUCTURES SHALL BE CHAMFERED 3/4".

FOR DEFLECTION TABLE, SEE SHEET 6.

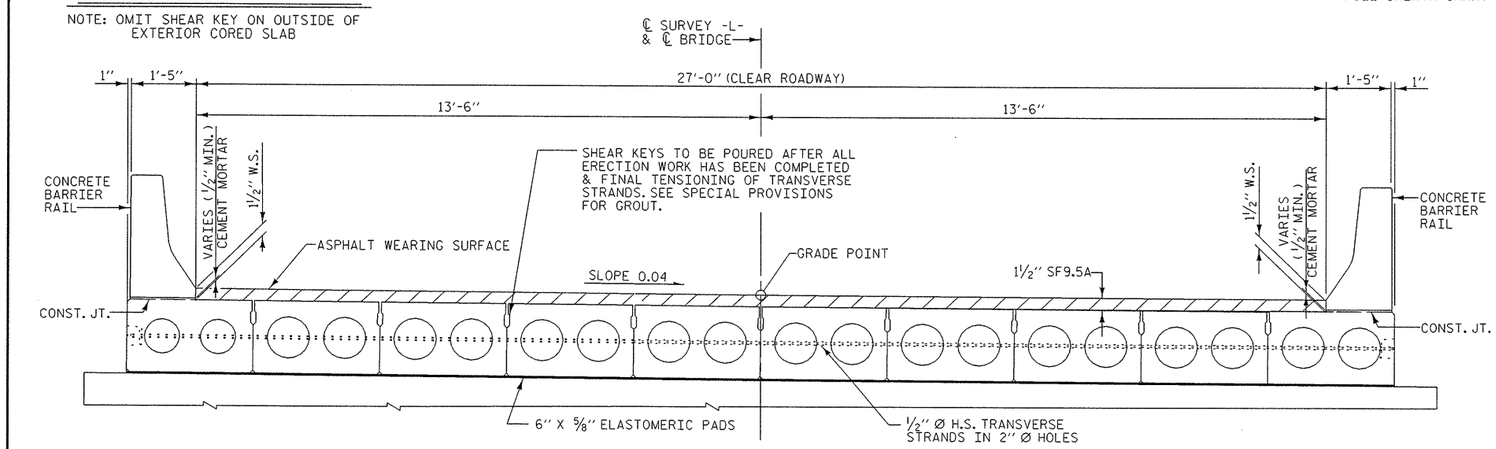

TYPICAL SECTION

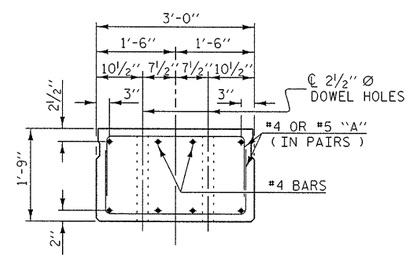

SLAB END ELEVATION

THE 2 1/2" Ø DOWEL HOLES AT EXPANSION ENDS OF SLAB SECTIONS SHALL BE FILLED WITH LOW MODULUS SILICONE MATERIAL TO 1 1/2" ABOVE TOP OF DOWELS AND THEN FILLED WITH GROUT, SEE STANDARD SPECIFICATIONS.

THE 2 1/2" Ø DOWEL HOLES AT FIXED ENDS OF SLAB SECTIONS SHALL BE FILLED WITH GROUT, SEE STANDARD SPECIFICATIONS.

NORTH CAROLINA PROFESSIONAL ENGINEER SEAL 19661 L. KEVIN AUSTIN 3/6/08

PLANS PREPARED BY:
MULKEY ENGINEERS & CONSULTANTS
PO Box 33127 Raleigh, N.C. 27636
(919) 851-1912 FAX (919) 851-1918
WWW.MULKEYINC.COM

PROJECT NO. 33268.1.1
BUNCOMBE COUNTY
STATION: 6+68.10 -L-

REPLACES BRIDGE NO. 250

STATE OF NORTH CAROLINA
DEPARTMENT OF TRANSPORTATION
RALEIGH
STANDARD

PRESTRESSED CORED SLAB
45' & 25' SPANS

27' CLEAR ROADWAY - 60° SKEW

REVISIONS						SHEET NO.
NO.	BY:	DATE:	NO.	BY:	DATE:	3
1			3			TOTAL SHEETS
2			4			18

DRAWN BY : L. M. MORRIS DATE : 11/03
CHECKED BY : R. C. LARSON DATE : 8/04

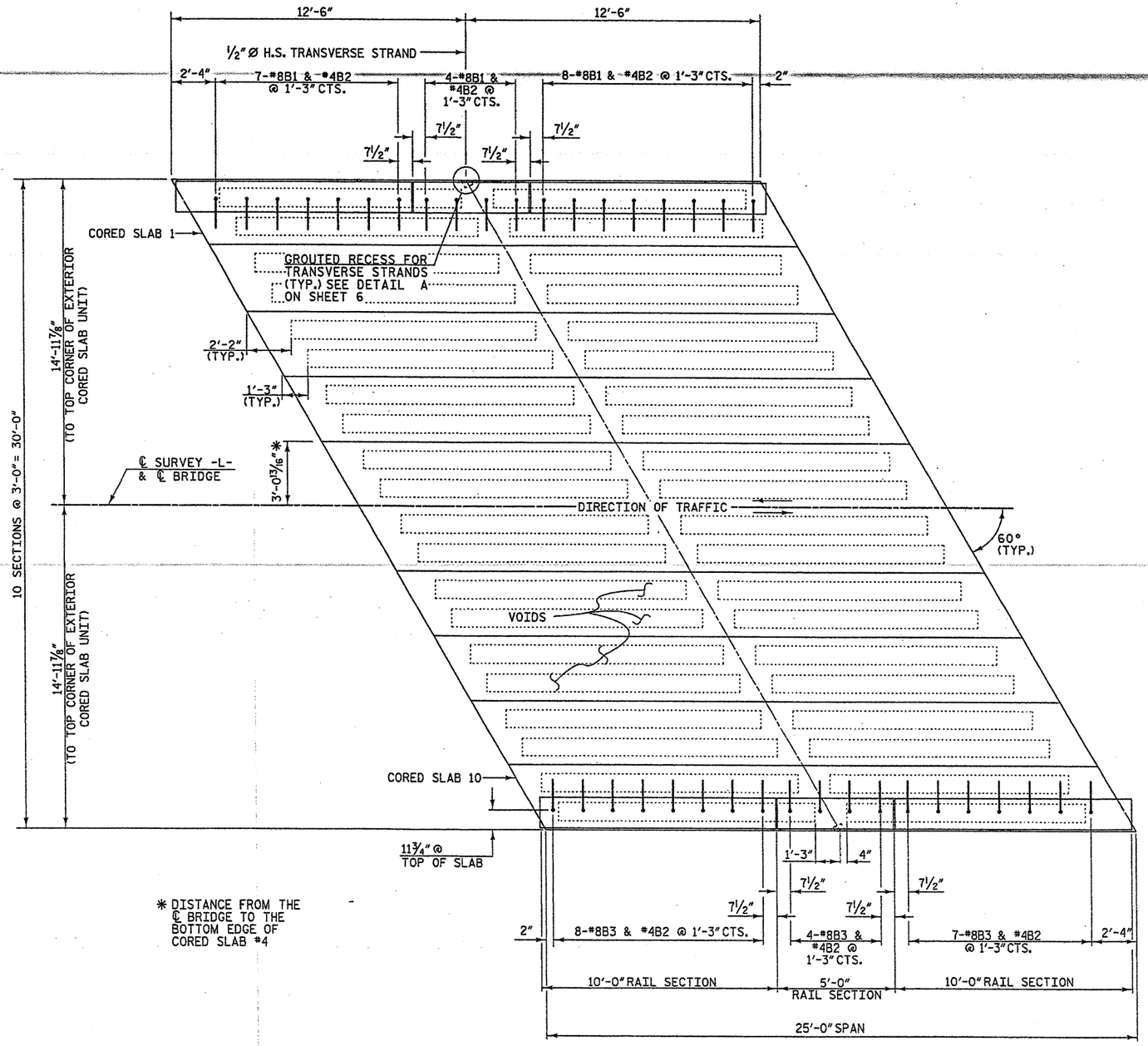

* DISTANCE FROM THE ℄ BRIDGE TO THE BOTTOM EDGE OF CORED SLAB #4

PLAN OF SPAN

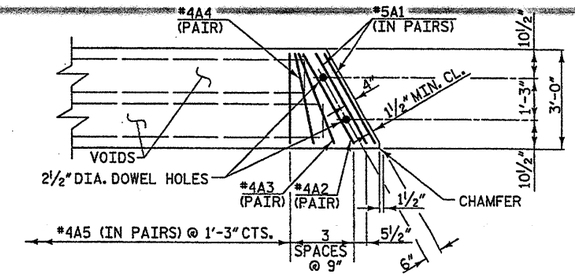

PART PLAN - SLAB SECTION

PROJECT NO. 33268.1.1

BUNCOMBE COUNTY

STATION: 6+68.10 -L-

REPLACES BRIDGE NO. 250

STATE OF NORTH CAROLINA
DEPARTMENT OF TRANSPORTATION
RALEIGH

STANDARD

PRESTRESSED CORED SLAB 25' SPAN

27' CLEAR ROADWAY - 60° SKEW

NORTH CAROLINA PROFESSIONAL SEAL ENGINEER 19661 L. KEVIN AUSTIN 1/7/08

PLANS PREPARED BY:

MULKEY ENGINEERS & CONSULTANTS
PO BOX 33127
RALEIGH, N.C. 27636
(919) 851-1912
(919) 851-1918 (FAX)
WWW.MULKEYINC.COM

REVISIONS							SHEET NO.
NO.	BY:	DATE:	NO.	BY:	DATE:		4
1			3				TOTAL SHEETS
2			4				18

DRAWN BY :	L. M. MORRIS	DATE :	10/03
CHECKED BY :	R. C. LARSON	DATE :	8/04

10/9/2007 4:46:39 PM G:\project\2002\250.02\S-383\structures\bridge#250\S383-250_SD_CS_04.dgn

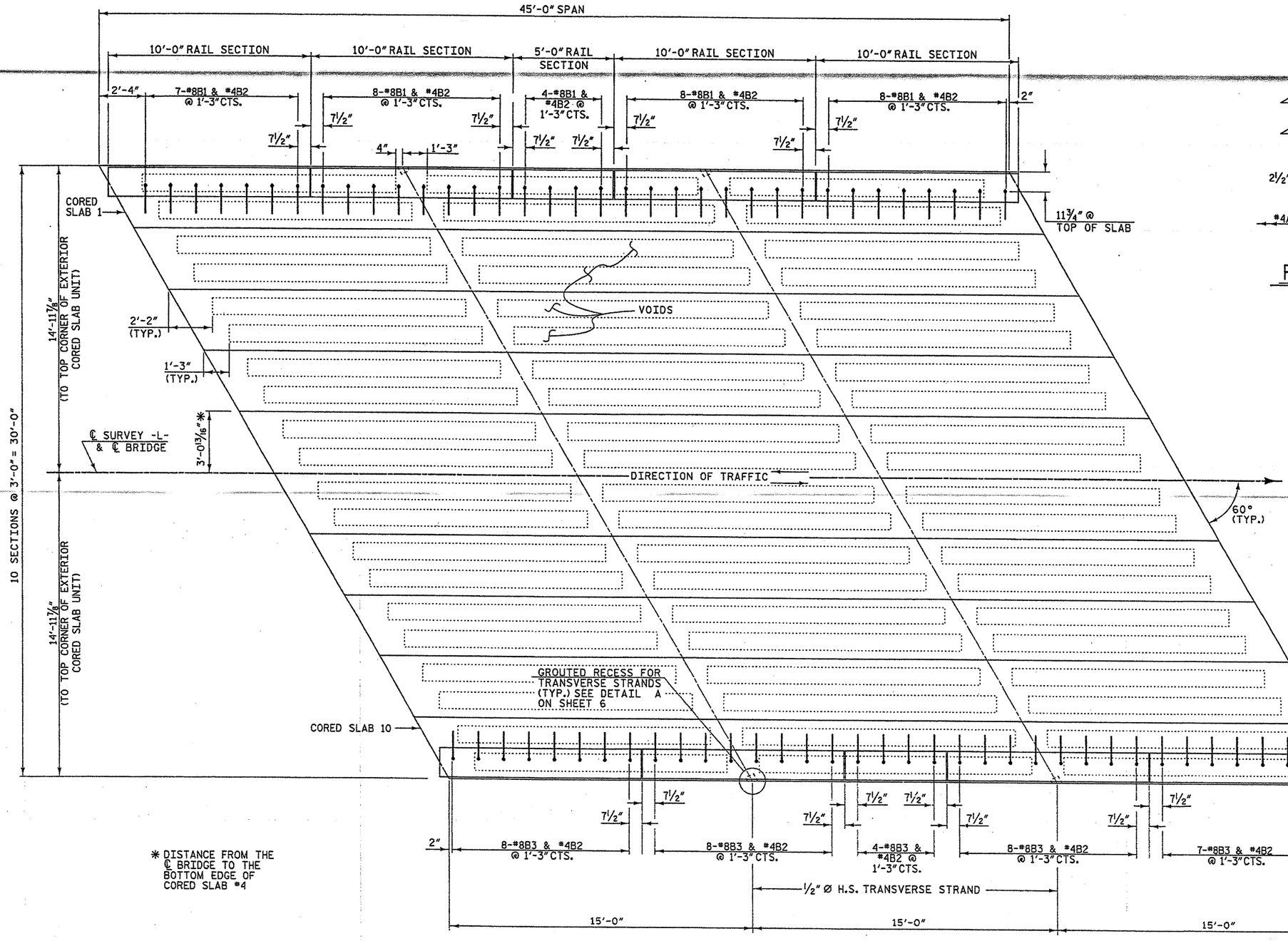

* DISTANCE FROM THE ℄ BRIDGE TO THE BOTTOM EDGE OF CORED SLAB #4

PLAN OF SPAN

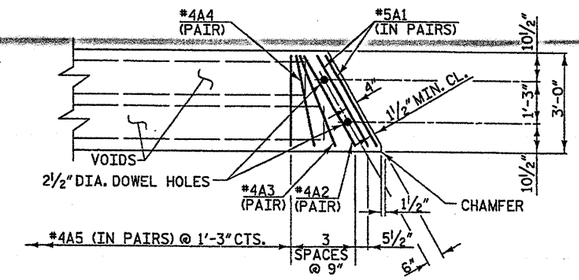

PART PLAN - SLAB SECTION

PROJECT NO. 33268.1.1

BUNCOMBE COUNTY

STATION: 6+68.10 -L-

REPLACES BRIDGE NO. 250

STATE OF NORTH CAROLINA
DEPARTMENT OF TRANSPORTATION
RALEIGH

STANDARD

PRESTRESSED CORED SLAB
45' SPAN

27' CLEAR ROADWAY - 60° SKEW

NORTH CAROLINA PROFESSIONAL SEAL 19661 ENGINEER KEVIN AUSTIN 1/7/08

PLANS PREPARED BY:
MULKEY ENGINEERS & CONSULTANTS
PO BOX 33127
RALEIGH, N.C. 27636
(919) 851-1912
(919) 851-1918 (FAX)
WWW.MULKEYINC.COM

REVISIONS							SHEET NO.
NO.	BY:	DATE:	NO.	BY:	DATE:		5
1			3				TOTAL SHEETS
2			4				

DRAWN BY : L. M. MORRIS DATE : 10/03
CHECKED BY : R. C. LARSON DATE : 8/04

10/9/2007 4:48:54 PM G:\project\2002\250.02\B-383\Structure\Bridge#250\B383-250_CS_03.dgn

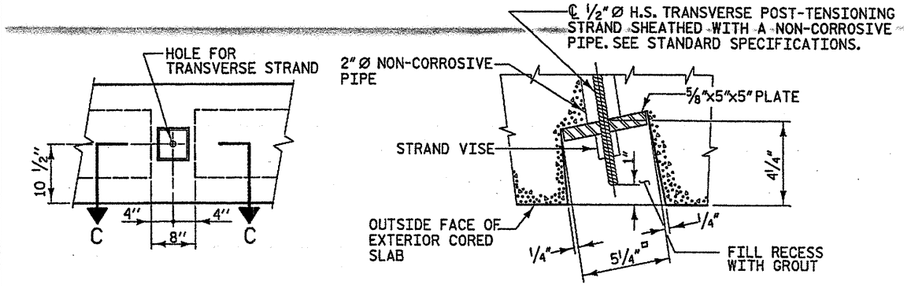

ELEVATION

SECTION C-C

DETAIL A
GROUTED RECESS AT END OF POST-TENSIONED STRAND CORED SLAB

NOTES

EACH PRECAST RAIL UNIT SHALL BE CAST WITH CLASS AA CONCRETE.

RAIL TO BE FLUSH WITH CORED SLAB UNITS AT EACH END OF SPAN.

GROUT SHALL BE 1" ABOVE DRAINS BETWEEN RAIL SECTIONS EXCEPT AT BENTS WHERE LOW MODULUS SILICONE SHALL BE SUBSTITUTED IN PLACE OF GROUT.

EACH PRECAST RAIL UNIT SHALL BE SUPPLIED WITH LIFTING DEVICE(S). NO CABLES ARE TO BE WRAPPED AROUND THE RAIL UNITS FOR LIFTING.

FOR DECK DRAINS SEE SECTION 1054-3 OF STANDARD SPECS.

THE EXPANSION JOINT SEALER SHALL BE LOW MODULUS SILICONE SEALANT. SEE SECTION 1028-4 OF THE STANDARD SPECIFICATIONS.

CONCRETE CHAMFERS:
UNLESS OTHERWISE NOTED ON THE PLANS, ALL EXPOSED CORNERS ON STRUCTURES SHALL BE CHAMFERED 3/4" WITH THE FOLLOWING EXCEPTIONS: TOP CORNERS OF CURBS MAY BE ROUNDED TO 1 1/2" RADIUS WHICH IS BUILT INTO CURB FORMS; CORNERS OF TRANSVERSE FLOOR EXPANSION JOINTS SHALL BE ROUNDED WITH A 1/4" FINISHING TOOL UNLESS OTHERWISE REQUIRED ON PLANS; AND CORNERS OF EXPANSION JOINTS IN THE ROADWAY FACES AND TOPS OF CURBS AND SIDEWALKS SHALL BE ROUNDED TO A 1/4" RADIUS WITH A FINISHING STONE OR TOOL UNLESS OTHERWISE ON PLANS.

BILL OF MATERIAL FOR ONE 5'-0" RAIL SECTION

BAR	NO.	SIZE	TYPE	LENGTH	WEIGHT
B3	5	#5	1	2'-8"	14
B4	5	#5	2	4'-11"	26
B5	5	#5	STR.	4'-7"	24
REINFORCING STEEL LBS. =					64
CLASS AA CONCRETE CU. YDS. =					0.5

BILL OF MATERIAL FOR ONE 10'-0" RAIL SECTION

BAR	NO.	SIZE	TYPE	LENGTH	WEIGHT
B3	9	#5	1	2'-8"	25
B4	9	#5	2	4'-11"	46
B6	5	#5	STR.	9'-7"	50
REINFORCING STEEL LBS. =					121
CLASS AA CONCRETE CU. YDS. =					1.0

BAR TYPES

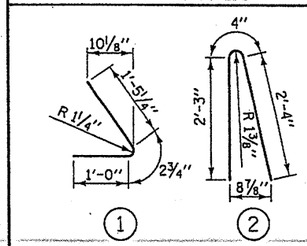

ALL BAR DIMENSIONS ARE OUT TO OUT

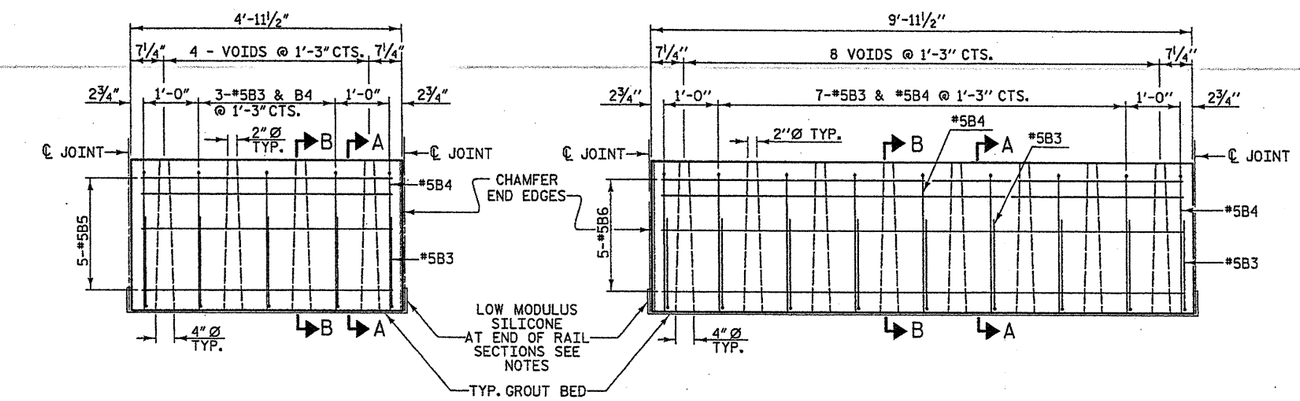

TYPICAL 5'-0" PRECAST UNIT

TYPICAL 10'-0" PRECAST UNIT

EXTERIOR SLAB UNIT	25'	45'
CAMBER (SLAB UNIT ALONE IN PLACE)	3/16" (UP)	1 5/16" (UP)
DEFLECTION (SUPERIMPOSED DEAD LOAD)	* 0" (DOWN)	* 3/16" (DOWN)
FINAL DEFLECTION	3/16" (UP)	1 1/8" (UP)
* INCLUDES FUTURE WEARING SURFACE		

INTERIOR SLAB UNIT	25'	45'
CAMBER (SLAB UNIT ALONE IN PLACE)	3/16" (UP)	1 9/16" (UP)
DEFLECTION (SUPERIMPOSED DEAD LOAD)	* 0" (DOWN)	* 3/16" (DOWN)
FINAL DEFLECTION	3/16" (UP)	1 3/8" (UP)
* INCLUDES FUTURE WEARING SURFACE		

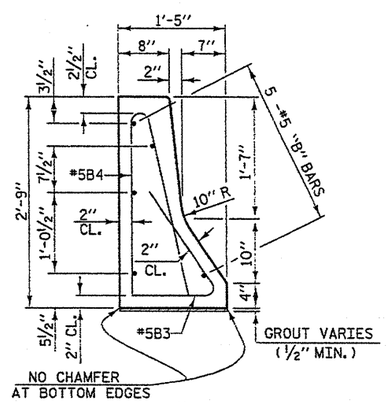

SECTION A-A

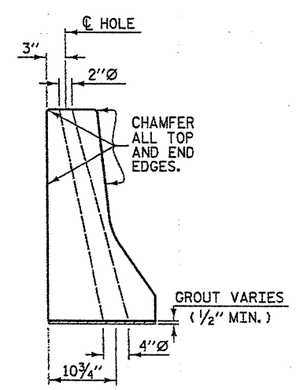

SECTION B-B

PROJECT NO. 33268.1.1

BUNCOMBE COUNTY

STATION: 6+68.10 -L-

REPLACES BRIDGE NO. 250

STATE OF NORTH CAROLINA
DEPARTMENT OF TRANSPORTATION
RALEIGH

STANDARD
PRECAST CONCRETE BARRIER RAIL SECTIONS
25' & 45' SPANS
27' CLEAR ROADWAY - 60° SKEW

NORTH CAROLINA PROFESSIONAL SEAL 19661 ENGINEER KEVIN AUSTIN 1/7/08

PLANS PREPARED BY:
MULKEY ENGINEERS & CONSULTANTS
PO Box 33127 Raleigh, N.C. 27636
(919) 851-1912
(919) 851-1918 (FAX)
WWW.MULKEYINC.COM

REVISIONS							SHEET NO.
NO.	BY:	DATE:	NO.	BY:	DATE:		6
1			3				TOTAL SHEETS
2			4				18

DRAWN BY : L. M. MORRIS DATE : 11/03
CHECKED BY : R. C. LARSON DATE : 8/04

10/8/2007 6:25:02 AM G:\project\3002\250.02\B-3813\structures\bridge*250\B3813-250_S3_BR_01.dgn

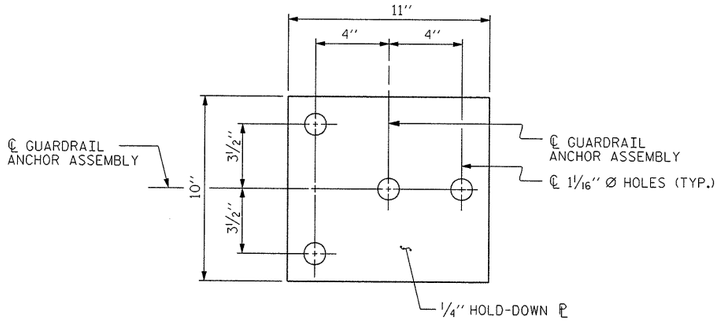

PLAN

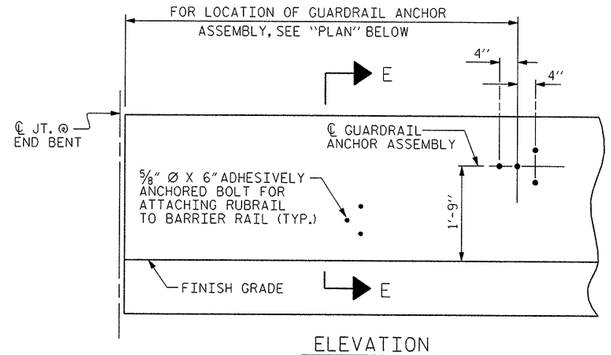

ELEVATION

FOR LOCATION OF RUBRAIL, SEE ROADWAY STD. 862.03

NOTES

THE GUARDRAIL ANCHOR ASSEMBLY SHALL CONSIST OF A 1/4 " HOLD DOWN PLATE AND
4 - 7/8 " Ø BOLTS WITH NUTS AND WASHERS, RUBRAIL, AND ADHESIVELY ANCHORED
BOLTS.

THE HOLD-DOWN PLATE SHALL CONFORM TO AASHTO M270 GRADE 36. AFTER FABRICATION, THE HOLD-DOWN PLATE SHALL BE HOT-DIP GALVANIZED IN ACCORDANCE WITH AASHTO M111.

BOLTS SHALL CONFORM TO THE REQUIREMENTS OF ASTM A307 AND NUTS SHALL CONFORM TO THE REQUIREMENTS OF AASHTO M291. BOLTS, NUTS AND WASHERS SHALL BE GALVANIZED. (AT THE CONTRACTOR'S OPTION, STAINLESS STEEL BOLTS, NUTS AND WASHERS MAY BE USED AS AN ALTERNATE FOR THE 7/8 " Ø GALVANIZED BOLTS,
NUTS AND WASHERS. THEY SHALL CONFORM TO OR EXCEED THE MECHANICAL REQUIREMENTS OF ASTM A307. THE USE OF THIS ALTERNATE SHALL BE APPROVED BY THE ENGINEER.)

THE GUARDRAIL ANCHOR ASSEMBLY IS REQUIRED AT ALL POINTS WHERE APPROACH GUARDRAIL IS TO BE ATTACHED TO THE END OF BARRIER RAIL. FOR POINTS OF ATTACHMENT, SEE SKETCH.

AFTER INSTALLATION, THE EXPOSED THREAD OF THE BOLT SHALL BE BURRED WITH A SHARP POINTED TOOL.

THE COST OF THE GUARDRAIL ANCHOR ASSEMBLY SHALL BE INCLUDED IN THE UNIT CONTRACT PRICE BID FOR GUARDRAIL ANCHOR UNIT, TYPE B-77.

THE 1 1/4 " Ø HOLES SHALL BE FORMED OR DRILLED WITH A CORE BIT. IMPACT TOOLS
WILL NOT BE PERMITTED. ANY CONCRETE DAMAGED BY THIS WORK SHALL BE REPAIRED TO THE SATISFACTION OF THE ENGINEER.

THE C6 X 8.2 RUBRAIL IS TO BE ADHESIVELY ANCHORED TO THE RAIL USING THREE 5/8 "Ø X 6" BOLTS WITH WASHERS. SEE ROADWAY STANDARD 862.03 FOR DETAILS AND
LOCATION OF THE RUBRAIL.

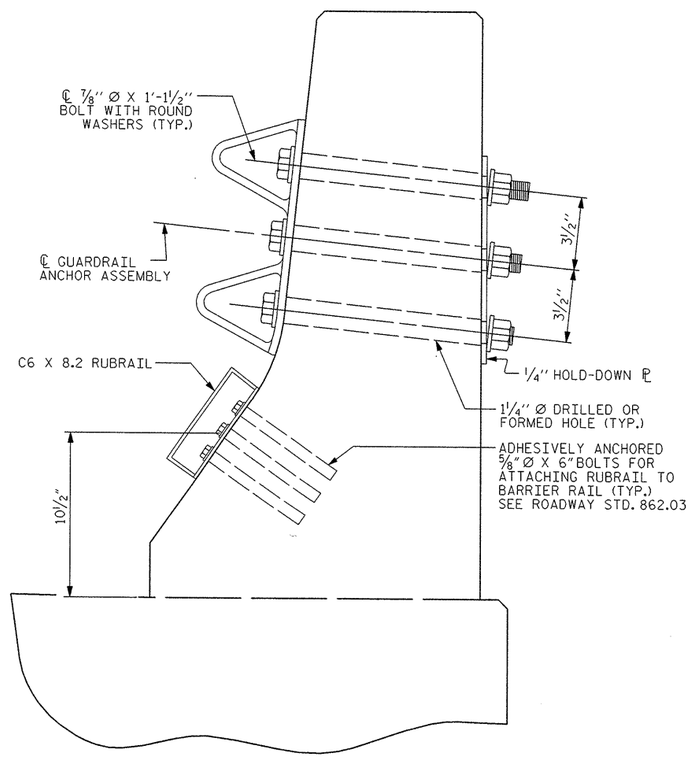

SECTION E-E

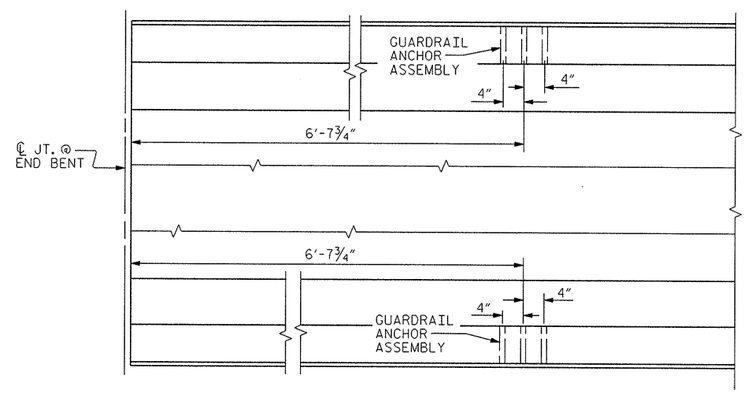

PLAN

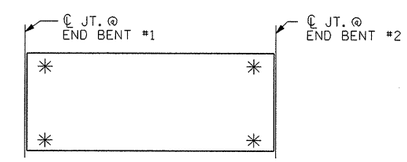

SKETCH SHOWING POINTS OF ATTACHMENTS

✳ DENOTES GUARDRAIL ANCHOR ASSEMBLY

GUARDRAIL ANCHOR ASSEMBLY DETAILS

LOCATION OF ANCHORS FOR GUARDRAIL

END BENT #1 SHOWN, END BENT #2 SIMILAR.

PROJECT NO. 33268.1.1

BUNCOMBE COUNTY

STATION: 6+68.10 -L-

REPLACES BRIDGE NO. 250

STATE OF NORTH CAROLINA
DEPARTMENT OF TRANSPORTATION
RALEIGH

STANDARD
GUARDRAIL ANCHORAGE FOR BARRIER RAIL

THIS STANDARD DRAWING REVIEWED & ADOPTED FOR USE AT THE REFERENCED LOCATION BY THE UNDERSIGNED:

NORTH CAROLINA PROFESSIONAL SEAL 19661 ENGINEER L. KEVIN AUSTIN 3/6/08

PLANS PREPARED BY:
MULKEY ENGINEERS & CONSULTANTS
PO Box 33127
RALEIGH, N.C. 27636
(919) 851-1912
(919) 851-1918 (FAX)
WWW.MULKEYINC.COM

REVISIONS						SHEET NO.
NO.	BY:	DATE:	NO.	BY:	DATE:	7
1			3			TOTAL SHEETS
2			4			18

STD. NO. GRA2

ASSEMBLED BY : W. B. ALLEN		DATE : 1/08	
CHECKED BY : L. K. AUSTIN		DATE : 1/08	
DRAWN BY : TLA 5/06	ADDED 5/1/06		
CHECKED BY : GM 5/06			

3/6/2008 3:33:29 PM G:\project\2002\250.02\B-5813\Structures\Bridge#250\B3B3-250_SD_GR_0.dgn

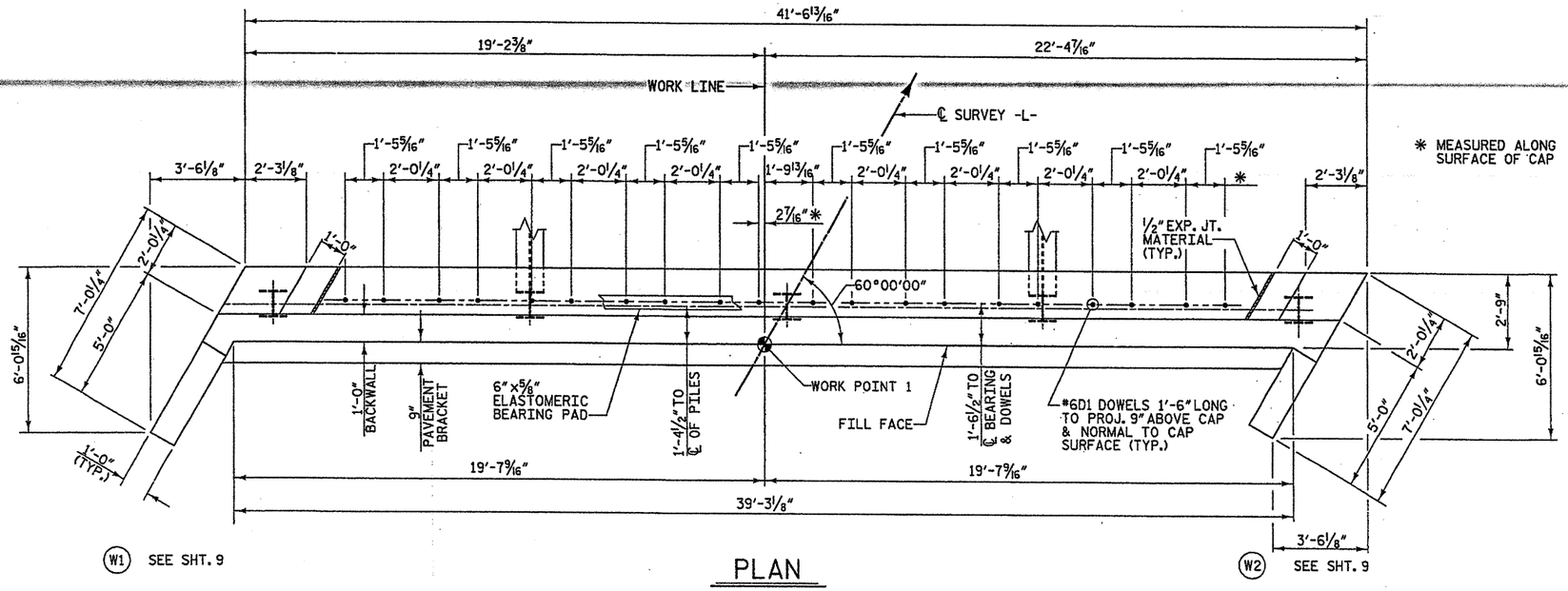

PLAN

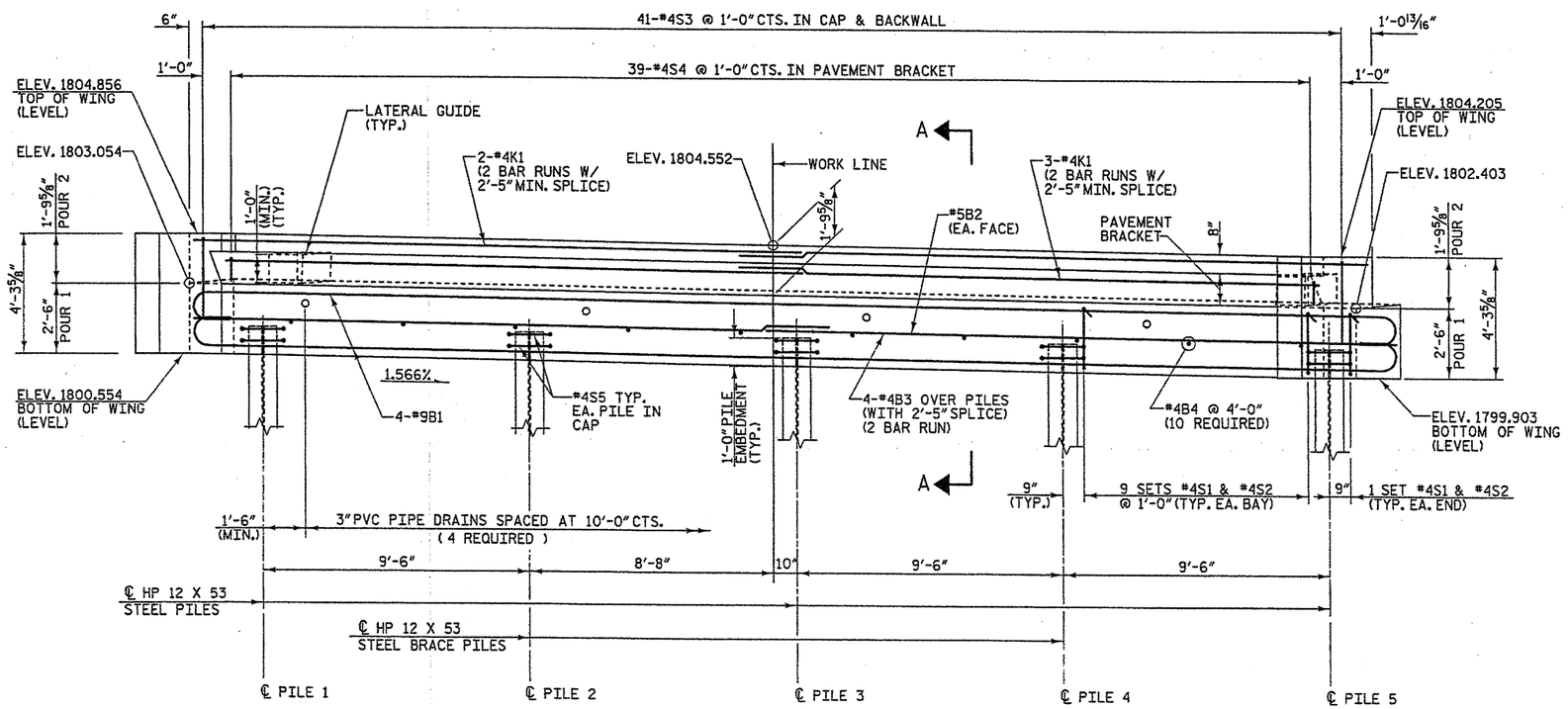

ELEVATION

NOTES

STIRRUPS IN CAP MAY BE SHIFTED AS NECESSARY TO CLEAR #6D1 DOWELS.

PILE CUT OFF ELEVATIONS	
PILE	ELEVATION
1	1801.513
2	1801.364
3	1801.215
4	1801.067
5	1800.918

PROJECT NO. 33268.1.1

BUNCOMBE COUNTY

STATION: 6+68.10 -L-

REPLACES BRIDGE NO. 250 SHEET 1 OF 3

STATE OF NORTH CAROLINA
DEPARTMENT OF TRANSPORTATION
RALEIGH

SUBSTRUCTURE END BENT 1

27' CLEAR ROADWAY - 60° SKEW

NORTH CAROLINA PROFESSIONAL ENGINEER SEAL 19661 L. KEVIN AUSTIN 11/7/08

PLANS PREPARED BY:
MULKEY ENGINEERS & CONSULTANTS
PO Box 33127 Raleigh N.C. 27636
(919) 851-1912 (919) 851-1918 (FAX)
WWW.MULKEYINC.COM

REVISIONS						SHEET NO.
NO.	BY:	DATE:	NO.	BY:	DATE:	8
1			3			TOTAL SHEETS
2			4			

DRAWN BY :	W. B. ALLEN	DATE :	4/03
CHECKED BY :	R. C. LARSON	DATE :	8/04

10/9/2007 4:49:22 PM G:\project\2002\250.02\B-3613\Structures\Bridge*250\B3613-250.S3_E1.dgn

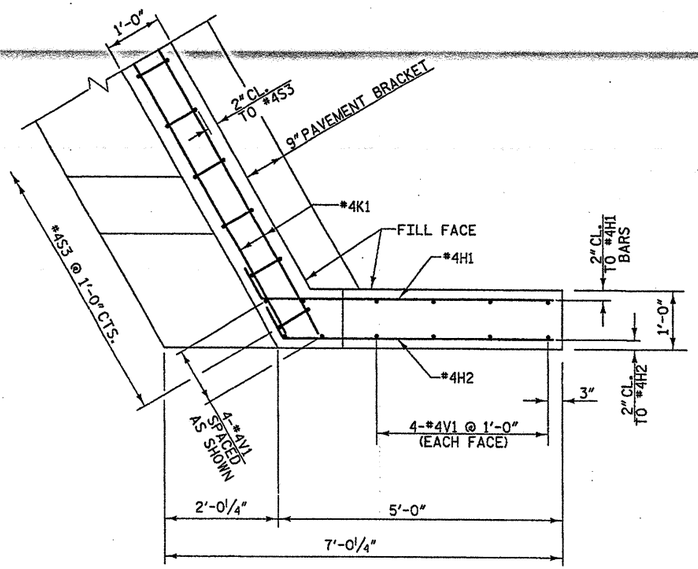

W1 PLAN OF LEFT WING

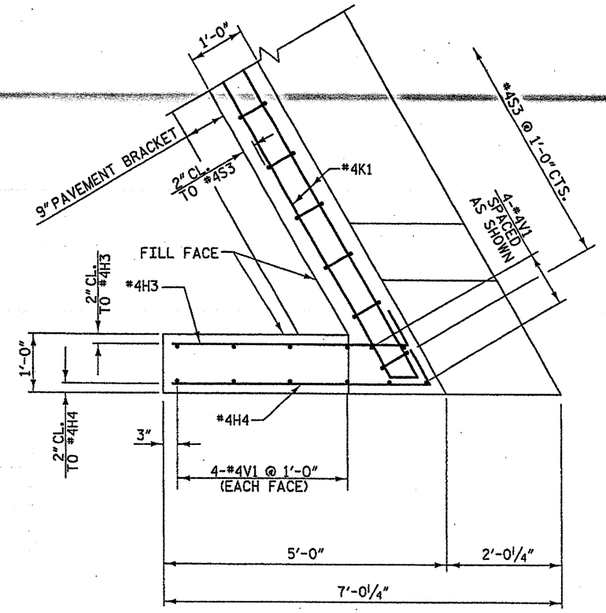

W2 PLAN OF RIGHT WING

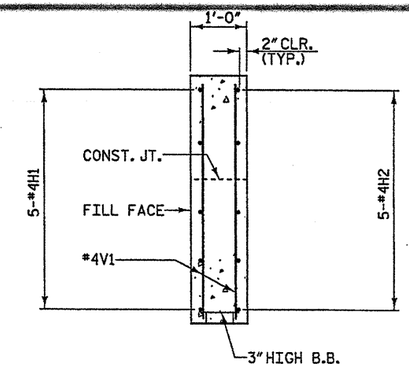

SECTION X-X

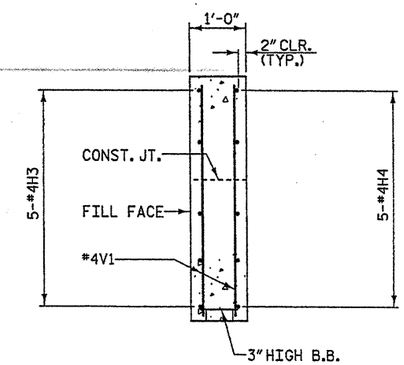

SECTION W-W

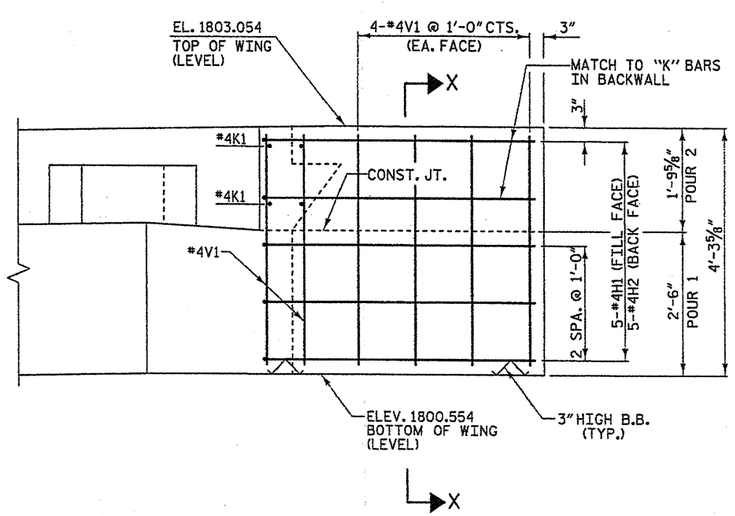

W1 ELEVATION OF LEFT WING

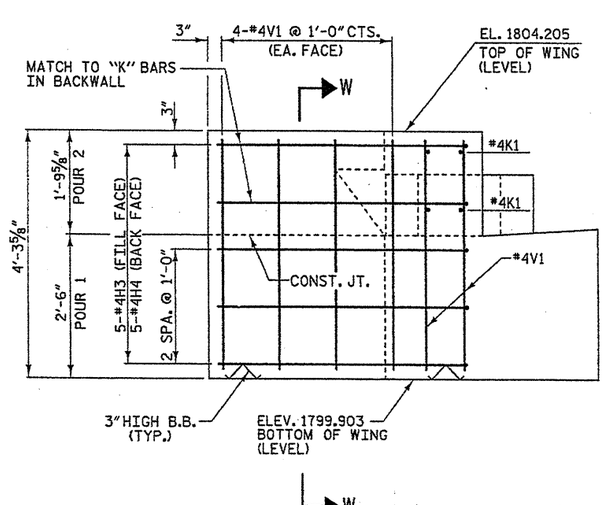

W2 ELEVATION OF RIGHT WING

PROJECT NO. 33268.1.1

BUNCOMBE COUNTY

STATION: 6+68.10 -L-

REPLACES BRIDGE NO. 250 SHEET 2 OF 3

STATE OF NORTH CAROLINA
DEPARTMENT OF TRANSPORTATION
RALEIGH

SUBSTRUCTURE END BENT 1

27' CLEAR ROADWAY - 60° SKEW

NORTH CAROLINA PROFESSIONAL SEAL 19661 ENGINEER L. KEVIN AUSTIN 1/7/08

PLANS PREPARED BY:
MULKEY ENGINEERS & CONSULTANTS
PO Box 33127 RALEIGH, N.C. 27636
(919) 851-1912
(919) 851-1918 (FAX)
WWW.MULKEYINC.COM

REVISIONS						SHEET NO.
NO.	BY:	DATE:	NO.	BY:	DATE:	9
1			3			TOTAL SHEETS
2			4			18

DRAWN BY : W. B. ALLEN DATE : 4/04
CHECKED BY : R. C. LARSON DATE : 8/04

10/9/2007 4:49:45 PM G:\project\2002\290.02\B-3803\Structures\Bridge#250\B3803-250_SD_EL02.dgn

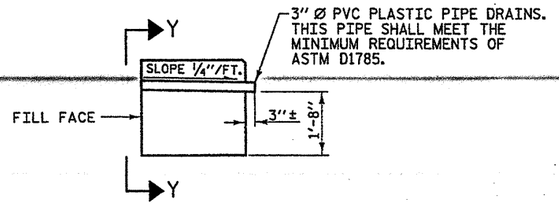

SECTION THRU CAP

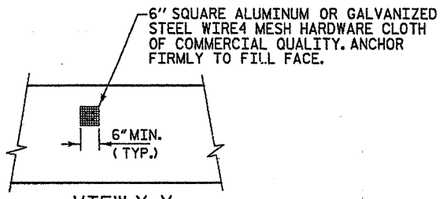

VIEW Y-Y

NOTE: NO SEPARATE PAYMENT WILL BE MADE FOR FURNISHING AND INSTALLING THE PVC PLASTIC PIPE DRAINS, HARDWARE CLOTH AND FASTENERS. THE ENTIRE COST OF THIS WORK SHALL BE INCLUDED IN THE LUMP SUM BID PRICE FOR PLACEMENT OF SUBSTRUCTURE.

PIPE DRAIN DETAILS

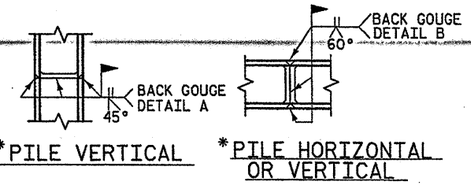

*PILE VERTICAL *PILE HORIZONTAL OR VERTICAL

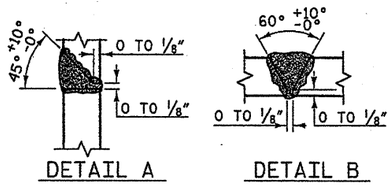

DETAIL A DETAIL B

PILE SPLICE DETAILS

*POSITION OF PILE DURING WELDING.

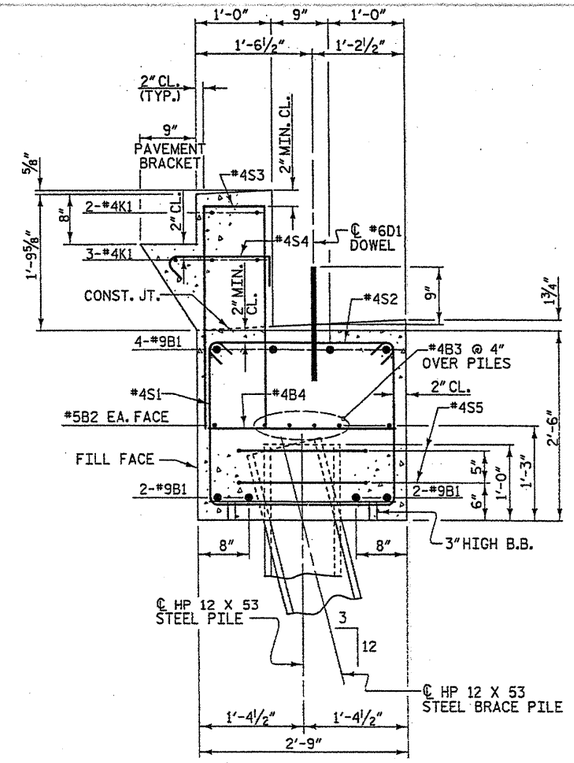

SECTION A-A

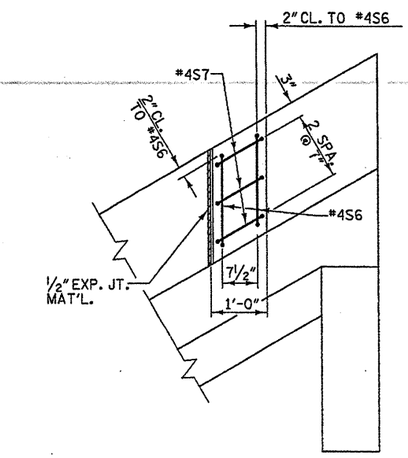

PLAN

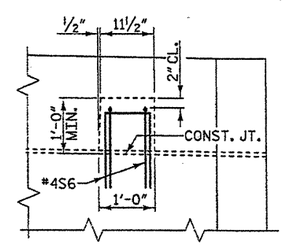

ELEVATION

LATERAL GUIDE DETAIL

BAR TYPES

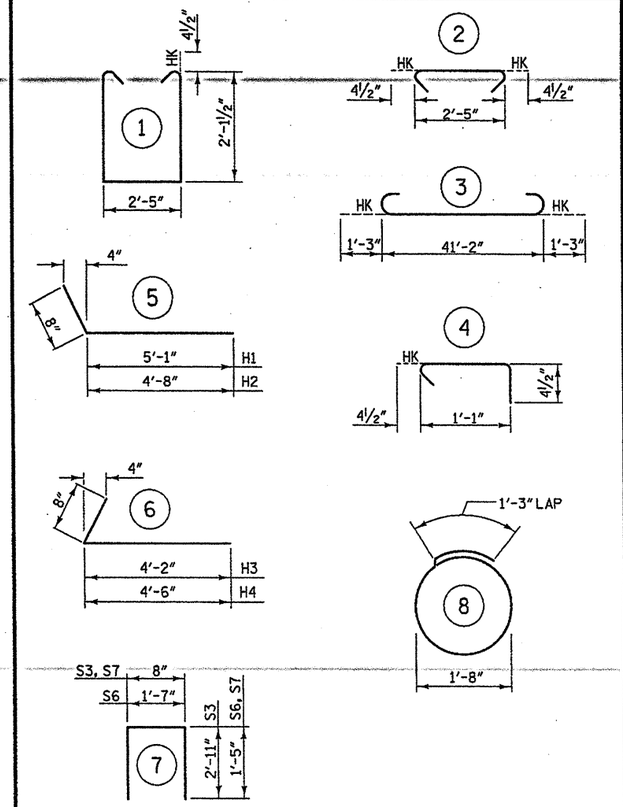

ALL BAR DIMENSIONS ARE OUT TO OUT

BILL OF MATERIAL

FOR END BENT 1

BAR	NO.	SIZE	TYPE	LENGTH	WEIGHT
B1	8	#9	3	43'-8"	1188
B2	2	#5	STR	41'-2"	86
B3	8	#4	STR	21'-10"	117
B4	10	#4	STR	2'-5"	16
D1	20	#6	STR	1'-6"	45
H1	5	#4	5	5'-9"	19
H2	5	#4	5	5'-4"	18
H3	5	#4	6	4'-10"	16
H4	5	#4	6	5'-2"	17
S1	20	#4	1	7'-5"	99
S2	20	#4	2	3'-2"	42
S3	41	#4	7	6'-6"	178
S4	39	#4	4	1'-10"	48
S5	10	#4	8	6'-6"	43
S6	4	#4	7	4'-5"	12
S7	6	#4	7	3'-6"	14
V1	24	#4	STR	3'-11"	63

TOTAL REINFORCING STEEL =	2021 lbs.
CLASS "A" CONCRETE - CU. YARDS	
POUR 1	11.6 cu. yds.
POUR 2	4.0 cu. yds.
TOTAL	15.6 cu. yds.
HP 12 X 53 STEEL PILES	
5 PILES REQUIRED - LIN. FEET	100

PROJECT NO. 33268.1.1

BUNCOMBE COUNTY

STATION: 6+68.10 -L-

REPLACES BRIDGE NO. 250 SHEET 3 OF 3

STATE OF NORTH CAROLINA
DEPARTMENT OF TRANSPORTATION
RALEIGH

SUBSTRUCTURE END BENT 1

27' CLEAR ROADWAY - 60° SKEW

NORTH CAROLINA PROFESSIONAL SEAL ENGINEER 19661 L. KEVIN AUSTIN 1/7/08

PLANS PREPARED BY:
MULKEY ENGINEERS & CONSULTANTS
PO Box 33127
Raleigh, NC 27636
(919) 851-1912
(919) 851-1918 (FAX)
WWW.MULKEYINC.COM

REVISIONS						SHEET NO.
NO.	BY:	DATE:	NO.	BY:	DATE:	10
1			3			TOTAL SHEETS
2			4			

DRAWN BY :	W. B. ALLEN	DATE :	4/04
CHECKED BY :	R. C. LARSON	DATE :	8/04

10/9/2007 4:50:33 PM G:\project\2002\250.02\B-3813\structures\Bridge#250\B3813-250_SU_EB_03.dgn

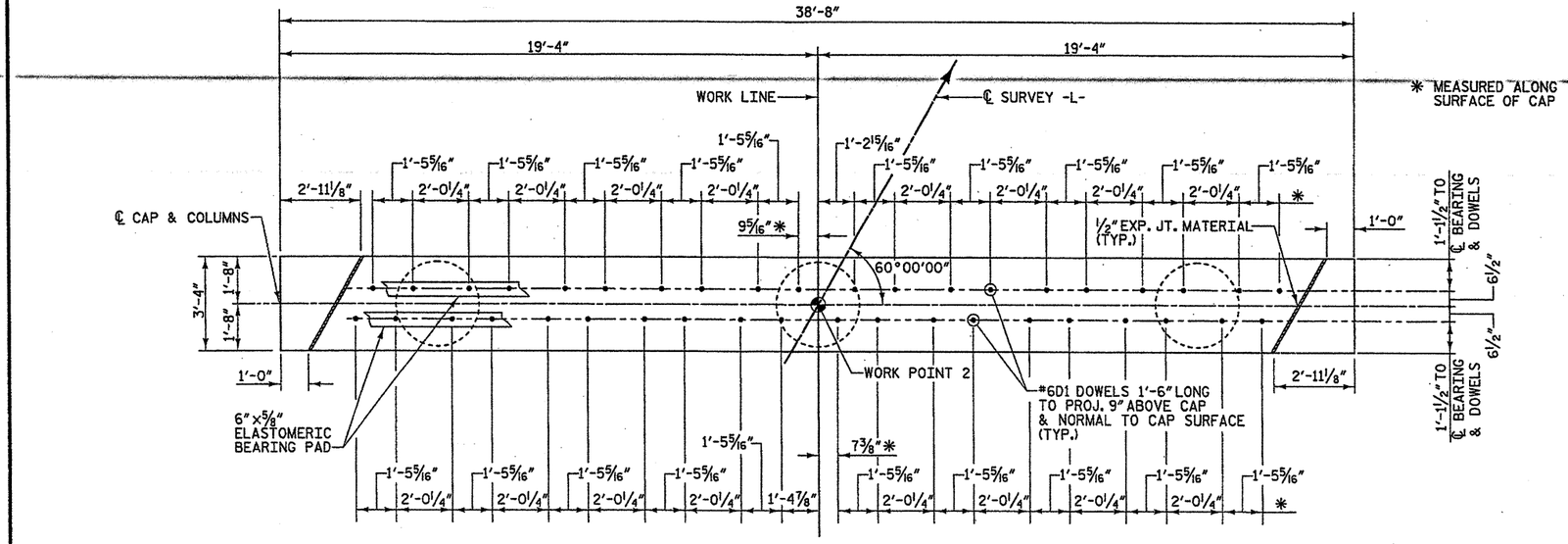

PLAN

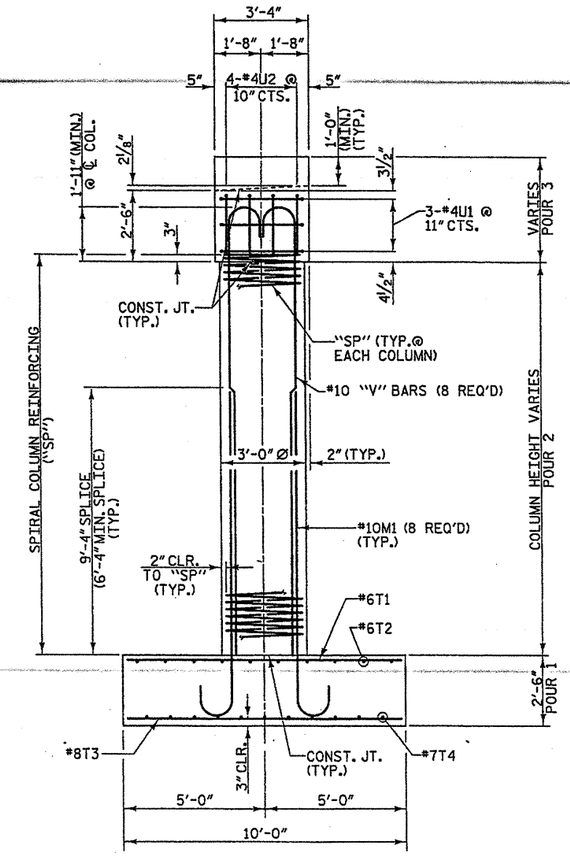

END ELEVATION

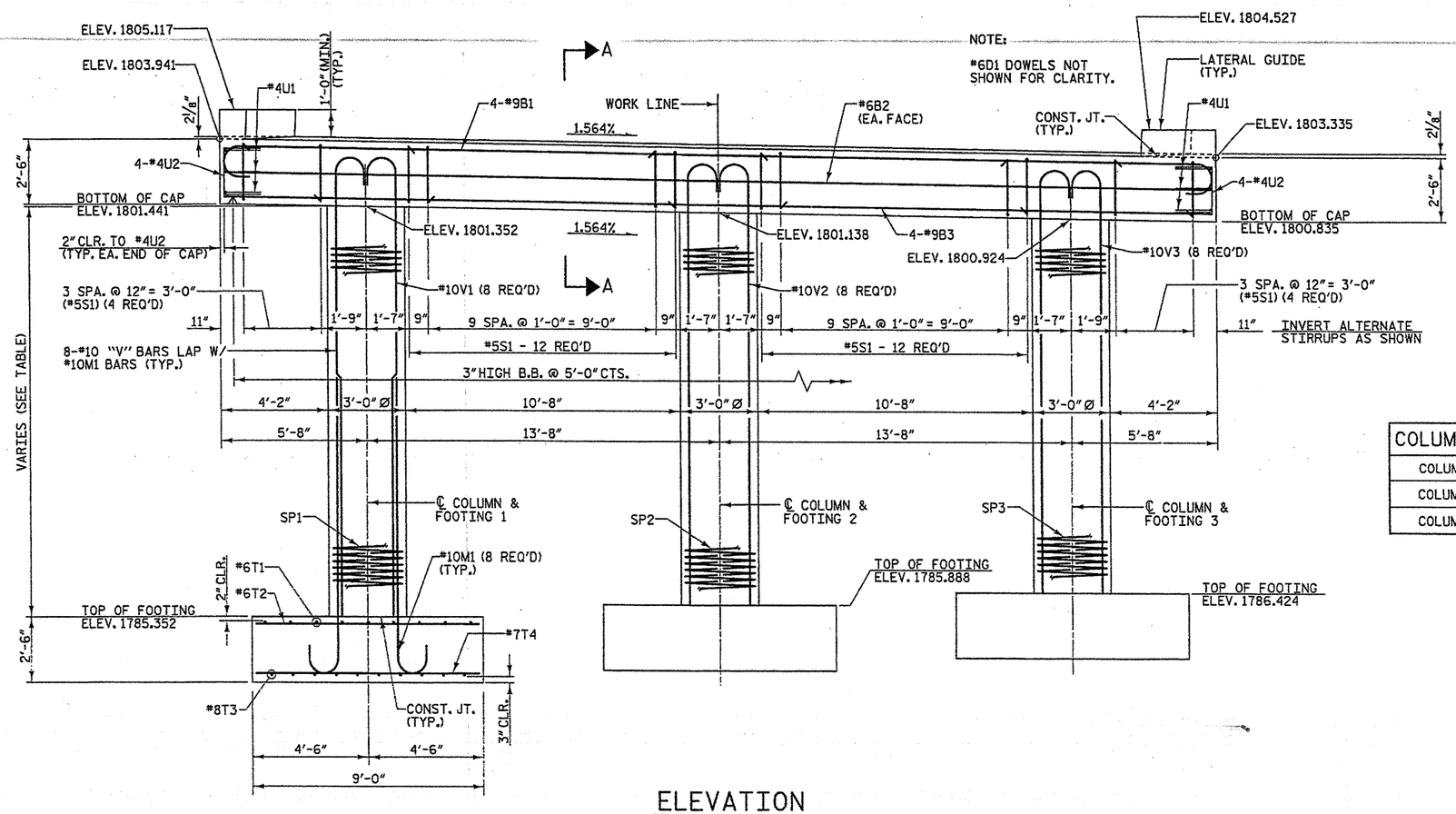

ELEVATION

COLUMN HEIGHT TABLE	
COLUMN 1	16'-0"
COLUMN 2	15'-3"
COLUMN 3	14'-6"

PROJECT NO. 33268.1.1

BUNCOMBE COUNTY

STATION: 6+68.10 -L-

REPLACES BRIDGE NO. 250 SHEET 1 OF 2

STATE OF NORTH CAROLINA
DEPARTMENT OF TRANSPORTATION
RALEIGH

SUBSTRUCTURE BENT 1

27' CLEAR ROADWAY - 60° SKEW

NORTH CAROLINA PROFESSIONAL SEAL 19661 ENGINEER KEVIN AUSTIN 1/7/08

PLANS PREPARED BY:
MULKEY ENGINEERS & CONSULTANTS
PO BOX 33127 RALEIGH, N.C. 27636
(919) 851-1912
(919) 851-1918 (FAX)
WWW.MULKEYINC.COM

REVISIONS								SHEET NO.
NO.	BY:	DATE:	NO.	BY:	DATE:			11
1			3					TOTAL SHEETS
2			4					

DRAWN BY :	W. B. ALLEN	DATE :	4/03
CHECKED BY :	R. C. LARSON	DATE :	8/04

10/9/2007 4:47:00 PM G:\project\2002\290.02\B-3983\Structures\Bridge*250\B3983-250_SD_B1.dgn

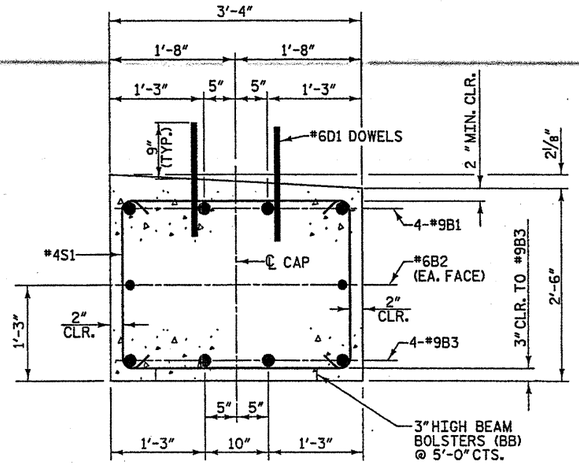

SECTION A-A

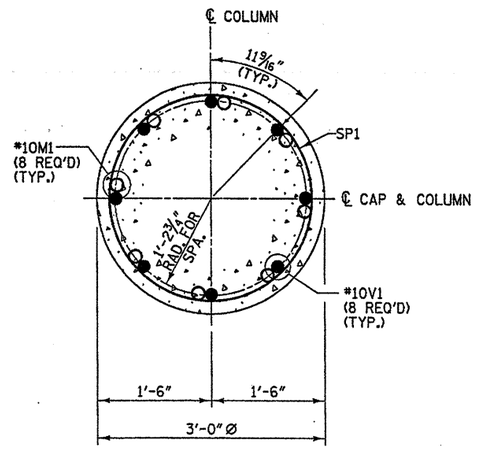

SECTION THRU COLUMN

(COLUMN 1 SHOWN, ALL OTHER COLUMNS SIMILAR.)
(SEE ELEVATION FOR BAR MARKS.)

NOTES:

STIRRUPS IN THE CAP MAY BE SHIFTED AS NECESSARY TO CLEAR *6D1 DOWELS.

FOR SPIRAL COLUMN REINFORCING STEEL, SEE SPECIAL PROVISIONS.

HOOKS ON "V" BARS MAY BE TURNED AS NECESSARY FOR PLACING REINFORCING STEEL.

* THE "SP" SPIRAL REINFORCING STEEL SHALL BE W20 OR D-20 COLD DRAWN WIRE OR #4 PLAIN OR DEFORMED WIRE.

BAR TYPES

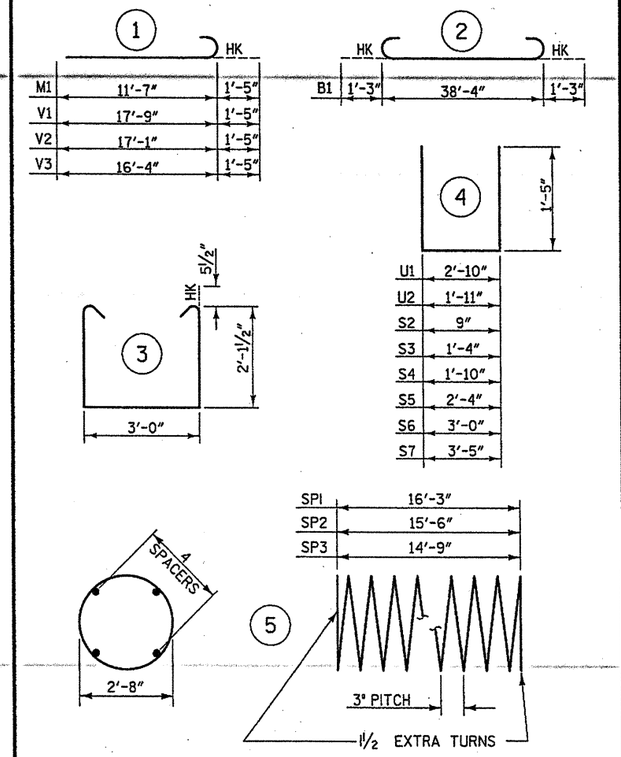

ALL BAR DIMENSIONS ARE OUT TO OUT

BILL OF MATERIAL

FOR BENT 1

BAR	NO.	SIZE	TYPE	LENGTH	WEIGHT
B1	4	#9	2	40'-10"	555
B2	2	#6	STR	38'-4"	115
B3	4	#9	STR	38'-4"	521
D1	40	#6	STR	1'-6"	90
M1	24	10	1	13'-0"	1343
S1	32	#5	3	8'-2"	273
S2	2	#4	4	3'-7"	5
S3	2	#4	4	4'-2"	6
S4	2	#4	4	4'-8"	6
S5	2	#4	4	5'-2"	7
S6	2	#4	4	5'-10"	8
S7	2	#4	4	6'-3"	8
T1	27	#6	STR	9'-8"	392
T2	30	#6	STR	8'-8"	391
T3	30	#8	STR	9'-8"	774
T4	33	#7	STR	8'-8"	585
U1	6	#4	4	5'-8"	23
U2	8	#4	4	4'-9"	25
V1	8	10	1	19'-2"	660
V2	8	10	1	18'-6"	637
V3	8	10	1	17'-9"	611
TOTAL REINFORCING STEEL =					7035 lbs.
SP1	1	*	5	561'-1"	375
SP2	1	*	5	536'-4"	358
SP3	1	*	5	511'-7"	342
SPIRAL COLUMN REINFORCING STEEL =					1075 lbs.

CLASS "A" CONCRETE - CU. YARDS	
POUR 1 (FOOTINGS)	25.0 cu. yds.
POUR 2 (COLUMNS)	11.9 cu. yds.
POUR 3 (CAP)	12.9 cu. yds.
TOTAL	49.8 cu. yds.

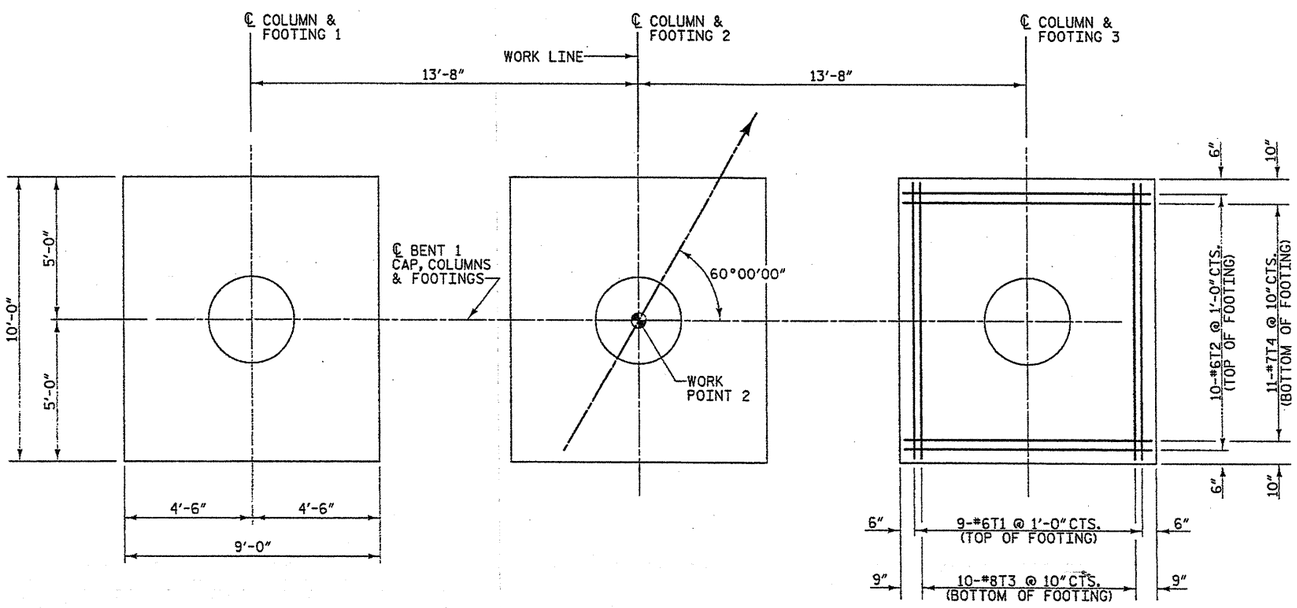

PLAN OF FOOTINGS

NOTE: FOOTING DETAILS ARE TYPICAL

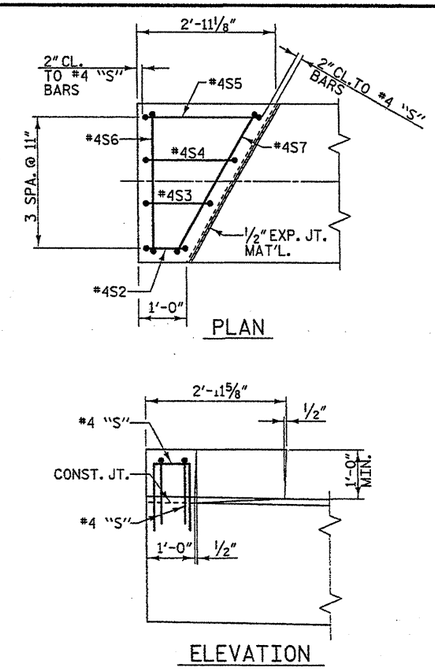

LATERAL GUIDE DETAIL

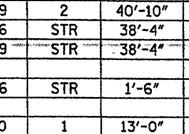

PLANS PREPARED BY:

MULKEY ENGINEERS & CONSULTANTS
PO Box 33127
RALEIGH, N.C. 27636
(919) 851-1912
(919) 851-1918 (FAX)
WWW.MULKEYINC.COM

PROJECT NO. 33268.1.1

BUNCOMBE COUNTY

STATION: 6+68.10 -L-

REPLACES BRIDGE NO. 250 SHEET 2 OF 2

STATE OF NORTH CAROLINA
DEPARTMENT OF TRANSPORTATION
RALEIGH

SUBSTRUCTURE BENT 1

27' CLEAR ROADWAY - 60° SKEW

REVISIONS						SHEET NO.
NO.	BY:	DATE:	NO.	BY:	DATE:	12
1			3			TOTAL SHEETS
2			4			18

DRAWN BY : W. B. ALLEN DATE : 4/04
CHECKED BY : R. C. LARSON DATE : 8/04

NOTES

STIRRUPS IN CAP MAY BE SHIFTED AS NECESSARY TO CLEAR *6D1 DOWELS.

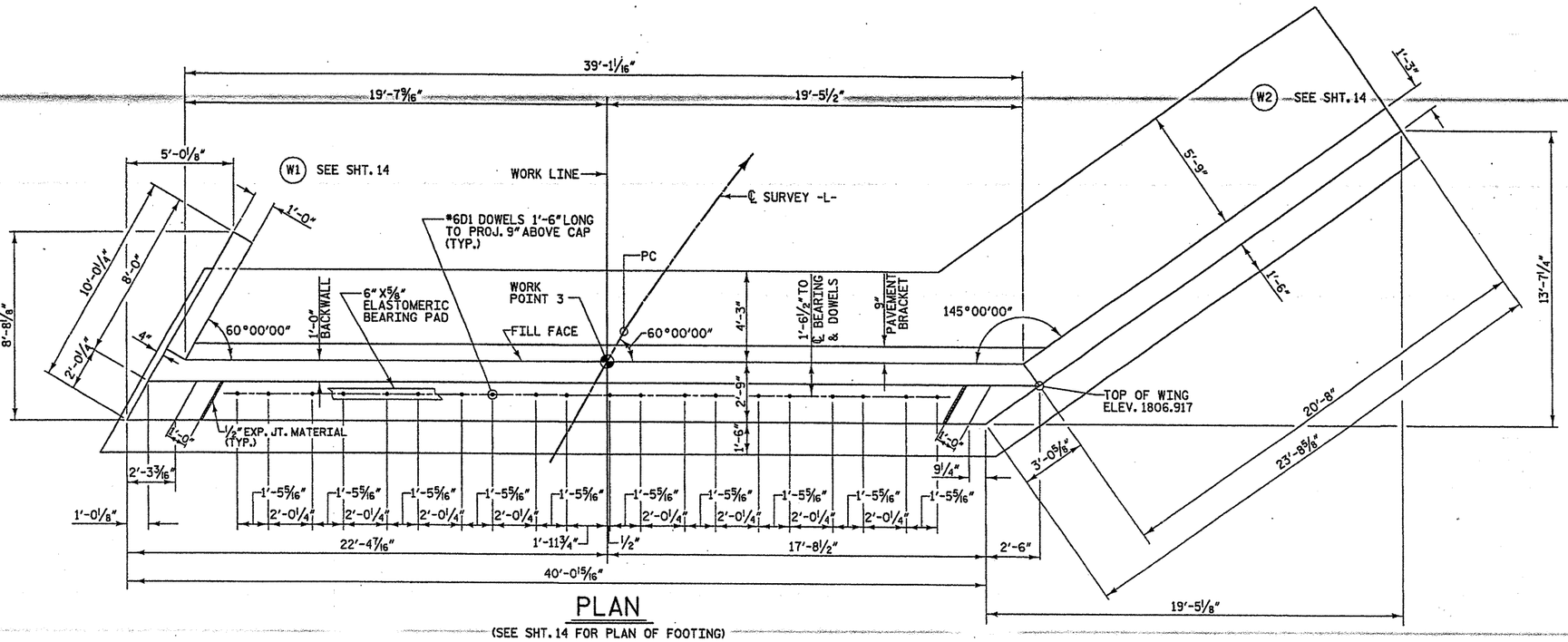

PLAN

(SEE SHT. 14 FOR PLAN OF FOOTING)

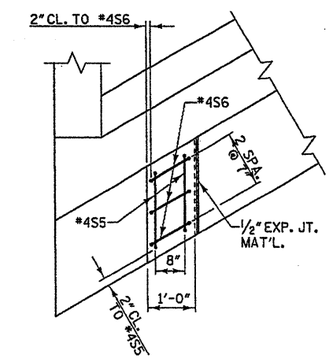

PLAN

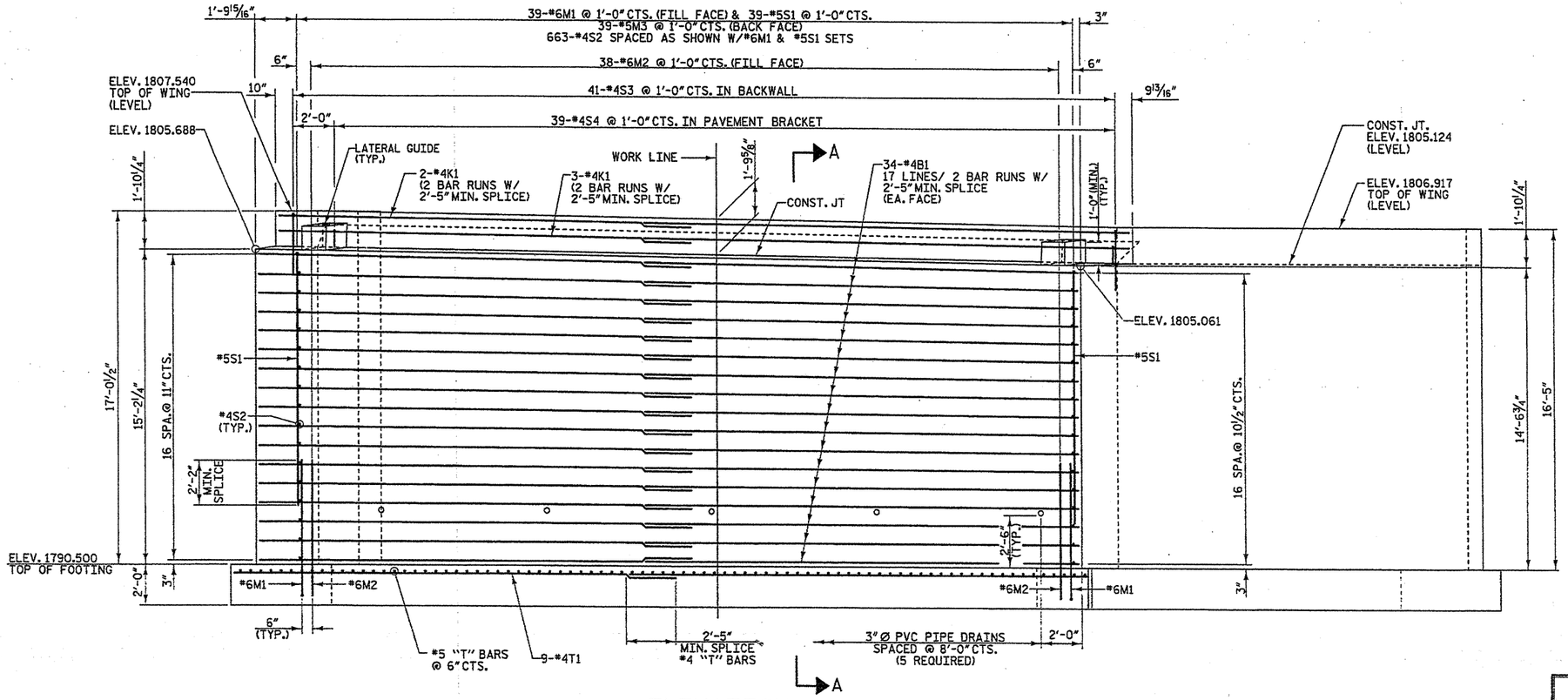

ELEVATION

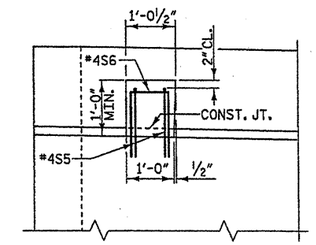

ELEVATION

LATERAL GUIDE DETAIL

PROJECT NO. 33268.1.1

BUNCOMBE COUNTY

STATION: 6+68.10 -L-

REPLACES BRIDGE NO. 250 SHEET 1 OF 3

STATE OF NORTH CAROLINA
DEPARTMENT OF TRANSPORTATION
RALEIGH

SUBSTRUCTURE END BENT 2

27' CLEAR ROADWAY - 60° SKEW

NORTH CAROLINA PROFESSIONAL SEAL ENGINEER 19661 R. KEVIN AUSTIN 1/7/05

PLANS PREPARED BY:
MULKEY ENGINEERS & CONSULTANTS
PO BOX 33127 RALEIGH, N.C. 27636
(919) 851-1912
(919) 851-1918 (FAX)
WWW.MULKEYINC.COM

REVISIONS						SHEET NO.
NO.	BY:	DATE:	NO.	BY:	DATE:	13
1			3			TOTAL SHEETS
2			4			18

DRAWN BY : W. B. ALLEN DATE : 4/04
CHECKED BY : R. C. LARSON DATE : 8/04

10/9/2007 4:51:04 PM G:\project\20021290.02-18-38\Structures\Bridge*250\03813-250_S0_E2_01.dgn

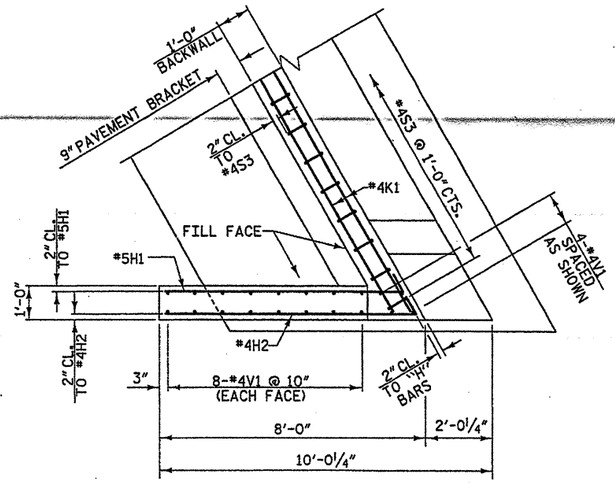

W1 PLAN OF LEFT WING

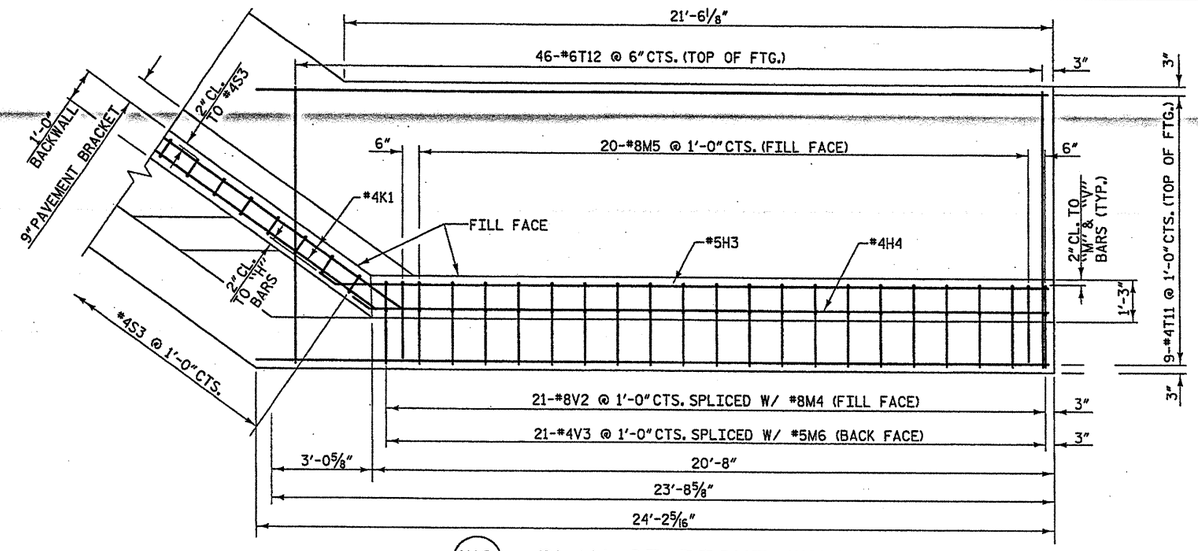

W2 PLAN OF RIGHT WING

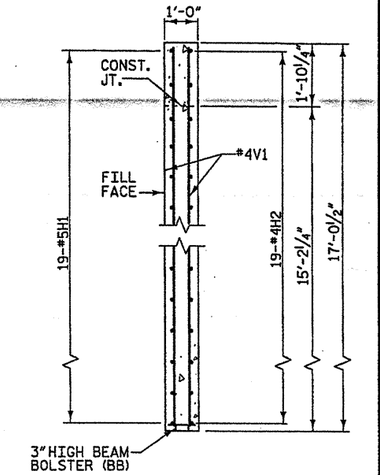

SECTION X-X

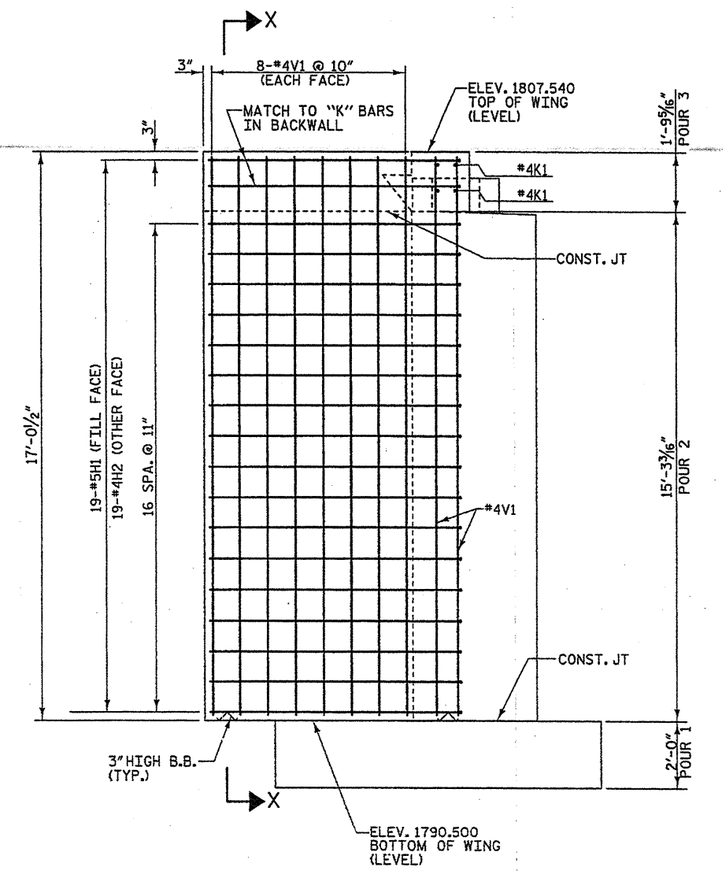

W1 ELEVATION OF LEFT WING

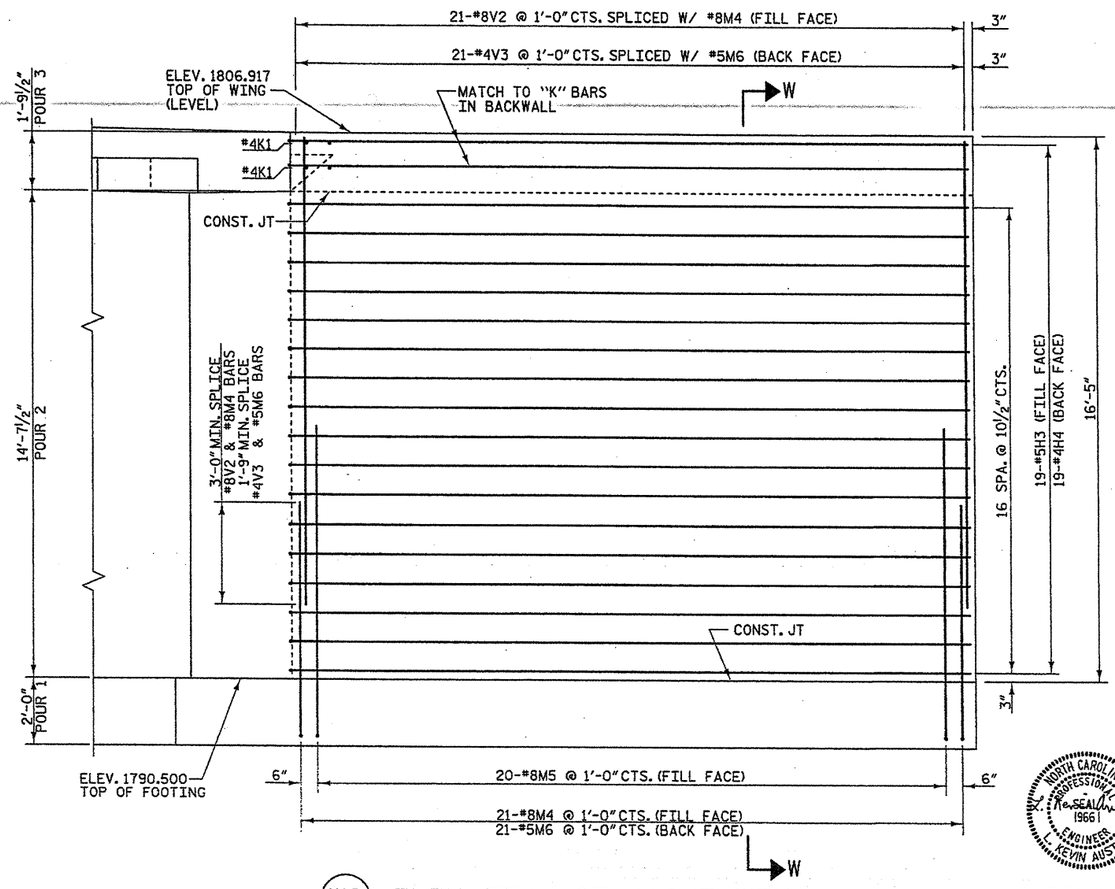

W2 ELEVATION OF RIGHT WING

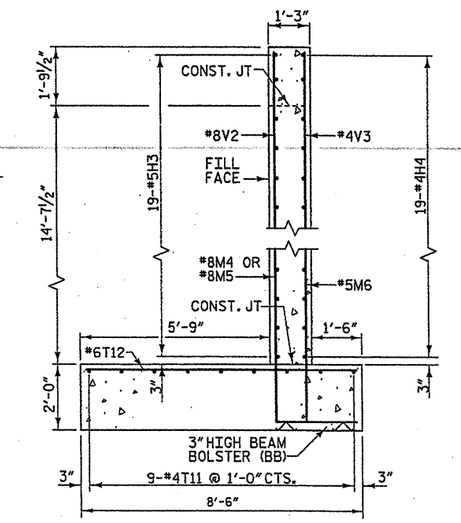

SECTION W-W

PROJECT NO. 33268.1.1

BUNCOMBE COUNTY

STATION: 6+68.10 -L-

REPLACES BRIDGE NO. 250 SHEET 2 OF 3

STATE OF NORTH CAROLINA
DEPARTMENT OF TRANSPORTATION
RALEIGH

SUBSTRUCTURE END BENT 2

27' CLEAR ROADWAY - 60° SKEW

NORTH CAROLINA PROFESSIONAL SEAL 19661 ENGINEER R. KEVIN AUSTIN 1/7/09

PLANS PREPARED BY:
MULKEY ENGINEERS & CONSULTANTS
PO Box 33127
RALEIGH, N.C. 27636
(919) 851-1912
(919) 851-1918 (FAX)
WWW.MULKEYINC.COM

REVISIONS							SHEET NO.
NO.	BY:	DATE:	NO.	BY:	DATE:		14
1			3				TOTAL SHEETS
2			4				18

DRAWN BY : W. B. ALLEN DATE : 4/04
CHECKED BY : R. C. LARSON DATE : 8/04

10/9/2007 4:43:39 PM G:\project\2002\250.02\B-3813\Structures\Bridge#250\B3813-250_SD_E2_02.dgn

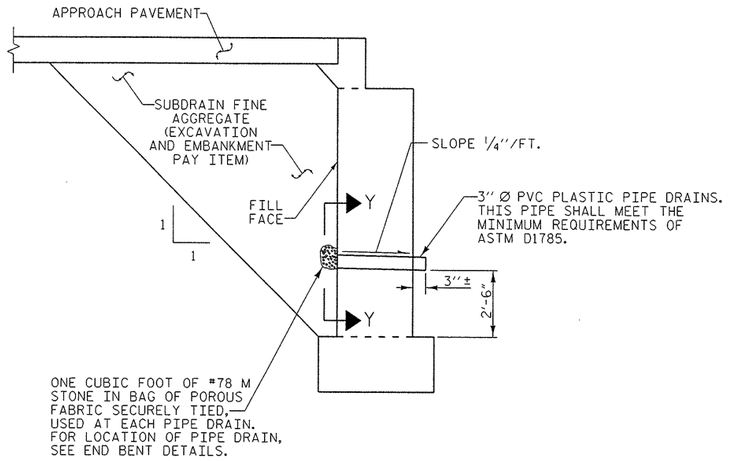

SUBDRAIN DETAIL AT END BENT

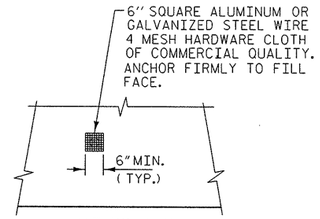

VIEW Y-Y

NOTE: NO SEPARATE PAYMENT WILL BE MADE FOR FURNISHING AND INSTALLING THE PVC PLASTIC PIPE DRAINS, HARDWARE CLOTH AND FASTENERS. THE ENTIRE COST OF THIS WORK SHALL BE INCLUDED IN THE LUMP SUM BID PRICE FOR PLACEMENT OF SUBSTRUCTURE.

PIPE DRAIN DETAILS

BAR TYPES

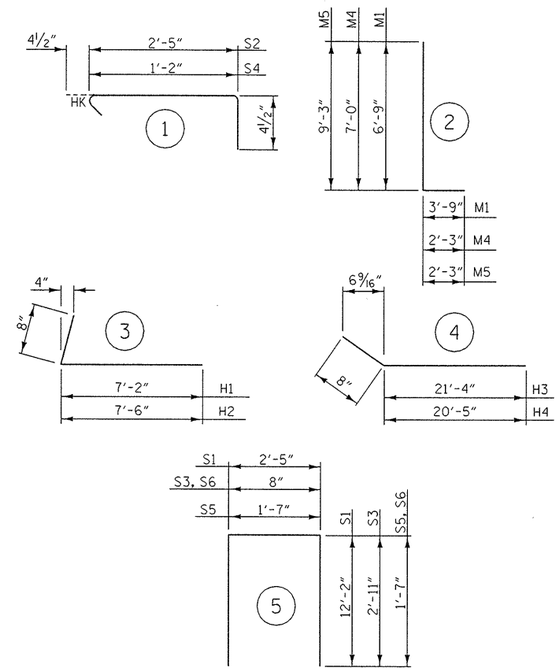

ALL BAR DIMENSIONS ARE OUT TO OUT

BILL OF MATERIAL

FOR END BENT 2

BAR	NO.	SIZE	TYPE	LENGTH	WEIGHT
B1	68	#4	STR	23'-0"	1045
H1	19	#5	3	7'-10"	155
H2	19	#4	3	8'-2"	104
H3	19	#5	4	22'-0"	436
H4	19	#4	4	21'-1"	268
K1	10	#4	STR	23'-0"	154
M1	39	#6	2	10'-6"	615
M2	38	#6	STR	6'-9"	385
M3	39	#5	STR	6'-9"	275
M4	21	#8	2	9'-3"	519
M5	20	#8	2	11'-6"	614
M6	21	#5	STR	7'-0"	153
S1	39	#5	5	26'-9"	1088
S2	663	#4	1	3'-2"	1402
S3	41	#4	5	6'-6"	178
S4	39	#4	1	1'-11"	50
S5	4	#4	5	4'-5"	12
S6	6	#4	5	3'-6"	14
T1	18	#4	STR	22'-0"	265
T2	73	#5	STR	8'-2"	622
T3	1	#5	STR	7'-11"	8
T4	1	#5	STR	7'-0"	7
T5	1	#5	STR	6'-2"	6
T6	1	#5	STR	5'-4"	6
T7	1	#5	STR	4'-5"	5
T8	1	#5	STR	3'-7"	4
T9	1	#5	STR	2'-8"	3
T10	1	#5	STR	1'-10"	2
T11	9	#4	STR	24'-0"	144
T12	46	#6	STR	8'-2"	564
V1	20	#4	STR	16'-8"	223
V2	21	#8	STR	14'-0"	785
V3	21	#4	STR	12'-9"	179
TOTAL REINFORCING STEEL =					10290 lbs.

CLASS "A" CONCRETE - CU. YARDS	
POUR 1	38.3 cu. yds.
POUR 2	80.0 cu. yds.
POUR 3	5.6 cu. yds.
TOTAL	123.9 cu. yds.

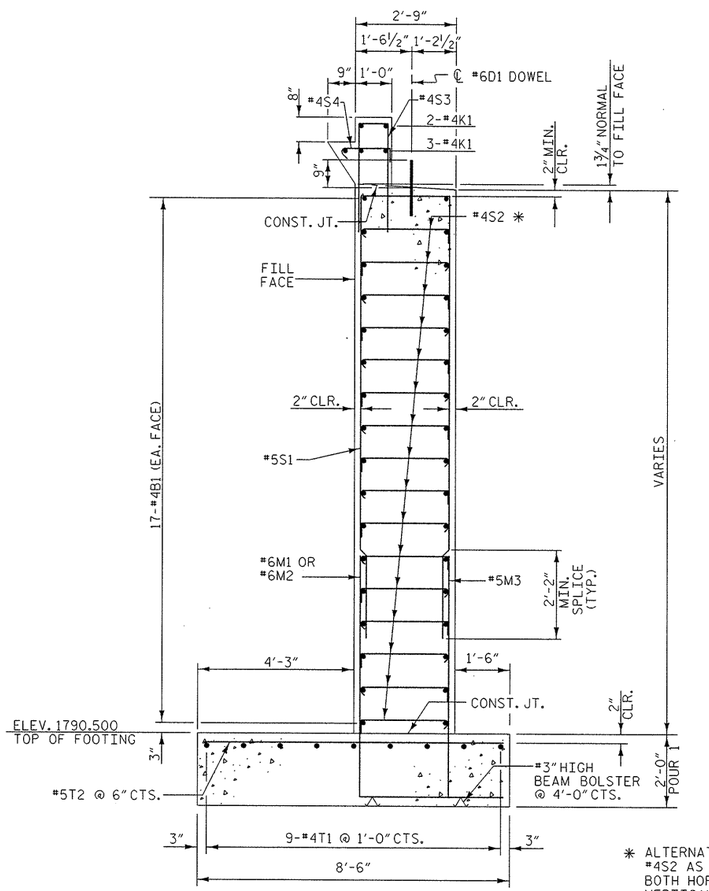

SECTION A-A

* ALTERNATE HOOK ON #4S2 AS SHOWN, IN BOTH HORIZONTAL AND VERTICAL DIRECTIONS.

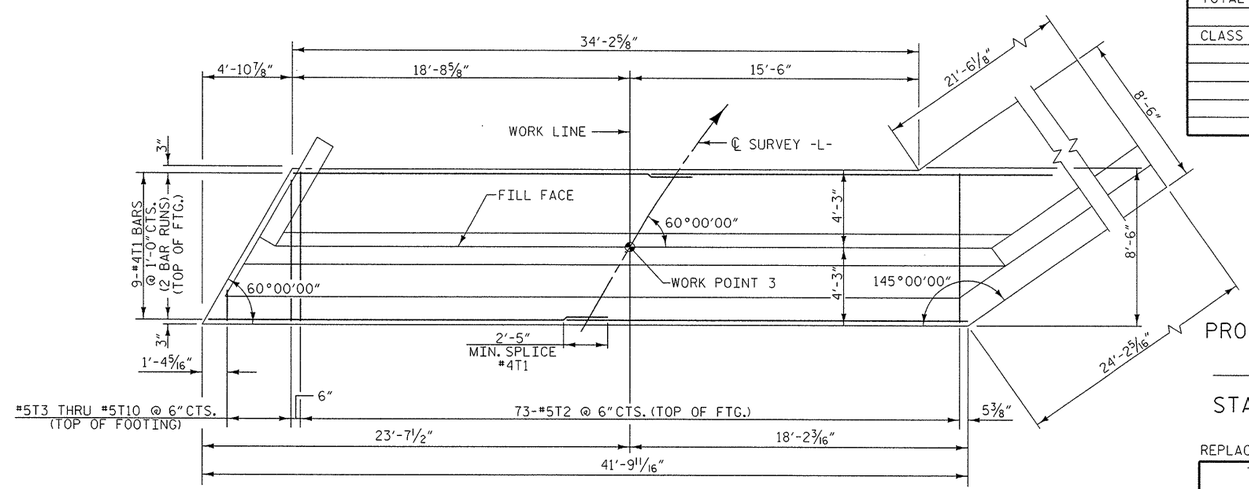

PLAN VIEW OF FOOTING

NOTE:

FOR REINFORCING STEEL IN THE WING WALL FOOTING SEE SHEET NO. 14

NORTH CAROLINA PROFESSIONAL ENGINEER SEAL 19661 L. KEVIN AUSTIN 3/6/08

PLANS PREPARED BY:

MULKEY ENGINEERS & CONSULTANTS
PO BOX 33127
RALEIGH, N.C. 27636
(919) 851-1912
(919) 851-1918 (FAX)
WWW.MULKEYINC.COM

PROJECT NO. 33268.1.1

BUNCOMBE COUNTY

STATION: 6+68.10 -L-

REPLACES BRIDGE NO. 250 SHEET 3 OF 3

STATE OF NORTH CAROLINA
DEPARTMENT OF TRANSPORTATION
RALEIGH

SUBSTRUCTURE END BENT 2

27' CLEAR ROADWAY - 60° SKEW

REVISIONS						SHEET NO.
NO.	BY:	DATE:	NO.	BY:	DATE:	15
1			3			TOTAL SHEETS
2			4			18

DRAWN BY : W. B. ALLEN DATE : 4/04
CHECKED BY : R. C. LARSON DATE : 8/04

3/6/2008 3:44:21 PM G:\project\3002\290.02\B-3833\Structures\Bridge\250\B3833-250_S0_E2_03.dgn

EROSION CONTROL PLAN

ROADSIDE ENVIRONMENTAL UNIT
DEPARTMENT OF TRANSPORTATION
DIVISION OF HIGHWAYS
RALEIGH, N.C.

2006 STANDARD SPECIFICATIONS

NOTES: ANY DEVIATION FROM OPTIONS GIVEN WILL REQUIRE PRIOR APPROVAL BY ENGINEER.

ADDITIONAL EROSION CONTROL DEVICES MAY NEED TO BE INSTALLED AS DIRECTED BY THE ENGINEER.

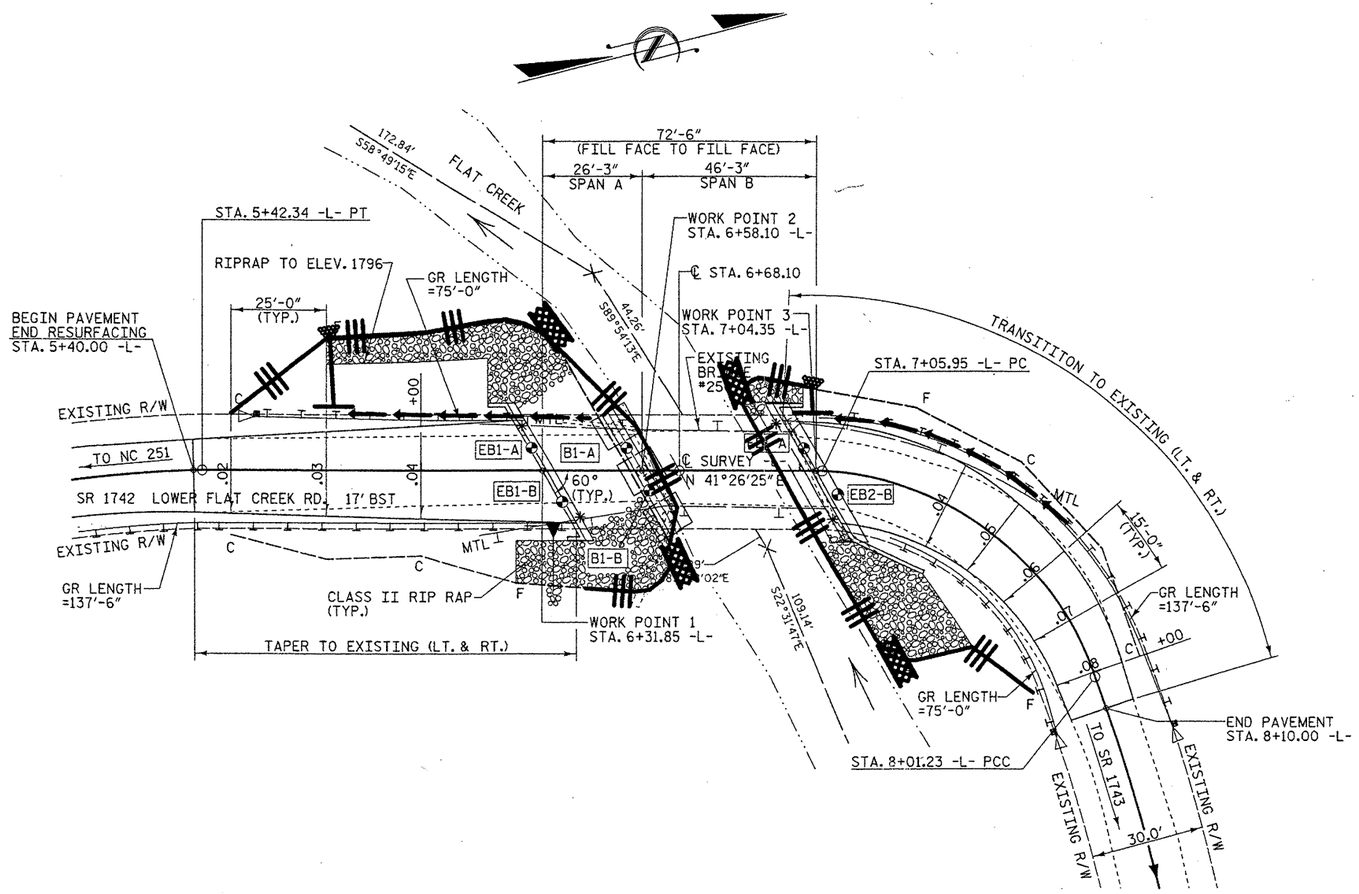

PROJECT NO. 33268.1.1

BUNCOMBE COUNTY

STATION: 6+68.10 -L-

REPLACES BRIDGE NO. 250

STATE OF NORTH CAROLINA
DEPARTMENT OF TRANSPORTATION
RALEIGH

BRIDGE ON SR 1742 OVER
FLAT CREEK BETWEEN
NC 251 & SR 1743

27' CLEAR ROADWAY - 60° SKEW

REVISIONS						SHEET NO.
NO.	BY:	DATE:	NO.	BY:	DATE:	16
1			3			TOTAL SHEETS
2			4			18

STD. #

1605.01 Temporary Silt Fence

1622.01 Temporary Berms and Slope Drains

1633.01 Temporary Rock Silt Check Type A

EROSION CONTROL PLAN

ROADSIDE ENVIRONMENTAL UNIT
DEPARTMENT OF TRANSPORTATION
DIVISION OF HIGHWAYS
RALEIGH, N.C.

2006 STANDARD SPECIFICATIONS

STATE OF NORTH CAROLINA
DEPT. OF TRANSPORTATION
DIVISION OF HIGHWAYS
RALEIGH, N.C.

ENGLISH STANDARD DRAWING FOR
TEMPORARY SILT FENCE

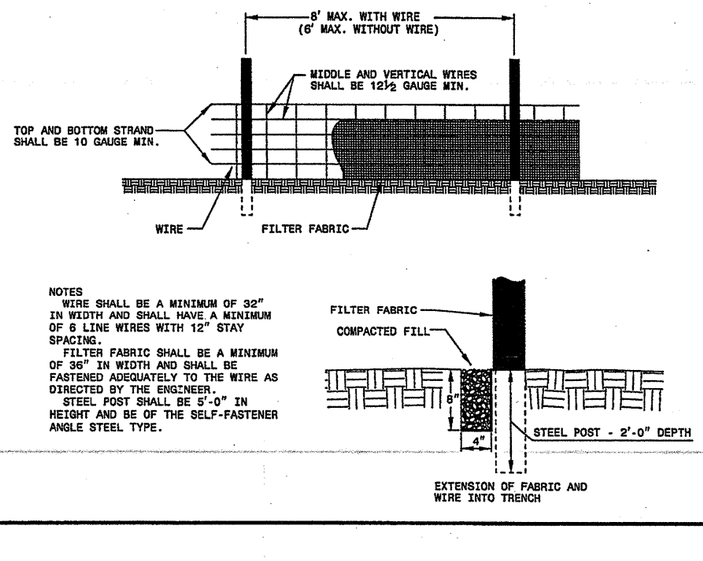

NOTES
WIRE SHALL BE A MINIMUM OF 32" IN WIDTH AND SHALL HAVE A MINIMUM OF 6 LINE WIRES WITH 12" STAY SPACING.
FILTER FABRIC SHALL BE A MINIMUM OF 36" IN WIDTH AND SHALL BE FASTENED ADEQUATELY TO THE WIRE AS DIRECTED BY THE ENGINEER.
STEEL POST SHALL BE 5'-0" IN HEIGHT AND BE OF THE SELF-FASTENER ANGLE STEEL TYPE.

SHEET 1 OF 1
1605.01

STATE OF NORTH CAROLINA
DEPT. OF TRANSPORTATION
DIVISION OF HIGHWAYS
RALEIGH, N.C.

ENGLISH STANDARD DRAWING FOR
TEMPORARY ROCK SILT CHECK TYPE 'A'

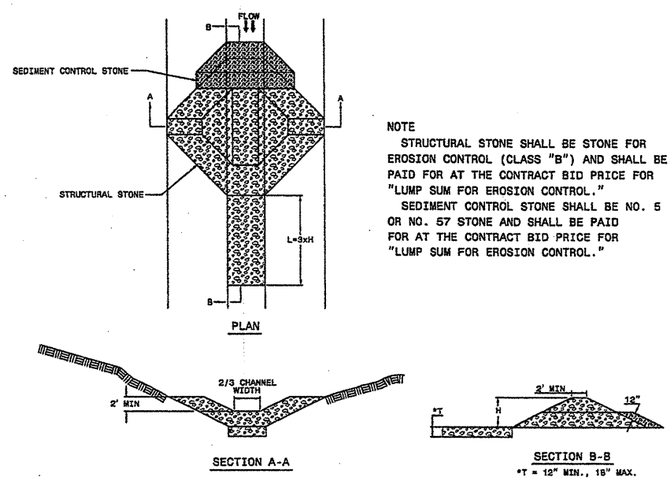

NOTE
STRUCTURAL STONE SHALL BE STONE FOR EROSION CONTROL (CLASS "B") AND SHALL BE PAID FOR AT THE CONTRACT BID PRICE FOR "LUMP SUM FOR EROSION CONTROL."
SEDIMENT CONTROL STONE SHALL BE NO. 5 OR NO. 57 STONE AND SHALL BE PAID FOR AT THE CONTRACT BID PRICE FOR "LUMP SUM FOR EROSION CONTROL."

SHEET 1 OF 1
1633.01

STATE OF NORTH CAROLINA
DEPT. OF TRANSPORTATION
DIVISION OF HIGHWAYS
RALEIGH, N.C.

ENGLISH STANDARD DRAWING FOR
GUIDE FOR TEMPORARY BERMS AND SLOPE DRAIN

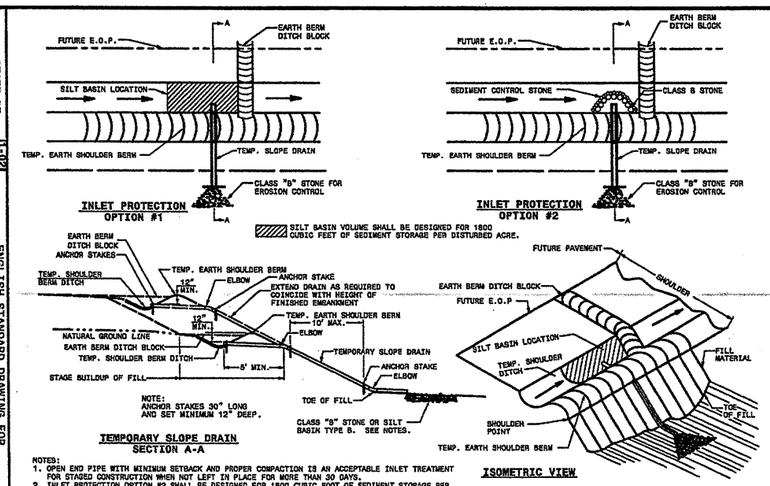

NOTED:
1. OPEN END PIPE WITH MINIMUM SETBACK AND PROPER COMPACTION IS AN ACCEPTABLE INLET TREATMENT FOR STAGED CONSTRUCTION WHEN NOT LEFT IN PLACE FOR MORE THAN 30 DAYS.
2. INLET PROTECTION OPTION #2 SHALL BE DESIGNED FOR 1800 CUBIC FOOT OF SEDIMENT STORAGE PER DISTURBED ACRE.
3. SILT BASINS SHALL HAVE A 2:1 LENGTH TO WIDTH RATIO MINIMUM.
4. USE CLASS B STONE FOR EROSION CONTROL AT OUTLET LOCATIONS SUBJECT TO SCOURING. SILT BASINS AND/OR OTHER EROSION CONTROL DEVICES MAY ALSO BE UTILIZED TO PREVENT SCOUR AT OUTLET LOCATIONS.
5. MAXIMUM SLOPE DRAIN SPACING SHALL BE 200 FT.

SHEET 1 OF 1
1622.01

PROJECT NO. 33268.1.1
BUNCOMBE COUNTY
STATION: 6+68.10 -L-

REPLACES BRIDGE NO. 250

STATE OF NORTH CAROLINA
DEPARTMENT OF TRANSPORTATION
RALEIGH

BRIDGE ON SR 1742 OVER
FLAT CREEK BETWEEN
NC 251 & SR 1743

27' CLEAR ROADWAY - 60° SKEW

REVISIONS						SHEET NO.
NO.	BY:	DATE:	NO.	BY:	DATE:	17
1			3			TOTAL SHEETS
2			4			18

EROSION CONTROL PLAN

ROADSIDE ENVIRONMENTAL UNIT
DEPARTMENT OF TRANSPORTATION
DIVISION OF HIGHWAYS
RALEIGH, N.C.

2006 STANDARD SPECIFICATIONS

STATE OF
NORTH CAROLINA
DEPT. OF TRANSPORTATION
DIVISION OF HIGHWAYS
RALEIGH, N.C.

7-06

ENGLISH STANDARD DRAWING FOR
SPECIAL STILLING BASIN

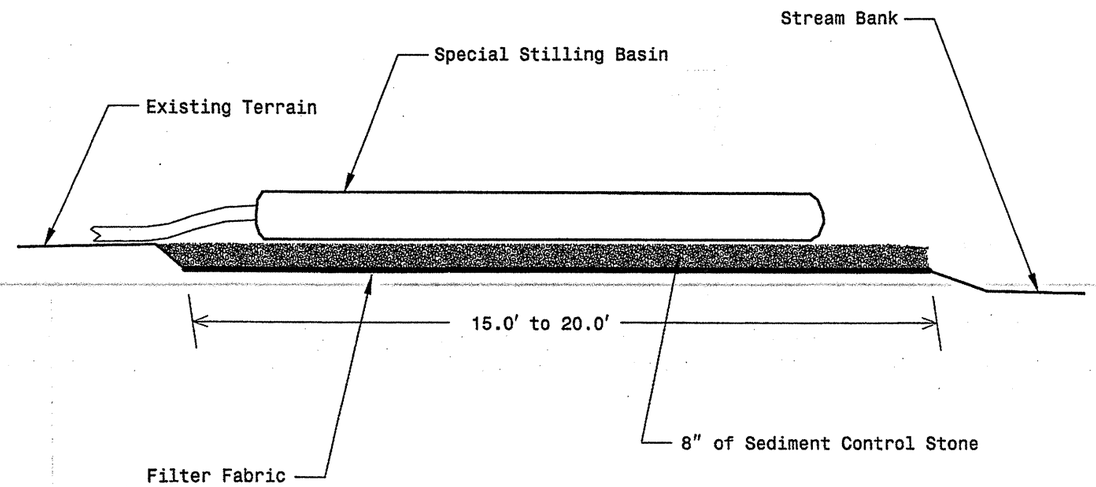

Note: Provide Stabilized Outlet to Streambank

Not To Scale

SHEET 1 OF 1
1630.06

STATE OF
NORTH CAROLINA
DEPT. OF TRANSPORTATION
DIVISION OF HIGHWAYS
RALEIGH, N.C.

7-06

ENGLISH STANDARD DRAWING FOR
SPECIAL STILLING BASIN

SHEET 1 OF 1
1630.06

Special Stilling Basin(s):

The work covered by this section consists of furnishing, placing, and removing a special stilling basin(s) as directed by the Engineer. The special stilling basin(s) shall be used to filter pumped water during the drilled pier operation, footing excavation, or culvert construction.

The filter fabric shall meet the requirements of Section 1056 for Type 2 Fabric.

Sediment control stone shall meet the requirements of Section 1005. Install stone according to the detail shown on the plans.

The special stilling basin(s) shall be a water permeable fabric bag that traps sand, silt, and fines as sediment laden water is pumped into it. This device shall be constructed such that it is portable and can be used adjacent to the drilled pier operation, footing excavation, or culvert construction.

The special stilling basin(s) shall be a bag constructed to a minimum size of 10' x 15' made from a nonwoven fabric. It shall have a sewn-in 8 in. (maximum) spout for receiving pump discharge. The bag seams shall be sewn with a double needle machine using a high strength thread. The seams shall have a minimum wide width strength as follows:

Test Method	Minimum Specifications
ASTM D-4884	60 lb/in

The fabric used to construct the bag shall be stabilized to provide resistance to ultra-violet degradation and meet the following specifications for flow rates, strength, and permeability:

Property	Test Method	Units	Minimum Specifications
Weight	ASTM D-3776	oz/yd	8.0
Grab tensile	ASTM D-4632	lb	200.0
Puncture	ASTM D-4833	lb	130.0
Flow rate	ASTM D-4491	gal/min/ft²	80.0
Permittivity	ASTM D-4991	1/sec	1.2
UV Resistance	ASTM D-4355	%	70.0

The Contractor shall install the special stilling basin in accordance with the details in the plans and at locations as directed by the Engineer.

The special stilling basin(s) shall be placed so the incoming water flows into and through the bag without causing erosion. The neck or spout of the bag shall be tied off tightly to stop the water from flowing out of the bag without going through the walls.

The special stilling basin(s) shall be replaced and disposed of when it is 3/4 full of sediment or when it is impractical for the bag to filter the sediment out at a reasonable flow rate. Prior approval from the Engineer must be received before removal and replacement.

The Contractor shall be responsible for providing a sufficient quantity of bags to contain silt from pumped effluent during the drilled pier operation, footing excavation, or culvert construction.

The quantity of sediment control stone, filter fabric for drainage, and special stilling basin(s) as measured above will be paid for at contract price for "Lump Sum for Erosion Control". Such price and payment will be full compensation for all work covered by this provision, including but not limited to, furnishing all materials, placing and maintaining the special stilling basin(s), and removal and disposal of silt accumulations and bag.

PROJECT NO. 33268.1.1

BUNCOMBE COUNTY

STATION: 6+68.10 -L-

REPLACES BRIDGE NO. 250

STATE OF NORTH CAROLINA
DEPARTMENT OF TRANSPORTATION
RALEIGH

BRIDGE ON SR 1742 OVER
FLAT CREEK BETWEEN
NC 251 & SR 1743

27' CLEAR ROADWAY - 60° SKEW

REVISIONS						SHEET NO.
NO.	BY:	DATE:	NO.	BY:	DATE:	18
1			3			TOTAL SHEETS
2			4			18

B-3813

#249 BUNCOMBE

F. A. PROJ. NO. BRSTP-1742(1)

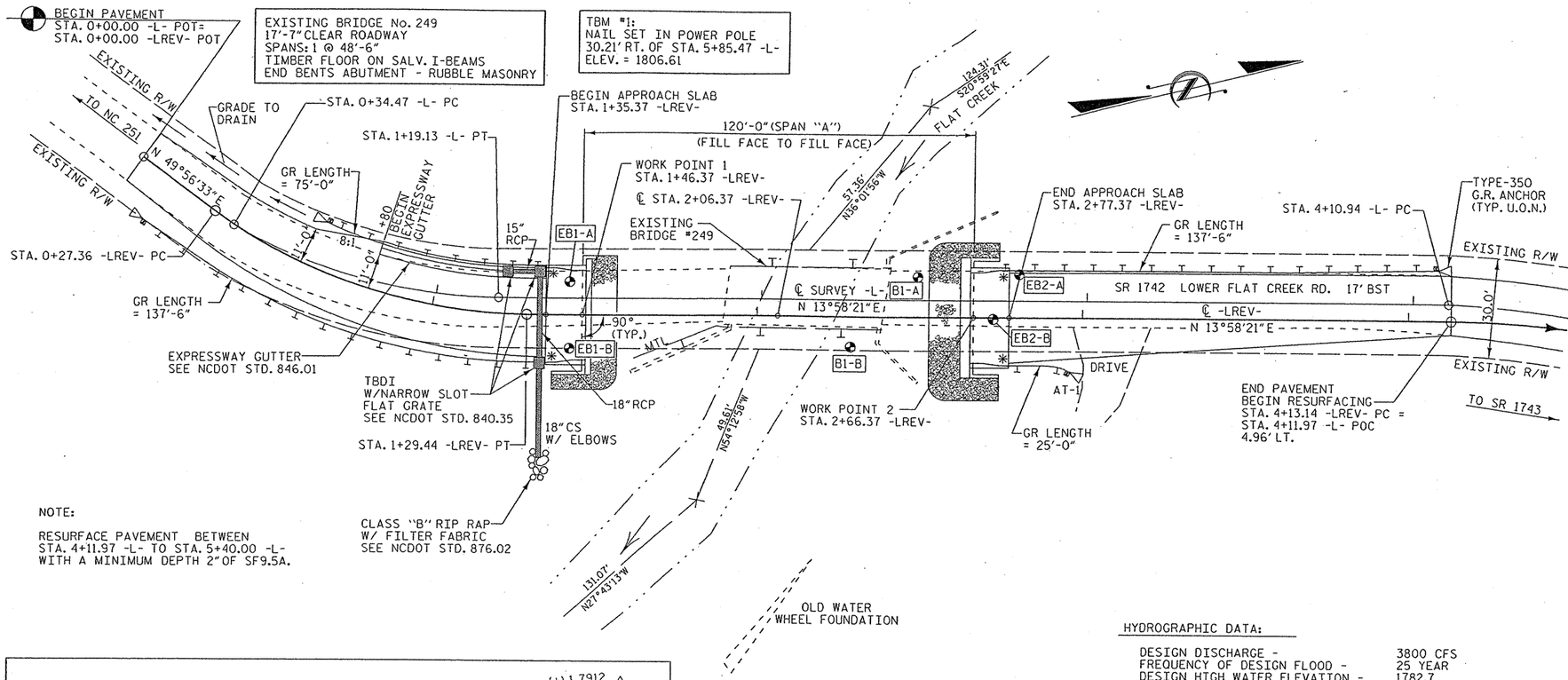

NOTE:

RESURFACE PAVEMENT BETWEEN STA. 4+11.97 -L- TO STA. 5+40.00 -L- WITH A MINIMUM DEPTH 2" OF SF9.5A.

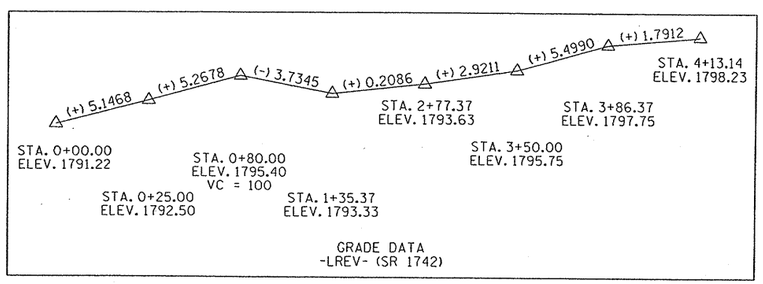

PLAN

SCALE : 1" = 20'

DENOTES GEO-TECH BORE HOLE LOCATIONS.

DENOTES 12" FUNNEL AND FUNNEL DRAIN REQ'D LOCATION TO BE DETERMINED BY THE ENGINEER.

* DENOTES TYPE III GUARDRAIL CONNECTION REQ'D., SEE SHEET 12

U.O.N. - UNLESS OTHERWISE NOTED

HYDROGRAPHIC DATA:

DESIGN DISCHARGE -	3800 CFS
FREQUENCY OF DESIGN FLOOD -	25 YEAR
DESIGN HIGH WATER ELEVATION -	1782.7
DRAINAGE AREA -	24.5 SQ. MI.
BASIC DISCHARGE (Q 100) -	5500 CFS
BASIC HIGH WATER ELEVATION -	1784.6

OVERTOPPING FLOOD DATA:

OVERTOPPING DISCHARGE -	8000+ CFS
FREQUENCY OF OVERTOPPING FLOOD -	500 + YEAR
OVERTOPPING FLOOD ELEVATION -	1795.0 +/-

NOTES

ASSUMED LIVE LOAD = HS20 OR ALTERNATE LOADING

FOR EROSION CONTROL MEASURES SEE EROSION CONTROL PLANS.

REMOVAL OF THE EXISTING BRIDGE SHALL BE PERFORMED SO AS NOT TO ALLOW DEBRIS TO FALL INTO THE WATER. THE CONTRACTOR SHALL REMOVE THE BRIDGE AND SUBMIT PLANS FOR THE DEMOLITION IN ACCORDANCE WITH ARTICLE 402-2 OF THE STANDARD SPECIFICATIONS.

THE SUBSTRUCTURE OF THE EXISTING BRIDGE INDICATED ON THE PLANS IS FROM THE BEST INFORMATION AVAILABLE. SINCE THIS INFORMATION IS SHOWN FOR THE CONVENIENCE OF THE CONTRACTOR, THE CONTRACTOR SHALL HAVE NO CLAIM WHATSOEVER AGAINST THE DEPARTMENT OF TRANSPORTATION FOR ANY DELAYS OR ADDITIONAL COST INCURRED BASED ON DIFFFERENCES BETWEEN THE EXISTING BRIDGE SUBSTRUCTURE SHOWN ON THE PLANS AND THE ACTUAL CONDITIONS AT THE PROJECT SITE.

THIS STRUCTURE HAS BEEN DESIGNED IN ACCORDANCE WITH HEC 18, "EVALUATING SCOUR AT BRIDGES", NOVEMBER 1995.

THIS BRIDGE HAS BEEN DESIGNED IN ACCORDANCE WITH THE REQUIREMENTS OF THE STANDARD SPECIFICATIONS FOR SEISMIC DESIGN OF HIGHWAY BRIDGES FOR SEISMIC CATEGORY A.

INASMUCH AS THE PAINT SYSTEM ON THE EXISTING STRUCTURAL STEEL CONTAINS LEAD, THE CONTRACTOR'S ATTENTION IS DIRECTED TO ARTICLE 107-1, OF THE STANDARD SPECIFICATIONS. ANY COSTS RESULTING FROM COMPLIANCE WITH APPLICABLE STATE OR FEDERAL REGULATIONS PERTAINING TO HANDLING OF MATERIALS CONTAINING LEAD BASED PAINT SHALL BE INCLUDED IN THE BID PRICE FOR "REMOVAL OF EXISTING STRUCTURE AT STATION 2+06.37"

NEEDLE BEAMS WILL NOT BE ALLOWED UNLESS OTHERWISE CALLED FOR ON THE PLANS OR APPROVED BY THE ENGINEERS.

FOR SUBMITTAL OF WORKING DRAWINGS, SEE SPECIAL PROVISIONS.

FOR FALSEWORK AND FORMWORK, SEE SPECIAL PROVISIONS.

WHEN DRIVING PILES, THE MAXIMUM BLOW COUNT SHALL NOT BE EXCEEDED.

PILES FOR END BENT No. 2 SHALL BE DRIVEN TO A MINIMUM BEARING CAPACITY OF 45 TONS EACH.

PILE EXCAVATION SHALL BE UTILIZED TO INSTALL PILES TO ELEVATION 1774.5 AT END BENT 2.

THE REQUIRED BEARING CAPACITY OF THE FOOTING AT END BENT NO. 1 IS 5 TONS PER SQ. FT. THE REQUIRED BEARING CAPACITY SHALL BE VERIFIED.

THIS STRUCTURE HAS BEEN DESIGNED IN ACCORDANCE WITH FHWA'S TECHNICAL ADVISORY T5140.20 (SCOUR AT BRIDGES).

ADT = 430 FOR YEAR 1999.

THE QUANTITY OF RIP RAP TO BE PAID FOR WILL BE THE ACTUAL NUMBER OF TONS OF EACH CLASS OF RIP RAP WHICH HAS BEEN INCORPORATED INTO THE COMPLETED AND ACCEPTED WORK. THE RIP RAP WILL BE MEASURED BY BEING WEIGHED IN TRUCKS ON CERTIFIED PLATFORM SCALES OR OTHER CERTIFIED WEIGHING DEVICES. THE QUANTITY OF RIP RAP WILL BE PAID FOR AT THE CONTRACT UNIT PRICE PER TON:

PLAIN RIP RAP CLASS II (2'-0" THICK)

END BENT No. 1	45	TONS
END BENT No. 2	100	TONS
TOTAL	145	TONS

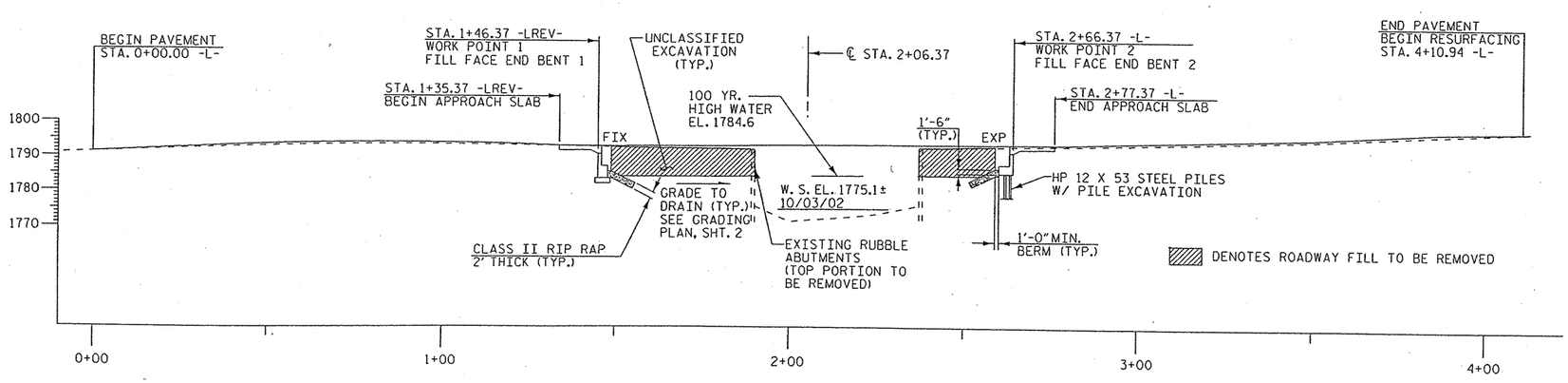

PROFILE ALONG ℄ -LREV-

SCALE : 1" = 20'

PROJECT NO. 33268.1.1

BUNCOMBE COUNTY

STATION: 2+06.37 -LREV-

REPLACES BRIDGE NO. 249

STATE OF NORTH CAROLINA
DEPARTMENT OF TRANSPORTATION
RALEIGH

BRIDGE ON SR 1742 OVER FLAT CREEK BETWEEN NC 251 & SR 1743

27' CLEAR ROADWAY - 90° SKEW

NORTH CAROLINA PROFESSIONAL SEAL 19661 ENGINEER L. KEVIN AUSTIN 3/6/08

PLANS PREPARED BY:

MULKEY ENGINEERS & CONSULTANTS
PO Box 33127
Raleigh, N.C. 27636
(919) 851-1912
(919) 851-1918 (FAX)
WWW.MULKEYINC.COM

REVISIONS								SHEET NO.
NO.	BY:	DATE:	NO.	BY:	DATE:			1
1			3					TOTAL SHEETS
2			4					23

DRAWN BY :	J. P. SHERMAN	DATE :	5/04
CHECKED BY :	R. C. LARSON	DATE :	8/04

3/6/2008 3:51:19 PM G:\Project\2002\290.02\B-3813\Structures\Bridge*249\B3813-249_SD_GD_01.dgn

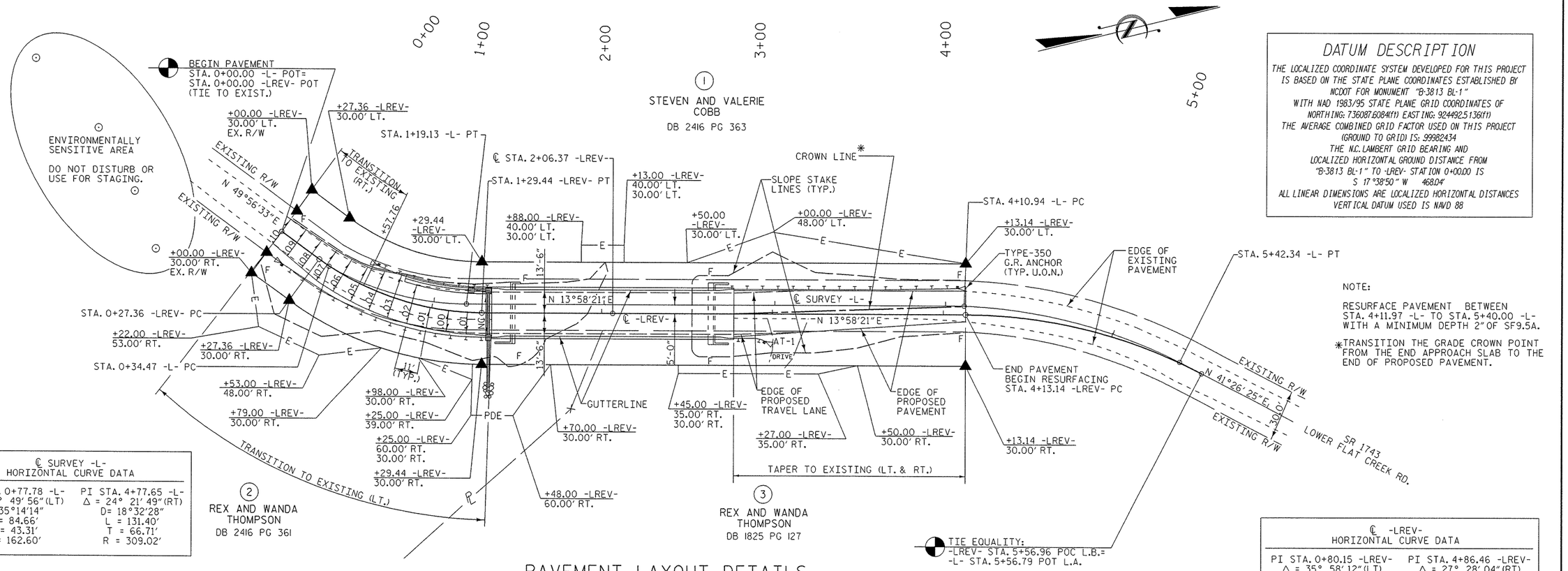

PAVEMENT LAYOUT DETAILS

SCALE : 1" = 30'

DATUM DESCRIPTION

THE LOCALIZED COORDINATE SYSTEM DEVELOPED FOR THIS PROJECT IS BASED ON THE STATE PLANE COORDINATES ESTABLISHED BY NCDOT FOR MONUMENT "B-3813 BL-1"
WITH NAD 1983/95 STATE PLANE GRID COORDINATES OF NORTHING: 736087.6084(ft) EASTING: 924492.5136(ft)
THE AVERAGE COMBINED GRID FACTOR USED ON THIS PROJECT (GROUND TO GRID) IS: .99982434
THE N.C. LAMBERT GRID BEARING AND LOCALIZED HORIZONTAL GROUND DISTANCE FROM "B-3813 BL-1" TO -LREV- STATION 0+00.00 IS
S 17°38'50" W 468.04'
ALL LINEAR DIMENSIONS ARE LOCALIZED HORIZONTAL DISTANCES
VERTICAL DATUM USED IS NAVD 88

NOTE:

RESURFACE PAVEMENT BETWEEN STA. 4+11.97 -L- TO STA. 5+40.00 -L- WITH A MINIMUM DEPTH 2" OF SF9.5A.

*TRANSITION THE GRADE CROWN POINT FROM THE END APPROACH SLAB TO THE END OF PROPOSED PAVEMENT.

℄ SURVEY -L- HORIZONTAL CURVE DATA

PI STA. 0+77.78 -L-	PI STA. 4+77.65 -L-
Δ = 29° 49' 56" (LT)	Δ = 24° 21' 49" (RT)
D= 35°14'14"	D= 18°32'28"
L = 84.66'	L = 131.40'
T = 43.31'	T = 66.71'
R = 162.60'	R = 309.02'

℄ -LREV- HORIZONTAL CURVE DATA

PI STA. 0+80.15 -LREV-	PI STA. 4+86.46 -LREV-
Δ = 35° 58' 12" (LT)	Δ = 27° 28' 04" (RT)
D= 35°14'14"	D= 19°05'55"
L = 102.08'	L = 143.82'
T = 52.78'	T = 73.32'
R = 162.60'	R = 300.00'

RIGHT OF WAY AREA DATA

PARCEL NO.	PROPERTY OWNERS NAMES	TOTAL AREA	AREA TAKEN	AREA REMAINING RT.	AREA REMAINING LT.	CONST. EASE.	PERM. DRAIN. EASE.	TEMP. DRAIN. EASE.
1	STEVEN AND VALERIE COBB	4.52 AC	4342 SF		4.42 AC	1718 SF		
2	REX AND WANDA THOMPSON	1.83 AC	3762 SF	1.74 AC		1389 SF	1056 SF	
3	REX AND WANDA THOMPSON	2.97 AC	0.10 AC	2.84 AC		468 SF		

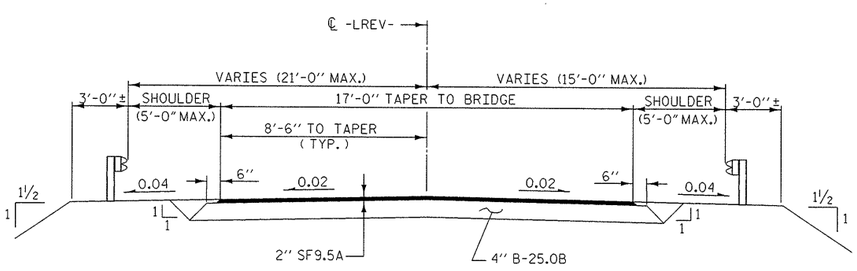

TYPICAL ROADWAY SECTION

(WITHIN CONSTRUCTION LIMITS)

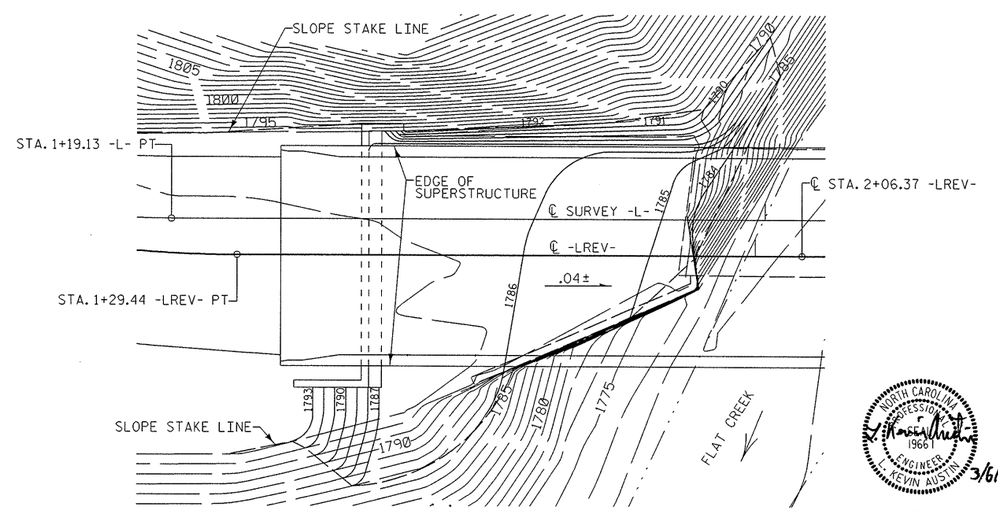

GRADING PLAN

(@ END BENT 1)

NORTH CAROLINA PROFESSIONAL ENGINEER SEAL 19661 L. KEVIN AUSTIN 3/6/08

PLANS PREPARED BY:
MULKEY ENGINEERS & CONSULTANTS
PO Box 33127 Raleigh, N.C. 27636
(919) 851-1912
(919) 851-1918 (FAX)
WWW.MULKEYINC.COM

PROJECT NO. 33268.1.1
BUNCOMBE COUNTY
STATION: 2+06.37 -LREV-

REPLACES BRIDGE NO. 249

STATE OF NORTH CAROLINA
DEPARTMENT OF TRANSPORTATION
RALEIGH

ROADWAY DETAILS

27' CLEAR ROADWAY - 90° SKEW

REVISIONS						SHEET NO.
NO.	BY:	DATE:	NO.	BY:	DATE:	2
1			3			TOTAL SHEETS
2			4			23

DRAWN BY : J. P. SHERMAN DATE : 5/04
CHECKED BY : R. C. LARSON DATE : 8/04

3/6/2008 4:03:46 PM G:\project\2002\390.02\B-3813\Structures\Bridge*249\B3813-249_SD_02_02.dgn

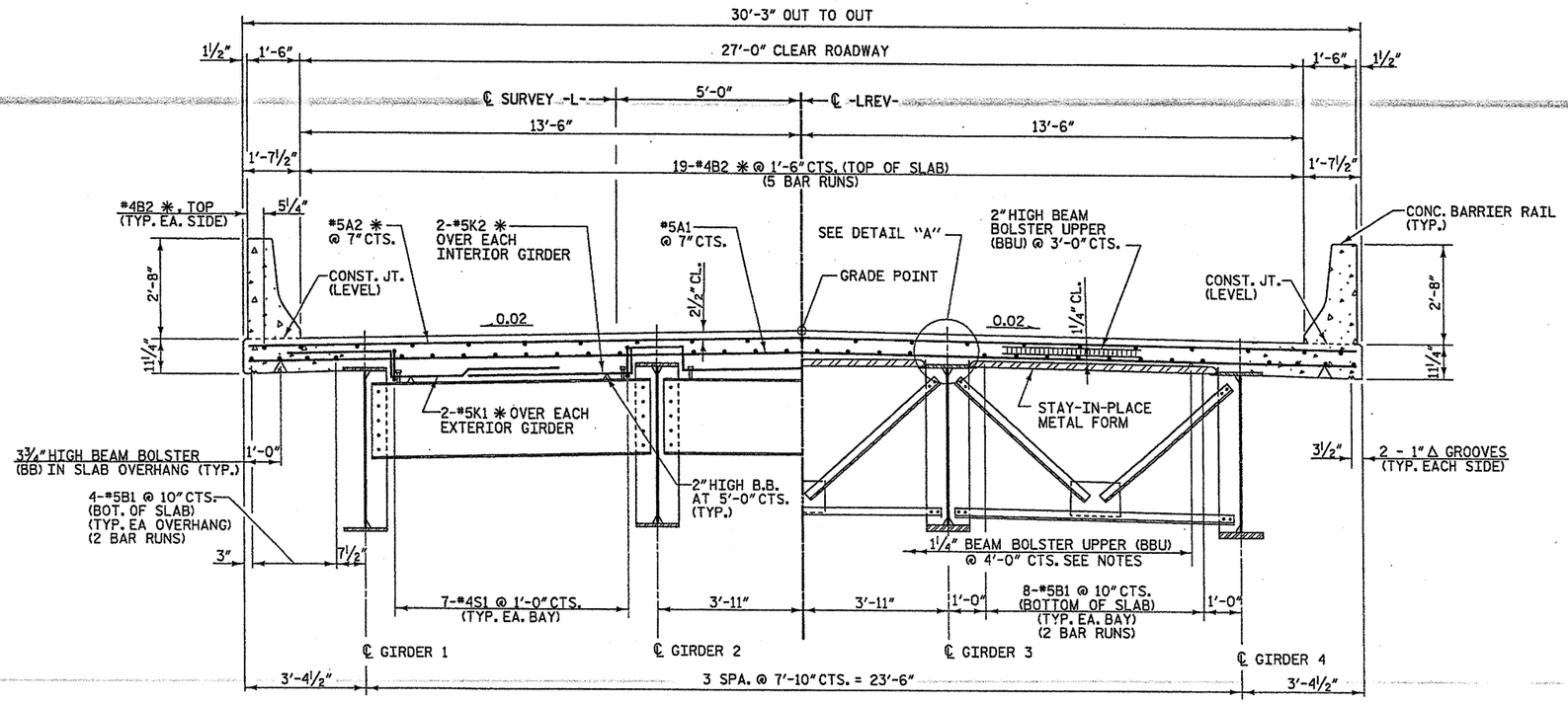

HALF SECTION AT END BENTS
(SHOWING END BENT DIAPHRAGMS)

HALF SECTION AT MID SPAN
(SHOWING INTERMEDIATE DIAPHRAGMS)

TYPICAL SECTION

NOTES:

PROVIDE 1¼" HIGH BEAM BOLSTERS UPPER (BBU) AT 4'-0" CENTERS ATOP THE METAL STAY-IN-PLACE FORMS TO SUPPORT THE BOTTOM MAT OF "A" BARS. WHEN USING REMOVABLE FORMS, PROVIDE CONTINUOUS HIGH CHAIRS FOR METAL DECK (C.H.C.M.) @ 4'-0" CTS. WITH A HEIGHT TO SUPPORT THE BOTTOM MAT OF "A" BARS A CLEAR DISTANCE OF 2½" ABOVE THE TOP OF THE REMOVABLE FORM.

THE NOMINAL UNCOMPRESSED SEAL WIDTH OF THE EVAZOTE JOINT SEAL SHALL BE 2½" FOR EVAZOTE JOINT SEALS. SEE SPECIAL PROVISIONS.

PREVIOUSLY CAST CONCRETE IN SPAN 'A' SHALL HAVE ATTAINED A MINIMUM COMPRESSIVE STRENGTH OF 3,000 PSI BEFORE ADDITIONAL CONCRETE IS CAST IN THE SPAN.

DIRECTION OF CASTING DECK CONCRETE SHALL BE FROM THE FIXED END TOWARD THE EXPANSION BEARING END OF THE SPAN.

THE CONTRACTOR MAY, WHEN NECESSARY, PROPOSE A SCHEME FOR AVOIDING INTERFERENCE BETWEEN METAL STAY-IN-PLACE FORM SUPPORTS OR FORMS AND GIRDER STIFFENER OR CONNECTOR PLATES. THE PROPOSAL SHALL BE INDICATED, AS APPROPRIATE, ON EITHER THE STEEL WORKING DRAWINGS OR THE METAL STAY-IN-PLACE FORM WORKING DRAWINGS.

STRUCTURAL STEEL ERECTION IN SPAN 'A' SHALL BE COMPLETE BEFORE FALSEWORK OR FORMS ARE PLACED ON THE UNIT.

✱ EPOXY COATED REINFORCING STEEL

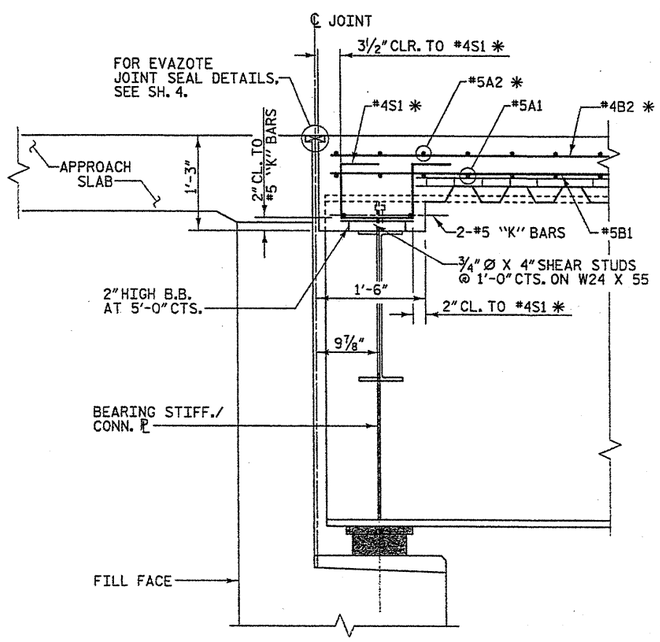

SECTION A-A

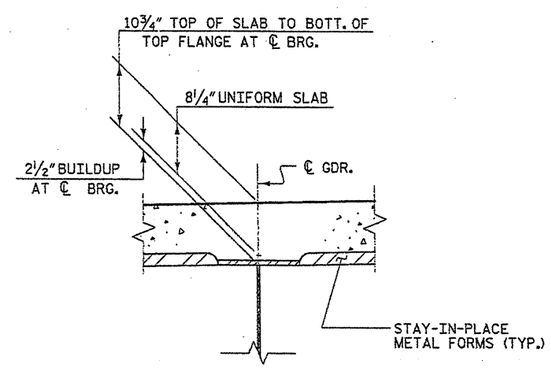

DETAIL "A"

PROJECT NO. 33268.1.1
BUNCOMBE COUNTY
STATION: 2+06.37 -LREV-

REPLACES BRIDGE NO. 249

STATE OF NORTH CAROLINA
DEPARTMENT OF TRANSPORTATION
RALEIGH

SUPERSTRUCTURE TYPICAL SECTION

27' CLEAR ROADWAY - 90° SKEW

REVISIONS						SHEET NO.
NO.	BY:	DATE:	NO.	BY:	DATE:	3
1			3			TOTAL SHEETS
2			4			23

NORTH CAROLINA PROFESSIONAL SEAL 19661 ENGINEER KEVIN AUSTIN 1/7/08

PLANS PREPARED BY:
MULKEY ENGINEERS & CONSULTANTS
PO Box 33127
Raleigh, N.C. 27636
(919) 851-1912
(919) 851-1918 (FAX)
WWW.MULKEYINC.COM

DRAWN BY : J. P. SHERMAN DATE : 5/04
CHECKED BY : R. C. LARSON DATE : 8/04

10/9/2007 4:39:51 PM G:\projects\2002\290.02\B-3883\Structures\Bridge#249\B3883-249_SD_TS_01.dgn

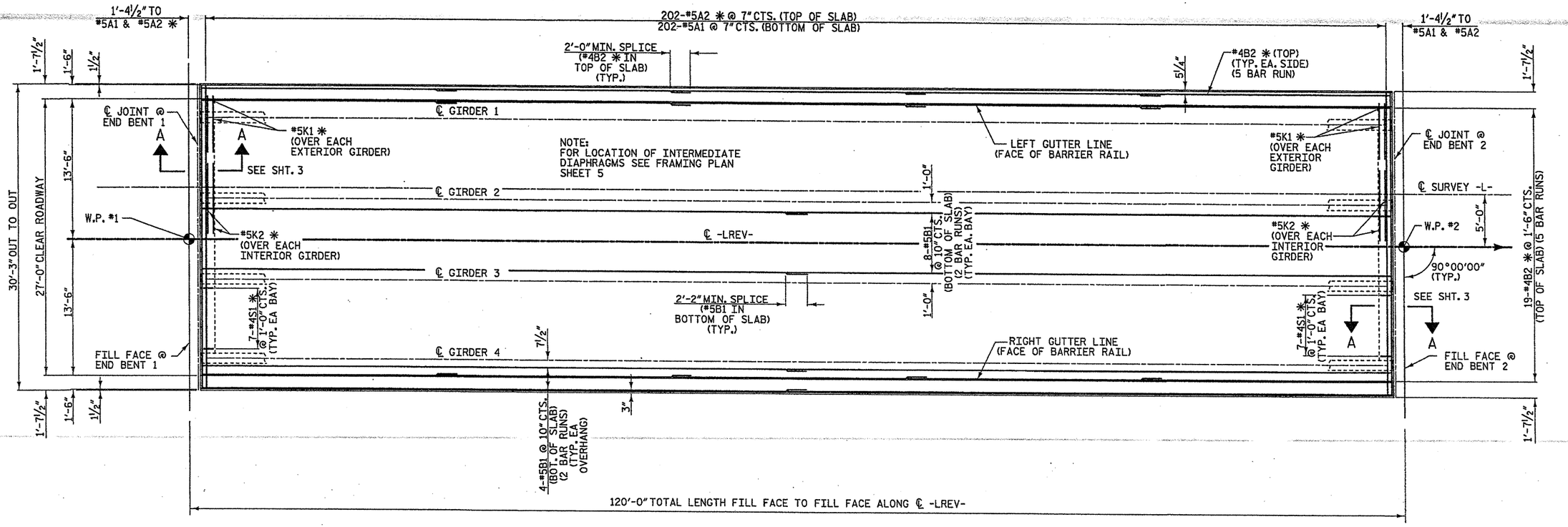

PLAN OF SPAN 'A'

✱ EPOXY COATED REINFORCING STEEL

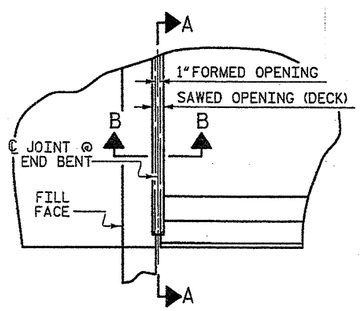

PLAN

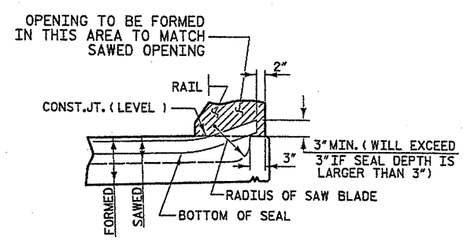

SECTION A-A

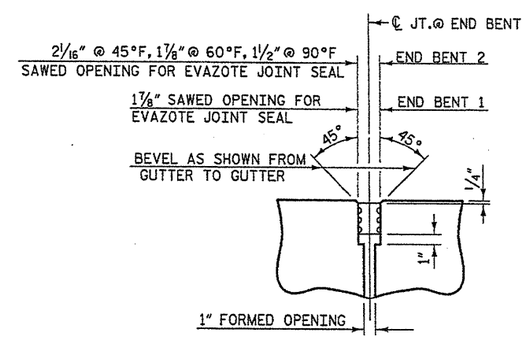

SECTION B-B
EVAZOTE JOINT SEAL

JOINT SEAL DETAILS @ END BENT

(FOR BARRIER RAIL)

PROJECT NO. 33268.1.1
BUNCOMBE COUNTY
STATION: 2+06.37 -LREV-

REPLACES BRIDGE NO. 249

STATE OF NORTH CAROLINA
DEPARTMENT OF TRANSPORTATION
RALEIGH

SUPERSTRUCTURE SPAN "A"

27' CLEAR ROADWAY - 90° SKEW

NORTH CAROLINA PROFESSIONAL ENGINEER SEAL 19661 KEVIN AUSTIN 1/7/08

PLANS PREPARED BY:
MULKEY ENGINEERS & CONSULTANTS
PO Box 33127 RALEIGH, N.C. 27636
(919) 851-1912
(919) 851-1918 (FAX)
WWW.MULKEYINC.COM

REVISIONS						SHEET NO.
NO.	BY:	DATE:	NO.	BY:	DATE:	4
1			3			TOTAL SHEETS
2			4			23

DRAWN BY: J. P. SHERMAN DATE: 5/04
CHECKED BY: R. C. LARSON DATE: 8/04

10/9/2007 4:38:34 PM G:\project\2002\290.02\B-3815\structures\Bridge#249\03B3-249_SD_SL01.dgn

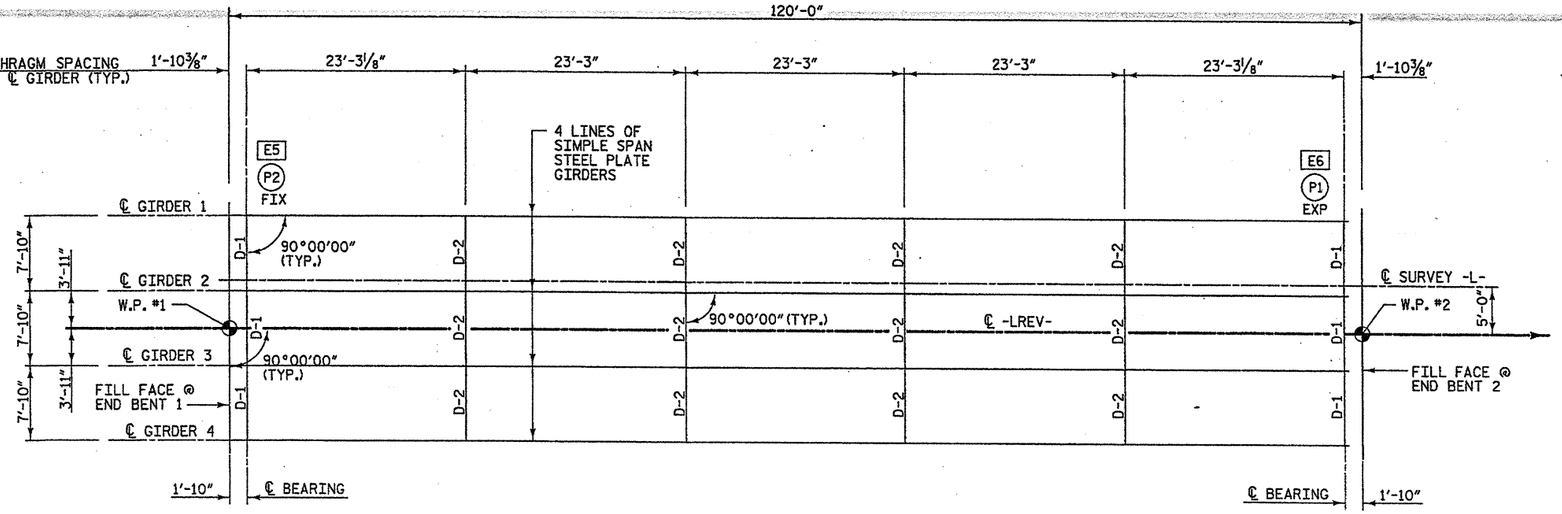

FRAMING PLAN

NOTES:

1. DIAPHRAGMS INDICATED THUS: D- (NUMBER)
2. ELASTOMERIC BEARINGS INDICATED THUS: EN (N=NUMBER)
3. SOLE PLATES INDICATED THUS: PN (N=NUMBER)

STRUCTURAL STEEL NOTES

ALL STRUCTURAL STEEL SHALL BE AASHTO M270 GRADE 50W AND PAINTED IN ACCORDANCE WITH SYSTEM 4 OF ARTICLE 442-7 OF THE STANDARD SPECIFICATIONS UNLESS OTHERWISE NOTED ON THE PLANS.

ALL DIMENSIONS SHOWN ARE HORIZONTAL OR VERTICAL UNLESS OTHERWISE NOTED.

ALL FIELD CONNECTIONS TO BE ⅞" DIA. HIGH STRENGTH BOLTS UNLESS OTHERWISE NOTED.

BEARING STIFFENERS SHALL BE PLACED NORMAL TO THE WEB OF THE GIRDER AND SHALL BE PLUMB.

A CHARPY V-NOTCH TEST IS REQUIRED FOR WEB PLATES, BOTTOM FLANGE PLATES, BOTTOM FLANGE SPLICE PLATES AND WEB SPLICE PLATES FOR ALL GIRDERS AND IN ACCORDANCE WITH ARTICLE 1072-9 OF THE STANDARD SPECIFICATIONS.

SHOP SPLICES ARE PERMITTED TO LIMIT THE MAXIMUM REQUIRED FLANGE PIECE LENGTHS TO 60 FEET AND WEB PIECE LENGTHS TO 45 FEET. PERMITTED FLANGE AND WEB SHOP SPLICES SHALL NOT BE LOCATED WITHIN 15 FEET OF MAXIMUM DEAD LOAD DEFLECTION NOR WITHIN 15 FEET OF INTERMEDIATE BEARINGS OF CONTINUOUS UNITS. KEEP 2 FEET MINIMUM BETWEEN WEB AND FLANGE SHOP SPLICES. KEEP 6" MINIMUM BETWEEN CONNECTOR PLATE OR TRANSVERSE STIFFENER WELDS AND WEB OR FLANGE SHOP SPLICES.

TENSION ON THE AASHTO M164 BOLTS SHALL BE CALIBRATED USING DIRECT TENSION INDICATOR WASHERS IN ACCORDANCE WITH ARTICLE 440-10 OF THE STANDARD SPECIFICATIONS.

ENDS OF GIRDERS SHALL BE PLUMB.

ALL CONNECTOR PLATES AT DIAPHRAGMS SHALL BE PLACED IN PAIRS EXCEPT AT EXTERIOR GIRDERS WHERE THEY WILL BE PLACED ON THE INSIDE FACE ONLY.

INTERMEDIATE DIAPHRAGM CONNECTOR PLATES SHALL BE NORMAL TO THE GIRDER FLANGES AND WEB.

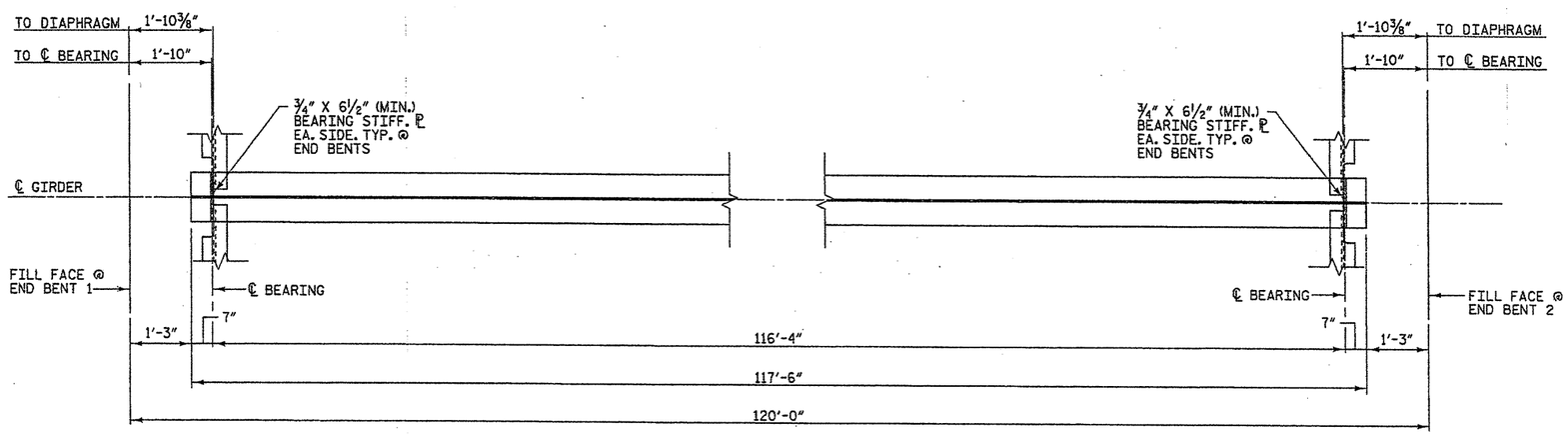

PLAN OF BOTTOM FLANGE - TYPICAL INTERIOR GIRDER

(ALL DIMENSIONS ARE IN HORIZONTAL PLANE) (EXTERIOR GIRDER SIMILAR EXCEPT OMIT DIAPHRAGMS ON OUTSIDE OF GIRDER)

PROJECT NO. 33268.1.1

BUNCOMBE COUNTY

STATION: 2+06.37 -LREV-

REPLACES BRIDGE NO. 249

STATE OF NORTH CAROLINA
DEPARTMENT OF TRANSPORTATION
RALEIGH

SUPERSTRUCTURE FRAMING PLAN

27' CLEAR ROADWAY - 90° SKEW

NORTH CAROLINA PROFESSIONAL SEAL 19661 ENGINEER KEVIN AUSTIN 1/7/08

PLANS PREPARED BY:
MULKEY ENGINEERS & CONSULTANTS
PO BOX 33127 RALEIGH, N.C. 27636
(919) 851-1912
(919) 851-1918 (FAX)
WWW.MULKEYINC.COM

REVISIONS						SHEET NO.
NO.	BY:	DATE:	NO.	BY:	DATE:	5
1			3			TOTAL SHEETS
2			4			23

DRAWN BY :	J. P. SHERMAN	DATE :	5/04
CHECKED BY :	R. C. LARSON	DATE :	8/04

10/9/2007 4:38:08 PM G:\project\2002\290.02\B-383\Structures\Bridge#249\B3813-249_SD_FP_01.dgn

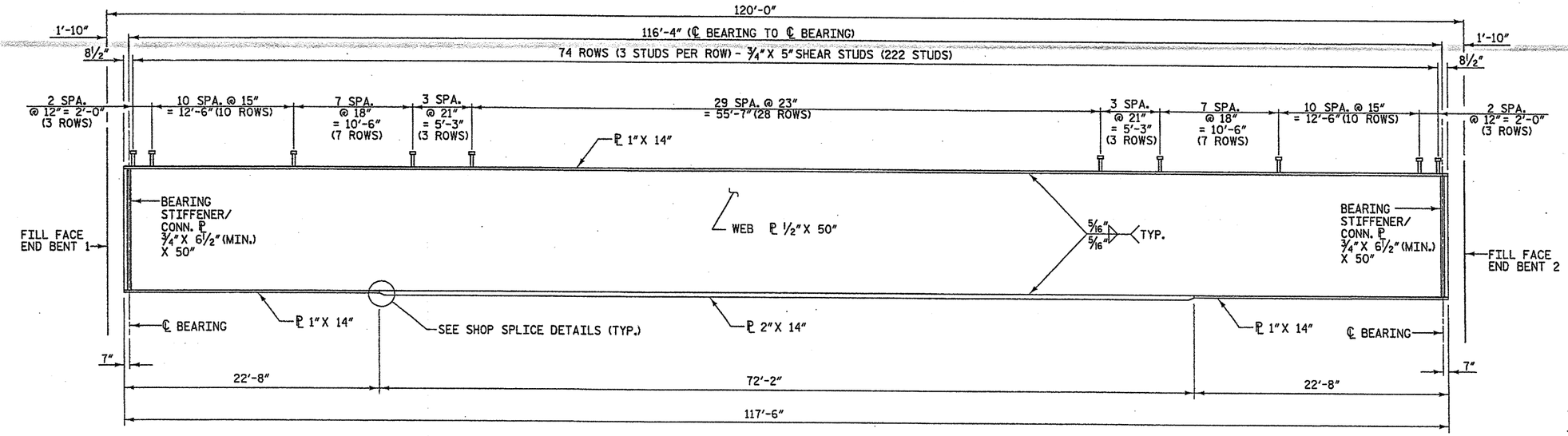

*ALL DIMENSIONS ARE MEASURED ALONG THE ℄ GIRDER.

ELEVATION - GIRDERS 1 THRU 4

(ALL DIMENSIONS ARE IN HORIZONTAL PLANE)

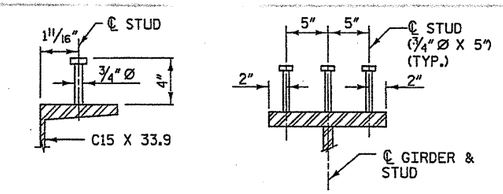

SHEAR STUD DETAILS

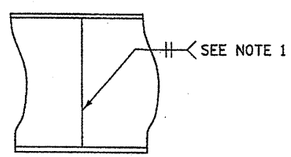

SHOP WEB SPLICE

NOTE 1: THE SHOP WEB SPLICE IS TO BE GROUND SMOOTH AND FLUSH ON THE OUTER FACE OF THE EXTERIOR GIRDERS.

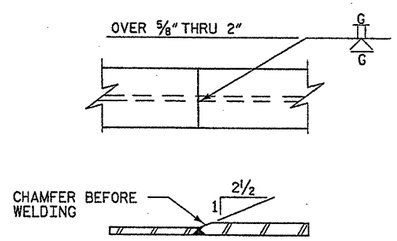

SHOP FLANGE SPLICE DETAILS

SHOP SPLICE DETAILS

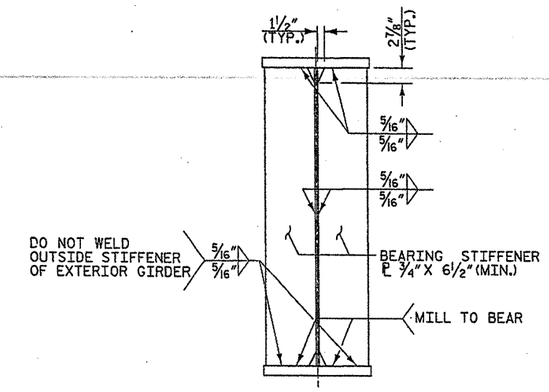

BEARING STIFFENER DETAIL

AT END BENTS

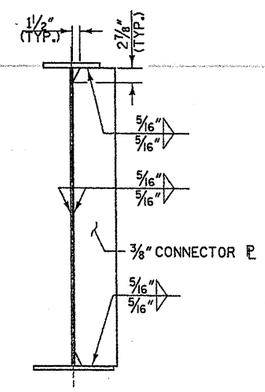

CONNECTOR PLATE DETAIL

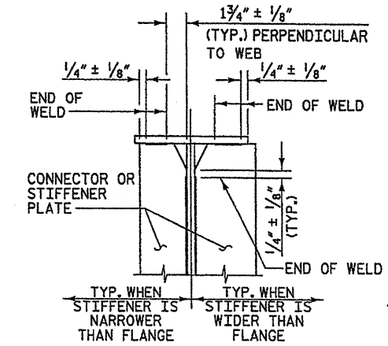

TYPICAL STIFFENER OR CONNECTOR PLATE CONNECTIONS

WELD TERMINATION DETAIL

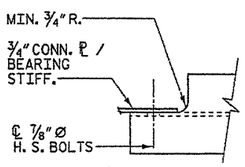

SECTION A-A

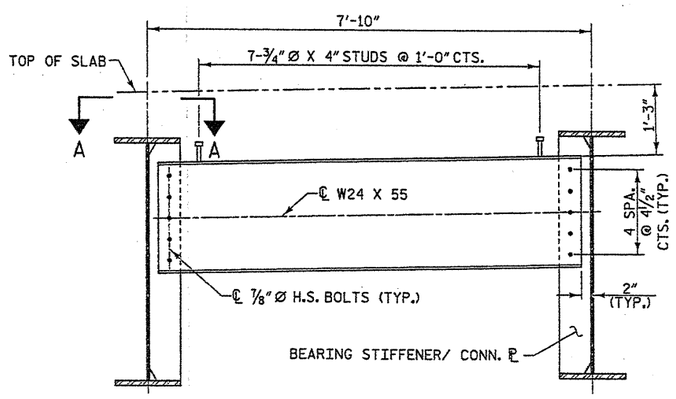

D-1 END BENT DIAPHRAGM

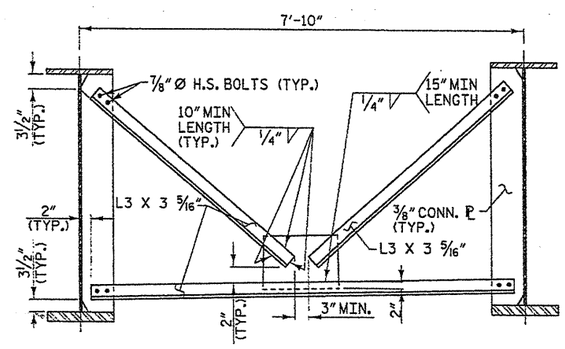

D-2 INTERMEDIATE DIAPHRAGM

PROJECT NO. 33268.1.1

BUNCOMBE COUNTY

STATION: 2+06.37 -LREV-

REPLACES BRIDGE NO. 249

STATE OF NORTH CAROLINA
DEPARTMENT OF TRANSPORTATION
RALEIGH

SUPERSTRUCTURE STRUCTURAL STEEL DETAILS

27' CLEAR ROADWAY - 90° SKEW

NORTH CAROLINA PROFESSIONAL SEAL ENGINEER 19661 KEVIN AUSTIN 11/08

PLANS PREPARED BY:
MULKEY ENGINEERS & CONSULTANTS
PO Box 33127 RALEIGH, N.C. 27636
(919) 851-1912
(919) 851-1918 (FAX)
WWW.MULKEYINC.COM

REVISIONS						SHEET NO.
NO.	BY:	DATE:	NO.	BY:	DATE:	6
1			3			TOTAL SHEETS
2			4			23

DRAWN BY : J. P. SHERMAN DATE : 5/04
CHECKED BY : R. C. LARSON DATE : 8/04

10/9/2007 4:35:03 PM G:\project\2002\20.02\B-3815\Structures\Bridge*249\B3815-249_SD_SS_01.dgn

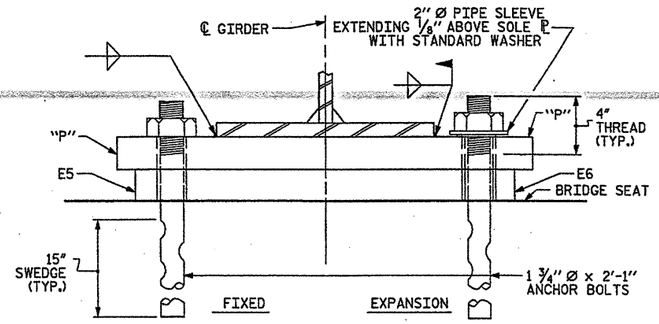

END VIEW

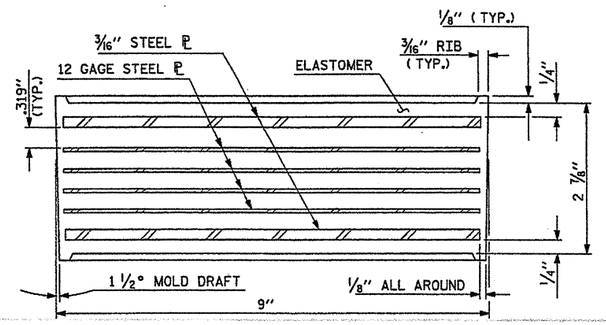

TYPICAL SECTION OF ELASTOMERIC BEARINGS

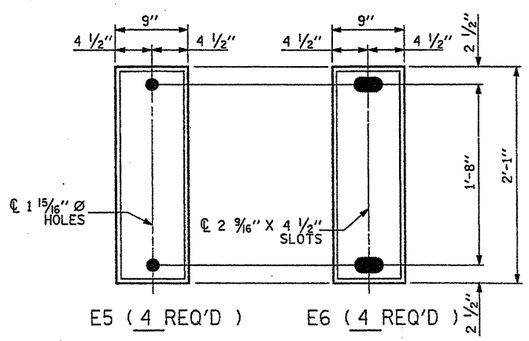

E5 (4 REQ'D) E6 (4 REQ'D)

PLAN VIEW OF ELASTOMERIC BEARING

TYPE III

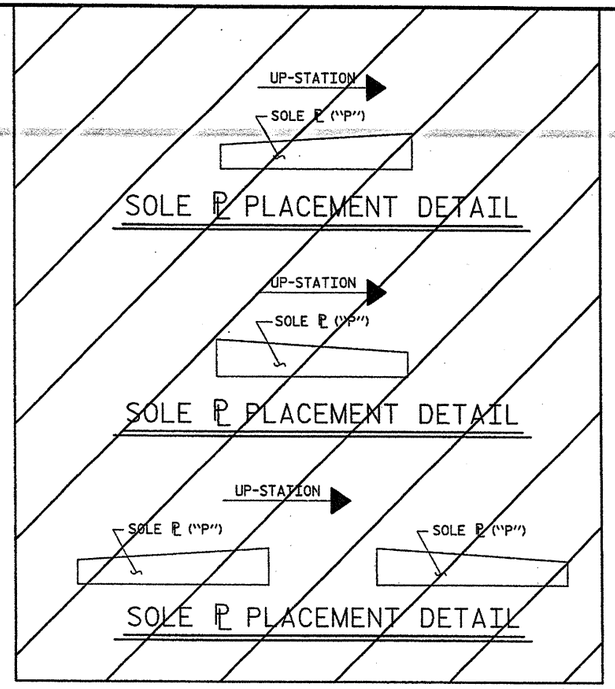

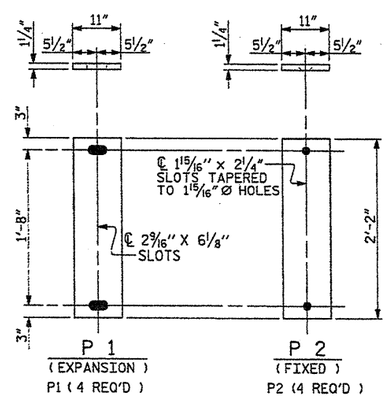

SOLE PLATE DETAILS ("P")

NOTES

AT ALL FIXED POINTS OF SUPPORT, NUTS FOR ANCHOR BOLTS ARE TO BE TIGHTENED FINGER TIGHT AND THEN BACKED OFF 1/2 TURN. THE THREAD OF THE NUT AND BOLT SHALL THEN BE BURRED WITH A SHARP POINTED TOOL.

THE 2" Ø PIPE SLEEVE SHALL BE CUT FROM SCHEDULE 40 PVC PLASTIC PIPE. THE PVC PLASTIC PIPE SHALL MEET THE REQUIREMENTS OF ASTM D1785.

THE PAYMENT FOR THE PIPE SLEEVES SHALL BE INCLUDED IN THE SEVERAL PAY ITEMS.

FOR PAINTED STRUCTURAL STEEL (EXCLUDING AASHTO M270 GRADE 50W), SOLE PLATES, ANCHOR BOLTS, NUTS AND WASHERS SHALL BE GALVANIZED IN ACCORDANCE WITH THE STANDARD SPECIFICATIONS.

FOR AASHTO M270 GRADE 50W STRUCTURAL STEEL, SOLE PLATE SHALL BE AASHTO M270 GRADE 50W AND SHALL NOT BE GALVANIZED. ANCHOR BOLTS, NUTS AND WASHERS SHALL BE GALVANIZED IN ACCORDANCE WITH THE STANDARD SPECIFICATIONS.

ANCHOR BOLTS SHALL MEET THE REQUIREMENTS OF ASTM A449. NUTS SHALL MEET THE REQUIREMENTS OF AASHTO M291-DH OR AASHTO M292-2H. WASHERS SHALL MEET THE REQUIREMENTS OF AASHTO M293. SHOP DRAWINGS ARE NOT REQUIRED FOR ANCHOR BOLTS, NUTS AND WASHERS. SHOP INSPECTION IS REQUIRED.

WHEN FIELD WELDING THE SOLE PLATE TO THE GIRDER FLANGE, USE TEMPERATURE INDICATING WAX PENS, OR OTHER SUITABLE MEANS, TO ENSURE THAT THE TEMPERATURE OF THE SOLE PLATE DOES NOT EXCEED 300°F. TEMPERATURES ABOVE THIS MAY DAMAGE THE ELASTOMER.

ALL SURFACES OF BEARING PLATES SHALL BE SMOOTH AND STRAIGHT.

—LOAD RATINGS—

	MAX.D.L.+L.L.
~~TYPE I~~	~~91 K~~
~~TYPE II~~	~~119 K~~
TYPE III	144 K

PROJECT NO. 33268.1.1

BUNCOMBE COUNTY

STATION: 2+06.37 -LREV-

PLANS PREPARED BY:

MULKEY ENGINEERS & CONSULTANTS
PO Box 33127
Raleigh, N.C. 27636
(919) 851-1912
(919) 851-1918 (FAX)
WWW.MULKEYINC.COM

THIS STANDARD DRAWING REVIEWED & ADOPTED FOR USE AT THE REFERENCED LOCATION BY THE UNDERSIGNED:

NORTH CAROLINA PROFESSIONAL SEAL 19661 ENGINEER KEVIN AUSTIN
1/7/08

STATE OF NORTH CAROLINA
DEPARTMENT OF TRANSPORTATION
RALEIGH

STANDARD ELASTOMERIC BEARING DETAILS

(STEEL SUPERSTRUCTURE)

STD.No.EB1

REVISIONS							SHEET NO.
NO.	BY:	DATE:	NO.	BY:	DATE:		7
1			3				TOTAL SHEETS
2			4				23

ASSEMBLED BY :	W. B. ALLEN	DATE :	10/07
CHECKED BY :	R.C. LARSON	DATE :	10/07
DRAWN BY : JMB	11/87	REV. 8/16/99	MAB/LES
CHECKED BY : ARB	11/87	REV. 10/17/00	RWW/LES
		REV. 5/1/06	TLA/GM

10/10/2007 6:36:23 AM G:\project\2002\230.02\8-3183\structures\bridge#2\03183-249_SD_B6_01.dgn

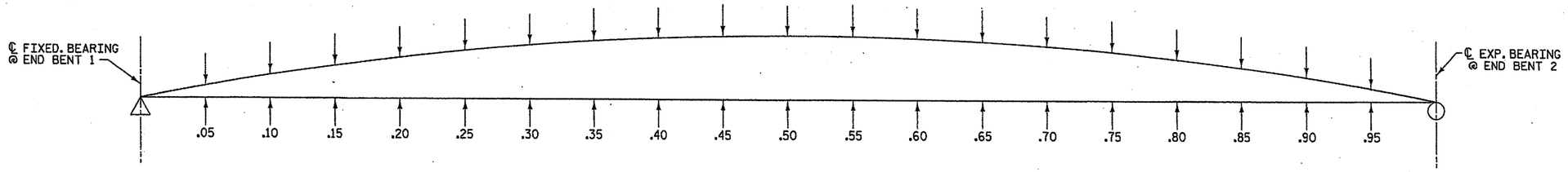

GIRDER 1 AND 4																			
GIRDER ORDINATE																			
DEFLEC. DUE TO WEIGHT OF STEEL	0.016	0.031	0.045	0.058	0.069	0.078	0.087	0.092	0.095	0.097	0.095	0.092	0.087	0.078	0.069	0.058	0.045	0.031	0.016
DEFLEC. DUE TO WEIGHT OF SLAB	0.059	0.116	0.169	0.217	0.258	0.293	0.322	0.342	0.354	0.358	0.354	0.342	0.322	0.293	0.258	0.217	0.169	0.116	0.059
DEFLEC. DUE TO WEIGHT OF RAIL	0.003	0.007	0.010	0.013	0.015	0.018	0.019	0.020	0.021	0.022	0.021	0.020	0.019	0.018	0.015	0.013	0.010	0.007	0.003
TOTAL DEAD LOAD DEFLECTION	0.078	0.154	0.224	0.288	0.342	0.389	0.428	0.454	0.470	0.477	0.470	0.454	0.428	0.389	0.342	0.288	0.224	0.154	0.078
REQUIRED CAMBER	15/16"	1 7/8"	2 11/16"	3 7/16"	4 1/8"	4 11/16"	5 1/8"	5 7/16"	5 5/8"	5 3/4"	5 5/8"	5 7/16"	5 1/8"	4 11/16"	4 1/8"	3 7/16"	2 11/16"	1 7/8"	15/16"

GIRDER 2 AND 3																			
GIRDER ORDINATE																			
DEFLEC. DUE TO WEIGHT OF STEEL	0.018	0.035	0.051	0.065	0.078	0.088	0.097	0.103	0.107	0.108	0.107	0.103	0.097	0.088	0.078	0.065	0.051	0.035	0.018
DEFLEC. DUE TO WEIGHT OF SLAB	0.059	0.116	0.169	0.217	0.258	0.293	0.322	0.342	0.354	0.358	0.354	0.342	0.322	0.293	0.258	0.217	0.169	0.116	0.059
DEFLEC. DUE TO WEIGHT OF RAIL	0.003	0.007	0.010	0.013	0.015	0.017	0.018	0.020	0.021	0.021	0.021	0.020	0.018	0.017	0.015	0.013	0.010	0.007	0.003
TOTAL DEAD LOAD DEFLECTION	0.080	0.158	0.230	0.295	0.351	0.398	0.437	0.465	0.482	0.487	0.482	0.465	0.437	0.398	0.351	0.295	0.230	0.158	0.080
REQUIRED CAMBER	15/16"	1 7/8"	2 3/4"	3 9/16"	4 3/16"	4 3/4"	5 1/4"	5 9/16"	5 13/16"	5 7/8"	5 13/16"	5 9/16"	5 1/4"	4 3/4"	4 3/16"	3 9/16"	2 3/4"	1 7/8"	15/16"

DEAD LOAD DEFLECTION TABLE FOR GIRDERS

SPAN 'A'

NOTES:

DEFLECTION IS IN FEET AND REQUIRED CAMBER IS IN INCHES AT TWENTIETH POINTS BETWEEN BEARINGS.

FOR GIRDERS DESIGNATION, SEE STRUCTURAL STEEL FRAMING PLAN.

PROJECT NO. 33268.1.1

BUNCOMBE COUNTY

STATION: 2+06.37 -LREV-

REPLACES BRIDGE NO. 249

NORTH CAROLINA PROFESSIONAL ENGINEER SEAL 19661 KEVIN AUSTIN 1/7/08

PLANS PREPARED BY:

MULKEY ENGINEERS & CONSULTANTS
PO Box 33127
Raleigh, N.C. 27636
(919) 851-1912
(919) 851-1918 (FAX)
WWW.MULKEYINC.COM

STATE OF NORTH CAROLINA
DEPARTMENT OF TRANSPORTATION
RALEIGH

SUPERSTRUCTURE
DEAD LOAD
DEFLECTIONS

27' CLEAR ROADWAY - 90° SKEW

REVISIONS						SHEET NO.
NO.	BY:	DATE:	NO.	BY:	DATE:	8
1			3			TOTAL SHEETS
2			4			23

DRAWN BY : J. P. SHERMAN DATE : 5/04
CHECKED BY : R. C. LARSON DATE : 8/04

10/9/2007 4:55:05 PM G:\project\2002\390.02\B-383\Structures\Bridge#249\B383-249_SD_DL_01.dgn

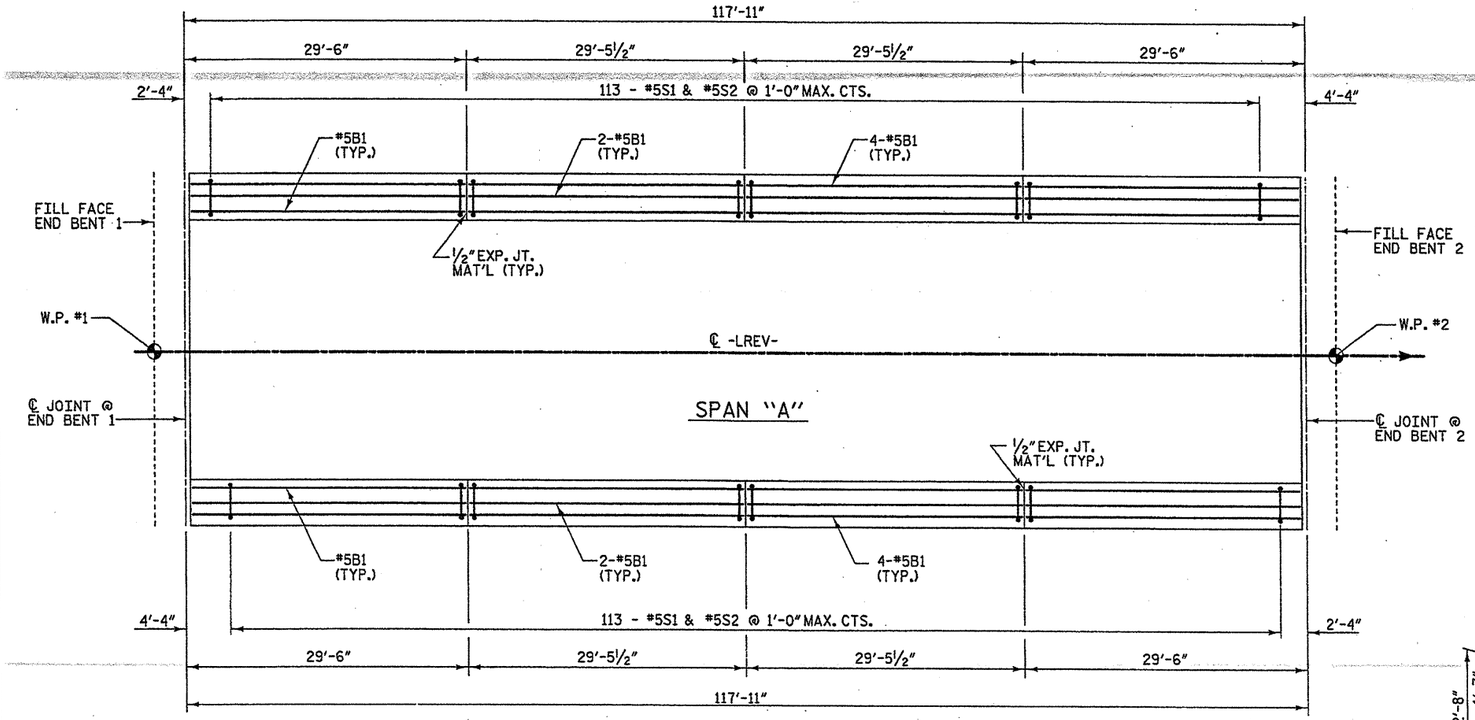

PLAN

NOTES:

THE BARRIER RAIL IN EACH SPAN SHALL NOT BE CAST UNTIL ALL SLAB CONCRETE IN THAT SPAN HAS BEEN CAST AND HAS REACHED A MINIMUM COMPRESSIVE STRENGTH OF 3000 PSI.

WHEN COMPRESSION JOINT SEAL OR EVAZOTE JOINT SEAL IS REQUIRED, THE JOINT IN THE DECK SHALL BE SAWED PRIOR TO THE CASTING OF BARRIER RAIL.

ALL REINFORCING STEEL IN BARRIER RAILS SHALL BE EPOXY COATED.

THE #5S3 THRU #5S4 BARS SHALL BE INSTALLED, USING AN ADHESIVE ANCHORING SYSTEM, AFTER SAWING THE JOINT. FOR ADHESIVELY ANCHORED ANCHOR BOLTS OR DOWELS, SEE SPECIAL PROVISIONS. THE YIELD LOAD FOR THE #5S3 THRU #5S4 BARS IS 18.6 KIPS. FIELD TESTING FOR THE ADHESIVE BONDING SYSTEM IS NOT REQUIRED.

VERTICAL GROOVED CONTRACTION JOINTS, ½" IN DEPTH, SHALL BE TOOLED IN ALL EXPOSED FACES OF THE BARRIER RAIL AND IN ACCORDANCE WITH ARTICLE 825-10(B) OF THE STANDARD SPECIFICATIONS. A JOINT SHALL BE LOCATED AT EACH THIRD POINT BETWEEN BARRIER RAIL EXPANSION JOINTS. ONLY ONE JOINT IS REQUIRED AT MIDPOINT OF BARRIER RAIL SEGMENTS LESS THAN 20 FEET IN LENGTH AND NO JOINTS ARE REQUIRED FOR THOSE SEGMENTS LESS THEN 10 FEET IN LENGTH.

#5S1 & #5S2 BARS MAY BE SHIFTED SLIGHTLY TO CLEAR EXPANSION JOINTS IN THE RAIL

BAR TYPES

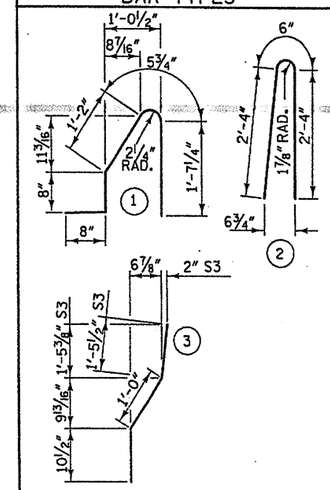

ALL BAR DIMENSIONS ARE OUT TO OUT

BILL OF MATERIAL

FOR CONCRETE BARRIER RAIL ONLY

BAR	NO.	SIZE	TYPE	LENGTH	WEIGHT
* S1	226	#5	1	4'-7"	1080
* S2	226	#5	2	5'-2"	1218
* S3	12	#5	3	3'-4"	42
* S4	12	#5	STR	3'-2"	40
* B1	56	#5	STR	29'-0"	1694

* EPOXY COATED REINFORCING STEEL	4074 LBS.
CLASS AA CONCRETE	23.5 CU. YDS.
CONCRETE BARRIER RAIL	235.83 FEET

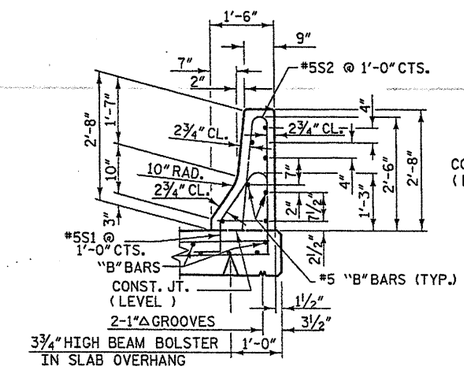

SECTION THRU RAIL

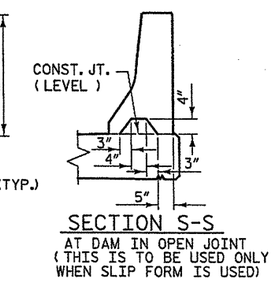

SECTION S-S

AT DAM IN OPEN JOINT (THIS IS TO BE USED ONLY WHEN SLIP FORM IS USED)

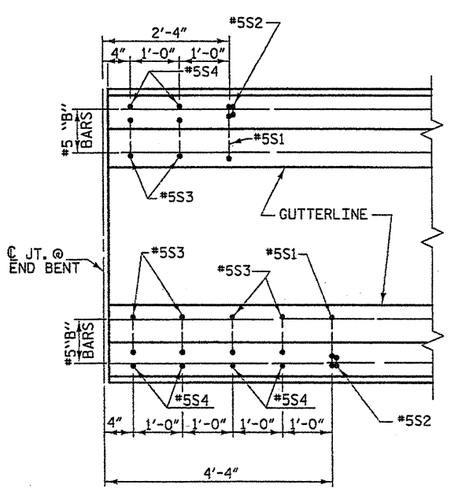

PLAN

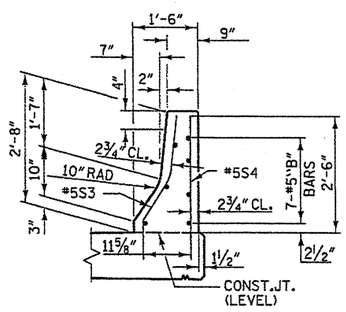

END VIEW

BARRIER RAIL - END OF RAIL DETAILS

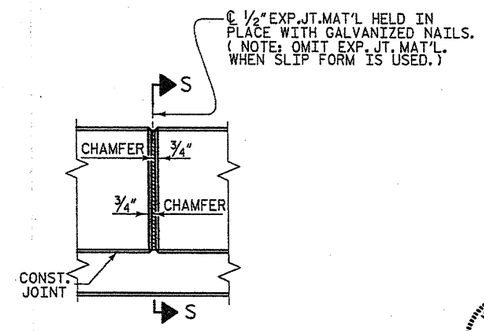

ELEVATION AT EXPANSION JOINTS

BARRIER RAIL DETAILS

PROJECT NO. 33268.1.1

BUNCOMBE COUNTY

STATION: 2+06.37 -LREV-

REPLACES BRIDGE NO. 249

STATE OF NORTH CAROLINA
DEPARTMENT OF TRANSPORTATION
RALEIGH

CAST-IN-PLACE CONCRETE BARRIER RAIL

27' CLEAR ROADWAY - 90° SKEW

NORTH CAROLINA PROFESSIONAL SEAL 19661 ENGINEER KEVIN AUSTIN 1/7/08

PLANS PREPARED BY:
MULKEY ENGINEERS & CONSULTANTS
PO BOX 33127 RALEIGH, N.C. 27636
(919) 851-1912
(919) 851-1918 (FAX)
WWW.MULKEYINC.COM

REVISIONS						SHEET NO.
NO.	BY:	DATE:	NO.	BY:	DATE:	9
1			3			TOTAL SHEETS
2			4			23

DRAWN BY : J. P. SHERMAN DATE : 5/04
CHECKED BY : R. C. LARSON DATE : 8/04

10/9/2007 4:37:37 PM G:\project\2008\250.02\B-3813\structures\Bridge#249\B3813-249_SD_BR_01.dgn

SUPERSTRUCTURE REINFORCING STEEL LENGTHS ARE BASED ON THE FOLLOWING MINIMUM SPLICE LENGTHS					
BAR SIZE	SUPERSTRUCTURE EXCEPT APPROACH SLABS, PARAPET, AND BARRIER RAIL		APPROACH SLABS		PARAPET AND BARRIER RAIL
	EPOXY COATED	UNCOATED	EPOXY COATED	UNCOATED	
#4	2'-0"	1'-9"	2'-0"	1'-9"	2'-9"
#5	2'-6"	2'-2"	2'-6"	2'-2"	3'-5"
#6	3'-0"	2'-7"	3'-10"	2'-7"	4'-4"
#7	5'-3"	3'-6"			
#8	6'-10"	4'-7"			

GROOVING BRIDGE FLOORS		
APPROACH SLABS	-	SQ. FEET
BRIDGE DECK	2820	SQ. FEET
TOTAL	2820	SQ. FEET

REINFORCING BAR SCHEDULE

REINFORCING STEEL

MARK	NO.	SIZE	TYPE	LENGTH	WEIGHT
A1	202	#5	STR	29'-11"	6303
B1	64	#5	STR	59'-10"	3994
TOTAL REINFORCING STEEL LBS.					10297

EPOXY COATED REINFORCING STEEL

MARK	NO.	SIZE	TYPE	LENGTH	WEIGHT
A2 *	202	#5	STR	29'-11"	6303
B2 *	105	#4	STR	25'-2"	1765
K1 *	8	#5	2	7'-9"	65
K2 *	8	#5	1	11'-10"	99
S1 *	42	#4	3	3'-6"	98
TOTAL EPOXY COATED REINFORCING STEEL LBS.					8330

* EPOXY COATED REINFORCING STEEL

BAR TYPES

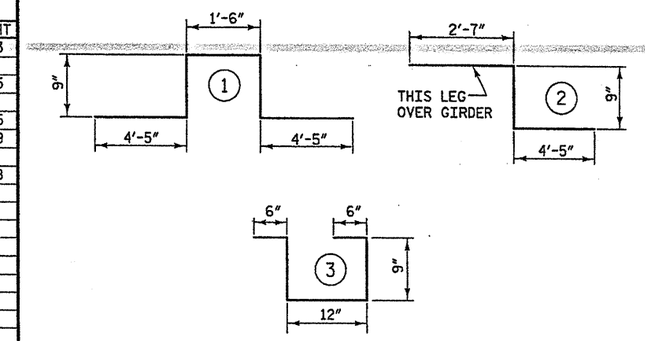

ALL BAR DIMENSIONS ARE OUT TO OUT

SUPERSTRUCTURE BILL OF MATERIAL

	CLASS AA CONCRETE (CU. YARDS)	REINFORCING STEEL (LBS.)	EPOXY COATED REINFORCING STEEL (LBS.)
POUR 1	107.0		
TOTALS	107.0	10297	8330

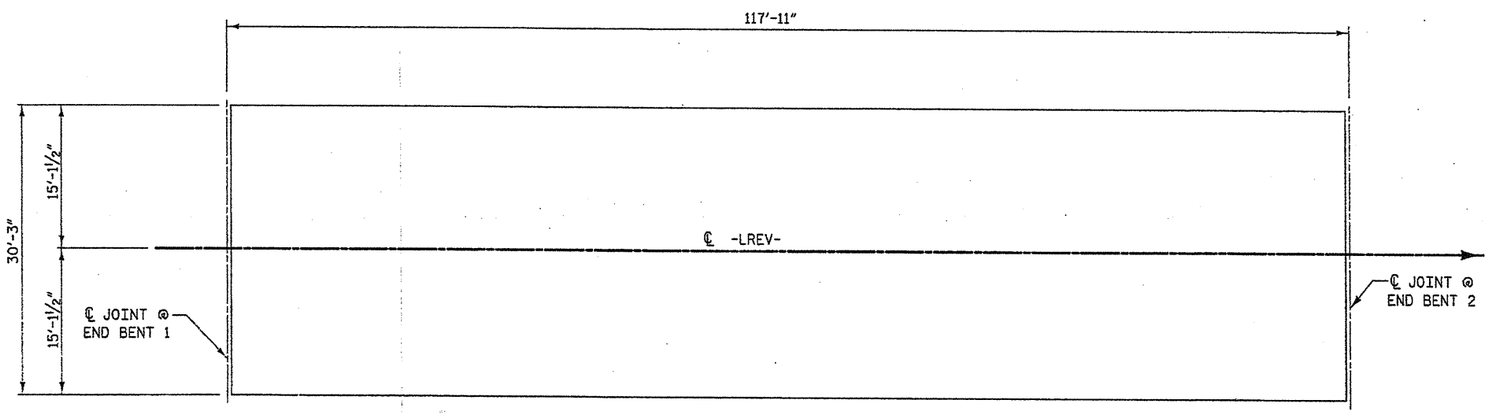

LAYOUT FOR COMPUTING AREA OF REINFORCED CONCRETE DECK SLAB
(SQ. FEET = 3567)

DRAWN BY : J. P. SHERMAN DATE : 5/04
CHECKED BY : R. C. LARSON DATE : 8/04

10/9/2007 4:34:09 PM G:\project\2006\290.02\B-3885\Structures\Bridge#249\B3885-249_SD_BIL_01.dgn

PROJECT NO. 33268.1.1
BUNCOMBE COUNTY
STATION: 2+06.37 -LREV-

REPLACES BRIDGE NO. 249

NORTH CAROLINA PROFESSIONAL SEAL 19661 ENGINEER L. KEVIN AUSTIN 1/7/08

PLANS PREPARED BY:
MULKEY ENGINEERS & CONSULTANTS
PO BOX 33127 RALEIGH, N.C. 27636
(919) 851-1912
(919) 851-1918 (FAX)
WWW.MULKEYINC.COM

STATE OF NORTH CAROLINA
DEPARTMENT OF TRANSPORTATION
RALEIGH

SUPERSTRUCTURE BILL OF MATERIAL

27' CLEAR ROADWAY - 90° SKEW

REVISIONS						SHEET NO.
NO.	BY:	DATE:	NO.	BY:	DATE:	10
1			3			TOTAL SHEETS
2			4			23

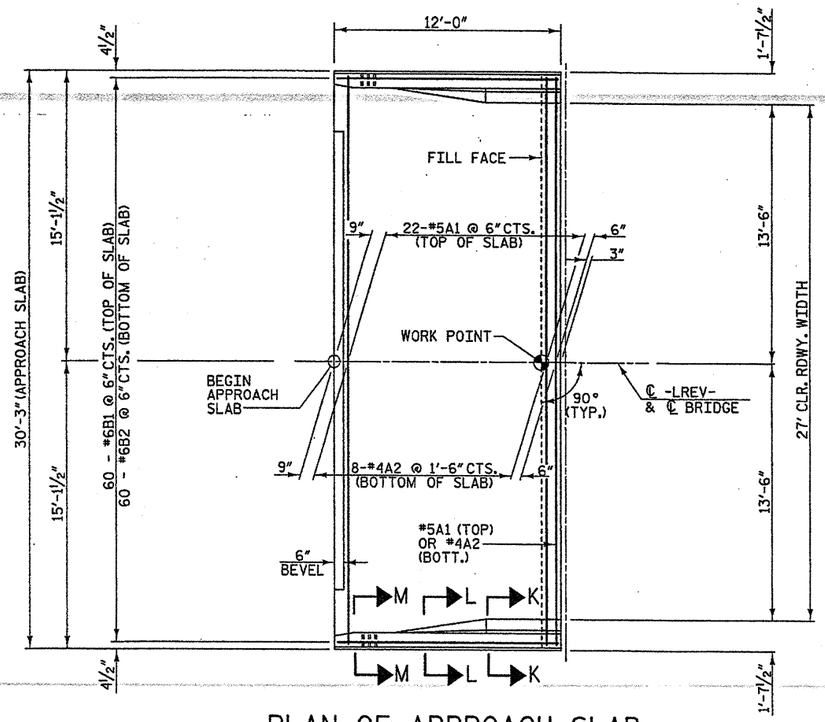

PLAN OF APPROACH SLAB

BEGIN APPROACH SLAB SHOWN
END APPROACH SLAB SIMILAR

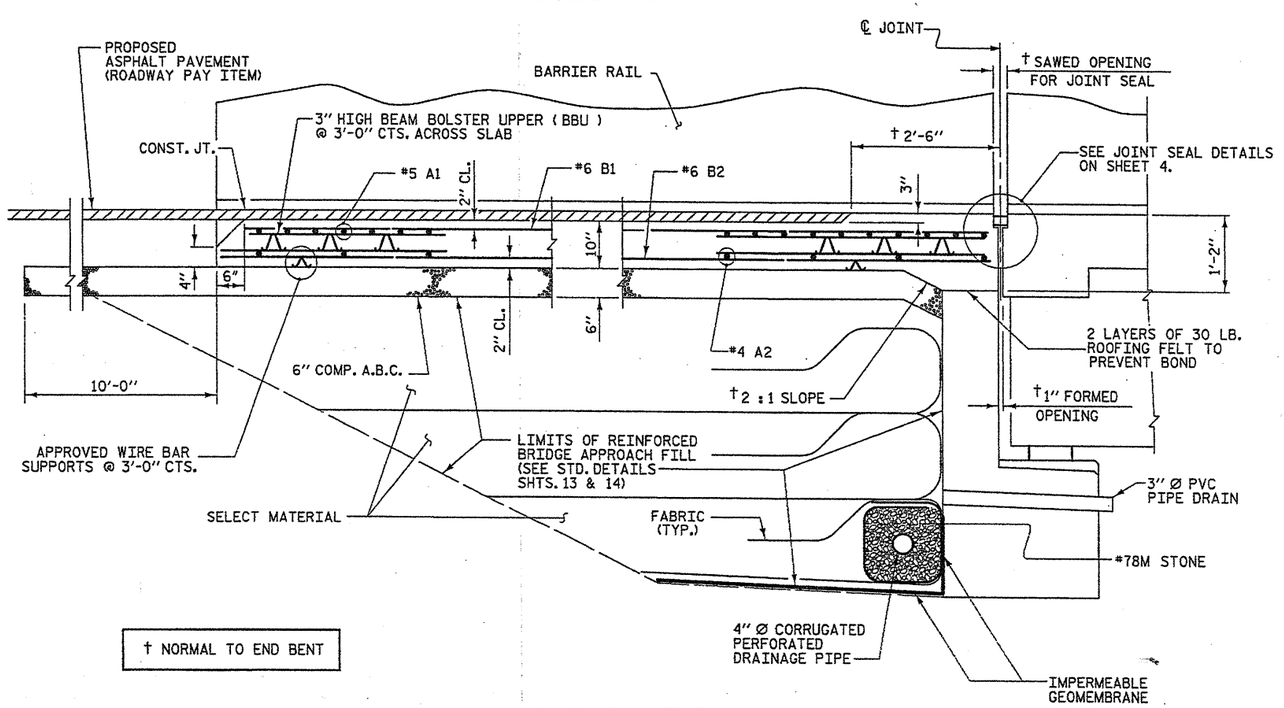

SECTION THRU SLAB

NOTES

THE COST OF THE BARRIER RAIL ON THE APPROACH SLAB SHALL BE INCLUDED IN THE LUMP SUM CONTRACT PRICE BID FOR BRIDGE APPROACH SLABS.

APPROACH SLAB SHALL NOT BE CONSTRUCTED PRIOR TO COMPLETION OF THE BRIDGE DECK.

FOR REINFORCED BRIDGE APPROACH FILL INCLUDING FABRIC, IMPERMEABLE GEOMEMBRANE, 4" Ø DRAINAGE PIPE, #78M STONE, AND SELECT MATERIAL, SEE STD. DETAILS, SHEETS 13 & 14.

TEMPORARY DRAINAGE AND TEMPORARY BERM AND SLOPE DRAINS WILL BE PAID FOR UNDER THE LUMP SUM PRICE FOR BRIDGE APPROACH SLAB.

AREA BETWEEN THE WINGWALL AND APPROACH SLAB SHALL BE GRADED TO DRAIN THE WATER AWAY FROM THE FILL FACE OF THE BRIDGE AND SHALL BE PAVED. SEE ROADWAY PLANS.

THE 6" COMP. A.B.C. SHALL EXTEND 10'-0" BEYOND THE END OF THE APPROACH SLAB AND 1'-0" OUTSIDE OF EACH EDGE OF SLAB.

THE CONTRACTOR MAY USE 4" TYPE B-25.0B ASPHALT CONCRETE BASE COURSE IN LIEU OF 6" COMP. A.B.C. IF THIS OPTION IS USED, THE BASE COURSE SHALL EXTEND 1'-0" BEYOND THE END OF THE APPROACH SLAB AND THE WIDTH SHALL BE THE SAME AS THAT OF THE APPROACH SLAB.

THE CONTRACTOR MAY USE 5" CLASS "A" CONCRETE BASE IN LIEU OF 6" COMP. A.B.C. IF THIS OPTION IS USED, THE CONCRETE BASE SHALL EXTEND 1'-0" BEYOND THE END OF THE APPROACH SLAB AND THE WIDTH SHALL BE THE SAME AS THAT OF THE APPROACH SLAB. THE CONCRETE SHALL BE FINISHED TO A SMOOTH SURFACE AND A LAYER OF 30 LB ROOFING FELT SHALL BE PLACED BETWEEN THE CONCRETE BASE AND THE APPROACH SLAB TO PREVENT BOND. THE APPROACH SLAB SHALL NOT BE CAST UNTIL THE CONCRETE BASE HAS REACHED AN AGE OF THREE CURING DAYS.

THE JOINT SHALL BE SAWED PRIOR TO THE CASTING OF THE BARRIER RAIL.

APPROACH SLAB GROOVING IS NOT REQUIRED. TINE CONCRETE ONLY WITHIN THE LIMITS OF THE ASPHALT PAVEMENT AND IN ACCORDANCE WITH ARTICLE 422-3 OF THE STANDARD SPECIFICATIONS.

WITH EVAZOTE JOINT SEAL

FOR EVAZOTE JOINT SEALS, SEE SPECIAL PROVISIONS.

THE NOMINAL UNCOMPRESSED SEAL WIDTH OF THE EVAZOTE JOINT SEAL SHALL BE 2 ½".

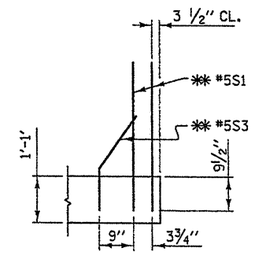

SECTION K-K
** ADHESIVELY ANCHORED

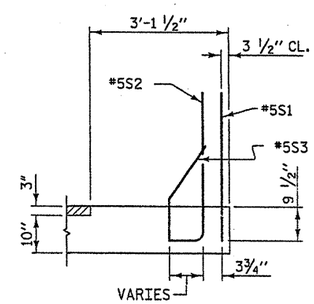

SECTION L-L

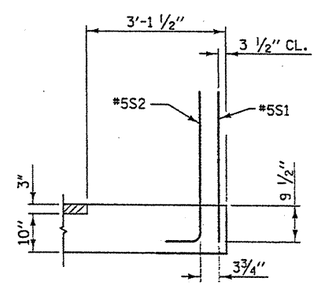

SECTION M-M

BILL OF MATERIAL
FOR ONE APPROACH SLAB (2 REQ'D)

BAR	NO.	SIZE	TYPE	LENGTH	WEIGHT
* A1	23	#5	STR	29'-11"	718
A2	9	#4	STR	29'-11"	180
* B1	60	#6	STR	11'-4"	1021
B2	60	#6	STR	11'-8"	1051
* B3	14	#5	STR	11'-8"	170
* B4	2	#5	3	6'-5"	13
* S1	56	#5	STR	3'-3"	190
* S2	40	#5	1	4'-1"	170
* S3	20	#5	2	2'-3"	47

REINFORCING STEEL	LBS.	1231
* EPOXY COATED REINFORCING STEEL	LBS.	2329

CLASS AA CONCRETE BREAKDOWN

POUR 1 SLAB	C. Y.	11.9
POUR 2 RAIL	C. Y.	2.1
CLASS AA CONCRETE	C. Y.	14.0

BAR TYPES

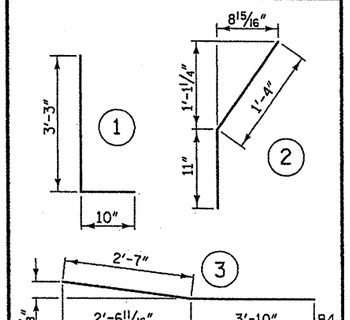

ALL BAR DIMENSIONS ARE OUT TO OUT

PROJECT NO. 33268.1.1
BUNCOMBE COUNTY
STATION: 2+06.37 -LREV-

REPLACES BRIDGE NO. 249 SHEET 1 OF 2

STATE OF NORTH CAROLINA
DEPARTMENT OF TRANSPORTATION
RALEIGH

APPROACH SLAB

27' CLEAR ROADWAY - 90° SKEW

NORTH CAROLINA PROFESSIONAL SEAL 19661 ENGINEER KEVIN AUSTIN 1/7/05

PLANS PREPARED BY:
MULKEY ENGINEERS & CONSULTANTS
PO Box 33127
Raleigh, N.C. 27636
(919) 851-1912
(919) 851-1918 (FAX)
WWW.MULKEYINC.COM

REVISIONS							SHEET NO.
NO.	BY:	DATE:	NO.	BY:	DATE:		11
1			3				TOTAL SHEETS
2			4				27

DRAWN BY : J. P. SHERMAN DATE : 5/04
CHECKED BY : R. C. LARSON DATE : 9/04

10/5/2007 4:41:32 PM G:\project\2002\230.02\B-3833\Structures\Bridge#249\B3833-249_S0_AS.dgn

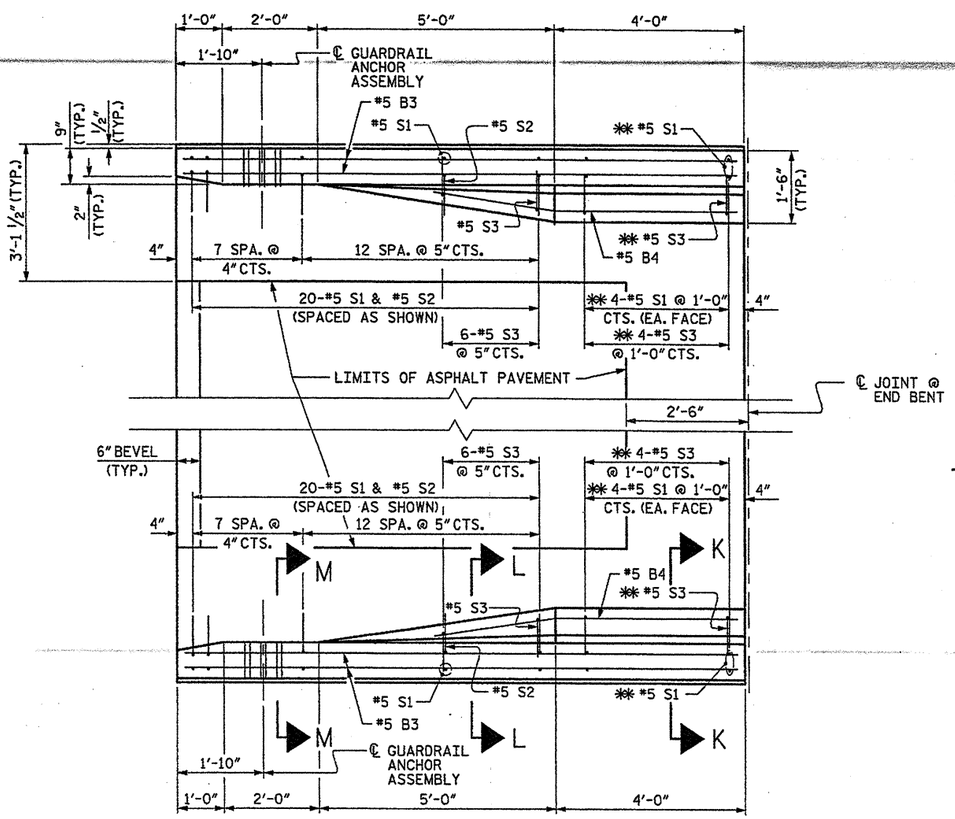

PLAN

BEGIN APPROACH SLAB SHOWN, END APPROACH SLAB SIMILAR

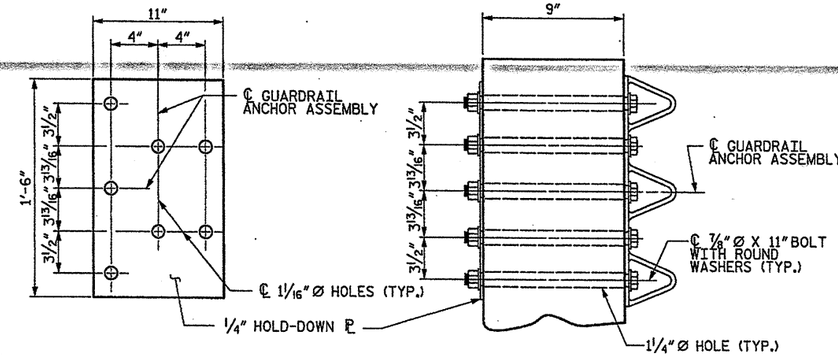

PLAN

SECTION E-E

GUARDRAIL ANCHOR ASSEMBLY DETAILS

NOTES

THE GUARDRAIL ANCHOR ASSEMBLY SHALL CONSIST OF A ¼" HOLD DOWN PLATE AND 7 - ⅞" Ø BOLTS WITH NUTS AND WASHERS.

THE HOLD-DOWN PLATE SHALL CONFORM TO AASHTO M270 GRADE 36. AFTER FABRICATION, THE HOLD-DOWN PLATE SHALL BE HOT-DIP GALVANIZED IN ACCORDANCE WITH AASHTO M111.

BOLTS SHALL CONFORM TO THE REQUIREMENTS OF ASTM A307 AND NUTS SHALL CONFORM TO THE REQUIREMENTS OF AASHTO M291. BOLTS, NUTS AND WASHERS SHALL BE GALVANIZED. AT THE CONTRACTOR'S OPTION, STAINLESS STEEL BOLTS, NUTS AND WASHERS MAY BE USED AS AN ALTERNATE FOR THE ⅞" Ø GALVANIZED BOLTS, NUTS AND WASHERS. THEY SHALL CONFORM TO OR EXCEED THE MECHANICAL REQUIREMENTS OF ASTM A307. THE USE OF THIS ALTERNATE SHALL BE APPROVED BY THE ENGINEER.

AFTER INSTALLATION, THE EXPOSED THREAD OF THE BOLT SHALL BE BURRED WITH A SHARP POINTED TOOL.

THE COST OF THE GUARDRAIL ANCHOR ASSEMBLIES WITH BOLTS, NUTS AND WASHERS COMPLETE IN PLACE, SHALL BE INCLUDED IN THE LUMP SUM CONTRACT PRICE BID FOR BRIDGE APPROACH SLABS.

THE 1 ¼" Ø HOLES SHALL BE FORMED OR DRILLED WITH A CORE BIT. IMPACT TOOLS WILL NOT BE PERMITTED. ANY CONCRETE DAMAGED BY THIS WORK SHALL BE REPAIRED TO THE SATISFACTION OF THE ENGINEER.

THE #5 S1 AND #5 S3 BARS SHALL BE INSTALLED, WHERE NOTED ON THE PLANS, USING AN ADHESIVE ANCHORING SYSTEM AFTER SAWING THE JOINT. FOR ADHESIVELY ANCHORED ANCHOR BOLTS OR DOWELS, SEE SPECIAL PROVISIONS. THE YIELD LOAD FOR THE #5 S1 AND #5 S3 BARS IS 18.6 KIPS. FIELD TESTING FOR THE ADHESIVE BONDING SYSTEM IS NOT REQUIRED.

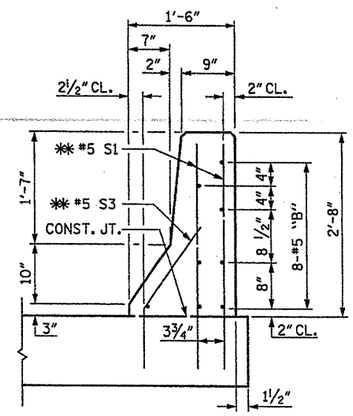

SECTION K-K

✱✱ ADHESIVELY ANCHORED

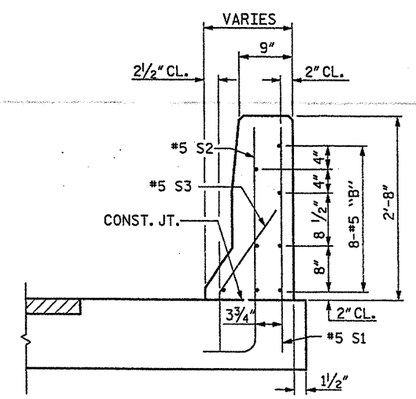

SECTION L-L

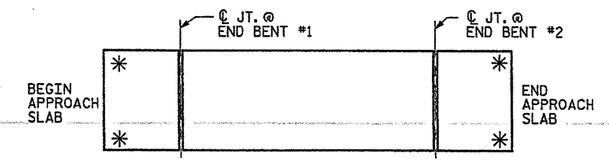

SKETCH SHOWING POINTS OF ATTACHMENT

✱ INDICATES POINTS OF ATTACHMENT

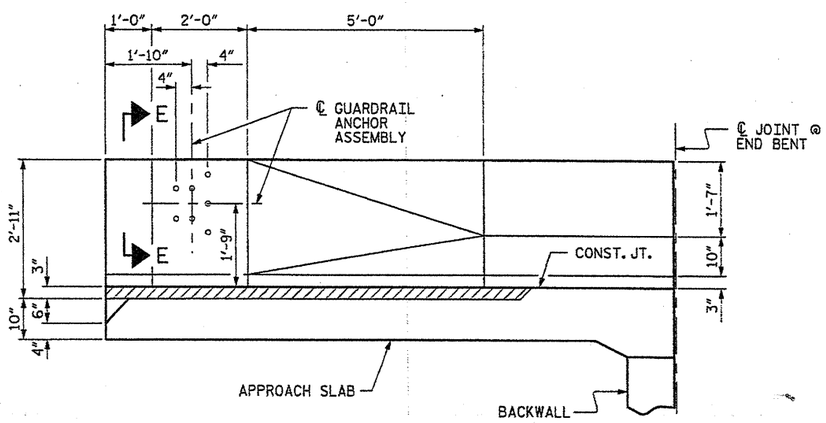

ELEVATION

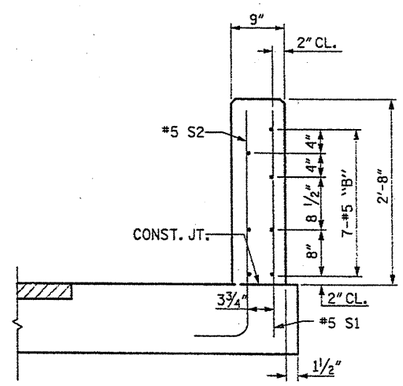

SECTION M-M

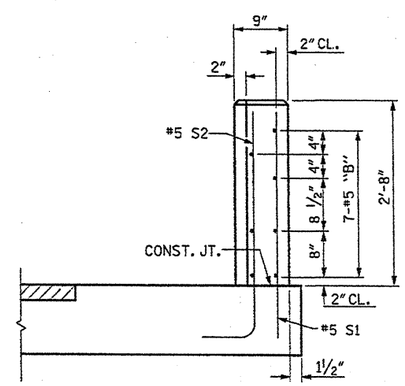

END VIEW

PROJECT NO. 33268.1.1

BUNCOMBE COUNTY

STATION: 2+06.37 -LREV-

REPLACES BRIDGE NO. 249

STATE OF NORTH CAROLINA
DEPARTMENT OF TRANSPORTATION
RALEIGH

BRIDGE APPROACH SLAB DETAILS FOR FLEXIBLE PAVEMENT WITH BARRIER RAIL

27' CLEAR ROADWAY - 90° SKEW

NORTH CAROLINA PROFESSIONAL SEAL 19661 ENGINEER KEVIN AUSTIN 1/7/09

PLANS PREPARED BY:
MULKEY ENGINEERS & CONSULTANTS
PO BOX 33127 RALEIGH, N.C. 27636
(919) 851-1912
(919) 851-1918 (FAX)
WWW.MULKEYINC.COM

REVISIONS								SHEET NO.
NO.	BY:	DATE:	NO.	BY:	DATE:			12
1			3					TOTAL SHEETS
2			4					23

DRAWN BY : J. P. SHERMAN DATE : 5/04
CHECKED BY : R. C. LARSON DATE : 9/04

10/9/2007 4:32:02 PM G:\projects\2002\290.02\b-3813\structures\Bridge#249\B3813-249.SD.AS.02.dgn

PROJECT REFERENCE NO.	SHEET NO.
B-3813	13

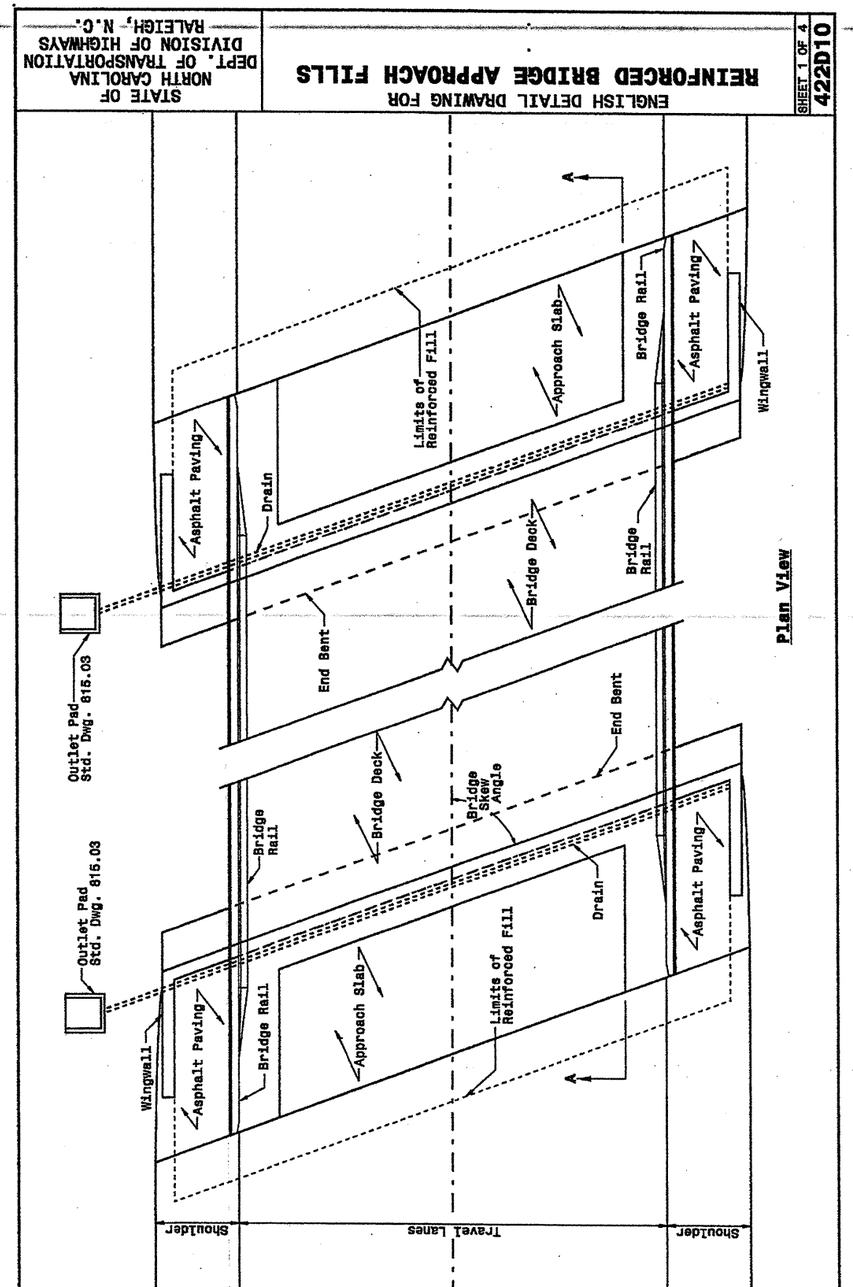

STATE OF NORTH CAROLINA DEPT. OF TRANSPORTATION DIVISION OF HIGHWAYS RALEIGH, N.C.

ENGLISH DETAIL DRAWING FOR
REINFORCED BRIDGE APPROACH FILLS

SHEET 1 OF 4 — 422D10

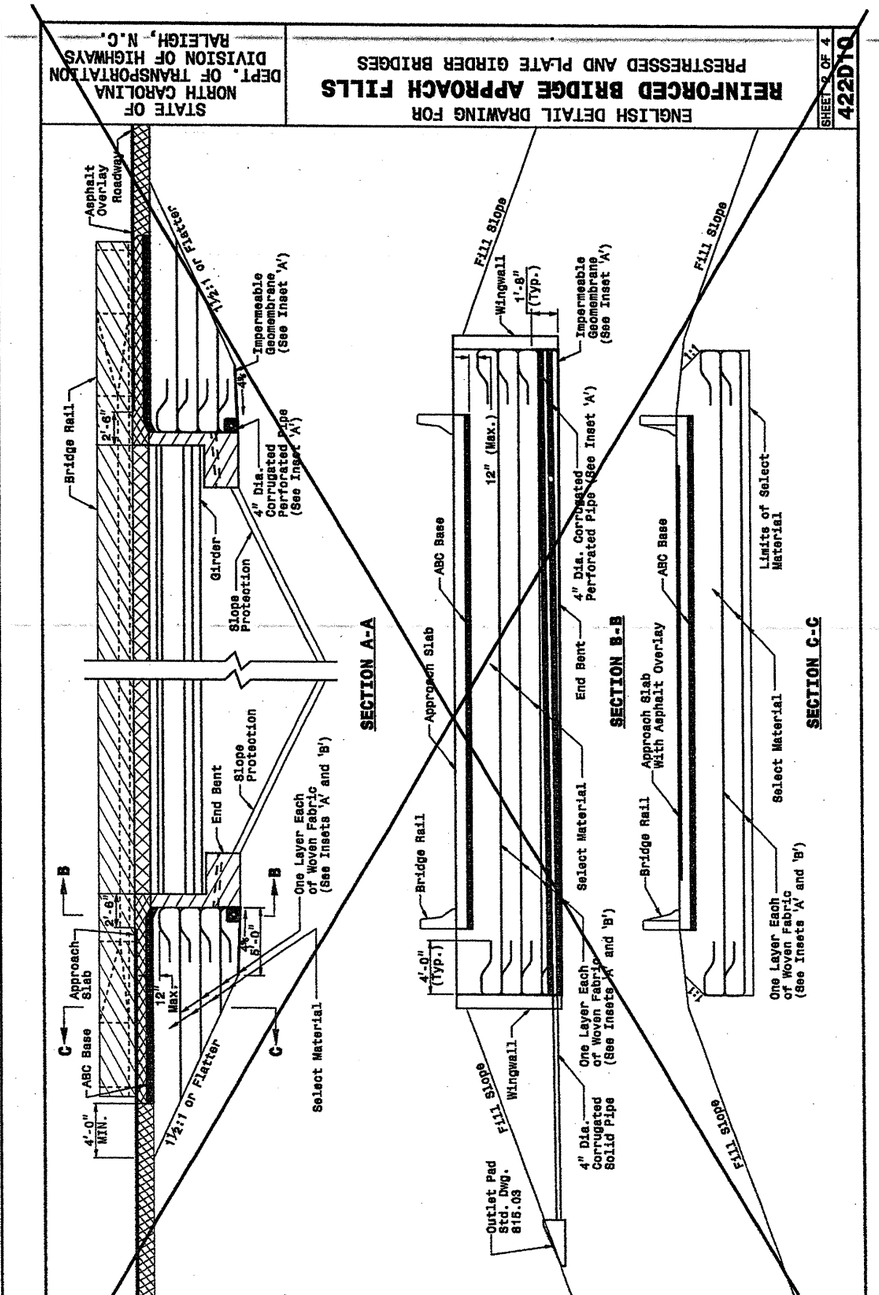

STATE OF NORTH CAROLINA DEPT. OF TRANSPORTATION DIVISION OF HIGHWAYS RALEIGH, N.C.

ENGLISH DETAIL DRAWING FOR
REINFORCED BRIDGE APPROACH FILLS
PRESTRESSED AND PLATE GIRDER BRIDGES

SHEET 2 OF 4 — 422D10

STATE OF NORTH CAROLINA DEPT. OF TRANSPORTATION DIVISION OF HIGHWAYS RALEIGH, N.C.

ENGLISH DETAIL DRAWING FOR
REINFORCED BRIDGE APPROACH FILLS

SHEET 1 OF 4 — 422D10

STATE OF NORTH CAROLINA DEPT. OF TRANSPORTATION DIVISION OF HIGHWAYS RALEIGH, N.C.

ENGLISH DETAIL DRAWING FOR
REINFORCED BRIDGE APPROACH FILLS
PRESTRESSED AND PLATE GIRDER BRIDGES

SHEET 2 OF 4 — 422D10

DESIGN SERVICES UNIT
STANDARDS AND SPECIAL DESIGN
Office 919-250-4128 FAX 919-250-4119

SEE PLATE FOR TITLE

ORIGINAL BY: 2002 STANDARDS DATE: 01-15-02
MODIFIED BY: E.E. WARD DATE: 03-26-03
CHECKED BY: DATE:
FILE SPEC.: stds/02stdstodetails/english/422d10.dgn

5/14/99

04-APR-2003 09:11
W:\Special Details\engineerword\stds\02' Stds to Special Details\english\422d10\0422d10.dgn
.eriowerd AT DS1B8660

04-APR-2003 09:11
W:\Special Details\ericward\stds\02' Stds to Special Details\english\42210\0422d10.dgn
ericward AT DS188660

5/14/99

STATE OF NORTH CAROLINA
DEPT. OF TRANSPORTATION
DIVISION OF HIGHWAYS
RALEIGH, N.C.

ENGLISH DETAIL DRAWING FOR
REINFORCED BRIDGE APPROACH FILLS
CORED SLAB BRIDGES

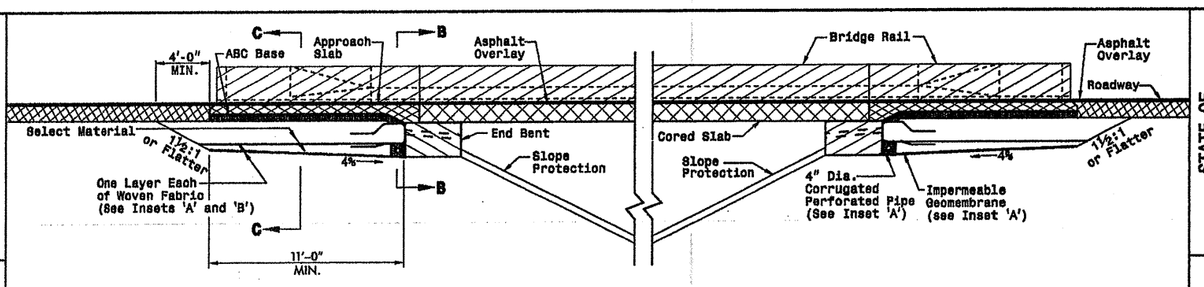

SECTION A-A

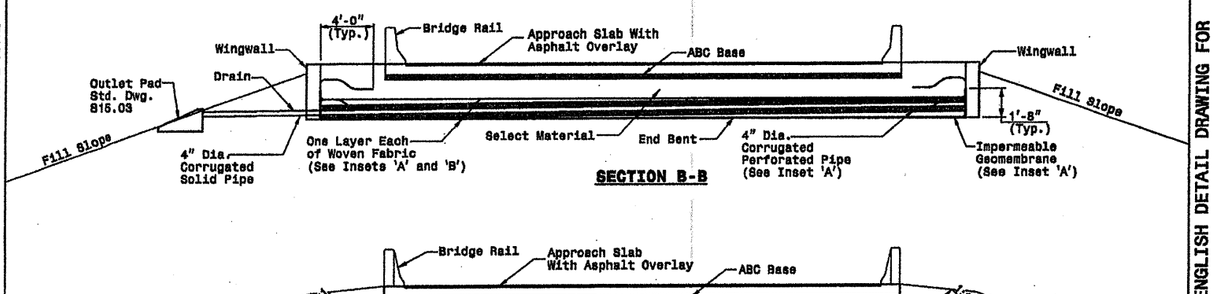

SECTION B-B

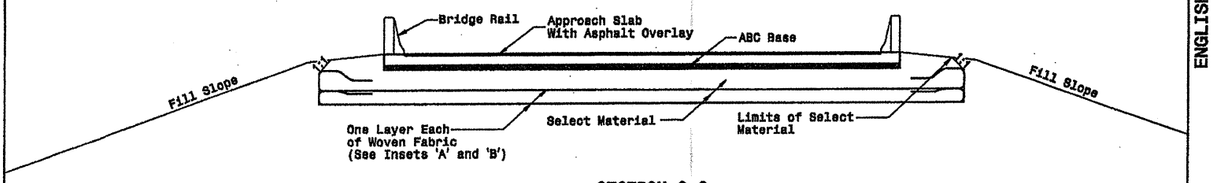

SECTION C-C

SHEET 3 OF 4
422D10

STATE OF NORTH CAROLINA
DEPT. OF TRANSPORTATION
DIVISION OF HIGHWAYS
RALEIGH, N.C.

ENGLISH DETAIL DRAWING FOR
REINFORCED BRIDGE APPROACH FILLS
INSETS AND CHARTS

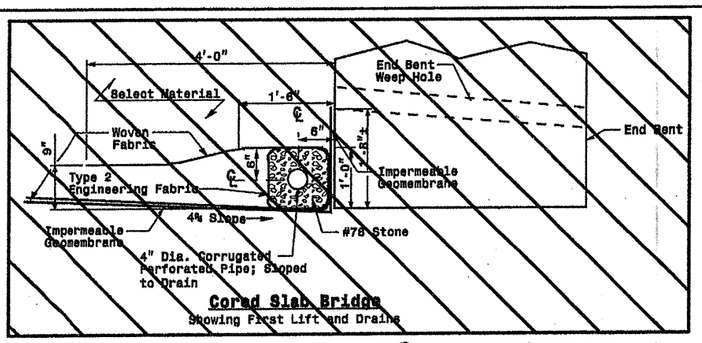

Cored Slab Bridge
Showing First Lift and Drains

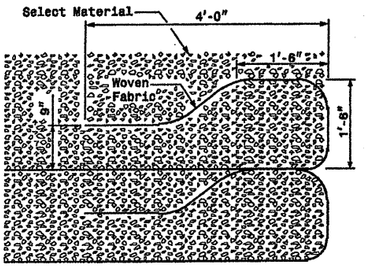

Typical Fabric Lift and Wrap
Showing Second and Above Lifts

Inset 'B'

Height of Backwall	Number of Fabric Layers
4'-6" - 5'-9"	3
5'-10" - 7'-2"	4
7'-3" - 8'-8"	5
8'-9" - 10'-1"	6
10'-2" - 11'-8"	7

Note: Cored Slab Structures Require 2 Fabric Layers.

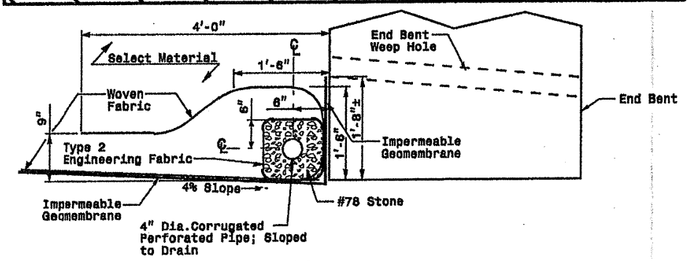

Girder Bridge
Showing First Lift and Drains

Inset 'A'

Length of Bridge End Bent Inside Wingwalls
If Bridge Skew is Less Than or Equal to 90°: $\frac{\text{(Roadway Width + 7'-0")}}{\text{Sin (Bridge Skew Angle)}}$ = Dis. Between Wingwalls
If Bridge Skew is Greater Than 90°: $\frac{\text{(Roadway Width + 7'-0")}}{\text{Cos (Bridge Skew Angle - 90°)}}$ = Dis. Between Wingwalls

SHEET 4 OF 4
422D10

STATE OF NORTH CAROLINA
DEPT. OF TRANSPORTATION
DIVISION OF HIGHWAYS
RALEIGH, N.C.

ENGLISH DETAIL DRAWING FOR
REINFORCED BRIDGE APPROACH FILLS
INSETS AND CHARTS

SHEET 4 OF 4
422D10

DESIGN SERVICES UNIT
STANDARDS AND SPECIAL DESIGN
Office 919-250-4128 FAX 919-250-4119

SEE PLATE FOR TITLE

ORIGINAL BY: 2002 STANDARDS DATE: 01-15-02
MODIFIED BY: E.E. WARD DATE: 03-28-03
CHECKED BY: DATE:
FILE SPEC.: sdsd/0ericdrtdrdetails/english/422d10.dgn

PROJECT REFERENCE NO. B-3813
SHEET NO. 14

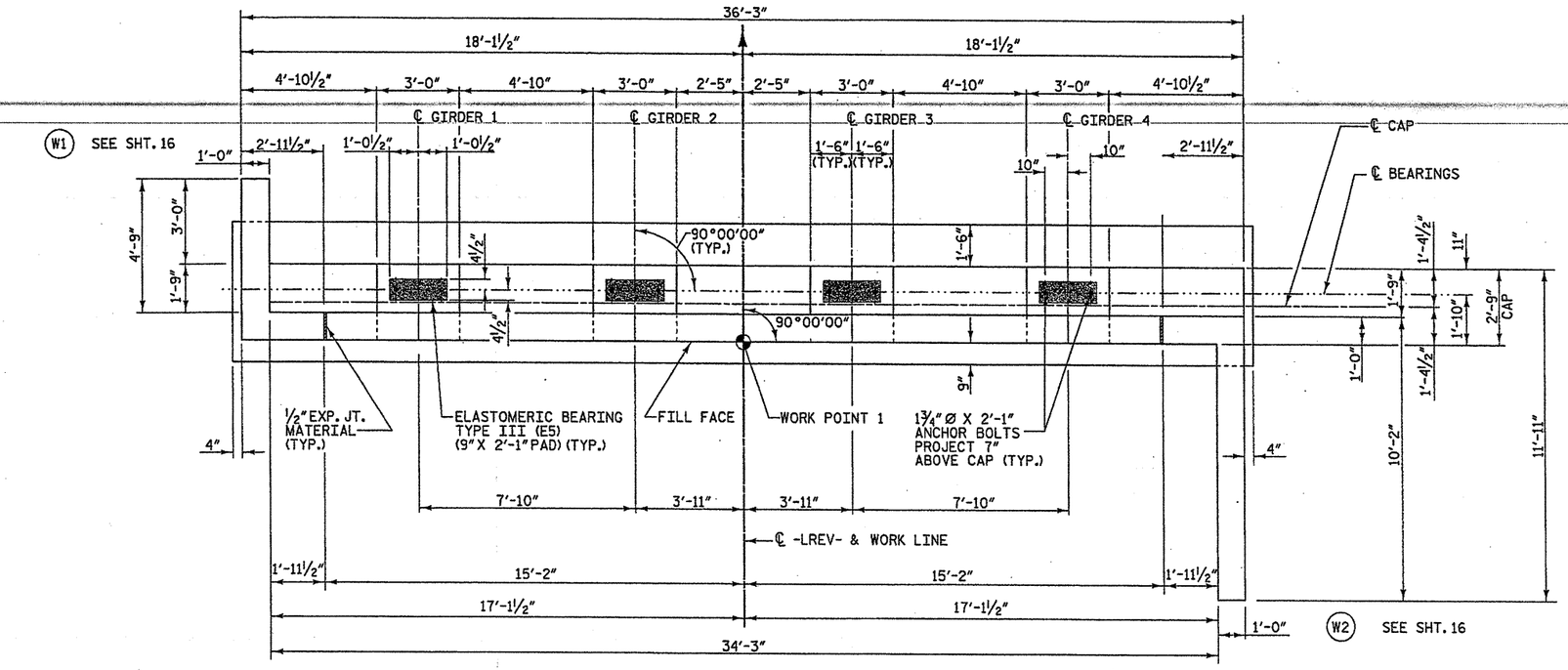

PLAN

NOTES:

STIRRUPS IN CAP MAY BE SHIFTED AS NECESSARY TO CLEAR ANCHOR BOLTS.

FOR PIPE DRAIN DETAILS, SEE END BENT 1, SHT.17

FOR EPOXY PROTECTIVE COATING, SEE SPECIAL PROVISIONS.

PIPE DRAINS MAY BE SHIFTED SLIGHTLY AS NECESSARY TO CLEAR REINFORCING STEEL AND ANCHOR BOLTS.

BACKWALL SHALL BE PLACED BEFORE APPLYING THE EPOXY PROTECTIVE COATING.

THE TOP SURFACE AREA OF THE END BENT CAP SHALL BE CURED IN ACCORDANCE WITH THE STANDARD SPECIFICATIONS EXCEPT THAT THE MEMBRANE CURING COMPOUND METHOD SHALL NOT BE USED.

NOTE:

THE TOP SURFACE OF THE CAP EXCEPT THE BRIDGE SEAT BUILDUPS SHALL BE SLOPED TRANSVERSELY FROM THE FILL FACE TO THE BACK FACE AT THE RATE OF 2%. ELEVATIONS BETWEEN BRIDGE SEAT BUILDUPS ARE SHOWN AT THE NOTED THUS ✱ IN THE SKETCH BELOW

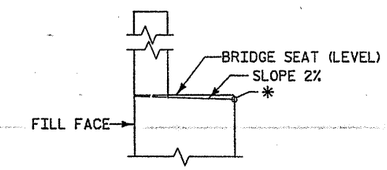

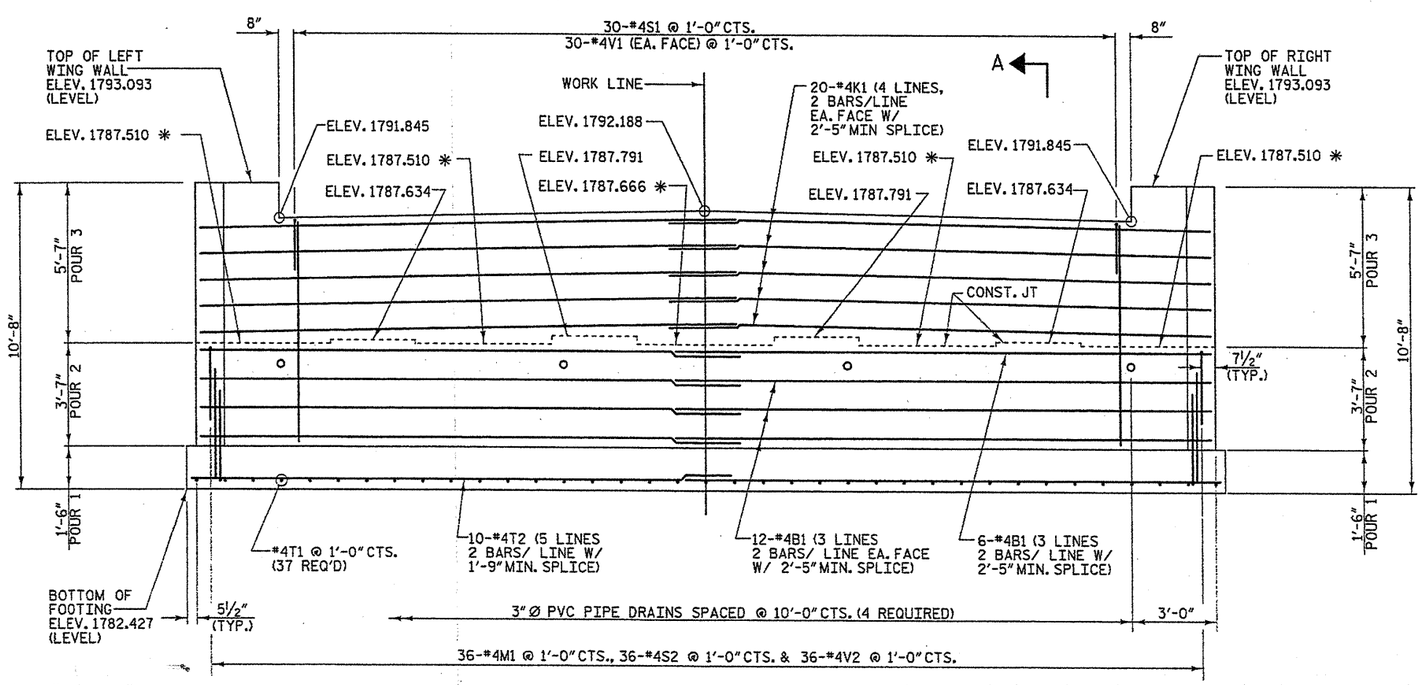

ELEVATION

DRAWN BY :	J. P. SHERMAN	DATE :	5/04
CHECKED BY :	R. C. LARSON	DATE :	9/04

PROJECT NO. 33268.1.1

BUNCOMBE COUNTY

STATION: 2+06.37 -LREV-

REPLACES BRIDGE NO. 249 SHEET 1 OF 3

STATE OF NORTH CAROLINA
DEPARTMENT OF TRANSPORTATION
RALEIGH

SUBSTRUCTURE END BENT 1

27' CLEAR ROADWAY - 90° SKEW

NORTH CAROLINA PROFESSIONAL SEAL 19661 ENGINEER KEVIN AUSTIN 1/7/09

PLANS PREPARED BY:
MULKEY ENGINEERS & CONSULTANTS
PO Box 33127 RALEIGH, N.C. 27636
(919) 851-1912
(919) 851-1918 (FAX)
WWW.MULKEYINC.COM

REVISIONS						SHEET NO.
NO.	BY:	DATE:	NO.	BY:	DATE:	15
1			3			TOTAL SHEETS
2			4			23

10/9/2007 4:35:29 PM G:\projects\2002\290.02\B-3883\Structures\Bridge#249\B3883-249_SD_EB_01.dgn

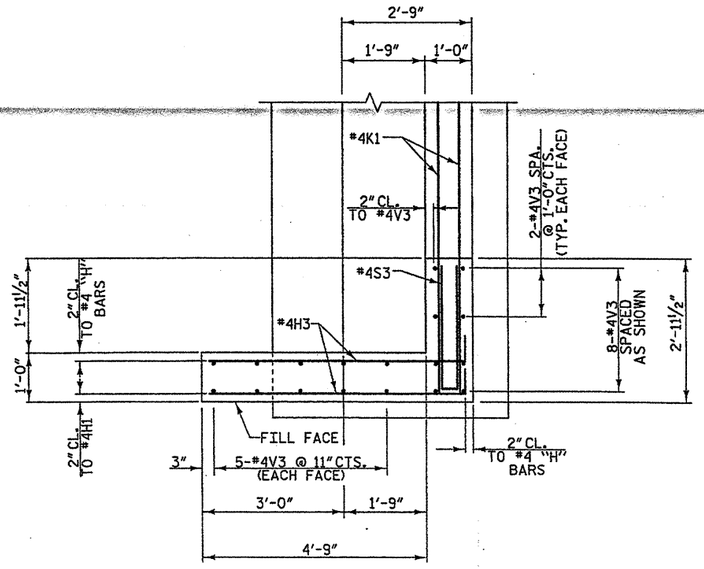

W1 PLAN OF LEFT WING

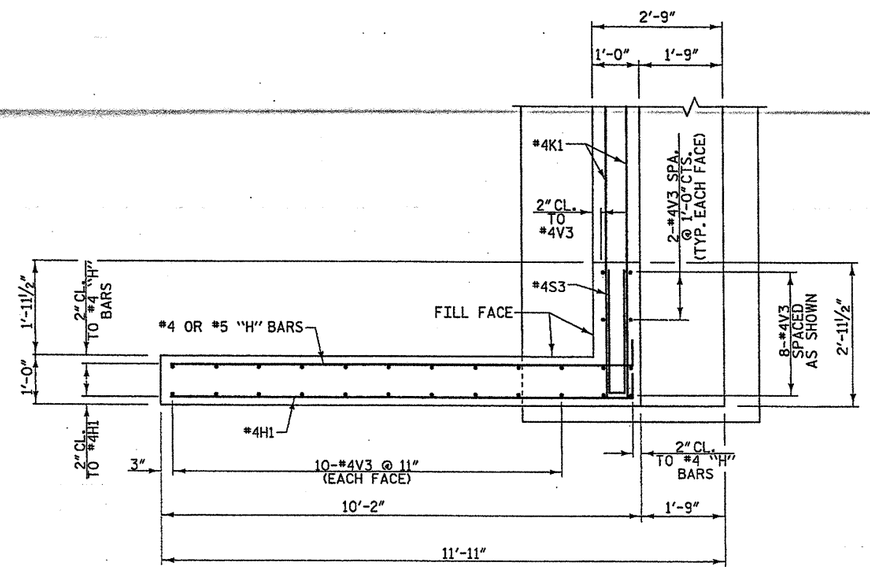

W2 PLAN OF RIGHT WING

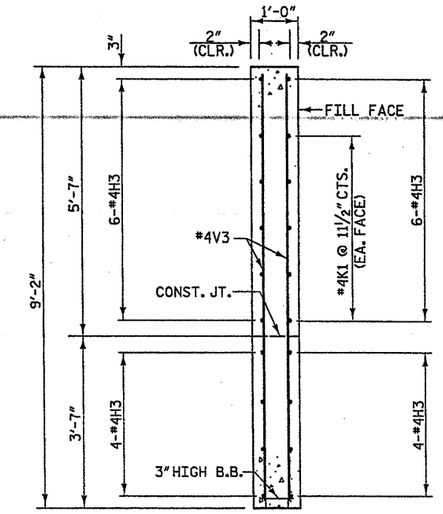

SECTION W-W

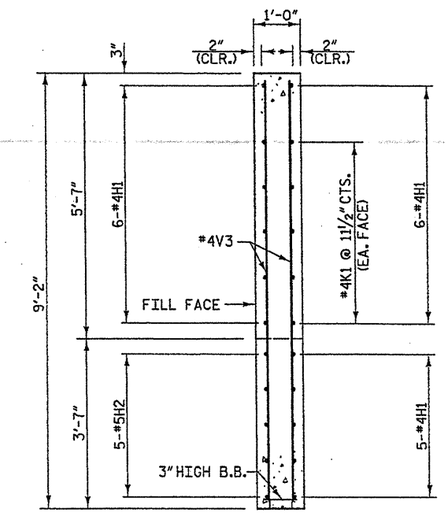

SECTION X-X

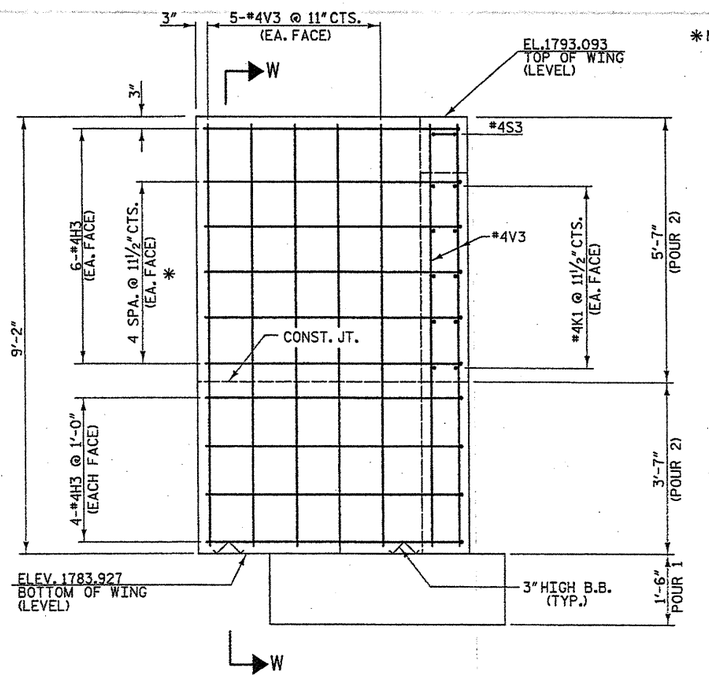

W1 ELEVATION OF LEFT WING

* MATCH "H" BARS TO "K" BARS IN BACKWALL AS SHOWN

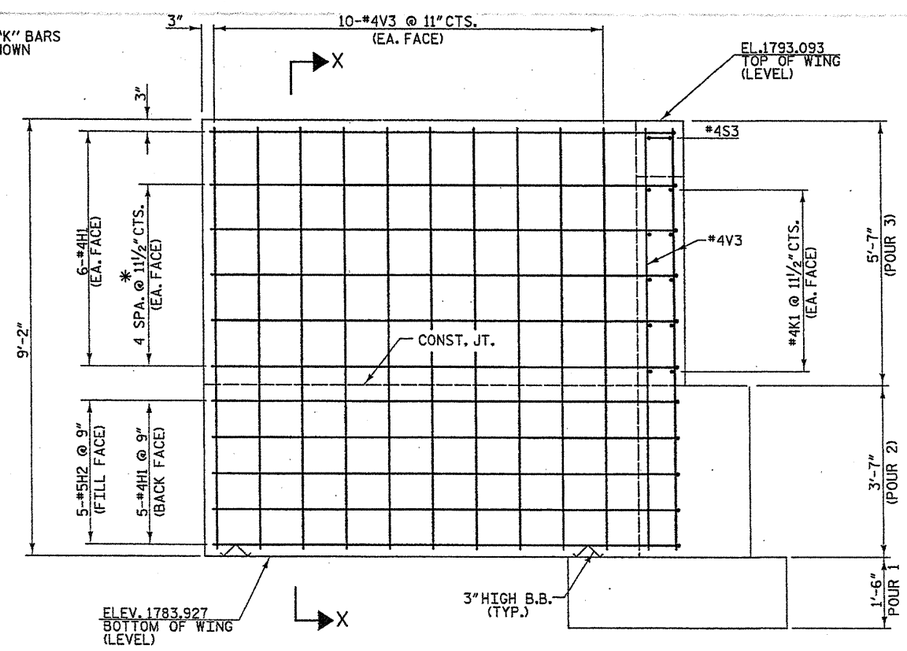

W2 ELEVATION OF RIGHT WING

PROJECT NO. 33268.1.1

BUNCOMBE COUNTY

STATION: 2+06.37 -LREV-

REPLACES BRIDGE NO. 249 SHEET 2 OF 3

STATE OF NORTH CAROLINA
DEPARTMENT OF TRANSPORTATION
RALEIGH

SUBSTRUCTURE END BENT 1

27' CLEAR ROADWAY - 90° SKEW

NORTH CAROLINA PROFESSIONAL SEAL 19661 ENGINEER L. KEVIN AUSTIN 1/7/08

PLANS PREPARED BY:
MULKEY ENGINEERS & CONSULTANTS
PO Box 33127 Raleigh, N.C. 27636
(919) 851-1912 (919) 851-1918 (FAX)
WWW.MULKEYINC.COM

REVISIONS						SHEET NO.
NO.	BY:	DATE:	NO.	BY:	DATE:	16
1			3			TOTAL SHEETS
2			4			23

DRAWN BY :	J. P. SHERMAN	DATE :	5/04
CHECKED BY :	R. C. LARSON	DATE :	9/04

10/9/2007 4:35:52 PM G:\proj\2002\290.02\B-3813\Structures\Bridge#249\B3813-249-SD-EL-02.dgn

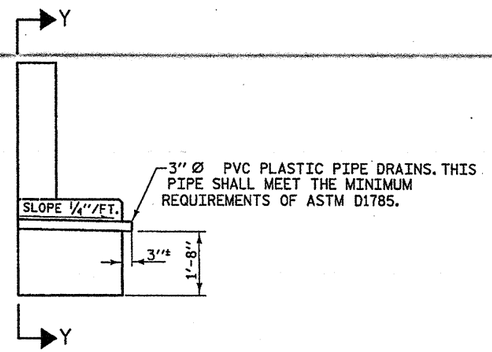

SUBDRAIN DETAIL AT END BENT

**NORMAL TO END BENT

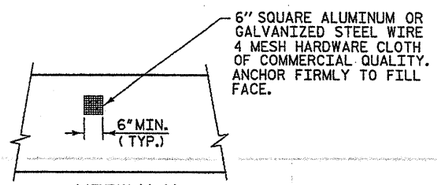

VIEW Y-Y

NOTE: NO SEPARATE PAYMENT WILL BE MADE FOR FURNISHING AND INSTALLING THE PVC PLASTIC PIPE DRAINS, HARDWARE CLOTH AND FASTENERS. THE ENTIRE COST OF THIS WORK SHALL BE INCLUDED IN THE LUMP SUM BID PRICE FOR PLACEMENT OF SUBSTRUCTURE.

PIPE DRAIN DETAILS

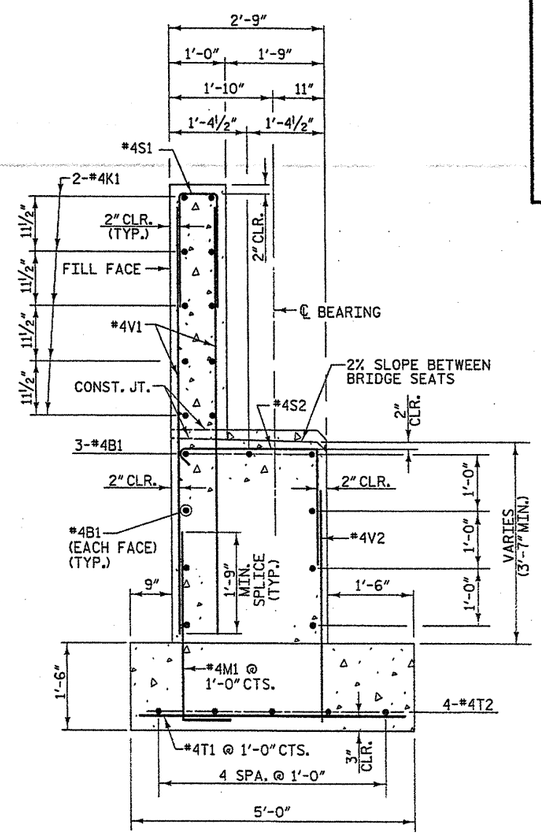

SECTION A-A

BAR TYPES

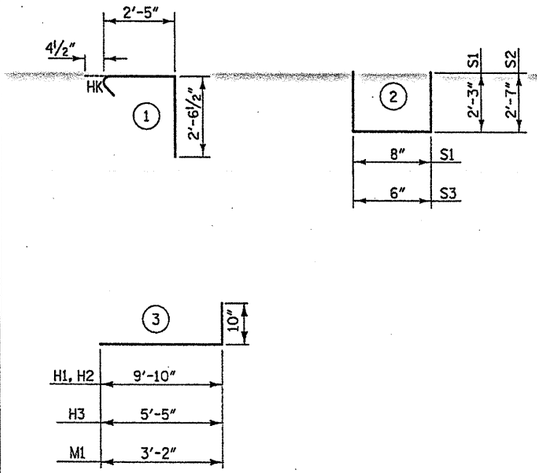

ALL BAR DIMENSIONS ARE OUT TO OUT

BILL OF MATERIAL

FOR END BENT 1

BAR	NO.	SIZE	TYPE	LENGTH	WEIGHT
B1	18	#4	STR	19'-2"	230
H1	17	#4	3	10'-8"	121
H2	5	#5	3	10'-8"	56
H3	20	#4	3	6'-3"	84
K1	20	#4	STR	19'-2"	256
M1	36	#4	3	4'-0"	96
S1	30	#4	2	5'-2"	104
S2	36	#4	1	5'-4"	128
S3	2	#4	2	5'-8"	8
T1	37	#4	STR	4'-8"	115
T2	10	#4	STR	19'-2"	128
V1	30	#4	STR	7'-7"	152
V2	36	#4	STR	4'-0"	96
V3	46	#4	STR	8'-10"	271

TOTAL REINFORCING STEEL =	1845 lbs.
CLASS "A" CONCRETE - CU. YARDS	
POUR 1	10.3 cu. yds.
POUR 2	15.3 cu. yds.
POUR 3	9.0 cu. yds.
TOTAL	34.6 cu. yds.

PROJECT NO. 33268.1.1

BUNCOMBE COUNTY

STATION: 2+06.37 -LREV-

REPLACES BRIDGE NO. 249 SHEET 3 OF 3

STATE OF NORTH CAROLINA
DEPARTMENT OF TRANSPORTATION
RALEIGH

SUBSTRUCTURE END BENT 1

27' CLEAR ROADWAY - 90° SKEW

NORTH CAROLINA PROFESSIONAL SEAL 19661 ENGINEER L. KEVIN AUSTIN 1/7/06

PLANS PREPARED BY:
MULKEY ENGINEERS & CONSULTANTS
PO Box 33127
Raleigh, N.C. 27636
(919) 851-1912
(919) 851-1918 (FAX)
WWW.MULKEYINC.COM

REVISIONS						SHEET NO.
NO.	BY:	DATE:	NO.	BY:	DATE:	17
1			3			TOTAL SHEETS
2			4			23

DRAWN BY :	J. P. SHERMAN	DATE :	5/04
CHECKED BY :	R. C. LARSON	DATE :	8/04

10/9/2007 4:36:21 PM G:\project\2002\290.02\B-3813\Structures\Bridge*249\B3813-249_SD_EL03.dgn

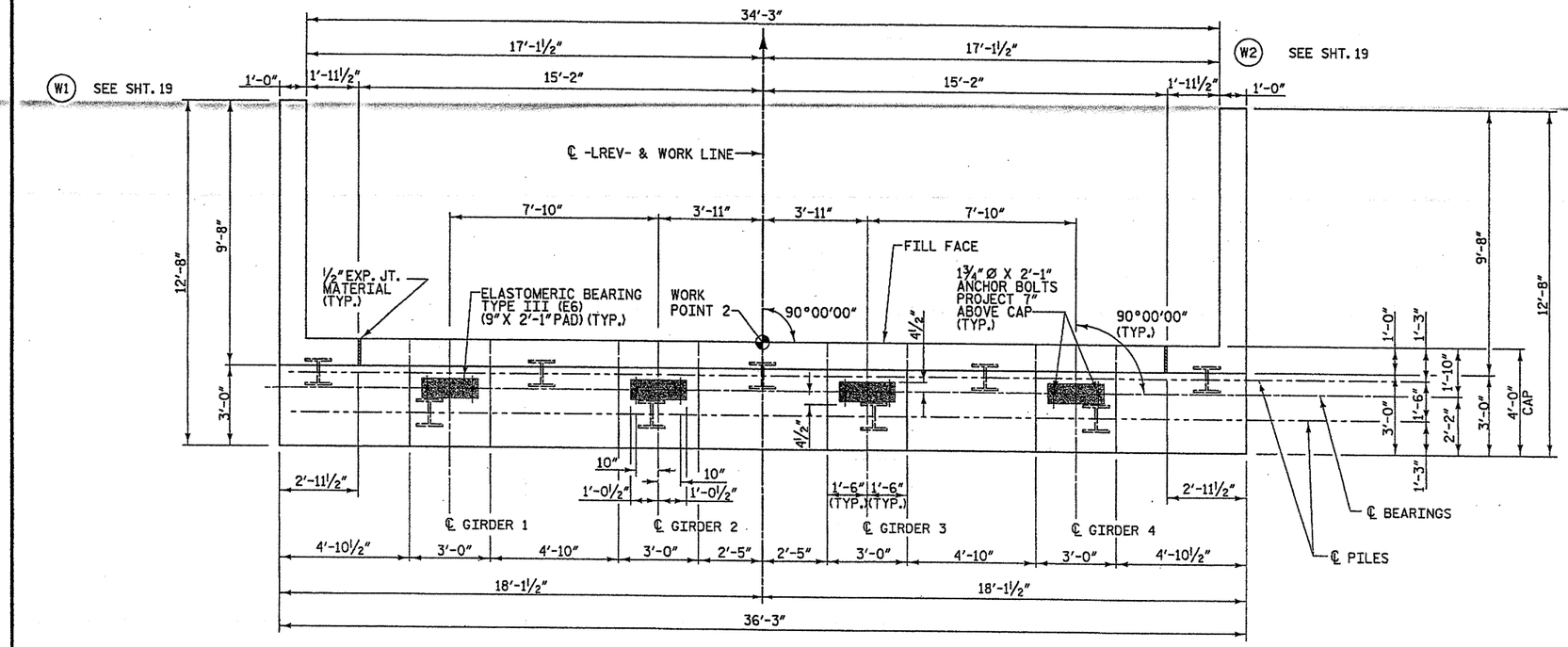

PLAN

NOTES:

STIRRUPS IN CAP MAY BE SHIFTED AS NECESSARY TO CLEAR ANCHOR BOLTS.

FOR PIPE DRAIN DETAILS, SEE END BENT 1, SHT. 17

FOR PILE SPLICE DETAILS, SEE END BENT 2, SHT. 20

FOR EPOXY PROTECTIVE COATING, SEE SPECIAL PROVISIONS.

PIPE DRAINS MAY BE SHIFTED SLIGHTLY AS NECESSARY TO CLEAR REINFORCING STEEL AND ANCHOR BOLTS.

BACKWALL SHALL BE PLACED BEFORE APPLYING THE EPOXY PROTECTIVE COATING.

THE TOP SURFACE AREA OF THE END BENT CAP SHALL BE CURED IN ACCORDANCE WITH THE STANDARD SPECIFICATIONS EXCEPT THAT THE MEMBRANE CURING COMPOUND METHOD SHALL NOT BE USED.

NOTE:

THE TOP SURFACE OF THE CAP EXCEPT THE BRIDGE SEAT BUILDUPS SHALL BE SLOPED TRANSVERSELY FROM THE FILL FACE TO THE BACK FACE AT THE RATE OF 2%. ELEVATIONS BETWEEN BRIDGE SEAT BUILDUPS ARE SHOWN AT THE LOCATION NOTED THUS * IN THE SKETCH BELOW

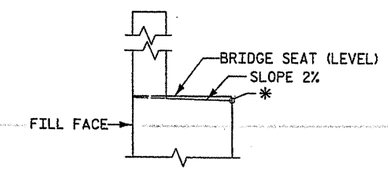

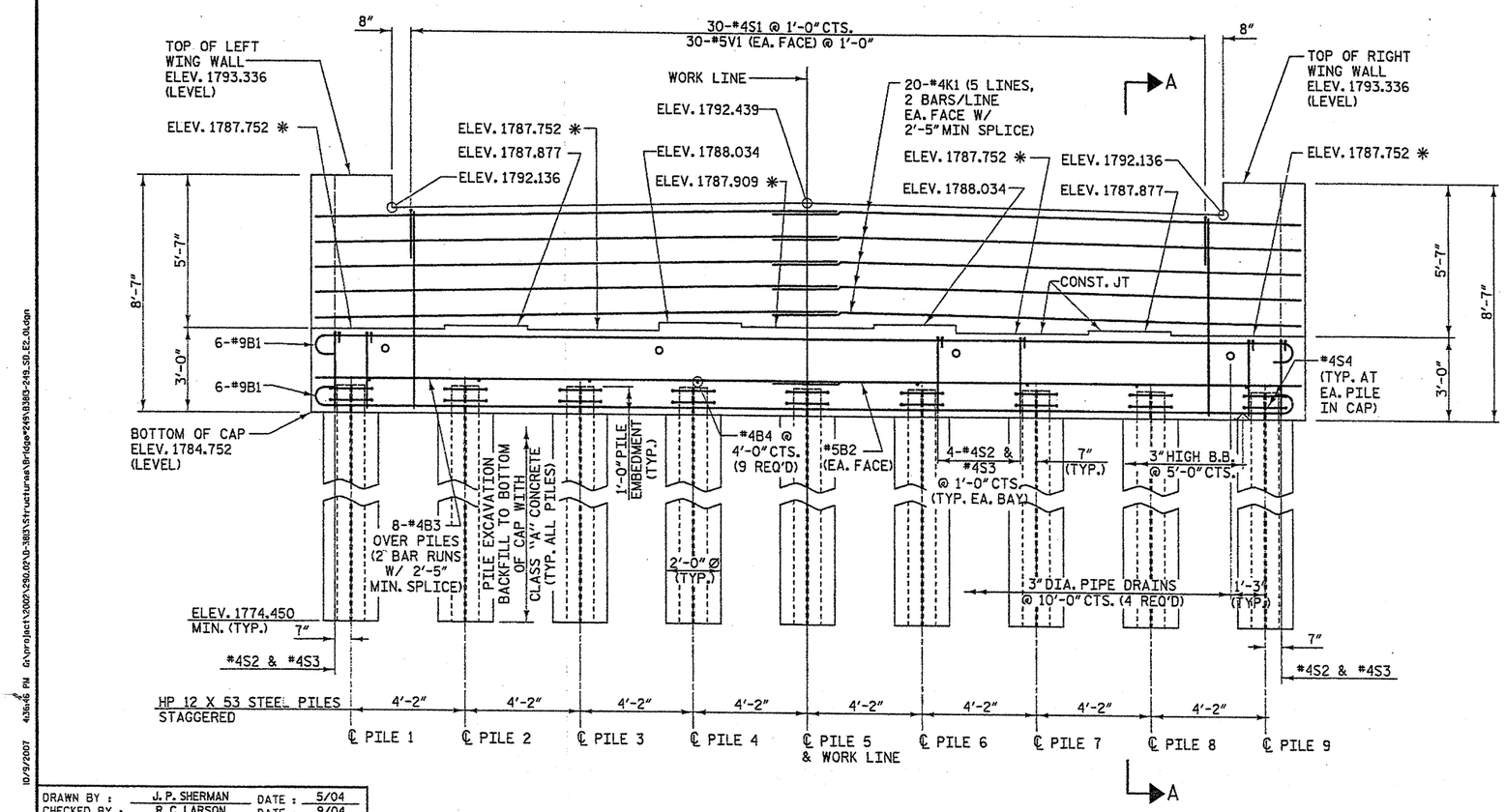

PROJECT NO. 33268.1.1

BUNCOMBE COUNTY

STATION: 2+06.37 -LREV-

REPLACES BRIDGE NO. 249 SHEET 1 OF 3

STATE OF NORTH CAROLINA
DEPARTMENT OF TRANSPORTATION
RALEIGH

SUBSTRUCTURE END BENT 2

27' CLEAR ROADWAY - 90° SKEW

NORTH CAROLINA PROFESSIONAL ENGINEER SEAL 19661 KEVIN AUSTIN 1/7/09

PLANS PREPARED BY:
MULKEY ENGINEERS & CONSULTANTS
PO BOX 33127 RALEIGH, N.C. 27636
(919) 851-1912
(919) 851-1918 (FAX)
WWW.MULKEYINC.COM

REVISIONS								SHEET NO.
NO.	BY:	DATE:	NO.	BY:	DATE:			18
1			3					TOTAL SHEETS
2								

DRAWN BY : J. P. SHERMAN DATE : 5/04
CHECKED BY : R. C. LARSON DATE : 9/04

10/9/2007 4:35:46 PM G:\project\2002\290.02\D-3803\Structures\Bridge#249\B3803-249_SD_E2_0L.dgn

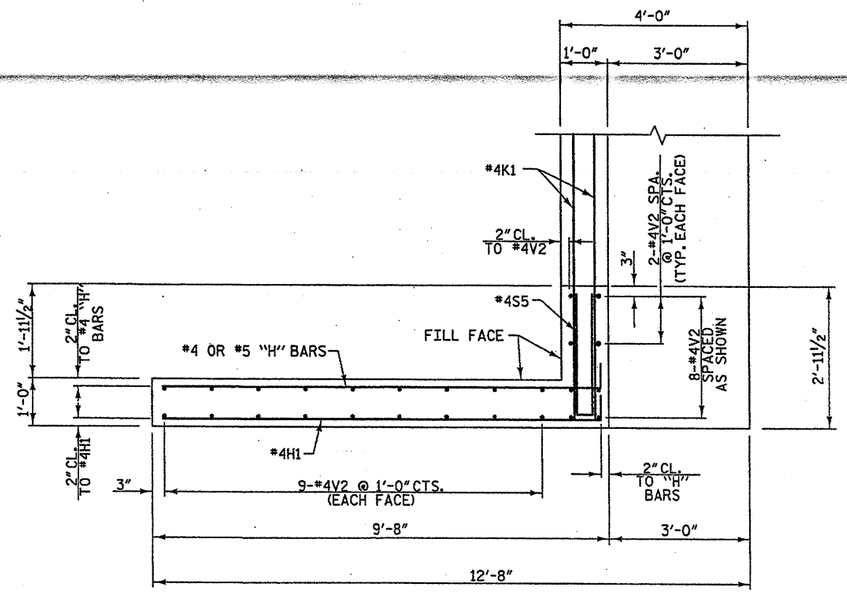

W1 PLAN OF LEFT WING

(RIGHT WING W2 SIMILAR)

* MATCH "H" BARS TO "K" BARS IN BACKWALL AS SHOWN

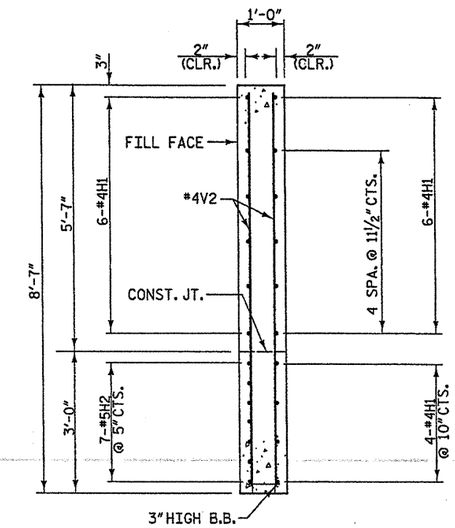

SECTION X-X

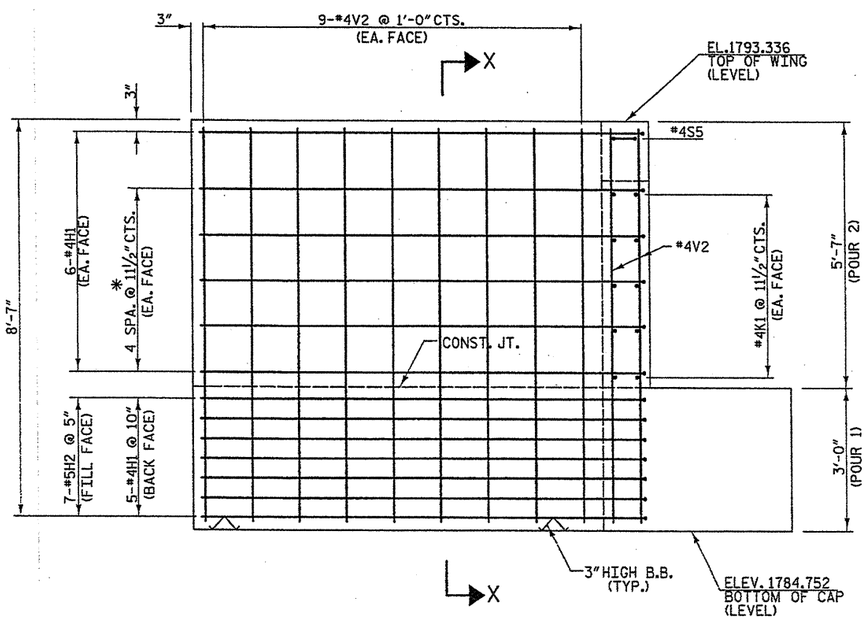

W1 ELEVATION OF LEFT WING

(RIGHT WING W2 SIMILAR)

PROJECT NO. 33268.1.1

BUNCOMBE COUNTY

STATION: 2+06.37 -LREV-

REPLACES BRIDGE NO. 249 SHEET 2 OF 3

STATE OF NORTH CAROLINA
DEPARTMENT OF TRANSPORTATION
RALEIGH

SUBSTRUCTURE END BENT 2

27' CLEAR ROADWAY - 90° SKEW

NORTH CAROLINA PROFESSIONAL SEAL 19661 ENGINEER L. KEVIN AUSTIN 1/7/08

PLANS PREPARED BY:

MULKEY ENGINEERS & CONSULTANTS
PO Box 33127
Raleigh, N.C. 27636
(919) 851-1912
(919) 851-1918 (FAX)
WWW.MULKEYINC.COM

REVISIONS							SHEET NO.
NO.	BY:	DATE:	NO.	BY:	DATE:		19
1			3				TOTAL SHEETS
2			4				23

DRAWN BY :	J. P. SHERMAN	DATE :	5/04
CHECKED BY :	R. C. LARSON	DATE :	9/04

10/31/2007 4:37:13 PM G:\project\2002\290.02\B-3813\Structures\Br-1dga*249\B3813-249_S0_E2_02.dgn

BAR TYPES

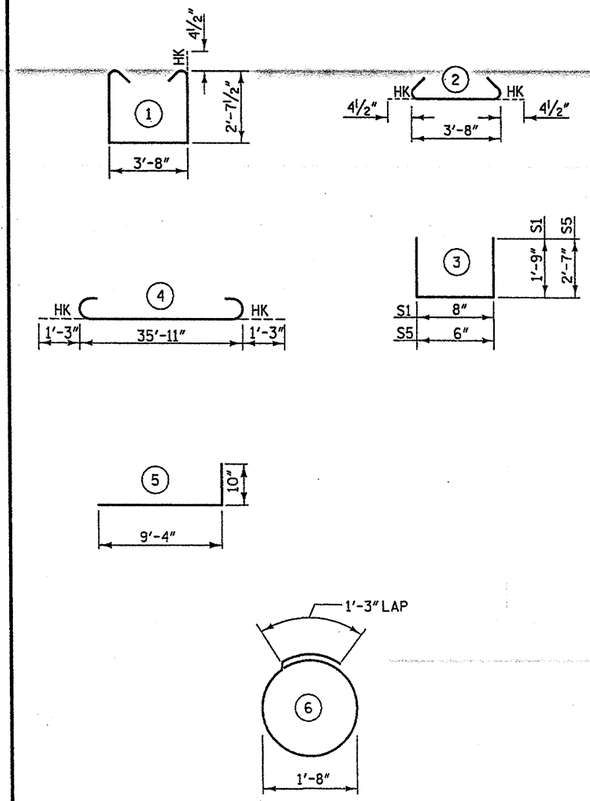

ALL BAR DIMENSIONS ARE OUT TO OUT

BILL OF MATERIAL

FOR END BENT 2

BAR	NO.	SIZE	TYPE	LENGTH	WEIGHT
B1	12	#9	4	38'-5"	1567
B2	2	#5	STR	35'-11"	75
B3	16	#4	STR	19'-2"	205
B4	9	#4	STR	3'-8"	22
H1	34	#4	5	10'-2"	231
H2	10	#5	5	10'-2"	106
K1	20	#4	STR	19'-2"	256
S1	30	#4	3	4'-2"	84
S2	34	#4	1	9'-8"	220
S3	34	#4	2	4'-5"	100
S4	18	#4	6	6'-6"	78
S5	2	#4	3	5'-8"	8
V1	30	#5	STR	7'-0"	219
V2	52	#4	STR	8'-3"	287

TOTAL REINFORCING STEEL =	3458 lbs.
CLASS "A" CONCRETE - CU. YARDS	
POUR 1	18.7 cu. yds.
POUR 2	9.7 cu. yds.
TOTAL	28.4 cu. yds.
PILE EXCAVATION IN SOIL - LIN. FEET	53
PILE EXCAVATION NOT IN SOIL - LIN. FEET	53
PILE EXCAVATION BACKFILL	
CLASS "A" CONCRETE - CU. YARDS	11.3
HP 12 X 53 STEEL PILES	
9 PILES REQUIRED - LIN. FEET	106

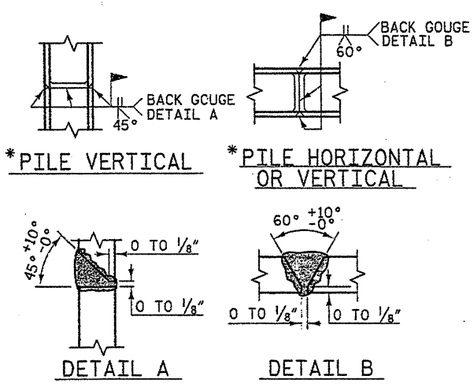

PILE SPLICE DETAILS

*POSITION OF PILE DURING WELDING.

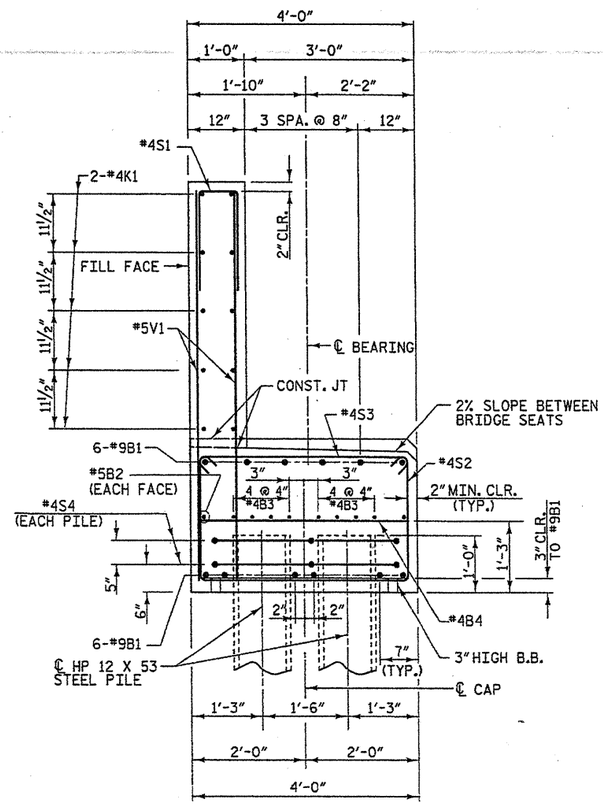

SECTION A-A

PROJECT NO. 33268.1.1

BUNCOMBE COUNTY

STATION: 2+06.37 -LREV-

REPLACES BRIDGE NO. 249 SHEET 3 OF 3

STATE OF NORTH CAROLINA
DEPARTMENT OF TRANSPORTATION
RALEIGH

SUBSTRUCTURE END BENT 2

27' CLEAR ROADWAY - 90° SKEW

NORTH CAROLINA PROFESSIONAL ENGINEER SEAL 19661 L. KEVIN AUSTIN 1/7/09

PLANS PREPARED BY:

MULKEY ENGINEERS & CONSULTANTS
PO Box 33127
Raleigh, N.C. 27636
(919) 851-1912
(919) 851-1918 (FAX)
WWW.MULKEYINC.COM

REVISIONS						SHEET NO.
NO.	BY:	DATE:	NO.	BY:	DATE:	20
1			3			TOTAL SHEETS
2			4			23

DRAWN BY :	J. P. SHERMAN	DATE :	5/04
CHECKED BY :	R. C. LARSON	DATE :	9/04

10/9/2007 4371358FIN G:\project\2002\250.02\B-3813\Structures\Bridge*249\B3813-249_SD_E2_03.dgn

ROADSIDE ENVIRONMENTAL UNIT
DEPARTMENT OF TRANSPORTATION
DIVISION OF HIGHWAYS
RALEIGH, N.C.

2006 STANDARD SPECIFICATIONS

NOTES: ANY DEVIATION FROM OPTIONS GIVEN WILL REQUIRE PRIOR APPROVAL BY ENGINEER.

ADDITIONAL EROSION CONTROL DEVICES MAY NEED TO BE INSTALLED AS DIRECTED BY THE ENGINEER.

EROSION CONTROL PLAN

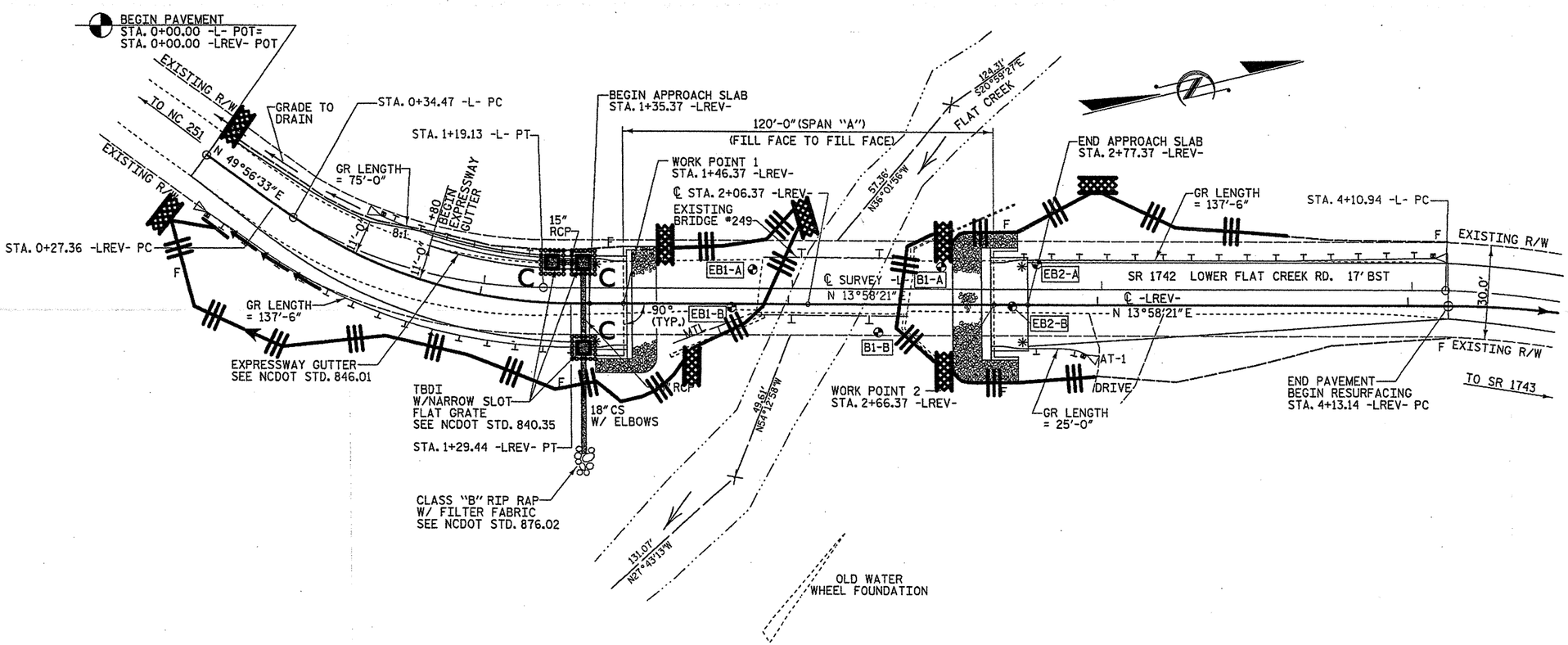

STD. #

1605.01 Temporary Silt Fence

1622.01 Temporary Berms and Slope Drains

1632.03 Rock Inlet Sediment Trap Type C

1633.01 Temporary Rock Silt Check Type-A

1633.02 Temporary Rock Silt Check Type-B

PROJECT NO. 33268.1.1

BUNCOMBE COUNTY

STATION: 2+06.37 -LREV-

REPLACES BRIDGE NO. 249

STATE OF NORTH CAROLINA
DEPARTMENT OF TRANSPORTATION
RALEIGH

BRIDGE ON SR 1742 OVER FLAT CREEK BETWEEN NC 251 & SR 1743

27' CLEAR ROADWAY - 90° SKEW

REVISIONS						SHEET NO.
NO.	BY:	DATE:	NO.	BY:	DATE:	21
1			3			TOTAL SHEETS
2			4			23

10/15/2007 7:08:07 AM G:\project\2002\290.02\B-3383\Structures\Bridge#249\B3383-249_SD_EC_01.dgn

ROADSIDE ENVIRONMENTAL UNIT
DEPARTMENT OF TRANSPORTATION
DIVISION OF HIGHWAYS
RALEIGH, N.C.

2006 STANDARD SPECIFICATIONS

EROSION CONTROL PLAN

STATE OF NORTH CAROLINA DEPT. OF TRANSPORTATION DIVISION OF HIGHWAYS RALEIGH, N.C.

ENGLISH STANDARD DRAWING FOR
TEMPORARY SILT FENCE

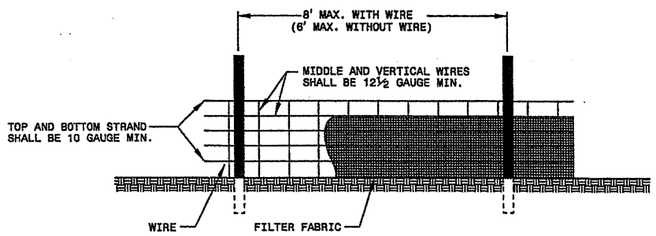

NOTES
WIRE SHALL BE A MINIMUM OF 32" IN WIDTH AND SHALL HAVE A MINIMUM OF 6 LINE WIRES WITH 12" STAY SPACING.
FILTER FABRIC SHALL BE A MINIMUM OF 36" IN WIDTH AND SHALL BE FASTENED ADEQUATELY TO THE WIRE AS DIRECTED BY THE ENGINEER.
STEEL POST SHALL BE 5'-0" IN HEIGHT AND BE OF THE SELF-FASTENER ANGLE STEEL TYPE.

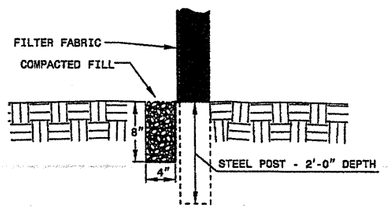

STATE OF NORTH CAROLINA DEPT. OF TRANSPORTATION DIVISION OF HIGHWAYS RALEIGH, N.C.

SHEET 1 OF 1
1605.01

STATE OF NORTH CAROLINA DEPT. OF TRANSPORTATION DIVISION OF HIGHWAYS RALEIGH, N.C.

1-102

ENGLISH STANDARD DRAWING FOR
GUIDE FOR TEMPORARY BERMS AND SLOPE DRAIN

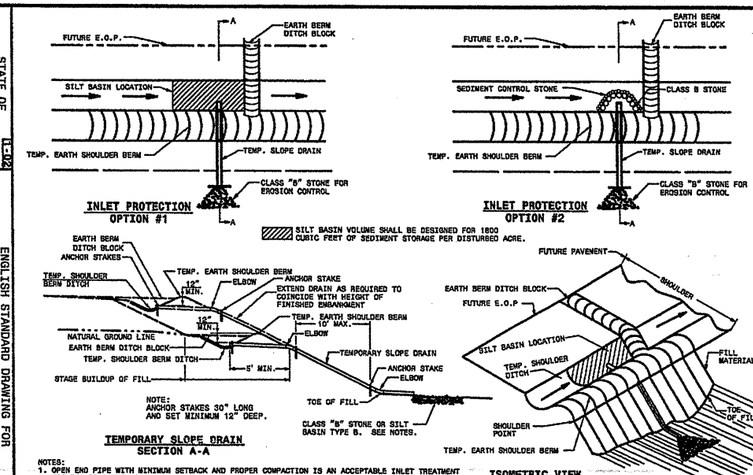

NOTES:
1. OPEN END PIPE WITH MINIMUM SETBACK AND PROPER COMPACTION IS AN ACCEPTABLE INLET TREATMENT FOR STAGED CONSTRUCTION WHEN NOT LEFT IN PLACE FOR MORE THAN 30 DAYS.
2. INLET PROTECTION OPTION #2 SHALL BE DESIGNED FOR 1800 CUBIC FOOT OF SEDIMENT STORAGE PER DISTURBED ACRE.
3. SILT BASINS SHALL HAVE A 2:1 LENGTH TO WIDTH RATIO MINIMUM.
4. USE CLASS B STONE FOR EROSION CONTROL AT OUTLET LOCATIONS SUBJECT TO SCOURING. SILT BASINS AND/OR OTHER EROSION CONTROL DEVICES MAY ALSO BE UTILIZED TO PREVENT SCOUR AT OUTLET LOCATIONS.
5. MAXIMUM SLOPE DRAIN SPACING SHALL BE 200 FT.

SHEET 1 OF 1
1622.01

STATE OF NORTH CAROLINA DEPT. OF TRANSPORTATION DIVISION OF HIGHWAYS RALEIGH, N.C.

ENGLISH STANDARD DRAWING FOR
ROCK INLET SEDIMENT TRAP TYPE 'C'

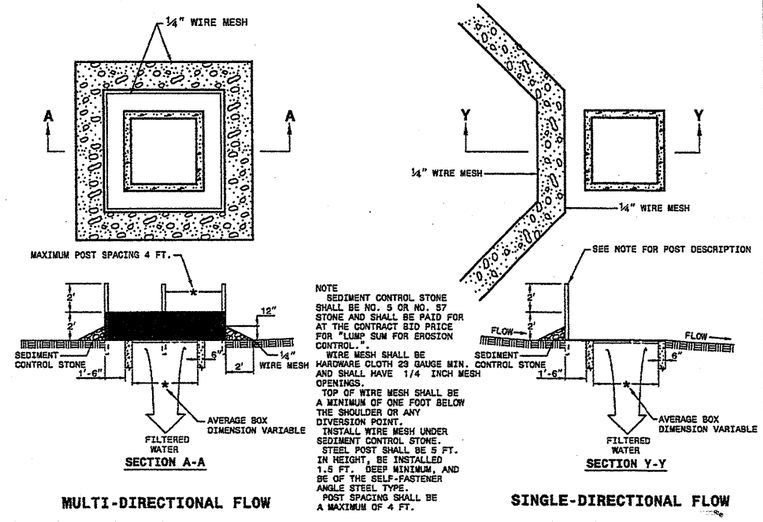

NOTE
SEDIMENT CONTROL STONE SHALL BE NO. 5 OR NO. 57 STONE AND SHALL BE PAID FOR AT THE CONTRACT BID PRICE FOR "LUMP SUM FOR EROSION CONTROL."
WIRE MESH SHALL BE HARDWARE CLOTH 23 GAUGE MIN. AND SHALL HAVE 1/4 INCH MESH OPENINGS.
TOP OF WIRE MESH SHALL BE A MINIMUM OF ONE FOOT BELOW THE SHOULDER OR ANY DIVERSION POINT.
INSTALL WIRE MESH UNDER SEDIMENT CONTROL STONE.
STEEL POST SHALL BE 5 FT. IN HEIGHT, BE INSTALLED 1.5 FT. DEEP MINIMUM, AND BE OF THE SELF-FASTENER ANGLE STEEL TYPE.
POST SPACING SHALL BE A MAXIMUM OF 4 FT.

SHEET 1 OF 1
1632.03

STATE OF NORTH CAROLINA DEPT. OF TRANSPORTATION DIVISION OF HIGHWAYS RALEIGH, N.C.

ENGLISH STANDARD DRAWING FOR
TEMPORARY ROCK SILT CHECK TYPE 'A'

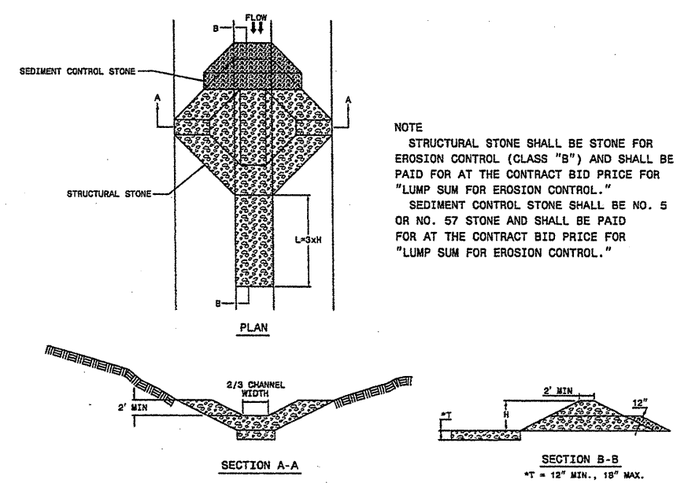

NOTE
STRUCTURAL STONE SHALL BE STONE FOR EROSION CONTROL (CLASS "B") AND SHALL BE PAID FOR AT THE CONTRACT BID PRICE FOR "LUMP SUM FOR EROSION CONTROL."
SEDIMENT CONTROL STONE SHALL BE NO. 5 OR NO. 57 STONE AND SHALL BE PAID FOR AT THE CONTRACT BID PRICE FOR "LUMP SUM FOR EROSION CONTROL."

SHEET 1 OF 1
1633.01

STATE OF NORTH CAROLINA DEPT. OF TRANSPORTATION DIVISION OF HIGHWAYS RALEIGH, N.C.

ENGLISH STANDARD DRAWING FOR
TEMPORARY ROCK SILT CHECK TYPE 'A'

SHEET 1 OF 1
1633.01

PROJECT NO. 33268.1.1
BUNCOMBE COUNTY
STATION: 2+06.37 -LREV-

REPLACES BRIDGE NO. 249

STATE OF NORTH CAROLINA
DEPARTMENT OF TRANSPORTATION
RALEIGH

BRIDGE ON SR 1742 OVER FLAT CREEK BETWEEN NC 251 & SR 1743

27' CLEAR ROADWAY - 90° SKEW

REVISIONS						SHEET NO.
NO.	BY:	DATE:	NO.	BY:	DATE:	22
1			3			TOTAL SHEETS
2			4			23

10/15/2007 1:07:57 AM G:\projects\2002\390.02\B-383\Structures\Bridge%249\B383-249_SD_EC_04.dgn

ROADSIDE ENVIRONMENTAL UNIT
DEPARTMENT OF TRANSPORTATION
DIVISION OF HIGHWAYS
RALEIGH, N.C.

2006 STANDARD SPECIFICATIONS

EROSION CONTROL PLAN

TEMPORARY ROCK SILT CHECK TYPE 'B' DETAIL

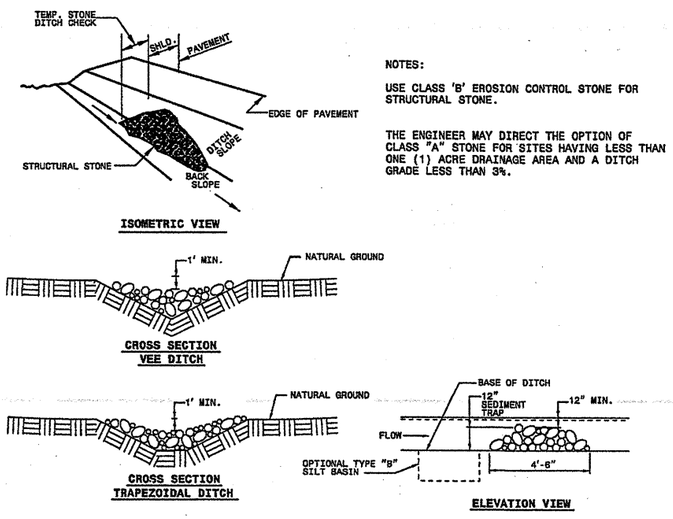

NOTES:

USE CLASS 'B' EROSION CONTROL STONE FOR STRUCTURAL STONE.

THE ENGINEER MAY DIRECT THE OPTION OF CLASS "A" STONE FOR SITES HAVING LESS THAN ONE (1) ACRE DRAINAGE AREA AND A DITCH GRADE LESS THAN 3%.

STATE OF NORTH CAROLINA
DEPT. OF TRANSPORTATION
DIVISION OF HIGHWAYS
RALEIGH, N.C.

7-06

ENGLISH STANDARD DRAWING FOR
SPECIAL STILLING BASIN

SHEET 1 OF 1
1630.06

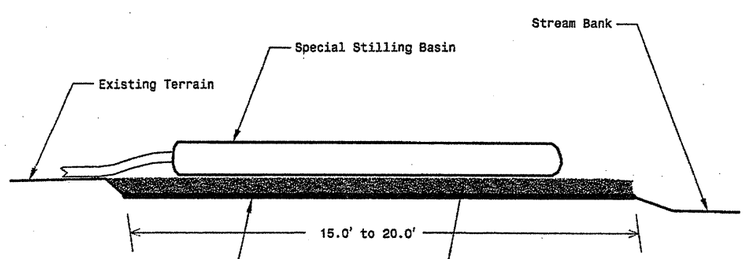

Note: Provide Stabilized Outlet to Streambank
Not To Scale

STATE OF NORTH CAROLINA
DEPT. OF TRANSPORTATION
DIVISION OF HIGHWAYS
RALEIGH, N.C.

7-06

ENGLISH STANDARD DRAWING FOR
SPECIAL STILLING BASIN

SHEET 1 OF 1
1630.06

Special Stilling Basin(s):

The work covered by this section consists of furnishing, placing, and removing a special stilling basin(s) as directed by the Engineer. The special stilling basin(s) shall be used to filter pumped water during the drilled pier operation, footing excavation, or culvert construction.

The filter fabric shall meet the requirements of Section 1056 for Type 2 Fabric.

Sediment control stone shall meet the requirements of Section 1005. Install stone according to the detail shown on the plans.

The special stilling basin(s) shall be a water permeable fabric bag that traps sand, silt, and fines as sediment laden water is pumped into it. This device shall be constructed such that it is portable and can be used adjacent to the drilled pier operation, footing excavation, or culvert construction.

The special stilling basin(s) shall be a bag constructed to a minimum size of 10' x 15' made from a nonwoven fabric. It shall have a sewn-in 8 in. (maximum) spout for receiving pump discharge. The bag seams shall be sewn with a double needle machine using a high strength thread. The seams shall have a minimum wide width strength as follows:

Test Method	Minimum Specifications
ASTM D-4884	60 lb/in

The fabric used to construct the bag shall be stabilized to provide resistance to ultra-violet degradation and meet the following specifications for flow rates, strength, and permeability:

Property	Test Method	Units	Minimum Specifications
Weight	ASTM D-3776	oz/yd	8.0
Grab tensile	ASTM D-4632	lb	200.0
Puncture	ASTM D-4833	lb	130.0
Flow rate	ASTM D-4491	gal/min/sf	80.0
Permittivity	ASTM D-4991	1/sec	1.2
UV Resistance	ASTM D-4355	%	70.0

The Contractor shall install the special stilling basin in accordance with the details in the plans and at locations as directed by the Engineer.

The special stilling basin(s) shall be placed so the incoming water flows into and through the bag without causing erosion. The neck or spout of the bag shall be tied off tightly to stop the water from flowing out of the bag without going through the walls.

The special stilling basin(s) shall be replaced and disposed of when it is 3/4 full of sediment or when it is impractical for the bag to filter the sediment out at a reasonable flow rate. Prior approval from the Engineer must be received before removal and replacement.

The Contractor shall be responsible for providing a sufficient quantity of bags to contain silt from pumped effluent during the drilled pier operation, footing excavation, or culvert construction.

The quantity of sediment control stone, filter fabric for drainage, and special stilling basin(s) as measured above will be paid for at contract price for "Lump Sum for Erosion Control". Such price and payment will be full compensation for all work covered by this provision, including but not limted to, furnishing all materials, placing and maintaining the special stilling basin(s), and removal and disposal of silt accumulations and bag.

PROJECT NO. 33268.1.1
BUNCOMBE COUNTY
STATION: 2+06.37 -LREV-

REPLACES BRIDGE NO. 249

STATE OF NORTH CAROLINA
DEPARTMENT OF TRANSPORTATION
RALEIGH

BRIDGE ON SR 1742 OVER FLAT CREEK BETWEEN NC 251 & SR 1743

27' CLEAR ROADWAY - 90° SKEW

REVISIONS						SHEET NO.
NO.	BY:	DATE:	NO.	BY:	DATE:	23
1			3			TOTAL SHEETS
2			4			23

10/05/2007 7:07:47 AM G:\project\2002\290.02\B-383\Structures\Bridge#249\B383-249_SD_EC_01.dgn

STANDARD NOTES

DESIGN DATA:

SPECIFICATIONS	A.A.S.H.T.O. (CURRENT)
LIVE LOAD	SEE PLANS
IMPACT ALLOWANCE	SEE A.A.S.H.T.O.
STRESS IN EXTREME FIBER OF	
STRUCTURAL STEEL - AASHTO M270 GRADE 36	20,000 LBS. PER SQ. IN.
- AASHTO M270 GRADE 50W	27,000 LBS. PER SQ. IN.
- AASHTO M270 GRADE 50	27,000 LBS. PER SQ. IN.
REINFORCING STEEL IN TENSION	
GRADE 60	24,000 LBS. PER SQ. IN.
CONCRETE IN COMPRESSION	1,200 LBS. PER SQ. IN.
CONCRETE IN SHEAR	SEE A.A.S.H.T.O.
STRUCTURAL TIMBER - TREATED OR	
UNTREATED - EXTREME FIBER STRESS	1,800 LBS. PER SQ. IN.
COMPRESSION PERPENDICULAR TO GRAIN OF TIMBER	375 LBS. PER SQ. IN.
EQUIVALENT FLUID PRESSURE OF EARTH	30 LBS. PER CU. FT. (MINIMUM)

MATERIAL AND WORKMANSHIP:

EXCEPT AS MAY OTHERWISE BE SPECIFIED ON PLANS OR IN THE SPECIAL PROVISIONS, ALL MATERIAL AND WORKMANSHIP SHALL BE IN ACCORDANCE WITH THE 2002 STANDARD SPECIFICATIONS "FOR ROADS AND STRUCTURES" OF THE N. C. DEPARTMENT OF TRANSPORTATION.

STEEL SHEET PILING FOR PERMANENT OR TEMPORARY APPLICATIONS SHALL BE HOT ROLLED.

CONCRETE:

UNLESS OTHERWISE REQUIRED ON PLANS, CLASS A CONCRETE SHALL BE USED FOR ALL PORTIONS OF ALL STRUCTURES WITH THE EXCEPTION THAT: CLASS AA CONCRETE SHALL BE USED IN BRIDGE SUPERSTRUCTURES, ABUTMENT BACKWALLS, AND APPROACH SLABS; CLASS B CONCRETE SHALL BE USED FOR SLOPE PROTECTION AND RIP RAP; AND CLASS S SHALL BE USED FOR UNDERWATER FOOTING SEALS.

CONCRETE CHAMFERS:

UNLESS OTHERWISE NOTED ON THE PLANS, ALL EXPOSED CORNERS ON STRUCTURES SHALL BE CHAMFERED 3/4" WITH THE FOLLOWING EXCEPTIONS: TOP CORNERS OF CURBS MAY BE ROUNDED TO 1-1/2" RADIUS WHICH IS BUILT INTO CURB FORMS; CORNERS OF TRANSVERSE FLOOR EXPANSION JOINTS SHALL BE ROUNDED WITH A 1/4" FINISHING TOOL UNLESS OTHERWISE REQUIRED ON PLANS; AND CORNERS OF EXPANSION JOINTS IN THE ROADWAY FACES AND TOPS OF CURBS AND SIDEWALKS SHALL BE ROUNDED TO A 1/4" RADIUS WITH A FINISHING STONE OR TOOL UNLESS OTHERWISE REQUIRED ON PLANS.

DOWELS:

DOWELS WHEN INDICATED ON PLANS AS FOR CULVERT EXTENSIONS, SHALL BE EMBEDDED AT LEAST 12" INTO THE OLD CONCRETE AND GROUTED INTO PLACE WITH 1:2 CEMENT MORTAR.

ALLOWANCE FOR DEAD LOAD DEFLECTION, SETTLEMENT, ETC. IN CASTING SUPERSTRUCTURES:

BRIDGES SHALL BE BUILT ON THE GRADE OR VERTICAL CURVE SHOWN ON PLANS. SLABS, CURBS AND PARAPETS SHALL CONFORM TO THE GRADE OR CURVE.

ALL DIMENSIONS WHICH ARE GIVEN IN SECTION AND ARE AFFECTED BY DEAD LOAD DEFLECTIONS ARE DIMENSIONS AT CENTER LINE OF BEARING UNLESS OTHERWISE NOTED ON PLANS. IN SETTING FORMS FOR STEEL BEAM BRIDGES AND PRESTRESSED CONCRETE GIRDER BRIDGES, ADJUSTMENTS SHALL BE MADE DUE TO THE DEAD LOAD DEFLECTIONS FOR THE ELEVATIONS SHOWN. WHERE BLOCKS ARE SHOWN OVER BEAMS FOR BUILDING UP TO THE SLAB, THE VERTICAL DIMENSIONS OF THE BLOCKS SHALL BE ADJUSTED BETWEEN BEARINGS TO COMPENSATE FOR DEAD LOAD DEFLECTIONS, VERTICAL CURVE ORDINATE, AND ACTUAL BEAM CAMBER. WHERE BOTTOM OF SLAB IS IN LINE WITH BOTTOM OF TOP FLANGES, DEPTH OF SLAB BETWEEN BEARINGS SHALL BE ADJUSTED TO COMPENSATE FOR DEAD LOAD DEFLECTION, VERTICAL CURVE ORDINATE, AND ACTUAL BEAM CAMBER.

IN SETTING FALSEWORK AND FORMS FOR REINFORCED CONCRETE SPANS, AN ALLOWANCE SHALL BE MADE FOR DEAD LOAD DEFLECTIONS, SETTLEMENT OF FALSEWORK, AND PERMANENT CAMBER WHICH SHALL BE PROVIDED FOR IN ADDITION TO THE ELEVATIONS SHOWN. AFTER REMOVAL OF THE FALSEWORK, THE FINISHED STRUCTURES SHALL CONFORM TO THE PROFILE AND ELEVATIONS SHOWN ON THE PLANS AND CONSTRUCTION ELEVATIONS FURNISHED BY THE ENGINEER.

DETAILED DRAWINGS FOR FALSEWORK OR FORMS FOR BRIDGE SUPERSTRUCTURE AND ANY STRUCTURE OR PARTS OF A STRUCTURE AS NOTED ON THE PLANS SHALL BE SUBMITTED TO THE ENGINEER FOR APPROVAL BEFORE CONSTRUCTION OF THE FALSEWORK OR FORMS IS STARTED.

REINFORCING STEEL:

ALL REINFORCING STEEL SHALL BE DEFORMED WITH THE EXCEPTION OF #2 BARS WHICH MAY BE FABRICATED FROM COLD DRAWN STEEL WIRE. DIMENSIONS RELATIVE TO PLACEMENT OF REINFORCING ARE TO CENTERS OF BARS UNLESS OTHERWISE INDICATED IN THE PLANS. DIMENSIONS ON BAR DETAILS ARE TO CENTERS OF BARS OR ARE OUT TO OUT AS INDICATED ON PLANS.

WIRE BAR SUPPORTS SHALL BE PROVIDED FOR REINFORCING STEEL WHERE INDICATED ON THE PLANS. WHEN BAR SUPPORT PIECES ARE PLACED IN CONTINUOUS LINES, THEY SHALL BE SO PLACED THAT THE ENDS OF THE SUPPORTING WIRES SHALL BE LAPPED TO LOCK LEGS ON ADJOINING PIECES.

STRUCTURAL STEEL:

AT THE CONTRACTOR'S OPTION, HE MAY SUBSTITUTE 7/8" Ø SHEAR STUDS FOR THE 3/4" Ø STUDS SPECIFIED ON THE PLANS. THIS SUBSTITUTION SHALL BE MADE AT THE RATE OF 3 - 7/8" Ø STUDS FOR 4 - 3/4" Ø STUDS, AND STUD SPACING CHANGES SHALL BE MADE AS NECESSARY TO PROVIDE THE SAME EQUIVALENT NUMBER OF 7/8" Ø STUDS ALONG THE BEAM AS SHOWN FOR 3/4" Ø STUDS BASED ON THE RATIO OF 3 - 7/8" Ø STUDS FOR 4 - 3/4" Ø STUDS. STUDS OF THE LENGTH SPECIFIED ON THE PLANS MUST BE PROVIDED. THE MAXIMUM SPACING SHALL BE 2'-0".

EXCEPT AT THE INTERIOR SUPPORTS OF CONTINUOUS BEAMS WHERE THE COVER PLATE IS IN CONTACT WITH BEARING PLATE, THE CONTRACTOR MAY, AT HIS OPTION, SUBSTITUTE FOR THE COVER PLATES DESIGNATED ON THE PLANS COVER PLATES OF THE EQUIVALENT AREA PROVIDED THESE PLATES ARE AT LEAST 5/16" IN THICKNESS AND DO NOT EXCEED A WIDTH EQUAL TO THE FLANGE WIDTH LESS 2" OR A THICKNESS EQUAL TO 2 TIMES THE FLANGE THICKNESS. THE SIZE OF FILLET WELDS SHALL CONFORM TO THE REQUIREMENTS OF THE CURRENT ANSI/AASHTO/AWS "BRIDGE WELDING CODE". ELECTROSLAG WELDING WILL NOT BE PERMITTED.

PLACEMENT OF BEAM OR GIRDER MEMBERS ON TRUCKS FOR HAULING SHALL BE DONE IN COMPLIANCE WITH LIMITS SHOWN ON SKETCHES PROVIDED TO THE MATERIALS AND TEST UNIT APPROVED BY THE STRUCTURE DESIGN UNIT DATED MAY 8, 1991. THESE SKETCHES PRIMARILY LIMIT THE UNSUPPORTED CANTILEVER LENGTH OF MEMBERS. WHEN THE CONTRACTOR WISHES TO PLACE MEMBERS ON TRUCKS NOT IN ACCORDANCE WITH THESE LIMITS, TO SHIP BY RAIL, TO ATTACH SHIPPING RESTRAINTS TO THE MEMBERS OR TO INVERT MEMBERS, HE SHALL SUBMIT A SKETCH FOR APPROVAL PRIOR TO SHIPPING. SEE ALSO ARTICLE 1072-11.

WITH THE SOLE EXCEPTION OF EDGES AT SURFACES WHICH BEAR ON OTHER SURFACES, ALL SHARP EDGES AND ENDS OF SHAPES AND PLATES SHALL BE SLIGHTLY ROUNDED BY SUITABLE MEANS TO A RADIUS OF APPROXIMATELY 1/16 INCH OR EQUIVALENT FLAT SURFACE AT A SUITABLE ANGLE PRIOR TO PAINTING, GALVANIZING, OR METALLIZING.

HANDRAILS AND POSTS:

METAL STANDARDS AND FACES OF THE CONCRETE END POSTS FOR THE METAL RAIL SHALL BE SET NORMAL TO THE GRADE OF THE CURB, UNLESS OTHERWISE SHOWN ON PLANS. THE METAL RAIL AND TOPS OF CONCRETE POSTS USED WITH THE ALUMINUM RAIL SHALL BE BUILT PARALLEL TO THE GRADE OF THE CURB.

METAL HANDRAILS SHALL BE IN ACCORDANCE WITH THE PLANS. RAILS SHALL BE AS MANUFACTURED FOR BRIDGE RAILING. CASTINGS SHALL BE OF A UNIFORM APPEARANCE. FINS AND OTHER DEFORMATIONS RESULTING FROM CASTING OR OTHERWISE SHALL BE REMOVED IN A MANNER SO THAT A UNIFORM COLORING OF THE COMPLETED CASTING SHALL BE OBTAINED. CASTINGS WITH DISCOLORATIONS OR OF NON-UNIFORM COLORING WILL NOT BE ACCEPTED. CERTIFIED MILL REPORTS ARE REQUIRED FOR METAL RAILS AND POSTS.

SPECIAL NOTES:

GENERALLY, IN CASE OF DISCREPANCY, THIS STANDARD SHEET OF NOTES SHALL GOVERN OVER THE SPECIFICATIONS, BUT THE REMAINDER OF THE PLANS SHALL GOVERN OVER NOTES HEREON, AND SPECIAL PROVISIONS SHALL GOVERN OVER ALL. SEE SPECIFICATIONS ARTICLE 105-4.

ENGLISH

JANUARY, 1990

STD. NO. SN