**LOCHNER**

PROJECT: BONNER BRIDGE - OREGON INLET NORTH CAROLINA
SUBJECT: PRESTRESSED GIRDER ANALYSIS
BEAM REACTIONS

JMJ May-06
KBM May-06

## HIGH LEVEL BENT 142

| Beam No. | Self Wt. | Topping (Deck + Haunch) | DL - Precast | Interior Diaphragms | D.L.-Comp | Total D.L. |
|---|---|---|---|---|---|---|
| Exterior | | | | | | |
| Span 142 | 17.40 | 23.30 | 0.70 | 1.00 | 3.30 | 45.70 |
| Span 143 | 17.40 | 23.30 | 0.70 | 1.00 | 3.30 | 45.70 |
| Totals | 34.80 | 46.60 | 1.40 | 2.00 | 6.60 | 91.40 |
| | | | | | | |
| Interior | | | | | | |
| Span 142 | 17.40 | 21.60 | 0.70 | 1.90 | 3.10 | 44.70 |
| Span 143 | 17.40 | 21.60 | 0.70 | 1.90 | 3.10 | 44.70 |
| Totals | 34.80 | 43.20 | 1.40 | 3.80 | 6.20 | 89.40 |

## LIVE LOAD ( Bents 137, 142, 160)

**HS-20 AXLE LOAD**

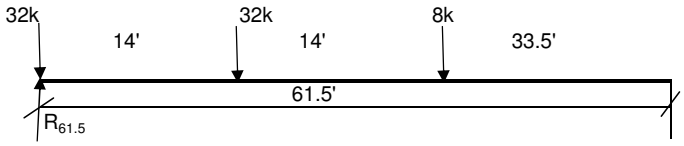


$R_{61.5}$ = 32 + 32 * ( 47.5 / 61.5 ) + 8 * ( 33.5 / 61.5 ) = 61.1 k

**HS-20 WHEEL LOAD**

$W_{61.5}$ = $R_{61.5}$ / 2 = 30.5 k

w/Impact = $30.5 * \left( \frac{50}{61.5 + 125} + 1 \right) = 38.7$ k

**Max. NEGATIVE MOMENT**

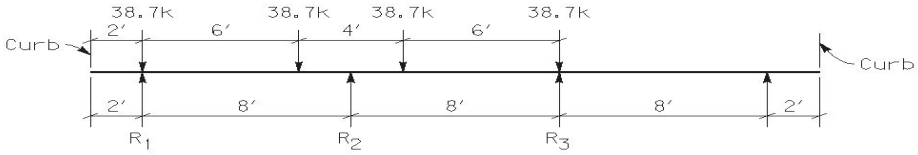


w/ Impact

$R_1$ = 38.7 + 38.7 * ( 2 / 8 ) = 48.4 k = $R_3$

$R_2$ = 38.7 * 2 * ( 6 / 8 ) = 58.1 k

w/o Impact

$R_1$ = 30.5 + 30.5 * ( 2 / 8 ) = 38.1 k = $R_3$

$R_2$ = ( 30.5 * 2 * ( 6 / 8 ) = 45.8 k

**LIVE LOAD** **( Bents 137, 142, 160)**

**MAX. POSITIVE MOMENT**

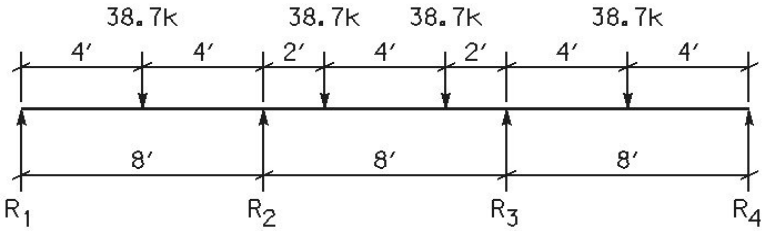


w/ Impact

$R_1 = R_4$ = 38.7 * ( 4 / 8 ) = 19.4 k

$R_2 = R_3$ = 19.4 + 38.7 * ( 6 / 8 ) + ( 38.7 * ( 2 / 8 ) = 58.1 k

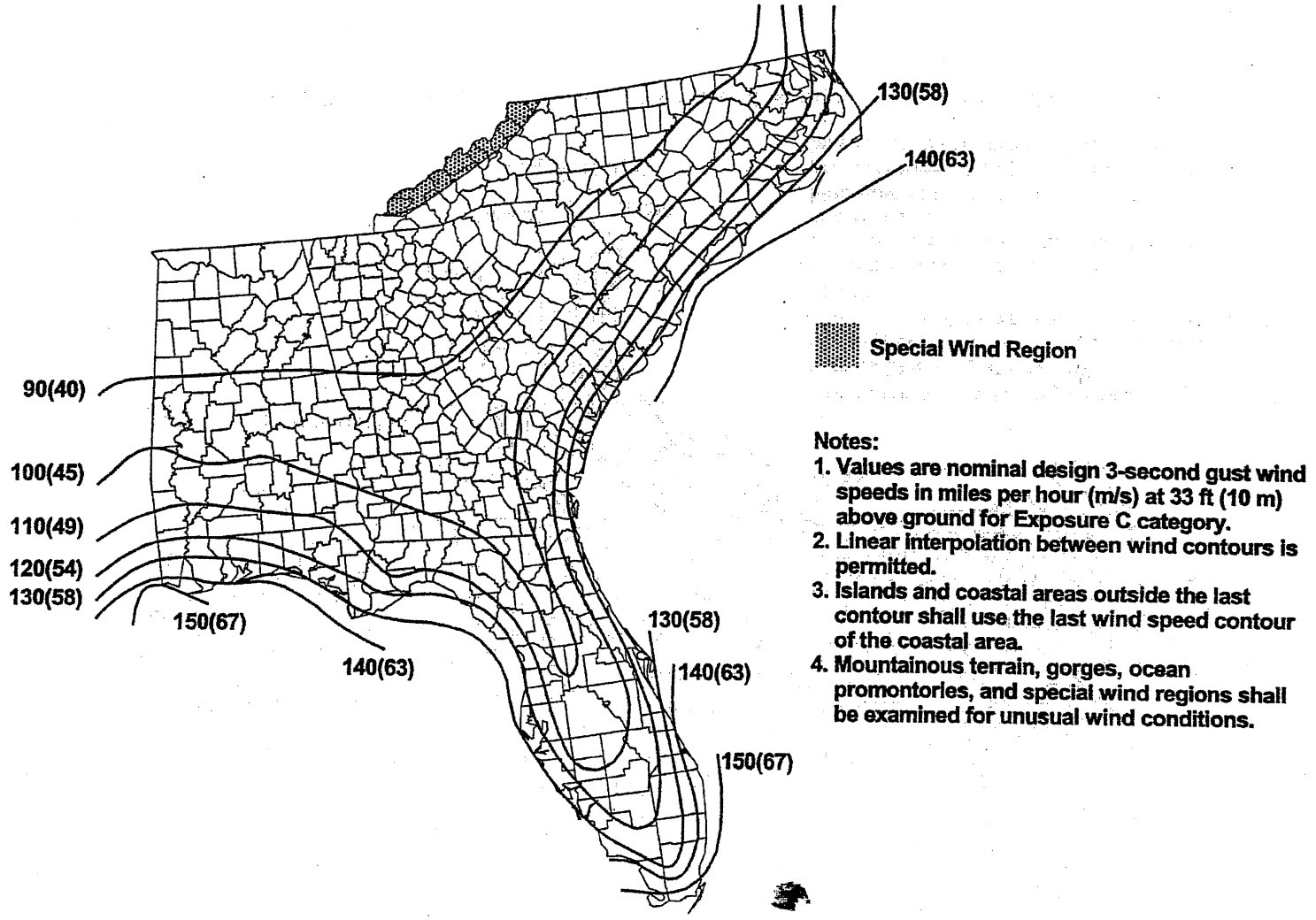


FIGURE 6-1b. Basic Wind Speed—Eastern Gulf of Mexico and Southeastern U.S. Hurricane Coastline

## LOADING

**Earth Loads**

Assume No Earth Loading on Bents or Pile Cap.

**Wind Loads (AASHTO 3.15)**

Design Wind Speed = 130 MPH (Original Design Speed)

Ratio = ( 130 )$^2$ / ( 100 )$^2$ = 1.69

**Wind on Superstructure (AASHTO 3.15.2.1)**

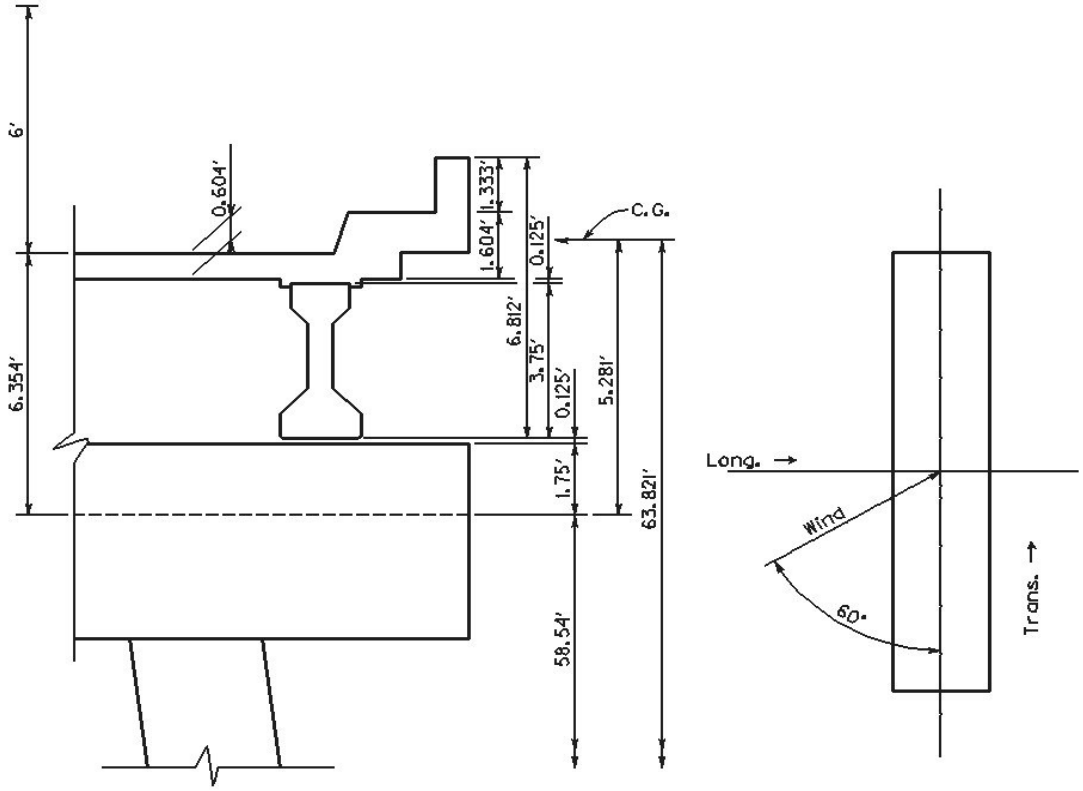


Assume Wind @ 60° Skew

Long. = ( 0.019 k/Ft$^2$ )( 1.69 Ratio ) = 0.032 k/Ft$^2$
Trans. = ( 0.017 k/Ft$^2$ )( 1.69 Ratio ) = 0.029 k/Ft$^2$

Assume Adjacent Bent Takes 1/2 Load

Load Length = 61.500 * 2 / 2 = 61.500 Ft.

Long. Force = ( 0.032 k/Ft$^2$ )( 6.812 Ft.) ( 61.500 Ft.) = 13.406 k
Trans. Force = ( 0.029 k/Ft$^2$ )( 6.812 Ft.) ( 61.500 Ft.) = 12.149 k

Moment Factor $M_F$ = 63.821 / 58.54 = 1.090

Modify & Apply to Jt. 2 & 3

| | | | | | | | | |
|---|---|---|---|---|---|---|---|---|
| Long. Wind | = ( | 13.406 k) | * ( | 1.090 | ) / | 2 = | 7.306 k/Jt | |
| Trans. Wind | = ( | 12.149 k) | * ( | 1.090 | ) / | 2 = | 6.621 k/Jt | |

**Wind on Live Load (AASHTO 3.15.2.1.2)**

Assume Wind @ 60° Skew & Apply @ 6' above Deck

| | | | | | | | | |
|---|---|---|---|---|---|---|---|---|
| Long. | = | ( | 0.038 k/Ft$^2$ | ) | | | | |
| Trans. | = | ( | 0.034 k/Ft$^2$ | ) | | | | |
| Long. Force | = ( | 0.038 k/Ft$^2$ | ) * ( | 61.500 Ft.) | | = | 2.337 k | |
| Trans. Force | = ( | 0.034 k/Ft$^2$ | ) * ( | 61.500 Ft.) | | = | 2.091 k | |

Moment Factor = ( 58.540 Ft. + 6.354 Ft. + 6.000 Ft. ) / 58.540 Ft. = 1.211

Modify & Apply to Jt. 2 & 3

| | | | | | | | | |
|---|---|---|---|---|---|---|---|---|
| Long. Wind | = ( | 2.337 k) | * ( | 1.211 | ) / | 2.000 = | 1.415 k/Jt | |
| Trans. Wind | = ( | 2.091 k) | * ( | 1.211 | ) / | 2.000 = | 1.266 k/Jt | |

**Wind on Superstructure**

| | | | | | |
|---|---|---|---|---|---|
| Wind Pressure = | 0.040 k/Ft$^2$ | * | 1.690 | = | 0.068 k/Ft$^2$ |
| Long. = | 0.068 k/Ft$^2$ | * | sin 60.000 | = | 0.059 k/Ft$^2$ |
| Trans. = | 0.068 k/Ft$^2$ | * | cos 60.000 | = | 0.034 k/Ft$^2$ |

Cap

| | | | | | |
|---|---|---|---|---|---|
| $W_z$ = | 0.059 k/Ft$^2$ | * | 3.500 Ft. | = | 0.207 k/Ft |
| Wx = | 0.034 k/Ft$^2$ | * | 3.500 Ft. * 3.000 Ft. | = | 0.357 k/Ft |

Columns

Members 4 & 5

| | | | | | |
|---|---|---|---|---|---|
| $W_z$ = | 0.059 k/Ft$^2$ | * | 3.000 Ft. | = | 0.177 k/Ft |
| Wx = | 0.034 k/Ft$^2$ | * | 2.948 Ft. | = | 0.100 k/Ft |

Members 7 & 8

| | | | | | |
|---|---|---|---|---|---|
| $W_z$ = | 0.177 k/Ft | | | | |
| Wx = | 0.034 k/Ft$^2$ | * | 4.052 Ft. | = | 0.138 k/Ft |

Members 10 & 11

| | | | | | |
|---|---|---|---|---|---|
| $W_z$ = | 0.177 k/Ft | | | | |
| Wx = | 0.034 k/Ft$^2$ | * | 5.179 Ft. | = | 0.176 k/Ft |

Members 13 & 14

| | | | | | |
|---|---|---|---|---|---|
| $W_z$ = | 0.177 k/Ft$^2$ | | | | |
| Wx = | 0.034 k/Ft$^2$ | * | 5.905 Ft. | = | 0.201 k/Ft |

Struts
Members 6 & 9
$W_z$ = 0.177 k/Ft

Member 12
$W_z$ = 0.059 $k/Ft^2$ * 5.000 Ft. = 0.295 k/Ft

**Longitudinal Forces (AASHTO 3.9)**

Lane Loading
2 Lanes, HS20, No Reduction (AASHTO 3.12.1)
LF = [( 0.64 k/Ft * 61.500 ') + 18 k ] * 2 Lanes * 0.05 = 5.736 k

Modify & Apply to Jts. 2 & 3
$M_F$ = 1.211 *from Wind on L.L.*
Fz = ( 5.736 k * 1.211 ) / 2 = 3.473 k/Jt

**Thermal Forces (AASHTO 3.16)**

Longitudinal - Structure Free to move at Brgs., No Long. Forces From $\Delta T$
Transverse
Assume 45° $\Delta T$
Thermal = 0.000006 (AASHTO 8.5.3)
Shrinkage = 0.0002 (AASHTO 8.5.4)

$$\text{Ratio} = \frac{S}{T*\Delta T} = \frac{0.0002}{0.000006 * 45} = 0.741 \quad \text{use } 1.741$$

**Stream Forces (AASHTO 3.18.1)**

Tidal, Stream, & Surge Forces Beyond Scope

**Seismic Loading (AASHTO 3.1)**

Since Acceleration = 4 % --> SPC = A --> No Seismic Analysis Required

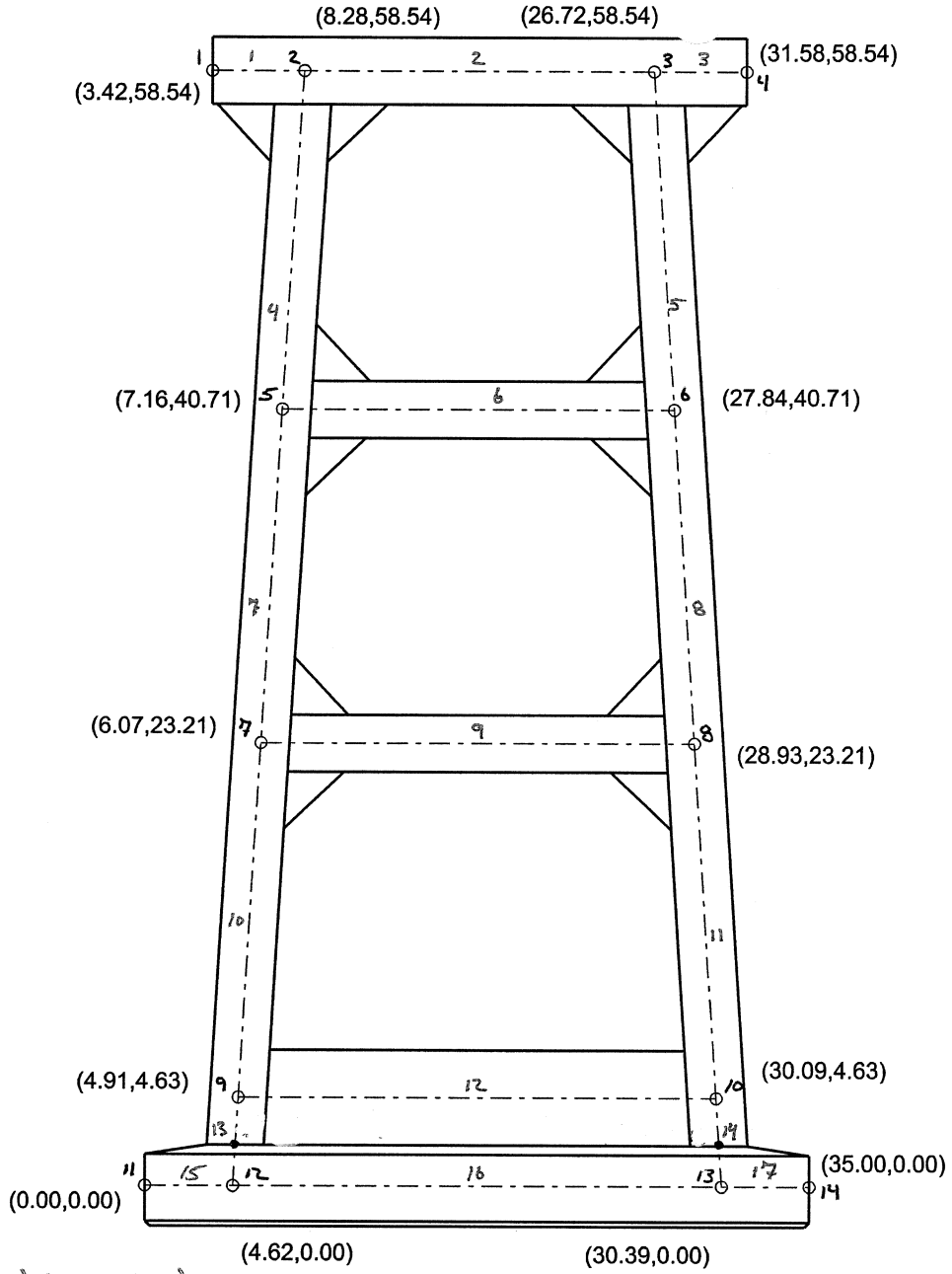


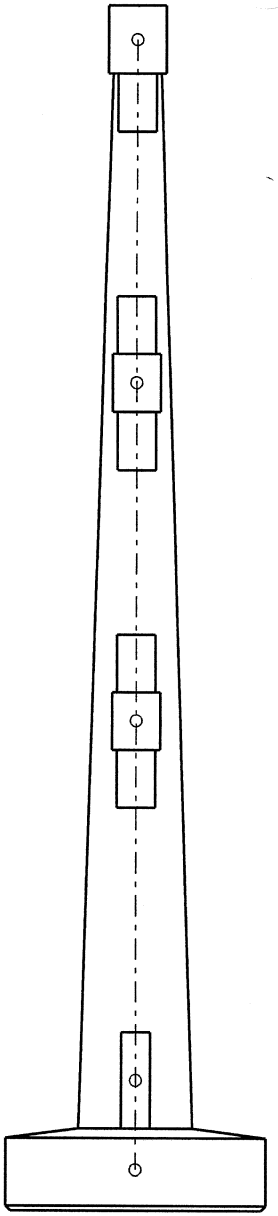

ADD (3')(3')(2')(.150 k/ft³)
= 2.7 k FOR CRUTCH

# BENT 142
# TRIPLE STRUT
# PRESTRESSED GIRDER - PRESTRESSED GIRDER

```
**************************************************
*                                                *
*          STAAD.Pro                             *
*          Version  2004    Bld 1002.US          *
*          Proprietary Program of                *
*          Research Engineers,  Intl.            *
*          Date=    JUL 20, 2006                 *
*          Time=    10: 5:35                     *
*                                                *
*     USER ID: H.W. Lochner                      *
**************************************************
```

JMJ 7/06

WDB 7/06

```
     1. STAAD SPACE BONNER BRIDGE, HLB142
INPUT FILE: HLB142.STD
     2. START JOB INFORMATION
     3. JOB NAME BONNER BRIDGE
     4. JOB CLIENT NORTH CAROLINA
     5. ENGINEER NAME JMJ
     6. ENGINEER DATE MAY 2006
     7. END JOB INFORMATION
     8. INPUT WIDTH 72
     9. PAGE LENGTH 62
    10. UNIT FEET KIP
    11. JOINT COORDINATES
    12. 1 3.42 58.54 0; 2 8.28 58.54 0; 3 26.72 58.54 0; 4 31.58 58.54 0
    13. 5 7.16 40.71 0; 6 27.84 40.71 0; 7 6.07 23.21 0; 8 28.93 23.21 0
    14. 9 4.91 4.63 0; 10 30.09 4.63 0; 11 0 0 0; 12 4.62 0 0; 13 30.39 0 0
    15. 14 35 0 0
    16. MEMBER INCIDENCES
    17. 1 1 2; 2 2 3; 3 3 4; 4 2 5; 5 3 6; 6 5 6; 7 5 7; 8 6 8; 9 7 8; 10 7 9
    18. 11 8 10; 12 9 10; 13 9 12; 14 10 13; 15 11 12; 16 12 13; 17 13 14
    19. DEFINE MATERIAL START
    20. ISOTROPIC CONCRETE
    21. E 453600
    22. POISSON 0.17
    23. DENSITY 0.14999
    24. ALPHA 5.5E-006
    25. DAMP 0.05
    26. END DEFINE MATERIAL
    27. MEMBER PROPERTY AMERICAN
    28. 1 TO 3 PRIS YD 3.5 ZD 3
    29. 4 5 PRIS YD 2.994 ZD 2.948
    30. 6 PRIS YD 3 ZD 2.5
    31. 7 8 PRIS YD 2.994 ZD 4.052
    32. 9 PRIS YD 3 ZD 2.5
    33. 10 11 PRIS YD 2.994 ZD 5.179
    34. 12 PRIS YD 5 ZD 1.5
    35. 13 14 PRIS YD 2.994 ZD 5.905
    36. 15 TO 17 PRIS YD 4.25 ZD 13.5
    37. CONSTANTS
    38. MATERIAL CONCRETE MEMB 1 TO 17
    39. SUPPORTS
    40. 11 TO 14 FIXED
    41. DRAW JOINT MEMBER SUPPORT
```





S T A A D -III
REV: 2004

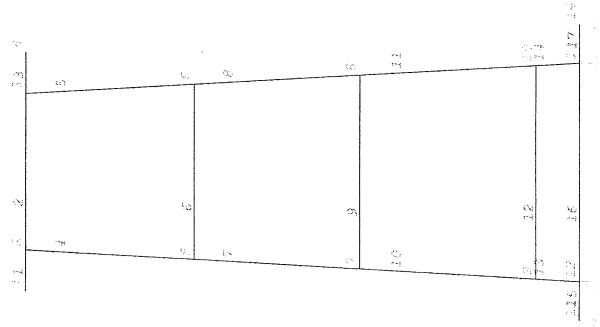

STRUCTURE DATA:

TYPE = SPACE
NJ = 14
NM = 17
NE = 0
NS = 4
NL = 0
UNIT FEET KIP
XMAX= 35.0
YMAX= 56.5
ZMAX= 0.0

DATE:JUL 20,2006
TIME: 10: 5:35

DRAW JOINT MEMBER SUPPORT

```
42. **
43. **DEAD LOAD
44. **
45. LOAD 2 DEAD
46. SELFWEIGHT Y -1
47. MEMBER LOAD
48. 1 CON GY -91.4 2.08
49. 2 CON GY -89.4 5.22
50. 2 CON GY -89.4 13.22
51. 3 CON GY -91.4 2.78
52. JOINT LOAD
53. 2 3 5 6 7 8 FY -2.7
54. **
55. **MAXIMUM NEGATIVE MOMENT
56. **
57. LOAD 11 LIVELOAD + IMPACT FOR JT. 2 MEM 1 AND 2
58. MEMBER LOAD
59. 1 CON Y -48.4 2.08
60. 2 CON Y -58.1 5.22
61. 2 CON Y -48.4 13.22
62. LOAD 12 LIVELOAD + IMPACT FOR JT. 3  MEM. 2 AND 3
63. MEMBER LOAD
64. 2 CON Y -48.4 5.22
65. 2 CON Y -58.1 13.22
66. 3 CON Y -48.4 2.78
67. **
68. **MAXIMUM POSITIVE MOMENT
69. **
70. LOAD 13 LIVELOAD + IMPACT  MEM 2
71. MEMBER LOAD
72. 1 CON Y -19.4 2.08
73. 2 CON Y -58.1 5.22
74. 2 CON Y -58.1 13.22
75. 3 CON Y -19.4 2.78
76. **
77. **LOADS ON FOOTINGS
78. **
79. LOAD 14 LIVELOAD NO IMPACT JT. 12
80. MEMBER LOAD
81. 1 CON Y -38.1 2.08
82. 2 CON Y -45.8 5.22
83. 2 CON Y -38.1 13.22
84. LOAD 15 LIVELOAD NO IMPACT FOR JT. 13
85. MEMBER LOAD
86. 2 CON Y -38.1 5.22
87. 2 CON Y -45.8 13.22
88. 3 CON Y -38.1 2.78
89. **
90. **WIND
91. **
92. LOAD 4 WIND
93. JOINT LOAD
94. 2 3 FX -6.621 FZ -7.306
95. 4 FX -0.357
96. MEMBER LOAD
97. 1 TO 3 UNI GZ -0.207
98. 4 5 7 8 10 11 13 14 UNI GZ -0.177
99. 4 5 UNI GX -0.100
100. 7 8 UNI GX -0.138
101. 10 11 UNI GX -0.176
```





```
102. 13 14 UNI GX -0.201
103. 6 9 UNI GZ -0.177
104. 12 UNI GZ -0.295
105. **
106. LOAD 5 WIND ON LL
107. JOINT LOAD
108. 2 3 FX -1.266 FZ -1.415
109. **
110. LOAD 6 LONGITUDINAL FORCE
111. JOINT LOAD
112. 2 3 FZ -3.473
113. **
114. LOAD 7 TEMP LOAD
115. TEMPERATURE LOAD
116. 1 TO 17 TEMP -45
117. **
118. LOAD 8 STREAM LOAD
119. MEMBER LOAD
120. 15 TO 17 UNI GZ -0
121. **
122. LOAD COMB 10 GROUP 1
123. 8 1.0
124. LOAD COMB 20 GROUP 2
125. 4 1.0 8 1.0
126. LOAD COMB 30 GROUP 3
127. 4 0.3 5 1.0 6 1.0 8 1.0
128. LOAD COMB 40 GROUP 4
129. 7 1.74 8 1.0
130. LOAD COMB 50 GROUP 5
131. 4 1.0 7 1.74 8 1.0
132. LOAD COMB 60 GROUP 6
133. 4 0.3 5 1.0 6 1.0 7 1.74 8 1.0
134. LOAD COMB 100 USED TO DETERMINE LOCATION OF MAX FACTORED POSITIVE MOMENT
135. 2 1.0 13 1.67
136. PERFORM ANALYSIS


        P R O B L E M   S T A T I S T I C S
        -----------------------------------

  NUMBER OF JOINTS/MEMBER+ELEMENTS/SUPPORTS =    14/    17/     4
  ORIGINAL/FINAL BAND-WIDTH=     3/     3/     24 DOF
  TOTAL PRIMARY LOAD CASES =   11, TOTAL DEGREES OF FREEDOM =     60
  SIZE OF STIFFNESS MATRIX =        2 DOUBLE  KILO-WORDS
  REQRD/AVAIL. DISK SPACE  =     12.1/ 110687.6 MB


137. PRINT MEMBER FORCES LIST 2 4 5 6 7 8 9 10 11 13 14
```

**MEMBER END FORCES STRUCTURE TYPE = SPACE**

**ALL UNITS ARE -- KIP FEET**

| MEMBER | LOAD | JT | AXIAL | SHEAR-Y | SHEAR-Z | TORSION | MOM-Y | MOM-Z | |
|---|---|---|---|---|---|---|---|---|---|
| | | | | | $V_{DL}$ | | | | |
| 2 | 2 | 2 | 18.26 | 103.92 | 0.00 | 0.00 | 0.00 | 330.36 | – MAX. NEG $M_{DL}$ |
| | | 3 | -18.26 | 103.92 | 0.00 | 0.00 | 0.00 | -330.35 | |
| | 11 | 2 | 9.82 | 59.50 | 0.00 | 0.00 | 0.00 | 173.41 | – MAX. NEG. $M_{LL+I}$ |
| | | 3 | -9.82 | 47.00 | 0.00 | 0.00 | 0.00 | -96.94 | |
| | 12 | 2 | 9.82 | 47.00 $V_{LL+I}$ | 0.00 | 0.00 | 0.00 | 96.94 | |
| | | 3 | -9.82 | 59.50 | 0.00 | 0.00 | 0.00 | -173.41 | |
| | 13 | 2 | 11.02 | 58.10 | 0.00 | 0.00 | 0.00 | 138.16 | |
| | | 3 | -11.02 | 58.10 | 0.00 | 0.00 | 0.00 | -138.16 | |
| | 14 | 2 | 7.74 | 46.88 | 0.00 | 0.00 | 0.00 | 136.56 | |
| | | 3 | -7.74 | 37.02 | 0.00 | 0.00 | 0.00 | -76.38 | |
| | 15 | 2 | 7.74 | 37.02 | 0.00 | 0.00 | 0.00 | 76.38 | |
| | | 3 | -7.74 | 46.88 | 0.00 | 0.00 | 0.00 | -136.56 | |
| | 4 | 2 | 0.18 | 9.06 | 1.91 | 0.00 | 4.82 | 83.50 | |
| | | 3 | -0.18 | -9.06 | 1.91 | 0.00 | -4.83 | 83.52 | |
| | 5 | 2 | 0.00 | 1.45 | 0.00 | 0.00 | 0.63 | 13.39 | |
| | | 3 | 0.00 | -1.45 | 0.00 | 0.00 | -0.63 | 13.39 | |
| | 6 | 2 | 0.00 | 0.00 | 0.00 | 0.00 | 1.56 | 0.00 | |
| | | 3 | 0.00 | 0.00 | 0.00 | 0.00 | -1.56 | 0.00 | |
| | 7 | 2 | 0.13 | 0.00 | 0.00 | 0.00 | 0.00 | 0.41 | |
| | | 3 | -0.13 | 0.00 | 0.00 | 0.00 | 0.00 | -0.41 | |
| | 8 | 2 | 0.00 | 0.00 | 0.00 | 0.00 | 0.00 | 0.00 | |
| | | 3 | 0.00 | 0.00 | 0.00 | 0.00 | 0.00 | 0.00 | |
| | 10 | 2 | 0.00 | 0.00 | 0.00 | 0.00 | 0.00 | 0.00 | |
| | | 3 | 0.00 | 0.00 | 0.00 | 0.00 | 0.00 | 0.00 | |
| | 20 | 2 | 0.18 | 9.06 | 1.91 | 0.00 | 4.82 | 83.50 | |
| | | 3 | -0.18 | -9.06 | 1.91 | 0.00 | -4.83 | 83.52 | |
| | 30 | 2 | 0.05 | 4.17 | 0.57 | 0.00 | 3.64 | 38.44 | |
| | | 3 | -0.05 | -4.17 | 0.57 | 0.00 | -3.64 | 38.45 | |
| | 40 | 2 | 0.22 | 0.00 | 0.00 | 0.00 | 0.00 | 0.71 | |
| | | 3 | -0.22 | 0.00 | 0.00 | 0.00 | 0.00 | -0.71 | |
| | 50 | 2 | 0.40 | 9.06 | 1.91 | 0.00 | 4.82 | 84.21 | |
| | | 3 | -0.40 | -9.06 | 1.91 | 0.00 | -4.83 | 82.81 | |
| | 60 | 2 | 0.28 | 4.17 | 0.57 | 0.00 | 3.64 | 39.15 | |
| | | 3 | -0.28 | -4.17 | 0.57 | 0.00 | -3.64 | 37.74 | |
| | 100 | 2 | 36.67 | 200.95 | 0.00 | 0.00 | 0.00 | 561.09 | |
| | | 3 | -36.67 | 200.95 | 0.00 | 0.00 | 0.00 | -561.08 | |
| 4 | 2 | 2 | 206.42 | 5.33 | 0.00 | 0.00 | 0.00 | 57.66 | |
| | | 5 | -230.02 | -3.85 | 0.00 | 0.00 | 0.00 | 24.36 | |
| | 11 | 2 | 108.30 | 3.04 | 0.00 | 0.00 | 0.00 | 38.85 | |
| | | 5 | -108.30 | -3.04 | 0.00 | 0.00 | 0.00 | 15.39 | |
| | 12 | 2 | 47.52 | 6.85 | 0.00 | 0.00 | 0.00 | 96.94 | |
| | | 5 | -47.52 | -6.85 | 0.00 | 0.00 | 0.00 | 25.51 | |
| | 13 | 2 | 78.04 | 6.14 | 0.00 | 0.00 | 0.00 | 84.23 | |
| | | 5 | -78.04 | -6.14 | 0.00 | 0.00 | 0.00 | 25.45 | |
| | 14 | 2 | 85.30 | 2.39 | 0.00 | 0.00 | 0.00 | 30.64 | |
| | | 5 | -85.30 | -2.39 | 0.00 | 0.00 | 0.00 | 12.12 | |
| | 15 | 2 | 37.43 | 5.40 | 0.00 | 0.00 | 0.00 | 76.38 | |
| | | 5 | -37.43 | -5.40 | 0.00 | 0.00 | 0.00 | 20.11 | |





**MEMBER END FORCES STRUCTURE TYPE = SPACE**

**ALL UNITS ARE -- KIP FEET**

| MEMBER | LOAD | JT | AXIAL | SHEAR-Y | SHEAR-Z | TORSION | MOM-Y | MOM-Z |
|---|---|---|---|---|---|---|---|---|
| | 4 | 2 | 9.47 | 6.22 | 10.22 | 7.25 | -0.45 | 83.50 |
| | | 5 | -9.58 | -8.00 | -13.38 | -7.25 | -210.39 | 43.50 |
| | 5 | 2 | 1.53 | 1.17 | 1.42 | 0.63 | -0.04 | 13.39 |
| | | 5 | -1.53 | -1.17 | -1.42 | -0.63 | -25.24 | 7.55 |
| | 6 | 2 | 0.00 | 0.00 | 3.47 | 1.55 | -0.10 | 0.00 |
| | | 5 | 0.00 | 0.00 | -3.47 | -1.55 | -61.95 | 0.00 |
| | 7 | 2 | 0.01 | 0.13 | 0.00 | 0.00 | 0.00 | 0.41 |
| | | 5 | -0.01 | -0.13 | 0.00 | 0.00 | 0.00 | 1.89 |
| | 8 | 2 | 0.00 | 0.00 | 0.00 | 0.00 | 0.00 | 0.00 |
| | | 5 | 0.00 | 0.00 | 0.00 | 0.00 | 0.00 | 0.00 |
| | 10 | 2 | 0.00 | 0.00 | 0.00 | 0.00 | 0.00 | 0.00 |
| | | 5 | 0.00 | 0.00 | 0.00 | 0.00 | 0.00 | 0.00 |
| | 20 | 2 | 9.47 | 6.22 | 10.22 | 7.25 | -0.45 | 83.50 |
| | | 5 | -9.58 | -8.00 | -13.38 | -7.25 | -210.39 | 43.50 |
| | 30 | 2 | 4.37 | 3.04 | 7.95 | 4.36 | -0.27 | 38.44 |
| | | 5 | -4.40 | -3.57 | -8.90 | -4.36 | -150.31 | 20.60 |
| | 40 | 2 | 0.01 | 0.22 | 0.00 | 0.00 | 0.00 | 0.71 |
| | | 5 | -0.01 | -0.22 | 0.00 | 0.00 | 0.00 | 3.29 |
| | 50 | 2 | 9.48 | 6.44 | 10.22 | 7.25 | -0.45 | 84.21 |
| | | 5 | -9.59 | -8.22 | -13.38 | -7.25 | -210.39 | 46.79 |
| | 60 | 2 | 4.38 | 3.26 | 7.95 | 4.36 | -0.27 | 39.15 |
| | | 5 | -4.42 | -3.80 | -8.90 | -4.36 | -150.31 | 23.89 |
| | 100 | 2 | 336.74 | 15.59 | 0.00 | 0.00 | 0.00 | 198.33 |
| | | 5 | -360.34 | -14.10 | 0.00 | 0.00 | 0.00 | 66.86 |
| 5 | 2 | 3 | 206.41 | 5.33 | 0.00 | 0.00 | 0.00 | 57.66 |
| | | 6 | -230.02 | -3.85 | 0.00 | 0.00 | 0.00 | 24.36 |
| | 11 | 3 | 47.52 | 6.85 | 0.00 | 0.00 | 0.00 | 96.94 |
| | | 6 | -47.52 | -6.85 | 0.00 | 0.00 | 0.00 | 25.51 |
| | 12 | 3 | 108.30 | 3.04 | 0.00 | 0.00 | 0.00 | 38.85 |
| | | 6 | -108.30 | -3.04 | 0.00 | 0.00 | 0.00 | 15.39 |
| | 13 | 3 | 78.04 | 6.14 | 0.00 | 0.00 | 0.00 | 84.23 |
| | | 6 | -78.04 | -6.14 | 0.00 | 0.00 | 0.00 | 25.45 |
| | 14 | 3 | 37.43 | 5.40 | 0.00 | 0.00 | 0.00 | 76.38 |
| | | 6 | -37.43 | -5.40 | 0.00 | 0.00 | 0.00 | 20.11 |
| | 15 | 3 | 85.30 | 2.39 | 0.00 | 0.00 | 0.00 | 30.64 |
| | | 6 | -85.30 | -2.39 | 0.00 | 0.00 | 0.00 | 12.12 |
| | 4 | 3 | -9.47 | -6.22 | -10.22 | -7.26 | 0.46 | -83.52 |
| | | 6 | 9.58 | 8.00 | 13.38 | 7.26 | 210.37 | -43.52 |
| | 5 | 3 | -1.53 | -1.17 | -1.41 | -0.63 | 0.04 | -13.39 |
| | | 6 | 1.53 | 1.17 | 1.41 | 0.63 | 25.24 | -7.55 |
| | 6 | 3 | 0.00 | 0.00 | -3.47 | -1.55 | 0.10 | 0.00 |
| | | 6 | 0.00 | 0.00 | 3.47 | 1.55 | 61.95 | 0.00 |
| | 7 | 3 | 0.01 | 0.13 | 0.00 | 0.00 | 0.00 | 0.41 |
| | | 6 | -0.01 | -0.13 | 0.00 | 0.00 | 0.00 | 1.89 |
| | 8 | 3 | 0.00 | 0.00 | 0.00 | 0.00 | 0.00 | 0.00 |
| | | 6 | 0.00 | 0.00 | 0.00 | 0.00 | 0.00 | 0.00 |
| | 10 | 3 | 0.00 | 0.00 | 0.00 | 0.00 | 0.00 | 0.00 |
| | | 6 | 0.00 | 0.00 | 0.00 | 0.00 | 0.00 | 0.00 |
| | 20 | 3 | -9.47 | -6.22 | -10.22 | -7.26 | 0.46 | -83.52 |
| | | 6 | 9.58 | 8.00 | 13.38 | 7.26 | 210.37 | -43.52 |

**MEMBER END FORCES STRUCTURE TYPE = SPACE**

**ALL UNITS ARE -- KIP FEET**

| MEMBER | LOAD | JT | AXIAL | SHEAR-Y | SHEAR-Z | TORSION | MOM-Y | MOM-Z |
|---|---|---|---|---|---|---|---|---|
| | 30 | 3 | -4.37 | -3.04 | -7.95 | -4.37 | 0.28 | -38.45 |
| | | 6 | 4.40 | 3.57 | 8.90 | 4.37 | 150.30 | -20.61 |
| | 40 | 3 | 0.01 | 0.22 | 0.00 | 0.00 | 0.00 | 0.71 |
| | | 6 | -0.01 | -0.22 | 0.00 | 0.00 | 0.00 | 3.29 |
| | 50 | 3 | -9.45 | -6.00 | -10.22 | -7.26 | 0.46 | -82.81 |
| | | 6 | 9.56 | 7.78 | 13.38 | 7.26 | 210.37 | -40.22 |
| | 60 | 3 | -4.36 | -2.81 | -7.95 | -4.37 | 0.28 | -37.74 |
| | | 6 | 4.39 | 3.35 | 8.90 | 4.37 | 150.30 | -17.31 |
| | 100 | 3 | 336.74 | 15.59 | 0.00 | 0.00 | 0.00 | 198.32 |
| | | 6 | -360.34 | -14.10 | 0.00 | 0.00 | 0.00 | 66.87 |
| 6 | 2 | 5 | -0.44 | 11.63 | 0.00 | 0.00 | 0.00 | 38.54 |
| | | 6 | 0.44 | 11.63 | 0.00 | 0.00 | 0.00 | -38.52 |
| | 11 | 5 | -6.11 | -2.29 | 0.00 | 0.00 | 0.00 | -18.72 |
| | | 6 | 6.11 | 2.29 | 0.00 | 0.00 | 0.00 | -28.66 |
| | 12 | 5 | -6.11 | 2.29 | 0.00 | 0.00 | 0.00 | 28.67 |
| | | 6 | 6.11 | -2.29 | 0.00 | 0.00 | 0.00 | 18.73 |
| | 13 | 5 | -7.57 | 0.00 | 0.00 | 0.00 | 0.00 | 6.23 |
| | | 6 | 7.57 | 0.00 | 0.00 | 0.00 | 0.00 | -6.23 |
| | 14 | 5 | -4.81 | -1.81 | 0.00 | 0.00 | 0.00 | -14.75 |
| | | 6 | 4.81 | 1.81 | 0.00 | 0.00 | 0.00 | -22.58 |
| | 15 | 5 | -4.82 | 1.81 | 0.00 | 0.00 | 0.00 | 22.59 |
| | | 6 | 4.82 | -1.81 | 0.00 | 0.00 | 0.00 | 14.75 |
| | 4 | 5 | 0.00 | 11.94 | 1.83 | 0.01 | 2.23 | 123.48 |
| | | 6 | 0.00 | -11.94 | 1.83 | -0.01 | -2.22 | 123.49 |
| | 5 | 5 | 0.00 | 1.64 | 0.00 | 0.00 | 0.36 | 16.96 |
| | | 6 | 0.00 | -1.64 | 0.00 | 0.00 | -0.36 | 16.96 |
| | 6 | 5 | 0.00 | 0.00 | 0.00 | 0.00 | 0.88 | 0.00 |
| | | 6 | 0.00 | 0.00 | 0.00 | 0.00 | -0.88 | 0.00 |
| | 7 | 5 | -1.18 | 0.00 | 0.00 | 0.00 | 0.00 | -0.90 |
| | | 6 | 1.18 | 0.00 | 0.00 | 0.00 | 0.00 | 0.91 |
| | 8 | 5 | 0.00 | 0.00 | 0.00 | 0.00 | 0.00 | 0.00 |
| | | 6 | 0.00 | 0.00 | 0.00 | 0.00 | 0.00 | 0.00 |
| | 10 | 5 | 0.00 | 0.00 | 0.00 | 0.00 | 0.00 | 0.00 |
| | | 6 | 0.00 | 0.00 | 0.00 | 0.00 | 0.00 | 0.00 |
| | 20 | 5 | 0.00 | 11.94 | 1.83 | 0.01 | 2.23 | 123.48 |
| | | 6 | 0.00 | -11.94 | 1.83 | -0.01 | -2.22 | 123.49 |
| | 30 | 5 | 0.00 | 5.22 | 0.55 | 0.00 | 1.91 | 54.01 |
| | | 6 | 0.00 | -5.22 | 0.55 | 0.00 | -1.90 | 54.01 |
| | 40 | 5 | -2.05 | 0.00 | 0.00 | 0.00 | 0.00 | -1.57 |
| | | 6 | 2.05 | 0.00 | 0.00 | 0.00 | 0.00 | 1.58 |
| | 50 | 5 | -2.05 | 11.94 | 1.83 | 0.01 | 2.23 | 121.91 |
| | | 6 | 2.05 | -11.94 | 1.83 | -0.01 | -2.22 | 125.07 |
| | 60 | 5 | -2.05 | 5.22 | 0.55 | 0.00 | 1.91 | 52.44 |
| | | 6 | 2.05 | -5.22 | 0.55 | 0.00 | -1.90 | 55.59 |
| | 100 | 5 | -13.09 | 11.63 | 0.00 | 0.00 | 0.00 | 48.95 |
| | | 6 | 13.09 | 11.63 | 0.00 | 0.00 | 0.00 | -48.92 |
| 7 | 2 | 5 | 244.30 | 2.64 | 0.00 | 0.00 | 0.00 | 14.19 |
| | | 7 | -276.14 | -0.66 | 0.00 | 0.00 | 0.00 | 14.76 |
| | 11 | 5 | 105.64 | -2.86 | 0.00 | 0.00 | 0.00 | -34.11 |
| | | 7 | -105.64 | 2.86 | 0.00 | 0.00 | 0.00 | -16.07 |

$V_{DL}$ — Max. Neg. $M_{DL}$

$V_{LL+I}$ — Max. Neg. $M_{LL+I}$





**MEMBER END FORCES STRUCTURE TYPE = SPACE**

**ALL UNITS ARE -- KIP FEET**

| MEMBER | LOAD | JT | AXIAL | SHEAR-Y | SHEAR-Z | TORSION | MOM-Y | MOM-Z |
|---|---|---|---|---|---|---|---|---|
| | 12 | 5 | 49.43 | 0.64 | 0.00 | 0.00 | 0.00 | 3.16 |
| | | 7 | -49.43 | -0.64 | 0.00 | 0.00 | 0.00 | 8.04 |
| | 13 | 5 | 77.56 | -1.38 | 0.00 | 0.00 | 0.00 | -19.22 |
| | | 7 | -77.56 | 1.38 | 0.00 | 0.00 | 0.00 | -4.96 |
| | 14 | 5 | 83.20 | -2.25 | 0.00 | 0.00 | 0.00 | -26.87 |
| | | 7 | -83.20 | 2.25 | 0.00 | 0.00 | 0.00 | -12.66 |
| | 15 | 5 | 38.93 | 0.50 | 0.00 | 0.00 | 0.00 | 2.48 |
| | | 7 | -38.93 | -0.50 | 0.00 | 0.00 | 0.00 | 6.34 |
| | 4 | 5 | 21.49 | 7.26 | 15.21 | 9.37 | 210.26 | 79.99 |
| | | 7 | -21.64 | -9.68 | -18.32 | -9.37 | -504.21 | 68.56 |
| | 5 | 5 | 3.17 | 1.07 | 1.41 | 0.98 | 25.22 | 9.41 |
| | | 7 | -3.17 | -1.07 | -1.41 | -0.98 | -50.03 | 9.37 |
| | 6 | 5 | 0.00 | 0.00 | 3.47 | 2.40 | 61.90 | 0.00 |
| | | 7 | 0.00 | 0.00 | -3.47 | -2.40 | -122.79 | 0.00 |
| | 7 | 5 | -0.06 | -1.05 | 0.00 | 0.00 | 0.00 | -2.79 |
| | | 7 | 0.06 | 1.05 | 0.00 | 0.00 | 0.00 | -15.55 |
| | 8 | 5 | 0.00 | 0.00 | 0.00 | 0.00 | 0.00 | 0.00 |
| | | 7 | 0.00 | 0.00 | 0.00 | 0.00 | 0.00 | 0.00 |
| | 10 | 5 | 0.00 | 0.00 | 0.00 | 0.00 | 0.00 | 0.00 |
| | | 7 | 0.00 | 0.00 | 0.00 | 0.00 | 0.00 | 0.00 |
| | 20 | 5 | 21.49 | 7.26 | 15.21 | 9.37 | 210.26 | 79.99 |
| | | 7 | -21.64 | -9.68 | -18.32 | -9.37 | -504.21 | 68.56 |
| | 30 | 5 | 9.61 | 3.25 | 9.45 | 6.19 | 150.19 | 33.41 |
| | | 7 | -9.66 | -3.98 | -10.38 | -6.19 | -324.08 | 29.94 |
| | 40 | 5 | -0.11 | -1.82 | 0.00 | 0.00 | 0.00 | -4.86 |
| | | 7 | 0.11 | 1.82 | 0.00 | 0.00 | 0.00 | -27.05 |
| | 50 | 5 | 21.38 | 5.44 | 15.21 | 9.37 | 210.26 | 75.13 |
| | | 7 | -21.53 | -7.86 | -18.32 | -9.37 | -504.21 | 41.51 |
| | 60 | 5 | 9.50 | 1.43 | 9.45 | 6.19 | 150.19 | 28.54 |
| | | 7 | -9.55 | -2.15 | -10.38 | -6.19 | -324.08 | 2.89 |
| | 100 | 5 | 373.83 | 0.34 | 0.00 | 0.00 | 0.00 | -17.91 |
| | | 7 | -405.67 | 1.64 | 0.00 | 0.00 | 0.00 | 6.46 |
| 8 | 2 | 6 | 244.29 | 2.64 | 0.00 | 0.00 | 0.00 | 14.16 |
| | | 8 | -276.14 | -0.66 | 0.00 | 0.00 | 0.00 | 14.79 |
| | 11 | 6 | 49.43 | 0.64 | 0.00 | 0.00 | 0.00 | 3.15 |
| | | 8 | -49.43 | -0.64 | 0.00 | 0.00 | 0.00 | 8.06 |
| | 12 | 6 | 105.64 | -2.86 | 0.00 | 0.00 | 0.00 | -34.11 |
| | | 8 | -105.64 | 2.86 | 0.00 | 0.00 | 0.00 | -16.07 |
| | 13 | 6 | 77.56 | -1.38 | 0.00 | 0.00 | 0.00 | -19.23 |
| | | 8 | -77.56 | 1.38 | 0.00 | 0.00 | 0.00 | -4.96 |
| | 14 | 6 | 38.93 | 0.50 | 0.00 | 0.00 | 0.00 | 2.47 |
| | | 8 | -38.93 | -0.50 | 0.00 | 0.00 | 0.00 | 6.35 |
| | 15 | 6 | 83.20 | -2.25 | 0.00 | 0.00 | 0.00 | -26.87 |
| | | 8 | -83.20 | 2.25 | 0.00 | 0.00 | 0.00 | -12.66 |
| | 4 | 6 | -21.49 | -7.26 | -15.21 | -9.37 | -210.23 | -79.97 |
| | | 8 | 21.64 | 9.68 | 18.32 | 9.37 | 504.19 | -68.55 |
| | 5 | 6 | -3.17 | -1.07 | -1.42 | -0.98 | -25.22 | -9.41 |
| | | 8 | 3.17 | 1.07 | 1.42 | 0.98 | 50.03 | -9.37 |
| | 6 | 6 | 0.00 | 0.00 | -3.47 | -2.40 | -61.89 | 0.00 |
| | | 8 | 0.00 | 0.00 | 3.47 | 2.40 | 122.79 | 0.00 |

**MEMBER END FORCES STRUCTURE TYPE = SPACE**

**ALL UNITS ARE -- KIP FEET**

| MEMBER | LOAD | JT | AXIAL | SHEAR-Y | SHEAR-Z | TORSION | MOM-Y | MOM-Z | |
|---|---|---|---|---|---|---|---|---|---|
| | 7 | 6 | -0.07 | -1.05 | 0.00 | 0.00 | 0.00 | -2.80 | |
| | | 8 | 0.07 | 1.05 | 0.00 | 0.00 | 0.00 | -15.54 | |
| | 8 | 6 | 0.00 | 0.00 | 0.00 | 0.00 | 0.00 | 0.00 | |
| | | 8 | 0.00 | 0.00 | 0.00 | 0.00 | 0.00 | 0.00 | |
| | 10 | 6 | 0.00 | 0.00 | 0.00 | 0.00 | 0.00 | 0.00 | |
| | | 8 | 0.00 | 0.00 | 0.00 | 0.00 | 0.00 | 0.00 | |
| | 20 | 6 | -21.49 | -7.26 | -15.21 | -9.37 | -210.23 | -79.97 | |
| | | 8 | 21.64 | 9.68 | 18.32 | 9.37 | 504.19 | -68.55 | |
| | 30 | 6 | -9.61 | -3.25 | -9.45 | -6.18 | -150.18 | -33.40 | |
| | | 8 | 9.66 | 3.97 | 10.38 | 6.18 | 324.07 | -29.94 | |
| | 40 | 6 | -0.11 | -1.82 | 0.00 | 0.00 | 0.00 | -4.87 | |
| | | 8 | 0.11 | 1.82 | 0.00 | 0.00 | 0.00 | -27.04 | |
| | 50 | 6 | -21.61 | -9.08 | -15.21 | -9.37 | -210.23 | -84.84 | |
| | | 8 | 21.76 | 11.50 | 18.32 | 9.37 | 504.19 | -95.59 | |
| | 60 | 6 | -9.73 | -5.07 | -9.45 | -6.18 | -150.18 | -38.27 | |
| | | 8 | 9.77 | 5.79 | 10.38 | 6.18 | 324.07 | -56.98 | |
| | 100 | 6 | 373.82 | 0.34 | 0.00 | 0.00 | 0.00 | -17.95 | |
| | | 8 | -405.67 | 1.64 | 0.00 | 0.00 | 0.00 | 6.51 | |
| 9 | 2 | 7 | 4.36 | 12.86 | 0.00 | 0.00 | 0.00 | 44.58 | - MAX. NEG. $M_{DL}$ |
| | | 8 | -4.36 | 12.85 | 0.00 | 0.00 | 0.00 | -44.48 | |
| | 11 | 7 | 1.32 | -1.96 | 0.00 | 0.00 | 0.00 | -23.35 | |
| | | 8 | -1.32 | 1.96 | 0.00 | 0.00 | 0.00 | -21.43 | |
| | 12 | 7 | 1.33 | 1.96 | 0.00 | 0.00 | 0.00 | 21.45 | |
| | | 8 | -1.33 | -1.96 | 0.00 | 0.00 | 0.00 | 23.37 | - MAX. NEG. $M_{LL+I}$ |
| | 13 | 7 | 1.65 | 0.00 | 0.00 | 0.00 | 0.00 | -1.14 | |
| | | 8 | -1.65 | 0.00 | 0.00 | 0.00 | 0.00 | 1.16 | |
| | 14 | 7 | 1.04 | -1.54 | 0.00 | 0.00 | 0.00 | -18.39 | |
| | | 8 | -1.04 | 1.54 | 0.00 | 0.00 | 0.00 | -16.88 | |
| | 15 | 7 | 1.04 | 1.54 | 0.00 | 0.00 | 0.00 | 16.90 | |
| | | 8 | -1.04 | -1.54 | 0.00 | 0.00 | 0.00 | 18.41 | |
| | 4 | 7 | 0.00 | 11.06 | 2.02 | 0.01 | -1.23 | 126.42 | |
| | | 8 | 0.00 | -11.06 | 2.03 | -0.01 | 1.33 | 126.43 | |
| | 5 | 7 | 0.00 | 1.24 | 0.00 | 0.00 | 0.17 | 14.19 | |
| | | 8 | 0.00 | -1.24 | 0.00 | 0.00 | -0.17 | 14.19 | |
| | 6 | 7 | 0.00 | 0.00 | 0.00 | 0.00 | 0.43 | 0.00 | |
| | | 8 | 0.00 | 0.00 | 0.00 | 0.00 | -0.41 | 0.00 | |
| | 7 | 7 | 13.96 | 0.00 | 0.00 | 0.00 | 0.00 | 5.26 | |
| | | 8 | -13.96 | 0.00 | 0.00 | 0.00 | 0.00 | -5.24 | |
| | 8 | 7 | 0.00 | 0.00 | 0.00 | 0.00 | 0.00 | 0.00 | |
| | | 8 | 0.00 | 0.00 | 0.00 | 0.00 | 0.00 | 0.00 | |
| | 10 | 7 | 0.00 | 0.00 | 0.00 | 0.00 | 0.00 | 0.00 | |
| | | 8 | 0.00 | 0.00 | 0.00 | 0.00 | 0.00 | 0.00 | |
| | 20 | 7 | 0.00 | 11.06 | 2.02 | 0.01 | -1.23 | 126.42 | |
| | | 8 | 0.00 | -11.06 | 2.03 | -0.01 | 1.33 | 126.43 | |
| | 30 | 7 | 0.00 | 4.56 | 0.60 | 0.01 | 0.23 | 52.12 | |
| | | 8 | 0.00 | -4.56 | 0.61 | -0.01 | -0.18 | 52.12 | |
| | 40 | 7 | 24.28 | 0.00 | 0.00 | 0.00 | 0.00 | 9.16 | |
| | | 8 | -24.28 | 0.00 | 0.00 | 0.00 | 0.00 | -9.12 | |
| | 50 | 7 | 24.28 | 11.06 | 2.02 | 0.01 | -1.23 | 135.58 | |
| | | 8 | -24.28 | -11.06 | 2.03 | -0.01 | 1.33 | 117.31 | |





**MEMBER END FORCES STRUCTURE TYPE = SPACE**

**ALL UNITS ARE -- KIP FEET**

| MEMBER | LOAD | JT | AXIAL | SHEAR-Y | SHEAR-Z | TORSION | MOM-Y | MOM-Z |
|---|---|---|---|---|---|---|---|---|
| | 60 | 7 | 24.28 | 4.56 | 0.60 | 0.01 | 0.23 | 61.27 |
| | | 8 | -24.28 | -4.56 | 0.61 | -0.01 | -0.18 | 43.00 |
| | 100 | 7 | 7.11 | 12.86 | 0.00 | 0.00 | 0.00 | 42.67 |
| | | 8 | -7.11 | 12.85 | 0.00 | 0.00 | 0.00 | -42.54 |
| 10 | 2 | 7 | 291.94 | 4.00 | 0.00 | 0.00 | 0.00 | 29.82 |
| | | 9 | -335.15 | -1.30 | 0.00 | 0.00 | 0.00 | 19.53 |
| | 11 | 7 | 103.76 | -1.43 | 0.00 | 0.00 | 0.00 | -7.28 |
| | | 9 | -103.76 | 1.43 | 0.00 | 0.00 | 0.00 | -19.42 |
| | 12 | 7 | 51.47 | 1.83 | 0.00 | 0.00 | 0.00 | 13.41 |
| | | 9 | -51.47 | -1.83 | 0.00 | 0.00 | 0.00 | 20.71 |
| | 13 | 7 | 77.67 | 0.25 | 0.00 | 0.00 | 0.00 | 3.82 |
| | | 9 | -77.67 | -0.25 | 0.00 | 0.00 | 0.00 | 0.86 |
| | 14 | 7 | 81.72 | -1.13 | 0.00 | 0.00 | 0.00 | -5.73 |
| | | 9 | -81.72 | 1.13 | 0.00 | 0.00 | 0.00 | -15.29 |
| | 15 | 7 | 40.53 | 1.44 | 0.00 | 0.00 | 0.00 | 10.56 |
| | | 9 | -40.53 | -1.44 | 0.00 | 0.00 | 0.00 | 16.31 |
| | 4 | 7 | 32.68 | 8.99 | 20.34 | 8.22 | 504.29 | 57.86 |
| | | 9 | -32.89 | -12.26 | -23.63 | -8.22 | -913.52 | 139.85 |
| | 5 | 7 | 4.41 | 0.99 | 1.41 | 1.16 | 50.02 | 4.82 |
| | | 9 | -4.41 | -0.99 | -1.41 | -1.16 | -76.35 | 13.67 |
| | 6 | 7 | 0.00 | 0.00 | 3.47 | 2.84 | 122.77 | 0.00 |
| | | 9 | 0.00 | 0.00 | -3.47 | -2.84 | -187.40 | 0.00 |
| | 7 | 7 | 0.81 | 12.88 | 0.00 | 0.00 | 0.00 | 20.81 |
| | | 9 | -0.81 | -12.88 | 0.00 | 0.00 | 0.00 | 219.02 |
| | 8 | 7 | 0.00 | 0.00 | 0.00 | 0.00 | 0.00 | 0.00 |
| | | 9 | 0.00 | 0.00 | 0.00 | 0.00 | 0.00 | 0.00 |
| | 10 | 7 | 0.00 | 0.00 | 0.00 | 0.00 | 0.00 | 0.00 |
| | | 9 | 0.00 | 0.00 | 0.00 | 0.00 | 0.00 | 0.00 |
| | 20 | 7 | 32.68 | 8.99 | 20.34 | 8.22 | 504.29 | 57.86 |
| | | 9 | -32.89 | -12.26 | -23.63 | -8.22 | -913.52 | 139.85 |
| | 30 | 7 | 14.21 | 3.69 | 10.99 | 6.47 | 324.07 | 22.18 |
| | | 9 | -14.27 | -4.67 | -11.98 | -6.47 | -537.82 | 55.63 |
| | 40 | 7 | 1.40 | 22.42 | 0.00 | 0.00 | 0.00 | 36.21 |
| | | 9 | -1.40 | -22.42 | 0.00 | 0.00 | 0.00 | 381.10 |
| | 50 | 7 | 34.09 | 31.40 | 20.34 | 8.22 | 504.29 | 94.07 |
| | | 9 | -34.29 | -34.67 | -23.63 | -8.22 | -913.52 | 520.95 |
| | 60 | 7 | 15.61 | 26.11 | 10.99 | 6.47 | 324.07 | 58.39 |
| | | 9 | -15.67 | -27.09 | -11.98 | -6.47 | -537.82 | 436.73 |
| | 100 | 7 | 421.65 | 4.42 | 0.00 | 0.00 | 0.00 | 36.21 |
| | | 9 | -464.86 | -1.72 | 0.00 | 0.00 | 0.00 | 20.96 |
| 11 | 2 | 8 | 291.93 | 4.00 | 0.00 | 0.00 | 0.00 | 29.70 |
| | | 10 | -335.14 | -1.30 | 0.00 | 0.00 | 0.00 | 19.67 |
| | 11 | 8 | 51.46 | 1.83 | 0.00 | 0.00 | 0.00 | 13.37 |
| | | 10 | -51.46 | -1.83 | 0.00 | 0.00 | 0.00 | 20.72 |
| | 12 | 8 | 103.76 | -1.43 | 0.00 | 0.00 | 0.00 | -7.30 |
| | | 10 | -103.76 | 1.43 | 0.00 | 0.00 | 0.00 | -19.36 |
| | 13 | 8 | 77.67 | 0.25 | 0.00 | 0.00 | 0.00 | 3.79 |
| | | 10 | -77.67 | -0.25 | 0.00 | 0.00 | 0.00 | 0.89 |
| | 14 | 8 | 40.53 | 1.44 | 0.00 | 0.00 | 0.00 | 10.53 |
| | | 10 | -40.53 | -1.44 | 0.00 | 0.00 | 0.00 | 16.32 |

**MEMBER END FORCES STRUCTURE TYPE = SPACE**

**ALL UNITS ARE -- KIP FEET**

| MEMBER | LOAD | JT | AXIAL | SHEAR-Y | SHEAR-Z | TORSION | MOM-Y | MOM-Z |
|---|---|---|---|---|---|---|---|---|
| | 15 | 8 | 81.72 | -1.13 | 0.00 | 0.00 | 0.00 | -5.75 |
| | | 10 | -81.72 | 1.13 | 0.00 | 0.00 | 0.00 | -15.25 |
| | 4 | 8 | -32.68 | -8.99 | -20.34 | -8.12 | -504.26 | -57.87 |
| | | 10 | 32.89 | 12.26 | 23.64 | 8.12 | 913.65 | -139.88 |
| | 5 | 8 | -4.41 | -0.99 | -1.42 | -1.15 | -50.02 | -4.82 |
| | | 10 | 4.41 | 0.99 | 1.42 | 1.15 | 76.36 | -13.68 |
| | 6 | 8 | 0.00 | 0.00 | -3.47 | -2.82 | -122.76 | 0.00 |
| | | 10 | 0.00 | 0.00 | 3.47 | 2.82 | 187.43 | 0.00 |
| | 7 | 8 | 0.80 | 12.88 | 0.00 | 0.00 | 0.00 | 20.78 |
| | | 10 | -0.80 | -12.88 | 0.00 | 0.00 | 0.00 | 219.05 |
| | 8 | 8 | 0.00 | 0.00 | 0.00 | 0.00 | 0.00 | 0.00 |
| | | 10 | 0.00 | 0.00 | 0.00 | 0.00 | 0.00 | 0.00 |
| | 10 | 8 | 0.00 | 0.00 | 0.00 | 0.00 | 0.00 | 0.00 |
| | | 10 | 0.00 | 0.00 | 0.00 | 0.00 | 0.00 | 0.00 |
| | 20 | 8 | -32.68 | -8.99 | -20.34 | -8.12 | -504.26 | -57.87 |
| | | 10 | 32.89 | 12.26 | 23.64 | 8.12 | 913.65 | -139.88 |
| | 30 | 8 | -14.21 | -3.69 | -10.99 | -6.41 | -324.05 | -22.18 |
| | | 10 | 14.27 | 4.67 | 11.98 | 6.41 | 537.89 | -55.64 |
| | 40 | 8 | 1.40 | 22.42 | 0.00 | 0.00 | 0.00 | 36.16 |
| | | 10 | -1.40 | -22.42 | 0.00 | 0.00 | 0.00 | 381.15 |
| | 50 | 8 | -31.29 | 13.43 | -20.34 | -8.12 | -504.26 | -21.71 |
| | | 10 | 31.49 | -10.16 | 23.64 | 8.12 | 913.65 | 241.27 |
| | 60 | 8 | -12.81 | 18.73 | -10.99 | -6.41 | -324.05 | 13.98 |
| | | 10 | 12.87 | -17.75 | 11.98 | 6.41 | 537.89 | 325.51 |
| | 100 | 8 | 421.63 | 4.42 | 0.00 | 0.00 | 0.00 | 36.03 |
| | | 10 | -464.84 | -1.72 | 0.00 | 0.00 | 0.00 | 21.15 |
| 13 | 2 | 9 | 349.58 | 4.39 | 0.00 | 0.00 | 0.00 | 30.90 |
| | | 12 | -361.86 | -3.62 | 0.00 | 0.00 | 0.00 | -12.32 |
| | 11 | 9 | 102.65 | -1.85 | 0.00 | 0.00 | 0.00 | 5.74 |
| | | 12 | -102.65 | 1.85 | 0.00 | 0.00 | 0.00 | -14.30 |
| | 12 | 9 | 52.54 | 1.32 | 0.00 | 0.00 | 0.00 | -6.92 |
| | | 12 | -52.54 | -1.32 | 0.00 | 0.00 | 0.00 | 13.05 |
| | 13 | 9 | 77.64 | -0.27 | 0.00 | 0.00 | 0.00 | -0.75 |
| | | 12 | -77.64 | 0.27 | 0.00 | 0.00 | 0.00 | -0.51 |
| | 14 | 9 | 80.85 | -1.45 | 0.00 | 0.00 | 0.00 | 4.52 |
| | | 12 | -80.85 | 1.45 | 0.00 | 0.00 | 0.00 | -11.26 |
| | 15 | 9 | 41.38 | 1.04 | 0.00 | 0.00 | 0.00 | -5.45 |
| | | 12 | -41.38 | -1.04 | 0.00 | 0.00 | 0.00 | 10.28 |
| | 4 | 9 | 40.04 | 11.78 | 27.34 | -6.29 | 914.45 | -49.65 |
| | | 12 | -40.10 | -12.71 | -28.16 | 6.29 | -1043.18 | 106.46 |
| | 5 | 9 | 5.08 | 0.95 | 1.41 | 1.19 | 76.35 | -5.19 |
| | | 12 | -5.08 | -0.95 | -1.41 | -1.19 | -82.91 | 9.59 |
| | 6 | 9 | 0.00 | 0.00 | 3.47 | 2.91 | 187.40 | 0.00 |
| | | 12 | 0.00 | 0.00 | -3.47 | -2.91 | -203.51 | 0.00 |
| | 7 | 9 | -22.31 | -356.38 | 0.00 | 0.00 | 0.00 | -403.39 |
| | | 12 | 22.31 | 356.38 | 0.00 | 0.00 | 0.00 | -1249.87 |
| | 8 | 9 | 0.00 | 0.00 | 0.00 | 0.00 | 0.00 | 0.00 |
| | | 12 | 0.00 | 0.00 | 0.00 | 0.00 | 0.00 | 0.00 |
| | 10 | 9 | 0.00 | 0.00 | 0.00 | 0.00 | 0.00 | 0.00 |
| | | 12 | 0.00 | 0.00 | 0.00 | 0.00 | 0.00 | 0.00 |





**MEMBER END FORCES STRUCTURE TYPE = SPACE**

**ALL UNITS ARE -- KIP FEET**

| MEMBER | LOAD | JT | AXIAL | SHEAR-Y | SHEAR-Z | TORSION | MOM-Y | MOM-Z |
|---|---|---|---|---|---|---|---|---|
| | 20 | 9 | 40.04 | 11.78 | 27.34 | -6.29 | 914.45 | -49.65 |
| | | 12 | -40.10 | -12.71 | -28.16 | 6.29 | -1043.18 | 106.46 |
| | 30 | 9 | 17.09 | 4.48 | 13.09 | 2.21 | 538.09 | -20.08 |
| | | 12 | -17.11 | -4.76 | -13.33 | -2.21 | -599.38 | 41.52 |
| | 40 | 9 | -38.82 | -620.10 | 0.00 | 0.00 | 0.00 | -701.90 |
| | | 12 | 38.82 | 620.10 | 0.00 | 0.00 | 0.00 | -2174.77 |
| | 50 | 9 | 1.22 | -608.31 | 27.34 | -6.29 | 914.45 | -751.54 |
| | | 12 | -1.27 | 607.38 | -28.16 | 6.29 | -1043.18 | -2068.31 |
| | 60 | 9 | -21.73 | -615.61 | 13.09 | 2.21 | 538.09 | -721.98 |
| | | 12 | 21.72 | 615.33 | -13.33 | -2.21 | -599.38 | -2133.25 |
| | 100 | 9 | 479.24 | 3.94 | 0.00 | 0.00 | 0.00 | 29.66 |
| | | 12 | -491.52 | -3.17 | 0.00 | 0.00 | 0.00 | -13.17 |
| 14 | 2 | 10 | 349.51 | 3.64 | 0.00 | 0.00 | 0.00 | 29.88 |
| | | 13 | -361.78 | -2.85 | 0.00 | 0.00 | 0.00 | -14.82 |
| | 11 | 10 | 52.52 | 1.18 | 0.00 | 0.00 | 0.00 | -7.11 |
| | | 13 | -52.52 | -1.18 | 0.00 | 0.00 | 0.00 | 12.59 |
| | 12 | 10 | 102.63 | -2.04 | 0.00 | 0.00 | 0.00 | 5.48 |
| | | 13 | -102.63 | 2.04 | 0.00 | 0.00 | 0.00 | -14.93 |
| | 13 | 10 | 77.63 | -0.44 | 0.00 | 0.00 | 0.00 | -0.97 |
| | | 13 | -77.63 | 0.44 | 0.00 | 0.00 | 0.00 | -1.05 |
| | 14 | 10 | 41.36 | 0.93 | 0.00 | 0.00 | 0.00 | -5.60 |
| | | 13 | -41.36 | -0.93 | 0.00 | 0.00 | 0.00 | 9.92 |
| | 15 | 10 | 80.83 | -1.61 | 0.00 | 0.00 | 0.00 | 4.31 |
| | | 13 | -80.83 | 1.61 | 0.00 | 0.00 | 0.00 | -11.76 |
| | 4 | 10 | -40.07 | -11.74 | -27.36 | 4.54 | -914.59 | 49.70 |
| | | 13 | 40.13 | 12.67 | 28.18 | -4.54 | 1043.42 | -106.31 |
| | 5 | 10 | -5.08 | -0.94 | -1.42 | -1.33 | -76.36 | 5.20 |
| | | 13 | 5.08 | 0.94 | 1.42 | 1.33 | 82.93 | -9.57 |
| | 6 | 10 | 0.00 | 0.00 | -3.47 | -3.27 | -187.42 | 0.00 |
| | | 13 | 0.00 | 0.00 | 3.47 | 3.27 | 203.54 | 0.00 |
| | 7 | 10 | -23.10 | -356.33 | 0.00 | 0.00 | 0.00 | -403.63 |
| | | 13 | 23.10 | 356.33 | 0.00 | 0.00 | 0.00 | -1249.63 |
| | 8 | 10 | 0.00 | 0.00 | 0.00 | 0.00 | 0.00 | 0.00 |
| | | 13 | 0.00 | 0.00 | 0.00 | 0.00 | 0.00 | 0.00 |
| | 10 | 10 | 0.00 | 0.00 | 0.00 | 0.00 | 0.00 | 0.00 |
| | | 13 | 0.00 | 0.00 | 0.00 | 0.00 | 0.00 | 0.00 |
| | 20 | 10 | -40.07 | -11.74 | -27.36 | 4.54 | -914.59 | 49.70 |
| | | 13 | 40.13 | 12.67 | 28.18 | -4.54 | 1043.42 | -106.31 |
| | 30 | 10 | -17.10 | -4.46 | -13.10 | -3.25 | -538.16 | 20.11 |
| | | 13 | 17.12 | 4.74 | 13.34 | 3.25 | 599.50 | -41.46 |
| | 40 | 10 | -40.19 | -620.01 | 0.00 | 0.00 | 0.00 | -702.31 |
| | | 13 | 40.19 | 620.01 | 0.00 | 0.00 | 0.00 | -2174.35 |
| | 50 | 10 | -80.26 | -631.74 | -27.36 | 4.54 | -914.59 | -652.61 |
| | | 13 | 80.32 | 632.68 | 28.18 | -4.54 | 1043.42 | -2280.66 |
| | 60 | 10 | -57.29 | -624.47 | -13.10 | -3.25 | -538.16 | -682.20 |
| | | 13 | 57.31 | 624.75 | 13.34 | 3.25 | 599.50 | -2215.81 |
| | 100 | 10 | 479.14 | 2.92 | 0.00 | 0.00 | 0.00 | 28.26 |
| | | 13 | -491.42 | -2.12 | 0.00 | 0.00 | 0.00 | -16.58 |

********** END OF LATEST ANALYSIS RESULT **********

138. SECTION 0.54 MEMB 13 14
139. PRINT MEMBER SECTION FORCES LIST 13 14





**MEMBER FORCES AT INTERMEDIATE SECTIONS**
**----------**
**ALL UNITS ARE -- KIP FEET**

| MEMB | LOAD | SEC | SHEAR-Y | SHEAR-Z | MOM-Y | MOM-Z |
|---|---|---|---|---|---|---|
| 13 | 2 | 0.54 | 3.97 | 0.00 | 0.00 | 20.43 |
| | 11 | 0.54 | -1.85 | 0.00 | 0.00 | 10.36 |
| | 12 | 0.54 | 1.32 | 0.00 | 0.00 | -10.23 |
| | 13 | 0.54 | -0.27 | 0.00 | 0.00 | -0.07 |
| | 14 | 0.54 | -1.45 | 0.00 | 0.00 | 8.16 |
| | 15 | 0.54 | 1.04 | 0.00 | 0.00 | -8.06 |
| | 4 | 0.54 | 12.28 | 27.78 | 983.49 | -79.79 |
| | 5 | 0.54 | 0.95 | 1.41 | 79.90 | -7.56 |
| | 6 | 0.54 | 0.00 | 3.47 | 196.10 | 0.00 |
| | 7 | 0.54 | -356.38 | 0.00 | 0.00 | 489.37 |
| | 8 | 0.54 | 0.00 | 0.00 | 0.00 | 0.00 |
| | 10 | 0.54 | 0.00 | 0.00 | 0.00 | 0.00 |
| | 20 | 0.54 | 12.28 | 27.78 | 983.49 | -79.79 |
| | 30 | 0.54 | 4.63 | 13.22 | 571.04 | -31.50 |
| | 40 | 0.54 | -620.10 | 0.00 | 0.00 | 851.50 |
| | 50 | 0.54 | -607.81 | 27.78 | 983.49 | 771.71 |
| | 60 | 0.54 | -615.46 | 13.22 | 571.04 | 820.00 |
| | 100 | 0.54 | 3.52 | 0.00 | 0.00 | 20.31 |
| 14 | 2 | 0.54 | 3.21 | 0.00 | 0.00 | 21.29 |
| | 11 | 0.54 | 1.18 | 0.00 | 0.00 | -10.07 |
| | 12 | 0.54 | -2.04 | 0.00 | 0.00 | 10.58 |
| | 13 | 0.54 | -0.44 | 0.00 | 0.00 | 0.12 |
| | 14 | 0.54 | 0.93 | 0.00 | 0.00 | -7.93 |
| | 15 | 0.54 | -1.61 | 0.00 | 0.00 | 8.33 |
| | 4 | 0.54 | -12.24 | -27.80 | -983.68 | 79.73 |
| | 5 | 0.54 | -0.94 | -1.42 | -79.91 | 7.56 |
| | 6 | 0.54 | 0.00 | -3.47 | -196.13 | 0.00 |
| | 7 | 0.54 | -356.33 | 0.00 | 0.00 | 489.13 |
| | 8 | 0.54 | 0.00 | 0.00 | 0.00 | 0.00 |
| | 10 | 0.54 | 0.00 | 0.00 | 0.00 | 0.00 |
| | 20 | 0.54 | -12.24 | -27.80 | -983.68 | 79.73 |
| | 30 | 0.54 | -4.61 | -13.23 | -571.14 | 31.48 |
| | 40 | 0.54 | -620.01 | 0.00 | 0.00 | 851.09 |
| | 50 | 0.54 | -632.25 | -27.80 | -983.68 | 930.82 |
| | 60 | 0.54 | -624.62 | -13.23 | -571.14 | 882.56 |
| | 100 | 0.54 | 2.49 | 0.00 | 0.00 | 21.49 |

********** END OF LATEST ANALYSIS RESULT **********

140. LOAD LIST 2 13 100
141. SECTION 0.45 0.5 0.55 MEMB 2 6 9
142. PRINT MEMBER SECTION FORCES LIST 2 6 9

**MEMBER FORCES AT INTERMEDIATE SECTIONS**

**ALL UNITS ARE -- KIP FEET**

| MEMB | LOAD | SEC | SHEAR-Y | SHEAR-Z | MOM-Y | MOM-Z | |
|---|---|---|---|---|---|---|---|
| 2 | 2 | 0.45 | 1.45 | 0.00 | 0.00 | -202.58 | |
| | | 0.50 | 0.00 | 0.00 | 0.00 | -203.25 | - MAX. POS. MDL |
| | | 0.55 | -1.45 | 0.00 | 0.00 | -202.58 | |
| | 13 | 0.45 | 0.00 | 0.00 | 0.00 | -165.12 | |
| | | 0.50 | 0.00 | 0.00 | 0.00 | -165.12 | - MAX. POS. MLL+I |
| | | 0.55 | 0.00 | 0.00 | 0.00 | -165.12 | |
| | 100 | 0.45 | 1.45 | 0.00 | 0.00 | -478.33 | |
| | | 0.50 | 0.00 | 0.00 | 0.00 | -479.00 | - MAX. POS. FACT. M |
| | | 0.55 | -1.45 | 0.00 | 0.00 | -478.33 | |
| 6 | 2 | 0.45 | 1.16 | 0.00 | 0.00 | -21.00 | |
| | | 0.50 | 0.00 | 0.00 | 0.00 | -21.61 | - MAX. POS. MDL |
| | | 0.55 | -1.16 | 0.00 | 0.00 | -21.01 | |
| | 13 | 0.45 | 0.00 | 0.00 | 0.00 | 6.23 | |
| | | 0.50 | 0.00 | 0.00 | 0.00 | 6.23 | - MAX. POS. MLL+I |
| | | 0.55 | 0.00 | 0.00 | 0.00 | 6.23 | |
| | 100 | 0.45 | 1.16 | 0.00 | 0.00 | -10.60 | |
| | | 0.50 | 0.00 | 0.00 | 0.00 | -11.20 | - MAX. POS. FACT. M |
| | | 0.55 | -1.16 | 0.00 | 0.00 | -10.60 | |
| 9 | 2 | 0.45 | 1.29 | 0.00 | 0.00 | -28.21 | |
| | | 0.50 | 0.00 | 0.00 | 0.00 | -28.95 | - MAX. POS. MDL |
| | | 0.55 | -1.28 | 0.00 | 0.00 | -28.22 | |
| | 13 | 0.45 | 0.00 | 0.00 | 0.00 | -1.15 | |
| | | 0.50 | 0.00 | 0.00 | 0.00 | -1.15 | - MAX. POS. MLL+I |
| | | 0.55 | 0.00 | 0.00 | 0.00 | -1.15 | |
| | 100 | 0.45 | 1.29 | 0.00 | 0.00 | -30.14 | |
| | | 0.50 | 0.01 | 0.00 | 0.00 | -30.88 | - MAX. POS. FACT. M. |
| | | 0.55 | -1.28 | 0.00 | 0.00 | -30.15 | |

********** END OF LATEST ANALYSIS RESULT **********

143. FINISH

********** END OF THE STAAD.Pro RUN **********

**** DATE= JUL 20,2006 TIME= 10: 5:35 ****

```
**************************************************************
*        For questions on STAAD.Pro, please contact          *
*   Research Engineers Offices at the following locations    *
*                                                            *
*              Telephone              Email                  *
*  USA:      +1 (714)974-2500      support@reiusa.com         *
*  CANADA    +1 (905)632-4771      detech@odandetech.com      *
*  UK        +44(1454)207-000      support@reel.co.uk         *
*  FRANCE    +33(0)1 64551084      support@reel.co.uk         *
*  GERMANY   +49/931/40468-71      info@reig.de               *
*  NORWAY    +47 67 57 21 30       support@reel.co.uk         *
*  SINGAPORE +65 6225-6015/16      support@reiasia.net        *
```

H. W. LOCHNER, INC.

PROJECT: BONNER BRIDGE - OREGON INLET NORTH CAROLINA JMJ Jul-06
SUBJECT: HIGH LEVEL BENT ANALYSIS
HLB 142 MEM. 4 JT. 2 WDB 7/06

## COLUMN LOADS

### PMAX

HLB 142 MEMBER 4 JOINT 2

GROUP 1

| | P | MY | MZ |
|---|---|---|---|
| DL | 206.42 | 0.00 | 57.66 |
| LL | 108.30 | 0.00 | 38.85 |
| GROUP 1 | 0.00 | 0.00 | 0.00 |
| SERVICE | 314.72 | 0.00 | 96.51 |
| STRENGTH | 503.00 | 0.00 | 159.13 |

GROUP 2

| | P | MY | MZ |
|---|---|---|---|
| DL | 206.42 | 0.00 | 57.66 |
| LL | 0.00 | 0.00 | 0.00 |
| GROUP 2 | 9.47 | -0.45 | 83.50 |
| SERVICE | 215.89 | -0.45 | 141.16 |
| STRENGTH | 280.66 | -0.59 | 183.51 |

GROUP 3

| | P | MY | MZ |
|---|---|---|---|
| DL | 206.42 | 0.00 | 57.66 |
| LL | 108.30 | 0.00 | 38.85 |
| GROUP 3 | 4.37 | -0.27 | 38.44 |
| SERVICE | 319.09 | -0.27 | 134.95 |
| STRENGTH | 414.82 | -0.35 | 175.44 |

GROUP 4

| | P | MY | MZ |
|---|---|---|---|
| DL | 206.42 | 0.00 | 57.66 |
| LL | 108.30 | 0.00 | 38.85 |
| GROUP 4 | 0.01 | 0.00 | 0.71 |
| SERVICE | 314.73 | 0.00 | 97.22 |
| STRENGTH | 409.15 | 0.00 | 126.39 |

GROUP 5

| | P | MY | MZ |
|---|---|---|---|
| DL | 206.42 | 0.00 | 57.66 |
| LL | 0.00 | 0.00 | 0.00 |
| GROUP 5 | 9.48 | -0.45 | 84.21 |
| SERVICE | 215.90 | -0.45 | 141.87 |
| STRENGTH | 269.88 | -0.56 | 177.34 |

GROUP 6

| | P | MY | MZ |
|---|---|---|---|
| DL | 206.42 | 0.00 | 57.66 |
| LL | 108.30 | 0.00 | 38.85 |
| GROUP 6 | 4.38 | -0.27 | 39.15 |
| SERVICE | 319.10 | -0.27 | 135.66 |
| STRENGTH | 398.88 | -0.34 | 169.58 |

## SLENDERNESS EFFECTS IN COMPRESSION MEMBERS (AASHTO 8.16.5)

f'c = 3000 psi PHI = 0.70 $W_C$ = 150 PCF

$E_C = W_C^{1.5} * 33 * f'c^{0.5}$ = 3320561 PSI Width of Rect. Col. = B = 35.928 In.

Depth of Rect. Col = D = 35.376 In.

$r_Y = 0.30*D$ = 10.61 In. $L_Y$ = 8.583 Ft. $K_Y$ = 2.0

$r_Z = 0.30*B$ = 10.78 In. $L_Z$ = 16.083 Ft. $K_Z$ = 1.2

$I_{YY}$ = $B*D^3/12$ $I_{YY}$ = 132549 $In^4$

$I_{ZZ}$ = $D*B^3/12$ $I_{ZZ}$ = 136718 $In^5$

$K_Y L_Y/r$ = 19.4 < 22 NO SLENDERNESS EFFECT

$K_Z L_Z/r$ = 21.5 < 22 NO SLENDERNESS EFFECT

H. W. LOCHNER, INC.

PROJECT: BONNER BRIDGE - OREGON INLET NORTH CAROLINA JMJ Jul-06
SUBJECT: HIGH LEVEL BENT ANALYSIS
HLB 142 MEM. 4 JT. 2 WDB 7/06

**SLENDERNESS EFFECTS IN RECTANGULAR COMPRESSION MEMBERS (AASHTO 8.16.5)**

**GROUP 1**

| | B | D | KL/R | $M_U$ | $M_{DL}$ | $B_D$ | $P_U$ | $P_C$ | $\delta_b$ | $\delta_s$ | $M_C$ | |
|---|---|---|---|---|---|---|---|---|---|---|---|---|
| | In. | In. | | Ft. Kips | Ft. Kips | | Kips | Kips | | | Ft. Kips | |
| MY | 35.928 | 35.376 | 19.4 | 0.00 | 0.00 | 0.000 | 503 | 0 | 1.000 | 1.000 | 70 | * |
| MZ | 35.928 | 35.376 | 21.5 | 159.13 | 74.96 | 0.471 | 503 | 0 | 1.000 | 1.000 | 159 | |

**GROUP 2**

| | B | D | KL/R | $M_U$ | $M_{DL}$ | $B_D$ | $P_U$ | $P_C$ | $\delta_b$ | $\delta_s$ | $M_C$ | |
|---|---|---|---|---|---|---|---|---|---|---|---|---|
| | In. | In. | | Ft. Kips | Ft. Kips | | Kips | Kips | | | Ft. Kips | |
| MY | 35.928 | 35.376 | 19.4 | 0.59 | 0.00 | 0.000 | 281 | 0 | 1.000 | 1.000 | 39 | * |
| MZ | 35.928 | 35.376 | 21.5 | 183.51 | 74.96 | 0.408 | 281 | 0 | 1.000 | 1.000 | 184 | |

**GROUP 3**

| | B | D | KL/R | $M_U$ | $M_{DL}$ | $B_D$ | $P_U$ | $P_C$ | $\delta_b$ | $\delta_s$ | $M_C$ | |
|---|---|---|---|---|---|---|---|---|---|---|---|---|
| | In. | In. | | Ft. Kips | Ft. Kips | | Kips | Kips | | | Ft. Kips | |
| MY | 35.928 | 35.376 | 19.4 | 0.35 | 0.00 | 0.000 | 415 | 0 | 1.000 | 1.000 | 57 | * |
| MZ | 35.928 | 35.376 | 21.5 | 175.44 | 74.96 | 0.427 | 415 | 0 | 1.000 | 1.000 | 175 | |

**GROUP 4**

| | B | D | KL/R | $M_U$ | $M_{DL}$ | $B_D$ | $P_U$ | $P_C$ | $\delta_b$ | $\delta_s$ | $M_C$ | |
|---|---|---|---|---|---|---|---|---|---|---|---|---|
| | In. | In. | | Ft. Kips | Ft. Kips | | Kips | Kips | | | Ft. Kips | |
| MY | 35.928 | 35.376 | 19.4 | 0.00 | 0.00 | 0.000 | 409 | 0 | 1.000 | 1.000 | 57 | * |
| MZ | 35.928 | 35.376 | 21.5 | 126.39 | 74.96 | 0.593 | 409 | 0 | 1.000 | 1.000 | 126 | |

**GROUP 5**

| | B | D | KL/R | $M_U$ | $M_{DL}$ | $B_D$ | $P_U$ | $P_C$ | $\delta_b$ | $\delta_s$ | $M_C$ | |
|---|---|---|---|---|---|---|---|---|---|---|---|---|
| | In. | In. | | Ft. Kips | Ft. Kips | | Kips | Kips | | | Ft. Kips | |
| MY | 35.928 | 35.376 | 19.4 | 0.56 | 0.00 | 0.000 | 270 | 0 | 1.000 | 1.000 | 37 | * |
| MZ | 35.928 | 35.376 | 21.5 | 177.34 | 74.96 | 0.423 | 270 | 0 | 1.000 | 1.000 | 177 | |

**GROUP 6**

| | B | D | KL/R | $M_U$ | $M_{DL}$ | $B_D$ | $P_U$ | $P_C$ | $\delta_b$ | $\delta_s$ | $M_C$ | |
|---|---|---|---|---|---|---|---|---|---|---|---|---|
| | In. | In. | | Ft. Kips | Ft. Kips | | Kips | Kips | | | Ft. Kips | |
| MY | 35.928 | 35.376 | 19.4 | 0.34 | 0.00 | 0.000 | 399 | 0 | 1.000 | 1.000 | 55 | * |
| MZ | 35.928 | 35.376 | 21.5 | 169.58 | 74.96 | 0.442 | 399 | 0 | 1.000 | 1.000 | 170 | |

* MINIMUM MOMENT CONTROLS

H. W. LOCHNER, INC.

PROJECT: BONNER BRIDGE - OREGON INLET NORTH CAROLINA JMJ Jul-06
SUBJECT: HIGH LEVEL BENT ANALYSIS
HLB 142 MEM. 4 JT. 2 WDB 7/06

## COLUMN LOADS

**PMIN**

HLB 142 MEMBER 4 JOINT 2

GROUP 1

| | P | MY | MZ |
|---|---|---|---|
| DL | 154.82 | 0.00 | 57.66 |
| LL | 47.52 | 0.00 | 96.94 |
| GROUP 1 | 0.00 | 0.00 | 0.00 |
| SERVICE | 202.34 | 0.00 | 154.60 |
| STRENGTH | 304.22 | 0.00 | 284.99 |

GROUP 2

| | P | MY | MZ |
|---|---|---|---|
| DL | 154.82 | 0.00 | 57.66 |
| LL | 0.00 | 0.00 | 0.00 |
| GROUP 2 | 9.47 | -0.45 | 83.50 |
| SERVICE | 164.29 | -0.45 | 141.16 |
| STRENGTH | 213.57 | -0.59 | 183.51 |

GROUP 3

| | P | MY | MZ |
|---|---|---|---|
| DL | 154.82 | 0.00 | 57.66 |
| LL | 47.52 | 0.00 | 96.94 |
| GROUP 3 | 4.37 | -0.27 | 38.44 |
| SERVICE | 206.71 | -0.27 | 193.04 |
| STRENGTH | 268.72 | -0.35 | 250.95 |

GROUP 4

| | P | MY | MZ |
|---|---|---|---|
| DL | 154.82 | 0.00 | 57.66 |
| LL | 47.52 | 0.00 | 96.94 |
| GROUP 4 | 0.01 | 0.00 | 0.71 |
| SERVICE | 202.35 | 0.00 | 155.31 |
| STRENGTH | 263.05 | 0.00 | 201.90 |

GROUP 5

| | P | MY | MZ |
|---|---|---|---|
| DL | 154.82 | 0.00 | 57.66 |
| LL | 0.00 | 0.00 | 0.00 |
| GROUP 5 | 9.48 | -0.45 | 84.21 |
| SERVICE | 164.30 | -0.45 | 141.87 |
| STRENGTH | 205.37 | -0.56 | 177.34 |

GROUP 6

| | P | MY | MZ |
|---|---|---|---|
| DL | 154.82 | 0.00 | 57.66 |
| LL | 47.52 | 0.00 | 96.94 |
| GROUP 6 | 4.38 | -0.27 | 39.15 |
| SERVICE | 206.72 | -0.27 | 193.75 |
| STRENGTH | 258.39 | -0.34 | 242.19 |

## SLENDERNESS EFFECTS IN COMPRESSION MEMBERS (AASHTO 8.16.5)

f'c = 3000 psi PHI = 0.70 $W_C$ = 150 PCF

$E_C = W_C^{1.5} * 33 * f'c^{0.5}$ = 3320561 PSI Width of Rect. Col. = B = 35.928 In.

Depth of Rect. Col = D = 35.376 In.

$r_Y = 0.30*D$ = 10.61 In. $L_Y$ = 8.583 Ft. $K_Y$ = 2.0

$r_Z = 0.30*B$ = 10.78 In. $L_Z$ = 16.083 Ft. $K_Z$ = 1.2

$I_{YY}$ = $B*D^3/12$ $I_{YY}$ = 132549 $In^4$

$I_{ZZ}$ = $D*B^3/12$ $I_{ZZ}$ = 136718 $In^5$

$K_Y L_Y/r$ = 19.4 < 22 NO SLENDERNESS EFFECT

$K_Z L_Z/r$ = 21.5 < 22 NO SLENDERNESS EFFECT

H. W. LOCHNER, INC.

PROJECT: BONNER BRIDGE - OREGON INLET NORTH CAROLINA JMJ Jul-06
SUBJECT: HIGH LEVEL BENT ANALYSIS
HLB 142 MEM. 4 JT. 2 WDB 7/06

**SLENDERNESS EFFECTS IN RECTANGULAR COMPRESSION MEMBERS (AASHTO 8.16.5)**

**GROUP 1**

| | B | D | KL/R | $M_U$ | $M_{DL}$ | $B_D$ | $P_U$ | $P_C$ | $\delta_b$ | $\delta_s$ | $M_C$ | |
|---|---|---|---|---|---|---|---|---|---|---|---|---|
| | In. | In. | | Ft. Kips | Ft. Kips | | Kips | Kips | | | Ft. Kips | |
| MY | 35.928 | 35.376 | 19.4 | 0.00 | 0.00 | 0.000 | 304 | 0 | 1.000 | 1.000 | 42 | * |
| MZ | 35.928 | 35.376 | 21.5 | 284.99 | 74.96 | 0.263 | 304 | 0 | 1.000 | 1.000 | 285 | |

**GROUP 2**

| | B | D | KL/R | $M_U$ | $M_{DL}$ | $B_D$ | $P_U$ | $P_C$ | $\delta_b$ | $\delta_s$ | $M_C$ | |
|---|---|---|---|---|---|---|---|---|---|---|---|---|
| | In. | In. | | Ft. Kips | Ft. Kips | | Kips | Kips | | | Ft. Kips | |
| MY | 35.928 | 35.376 | 19.4 | 0.59 | 0.00 | 0.000 | 214 | 0 | 1.000 | 1.000 | 30 | * |
| MZ | 35.928 | 35.376 | 21.5 | 183.51 | 74.96 | 0.408 | 214 | 0 | 1.000 | 1.000 | 184 | |

**GROUP 3**

| | B | D | KL/R | $M_U$ | $M_{DL}$ | $B_D$ | $P_U$ | $P_C$ | $\delta_b$ | $\delta_s$ | $M_C$ | |
|---|---|---|---|---|---|---|---|---|---|---|---|---|
| | In. | In. | | Ft. Kips | Ft. Kips | | Kips | Kips | | | Ft. Kips | |
| MY | 35.928 | 35.376 | 19.4 | 0.35 | 0.00 | 0.000 | 269 | 0 | 1.000 | 1.000 | 37 | * |
| MZ | 35.928 | 35.376 | 21.5 | 250.95 | 74.96 | 0.299 | 269 | 0 | 1.000 | 1.000 | 251 | |

**GROUP 4**

| | B | D | KL/R | $M_U$ | $M_{DL}$ | $B_D$ | $P_U$ | $P_C$ | $\delta_b$ | $\delta_s$ | $M_C$ | |
|---|---|---|---|---|---|---|---|---|---|---|---|---|
| | In. | In. | | Ft. Kips | Ft. Kips | | Kips | Kips | | | Ft. Kips | |
| MY | 35.928 | 35.376 | 19.4 | 0.00 | 0.00 | 0.000 | 263 | 0 | 1.000 | 1.000 | 36 | * |
| MZ | 35.928 | 35.376 | 21.5 | 201.90 | 74.96 | 0.371 | 263 | 0 | 1.000 | 1.000 | 202 | |

**GROUP 5**

| | B | D | KL/R | $M_U$ | $M_{DL}$ | $B_D$ | $P_U$ | $P_C$ | $\delta_b$ | $\delta_s$ | $M_C$ | |
|---|---|---|---|---|---|---|---|---|---|---|---|---|
| | In. | In. | | Ft. Kips | Ft. Kips | | Kips | Kips | | | Ft. Kips | |
| MY | 35.928 | 35.376 | 19.4 | 0.56 | 0.00 | 0.000 | 205 | 0 | 1.000 | 1.000 | 28 | * |
| MZ | 35.928 | 35.376 | 21.5 | 177.34 | 74.96 | 0.423 | 205 | 0 | 1.000 | 1.000 | 177 | |

**GROUP 6**

| | B | D | KL/R | $M_U$ | $M_{DL}$ | $B_D$ | $P_U$ | $P_C$ | $\delta_b$ | $\delta_s$ | $M_C$ | |
|---|---|---|---|---|---|---|---|---|---|---|---|---|
| | In. | In. | | Ft. Kips | Ft. Kips | | Kips | Kips | | | Ft. Kips | |
| MY | 35.928 | 35.376 | 19.4 | 0.34 | 0.00 | 0.000 | 258 | 0 | 1.000 | 1.000 | 36 | * |
| MZ | 35.928 | 35.376 | 21.5 | 242.19 | 74.96 | 0.310 | 258 | 0 | 1.000 | 1.000 | 242 | |

* MINIMUM MOMENT CONTROLS

H. W. LOCHNER, INC.

PROJECT: BONNER BRIDGE - OREGON INLET NORTH CAROLINA JMJ Jun-06
SUBJECT: HIGH LEVEL BENT ANALYSIS
HLB 142 MEM. 4 JT. 5 WDB 7/06

## COLUMN LOADS

### PMAX

HLB 142 MEMBER 4 JOINT 5

GROUP 1

| | P | MY | MZ |
|---|---|---|---|
| DL | -230.02 | 0.00 | 24.36 |
| LL | -108.30 | 0.00 | 15.39 |
| GROUP 1 | 0.00 | 0.00 | 0.00 |
| SERVICE | -338.32 | 0.00 | 39.75 |
| STRENGTH | -533.68 | 0.00 | 65.01 |

GROUP 2

| | P | MY | MZ |
|---|---|---|---|
| DL | -230.02 | 0.00 | 24.36 |
| LL | 0.00 | 0.00 | 0.00 |
| GROUP 2 | -9.58 | -210.39 | 43.50 |
| SERVICE | -239.60 | -210.39 | 67.86 |
| STRENGTH | -311.48 | -273.51 | 88.22 |

GROUP 3

| | P | MY | MZ |
|---|---|---|---|
| DL | -230.02 | 0.00 | 24.36 |
| LL | -108.30 | 0.00 | 15.39 |
| GROUP 3 | -4.40 | -150.31 | 20.60 |
| SERVICE | -342.72 | -150.31 | 60.35 |
| STRENGTH | -445.54 | -195.40 | 78.46 |

GROUP 4

| | P | MY | MZ |
|---|---|---|---|
| DL | -230.02 | 0.00 | 24.36 |
| LL | -108.30 | 0.00 | 15.39 |
| GROUP 4 | -0.01 | 0.00 | 3.29 |
| SERVICE | -338.33 | 0.00 | 43.04 |
| STRENGTH | -439.83 | 0.00 | 55.95 |

GROUP 5

| | P | MY | MZ |
|---|---|---|---|
| DL | -230.02 | 0.00 | 24.36 |
| LL | 0.00 | 0.00 | 0.00 |
| GROUP 5 | -9.59 | -210.39 | 46.79 |
| SERVICE | -239.61 | -210.39 | 71.15 |
| STRENGTH | -299.51 | -262.99 | 88.94 |

GROUP 6

| | P | MY | MZ |
|---|---|---|---|
| DL | -230.02 | 0.00 | 24.36 |
| LL | -108.30 | 0.00 | 15.39 |
| GROUP 6 | -4.42 | -150.31 | 23.89 |
| SERVICE | -342.74 | -150.31 | 63.64 |
| STRENGTH | -428.43 | -187.89 | 79.55 |

## SLENDERNESS EFFECTS IN COMPRESSION MEMBERS (AASHTO 8.16.5)

f'c = 3000 psi PHI = 0.70 $W_C$ = 150 PCF

$E_C = W_C^{1.5} * 33 * f'c^{0.5}$ = 3320561 PSI Width of Rect. Col. = B = 35.928 In.

Depth of Rect. Col = D = 35.376 In.

$r_Y = 0.30*D$ = 10.61 In. $L_Y$ = 8.583 Ft. $K_Y$ = 2.0

$r_Z = 0.30*B$ = 10.78 In. $L_Z$ = 16.083 Ft. $K_Z$ = 1.2

$I_{YY}$ = $B*D^3/12$ $I_{YY}$ = 132549 $In^4$

$I_{ZZ}$ = $D*B^3/12$ $I_{ZZ}$ = 136718 $In^5$

$K_Y L_Y/r$ = 19.4 < 22 NO SLENDERNESS EFFECT

$K_Z L_Z/r$ = 21.5 < 22 NO SLENDERNESS EFFECT

H. W. LOCHNER, INC.

PROJECT: BONNER BRIDGE - OREGON INLET NORTH CAROLINA JMJ Jun-06
SUBJECT: HIGH LEVEL BENT ANALYSIS
HLB 142 MEM. 4 JT. 5 WDB 7/06

**SLENDERNESS EFFECTS IN RECTANGULAR COMPRESSION MEMBERS (AASHTO 8.16.5)**

**GROUP 1**

| | B | D | KL/R | $M_U$ | $M_{DL}$ | $B_D$ | $P_U$ | $P_C$ | $\delta_b$ | $\delta_s$ | $M_C$ | |
|---|---|---|---|---|---|---|---|---|---|---|---|---|
| | In. | In. | | Ft. Kips | Ft. Kips | | Kips | Kips | | | Ft. Kips | |
| MY | 35.928 | 35.376 | 19.4 | 0.00 | 0.00 | 0.000 | 534 | 0 | 1.000 | 1.000 | 74 | * |
| MZ | 35.928 | 35.376 | 21.5 | 65.01 | 31.67 | 0.487 | 534 | 0 | 1.000 | 1.000 | 75 | * |

**GROUP 2**

| | B | D | KL/R | $M_U$ | $M_{DL}$ | $B_D$ | $P_U$ | $P_C$ | $\delta_b$ | $\delta_s$ | $M_C$ |
|---|---|---|---|---|---|---|---|---|---|---|---|
| | In. | In. | | Ft. Kips | Ft. Kips | | Kips | Kips | | | Ft. Kips |
| MY | 35.928 | 35.376 | 19.4 | 273.51 | 0.00 | 0.000 | 311 | 0 | 1.000 | 1.000 | 274 |
| MZ | 35.928 | 35.376 | 21.5 | 88.22 | 31.67 | 0.359 | 311 | 0 | 1.000 | 1.000 | 88 |

**GROUP 3**

| | B | D | KL/R | $M_U$ | $M_{DL}$ | $B_D$ | $P_U$ | $P_C$ | $\delta_b$ | $\delta_s$ | $M_C$ |
|---|---|---|---|---|---|---|---|---|---|---|---|
| | In. | In. | | Ft. Kips | Ft. Kips | | Kips | Kips | | | Ft. Kips |
| MY | 35.928 | 35.376 | 19.4 | 195.40 | 0.00 | 0.000 | 446 | 0 | 1.000 | 1.000 | 195 |
| MZ | 35.928 | 35.376 | 21.5 | 78.46 | 31.67 | 0.404 | 446 | 0 | 1.000 | 1.000 | 78 |

**GROUP 4**

| | B | D | KL/R | $M_U$ | $M_{DL}$ | $B_D$ | $P_U$ | $P_C$ | $\delta_b$ | $\delta_s$ | $M_C$ | |
|---|---|---|---|---|---|---|---|---|---|---|---|---|
| | In. | In. | | Ft. Kips | Ft. Kips | | Kips | Kips | | | Ft. Kips | |
| MY | 35.928 | 35.376 | 19.4 | 0.00 | 0.00 | 0.000 | 440 | 0 | 1.000 | 1.000 | 61 | * |
| MZ | 35.928 | 35.376 | 21.5 | 55.95 | 31.67 | 0.566 | 440 | 0 | 1.000 | 1.000 | 61 | * |

**GROUP 5**

| | B | D | KL/R | $M_U$ | $M_{DL}$ | $B_D$ | $P_U$ | $P_C$ | $\delta_b$ | $\delta_s$ | $M_C$ |
|---|---|---|---|---|---|---|---|---|---|---|---|
| | In. | In. | | Ft. Kips | Ft. Kips | | Kips | Kips | | | Ft. Kips |
| MY | 35.928 | 35.376 | 19.4 | 262.99 | 0.00 | 0.000 | 300 | 0 | 1.000 | 1.000 | 263 |
| MZ | 35.928 | 35.376 | 21.5 | 88.94 | 31.67 | 0.356 | 300 | 0 | 1.000 | 1.000 | 89 |

**GROUP 6**

| | B | D | KL/R | $M_U$ | $M_{DL}$ | $B_D$ | $P_U$ | $P_C$ | $\delta_b$ | $\delta_s$ | $M_C$ |
|---|---|---|---|---|---|---|---|---|---|---|---|
| | In. | In. | | Ft. Kips | Ft. Kips | | Kips | Kips | | | Ft. Kips |
| MY | 35.928 | 35.376 | 19.4 | 187.89 | 0.00 | 0.000 | 428 | 0 | 1.000 | 1.000 | 188 |
| MZ | 35.928 | 35.376 | 21.5 | 79.55 | 31.67 | 0.398 | 428 | 0 | 1.000 | 1.000 | 80 |

* MINIMUM MOMENT CONTROLS

H. W. LOCHNER, INC.

PROJECT: BONNER BRIDGE - OREGON INLET NORTH CAROLINA JMJ Jun-06
SUBJECT: HIGH LEVEL BENT ANALYSIS
HLB 142 MEM. 4 JT. 5 WDB 7/06

## COLUMN LOADS

**PMIN**

HLB 142 MEMBER 4 JOINT 5

| | GROUP 1 | | | | GROUP 2 | | |
|---|---|---|---|---|---|---|---|
| | P | MY | MZ | | P | MY | MZ |
| DL | -172.52 | 0.00 | 24.36 | DL | -172.52 | 0.00 | 24.36 |
| LL | -47.52 | 0.00 | 25.51 | LL | 0.00 | 0.00 | 0.00 |
| GROUP 1 | 0.00 | 0.00 | 0.00 | GROUP 2 | -9.58 | -210.39 | 43.50 |
| SERVICE | -220.04 | 0.00 | 49.87 | SERVICE | -182.10 | -210.39 | 67.86 |
| STRENGTH | -327.23 | 0.00 | 86.94 | STRENGTH | -236.72 | -273.51 | 88.22 |

| | GROUP 3 | | | | GROUP 4 | | |
|---|---|---|---|---|---|---|---|
| | P | MY | MZ | | P | MY | MZ |
| DL | -172.52 | 0.00 | 24.36 | DL | -172.52 | 0.00 | 24.36 |
| LL | -47.52 | 0.00 | 25.51 | LL | -47.52 | 0.00 | 25.51 |
| GROUP 3 | -4.40 | -150.31 | 20.60 | GROUP 4 | -0.01 | 0.00 | 3.29 |
| SERVICE | -224.44 | -150.31 | 70.47 | SERVICE | -220.05 | 0.00 | 53.16 |
| STRENGTH | -291.77 | -195.40 | 91.61 | STRENGTH | -286.06 | 0.00 | 69.11 |

| | GROUP 5 | | | | GROUP 6 | | |
|---|---|---|---|---|---|---|---|
| | P | MY | MZ | | P | MY | MZ |
| DL | -172.52 | 0.00 | 24.36 | DL | -172.52 | 0.00 | 24.36 |
| LL | 0.00 | 0.00 | 0.00 | LL | -47.52 | 0.00 | 25.51 |
| GROUP 5 | -9.59 | -210.39 | 46.79 | GROUP 6 | -4.42 | -150.31 | 23.89 |
| SERVICE | -182.11 | -210.39 | 71.15 | SERVICE | -224.46 | -150.31 | 73.76 |
| STRENGTH | -227.63 | -262.99 | 88.94 | STRENGTH | -280.57 | -187.89 | 92.20 |

## SLENDERNESS EFFECTS IN COMPRESSION MEMBERS (AASHTO 8.16.5)

f'c = 3000 psi PHI = 0.70 $W_C$ = 150 PCF

$E_C = W_C^{1.5} * 33 * f'c^{0.5}$ = 3320561 PSI Width of Rect. Col. = B = 35.928 In.

Depth of Rect. Col = D = 35.376 In.

$r_Y = 0.30*D$ = 10.61 In. $L_Y$ = 8.583 Ft. $K_Y$ = 2.0

$r_Z = 0.30*B$ = 10.78 In. $L_Z$ = 16.083 Ft. $K_Z$ = 1.2

$I_{YY}$ = $B*D^3/12$ $I_{YY}$ = 132549 $In^4$

$I_{ZZ}$ = $D*B^3/12$ $I_{ZZ}$ = 136718 $In^5$

$K_Y L_Y/r$ = 19.4 < 22 NO SLENDERNESS EFFECT

$K_Z L_Z/r$ = 21.5 < 22 NO SLENDERNESS EFFECT

H. W. LOCHNER, INC.

PROJECT: BONNER BRIDGE - OREGON INLET NORTH CAROLINA JMJ Jun-06
SUBJECT: HIGH LEVEL BENT ANALYSIS
HLB 142 MEM. 4 JT. 5 WDB 7/06

**SLENDERNESS EFFECTS IN RECTANGULAR COMPRESSION MEMBERS (AASHTO 8.16.5)**

**GROUP 1**

| | B | D | KL/R | $M_U$ | $M_{DL}$ | $B_D$ | $P_U$ | $P_C$ | $\delta_b$ | $\delta_s$ | $M_C$ | |
|---|---|---|---|---|---|---|---|---|---|---|---|---|
| | In. | In. | | Ft. Kips | Ft. Kips | | Kips | Kips | | | Ft. Kips | |
| MY | 35.928 | 35.376 | 19.4 | 0.00 | 0.00 | 0.000 | 327 | 0 | 1.000 | 1.000 | 45 | * |
| MZ | 35.928 | 35.376 | 21.5 | 86.94 | 31.67 | 0.364 | 327 | 0 | 1.000 | 1.000 | 87 | |

**GROUP 2**

| | B | D | KL/R | $M_U$ | $M_{DL}$ | $B_D$ | $P_U$ | $P_C$ | $\delta_b$ | $\delta_s$ | $M_C$ |
|---|---|---|---|---|---|---|---|---|---|---|---|
| | In. | In. | | Ft. Kips | Ft. Kips | | Kips | Kips | | | Ft. Kips |
| MY | 35.928 | 35.376 | 19.4 | 273.51 | 0.00 | 0.000 | 237 | 0 | 1.000 | 1.000 | 274 |
| MZ | 35.928 | 35.376 | 21.5 | 88.22 | 31.67 | 0.359 | 237 | 0 | 1.000 | 1.000 | 88 |

**GROUP 3**

| | B | D | KL/R | $M_U$ | $M_{DL}$ | $B_D$ | $P_U$ | $P_C$ | $\delta_b$ | $\delta_s$ | $M_C$ |
|---|---|---|---|---|---|---|---|---|---|---|---|
| | In. | In. | | Ft. Kips | Ft. Kips | | Kips | Kips | | | Ft. Kips |
| MY | 35.928 | 35.376 | 19.4 | 195.40 | 0.00 | 0.000 | 292 | 0 | 1.000 | 1.000 | 195 |
| MZ | 35.928 | 35.376 | 21.5 | 91.61 | 31.67 | 0.346 | 292 | 0 | 1.000 | 1.000 | 92 |

**GROUP 4**

| | B | D | KL/R | $M_U$ | $M_{DL}$ | $B_D$ | $P_U$ | $P_C$ | $\delta_b$ | $\delta_s$ | $M_C$ | |
|---|---|---|---|---|---|---|---|---|---|---|---|---|
| | In. | In. | | Ft. Kips | Ft. Kips | | Kips | Kips | | | Ft. Kips | |
| MY | 35.928 | 35.376 | 19.4 | 0.00 | 0.00 | 0.000 | 286 | 0 | 1.000 | 1.000 | 40 | * |
| MZ | 35.928 | 35.376 | 21.5 | 69.11 | 31.67 | 0.458 | 286 | 0 | 1.000 | 1.000 | 69 | |

**GROUP 5**

| | B | D | KL/R | $M_U$ | $M_{DL}$ | $B_D$ | $P_U$ | $P_C$ | $\delta_b$ | $\delta_s$ | $M_C$ |
|---|---|---|---|---|---|---|---|---|---|---|---|
| | In. | In. | | Ft. Kips | Ft. Kips | | Kips | Kips | | | Ft. Kips |
| MY | 35.928 | 35.376 | 19.4 | 262.99 | 0.00 | 0.000 | 228 | 0 | 1.000 | 1.000 | 263 |
| MZ | 35.928 | 35.376 | 21.5 | 88.94 | 31.67 | 0.356 | 228 | 0 | 1.000 | 1.000 | 89 |

**GROUP 6**

| | B | D | KL/R | $M_U$ | $M_{DL}$ | $B_D$ | $P_U$ | $P_C$ | $\delta_b$ | $\delta_s$ | $M_C$ |
|---|---|---|---|---|---|---|---|---|---|---|---|
| | In. | In. | | Ft. Kips | Ft. Kips | | Kips | Kips | | | Ft. Kips |
| MY | 35.928 | 35.376 | 19.4 | 187.89 | 0.00 | 0.000 | 281 | 0 | 1.000 | 1.000 | 188 |
| MZ | 35.928 | 35.376 | 21.5 | 92.20 | 31.67 | 0.343 | 281 | 0 | 1.000 | 1.000 | 92 |

* MINIMUM MOMENT CONTROLS

SMS 7/06

WDB 7/06

```
OOOOOOO    OOOOO    OOOOO    OOOOO    OOOOO    OO
OO    OO   OO  OO   OO  OO   OO  OO   OO  OO   OO
OO    OO   OO  OO   OO  OO   OO  OO   OO  OO   OO
OO    OO   OO       OO  OO   OO       OO  OO   OO
OO    OO   OO       OOOOOOO  OO       OO  OO   OO
OOOOOOO    OO  OO   OO  OO   OO  OO   OO  OO   OO
OO         OO  OO   OO  OO   OO  OO   OO  OO   OO
OO          OOOOO   OO  OO    OOOOO    OOOOO    OOOOO  (TM)
```

==========
Computer program for the Strength Design of Reinforced Concrete Sections
==========

Licensee stated above acknowledges that Portland Cement Association (PCA) is not and cannot be responsible for either the accuracy or adequacy of the material supplied as input for processing by the PCACOL(tm) computer program. Furthermore, PCA neither makes any warranty expressed nor implied with respect to the correctness of the output prepared by the PCACOL(tm) program. Although PCA has endeavored to produce PCACOL(tm) error free, the program is not and can't be certified infallible. The final and only responsibility for analysis, design and engineering documents is the licensees. Accordingly, PCA disclaims all responsibility in contract, negligence or other tort for any analysis, design or engineering documents prepared in connection with the use of the PCACOL(tm) program.

BASED ON PLANS.

General Information:
==========

File Name: S:\DGN-ST\NORTHC~1\BONNER~1\ANALYSIS\PIERS\HLB142\PCACOL~1\M4PLAN.COL
Project: BONNER BRIDGE - OREGON INLET
Column: HLB #142 Engineer: JMJ
Code: ACI 318-95 Units: English

Run Option: Investigation Slenderness: Not considered
Run Axis: Biaxial Column Type: Structural

Material Properties:
==========

f'c = 3 ksi fy = 40 ksi
Ec = 3122.02 ksi Es = 29000 ksi
fc = 2.55 ksi Rupture strain = Infinity
Ultimate strain = 0.003 in/in
Beta1 = 0.85

Section:
==========

Rectangular: Width = 36 in Depth = 35.4 in

Gross section area, Ag = 1274.4 in^2
Ix = 133086 in^4 Iy = 137635 in^4
Xo = 0 in Yo = 0 in

Reinforcement:
==========

Rebar Database: User-defined

| Size | Diam (in) | Area (in^2) | Size | Diam (in) | Area (in^2) | Size | Diam (in) | Area (in^2) |
|---|---|---|---|---|---|---|---|---|
| # 1 | 0.00 | 0.00 | # 3 | 0.38 | 0.11 | # 4 | 0.50 | 0.20 |
| # 5 | 0.63 | 0.31 | # 6 | 0.75 | 0.44 | # 7 | 0.88 | 0.60 |
| # 8 | 1.00 | 0.79 | # 9 | 1.13 | 1.00 | # 10 | 1.27 | 1.27 |
| # 11 | 1.41 | 1.56 | # 14 | 1.69 | 2.25 | # 18 | 2.26 | 4.00 |

Confinement: Tied; #1 ties with #9 bars, #1 with larger bars.
phi(a) = 0.8, phi(b) = 0.9, phi(c) = 0.7

Layout: Rectangular
Pattern: Equal Bar Spacing (Cover to longitudinal reinforcement)
Total steel area, As = 28.08 in^2 at 2.20%
18 #11 Cover = 5 in

Factored Loads and Moments with Corresponding Capacities: (see user's manual for notation)
==========

| No. | Pu kip | Mux k-ft | Muy k-ft | fMnx k-ft | fMny k-ft | fMn/Mu |
|---|---|---|---|---|---|---|
| 1 | 503.0 | 70.0 | 159.0 | 475.4 | 1075.5 | 6.768 |
| 2 | 281.0 | 39.0 | 184.0 | 243.4 | 1150.4 | 6.252 |
| 3 | 415.0 | 57.0 | 175.0 | 356.5 | 1093.2 | 6.248 |
| 4 | 409.0 | 57.0 | 126.0 | 468.3 | 1031.9 | 8.194 |
| 5 | 270.0 | 37.0 | 177.0 | 239.7 | 1152.1 | 6.508 |
| 6 | 399.0 | 55.0 | 170.0 | 352.7 | 1086.7 | 6.394 |
| 7 | 304.0 | 42.0 | 285.0 | 171.1 | 1168.0 | 4.098 |
| 8 | 214.0 | 30.0 | 184.0 | 191.0 | 1161.1 | 6.312 |
| 9 | 269.0 | 37.0 | 251.0 | 172.0 | 1168.8 | 4.656 |
| 10 | 263.0 | 36.0 | 202.0 | 206.3 | 1160.5 | 5.744 |
| 11 | 205.0 | 28.0 | 177.0 | 183.8 | 1161.8 | 6.564 |
| 12 | 258.0 | 36.0 | 242.0 | 173.6 | 1168.2 | 4.827 |
| 13 | 534.0 | 74.0 | 75.0 | 811.7 | 823.3 | 10.973 |
| 14 | 311.0 | 274.0 | 88.0 | 1107.9 | 354.1 | 4.041 |
| 15 | 446.0 | 195.0 | 78.0 | 1083.3 | 433.3 | 5.556 |

| | | | | | | |
|---|---|---|---|---|---|---|
| 16 | 440.0 | 61.0 | 61.0 | 794.6 | 795.6 | 13.035 |
| 17 | 300.0 | 263.0 | 89.0 | 1102.4 | 371.8 | 4.190 |
| 18 | 428.0 | 188.0 | 80.0 | 1062.3 | 453.3 | 5.653 |
| 19 | 327.0 | 45.0 | 87.0 | 524.0 | 1011.2 | 11.627 |
| 20 | 237.0 | 274.0 | 88.0 | 1110.6 | 355.1 | 4.052 |
| 21 | 292.0 | 195.0 | 92.0 | 1041.1 | 492.3 | 5.341 |
| 22 | 286.0 | 40.0 | 69.0 | 573.5 | 990.0 | 14.345 |
| 23 | 228.0 | 263.0 | 89.0 | 1103.1 | 374.7 | 4.196 |
| 24 | 281.0 | 188.0 | 92.0 | 1034.9 | 506.8 | 5.506 |

*** Program completed as requested! ***

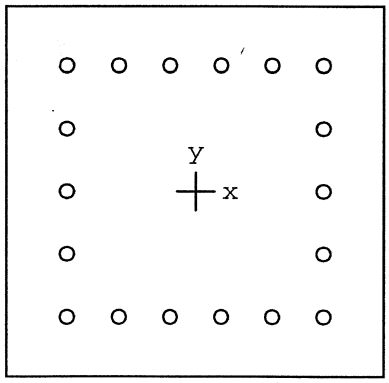


36 x 35.4 in

Code: ACI 318-95

Units: English

Run axis: Biaxial

Run option: Investigation

Slenderness: Not considered

umn type: Structural

Bars: User-defined

Date: 07/20/06

Time: 12:33:45

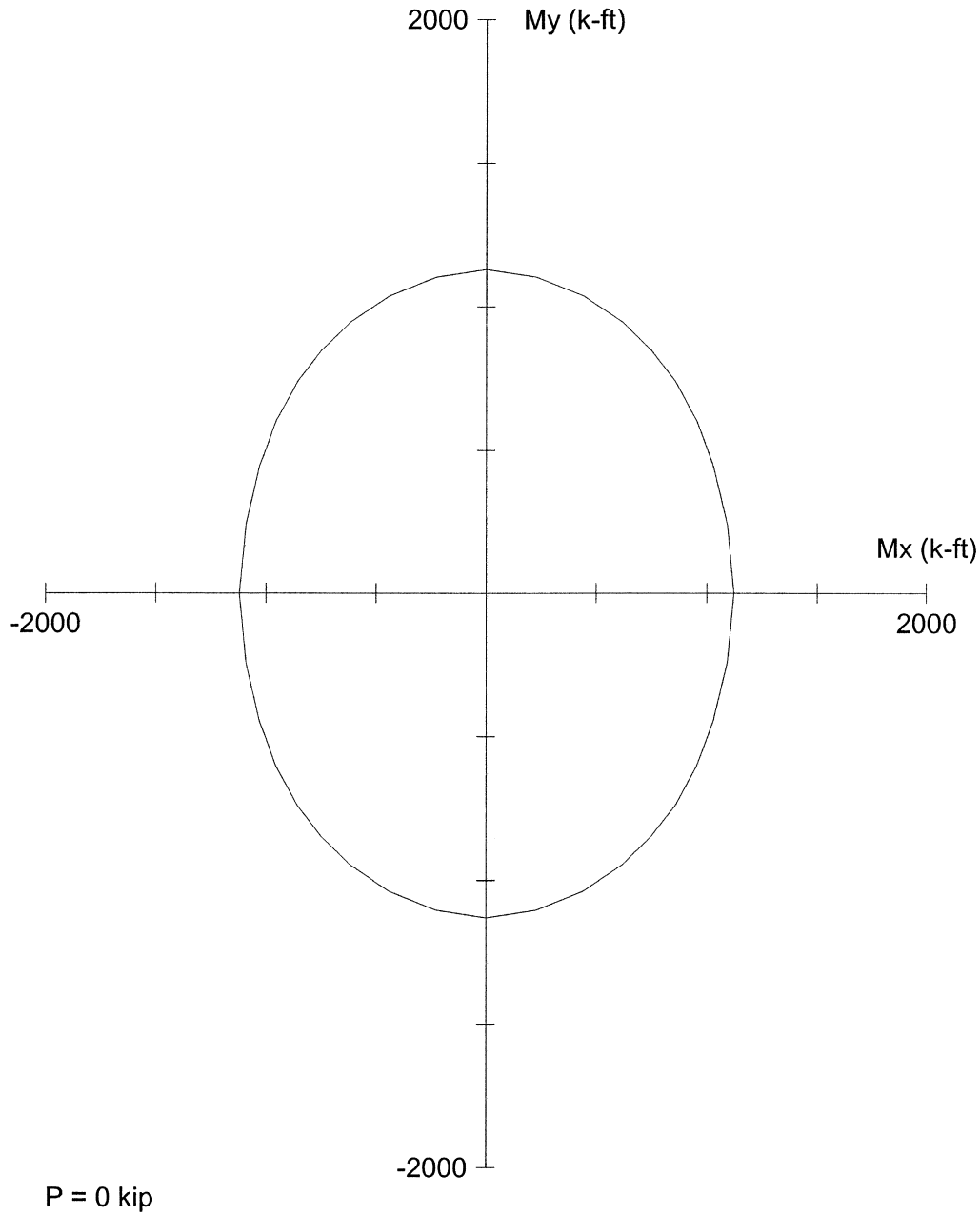


PCACOL V3.00 (PCA 1999) - Licensed to: Licensee name not yet specified.

File: S:\DGN-ST\NORTHC~1\BONNER~1\ANALYSIS\PIERS\HLB142\PCACOL~1\M4PLAN.COL

Project: BONNER BRIDGE - OREGON INLET

| | | | |
|---|---|---|---|
| Column: HLB #142 | | Engineer: JMJ | |
| f'c = 3 ksi | fy = 40 ksi | Ag = 1274.4 in^2 | 18 #11 bars |
| Ec = 3122 ksi | Es = 29000 ksi | As = 28.08 in^2 | Rho = 2.20% |
| fc = 2.55 ksi | e_rup = Infinity | Xo = 0.00 in | Ix = 133086 in^4 |
| _u = 0.003 in/in | | Yo = 0.00 in | Iy = 137635 in^4 |
| Beta1 = 0.85 | | Clear spacing = 3.51 in | Clear cover = 5.00 in |
| Confinement: Tied | phi(a) = 0.8, phi(b) = 0.9, phi(c) = 0.7 | | |

JMJ 7/06
WDB 7/06

```
OOOOOOO    OOOOO    OOOOO    OOOOO    OOOOO   OO
OO    OO   OO  OO   OO  OO   OO  OO   OO  OO   OO
OO    OO   OO  OO   OO  OO   OO  OO   OO  OO   OO
OO    OO   OO       OO  OO   OO       OO  OO   OO
OO    OO   OO       OOOOOOO  OO       OO  OO   OO
OOOOOOO    OO  OO   OO  OO   OO  OO   OO  OO   OO
OO         OO  OO   OO  OO   OO  OO   OO  OO   OO
OO          OOOOO   OO  OO    OOOOO    OOOOO   OOOOO  (TM)
```

==========
Computer program for the Strength Design of Reinforced Concrete Sections
==========

Licensee stated above acknowledges that Portland Cement Association (PCA) is not and cannot be responsible for either the accuracy or adequacy of the material supplied as input for processing by the PCACOL(tm) computer program. Furthermore, PCA neither makes any warranty expressed nor implied with respect to the correctness of the output prepared by the PCACOL(tm) program. Although PCA has endeavored to produce PCACOL(tm) error free, the program is not and can't be certified infallible. The final and only responsibility for analysis, design and engineering documents is the licensees. Accordingly, PCA disclaims all responsibility in contract, negligence or other tort for any analysis, design or engineering documents prepared in connection with the use of the PCACOL(tm) program.

50% COVER LOSS
$f'_c$ = 4400 PSI

General Information:
==========

File Name: S:\DGN-ST\NORTHC~1\BONNER~1\ANALYSIS\PIERS\HLB142\PCACOL~1\M4ACT.COL
Project: BONNER BRIDGE - OREGON INLET
Column: HLB #142 Engineer: JMJ
Code: ACI 318-95 Units: English

Run Option: Investigation Slenderness: Not considered
Run Axis: Biaxial Column Type: Structural

Material Properties:
==========

f'c = 4.4 ksi fy = 40 ksi
Ec = 3780.96 ksi Es = 29000 ksi
fc = 3.74 ksi Rupture strain = Infinity
Ultimate strain = 0.003 in/in
Beta1 = 0.83

Section:
==========

Rectangular: Width = 31 in Depth = 30.4 in

Gross section area, Ag = 942.4 in^2
Ix = 72577.4 in^4 Iy = 75470.5 in^4
Xo = 0 in Yo = 0 in

Reinforcement:
==========

Rebar Database: User-defined

| Size | Diam (in) | Area (in^2) | Size | Diam (in) | Area (in^2) | Size | Diam (in) | Area (in^2) |
|---|---|---|---|---|---|---|---|---|
| # 1 | 0.00 | 0.00 | # 3 | 0.38 | 0.11 | # 4 | 0.50 | 0.20 |
| # 5 | 0.63 | 0.31 | # 6 | 0.75 | 0.44 | # 7 | 0.88 | 0.60 |
| # 8 | 1.00 | 0.79 | # 9 | 1.13 | 1.00 | # 10 | 1.27 | 1.27 |
| # 11 | 1.41 | 1.56 | # 14 | 1.69 | 2.25 | # 18 | 2.26 | 4.00 |

Confinement: Tied; #1 ties with #9 bars, #1 with larger bars.
phi(a) = 0.8, phi(b) = 0.9, phi(c) = 0.7

Layout: Rectangular
Pattern: Equal Bar Spacing (Cover to longitudinal reinforcement)
Total steel area, As = 28.08 in^2 at 2.98%
18 #11 Cover = 2.5 in

Factored Loads and Moments with Corresponding Capacities: (see user's manual for notation)
==========

| No. | Pu kip | Mux k-ft | Muy k-ft | fMnx k-ft | fMny k-ft | fMn/Mu |
|---|---|---|---|---|---|---|
| 1 | 503.0 | 70.0 | 159.0 | 450.1 | 1017.5 | 6.404 |
| 2 | 281.0 | 39.0 | 184.0 | 231.5 | 1092.5 | 5.937 |
| 3 | 415.0 | 57.0 | 175.0 | 336.7 | 1034.7 | 5.912 |
| 4 | 409.0 | 57.0 | 126.0 | 445.5 | 980.8 | 7.789 |
| 5 | 270.0 | 37.0 | 177.0 | 228.4 | 1092.5 | 6.172 |
| 6 | 399.0 | 55.0 | 170.0 | 336.8 | 1039.9 | 6.118 |
| 7 | 304.0 | 42.0 | 285.0 | 164.0 | 1110.5 | 3.897 |
| 8 | 214.0 | 30.0 | 184.0 | 179.4 | 1098.6 | 5.971 |
| 9 | 269.0 | 37.0 | 251.0 | 164.2 | 1108.6 | 4.417 |
| 10 | 263.0 | 36.0 | 202.0 | 196.4 | 1100.3 | 5.447 |
| 11 | 205.0 | 28.0 | 177.0 | 172.3 | 1099.0 | 6.207 |
| 12 | 258.0 | 36.0 | 242.0 | 165.5 | 1107.4 | 4.576 |
| 13 | 534.0 | 74.0 | 75.0 | 770.4 | 782.2 | 10.420 |
| 14 | 311.0 | 274.0 | 88.0 | 1056.5 | 339.7 | 3.856 |
| 15 | 446.0 | 195.0 | 78.0 | 1020.7 | 408.9 | 5.236 |

| | | | | | | |
|---|---|---|---|---|---|---|
| 16 | 440.0 | 61.0 | 61.0 | 752.3 | 752.8 | 12.337 |
| 17 | 300.0 | 263.0 | 89.0 | 1050.6 | 355.8 | 3.995 |
| 18 | 428.0 | 188.0 | 80.0 | 1001.3 | 426.9 | 5.328 |
| 19 | 327.0 | 45.0 | 87.0 | 501.1 | 972.0 | 11.165 |
| 20 | 237.0 | 274.0 | 88.0 | 1054.9 | 337.6 | 3.849 |
| 21 | 292.0 | 195.0 | 92.0 | 997.6 | 469.6 | 5.114 |
| 22 | 286.0 | 40.0 | 69.0 | 547.8 | 947.6 | 13.724 |
| 23 | 228.0 | 263.0 | 89.0 | 1048.3 | 353.0 | 3.984 |
| 24 | 281.0 | 188.0 | 92.0 | 989.7 | 483.6 | 5.263 |

*** Program completed as requested! ***

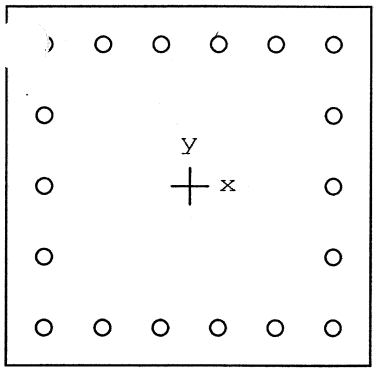


31 x 30.4 in

Code: ACI 318-95

Units: English

Run axis: Biaxial

Run option: Investigation

Slenderness: Not considered

Column type: Structural

Bars: User-defined

Date: 07/25/06

Time: 13:46:23

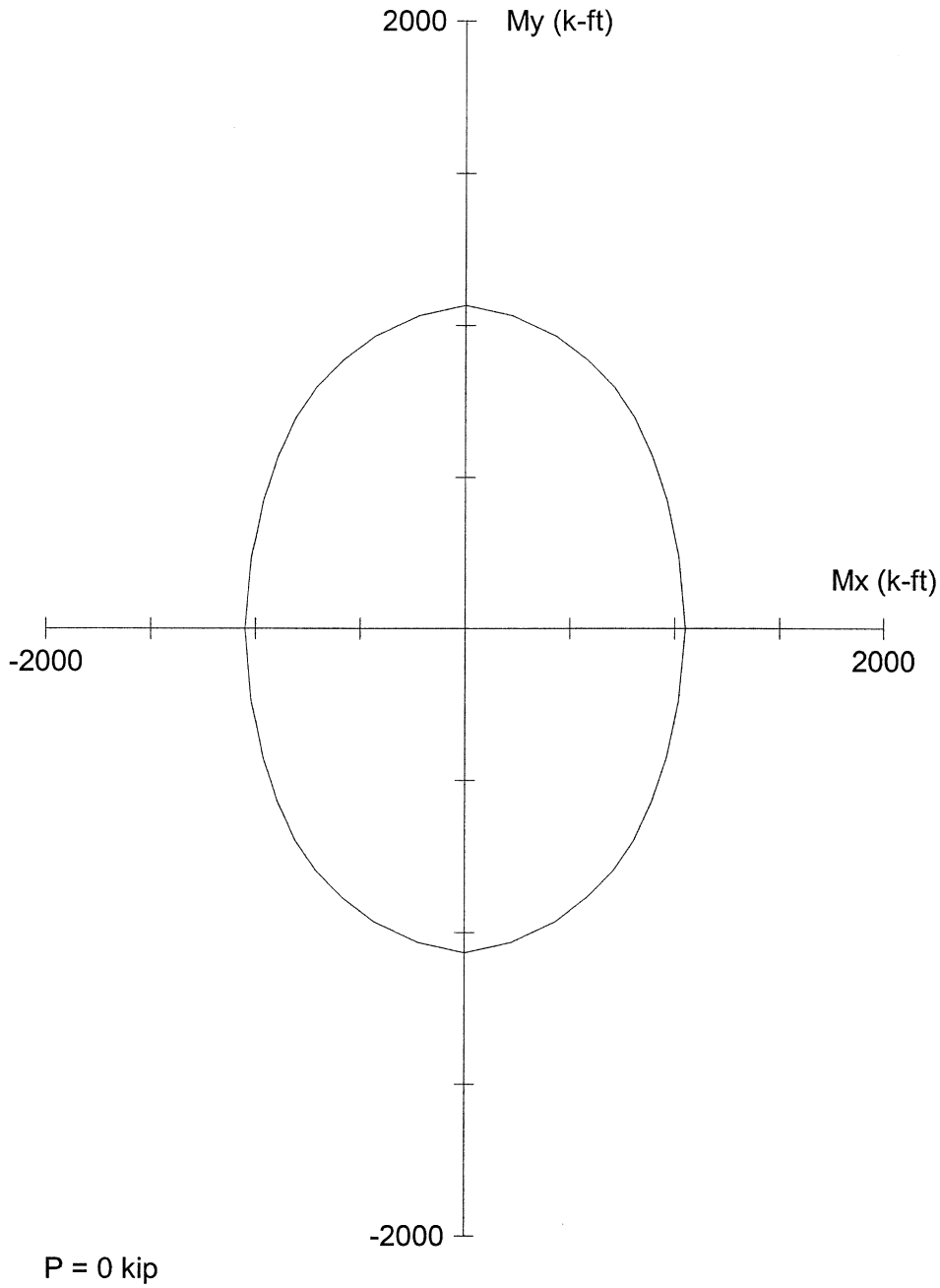


PCACOL V3.00 (PCA 1999) - Licensed to: Licensee name not yet specified.

File: S:\DGN-ST\NORTHC~1\BONNER~1\ANALYSIS\PIERS\HLB142\PCACOL~1\M4ACT.COL

Project: BONNER BRIDGE - OREGON INLET

| | | | |
|---|---|---|---|
| Column: HLB #142 | | Engineer: JMJ | |
| f'c = 4.4 ksi | fy = 40 ksi | Ag = 942.4 in^2 | 18 #11 bars |
| Ec = 3781 ksi | Es = 29000 ksi | As = 28.08 in^2 | Rho = 2.98% |
| fc = 3.74 ksi | e_rup = Infinity | Xo = 0.00 in | Ix = 72577.4 in^4 |
| e_u = 0.003 in/in | | Yo = 0.00 in | Iy = 75470.5 in^4 |
| Beta1 = 0.83 | | Clear spacing = 3.51 in | Clear cover = 2.50 in |
| Confinement: Tied | phi(a) = 0.8, phi(b) = 0.9, phi(c) = 0.7 | | |

H. W. LOCHNER, INC.

PROJECT: BONNER BRIDGE - OREGON INLET NORTH CAROLINA JMJ Jun-06
SUBJECT: HIGH LEVEL BENT ANALYSIS
HLB 142 MEM. 5 JT. 3 WDB 7/06

## COLUMN LOADS

### PMAX

HLB 142 MEMBER 5 JOINT 3

| | GROUP 1 | | | | GROUP 2 | | |
|---|---|---|---|---|---|---|---|
| | P | MY | MZ | | P | MY | MZ |
| DL | 206.41 | 0.00 | 57.66 | DL | 206.41 | 0.00 | 57.66 |
| LL | 108.30 | 0.00 | 38.85 | LL | 0.00 | 0.00 | 0.00 |
| GROUP 1 | 0.00 | 0.00 | 0.00 | GROUP 2 | -9.47 | 0.46 | -83.52 |
| SERVICE | 314.71 | 0.00 | 96.51 | SERVICE | 196.94 | 0.46 | -25.86 |
| STRENGTH | 502.98 | 0.00 | 159.13 | STRENGTH | 256.02 | 0.60 | -33.62 |

| | GROUP 3 | | | | GROUP 4 | | |
|---|---|---|---|---|---|---|---|
| | P | MY | MZ | | P | MY | MZ |
| DL | 206.41 | 0.00 | 57.66 | DL | 206.41 | 0.00 | 57.66 |
| LL | 108.30 | 0.00 | 38.85 | LL | 108.30 | 0.00 | 38.85 |
| GROUP 3 | -4.37 | 0.28 | -38.45 | GROUP 4 | 0.01 | 0.00 | 0.71 |
| SERVICE | 310.34 | 0.28 | 58.06 | SERVICE | 314.72 | 0.00 | 97.22 |
| STRENGTH | 403.44 | 0.36 | 75.48 | STRENGTH | 409.14 | 0.00 | 126.39 |

| | GROUP 5 | | | | GROUP 6 | | |
|---|---|---|---|---|---|---|---|
| | P | MY | MZ | | P | MY | MZ |
| DL | 206.41 | 0.00 | 57.66 | DL | 206.41 | 0.00 | 57.66 |
| LL | 0.00 | 0.00 | 0.00 | LL | 108.30 | 0.00 | 38.85 |
| GROUP 5 | -9.45 | 0.46 | -82.81 | GROUP 6 | -4.36 | 0.28 | -37.74 |
| SERVICE | 196.96 | 0.46 | -25.15 | SERVICE | 310.35 | 0.28 | 58.77 |
| STRENGTH | 246.20 | 0.58 | -31.44 | STRENGTH | 387.94 | 0.35 | 73.46 |

## SLENDERNESS EFFECTS IN COMPRESSION MEMBERS (AASHTO 8.16.5)

f'c = 3000 psi PHI = 0.70 $W_C$ = 150 PCF

$E_C = W_C$^$1.5$ *33*f'c^$0.5$ = 3320561 PSI Width of Rect. Col. = B = 35.928 In.

Depth of Rect. Col = D = 35.376 In.

$r_Y$ = 0.30*D = 10.61 In. $L_Y$ = 8.583 Ft. $K_Y$ = 2.0

$r_Z$ = 0.30*B = 10.78 In. $L_Z$ = 16.083 Ft. $K_Z$ = 1.2

$I_{YY}$ = B*D^$3$/12 $I_{YY}$ = 132549 $In^4$

$I_{ZZ}$ = D*B^$3$/12 $I_{ZZ}$ = 136718 $In^5$

$K_YL_Y/r$ = 19.4 < 22 NO SLENDERNESS EFFECT

$K_ZL_Z/r$ = 21.5 < 22 NO SLENDERNESS EFFECT

H. W. LOCHNER, INC.

PROJECT: BONNER BRIDGE - OREGON INLET NORTH CAROLINA JMJ Jun-06
SUBJECT: HIGH LEVEL BENT ANALYSIS
HLB 142 MEM. 5 JT. 3 WDB 7/06

**SLENDERNESS EFFECTS IN RECTANGULAR COMPRESSION MEMBERS (AASHTO 8.16.5)**

**GROUP 1**

| | B | D | KL/R | $M_U$ | $M_{DL}$ | $B_D$ | $P_U$ | $P_C$ | $\delta_b$ | $\delta_s$ | $M_C$ | |
|---|---|---|---|---|---|---|---|---|---|---|---|---|
| | In. | In. | | Ft. Kips | Ft. Kips | | Kips | Kips | | | Ft. Kips | |
| MY | 35.928 | 35.376 | 19.4 | 0.00 | 0.00 | 0.000 | 503 | 0 | 1.000 | 1.000 | 70 | * |
| MZ | 35.928 | 35.376 | 21.5 | 159.13 | 74.96 | 0.471 | 503 | 0 | 1.000 | 1.000 | 159 | |

**GROUP 2**

| | B | D | KL/R | $M_U$ | $M_{DL}$ | $B_D$ | $P_U$ | $P_C$ | $\delta_b$ | $\delta_s$ | $M_C$ | |
|---|---|---|---|---|---|---|---|---|---|---|---|---|
| | In. | In. | | Ft. Kips | Ft. Kips | | Kips | Kips | | | Ft. Kips | |
| MY | 35.928 | 35.376 | 19.4 | 0.60 | 0.00 | 0.000 | 256 | 0 | 1.000 | 1.000 | 35 | * |
| MZ | 35.928 | 35.376 | 21.5 | 33.62 | 74.96 | 2.230 | 256 | 0 | 1.000 | 1.000 | 36 | * |

**GROUP 3**

| | B | D | KL/R | $M_U$ | $M_{DL}$ | $B_D$ | $P_U$ | $P_C$ | $\delta_b$ | $\delta_s$ | $M_C$ | |
|---|---|---|---|---|---|---|---|---|---|---|---|---|
| | In. | In. | | Ft. Kips | Ft. Kips | | Kips | Kips | | | Ft. Kips | |
| MY | 35.928 | 35.376 | 19.4 | 0.36 | 0.00 | 0.000 | 403 | 0 | 1.000 | 1.000 | 56 | * |
| MZ | 35.928 | 35.376 | 21.5 | 75.48 | 74.96 | 0.993 | 403 | 0 | 1.000 | 1.000 | 75 | |

**GROUP 4**

| | B | D | KL/R | $M_U$ | $M_{DL}$ | $B_D$ | $P_U$ | $P_C$ | $\delta_b$ | $\delta_s$ | $M_C$ | |
|---|---|---|---|---|---|---|---|---|---|---|---|---|
| | In. | In. | | Ft. Kips | Ft. Kips | | Kips | Kips | | | Ft. Kips | |
| MY | 35.928 | 35.376 | 19.4 | 0.00 | 0.00 | 0.000 | 409 | 0 | 1.000 | 1.000 | 57 | * |
| MZ | 35.928 | 35.376 | 21.5 | 126.39 | 74.96 | 0.593 | 409 | 0 | 1.000 | 1.000 | 126 | |

**GROUP 5**

| | B | D | KL/R | $M_U$ | $M_{DL}$ | $B_D$ | $P_U$ | $P_C$ | $\delta_b$ | $\delta_s$ | $M_C$ | |
|---|---|---|---|---|---|---|---|---|---|---|---|---|
| | In. | In. | | Ft. Kips | Ft. Kips | | Kips | Kips | | | Ft. Kips | |
| MY | 35.928 | 35.376 | 19.4 | 0.58 | 0.00 | 0.000 | 246 | 0 | 1.000 | 1.000 | 34 | * |
| MZ | 35.928 | 35.376 | 21.5 | 31.44 | 74.96 | 2.384 | 246 | 0 | 1.000 | 1.000 | 34 | * |

**GROUP 6**

| | B | D | KL/R | $M_U$ | $M_{DL}$ | $B_D$ | $P_U$ | $P_C$ | $\delta_b$ | $\delta_s$ | $M_C$ | |
|---|---|---|---|---|---|---|---|---|---|---|---|---|
| | In. | In. | | Ft. Kips | Ft. Kips | | Kips | Kips | | | Ft. Kips | |
| MY | 35.928 | 35.376 | 19.4 | 0.35 | 0.00 | 0.000 | 388 | 0 | 1.000 | 1.000 | 54 | * |
| MZ | 35.928 | 35.376 | 21.5 | 73.46 | 74.96 | 1.020 | 388 | 0 | 1.000 | 1.000 | 73 | |

* MINIMUM MOMENT CONTROLS

H. W. LOCHNER, INC.

PROJECT: BONNER BRIDGE - OREGON INLET NORTH CAROLINA JMJ Jun-06
SUBJECT: HIGH LEVEL BENT ANALYSIS
HLB 142 MEM. 5 JT. 3 WDB 7/06

## COLUMN LOADS

**PMIN**

HLB 142 MEMBER 5 JOINT 3

GROUP 1

| | P | MY | MZ |
|---|---|---|---|
| DL | 154.81 | 0.00 | 57.66 |
| LL | 47.52 | 0.00 | 96.94 |
| GROUP 1 | 0.00 | 0.00 | 0.00 |
| SERVICE | 202.33 | 0.00 | 154.60 |
| STRENGTH | 304.21 | 0.00 | 284.99 |

GROUP 2

| | P | MY | MZ |
|---|---|---|---|
| DL | 154.81 | 0.00 | 57.66 |
| LL | 0.00 | 0.00 | 0.00 |
| GROUP 2 | -9.47 | 0.46 | -83.52 |
| SERVICE | 145.34 | 0.46 | -25.86 |
| STRENGTH | 188.94 | 0.60 | -33.62 |

GROUP 3

| | P | MY | MZ |
|---|---|---|---|
| DL | 154.81 | 0.00 | 57.66 |
| LL | 47.52 | 0.00 | 96.94 |
| GROUP 3 | -4.37 | 0.28 | -38.45 |
| SERVICE | 197.96 | 0.28 | 116.15 |
| STRENGTH | 257.34 | 0.36 | 151.00 |

GROUP 4

| | P | MY | MZ |
|---|---|---|---|
| DL | 154.81 | 0.00 | 57.66 |
| LL | 47.52 | 0.00 | 96.94 |
| GROUP 4 | 0.01 | 0.00 | 0.71 |
| SERVICE | 202.34 | 0.00 | 155.31 |
| STRENGTH | 263.04 | 0.00 | 201.90 |

GROUP 5

| | P | MY | MZ |
|---|---|---|---|
| DL | 154.81 | 0.00 | 57.66 |
| LL | 0.00 | 0.00 | 0.00 |
| GROUP 5 | -9.45 | 0.46 | -82.81 |
| SERVICE | 145.36 | 0.46 | -25.15 |
| STRENGTH | 181.70 | 0.58 | -31.44 |

GROUP 6

| | P | MY | MZ |
|---|---|---|---|
| DL | 154.81 | 0.00 | 57.66 |
| LL | 47.52 | 0.00 | 96.94 |
| GROUP 6 | -4.36 | 0.28 | -37.74 |
| SERVICE | 197.97 | 0.28 | 116.86 |
| STRENGTH | 247.46 | 0.35 | 146.08 |

## SLENDERNESS EFFECTS IN COMPRESSION MEMBERS (AASHTO 8.16.5)

f'c = 3000 psi PHI = 0.70 $W_C$ = 150 PCF

$E_C = W_C^{1.5} * 33 * f'c^{0.5}$ = 3320561 PSI Width of Rect. Col. = B = 35.928 In.

Depth of Rect. Col = D = 35.376 In.

$r_Y = 0.30*D$ = 10.61 In. $L_Y$ = 8.583 Ft. $K_Y$ = 2.0

$r_Z = 0.30*B$ = 10.78 In. $L_Z$ = 16.083 Ft. $K_Z$ = 1.2

$I_{YY}$ = $B*D^3/12$ $I_{YY}$ = 132549 $In^4$

$I_{ZZ}$ = $D*B^3/12$ $I_{ZZ}$ = 136718 $In^5$

$K_Y L_Y/r$ = 19.4 < 22 NO SLENDERNESS EFFECT

$K_Z L_Z/r$ = 21.5 < 22 NO SLENDERNESS EFFECT

H. W. LOCHNER, INC.

PROJECT: BONNER BRIDGE - OREGON INLET NORTH CAROLINA JMJ Jun-06
SUBJECT: HIGH LEVEL BENT ANALYSIS
HLB 142 MEM. 5 JT. 3 WDB 7/06

**SLENDERNESS EFFECTS IN RECTANGULAR COMPRESSION MEMBERS (AASHTO 8.16.5)**

**GROUP 1**

| | B | D | KL/R | $M_U$ | $M_{DL}$ | $B_D$ | $P_U$ | $P_C$ | $\delta_b$ | $\delta_s$ | $M_C$ | |
|---|---|---|---|---|---|---|---|---|---|---|---|---|
| | In. | In. | | Ft. Kips | Ft. Kips | | Kips | Kips | | | Ft. Kips | |
| MY | 35.928 | 35.376 | 19.4 | 0.00 | 0.00 | 0.000 | 304 | 0 | 1.000 | 1.000 | 42 | * |
| MZ | 35.928 | 35.376 | 21.5 | 284.99 | 74.96 | 0.263 | 304 | 0 | 1.000 | 1.000 | 285 | |

**GROUP 2**

| | B | D | KL/R | $M_U$ | $M_{DL}$ | $B_D$ | $P_U$ | $P_C$ | $\delta_b$ | $\delta_s$ | $M_C$ | |
|---|---|---|---|---|---|---|---|---|---|---|---|---|
| | In. | In. | | Ft. Kips | Ft. Kips | | Kips | Kips | | | Ft. Kips | |
| MY | 35.928 | 35.376 | 19.4 | 0.60 | 0.00 | 0.000 | 189 | 0 | 1.000 | 1.000 | 26 | * |
| MZ | 35.928 | 35.376 | 21.5 | 33.62 | 74.96 | 2.230 | 189 | 0 | 1.000 | 1.000 | 34 | |

**GROUP 3**

| | B | D | KL/R | $M_U$ | $M_{DL}$ | $B_D$ | $P_U$ | $P_C$ | $\delta_b$ | $\delta_s$ | $M_C$ | |
|---|---|---|---|---|---|---|---|---|---|---|---|---|
| | In. | In. | | Ft. Kips | Ft. Kips | | Kips | Kips | | | Ft. Kips | |
| MY | 35.928 | 35.376 | 19.4 | 0.36 | 0.00 | 0.000 | 257 | 0 | 1.000 | 1.000 | 36 | * |
| MZ | 35.928 | 35.376 | 21.5 | 151.00 | 74.96 | 0.496 | 257 | 0 | 1.000 | 1.000 | 151 | |

**GROUP 4**

| | B | D | KL/R | $M_U$ | $M_{DL}$ | $B_D$ | $P_U$ | $P_C$ | $\delta_b$ | $\delta_s$ | $M_C$ | |
|---|---|---|---|---|---|---|---|---|---|---|---|---|
| | In. | In. | | Ft. Kips | Ft. Kips | | Kips | Kips | | | Ft. Kips | |
| MY | 35.928 | 35.376 | 19.4 | 0.00 | 0.00 | 0.000 | 263 | 0 | 1.000 | 1.000 | 36 | * |
| MZ | 35.928 | 35.376 | 21.5 | 201.90 | 74.96 | 0.371 | 263 | 0 | 1.000 | 1.000 | 202 | |

**GROUP 5**

| | B | D | KL/R | $M_U$ | $M_{DL}$ | $B_D$ | $P_U$ | $P_C$ | $\delta_b$ | $\delta_s$ | $M_C$ | |
|---|---|---|---|---|---|---|---|---|---|---|---|---|
| | In. | In. | | Ft. Kips | Ft. Kips | | Kips | Kips | | | Ft. Kips | |
| MY | 35.928 | 35.376 | 19.4 | 0.58 | 0.00 | 0.000 | 182 | 0 | 1.000 | 1.000 | 25 | * |
| MZ | 35.928 | 35.376 | 21.5 | 31.44 | 74.96 | 2.384 | 182 | 0 | 1.000 | 1.000 | 31 | |

**GROUP 6**

| | B | D | KL/R | $M_U$ | $M_{DL}$ | $B_D$ | $P_U$ | $P_C$ | $\delta_b$ | $\delta_s$ | $M_C$ | |
|---|---|---|---|---|---|---|---|---|---|---|---|---|
| | In. | In. | | Ft. Kips | Ft. Kips | | Kips | Kips | | | Ft. Kips | |
| MY | 35.928 | 35.376 | 19.4 | 0.35 | 0.00 | 0.000 | 247 | 0 | 1.000 | 1.000 | 34 | * |
| MZ | 35.928 | 35.376 | 21.5 | 146.08 | 74.96 | 0.513 | 247 | 0 | 1.000 | 1.000 | 146 | |

* MINIMUM MOMENT CONTROLS

H. W. LOCHNER, INC.

PROJECT: BONNER BRIDGE - OREGON INLET NORTH CAROLINA JMJ Jun-06
SUBJECT: HIGH LEVEL BENT ANALYSIS
HLB 142 MEM. 5 JT. 6 WJB 7/06

## COLUMN LOADS

### PMAX

HLB 142 MEMBER 5 JOINT 6

GROUP 1

| | P | MY | MZ |
|---|---|---|---|
| DL | -230.02 | 0.00 | 24.36 |
| LL | -108.30 | 0.00 | 15.39 |
| GROUP 1 | 0.00 | 0.00 | 0.00 |
| SERVICE | -338.32 | 0.00 | 39.75 |
| STRENGTH | -533.68 | 0.00 | 65.01 |

GROUP 2

| | P | MY | MZ |
|---|---|---|---|
| DL | -230.02 | 0.00 | 24.36 |
| LL | 0.00 | 0.00 | 0.00 |
| GROUP 2 | 9.58 | 210.37 | -43.52 |
| SERVICE | -220.44 | 210.37 | -19.16 |
| STRENGTH | -286.57 | 273.48 | -24.91 |

GROUP 3

| | P | MY | MZ |
|---|---|---|---|
| DL | -230.02 | 0.00 | 24.36 |
| LL | -108.30 | 0.00 | 15.39 |
| GROUP 3 | 4.40 | 150.30 | -20.61 |
| SERVICE | -333.92 | 150.30 | 19.14 |
| STRENGTH | -434.10 | 195.39 | 24.88 |

GROUP 4

| | P | MY | MZ |
|---|---|---|---|
| DL | -230.02 | 0.00 | 24.36 |
| LL | -108.30 | 0.00 | 15.39 |
| GROUP 4 | -0.01 | 0.00 | 3.29 |
| SERVICE | -338.33 | 0.00 | 43.04 |
| STRENGTH | -439.83 | 0.00 | 55.95 |

GROUP 5

| | P | MY | MZ |
|---|---|---|---|
| DL | -230.02 | 0.00 | 24.36 |
| LL | 0.00 | 0.00 | 0.00 |
| GROUP 5 | 9.56 | 210.37 | -40.22 |
| SERVICE | -220.46 | 210.37 | -15.86 |
| STRENGTH | -275.58 | 262.96 | -19.83 |

GROUP 6

| | P | MY | MZ |
|---|---|---|---|
| DL | -230.02 | 0.00 | 24.36 |
| LL | -108.30 | 0.00 | 15.39 |
| GROUP 6 | 4.39 | 150.30 | -17.31 |
| SERVICE | -333.93 | 150.30 | 22.44 |
| STRENGTH | -417.41 | 187.88 | 28.05 |

## SLENDERNESS EFFECTS IN COMPRESSION MEMBERS (AASHTO 8.16.5)

f'c = 3000 psi PHI = 0.70 $W_C$ = 150 PCF

$E_C = W_C^{1.5} * 33 * f'c^{0.5}$ = 3320561 PSI Width of Rect. Col. = B = 35.928 In.

Depth of Rect. Col = D = 35.376 In.

$r_Y = 0.30*D$ = 10.61 In. $L_Y$ = 8.583 Ft. $K_Y$ = 2.0

$r_Z = 0.30*B$ = 10.78 In. $L_Z$ = 16.083 Ft. $K_Z$ = 1.2

$I_{YY}$ = $B*D^3/12$ $I_{YY}$ = 132549 $In^4$

$I_{ZZ}$ = $D*B^3/12$ $I_{ZZ}$ = 136718 $In^5$

$K_Y L_Y/r$ = 19.4 < 22 NO SLENDERNESS EFFECT

$K_Z L_Z/r$ = 21.5 < 22 NO SLENDERNESS EFFECT

H. W. LOCHNER, INC.

PROJECT: BONNER BRIDGE - OREGON INLET NORTH CAROLINA JMJ Jun-06
SUBJECT: HIGH LEVEL BENT ANALYSIS WDB 7/06
HLB 142 MEM. 5 JT. 6

**SLENDERNESS EFFECTS IN RECTANGULAR COMPRESSION MEMBERS (AASHTO 8.16.5)**

**GROUP 1**

| | B | D | KL/R | $M_U$ | $M_{DL}$ | $B_D$ | $P_U$ | $P_C$ | $\delta_b$ | $\delta_s$ | $M_C$ | |
|---|---|---|---|---|---|---|---|---|---|---|---|---|
| | In. | In. | | Ft. Kips | Ft. Kips | | Kips | Kips | | | Ft. Kips | |
| MY | 35.928 | 35.376 | 19.4 | 0.00 | 0.00 | 0.000 | 534 | 0 | 1.000 | 1.000 | 74 | * |
| MZ | 35.928 | 35.376 | 21.5 | 65.01 | 31.67 | 0.487 | 534 | 0 | 1.000 | 1.000 | 75 | * |

**GROUP 2**

| | B | D | KL/R | $M_U$ | $M_{DL}$ | $B_D$ | $P_U$ | $P_C$ | $\delta_b$ | $\delta_s$ | $M_C$ | |
|---|---|---|---|---|---|---|---|---|---|---|---|---|
| | In. | In. | | Ft. Kips | Ft. Kips | | Kips | Kips | | | Ft. Kips | |
| MY | 35.928 | 35.376 | 19.4 | 273.48 | 0.00 | 0.000 | 287 | 0 | 1.000 | 1.000 | 273 | |
| MZ | 35.928 | 35.376 | 21.5 | 24.91 | 31.67 | 1.271 | 287 | 0 | 1.000 | 1.000 | 40 | * |

**GROUP 3**

| | B | D | KL/R | $M_U$ | $M_{DL}$ | $B_D$ | $P_U$ | $P_C$ | $\delta_b$ | $\delta_s$ | $M_C$ | |
|---|---|---|---|---|---|---|---|---|---|---|---|---|
| | In. | In. | | Ft. Kips | Ft. Kips | | Kips | Kips | | | Ft. Kips | |
| MY | 35.928 | 35.376 | 19.4 | 195.39 | 0.00 | 0.000 | 434 | 0 | 1.000 | 1.000 | 195 | |
| MZ | 35.928 | 35.376 | 21.5 | 24.88 | 31.67 | 1.273 | 434 | 0 | 1.000 | 1.000 | 61 | * |

**GROUP 4**

| | B | D | KL/R | $M_U$ | $M_{DL}$ | $B_D$ | $P_U$ | $P_C$ | $\delta_b$ | $\delta_s$ | $M_C$ | |
|---|---|---|---|---|---|---|---|---|---|---|---|---|
| | In. | In. | | Ft. Kips | Ft. Kips | | Kips | Kips | | | Ft. Kips | |
| MY | 35.928 | 35.376 | 19.4 | 0.00 | 0.00 | 0.000 | 440 | 0 | 1.000 | 1.000 | 61 | * |
| MZ | 35.928 | 35.376 | 21.5 | 55.95 | 31.67 | 0.566 | 440 | 0 | 1.000 | 1.000 | 61 | * |

**GROUP 5**

| | B | D | KL/R | $M_U$ | $M_{DL}$ | $B_D$ | $P_U$ | $P_C$ | $\delta_b$ | $\delta_s$ | $M_C$ | |
|---|---|---|---|---|---|---|---|---|---|---|---|---|
| | In. | In. | | Ft. Kips | Ft. Kips | | Kips | Kips | | | Ft. Kips | |
| MY | 35.928 | 35.376 | 19.4 | 262.96 | 0.00 | 0.000 | 276 | 0 | 1.000 | 1.000 | 263 | |
| MZ | 35.928 | 35.376 | 21.5 | 19.83 | 31.67 | 1.597 | 276 | 0 | 1.000 | 1.000 | 39 | * |

**GROUP 6**

| | B | D | KL/R | $M_U$ | $M_{DL}$ | $B_D$ | $P_U$ | $P_C$ | $\delta_b$ | $\delta_s$ | $M_C$ | |
|---|---|---|---|---|---|---|---|---|---|---|---|---|
| | In. | In. | | Ft. Kips | Ft. Kips | | Kips | Kips | | | Ft. Kips | |
| MY | 35.928 | 35.376 | 19.4 | 187.88 | 0.00 | 0.000 | 417 | 0 | 1.000 | 1.000 | 188 | |
| MZ | 35.928 | 35.376 | 21.5 | 28.05 | 31.67 | 1.129 | 417 | 0 | 1.000 | 1.000 | 58 | * |

* MINIMUM MOMENT CONTROLS

H. W. LOCHNER, INC.

PROJECT: BONNER BRIDGE - OREGON INLET NORTH CAROLINA JMJ Jun-06
SUBJECT: HIGH LEVEL BENT ANALYSIS
HLB 142 MEM. 5 JT. 6 WDB 7/06

## COLUMN LOADS

**PMIN**

HLB 142 MEMBER 5 JOINT 6

| GROUP 1 | P | MY | MZ |
|---|---|---|---|
| DL | -172.52 | 0.00 | 24.36 |
| LL | -47.52 | 0.00 | 25.51 |
| GROUP 1 | 0.00 | 0.00 | 0.00 |
| SERVICE | -220.04 | 0.00 | 49.87 |
| STRENGTH | -327.23 | 0.00 | 86.94 |

| GROUP 2 | P | MY | MZ |
|---|---|---|---|
| DL | -172.52 | 0.00 | 24.36 |
| LL | 0.00 | 0.00 | 0.00 |
| GROUP 2 | 9.58 | 210.37 | -43.52 |
| SERVICE | -162.94 | 210.37 | -19.16 |
| STRENGTH | -211.82 | 273.48 | -24.91 |

| GROUP 3 | P | MY | MZ |
|---|---|---|---|
| DL | -172.52 | 0.00 | 24.36 |
| LL | -47.52 | 0.00 | 25.51 |
| GROUP 3 | 4.40 | 150.30 | -20.61 |
| SERVICE | -215.64 | 150.30 | 29.26 |
| STRENGTH | -280.33 | 195.39 | 38.04 |

| GROUP 4 | P | MY | MZ |
|---|---|---|---|
| DL | -172.52 | 0.00 | 24.36 |
| LL | -47.52 | 0.00 | 25.51 |
| GROUP 4 | -0.01 | 0.00 | 3.29 |
| SERVICE | -220.05 | 0.00 | 53.16 |
| STRENGTH | -286.06 | 0.00 | 69.11 |

| GROUP 5 | P | MY | MZ |
|---|---|---|---|
| DL | -172.52 | 0.00 | 24.36 |
| LL | 0.00 | 0.00 | 0.00 |
| GROUP 5 | 9.56 | 210.37 | -40.22 |
| SERVICE | -162.96 | 210.37 | -15.86 |
| STRENGTH | -203.69 | 262.96 | -19.83 |

| GROUP 6 | P | MY | MZ |
|---|---|---|---|
| DL | -172.52 | 0.00 | 24.36 |
| LL | -47.52 | 0.00 | 25.51 |
| GROUP 6 | 4.39 | 150.30 | -17.31 |
| SERVICE | -215.65 | 150.30 | 32.56 |
| STRENGTH | -269.56 | 187.88 | 40.70 |

## SLENDERNESS EFFECTS IN COMPRESSION MEMBERS (AASHTO 8.16.5)

f'c = 3000 psi PHI = 0.70 $W_C$ = 150 PCF

$E_C = W_C^{1.5} * 33 * f'c^{0.5}$ = 3320561 PSI Width of Rect. Col. = B = 35.928 In.

Depth of Rect. Col = D = 35.376 In.

$r_Y = 0.30*D$ = 10.61 In. $L_Y$ = 8.583 Ft. $K_Y$ = 2.0

$r_Z = 0.30*B$ = 10.78 In. $L_Z$ = 16.083 Ft. $K_Z$ = 1.2

$I_{YY}$ = $B*D^3/12$ $I_{YY}$ = 132549 $In^4$

$I_{ZZ}$ = $D*B^3/12$ $I_{ZZ}$ = 136718 $In^5$

$K_Y L_Y/r$ = 19.4 < 22 NO SLENDERNESS EFFECT

$K_Z L_Z/r$ = 21.5 < 22 NO SLENDERNESS EFFECT

H. W. LOCHNER, INC.

PROJECT: BONNER BRIDGE - OREGON INLET NORTH CAROLINA JMJ Jun-06
SUBJECT: HIGH LEVEL BENT ANALYSIS
HLB 142 MEM. 5 JT. 6 WAB 7/06

**SLENDERNESS EFFECTS IN RECTANGULAR COMPRESSION MEMBERS (AASHTO 8.16.5)**

**GROUP 1**

| | B | D | KL/R | $M_U$ | $M_{DL}$ | $B_D$ | $P_U$ | $P_C$ | $\delta_b$ | $\delta_s$ | $M_C$ | |
|---|---|---|---|---|---|---|---|---|---|---|---|---|
| | In. | In. | | Ft. Kips | Ft. Kips | | Kips | Kips | | | Ft. Kips | |
| MY | 35.928 | 35.376 | 19.4 | 0.00 | 0.00 | 0.000 | 327 | 0 | 1.000 | 1.000 | 45 | * |
| MZ | 35.928 | 35.376 | 21.5 | 86.94 | 31.67 | 0.364 | 327 | 0 | 1.000 | 1.000 | 87 | |

**GROUP 2**

| | B | D | KL/R | $M_U$ | $M_{DL}$ | $B_D$ | $P_U$ | $P_C$ | $\delta_b$ | $\delta_s$ | $M_C$ | |
|---|---|---|---|---|---|---|---|---|---|---|---|---|
| | In. | In. | | Ft. Kips | Ft. Kips | | Kips | Kips | | | Ft. Kips | |
| MY | 35.928 | 35.376 | 19.4 | 273.48 | 0.00 | 0.000 | 212 | 0 | 1.000 | 1.000 | 273 | |
| MZ | 35.928 | 35.376 | 21.5 | 24.91 | 31.67 | 1.271 | 212 | 0 | 1.000 | 1.000 | 30 | * |

**GROUP 3**

| | B | D | KL/R | $M_U$ | $M_{DL}$ | $B_D$ | $P_U$ | $P_C$ | $\delta_b$ | $\delta_s$ | $M_C$ | |
|---|---|---|---|---|---|---|---|---|---|---|---|---|
| | In. | In. | | Ft. Kips | Ft. Kips | | Kips | Kips | | | Ft. Kips | |
| MY | 35.928 | 35.376 | 19.4 | 195.39 | 0.00 | 0.000 | 280 | 0 | 1.000 | 1.000 | 195 | |
| MZ | 35.928 | 35.376 | 21.5 | 38.04 | 31.67 | 0.833 | 280 | 0 | 1.000 | 1.000 | 39 | * |

**GROUP 4**

| | B | D | KL/R | $M_U$ | $M_{DL}$ | $B_D$ | $P_U$ | $P_C$ | $\delta_b$ | $\delta_s$ | $M_C$ | |
|---|---|---|---|---|---|---|---|---|---|---|---|---|
| | In. | In. | | Ft. Kips | Ft. Kips | | Kips | Kips | | | Ft. Kips | |
| MY | 35.928 | 35.376 | 19.4 | 0.00 | 0.00 | 0.000 | 286 | 0 | 1.000 | 1.000 | 40 | * |
| MZ | 35.928 | 35.376 | 21.5 | 69.11 | 31.67 | 0.458 | 286 | 0 | 1.000 | 1.000 | 69 | |

**GROUP 5**

| | B | D | KL/R | $M_U$ | $M_{DL}$ | $B_D$ | $P_U$ | $P_C$ | $\delta_b$ | $\delta_s$ | $M_C$ | |
|---|---|---|---|---|---|---|---|---|---|---|---|---|
| | In. | In. | | Ft. Kips | Ft. Kips | | Kips | Kips | | | Ft. Kips | |
| MY | 35.928 | 35.376 | 19.4 | 262.96 | 0.00 | 0.000 | 204 | 0 | 1.000 | 1.000 | 263 | |
| MZ | 35.928 | 35.376 | 21.5 | 19.83 | 31.67 | 1.597 | 204 | 0 | 1.000 | 1.000 | 28 | * |

**GROUP 6**

| | B | D | KL/R | $M_U$ | $M_{DL}$ | $B_D$ | $P_U$ | $P_C$ | $\delta_b$ | $\delta_s$ | $M_C$ |
|---|---|---|---|---|---|---|---|---|---|---|---|
| | In. | In. | | Ft. Kips | Ft. Kips | | Kips | Kips | | | Ft. Kips |
| MY | 35.928 | 35.376 | 19.4 | 187.88 | 0.00 | 0.000 | 270 | 0 | 1.000 | 1.000 | 188 |
| MZ | 35.928 | 35.376 | 21.5 | 40.70 | 31.67 | 0.778 | 270 | 0 | 1.000 | 1.000 | 41 |

* MINIMUM MOMENT CONTROLS

JMJ 7/06

WDB 7/06

```
OOOOOOO    OOOOO    OOOOO    OOOOO    OOOOO   OO
OO    OO   OO  OO   OO  OO   OO  OO   OO  OO   OO
OO    OO   OO  OO   OO  OO   OO  OO   OO  OO   OO
OO    OO   OO       OO  OO   OO       OO  OO   OO
OO    OO   OO       OOOOOOO  OO       OO  OO   OO
OOOOOOO    OO  OO   OO  OO   OO  OO   OO  OO   OO
OO         OO  OO   OO  OO   OO  OO   OO  OO   OO
OO          OOOOO   OO  OO    OOOOO    OOOOO   OOOOO  (TM)
```

==========
Computer program for the Strength Design of Reinforced Concrete Sections
==========

Licensee stated above acknowledges that Portland Cement Association (PCA) is not and cannot be responsible for either the accuracy or adequacy of the material supplied as input for processing by the PCACOL(tm) computer program. Furthermore, PCA neither makes any warranty expressed nor implied with respect to the correctness of the output prepared by the PCACOL(tm) program. Although PCA has endeavored to produce PCACOL(tm) error free, the program is not and can't be certified infallible. The final and only responsibility for analysis, design and engineering documents is the licensees. Accordingly, PCA disclaims all responsibility in contract, negligence or other tort for any analysis, design or engineering documents prepared in connection with the use of the PCACOL(tm) program.

BASED ON PLANS.

General Information:
==========

File Name: S:\DGN-ST\NORTHC~1\BONNER~1\ANALYSIS\PIERS\HLB142\PCACOL~1\M5PLAN.COL
Project: BONNER BRIDGE - OREGON INLET
Column: HLB #142 Engineer: JMJ
Code: ACI 318-95 Units: English

Run Option: Investigation Slenderness: Not considered
Run Axis: Biaxial Column Type: Structural

Material Properties:
==========

f'c = 3 ksi fy = 40 ksi
Ec = 3122.02 ksi Es = 29000 ksi
fc = 2.55 ksi Rupture strain = Infinity
Ultimate strain = 0.003 in/in
Beta1 = 0.85

Section:
==========

Rectangular: Width = 36 in Depth = 35.4 in

Gross section area, Ag = 1274.4 in^2
Ix = 133086 in^4 Iy = 137635 in^4
Xo = 0 in Yo = 0 in

Reinforcement:
==========

Rebar Database: User-defined

| Size | Diam (in) | Area (in^2) | Size | Diam (in) | Area (in^2) | Size | Diam (in) | Area (in^2) |
|---|---|---|---|---|---|---|---|---|
| # 1 | 0.00 | 0.00 | # 3 | 0.38 | 0.11 | # 4 | 0.50 | 0.20 |
| # 5 | 0.63 | 0.31 | # 6 | 0.75 | 0.44 | # 7 | 0.88 | 0.60 |
| # 8 | 1.00 | 0.79 | # 9 | 1.13 | 1.00 | # 10 | 1.27 | 1.27 |
| # 11 | 1.41 | 1.56 | # 14 | 1.69 | 2.25 | # 18 | 2.26 | 4.00 |

Confinement: Tied; #1 ties with #9 bars, #1 with larger bars.
phi(a) = 0.8, phi(b) = 0.9, phi(c) = 0.7

Layout: Rectangular
Pattern: Equal Bar Spacing (Cover to longitudinal reinforcement)
Total steel area, As = 28.08 in^2 at 2.20%
18 #11 Cover = 5 in

Factored Loads and Moments with Corresponding Capacities: (see user's manual for notation)
==========

| No. | Pu kip | Mux k-ft | Muy k-ft | fMnx k-ft | fMny k-ft | fMn/Mu |
|---|---|---|---|---|---|---|
| 1 | 503.0 | 70.0 | 159.0 | 475.4 | 1075.5 | 6.768 |
| 2 | 256.0 | 35.0 | 36.0 | 796.8 | 819.6 | 22.766 |
| 3 | 403.0 | 56.0 | 75.0 | 666.3 | 892.0 | 11.895 |
| 4 | 409.0 | 57.0 | 126.0 | 468.3 | 1031.9 | 8.194 |
| 5 | 246.0 | 34.0 | 34.0 | 810.0 | 810.0 | 23.823 |
| 6 | 388.0 | 54.0 | 73.0 | 657.1 | 891.0 | 12.192 |
| 7 | 304.0 | 42.0 | 285.0 | 171.1 | 1168.0 | 4.098 |
| 8 | 189.0 | 26.0 | 34.0 | 700.5 | 913.3 | 26.892 |
| 9 | 257.0 | 36.0 | 151.0 | 272.8 | 1141.3 | 7.559 |
| 10 | 263.0 | 36.0 | 202.0 | 206.3 | 1160.5 | 5.744 |
| 11 | 182.0 | 25.0 | 31.0 | 723.1 | 897.1 | 28.933 |
| 12 | 247.0 | 34.0 | 146.0 | 265.7 | 1144.4 | 7.837 |
| 13 | 534.0 | 74.0 | 75.0 | 811.7 | 823.3 | 10.973 |
| 14 | 287.0 | 273.0 | 40.0 | 1168.5 | 171.5 | 4.280 |
| 15 | 434.0 | 195.0 | 61.0 | 1117.5 | 348.9 | 5.730 |

| | | | | | | |
|---|---|---|---|---|---|---|
| 16 | 440.0 | 61.0 | 61.0 | 794.6 | 795.6 | 13.035 |
| 17 | 276.0 | 263.0 | 39.0 | 1168.5 | 173.7 | 4.443 |
| 18 | 417.0 | 188.0 | 58.0 | 1110.4 | 342.6 | 5.907 |
| 19 | 327.0 | 45.0 | 87.0 | 524.0 | 1011.2 | 11.627 |
| 20 | 212.0 | 273.0 | 30.0 | 1171.3 | 128.9 | 4.291 |
| 21 | 280.0 | 195.0 | 39.0 | 1151.8 | 230.3 | 5.906 |
| 22 | 286.0 | 40.0 | 69.0 | 573.5 | 990.0 | 14.345 |
| 23 | 204.0 | 263.0 | 28.0 | 1170.6 | 124.7 | 4.451 |
| 24 | 270.0 | 188.0 | 41.0 | 1146.1 | 249.9 | 6.096 |

*** Program completed as requested! ***

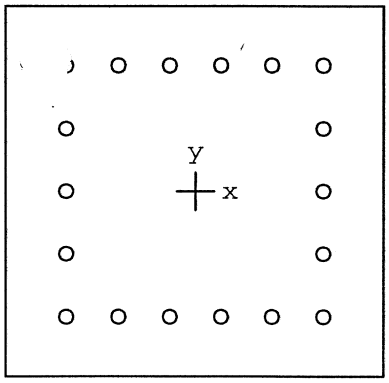


36 x 35.4 in

Code: ACI 318-95

Units: English

Run axis: Biaxial

Run option: Investigation

Slenderness: Not considered

mn type: Structural

Bars: User-defined

Date: 07/20/06

Time: 12:39:07

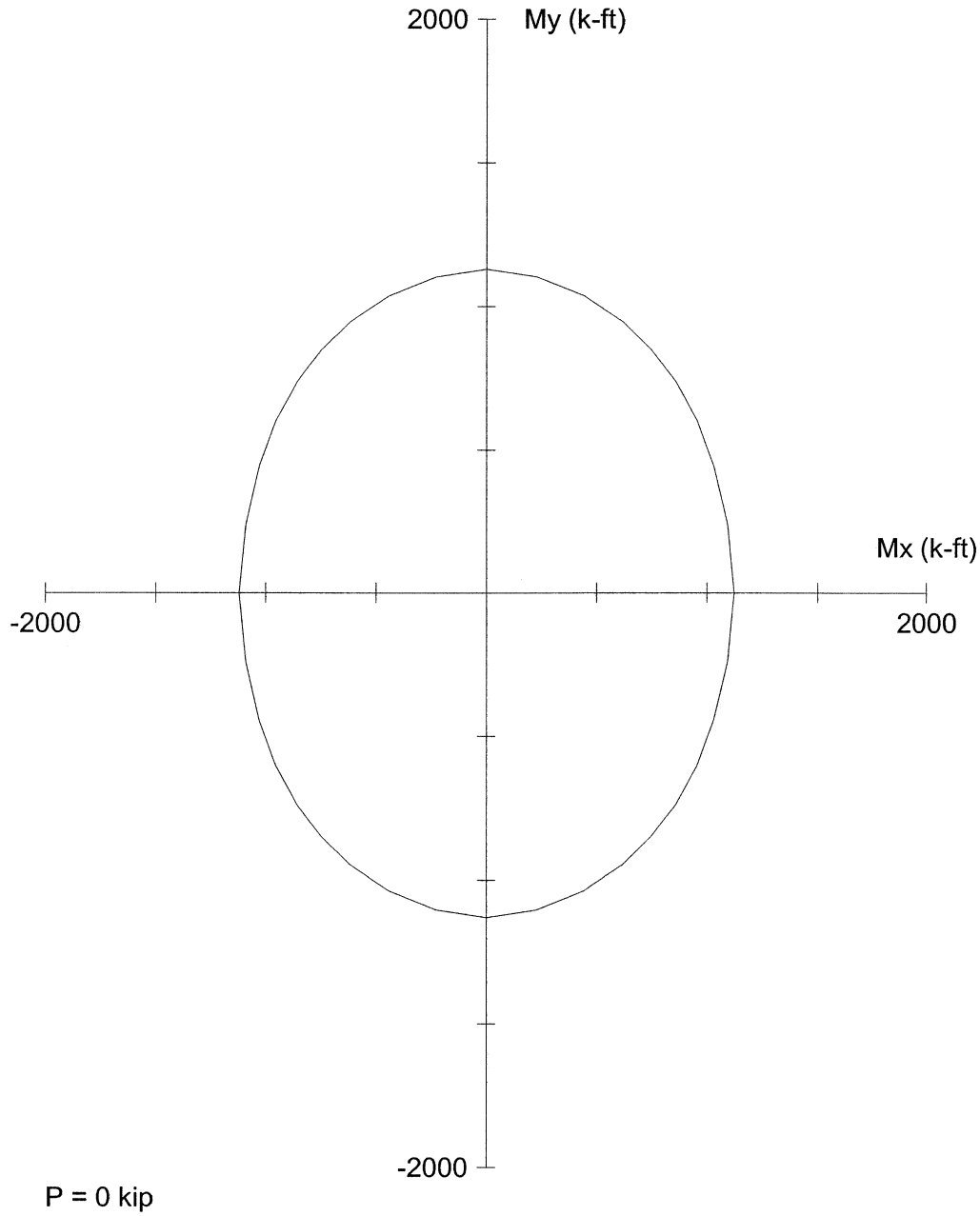


PCACOL V3.00 (PCA 1999) - Licensed to: Licensee name not yet specified.

File: S:\DGN-ST\NORTHC~1\BONNER~1\ANALYSIS\PIERS\HLB142\PCACOL~1\M5PLAN.COL

Project: BONNER BRIDGE - OREGON INLET

| | | | |
|---|---|---|---|
| Column: HLB #142 | | Engineer: JMJ | |
| f'c = 3 ksi | fy = 40 ksi | Ag = 1274.4 in^2 | 18 #11 bars |
| Ec = 3122 ksi | Es = 29000 ksi | As = 28.08 in^2 | Rho = 2.20% |
| fc = 2.55 ksi | e_rup = Infinity | Xo = 0.00 in | Ix = 133086 in^4 |
| u = 0.003 in/in | | Yo = 0.00 in | Iy = 137635 in^4 |
| Beta1 = 0.85 | | Clear spacing = 3.51 in | Clear cover = 5.00 in |
| Confinement: Tied | phi(a) = 0.8, phi(b) = 0.9, phi(c) = 0.7 | | |

JMS 7/06
WDB 7/06

```
OOOOOOO    OOOOO    OOOOO    OOOOO    OOOOO   OO
OO    OO   OO  OO   OO  OO   OO  OO   OO  OO   OO
OO    OO   OO  OO   OO  OO   OO  OO   OO  OO   OO
OO    OO   OO       OO  OO   OO       OO  OO   OO
OO    OO   OO       OOOOOOO  OO       OO  OO   OO
OOOOOOO    OO  OO   OO  OO   OO  OO   OO  OO   OO
OO         OO  OO   OO  OO   OO  OO   OO  OO   OO
OO          OOOOO   OO  OO    OOOOO    OOOOO   OOOOO   (TM)
```

==========
Computer program for the Strength Design of Reinforced Concrete Sections
==========

Licensee stated above acknowledges that Portland Cement Association (PCA) is not and cannot be responsible for either the accuracy or adequacy of the material supplied as input for processing by the PCACOL(tm) computer program. Furthermore, PCA neither makes any warranty expressed nor implied with respect to the correctness of the output prepared by the PCACOL(tm) program. Although PCA has endeavored to produce PCACOL(tm) error free, the program is not and can't be certified infallible. The final and only responsibility for analysis, design and engineering documents is the licensees. Accordingly, PCA disclaims all responsibility in contract, negligence or other tort for any analysis, design or engineering documents prepared in connection with the use of the PCACOL(tm) program.

50% COVER LOSS
$f'_c$ = 4400 PSI

General Information:
==========

File Name: S:\DGN-ST\NORTHC~1\BONNER~1\ANALYSIS\PIERS\HLB142\PCACOL~1\M5ACT.COL
Project: BONNER BRIDGE - OREGON INLET
Column: HLB #142 Engineer: JMJ
Code: ACI 318-95 Units: English

Run Option: Investigation Slenderness: Not considered
Run Axis: Biaxial Column Type: Structural

Material Properties:
==========

f'c = 4.4 ksi fy = 40 ksi
Ec = 3780.96 ksi Es = 29000 ksi
fc = 3.74 ksi Rupture strain = Infinity
Ultimate strain = 0.003 in/in
Beta1 = 0.83

Section:
==========

Rectangular: Width = 31 in Depth = 30.4 in

Gross section area, Ag = 942.4 in^2
Ix = 72577.4 in^4 Iy = 75470.5 in^4
Xo = 0 in Yo = 0 in

Reinforcement:
==========

Rebar Database: User-defined

| Size | Diam (in) | Area (in^2) | Size | Diam (in) | Area (in^2) | Size | Diam (in) | Area (in^2) |
|---|---|---|---|---|---|---|---|---|
| # 1 | 0.00 | 0.00 | # 3 | 0.38 | 0.11 | # 4 | 0.50 | 0.20 |
| # 5 | 0.63 | 0.31 | # 6 | 0.75 | 0.44 | # 7 | 0.88 | 0.60 |
| # 8 | 1.00 | 0.79 | # 9 | 1.13 | 1.00 | # 10 | 1.27 | 1.27 |
| # 11 | 1.41 | 1.56 | # 14 | 1.69 | 2.25 | # 18 | 2.26 | 4.00 |

Confinement: Tied; #1 ties with #9 bars, #1 with larger bars.
phi(a) = 0.8, phi(b) = 0.9, phi(c) = 0.7

Layout: Rectangular
Pattern: Equal Bar Spacing (Cover to longitudinal reinforcement)
Total steel area, As = 28.08 in^2 at 2.98%
18 #11 Cover = 2.5 in

Factored Loads and Moments with Corresponding Capacities: (see user's manual for notation)
==========

| No. | Pu kip | Mux k-ft | Muy k-ft | fMnx k-ft | fMny k-ft | fMn/Mu |
|---|---|---|---|---|---|---|
| 1 | 503.0 | 70.0 | 159.0 | 450.1 | 1017.5 | 6.404 |
| 2 | 256.0 | 35.0 | 36.0 | 763.4 | 784.7 | 21.803 |
| 3 | 403.0 | 56.0 | 75.0 | 636.1 | 850.4 | 11.345 |
| 4 | 409.0 | 57.0 | 126.0 | 445.5 | 980.8 | 7.789 |
| 5 | 246.0 | 34.0 | 34.0 | 774.7 | 774.2 | 22.777 |
| 6 | 388.0 | 54.0 | 73.0 | 636.3 | 857.5 | 11.759 |
| 7 | 304.0 | 42.0 | 285.0 | 164.0 | 1110.5 | 3.897 |
| 8 | 189.0 | 26.0 | 34.0 | 666.1 | 872.3 | 25.643 |
| 9 | 257.0 | 36.0 | 151.0 | 258.1 | 1082.8 | 7.171 |
| 10 | 263.0 | 36.0 | 202.0 | 196.4 | 1100.3 | 5.447 |
| 11 | 182.0 | 25.0 | 31.0 | 688.1 | 855.6 | 27.570 |
| 12 | 247.0 | 34.0 | 146.0 | 252.3 | 1083.3 | 7.420 |
| 13 | 534.0 | 74.0 | 75.0 | 770.4 | 782.2 | 10.420 |
| 14 | 287.0 | 273.0 | 40.0 | 1115.5 | 161.7 | 4.085 |
| 15 | 434.0 | 195.0 | 61.0 | 1053.0 | 329.7 | 5.400 |

| | | | | | | |
|---|---|---|---|---|---|---|
| 16 | 440.0 | 61.0 | 61.0 | 752.3 | 752.8 | 12.337 |
| 17 | 276.0 | 263.0 | 39.0 | 1114.1 | 163.9 | 4.236 |
| 18 | 417.0 | 188.0 | 58.0 | 1046.1 | 324.5 | 5.567 |
| 19 | 327.0 | 45.0 | 87.0 | 501.1 | 972.0 | 11.165 |
| 20 | 212.0 | 273.0 | 30.0 | 1113.6 | 122.0 | 4.079 |
| 21 | 280.0 | 195.0 | 39.0 | 1097.4 | 221.4 | 5.629 |
| 22 | 286.0 | 40.0 | 69.0 | 547.8 | 947.6 | 13.724 |
| 23 | 204.0 | 263.0 | 28.0 | 1112.9 | 117.9 | 4.232 |
| 24 | 270.0 | 188.0 | 41.0 | 1091.4 | 239.3 | 5.807 |

*** Program completed as requested! ***

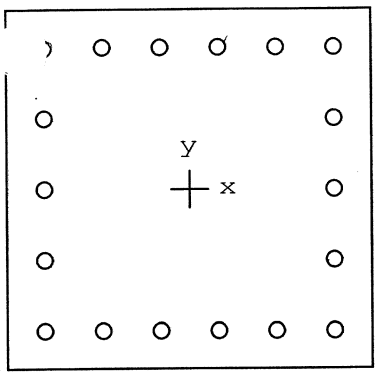


31 x 30.4 in

Code: ACI 318-95

Units: English

Run axis: Biaxial

Run option: Investigation

Slenderness: Not considered

Column type: Structural

Bars: User-defined

Date: 07/25/06

Time: 13:47:45

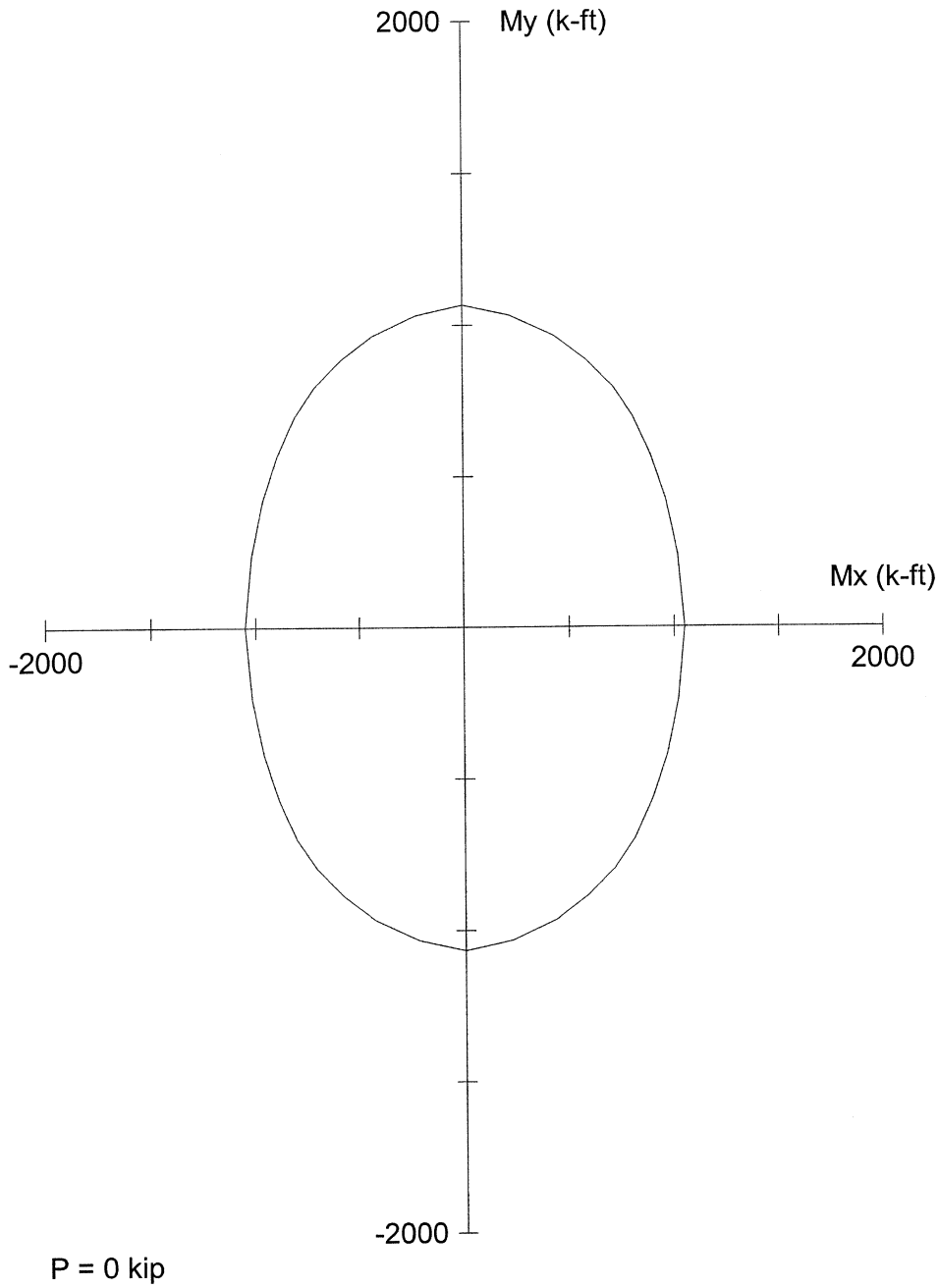


PCACOL V3.00 (PCA 1999) - Licensed to: Licensee name not yet specified.

File: S:\DGN-ST\NORTHC~1\BONNER~1\ANALYSIS\PIERS\HLB142\PCACOL~1\M5ACT.COL

Project: BONNER BRIDGE - OREGON INLET

| | | | |
|---|---|---|---|
| Column: HLB #142 | | Engineer: JMJ | |
| f'c = 4.4 ksi | fy = 40 ksi | Ag = 942.4 in^2 | 18 #11 bars |
| Ec = 3781 ksi | Es = 29000 ksi | As = 28.08 in^2 | Rho = 2.98% |
| fc = 3.74 ksi | e_rup = Infinity | Xo = 0.00 in | Ix = 72577.4 in^4 |
| e_u = 0.003 in/in | | Yo = 0.00 in | Iy = 75470.5 in^4 |
| Beta1 = 0.83 | | Clear spacing = 3.51 in | Clear cover = 2.50 in |
| Confinement: Tied | phi(a) = 0.8, phi(b) = 0.9, phi(c) = 0.7 | | |

H. W. LOCHNER, INC.

PROJECT: BONNER BRIDGE - OREGON INLET NORTH CAROLINA JMJ Jun-06
SUBJECT: HIGH LEVEL BENT ANALYSIS
HLB 142 MEM. 7 JT. 5 WDB 7/06

## COLUMN LOADS

### PMAX

HLB 142 MEMBER 7 JOINT 5

GROUP 1

| | P | MY | MZ |
|---|---|---|---|
| DL | 244.30 | 0.00 | 14.19 |
| LL | 105.64 | 0.00 | -34.11 |
| GROUP 1 | 0.00 | 0.00 | 0.00 |
| SERVICE | 349.94 | 0.00 | -19.92 |
| STRENGTH | 546.48 | 0.00 | -55.46 |

GROUP 2

| | P | MY | MZ |
|---|---|---|---|
| DL | 244.30 | 0.00 | 14.19 |
| LL | 0.00 | 0.00 | 0.00 |
| GROUP 2 | 21.49 | 210.26 | 79.99 |
| SERVICE | 265.79 | 210.26 | 94.18 |
| STRENGTH | 345.53 | 273.34 | 122.43 |

GROUP 3

| | P | MY | MZ |
|---|---|---|---|
| DL | 244.30 | 0.00 | 14.19 |
| LL | 105.64 | 0.00 | -34.11 |
| GROUP 3 | 9.61 | 150.19 | 33.41 |
| SERVICE | 359.55 | 150.19 | 13.49 |
| STRENGTH | 467.42 | 195.25 | 17.54 |

GROUP 4

| | P | MY | MZ |
|---|---|---|---|
| DL | 244.30 | 0.00 | 14.19 |
| LL | 105.64 | 0.00 | -34.11 |
| GROUP 4 | -0.11 | 0.00 | -4.86 |
| SERVICE | 349.83 | 0.00 | -24.78 |
| STRENGTH | 454.78 | 0.00 | -32.21 |

GROUP 5

| | P | MY | MZ |
|---|---|---|---|
| DL | 244.30 | 0.00 | 14.19 |
| LL | 0.00 | 0.00 | 0.00 |
| GROUP 5 | 21.38 | 210.26 | 75.13 |
| SERVICE | 265.68 | 210.26 | 89.32 |
| STRENGTH | 332.10 | 262.83 | 111.65 |

GROUP 6

| | P | MY | MZ |
|---|---|---|---|
| DL | 244.30 | 0.00 | 14.19 |
| LL | 105.64 | 0.00 | -34.11 |
| GROUP 6 | 9.50 | 150.19 | 28.54 |
| SERVICE | 359.44 | 150.19 | 8.62 |
| STRENGTH | 449.30 | 187.74 | 10.78 |

## SLENDERNESS EFFECTS IN COMPRESSION MEMBERS (AASHTO 8.16.5)

f'c = 3000 psi PHI = 0.70 $W_C$ = 150 PCF

$E_C = W_C$^$1.5$ *33*f'c^$0.5$ = 3320561 PSI Width of Rect. Col. = B = 35.928 In.

Depth of Rect. Col = D = 48.624 In.

$r_Y$ = 0.30*D = 14.59 In. $L_Y$ = 8.5 Ft. $K_Y$ = 2.0

$r_Z$ = 0.30*B = 10.78 In. $L_Z$ = 17.5 Ft. $K_Z$ = 1.2

$I_{YY}$ = B*D^3/12 $I_{YY}$ = 344194 $In^4$

$I_{ZZ}$ = D*B^3/12 $I_{ZZ}$ = 187918 $In^5$

$K_YL_Y/r$ = 14.0 < 22 NO SLENDERNESS EFFECT

$K_ZL_Z/r$ = 23.4 > 22 CONSIDER SLENDERNESS

H. W. LOCHNER, INC.

PROJECT: BONNER BRIDGE - OREGON INLET NORTH CAROLINA JMJ Jun-06
SUBJECT: HIGH LEVEL BENT ANALYSIS
HLB 142 MEM. 7 JT. 5 WAB 7/06

**SLENDERNESS EFFECTS IN RECTANGULAR COMPRESSION MEMBERS (AASHTO 8.16.5)**

**GROUP 1**

| | B | D | KL/R | $M_U$ | $M_{DL}$ | $B_D$ | $P_U$ | $P_C$ | $\delta_b$ | $\delta_s$ | $M_C$ | |
|---|---|---|---|---|---|---|---|---|---|---|---|---|
| | In. | In. | | Ft. Kips | Ft. Kips | | Kips | Kips | | | Ft. Kips | |
| MY | 35.928 | 48.624 | 14.0 | 0.00 | 0.00 | 0.000 | 546 | 0 | 1.000 | 1.000 | 94 | * |
| MZ | 35.928 | 48.624 | 23.4 | 55.46 | 18.45 | 0.333 | 546 | 29109 | 1.028 | 1.028 | 76 | * |

**GROUP 2**

| | B | D | KL/R | $M_U$ | $M_{DL}$ | $B_D$ | $P_U$ | $P_C$ | $\delta_b$ | $\delta_s$ | $M_C$ |
|---|---|---|---|---|---|---|---|---|---|---|---|
| | In. | In. | | Ft. Kips | Ft. Kips | | Kips | Kips | | | Ft. Kips |
| MY | 35.928 | 48.624 | 14.0 | 273.34 | 0.00 | 0.000 | 346 | 0 | 1.000 | 1.000 | 273 |
| MZ | 35.928 | 48.624 | 23.4 | 122.43 | 18.45 | 0.151 | 346 | 33712 | 1.015 | 1.015 | 124 |

**GROUP 3**

| | B | D | KL/R | $M_U$ | $M_{DL}$ | $B_D$ | $P_U$ | $P_C$ | $\delta_b$ | $\delta_s$ | $M_C$ | |
|---|---|---|---|---|---|---|---|---|---|---|---|---|
| | In. | In. | | Ft. Kips | Ft. Kips | | Kips | Kips | | | Ft. Kips | |
| MY | 35.928 | 48.624 | 14.0 | 195.25 | 0.00 | 0.000 | 467 | 0 | 1.000 | 1.000 | 195 | |
| MZ | 35.928 | 48.624 | 23.4 | 17.54 | 18.45 | 1.052 | 467 | 18905 | 1.037 | 1.037 | 65 | * |

**GROUP 4**

| | B | D | KL/R | $M_U$ | $M_{DL}$ | $B_D$ | $P_U$ | $P_C$ | $\delta_b$ | $\delta_s$ | $M_C$ | |
|---|---|---|---|---|---|---|---|---|---|---|---|---|
| | In. | In. | | Ft. Kips | Ft. Kips | | Kips | Kips | | | Ft. Kips | |
| MY | 35.928 | 48.624 | 14.0 | 0.00 | 0.00 | 0.000 | 455 | 0 | 1.000 | 1.000 | 78 | * |
| MZ | 35.928 | 48.624 | 23.4 | 32.21 | 18.45 | 0.573 | 455 | 24667 | 1.027 | 1.027 | 64 | * |

**GROUP 5**

| | B | D | KL/R | $M_U$ | $M_{DL}$ | $B_D$ | $P_U$ | $P_C$ | $\delta_b$ | $\delta_s$ | $M_C$ |
|---|---|---|---|---|---|---|---|---|---|---|---|
| | In. | In. | | Ft. Kips | Ft. Kips | | Kips | Kips | | | Ft. Kips |
| MY | 35.928 | 48.624 | 14.0 | 262.83 | 0.00 | 0.000 | 332 | 0 | 1.000 | 1.000 | 263 |
| MZ | 35.928 | 48.624 | 23.4 | 111.65 | 18.45 | 0.165 | 332 | 33291 | 1.014 | 1.014 | 113 |

**GROUP 6**

| | B | D | KL/R | $M_U$ | $M_{DL}$ | $B_D$ | $P_U$ | $P_C$ | $\delta_b$ | $\delta_s$ | $M_C$ | |
|---|---|---|---|---|---|---|---|---|---|---|---|---|
| | In. | In. | | Ft. Kips | Ft. Kips | | Kips | Kips | | | Ft. Kips | |
| MY | 35.928 | 48.624 | 14.0 | 187.74 | 0.00 | 0.000 | 449 | 0 | 1.000 | 1.000 | 188 | |
| MZ | 35.928 | 48.624 | 23.4 | 10.78 | 18.45 | 1.712 | 449 | 14304 | 1.047 | 1.047 | 63 | * |

* MINIMUM MOMENT CONTROLS

H. W. LOCHNER, INC.

PROJECT: BONNER BRIDGE - OREGON INLET NORTH CAROLINA JMJ Jun-06
SUBJECT: HIGH LEVEL BENT ANALYSIS
HLB 142 MEM. 7 JT. 5 WDB 7/06

## COLUMN LOADS

**PMIN**

HLB 142 MEMBER 7 JOINT 5

GROUP 1

| | P | MY | MZ |
|---|---|---|---|
| DL | 183.23 | 0.00 | 14.19 |
| LL | 49.43 | 0.00 | 3.16 |
| GROUP 1 | 0.00 | 0.00 | 0.00 |
| SERVICE | 232.66 | 0.00 | 17.35 |
| STRENGTH | 345.29 | 0.00 | 25.29 |

GROUP 2

| | P | MY | MZ |
|---|---|---|---|
| DL | 183.23 | 0.00 | 14.19 |
| LL | 0.00 | 0.00 | 0.00 |
| GROUP 2 | 21.49 | 210.26 | 79.99 |
| SERVICE | 204.72 | 210.26 | 94.18 |
| STRENGTH | 266.13 | 273.34 | 122.43 |

GROUP 3

| | P | MY | MZ |
|---|---|---|---|
| DL | 183.23 | 0.00 | 14.19 |
| LL | 49.43 | 0.00 | 3.16 |
| GROUP 3 | 9.61 | 150.19 | 33.41 |
| SERVICE | 242.27 | 150.19 | 50.76 |
| STRENGTH | 314.94 | 195.25 | 65.99 |

GROUP 4

| | P | MY | MZ |
|---|---|---|---|
| DL | 183.23 | 0.00 | 14.19 |
| LL | 49.43 | 0.00 | 3.16 |
| GROUP 4 | -0.11 | 0.00 | -4.86 |
| SERVICE | 232.55 | 0.00 | 12.49 |
| STRENGTH | 302.31 | 0.00 | 16.24 |

GROUP 5

| | P | MY | MZ |
|---|---|---|---|
| DL | 183.23 | 0.00 | 14.19 |
| LL | 0.00 | 0.00 | 0.00 |
| GROUP 5 | 21.38 | 210.26 | 75.13 |
| SERVICE | 204.61 | 210.26 | 89.32 |
| STRENGTH | 255.76 | 262.83 | 111.65 |

GROUP 6

| | P | MY | MZ |
|---|---|---|---|
| DL | 183.23 | 0.00 | 14.19 |
| LL | 49.43 | 0.00 | 3.16 |
| GROUP 6 | 9.50 | 150.19 | 28.54 |
| SERVICE | 242.16 | 150.19 | 45.89 |
| STRENGTH | 302.69 | 187.74 | 57.36 |

## SLENDERNESS EFFECTS IN COMPRESSION MEMBERS (AASHTO 8.16.5)

f'c = 3000 psi PHI = 0.70 $W_C$ = 150 PCF

$E_C = W_C$^$^{1.5}$ *33*f'c^$^{0.5}$ = 3320561 PSI Width of Rect. Col. = B = 35.928 In.

Depth of Rect. Col = D = 48.624 In.

$r_Y$ = 0.30*D = 14.59 In. $L_Y$ = 8.5 Ft. $K_Y$ = 2.0

$r_Z$ = 0.30*B = 10.78 In. $L_Z$ = 17.5 Ft. $K_Z$ = 1.2

$I_{YY}$ = B*D^$^3$/12 $I_{YY}$ = 344194 $In^4$

$I_{ZZ}$ = D*B^$^3$/12 $I_{ZZ}$ = 187918 $In^5$

$K_YL_Y/r$ = 14.0 < 22 NO SLENDERNESS EFFECT

$K_ZL_Z/r$ = 23.4 > 22 CONSIDER SLENDERNESS

H. W. LOCHNER, INC.

PROJECT: BONNER BRIDGE - OREGON INLET NORTH CAROLINA JMJ Jun-06
SUBJECT: HIGH LEVEL BENT ANALYSIS
HLB 142 MEM. 7 JT. 5 WJB 7/06

**SLENDERNESS EFFECTS IN RECTANGULAR COMPRESSION MEMBERS (AASHTO 8.16.5)**

**GROUP 1**

| | B | D | KL/R | $M_U$ | $M_{DL}$ | $B_D$ | $P_U$ | $P_C$ | $\delta_b$ | $\delta_s$ | $M_C$ | |
|---|---|---|---|---|---|---|---|---|---|---|---|---|
| | In. | In. | | Ft. Kips | Ft. Kips | | Kips | Kips | | | Ft. Kips | |
| MY | 35.928 | 48.624 | 14.0 | 0.00 | 0.00 | 0.000 | 345 | 0 | 1.000 | 1.000 | 59 | * |
| MZ | 35.928 | 48.624 | 23.4 | 25.29 | 18.45 | 0.729 | 345 | 22432 | 1.022 | 1.022 | 48 | * |

**GROUP 2**

| | B | D | KL/R | $M_U$ | $M_{DL}$ | $B_D$ | $P_U$ | $P_C$ | $\delta_b$ | $\delta_s$ | $M_C$ |
|---|---|---|---|---|---|---|---|---|---|---|---|
| | In. | In. | | Ft. Kips | Ft. Kips | | Kips | Kips | | | Ft. Kips |
| MY | 35.928 | 48.624 | 14.0 | 273.34 | 0.00 | 0.000 | 266 | 0 | 1.000 | 1.000 | 273 |
| MZ | 35.928 | 48.624 | 23.4 | 122.43 | 18.45 | 0.151 | 266 | 33712 | 1.011 | 1.011 | 124 |

**GROUP 3**

| | B | D | KL/R | $M_U$ | $M_{DL}$ | $B_D$ | $P_U$ | $P_C$ | $\delta_b$ | $\delta_s$ | $M_C$ |
|---|---|---|---|---|---|---|---|---|---|---|---|
| | In. | In. | | Ft. Kips | Ft. Kips | | Kips | Kips | | | Ft. Kips |
| MY | 35.928 | 48.624 | 14.0 | 195.25 | 0.00 | 0.000 | 315 | 0 | 1.000 | 1.000 | 195 |
| MZ | 35.928 | 48.624 | 23.4 | 65.99 | 18.45 | 0.280 | 315 | 30317 | 1.015 | 1.015 | 67 |

**GROUP 4**

| | B | D | KL/R | $M_U$ | $M_{DL}$ | $B_D$ | $P_U$ | $P_C$ | $\delta_b$ | $\delta_s$ | $M_C$ | |
|---|---|---|---|---|---|---|---|---|---|---|---|---|
| | In. | In. | | Ft. Kips | Ft. Kips | | Kips | Kips | | | Ft. Kips | |
| MY | 35.928 | 48.624 | 14.0 | 0.00 | 0.00 | 0.000 | 302 | 0 | 1.000 | 1.000 | 52 | * |
| MZ | 35.928 | 48.624 | 23.4 | 16.24 | 18.45 | 1.136 | 302 | 18160 | 1.024 | 1.024 | 42 | * |

**GROUP 5**

| | B | D | KL/R | $M_U$ | $M_{DL}$ | $B_D$ | $P_U$ | $P_C$ | $\delta_b$ | $\delta_s$ | $M_C$ |
|---|---|---|---|---|---|---|---|---|---|---|---|
| | In. | In. | | Ft. Kips | Ft. Kips | | Kips | Kips | | | Ft. Kips |
| MY | 35.928 | 48.624 | 14.0 | 262.83 | 0.00 | 0.000 | 256 | 0 | 1.000 | 1.000 | 263 |
| MZ | 35.928 | 48.624 | 23.4 | 111.65 | 18.45 | 0.165 | 256 | 33291 | 1.011 | 1.011 | 113 |

**GROUP 6**

| | B | D | KL/R | $M_U$ | $M_{DL}$ | $B_D$ | $P_U$ | $P_C$ | $\delta_b$ | $\delta_s$ | $M_C$ |
|---|---|---|---|---|---|---|---|---|---|---|---|
| | In. | In. | | Ft. Kips | Ft. Kips | | Kips | Kips | | | Ft. Kips |
| MY | 35.928 | 48.624 | 14.0 | 187.74 | 0.00 | 0.000 | 303 | 0 | 1.000 | 1.000 | 188 |
| MZ | 35.928 | 48.624 | 23.4 | 57.36 | 18.45 | 0.322 | 303 | 29352 | 1.015 | 1.015 | 58 |

* MINIMUM MOMENT CONTROLS

H. W. LOCHNER, INC.

PROJECT: BONNER BRIDGE - OREGON INLET NORTH CAROLINA JMJ Jun-06
SUBJECT: HIGH LEVEL BENT ANALYSIS
HLB 142 MEM. 7 JT. 7 WAB 7/06

## COLUMN LOADS

### PMAX

HLB 142 MEMBER 7 JOINT 7

GROUP 1

| | P | MY | MZ |
|---|---|---|---|
| DL | -276.14 | 0.00 | 14.76 |
| LL | -105.64 | 0.00 | -16.07 |
| GROUP 1 | 0.00 | 0.00 | 0.00 |
| SERVICE | -381.78 | 0.00 | -1.31 |
| STRENGTH | -587.87 | 0.00 | -15.63 |

GROUP 2

| | P | MY | MZ |
|---|---|---|---|
| DL | -276.14 | 0.00 | 14.76 |
| LL | 0.00 | 0.00 | 0.00 |
| GROUP 2 | -21.64 | -504.21 | 68.56 |
| SERVICE | -297.78 | -504.21 | 83.32 |
| STRENGTH | -387.11 | -655.47 | 108.32 |

GROUP 3

| | P | MY | MZ |
|---|---|---|---|
| DL | -276.14 | 0.00 | 14.76 |
| LL | -105.64 | 0.00 | -16.07 |
| GROUP 3 | -9.66 | -324.08 | 29.94 |
| SERVICE | -391.44 | -324.08 | 28.63 |
| STRENGTH | -508.87 | -421.30 | 37.22 |

GROUP 4

| | P | MY | MZ |
|---|---|---|---|
| DL | -276.14 | 0.00 | 14.76 |
| LL | -105.64 | 0.00 | -16.07 |
| GROUP 4 | 0.11 | 0.00 | -27.05 |
| SERVICE | -381.67 | 0.00 | -28.36 |
| STRENGTH | -496.17 | 0.00 | -36.87 |

GROUP 5

| | P | MY | MZ |
|---|---|---|---|
| DL | -276.14 | 0.00 | 14.76 |
| LL | 0.00 | 0.00 | 0.00 |
| GROUP 5 | -21.53 | -504.21 | 41.51 |
| SERVICE | -297.67 | -504.21 | 56.27 |
| STRENGTH | -372.09 | -630.26 | 70.34 |

GROUP 6

| | P | MY | MZ |
|---|---|---|---|
| DL | -276.14 | 0.00 | 14.76 |
| LL | -105.64 | 0.00 | -16.07 |
| GROUP 6 | -9.55 | -324.08 | 2.89 |
| SERVICE | -391.33 | -324.08 | 1.58 |
| STRENGTH | -489.16 | -405.10 | 1.98 |

## SLENDERNESS EFFECTS IN COMPRESSION MEMBERS (AASHTO 8.16.5)

f'c = 3000 psi PHI = 0.70 $W_C$ = 150 PCF

$E_C = W_C$^$1.5$ *33*f'c^$0.5$ = 3320561 PSI Width of Rect. Col. = B = 35.928 In.

Depth of Rect. Col = D = 48.624 In.

$r_Y$ = 0.30*D = 14.59 In. $L_Y$ = 8.5 Ft. $K_Y$ = 2.0

$r_Z$ = 0.30*B = 10.78 In. $L_Z$ = 17.5 Ft. $K_Z$ = 1.2

$I_{YY}$ = B*D^$3$/12 $I_{YY}$ = 344194 $In^4$

$I_{ZZ}$ = D*B^$3$/12 $I_{ZZ}$ = 187918 $In^5$

$K_YL_Y/r$ = 14.0 < 22 NO SLENDERNESS EFFECT

$K_ZL_Z/r$ = 23.4 > 22 CONSIDER SLENDERNESS

H. W. LOCHNER, INC.

PROJECT: BONNER BRIDGE - OREGON INLET NORTH CAROLINA JMJ Jun-06
SUBJECT: HIGH LEVEL BENT ANALYSIS
HLB 142 MEM. 7 JT. 7 WDB 7/06

**SLENDERNESS EFFECTS IN RECTANGULAR COMPRESSION MEMBERS (AASHTO 8.16.5)**

**GROUP 1**

| | B | D | KL/R | $M_U$ | $M_{DL}$ | $B_D$ | $P_U$ | $P_C$ | $\delta_b$ | $\delta_s$ | $M_C$ | |
|---|---|---|---|---|---|---|---|---|---|---|---|---|
| | In. | In. | | Ft. Kips | Ft. Kips | | Kips | Kips | | | Ft. Kips | |
| MY | 35.928 | 48.624 | 14.0 | 0.00 | 0.00 | 0.000 | 588 | 0 | 1.000 | 1.000 | 101 | * |
| MZ | 35.928 | 48.624 | 23.4 | 15.63 | 19.19 | 1.228 | 588 | 17414 | 1.051 | 1.051 | 82 | * |

**GROUP 2**

| | B | D | KL/R | $M_U$ | $M_{DL}$ | $B_D$ | $P_U$ | $P_C$ | $\delta_b$ | $\delta_s$ | $M_C$ |
|---|---|---|---|---|---|---|---|---|---|---|---|
| | In. | In. | | Ft. Kips | Ft. Kips | | Kips | Kips | | | Ft. Kips |
| MY | 35.928 | 48.624 | 14.0 | 655.47 | 0.00 | 0.000 | 387 | 0 | 1.000 | 1.000 | 655 |
| MZ | 35.928 | 48.624 | 23.4 | 108.32 | 19.19 | 0.177 | 387 | 32954 | 1.017 | 1.017 | 110 |

**GROUP 3**

| | B | D | KL/R | $M_U$ | $M_{DL}$ | $B_D$ | $P_U$ | $P_C$ | $\delta_b$ | $\delta_s$ | $M_C$ | |
|---|---|---|---|---|---|---|---|---|---|---|---|---|
| | In. | In. | | Ft. Kips | Ft. Kips | | Kips | Kips | | | Ft. Kips | |
| MY | 35.928 | 48.624 | 14.0 | 421.30 | 0.00 | 0.000 | 509 | 0 | 1.000 | 1.000 | 421 | |
| MZ | 35.928 | 48.624 | 23.4 | 37.22 | 19.19 | 0.516 | 509 | 25596 | 1.029 | 1.029 | 71 | * |

**GROUP 4**

| | B | D | KL/R | $M_U$ | $M_{DL}$ | $B_D$ | $P_U$ | $P_C$ | $\delta_b$ | $\delta_s$ | $M_C$ | |
|---|---|---|---|---|---|---|---|---|---|---|---|---|
| | In. | In. | | Ft. Kips | Ft. Kips | | Kips | Kips | | | Ft. Kips | |
| MY | 35.928 | 48.624 | 14.0 | 0.00 | 0.00 | 0.000 | 496 | 0 | 1.000 | 1.000 | 85 | * |
| MZ | 35.928 | 48.624 | 23.4 | 36.87 | 19.19 | 0.520 | 496 | 25513 | 1.029 | 1.029 | 69 | * |

**GROUP 5**

| | B | D | KL/R | $M_U$ | $M_{DL}$ | $B_D$ | $P_U$ | $P_C$ | $\delta_b$ | $\delta_s$ | $M_C$ |
|---|---|---|---|---|---|---|---|---|---|---|---|
| | In. | In. | | Ft. Kips | Ft. Kips | | Kips | Kips | | | Ft. Kips |
| MY | 35.928 | 48.624 | 14.0 | 630.26 | 0.00 | 0.000 | 372 | 0 | 1.000 | 1.000 | 630 |
| MZ | 35.928 | 48.624 | 23.4 | 70.34 | 19.19 | 0.273 | 372 | 30477 | 1.018 | 1.018 | 72 |

**GROUP 6**

| | B | D | KL/R | $M_U$ | $M_{DL}$ | $B_D$ | $P_U$ | $P_C$ | $\delta_b$ | $\delta_s$ | $M_C$ | |
|---|---|---|---|---|---|---|---|---|---|---|---|---|
| | In. | In. | | Ft. Kips | Ft. Kips | | Kips | Kips | | | Ft. Kips | |
| MY | 35.928 | 48.624 | 14.0 | 405.10 | 0.00 | 0.000 | 489 | 0 | 1.000 | 1.000 | 405 | |
| MZ | 35.928 | 48.624 | 23.4 | 1.98 | 19.19 | 9.715 | 489 | 3620 | 1.239 | 1.239 | 68 | * |

* MINIMUM MOMENT CONTROLS

H. W. LOCHNER, INC.

PROJECT: BONNER BRIDGE - OREGON INLET NORTH CAROLINA JMJ Jun-06
SUBJECT: HIGH LEVEL BENT ANALYSIS
HLB 142 MEM. 7 JT. 7 WDB 7/06

## COLUMN LOADS

**PMIN**

HLB 142 MEMBER 7 JOINT 7

GROUP 1

| | P | MY | MZ |
|---|---|---|---|
| DL | -207.11 | 0.00 | 14.76 |
| LL | -49.43 | 0.00 | 8.04 |
| GROUP 1 | 0.00 | 0.00 | 0.00 |
| SERVICE | -256.54 | 0.00 | 22.80 |
| STRENGTH | -376.33 | 0.00 | 36.61 |

GROUP 2

| | P | MY | MZ |
|---|---|---|---|
| DL | -207.11 | 0.00 | 14.76 |
| LL | 0.00 | 0.00 | 0.00 |
| GROUP 2 | -21.64 | -504.21 | 68.56 |
| SERVICE | -228.75 | -504.21 | 83.32 |
| STRENGTH | -297.37 | -655.47 | 108.32 |

GROUP 3

| | P | MY | MZ |
|---|---|---|---|
| DL | -207.11 | 0.00 | 14.76 |
| LL | -49.43 | 0.00 | 8.04 |
| GROUP 3 | -9.66 | -324.08 | 29.94 |
| SERVICE | -266.20 | -324.08 | 52.74 |
| STRENGTH | -346.05 | -421.30 | 68.56 |

GROUP 4

| | P | MY | MZ |
|---|---|---|---|
| DL | -207.11 | 0.00 | 14.76 |
| LL | -49.43 | 0.00 | 8.04 |
| GROUP 4 | 0.11 | 0.00 | -27.05 |
| SERVICE | -256.43 | 0.00 | -4.25 |
| STRENGTH | -333.35 | 0.00 | -5.53 |

GROUP 5

| | P | MY | MZ |
|---|---|---|---|
| DL | -207.11 | 0.00 | 14.76 |
| LL | 0.00 | 0.00 | 0.00 |
| GROUP 5 | -21.53 | -504.21 | 41.51 |
| SERVICE | -228.64 | -504.21 | 56.27 |
| STRENGTH | -285.79 | -630.26 | 70.34 |

GROUP 6

| | P | MY | MZ |
|---|---|---|---|
| DL | -207.11 | 0.00 | 14.76 |
| LL | -49.43 | 0.00 | 8.04 |
| GROUP 6 | -9.55 | -324.08 | 2.89 |
| SERVICE | -266.09 | -324.08 | 25.69 |
| STRENGTH | -332.61 | -405.10 | 32.11 |

## SLENDERNESS EFFECTS IN COMPRESSION MEMBERS (AASHTO 8.16.5)

f'c = 3000 psi PHI = 0.70 $W_C$ = 150 PCF

$E_C = W_C^{1.5} * 33 * f'c^{0.5}$ = 3320561 PSI Width of Rect. Col. = B = 35.928 In.

Depth of Rect. Col = D = 48.624 In.

$r_Y = 0.30*D$ = 14.59 In. $L_Y$ = 8.5 Ft. $K_Y$ = 2.0

$r_Z = 0.30*B$ = 10.78 In. $L_Z$ = 17.5 Ft. $K_Z$ = 1.2

$I_{YY}$ = $B*D^3/12$ $I_{YY}$ = 344194 $In^4$

$I_{ZZ}$ = $D*B^3/12$ $I_{ZZ}$ = 187918 $In^5$

$K_Y L_Y/r$ = 14.0 < 22 NO SLENDERNESS EFFECT

$K_Z L_Z/r$ = 23.4 > 22 CONSIDER SLENDERNESS

H. W. LOCHNER, INC.

PROJECT: BONNER BRIDGE - OREGON INLET NORTH CAROLINA JMJ Jun-06
SUBJECT: HIGH LEVEL BENT ANALYSIS
HLB 142 MEM. 7 JT. 7 WDB 7/06

**SLENDERNESS EFFECTS IN RECTANGULAR COMPRESSION MEMBERS (AASHTO 8.16.5)**

**GROUP 1**

| | B | D | KL/R | $M_U$ | $M_{DL}$ | $B_D$ | $P_U$ | $P_C$ | $\delta_b$ | $\delta_s$ | $M_C$ | |
|---|---|---|---|---|---|---|---|---|---|---|---|---|
| | In. | In. | | Ft. Kips | Ft. Kips | | Kips | Kips | | | Ft. Kips | |
| MY | 35.928 | 48.624 | 14.0 | 0.00 | 0.00 | 0.000 | 376 | 0 | 1.000 | 1.000 | 65 | * |
| MZ | 35.928 | 48.624 | 23.4 | 36.61 | 19.19 | 0.524 | 376 | 25451 | 1.022 | 1.022 | 53 | * |

**GROUP 2**

| | B | D | KL/R | $M_U$ | $M_{DL}$ | $B_D$ | $P_U$ | $P_C$ | $\delta_b$ | $\delta_s$ | $M_C$ |
|---|---|---|---|---|---|---|---|---|---|---|---|
| | In. | In. | | Ft. Kips | Ft. Kips | | Kips | Kips | | | Ft. Kips |
| MY | 35.928 | 48.624 | 14.0 | 655.47 | 0.00 | 0.000 | 297 | 0 | 1.000 | 1.000 | 655 |
| MZ | 35.928 | 48.624 | 23.4 | 108.32 | 19.19 | 0.177 | 297 | 32954 | 1.013 | 1.013 | 110 |

**GROUP 3**

| | B | D | KL/R | $M_U$ | $M_{DL}$ | $B_D$ | $P_U$ | $P_C$ | $\delta_b$ | $\delta_s$ | $M_C$ |
|---|---|---|---|---|---|---|---|---|---|---|---|
| | In. | In. | | Ft. Kips | Ft. Kips | | Kips | Kips | | | Ft. Kips |
| MY | 35.928 | 48.624 | 14.0 | 421.30 | 0.00 | 0.000 | 346 | 0 | 1.000 | 1.000 | 421 |
| MZ | 35.928 | 48.624 | 23.4 | 68.56 | 19.19 | 0.280 | 346 | 30309 | 1.017 | 1.017 | 70 |

**GROUP 4**

| | B | D | KL/R | $M_U$ | $M_{DL}$ | $B_D$ | $P_U$ | $P_C$ | $\delta_b$ | $\delta_s$ | $M_C$ | |
|---|---|---|---|---|---|---|---|---|---|---|---|---|
| | In. | In. | | Ft. Kips | Ft. Kips | | Kips | Kips | | | Ft. Kips | |
| MY | 35.928 | 48.624 | 14.0 | 0.00 | 0.00 | 0.000 | 333 | 0 | 1.000 | 1.000 | 57 | * |
| MZ | 35.928 | 48.624 | 23.4 | 5.53 | 19.19 | 3.473 | 333 | 8673 | 1.058 | 1.058 | 47 | * |

**GROUP 5**

| | B | D | KL/R | $M_U$ | $M_{DL}$ | $B_D$ | $P_U$ | $P_C$ | $\delta_b$ | $\delta_s$ | $M_C$ |
|---|---|---|---|---|---|---|---|---|---|---|---|
| | In. | In. | | Ft. Kips | Ft. Kips | | Kips | Kips | | | Ft. Kips |
| MY | 35.928 | 48.624 | 14.0 | 630.26 | 0.00 | 0.000 | 286 | 0 | 1.000 | 1.000 | 630 |
| MZ | 35.928 | 48.624 | 23.4 | 70.34 | 19.19 | 0.273 | 286 | 30477 | 1.014 | 1.014 | 71 |

**GROUP 6**

| | B | D | KL/R | $M_U$ | $M_{DL}$ | $B_D$ | $P_U$ | $P_C$ | $\delta_b$ | $\delta_s$ | $M_C$ | |
|---|---|---|---|---|---|---|---|---|---|---|---|---|
| | In. | In. | | Ft. Kips | Ft. Kips | | Kips | Kips | | | Ft. Kips | |
| MY | 35.928 | 48.624 | 14.0 | 405.10 | 0.00 | 0.000 | 333 | 0 | 1.000 | 1.000 | 405 | |
| MZ | 35.928 | 48.624 | 23.4 | 32.11 | 19.19 | 0.598 | 333 | 24282 | 1.020 | 1.020 | 47 | * |

* MINIMUM MOMENT CONTROLS

JMJ 7/06

WDB 7/06

```
OOOOOOO    OOOOO    OOOOO    OOOOO    OOOOO   OO
OO    OO   OO  OO   OO  OO   OO  OO   OO  OO   OO
OO    OO   OO  OO   OO  OO   OO  OO   OO  OO   OO
OO    OO   OO       OO  OO   OO       OO  OO   OO
OO    OO   OO       OOOOOOO  OO       OO  OO   OO
OOOOOOO    OO  OO   OO  OO   OO  OO   OO  OO   OO
OO         OO  OO   OO  OO   OO  OO   OO  OO   OO
OO          OOOOO   OO  OO    OOOOO    OOOOO   OOOOO  (TM)
```

==========
Computer program for the Strength Design of Reinforced Concrete Sections
==========

Licensee stated above acknowledges that Portland Cement Association (PCA) is not and cannot be responsible for either the accuracy or adequacy of the material supplied as input for processing by the PCACOL(tm) computer program. Furthermore, PCA neither makes any warranty expressed nor implied with respect to the correctness of the output prepared by the PCACOL(tm) program. Although PCA has endeavored to produce PCACOL(tm) error free, the program is not and can't be certified infallible. The final and only responsibility for analysis, design and engineering documents is the licensees. Accordingly, PCA disclaims all responsibility in contract, negligence or other tort for any analysis, design or engineering documents prepared in connection with the use of the PCACOL(tm) program.

BASED ON PLANS.

General Information:
==========

File Name: S:\DGN-ST\NORTHC~1\BONNER~1\ANALYSIS\PIERS\HLB142\PCACOL~1\M7PLAN.COL
Project: BONNER BRIDGE - OREGON INLET
Column: HLB #142 Engineer: JMJ
Code: ACI 318-95 Units: English

Run Option: Investigation Slenderness: Not considered
Run Axis: Biaxial Column Type: Structural

Material Properties:
==========

f'c = 3 ksi fy = 40 ksi
Ec = 3122.02 ksi Es = 29000 ksi
fc = 2.55 ksi Rupture strain = Infinity
Ultimate strain = 0.003 in/in
Beta1 = 0.85

Section:
==========

Rectangular: Width = 36 in Depth = 48.6 in

Gross section area, Ag = 1749.6 in^2
Ix = 344374 in^4 Iy = 188957 in^4
Xo = 0 in Yo = 0 in

Reinforcement:
==========

Rebar Database: User-defined

| Size | Diam (in) | Area (in^2) | Size | Diam (in) | Area (in^2) | Size | Diam (in) | Area (in^2) |
|---|---|---|---|---|---|---|---|---|
| # 1 | 0.00 | 0.00 | # 3 | 0.38 | 0.11 | # 4 | 0.50 | 0.20 |
| # 5 | 0.63 | 0.31 | # 6 | 0.75 | 0.44 | # 7 | 0.88 | 0.60 |
| # 8 | 1.00 | 0.79 | # 9 | 1.13 | 1.00 | # 10 | 1.27 | 1.27 |
| # 11 | 1.41 | 1.56 | # 14 | 1.69 | 2.25 | # 18 | 2.26 | 4.00 |

Confinement: Tied; #1 ties with #9 bars, #1 with larger bars.
phi(a) = 0.8, phi(b) = 0.9, phi(c) = 0.7

Layout: Rectangular
Pattern: Equal Bar Spacing (Cover to longitudinal reinforcement)
Total steel area, As = 28.08 in^2 at 1.60%
18 #11 Cover = 5 in

Factored Loads and Moments with Corresponding Capacities: (see user's manual for notation)
==========

| No. | Pu kip | Mux k-ft | Muy k-ft | fMnx k-ft | fMny k-ft | fMn/Mu |
|---|---|---|---|---|---|---|
| 1 | 546.0 | 94.0 | 76.0 | 1239.9 | 1002.5 | 13.190 |
| 2 | 346.0 | 273.0 | 124.0 | 1583.4 | 716.4 | 5.796 |
| 3 | 467.0 | 195.0 | 65.0 | 1709.4 | 567.4 | 8.763 |
| 4 | 456.0 | 78.0 | 64.0 | 1231.7 | 1014.2 | 15.814 |
| 5 | 332.0 | 263.0 | 113.0 | 1603.8 | 688.9 | 6.098 |
| 6 | 449.0 | 188.0 | 63.0 | 1705.6 | 573.1 | 9.075 |
| 7 | 345.0 | 59.0 | 48.0 | 1236.2 | 1009.2 | 20.981 |
| 8 | 266.0 | 273.0 | 124.0 | 1566.5 | 709.5 | 5.735 |
| 9 | 315.0 | 195.0 | 67.0 | 1679.0 | 577.8 | 8.612 |
| 10 | 302.0 | 52.0 | 42.0 | 1241.6 | 999.7 | 23.848 |
| 11 | 256.0 | 263.0 | 113.0 | 1586.4 | 678.6 | 6.028 |
| 12 | 303.0 | 188.0 | 58.0 | 1711.2 | 524.7 | 9.097 |
| 13 | 588.0 | 101.0 | 82.0 | 1257.1 | 1017.8 | 12.433 |
| 14 | 387.0 | 655.0 | 110.0 | 1843.6 | 309.2 | 2.814 |
| 15 | 509.0 | 421.0 | 71.0 | 1853.3 | 314.6 | 4.403 |

| | | | | | | |
|---|---|---|---|---|---|---|
| 16 | 496.0 | 85.0 | 69.0 | 1234.7 | 1004.1 | 14.536 |
| 17 | 372.0 | 630.0 | 72.0 | 1873.4 | 214.7 | 2.974 |
| 18 | 489.0 | 405.0 | 68.0 | 1858.0 | 309.6 | 4.587 |
| 19 | 376.0 | 65.0 | 53.0 | 1238.0 | 1010.7 | 19.055 |
| 20 | 297.0 | 655.0 | 110.0 | 1813.6 | 306.3 | 2.769 |
| 21 | 346.0 | 421.0 | 70.0 | 1831.9 | 306.8 | 4.352 |
| 22 | 333.0 | 57.0 | 47.0 | 1229.5 | 1012.1 | 21.556 |
| 23 | 286.0 | 630.0 | 71.0 | 1844.3 | 209.2 | 2.928 |
| 24 | 333.0 | 405.0 | 47.0 | 1860.3 | 215.6 | 4.593 |

*** Program completed as requested! ***

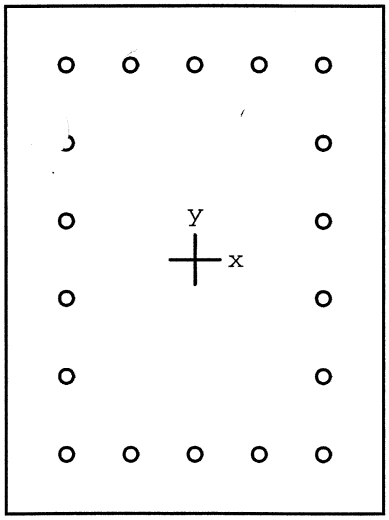


36 x 48.6 in

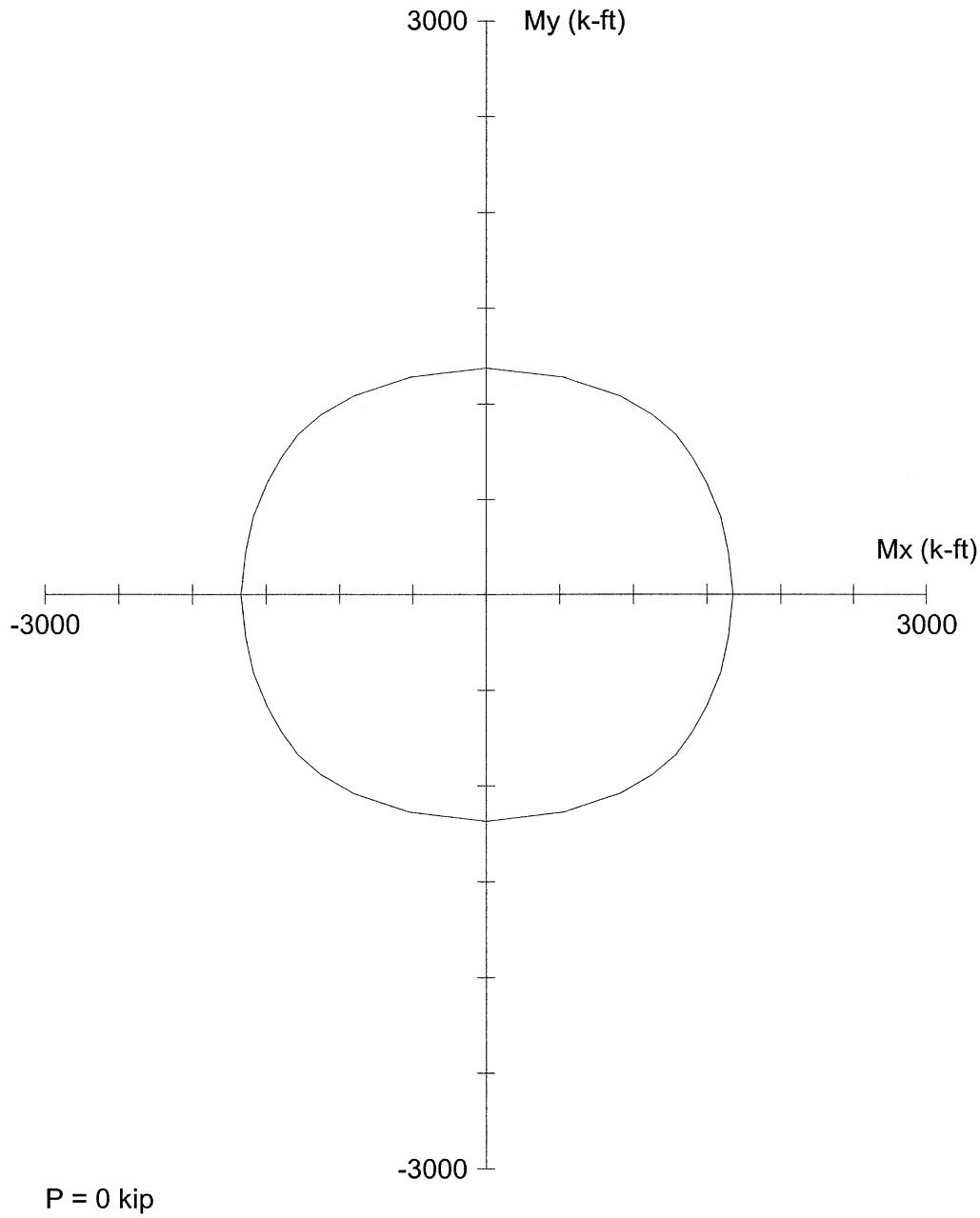


Code: ACI 318-95

Units: English

Run axis: Biaxial

Run option: Investigation

Slenderness: Not considered

mn type: Structural

Bars: User-defined

Date: 07/20/06

Time: 12:43:43

PCACOL V3.00 (PCA 1999) - Licensed to: Licensee name not yet specified.

File: S:\DGN-ST\NORTHC~1\BONNER~1\ANALYSIS\PIERS\HLB142\PCACOL~1\M7PLAN.COL

Project: BONNER BRIDGE - OREGON INLET

| | | | |
|---|---|---|---|
| Column: HLB #142 | | Engineer: JMJ | |
| f'c = 3 ksi | fy = 40 ksi | Ag = 1749.6 in^2 | 18 #11 bars |
| Ec = 3122 ksi | Es = 29000 ksi | As = 28.08 in^2 | Rho = 1.60% |
| fc = 2.55 ksi | e_rup = Infinity | Xo = 0.00 in | Ix = 344374 in^4 |
| u = 0.003 in/in | | Yo = 0.00 in | Iy = 188957 in^4 |
| Beta1 = 0.85 | | Clear spacing = 4.74 in | Clear cover = 5.00 in |
| Confinement: Tied | phi(a) = 0.8, phi(b) = 0.9, phi(c) = 0.7 | | |

JMJ 7/06
WOB 7/06

```
OOOOOOO    OOOOO    OOOOO    OOOOO    OOOOO   OO
OO    OO   OO  OO   OO  OO   OO  OO   OO  OO   OO
OO    OO   OO  OO   OO  OO   OO  OO   OO  OO   OO
OO    OO   OO       OO  OO   OO       OO  OO   OO
OO    OO   OO       OOOOOOO  OO       OO  OO   OO
OOOOOOO    OO  OO   OO  OO   OO  OO   OO  OO   OO
OO         OO  OO   OO  OO   OO  OO   OO  OO   OO
OO          OOOOO   OO  OO    OOOOO    OOOOO   OOOOO  (TM)
```

==========
Computer program for the Strength Design of Reinforced Concrete Sections
==========

Licensee stated above acknowledges that Portland Cement Association (PCA) is not and cannot be responsible for either the accuracy or adequacy of the material supplied as input for processing by the PCACOL(tm) computer program. Furthermore, PCA neither makes any warranty expressed nor implied with respect to the correctness of the output prepared by the PCACOL(tm) program. Although PCA has endeavored to produce PCACOL(tm) error free, the program is not and can't be certified infallible. The final and only responsibility for analysis, design and engineering documents is the licensees. Accordingly, PCA disclaims all responsibility in contract, negligence or other tort for any analysis, design or engineering documents prepared in connection with the use of the PCACOL(tm) program.

50% COVER LOCS

$f'_c$ = 4400 PSI

General Information:
==========

File Name: S:\DGN-ST\NORTHC~1\BONNER~1\ANALYSIS\PIERS\HLB142\PCACOL~1\M7ACT.COL
Project: BONNER BRIDGE - OREGON INLET
Column: HLB #142 Engineer: JMJ
Code: ACI 318-95 Units: English

Run Option: Investigation Slenderness: Not considered
Run Axis: Biaxial Column Type: Structural

Material Properties:
==========

f'c = 4.4 ksi fy = 40 ksi
Ec = 3780.96 ksi Es = 29000 ksi
fc = 3.74 ksi Rupture strain = Infinity
Ultimate strain = 0.003 in/in
Beta1 = 0.83

Section:
==========

Rectangular: Width = 31 in Depth = 43.6 in

Gross section area, Ag = 1351.6 in^2
Ix = 214111 in^4 Iy = 108241 in^4
Xo = 0 in Yo = 0 in

Reinforcement:
==========

Rebar Database: User-defined

| Size | Diam (in) | Area (in^2) | Size | Diam (in) | Area (in^2) | Size | Diam (in) | Area (in^2) |
|---|---|---|---|---|---|---|---|---|
| # 1 | 0.00 | 0.00 | # 3 | 0.38 | 0.11 | # 4 | 0.50 | 0.20 |
| # 5 | 0.63 | 0.31 | # 6 | 0.75 | 0.44 | # 7 | 0.88 | 0.60 |
| # 8 | 1.00 | 0.79 | # 9 | 1.13 | 1.00 | # 10 | 1.27 | 1.27 |
| # 11 | 1.41 | 1.56 | # 14 | 1.69 | 2.25 | # 18 | 2.26 | 4.00 |

Confinement: Tied; #1 ties with #9 bars, #1 with larger bars.
phi(a) = 0.8, phi(b) = 0.9, phi(c) = 0.7

Layout: Rectangular
Pattern: Equal Bar Spacing (Cover to longitudinal reinforcement)
Total steel area, As = 28.08 in^2 at 2.08%
18 #11 Cover = 2.5 in

Factored Loads and Moments with Corresponding Capacities: (see user's manual for notation)
==========

| No. | Pu kip | Mux k-ft | Muy k-ft | fMnx k-ft | fMny k-ft | fMn/Mu |
|---|---|---|---|---|---|---|
| 1 | 546.0 | 94.0 | 76.0 | 1217.6 | 986.9 | 12.966 |
| 2 | 346.0 | 273.0 | 124.0 | 1543.7 | 700.6 | 5.654 |
| 3 | 467.0 | 195.0 | 65.0 | 1683.0 | 561.3 | 8.631 |
| 4 | 456.0 | 78.0 | 64.0 | 1212.0 | 991.2 | 15.518 |
| 5 | 332.0 | 263.0 | 113.0 | 1560.3 | 672.0 | 5.935 |
| 6 | 449.0 | 188.0 | 63.0 | 1676.5 | 564.8 | 8.923 |
| 7 | 345.0 | 59.0 | 48.0 | 1205.2 | 978.4 | 20.410 |
| 8 | 266.0 | 273.0 | 124.0 | 1517.7 | 688.1 | 5.558 |
| 9 | 315.0 | 195.0 | 67.0 | 1632.2 | 562.8 | 8.373 |
| 10 | 302.0 | 52.0 | 42.0 | 1198.0 | 969.3 | 23.055 |
| 11 | 256.0 | 263.0 | 113.0 | 1534.2 | 661.5 | 5.837 |
| 12 | 303.0 | 188.0 | 58.0 | 1662.9 | 510.5 | 8.841 |
| 13 | 588.0 | 101.0 | 82.0 | 1211.9 | 985.1 | 12.005 |
| 14 | 387.0 | 655.0 | 110.0 | 1798.6 | 303.1 | 2.746 |
| 15 | 509.0 | 421.0 | 71.0 | 1834.7 | 312.3 | 4.359 |

| | | | | | | |
|---|---|---|---|---|---|---|
| 16 | 496.0 | 85.0 | 69.0 | 1218.2 | 988.6 | 14.330 |
| 17 | 372.0 | 630.0 | 72.0 | 1826.4 | 209.9 | 2.899 |
| 18 | 489.0 | 405.0 | 68.0 | 1831.0 | 309.5 | 4.522 |
| 19 | 376.0 | 65.0 | 53.0 | 1205.5 | 985.6 | 18.566 |
| 20 | 297.0 | 655.0 | 110.0 | 1758.7 | 297.2 | 2.685 |
| 21 | 346.0 | 421.0 | 70.0 | 1784.0 | 294.5 | 4.237 |
| 22 | 333.0 | 57.0 | 47.0 | 1191.3 | 982.2 | 20.899 |
| 23 | 286.0 | 630.0 | 71.0 | 1787.6 | 200.5 | 2.837 |
| 24 | 333.0 | 405.0 | 47.0 | 1808.1 | 212.6 | 4.465 |

*** Program completed as requested! ***

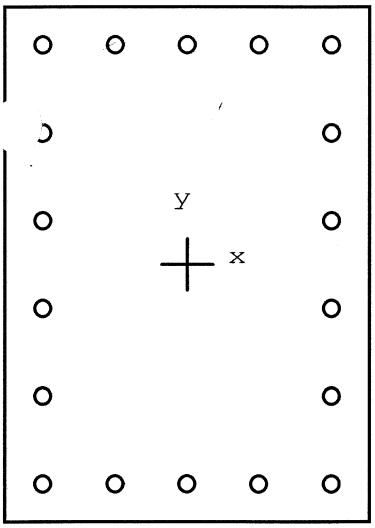


31 x 43.6 in

Code: ACI 318-95

Units: English

Run axis: Biaxial

Run option: Investigation

Slenderness: Not considered

Column type: Structural

Bars: User-defined

Date: 07/25/06

Time: 13:47:57

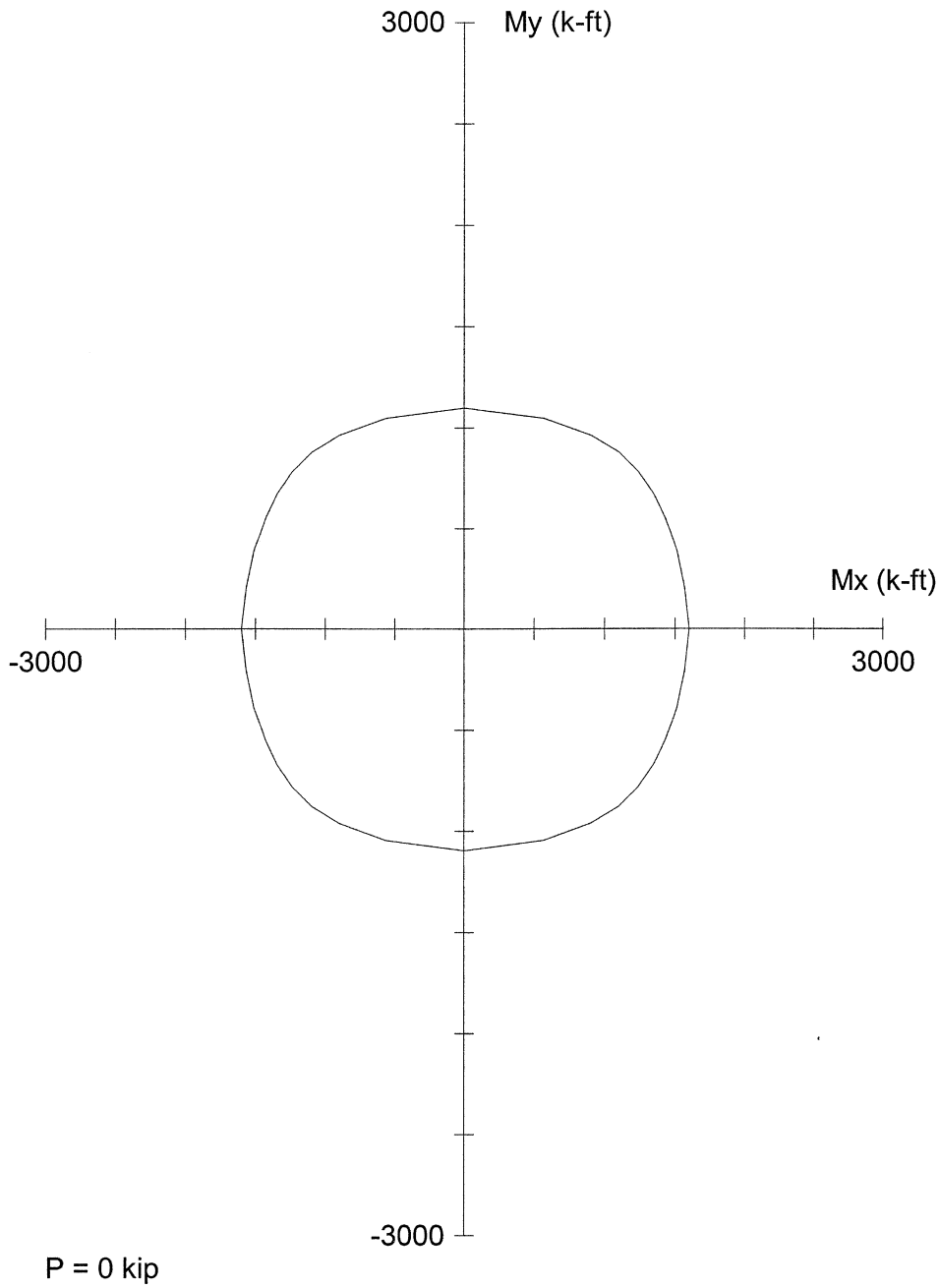


PCACOL V3.00 (PCA 1999) - Licensed to: Licensee name not yet specified.

File: S:\DGN-ST\NORTHC~1\BONNER~1\ANALYSIS\PIERS\HLB142\PCACOL~1\M7ACT.COL

Project: BONNER BRIDGE - OREGON INLET

| | | | |
|---|---|---|---|
| Column: HLB #142 | | Engineer: JMJ | |
| f'c = 4.4 ksi | fy = 40 ksi | Ag = 1351.6 in^2 | 18 #11 bars |
| Ec = 3781 ksi | Es = 29000 ksi | As = 28.08 in^2 | Rho = 2.08% |
| fc = 3.74 ksi | e_rup = Infinity | Xo = 0.00 in | Ix = 214111 in^4 |
| e_u = 0.003 in/in | | Yo = 0.00 in | Iy = 108241 in^4 |
| Beta1 = 0.83 | | Clear spacing = 4.74 in | Clear cover = 2.50 in |
| Confinement: Tied | phi(a) = 0.8, phi(b) = 0.9, phi(c) = 0.7 | | |

H. W. LOCHNER, INC.

PROJECT: BONNER BRIDGE - OREGON INLET NORTH CAROLINA JMJ Jun-06
SUBJECT: HIGH LEVEL BENT ANALYSIS
HLB 142 MEM. 8 JT. 6 WDB 7/06

## COLUMN LOADS

### PMAX

HLB 142 MEMBER 8 JOINT 6

GROUP 1

| | P | MY | MZ |
|---|---|---|---|
| DL | 244.29 | 0.00 | 14.16 |
| LL | 105.64 | 0.00 | -34.11 |
| GROUP 1 | 0.00 | 0.00 | 0.00 |
| SERVICE | 349.93 | 0.00 | -19.95 |
| STRENGTH | 546.46 | 0.00 | -55.50 |

GROUP 2

| | P | MY | MZ |
|---|---|---|---|
| DL | 244.29 | 0.00 | 14.16 |
| LL | 0.00 | 0.00 | 0.00 |
| GROUP 2 | -21.49 | -210.23 | -79.97 |
| SERVICE | 222.80 | -210.23 | -65.81 |
| STRENGTH | 289.64 | -273.30 | -85.55 |

GROUP 3

| | P | MY | MZ |
|---|---|---|---|
| DL | 244.29 | 0.00 | 14.16 |
| LL | 105.64 | 0.00 | -34.11 |
| GROUP 3 | -9.61 | -150.18 | -33.40 |
| SERVICE | 340.32 | -150.18 | -53.35 |
| STRENGTH | 442.42 | -195.23 | -69.36 |

GROUP 4

| | P | MY | MZ |
|---|---|---|---|
| DL | 244.29 | 0.00 | 14.16 |
| LL | 105.64 | 0.00 | -34.11 |
| GROUP 4 | -0.11 | 0.00 | -4.87 |
| SERVICE | 349.82 | 0.00 | -24.82 |
| STRENGTH | 454.77 | 0.00 | -32.27 |

GROUP 5

| | P | MY | MZ |
|---|---|---|---|
| DL | 244.29 | 0.00 | 14.16 |
| LL | 0.00 | 0.00 | 0.00 |
| GROUP 5 | -21.61 | -210.23 | -84.84 |
| SERVICE | 222.68 | -210.23 | -70.68 |
| STRENGTH | 278.35 | -262.79 | -88.35 |

GROUP 6

| | P | MY | MZ |
|---|---|---|---|
| DL | 244.29 | 0.00 | 14.16 |
| LL | 105.64 | 0.00 | -34.11 |
| GROUP 6 | -9.73 | -150.18 | -38.27 |
| SERVICE | 340.20 | -150.18 | -58.22 |
| STRENGTH | 425.25 | -187.73 | -72.78 |

## SLENDERNESS EFFECTS IN COMPRESSION MEMBERS (AASHTO 8.16.5)

f'c = 3000 psi PHI = 0.70 $W_C$ = 150 PCF

$E_C = W_C^{1.5} * 33 * f'c^{0.5}$ = 3320561 PSI Width of Rect. Col. = B = 35.928 In.

Depth of Rect. Col = D = 48.624 In.

$r_Y = 0.30*D$ = 14.59 In. $L_Y$ = 8.5 Ft. $K_Y$ = 2.0

$r_Z = 0.30*B$ = 10.78 In. $L_Z$ = 17.5 Ft. $K_Z$ = 1.2

$I_{YY}$ = $B*D^3/12$ $I_{YY}$ = 344194 $In^4$

$I_{ZZ}$ = $D*B^3/12$ $I_{ZZ}$ = 187918 $In^5$

| | | | | | |
|---|---|---|---|---|---|
| $K_Y L_Y/r$ | = | 14.0 | < | 22 | NO SLENDERNESS EFFECT |
| $K_Z L_Z/r$ | = | 23.4 | > | 22 | CONSIDER SLENDERNESS |

H. W. LOCHNER, INC.

PROJECT: BONNER BRIDGE - OREGON INLET NORTH CAROLINA JMJ Jun-06
SUBJECT: HIGH LEVEL BENT ANALYSIS
HLB 142 MEM. 8 JT. 6 WDB 7/06

## SLENDERNESS EFFECTS IN RECTANGULAR COMPRESSION MEMBERS (AASHTO 8.16.5)

### GROUP 1

| | B | D | KL/R | $M_U$ | $M_{DL}$ | $B_D$ | $P_U$ | $P_C$ | $\delta_b$ | $\delta_s$ | $M_C$ | |
|---|---|---|---|---|---|---|---|---|---|---|---|---|
| | In. | In. | | Ft. Kips | Ft. Kips | | Kips | Kips | | | Ft. Kips | |
| MY | 35.928 | 48.624 | 14.0 | 0.00 | 0.00 | 0.000 | 546 | 0 | 1.000 | 1.000 | 94 | * |
| MZ | 35.928 | 48.624 | 23.4 | 55.50 | 18.41 | 0.332 | 546 | 29130 | 1.028 | 1.028 | 76 | * |

### GROUP 2

| | B | D | KL/R | $M_U$ | $M_{DL}$ | $B_D$ | $P_U$ | $P_C$ | $\delta_b$ | $\delta_s$ | $M_C$ |
|---|---|---|---|---|---|---|---|---|---|---|---|
| | In. | In. | | Ft. Kips | Ft. Kips | | Kips | Kips | | | Ft. Kips |
| MY | 35.928 | 48.624 | 14.0 | 273.30 | 0.00 | 0.000 | 290 | 0 | 1.000 | 1.000 | 273 |
| MZ | 35.928 | 48.624 | 23.4 | 85.55 | 18.41 | 0.215 | 290 | 31923 | 1.013 | 1.013 | 87 |

### GROUP 3

| | B | D | KL/R | $M_U$ | $M_{DL}$ | $B_D$ | $P_U$ | $P_C$ | $\delta_b$ | $\delta_s$ | $M_C$ |
|---|---|---|---|---|---|---|---|---|---|---|---|
| | In. | In. | | Ft. Kips | Ft. Kips | | Kips | Kips | | | Ft. Kips |
| MY | 35.928 | 48.624 | 14.0 | 195.23 | 0.00 | 0.000 | 442 | 0 | 1.000 | 1.000 | 195 |
| MZ | 35.928 | 48.624 | 23.4 | 69.36 | 18.41 | 0.265 | 442 | 30655 | 1.021 | 1.021 | 71 |

### GROUP 4

| | B | D | KL/R | $M_U$ | $M_{DL}$ | $B_D$ | $P_U$ | $P_C$ | $\delta_b$ | $\delta_s$ | $M_C$ | |
|---|---|---|---|---|---|---|---|---|---|---|---|---|
| | In. | In. | | Ft. Kips | Ft. Kips | | Kips | Kips | | | Ft. Kips | |
| MY | 35.928 | 48.624 | 14.0 | 0.00 | 0.00 | 0.000 | 455 | 0 | 1.000 | 1.000 | 78 | * |
| MZ | 35.928 | 48.624 | 23.4 | 32.27 | 18.41 | 0.571 | 455 | 24700 | 1.027 | 1.027 | 64 | * |

### GROUP 5

| | B | D | KL/R | $M_U$ | $M_{DL}$ | $B_D$ | $P_U$ | $P_C$ | $\delta_b$ | $\delta_s$ | $M_C$ |
|---|---|---|---|---|---|---|---|---|---|---|---|
| | In. | In. | | Ft. Kips | Ft. Kips | | Kips | Kips | | | Ft. Kips |
| MY | 35.928 | 48.624 | 14.0 | 262.79 | 0.00 | 0.000 | 278 | 0 | 1.000 | 1.000 | 263 |
| MZ | 35.928 | 48.624 | 23.4 | 88.35 | 18.41 | 0.208 | 278 | 32103 | 1.013 | 1.013 | 89 |

### GROUP 6

| | B | D | KL/R | $M_U$ | $M_{DL}$ | $B_D$ | $P_U$ | $P_C$ | $\delta_b$ | $\delta_s$ | $M_C$ |
|---|---|---|---|---|---|---|---|---|---|---|---|
| | In. | In. | | Ft. Kips | Ft. Kips | | Kips | Kips | | | Ft. Kips |
| MY | 35.928 | 48.624 | 14.0 | 187.73 | 0.00 | 0.000 | 425 | 0 | 1.000 | 1.000 | 188 |
| MZ | 35.928 | 48.624 | 23.4 | 72.78 | 18.41 | 0.253 | 425 | 30960 | 1.020 | 1.020 | 74 |

* MINIMUM MOMENT CONTROLS

H. W. LOCHNER, INC.

PROJECT: BONNER BRIDGE - OREGON INLET NORTH CAROLINA JMJ Jun-06
SUBJECT: HIGH LEVEL BENT ANALYSIS
HLB 142 MEM. 8 JT. 6 WPB 7/06

## COLUMN LOADS

**PMIN**

HLB 142 MEMBER 8 JOINT 6

GROUP 1

| | P | MY | MZ |
|---|---|---|---|
| DL | 183.22 | 0.00 | 14.16 |
| LL | 49.43 | 0.00 | 3.15 |
| GROUP 1 | 0.00 | 0.00 | 0.00 |
| SERVICE | 232.65 | 0.00 | 17.31 |
| STRENGTH | 345.28 | 0.00 | 25.23 |

GROUP 2

| | P | MY | MZ |
|---|---|---|---|
| DL | 183.22 | 0.00 | 14.16 |
| LL | 0.00 | 0.00 | 0.00 |
| GROUP 2 | -21.49 | -210.23 | -79.97 |
| SERVICE | 161.73 | -210.23 | -65.81 |
| STRENGTH | 210.25 | -273.30 | -85.55 |

GROUP 3

| | P | MY | MZ |
|---|---|---|---|
| DL | 183.22 | 0.00 | 14.16 |
| LL | 49.43 | 0.00 | 3.15 |
| GROUP 3 | -9.61 | -150.18 | -33.40 |
| SERVICE | 223.04 | -150.18 | -16.09 |
| STRENGTH | 289.95 | -195.23 | -20.92 |

GROUP 4

| | P | MY | MZ |
|---|---|---|---|
| DL | 183.22 | 0.00 | 14.16 |
| LL | 49.43 | 0.00 | 3.15 |
| GROUP 4 | -0.11 | 0.00 | -4.87 |
| SERVICE | 232.54 | 0.00 | 12.44 |
| STRENGTH | 302.30 | 0.00 | 16.17 |

GROUP 5

| | P | MY | MZ |
|---|---|---|---|
| DL | 183.22 | 0.00 | 14.16 |
| LL | 0.00 | 0.00 | 0.00 |
| GROUP 5 | -21.61 | -210.23 | -84.84 |
| SERVICE | 161.61 | -210.23 | -70.68 |
| STRENGTH | 202.01 | -262.79 | -88.35 |

GROUP 6

| | P | MY | MZ |
|---|---|---|---|
| DL | 183.22 | 0.00 | 14.16 |
| LL | 49.43 | 0.00 | 3.15 |
| GROUP 6 | -9.73 | -150.18 | -38.27 |
| SERVICE | 222.92 | -150.18 | -20.96 |
| STRENGTH | 278.65 | -187.73 | -26.20 |

## SLENDERNESS EFFECTS IN COMPRESSION MEMBERS (AASHTO 8.16.5)

f'c = 3000 psi PHI = 0.70 $W_C$ = 150 PCF

$E_C = W_C^{1.5} * 33 * f'c^{0.5}$ = 3320561 PSI Width of Rect. Col. = B = 35.928 In.

Depth of Rect. Col = D = 48.624 In.

$r_Y = 0.30*D$ = 14.59 In. $L_Y$ = 8.5 Ft. $K_Y$ = 2.0

$r_Z = 0.30*B$ = 10.78 In. $L_Z$ = 17.5 Ft. $K_Z$ = 1.2

$I_{YY}$ = $B*D^3/12$ $I_{YY}$ = 344194 $In^4$

$I_{ZZ}$ = $D*B^3/12$ $I_{ZZ}$ = 187918 $In^5$

$K_YL_Y/r$ = 14.0 < 22 NO SLENDERNESS EFFECT

$K_ZL_Z/r$ = 23.4 > 22 CONSIDER SLENDERNESS

H. W. LOCHNER, INC.

PROJECT: BONNER BRIDGE - OREGON INLET NORTH CAROLINA JMJ Jun-06
SUBJECT: HIGH LEVEL BENT ANALYSIS
HLB 142 MEM. 8 JT. 6 WAB 7/06

## SLENDERNESS EFFECTS IN RECTANGULAR COMPRESSION MEMBERS (AASHTO 8.16.5)

### GROUP 1

| | B | D | KL/R | $M_U$ | $M_{DL}$ | $B_D$ | $P_U$ | $P_C$ | $\delta_b$ | $\delta_s$ | $M_C$ | |
|---|---|---|---|---|---|---|---|---|---|---|---|---|
| | In. | In. | | Ft. Kips | Ft. Kips | | Kips | Kips | | | Ft. Kips | |
| MY | 35.928 | 48.624 | 14.0 | 0.00 | 0.00 | 0.000 | 345 | 0 | 1.000 | 1.000 | 59 | * |
| MZ | 35.928 | 48.624 | 23.4 | 25.23 | 18.41 | 0.730 | 345 | 22429 | 1.022 | 1.022 | 48 | * |

### GROUP 2

| | B | D | KL/R | $M_U$ | $M_{DL}$ | $B_D$ | $P_U$ | $P_C$ | $\delta_b$ | $\delta_s$ | $M_C$ |
|---|---|---|---|---|---|---|---|---|---|---|---|
| | In. | In. | | Ft. Kips | Ft. Kips | | Kips | Kips | | | Ft. Kips |
| MY | 35.928 | 48.624 | 14.0 | 273.30 | 0.00 | 0.000 | 210 | 0 | 1.000 | 1.000 | 273 |
| MZ | 35.928 | 48.624 | 23.4 | 85.55 | 18.41 | 0.215 | 210 | 31923 | 1.009 | 1.009 | 86 |

### GROUP 3

| | B | D | KL/R | $M_U$ | $M_{DL}$ | $B_D$ | $P_U$ | $P_C$ | $\delta_b$ | $\delta_s$ | $M_C$ | |
|---|---|---|---|---|---|---|---|---|---|---|---|---|
| | In. | In. | | Ft. Kips | Ft. Kips | | Kips | Kips | | | Ft. Kips | |
| MY | 35.928 | 48.624 | 14.0 | 195.23 | 0.00 | 0.000 | 290 | 0 | 1.000 | 1.000 | 195 | |
| MZ | 35.928 | 48.624 | 23.4 | 20.92 | 18.41 | 0.880 | 290 | 20633 | 1.020 | 1.020 | 41 | * |

### GROUP 4

| | B | D | KL/R | $M_U$ | $M_{DL}$ | $B_D$ | $P_U$ | $P_C$ | $\delta_b$ | $\delta_s$ | $M_C$ | |
|---|---|---|---|---|---|---|---|---|---|---|---|---|
| | In. | In. | | Ft. Kips | Ft. Kips | | Kips | Kips | | | Ft. Kips | |
| MY | 35.928 | 48.624 | 14.0 | 0.00 | 0.00 | 0.000 | 302 | 0 | 1.000 | 1.000 | 52 | * |
| MZ | 35.928 | 48.624 | 23.4 | 16.17 | 18.41 | 1.138 | 302 | 18142 | 1.024 | 1.024 | 42 | * |

### GROUP 5

| | B | D | KL/R | $M_U$ | $M_{DL}$ | $B_D$ | $P_U$ | $P_C$ | $\delta_b$ | $\delta_s$ | $M_C$ |
|---|---|---|---|---|---|---|---|---|---|---|---|
| | In. | In. | | Ft. Kips | Ft. Kips | | Kips | Kips | | | Ft. Kips |
| MY | 35.928 | 48.624 | 14.0 | 262.79 | 0.00 | 0.000 | 202 | 0 | 1.000 | 1.000 | 263 |
| MZ | 35.928 | 48.624 | 23.4 | 88.35 | 18.41 | 0.208 | 202 | 32103 | 1.009 | 1.009 | 89 |

### GROUP 6

| | B | D | KL/R | $M_U$ | $M_{DL}$ | $B_D$ | $P_U$ | $P_C$ | $\delta_b$ | $\delta_s$ | $M_C$ | |
|---|---|---|---|---|---|---|---|---|---|---|---|---|
| | In. | In. | | Ft. Kips | Ft. Kips | | Kips | Kips | | | Ft. Kips | |
| MY | 35.928 | 48.624 | 14.0 | 187.73 | 0.00 | 0.000 | 279 | 0 | 1.000 | 1.000 | 188 | |
| MZ | 35.928 | 48.624 | 23.4 | 26.20 | 18.41 | 0.703 | 279 | 22784 | 1.018 | 1.018 | 39 | * |

* MINIMUM MOMENT CONTROLS

H. W. LOCHNER, INC.

PROJECT: BONNER BRIDGE - OREGON INLET NORTH CAROLINA JMJ Jul-06
SUBJECT: HIGH LEVEL BENT ANALYSIS
HLB 142 MEM. 8 JT. 8 WDB 7/06

## COLUMN LOADS

### PMAX

HLB 142 MEMBER 8 JOINT 8

GROUP 1

| | P | MY | MZ |
|---|---|---|---|
| DL | -276.14 | 0.00 | 14.79 |
| LL | -105.64 | 0.00 | -16.07 |
| GROUP 1 | 0.00 | 0.00 | 0.00 |
| SERVICE | -381.78 | 0.00 | -1.28 |
| STRENGTH | -587.87 | 0.00 | -15.59 |

GROUP 2

| | P | MY | MZ |
|---|---|---|---|
| DL | -276.14 | 0.00 | 14.79 |
| LL | 0.00 | 0.00 | 0.00 |
| GROUP 2 | 21.64 | 504.19 | -68.55 |
| SERVICE | -254.50 | 504.19 | -53.76 |
| STRENGTH | -330.85 | 655.45 | -69.89 |

GROUP 3

| | P | MY | MZ |
|---|---|---|---|
| DL | -276.14 | 0.00 | 14.79 |
| LL | -105.64 | 0.00 | -16.07 |
| GROUP 3 | 9.66 | 324.07 | -29.94 |
| SERVICE | -372.12 | 324.07 | -31.22 |
| STRENGTH | -483.76 | 421.29 | -40.59 |

GROUP 4

| | P | MY | MZ |
|---|---|---|---|
| DL | -276.14 | 0.00 | 14.79 |
| LL | -105.64 | 0.00 | -16.07 |
| GROUP 4 | 0.11 | 0.00 | -27.04 |
| SERVICE | -381.67 | 0.00 | -28.32 |
| STRENGTH | -496.17 | 0.00 | -36.82 |

GROUP 5

| | P | MY | MZ |
|---|---|---|---|
| DL | -276.14 | 0.00 | 14.79 |
| LL | 0.00 | 0.00 | 0.00 |
| GROUP 5 | 21.76 | 504.19 | -95.59 |
| SERVICE | -254.38 | 504.19 | -80.80 |
| STRENGTH | -317.98 | 630.24 | -101.00 |

GROUP 6

| | P | MY | MZ |
|---|---|---|---|
| DL | -276.14 | 0.00 | 14.79 |
| LL | -105.64 | 0.00 | -16.07 |
| GROUP 6 | 9.77 | 324.07 | -56.98 |
| SERVICE | -372.01 | 324.07 | -58.26 |
| STRENGTH | -465.01 | 405.09 | -72.83 |

## SLENDERNESS EFFECTS IN COMPRESSION MEMBERS (AASHTO 8.16.5)

f'c = 3000 psi PHI = 0.70 $W_C$ = 150 PCF

$E_C = W_C^{1.5} * 33 * f'c^{0.5}$ = 3320561 PSI Width of Rect. Col. = B = 35.928 In.

Depth of Rect. Col = D = 48.624 In.

$r_Y = 0.30*D$ = 14.59 In. $L_Y$ = 8.5 Ft. $K_Y$ = 2.0

$r_Z = 0.30*B$ = 10.78 In. $L_Z$ = 17.5 Ft. $K_Z$ = 1.2

$I_{YY}$ = $B*D^3/12$ $I_{YY}$ = 344194 $In^4$

$I_{ZZ}$ = $D*B^3/12$ $I_{ZZ}$ = 187918 $In^5$

$K_Y L_Y/r$ = 14.0 < 22 NO SLENDERNESS EFFECT

$K_Z L_Z/r$ = 23.4 > 22 CONSIDER SLENDERNESS

H. W. LOCHNER, INC.

PROJECT: BONNER BRIDGE - OREGON INLET NORTH CAROLINA JMJ Jul-06
SUBJECT: HIGH LEVEL BENT ANALYSIS
HLB 142 MEM. 8 JT. 8 WDB 7/06

**SLENDERNESS EFFECTS IN RECTANGULAR COMPRESSION MEMBERS (AASHTO 8.16.5)**

**GROUP 1**

| | B | D | KL/R | $M_U$ | $M_{DL}$ | $B_D$ | $P_U$ | $P_C$ | $\delta_b$ | $\delta_s$ | $M_C$ | |
|---|---|---|---|---|---|---|---|---|---|---|---|---|
| | In. | In. | | Ft. Kips | Ft. Kips | | Kips | Kips | | | Ft. Kips | |
| MY | 35.928 | 48.624 | 14.0 | 0.00 | 0.00 | 0.000 | 588 | 0 | 1.000 | 1.000 | 101 | * |
| MZ | 35.928 | 48.624 | 23.4 | 15.59 | 19.23 | 1.233 | 588 | 17371 | 1.051 | 1.051 | 82 | * |

**GROUP 2**

| | B | D | KL/R | $M_U$ | $M_{DL}$ | $B_D$ | $P_U$ | $P_C$ | $\delta_b$ | $\delta_s$ | $M_C$ |
|---|---|---|---|---|---|---|---|---|---|---|---|
| | In. | In. | | Ft. Kips | Ft. Kips | | Kips | Kips | | | Ft. Kips |
| MY | 35.928 | 48.624 | 14.0 | 655.45 | 0.00 | 0.000 | 331 | 0 | 1.000 | 1.000 | 655 |
| MZ | 35.928 | 48.624 | 23.4 | 69.89 | 19.23 | 0.275 | 331 | 30422 | 1.016 | 1.016 | 71 |

**GROUP 3**

| | B | D | KL/R | $M_U$ | $M_{DL}$ | $B_D$ | $P_U$ | $P_C$ | $\delta_b$ | $\delta_s$ | $M_C$ | |
|---|---|---|---|---|---|---|---|---|---|---|---|---|
| | In. | In. | | Ft. Kips | Ft. Kips | | Kips | Kips | | | Ft. Kips | |
| MY | 35.928 | 48.624 | 14.0 | 421.29 | 0.00 | 0.000 | 484 | 0 | 1.000 | 1.000 | 421 | |
| MZ | 35.928 | 48.624 | 23.4 | 40.59 | 19.23 | 0.474 | 484 | 26322 | 1.027 | 1.027 | 68 | * |

**GROUP 4**

| | B | D | KL/R | $M_U$ | $M_{DL}$ | $B_D$ | $P_U$ | $P_C$ | $\delta_b$ | $\delta_s$ | $M_C$ | |
|---|---|---|---|---|---|---|---|---|---|---|---|---|
| | In. | In. | | Ft. Kips | Ft. Kips | | Kips | Kips | | | Ft. Kips | |
| MY | 35.928 | 48.624 | 14.0 | 0.00 | 0.00 | 0.000 | 496 | 0 | 1.000 | 1.000 | 85 | * |
| MZ | 35.928 | 48.624 | 23.4 | 36.82 | 19.23 | 0.522 | 496 | 25483 | 1.029 | 1.029 | 69 | * |

**GROUP 5**

| | B | D | KL/R | $M_U$ | $M_{DL}$ | $B_D$ | $P_U$ | $P_C$ | $\delta_b$ | $\delta_s$ | $M_C$ |
|---|---|---|---|---|---|---|---|---|---|---|---|
| | In. | In. | | Ft. Kips | Ft. Kips | | Kips | Kips | | | Ft. Kips |
| MY | 35.928 | 48.624 | 14.0 | 630.24 | 0.00 | 0.000 | 318 | 0 | 1.000 | 1.000 | 630 |
| MZ | 35.928 | 48.624 | 23.4 | 101.00 | 19.23 | 0.190 | 318 | 32588 | 1.014 | 1.014 | 102 |

**GROUP 6**

| | B | D | KL/R | $M_U$ | $M_{DL}$ | $B_D$ | $P_U$ | $P_C$ | $\delta_b$ | $\delta_s$ | $M_C$ |
|---|---|---|---|---|---|---|---|---|---|---|---|
| | In. | In. | | Ft. Kips | Ft. Kips | | Kips | Kips | | | Ft. Kips |
| MY | 35.928 | 48.624 | 14.0 | 405.09 | 0.00 | 0.000 | 465 | 0 | 1.000 | 1.000 | 405 |
| MZ | 35.928 | 48.624 | 23.4 | 72.83 | 19.23 | 0.264 | 465 | 30689 | 1.022 | 1.022 | 74 |

* MINIMUM MOMENT CONTROLS

H. W. LOCHNER, INC.

PROJECT: BONNER BRIDGE - OREGON INLET NORTH CAROLINA JMJ Jul-06
SUBJECT: HIGH LEVEL BENT ANALYSIS
HLB 142 MEM. 8 JT. 8 WDB 7/06

## COLUMN LOADS

**PMIN**

HLB 142 MEMBER 8 JOINT 8

GROUP 1

| | P | MY | MZ |
|---|---|---|---|
| DL | -207.11 | 0.00 | 14.79 |
| LL | -49.43 | 0.00 | 8.06 |
| GROUP 1 | 0.00 | 0.00 | 0.00 |
| SERVICE | -256.54 | 0.00 | 22.85 |
| STRENGTH | -376.33 | 0.00 | 36.69 |

GROUP 2

| | P | MY | MZ |
|---|---|---|---|
| DL | -207.11 | 0.00 | 14.79 |
| LL | 0.00 | 0.00 | 0.00 |
| GROUP 2 | 21.64 | 504.19 | -68.55 |
| SERVICE | -185.47 | 504.19 | -53.76 |
| STRENGTH | -241.10 | 655.45 | -69.89 |

GROUP 3

| | P | MY | MZ |
|---|---|---|---|
| DL | -207.11 | 0.00 | 14.79 |
| LL | -49.43 | 0.00 | 8.06 |
| GROUP 3 | 9.66 | 324.07 | -29.94 |
| SERVICE | -246.88 | 324.07 | -7.09 |
| STRENGTH | -320.94 | 421.29 | -9.22 |

GROUP 4

| | P | MY | MZ |
|---|---|---|---|
| DL | -207.11 | 0.00 | 14.79 |
| LL | -49.43 | 0.00 | 8.06 |
| GROUP 4 | 0.11 | 0.00 | -27.04 |
| SERVICE | -256.43 | 0.00 | -4.19 |
| STRENGTH | -333.35 | 0.00 | -5.45 |

GROUP 5

| | P | MY | MZ |
|---|---|---|---|
| DL | -207.11 | 0.00 | 14.79 |
| LL | 0.00 | 0.00 | 0.00 |
| GROUP 5 | 21.76 | 504.19 | -95.59 |
| SERVICE | -185.35 | 504.19 | -80.80 |
| STRENGTH | -231.68 | 630.24 | -101.00 |

GROUP 6

| | P | MY | MZ |
|---|---|---|---|
| DL | -207.11 | 0.00 | 14.79 |
| LL | -49.43 | 0.00 | 8.06 |
| GROUP 6 | 9.77 | 324.07 | -56.98 |
| SERVICE | -246.77 | 324.07 | -34.13 |
| STRENGTH | -308.46 | 405.09 | -42.66 |

## SLENDERNESS EFFECTS IN COMPRESSION MEMBERS (AASHTO 8.16.5)

f'c = 3000 psi PHI = 0.70 $W_C$ = 150 PCF

$E_C = W_C^{1.5} * 33 * f'c^{0.5}$ = 3320561 PSI Width of Rect. Col. = B = 35.928 In.

Depth of Rect. Col = D = 48.624 In.

$r_Y = 0.30*D$ = 14.59 In. $L_Y$ = 8.5 Ft. $K_Y$ = 2.0

$r_Z = 0.30*B$ = 10.78 In. $L_Z$ = 17.5 Ft. $K_Z$ = 1.2

$I_{YY}$ = $B*D^3/12$ $I_{YY}$ = 344194 $In^4$

$I_{ZZ}$ = $D*B^3/12$ $I_{ZZ}$ = 187918 $In^5$

$K_Y L_Y/r$ = 14.0 < 22 NO SLENDERNESS EFFECT

$K_Z L_Z/r$ = 23.4 > 22 CONSIDER SLENDERNESS

H. W. LOCHNER, INC.

PROJECT: BONNER BRIDGE - OREGON INLET NORTH CAROLINA JMJ Jul-06
SUBJECT: HIGH LEVEL BENT ANALYSIS
HLB 142 MEM. 8 JT. 8 WDB 7/06

## SLENDERNESS EFFECTS IN RECTANGULAR COMPRESSION MEMBERS (AASHTO 8.16.5)

### GROUP 1

| | B | D | KL/R | $M_U$ | $M_{DL}$ | $B_D$ | $P_U$ | $P_C$ | $\delta_b$ | $\delta_s$ | $M_C$ | |
|---|---|---|---|---|---|---|---|---|---|---|---|---|
| | In. | In. | | Ft. Kips | Ft. Kips | | Kips | Kips | | | Ft. Kips | |
| MY | 35.928 | 48.624 | 14.0 | 0.00 | 0.00 | 0.000 | 376 | 0 | 1.000 | 1.000 | 65 | * |
| MZ | 35.928 | 48.624 | 23.4 | 36.69 | 19.23 | 0.524 | 376 | 25453 | 1.022 | 1.022 | 53 | * |

### GROUP 2

| | B | D | KL/R | $M_U$ | $M_{DL}$ | $B_D$ | $P_U$ | $P_C$ | $\delta_b$ | $\delta_s$ | $M_C$ |
|---|---|---|---|---|---|---|---|---|---|---|---|
| | In. | In. | | Ft. Kips | Ft. Kips | | Kips | Kips | | | Ft. Kips |
| MY | 35.928 | 48.624 | 14.0 | 655.45 | 0.00 | 0.000 | 241 | 0 | 1.000 | 1.000 | 655 |
| MZ | 35.928 | 48.624 | 23.4 | 69.89 | 19.23 | 0.275 | 241 | 30422 | 1.011 | 1.011 | 71 |

### GROUP 3

| | B | D | KL/R | $M_U$ | $M_{DL}$ | $B_D$ | $P_U$ | $P_C$ | $\delta_b$ | $\delta_s$ | $M_C$ | |
|---|---|---|---|---|---|---|---|---|---|---|---|---|
| | In. | In. | | Ft. Kips | Ft. Kips | | Kips | Kips | | | Ft. Kips | |
| MY | 35.928 | 48.624 | 14.0 | 421.29 | 0.00 | 0.000 | 321 | 0 | 1.000 | 1.000 | 421 | |
| MZ | 35.928 | 48.624 | 23.4 | 9.22 | 19.23 | 2.086 | 321 | 12570 | 1.038 | 1.038 | 45 | * |

### GROUP 4

| | B | D | KL/R | $M_U$ | $M_{DL}$ | $B_D$ | $P_U$ | $P_C$ | $\delta_b$ | $\delta_s$ | $M_C$ | |
|---|---|---|---|---|---|---|---|---|---|---|---|---|
| | In. | In. | | Ft. Kips | Ft. Kips | | Kips | Kips | | | Ft. Kips | |
| MY | 35.928 | 48.624 | 14.0 | 0.00 | 0.00 | 0.000 | 333 | 0 | 1.000 | 1.000 | 57 | * |
| MZ | 35.928 | 48.624 | 23.4 | 5.45 | 19.23 | 3.530 | 333 | 8564 | 1.059 | 1.059 | 47 | * |

### GROUP 5

| | B | D | KL/R | $M_U$ | $M_{DL}$ | $B_D$ | $P_U$ | $P_C$ | $\delta_b$ | $\delta_s$ | $M_C$ |
|---|---|---|---|---|---|---|---|---|---|---|---|
| | In. | In. | | Ft. Kips | Ft. Kips | | Kips | Kips | | | Ft. Kips |
| MY | 35.928 | 48.624 | 14.0 | 630.24 | 0.00 | 0.000 | 232 | 0 | 1.000 | 1.000 | 630 |
| MZ | 35.928 | 48.624 | 23.4 | 101.00 | 19.23 | 0.190 | 232 | 32588 | 1.010 | 1.010 | 102 |

### GROUP 6

| | B | D | KL/R | $M_U$ | $M_{DL}$ | $B_D$ | $P_U$ | $P_C$ | $\delta_b$ | $\delta_s$ | $M_C$ |
|---|---|---|---|---|---|---|---|---|---|---|---|
| | In. | In. | | Ft. Kips | Ft. Kips | | Kips | Kips | | | Ft. Kips |
| MY | 35.928 | 48.624 | 14.0 | 405.09 | 0.00 | 0.000 | 308 | 0 | 1.000 | 1.000 | 405 |
| MZ | 35.928 | 48.624 | 23.4 | 42.66 | 19.23 | 0.451 | 308 | 26740 | 1.017 | 1.017 | 43 |

* MINIMUM MOMENT CONTROLS

SMS 7/06

WDB 7/06

```
OOOOOOO    OOOOO    OOOOO    OOOOO    OOOOO    OO
OO    OO   OO  OO   OO  OO   OO  OO   OO  OO   OO
OO    OO   OO  OO   OO  OO   OO  OO   OO  OO   OO
OO    OO   OO       OO  OO   OO       OO  OO   OO
OO    OO   OO       OOOOOOO  OO       OO  OO   OO
OOOOOOO    OO  OO   OO  OO   OO  OO   OO  OO   OO
OO         OO  OO   OO  OO   OO  OO   OO  OO   OO
OO          OOOOO   OO  OO    OOOOO    OOOOO    OOOOO  (TM)
```

==========
Computer program for the Strength Design of Reinforced Concrete Sections
==========

Licensee stated above acknowledges that Portland Cement Association (PCA) is not and cannot be responsible for either the accuracy or adequacy of the material supplied as input for processing by the PCACOL(tm) computer program. Furthermore, PCA neither makes any warranty expressed nor implied with respect to the correctness of the output prepared by the PCACOL(tm) program. Although PCA has endeavored to produce PCACOL(tm) error free, the program is not and can't be certified infallible. The final and only responsibility for analysis, design and engineering documents is the licensees. Accordingly, PCA disclaims all responsibility in contract, negligence or other tort for any analysis, design or engineering documents prepared in connection with the use of the PCACOL(tm) program.

BASED ON PLANS.

General Information:
==========

File Name: S:\DGN-ST\NORTHC~1\BONNER~1\ANALYSIS\PIERS\HLB142\PCACOL~1\M8PLAN.COL
Project: BONNER BRIDGE - OREGON INLET
Column: HLB #142 Engineer: JMJ
Code: ACI 318-95 Units: English

Run Option: Investigation Slenderness: Not considered
Run Axis: Biaxial Column Type: Structural

Material Properties:
==========

f'c = 3 ksi fy = 40 ksi
Ec = 3122.02 ksi Es = 29000 ksi
fc = 2.55 ksi Rupture strain = Infinity
Ultimate strain = 0.003 in/in
Beta1 = 0.85

Section:
==========

Rectangular: Width = 36 in Depth = 48.6 in

Gross section area, Ag = 1749.6 in^2
Ix = 344374 in^4 Iy = 188957 in^4
Xo = 0 in Yo = 0 in

Reinforcement:
==========

Rebar Database: User-defined

| Size | Diam (in) | Area (in^2) | Size | Diam (in) | Area (in^2) | Size | Diam (in) | Area (in^2) |
|---|---|---|---|---|---|---|---|---|
| # 1 | 0.00 | 0.00 | # 3 | 0.38 | 0.11 | # 4 | 0.50 | 0.20 |
| # 5 | 0.63 | 0.31 | # 6 | 0.75 | 0.44 | # 7 | 0.88 | 0.60 |
| # 8 | 1.00 | 0.79 | # 9 | 1.13 | 1.00 | # 10 | 1.27 | 1.27 |
| # 11 | 1.41 | 1.56 | # 14 | 1.69 | 2.25 | # 18 | 2.26 | 4.00 |

Confinement: Tied; #1 ties with #9 bars, #1 with larger bars.
phi(a) = 0.8, phi(b) = 0.9, phi(c) = 0.7

Layout: Rectangular
Pattern: Equal Bar Spacing (Cover to longitudinal reinforcement)
Total steel area, As = 28.08 in^2 at 1.60%
18 #11 Cover = 5 in

Factored Loads and Moments with Corresponding Capacities: (see user's manual for notation)
==========

| No. | Pu kip | Mux k-ft | Muy k-ft | fMnx k-ft | fMny k-ft | fMn/Mu |
|---|---|---|---|---|---|---|
| 1 | 546.0 | 94.0 | 76.0 | 1239.9 | 1002.5 | 13.190 |
| 2 | 290.0 | 273.0 | 87.0 | 1697.1 | 539.8 | 6.216 |
| 3 | 442.0 | 195.0 | 71.0 | 1680.6 | 609.1 | 8.614 |
| 4 | 455.0 | 78.0 | 64.0 | 1232.0 | 1014.1 | 15.815 |
| 5 | 278.0 | 263.0 | 89.0 | 1676.0 | 564.1 | 6.369 |
| 6 | 425.0 | 188.0 | 74.0 | 1649.8 | 646.4 | 8.770 |
| 7 | 345.0 | 59.0 | 48.0 | 1236.2 | 1009.2 | 20.981 |
| 8 | 210.0 | 273.0 | 86.0 | 1670.7 | 526.7 | 6.120 |
| 9 | 290.0 | 195.0 | 41.0 | 1782.1 | 376.6 | 9.141 |
| 10 | 302.0 | 52.0 | 42.0 | 1241.6 | 999.7 | 23.848 |
| 11 | 202.0 | 263.0 | 89.0 | 1647.9 | 560.6 | 6.269 |
| 12 | 279.0 | 188.0 | 39.0 | 1781.4 | 366.6 | 9.473 |
| 13 | 588.0 | 101.0 | 82.0 | 1257.1 | 1017.8 | 12.433 |
| 14 | 331.0 | 655.0 | 71.0 | 1863.8 | 203.1 | 2.846 |
| 15 | 484.0 | 421.0 | 68.0 | 1863.2 | 300.2 | 4.425 |

| | | | | | | |
|---|---|---|---|---|---|---|
| 16 | 496.0 | 85.0 | 69.0 | 1234.7 | 1004.1 | 14.536 |
| 17 | 318.0 | 630.0 | 102.0 | 1825.7 | 296.3 | 2.898 |
| 18 | 465.0 | 405.0 | 74.0 | 1846.4 | 334.4 | 4.558 |
| 19 | 376.0 | 65.0 | 53.0 | 1238.0 | 1010.7 | 19.055 |
| 20 | 241.0 | 655.0 | 71.0 | 1824.1 | 199.2 | 2.785 |
| 21 | 321.0 | 421.0 | 45.0 | 1861.0 | 200.5 | 4.421 |
| 22 | 333.0 | 57.0 | 47.0 | 1229.5 | 1012.1 | 21.556 |
| 23 | 232.0 | 630.0 | 102.0 | 1790.1 | 288.5 | 2.841 |
| 24 | 308.0 | 405.0 | 43.0 | 1856.6 | 199.0 | 4.585 |

*** Program completed as requested! ***

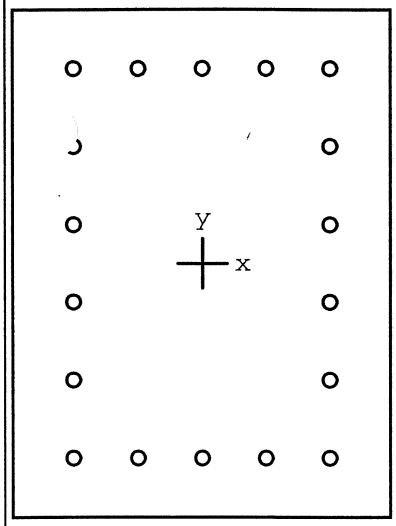


36 x 48.6 in

Code: ACI 318-95

Units: English

Run axis: Biaxial

Run option: Investigation

Slenderness: Not considered

mn type: Structural

Bars: User-defined

Date: 07/20/06

Time: 12:47:49

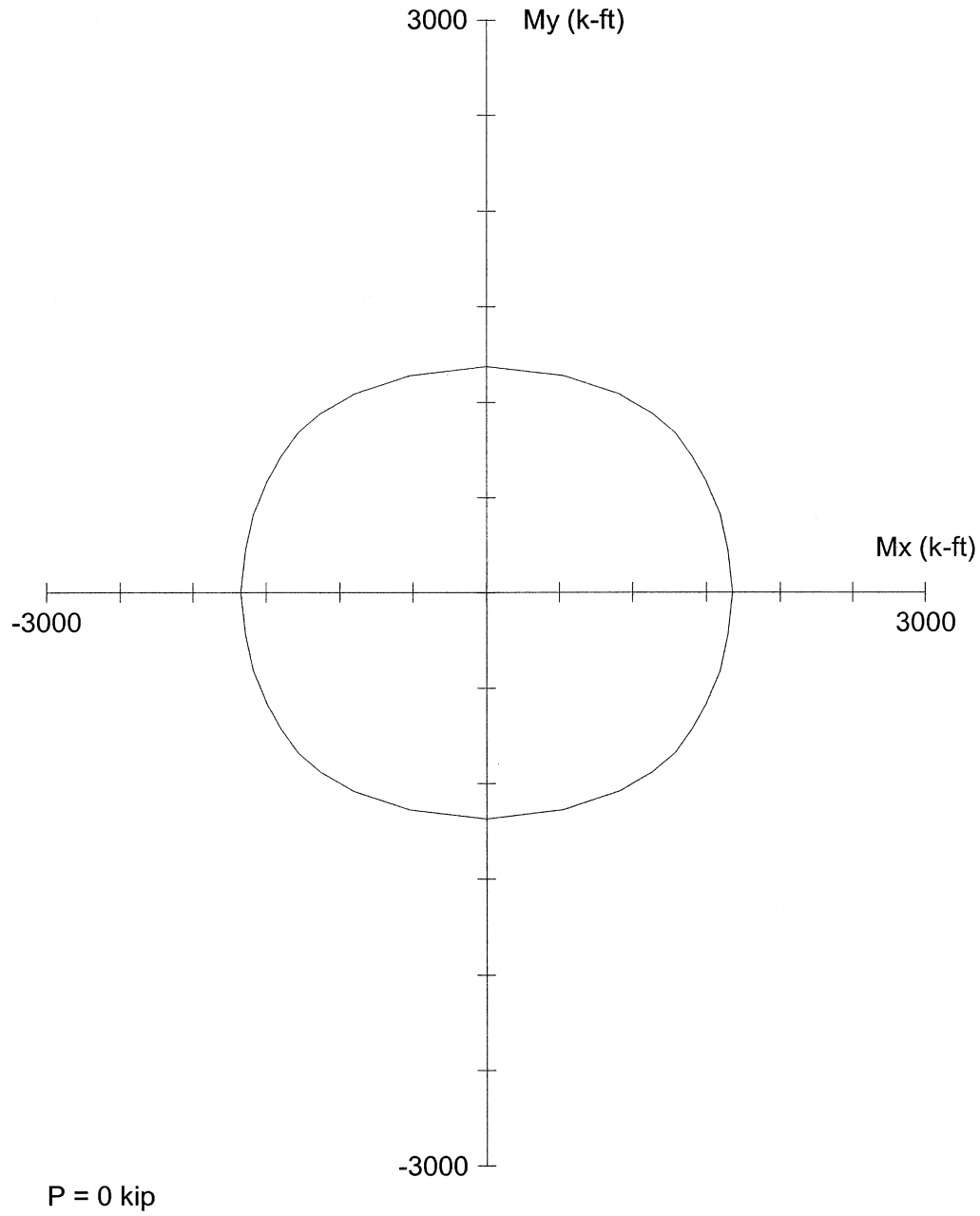


PCACOL V3.00 (PCA 1999) - Licensed to: Licensee name not yet specified.

File: S:\DGN-ST\NORTHC~1\BONNER~1\ANALYSIS\PIERS\HLB142\PCACOL~1\M8PLAN.COL

Project: BONNER BRIDGE - OREGON INLET

| | | | |
|---|---|---|---|
| Column: HLB #142 | | Engineer: JMJ | |
| f'c = 3 ksi | fy = 40 ksi | Ag = 1749.6 in^2 | 18 #11 bars |
| Ec = 3122 ksi | Es = 29000 ksi | As = 28.08 in^2 | Rho = 1.60% |
| fc = 2.55 ksi | e_rup = Infinity | Xo = 0.00 in | Ix = 344374 in^4 |
| u = 0.003 in/in | | Yo = 0.00 in | Iy = 188957 in^4 |
| Beta1 = 0.85 | | Clear spacing = 4.74 in | Clear cover = 5.00 in |
| Confinement: Tied | phi(a) = 0.8, phi(b) = 0.9, phi(c) = 0.7 | | |

JMS 7/06
WDB 7/06

```
OOOOOOO    OOOOO    OOOOO    OOOOO    OOOOO   OO
OO    OO   OO  OO   OO  OO   OO  OO   OO  OO   OO
OO    OO   OO  OO   OO  OO   OO  OO   OO  OO   OO
OO    OO   OO       OO  OO   OO       OO  OO   OO
OO    OO   OO       OOOOOOO  OO       OO  OO   OO
OOOOOOO    OO  OO   OO  OO   OO  OO   OO  OO   OO
OO         OO  OO   OO  OO   OO  OO   OO  OO   OO
OO          OOOOO   OO  OO    OOOOO    OOOOO   OOOOO  (TM)
```

==========
Computer program for the Strength Design of Reinforced Concrete Sections
==========

Licensee stated above acknowledges that Portland Cement Association (PCA) is not and cannot be responsible for either the accuracy or adequacy of the material supplied as input for processing by the PCACOL(tm) computer program. Furthermore, PCA neither makes any warranty expressed nor implied with respect to the correctness of the output prepared by the PCACOL(tm) program. Although PCA has endeavored to produce PCACOL(tm) error free, the program is not and can't be certified infallible. The final and only responsibility for analysis, design and engineering documents is the licensees. Accordingly, PCA disclaims all responsibility in contract, negligence or other tort for any analysis, design or engineering documents prepared in connection with the use of the PCACOL(tm) program.

50% COVER LOSS
$f'_c$ = 4400 PSI

General Information:
==========

File Name: S:\DGN-ST\NORTHC~1\BONNER~1\ANALYSIS\PIERS\HLB142\PCACOL~1\M8ACT.COL
Project: BONNER BRIDGE - OREGON INLET
Column: HLB #142 Engineer: JMJ
Code: ACI 318-95 Units: English

Run Option: Investigation Slenderness: Not considered
Run Axis: Biaxial Column Type: Structural

Material Properties:
==========

f'c = 4.4 ksi fy = 40 ksi
Ec = 3780.96 ksi Es = 29000 ksi
fc = 3.74 ksi Rupture strain = Infinity
Ultimate strain = 0.003 in/in
Beta1 = 0.83

Section:
==========

Rectangular: Width = 31 in Depth = 43.6 in

Gross section area, Ag = 1351.6 in^2
Ix = 214111 in^4 Iy = 108241 in^4
Xo = 0 in Yo = 0 in

Reinforcement:
==========

Rebar Database: User-defined

| Size | Diam (in) | Area (in^2) | Size | Diam (in) | Area (in^2) | Size | Diam (in) | Area (in^2) |
|---|---|---|---|---|---|---|---|---|
| # 1 | 0.00 | 0.00 | # 3 | 0.38 | 0.11 | # 4 | 0.50 | 0.20 |
| # 5 | 0.63 | 0.31 | # 6 | 0.75 | 0.44 | # 7 | 0.88 | 0.60 |
| # 8 | 1.00 | 0.79 | # 9 | 1.13 | 1.00 | # 10 | 1.27 | 1.27 |
| # 11 | 1.41 | 1.56 | # 14 | 1.69 | 2.25 | # 18 | 2.26 | 4.00 |

Confinement: Tied; #1 ties with #9 bars, #1 with larger bars.
phi(a) = 0.8, phi(b) = 0.9, phi(c) = 0.7

Layout: Rectangular
Pattern: Equal Bar Spacing (Cover to longitudinal reinforcement)
Total steel area, As = 28.08 in^2 at 2.08%
18 #11 Cover = 2.5 in

Factored Loads and Moments with Corresponding Capacities: (see user's manual for notation)
==========

| No. | Pu kip | Mux k-ft | Muy k-ft | fMnx k-ft | fMny k-ft | fMn/Mu |
|---|---|---|---|---|---|---|
| 1 | 546.0 | 94.0 | 76.0 | 1217.6 | 986.9 | 12.966 |
| 2 | 290.0 | 273.0 | 87.0 | 1649.3 | 523.3 | 6.039 |
| 3 | 442.0 | 195.0 | 71.0 | 1648.4 | 602.6 | 8.457 |
| 4 | 455.0 | 78.0 | 64.0 | 1212.1 | 991.1 | 15.518 |
| 5 | 278.0 | 263.0 | 89.0 | 1626.1 | 548.5 | 6.181 |
| 6 | 425.0 | 188.0 | 74.0 | 1616.9 | 638.3 | 8.604 |
| 7 | 345.0 | 59.0 | 48.0 | 1205.2 | 978.4 | 20.410 |
| 8 | 210.0 | 273.0 | 86.0 | 1612.8 | 505.9 | 5.905 |
| 9 | 290.0 | 195.0 | 41.0 | 1726.8 | 364.1 | 8.856 |
| 10 | 302.0 | 52.0 | 42.0 | 1198.0 | 969.3 | 23.055 |
| 11 | 202.0 | 263.0 | 89.0 | 1591.9 | 536.3 | 6.050 |
| 12 | 279.0 | 188.0 | 39.0 | 1722.8 | 359.7 | 9.166 |
| 13 | 588.0 | 101.0 | 82.0 | 1211.9 | 985.1 | 12.005 |
| 14 | 331.0 | 655.0 | 71.0 | 1812.9 | 196.2 | 2.768 |
| 15 | 484.0 | 421.0 | 68.0 | 1835.0 | 295.9 | 4.358 |

| | | | | | | |
|---|---|---|---|---|---|---|
| 16 | 496.0 | 85.0 | 69.0 | 1218.2 | 988.6 | 14.330 |
| 17 | 318.0 | 630.0 | 102.0 | 1773.3 | 287.7 | 2.815 |
| 18 | 465.0 | 405.0 | 74.0 | 1816.5 | 328.8 | 4.484 |
| 19 | 376.0 | 65.0 | 53.0 | 1205.5 | 985.6 | 18.566 |
| 20 | 241.0 | 655.0 | 71.0 | 1761.7 | 193.4 | 2.690 |
| 21 | 321.0 | 421.0 | 45.0 | 1809.2 | 193.3 | 4.297 |
| 22 | 333.0 | 57.0 | 47.0 | 1191.3 | 982.2 | 20.899 |
| 23 | 232.0 | 630.0 | 102.0 | 1729.3 | 281.6 | 2.745 |
| 24 | 308.0 | 405.0 | 43.0 | 1801.9 | 193.7 | 4.450 |

*** Program completed as requested! ***

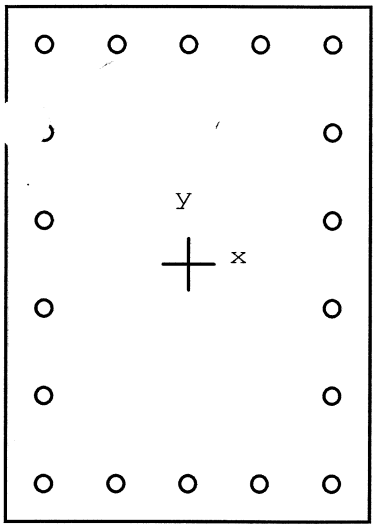


31 x 43.6 in

Code: ACI 318-95

Units: English

Run axis: Biaxial

Run option: Investigation

Slenderness: Not considered

Column type: Structural

Bars: User-defined

Date: 07/25/06

Time: 13:48:08

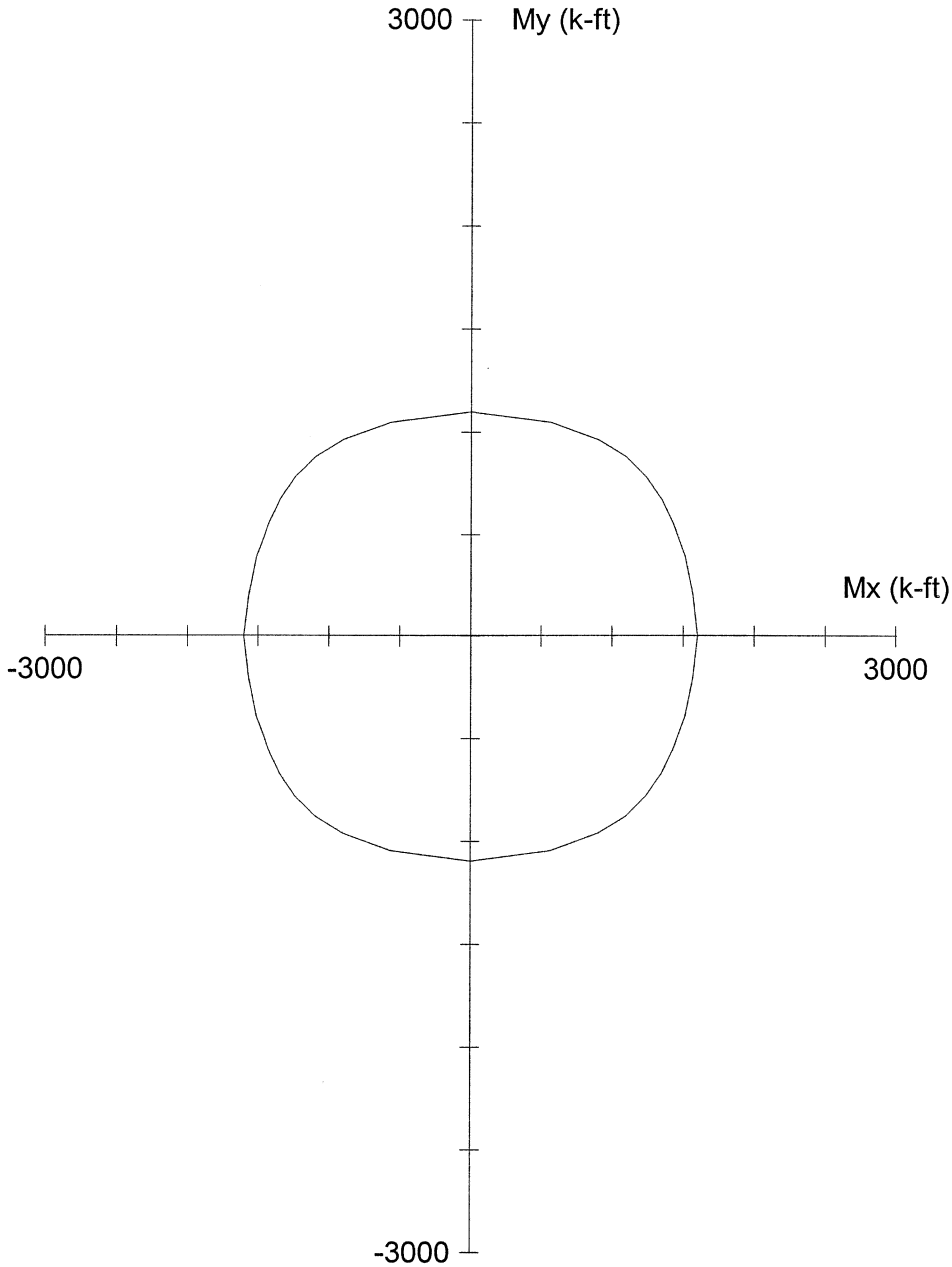


P = 0 kip

PCACOL V3.00 (PCA 1999) - Licensed to: Licensee name not yet specified.

File: S:\DGN-ST\NORTHC~1\BONNER~1\ANALYSIS\PIERS\HLB142\PCACOL~1\M8ACT.COL

Project: BONNER BRIDGE - OREGON INLET

| | | | |
|---|---|---|---|
| Column: HLB #142 | | Engineer: JMJ | |
| f'c = 4.4 ksi | fy = 40 ksi | Ag = 1351.6 in^2 | 18 #11 bars |
| Ec = 3781 ksi | Es = 29000 ksi | As = 28.08 in^2 | Rho = 2.08% |
| fc = 3.74 ksi | e_rup = Infinity | Xo = 0.00 in | Ix = 214111 in^4 |
| e_u = 0.003 in/in | | Yo = 0.00 in | Iy = 108241 in^4 |
| Beta1 = 0.83 | | Clear spacing = 4.74 in | Clear cover = 2.50 in |
| Confinement: Tied | phi(a) = 0.8, phi(b) = 0.9, phi(c) = 0.7 | | |

H. W. LOCHNER, INC.

PROJECT: BONNER BRIDGE - OREGON INLET NORTH CAROLINA JMJ Jun-06
SUBJECT: HIGH LEVEL BENT ANALYSIS WDB 7/06
HLB 142 MEM. 10 JT. 7

## COLUMN LOADS

### PMAX

HLB 142 MEMBER 10 JOINT 7

GROUP 1

| | P | MY | MZ |
|---|---|---|---|
| DL | 291.94 | 0.00 | 29.82 |
| LL | 103.76 | 0.00 | -7.28 |
| GROUP 1 | 0.00 | 0.00 | 0.00 |
| SERVICE | 395.70 | 0.00 | 22.54 |
| STRENGTH | 604.34 | 0.00 | 22.99 |

GROUP 2

| | P | MY | MZ |
|---|---|---|---|
| DL | 291.94 | 0.00 | 29.82 |
| LL | 0.00 | 0.00 | 0.00 |
| GROUP 2 | 32.68 | 504.29 | 57.86 |
| SERVICE | 324.62 | 504.29 | 87.68 |
| STRENGTH | 422.01 | 655.58 | 113.98 |

GROUP 3

| | P | MY | MZ |
|---|---|---|---|
| DL | 291.94 | 0.00 | 29.82 |
| LL | 103.76 | 0.00 | -7.28 |
| GROUP 3 | 14.21 | 324.07 | 22.18 |
| SERVICE | 409.91 | 324.07 | 44.72 |
| STRENGTH | 532.88 | 421.29 | 58.14 |

GROUP 4

| | P | MY | MZ |
|---|---|---|---|
| DL | 291.94 | 0.00 | 29.82 |
| LL | 103.76 | 0.00 | -7.28 |
| GROUP 4 | 1.40 | 0.00 | 36.21 |
| SERVICE | 397.10 | 0.00 | 58.75 |
| STRENGTH | 516.23 | 0.00 | 76.38 |

GROUP 5

| | P | MY | MZ |
|---|---|---|---|
| DL | 291.94 | 0.00 | 29.82 |
| LL | 0.00 | 0.00 | 0.00 |
| GROUP 5 | 34.09 | 504.29 | 94.07 |
| SERVICE | 326.03 | 504.29 | 123.89 |
| STRENGTH | 407.54 | 630.36 | 154.86 |

GROUP 6

| | P | MY | MZ |
|---|---|---|---|
| DL | 291.94 | 0.00 | 29.82 |
| LL | 103.76 | 0.00 | -7.28 |
| GROUP 6 | 15.61 | 324.07 | 58.39 |
| SERVICE | 411.31 | 324.07 | 80.93 |
| STRENGTH | 514.14 | 405.09 | 101.16 |

## SLENDERNESS EFFECTS IN COMPRESSION MEMBERS (AASHTO 8.16.5)

f'c = 3000 psi PHI = 0.70 $W_C$ = 150 PCF

$E_C = W_C^{1.5} * 33 * f'c^{0.5}$ = 3320561 PSI Width of Rect. Col. = B = 35.928 In.

Depth of Rect. Col = D = 62.148 In.

$r_Y = 0.30*D$ = 18.64 In. $L_Y$ = 11.583 Ft. $K_Y$ = 2.0

$r_Z = 0.30*B$ = 10.78 In. $L_Z$ = 18.583 Ft. $K_Z$ = 1.2

$I_{YY}$ = $B*D^3/12$ $I_{YY}$ = 718676 $In^4$

$I_{ZZ}$ = $D*B^3/12$ $I_{ZZ}$ = 240185 $In^5$

$K_Y L_Y/r$ = 14.9 < 22 NO SLENDERNESS EFFECT

$K_Z L_Z/r$ = 24.8 > 22 CONSIDER SLENDERNESS

H. W. LOCHNER, INC.

PROJECT: BONNER BRIDGE - OREGON INLET NORTH CAROLINA JMJ Jun-06
SUBJECT: HIGH LEVEL BENT ANALYSIS
HLB 142 MEM. 10 JT. 7 WDB 7/06

## SLENDERNESS EFFECTS IN RECTANGULAR COMPRESSION MEMBERS (AASHTO 8.16.5)

### GROUP 1

| | B | D | KL/R | $M_U$ | $M_{DL}$ | $B_D$ | $P_U$ | $P_C$ | $\delta_b$ | $\delta_s$ | $M_C$ | |
|---|---|---|---|---|---|---|---|---|---|---|---|---|
| | In. | In. | | Ft. Kips | Ft. Kips | | Kips | Kips | | | Ft. Kips | |
| MY | 35.928 | 62.148 | 14.9 | 0.00 | 0.00 | 0.000 | 604 | 0 | 1.000 | 1.000 | 124 | * |
| MZ | 35.928 | 62.148 | 24.8 | 22.99 | 38.77 | 1.686 | 604 | 16370 | 1.056 | 1.056 | 84 | * |

### GROUP 2

| | B | D | KL/R | $M_U$ | $M_{DL}$ | $B_D$ | $P_U$ | $P_C$ | $\delta_b$ | $\delta_s$ | $M_C$ |
|---|---|---|---|---|---|---|---|---|---|---|---|
| | In. | In. | | Ft. Kips | Ft. Kips | | Kips | Kips | | | Ft. Kips |
| MY | 35.928 | 62.148 | 14.9 | 655.58 | 0.00 | 0.000 | 422 | 0 | 1.000 | 1.000 | 656 |
| MZ | 35.928 | 62.148 | 24.8 | 113.98 | 38.77 | 0.340 | 422 | 32811 | 1.019 | 1.019 | 116 |

### GROUP 3

| | B | D | KL/R | $M_U$ | $M_{DL}$ | $B_D$ | $P_U$ | $P_C$ | $\delta_b$ | $\delta_s$ | $M_C$ | |
|---|---|---|---|---|---|---|---|---|---|---|---|---|
| | In. | In. | | Ft. Kips | Ft. Kips | | Kips | Kips | | | Ft. Kips | |
| MY | 35.928 | 62.148 | 14.9 | 421.29 | 0.00 | 0.000 | 533 | 0 | 1.000 | 1.000 | 421 | |
| MZ | 35.928 | 62.148 | 24.8 | 58.14 | 38.77 | 0.667 | 533 | 26380 | 1.030 | 1.030 | 75 | * |

### GROUP 4

| | B | D | KL/R | $M_U$ | $M_{DL}$ | $B_D$ | $P_U$ | $P_C$ | $\delta_b$ | $\delta_s$ | $M_C$ | |
|---|---|---|---|---|---|---|---|---|---|---|---|---|
| | In. | In. | | Ft. Kips | Ft. Kips | | Kips | Kips | | | Ft. Kips | |
| MY | 35.928 | 62.148 | 14.9 | 0.00 | 0.00 | 0.000 | 516 | 0 | 1.000 | 1.000 | 106 | * |
| MZ | 35.928 | 62.148 | 24.8 | 76.38 | 38.77 | 0.508 | 516 | 29166 | 1.026 | 1.026 | 78 | |

### GROUP 5

| | B | D | KL/R | $M_U$ | $M_{DL}$ | $B_D$ | $P_U$ | $P_C$ | $\delta_b$ | $\delta_s$ | $M_C$ |
|---|---|---|---|---|---|---|---|---|---|---|---|
| | In. | In. | | Ft. Kips | Ft. Kips | | Kips | Kips | | | Ft. Kips |
| MY | 35.928 | 62.148 | 14.9 | 630.36 | 0.00 | 0.000 | 408 | 0 | 1.000 | 1.000 | 630 |
| MZ | 35.928 | 62.148 | 24.8 | 154.86 | 38.77 | 0.250 | 408 | 35167 | 1.017 | 1.017 | 157 |

### GROUP 6

| | B | D | KL/R | $M_U$ | $M_{DL}$ | $B_D$ | $P_U$ | $P_C$ | $\delta_b$ | $\delta_s$ | $M_C$ |
|---|---|---|---|---|---|---|---|---|---|---|---|
| | In. | In. | | Ft. Kips | Ft. Kips | | Kips | Kips | | | Ft. Kips |
| MY | 35.928 | 62.148 | 14.9 | 405.09 | 0.00 | 0.000 | 514 | 0 | 1.000 | 1.000 | 405 |
| MZ | 35.928 | 62.148 | 24.8 | 101.16 | 38.77 | 0.383 | 514 | 31789 | 1.024 | 1.024 | 104 |

* MINIMUM MOMENT CONTROLS

H. W. LOCHNER, INC.

PROJECT: BONNER BRIDGE - OREGON INLET NORTH CAROLINA JMJ Jun-06
SUBJECT: HIGH LEVEL BENT ANALYSIS
HLB 142 MEM. 10 JT. 7 VDB 7/06

## COLUMN LOADS

**PMIN**

HLB 142 MEMBER 10 JOINT 7

| | GROUP 1 | | | | GROUP 2 | | |
|---|---|---|---|---|---|---|---|
| | P | MY | MZ | | P | MY | MZ |
| DL | 218.96 | 0.00 | 29.82 | DL | 218.96 | 0.00 | 29.82 |
| LL | 51.47 | 0.00 | 13.41 | LL | 0.00 | 0.00 | 0.00 |
| GROUP 1 | 0.00 | 0.00 | 0.00 | GROUP 2 | 32.68 | 504.29 | 57.86 |
| SERVICE | 270.43 | 0.00 | 43.23 | SERVICE | 251.64 | 504.29 | 87.68 |
| STRENGTH | 396.16 | 0.00 | 67.82 | STRENGTH | 327.13 | 655.58 | 113.98 |

| | GROUP 3 | | | | GROUP 4 | | |
|---|---|---|---|---|---|---|---|
| | P | MY | MZ | | P | MY | MZ |
| DL | 218.96 | 0.00 | 29.82 | DL | 218.96 | 0.00 | 29.82 |
| LL | 51.47 | 0.00 | 13.41 | LL | 51.47 | 0.00 | 13.41 |
| GROUP 3 | 14.21 | 324.07 | 22.18 | GROUP 4 | 1.40 | 0.00 | 36.21 |
| SERVICE | 284.64 | 324.07 | 65.41 | SERVICE | 271.83 | 0.00 | 79.44 |
| STRENGTH | 370.03 | 421.29 | 85.03 | STRENGTH | 353.37 | 0.00 | 103.27 |

| | GROUP 5 | | | | GROUP 6 | | |
|---|---|---|---|---|---|---|---|
| | P | MY | MZ | | P | MY | MZ |
| DL | 218.96 | 0.00 | 29.82 | DL | 218.96 | 0.00 | 29.82 |
| LL | 0.00 | 0.00 | 0.00 | LL | 51.47 | 0.00 | 13.41 |
| GROUP 5 | 34.09 | 504.29 | 94.07 | GROUP 6 | 15.61 | 324.07 | 58.39 |
| SERVICE | 253.05 | 504.29 | 123.89 | SERVICE | 286.04 | 324.07 | 101.62 |
| STRENGTH | 316.31 | 630.36 | 154.86 | STRENGTH | 357.54 | 405.09 | 127.03 |

## SLENDERNESS EFFECTS IN COMPRESSION MEMBERS (AASHTO 8.16.5)

f'c = 3000 psi PHI = 0.70 $W_C$ = 150 PCF

$E_C = W_C$^$^{1.5}$ *33*f'c^$^{0.5}$ = 3320561 PSI Width of Rect. Col. = B = 35.928 In.

Depth of Rect. Col = D = 62.148 In.

$r_Y$ = 0.30*D = 18.64 In. $L_Y$ = 11.583 Ft. $K_Y$ = 2.0

$r_Z$ = 0.30*B = 10.78 In. $L_Z$ = 18.583 Ft. $K_Z$ = 1.2

$I_{YY}$ = B*D^$^3$/12 $I_{YY}$ = 718676 $In^4$

$I_{ZZ}$ = D*B^$^3$/12 $I_{ZZ}$ = 240185 $In^5$

$K_YL_Y/r$ = 14.9 < 22 NO SLENDERNESS EFFECT

$K_ZL_Z/r$ = 24.8 > 22 CONSIDER SLENDERNESS

H. W. LOCHNER, INC.

PROJECT: BONNER BRIDGE - OREGON INLET NORTH CAROLINA JMJ Jun-06
SUBJECT: HIGH LEVEL BENT ANALYSIS
HLB 142 MEM. 10 JT. 7

WDB 7/06

## SLENDERNESS EFFECTS IN RECTANGULAR COMPRESSION MEMBERS (AASHTO 8.16.5)

### GROUP 1

| | B | D | KL/R | $M_U$ | $M_{DL}$ | $B_D$ | $P_U$ | $P_C$ | $\delta_b$ | $\delta_s$ | $M_C$ | |
|---|---|---|---|---|---|---|---|---|---|---|---|---|
| | In. | In. | | Ft. Kips | Ft. Kips | | Kips | Kips | | | Ft. Kips | |
| MY | 35.928 | 62.148 | 14.9 | 0.00 | 0.00 | 0.000 | 396 | 0 | 1.000 | 1.000 | 81 | * |
| MZ | 35.928 | 62.148 | 24.8 | 67.82 | 38.77 | 0.572 | 396 | 27978 | 1.021 | 1.021 | 69 | |

### GROUP 2

| | B | D | KL/R | $M_U$ | $M_{DL}$ | $B_D$ | $P_U$ | $P_C$ | $\delta_b$ | $\delta_s$ | $M_C$ |
|---|---|---|---|---|---|---|---|---|---|---|---|
| | In. | In. | | Ft. Kips | Ft. Kips | | Kips | Kips | | | Ft. Kips |
| MY | 35.928 | 62.148 | 14.9 | 655.58 | 0.00 | 0.000 | 327 | 0 | 1.000 | 1.000 | 656 |
| MZ | 35.928 | 62.148 | 24.8 | 113.98 | 38.77 | 0.340 | 327 | 32811 | 1.014 | 1.014 | 116 |

### GROUP 3

| | B | D | KL/R | $M_U$ | $M_{DL}$ | $B_D$ | $P_U$ | $P_C$ | $\delta_b$ | $\delta_s$ | $M_C$ |
|---|---|---|---|---|---|---|---|---|---|---|---|
| | In. | In. | | Ft. Kips | Ft. Kips | | Kips | Kips | | | Ft. Kips |
| MY | 35.928 | 62.148 | 14.9 | 421.29 | 0.00 | 0.000 | 370 | 0 | 1.000 | 1.000 | 421 |
| MZ | 35.928 | 62.148 | 24.8 | 85.03 | 38.77 | 0.456 | 370 | 30202 | 1.018 | 1.018 | 87 |

### GROUP 4

| | B | D | KL/R | $M_U$ | $M_{DL}$ | $B_D$ | $P_U$ | $P_C$ | $\delta_b$ | $\delta_s$ | $M_C$ | |
|---|---|---|---|---|---|---|---|---|---|---|---|---|
| | In. | In. | | Ft. Kips | Ft. Kips | | Kips | Kips | | | Ft. Kips | |
| MY | 35.928 | 62.148 | 14.9 | 0.00 | 0.00 | 0.000 | 353 | 0 | 1.000 | 1.000 | 73 | * |
| MZ | 35.928 | 62.148 | 24.8 | 103.27 | 38.77 | 0.375 | 353 | 31970 | 1.016 | 1.016 | 105 | |

### GROUP 5

| | B | D | KL/R | $M_U$ | $M_{DL}$ | $B_D$ | $P_U$ | $P_C$ | $\delta_b$ | $\delta_s$ | $M_C$ |
|---|---|---|---|---|---|---|---|---|---|---|---|
| | In. | In. | | Ft. Kips | Ft. Kips | | Kips | Kips | | | Ft. Kips |
| MY | 35.928 | 62.148 | 14.9 | 630.36 | 0.00 | 0.000 | 316 | 0 | 1.000 | 1.000 | 630 |
| MZ | 35.928 | 62.148 | 24.8 | 154.86 | 38.77 | 0.250 | 316 | 35167 | 1.013 | 1.013 | 157 |

### GROUP 6

| | B | D | KL/R | $M_U$ | $M_{DL}$ | $B_D$ | $P_U$ | $P_C$ | $\delta_b$ | $\delta_s$ | $M_C$ |
|---|---|---|---|---|---|---|---|---|---|---|---|
| | In. | In. | | Ft. Kips | Ft. Kips | | Kips | Kips | | | Ft. Kips |
| MY | 35.928 | 62.148 | 14.9 | 405.09 | 0.00 | 0.000 | 358 | 0 | 1.000 | 1.000 | 405 |
| MZ | 35.928 | 62.148 | 24.8 | 127.03 | 38.77 | 0.305 | 358 | 33689 | 1.015 | 1.015 | 129 |

* MINIMUM MOMENT CONTROLS

H. W. LOCHNER, INC.

PROJECT: BONNER BRIDGE - OREGON INLET NORTH CAROLINA JMJ Jul-06
SUBJECT: HIGH LEVEL BENT ANALYSIS
HLB 142 MEM. 10 JT. 9 WPB 7/06

## COLUMN LOADS

### PMAX

HLB 142 MEMBER 10 JOINT 9

GROUP 1

| | P | MY | MZ |
|---|---|---|---|
| DL | -335.15 | 0.00 | 19.53 |
| LL | -103.76 | 0.00 | -19.42 |
| GROUP 1 | 0.00 | 0.00 | 0.00 |
| SERVICE | -438.91 | 0.00 | 0.11 |
| STRENGTH | -660.51 | 0.00 | -16.69 |

GROUP 2

| | P | MY | MZ |
|---|---|---|---|
| DL | -335.15 | 0.00 | 19.53 |
| LL | 0.00 | 0.00 | 0.00 |
| GROUP 2 | -32.89 | -913.52 | 139.85 |
| SERVICE | -368.04 | -913.52 | 159.38 |
| STRENGTH | -478.45 | -1187.58 | 207.19 |

GROUP 3

| | P | MY | MZ |
|---|---|---|---|
| DL | -335.15 | 0.00 | 19.53 |
| LL | -103.76 | 0.00 | -19.42 |
| GROUP 3 | -14.27 | -537.82 | 55.63 |
| SERVICE | -453.18 | -537.82 | 55.74 |
| STRENGTH | -589.13 | -699.17 | 72.46 |

GROUP 4

| | P | MY | MZ |
|---|---|---|---|
| DL | -335.15 | 0.00 | 19.53 |
| LL | -103.76 | 0.00 | -19.42 |
| GROUP 4 | -1.40 | 0.00 | 381.10 |
| SERVICE | -440.31 | 0.00 | 381.21 |
| STRENGTH | -572.40 | 0.00 | 495.57 |

GROUP 5

| | P | MY | MZ |
|---|---|---|---|
| DL | -335.15 | 0.00 | 19.53 |
| LL | 0.00 | 0.00 | 0.00 |
| GROUP 5 | -34.29 | -913.52 | 520.95 |
| SERVICE | -369.44 | -913.52 | 540.48 |
| STRENGTH | -461.80 | -1141.90 | 675.60 |

GROUP 6

| | P | MY | MZ |
|---|---|---|---|
| DL | -335.15 | 0.00 | 19.53 |
| LL | -103.76 | 0.00 | -19.42 |
| GROUP 6 | -15.67 | -537.82 | 436.73 |
| SERVICE | -454.58 | -537.82 | 436.84 |
| STRENGTH | -568.23 | -672.28 | 546.05 |

## SLENDERNESS EFFECTS IN COMPRESSION MEMBERS (AASHTO 8.16.5)

f'c = 3000 psi PHI = 0.70 $W_C$ = 150 PCF

$E_C = W_C$^$1.5$ *33*f'c^$0.5$ = 3320561 PSI Width of Rect. Col. = B = 35.928 In.

Depth of Rect. Col = D = 62.148 In.

$r_Y$ = 0.30*D = 18.64 In. $L_Y$ = 11.583 Ft. $K_Y$ = 2.0

$r_Z$ = 0.30*B = 10.78 In. $L_Z$ = 18.583 Ft. $K_Z$ = 1.2

$I_{YY}$ = B*D^3/12 $I_{YY}$ = 718676 $In^4$

$I_{ZZ}$ = D*B^3/12 $I_{ZZ}$ = 240185 $In^5$

$K_Y L_Y/r$ = 14.9 < 22 NO SLENDERNESS EFFECT

$K_Z L_Z/r$ = 24.8 > 22 CONSIDER SLENDERNESS

H. W. LOCHNER, INC.

PROJECT: BONNER BRIDGE - OREGON INLET NORTH CAROLINA JMJ Jul-06
SUBJECT: HIGH LEVEL BENT ANALYSIS
HLB 142 MEM. 10 JT. 9 WDB 7/06

## SLENDERNESS EFFECTS IN RECTANGULAR COMPRESSION MEMBERS (AASHTO 8.16.5)

### GROUP 1

| | B | D | KL/R | $M_U$ | $M_{DL}$ | $B_D$ | $P_U$ | $P_C$ | $\delta_b$ | $\delta_s$ | $M_C$ | |
|---|---|---|---|---|---|---|---|---|---|---|---|---|
| | In. | In. | | Ft. Kips | Ft. Kips | | Kips | Kips | | | Ft. Kips | |
| MY | 35.928 | 62.148 | 14.9 | 0.00 | 0.00 | 0.000 | 661 | 0 | 1.000 | 1.000 | 136 | * |
| MZ | 35.928 | 62.148 | 24.8 | 16.69 | 25.39 | 1.521 | 661 | 17439 | 1.057 | 1.057 | 92 | * |

### GROUP 2

| | B | D | KL/R | $M_U$ | $M_{DL}$ | $B_D$ | $P_U$ | $P_C$ | $\delta_b$ | $\delta_s$ | $M_C$ |
|---|---|---|---|---|---|---|---|---|---|---|---|
| | In. | In. | | Ft. Kips | Ft. Kips | | Kips | Kips | | | Ft. Kips |
| MY | 35.928 | 62.148 | 14.9 | 1187.58 | 0.00 | 0.000 | 478 | 0 | 1.000 | 1.000 | 1188 |
| MZ | 35.928 | 62.148 | 24.8 | 207.19 | 25.39 | 0.123 | 478 | 39170 | 1.018 | 1.018 | 211 |

### GROUP 3

| | B | D | KL/R | $M_U$ | $M_{DL}$ | $B_D$ | $P_U$ | $P_C$ | $\delta_b$ | $\delta_s$ | $M_C$ | |
|---|---|---|---|---|---|---|---|---|---|---|---|---|
| | In. | In. | | Ft. Kips | Ft. Kips | | Kips | Kips | | | Ft. Kips | |
| MY | 35.928 | 62.148 | 14.9 | 699.17 | 0.00 | 0.000 | 589 | 0 | 1.000 | 1.000 | 699 | |
| MZ | 35.928 | 62.148 | 24.8 | 72.46 | 25.39 | 0.350 | 589 | 32562 | 1.027 | 1.027 | 82 | * |

### GROUP 4

| | B | D | KL/R | $M_U$ | $M_{DL}$ | $B_D$ | $P_U$ | $P_C$ | $\delta_b$ | $\delta_s$ | $M_C$ | |
|---|---|---|---|---|---|---|---|---|---|---|---|---|
| | In. | In. | | Ft. Kips | Ft. Kips | | Kips | Kips | | | Ft. Kips | |
| MY | 35.928 | 62.148 | 14.9 | 0.00 | 0.00 | 0.000 | 572 | 0 | 1.000 | 1.000 | 118 | * |
| MZ | 35.928 | 62.148 | 24.8 | 495.57 | 25.39 | 0.051 | 572 | 41827 | 1.020 | 1.020 | 505 | |

### GROUP 5

| | B | D | KL/R | $M_U$ | $M_{DL}$ | $B_D$ | $P_U$ | $P_C$ | $\delta_b$ | $\delta_s$ | $M_C$ |
|---|---|---|---|---|---|---|---|---|---|---|---|
| | In. | In. | | Ft. Kips | Ft. Kips | | Kips | Kips | | | Ft. Kips |
| MY | 35.928 | 62.148 | 14.9 | 1141.90 | 0.00 | 0.000 | 462 | 0 | 1.000 | 1.000 | 1142 |
| MZ | 35.928 | 62.148 | 24.8 | 675.60 | 25.39 | 0.038 | 462 | 42378 | 1.016 | 1.016 | 686 |

### GROUP 6

| | B | D | KL/R | $M_U$ | $M_{DL}$ | $B_D$ | $P_U$ | $P_C$ | $\delta_b$ | $\delta_s$ | $M_C$ |
|---|---|---|---|---|---|---|---|---|---|---|---|
| | In. | In. | | Ft. Kips | Ft. Kips | | Kips | Kips | | | Ft. Kips |
| MY | 35.928 | 62.148 | 14.9 | 672.28 | 0.00 | 0.000 | 568 | 0 | 1.000 | 1.000 | 672 |
| MZ | 35.928 | 62.148 | 24.8 | 546.05 | 25.39 | 0.046 | 568 | 42017 | 1.020 | 1.020 | 557 |

* MINIMUM MOMENT CONTROLS

H. W. LOCHNER, INC.

PROJECT: BONNER BRIDGE - OREGON INLET NORTH CAROLINA JMJ Jul-06
SUBJECT: HIGH LEVEL BENT ANALYSIS
HLB 142 MEM. 10 JT. 9 WDB 7/06

## COLUMN LOADS

**PMIN**

HLB 142 MEMBER 10 JOINT 9

GROUP 1

| | P | MY | MZ |
|---|---|---|---|
| DL | -251.36 | 0.00 | 19.53 |
| LL | -51.47 | 0.00 | 20.71 |
| GROUP 1 | 0.00 | 0.00 | 0.00 |
| SERVICE | -302.83 | 0.00 | 40.24 |
| STRENGTH | -438.29 | 0.00 | 70.26 |

GROUP 2

| | P | MY | MZ |
|---|---|---|---|
| DL | -251.36 | 0.00 | 19.53 |
| LL | 0.00 | 0.00 | 0.00 |
| GROUP 2 | -32.89 | -913.52 | 139.85 |
| SERVICE | -284.25 | -913.52 | 159.38 |
| STRENGTH | -369.53 | -1187.58 | 207.19 |

GROUP 3

| | P | MY | MZ |
|---|---|---|---|
| DL | -251.36 | 0.00 | 19.53 |
| LL | -51.47 | 0.00 | 20.71 |
| GROUP 3 | -14.27 | -537.82 | 55.63 |
| SERVICE | -317.10 | -537.82 | 95.87 |
| STRENGTH | -412.23 | -699.17 | 124.63 |

GROUP 4

| | P | MY | MZ |
|---|---|---|---|
| DL | -251.36 | 0.00 | 19.53 |
| LL | -51.47 | 0.00 | 20.71 |
| GROUP 4 | -1.40 | 0.00 | 381.10 |
| SERVICE | -304.23 | 0.00 | 421.34 |
| STRENGTH | -395.50 | 0.00 | 547.74 |

GROUP 5

| | P | MY | MZ |
|---|---|---|---|
| DL | -251.36 | 0.00 | 19.53 |
| LL | 0.00 | 0.00 | 0.00 |
| GROUP 5 | -34.29 | -913.52 | 520.95 |
| SERVICE | -285.65 | -913.52 | 540.48 |
| STRENGTH | -357.07 | -1141.90 | 675.60 |

GROUP 6

| | P | MY | MZ |
|---|---|---|---|
| DL | -251.36 | 0.00 | 19.53 |
| LL | -51.47 | 0.00 | 20.71 |
| GROUP 6 | -15.67 | -537.82 | 436.73 |
| SERVICE | -318.50 | -537.82 | 476.97 |
| STRENGTH | -398.13 | -672.28 | 596.21 |

## SLENDERNESS EFFECTS IN COMPRESSION MEMBERS (AASHTO 8.16.5)

f'c = 3000 psi PHI = 0.70 $W_C$ = 150 PCF

$E_C = W_C^{1.5} * 33 * f'c^{0.5}$ = 3320561 PSI Width of Rect. Col. = B = 35.928 In.

Depth of Rect. Col = D = 62.148 In.

$r_Y = 0.30*D$ = 18.64 In. $L_Y$ = 11.583 Ft. $K_Y$ = 2.0

$r_Z = 0.30*B$ = 10.78 In. $L_Z$ = 18.583 Ft. $K_Z$ = 1.2

$I_{YY}$ = $B*D^3/12$ $I_{YY}$ = 718676 $In^4$

$I_{ZZ}$ = $D*B^3/12$ $I_{ZZ}$ = 240185 $In^5$

$K_Y L_Y/r$ = 14.9 < 22 NO SLENDERNESS EFFECT

$K_Z L_Z/r$ = 24.8 > 22 CONSIDER SLENDERNESS

H. W. LOCHNER, INC.

PROJECT: BONNER BRIDGE - OREGON INLET NORTH CAROLINA JMJ Jul-06
SUBJECT: HIGH LEVEL BENT ANALYSIS
HLB 142 MEM. 10 JT. 9 WDB 7/06

## SLENDERNESS EFFECTS IN RECTANGULAR COMPRESSION MEMBERS (AASHTO 8.16.5)

### GROUP 1

| | B | D | KL/R | $M_U$ | $M_{DL}$ | $B_D$ | $P_U$ | $P_C$ | $\delta_b$ | $\delta_s$ | $M_C$ | |
|---|---|---|---|---|---|---|---|---|---|---|---|---|
| | In. | In. | | Ft. Kips | Ft. Kips | | Kips | Kips | | | Ft. Kips | |
| MY | 35.928 | 62.148 | 14.9 | 0.00 | 0.00 | 0.000 | 438 | 0 | 1.000 | 1.000 | 90 | * |
| MZ | 35.928 | 62.148 | 24.8 | 70.26 | 25.39 | 0.361 | 438 | 32299 | 1.020 | 1.020 | 72 | |

### GROUP 2

| | B | D | KL/R | $M_U$ | $M_{DL}$ | $B_D$ | $P_U$ | $P_C$ | $\delta_b$ | $\delta_s$ | $M_C$ |
|---|---|---|---|---|---|---|---|---|---|---|---|
| | In. | In. | | Ft. Kips | Ft. Kips | | Kips | Kips | | | Ft. Kips |
| MY | 35.928 | 62.148 | 14.9 | 1187.58 | 0.00 | 0.000 | 370 | 0 | 1.000 | 1.000 | 1188 |
| MZ | 35.928 | 62.148 | 24.8 | 207.19 | 25.39 | 0.123 | 370 | 39170 | 1.014 | 1.014 | 210 |

### GROUP 3

| | B | D | KL/R | $M_U$ | $M_{DL}$ | $B_D$ | $P_U$ | $P_C$ | $\delta_b$ | $\delta_s$ | $M_C$ |
|---|---|---|---|---|---|---|---|---|---|---|---|
| | In. | In. | | Ft. Kips | Ft. Kips | | Kips | Kips | | | Ft. Kips |
| MY | 35.928 | 62.148 | 14.9 | 699.17 | 0.00 | 0.000 | 412 | 0 | 1.000 | 1.000 | 699 |
| MZ | 35.928 | 62.148 | 24.8 | 124.63 | 25.39 | 0.204 | 412 | 36529 | 1.016 | 1.016 | 127 |

### GROUP 4

| | B | D | KL/R | $M_U$ | $M_{DL}$ | $B_D$ | $P_U$ | $P_C$ | $\delta_b$ | $\delta_s$ | $M_C$ | |
|---|---|---|---|---|---|---|---|---|---|---|---|---|
| | In. | In. | | Ft. Kips | Ft. Kips | | Kips | Kips | | | Ft. Kips | |
| MY | 35.928 | 62.148 | 14.9 | 0.00 | 0.00 | 0.000 | 396 | 0 | 1.000 | 1.000 | 81 | * |
| MZ | 35.928 | 62.148 | 24.8 | 547.74 | 25.39 | 0.046 | 396 | 42022 | 1.014 | 1.014 | 555 | |

### GROUP 5

| | B | D | KL/R | $M_U$ | $M_{DL}$ | $B_D$ | $P_U$ | $P_C$ | $\delta_b$ | $\delta_s$ | $M_C$ |
|---|---|---|---|---|---|---|---|---|---|---|---|
| | In. | In. | | Ft. Kips | Ft. Kips | | Kips | Kips | | | Ft. Kips |
| MY | 35.928 | 62.148 | 14.9 | 1141.90 | 0.00 | 0.000 | 357 | 0 | 1.000 | 1.000 | 1142 |
| MZ | 35.928 | 62.148 | 24.8 | 675.60 | 25.39 | 0.038 | 357 | 42378 | 1.012 | 1.012 | 684 |

### GROUP 6

| | B | D | KL/R | $M_U$ | $M_{DL}$ | $B_D$ | $P_U$ | $P_C$ | $\delta_b$ | $\delta_s$ | $M_C$ |
|---|---|---|---|---|---|---|---|---|---|---|---|
| | In. | In. | | Ft. Kips | Ft. Kips | | Kips | Kips | | | Ft. Kips |
| MY | 35.928 | 62.148 | 14.9 | 672.28 | 0.00 | 0.000 | 398 | 0 | 1.000 | 1.000 | 672 |
| MZ | 35.928 | 62.148 | 24.8 | 596.21 | 25.39 | 0.043 | 398 | 42174 | 1.014 | 1.014 | 604 |

* MINIMUM MOMENT CONTROLS

JMS 7/06

WDB 7/06

```
OOOOOOO    OOOOO    OOOOO    OOOOO    OOOOO    OO
OO    OO   OO  OO   OO  OO   OO  OO   OO  OO   OO
OO    OO   OO  OO   OO  OO   OO  OO   OO  OO   OO
OO    OO   OO       OO  OO   OO       OO  OO   OO
OO    OO   OO       OOOOOOO  OO       OO  OO   OO
OOOOOOO    OO  OO   OO  OO   OO  OO   OO  OO   OO
OO         OO  OO   OO  OO   OO  OO   OO  OO   OO
OO          OOOOO   OO  OO    OOOOO    OOOOO    OOOOO  (TM)
```

==========
Computer program for the Strength Design of Reinforced Concrete Sections
==========

Licensee stated above acknowledges that Portland Cement Association (PCA) is not and cannot be responsible for either the accuracy or adequacy of the material supplied as input for processing by the PCACOL(tm) computer program. Furthermore, PCA neither makes any warranty expressed nor implied with respect to the correctness of the output prepared by the PCACOL(tm) program. Although PCA has endeavored to produce PCACOL(tm) error free, the program is not and can't be certified infallible. The final and only responsibility for analysis, design and engineering documents is the licensees. Accordingly, PCA disclaims all responsibility in contract, negligence or other tort for any analysis, design or engineering documents prepared in connection with the use of the PCACOL(tm) program.

BASED ON PLANS

General Information:
==========
File Name: S:\DGN-ST\NORTHC~1\BONNER~1\ANALYSIS\PIERS\HLB142\PCACOL~1\M10PLAN.COL
Project: BONNER BRIDGE - OREGON INLET
Column: HLB #142 Engineer: JMJ
Code: ACI 318-95 Units: English

Run Option: Investigation Slenderness: Not considered
Run Axis: Biaxial Column Type: Structural

Material Properties:
==========
f'c = 3 ksi fy = 40 ksi
Ec = 3122.02 ksi Es = 29000 ksi
fc = 2.55 ksi Rupture strain = Infinity
Ultimate strain = 0.003 in/in
Beta1 = 0.85

Section:
==========
Rectangular: Width = 36 in Depth = 62.1 in

Gross section area, Ag = 2235.6 in^2
Ix = 718449 in^4 Iy = 241445 in^4
Xo = 0 in Yo = 0 in

Reinforcement:
==========
Rebar Database: User-defined

| Size | Diam (in) | Area (in^2) | Size | Diam (in) | Area (in^2) | Size | Diam (in) | Area (in^2) |
|---|---|---|---|---|---|---|---|---|
| # 1 | 0.00 | 0.00 | # 3 | 0.38 | 0.11 | # 4 | 0.50 | 0.20 |
| # 5 | 0.63 | 0.31 | # 6 | 0.75 | 0.44 | # 7 | 0.88 | 0.60 |
| # 8 | 1.00 | 0.79 | # 9 | 1.13 | 1.00 | # 10 | 1.27 | 1.27 |
| # 11 | 1.41 | 1.56 | # 14 | 1.69 | 2.25 | # 18 | 2.26 | 4.00 |

Confinement: Tied; #1 ties with #9 bars, #1 with larger bars.
phi(a) = 0.8, phi(b) = 0.9, phi(c) = 0.7

Layout: Rectangular
Pattern: Equal Bar Spacing (Cover to longitudinal reinforcement)
Total steel area, As = 28.08 in^2 at 1.26%
18 #11 Cover = 5 in

Factored Loads and Moments with Corresponding Capacities: (see user's manual for notation)
==========

| No. | Pu kip | Mux k-ft | Muy k-ft | fMnx k-ft | fMny k-ft | fMn/Mu |
|---|---|---|---|---|---|---|
| 1 | 604.0 | 124.0 | 84.0 | 1758.2 | 1194.8 | 14.193 |
| 2 | 422.0 | 656.0 | 116.0 | 2548.2 | 448.3 | 3.884 |
| 3 | 533.0 | 421.0 | 75.0 | 2602.8 | 462.5 | 6.182 |
| 4 | 516.0 | 106.0 | 78.0 | 1667.4 | 1226.7 | 15.729 |
| 5 | 408.0 | 630.0 | 157.0 | 2434.3 | 605.8 | 3.864 |
| 6 | 514.0 | 405.0 | 104.0 | 2475.8 | 636.8 | 6.114 |
| 7 | 396.0 | 81.0 | 69.0 | 1477.4 | 1259.7 | 18.247 |
| 8 | 327.0 | 656.0 | 116.0 | 2479.1 | 435.4 | 3.778 |
| 9 | 370.0 | 421.0 | 87.0 | 2474.1 | 507.9 | 5.875 |
| 10 | 353.0 | 73.0 | 105.0 | 956.4 | 1377.3 | 13.112 |
| 11 | 316.0 | 630.0 | 157.0 | 2374.2 | 591.0 | 3.768 |
| 12 | 358.0 | 405.0 | 129.0 | 2298.0 | 731.3 | 5.674 |
| 13 | 661.0 | 136.0 | 92.0 | 1761.2 | 1187.4 | 12.936 |
| 14 | 478.0 | 1188.0 | 211.0 | 2576.9 | 457.3 | 2.169 |
| 15 | 589.0 | 699.0 | 82.0 | 2701.6 | 317.5 | 3.865 |

| | | | | | | |
|---|---|---|---|---|---|---|
| 16 | 572.0 | 118.0 | 505.0 | 365.4 | 1558.8 | 3.087 |
| 17 | 462.0 | 1142.0 | 686.0 | 1862.1 | 1122.3 | 1.632 |
| 18 | 568.0 | 672.0 | 557.0 | 1551.2 | 1286.3 | 2.309 |
| 19 | 438.0 | 90.0 | 72.0 | 1560.6 | 1247.4 | 17.334 |
| 20 | 370.0 | 1188.0 | 210.0 | 2513.3 | 442.3 | 2.115 |
| 21 | 412.0 | 699.0 | 127.0 | 2535.6 | 458.1 | 3.627 |
| 22 | 396.0 | 81.0 | 555.0 | 217.2 | 1488.2 | 2.681 |
| 23 | 357.0 | 1142.0 | 684.0 | 1830.6 | 1098.1 | 1.604 |
| 24 | 398.0 | 672.0 | 604.0 | 1425.2 | 1277.8 | 2.118 |

*** Program completed as requested! ***

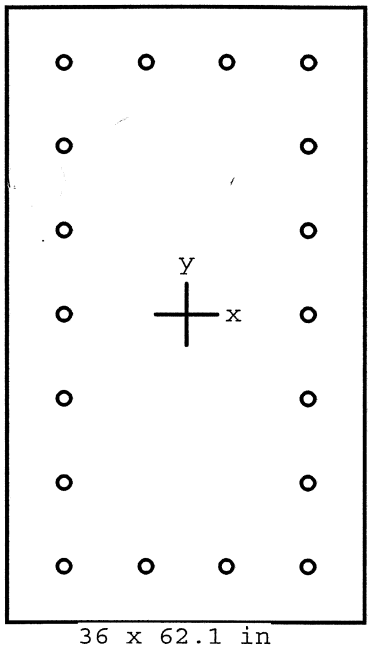


36 x 62.1 in

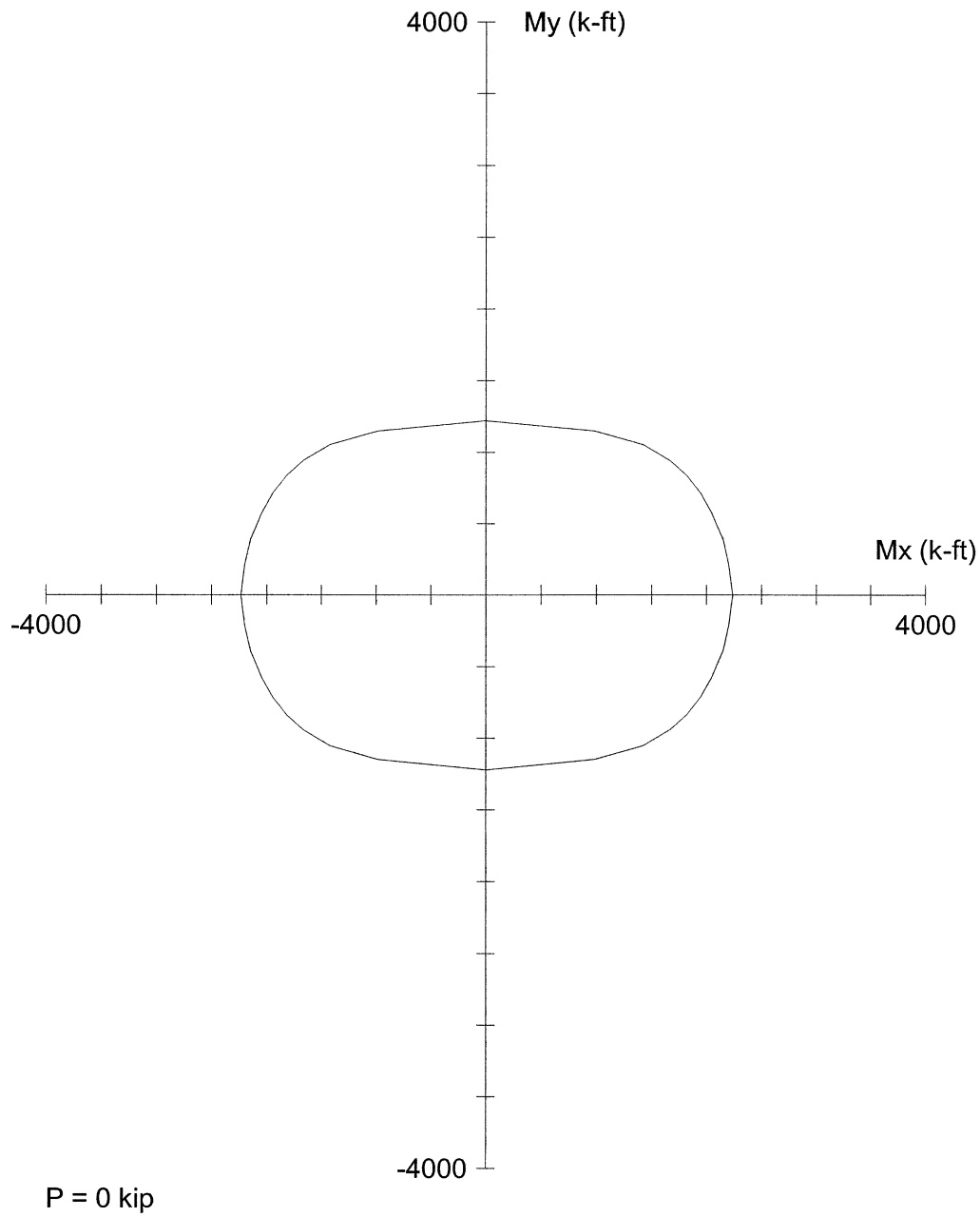


Code: ACI 318-95

Units: English

Run axis: Biaxial

Run option: Investigation

Slenderness: Not considered

mn type: Structural

Bars: User-defined

Date: 07/20/06

Time: 13:01:04

PCACOL V3.00 (PCA 1999) - Licensed to: Licensee name not yet specified.

File: S:\DGN-ST\NORTHC~1\BONNER~1\ANALYSIS\PIERS\HLB142\PCACOL~1\M10PLAN.COL

Project: BONNER BRIDGE - OREGON INLET

| | | | |
|---|---|---|---|
| Column: HLB #142 | | Engineer: JMJ | |
| f'c = 3 ksi | fy = 40 ksi | Ag = 2235.6 in^2 | 18 #11 bars |
| Ec = 3122 ksi | Es = 29000 ksi | As = 28.08 in^2 | Rho = 1.26% |
| fc = 2.55 ksi | e_rup = Infinity | Xo = 0.00 in | Ix = 718449 in^4 |
| u = 0.003 in/in | | Yo = 0.00 in | Iy = 241445 in^4 |
| Beta1 = 0.85 | | Clear spacing = 6.79 in | Clear cover = 5.00 in |
| Confinement: Tied | phi(a) = 0.8, phi(b) = 0.9, phi(c) = 0.7 | | |

JMJ 7/06
WDB 7/06

```
OOOOOOO    OOOOO    OOOOO    OOOOO    OOOOO    OO
OO    OO   OO  OO   OO  OO   OO  OO   OO  OO   OO
OO    OO   OO  OO   OO  OO   OO  OO   OO  OO   OO
OO    OO   OO       OO  OO   OO       OO  OO   OO
OO    OO   OO       OOOOOOO  OO       OO  OO   OO
OOOOOOO    OO  OO   OO  OO   OO  OO   OO  OO   OO
OO         OO  OO   OO  OO   OO  OO   OO  OO   OO
OO          OOOOO   OO  OO    OOOOO    OOOOO    OOOOO  (TM)
```

==========
Computer program for the Strength Design of Reinforced Concrete Sections
==========

Licensee stated above acknowledges that Portland Cement Association (PCA) is not and cannot be responsible for either the accuracy or adequacy of the material supplied as input for processing by the PCACOL(tm) computer program. Furthermore, PCA neither makes any warranty expressed nor implied with respect to the correctness of the output prepared by the PCACOL(tm) program. Although PCA has endeavored to produce PCACOL(tm) error free, the program is not and can't be certified infallible. The final and only responsibility for analysis, design and engineering documents is the licensees. Accordingly, PCA disclaims all responsibility in contract, negligence or other tort for any analysis, design or engineering documents prepared in connection with the use of the PCACOL(tm) program.

50% COVER LOSS
$f'_c$ = 4000 PSI

General Information:
==========

File Name: S:\DGN-ST\NORTHC~1\BONNER~1\ANALYSIS\PIERS\HLB142\PCACOL~1\M10ACT.COL
Project: BONNER BRIDGE - OREGON INLET
Column: HLB #142 Engineer: JMJ
Code: ACI 318-95 Units: English

Run Option: Investigation Slenderness: Not considered
Run Axis: Biaxial Column Type: Structural

Material Properties:
==========

f'c = 4.4 ksi fy = 40 ksi
Ec = 3780.96 ksi Es = 29000 ksi
fc = 3.74 ksi Rupture strain = Infinity
Ultimate strain = 0.003 in/in
Beta1 = 0.83

Section:
==========

Rectangular: Width = 31 in Depth = 57.1 in

Gross section area, Ag = 1770.1 in^2
Ix = 480938 in^4 Iy = 141756 in^4
Xo = 0 in Yo = 0 in

Reinforcement:
==========

Rebar Database: User-defined

| Size | Diam (in) | Area (in^2) | Size | Diam (in) | Area (in^2) | Size | Diam (in) | Area (in^2) |
|---|---|---|---|---|---|---|---|---|
| # 1 | 0.00 | 0.00 | # 3 | 0.38 | 0.11 | # 4 | 0.50 | 0.20 |
| # 5 | 0.63 | 0.31 | # 6 | 0.75 | 0.44 | # 7 | 0.88 | 0.60 |
| # 8 | 1.00 | 0.79 | # 9 | 1.13 | 1.00 | # 10 | 1.27 | 1.27 |
| # 11 | 1.41 | 1.56 | # 14 | 1.69 | 2.25 | # 18 | 2.26 | 4.00 |

Confinement: Tied; #1 ties with #9 bars, #1 with larger bars.
phi(a) = 0.8, phi(b) = 0.9, phi(c) = 0.7

Layout: Rectangular
Pattern: Equal Bar Spacing (Cover to longitudinal reinforcement)
Total steel area, As = 28.08 in^2 at 1.59%
18 #11 Cover = 2.5 in

Factored Loads and Moments with Corresponding Capacities: (see user's manual for notation)
==========

| No. | Pu kip | Mux k-ft | Muy k-ft | fMnx k-ft | fMny k-ft | fMn/Mu |
|---|---|---|---|---|---|---|
| 1 | 604.0 | 124.0 | 84.0 | 1747.2 | 1183.7 | 14.091 |
| 2 | 422.0 | 656.0 | 116.0 | 2507.8 | 443.6 | 3.823 |
| 3 | 533.0 | 421.0 | 75.0 | 2585.9 | 462.6 | 6.143 |
| 4 | 516.0 | 106.0 | 78.0 | 1625.3 | 1200.2 | 15.352 |
| 5 | 408.0 | 630.0 | 157.0 | 2395.9 | 597.0 | 3.803 |
| 6 | 514.0 | 405.0 | 104.0 | 2456.3 | 629.3 | 6.064 |
| 7 | 396.0 | 81.0 | 69.0 | 1424.0 | 1213.5 | 17.583 |
| 8 | 327.0 | 656.0 | 116.0 | 2423.4 | 427.4 | 3.694 |
| 9 | 370.0 | 421.0 | 87.0 | 2427.8 | 501.2 | 5.767 |
| 10 | 353.0 | 73.0 | 105.0 | 907.0 | 1305.5 | 12.430 |
| 11 | 316.0 | 630.0 | 157.0 | 2324.2 | 582.0 | 3.690 |
| 12 | 358.0 | 405.0 | 129.0 | 2257.6 | 715.8 | 5.572 |
| 13 | 661.0 | 136.0 | 92.0 | 1759.4 | 1191.1 | 12.940 |
| 14 | 478.0 | 1188.0 | 211.0 | 2553.4 | 449.2 | 2.149 |
| 15 | 589.0 | 699.0 | 82.0 | 2705.1 | 316.5 | 3.870 |

| | | | | | | |
|---|---|---|---|---|---|---|
| 16 | 572.0 | 118.0 | 505.0 | 350.2 | 1496.3 | 2.963 |
| 17 | 462.0 | 1142.0 | 686.0 | 1829.1 | 1097.7 | 1.601 |
| 18 | 568.0 | 672.0 | 557.0 | 1517.3 | 1256.7 | 2.257 |
| 19 | 438.0 | 90.0 | 72.0 | 1506.5 | 1206.9 | 16.748 |
| 20 | 370.0 | 1188.0 | 210.0 | 2461.4 | 437.3 | 2.072 |
| 21 | 412.0 | 699.0 | 127.0 | 2493.5 | 453.1 | 3.567 |
| 22 | 396.0 | 81.0 | 555.0 | 203.4 | 1406.1 | 2.533 |
| 23 | 357.0 | 1142.0 | 684.0 | 1777.9 | 1066.1 | 1.557 |
| 24 | 398.0 | 672.0 | 604.0 | 1369.0 | 1231.5 | 2.038 |

*** Program completed as requested! ***

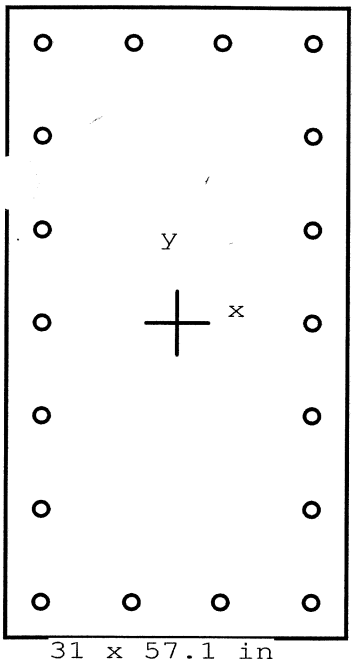


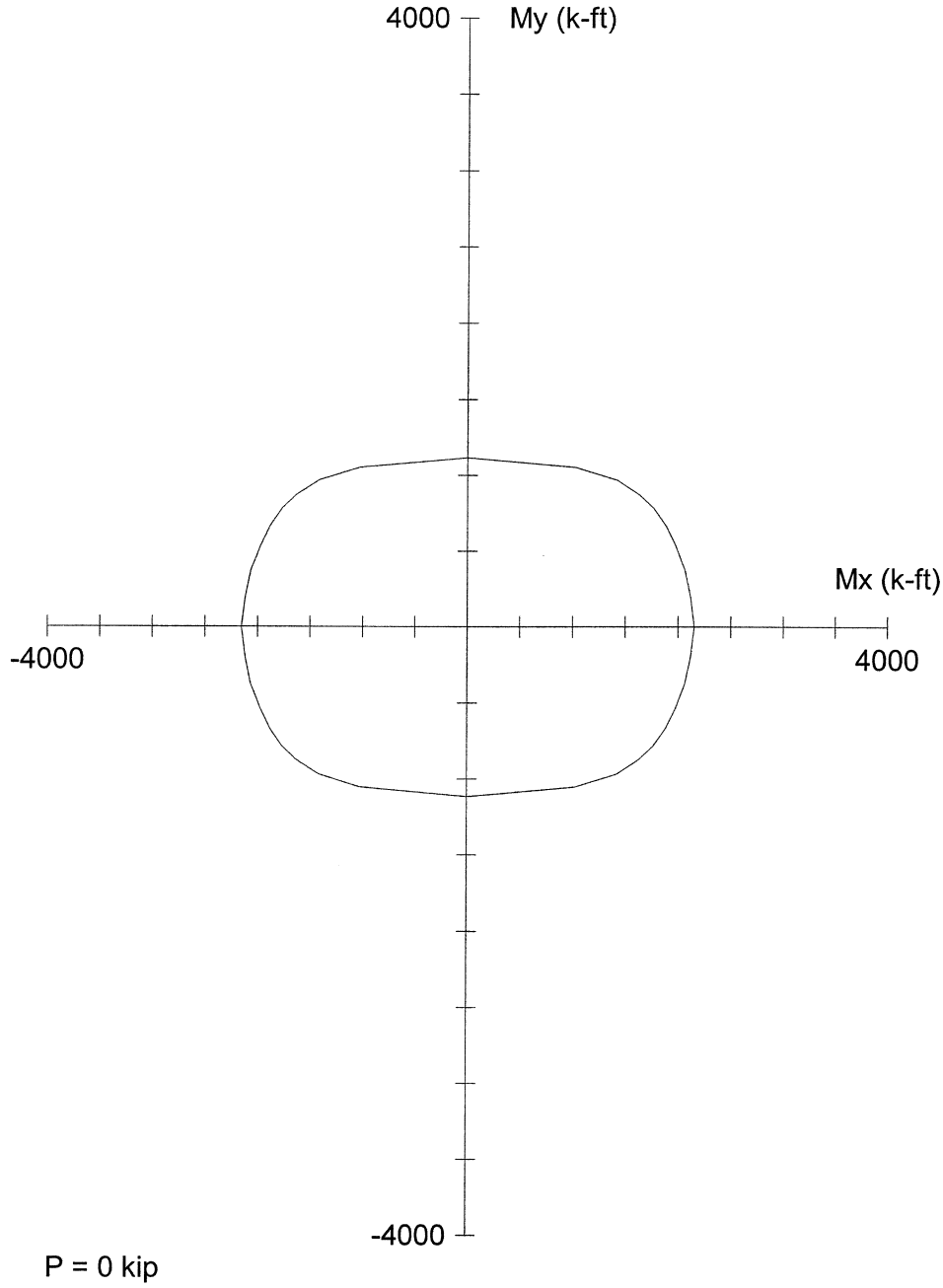


Code: ACI 318-95

Units: English

Run axis: Biaxial

Run option: Investigation

Slenderness: Not considered

Column type: Structural

Bars: User-defined

Date: 07/25/06

Time: 13:48:17

PCACOL V3.00 (PCA 1999) - Licensed to: Licensee name not yet specified.

File: S:\DGN-ST\NORTHC~1\BONNER~1\ANALYSIS\PIERS\HLB142\PCACOL~1\M10ACT.COL

Project: BONNER BRIDGE - OREGON INLET

| | | | |
|---|---|---|---|
| Column: HLB #142 | | Engineer: JMJ | |
| f'c = 4.4 ksi | fy = 40 ksi | Ag = 1770.1 in^2 | 18 #11 bars |
| Ec = 3781 ksi | Es = 29000 ksi | As = 28.08 in^2 | Rho = 1.59% |
| fc = 3.74 ksi | e_rup = Infinity | Xo = 0.00 in | Ix = 480938 in^4 |
| e_u = 0.003 in/in | | Yo = 0.00 in | Iy = 141756 in^4 |
| Beta1 = 0.83 | | Clear spacing = 6.79 in | Clear cover = 2.50 in |
| Confinement: Tied | phi(a) = 0.8, phi(b) = 0.9, phi(c) = 0.7 | | |

H. W. LOCHNER, INC.

PROJECT: BONNER BRIDGE - OREGON INLET NORTH CAROLINA JMJ Jul-06
SUBJECT: HIGH LEVEL BENT ANALYSIS
HLB 142 MEM. 11 JT. 8 WDB 7/06

## COLUMN LOADS

### PMAX

HLB 142 MEMBER 11 JOINT 8

| | GROUP 1 | | | | GROUP 2 | | |
|---|---|---|---|---|---|---|---|
| | P | MY | MZ | | P | MY | MZ |
| DL | 291.93 | 0.00 | 29.70 | DL | 291.93 | 0.00 | 29.70 |
| LL | 103.76 | 0.00 | -7.30 | LL | 0.00 | 0.00 | 0.00 |
| GROUP 1 | 0.00 | 0.00 | 0.00 | GROUP 2 | -32.68 | -504.26 | -57.87 |
| SERVICE | 395.69 | 0.00 | 22.40 | SERVICE | 259.25 | -504.26 | -28.17 |
| STRENGTH | 604.32 | 0.00 | 22.79 | STRENGTH | 337.03 | -655.54 | -36.62 |

| | GROUP 3 | | | | GROUP 4 | | |
|---|---|---|---|---|---|---|---|
| | P | MY | MZ | | P | MY | MZ |
| DL | 291.93 | 0.00 | 29.70 | DL | 291.93 | 0.00 | 29.70 |
| LL | 103.76 | 0.00 | -7.30 | LL | 103.76 | 0.00 | -7.30 |
| GROUP 3 | -14.21 | -324.05 | -22.18 | GROUP 4 | 1.40 | 0.00 | 36.16 |
| SERVICE | 381.48 | -324.05 | 0.22 | SERVICE | 397.09 | 0.00 | 58.56 |
| STRENGTH | 495.92 | -421.27 | 0.29 | STRENGTH | 516.22 | 0.00 | 76.13 |

| | GROUP 5 | | | | GROUP 6 | | |
|---|---|---|---|---|---|---|---|
| | P | MY | MZ | | P | MY | MZ |
| DL | 291.93 | 0.00 | 29.70 | DL | 291.93 | 0.00 | 29.70 |
| LL | 0.00 | 0.00 | 0.00 | LL | 103.76 | 0.00 | -7.30 |
| GROUP 5 | -31.29 | -504.26 | -21.71 | GROUP 6 | -12.81 | -324.05 | 13.98 |
| SERVICE | 260.64 | -504.26 | 7.99 | SERVICE | 382.88 | -324.05 | 36.38 |
| STRENGTH | 325.80 | -630.33 | 9.99 | STRENGTH | 478.60 | -405.06 | 45.48 |

## SLENDERNESS EFFECTS IN COMPRESSION MEMBERS (AASHTO 8.16.5)

f'c = 3000 psi PHI = 0.70 $W_C$ = 150 PCF

$E_C = W_C^{1.5} * 33 * f'c^{0.5}$ = 3320561 PSI Width of Rect. Col. = B = 35.928 In.

Depth of Rect. Col = D = 62.148 In.

$r_Y = 0.30*D$ = 18.64 In. $L_Y$ = 11.583 Ft. $K_Y$ = 2.0

$r_Z = 0.30*B$ = 10.78 In. $L_Z$ = 18.583 Ft. $K_Z$ = 1.2

$I_{YY}$ = $B*D^3/12$ $I_{YY}$ = 718676 $In^4$

$I_{ZZ}$ = $D*B^3/12$ $I_{ZZ}$ = 240185 $In^5$

$K_Y L_Y/r$ = 14.9 < 22 NO SLENDERNESS EFFECT

$K_Z L_Z/r$ = 24.8 > 22 CONSIDER SLENDERNESS

H. W. LOCHNER, INC.

PROJECT: BONNER BRIDGE - OREGON INLET NORTH CAROLINA JMJ Jul-06
SUBJECT: HIGH LEVEL BENT ANALYSIS
HLB 142 MEM. 11 JT. 8 WDB 7/06

## SLENDERNESS EFFECTS IN RECTANGULAR COMPRESSION MEMBERS (AASHTO 8.16.5)

### GROUP 1

| | B | D | KL/R | $M_U$ | $M_{DL}$ | $B_D$ | $P_U$ | $P_C$ | $\delta_b$ | $\delta_s$ | $M_C$ | |
|---|---|---|---|---|---|---|---|---|---|---|---|---|
| | In. | In. | | Ft. Kips | Ft. Kips | | Kips | Kips | | | Ft. Kips | |
| MY | 35.928 | 62.148 | 14.9 | 0.00 | 0.00 | 0.000 | 604 | 0 | 1.000 | 1.000 | 124 | * |
| MZ | 35.928 | 62.148 | 24.8 | 22.79 | 38.61 | 1.694 | 604 | 16322 | 1.056 | 1.056 | 84 | * |

### GROUP 2

| | B | D | KL/R | $M_U$ | $M_{DL}$ | $B_D$ | $P_U$ | $P_C$ | $\delta_b$ | $\delta_s$ | $M_C$ | |
|---|---|---|---|---|---|---|---|---|---|---|---|---|
| | In. | In. | | Ft. Kips | Ft. Kips | | Kips | Kips | | | Ft. Kips | |
| MY | 35.928 | 62.148 | 14.9 | 655.54 | 0.00 | 0.000 | 337 | 0 | 1.000 | 1.000 | 656 | |
| MZ | 35.928 | 62.148 | 24.8 | 36.62 | 38.61 | 1.054 | 337 | 21404 | 1.023 | 1.023 | 47 | * |

### GROUP 3

| | B | D | KL/R | $M_U$ | $M_{DL}$ | $B_D$ | $P_U$ | $P_C$ | $\delta_b$ | $\delta_s$ | $M_C$ | |
|---|---|---|---|---|---|---|---|---|---|---|---|---|
| | In. | In. | | Ft. Kips | Ft. Kips | | Kips | Kips | | | Ft. Kips | |
| MY | 35.928 | 62.148 | 14.9 | 421.27 | 0.00 | 0.000 | 496 | 0 | 1.000 | 1.000 | 421 | |
| MZ | 35.928 | 62.148 | 24.8 | 0.29 | 38.61 | ######## | 496 | 323 | -0.839 | -0.839 | 69 | * |

### GROUP 4

| | B | D | KL/R | $M_U$ | $M_{DL}$ | $B_D$ | $P_U$ | $P_C$ | $\delta_b$ | $\delta_s$ | $M_C$ | |
|---|---|---|---|---|---|---|---|---|---|---|---|---|
| | In. | In. | | Ft. Kips | Ft. Kips | | Kips | Kips | | | Ft. Kips | |
| MY | 35.928 | 62.148 | 14.9 | 0.00 | 0.00 | 0.000 | 516 | 0 | 1.000 | 1.000 | 106 | * |
| MZ | 35.928 | 62.148 | 24.8 | 76.13 | 38.61 | 0.507 | 516 | 29174 | 1.026 | 1.026 | 78 | |

### GROUP 5

| | B | D | KL/R | $M_U$ | $M_{DL}$ | $B_D$ | $P_U$ | $P_C$ | $\delta_b$ | $\delta_s$ | $M_C$ | |
|---|---|---|---|---|---|---|---|---|---|---|---|---|
| | In. | In. | | Ft. Kips | Ft. Kips | | Kips | Kips | | | Ft. Kips | |
| MY | 35.928 | 62.148 | 14.9 | 630.33 | 0.00 | 0.000 | 326 | 0 | 1.000 | 1.000 | 630 | |
| MZ | 35.928 | 62.148 | 24.8 | 9.99 | 38.61 | 3.866 | 326 | 9037 | 1.054 | 1.054 | 46 | * |

### GROUP 6

| | B | D | KL/R | $M_U$ | $M_{DL}$ | $B_D$ | $P_U$ | $P_C$ | $\delta_b$ | $\delta_s$ | $M_C$ | |
|---|---|---|---|---|---|---|---|---|---|---|---|---|
| | In. | In. | | Ft. Kips | Ft. Kips | | Kips | Kips | | | Ft. Kips | |
| MY | 35.928 | 62.148 | 14.9 | 405.06 | 0.00 | 0.000 | 479 | 0 | 1.000 | 1.000 | 405 | |
| MZ | 35.928 | 62.148 | 24.8 | 45.48 | 38.61 | 0.849 | 479 | 23780 | 1.030 | 1.030 | 67 | * |

* MINIMUM MOMENT CONTROLS

H. W. LOCHNER, INC.

PROJECT: BONNER BRIDGE - OREGON INLET NORTH CAROLINA JMJ Jul-06
SUBJECT: HIGH LEVEL BENT ANALYSIS
HLB 142 MEM. 11 JT. 8 WDB 7/06

## COLUMN LOADS

**PMIN**

HLB 142 MEMBER 11 JOINT 8

| | GROUP 1 | | | | GROUP 2 | | |
|---|---|---|---|---|---|---|---|
| | P | MY | MZ | | P | MY | MZ |
| DL | 218.95 | 0.00 | 29.70 | DL | 218.95 | 0.00 | 29.70 |
| LL | 51.46 | 0.00 | 13.37 | LL | 0.00 | 0.00 | 0.00 |
| GROUP 1 | 0.00 | 0.00 | 0.00 | GROUP 2 | -32.68 | -504.26 | -57.87 |
| SERVICE | 270.41 | 0.00 | 43.07 | SERVICE | 186.27 | -504.26 | -28.17 |
| STRENGTH | 396.13 | 0.00 | 67.58 | STRENGTH | 242.15 | -655.54 | -36.62 |

| | GROUP 3 | | | | GROUP 4 | | |
|---|---|---|---|---|---|---|---|
| | P | MY | MZ | | P | MY | MZ |
| DL | 218.95 | 0.00 | 29.70 | DL | 218.95 | 0.00 | 29.70 |
| LL | 51.46 | 0.00 | 13.37 | LL | 51.46 | 0.00 | 13.37 |
| GROUP 3 | -14.21 | -324.05 | -22.18 | GROUP 4 | 1.40 | 0.00 | 36.16 |
| SERVICE | 256.20 | -324.05 | 20.89 | SERVICE | 271.81 | 0.00 | 79.23 |
| STRENGTH | 333.06 | -421.27 | 27.16 | STRENGTH | 353.35 | 0.00 | 103.00 |

| | GROUP 5 | | | | GROUP 6 | | |
|---|---|---|---|---|---|---|---|
| | P | MY | MZ | | P | MY | MZ |
| DL | 218.95 | 0.00 | 29.70 | DL | 218.95 | 0.00 | 29.70 |
| LL | 0.00 | 0.00 | 0.00 | LL | 51.46 | 0.00 | 13.37 |
| GROUP 5 | -31.29 | -504.26 | -21.71 | GROUP 6 | -12.81 | -324.05 | 13.98 |
| SERVICE | 187.66 | -504.26 | 7.99 | SERVICE | 257.60 | -324.05 | 57.05 |
| STRENGTH | 234.57 | -630.33 | 9.99 | STRENGTH | 322.00 | -405.06 | 71.31 |

## SLENDERNESS EFFECTS IN COMPRESSION MEMBERS (AASHTO 8.16.5)

f'c = 3000 psi PHI = 0.70 $W_C$ = 150 PCF

$E_C = W_C$^$^{1.5}$ *33*f'c^$^{0.5}$ = 3320561 PSI Width of Rect. Col. = B = 35.928 In.

Depth of Rect. Col = D = 62.148 In.

$r_Y$ = 0.30*D = 18.64 In. $L_Y$ = 11.583 Ft. $K_Y$ = 2.0

$r_Z$ = 0.30*B = 10.78 In. $L_Z$ = 18.583 Ft. $K_Z$ = 1.2

$I_{YY}$ = B*D^$^3$/12 $I_{YY}$ = 718676 $In^4$

$I_{ZZ}$ = D*B^$^3$/12 $I_{ZZ}$ = 240185 $In^5$

$K_YL_Y/r$ = 14.9 < 22 NO SLENDERNESS EFFECT

$K_ZL_Z/r$ = 24.8 > 22 CONSIDER SLENDERNESS

H. W. LOCHNER, INC.

PROJECT: BONNER BRIDGE - OREGON INLET NORTH CAROLINA JMJ Jul-06
SUBJECT: HIGH LEVEL BENT ANALYSIS
HLB 142 MEM. 11 JT. 8 WDB 7/06

## SLENDERNESS EFFECTS IN RECTANGULAR COMPRESSION MEMBERS (AASHTO 8.16.5)

### GROUP 1

| | B | D | KL/R | $M_U$ | $M_{DL}$ | $B_D$ | $P_U$ | $P_C$ | $\delta_b$ | $\delta_s$ | $M_C$ | |
|---|---|---|---|---|---|---|---|---|---|---|---|---|
| | In. | In. | | Ft. Kips | Ft. Kips | | Kips | Kips | | | Ft. Kips | |
| MY | 35.928 | 62.148 | 14.9 | 0.00 | 0.00 | 0.000 | 396 | 0 | 1.000 | 1.000 | 81 | * |
| MZ | 35.928 | 62.148 | 24.8 | 67.58 | 38.61 | 0.571 | 396 | 27983 | 1.021 | 1.021 | 69 | |

### GROUP 2

| | B | D | KL/R | $M_U$ | $M_{DL}$ | $B_D$ | $P_U$ | $P_C$ | $\delta_b$ | $\delta_s$ | $M_C$ |
|---|---|---|---|---|---|---|---|---|---|---|---|
| | In. | In. | | Ft. Kips | Ft. Kips | | Kips | Kips | | | Ft. Kips |
| MY | 35.928 | 62.148 | 14.9 | 655.54 | 0.00 | 0.000 | 242 | 0 | 1.000 | 1.000 | 656 |
| MZ | 35.928 | 62.148 | 24.8 | 36.62 | 38.61 | 1.054 | 242 | 21404 | 1.016 | 1.016 | 37 |

### GROUP 3

| | B | D | KL/R | $M_U$ | $M_{DL}$ | $B_D$ | $P_U$ | $P_C$ | $\delta_b$ | $\delta_s$ | $M_C$ | |
|---|---|---|---|---|---|---|---|---|---|---|---|---|
| | In. | In. | | Ft. Kips | Ft. Kips | | Kips | Kips | | | Ft. Kips | |
| MY | 35.928 | 62.148 | 14.9 | 421.27 | 0.00 | 0.000 | 333 | 0 | 1.000 | 1.000 | 421 | |
| MZ | 35.928 | 62.148 | 24.8 | 27.16 | 38.61 | 1.422 | 333 | 18157 | 1.027 | 1.027 | 47 | * |

### GROUP 4

| | B | D | KL/R | $M_U$ | $M_{DL}$ | $B_D$ | $P_U$ | $P_C$ | $\delta_b$ | $\delta_s$ | $M_C$ | |
|---|---|---|---|---|---|---|---|---|---|---|---|---|
| | In. | In. | | Ft. Kips | Ft. Kips | | Kips | Kips | | | Ft. Kips | |
| MY | 35.928 | 62.148 | 14.9 | 0.00 | 0.00 | 0.000 | 353 | 0 | 1.000 | 1.000 | 73 | * |
| MZ | 35.928 | 62.148 | 24.8 | 103.00 | 38.61 | 0.375 | 353 | 31982 | 1.016 | 1.016 | 105 | |

### GROUP 5

| | B | D | KL/R | $M_U$ | $M_{DL}$ | $B_D$ | $P_U$ | $P_C$ | $\delta_b$ | $\delta_s$ | $M_C$ | |
|---|---|---|---|---|---|---|---|---|---|---|---|---|
| | In. | In. | | Ft. Kips | Ft. Kips | | Kips | Kips | | | Ft. Kips | |
| MY | 35.928 | 62.148 | 14.9 | 630.33 | 0.00 | 0.000 | 235 | 0 | 1.000 | 1.000 | 630 | |
| MZ | 35.928 | 62.148 | 24.8 | 9.99 | 38.61 | 3.866 | 235 | 9037 | 1.039 | 1.039 | 33 | * |

### GROUP 6

| | B | D | KL/R | $M_U$ | $M_{DL}$ | $B_D$ | $P_U$ | $P_C$ | $\delta_b$ | $\delta_s$ | $M_C$ |
|---|---|---|---|---|---|---|---|---|---|---|---|
| | In. | In. | | Ft. Kips | Ft. Kips | | Kips | Kips | | | Ft. Kips |
| MY | 35.928 | 62.148 | 14.9 | 405.06 | 0.00 | 0.000 | 322 | 0 | 1.000 | 1.000 | 405 |
| MZ | 35.928 | 62.148 | 24.8 | 71.31 | 38.61 | 0.541 | 322 | 28526 | 1.016 | 1.016 | 72 |

* MINIMUM MOMENT CONTROLS

H. W. LOCHNER, INC.

PROJECT: BONNER BRIDGE - OREGON INLET NORTH CAROLINA JMJ Jul-06
SUBJECT: HIGH LEVEL BENT ANALYSIS
HLB 142 MEM. 11 JT. 10 WDB 7/06

## COLUMN LOADS

### PMAX

HLB 142 MEMBER 11 JOINT 10

GROUP 1

| | P | MY | MZ |
|---|---|---|---|
| DL | -335.14 | 0.00 | 19.67 |
| LL | -103.76 | 0.00 | -19.36 |
| GROUP 1 | 0.00 | 0.00 | 0.00 |
| SERVICE | -438.90 | 0.00 | 0.31 |
| STRENGTH | -660.50 | 0.00 | -16.38 |

GROUP 2

| | P | MY | MZ |
|---|---|---|---|
| DL | -335.14 | 0.00 | 19.67 |
| LL | 0.00 | 0.00 | 0.00 |
| GROUP 2 | 32.89 | 913.65 | -139.88 |
| SERVICE | -302.25 | 913.65 | -120.21 |
| STRENGTH | -392.93 | 1187.75 | -156.27 |

GROUP 3

| | P | MY | MZ |
|---|---|---|---|
| DL | -335.14 | 0.00 | 19.67 |
| LL | -103.76 | 0.00 | -19.36 |
| GROUP 3 | 14.27 | 537.89 | -55.64 |
| SERVICE | -424.63 | 537.89 | -55.33 |
| STRENGTH | -552.02 | 699.26 | -71.93 |

GROUP 4

| | P | MY | MZ |
|---|---|---|---|
| DL | -335.14 | 0.00 | 19.67 |
| LL | -103.76 | 0.00 | -19.36 |
| GROUP 4 | -1.40 | 0.00 | 381.15 |
| SERVICE | -440.30 | 0.00 | 381.46 |
| STRENGTH | -572.39 | 0.00 | 495.90 |

GROUP 5

| | P | MY | MZ |
|---|---|---|---|
| DL | -335.14 | 0.00 | 19.67 |
| LL | 0.00 | 0.00 | 0.00 |
| GROUP 5 | 31.49 | 913.65 | 241.27 |
| SERVICE | -303.65 | 913.65 | 260.94 |
| STRENGTH | -379.56 | 1142.06 | 326.18 |

GROUP 6

| | P | MY | MZ |
|---|---|---|---|
| DL | -335.14 | 0.00 | 19.67 |
| LL | -103.76 | 0.00 | -19.36 |
| GROUP 6 | 12.87 | 537.89 | 325.51 |
| SERVICE | -426.03 | 537.89 | 325.82 |
| STRENGTH | -532.54 | 672.36 | 407.28 |

## SLENDERNESS EFFECTS IN COMPRESSION MEMBERS (AASHTO 8.16.5)

f'c = 3000 psi PHI = 0.70 $W_C$ = 150 PCF

$E_C = W_C^{1.5} * 33 * f'c^{0.5}$ = 3320561 PSI Width of Rect. Col. = B = 35.928 In.

Depth of Rect. Col = D = 62.148 In.

$r_Y = 0.30*D$ = 18.64 In. $L_Y$ = 11.583 Ft. $K_Y$ = 2.0

$r_Z = 0.30*B$ = 10.78 In. $L_Z$ = 18.583 Ft. $K_Z$ = 1.2

$I_{YY}$ = $B*D^3/12$ $I_{YY}$ = 718676 $In^4$

$I_{ZZ}$ = $D*B^3/12$ $I_{ZZ}$ = 240185 $In^5$

$K_Y L_Y/r$ = 14.9 < 22 NO SLENDERNESS EFFECT

$K_Z L_Z/r$ = 24.8 > 22 CONSIDER SLENDERNESS

H. W. LOCHNER, INC.

PROJECT: BONNER BRIDGE - OREGON INLET NORTH CAROLINA JMJ Jul-06
SUBJECT: HIGH LEVEL BENT ANALYSIS
HLB 142 MEM. 11 JT. 10 WDB 7/06

## SLENDERNESS EFFECTS IN RECTANGULAR COMPRESSION MEMBERS (AASHTO 8.16.5)

### GROUP 1

| | B | D | KL/R | $M_U$ | $M_{DL}$ | $B_D$ | $P_U$ | $P_C$ | $\delta_b$ | $\delta_s$ | $M_C$ | |
|---|---|---|---|---|---|---|---|---|---|---|---|---|
| | In. | In. | | Ft. Kips | Ft. Kips | | Kips | Kips | | | Ft. Kips | |
| MY | 35.928 | 62.148 | 14.9 | 0.00 | 0.00 | 0.000 | 660 | 0 | 1.000 | 1.000 | 136 | * |
| MZ | 35.928 | 62.148 | 24.8 | 16.38 | 25.57 | 1.562 | 660 | 17166 | 1.058 | 1.058 | 92 | * |

### GROUP 2

| | B | D | KL/R | $M_U$ | $M_{DL}$ | $B_D$ | $P_U$ | $P_C$ | $\delta_b$ | $\delta_s$ | $M_C$ |
|---|---|---|---|---|---|---|---|---|---|---|---|
| | In. | In. | | Ft. Kips | Ft. Kips | | Kips | Kips | | | Ft. Kips |
| MY | 35.928 | 62.148 | 14.9 | 1187.75 | 0.00 | 0.000 | 393 | 0 | 1.000 | 1.000 | 1188 |
| MZ | 35.928 | 62.148 | 24.8 | 156.27 | 25.57 | 0.164 | 393 | 37787 | 1.015 | 1.015 | 159 |

### GROUP 3

| | B | D | KL/R | $M_U$ | $M_{DL}$ | $B_D$ | $P_U$ | $P_C$ | $\delta_b$ | $\delta_s$ | $M_C$ | |
|---|---|---|---|---|---|---|---|---|---|---|---|---|
| | In. | In. | | Ft. Kips | Ft. Kips | | Kips | Kips | | | Ft. Kips | |
| MY | 35.928 | 62.148 | 14.9 | 699.26 | 0.00 | 0.000 | 552 | 0 | 1.000 | 1.000 | 699 | |
| MZ | 35.928 | 62.148 | 24.8 | 71.93 | 25.57 | 0.356 | 552 | 32438 | 1.025 | 1.025 | 77 | * |

### GROUP 4

| | B | D | KL/R | $M_U$ | $M_{DL}$ | $B_D$ | $P_U$ | $P_C$ | $\delta_b$ | $\delta_s$ | $M_C$ | |
|---|---|---|---|---|---|---|---|---|---|---|---|---|
| | In. | In. | | Ft. Kips | Ft. Kips | | Kips | Kips | | | Ft. Kips | |
| MY | 35.928 | 62.148 | 14.9 | 0.00 | 0.00 | 0.000 | 572 | 0 | 1.000 | 1.000 | 118 | * |
| MZ | 35.928 | 62.148 | 24.8 | 495.90 | 25.57 | 0.052 | 572 | 41814 | 1.020 | 1.020 | 506 | |

### GROUP 5

| | B | D | KL/R | $M_U$ | $M_{DL}$ | $B_D$ | $P_U$ | $P_C$ | $\delta_b$ | $\delta_s$ | $M_C$ |
|---|---|---|---|---|---|---|---|---|---|---|---|
| | In. | In. | | Ft. Kips | Ft. Kips | | Kips | Kips | | | Ft. Kips |
| MY | 35.928 | 62.148 | 14.9 | 1142.06 | 0.00 | 0.000 | 380 | 0 | 1.000 | 1.000 | 1142 |
| MZ | 35.928 | 62.148 | 24.8 | 326.18 | 25.57 | 0.078 | 380 | 40774 | 1.013 | 1.013 | 331 |

### GROUP 6

| | B | D | KL/R | $M_U$ | $M_{DL}$ | $B_D$ | $P_U$ | $P_C$ | $\delta_b$ | $\delta_s$ | $M_C$ |
|---|---|---|---|---|---|---|---|---|---|---|---|
| | In. | In. | | Ft. Kips | Ft. Kips | | Kips | Kips | | | Ft. Kips |
| MY | 35.928 | 62.148 | 14.9 | 672.36 | 0.00 | 0.000 | 533 | 0 | 1.000 | 1.000 | 672 |
| MZ | 35.928 | 62.148 | 24.8 | 407.28 | 25.57 | 0.063 | 533 | 41373 | 1.019 | 1.019 | 415 |

* MINIMUM MOMENT CONTROLS

H. W. LOCHNER, INC.

PROJECT: BONNER BRIDGE - OREGON INLET NORTH CAROLINA JMJ Jul-06
SUBJECT: HIGH LEVEL BENT ANALYSIS
HLB 142 MEM. 11 JT. 10 WDB 7/06

## COLUMN LOADS

**PMIN**

HLB 142 MEMBER 11 JOINT 10

| | GROUP 1 | | | | GROUP 2 | | |
|---|---|---|---|---|---|---|---|
| | P | MY | MZ | | P | MY | MZ |
| DL | -251.36 | 0.00 | 19.67 | DL | -251.36 | 0.00 | 19.67 |
| LL | -51.46 | 0.00 | 20.72 | LL | 0.00 | 0.00 | 0.00 |
| GROUP 1 | 0.00 | 0.00 | 0.00 | GROUP 2 | 32.89 | 913.65 | -139.88 |
| SERVICE | -302.82 | 0.00 | 40.39 | SERVICE | -218.47 | 913.65 | -120.21 |
| STRENGTH | -438.26 | 0.00 | 70.46 | STRENGTH | -284.00 | 1187.75 | -156.27 |

| | GROUP 3 | | | | GROUP 4 | | |
|---|---|---|---|---|---|---|---|
| | P | MY | MZ | | P | MY | MZ |
| DL | -251.36 | 0.00 | 19.67 | DL | -251.36 | 0.00 | 19.67 |
| LL | -51.46 | 0.00 | 20.72 | LL | -51.46 | 0.00 | 20.72 |
| GROUP 3 | 14.27 | 537.89 | -55.64 | GROUP 4 | -1.40 | 0.00 | 381.15 |
| SERVICE | -288.55 | 537.89 | -15.25 | SERVICE | -304.22 | 0.00 | 421.54 |
| STRENGTH | -375.11 | 699.26 | -19.83 | STRENGTH | -395.48 | 0.00 | 548.00 |

| | GROUP 5 | | | | GROUP 6 | | |
|---|---|---|---|---|---|---|---|
| | P | MY | MZ | | P | MY | MZ |
| DL | -251.36 | 0.00 | 19.67 | DL | -251.36 | 0.00 | 19.67 |
| LL | 0.00 | 0.00 | 0.00 | LL | -51.46 | 0.00 | 20.72 |
| GROUP 5 | 31.49 | 913.65 | 241.27 | GROUP 6 | 12.87 | 537.89 | 325.51 |
| SERVICE | -219.87 | 913.65 | 260.94 | SERVICE | -289.95 | 537.89 | 365.90 |
| STRENGTH | -274.83 | 1142.06 | 326.18 | STRENGTH | -362.43 | 672.36 | 457.38 |

## SLENDERNESS EFFECTS IN COMPRESSION MEMBERS (AASHTO 8.16.5)

f'c = 3000 psi PHI = 0.70 $W_C$ = 150 PCF

$E_C = W_C$^$^{1.5}$ *33*f'c^$^{0.5}$ = 3320561 PSI Width of Rect. Col. = B = 35.928 In.

Depth of Rect. Col = D = 62.148 In.

$r_Y$ = 0.30*D = 18.64 In. $L_Y$ = 11.583 Ft. $K_Y$ = 2.0

$r_Z$ = 0.30*B = 10.78 In. $L_Z$ = 18.583 Ft. $K_Z$ = 1.2

$I_{YY}$ = B*D^$^3$/12 $I_{YY}$ = 718676 $In^4$

$I_{ZZ}$ = D*B^$^3$/12 $I_{ZZ}$ = 240185 $In^5$

$K_YL_Y/r$ = 14.9 < 22 NO SLENDERNESS EFFECT

$K_ZL_Z/r$ = 24.8 > 22 CONSIDER SLENDERNESS

H. W. LOCHNER, INC.

PROJECT: BONNER BRIDGE - OREGON INLET NORTH CAROLINA JMJ Jul-06
SUBJECT: HIGH LEVEL BENT ANALYSIS
HLB 142 MEM. 11 JT. 10 WDB 7/06

## SLENDERNESS EFFECTS IN RECTANGULAR COMPRESSION MEMBERS (AASHTO 8.16.5)

### GROUP 1

| | B | D | KL/R | $M_U$ | $M_{DL}$ | $B_D$ | $P_U$ | $P_C$ | $\delta_b$ | $\delta_s$ | $M_C$ | |
|---|---|---|---|---|---|---|---|---|---|---|---|---|
| | In. | In. | | Ft. Kips | Ft. Kips | | Kips | Kips | | | Ft. Kips | |
| MY | 35.928 | 62.148 | 14.9 | 0.00 | 0.00 | 0.000 | 438 | 0 | 1.000 | 1.000 | 90 | * |
| MZ | 35.928 | 62.148 | 24.8 | 70.46 | 25.57 | 0.363 | 438 | 32262 | 1.020 | 1.020 | 72 | |

### GROUP 2

| | B | D | KL/R | $M_U$ | $M_{DL}$ | $B_D$ | $P_U$ | $P_C$ | $\delta_b$ | $\delta_s$ | $M_C$ |
|---|---|---|---|---|---|---|---|---|---|---|---|
| | In. | In. | | Ft. Kips | Ft. Kips | | Kips | Kips | | | Ft. Kips |
| MY | 35.928 | 62.148 | 14.9 | 1187.75 | 0.00 | 0.000 | 284 | 0 | 1.000 | 1.000 | 1188 |
| MZ | 35.928 | 62.148 | 24.8 | 156.27 | 25.57 | 0.164 | 284 | 37787 | 1.011 | 1.011 | 158 |

### GROUP 3

| | B | D | KL/R | $M_U$ | $M_{DL}$ | $B_D$ | $P_U$ | $P_C$ | $\delta_b$ | $\delta_s$ | $M_C$ | |
|---|---|---|---|---|---|---|---|---|---|---|---|---|
| | In. | In. | | Ft. Kips | Ft. Kips | | Kips | Kips | | | Ft. Kips | |
| MY | 35.928 | 62.148 | 14.9 | 699.26 | 0.00 | 0.000 | 375 | 0 | 1.000 | 1.000 | 699 | |
| MZ | 35.928 | 62.148 | 24.8 | 19.83 | 25.57 | 1.290 | 375 | 19202 | 1.029 | 1.029 | 52 | * |

### GROUP 4

| | B | D | KL/R | $M_U$ | $M_{DL}$ | $B_D$ | $P_U$ | $P_C$ | $\delta_b$ | $\delta_s$ | $M_C$ | |
|---|---|---|---|---|---|---|---|---|---|---|---|---|
| | In. | In. | | Ft. Kips | Ft. Kips | | Kips | Kips | | | Ft. Kips | |
| MY | 35.928 | 62.148 | 14.9 | 0.00 | 0.00 | 0.000 | 395 | 0 | 1.000 | 1.000 | 81 | * |
| MZ | 35.928 | 62.148 | 24.8 | 548.00 | 25.57 | 0.047 | 395 | 42010 | 1.014 | 1.014 | 555 | |

### GROUP 5

| | B | D | KL/R | $M_U$ | $M_{DL}$ | $B_D$ | $P_U$ | $P_C$ | $\delta_b$ | $\delta_s$ | $M_C$ |
|---|---|---|---|---|---|---|---|---|---|---|---|
| | In. | In. | | Ft. Kips | Ft. Kips | | Kips | Kips | | | Ft. Kips |
| MY | 35.928 | 62.148 | 14.9 | 1142.06 | 0.00 | 0.000 | 275 | 0 | 1.000 | 1.000 | 1142 |
| MZ | 35.928 | 62.148 | 24.8 | 326.18 | 25.57 | 0.078 | 275 | 40774 | 1.010 | 1.010 | 329 |

### GROUP 6

| | B | D | KL/R | $M_U$ | $M_{DL}$ | $B_D$ | $P_U$ | $P_C$ | $\delta_b$ | $\delta_s$ | $M_C$ |
|---|---|---|---|---|---|---|---|---|---|---|---|
| | In. | In. | | Ft. Kips | Ft. Kips | | Kips | Kips | | | Ft. Kips |
| MY | 35.928 | 62.148 | 14.9 | 672.36 | 0.00 | 0.000 | 362 | 0 | 1.000 | 1.000 | 672 |
| MZ | 35.928 | 62.148 | 24.8 | 457.38 | 25.57 | 0.056 | 362 | 41642 | 1.013 | 1.013 | 463 |

* MINIMUM MOMENT CONTROLS

JMJ 7/06

WDB 7/06

```
OOOOOOO    OOOOO    OOOOO    OOOOO    OOOOO   OO
OO    OO   OO  OO   OO  OO   OO  OO   OO  OO   OO
OO    OO   OO  OO   OO  OO   OO  OO   OO  OO   OO
OO    OO   OO       OO  OO   OO       OO  OO   OO
OO    OO   OO       OOOOOOO  OO       OO  OO   OO
OOOOOOO    OO  OO   OO  OO   OO  OO   OO  OO   OO
OO         OO  OO   OO  OO   OO  OO   OO  OO   OO
OO          OOOOO   OO  OO    OOOOO    OOOOO   OOOOO  (TM)
```

==========
Computer program for the Strength Design of Reinforced Concrete Sections
==========

Licensee stated above acknowledges that Portland Cement Association (PCA) is not and cannot be responsible for either the accuracy or adequacy of the material supplied as input for processing by the PCACOL(tm) computer program. Furthermore, PCA neither makes any warranty expressed nor implied with respect to the correctness of the output prepared by the PCACOL(tm) program. Although PCA has endeavored to produce PCACOL(tm) error free, the program is not and can't be certified infallible. The final and only responsibility for analysis, design and engineering documents is the licensees. Accordingly, PCA disclaims all responsibility in contract, negligence or other tort for any analysis, design or engineering documents prepared in connection with the use of the PCACOL(tm) program.

BASED ON PLANS.

General Information:
==========

File Name: S:\DGN-ST\NORTHC~1\BONNER~1\ANALYSIS\PIERS\HLB142\PCACOL~1\M11PLAN.COL
Project: BONNER BRIDGE - OREGON INLET
Column: HLB #142 Engineer: JMJ
Code: ACI 318-95 Units: English

Run Option: Investigation Slenderness: Not considered
Run Axis: Biaxial Column Type: Structural

Material Properties:
==========

f'c = 3 ksi fy = 40 ksi
Ec = 3122.02 ksi Es = 29000 ksi
fc = 2.55 ksi Rupture strain = Infinity
Ultimate strain = 0.003 in/in
Beta1 = 0.85

Section:
==========

Rectangular: Width = 36 in Depth = 62.1 in

Gross section area, Ag = 2235.6 in^2
Ix = 718449 in^4 Iy = 241445 in^4
Xo = 0 in Yo = 0 in

Reinforcement:
==========

Rebar Database: User-defined

| Size | Diam (in) | Area (in^2) | Size | Diam (in) | Area (in^2) | Size | Diam (in) | Area (in^2) |
|---|---|---|---|---|---|---|---|---|
| # 1 | 0.00 | 0.00 | # 3 | 0.38 | 0.11 | # 4 | 0.50 | 0.20 |
| # 5 | 0.63 | 0.31 | # 6 | 0.75 | 0.44 | # 7 | 0.88 | 0.60 |
| # 8 | 1.00 | 0.79 | # 9 | 1.13 | 1.00 | # 10 | 1.27 | 1.27 |
| # 11 | 1.41 | 1.56 | # 14 | 1.69 | 2.25 | # 18 | 2.26 | 4.00 |

Confinement: Tied; #1 ties with #9 bars, #1 with larger bars.
phi(a) = 0.8, phi(b) = 0.9, phi(c) = 0.7

Layout: Rectangular
Pattern: Equal Bar Spacing (Cover to longitudinal reinforcement)
Total steel area, As = 28.08 in^2 at 1.26%
18 #11 Cover = 5 in

Factored Loads and Moments with Corresponding Capacities: (see user's manual for notation)
==========

| No. | Pu kip | Mux k-ft | Muy k-ft | fMnx k-ft | fMny k-ft | fMn/Mu |
|---|---|---|---|---|---|---|
| 1 | 604.0 | 124.0 | 84.0 | 1758.2 | 1194.8 | 14.193 |
| 2 | 337.0 | 656.0 | 47.0 | 2589.7 | 185.6 | 3.948 |
| 3 | 496.0 | 421.0 | 69.0 | 2603.0 | 430.5 | 6.184 |
| 4 | 516.0 | 106.0 | 78.0 | 1667.4 | 1226.7 | 15.729 |
| 5 | 326.0 | 630.0 | 46.0 | 2579.4 | 188.0 | 4.094 |
| 6 | 479.0 | 405.0 | 67.0 | 2594.6 | 428.9 | 6.406 |
| 7 | 396.0 | 81.0 | 69.0 | 1477.4 | 1259.7 | 18.247 |
| 8 | 242.0 | 656.0 | 37.0 | 2506.5 | 144.2 | 3.821 |
| 9 | 333.0 | 421.0 | 47.0 | 2549.8 | 285.7 | 6.057 |
| 10 | 353.0 | 73.0 | 105.0 | 956.4 | 1377.3 | 13.112 |
| 11 | 235.0 | 630.0 | 33.0 | 2502.5 | 127.5 | 3.972 |
| 12 | 322.0 | 405.0 | 72.0 | 2473.5 | 437.5 | 6.106 |
| 13 | 660.0 | 136.0 | 92.0 | 1761.7 | 1187.3 | 12.939 |
| 14 | 393.0 | 1188.0 | 159.0 | 2576.3 | 344.9 | 2.169 |
| 15 | 552.0 | 699.0 | 77.0 | 2701.6 | 297.9 | 3.865 |

| | | | | | | |
|---|---|---|---|---|---|---|
| 16 | 572.0 | 118.0 | 506.0 | 366.1 | 1558.7 | 3.082 |
| 17 | 380.0 | 1142.0 | 331.0 | 2357.8 | 679.9 | 2.064 |
| 18 | 533.0 | 672.0 | 415.0 | 1848.0 | 1143.8 | 2.752 |
| 19 | 438.0 | 90.0 | 72.0 | 1560.6 | 1247.4 | 17.334 |
| 20 | 284.0 | 1188.0 | 158.0 | 2487.0 | 330.8 | 2.093 |
| 21 | 375.0 | 699.0 | 52.0 | 2617.7 | 196.4 | 3.745 |
| 22 | 395.0 | 81.0 | 555.0 | 219.4 | 1487.6 | 2.681 |
| 23 | 275.0 | 1142.0 | 329.0 | 2289.0 | 656.8 | 2.004 |
| 24 | 362.0 | 672.0 | 463.0 | 1698.0 | 1167.0 | 2.525 |

*** Program completed as requested! ***

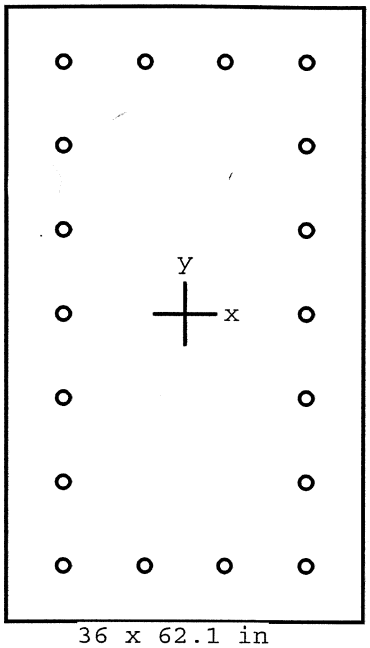


36 x 62.1 in

Code: ACI 318-95

Units: English

Run axis: Biaxial

Run option: Investigation

Slenderness: Not considered

mn type: Structural

Bars: User-defined

Date: 07/20/06

Time: 14:08:02

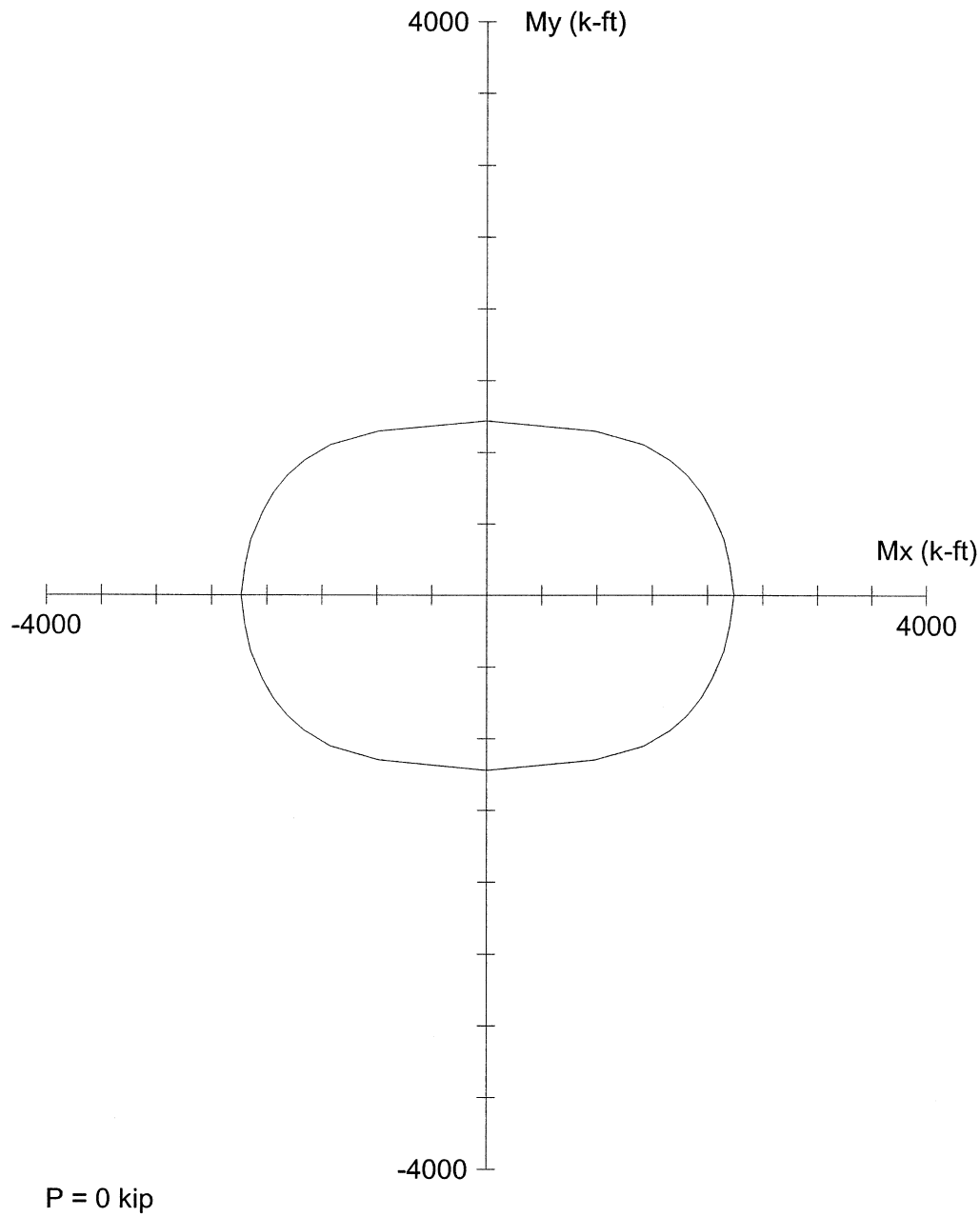


PCACOL V3.00 (PCA 1999) - Licensed to: Licensee name not yet specified.

File: S:\DGN-ST\NORTHC~1\BONNER~1\ANALYSIS\PIERS\HLB142\PCACOL~1\M11PLAN.COL

Project: BONNER BRIDGE - OREGON INLET

| | | | |
|---|---|---|---|
| Column: HLB #142 | | Engineer: JMJ | |
| f'c = 3 ksi | fy = 40 ksi | Ag = 2235.6 in^2 | 18 #11 bars |
| Ec = 3122 ksi | Es = 29000 ksi | As = 28.08 in^2 | Rho = 1.26% |
| fc = 2.55 ksi | e_rup = Infinity | Xo = 0.00 in | Ix = 718449 in^4 |
| u = 0.003 in/in | | Yo = 0.00 in | Iy = 241445 in^4 |
| Beta1 = 0.85 | | Clear spacing = 6.79 in | Clear cover = 5.00 in |
| Confinement: Tied | phi(a) = 0.8, phi(b) = 0.9, phi(c) = 0.7 | | |

JMJ 7/06
WDB 7/06

```
OOOOOOO    OOOOO    OOOOO    OOOOO    OOOOO   OO
OO    OO   OO  OO   OO  OO   OO  OO   OO  OO   OO
OO    OO   OO  OO   OO  OO   OO  OO   OO  OO   OO
OO    OO   OO       OO  OO   OO       OO  OO   OO
OO    OO   OO       OOOOOOO  OO       OO  OO   OO
OOOOOOO    OO  OO   OO  OO   OO  OO   OO  OO   OO
OO         OO  OO   OO  OO   OO  OO   OO  OO   OO
OO          OOOOO   OO  OO    OOOOO    OOOOO   OOOOO  (TM)
```

==========
Computer program for the Strength Design of Reinforced Concrete Sections
==========

Licensee stated above acknowledges that Portland Cement Association (PCA) is not and cannot be responsible for either the accuracy or adequacy of the material supplied as input for processing by the PCACOL(tm) computer program. Furthermore, PCA neither makes any warranty expressed nor implied with respect to the correctness of the output prepared by the PCACOL(tm) program. Although PCA has endeavored to produce PCACOL(tm) error free, the program is not and can't be certified infallible. The final and only responsibility for analysis, design and engineering documents is the licensees. Accordingly, PCA disclaims all responsibility in contract, negligence or other tort for any analysis, design or engineering documents prepared in connection with the use of the PCACOL(tm) program.

50% COVER LOSS
f'c = 4400 PSI

General Information:
==========

File Name: S:\DGN-ST\NORTHC~1\BONNER~1\ANALYSIS\PIERS\HLB142\PCACOL~1\M11ACT.COL
Project: BONNER BRIDGE - OREGON INLET
Column: HLB #142 Engineer: JMJ
Code: ACI 318-95 Units: English

Run Option: Investigation Slenderness: Not considered
Run Axis: Biaxial Column Type: Structural

Material Properties:
==========

f'c = 4.4 ksi fy = 40 ksi
Ec = 3780.96 ksi Es = 29000 ksi
fc = 3.74 ksi Rupture strain = Infinity
Ultimate strain = 0.003 in/in
Beta1 = 0.83

Section:
==========

Rectangular: Width = 31 in Depth = 57.1 in

Gross section area, Ag = 1770.1 in^2
Ix = 480938 in^4 Iy = 141756 in^4
Xo = 0 in Yo = 0 in

Reinforcement:
==========

Rebar Database: User-defined

| Size | Diam (in) | Area (in^2) | Size | Diam (in) | Area (in^2) | Size | Diam (in) | Area (in^2) |
|---|---|---|---|---|---|---|---|---|
| # 1 | 0.00 | 0.00 | # 3 | 0.38 | 0.11 | # 4 | 0.50 | 0.20 |
| # 5 | 0.63 | 0.31 | # 6 | 0.75 | 0.44 | # 7 | 0.88 | 0.60 |
| # 8 | 1.00 | 0.79 | # 9 | 1.13 | 1.00 | # 10 | 1.27 | 1.27 |
| # 11 | 1.41 | 1.56 | # 14 | 1.69 | 2.25 | # 18 | 2.26 | 4.00 |

Confinement: Tied; #1 ties with #9 bars, #1 with larger bars.
phi(a) = 0.8, phi(b) = 0.9, phi(c) = 0.7

Layout: Rectangular
Pattern: Equal Bar Spacing (Cover to longitudinal reinforcement)
Total steel area, As = 28.08 in^2 at 1.59%
18 #11 Cover = 2.5 in

Factored Loads and Moments with Corresponding Capacities: (see user's manual for notation)
==========

| No. | Pu kip | Mux k-ft | Muy k-ft | fMnx k-ft | fMny k-ft | fMn/Mu |
|---|---|---|---|---|---|---|
| 1 | 604.0 | 124.0 | 84.0 | 1747.2 | 1183.7 | 14.091 |
| 2 | 337.0 | 656.0 | 47.0 | 2535.2 | 185.0 | 3.865 |
| 3 | 496.0 | 421.0 | 69.0 | 2584.3 | 421.5 | 6.138 |
| 4 | 516.0 | 106.0 | 78.0 | 1625.3 | 1200.2 | 15.352 |
| 5 | 326.0 | 630.0 | 46.0 | 2522.7 | 188.5 | 4.005 |
| 6 | 479.0 | 405.0 | 67.0 | 2567.0 | 427.2 | 6.339 |
| 7 | 396.0 | 81.0 | 69.0 | 1424.0 | 1213.5 | 17.583 |
| 8 | 242.0 | 656.0 | 37.0 | 2441.2 | 134.5 | 3.721 |
| 9 | 333.0 | 421.0 | 47.0 | 2498.1 | 274.6 | 5.933 |
| 10 | 353.0 | 73.0 | 105.0 | 907.0 | 1305.5 | 12.430 |
| 11 | 235.0 | 630.0 | 33.0 | 2434.3 | 128.5 | 3.864 |
| 12 | 322.0 | 405.0 | 72.0 | 2417.3 | 429.4 | 5.969 |
| 13 | 660.0 | 136.0 | 92.0 | 1759.7 | 1190.8 | 12.940 |
| 14 | 393.0 | 1188.0 | 159.0 | 2531.1 | 335.8 | 2.130 |
| 15 | 552.0 | 699.0 | 77.0 | 2685.9 | 296.1 | 3.842 |

| | | | | | | |
|---|---|---|---|---|---|---|
| 16 | 572.0 | 118.0 | 506.0 | 347.0 | 1496.6 | 2.957 |
| 17 | 380.0 | 1142.0 | 331.0 | 2312.5 | 672.7 | 2.026 |
| 18 | 533.0 | 672.0 | 415.0 | 1823.7 | 1127.8 | 2.715 |
| 19 | 438.0 | 90.0 | 72.0 | 1506.5 | 1206.9 | 16.748 |
| 20 | 284.0 | 1188.0 | 158.0 | 2426.7 | 324.6 | 2.043 |
| 21 | 375.0 | 699.0 | 52.0 | 2571.9 | 187.9 | 3.679 |
| 22 | 395.0 | 81.0 | 555.0 | 206.7 | 1405.3 | 2.533 |
| 23 | 275.0 | 1142.0 | 329.0 | 2234.5 | 646.9 | 1.957 |
| 24 | 362.0 | 672.0 | 463.0 | 1632.3 | 1128.3 | 2.432 |

*** Program completed as requested! ***

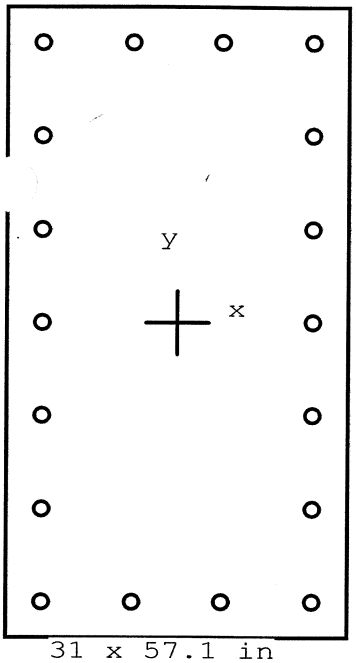


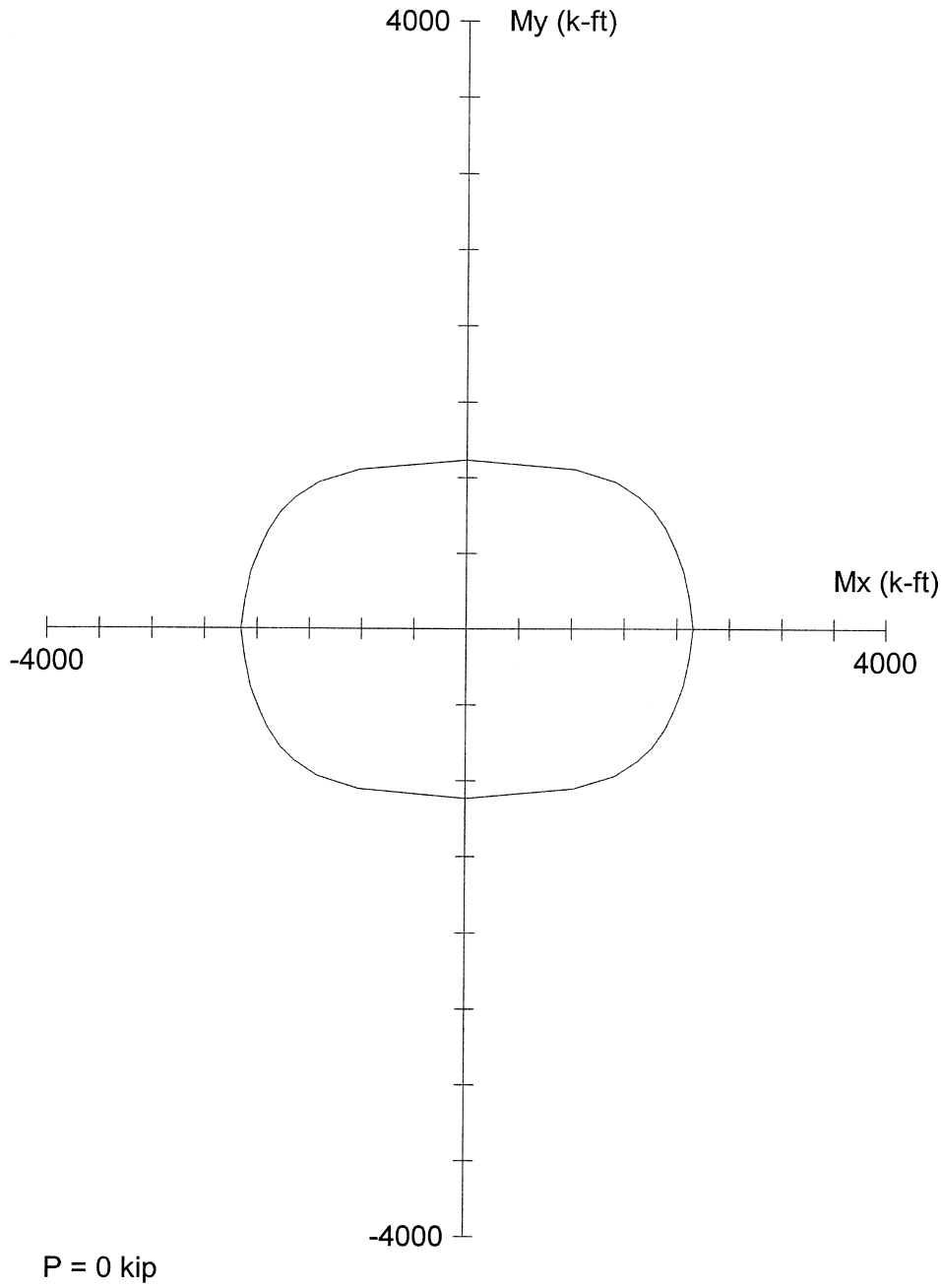


Code: ACI 318-95

Units: English

Run axis: Biaxial

Run option: Investigation

Slenderness: Not considered

Column type: Structural

Bars: User-defined

Date: 07/25/06

Time: 13:48:25

PCACOL V3.00 (PCA 1999) - Licensed to: Licensee name not yet specified.

File: S:\DGN-ST\NORTHC~1\BONNER~1\ANALYSIS\PIERS\HLB142\PCACOL~1\M11ACT.COL

Project: BONNER BRIDGE - OREGON INLET

| | | | |
|---|---|---|---|
| Column: HLB #142 | | Engineer: JMJ | |
| f'c = 4.4 ksi | fy = 40 ksi | Ag = 1770.1 in^2 | 18 #11 bars |
| Ec = 3781 ksi | Es = 29000 ksi | As = 28.08 in^2 | Rho = 1.59% |
| fc = 3.74 ksi | e_rup = Infinity | Xo = 0.00 in | Ix = 480938 in^4 |
| e_u = 0.003 in/in | | Yo = 0.00 in | Iy = 141756 in^4 |
| Beta1 = 0.83 | | Clear spacing = 6.79 in | Clear cover = 2.50 in |
| Confinement: Tied | phi(a) = 0.8, phi(b) = 0.9, phi(c) = 0.7 | | |

H. W. LOCHNER, INC.

PROJECT: BONNER BRIDGE - OREGON INLET NORTH CAROLINA JMJ Jul-06
SUBJECT: HIGH LEVEL BENT ANALYSIS
HLB 142 MEM. 13 JT. 9 WDB 7/06

## COLUMN LOADS

### PMAX

HLB 142 MEMBER 13 JOINT 9

GROUP 1

| | P | MY | MZ |
|---|---|---|---|
| DL | 349.58 | 0.00 | 30.90 |
| LL | 102.65 | 0.00 | 5.74 |
| GROUP 1 | 0.00 | 0.00 | 0.00 |
| SERVICE | 452.23 | 0.00 | 36.64 |
| STRENGTH | 676.86 | 0.00 | 52.61 |

GROUP 2

| | P | MY | MZ |
|---|---|---|---|
| DL | 349.58 | 0.00 | 30.90 |
| LL | 0.00 | 0.00 | 0.00 |
| GROUP 2 | 40.04 | 914.45 | -49.65 |
| SERVICE | 389.62 | 914.45 | -18.75 |
| STRENGTH | 506.51 | 1188.79 | -24.38 |

GROUP 3

| | P | MY | MZ |
|---|---|---|---|
| DL | 349.58 | 0.00 | 30.90 |
| LL | 102.65 | 0.00 | 5.74 |
| GROUP 3 | 17.09 | 538.09 | -20.08 |
| SERVICE | 469.32 | 538.09 | 16.56 |
| STRENGTH | 610.12 | 699.52 | 21.53 |

GROUP 4

| | P | MY | MZ |
|---|---|---|---|
| DL | 349.58 | 0.00 | 30.90 |
| LL | 102.65 | 0.00 | 5.74 |
| GROUP 4 | -38.82 | 0.00 | -701.90 |
| SERVICE | 413.41 | 0.00 | -665.26 |
| STRENGTH | 537.43 | 0.00 | -864.84 |

GROUP 5

| | P | MY | MZ |
|---|---|---|---|
| DL | 349.58 | 0.00 | 30.90 |
| LL | 0.00 | 0.00 | 0.00 |
| GROUP 5 | 1.22 | 914.45 | -751.54 |
| SERVICE | 350.80 | 914.45 | -720.64 |
| STRENGTH | 438.50 | 1143.06 | -900.80 |

GROUP 6

| | P | MY | MZ |
|---|---|---|---|
| DL | 349.58 | 0.00 | 30.90 |
| LL | 102.65 | 0.00 | 5.74 |
| GROUP 6 | -21.73 | 538.09 | -721.98 |
| SERVICE | 430.50 | 538.09 | -685.34 |
| STRENGTH | 538.13 | 672.61 | -856.68 |

## SLENDERNESS EFFECTS IN COMPRESSION MEMBERS (AASHTO 8.16.5)

f'c = 3000 psi PHI = 0.70 $W_C$ = 150 PCF

$E_C = W_C^{1.5} * 33 * f'c^{0.5}$ = 3320561 PSI Width of Rect. Col. = B = 35.928 In.

Depth of Rect. Col = D = 70.86 In.

$r_Y = 0.30*D$ = 21.26 In. $L_Y$ = 0 Ft. $K_Y$ = 2.0

$r_Z = 0.30*B$ = 10.78 In. $L_Z$ = 2.5 Ft. $K_Z$ = 1.2

$I_{YY}$ = $B*D^3/12$ $I_{YY}$ = 1065259 $In^4$

$I_{ZZ}$ = $D*B^3/12$ $I_{ZZ}$ = 273854 $In^5$

$K_Y L_Y/r$ = 0.0 < 22 NO SLENDERNESS EFFECT

$K_Z L_Z/r$ = 3.3 < 22 NO SLENDERNESS EFFECT

H. W. LOCHNER, INC.

PROJECT: BONNER BRIDGE - OREGON INLET NORTH CAROLINA JMJ Jul-06
SUBJECT: HIGH LEVEL BENT ANALYSIS
HLB 142 MEM. 13 JT. 9

WDB 7/06

## SLENDERNESS EFFECTS IN RECTANGULAR COMPRESSION MEMBERS (AASHTO 8.16.5)

### GROUP 1

| | B | D | KL/R | $M_U$ | $M_{DL}$ | $B_D$ | $P_U$ | $P_C$ | $\delta_b$ | $\delta_s$ | $M_C$ | |
|---|---|---|---|---|---|---|---|---|---|---|---|---|
| | In. | In. | | Ft. Kips | Ft. Kips | | Kips | Kips | | | Ft. Kips | |
| MY | 35.928 | 70.86 | 0.0 | 0.00 | 0.00 | 0.000 | 677 | 0 | 1.000 | 1.000 | 154 | * |
| MZ | 35.928 | 70.86 | 3.3 | 52.61 | 40.17 | 0.764 | 677 | 0 | 1.000 | 1.000 | 95 | * |

### GROUP 2

| | B | D | KL/R | $M_U$ | $M_{DL}$ | $B_D$ | $P_U$ | $P_C$ | $\delta_b$ | $\delta_s$ | $M_C$ | |
|---|---|---|---|---|---|---|---|---|---|---|---|---|
| | In. | In. | | Ft. Kips | Ft. Kips | | Kips | Kips | | | Ft. Kips | |
| MY | 35.928 | 70.86 | 0.0 | 1188.79 | 0.00 | 0.000 | 507 | 0 | 1.000 | 1.000 | 1189 | |
| MZ | 35.928 | 70.86 | 3.3 | 24.38 | 40.17 | 1.648 | 507 | 0 | 1.000 | 1.000 | 71 | * |

### GROUP 3

| | B | D | KL/R | $M_U$ | $M_{DL}$ | $B_D$ | $P_U$ | $P_C$ | $\delta_b$ | $\delta_s$ | $M_C$ | |
|---|---|---|---|---|---|---|---|---|---|---|---|---|
| | In. | In. | | Ft. Kips | Ft. Kips | | Kips | Kips | | | Ft. Kips | |
| MY | 35.928 | 70.86 | 0.0 | 699.52 | 0.00 | 0.000 | 610 | 0 | 1.000 | 1.000 | 700 | |
| MZ | 35.928 | 70.86 | 3.3 | 21.53 | 40.17 | 1.866 | 610 | 0 | 1.000 | 1.000 | 85 | * |

### GROUP 4

| | B | D | KL/R | $M_U$ | $M_{DL}$ | $B_D$ | $P_U$ | $P_C$ | $\delta_b$ | $\delta_s$ | $M_C$ | |
|---|---|---|---|---|---|---|---|---|---|---|---|---|
| | In. | In. | | Ft. Kips | Ft. Kips | | Kips | Kips | | | Ft. Kips | |
| MY | 35.928 | 70.86 | 0.0 | 0.00 | 0.00 | 0.000 | 537 | 0 | 1.000 | 1.000 | 122 | * |
| MZ | 35.928 | 70.86 | 3.3 | 864.84 | 40.17 | 0.046 | 537 | 0 | 1.000 | 1.000 | 865 | |

### GROUP 5

| | B | D | KL/R | $M_U$ | $M_{DL}$ | $B_D$ | $P_U$ | $P_C$ | $\delta_b$ | $\delta_s$ | $M_C$ |
|---|---|---|---|---|---|---|---|---|---|---|---|
| | In. | In. | | Ft. Kips | Ft. Kips | | Kips | Kips | | | Ft. Kips |
| MY | 35.928 | 70.86 | 0.0 | 1143.06 | 0.00 | 0.000 | 439 | 0 | 1.000 | 1.000 | 1143 |
| MZ | 35.928 | 70.86 | 3.3 | 900.80 | 40.17 | 0.045 | 439 | 0 | 1.000 | 1.000 | 901 |

### GROUP 6

| | B | D | KL/R | $M_U$ | $M_{DL}$ | $B_D$ | $P_U$ | $P_C$ | $\delta_b$ | $\delta_s$ | $M_C$ |
|---|---|---|---|---|---|---|---|---|---|---|---|
| | In. | In. | | Ft. Kips | Ft. Kips | | Kips | Kips | | | Ft. Kips |
| MY | 35.928 | 70.86 | 0.0 | 672.61 | 0.00 | 0.000 | 538 | 0 | 1.000 | 1.000 | 673 |
| MZ | 35.928 | 70.86 | 3.3 | 856.68 | 40.17 | 0.047 | 538 | 0 | 1.000 | 1.000 | 857 |

* MINIMUM MOMENT CONTROLS

H. W. LOCHNER, INC.

PROJECT: BONNER BRIDGE - OREGON INLET NORTH CAROLINA JMJ Jul-06
SUBJECT: HIGH LEVEL BENT ANALYSIS
HLB 142 MEM. 13 JT. 9 WDB 7/06

## COLUMN LOADS

**PMIN**

HLB 142 MEMBER 13 JOINT 9

GROUP 1

| | P | MY | MZ |
|---|---|---|---|
| DL | 262.19 | 0.00 | 30.90 |
| LL | 52.54 | 0.00 | -6.92 |
| GROUP 1 | 0.00 | 0.00 | 0.00 |
| SERVICE | 314.73 | 0.00 | 23.98 |
| STRENGTH | 454.68 | 0.00 | 25.18 |

GROUP 2

| | P | MY | MZ |
|---|---|---|---|
| DL | 262.19 | 0.00 | 30.90 |
| LL | 0.00 | 0.00 | 0.00 |
| GROUP 2 | 40.04 | 914.45 | -49.65 |
| SERVICE | 302.23 | 914.45 | -18.75 |
| STRENGTH | 392.89 | 1188.79 | -24.38 |

GROUP 3

| | P | MY | MZ |
|---|---|---|---|
| DL | 262.19 | 0.00 | 30.90 |
| LL | 52.54 | 0.00 | -6.92 |
| GROUP 3 | 17.09 | 538.09 | -20.08 |
| SERVICE | 331.82 | 538.09 | 3.90 |
| STRENGTH | 431.36 | 699.52 | 5.07 |

GROUP 4

| | P | MY | MZ |
|---|---|---|---|
| DL | 262.19 | 0.00 | 30.90 |
| LL | 52.54 | 0.00 | -6.92 |
| GROUP 4 | -38.82 | 0.00 | -701.90 |
| SERVICE | 275.91 | 0.00 | -677.92 |
| STRENGTH | 358.68 | 0.00 | -881.30 |

GROUP 5

| | P | MY | MZ |
|---|---|---|---|
| DL | 262.19 | 0.00 | 30.90 |
| LL | 0.00 | 0.00 | 0.00 |
| GROUP 5 | 1.22 | 914.45 | -751.54 |
| SERVICE | 263.41 | 914.45 | -720.64 |
| STRENGTH | 329.26 | 1143.06 | -900.80 |

GROUP 6

| | P | MY | MZ |
|---|---|---|---|
| DL | 262.19 | 0.00 | 30.90 |
| LL | 52.54 | 0.00 | -6.92 |
| GROUP 6 | -21.73 | 538.09 | -721.98 |
| SERVICE | 293.00 | 538.09 | -698.00 |
| STRENGTH | 366.24 | 672.61 | -872.50 |

## SLENDERNESS EFFECTS IN COMPRESSION MEMBERS (AASHTO 8.16.5)

f'c = 3000 psi PHI = 0.70 $W_C$ = 150 PCF

$E_C = W_C^{1.5} * 33 * f'c^{0.5}$ = 3320561 PSI Width of Rect. Col. = B = 35.928 In.

Depth of Rect. Col = D = 70.86 In.

$r_Y = 0.30*D$ = 21.26 In. $L_Y$ = 0 Ft. $K_Y$ = 2.0

$r_Z = 0.30*B$ = 10.78 In. $L_Z$ = 2.5 Ft. $K_Z$ = 1.2

$I_{YY}$ = $B*D^3/12$ $I_{YY}$ = 1065259 $In^4$

$I_{ZZ}$ = $D*B^3/12$ $I_{ZZ}$ = 273854 $In^5$

$K_Y L_Y/r$ = 0.0 < 22 NO SLENDERNESS EFFECT

$K_Z L_Z/r$ = 3.3 < 22 NO SLENDERNESS EFFECT

H. W. LOCHNER, INC.

PROJECT: BONNER BRIDGE - OREGON INLET NORTH CAROLINA JMJ Jul-06
SUBJECT: HIGH LEVEL BENT ANALYSIS
HLB 142 MEM. 13 JT. 9 WDB 7/06

## SLENDERNESS EFFECTS IN RECTANGULAR COMPRESSION MEMBERS (AASHTO 8.16.5)

### GROUP 1

| | B | D | KL/R | $M_U$ | $M_{DL}$ | $B_D$ | $P_U$ | $P_C$ | $\delta_b$ | $\delta_s$ | $M_C$ | |
|---|---|---|---|---|---|---|---|---|---|---|---|---|
| | In. | In. | | Ft. Kips | Ft. Kips | | Kips | Kips | | | Ft. Kips | |
| MY | 35.928 | 70.86 | 0.0 | 0.00 | 0.00 | 0.000 | 455 | 0 | 1.000 | 1.000 | 103 | * |
| MZ | 35.928 | 70.86 | 3.3 | 25.18 | 40.17 | 1.596 | 455 | 0 | 1.000 | 1.000 | 64 | * |

### GROUP 2

| | B | D | KL/R | $M_U$ | $M_{DL}$ | $B_D$ | $P_U$ | $P_C$ | $\delta_b$ | $\delta_s$ | $M_C$ | |
|---|---|---|---|---|---|---|---|---|---|---|---|---|
| | In. | In. | | Ft. Kips | Ft. Kips | | Kips | Kips | | | Ft. Kips | |
| MY | 35.928 | 70.86 | 0.0 | 1188.79 | 0.00 | 0.000 | 393 | 0 | 1.000 | 1.000 | 1189 | |
| MZ | 35.928 | 70.86 | 3.3 | 24.38 | 40.17 | 1.648 | 393 | 0 | 1.000 | 1.000 | 55 | * |

### GROUP 3

| | B | D | KL/R | $M_U$ | $M_{DL}$ | $B_D$ | $P_U$ | $P_C$ | $\delta_b$ | $\delta_s$ | $M_C$ | |
|---|---|---|---|---|---|---|---|---|---|---|---|---|
| | In. | In. | | Ft. Kips | Ft. Kips | | Kips | Kips | | | Ft. Kips | |
| MY | 35.928 | 70.86 | 0.0 | 699.52 | 0.00 | 0.000 | 431 | 0 | 1.000 | 1.000 | 700 | |
| MZ | 35.928 | 70.86 | 3.3 | 5.07 | 40.17 | 7.923 | 431 | 0 | 1.000 | 1.000 | 60 | * |

### GROUP 4

| | B | D | KL/R | $M_U$ | $M_{DL}$ | $B_D$ | $P_U$ | $P_C$ | $\delta_b$ | $\delta_s$ | $M_C$ | |
|---|---|---|---|---|---|---|---|---|---|---|---|---|
| | In. | In. | | Ft. Kips | Ft. Kips | | Kips | Kips | | | Ft. Kips | |
| MY | 35.928 | 70.86 | 0.0 | 0.00 | 0.00 | 0.000 | 359 | 0 | 1.000 | 1.000 | 81 | * |
| MZ | 35.928 | 70.86 | 3.3 | 881.30 | 40.17 | 0.046 | 359 | 0 | 1.000 | 1.000 | 881 | |

### GROUP 5

| | B | D | KL/R | $M_U$ | $M_{DL}$ | $B_D$ | $P_U$ | $P_C$ | $\delta_b$ | $\delta_s$ | $M_C$ |
|---|---|---|---|---|---|---|---|---|---|---|---|
| | In. | In. | | Ft. Kips | Ft. Kips | | Kips | Kips | | | Ft. Kips |
| MY | 35.928 | 70.86 | 0.0 | 1143.06 | 0.00 | 0.000 | 329 | 0 | 1.000 | 1.000 | 1143 |
| MZ | 35.928 | 70.86 | 3.3 | 900.80 | 40.17 | 0.045 | 329 | 0 | 1.000 | 1.000 | 901 |

### GROUP 6

| | B | D | KL/R | $M_U$ | $M_{DL}$ | $B_D$ | $P_U$ | $P_C$ | $\delta_b$ | $\delta_s$ | $M_C$ |
|---|---|---|---|---|---|---|---|---|---|---|---|
| | In. | In. | | Ft. Kips | Ft. Kips | | Kips | Kips | | | Ft. Kips |
| MY | 35.928 | 70.86 | 0.0 | 672.61 | 0.00 | 0.000 | 366 | 0 | 1.000 | 1.000 | 673 |
| MZ | 35.928 | 70.86 | 3.3 | 872.50 | 40.17 | 0.046 | 366 | 0 | 1.000 | 1.000 | 873 |

* MINIMUM MOMENT CONTROLS

H. W. LOCHNER, INC.

PROJECT: BONNER BRIDGE - OREGON INLET NORTH CAROLINA JMJ Jul-06
SUBJECT: HIGH LEVEL BENT ANALYSIS
HLB 142 MEM. 13 JT. FOOTING WDB 7/06

## COLUMN LOADS

### PMAX

HLB 142 MEMBER 13 JOINT FOOTING

GROUP 1

| | P | MY | MZ |
|---|---|---|---|
| DL | 356.21 | 0.00 | 20.43 |
| LL | 102.65 | 0.00 | 10.36 |
| GROUP 1 | 0.00 | 0.00 | 0.00 |
| SERVICE | 458.86 | 0.00 | 30.79 |
| STRENGTH | 685.48 | 0.00 | 49.01 |

GROUP 2

| | P | MY | MZ |
|---|---|---|---|
| DL | 356.21 | 0.00 | 20.43 |
| LL | 0.00 | 0.00 | 0.00 |
| GROUP 2 | 40.07 | 983.49 | -79.79 |
| SERVICE | 396.28 | 983.49 | -59.36 |
| STRENGTH | 515.17 | 1278.54 | -77.17 |

GROUP 3

| | P | MY | MZ |
|---|---|---|---|
| DL | 356.21 | 0.00 | 20.43 |
| LL | 102.65 | 0.00 | 10.36 |
| GROUP 3 | 17.10 | 571.04 | -31.50 |
| SERVICE | 475.96 | 571.04 | -0.71 |
| STRENGTH | 618.75 | 742.35 | -0.92 |

GROUP 4

| | P | MY | MZ |
|---|---|---|---|
| DL | 356.21 | 0.00 | 20.43 |
| LL | 102.65 | 0.00 | 10.36 |
| GROUP 4 | -38.82 | 0.00 | 851.50 |
| SERVICE | 420.04 | 0.00 | 882.29 |
| STRENGTH | 546.05 | 0.00 | 1146.98 |

GROUP 5

| | P | MY | MZ |
|---|---|---|---|
| DL | 356.21 | 0.00 | 20.43 |
| LL | 0.00 | 0.00 | 0.00 |
| GROUP 5 | 1.25 | 983.49 | 771.71 |
| SERVICE | 357.46 | 983.49 | 792.14 |
| STRENGTH | 446.82 | 1229.36 | 990.18 |

GROUP 6

| | P | MY | MZ |
|---|---|---|---|
| DL | 356.21 | 0.00 | 20.43 |
| LL | 102.65 | 0.00 | 10.36 |
| GROUP 6 | -21.73 | 571.04 | 820.00 |
| SERVICE | 437.14 | 571.04 | 850.79 |
| STRENGTH | 546.42 | 713.80 | 1063.49 |

## SLENDERNESS EFFECTS IN COMPRESSION MEMBERS (AASHTO 8.16.5)

f'c = 3000 psi PHI = 0.70 $W_C$ = 150 PCF

$E_C = W_C^{1.5} * 33 * f'c^{0.5}$ = 3320561 PSI Width of Rect. Col. = B = 35.928 In.

Depth of Rect. Col = D = 70.86 In.

$r_Y = 0.30*D$ = 21.26 In. $L_Y$ = 0 Ft. $K_Y$ = 2.0

$r_Z = 0.30*B$ = 10.78 In. $L_Z$ = 2.5 Ft. $K_Z$ = 1.2

$I_{YY}$ = $B*D^3/12$ $I_{YY}$ = 1065259 $In^4$

$I_{ZZ}$ = $D*B^3/12$ $I_{ZZ}$ = 273854 $In^5$

$K_Y L_Y/r$ = 0.0 < 22 NO SLENDERNESS EFFECT

$K_Z L_Z/r$ = 3.3 < 22 NO SLENDERNESS EFFECT

H. W. LOCHNER, INC.

PROJECT: BONNER BRIDGE - OREGON INLET NORTH CAROLINA JMJ Jul-06
SUBJECT: HIGH LEVEL BENT ANALYSIS
HLB 142 MEM. 13 JT. FOOTING WLB 7/06

## SLENDERNESS EFFECTS IN RECTANGULAR COMPRESSION MEMBERS (AASHTO 8.16.5)

### GROUP 1

| | B | D | KL/R | $M_U$ | $M_{DL}$ | $B_D$ | $P_U$ | $P_C$ | $\delta_b$ | $\delta_s$ | $M_C$ | |
|---|---|---|---|---|---|---|---|---|---|---|---|---|
| | In. | In. | | Ft. Kips | Ft. Kips | | Kips | Kips | | | Ft. Kips | |
| MY | 35.928 | 70.86 | 0.0 | 0.00 | 0.00 | 0.000 | 685 | 0 | 1.000 | 1.000 | 156 | * |
| MZ | 35.928 | 70.86 | 3.3 | 49.01 | 26.56 | 0.542 | 685 | 0 | 1.000 | 1.000 | 96 | * |

### GROUP 2

| | B | D | KL/R | $M_U$ | $M_{DL}$ | $B_D$ | $P_U$ | $P_C$ | $\delta_b$ | $\delta_s$ | $M_C$ |
|---|---|---|---|---|---|---|---|---|---|---|---|
| | In. | In. | | Ft. Kips | Ft. Kips | | Kips | Kips | | | Ft. Kips |
| MY | 35.928 | 70.86 | 0.0 | 1278.54 | 0.00 | 0.000 | 515 | 0 | 1.000 | 1.000 | 1279 |
| MZ | 35.928 | 70.86 | 3.3 | 77.17 | 26.56 | 0.344 | 515 | 0 | 1.000 | 1.000 | 77 |

### GROUP 3

| | B | D | KL/R | $M_U$ | $M_{DL}$ | $B_D$ | $P_U$ | $P_C$ | $\delta_b$ | $\delta_s$ | $M_C$ | |
|---|---|---|---|---|---|---|---|---|---|---|---|---|
| | In. | In. | | Ft. Kips | Ft. Kips | | Kips | Kips | | | Ft. Kips | |
| MY | 35.928 | 70.86 | 0.0 | 742.35 | 0.00 | 0.000 | 619 | 0 | 1.000 | 1.000 | 742 | |
| MZ | 35.928 | 70.86 | 3.3 | 0.92 | 26.56 | 28.775 | 619 | 0 | 1.000 | 1.000 | 87 | * |

### GROUP 4

| | B | D | KL/R | $M_U$ | $M_{DL}$ | $B_D$ | $P_U$ | $P_C$ | $\delta_b$ | $\delta_s$ | $M_C$ | |
|---|---|---|---|---|---|---|---|---|---|---|---|---|
| | In. | In. | | Ft. Kips | Ft. Kips | | Kips | Kips | | | Ft. Kips | |
| MY | 35.928 | 70.86 | 0.0 | 0.00 | 0.00 | 0.000 | 546 | 0 | 1.000 | 1.000 | 124 | * |
| MZ | 35.928 | 70.86 | 3.3 | 1146.98 | 26.56 | 0.023 | 546 | 0 | 1.000 | 1.000 | 1147 | |

### GROUP 5

| | B | D | KL/R | $M_U$ | $M_{DL}$ | $B_D$ | $P_U$ | $P_C$ | $\delta_b$ | $\delta_s$ | $M_C$ |
|---|---|---|---|---|---|---|---|---|---|---|---|
| | In. | In. | | Ft. Kips | Ft. Kips | | Kips | Kips | | | Ft. Kips |
| MY | 35.928 | 70.86 | 0.0 | 1229.36 | 0.00 | 0.000 | 447 | 0 | 1.000 | 1.000 | 1229 |
| MZ | 35.928 | 70.86 | 3.3 | 990.18 | 26.56 | 0.027 | 447 | 0 | 1.000 | 1.000 | 990 |

### GROUP 6

| | B | D | KL/R | $M_U$ | $M_{DL}$ | $B_D$ | $P_U$ | $P_C$ | $\delta_b$ | $\delta_s$ | $M_C$ |
|---|---|---|---|---|---|---|---|---|---|---|---|
| | In. | In. | | Ft. Kips | Ft. Kips | | Kips | Kips | | | Ft. Kips |
| MY | 35.928 | 70.86 | 0.0 | 713.80 | 0.00 | 0.000 | 546 | 0 | 1.000 | 1.000 | 714 |
| MZ | 35.928 | 70.86 | 3.3 | 1063.49 | 26.56 | 0.025 | 546 | 0 | 1.000 | 1.000 | 1063 |

* MINIMUM MOMENT CONTROLS

H. W. LOCHNER, INC.

PROJECT: BONNER BRIDGE - OREGON INLET NORTH CAROLINA JMJ Jul-06
SUBJECT: HIGH LEVEL BENT ANALYSIS
HLB 142 MEM. 13 JT. FOOTING WDB 7/06

## COLUMN LOADS

**PMIN**

HLB 142 MEMBER 13 JOINT FOOTING

GROUP 1

| | P | MY | MZ |
|---|---|---|---|
| DL | 267.16 | 0.00 | 20.43 |
| LL | 52.54 | 0.00 | -10.23 |
| GROUP 1 | 0.00 | 0.00 | 0.00 |
| SERVICE | 319.70 | 0.00 | 10.20 |
| STRENGTH | 461.14 | 0.00 | 4.39 |

GROUP 2

| | P | MY | MZ |
|---|---|---|---|
| DL | 267.16 | 0.00 | 20.43 |
| LL | 0.00 | 0.00 | 0.00 |
| GROUP 2 | 40.07 | 983.49 | -79.79 |
| SERVICE | 307.23 | 983.49 | -59.36 |
| STRENGTH | 399.40 | 1278.54 | -77.17 |

GROUP 3

| | P | MY | MZ |
|---|---|---|---|
| DL | 267.16 | 0.00 | 20.43 |
| LL | 52.54 | 0.00 | -10.23 |
| GROUP 3 | 17.10 | 571.04 | -31.50 |
| SERVICE | 336.80 | 571.04 | -21.30 |
| STRENGTH | 437.84 | 742.35 | -27.69 |

GROUP 4

| | P | MY | MZ |
|---|---|---|---|
| DL | 267.16 | 0.00 | 20.43 |
| LL | 52.54 | 0.00 | -10.23 |
| GROUP 4 | -38.82 | 0.00 | 851.50 |
| SERVICE | 280.88 | 0.00 | 861.70 |
| STRENGTH | 365.14 | 0.00 | 1120.21 |

GROUP 5

| | P | MY | MZ |
|---|---|---|---|
| DL | 267.16 | 0.00 | 20.43 |
| LL | 0.00 | 0.00 | 0.00 |
| GROUP 5 | 1.25 | 983.49 | 771.71 |
| SERVICE | 268.40 | 983.49 | 792.14 |
| STRENGTH | 335.50 | 1229.36 | 990.18 |

GROUP 6

| | P | MY | MZ |
|---|---|---|---|
| DL | 267.16 | 0.00 | 20.43 |
| LL | 52.54 | 0.00 | -10.23 |
| GROUP 6 | -21.73 | 571.04 | 820.00 |
| SERVICE | 297.97 | 571.04 | 830.20 |
| STRENGTH | 372.47 | 713.80 | 1037.75 |

## SLENDERNESS EFFECTS IN COMPRESSION MEMBERS (AASHTO 8.16.5)

f'c = 3000 psi PHI = 0.70 $W_C$ = 150 PCF

$E_C = W_C^{1.5} * 33 * f'c^{0.5}$ = 3320561 PSI Width of Rect. Col. = B = 35.928 In.

Depth of Rect. Col = D = 70.86 In.

$r_Y = 0.30*D$ = 21.26 In. $L_Y$ = 0 Ft. $K_Y$ = 2.0

$r_Z = 0.30*B$ = 10.78 In. $L_Z$ = 2.5 Ft. $K_Z$ = 1.2

$I_{YY}$ = $B*D^3/12$ $I_{YY}$ = 1065259 $In^4$

$I_{ZZ}$ = $D*B^3/12$ $I_{ZZ}$ = 273854 $In^5$

$K_Y L_Y/r$ = 0.0 < 22 NO SLENDERNESS EFFECT

$K_Z L_Z/r$ = 3.3 < 22 NO SLENDERNESS EFFECT

H. W. LOCHNER, INC.

PROJECT: BONNER BRIDGE - OREGON INLET NORTH CAROLINA JMJ Jul-06
SUBJECT: HIGH LEVEL BENT ANALYSIS
HLB 142 MEM. 13 JT. FOOTING WDB 7/06

**SLENDERNESS EFFECTS IN RECTANGULAR COMPRESSION MEMBERS (AASHTO 8.16.5)**

**GROUP 1**

| | B | D | KL/R | $M_U$ | $M_{DL}$ | $B_D$ | $P_U$ | $P_C$ | $\delta_b$ | $\delta_s$ | $M_C$ | |
|---|---|---|---|---|---|---|---|---|---|---|---|---|
| | In. | In. | | Ft. Kips | Ft. Kips | | Kips | Kips | | | Ft. Kips | |
| MY | 35.928 | 70.86 | 0.0 | 0.00 | 0.00 | 0.000 | 461 | 0 | 1.000 | 1.000 | 105 | * |
| MZ | 35.928 | 70.86 | 3.3 | 4.39 | 26.56 | 6.044 | 461 | 0 | 1.000 | 1.000 | 64 | * |

**GROUP 2**

| | B | D | KL/R | $M_U$ | $M_{DL}$ | $B_D$ | $P_U$ | $P_C$ | $\delta_b$ | $\delta_s$ | $M_C$ |
|---|---|---|---|---|---|---|---|---|---|---|---|
| | In. | In. | | Ft. Kips | Ft. Kips | | Kips | Kips | | | Ft. Kips |
| MY | 35.928 | 70.86 | 0.0 | 1278.54 | 0.00 | 0.000 | 399 | 0 | 1.000 | 1.000 | 1279 |
| MZ | 35.928 | 70.86 | 3.3 | 77.17 | 26.56 | 0.344 | 399 | 0 | 1.000 | 1.000 | 77 |

**GROUP 3**

| | B | D | KL/R | $M_U$ | $M_{DL}$ | $B_D$ | $P_U$ | $P_C$ | $\delta_b$ | $\delta_s$ | $M_C$ | |
|---|---|---|---|---|---|---|---|---|---|---|---|---|
| | In. | In. | | Ft. Kips | Ft. Kips | | Kips | Kips | | | Ft. Kips | |
| MY | 35.928 | 70.86 | 0.0 | 742.35 | 0.00 | 0.000 | 438 | 0 | 1.000 | 1.000 | 742 | |
| MZ | 35.928 | 70.86 | 3.3 | 27.69 | 26.56 | 0.959 | 438 | 0 | 1.000 | 1.000 | 61 | * |

**GROUP 4**

| | B | D | KL/R | $M_U$ | $M_{DL}$ | $B_D$ | $P_U$ | $P_C$ | $\delta_b$ | $\delta_s$ | $M_C$ | |
|---|---|---|---|---|---|---|---|---|---|---|---|---|
| | In. | In. | | Ft. Kips | Ft. Kips | | Kips | Kips | | | Ft. Kips | |
| MY | 35.928 | 70.86 | 0.0 | 0.00 | 0.00 | 0.000 | 365 | 0 | 1.000 | 1.000 | 83 | * |
| MZ | 35.928 | 70.86 | 3.3 | 1120.21 | 26.56 | 0.024 | 365 | 0 | 1.000 | 1.000 | 1120 | |

**GROUP 5**

| | B | D | KL/R | $M_U$ | $M_{DL}$ | $B_D$ | $P_U$ | $P_C$ | $\delta_b$ | $\delta_s$ | $M_C$ |
|---|---|---|---|---|---|---|---|---|---|---|---|
| | In. | In. | | Ft. Kips | Ft. Kips | | Kips | Kips | | | Ft. Kips |
| MY | 35.928 | 70.86 | 0.0 | 1229.36 | 0.00 | 0.000 | 336 | 0 | 1.000 | 1.000 | 1229 |
| MZ | 35.928 | 70.86 | 3.3 | 990.18 | 26.56 | 0.027 | 336 | 0 | 1.000 | 1.000 | 990 |

**GROUP 6**

| | B | D | KL/R | $M_U$ | $M_{DL}$ | $B_D$ | $P_U$ | $P_C$ | $\delta_b$ | $\delta_s$ | $M_C$ |
|---|---|---|---|---|---|---|---|---|---|---|---|
| | In. | In. | | Ft. Kips | Ft. Kips | | Kips | Kips | | | Ft. Kips |
| MY | 35.928 | 70.86 | 0.0 | 713.80 | 0.00 | 0.000 | 372 | 0 | 1.000 | 1.000 | 714 |
| MZ | 35.928 | 70.86 | 3.3 | 1037.75 | 26.56 | 0.026 | 372 | 0 | 1.000 | 1.000 | 1038 |

* MINIMUM MOMENT CONTROLS

JMS 7/06

WDB 7/06

```
OOOOOOO    OOOOO    OOOOO    OOOOO    OOOOO   OO
OO    OO   OO  OO   OO  OO   OO  OO   OO  OO   OO
OO    OO   OO  OO   OO  OO   OO  OO   OO  OO   OO
OO    OO   OO       OO  OO   OO       OO  OO   OO
OO    OO   OO       OOOOOOO  OO       OO  OO   OO
OOOOOOO    OO  OO   OO  OO   OO  OO   OO  OO   OO
OO         OO  OO   OO  OO   OO  OO   OO  OO   OO
OO          OOOOO   OO  OO    OOOOO    OOOOO   OOOOO  (TM)
```

==========
Computer program for the Strength Design of Reinforced Concrete Sections
==========

Licensee stated above acknowledges that Portland Cement Association (PCA) is not and cannot be responsible for either the accuracy or adequacy of the material supplied as input for processing by the PCACOL(tm) computer program. Furthermore, PCA neither makes any warranty expressed nor implied with respect to the correctness of the output prepared by the PCACOL(tm) program. Although PCA has endeavored to produce PCACOL(tm) error free, the program is not and can't be certified infallible. The final and only responsibility for analysis, design and engineering documents is the licensees. Accordingly, PCA disclaims all responsibility in contract, negligence or other tort for any analysis, design or engineering documents prepared in connection with the use of the PCACOL(tm) program.

BASED ON PLANS.

General Information:
==========

File Name: S:\DGN-ST\NORTHC~1\BONNER~1\ANALYSIS\PIERS\HLB142\PCACOL~1\M13PLAN.COL
Project: BONNER BRIDGE - OREGON INLET
Column: HLB #142 Engineer: JMJ
Code: ACI 318-95 Units: English

Run Option: Investigation Slenderness: Not considered
Run Axis: Biaxial Column Type: Structural

Material Properties:
==========

f'c = 3 ksi fy = 40 ksi
Ec = 3122.02 ksi Es = 29000 ksi
fc = 2.55 ksi Rupture strain = Infinity
Ultimate strain = 0.003 in/in
Beta1 = 0.85

Section:
==========

Rectangular: Width = 36 in Depth = 70.9 in

Gross section area, Ag = 2552.4 in^2
Ix = 1.0692e+006 in^4 Iy = 275659 in^4
Xo = 0 in Yo = 0 in

Reinforcement:
==========

Rebar Database: User-defined

| Size | Diam (in) | Area (in^2) | Size | Diam (in) | Area (in^2) | Size | Diam (in) | Area (in^2) |
|---|---|---|---|---|---|---|---|---|
| # 1 | 0.00 | 0.00 | # 3 | 0.38 | 0.11 | # 4 | 0.50 | 0.20 |
| # 5 | 0.63 | 0.31 | # 6 | 0.75 | 0.44 | # 7 | 0.88 | 0.60 |
| # 8 | 1.00 | 0.79 | # 9 | 1.13 | 1.00 | # 10 | 1.27 | 1.27 |
| # 11 | 1.41 | 1.56 | # 14 | 1.69 | 2.25 | # 18 | 2.26 | 4.00 |

Confinement: Tied; #1 ties with #9 bars, #1 with larger bars.
phi(a) = 0.8, phi(b) = 0.9, phi(c) = 0.7

Layout: Rectangular
Pattern: Equal Bar Spacing (Cover to longitudinal reinforcement)
Total steel area, As = 28.08 in^2 at 1.10%
18 #11 Cover = 5 in

Factored Loads and Moments with Corresponding Capacities: (see user's manual for notation)
==========

| No. | Pu kip | Mux k-ft | Muy k-ft | fMnx k-ft | fMny k-ft | fMn/Mu |
|---|---|---|---|---|---|---|
| 1 | 677.0 | 154.0 | 95.0 | 2124.8 | 1311.5 | 13.800 |
| 2 | 507.0 | 1189.0 | 71.0 | 3271.9 | 190.3 | 2.752 |
| 3 | 610.0 | 700.0 | 85.0 | 3270.9 | 399.0 | 4.673 |
| 4 | 537.0 | 122.0 | 865.0 | 231.3 | 1623.1 | 1.877 |
| 5 | 439.0 | 1143.0 | 901.0 | 1727.3 | 1357.2 | 1.509 |
| 6 | 538.0 | 673.0 | 857.0 | 1197.6 | 1523.0 | 1.778 |
| 7 | 455.0 | 103.0 | 64.0 | 2040.5 | 1272.6 | 19.832 |
| 8 | 393.0 | 1189.0 | 55.0 | 3161.0 | 151.4 | 2.659 |
| 9 | 431.0 | 700.0 | 60.0 | 3159.8 | 275.9 | 4.515 |
| 10 | 359.0 | 81.0 | 881.0 | 139.8 | 1511.8 | 1.716 |
| 11 | 329.0 | 1143.0 | 901.0 | 1666.1 | 1316.1 | 1.459 |
| 12 | 366.0 | 673.0 | 873.0 | 1113.6 | 1439.8 | 1.651 |
| 13 | 685.0 | 156.0 | 96.0 | 2127.1 | 1311.7 | 13.643 |
| 14 | 515.0 | 1279.0 | 77.0 | 3275.1 | 202.2 | 2.561 |
| 15 | 619.0 | 742.0 | 87.0 | 3283.2 | 389.0 | 4.425 |

| | | | | | | |
|---|---|---|---|---|---|---|
| 16 | 546.0 | 124.0 | 1147.0 | 174.4 | 1629.4 | 1.420 |
| 17 | 447.0 | 1229.0 | 990.0 | 1699.2 | 1368.7 | 1.383 |
| 18 | 546.0 | 714.0 | 1063.0 | 1039.6 | 1551.4 | 1.458 |
| 19 | 461.0 | 105.0 | 64.0 | 2078.9 | 1263.1 | 19.782 |
| 20 | 399.0 | 1279.0 | 77.0 | 3157.2 | 194.5 | 2.469 |
| 21 | 438.0 | 742.0 | 61.0 | 3175.5 | 256.3 | 4.279 |
| 22 | 365.0 | 83.0 | 1120.0 | 113.1 | 1516.2 | 1.354 |
| 23 | 336.0 | 1229.0 | 990.0 | 1642.0 | 1326.4 | 1.338 |
| 24 | 372.0 | 714.0 | 1038.0 | 1003.7 | 1459.1 | 1.406 |

*** Program completed as requested! ***

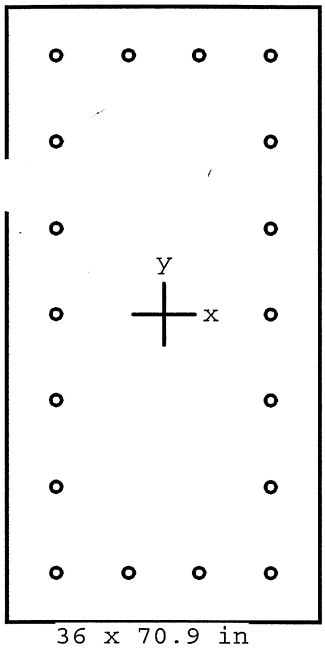


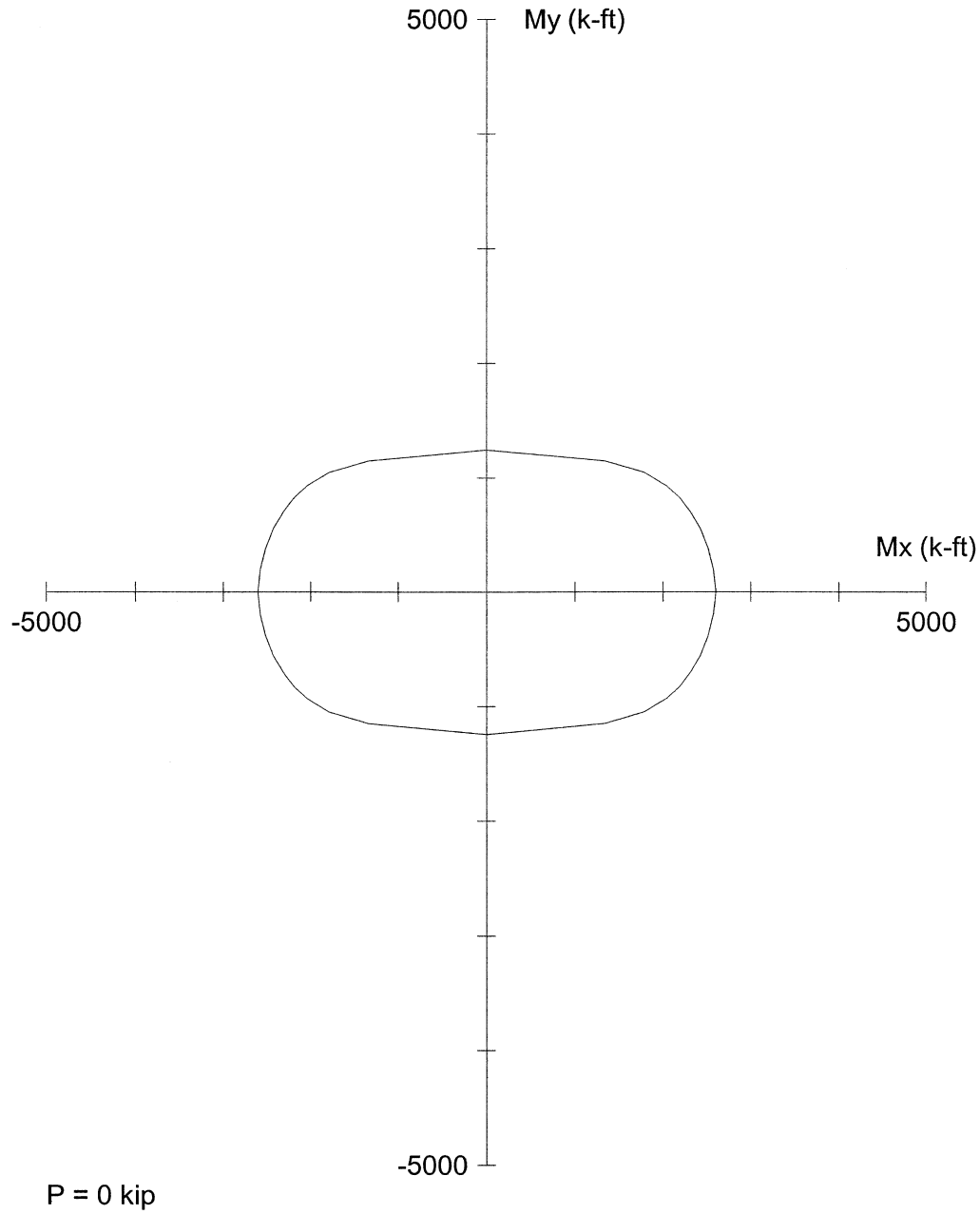


Code: ACI 318-95

Units: English

Run axis: Biaxial

Run option: Investigation

Slenderness: Not considered

mn type: Structural

Bars: User-defined

Date: 07/21/06

Time: 14:31:19

PCACOL V3.00 (PCA 1999) - Licensed to: Licensee name not yet specified.

File: S:\DGN-ST\NORTHC~1\BONNER~1\ANALYSIS\PIERS\HLB142\PCACOL~1\M13PLAN.COL

Project: BONNER BRIDGE - OREGON INLET

| | | | |
|---|---|---|---|
| Column: HLB #142 | | Engineer: JMJ | |
| f'c = 3 ksi | fy = 40 ksi | Ag = 2552.4 in^2 | 18 #11 bars |
| Ec = 3122 ksi | Es = 29000 ksi | As = 28.08 in^2 | Rho = 1.10% |
| fc = 2.55 ksi | e_rup = Infinity | Xo = 0.00 in | Ix = 1.0692e+006 in^4 |
| ɹ = 0.003 in/in | | Yo = 0.00 in | Iy = 275659 in^4 |
| Beta1 = 0.85 | | Clear spacing = 6.79 in | Clear cover = 5.00 in |
| Confinement: Tied | phi(a) = 0.8, phi(b) = 0.9, phi(c) = 0.7 | | |

JMJ 7/06
WOB 7/06

```
OOOOOOO    OOOOO    OOOOO    OOOOO    OOOOO   OO
OO    OO   OO  OO   OO  OO   OO  OO   OO  OO   OO
OO    OO   OO  OO   OO  OO   OO  OO   OO  OO   OO
OO    OO   OO       OO  OO   OO       OO  OO   OO
OO    OO   OO       OOOOOOO  OO       OO  OO   OO
OOOOOOO    OO  OO   OO  OO   OO  OO   OO  OO   OO
OO         OO  OO   OO  OO   OO  OO   OO  OO   OO
OO          OOOOO   OO  OO    OOOOO    OOOOO   OOOOO  (TM)
```

==========
Computer program for the Strength Design of Reinforced Concrete Sections
==========

Licensee stated above acknowledges that Portland Cement Association (PCA) is not and cannot be responsible for either the accuracy or adequacy of the material supplied as input for processing by the PCACOL(tm) computer program. Furthermore, PCA neither makes any warranty expressed nor implied with respect to the correctness of the output prepared by the PCACOL(tm) program. Although PCA has endeavored to produce PCACOL(tm) error free, the program is not and can't be certified infallible. The final and only responsibility for analysis, design and engineering documents is the licensees. Accordingly, PCA disclaims all responsibility in contract, negligence or other tort for any analysis, design or engineering documents prepared in connection with the use of the PCACOL(tm) program.

50% COVER LOSS
$f_c$ = 4400 PSI

General Information:
==========

File Name: S:\DGN-ST\NORTHC~1\BONNER~1\ANALYSIS\PIERS\HLB142\PCACOL~1\M13ACT.COL
Project: BONNER BRIDGE - OREGON INLET
Column: HLB #142 Engineer: JMJ
Code: ACI 318-95 Units: English

Run Option: Investigation Slenderness: Not considered
Run Axis: Biaxial Column Type: Structural

Material Properties:
==========

f'c = 4.4 ksi fy = 40 ksi
Ec = 3780.96 ksi Es = 29000 ksi
fc = 3.74 ksi Rupture strain = Infinity
Ultimate strain = 0.003 in/in
Beta1 = 0.83

Section:
==========

Rectangular: Width = 31 in Depth = 65.9 in

Gross section area, Ag = 2042.9 in^2
Ix = 739327 in^4 Iy = 163602 in^4
Xo = 0 in Yo = 0 in

Reinforcement:
==========

Rebar Database: User-defined

| Size | Diam (in) | Area (in^2) | Size | Diam (in) | Area (in^2) | Size | Diam (in) | Area (in^2) |
|---|---|---|---|---|---|---|---|---|
| # 1 | 0.00 | 0.00 | # 3 | 0.38 | 0.11 | # 4 | 0.50 | 0.20 |
| # 5 | 0.63 | 0.31 | # 6 | 0.75 | 0.44 | # 7 | 0.88 | 0.60 |
| # 8 | 1.00 | 0.79 | # 9 | 1.13 | 1.00 | # 10 | 1.27 | 1.27 |
| # 11 | 1.41 | 1.56 | # 14 | 1.69 | 2.25 | # 18 | 2.26 | 4.00 |

Confinement: Tied; #1 ties with #9 bars, #1 with larger bars.
phi(a) = 0.8, phi(b) = 0.9, phi(c) = 0.7

Layout: Rectangular
Pattern: Equal Bar Spacing (Cover to longitudinal reinforcement)
Total steel area, As = 28.08 in^2 at 1.37%
18 #11 Cover = 2.5 in

Factored Loads and Moments with Corresponding Capacities: (see user's manual for notation)
==========

| No. | Pu kip | Mux k-ft | Muy k-ft | fMnx k-ft | fMny k-ft | fMn/Mu |
|---|---|---|---|---|---|---|
| 1 | 677.0 | 154.0 | 95.0 | 2108.9 | 1297.9 | 13.685 |
| 2 | 507.0 | 1189.0 | 71.0 | 3244.4 | 197.1 | 2.729 |
| 3 | 610.0 | 700.0 | 85.0 | 3271.8 | 394.5 | 4.674 |
| 4 | 537.0 | 122.0 | 865.0 | 217.4 | 1537.0 | 1.777 |
| 5 | 439.0 | 1143.0 | 901.0 | 1654.7 | 1307.5 | 1.449 |
| 6 | 538.0 | 673.0 | 857.0 | 1142.3 | 1452.4 | 1.696 |
| 7 | 455.0 | 103.0 | 64.0 | 1977.2 | 1230.3 | 19.204 |
| 8 | 393.0 | 1189.0 | 55.0 | 3113.9 | 141.9 | 2.619 |
| 9 | 431.0 | 700.0 | 60.0 | 3124.5 | 269.8 | 4.464 |
| 10 | 359.0 | 81.0 | 881.0 | 129.9 | 1411.9 | 1.603 |
| 11 | 329.0 | 1143.0 | 901.0 | 1589.3 | 1251.0 | 1.390 |
| 12 | 366.0 | 673.0 | 873.0 | 1045.2 | 1359.1 | 1.555 |
| 13 | 685.0 | 156.0 | 96.0 | 2113.1 | 1299.7 | 13.544 |
| 14 | 515.0 | 1279.0 | 77.0 | 3253.2 | 197.9 | 2.544 |
| 15 | 619.0 | 742.0 | 87.0 | 3285.8 | 386.0 | 4.428 |

| | | | | | | |
|---|---|---|---|---|---|---|
| 16 | 546.0 | 124.0 | 1147.0 | 166.9 | 1544.0 | 1.346 |
| 17 | 447.0 | 1229.0 | 990.0 | 1630.2 | 1317.1 | 1.328 |
| 18 | 546.0 | 714.0 | 1063.0 | 989.0 | 1477.7 | 1.389 |
| 19 | 461.0 | 105.0 | 64.0 | 2005.9 | 1225.3 | 19.115 |
| 20 | 399.0 | 1279.0 | 77.0 | 3111.6 | 185.3 | 2.433 |
| 21 | 438.0 | 742.0 | 61.0 | 3136.3 | 262.8 | 4.227 |
| 22 | 365.0 | 83.0 | 1120.0 | 104.3 | 1416.5 | 1.265 |
| 23 | 336.0 | 1229.0 | 990.0 | 1568.4 | 1259.7 | 1.275 |
| 24 | 372.0 | 714.0 | 1038.0 | 948.7 | 1375.9 | 1.327 |

*** Program completed as requested! ***

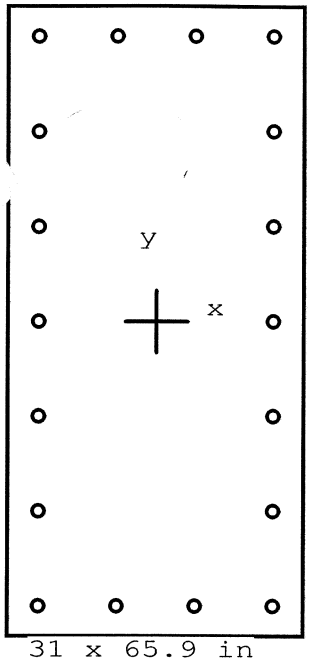


Code: ACI 318-95

Units: English

Run axis: Biaxial

Run option: Investigation

Slenderness: Not considered

Column type: Structural

Bars: User-defined

Date: 07/25/06

Time: 13:48:37

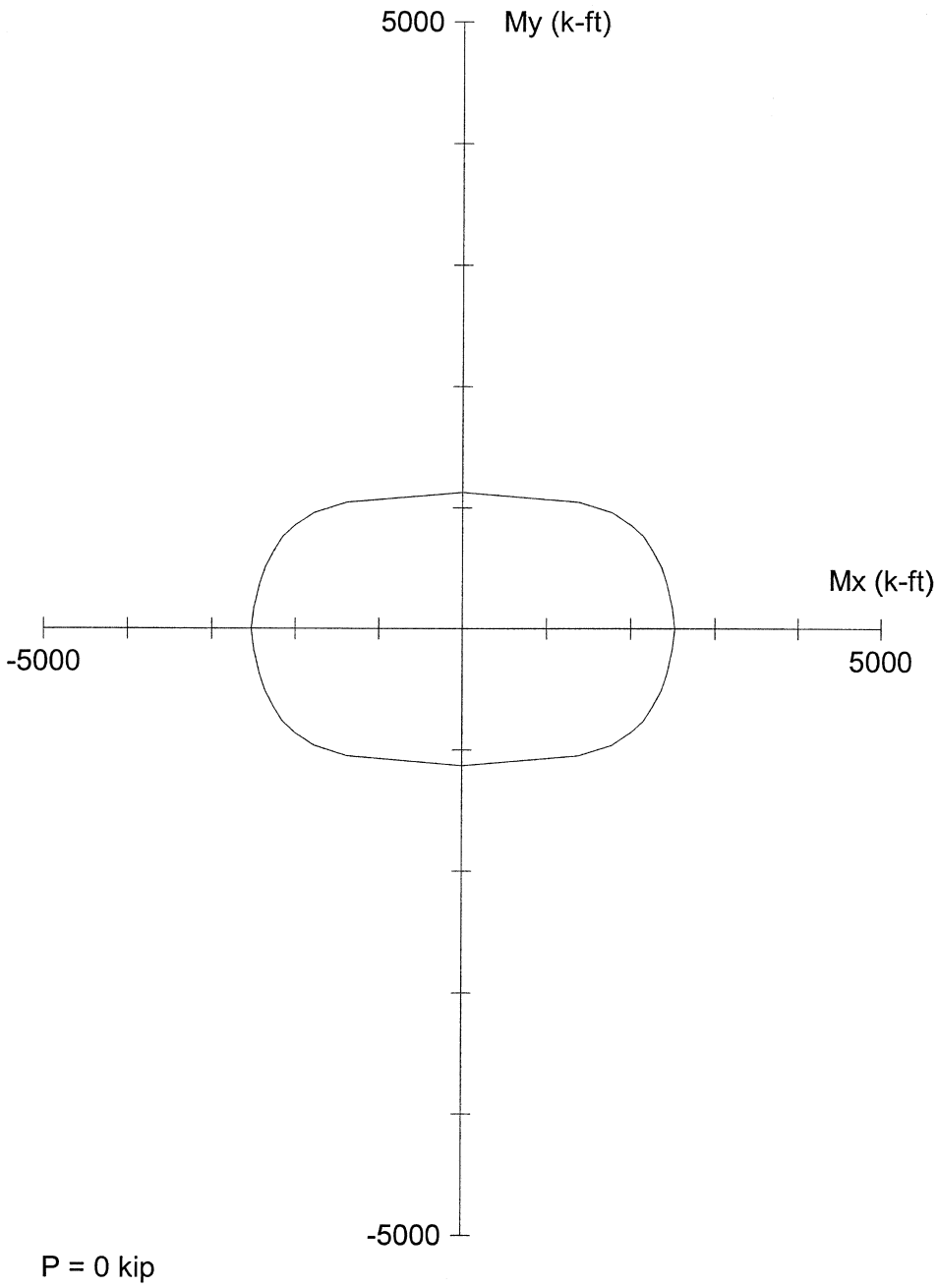


PCACOL V3.00 (PCA 1999) - Licensed to: Licensee name not yet specified.

File: S:\DGN-ST\NORTHC~1\BONNER~1\ANALYSIS\PIERS\HLB142\PCACOL~1\M13ACT.COL

Project: BONNER BRIDGE - OREGON INLET

| | | | |
|---|---|---|---|
| Column: HLB #142 | | Engineer: JMJ | |
| f'c = 4.4 ksi | fy = 40 ksi | Ag = 2042.9 in^2 | 18 #11 bars |
| Ec = 3781 ksi | Es = 29000 ksi | As = 28.08 in^2 | Rho = 1.37% |
| fc = 3.74 ksi | e_rup = Infinity | Xo = 0.00 in | Ix = 739327 in^4 |
| e_u = 0.003 in/in | | Yo = 0.00 in | Iy = 163602 in^4 |
| Beta1 = 0.83 | | Clear spacing = 6.79 in | Clear cover = 2.50 in |
| Confinement: Tied | phi(a) = 0.8, phi(b) = 0.9, phi(c) = 0.7 | | |

H. W. LOCHNER, INC.

PROJECT: BONNER BRIDGE - OREGON INLET NORTH CAROLINA JMJ Jul-06
SUBJECT: HIGH LEVEL BENT ANALYSIS WPB 7/06
HLB 142 MEM. 14 JT. 10

## COLUMN LOADS

### PMAX

HLB 142 MEMBER 14 JOINT 10

| | GROUP 1 | | | | GROUP 2 | | |
|---|---|---|---|---|---|---|---|
| | P | MY | MZ | | P | MY | MZ |
| DL | 349.51 | 0.00 | 29.88 | DL | 349.51 | 0.00 | 29.88 |
| LL | 102.63 | 0.00 | 5.48 | LL | 0.00 | 0.00 | 0.00 |
| GROUP 1 | 0.00 | 0.00 | 0.00 | GROUP 2 | -40.07 | -914.59 | 49.70 |
| SERVICE | 452.14 | 0.00 | 35.36 | SERVICE | 309.44 | -914.59 | 79.58 |
| STRENGTH | 676.73 | 0.00 | 50.72 | STRENGTH | 402.27 | -1188.97 | 103.45 |

| | GROUP 3 | | | | GROUP 4 | | |
|---|---|---|---|---|---|---|---|
| | P | MY | MZ | | P | MY | MZ |
| DL | 349.51 | 0.00 | 29.88 | DL | 349.51 | 0.00 | 29.88 |
| LL | 102.63 | 0.00 | 5.48 | LL | 102.63 | 0.00 | 5.48 |
| GROUP 3 | -17.10 | -538.16 | 20.11 | GROUP 4 | -40.19 | 0.00 | -702.31 |
| SERVICE | 435.04 | -538.16 | 55.47 | SERVICE | 411.95 | 0.00 | -666.95 |
| STRENGTH | 565.55 | -699.61 | 72.11 | STRENGTH | 535.54 | 0.00 | -867.04 |

| | GROUP 5 | | | | GROUP 6 | | |
|---|---|---|---|---|---|---|---|
| | P | MY | MZ | | P | MY | MZ |
| DL | 349.51 | 0.00 | 29.88 | DL | 349.51 | 0.00 | 29.88 |
| LL | 0.00 | 0.00 | 0.00 | LL | 102.63 | 0.00 | 5.48 |
| GROUP 5 | -80.26 | -914.59 | -652.61 | GROUP 6 | -57.29 | -538.16 | -682.20 |
| SERVICE | 269.25 | -914.59 | -622.73 | SERVICE | 394.85 | -538.16 | -646.84 |
| STRENGTH | 336.56 | -1143.24 | -778.41 | STRENGTH | 493.56 | -672.70 | -808.55 |

## SLENDERNESS EFFECTS IN COMPRESSION MEMBERS (AASHTO 8.16.5)

f'c = 3000 psi PHI = 0.70 $W_C$ = 150 PCF

$E_C = W_C^{1.5} * 33 * f'c^{0.5}$ = 3320561 PSI Width of Rect. Col. = B = 35.928 In.

Depth of Rect. Col = D = 70.86 In.

$r_Y = 0.30*D$ = 21.26 In. $L_Y$ = 0 Ft. $K_Y$ = 2.0

$r_Z = 0.30*B$ = 10.78 In. $L_Z$ = 2.5 Ft. $K_Z$ = 1.2

$I_{YY}$ = $B*D^3/12$ $I_{YY}$ = 1065259 $In^4$

$I_{ZZ}$ = $D*B^3/12$ $I_{ZZ}$ = 273854 $In^5$

$K_Y L_Y/r$ = 0.0 < 22 NO SLENDERNESS EFFECT

$K_Z L_Z/r$ = 3.3 < 22 NO SLENDERNESS EFFECT

H. W. LOCHNER, INC.

PROJECT: BONNER BRIDGE - OREGON INLET NORTH CAROLINA JMJ Jul-06
SUBJECT: HIGH LEVEL BENT ANALYSIS
HLB 142 MEM. 14 JT. 10 WAB 7/06

**SLENDERNESS EFFECTS IN RECTANGULAR COMPRESSION MEMBERS (AASHTO 8.16.5)**

**GROUP 1**

| | B | D | KL/R | $M_U$ | $M_{DL}$ | $B_D$ | $P_U$ | $P_C$ | $\delta_b$ | $\delta_s$ | $M_C$ | |
|---|---|---|---|---|---|---|---|---|---|---|---|---|
| | In. | In. | | Ft. Kips | Ft. Kips | | Kips | Kips | | | Ft. Kips | |
| MY | 35.928 | 70.86 | 0.0 | 0.00 | 0.00 | 0.000 | 677 | 0 | 1.000 | 1.000 | 154 | * |
| MZ | 35.928 | 70.86 | 3.3 | 50.72 | 38.84 | 0.766 | 677 | 0 | 1.000 | 1.000 | 95 | * |

**GROUP 2**

| | B | D | KL/R | $M_U$ | $M_{DL}$ | $B_D$ | $P_U$ | $P_C$ | $\delta_b$ | $\delta_s$ | $M_C$ |
|---|---|---|---|---|---|---|---|---|---|---|---|
| | In. | In. | | Ft. Kips | Ft. Kips | | Kips | Kips | | | Ft. Kips |
| MY | 35.928 | 70.86 | 0.0 | 1188.97 | 0.00 | 0.000 | 402 | 0 | 1.000 | 1.000 | 1189 |
| MZ | 35.928 | 70.86 | 3.3 | 103.45 | 38.84 | 0.375 | 402 | 0 | 1.000 | 1.000 | 103 |

**GROUP 3**

| | B | D | KL/R | $M_U$ | $M_{DL}$ | $B_D$ | $P_U$ | $P_C$ | $\delta_b$ | $\delta_s$ | $M_C$ | |
|---|---|---|---|---|---|---|---|---|---|---|---|---|
| | In. | In. | | Ft. Kips | Ft. Kips | | Kips | Kips | | | Ft. Kips | |
| MY | 35.928 | 70.86 | 0.0 | 699.61 | 0.00 | 0.000 | 566 | 0 | 1.000 | 1.000 | 700 | |
| MZ | 35.928 | 70.86 | 3.3 | 72.11 | 38.84 | 0.539 | 566 | 0 | 1.000 | 1.000 | 79 | * |

**GROUP 4**

| | B | D | KL/R | $M_U$ | $M_{DL}$ | $B_D$ | $P_U$ | $P_C$ | $\delta_b$ | $\delta_s$ | $M_C$ | |
|---|---|---|---|---|---|---|---|---|---|---|---|---|
| | In. | In. | | Ft. Kips | Ft. Kips | | Kips | Kips | | | Ft. Kips | |
| MY | 35.928 | 70.86 | 0.0 | 0.00 | 0.00 | 0.000 | 536 | 0 | 1.000 | 1.000 | 122 | * |
| MZ | 35.928 | 70.86 | 3.3 | 867.04 | 38.84 | 0.045 | 536 | 0 | 1.000 | 1.000 | 867 | |

**GROUP 5**

| | B | D | KL/R | $M_U$ | $M_{DL}$ | $B_D$ | $P_U$ | $P_C$ | $\delta_b$ | $\delta_s$ | $M_C$ |
|---|---|---|---|---|---|---|---|---|---|---|---|
| | In. | In. | | Ft. Kips | Ft. Kips | | Kips | Kips | | | Ft. Kips |
| MY | 35.928 | 70.86 | 0.0 | 1143.24 | 0.00 | 0.000 | 337 | 0 | 1.000 | 1.000 | 1143 |
| MZ | 35.928 | 70.86 | 3.3 | 778.41 | 38.84 | 0.050 | 337 | 0 | 1.000 | 1.000 | 778 |

**GROUP 6**

| | B | D | KL/R | $M_U$ | $M_{DL}$ | $B_D$ | $P_U$ | $P_C$ | $\delta_b$ | $\delta_s$ | $M_C$ |
|---|---|---|---|---|---|---|---|---|---|---|---|
| | In. | In. | | Ft. Kips | Ft. Kips | | Kips | Kips | | | Ft. Kips |
| MY | 35.928 | 70.86 | 0.0 | 672.70 | 0.00 | 0.000 | 494 | 0 | 1.000 | 1.000 | 673 |
| MZ | 35.928 | 70.86 | 3.3 | 808.55 | 38.84 | 0.048 | 494 | 0 | 1.000 | 1.000 | 809 |

* MINIMUM MOMENT CONTROLS

H. W. LOCHNER, INC.

PROJECT: BONNER BRIDGE - OREGON INLET NORTH CAROLINA JMJ Jul-06
SUBJECT: HIGH LEVEL BENT ANALYSIS
HLB 142 MEM. 14 JT. 10 WLB 7/06

## COLUMN LOADS

**PMIN**

HLB 142 MEMBER 14 JOINT 10

GROUP 1

| | P | MY | MZ |
|---|---|---|---|
| DL | 262.13 | 0.00 | 29.88 |
| LL | 52.52 | 0.00 | -7.11 |
| GROUP 1 | 0.00 | 0.00 | 0.00 |
| SERVICE | 314.65 | 0.00 | 22.77 |
| STRENGTH | 454.57 | 0.00 | 23.44 |

GROUP 2

| | P | MY | MZ |
|---|---|---|---|
| DL | 262.13 | 0.00 | 29.88 |
| LL | 0.00 | 0.00 | 0.00 |
| GROUP 2 | -40.07 | -914.59 | 49.70 |
| SERVICE | 222.06 | -914.59 | 79.58 |
| STRENGTH | 288.68 | -1188.97 | 103.45 |

GROUP 3

| | P | MY | MZ |
|---|---|---|---|
| DL | 262.13 | 0.00 | 29.88 |
| LL | 52.52 | 0.00 | -7.11 |
| GROUP 3 | -17.10 | -538.16 | 20.11 |
| SERVICE | 297.55 | -538.16 | 42.88 |
| STRENGTH | 386.82 | -699.61 | 55.74 |

GROUP 4

| | P | MY | MZ |
|---|---|---|---|
| DL | 262.13 | 0.00 | 29.88 |
| LL | 52.52 | 0.00 | -7.11 |
| GROUP 4 | -40.19 | 0.00 | -702.31 |
| SERVICE | 274.46 | 0.00 | -679.54 |
| STRENGTH | 356.80 | 0.00 | -883.40 |

GROUP 5

| | P | MY | MZ |
|---|---|---|---|
| DL | 262.13 | 0.00 | 29.88 |
| LL | 0.00 | 0.00 | 0.00 |
| GROUP 5 | -80.26 | -914.59 | -652.61 |
| SERVICE | 181.87 | -914.59 | -622.73 |
| STRENGTH | 227.34 | -1143.24 | -778.41 |

GROUP 6

| | P | MY | MZ |
|---|---|---|---|
| DL | 262.13 | 0.00 | 29.88 |
| LL | 52.52 | 0.00 | -7.11 |
| GROUP 6 | -57.29 | -538.16 | -682.20 |
| SERVICE | 257.36 | -538.16 | -659.43 |
| STRENGTH | 321.70 | -672.70 | -824.29 |

## SLENDERNESS EFFECTS IN COMPRESSION MEMBERS (AASHTO 8.16.5)

f'c = 3000 psi PHI = 0.70 $W_C$ = 150 PCF

$E_C = W_C^{1.5} * 33 * f'c^{0.5}$ = 3320561 PSI Width of Rect. Col. = B = 35.928 In.

Depth of Rect. Col = D = 70.86 In.

$r_Y = 0.30*D$ = 21.26 In. $L_Y$ = 0 Ft. $K_Y$ = 2.0

$r_Z = 0.30*B$ = 10.78 In. $L_Z$ = 2.5 Ft. $K_Z$ = 1.2

$I_{YY}$ = $B*D^3/12$ $I_{YY}$ = 1065259 $In^4$

$I_{ZZ}$ = $D*B^3/12$ $I_{ZZ}$ = 273854 $In^5$

$K_Y L_Y/r$ = 0.0 < 22 NO SLENDERNESS EFFECT

$K_Z L_Z/r$ = 3.3 < 22 NO SLENDERNESS EFFECT

H. W. LOCHNER, INC.

PROJECT: BONNER BRIDGE - OREGON INLET NORTH CAROLINA JMJ Jul-06
SUBJECT: HIGH LEVEL BENT ANALYSIS
HLB 142 MEM. 14 JT. 10 WDB 7/06

## SLENDERNESS EFFECTS IN RECTANGULAR COMPRESSION MEMBERS (AASHTO 8.16.5)

### GROUP 1

| | B | D | KL/R | $M_U$ | $M_{DL}$ | $B_D$ | $P_U$ | $P_C$ | $\delta_b$ | $\delta_s$ | $M_C$ | |
|---|---|---|---|---|---|---|---|---|---|---|---|---|
| | In. | In. | | Ft. Kips | Ft. Kips | | Kips | Kips | | | Ft. Kips | |
| MY | 35.928 | 70.86 | 0.0 | 0.00 | 0.00 | 0.000 | 455 | 0 | 1.000 | 1.000 | 103 | * |
| MZ | 35.928 | 70.86 | 3.3 | 23.44 | 38.84 | 1.657 | 455 | 0 | 1.000 | 1.000 | 64 | * |

### GROUP 2

| | B | D | KL/R | $M_U$ | $M_{DL}$ | $B_D$ | $P_U$ | $P_C$ | $\delta_b$ | $\delta_s$ | $M_C$ |
|---|---|---|---|---|---|---|---|---|---|---|---|
| | In. | In. | | Ft. Kips | Ft. Kips | | Kips | Kips | | | Ft. Kips |
| MY | 35.928 | 70.86 | 0.0 | 1188.97 | 0.00 | 0.000 | 289 | 0 | 1.000 | 1.000 | 1189 |
| MZ | 35.928 | 70.86 | 3.3 | 103.45 | 38.84 | 0.375 | 289 | 0 | 1.000 | 1.000 | 103 |

### GROUP 3

| | B | D | KL/R | $M_U$ | $M_{DL}$ | $B_D$ | $P_U$ | $P_C$ | $\delta_b$ | $\delta_s$ | $M_C$ |
|---|---|---|---|---|---|---|---|---|---|---|---|
| | In. | In. | | Ft. Kips | Ft. Kips | | Kips | Kips | | | Ft. Kips |
| MY | 35.928 | 70.86 | 0.0 | 699.61 | 0.00 | 0.000 | 387 | 0 | 1.000 | 1.000 | 700 |
| MZ | 35.928 | 70.86 | 3.3 | 55.74 | 38.84 | 0.697 | 387 | 0 | 1.000 | 1.000 | 56 |

### GROUP 4

| | B | D | KL/R | $M_U$ | $M_{DL}$ | $B_D$ | $P_U$ | $P_C$ | $\delta_b$ | $\delta_s$ | $M_C$ | |
|---|---|---|---|---|---|---|---|---|---|---|---|---|
| | In. | In. | | Ft. Kips | Ft. Kips | | Kips | Kips | | | Ft. Kips | |
| MY | 35.928 | 70.86 | 0.0 | 0.00 | 0.00 | 0.000 | 357 | 0 | 1.000 | 1.000 | 81 | * |
| MZ | 35.928 | 70.86 | 3.3 | 883.40 | 38.84 | 0.044 | 357 | 0 | 1.000 | 1.000 | 883 | |

### GROUP 5

| | B | D | KL/R | $M_U$ | $M_{DL}$ | $B_D$ | $P_U$ | $P_C$ | $\delta_b$ | $\delta_s$ | $M_C$ |
|---|---|---|---|---|---|---|---|---|---|---|---|
| | In. | In. | | Ft. Kips | Ft. Kips | | Kips | Kips | | | Ft. Kips |
| MY | 35.928 | 70.86 | 0.0 | 1143.24 | 0.00 | 0.000 | 227 | 0 | 1.000 | 1.000 | 1143 |
| MZ | 35.928 | 70.86 | 3.3 | 778.41 | 38.84 | 0.050 | 227 | 0 | 1.000 | 1.000 | 778 |

### GROUP 6

| | B | D | KL/R | $M_U$ | $M_{DL}$ | $B_D$ | $P_U$ | $P_C$ | $\delta_b$ | $\delta_s$ | $M_C$ |
|---|---|---|---|---|---|---|---|---|---|---|---|
| | In. | In. | | Ft. Kips | Ft. Kips | | Kips | Kips | | | Ft. Kips |
| MY | 35.928 | 70.86 | 0.0 | 672.70 | 0.00 | 0.000 | 322 | 0 | 1.000 | 1.000 | 673 |
| MZ | 35.928 | 70.86 | 3.3 | 824.29 | 38.84 | 0.047 | 322 | 0 | 1.000 | 1.000 | 824 |

* MINIMUM MOMENT CONTROLS

H. W. LOCHNER, INC.

PROJECT: BONNER BRIDGE - OREGON INLET NORTH CAROLINA JMJ Jul-06
SUBJECT: HIGH LEVEL BENT ANALYSIS
HLB 142 MEM. 14 JT. FOOTING WDB 7/06

## COLUMN LOADS

### PMAX

HLB 142 MEMBER 14 JOINT FOOTING

| | GROUP 1 | | | | GROUP 2 | | |
|---|---|---|---|---|---|---|---|
| | P | MY | MZ | | P | MY | MZ |
| DL | 356.14 | 0.00 | 21.29 | DL | 356.14 | 0.00 | 21.29 |
| LL | 102.63 | 0.00 | 10.58 | LL | 0.00 | 0.00 | 0.00 |
| GROUP 1 | 0.00 | 0.00 | 0.00 | GROUP 2 | -40.10 | -983.68 | 79.73 |
| SERVICE | 458.77 | 0.00 | 31.87 | SERVICE | 316.04 | -983.68 | 101.02 |
| STRENGTH | 685.34 | 0.00 | 50.60 | STRENGTH | 410.85 | -1278.78 | 131.33 |

| | GROUP 3 | | | | GROUP 4 | | |
|---|---|---|---|---|---|---|---|
| | P | MY | MZ | | P | MY | MZ |
| DL | 356.14 | 0.00 | 21.29 | DL | 356.14 | 0.00 | 21.29 |
| LL | 102.63 | 0.00 | 10.58 | LL | 102.63 | 0.00 | 10.58 |
| GROUP 3 | -17.11 | -571.14 | 31.48 | GROUP 4 | -40.19 | 0.00 | 851.09 |
| SERVICE | 441.66 | -571.14 | 63.35 | SERVICE | 418.58 | 0.00 | 882.96 |
| STRENGTH | 574.15 | -742.48 | 82.36 | STRENGTH | 544.15 | 0.00 | 1147.85 |

| | GROUP 5 | | | | GROUP 6 | | |
|---|---|---|---|---|---|---|---|
| | P | MY | MZ | | P | MY | MZ |
| DL | 356.14 | 0.00 | 21.29 | DL | 356.14 | 0.00 | 21.29 |
| LL | 0.00 | 0.00 | 0.00 | LL | 102.63 | 0.00 | 10.58 |
| GROUP 5 | -80.29 | -983.69 | 930.82 | GROUP 6 | -57.30 | -571.14 | 882.56 |
| SERVICE | 275.85 | -983.69 | 952.11 | SERVICE | 401.47 | -571.14 | 914.43 |
| STRENGTH | 344.81 | -1229.61 | 1190.14 | STRENGTH | 501.83 | -713.93 | 1143.04 |

## SLENDERNESS EFFECTS IN COMPRESSION MEMBERS (AASHTO 8.16.5)

f'c = 3000 psi PHI = 0.70 $W_C$ = 150 PCF

$E_C = W_C^{1.5} * 33 * f'c^{0.5}$ = 3320561 PSI Width of Rect. Col. = B = 35.928 In.

Depth of Rect. Col = D = 70.86 In.

$r_Y = 0.30*D$ = 21.26 In. $L_Y$ = 0 Ft. $K_Y$ = 2.0

$r_Z = 0.30*B$ = 10.78 In. $L_Z$ = 2.5 Ft. $K_Z$ = 1.2

$I_{YY}$ = $B*D^3/12$ $I_{YY}$ = 1065259 $In^4$

$I_{ZZ}$ = $D*B^3/12$ $I_{ZZ}$ = 273854 $In^5$

$K_Y L_Y/r$ = 0.0 < 22 NO SLENDERNESS EFFECT

$K_Z L_Z/r$ = 3.3 < 22 NO SLENDERNESS EFFECT

H. W. LOCHNER, INC.

PROJECT: BONNER BRIDGE - OREGON INLET NORTH CAROLINA JMJ Jul-06
SUBJECT: HIGH LEVEL BENT ANALYSIS
HLB 142 MEM. 14 JT. FOOTING WDB 7/06

## SLENDERNESS EFFECTS IN RECTANGULAR COMPRESSION MEMBERS (AASHTO 8.16.5)

### GROUP 1

| | B | D | KL/R | $M_U$ | $M_{DL}$ | $B_D$ | $P_U$ | $P_C$ | $\delta_b$ | $\delta_s$ | $M_C$ | |
|---|---|---|---|---|---|---|---|---|---|---|---|---|
| | In. | In. | | Ft. Kips | Ft. Kips | | Kips | Kips | | | Ft. Kips | |
| MY | 35.928 | 70.86 | 0.0 | 0.00 | 0.00 | 0.000 | 685 | 0 | 1.000 | 1.000 | 156 | * |
| MZ | 35.928 | 70.86 | 3.3 | 50.60 | 27.68 | 0.547 | 685 | 0 | 1.000 | 1.000 | 96 | * |

### GROUP 2

| | B | D | KL/R | $M_U$ | $M_{DL}$ | $B_D$ | $P_U$ | $P_C$ | $\delta_b$ | $\delta_s$ | $M_C$ |
|---|---|---|---|---|---|---|---|---|---|---|---|
| | In. | In. | | Ft. Kips | Ft. Kips | | Kips | Kips | | | Ft. Kips |
| MY | 35.928 | 70.86 | 0.0 | 1278.78 | 0.00 | 0.000 | 411 | 0 | 1.000 | 1.000 | 1279 |
| MZ | 35.928 | 70.86 | 3.3 | 131.33 | 27.68 | 0.211 | 411 | 0 | 1.000 | 1.000 | 131 |

### GROUP 3

| | B | D | KL/R | $M_U$ | $M_{DL}$ | $B_D$ | $P_U$ | $P_C$ | $\delta_b$ | $\delta_s$ | $M_C$ |
|---|---|---|---|---|---|---|---|---|---|---|---|
| | In. | In. | | Ft. Kips | Ft. Kips | | Kips | Kips | | | Ft. Kips |
| MY | 35.928 | 70.86 | 0.0 | 742.48 | 0.00 | 0.000 | 574 | 0 | 1.000 | 1.000 | 742 |
| MZ | 35.928 | 70.86 | 3.3 | 82.36 | 27.68 | 0.336 | 574 | 0 | 1.000 | 1.000 | 82 |

### GROUP 4

| | B | D | KL/R | $M_U$ | $M_{DL}$ | $B_D$ | $P_U$ | $P_C$ | $\delta_b$ | $\delta_s$ | $M_C$ | |
|---|---|---|---|---|---|---|---|---|---|---|---|---|
| | In. | In. | | Ft. Kips | Ft. Kips | | Kips | Kips | | | Ft. Kips | |
| MY | 35.928 | 70.86 | 0.0 | 0.00 | 0.00 | 0.000 | 544 | 0 | 1.000 | 1.000 | 124 | * |
| MZ | 35.928 | 70.86 | 3.3 | 1147.85 | 27.68 | 0.024 | 544 | 0 | 1.000 | 1.000 | 1148 | |

### GROUP 5

| | B | D | KL/R | $M_U$ | $M_{DL}$ | $B_D$ | $P_U$ | $P_C$ | $\delta_b$ | $\delta_s$ | $M_C$ |
|---|---|---|---|---|---|---|---|---|---|---|---|
| | In. | In. | | Ft. Kips | Ft. Kips | | Kips | Kips | | | Ft. Kips |
| MY | 35.928 | 70.86 | 0.0 | 1229.61 | 0.00 | 0.000 | 345 | 0 | 1.000 | 1.000 | 1230 |
| MZ | 35.928 | 70.86 | 3.3 | 1190.14 | 27.68 | 0.023 | 345 | 0 | 1.000 | 1.000 | 1190 |

### GROUP 6

| | B | D | KL/R | $M_U$ | $M_{DL}$ | $B_D$ | $P_U$ | $P_C$ | $\delta_b$ | $\delta_s$ | $M_C$ |
|---|---|---|---|---|---|---|---|---|---|---|---|
| | In. | In. | | Ft. Kips | Ft. Kips | | Kips | Kips | | | Ft. Kips |
| MY | 35.928 | 70.86 | 0.0 | 713.93 | 0.00 | 0.000 | 502 | 0 | 1.000 | 1.000 | 714 |
| MZ | 35.928 | 70.86 | 3.3 | 1143.04 | 27.68 | 0.024 | 502 | 0 | 1.000 | 1.000 | 1143 |

* MINIMUM MOMENT CONTROLS

H. W. LOCHNER, INC.

PROJECT: BONNER BRIDGE - OREGON INLET NORTH CAROLINA JMJ Jul-06
SUBJECT: HIGH LEVEL BENT ANALYSIS
HLB 142 MEM. 14 JT. FOOTING WDB 7/06

## COLUMN LOADS

**PMIN**

HLB 142 MEMBER 14 JOINT FOOTING

GROUP 1

| | P | MY | MZ |
|---|---|---|---|
| DL | 267.10 | 0.00 | 21.29 |
| LL | 52.52 | 0.00 | -10.07 |
| GROUP 1 | 0.00 | 0.00 | 0.00 |
| SERVICE | 319.62 | 0.00 | 11.22 |
| STRENGTH | 461.03 | 0.00 | 5.86 |

GROUP 2

| | P | MY | MZ |
|---|---|---|---|
| DL | 267.10 | 0.00 | 21.29 |
| LL | 0.00 | 0.00 | 0.00 |
| GROUP 2 | -40.10 | -983.68 | 79.73 |
| SERVICE | 227.00 | -983.68 | 101.02 |
| STRENGTH | 295.10 | -1278.78 | 131.33 |

GROUP 3

| | P | MY | MZ |
|---|---|---|---|
| DL | 267.10 | 0.00 | 21.29 |
| LL | 52.52 | 0.00 | -10.07 |
| GROUP 3 | -17.11 | -571.14 | 31.48 |
| SERVICE | 302.51 | -571.14 | 42.70 |
| STRENGTH | 393.27 | -742.48 | 55.51 |

GROUP 4

| | P | MY | MZ |
|---|---|---|---|
| DL | 267.10 | 0.00 | 21.29 |
| LL | 52.52 | 0.00 | -10.07 |
| GROUP 4 | -40.19 | 0.00 | 851.09 |
| SERVICE | 279.43 | 0.00 | 862.31 |
| STRENGTH | 363.26 | 0.00 | 1121.00 |

GROUP 5

| | P | MY | MZ |
|---|---|---|---|
| DL | 267.10 | 0.00 | 21.29 |
| LL | 0.00 | 0.00 | 0.00 |
| GROUP 5 | -80.29 | -983.69 | 930.82 |
| SERVICE | 186.81 | -983.69 | 952.11 |
| STRENGTH | 233.51 | -1229.61 | 1190.14 |

GROUP 6

| | P | MY | MZ |
|---|---|---|---|
| DL | 267.10 | 0.00 | 21.29 |
| LL | 52.52 | 0.00 | -10.07 |
| GROUP 6 | -57.30 | -571.14 | 882.56 |
| SERVICE | 262.32 | -571.14 | 893.78 |
| STRENGTH | 327.90 | -713.93 | 1117.23 |

## SLENDERNESS EFFECTS IN COMPRESSION MEMBERS (AASHTO 8.16.5)

f'c = 3000 psi PHI = 0.70 $W_C$ = 150 PCF

$E_C = W_C^{1.5} * 33 * f'c^{0.5}$ = 3320561 PSI Width of Rect. Col. = B = 35.928 In.

Depth of Rect. Col = D = 70.86 In.

$r_Y = 0.30*D$ = 21.26 In. $L_Y$ = 0 Ft. $K_Y$ = 2.0

$r_Z = 0.30*B$ = 10.78 In. $L_Z$ = 2.5 Ft. $K_Z$ = 1.2

$I_{YY}$ = $B*D^3/12$ $I_{YY}$ = 1065259 $In^4$

$I_{ZZ}$ = $D*B^3/12$ $I_{ZZ}$ = 273854 $In^5$

$K_Y L_Y/r$ = 0.0 < 22 NO SLENDERNESS EFFECT

$K_Z L_Z/r$ = 3.3 < 22 NO SLENDERNESS EFFECT

H. W. LOCHNER, INC.

PROJECT: BONNER BRIDGE - OREGON INLET NORTH CAROLINA
SUBJECT: HIGH LEVEL BENT ANALYSIS
HLB 142 MEM. 14 JT. FOOTING

JMJ Jul-06
WDB 7/06

## SLENDERNESS EFFECTS IN RECTANGULAR COMPRESSION MEMBERS (AASHTO 8.16.5)

### GROUP 1

| | B | D | KL/R | $M_U$ | $M_{DL}$ | $B_D$ | $P_U$ | $P_C$ | $\delta_b$ | $\delta_s$ | $M_C$ | |
|---|---|---|---|---|---|---|---|---|---|---|---|---|
| | In. | In. | | Ft. Kips | Ft. Kips | | Kips | Kips | | | Ft. Kips | |
| MY | 35.928 | 70.86 | 0.0 | 0.00 | 0.00 | 0.000 | 461 | 0 | 1.000 | 1.000 | 105 | * |
| MZ | 35.928 | 70.86 | 3.3 | 5.86 | 27.68 | 4.724 | 461 | 0 | 1.000 | 1.000 | 64 | * |

### GROUP 2

| | B | D | KL/R | $M_U$ | $M_{DL}$ | $B_D$ | $P_U$ | $P_C$ | $\delta_b$ | $\delta_s$ | $M_C$ |
|---|---|---|---|---|---|---|---|---|---|---|---|
| | In. | In. | | Ft. Kips | Ft. Kips | | Kips | Kips | | | Ft. Kips |
| MY | 35.928 | 70.86 | 0.0 | 1278.78 | 0.00 | 0.000 | 295 | 0 | 1.000 | 1.000 | 1279 |
| MZ | 35.928 | 70.86 | 3.3 | 131.33 | 27.68 | 0.211 | 295 | 0 | 1.000 | 1.000 | 131 |

### GROUP 3

| | B | D | KL/R | $M_U$ | $M_{DL}$ | $B_D$ | $P_U$ | $P_C$ | $\delta_b$ | $\delta_s$ | $M_C$ |
|---|---|---|---|---|---|---|---|---|---|---|---|
| | In. | In. | | Ft. Kips | Ft. Kips | | Kips | Kips | | | Ft. Kips |
| MY | 35.928 | 70.86 | 0.0 | 742.48 | 0.00 | 0.000 | 393 | 0 | 1.000 | 1.000 | 742 |
| MZ | 35.928 | 70.86 | 3.3 | 55.51 | 27.68 | 0.499 | 393 | 0 | 1.000 | 1.000 | 56 |

### GROUP 4

| | B | D | KL/R | $M_U$ | $M_{DL}$ | $B_D$ | $P_U$ | $P_C$ | $\delta_b$ | $\delta_s$ | $M_C$ | |
|---|---|---|---|---|---|---|---|---|---|---|---|---|
| | In. | In. | | Ft. Kips | Ft. Kips | | Kips | Kips | | | Ft. Kips | |
| MY | 35.928 | 70.86 | 0.0 | 0.00 | 0.00 | 0.000 | 363 | 0 | 1.000 | 1.000 | 83 | * |
| MZ | 35.928 | 70.86 | 3.3 | 1121.00 | 27.68 | 0.025 | 363 | 0 | 1.000 | 1.000 | 1121 | |

### GROUP 5

| | B | D | KL/R | $M_U$ | $M_{DL}$ | $B_D$ | $P_U$ | $P_C$ | $\delta_b$ | $\delta_s$ | $M_C$ |
|---|---|---|---|---|---|---|---|---|---|---|---|
| | In. | In. | | Ft. Kips | Ft. Kips | | Kips | Kips | | | Ft. Kips |
| MY | 35.928 | 70.86 | 0.0 | 1229.61 | 0.00 | 0.000 | 234 | 0 | 1.000 | 1.000 | 1230 |
| MZ | 35.928 | 70.86 | 3.3 | 1190.14 | 27.68 | 0.023 | 234 | 0 | 1.000 | 1.000 | 1190 |

### GROUP 6

| | B | D | KL/R | $M_U$ | $M_{DL}$ | $B_D$ | $P_U$ | $P_C$ | $\delta_b$ | $\delta_s$ | $M_C$ |
|---|---|---|---|---|---|---|---|---|---|---|---|
| | In. | In. | | Ft. Kips | Ft. Kips | | Kips | Kips | | | Ft. Kips |
| MY | 35.928 | 70.86 | 0.0 | 713.93 | 0.00 | 0.000 | 328 | 0 | 1.000 | 1.000 | 714 |
| MZ | 35.928 | 70.86 | 3.3 | 1117.23 | 27.68 | 0.025 | 328 | 0 | 1.000 | 1.000 | 1117 |

* MINIMUM MOMENT CONTROLS

JMJ 7/06

WDB 7/06

```
OOOOOOO    OOOOO    OOOOO    OOOOO    OOOOO   OO
OO    OO   OO  OO   OO  OO   OO  OO   OO  OO   OO
OO    OO   OO  OO   OO  OO   OO  OO   OO  OO   OO
OO    OO   OO       OO  OO   OO       OO  OO   OO
OO    OO   OO       OOOOOOO  OO       OO  OO   OO
OOOOOOO    OO  OO   OO  OO   OO  OO   OO  OO   OO
OO         OO  OO   OO  OO   OO  OO   OO  OO   OO
OO          OOOOO   OO  OO    OOOOO    OOOOO   OOOOO  (TM)
```

==========
Computer program for the Strength Design of Reinforced Concrete Sections
==========

Licensee stated above acknowledges that Portland Cement Association (PCA) is not and cannot be responsible for either the accuracy or adequacy of the material supplied as input for processing by the PCACOL(tm) computer program. Furthermore, PCA neither makes any warranty expressed nor implied with respect to the correctness of the output prepared by the PCACOL(tm) program. Although PCA has endeavored to produce PCACOL(tm) error free, the program is not and can't be certified infallible. The final and only responsibility for analysis, design and engineering documents is the licensees. Accordingly, PCA disclaims all responsibility in contract, negligence or other tort for any analysis, design or engineering documents prepared in connection with the use of the PCACOL(tm) program.

BASED ON PLANS.

General Information:
==========

File Name: S:\DGN-ST\NORTHC~1\BONNER~1\ANALYSIS\PIERS\HLB142\PCACOL~1\M14PLAN.COL
Project: BONNER BRIDGE - OREGON INLET
Column: HLB #142 Engineer: JMJ
Code: ACI 318-95 Units: English

Run Option: Investigation Slenderness: Not considered
Run Axis: Biaxial Column Type: Structural

Material Properties:
==========

f'c = 3 ksi fy = 40 ksi
Ec = 3122.02 ksi Es = 29000 ksi
fc = 2.55 ksi Rupture strain = Infinity
Ultimate strain = 0.003 in/in
Beta1 = 0.85

Section:
==========

Rectangular: Width = 36 in Depth = 70.9 in

Gross section area, Ag = 2552.4 in^2
Ix = 1.0692e+006 in^4 Iy = 275659 in^4
Xo = 0 in Yo = 0 in

Reinforcement:
==========

Rebar Database: User-defined

| Size | Diam (in) | Area (in^2) | Size | Diam (in) | Area (in^2) | Size | Diam (in) | Area (in^2) |
|---|---|---|---|---|---|---|---|---|
| # 1 | 0.00 | 0.00 | # 3 | 0.38 | 0.11 | # 4 | 0.50 | 0.20 |
| # 5 | 0.63 | 0.31 | # 6 | 0.75 | 0.44 | # 7 | 0.88 | 0.60 |
| # 8 | 1.00 | 0.79 | # 9 | 1.13 | 1.00 | # 10 | 1.27 | 1.27 |
| # 11 | 1.41 | 1.56 | # 14 | 1.69 | 2.25 | # 18 | 2.26 | 4.00 |

Confinement: Tied; #1 ties with #9 bars, #1 with larger bars.
phi(a) = 0.8, phi(b) = 0.9, phi(c) = 0.7

Layout: Rectangular
Pattern: Equal Bar Spacing (Cover to longitudinal reinforcement)
Total steel area, As = 28.08 in^2 at 1.10%
18 #11 Cover = 5 in

Factored Loads and Moments with Corresponding Capacities: (see user's manual for notation)
==========

| No. | Pu kip | Mux k-ft | Muy k-ft | fMnx k-ft | fMny k-ft | fMn/Mu |
|---|---|---|---|---|---|---|
| 1 | 677.0 | 154.0 | 95.0 | 2124.8 | 1311.5 | 13.800 |
| 2 | 402.0 | 1189.0 | 103.0 | 3132.1 | 266.3 | 2.634 |
| 3 | 566.0 | 700.0 | 79.0 | 3251.0 | 369.1 | 4.645 |
| 4 | 536.0 | 122.0 | 867.0 | 226.7 | 1622.6 | 1.871 |
| 5 | 337.0 | 1143.0 | 778.0 | 1857.9 | 1267.3 | 1.627 |
| 6 | 494.0 | 673.0 | 809.0 | 1243.1 | 1492.9 | 1.846 |
| 7 | 455.0 | 103.0 | 64.0 | 2040.5 | 1272.6 | 19.832 |
| 8 | 289.0 | 1189.0 | 103.0 | 2998.3 | 262.4 | 2.522 |
| 9 | 387.0 | 700.0 | 56.0 | 3120.2 | 254.7 | 4.458 |
| 10 | 357.0 | 81.0 | 883.0 | 140.6 | 1510.4 | 1.711 |
| 11 | 227.0 | 1143.0 | 778.0 | 1793.1 | 1218.8 | 1.568 |
| 12 | 322.0 | 673.0 | 824.0 | 1146.2 | 1407.0 | 1.706 |
| 13 | 685.0 | 156.0 | 96.0 | 2127.1 | 1311.7 | 13.643 |
| 14 | 411.0 | 1279.0 | 131.0 | 3119.1 | 318.8 | 2.439 |
| 15 | 574.0 | 742.0 | 82.0 | 3260.5 | 363.7 | 4.395 |

| | | | | | | |
|---|---|---|---|---|---|---|
| 16 | 544.0 | 124.0 | 1148.0 | 176.8 | 1628.2 | 1.418 |
| 17 | 345.0 | 1230.0 | 1190.0 | 1419.6 | 1376.2 | 1.155 |
| 18 | 502.0 | 714.0 | 1143.0 | 962.6 | 1539.4 | 1.347 |
| 19 | 461.0 | 105.0 | 64.0 | 2078.9 | 1263.1 | 19.782 |
| 20 | 295.0 | 1279.0 | 131.0 | 2989.4 | 306.4 | 2.337 |
| 21 | 393.0 | 742.0 | 56.0 | 3135.4 | 234.5 | 4.225 |
| 22 | 363.0 | 83.0 | 1121.0 | 114.8 | 1514.8 | 1.351 |
| 23 | 234.0 | 1230.0 | 1190.0 | 1361.4 | 1314.9 | 1.106 |
| 24 | 328.0 | 714.0 | 1117.0 | 922.0 | 1441.4 | 1.291 |

*** Program completed as requested! ***

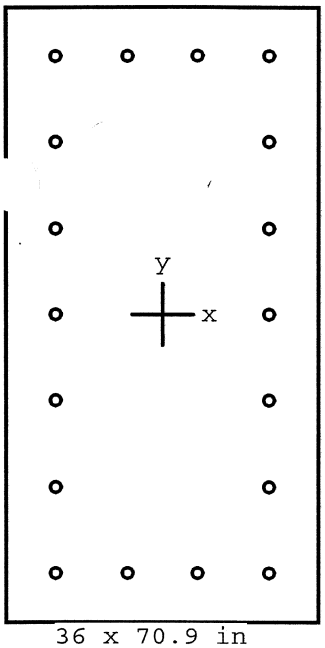


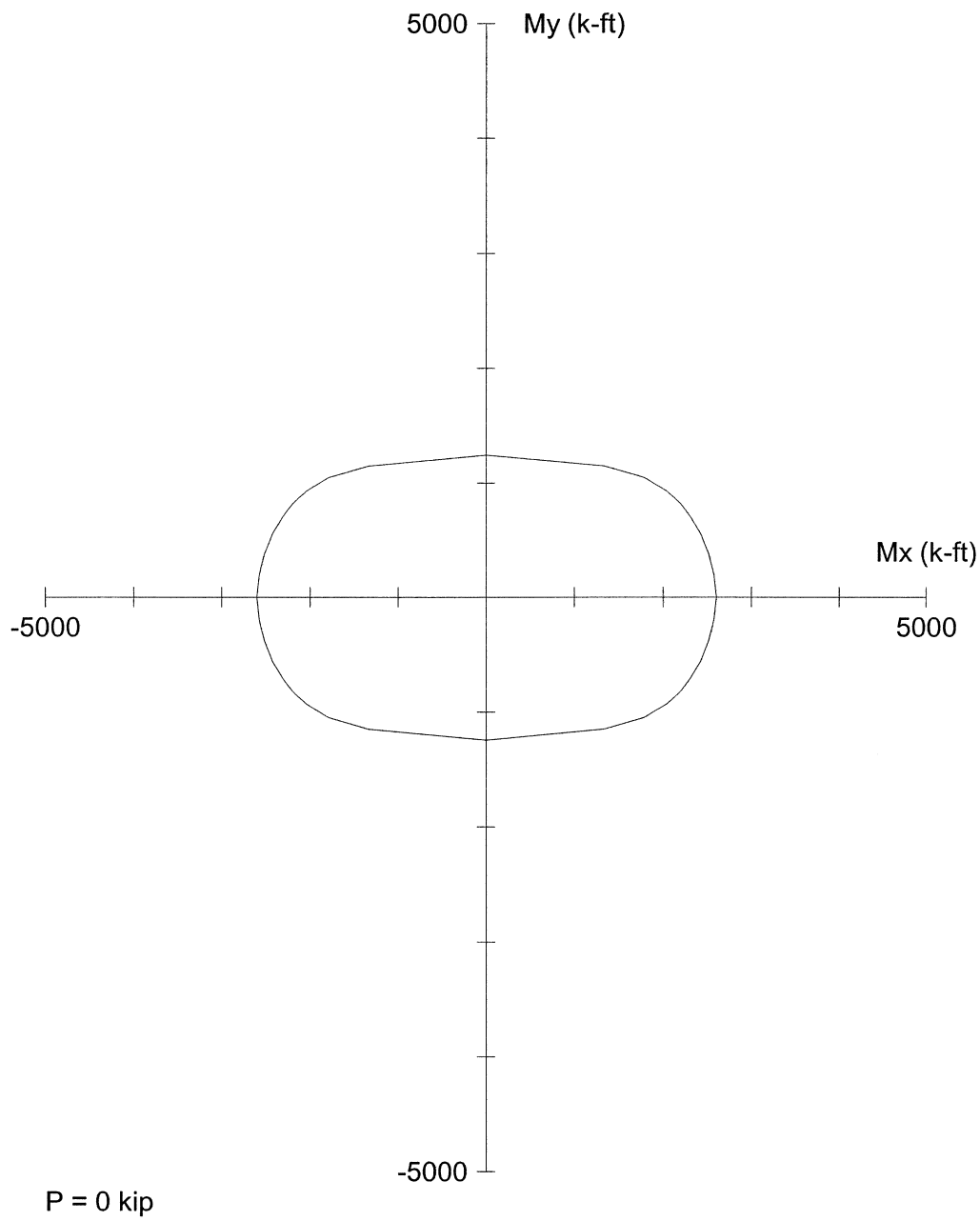


Code: ACI 318-95

Units: English

Run axis: Biaxial

Run option: Investigation

Slenderness: Not considered

mn type: Structural

Bars: User-defined

Date: 07/20/06

Time: 14:19:11

PCACOL V3.00 (PCA 1999) - Licensed to: Licensee name not yet specified.

File: S:\DGN-ST\NORTHC~1\BONNER~1\ANALYSIS\PIERS\HLB142\PCACOL~1\M14PLAN.COL

Project: BONNER BRIDGE - OREGON INLET

| | | | |
|---|---|---|---|
| Column: HLB #142 | | Engineer: JMJ | |
| f'c = 3 ksi | fy = 40 ksi | Ag = 2552.4 in^2 | 18 #11 bars |
| Ec = 3122 ksi | Es = 29000 ksi | As = 28.08 in^2 | Rho = 1.10% |
| fc = 2.55 ksi | e_rup = Infinity | Xo = 0.00 in | Ix = 1.0692e+006 in^4 |
| u = 0.003 in/in | | Yo = 0.00 in | Iy = 275659 in^4 |
| Beta1 = 0.85 | | Clear spacing = 6.79 in | Clear cover = 5.00 in |
| Confinement: Tied | phi(a) = 0.8, phi(b) = 0.9, phi(c) = 0.7 | | |

JMJ 7/06
WDB 7/06

```
OOOOOOO    OOOOO    OOOOO    OOOOO    OOOOO   OO
OO    OO   OO  OO   OO  OO   OO  OO   OO  OO   OO
OO    OO   OO  OO   OO  OO   OO  OO   OO  OO   OO
OO    OO   OO       OO  OO   OO       OO  OO   OO
OO    OO   OO       OOOOOOO  OO       OO  OO   OO
OOOOOOO    OO  OO   OO  OO   OO  OO   OO  OO   OO
OO         OO  OO   OO  OO   OO  OO   OO  OO   OO
OO          OOOOO   OO  OO    OOOOO    OOOOO   OOOOO  (TM)
```

==========
Computer program for the Strength Design of Reinforced Concrete Sections
==========

Licensee stated above acknowledges that Portland Cement Association (PCA) is not and cannot be responsible for either the accuracy or adequacy of the material supplied as input for processing by the PCACOL(tm) computer program. Furthermore, PCA neither makes any warranty expressed nor implied with respect to the correctness of the output prepared by the PCACOL(tm) program. Although PCA has endeavored to produce PCACOL(tm) error free, the program is not and can't be certified infallible. The final and only responsibility for analysis, design and engineering documents is the licensees. Accordingly, PCA disclaims all responsibility in contract, negligence or other tort for any analysis, design or engineering documents prepared in connection with the use of the PCACOL(tm) program.

50% cover loss
$f_c$ = 4400 psi

General Information:
==========
File Name: S:\DGN-ST\NORTHC~1\BONNER~1\ANALYSIS\PIERS\HLB142\PCACOL~1\M14ACT.COL
Project: BONNER BRIDGE - OREGON INLET
Column: HLB #142 Engineer: JMJ
Code: ACI 318-95 Units: English

Run Option: Investigation Slenderness: Not considered
Run Axis: Biaxial Column Type: Structural

Material Properties:
==========
f'c = 4.4 ksi fy = 40 ksi
Ec = 3780.96 ksi Es = 29000 ksi
fc = 3.74 ksi Rupture strain = Infinity
Ultimate strain = 0.003 in/in
Beta1 = 0.83

Section:
==========
Rectangular: Width = 31 in Depth = 65.9 in

Gross section area, Ag = 2042.9 in^2
Ix = 739327 in^4 Iy = 163602 in^4
Xo = 0 in Yo = 0 in

Reinforcement:
==========
Rebar Database: User-defined

| Size | Diam (in) | Area (in^2) | Size | Diam (in) | Area (in^2) | Size | Diam (in) | Area (in^2) |
|---|---|---|---|---|---|---|---|---|
| # 1 | 0.00 | 0.00 | # 3 | 0.38 | 0.11 | # 4 | 0.50 | 0.20 |
| # 5 | 0.63 | 0.31 | # 6 | 0.75 | 0.44 | # 7 | 0.88 | 0.60 |
| # 8 | 1.00 | 0.79 | # 9 | 1.13 | 1.00 | # 10 | 1.27 | 1.27 |
| # 11 | 1.41 | 1.56 | # 14 | 1.69 | 2.25 | # 18 | 2.26 | 4.00 |

Confinement: Tied; #1 ties with #9 bars, #1 with larger bars.
phi(a) = 0.8, phi(b) = 0.9, phi(c) = 0.7

Layout: Rectangular
Pattern: Equal Bar Spacing (Cover to longitudinal reinforcement)
Total steel area, As = 28.08 in^2 at 1.37%
18 #11 Cover = 2.5 in

Factored Loads and Moments with Corresponding Capacities: (see user's manual for notation)
==========

| No. | Pu kip | Mux k-ft | Muy k-ft | fMnx k-ft | fMny k-ft | fMn/Mu |
|---|---|---|---|---|---|---|
| 1 | 677.0 | 154.0 | 95.0 | 2108.9 | 1297.9 | 13.685 |
| 2 | 402.0 | 1189.0 | 103.0 | 3086.8 | 272.7 | 2.597 |
| 3 | 566.0 | 700.0 | 79.0 | 3240.8 | 361.5 | 4.629 |
| 4 | 536.0 | 122.0 | 867.0 | 218.6 | 1536.3 | 1.772 |
| 5 | 337.0 | 1143.0 | 778.0 | 1789.9 | 1215.0 | 1.565 |
| 6 | 494.0 | 673.0 | 809.0 | 1178.5 | 1421.5 | 1.755 |
| 7 | 455.0 | 103.0 | 64.0 | 1977.2 | 1230.3 | 19.204 |
| 8 | 289.0 | 1189.0 | 103.0 | 2939.0 | 253.0 | 2.472 |
| 9 | 387.0 | 700.0 | 56.0 | 3077.2 | 250.0 | 4.396 |
| 10 | 357.0 | 81.0 | 883.0 | 129.6 | 1410.4 | 1.597 |
| 11 | 227.0 | 1143.0 | 778.0 | 1701.2 | 1161.2 | 1.490 |
| 12 | 322.0 | 673.0 | 824.0 | 1081.2 | 1325.3 | 1.608 |
| 13 | 685.0 | 156.0 | 96.0 | 2113.1 | 1299.7 | 13.544 |
| 14 | 411.0 | 1279.0 | 131.0 | 3078.3 | 315.0 | 2.407 |
| 15 | 574.0 | 742.0 | 82.0 | 3252.2 | 356.4 | 4.383 |

| | | | | | | |
|---|---|---|---|---|---|---|
| 16 | 544.0 | 124.0 | 1148.0 | 169.1 | 1542.6 | 1.344 |
| 17 | 345.0 | 1230.0 | 1190.0 | 1348.7 | 1301.8 | 1.095 |
| 18 | 502.0 | 714.0 | 1143.0 | 910.8 | 1461.7 | 1.278 |
| 19 | 461.0 | 105.0 | 64.0 | 2005.9 | 1225.3 | 19.115 |
| 20 | 295.0 | 1279.0 | 131.0 | 2931.5 | 300.0 | 2.292 |
| 21 | 393.0 | 742.0 | 56.0 | 3091.4 | 230.7 | 4.166 |
| 22 | 363.0 | 83.0 | 1121.0 | 104.3 | 1415.1 | 1.262 |
| 23 | 234.0 | 1230.0 | 1190.0 | 1282.0 | 1237.0 | 1.041 |
| 24 | 328.0 | 714.0 | 1117.0 | 869.9 | 1356.0 | 1.215 |

*** Program completed as requested! ***

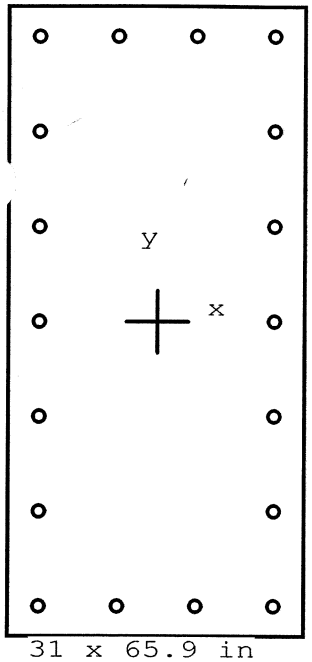


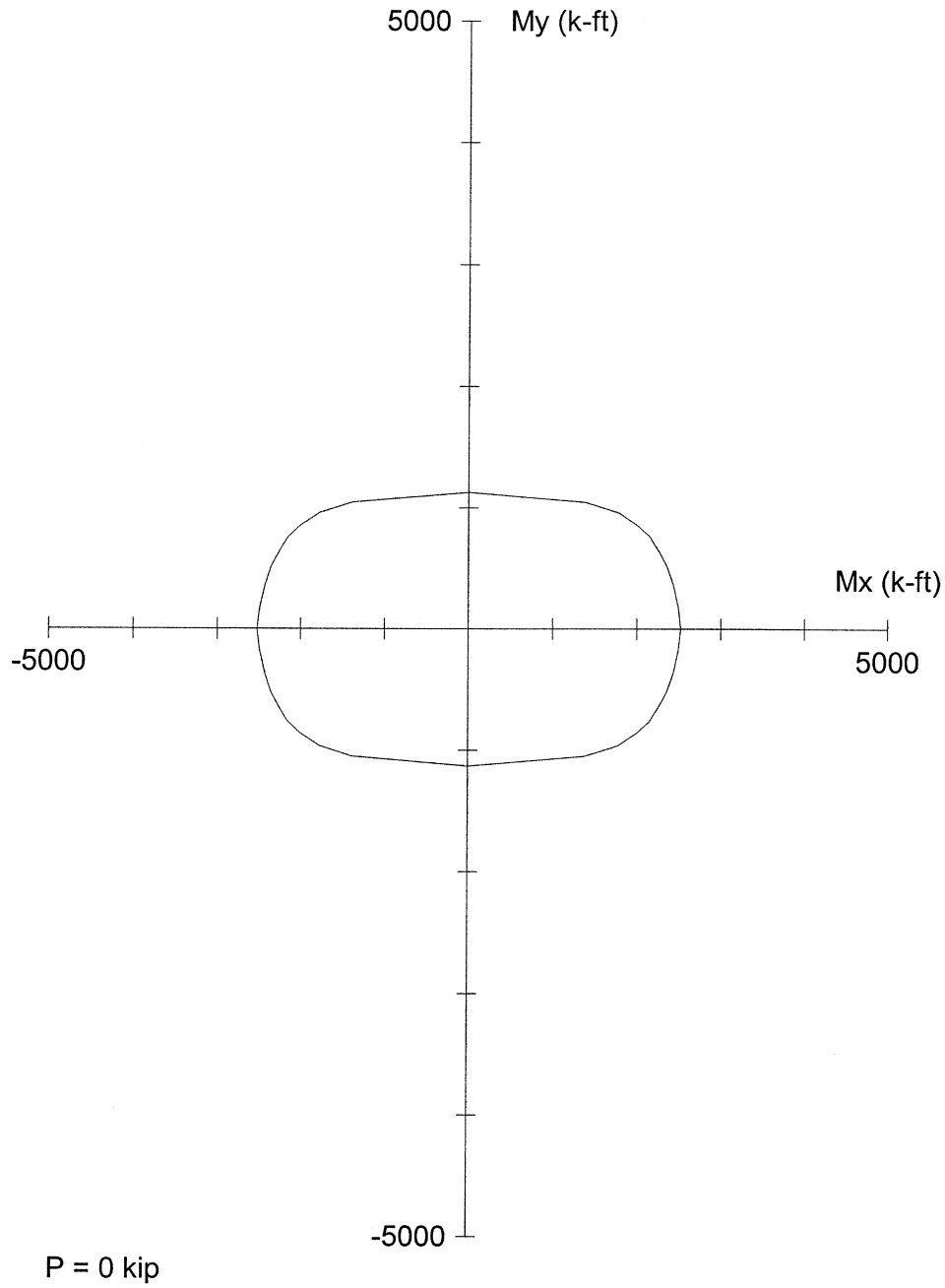


Code: ACI 318-95

Units: English

Run axis: Biaxial

Run option: Investigation

Slenderness: Not considered

Column type: Structural

Bars: User-defined

Date: 07/25/06

Time: 13:48:48

PCACOL V3.00 (PCA 1999) - Licensed to: Licensee name not yet specified.

File: S:\DGN-ST\NORTHC~1\BONNER~1\ANALYSIS\PIERS\HLB142\PCACOL~1\M14ACT.COL

Project: BONNER BRIDGE - OREGON INLET

| | | | |
|---|---|---|---|
| Column: HLB #142 | | Engineer: JMJ | |
| f'c = 4.4 ksi | fy = 40 ksi | Ag = 2042.9 in^2 | 18 #11 bars |
| Ec = 3781 ksi | Es = 29000 ksi | As = 28.08 in^2 | Rho = 1.37% |
| fc = 3.74 ksi | e_rup = Infinity | Xo = 0.00 in | Ix = 739327 in^4 |
| e_u = 0.003 in/in | | Yo = 0.00 in | Iy = 163602 in^4 |
| Beta1 = 0.83 | | Clear spacing = 6.79 in | Clear cover = 2.50 in |
| Confinement: Tied | phi(a) = 0.8, phi(b) = 0.9, phi(c) = 0.7 | | |

**LOCHNER**

PROJECT: BONNER BRIDGE - OREGON INLET NORTH CAROLINA
SUBJECT: HIGH LEVEL BENT #142
SUBJECT: TOP OF CAP - BASED ON PLAN DIMENSIONS

SHEET
JMJ Jun-06
KBM Jun-06

## CONCRETE DESIGN - CAP

**INPUT**

| | | | | | | |
|---|---|---|---|---|---|---|
| Dead Load Moment | 330.360 | Ft. Kips | Working Stress Mom. | | 503.770 | Ft. Kips |
| Live Load Moment | 173.410 | Ft. Kips | Load Factor Mom. | | 805.941 | Ft. Kips |
| Avrg. Bar Clearance | 3.625 | In. | Z For Steel Dist. | | 170 | |
| Cover | 3.000 | In. | f'c | = | 3.000 | Ksi |
| Width of Member (b) | 36.000 | In. | fy | = | 40.000 | Ksi |
| Depth of Member (h) | 42.000 | In. | | | | |

**AREA OF STEEL**

| | | | | | |
|---|---|---|---|---|---|
| Bar Size | 11 | | $d_C$ = | 4.330 | In. |
| No. Bars | 7 | | $d_C'$ = | 2.705 | In. |
| $A_S$ | 10.93 | Sq. In. | d = | 37.670 | In. |

**RESULTS**

| | | | | | |
|---|---|---|---|---|---|
| A | = | 2.00 x 4.56 x 2.705 | = | 24.68 | |
| $f_S$ Allow | = | 170.00 / (24.68 x 2.705)^.33 | = | 41.91 | Ksi 36.00 Max |
| a | = | (10.93 x 40.00) / 0.85 x 3.00 x 36.00 | = | 4.763 | In. |
| jd | = | 37.670 - 4.76 / 2.00 | = | 35.29 | |
| $f_S$ Act | = | (503.77 x 12.00) / 10.93 x 35.29 | = | 15.67 | Ksi |
| $\theta M_N$ | = | 0.90 x 10.93 x 40.00 x 35.29 / 12 | = | 1157.13 | Ft. Kips |

AASHTO 8.17.1 Min. Reinforcement $\phi M_n$ > 1.2Mcr Mcr = fr Ig/yt

| | | | | | | |
|---|---|---|---|---|---|---|
| fr | = | $7.5 (f'c)^{1/2}$ | | | = | 0.411 Ksi |
| Ig | = | $1/12 * b * h^3$ = 222264 $In.^4$ | yt = h/2 | | = | 21.00 In. |
| Mcr | = | 0.411 x 222264 / 21.00 / 12 | | | = | 362.32 Ft. Kips |

AASHTO 8.17.1 **$\phi M_n$ = 1157.13 > 1.2 Mcr = 434.78 OK**

**$f_S$ Act = 15.67 < $f_S$ Allow = 36.00 OK**

**$\phi M_n$ = 1157.13 > Mu = 805.94 OK**

**LOCHNER**

| | | SHEET | |
|---|---|---|---|
| PROJECT: | BONNER BRIDGE - OREGON INLET NORTH CAROLINA | JMJ | Jun-06 |
| SUBJECT: | HIGH LEVEL BENT #142 | KBM | Jun-06 |
| SUBJECT: | BOTTOM OF CAP - BASED ON PLAN DIMENSIONS | | |

## CONCRETE DESIGN - CAP

**INPUT**

| | | | | | | |
|---|---|---|---|---|---|---|
| Dead Load Moment | 203.250 | Ft. Kips | Working Stress Mom. | | 368.370 | Ft. Kips |
| Live Load Moment | 165.120 | Ft. Kips | Load Factor Mom. | | 622.701 | Ft. Kips |
| Bar Clearance | 3.625 | In. | Z For Steel Dist. | | 170 | |
| Cover | 3.000 | In. | f'c | = | 3.000 | Ksi |
| Width of Member (b) | 36.00 | In. | fy | = | 40.000 | Ksi |
| Depth of Member (h) | 42.00 | In. | | | | |

**AREA OF STEEL**

| | | | | | |
|---|---|---|---|---|---|
| Bar Size | 11 | | $d_C$ = | 4.330 | In. |
| No. Bars | 5 | | $d_C'$ = | 2.705 | In. |
| $A_S$ | 7.81 | Sq. In. | d = | 37.670 | In. |

**RESULTS**

| | | | | | | |
|---|---|---|---|---|---|---|
| A | = | 2.00 x 6.84 x 2.705 | = | 37.02 | | |
| $f_S$ Allow | = | 170.00 / (37.02 x 2.705)^.33 | = | 36.61 | Ksi | 36.00 Max |
| a | = | (7.81 x 40.00) / 0.85 x 3.00 x 36.00 | = | 3.402 | In. | |
| jd | = | 37.670 - 3.40 / 2.00 | = | 35.97 | | |
| $f_S$ Act | = | (368.37 x 12.00) / 7.81 x 35.97 | = | 15.74 | Ksi | |
| $\theta M_N$ | = | 0.90 x 7.81 x 40.00 x 35.97 / 12 | = | 842.46 | Ft. Kips | |

AASHTO 8.17.1 Min. Reinforcement $\phi M_n >$ 1.2Mcr Mcr = fr Ig/yt

| | | | | | | |
|---|---|---|---|---|---|---|
| fr | = | $7.5\ (f'c)^{1/2}$ | | = | 0.411 | Ksi |
| Ig | = | $1/12 * b * h^3$ = 222264 $In.^4$ | yt = h/2 | = | 21.00 | In. |
| Mcr | = | 0.411 x 222264 / 21.00 / 12 | | = | 362.32 | Ft. Kips |

AASHTO 8.17.1 **$\phi M_n$ = 842.46 > 1.2 Mcr = 434.78 OK**

**$f_S$ Act = 15.74 < $f_S$ Allow = 36.00 OK**

**$\phi M_n$ = 842.46 > Mu = 622.70 OK**

**LOCHNER**

| | | | |
|---|---|---|---|
| PROJECT: | BONNER BRIDGE - OREGON INLET NORTH CAROLINA | SHEET | |
| SUBJECT: | HIGH LEVEL BENT #142 | JMJ | Jun-06 |
| | SHEAR - BASED ON PLAN DIMENSIONS | KBM | Jun-06 |

# SHEAR DESIGN - CAP COMPLETE

$V_{DL}$ = 103.92 KIPS  $V_{LL}$ = 59.50 KIPS  $F_V$ = 40000 PSI

d = 37.67 INCHES  b = 36.00 INCHES  f'c = 3000 PSI

V@ d DIST. FROM FACE OF SUPPORT  Col. Width = D = 3.00 FT

ASSUME FACE OF SUPPORT  D/4 = 0.75 FT.  FROM CENTER OF COL.

$d_{DIST.}$ = 37.67 / 12.00 + 0.750 = 3.89 FT.  $W_{DL}$ CAP= 1.575 KIPS/FT

$V_{DL}$ = $V_{DL}$ - $W_{DL}$ * $d_{DIST}$ = 97.79

$V_U$ = 1.3($V_{DL}$ +(1.67*$V_{LL}$)) = 256.31

$V_U < q\ V_N$  $V_N = V_C + V_S$

$V_U < qV_C + qV_S$

$V_C$ = 2*(f'c)^1/2* b* d = 148.56 KIPS

$qV_S = V_U - qV_C$

$V_S = V_U/q - V_C$ = 152.98 KIPS

$V_S = A_V * F_V * d / S$

USE # 5 STIRRUPS  $A_S$= 0.31 SQ. IN.
No. of Bars = 2

$A_V = 2 \times A_S$ = 2 * 0.307 = 0.61359232 SQ. IN.

$S = A_V * F_V * d / V_S$ = 6.0 INCHES

$S_{MIN} = A_V * F_V /50 * b$ = 20.45 INCHES

$S_{ACT}$ = 6.00 INCHES **OK**

**LOCHNER**

SHEET

PROJECT: BONNER BRIDGE - OREGON INLET NORTH CAROLINA — JMJ Jul-06

SUBJECT: HIGH LEVEL BENT #142

SUBJECT: TOP OF CAP - BASED ON FIELD DATA, ASSUME 50% COVER LOSS EVERYWHERE — WDB 7/06

## CONCRETE DESIGN - CAP

**INPUT**

| | | | | | | |
|---|---|---|---|---|---|---|
| Dead Load Moment | 330.360 | Ft. Kips | Working Stress Mom. | | 503.770 | Ft. Kips |
| Live Load Moment | 173.410 | Ft. Kips | Load Factor Mom. | | 805.941 | Ft. Kips |
| Avrg. Bar Clearance | 3.625 | In. | Z For Steel Dist. | | 170 | |
| Cover | 3.000 | In. | f'c | = | 4.400 | Ksi |
| Width of Member (b) | 33.000 | In. | fy | = | 40.000 | Ksi |
| Depth of Member (h) | 42.000 | In. | | | | |

**AREA OF STEEL**

| | | | | | |
|---|---|---|---|---|---|
| Bar Size | 11 | | $d_C$ = | 4.330 | In. |
| No. Bars | 7 | | $d_C'$ = | 2.705 | In. |
| $A_S$ | 10.93 | Sq. In. | d = | 37.670 | In. |

**RESULTS**

| | | | | | | |
|---|---|---|---|---|---|---|
| A | = | 2.00 x 4.06 x 2.705 | = | 21.98 | | |
| $f_S$ Allow | = | 170.00 / (21.98 x 2.705)^.33 | = | 43.56 | Ksi | 36.00 Max |
| a | = | (10.93 x 40.00) / 0.85 x 4.40 x 33.00 | = | 3.542 | In. | |
| jd | = | 37.670 - 3.54 / 2.00 | = | 35.90 | | |
| $f_S$ Act | = | (503.77 x 12.00) / 10.93 x 35.90 | = | 15.41 | Ksi | |
| $\theta M_N$ | = | 0.90 x 10.93 x 40.00 x 35.90 / 12 | = | 1177.14 | Ft. Kips | |

AASHTO 8.17.1 — Min. Reinforcement — $\phi M_n >$ 1.2Mcr — Mcr = fr Ig/yt

| | | | | | | |
|---|---|---|---|---|---|---|
| fr | = | $7.5\ (f'c)^{1/2}$ | | | = | 0.497 Ksi |
| Ig | = | $1/12 * b * h^3$ = 203742 $In.^4$ | yt = h/2 | | = | 21.00 In. |
| Mcr | = | 0.497 x 203742 / 21.00 / 12 | | | = | 402.22 Ft. Kips |

AASHTO 8.17.1 — **$\phi M_n$ = 1177.14 > 1.2 Mcr = 482.67 OK**

**$f_S$ Act = 15.41 < $f_S$ Allow = 36.00 OK**

**$\phi M_n$ = 1177.14 > Mu = 805.94 OK**

**LOCHNER**

PROJECT: BONNER BRIDGE - OREGON INLET NORTH CAROLINA
SUBJECT: HIGH LEVEL BENT #142
SUBJECT: BOTTOM OF CAP - BASED ON FIELD DATA, ASSUME 50% COVER LOSS EVERYWHERE

SHEET
JMJ Jul-06
WAB 7/06

## CONCRETE DESIGN - CAP

**INPUT**

| | | | | | | |
|---|---|---|---|---|---|---|
| Dead Load Moment | 203.250 | Ft. Kips | Working Stress Mom. | | 368.370 | Ft. Kips |
| Live Load Moment | 165.120 | Ft. Kips | Load Factor Mom. | | 622.701 | Ft. Kips |
| Bar Clearance | 3.625 | In. | Z For Steel Dist. | | 170 | |
| Cover | 3.000 | In. | f'c | = | 4.400 | Ksi |
| Width of Member (b) | 33.00 | In. | fy | = | 40.000 | Ksi |
| Depth of Member (h) | 42.00 | In. | | | | |

**AREA OF STEEL**

| | | | | | |
|---|---|---|---|---|---|
| Bar Size | 11 | | $d_C$ = | 4.330 | In. |
| No. Bars | 5 | | $d_C'$ = | 2.705 | In. |
| $A_S$ | 7.81 | Sq. In. | d = | 37.670 | In. |

**RESULTS**

| | | | | | | |
|---|---|---|---|---|---|---|
| A | = | 2.00 x 6.09 x 2.705 | = | 32.97 | | |
| $f_S$ Allow | = | 170.00 / (32.97 x 2.705)^.33 | = | 38.06 | Ksi | 36.00 Max |
| a | = | (7.81 x 40.00) / 0.85 x 4.40 x 33.00 | = | 2.530 | In. | |
| jd | = | 37.670 - 2.53 / 2.00 | = | 36.40 | | |
| $f_S$ Act | = | (368.37 x 12.00) / 7.81 x 36.40 | = | 15.55 | Ksi | |
| $\theta M_N$ | = | 0.90 x 7.81 x 40.00 x 36.40 / 12 | = | 852.67 | Ft. Kips | |

AASHTO 8.17.1 Min. Reinforcement $\phi M_n >$ 1.2Mcr Mcr = fr Ig/yt

| | | | | | | |
|---|---|---|---|---|---|---|
| fr | = | $7.5\ (f'c)^{1/2}$ | | = | 0.497 | Ksi |
| Ig | = | $1/12 * b * h^3$ = 203742 $In.^4$ | yt = h/2 | = | 21.00 | In. |
| Mcr | = | 0.497 x 203742 / 21.00 / 12 | | = | 402.22 | Ft. Kips |

AASHTO 8.17.1 **$\phi M_n$ = 852.67 > 1.2 Mcr = 482.67 OK**

**$f_S$ Act = 15.55 < $f_S$ Allow = 36.00 OK**

**$\phi M_n$ = 852.67 > Mu = 622.70 OK**

**LOCHNER**

| | | | |
|---|---|---|---|
| PROJECT: | BONNER BRIDGE - OREGON INLET NORTH CAROLINA | SHEET | |
| SUBJECT: | HIGH LEVEL BENT #142 | JMJ | Jul-06 |
| | SHEAR - BASED ON FIELD DATA, ASSUME 5-% COVER LOSS EVERYWHERE | WDB | 7/06 |

# SHEAR DESIGN - CAP COMPLETE

$V_{DL}$ = 103.92 KIPS  $V_{LL}$ = 59.50 KIPS  $F_V$ = 40000 PSI

d = 37.67 INCHES  b = 33.00 INCHES  f'c = 4400 PSI

V@ d DIST. FROM FACE OF SUPPORT  Col. Width = D = 3.00 FT

ASSUME FACE OF SUPPORT  D/4 = 0.75 FT.  FROM CENTER OF COL.

$d_{DIST.}$ = 37.67 / 12.00 + 0.750 = 3.89 FT.  $W_{DL}$ CAP= 1.444 KIPS/FT

$V_{DL}$ = $V_{DL} - W_{DL} * d_{DIST}$ = 98.31

$V_U$ = $1.3(V_{DL} + (1.67*V_{LL}))$ = 256.97

$V_U < q\ V_N$  $V_N = V_C + V_S$

$V_U < qV_C + qV_S$

$V_C = 2*(f'c)^{1/2}* b* d$ = 164.92 KIPS

$qV_S = V_U - qV_C$

$V_S = V_U/q - V_C$ = 137.40 KIPS

$V_S = A_V* F_V * d / S$

USE # 5 STIRRUPS  $A_S$= 0.31 SQ. IN.
No. of Bars = 2

$A_V = 2\ x\ A_S$ = 2 * 0.307 = 0.61359232 SQ. IN.

$S = A_V * F_V* d / V_S$ = 6.7 INCHES

$S_{MIN} = A_V * F_V /50 *b$ = 22.31 INCHES

$S_{ACT}$ = 6.00 INCHES **OK**

**LOCHNER**

| | | SHEET | |
|---|---|---|---|
| PROJECT: | BONNER BRIDGE - OREGON INLET NORTH CAROLINA | JMJ | Jun-06 |
| SUBJECT: | HIGH LEVEL BENT #142 - TOP STRUT | KBM | Jun-06 |
| SUBJECT: | TOP OF STRUT - BASED ON PLAN DIMENSIONS | | |

## CONCRETE DESIGN - STRUT

**INPUT**

| | | | | | | |
|---|---|---|---|---|---|---|
| Dead Load Moment | 38.540 | Ft. Kips | Working Stress Mom. | | 67.210 | Ft. Kips |
| Live Load Moment | 28.670 | Ft. Kips | Load Factor Mom. | | 112.345 | Ft. Kips |
| Avrg. Bar Clearance | 3.625 | In. | Z For Steel Dist. | | 170 | |
| Cover | 3.000 | In. | f'c | = | 3.000 | Ksi |
| Width of Member (b) | 30.000 | In. | fy | = | 40.000 | Ksi |
| Depth of Member (h) | 36.000 | In. | | | | |

**AREA OF STEEL**

| | | | | | |
|---|---|---|---|---|---|
| Bar Size | 11 | | $d_C$ = | 4.330 | In. |
| No. Bars | 5 | | $d_C'$ = | 2.705 | In. |
| $A_S$ | 7.81 | Sq. In. | d = | 31.670 | In. |

**RESULTS**

| | | | | | | |
|---|---|---|---|---|---|---|
| A | = | 2.00 x 5.34 x 2.705 | = | 28.91 | | |
| $f_S$ Allow | = | 170.00 / (28.91 x 2.705)^.33 | = | 39.76 | Ksi | 36.00 Max |
| a | = | (7.81 x 40.00) / 0.85 x 3.00 x 30.00 | = | 4.082 | In. | |
| jd | = | 31.670 - 4.08 / 2.00 | = | 29.63 | | |
| $f_S$ Act | = | (67.21 x 12.00) / 7.81 x 29.63 | = | 3.49 | Ksi | |
| $\theta M_N$ | = | 0.90 x 7.81 x 40.00 x 29.63 / 12 | = | 693.96 | Ft. Kips | |

AASHTO 8.17.1 Min. Reinforcement $\phi M_n >$ 1.2Mcr Mcr = fr Ig/yt

| | | | | | | |
|---|---|---|---|---|---|---|
| fr | = | $7.5\ (f'c)^{1/2}$ | | | = | 0.411 Ksi |
| Ig | = | $1/12 * b * h^3$ = 116640 $In.^4$ | yt = h/2 | | = | 18.00 In. |
| Mcr | = | 0.411 x 116640 / 18.00 / 12 | | | = | 221.83 Ft. Kips |

AASHTO 8.17.1 **$\phi M_n$ = 693.96 > 1.2 Mcr = 266.19 OK**

**$f_S$ Act = 3.49 < $f_S$ Allow = 36.00 OK**

**$\phi M_n$ = 693.96 > Mu = 112.34 OK**

**LOCHNER**

| | | SHEET | |
|---|---|---|---|
| PROJECT: | BONNER BRIDGE - OREGON INLET NORTH CAROLINA | JMJ | Jun-06 |
| SUBJECT: | HIGH LEVEL BENT #142 - TOP STRUT | KBM | Jun-06 |
| SUBJECT: | BOTTOM OF STRUT - BASED ON PLAN DIMENSIONS | | |

## CONCRETE DESIGN - STRUT

**INPUT**

| | | | | | | |
|---|---|---|---|---|---|---|
| Dead Load Moment | 21.610 | Ft. Kips | Working Stress Mom. | | 27.840 | Ft. Kips |
| Live Load Moment | 6.230 | Ft. Kips | Load Factor Mom. | | 41.618 | Ft. Kips |
| Bar Clearance | 3.625 | In. | Z For Steel Dist. | | 170 | |
| Cover | 3.000 | In. | f'c | = | 3.000 | Ksi |
| Width of Member (b) | 30.00 | In. | fy | = | 40.000 | Ksi |
| Depth of Member (h) | 36.00 | In. | | | | |

**AREA OF STEEL**

| | | | | | |
|---|---|---|---|---|---|
| Bar Size | 11 | | $d_C$ = | 4.330 | In. |
| No. Bars | 5 | | $d_C'$ = | 2.705 | In. |
| $A_S$ | 7.81 | Sq. In. | d = | 31.670 | In. |

**RESULTS**

| | | | | | | |
|---|---|---|---|---|---|---|
| A | = | 2.00 x 5.34 x 2.705 | = | 28.91 | | |
| $f_S$ Allow | = | 170.00 / (28.91 x 2.705)^.33 | = | 39.76 | Ksi | 36.00 Max |
| a | = | (7.81 x 40.00) / 0.85 x 3.00 x 30.00 | = | 4.082 | In. | |
| jd | = | 31.670 - 4.08 / 2.00 | = | 29.63 | | |
| $f_S$ Act | = | (27.84 x 12.00) / 7.81 x 29.63 | = | 1.44 | Ksi | |
| $\theta M_N$ | = | 0.90 x 7.81 x 40.00 x 29.63 / 12 | = | 693.96 | Ft. Kips | |

AASHTO 8.17.1 Min. Reinforcement $\phi M_n >$ 1.2Mcr Mcr = fr Ig/yt

| | | | | | | |
|---|---|---|---|---|---|---|
| fr | = | $7.5 (f'c)^{1/2}$ | | = | 0.411 | Ksi |
| Ig | = | $1/12 * b * h^3$ = 116640 $In.^4$ | yt = h/2 | = | 18.00 | In. |
| Mcr | = | 0.411 x 116640 / 18.00 / 12 | | = | 221.83 | Ft. Kips |

AASHTO 8.17.1 **$\phi M_n$ = 693.96 > 1.2 Mcr = 266.19 OK**

**$f_S$ Act = 1.44 < $f_S$ Allow = 36.00 OK**

**$\phi M_n$ = 693.96 > Mu = 41.62 OK**

LOCHNER

| | | | |
|---|---|---|---|
| PROJECT: | BONNER BRIDGE - OREGON INLET NORTH CAROLINA | SHEET | |
| SUBJECT: | HIGH LEVEL BENT #142 - TOP STRUT | JMJ | Jun-06 |
| | SHEAR - BASED ON PLAN DIMENSIONS | KBM | Jun-06 |

# SHEAR DESIGN - STRUT COMPLETE

$V_{DL}$ = 11.63 KIPS $V_{LL}$ = 2.29 KIPS $F_V$ = 40000 PSI

d = 31.67 INCHES b = 30.00 INCHES f'c = 3000 PSI

V@ d DIST. FROM FACE OF SUPPORT Col. Width = D = 3.00 FT

ASSUME FACE OF SUPPORT D/4 = 0.75 FT. FROM CENTER OF COL.

$d_{DIST.}$ = 31.67 / 12.00 + 0.750 = 3.39 FT. $W_{DL}$ CAP= 1.125 KIPS/FT

$V_{DL}$ = $V_{DL} - W_{DL} * d_{DIST}$ = 7.82

$V_U$ = $1.3(V_{DL} + (1.67*V_{LL}))$ = 15.13

$V_U < q\,V_N$ $V_N = V_C + V_S$

$V_U < qV_C + qV_S$

$V_C$ = 2*(f'c)^1/2* b* d = 104.08 KIPS

$qV_S = V_U - qV_C$

$V_S = V_U/q - V_C$ = -86.27 KIPS

$V_S = A_V * F_V * d / S$

USE # 5 STIRRUPS $A_S$= 0.31 SQ. IN.

No. of Bars = 2

$A_V = 2 \times A_S$ = 2 * 0.307 = 0.61359232 SQ. IN.

$S = A_V * F_V * d / V_S$ = -9.0 INCHES

$S_{MIN} = A_V * F_V / 50 * b$ = 24.54 INCHES

$S_{ACT}$ = 14.00 INCHES **OK**

**LOCHNER**

PROJECT: BONNER BRIDGE - OREGON INLET NORTH CAROLINA
SUBJECT: HIGH LEVEL BENT #142 - TOP STRUT
SUBJECT: TOP OF STRUT - BASED ON FIELD DATA, ASSUME 50% COVER LOSS EVERYWHERE

SHEET
JMJ Jun-06
WDB 7/06

## CONCRETE DESIGN - STRUT

**INPUT**

| | | | | | | |
|---|---|---|---|---|---|---|
| Dead Load Moment | 38.540 | Ft. Kips | Working Stress Mom. | | 67.210 | Ft. Kips |
| Live Load Moment | 28.670 | Ft. Kips | Load Factor Mom. | | 112.345 | Ft. Kips |
| Avrg. Bar Clearance | 3.625 | In. | Z For Steel Dist. | | 170 | |
| Cover | 3.000 | In. | f'c | = | 4.400 | Ksi |
| Width of Member (b) | 27.000 | In. | fy | = | 40.000 | Ksi |
| Depth of Member (h) | 36.000 | In. | | | | |

**AREA OF STEEL**

| | | | | | |
|---|---|---|---|---|---|
| Bar Size | 11 | | $d_C$ = | 4.330 | In. |
| No. Bars | 5 | | $d_C'$ = | 2.705 | In. |
| $A_S$ | 7.81 | Sq. In. | d = | 31.670 | In. |

**RESULTS**

| | | | | | |
|---|---|---|---|---|---|
| A | = | 2.00 x 4.59 x 2.705 | = | 24.85 | |
| $f_S$ Allow | = | 170.00 / (24.85 x 2.705)^.33 | = | 41.82 Ksi | 36.00 Max |
| a | = | (7.81 x 40.00) / 0.85 x 4.40 x 27.00 | = | 3.093 In. | |
| jd | = | 31.670 - 3.09 / 2.00 | = | 30.12 | |
| $f_S$ Act | = | (67.21 x 12.00) / 7.81 x 30.12 | = | 3.43 Ksi | |
| $\theta M_N$ | = | 0.90 x 7.81 x 40.00 x 30.12 / 12 | = | 705.55 Ft. Kips | |

AASHTO 8.17.1 Min. Reinforcement $\phi M_n >$ 1.2Mcr Mcr = fr Ig/yt

| | | | | | | |
|---|---|---|---|---|---|---|
| fr | = | $7.5\ (f'c)^{1/2}$ | | | = | 0.497 Ksi |
| Ig | = | $1/12 * b * h^3$ = 104976 $In.^4$ | yt = h/2 | | = | 18.00 In. |
| Mcr | = | 0.497 x 104976 / 18.00 / 12 | | | = | 241.78 Ft. Kips |

AASHTO 8.17.1 **$\phi M_n$ = 705.55 > 1.2 Mcr = 290.14 OK**

**$f_S$ Act = 3.43 < $f_S$ Allow = 36.00 OK**

**$\phi M_n$ = 705.55 > Mu = 112.34 OK**

**LOCHNER**

SHEET

PROJECT: BONNER BRIDGE - OREGON INLET NORTH CAROLINA — JMJ Jun-06

SUBJECT: HIGH LEVEL BENT #142 - TOP STRUT — WDB 7/06

SUBJECT: BOTTOM OF STRUT - BASED ON FIELD DATA, ASSUME 50% COVER LOSS EVERYWHERE

## CONCRETE DESIGN - STRUT

**INPUT**

| | | | | | | |
|---|---|---|---|---|---|---|
| Dead Load Moment | 21.610 | Ft. Kips | Working Stress Mom. | | 27.840 | Ft. Kips |
| Live Load Moment | 6.230 | Ft. Kips | Load Factor Mom. | | 41.618 | Ft. Kips |
| Bar Clearance | 3.625 | In. | Z For Steel Dist. | | 170 | |
| Cover | 3.000 | In. | f'c | = | 4.400 | Ksi |
| Width of Member (b) | 27.00 | In. | fy | = | 40.000 | Ksi |
| Depth of Member (h) | 36.00 | In. | | | | |

**AREA OF STEEL**

| | | | | | |
|---|---|---|---|---|---|
| Bar Size | 11 | | $d_C$ = | 4.330 | In. |
| No. Bars | 5 | | $d_C'$ = | 2.705 | In. |
| $A_S$ | 7.81 | Sq. In. | d = | 31.670 | In. |

**RESULTS**

| | | | | | | |
|---|---|---|---|---|---|---|
| A | = | 2.00 x 4.59 x 2.705 | = | 24.85 | | |
| $f_S$ Allow | = | 170.00 / (24.85 x 2.705)^.33 | = | 41.82 | Ksi | 36.00 Max |
| a | = | (7.81 x 40.00) / 0.85 x 4.40 x 27.00 | = | 3.093 | In. | |
| jd | = | 31.670 - 3.09 / 2.00 | = | 30.12 | | |
| $f_S$ Act | = | (27.84 x 12.00) / 7.81 x 30.12 | = | 1.42 | Ksi | |
| $\theta M_N$ | = | 0.90 x 7.81 x 40.00 x 30.12 / 12 | = | 705.55 | Ft. Kips | |

AASHTO 8.17.1 — Min. Reinforcement — $\phi M_n >$ 1.2Mcr — Mcr = fr Ig/yt

| | | | | | | |
|---|---|---|---|---|---|---|
| fr | = | $7.5\,(f'c)^{1/2}$ | | = | 0.497 | Ksi |
| Ig | = | $1/12 * b * h^3$ = 104976 $In.^4$ | yt = h/2 | = | 18.00 | In. |
| Mcr | = | 0.497 x 104976 / 18.00 / 12 | | = | 241.78 | Ft. Kips |

AASHTO 8.17.1 — **$\phi M_n$ = 705.55 > 1.2 Mcr = 290.14 OK**

**$f_S$ Act = 1.42 < $f_S$ Allow = 36.00 OK**

**$\phi M_n$ = 705.55 > Mu = 41.62 OK**

**LOCHNER**

| | | | |
|---|---|---|---|
| PROJECT: | BONNER BRIDGE - OREGON INLET NORTH CAROLINA | SHEET JMJ | Jun-06 |
| SUBJECT: | HIGH LEVEL BENT #142 - TOP STRUT | WDB | 7/06 |
| | SHEAR - BASED ON FIELD DATA, ASSUME 50% COVER LOSS EVERYWHERE | | |

# SHEAR DESIGN - STRUT COMPLETE

$V_{DL}$ = 11.63 KIPS  $V_{LL}$ = 2.29 KIPS  $F_V$ = 40000 PSI

d = 31.67 INCHES  b = 27.00 INCHES  f'c = 4400 PSI

V@ d DIST. FROM FACE OF SUPPORT  Col. Width = D = 3.00 FT

ASSUME FACE OF SUPPORT  D/4 = 0.75 FT.  FROM CENTER OF COL.

$d_{DIST.}$ = 31.67 / 12.00 + 0.750 = 3.39 FT.  $W_{DL}$ CAP= 1.013 KIPS/FT

$V_{DL}$ = $V_{DL}$ - $W_{DL}$ * $d_{DIST}$ = 8.20

$V_U$ = 1.3($V_{DL}$ +(1.67*$V_{LL}$)) = 15.63

$V_U < q\ V_N$  $V_N = V_C + V_S$

$V_U < qV_C + qV_S$

$V_C$ = 2*(f'c)^1/2* b* d = 113.44 KIPS

$qV_S = V_U - qV_C$

$V_S = V_U/q - V_C$ = -95.05 KIPS

$V_S = A_V * F_V * d / S$

USE # 5 STIRRUPS  $A_S$= 0.31 SQ. IN.
No. of Bars = 2

$A_V = 2 \times A_S$ = 2 * 0.307 = 0.61359232 SQ. IN.

$S = A_V * F_V * d / V_S$ = -8.2 INCHES

$S_{MIN} = A_V * F_V /50 * b$ = 27.27 INCHES

$S_{ACT}$ = 14.00 INCHES **OK**

**LOCHNER**

PROJECT: BONNER BRIDGE - OREGON INLET NORTH CAROLINA
SUBJECT: HIGH LEVEL BENT #142 - BOTTOM STRUT
SUBJECT: TOP OF STRUT - BASED ON PLAN DIMENSIONS

SHEET
JMJ Jun-06
KBM Jun-06

## CONCRETE DESIGN - STRUT

**INPUT**

| | | | | | | |
|---|---|---|---|---|---|---|
| Dead Load Moment | 44.580 | Ft. Kips | Working Stress Mom. | | 67.950 | Ft. Kips |
| Live Load Moment | 23.370 | Ft. Kips | Load Factor Mom. | | 108.690 | Ft. Kips |
| Avrg. Bar Clearance | 3.625 | In. | Z For Steel Dist. | | 170 | |
| Cover | 3.000 | In. | f'c | = | 3.000 | Ksi |
| Width of Member (b) | 30.000 | In. | fy | = | 40.000 | Ksi |
| Depth of Member (h) | 36.000 | In. | | | | |

**AREA OF STEEL**

| | | | | | |
|---|---|---|---|---|---|
| Bar Size | 11 | | $d_C$ = | 4.330 | In. |
| No. Bars | 5 | | $d_C'$ = | 2.705 | In. |
| $A_S$ | 7.81 | Sq. In. | d = | 31.670 | In. |

**RESULTS**

| | | | | | | |
|---|---|---|---|---|---|---|
| A | = | 2.00 x 5.34 x 2.705 | = | 28.91 | | |
| $f_S$ Allow | = | 170.00 / (28.91 x 2.705)^.33 | = | 39.76 | Ksi | 36.00 Max |
| a | = | (7.81 x 40.00) / 0.85 x 3.00 x 30.00 | = | 4.082 | In. | |
| jd | = | 31.670 - 4.08 / 2.00 | = | 29.63 | | |
| $f_S$ Act | = | (67.95 x 12.00) / 7.81 x 29.63 | = | 3.52 | Ksi | |
| $\theta M_N$ | = | 0.90 x 7.81 x 40.00 x 29.63 / 12 | = | 693.96 | Ft. Kips | |

AASHTO 8.17.1 Min. Reinforcement $\phi M_n >$ 1.2Mcr Mcr = fr Ig/yt

| | | | | | | |
|---|---|---|---|---|---|---|
| fr | = | $7.5 (f'c)^{1/2}$ | | = | 0.411 | Ksi |
| Ig | = | $1/12 * b * h^3$ = 116640 $In.^4$ | yt = h/2 | = | 18.00 | In. |
| Mcr | = | 0.411 x 116640 / 18.00 / 12 | | = | 221.83 | Ft. Kips |

AASHTO 8.17.1 **$\phi M_n$ = 693.96 > 1.2 Mcr = 266.19 OK**

**$f_S$ Act = 3.52 < $f_S$ Allow = 36.00 OK**

**$\phi M_n$ = 693.96 > Mu = 108.69 OK**

**LOCHNER**

| | | SHEET | |
|---|---|---|---|
| PROJECT: | BONNER BRIDGE - OREGON INLET NORTH CAROLINA | JMJ | Jun-06 |
| SUBJECT: | HIGH LEVEL BENT #142 - BOTTOM STRUT | KBM | Jun-06 |
| SUBJECT: | BOTTOM OF STRUT - BASED ON PLAN DIMENSIONS | | |

## CONCRETE DESIGN - STRUT

**INPUT**

| | | | | | | |
|---|---|---|---|---|---|---|
| Dead Load Moment | 28.950 | Ft. Kips | Working Stress Mom. | | 30.100 | Ft. Kips |
| Live Load Moment | 1.150 | Ft. Kips | Load Factor Mom. | | 40.132 | Ft. Kips |
| Bar Clearance | 3.625 | In. | Z For Steel Dist. | | 170 | |
| Cover | 3.000 | In. | f'c | = | 3.000 | Ksi |
| Width of Member (b) | 30.00 | In. | fy | = | 40.000 | Ksi |
| Depth of Member (h) | 36.00 | In. | | | | |

**AREA OF STEEL**

| | | | | | |
|---|---|---|---|---|---|
| Bar Size | 11 | | $d_C$ = | 4.330 | In. |
| No. Bars | 5 | | $d_C'$ = | 2.705 | In. |
| $A_S$ | 7.81 | Sq. In. | d = | 31.670 | In. |

**RESULTS**

| | | | | | | |
|---|---|---|---|---|---|---|
| A | = | 2.00 x 5.34 x 2.705 | = | 28.91 | | |
| $f_S$ Allow | = | 170.00 / (28.91 x 2.705)^.33 | = | 39.76 | Ksi | 36.00 Max |
| a | = | (7.81 x 40.00) / 0.85 x 3.00 x 30.00 | = | 4.082 | In. | |
| jd | = | 31.670 - 4.08 / 2.00 | = | 29.63 | | |
| $f_S$ Act | = | (30.10 x 12.00) / 7.81 x 29.63 | = | 1.56 | Ksi | |
| $\theta M_N$ | = | 0.90 x 7.81 x 40.00 x 29.63 / 12 | = | 693.96 | Ft. Kips | |

AASHTO 8.17.1 Min. Reinforcement $\phi M_n >$ 1.2Mcr Mcr = fr Ig/yt

| | | | | | | |
|---|---|---|---|---|---|---|
| fr | = | $7.5 (f'c)^{1/2}$ | | = | 0.411 | Ksi |
| Ig | = | $1/12 * b * h^3$ = 116640 $In.^4$ | yt = h/2 | = | 18.00 | In. |
| Mcr | = | 0.411 x 116640 / 18.00 / 12 | | = | 221.83 | Ft. Kips |

AASHTO 8.17.1 **$\phi M_n$ = 693.96 > 1.2 Mcr = 266.19 OK**

**$f_S$ Act = 1.56 < $f_S$ Allow = 36.00 OK**

**$\phi M_n$ = 693.96 > Mu = 40.13 OK**

# SHEAR DESIGN - STRUT COMPLETE

$V_{DL}$ = 12.86 KIPS $V_{LL}$ = 1.96 KIPS $F_V$ = 40000 PSI

d = 31.67 INCHES b = 30.00 INCHES f'c = 3000 PSI

V@ d DIST. FROM FACE OF SUPPORT Col. Width = D = 3.00 FT

ASSUME FACE OF SUPPORT D/4 = 0.75 FT. FROM CENTER OF COL.

$d_{DIST.}$ = 31.67 / 12.00 + 0.750 = 3.39 FT. $W_{DL}$ CAP= 1.125 KIPS/FT

$V_{DL}$ = $V_{DL} - W_{DL} * d_{DIST}$ = 9.05

$V_U$ = $1.3(V_{DL} + (1.67*V_{LL}))$ = 16.02

$V_U < q\ V_N$ $V_N = V_C + V_S$

$V_U < qV_C + qV_S$

$V_C = 2*(f'c)^{1/2}* b* d$ = 104.08 KIPS

$qV_S = V_U - qV_C$

$V_S = V_U/q - V_C$ = -85.24 KIPS

$V_S = A_V * F_V * d / S$

USE # 5 STIRRUPS $A_S$= 0.31 SQ. IN.

No. of Bars = 2

$A_V = 2 \times A_S$ = 2 * 0.307 = 0.61359232 SQ. IN.

$S = A_V * F_V * d / V_S$ = -9.1 INCHES

$S_{MIN} = A_V * F_V /50 *b$ = 24.54 INCHES

$S_{ACT}$ = 14.00 INCHES **OK**

**LOCHNER**

SHEET

PROJECT: BONNER BRIDGE - OREGON INLET NORTH CAROLINA — JMJ Jun-06

SUBJECT: HIGH LEVEL BENT #142 - BOTTOM STRUT — WDB 7/06

SUBJECT: TOP OF STRUT - BASED ON FIELD DATA, ASSUME 50% COVER LOSS EVERYWHERE

## CONCRETE DESIGN - STRUT

**INPUT**

| | | | | | | |
|---|---|---|---|---|---|---|
| Dead Load Moment | 44.580 | Ft. Kips | Working Stress Mom. | | 67.950 | Ft. Kips |
| Live Load Moment | 23.370 | Ft. Kips | Load Factor Mom. | | 108.690 | Ft. Kips |
| Avrg. Bar Clearance | 3.625 | In. | Z For Steel Dist. | | 170 | |
| Cover | 3.000 | In. | f'c | = | 4.400 | Ksi |
| Width of Member (b) | 27.000 | In. | fy | = | 40.000 | Ksi |
| Depth of Member (h) | 36.000 | In. | | | | |

**AREA OF STEEL**

| | | | | | |
|---|---|---|---|---|---|
| Bar Size | 11 | | $d_C$ = | 4.330 | In. |
| No. Bars | 5 | | $d_C'$ = | 2.705 | In. |
| $A_S$ | 7.81 | Sq. In. | d = | 31.670 | In. |

**RESULTS**

| | | | | | |
|---|---|---|---|---|---|
| A | = | 2.00 x 4.59 x 2.705 | = | 24.85 | |
| $f_S$ Allow | = | 170.00 / (24.85 x 2.705)^.33 | = | 41.82 Ksi | 36.00 Max |
| a | = | (7.81 x 40.00) / 0.85 x 4.40 x 27.00 | = | 3.093 In. | |
| jd | = | 31.670 - 3.09 / 2.00 | = | 30.12 | |
| $f_S$ Act | = | (67.95 x 12.00) / 7.81 x 30.12 | = | 3.47 Ksi | |
| $\theta M_N$ | = | 0.90 x 7.81 x 40.00 x 30.12 / 12 | = | 705.55 Ft. Kips | |

AASHTO 8.17.1 — Min. Reinforcement — $\phi M_n >$ 1.2Mcr — Mcr = fr Ig/yt

| | | | | | | |
|---|---|---|---|---|---|---|
| fr | = | $7.5 (f'c)^{1/2}$ | | | = | 0.497 Ksi |
| Ig | = | $1/12 * b * h^3$ = 104976 $In.^4$ | yt = h/2 | | = | 18.00 In. |
| Mcr | = | 0.497 x 104976 / 18.00 / 12 | | | = | 241.78 Ft. Kips |

AASHTO 8.17.1 — **$\phi M_n$ = 705.55 > 1.2 Mcr = 290.14 OK**

**$f_S$ Act = 3.47 < $f_S$ Allow = 36.00 OK**

**$\phi M_n$ = 705.55 > Mu = 108.69 OK**

**LOCHNER**

SHEET

PROJECT: BONNER BRIDGE - OREGON INLET NORTH CAROLINA — JMJ Jun-06

SUBJECT: HIGH LEVEL BENT #142 - BOTTOM STRUT — NDB 7/06

SUBJECT: BOTTOM OF STRUT - BASED ON FIELD DATA, ASSUME 50% COVER LOSS EVERYWHERE

## CONCRETE DESIGN - STRUT

**INPUT**

| | | | | | | |
|---|---|---|---|---|---|---|
| Dead Load Moment | 28.950 | Ft. Kips | Working Stress Mom. | | 30.100 | Ft. Kips |
| Live Load Moment | 1.150 | Ft. Kips | Load Factor Mom. | | 40.132 | Ft. Kips |
| Bar Clearance | 3.625 | In. | Z For Steel Dist. | | 170 | |
| Cover | 3.000 | In. | f'c | = | 4.400 | Ksi |
| Width of Member (b) | 27.00 | In. | fy | = | 40.000 | Ksi |
| Depth of Member (h) | 36.00 | In. | | | | |

**AREA OF STEEL**

| | | | | | |
|---|---|---|---|---|---|
| Bar Size | 11 | | $d_C$ = | 4.330 | In. |
| No. Bars | 5 | | $d_C'$ = | 2.705 | In. |
| $A_S$ | 7.81 | Sq. In. | d = | 31.670 | In. |

**RESULTS**

| | | | | | |
|---|---|---|---|---|---|
| A | = | 2.00 x 4.59 x 2.705 | = | 24.85 | |
| $f_S$ Allow | = | 170.00 / (24.85 x 2.705)^.33 | = | 41.82 | Ksi 36.00 Max |
| a | = | (7.81 x 40.00) / 0.85 x 4.40 x 27.00 | = | 3.093 | In. |
| jd | = | 31.670 - 3.09 / 2.00 | = | 30.12 | |
| $f_S$ Act | = | (30.10 x 12.00) / 7.81 x 30.12 | = | 1.54 | Ksi |
| $\theta M_N$ | = | 0.90 x 7.81 x 40.00 x 30.12 / 12 | = | 705.55 | Ft. Kips |

AASHTO 8.17.1 Min. Reinforcement $\phi M_n >$ 1.2Mcr Mcr = fr Ig/yt

| | | | | | | |
|---|---|---|---|---|---|---|
| fr | = | $7.5 (f'c)^{1/2}$ | | | = | 0.497 Ksi |
| Ig | = | $1/12 * b * h^3$ = 104976 $In.^4$ | yt = h/2 | | = | 18.00 In. |
| Mcr | = | 0.497 x 104976 / 18.00 / 12 | | | = | 241.78 Ft. Kips |

AASHTO 8.17.1 **$\phi M_n$ = 705.55 > 1.2 Mcr = 290.14 OK**

**$f_S$ Act = 1.54 < $f_S$ Allow = 36.00 OK**

**$\phi M_n$ = 705.55 > Mu = 40.13 OK**

**LOCHNER**

| | | | |
|---|---|---|---|
| PROJECT: | BONNER BRIDGE - OREGON INLET NORTH CAROLINA | SHEET | |
| SUBJECT: | HIGH LEVEL BENT #142 - BOTTOM STRUT | JMJ | Jun-06 |
| | SHEAR - BASED ON FIELD DATA, ASSUME 50% COVER LOSS EVERYWHERE | WDB | 7/06 |

# SHEAR DESIGN - STRUT COMPLETE

$V_{DL}$ = 12.86 KIPS  $V_{LL}$ = 1.96 KIPS  $F_V$ = 40000 PSI

d = 31.67 INCHES  b = 27.00 INCHES  f'c = 4400 PSI

V@ d DIST. FROM FACE OF SUPPORT  Col. Width = D = 3.00 FT

ASSUME FACE OF SUPPORT  D/4 = 0.75 FT.  FROM CENTER OF COL.

$d_{DIST.}$ = 31.67 / 12.00 + 0.750 = 3.39 FT.  $W_{DL}$ CAP= 1.013 KIPS/FT

$V_{DL}$ = $V_{DL}$ - $W_{DL}$ * $d_{DIST}$ = 9.43

$V_U$ = 1.3($V_{DL}$ +(1.67*$V_{LL}$)) = 16.51

$V_U < q\ V_N$  $V_N = V_C + V_S$

$V_U < qV_C + qV_S$

$V_C$ = 2*(f'c)^1/2* b* d = 113.44 KIPS

$qV_S = V_U - qV_C$

$V_S = V_U/q - V_C$ = -94.01 KIPS

$V_S = A_V * F_V * d / S$

USE # 5 STIRRUPS  $A_S$= 0.31 SQ. IN.
No. of Bars = 2

$A_V = 2 \times A_S$ = 2 * 0.307 = 0.61359232 SQ. IN.

$S = A_V * F_V * d / V_S$ = -8.3 INCHES

$S_{MIN} = A_V * F_V /50 * b$ = 27.27 INCHES

$S_{ACT}$ = 14.00 INCHES **OK**

H. W. LOCHNER, INC.

PROJECT: BONNER BRIDGE - OREGON INLET NORTH CAROLINA
SUBJECT: HIGH LEVEL BENT ANALYSIS
HLB 142 MEM. 13 JT. FOOTING

JMJ Jul-06
WDB 7/06

## FOOTING LOADS

**PMIN**

HLB 142 MEMBER 13 JOINT FOOTING

GROUP 1

| | P | MY | MZ |
|---|---|---|---|
| DL | 356.21 | 0.00 | 20.43 |
| LL | 41.38 | 0.00 | -8.06 |
| GROUP 1 | 0.00 | 0.00 | 0.00 |
| SERVICE | 397.59 | 0.00 | 12.37 |
| STRENGTH | 552.73 | 0.00 | 9.10 |

GROUP 2

| | P | MY | MZ |
|---|---|---|---|
| DL | 356.21 | 0.00 | 20.43 |
| LL | 0.00 | 0.00 | 0.00 |
| GROUP 2 | 40.07 | 983.49 | -79.79 |
| SERVICE | 396.28 | 983.49 | -59.36 |
| STRENGTH | 515.16 | 1278.54 | -77.17 |

GROUP 3

| | P | MY | MZ |
|---|---|---|---|
| DL | 356.21 | 0.00 | 20.43 |
| LL | 41.38 | 0.00 | -8.06 |
| GROUP 3 | 17.10 | 571.04 | -31.50 |
| SERVICE | 414.69 | 571.04 | -19.13 |
| STRENGTH | 539.10 | 742.35 | -24.87 |

GROUP 4

| | P | MY | MZ |
|---|---|---|---|
| DL | 356.21 | 0.00 | 20.43 |
| LL | 41.38 | 0.00 | -8.06 |
| GROUP 4 | -38.82 | 0.00 | 851.50 |
| SERVICE | 358.77 | 0.00 | 863.87 |
| STRENGTH | 466.40 | 0.00 | 1123.03 |

GROUP 5

| | P | MY | MZ |
|---|---|---|---|
| DL | 356.21 | 0.00 | 20.43 |
| LL | 0.00 | 0.00 | 0.00 |
| GROUP 5 | 1.25 | 983.49 | 771.71 |
| SERVICE | 357.46 | 983.49 | 792.14 |
| STRENGTH | 446.83 | 1229.36 | 990.18 |

GROUP 6

| | P | MY | MZ |
|---|---|---|---|
| DL | 356.21 | 0.00 | 20.43 |
| LL | 41.38 | 0.00 | -8.06 |
| GROUP 6 | -21.73 | 571.04 | 820.00 |
| SERVICE | 375.86 | 571.04 | 832.37 |
| STRENGTH | 469.83 | 713.80 | 1040.46 |

H. W. LOCHNER, INC.

PROJECT: BONNER BRIDGE - OREGON INLET NORTH CAROLINA JMJ Jul-06
SUBJECT: HIGH LEVEL BENT ANALYSIS
HLB 142 MEM. 14 JT. FOOTING WDB 7/06

## FOOTING LOADS

**PMAX**

HLB 142 MEMBER 14 JOINT FOOTING

GROUP 1

| | P | MY | MZ |
|---|---|---|---|
| DL | 356.14 | 0.00 | 21.29 |
| LL | 80.83 | 0.00 | 8.33 |
| GROUP 1 | 0.00 | 0.00 | 0.00 |
| SERVICE | 436.97 | 0.00 | 29.62 |
| STRENGTH | 638.11 | 0.00 | 45.73 |

GROUP 2

| | P | MY | MZ |
|---|---|---|---|
| DL | 356.14 | 0.00 | 21.29 |
| LL | 0.00 | 0.00 | 0.00 |
| GROUP 2 | -40.10 | -983.68 | 79.73 |
| SERVICE | 316.04 | -983.68 | 101.02 |
| STRENGTH | 410.85 | -1278.78 | 131.33 |

GROUP 3

| | P | MY | MZ |
|---|---|---|---|
| DL | 356.14 | 0.00 | 21.29 |
| LL | 80.83 | 0.00 | 8.33 |
| GROUP 3 | -17.11 | -571.14 | 31.48 |
| SERVICE | 419.86 | -571.14 | 61.10 |
| STRENGTH | 545.82 | -742.48 | 79.43 |

GROUP 4

| | P | MY | MZ |
|---|---|---|---|
| DL | 356.14 | 0.00 | 21.29 |
| LL | 80.83 | 0.00 | 8.33 |
| GROUP 4 | -40.19 | 0.00 | 851.09 |
| SERVICE | 396.78 | 0.00 | 880.71 |
| STRENGTH | 515.81 | 0.00 | 1144.92 |

GROUP 5

| | P | MY | MZ |
|---|---|---|---|
| DL | 356.14 | 0.00 | 21.29 |
| LL | 0.00 | 0.00 | 0.00 |
| GROUP 5 | -80.29 | -983.69 | 930.82 |
| SERVICE | 275.85 | -983.69 | 952.11 |
| STRENGTH | 344.81 | -1229.61 | 1190.14 |

GROUP 6

| | P | MY | MZ |
|---|---|---|---|
| DL | 356.14 | 0.00 | 21.29 |
| LL | 80.83 | 0.00 | 8.33 |
| GROUP 6 | -57.30 | -571.14 | 882.56 |
| SERVICE | 379.67 | -571.14 | 912.18 |
| STRENGTH | 474.59 | -713.93 | 1140.23 |

H. W. Lochner, Inc. PHONE: 859-224-4476
1040 Monarch St. Suite 300 Lexington, KY 40513
SHEET 1 OF 9
JOB NO. HLB#142
PROGRAM: RC-PIER® v4.1.0 LEAP Software Inc., Tampa, Florida
BY JMJ DATE Jun/15/2006
PHONE : TOLL-FREE 1-800-451-5327 TAMPA AREA: 813-985-9170
CKD. DATE

PROJECT: BONNER BRIDGE - OREGON INLET NORTH CAROLINA

PROJECT DATA
==========

Project : BONNER BRIDGE - OREGON INLET NORTH CAROLINA
User Job No.: HLB#142
State : North Carolina State Job No. :
Code : AASHTO STANDARD (17th Edition 2002)
Comments : Bonner Bridge HLB #142 - Load Groups 1-3 (For Ease of Checking) - Per Pla
n Dimensions

JMJ 7/06
WDB 7/06

H. W. Lochner, Inc. PHONE: 859-224-4476
1040 Monarch St. Suite 300 Lexington, KY 40513

JOB NO. HLB#142
PROGRAM: RC-PIER® v4.1.0 LEAP Software Inc., Tampa, Florida
BY JMJ DATE Jun/15/2006
PHONE : TOLL-FREE 1-800-451-5327 TAMPA AREA: 813-985-9170
CKD. DATE

PROJECT: BONNER BRIDGE - OREGON INLET NORTH CAROLINA

LOADS
=====

Load Cases: 3

Loadcase ID: (L+In)1 Name: Group 1 Loadings
Multiplier = 1.000

Cap loads:

| Type | Dir | Arm ft | Mag1 kip,kip/ft, kft | x1/L | Mag2 kip,kip/ft, kft | x2/L |
|---|---|---|---|---|---|---|
| Force | Y | 0.00 | -552.73 | 0.00 | ---- | ---- |
| Force | Y | 0.00 | -638.11 | 1.00 | ---- | ---- |
| Moment | Z | ---- | 9.10 | 0.00 | ---- | ---- |
| Moment | Z | ---- | 45.73 | 1.00 | ---- | ---- |

Loadcase ID: (L+Ip)1 Name: Group 2 Loadings
Multiplier = 1.000

Cap loads:

| Type | Dir | Arm ft | Mag1 kip,kip/ft, kft | x1/L | Mag2 kip,kip/ft, kft | x2/L |
|---|---|---|---|---|---|---|
| Force | Y | 0.00 | -515.16 | 0.00 | ---- | ---- |
| Force | Y | 0.00 | -410.85 | 1.00 | ---- | ---- |
| Moment | X | ---- | -1278.78 | 1.00 | ---- | ---- |
| Moment | X | ---- | 1278.54 | 0.00 | ---- | ---- |
| Moment | Z | ---- | -77.17 | 0.00 | ---- | ---- |
| Moment | Z | ---- | 131.33 | 1.00 | ---- | ---- |

Loadcase ID: W1 Name: Group 3 Loadings
Multiplier = 1.000

Cap loads:

| Type | Dir | Arm ft | Mag1 kip,kip/ft, kft | x1/L | Mag2 kip,kip/ft, kft | x2/L |
|---|---|---|---|---|---|---|
| Force | Y | 0.00 | -539.10 | 0.00 | ---- | ---- |
| Force | Y | 0.00 | -545.82 | 1.00 | ---- | ---- |
| Moment | X | ---- | -742.48 | 1.00 | ---- | ---- |
| Moment | X | ---- | 742.35 | 0.00 | ---- | ---- |
| Moment | Z | ---- | -24.87 | 0.00 | ---- | ---- |
| Moment | Z | ---- | 79.43 | 1.00 | ---- | ---- |

Selected load groups:

SERVICE GROUP I
SERVICE GROUP IB
SERVICE GROUP II

H. W. Lochner, Inc. PHONE: 859-224-4476
1040 Monarch St. Suite 300 Lexington, KY 40513
SHEET 3 OF 9
JOB NO. HLB#142
PROGRAM: RC-PIER® v4.1.0 LEAP Software Inc., Tampa, Florida
BY JMJ DATE Jun/15/2006
PHONE : TOLL-FREE 1-800-451-5327 TAMPA AREA: 813-985-9170
CKD. DATE

PROJECT: BONNER BRIDGE - OREGON INLET NORTH CAROLINA

COMBINED FOOTING DESIGN

Code: AASHTO STANDARD (17th Edition 2002) - Service Load Design
Units: US

Geometry:
=========
Name : 1
Shape : Rectangular, Type : Pile/Shaft Cap

Bf(X) = 35.00 ft, Hf(Z) = 13.50 ft, Thickness(Y) = 51.00 in

Footing concentric.
Columns located on the footing:
Column No. 1 at x = 0.00 ft, Rectangular 36.00 in x 71.00 in
Column No. 2 at x = 25.50 ft, Rectangular 36.00 in x 71.00 in

Ag = 472.50 ft^2, Ix = 225.63 ft^2, Iz = 1825.50 ft^2

Surcharge = 0.00 ksf

Piles: Circular Size: 22.00 in Capacity: 100.00 kips

Design Parameters:
==========
f'c = 3000.00 psi fy = 40000.00 psi
Ec = 3320.6 ksi Es = 29000.0 ksi
Crack control factor z = 130.00 kips/in
Concrete Type : Normal Weight.

Pile Reactions, Service (Without the reduction of overstress allowance):
==========

| Pile | Loc(X) ft | X in | Z in | Column Loads col# | comb | Ovs | P, kips | Mxx, kft | Mzz, kft | Pile Reac. kips |
|---|---|---|---|---|---|---|---|---|---|---|
| 1 | -2.80 | 24.0 | 57.0 | 1 | 2 | 1.000 | -515.15 | 1278.04 | -82.20 | 93.13 |
| | | | | 2 | 2 | 1.000 | -410.86 | -1278.28 | 131.39 | |
| | | | | 1 | 4 | 1.250 | 539.10 | -742.06 | 30.22 | -51.47 |
| | | | | 2 | 4 | 1.250 | 545.82 | 742.19 | -79.45 | |
| 2 | 4.70 | 114.0 | 57.0 | 1 | 1 | 1.000 | -552.73 | 0.00 | 3.56 | 94.66 |
| | | | | 2 | 1 | 1.000 | -638.11 | 0.00 | 45.72 | |
| | | | | 1 | 4 | 1.250 | 539.10 | -742.06 | 30.22 | -51.85 |
| | | | | 2 | 4 | 1.250 | 545.82 | 742.19 | -79.45 | |
| 3 | 12.70 | 210.0 | 57.0 | 1 | 1 | 1.000 | -552.73 | 0.00 | 3.56 | 99.47 |
| | | | | 2 | 1 | 1.000 | -638.11 | 0.00 | 45.72 | |
| | | | | 1 | 4 | 1.250 | 539.10 | -742.06 | 30.22 | -52.24 |
| | | | | 2 | 4 | 1.250 | 545.82 | 742.19 | -79.45 | |
| 4 | 20.70 | 306.0 | 57.0 | 1 | 1 | 1.000 | -552.73 | 0.00 | 3.56 | 104.29* |
| | | | | 2 | 1 | 1.000 | -638.11 | 0.00 | 45.72 | |
| | | | | 1 | 4 | 1.250 | 539.10 | -742.06 | 30.22 | -52.64 |
| | | | | 2 | 4 | 1.250 | 545.82 | 742.19 | -79.45 | |
| 5 | 28.20 | 396.0 | 57.0 | 1 | 1 | 1.000 | -552.73 | 0.00 | 3.56 | 108.80* |
| | | | | 2 | 1 | 1.000 | -638.11 | 0.00 | 45.72 | |
| | | | | 1 | 4 | 1.250 | 539.10 | -742.06 | 30.22 | -53.01 |
| | | | | 2 | 4 | 1.250 | 545.82 | 742.19 | -79.45 | |
| 6 | -2.80 | 24.0 | 0.0 | 1 | 2 | 1.000 | -515.15 | 1278.04 | -82.20 | 93.13 |
| | | | | 2 | 2 | 1.000 | -410.86 | -1278.28 | 131.39 | |
| | | | | 1 | 4 | 1.250 | 539.10 | -742.06 | 30.22 | -51.48 |

PROJECT: BONNER BRIDGE - OREGON INLET NORTH CAROLINA

| | | | | | | | | | | |
|---|---|---|---|---|---|---|---|---|---|---|
| | | | | 2 | 4 | 1.250 | 545.82 | 742.19 | -79.45 | |
| 7 | 4.70 | 114.0 | 0.0 | 1 | 1 | 1.000 | -552.73 | 0.00 | 3.56 | 94.66 |
| | | | | 2 | 1 | 1.000 | -638.11 | 0.00 | 45.72 | |
| | | | | 1 | 4 | 1.250 | 539.10 | -742.06 | 30.22 | -51.85 |
| | | | | 2 | 4 | 1.250 | 545.82 | 742.19 | -79.45 | |
| 8 | 12.70 | 210.0 | 0.0 | 1 | 1 | 1.000 | -552.73 | 0.00 | 3.56 | 99.47 |
| | | | | 2 | 1 | 1.000 | -638.11 | 0.00 | 45.72 | |
| | | | | 1 | 4 | 1.250 | 539.10 | -742.06 | 30.22 | -52.25 |
| | | | | 2 | 4 | 1.250 | 545.82 | 742.19 | -79.45 | |
| 9 | 20.70 | 306.0 | 0.0 | 1 | 1 | 1.000 | -552.73 | 0.00 | 3.56 | 104.29* |
| | | | | 2 | 1 | 1.000 | -638.11 | 0.00 | 45.72 | |
| | | | | 1 | 4 | 1.250 | 539.10 | -742.06 | 30.22 | -52.64 |
| | | | | 2 | 4 | 1.250 | 545.82 | 742.19 | -79.45 | |
| 10 | 28.20 | 396.0 | 0.0 | 1 | 1 | 1.000 | -552.73 | 0.00 | 3.56 | 108.80* |
| | | | | 2 | 1 | 1.000 | -638.11 | 0.00 | 45.72 | |
| | | | | 1 | 4 | 1.250 | 539.10 | -742.06 | 30.22 | -53.02 |
| | | | | 2 | 4 | 1.250 | 545.82 | 742.19 | -79.45 | |
| 11 | -2.80 | 24.0 | -57.0 | 1 | 2 | 1.000 | -515.15 | 1278.04 | -82.20 | 93.14 |
| | | | | 2 | 2 | 1.000 | -410.86 | -1278.28 | 131.39 | |
| | | | | 1 | 4 | 1.250 | 539.10 | -742.06 | 30.22 | -51.48 |
| | | | | 2 | 4 | 1.250 | 545.82 | 742.19 | -79.45 | |
| 12 | 4.70 | 114.0 | -57.0 | 1 | 1 | 1.000 | -552.73 | 0.00 | 3.56 | 94.66 |
| | | | | 2 | 1 | 1.000 | -638.11 | 0.00 | 45.72 | |
| | | | | 1 | 4 | 1.250 | 539.10 | -742.06 | 30.22 | -51.85 |
| | | | | 2 | 4 | 1.250 | 545.82 | 742.19 | -79.45 | |
| 13 | 12.70 | 210.0 | -57.0 | 1 | 1 | 1.000 | -552.73 | 0.00 | 3.56 | 99.47 |
| | | | | 2 | 1 | 1.000 | -638.11 | 0.00 | 45.72 | |
| | | | | 1 | 4 | 1.250 | 539.10 | -742.06 | 30.22 | -52.25 |
| | | | | 2 | 4 | 1.250 | 545.82 | 742.19 | -79.45 | |
| 14 | 20.70 | 306.0 | -57.0 | 1 | 1 | 1.000 | -552.73 | 0.00 | 3.56 | 104.29* |
| | | | | 2 | 1 | 1.000 | -638.11 | 0.00 | 45.72 | |
| | | | | 1 | 4 | 1.250 | 539.10 | -742.06 | 30.22 | -52.65 |
| | | | | 2 | 4 | 1.250 | 545.82 | 742.19 | -79.45 | |
| 15 | 28.20 | 396.0 | -57.0 | 1 | 1 | 1.000 | -552.73 | 0.00 | 3.56 | 108.80* |
| | | | | 2 | 1 | 1.000 | -638.11 | 0.00 | 45.72 | |
| | | | | 1 | 4 | 1.250 | 539.10 | -742.06 | 30.22 | -53.02 |
| | | | | 2 | 4 | 1.250 | 545.82 | 742.19 | -79.45 | |

Pile Reactions, Service (After the reduction of overstress allowance):

| Pile | Loc(X) ft | X in | Z in | Column Loads col# | comb | Ovs | P, kips | Mxx, kft | Mzz, kft | Pile Reac. kips |
|---|---|---|---|---|---|---|---|---|---|---|
| 1 | -2.80 | 24.0 | 57.0 | 1 | 2 | 1.000 | -515.15 | 1278.04 | -82.20 | 93.13 |
| | | | | 2 | 2 | 1.000 | -410.86 | -1278.28 | 131.39 | |
| | | | | 1 | 4 | 1.250 | 539.10 | -742.06 | 30.22 | -41.18 |
| | | | | 2 | 4 | 1.250 | 545.82 | 742.19 | -79.45 | |
| 2 | 4.70 | 114.0 | 57.0 | 1 | 1 | 1.000 | -552.73 | 0.00 | 3.56 | 94.66 |
| | | | | 2 | 1 | 1.000 | -638.11 | 0.00 | 45.72 | |
| | | | | 1 | 4 | 1.250 | 539.10 | -742.06 | 30.22 | -41.48 |
| | | | | 2 | 4 | 1.250 | 545.82 | 742.19 | -79.45 | |
| 3 | 12.70 | 210.0 | 57.0 | 1 | 1 | 1.000 | -552.73 | 0.00 | 3.56 | 99.47 |
| | | | | 2 | 1 | 1.000 | -638.11 | 0.00 | 45.72 | |
| | | | | 1 | 4 | 1.250 | 539.10 | -742.06 | 30.22 | -41.80 |
| | | | | 2 | 4 | 1.250 | 545.82 | 742.19 | -79.45 | |
| 4 | 20.70 | 306.0 | 57.0 | 1 | 1 | 1.000 | -552.73 | 0.00 | 3.56 | 104.29* |
| | | | | 2 | 1 | 1.000 | -638.11 | 0.00 | 45.72 | |
| | | | | 1 | 4 | 1.250 | 539.10 | -742.06 | 30.22 | -42.11 |

PROJECT: BONNER BRIDGE - OREGON INLET NORTH CAROLINA

| | | | | | | | | | | |
|---|---|---|---|---|---|---|---|---|---|---|
| | | | | 2 | 4 | 1.250 | 545.82 | 742.19 | -79.45 | |
| 5 | 28.20 | 396.0 | 57.0 | 1 | 1 | 1.000 | -552.73 | 0.00 | 3.56 | 108.80* |
| | | | | 2 | 1 | 1.000 | -638.11 | 0.00 | 45.72 | |
| | | | | 1 | 4 | 1.250 | 539.10 | -742.06 | 30.22 | -42.41 |
| | | | | 2 | 4 | 1.250 | 545.82 | 742.19 | -79.45 | |
| 6 | -2.80 | 24.0 | 0.0 | 1 | 2 | 1.000 | -515.15 | 1278.04 | -82.20 | 93.13 |
| | | | | 2 | 2 | 1.000 | -410.86 | -1278.28 | 131.39 | |
| | | | | 1 | 4 | 1.250 | 539.10 | -742.06 | 30.22 | -41.18 |
| | | | | 2 | 4 | 1.250 | 545.82 | 742.19 | -79.45 | |
| 7 | 4.70 | 114.0 | 0.0 | 1 | 1 | 1.000 | -552.73 | 0.00 | 3.56 | 94.66 |
| | | | | 2 | 1 | 1.000 | -638.11 | 0.00 | 45.72 | |
| | | | | 1 | 4 | 1.250 | 539.10 | -742.06 | 30.22 | -41.48 |
| | | | | 2 | 4 | 1.250 | 545.82 | 742.19 | -79.45 | |
| 8 | 12.70 | 210.0 | 0.0 | 1 | 1 | 1.000 | -552.73 | 0.00 | 3.56 | 99.47 |
| | | | | 2 | 1 | 1.000 | -638.11 | 0.00 | 45.72 | |
| | | | | 1 | 4 | 1.250 | 539.10 | -742.06 | 30.22 | -41.80 |
| | | | | 2 | 4 | 1.250 | 545.82 | 742.19 | -79.45 | |
| 9 | 20.70 | 306.0 | 0.0 | 1 | 1 | 1.000 | -552.73 | 0.00 | 3.56 | 104.29* |
| | | | | 2 | 1 | 1.000 | -638.11 | 0.00 | 45.72 | |
| | | | | 1 | 4 | 1.250 | 539.10 | -742.06 | 30.22 | -42.12 |
| | | | | 2 | 4 | 1.250 | 545.82 | 742.19 | -79.45 | |
| 10 | 28.20 | 396.0 | 0.0 | 1 | 1 | 1.000 | -552.73 | 0.00 | 3.56 | 108.80* |
| | | | | 2 | 1 | 1.000 | -638.11 | 0.00 | 45.72 | |
| | | | | 1 | 4 | 1.250 | 539.10 | -742.06 | 30.22 | -42.41 |
| | | | | 2 | 4 | 1.250 | 545.82 | 742.19 | -79.45 | |
| 11 | -2.80 | 24.0 | -57.0 | 1 | 2 | 1.000 | -515.15 | 1278.04 | -82.20 | 93.14 |
| | | | | 2 | 2 | 1.000 | -410.86 | -1278.28 | 131.39 | |
| | | | | 1 | 4 | 1.250 | 539.10 | -742.06 | 30.22 | -41.18 |
| | | | | 2 | 4 | 1.250 | 545.82 | 742.19 | -79.45 | |
| 12 | 4.70 | 114.0 | -57.0 | 1 | 1 | 1.000 | -552.73 | 0.00 | 3.56 | 94.66 |
| | | | | 2 | 1 | 1.000 | -638.11 | 0.00 | 45.72 | |
| | | | | 1 | 4 | 1.250 | 539.10 | -742.06 | 30.22 | -41.48 |
| | | | | 2 | 4 | 1.250 | 545.82 | 742.19 | -79.45 | |
| 13 | 12.70 | 210.0 | -57.0 | 1 | 1 | 1.000 | -552.73 | 0.00 | 3.56 | 99.47 |
| | | | | 2 | 1 | 1.000 | -638.11 | 0.00 | 45.72 | |
| | | | | 1 | 4 | 1.250 | 539.10 | -742.06 | 30.22 | -41.80 |
| | | | | 2 | 4 | 1.250 | 545.82 | 742.19 | -79.45 | |
| 14 | 20.70 | 306.0 | -57.0 | 1 | 1 | 1.000 | -552.73 | 0.00 | 3.56 | 104.29* |
| | | | | 2 | 1 | 1.000 | -638.11 | 0.00 | 45.72 | |
| | | | | 1 | 4 | 1.250 | 539.10 | -742.06 | 30.22 | -42.12 |
| | | | | 2 | 4 | 1.250 | 545.82 | 742.19 | -79.45 | |
| 15 | 28.20 | 396.0 | -57.0 | 1 | 1 | 1.000 | -552.73 | 0.00 | 3.56 | 108.80* |
| | | | | 2 | 1 | 1.000 | -638.11 | 0.00 | 45.72 | |
| | | | | 1 | 4 | 1.250 | 539.10 | -742.06 | 30.22 | -42.42 |
| | | | | 2 | 4 | 1.250 | 545.82 | 742.19 | -79.45 | |

Note:
* Force in pile is greater than pile capacity.

Only max. force in piles is considered for design.
Pile coordinates X and Z are from the most left edge of the footing.

Max. Pile Reaction Used in Design: (without selfweight and surcharge)
==========

Working Stress pile reaction = 88.72 kips

H. W. Lochner, Inc. PHONE: 859-224-4476
1040 Monarch St. Suite 300 Lexington, KY 40513

JOB NO. HLB#142
PROGRAM: RC-PIER® v4.1.0 LEAP Software Inc., Tampa, Florida
BY JMJ DATE Jun/15/2006
PHONE : TOLL-FREE 1-800-451-5327 TAMPA AREA: 813-985-9170
CKD. DATE

PROJECT: BONNER BRIDGE - OREGON INLET NORTH CAROLINA

Reinforcement Schedule:
==========:

| Dir | Quantity | Size | Bar dist. in | As total in^2 | From ft | To ft | Hook |
|---|---|---|---|---|---|---|---|
| X | 8 | # 6 | 6.00 | 3.52 | 0.50 | 34.50 | None |
| X | 20 | # 6 | 22.00 | 8.80 | 0.50 | 34.50 | Both |
| X | 18 | # 10 | 45.50 | 22.86 | 0.50 | 34.50 | Both |
| Z | 28 | # 5 | 46.45 | 8.68 | ---- | ---- | Both |
| Z | 52 | # 5 | 21.13 | 16.12 | ---- | ---- | Both |
| Z | 8 | # 11 | 7.08 | 12.48 | ---- | ---- | None |
| Z | 28 | # 5 | 5.31 | 8.68 | ---- | ---- | Both |

Flexure:
========

X direction

| Loc ft | Mmax Mmin kft | Comb Comb | Asb_req Asb_req in^2 | Asb_prv Asb_prv in^2 | Asb_eff Asb_eff in^2 | Ast_req Ast_req in^2 | Ast_prv Ast_prv in^2 | Ast_eff Ast_eff in^2 |
|---|---|---|---|---|---|---|---|---|
| -4.80 | 0.0 | 1 | 0.00 | 0.00 | 0.00 | 0.00 | 0.00 | 0.00 |
| | 0.0 | 1 | 0.00 | 0.00 | 0.00 | 0.00 | 0.00 | 0.00 |
| -4.43 | 0.0 | 1 | 0.00 | 0.00 | 0.00 | 0.00 | 0.00 | 0.00 |
| | 0.0 | 1 | 0.00 | 0.00 | 0.00 | 0.00 | 0.00 | 0.00 |
| -4.30 | 0.0 | 1 | 0.00 | 12.32 | 0.03 | 0.00 | 22.86 | 0.04 |
| | 0.0 | 1 | 0.00 | 12.32 | 0.03 | 0.00 | 22.86 | 0.04 |
| -3.70 | 0.0 | 1 | 0.00 | 12.32 | 8.74 | 0.00 | 22.86 | 8.87 |
| | 0.0 | 1 | 0.00 | 12.32 | 8.10 | 0.00 | 22.86 | 8.87 |
| -3.33 | 0.0 | 1 | 0.00 | 12.32 | 12.32 | 0.00 | 22.86 | 14.30 |
| | 0.0 | 1 | 0.00 | 12.32 | 12.32 | 0.00 | 22.86 | 14.30 |
| -2.97 | 0.0 | 1 | 0.00 | 12.32 | 12.32 | 0.00 | 22.86 | 19.72 |
| | 0.0 | 1 | 0.00 | 12.32 | 12.32 | 0.00 | 22.86 | 19.72 |
| -2.60 | 53.2 | 1 | 1.29 | 12.32 | 12.32 | 0.00 | 22.86 | 22.86 |
| | 0.0 | 1 | 0.00 | 12.32 | 12.32 | 0.00 | 22.86 | 22.86 |
| -2.23 | 150.8 | 1 | 3.71 | 12.32 | 12.32 | 0.00 | 22.86 | 22.86 |
| | 0.0 | 1 | 0.00 | 12.32 | 12.32 | 0.00 | 22.86 | 22.86 |
| -1.87 | 248.4 | 1 | 6.17 | 12.32 | 12.32 | 0.00 | 22.86 | 22.86 |
| | 0.0 | 1 | 0.00 | 12.32 | 12.32 | 0.00 | 22.86 | 22.86 |
| -1.50 | 346.0 | 1 | 8.67 | 12.32 | 12.32 | 0.00 | 22.86 | 22.86 |
| | 0.0 | 1 | 0.00 | 12.32 | 12.32 | 0.00 | 22.86 | 22.86 |
| 0.00 | 0.0 | 1 | 0.00 | 12.32 | 12.32 | 0.00 | 22.86 | 22.86 |
| | 0.0 | 1 | 0.00 | 12.32 | 12.32 | 0.00 | 22.86 | 22.86 |
| 1.50 | 142.5 | 1 | 3.50 | 12.32 | 12.32 | 0.00 | 22.86 | 22.86 |
| | 0.0 | 1 | 0.00 | 12.32 | 12.32 | 0.00 | 22.86 | 22.86 |
| 4.30 | 0.0 | 1 | 0.00 | 12.32 | 12.32 | 0.00 | 22.86 | 22.86 |
| | -981.7 | 1 | 0.00 | 12.32 | 12.32 | 18.37 | 22.86 | 22.86 |
| 7.13 | 0.0 | 1 | 0.00 | 12.32 | 12.32 | 0.00 | 22.86 | 22.86 |
| | -1472.5 | 1 | 0.00 | 12.32 | 12.32 | 27.93 | 22.86 * | 22.86 |
| 9.94 | 0.0 | 1 | 0.00 | 12.32 | 12.32 | 0.00 | 22.86 | 22.86 |
| | -1854.1 | 1 | 0.00 | 12.32 | 12.32 | 35.49 | 22.86 * | 22.86 |
| 12.75 | 0.0 | 1 | 0.00 | 12.32 | 12.32 | 0.00 | 22.86 | 22.86 |
| | -2222.4 | 1 | 0.00 | 12.32 | 12.32 | 41.79 | 22.86 * | 22.86 |
| 15.56 | 0.0 | 1 | 0.00 | 12.32 | 12.32 | 0.00 | 22.86 | 22.86 |
| | -1855.5 | 1 | 0.00 | 12.32 | 12.32 | 35.51 | 22.86 * | 22.86 |
| 18.38 | 0.0 | 1 | 0.00 | 12.32 | 12.32 | 0.00 | 22.86 | 22.86 |
| | -1488.5 | 1 | 0.00 | 12.32 | 12.32 | 28.25 | 22.86 * | 22.86 |

PROJECT: BONNER BRIDGE - OREGON INLET NORTH CAROLINA

| | | | | | | | | |
|---|---|---|---|---|---|---|---|---|
| 21.20 | 0.0 | 1 | 0.00 | 12.32 | 12.32 | 0.00 | 22.86 | 22.86 |
| | -985.9 | 1 | 0.00 | 12.32 | 12.32 | 18.45 | 22.86 | 22.86 |
| 24.00 | 123.7 | 1 | 3.04 | 12.32 | 12.32 | 0.00 | 22.86 | 22.86 |
| | 0.0 | 1 | 0.00 | 12.32 | 12.32 | 0.00 | 22.86 | 22.86 |
| 25.50 | 0.0 | 1 | 0.00 | 12.32 | 12.32 | 0.00 | 22.86 | 22.86 |
| | 0.0 | 1 | 0.00 | 12.32 | 12.32 | 0.00 | 22.86 | 22.86 |
| 27.00 | 319.4 | 1 | 7.99 | 12.32 | 12.32 | 0.00 | 22.86 | 22.86 |
| | 0.0 | 1 | 0.00 | 12.32 | 12.32 | 0.00 | 22.86 | 22.86 |
| 27.36 | 224.8 | 1 | 5.58 | 12.32 | 12.32 | 0.00 | 22.86 | 22.86 |
| | 0.0 | 1 | 0.00 | 12.32 | 12.32 | 0.00 | 22.86 | 22.86 |
| 27.71 | 130.1 | 1 | 3.20 | 12.32 | 12.32 | 0.00 | 22.86 | 22.86 |
| | 0.0 | 1 | 0.00 | 12.32 | 12.32 | 0.00 | 22.86 | 22.86 |
| 28.07 | 35.5 | 1 | 0.86 | 12.32 | 12.32 | 0.00 | 22.86 | 22.86 |
| | 0.0 | 1 | 0.00 | 12.32 | 12.32 | 0.00 | 22.86 | 22.86 |
| 28.42 | 0.0 | 1 | 0.00 | 12.32 | 12.32 | 0.00 | 22.86 | 18.90 |
| | 0.0 | 1 | 0.00 | 12.32 | 12.32 | 0.00 | 22.86 | 18.90 |
| 28.78 | 0.0 | 1 | 0.00 | 12.32 | 12.32 | 0.00 | 22.86 | 13.64 |
| | 0.0 | 1 | 0.00 | 12.32 | 12.32 | 0.00 | 22.86 | 13.64 |
| 29.13 | 0.0 | 1 | 0.00 | 12.32 | 8.26 | 0.00 | 22.86 | 8.38 |
| | 0.0 | 1 | 0.00 | 12.32 | 7.65 | 0.00 | 22.86 | 8.38 |
| 29.49 | 0.0 | 1 | 0.00 | 12.32 | 3.08 | 0.00 | 22.86 | 3.12 |
| | 0.0 | 1 | 0.00 | 12.32 | 2.85 | 0.00 | 22.86 | 3.12 |
| 29.80 | 0.0 | 1 | 0.00 | 0.00 | 0.00 | 0.00 | 0.00 | 0.00 |
| | 0.0 | 1 | 0.00 | 0.00 | 0.00 | 0.00 | 0.00 | 0.00 |
| 30.20 | 0.0 | 1 | 0.00 | 0.00 | 0.00 | 0.00 | 0.00 | 0.00 |
| | 0.0 | 1 | 0.00 | 0.00 | 0.00 | 0.00 | 0.00 | 0.00 |

Z direction

| Loc ft | Mmax kft | Comb | Asb_req in^2 | Asb_prv in^2 | Asb_eff in^2 | Ast_req in^2 | Ast_prv in^2 | Ast_eff in^2 |
|---|---|---|---|---|---|---|---|---|
| -2.96 | 794.8 | 1 | 17.32 | 37.28 | 37.28 | 0.00 | 8.68 | 8.68 |
| 2.96 | 794.8 | 1 | 17.32 | 37.28 | 37.28 | 0.00 | 8.68 | 8.68 |

Note:
* The provided reinforcement is not adequate, either less than required or larger than maximum allowed.

One Way Shear:
==========

| Col | Dist ft | Comb | d in | V kips | Vc kips |
|---|---|---|---|---|---|
| X direction | | | | | |
| 1 | -4.30 | 1 | 34.41 | 0.0 | 290.1 |
| | 4.30 | 1 | 33.57 | 327.2 * | 283.0 |
| 2 | 21.20 | 1 | 33.57 | 336.5 * | 283.0 |
| | 29.80 | 1 | 48.00 | 0.0 | 404.6 |
| Z direction | | | | | |
| | -6.15 | 1 | 38.26 | 0.0 | 836.1 |
| | 6.15 | 1 | 38.26 | 0.0 | 836.1 |

H. W. Lochner, Inc. PHONE: 859-224-4476
1040 Monarch St. Suite 300 Lexington, KY 40513
SHEET 8 OF 9
JOB NO. HLB#142
PROGRAM: RC-PIER® v4.1.0 LEAP Software Inc., Tampa, Florida
BY JMJ DATE Jun/15/2006
PHONE : TOLL-FREE 1-800-451-5327 TAMPA AREA: 813-985-9170
CKD. DATE

PROJECT: BONNER BRIDGE - OREGON INLET NORTH CAROLINA

Note:
* Shear resistance is less than applied shear force.
  You may increase the footing depth or provide stirrups.

Two Way Shear:
==========

| # | Bo ft | Ao ft^2 | Comb | Avg. d in | V kips | Vc kips |
|---|---|---|---|---|---|---|
| Columns: | | | | | | |
| 1 | 29.87 | 53.66 | 1 | 36.12 | 668.0 | 1276.8 |
| 2 | 29.87 | 53.66 | 1 | 39.52 | 662.8 | 1276.8 |
| Piles - max: | | | | | | |
| 7 | 15.22 | 18.43 | 1 | 37.82 | 0.0 | 650.4 |
| Piles - min: | | | | | | |
| 1 | 5.90 | 14.84 | 1 | 37.82 | 0.0 | 252.2 |

Note:
TWO WAY SHEAR IN FOOTING IS NOT DESIGNED AND STIRRUPS ARE NOT CONSIDERED.

H. W. Lochner, Inc. PHONE: 859-224-4476
1040 Monarch St. Suite 300 Lexington, KY 40513
SHEET 1 OF 9
JOB NO. HLB#142
PROGRAM: RC-PIER® v4.1.0 LEAP Software Inc., Tampa, Florida
BY JMJ DATE Jun/15/2006
PHONE : TOLL-FREE 1-800-451-5327 TAMPA AREA: 813-985-9170
CKD. DATE

PROJECT: BONNER BRIDGE - OREGON INLET NORTH CAROLINA

PROJECT DATA
==========

Project : BONNER BRIDGE - OREGON INLET NORTH CAROLINA
User Job No.: HLB#142
State : North Carolina State Job No. :
Code : AASHTO STANDARD (17th Edition 2002)
Comments : Bonner Bridge HLB #142 - Load Groups 4-6 (For Ease of Checking) - Per Pla
n Dimensions

JMJ 7/06

WDB 7/06

PROJECT: BONNER BRIDGE - OREGON INLET NORTH CAROLINA

LOADS
=====

Load Cases: 3

Loadcase ID: (L+In)1 Name: Group 4 Loadings
Multiplier = 1.000

Cap loads:

| Type | Dir | Arm ft | Mag1 kip,kip/ft, kft | x1/L | Mag2 kip,kip/ft, kft | x2/L |
|---|---|---|---|---|---|---|
| Force | Y | 0.00 | -466.40 | 0.00 | ---- | ---- |
| Force | Y | 0.00 | -515.81 | 1.00 | ---- | ---- |
| Moment | Z | ---- | 1123.03 | 0.00 | ---- | ---- |
| Moment | Z | ---- | 1144.92 | 1.00 | ---- | ---- |

Loadcase ID: (L+Ip)1 Name: Group 5 Loadings
Multiplier = 1.000

Cap loads:

| Type | Dir | Arm ft | Mag1 kip,kip/ft, kft | x1/L | Mag2 kip,kip/ft, kft | x2/L |
|---|---|---|---|---|---|---|
| Force | Y | 0.00 | -446.83 | 0.00 | ---- | ---- |
| Force | Y | 0.00 | -344.81 | 1.00 | ---- | ---- |
| Moment | X | ---- | -1229.61 | 1.00 | ---- | ---- |
| Moment | X | ---- | 1229.36 | 0.00 | ---- | ---- |
| Moment | Z | ---- | 990.18 | 0.00 | ---- | ---- |
| Moment | Z | ---- | 1190.14 | 1.00 | ---- | ---- |

Loadcase ID: W1 Name: Group 6 Loadings
Multiplier = 1.000

Cap loads:

| Type | Dir | Arm ft | Mag1 kip,kip/ft, kft | x1/L | Mag2 kip,kip/ft, kft | x2/L |
|---|---|---|---|---|---|---|
| Force | Y | 0.00 | -469.83 | 0.00 | ---- | ---- |
| Force | Y | 0.00 | -474.59 | 1.00 | ---- | ---- |
| Moment | X | ---- | -713.93 | 1.00 | ---- | ---- |
| Moment | X | ---- | 713.80 | 0.00 | ---- | ---- |
| Moment | Z | ---- | 1040.46 | 0.00 | ---- | ---- |
| Moment | Z | ---- | 1140.23 | 1.00 | ---- | ---- |

Selected load groups:

SERVICE GROUP I
SERVICE GROUP IB
SERVICE GROUP II

H. W. Lochner, Inc. PHONE: 859-224-4476
1040 Monarch St. Suite 300 Lexington, KY 40513
SHEET 3 OF 9
JOB NO. HLB#142
PROGRAM: RC-PIER® v4.1.0 LEAP Software Inc., Tampa, Florida
BY JMJ DATE Jun/15/2006
PHONE : TOLL-FREE 1-800-451-5327 TAMPA AREA: 813-985-9170
CKD. DATE

PROJECT: BONNER BRIDGE - OREGON INLET NORTH CAROLINA

COMBINED FOOTING DESIGN

Code: AASHTO STANDARD (17th Edition 2002) - Service Load Design
Units: US

Geometry:
=========

Name : 1
Shape : Rectangular, Type : Pile/Shaft Cap

Bf(X) = 35.00 ft, Hf(Z) = 13.50 ft, Thickness(Y) = 51.00 in

Footing concentric.
Columns located on the footing:
Column No. 1 at x = 0.00 ft, Rectangular 36.00 in x 71.00 in
Column No. 2 at x = 25.50 ft, Rectangular 36.00 in x 71.00 in

Ag = 472.50 ft^2, Ix = 225.63 ft^2, Iz = 1825.50 ft^2

Surcharge = 0.00 ksf

Piles: Circular Size: 22.00 in Capacity: 100.00 kips

Design Parameters:
==========

f'c = 3000.00 psi fy = 40000.00 psi
Ec = 3320.6 ksi Es = 29000.0 ksi
Crack control factor z = 130.00 kips/in
Concrete Type : Normal Weight.

Pile Reactions, Service (Without the reduction of overstress allowance):
==========

| Pile | Loc(X) ft | X in | Z in | Column Loads col# | comb | Ovs | P, kips | Mxx, kft | Mzz, kft | Pile Reac. kips |
|---|---|---|---|---|---|---|---|---|---|---|
| 1 | -2.80 | 24.0 | 57.0 | 1 | 2 | 1.000 | -446.92 | 1228.88 | 984.16 | 102.04* |
| | | | | 2 | 2 | 1.000 | -344.72 | -1229.13 | 1189.36 | |
| | | | | 1 | 4 | 1.250 | 469.93 | -713.52 | -1034.13 | -60.44 |
| | | | | 2 | 4 | 1.250 | 474.49 | 713.65 | -1139.41 | |
| 2 | 4.70 | 114.0 | 57.0 | 1 | 1 | 1.000 | -466.50 | 0.00 | 1116.61 | 92.50 |
| | | | | 2 | 1 | 1.000 | -515.71 | 0.00 | 1144.04 | |
| | | | | 1 | 4 | 1.250 | 469.93 | -713.52 | -1034.13 | -51.94 |
| | | | | 2 | 4 | 1.250 | 474.49 | 713.65 | -1139.41 | |
| 3 | 12.70 | 210.0 | 57.0 | 1 | 1 | 1.000 | -466.50 | 0.00 | 1116.61 | 85.56 |
| | | | | 2 | 1 | 1.000 | -515.71 | 0.00 | 1144.04 | |
| | | | | 1 | 4 | 1.250 | 469.93 | -713.52 | -1034.13 | -42.88 |
| | | | | 2 | 4 | 1.250 | 474.49 | 713.65 | -1139.41 | |
| 4 | 20.70 | 306.0 | 57.0 | 1 | 1 | 1.000 | -466.50 | 0.00 | 1116.61 | 78.62 |
| | | | | 2 | 1 | 1.000 | -515.71 | 0.00 | 1144.04 | |
| | | | | 1 | 4 | 1.250 | 469.93 | -713.52 | -1034.13 | -33.81 |
| | | | | 2 | 4 | 1.250 | 474.49 | 713.65 | -1139.41 | |
| 5 | 28.20 | 396.0 | 57.0 | 1 | 1 | 1.000 | -466.50 | 0.00 | 1116.61 | 72.11 |
| | | | | 2 | 1 | 1.000 | -515.71 | 0.00 | 1144.04 | |
| | | | | 1 | 4 | 1.250 | 469.93 | -713.52 | -1034.13 | -25.32 |
| | | | | 2 | 4 | 1.250 | 474.49 | 713.65 | -1139.41 | |
| 6 | -2.80 | 24.0 | 0.0 | 1 | 2 | 1.000 | -446.92 | 1228.88 | 984.16 | 102.04* |
| | | | | 2 | 2 | 1.000 | -344.72 | -1229.13 | 1189.36 | |
| | | | | 1 | 4 | 1.250 | 469.93 | -713.52 | -1034.13 | -60.44 |

PROJECT: BONNER BRIDGE - OREGON INLET NORTH CAROLINA

| | | | | | | | | | | |
|---|---|---|---|---|---|---|---|---|---|---|
| | | | | 2 | 4 | 1.250 | 474.49 | 713.65 | -1139.41 | |
| 7 | 4.70 | 114.0 | 0.0 | 1 | 1 | 1.000 | -466.50 | 0.00 | 1116.61 | 92.50 |
| | | | | 2 | 1 | 1.000 | -515.71 | 0.00 | 1144.04 | |
| | | | | 1 | 4 | 1.250 | 469.93 | -713.52 | -1034.13 | -51.94 |
| | | | | 2 | 4 | 1.250 | 474.49 | 713.65 | -1139.41 | |
| 8 | 12.70 | 210.0 | 0.0 | 1 | 1 | 1.000 | -466.50 | 0.00 | 1116.61 | 85.56 |
| | | | | 2 | 1 | 1.000 | -515.71 | 0.00 | 1144.04 | |
| | | | | 1 | 4 | 1.250 | 469.93 | -713.52 | -1034.13 | -42.88 |
| | | | | 2 | 4 | 1.250 | 474.49 | 713.65 | -1139.41 | |
| 9 | 20.70 | 306.0 | 0.0 | 1 | 1 | 1.000 | -466.50 | 0.00 | 1116.61 | 78.62 |
| | | | | 2 | 1 | 1.000 | -515.71 | 0.00 | 1144.04 | |
| | | | | 1 | 4 | 1.250 | 469.93 | -713.52 | -1034.13 | -33.82 |
| | | | | 2 | 4 | 1.250 | 474.49 | 713.65 | -1139.41 | |
| 10 | 28.20 | 396.0 | 0.0 | 1 | 1 | 1.000 | -466.50 | 0.00 | 1116.61 | 72.11 |
| | | | | 2 | 1 | 1.000 | -515.71 | 0.00 | 1144.04 | |
| | | | | 1 | 4 | 1.250 | 469.93 | -713.52 | -1034.13 | -25.32 |
| | | | | 2 | 4 | 1.250 | 474.49 | 713.65 | -1139.41 | |
| 11 | -2.80 | 24.0 | -57.0 | 1 | 2 | 1.000 | -446.92 | 1228.88 | 984.16 | 102.05* |
| | | | | 2 | 2 | 1.000 | -344.72 | -1229.13 | 1189.36 | |
| | | | | 1 | 4 | 1.250 | 469.93 | -713.52 | -1034.13 | -60.44 |
| | | | | 2 | 4 | 1.250 | 474.49 | 713.65 | -1139.41 | |
| 12 | 4.70 | 114.0 | -57.0 | 1 | 1 | 1.000 | -466.50 | 0.00 | 1116.61 | 92.50 |
| | | | | 2 | 1 | 1.000 | -515.71 | 0.00 | 1144.04 | |
| | | | | 1 | 4 | 1.250 | 469.93 | -713.52 | -1034.13 | -51.95 |
| | | | | 2 | 4 | 1.250 | 474.49 | 713.65 | -1139.41 | |
| 13 | 12.70 | 210.0 | -57.0 | 1 | 1 | 1.000 | -466.50 | 0.00 | 1116.61 | 85.56 |
| | | | | 2 | 1 | 1.000 | -515.71 | 0.00 | 1144.04 | |
| | | | | 1 | 4 | 1.250 | 469.93 | -713.52 | -1034.13 | -42.88 |
| | | | | 2 | 4 | 1.250 | 474.49 | 713.65 | -1139.41 | |
| 14 | 20.70 | 306.0 | -57.0 | 1 | 1 | 1.000 | -466.50 | 0.00 | 1116.61 | 78.62 |
| | | | | 2 | 1 | 1.000 | -515.71 | 0.00 | 1144.04 | |
| | | | | 1 | 4 | 1.250 | 469.93 | -713.52 | -1034.13 | -33.82 |
| | | | | 2 | 4 | 1.250 | 474.49 | 713.65 | -1139.41 | |
| 15 | 28.20 | 396.0 | -57.0 | 1 | 1 | 1.000 | -466.50 | 0.00 | 1116.61 | 72.11 |
| | | | | 2 | 1 | 1.000 | -515.71 | 0.00 | 1144.04 | |
| | | | | 1 | 4 | 1.250 | 469.93 | -713.52 | -1034.13 | -25.32 |
| | | | | 2 | 4 | 1.250 | 474.49 | 713.65 | -1139.41 | |

Pile Reactions, Service (After the reduction of overstress allowance):

| Pile | Loc(X) ft | X in | Z in | Column Loads col# | comb | Ovs | P, kips | Mxx, kft | Mzz, kft | Pile Reac. kips |
|---|---|---|---|---|---|---|---|---|---|---|
| 1 | -2.80 | 24.0 | 57.0 | 1 | 2 | 1.000 | -446.92 | 1228.88 | 984.16 | 102.04* |
| | | | | 2 | 2 | 1.000 | -344.72 | -1229.13 | 1189.36 | |
| | | | | 1 | 4 | 1.250 | 469.93 | -713.52 | -1034.13 | -48.35 |
| | | | | 2 | 4 | 1.250 | 474.49 | 713.65 | -1139.41 | |
| 2 | 4.70 | 114.0 | 57.0 | 1 | 1 | 1.000 | -466.50 | 0.00 | 1116.61 | 92.50 |
| | | | | 2 | 1 | 1.000 | -515.71 | 0.00 | 1144.04 | |
| | | | | 1 | 4 | 1.250 | 469.93 | -713.52 | -1034.13 | -41.55 |
| | | | | 2 | 4 | 1.250 | 474.49 | 713.65 | -1139.41 | |
| 3 | 12.70 | 210.0 | 57.0 | 1 | 1 | 1.000 | -466.50 | 0.00 | 1116.61 | 85.56 |
| | | | | 2 | 1 | 1.000 | -515.71 | 0.00 | 1144.04 | |
| | | | | 1 | 4 | 1.250 | 469.93 | -713.52 | -1034.13 | -34.30 |
| | | | | 2 | 4 | 1.250 | 474.49 | 713.65 | -1139.41 | |
| 4 | 20.70 | 306.0 | 57.0 | 1 | 1 | 1.000 | -466.50 | 0.00 | 1116.61 | 78.62 |
| | | | | 2 | 1 | 1.000 | -515.71 | 0.00 | 1144.04 | |
| | | | | 1 | 4 | 1.250 | 469.93 | -713.52 | -1034.13 | -27.05 |

PROJECT: BONNER BRIDGE - OREGON INLET NORTH CAROLINA

| | | | | | | | | | | |
|---|---|---|---|---|---|---|---|---|---|---|
| | | | | 2 | 4 | 1.250 | 474.49 | 713.65 | -1139.41 | |
| 5 | 28.20 | 396.0 | 57.0 | 1 | 1 | 1.000 | -466.50 | 0.00 | 1116.61 | 72.11 |
| | | | | 2 | 1 | 1.000 | -515.71 | 0.00 | 1144.04 | |
| | | | | 1 | 4 | 1.250 | 469.93 | -713.52 | -1034.13 | -20.25 |
| | | | | 2 | 4 | 1.250 | 474.49 | 713.65 | -1139.41 | |
| 6 | -2.80 | 24.0 | 0.0 | 1 | 2 | 1.000 | -446.92 | 1228.88 | 984.16 | 102.04* |
| | | | | 2 | 2 | 1.000 | -344.72 | -1229.13 | 1189.36 | |
| | | | | 1 | 4 | 1.250 | 469.93 | -713.52 | -1034.13 | -48.35 |
| | | | | 2 | 4 | 1.250 | 474.49 | 713.65 | -1139.41 | |
| 7 | 4.70 | 114.0 | 0.0 | 1 | 1 | 1.000 | -466.50 | 0.00 | 1116.61 | 92.50 |
| | | | | 2 | 1 | 1.000 | -515.71 | 0.00 | 1144.04 | |
| | | | | 1 | 4 | 1.250 | 469.93 | -713.52 | -1034.13 | -41.55 |
| | | | | 2 | 4 | 1.250 | 474.49 | 713.65 | -1139.41 | |
| 8 | 12.70 | 210.0 | 0.0 | 1 | 1 | 1.000 | -466.50 | 0.00 | 1116.61 | 85.56 |
| | | | | 2 | 1 | 1.000 | -515.71 | 0.00 | 1144.04 | |
| | | | | 1 | 4 | 1.250 | 469.93 | -713.52 | -1034.13 | -34.30 |
| | | | | 2 | 4 | 1.250 | 474.49 | 713.65 | -1139.41 | |
| 9 | 20.70 | 306.0 | 0.0 | 1 | 1 | 1.000 | -466.50 | 0.00 | 1116.61 | 78.62 |
| | | | | 2 | 1 | 1.000 | -515.71 | 0.00 | 1144.04 | |
| | | | | 1 | 4 | 1.250 | 469.93 | -713.52 | -1034.13 | -27.05 |
| | | | | 2 | 4 | 1.250 | 474.49 | 713.65 | -1139.41 | |
| 10 | 28.20 | 396.0 | 0.0 | 1 | 1 | 1.000 | -466.50 | 0.00 | 1116.61 | 72.11 |
| | | | | 2 | 1 | 1.000 | -515.71 | 0.00 | 1144.04 | |
| | | | | 1 | 4 | 1.250 | 469.93 | -713.52 | -1034.13 | -20.26 |
| | | | | 2 | 4 | 1.250 | 474.49 | 713.65 | -1139.41 | |
| 11 | -2.80 | 24.0 | -57.0 | 1 | 2 | 1.000 | -446.92 | 1228.88 | 984.16 | 102.05* |
| | | | | 2 | 2 | 1.000 | -344.72 | -1229.13 | 1189.36 | |
| | | | | 1 | 4 | 1.250 | 469.93 | -713.52 | -1034.13 | -48.35 |
| | | | | 2 | 4 | 1.250 | 474.49 | 713.65 | -1139.41 | |
| 12 | 4.70 | 114.0 | -57.0 | 1 | 1 | 1.000 | -466.50 | 0.00 | 1116.61 | 92.50 |
| | | | | 2 | 1 | 1.000 | -515.71 | 0.00 | 1144.04 | |
| | | | | 1 | 4 | 1.250 | 469.93 | -713.52 | -1034.13 | -41.56 |
| | | | | 2 | 4 | 1.250 | 474.49 | 713.65 | -1139.41 | |
| 13 | 12.70 | 210.0 | -57.0 | 1 | 1 | 1.000 | -466.50 | 0.00 | 1116.61 | 85.56 |
| | | | | 2 | 1 | 1.000 | -515.71 | 0.00 | 1144.04 | |
| | | | | 1 | 4 | 1.250 | 469.93 | -713.52 | -1034.13 | -34.31 |
| | | | | 2 | 4 | 1.250 | 474.49 | 713.65 | -1139.41 | |
| 14 | 20.70 | 306.0 | -57.0 | 1 | 1 | 1.000 | -466.50 | 0.00 | 1116.61 | 78.62 |
| | | | | 2 | 1 | 1.000 | -515.71 | 0.00 | 1144.04 | |
| | | | | 1 | 4 | 1.250 | 469.93 | -713.52 | -1034.13 | -27.06 |
| | | | | 2 | 4 | 1.250 | 474.49 | 713.65 | -1139.41 | |
| 15 | 28.20 | 396.0 | -57.0 | 1 | 1 | 1.000 | -466.50 | 0.00 | 1116.61 | 72.11 |
| | | | | 2 | 1 | 1.000 | -515.71 | 0.00 | 1144.04 | |
| | | | | 1 | 4 | 1.250 | 469.93 | -713.52 | -1034.13 | -20.26 |
| | | | | 2 | 4 | 1.250 | 474.49 | 713.65 | -1139.41 | |

Note:
* Force in pile is greater than pile capacity.

Only max. force in piles is considered for design.
Pile coordinates X and Z are from the most left edge of the footing.

Max. Pile Reaction Used in Design: (without selfweight and surcharge)
==========

Working Stress pile reaction = 81.96 kips

H. W. Lochner, Inc. PHONE: 859-224-4476
1040 Monarch St. Suite 300 Lexington, KY 40513

PROGRAM: RC-PIER® v4.1.0 LEAP Software Inc., Tampa, Florida
PHONE : TOLL-FREE 1-800-451-5327 TAMPA AREA: 813-985-9170

PROJECT: BONNER BRIDGE - OREGON INLET NORTH CAROLINA

Reinforcement Schedule:
==========:

| Dir | Quantity | Size | Bar dist. in | As total in^2 | From ft | To ft | Hook |
|---|---|---|---|---|---|---|---|
| X | 8 | # 6 | 6.00 | 3.52 | 0.50 | 34.50 | None |
| X | 20 | # 6 | 22.00 | 8.80 | 0.50 | 34.50 | Both |
| X | 18 | # 10 | 45.50 | 22.86 | 0.50 | 34.50 | Both |
| Z | 28 | # 5 | 46.45 | 8.68 | ---- | ---- | Both |
| Z | 52 | # 5 | 21.13 | 16.12 | ---- | ---- | Both |
| Z | 8 | # 11 | 7.08 | 12.48 | ---- | ---- | None |
| Z | 28 | # 5 | 5.31 | 8.68 | ---- | ---- | Both |

Flexure:
========

X direction

| Loc ft | Mmax Mmin kft | Comb Comb | Asb_req Asb_req in^2 | Asb_prv Asb_prv in^2 | Asb_eff Asb_eff in^2 | Ast_req Ast_req in^2 | Ast_prv Ast_prv in^2 | Ast_eff Ast_eff in^2 |
|---|---|---|---|---|---|---|---|---|
| -4.80 | 0.0 | 2 | 0.00 | 0.00 | 0.00 | 0.00 | 0.00 | 0.00 |
| | 0.0 | 2 | 0.00 | 0.00 | 0.00 | 0.00 | 0.00 | 0.00 |
| -4.43 | 0.0 | 2 | 0.00 | 0.00 | 0.00 | 0.00 | 0.00 | 0.00 |
| | 0.0 | 2 | 0.00 | 0.00 | 0.00 | 0.00 | 0.00 | 0.00 |
| -4.30 | 0.0 | 2 | 0.00 | 12.32 | 0.03 | 0.00 | 22.86 | 0.04 |
| | 0.0 | 2 | 0.00 | 12.32 | 0.03 | 0.00 | 22.86 | 0.04 |
| -3.70 | 0.0 | 2 | 0.00 | 12.32 | 8.74 | 0.00 | 22.86 | 8.87 |
| | 0.0 | 2 | 0.00 | 12.32 | 8.10 | 0.00 | 22.86 | 8.87 |
| -3.33 | 0.0 | 2 | 0.00 | 12.32 | 12.32 | 0.00 | 22.86 | 14.30 |
| | 0.0 | 2 | 0.00 | 12.32 | 12.32 | 0.00 | 22.86 | 14.30 |
| -2.97 | 0.0 | 2 | 0.00 | 12.32 | 12.32 | 0.00 | 22.86 | 19.72 |
| | 0.0 | 2 | 0.00 | 12.32 | 12.32 | 0.00 | 22.86 | 19.72 |
| -2.60 | 49.2 | 2 | 1.19 | 12.32 | 12.32 | 0.00 | 22.86 | 22.86 |
| | 0.0 | 2 | 0.00 | 12.32 | 12.32 | 0.00 | 22.86 | 22.86 |
| -2.23 | 139.3 | 2 | 3.43 | 12.32 | 12.32 | 0.00 | 22.86 | 22.86 |
| | 0.0 | 2 | 0.00 | 12.32 | 12.32 | 0.00 | 22.86 | 22.86 |
| -1.87 | 229.5 | 2 | 5.70 | 12.32 | 12.32 | 0.00 | 22.86 | 22.86 |
| | 0.0 | 2 | 0.00 | 12.32 | 12.32 | 0.00 | 22.86 | 22.86 |
| -1.50 | 319.7 | 2 | 7.99 | 12.32 | 12.32 | 0.00 | 22.86 | 22.86 |
| | 0.0 | 2 | 0.00 | 12.32 | 12.32 | 0.00 | 22.86 | 22.86 |
| 0.00 | 0.0 | 2 | 0.00 | 12.32 | 12.32 | 0.00 | 22.86 | 22.86 |
| | 0.0 | 2 | 0.00 | 12.32 | 12.32 | 0.00 | 22.86 | 22.86 |
| 1.50 | 131.6 | 2 | 3.23 | 12.32 | 12.32 | 0.00 | 22.86 | 22.86 |
| | 0.0 | 2 | 0.00 | 12.32 | 12.32 | 0.00 | 22.86 | 22.86 |
| 4.30 | 0.0 | 2 | 0.00 | 12.32 | 12.32 | 0.00 | 22.86 | 22.86 |
| | -907.0 | 2 | 0.00 | 12.32 | 12.32 | 16.93 | 22.86 | 22.86 |
| 7.13 | 0.0 | 2 | 0.00 | 12.32 | 12.32 | 0.00 | 22.86 | 22.86 |
| | -1360.4 | 2 | 0.00 | 12.32 | 12.32 | 25.73 | 22.86 * | 22.86 |
| 9.94 | 0.0 | 2 | 0.00 | 12.32 | 12.32 | 0.00 | 22.86 | 22.86 |
| | -1712.9 | 2 | 0.00 | 12.32 | 12.32 | 32.68 | 22.86 * | 22.86 |
| 12.75 | 0.0 | 2 | 0.00 | 12.32 | 12.32 | 0.00 | 22.86 | 22.86 |
| | -2053.2 | 2 | 0.00 | 12.32 | 12.32 | 39.46 | 22.86 * | 22.86 |
| 15.56 | 0.0 | 2 | 0.00 | 12.32 | 12.32 | 0.00 | 22.86 | 22.86 |
| | -1714.2 | 2 | 0.00 | 12.32 | 12.32 | 32.71 | 22.86 * | 22.86 |
| 18.38 | 0.0 | 2 | 0.00 | 12.32 | 12.32 | 0.00 | 22.86 | 22.86 |
| | -1375.2 | 2 | 0.00 | 12.32 | 12.32 | 26.02 | 22.86 * | 22.86 |

H. W. Lochner, Inc. PHONE: 859-224-4476
1040 Monarch St. Suite 300 Lexington, KY 40513
SHEET 7 OF 9
JOB NO. HLB#142
PROGRAM: RC-PIER® v4.1.0 LEAP Software Inc., Tampa, Florida
BY JMJ DATE Jun/15/2006
PHONE : TOLL-FREE 1-800-451-5327 TAMPA AREA: 813-985-9170
CKD. DATE

PROJECT: BONNER BRIDGE - OREGON INLET NORTH CAROLINA

| | | | | | | | | |
|---|---|---|---|---|---|---|---|---|
| 21.20 | 0.0 | 2 | 0.00 | 12.32 | 12.32 | 0.00 | 22.86 | 22.86 |
| | -910.9 | 2 | 0.00 | 12.32 | 12.32 | 17.00 | 22.86 | 22.86 |
| 24.00 | 114.3 | 2 | 2.80 | 12.32 | 12.32 | 0.00 | 22.86 | 22.86 |
| | 0.0 | 2 | 0.00 | 12.32 | 12.32 | 0.00 | 22.86 | 22.86 |
| 25.50 | 0.0 | 2 | 0.00 | 12.32 | 12.32 | 0.00 | 22.86 | 22.86 |
| | 0.0 | 2 | 0.00 | 12.32 | 12.32 | 0.00 | 22.86 | 22.86 |
| 27.00 | 295.1 | 2 | 7.36 | 12.32 | 12.32 | 0.00 | 22.86 | 22.86 |
| | 0.0 | 2 | 0.00 | 12.32 | 12.32 | 0.00 | 22.86 | 22.86 |
| 27.36 | 207.6 | 2 | 5.14 | 12.32 | 12.32 | 0.00 | 22.86 | 22.86 |
| | 0.0 | 2 | 0.00 | 12.32 | 12.32 | 0.00 | 22.86 | 22.86 |
| 27.71 | 120.2 | 2 | 2.95 | 12.32 | 12.32 | 0.00 | 22.86 | 22.86 |
| | 0.0 | 2 | 0.00 | 12.32 | 12.32 | 0.00 | 22.86 | 22.86 |
| 28.07 | 32.8 | 2 | 0.79 | 12.32 | 12.32 | 0.00 | 22.86 | 22.86 |
| | 0.0 | 2 | 0.00 | 12.32 | 12.32 | 0.00 | 22.86 | 22.86 |
| 28.42 | 0.0 | 2 | 0.00 | 12.32 | 12.32 | 0.00 | 22.86 | 18.90 |
| | 0.0 | 2 | 0.00 | 12.32 | 12.32 | 0.00 | 22.86 | 18.90 |
| 28.78 | 0.0 | 2 | 0.00 | 12.32 | 12.32 | 0.00 | 22.86 | 13.64 |
| | 0.0 | 2 | 0.00 | 12.32 | 12.32 | 0.00 | 22.86 | 13.64 |
| 29.13 | 0.0 | 2 | 0.00 | 12.32 | 8.26 | 0.00 | 22.86 | 8.38 |
| | 0.0 | 2 | 0.00 | 12.32 | 7.65 | 0.00 | 22.86 | 8.38 |
| 29.49 | 0.0 | 2 | 0.00 | 12.32 | 3.08 | 0.00 | 22.86 | 3.12 |
| | 0.0 | 2 | 0.00 | 12.32 | 2.85 | 0.00 | 22.86 | 3.12 |
| 29.80 | 0.0 | 2 | 0.00 | 0.00 | 0.00 | 0.00 | 0.00 | 0.00 |
| | 0.0 | 2 | 0.00 | 0.00 | 0.00 | 0.00 | 0.00 | 0.00 |
| 30.20 | 0.0 | 2 | 0.00 | 0.00 | 0.00 | 0.00 | 0.00 | 0.00 |
| | 0.0 | 2 | 0.00 | 0.00 | 0.00 | 0.00 | 0.00 | 0.00 |

Z direction

| Loc ft | Mmax kft | Comb | Asb_req in^2 | Asb_prv in^2 | Asb_eff in^2 | Ast_req in^2 | Ast_prv in^2 | Ast_eff in^2 |
|---|---|---|---|---|---|---|---|---|
| -2.96 | 734.3 | 2 | 15.97 | 37.28 | 37.28 | 0.00 | 8.68 | 8.68 |
| 2.96 | 734.3 | 2 | 15.97 | 37.28 | 37.28 | 0.00 | 8.68 | 8.68 |

Note:
* The provided reinforcement is not adequate, either less than required or larger than maximum allowed.

One Way Shear:
==========

| Col | Dist ft | Comb | d in | V kips | Vc kips |
|---|---|---|---|---|---|
| X direction | | | | | |
| 1 | -4.30 | 2 | 34.41 | 0.0 | 290.1 |
| | 4.30 | 2 | 33.57 | 302.3 * | 283.0 |
| 2 | 21.20 | 2 | 33.57 | 310.9 * | 283.0 |
| | 29.80 | 2 | 48.00 | 0.0 | 404.6 |
| Z direction | | | | | |
| | -6.15 | 2 | 38.26 | 0.0 | 836.1 |
| | 6.15 | 2 | 38.26 | 0.0 | 836.1 |

H. W. Lochner, Inc. PHONE: 859-224-4476
1040 Monarch St. Suite 300 Lexington, KY 40513
SHEET 8 OF 9
JOB NO. HLB#142
PROGRAM: RC-PIER® v4.1.0 LEAP Software Inc., Tampa, Florida
BY JMJ DATE Jun/15/2006
PHONE : TOLL-FREE 1-800-451-5327 TAMPA AREA: 813-985-9170
CKD. DATE

PROJECT: BONNER BRIDGE - OREGON INLET NORTH CAROLINA

Note:
* Shear resistance is less than applied shear force.
  You may increase the footing depth or provide stirrups.

Two Way Shear:
==========

| # | Bo ft | Ao ft^2 | Comb | Avg. d in | V kips | Vc kips |
|---|---|---|---|---|---|---|
| Columns: | | | | | | |
| 1 | 29.87 | 53.66 | 2 | 36.12 | 617.1 | 1276.8 |
| 2 | 29.87 | 53.66 | 2 | 39.52 | 612.3 | 1276.8 |
| Piles - max: | | | | | | |
| 7 | 15.22 | 18.43 | 2 | 37.82 | 0.0 | 650.4 |
| Piles - min: | | | | | | |
| 1 | 5.90 | 14.84 | 2 | 37.82 | 0.0 | 252.2 |

Note:
TWO WAY SHEAR IN FOOTING IS NOT DESIGNED AND STIRRUPS ARE NOT CONSIDERED.

H. W. Lochner, Inc. PHONE: 859-224-4476
1040 Monarch St. Suite 300 Lexington, KY 40513
SHEET 1 OF 8
JOB NO. HLB#142
PROGRAM: RC-PIER® v4.1.0 LEAP Software Inc., Tampa, Florida
BY JMJ DATE Jun/15/2006
PHONE : TOLL-FREE 1-800-451-5327 TAMPA AREA: 813-985-9170
CKD. DATE

---

PROJECT: BONNER BRIDGE - OREGON INLET NORTH CAROLINA

PROJECT DATA
==========

Project : BONNER BRIDGE - OREGON INLET NORTH CAROLINA
User Job No.: HLB#142
State : North Carolina State Job No. :
Code : AASHTO STANDARD (17th Edition 2002)
Comments : Bonner Bridge HLB #142 - Load Groups 1-3 (For Ease of Checking) - Per Field Data

JMJ 7/06

WDB 7/06

H. W. Lochner, Inc. PHONE: 859-224-4476
1040 Monarch St. Suite 300 Lexington, KY 40513
SHEET 2 OF 8
JOB NO. HLB#142
PROGRAM: RC-PIER® v4.1.0 LEAP Software Inc., Tampa, Florida
BY JMJ DATE Jun/15/2006
PHONE : TOLL-FREE 1-800-451-5327 TAMPA AREA: 813-985-9170
CKD. DATE

PROJECT: BONNER BRIDGE - OREGON INLET NORTH CAROLINA

## LOADS

Load Cases: 3

Loadcase ID: (L+In)1 Name: Group 1 Loadings
Multiplier = 1.000

Cap loads:

| Type | Dir | Arm ft | Mag1 kip,kip/ft, kft | x1/L | Mag2 kip,kip/ft, kft | x2/L |
|---|---|---|---|---|---|---|
| Force | Y | 0.00 | -552.73 | 0.00 | ---- | ---- |
| Force | Y | 0.00 | -638.11 | 1.00 | ---- | ---- |
| Moment | Z | ---- | 9.10 | 0.00 | ---- | ---- |
| Moment | Z | ---- | 45.73 | 1.00 | ---- | ---- |

Loadcase ID: (L+Ip)1 Name: Group 2 Loadings
Multiplier = 1.000

Cap loads:

| Type | Dir | Arm ft | Mag1 kip,kip/ft, kft | x1/L | Mag2 kip,kip/ft, kft | x2/L |
|---|---|---|---|---|---|---|
| Force | Y | 0.00 | -515.16 | 0.00 | ---- | ---- |
| Force | Y | 0.00 | -410.85 | 1.00 | ---- | ---- |
| Moment | X | ---- | -1278.78 | 1.00 | ---- | ---- |
| Moment | X | ---- | 1278.54 | 0.00 | ---- | ---- |
| Moment | Z | ---- | -77.17 | 0.00 | ---- | ---- |
| Moment | Z | ---- | 131.33 | 1.00 | ---- | ---- |

Loadcase ID: W1 Name: Group 3 Loadings
Multiplier = 1.000

Cap loads:

| Type | Dir | Arm ft | Mag1 kip,kip/ft, kft | x1/L | Mag2 kip,kip/ft, kft | x2/L |
|---|---|---|---|---|---|---|
| Force | Y | 0.00 | -539.10 | 0.00 | ---- | ---- |
| Force | Y | 0.00 | -545.82 | 1.00 | ---- | ---- |
| Moment | X | ---- | -742.48 | 1.00 | ---- | ---- |
| Moment | X | ---- | 742.35 | 0.00 | ---- | ---- |
| Moment | Z | ---- | -24.87 | 0.00 | ---- | ---- |
| Moment | Z | ---- | 79.43 | 1.00 | ---- | ---- |

Selected load groups:

SERVICE GROUP I
SERVICE GROUP IB
SERVICE GROUP II

H. W. Lochner, Inc. PHONE: 859-224-4476
1040 Monarch St. Suite 300 Lexington, KY 40513
PROGRAM: RC-PIER® v4.1.0 LEAP Software Inc., Tampa, Florida
PHONE : TOLL-FREE 1-800-451-5327 TAMPA AREA: 813-985-9170

SHEET 3 OF 8
JOB NO. HLB#142
BY JMJ DATE Jun/15/2006
CKD. DATE

---

PROJECT: BONNER BRIDGE - OREGON INLET NORTH CAROLINA

COMBINED FOOTING DESIGN

Code: AASHTO STANDARD (17th Edition 2002) - Service Load Design
Units: US

Geometry:
=========

Name : 1
Shape : Rectangular, Type : Pile/Shaft Cap

Bf(X) = 35.00 ft, Hf(Z) = 13.50 ft, Thickness(Y) = 51.00 in

Footing concentric.
Columns located on the footing:
Column No. 1 at x = 0.00 ft, Rectangular 36.00 in x 71.00 in
Column No. 2 at x = 25.50 ft, Rectangular 36.00 in x 71.00 in

Ag = 472.50 ft^2, Ix = 225.63 ft^2, Iz = 1825.50 ft^2

Surcharge = 0.00 ksf

Piles: Circular Size: 22.00 in Capacity: 100.00 kips

Design Parameters:
==========

f'c = 4400.00 psi fy = 40000.00 psi
Ec = 4021.4 ksi Es = 29000.0 ksi
Crack control factor z = 130.00 kips/in
Concrete Type : Normal Weight.

Pile Reactions, Service (Without the reduction of overstress allowance):
==========

| Pile | Loc(X) ft | X in | Z in | Column Loads col# | comb | Ovs | P, kips | Mxx, kft | Mzz, kft | Pile Reac. kips |
|---|---|---|---|---|---|---|---|---|---|---|
| 1 | -2.80 | 24.0 | 57.0 | 1 | 2 | 1.000 | -515.15 | 1278.04 | -82.20 | 93.13 |
| | | | | 2 | 2 | 1.000 | -410.86 | -1278.28 | 131.39 | |
| | | | | 1 | 4 | 1.250 | 539.10 | -742.06 | 30.22 | -51.47 |
| | | | | 2 | 4 | 1.250 | 545.82 | 742.19 | -79.45 | |
| 2 | 4.70 | 114.0 | 57.0 | 1 | 1 | 1.000 | -552.73 | 0.00 | 3.56 | 94.66 |
| | | | | 2 | 1 | 1.000 | -638.11 | 0.00 | 45.72 | |
| | | | | 1 | 4 | 1.250 | 539.10 | -742.06 | 30.22 | -51.85 |
| | | | | 2 | 4 | 1.250 | 545.82 | 742.19 | -79.45 | |
| 3 | 12.70 | 210.0 | 57.0 | 1 | 1 | 1.000 | -552.73 | 0.00 | 3.56 | 99.47 |
| | | | | 2 | 1 | 1.000 | -638.11 | 0.00 | 45.72 | |
| | | | | 1 | 4 | 1.250 | 539.10 | -742.06 | 30.22 | -52.24 |
| | | | | 2 | 4 | 1.250 | 545.82 | 742.19 | -79.45 | |
| 4 | 20.70 | 306.0 | 57.0 | 1 | 1 | 1.000 | -552.73 | 0.00 | 3.56 | 104.29* |
| | | | | 2 | 1 | 1.000 | -638.11 | 0.00 | 45.72 | |
| | | | | 1 | 4 | 1.250 | 539.10 | -742.06 | 30.22 | -52.64 |
| | | | | 2 | 4 | 1.250 | 545.82 | 742.19 | -79.45 | |
| 5 | 28.20 | 396.0 | 57.0 | 1 | 1 | 1.000 | -552.73 | 0.00 | 3.56 | 108.80* |
| | | | | 2 | 1 | 1.000 | -638.11 | 0.00 | 45.72 | |
| | | | | 1 | 4 | 1.250 | 539.10 | -742.06 | 30.22 | -53.01 |
| | | | | 2 | 4 | 1.250 | 545.82 | 742.19 | -79.45 | |
| 6 | -2.80 | 24.0 | 0.0 | 1 | 2 | 1.000 | -515.15 | 1278.04 | -82.20 | 93.13 |
| | | | | 2 | 2 | 1.000 | -410.86 | -1278.28 | 131.39 | |
| | | | | 1 | 4 | 1.250 | 539.10 | -742.06 | 30.22 | -51.48 |

H. W. Lochner, Inc. PHONE: 859-224-4476 | SHEET 4 OF 8
1040 Monarch St. Suite 300 Lexington, KY 40513 | JOB NO. HLB#142
PROGRAM: RC-PIER® v4.1.0 LEAP Software Inc., Tampa, Florida | BY JMJ DATE Jun/15/2006
PHONE : TOLL-FREE 1-800-451-5327 TAMPA AREA: 813-985-9170 | CKD. DATE

PROJECT: BONNER BRIDGE - OREGON INLET NORTH CAROLINA

| | | | | | | | | | | |
|---|---|---|---|---|---|---|---|---|---|---|
| | | | | 2 | 4 | 1.250 | 545.82 | 742.19 | -79.45 | |
| 7 | 4.70 | 114.0 | 0.0 | 1 | 1 | 1.000 | -552.73 | 0.00 | 3.56 | 94.66 |
| | | | | 2 | 1 | 1.000 | -638.11 | 0.00 | 45.72 | |
| | | | | 1 | 4 | 1.250 | 539.10 | -742.06 | 30.22 | -51.85 |
| | | | | 2 | 4 | 1.250 | 545.82 | 742.19 | -79.45 | |
| 8 | 12.70 | 210.0 | 0.0 | 1 | 1 | 1.000 | -552.73 | 0.00 | 3.56 | 99.47 |
| | | | | 2 | 1 | 1.000 | -638.11 | 0.00 | 45.72 | |
| | | | | 1 | 4 | 1.250 | 539.10 | -742.06 | 30.22 | -52.25 |
| | | | | 2 | 4 | 1.250 | 545.82 | 742.19 | -79.45 | |
| 9 | 20.70 | 306.0 | 0.0 | 1 | 1 | 1.000 | -552.73 | 0.00 | 3.56 | 104.29* |
| | | | | 2 | 1 | 1.000 | -638.11 | 0.00 | 45.72 | |
| | | | | 1 | 4 | 1.250 | 539.10 | -742.06 | 30.22 | -52.64 |
| | | | | 2 | 4 | 1.250 | 545.82 | 742.19 | -79.45 | |
| 10 | 28.20 | 396.0 | 0.0 | 1 | 1 | 1.000 | -552.73 | 0.00 | 3.56 | 108.80* |
| | | | | 2 | 1 | 1.000 | -638.11 | 0.00 | 45.72 | |
| | | | | 1 | 4 | 1.250 | 539.10 | -742.06 | 30.22 | -53.02 |
| | | | | 2 | 4 | 1.250 | 545.82 | 742.19 | -79.45 | |
| 11 | -2.80 | 24.0 | -57.0 | 1 | 2 | 1.000 | -515.15 | 1278.04 | -82.20 | 93.14 |
| | | | | 2 | 2 | 1.000 | -410.86 | -1278.28 | 131.39 | |
| | | | | 1 | 4 | 1.250 | 539.10 | -742.06 | 30.22 | -51.48 |
| | | | | 2 | 4 | 1.250 | 545.82 | 742.19 | -79.45 | |
| 12 | 4.70 | 114.0 | -57.0 | 1 | 1 | 1.000 | -552.73 | 0.00 | 3.56 | 94.66 |
| | | | | 2 | 1 | 1.000 | -638.11 | 0.00 | 45.72 | |
| | | | | 1 | 4 | 1.250 | 539.10 | -742.06 | 30.22 | -51.85 |
| | | | | 2 | 4 | 1.250 | 545.82 | 742.19 | -79.45 | |
| 13 | 12.70 | 210.0 | -57.0 | 1 | 1 | 1.000 | -552.73 | 0.00 | 3.56 | 99.47 |
| | | | | 2 | 1 | 1.000 | -638.11 | 0.00 | 45.72 | |
| | | | | 1 | 4 | 1.250 | 539.10 | -742.06 | 30.22 | -52.25 |
| | | | | 2 | 4 | 1.250 | 545.82 | 742.19 | -79.45 | |
| 14 | 20.70 | 306.0 | -57.0 | 1 | 1 | 1.000 | -552.73 | 0.00 | 3.56 | 104.29* |
| | | | | 2 | 1 | 1.000 | -638.11 | 0.00 | 45.72 | |
| | | | | 1 | 4 | 1.250 | 539.10 | -742.06 | 30.22 | -52.65 |
| | | | | 2 | 4 | 1.250 | 545.82 | 742.19 | -79.45 | |
| 15 | 28.20 | 396.0 | -57.0 | 1 | 1 | 1.000 | -552.73 | 0.00 | 3.56 | 108.80* |
| | | | | 2 | 1 | 1.000 | -638.11 | 0.00 | 45.72 | |
| | | | | 1 | 4 | 1.250 | 539.10 | -742.06 | 30.22 | -53.02 |
| | | | | 2 | 4 | 1.250 | 545.82 | 742.19 | -79.45 | |

Pile Reactions, Service (After the reduction of overstress allowance):

| Pile | Loc(X) ft | X in | Z in | Column Loads col# | comb | Ovs | P, kips | Mxx, kft | Mzz, kft | Pile Reac. kips |
|---|---|---|---|---|---|---|---|---|---|---|
| 1 | -2.80 | 24.0 | 57.0 | 1 | 2 | 1.000 | -515.15 | 1278.04 | -82.20 | 93.13 |
| | | | | 2 | 2 | 1.000 | -410.86 | -1278.28 | 131.39 | |
| | | | | 1 | 4 | 1.250 | 539.10 | -742.06 | 30.22 | -41.18 |
| | | | | 2 | 4 | 1.250 | 545.82 | 742.19 | -79.45 | |
| 2 | 4.70 | 114.0 | 57.0 | 1 | 1 | 1.000 | -552.73 | 0.00 | 3.56 | 94.66 |
| | | | | 2 | 1 | 1.000 | -638.11 | 0.00 | 45.72 | |
| | | | | 1 | 4 | 1.250 | 539.10 | -742.06 | 30.22 | -41.48 |
| | | | | 2 | 4 | 1.250 | 545.82 | 742.19 | -79.45 | |
| 3 | 12.70 | 210.0 | 57.0 | 1 | 1 | 1.000 | -552.73 | 0.00 | 3.56 | 99.47 |
| | | | | 2 | 1 | 1.000 | -638.11 | 0.00 | 45.72 | |
| | | | | 1 | 4 | 1.250 | 539.10 | -742.06 | 30.22 | -41.80 |
| | | | | 2 | 4 | 1.250 | 545.82 | 742.19 | -79.45 | |
| 4 | 20.70 | 306.0 | 57.0 | 1 | 1 | 1.000 | -552.73 | 0.00 | 3.56 | 104.29* |
| | | | | 2 | 1 | 1.000 | -638.11 | 0.00 | 45.72 | |
| | | | | 1 | 4 | 1.250 | 539.10 | -742.06 | 30.22 | -42.11 |

H. W. Lochner, Inc. PHONE: 859-224-4476
1040 Monarch St. Suite 300 Lexington, KY 40513
SHEET 5 OF 8
JOB NO. HLB#142
PROGRAM: RC-PIER® v4.1.0 LEAP Software Inc., Tampa, Florida
BY JMJ DATE Jun/15/2006
PHONE : TOLL-FREE 1-800-451-5327 TAMPA AREA: 813-985-9170
CKD. DATE

PROJECT: BONNER BRIDGE - OREGON INLET NORTH CAROLINA

| | | | | | | | | | | |
|---|---|---|---|---|---|---|---|---|---|---|
| | | | | 2 | 4 | 1.250 | 545.82 | 742.19 | -79.45 | |
| 5 | 28.20 | 396.0 | 57.0 | 1 | 1 | 1.000 | -552.73 | 0.00 | 3.56 | 108.80* |
| | | | | 2 | 1 | 1.000 | -638.11 | 0.00 | 45.72 | |
| | | | | 1 | 4 | 1.250 | 539.10 | -742.06 | 30.22 | -42.41 |
| | | | | 2 | 4 | 1.250 | 545.82 | 742.19 | -79.45 | |
| 6 | -2.80 | 24.0 | 0.0 | 1 | 2 | 1.000 | -515.15 | 1278.04 | -82.20 | 93.13 |
| | | | | 2 | 2 | 1.000 | -410.86 | -1278.28 | 131.39 | |
| | | | | 1 | 4 | 1.250 | 539.10 | -742.06 | 30.22 | -41.18 |
| | | | | 2 | 4 | 1.250 | 545.82 | 742.19 | -79.45 | |
| 7 | 4.70 | 114.0 | 0.0 | 1 | 1 | 1.000 | -552.73 | 0.00 | 3.56 | 94.66 |
| | | | | 2 | 1 | 1.000 | -638.11 | 0.00 | 45.72 | |
| | | | | 1 | 4 | 1.250 | 539.10 | -742.06 | 30.22 | -41.48 |
| | | | | 2 | 4 | 1.250 | 545.82 | 742.19 | -79.45 | |
| 8 | 12.70 | 210.0 | 0.0 | 1 | 1 | 1.000 | -552.73 | 0.00 | 3.56 | 99.47 |
| | | | | 2 | 1 | 1.000 | -638.11 | 0.00 | 45.72 | |
| | | | | 1 | 4 | 1.250 | 539.10 | -742.06 | 30.22 | -41.80 |
| | | | | 2 | 4 | 1.250 | 545.82 | 742.19 | -79.45 | |
| 9 | 20.70 | 306.0 | 0.0 | 1 | 1 | 1.000 | -552.73 | 0.00 | 3.56 | 104.29* |
| | | | | 2 | 1 | 1.000 | -638.11 | 0.00 | 45.72 | |
| | | | | 1 | 4 | 1.250 | 539.10 | -742.06 | 30.22 | -42.12 |
| | | | | 2 | 4 | 1.250 | 545.82 | 742.19 | -79.45 | |
| 10 | 28.20 | 396.0 | 0.0 | 1 | 1 | 1.000 | -552.73 | 0.00 | 3.56 | 108.80* |
| | | | | 2 | 1 | 1.000 | -638.11 | 0.00 | 45.72 | |
| | | | | 1 | 4 | 1.250 | 539.10 | -742.06 | 30.22 | -42.41 |
| | | | | 2 | 4 | 1.250 | 545.82 | 742.19 | -79.45 | |
| 11 | -2.80 | 24.0 | -57.0 | 1 | 2 | 1.000 | -515.15 | 1278.04 | -82.20 | 93.14 |
| | | | | 2 | 2 | 1.000 | -410.86 | -1278.28 | 131.39 | |
| | | | | 1 | 4 | 1.250 | 539.10 | -742.06 | 30.22 | -41.18 |
| | | | | 2 | 4 | 1.250 | 545.82 | 742.19 | -79.45 | |
| 12 | 4.70 | 114.0 | -57.0 | 1 | 1 | 1.000 | -552.73 | 0.00 | 3.56 | 94.66 |
| | | | | 2 | 1 | 1.000 | -638.11 | 0.00 | 45.72 | |
| | | | | 1 | 4 | 1.250 | 539.10 | -742.06 | 30.22 | -41.48 |
| | | | | 2 | 4 | 1.250 | 545.82 | 742.19 | -79.45 | |
| 13 | 12.70 | 210.0 | -57.0 | 1 | 1 | 1.000 | -552.73 | 0.00 | 3.56 | 99.47 |
| | | | | 2 | 1 | 1.000 | -638.11 | 0.00 | 45.72 | |
| | | | | 1 | 4 | 1.250 | 539.10 | -742.06 | 30.22 | -41.80 |
| | | | | 2 | 4 | 1.250 | 545.82 | 742.19 | -79.45 | |
| 14 | 20.70 | 306.0 | -57.0 | 1 | 1 | 1.000 | -552.73 | 0.00 | 3.56 | 104.29* |
| | | | | 2 | 1 | 1.000 | -638.11 | 0.00 | 45.72 | |
| | | | | 1 | 4 | 1.250 | 539.10 | -742.06 | 30.22 | -42.12 |
| | | | | 2 | 4 | 1.250 | 545.82 | 742.19 | -79.45 | |
| 15 | 28.20 | 396.0 | -57.0 | 1 | 1 | 1.000 | -552.73 | 0.00 | 3.56 | 108.80* |
| | | | | 2 | 1 | 1.000 | -638.11 | 0.00 | 45.72 | |
| | | | | 1 | 4 | 1.250 | 539.10 | -742.06 | 30.22 | -42.42 |
| | | | | 2 | 4 | 1.250 | 545.82 | 742.19 | -79.45 | |

Note:
* Force in pile is greater than pile capacity.

Only max. force in piles is considered for design.
Pile coordinates X and Z are from the most left edge of the footing.

Max. Pile Reaction Used in Design: (without selfweight and surcharge)
==========

Working Stress pile reaction = 88.72 kips

H. W. Lochner, Inc. PHONE: 859-224-4476
1040 Monarch St. Suite 300 Lexington, KY 40513
SHEET 6 OF 8
JOB NO. HLB#142
PROGRAM: RC-PIER® v4.1.0 LEAP Software Inc., Tampa, Florida
BY JMJ DATE Jun/15/2006
PHONE : TOLL-FREE 1-800-451-5327 TAMPA AREA: 813-985-9170
CKD. DATE

PROJECT: BONNER BRIDGE - OREGON INLET NORTH CAROLINA

Reinforcement Schedule:
==========:

| Dir | Quantity | Size | Bar dist. in | As total in^2 | From ft | To ft | Hook |
|---|---|---|---|---|---|---|---|
| X | 8 | # 6 | 6.00 | 3.52 | 0.50 | 34.50 | None |
| X | 20 | # 6 | 22.00 | 8.80 | 0.50 | 34.50 | Both |
| X | 18 | # 10 | 45.50 | 22.86 | 0.50 | 34.50 | Both |
| Z | 28 | # 5 | 46.45 | 8.68 | ---- | ---- | Both |
| Z | 52 | # 5 | 21.13 | 16.12 | ---- | ---- | Both |
| Z | 8 | # 11 | 7.08 | 12.48 | ---- | ---- | None |
| Z | 28 | # 5 | 5.31 | 8.68 | ---- | ---- | Both |

Flexure:
========

X direction

| Loc ft | Mmax Mmin kft | Comb Comb | Asb_req Asb_req in^2 | Asb_prv Asb_prv in^2 | Asb_eff Asb_eff in^2 | Ast_req Ast_req in^2 | Ast_prv Ast_prv in^2 | Ast_eff Ast_eff in^2 |
|---|---|---|---|---|---|---|---|---|
| -4.80 | 0.0 | 1 | 0.00 | 0.00 | 0.00 | 0.00 | 0.00 | 0.00 |
| | 0.0 | 1 | 0.00 | 0.00 | 0.00 | 0.00 | 0.00 | 0.00 |
| -4.43 | 0.0 | 1 | 0.00 | 0.00 | 0.00 | 0.00 | 0.00 | 0.00 |
| | 0.0 | 1 | 0.00 | 0.00 | 0.00 | 0.00 | 0.00 | 0.00 |
| -4.30 | 0.0 | 1 | 0.00 | 12.32 | 0.04 | 0.00 | 22.86 | 0.04 |
| | 0.0 | 1 | 0.00 | 12.32 | 0.04 | 0.00 | 22.86 | 0.04 |
| -3.70 | 0.0 | 1 | 0.00 | 12.32 | 10.17 | 0.00 | 22.86 | 10.75 |
| | 0.0 | 1 | 0.00 | 12.32 | 9.81 | 0.00 | 22.86 | 10.75 |
| -3.33 | 0.0 | 1 | 0.00 | 12.32 | 12.32 | 0.00 | 22.86 | 17.31 |
| | 0.0 | 1 | 0.00 | 12.32 | 12.32 | 0.00 | 22.86 | 17.31 |
| -2.97 | 0.0 | 1 | 0.00 | 12.32 | 12.32 | 0.00 | 22.86 | 22.86 |
| | 0.0 | 1 | 0.00 | 12.32 | 12.32 | 0.00 | 22.86 | 22.86 |
| -2.60 | 53.2 | 1 | 1.29 | 12.32 | 12.32 | 0.00 | 22.86 | 22.86 |
| | 0.0 | 1 | 0.00 | 12.32 | 12.32 | 0.00 | 22.86 | 22.86 |
| -2.23 | 150.8 | 1 | 3.70 | 12.32 | 12.32 | 0.00 | 22.86 | 22.86 |
| | 0.0 | 1 | 0.00 | 12.32 | 12.32 | 0.00 | 22.86 | 22.86 |
| -1.87 | 248.4 | 1 | 6.15 | 12.32 | 12.32 | 0.00 | 22.86 | 22.86 |
| | 0.0 | 1 | 0.00 | 12.32 | 12.32 | 0.00 | 22.86 | 22.86 |
| -1.50 | 346.0 | 1 | 8.63 | 12.32 | 12.32 | 0.00 | 22.86 | 22.86 |
| | 0.0 | 1 | 0.00 | 12.32 | 12.32 | 0.00 | 22.86 | 22.86 |
| 0.00 | 0.0 | 1 | 0.00 | 12.32 | 12.32 | 0.00 | 22.86 | 22.86 |
| | 0.0 | 1 | 0.00 | 12.32 | 12.32 | 0.00 | 22.86 | 22.86 |
| 1.50 | 142.5 | 1 | 3.49 | 12.32 | 12.32 | 0.00 | 22.86 | 22.86 |
| | 0.0 | 1 | 0.00 | 12.32 | 12.32 | 0.00 | 22.86 | 22.86 |
| 4.30 | 0.0 | 1 | 0.00 | 12.32 | 12.32 | 0.00 | 22.86 | 22.86 |
| | -981.7 | 1 | 0.00 | 12.32 | 12.32 | 18.27 | 22.86 | 22.86 |
| 7.13 | 0.0 | 1 | 0.00 | 12.32 | 12.32 | 0.00 | 22.86 | 22.86 |
| | -1472.5 | 1 | 0.00 | 12.32 | 12.32 | 27.74 | 22.86 * | 22.86 |
| 9.94 | 0.0 | 1 | 0.00 | 12.32 | 12.32 | 0.00 | 22.86 | 22.86 |
| | -1854.1 | 1 | 0.00 | 12.32 | 12.32 | 35.22 | 22.86 * | 22.86 |
| 12.75 | 0.0 | 1 | 0.00 | 12.32 | 12.32 | 0.00 | 22.86 | 22.86 |
| | -2222.4 | 1 | 0.00 | 12.32 | 12.32 | 42.52 | 22.86 * | 22.86 |
| 15.56 | 0.0 | 1 | 0.00 | 12.32 | 12.32 | 0.00 | 22.86 | 22.86 |
| | -1855.5 | 1 | 0.00 | 12.32 | 12.32 | 35.25 | 22.86 * | 22.86 |
| 18.38 | 0.0 | 1 | 0.00 | 12.32 | 12.32 | 0.00 | 22.86 | 22.86 |
| | -1488.5 | 1 | 0.00 | 12.32 | 12.32 | 28.06 | 22.86 * | 22.86 |

H. W. Lochner, Inc. PHONE: 859-224-4476
1040 Monarch St. Suite 300 Lexington, KY 40513
SHEET 7 OF 8
JOB NO. HLB#142
PROGRAM: RC-PIER® v4.1.0 LEAP Software Inc., Tampa, Florida
BY JMJ DATE Jun/15/2006
PHONE : TOLL-FREE 1-800-451-5327 TAMPA AREA: 813-985-9170
CKD. DATE

PROJECT: BONNER BRIDGE - OREGON INLET NORTH CAROLINA

| | | | | | | | | |
|---|---|---|---|---|---|---|---|---|
| 21.20 | 0.0 | 1 | 0.00 | 12.32 | 12.32 | 0.00 | 22.86 | 22.86 |
| | -985.9 | 1 | 0.00 | 12.32 | 12.32 | 18.35 | 22.86 | 22.86 |
| 24.00 | 123.7 | 1 | 3.03 | 12.32 | 12.32 | 0.00 | 22.86 | 22.86 |
| | 0.0 | 1 | 0.00 | 12.32 | 12.32 | 0.00 | 22.86 | 22.86 |
| 25.50 | 0.0 | 1 | 0.00 | 12.32 | 12.32 | 0.00 | 22.86 | 22.86 |
| | 0.0 | 1 | 0.00 | 12.32 | 12.32 | 0.00 | 22.86 | 22.86 |
| 27.00 | 319.4 | 1 | 7.95 | 12.32 | 12.32 | 0.00 | 22.86 | 22.86 |
| | 0.0 | 1 | 0.00 | 12.32 | 12.32 | 0.00 | 22.86 | 22.86 |
| 27.36 | 224.8 | 1 | 5.55 | 12.32 | 12.32 | 0.00 | 22.86 | 22.86 |
| | 0.0 | 1 | 0.00 | 12.32 | 12.32 | 0.00 | 22.86 | 22.86 |
| 27.71 | 130.1 | 1 | 3.19 | 12.32 | 12.32 | 0.00 | 22.86 | 22.86 |
| | 0.0 | 1 | 0.00 | 12.32 | 12.32 | 0.00 | 22.86 | 22.86 |
| 28.07 | 35.5 | 1 | 0.86 | 12.32 | 12.32 | 0.00 | 22.86 | 22.86 |
| | 0.0 | 1 | 0.00 | 12.32 | 12.32 | 0.00 | 22.86 | 22.86 |
| 28.42 | 0.0 | 1 | 0.00 | 12.32 | 12.32 | 0.00 | 22.86 | 22.86 |
| | 0.0 | 1 | 0.00 | 12.32 | 12.32 | 0.00 | 22.86 | 22.86 |
| 28.78 | 0.0 | 1 | 0.00 | 12.32 | 12.32 | 0.00 | 22.86 | 16.52 |
| | 0.0 | 1 | 0.00 | 12.32 | 12.32 | 0.00 | 22.86 | 16.52 |
| 29.13 | 0.0 | 1 | 0.00 | 12.32 | 9.61 | 0.00 | 22.86 | 10.15 |
| | 0.0 | 1 | 0.00 | 12.32 | 9.26 | 0.00 | 22.86 | 10.15 |
| 29.49 | 0.0 | 1 | 0.00 | 12.32 | 3.58 | 0.00 | 22.86 | 3.78 |
| | 0.0 | 1 | 0.00 | 12.32 | 3.45 | 0.00 | 22.86 | 3.78 |
| 29.80 | 0.0 | 1 | 0.00 | 0.00 | 0.00 | 0.00 | 0.00 | 0.00 |
| | 0.0 | 1 | 0.00 | 0.00 | 0.00 | 0.00 | 0.00 | 0.00 |
| 30.20 | 0.0 | 1 | 0.00 | 0.00 | 0.00 | 0.00 | 0.00 | 0.00 |
| | 0.0 | 1 | 0.00 | 0.00 | 0.00 | 0.00 | 0.00 | 0.00 |

Z direction

| Loc ft | Mmax kft | Comb | Asb_req in^2 | Asb_prv in^2 | Asb_eff in^2 | Ast_req in^2 | Ast_prv in^2 | Ast_eff in^2 |
|---|---|---|---|---|---|---|---|---|
| -2.96 | 794.8 | 1 | 17.25 | 37.28 | 37.28 | 0.00 | 8.68 | 8.68 |
| 2.96 | 794.8 | 1 | 17.25 | 37.28 | 37.28 | 0.00 | 8.68 | 8.68 |

Note:
* The provided reinforcement is not adequate, either less than required or larger than maximum allowed.

One Way Shear:
==========

| Col | Dist ft | Comb | d in | V kips | Vc kips |
|---|---|---|---|---|---|
| X direction | | | | | |
| 1 | -4.30 | 1 | 33.98 | 0.0 | 346.9 |
| | 4.30 | 1 | 33.57 | 327.2 | 342.7 |
| 2 | 21.20 | 1 | 33.57 | 336.5 | 342.7 |
| | 29.80 | 1 | 48.00 | 0.0 | 490.0 |
| Z direction | | | | | |
| | -6.15 | 1 | 38.26 | 0.0 | 1012.5 |
| | 6.15 | 1 | 38.26 | 0.0 | 1012.5 |

H. W. Lochner, Inc. PHONE: 859-224-4476
1040 Monarch St. Suite 300 Lexington, KY 40513
PROGRAM: RC-PIER® v4.1.0 LEAP Software Inc., Tampa, Florida
PHONE : TOLL-FREE 1-800-451-5327 TAMPA AREA: 813-985-9170

SHEET 8 OF 8
JOB NO. HLB#142
BY JMJ DATE Jun/15/2006
CKD. DATE

PROJECT: BONNER BRIDGE - OREGON INLET NORTH CAROLINA

Two Way Shear:
==========

| # | Bo ft | Ao ft^2 | Comb | Avg. d in | V kips | Vc kips |
|---|---|---|---|---|---|---|
| Columns: | | | | | | |
| 1 | 29.84 | 53.52 | 1 | 36.02 | 668.0 | 1539.8 |
| 2 | 29.84 | 53.52 | 1 | 39.52 | 662.8 | 1539.8 |
| Piles - max: | | | | | | |
| 7 | 15.19 | 18.36 | 1 | 37.77 | 0.0 | 783.8 |
| Piles - min: | | | | | | |
| 1 | 5.90 | 14.82 | 1 | 37.77 | 0.0 | 304.4 |

Note:
TWO WAY SHEAR IN FOOTING IS NOT DESIGNED AND STIRRUPS ARE NOT CONSIDERED.

H. W. Lochner, Inc. PHONE: 859-224-4476
1040 Monarch St. Suite 300 Lexington, KY 40513
SHEET 1 OF 8
JOB NO. HLB#142
PROGRAM: RC-PIER® v4.1.0 LEAP Software Inc., Tampa, Florida
BY JMJ DATE Jun/15/2006
PHONE : TOLL-FREE 1-800-451-5327 TAMPA AREA: 813-985-9170
CKD. DATE

---

PROJECT: BONNER BRIDGE - OREGON INLET NORTH CAROLINA

PROJECT DATA
==========

Project : BONNER BRIDGE - OREGON INLET NORTH CAROLINA
User Job No.: HLB#142
State : North Carolina State Job No. :
Code : AASHTO STANDARD (17th Edition 2002)
Comments : Bonner Bridge HLB #142 - Load Groups 4-6 (For Ease of Checking) - Per Field Data

JMJ 7/06

WDB 7/06

H. W. Lochner, Inc. PHONE: 859-224-4476
1040 Monarch St. Suite 300 Lexington, KY 40513
PROGRAM: RC-PIER® v4.1.0 LEAP Software Inc., Tampa, Florida
PHONE : TOLL-FREE 1-800-451-5327 TAMPA AREA: 813-985-9170

SHEET 2 OF 8
JOB NO. HLB#142
BY JMJ DATE Jun/15/2006
CKD. DATE

PROJECT: BONNER BRIDGE - OREGON INLET NORTH CAROLINA

LOADS
=====

Load Cases: 3

Loadcase ID: (L+In)1 Name: Group 4 Loadings
Multiplier = 1.000

Cap loads:

| Type | Dir | Arm ft | Mag1 kip,kip/ft, kft | x1/L | Mag2 kip,kip/ft, kft | x2/L |
|---|---|---|---|---|---|---|
| Force | Y | 0.00 | -466.40 | 0.00 | ---- | ---- |
| Force | Y | 0.00 | -515.81 | 1.00 | ---- | ---- |
| Moment | Z | ---- | 1123.03 | 0.00 | ---- | ---- |
| Moment | Z | ---- | 1144.92 | 1.00 | ---- | ---- |

Loadcase ID: (L+Ip)1 Name: Group 5 Loadings
Multiplier = 1.000

Cap loads:

| Type | Dir | Arm ft | Mag1 kip,kip/ft, kft | x1/L | Mag2 kip,kip/ft, kft | x2/L |
|---|---|---|---|---|---|---|
| Force | Y | 0.00 | -446.83 | 0.00 | ---- | ---- |
| Force | Y | 0.00 | -344.81 | 1.00 | ---- | ---- |
| Moment | X | ---- | -1229.61 | 1.00 | ---- | ---- |
| Moment | X | ---- | 1229.36 | 0.00 | ---- | ---- |
| Moment | Z | ---- | 990.18 | 0.00 | ---- | ---- |
| Moment | Z | ---- | 1190.14 | 1.00 | ---- | ---- |

Loadcase ID: W1 Name: Group 6 Loadings
Multiplier = 1.000

Cap loads:

| Type | Dir | Arm ft | Mag1 kip,kip/ft, kft | x1/L | Mag2 kip,kip/ft, kft | x2/L |
|---|---|---|---|---|---|---|
| Force | Y | 0.00 | -469.83 | 0.00 | ---- | ---- |
| Force | Y | 0.00 | -474.59 | 1.00 | ---- | ---- |
| Moment | X | ---- | -713.93 | 1.00 | ---- | ---- |
| Moment | X | ---- | 713.80 | 0.00 | ---- | ---- |
| Moment | Z | ---- | 1040.46 | 0.00 | ---- | ---- |
| Moment | Z | ---- | 1140.23 | 1.00 | ---- | ---- |

Selected load groups:

SERVICE GROUP I
SERVICE GROUP IB
SERVICE GROUP II

H. W. Lochner, Inc. PHONE: 859-224-4476
1040 Monarch St. Suite 300 Lexington, KY 40513
SHEET 3 OF 8
JOB NO. HLB#142
PROGRAM: RC-PIER® v4.1.0 LEAP Software Inc., Tampa, Florida
BY JMJ DATE Jun/15/2006
PHONE : TOLL-FREE 1-800-451-5327 TAMPA AREA: 813-985-9170
CKD. DATE

PROJECT: BONNER BRIDGE - OREGON INLET NORTH CAROLINA

COMBINED FOOTING DESIGN

Code: AASHTO STANDARD (17th Edition 2002) - Service Load Design
Units: US

Geometry:
=========
Name : 1
Shape : Rectangular, Type : Pile/Shaft Cap

Bf(X) = 35.00 ft, Hf(Z) = 13.50 ft, Thickness(Y) = 51.00 in

Footing concentric.
Columns located on the footing:
Column No. 1 at x = 0.00 ft, Rectangular 36.00 in x 71.00 in
Column No. 2 at x = 25.50 ft, Rectangular 36.00 in x 71.00 in

Ag = 472.50 ft^2, Ix = 225.63 ft^2, Iz = 1825.50 ft^2

Surcharge = 0.00 ksf

Piles: Circular Size: 22.00 in Capacity: 100.00 kips

Design Parameters:
==========
f'c = 4400.00 psi fy = 40000.00 psi
Ec = 4021.4 ksi Es = 29000.0 ksi
Crack control factor z = 130.00 kips/in
Concrete Type : Normal Weight.

Pile Reactions, Service (Without the reduction of overstress allowance):
==========

| Pile | Loc(X) ft | X in | Z in | Column Loads col# | comb | Ovs | P, kips | Mxx, kft | Mzz, kft | Pile Reac. kips |
|---|---|---|---|---|---|---|---|---|---|---|
| 1 | -2.80 | 24.0 | 57.0 | 1 | 2 | 1.000 | -446.92 | 1228.88 | 984.16 | 102.04* |
| | | | | 2 | 2 | 1.000 | -344.72 | -1229.13 | 1189.36 | |
| | | | | 1 | 4 | 1.250 | 469.93 | -713.52 | -1034.13 | -60.44 |
| | | | | 2 | 4 | 1.250 | 474.49 | 713.65 | -1139.41 | |
| 2 | 4.70 | 114.0 | 57.0 | 1 | 1 | 1.000 | -466.50 | 0.00 | 1116.61 | 92.50 |
| | | | | 2 | 1 | 1.000 | -515.71 | 0.00 | 1144.04 | |
| | | | | 1 | 4 | 1.250 | 469.93 | -713.52 | -1034.13 | -51.94 |
| | | | | 2 | 4 | 1.250 | 474.49 | 713.65 | -1139.41 | |
| 3 | 12.70 | 210.0 | 57.0 | 1 | 1 | 1.000 | -466.50 | 0.00 | 1116.61 | 85.56 |
| | | | | 2 | 1 | 1.000 | -515.71 | 0.00 | 1144.04 | |
| | | | | 1 | 4 | 1.250 | 469.93 | -713.52 | -1034.13 | -42.88 |
| | | | | 2 | 4 | 1.250 | 474.49 | 713.65 | -1139.41 | |
| 4 | 20.70 | 306.0 | 57.0 | 1 | 1 | 1.000 | -466.50 | 0.00 | 1116.61 | 78.62 |
| | | | | 2 | 1 | 1.000 | -515.71 | 0.00 | 1144.04 | |
| | | | | 1 | 4 | 1.250 | 469.93 | -713.52 | -1034.13 | -33.81 |
| | | | | 2 | 4 | 1.250 | 474.49 | 713.65 | -1139.41 | |
| 5 | 28.20 | 396.0 | 57.0 | 1 | 1 | 1.000 | -466.50 | 0.00 | 1116.61 | 72.11 |
| | | | | 2 | 1 | 1.000 | -515.71 | 0.00 | 1144.04 | |
| | | | | 1 | 4 | 1.250 | 469.93 | -713.52 | -1034.13 | -25.32 |
| | | | | 2 | 4 | 1.250 | 474.49 | 713.65 | -1139.41 | |
| 6 | -2.80 | 24.0 | 0.0 | 1 | 2 | 1.000 | -446.92 | 1228.88 | 984.16 | 102.04* |
| | | | | 2 | 2 | 1.000 | -344.72 | -1229.13 | 1189.36 | |
| | | | | 1 | 4 | 1.250 | 469.93 | -713.52 | -1034.13 | -60.44 |

H. W. Lochner, Inc. PHONE: 859-224-4476
1040 Monarch St. Suite 300 Lexington, KY 40513


PROJECT: BONNER BRIDGE - OREGON INLET NORTH CAROLINA

| | | | | | | | | | | |
|---|---|---|---|---|---|---|---|---|---|---|
| | | | | 2 | 4 | 1.250 | 474.49 | 713.65 | -1139.41 | |
| 7 | 4.70 | 114.0 | 0.0 | 1 | 1 | 1.000 | -466.50 | 0.00 | 1116.61 | 92.50 |
| | | | | 2 | 1 | 1.000 | -515.71 | 0.00 | 1144.04 | |
| | | | | 1 | 4 | 1.250 | 469.93 | -713.52 | -1034.13 | -51.94 |
| | | | | 2 | 4 | 1.250 | 474.49 | 713.65 | -1139.41 | |
| 8 | 12.70 | 210.0 | 0.0 | 1 | 1 | 1.000 | -466.50 | 0.00 | 1116.61 | 85.56 |
| | | | | 2 | 1 | 1.000 | -515.71 | 0.00 | 1144.04 | |
| | | | | 1 | 4 | 1.250 | 469.93 | -713.52 | -1034.13 | -42.88 |
| | | | | 2 | 4 | 1.250 | 474.49 | 713.65 | -1139.41 | |
| 9 | 20.70 | 306.0 | 0.0 | 1 | 1 | 1.000 | -466.50 | 0.00 | 1116.61 | 78.62 |
| | | | | 2 | 1 | 1.000 | -515.71 | 0.00 | 1144.04 | |
| | | | | 1 | 4 | 1.250 | 469.93 | -713.52 | -1034.13 | -33.82 |
| | | | | 2 | 4 | 1.250 | 474.49 | 713.65 | -1139.41 | |
| 10 | 28.20 | 396.0 | 0.0 | 1 | 1 | 1.000 | -466.50 | 0.00 | 1116.61 | 72.11 |
| | | | | 2 | 1 | 1.000 | -515.71 | 0.00 | 1144.04 | |
| | | | | 1 | 4 | 1.250 | 469.93 | -713.52 | -1034.13 | -25.32 |
| | | | | 2 | 4 | 1.250 | 474.49 | 713.65 | -1139.41 | |
| 11 | -2.80 | 24.0 | -57.0 | 1 | 2 | 1.000 | -446.92 | 1228.88 | 984.16 | 102.05* |
| | | | | 2 | 2 | 1.000 | -344.72 | -1229.13 | 1189.36 | |
| | | | | 1 | 4 | 1.250 | 469.93 | -713.52 | -1034.13 | -60.44 |
| | | | | 2 | 4 | 1.250 | 474.49 | 713.65 | -1139.41 | |
| 12 | 4.70 | 114.0 | -57.0 | 1 | 1 | 1.000 | -466.50 | 0.00 | 1116.61 | 92.50 |
| | | | | 2 | 1 | 1.000 | -515.71 | 0.00 | 1144.04 | |
| | | | | 1 | 4 | 1.250 | 469.93 | -713.52 | -1034.13 | -51.95 |
| | | | | 2 | 4 | 1.250 | 474.49 | 713.65 | -1139.41 | |
| 13 | 12.70 | 210.0 | -57.0 | 1 | 1 | 1.000 | -466.50 | 0.00 | 1116.61 | 85.56 |
| | | | | 2 | 1 | 1.000 | -515.71 | 0.00 | 1144.04 | |
| | | | | 1 | 4 | 1.250 | 469.93 | -713.52 | -1034.13 | -42.88 |
| | | | | 2 | 4 | 1.250 | 474.49 | 713.65 | -1139.41 | |
| 14 | 20.70 | 306.0 | -57.0 | 1 | 1 | 1.000 | -466.50 | 0.00 | 1116.61 | 78.62 |
| | | | | 2 | 1 | 1.000 | -515.71 | 0.00 | 1144.04 | |
| | | | | 1 | 4 | 1.250 | 469.93 | -713.52 | -1034.13 | -33.82 |
| | | | | 2 | 4 | 1.250 | 474.49 | 713.65 | -1139.41 | |
| 15 | 28.20 | 396.0 | -57.0 | 1 | 1 | 1.000 | -466.50 | 0.00 | 1116.61 | 72.11 |
| | | | | 2 | 1 | 1.000 | -515.71 | 0.00 | 1144.04 | |
| | | | | 1 | 4 | 1.250 | 469.93 | -713.52 | -1034.13 | -25.32 |
| | | | | 2 | 4 | 1.250 | 474.49 | 713.65 | -1139.41 | |

Pile Reactions, Service (After the reduction of overstress allowance):

| Pile | Loc(X) ft | X in | Z in | Column Loads col# | comb | Ovs | P, kips | Mxx, kft | Mzz, kft | Pile Reac. kips |
|---|---|---|---|---|---|---|---|---|---|---|
| 1 | -2.80 | 24.0 | 57.0 | 1 | 2 | 1.000 | -446.92 | 1228.88 | 984.16 | 102.04* |
| | | | | 2 | 2 | 1.000 | -344.72 | -1229.13 | 1189.36 | |
| | | | | 1 | 4 | 1.250 | 469.93 | -713.52 | -1034.13 | -48.35 |
| | | | | 2 | 4 | 1.250 | 474.49 | 713.65 | -1139.41 | |
| 2 | 4.70 | 114.0 | 57.0 | 1 | 1 | 1.000 | -466.50 | 0.00 | 1116.61 | 92.50 |
| | | | | 2 | 1 | 1.000 | -515.71 | 0.00 | 1144.04 | |
| | | | | 1 | 4 | 1.250 | 469.93 | -713.52 | -1034.13 | -41.55 |
| | | | | 2 | 4 | 1.250 | 474.49 | 713.65 | -1139.41 | |
| 3 | 12.70 | 210.0 | 57.0 | 1 | 1 | 1.000 | -466.50 | 0.00 | 1116.61 | 85.56 |
| | | | | 2 | 1 | 1.000 | -515.71 | 0.00 | 1144.04 | |
| | | | | 1 | 4 | 1.250 | 469.93 | -713.52 | -1034.13 | -34.30 |
| | | | | 2 | 4 | 1.250 | 474.49 | 713.65 | -1139.41 | |
| 4 | 20.70 | 306.0 | 57.0 | 1 | 1 | 1.000 | -466.50 | 0.00 | 1116.61 | 78.62 |
| | | | | 2 | 1 | 1.000 | -515.71 | 0.00 | 1144.04 | |
| | | | | 1 | 4 | 1.250 | 469.93 | -713.52 | -1034.13 | -27.05 |

H. W. Lochner, Inc. PHONE: 859-224-4476
1040 Monarch St. Suite 300 Lexington, KY 40513
SHEET 5 OF 8
JOB NO. HLB#142
PROGRAM: RC-PIER® v4.1.0 LEAP Software Inc., Tampa, Florida
BY JMJ DATE Jun/15/2006
PHONE : TOLL-FREE 1-800-451-5327 TAMPA AREA: 813-985-9170
CKD. DATE

PROJECT: BONNER BRIDGE - OREGON INLET NORTH CAROLINA

| | | | | | | | | | | |
|---|---|---|---|---|---|---|---|---|---|---|
| | | | | 2 | 4 | 1.250 | 474.49 | 713.65 | -1139.41 | |
| 5 | 28.20 | 396.0 | 57.0 | 1 | 1 | 1.000 | -466.50 | 0.00 | 1116.61 | 72.11 |
| | | | | 2 | 1 | 1.000 | -515.71 | 0.00 | 1144.04 | |
| | | | | 1 | 4 | 1.250 | 469.93 | -713.52 | -1034.13 | -20.25 |
| | | | | 2 | 4 | 1.250 | 474.49 | 713.65 | -1139.41 | |
| 6 | -2.80 | 24.0 | 0.0 | 1 | 2 | 1.000 | -446.92 | 1228.88 | 984.16 | 102.04* |
| | | | | 2 | 2 | 1.000 | -344.72 | -1229.13 | 1189.36 | |
| | | | | 1 | 4 | 1.250 | 469.93 | -713.52 | -1034.13 | -48.35 |
| | | | | 2 | 4 | 1.250 | 474.49 | 713.65 | -1139.41 | |
| 7 | 4.70 | 114.0 | 0.0 | 1 | 1 | 1.000 | -466.50 | 0.00 | 1116.61 | 92.50 |
| | | | | 2 | 1 | 1.000 | -515.71 | 0.00 | 1144.04 | |
| | | | | 1 | 4 | 1.250 | 469.93 | -713.52 | -1034.13 | -41.55 |
| | | | | 2 | 4 | 1.250 | 474.49 | 713.65 | -1139.41 | |
| 8 | 12.70 | 210.0 | 0.0 | 1 | 1 | 1.000 | -466.50 | 0.00 | 1116.61 | 85.56 |
| | | | | 2 | 1 | 1.000 | -515.71 | 0.00 | 1144.04 | |
| | | | | 1 | 4 | 1.250 | 469.93 | -713.52 | -1034.13 | -34.30 |
| | | | | 2 | 4 | 1.250 | 474.49 | 713.65 | -1139.41 | |
| 9 | 20.70 | 306.0 | 0.0 | 1 | 1 | 1.000 | -466.50 | 0.00 | 1116.61 | 78.62 |
| | | | | 2 | 1 | 1.000 | -515.71 | 0.00 | 1144.04 | |
| | | | | 1 | 4 | 1.250 | 469.93 | -713.52 | -1034.13 | -27.05 |
| | | | | 2 | 4 | 1.250 | 474.49 | 713.65 | -1139.41 | |
| 10 | 28.20 | 396.0 | 0.0 | 1 | 1 | 1.000 | -466.50 | 0.00 | 1116.61 | 72.11 |
| | | | | 2 | 1 | 1.000 | -515.71 | 0.00 | 1144.04 | |
| | | | | 1 | 4 | 1.250 | 469.93 | -713.52 | -1034.13 | -20.26 |
| | | | | 2 | 4 | 1.250 | 474.49 | 713.65 | -1139.41 | |
| 11 | -2.80 | 24.0 | -57.0 | 1 | 2 | 1.000 | -446.92 | 1228.88 | 984.16 | 102.05* |
| | | | | 2 | 2 | 1.000 | -344.72 | -1229.13 | 1189.36 | |
| | | | | 1 | 4 | 1.250 | 469.93 | -713.52 | -1034.13 | -48.35 |
| | | | | 2 | 4 | 1.250 | 474.49 | 713.65 | -1139.41 | |
| 12 | 4.70 | 114.0 | -57.0 | 1 | 1 | 1.000 | -466.50 | 0.00 | 1116.61 | 92.50 |
| | | | | 2 | 1 | 1.000 | -515.71 | 0.00 | 1144.04 | |
| | | | | 1 | 4 | 1.250 | 469.93 | -713.52 | -1034.13 | -41.56 |
| | | | | 2 | 4 | 1.250 | 474.49 | 713.65 | -1139.41 | |
| 13 | 12.70 | 210.0 | -57.0 | 1 | 1 | 1.000 | -466.50 | 0.00 | 1116.61 | 85.56 |
| | | | | 2 | 1 | 1.000 | -515.71 | 0.00 | 1144.04 | |
| | | | | 1 | 4 | 1.250 | 469.93 | -713.52 | -1034.13 | -34.31 |
| | | | | 2 | 4 | 1.250 | 474.49 | 713.65 | -1139.41 | |
| 14 | 20.70 | 306.0 | -57.0 | 1 | 1 | 1.000 | -466.50 | 0.00 | 1116.61 | 78.62 |
| | | | | 2 | 1 | 1.000 | -515.71 | 0.00 | 1144.04 | |
| | | | | 1 | 4 | 1.250 | 469.93 | -713.52 | -1034.13 | -27.06 |
| | | | | 2 | 4 | 1.250 | 474.49 | 713.65 | -1139.41 | |
| 15 | 28.20 | 396.0 | -57.0 | 1 | 1 | 1.000 | -466.50 | 0.00 | 1116.61 | 72.11 |
| | | | | 2 | 1 | 1.000 | -515.71 | 0.00 | 1144.04 | |
| | | | | 1 | 4 | 1.250 | 469.93 | -713.52 | -1034.13 | -20.26 |
| | | | | 2 | 4 | 1.250 | 474.49 | 713.65 | -1139.41 | |

Note:
* Force in pile is greater than pile capacity.

Only max. force in piles is considered for design.
Pile coordinates X and Z are from the most left edge of the footing.

Max. Pile Reaction Used in Design: (without selfweight and surcharge)
==========

Working Stress pile reaction = 81.96 kips

H. W. Lochner, Inc. PHONE: 859-224-4476
1040 Monarch St. Suite 300 Lexington, KY 40513
SHEET 6 OF 8
JOB NO. HLB#142
PROGRAM: RC-PIER® v4.1.0 LEAP Software Inc., Tampa, Florida
BY JMJ DATE Jun/15/2006
PHONE : TOLL-FREE 1-800-451-5327 TAMPA AREA: 813-985-9170
CKD. DATE

PROJECT: BONNER BRIDGE - OREGON INLET NORTH CAROLINA

Reinforcement Schedule:
==========:

| Dir | Quantity | Size | Bar dist. in | As total in^2 | From ft | To ft | Hook |
|---|---|---|---|---|---|---|---|
| X | 8 | # 6 | 6.00 | 3.52 | 0.50 | 34.50 | None |
| X | 20 | # 6 | 22.00 | 8.80 | 0.50 | 34.50 | Both |
| X | 18 | # 10 | 45.50 | 22.86 | 0.50 | 34.50 | Both |
| Z | 28 | # 5 | 46.45 | 8.68 | ---- | ---- | Both |
| Z | 52 | # 5 | 21.13 | 16.12 | ---- | ---- | Both |
| Z | 8 | # 11 | 7.08 | 12.48 | ---- | ---- | None |
| Z | 28 | # 5 | 5.31 | 8.68 | ---- | ---- | Both |

Flexure:
========

X direction

| Loc ft | Mmax Mmin kft | Comb Comb | Asb_req Asb_req in^2 | Asb_prv Asb_prv in^2 | Asb_eff Asb_eff in^2 | Ast_req Ast_req in^2 | Ast_prv Ast_prv in^2 | Ast_eff Ast_eff in^2 |
|---|---|---|---|---|---|---|---|---|
| -4.80 | 0.0 | 2 | 0.00 | 0.00 | 0.00 | 0.00 | 0.00 | 0.00 |
| | 0.0 | 2 | 0.00 | 0.00 | 0.00 | 0.00 | 0.00 | 0.00 |
| -4.43 | 0.0 | 2 | 0.00 | 0.00 | 0.00 | 0.00 | 0.00 | 0.00 |
| | 0.0 | 2 | 0.00 | 0.00 | 0.00 | 0.00 | 0.00 | 0.00 |
| -4.30 | 0.0 | 2 | 0.00 | 12.32 | 0.04 | 0.00 | 22.86 | 0.04 |
| | 0.0 | 2 | 0.00 | 12.32 | 0.04 | 0.00 | 22.86 | 0.04 |
| -3.70 | 0.0 | 2 | 0.00 | 12.32 | 10.17 | 0.00 | 22.86 | 10.75 |
| | 0.0 | 2 | 0.00 | 12.32 | 9.81 | 0.00 | 22.86 | 10.75 |
| -3.33 | 0.0 | 2 | 0.00 | 12.32 | 12.32 | 0.00 | 22.86 | 17.31 |
| | 0.0 | 2 | 0.00 | 12.32 | 12.32 | 0.00 | 22.86 | 17.31 |
| -2.97 | 0.0 | 2 | 0.00 | 12.32 | 12.32 | 0.00 | 22.86 | 22.86 |
| | 0.0 | 2 | 0.00 | 12.32 | 12.32 | 0.00 | 22.86 | 22.86 |
| -2.60 | 49.2 | 2 | 1.19 | 12.32 | 12.32 | 0.00 | 22.86 | 22.86 |
| | 0.0 | 2 | 0.00 | 12.32 | 12.32 | 0.00 | 22.86 | 22.86 |
| -2.23 | 139.3 | 2 | 3.42 | 12.32 | 12.32 | 0.00 | 22.86 | 22.86 |
| | 0.0 | 2 | 0.00 | 12.32 | 12.32 | 0.00 | 22.86 | 22.86 |
| -1.87 | 229.5 | 2 | 5.67 | 12.32 | 12.32 | 0.00 | 22.86 | 22.86 |
| | 0.0 | 2 | 0.00 | 12.32 | 12.32 | 0.00 | 22.86 | 22.86 |
| -1.50 | 319.7 | 2 | 7.96 | 12.32 | 12.32 | 0.00 | 22.86 | 22.86 |
| | 0.0 | 2 | 0.00 | 12.32 | 12.32 | 0.00 | 22.86 | 22.86 |
| 0.00 | 0.0 | 2 | 0.00 | 12.32 | 12.32 | 0.00 | 22.86 | 22.86 |
| | 0.0 | 2 | 0.00 | 12.32 | 12.32 | 0.00 | 22.86 | 22.86 |
| 1.50 | 131.6 | 2 | 3.22 | 12.32 | 12.32 | 0.00 | 22.86 | 22.86 |
| | 0.0 | 2 | 0.00 | 12.32 | 12.32 | 0.00 | 22.86 | 22.86 |
| 4.30 | 0.0 | 2 | 0.00 | 12.32 | 12.32 | 0.00 | 22.86 | 22.86 |
| | -907.0 | 2 | 0.00 | 12.32 | 12.32 | 16.84 | 22.86 | 22.86 |
| 7.13 | 0.0 | 2 | 0.00 | 12.32 | 12.32 | 0.00 | 22.86 | 22.86 |
| | -1360.4 | 2 | 0.00 | 12.32 | 12.32 | 25.56 | 22.86 * | 22.86 |
| 9.94 | 0.0 | 2 | 0.00 | 12.32 | 12.32 | 0.00 | 22.86 | 22.86 |
| | -1712.9 | 2 | 0.00 | 12.32 | 12.32 | 32.45 | 22.86 * | 22.86 |
| 12.75 | 0.0 | 2 | 0.00 | 12.32 | 12.32 | 0.00 | 22.86 | 22.86 |
| | -2053.2 | 2 | 0.00 | 12.32 | 12.32 | 39.16 | 22.86 * | 22.86 |
| 15.56 | 0.0 | 2 | 0.00 | 12.32 | 12.32 | 0.00 | 22.86 | 22.86 |
| | -1714.2 | 2 | 0.00 | 12.32 | 12.32 | 32.47 | 22.86 * | 22.86 |
| 18.38 | 0.0 | 2 | 0.00 | 12.32 | 12.32 | 0.00 | 22.86 | 22.86 |
| | -1375.2 | 2 | 0.00 | 12.32 | 12.32 | 25.85 | 22.86 * | 22.86 |

H. W. Lochner, Inc. PHONE: 859-224-4476
1040 Monarch St. Suite 300 Lexington, KY 40513
SHEET 7 OF 8
JOB NO. HLB#142
PROGRAM: RC-PIER® v4.1.0 LEAP Software Inc., Tampa, Florida
BY JMJ DATE Jun/15/2006
PHONE : TOLL-FREE 1-800-451-5327 TAMPA AREA: 813-985-9170
CKD. DATE

PROJECT: BONNER BRIDGE - OREGON INLET NORTH CAROLINA

| | | | | | | | | |
|---|---|---|---|---|---|---|---|---|
| 21.20 | 0.0 | 2 | 0.00 | 12.32 | 12.32 | 0.00 | 22.86 | 22.86 |
| | -910.9 | 2 | 0.00 | 12.32 | 12.32 | 16.91 | 22.86 | 22.86 |
| 24.00 | 114.3 | 2 | 2.79 | 12.32 | 12.32 | 0.00 | 22.86 | 22.86 |
| | 0.0 | 2 | 0.00 | 12.32 | 12.32 | 0.00 | 22.86 | 22.86 |
| 25.50 | 0.0 | 2 | 0.00 | 12.32 | 12.32 | 0.00 | 22.86 | 22.86 |
| | 0.0 | 2 | 0.00 | 12.32 | 12.32 | 0.00 | 22.86 | 22.86 |
| 27.00 | 295.1 | 2 | 7.33 | 12.32 | 12.32 | 0.00 | 22.86 | 22.86 |
| | 0.0 | 2 | 0.00 | 12.32 | 12.32 | 0.00 | 22.86 | 22.86 |
| 27.36 | 207.6 | 2 | 5.12 | 12.32 | 12.32 | 0.00 | 22.86 | 22.86 |
| | 0.0 | 2 | 0.00 | 12.32 | 12.32 | 0.00 | 22.86 | 22.86 |
| 27.71 | 120.2 | 2 | 2.94 | 12.32 | 12.32 | 0.00 | 22.86 | 22.86 |
| | 0.0 | 2 | 0.00 | 12.32 | 12.32 | 0.00 | 22.86 | 22.86 |
| 28.07 | 32.8 | 2 | 0.79 | 12.32 | 12.32 | 0.00 | 22.86 | 22.86 |
| | 0.0 | 2 | 0.00 | 12.32 | 12.32 | 0.00 | 22.86 | 22.86 |
| 28.42 | 0.0 | 2 | 0.00 | 12.32 | 12.32 | 0.00 | 22.86 | 22.86 |
| | 0.0 | 2 | 0.00 | 12.32 | 12.32 | 0.00 | 22.86 | 22.86 |
| 28.78 | 0.0 | 2 | 0.00 | 12.32 | 12.32 | 0.00 | 22.86 | 16.52 |
| | 0.0 | 2 | 0.00 | 12.32 | 12.32 | 0.00 | 22.86 | 16.52 |
| 29.13 | 0.0 | 2 | 0.00 | 12.32 | 9.61 | 0.00 | 22.86 | 10.15 |
| | 0.0 | 2 | 0.00 | 12.32 | 9.26 | 0.00 | 22.86 | 10.15 |
| 29.49 | 0.0 | 2 | 0.00 | 12.32 | 3.58 | 0.00 | 22.86 | 3.78 |
| | 0.0 | 2 | 0.00 | 12.32 | 3.45 | 0.00 | 22.86 | 3.78 |
| 29.80 | 0.0 | 2 | 0.00 | 0.00 | 0.00 | 0.00 | 0.00 | 0.00 |
| | 0.0 | 2 | 0.00 | 0.00 | 0.00 | 0.00 | 0.00 | 0.00 |
| 30.20 | 0.0 | 2 | 0.00 | 0.00 | 0.00 | 0.00 | 0.00 | 0.00 |
| | 0.0 | 2 | 0.00 | 0.00 | 0.00 | 0.00 | 0.00 | 0.00 |

Z direction

| Loc ft | Mmax kft | Comb | Asb_req in^2 | Asb_prv in^2 | Asb_eff in^2 | Ast_req in^2 | Ast_prv in^2 | Ast_eff in^2 |
|---|---|---|---|---|---|---|---|---|
| -2.96 | 734.3 | 2 | 15.91 | 37.28 | 37.28 | 0.00 | 8.68 | 8.68 |
| 2.96 | 734.3 | 2 | 15.91 | 37.28 | 37.28 | 0.00 | 8.68 | 8.68 |

Note:
* The provided reinforcement is not adequate, either less than required or larger than maximum allowed.

One Way Shear:
==========

| Col | Dist ft | Comb | d in | V kips | Vc kips |
|---|---|---|---|---|---|

X direction

| | | | | | |
|---|---|---|---|---|---|
| 1 | -4.30 | 2 | 33.98 | 0.0 | 346.9 |
| | 4.30 | 2 | 33.57 | 302.3 | 342.7 |
| 2 | 21.20 | 2 | 33.57 | 310.9 | 342.7 |
| | 29.80 | 2 | 48.00 | 0.0 | 490.0 |

Z direction

| | | | | | |
|---|---|---|---|---|---|
| | -6.15 | 2 | 38.26 | 0.0 | 1012.5 |
| | 6.15 | 2 | 38.26 | 0.0 | 1012.5 |

H. W. Lochner, Inc. PHONE: 859-224-4476
1040 Monarch St. Suite 300 Lexington, KY 40513
SHEET 8 OF 8
JOB NO. HLB#142
PROGRAM: RC-PIER® v4.1.0 LEAP Software Inc., Tampa, Florida
BY JMJ DATE Jun/15/2006
PHONE : TOLL-FREE 1-800-451-5327 TAMPA AREA: 813-985-9170
CKD. DATE

PROJECT: BONNER BRIDGE - OREGON INLET NORTH CAROLINA

Two Way Shear:
==========

| # | Bo ft | Ao ft^2 | Comb | Avg. d in | V kips | Vc kips |
|---|---|---|---|---|---|---|
| Columns: | | | | | | |
| 1 | 29.84 | 53.52 | 2 | 36.02 | 617.1 | 1539.8 |
| 2 | 29.84 | 53.52 | 2 | 39.52 | 612.3 | 1539.8 |
| Piles - max: | | | | | | |
| 7 | 15.19 | 18.36 | 2 | 37.77 | 0.0 | 783.8 |
| Piles - min: | | | | | | |
| 1 | 5.90 | 14.82 | 2 | 37.77 | 0.0 | 304.4 |

Note:
TWO WAY SHEAR IN FOOTING IS NOT DESIGNED AND STIRRUPS ARE NOT CONSIDERED.