LOCHNER

PROJECT: BONNER BRIDGE - OREGON INLET NORTH CAROLINA
SUBJECT: PRESTRESSED GIRDER ANALYSIS
BEAM REACTIONS

JMJ May-06
WDB Jun-06

HIGH LEVEL BENT 145

Beam No.	Self Wt.	D.L.-Comp	Total D.L.
Exterior	205.15	19.48	224.63
Interior	215.69	20.45	236.14

LIVE LOAD (Bent 145)

HS-20 AXLE LOAD (LFD - APPENDIX A)

Span 145 = 180' --> R_{145} = 83.6k
Span 146 = 160.9583' --> R_{144} = 77.5k

HS-20 WHEEL LOAD

W_{145} = R_{145} / 2 = 41.8 k

w/Impact = $41.8 * \left(\frac{50}{180 + 125} + 1 \right) = 48.7$ k

W_{144} = R_{144} / 2 = 38.8 k

w/Impact = $38.8 * \left(\frac{50}{160.96 + 125} + 1 \right) = 45.6$ k

Max. NEGATIVE MOMENT

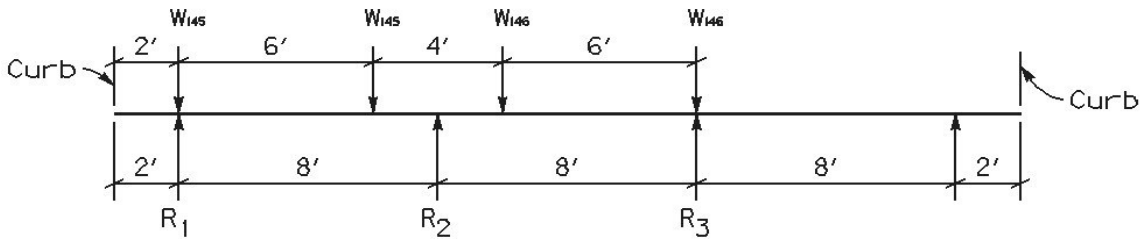

w/ Impact

R_1 = 48.7 + 48.7 * (2 / 8) = 60.9 k

R_2 = (48.7 + 45.6) * (6 / 8) = 70.7 k

R_3 = 45.6 + 45.6 * (2 / 8) = 57.0 k

w/o Impact

R_1 = 41.8 + 41.8 * (2 / 8) = 52.3 k

R_2 = (41.8 + 38.8) * (6 / 8) = 60.5 k

R_3 = 38.8 + 38.8 * (2 / 8) = 48.5 k

H. W. LOCHNER, INC.

PROJECT: BONNER BRIDGE - OREGON INLET NORTH CAROLINA JMJ Jun-06
SUBJECT: HIGH LEVEL BENT ANALYSIS WDB Jun-06
HIGH LEVEL BENTS

LIVE LOAD **(BENT 145)**

MAX. POSITIVE MOMENT

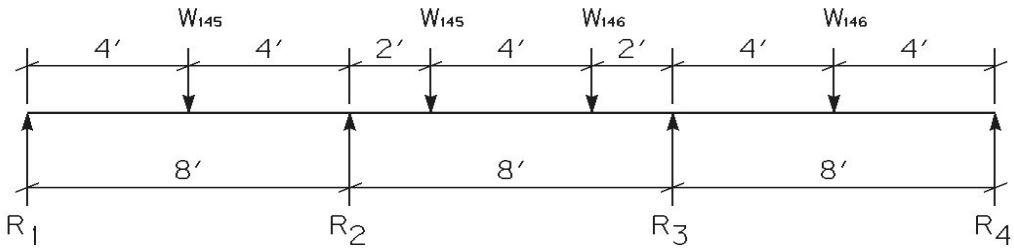

R_1 = 48.7 * (4 / 8) = 24.4 k

R_2 = 48.7 * (4 / 8) + 48.7 * (6 / 8) + 45.6 * (2 / 8) = 72.3 k

R_3 = 48.7 * (2 / 8) + 45.6 * (6 / 8) + 45.6 * (4 / 8) = 69.2 k

R_4 = 45.6 * (4 / 8) = 22.8 k

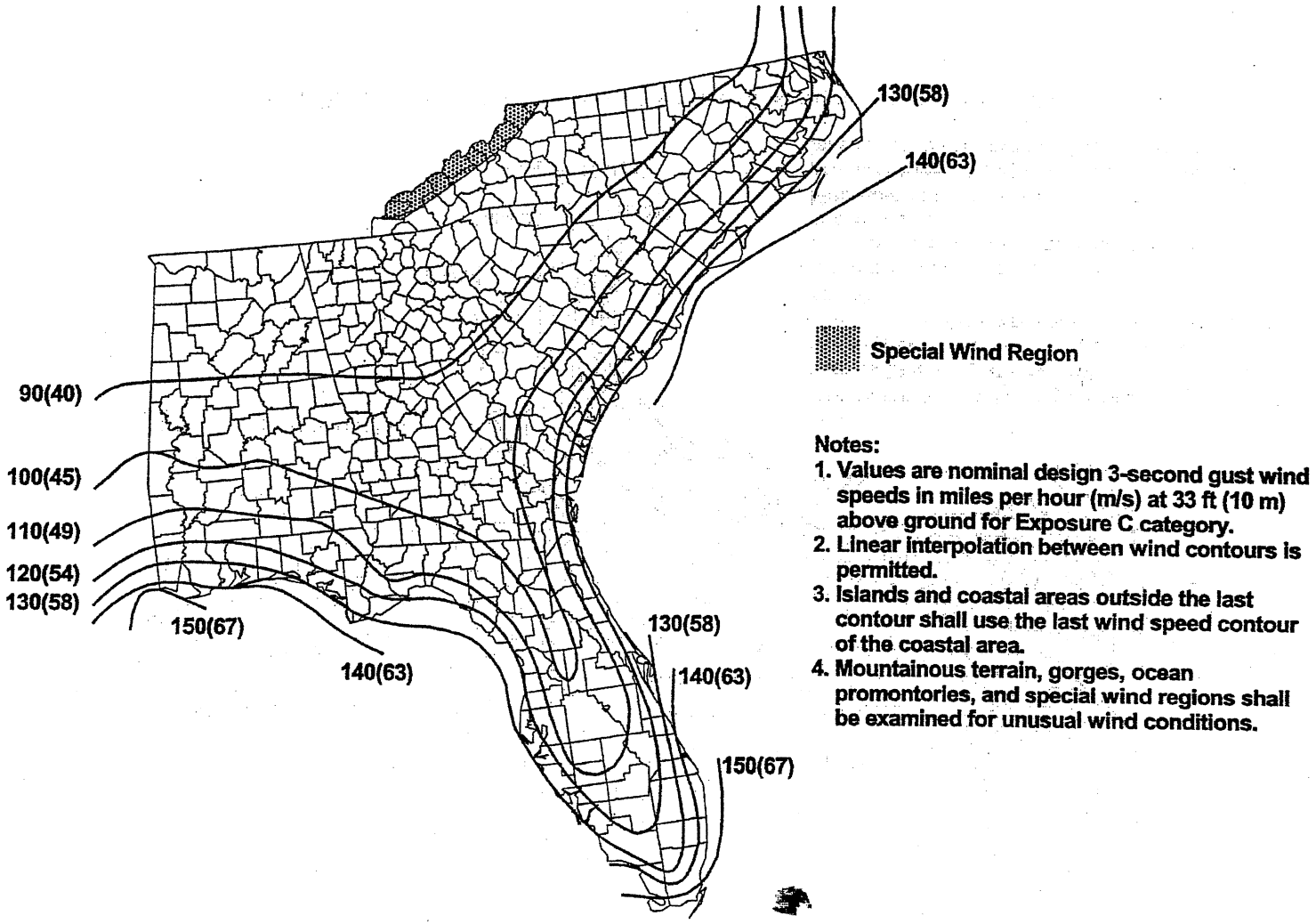

FIGURE 6-1b. Basic Wind Speed—Eastern Gulf of Mexico and Southeastern U.S. Hurricane Coastline

Earth Loads

Assume No Earth Loading on Bents or Pile Cap.

Wind Loads (AASHTO 3.15)

Design Wind Speed = 130 MPH (Original Design Speed)

Ratio = (130)^2 / (100)^2 = 1.69

Wind on Superstructure (AASHTO 3.15.2.1)

Average Beam Depth by Area=
[(8')(9.083')+(8')(7.708')+(16')(6.292')+(18')(6.125')+(12')(6.271')+(18')(6.3333')
+(9)(9.083')+(9')(7.708')+(15')(6.292')+(57')(6.167')] / 170' = 6.656'

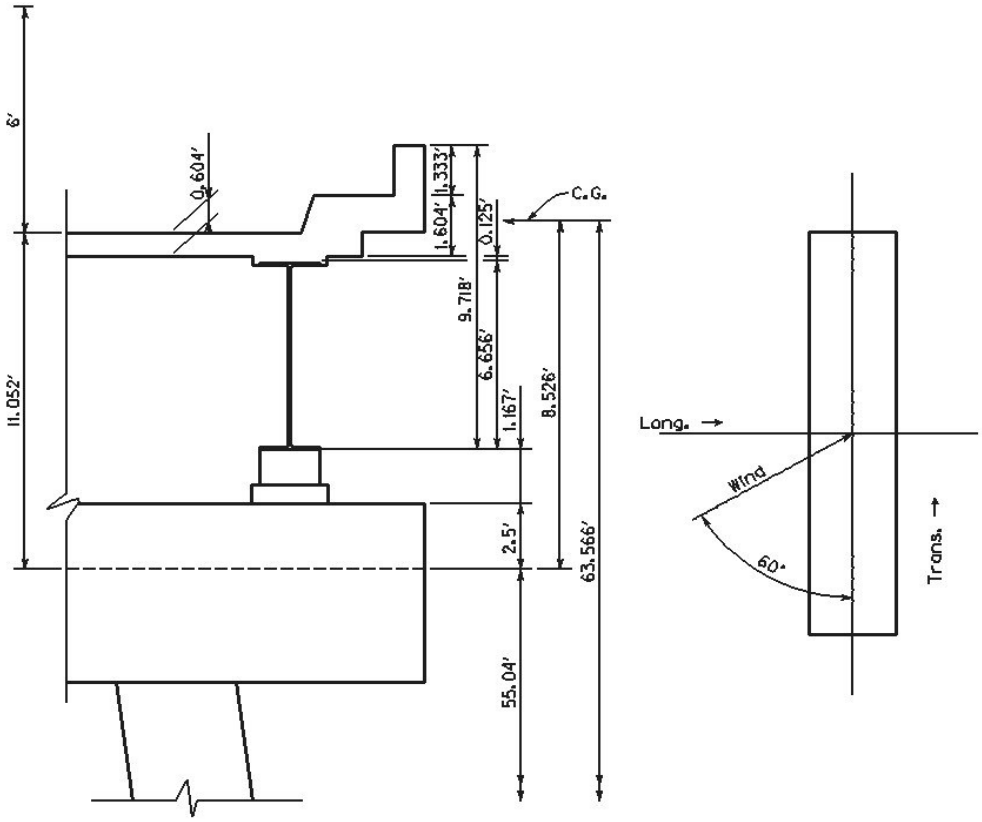

Assume Wind @ 60° Skew

Long. = (0.019 k/Ft^2)(1.69 Ratio) = 0.032 k/Ft^2
Trans. = (0.017 k/Ft^2)(1.69 Ratio) = 0.029 k/Ft^2

Assume Adjacent Bents 144 & 146 Take 1/2 Load
Load Length =(160.958 + 180) / 2 = 170.479 Ft.

Long. Force = (0.032 k/Ft^2)(9.718 Ft.) (170.479 Ft.) = 53.015 k
Trans. Force = (0.029 k/Ft^2)(9.718 Ft.) (170.479 Ft.) = 48.045 k

Moment Factor
M_F = 63.566 / 55.04 = 1.155

Modify & Apply to Jt. 2 & 3

Long. Wind	= (	53.015 k)	* (	1.155	) /	2 =	30.616 k/Jt
Trans. Wind	= (	48.045 k)	* (	1.155	) /	2 =	27.746 k/Jt

Wind on Live Load (AASHTO 3.15.2.1.2)

Assume Wind @ 60° Skew & Apply @ 6' above Deck

Long.	=	(	0.038 k/Ft^2	)			
Trans.	=	(	0.034 k/Ft^2	)			
Long. Force	= (	0.038 k/Ft^2	) * (	170.479 Ft.)		=	6.478 k
Trans. Force	= (	0.034 k/Ft^2	) * (	170.479 Ft.)		=	5.796 k

Moment Factor = (55.040 Ft. + 11.052 Ft. + 6.000 Ft.) / 55.040 Ft. = 1.310

Modify & Apply to Jt. 2 & 3

Long. Wind	= (	6.478 k)	* (	1.310	) /	2.000 =	4.243 k/Jt
Trans. Wind	= (	5.796 k)	* (	1.310	) /	2.000 =	3.796 k/Jt

Additional Dead Load -Bearings

Apply 0.300k under each Beam.

Wind on Superstructure

Wind Pressure =	0.040 k/Ft^2	*	1.690		=	0.068 k/Ft^2
Long. =	0.068 k/Ft^2	*	sin 60.000		=	0.059 k/Ft^2
Trans. =	0.068 k/Ft^2	*	cos 60.000		=	0.034 k/Ft^2

Cap

W_z =	0.059 k/Ft^2	*	5.000 Ft.		=	0.295 k/Ft	*on Members 1-3*
Fx =	0.034 k/Ft^2	*	5.000 Ft. *	4.000	=	0.680 k/Ft	*at Jt. 4*

Columns

Members 4 & 5

W_z =	0.059 k/Ft^2	*	4.500 Ft.	=	0.266 k/Ft
Wx =	0.034 k/Ft^2	*	3.907 Ft.	=	0.133 k/Ft

Members 7 & 8

W_z =	0.266 k/Ft				
Wx =	0.034 k/Ft^2	*	5.047 Ft.	=	0.172 k/Ft

Members 10 & 11

W_z =	0.266 k/Ft				
Wx =	0.034 k/Ft^2	*	6.052 Ft.	=	0.206 k/Ft

Members 13 & 14

W_z = 0.266 k/Ft^2

Wx = 0.034 k/Ft^2 * 6.631 Ft. = 0.225 k/Ft

Struts

Members 6 & 9

W_z = 0.059 k/Ft^2 * 4.000 Ft. = 0.236 k/Ft

Member 12

W_z = 0.059 k/Ft^2 * 5.000 Ft. = 0.295 k/Ft

Longitudinal Forces (AASHTO 3.9)

Lane Loading

2 Lanes, HS20, No Reduction (AASHTO 3.12.1)

LF = [(0.64 k/Ft * 170.479 ') + 18 k] * 2 Lanes * 0.05 = 12.711 k

Modify & Apply to Jts. 2 & 3

M_F = 1.31 *from Wind on L.L.*

Fz = (12.711 k * 1.31) / 2 = 8.326 k/Jt

Thermal Forces (AASHTO 3.16)

Longitudinal - Structure Free @ End Piers, No. Long. Forces Do To Temp.

Transverse

Assume 45° ΔT

Thermal = 0.000006 (AASHTO 8.5.3)

Shrinkage = 0.0002 (AASHTO 8.5.4)

$$\text{Ratio} = \frac{S}{T^*\Delta T} = \frac{0.0002}{0.000006 * 45} = 0.7407 \quad \text{use } 1.741$$

Stream Forces (AASHTO 3.18.1)

Tidal, Stream, & Storm Surge Forces Beyond Scope

Seismic Loading (AASHTO 3.1)

Since Acceleration = 4 % --> SPC = A --> No Seismic Analysis Required

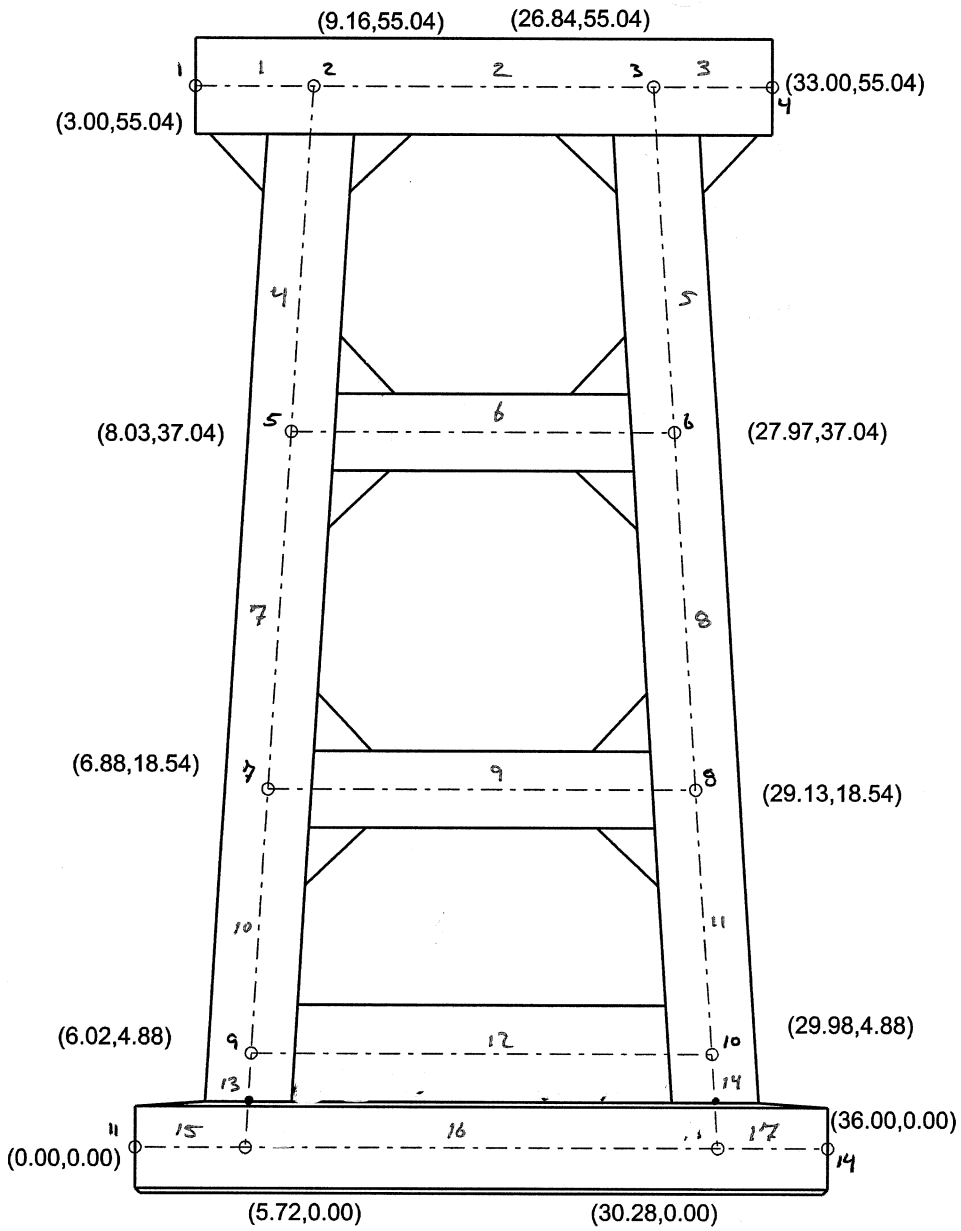

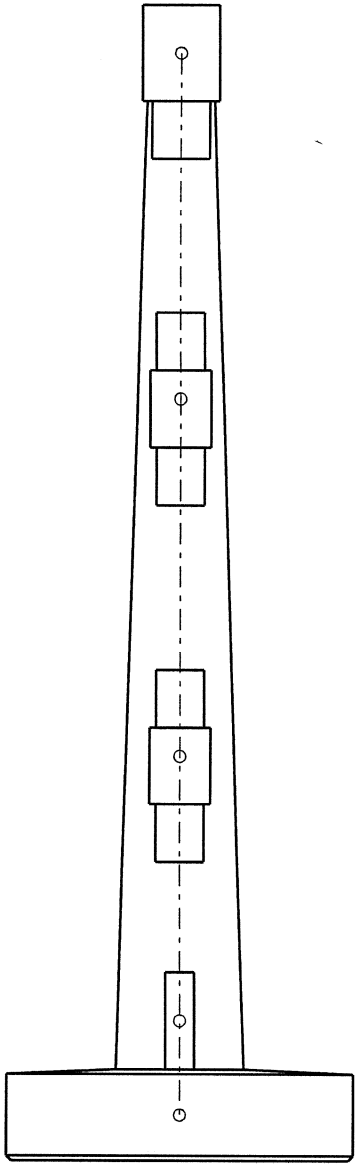

* ADD (3')(3')(2.5')(.150 K/FT³) = 3.375 K FOR STRUTS

BENT 145
TRIPLE STRUT
WELDED STEEL GIRDER - WELDED STEEL GIRDER

```
**************************************************
*                                                *
*          STAAD.Pro                             *
*          Version  2004    Bld 1002.US          *
*          Proprietary Program of                *
*          Research Engineers,  Intl.            *
*          Date=    JUL 20, 2006                 *
*          Time=    15:46:39                     *
*                                                *
*     USER ID: H.W. Lochner                      *
**************************************************
```

JMJ 7/06
WDB 7/06

```
     1. STAAD SPACE BONNER BRIDGE, HLB145
INPUT FILE: HLB145.STD
     2. START JOB INFORMATION
     3. JOB NAME BONNER BRIDGE
     4. JOB CLIENT NORTH CAROLINA
     5. ENGINEER NAME JMJ
     6. ENGINEER DATE MAY 2006
     7. END JOB INFORMATION
     8. INPUT WIDTH 72
     9. PAGE LENGTH 62
    10. UNIT FEET KIP
    11. JOINT COORDINATES
    12. 1 3 55.04 0; 2 9.16 55.04 0; 3 26.84 55.04 0; 4 33 55.04 0
    13. 5 8.03 37.04 0; 6 27.97 37.04 0; 7 6.88 18.54 0; 8 29.13 18.54 0
    14. 9 6.02 4.88 0; 10 29.98 4.88 0; 11 0 0 0; 12 5.72 0 0; 13 30.28 0 0
    15. 14 36 0 0
    16. MEMBER INCIDENCES
    17. 1 1 2; 2 2 3; 3 3 4; 4 2 5; 5 3 6; 6 5 6; 7 5 7; 8 6 8; 9 7 8; 10 7 9
    18. 11 8 10; 12 9 10; 13 9 12; 14 10 13; 15 11 12; 16 12 13; 17 13 14
    19. DEFINE MATERIAL START
    20. ISOTROPIC CONCRETE
    21. E 453600
    22. POISSON 0.17
    23. DENSITY 0.14999
    24. ALPHA 5.5E-006
    25. DAMP 0.05
    26. END DEFINE MATERIAL
    27. MEMBER PROPERTY AMERICAN
    28. 1 TO 3 PRIS YD 5 ZD 4
    29. 4 5 PRIS YD 4.491 ZD 3.907
    30. 6 PRIS YD 4 ZD 3.167
    31. 7 8 PRIS YD 4.491 ZD 5.047
    32. 9 PRIS YD 4 ZD 3.167
    33. 10 11 PRIS YD 4.491 ZD 6.052
    34. 12 PRIS YD 5 ZD 1.5
    35. 13 14 PRIS YD 4.491 ZD 6.631
    36. 15 TO 17 PRIS YD 4.75 ZD 18
    37. CONSTANTS
    38. MATERIAL CONCRETE MEMB 1 TO 17
    39. SUPPORTS
    40. 11 TO 14 FIXED
    41. DRAW JOINT MEMBER SUPPORT
```


S T A A D -III
REV: 2004

STRUCTURE DATA:

TYPE = SPACE
NJ = 14
NM = 17
NE = 0
NS = 4
NL = 0
UNIT FEET KIP
XMAX= 36.0
YMAX= 55.0
ZMAX= 0.0

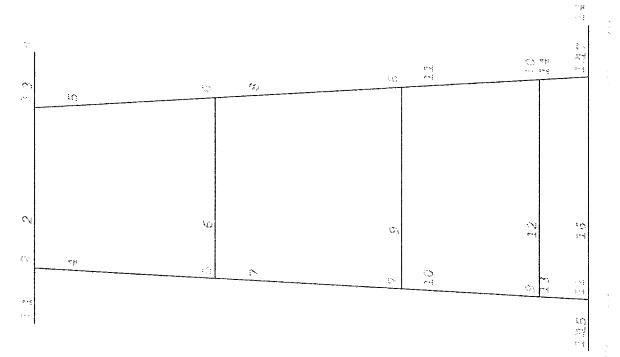

DATE:JUL 20,2006
TIME: 15:46:39

DRAW JOINT MEMBER SUPPORT

```
42. **
43. **DEAD LOAD
44. **
45. LOAD 2 DEAD
46. SELFWEIGHT Y -1
47. MEMBER LOAD
48. 1 CON GY -224.63 3
49. 2 CON GY -236.14 4.84
50. 2 CON GY -236.14 12.84
51. 3 CON GY -224.63 3.16
52. 1 CON GY -0.3 3
53. 2 CON GY -0.3 4.84
54. 2 CON GY -0.3 12.84
55. 3 CON GY -0.3 3.16
56. JOINT LOAD
57. 2 3 5 6 7 8 FY -3.375
58. **
59. **MAXIMUM NEGATIVE MOMENT
60. **
61. LOAD 11 LIVELOAD + IMPACT FOR JT. 2 MEM 1 AND 2
62. MEMBER LOAD
63. 1 CON Y -60.9 3
64. 2 CON Y -70.7 4.84
65. 2 CON Y -57.0 12.84
66. LOAD 12 LIVELOAD + IMPACT FOR JT. 3  MEM. 2 AND 3
67. MEMBER LOAD
68. 2 CON Y -57.0 4.84
69. 2 CON Y -70.7 12.84
70. 3 CON Y -60.9 3.16
71. **
72. **MAXIMUM POSITIVE MOMENT
73. **
74. LOAD 13 LIVELOAD + IMPACT  MEM 2
75. MEMBER LOAD
76. 1 CON Y -24.4 3
77. 2 CON Y -72.3 4.84
78. 2 CON Y -69.2 12.84
79. 3 CON Y -22.8 3.16
80. **
81. **LOADS ON FOOTINGS
82. **
83. LOAD 14 LIVELOAD NO IMPACT JT. 12
84. MEMBER LOAD
85. 1 CON Y -52.3 3
86. 2 CON Y -60.5 4.84
87. 2 CON Y -48.5 12.84
88. LOAD 15 LIVELOAD NO IMPACT FOR JT. 13
89. MEMBER LOAD
90. 2 CON Y -48.5 4.84
91. 2 CON Y -60.5 12.84
92. 3 CON Y -52.3 3.16
93. **
94. **WIND
95. **
96. LOAD 4 WIND
97. JOINT LOAD
98. 2 3 FX -27.746 FZ -30.616
99. 4 FX -0.68
100. MEMBER LOAD
101. 1 TO 3 UNI GZ -0.295
```



```
102. 4 5 7 8 10 11 13 14 UNI GZ -0.266
103. 4 5 UNI GX -0.133
104. 7 8 UNI GX -0.172
105. 10 11 UNI GX -0.206
106. 13 14 UNI GX -0.225
107. 6 9 UNI GZ -0.236
108. 12 UNI GZ -0.295
109. **
110. LOAD 5 WIND ON LL
111. JOINT LOAD
112. 2 3 FX -3.796 FZ -4.243
113. **
114. LOAD 6 LONGITUDINAL FORCE
115. JOINT LOAD
116. 2 3 FZ -8.326
117. **
118. LOAD 7 TEMP LOAD
119. TEMPERATURE LOAD
120. 1 TO 17 TEMP -45
121. **
122. LOAD 8 STREAM LOAD
123. MEMBER LOAD
124. 15 TO 17 UNI GZ -0
125. **
126. LOAD COMB 10 GROUP 1
127. 8 1.0
128. LOAD COMB 20 GROUP 2
129. 4 1.0 8 1.0
130. LOAD COMB 30 GROUP 3
131. 4 0.3 5 1.0 6 1.0 8 1.0
132. LOAD COMB 40 GROUP 4
133. 7 1.74 8 1.0
134. LOAD COMB 50 GROUP 5
135. 4 1.0 7 1.74 8 1.0
136. LOAD COMB 60 GROUP 6
137. 4 0.3 5 1.0 6 1.0 7 1.74 8 1.0
138. LOAD COMB 100 USED TO DETERMINE LOCATION OF MAX FACTORED POSITIVE MOMENT
139. 2 1.0 13 1.67
140. PERFORM ANALYSIS


        P R O B L E M   S T A T I S T I C S
        -----------------------------------

  NUMBER OF JOINTS/MEMBER+ELEMENTS/SUPPORTS =    14/    17/     4
  ORIGINAL/FINAL BAND-WIDTH=     3/     3/     24 DOF
  TOTAL PRIMARY LOAD CASES =   11, TOTAL DEGREES OF FREEDOM =     60
  SIZE OF STIFFNESS MATRIX =        2 DOUBLE  KILO-WORDS
  REQRD/AVAIL. DISK SPACE  =     12.1/ 110682.1 MB


141. PRINT MEMBER FORCES LIST 2 4 5 6 7 8 9 10 11 13 14
```

MEMBER END FORCES STRUCTURE TYPE = SPACE

ALL UNITS ARE -- KIP FEET

MEMBER	LOAD	JT	AXIAL	SHEAR-Y	SHEAR-Z	TORSION	MOM-Y	MOM-Z
				V_{DL}				
2	2	2	39.08	262.99	0.00	0.00	0.00	841.29 — Max. Neg. M_{DL}
		3	-39.08	262.93	0.00	0.00	0.00	-840.81
	11	2	10.44	72.71	0.00	0.00	0.00	212.71 — Max. Neg. M_{LL+I}
		3	-10.44	54.99	0.00	0.00	0.00	-110.83
	12	2	10.44	55.00 V_{LL+I}	0.00	0.00	0.00	110.92
		3	-10.44	72.70	0.00	0.00	0.00	-212.63
	13	2	12.11	71.57	0.00	0.00	0.00	165.11
		3	-12.11	69.93	0.00	0.00	0.00	-163.05
	14	2	8.90	62.16	0.00	0.00	0.00	182.03
		3	-8.90	46.84	0.00	0.00	0.00	-94.60
	15	2	8.90	46.85	0.00	0.00	0.00	94.68
		3	-8.90	62.15	0.00	0.00	0.00	-181.97
	4	2	0.34	38.20	2.61	-0.01	19.28	337.69
		3	-0.34	-38.20	2.61	0.01	-19.27	337.75
	5	2	0.00	4.88	0.00	0.00	2.41	43.18
		3	0.00	-4.88	0.00	0.00	-2.41	43.18
	6	2	0.00	0.00	0.00	0.00	4.72	0.00
		3	0.00	0.00	0.00	0.00	-4.72	0.00
	7	2	-1.68	0.00	0.00	0.00	0.00	-4.29
		3	1.68	0.00	0.00	0.00	0.00	4.28
	8	2	0.00	0.00	0.00	0.00	0.00	0.00
		3	0.00	0.00	0.00	0.00	0.00	0.00
	10	2	0.00	0.00	0.00	0.00	0.00	0.00
		3	0.00	0.00	0.00	0.00	0.00	0.00
	20	2	0.34	38.20	2.61	-0.01	19.28	337.69
		3	-0.34	-38.20	2.61	0.01	-19.27	337.75
	30	2	0.10	16.35	0.78	0.00	12.91	144.49
		3	-0.10	-16.35	0.78	0.00	-12.91	144.51
	40	2	-2.93	0.00	0.00	0.00	0.00	-7.46
		3	2.93	0.00	0.00	0.00	0.00	7.45
	50	2	-2.60	38.20	2.61	-0.01	19.28	330.24
		3	2.60	-38.20	2.61	0.01	-19.27	345.20
	60	2	-2.83	16.35	0.78	0.00	12.91	137.03
		3	2.83	-16.35	0.78	0.00	-12.91	151.96
	100	2	59.29	382.50	0.00	0.00	0.00	1117.03
		3	-59.29	379.72	0.00	0.00	0.00	-1113.10
4	2	2	511.22	7.06	0.00	0.00	0.00	73.59
		5	-558.59	-4.09	0.00	0.00	0.00	26.91
	11	2	134.00	2.04	0.00	0.00	0.00	20.26
		5	-134.00	-2.04	0.00	0.00	0.00	16.60
	12	2	55.54	6.97	0.00	0.00	0.00	110.92
		5	-55.54	-6.97	0.00	0.00	0.00	14.80
	13	2	96.54	6.07	0.00	0.00	0.00	88.01
		5	-96.54	-6.07	0.00	0.00	0.00	21.45
	14	2	114.79	1.71	0.00	0.00	0.00	16.76
		5	-114.79	-1.71	0.00	0.00	0.00	14.08
	15	2	47.31	5.95	0.00	0.00	0.00	94.68
		5	-47.31	-5.95	0.00	0.00	0.00	12.59

MEMBER END FORCES STRUCTURE TYPE = SPACE

ALL UNITS ARE -- KIP FEET

MEMBER	LOAD	JT	AXIAL	SHEAR-Y	SHEAR-Z	TORSION	MOM-Y	MOM-Z
	4	2	39.89	25.63	35.04	24.83	-1.57	337.69
		5	-40.04	-28.03	-39.84	-24.83	-673.66	146.19
	5	2	5.11	3.48	4.24	2.40	-0.15	43.18
		5	-5.11	-3.48	-4.24	-2.40	-76.37	19.62
	6	2	0.00	0.00	8.33	4.71	-0.30	0.00
		5	0.00	0.00	-8.33	-4.71	-149.86	0.00
	7	2	-0.11	-1.68	0.00	0.00	0.00	-4.29
		5	0.11	1.68	0.00	0.00	0.00	-26.04
	8	2	0.00	0.00	0.00	0.00	0.00	0.00
		5	0.00	0.00	0.00	0.00	0.00	0.00
	10	2	0.00	0.00	0.00	0.00	0.00	0.00
		5	0.00	0.00	0.00	0.00	0.00	0.00
	20	2	39.89	25.63	35.04	24.83	-1.57	337.69
		5	-40.04	-28.03	-39.84	-24.83	-673.66	146.19
	30	2	17.08	11.17	23.08	14.56	-0.92	144.49
		5	-17.12	-11.89	-24.52	-14.56	-428.34	63.48
	40	2	-0.18	-2.93	0.00	0.00	0.00	-7.46
		5	0.18	2.93	0.00	0.00	0.00	-45.30
	50	2	39.70	22.71	35.04	24.83	-1.57	330.24
		5	-39.85	-25.10	-39.84	-24.83	-673.66	100.89
	60	2	16.90	8.25	23.08	14.56	-0.92	137.03
		5	-16.94	-8.97	-24.52	-14.56	-428.34	18.18
	100	2	672.43	17.20	0.00	0.00	0.00	220.57
		5	-719.81	-14.22	0.00	0.00	0.00	62.74
5	2	3	511.16	7.06	0.00	0.00	0.00	73.11
		6	-558.53	-4.09	0.00	0.00	0.00	27.45
	11	3	55.53	6.97	0.00	0.00	0.00	110.83
		6	-55.53	-6.97	0.00	0.00	0.00	14.87
	12	3	133.99	2.05	0.00	0.00	0.00	20.19
		6	-133.99	-2.05	0.00	0.00	0.00	16.70
	13	3	93.31	6.27	0.00	0.00	0.00	91.00
		6	-93.31	-6.27	0.00	0.00	0.00	22.12
	14	3	47.31	5.95	0.00	0.00	0.00	94.60
		6	-47.31	-5.95	0.00	0.00	0.00	12.65
	15	3	114.79	1.71	0.00	0.00	0.00	16.70
		6	-114.79	-1.71	0.00	0.00	0.00	14.17
	4	3	-39.89	-25.64	-35.04	-24.82	1.55	-337.75
		6	40.04	28.04	39.84	24.82	673.70	-146.29
	5	3	-5.11	-3.48	-4.24	-2.40	0.15	-43.18
		6	5.11	3.48	4.24	2.40	76.38	-19.63
	6	3	0.00	0.00	-8.33	-4.71	0.29	0.00
		6	0.00	0.00	8.33	4.71	149.87	0.00
	7	3	-0.11	-1.68	0.00	0.00	0.00	-4.28
		6	0.11	1.68	0.00	0.00	0.00	-26.04
	8	3	0.00	0.00	0.00	0.00	0.00	0.00
		6	0.00	0.00	0.00	0.00	0.00	0.00
	10	3	0.00	0.00	0.00	0.00	0.00	0.00
		6	0.00	0.00	0.00	0.00	0.00	0.00
	20	3	-39.89	-25.64	-35.04	-24.82	1.55	-337.75
		6	40.04	28.04	39.84	24.82	673.70	-146.29

MEMBER END FORCES STRUCTURE TYPE = SPACE

ALL UNITS ARE -- KIP FEET

MEMBER	LOAD	JT	AXIAL	SHEAR-Y	SHEAR-Z	TORSION	MOM-Y	MOM-Z
	30	3	-17.08	-11.18	-23.08	-14.56	0.91	-144.51
		6	17.12	11.89	24.52	14.56	428.36	-63.52
	40	3	-0.18	-2.93	0.00	0.00	0.00	-7.45
		6	0.18	2.93	0.00	0.00	0.00	-45.31
	50	3	-40.07	-28.57	-35.04	-24.82	1.55	-345.20
		6	40.22	30.96	39.84	24.82	673.70	-191.61
	60	3	-17.26	-14.10	-23.08	-14.56	0.91	-151.96
		6	17.31	14.82	24.52	14.56	428.36	-108.83
	100	3	666.99	17.54	0.00	0.00	0.00	225.08
		6	-714.36	-14.56	0.00	0.00	0.00	64.39
					Vol			
6	2	5	2.22	19.02	0.00	0.00	0.00	58.51 - Max. Neg. Mol
		6	-2.22	18.87	0.00	0.00	0.00	-56.96
	11	5	-5.36	-2.71	0.00	0.00	0.00	-23.76
		6	5.36	2.71	0.00	0.00	0.00	-30.32
	12	5	-5.34	2.74	0.00	0.00	0.00	30.57 - Max. Neg. Mu+z
		6	5.34	-2.74	0.00	0.00	0.00	24.02
	13	5	-7.32	-0.12	Mu+z 0.00	0.00	0.00	3.45
		6	7.32	0.12	0.00	0.00	0.00	-5.89
	14	5	-4.55	-2.33	0.00	0.00	0.00	-20.49
		6	4.55	2.33	0.00	0.00	0.00	-26.06
	15	5	-4.54	2.36	0.00	0.00	0.00	26.27
		6	4.54	-2.36	0.00	0.00	0.00	20.71
	4	5	-0.01	38.54	2.36	-0.01	9.99	384.28
		6	0.01	-38.54	2.35	0.01	-10.03	384.29
	5	5	0.00	4.68	0.00	0.00	1.31	46.67
		6	0.00	-4.68	0.00	0.00	-1.32	46.67
	6	5	0.00	0.00	0.00	0.00	2.58	0.00
		6	0.00	0.00	0.00	0.00	-2.58	0.00
	7	5	12.97	0.00	0.00	0.00	0.00	9.72
		6	-12.97	0.00	0.00	0.00	0.00	-9.74
	8	5	0.00	0.00	0.00	0.00	0.00	0.00
		6	0.00	0.00	0.00	0.00	0.00	0.00
	10	5	0.00	0.00	0.00	0.00	0.00	0.00
		6	0.00	0.00	0.00	0.00	0.00	0.00
	20	5	-0.01	38.54	2.36	-0.01	9.99	384.28
		6	0.01	-38.54	2.35	0.01	-10.03	384.29
	30	5	-0.01	16.24	0.71	-0.01	6.88	161.96
		6	0.01	-16.24	0.70	0.01	-6.91	161.96
	40	5	22.56	0.00	0.00	0.00	0.00	16.92
		6	-22.56	0.00	0.00	0.00	0.00	-16.95
	50	5	22.55	38.54	2.36	-0.01	9.99	401.20
		6	-22.55	-38.54	2.35	0.01	-10.03	367.34
	60	5	22.56	16.24	0.71	-0.01	6.88	178.87
		6	-22.56	-16.24	0.70	0.01	-6.91	145.01
	100	5	-9.99	18.82	0.00	0.00	0.00	64.27
		6	9.99	19.07	0.00	0.00	0.00	-66.80
7	2	5	581.08	5.26	0.00	0.00	0.00	31.60
		7	-643.97	-1.35	0.00	0.00	0.00	29.60
	11	5	130.96	-3.05	0.00	0.00	0.00	-40.36
		7	-130.96	3.05	0.00	0.00	0.00	-16.23

MEMBER END FORCES STRUCTURE TYPE = SPACE

ALL UNITS ARE -- KIP FEET

MEMBER	LOAD	JT	AXIAL	SHEAR-Y	SHEAR-Z	TORSION	MOM-Y	MOM-Z
	12	5	57.94	1.50	0.00	0.00	0.00	15.77
		7	-57.94	-1.50	0.00	0.00	0.00	12.08
	13	5	95.96	-1.16	0.00	0.00	0.00	-18.00
		7	-95.96	1.16	0.00	0.00	0.00	-3.59
	14	5	112.18	-2.62	0.00	0.00	0.00	-34.57
		7	-112.18	2.62	0.00	0.00	0.00	-13.94
	15	5	49.38	1.30	0.00	0.00	0.00	13.69
		7	-49.38	-1.30	0.00	0.00	0.00	10.42
	4	5	78.49	25.65	42.19	34.38	673.05	238.09
		7	-78.69	-28.83	-47.12	-34.38	-1500.82	266.83
	5	5	9.78	3.19	4.24	3.66	76.29	27.05
		7	-9.78	-3.19	-4.24	-3.66	-154.94	32.14
	6	5	0.00	0.00	8.33	7.19	149.70	0.00
		7	0.00	0.00	-8.33	-7.19	-304.04	0.00
	7	5	0.70	11.26	0.00	0.00	0.00	35.76
		7	-0.70	-11.26	0.00	0.00	0.00	172.95
	8	5	0.00	0.00	0.00	0.00	0.00	0.00
		7	0.00	0.00	0.00	0.00	0.00	0.00
	10	5	0.00	0.00	0.00	0.00	0.00	0.00
		7	0.00	0.00	0.00	0.00	0.00	0.00
	20	5	78.49	25.65	42.19	34.38	673.05	238.09
		7	-78.69	-28.83	-47.12	-34.38	-1500.82	266.83
	30	5	33.33	10.89	25.23	21.17	427.91	98.48
		7	-33.39	-11.84	-26.71	-21.17	-909.22	112.19
	40	5	1.22	19.59	0.00	0.00	0.00	62.22
		7	-1.22	-19.59	0.00	0.00	0.00	300.93
	50	5	79.71	45.24	42.19	34.38	673.05	300.31
		7	-79.90	-48.42	-47.12	-34.38	-1500.82	567.75
	60	5	34.55	30.48	25.23	21.17	427.91	160.70
		7	-34.61	-31.43	-26.71	-21.17	-909.22	413.11
	100	5	741.33	3.31	0.00	0.00	0.00	1.53
		7	-804.22	0.60	0.00	0.00	0.00	23.61
8	2	6	580.87	4.96	0.00	0.00	0.00	29.51
		8	-643.76	-1.01	0.00	0.00	0.00	25.82
	11	6	57.91	1.46	0.00	0.00	0.00	15.45
		8	-57.91	-1.46	0.00	0.00	0.00	11.55
	12	6	130.93	-3.11	0.00	0.00	0.00	-40.72
		8	-130.93	3.11	0.00	0.00	0.00	-16.84
	13	6	92.97	-1.03	0.00	0.00	0.00	-16.23
		8	-92.97	1.03	0.00	0.00	0.00	-2.85
	14	6	49.35	1.26	0.00	0.00	0.00	13.41
		8	-49.35	-1.26	0.00	0.00	0.00	9.97
	15	6	112.15	-2.66	0.00	0.00	0.00	-34.88
		8	-112.15	2.66	0.00	0.00	0.00	-14.46
	4	6	-78.51	-25.64	-42.19	-34.78	-673.09	-237.99
		8	78.71	28.82	47.12	34.78	1500.83	-266.72
	5	6	-9.78	-3.19	-4.24	-3.71	-76.29	-27.04
		8	9.78	3.19	4.24	3.71	154.94	-32.13
	6	6	0.00	0.00	-8.33	-7.28	-149.71	0.00
		8	0.00	0.00	8.33	7.28	304.04	0.00

MEMBER END FORCES STRUCTURE TYPE = SPACE

ALL UNITS ARE -- KIP FEET

MEMBER	LOAD	JT	AXIAL	SHEAR-Y	SHEAR-Z	TORSION	MOM-Y	MOM-Z
	7	6	0.71	11.26	0.00	0.00	0.00	35.78
		8	-0.71	-11.26	0.00	0.00	0.00	172.92
	8	6	0.00	0.00	0.00	0.00	0.00	0.00
		8	0.00	0.00	0.00	0.00	0.00	0.00
	10	6	0.00	0.00	0.00	0.00	0.00	0.00
		8	0.00	0.00	0.00	0.00	0.00	0.00
	20	6	-78.51	-25.64	-42.19	-34.78	-673.09	-237.99
		8	78.71	28.82	47.12	34.78	1500.83	-266.72
	30	6	-33.34	-10.88	-25.23	-21.42	-427.93	-98.44
		8	33.40	11.84	26.70	21.42	909.23	-112.14
	40	6	1.23	19.59	0.00	0.00	0.00	62.26
		8	-1.23	-19.59	0.00	0.00	0.00	300.89
	50	6	-77.28	-6.05	-42.19	-34.78	-673.09	-175.73
		8	77.48	9.23	47.12	34.78	1500.83	34.17
	60	6	-32.11	8.71	-25.23	-21.42	-427.93	-36.18
		8	32.17	-7.75	26.70	21.42	909.23	188.74
	100	6	736.13	3.24	0.00	0.00	0.00	2.40
		8	-799.03	0.71	0.00	0.00	0.00	21.06
9	2	7	6.62	21.12	0.00	0.00	0.00	70.11
		8	-6.62	21.15	0.00	0.00	0.00	-70.44
	11	7	0.87	-2.12	0.00	0.00	0.00	-24.40
		8	-0.87	2.12	0.00	0.00	0.00	-22.81
	12	7	0.84	2.12	0.00	0.00	0.00	22.80
		8	-0.84	-2.12	0.00	0.00	0.00	24.38
	13	7	1.20	-0.09	0.00	0.00	0.00	-1.96
		8	-1.20	0.09	0.00	0.00	0.00	-0.06
	14	7	0.74	-1.83	0.00	0.00	0.00	-20.98
		8	-0.74	1.83	0.00	0.00	0.00	-19.63
	15	7	0.71	1.82	0.00	0.00	0.00	19.61
		8	-0.71	-1.82	0.00	0.00	0.00	20.97
	4	7	0.04	27.90	2.64	-0.03	1.41	310.38
		8	-0.04	-27.90	2.61	0.03	-1.65	310.38
	5	7	0.01	3.16	0.00	0.00	0.65	35.12
		8	-0.01	-3.16	0.00	0.00	-0.68	35.12
	6	7	0.00	0.00	0.00	-0.01	1.28	0.00
		8	0.00	0.00	0.00	0.01	-1.33	0.00
	7	7	-11.75	0.00	0.00	0.00	0.00	-41.97
		8	11.75	0.00	0.00	0.00	0.00	41.91
	8	7	0.00	0.00	0.00	0.00	0.00	0.00
		8	0.00	0.00	0.00	0.00	0.00	0.00
	10	7	0.00	0.00	0.00	0.00	0.00	0.00
		8	0.00	0.00	0.00	0.00	0.00	0.00
	20	7	0.04	27.90	2.64	-0.03	1.41	310.38
		8	-0.04	-27.90	2.61	0.03	-1.65	310.38
	30	7	0.02	11.53	0.79	-0.02	2.35	128.23
		8	-0.02	-11.53	0.78	0.02	-2.50	128.23
	40	7	-20.44	0.00	0.00	0.00	0.00	-73.03
		8	20.44	0.00	0.00	0.00	0.00	72.93
	50	7	-20.40	27.89	2.64	-0.03	1.41	237.34
		8	20.40	-27.89	2.61	0.03	-1.65	383.31

Y_{DL} — MAX. NEG. M_{DL}

M_{LLT} — MAX. NEG. M_{LLTZ}

MEMBER END FORCES STRUCTURE TYPE = SPACE

ALL UNITS ARE -- KIP FEET

MEMBER	LOAD	JT	AXIAL	SHEAR-Y	SHEAR-Z	TORSION	MOM-Y	MOM-Z
	60	7	-20.42	11.52	0.79	-0.02	2.35	55.20
		8	20.42	-11.52	0.78	0.02	-2.50	201.16
	100	7	8.63	20.97	0.00	0.00	0.00	66.84
		8	-8.63	21.30	0.00	0.00	0.00	-70.55
10	2	7	668.84	5.91	0.00	0.00	0.00	40.51
		9	-724.52	-2.40	0.00	0.00	0.00	16.36
	11	7	128.90	-2.15	0.00	0.00	0.00	-8.17
		9	-128.90	2.15	0.00	0.00	0.00	-21.32
	12	7	60.11	2.16	0.00	0.00	0.00	10.71
		9	-60.11	-2.16	0.00	0.00	0.00	18.81
	13	7	95.94	-0.03	0.00	0.00	0.00	1.63
		9	-95.94	0.03	0.00	0.00	0.00	-2.10
	14	7	110.40	-1.85	0.00	0.00	0.00	-7.04
		9	-110.40	1.85	0.00	0.00	0.00	-18.33
	15	7	51.25	1.85	0.00	0.00	0.00	9.19
		9	-51.25	-1.85	0.00	0.00	0.00	16.19
	4	7	106.56	27.06	49.76	36.98	1500.68	43.55
		9	-106.74	-29.87	-53.40	-36.98	-2206.65	346.08
	5	7	12.94	2.99	4.24	4.44	154.89	2.98
		9	-12.94	-2.99	-4.24	-4.44	-212.98	37.98
	6	7	0.00	0.00	8.33	8.70	303.95	0.00
		9	0.00	0.00	-8.33	-8.70	-417.94	0.00
	7	7	-0.03	-0.47	0.00	0.00	0.00	-214.92
		9	0.03	0.47	0.00	0.00	0.00	208.55
	8	7	0.00	0.00	0.00	0.00	0.00	0.00
		9	0.00	0.00	0.00	0.00	0.00	0.00
	10	7	0.00	0.00	0.00	0.00	0.00	0.00
		9	0.00	0.00	0.00	0.00	0.00	0.00
	20	7	106.56	27.06	49.76	36.98	1500.68	43.55
		9	-106.74	-29.87	-53.40	-36.98	-2206.65	346.08
	30	7	44.90	11.11	27.50	24.23	909.04	16.05
		9	-44.96	-11.95	-28.59	-24.23	-1292.92	141.80
	40	7	-0.06	-0.81	0.00	0.00	0.00	-373.96
		9	0.06	0.81	0.00	0.00	0.00	362.88
	50	7	106.50	26.25	49.76	36.98	1500.68	-330.41
		9	-106.68	-29.06	-53.40	-36.98	-2206.65	708.96
	60	7	44.85	10.30	27.50	24.23	909.04	-357.92
		9	-44.90	-11.14	-28.59	-24.23	-1292.92	504.68
	100	7	829.06	5.85	0.00	0.00	0.00	43.23
		9	-884.75	-2.34	0.00	0.00	0.00	12.85
11	2	8	668.66	6.41	0.00	0.00	0.00	44.62
		10	-724.34	-2.94	0.00	0.00	0.00	19.35
	11	8	60.08	2.22	0.00	0.00	0.00	11.26
		10	-60.08	-2.22	0.00	0.00	0.00	19.15
	12	8	128.86	-2.08	0.00	0.00	0.00	-7.55
		10	-128.86	2.08	0.00	0.00	0.00	-20.89
	13	8	93.14	0.21	0.00	0.00	0.00	2.91
		10	-93.14	-0.21	0.00	0.00	0.00	-0.03
	14	8	51.22	1.91	0.00	0.00	0.00	9.66
		10	-51.22	-1.91	0.00	0.00	0.00	16.48

MEMBER END FORCES STRUCTURE TYPE = SPACE

ALL UNITS ARE -- KIP FEET

MEMBER	LOAD	JT	AXIAL	SHEAR-Y	SHEAR-Z	TORSION	MOM-Y	MOM-Z
	15	8	110.37	-1.79	0.00	0.00	0.00	-6.51
		10	-110.37	1.79	0.00	0.00	0.00	-17.96
	4	8	-106.53	-27.08	-49.74	-35.71	-1500.77	-43.66
		10	106.71	29.89	53.38	35.71	2206.38	-346.22
	5	8	-12.93	-2.99	-4.24	-4.31	-154.90	-2.99
		10	12.93	2.99	4.24	4.31	212.96	-38.00
	6	8	0.00	0.00	-8.32	-8.46	-303.97	0.00
		10	0.00	0.00	8.32	8.46	417.89	0.00
	7	8	-0.03	-0.47	0.00	0.00	0.00	-214.83
		10	0.03	0.47	0.00	0.00	0.00	208.46
	8	8	0.00	0.00	0.00	0.00	0.00	0.00
		10	0.00	0.00	0.00	0.00	0.00	0.00
	10	8	0.00	0.00	0.00	0.00	0.00	0.00
		10	0.00	0.00	0.00	0.00	0.00	0.00
	20	8	-106.53	-27.08	-49.74	-35.71	-1500.77	-43.66
		10	106.71	29.89	53.38	35.71	2206.38	-346.22
	30	8	-44.89	-11.12	-27.49	-23.48	-909.10	-16.09
		10	44.95	11.96	28.58	23.48	1292.76	-141.86
	40	8	-0.04	-0.81	0.00	0.00	0.00	-373.81
		10	0.04	0.81	0.00	0.00	0.00	362.71
	50	8	-106.58	-27.89	-49.74	-35.71	-1500.77	-417.48
		10	106.75	30.70	53.38	35.71	2206.38	16.50
	60	8	-44.94	-11.93	-27.49	-23.48	-909.10	-389.91
		10	44.99	12.77	28.58	23.48	1292.76	220.85
	100	8	824.20	6.76	0.00	0.00	0.00	49.49
		10	-879.88	-3.29	0.00	0.00	0.00	19.29
13	2	9	737.89	1.79	0.00	0.00	0.00	33.38
		12	-759.68	-0.45	0.00	0.00	0.00	-27.89
	11	9	128.24	-2.25	0.00	0.00	0.00	13.43
		12	-128.24	2.25	0.00	0.00	0.00	-24.43
	12	9	60.72	1.89	0.00	0.00	0.00	-11.36
		12	-60.72	-1.89	0.00	0.00	0.00	20.59
	13	9	95.89	-0.24	0.00	0.00	0.00	1.57
		12	-95.89	0.24	0.00	0.00	0.00	-2.72
	14	9	109.83	-1.93	0.00	0.00	0.00	11.55
		12	-109.83	1.93	0.00	0.00	0.00	-21.00
	15	9	51.77	1.62	0.00	0.00	0.00	-9.78
		12	-51.77	-1.62	0.00	0.00	0.00	17.71
	4	9	115.34	29.49	56.93	20.17	2207.54	-242.29
		12	-115.41	-30.59	-58.23	-20.17	-2489.08	389.18
	5	9	13.86	2.95	4.24	4.15	212.99	-26.84
		12	-13.86	-2.95	-4.24	-4.15	-233.74	41.28
	6	9	0.00	0.00	8.33	8.14	417.95	0.00
		12	0.00	0.00	-8.33	-8.14	-458.67	0.00
	7	9	-31.67	-515.16	0.00	0.00	0.00	-327.29
		12	31.67	515.16	0.00	0.00	0.00	-2191.44
	8	9	0.00	0.00	0.00	0.00	0.00	0.00
		12	0.00	0.00	0.00	0.00	0.00	0.00
	10	9	0.00	0.00	0.00	0.00	0.00	0.00
		12	0.00	0.00	0.00	0.00	0.00	0.00

MEMBER END FORCES STRUCTURE TYPE = SPACE

ALL UNITS ARE -- KIP FEET

MEMBER	LOAD	JT	AXIAL	SHEAR-Y	SHEAR-Z	TORSION	MOM-Y	MOM-Z
	20	9	115.34	29.49	56.93	20.17	2207.54	-242.29
		12	-115.41	-30.59	-58.23	-20.17	-2489.08	389.18
	30	9	48.46	11.80	29.65	18.33	1293.20	-99.53
		12	-48.48	-12.13	-30.04	-18.33	-1439.13	158.03
	40	9	-55.11	-896.38	0.00	0.00	0.00	-569.48
		12	55.11	896.38	0.00	0.00	0.00	-3813.11
	50	9	60.23	-866.89	56.93	20.17	2207.54	-811.78
		12	-60.30	865.79	-58.23	-20.17	-2489.08	-3423.93
	60	9	-6.65	-884.58	29.65	18.33	1293.20	-669.01
		12	6.63	884.25	-30.04	-18.33	-1439.13	-3655.07
	100	9	898.02	1.40	0.00	0.00	0.00	36.00
		12	-919.82	-0.06	0.00	0.00	0.00	-32.43
14	2	10	737.77	1.80	0.00	0.00	0.00	31.17
		13	-759.57	-0.46	0.00	0.00	0.00	-25.64
	11	10	60.70	1.90	0.00	0.00	0.00	-11.61
		13	-60.70	-1.90	0.00	0.00	0.00	20.91
	12	10	128.21	-2.26	0.00	0.00	0.00	13.10
		13	-128.21	2.26	0.00	0.00	0.00	-24.16
	13	10	93.15	-0.07	0.00	0.00	0.00	0.24
		13	-93.15	0.07	0.00	0.00	0.00	-0.57
	14	10	51.75	1.64	0.00	0.00	0.00	-9.99
		13	-51.75	-1.64	0.00	0.00	0.00	17.99
	15	10	109.81	-1.95	0.00	0.00	0.00	11.26
		13	-109.81	1.95	0.00	0.00	0.00	-20.78
	4	10	-115.34	-29.45	-56.91	-20.49	-2207.24	242.42
		13	115.40	30.55	58.21	20.49	2488.67	-389.09
	5	10	-13.86	-2.95	-4.24	-4.17	-212.96	26.85
		13	13.86	2.95	4.24	4.17	233.70	-41.27
	6	10	0.00	0.00	-8.32	-8.19	-417.89	0.00
		13	0.00	0.00	8.32	8.19	458.59	0.00
	7	10	-31.67	-515.16	0.00	0.00	0.00	-327.22
		13	31.67	515.16	0.00	0.00	0.00	-2191.51
	8	10	0.00	0.00	0.00	0.00	0.00	0.00
		13	0.00	0.00	0.00	0.00	0.00	0.00
	10	10	0.00	0.00	0.00	0.00	0.00	0.00
		13	0.00	0.00	0.00	0.00	0.00	0.00
	20	10	-115.34	-29.45	-56.91	-20.49	-2207.24	242.42
		13	115.40	30.55	58.21	20.49	2488.67	-389.09
	30	10	-48.46	-11.78	-29.64	-18.51	-1293.02	99.58
		13	48.48	12.11	30.03	18.51	1438.89	-158.00
	40	10	-55.10	-896.38	0.00	0.00	0.00	-569.36
		13	55.10	896.38	0.00	0.00	0.00	-3813.23
	50	10	-170.44	-925.83	-56.91	-20.49	-2207.24	-326.94
		13	170.50	926.93	58.21	20.49	2488.67	-4202.32
	60	10	-103.56	-908.16	-29.64	-18.51	-1293.02	-469.78
		13	103.58	908.49	30.03	18.51	1438.89	-3971.23
	100	10	893.33	1.69	0.00	0.00	0.00	31.57
		13	-915.12	-0.35	0.00	0.00	0.00	-26.58

********** END OF LATEST ANALYSIS RESULT **********

142. SECTION 0.51 MEMB 13 14
143. PRINT MEMBER SECTION FORCES LIST 13 14

MEMBER FORCES AT INTERMEDIATE SECTIONS

ALL UNITS ARE -- KIP FEET

MEMB	LOAD	SEC	SHEAR-Y	SHEAR-Z	MOM-Y	MOM-Z
13	2	0.51	1.11	0.00	0.00	29.76
	11	0.51	-2.25	0.00	0.00	19.04
	12	0.51	1.89	0.00	0.00	-16.07
	13	0.51	-0.24	0.00	0.00	2.16
	14	0.51	-1.93	0.00	0.00	16.37
	15	0.51	1.62	0.00	0.00	-13.83
	4	0.51	30.05	57.60	2350.33	-316.53
	5	0.51	2.95	4.24	223.57	-34.20
	6	0.51	0.00	8.33	438.71	0.00
	7	0.51	-515.16	0.00	0.00	957.26
	8	0.51	0.00	0.00	0.00	0.00
	10	0.51	0.00	0.00	0.00	0.00
	20	0.51	30.05	57.60	2350.33	-316.53
	30	0.51	11.97	29.85	1367.39	-129.16
	40	0.51	-896.38	0.00	0.00	1665.64
	50	0.51	-866.33	57.60	2350.33	1349.10
	60	0.51	-884.41	29.85	1367.39	1536.47
	100	0.51	0.72	0.00	0.00	33.36
14	2	0.51	1.12	0.00	0.00	27.53
	11	0.51	1.90	0.00	0.00	-16.35
	12	0.51	-2.26	0.00	0.00	18.74
	13	0.51	-0.07	0.00	0.00	0.41
	14	0.51	1.64	0.00	0.00	-14.07
	15	0.51	-1.95	0.00	0.00	16.12
	4	0.51	-30.01	-57.57	-2349.98	316.55
	5	0.51	-2.95	-4.24	-223.54	34.21
	6	0.51	0.00	-8.32	-438.64	0.00
	7	0.51	-515.16	0.00	0.00	957.33
	8	0.51	0.00	0.00	0.00	0.00
	10	0.51	0.00	0.00	0.00	0.00
	20	0.51	-30.01	-57.57	-2349.98	316.55
	30	0.51	-11.95	-29.84	-1367.18	129.17
	40	0.51	-896.38	0.00	0.00	1665.76
	50	0.51	-926.39	-57.57	-2349.98	1982.31
	60	0.51	-908.33	-29.84	-1367.18	1794.93
	100	0.51	1.01	0.00	0.00	28.21

********** END OF LATEST ANALYSIS RESULT **********

144. LOAD LIST 2 13 100
145. SECTION 0.45 0.5 0.55 MEMB 2 6 9
146. PRINT MEMBER SECTION FORCES LIST 2 6 9

MEMBER FORCES AT INTERMEDIATE SECTIONS

ALL UNITS ARE -- KIP FEET

MEMB	LOAD	SEC	SHEAR-Y	SHEAR-Z	MOM-Y	MOM-Z	
2	2	0.45	2.68	0.00	0.00	-419.34	
		0.50	0.03	0.00	0.00	-420.53	- Max. Pos. MoL
		0.55	-2.62	0.00	0.00	-419.39	
	13	0.45	-0.73	0.00	0.00	-179.00	
		0.50	-0.73	0.00	0.00	-178.35	- Max. Pos. MLTZ
		0.55	-0.73	0.00	0.00	-177.70	
	100	0.45	1.46	0.00	0.00	-718.26	
		0.50	-1.20	0.00	0.00	-718.38	- Max. Pos. Fact. M
		0.55	-3.85	0.00	0.00	-716.15	
6	2	0.45	1.97	0.00	0.00	-35.68	
		0.50	0.08	0.00	0.00	-36.70	- Max. Pos. MoL
		0.55	-1.82	0.00	0.00	-35.83	
	13	0.45	-0.12	0.00	0.00	4.55	
		0.50	-0.12	0.00	0.00	4.67	- Max. Pos. MLTZ
		0.55	-0.12	0.00	0.00	4.79	
	100	0.45	1.77	0.00	0.00	-28.08	
		0.50	-0.13	0.00	0.00	-28.90	- Max. Pos. Fact. M
		0.55	-2.02	0.00	0.00	-27.83	
9	2	0.45	2.10	0.00	0.00	-46.14	
		0.50	-0.01	0.00	0.00	-47.30	- Max. Pos. MoL
		0.55	-2.13	0.00	0.00	-46.11	
	13	0.45	-0.09	0.00	0.00	-1.05	
		0.50	-0.09	0.00	0.00	-0.95	- Max. Pos. MLTZ
		0.55	-0.09	0.00	0.00	-0.85	
	100	0.45	1.95	0.00	0.00	-47.90	
		0.50	-0.17	0.00	0.00	-48.89	- Max. Pos. Fact. M.
		0.55	-2.28	0.00	0.00	-47.53	

********** END OF LATEST ANALYSIS RESULT **********

147. FINISH

********** END OF THE STAAD.Pro RUN **********

**** DATE= JUL 20,2006 TIME= 15:46:39 ****

```
**************************************************************
*         For questions on STAAD.Pro, please contact         *
*   Research Engineers Offices at the following locations    *
*                                                            *
*                Telephone                Email               *
*  USA:       +1 (714)974-2500       support@reiusa.com       *
*  CANADA     +1 (905)632-4771       detech@odandetech.com    *
*  UK         +44(1454)207-000       support@reel.co.uk       *
*  FRANCE     +33(0)1 64551084       support@reel.co.uk       *
*  GERMANY    +49/931/40468-71       info@reig.de             *
*  NORWAY     +47 67 57 21 30        support@reel.co.uk       *
*  SINGAPORE  +65 6225-6015/16       support@reiasia.net      *
```

H. W. LOCHNER, INC.

PROJECT: BONNER BRIDGE - OREGON INLET NORTH CAROLINA JMJ Jun-06
SUBJECT: HIGH LEVEL BENT ANALYSIS WDB Jun-06
HLB 145 MEM. 4 JT. 2

COLUMN LOADS

PMAX

HLB 145 MEMBER 4 JOINT 2

GROUP 1

	P	MY	MZ
DL	511.22	0.00	73.59
LL	134.00	0.00	20.26
GROUP 1	0.00	0.00	0.00
SERVICE	645.22	0.00	93.85
STRENGTH	954.92	0.00	139.56

GROUP 2

	P	MY	MZ
DL	511.22	0.00	73.59
LL	0.00	0.00	0.00
GROUP 2	39.89	-1.57	337.69
SERVICE	551.11	-1.57	411.28
STRENGTH	716.44	-2.04	534.66

GROUP 3

	P	MY	MZ
DL	511.22	0.00	73.59
LL	134.00	0.00	20.26
GROUP 3	17.08	-0.92	144.49
SERVICE	662.30	-0.92	238.34
STRENGTH	860.99	-1.20	309.84

GROUP 4

	P	MY	MZ
DL	511.22	0.00	73.59
LL	134.00	0.00	20.26
GROUP 4	-0.18	0.00	-7.46
SERVICE	645.04	0.00	86.39
STRENGTH	838.55	0.00	112.31

GROUP 5

	P	MY	MZ
DL	511.22	0.00	73.59
LL	0.00	0.00	0.00
GROUP 5	39.70	-1.57	330.24
SERVICE	550.92	-1.57	403.83
STRENGTH	688.65	-1.96	504.79

GROUP 6

	P	MY	MZ
DL	511.22	0.00	73.59
LL	134.00	0.00	20.26
GROUP 6	16.90	-0.92	137.03
SERVICE	662.12	-0.92	230.88
STRENGTH	827.65	-1.15	288.60

SLENDERNESS EFFECTS IN COMPRESSION MEMBERS (AASHTO 8.16.5)

f'c = 3000 psi PHI = 0.70 W_C = 150 PCF

$E_C = W_C$^1.5 *33*f'c^0.5 = 3320561 PSI Width of Rect. Col. = B = 53.892 In.

Depth of Rect. Col = D = 46.884 In.

r_Y = 0.30*D = 14.07 In. L_Y = 7.5 Ft. K_Y = 2.0

r_Z = 0.30*B = 16.17 In. L_Z = 15.5 Ft. K_Z = 1.2

I_{YY} = B*D^3/12 I_{YY} = 462825 In^4

I_{ZZ} = D*B^3/12 I_{ZZ} = 611528 In^5

$K_Y L_Y/r$ = 12.8 < 22 NO SLENDERNESS EFFECT

$K_Z L_Z/r$ = 13.8 < 22 NO SLENDERNESS EFFECT

H. W. LOCHNER, INC.

PROJECT: BONNER BRIDGE - OREGON INLET NORTH CAROLINA JMJ Jun-06
SUBJECT: HIGH LEVEL BENT ANALYSIS WDB Jun-06
HLB 145 MEM. 4 JT. 2

SLENDERNESS EFFECTS IN RECTANGULAR COMPRESSION MEMBERS (AASHTO 8.16.5)

GROUP 1

	B	D	KL/R	M_U	M_{DL}	B_D	P_U	P_C	δ_b	δ_s	M_C	
	In.	In.		Ft. Kips	Ft. Kips		Kips	Kips			Ft. Kips	
MY	53.892	46.884	12.8	0.00	0.00	0.000	955	0	1.000	1.000	160	*
MZ	53.892	46.884	13.8	139.56	95.67	0.685	955	0	1.000	1.000	176	*

GROUP 2

	B	D	KL/R	M_U	M_{DL}	B_D	P_U	P_C	δ_b	δ_s	M_C	
	In.	In.		Ft. Kips	Ft. Kips		Kips	Kips			Ft. Kips	
MY	53.892	46.884	12.8	2.04	0.00	0.000	716	0	1.000	1.000	120	*
MZ	53.892	46.884	13.8	534.66	95.67	0.179	716	0	1.000	1.000	535	

GROUP 3

	B	D	KL/R	M_U	M_{DL}	B_D	P_U	P_C	δ_b	δ_s	M_C	
	In.	In.		Ft. Kips	Ft. Kips		Kips	Kips			Ft. Kips	
MY	53.892	46.884	12.8	1.20	0.00	0.000	861	0	1.000	1.000	144	*
MZ	53.892	46.884	13.8	309.84	95.67	0.309	861	0	1.000	1.000	310	

GROUP 4

	B	D	KL/R	M_U	M_{DL}	B_D	P_U	P_C	δ_b	δ_s	M_C	
	In.	In.		Ft. Kips	Ft. Kips		Kips	Kips			Ft. Kips	
MY	53.892	46.884	12.8	0.00	0.00	0.000	839	0	1.000	1.000	140	*
MZ	53.892	46.884	13.8	112.31	95.67	0.852	839	0	1.000	1.000	155	*

GROUP 5

	B	D	KL/R	M_U	M_{DL}	B_D	P_U	P_C	δ_b	δ_s	M_C	
	In.	In.		Ft. Kips	Ft. Kips		Kips	Kips			Ft. Kips	
MY	53.892	46.884	12.8	1.96	0.00	0.000	689	0	1.000	1.000	115	*
MZ	53.892	46.884	13.8	504.79	95.67	0.190	689	0	1.000	1.000	505	

GROUP 6

	B	D	KL/R	M_U	M_{DL}	B_D	P_U	P_C	δ_b	δ_s	M_C	
	In.	In.		Ft. Kips	Ft. Kips		Kips	Kips			Ft. Kips	
MY	53.892	46.884	12.8	1.15	0.00	0.000	828	0	1.000	1.000	138	*
MZ	53.892	46.884	13.8	288.60	95.67	0.331	828	0	1.000	1.000	289	

* MINIMUM MOMENT CONTROLS

H. W. LOCHNER, INC.

PROJECT: BONNER BRIDGE - OREGON INLET NORTH CAROLINA JMJ Jun-06
SUBJECT: HIGH LEVEL BENT ANALYSIS WDB Jun-06
HLB 145 MEM. 4 JT. 2

COLUMN LOADS

PMIN

HLB 145 MEMBER 4 JOINT 2

	GROUP 1				GROUP 2		
	P	MY	MZ		P	MY	MZ
DL	383.42	0.00	73.59	DL	383.42	0.00	73.59
LL	55.54	0.00	110.92	LL	0.00	0.00	0.00
GROUP 1	0.00	0.00	0.00	GROUP 2	39.89	-1.57	337.69
SERVICE	438.96	0.00	184.51	SERVICE	423.31	-1.57	411.28
STRENGTH	618.78	0.00	335.99	STRENGTH	550.30	-2.04	534.66

	GROUP 3				GROUP 4		
	P	MY	MZ		P	MY	MZ
DL	383.42	0.00	73.59	DL	383.42	0.00	73.59
LL	55.54	0.00	110.92	LL	55.54	0.00	110.92
GROUP 3	17.08	-0.92	144.49	GROUP 4	-0.18	0.00	-7.46
SERVICE	456.04	-0.92	329.00	SERVICE	438.78	0.00	177.05
STRENGTH	592.85	-1.20	427.70	STRENGTH	570.41	0.00	230.17

	GROUP 5				GROUP 6		
	P	MY	MZ		P	MY	MZ
DL	383.42	0.00	73.59	DL	383.42	0.00	73.59
LL	0.00	0.00	0.00	LL	55.54	0.00	110.92
GROUP 5	39.70	-1.57	330.24	GROUP 6	16.90	-0.92	137.03
SERVICE	423.12	-1.57	403.83	SERVICE	455.86	-0.92	321.54
STRENGTH	528.89	-1.96	504.79	STRENGTH	569.82	-1.15	401.93

SLENDERNESS EFFECTS IN COMPRESSION MEMBERS (AASHTO 8.16.5)

f'c = 3000 psi PHI = 0.70 W_C = 150 PCF

$E_C = W_C^{1.5} * 33 * f'c^{0.5}$ = 3320561 PSI Width of Rect. Col. = B = 53.892 In.

Depth of Rect. Col = D = 46.884 In.

$r_Y = 0.30*D$ = 14.07 In. L_Y = 7.5 Ft. K_Y = 2.0

$r_Z = 0.30*B$ = 16.17 In. L_Z = 15.5 Ft. K_Z = 1.2

I_{YY} = $B*D^3/12$ I_{YY} = 462825 In^4

I_{ZZ} = $D*B^3/12$ I_{ZZ} = 611528 In^5

$K_Y L_Y/r$ = 12.8 < 22 NO SLENDERNESS EFFECT

$K_Z L_Z/r$ = 13.8 < 22 NO SLENDERNESS EFFECT

H. W. LOCHNER, INC.

PROJECT: BONNER BRIDGE - OREGON INLET NORTH CAROLINA JMJ Jun-06
SUBJECT: HIGH LEVEL BENT ANALYSIS WDB Jun-06
HLB 145 MEM. 4 JT. 2

SLENDERNESS EFFECTS IN RECTANGULAR COMPRESSION MEMBERS (AASHTO 8.16.5)

GROUP 1

	B	D	KL/R	M_U	M_{DL}	B_D	P_U	P_C	δ_b	δ_s	M_C	
	In.	In.		Ft. Kips	Ft. Kips		Kips	Kips			Ft. Kips	
MY	53.892	46.884	12.8	0.00	0.00	0.000	619	0	1.000	1.000	103	*
MZ	53.892	46.884	13.8	335.99	95.67	0.285	619	0	1.000	1.000	336	

GROUP 2

	B	D	KL/R	M_U	M_{DL}	B_D	P_U	P_C	δ_b	δ_s	M_C	
	In.	In.		Ft. Kips	Ft. Kips		Kips	Kips			Ft. Kips	
MY	53.892	46.884	12.8	2.04	0.00	0.000	550	0	1.000	1.000	92	*
MZ	53.892	46.884	13.8	534.66	95.67	0.179	550	0	1.000	1.000	535	

GROUP 3

	B	D	KL/R	M_U	M_{DL}	B_D	P_U	P_C	δ_b	δ_s	M_C	
	In.	In.		Ft. Kips	Ft. Kips		Kips	Kips			Ft. Kips	
MY	53.892	46.884	12.8	1.20	0.00	0.000	593	0	1.000	1.000	99	*
MZ	53.892	46.884	13.8	427.70	95.67	0.224	593	0	1.000	1.000	428	

GROUP 4

	B	D	KL/R	M_U	M_{DL}	B_D	P_U	P_C	δ_b	δ_s	M_C	
	In.	In.		Ft. Kips	Ft. Kips		Kips	Kips			Ft. Kips	
MY	53.892	46.884	12.8	0.00	0.00	0.000	570	0	1.000	1.000	95	*
MZ	53.892	46.884	13.8	230.17	95.67	0.416	570	0	1.000	1.000	230	

GROUP 5

	B	D	KL/R	M_U	M_{DL}	B_D	P_U	P_C	δ_b	δ_s	M_C	
	In.	In.		Ft. Kips	Ft. Kips		Kips	Kips			Ft. Kips	
MY	53.892	46.884	12.8	1.96	0.00	0.000	529	0	1.000	1.000	88	*
MZ	53.892	46.884	13.8	504.79	95.67	0.190	529	0	1.000	1.000	505	

GROUP 6

	B	D	KL/R	M_U	M_{DL}	B_D	P_U	P_C	δ_b	δ_s	M_C	
	In.	In.		Ft. Kips	Ft. Kips		Kips	Kips			Ft. Kips	
MY	53.892	46.884	12.8	1.15	0.00	0.000	570	0	1.000	1.000	95	*
MZ	53.892	46.884	13.8	401.93	95.67	0.238	570	0	1.000	1.000	402	

* MINIMUM MOMENT CONTROLS

H. W. LOCHNER, INC.

PROJECT: BONNER BRIDGE - OREGON INLET NORTH CAROLINA JMJ Jun-06
SUBJECT: HIGH LEVEL BENT ANALYSIS WDB Jun-06
HLB 145 MEM. 4 JT. 5

COLUMN LOADS

PMAX

HLB 145 MEMBER 4 JOINT 5

GROUP 1

	P	MY	MZ
DL	-558.59	0.00	26.91
LL	-134.00	0.00	16.60
GROUP 1	0.00	0.00	0.00
SERVICE	-692.59	0.00	43.51
STRENGTH	-1016.50	0.00	70.95

GROUP 2

	P	MY	MZ
DL	-558.59	0.00	26.91
LL	0.00	0.00	0.00
GROUP 2	-40.04	-673.66	146.19
SERVICE	-598.63	-673.66	173.10
STRENGTH	-778.22	-875.76	225.03

GROUP 3

	P	MY	MZ
DL	-558.59	0.00	26.91
LL	-134.00	0.00	16.60
GROUP 3	-17.12	-428.34	63.48
SERVICE	-709.71	-428.34	106.99
STRENGTH	-922.62	-556.84	139.09

GROUP 4

	P	MY	MZ
DL	-558.59	0.00	26.91
LL	-134.00	0.00	16.60
GROUP 4	0.18	0.00	-45.30
SERVICE	-692.41	0.00	-1.79
STRENGTH	-900.13	0.00	-2.33

GROUP 5

	P	MY	MZ
DL	-558.59	0.00	26.91
LL	0.00	0.00	0.00
GROUP 5	-39.85	-673.66	100.89
SERVICE	-598.44	-673.66	127.80
STRENGTH	-748.05	-842.08	159.75

GROUP 6

	P	MY	MZ
DL	-558.59	0.00	26.91
LL	-134.00	0.00	16.60
GROUP 6	-16.94	-428.34	18.18
SERVICE	-709.53	-428.34	61.69
STRENGTH	-886.91	-535.43	77.11

SLENDERNESS EFFECTS IN COMPRESSION MEMBERS (AASHTO 8.16.5)

f'c = 3000 psi PHI = 0.70 W_C = 150 PCF

$E_C = W_C^{1.5} * 33 * f'c^{0.5}$ = 3320561 PSI Width of Rect. Col. = B = 53.892 In.

Depth of Rect. Col = D = 46.884 In.

$r_Y = 0.30*D$ = 14.07 In. L_Y = 7.5 Ft. K_Y = 2.0

$r_Z = 0.30*B$ = 16.17 In. L_Z = 15.5 Ft. K_Z = 1.2

I_{YY} = $B*D^3/12$ I_{YY} = 462825 In^4

I_{ZZ} = $D*B^3/12$ I_{ZZ} = 611528 In^5

$K_Y L_Y/r$ = 12.8 < 22 NO SLENDERNESS EFFECT

$K_Z L_Z/r$ = 13.8 < 22 NO SLENDERNESS EFFECT

H. W. LOCHNER, INC.

PROJECT: BONNER BRIDGE - OREGON INLET NORTH CAROLINA JMJ Jun-06
SUBJECT: HIGH LEVEL BENT ANALYSIS WDB Jun-06
HLB 145 MEM. 4 JT. 5

SLENDERNESS EFFECTS IN RECTANGULAR COMPRESSION MEMBERS (AASHTO 8.16.5)

GROUP 1

	B	D	KL/R	M_U	M_{DL}	B_D	P_U	P_C	δ_b	δ_s	M_C	
	In.	In.		Ft. Kips	Ft. Kips		Kips	Kips			Ft. Kips	
MY	53.892	46.884	12.8	0.00	0.00	0.000	1017	0	1.000	1.000	170	*
MZ	53.892	46.884	13.8	70.95	34.98	0.493	1017	0	1.000	1.000	188	*

GROUP 2

	B	D	KL/R	M_U	M_{DL}	B_D	P_U	P_C	δ_b	δ_s	M_C
	In.	In.		Ft. Kips	Ft. Kips		Kips	Kips			Ft. Kips
MY	53.892	46.884	12.8	875.76	0.00	0.000	778	0	1.000	1.000	876
MZ	53.892	46.884	13.8	225.03	34.98	0.155	778	0	1.000	1.000	225

GROUP 3

	B	D	KL/R	M_U	M_{DL}	B_D	P_U	P_C	δ_b	δ_s	M_C	
	In.	In.		Ft. Kips	Ft. Kips		Kips	Kips			Ft. Kips	
MY	53.892	46.884	12.8	556.84	0.00	0.000	923	0	1.000	1.000	557	
MZ	53.892	46.884	13.8	139.09	34.98	0.252	923	0	1.000	1.000	170	*

GROUP 4

	B	D	KL/R	M_U	M_{DL}	B_D	P_U	P_C	δ_b	δ_s	M_C	
	In.	In.		Ft. Kips	Ft. Kips		Kips	Kips			Ft. Kips	
MY	53.892	46.884	12.8	0.00	0.00	0.000	900	0	1.000	1.000	151	*
MZ	53.892	46.884	13.8	2.33	34.98	15.034	900	0	1.000	1.000	166	*

GROUP 5

	B	D	KL/R	M_U	M_{DL}	B_D	P_U	P_C	δ_b	δ_s	M_C
	In.	In.		Ft. Kips	Ft. Kips		Kips	Kips			Ft. Kips
MY	53.892	46.884	12.8	842.08	0.00	0.000	748	0	1.000	1.000	842
MZ	53.892	46.884	13.8	159.75	34.98	0.219	748	0	1.000	1.000	160

GROUP 6

	B	D	KL/R	M_U	M_{DL}	B_D	P_U	P_C	δ_b	δ_s	M_C	
	In.	In.		Ft. Kips	Ft. Kips		Kips	Kips			Ft. Kips	
MY	53.892	46.884	12.8	535.43	0.00	0.000	887	0	1.000	1.000	535	
MZ	53.892	46.884	13.8	77.11	34.98	0.454	887	0	1.000	1.000	164	*

* MINIMUM MOMENT CONTROLS

H. W. LOCHNER, INC.

PROJECT: BONNER BRIDGE - OREGON INLET NORTH CAROLINA JMJ Jun-06
SUBJECT: HIGH LEVEL BENT ANALYSIS WDB Jun-06
HLB 145 MEM. 4 JT. 5

COLUMN LOADS

PMIN

HLB 145 MEMBER 4 JOINT 5

GROUP 1

	P	MY	MZ
DL	-418.94	0.00	26.91
LL	-55.54	0.00	14.80
GROUP 1	0.00	0.00	0.00
SERVICE	-474.48	0.00	41.71
STRENGTH	-664.96	0.00	67.05

GROUP 2

	P	MY	MZ
DL	-418.94	0.00	26.91
LL	0.00	0.00	0.00
GROUP 2	-40.04	-673.66	146.19
SERVICE	-458.98	-673.66	173.10
STRENGTH	-596.68	-875.76	225.03

GROUP 3

	P	MY	MZ
DL	-418.94	0.00	26.91
LL	-55.54	0.00	14.80
GROUP 3	-17.12	-428.34	63.48
SERVICE	-491.60	-428.34	105.19
STRENGTH	-639.08	-556.84	136.75

GROUP 4

	P	MY	MZ
DL	-418.94	0.00	26.91
LL	-55.54	0.00	14.80
GROUP 4	0.18	0.00	-45.30
SERVICE	-474.30	0.00	-3.59
STRENGTH	-616.59	0.00	-4.67

GROUP 5

	P	MY	MZ
DL	-418.94	0.00	26.91
LL	0.00	0.00	0.00
GROUP 5	-39.85	-673.66	100.89
SERVICE	-458.79	-673.66	127.80
STRENGTH	-573.49	-842.08	159.75

GROUP 6

	P	MY	MZ
DL	-418.94	0.00	26.91
LL	-55.54	0.00	14.80
GROUP 6	-16.94	-428.34	18.18
SERVICE	-491.42	-428.34	59.89
STRENGTH	-614.28	-535.43	74.86

SLENDERNESS EFFECTS IN COMPRESSION MEMBERS (AASHTO 8.16.5)

f'c = 3000 psi PHI = 0.70 W_C = 150 PCF

$E_C = W_C$^$^{1.5}$ *33*f'c^$^{0.5}$ = 3320561 PSI Width of Rect. Col. = B = 53.892 In.

Depth of Rect. Col = D = 46.884 In.

r_Y = 0.30*D = 14.07 In. L_Y = 7.5 Ft. K_Y = 2.0

r_Z = 0.30*B = 16.17 In. L_Z = 15.5 Ft. K_Z = 1.2

I_{YY} = B*D^^{3}/12 I_{YY} = 462825 In^4

I_{ZZ} = D*B^^{3}/12 I_{ZZ} = 611528 In^5

K_YL_Y/r = 12.8 < 22 NO SLENDERNESS EFFECT

K_ZL_Z/r = 13.8 < 22 NO SLENDERNESS EFFECT

H. W. LOCHNER, INC.

PROJECT: BONNER BRIDGE - OREGON INLET NORTH CAROLINA JMJ Jun-06
SUBJECT: HIGH LEVEL BENT ANALYSIS WDB Jun-06
HLB 145 MEM. 4 JT. 5

SLENDERNESS EFFECTS IN RECTANGULAR COMPRESSION MEMBERS (AASHTO 8.16.5)

GROUP 1

	B	D	KL/R	M_U	M_{DL}	B_D	P_U	P_C	δ_b	δ_s	M_C	
	In.	In.		Ft. Kips	Ft. Kips		Kips	Kips			Ft. Kips	
MY	53.892	46.884	12.8	0.00	0.00	0.000	665	0	1.000	1.000	111	*
MZ	53.892	46.884	13.8	67.05	34.98	0.522	665	0	1.000	1.000	123	*

GROUP 2

	B	D	KL/R	M_U	M_{DL}	B_D	P_U	P_C	δ_b	δ_s	M_C
	In.	In.		Ft. Kips	Ft. Kips		Kips	Kips			Ft. Kips
MY	53.892	46.884	12.8	875.76	0.00	0.000	597	0	1.000	1.000	876
MZ	53.892	46.884	13.8	225.03	34.98	0.155	597	0	1.000	1.000	225

GROUP 3

	B	D	KL/R	M_U	M_{DL}	B_D	P_U	P_C	δ_b	δ_s	M_C
	In.	In.		Ft. Kips	Ft. Kips		Kips	Kips			Ft. Kips
MY	53.892	46.884	12.8	556.84	0.00	0.000	639	0	1.000	1.000	557
MZ	53.892	46.884	13.8	136.75	34.98	0.256	639	0	1.000	1.000	137

GROUP 4

	B	D	KL/R	M_U	M_{DL}	B_D	P_U	P_C	δ_b	δ_s	M_C	
	In.	In.		Ft. Kips	Ft. Kips		Kips	Kips			Ft. Kips	
MY	53.892	46.884	12.8	0.00	0.00	0.000	617	0	1.000	1.000	103	*
MZ	53.892	46.884	13.8	4.67	34.98	7.496	617	0	1.000	1.000	114	*

GROUP 5

	B	D	KL/R	M_U	M_{DL}	B_D	P_U	P_C	δ_b	δ_s	M_C
	In.	In.		Ft. Kips	Ft. Kips		Kips	Kips			Ft. Kips
MY	53.892	46.884	12.8	842.08	0.00	0.000	573	0	1.000	1.000	842
MZ	53.892	46.884	13.8	159.75	34.98	0.219	573	0	1.000	1.000	160

GROUP 6

	B	D	KL/R	M_U	M_{DL}	B_D	P_U	P_C	δ_b	δ_s	M_C	
	In.	In.		Ft. Kips	Ft. Kips		Kips	Kips			Ft. Kips	
MY	53.892	46.884	12.8	535.43	0.00	0.000	614	0	1.000	1.000	535	
MZ	53.892	46.884	13.8	74.86	34.98	0.467	614	0	1.000	1.000	113	*

* MINIMUM MOMENT CONTROLS

```
OOOOOOO    OOOOO    OOOOO    OOOOO    OOOOO    OO
OO    OO   OO  OO   OO  OO   OO  OO   OO  OO   OO
OO    OO   OO  OO   OO  OO   OO  OO   OO  OO   OO
OO    OO   OO       OO  OO   OO       OO  OO   OO
OO    OO   OO       OOOOOOO  OO       OO  OO   OO
OOOOOOO    OO  OO   OO  OO   OO  OO   OO  OO   OO
OO         OO  OO   OO  OO   OO  OO   OO  OO   OO
OO          OOOOO   OO  OO    OOOOO    OOOOO    OOOOO  (TM)
```

JMJ 7/06
WDB 7/06

==========
Computer program for the Strength Design of Reinforced Concrete Sections
==========

Licensee stated above acknowledges that Portland Cement Association (PCA) is not and cannot be responsible for either the accuracy or adequacy of the material supplied as input for processing by the PCACOL(tm) computer program. Furthermore, PCA neither makes any warranty expressed nor implied with respect to the correctness of the output prepared by the PCACOL(tm) program. Although PCA has endeavored to produce PCACOL(tm) error free, the program is not and can't be certified infallible. The final and only responsibility for analysis, design and engineering documents is the licensees. Accordingly, PCA disclaims all responsibility in contract, negligence or other tort for any analysis, design or engineering documents prepared in connection with the use of the PCACOL(tm) program.

BASED ON PLANS.

General Information:
==========

File Name: S:\DGN-ST\NORTHC~1\BONNER~1\ANALYSIS\PIERS\HLB144~1\PCACOL~1\NEWFOL~1\M4PLAN.COL
Project: BONNER BRIDGE - OREGON INLET
Column: HLB #145 Engineer: JMJ
Code: ACI 318-95 Units: English

Run Option: Investigation Slenderness: Not considered
Run Axis: Biaxial Column Type: Structural

Material Properties:
==========

f'c = 3 ksi fy = 40 ksi
Ec = 3122.02 ksi Es = 29000 ksi
fc = 2.55 ksi Rupture strain = Infinity
Ultimate strain = 0.003 in/in
Beta1 = 0.85

Section:
==========

Rectangular: Width = 53.9 in Depth = 46.9 in

Gross section area, Ag = 2527.91 in^2
Ix = 463368 in^4 Iy = 612009 in^4
Xo = 0 in Yo = 0 in

Reinforcement:
==========

Rebar Database: User-defined

Size	Diam (in)	Area (in^2)	Size	Diam (in)	Area (in^2)	Size	Diam (in)	Area (in^2)
# 1	0.00	0.00	# 3	0.38	0.11	# 4	0.50	0.20
# 5	0.63	0.31	# 6	0.75	0.44	# 7	0.88	0.60
# 8	1.00	0.79	# 9	1.13	1.00	# 10	1.27	1.27
# 11	1.41	1.56	# 14	1.69	2.25	# 18	2.26	4.00

Confinement: Tied; #1 ties with #9 bars, #1 with larger bars.
phi(a) = 0.8, phi(b) = 0.9, phi(c) = 0.7

Layout: Rectangular
Pattern: Equal Bar Spacing (Cover to longitudinal reinforcement)
Total steel area, As = 49.92 in^2 at 1.97%
32 #11 Cover = 5 in

Factored Loads and Moments with Corresponding Capacities: (see user's manual for notation)
==========

No.	Pu kip	Mux k-ft	Muy k-ft	fMnx k-ft	fMny k-ft	fMn/Mu
1	955.0	160.0	176.0	2165.1	2381.8	13.532
2	716.0	120.0	535.0	749.2	3324.6	6.216
3	861.0	144.0	310.0	1399.0	3022.7	9.744
4	839.0	140.0	155.0	2116.6	2337.2	15.096
5	689.0	115.0	505.0	758.4	3331.0	6.596
6	828.0	138.0	289.0	1418.4	2978.8	10.302
7	619.0	103.0	336.0	996.7	3239.3	9.644
8	550.0	92.0	535.0	587.7	3415.0	6.383
9	593.0	99.0	428.0	777.7	3343.2	7.814
10	570.0	95.0	230.0	1274.6	3098.7	13.464
11	529.0	88.0	505.0	597.5	3411.2	6.756
12	570.0	95.0	402.0	794.8	3338.9	8.309
13	1017.0	170.0	188.0	2182.6	2411.8	12.833
14	778.0	876.0	225.0	2953.9	756.8	3.372
15	923.0	557.0	170.0	3020.7	922.3	5.423

16	900.0	151.0	166.0	2148.2	2356.0	14.208
17	748.0	842.0	160.0	2990.4	571.6	3.552
18	887.0	535.0	164.0	2996.2	914.7	5.598
19	665.0	111.0	123.0	2110.4	2343.3	19.034
20	597.0	876.0	225.0	2964.3	765.3	3.385
21	639.0	557.0	137.0	2969.6	734.6	5.333
22	617.0	103.0	114.0	2126.8	2352.2	20.640
23	573.0	842.0	160.0	3009.9	566.6	3.573
24	614.0	535.0	113.0	2995.9	636.2	5.601

*** Program completed as requested! ***

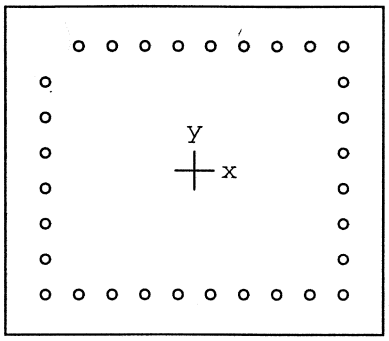

53.9 x 46.9 in

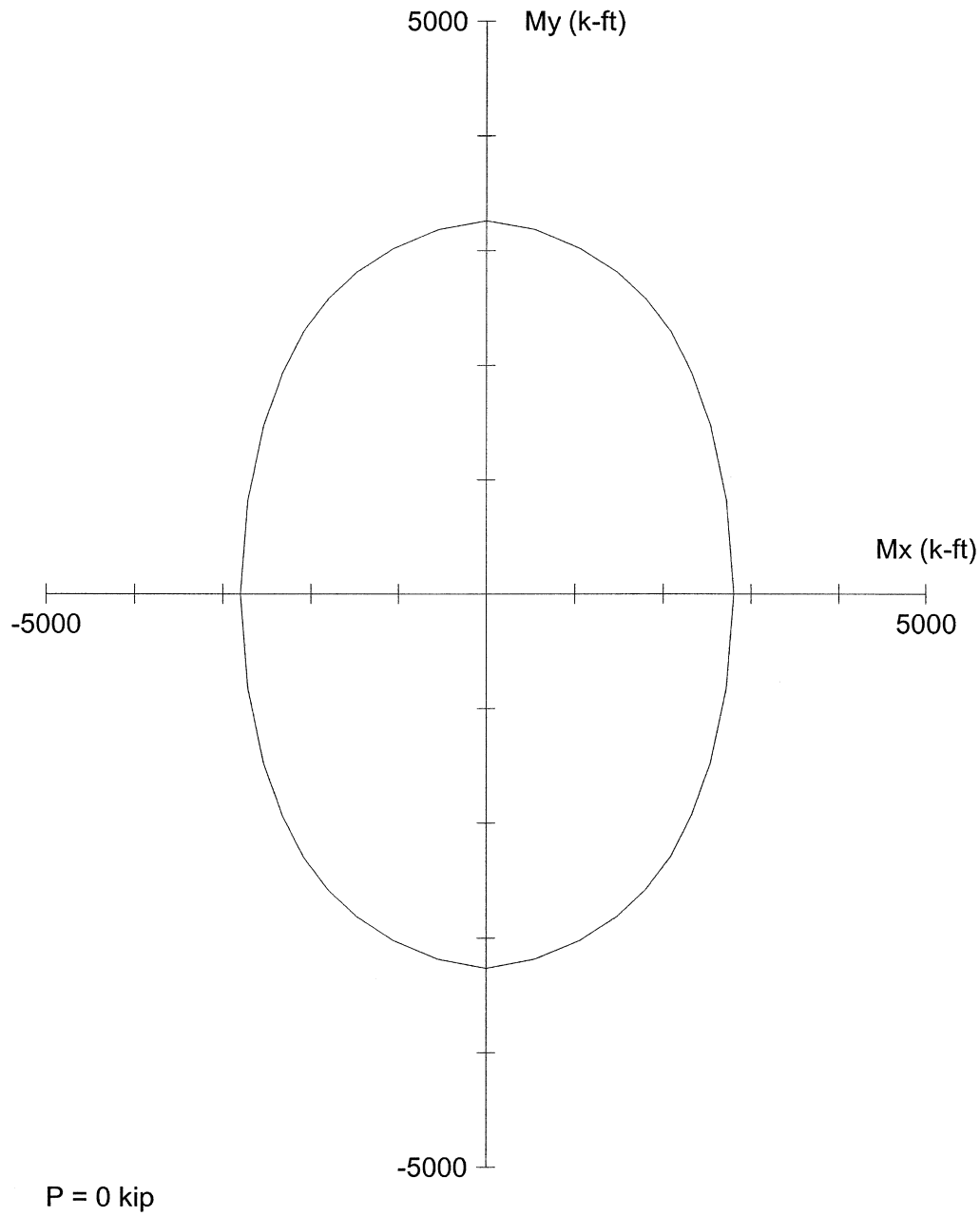

Code: ACI 318-95

Units: English

Run axis: Biaxial

Run option: Investigation

Slenderness: Not considered

mn type: Structural

Bars: User-defined

Date: 07/20/06

Time: 15:55:41

PCACOL V3.00 (PCA 1999) - Licensed to: Licensee name not yet specified.

File: S:\DGN-ST\NORTHC~1\BONNER~1\ANALYSIS\PIERS\HLB144~1\PCACOL~1\NEWFOL~1\M4PLAN.COL

Project: BONNER BRIDGE - OREGON INLET

Column: OL		Engineer: JMJ	
f'c = 3 ksi	fy = 40 ksi	Ag = 2527.91 in^2	32 #11 bars
Ec = 3122 ksi	Es = 29000 ksi	As = 49.92 in^2	Rho = 1.97%
fc = 2.55 ksi	e_rup = Infinity	Xo = 0.00 in	Ix = 463368 in^4
u = 0.003 in/in		Yo = 0.00 in	Iy = 612009 in^4
Beta1 = 0.85		Clear spacing = 3.31 in	Clear cover = 5.00 in
Confinement: Tied	phi(a) = 0.8, phi(b) = 0.9, phi(c) = 0.7		

JMJ 7/06
WDB 7/06

```
OOOOOOO    OOOOO    OOOOO    OOOOO    OOOOO   OO
OO    OO   OO  OO   OO  OO   OO  OO   OO  OO   OO
OO    OO   OO  OO   OO  OO   OO  OO   OO  OO   OO
OO    OO   OO       OO  OO   OO       OO  OO   OO
OO    OO   OO       OOOOOOO  OO       OO  OO   OO
OOOOOOO    OO  OO   OO  OO   OO  OO   OO  OO   OO
OO         OO  OO   OO  OO   OO  OO   OO  OO   OO
OO          OOOOO   OO  OO    OOOOO    OOOOO   OOOOO  (TM)
```

==========
Computer program for the Strength Design of Reinforced Concrete Sections
==========

Licensee stated above acknowledges that Portland Cement Association (PCA) is not and cannot be responsible for either the accuracy or adequacy of the material supplied as input for processing by the PCACOL(tm) computer program. Furthermore, PCA neither makes any warranty expressed nor implied with respect to the correctness of the output prepared by the PCACOL(tm) program. Although PCA has endeavored to produce PCACOL(tm) error free, the program is not and can't be certified infallible. The final and only responsibility for analysis, design and engineering documents is the licensees. Accordingly, PCA disclaims all responsibility in contract, negligence or other tort for any analysis, design or engineering documents prepared in connection with the use of the PCACOL(tm) program.

50% COVER LOSS
f'_c = 4400 PSI

General Information:
==========

File Name: S:\DGN-ST\NORTHC~1\BONNER~1\ANALYSIS\PIERS\HLB144~1\PCACOL~1\M4ACT.COL
Project: BONNER BRIDGE - OREGON INLET
Column: OL — Engineer: JMJ
Code: ACI 318-95 — Units: English

Run Option: Investigation — Slenderness: Not considered
Run Axis: Biaxial — Column Type: Structural

Material Properties:
==========

f'c = 4.4 ksi — fy = 40 ksi
Ec = 3780.96 ksi — Es = 29000 ksi
fc = 3.74 ksi — Rupture strain = Infinity
Ultimate strain = 0.003 in/in
Beta1 = 0.83

Section:
==========

Rectangular: Width = 48.9 in — Depth = 41.9 in

Gross section area, Ag = 2048.91 in^2
Ix = 299757 in^4 — Iy = 408281 in^4
Xo = 0 in — Yo = 0 in

Reinforcement:
==========

Rebar Database: User-defined

Size	Diam (in)	Area (in^2)	Size	Diam (in)	Area (in^2)	Size	Diam (in)	Area (in^2)
# 1	0.00	0.00	# 3	0.38	0.11	# 4	0.50	0.20
# 5	0.63	0.31	# 6	0.75	0.44	# 7	0.88	0.60
# 8	1.00	0.79	# 9	1.13	1.00	# 10	1.27	1.27
# 11	1.41	1.56	# 14	1.69	2.25	# 18	2.26	4.00

Confinement: Tied; #1 ties with #9 bars, #1 with larger bars.
phi(a) = 0.8, phi(b) = 0.9, phi(c) = 0.7

Layout: Rectangular
Pattern: Equal Bar Spacing (Cover to longitudinal reinforcement)
Total steel area, As = 49.92 in^2 at 2.44%
32 #11 Cover = 2.5 in

Factored Loads and Moments with Corresponding Capacities: (see user's manual for notation)
==========

No.	Pu kip	Mux k-ft	Muy k-ft	fMnx k-ft	fMny k-ft	fMn/Mu
1	955.0	160.0	176.0	2162.9	2371.0	13.493
2	716.0	120.0	535.0	759.7	3403.8	6.361
3	861.0	144.0	310.0	1411.3	3037.9	9.800
4	839.0	140.0	155.0	2146.1	2376.3	15.330
5	689.0	115.0	505.0	773.2	3396.4	6.725
6	828.0	138.0	289.0	1445.7	3026.1	10.472
7	619.0	103.0	336.0	1004.2	3283.4	9.770
8	550.0	92.0	535.0	590.7	3422.7	6.398
9	593.0	99.0	428.0	785.5	3371.8	7.881
10	570.0	95.0	230.0	1292.7	3125.1	13.590
11	529.0	88.0	505.0	591.7	3413.7	6.759
12	570.0	95.0	402.0	794.0	3361.6	8.362
13	1017.0	170.0	188.0	2183.2	2406.9	12.820
14	778.0	876.0	225.0	2996.9	765.7	3.420
15	923.0	557.0	170.0	2961.6	905.7	5.318

16	900.0	151.0	166.0	2138.1	2348.5	14.153
17	748.0	842.0	160.0	3038.4	574.8	3.608
18	887.0	535.0	164.0	2946.9	902.4	5.508
19	665.0	111.0	123.0	2168.1	2400.1	19.522
20	597.0	876.0	225.0	2966.7	762.1	3.387
21	639.0	557.0	137.0	2985.9	730.6	5.359
22	617.0	103.0	114.0	2167.5	2401.3	21.055
23	573.0	842.0	160.0	3000.4	574.1	3.564
24	614.0	535.0	113.0	3000.8	635.9	5.610

*** Program completed as requested! ***

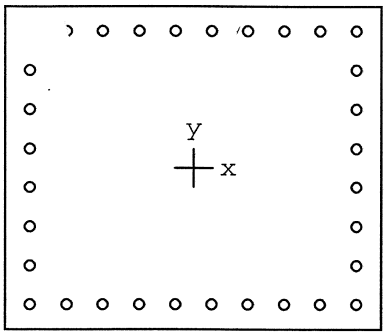

48.9 x 41.9 in

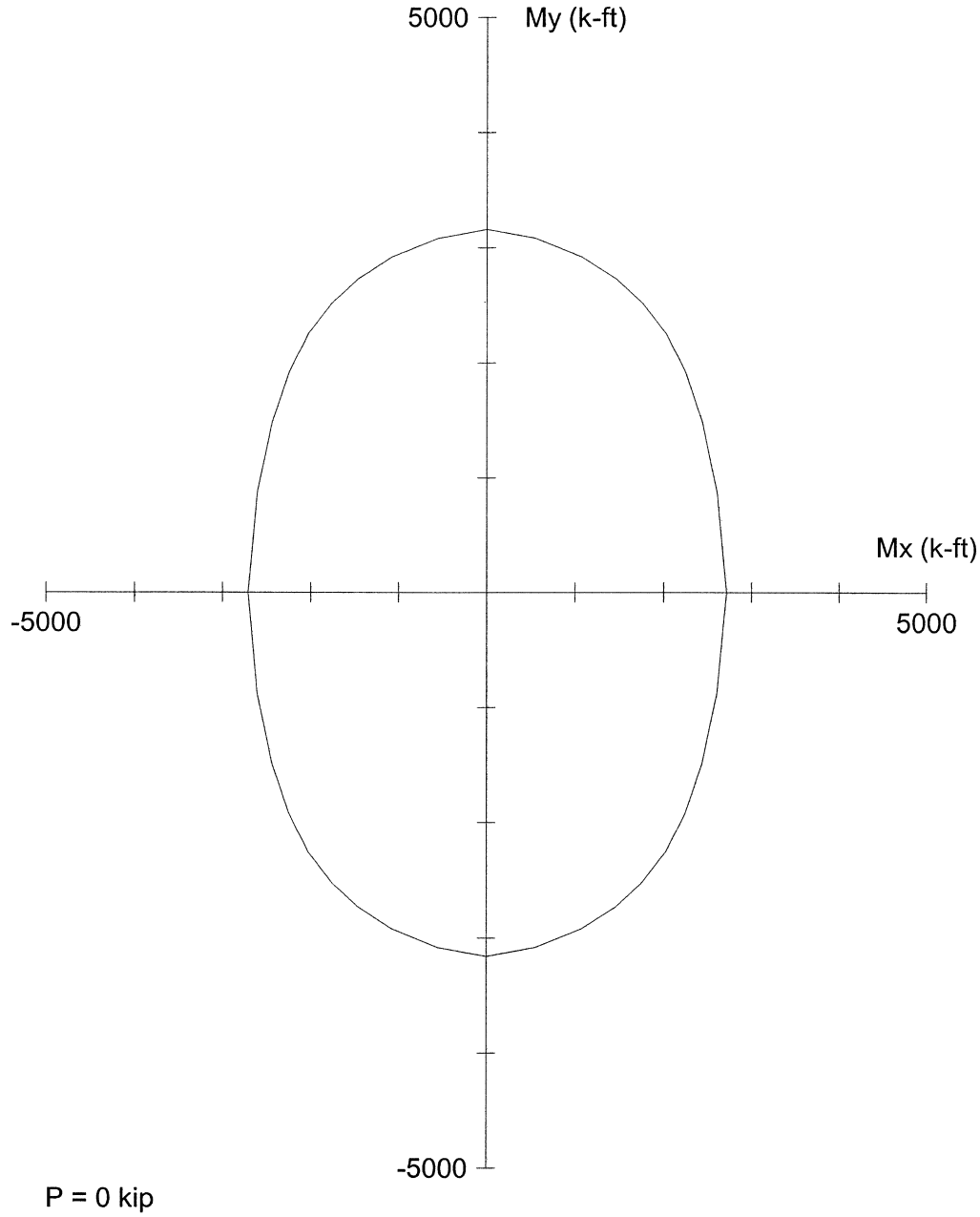

Code: ACI 318-95

Units: English

Run axis: Biaxial

Run option: Investigation

Slenderness: Not considered

mn type: Structural

Bars: User-defined

Date: 07/25/06

Time: 13:19:07

PCACOL V3.00 (PCA 1999) - Licensed to: Licensee name not yet specified.

File: S:\DGN-ST\NORTHC~1\BONNER~1\ANALYSIS\PIERS\HLB144~1\PCACOL~1\M4ACT.COL

Project: BONNER BRIDGE - OREGON INLET

Column: OL		Engineer: JMJ	
f'c = 4.4 ksi	fy = 40 ksi	Ag = 2048.91 in^2	32 #11 bars
Ec = 3781 ksi	Es = 29000 ksi	As = 49.92 in^2	Rho = 2.44%
fc = 3.74 ksi	e_rup = Infinity	Xo = 0.00 in	Ix = 299757 in^4
u = 0.003 in/in		Yo = 0.00 in	Iy = 408281 in^4
Beta1 = 0.83		Clear spacing = 3.31 in	Clear cover = 2.50 in
Confinement: Tied	phi(a) = 0.8, phi(b) = 0.9, phi(c) = 0.7		

H. W. LOCHNER, INC.

PROJECT: BONNER BRIDGE - OREGON INLET NORTH CAROLINA JMJ Jun-06
SUBJECT: HIGH LEVEL BENT ANALYSIS WDB Jun-06
HLB 145 MEM. 5 JT. 3

COLUMN LOADS

PMAX

HLB 145 MEMBER 5 JOINT 3

GROUP 1

	P	MY	MZ
DL	511.16	0.00	73.11
LL	133.99	0.00	20.19
GROUP 1	0.00	0.00	0.00
SERVICE	645.15	0.00	93.30
STRENGTH	954.82	0.00	138.79

GROUP 2

	P	MY	MZ
DL	511.16	0.00	73.11
LL	0.00	0.00	0.00
GROUP 2	-39.89	1.55	-337.75
SERVICE	471.27	1.55	-264.64
STRENGTH	612.65	2.02	-344.03

GROUP 3

	P	MY	MZ
DL	511.16	0.00	73.11
LL	133.99	0.00	20.19
GROUP 3	-17.08	0.91	-144.51
SERVICE	628.07	0.91	-51.21
STRENGTH	816.49	1.18	-66.57

GROUP 4

	P	MY	MZ
DL	511.16	0.00	73.11
LL	133.99	0.00	20.19
GROUP 4	-0.18	0.00	-7.45
SERVICE	644.97	0.00	85.85
STRENGTH	838.46	0.00	111.61

GROUP 5

	P	MY	MZ
DL	511.16	0.00	73.11
LL	0.00	0.00	0.00
GROUP 5	-40.07	1.55	-345.20
SERVICE	471.09	1.55	-272.09
STRENGTH	588.86	1.94	-340.11

GROUP 6

	P	MY	MZ
DL	511.16	0.00	73.11
LL	133.99	0.00	20.19
GROUP 6	-17.26	0.91	-151.96
SERVICE	627.89	0.91	-58.66
STRENGTH	784.86	1.14	-73.33

SLENDERNESS EFFECTS IN COMPRESSION MEMBERS (AASHTO 8.16.5)

f'c = 3000 psi PHI = 0.70 W_C = 150 PCF

$E_C = W_C^{1.5} * 33 * f'c^{0.5}$ = 3320561 PSI Width of Rect. Col. = B = 53.892 In.

Depth of Rect. Col = D = 46.884 In.

$r_Y = 0.30*D$ = 14.07 In. L_Y = 7.5 Ft. K_Y = 2.0

$r_Z = 0.30*B$ = 16.17 In. L_Z = 15.5 Ft. K_Z = 1.2

I_{YY} = $B*D^3/12$ I_{YY} = 462825 In^4

I_{ZZ} = $D*B^3/12$ I_{ZZ} = 611528 In^5

$K_Y L_Y/r$ = 12.8 < 22 NO SLENDERNESS EFFECT

$K_Z L_Z/r$ = 13.8 < 22 NO SLENDERNESS EFFECT

H. W. LOCHNER, INC.

PROJECT: BONNER BRIDGE - OREGON INLET NORTH CAROLINA JMJ Jun-06
SUBJECT: HIGH LEVEL BENT ANALYSIS WDB Jun-06
HLB 145 MEM. 5 JT. 3

SLENDERNESS EFFECTS IN RECTANGULAR COMPRESSION MEMBERS (AASHTO 8.16.5)

GROUP 1

	B	D	KL/R	M_U	M_{DL}	B_D	P_U	P_C	δ_b	δ_s	M_C	
	In.	In.		Ft. Kips	Ft. Kips		Kips	Kips			Ft. Kips	
MY	53.892	46.884	12.8	0.00	0.00	0.000	955	0	1.000	1.000	160	*
MZ	53.892	46.884	13.8	138.79	95.04	0.685	955	0	1.000	1.000	176	*

GROUP 2

	B	D	KL/R	M_U	M_{DL}	B_D	P_U	P_C	δ_b	δ_s	M_C	
	In.	In.		Ft. Kips	Ft. Kips		Kips	Kips			Ft. Kips	
MY	53.892	46.884	12.8	2.02	0.00	0.000	613	0	1.000	1.000	102	*
MZ	53.892	46.884	13.8	344.03	95.04	0.276	613	0	1.000	1.000	344	

GROUP 3

	B	D	KL/R	M_U	M_{DL}	B_D	P_U	P_C	δ_b	δ_s	M_C	
	In.	In.		Ft. Kips	Ft. Kips		Kips	Kips			Ft. Kips	
MY	53.892	46.884	12.8	1.18	0.00	0.000	816	0	1.000	1.000	137	*
MZ	53.892	46.884	13.8	66.57	95.04	1.428	816	0	1.000	1.000	151	*

GROUP 4

	B	D	KL/R	M_U	M_{DL}	B_D	P_U	P_C	δ_b	δ_s	M_C	
	In.	In.		Ft. Kips	Ft. Kips		Kips	Kips			Ft. Kips	
MY	53.892	46.884	12.8	0.00	0.00	0.000	838	0	1.000	1.000	140	*
MZ	53.892	46.884	13.8	111.61	95.04	0.852	838	0	1.000	1.000	155	*

GROUP 5

	B	D	KL/R	M_U	M_{DL}	B_D	P_U	P_C	δ_b	δ_s	M_C	
	In.	In.		Ft. Kips	Ft. Kips		Kips	Kips			Ft. Kips	
MY	53.892	46.884	12.8	1.94	0.00	0.000	589	0	1.000	1.000	98	*
MZ	53.892	46.884	13.8	340.11	95.04	0.279	589	0	1.000	1.000	340	

GROUP 6

	B	D	KL/R	M_U	M_{DL}	B_D	P_U	P_C	δ_b	δ_s	M_C	
	In.	In.		Ft. Kips	Ft. Kips		Kips	Kips			Ft. Kips	
MY	53.892	46.884	12.8	1.14	0.00	0.000	785	0	1.000	1.000	131	*
MZ	53.892	46.884	13.8	73.33	95.04	1.296	785	0	1.000	1.000	145	*

* MINIMUM MOMENT CONTROLS

H. W. LOCHNER, INC.

PROJECT: BONNER BRIDGE - OREGON INLET NORTH CAROLINA JMJ Jun-06
SUBJECT: HIGH LEVEL BENT ANALYSIS WDB Jun-06
HLB 145 MEM. 5 JT. 3

COLUMN LOADS

PMIN

HLB 145 MEMBER 5 JOINT 3

GROUP 1

	P	MY	MZ
DL	383.37	0.00	73.11
LL	55.53	0.00	110.83
GROUP 1	0.00	0.00	0.00
SERVICE	438.90	0.00	183.94
STRENGTH	618.70	0.00	335.17

GROUP 2

	P	MY	MZ
DL	383.37	0.00	73.11
LL	0.00	0.00	0.00
GROUP 2	-39.89	1.55	-337.75
SERVICE	343.48	1.55	-264.64
STRENGTH	446.52	2.02	-344.03

GROUP 3

	P	MY	MZ
DL	383.37	0.00	73.11
LL	55.53	0.00	110.83
GROUP 3	-17.08	0.91	-144.51
SERVICE	421.82	0.91	39.43
STRENGTH	548.37	1.18	51.26

GROUP 4

	P	MY	MZ
DL	383.37	0.00	73.11
LL	55.53	0.00	110.83
GROUP 4	-0.18	0.00	-7.45
SERVICE	438.72	0.00	176.49
STRENGTH	570.34	0.00	229.44

GROUP 5

	P	MY	MZ
DL	383.37	0.00	73.11
LL	0.00	0.00	0.00
GROUP 5	-40.07	1.55	-345.20
SERVICE	343.30	1.55	-272.09
STRENGTH	429.13	1.94	-340.11

GROUP 6

	P	MY	MZ
DL	383.37	0.00	73.11
LL	55.53	0.00	110.83
GROUP 6	-17.26	0.91	-151.96
SERVICE	421.64	0.91	31.98
STRENGTH	527.05	1.14	39.98

SLENDERNESS EFFECTS IN COMPRESSION MEMBERS (AASHTO 8.16.5)

f'c = 3000 psi PHI = 0.70 W_C = 150 PCF

$E_C = W_C^{1.5} * 33 * f'c^{0.5}$ = 3320561 PSI Width of Rect. Col. = B = 53.892 In.

Depth of Rect. Col = D = 46.884 In.

$r_Y = 0.30*D$ = 14.07 In. L_Y = 7.5 Ft. K_Y = 2.0

$r_Z = 0.30*B$ = 16.17 In. L_Z = 15.5 Ft. K_Z = 1.2

I_{YY} = $B*D^3/12$ I_{YY} = 462825 In^4

I_{ZZ} = $D*B^3/12$ I_{ZZ} = 611528 In^5

$K_Y L_Y/r$ = 12.8 < 22 NO SLENDERNESS EFFECT

$K_Z L_Z/r$ = 13.8 < 22 NO SLENDERNESS EFFECT

H. W. LOCHNER, INC.

PROJECT: BONNER BRIDGE - OREGON INLET NORTH CAROLINA JMJ Jun-06
SUBJECT: HIGH LEVEL BENT ANALYSIS WDB Jun-06
HLB 145 MEM. 5 JT. 3

SLENDERNESS EFFECTS IN RECTANGULAR COMPRESSION MEMBERS (AASHTO 8.16.5)

GROUP 1

	B	D	KL/R	M_U	M_{DL}	B_D	P_U	P_C	δ_b	δ_s	M_C	
	In.	In.		Ft. Kips	Ft. Kips		Kips	Kips			Ft. Kips	
MY	53.892	46.884	12.8	0.00	0.00	0.000	619	0	1.000	1.000	103	*
MZ	53.892	46.884	13.8	335.17	95.04	0.284	619	0	1.000	1.000	335	

GROUP 2

	B	D	KL/R	M_U	M_{DL}	B_D	P_U	P_C	δ_b	δ_s	M_C	
	In.	In.		Ft. Kips	Ft. Kips		Kips	Kips			Ft. Kips	
MY	53.892	46.884	12.8	2.02	0.00	0.000	447	0	1.000	1.000	75	*
MZ	53.892	46.884	13.8	344.03	95.04	0.276	447	0	1.000	1.000	344	

GROUP 3

	B	D	KL/R	M_U	M_{DL}	B_D	P_U	P_C	δ_b	δ_s	M_C	
	In.	In.		Ft. Kips	Ft. Kips		Kips	Kips			Ft. Kips	
MY	53.892	46.884	12.8	1.18	0.00	0.000	548	0	1.000	1.000	92	*
MZ	53.892	46.884	13.8	51.26	95.04	1.854	548	0	1.000	1.000	101	*

GROUP 4

	B	D	KL/R	M_U	M_{DL}	B_D	P_U	P_C	δ_b	δ_s	M_C	
	In.	In.		Ft. Kips	Ft. Kips		Kips	Kips			Ft. Kips	
MY	53.892	46.884	12.8	0.00	0.00	0.000	570	0	1.000	1.000	95	*
MZ	53.892	46.884	13.8	229.44	95.04	0.414	570	0	1.000	1.000	229	

GROUP 5

	B	D	KL/R	M_U	M_{DL}	B_D	P_U	P_C	δ_b	δ_s	M_C	
	In.	In.		Ft. Kips	Ft. Kips		Kips	Kips			Ft. Kips	
MY	53.892	46.884	12.8	1.94	0.00	0.000	429	0	1.000	1.000	72	*
MZ	53.892	46.884	13.8	340.11	95.04	0.279	429	0	1.000	1.000	340	

GROUP 6

	B	D	KL/R	M_U	M_{DL}	B_D	P_U	P_C	δ_b	δ_s	M_C	
	In.	In.		Ft. Kips	Ft. Kips		Kips	Kips			Ft. Kips	
MY	53.892	46.884	12.8	1.14	0.00	0.000	527	0	1.000	1.000	88	*
MZ	53.892	46.884	13.8	39.98	95.04	2.378	527	0	1.000	1.000	97	*

* MINIMUM MOMENT CONTROLS

H. W. LOCHNER, INC.

PROJECT: BONNER BRIDGE - OREGON INLET NORTH CAROLINA JMJ Jun-06
SUBJECT: HIGH LEVEL BENT ANALYSIS WDB Jun-06
HLB 145 MEM. 5 JT. 6

COLUMN LOADS

PMAX

HLB 145 MEMBER 5 JOINT 6

GROUP 1

	P	MY	MZ
DL	-558.53	0.00	27.45
LL	-133.99	0.00	16.70
GROUP 1	0.00	0.00	0.00
SERVICE	-692.52	0.00	44.15
STRENGTH	-1016.40	0.00	71.87

GROUP 2

	P	MY	MZ
DL	-558.53	0.00	27.45
LL	0.00	0.00	0.00
GROUP 2	40.04	673.70	-146.29
SERVICE	-518.49	673.70	-118.84
STRENGTH	-674.04	875.81	-154.49

GROUP 3

	P	MY	MZ
DL	-558.53	0.00	27.45
LL	-133.99	0.00	16.70
GROUP 3	17.12	428.36	-63.52
SERVICE	-675.40	428.36	-19.37
STRENGTH	-878.02	556.87	-25.18

GROUP 4

	P	MY	MZ
DL	-558.53	0.00	27.45
LL	-133.99	0.00	16.70
GROUP 4	0.18	0.00	-45.31
SERVICE	-692.34	0.00	-1.16
STRENGTH	-900.04	0.00	-1.51

GROUP 5

	P	MY	MZ
DL	-558.53	0.00	27.45
LL	0.00	0.00	0.00
GROUP 5	40.22	673.70	-191.61
SERVICE	-518.31	673.70	-164.16
STRENGTH	-647.89	842.13	-205.20

GROUP 6

	P	MY	MZ
DL	-558.53	0.00	27.45
LL	-133.99	0.00	16.70
GROUP 6	17.31	428.36	-108.83
SERVICE	-675.21	428.36	-64.68
STRENGTH	-844.01	535.45	-80.85

SLENDERNESS EFFECTS IN COMPRESSION MEMBERS (AASHTO 8.16.5)

f'c = 3000 psi PHI = 0.70 W_C = 150 PCF

$E_C = W_C^{1.5} * 33 * f'c^{0.5}$ = 3320561 PSI Width of Rect. Col. = B = 53.892 In.

Depth of Rect. Col = D = 46.884 In.

$r_Y = 0.30*D$ = 14.07 In. L_Y = 7.5 Ft. K_Y = 2.0

$r_Z = 0.30*B$ = 16.17 In. L_Z = 15.5 Ft. K_Z = 1.2

I_{YY} = $B*D^3/12$ I_{YY} = 462825 In^4

I_{ZZ} = $D*B^3/12$ I_{ZZ} = 611528 In^5

$K_Y L_Y/r$ = 12.8 < 22 NO SLENDERNESS EFFECT

$K_Z L_Z/r$ = 13.8 < 22 NO SLENDERNESS EFFECT

H. W. LOCHNER, INC.

PROJECT: BONNER BRIDGE - OREGON INLET NORTH CAROLINA JMJ Jun-06
SUBJECT: HIGH LEVEL BENT ANALYSIS WDB Jun-06
HLB 145 MEM. 5 JT. 6

SLENDERNESS EFFECTS IN RECTANGULAR COMPRESSION MEMBERS (AASHTO 8.16.5)

GROUP 1

	B	D	KL/R	M_U	M_{DL}	B_D	P_U	P_C	δ_b	δ_s	M_C	
	In.	In.		Ft. Kips	Ft. Kips		Kips	Kips			Ft. Kips	
MY	53.892	46.884	12.8	0.00	0.00	0.000	1016	0	1.000	1.000	170	*
MZ	53.892	46.884	13.8	71.87	35.69	0.497	1016	0	1.000	1.000	188	*

GROUP 2

	B	D	KL/R	M_U	M_{DL}	B_D	P_U	P_C	δ_b	δ_s	M_C
	In.	In.		Ft. Kips	Ft. Kips		Kips	Kips			Ft. Kips
MY	53.892	46.884	12.8	875.81	0.00	0.000	674	0	1.000	1.000	876
MZ	53.892	46.884	13.8	154.49	35.69	0.231	674	0	1.000	1.000	154

GROUP 3

	B	D	KL/R	M_U	M_{DL}	B_D	P_U	P_C	δ_b	δ_s	M_C	
	In.	In.		Ft. Kips	Ft. Kips		Kips	Kips			Ft. Kips	
MY	53.892	46.884	12.8	556.87	0.00	0.000	878	0	1.000	1.000	557	
MZ	53.892	46.884	13.8	25.18	35.69	1.417	878	0	1.000	1.000	162	*

GROUP 4

	B	D	KL/R	M_U	M_{DL}	B_D	P_U	P_C	δ_b	δ_s	M_C	
	In.	In.		Ft. Kips	Ft. Kips		Kips	Kips			Ft. Kips	
MY	53.892	46.884	12.8	0.00	0.00	0.000	900	0	1.000	1.000	150	*
MZ	53.892	46.884	13.8	1.51	35.69	23.664	900	0	1.000	1.000	166	*

GROUP 5

	B	D	KL/R	M_U	M_{DL}	B_D	P_U	P_C	δ_b	δ_s	M_C
	In.	In.		Ft. Kips	Ft. Kips		Kips	Kips			Ft. Kips
MY	53.892	46.884	12.8	842.13	0.00	0.000	648	0	1.000	1.000	842
MZ	53.892	46.884	13.8	205.20	35.69	0.174	648	0	1.000	1.000	205

GROUP 6

	B	D	KL/R	M_U	M_{DL}	B_D	P_U	P_C	δ_b	δ_s	M_C	
	In.	In.		Ft. Kips	Ft. Kips		Kips	Kips			Ft. Kips	
MY	53.892	46.884	12.8	535.45	0.00	0.000	844	0	1.000	1.000	535	
MZ	53.892	46.884	13.8	80.85	35.69	0.441	844	0	1.000	1.000	156	*

* MINIMUM MOMENT CONTROLS

H. W. LOCHNER, INC.

PROJECT: BONNER BRIDGE - OREGON INLET NORTH CAROLINA JMJ Jun-06
SUBJECT: HIGH LEVEL BENT ANALYSIS WDB Jun-06
HLB 145 MEM. 5 JT. 6

COLUMN LOADS

PMIN

HLB 145 MEMBER 5 JOINT 6

GROUP 1

	P	MY	MZ
DL	-418.90	0.00	27.45
LL	-55.53	0.00	14.87
GROUP 1	0.00	0.00	0.00
SERVICE	-474.43	0.00	42.32
STRENGTH	-664.88	0.00	67.90

GROUP 2

	P	MY	MZ
DL	-418.90	0.00	27.45
LL	0.00	0.00	0.00
GROUP 2	40.04	673.70	-146.29
SERVICE	-378.86	673.70	-118.84
STRENGTH	-492.51	875.81	-154.49

GROUP 3

	P	MY	MZ
DL	-418.90	0.00	27.45
LL	-55.53	0.00	14.87
GROUP 3	17.12	428.36	-63.52
SERVICE	-457.31	428.36	-21.20
STRENGTH	-594.50	556.87	-27.56

GROUP 4

	P	MY	MZ
DL	-418.90	0.00	27.45
LL	-55.53	0.00	14.87
GROUP 4	0.18	0.00	-45.31
SERVICE	-474.25	0.00	-2.99
STRENGTH	-616.52	0.00	-3.89

GROUP 5

	P	MY	MZ
DL	-418.90	0.00	27.45
LL	0.00	0.00	0.00
GROUP 5	40.22	673.70	-191.61
SERVICE	-378.68	673.70	-164.16
STRENGTH	-473.35	842.13	-205.20

GROUP 6

	P	MY	MZ
DL	-418.90	0.00	27.45
LL	-55.53	0.00	14.87
GROUP 6	17.31	428.36	-108.83
SERVICE	-457.12	428.36	-66.51
STRENGTH	-571.40	535.45	-83.14

SLENDERNESS EFFECTS IN COMPRESSION MEMBERS (AASHTO 8.16.5)

f'c = 3000 psi PHI = 0.70 W_C = 150 PCF

$E_C = W_C^{1.5} * 33 * f'c^{0.5}$ = 3320561 PSI Width of Rect. Col. = B = 53.892 In.

Depth of Rect. Col = D = 46.884 In.

$r_Y = 0.30*D$ = 14.07 In. L_Y = 7.5 Ft. K_Y = 2.0

$r_Z = 0.30*B$ = 16.17 In. L_Z = 15.5 Ft. K_Z = 1.2

I_{YY} = $B*D^3/12$ I_{YY} = 462825 In^4

I_{ZZ} = $D*B^3/12$ I_{ZZ} = 611528 In^5

$K_Y L_Y/r$ = 12.8 < 22 NO SLENDERNESS EFFECT

$K_Z L_Z/r$ = 13.8 < 22 NO SLENDERNESS EFFECT

H. W. LOCHNER, INC.

PROJECT: BONNER BRIDGE - OREGON INLET NORTH CAROLINA JMJ Jun-06
SUBJECT: HIGH LEVEL BENT ANALYSIS WDB Jun-06
HLB 145 MEM. 5 JT. 6

SLENDERNESS EFFECTS IN RECTANGULAR COMPRESSION MEMBERS (AASHTO 8.16.5)

GROUP 1

	B	D	KL/R	M_U	M_{DL}	B_D	P_U	P_C	δ_b	δ_s	M_C	
	In.	In.		Ft. Kips	Ft. Kips		Kips	Kips			Ft. Kips	
MY	53.892	46.884	12.8	0.00	0.00	0.000	665	0	1.000	1.000	111	*
MZ	53.892	46.884	13.8	67.90	35.69	0.526	665	0	1.000	1.000	123	*

GROUP 2

	B	D	KL/R	M_U	M_{DL}	B_D	P_U	P_C	δ_b	δ_s	M_C
	In.	In.		Ft. Kips	Ft. Kips		Kips	Kips			Ft. Kips
MY	53.892	46.884	12.8	875.81	0.00	0.000	493	0	1.000	1.000	876
MZ	53.892	46.884	13.8	154.49	35.69	0.231	493	0	1.000	1.000	154

GROUP 3

	B	D	KL/R	M_U	M_{DL}	B_D	P_U	P_C	δ_b	δ_s	M_C	
	In.	In.		Ft. Kips	Ft. Kips		Kips	Kips			Ft. Kips	
MY	53.892	46.884	12.8	556.87	0.00	0.000	594	0	1.000	1.000	557	
MZ	53.892	46.884	13.8	27.56	35.69	1.295	594	0	1.000	1.000	110	*

GROUP 4

	B	D	KL/R	M_U	M_{DL}	B_D	P_U	P_C	δ_b	δ_s	M_C	
	In.	In.		Ft. Kips	Ft. Kips		Kips	Kips			Ft. Kips	
MY	53.892	46.884	12.8	0.00	0.00	0.000	617	0	1.000	1.000	103	*
MZ	53.892	46.884	13.8	3.89	35.69	9.181	617	0	1.000	1.000	114	*

GROUP 5

	B	D	KL/R	M_U	M_{DL}	B_D	P_U	P_C	δ_b	δ_s	M_C
	In.	In.		Ft. Kips	Ft. Kips		Kips	Kips			Ft. Kips
MY	53.892	46.884	12.8	842.13	0.00	0.000	473	0	1.000	1.000	842
MZ	53.892	46.884	13.8	205.20	35.69	0.174	473	0	1.000	1.000	205

GROUP 6

	B	D	KL/R	M_U	M_{DL}	B_D	P_U	P_C	δ_b	δ_s	M_C	
	In.	In.		Ft. Kips	Ft. Kips		Kips	Kips			Ft. Kips	
MY	53.892	46.884	12.8	535.45	0.00	0.000	571	0	1.000	1.000	535	
MZ	53.892	46.884	13.8	83.14	35.69	0.429	571	0	1.000	1.000	106	*

* MINIMUM MOMENT CONTROLS

SMJ 7/06
WDB 7/06

```
OOOOOOO    OOOOO    OOOOO    OOOOO    OOOOO   OO
OO    OO   OO  OO   OO  OO   OO  OO   OO  OO   OO
OO    OO   OO  OO   OO  OO   OO  OO   OO  OO   OO
OO    OO   OO       OO  OO   OO       OO  OO   OO
OO    OO   OO       OOOOOOO  OO       OO  OO   OO
OOOOOOO    OO  OO   OO  OO   OO  OO   OO  OO   OO
OO         OO  OO   OO  OO   OO  OO   OO  OO   OO
OO          OOOOO   OO  OO    OOOOO    OOOOO   OOOOO  (TM)
```

==========
Computer program for the Strength Design of Reinforced Concrete Sections
==========

Licensee stated above acknowledges that Portland Cement Association (PCA) is not and cannot be responsible for either the accuracy or adequacy of the material supplied as input for processing by the PCACOL(tm) computer program. Furthermore, PCA neither makes any warranty expressed nor implied with respect to the correctness of the output prepared by the PCACOL(tm) program. Although PCA has endeavored to produce PCACOL(tm) error free, the program is not and can't be certified infallible. The final and only responsibility for analysis, design and engineering documents is the licensees. Accordingly, PCA disclaims all responsibility in contract, negligence or other tort for any analysis, design or engineering documents prepared in connection with the use of the PCACOL(tm) program.

BASED ON PLANS.

General Information:
==========

File Name: S:\DGN-ST\NORTHC~1\BONNER~1\ANALYSIS\PIERS\HLB144~1\PCACOL~1\NEWFOL~1\M5PLAN.COL
Project: BONNER BRIDGE - OREGON INLET
Column: HLB #145 Engineer: JMJ
Code: ACI 318-95 Units: English

Run Option: Investigation Slenderness: Not considered
Run Axis: Biaxial Column Type: Structural

Material Properties:
==========

f'c = 3 ksi fy = 40 ksi
Ec = 3122.02 ksi Es = 29000 ksi
fc = 2.55 ksi Rupture strain = Infinity
Ultimate strain = 0.003 in/in
Beta1 = 0.85

Section:
==========

Rectangular: Width = 53.9 in Depth = 46.9 in

Gross section area, Ag = 2527.91 in^2
Ix = 463368 in^4 Iy = 612009 in^4
Xo = 0 in Yo = 0 in

Reinforcement:
==========

Rebar Database: User-defined

Size	Diam (in)	Area (in^2)	Size	Diam (in)	Area (in^2)	Size	Diam (in)	Area (in^2)
# 1	0.00	0.00	# 3	0.38	0.11	# 4	0.50	0.20
# 5	0.63	0.31	# 6	0.75	0.44	# 7	0.88	0.60
# 8	1.00	0.79	# 9	1.13	1.00	# 10	1.27	1.27
# 11	1.41	1.56	# 14	1.69	2.25	# 18	2.26	4.00

Confinement: Tied; #1 ties with #9 bars, #1 with larger bars.
phi(a) = 0.8, phi(b) = 0.9, phi(c) = 0.7

Layout: Rectangular
Pattern: Equal Bar Spacing (Cover to longitudinal reinforcement)
Total steel area, As = 49.92 in^2 at 1.97%
32 #11 Cover = 5 in

Factored Loads and Moments with Corresponding Capacities: (see user's manual for notation)
==========

No.	Pu kip	Mux k-ft	Muy k-ft	fMnx k-ft	fMny k-ft	fMn/Mu
1	955.0	160.0	176.0	2165.1	2381.8	13.532
2	613.0	102.0	344.0	967.2	3255.7	9.466
3	816.0	137.0	151.0	2110.8	2321.8	15.390
4	838.0	140.0	155.0	2116.1	2336.8	15.094
5	589.0	98.0	340.0	944.7	3272.0	9.625
6	785.0	131.0	145.0	2092.9	2310.2	15.952
7	619.0	103.0	335.0	999.5	3237.9	9.669
8	447.0	75.0	344.0	735.2	3351.8	9.746
9	548.0	92.0	101.0	2144.4	2361.3	23.347
10	570.0	95.0	229.0	1279.1	3096.0	13.512
11	429.0	72.0	340.0	710.6	3355.3	9.868
12	527.0	88.0	97.0	2146.5	2364.3	24.382
13	1016.0	170.0	188.0	2182.1	2411.5	12.831
14	674.0	876.0	154.0	3015.4	531.1	3.442
15	878.0	557.0	162.0	3005.0	870.5	5.393

16	900.0	150.0	166.0	2141.0	2364.4	14.257
17	648.0	842.0	205.0	2972.6	720.0	3.529
18	844.0	535.0	156.0	2977.5	871.9	5.567
19	665.0	111.0	123.0	2110.4	2343.3	19.034
20	493.0	876.0	154.0	3008.0	533.4	3.435
21	594.0	557.0	110.0	3005.3	592.3	5.395
22	617.0	103.0	114.0	2126.8	2352.2	20.640
23	473.0	842.0	205.0	2963.9	718.9	3.519
24	571.0	535.0	106.0	3002.5	600.1	5.614

*** Program completed as requested! ***

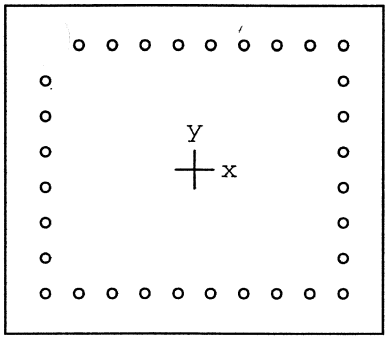

53.9 x 46.9 in

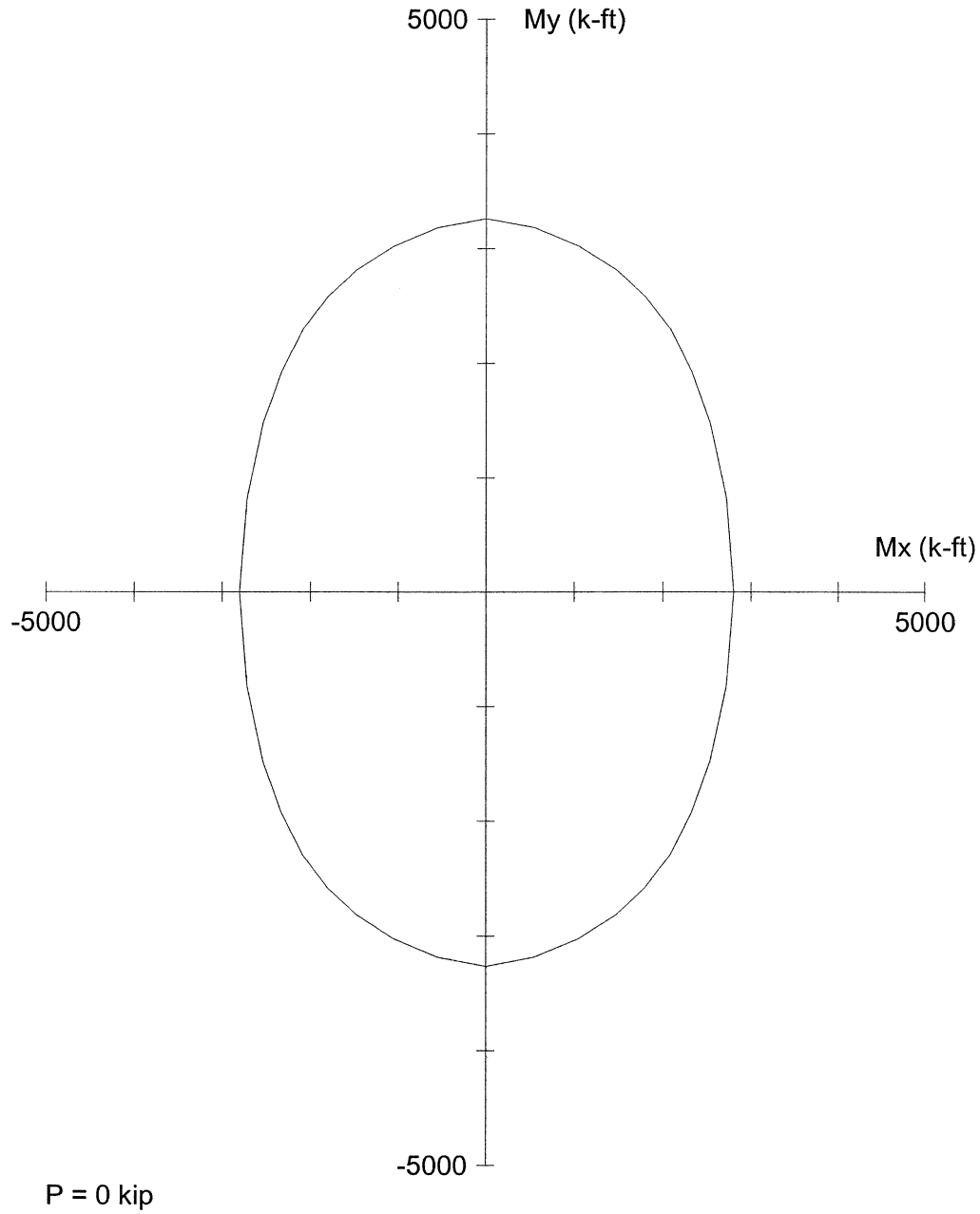

Code: ACI 318-95

Units: English

Run axis: Biaxial

Run option: Investigation

Slenderness: Not considered

mn type: Structural

Bars: User-defined

Date: 07/20/06

Time: 15:58:44

PCACOL V3.00 (PCA 1999) - Licensed to: Licensee name not yet specified.

File: S:\DGN-ST\NORTHC~1\BONNER~1\ANALYSIS\PIERS\HLB144~1\PCACOL~1\NEWFOL~1\M5PLAN.COL

Project: BONNER BRIDGE - OREGON INLET

Column: OL		Engineer: JMJ	
f'c = 3 ksi	fy = 40 ksi	Ag = 2527.91 in^2	32 #11 bars
Ec = 3122 ksi	Es = 29000 ksi	As = 49.92 in^2	Rho = 1.97%
fc = 2.55 ksi	e_rup = Infinity	Xo = 0.00 in	Ix = 463368 in^4
u = 0.003 in/in		Yo = 0.00 in	Iy = 612009 in^4
Beta1 = 0.85		Clear spacing = 3.31 in	Clear cover = 5.00 in
Confinement: Tied	phi(a) = 0.8, phi(b) = 0.9, phi(c) = 0.7		

JMJ 7/06
WDB 7/06

```
OOOOOOO    OOOOO    OOOOO    OOOOO    OOOOO   OO
OO    OO   OO  OO   OO  OO   OO  OO   OO  OO   OO
OO    OO   OO  OO   OO  OO   OO  OO   OO  OO   OO
OO    OO   OO       OO  OO   OO       OO  OO   OO
OO    OO   OO       OOOOOOO  OO       OO  OO   OO
OOOOOOO    OO  OO   OO  OO   OO  OO   OO  OO   OO
OO         OO  OO   OO  OO   OO  OO   OO  OO   OO
OO          OOOOO   OO  OO    OOOOO    OOOOO   OOOOO  (TM)
```

==========
Computer program for the Strength Design of Reinforced Concrete Sections
==========

Licensee stated above acknowledges that Portland Cement Association (PCA) is not and cannot be responsible for either the accuracy or adequacy of the material supplied as input for processing by the PCACOL(tm) computer program. Furthermore, PCA neither makes any warranty expressed nor implied with respect to the correctness of the output prepared by the PCACOL(tm) program. Although PCA has endeavored to produce PCACOL(tm) error free, the program is not and can't be certified infallible. The final and only responsibility for analysis, design and engineering documents is the licensees. Accordingly, PCA disclaims all responsibility in contract, negligence or other tort for any analysis, design or engineering documents prepared in connection with the use of the PCACOL(tm) program.

50% COVER LOSS
f'_c = 4400 PSI

General Information:
==========

File Name: S:\DGN-ST\NORTHC~1\BONNER~1\ANALYSIS\PIERS\HLB144~1\PCACOL~1\M5ACT.COL
Project: BONNER BRIDGE - OREGON INLET
Column: OL — Engineer: JMJ
Code: ACI 318-95 — Units: English

Run Option: Investigation — Slenderness: Not considered
Run Axis: Biaxial — Column Type: Structural

Material Properties:
==========

f'c = 4.4 ksi — fy = 40 ksi
Ec = 3780.96 ksi — Es = 29000 ksi
fc = 3.74 ksi — Rupture strain = Infinity
Ultimate strain = 0.003 in/in
Beta1 = 0.83

Section:
==========

Rectangular: Width = 48.9 in — Depth = 41.9 in

Gross section area, Ag = 2048.91 in^2
Ix = 299757 in^4 — Iy = 408281 in^4
Xo = 0 in — Yo = 0 in

Reinforcement:
==========

Rebar Database: User-defined

Size	Diam (in)	Area (in^2)	Size	Diam (in)	Area (in^2)	Size	Diam (in)	Area (in^2)
# 1	0.00	0.00	# 3	0.38	0.11	# 4	0.50	0.20
# 5	0.63	0.31	# 6	0.75	0.44	# 7	0.88	0.60
# 8	1.00	0.79	# 9	1.13	1.00	# 10	1.27	1.27
# 11	1.41	1.56	# 14	1.69	2.25	# 18	2.26	4.00

Confinement: Tied; #1 ties with #9 bars, #1 with larger bars.
phi(a) = 0.8, phi(b) = 0.9, phi(c) = 0.7

Layout: Rectangular
Pattern: Equal Bar Spacing (Cover to longitudinal reinforcement)
Total steel area, As = 49.92 in^2 at 2.44%
32 #11 Cover = 2.5 in

Factored Loads and Moments with Corresponding Capacities: (see user's manual for notation)
==========

No.	Pu kip	Mux k-ft	Muy k-ft	fMnx k-ft	fMny k-ft	fMn/Mu
1	955.0	160.0	176.0	2162.9	2371.0	13.493
2	613.0	102.0	344.0	975.9	3294.8	9.577
3	816.0	137.0	151.0	2156.5	2374.9	15.734
4	838.0	140.0	155.0	2146.2	2376.6	15.332
5	589.0	98.0	340.0	949.6	3300.6	9.706
6	785.0	131.0	145.0	2160.1	2383.3	16.460
7	619.0	103.0	335.0	1006.8	3282.2	9.796
8	447.0	75.0	344.0	728.3	3335.7	9.697
9	548.0	92.0	101.0	2176.8	2382.0	23.619
10	570.0	95.0	229.0	1297.2	3122.5	13.638
11	429.0	72.0	340.0	701.0	3337.0	9.811
12	527.0	88.0	97.0	2168.6	2388.3	24.631
13	1016.0	170.0	188.0	2182.7	2406.5	12.818
14	674.0	876.0	154.0	3034.4	538.7	3.465
15	878.0	557.0	162.0	2961.8	856.6	5.315

16	900.0	150.0	166.0	2130.6	2357.1	14.201
17	648.0	842.0	205.0	2988.6	727.6	3.549
18	844.0	535.0	156.0	2964.7	862.2	5.540
19	665.0	111.0	123.0	2168.1	2400.1	19.522
20	493.0	876.0	154.0	2977.7	520.3	3.399
21	594.0	557.0	110.0	3004.5	588.2	5.392
22	617.0	103.0	114.0	2167.5	2401.3	21.055
23	473.0	842.0	205.0	2930.6	713.2	3.480
24	571.0	535.0	106.0	2995.6	593.6	5.599

*** Program completed as requested! ***

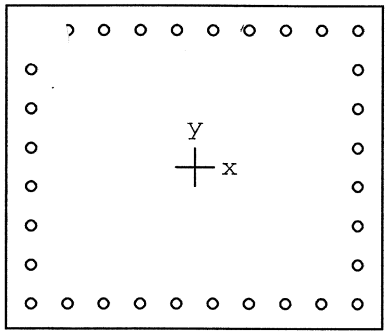

48.9 x 41.9 in

Code: ACI 318-95

Units: English

Run axis: Biaxial

Run option: Investigation

Slenderness: Not considered

mn type: Structural

Bars: User-defined

Date: 07/25/06

Time: 13:25:13

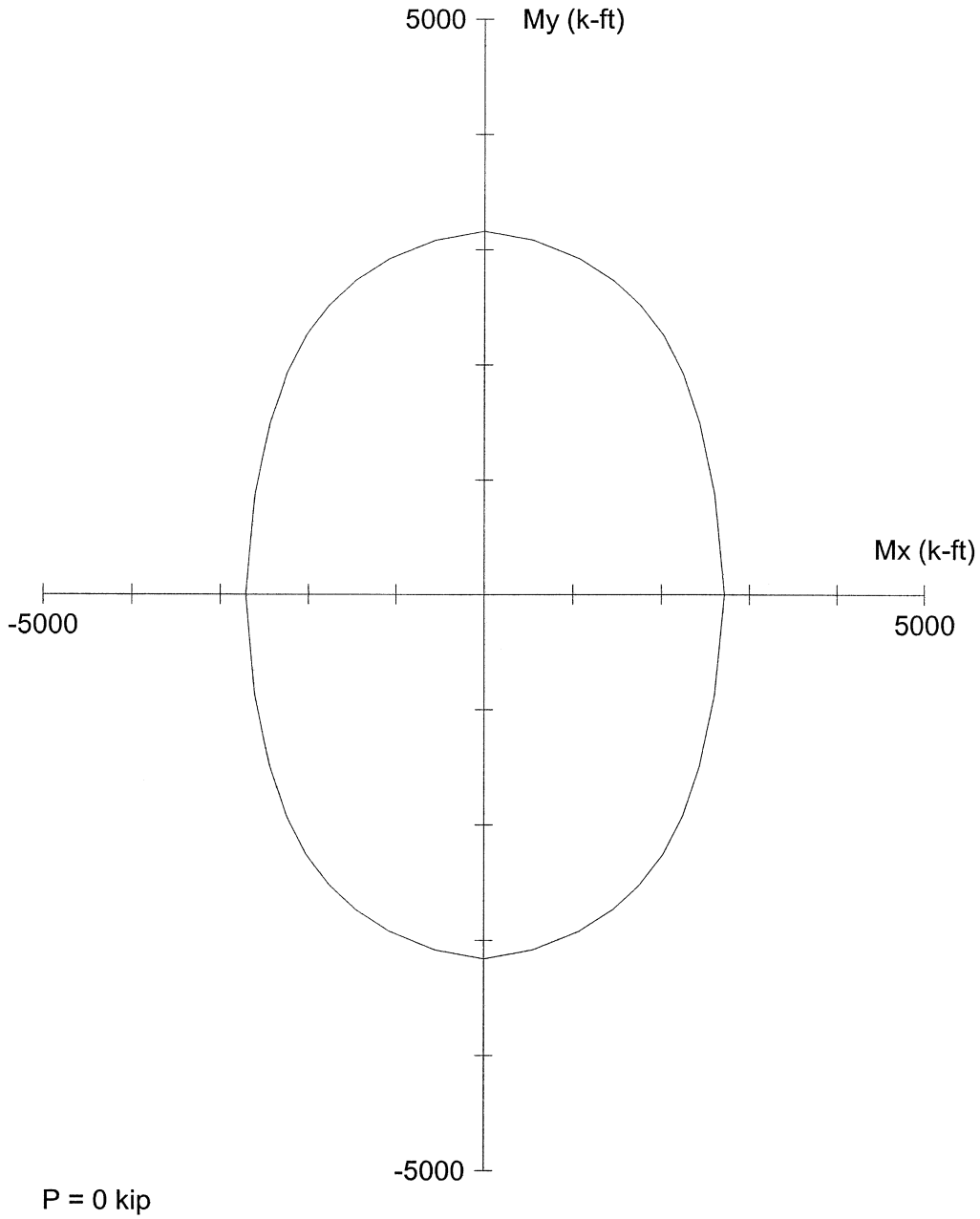

PCACOL V3.00 (PCA 1999) - Licensed to: Licensee name not yet specified.

File: S:\DGN-ST\NORTHC~1\BONNER~1\ANALYSIS\PIERS\HLB144~1\PCACOL~1\M5ACT.COL

Project: BONNER BRIDGE - OREGON INLET

Column: OL		Engineer: JMJ	
f'c = 4.4 ksi	fy = 40 ksi	Ag = 2048.91 in^2	32 #11 bars
Ec = 3781 ksi	Es = 29000 ksi	As = 49.92 in^2	Rho = 2.44%
fc = 3.74 ksi	e_rup = Infinity	Xo = 0.00 in	Ix = 299757 in^4
u = 0.003 in/in		Yo = 0.00 in	Iy = 408281 in^4
Beta1 = 0.83		Clear spacing = 3.31 in	Clear cover = 2.50 in
Confinement: Tied	phi(a) = 0.8, phi(b) = 0.9, phi(c) = 0.7		

H. W. LOCHNER, INC.

PROJECT: BONNER BRIDGE - OREGON INLET NORTH CAROLINA JMJ Jun-06
SUBJECT: HIGH LEVEL BENT ANALYSIS WDB Jun-06
HLB 145 MEM. 7 JT. 5

COLUMN LOADS

PMAX

HLB 145 MEMBER 7 JOINT 5

GROUP 1

	P	MY	MZ
DL	581.08	0.00	31.60
LL	130.96	0.00	-40.36
GROUP 1	0.00	0.00	0.00
SERVICE	712.04	0.00	-8.76
STRENGTH	1039.15	0.00	-46.37

GROUP 2

	P	MY	MZ
DL	581.08	0.00	31.60
LL	0.00	0.00	0.00
GROUP 2	78.49	673.05	238.09
SERVICE	659.57	673.05	269.69
STRENGTH	857.44	874.97	350.60

GROUP 3

	P	MY	MZ
DL	581.08	0.00	31.60
LL	130.96	0.00	-40.36
GROUP 3	33.33	427.91	98.48
SERVICE	745.37	427.91	89.72
STRENGTH	968.98	556.28	116.64

GROUP 4

	P	MY	MZ
DL	581.08	0.00	31.60
LL	130.96	0.00	-40.36
GROUP 4	1.22	0.00	62.22
SERVICE	713.26	0.00	53.46
STRENGTH	927.24	0.00	69.50

GROUP 5

	P	MY	MZ
DL	581.08	0.00	31.60
LL	0.00	0.00	0.00
GROUP 5	79.71	673.05	300.31
SERVICE	660.79	673.05	331.91
STRENGTH	825.99	841.31	414.89

GROUP 6

	P	MY	MZ
DL	581.08	0.00	31.60
LL	130.96	0.00	-40.36
GROUP 6	34.55	427.94	160.70
SERVICE	746.59	427.94	151.94
STRENGTH	933.24	534.93	189.93

SLENDERNESS EFFECTS IN COMPRESSION MEMBERS (AASHTO 8.16.5)

f'c = 3000 psi PHI = 0.70 W_C = 150 PCF

$E_C = W_C$^1.5 *33*f'c^0.5 = 3320561 PSI Width of Rect. Col. = B = 53.892 In.

Depth of Rect. Col = D = 60.564 In.

r_Y = 0.30*D = 18.17 In. L_Y = 8.5 Ft. K_Y = 2.0

r_Z = 0.30*B = 16.17 In. L_Z = 18.5 Ft. K_Z = 1.2

I_{YY} = B*D^3/12 I_{YY} = 997670 In^4

I_{ZZ} = D*B^3/12 I_{ZZ} = 789962 In^5

$K_Y L_Y/r$ = 11.2 < 22 NO SLENDERNESS EFFECT

$K_Z L_Z/r$ = 16.5 < 22 NO SLENDERNESS EFFECT

H. W. LOCHNER, INC.

PROJECT: BONNER BRIDGE - OREGON INLET NORTH CAROLINA JMJ Jun-06
SUBJECT: HIGH LEVEL BENT ANALYSIS WDB Jun-06
HLB 145 MEM. 7 JT. 5

SLENDERNESS EFFECTS IN RECTANGULAR COMPRESSION MEMBERS (AASHTO 8.16.5)

GROUP 1

	B	D	KL/R	M_U	M_{DL}	B_D	P_U	P_C	δ_b	δ_s	M_C	
	In.	In.		Ft. Kips	Ft. Kips		Kips	Kips			Ft. Kips	
MY	53.892	60.564	11.2	0.00	0.00	0.000	1039	0	1.000	1.000	209	*
MZ	53.892	60.564	16.5	46.37	41.08	0.886	1039	0	1.000	1.000	192	*

GROUP 2

	B	D	KL/R	M_U	M_{DL}	B_D	P_U	P_C	δ_b	δ_s	M_C
	In.	In.		Ft. Kips	Ft. Kips		Kips	Kips			Ft. Kips
MY	53.892	60.564	11.2	874.97	0.00	0.000	857	0	1.000	1.000	875
MZ	53.892	60.564	16.5	350.60	41.08	0.117	857	0	1.000	1.000	351

GROUP 3

	B	D	KL/R	M_U	M_{DL}	B_D	P_U	P_C	δ_b	δ_s	M_C	
	In.	In.		Ft. Kips	Ft. Kips		Kips	Kips			Ft. Kips	
MY	53.892	60.564	11.2	556.28	0.00	0.000	969	0	1.000	1.000	556	
MZ	53.892	60.564	16.5	116.64	41.08	0.352	969	0	1.000	1.000	179	*

GROUP 4

	B	D	KL/R	M_U	M_{DL}	B_D	P_U	P_C	δ_b	δ_s	M_C	
	In.	In.		Ft. Kips	Ft. Kips		Kips	Kips			Ft. Kips	
MY	53.892	60.564	11.2	0.00	0.00	0.000	927	0	1.000	1.000	187	*
MZ	53.892	60.564	16.5	69.50	41.08	0.591	927	0	1.000	1.000	171	*

GROUP 5

	B	D	KL/R	M_U	M_{DL}	B_D	P_U	P_C	δ_b	δ_s	M_C
	In.	In.		Ft. Kips	Ft. Kips		Kips	Kips			Ft. Kips
MY	53.892	60.564	11.2	841.31	0.00	0.000	826	0	1.000	1.000	841
MZ	53.892	60.564	16.5	414.89	41.08	0.099	826	0	1.000	1.000	415

GROUP 6

	B	D	KL/R	M_U	M_{DL}	B_D	P_U	P_C	δ_b	δ_s	M_C
	In.	In.		Ft. Kips	Ft. Kips		Kips	Kips			Ft. Kips
MY	53.892	60.564	11.2	534.93	0.00	0.000	933	0	1.000	1.000	535
MZ	53.892	60.564	16.5	189.93	41.08	0.216	933	0	1.000	1.000	190

* MINIMUM MOMENT CONTROLS

H. W. LOCHNER, INC.

PROJECT: BONNER BRIDGE - OREGON INLET NORTH CAROLINA JMJ Jun-06
SUBJECT: HIGH LEVEL BENT ANALYSIS WDB Jun-06
HLB 145 MEM. 7 JT. 5

COLUMN LOADS

PMIN

HLB 145 MEMBER 7 JOINT 5

	GROUP 1				GROUP 2		
	P	MY	MZ		P	MY	MZ
DL	435.81	0.00	31.60	DL	435.81	0.00	31.60
LL	57.94	0.00	15.77	LL	0.00	0.00	0.00
GROUP 1	0.00	0.00	0.00	GROUP 2	78.49	673.05	238.09
SERVICE	493.75	0.00	47.37	SERVICE	514.30	673.05	269.69
STRENGTH	692.09	0.00	75.25	STRENGTH	668.59	874.97	350.60

	GROUP 3				GROUP 4		
	P	MY	MZ		P	MY	MZ
DL	435.81	0.00	31.60	DL	435.81	0.00	31.60
LL	57.94	0.00	15.77	LL	57.94	0.00	15.77
GROUP 3	33.33	427.91	98.48	GROUP 4	1.22	0.00	62.22
SERVICE	527.08	427.91	145.85	SERVICE	494.97	0.00	109.59
STRENGTH	685.20	556.28	189.61	STRENGTH	643.46	0.00	142.47

	GROUP 5				GROUP 6		
	P	MY	MZ		P	MY	MZ
DL	435.81	0.00	31.60	DL	435.81	0.00	31.60
LL	0.00	0.00	0.00	LL	57.94	0.00	15.77
GROUP 5	79.71	673.05	300.31	GROUP 6	34.55	427.94	160.70
SERVICE	515.52	673.05	331.91	SERVICE	528.30	427.94	208.07
STRENGTH	644.40	841.31	414.89	STRENGTH	660.38	534.93	260.09

SLENDERNESS EFFECTS IN COMPRESSION MEMBERS (AASHTO 8.16.5)

f'c = 3000 psi PHI = 0.70 W_C = 150 PCF

$E_C = W_C^{1.5} * 33 * f'c^{0.5}$ = 3320561 PSI Width of Rect. Col. = B = 53.892 In.

Depth of Rect. Col = D = 60.564 In.

$r_Y = 0.30*D$ = 18.17 In. L_Y = 8.5 Ft. K_Y = 2.0

$r_Z = 0.30*B$ = 16.17 In. L_Z = 18.5 Ft. K_Z = 1.2

I_{YY} = $B*D^3/12$ I_{YY} = 997670 In^4

I_{ZZ} = $D*B^3/12$ I_{ZZ} = 789962 In^5

$K_Y L_Y/r$ = 11.2 < 22 NO SLENDERNESS EFFECT

$K_Z L_Z/r$ = 16.5 < 22 NO SLENDERNESS EFFECT

H. W. LOCHNER, INC.

PROJECT: BONNER BRIDGE - OREGON INLET NORTH CAROLINA JMJ Jun-06
SUBJECT: HIGH LEVEL BENT ANALYSIS WDB Jun-06
HLB 145 MEM. 7 JT. 5

SLENDERNESS EFFECTS IN RECTANGULAR COMPRESSION MEMBERS (AASHTO 8.16.5)

GROUP 1

	B	D	KL/R	M_U	M_{DL}	B_D	P_U	P_C	δ_b	δ_s	M_C	
	In.	In.		Ft. Kips	Ft. Kips		Kips	Kips			Ft. Kips	
MY	53.892	60.564	11.2	0.00	0.00	0.000	692	0	1.000	1.000	139	*
MZ	53.892	60.564	16.5	75.25	41.08	0.546	692	0	1.000	1.000	128	*

GROUP 2

	B	D	KL/R	M_U	M_{DL}	B_D	P_U	P_C	δ_b	δ_s	M_C
	In.	In.		Ft. Kips	Ft. Kips		Kips	Kips			Ft. Kips
MY	53.892	60.564	11.2	874.97	0.00	0.000	669	0	1.000	1.000	875
MZ	53.892	60.564	16.5	350.60	41.08	0.117	669	0	1.000	1.000	351

GROUP 3

	B	D	KL/R	M_U	M_{DL}	B_D	P_U	P_C	δ_b	δ_s	M_C
	In.	In.		Ft. Kips	Ft. Kips		Kips	Kips			Ft. Kips
MY	53.892	60.564	11.2	556.28	0.00	0.000	685	0	1.000	1.000	556
MZ	53.892	60.564	16.5	189.61	41.08	0.217	685	0	1.000	1.000	190

GROUP 4

	B	D	KL/R	M_U	M_{DL}	B_D	P_U	P_C	δ_b	δ_s	M_C	
	In.	In.		Ft. Kips	Ft. Kips		Kips	Kips			Ft. Kips	
MY	53.892	60.564	11.2	0.00	0.00	0.000	643	0	1.000	1.000	130	*
MZ	53.892	60.564	16.5	142.47	41.08	0.288	643	0	1.000	1.000	142	

GROUP 5

	B	D	KL/R	M_U	M_{DL}	B_D	P_U	P_C	δ_b	δ_s	M_C
	In.	In.		Ft. Kips	Ft. Kips		Kips	Kips			Ft. Kips
MY	53.892	60.564	11.2	841.31	0.00	0.000	644	0	1.000	1.000	841
MZ	53.892	60.564	16.5	414.89	41.08	0.099	644	0	1.000	1.000	415

GROUP 6

	B	D	KL/R	M_U	M_{DL}	B_D	P_U	P_C	δ_b	δ_s	M_C
	In.	In.		Ft. Kips	Ft. Kips		Kips	Kips			Ft. Kips
MY	53.892	60.564	11.2	534.93	0.00	0.000	660	0	1.000	1.000	535
MZ	53.892	60.564	16.5	260.09	41.08	0.158	660	0	1.000	1.000	260

* MINIMUM MOMENT CONTROLS

H. W. LOCHNER, INC.

PROJECT: BONNER BRIDGE - OREGON INLET NORTH CAROLINA JMJ Jun-06
SUBJECT: HIGH LEVEL BENT ANALYSIS WDB Jun-06
HLB 145 MEM. 7 JT. 7

COLUMN LOADS

PMAX

HLB 145 MEMBER 7 JOINT 7

GROUP 1

	P	MY	MZ
DL	643.97	0.00	29.60
LL	-130.96	0.00	-16.23
GROUP 1	0.00	0.00	0.00
SERVICE	513.01	0.00	13.37
STRENGTH	553.41	0.00	3.31

GROUP 2

	P	MY	MZ
DL	643.97	0.00	29.60
LL	0.00	0.00	0.00
GROUP 2	-78.69	-1500.82	266.83
SERVICE	565.28	-1500.82	296.43
STRENGTH	734.86	-1951.07	385.36

GROUP 3

	P	MY	MZ
DL	643.97	0.00	29.60
LL	-130.96	0.00	-16.23
GROUP 3	-33.39	-909.22	112.19
SERVICE	479.62	-909.22	125.56
STRENGTH	623.51	-1181.99	163.23

GROUP 4

	P	MY	MZ
DL	643.97	0.00	29.60
LL	-130.96	0.00	-16.23
GROUP 4	-1.22	0.00	300.93
SERVICE	511.79	0.00	314.30
STRENGTH	665.33	0.00	408.59

GROUP 5

	P	MY	MZ
DL	643.97	0.00	29.60
LL	0.00	0.00	0.00
GROUP 5	-79.90	-1500.82	567.75
SERVICE	564.07	-1500.82	597.35
STRENGTH	705.09	-1876.03	746.69

GROUP 6

	P	MY	MZ
DL	643.97	0.00	29.60
LL	-130.96	0.00	-16.23
GROUP 6	-34.61	-909.22	413.11
SERVICE	478.40	-909.22	426.48
STRENGTH	598.00	-1136.53	533.10

SLENDERNESS EFFECTS IN COMPRESSION MEMBERS (AASHTO 8.16.5)

f'c = 3000 psi PHI = 0.70 W_C = 150 PCF

$E_C = W_C^{1.5} * 33 * f'c^{0.5}$ = 3320561 PSI Width of Rect. Col. = B = 53.892 In.

Depth of Rect. Col = D = 60.564 In.

$r_Y = 0.30*D$ = 18.17 In. L_Y = 8.5 Ft. K_Y = 2.0

$r_Z = 0.30*B$ = 16.17 In. L_Z = 18.5 Ft. K_Z = 1.2

I_{YY} = $B*D^3/12$ I_{YY} = 997670 In^4

I_{ZZ} = $D*B^3/12$ I_{ZZ} = 789962 In^5

$K_Y L_Y/r$ = 11.2 < 22 NO SLENDERNESS EFFECT

$K_Z L_Z/r$ = 16.5 < 22 NO SLENDERNESS EFFECT

H. W. LOCHNER, INC.

PROJECT: BONNER BRIDGE - OREGON INLET NORTH CAROLINA JMJ Jun-06
SUBJECT: HIGH LEVEL BENT ANALYSIS WDB Jun-06
HLB 145 MEM. 7 JT. 7

SLENDERNESS EFFECTS IN RECTANGULAR COMPRESSION MEMBERS (AASHTO 8.16.5)

GROUP 1

	B	D	KL/R	M_U	M_{DL}	B_D	P_U	P_C	δ_b	δ_s	M_C	
	In.	In.		Ft. Kips	Ft. Kips		Kips	Kips			Ft. Kips	
MY	53.892	60.564	11.2	0.00	0.00	0.000	553	0	1.000	1.000	111	*
MZ	53.892	60.564	16.5	3.31	38.48	11.608	553	0	1.000	1.000	102	*

GROUP 2

	B	D	KL/R	M_U	M_{DL}	B_D	P_U	P_C	δ_b	δ_s	M_C
	In.	In.		Ft. Kips	Ft. Kips		Kips	Kips			Ft. Kips
MY	53.892	60.564	11.2	1951.07	0.00	0.000	735	0	1.000	1.000	1951
MZ	53.892	60.564	16.5	385.36	38.48	0.100	735	0	1.000	1.000	385

GROUP 3

	B	D	KL/R	M_U	M_{DL}	B_D	P_U	P_C	δ_b	δ_s	M_C
	In.	In.		Ft. Kips	Ft. Kips		Kips	Kips			Ft. Kips
MY	53.892	60.564	11.2	1181.99	0.00	0.000	624	0	1.000	1.000	1182
MZ	53.892	60.564	16.5	163.23	38.48	0.236	624	0	1.000	1.000	163

GROUP 4

	B	D	KL/R	M_U	M_{DL}	B_D	P_U	P_C	δ_b	δ_s	M_C	
	In.	In.		Ft. Kips	Ft. Kips		Kips	Kips			Ft. Kips	
MY	53.892	60.564	11.2	0.00	0.00	0.000	665	0	1.000	1.000	134	*
MZ	53.892	60.564	16.5	408.59	38.48	0.094	665	0	1.000	1.000	409	

GROUP 5

	B	D	KL/R	M_U	M_{DL}	B_D	P_U	P_C	δ_b	δ_s	M_C
	In.	In.		Ft. Kips	Ft. Kips		Kips	Kips			Ft. Kips
MY	53.892	60.564	11.2	1876.03	0.00	0.000	705	0	1.000	1.000	1876
MZ	53.892	60.564	16.5	746.69	38.48	0.052	705	0	1.000	1.000	747

GROUP 6

	B	D	KL/R	M_U	M_{DL}	B_D	P_U	P_C	δ_b	δ_s	M_C
	In.	In.		Ft. Kips	Ft. Kips		Kips	Kips			Ft. Kips
MY	53.892	60.564	11.2	1136.53	0.00	0.000	598	0	1.000	1.000	1137
MZ	53.892	60.564	16.5	533.10	38.48	0.072	598	0	1.000	1.000	533

* MINIMUM MOMENT CONTROLS

H. W. LOCHNER, INC.

PROJECT: BONNER BRIDGE - OREGON INLET NORTH CAROLINA JMJ Jun-06
SUBJECT: HIGH LEVEL BENT ANALYSIS WDB Jun-06
HLB 145 MEM. 7 JT. 7

COLUMN LOADS

PMIN

HLB 145 MEMBER 7 JOINT 7

GROUP 1

	P	MY	MZ
DL	482.98	0.00	29.60
LL	-57.94	0.00	12.08
GROUP 1	0.00	0.00	0.00
SERVICE	425.04	0.00	41.68
STRENGTH	502.33	0.00	64.65

GROUP 2

	P	MY	MZ
DL	482.98	0.00	29.60
LL	0.00	0.00	0.00
GROUP 2	-78.69	-1500.82	266.83
SERVICE	404.29	-1500.82	296.43
STRENGTH	525.57	-1951.07	385.36

GROUP 3

	P	MY	MZ
DL	482.98	0.00	29.60
LL	-57.94	0.00	12.08
GROUP 3	-33.39	-909.22	112.19
SERVICE	391.65	-909.22	153.87
STRENGTH	509.14	-1181.99	200.03

GROUP 4

	P	MY	MZ
DL	482.98	0.00	29.60
LL	-57.94	0.00	12.08
GROUP 4	-1.22	0.00	300.93
SERVICE	423.82	0.00	342.61
STRENGTH	550.96	0.00	445.39

GROUP 5

	P	MY	MZ
DL	482.98	0.00	29.60
LL	0.00	0.00	0.00
GROUP 5	-79.90	-1500.82	567.75
SERVICE	403.08	-1500.82	597.35
STRENGTH	503.85	-1876.03	746.69

GROUP 6

	P	MY	MZ
DL	482.98	0.00	29.60
LL	-57.94	0.00	12.08
GROUP 6	-34.61	-909.22	413.11
SERVICE	390.43	-909.22	454.79
STRENGTH	488.03	-1136.53	568.49

SLENDERNESS EFFECTS IN COMPRESSION MEMBERS (AASHTO 8.16.5)

f'c = 3000 psi PHI = 0.70 W_C = 150 PCF

$E_C = W_C^{1.5} * 33 * f'c^{0.5}$ = 3320561 PSI Width of Rect. Col. = B = 53.892 In.

Depth of Rect. Col = D = 60.564 In.

$r_Y = 0.30*D$ = 18.17 In. L_Y = 8.5 Ft. K_Y = 2.0

$r_Z = 0.30*B$ = 16.17 In. L_Z = 18.5 Ft. K_Z = 1.2

I_{YY} = $B*D^3/12$ I_{YY} = 997670 In^4

I_{ZZ} = $D*B^3/12$ I_{ZZ} = 789962 In^5

$K_Y L_Y/r$ = 11.2 < 22 NO SLENDERNESS EFFECT

$K_Z L_Z/r$ = 16.5 < 22 NO SLENDERNESS EFFECT

H. W. LOCHNER, INC.

PROJECT: BONNER BRIDGE - OREGON INLET NORTH CAROLINA JMJ Jun-06
SUBJECT: HIGH LEVEL BENT ANALYSIS WDB Jun-06
HLB 145 MEM. 7 JT. 7

SLENDERNESS EFFECTS IN RECTANGULAR COMPRESSION MEMBERS (AASHTO 8.16.5)

GROUP 1

	B	D	KL/R	M_U	M_{DL}	B_D	P_U	P_C	δ_b	δ_s	M_C	
	In.	In.		Ft. Kips	Ft. Kips		Kips	Kips			Ft. Kips	
MY	53.892	60.564	11.2	0.00	0.00	0.000	502	0	1.000	1.000	101	*
MZ	53.892	60.564	16.5	64.65	38.48	0.595	502	0	1.000	1.000	93	*

GROUP 2

	B	D	KL/R	M_U	M_{DL}	B_D	P_U	P_C	δ_b	δ_s	M_C
	In.	In.		Ft. Kips	Ft. Kips		Kips	Kips			Ft. Kips
MY	53.892	60.564	11.2	1951.07	0.00	0.000	526	0	1.000	1.000	1951
MZ	53.892	60.564	16.5	385.36	38.48	0.100	526	0	1.000	1.000	385

GROUP 3

	B	D	KL/R	M_U	M_{DL}	B_D	P_U	P_C	δ_b	δ_s	M_C
	In.	In.		Ft. Kips	Ft. Kips		Kips	Kips			Ft. Kips
MY	53.892	60.564	11.2	1181.99	0.00	0.000	509	0	1.000	1.000	1182
MZ	53.892	60.564	16.5	200.03	38.48	0.192	509	0	1.000	1.000	200

GROUP 4

	B	D	KL/R	M_U	M_{DL}	B_D	P_U	P_C	δ_b	δ_s	M_C	
	In.	In.		Ft. Kips	Ft. Kips		Kips	Kips			Ft. Kips	
MY	53.892	60.564	11.2	0.00	0.00	0.000	551	0	1.000	1.000	111	*
MZ	53.892	60.564	16.5	445.39	38.48	0.086	551	0	1.000	1.000	445	

GROUP 5

	B	D	KL/R	M_U	M_{DL}	B_D	P_U	P_C	δ_b	δ_s	M_C
	In.	In.		Ft. Kips	Ft. Kips		Kips	Kips			Ft. Kips
MY	53.892	60.564	11.2	1876.03	0.00	0.000	504	0	1.000	1.000	1876
MZ	53.892	60.564	16.5	746.69	38.48	0.052	504	0	1.000	1.000	747

GROUP 6

	B	D	KL/R	M_U	M_{DL}	B_D	P_U	P_C	δ_b	δ_s	M_C
	In.	In.		Ft. Kips	Ft. Kips		Kips	Kips			Ft. Kips
MY	53.892	60.564	11.2	1136.53	0.00	0.000	488	0	1.000	1.000	1137
MZ	53.892	60.564	16.5	568.49	38.48	0.068	488	0	1.000	1.000	568

* MINIMUM MOMENT CONTROLS

JMJ 7/06
WDB 7/06

```
OOOOOOO    OOOOO    OOOOO    OOOOO    OOOOO   OO
OO    OO   OO  OO   OO  OO   OO  OO   OO  OO   OO
OO    OO   OO  OO   OO  OO   OO  OO   OO  OO   OO
OO    OO   OO       OO  OO   OO       OO  OO   OO
OO    OO   OO       OOOOOOO  OO       OO  OO   OO
OOOOOOO    OO  OO   OO  OO   OO  OO   OO  OO   OO
OO         OO  OO   OO  OO   OO  OO   OO  OO   OO
OO          OOOOO   OO  OO    OOOOO    OOOOO   OOOOO  (TM)
```

==========
Computer program for the Strength Design of Reinforced Concrete Sections
==========

Licensee stated above acknowledges that Portland Cement Association (PCA) is not and cannot be responsible for either the accuracy or adequacy of the material supplied as input for processing by the PCACOL(tm) computer program. Furthermore, PCA neither makes any warranty expressed nor implied with respect to the correctness of the output prepared by the PCACOL(tm) program. Although PCA has endeavored to produce PCACOL(tm) error free, the program is not and can't be certified infallible. The final and only responsibility for analysis, design and engineering documents is the licensees. Accordingly, PCA disclaims all responsibility in contract, negligence or other tort for any analysis, design or engineering documents prepared in connection with the use of the PCACOL(tm) program.

BASED ON PLANS.

General Information:
==========

File Name: S:\DGN-ST\NORTHC~1\BONNER~1\ANALYSIS\PIERS\HLB144~1\PCACOL~1\M7PLAN.COL
Project: BONNER BRIDGE - OREGON INLET
Column: HLB #145 Engineer: JMJ
Code: ACI 318-95 Units: English

Run Option: Investigation Slenderness: Not considered
Run Axis: Biaxial Column Type: Structural

Material Properties:
==========

f'c = 3 ksi fy = 40 ksi
Ec = 3122.02 ksi Es = 29000 ksi
fc = 2.55 ksi Rupture strain = Infinity
Ultimate strain = 0.003 in/in
Beta1 = 0.85

Section:
==========

Rectangular: Width = 53.9 in Depth = 60.6 in

Gross section area, Ag = 3266.34 in^2
Ix = 999598 in^4 Iy = 790784 in^4
Xo = 0 in Yo = 0 in

Reinforcement:
==========

Rebar Database: User-defined

Size	Diam (in)	Area (in^2)	Size	Diam (in)	Area (in^2)	Size	Diam (in)	Area (in^2)
# 1	0.00	0.00	# 3	0.38	0.11	# 4	0.50	0.20
# 5	0.63	0.31	# 6	0.75	0.44	# 7	0.88	0.60
# 8	1.00	0.79	# 9	1.13	1.00	# 10	1.27	1.27
# 11	1.41	1.56	# 14	1.69	2.25	# 18	2.26	4.00

Confinement: Tied; #1 ties with #9 bars, #1 with larger bars.
phi(a) = 0.8, phi(b) = 0.9, phi(c) = 0.7

Layout: Rectangular
Pattern: Equal Bar Spacing (Cover to longitudinal reinforcement)
Total steel area, As = 49.92 in^2 at 1.53%
32 #11 Cover = 5 in

Factored Loads and Moments with Corresponding Capacities: (see user's manual for notation)
==========

No.	Pu kip	Mux k-ft	Muy k-ft	fMnx k-ft	fMny k-ft	fMn/Mu
1	1039.0	209.0	192.0	3039.2	2795.6	14.550
2	857.0	875.0	351.0	3984.0	1601.0	4.554
3	969.0	556.0	179.0	4112.3	1317.7	7.393
4	927.0	187.0	171.0	3026.9	2769.0	16.189
5	826.0	841.0	415.0	3812.2	1882.4	4.534
6	933.0	535.0	190.0	4059.1	1442.6	7.588
7	692.0	139.0	128.0	3031.9	2790.6	21.807
8	669.0	875.0	351.0	3959.9	1584.7	4.524
9	685.0	556.0	190.0	4057.5	1392.2	7.301
10	643.0	130.0	142.0	2752.1	3007.6	21.176
11	644.0	841.0	415.0	3793.0	1864.3	4.507
12	660.0	535.0	260.0	3809.1	1845.6	7.116
13	553.0	111.0	102.0	3016.0	2768.0	27.156
14	735.0	1951.0	385.0	4287.0	839.1	2.197
15	624.0	1182.0	163.0	4302.5	590.0	3.640

16	665.0	134.0	409.0	1229.8	3743.1	9.154
17	705.0	1876.0	747.0	3972.5	1579.7	2.117
18	598.0	1137.0	533.0	3816.6	1795.7	3.359
19	502.0	101.0	93.0	2995.8	2765.6	29.697
20	526.0	1951.0	385.0	4183.7	831.4	2.145
21	509.0	1182.0	200.0	4204.3	705.0	3.556
22	551.0	111.0	445.0	936.3	3755.0	8.438
23	504.0	1876.0	747.0	3901.5	1548.3	2.079
24	488.0	1137.0	568.0	3729.6	1860.7	3.279

*** Program completed as requested! ***

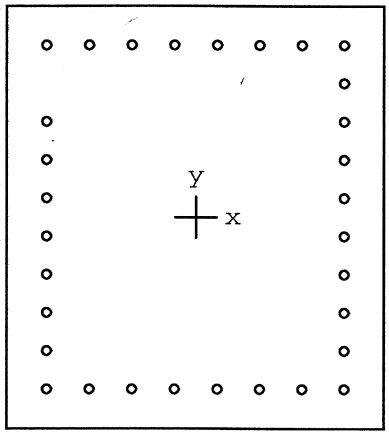

53.9 x 60.6 in

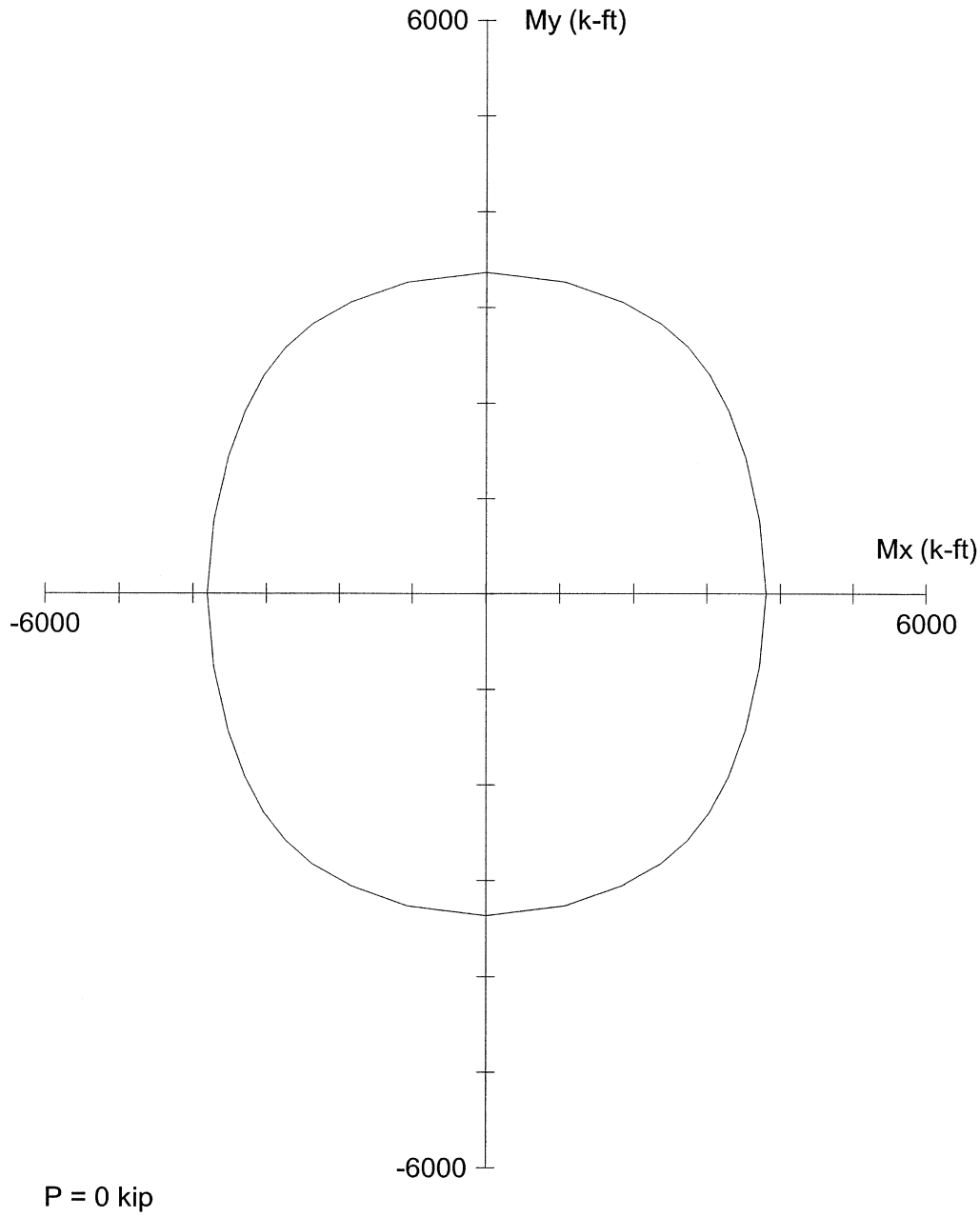

Code: ACI 318-95

Units: English

Run axis: Biaxial

Run option: Investigation

Slenderness: Not considered

mn type: Structural

Bars: User-defined

Date: 07/21/06

Time: 14:00:58

PCACOL V3.00 (PCA 1999) - Licensed to: Licensee name not yet specified.

File: S:\DGN-ST\NORTHC~1\BONNER~1\ANALYSIS\PIERS\HLB144~1\PCACOL~1\M7PLAN.COL

Project: BONNER BRIDGE - OREGON INLET

Column: HLB #145		Engineer: JMJ	
f'c = 3 ksi	fy = 40 ksi	Ag = 3266.34 in^2	32 #11 bars
Ec = 3122 ksi	Es = 29000 ksi	As = 49.92 in^2	Rho = 1.53%
fc = 2.55 ksi	e_rup = Infinity	Xo = 0.00 in	Ix = 999598 in^4
u = 0.003 in/in		Yo = 0.00 in	Iy = 790784 in^4
Beta1 = 0.85		Clear spacing = 4.06 in	Clear cover = 5.00 in
Confinement: Tied	phi(a) = 0.8, phi(b) = 0.9, phi(c) = 0.7		

JMJ 7/06
WDB 7/06

```
OOOOOOO    OOOOO    OOOOO    OOOOO    OOOOO   OO
OO    OO   OO  OO   OO  OO   OO  OO   OO  OO   OO
OO    OO   OO  OO   OO  OO   OO  OO   OO  OO   OO
OO    OO   OO       OO  OO   OO       OO  OO   OO
OO    OO   OO       OOOOOOO  OO       OO  OO   OO
OOOOOOO    OO  OO   OO  OO   OO  OO   OO  OO   OO
OO         OO  OO   OO  OO   OO  OO   OO  OO   OO
OO          OOOOO   OO  OO    OOOOO    OOOOO   OOOOO  (TM)
```

==========
Computer program for the Strength Design of Reinforced Concrete Sections
==========

Licensee stated above acknowledges that Portland Cement Association (PCA) is not and cannot be responsible for either the accuracy or adequacy of the material supplied as input for processing by the PCACOL(tm) computer program. Furthermore, PCA neither makes any warranty expressed nor implied with respect to the correctness of the output prepared by the PCACOL(tm) program. Although PCA has endeavored to produce PCACOL(tm) error free, the program is not and can't be certified infallible. The final and only responsibility for analysis, design and engineering documents is the licensees. Accordingly, PCA disclaims all responsibility in contract, negligence or other tort for any analysis, design or engineering documents prepared in connection with the use of the PCACOL(tm) program.

50% COVER LOSS
f'_c = 4400 PSI

General Information:
==========

File Name: S:\DGN-ST\NORTHC~1\BONNER~1\ANALYSIS\PIERS\HLB144~1\PCACOL~1\M7ACT.COL
Project: BONNER BRIDGE - OREGON INLET
Column: HLB #145 Engineer: JMJ
Code: ACI 318-95 Units: English

Run Option: Investigation Slenderness: Not considered
Run Axis: Biaxial Column Type: Structural

Material Properties:
==========

f'c = 4.4 ksi fy = 40 ksi
Ec = 3780.96 ksi Es = 29000 ksi
fc = 3.74 ksi Rupture strain = Infinity
Ultimate strain = 0.003 in/in
Beta1 = 0.83

Section:
==========

Rectangular: Width = 48.9 in Depth = 55.6 in

Gross section area, Ag = 2718.84 in^2
Ix = 700409 in^4 Iy = 541777 in^4
Xo = 0 in Yo = 0 in

Reinforcement:
==========

Rebar Database: User-defined

Size	Diam (in)	Area (in^2)	Size	Diam (in)	Area (in^2)	Size	Diam (in)	Area (in^2)
# 1	0.00	0.00	# 3	0.38	0.11	# 4	0.50	0.20
# 5	0.63	0.31	# 6	0.75	0.44	# 7	0.88	0.60
# 8	1.00	0.79	# 9	1.13	1.00	# 10	1.27	1.27
# 11	1.41	1.56	# 14	1.69	2.25	# 18	2.26	4.00

Confinement: Tied; #1 ties with #9 bars, #1 with larger bars.
phi(a) = 0.8, phi(b) = 0.9, phi(c) = 0.7

Layout: Rectangular
Pattern: Equal Bar Spacing (Cover to longitudinal reinforcement)
Total steel area, As = 49.92 in^2 at 1.84%
32 #11 Cover = 2.5 in

Factored Loads and Moments with Corresponding Capacities: (see user's manual for notation)
==========

No.	Pu kip	Mux k-ft	Muy k-ft	fMnx k-ft	fMny k-ft	fMn/Mu
1	1039.0	209.0	192.0	3165.9	2907.4	15.145
2	857.0	875.0	351.0	4100.3	1642.7	4.685
3	969.0	556.0	179.0	4271.1	1380.3	7.685
4	927.0	187.0	171.0	3163.2	2889.9	16.908
5	826.0	841.0	415.0	3924.5	1933.9	4.665
6	933.0	535.0	190.0	4207.5	1489.6	7.862
7	692.0	139.0	128.0	3096.9	2850.2	22.274
8	669.0	875.0	351.0	4006.8	1607.4	4.579
9	685.0	556.0	190.0	4109.1	1405.2	7.391
10	643.0	130.0	142.0	2789.7	3049.4	21.468
11	644.0	841.0	415.0	3843.8	1889.8	4.567
12	660.0	535.0	260.0	3865.3	1872.2	7.220
13	553.0	111.0	102.0	3046.2	2794.6	27.423
14	735.0	1951.0	385.0	4336.1	848.4	2.222
15	624.0	1182.0	163.0	4310.5	588.3	3.646

16	665.0	134.0	409.0	1226.5	3745.6	9.157
17	705.0	1876.0	747.0	4030.9	1605.6	2.149
18	598.0	1137.0	533.0	3852.4	1808.5	3.389
19	502.0	101.0	93.0	3013.2	2782.0	29.870
20	526.0	1951.0	385.0	4173.0	824.5	2.139
21	509.0	1182.0	200.0	4184.5	710.1	3.540
22	551.0	111.0	445.0	926.1	3723.7	8.366
23	504.0	1876.0	747.0	3904.0	1552.9	2.081
24	488.0	1137.0	568.0	3730.4	1868.2	3.283

*** Program completed as requested! ***

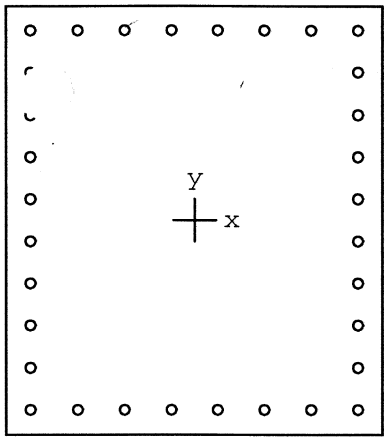

48.9 x 55.6 in

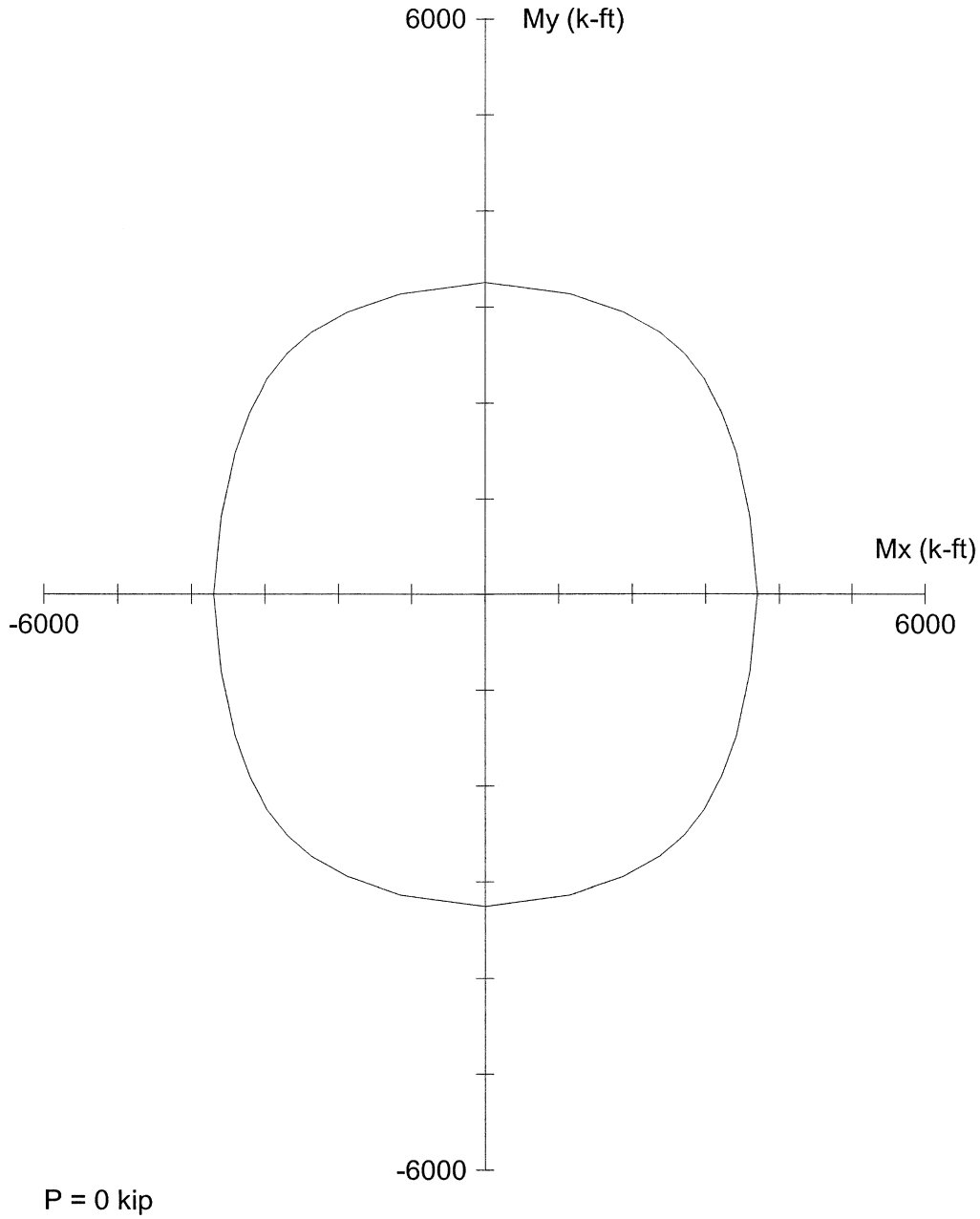

Code: ACI 318-95

Units: English

Run axis: Biaxial

Run option: Investigation

Slenderness: Not considered

(mn type: Structural

Bars: User-defined

Date: 07/25/06

Time: 13:25:34

PCACOL V3.00 (PCA 1999) - Licensed to: Licensee name not yet specified.

File: S:\DGN-ST\NORTHC~1\BONNER~1\ANALYSIS\PIERS\HLB144~1\PCACOL~1\M7ACT.COL

Project: BONNER BRIDGE - OREGON INLET

Column: HLB #145		Engineer: JMJ	
f'c = 4.4 ksi	fy = 40 ksi	Ag = 2718.84 in^2	32 #11 bars
Ec = 3781 ksi	Es = 29000 ksi	As = 49.92 in^2	Rho = 1.84%
fc = 3.74 ksi	e_rup = Infinity	Xo = 0.00 in	Ix = 700409 in^4
ɹ = 0.003 in/in		Yo = 0.00 in	Iy = 541777 in^4
Beta1 = 0.83		Clear spacing = 4.06 in	Clear cover = 2.50 in
Confinement: Tied	phi(a) = 0.8, phi(b) = 0.9, phi(c) = 0.7		

H. W. LOCHNER, INC.

PROJECT: BONNER BRIDGE - OREGON INLET NORTH CAROLINA JMJ Jun-06
SUBJECT: HIGH LEVEL BENT ANALYSIS WDB Jun-06
HLB 145 MEM. 8 JT. 6

COLUMN LOADS

PMAX

HLB 145 MEMBER 8 JOINT 6

GROUP 1

	P	MY	MZ
DL	580.87	0.00	29.51
LL	130.93	0.00	-40.72
GROUP 1	0.00	0.00	0.00
SERVICE	711.80	0.00	-11.21
STRENGTH	1038.81	0.00	-49.86

GROUP 2

	P	MY	MZ
DL	580.87	0.00	29.51
LL	0.00	0.00	0.00
GROUP 2	-78.51	-673.09	-237.99
SERVICE	502.36	-673.09	-208.48
STRENGTH	653.07	-875.02	-271.02

GROUP 3

	P	MY	MZ
DL	580.87	0.00	29.51
LL	130.93	0.00	-40.72
GROUP 3	-33.34	-427.93	-98.44
SERVICE	678.46	-427.93	-109.65
STRENGTH	882.00	-556.31	-142.55

GROUP 4

	P	MY	MZ
DL	580.87	0.00	29.51
LL	130.93	0.00	-40.72
GROUP 4	1.23	0.00	62.26
SERVICE	713.03	0.00	51.05
STRENGTH	926.94	0.00	66.37

GROUP 5

	P	MY	MZ
DL	580.87	0.00	29.51
LL	0.00	0.00	0.00
GROUP 5	-77.28	-673.09	-175.73
SERVICE	503.59	-673.09	-146.22
STRENGTH	629.49	-841.36	-182.78

GROUP 6

	P	MY	MZ
DL	580.87	0.00	29.51
LL	130.93	0.00	-40.72
GROUP 6	-32.11	-427.93	-36.18
SERVICE	679.69	-427.93	-47.39
STRENGTH	849.61	-534.91	-59.24

SLENDERNESS EFFECTS IN COMPRESSION MEMBERS (AASHTO 8.16.5)

f'c = 3000 psi PHI = 0.70 W_C = 150 PCF

$E_C = W_C^{1.5} * 33 * f'c^{0.5}$ = 3320561 PSI Width of Rect. Col. = B = 53.892 In.

Depth of Rect. Col = D = 60.564 In.

$r_Y = 0.30*D$ = 18.17 In. L_Y = 8.5 Ft. K_Y = 2.0

$r_Z = 0.30*B$ = 16.17 In. L_Z = 18.5 Ft. K_Z = 1.2

I_{YY} = $B*D^3/12$ I_{YY} = 997670 In^4

I_{ZZ} = $D*B^3/12$ I_{ZZ} = 789962 In^5

$K_Y L_Y/r$ = 11.2 < 22 NO SLENDERNESS EFFECT

$K_Z L_Z/r$ = 16.5 < 22 NO SLENDERNESS EFFECT

H. W. LOCHNER, INC.

PROJECT: BONNER BRIDGE - OREGON INLET NORTH CAROLINA JMJ Jun-06
SUBJECT: HIGH LEVEL BENT ANALYSIS WDB Jun-06
HLB 145 MEM. 8 JT. 6

SLENDERNESS EFFECTS IN RECTANGULAR COMPRESSION MEMBERS (AASHTO 8.16.5)

GROUP 1

	B	D	KL/R	M_U	M_{DL}	B_D	P_U	P_C	δ_b	δ_s	M_C	
	In.	In.		Ft. Kips	Ft. Kips		Kips	Kips			Ft. Kips	
MY	53.892	60.564	11.2	0.00	0.00	0.000	1039	0	1.000	1.000	209	*
MZ	53.892	60.564	16.5	49.86	38.36	0.769	1039	0	1.000	1.000	192	*

GROUP 2

	B	D	KL/R	M_U	M_{DL}	B_D	P_U	P_C	δ_b	δ_s	M_C
	In.	In.		Ft. Kips	Ft. Kips		Kips	Kips			Ft. Kips
MY	53.892	60.564	11.2	875.02	0.00	0.000	653	0	1.000	1.000	875
MZ	53.892	60.564	16.5	271.02	38.36	0.142	653	0	1.000	1.000	271

GROUP 3

	B	D	KL/R	M_U	M_{DL}	B_D	P_U	P_C	δ_b	δ_s	M_C	
	In.	In.		Ft. Kips	Ft. Kips		Kips	Kips			Ft. Kips	
MY	53.892	60.564	11.2	556.31	0.00	0.000	882	0	1.000	1.000	556	
MZ	53.892	60.564	16.5	142.55	38.36	0.269	882	0	1.000	1.000	163	*

GROUP 4

	B	D	KL/R	M_U	M_{DL}	B_D	P_U	P_C	δ_b	δ_s	M_C	
	In.	In.		Ft. Kips	Ft. Kips		Kips	Kips			Ft. Kips	
MY	53.892	60.564	11.2	0.00	0.00	0.000	927	0	1.000	1.000	187	*
MZ	53.892	60.564	16.5	66.37	38.36	0.578	927	0	1.000	1.000	171	*

GROUP 5

	B	D	KL/R	M_U	M_{DL}	B_D	P_U	P_C	δ_b	δ_s	M_C
	In.	In.		Ft. Kips	Ft. Kips		Kips	Kips			Ft. Kips
MY	53.892	60.564	11.2	841.36	0.00	0.000	629	0	1.000	1.000	841
MZ	53.892	60.564	16.5	182.78	38.36	0.210	629	0	1.000	1.000	183

GROUP 6

	B	D	KL/R	M_U	M_{DL}	B_D	P_U	P_C	δ_b	δ_s	M_C	
	In.	In.		Ft. Kips	Ft. Kips		Kips	Kips			Ft. Kips	
MY	53.892	60.564	11.2	534.91	0.00	0.000	850	0	1.000	1.000	535	
MZ	53.892	60.564	16.5	59.24	38.36	0.648	850	0	1.000	1.000	157	*

* MINIMUM MOMENT CONTROLS

H. W. LOCHNER, INC.

PROJECT: BONNER BRIDGE - OREGON INLET NORTH CAROLINA JMJ Jun-06
SUBJECT: HIGH LEVEL BENT ANALYSIS WDB Jun-06
'HLB 145 MEM. 8 JT. 6

COLUMN LOADS

PMIN

HLB 145 MEMBER 8 JOINT 6

GROUP 1

	P	MY	MZ
DL	435.65	0.00	29.51
LL	57.91	0.00	15.45
GROUP 1	0.00	0.00	0.00
SERVICE	493.56	0.00	44.96
STRENGTH	691.82	0.00	71.84

GROUP 2

	P	MY	MZ
DL	435.65	0.00	29.51
LL	0.00	0.00	0.00
GROUP 2	-78.51	-673.09	-237.99
SERVICE	357.14	-673.09	-208.48
STRENGTH	464.29	-875.02	-271.02

GROUP 3

	P	MY	MZ
DL	435.65	0.00	29.51
LL	57.91	0.00	15.45
GROUP 3	-33.34	-427.93	-98.44
SERVICE	460.22	-427.93	-53.48
STRENGTH	598.29	-556.31	-69.52

GROUP 4

	P	MY	MZ
DL	435.65	0.00	29.51
LL	57.91	0.00	15.45
GROUP 4	1.23	0.00	62.26
SERVICE	494.79	0.00	107.22
STRENGTH	643.23	0.00	139.39

GROUP 5

	P	MY	MZ
DL	435.65	0.00	29.51
LL	0.00	0.00	0.00
GROUP 5	-77.28	-673.09	-175.73
SERVICE	358.37	-673.09	-146.22
STRENGTH	447.97	-841.36	-182.78

GROUP 6

	P	MY	MZ
DL	435.65	0.00	29.51
LL	57.91	0.00	15.45
GROUP 6	-32.11	-427.93	-36.18
SERVICE	461.45	-427.93	8.78
STRENGTH	576.82	-534.91	10.98

SLENDERNESS EFFECTS IN COMPRESSION MEMBERS (AASHTO 8.16.5)

f'c = 3000 psi PHI = 0.70 W_C = 150 PCF

$E_C = W_C^{1.5} * 33 * f'c^{0.5}$ = 3320561 PSI Width of Rect. Col. = B = 53.892 In.

Depth of Rect. Col = D = 60.564 In.

$r_Y = 0.30*D$ = 18.17 In. L_Y = 8.5 Ft. K_Y = 2.0

$r_Z = 0.30*B$ = 16.17 In. L_Z = 18.5 Ft. K_Z = 1.2

I_{YY} = $B*D^3/12$ I_{YY} = 997670 In^4

I_{ZZ} = $D*B^3/12$ I_{ZZ} = 789962 In^5

$K_Y L_Y/r$ = 11.2 < 22 NO SLENDERNESS EFFECT

$K_Z L_Z/r$ = 16.5 < 22 NO SLENDERNESS EFFECT

H. W. LOCHNER, INC.

PROJECT: BONNER BRIDGE - OREGON INLET NORTH CAROLINA JMJ Jun-06
SUBJECT: HIGH LEVEL BENT ANALYSIS WDB Jun-06
HLB 145 MEM. 8 JT. 6

SLENDERNESS EFFECTS IN RECTANGULAR COMPRESSION MEMBERS (AASHTO 8.16.5)

GROUP 1

	B	D	KL/R	M_U	M_{DL}	B_D	P_U	P_C	δ_b	δ_s	M_C	
	In.	In.		Ft. Kips	Ft. Kips		Kips	Kips			Ft. Kips	
MY	53.892	60.564	11.2	0.00	0.00	0.000	692	0	1.000	1.000	139	*
MZ	53.892	60.564	16.5	71.84	38.36	0.534	692	0	1.000	1.000	128	*

GROUP 2

	B	D	KL/R	M_U	M_{DL}	B_D	P_U	P_C	δ_b	δ_s	M_C
	In.	In.		Ft. Kips	Ft. Kips		Kips	Kips			Ft. Kips
MY	53.892	60.564	11.2	875.02	0.00	0.000	464	0	1.000	1.000	875
MZ	53.892	60.564	16.5	271.02	38.36	0.142	464	0	1.000	1.000	271

GROUP 3

	B	D	KL/R	M_U	M_{DL}	B_D	P_U	P_C	δ_b	δ_s	M_C	
	In.	In.		Ft. Kips	Ft. Kips		Kips	Kips			Ft. Kips	
MY	53.892	60.564	11.2	556.31	0.00	0.000	598	0	1.000	1.000	556	
MZ	53.892	60.564	16.5	69.52	38.36	0.552	598	0	1.000	1.000	111	*

GROUP 4

	B	D	KL/R	M_U	M_{DL}	B_D	P_U	P_C	δ_b	δ_s	M_C	
	In.	In.		Ft. Kips	Ft. Kips		Kips	Kips			Ft. Kips	
MY	53.892	60.564	11.2	0.00	0.00	0.000	643	0	1.000	1.000	130	*
MZ	53.892	60.564	16.5	139.39	38.36	0.275	643	0	1.000	1.000	139	

GROUP 5

	B	D	KL/R	M_U	M_{DL}	B_D	P_U	P_C	δ_b	δ_s	M_C
	In.	In.		Ft. Kips	Ft. Kips		Kips	Kips			Ft. Kips
MY	53.892	60.564	11.2	841.36	0.00	0.000	448	0	1.000	1.000	841
MZ	53.892	60.564	16.5	182.78	38.36	0.210	448	0	1.000	1.000	183

GROUP 6

	B	D	KL/R	M_U	M_{DL}	B_D	P_U	P_C	δ_b	δ_s	M_C	
	In.	In.		Ft. Kips	Ft. Kips		Kips	Kips			Ft. Kips	
MY	53.892	60.564	11.2	534.91	0.00	0.000	577	0	1.000	1.000	535	
MZ	53.892	60.564	16.5	10.98	38.36	3.495	577	0	1.000	1.000	107	*

* MINIMUM MOMENT CONTROLS

H. W. LOCHNER, INC.

PROJECT: BONNER BRIDGE - OREGON INLET NORTH CAROLINA JMJ Jun-06
SUBJECT: HIGH LEVEL BENT ANALYSIS WDB Jun-06
HLB 145 MEM. 8 JT. 8

COLUMN LOADS

PMAX

HLB 145 MEMBER 8 JOINT 8

GROUP 1

	P	MY	MZ
DL	-643.76	0.00	25.82
LL	-130.93	0.00	-16.84
GROUP 1	0.00	0.00	0.00
SERVICE	-774.69	0.00	8.98
STRENGTH	-1120.57	0.00	-2.92

GROUP 2

	P	MY	MZ
DL	-643.76	0.00	25.82
LL	0.00	0.00	0.00
GROUP 2	78.71	1500.83	-266.72
SERVICE	-565.05	1500.83	-240.90
STRENGTH	-734.57	1951.08	-313.17

GROUP 3

	P	MY	MZ
DL	-643.76	0.00	25.82
LL	-130.93	0.00	-16.84
GROUP 3	33.40	909.23	-112.14
SERVICE	-741.29	909.23	-103.16
STRENGTH	-963.68	1182.00	-134.11

GROUP 4

	P	MY	MZ
DL	-643.76	0.00	25.82
LL	-130.93	0.00	-16.84
GROUP 4	-1.23	0.00	300.89
SERVICE	-775.92	0.00	309.87
STRENGTH	-1008.70	0.00	402.83

GROUP 5

	P	MY	MZ
DL	-643.76	0.00	25.82
LL	0.00	0.00	0.00
GROUP 5	77.48	1500.83	34.17
SERVICE	-566.28	1500.83	59.99
STRENGTH	-707.85	1876.04	74.99

GROUP 6

	P	MY	MZ
DL	-643.76	0.00	25.82
LL	-130.93	0.00	-16.84
GROUP 6	32.17	909.23	188.74
SERVICE	-742.52	909.23	197.72
STRENGTH	-928.15	1136.54	247.15

SLENDERNESS EFFECTS IN COMPRESSION MEMBERS (AASHTO 8.16.5)

f'c = 3000 psi PHI = 0.70 W_C = 150 PCF

$E_C = W_C^{1.5} * 33 * f'c^{0.5}$ = 3320561 PSI Width of Rect. Col. = B = 53.892 In.

Depth of Rect. Col = D = 60.564 In.

$r_Y = 0.30*D$ = 18.17 In. L_Y = 8.5 Ft. K_Y = 2.0

$r_Z = 0.30*B$ = 16.17 In. L_Z = 18.5 Ft. K_Z = 1.2

I_{YY} = $B*D^3/12$ I_{YY} = 997670 In^4

I_{ZZ} = $D*B^3/12$ I_{ZZ} = 789962 In^5

$K_Y L_Y/r$ = 11.2 < 22 NO SLENDERNESS EFFECT

$K_Z L_Z/r$ = 16.5 < 22 NO SLENDERNESS EFFECT

H. W. LOCHNER, INC.

PROJECT: BONNER BRIDGE - OREGON INLET NORTH CAROLINA JMJ Jun-06
SUBJECT: HIGH LEVEL BENT ANALYSIS WDB Jun-06
HLB 145 MEM. 8 JT. 8

SLENDERNESS EFFECTS IN RECTANGULAR COMPRESSION MEMBERS (AASHTO 8.16.5)

GROUP 1

	B	D	KL/R	M_U	M_{DL}	B_D	P_U	P_C	δ_b	δ_s	M_C	
	In.	In.		Ft. Kips	Ft. Kips		Kips	Kips			Ft. Kips	
MY	53.892	60.564	11.2	0.00	0.00	0.000	1121	0	1.000	1.000	226	*
MZ	53.892	60.564	16.5	2.92	33.57	11.493	1121	0	1.000	1.000	207	*

GROUP 2

	B	D	KL/R	M_U	M_{DL}	B_D	P_U	P_C	δ_b	δ_s	M_C
	In.	In.		Ft. Kips	Ft. Kips		Kips	Kips			Ft. Kips
MY	53.892	60.564	11.2	1951.08	0.00	0.000	735	0	1.000	1.000	1951
MZ	53.892	60.564	16.5	313.17	33.57	0.107	735	0	1.000	1.000	313

GROUP 3

	B	D	KL/R	M_U	M_{DL}	B_D	P_U	P_C	δ_b	δ_s	M_C	
	In.	In.		Ft. Kips	Ft. Kips		Kips	Kips			Ft. Kips	
MY	53.892	60.564	11.2	1182.00	0.00	0.000	964	0	1.000	1.000	1182	
MZ	53.892	60.564	16.5	134.11	33.57	0.250	964	0	1.000	1.000	178	*

GROUP 4

	B	D	KL/R	M_U	M_{DL}	B_D	P_U	P_C	δ_b	δ_s	M_C	
	In.	In.		Ft. Kips	Ft. Kips		Kips	Kips			Ft. Kips	
MY	53.892	60.564	11.2	0.00	0.00	0.000	1009	0	1.000	1.000	203	*
MZ	53.892	60.564	16.5	402.83	33.57	0.083	1009	0	1.000	1.000	403	

GROUP 5

	B	D	KL/R	M_U	M_{DL}	B_D	P_U	P_C	δ_b	δ_s	M_C	
	In.	In.		Ft. Kips	Ft. Kips		Kips	Kips			Ft. Kips	
MY	53.892	60.564	11.2	1876.04	0.00	0.000	708	0	1.000	1.000	1876	
MZ	53.892	60.564	16.5	74.99	33.57	0.448	708	0	1.000	1.000	131	*

GROUP 6

	B	D	KL/R	M_U	M_{DL}	B_D	P_U	P_C	δ_b	δ_s	M_C
	In.	In.		Ft. Kips	Ft. Kips		Kips	Kips			Ft. Kips
MY	53.892	60.564	11.2	1136.54	0.00	0.000	928	0	1.000	1.000	1137
MZ	53.892	60.564	16.5	247.15	33.57	0.136	928	0	1.000	1.000	247

* MINIMUM MOMENT CONTROLS

H. W. LOCHNER, INC.

PROJECT: BONNER BRIDGE - OREGON INLET NORTH CAROLINA JMJ Jun-06
SUBJECT: HIGH LEVEL BENT ANALYSIS WDB Jun-06
'HLB 145 MEM. 8 JT. 8

COLUMN LOADS

PMIN

HLB 145 MEMBER 8 JOINT 8

GROUP 1

	P	MY	MZ
DL	-482.82	0.00	25.82
LL	-57.91	0.00	11.55
GROUP 1	0.00	0.00	0.00
SERVICE	-540.73	0.00	37.37
STRENGTH	-753.14	0.00	58.59

GROUP 2

	P	MY	MZ
DL	-482.82	0.00	25.82
LL	0.00	0.00	0.00
GROUP 2	78.71	1500.83	-266.72
SERVICE	-404.11	1500.83	-240.90
STRENGTH	-525.34	1951.08	-313.17

GROUP 3

	P	MY	MZ
DL	-482.82	0.00	25.82
LL	-57.91	0.00	11.55
GROUP 3	33.40	909.23	-112.14
SERVICE	-507.33	909.23	-74.77
STRENGTH	-659.53	1182.00	-97.20

GROUP 4

	P	MY	MZ
DL	-482.82	0.00	25.82
LL	-57.91	0.00	11.55
GROUP 4	-1.23	0.00	300.89
SERVICE	-541.96	0.00	338.26
STRENGTH	-704.55	0.00	439.74

GROUP 5

	P	MY	MZ
DL	-482.82	0.00	25.82
LL	0.00	0.00	0.00
GROUP 5	77.48	1500.83	34.17
SERVICE	-405.34	1500.83	59.99
STRENGTH	-506.68	1876.04	74.99

GROUP 6

	P	MY	MZ
DL	-482.82	0.00	25.82
LL	-57.91	0.00	11.55
GROUP 6	32.17	909.23	188.74
SERVICE	-508.56	909.23	226.11
STRENGTH	-635.70	1136.54	282.64

SLENDERNESS EFFECTS IN COMPRESSION MEMBERS (AASHTO 8.16.5)

f'c = 3000 psi PHI = 0.70 W_C = 150 PCF

$E_C = W_C^{1.5} * 33 * f'c^{0.5}$ = 3320561 PSI Width of Rect. Col. = B = 53.892 In.

Depth of Rect. Col = D = 60.564 In.

$r_Y = 0.30*D$ = 18.17 In. L_Y = 8.5 Ft. K_Y = 2.0

$r_Z = 0.30*B$ = 16.17 In. L_Z = 18.5 Ft. K_Z = 1.2

I_{YY} = $B*D^3/12$ I_{YY} = 997670 In^4

I_{ZZ} = $D*B^3/12$ I_{ZZ} = 789962 In^5

$K_Y L_Y/r$ = 11.2 < 22 NO SLENDERNESS EFFECT

$K_Z L_Z/r$ = 16.5 < 22 NO SLENDERNESS EFFECT

H. W. LOCHNER, INC.

PROJECT: BONNER BRIDGE - OREGON INLET NORTH CAROLINA — JMJ Jun-06
SUBJECT: HIGH LEVEL BENT ANALYSIS — WDB Jun-06
HLB 145 MEM. 8 JT. 8

SLENDERNESS EFFECTS IN RECTANGULAR COMPRESSION MEMBERS (AASHTO 8.16.5)

GROUP 1

	B	D	KL/R	M_U	M_{DL}	B_D	P_U	P_C	δ_b	δ_s	M_C	
	In.	In.		Ft. Kips	Ft. Kips		Kips	Kips			Ft. Kips	
MY	53.892	60.564	11.2	0.00	0.00	0.000	753	0	1.000	1.000	152	*
MZ	53.892	60.564	16.5	58.59	33.57	0.573	753	0	1.000	1.000	139	*

GROUP 2

	B	D	KL/R	M_U	M_{DL}	B_D	P_U	P_C	δ_b	δ_s	M_C
	In.	In.		Ft. Kips	Ft. Kips		Kips	Kips			Ft. Kips
MY	53.892	60.564	11.2	1951.08	0.00	0.000	525	0	1.000	1.000	1951
MZ	53.892	60.564	16.5	313.17	33.57	0.107	525	0	1.000	1.000	313

GROUP 3

	B	D	KL/R	M_U	M_{DL}	B_D	P_U	P_C	δ_b	δ_s	M_C	
	In.	In.		Ft. Kips	Ft. Kips		Kips	Kips			Ft. Kips	
MY	53.892	60.564	11.2	1182.00	0.00	0.000	660	0	1.000	1.000	1182	
MZ	53.892	60.564	16.5	97.20	33.57	0.345	660	0	1.000	1.000	122	*

GROUP 4

	B	D	KL/R	M_U	M_{DL}	B_D	P_U	P_C	δ_b	δ_s	M_C	
	In.	In.		Ft. Kips	Ft. Kips		Kips	Kips			Ft. Kips	
MY	53.892	60.564	11.2	0.00	0.00	0.000	705	0	1.000	1.000	142	*
MZ	53.892	60.564	16.5	439.74	33.57	0.076	705	0	1.000	1.000	440	

GROUP 5

	B	D	KL/R	M_U	M_{DL}	B_D	P_U	P_C	δ_b	δ_s	M_C	
	In.	In.		Ft. Kips	Ft. Kips		Kips	Kips			Ft. Kips	
MY	53.892	60.564	11.2	1876.04	0.00	0.000	507	0	1.000	1.000	1876	
MZ	53.892	60.564	16.5	74.99	33.57	0.448	507	0	1.000	1.000	94	*

GROUP 6

	B	D	KL/R	M_U	M_{DL}	B_D	P_U	P_C	δ_b	δ_s	M_C
	In.	In.		Ft. Kips	Ft. Kips		Kips	Kips			Ft. Kips
MY	53.892	60.564	11.2	1136.54	0.00	0.000	636	0	1.000	1.000	1137
MZ	53.892	60.564	16.5	282.64	33.57	0.119	636	0	1.000	1.000	283

* MINIMUM MOMENT CONTROLS

JMJ 7/06
WDB 7/06

```
OOOOOOO    OOOOO    OOOOO    OOOOO    OOOOO    OO
OO    OO   OO  OO   OO  OO   OO  OO   OO  OO   OO
OO    OO   OO  OO   OO  OO   OO  OO   OO  OO   OO
OO    OO   OO       OO  OO   OO       OO  OO   OO
OO    OO   OO       OOOOOOO  OO       OO  OO   OO
OOOOOOO    OO  OO   OO  OO   OO  OO   OO  OO   OO
OO         OO  OO   OO  OO   OO  OO   OO  OO   OO
OO          OOOOO   OO  OO    OOOOO    OOOOO    OOOOO  (TM)
```

==========
Computer program for the Strength Design of Reinforced Concrete Sections
==========

Licensee stated above acknowledges that Portland Cement Association (PCA) is not and cannot be responsible for either the accuracy or adequacy of the material supplied as input for processing by the PCACOL(tm) computer program. Furthermore, PCA neither makes any warranty expressed nor implied with respect to the correctness of the output prepared by the PCACOL(tm) program. Although PCA has endeavored to produce PCACOL(tm) error free, the program is not and can't be certified infallible. The final and only responsibility for analysis, design and engineering documents is the licensees. Accordingly, PCA disclaims all responsibility in contract, negligence or other tort for any analysis, design or engineering documents prepared in connection with the use of the PCACOL(tm) program.

BASED ON PLANS.

General Information:
==========

File Name: S:\DGN-ST\NORTHC~1\BONNER~1\ANALYSIS\PIERS\HLB144~1\PCACOL~1\NEWFOL~1\M8PLAN.COL
Project: BONNER BRIDGE - OREGON INLET
Column: HLB #145 Engineer: JMJ
Code: ACI 318-95 Units: English

Run Option: Investigation Slenderness: Not considered
Run Axis: Biaxial Column Type: Structural

Material Properties:
==========

f'c = 3 ksi fy = 40 ksi
Ec = 3122.02 ksi Es = 29000 ksi
fc = 2.55 ksi Rupture strain = Infinity
Ultimate strain = 0.003 in/in
Beta1 = 0.85

Section:
==========

Rectangular: Width = 53.9 in Depth = 60.6 in

Gross section area, Ag = 3266.34 in^2
Ix = 999598 in^4 Iy = 790784 in^4
Xo = 0 in Yo = 0 in

Reinforcement:
==========

Rebar Database: User-defined

Size	Diam (in)	Area (in^2)	Size	Diam (in)	Area (in^2)	Size	Diam (in)	Area (in^2)
# 1	0.00	0.00	# 3	0.38	0.11	# 4	0.50	0.20
# 5	0.63	0.31	# 6	0.75	0.44	# 7	0.88	0.60
# 8	1.00	0.79	# 9	1.13	1.00	# 10	1.27	1.27
# 11	1.41	1.56	# 14	1.69	2.25	# 18	2.26	4.00

Confinement: Tied; #1 ties with #9 bars, #1 with larger bars.
phi(a) = 0.8, phi(b) = 0.9, phi(c) = 0.7

Layout: Rectangular
Pattern: Equal Bar Spacing (Cover to longitudinal reinforcement)
Total steel area, As = 49.92 in^2 at 1.53%
32 #11 Cover = 5 in

Factored Loads and Moments with Corresponding Capacities: (see user's manual for notation)
==========

No.	Pu kip	Mux k-ft	Muy k-ft	fMnx k-ft	fMny k-ft	fMn/Mu
1	1039.0	209.0	192.0	3039.2	2795.6	14.550
2	653.0	875.0	271.0	4098.6	1271.7	4.685
3	882.0	556.0	163.0	4173.7	1219.4	7.505
4	927.0	187.0	171.0	3026.9	2769.0	16.189
5	629.0	841.0	183.0	4214.5	921.6	5.012
6	850.0	535.0	157.0	4169.1	1229.9	7.796
7	692.0	139.0	128.0	3031.9	2790.6	21.807
8	464.0	875.0	271.0	4008.7	1240.6	4.581
9	598.0	556.0	111.0	4223.7	837.9	7.595
10	643.0	130.0	139.0	2793.4	2977.7	21.453
11	448.0	841.0	183.0	4114.9	889.7	4.891
12	577.0	535.0	107.0	4212.0	837.7	7.871
13	1121.0	226.0	207.0	3099.2	2830.2	13.695
14	735.0	1951.0	313.0	4329.0	694.7	2.219
15	964.0	1182.0	178.0	4369.9	664.9	3.698

16	1009.0	203.0	403.0	1813.1	3589.7	8.912
17	708.0	1876.0	131.0	4400.3	304.7	2.345
18	928.0	1137.0	247.0	4285.1	930.5	3.769
19	753.0	152.0	139.0	3043.9	2785.8	20.033
20	525.0	1951.0	313.0	4223.2	670.9	2.164
21	660.0	1182.0	122.0	4351.9	448.1	3.682
22	705.0	142.0	440.0	1221.2	3763.5	8.558
23	507.0	1876.0	94.0	4296.2	212.2	2.290
24	636.0	1137.0	283.0	4179.7	1041.2	3.676

*** Program completed as requested! ***

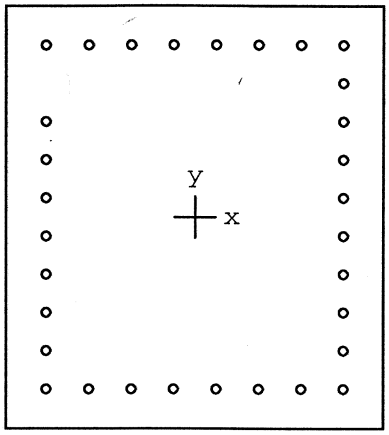

53.9 x 60.6 in

Code: ACI 318-95

Units: English

Run axis: Biaxial

Run option: Investigation

Slenderness: Not considered

mn type: Structural

Bars: User-defined

Date: 07/20/06

Time: 16:04:01

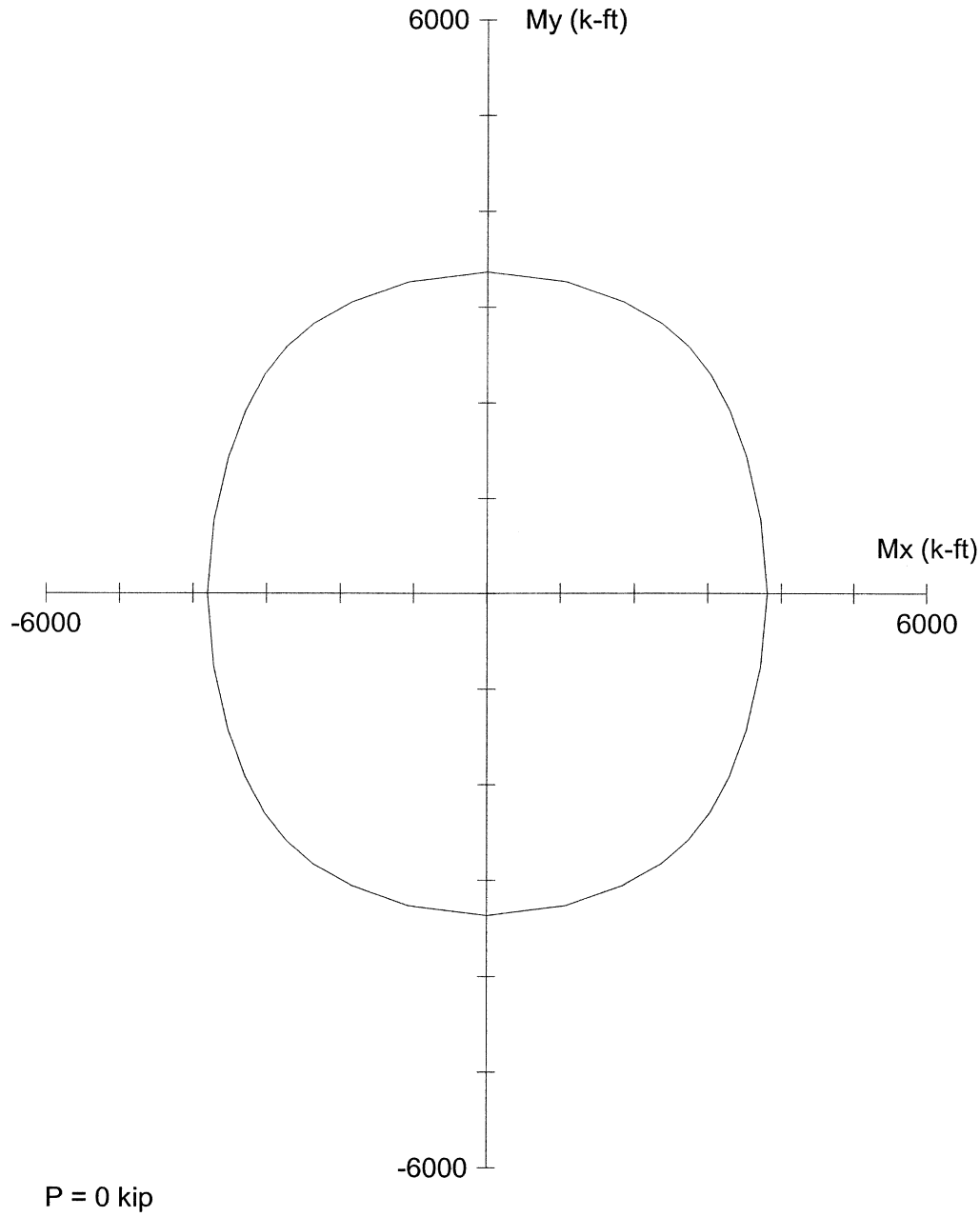

PCACOL V3.00 (PCA 1999) - Licensed to: Licensee name not yet specified.

File: S:\DGN-ST\NORTHC~1\BONNER~1\ANALYSIS\PIERS\HLB144~1\PCACOL~1\NEWFOL~1\M8PLAN.COL

Project: BONNER BRIDGE - OREGON INLET

Column: OL		Engineer: JMJ	
f'c = 3 ksi	fy = 40 ksi	Ag = 3266.34 in^2	32 #11 bars
Ec = 3122 ksi	Es = 29000 ksi	As = 49.92 in^2	Rho = 1.53%
fc = 2.55 ksi	e_rup = Infinity	Xo = 0.00 in	Ix = 999598 in^4
u = 0.003 in/in		Yo = 0.00 in	Iy = 790784 in^4
Beta1 = 0.85		Clear spacing = 4.06 in	Clear cover = 5.00 in
Confinement: Tied	phi(a) = 0.8, phi(b) = 0.9, phi(c) = 0.7		

JMJ 7/06
WDB 7/06

```
OOOOOOO    OOOOO    OOOOO    OOOOO    OOOOO   OO
OO    OO   OO  OO   OO  OO   OO  OO   OO  OO   OO
OO    OO   OO  OO   OO  OO   OO  OO   OO  OO   OO
OO    OO   OO       OO  OO   OO       OO  OO   OO
OO    OO   OO       OOOOOOO  OO       OO  OO   OO
OOOOOOO    OO  OO   OO  OO   OO  OO   OO  OO   OO
OO         OO  OO   OO  OO   OO  OO   OO  OO   OO
OO          OOOOO   OO  OO    OOOOO    OOOOO   OOOOO  (TM)
```

==========
Computer program for the Strength Design of Reinforced Concrete Sections
==========

Licensee stated above acknowledges that Portland Cement Association (PCA) is not and cannot be responsible for either the accuracy or adequacy of the material supplied as input for processing by the PCACOL(tm) computer program. Furthermore, PCA neither makes any warranty expressed nor implied with respect to the correctness of the output prepared by the PCACOL(tm) program. Although PCA has endeavored to produce PCACOL(tm) error free, the program is not and can't be certified infallible. The final and only responsibility for analysis, design and engineering documents is the licensees. Accordingly, PCA disclaims all responsibility in contract, negligence or other tort for any analysis, design or engineering documents prepared in connection with the use of the PCACOL(tm) program.

50% COVERLOSS
f'_c = 4400 PSI

General Information:
==========

File Name: S:\DGN-ST\NORTHC~1\BONNER~1\ANALYSIS\PIERS\HLB144~1\PCACOL~1\M8ACT.COL
Project: BONNER BRIDGE - OREGON INLET
Column: OL — Engineer: JMJ
Code: ACI 318-95 — Units: English

Run Option: Investigation — Slenderness: Not considered
Run Axis: Biaxial — Column Type: Structural

Material Properties:
==========

f'c = 4.4 ksi — fy = 40 ksi
Ec = 3780.96 ksi — Es = 29000 ksi
fc = 3.74 ksi — Rupture strain = Infinity
Ultimate strain = 0.003 in/in
Beta1 = 0.83

Section:
==========

Rectangular: Width = 48.9 in — Depth = 55.6 in

Gross section area, Ag = 2718.84 in^2
Ix = 700409 in^4 — Iy = 541777 in^4
Xo = 0 in — Yo = 0 in

Reinforcement:
==========

Rebar Database: User-defined

Size	Diam (in)	Area (in^2)	Size	Diam (in)	Area (in^2)	Size	Diam (in)	Area (in^2)
# 1	0.00	0.00	# 3	0.38	0.11	# 4	0.50	0.20
# 5	0.63	0.31	# 6	0.75	0.44	# 7	0.88	0.60
# 8	1.00	0.79	# 9	1.13	1.00	# 10	1.27	1.27
# 11	1.41	1.56	# 14	1.69	2.25	# 18	2.26	4.00

Confinement: Tied; #1 ties with #9 bars, #1 with larger bars.
phi(a) = 0.8, phi(b) = 0.9, phi(c) = 0.7

Layout: Rectangular
Pattern: Equal Bar Spacing (Cover to longitudinal reinforcement)
Total steel area, As = 49.92 in^2 at 1.84%
32 #11 Cover = 2.5 in

Factored Loads and Moments with Corresponding Capacities: (see user's manual for notation)
==========

No.	Pu kip	Mux k-ft	Muy k-ft	fMnx k-ft	fMny k-ft	fMn/Mu
1	1039.0	209.0	192.0	3165.9	2907.4	15.145
2	653.0	875.0	271.0	4133.2	1281.0	4.724
3	882.0	556.0	163.0	4287.5	1249.9	7.708
4	927.0	187.0	171.0	3163.2	2889.9	16.908
5	629.0	841.0	183.0	4238.0	919.8	5.039
6	850.0	535.0	157.0	4272.9	1246.4	7.983
7	692.0	139.0	128.0	3096.9	2850.2	22.274
8	464.0	875.0	271.0	3994.1	1234.5	4.564
9	598.0	556.0	111.0	4231.4	844.7	7.610
10	643.0	130.0	139.0	2827.2	3022.7	21.747
11	448.0	841.0	183.0	4080.2	894.4	4.853
12	577.0	535.0	107.0	4213.9	843.4	7.877
13	1121.0	226.0	207.0	3171.9	2900.4	14.024
14	735.0	1951.0	313.0	4372.3	703.7	2.241
15	964.0	1182.0	178.0	4516.2	675.8	3.820

16	1009.0	203.0	403.0	1871.6	3711.1	9.211
17	708.0	1876.0	131.0	4425.1	309.9	2.359
18	928.0	1137.0	247.0	4414.7	964.9	3.884
19	753.0	152.0	139.0	3121.4	2860.0	20.554
20	525.0	1951.0	313.0	4208.9	668.5	2.157
21	660.0	1182.0	122.0	4366.6	452.3	3.694
22	705.0	142.0	440.0	1212.0	3777.2	8.580
23	507.0	1876.0	94.0	4263.1	212.3	2.272
24	636.0	1137.0	283.0	4202.0	1049.1	3.696

*** Program completed as requested! ***

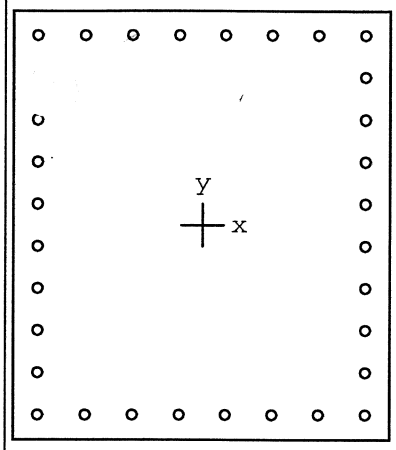

48.9 x 55.6 in

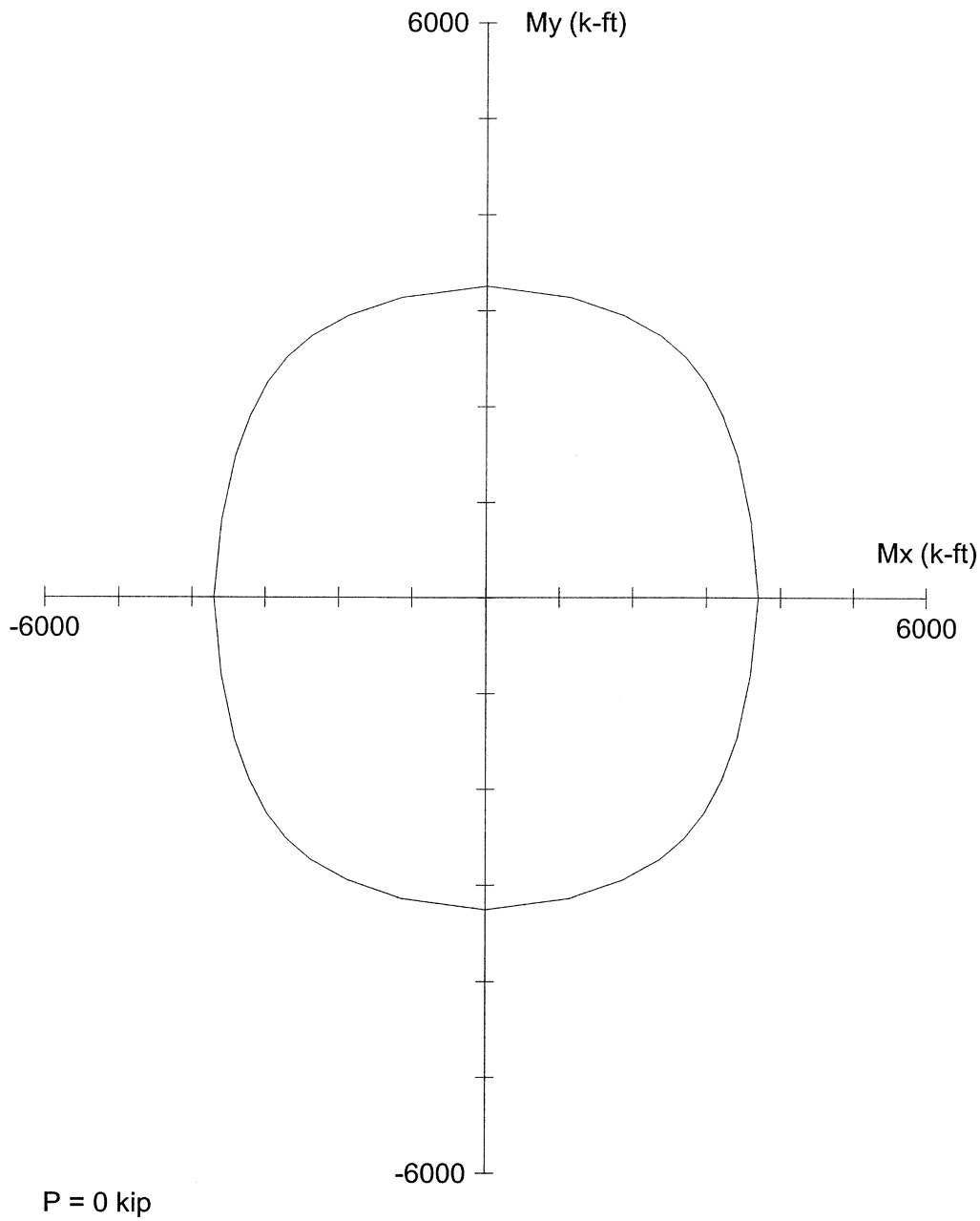

Code: ACI 318-95

Units: English

Run axis: Biaxial

Run option: Investigation

Slenderness: Not considered

.mn type: Structural

Bars: User-defined

Date: 07/25/06

Time: 13:25:43

PCACOL V3.00 (PCA 1999) - Licensed to: Licensee name not yet specified.

File: S:\DGN-ST\NORTHC~1\BONNER~1\ANALYSIS\PIERS\HLB144~1\PCACOL~1\M8ACT.COL

Project: BONNER BRIDGE - OREGON INLET

Column: OL		Engineer: JMJ	
f'c = 4.4 ksi	fy = 40 ksi	Ag = 2718.84 in^2	32 #11 bars
Ec = 3781 ksi	Es = 29000 ksi	As = 49.92 in^2	Rho = 1.84%
fc = 3.74 ksi	e_rup = Infinity	Xo = 0.00 in	Ix = 700409 in^4
_u = 0.003 in/in		Yo = 0.00 in	Iy = 541777 in^4
Beta1 = 0.83		Clear spacing = 4.06 in	Clear cover = 2.50 in
Confinement: Tied	phi(a) = 0.8, phi(b) = 0.9, phi(c) = 0.7		

H. W. LOCHNER, INC.

PROJECT: BONNER BRIDGE - OREGON INLET NORTH CAROLINA JMJ Jun-06
SUBJECT: HIGH LEVEL BENT ANALYSIS WDB Jun-06
HLB 145 MEM. 10 JT. 7

COLUMN LOADS

PMAX

HLB 145 MEMBER 10 JOINT 7

GROUP 1

	P	MY	MZ
DL	688.84	0.00	40.51
LL	128.90	0.00	-8.17
GROUP 1	0.00	0.00	0.00
SERVICE	817.74	0.00	32.34
STRENGTH	1174.78	0.00	34.96

GROUP 2

	P	MY	MZ
DL	688.84	0.00	40.51
LL	0.00	0.00	0.00
GROUP 2	106.56	1500.68	43.55
SERVICE	795.40	1500.68	84.06
STRENGTH	1034.02	1950.88	109.28

GROUP 3

	P	MY	MZ
DL	688.84	0.00	40.51
LL	128.90	0.00	-8.17
GROUP 3	44.90	909.04	16.05
SERVICE	862.64	909.04	48.39
STRENGTH	1121.43	1181.75	62.91

GROUP 4

	P	MY	MZ
DL	688.84	0.00	40.51
LL	128.90	0.00	-8.17
GROUP 4	-0.06	0.00	-373.96
SERVICE	817.68	0.00	-341.62
STRENGTH	1062.98	0.00	-444.11

GROUP 5

	P	MY	MZ
DL	688.84	0.00	40.51
LL	0.00	0.00	0.00
GROUP 5	106.50	1500.68	-330.41
SERVICE	795.34	1500.68	-289.90
STRENGTH	994.18	1875.85	-362.38

GROUP 6

	P	MY	MZ
DL	688.84	0.00	40.51
LL	128.90	0.00	-8.17
GROUP 6	44.85	909.04	-357.92
SERVICE	862.59	909.04	-325.58
STRENGTH	1078.24	1136.30	-406.98

SLENDERNESS EFFECTS IN COMPRESSION MEMBERS (AASHTO 8.16.5)

f'c = 3000 psi PHI = 0.70 W_C = 150 PCF

$E_C = W_C^{1.5} * 33 * f'c^{0.5}$ = 3320561 PSI Width of Rect. Col. = B = 53.892 In.

Depth of Rect. Col = D = 72.624 In.

$r_Y = 0.30*D$ = 21.79 In. L_Y = 6.167 Ft. K_Y = 2.0

$r_Z = 0.30*B$ = 16.17 In. L_Z = 13.667 Ft. K_Z = 1.2

I_{YY} = $B*D^3/12$ I_{YY} = 1720218 In^4

I_{ZZ} = $D*B^3/12$ I_{ZZ} = 947266 In^5

$K_Y L_Y/r$ = 6.8 < 22 NO SLENDERNESS EFFECT

$K_Z L_Z/r$ = 12.2 < 22 NO SLENDERNESS EFFECT

H. W. LOCHNER, INC.

PROJECT: BONNER BRIDGE - OREGON INLET NORTH CAROLINA JMJ Jun-06
SUBJECT: HIGH LEVEL BENT ANALYSIS WDB Jun-06
HLB 145 MEM. 10 JT. 7

SLENDERNESS EFFECTS IN RECTANGULAR COMPRESSION MEMBERS (AASHTO 8.16.5)

GROUP 1

	B	D	KL/R	M_U	M_{DL}	B_D	P_U	P_C	δ_b	δ_s	M_C	
	In.	In.		Ft. Kips	Ft. Kips		Kips	Kips			Ft. Kips	
MY	53.892	72.624	6.8	0.00	0.00	0.000	1175	0	1.000	1.000	272	*
MZ	53.892	72.624	12.2	34.96	52.66	1.506	1175	0	1.000	1.000	217	*

GROUP 2

	B	D	KL/R	M_U	M_{DL}	B_D	P_U	P_C	δ_b	δ_s	M_C	
	In.	In.		Ft. Kips	Ft. Kips		Kips	Kips			Ft. Kips	
MY	53.892	72.624	6.8	1950.88	0.00	0.000	1034	0	1.000	1.000	1951	
MZ	53.892	72.624	12.2	109.28	52.66	0.482	1034	0	1.000	1.000	191	*

GROUP 3

	B	D	KL/R	M_U	M_{DL}	B_D	P_U	P_C	δ_b	δ_s	M_C	
	In.	In.		Ft. Kips	Ft. Kips		Kips	Kips			Ft. Kips	
MY	53.892	72.624	6.8	1181.75	0.00	0.000	1121	0	1.000	1.000	1182	
MZ	53.892	72.624	12.2	62.91	52.66	0.837	1121	0	1.000	1.000	207	*

GROUP 4

	B	D	KL/R	M_U	M_{DL}	B_D	P_U	P_C	δ_b	δ_s	M_C	
	In.	In.		Ft. Kips	Ft. Kips		Kips	Kips			Ft. Kips	
MY	53.892	72.624	6.8	0.00	0.00	0.000	1063	0	1.000	1.000	246	*
MZ	53.892	72.624	12.2	444.11	52.66	0.119	1063	0	1.000	1.000	444	

GROUP 5

	B	D	KL/R	M_U	M_{DL}	B_D	P_U	P_C	δ_b	δ_s	M_C
	In.	In.		Ft. Kips	Ft. Kips		Kips	Kips			Ft. Kips
MY	53.892	72.624	6.8	1875.85	0.00	0.000	994	0	1.000	1.000	1876
MZ	53.892	72.624	12.2	362.38	52.66	0.145	994	0	1.000	1.000	362

GROUP 6

	B	D	KL/R	M_U	M_{DL}	B_D	P_U	P_C	δ_b	δ_s	M_C
	In.	In.		Ft. Kips	Ft. Kips		Kips	Kips			Ft. Kips
MY	53.892	72.624	6.8	1136.30	0.00	0.000	1078	0	1.000	1.000	1136
MZ	53.892	72.624	12.2	406.98	52.66	0.129	1078	0	1.000	1.000	407

* MINIMUM MOMENT CONTROLS

H. W. LOCHNER, INC.

PROJECT: BONNER BRIDGE - OREGON INLET NORTH CAROLINA JMJ Jun-06
SUBJECT: HIGH LEVEL BENT ANALYSIS WDB Jun-06
HLB 145 MEM. 10 JT. 7

COLUMN LOADS

PMIN

HLB 145 MEMBER 10 JOINT 7

GROUP 1

	P	MY	MZ
DL	516.63	0.00	40.51
LL	60.11	0.00	10.71
GROUP 1	0.00	0.00	0.00
SERVICE	576.74	0.00	51.22
STRENGTH	801.86	0.00	75.87

GROUP 2

	P	MY	MZ
DL	516.63	0.00	40.51
LL	0.00	0.00	0.00
GROUP 2	106.56	1500.68	43.55
SERVICE	623.19	1500.68	84.06
STRENGTH	810.15	1950.88	109.28

GROUP 3

	P	MY	MZ
DL	516.63	0.00	40.51
LL	60.11	0.00	10.71
GROUP 3	44.90	909.04	16.05
SERVICE	621.64	909.04	67.27
STRENGTH	808.13	1181.75	87.45

GROUP 4

	P	MY	MZ
DL	516.63	0.00	40.51
LL	60.11	0.00	10.71
GROUP 4	-0.06	0.00	-373.96
SERVICE	576.68	0.00	-322.74
STRENGTH	749.68	0.00	-419.56

GROUP 5

	P	MY	MZ
DL	516.63	0.00	40.51
LL	0.00	0.00	0.00
GROUP 5	106.50	1500.68	-330.41
SERVICE	623.13	1500.68	-289.90
STRENGTH	778.91	1875.85	-362.38

GROUP 6

	P	MY	MZ
DL	516.63	0.00	40.51
LL	60.11	0.00	10.71
GROUP 6	44.85	909.04	-357.92
SERVICE	621.59	909.04	-306.70
STRENGTH	776.99	1136.30	-383.38

SLENDERNESS EFFECTS IN COMPRESSION MEMBERS (AASHTO 8.16.5)

f'c = 3000 psi PHI = 0.70 W_C = 150 PCF

$E_C = W_C$^$^{1.5}$ *33*f'c^$^{0.5}$ = 3320561 PSI Width of Rect. Col. = B = 53.892 In.

Depth of Rect. Col = D = 72.624 In.

r_Y = 0.30*D = 21.79 In. L_Y = 6.167 Ft. K_Y = 2.0

r_Z = 0.30*B = 16.17 In. L_Z = 13.667 Ft. K_Z = 1.2

I_{YY} = B*D^^{3}/12 I_{YY} = 1720218 In^4

I_{ZZ} = D*B^^{3}/12 I_{ZZ} = 947266 In^5

K_YL_Y/r = 6.8 < 22 NO SLENDERNESS EFFECT

K_ZL_Z/r = 12.2 < 22 NO SLENDERNESS EFFECT

H. W. LOCHNER, INC.

PROJECT: BONNER BRIDGE - OREGON INLET NORTH CAROLINA JMJ Jun-06
SUBJECT: HIGH LEVEL BENT ANALYSIS WDB Jun-06
HLB 145 MEM. 10 JT. 7

SLENDERNESS EFFECTS IN RECTANGULAR COMPRESSION MEMBERS (AASHTO 8.16.5)

GROUP 1

	B	D	KL/R	M_U	M_{DL}	B_D	P_U	P_C	δ_b	δ_s	M_C	
	In.	In.		Ft. Kips	Ft. Kips		Kips	Kips			Ft. Kips	
MY	53.892	72.624	6.8	0.00	0.00	0.000	802	0	1.000	1.000	186	*
MZ	53.892	72.624	12.2	75.87	52.66	0.694	802	0	1.000	1.000	148	*

GROUP 2

	B	D	KL/R	M_U	M_{DL}	B_D	P_U	P_C	δ_b	δ_s	M_C	
	In.	In.		Ft. Kips	Ft. Kips		Kips	Kips			Ft. Kips	
MY	53.892	72.624	6.8	1950.88	0.00	0.000	810	0	1.000	1.000	1951	
MZ	53.892	72.624	12.2	109.28	52.66	0.482	810	0	1.000	1.000	150	*

GROUP 3

	B	D	KL/R	M_U	M_{DL}	B_D	P_U	P_C	δ_b	δ_s	M_C	
	In.	In.		Ft. Kips	Ft. Kips		Kips	Kips			Ft. Kips	
MY	53.892	72.624	6.8	1181.75	0.00	0.000	808	0	1.000	1.000	1182	
MZ	53.892	72.624	12.2	87.45	52.66	0.602	808	0	1.000	1.000	149	*

GROUP 4

	B	D	KL/R	M_U	M_{DL}	B_D	P_U	P_C	δ_b	δ_s	M_C	
	In.	In.		Ft. Kips	Ft. Kips		Kips	Kips			Ft. Kips	
MY	53.892	72.624	6.8	0.00	0.00	0.000	750	0	1.000	1.000	174	*
MZ	53.892	72.624	12.2	419.56	52.66	0.126	750	0	1.000	1.000	420	

GROUP 5

	B	D	KL/R	M_U	M_{DL}	B_D	P_U	P_C	δ_b	δ_s	M_C
	In.	In.		Ft. Kips	Ft. Kips		Kips	Kips			Ft. Kips
MY	53.892	72.624	6.8	1875.85	0.00	0.000	779	0	1.000	1.000	1876
MZ	53.892	72.624	12.2	362.38	52.66	0.145	779	0	1.000	1.000	362

GROUP 6

	B	D	KL/R	M_U	M_{DL}	B_D	P_U	P_C	δ_b	δ_s	M_C
	In.	In.		Ft. Kips	Ft. Kips		Kips	Kips			Ft. Kips
MY	53.892	72.624	6.8	1136.30	0.00	0.000	777	0	1.000	1.000	1136
MZ	53.892	72.624	12.2	383.38	52.66	0.137	777	0	1.000	1.000	383

* MINIMUM MOMENT CONTROLS

H. W. LOCHNER, INC.

PROJECT: BONNER BRIDGE - OREGON INLET NORTH CAROLINA JMJ Jun-06
SUBJECT: HIGH LEVEL BENT ANALYSIS WDB Jun-06
HLB 145 MEM. 10 JT. 9

COLUMN LOADS

PMAX

HLB 145 MEMBER 10 JOINT 9

GROUP 1

	P	MY	MZ
DL	-724.52	0.00	16.36
LL	-128.90	0.00	-21.32
GROUP 1	0.00	0.00	0.00
SERVICE	-853.42	0.00	-4.96
STRENGTH	-1221.16	0.00	-24.93

GROUP 2

	P	MY	MZ
DL	-724.52	0.00	16.36
LL	0.00	0.00	0.00
GROUP 2	-106.74	-2206.65	346.08
SERVICE	-831.26	-2206.65	362.44
STRENGTH	-1080.64	-2868.65	471.17

GROUP 3

	P	MY	MZ
DL	-724.52	0.00	16.36
LL	-128.90	0.00	-21.32
GROUP 3	-44.96	-1292.92	141.80
SERVICE	-898.38	-1292.92	136.84
STRENGTH	-1167.89	-1680.80	177.89

GROUP 4

	P	MY	MZ
DL	-724.52	0.00	16.36
LL	-128.90	0.00	-21.32
GROUP 4	0.06	0.00	362.88
SERVICE	-853.36	0.00	357.92
STRENGTH	-1109.37	0.00	465.30

GROUP 5

	P	MY	MZ
DL	-724.52	0.00	16.36
LL	0.00	0.00	0.00
GROUP 5	-106.68	-2206.65	708.96
SERVICE	-831.20	-2206.65	725.32
STRENGTH	-1039.00	-2758.31	906.65

GROUP 6

	P	MY	MZ
DL	-724.52	0.00	16.36
LL	-128.90	0.00	-21.32
GROUP 6	-44.90	-1292.92	504.68
SERVICE	-898.32	-1292.92	499.72
STRENGTH	-1122.90	-1616.15	624.65

SLENDERNESS EFFECTS IN COMPRESSION MEMBERS (AASHTO 8.16.5)

f'c = 3000 psi PHI = 0.70 W_C = 150 PCF

$E_C = W_C^{1.5} * 33 * f'c^{0.5}$ = 3320561 PSI Width of Rect. Col. = B = 53.892 In.
Depth of Rect. Col = D = 72.624 In.

$r_Y = 0.30*D$ = 21.79 In. L_Y = 6.167 Ft. K_Y = 2.0
$r_Z = 0.30*B$ = 16.17 In. L_Z = 13.667 Ft. K_Z = 1.2

I_{YY} = $B*D^3/12$ I_{YY} = 1720218 In^4
I_{ZZ} = $D*B^3/12$ I_{ZZ} = 947266 In^5

$K_Y L_Y/r$ = 6.8 < 22 NO SLENDERNESS EFFECT
$K_Z L_Z/r$ = 12.2 < 22 NO SLENDERNESS EFFECT

H. W. LOCHNER, INC.

PROJECT: BONNER BRIDGE - OREGON INLET NORTH CAROLINA JMJ Jun-06
SUBJECT: HIGH LEVEL BENT ANALYSIS WDB Jun-06
HLB 145 MEM. 10 JT. 9

SLENDERNESS EFFECTS IN RECTANGULAR COMPRESSION MEMBERS (AASHTO 8.16.5)

GROUP 1

	B	D	KL/R	M_U	M_{DL}	B_D	P_U	P_C	δ_b	δ_s	M_C	
	In.	In.		Ft. Kips	Ft. Kips		Kips	Kips			Ft. Kips	
MY	53.892	72.624	6.8	0.00	0.00	0.000	1221	0	1.000	1.000	283	*
MZ	53.892	72.624	12.2	24.93	21.27	0.853	1221	0	1.000	1.000	226	*

GROUP 2

	B	D	KL/R	M_U	M_{DL}	B_D	P_U	P_C	δ_b	δ_s	M_C
	In.	In.		Ft. Kips	Ft. Kips		Kips	Kips			Ft. Kips
MY	53.892	72.624	6.8	2868.65	0.00	0.000	1081	0	1.000	1.000	2869
MZ	53.892	72.624	12.2	471.17	21.27	0.045	1081	0	1.000	1.000	471

GROUP 3

	B	D	KL/R	M_U	M_{DL}	B_D	P_U	P_C	δ_b	δ_s	M_C	
	In.	In.		Ft. Kips	Ft. Kips		Kips	Kips			Ft. Kips	
MY	53.892	72.624	6.8	1680.80	0.00	0.000	1168	0	1.000	1.000	1681	
MZ	53.892	72.624	12.2	177.89	21.27	0.120	1168	0	1.000	1.000	216	*

GROUP 4

	B	D	KL/R	M_U	M_{DL}	B_D	P_U	P_C	δ_b	δ_s	M_C	
	In.	In.		Ft. Kips	Ft. Kips		Kips	Kips			Ft. Kips	
MY	53.892	72.624	6.8	0.00	0.00	0.000	1109	0	1.000	1.000	257	*
MZ	53.892	72.624	12.2	465.30	21.27	0.046	1109	0	1.000	1.000	465	

GROUP 5

	B	D	KL/R	M_U	M_{DL}	B_D	P_U	P_C	δ_b	δ_s	M_C
	In.	In.		Ft. Kips	Ft. Kips		Kips	Kips			Ft. Kips
MY	53.892	72.624	6.8	2758.31	0.00	0.000	1039	0	1.000	1.000	2758
MZ	53.892	72.624	12.2	906.65	21.27	0.023	1039	0	1.000	1.000	907

GROUP 6

	B	D	KL/R	M_U	M_{DL}	B_D	P_U	P_C	δ_b	δ_s	M_C
	In.	In.		Ft. Kips	Ft. Kips		Kips	Kips			Ft. Kips
MY	53.892	72.624	6.8	1616.15	0.00	0.000	1123	0	1.000	1.000	1616
MZ	53.892	72.624	12.2	624.65	21.27	0.034	1123	0	1.000	1.000	625

* MINIMUM MOMENT CONTROLS

H. W. LOCHNER, INC.

PROJECT: BONNER BRIDGE - OREGON INLET NORTH CAROLINA JMJ Jun-06
SUBJECT: HIGH LEVEL BENT ANALYSIS WDB Jun-06
HLB 145 MEM. 10 JT. 9

COLUMN LOADS

PMIN

HLB 145 MEMBER 10 JOINT 9

	GROUP 1				GROUP 2		
	P	MY	MZ		P	MY	MZ
DL	-543.39	0.00	16.36	DL	-543.39	0.00	16.36
LL	-60.11	0.00	18.81	LL	0.00	0.00	0.00
GROUP 1	0.00	0.00	0.00	GROUP 2	-106.74	-2206.65	346.08
SERVICE	-603.50	0.00	35.17	SERVICE	-650.13	-2206.65	362.44
STRENGTH	-836.65	0.00	62.02	STRENGTH	-845.17	-2868.65	471.17

	GROUP 3				GROUP 4		
	P	MY	MZ		P	MY	MZ
DL	-543.39	0.00	16.36	DL	-543.39	0.00	16.36
LL	-60.11	0.00	18.81	LL	-60.11	0.00	18.81
GROUP 3	-44.96	-1292.92	141.80	GROUP 4	0.06	0.00	362.88
SERVICE	-648.46	-1292.92	176.97	SERVICE	-603.44	0.00	398.05
STRENGTH	-843.00	-1680.80	230.06	STRENGTH	-784.47	0.00	517.47

	GROUP 5				GROUP 6		
	P	MY	MZ		P	MY	MZ
DL	-543.39	0.00	16.36	DL	-543.39	0.00	16.36
LL	0.00	0.00	0.00	LL	-60.11	0.00	18.81
GROUP 5	-106.68	-2206.65	708.96	GROUP 6	-44.90	-1292.92	504.68
SERVICE	-650.07	-2206.65	725.32	SERVICE	-648.40	-1292.92	539.85
STRENGTH	-812.59	-2758.31	906.65	STRENGTH	-810.50	-1616.15	674.81

SLENDERNESS EFFECTS IN COMPRESSION MEMBERS (AASHTO 8.16.5)

f'c = 3000 psi PHI = 0.70 W_C = 150 PCF

$E_C = W_C^{1.5} * 33 * f'c^{0.5}$ = 3320561 PSI Width of Rect. Col. = B = 53.892 In.

Depth of Rect. Col = D = 72.624 In.

$r_Y = 0.30*D$ = 21.79 In. L_Y = 6.167 Ft. K_Y = 2.0

$r_Z = 0.30*B$ = 16.17 In. L_Z = 13.667 Ft. K_Z = 1.2

I_{YY} = $B*D^3/12$ I_{YY} = 1720218 In^4

I_{ZZ} = $D*B^3/12$ I_{ZZ} = 947266 In^5

$K_Y L_Y/r$ = 6.8 < 22 NO SLENDERNESS EFFECT

$K_Z L_Z/r$ = 12.2 < 22 NO SLENDERNESS EFFECT

H. W. LOCHNER, INC.

PROJECT: BONNER BRIDGE - OREGON INLET NORTH CAROLINA JMJ Jun-06
SUBJECT: HIGH LEVEL BENT ANALYSIS WDB Jun-06
HLB 145 MEM. 10 JT. 9

SLENDERNESS EFFECTS IN RECTANGULAR COMPRESSION MEMBERS (AASHTO 8.16.5)

GROUP 1

	B	D	KL/R	M_U	M_{DL}	B_D	P_U	P_C	δ_b	δ_s	M_C	
	In.	In.		Ft. Kips	Ft. Kips		Kips	Kips			Ft. Kips	
MY	53.892	72.624	6.8	0.00	0.00	0.000	837	0	1.000	1.000	194	*
MZ	53.892	72.624	12.2	62.02	21.27	0.343	837	0	1.000	1.000	155	*

GROUP 2

	B	D	KL/R	M_U	M_{DL}	B_D	P_U	P_C	δ_b	δ_s	M_C
	In.	In.		Ft. Kips	Ft. Kips		Kips	Kips			Ft. Kips
MY	53.892	72.624	6.8	2868.65	0.00	0.000	845	0	1.000	1.000	2869
MZ	53.892	72.624	12.2	471.17	21.27	0.045	845	0	1.000	1.000	471

GROUP 3

	B	D	KL/R	M_U	M_{DL}	B_D	P_U	P_C	δ_b	δ_s	M_C
	In.	In.		Ft. Kips	Ft. Kips		Kips	Kips			Ft. Kips
MY	53.892	72.624	6.8	1680.80	0.00	0.000	843	0	1.000	1.000	1681
MZ	53.892	72.624	12.2	230.06	21.27	0.092	843	0	1.000	1.000	230

GROUP 4

	B	D	KL/R	M_U	M_{DL}	B_D	P_U	P_C	δ_b	δ_s	M_C	
	In.	In.		Ft. Kips	Ft. Kips		Kips	Kips			Ft. Kips	
MY	53.892	72.624	6.8	0.00	0.00	0.000	784	0	1.000	1.000	182	*
MZ	53.892	72.624	12.2	517.47	21.27	0.041	784	0	1.000	1.000	517	

GROUP 5

	B	D	KL/R	M_U	M_{DL}	B_D	P_U	P_C	δ_b	δ_s	M_C
	In.	In.		Ft. Kips	Ft. Kips		Kips	Kips			Ft. Kips
MY	53.892	72.624	6.8	2758.31	0.00	0.000	813	0	1.000	1.000	2758
MZ	53.892	72.624	12.2	906.65	21.27	0.023	813	0	1.000	1.000	907

GROUP 6

	B	D	KL/R	M_U	M_{DL}	B_D	P_U	P_C	δ_b	δ_s	M_C
	In.	In.		Ft. Kips	Ft. Kips		Kips	Kips			Ft. Kips
MY	53.892	72.624	6.8	1616.15	0.00	0.000	811	0	1.000	1.000	1616
MZ	53.892	72.624	12.2	674.81	21.27	0.032	811	0	1.000	1.000	675

* MINIMUM MOMENT CONTROLS

JMJ 7/06
WDB 7/06

```
OOOOOOO    OOOOO    OOOOO    OOOOO    OOOOO   OO
OO    OO   OO  OO   OO  OO   OO  OO   OO  OO   OO
OO    OO   OO  OO   OO  OO   OO  OO   OO  OO   OO
OO    OO   OO       OO  OO   OO       OO  OO   OO
OO    OO   OO       OOOOOOO  OO       OO  OO   OO
OOOOOOO    OO  OO   OO  OO   OO  OO   OO  OO   OO
OO         OO  OO   OO  OO   OO  OO   OO  OO   OO
OO          OOOOO   OO  OO    OOOOO    OOOOO   OOOOO  (TM)
```

==========
Computer program for the Strength Design of Reinforced Concrete Sections
==========

Licensee stated above acknowledges that Portland Cement Association (PCA) is not and cannot be responsible for either the accuracy or adequacy of the material supplied as input for processing by the PCACOL(tm) computer program. Furthermore, PCA neither makes any warranty expressed nor implied with respect to the correctness of the output prepared by the PCACOL(tm) program. Although PCA has endeavored to produce PCACOL(tm) error free, the program is not and can't be certified infallible. The final and only responsibility for analysis, design and engineering documents is the licensees. Accordingly, PCA disclaims all responsibility in contract, negligence or other tort for any analysis, design or engineering documents prepared in connection with the use of the PCACOL(tm) program.

BASED ON PLANS.

General Information:
==========

File Name: S:\DGN-ST\NORTHC~1\BONNER~1\ANALYSIS\PIERS\HLB144~1\PCACOL~1\NEWFOL~1\M10PLAN.COL
Project: BONNER BRIDGE - OREGON INLET
Column: HLB #145 Engineer: JMJ
Code: ACI 318-95 Units: English

Run Option: Investigation Slenderness: Not considered
Run Axis: Biaxial Column Type: Structural

Material Properties:
==========

f'c = 3 ksi fy = 40 ksi
Ec = 3122.02 ksi Es = 29000 ksi
fc = 2.55 ksi Rupture strain = Infinity
Ultimate strain = 0.003 in/in
Beta1 = 0.85

Section:
==========

Rectangular: Width = 53.9 in Depth = 72.6 in

Gross section area, Ag = 3913.14 in^2
Ix = 1.71877e+006 in^4 Iy = 947375 in^4
Xo = 0 in Yo = 0 in

Reinforcement:
==========

Rebar Database: User-defined

Size	Diam (in)	Area (in^2)	Size	Diam (in)	Area (in^2)	Size	Diam (in)	Area (in^2)
# 1	0.00	0.00	# 3	0.38	0.11	# 4	0.50	0.20
# 5	0.63	0.31	# 6	0.75	0.44	# 7	0.88	0.60
# 8	1.00	0.79	# 9	1.13	1.00	# 10	1.27	1.27
# 11	1.41	1.56	# 14	1.69	2.25	# 18	2.26	4.00

Confinement: Tied; #1 ties with #9 bars, #1 with larger bars.
phi(a) = 0.8, phi(b) = 0.9, phi(c) = 0.7

Layout: Rectangular
Pattern: Equal Bar Spacing (Cover to longitudinal reinforcement)
Total steel area, As = 49.92 in^2 at 1.28%
32 #11 Cover = 5 in

Factored Loads and Moments with Corresponding Capacities: (see user's manual for notation)
==========

No.	Pu kip	Mux k-ft	Muy k-ft	fMnx k-ft	fMny k-ft	fMn/Mu
1	1175.0	272.0	217.0	3930.0	3124.3	14.429
2	1034.0	1951.0	191.0	5834.2	580.2	2.991
3	1121.0	1182.0	207.0	5713.5	1004.4	4.834
4	1063.0	246.0	444.0	2209.8	3983.3	8.974
5	994.0	1876.0	362.0	5638.8	1090.9	3.006
6	1078.0	1136.0	407.0	5225.0	1874.3	4.600
7	802.0	186.0	148.0	3904.7	3098.7	20.971
8	810.0	1951.0	150.0	5717.8	435.6	2.931
9	808.0	1182.0	149.0	5647.0	720.4	4.778
10	750.0	174.0	420.0	1647.0	3988.4	9.492
11	779.0	1876.0	362.0	5507.3	1062.6	2.936
12	777.0	1136.0	383.0	5170.7	1747.9	4.553
13	1221.0	283.0	226.0	3950.7	3164.9	13.977
14	1081.0	2869.0	471.0	5733.9	942.1	1.999
15	1168.0	1681.0	216.0	5817.0	749.5	3.461

	109.0	257.0	465.0	2207.1	3988.3	8.579
	39.0	2758.0	907.0	5298.8	1751.1	1.922
	3.0	1616.0	625.0	5140.7	1992.3	3.182
	.0	194.0	155.0	3900.5	3115.2	20.103
	45.0	2869.0	471.0	5609.2	924.7	1.955
	843.0	1681.0	230.0	5662.1	768.4	3.368
	784.0	182.0	517.0	1431.8	4055.8	7.847
23	813.0	2758.0	907.0	5217.0	1711.4	1.891
24	811.0	1616.0	675.0	4972.3	2077.0	3.077

*** Program completed as requested! ***

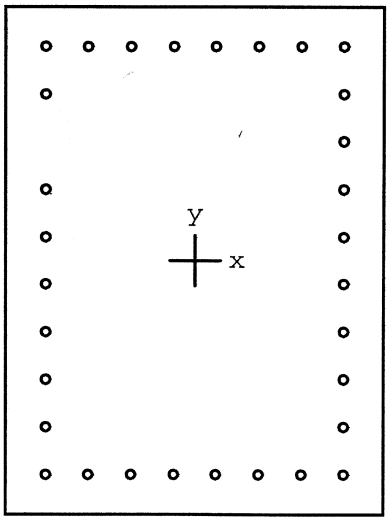

53.9 x 72.6 in

Code: ACI 318-95

Units: English

Run axis: Biaxial

Run option: Investigation

Slenderness: Not considered

mn type: Structural

Bars: User-defined

Date: 07/20/06

Time: 16:06:00

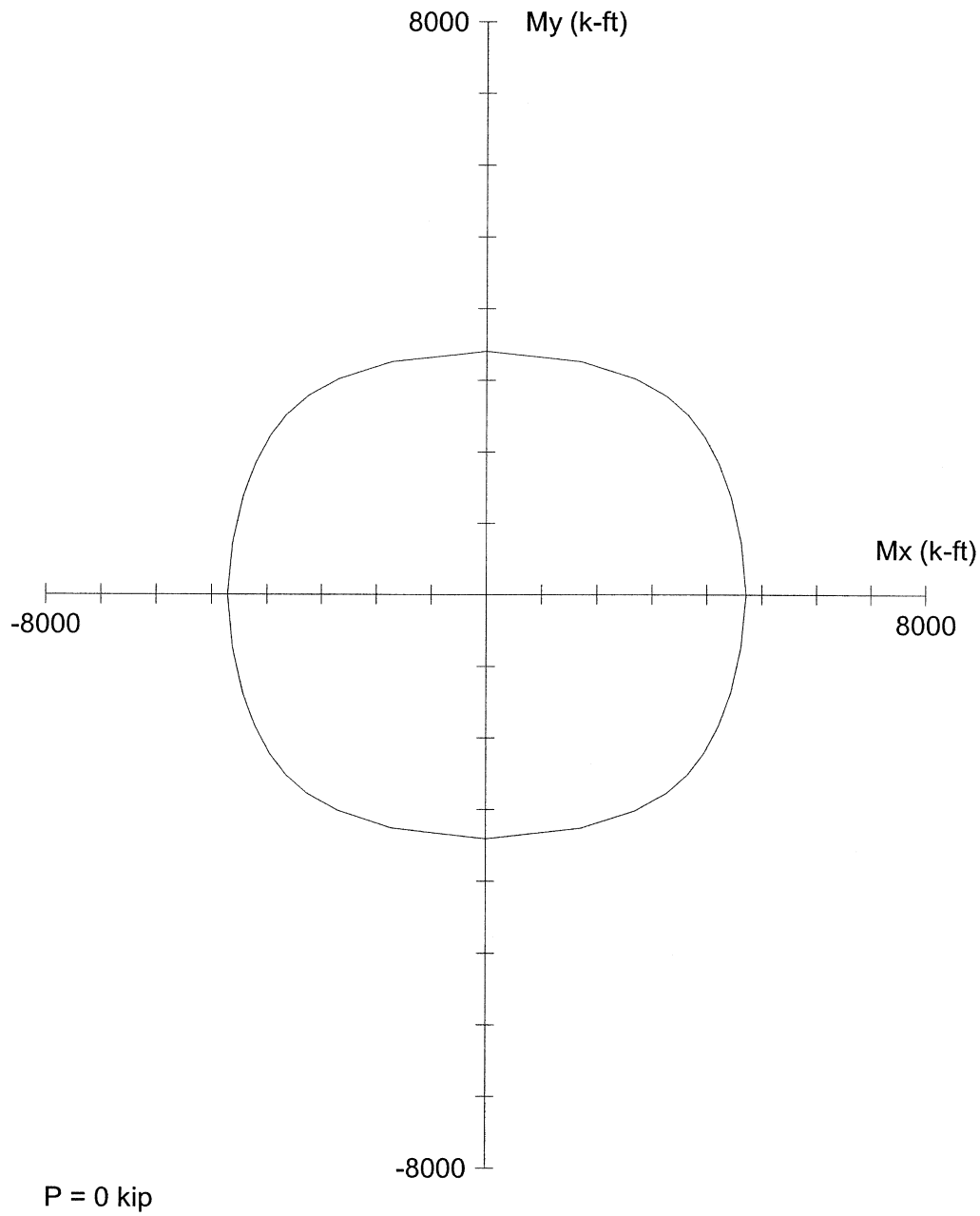

PCACOL V3.00 (PCA 1999) - Licensed to: Licensee name not yet specified.

File: S:\DGN-ST\NORTHC~1\BONNER~1\ANALYSIS\PIERS\HLB144~1\PCACOL~1\NEWFOL~1\M10PLAN.COL

Project: BONNER BRIDGE - OREGON INLET

Column: COL		Engineer: JMJ	
f'c = 3 ksi	fy = 40 ksi	Ag = 3913.14 in^2	32 #11 bars
Ec = 3122 ksi	Es = 29000 ksi	As = 49.92 in^2	Rho = 1.28%
fc = 2.55 ksi	e_rup = Infinity	Xo = 0.00 in	Ix = 1.71877e+006 in^4
ı = 0.003 in/in		Yo = 0.00 in	Iy = 947375 in^4
Beta1 = 0.85		Clear spacing = 4.66 in	Clear cover = 5.00 in
Confinement: Tied	phi(a) = 0.8, phi(b) = 0.9, phi(c) = 0.7		

JMJ 7/06
WDB 7/06

```
OOOOOOO    OOOOO    OOOOO    OOOOO    OOOOO   OO
OO    OO   OO  OO   OO  OO   OO  OO   OO  OO   OO
OO    OO   OO  OO   OO  OO   OO  OO   OO  OO   OO
OO    OO   OO       OO  OO   OO       OO  OO   OO
OO    OO   OO       OOOOOOO  OO       OO  OO   OO
OOOOOOO    OO  OO   OO  OO   OO  OO   OO  OO   OO
OO         OO  OO   OO  OO   OO  OO   OO  OO   OO
OO          OOOOO   OO  OO    OOOOO    OOOOO   OOOOO  (TM)
```

==========
Computer program for the Strength Design of Reinforced Concrete Sections
==========

Licensee stated above acknowledges that Portland Cement Association (PCA) is not and cannot be responsible for either the accuracy or adequacy of the material supplied as input for processing by the PCACOL(tm) computer program. Furthermore, PCA neither makes any warranty expressed nor implied with respect to the correctness of the output prepared by the PCACOL(tm) program. Although PCA has endeavored to produce PCACOL(tm) error free, the program is not and can't be certified infallible. The final and only responsibility for analysis, design and engineering documents is the licensees. Accordingly, PCA disclaims all responsibility in contract, negligence or other tort for any analysis, design or engineering documents prepared in connection with the use of the PCACOL(tm) program.

50% COVER LOSS

f'_c = 4400 PSI

General Information:
==========

File Name: S:\DGN-ST\NORTHC~1\BONNER~1\ANALYSIS\PIERS\HLB144~1\PCACOL~1\M10ACT.COL
Project: BONNER BRIDGE - OREGON INLET
Column: COL Engineer: JMJ
Code: ACI 318-95 Units: English

Run Option: Investigation Slenderness: Not considered
Run Axis: Biaxial Column Type: Structural

Material Properties:
==========

f'c = 4.4 ksi fy = 40 ksi
Ec = 3780.96 ksi Es = 29000 ksi
fc = 3.74 ksi Rupture strain = Infinity
Ultimate strain = 0.003 in/in
Beta1 = 0.83

Section:
==========

Rectangular: Width = 48.9 in Depth = 67.6 in

Gross section area, Ag = 3305.64 in^2
Ix = 1.25883e+006 in^4 Iy = 658707 in^4
Xo = 0 in Yo = 0 in

Reinforcement:
==========

Rebar Database: User-defined

Size	Diam (in)	Area (in^2)	Size	Diam (in)	Area (in^2)	Size	Diam (in)	Area (in^2)
# 1	0.00	0.00	# 3	0.38	0.11	# 4	0.50	0.20
# 5	0.63	0.31	# 6	0.75	0.44	# 7	0.88	0.60
# 8	1.00	0.79	# 9	1.13	1.00	# 10	1.27	1.27
# 11	1.41	1.56	# 14	1.69	2.25	# 18	2.26	4.00

Confinement: Tied; #1 ties with #9 bars, #1 with larger bars.
phi(a) = 0.8, phi(b) = 0.9, phi(c) = 0.7

Layout: Rectangular
Pattern: Equal Bar Spacing (Cover to longitudinal reinforcement)
Total steel area, As = 49.92 in^2 at 1.51%
32 #11 Cover = 2.5 in

Factored Loads and Moments with Corresponding Capacities: (see user's manual for notation)
==========

No.	Pu kip	Mux k-ft	Muy k-ft	fMnx k-ft	fMny k-ft	fMn/Mu
1	1175.0	272.0	217.0	4149.9	3303.8	15.244
2	1034.0	1951.0	191.0	5994.6	588.2	3.073
3	1121.0	1182.0	207.0	5936.0	1034.8	5.021
4	1063.0	246.0	444.0	2257.2	4081.0	9.188
5	994.0	1876.0	362.0	5791.5	1119.3	3.087
6	1078.0	1136.0	407.0	5445.8	1951.9	4.794
7	802.0	186.0	148.0	3981.1	3173.4	21.418
8	810.0	1951.0	150.0	5783.6	449.1	2.965
9	808.0	1182.0	149.0	5719.0	726.8	4.839
10	750.0	174.0	420.0	1654.5	3978.4	9.478
11	779.0	1876.0	362.0	5583.2	1074.0	2.976
12	777.0	1136.0	383.0	5270.6	1769.3	4.638
13	1221.0	283.0	226.0	4154.1	3319.6	14.683
14	1081.0	2869.0	471.0	5921.7	981.8	2.065
15	1168.0	1681.0	216.0	6060.9	787.8	3.606

16	1109.0	257.0	465.0	2266.0	4106.2	8.827
17	1039.0	2758.0	907.0	5499.4	1807.7	1.994
18	1123.0	1616.0	625.0	5390.8	2079.6	3.335
19	837.0	194.0	155.0	4002.3	3189.2	20.609
20	845.0	2869.0	471.0	5705.8	927.4	1.988
21	843.0	1681.0	230.0	5743.4	785.6	3.417
22	784.0	182.0	517.0	1431.1	4048.1	7.834
23	813.0	2758.0	907.0	5324.3	1744.2	1.930
24	811.0	1616.0	675.0	5086.1	2116.8	3.146

*** Program completed as requested! ***

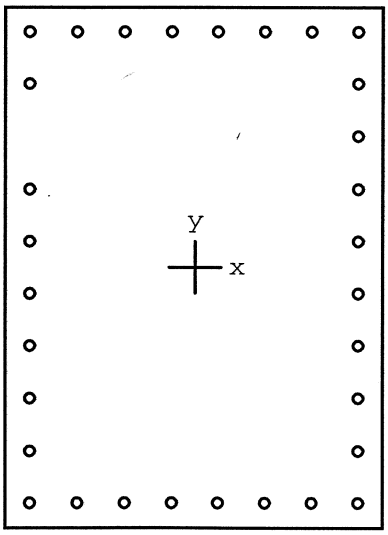

48.9 x 67.6 in

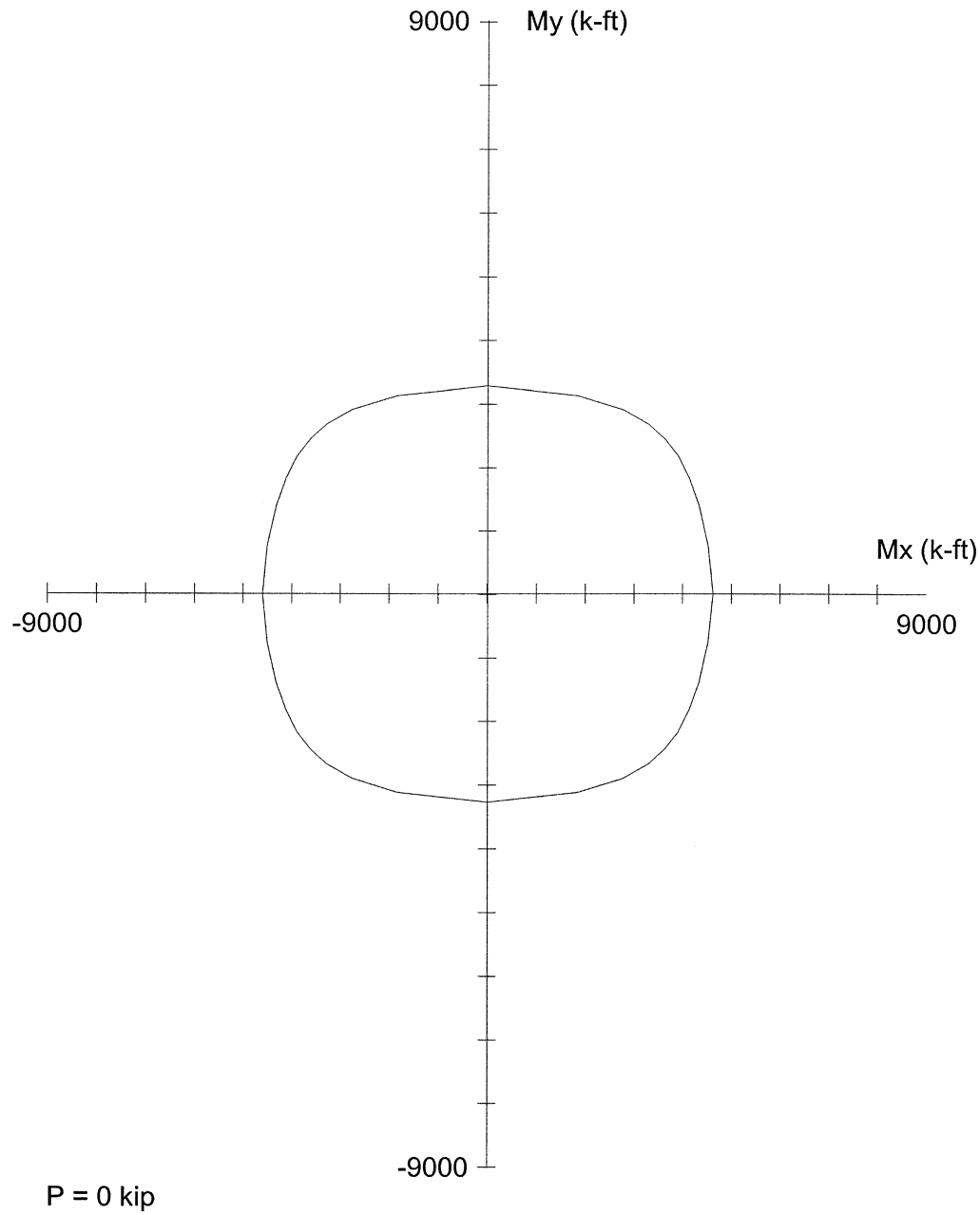

Code: ACI 318-95

Units: English

Run axis: Biaxial

Run option: Investigation

Slenderness: Not considered

mn type: Structural

Bars: User-defined

Date: 07/25/06

Time: 13:25:53

PCACOL V3.00 (PCA 1999) - Licensed to: Licensee name not yet specified.

File: S:\DGN-ST\NORTHC~1\BONNER~1\ANALYSIS\PIERS\HLB144~1\PCACOL~1\M10ACT.COL

Project: BONNER BRIDGE - OREGON INLET

Column: COL		Engineer: JMJ	
f'c = 4.4 ksi	fy = 40 ksi	Ag = 3305.64 in^2	32 #11 bars
Ec = 3781 ksi	Es = 29000 ksi	As = 49.92 in^2	Rho = 1.51%
fc = 3.74 ksi	e_rup = Infinity	Xo = 0.00 in	Ix = 1.25883e+006 in^4
u = 0.003 in/in		Yo = 0.00 in	Iy = 658707 in^4
Beta1 = 0.83		Clear spacing = 4.66 in	Clear cover = 2.50 in
Confinement: Tied	phi(a) = 0.8, phi(b) = 0.9, phi(c) = 0.7		

H. W. LOCHNER, INC.

PROJECT: BONNER BRIDGE - OREGON INLET NORTH CAROLINA JMJ Jun-06
SUBJECT: HIGH LEVEL BENT ANALYSIS WDB Jun-06
HLB 145 MEM. 11 JT. 8

COLUMN LOADS

PMAX

HLB 145 MEMBER 11 JOINT 8

GROUP 1

	P	MY	MZ
DL	668.66	0.00	44.62
LL	128.86	0.00	-7.55
GROUP 1	0.00	0.00	0.00
SERVICE	797.52	0.00	37.07
STRENGTH	1148.45	0.00	41.65

GROUP 2

	P	MY	MZ
DL	668.66	0.00	44.62
LL	0.00	0.00	0.00
GROUP 2	-106.53	-1500.77	-43.66
SERVICE	562.13	-1500.77	0.96
STRENGTH	730.77	-1951.00	1.25

GROUP 3

	P	MY	MZ
DL	668.66	0.00	44.62
LL	128.86	0.00	-7.55
GROUP 3	-44.89	-909.10	-16.09
SERVICE	752.63	-909.10	20.98
STRENGTH	978.42	-1181.83	27.27

GROUP 4

	P	MY	MZ
DL	668.66	0.00	44.62
LL	128.86	0.00	-7.55
GROUP 4	-0.04	0.00	-373.81
SERVICE	797.48	0.00	-336.74
STRENGTH	1036.72	0.00	-437.76

GROUP 5

	P	MY	MZ
DL	668.66	0.00	44.62
LL	0.00	0.00	0.00
GROUP 5	-106.58	-1500.77	-417.48
SERVICE	562.08	-1500.77	-372.86
STRENGTH	702.60	-1875.96	-466.08

GROUP 6

	P	MY	MZ
DL	668.66	0.00	44.62
LL	128.86	0.00	-7.55
GROUP 6	-44.94	-909.10	-389.91
SERVICE	752.58	-909.10	-352.84
STRENGTH	940.73	-1136.38	-441.05

SLENDERNESS EFFECTS IN COMPRESSION MEMBERS (AASHTO 8.16.5)

f'c = 3000 psi PHI = 0.70 W_C = 150 PCF

$E_C = W_C^{1.5} * 33 * f'c^{0.5}$ = 3320561 PSI Width of Rect. Col. = B = 53.892 In.

Depth of Rect. Col = D = 72.624 In.

$r_Y = 0.30*D$ = 21.79 In. L_Y = 6.167 Ft. K_Y = 2.0

$r_Z = 0.30*B$ = 16.17 In. L_Z = 13.667 Ft. K_Z = 1.2

I_{YY} = $B*D^3/12$ I_{YY} = 1720218 In^4

I_{ZZ} = $D*B^3/12$ I_{ZZ} = 947266 In^5

$K_Y L_Y/r$ = 6.8 < 22 NO SLENDERNESS EFFECT

$K_Z L_Z/r$ = 12.2 < 22 NO SLENDERNESS EFFECT

H. W. LOCHNER, INC.

PROJECT: BONNER BRIDGE - OREGON INLET NORTH CAROLINA — JMJ Jun-06
SUBJECT: HIGH LEVEL BENT ANALYSIS — WDB Jun-06
HLB 145 MEM. 11 JT. 8

SLENDERNESS EFFECTS IN RECTANGULAR COMPRESSION MEMBERS (AASHTO 8.16.5)

GROUP 1

	B	D	KL/R	M_U	M_{DL}	B_D	P_U	P_C	δ_b	δ_s	M_C	
	In.	In.		Ft. Kips	Ft. Kips		Kips	Kips			Ft. Kips	
MY	53.892	72.624	6.8	0.00	0.00	0.000	1148	0	1.000	1.000	266	*
MZ	53.892	72.624	12.2	41.65	58.01	1.393	1148	0	1.000	1.000	212	*

GROUP 2

	B	D	KL/R	M_U	M_{DL}	B_D	P_U	P_C	δ_b	δ_s	M_C	
	In.	In.		Ft. Kips	Ft. Kips		Kips	Kips			Ft. Kips	
MY	53.892	72.624	6.8	1951.00	0.00	0.000	731	0	1.000	1.000	1951	
MZ	53.892	72.624	12.2	1.25	58.01	46.479	731	0	1.000	1.000	135	*

GROUP 3

	B	D	KL/R	M_U	M_{DL}	B_D	P_U	P_C	δ_b	δ_s	M_C	
	In.	In.		Ft. Kips	Ft. Kips		Kips	Kips			Ft. Kips	
MY	53.892	72.624	6.8	1181.83	0.00	0.000	978	0	1.000	1.000	1182	
MZ	53.892	72.624	12.2	27.27	58.01	2.127	978	0	1.000	1.000	181	*

GROUP 4

	B	D	KL/R	M_U	M_{DL}	B_D	P_U	P_C	δ_b	δ_s	M_C	
	In.	In.		Ft. Kips	Ft. Kips		Kips	Kips			Ft. Kips	
MY	53.892	72.624	6.8	0.00	0.00	0.000	1037	0	1.000	1.000	240	*
MZ	53.892	72.624	12.2	437.76	58.01	0.133	1037	0	1.000	1.000	438	

GROUP 5

	B	D	KL/R	M_U	M_{DL}	B_D	P_U	P_C	δ_b	δ_s	M_C
	In.	In.		Ft. Kips	Ft. Kips		Kips	Kips			Ft. Kips
MY	53.892	72.624	6.8	1875.96	0.00	0.000	703	0	1.000	1.000	1876
MZ	53.892	72.624	12.2	466.08	58.01	0.124	703	0	1.000	1.000	466

GROUP 6

	B	D	KL/R	M_U	M_{DL}	B_D	P_U	P_C	δ_b	δ_s	M_C
	In.	In.		Ft. Kips	Ft. Kips		Kips	Kips			Ft. Kips
MY	53.892	72.624	6.8	1136.38	0.00	0.000	941	0	1.000	1.000	1136
MZ	53.892	72.624	12.2	441.05	58.01	0.132	941	0	1.000	1.000	441

* MINIMUM MOMENT CONTROLS

H. W. LOCHNER, INC.

PROJECT: BONNER BRIDGE - OREGON INLET NORTH CAROLINA JMJ Jun-06
SUBJECT: HIGH LEVEL BENT ANALYSIS WDB Jun-06
HLB 145 MEM. 11 JT. 8

COLUMN LOADS

PMIN

HLB 145 MEMBER 11 JOINT 8

GROUP 1

	P	MY	MZ
DL	501.50	0.00	44.62
LL	60.08	0.00	11.26
GROUP 1	0.00	0.00	0.00
SERVICE	561.58	0.00	55.88
STRENGTH	782.12	0.00	82.40

GROUP 2

	P	MY	MZ
DL	501.50	0.00	44.62
LL	0.00	0.00	0.00
GROUP 2	-106.53	-1500.77	-43.66
SERVICE	394.97	-1500.77	0.96
STRENGTH	513.45	-1951.00	1.25

GROUP 3

	P	MY	MZ
DL	501.50	0.00	44.62
LL	60.08	0.00	11.26
GROUP 3	-44.89	-909.10	-16.09
SERVICE	516.69	-909.10	39.79
STRENGTH	671.69	-1181.83	51.73

GROUP 4

	P	MY	MZ
DL	501.50	0.00	44.62
LL	60.08	0.00	11.26
GROUP 4	-0.04	0.00	-373.81
SERVICE	561.54	0.00	-317.93
STRENGTH	730.00	0.00	-413.31

GROUP 5

	P	MY	MZ
DL	501.50	0.00	44.62
LL	0.00	0.00	0.00
GROUP 5	-106.58	-1500.77	-417.48
SERVICE	394.92	-1500.77	-372.86
STRENGTH	493.64	-1875.96	-466.08

GROUP 6

	P	MY	MZ
DL	501.50	0.00	44.62
LL	60.08	0.00	11.26
GROUP 6	-44.94	-909.10	-389.91
SERVICE	516.64	-909.10	-334.03
STRENGTH	645.79	-1136.38	-417.54

SLENDERNESS EFFECTS IN COMPRESSION MEMBERS (AASHTO 8.16.5)

f'c = 3000 psi PHI = 0.70 W_C = 150 PCF

$E_C = W_C^{1.5} * 33 * f'c^{0.5}$ = 3320561 PSI Width of Rect. Col. = B = 53.892 In.

Depth of Rect. Col = D = 72.624 In.

$r_Y = 0.30*D$ = 21.79 In. L_Y = 6.167 Ft. K_Y = 2.0

$r_Z = 0.30*B$ = 16.17 In. L_Z = 13.667 Ft. K_Z = 1.2

I_{YY} = $B*D^3/12$ I_{YY} = 1720218 In^4

I_{ZZ} = $D*B^3/12$ I_{ZZ} = 947266 In^5

$K_Y L_Y/r$ = 6.8 < 22 NO SLENDERNESS EFFECT

$K_Z L_Z/r$ = 12.2 < 22 NO SLENDERNESS EFFECT

H. W. LOCHNER, INC.

PROJECT: BONNER BRIDGE - OREGON INLET NORTH CAROLINA JMJ Jun-06
SUBJECT: HIGH LEVEL BENT ANALYSIS WDB Jun-06
HLB 145 MEM. 11 JT. 8

SLENDERNESS EFFECTS IN RECTANGULAR COMPRESSION MEMBERS (AASHTO 8.16.5)

GROUP 1

	B	D	KL/R	M_U	M_{DL}	B_D	P_U	P_C	δ_b	δ_s	M_C	
	In.	In.		Ft. Kips	Ft. Kips		Kips	Kips			Ft. Kips	
MY	53.892	72.624	6.8	0.00	0.00	0.000	782	0	1.000	1.000	181	*
MZ	53.892	72.624	12.2	82.40	58.01	0.704	782	0	1.000	1.000	144	*

GROUP 2

	B	D	KL/R	M_U	M_{DL}	B_D	P_U	P_C	δ_b	δ_s	M_C	
	In.	In.		Ft. Kips	Ft. Kips		Kips	Kips			Ft. Kips	
MY	53.892	72.624	6.8	1951.00	0.00	0.000	513	0	1.000	1.000	1951	
MZ	53.892	72.624	12.2	1.25	58.01	46.479	513	0	1.000	1.000	95	*

GROUP 3

	B	D	KL/R	M_U	M_{DL}	B_D	P_U	P_C	δ_b	δ_s	M_C	
	In.	In.		Ft. Kips	Ft. Kips		Kips	Kips			Ft. Kips	
MY	53.892	72.624	6.8	1181.83	0.00	0.000	672	0	1.000	1.000	1182	
MZ	53.892	72.624	12.2	51.73	58.01	1.121	672	0	1.000	1.000	124	*

GROUP 4

	B	D	KL/R	M_U	M_{DL}	B_D	P_U	P_C	δ_b	δ_s	M_C	
	In.	In.		Ft. Kips	Ft. Kips		Kips	Kips			Ft. Kips	
MY	53.892	72.624	6.8	0.00	0.00	0.000	730	0	1.000	1.000	169	*
MZ	53.892	72.624	12.2	413.31	58.01	0.140	730	0	1.000	1.000	413	

GROUP 5

	B	D	KL/R	M_U	M_{DL}	B_D	P_U	P_C	δ_b	δ_s	M_C
	In.	In.		Ft. Kips	Ft. Kips		Kips	Kips			Ft. Kips
MY	53.892	72.624	6.8	1875.96	0.00	0.000	494	0	1.000	1.000	1876
MZ	53.892	72.624	12.2	466.08	58.01	0.124	494	0	1.000	1.000	466

GROUP 6

	B	D	KL/R	M_U	M_{DL}	B_D	P_U	P_C	δ_b	δ_s	M_C
	In.	In.		Ft. Kips	Ft. Kips		Kips	Kips			Ft. Kips
MY	53.892	72.624	6.8	1136.38	0.00	0.000	646	0	1.000	1.000	1136
MZ	53.892	72.624	12.2	417.54	58.01	0.139	646	0	1.000	1.000	418

* MINIMUM MOMENT CONTROLS

H. W. LOCHNER, INC.

PROJECT: BONNER BRIDGE - OREGON INLET NORTH CAROLINA JMJ Jun-06
SUBJECT: HIGH LEVEL BENT ANALYSIS WDB Jun-06
HLB 145 MEM. 11 JT. 10

COLUMN LOADS

PMAX

HLB 145 MEMBER 11 JOINT 10

GROUP 1

	P	MY	MZ
DL	-724.34	0.00	19.35
LL	-128.86	0.00	-20.89
GROUP 1	0.00	0.00	0.00
SERVICE	-853.20	0.00	-1.54
STRENGTH	-1220.84	0.00	-20.11

GROUP 2

	P	MY	MZ
DL	-724.34	0.00	19.35
LL	0.00	0.00	0.00
GROUP 2	106.71	2206.38	-346.22
SERVICE	-617.63	2206.38	-326.87
STRENGTH	-802.92	2868.29	-424.93

GROUP 3

	P	MY	MZ
DL	-724.34	0.00	19.35
LL	-128.86	0.00	-20.89
GROUP 3	44.95	1292.76	-141.86
SERVICE	-808.25	1292.76	-143.40
STRENGTH	-1050.73	1680.59	-186.42

GROUP 4

	P	MY	MZ
DL	-724.34	0.00	19.35
LL	-128.86	0.00	-20.89
GROUP 4	0.04	0.00	362.71
SERVICE	-853.16	0.00	361.17
STRENGTH	-1109.11	0.00	469.52

GROUP 5

	P	MY	MZ
DL	-724.34	0.00	19.35
LL	0.00	0.00	0.00
GROUP 5	106.75	2206.38	16.50
SERVICE	-617.59	2206.38	35.85
STRENGTH	-771.99	2757.98	44.81

GROUP 6

	P	MY	MZ
DL	-724.34	0.00	19.35
LL	-128.86	0.00	-20.89
GROUP 6	44.99	1292.76	220.85
SERVICE	-808.21	1292.76	219.31
STRENGTH	-1010.26	1615.95	274.14

SLENDERNESS EFFECTS IN COMPRESSION MEMBERS (AASHTO 8.16.5)

f'c = 3000 psi PHI = 0.70 W_C = 150 PCF

$E_C = W_C^{1.5} * 33 * f'c^{0.5}$ = 3320561 PSI Width of Rect. Col. = B = 53.892 In.

Depth of Rect. Col = D = 72.624 In.

$r_Y = 0.30*D$ = 21.79 In. L_Y = 6.167 Ft. K_Y = 2.0

$r_Z = 0.30*B$ = 16.17 In. L_Z = 13.667 Ft. K_Z = 1.2

I_{YY} = $B*D^3/12$ I_{YY} = 1720218 In^4

I_{ZZ} = $D*B^3/12$ I_{ZZ} = 947266 In^5

$K_Y L_Y/r$ = 6.8 < 22 NO SLENDERNESS EFFECT

$K_Z L_Z/r$ = 12.2 < 22 NO SLENDERNESS EFFECT

H. W. LOCHNER, INC.

PROJECT: BONNER BRIDGE - OREGON INLET NORTH CAROLINA — JMJ Jun-06
SUBJECT: HIGH LEVEL BENT ANALYSIS — WDB Jun-06
HLB 145 MEM. 11 JT. 10

SLENDERNESS EFFECTS IN RECTANGULAR COMPRESSION MEMBERS (AASHTO 8.16.5)

GROUP 1

	B	D	KL/R	M_U	M_{DL}	B_D	P_U	P_C	δ_b	δ_s	M_C	
	In.	In.		Ft. Kips	Ft. Kips		Kips	Kips			Ft. Kips	
MY	53.892	72.624	6.8	0.00	0.00	0.000	1221	0	1.000	1.000	283	*
MZ	53.892	72.624	12.2	20.11	25.16	1.251	1221	0	1.000	1.000	226	*

GROUP 2

	B	D	KL/R	M_U	M_{DL}	B_D	P_U	P_C	δ_b	δ_s	M_C
	In.	In.		Ft. Kips	Ft. Kips		Kips	Kips			Ft. Kips
MY	53.892	72.624	6.8	2868.29	0.00	0.000	803	0	1.000	1.000	2868
MZ	53.892	72.624	12.2	424.93	25.16	0.059	803	0	1.000	1.000	425

GROUP 3

	B	D	KL/R	M_U	M_{DL}	B_D	P_U	P_C	δ_b	δ_s	M_C	
	In.	In.		Ft. Kips	Ft. Kips		Kips	Kips			Ft. Kips	
MY	53.892	72.624	6.8	1680.59	0.00	0.000	1051	0	1.000	1.000	1681	
MZ	53.892	72.624	12.2	186.42	25.16	0.135	1051	0	1.000	1.000	194	*

GROUP 4

	B	D	KL/R	M_U	M_{DL}	B_D	P_U	P_C	δ_b	δ_s	M_C	
	In.	In.		Ft. Kips	Ft. Kips		Kips	Kips			Ft. Kips	
MY	53.892	72.624	6.8	0.00	0.00	0.000	1109	0	1.000	1.000	257	*
MZ	53.892	72.624	12.2	469.52	25.16	0.054	1109	0	1.000	1.000	470	

GROUP 5

	B	D	KL/R	M_U	M_{DL}	B_D	P_U	P_C	δ_b	δ_s	M_C	
	In.	In.		Ft. Kips	Ft. Kips		Kips	Kips			Ft. Kips	
MY	53.892	72.624	6.8	2757.98	0.00	0.000	772	0	1.000	1.000	2758	
MZ	53.892	72.624	12.2	44.81	25.16	0.561	772	0	1.000	1.000	143	*

GROUP 6

	B	D	KL/R	M_U	M_{DL}	B_D	P_U	P_C	δ_b	δ_s	M_C
	In.	In.		Ft. Kips	Ft. Kips		Kips	Kips			Ft. Kips
MY	53.892	72.624	6.8	1615.95	0.00	0.000	1010	0	1.000	1.000	1616
MZ	53.892	72.624	12.2	274.14	25.16	0.092	1010	0	1.000	1.000	274

* MINIMUM MOMENT CONTROLS

H. W. LOCHNER, INC.

PROJECT: BONNER BRIDGE - OREGON INLET NORTH CAROLINA JMJ Jun-06
SUBJECT: HIGH LEVEL BENT ANALYSIS WDB Jun-06
HLB 145 MEM. 11 JT. 10

COLUMN LOADS

PMIN

HLB 145 MEMBER 11 JOINT 10

GROUP 1

	P	MY	MZ
DL	-543.26	0.00	19.35
LL	-60.08	0.00	19.15
GROUP 1	0.00	0.00	0.00
SERVICE	-603.34	0.00	38.50
STRENGTH	-836.40	0.00	66.65

GROUP 2

	P	MY	MZ
DL	-543.26	0.00	19.35
LL	0.00	0.00	0.00
GROUP 2	106.71	2206.38	-346.22
SERVICE	-436.55	2206.38	-326.87
STRENGTH	-567.51	2868.29	-424.93

GROUP 3

	P	MY	MZ
DL	-543.26	0.00	19.35
LL	-60.08	0.00	19.15
GROUP 3	44.95	1292.76	-141.86
SERVICE	-558.39	1292.76	-103.36
STRENGTH	-725.90	1680.59	-134.37

GROUP 4

	P	MY	MZ
DL	-543.26	0.00	19.35
LL	-60.08	0.00	19.15
GROUP 4	0.04	0.00	362.71
SERVICE	-603.30	0.00	401.21
STRENGTH	-784.28	0.00	521.57

GROUP 5

	P	MY	MZ
DL	-543.26	0.00	19.35
LL	0.00	0.00	0.00
GROUP 5	106.75	2206.38	16.50
SERVICE	-436.51	2206.38	35.85
STRENGTH	-545.63	2757.98	44.81

GROUP 6

	P	MY	MZ
DL	-543.26	0.00	19.35
LL	-60.08	0.00	19.15
GROUP 6	44.99	1292.76	220.85
SERVICE	-558.35	1292.76	259.35
STRENGTH	-697.93	1615.95	324.19

SLENDERNESS EFFECTS IN COMPRESSION MEMBERS (AASHTO 8.16.5)

f'c = 3000 psi PHI = 0.70 W_C = 150 PCF

$E_C = W_C^{1.5} * 33 * f'c^{0.5}$ = 3320561 PSI Width of Rect. Col. = B = 53.892 In.

Depth of Rect. Col = D = 72.624 In.

$r_Y = 0.30*D$ = 21.79 In. L_Y = 6.167 Ft. K_Y = 2.0

$r_Z = 0.30*B$ = 16.17 In. L_Z = 13.667 Ft. K_Z = 1.2

I_{YY} = $B*D^3/12$ I_{YY} = 1720218 In^4

I_{ZZ} = $D*B^3/12$ I_{ZZ} = 947266 In^5

$K_Y L_Y/r$ = 6.8 < 22 NO SLENDERNESS EFFECT

$K_Z L_Z/r$ = 12.2 < 22 NO SLENDERNESS EFFECT

H. W. LOCHNER, INC.

PROJECT: BONNER BRIDGE - OREGON INLET NORTH CAROLINA JMJ Jun-06
SUBJECT: HIGH LEVEL BENT ANALYSIS WDB Jun-06
HLB 145 MEM. 11 JT. 10

SLENDERNESS EFFECTS IN RECTANGULAR COMPRESSION MEMBERS (AASHTO 8.16.5)

GROUP 1

	B	D	KL/R	M_U	M_{DL}	B_D	P_U	P_C	δ_b	δ_s	M_C	
	In.	In.		Ft. Kips	Ft. Kips		Kips	Kips			Ft. Kips	
MY	53.892	72.624	6.8	0.00	0.00	0.000	836	0	1.000	1.000	194	*
MZ	53.892	72.624	12.2	66.65	25.16	0.377	836	0	1.000	1.000	155	*

GROUP 2

	B	D	KL/R	M_U	M_{DL}	B_D	P_U	P_C	δ_b	δ_s	M_C
	In.	In.		Ft. Kips	Ft. Kips		Kips	Kips			Ft. Kips
MY	53.892	72.624	6.8	2868.29	0.00	0.000	568	0	1.000	1.000	2868
MZ	53.892	72.624	12.2	424.93	25.16	0.059	568	0	1.000	1.000	425

GROUP 3

	B	D	KL/R	M_U	M_{DL}	B_D	P_U	P_C	δ_b	δ_s	M_C
	In.	In.		Ft. Kips	Ft. Kips		Kips	Kips			Ft. Kips
MY	53.892	72.624	6.8	1680.59	0.00	0.000	726	0	1.000	1.000	1681
MZ	53.892	72.624	12.2	134.37	25.16	0.187	726	0	1.000	1.000	134

GROUP 4

	B	D	KL/R	M_U	M_{DL}	B_D	P_U	P_C	δ_b	δ_s	M_C	
	In.	In.		Ft. Kips	Ft. Kips		Kips	Kips			Ft. Kips	
MY	53.892	72.624	6.8	0.00	0.00	0.000	784	0	1.000	1.000	182	*
MZ	53.892	72.624	12.2	521.57	25.16	0.048	784	0	1.000	1.000	522	

GROUP 5

	B	D	KL/R	M_U	M_{DL}	B_D	P_U	P_C	δ_b	δ_s	M_C	
	In.	In.		Ft. Kips	Ft. Kips		Kips	Kips			Ft. Kips	
MY	53.892	72.624	6.8	2757.98	0.00	0.000	546	0	1.000	1.000	2758	
MZ	53.892	72.624	12.2	44.81	25.16	0.561	546	0	1.000	1.000	101	*

GROUP 6

	B	D	KL/R	M_U	M_{DL}	B_D	P_U	P_C	δ_b	δ_s	M_C
	In.	In.		Ft. Kips	Ft. Kips		Kips	Kips			Ft. Kips
MY	53.892	72.624	6.8	1615.95	0.00	0.000	698	0	1.000	1.000	1616
MZ	53.892	72.624	12.2	324.19	25.16	0.078	698	0	1.000	1.000	324

* MINIMUM MOMENT CONTROLS

JMS 7/06
WDB 7/06

```
OOOOOOO    OOOOO    OOOOO    OOOOO    OOOOO    OO
OO    OO   OO  OO   OO  OO   OO  OO   OO  OO   OO
OO    OO   OO  OO   OO  OO   OO  OO   OO  OO   OO
OO    OO   OO       OO  OO   OO       OO  OO   OO
OO    OO   OO       OOOOOOO  OO       OO  OO   OO
OOOOOOO    OO  OO   OO  OO   OO  OO   OO  OO   OO
OO         OO  OO   OO  OO   OO  OO   OO  OO   OO
OO          OOOOO   OO  OO    OOOOO    OOOOO    OOOOO  (TM)
```

==========
Computer program for the Strength Design of Reinforced Concrete Sections
==========

Licensee stated above acknowledges that Portland Cement Association (PCA) is not and cannot be responsible for either the accuracy or adequacy of the material supplied as input for processing by the PCACOL(tm) computer program. Furthermore, PCA neither makes any warranty expressed nor implied with respect to the correctness of the output prepared by the PCACOL(tm) program. Although PCA has endeavored to produce PCACOL(tm) error free, the program is not and can't be certified infallible. The final and only responsibility for analysis, design and engineering documents is the licensees. Accordingly, PCA disclaims all responsibility in contract, negligence or other tort for any analysis, design or engineering documents prepared in connection with the use of the PCACOL(tm) program.

BASED ON PLANS.

General Information:
==========

File Name: S:\DGN-ST\NORTHC~1\BONNER~1\ANALYSIS\PIERS\HLB144~1\PCACOL~1\NEWFOL~1\M11PLAN.COL
Project: BONNER BRIDGE - OREGON INLET
Column: HLB #145 Engineer: JMJ
Code: ACI 318-95 Units: English

Run Option: Investigation Slenderness: Not considered
Run Axis: Biaxial Column Type: Structural

Material Properties:
==========

f'c = 3 ksi fy = 40 ksi
Ec = 3122.02 ksi Es = 29000 ksi
fc = 2.55 ksi Rupture strain = Infinity
Ultimate strain = 0.003 in/in
Beta1 = 0.85

Section:
==========

Rectangular: Width = 53.9 in Depth = 72.6 in

Gross section area, Ag = 3913.14 in^2
Ix = 1.71877e+006 in^4 Iy = 947375 in^4
Xo = 0 in Yo = 0 in

Reinforcement:
==========

Rebar Database: User-defined

Size	Diam (in)	Area (in^2)	Size	Diam (in)	Area (in^2)	Size	Diam (in)	Area (in^2)
# 1	0.00	0.00	# 3	0.38	0.11	# 4	0.50	0.20
# 5	0.63	0.31	# 6	0.75	0.44	# 7	0.88	0.60
# 8	1.00	0.79	# 9	1.13	1.00	# 10	1.27	1.27
# 11	1.41	1.56	# 14	1.69	2.25	# 18	2.26	4.00

Confinement: Tied; #1 ties with #9 bars, #1 with larger bars.
phi(a) = 0.8, phi(b) = 0.9, phi(c) = 0.7

Layout: Rectangular
Pattern: Equal Bar Spacing (Cover to longitudinal reinforcement)
Total steel area, As = 49.92 in^2 at 1.28%
32 #11 Cover = 5 in

Factored Loads and Moments with Corresponding Capacities: (see user's manual for notation)
==========

No.	Pu kip	Mux k-ft	Muy k-ft	fMnx k-ft	fMny k-ft	fMn/Mu
1	1148.0	266.0	212.0	3925.1	3134.0	14.766
2	731.0	1951.0	135.0	5657.7	396.3	2.900
3	978.0	1182.0	181.0	5712.4	880.6	4.834
4	1037.0	240.0	438.0	2186.7	3986.6	9.104
5	703.0	1876.0	466.0	5337.6	1320.4	2.845
6	941.0	1136.0	441.0	5102.0	1988.9	4.494
7	782.0	181.0	144.0	3900.7	3093.1	21.523
8	513.0	1951.0	95.0	5443.4	264.2	2.790
9	672.0	1182.0	124.0	5558.7	580.0	4.703
10	730.0	169.0	413.0	1632.2	3977.8	9.635
11	494.0	1876.0	466.0	5147.3	1270.7	2.743
12	646.0	1136.0	418.0	5013.0	1837.8	4.411
13	1221.0	283.0	226.0	3950.7	3164.9	13.977
14	803.0	2868.0	425.0	5611.8	827.2	1.956
15	1051.0	1681.0	194.0	5816.6	668.3	3.460

16	1109.0	257.0	470.0	2177.5	3998.5	8.499
17	772.0	2758.0	143.0	5712.3	300.0	2.071
18	1010.0	1616.0	274.0	5694.7	973.1	3.525
19	836.0	194.0	155.0	3900.5	3114.8	20.102
20	568.0	2868.0	425.0	5395.1	793.1	1.881
21	726.0	1681.0	134.0	5640.5	454.1	3.356
22	784.0	182.0	522.0	1422.2	4057.7	7.778
23	546.0	2758.0	101.0	5492.1	203.6	1.991
24	698.0	1616.0	324.0	5427.7	1091.2	3.359

*** Program completed as requested! ***

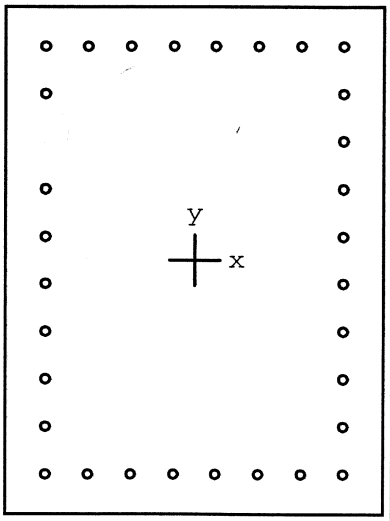

53.9 x 72.6 in

Code: ACI 318-95

Units: English

Run axis: Biaxial

Run option: Investigation

Slenderness: Not considered

mn type: Structural

Bars: User-defined

Date: 07/20/06

Time: 16:08:05

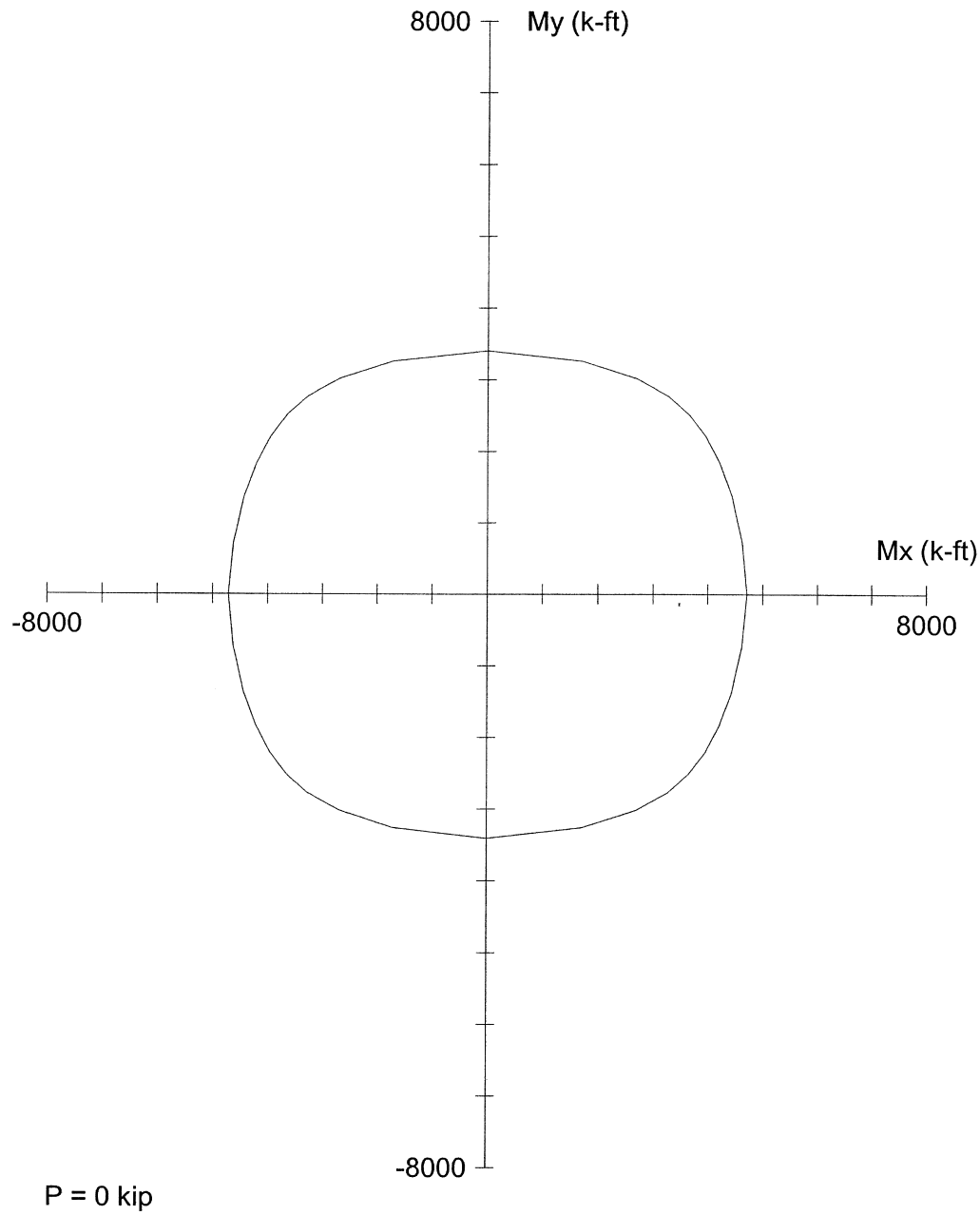

PCACOL V3.00 (PCA 1999) - Licensed to: Licensee name not yet specified.

File: S:\DGN-ST\NORTHC~1\BONNER~1\ANALYSIS\PIERS\HLB144~1\PCACOL~1\NEWFOL~1\M11PLAN.COL

Project: BONNER BRIDGE - OREGON INLET

Column: COL		Engineer: JMJ	
f'c = 3 ksi	fy = 40 ksi	Ag = 3913.14 in^2	32 #11 bars
Ec = 3122 ksi	Es = 29000 ksi	As = 49.92 in^2	Rho = 1.28%
fc = 2.55 ksi	e_rup = Infinity	Xo = 0.00 in	Ix = 1.71877e+006 in^4
u = 0.003 in/in		Yo = 0.00 in	Iy = 947375 in^4
Beta1 = 0.85		Clear spacing = 4.66 in	Clear cover = 5.00 in
Confinement: Tied	phi(a) = 0.8, phi(b) = 0.9, phi(c) = 0.7		

JMJ 7/06
WDB 7/06

```
OOOOOOO    OOOOO    OOOOO    OOOOO    OOOOO   OO
OO    OO   OO  OO   OO  OO   OO  OO   OO  OO   OO
OO    OO   OO  OO   OO  OO   OO  OO   OO  OO   OO
OO    OO   OO       OO  OO   OO       OO  OO   OO
OO    OO   OO       OOOOOOO  OO       OO  OO   OO
OOOOOOO    OO  OO   OO  OO   OO  OO   OO  OO   OO
OO         OO  OO   OO  OO   OO  OO   OO  OO   OO
OO          OOOOO   OO  OO    OOOOO    OOOOO   OOOOO  (TM)
```

==========
Computer program for the Strength Design of Reinforced Concrete Sections
==========

Licensee stated above acknowledges that Portland Cement Association (PCA) is not and cannot be responsible for either the accuracy or adequacy of the material supplied as input for processing by the PCACOL(tm) computer program. Furthermore, PCA neither makes any warranty expressed nor implied with respect to the correctness of the output prepared by the PCACOL(tm) program. Although PCA has endeavored to produce PCACOL(tm) error free, the program is not and can't be certified infallible. The final and only responsibility for analysis, design and engineering documents is the licensees. Accordingly, PCA disclaims all responsibility in contract, negligence or other tort for any analysis, design or engineering documents prepared in connection with the use of the PCACOL(tm) program.

50% COVER LOSS
f'_c = 4400 PSI

General Information:
==========

File Name: S:\DGN-ST\NORTHC~1\BONNER~1\ANALYSIS\PIERS\HLB144~1\PCACOL~1\M11ACT.COL
Project: BONNER BRIDGE - OREGON INLET
Column: COL
Engineer: JMJ
Code: ACI 318-95
Units: English

Run Option: Investigation
Slenderness: Not considered
Run Axis: Biaxial
Column Type: Structural

Material Properties:
==========

f'c = 4.4 ksi
fy = 40 ksi
Ec = 3780.96 ksi
Es = 29000 ksi
fc = 3.74 ksi
Rupture strain = Infinity
Ultimate strain = 0.003 in/in
Beta1 = 0.83

Section:
==========

Rectangular: Width = 48.9 in
Depth = 67.6 in

Gross section area, Ag = 3305.64 in^2
Ix = 1.25883e+006 in^4
Iy = 658707 in^4
Xo = 0 in
Yo = 0 in

Reinforcement:
==========

Rebar Database: User-defined

Size	Diam (in)	Area (in^2)	Size	Diam (in)	Area (in^2)	Size	Diam (in)	Area (in^2)
# 1	0.00	0.00	# 3	0.38	0.11	# 4	0.50	0.20
# 5	0.63	0.31	# 6	0.75	0.44	# 7	0.88	0.60
# 8	1.00	0.79	# 9	1.13	1.00	# 10	1.27	1.27
# 11	1.41	1.56	# 14	1.69	2.25	# 18	2.26	4.00

Confinement: Tied; #1 ties with #9 bars, #1 with larger bars.
phi(a) = 0.8, phi(b) = 0.9, phi(c) = 0.7

Layout: Rectangular
Pattern: Equal Bar Spacing (Cover to longitudinal reinforcement)
Total steel area, As = 49.92 in^2 at 1.51%
32 #11 Cover = 2.5 in

Factored Loads and Moments with Corresponding Capacities: (see user's manual for notation)
==========

No.	Pu kip	Mux k-ft	Muy k-ft	fMnx k-ft	fMny k-ft	fMn/Mu
1	1148.0	266.0	212.0	4140.6	3298.2	15.563
2	731.0	1951.0	135.0	5694.3	384.7	2.918
3	978.0	1182.0	181.0	5857.4	895.0	4.955
4	1037.0	240.0	438.0	2229.2	4072.7	9.296
5	703.0	1876.0	466.0	5389.6	1335.9	2.873
6	941.0	1136.0	441.0	5269.9	2044.5	4.639
7	782.0	181.0	144.0	3974.5	3160.4	21.954
8	513.0	1951.0	95.0	5411.3	268.0	2.774
9	672.0	1182.0	124.0	5582.8	581.4	4.723
10	730.0	169.0	413.0	1628.5	3965.4	9.606
11	494.0	1876.0	466.0	5134.3	1278.7	2.737
12	646.0	1136.0	418.0	5057.0	1868.4	4.454
13	1221.0	283.0	226.0	4154.1	3319.6	14.683
14	803.0	2868.0	425.0	5681.7	843.1	1.981
15	1051.0	1681.0	194.0	5984.3	701.2	3.561

16	1109.0	257.0	470.0	2248.2	4111.3	8.748
17	772.0	2758.0	143.0	5756.5	291.3	2.087
18	1010.0	1616.0	274.0	5852.3	997.7	3.622
19	836.0	194.0	155.0	4001.9	3188.5	20.606
20	568.0	2868.0	425.0	5391.7	796.6	1.880
21	726.0	1681.0	134.0	5676.3	460.8	3.377
22	784.0	182.0	522.0	1409.8	4051.3	7.760
23	546.0	2758.0	101.0	5465.1	206.7	1.982
24	698.0	1616.0	324.0	5472.8	1098.6	3.387

*** Program completed as requested! ***

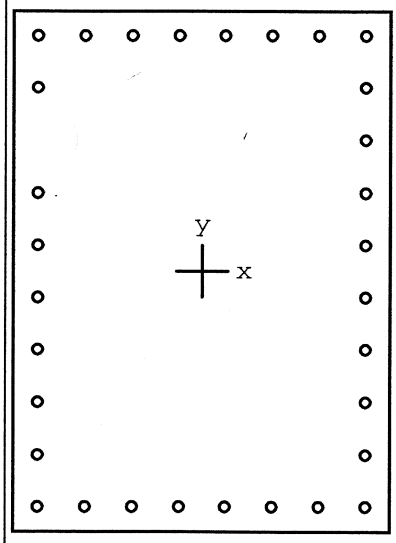

48.9 x 67.6 in

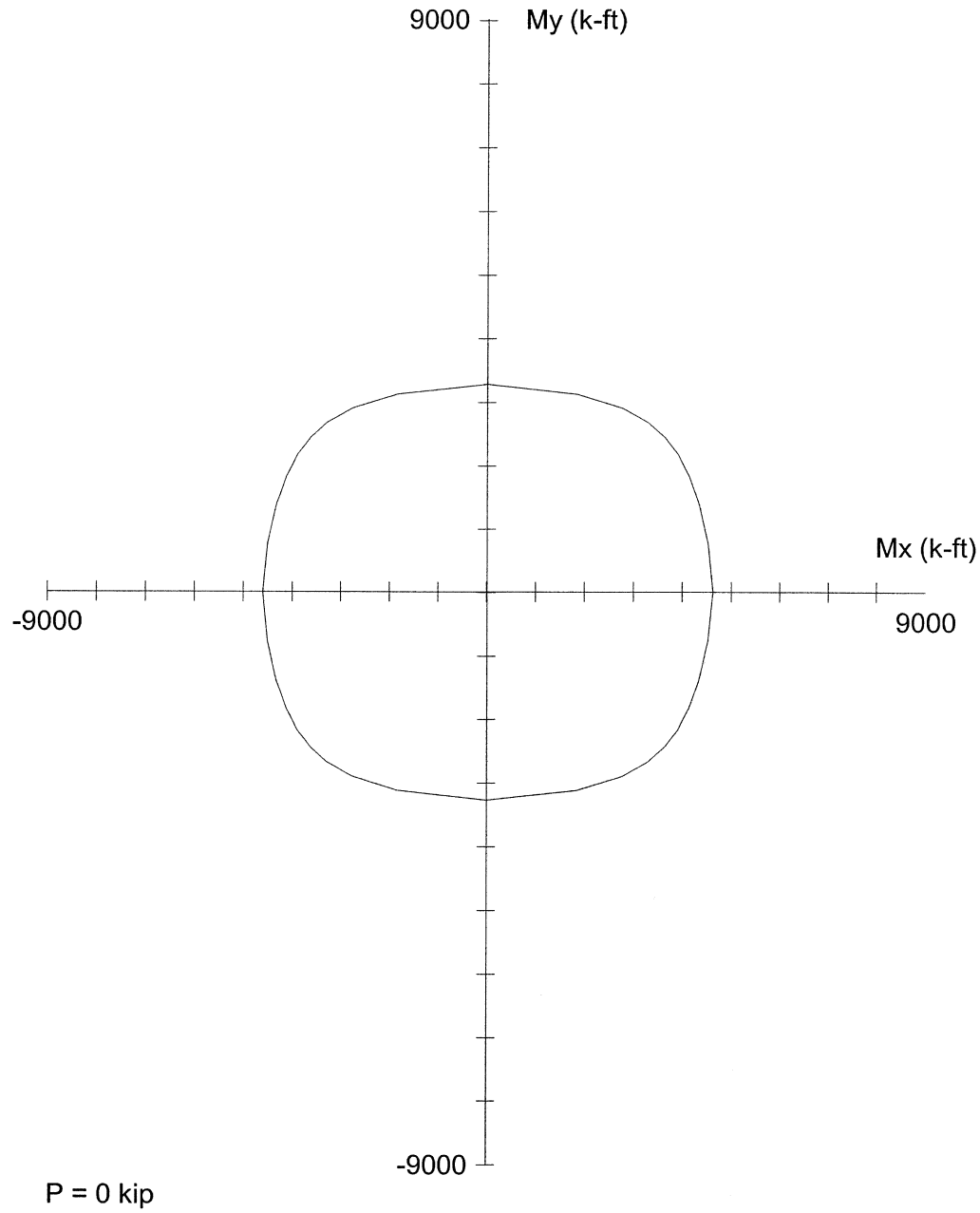

Code: ACI 318-95

Units: English

Run axis: Biaxial

Run option: Investigation

Slenderness: Not considered

mn type: Structural

Bars: User-defined

Date: 07/25/06

Time: 13:26:09

PCACOL V3.00 (PCA 1999) - Licensed to: Licensee name not yet specified.

File: S:\DGN-ST\NORTHC~1\BONNER~1\ANALYSIS\PIERS\HLB144~1\PCACOL~1\M11ACT.COL

Project: BONNER BRIDGE - OREGON INLET

Column: COL		Engineer: JMJ	
f'c = 4.4 ksi	fy = 40 ksi	Ag = 3305.64 in^2	32 #11 bars
Ec = 3781 ksi	Es = 29000 ksi	As = 49.92 in^2	Rho = 1.51%
fc = 3.74 ksi	e_rup = Infinity	Xo = 0.00 in	Ix = 1.25883e+006 in^4
u = 0.003 in/in		Yo = 0.00 in	Iy = 658707 in^4
Beta1 = 0.83		Clear spacing = 4.66 in	Clear cover = 2.50 in
Confinement: Tied	phi(a) = 0.8, phi(b) = 0.9, phi(c) = 0.7		

H. W. LOCHNER, INC.

PROJECT: BONNER BRIDGE - OREGON INLET NORTH CAROLINA JMJ Jun-06
SUBJECT: HIGH LEVEL BENT ANALYSIS WDB Jun-06
HLB 145 MEM. 13 JT. 9

COLUMN LOADS

PMAX

HLB 145 MEMBER 13 JOINT 9

GROUP 1

	P	MY	MZ
DL	737.89	0.00	33.38
LL	128.24	0.00	13.43
GROUP 1	0.00	0.00	0.00
SERVICE	866.13	0.00	46.81
STRENGTH	1237.11	0.00	72.49

GROUP 2

	P	MY	MZ
DL	737.89	0.00	33.38
LL	0.00	0.00	0.00
GROUP 2	115.34	2207.54	-242.29
SERVICE	853.23	2207.54	-208.91
STRENGTH	1109.20	2869.80	-271.58

GROUP 3

	P	MY	MZ
DL	737.89	0.00	33.38
LL	128.24	0.00	13.43
GROUP 3	48.46	1293.20	-99.53
SERVICE	914.59	1293.20	-52.72
STRENGTH	1188.97	1681.16	-68.54

GROUP 4

	P	MY	MZ
DL	737.89	0.00	33.38
LL	128.24	0.00	13.43
GROUP 4	-55.11	0.00	-569.48
SERVICE	811.02	0.00	-522.67
STRENGTH	1054.33	0.00	-679.47

GROUP 5

	P	MY	MZ
DL	737.89	0.00	33.38
LL	0.00	0.00	0.00
GROUP 5	60.23	2207.54	-811.78
SERVICE	798.12	2207.54	-778.40
STRENGTH	997.65	2759.43	-973.00

GROUP 6

	P	MY	MZ
DL	737.89	0.00	33.38
LL	128.24	0.00	13.43
GROUP 6	-6.65	1293.20	-669.01
SERVICE	859.48	1293.20	-622.20
STRENGTH	1074.35	1616.50	-777.75

SLENDERNESS EFFECTS IN COMPRESSION MEMBERS (AASHTO 8.16.5)

f'c = 3000 psi PHI = 0.70 W_C = 150 PCF

$E_C = W_C^{1.5} * 33 * f'c^{0.5}$ = 3320561 PSI Width of Rect. Col. = B = 53.892 In.

Depth of Rect. Col = D = 79.572 In.

$r_Y = 0.30*D$ = 23.87 In. L_Y = 0 Ft. K_Y = 2.0

$r_Z = 0.30*B$ = 16.17 In. L_Z = 2.5 Ft. K_Z = 1.2

I_{YY} = $B*D^3/12$ I_{YY} = 2262684 In^4

I_{ZZ} = $D*B^3/12$ I_{ZZ} = 1037891 In^5

$K_Y L_Y/r$ = 0.0 < 22 NO SLENDERNESS EFFECT

$K_Z L_Z/r$ = 2.2 < 22 NO SLENDERNESS EFFECT

H. W. LOCHNER, INC.

PROJECT: BONNER BRIDGE - OREGON INLET NORTH CAROLINA — JMJ Jun-06
SUBJECT: HIGH LEVEL BENT ANALYSIS — WDB Jun-06
HLB 145 MEM. 13 JT. 9

SLENDERNESS EFFECTS IN RECTANGULAR COMPRESSION MEMBERS (AASHTO 8.16.5)

GROUP 1

	B	D	KL/R	M_U	M_{DL}	B_D	P_U	P_C	δ_b	δ_s	M_C	
	In.	In.		Ft. Kips	Ft. Kips		Kips	Kips			Ft. Kips	
MY	53.892	79.572	0.0	0.00	0.00	0.000	1237	0	1.000	1.000	308	*
MZ	53.892	79.572	2.2	72.49	43.39	0.599	1237	0	1.000	1.000	229	*

GROUP 2

	B	D	KL/R	M_U	M_{DL}	B_D	P_U	P_C	δ_b	δ_s	M_C
	In.	In.		Ft. Kips	Ft. Kips		Kips	Kips			Ft. Kips
MY	53.892	79.572	0.0	2869.80	0.00	0.000	1109	0	1.000	1.000	2870
MZ	53.892	79.572	2.2	271.58	43.39	0.160	1109	0	1.000	1.000	272

GROUP 3

	B	D	KL/R	M_U	M_{DL}	B_D	P_U	P_C	δ_b	δ_s	M_C	
	In.	In.		Ft. Kips	Ft. Kips		Kips	Kips			Ft. Kips	
MY	53.892	79.572	0.0	1681.16	0.00	0.000	1189	0	1.000	1.000	1681	
MZ	53.892	79.572	2.2	68.54	43.39	0.633	1189	0	1.000	1.000	220	*

GROUP 4

	B	D	KL/R	M_U	M_{DL}	B_D	P_U	P_C	δ_b	δ_s	M_C	
	In.	In.		Ft. Kips	Ft. Kips		Kips	Kips			Ft. Kips	
MY	53.892	79.572	0.0	0.00	0.00	0.000	1054	0	1.000	1.000	262	*
MZ	53.892	79.572	2.2	679.47	43.39	0.064	1054	0	1.000	1.000	679	

GROUP 5

	B	D	KL/R	M_U	M_{DL}	B_D	P_U	P_C	δ_b	δ_s	M_C
	In.	In.		Ft. Kips	Ft. Kips		Kips	Kips			Ft. Kips
MY	53.892	79.572	0.0	2759.43	0.00	0.000	998	0	1.000	1.000	2759
MZ	53.892	79.572	2.2	973.00	43.39	0.045	998	0	1.000	1.000	973

GROUP 6

	B	D	KL/R	M_U	M_{DL}	B_D	P_U	P_C	δ_b	δ_s	M_C
	In.	In.		Ft. Kips	Ft. Kips		Kips	Kips			Ft. Kips
MY	53.892	79.572	0.0	1616.50	0.00	0.000	1074	0	1.000	1.000	1617
MZ	53.892	79.572	2.2	777.75	43.39	0.056	1074	0	1.000	1.000	778

* MINIMUM MOMENT CONTROLS

H. W. LOCHNER, INC.

PROJECT: BONNER BRIDGE - OREGON INLET NORTH CAROLINA JMJ Jun-06
SUBJECT: HIGH LEVEL BENT ANALYSIS WDB Jun-06
HLB 145 MEM. 13 JT. 9

COLUMN LOADS

PMIN

HLB 145 MEMBER 13 JOINT 9

	GROUP 1				GROUP 2		
	P	MY	MZ		P	MY	MZ
DL	553.42	0.00	33.38	DL	553.42	0.00	33.38
LL	60.72	0.00	-11.36	LL	0.00	0.00	0.00
GROUP 1	0.00	0.00	0.00	GROUP 2	115.34	2207.54	-242.29
SERVICE	614.14	0.00	22.02	SERVICE	668.76	2207.54	-208.91
STRENGTH	851.00	0.00	18.78	STRENGTH	869.38	2869.80	-271.58

	GROUP 3				GROUP 4		
	P	MY	MZ		P	MY	MZ
DL	553.42	0.00	33.38	DL	553.42	0.00	33.38
LL	60.72	0.00	-11.36	LL	60.72	0.00	-11.36
GROUP 3	48.46	1293.20	-99.53	GROUP 4	-55.11	0.00	-569.48
SERVICE	662.60	1293.20	-77.51	SERVICE	559.03	0.00	-547.46
STRENGTH	861.38	1681.16	-100.76	STRENGTH	726.74	0.00	-711.70

	GROUP 5				GROUP 6		
	P	MY	MZ		P	MY	MZ
DL	553.42	0.00	33.38	DL	553.42	0.00	33.38
LL	0.00	0.00	0.00	LL	60.72	0.00	-11.36
GROUP 5	60.23	2207.54	-811.78	GROUP 6	-6.65	1293.20	-669.01
SERVICE	613.65	2207.54	-778.40	SERVICE	607.49	1293.20	-646.99
STRENGTH	767.06	2759.43	-973.00	STRENGTH	759.36	1616.50	-808.74

SLENDERNESS EFFECTS IN COMPRESSION MEMBERS (AASHTO 8.16.5)

f'c = 3000 psi PHI = 0.70 W_C = 150 PCF

$E_C = W_C$^1.5 *33*f'c^0.5 = 3320561 PSI Width of Rect. Col. = B = 53.892 In.

Depth of Rect. Col = D = 79.572 In.

r_Y = 0.30*D = 23.87 In. L_Y = 0 Ft. K_Y = 2.0

r_Z = 0.30*B = 16.17 In. L_Z = 2.5 Ft. K_Z = 1.2

I_{YY} = B*D^3/12 I_{YY} = 2262684 In^4

I_{ZZ} = D*B^3/12 I_{ZZ} = 1037891 In^5

$K_Y L_Y/r$ = 0.0 < 22 NO SLENDERNESS EFFECT

$K_Z L_Z/r$ = 2.2 < 22 NO SLENDERNESS EFFECT

H. W. LOCHNER, INC.

PROJECT: BONNER BRIDGE - OREGON INLET NORTH CAROLINA JMJ Jun-06
SUBJECT: HIGH LEVEL BENT ANALYSIS WDB Jun-06
HLB 145 MEM. 13 JT. 9

SLENDERNESS EFFECTS IN RECTANGULAR COMPRESSION MEMBERS (AASHTO 8.16.5)

GROUP 1

	B	D	KL/R	M_U	M_{DL}	B_D	P_U	P_C	δ_b	δ_s	M_C	
	In.	In.		Ft. Kips	Ft. Kips		Kips	Kips			Ft. Kips	
MY	53.892	79.572	0.0	0.00	0.00	0.000	851	0	1.000	1.000	212	*
MZ	53.892	79.572	2.2	18.78	43.39	2.311	851	0	1.000	1.000	157	*

GROUP 2

	B	D	KL/R	M_U	M_{DL}	B_D	P_U	P_C	δ_b	δ_s	M_C
	In.	In.		Ft. Kips	Ft. Kips		Kips	Kips			Ft. Kips
MY	53.892	79.572	0.0	2869.80	0.00	0.000	869	0	1.000	1.000	2870
MZ	53.892	79.572	2.2	271.58	43.39	0.160	869	0	1.000	1.000	272

GROUP 3

	B	D	KL/R	M_U	M_{DL}	B_D	P_U	P_C	δ_b	δ_s	M_C	
	In.	In.		Ft. Kips	Ft. Kips		Kips	Kips			Ft. Kips	
MY	53.892	79.572	0.0	1681.16	0.00	0.000	861	0	1.000	1.000	1681	
MZ	53.892	79.572	2.2	100.76	43.39	0.431	861	0	1.000	1.000	159	*

GROUP 4

	B	D	KL/R	M_U	M_{DL}	B_D	P_U	P_C	δ_b	δ_s	M_C	
	In.	In.		Ft. Kips	Ft. Kips		Kips	Kips			Ft. Kips	
MY	53.892	79.572	0.0	0.00	0.00	0.000	727	0	1.000	1.000	181	*
MZ	53.892	79.572	2.2	711.70	43.39	0.061	727	0	1.000	1.000	712	

GROUP 5

	B	D	KL/R	M_U	M_{DL}	B_D	P_U	P_C	δ_b	δ_s	M_C
	In.	In.		Ft. Kips	Ft. Kips		Kips	Kips			Ft. Kips
MY	53.892	79.572	0.0	2759.43	0.00	0.000	767	0	1.000	1.000	2759
MZ	53.892	79.572	2.2	973.00	43.39	0.045	767	0	1.000	1.000	973

GROUP 6

	B	D	KL/R	M_U	M_{DL}	B_D	P_U	P_C	δ_b	δ_s	M_C
	In.	In.		Ft. Kips	Ft. Kips		Kips	Kips			Ft. Kips
MY	53.892	79.572	0.0	1616.50	0.00	0.000	759	0	1.000	1.000	1617
MZ	53.892	79.572	2.2	808.74	43.39	0.054	759	0	1.000	1.000	809

* MINIMUM MOMENT CONTROLS

H. W. LOCHNER, INC.

PROJECT: BONNER BRIDGE - OREGON INLET NORTH CAROLINA JMJ Jun-06
SUBJECT: HIGH LEVEL BENT ANALYSIS WDB Jun-06
HLB 145 MEM. 13 JT. FOOTING

COLUMN LOADS

PMAX

HLB 145 MEMBER 13 JOINT FOOTING

GROUP 1

	P	MY	MZ
DL	749.00	0.00	29.76
LL	128.24	0.00	19.04
GROUP 1	0.00	0.00	0.00
SERVICE	877.24	0.00	48.80
STRENGTH	1251.56	0.00	79.94

GROUP 2

	P	MY	MZ
DL	749.00	0.00	29.76
LL	0.00	0.00	0.00
GROUP 2	115.38	2350.33	-316.53
SERVICE	864.38	2350.33	-286.77
STRENGTH	1123.69	3055.43	-372.80

GROUP 3

	P	MY	MZ
DL	749.00	0.00	29.76
LL	128.24	0.00	19.04
GROUP 3	48.47	1367.39	-129.16
SERVICE	925.71	1367.39	-80.36
STRENGTH	1203.43	1777.61	-104.47

GROUP 4

	P	MY	MZ
DL	749.00	0.00	29.76
LL	128.24	0.00	19.04
GROUP 4	-55.11	0.00	1665.64
SERVICE	822.13	0.00	1714.44
STRENGTH	1068.77	0.00	2228.77

GROUP 5

	P	MY	MZ
DL	749.00	0.00	29.76
LL	0.00	0.00	0.00
GROUP 5	60.24	2350.33	1349.10
SERVICE	809.24	2350.33	1378.86
STRENGTH	1011.55	2937.91	1723.58

GROUP 6

	P	MY	MZ
DL	749.00	0.00	29.76
LL	128.24	0.00	19.04
GROUP 6	-6.64	1367.39	1536.47
SERVICE	870.60	1367.39	1585.27
STRENGTH	1088.25	1709.24	1981.59

SLENDERNESS EFFECTS IN COMPRESSION MEMBERS (AASHTO 8.16.5)

f'c = 3000 psi PHI = 0.70 W_C = 150 PCF

$E_C = W_C^{1.5} * 33 * f'c^{0.5}$ = 3320561 PSI Width of Rect. Col. = B = 53.892 In.

Depth of Rect. Col = D = 79.572 In.

$r_Y = 0.30*D$ = 23.87 In. L_Y = 0 Ft. K_Y = 2.0

$r_Z = 0.30*B$ = 16.17 In. L_Z = 2.5 Ft. K_Z = 1.2

I_{YY} = $B*D^3/12$ I_{YY} = 2262684 In^4

I_{ZZ} = $D*B^3/12$ I_{ZZ} = 1037891 In^5

$K_Y L_Y/r$ = 0.0 < 22 NO SLENDERNESS EFFECT

$K_Z L_Z/r$ = 2.2 < 22 NO SLENDERNESS EFFECT

H. W. LOCHNER, INC.

PROJECT: BONNER BRIDGE - OREGON INLET NORTH CAROLINA JMJ Jun-06
SUBJECT: HIGH LEVEL BENT ANALYSIS WDB Jun-06
HLB 145 MEM. 13 JT. FOOTING

SLENDERNESS EFFECTS IN RECTANGULAR COMPRESSION MEMBERS (AASHTO 8.16.5)

GROUP 1

	B	D	KL/R	M_U	M_{DL}	B_D	P_U	P_C	δ_b	δ_s	M_C	
	In.	In.		Ft. Kips	Ft. Kips		Kips	Kips			Ft. Kips	
MY	53.892	79.572	0.0	0.00	0.00	0.000	1252	0	1.000	1.000	312	*
MZ	53.892	79.572	2.2	79.94	38.69	0.484	1252	0	1.000	1.000	231	*

GROUP 2

	B	D	KL/R	M_U	M_{DL}	B_D	P_U	P_C	δ_b	δ_s	M_C
	In.	In.		Ft. Kips	Ft. Kips		Kips	Kips			Ft. Kips
MY	53.892	79.572	0.0	3055.43	0.00	0.000	1124	0	1.000	1.000	3055
MZ	53.892	79.572	2.2	372.80	38.69	0.104	1124	0	1.000	1.000	373

GROUP 3

	B	D	KL/R	M_U	M_{DL}	B_D	P_U	P_C	δ_b	δ_s	M_C	
	In.	In.		Ft. Kips	Ft. Kips		Kips	Kips			Ft. Kips	
MY	53.892	79.572	0.0	1777.61	0.00	0.000	1203	0	1.000	1.000	1778	
MZ	53.892	79.572	2.2	104.47	38.69	0.370	1203	0	1.000	1.000	222	*

GROUP 4

	B	D	KL/R	M_U	M_{DL}	B_D	P_U	P_C	δ_b	δ_s	M_C	
	In.	In.		Ft. Kips	Ft. Kips		Kips	Kips			Ft. Kips	
MY	53.892	79.572	0.0	0.00	0.00	0.000	1069	0	1.000	1.000	266	*
MZ	53.892	79.572	2.2	2228.77	38.69	0.017	1069	0	1.000	1.000	2229	

GROUP 5

	B	D	KL/R	M_U	M_{DL}	B_D	P_U	P_C	δ_b	δ_s	M_C
	In.	In.		Ft. Kips	Ft. Kips		Kips	Kips			Ft. Kips
MY	53.892	79.572	0.0	2937.91	0.00	0.000	1012	0	1.000	1.000	2938
MZ	53.892	79.572	2.2	1723.58	38.69	0.022	1012	0	1.000	1.000	1724

GROUP 6

	B	D	KL/R	M_U	M_{DL}	B_D	P_U	P_C	δ_b	δ_s	M_C
	In.	In.		Ft. Kips	Ft. Kips		Kips	Kips			Ft. Kips
MY	53.892	79.572	0.0	1709.24	0.00	0.000	1088	0	1.000	1.000	1709
MZ	53.892	79.572	2.2	1981.59	38.69	0.020	1088	0	1.000	1.000	1982

* MINIMUM MOMENT CONTROLS

H. W. LOCHNER, INC.

PROJECT: BONNER BRIDGE - OREGON INLET NORTH CAROLINA JMJ Jun-06
SUBJECT: HIGH LEVEL BENT ANALYSIS WDB Jun-06
HLB 145 MEM. 13 JT. FOOTING

COLUMN LOADS

PMIN

HLB 145 MEMBER 13 JOINT FOOTING

GROUP 1

	P	MY	MZ
DL	561.75	0.00	29.76
LL	60.72	0.00	-16.07
GROUP 1	0.00	0.00	0.00
SERVICE	622.47	0.00	13.69
STRENGTH	861.84	0.00	3.87

GROUP 2

	P	MY	MZ
DL	561.75	0.00	29.76
LL	0.00	0.00	0.00
GROUP 2	115.38	2350.33	-316.53
SERVICE	677.13	2350.33	-286.77
STRENGTH	880.27	3055.43	-372.80

GROUP 3

	P	MY	MZ
DL	561.75	0.00	29.76
LL	60.72	0.00	-16.07
GROUP 3	48.47	1367.39	-129.16
SERVICE	670.94	1367.39	-115.47
STRENGTH	872.22	1777.61	-150.11

GROUP 4

	P	MY	MZ
DL	561.75	0.00	29.76
LL	60.72	0.00	-16.07
GROUP 4	-55.11	0.00	1665.64
SERVICE	567.36	0.00	1679.33
STRENGTH	737.57	0.00	2183.13

GROUP 5

	P	MY	MZ
DL	561.75	0.00	29.76
LL	0.00	0.00	0.00
GROUP 5	60.24	2350.33	1349.10
SERVICE	621.99	2350.33	1378.86
STRENGTH	777.48	2937.91	1723.58

GROUP 6

	P	MY	MZ
DL	561.75	0.00	29.76
LL	60.72	0.00	-16.07
GROUP 6	-6.64	1367.39	1536.47
SERVICE	615.83	1367.39	1550.16
STRENGTH	769.79	1709.24	1937.70

SLENDERNESS EFFECTS IN COMPRESSION MEMBERS (AASHTO 8.16.5)

f'c = 3000 psi PHI = 0.70 W_C = 150 PCF

$E_C = W_C^{1.5} * 33 * f'c^{0.5}$ = 3320561 PSI Width of Rect. Col. = B = 53.892 In.

Depth of Rect. Col = D = 79.572 In.

$r_Y = 0.30*D$ = 23.87 In. L_Y = 0 Ft. K_Y = 2.0

$r_Z = 0.30*B$ = 16.17 In. L_Z = 2.5 Ft. K_Z = 1.2

I_{YY} = $B*D^3/12$ I_{YY} = 2262684 In^4

I_{ZZ} = $D*B^3/12$ I_{ZZ} = 1037891 In^5

$K_Y L_Y/r$ = 0.0 < 22 NO SLENDERNESS EFFECT

$K_Z L_Z/r$ = 2.2 < 22 NO SLENDERNESS EFFECT

H. W. LOCHNER, INC.

PROJECT: BONNER BRIDGE - OREGON INLET NORTH CAROLINA — JMJ Jun-06
SUBJECT: HIGH LEVEL BENT ANALYSIS — WDB Jun-06
HLB 145 MEM. 13 JT. FOOTING

SLENDERNESS EFFECTS IN RECTANGULAR COMPRESSION MEMBERS (AASHTO 8.16.5)

GROUP 1

	B	D	KL/R	M_U	M_{DL}	B_D	P_U	P_C	δ_b	δ_s	M_C	
	In.	In.		Ft. Kips	Ft. Kips		Kips	Kips			Ft. Kips	
MY	53.892	79.572	0.0	0.00	0.00	0.000	862	0	1.000	1.000	215	*
MZ	53.892	79.572	2.2	3.87	38.69	9.998	862	0	1.000	1.000	159	*

GROUP 2

	B	D	KL/R	M_U	M_{DL}	B_D	P_U	P_C	δ_b	δ_s	M_C
	In.	In.		Ft. Kips	Ft. Kips		Kips	Kips			Ft. Kips
MY	53.892	79.572	0.0	3055.43	0.00	0.000	880	0	1.000	1.000	3055
MZ	53.892	79.572	2.2	372.80	38.69	0.104	880	0	1.000	1.000	373

GROUP 3

	B	D	KL/R	M_U	M_{DL}	B_D	P_U	P_C	δ_b	δ_s	M_C	
	In.	In.		Ft. Kips	Ft. Kips		Kips	Kips			Ft. Kips	
MY	53.892	79.572	0.0	1777.61	0.00	0.000	872	0	1.000	1.000	1778	
MZ	53.892	79.572	2.2	150.11	38.69	0.258	872	0	1.000	1.000	161	*

GROUP 4

	B	D	KL/R	M_U	M_{DL}	B_D	P_U	P_C	δ_b	δ_s	M_C	
	In.	In.		Ft. Kips	Ft. Kips		Kips	Kips			Ft. Kips	
MY	53.892	79.572	0.0	0.00	0.00	0.000	738	0	1.000	1.000	184	*
MZ	53.892	79.572	2.2	2183.13	38.69	0.018	738	0	1.000	1.000	2183	

GROUP 5

	B	D	KL/R	M_U	M_{DL}	B_D	P_U	P_C	δ_b	δ_s	M_C
	In.	In.		Ft. Kips	Ft. Kips		Kips	Kips			Ft. Kips
MY	53.892	79.572	0.0	2937.91	0.00	0.000	777	0	1.000	1.000	2938
MZ	53.892	79.572	2.2	1723.58	38.69	0.022	777	0	1.000	1.000	1724

GROUP 6

	B	D	KL/R	M_U	M_{DL}	B_D	P_U	P_C	δ_b	δ_s	M_C
	In.	In.		Ft. Kips	Ft. Kips		Kips	Kips			Ft. Kips
MY	53.892	79.572	0.0	1709.24	0.00	0.000	770	0	1.000	1.000	1709
MZ	53.892	79.572	2.2	1937.70	38.69	0.020	770	0	1.000	1.000	1938

* MINIMUM MOMENT CONTROLS

JMJ 7/06

WDB 7/06

```
OOOOOOO    OOOOO    OOOOO    OOOOO    OOOOO    OO
OO    OO   OO  OO   OO  OO   OO  OO   OO  OO   OO
OO    OO   OO  OO   OO  OO   OO  OO   OO  OO   OO
OO    OO   OO       OO  OO   OO       OO  OO   OO
OO    OO   OO       OOOOOOO  OO       OO  OO   OO
OOOOOOO    OO  OO   OO  OO   OO  OO   OO  OO   OO
OO         OO  OO   OO  OO   OO  OO   OO  OO   OO
OO          OOOOO   OO  OO    OOOOO    OOOOO    OOOOO  (TM)
```

==========
Computer program for the Strength Design of Reinforced Concrete Sections
==========

Licensee stated above acknowledges that Portland Cement Association (PCA) is not and cannot be responsible for either the accuracy or adequacy of the material supplied as input for processing by the PCACOL(tm) computer program. Furthermore, PCA neither makes any warranty expressed nor implied with respect to the correctness of the output prepared by the PCACOL(tm) program. Although PCA has endeavored to produce PCACOL(tm) error free, the program is not and can't be certified infallible. The final and only responsibility for analysis, design and engineering documents is the licensees. Accordingly, PCA disclaims all responsibility in contract, negligence or other tort for any analysis, design or engineering documents prepared in connection with the use of the PCACOL(tm) program.

BASED ON PLANS.

General Information:
==========

File Name: S:\DGN-ST\NORTHC~1\BONNER~1\ANALYSIS\PIERS\HLB144~1\PCACOL~1\NEWFOL~1\M13PLAN.COL
Project: BONNER BRIDGE - OREGON INLET
Column: HLB #145 Engineer: JMJ
Code: ACI 318-95 Units: English

Run Option: Investigation Slenderness: Not considered
Run Axis: Biaxial Column Type: Structural

Material Properties:
==========

f'c = 3 ksi fy = 40 ksi
Ec = 3122.02 ksi Es = 29000 ksi
fc = 2.55 ksi Rupture strain = Infinity
Ultimate strain = 0.003 in/in
Beta1 = 0.85

Section:
==========

Rectangular: Width = 53.9 in Depth = 79.6 in

Gross section area, Ag = 4290.44 in^2
Ix = 2.26541e+006 in^4 Iy = 1.03872e+006 in^4
Xo = 0 in Yo = 0 in

Reinforcement:
==========

Rebar Database: User-defined

Size	Diam (in)	Area (in^2)	Size	Diam (in)	Area (in^2)	Size	Diam (in)	Area (in^2)
# 1	0.00	0.00	# 3	0.38	0.11	# 4	0.50	0.20
# 5	0.63	0.31	# 6	0.75	0.44	# 7	0.88	0.60
# 8	1.00	0.79	# 9	1.13	1.00	# 10	1.27	1.27
# 11	1.41	1.56	# 14	1.69	2.25	# 18	2.26	4.00

Confinement: Tied; #1 ties with #9 bars, #1 with larger bars.
phi(a) = 0.8, phi(b) = 0.9, phi(c) = 0.7

Layout: Rectangular
Pattern: Equal Bar Spacing (Cover to longitudinal reinforcement)
Total steel area, As = 49.92 in^2 at 1.16%
32 #11 Cover = 5 in

Factored Loads and Moments with Corresponding Capacities: (see user's manual for notation)
==========

No.	Pu kip	Mux k-ft	Muy k-ft	fMnx k-ft	fMny k-ft	fMn/Mu
1	1237.0	308.0	229.0	4502.8	3339.1	14.606
2	1109.0	2870.0	272.0	6631.3	640.0	2.311
3	1189.0	1681.0	220.0	6597.2	868.1	3.925
4	1054.0	262.0	679.0	1690.3	4366.0	6.433
5	998.0	2759.0	973.0	5841.9	2059.1	2.117
6	1074.0	1617.0	778.0	5401.0	2606.7	3.342
7	851.0	212.0	157.0	4428.9	3271.8	20.873
8	869.0	2870.0	272.0	6443.3	607.6	2.245
9	861.0	1681.0	159.0	6435.4	605.1	3.828
10	727.0	181.0	712.0	1068.6	4220.4	5.926
11	767.0	2759.0	973.0	5693.5	1997.1	2.062
12	759.0	1617.0	809.0	5182.8	2604.2	3.208
13	1252.0	312.0	231.0	4507.3	3335.6	14.444
14	1124.0	3055.0	373.0	6591.8	801.2	2.158
15	1203.0	1778.0	222.0	6615.2	834.3	3.721

16	1069.0	266.0	2229.0	538.3	4540.1	2.037
17	1012.0	2938.0	1724.0	5001.4	2941.3	1.703
18	1088.0	1709.0	1982.0	3362.4	3904.3	1.969
19	862.0	215.0	159.0	4431.7	3275.9	20.609
20	880.0	3055.0	373.0	6406.9	772.6	2.097
21	872.0	1778.0	161.0	6452.1	582.8	3.629
22	738.0	184.0	2183.0	358.5	4285.1	1.963
23	777.0	2938.0	1724.0	4909.3	2874.2	1.670
24	770.0	1709.0	1938.0	3301.3	3750.9	1.934

*** Program completed as requested! ***

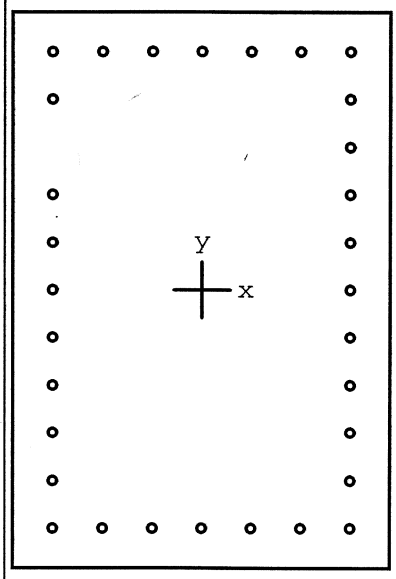

53.9 x 79.6 in

Code: ACI 318-95

Units: English

Run axis: Biaxial

Run option: Investigation

Slenderness: Not considered

(mn type: Structural

Bars: User-defined

Date: 07/20/06

Time: 16:09:32

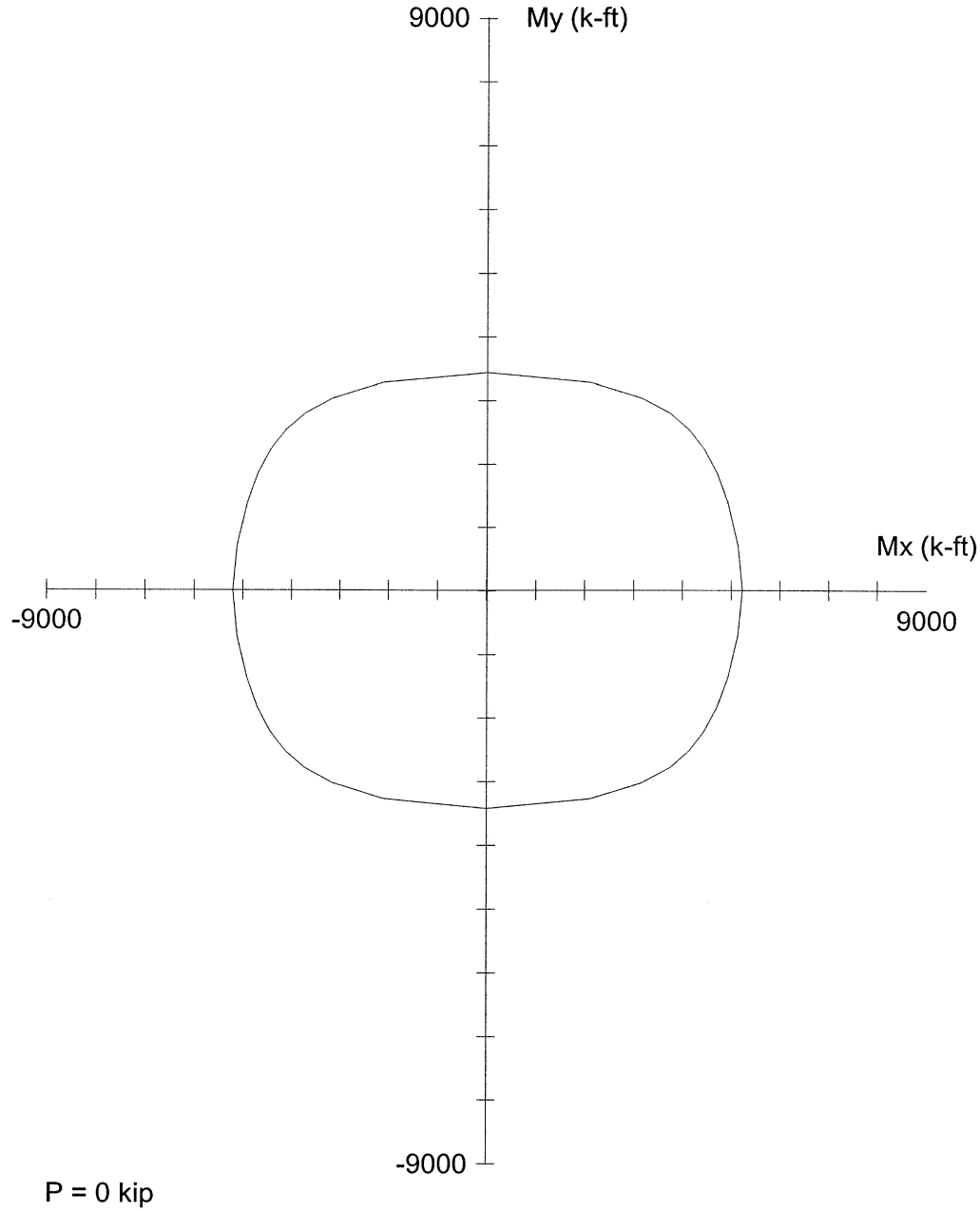

PCACOL V3.00 (PCA 1999) - Licensed to: Licensee name not yet specified.

File: S:\DGN-ST\NORTHC~1\BONNER~1\ANALYSIS\PIERS\HLB144~1\PCACOL~1\NEWFOL~1\M13PLAN.COL

Project: BONNER BRIDGE - OREGON INLET

Column: COL		Engineer: JMJ	
f'c = 3 ksi	fy = 40 ksi	Ag = 4290.44 in^2	32 #11 bars
Ec = 3122 ksi	Es = 29000 ksi	As = 49.92 in^2	Rho = 1.16%
fc = 2.55 ksi	e_rup = Infinity	Xo = 0.00 in	Ix = 2.26541e+006 in^4
ı = 0.003 in/in		Yo = 0.00 in	Iy = 1.03872e+006 in^4
Beta1 = 0.85		Clear spacing = 5.41 in	Clear cover = 5.00 in
Confinement: Tied	phi(a) = 0.8, phi(b) = 0.9, phi(c) = 0.7		

JMJ 7/06
WDB 7/06

```
OOOOOOO    OOOOO    OOOOO    OOOOO    OOOOO   OO
OO    OO   OO  OO   OO  OO   OO  OO   OO  OO   OO
OO    OO   OO  OO   OO  OO   OO  OO   OO  OO   OO
OO    OO   OO       OO  OO   OO       OO  OO   OO
OO    OO   OO       OOOOOOO  OO       OO  OO   OO
OOOOOOO    OO  OO   OO  OO   OO  OO   OO  OO   OO
OO         OO  OO   OO  OO   OO  OO   OO  OO   OO
OO          OOOOO   OO  OO    OOOOO    OOOOO   OOOOO  (TM)
```

==========
Computer program for the Strength Design of Reinforced Concrete Sections
==========

Licensee stated above acknowledges that Portland Cement Association (PCA) is not and cannot be responsible for either the accuracy or adequacy of the material supplied as input for processing by the PCACOL(tm) computer program. Furthermore, PCA neither makes any warranty expressed nor implied with respect to the correctness of the output prepared by the PCACOL(tm) program. Although PCA has endeavored to produce PCACOL(tm) error free, the program is not and can't be certified infallible. The final and only responsibility for analysis, design and engineering documents is the licensees. Accordingly, PCA disclaims all responsibility in contract, negligence or other tort for any analysis, design or engineering documents prepared in connection with the use of the PCACOL(tm) program.

30% COVER LOSS

f'_c = 4400 PSI

General Information:
==========

File Name: S:\DGN-ST\NORTHC~1\BONNER~1\ANALYSIS\PIERS\HLB144~1\PCACOL~1\M13ACT.COL
Project: BONNER BRIDGE - OREGON INLET
Column: OL
Engineer: JMJ
Code: ACI 318-95
Units: English

Run Option: Investigation
Slenderness: Not considered
Run Axis: Biaxial
Column Type: Structural

Material Properties:
==========

f'c = 4.4 ksi
fy = 40 ksi
Ec = 3780.96 ksi
Es = 29000 ksi
fc = 3.74 ksi
Rupture strain = Infinity
Ultimate strain = 0.003 in/in
Beta1 = 0.83

Section:
==========

Rectangular: Width = 48.9 in
Depth = 74.6 in

Gross section area, Ag = 3647.94 in^2
Ix = 1.69178e+006 in^4
Iy = 726916 in^4
Xo = 0 in
Yo = 0 in

Reinforcement:
==========

Rebar Database: User-defined

Size	Diam (in)	Area (in^2)	Size	Diam (in)	Area (in^2)	Size	Diam (in)	Area (in^2)
# 1	0.00	0.00	# 3	0.38	0.11	# 4	0.50	0.20
# 5	0.63	0.31	# 6	0.75	0.44	# 7	0.88	0.60
# 8	1.00	0.79	# 9	1.13	1.00	# 10	1.27	1.27
# 11	1.41	1.56	# 14	1.69	2.25	# 18	2.26	4.00

Confinement: Tied; #1 ties with #9 bars, #1 with larger bars.
phi(a) = 0.8, phi(b) = 0.9, phi(c) = 0.7

Layout: Rectangular
Pattern: Equal Bar Spacing (Cover to longitudinal reinforcement)
Total steel area, As = 49.92 in^2 at 1.37%
32 #11 Cover = 2.5 in

Factored Loads and Moments with Corresponding Capacities: (see user's manual for notation)
==========

No.	Pu kip	Mux k-ft	Muy k-ft	fMnx k-ft	fMny k-ft	fMn/Mu
1	1237.0	308.0	229.0	4745.4	3516.3	15.389
2	1109.0	2870.0	272.0	6839.7	648.5	2.383
3	1189.0	1681.0	220.0	6853.3	904.8	4.078
4	1054.0	262.0	679.0	1693.5	4402.6	6.481
5	998.0	2759.0	973.0	6029.5	2120.1	2.185
6	1074.0	1617.0	778.0	5632.6	2701.9	3.481
7	851.0	212.0	157.0	4522.4	3338.6	21.308
8	869.0	2870.0	272.0	6531.2	629.3	2.276
9	861.0	1681.0	159.0	6525.3	606.5	3.881
10	727.0	181.0	712.0	1058.7	4168.3	5.854
11	767.0	2759.0	973.0	5780.1	2046.0	2.096
12	759.0	1617.0	809.0	5291.2	2656.9	3.275
13	1252.0	312.0	231.0	4759.0	3518.0	15.245
14	1124.0	3055.0	373.0	6802.4	840.3	2.227
15	1203.0	1778.0	222.0	6887.0	848.3	3.873

16	1069.0	266.0	2229.0	543.2	4554.3	2.043
17	1012.0	2938.0	1724.0	5191.4	3042.8	1.766
18	1088.0	1709.0	1982.0	3459.6	4003.9	2.022
19	862.0	215.0	159.0	4530.3	3344.5	21.058
20	880.0	3055.0	373.0	6503.5	799.8	2.129
21	872.0	1778.0	161.0	6545.8	582.7	3.681
22	738.0	184.0	2183.0	357.3	4234.1	1.940
23	777.0	2938.0	1724.0	5006.5	2936.3	1.704
24	770.0	1709.0	1938.0	3327.2	3769.4	1.946

*** Program completed as requested! ***

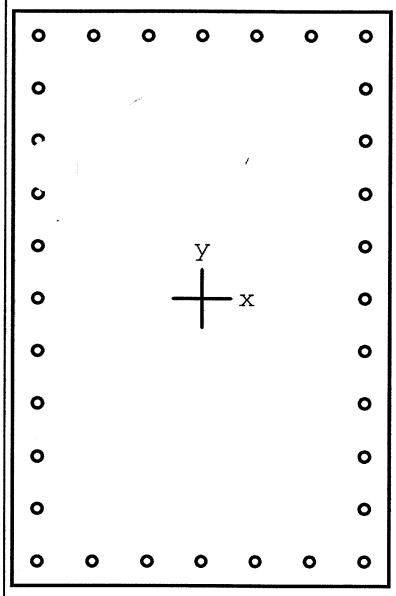

48.9 x 74.6 in

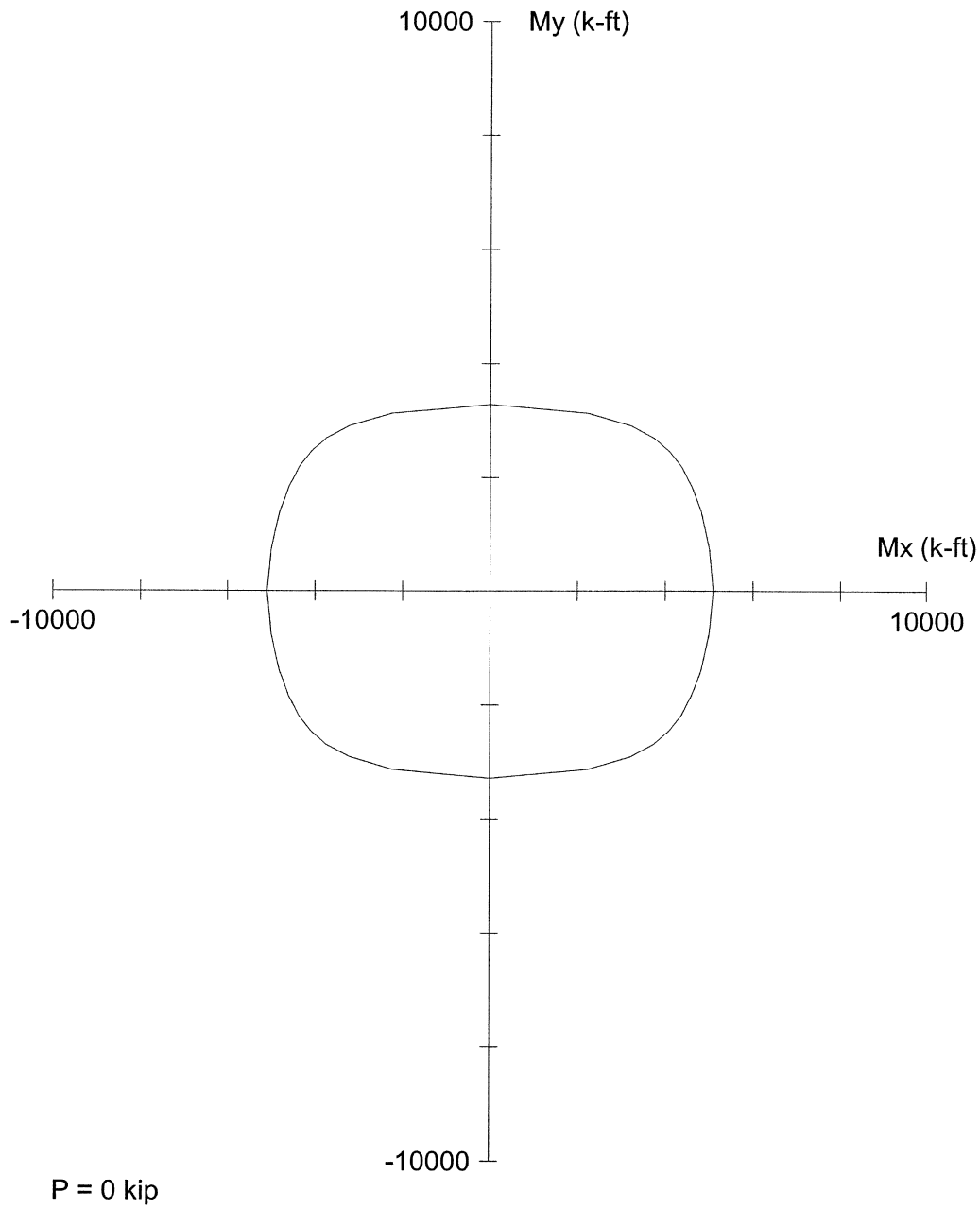

Code: ACI 318-95

Units: English

Run axis: Biaxial

Run option: Investigation

Slenderness: Not considered

Column type: Structural

Bars: User-defined

Date: 07/25/06

Time: 13:26:18

PCACOL V3.00 (PCA 1999) - Licensed to: Licensee name not yet specified.

File: S:\DGN-ST\NORTHC~1\BONNER~1\ANALYSIS\PIERS\HLB144~1\PCACOL~1\M13ACT.COL

Project: BONNER BRIDGE - OREGON INLET

Column: OL		Engineer: JMJ	
f'c = 4.4 ksi	fy = 40 ksi	Ag = 3647.94 in^2	32 #11 bars
Ec = 3781 ksi	Es = 29000 ksi	As = 49.92 in^2	Rho = 1.37%
fc = 3.74 ksi	e_rup = Infinity	Xo = 0.00 in	Ix = 1.69178e+006 in^4
u = 0.003 in/in		Yo = 0.00 in	Iy = 726916 in^4
Beta1 = 0.83		Clear spacing = 5.41 in	Clear cover = 2.50 in
Confinement: Tied	phi(a) = 0.8, phi(b) = 0.9, phi(c) = 0.7		

H. W. LOCHNER, INC.

PROJECT: BONNER BRIDGE - OREGON INLET NORTH CAROLINA JMJ Jun-06
SUBJECT: HIGH LEVEL BENT ANALYSIS WDB Jun-06
HLB 145 MEM. 14 JT. 10

COLUMN LOADS

PMAX

HLB 145 MEMBER 14 JOINT 10

GROUP 1

	P	MY	MZ
DL	737.77	0.00	31.17
LL	128.21	0.00	13.10
GROUP 1	0.00	0.00	0.00
SERVICE	865.98	0.00	44.27
STRENGTH	1236.89	0.00	68.90

GROUP 2

	P	MY	MZ
DL	737.77	0.00	31.17
LL	0.00	0.00	0.00
GROUP 2	-115.34	-2207.24	242.42
SERVICE	622.43	-2207.24	273.59
STRENGTH	809.16	-2869.41	355.67

GROUP 3

	P	MY	MZ
DL	737.77	0.00	31.17
LL	128.21	0.00	13.10
GROUP 3	-48.46	-1293.02	99.58
SERVICE	817.52	-1293.02	143.85
STRENGTH	1062.78	-1680.93	187.01

GROUP 4

	P	MY	MZ
DL	737.77	0.00	31.17
LL	128.21	0.00	13.10
GROUP 4	-55.10	0.00	-569.36
SERVICE	810.88	0.00	-525.09
STRENGTH	1054.14	0.00	-682.62

GROUP 5

	P	MY	MZ
DL	737.77	0.00	31.17
LL	0.00	0.00	0.00
GROUP 5	-170.44	-2207.24	-326.94
SERVICE	567.33	-2207.24	-295.77
STRENGTH	709.16	-2759.05	-369.71

GROUP 6

	P	MY	MZ
DL	737.77	0.00	31.17
LL	128.21	0.00	13.10
GROUP 6	-103.56	-1293.02	-469.78
SERVICE	762.42	-1293.02	-425.51
STRENGTH	953.03	-1616.28	-531.89

SLENDERNESS EFFECTS IN COMPRESSION MEMBERS (AASHTO 8.16.5)

f'c = 3000 psi PHI = 0.70 W_C = 150 PCF

$E_C = W_C^{1.5} * 33 * f'c^{0.5}$ = 3320561 PSI Width of Rect. Col. = B = 53.892 In.

Depth of Rect. Col = D = 79.572 In.

$r_Y = 0.30*D$ = 23.87 In. L_Y = 0 Ft. K_Y = 2.0

$r_Z = 0.30*B$ = 16.17 In. L_Z = 2.5 Ft. K_Z = 1.2

I_{YY} = $B*D^3/12$ I_{YY} = 2262684 In^4

I_{ZZ} = $D*B^3/12$ I_{ZZ} = 1037891 In^5

$K_Y L_Y/r$ = 0.0 < 22 NO SLENDERNESS EFFECT

$K_Z L_Z/r$ = 2.2 < 22 NO SLENDERNESS EFFECT

H. W. LOCHNER, INC.

PROJECT: BONNER BRIDGE - OREGON INLET NORTH CAROLINA JMJ Jun-06
SUBJECT: HIGH LEVEL BENT ANALYSIS WDB Jun-06
HLB 145 MEM. 14 JT. 10

SLENDERNESS EFFECTS IN RECTANGULAR COMPRESSION MEMBERS (AASHTO 8.16.5)

GROUP 1

	B	D	KL/R	M_U	M_{DL}	B_D	P_U	P_C	δ_b	δ_s	M_C	
	In.	In.		Ft. Kips	Ft. Kips		Kips	Kips			Ft. Kips	
MY	53.892	79.572	0.0	0.00	0.00	0.000	1237	0	1.000	1.000	308	*
MZ	53.892	79.572	2.2	68.90	40.52	0.588	1237	0	1.000	1.000	228	*

GROUP 2

	B	D	KL/R	M_U	M_{DL}	B_D	P_U	P_C	δ_b	δ_s	M_C
	In.	In.		Ft. Kips	Ft. Kips		Kips	Kips			Ft. Kips
MY	53.892	79.572	0.0	2869.41	0.00	0.000	809	0	1.000	1.000	2869
MZ	53.892	79.572	2.2	355.67	40.52	0.114	809	0	1.000	1.000	356

GROUP 3

	B	D	KL/R	M_U	M_{DL}	B_D	P_U	P_C	δ_b	δ_s	M_C	
	In.	In.		Ft. Kips	Ft. Kips		Kips	Kips			Ft. Kips	
MY	53.892	79.572	0.0	1680.93	0.00	0.000	1063	0	1.000	1.000	1681	
MZ	53.892	79.572	2.2	187.01	40.52	0.217	1063	0	1.000	1.000	196	*

GROUP 4

	B	D	KL/R	M_U	M_{DL}	B_D	P_U	P_C	δ_b	δ_s	M_C	
	In.	In.		Ft. Kips	Ft. Kips		Kips	Kips			Ft. Kips	
MY	53.892	79.572	0.0	0.00	0.00	0.000	1054	0	1.000	1.000	262	*
MZ	53.892	79.572	2.2	682.62	40.52	0.059	1054	0	1.000	1.000	683	

GROUP 5

	B	D	KL/R	M_U	M_{DL}	B_D	P_U	P_C	δ_b	δ_s	M_C
	In.	In.		Ft. Kips	Ft. Kips		Kips	Kips			Ft. Kips
MY	53.892	79.572	0.0	2759.05	0.00	0.000	709	0	1.000	1.000	2759
MZ	53.892	79.572	2.2	369.71	40.52	0.110	709	0	1.000	1.000	370

GROUP 6

	B	D	KL/R	M_U	M_{DL}	B_D	P_U	P_C	δ_b	δ_s	M_C
	In.	In.		Ft. Kips	Ft. Kips		Kips	Kips			Ft. Kips
MY	53.892	79.572	0.0	1616.28	0.00	0.000	953	0	1.000	1.000	1616
MZ	53.892	79.572	2.2	531.89	40.52	0.076	953	0	1.000	1.000	532

* MINIMUM MOMENT CONTROLS

H. W. LOCHNER, INC.

PROJECT: BONNER BRIDGE - OREGON INLET NORTH CAROLINA JMJ Jun-06
SUBJECT: HIGH LEVEL BENT ANALYSIS WDB Jun-06
HLB 145 MEM. 14 JT. 10

COLUMN LOADS

PMIN

HLB 145 MEMBER 14 JOINT 10

	GROUP 1				GROUP 2		
	P	MY	MZ		P	MY	MZ
DL	553.33	0.00	31.17	DL	553.33	0.00	31.17
LL	60.70	0.00	-11.61	LL	0.00	0.00	0.00
GROUP 1	0.00	0.00	0.00	GROUP 2	-115.34	-2207.24	242.42
SERVICE	614.03	0.00	19.56	SERVICE	437.99	-2207.24	273.59
STRENGTH	850.84	0.00	15.37	STRENGTH	569.38	-2869.41	355.67

	GROUP 3				GROUP 4		
	P	MY	MZ		P	MY	MZ
DL	553.33	0.00	31.17	DL	553.33	0.00	31.17
LL	60.70	0.00	-11.61	LL	60.70	0.00	-11.61
GROUP 3	-48.46	-1293.02	99.58	GROUP 4	-55.10	0.00	-569.36
SERVICE	565.57	-1293.02	119.14	SERVICE	558.93	0.00	-549.80
STRENGTH	735.24	-1680.93	154.88	STRENGTH	726.61	0.00	-714.74

	GROUP 5				GROUP 6		
	P	MY	MZ		P	MY	MZ
DL	553.33	0.00	31.17	DL	553.33	0.00	31.17
LL	0.00	0.00	0.00	LL	60.70	0.00	-11.61
GROUP 5	-170.44	-2207.24	-326.94	GROUP 6	-103.56	-1293.02	-469.78
SERVICE	382.89	-2207.24	-295.77	SERVICE	510.47	-1293.02	-450.22
STRENGTH	478.61	-2759.05	-369.71	STRENGTH	638.08	-1616.28	-562.78

SLENDERNESS EFFECTS IN COMPRESSION MEMBERS (AASHTO 8.16.5)

f'c = 3000 psi PHI = 0.70 W_C = 150 PCF

$E_C = W_C$^$^{1.5}$ *33*f'c^$^{0.5}$ = 3320561 PSI Width of Rect. Col. = B = 53.892 In.

Depth of Rect. Col = D = 79.572 In.

r_Y = 0.30*D = 23.87 In. L_Y = 0 Ft. K_Y = 2.0

r_Z = 0.30*B = 16.17 In. L_Z = 2.5 Ft. K_Z = 1.2

I_{YY} = B*D^^{3}/12 I_{YY} = 2262684 In^4

I_{ZZ} = D*B^^{3}/12 I_{ZZ} = 1037891 In^5

K_YL_Y/r = 0.0 < 22 NO SLENDERNESS EFFECT

K_ZL_Z/r = 2.2 < 22 NO SLENDERNESS EFFECT

H. W. LOCHNER, INC.

PROJECT: BONNER BRIDGE - OREGON INLET NORTH CAROLINA JMJ Jun-06
SUBJECT: HIGH LEVEL BENT ANALYSIS WDB Jun-06
HLB 145 MEM. 14 JT. 10

SLENDERNESS EFFECTS IN RECTANGULAR COMPRESSION MEMBERS (AASHTO 8.16.5)

GROUP 1

	B	D	KL/R	M_U	M_{DL}	B_D	P_U	P_C	δ_b	δ_s	M_C	
	In.	In.		Ft. Kips	Ft. Kips		Kips	Kips			Ft. Kips	
MY	53.892	79.572	0.0	0.00	0.00	0.000	851	0	1.000	1.000	212	*
MZ	53.892	79.572	2.2	15.37	40.52	2.637	851	0	1.000	1.000	157	*

GROUP 2

	B	D	KL/R	M_U	M_{DL}	B_D	P_U	P_C	δ_b	δ_s	M_C
	In.	In.		Ft. Kips	Ft. Kips		Kips	Kips			Ft. Kips
MY	53.892	79.572	0.0	2869.41	0.00	0.000	569	0	1.000	1.000	2869
MZ	53.892	79.572	2.2	355.67	40.52	0.114	569	0	1.000	1.000	356

GROUP 3

	B	D	KL/R	M_U	M_{DL}	B_D	P_U	P_C	δ_b	δ_s	M_C
	In.	In.		Ft. Kips	Ft. Kips		Kips	Kips			Ft. Kips
MY	53.892	79.572	0.0	1680.93	0.00	0.000	735	0	1.000	1.000	1681
MZ	53.892	79.572	2.2	154.88	40.52	0.262	735	0	1.000	1.000	155

GROUP 4

	B	D	KL/R	M_U	M_{DL}	B_D	P_U	P_C	δ_b	δ_s	M_C	
	In.	In.		Ft. Kips	Ft. Kips		Kips	Kips			Ft. Kips	
MY	53.892	79.572	0.0	0.00	0.00	0.000	727	0	1.000	1.000	181	*
MZ	53.892	79.572	2.2	714.74	40.52	0.057	727	0	1.000	1.000	715	

GROUP 5

	B	D	KL/R	M_U	M_{DL}	B_D	P_U	P_C	δ_b	δ_s	M_C
	In.	In.		Ft. Kips	Ft. Kips		Kips	Kips			Ft. Kips
MY	53.892	79.572	0.0	2759.05	0.00	0.000	479	0	1.000	1.000	2759
MZ	53.892	79.572	2.2	369.71	40.52	0.110	479	0	1.000	1.000	370

GROUP 6

	B	D	KL/R	M_U	M_{DL}	B_D	P_U	P_C	δ_b	δ_s	M_C
	In.	In.		Ft. Kips	Ft. Kips		Kips	Kips			Ft. Kips
MY	53.892	79.572	0.0	1616.28	0.00	0.000	638	0	1.000	1.000	1616
MZ	53.892	79.572	2.2	562.78	40.52	0.072	638	0	1.000	1.000	563

* MINIMUM MOMENT CONTROLS

H. W. LOCHNER, INC.

PROJECT: BONNER BRIDGE - OREGON INLET NORTH CAROLINA JMJ Jun-06
SUBJECT: HIGH LEVEL BENT ANALYSIS WDB Jun-06
HLB 145 MEM. 14 JT. FOOTING

COLUMN LOADS

PMAX

HLB 145 MEMBER 14 JOINT FOOTING

GROUP 1

	P	MY	MZ
DL	748.89	0.00	27.53
LL	128.21	0.00	18.74
GROUP 1	0.00	0.00	0.00
SERVICE	877.10	0.00	46.27
STRENGTH	1251.34	0.00	76.39

GROUP 2

	P	MY	MZ
DL	748.89	0.00	27.53
LL	0.00	0.00	0.00
GROUP 2	-115.37	-2349.98	316.55
SERVICE	633.52	-2349.98	344.08
STRENGTH	823.57	-3054.97	447.30

GROUP 3

	P	MY	MZ
DL	748.89	0.00	27.53
LL	128.21	0.00	18.74
GROUP 3	-48.47	-1367.18	129.17
SERVICE	828.63	-1367.18	175.44
STRENGTH	1077.22	-1777.33	228.07

GROUP 4

	P	MY	MZ
DL	748.89	0.00	27.53
LL	128.21	0.00	18.74
GROUP 4	-55.10	0.00	1665.76
SERVICE	822.00	0.00	1712.03
STRENGTH	1068.60	0.00	2225.64

GROUP 5

	P	MY	MZ
DL	748.89	0.00	27.53
LL	0.00	0.00	0.00
GROUP 5	-170.47	-2349.98	1982.31
SERVICE	578.42	-2349.98	2009.84
STRENGTH	723.02	-2937.48	2512.30

GROUP 6

	P	MY	MZ
DL	748.89	0.00	27.53
LL	128.21	0.00	18.74
GROUP 6	-103.57	-1367.18	1794.93
SERVICE	773.53	-1367.18	1841.20
STRENGTH	966.91	-1708.98	2301.50

SLENDERNESS EFFECTS IN COMPRESSION MEMBERS (AASHTO 8.16.5)

f'c = 3000 psi PHI = 0.70 W_C = 150 PCF

$E_C = W_C^{1.5} * 33 * f'c^{0.5}$ = 3320561 PSI Width of Rect. Col. = B = 53.892 In.

Depth of Rect. Col = D = 79.572 In.

$r_Y = 0.30*D$ = 23.87 In. L_Y = 0 Ft. K_Y = 2.0

$r_Z = 0.30*B$ = 16.17 In. L_Z = 2.5 Ft. K_Z = 1.2

I_{YY} = $B*D^3/12$ I_{YY} = 2262684 In^4

I_{ZZ} = $D*B^3/12$ I_{ZZ} = 1037891 In^5

$K_Y L_Y/r$ = 0.0 < 22 NO SLENDERNESS EFFECT

$K_Z L_Z/r$ = 2.2 < 22 NO SLENDERNESS EFFECT

H. W. LOCHNER, INC.

PROJECT: BONNER BRIDGE - OREGON INLET NORTH CAROLINA JMJ Jun-06
SUBJECT: HIGH LEVEL BENT ANALYSIS WDB Jun-06
HLB 145 MEM. 14 JT. FOOTING

SLENDERNESS EFFECTS IN RECTANGULAR COMPRESSION MEMBERS (AASHTO 8.16.5)

GROUP 1

	B	D	KL/R	M_U	M_{DL}	B_D	P_U	P_C	δ_b	δ_s	M_C	
	In.	In.		Ft. Kips	Ft. Kips		Kips	Kips			Ft. Kips	
MY	53.892	79.572	0.0	0.00	0.00	0.000	1251	0	1.000	1.000	311	*
MZ	53.892	79.572	2.2	76.39	35.79	0.468	1251	0	1.000	1.000	231	*

GROUP 2

	B	D	KL/R	M_U	M_{DL}	B_D	P_U	P_C	δ_b	δ_s	M_C
	In.	In.		Ft. Kips	Ft. Kips		Kips	Kips			Ft. Kips
MY	53.892	79.572	0.0	3054.97	0.00	0.000	824	0	1.000	1.000	3055
MZ	53.892	79.572	2.2	447.30	35.79	0.080	824	0	1.000	1.000	447

GROUP 3

	B	D	KL/R	M_U	M_{DL}	B_D	P_U	P_C	δ_b	δ_s	M_C
	In.	In.		Ft. Kips	Ft. Kips		Kips	Kips			Ft. Kips
MY	53.892	79.572	0.0	1777.33	0.00	0.000	1077	0	1.000	1.000	1777
MZ	53.892	79.572	2.2	228.07	35.79	0.157	1077	0	1.000	1.000	228

GROUP 4

	B	D	KL/R	M_U	M_{DL}	B_D	P_U	P_C	δ_b	δ_s	M_C	
	In.	In.		Ft. Kips	Ft. Kips		Kips	Kips			Ft. Kips	
MY	53.892	79.572	0.0	0.00	0.00	0.000	1069	0	1.000	1.000	266	*
MZ	53.892	79.572	2.2	2225.64	35.79	0.016	1069	0	1.000	1.000	2226	

GROUP 5

	B	D	KL/R	M_U	M_{DL}	B_D	P_U	P_C	δ_b	δ_s	M_C
	In.	In.		Ft. Kips	Ft. Kips		Kips	Kips			Ft. Kips
MY	53.892	79.572	0.0	2937.48	0.00	0.000	723	0	1.000	1.000	2937
MZ	53.892	79.572	2.2	2512.30	35.79	0.014	723	0	1.000	1.000	2512

GROUP 6

	B	D	KL/R	M_U	M_{DL}	B_D	P_U	P_C	δ_b	δ_s	M_C
	In.	In.		Ft. Kips	Ft. Kips		Kips	Kips			Ft. Kips
MY	53.892	79.572	0.0	1708.98	0.00	0.000	967	0	1.000	1.000	1709
MZ	53.892	79.572	2.2	2301.50	35.79	0.016	967	0	1.000	1.000	2302

* MINIMUM MOMENT CONTROLS

H. W. LOCHNER, INC.

PROJECT: BONNER BRIDGE - OREGON INLET NORTH CAROLINA JMJ Jun-06
SUBJECT: HIGH LEVEL BENT ANALYSIS WDB Jun-06
HLB 145 MEM. 14 JT. FOOTING

COLUMN LOADS

PMIN

HLB 145 MEMBER 14 JOINT FOOTING

GROUP 1

	P	MY	MZ
DL	561.67	0.00	27.53
LL	60.70	0.00	-16.35
GROUP 1	0.00	0.00	0.00
SERVICE	622.37	0.00	11.18
STRENGTH	861.68	0.00	0.36

GROUP 2

	P	MY	MZ
DL	561.67	0.00	27.53
LL	0.00	0.00	0.00
GROUP 2	-115.37	-2349.98	316.55
SERVICE	446.30	-2349.98	344.08
STRENGTH	580.18	-3054.97	447.30

GROUP 3

	P	MY	MZ
DL	561.67	0.00	27.53
LL	60.70	0.00	-16.35
GROUP 3	-48.47	-1367.18	129.17
SERVICE	573.90	-1367.18	140.35
STRENGTH	746.06	-1777.33	182.46

GROUP 4

	P	MY	MZ
DL	561.67	0.00	27.53
LL	60.70	0.00	-16.35
GROUP 4	-55.10	0.00	1665.76
SERVICE	567.27	0.00	1676.94
STRENGTH	737.45	0.00	2180.02

GROUP 5

	P	MY	MZ
DL	561.67	0.00	27.53
LL	0.00	0.00	0.00
GROUP 5	-170.47	-2349.98	1982.31
SERVICE	391.20	-2349.98	2009.84
STRENGTH	489.00	-2937.48	2512.30

GROUP 6

	P	MY	MZ
DL	561.67	0.00	27.53
LL	60.70	0.00	-16.35
GROUP 6	-103.57	-1367.18	1794.93
SERVICE	518.80	-1367.18	1806.11
STRENGTH	648.50	-1708.98	2257.64

SLENDERNESS EFFECTS IN COMPRESSION MEMBERS (AASHTO 8.16.5)

f'c = 3000 psi PHI = 0.70 W_C = 150 PCF

$E_C = W_C^{1.5} * 33 * f'c^{0.5}$ = 3320561 PSI Width of Rect. Col. = B = 53.892 In.

Depth of Rect. Col = D = 79.572 In.

$r_Y = 0.30*D$ = 23.87 In. L_Y = 0 Ft. K_Y = 2.0

$r_Z = 0.30*B$ = 16.17 In. L_Z = 2.5 Ft. K_Z = 1.2

I_{YY} = $B*D^3/12$ I_{YY} = 2262684 In^4

I_{ZZ} = $D*B^3/12$ I_{ZZ} = 1037891 In^5

$K_Y L_Y/r$ = 0.0 < 22 NO SLENDERNESS EFFECT

$K_Z L_Z/r$ = 2.2 < 22 NO SLENDERNESS EFFECT

H. W. LOCHNER, INC.

PROJECT: BONNER BRIDGE - OREGON INLET NORTH CAROLINA JMJ Jun-06
SUBJECT: HIGH LEVEL BENT ANALYSIS WDB Jun-06
HLB 145 MEM. 14 JT. FOOTING

SLENDERNESS EFFECTS IN RECTANGULAR COMPRESSION MEMBERS (AASHTO 8.16.5)

GROUP 1

	B	D	KL/R	M_U	M_{DL}	B_D	P_U	P_C	δ_b	δ_s	M_C	
	In.	In.		Ft. Kips	Ft. Kips		Kips	Kips			Ft. Kips	
MY	53.892	79.572	0.0	0.00	0.00	0.000	862	0	1.000	1.000	214	*
MZ	53.892	79.572	2.2	0.36	35.79	98.323	862	0	1.000	1.000	159	*

GROUP 2

	B	D	KL/R	M_U	M_{DL}	B_D	P_U	P_C	δ_b	δ_s	M_C
	In.	In.		Ft. Kips	Ft. Kips		Kips	Kips			Ft. Kips
MY	53.892	79.572	0.0	3054.97	0.00	0.000	580	0	1.000	1.000	3055
MZ	53.892	79.572	2.2	447.30	35.79	0.080	580	0	1.000	1.000	447

GROUP 3

	B	D	KL/R	M_U	M_{DL}	B_D	P_U	P_C	δ_b	δ_s	M_C
	In.	In.		Ft. Kips	Ft. Kips		Kips	Kips			Ft. Kips
MY	53.892	79.572	0.0	1777.33	0.00	0.000	746	0	1.000	1.000	1777
MZ	53.892	79.572	2.2	182.46	35.79	0.196	746	0	1.000	1.000	182

GROUP 4

	B	D	KL/R	M_U	M_{DL}	B_D	P_U	P_C	δ_b	δ_s	M_C	
	In.	In.		Ft. Kips	Ft. Kips		Kips	Kips			Ft. Kips	
MY	53.892	79.572	0.0	0.00	0.00	0.000	737	0	1.000	1.000	184	*
MZ	53.892	79.572	2.2	2180.02	35.79	0.016	737	0	1.000	1.000	2180	

GROUP 5

	B	D	KL/R	M_U	M_{DL}	B_D	P_U	P_C	δ_b	δ_s	M_C
	In.	In.		Ft. Kips	Ft. Kips		Kips	Kips			Ft. Kips
MY	53.892	79.572	0.0	2937.48	0.00	0.000	489	0	1.000	1.000	2937
MZ	53.892	79.572	2.2	2512.30	35.79	0.014	489	0	1.000	1.000	2512

GROUP 6

	B	D	KL/R	M_U	M_{DL}	B_D	P_U	P_C	δ_b	δ_s	M_C
	In.	In.		Ft. Kips	Ft. Kips		Kips	Kips			Ft. Kips
MY	53.892	79.572	0.0	1708.98	0.00	0.000	648	0	1.000	1.000	1709
MZ	53.892	79.572	2.2	2257.64	35.79	0.016	648	0	1.000	1.000	2258

* MINIMUM MOMENT CONTROLS

JMJ 7/06
WDB 7/06

```
OOOOOOO    OOOOO    OOOOO    OOOOO    OOOOO   OO
OO    OO   OO  OO   OO  OO   OO  OO   OO  OO   OO
OO    OO   OO  OO   OO  OO   OO  OO   OO  OO   OO
OO    OO   OO       OO  OO   OO       OO  OO   OO
OO    OO   OO       OOOOOOO  OO       OO  OO   OO
OOOOOOO    OO  OO   OO  OO   OO  OO   OO  OO   OO
OO         OO  OO   OO  OO   OO  OO   OO  OO   OO
OO          OOOOO   OO  OO    OOOOO    OOOOO   OOOOO  (TM)
```

==========
Computer program for the Strength Design of Reinforced Concrete Sections
==========

Licensee stated above acknowledges that Portland Cement Association (PCA) is not and cannot be responsible for either the accuracy or adequacy of the material supplied as input for processing by the PCACOL(tm) computer program. Furthermore, PCA neither makes any warranty expressed nor implied with respect to the correctness of the output prepared by the PCACOL(tm) program. Although PCA has endeavored to produce PCACOL(tm) error free, the program is not and can't be certified infallible. The final and only responsibility for analysis, design and engineering documents is the licensees. Accordingly, PCA disclaims all responsibility in contract, negligence or other tort for any analysis, design or engineering documents prepared in connection with the use of the PCACOL(tm) program.

BASED ON PLANS.

General Information:
==========

File Name: S:\DGN-ST\NORTHC~1\BONNER~1\ANALYSIS\PIERS\HLB144~1\PCACOL~1\NEWFOL~1\M14PLAN.COL
Project: BONNER BRIDGE - OREGON INLET
Column: HLB #145 Engineer: JMJ
Code: ACI 318-95 Units: English

Run Option: Investigation Slenderness: Not considered
Run Axis: Biaxial Column Type: Structural

Material Properties:
==========

f'c = 3 ksi fy = 40 ksi
Ec = 3122.02 ksi Es = 29000 ksi
fc = 2.55 ksi Rupture strain = Infinity
Ultimate strain = 0.003 in/in
Beta1 = 0.85

Section:
==========

Rectangular: Width = 53.9 in Depth = 79.6 in

Gross section area, Ag = 4290.44 in^2
Ix = 2.26541e+006 in^4 Iy = 1.03872e+006 in^4
Xo = 0 in Yo = 0 in

Reinforcement:
==========

Rebar Database: User-defined

Size	Diam (in)	Area (in^2)	Size	Diam (in)	Area (in^2)	Size	Diam (in)	Area (in^2)
# 1	0.00	0.00	# 3	0.38	0.11	# 4	0.50	0.20
# 5	0.63	0.31	# 6	0.75	0.44	# 7	0.88	0.60
# 8	1.00	0.79	# 9	1.13	1.00	# 10	1.27	1.27
# 11	1.41	1.56	# 14	1.69	2.25	# 18	2.26	4.00

Confinement: Tied; #1 ties with #9 bars, #1 with larger bars.
phi(a) = 0.8, phi(b) = 0.9, phi(c) = 0.7

Layout: Rectangular
Pattern: Equal Bar Spacing (Cover to longitudinal reinforcement)
Total steel area, As = 49.92 in^2 at 1.16%
32 #11 Cover = 5 in

Factored Loads and Moments with Corresponding Capacities: (see user's manual for notation)
==========

No.	Pu kip	Mux k-ft	Muy k-ft	fMnx k-ft	fMny k-ft	fMn/Mu
1	1237.0	308.0	228.0	4515.0	3331.0	14.642
2	809.0	2869.0	356.0	6330.7	778.7	2.206
3	1063.0	1681.0	196.0	6566.7	760.0	3.906
4	1054.0	262.0	683.0	1675.4	4369.0	6.397
5	709.0	2759.0	370.0	6198.8	835.2	2.247
6	953.0	1616.0	532.0	5889.0	1945.6	3.645
7	851.0	212.0	157.0	4428.9	3271.8	20.873
8	569.0	2869.0	356.0	6042.8	745.0	2.106
9	735.0	1681.0	155.0	6299.3	572.9	3.747
10	727.0	181.0	715.0	1066.1	4220.7	5.902
11	479.0	2759.0	370.0	5901.8	801.3	2.140
12	638.0	1616.0	563.0	5592.1	1947.2	3.460
13	1251.0	311.0	231.0	4493.4	3344.9	14.460
14	824.0	3055.0	447.0	6299.7	918.8	2.062
15	1077.0	1777.0	228.0	6546.8	850.7	3.685

16	1069.0	266.0	2226.0	538.1	4540.2	2.039
17	723.0	2937.0	2512.0	3991.4	3423.9	1.361
18	967.0	1709.0	2302.0	2970.3	3989.3	1.735
19	862.0	214.0	159.0	4417.2	3284.6	20.647
20	580.0	3055.0	447.0	6020.7	874.5	1.970
21	746.0	1777.0	182.0	6295.6	642.8	3.543
22	737.0	184.0	2180.0	356.5	4284.2	1.965
23	489.0	2937.0	2512.0	3853.2	3296.6	1.312
24	648.0	1709.0	2258.0	2871.4	3794.3	1.680

*** Program completed as requested! ***

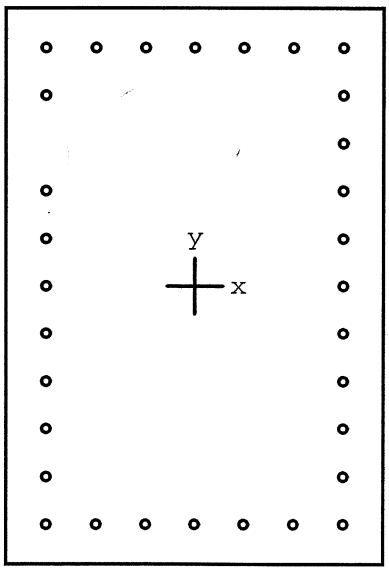

53.9 x 79.6 in

Code: ACI 318-95

Units: English

Run axis: Biaxial

Run option: Investigation

Slenderness: Not considered

mn type: Structural

Bars: User-defined

Date: 07/20/06

Time: 16:11:56

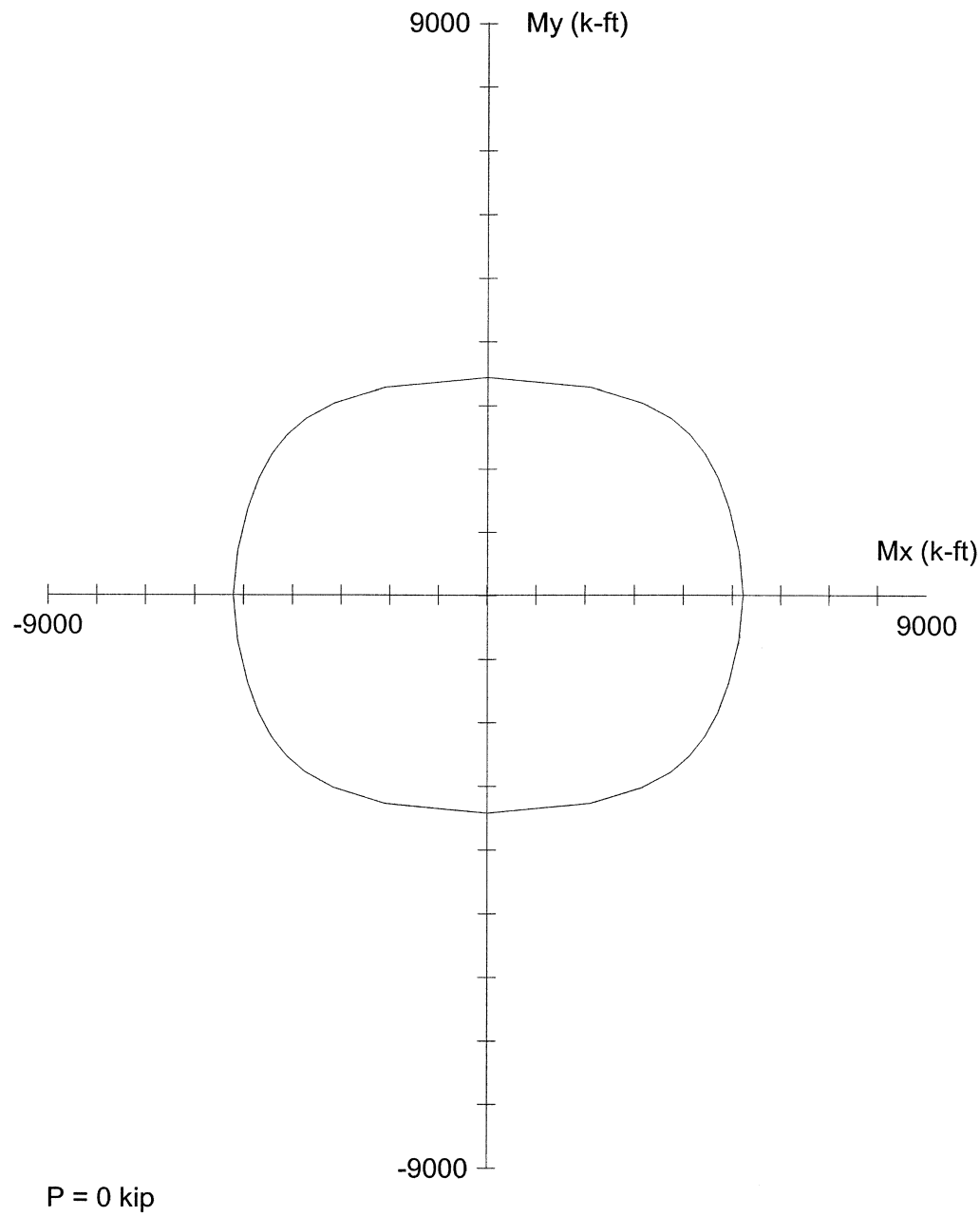

PCACOL V3.00 (PCA 1999) - Licensed to: Licensee name not yet specified.

File: S:\DGN-ST\NORTHC~1\BONNER~1\ANALYSIS\PIERS\HLB144~1\PCACOL~1\NEWFOL~1\M14PLAN.COL

Project: BONNER BRIDGE - OREGON INLET

Column: COL		Engineer: JMJ	
f'c = 3 ksi	fy = 40 ksi	Ag = 4290.44 in^2	32 #11 bars
Ec = 3122 ksi	Es = 29000 ksi	As = 49.92 in^2	Rho = 1.16%
fc = 2.55 ksi	e_rup = Infinity	Xo = 0.00 in	Ix = 2.26541e+006 in^4
u = 0.003 in/in		Yo = 0.00 in	Iy = 1.03872e+006 in^4
Beta1 = 0.85		Clear spacing = 5.41 in	Clear cover = 5.00 in
Confinement: Tied	phi(a) = 0.8, phi(b) = 0.9, phi(c) = 0.7		

JMJ 7/06
WOB 7/06

```
OOOOOOO    OOOOO    OOOOO    OOOOO    OOOOO   OO
OO    OO   OO  OO   OO  OO   OO  OO   OO  OO   OO
OO    OO   OO  OO   OO  OO   OO  OO   OO  OO   OO
OO    OO   OO       OO  OO   OO       OO  OO   OO
OO    OO   OO       OOOOOOO  OO       OO  OO   OO
OOOOOOO    OO  OO   OO  OO   OO  OO   OO  OO   OO
OO         OO  OO   OO  OO   OO  OO   OO  OO   OO
OO          OOOOO   OO  OO    OOOOO    OOOOO   OOOOO  (TM)
```

==========
Computer program for the Strength Design of Reinforced Concrete Sections
==========

Licensee stated above acknowledges that Portland Cement Association (PCA) is not and cannot be responsible for either the accuracy or adequacy of the material supplied as input for processing by the PCACOL(tm) computer program. Furthermore, PCA neither makes any warranty expressed nor implied with respect to the correctness of the output prepared by the PCACOL(tm) program. Although PCA has endeavored to produce PCACOL(tm) error free, the program is not and can't be certified infallible. The final and only responsibility for analysis, design and engineering documents is the licensees. Accordingly, PCA disclaims all responsibility in contract, negligence or other tort for any analysis, design or engineering documents prepared in connection with the use of the PCACOL(tm) program.

50% OVER LOSS
f'_c = 4400 PSI

General Information:
==========

File Name: S:\DGN-ST\NORTHC~1\BONNER~1\ANALYSIS\PIERS\HLB144~1\PCACOL~1\M14ACT.COL
Project: BONNER BRIDGE - OREGON INLET
Column: HLB #145 Engineer: JMJ
Code: ACI 318-95 Units: English

Run Option: Investigation Slenderness: Not considered
Run Axis: Biaxial Column Type: Structural

Material Properties:
==========

f'c = 4.4 ksi fy = 40 ksi
Ec = 3780.96 ksi Es = 29000 ksi
fc = 3.74 ksi Rupture strain = Infinity
Ultimate strain = 0.003 in/in
Beta1 = 0.83

Section:
==========

Rectangular: Width = 48.9 in Depth = 74.6 in

Gross section area, Ag = 3647.94 in^2
Ix = 1.69178e+006 in^4 Iy = 726916 in^4
Xo = 0 in Yo = 0 in

Reinforcement:
==========

Rebar Database: User-defined

Size	Diam (in)	Area (in^2)	Size	Diam (in)	Area (in^2)	Size	Diam (in)	Area (in^2)
# 1	0.00	0.00	# 3	0.38	0.11	# 4	0.50	0.20
# 5	0.63	0.31	# 6	0.75	0.44	# 7	0.88	0.60
# 8	1.00	0.79	# 9	1.13	1.00	# 10	1.27	1.27
# 11	1.41	1.56	# 14	1.69	2.25	# 18	2.26	4.00

Confinement: Tied; #1 ties with #9 bars, #1 with larger bars.
phi(a) = 0.8, phi(b) = 0.9, phi(c) = 0.7

Layout: Rectangular
Pattern: Equal Bar Spacing (Cover to longitudinal reinforcement)
Total steel area, As = 49.92 in^2 at 1.37%
32 #11 Cover = 2.5 in

Factored Loads and Moments with Corresponding Capacities: (see user's manual for notation)
==========

No.	Pu kip	Mux k-ft	Muy k-ft	fMnx k-ft	fMny k-ft	fMn/Mu
1	1237.0	308.0	228.0	4745.6	3516.1	15.413
2	809.0	2869.0	356.0	6403.8	795.8	2.232
3	1063.0	1681.0	196.0	6747.1	793.1	4.014
4	1054.0	262.0	683.0	1694.9	4402.3	6.449
5	709.0	2759.0	370.0	6245.5	836.3	2.264
6	953.0	1616.0	532.0	6055.7	2003.2	3.749
7	851.0	212.0	157.0	4522.4	3338.6	21.308
8	569.0	2869.0	356.0	6043.4	755.0	2.107
9	735.0	1681.0	155.0	6345.1	593.5	3.775
10	727.0	181.0	715.0	1054.0	4168.7	5.830
11	479.0	2759.0	370.0	5884.8	783.2	2.133
12	638.0	1616.0	563.0	5637.8	1973.9	3.491
13	1251.0	311.0	231.0	4742.5	3525.8	15.254
14	824.0	3055.0	447.0	6386.5	934.3	2.090
15	1077.0	1777.0	228.0	6741.9	859.4	3.794

16	1069.0	266.0	2226.0	550.4	4553.8	2.046
17	723.0	2937.0	2512.0	4039.1	3457.1	1.376
18	967.0	1709.0	2302.0	3003.7	4049.0	1.758
19	862.0	214.0	159.0	4517.1	3352.0	21.099
20	580.0	3055.0	447.0	6028.8	872.2	1.973
21	746.0	1777.0	182.0	6348.9	647.1	3.573
22	737.0	184.0	2180.0	364.2	4232.6	1.942
23	489.0	2937.0	2512.0	3843.8	3293.5	1.310
24	648.0	1709.0	2258.0	2852.1	3781.3	1.673

*** Program completed as requested! ***

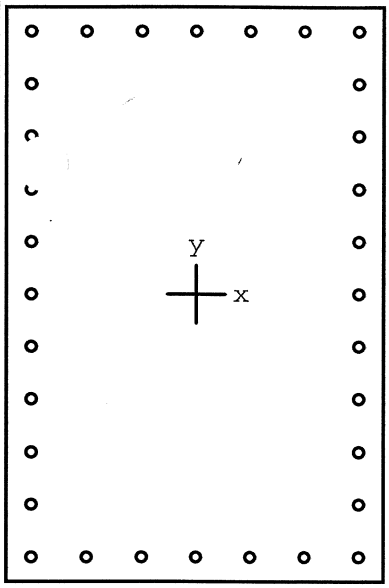

48.9 x 74.6 in

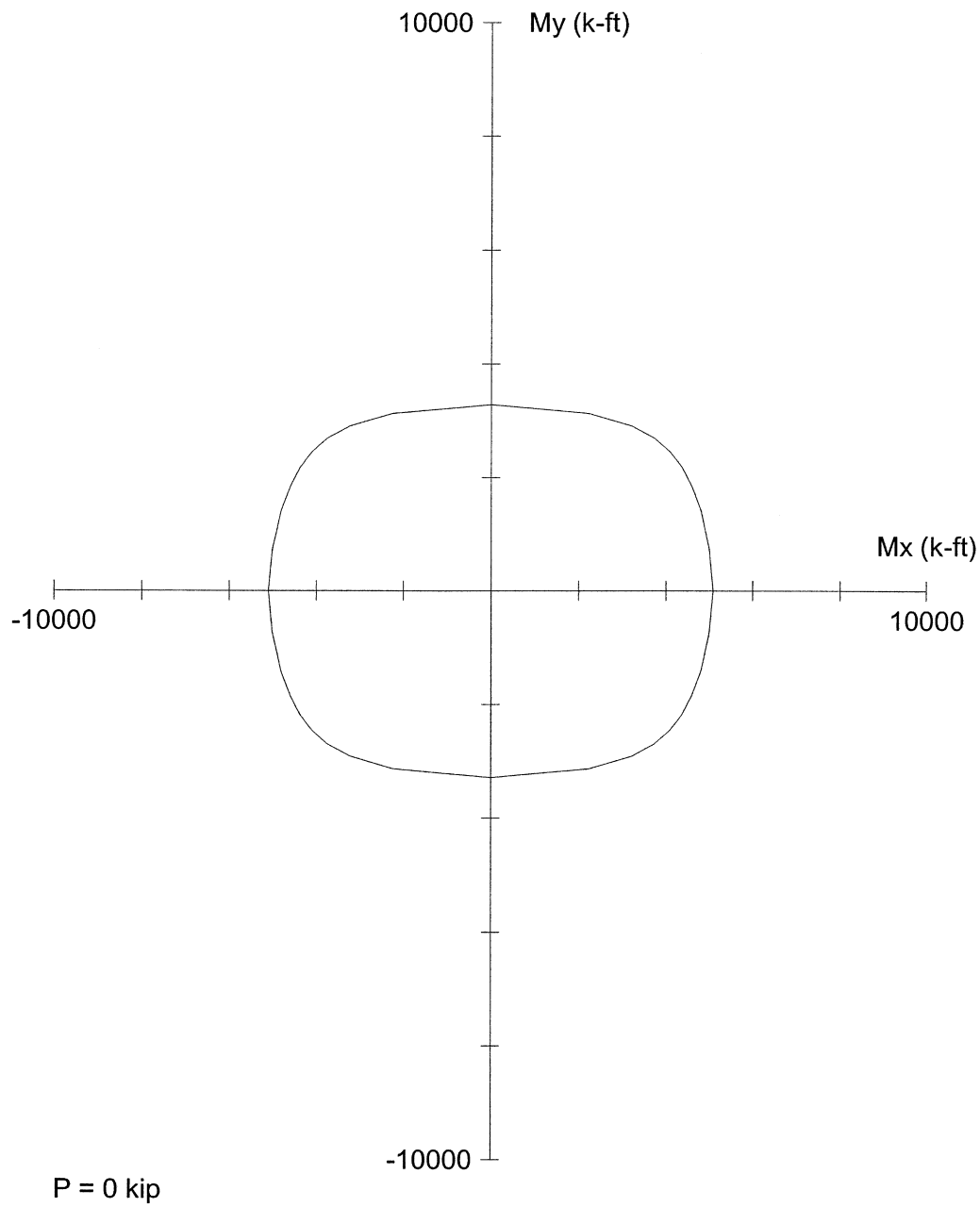

Code: ACI 318-95

Units: English

Run axis: Biaxial

Run option: Investigation

Slenderness: Not considered

mn type: Structural

Bars: User-defined

Date: 07/25/06

Time: 13:26:31

PCACOL V3.00 (PCA 1999) - Licensed to: Licensee name not yet specified.

File: S:\DGN-ST\NORTHC~1\BONNER~1\ANALYSIS\PIERS\HLB144~1\PCACOL~1\M14ACT.COL

Project: BONNER BRIDGE - OREGON INLET

Column: HLB #145		Engineer: JMJ	
f'c = 4.4 ksi	fy = 40 ksi	Ag = 3647.94 in^2	32 #11 bars
Ec = 3781 ksi	Es = 29000 ksi	As = 49.92 in^2	Rho = 1.37%
fc = 3.74 ksi	e_rup = Infinity	Xo = 0.00 in	Ix = 1.69178e+006 in^4
u = 0.003 in/in		Yo = 0.00 in	Iy = 726916 in^4
Beta1 = 0.83		Clear spacing = 5.41 in	Clear cover = 2.50 in
Confinement: Tied	phi(a) = 0.8, phi(b) = 0.9, phi(c) = 0.7		

LOCHNER

		SHEET	
PROJECT:	BONNER BRIDGE - OREGON INLET NORTH CAROLINA	JMJ	Jun-06
SUBJECT:	HIGH LEVEL BENT #145	WDB	Jun-06
SUBJECT:	TOP OF CAP - BASED ON PLAN DIMENSIONS		

CONCRETE DESIGN - CAP

INPUT

Dead Load Moment	841.290	Ft. Kips	Working Stress Mom.		1054.000	Ft. Kips
Live Load Moment	212.710	Ft. Kips	Load Factor Mom.		1555.470	Ft. Kips
Avrg. Bar Clearance	4.625	In.	Z For Steel Dist.		170	
Cover	4.000	In.	f'c	=	3.000	Ksi
Width of Member (b)	48.000	In.	fy	=	40.000	Ksi
Depth of Member (h)	60.000	In.				

AREA OF STEEL

Bar Size	11		d_C =	5.330	In.
No. Bars	11		d_C' =	2.705	In.
A_S	17.18	Sq. In.	d =	54.670	In.

RESULTS

A	=	2.00 x 3.74 x 2.705	=	20.22	
f_S Allow	=	170.00 / (20.22 x 2.705)^.33	=	44.79 Ksi	36.00 Max
a	=	(17.18 x 40.00) / 0.85 x 3.00 x 48.00	=	5.613 In.	
jd	=	54.670 - 5.61 / 2.00	=	51.86	
f_S Act	=	(1054.00 x 12.00) / 17.18 x 51.86	=	14.20 Ksi	
θM_N	=	0.90 x 17.18 x 40.00 x 51.86 / 12	=	2672.41 Ft. Kips	

AASHTO 8.17.1 Min. Reinforcement ϕM_n > 1.2Mcr Mcr = fr Ig/yt

fr	=	$7.5\ (f'c)^{1/2}$			=	0.411 Ksi
Ig	=	$1/12 * b * h^3$ = 864000 $In.^4$	yt = h/2		=	30.00 In.
Mcr	=	0.411 x 864000 / 30.00 / 12			=	985.90 Ft. Kips

AASHTO 8.17.1 **ϕM_n = 2672.41 > 1.2 Mcr = 1183.08 OK**

f_S Act = 14.20 < f_S Allow = 36.00 OK

ϕM_n = 2672.41 > Mu = 1555.47 OK

LOCHNER

		SHEET	
PROJECT:	BONNER BRIDGE - OREGON INLET NORTH CAROLINA	JMJ	Jun-06
SUBJECT:	HIGH LEVEL BENT #145	WDB	Jun-06
SUBJECT:	BOTTOM OF CAP - BASED ON PLAN DIMENSIONS		

CONCRETE DESIGN - CAP

INPUT

Dead Load Moment	420.530	Ft. Kips	Working Stress Mom.		598.880	Ft. Kips
Live Load Moment	178.350	Ft. Kips	Load Factor Mom.		933.887	Ft. Kips
Bar Clearance	4.625	In.	Z For Steel Dist.		170	
Cover	4.000	In.	f'c	=	3.000	Ksi
Width of Member (b)	48.00	In.	fy	=	40.000	Ksi
Depth of Member (h)	60.00	In.				

AREA OF STEEL

Bar Size	11		d_C =	5.330	In.
No. Bars	11		d_C' =	2.705	In.
A_S	17.18	Sq. In.	d =	54.670	In.

RESULTS

A	=	2.00 x 3.74 x 2.705	=	20.22		
f_S Allow	=	170.00 / (20.22 x 2.705)^.33	=	44.79	Ksi	36.00 Max
a	=	(17.18 x 40.00) / 0.85 x 3.00 x 48.00	=	5.613	In.	
jd	=	54.670 - 5.61 / 2.00	=	51.86		
f_S Act	=	(598.88 x 12.00) / 17.18 x 51.86	=	8.07	Ksi	
θM_N	=	0.90 x 17.18 x 40.00 x 51.86 / 12	=	2672.41	Ft. Kips	

AASHTO 8.17.1 Min. Reinforcement $\phi M_n >$ 1.2Mcr Mcr = fr Ig/yt

fr	=	$7.5\ (f'c)^{1/2}$			=	0.411 Ksi
Ig	=	$1/12 * b * h^3$ = 864000 $In.^4$	yt = h/2		=	30.00 In.
Mcr	=	0.411 x 864000 / 30.00 / 12			=	985.90 Ft. Kips

AASHTO 8.17.1 **ϕM_n = 2672.41 > 1.2 Mcr = 1183.08 OK**

f_S Act = 8.07 < f_S Allow = 36.00 OK

ϕM_n = 2672.41 > Mu = 933.89 OK

LOCHNER

		SHEET	
PROJECT:	BONNER BRIDGE - OREGON INLET NORTH CAROLINA	JMJ	Jun-06
SUBJECT:	HIGH LEVEL BENT #145	WDB	Jun-06
	SHEAR - BASED ON PLAN DIMENSIONS		

SHEAR DESIGN - CAP COMPLETE

V_{DL} = 262.99 KIPS V_{LL} = 72.71 KIPS F_V = 40000 PSI

d = 54.67 INCHES b = 48.00 INCHES f'c = 3000 PSI

V@ d DIST. FROM FACE OF SUPPORT Col. Width = D = 4.50 FT

ASSUME FACE OF SUPPORT D/4 = 1.125 FT. FROM CENTER OF COL.

$d_{DIST.}$ = 54.67 / 12.00 + 1.125 = 5.68 FT. W_{DL} CAP= 3.000 KIPS/FT

V_{DL} = V_{DL} - W_{DL} * d_{DIST} = 245.95

V_U = 1.3(V_{DL} +(1.67*V_{LL})) = 477.59

$V_U < q\ V_N$ $V_N = V_C + V_S$

$V_U < qV_C + qV_S$

V_C = 2*(f'c)^1/2* b* d = 287.46 KIPS

$qV_S = V_U - qV_C$

$V_S = V_U/q - V_C$ = 274.40 KIPS

$V_S = A_V * F_V * d / S$

USE # 5 STIRRUPS A_S= 0.31 SQ. IN.
No. of Bars = 2

$A_V = 2 \times A_S$ = 2 * 0.307 = 0.61359232 SQ. IN.

$S = A_V * F_V * d / V_S$ = 4.9 INCHES

$S_{MIN} = A_V * F_V /50 * b$ = 15.34 INCHES

S_{ACT} = 5.00 INCHES **NO GOOD**

LOCHNER

SHEET

PROJECT: BONNER BRIDGE - OREGON INLET NORTH CAROLINA — JMJ Jun-06

SUBJECT: HIGH LEVEL BENT #145 — WDB 7/06

SUBJECT: TOP OF CAP - BASED ON FIELD DATA, ASSUME 50% COVER LOSS EVERYWHERE

CONCRETE DESIGN - CAP

INPUT

Dead Load Moment	841.290	Ft. Kips	Working Stress Mom.		1054.000	Ft. Kips
Live Load Moment	212.710	Ft. Kips	Load Factor Mom.		1555.470	Ft. Kips
Avrg. Bar Clearance	4.625	In.	Z For Steel Dist.		170	
Cover	4.000	In.	f'c	=	4.400	Ksi
Width of Member (b)	44.000	In.	fy	=	40.000	Ksi
Depth of Member (h)	60.000	In.				

AREA OF STEEL

Bar Size	11		d_C =	5.330	In.
No. Bars	11		d_C' =	2.705	In.
A_S	17.18	Sq. In.	d =	54.670	In.

RESULTS

A	=	2.00 x 3.34 x 2.705	=	18.06		
f_S Allow	=	170.00 / (18.06 x 2.705)^.33	=	46.51	Ksi	36.00 Max
a	=	(17.18 x 40.00) / 0.85 x 4.40 x 44.00	=	4.175	In.	
jd	=	54.670 - 4.18 / 2.00	=	52.58		
f_S Act	=	(1054.00 x 12.00) / 17.18 x 52.58	=	14.00	Ksi	
θM_N	=	0.90 x 17.18 x 40.00 x 52.58 / 12	=	2709.46	Ft. Kips	

AASHTO 8.17.1 — Min. Reinforcement — $\phi M_n >$ 1.2Mcr — Mcr = fr Ig/yt

fr	=	$7.5\ (f'c)^{1/2}$			=	0.497 Ksi
Ig	=	$1/12 * b * h^3$ = 792000 $In.^4$	yt = h/2		=	30.00 In.
Mcr	=	0.497 x 792000 / 30.00 / 12			=	1094.49 Ft. Kips

AASHTO 8.17.1 — **ϕM_n = 2709.46 > 1.2 Mcr = 1313.38 OK**

f_S Act = 14.00 < f_S Allow = 36.00 OK

ϕM_n = 2709.46 > Mu = 1555.47 OK

LOCHNER

PROJECT:	BONNER BRIDGE - OREGON INLET NORTH CAROLINA	SHEET	
SUBJECT:	HIGH LEVEL BENT #145	JMJ	Jun-06
SUBJECT:	BOTTOM OF CAP - BASED ON FIELD DATA, ASSUME 50% COVER LOSS EVERYWHERE	WDB	7/06

CONCRETE DESIGN - CAP

INPUT

Dead Load Moment	420.530	Ft. Kips	Working Stress Mom.		598.880	Ft. Kips
Live Load Moment	178.350	Ft. Kips	Load Factor Mom.		933.887	Ft. Kips
Bar Clearance	4.625	In.	Z For Steel Dist.		170	
Cover	4.000	In.	f'c	=	4.400	Ksi
Width of Member (b)	44.00	In.	fy	=	40.000	Ksi
Depth of Member (h)	60.00	In.				

AREA OF STEEL

Bar Size	11		d_C =	5.330	In.
No. Bars	11		d_C' =	2.705	In.
A_S	17.18	Sq. In.	d =	54.670	In.

RESULTS

A	=	2.00 x 3.34 x 2.705	=	18.06		
f_S Allow	=	170.00 / (18.06 x 2.705)^.33	=	46.51	Ksi	36.00 Max
a	=	(17.18 x 40.00) / 0.85 x 4.40 x 44.00	=	4.175	In.	
jd	=	54.670 - 4.18 / 2.00	=	52.58		
f_S Act	=	(598.88 x 12.00) / 17.18 x 52.58	=	7.96	Ksi	
θM_N	=	0.90 x 17.18 x 40.00 x 52.58 / 12	=	2709.46	Ft. Kips	

AASHTO 8.17.1 Min. Reinforcement $\phi M_n >$ 1.2Mcr Mcr = fr Ig/yt

fr	=	$7.5\ (f'c)^{1/2}$		=	0.497	Ksi
Ig	=	$1/12 * b * h^3$ = 792000 $In.^4$	yt = h/2	=	30.00	In.
Mcr	=	0.497 x 792000 / 30.00 / 12		=	1094.49	Ft. Kips

AASHTO 8.17.1 **ϕM_n = 2709.46 > 1.2 Mcr = 1313.38 OK**

f_S Act = 7.96 < f_S Allow = 36.00 OK

ϕM_n = 2709.46 > Mu = 933.89 OK

LOCHNER

PROJECT:	BONNER BRIDGE - OREGON INLET NORTH CAROLINA	SHEET	
SUBJECT:	HIGH LEVEL BENT #145	JMJ	Jun-06
	SHEAR - BASED ON FIELD DATA, ASSUME 50% COVER LOSS EVERYWHERE	WDB	7/06

SHEAR DESIGN - CAP COMPLETE

V_{DL} = 262.99 KIPS V_{LL} = 72.71 KIPS F_V = 40000 PSI

d = 54.67 INCHES b = 44.00 INCHES f'c = 4400 PSI

V@ d DIST. FROM FACE OF SUPPORT Col. Width = D = 4.50 FT

ASSUME FACE OF SUPPORT D/4 = 1.125 FT. FROM CENTER OF COL.

$d_{DIST.}$ = 54.67 / 12.00 + 1.125 = 5.68 FT. W_{DL} CAP= 2.750 KIPS/FT

V_{DL} = V_{DL} - W_{DL} * d_{DIST} = 247.37

V_U = $1.3(V_{DL} + (1.67*V_{LL}))$ = 479.43

$V_U < q\ V_N$ $V_N = V_C + V_S$

$V_U < qV_C + qV_S$

V_C = 2*(f'c)^1/2* b* d = 319.12 KIPS

$qV_S = V_U - qV_C$

$V_S = V_U/q - V_C$ = 244.91 KIPS

$V_S = A_V * F_V * d / S$

USE # 5 STIRRUPS A_S= 0.31 SQ. IN.
No. of Bars = 2

$A_V = 2 \times A_S$ = 2 * 0.307 = 0.61359232 SQ. IN.

$S = A_V * F_V * d / V_S$ = 5.5 INCHES

$S_{MIN} = A_V * F_V /50 * b$ = 16.73 INCHES

S_{ACT} = 5.00 INCHES **OK**

LOCHNER

		SHEET	
PROJECT:	BONNER BRIDGE - OREGON INLET NORTH CAROLINA	JMJ	Jun-06
SUBJECT:	HIGH LEVEL BENT #145 - TOP STRUT	WDB	Jun-06
SUBJECT:	TOP OF STRUT - BASED ON PLAN DIMENSIONS		

CONCRETE DESIGN - STRUT

INPUT

Dead Load Moment	58.510	Ft. Kips	Working Stress Mom.		89.080	Ft. Kips
Live Load Moment	30.570	Ft. Kips	Load Factor Mom.		142.430	Ft. Kips
Avrg. Bar Clearance	5.625	In.	Z For Steel Dist.		170	
Cover	5.000	In.	f'c	=	3.000	Ksi
Width of Member (b)	38.000	In.	fy	=	40.000	Ksi
Depth of Member (h)	48.000	In.				

AREA OF STEEL

Bar Size	11		d_C =	6.330	In.
No. Bars	8		d_C' =	2.705	In.
A_S	12.49	Sq. In.	d =	41.670	In.

RESULTS

A	=	2.00 x 3.63 x 2.705	=	19.61	
f_S Allow	=	170.00 / (19.61 x 2.705)^.33	=	45.25	Ksi 36.00 Max
a	=	(12.49 x 40.00) / 0.85 x 3.00 x 38.00	=	5.156	In.
jd	=	41.670 - 5.16 / 2.00	=	39.09	
f_S Act	=	(89.08 x 12.00) / 12.49 x 39.09	=	2.19	Ksi
θM_N	=	0.90 x 12.49 x 40.00 x 39.09 / 12	=	1464.96	Ft. Kips

AASHTO 8.17.1 Min. Reinforcement ϕM_n > 1.2Mcr Mcr = fr Ig/yt

fr	=	$7.5 (f'c)^{1/2}$			=	0.411 Ksi
Ig	=	$1/12 * b * h^3$ = 350208 $In.^4$	yt = h/2		=	24.00 In.
Mcr	=	0.411 x 350208 / 24.00 / 12			=	499.52 Ft. Kips

AASHTO 8.17.1 **ϕM_n = 1464.96 > 1.2 Mcr = 599.43 OK**

f_S Act = 2.19 < f_S Allow = 36.00 OK

ϕM_n = 1464.96 > Mu = 142.43 OK

LOCHNER

		SHEET	
PROJECT:	BONNER BRIDGE - OREGON INLET NORTH CAROLINA	JMJ	Jun-06
SUBJECT:	HIGH LEVEL BENT #145 - TOP STRUT	WDB	Jun-06
SUBJECT:	BOTTOM OF STRUT - BASED ON PLAN DIMENSIONS		

CONCRETE DESIGN - STRUT

INPUT

Dead Load Moment	36.700	Ft. Kips	Working Stress Mom.		32.030	Ft. Kips
Live Load Moment	-4.670	Ft. Kips	Load Factor Mom.		37.571	Ft. Kips
Bar Clearance	5.625	In.	Z For Steel Dist.		170	
Cover	5.000	In.	f'c	=	3.000	Ksi
Width of Member (b)	38.00	In.	fy	=	40.000	Ksi
Depth of Member (h)	48.00	In.				

AREA OF STEEL

Bar Size	11		d_C =	6.330	In.
No. Bars	8		d_C' =	2.705	In.
A_S	12.49	Sq. In.	d =	41.670	In.

RESULTS

A	=	2.00 x 3.63 x 2.705	=	19.61		
f_S Allow	=	170.00 / (19.61 x 2.705)^.33	=	45.25	Ksi	36.00 Max
a	=	(12.49 x 40.00) / 0.85 x 3.00 x 38.00	=	5.156	In.	
jd	=	41.670 - 5.16 / 2.00	=	39.09		
f_S Act	=	(32.03 x 12.00) / 12.49 x 39.09	=	0.79	Ksi	
θM_N	=	0.90 x 12.49 x 40.00 x 39.09 / 12	=	1464.96	Ft. Kips	

AASHTO 8.17.1 Min. Reinforcement $\phi M_n >$ 1.2Mcr Mcr = fr Ig/yt

fr	=	$7.5\,(f'c)^{1/2}$		=	0.411	Ksi
Ig	=	$1/12 * b * h^3$ = 350208 $In.^4$	yt = h/2	=	24.00	In.
Mcr	=	0.411 x 350208 / 24.00 / 12		=	499.52	Ft. Kips

AASHTO 8.17.1 **ϕM_n = 1464.96 > 1.2 Mcr = 599.43 OK**

f_S Act = 0.79 < f_S Allow = 36.00 OK

ϕM_n = 1464.96 > Mu = 37.57 OK

LOCHNER

		SHEET	
PROJECT:	BONNER BRIDGE - OREGON INLET NORTH CAROLINA	JMJ	Jun-06
SUBJECT:	HIGH LEVEL BENT #145 - TOP STRUT	WDB	Jun-06
	SHEAR - BASED ON PLAN DIMENSIONS		

SHEAR DESIGN - STRUT COMPLETE

V_{DL} = 19.02 KIPS V_{LL} = 2.74 KIPS F_V = 40000 PSI

d = 41.67 INCHES b = 38.00 INCHES f'c = 3000 PSI

V@ d DIST. FROM FACE OF SUPPORT Col. Width = D = 4.50 FT

ASSUME FACE OF SUPPORT D/4 = 1.125 FT. FROM CENTER OF COL.

$d_{DIST.}$ = 41.67 / 12.00 + 1.125 = 4.60 FT. W_{DL} CAP= 1.900 KIPS/FT

V_{DL} = V_{DL} - W_{DL} * d_{DIST} = 10.28

V_U = $1.3(V_{DL} + (1.67 * V_{LL}))$ = 19.32

$V_U < q\ V_N$ $V_N = V_C + V_S$

$V_U < qV_C + qV_S$

V_C = 2*(f'c)^1/2* b* d = 173.46 KIPS

$qV_S = V_U - qV_C$

$V_S = V_U/q - V_C$ = -150.73 KIPS

$V_S = A_V * F_V * d / S$

USE # 5 STIRRUPS A_S= 0.31 SQ. IN.

No. of Bars = 2

$A_V = 2 \times A_S$ = 2 * 0.307 = 0.61359232 SQ. IN.

$S = A_V * F_V * d / V_S$ = -6.8 INCHES

$S_{MIN} = A_V * F_V / 50 * b$ = 19.38 INCHES

S_{ACT} = 15.00 INCHES **OK**

LOCHNER

PROJECT: BONNER BRIDGE - OREGON INLET NORTH CAROLINA
SUBJECT: HIGH LEVEL BENT #145 - TOP STRUT
SUBJECT: TOP OF STRUT - BASED ON FIELD DATA, ASSUME 50% COVER LOSS EVERYWHERE

SHEET
JMJ Jun-06
WDB 7/06

CONCRETE DESIGN - STRUT

INPUT

Dead Load Moment	58.510	Ft. Kips	Working Stress Mom.		89.080	Ft. Kips
Live Load Moment	30.570	Ft. Kips	Load Factor Mom.		142.430	Ft. Kips
Avrg. Bar Clearance	5.625	In.	Z For Steel Dist.		170	
Cover	5.000	In.	f'c	=	4.400	Ksi
Width of Member (b)	33.000	In.	fy	=	40.000	Ksi
Depth of Member (h)	48.000	In.				

AREA OF STEEL

Bar Size	11		d_C =	6.330	In.
No. Bars	8		d_C' =	2.705	In.
A_S	12.49	Sq. In.	d =	41.670	In.

RESULTS

A	=	2.00 x 2.91 x 2.705	=	15.75		
f_S Allow	=	170.00 / (15.75 x 2.705)^.33	=	48.68	Ksi	36.00 Max
a	=	(12.49 x 40.00) / 0.85 x 4.40 x 33.00	=	4.048	In.	
jd	=	41.670 - 4.05 / 2.00	=	39.65		
f_S Act	=	(89.08 x 12.00) / 12.49 x 39.65	=	2.16	Ksi	
θM_N	=	0.90 x 12.49 x 40.00 x 39.65 / 12	=	1485.72	Ft. Kips	

AASHTO 8.17.1 Min. Reinforcement $\phi M_n >$ 1.2Mcr Mcr = fr Ig/yt

fr	=	$7.5\ (f'c)^{1/2}$		=	0.497	Ksi
Ig	=	$1/12 * b * h^3$ = 304128 $In.^4$	yt = h/2	=	24.00	In.
Mcr	=	0.497 x 304128 / 24.00 / 12		=	525.35	Ft. Kips

AASHTO 8.17.1 **ϕM_n = 1485.72 > 1.2 Mcr = 630.42 OK**

f_S Act = 2.16 < f_S Allow = 36.00 OK

ϕM_n = 1485.72 > Mu = 142.43 OK

LOCHNER

SHEET

PROJECT: BONNER BRIDGE - OREGON INLET NORTH CAROLINA — JMJ Jun-06

SUBJECT: HIGH LEVEL BENT #145 - TOP STRUT — WDB 7/06

SUBJECT: BOTTOM OF STRUT - BASED FIELD DATA, ASSUME 50% COVER LOSS EVERYWHERE

CONCRETE DESIGN - STRUT

INPUT

Dead Load Moment	36.700	Ft. Kips	Working Stress Mom.		32.030	Ft. Kips
Live Load Moment	-4.670	Ft. Kips	Load Factor Mom.		37.571	Ft. Kips
Bar Clearance	5.625	In.	Z For Steel Dist.		170	
Cover	5.000	In.	f'c	=	4.400	Ksi
Width of Member (b)	33.00	In.	fy	=	40.000	Ksi
Depth of Member (h)	48.00	In.				

AREA OF STEEL

Bar Size	11		d_C =	6.330	In.
No. Bars	8		d_C' =	2.705	In.
A_S	12.49	Sq. In.	d =	41.670	In.

RESULTS

A	=	2.00 x 2.91 x 2.705	=	15.75		
f_S Allow	=	170.00 / (15.75 x 2.705)^.33	=	48.68	Ksi	36.00 Max
a	=	(12.49 x 40.00) / 0.85 x 4.40 x 33.00	=	4.048	In.	
jd	=	41.670 - 4.05 / 2.00	=	39.65		
f_S Act	=	(32.03 x 12.00) / 12.49 x 39.65	=	0.78	Ksi	
θM_N	=	0.90 x 12.49 x 40.00 x 39.65 / 12	=	1485.72	Ft. Kips	

AASHTO 8.17.1 — Min. Reinforcement — ϕM_n > 1.2Mcr — Mcr = fr Ig/yt

fr	=	$7.5\,(f'c)^{1/2}$		=	0.497	Ksi
Ig	=	$1/12 * b * h^3$ = 304128 $In.^4$	yt = h/2	=	24.00	In.
Mcr	=	0.497 x 304128 / 24.00 / 12		=	525.35	Ft. Kips

AASHTO 8.17.1 — **ϕM_n = 1485.72 > 1.2 Mcr = 630.42 OK**

f_S Act = 0.78 < f_S Allow = 36.00 OK

ϕM_n = 1485.72 > Mu = 37.57 OK

LOCHNER

PROJECT:	BONNER BRIDGE - OREGON INLET NORTH CAROLINA	SHEET JMJ	Jun-06
SUBJECT:	HIGH LEVEL BENT #145 - TOP STRUT	WDB	7/06
	SHEAR - BASED FIELD DATA, ASSUME 50% COVER LOSS EVERYWHERE		

SHEAR DESIGN - STRUT COMPLETE

V_{DL} = 19.02 KIPS V_{LL} = 2.74 KIPS F_V = 40000 PSI

d = 41.67 INCHES b = 33.00 INCHES f'c = 4400 PSI

V@ d DIST. FROM FACE OF SUPPORT Col. Width = D = 4.50 FT

ASSUME FACE OF SUPPORT D/4 = 1.125 FT. FROM CENTER OF COL.

$d_{DIST.}$ = 41.67 / 12.00 + 1.125 = 4.60 FT. W_{DL} CAP= 1.650 KIPS/FT

V_{DL} = V_{DL} - W_{DL} * d_{DIST} = 11.43

V_U = 1.3(V_{DL} +(1.67*V_{LL})) = 20.81

$V_U < q\ V_N$ $V_N = V_C + V_S$

$V_U < qV_C + qV_S$

V_C = 2*(f'c)^1/2* b* d = 182.43 KIPS

$qV_S = V_U - qV_C$

$V_S = V_U/q - V_C$ = -157.94 KIPS

$V_S = A_V * F_V * d / S$

USE # 5 STIRRUPS A_S= 0.31 SQ. IN.
No. of Bars = 2

$A_V = 2 \times A_S$ = 2 * 0.307 = 0.61359232 SQ. IN.

$S = A_V * F_V * d / V_S$ = -6.5 INCHES

$S_{MIN} = A_V * F_V /50 * b$ = 22.31 INCHES

S_{ACT} = 15.00 INCHES **OK**

LOCHNER

		SHEET	
PROJECT:	BONNER BRIDGE - OREGON INLET NORTH CAROLINA	JMJ	Jun-06
SUBJECT:	HIGH LEVEL BENT #145 - BOTTOM STRUT	WDB	Jun-06
SUBJECT:	TOP OF STRUT - BASED ON PLAN DIMENSIONS		

CONCRETE DESIGN - STRUT

INPUT

Dead Load Moment	70.440	Ft. Kips	Working Stress Mom.		94.840	Ft. Kips
Live Load Moment	24.400	Ft. Kips	Load Factor Mom.		144.544	Ft. Kips
Avrg. Bar Clearance	5.625	In.	Z For Steel Dist.		170	
Cover	5.000	In.	f'c	=	3.000	Ksi
Width of Member (b)	38.000	In.	fy	=	40.000	Ksi
Depth of Member (h)	48.000	In.				

AREA OF STEEL

Bar Size	11		d_C =	6.330	In.
No. Bars	8		d_C' =	2.705	In.
A_S	12.49	Sq. In.	d =	41.670	In.

RESULTS

A	=	2.00 x 3.63 x 2.705	=	19.61		
f_S Allow	=	170.00 / (19.61 x 2.705)^.33	=	45.25	Ksi	36.00 Max
a	=	(12.49 x 40.00) / 0.85 x 3.00 x 38.00	=	5.156	In.	
jd	=	41.670 - 5.16 / 2.00	=	39.09		
f_S Act	=	(94.84 x 12.00) / 12.49 x 39.09	=	2.33	Ksi	
θM_N	=	0.90 x 12.49 x 40.00 x 39.09 / 12	=	1464.96	Ft. Kips	

AASHTO 8.17.1 Min. Reinforcement $\phi M_n >$ 1.2Mcr Mcr = fr Ig/yt

fr	=	$7.5\ (f'c)^{1/2}$		=	0.411	Ksi
Ig	=	$1/12 * b * h^3$ = 350208 $In.^4$	yt = h/2	=	24.00	In.
Mcr	=	0.411 x 350208 / 24.00 / 12		=	499.52	Ft. Kips

AASHTO 8.17.1 **ϕM_n = 1464.96 > 1.2 Mcr = 599.43 OK**

f_S Act = 2.33 < f_S Allow = 36.00 OK

ϕM_n = 1464.96 > Mu = 144.54 OK

LOCHNER

		SHEET	
PROJECT:	BONNER BRIDGE - OREGON INLET NORTH CAROLINA	JMJ	Jun-06
SUBJECT:	HIGH LEVEL BENT #145 - BOTTOM STRUT	WDB	Jun-06
SUBJECT:	BOTTOM OF STRUT - BASED ON PLAN DIMENSIONS		

CONCRETE DESIGN - STRUT

INPUT

Dead Load Moment	47.300	Ft. Kips	Working Stress Mom.		48.250	Ft. Kips
Live Load Moment	0.950	Ft. Kips	Load Factor Mom.		63.552	Ft. Kips
Bar Clearance	5.625	In.	Z For Steel Dist.		170	
Cover	5.000	In.	f'c	=	3.000	Ksi
Width of Member (b)	38.00	In.	fy	=	40.000	Ksi
Depth of Member (h)	48.00	In.				

AREA OF STEEL

Bar Size	11		d_C =	6.330	In.
No. Bars	8		d_C' =	2.705	In.
A_S	12.49	Sq. In.	d =	41.670	In.

RESULTS

A	=	2.00 x 3.63 x 2.705	=	19.61		
f_S Allow	=	170.00 / (19.61 x 2.705)^.33	=	45.25	Ksi	36.00 Max
a	=	(12.49 x 40.00) / 0.85 x 3.00 x 38.00	=	5.156	In.	
jd	=	41.670 - 5.16 / 2.00	=	39.09		
f_S Act	=	(48.25 x 12.00) / 12.49 x 39.09	=	1.19	Ksi	
θM_N	=	0.90 x 12.49 x 40.00 x 39.09 / 12	=	1464.96	Ft. Kips	

AASHTO 8.17.1 Min. Reinforcement $\phi M_n >$ 1.2Mcr Mcr = fr Ig/yt

fr	=	$7.5\ (f'c)^{1/2}$		=	0.411	Ksi
Ig	=	$1/12 * b * h^3$ = 350208 $In.^4$	yt = h/2	=	24.00	In.
Mcr	=	0.411 x 350208 / 24.00 / 12		=	499.52	Ft. Kips

AASHTO 8.17.1 **ϕM_n = 1464.96 > 1.2 Mcr = 599.43 OK**

f_S Act = 1.19 < f_S Allow = 36.00 OK

ϕM_n = 1464.96 > Mu = 63.55 OK

SHEAR DESIGN - STRUT COMPLETE

V_{DL} = 21.15 KIPS V_{LL} = 2.12 KIPS F_V = 40000 PSI

d = 41.67 INCHES b = 38.00 INCHES f'c = 3000 PSI

V@ d DIST. FROM FACE OF SUPPORT Col. Width = D = 4.50 FT

ASSUME FACE OF SUPPORT D/4 = 1.125 FT. FROM CENTER OF COL.

$d_{DIST.}$ = 41.67 / 12.00 + 1.125 = 4.60 FT. W_{DL} CAP= 1.900 KIPS/FT

V_{DL} = $V_{DL} - W_{DL} * d_{DIST}$ = 12.41

V_U = $1.3(V_{DL} + (1.67*V_{LL}))$ = 20.74

$V_U < q\ V_N$ $V_N = V_C + V_S$

$V_U < qV_C + qV_S$

V_C = 2*(f'c)^1/2* b* d = 173.46 KIPS

$qV_S = V_U - qV_C$

$V_S = V_U/q - V_C$ = -149.06 KIPS

$V_S = A_V * F_V * d / S$

USE # 5 STIRRUPS A_S= 0.31 SQ. IN.
No. of Bars = 2

$A_V = 2 \times A_S$ = 2 * 0.307 = 0.61359232 SQ. IN.

$S = A_V * F_V * d / V_S$ = -6.9 INCHES

$S_{MIN} = A_V * F_V / 50 * b$ = 19.38 INCHES

S_{ACT} = 15.00 INCHES **OK**

LOCHNER

SHEET

PROJECT: BONNER BRIDGE - OREGON INLET NORTH CAROLINA — JMJ Jun-06

SUBJECT: HIGH LEVEL BENT #145 - BOTTOM STRUT — WOB 7/06

SUBJECT: TOP OF STRUT - BASED FIELD DATA, ASSUME 50% COVER LOSS EVERYWHERE

CONCRETE DESIGN - STRUT

INPUT

Dead Load Moment	70.440	Ft. Kips	Working Stress Mom.		94.840	Ft. Kips
Live Load Moment	24.400	Ft. Kips	Load Factor Mom.		144.544	Ft. Kips
Avrg. Bar Clearance	5.625	In.	Z For Steel Dist.		170	
Cover	5.000	In.	f'c	=	4.400	Ksi
Width of Member (b)	33.000	In.	fy	=	40.000	Ksi
Depth of Member (h)	48.000	In.				

AREA OF STEEL

Bar Size	11		d_C =	6.330	In.
No. Bars	8		d_C' =	2.705	In.
A_S	12.49	Sq. In.	d =	41.670	In.

RESULTS

A	=	2.00 x 2.91 x 2.705	=	15.75		
f_S Allow	=	170.00 / (15.75 x 2.705)^.33	=	48.68	Ksi	36.00 Max
a	=	(12.49 x 40.00) / 0.85 x 4.40 x 33.00	=	4.048	In.	
jd	=	41.670 - 4.05 / 2.00	=	39.65		
f_S Act	=	(94.84 x 12.00) / 12.49 x 39.65	=	2.30	Ksi	
θM_N	=	0.90 x 12.49 x 40.00 x 39.65 / 12	=	1485.72	Ft. Kips	

AASHTO 8.17.1 — Min. Reinforcement — ϕM_n > 1.2Mcr — Mcr = fr Ig/yt

fr	=	$7.5\ (f'c)^{1/2}$		=	0.497	Ksi
Ig	=	$1/12 * b * h^3$ = 304128 $In.^4$	yt = h/2	=	24.00	In.
Mcr	=	0.497 x 304128 / 24.00 / 12		=	525.35	Ft. Kips

AASHTO 8.17.1 — **ϕM_n = 1485.72 > 1.2 Mcr = 630.42 OK**

f_S Act = 2.30 < f_S Allow = 36.00 OK

ϕM_n = 1485.72 > Mu = 144.54 OK

LOCHNER

SHEET

PROJECT: BONNER BRIDGE - OREGON INLET NORTH CAROLINA — JMJ Jun-06

SUBJECT: HIGH LEVEL BENT #145 - BOTTOM STRUT — WDB 7/06

SUBJECT: BOTTOM OF STRUT - BASED FIELD DATA, ASSUME 50% COVER LOSS EVERYWHERE

CONCRETE DESIGN - STRUT

INPUT

Dead Load Moment	47.300	Ft. Kips	Working Stress Mom.		48.250	Ft. Kips
Live Load Moment	0.950	Ft. Kips	Load Factor Mom.		63.552	Ft. Kips
Bar Clearance	5.625	In.	Z For Steel Dist.		170	
Cover	5.000	In.	f'c	=	4.400	Ksi
Width of Member (b)	33.00	In.	fy	=	40.000	Ksi
Depth of Member (h)	48.00	In.				

AREA OF STEEL

Bar Size	11		d_C =	6.330	In.
No. Bars	8		d_C' =	2.705	In.
A_S	12.49	Sq. In.	d =	41.670	In.

RESULTS

A	=	2.00 x 2.91 x 2.705	=	15.75		
f_S Allow	=	170.00 / (15.75 x 2.705)^.33	=	48.68	Ksi	36.00 Max
a	=	(12.49 x 40.00) / 0.85 x 4.40 x 33.00	=	4.048	In.	
jd	=	41.670 - 4.05 / 2.00	=	39.65		
f_S Act	=	(48.25 x 12.00) / 12.49 x 39.65	=	1.17	Ksi	
θM_N	=	0.90 x 12.49 x 40.00 x 39.65 / 12	=	1485.72	Ft. Kips	

AASHTO 8.17.1 — Min. Reinforcement — ϕM_n > 1.2Mcr — Mcr = fr Ig/yt

fr	=	$7.5 (f'c)^{1/2}$			=	0.497 Ksi
Ig	=	$1/12 * b * h^3$ = 304128 $In.^4$	yt = h/2		=	24.00 In.
Mcr	=	0.497 x 304128 / 24.00 / 12			=	525.35 Ft. Kips

AASHTO 8.17.1 — **ϕM_n = 1485.72 > 1.2 Mcr = 630.42 OK**

f_S Act = 1.17 < f_S Allow = 36.00 OK

ϕM_n = 1485.72 > Mu = 63.55 OK

LOCHNER

PROJECT:	BONNER BRIDGE - OREGON INLET NORTH CAROLINA	SHEET JMJ	Jun-06
SUBJECT:	HIGH LEVEL BENT #145 - BOTTOM STRUT	WDB	7/06
	SHEAR - BASED FIELD DATA, ASSUME 50% COVER LOSS EVERYWHERE		

SHEAR DESIGN - STRUT COMPLETE

V_{DL} = 21.15 KIPS V_{LL} = 2.12 KIPS F_V = 40000 PSI

d = 41.67 INCHES b = 33.00 INCHES f'c = 4400 PSI

V@ d DIST. FROM FACE OF SUPPORT Col. Width = D = 4.50 FT

ASSUME FACE OF SUPPORT D/4 = 1.125 FT. FROM CENTER OF COL.

$d_{DIST.}$ = 41.67 / 12.00 + 1.125 = 4.60 FT. W_{DL} CAP= 1.650 KIPS/FT

V_{DL} = V_{DL} - W_{DL} * d_{DIST} = 13.56

V_U = $1.3(V_{DL} + (1.67*V_{LL}))$ = 22.24

$V_U < q\ V_N$ $V_N = V_C + V_S$

$V_U < qV_C + qV_S$

V_C = 2*(f'c)^1/2* b* d = 182.43 KIPS

$qV_S = V_U - qV_C$

$V_S = V_U/q - V_C$ = -156.27 KIPS

$V_S = A_V * F_V * d / S$

USE # 5 STIRRUPS A_S= 0.31 SQ. IN.

No. of Bars = 2

$A_V = 2 \times A_S$ = 2 * 0.307 = 0.61359232 SQ. IN.

$S = A_V * F_V * d / V_S$ = -6.5 INCHES

$S_{MIN} = A_V * F_V / 50 * b$ = 22.31 INCHES

S_{ACT} = 15.00 INCHES **OK**

H. W. LOCHNER, INC.

PROJECT: BONNER BRIDGE - OREGON INLET NORTH CAROLINA JMJ Jun-06
SUBJECT: HIGH LEVEL BENT ANALYSIS WDB Jun-06
HLB 145 MEM. 13 JT. FOOTING

FOOTING LOADS

PMIN

HLB 145 MEMBER 13 JOINT FOOTING

GROUP 1

	P	MY	MZ
DL	749.00	0.00	29.76
LL	51.77	0.00	-13.83
GROUP 1	0.00	0.00	0.00
SERVICE	800.77	0.00	15.93
STRENGTH	1085.87	0.00	8.72

GROUP 2

	P	MY	MZ
DL	749.00	0.00	29.76
LL	0.00	0.00	0.00
GROUP 2	115.38	2350.33	-316.53
SERVICE	864.38	2350.33	-286.77
STRENGTH	1123.69	3055.43	-372.80

GROUP 3

	P	MY	MZ
DL	749.00	0.00	29.76
LL	51.77	0.00	-13.83
GROUP 3	48.47	1367.39	-129.16
SERVICE	849.24	1367.39	-113.23
STRENGTH	1104.01	1777.61	-147.20

GROUP 4

	P	MY	MZ
DL	749.00	0.00	29.76
LL	51.77	0.00	-13.83
GROUP 4	-55.11	0.00	1665.64
SERVICE	745.66	0.00	1681.57
STRENGTH	969.36	0.00	2186.04

GROUP 5

	P	MY	MZ
DL	749.00	0.00	29.76
LL	0.00	0.00	0.00
GROUP 5	60.24	2350.33	1349.10
SERVICE	809.24	2350.33	1378.86
STRENGTH	1011.55	2937.91	1723.58

GROUP 6

	P	MY	MZ
DL	749.00	0.00	29.76
LL	51.77	0.00	-13.83
GROUP 6	-6.64	1367.39	1536.47
SERVICE	794.13	1367.39	1552.40
STRENGTH	992.66	1709.24	1940.50

H. W. LOCHNER, INC.

PROJECT: BONNER BRIDGE - OREGON INLET NORTH CAROLINA JMJ Jun-06
SUBJECT: HIGH LEVEL BENT ANALYSIS WDB Jun-06
HLB 145 MEM. 14 JT. FOOTING

FOOTING LOADS

PMAX

HLB 145 MEMBER 14 JOINT FOOTING

GROUP 1

	P	MY	MZ
DL	748.89	0.00	27.53
LL	109.81	0.00	16.12
GROUP 1	0.00	0.00	0.00
SERVICE	858.70	0.00	43.65
STRENGTH	1211.48	0.00	70.72

GROUP 2

	P	MY	MZ
DL	748.89	0.00	27.53
LL	0.00	0.00	0.00
GROUP 2	-115.37	-2349.98	316.55
SERVICE	633.52	-2349.98	344.08
STRENGTH	823.58	-3054.97	447.30

GROUP 3

	P	MY	MZ
DL	748.89	0.00	27.53
LL	109.81	0.00	16.12
GROUP 3	-48.47	-1367.18	129.17
SERVICE	810.23	-1367.18	172.82
STRENGTH	1053.30	-1777.33	224.67

GROUP 4

	P	MY	MZ
DL	748.89	0.00	27.53
LL	109.81	0.00	16.12
GROUP 4	-55.10	0.00	1665.76
SERVICE	803.60	0.00	1709.41
STRENGTH	1044.68	0.00	2222.23

GROUP 5

	P	MY	MZ
DL	748.89	0.00	27.53
LL	0.00	0.00	0.00
GROUP 5	-170.47	-2349.98	1982.31
SERVICE	578.42	-2349.98	2009.84
STRENGTH	723.03	-2937.48	2512.30

GROUP 6

	P	MY	MZ
DL	748.89	0.00	27.53
LL	109.81	0.00	16.12
GROUP 6	-103.57	-1367.18	1794.93
SERVICE	755.13	-1367.18	1838.58
STRENGTH	943.91	-1708.98	2298.23

H. W. Lochner, Inc. PHONE: 859-224-4476
1040 Monarch St. Suite 300 Lexington, KY 40513
SHEET 1 OF 13
JOB NO. HLB#145
PROGRAM: RC-PIER® v4.1.0 LEAP Software Inc., Tampa, Florida
BY JMJ DATE Jun/18/2006
PHONE : TOLL-FREE 1-800-451-5327 TAMPA AREA: 813-985-9170
CKD. DATE

PROJECT: BONNER BRIDGE - OREGON INLET NORTH CAROLINA

JMJ 7/06
WDB 7/06

PROJECT DATA
==========

Project : BONNER BRIDGE - OREGON INLET NORTH CAROLINA
User Job No.: HLB#145
State : North Carolina State Job No. :
Code : AASHTO STANDARD (17th Edition 2002)
Comments : Bonner Bridge HLB #145 - Load Groups 1-3 (For Ease of Checking) - Per Pla
n Dimensions

H. W. Lochner, Inc. PHONE: 859-224-4476
1040 Monarch St. Suite 300 Lexington, KY 40513

PROGRAM: RC-PIER® v4.1.0 LEAP Software Inc., Tampa, Florida
PHONE : TOLL-FREE 1-800-451-5327 TAMPA AREA: 813-985-9170

PROJECT: BONNER BRIDGE - OREGON INLET NORTH CAROLINA

LOADS

Load Cases: 3

Loadcase ID: (L+In)1 Name: Group 1 Loadings
Multiplier = 1.000

Cap loads:

Type	Dir	Arm ft	Mag1 kip,kip/ft, kft	x1/L	Mag2 kip,kip/ft, kft	x2/L
Force	Y	0.00	-1085.87	0.00	----	----
Force	Y	0.00	-1211.48	1.00	----	----
Moment	Z	----	8.72	0.00	----	----
Moment	Z	----	70.72	1.00	----	----

Loadcase ID: (L+Ip)1 Name: Group 2 Loadings
Multiplier = 1.000

Cap loads:

Type	Dir	Arm ft	Mag1 kip,kip/ft, kft	x1/L	Mag2 kip,kip/ft, kft	x2/L
Force	Y	0.00	-1123.69	0.00	----	----
Force	Y	0.00	-823.58	1.00	----	----
Moment	X	----	-3054.97	1.00	----	----
Moment	X	----	3055.43	0.00	----	----
Moment	Z	----	-372.80	0.00	----	----
Moment	Z	----	447.30	1.00	----	----

Loadcase ID: W1 Name: Group 3 Loadings
Multiplier = 1.000

Cap loads:

Type	Dir	Arm ft	Mag1 kip,kip/ft, kft	x1/L	Mag2 kip,kip/ft, kft	x2/L
Force	Y	0.00	-1104.01	0.00	----	----
Force	Y	0.00	-1053.30	1.00	----	----
Moment	X	----	-1777.33	1.00	----	----
Moment	X	----	1777.61	0.00	----	----
Moment	Z	----	-147.20	0.00	----	----
Moment	Z	----	224.67	1.00	----	----

Selected load groups:

SERVICE GROUP I
SERVICE GROUP IB
SERVICE GROUP II

H. W. Lochner, Inc. PHONE: 859-224-4476 | SHEET 3 OF 13
1040 Monarch St. Suite 300 Lexington, KY 40513 | JOB NO. HLB#145
PROGRAM: RC-PIER® v4.1.0 LEAP Software Inc., Tampa, Florida | BY JMJ DATE Jun/18/2006
PHONE : TOLL-FREE 1-800-451-5327 TAMPA AREA: 813-985-9170 | CKD. DATE

PROJECT: BONNER BRIDGE - OREGON INLET NORTH CAROLINA

COMBINED FOOTING DESIGN

Code: AASHTO STANDARD (17th Edition 2002) - Service Load Design
Units: US

Geometry:
=========
Name : 1
Shape : Rectangular, Type : Pile/Shaft Cap

Bf(X) = 36.00 ft, Hf(Z) = 18.00 ft, Thickness(Y) = 57.00 in

Footing concentric.
Columns located on the footing:
Column No. 1 at x = 0.00 ft, Rectangular 36.00 in x 79.63 in
Column No. 2 at x = 24.27 ft, Rectangular 36.00 in x 79.63 in

Ag = 648.00 ft^2, Ix = 1040.00 ft^2, Iz = 4730.00 ft^2

Surcharge = 0.00 ksf

Piles: Circular Size: 22.00 in Capacity: 100.00 kips

Design Parameters:
==========
f'c = 3000.00 psi fy = 40000.00 psi
Ec = 3320.6 ksi Es = 29000.0 ksi
Crack control factor z = 130.00 kips/in
Concrete Type : Normal Weight.

Pile Reactions, Service (Without the reduction of overstress allowance):
==========

Pile	Loc(X) ft	X in	Z in	Column Loads col#	comb	Ovs	P, kips	Mxx, kft	Mzz, kft	Pile Reac. kips
1	-3.90	24.0	84.0	1	2	1.000	-1123.65	3054.17	-383.41	72.53
				2	2	1.000	-823.62	-3053.71	447.61	
				1	4	1.250	1103.99	-1776.88	157.99	-44.44
				2	4	1.250	1053.32	1776.60	-224.80	
2	0.10	72.0	84.0	1	2	1.000	-1123.65	3054.17	-383.41	69.45
				2	2	1.000	-823.62	-3053.71	447.61	
				1	4	1.250	1103.99	-1776.88	157.99	-43.93
				2	4	1.250	1053.32	1776.60	-224.80	
3	4.10	120.0	84.0	1	3	1.250	-1103.99	1776.88	-157.99	66.50
				2	3	1.250	-1053.32	-1776.60	224.80	
				1	4	1.250	1103.99	-1776.88	157.99	-43.42
				2	4	1.250	1053.32	1776.60	-224.80	
4	9.10	180.0	84.0	1	1	1.000	-1085.87	0.00	-2.14	68.00
				2	1	1.000	-1211.48	0.00	70.72	
				1	4	1.250	1103.99	-1776.88	157.99	-42.78
				2	4	1.250	1053.32	1776.60	-224.80	
5	15.10	252.0	84.0	1	1	1.000	-1085.87	0.00	-2.14	69.95
				2	1	1.000	-1211.48	0.00	70.72	
				1	4	1.250	1103.99	-1776.88	157.99	-42.01
				2	4	1.250	1053.32	1776.60	-224.80	
6	20.10	312.0	84.0	1	1	1.000	-1085.87	0.00	-2.14	71.58
				2	1	1.000	-1211.48	0.00	70.72	
				1	4	1.250	1103.99	-1776.88	157.99	-41.37

H. W. Lochner, Inc. PHONE: 859-224-4476
1040 Monarch St. Suite 300 Lexington, KY 40513
SHEET 4 OF 13
JOB NO. HLB#145
PROGRAM: RC-PIER® v4.1.0 LEAP Software Inc., Tampa, Florida
BY JMJ DATE Jun/18/2006
PHONE : TOLL-FREE 1-800-451-5327 TAMPA AREA: 813-985-9170
CKD. DATE

PROJECT: BONNER BRIDGE - OREGON INLET NORTH CAROLINA

				2	4	1.250	1053.32	1776.60	-224.80	
7	24.10	360.0	84.0	1	1	1.000	-1085.87	0.00	-2.14	72.88
				2	1	1.000	-1211.48	0.00	70.72	
				1	4	1.250	1103.99	-1776.88	157.99	-40.86
				2	4	1.250	1053.32	1776.60	-224.80	
8	28.10	408.0	84.0	1	1	1.000	-1085.87	0.00	-2.14	74.18
				2	1	1.000	-1211.48	0.00	70.72	
				1	4	1.250	1103.99	-1776.88	157.99	-40.34
				2	4	1.250	1053.32	1776.60	-224.80	
9	-3.90	24.0	48.0	1	2	1.000	-1123.65	3054.17	-383.41	72.53
				2	2	1.000	-823.62	-3053.71	447.61	
				1	4	1.250	1103.99	-1776.88	157.99	-44.44
				2	4	1.250	1053.32	1776.60	-224.80	
10	0.10	72.0	48.0	1	2	1.000	-1123.65	3054.17	-383.41	69.45
				2	2	1.000	-823.62	-3053.71	447.61	
				1	4	1.250	1103.99	-1776.88	157.99	-43.93
				2	4	1.250	1053.32	1776.60	-224.80	
11	4.10	120.0	48.0	1	3	1.250	-1103.99	1776.88	-157.99	66.50
				2	3	1.250	-1053.32	-1776.60	224.80	
				1	4	1.250	1103.99	-1776.88	157.99	-43.41
				2	4	1.250	1053.32	1776.60	-224.80	
12	9.10	180.0	48.0	1	1	1.000	-1085.87	0.00	-2.14	68.00
				2	1	1.000	-1211.48	0.00	70.72	
				1	4	1.250	1103.99	-1776.88	157.99	-42.78
				2	4	1.250	1053.32	1776.60	-224.80	
13	15.10	252.0	48.0	1	1	1.000	-1085.87	0.00	-2.14	69.95
				2	1	1.000	-1211.48	0.00	70.72	
				1	4	1.250	1103.99	-1776.88	157.99	-42.01
				2	4	1.250	1053.32	1776.60	-224.80	
14	20.10	312.0	48.0	1	1	1.000	-1085.87	0.00	-2.14	71.58
				2	1	1.000	-1211.48	0.00	70.72	
				1	4	1.250	1103.99	-1776.88	157.99	-41.37
				2	4	1.250	1053.32	1776.60	-224.80	
15	24.10	360.0	48.0	1	1	1.000	-1085.87	0.00	-2.14	72.88
				2	1	1.000	-1211.48	0.00	70.72	
				1	4	1.250	1103.99	-1776.88	157.99	-40.86
				2	4	1.250	1053.32	1776.60	-224.80	
16	28.10	408.0	48.0	1	1	1.000	-1085.87	0.00	-2.14	74.18
				2	1	1.000	-1211.48	0.00	70.72	
				1	4	1.250	1103.99	-1776.88	157.99	-40.34
				2	4	1.250	1053.32	1776.60	-224.80	
17	-3.90	24.0	0.0	1	2	1.000	-1123.65	3054.17	-383.41	72.52
				2	2	1.000	-823.62	-3053.71	447.61	
				1	4	1.250	1103.99	-1776.88	157.99	-44.44
				2	4	1.250	1053.32	1776.60	-224.80	
18	0.10	72.0	0.0	1	2	1.000	-1123.65	3054.17	-383.41	69.45
				2	2	1.000	-823.62	-3053.71	447.61	
				1	4	1.250	1103.99	-1776.88	157.99	-43.93
				2	4	1.250	1053.32	1776.60	-224.80	
19	4.10	120.0	0.0	1	3	1.250	-1103.99	1776.88	-157.99	66.50
				2	3	1.250	-1053.32	-1776.60	224.80	
				1	4	1.250	1103.99	-1776.88	157.99	-43.41
				2	4	1.250	1053.32	1776.60	-224.80	
20	9.10	180.0	0.0	1	1	1.000	-1085.87	0.00	-2.14	68.00
				2	1	1.000	-1211.48	0.00	70.72	
				1	4	1.250	1103.99	-1776.88	157.99	-42.77
				2	4	1.250	1053.32	1776.60	-224.80	
21	15.10	252.0	0.0	1	1	1.000	-1085.87	0.00	-2.14	69.95
				2	1	1.000	-1211.48	0.00	70.72	
				1	4	1.250	1103.99	-1776.88	157.99	-42.01
				2	4	1.250	1053.32	1776.60	-224.80	

H. W. Lochner, Inc. PHONE: 859-224-4476
1040 Monarch St. Suite 300 Lexington, KY 40513

PROGRAM: RC-PIER® v4.1.0 LEAP Software Inc., Tampa, Florida
PHONE : TOLL-FREE 1-800-451-5327 TAMPA AREA: 813-985-9170

PROJECT: BONNER BRIDGE - OREGON INLET NORTH CAROLINA

22	20.10	312.0	0.0	1	1	1.000	-1085.87	0.00	-2.14	71.58
				2	1	1.000	-1211.48	0.00	70.72	
				1	4	1.250	1103.99	-1776.88	157.99	-41.37
				2	4	1.250	1053.32	1776.60	-224.80	
23	24.10	360.0	0.0	1	1	1.000	-1085.87	0.00	-2.14	72.88
				2	1	1.000	-1211.48	0.00	70.72	
				1	4	1.250	1103.99	-1776.88	157.99	-40.85
				2	4	1.250	1053.32	1776.60	-224.80	
24	28.10	408.0	0.0	1	1	1.000	-1085.87	0.00	-2.14	74.18
				2	1	1.000	-1211.48	0.00	70.72	
				1	4	1.250	1103.99	-1776.88	157.99	-40.34
				2	4	1.250	1053.32	1776.60	-224.80	
25	-3.90	24.0	-48.0	1	2	1.000	-1123.65	3054.17	-383.41	72.52
				2	2	1.000	-823.62	-3053.71	447.61	
				1	4	1.250	1103.99	-1776.88	157.99	-44.44
				2	4	1.250	1053.32	1776.60	-224.80	
26	0.10	72.0	-48.0	1	2	1.000	-1123.65	3054.17	-383.41	69.45
				2	2	1.000	-823.62	-3053.71	447.61	
				1	4	1.250	1103.99	-1776.88	157.99	-43.92
				2	4	1.250	1053.32	1776.60	-224.80	
27	4.10	120.0	-48.0	1	3	1.250	-1103.99	1776.88	-157.99	66.50
				2	3	1.250	-1053.32	-1776.60	224.80	
				1	4	1.250	1103.99	-1776.88	157.99	-43.41
				2	4	1.250	1053.32	1776.60	-224.80	
28	9.10	180.0	-48.0	1	1	1.000	-1085.87	0.00	-2.14	68.00
				2	1	1.000	-1211.48	0.00	70.72	
				1	4	1.250	1103.99	-1776.88	157.99	-42.77
				2	4	1.250	1053.32	1776.60	-224.80	
29	15.10	252.0	-48.0	1	1	1.000	-1085.87	0.00	-2.14	69.95
				2	1	1.000	-1211.48	0.00	70.72	
				1	4	1.250	1103.99	-1776.88	157.99	-42.01
				2	4	1.250	1053.32	1776.60	-224.80	
30	20.10	312.0	-48.0	1	1	1.000	-1085.87	0.00	-2.14	71.58
				2	1	1.000	-1211.48	0.00	70.72	
				1	4	1.250	1103.99	-1776.88	157.99	-41.37
				2	4	1.250	1053.32	1776.60	-224.80	
31	24.10	360.0	-48.0	1	1	1.000	-1085.87	0.00	-2.14	72.88
				2	1	1.000	-1211.48	0.00	70.72	
				1	4	1.250	1103.99	-1776.88	157.99	-40.85
				2	4	1.250	1053.32	1776.60	-224.80	
32	28.10	408.0	-48.0	1	1	1.000	-1085.87	0.00	-2.14	74.18
				2	1	1.000	-1211.48	0.00	70.72	
				1	4	1.250	1103.99	-1776.88	157.99	-40.34
				2	4	1.250	1053.32	1776.60	-224.80	
33	-3.90	24.0	-84.0	1	2	1.000	-1123.65	3054.17	-383.41	72.52
				2	2	1.000	-823.62	-3053.71	447.61	
				1	4	1.250	1103.99	-1776.88	157.99	-44.44
				2	4	1.250	1053.32	1776.60	-224.80	
34	0.10	72.0	-84.0	1	2	1.000	-1123.65	3054.17	-383.41	69.45
				2	2	1.000	-823.62	-3053.71	447.61	
				1	4	1.250	1103.99	-1776.88	157.99	-43.92
				2	4	1.250	1053.32	1776.60	-224.80	
35	4.10	120.0	-84.0	1	3	1.250	-1103.99	1776.88	-157.99	66.50
				2	3	1.250	-1053.32	-1776.60	224.80	
				1	4	1.250	1103.99	-1776.88	157.99	-43.41
				2	4	1.250	1053.32	1776.60	-224.80	
36	9.10	180.0	-84.0	1	1	1.000	-1085.87	0.00	-2.14	68.00
				2	1	1.000	-1211.48	0.00	70.72	
				1	4	1.250	1103.99	-1776.88	157.99	-42.77
				2	4	1.250	1053.32	1776.60	-224.80	
37	15.10	252.0	-84.0	1	1	1.000	-1085.87	0.00	-2.14	69.95

H. W. Lochner, Inc. PHONE: 859-224-4476
1040 Monarch St. Suite 300 Lexington, KY 40513

PROGRAM: RC-PIER® v4.1.0 LEAP Software Inc., Tampa, Florida
PHONE : TOLL-FREE 1-800-451-5327 TAMPA AREA: 813-985-9170

PROJECT: BONNER BRIDGE - OREGON INLET NORTH CAROLINA

				2	1	1.000	-1211.48	0.00	70.72	
				1	4	1.250	1103.99	-1776.88	157.99	-42.00
				2	4	1.250	1053.32	1776.60	-224.80	
38	20.10	312.0	-84.0	1	1	1.000	-1085.87	0.00	-2.14	71.58
				2	1	1.000	-1211.48	0.00	70.72	
				1	4	1.250	1103.99	-1776.88	157.99	-41.36
				2	4	1.250	1053.32	1776.60	-224.80	
39	24.10	360.0	-84.0	1	1	1.000	-1085.87	0.00	-2.14	72.88
				2	1	1.000	-1211.48	0.00	70.72	
				1	4	1.250	1103.99	-1776.88	157.99	-40.85
				2	4	1.250	1053.32	1776.60	-224.80	
40	28.10	408.0	-84.0	1	1	1.000	-1085.87	0.00	-2.14	74.18
				2	1	1.000	-1211.48	0.00	70.72	
				1	4	1.250	1103.99	-1776.88	157.99	-40.34
				2	4	1.250	1053.32	1776.60	-224.80	

Pile Reactions, Service (After the reduction of overstress allowance):

Pile	Loc(X) ft	X in	Z in	Column Loads col#	comb	Ovs	P, kips	Mxx, kft	Mzz, kft	Pile Reac. kips
1	-3.90	24.0	84.0	1	2	1.000	-1123.65	3054.17	-383.41	72.53
				2	2	1.000	-823.62	-3053.71	447.61	
				1	4	1.250	1103.99	-1776.88	157.99	-35.55
				2	4	1.250	1053.32	1776.60	-224.80	
2	0.10	72.0	84.0	1	2	1.000	-1123.65	3054.17	-383.41	69.45
				2	2	1.000	-823.62	-3053.71	447.61	
				1	4	1.250	1103.99	-1776.88	157.99	-35.14
				2	4	1.250	1053.32	1776.60	-224.80	
3	4.10	120.0	84.0	1	2	1.000	-1123.65	3054.17	-383.41	66.38
				2	2	1.000	-823.62	-3053.71	447.61	
				1	4	1.250	1103.99	-1776.88	157.99	-34.73
				2	4	1.250	1053.32	1776.60	-224.80	
4	9.10	180.0	84.0	1	1	1.000	-1085.87	0.00	-2.14	68.00
				2	1	1.000	-1211.48	0.00	70.72	
				1	4	1.250	1103.99	-1776.88	157.99	-34.22
				2	4	1.250	1053.32	1776.60	-224.80	
5	15.10	252.0	84.0	1	1	1.000	-1085.87	0.00	-2.14	69.95
				2	1	1.000	-1211.48	0.00	70.72	
				1	4	1.250	1103.99	-1776.88	157.99	-33.61
				2	4	1.250	1053.32	1776.60	-224.80	
6	20.10	312.0	84.0	1	1	1.000	-1085.87	0.00	-2.14	71.58
				2	1	1.000	-1211.48	0.00	70.72	
				1	4	1.250	1103.99	-1776.88	157.99	-33.09
				2	4	1.250	1053.32	1776.60	-224.80	
7	24.10	360.0	84.0	1	1	1.000	-1085.87	0.00	-2.14	72.88
				2	1	1.000	-1211.48	0.00	70.72	
				1	4	1.250	1103.99	-1776.88	157.99	-32.69
				2	4	1.250	1053.32	1776.60	-224.80	
8	28.10	408.0	84.0	1	1	1.000	-1085.87	0.00	-2.14	74.18
				2	1	1.000	-1211.48	0.00	70.72	
				1	4	1.250	1103.99	-1776.88	157.99	-32.28
				2	4	1.250	1053.32	1776.60	-224.80	
9	-3.90	24.0	48.0	1	2	1.000	-1123.65	3054.17	-383.41	72.53
				2	2	1.000	-823.62	-3053.71	447.61	
				1	4	1.250	1103.99	-1776.88	157.99	-35.55
				2	4	1.250	1053.32	1776.60	-224.80	
10	0.10	72.0	48.0	1	2	1.000	-1123.65	3054.17	-383.41	69.45

H. W. Lochner, Inc. PHONE: 859-224-4476
1040 Monarch St. Suite 300 Lexington, KY 40513

PROGRAM: RC-PIER® v4.1.0 LEAP Software Inc., Tampa, Florida
PHONE : TOLL-FREE 1-800-451-5327 TAMPA AREA: 813-985-9170

PROJECT: BONNER BRIDGE - OREGON INLET NORTH CAROLINA

				2	2	1.000	-823.62	-3053.71	447.61	
				1	4	1.250	1103.99	-1776.88	157.99	-35.14
				2	4	1.250	1053.32	1776.60	-224.80	
11	4.10	120.0	48.0	1	1	1.000	-1085.87	0.00	-2.14	66.38
				2	1	1.000	-1211.48	0.00	70.72	
				1	4	1.250	1103.99	-1776.88	157.99	-34.73
				2	4	1.250	1053.32	1776.60	-224.80	
12	9.10	180.0	48.0	1	1	1.000	-1085.87	0.00	-2.14	68.00
				2	1	1.000	-1211.48	0.00	70.72	
				1	4	1.250	1103.99	-1776.88	157.99	-34.22
				2	4	1.250	1053.32	1776.60	-224.80	
13	15.10	252.0	48.0	1	1	1.000	-1085.87	0.00	-2.14	69.95
				2	1	1.000	-1211.48	0.00	70.72	
				1	4	1.250	1103.99	-1776.88	157.99	-33.61
				2	4	1.250	1053.32	1776.60	-224.80	
14	20.10	312.0	48.0	1	1	1.000	-1085.87	0.00	-2.14	71.58
				2	1	1.000	-1211.48	0.00	70.72	
				1	4	1.250	1103.99	-1776.88	157.99	-33.09
				2	4	1.250	1053.32	1776.60	-224.80	
15	24.10	360.0	48.0	1	1	1.000	-1085.87	0.00	-2.14	72.88
				2	1	1.000	-1211.48	0.00	70.72	
				1	4	1.250	1103.99	-1776.88	157.99	-32.68
				2	4	1.250	1053.32	1776.60	-224.80	
16	28.10	408.0	48.0	1	1	1.000	-1085.87	0.00	-2.14	74.18
				2	1	1.000	-1211.48	0.00	70.72	
				1	4	1.250	1103.99	-1776.88	157.99	-32.28
				2	4	1.250	1053.32	1776.60	-224.80	
17	-3.90	24.0	0.0	1	2	1.000	-1123.65	3054.17	-383.41	72.52
				2	2	1.000	-823.62	-3053.71	447.61	
				1	4	1.250	1103.99	-1776.88	157.99	-35.55
				2	4	1.250	1053.32	1776.60	-224.80	
18	0.10	72.0	0.0	1	2	1.000	-1123.65	3054.17	-383.41	69.45
				2	2	1.000	-823.62	-3053.71	447.61	
				1	4	1.250	1103.99	-1776.88	157.99	-35.14
				2	4	1.250	1053.32	1776.60	-224.80	
19	4.10	120.0	0.0	1	1	1.000	-1085.87	0.00	-2.14	66.38
				2	1	1.000	-1211.48	0.00	70.72	
				1	4	1.250	1103.99	-1776.88	157.99	-34.73
				2	4	1.250	1053.32	1776.60	-224.80	
20	9.10	180.0	0.0	1	1	1.000	-1085.87	0.00	-2.14	68.00
				2	1	1.000	-1211.48	0.00	70.72	
				1	4	1.250	1103.99	-1776.88	157.99	-34.22
				2	4	1.250	1053.32	1776.60	-224.80	
21	15.10	252.0	0.0	1	1	1.000	-1085.87	0.00	-2.14	69.95
				2	1	1.000	-1211.48	0.00	70.72	
				1	4	1.250	1103.99	-1776.88	157.99	-33.61
				2	4	1.250	1053.32	1776.60	-224.80	
22	20.10	312.0	0.0	1	1	1.000	-1085.87	0.00	-2.14	71.58
				2	1	1.000	-1211.48	0.00	70.72	
				1	4	1.250	1103.99	-1776.88	157.99	-33.09
				2	4	1.250	1053.32	1776.60	-224.80	
23	24.10	360.0	0.0	1	1	1.000	-1085.87	0.00	-2.14	72.88
				2	1	1.000	-1211.48	0.00	70.72	
				1	4	1.250	1103.99	-1776.88	157.99	-32.68
				2	4	1.250	1053.32	1776.60	-224.80	
24	28.10	408.0	0.0	1	1	1.000	-1085.87	0.00	-2.14	74.18
				2	1	1.000	-1211.48	0.00	70.72	
				1	4	1.250	1103.99	-1776.88	157.99	-32.27
				2	4	1.250	1053.32	1776.60	-224.80	
25	-3.90	24.0	-48.0	1	2	1.000	-1123.65	3054.17	-383.41	72.52
				2	2	1.000	-823.62	-3053.71	447.61	

H. W. Lochner, Inc. PHONE: 859-224-4476
1040 Monarch St. Suite 300 Lexington, KY 40513

PROGRAM: RC-PIER® v4.1.0 LEAP Software Inc., Tampa, Florida
PHONE : TOLL-FREE 1-800-451-5327 TAMPA AREA: 813-985-9170

PROJECT: BONNER BRIDGE - OREGON INLET NORTH CAROLINA

				1	4	1.250	1103.99	-1776.88	157.99	-35.55
				2	4	1.250	1053.32	1776.60	-224.80	
26	0.10	72.0	-48.0	1	2	1.000	-1123.65	3054.17	-383.41	69.45
				2	2	1.000	-823.62	-3053.71	447.61	
				1	4	1.250	1103.99	-1776.88	157.99	-35.14
				2	4	1.250	1053.32	1776.60	-224.80	
27	4.10	120.0	-48.0	1	1	1.000	-1085.87	0.00	-2.14	66.38
				2	1	1.000	-1211.48	0.00	70.72	
				1	4	1.250	1103.99	-1776.88	157.99	-34.73
				2	4	1.250	1053.32	1776.60	-224.80	
28	9.10	180.0	-48.0	1	1	1.000	-1085.87	0.00	-2.14	68.00
				2	1	1.000	-1211.48	0.00	70.72	
				1	4	1.250	1103.99	-1776.88	157.99	-34.22
				2	4	1.250	1053.32	1776.60	-224.80	
29	15.10	252.0	-48.0	1	1	1.000	-1085.87	0.00	-2.14	69.95
				2	1	1.000	-1211.48	0.00	70.72	
				1	4	1.250	1103.99	-1776.88	157.99	-33.60
				2	4	1.250	1053.32	1776.60	-224.80	
30	20.10	312.0	-48.0	1	1	1.000	-1085.87	0.00	-2.14	71.58
				2	1	1.000	-1211.48	0.00	70.72	
				1	4	1.250	1103.99	-1776.88	157.99	-33.09
				2	4	1.250	1053.32	1776.60	-224.80	
31	24.10	360.0	-48.0	1	1	1.000	-1085.87	0.00	-2.14	72.88
				2	1	1.000	-1211.48	0.00	70.72	
				1	4	1.250	1103.99	-1776.88	157.99	-32.68
				2	4	1.250	1053.32	1776.60	-224.80	
32	28.10	408.0	-48.0	1	1	1.000	-1085.87	0.00	-2.14	74.18
				2	1	1.000	-1211.48	0.00	70.72	
				1	4	1.250	1103.99	-1776.88	157.99	-32.27
				2	4	1.250	1053.32	1776.60	-224.80	
33	-3.90	24.0	-84.0	1	2	1.000	-1123.65	3054.17	-383.41	72.52
				2	2	1.000	-823.62	-3053.71	447.61	
				1	4	1.250	1103.99	-1776.88	157.99	-35.55
				2	4	1.250	1053.32	1776.60	-224.80	
34	0.10	72.0	-84.0	1	2	1.000	-1123.65	3054.17	-383.41	69.45
				2	2	1.000	-823.62	-3053.71	447.61	
				1	4	1.250	1103.99	-1776.88	157.99	-35.14
				2	4	1.250	1053.32	1776.60	-224.80	
35	4.10	120.0	-84.0	1	1	1.000	-1085.87	0.00	-2.14	66.38
				2	1	1.000	-1211.48	0.00	70.72	
				1	4	1.250	1103.99	-1776.88	157.99	-34.73
				2	4	1.250	1053.32	1776.60	-224.80	
36	9.10	180.0	-84.0	1	1	1.000	-1085.87	0.00	-2.14	68.00
				2	1	1.000	-1211.48	0.00	70.72	
				1	4	1.250	1103.99	-1776.88	157.99	-34.22
				2	4	1.250	1053.32	1776.60	-224.80	
37	15.10	252.0	-84.0	1	1	1.000	-1085.87	0.00	-2.14	69.95
				2	1	1.000	-1211.48	0.00	70.72	
				1	4	1.250	1103.99	-1776.88	157.99	-33.60
				2	4	1.250	1053.32	1776.60	-224.80	
38	20.10	312.0	-84.0	1	1	1.000	-1085.87	0.00	-2.14	71.58
				2	1	1.000	-1211.48	0.00	70.72	
				1	4	1.250	1103.99	-1776.88	157.99	-33.09
				2	4	1.250	1053.32	1776.60	-224.80	
39	24.10	360.0	-84.0	1	1	1.000	-1085.87	0.00	-2.14	72.88
				2	1	1.000	-1211.48	0.00	70.72	
				1	4	1.250	1103.99	-1776.88	157.99	-32.68
				2	4	1.250	1053.32	1776.60	-224.80	
40	28.10	408.0	-84.0	1	1	1.000	-1085.87	0.00	-2.14	74.18
				2	1	1.000	-1211.48	0.00	70.72	
				1	4	1.250	1103.99	-1776.88	157.99	-32.27

H. W. Lochner, Inc. PHONE: 859-224-4476
1040 Monarch St. Suite 300 Lexington, KY 40513

PROGRAM: RC-PIER® v4.1.0 LEAP Software Inc., Tampa, Florida

PHONE : TOLL-FREE 1-800-451-5327 TAMPA AREA: 813-985-9170

PROJECT: BONNER BRIDGE - OREGON INLET NORTH CAROLINA

2	4	1.250	1053.32	1776.60	-224.80

Note:

Only max. force in piles is considered for design.
Pile coordinates X and Z are from the most left edge of the footing.

Max. Pile Reaction Used in Design: (without selfweight and surcharge)
==========

Working Stress pile reaction = 62.63 kips

Reinforcement Schedule:
==========:

Dir	Quantity	Size	Bar dist. in	As total in^2	From ft	To ft	Hook
X	10	# 9	6.00	10.00	0.50	35.50	None
X	26	# 7	22.00	15.60	0.50	35.50	Both
X	31	# 11	51.00	48.36	0.50	35.50	Both
Z	37	# 5	52.02	11.47	----	----	Both
Z	80	# 11	20.86	124.80	----	----	Both
Z	14	# 11	7.45	21.84	----	----	None
Z	37	# 5	5.12	11.47	----	----	Both

Flexure:
========

X direction

Loc ft	Mmax Mmin kft	Comb Comb	Asb_req Asb_req in^2	Asb_prv Asb_prv in^2	Asb_eff Asb_eff in^2	Ast_req Ast_req in^2	Ast_prv Ast_prv in^2	Ast_eff Ast_eff in^2
-5.90	0.0	1	0.00	0.00	0.00	0.00	0.00	0.00
	0.0	1	0.00	0.00	0.00	0.00	0.00	0.00
-5.41	0.0	1	0.00	0.00	0.00	0.00	0.00	0.00
	0.0	1	0.00	0.00	0.00	0.00	0.00	0.00
-4.94	0.0	1	0.00	25.60	9.62	0.00	48.36	13.03
	0.0	1	0.00	25.60	10.14	0.00	48.36	13.03
-4.43	0.0	1	0.00	25.60	20.12	0.00	48.36	27.24
	0.0	1	0.00	25.60	21.20	0.00	48.36	27.24
-3.94	0.0	1	0.00	25.60	24.57	0.00	48.36	41.02
	0.0	1	0.00	25.60	25.60	0.00	48.36	41.02
-3.46	139.2	1	2.76	25.60	25.60	0.00	48.36	48.36
	0.0	1	0.00	25.60	25.60	0.00	48.36	48.36
-2.97	292.3	1	5.85	25.60	25.60	0.00	48.36	48.36
	0.0	1	0.00	25.60	25.60	0.00	48.36	48.36
-2.48	445.4	1	8.99	25.60	25.60	0.00	48.36	48.36
	0.0	1	0.00	25.60	25.60	0.00	48.36	48.36
-1.99	598.5	1	12.16	25.60	25.60	0.00	48.36	48.36
	0.0	1	0.00	25.60	25.60	0.00	48.36	48.36
-1.50	751.6	1	15.35	25.60	25.60	0.00	48.36	48.36
	0.0	1	0.00	25.60	25.60	0.00	48.36	48.36

H. W. Lochner, Inc. PHONE: 859-224-4476
1040 Monarch St. Suite 300 Lexington, KY 40513
SHEET 10 OF 13
JOB NO. HLB#145
PROGRAM: RC-PIER® v4.1.0 LEAP Software Inc., Tampa, Florida
BY JMJ DATE Jun/18/2006
PHONE : TOLL-FREE 1-800-451-5327 TAMPA AREA: 813-985-9170
CKD. DATE

PROJECT: BONNER BRIDGE - OREGON INLET NORTH CAROLINA

0.00	0.0	1	0.00	25.60	25.60	0.00	48.36	48.36
	0.0	1	0.00	25.60	25.60	0.00	48.36	48.36
1.50	245.0	1	4.89	25.60	25.60	0.00	48.36	48.36
	0.0	1	0.00	25.60	25.60	0.00	48.36	48.36
4.94	0.0	1	0.00	25.60	25.60	0.00	48.36	48.36
	-1658.3	1	0.00	25.60	25.60	27.69	48.36	48.36
6.82	0.0	1	0.00	25.60	25.60	0.00	48.36	48.36
	-2254.0	1	0.00	25.60	25.60	38.02	48.36	48.36
9.48	0.0	1	0.00	25.60	25.60	0.00	48.36	48.36
	-2978.5	1	0.00	25.60	25.60	50.77	48.36 *	48.36
12.14	0.0	1	0.00	25.60	25.60	0.00	48.36	48.36
	-2988.3	1	0.00	25.60	25.60	50.95	48.36 *	48.36
14.79	0.0	1	0.00	25.60	25.60	0.00	48.36	48.36
	-2998.0	1	0.00	25.60	25.60	51.12	48.36 *	48.36
17.45	0.0	1	0.00	25.60	25.60	0.00	48.36	48.36
	-2270.8	1	0.00	25.60	25.60	38.32	48.36	48.36
19.33	0.0	1	0.00	25.60	25.60	0.00	48.36	48.36
	-1688.8	1	0.00	25.60	25.60	28.22	48.36	48.36
22.77	211.6	1	4.21	25.60	25.60	0.00	48.36	48.36
	0.0	1	0.00	25.60	25.60	0.00	48.36	48.36
24.27	0.0	1	0.00	25.60	25.60	0.00	48.36	48.36
	0.0	1	0.00	25.60	25.60	0.00	48.36	48.36
25.77	729.4	1	14.89	25.60	25.60	0.00	48.36	48.36
	0.0	1	0.00	25.60	25.60	0.00	48.36	48.36
26.25	578.7	1	11.75	25.60	25.60	0.00	48.36	48.36
	0.0	1	0.00	25.60	25.60	0.00	48.36	48.36
26.73	428.1	1	8.63	25.60	25.60	0.00	48.36	48.36
	0.0	1	0.00	25.60	25.60	0.00	48.36	48.36
27.21	277.5	1	5.55	25.60	25.60	0.00	48.36	48.36
	0.0	1	0.00	25.60	25.60	0.00	48.36	48.36
27.70	126.8	1	2.51	25.60	25.60	0.00	48.36	48.36
	0.0	1	0.00	25.60	25.60	0.00	48.36	48.36
28.18	0.0	1	0.00	25.60	24.37	0.00	48.36	40.13
	0.0	1	0.00	25.60	25.60	0.00	48.36	40.13
28.66	0.0	1	0.00	25.60	19.62	0.00	48.36	26.57
	0.0	1	0.00	25.60	20.68	0.00	48.36	26.57
29.21	0.0	1	0.00	25.60	8.15	0.00	48.36	11.03
	0.0	1	0.00	25.60	8.59	0.00	48.36	11.03
29.62	0.0	1	0.00	0.00	0.00	0.00	0.00	0.00
	0.0	1	0.00	0.00	0.00	0.00	0.00	0.00
30.10	0.0	1	0.00	0.00	0.00	0.00	0.00	0.00
	0.0	1	0.00	0.00	0.00	0.00	0.00	0.00

Z direction

Loc ft	Mmax kft	Comb	Asb_req in^2	Asb_prv in^2	Asb_eff in^2	Ast_req in^2	Ast_prv in^2	Ast_eff in^2
-3.32	2187.0	1	47.76	158.11	158.11	0.00	11.47	11.47
3.32	2187.0	1	47.76	158.11	158.11	0.00	11.47	11.47

Note:
* The provided reinforcement is not adequate, either less than required or larger than maximum allowed.

One Way Shear:
==========

Col	Dist	Comb	d	V	Vc

H. W. Lochner, Inc. PHONE: 859-224-4476
1040 Monarch St. Suite 300 Lexington, KY 40513

PROGRAM: RC-PIER® v4.1.0 LEAP Software Inc., Tampa, Florida

PHONE : TOLL-FREE 1-800-451-5327 TAMPA AREA: 813-985-9170

PROJECT: BONNER BRIDGE - OREGON INLET NORTH CAROLINA

	ft		in	kips	kips
X direction					
1	-4.94	1	39.74	0.0	446.6
	4.94	1	41.25	330.4	463.6
2	19.33	1	41.25	335.2	463.6
	29.21	1	39.74	0.0	446.6
Z direction					
	-6.58	1	39.13	380.4	879.7
	6.58	1	39.13	380.4	879.7

Two Way Shear:
==========

#	Bo ft	Ao ft^2	Comb	Avg. d in	V kips	Vc kips
Columns:						
1	32.54	62.88	1	39.81	1256.3	1451.3
2	32.54	62.88	1	39.81	1249.0	1451.3
Piles - max:						
10	16.18	20.84	1	39.81	0.0	762.3
Piles - min:						
1	6.02	15.60	1	39.81	0.0	283.7

Note:
TWO WAY SHEAR IN FOOTING IS NOT DESIGNED AND STIRRUPS ARE NOT CONSIDERED.

H. W. Lochner, Inc. PHONE: 859-224-4476
1040 Monarch St. Suite 300 Lexington, KY 40513
SHEET 1 OF 13
JOB NO. HLB#145
PROGRAM: RC-PIER® v4.1.0 LEAP Software Inc., Tampa, Florida
BY JMJ DATE Jun/18/2006
PHONE : TOLL-FREE 1-800-451-5327 TAMPA AREA: 813-985-9170
CKD. DATE

PROJECT: BONNER BRIDGE - OREGON INLET NORTH CAROLINA

JMJ 7/06
WDB 7/06

PROJECT DATA
==========

Project : BONNER BRIDGE - OREGON INLET NORTH CAROLINA
User Job No.: HLB#145
State : North Carolina State Job No. :
Code : AASHTO STANDARD (17th Edition 2002)
Comments : Bonner Bridge HLB #145 - Load Groups 4-6 (For Ease of Checking) - Per Pla
n Dimensions

H. W. Lochner, Inc. PHONE: 859-224-4476
1040 Monarch St. Suite 300 Lexington, KY 40513

PROGRAM: RC-PIER® v4.1.0 LEAP Software Inc., Tampa, Florida

PHONE : TOLL-FREE 1-800-451-5327 TAMPA AREA: 813-985-9170

PROJECT: BONNER BRIDGE - OREGON INLET NORTH CAROLINA

LOADS
=====

Load Cases: 3

Loadcase ID: (L+In)1 Name: Group 4 Loadings
Multiplier = 1.000

Cap loads:

Type	Dir	Arm ft	Mag1 kip,kip/ft, kft	x1/L	Mag2 kip,kip/ft, kft	x2/L
Force	Y	0.00	-969.36	0.00	----	----
Force	Y	0.00	-1044.68	1.00	----	----
Moment	Z	----	2186.04	0.00	----	----
Moment	Z	----	2222.23	1.00	----	----

Loadcase ID: (L+Ip)1 Name: Group 5 Loadings
Multiplier = 1.000

Cap loads:

Type	Dir	Arm ft	Mag1 kip,kip/ft, kft	x1/L	Mag2 kip,kip/ft, kft	x2/L
Force	Y	0.00	-1011.55	0.00	----	----
Force	Y	0.00	-723.03	1.00	----	----
Moment	X	----	-2937.48	1.00	----	----
Moment	X	----	2937.91	0.00	----	----
Moment	Z	----	1723.58	0.00	----	----
Moment	Z	----	2512.30	1.00	----	----

Loadcase ID: W1 Name: Group 6 Loadings
Multiplier = 1.000

Cap loads:

Type	Dir	Arm ft	Mag1 kip,kip/ft, kft	x1/L	Mag2 kip,kip/ft, kft	x2/L
Force	Y	0.00	-992.66	0.00	----	----
Force	Y	0.00	-943.91	1.00	----	----
Moment	X	----	-1708.98	1.00	----	----
Moment	X	----	1709.24	0.00	----	----
Moment	Z	----	1940.50	0.00	----	----
Moment	Z	----	2298.23	1.00	----	----

Selected load groups:

SERVICE GROUP I
SERVICE GROUP IB
SERVICE GROUP II

H. W. Lochner, Inc. PHONE: 859-224-4476
1040 Monarch St. Suite 300 Lexington, KY 40513
SHEET 3 OF 13
JOB NO. HLB#145
PROGRAM: RC-PIER® v4.1.0 LEAP Software Inc., Tampa, Florida
BY JMJ DATE Jun/18/2006
PHONE : TOLL-FREE 1-800-451-5327 TAMPA AREA: 813-985-9170
CKD. DATE

PROJECT: BONNER BRIDGE - OREGON INLET NORTH CAROLINA

COMBINED FOOTING DESIGN

Code: AASHTO STANDARD (17th Edition 2002) - Service Load Design
Units: US

Geometry:
=========
Name : 1
Shape : Rectangular, Type : Pile/Shaft Cap

Bf(X) = 36.00 ft, Hf(Z) = 18.00 ft, Thickness(Y) = 57.00 in

Footing concentric.
Columns located on the footing:
Column No. 1 at x = 0.00 ft, Rectangular 36.00 in x 79.63 in
Column No. 2 at x = 24.27 ft, Rectangular 36.00 in x 79.63 in

Ag = 648.00 ft^2, Ix = 1040.00 ft^2, Iz = 4730.00 ft^2

Surcharge = 0.00 ksf

Piles: Circular Size: 22.00 in Capacity: 100.00 kips

Design Parameters:
==========
f'c = 3000.00 psi fy = 40000.00 psi
Ec = 3320.6 ksi Es = 29000.0 ksi
Crack control factor z = 130.00 kips/in
Concrete Type : Normal Weight.

Pile Reactions, Service (Without the reduction of overstress allowance):
==========

Pile	Loc(X) ft	X in	Z in	Column Loads col#	comb	Ovs	P, kips	Mxx, kft	Mzz, kft	Pile Reac. kips
1	-3.90	24.0	84.0	1	2	1.000	-1011.73	2936.70	1710.63	80.84
				2	2	1.000	-722.85	-2936.27	2510.88	
				1	4	1.250	992.86	-1708.54	-1927.38	-52.95
				2	4	1.250	943.71	1708.28	-2296.63	
2	0.10	72.0	84.0	1	2	1.000	-1011.73	2936.70	1710.63	74.36
				2	2	1.000	-722.85	-2936.27	2510.88	
				1	4	1.250	992.86	-1708.54	-1927.38	-48.93
				2	4	1.250	943.71	1708.28	-2296.63	
3	4.10	120.0	84.0	1	3	1.250	-992.86	1708.54	1927.38	68.00
				2	3	1.250	-943.71	-1708.28	2296.63	
				1	4	1.250	992.86	-1708.54	-1927.38	-44.91
				2	4	1.250	943.71	1708.28	-2296.63	
4	9.10	180.0	84.0	1	1	1.000	-969.58	0.00	2172.75	64.06
				2	1	1.000	-1044.46	0.00	2220.43	
				1	4	1.250	992.86	-1708.54	-1927.38	-39.89
				2	4	1.250	943.71	1708.28	-2296.63	
5	15.10	252.0	84.0	1	1	1.000	-969.58	0.00	2172.75	59.73
				2	1	1.000	-1044.46	0.00	2220.43	
				1	4	1.250	992.86	-1708.54	-1927.38	-33.86
				2	4	1.250	943.71	1708.28	-2296.63	
6	20.10	312.0	84.0	1	1	1.000	-969.58	0.00	2172.75	56.12
				2	1	1.000	-1044.46	0.00	2220.43	
				1	4	1.250	992.86	-1708.54	-1927.38	-28.84

H. W. Lochner, Inc. PHONE: 859-224-4476
1040 Monarch St. Suite 300 Lexington, KY 40513

PROGRAM: RC-PIER® v4.1.0 LEAP Software Inc., Tampa, Florida
PHONE : TOLL-FREE 1-800-451-5327 TAMPA AREA: 813-985-9170

PROJECT: BONNER BRIDGE - OREGON INLET NORTH CAROLINA

				2	4	1.250	943.71	1708.28	-2296.63	
7	24.10	360.0	84.0	1	1	1.000	-969.58	0.00	2172.75	53.23
				2	1	1.000	-1044.46	0.00	2220.43	
				1	4	1.250	992.86	-1708.54	-1927.38	-24.82
				2	4	1.250	943.71	1708.28	-2296.63	
8	28.10	408.0	84.0	1	1	1.000	-969.58	0.00	2172.75	50.35
				2	1	1.000	-1044.46	0.00	2220.43	
				1	4	1.250	992.86	-1708.54	-1927.38	-20.80
				2	4	1.250	943.71	1708.28	-2296.63	
9	-3.90	24.0	48.0	1	2	1.000	-1011.73	2936.70	1710.63	80.84
				2	2	1.000	-722.85	-2936.27	2510.88	
				1	4	1.250	992.86	-1708.54	-1927.38	-52.95
				2	4	1.250	943.71	1708.28	-2296.63	
10	0.10	72.0	48.0	1	2	1.000	-1011.73	2936.70	1710.63	74.36
				2	2	1.000	-722.85	-2936.27	2510.88	
				1	4	1.250	992.86	-1708.54	-1927.38	-48.93
				2	4	1.250	943.71	1708.28	-2296.63	
11	4.10	120.0	48.0	1	3	1.250	-992.86	1708.54	1927.38	67.99
				2	3	1.250	-943.71	-1708.28	2296.63	
				1	4	1.250	992.86	-1708.54	-1927.38	-44.91
				2	4	1.250	943.71	1708.28	-2296.63	
12	9.10	180.0	48.0	1	1	1.000	-969.58	0.00	2172.75	64.06
				2	1	1.000	-1044.46	0.00	2220.43	
				1	4	1.250	992.86	-1708.54	-1927.38	-39.89
				2	4	1.250	943.71	1708.28	-2296.63	
13	15.10	252.0	48.0	1	1	1.000	-969.58	0.00	2172.75	59.73
				2	1	1.000	-1044.46	0.00	2220.43	
				1	4	1.250	992.86	-1708.54	-1927.38	-33.86
				2	4	1.250	943.71	1708.28	-2296.63	
14	20.10	312.0	48.0	1	1	1.000	-969.58	0.00	2172.75	56.12
				2	1	1.000	-1044.46	0.00	2220.43	
				1	4	1.250	992.86	-1708.54	-1927.38	-28.84
				2	4	1.250	943.71	1708.28	-2296.63	
15	24.10	360.0	48.0	1	1	1.000	-969.58	0.00	2172.75	53.23
				2	1	1.000	-1044.46	0.00	2220.43	
				1	4	1.250	992.86	-1708.54	-1927.38	-24.82
				2	4	1.250	943.71	1708.28	-2296.63	
16	28.10	408.0	48.0	1	1	1.000	-969.58	0.00	2172.75	50.35
				2	1	1.000	-1044.46	0.00	2220.43	
				1	4	1.250	992.86	-1708.54	-1927.38	-20.80
				2	4	1.250	943.71	1708.28	-2296.63	
17	-3.90	24.0	0.0	1	2	1.000	-1011.73	2936.70	1710.63	80.84
				2	2	1.000	-722.85	-2936.27	2510.88	
				1	4	1.250	992.86	-1708.54	-1927.38	-52.95
				2	4	1.250	943.71	1708.28	-2296.63	
18	0.10	72.0	0.0	1	2	1.000	-1011.73	2936.70	1710.63	74.35
				2	2	1.000	-722.85	-2936.27	2510.88	
				1	4	1.250	992.86	-1708.54	-1927.38	-48.93
				2	4	1.250	943.71	1708.28	-2296.63	
19	4.10	120.0	0.0	1	3	1.250	-992.86	1708.54	1927.38	67.99
				2	3	1.250	-943.71	-1708.28	2296.63	
				1	4	1.250	992.86	-1708.54	-1927.38	-44.91
				2	4	1.250	943.71	1708.28	-2296.63	
20	9.10	180.0	0.0	1	1	1.000	-969.58	0.00	2172.75	64.06
				2	1	1.000	-1044.46	0.00	2220.43	
				1	4	1.250	992.86	-1708.54	-1927.38	-39.89
				2	4	1.250	943.71	1708.28	-2296.63	
21	15.10	252.0	0.0	1	1	1.000	-969.58	0.00	2172.75	59.73
				2	1	1.000	-1044.46	0.00	2220.43	
				1	4	1.250	992.86	-1708.54	-1927.38	-33.86
				2	4	1.250	943.71	1708.28	-2296.63	

H. W. Lochner, Inc. PHONE: 859-224-4476
1040 Monarch St. Suite 300 Lexington, KY 40513
SHEET 5 OF 13
JOB NO. HLB#145
PROGRAM: RC-PIER® v4.1.0 LEAP Software Inc., Tampa, Florida
BY JMJ DATE Jun/18/2006
PHONE : TOLL-FREE 1-800-451-5327 TAMPA AREA: 813-985-9170
CKD. DATE

PROJECT: BONNER BRIDGE - OREGON INLET NORTH CAROLINA

22	20.10	312.0	0.0	1	1	1.000	-969.58	0.00	2172.75	56.12
				2	1	1.000	-1044.46	0.00	2220.43	
				1	4	1.250	992.86	-1708.54	-1927.38	-28.84
				2	4	1.250	943.71	1708.28	-2296.63	
23	24.10	360.0	0.0	1	1	1.000	-969.58	0.00	2172.75	53.23
				2	1	1.000	-1044.46	0.00	2220.43	
				1	4	1.250	992.86	-1708.54	-1927.38	-24.82
				2	4	1.250	943.71	1708.28	-2296.63	
24	28.10	408.0	0.0	1	1	1.000	-969.58	0.00	2172.75	50.35
				2	1	1.000	-1044.46	0.00	2220.43	
				1	4	1.250	992.86	-1708.54	-1927.38	-20.80
				2	4	1.250	943.71	1708.28	-2296.63	
25	-3.90	24.0	-48.0	1	2	1.000	-1011.73	2936.70	1710.63	80.84
				2	2	1.000	-722.85	-2936.27	2510.88	
				1	4	1.250	992.86	-1708.54	-1927.38	-52.94
				2	4	1.250	943.71	1708.28	-2296.63	
26	0.10	72.0	-48.0	1	2	1.000	-1011.73	2936.70	1710.63	74.35
				2	2	1.000	-722.85	-2936.27	2510.88	
				1	4	1.250	992.86	-1708.54	-1927.38	-48.93
				2	4	1.250	943.71	1708.28	-2296.63	
27	4.10	120.0	-48.0	1	3	1.250	-992.86	1708.54	1927.38	67.99
				2	3	1.250	-943.71	-1708.28	2296.63	
				1	4	1.250	992.86	-1708.54	-1927.38	-44.91
				2	4	1.250	943.71	1708.28	-2296.63	
28	9.10	180.0	-48.0	1	1	1.000	-969.58	0.00	2172.75	64.06
				2	1	1.000	-1044.46	0.00	2220.43	
				1	4	1.250	992.86	-1708.54	-1927.38	-39.88
				2	4	1.250	943.71	1708.28	-2296.63	
29	15.10	252.0	-48.0	1	1	1.000	-969.58	0.00	2172.75	59.73
				2	1	1.000	-1044.46	0.00	2220.43	
				1	4	1.250	992.86	-1708.54	-1927.38	-33.86
				2	4	1.250	943.71	1708.28	-2296.63	
30	20.10	312.0	-48.0	1	1	1.000	-969.58	0.00	2172.75	56.12
				2	1	1.000	-1044.46	0.00	2220.43	
				1	4	1.250	992.86	-1708.54	-1927.38	-28.83
				2	4	1.250	943.71	1708.28	-2296.63	
31	24.10	360.0	-48.0	1	1	1.000	-969.58	0.00	2172.75	53.23
				2	1	1.000	-1044.46	0.00	2220.43	
				1	4	1.250	992.86	-1708.54	-1927.38	-24.82
				2	4	1.250	943.71	1708.28	-2296.63	
32	28.10	408.0	-48.0	1	1	1.000	-969.58	0.00	2172.75	50.35
				2	1	1.000	-1044.46	0.00	2220.43	
				1	4	1.250	992.86	-1708.54	-1927.38	-20.80
				2	4	1.250	943.71	1708.28	-2296.63	
33	-3.90	24.0	-84.0	1	2	1.000	-1011.73	2936.70	1710.63	80.83
				2	2	1.000	-722.85	-2936.27	2510.88	
				1	4	1.250	992.86	-1708.54	-1927.38	-52.94
				2	4	1.250	943.71	1708.28	-2296.63	
34	0.10	72.0	-84.0	1	2	1.000	-1011.73	2936.70	1710.63	74.35
				2	2	1.000	-722.85	-2936.27	2510.88	
				1	4	1.250	992.86	-1708.54	-1927.38	-48.92
				2	4	1.250	943.71	1708.28	-2296.63	
35	4.10	120.0	-84.0	1	3	1.250	-992.86	1708.54	1927.38	67.99
				2	3	1.250	-943.71	-1708.28	2296.63	
				1	4	1.250	992.86	-1708.54	-1927.38	-44.91
				2	4	1.250	943.71	1708.28	-2296.63	
36	9.10	180.0	-84.0	1	1	1.000	-969.58	0.00	2172.75	64.06
				2	1	1.000	-1044.46	0.00	2220.43	
				1	4	1.250	992.86	-1708.54	-1927.38	-39.88
				2	4	1.250	943.71	1708.28	-2296.63	
37	15.10	252.0	-84.0	1	1	1.000	-969.58	0.00	2172.75	59.73

H. W. Lochner, Inc. PHONE: 859-224-4476
1040 Monarch St. Suite 300 Lexington, KY 40513

PROGRAM: RC-PIER® v4.1.0 LEAP Software Inc., Tampa, Florida
PHONE : TOLL-FREE 1-800-451-5327 TAMPA AREA: 813-985-9170

PROJECT: BONNER BRIDGE - OREGON INLET NORTH CAROLINA

				2	1	1.000	-1044.46	0.00	2220.43	
				1	4	1.250	992.86	-1708.54	-1927.38	-33.86
				2	4	1.250	943.71	1708.28	-2296.63	
38	20.10	312.0	-84.0	1	1	1.000	-969.58	0.00	2172.75	56.12
				2	1	1.000	-1044.46	0.00	2220.43	
				1	4	1.250	992.86	-1708.54	-1927.38	-28.83
				2	4	1.250	943.71	1708.28	-2296.63	
39	24.10	360.0	-84.0	1	1	1.000	-969.58	0.00	2172.75	53.23
				2	1	1.000	-1044.46	0.00	2220.43	
				1	4	1.250	992.86	-1708.54	-1927.38	-24.82
				2	4	1.250	943.71	1708.28	-2296.63	
40	28.10	408.0	-84.0	1	1	1.000	-969.58	0.00	2172.75	50.35
				2	1	1.000	-1044.46	0.00	2220.43	
				1	4	1.250	992.86	-1708.54	-1927.38	-20.80
				2	4	1.250	943.71	1708.28	-2296.63	

Pile Reactions, Service (After the reduction of overstress allowance):

Pile	Loc(X) ft	X in	Z in	Column Loads col#	comb	Ovs	P, kips	Mxx, kft	Mzz, kft	Pile Reac. kips
1	-3.90	24.0	84.0	1	2	1.000	-1011.73	2936.70	1710.63	80.84
				2	2	1.000	-722.85	-2936.27	2510.88	
				1	4	1.250	992.86	-1708.54	-1927.38	-42.36
				2	4	1.250	943.71	1708.28	-2296.63	
2	0.10	72.0	84.0	1	2	1.000	-1011.73	2936.70	1710.63	74.36
				2	2	1.000	-722.85	-2936.27	2510.88	
				1	4	1.250	992.86	-1708.54	-1927.38	-39.14
				2	4	1.250	943.71	1708.28	-2296.63	
3	4.10	120.0	84.0	1	2	1.000	-1011.73	2936.70	1710.63	67.87
				2	2	1.000	-722.85	-2936.27	2510.88	
				1	4	1.250	992.86	-1708.54	-1927.38	-35.93
				2	4	1.250	943.71	1708.28	-2296.63	
4	9.10	180.0	84.0	1	1	1.000	-969.58	0.00	2172.75	64.06
				2	1	1.000	-1044.46	0.00	2220.43	
				1	4	1.250	992.86	-1708.54	-1927.38	-31.91
				2	4	1.250	943.71	1708.28	-2296.63	
5	15.10	252.0	84.0	1	1	1.000	-969.58	0.00	2172.75	59.73
				2	1	1.000	-1044.46	0.00	2220.43	
				1	4	1.250	992.86	-1708.54	-1927.38	-27.09
				2	4	1.250	943.71	1708.28	-2296.63	
6	20.10	312.0	84.0	1	1	1.000	-969.58	0.00	2172.75	56.12
				2	1	1.000	-1044.46	0.00	2220.43	
				1	4	1.250	992.86	-1708.54	-1927.38	-23.07
				2	4	1.250	943.71	1708.28	-2296.63	
7	24.10	360.0	84.0	1	1	1.000	-969.58	0.00	2172.75	53.23
				2	1	1.000	-1044.46	0.00	2220.43	
				1	4	1.250	992.86	-1708.54	-1927.38	-19.85
				2	4	1.250	943.71	1708.28	-2296.63	
8	28.10	408.0	84.0	1	1	1.000	-969.58	0.00	2172.75	50.35
				2	1	1.000	-1044.46	0.00	2220.43	
				1	4	1.250	992.86	-1708.54	-1927.38	-16.64
				2	4	1.250	943.71	1708.28	-2296.63	
9	-3.90	24.0	48.0	1	2	1.000	-1011.73	2936.70	1710.63	80.84
				2	2	1.000	-722.85	-2936.27	2510.88	
				1	4	1.250	992.86	-1708.54	-1927.38	-42.36
				2	4	1.250	943.71	1708.28	-2296.63	
10	0.10	72.0	48.0	1	2	1.000	-1011.73	2936.70	1710.63	74.36

H. W. Lochner, Inc. PHONE: 859-224-4476
1040 Monarch St. Suite 300 Lexington, KY 40513

PROGRAM: RC-PIER® v4.1.0 LEAP Software Inc., Tampa, Florida
PHONE : TOLL-FREE 1-800-451-5327 TAMPA AREA: 813-985-9170

PROJECT: BONNER BRIDGE - OREGON INLET NORTH CAROLINA

				2	2	1.000	-722.85	-2936.27	2510.88	
				1	4	1.250	992.86	-1708.54	-1927.38	-39.14
				2	4	1.250	943.71	1708.28	-2296.63	
11	4.10	120.0	48.0	1	2	1.000	-1011.73	2936.70	1710.63	67.87
				2	2	1.000	-722.85	-2936.27	2510.88	
				1	4	1.250	992.86	-1708.54	-1927.38	-35.93
				2	4	1.250	943.71	1708.28	-2296.63	
12	9.10	180.0	48.0	1	1	1.000	-969.58	0.00	2172.75	64.06
				2	1	1.000	-1044.46	0.00	2220.43	
				1	4	1.250	992.86	-1708.54	-1927.38	-31.91
				2	4	1.250	943.71	1708.28	-2296.63	
13	15.10	252.0	48.0	1	1	1.000	-969.58	0.00	2172.75	59.73
				2	1	1.000	-1044.46	0.00	2220.43	
				1	4	1.250	992.86	-1708.54	-1927.38	-27.09
				2	4	1.250	943.71	1708.28	-2296.63	
14	20.10	312.0	48.0	1	1	1.000	-969.58	0.00	2172.75	56.12
				2	1	1.000	-1044.46	0.00	2220.43	
				1	4	1.250	992.86	-1708.54	-1927.38	-23.07
				2	4	1.250	943.71	1708.28	-2296.63	
15	24.10	360.0	48.0	1	1	1.000	-969.58	0.00	2172.75	53.23
				2	1	1.000	-1044.46	0.00	2220.43	
				1	4	1.250	992.86	-1708.54	-1927.38	-19.85
				2	4	1.250	943.71	1708.28	-2296.63	
16	28.10	408.0	48.0	1	1	1.000	-969.58	0.00	2172.75	50.35
				2	1	1.000	-1044.46	0.00	2220.43	
				1	4	1.250	992.86	-1708.54	-1927.38	-16.64
				2	4	1.250	943.71	1708.28	-2296.63	
17	-3.90	24.0	0.0	1	2	1.000	-1011.73	2936.70	1710.63	80.84
				2	2	1.000	-722.85	-2936.27	2510.88	
				1	4	1.250	992.86	-1708.54	-1927.38	-42.36
				2	4	1.250	943.71	1708.28	-2296.63	
18	0.10	72.0	0.0	1	2	1.000	-1011.73	2936.70	1710.63	74.35
				2	2	1.000	-722.85	-2936.27	2510.88	
				1	4	1.250	992.86	-1708.54	-1927.38	-39.14
				2	4	1.250	943.71	1708.28	-2296.63	
19	4.10	120.0	0.0	1	2	1.000	-1011.73	2936.70	1710.63	67.87
				2	2	1.000	-722.85	-2936.27	2510.88	
				1	4	1.250	992.86	-1708.54	-1927.38	-35.93
				2	4	1.250	943.71	1708.28	-2296.63	
20	9.10	180.0	0.0	1	1	1.000	-969.58	0.00	2172.75	64.06
				2	1	1.000	-1044.46	0.00	2220.43	
				1	4	1.250	992.86	-1708.54	-1927.38	-31.91
				2	4	1.250	943.71	1708.28	-2296.63	
21	15.10	252.0	0.0	1	1	1.000	-969.58	0.00	2172.75	59.73
				2	1	1.000	-1044.46	0.00	2220.43	
				1	4	1.250	992.86	-1708.54	-1927.38	-27.09
				2	4	1.250	943.71	1708.28	-2296.63	
22	20.10	312.0	0.0	1	1	1.000	-969.58	0.00	2172.75	56.12
				2	1	1.000	-1044.46	0.00	2220.43	
				1	4	1.250	992.86	-1708.54	-1927.38	-23.07
				2	4	1.250	943.71	1708.28	-2296.63	
23	24.10	360.0	0.0	1	1	1.000	-969.58	0.00	2172.75	53.23
				2	1	1.000	-1044.46	0.00	2220.43	
				1	4	1.250	992.86	-1708.54	-1927.38	-19.85
				2	4	1.250	943.71	1708.28	-2296.63	
24	28.10	408.0	0.0	1	1	1.000	-969.58	0.00	2172.75	50.35
				2	1	1.000	-1044.46	0.00	2220.43	
				1	4	1.250	992.86	-1708.54	-1927.38	-16.64
				2	4	1.250	943.71	1708.28	-2296.63	
25	-3.90	24.0	-48.0	1	2	1.000	-1011.73	2936.70	1710.63	80.84
				2	2	1.000	-722.85	-2936.27	2510.88	

H. W. Lochner, Inc. PHONE: 859-224-4476
1040 Monarch St. Suite 300 Lexington, KY 40513
SHEET 8 OF 13
JOB NO. HLB#145
PROGRAM: RC-PIER® v4.1.0 LEAP Software Inc., Tampa, Florida
BY JMJ DATE Jun/18/2006
PHONE : TOLL-FREE 1-800-451-5327 TAMPA AREA: 813-985-9170
CKD. DATE

PROJECT: BONNER BRIDGE - OREGON INLET NORTH CAROLINA

				1	4	1.250	992.86	-1708.54	-1927.38	-42.36
				2	4	1.250	943.71	1708.28	-2296.63	
26	0.10	72.0	-48.0	1	2	1.000	-1011.73	2936.70	1710.63	74.35
				2	2	1.000	-722.85	-2936.27	2510.88	
				1	4	1.250	992.86	-1708.54	-1927.38	-39.14
				2	4	1.250	943.71	1708.28	-2296.63	
27	4.10	120.0	-48.0	1	2	1.000	-1011.73	2936.70	1710.63	67.87
				2	2	1.000	-722.85	-2936.27	2510.88	
				1	4	1.250	992.86	-1708.54	-1927.38	-35.93
				2	4	1.250	943.71	1708.28	-2296.63	
28	9.10	180.0	-48.0	1	1	1.000	-969.58	0.00	2172.75	64.06
				2	1	1.000	-1044.46	0.00	2220.43	
				1	4	1.250	992.86	-1708.54	-1927.38	-31.91
				2	4	1.250	943.71	1708.28	-2296.63	
29	15.10	252.0	-48.0	1	1	1.000	-969.58	0.00	2172.75	59.73
				2	1	1.000	-1044.46	0.00	2220.43	
				1	4	1.250	992.86	-1708.54	-1927.38	-27.09
				2	4	1.250	943.71	1708.28	-2296.63	
30	20.10	312.0	-48.0	1	1	1.000	-969.58	0.00	2172.75	56.12
				2	1	1.000	-1044.46	0.00	2220.43	
				1	4	1.250	992.86	-1708.54	-1927.38	-23.07
				2	4	1.250	943.71	1708.28	-2296.63	
31	24.10	360.0	-48.0	1	1	1.000	-969.58	0.00	2172.75	53.23
				2	1	1.000	-1044.46	0.00	2220.43	
				1	4	1.250	992.86	-1708.54	-1927.38	-19.85
				2	4	1.250	943.71	1708.28	-2296.63	
32	28.10	408.0	-48.0	1	1	1.000	-969.58	0.00	2172.75	50.35
				2	1	1.000	-1044.46	0.00	2220.43	
				1	4	1.250	992.86	-1708.54	-1927.38	-16.64
				2	4	1.250	943.71	1708.28	-2296.63	
33	-3.90	24.0	-84.0	1	2	1.000	-1011.73	2936.70	1710.63	80.83
				2	2	1.000	-722.85	-2936.27	2510.88	
				1	4	1.250	992.86	-1708.54	-1927.38	-42.35
				2	4	1.250	943.71	1708.28	-2296.63	
34	0.10	72.0	-84.0	1	2	1.000	-1011.73	2936.70	1710.63	74.35
				2	2	1.000	-722.85	-2936.27	2510.88	
				1	4	1.250	992.86	-1708.54	-1927.38	-39.14
				2	4	1.250	943.71	1708.28	-2296.63	
35	4.10	120.0	-84.0	1	2	1.000	-1011.73	2936.70	1710.63	67.87
				2	2	1.000	-722.85	-2936.27	2510.88	
				1	4	1.250	992.86	-1708.54	-1927.38	-35.93
				2	4	1.250	943.71	1708.28	-2296.63	
36	9.10	180.0	-84.0	1	1	1.000	-969.58	0.00	2172.75	64.06
				2	1	1.000	-1044.46	0.00	2220.43	
				1	4	1.250	992.86	-1708.54	-1927.38	-31.91
				2	4	1.250	943.71	1708.28	-2296.63	
37	15.10	252.0	-84.0	1	1	1.000	-969.58	0.00	2172.75	59.73
				2	1	1.000	-1044.46	0.00	2220.43	
				1	4	1.250	992.86	-1708.54	-1927.38	-27.09
				2	4	1.250	943.71	1708.28	-2296.63	
38	20.10	312.0	-84.0	1	1	1.000	-969.58	0.00	2172.75	56.12
				2	1	1.000	-1044.46	0.00	2220.43	
				1	4	1.250	992.86	-1708.54	-1927.38	-23.07
				2	4	1.250	943.71	1708.28	-2296.63	
39	24.10	360.0	-84.0	1	1	1.000	-969.58	0.00	2172.75	53.23
				2	1	1.000	-1044.46	0.00	2220.43	
				1	4	1.250	992.86	-1708.54	-1927.38	-19.85
				2	4	1.250	943.71	1708.28	-2296.63	
40	28.10	408.0	-84.0	1	1	1.000	-969.58	0.00	2172.75	50.35
				2	1	1.000	-1044.46	0.00	2220.43	
				1	4	1.250	992.86	-1708.54	-1927.38	-16.64

H. W. Lochner, Inc. PHONE: 859-224-4476 | SHEET 9 OF 13
1040 Monarch St. Suite 300 Lexington, KY 40513 | JOB NO. HLB#145
PROGRAM: RC-PIER® v4.1.0 LEAP Software Inc., Tampa, Florida | BY JMJ DATE Jun/18/2006
PHONE : TOLL-FREE 1-800-451-5327 TAMPA AREA: 813-985-9170 | CKD. DATE

PROJECT: BONNER BRIDGE - OREGON INLET NORTH CAROLINA

2	4	1.250	943.71	1708.28	-2296.63

Note:

Only max. force in piles is considered for design.
Pile coordinates X and Z are from the most left edge of the footing.

Max. Pile Reaction Used in Design: (without selfweight and surcharge)
==========

Working Stress pile reaction = 69.30 kips

Reinforcement Schedule:
==========:

Dir	Quantity	Size	Bar dist. in	As total in^2	From ft	To ft	Hook
X	10	# 9	6.00	10.00	0.50	35.50	None
X	26	# 7	22.00	15.60	0.50	35.50	Both
X	31	# 11	51.00	48.36	0.50	35.50	Both
Z	37	# 5	52.02	11.47	----	----	Both
Z	80	# 11	20.86	124.80	----	----	Both
Z	14	# 11	7.27	21.84	----	----	None
Z	37	# 5	5.12	11.47	----	----	Both

Flexure:
========

X direction

Loc ft	Mmax Mmin kft	Comb Comb	Asb_req Asb_req in^2	Asb_prv Asb_prv in^2	Asb_eff Asb_eff in^2	Ast_req Ast_req in^2	Ast_prv Ast_prv in^2	Ast_eff Ast_eff in^2
-5.90	0.0	2	0.00	0.00	0.00	0.00	0.00	0.00
	0.0	2	0.00	0.00	0.00	0.00	0.00	0.00
-5.41	0.0	2	0.00	0.00	0.00	0.00	0.00	0.00
	0.0	2	0.00	0.00	0.00	0.00	0.00	0.00
-4.94	0.0	2	0.00	25.60	9.62	0.00	48.36	13.03
	0.0	2	0.00	25.60	10.14	0.00	48.36	13.03
-4.43	0.0	2	0.00	25.60	20.12	0.00	48.36	27.24
	0.0	2	0.00	25.60	21.20	0.00	48.36	27.24
-3.94	0.0	2	0.00	25.60	24.57	0.00	48.36	41.02
	0.0	2	0.00	25.60	25.60	0.00	48.36	41.02
-3.46	154.0	2	3.05	25.60	25.60	0.00	48.36	48.36
	0.0	2	0.00	25.60	25.60	0.00	48.36	48.36
-2.97	323.4	2	6.49	25.60	25.60	0.00	48.36	48.36
	0.0	2	0.00	25.60	25.60	0.00	48.36	48.36
-2.48	492.8	2	9.97	25.60	25.60	0.00	48.36	48.36
	0.0	2	0.00	25.60	25.60	0.00	48.36	48.36
-1.99	662.2	2	13.48	25.60	25.60	0.00	48.36	48.36
	0.0	2	0.00	25.60	25.60	0.00	48.36	48.36
-1.50	831.6	2	17.03	25.60	25.60	0.00	48.36	48.36
	0.0	2	0.00	25.60	25.60	0.00	48.36	48.36

H. W. Lochner, Inc. PHONE: 859-224-4476
1040 Monarch St. Suite 300 Lexington, KY 40513

JOB NO. HLB#145
PROGRAM: RC-PIER® v4.1.0 LEAP Software Inc., Tampa, Florida | BY JMJ DATE Jun/18/2006
PHONE : TOLL-FREE 1-800-451-5327 TAMPA AREA: 813-985-9170 | CKD. DATE

PROJECT: BONNER BRIDGE - OREGON INLET NORTH CAROLINA

0.00	0.0	2	0.00	25.60	25.60	0.00	48.36	48.36
	0.0	2	0.00	25.60	25.60	0.00	48.36	48.36
1.50	271.1	2	5.42	25.60	25.60	0.00	48.36	48.36
	0.0	2	0.00	25.60	25.60	0.00	48.36	48.36
4.94	0.0	2	0.00	25.60	25.60	0.00	48.36	48.36
	-1834.7	2	0.00	25.60	25.60	30.73	48.36	48.36
6.82	0.0	2	0.00	25.60	25.60	0.00	48.36	48.36
	-2493.8	2	0.00	25.60	25.60	42.22	48.36	48.36
9.48	0.0	2	0.00	25.60	25.60	0.00	48.36	48.36
	-3295.4	2	0.00	25.60	25.60	56.41	48.36 *	48.36
12.14	0.0	2	0.00	25.60	25.60	0.00	48.36	48.36
	-3306.2	2	0.00	25.60	25.60	56.60	48.36 *	48.36
14.79	0.0	2	0.00	25.60	25.60	0.00	48.36	48.36
	-3317.0	2	0.00	25.60	25.60	56.79	48.36 *	48.36
17.45	0.0	2	0.00	25.60	25.60	0.00	48.36	48.36
	-2512.4	2	0.00	25.60	25.60	42.55	48.36	48.36
19.33	0.0	2	0.00	25.60	25.60	0.00	48.36	48.36
	-1868.5	2	0.00	25.60	25.60	31.32	48.36	48.36
22.77	234.1	2	4.67	25.60	25.60	0.00	48.36	48.36
	0.0	2	0.00	25.60	25.60	0.00	48.36	48.36
24.27	0.0	2	0.00	25.60	25.60	0.00	48.36	48.36
	0.0	2	0.00	25.60	25.60	0.00	48.36	48.36
25.77	807.0	2	16.52	25.60	25.60	0.00	48.36	48.36
	0.0	2	0.00	25.60	25.60	0.00	48.36	48.36
26.25	640.3	2	13.03	25.60	25.60	0.00	48.36	48.36
	0.0	2	0.00	25.60	25.60	0.00	48.36	48.36
26.73	473.6	2	9.57	25.60	25.60	0.00	48.36	48.36
	0.0	2	0.00	25.60	25.60	0.00	48.36	48.36
27.21	307.0	2	6.15	25.60	25.60	0.00	48.36	48.36
	0.0	2	0.00	25.60	25.60	0.00	48.36	48.36
27.70	140.3	2	2.78	25.60	25.60	0.00	48.36	48.36
	0.0	2	0.00	25.60	25.60	0.00	48.36	48.36
28.18	0.0	2	0.00	25.60	24.37	0.00	48.36	40.13
	0.0	2	0.00	25.60	25.60	0.00	48.36	40.13
28.66	0.0	2	0.00	25.60	19.62	0.00	48.36	26.57
	0.0	2	0.00	25.60	20.68	0.00	48.36	26.57
29.21	0.0	2	0.00	25.60	8.15	0.00	48.36	11.03
	0.0	2	0.00	25.60	8.59	0.00	48.36	11.03
29.62	0.0	2	0.00	0.00	0.00	0.00	0.00	0.00
	0.0	2	0.00	0.00	0.00	0.00	0.00	0.00
30.10	0.0	2	0.00	0.00	0.00	0.00	0.00	0.00
	0.0	2	0.00	0.00	0.00	0.00	0.00	0.00

Z direction

Loc ft	Mmax kft	Comb	Asb_req in^2	Asb_prv in^2	Asb_eff in^2	Ast_req in^2	Ast_prv in^2	Ast_eff in^2
-3.32	2419.6	2	52.98	158.11	158.11	0.00	11.47	11.47
3.32	2419.6	2	52.98	158.11	158.11	0.00	11.47	11.47

Note:
* The provided reinforcement is not adequate, either less than required or larger than maximum allowed.

One Way Shear:
==========

Col	Dist	Comb	d	V	Vc

H. W. Lochner, Inc. PHONE: 859-224-4476
1040 Monarch St. Suite 300 Lexington, KY 40513

JOB NO. HLB#145
PROGRAM: RC-PIER® v4.1.0 LEAP Software Inc., Tampa, Florida
BY JMJ DATE Jun/18/2006
PHONE : TOLL-FREE 1-800-451-5327 TAMPA AREA: 813-985-9170
CKD. DATE

PROJECT: BONNER BRIDGE - OREGON INLET NORTH CAROLINA

	ft	in	kips	kips
X direction				
1	-4.94	2	39.74	0.0	446.6
	4.94	2	41.25	365.5	463.6
2	19.33	2	41.25	370.8	463.6
	29.21	2	39.74	0.0	446.6
Z direction					
	-6.58	2	39.16	420.2	880.2
	6.58	2	39.16	420.2	880.2

Two Way Shear:
==========

#	Bo ft	Ao ft^2	Comb	Avg. d in	V kips	Vc kips
Columns:						
1	32.55	62.90	2	39.83	1390.0	1451.9
2	32.55	62.90	2	39.83	1381.9	1451.9
Piles - max:						
10	16.19	20.85	2	39.83	0.0	762.7
Piles - min:						
1	6.02	15.61	2	39.83	0.0	283.8

Note:
TWO WAY SHEAR IN FOOTING IS NOT DESIGNED AND STIRRUPS ARE NOT CONSIDERED.

H. W. Lochner, Inc. PHONE: 859-224-4476
1040 Monarch St. Suite 300 Lexington, KY 40513
SHEET 1 OF 12
JOB NO. HLB#145
PROGRAM: RC-PIER® v4.1.0 LEAP Software Inc., Tampa, Florida
BY JMJ DATE Jun/18/2006
PHONE : TOLL-FREE 1-800-451-5327 TAMPA AREA: 813-985-9170
CKD. DATE

PROJECT: BONNER BRIDGE - OREGON INLET NORTH CAROLINA

JMJ 7/06
WDB 7/06

PROJECT DATA
==========

Project : BONNER BRIDGE - OREGON INLET NORTH CAROLINA
User Job No.: HLB#145
State : North Carolina State Job No. :
Code : AASHTO STANDARD (17th Edition 2002)
Comments : Bonner Bridge HLB #145 - Load Groups 1-3 (For Ease of Checking) - Per Field Data from HLB #144

H. W. Lochner, Inc. PHONE: 859-224-4476
1040 Monarch St. Suite 300 Lexington, KY 40513

PROGRAM: RC-PIER® v4.1.0 LEAP Software Inc., Tampa, Florida
BY JMJ DATE Jun/18/2006
PHONE : TOLL-FREE 1-800-451-5327 TAMPA AREA: 813-985-9170
CKD. DATE

PROJECT: BONNER BRIDGE - OREGON INLET NORTH CAROLINA

LOADS

Load Cases: 3

Loadcase ID: (L+In)1 Name: Group 1 Loadings
Multiplier = 1.000

Cap loads:

Type	Dir	Arm ft	Mag1 kip,kip/ft, kft	x1/L	Mag2 kip,kip/ft, kft	x2/L
Force	Y	0.00	-1085.87	0.00	----	----
Force	Y	0.00	-1211.48	1.00	----	----
Moment	Z	----	8.72	0.00	----	----
Moment	Z	----	70.72	1.00	----	----

Loadcase ID: (L+Ip)1 Name: Group 2 Loadings
Multiplier = 1.000

Cap loads:

Type	Dir	Arm ft	Mag1 kip,kip/ft, kft	x1/L	Mag2 kip,kip/ft, kft	x2/L
Force	Y	0.00	-1123.69	0.00	----	----
Force	Y	0.00	-823.58	1.00	----	----
Moment	X	----	-3054.97	1.00	----	----
Moment	X	----	3055.43	0.00	----	----
Moment	Z	----	-372.80	0.00	----	----
Moment	Z	----	447.30	1.00	----	----

Loadcase ID: W1 Name: Group 3 Loadings
Multiplier = 1.000

Cap loads:

Type	Dir	Arm ft	Mag1 kip,kip/ft, kft	x1/L	Mag2 kip,kip/ft, kft	x2/L
Force	Y	0.00	-1104.01	0.00	----	----
Force	Y	0.00	-1053.30	1.00	----	----
Moment	X	----	-1777.33	1.00	----	----
Moment	X	----	1777.61	0.00	----	----
Moment	Z	----	-147.20	0.00	----	----
Moment	Z	----	224.67	1.00	----	----

Selected load groups:

SERVICE GROUP I
SERVICE GROUP IB
SERVICE GROUP II

H. W. Lochner, Inc. PHONE: 859-224-4476
1040 Monarch St. Suite 300 Lexington, KY 40513
SHEET 3 OF 12
JOB NO. HLB#145
PROGRAM: RC-PIER® v4.1.0 LEAP Software Inc., Tampa, Florida
BY JMJ DATE Jun/18/2006
PHONE : TOLL-FREE 1-800-451-5327 TAMPA AREA: 813-985-9170
CKD. DATE

PROJECT: BONNER BRIDGE - OREGON INLET NORTH CAROLINA

COMBINED FOOTING DESIGN

Code: AASHTO STANDARD (17th Edition 2002) - Service Load Design
Units: US

Geometry:
=========

Name : 1
Shape : Rectangular, Type : Pile/Shaft Cap

Bf(X) = 36.00 ft, Hf(Z) = 18.00 ft, Thickness(Y) = 57.00 in

Footing concentric.
Columns located on the footing:
Column No. 1 at x = 0.00 ft, Rectangular 36.00 in x 79.63 in
Column No. 2 at x = 24.27 ft, Rectangular 36.00 in x 79.63 in

Ag = 648.00 ft^2, Ix = 952.92 ft^2, Iz = 4208.76 ft^2

Surcharge = 0.00 ksf

Piles: Circular Size: 22.00 in Capacity: 100.00 kips

Design Parameters:
==========

f'c = 3800.00 psi fy = 40000.00 psi
Ec = 3737.2 ksi Es = 29000.0 ksi
Crack control factor z = 130.00 kips/in
Concrete Type : Normal Weight.

Pile Reactions, Service (Without the reduction of overstress allowance):
==========

Pile	Loc(X) ft	X in	Z in	Column Loads col#	comb	Ovs	P, kips	Mxx, kft	Mzz, kft	Pile Reac. kips
1	-3.90	24.0	84.0	1	2	1.000	-1123.65	3054.17	-383.41	82.02
				2	2	1.000	-823.62	-3053.71	447.61	
				1	4	1.250	1103.99	-1776.88	157.99	-54.78
				2	4	1.250	1053.32	1776.60	-224.80	
2	0.10	72.0	84.0	1	2	1.000	-1123.65	3054.17	-383.41	78.77
				2	2	1.000	-823.62	-3053.71	447.61	
				1	4	1.250	1103.99	-1776.88	157.99	-54.37
				2	4	1.250	1053.32	1776.60	-224.80	
3	4.10	120.0	84.0	1	1	1.000	-1085.87	0.00	-2.14	76.46
				2	1	1.000	-1211.48	0.00	70.72	
				1	4	1.250	1103.99	-1776.88	157.99	-53.96
				2	4	1.250	1053.32	1776.60	-224.80	
4	9.10	180.0	84.0	1	1	1.000	-1085.87	0.00	-2.14	78.58
				2	1	1.000	-1211.48	0.00	70.72	
				1	4	1.250	1103.99	-1776.88	157.99	-53.45
				2	4	1.250	1053.32	1776.60	-224.80	
5	15.10	252.0	84.0	1	1	1.000	-1085.87	0.00	-2.14	81.13
				2	1	1.000	-1211.48	0.00	70.72	
				1	4	1.250	1103.99	-1776.88	157.99	-52.84
				2	4	1.250	1053.32	1776.60	-224.80	
6	20.10	312.0	84.0	1	1	1.000	-1085.87	0.00	-2.14	83.26
				2	1	1.000	-1211.48	0.00	70.72	
				1	4	1.250	1103.99	-1776.88	157.99	-52.33

H. W. Lochner, Inc. PHONE: 859-224-4476
1040 Monarch St. Suite 300 Lexington, KY 40513

PROGRAM: RC-PIER® v4.1.0 LEAP Software Inc., Tampa, Florida

PHONE : TOLL-FREE 1-800-451-5327 TAMPA AREA: 813-985-9170

PROJECT: BONNER BRIDGE - OREGON INLET NORTH CAROLINA

				2	4	1.250	1053.32	1776.60	-224.80	
7	24.10	360.0	84.0	1	1	1.000	-1085.87	0.00	-2.14	84.96
				2	1	1.000	-1211.48	0.00	70.72	
				1	4	1.250	1103.99	-1776.88	157.99	-51.92
				2	4	1.250	1053.32	1776.60	-224.80	
8	28.10	408.0	84.0	1	1	1.000	-1085.87	0.00	-2.14	86.66
				2	1	1.000	-1211.48	0.00	70.72	
				1	4	1.250	1103.99	-1776.88	157.99	-51.51
				2	4	1.250	1053.32	1776.60	-224.80	
9	-3.90	24.0	48.0	1	2	1.000	-1123.65	3054.17	-383.41	80.21
				2	2	1.000	-823.62	-3053.71	447.61	
				1	4	1.250	1103.99	-1776.88	157.99	-51.44
				2	4	1.250	1053.32	1776.60	-224.80	
10	0.10	72.0	48.0	1	2	1.000	-1123.65	3054.17	-383.41	76.96
				2	2	1.000	-823.62	-3053.71	447.61	
				1	4	1.250	1103.99	-1776.88	157.99	-51.04
				2	4	1.250	1053.32	1776.60	-224.80	
11	4.10	120.0	48.0	1	1	1.000	-1085.87	0.00	-2.14	74.07
				2	1	1.000	-1211.48	0.00	70.72	
				1	4	1.250	1103.99	-1776.88	157.99	-50.63
				2	4	1.250	1053.32	1776.60	-224.80	
12	9.10	180.0	48.0	1	1	1.000	-1085.87	0.00	-2.14	76.19
				2	1	1.000	-1211.48	0.00	70.72	
				1	4	1.250	1103.99	-1776.88	157.99	-50.12
				2	4	1.250	1053.32	1776.60	-224.80	
13	15.10	252.0	48.0	1	1	1.000	-1085.87	0.00	-2.14	78.74
				2	1	1.000	-1211.48	0.00	70.72	
				1	4	1.250	1103.99	-1776.88	157.99	-49.51
				2	4	1.250	1053.32	1776.60	-224.80	
14	20.10	312.0	48.0	1	1	1.000	-1085.87	0.00	-2.14	80.87
				2	1	1.000	-1211.48	0.00	70.72	
				1	4	1.250	1103.99	-1776.88	157.99	-49.00
				2	4	1.250	1053.32	1776.60	-224.80	
15	24.10	360.0	48.0	1	1	1.000	-1085.87	0.00	-2.14	82.57
				2	1	1.000	-1211.48	0.00	70.72	
				1	4	1.250	1103.99	-1776.88	157.99	-48.59
				2	4	1.250	1053.32	1776.60	-224.80	
16	28.10	408.0	48.0	1	1	1.000	-1085.87	0.00	-2.14	84.27
				2	1	1.000	-1211.48	0.00	70.72	
				1	4	1.250	1103.99	-1776.88	157.99	-48.18
				2	4	1.250	1053.32	1776.60	-224.80	
17	-3.90	24.0	0.0	1	2	1.000	-1123.65	3054.17	-383.41	77.80
				2	2	1.000	-823.62	-3053.71	447.61	
				1	4	1.250	1103.99	-1776.88	157.99	-47.00
				2	4	1.250	1053.32	1776.60	-224.80	
18	0.10	72.0	0.0	1	2	1.000	-1123.65	3054.17	-383.41	74.55
				2	2	1.000	-823.62	-3053.71	447.61	
				1	4	1.250	1103.99	-1776.88	157.99	-46.59
				2	4	1.250	1053.32	1776.60	-224.80	
19	4.10	120.0	0.0	1	2	1.000	-1123.65	3054.17	-383.41	71.30
				2	2	1.000	-823.62	-3053.71	447.61	
				1	4	1.250	1103.99	-1776.88	157.99	-46.18
				2	4	1.250	1053.32	1776.60	-224.80	
20	9.10	180.0	0.0	1	1	1.000	-1085.87	0.00	-2.14	73.01
				2	1	1.000	-1211.48	0.00	70.72	
				1	4	1.250	1103.99	-1776.88	157.99	-45.67
				2	4	1.250	1053.32	1776.60	-224.80	
21	15.10	252.0	0.0	1	1	1.000	-1085.87	0.00	-2.14	75.56
				2	1	1.000	-1211.48	0.00	70.72	
				1	4	1.250	1103.99	-1776.88	157.99	-45.06
				2	4	1.250	1053.32	1776.60	-224.80	

H. W. Lochner, Inc. PHONE: 859-224-4476
1040 Monarch St. Suite 300 Lexington, KY 40513

PROJECT: BONNER BRIDGE - OREGON INLET NORTH CAROLINA

22	20.10	312.0	0.0	1	1	1.000	-1085.87	0.00	-2.14	77.68
				2	1	1.000	-1211.48	0.00	70.72	
				1	4	1.250	1103.99	-1776.88	157.99	-44.55
				2	4	1.250	1053.32	1776.60	-224.80	
23	24.10	360.0	0.0	1	1	1.000	-1085.87	0.00	-2.14	79.38
				2	1	1.000	-1211.48	0.00	70.72	
				1	4	1.250	1103.99	-1776.88	157.99	-44.15
				2	4	1.250	1053.32	1776.60	-224.80	
24	28.10	408.0	0.0	1	1	1.000	-1085.87	0.00	-2.14	81.08
				2	1	1.000	-1211.48	0.00	70.72	
				1	4	1.250	1103.99	-1776.88	157.99	-43.74
				2	4	1.250	1053.32	1776.60	-224.80	
25	-3.90	24.0	-48.0	1	2	1.000	-1123.65	3054.17	-383.41	75.39
				2	2	1.000	-823.62	-3053.71	447.61	
				1	4	1.250	1103.99	-1776.88	157.99	-42.56
				2	4	1.250	1053.32	1776.60	-224.80	
26	0.10	72.0	-48.0	1	2	1.000	-1123.65	3054.17	-383.41	72.14
				2	2	1.000	-823.62	-3053.71	447.61	
				1	4	1.250	1103.99	-1776.88	157.99	-42.15
				2	4	1.250	1053.32	1776.60	-224.80	
27	4.10	120.0	-48.0	1	2	1.000	-1123.65	3054.17	-383.41	68.89
				2	2	1.000	-823.62	-3053.71	447.61	
				1	4	1.250	1103.99	-1776.88	157.99	-41.74
				2	4	1.250	1053.32	1776.60	-224.80	
28	9.10	180.0	-48.0	1	1	1.000	-1085.87	0.00	-2.14	69.82
				2	1	1.000	-1211.48	0.00	70.72	
				1	4	1.250	1103.99	-1776.88	157.99	-41.23
				2	4	1.250	1053.32	1776.60	-224.80	
29	20.10	312.0	-48.0	1	1	1.000	-1085.87	0.00	-2.14	74.49
				2	1	1.000	-1211.48	0.00	70.72	
				1	4	1.250	1103.99	-1776.88	157.99	-40.11
				2	4	1.250	1053.32	1776.60	-224.80	
30	24.10	360.0	-48.0	1	1	1.000	-1085.87	0.00	-2.14	76.19
				2	1	1.000	-1211.48	0.00	70.72	
				1	4	1.250	1103.99	-1776.88	157.99	-39.70
				2	4	1.250	1053.32	1776.60	-224.80	
31	0.10	72.0	-84.0	1	2	1.000	-1123.65	3054.17	-383.41	70.33
				2	2	1.000	-823.62	-3053.71	447.61	
				1	4	1.250	1103.99	-1776.88	157.99	-38.82
				2	4	1.250	1053.32	1776.60	-224.80	
32	4.10	120.0	-84.0	1	2	1.000	-1123.65	3054.17	-383.41	67.08
				2	2	1.000	-823.62	-3053.71	447.61	
				1	4	1.250	1103.99	-1776.88	157.99	-38.41
				2	4	1.250	1053.32	1776.60	-224.80	
33	9.10	180.0	-84.0	1	1	1.000	-1085.87	0.00	-2.14	67.43
				2	1	1.000	-1211.48	0.00	70.72	
				1	4	1.250	1103.99	-1776.88	157.99	-37.90
				2	4	1.250	1053.32	1776.60	-224.80	
34	15.10	252.0	-84.0	1	1	1.000	-1085.87	0.00	-2.14	69.98
				2	1	1.000	-1211.48	0.00	70.72	
				1	4	1.250	1103.99	-1776.88	157.99	-37.29
				2	4	1.250	1053.32	1776.60	-224.80	
35	20.10	312.0	-84.0	1	1	1.000	-1085.87	0.00	-2.14	72.11
				2	1	1.000	-1211.48	0.00	70.72	
				1	4	1.250	1103.99	-1776.88	157.99	-36.78
				2	4	1.250	1053.32	1776.60	-224.80	
36	24.10	360.0	-84.0	1	1	1.000	-1085.87	0.00	-2.14	73.81
				2	1	1.000	-1211.48	0.00	70.72	
				1	4	1.250	1103.99	-1776.88	157.99	-36.37
				2	4	1.250	1053.32	1776.60	-224.80	
37	28.10	408.0	-84.0	1	1	1.000	-1085.87	0.00	-2.14	75.51

H. W. Lochner, Inc. PHONE: 859-224-4476
1040 Monarch St. Suite 300 Lexington, KY 40513

PROGRAM: RC-PIER® v4.1.0 LEAP Software Inc., Tampa, Florida
PHONE : TOLL-FREE 1-800-451-5327 TAMPA AREA: 813-985-9170

PROJECT: BONNER BRIDGE - OREGON INLET NORTH CAROLINA

2	1	1.000	-1211.48	0.00	70.72	
1	4	1.250	1103.99	-1776.88	157.99	-35.96
2	4	1.250	1053.32	1776.60	-224.80	

Pile Reactions, Service (After the reduction of overstress allowance):

Pile	Loc(X) ft	X in	Z in	Column Loads col#	comb	Ovs	P, kips	Mxx, kft	Mzz, kft	Pile Reac. kips
1	-3.90	24.0	84.0	1	2	1.000	-1123.65	3054.17	-383.41	82.02
				2	2	1.000	-823.62	-3053.71	447.61	
				1	4	1.250	1103.99	-1776.88	157.99	-43.82
				2	4	1.250	1053.32	1776.60	-224.80	
2	0.10	72.0	84.0	1	2	1.000	-1123.65	3054.17	-383.41	78.77
				2	2	1.000	-823.62	-3053.71	447.61	
				1	4	1.250	1103.99	-1776.88	157.99	-43.49
				2	4	1.250	1053.32	1776.60	-224.80	
3	4.10	120.0	84.0	1	1	1.000	-1085.87	0.00	-2.14	76.46
				2	1	1.000	-1211.48	0.00	70.72	
				1	4	1.250	1103.99	-1776.88	157.99	-43.17
				2	4	1.250	1053.32	1776.60	-224.80	
4	9.10	180.0	84.0	1	1	1.000	-1085.87	0.00	-2.14	78.58
				2	1	1.000	-1211.48	0.00	70.72	
				1	4	1.250	1103.99	-1776.88	157.99	-42.76
				2	4	1.250	1053.32	1776.60	-224.80	
5	15.10	252.0	84.0	1	1	1.000	-1085.87	0.00	-2.14	81.13
				2	1	1.000	-1211.48	0.00	70.72	
				1	4	1.250	1103.99	-1776.88	157.99	-42.27
				2	4	1.250	1053.32	1776.60	-224.80	
6	20.10	312.0	84.0	1	1	1.000	-1085.87	0.00	-2.14	83.26
				2	1	1.000	-1211.48	0.00	70.72	
				1	4	1.250	1103.99	-1776.88	157.99	-41.86
				2	4	1.250	1053.32	1776.60	-224.80	
7	24.10	360.0	84.0	1	1	1.000	-1085.87	0.00	-2.14	84.96
				2	1	1.000	-1211.48	0.00	70.72	
				1	4	1.250	1103.99	-1776.88	157.99	-41.54
				2	4	1.250	1053.32	1776.60	-224.80	
8	28.10	408.0	84.0	1	1	1.000	-1085.87	0.00	-2.14	86.66
				2	1	1.000	-1211.48	0.00	70.72	
				1	4	1.250	1103.99	-1776.88	157.99	-41.21
				2	4	1.250	1053.32	1776.60	-224.80	
9	-3.90	24.0	48.0	1	2	1.000	-1123.65	3054.17	-383.41	80.21
				2	2	1.000	-823.62	-3053.71	447.61	
				1	4	1.250	1103.99	-1776.88	157.99	-41.15
				2	4	1.250	1053.32	1776.60	-224.80	
10	0.10	72.0	48.0	1	2	1.000	-1123.65	3054.17	-383.41	76.96
				2	2	1.000	-823.62	-3053.71	447.61	
				1	4	1.250	1103.99	-1776.88	157.99	-40.83
				2	4	1.250	1053.32	1776.60	-224.80	
11	4.10	120.0	48.0	1	1	1.000	-1085.87	0.00	-2.14	74.07
				2	1	1.000	-1211.48	0.00	70.72	
				1	4	1.250	1103.99	-1776.88	157.99	-40.50
				2	4	1.250	1053.32	1776.60	-224.80	
12	9.10	180.0	48.0	1	1	1.000	-1085.87	0.00	-2.14	76.19
				2	1	1.000	-1211.48	0.00	70.72	
				1	4	1.250	1103.99	-1776.88	157.99	-40.09
				2	4	1.250	1053.32	1776.60	-224.80	
13	15.10	252.0	48.0	1	1	1.000	-1085.87	0.00	-2.14	78.74

H. W. Lochner, Inc. PHONE: 859-224-4476
1040 Monarch St. Suite 300 Lexington, KY 40513

PROGRAM: RC-PIER® v4.1.0 LEAP Software Inc., Tampa, Florida
PHONE : TOLL-FREE 1-800-451-5327 TAMPA AREA: 813-985-9170

PROJECT: BONNER BRIDGE - OREGON INLET NORTH CAROLINA

				2	1	1.000	-1211.48	0.00	70.72	
				1	4	1.250	1103.99	-1776.88	157.99	-39.60
				2	4	1.250	1053.32	1776.60	-224.80	
14	20.10	312.0	48.0	1	1	1.000	-1085.87	0.00	-2.14	80.87
				2	1	1.000	-1211.48	0.00	70.72	
				1	4	1.250	1103.99	-1776.88	157.99	-39.20
				2	4	1.250	1053.32	1776.60	-224.80	
15	24.10	360.0	48.0	1	1	1.000	-1085.87	0.00	-2.14	82.57
				2	1	1.000	-1211.48	0.00	70.72	
				1	4	1.250	1103.99	-1776.88	157.99	-38.87
				2	4	1.250	1053.32	1776.60	-224.80	
16	28.10	408.0	48.0	1	1	1.000	-1085.87	0.00	-2.14	84.27
				2	1	1.000	-1211.48	0.00	70.72	
				1	4	1.250	1103.99	-1776.88	157.99	-38.54
				2	4	1.250	1053.32	1776.60	-224.80	
17	-3.90	24.0	0.0	1	2	1.000	-1123.65	3054.17	-383.41	77.80
				2	2	1.000	-823.62	-3053.71	447.61	
				1	4	1.250	1103.99	-1776.88	157.99	-37.60
				2	4	1.250	1053.32	1776.60	-224.80	
18	0.10	72.0	0.0	1	2	1.000	-1123.65	3054.17	-383.41	74.55
				2	2	1.000	-823.62	-3053.71	447.61	
				1	4	1.250	1103.99	-1776.88	157.99	-37.27
				2	4	1.250	1053.32	1776.60	-224.80	
19	4.10	120.0	0.0	1	2	1.000	-1123.65	3054.17	-383.41	71.30
				2	2	1.000	-823.62	-3053.71	447.61	
				1	4	1.250	1103.99	-1776.88	157.99	-36.95
				2	4	1.250	1053.32	1776.60	-224.80	
20	9.10	180.0	0.0	1	1	1.000	-1085.87	0.00	-2.14	73.01
				2	1	1.000	-1211.48	0.00	70.72	
				1	4	1.250	1103.99	-1776.88	157.99	-36.54
				2	4	1.250	1053.32	1776.60	-224.80	
21	15.10	252.0	0.0	1	1	1.000	-1085.87	0.00	-2.14	75.56
				2	1	1.000	-1211.48	0.00	70.72	
				1	4	1.250	1103.99	-1776.88	157.99	-36.05
				2	4	1.250	1053.32	1776.60	-224.80	
22	20.10	312.0	0.0	1	1	1.000	-1085.87	0.00	-2.14	77.68
				2	1	1.000	-1211.48	0.00	70.72	
				1	4	1.250	1103.99	-1776.88	157.99	-35.64
				2	4	1.250	1053.32	1776.60	-224.80	
23	24.10	360.0	0.0	1	1	1.000	-1085.87	0.00	-2.14	79.38
				2	1	1.000	-1211.48	0.00	70.72	
				1	4	1.250	1103.99	-1776.88	157.99	-35.32
				2	4	1.250	1053.32	1776.60	-224.80	
24	28.10	408.0	0.0	1	1	1.000	-1085.87	0.00	-2.14	81.08
				2	1	1.000	-1211.48	0.00	70.72	
				1	4	1.250	1103.99	-1776.88	157.99	-34.99
				2	4	1.250	1053.32	1776.60	-224.80	
25	-3.90	24.0	-48.0	1	2	1.000	-1123.65	3054.17	-383.41	75.39
				2	2	1.000	-823.62	-3053.71	447.61	
				1	4	1.250	1103.99	-1776.88	157.99	-34.05
				2	4	1.250	1053.32	1776.60	-224.80	
26	0.10	72.0	-48.0	1	2	1.000	-1123.65	3054.17	-383.41	72.14
				2	2	1.000	-823.62	-3053.71	447.61	
				1	4	1.250	1103.99	-1776.88	157.99	-33.72
				2	4	1.250	1053.32	1776.60	-224.80	
27	4.10	120.0	-48.0	1	2	1.000	-1123.65	3054.17	-383.41	68.89
				2	2	1.000	-823.62	-3053.71	447.61	
				1	4	1.250	1103.99	-1776.88	157.99	-33.39
				2	4	1.250	1053.32	1776.60	-224.80	
28	9.10	180.0	-48.0	1	1	1.000	-1085.87	0.00	-2.14	69.82
				2	1	1.000	-1211.48	0.00	70.72	

H. W. Lochner, Inc. PHONE: 859-224-4476
1040 Monarch St. Suite 300 Lexington, KY 40513
PROGRAM: RC-PIER® v4.1.0 LEAP Software Inc., Tampa, Florida
PHONE : TOLL-FREE 1-800-451-5327 TAMPA AREA: 813-985-9170

SHEET 8 OF 12
JOB NO. HLB#145
BY JMJ DATE Jun/18/2006
CKD. DATE

PROJECT: BONNER BRIDGE - OREGON INLET NORTH CAROLINA

				1	4	1.250	1103.99	-1776.88	157.99	-32.99
				2	4	1.250	1053.32	1776.60	-224.80	
29	20.10	312.0	-48.0	1	1	1.000	-1085.87	0.00	-2.14	74.49
				2	1	1.000	-1211.48	0.00	70.72	
				1	4	1.250	1103.99	-1776.88	157.99	-32.09
				2	4	1.250	1053.32	1776.60	-224.80	
30	24.10	360.0	-48.0	1	1	1.000	-1085.87	0.00	-2.14	76.19
				2	1	1.000	-1211.48	0.00	70.72	
				1	4	1.250	1103.99	-1776.88	157.99	-31.76
				2	4	1.250	1053.32	1776.60	-224.80	
31	0.10	72.0	-84.0	1	2	1.000	-1123.65	3054.17	-383.41	70.33
				2	2	1.000	-823.62	-3053.71	447.61	
				1	4	1.250	1103.99	-1776.88	157.99	-31.05
				2	4	1.250	1053.32	1776.60	-224.80	
32	4.10	120.0	-84.0	1	2	1.000	-1123.65	3054.17	-383.41	67.08
				2	2	1.000	-823.62	-3053.71	447.61	
				1	4	1.250	1103.99	-1776.88	157.99	-30.73
				2	4	1.250	1053.32	1776.60	-224.80	
33	9.10	180.0	-84.0	1	1	1.000	-1085.87	0.00	-2.14	67.43
				2	1	1.000	-1211.48	0.00	70.72	
				1	4	1.250	1103.99	-1776.88	157.99	-30.32
				2	4	1.250	1053.32	1776.60	-224.80	
34	15.10	252.0	-84.0	1	1	1.000	-1085.87	0.00	-2.14	69.98
				2	1	1.000	-1211.48	0.00	70.72	
				1	4	1.250	1103.99	-1776.88	157.99	-29.83
				2	4	1.250	1053.32	1776.60	-224.80	
35	20.10	312.0	-84.0	1	1	1.000	-1085.87	0.00	-2.14	72.11
				2	1	1.000	-1211.48	0.00	70.72	
				1	4	1.250	1103.99	-1776.88	157.99	-29.42
				2	4	1.250	1053.32	1776.60	-224.80	
36	24.10	360.0	-84.0	1	1	1.000	-1085.87	0.00	-2.14	73.81
				2	1	1.000	-1211.48	0.00	70.72	
				1	4	1.250	1103.99	-1776.88	157.99	-29.10
				2	4	1.250	1053.32	1776.60	-224.80	
37	28.10	408.0	-84.0	1	1	1.000	-1085.87	0.00	-2.14	75.51
				2	1	1.000	-1211.48	0.00	70.72	
				1	4	1.250	1103.99	-1776.88	157.99	-28.77
				2	4	1.250	1053.32	1776.60	-224.80	

Note:

Only max. force in piles is considered for design.
Pile coordinates X and Z are from the most left edge of the footing.

Max. Pile Reaction Used in Design: (without selfweight and surcharge)
==========

Working Stress pile reaction = 75.35 kips

Reinforcement Schedule:
==========:

Dir	Quantity	Size	Bar dist. in	As total in^2	From ft	To ft	Hook
X	10	# 9	6.00	10.00	0.50	35.50	None
X	26	# 7	22.00	15.60	0.50	35.50	Both

H. W. Lochner, Inc. PHONE: 859-224-4476
1040 Monarch St. Suite 300 Lexington, KY 40513

PROGRAM: RC-PIER® v4.1.0 LEAP Software Inc., Tampa, Florida | BY JMJ DATE Jun/18/2006
PHONE : TOLL-FREE 1-800-451-5327 TAMPA AREA: 813-985-9170 | CKD. DATE

PROJECT: BONNER BRIDGE - OREGON INLET NORTH CAROLINA

X	31	# 11	51.00	48.36	0.50	35.50	Both
Z	37	# 5	52.02	11.47	----	----	Both
Z	80	# 11	20.86	124.80	----	----	Both
Z	14	# 11	7.27	21.84	----	----	None
Z	37	# 5	5.12	11.47	----	----	Both

Flexure:
========

X direction

Loc ft	Mmax Mmin kft	Comb Comb	Asb_req Asb_req in^2	Asb_prv Asb_prv in^2	Asb_eff Asb_eff in^2	Ast_req Ast_req in^2	Ast_prv Ast_prv in^2	Ast_eff Ast_eff in^2
-5.90	0.0	1	0.00	0.00	0.00	0.00	0.00	0.00
	0.0	1	0.00	0.00	0.00	0.00	0.00	0.00
-5.41	0.0	1	0.00	0.00	0.00	0.00	0.00	0.00
	0.0	1	0.00	0.00	0.00	0.00	0.00	0.00
-4.94	0.0	1	0.00	25.60	10.83	0.00	48.36	14.67
	0.0	1	0.00	25.60	11.42	0.00	48.36	14.67
-4.43	0.0	1	0.00	25.60	22.30	0.00	48.36	30.66
	0.0	1	0.00	25.60	23.52	0.00	48.36	30.66
-3.94	0.0	1	0.00	25.60	25.60	0.00	48.36	46.16
	0.0	1	0.00	25.60	25.60	0.00	48.36	46.16
-3.46	134.0	1	2.65	25.60	25.60	0.00	48.36	48.36
	0.0	1	0.00	25.60	25.60	0.00	48.36	48.36
-2.97	281.3	1	5.62	25.60	25.60	0.00	48.36	48.36
	0.0	1	0.00	25.60	25.60	0.00	48.36	48.36
-2.48	428.7	1	8.62	25.60	25.60	0.00	48.36	48.36
	0.0	1	0.00	25.60	25.60	0.00	48.36	48.36
-1.99	576.0	1	11.66	25.60	25.60	0.00	48.36	48.36
	0.0	1	0.00	25.60	25.60	0.00	48.36	48.36
-1.50	723.4	1	14.72	25.60	25.60	0.00	48.36	48.36
	0.0	1	0.00	25.60	25.60	0.00	48.36	48.36
0.00	0.0	1	0.00	25.60	25.60	0.00	48.36	48.36
	0.0	1	0.00	25.60	25.60	0.00	48.36	48.36
1.50	44.0	1	0.86	25.60	25.60	0.00	48.36	48.36
	0.0	1	0.00	25.60	25.60	0.00	48.36	48.36
4.94	0.0	1	0.00	25.60	25.60	0.00	48.36	48.36
	-2147.3	1	0.00	25.60	25.60	36.02	48.36	48.36
6.82	0.0	1	0.00	25.60	25.60	0.00	48.36	48.36
	-2810.1	1	0.00	25.60	25.60	47.58	48.36	48.36
9.48	0.0	1	0.00	25.60	25.60	0.00	48.36	48.36
	-3605.4	1	0.00	25.60	25.60	61.64	48.36 *	48.36
12.14	0.0	1	0.00	25.60	25.60	0.00	48.36	48.36
	-3540.8	1	0.00	25.60	25.60	60.49	48.36 *	48.36
14.79	0.0	1	0.00	25.60	25.60	0.00	48.36	48.36
	-3476.2	1	0.00	25.60	25.60	59.35	48.36 *	48.36
17.45	0.0	1	0.00	25.60	25.60	0.00	48.36	48.36
	-2702.4	1	0.00	25.60	25.60	45.69	48.36	48.36
19.33	0.0	1	0.00	25.60	25.60	0.00	48.36	48.36
	-2090.0	1	0.00	25.60	25.60	35.02	48.36	48.36
22.77	36.0	1	0.70	25.60	25.60	0.00	48.36	48.36
	0.0	1	0.00	25.60	25.60	0.00	48.36	48.36
24.27	0.0	1	0.00	25.60	25.60	0.00	48.36	48.36
	0.0	1	0.00	25.60	25.60	0.00	48.36	48.36
25.77	702.0	1	14.27	25.60	25.60	0.00	48.36	48.36
	0.0	1	0.00	25.60	25.60	0.00	48.36	48.36

H. W. Lochner, Inc. PHONE: 859-224-4476 | SHEET 10 OF 12
1040 Monarch St. Suite 300 Lexington, KY 40513 | JOB NO. HLB#145
PROGRAM: RC-PIER® v4.1.0 LEAP Software Inc., Tampa, Florida | BY JMJ DATE Jun/18/2006
PHONE : TOLL-FREE 1-800-451-5327 TAMPA AREA: 813-985-9170 | CKD. DATE

PROJECT: BONNER BRIDGE - OREGON INLET NORTH CAROLINA

26.25	557.0	1	11.27	25.60	25.60	0.00	48.36	48.36
	0.0	1	0.00	25.60	25.60	0.00	48.36	48.36
26.73	412.0	1	8.28	25.60	25.60	0.00	48.36	48.36
	0.0	1	0.00	25.60	25.60	0.00	48.36	48.36
27.21	267.1	1	5.33	25.60	25.60	0.00	48.36	48.36
	0.0	1	0.00	25.60	25.60	0.00	48.36	48.36
27.70	122.1	1	2.41	25.60	25.60	0.00	48.36	48.36
	0.0	1	0.00	25.60	25.60	0.00	48.36	48.36
28.18	0.0	1	0.00	25.60	25.48	0.00	48.36	45.16
	0.0	1	0.00	25.60	25.60	0.00	48.36	45.16
28.66	0.0	1	0.00	25.60	22.09	0.00	48.36	29.91
	0.0	1	0.00	25.60	23.28	0.00	48.36	29.91
29.21	0.0	1	0.00	25.60	9.17	0.00	48.36	12.42
	0.0	1	0.00	25.60	9.66	0.00	48.36	12.42
29.62	0.0	1	0.00	0.00	0.00	0.00	0.00	0.00
	0.0	1	0.00	0.00	0.00	0.00	0.00	0.00
30.10	0.0	1	0.00	0.00	0.00	0.00	0.00	0.00
	0.0	1	0.00	0.00	0.00	0.00	0.00	0.00

Z direction

Loc ft	Mmax kft	Comb	Asb_req in^2	Asb_prv in^2	Asb_eff in^2	Ast_req in^2	Ast_prv in^2	Ast_eff in^2
-3.32	2250.8	1	48.98	158.11	158.11	0.00	11.47	11.47
3.32	2631.1	1	57.55	158.11	158.11	0.00	11.47	11.47

Note:
* The provided reinforcement is not adequate, either less than required or larger than maximum allowed.

One Way Shear:
==========

Col	Dist ft	Comb	d in	V kips	Vc kips
X direction					
1	-4.94	1	39.74	0.0	502.7
	4.94	1	41.25	368.8	521.8
2	19.33	1	41.25	356.6	521.8
	29.21	1	39.74	0.0	502.7
Z direction					
	-6.58	1	39.16	399.8	990.7
	6.58	1	39.16	456.9	990.7

Two Way Shear:
==========

#	Bo ft	Ao ft^2	Comb	Avg. d in	V kips	Vc kips

H. W. Lochner, Inc. PHONE: 859-224-4476
1040 Monarch St. Suite 300 Lexington, KY 40513
SHEET 11 OF 12
JOB NO. HLB#145
PROGRAM: RC-PIER® v4.1.0 LEAP Software Inc., Tampa, Florida
BY JMJ DATE Jun/18/2006
PHONE : TOLL-FREE 1-800-451-5327 TAMPA AREA: 813-985-9170
CKD. DATE

PROJECT: BONNER BRIDGE - OREGON INLET NORTH CAROLINA

Columns:

1	32.55	62.90	1	39.83	1407.4	1634.1
2	32.55	62.90	1	39.83	1380.7	1634.1

Piles - max:

10	16.19	20.85	1	39.83	0.0	858.3

Piles - min:

1	6.02	15.61	1	39.83	0.0	319.4

Note:
TWO WAY SHEAR IN FOOTING IS NOT DESIGNED AND STIRRUPS ARE NOT CONSIDERED.

H. W. Lochner, Inc. PHONE: 859-224-4476
1040 Monarch St. Suite 300 Lexington, KY 40513
PROGRAM: RC-PIER® v4.1.0 LEAP Software Inc., Tampa, Florida
PHONE : TOLL-FREE 1-800-451-5327 TAMPA AREA: 813-985-9170

SHEET 1 OF 12
JOB NO. HLB#145
BY JMJ DATE Jun/18/2006
CKD. DATE

PROJECT: BONNER BRIDGE - OREGON INLET NORTH CAROLINA

JMJ 7/06
WDB 7/06

PROJECT DATA
==========

Project : BONNER BRIDGE - OREGON INLET NORTH CAROLINA
User Job No.: HLB#145
State : North Carolina State Job No. :
Code : AASHTO STANDARD (17th Edition 2002)
Comments : Bonner Bridge HLB #145 - Load Groups 4-6 (For Ease of Checking) - Per Field Data from HLB #144

H. W. Lochner, Inc. PHONE: 859-224-4476
1040 Monarch St. Suite 300 Lexington, KY 40513

PROGRAM: RC-PIER® v4.1.0 LEAP Software Inc., Tampa, Florida

PHONE : TOLL-FREE 1-800-451-5327 TAMPA AREA: 813-985-9170

PROJECT: BONNER BRIDGE - OREGON INLET NORTH CAROLINA

LOADS

Load Cases: 3

Loadcase ID: (L+In)1 Name: Group 4 Loadings
Multiplier = 1.000

Cap loads:

Type	Dir	Arm ft	Mag1 kip,kip/ft, kft	x1/L	Mag2 kip,kip/ft, kft	x2/L
Force	Y	0.00	-969.36	0.00	----	----
Force	Y	0.00	-1044.68	1.00	----	----
Moment	Z	----	2186.04	0.00	----	----
Moment	Z	----	2222.23	1.00	----	----

Loadcase ID: (L+Ip)1 Name: Group 5 Loadings
Multiplier = 1.000

Cap loads:

Type	Dir	Arm ft	Mag1 kip,kip/ft, kft	x1/L	Mag2 kip,kip/ft, kft	x2/L
Force	Y	0.00	-1011.55	0.00	----	----
Force	Y	0.00	-723.03	1.00	----	----
Moment	X	----	-2937.48	1.00	----	----
Moment	X	----	2937.91	0.00	----	----
Moment	Z	----	1723.58	0.00	----	----
Moment	Z	----	2512.30	1.00	----	----

Loadcase ID: W1 Name: Group 6 Loadings
Multiplier = 1.000

Cap loads:

Type	Dir	Arm ft	Mag1 kip,kip/ft, kft	x1/L	Mag2 kip,kip/ft, kft	x2/L
Force	Y	0.00	-992.66	0.00	----	----
Force	Y	0.00	-943.91	1.00	----	----
Moment	X	----	-1708.98	1.00	----	----
Moment	X	----	1709.24	0.00	----	----
Moment	Z	----	1940.50	0.00	----	----
Moment	Z	----	2298.23	1.00	----	----

Selected load groups:

SERVICE GROUP I
SERVICE GROUP IB
SERVICE GROUP II

H. W. Lochner, Inc. PHONE: 859-224-4476
1040 Monarch St. Suite 300 Lexington, KY 40513

PROGRAM: RC-PIER® v4.1.0 LEAP Software Inc., Tampa, Florida
BY JMJ DATE Jun/18/2006
PHONE : TOLL-FREE 1-800-451-5327 TAMPA AREA: 813-985-9170
CKD. DATE

PROJECT: BONNER BRIDGE - OREGON INLET NORTH CAROLINA

COMBINED FOOTING DESIGN

Code: AASHTO STANDARD (17th Edition 2002) - Service Load Design
Units: US

Geometry:
=========
Name : 1
Shape : Rectangular, Type : Pile/Shaft Cap

Bf(X) = 36.00 ft, Hf(Z) = 18.00 ft, Thickness(Y) = 57.00 in

Footing concentric.
Columns located on the footing:
Column No. 1 at x = 0.00 ft, Rectangular 36.00 in x 79.63 in
Column No. 2 at x = 24.27 ft, Rectangular 36.00 in x 79.63 in

Ag = 648.00 ft^2, Ix = 952.92 ft^2, Iz = 4208.76 ft^2

Surcharge = 0.00 ksf

Piles: Circular Size: 22.00 in Capacity: 100.00 kips

Design Parameters:
==========
f'c = 3800.00 psi fy = 40000.00 psi
Ec = 3737.2 ksi Es = 29000.0 ksi
Crack control factor z = 130.00 kips/in
Concrete Type : Normal Weight.

Pile Reactions, Service (Without the reduction of overstress allowance):
==========

Pile	Loc(X) ft	X in	Z in	Column Loads col#	comb	Ovs	P, kips	Mxx, kft	Mzz, kft	Pile Reac. kips
1	-3.90	24.0	84.0	1	2	1.000	-1011.73	2936.70	1710.63	90.76
				2	2	1.000	-722.85	-2936.27	2510.88	
				1	4	1.250	992.86	-1708.54	-1927.38	-63.72
				2	4	1.250	943.71	1708.28	-2296.63	
2	0.10	72.0	84.0	1	2	1.000	-1011.73	2936.70	1710.63	83.66
				2	2	1.000	-722.85	-2936.27	2510.88	
				1	4	1.250	992.86	-1708.54	-1927.38	-59.35
				2	4	1.250	943.71	1708.28	-2296.63	
3	4.10	120.0	84.0	1	3	1.250	-992.86	1708.54	1927.38	77.23
				2	3	1.250	-943.71	-1708.28	2296.63	
				1	4	1.250	992.86	-1708.54	-1927.38	-54.98
				2	4	1.250	943.71	1708.28	-2296.63	
4	9.10	180.0	84.0	1	1	1.000	-969.58	0.00	2172.75	73.30
				2	1	1.000	-1044.46	0.00	2220.43	
				1	4	1.250	992.86	-1708.54	-1927.38	-49.52
				2	4	1.250	943.71	1708.28	-2296.63	
5	15.10	252.0	84.0	1	1	1.000	-969.58	0.00	2172.75	68.75
				2	1	1.000	-1044.46	0.00	2220.43	
				1	4	1.250	992.86	-1708.54	-1927.38	-42.96
				2	4	1.250	943.71	1708.28	-2296.63	
6	20.10	312.0	84.0	1	1	1.000	-969.58	0.00	2172.75	64.96
				2	1	1.000	-1044.46	0.00	2220.43	
				1	4	1.250	992.86	-1708.54	-1927.38	-37.50

H. W. Lochner, Inc. PHONE: 859-224-4476
1040 Monarch St. Suite 300 Lexington, KY 40513
SHEET 4 OF 12
JOB NO. HLB#145
PROGRAM: RC-PIER® v4.1.0 LEAP Software Inc., Tampa, Florida
BY JMJ DATE Jun/18/2006
PHONE : TOLL-FREE 1-800-451-5327 TAMPA AREA: 813-985-9170
CKD. DATE

PROJECT: BONNER BRIDGE - OREGON INLET NORTH CAROLINA

				2	4	1.250	943.71	1708.28	-2296.63	
7	24.10	360.0	84.0	1	1	1.000	-969.58	0.00	2172.75	61.93
				2	1	1.000	-1044.46	0.00	2220.43	
				1	4	1.250	992.86	-1708.54	-1927.38	-33.13
				2	4	1.250	943.71	1708.28	-2296.63	
8	28.10	408.0	84.0	1	1	1.000	-969.58	0.00	2172.75	58.89
				2	1	1.000	-1044.46	0.00	2220.43	
				1	4	1.250	992.86	-1708.54	-1927.38	-28.76
				2	4	1.250	943.71	1708.28	-2296.63	
9	-3.90	24.0	48.0	1	2	1.000	-1011.73	2936.70	1710.63	89.33
				2	2	1.000	-722.85	-2936.27	2510.88	
				1	4	1.250	992.86	-1708.54	-1927.38	-60.78
				2	4	1.250	943.71	1708.28	-2296.63	
10	0.10	72.0	48.0	1	2	1.000	-1011.73	2936.70	1710.63	82.23
				2	2	1.000	-722.85	-2936.27	2510.88	
				1	4	1.250	992.86	-1708.54	-1927.38	-56.41
				2	4	1.250	943.71	1708.28	-2296.63	
11	4.10	120.0	48.0	1	3	1.250	-992.86	1708.54	1927.38	75.47
				2	3	1.250	-943.71	-1708.28	2296.63	
				1	4	1.250	992.86	-1708.54	-1927.38	-52.04
				2	4	1.250	943.71	1708.28	-2296.63	
12	9.10	180.0	48.0	1	1	1.000	-969.58	0.00	2172.75	71.40
				2	1	1.000	-1044.46	0.00	2220.43	
				1	4	1.250	992.86	-1708.54	-1927.38	-46.58
				2	4	1.250	943.71	1708.28	-2296.63	
13	15.10	252.0	48.0	1	1	1.000	-969.58	0.00	2172.75	66.85
				2	1	1.000	-1044.46	0.00	2220.43	
				1	4	1.250	992.86	-1708.54	-1927.38	-40.02
				2	4	1.250	943.71	1708.28	-2296.63	
14	20.10	312.0	48.0	1	1	1.000	-969.58	0.00	2172.75	63.06
				2	1	1.000	-1044.46	0.00	2220.43	
				1	4	1.250	992.86	-1708.54	-1927.38	-34.56
				2	4	1.250	943.71	1708.28	-2296.63	
15	24.10	360.0	48.0	1	1	1.000	-969.58	0.00	2172.75	60.03
				2	1	1.000	-1044.46	0.00	2220.43	
				1	4	1.250	992.86	-1708.54	-1927.38	-30.19
				2	4	1.250	943.71	1708.28	-2296.63	
16	28.10	408.0	48.0	1	1	1.000	-969.58	0.00	2172.75	57.00
				2	1	1.000	-1044.46	0.00	2220.43	
				1	4	1.250	992.86	-1708.54	-1927.38	-25.82
				2	4	1.250	943.71	1708.28	-2296.63	
17	-3.90	24.0	0.0	1	2	1.000	-1011.73	2936.70	1710.63	87.42
				2	2	1.000	-722.85	-2936.27	2510.88	
				1	4	1.250	992.86	-1708.54	-1927.38	-56.85
				2	4	1.250	943.71	1708.28	-2296.63	
18	0.10	72.0	0.0	1	2	1.000	-1011.73	2936.70	1710.63	80.32
				2	2	1.000	-722.85	-2936.27	2510.88	
				1	4	1.250	992.86	-1708.54	-1927.38	-52.48
				2	4	1.250	943.71	1708.28	-2296.63	
19	4.10	120.0	0.0	1	2	1.000	-1011.73	2936.70	1710.63	73.22
				2	2	1.000	-722.85	-2936.27	2510.88	
				1	4	1.250	992.86	-1708.54	-1927.38	-48.11
				2	4	1.250	943.71	1708.28	-2296.63	
20	9.10	180.0	0.0	1	1	1.000	-969.58	0.00	2172.75	68.87
				2	1	1.000	-1044.46	0.00	2220.43	
				1	4	1.250	992.86	-1708.54	-1927.38	-42.65
				2	4	1.250	943.71	1708.28	-2296.63	
21	15.10	252.0	0.0	1	1	1.000	-969.58	0.00	2172.75	64.32
				2	1	1.000	-1044.46	0.00	2220.43	
				1	4	1.250	992.86	-1708.54	-1927.38	-36.10
				2	4	1.250	943.71	1708.28	-2296.63	

H. W. Lochner, Inc. PHONE: 859-224-4476
1040 Monarch St. Suite 300 Lexington, KY 40513
SHEET 5 OF 12
JOB NO. HLB#145
PROGRAM: RC-PIER® v4.1.0 LEAP Software Inc., Tampa, Florida
BY JMJ DATE Jun/18/2006
PHONE : TOLL-FREE 1-800-451-5327 TAMPA AREA: 813-985-9170
CKD. DATE

PROJECT: BONNER BRIDGE - OREGON INLET NORTH CAROLINA

22	20.10	312.0	0.0	1	1	1.000	-969.58	0.00	2172.75	60.53
				2	1	1.000	-1044.46	0.00	2220.43	
				1	4	1.250	992.86	-1708.54	-1927.38	-30.64
				2	4	1.250	943.71	1708.28	-2296.63	
23	24.10	360.0	0.0	1	1	1.000	-969.58	0.00	2172.75	57.50
				2	1	1.000	-1044.46	0.00	2220.43	
				1	4	1.250	992.86	-1708.54	-1927.38	-26.27
				2	4	1.250	943.71	1708.28	-2296.63	
24	28.10	408.0	0.0	1	1	1.000	-969.58	0.00	2172.75	54.47
				2	1	1.000	-1044.46	0.00	2220.43	
				1	4	1.250	992.86	-1708.54	-1927.38	-21.90
				2	4	1.250	943.71	1708.28	-2296.63	
25	-3.90	24.0	-48.0	1	2	1.000	-1011.73	2936.70	1710.63	85.51
				2	2	1.000	-722.85	-2936.27	2510.88	
				1	4	1.250	992.86	-1708.54	-1927.38	-52.93
				2	4	1.250	943.71	1708.28	-2296.63	
26	0.10	72.0	-48.0	1	2	1.000	-1011.73	2936.70	1710.63	78.41
				2	2	1.000	-722.85	-2936.27	2510.88	
				1	4	1.250	992.86	-1708.54	-1927.38	-48.56
				2	4	1.250	943.71	1708.28	-2296.63	
27	4.10	120.0	-48.0	1	2	1.000	-1011.73	2936.70	1710.63	71.31
				2	2	1.000	-722.85	-2936.27	2510.88	
				1	4	1.250	992.86	-1708.54	-1927.38	-44.19
				2	4	1.250	943.71	1708.28	-2296.63	
28	9.10	180.0	-48.0	1	1	1.000	-969.58	0.00	2172.75	66.34
				2	1	1.000	-1044.46	0.00	2220.43	
				1	4	1.250	992.86	-1708.54	-1927.38	-38.73
				2	4	1.250	943.71	1708.28	-2296.63	
29	20.10	312.0	-48.0	1	1	1.000	-969.58	0.00	2172.75	58.00
				2	1	1.000	-1044.46	0.00	2220.43	
				1	4	1.250	992.86	-1708.54	-1927.38	-26.71
				2	4	1.250	943.71	1708.28	-2296.63	
30	24.10	360.0	-48.0	1	1	1.000	-969.58	0.00	2172.75	54.97
				2	1	1.000	-1044.46	0.00	2220.43	
				1	4	1.250	992.86	-1708.54	-1927.38	-22.34
				2	4	1.250	943.71	1708.28	-2296.63	
31	0.10	72.0	-84.0	1	2	1.000	-1011.73	2936.70	1710.63	76.98
				2	2	1.000	-722.85	-2936.27	2510.88	
				1	4	1.250	992.86	-1708.54	-1927.38	-45.62
				2	4	1.250	943.71	1708.28	-2296.63	
32	4.10	120.0	-84.0	1	2	1.000	-1011.73	2936.70	1710.63	69.88
				2	2	1.000	-722.85	-2936.27	2510.88	
				1	4	1.250	992.86	-1708.54	-1927.38	-41.25
				2	4	1.250	943.71	1708.28	-2296.63	
33	9.10	180.0	-84.0	1	1	1.000	-969.58	0.00	2172.75	64.44
				2	1	1.000	-1044.46	0.00	2220.43	
				1	4	1.250	992.86	-1708.54	-1927.38	-35.79
				2	4	1.250	943.71	1708.28	-2296.63	
34	15.10	252.0	-84.0	1	1	1.000	-969.58	0.00	2172.75	59.89
				2	1	1.000	-1044.46	0.00	2220.43	
				1	4	1.250	992.86	-1708.54	-1927.38	-29.23
				2	4	1.250	943.71	1708.28	-2296.63	
35	20.10	312.0	-84.0	1	1	1.000	-969.58	0.00	2172.75	56.10
				2	1	1.000	-1044.46	0.00	2220.43	
				1	4	1.250	992.86	-1708.54	-1927.38	-23.77
				2	4	1.250	943.71	1708.28	-2296.63	
36	24.10	360.0	-84.0	1	1	1.000	-969.58	0.00	2172.75	53.07
				2	1	1.000	-1044.46	0.00	2220.43	
				1	4	1.250	992.86	-1708.54	-1927.38	-19.40
				2	4	1.250	943.71	1708.28	-2296.63	
37	28.10	408.0	-84.0	1	1	1.000	-969.58	0.00	2172.75	50.04

H. W. Lochner, Inc. PHONE: 859-224-4476
1040 Monarch St. Suite 300 Lexington, KY 40513

PROGRAM: RC-PIER® v4.1.0 LEAP Software Inc., Tampa, Florida
PHONE : TOLL-FREE 1-800-451-5327 TAMPA AREA: 813-985-9170

PROJECT: BONNER BRIDGE - OREGON INLET NORTH CAROLINA

2	1	1.000	-1044.46	0.00	2220.43	
1	4	1.250	992.86	-1708.54	-1927.38	-15.03
2	4	1.250	943.71	1708.28	-2296.63	

Pile Reactions, Service (After the reduction of overstress allowance):

Pile	Loc(X) ft	X in	Z in	Column Loads col#	comb	Ovs	P, kips	Mxx, kft	Mzz, kft	Pile Reac. kips
1	-3.90	24.0	84.0	1	2	1.000	-1011.73	2936.70	1710.63	90.76
				2	2	1.000	-722.85	-2936.27	2510.88	
				1	4	1.250	992.86	-1708.54	-1927.38	-50.98
				2	4	1.250	943.71	1708.28	-2296.63	
2	0.10	72.0	84.0	1	2	1.000	-1011.73	2936.70	1710.63	83.66
				2	2	1.000	-722.85	-2936.27	2510.88	
				1	4	1.250	992.86	-1708.54	-1927.38	-47.48
				2	4	1.250	943.71	1708.28	-2296.63	
3	4.10	120.0	84.0	1	1	1.000	-969.58	0.00	2172.75	77.09
				2	1	1.000	-1044.46	0.00	2220.43	
				1	4	1.250	992.86	-1708.54	-1927.38	-43.98
				2	4	1.250	943.71	1708.28	-2296.63	
4	9.10	180.0	84.0	1	1	1.000	-969.58	0.00	2172.75	73.30
				2	1	1.000	-1044.46	0.00	2220.43	
				1	4	1.250	992.86	-1708.54	-1927.38	-39.61
				2	4	1.250	943.71	1708.28	-2296.63	
5	15.10	252.0	84.0	1	1	1.000	-969.58	0.00	2172.75	68.75
				2	1	1.000	-1044.46	0.00	2220.43	
				1	4	1.250	992.86	-1708.54	-1927.38	-34.37
				2	4	1.250	943.71	1708.28	-2296.63	
6	20.10	312.0	84.0	1	1	1.000	-969.58	0.00	2172.75	64.96
				2	1	1.000	-1044.46	0.00	2220.43	
				1	4	1.250	992.86	-1708.54	-1927.38	-30.00
				2	4	1.250	943.71	1708.28	-2296.63	
7	24.10	360.0	84.0	1	1	1.000	-969.58	0.00	2172.75	61.93
				2	1	1.000	-1044.46	0.00	2220.43	
				1	4	1.250	992.86	-1708.54	-1927.38	-26.50
				2	4	1.250	943.71	1708.28	-2296.63	
8	28.10	408.0	84.0	1	1	1.000	-969.58	0.00	2172.75	58.89
				2	1	1.000	-1044.46	0.00	2220.43	
				1	4	1.250	992.86	-1708.54	-1927.38	-23.01
				2	4	1.250	943.71	1708.28	-2296.63	
9	-3.90	24.0	48.0	1	2	1.000	-1011.73	2936.70	1710.63	89.33
				2	2	1.000	-722.85	-2936.27	2510.88	
				1	4	1.250	992.86	-1708.54	-1927.38	-48.62
				2	4	1.250	943.71	1708.28	-2296.63	
10	0.10	72.0	48.0	1	2	1.000	-1011.73	2936.70	1710.63	82.23
				2	2	1.000	-722.85	-2936.27	2510.88	
				1	4	1.250	992.86	-1708.54	-1927.38	-45.13
				2	4	1.250	943.71	1708.28	-2296.63	
11	4.10	120.0	48.0	1	1	1.000	-969.58	0.00	2172.75	75.19
				2	1	1.000	-1044.46	0.00	2220.43	
				1	4	1.250	992.86	-1708.54	-1927.38	-41.63
				2	4	1.250	943.71	1708.28	-2296.63	
12	9.10	180.0	48.0	1	1	1.000	-969.58	0.00	2172.75	71.40
				2	1	1.000	-1044.46	0.00	2220.43	
				1	4	1.250	992.86	-1708.54	-1927.38	-37.26
				2	4	1.250	943.71	1708.28	-2296.63	
13	15.10	252.0	48.0	1	1	1.000	-969.58	0.00	2172.75	66.85

H. W. Lochner, Inc. PHONE: 859-224-4476
1040 Monarch St. Suite 300 Lexington, KY 40513
SHEET 7 OF 12
JOB NO. HLB#145
PROGRAM: RC-PIER® v4.1.0 LEAP Software Inc., Tampa, Florida
BY JMJ DATE Jun/18/2006
PHONE : TOLL-FREE 1-800-451-5327 TAMPA AREA: 813-985-9170
CKD. DATE

PROJECT: BONNER BRIDGE - OREGON INLET NORTH CAROLINA

				2	1	1.000	-1044.46	0.00	2220.43	
				1	4	1.250	992.86	-1708.54	-1927.38	-32.02
				2	4	1.250	943.71	1708.28	-2296.63	
14	20.10	312.0	48.0	1	1	1.000	-969.58	0.00	2172.75	63.06
				2	1	1.000	-1044.46	0.00	2220.43	
				1	4	1.250	992.86	-1708.54	-1927.38	-27.65
				2	4	1.250	943.71	1708.28	-2296.63	
15	24.10	360.0	48.0	1	1	1.000	-969.58	0.00	2172.75	60.03
				2	1	1.000	-1044.46	0.00	2220.43	
				1	4	1.250	992.86	-1708.54	-1927.38	-24.15
				2	4	1.250	943.71	1708.28	-2296.63	
16	28.10	408.0	48.0	1	1	1.000	-969.58	0.00	2172.75	57.00
				2	1	1.000	-1044.46	0.00	2220.43	
				1	4	1.250	992.86	-1708.54	-1927.38	-20.65
				2	4	1.250	943.71	1708.28	-2296.63	
17	-3.90	24.0	0.0	1	2	1.000	-1011.73	2936.70	1710.63	87.42
				2	2	1.000	-722.85	-2936.27	2510.88	
				1	4	1.250	992.86	-1708.54	-1927.38	-45.48
				2	4	1.250	943.71	1708.28	-2296.63	
18	0.10	72.0	0.0	1	2	1.000	-1011.73	2936.70	1710.63	80.32
				2	2	1.000	-722.85	-2936.27	2510.88	
				1	4	1.250	992.86	-1708.54	-1927.38	-41.99
				2	4	1.250	943.71	1708.28	-2296.63	
19	4.10	120.0	0.0	1	2	1.000	-1011.73	2936.70	1710.63	73.22
				2	2	1.000	-722.85	-2936.27	2510.88	
				1	4	1.250	992.86	-1708.54	-1927.38	-38.49
				2	4	1.250	943.71	1708.28	-2296.63	
20	9.10	180.0	0.0	1	1	1.000	-969.58	0.00	2172.75	68.87
				2	1	1.000	-1044.46	0.00	2220.43	
				1	4	1.250	992.86	-1708.54	-1927.38	-34.12
				2	4	1.250	943.71	1708.28	-2296.63	
21	15.10	252.0	0.0	1	1	1.000	-969.58	0.00	2172.75	64.32
				2	1	1.000	-1044.46	0.00	2220.43	
				1	4	1.250	992.86	-1708.54	-1927.38	-28.88
				2	4	1.250	943.71	1708.28	-2296.63	
22	20.10	312.0	0.0	1	1	1.000	-969.58	0.00	2172.75	60.53
				2	1	1.000	-1044.46	0.00	2220.43	
				1	4	1.250	992.86	-1708.54	-1927.38	-24.51
				2	4	1.250	943.71	1708.28	-2296.63	
23	24.10	360.0	0.0	1	1	1.000	-969.58	0.00	2172.75	57.50
				2	1	1.000	-1044.46	0.00	2220.43	
				1	4	1.250	992.86	-1708.54	-1927.38	-21.01
				2	4	1.250	943.71	1708.28	-2296.63	
24	28.10	408.0	0.0	1	1	1.000	-969.58	0.00	2172.75	54.47
				2	1	1.000	-1044.46	0.00	2220.43	
				1	4	1.250	992.86	-1708.54	-1927.38	-17.52
				2	4	1.250	943.71	1708.28	-2296.63	
25	-3.90	24.0	-48.0	1	2	1.000	-1011.73	2936.70	1710.63	85.51
				2	2	1.000	-722.85	-2936.27	2510.88	
				1	4	1.250	992.86	-1708.54	-1927.38	-42.35
				2	4	1.250	943.71	1708.28	-2296.63	
26	0.10	72.0	-48.0	1	2	1.000	-1011.73	2936.70	1710.63	78.41
				2	2	1.000	-722.85	-2936.27	2510.88	
				1	4	1.250	992.86	-1708.54	-1927.38	-38.85
				2	4	1.250	943.71	1708.28	-2296.63	
27	4.10	120.0	-48.0	1	2	1.000	-1011.73	2936.70	1710.63	71.31
				2	2	1.000	-722.85	-2936.27	2510.88	
				1	4	1.250	992.86	-1708.54	-1927.38	-35.35
				2	4	1.250	943.71	1708.28	-2296.63	
28	9.10	180.0	-48.0	1	1	1.000	-969.58	0.00	2172.75	66.34
				2	1	1.000	-1044.46	0.00	2220.43	

H. W. Lochner, Inc. PHONE: 859-224-4476
1040 Monarch St. Suite 300 Lexington, KY 40513
SHEET 8 OF 12
JOB NO. HLB#145
PROGRAM: RC-PIER® v4.1.0 LEAP Software Inc., Tampa, Florida
BY JMJ DATE Jun/18/2006
PHONE : TOLL-FREE 1-800-451-5327 TAMPA AREA: 813-985-9170
CKD. DATE

PROJECT: BONNER BRIDGE - OREGON INLET NORTH CAROLINA

				1	4	1.250	992.86	-1708.54	-1927.38	-30.98
				2	4	1.250	943.71	1708.28	-2296.63	
29	20.10	312.0	-48.0	1	1	1.000	-969.58	0.00	2172.75	58.00
				2	1	1.000	-1044.46	0.00	2220.43	
				1	4	1.250	992.86	-1708.54	-1927.38	-21.37
				2	4	1.250	943.71	1708.28	-2296.63	
30	24.10	360.0	-48.0	1	1	1.000	-969.58	0.00	2172.75	54.97
				2	1	1.000	-1044.46	0.00	2220.43	
				1	4	1.250	992.86	-1708.54	-1927.38	-17.87
				2	4	1.250	943.71	1708.28	-2296.63	
31	0.10	72.0	-84.0	1	2	1.000	-1011.73	2936.70	1710.63	76.98
				2	2	1.000	-722.85	-2936.27	2510.88	
				1	4	1.250	992.86	-1708.54	-1927.38	-36.50
				2	4	1.250	943.71	1708.28	-2296.63	
32	4.10	120.0	-84.0	1	2	1.000	-1011.73	2936.70	1710.63	69.88
				2	2	1.000	-722.85	-2936.27	2510.88	
				1	4	1.250	992.86	-1708.54	-1927.38	-33.00
				2	4	1.250	943.71	1708.28	-2296.63	
33	9.10	180.0	-84.0	1	1	1.000	-969.58	0.00	2172.75	64.44
				2	1	1.000	-1044.46	0.00	2220.43	
				1	4	1.250	992.86	-1708.54	-1927.38	-28.63
				2	4	1.250	943.71	1708.28	-2296.63	
34	15.10	252.0	-84.0	1	1	1.000	-969.58	0.00	2172.75	59.89
				2	1	1.000	-1044.46	0.00	2220.43	
				1	4	1.250	992.86	-1708.54	-1927.38	-23.39
				2	4	1.250	943.71	1708.28	-2296.63	
35	20.10	312.0	-84.0	1	1	1.000	-969.58	0.00	2172.75	56.10
				2	1	1.000	-1044.46	0.00	2220.43	
				1	4	1.250	992.86	-1708.54	-1927.38	-19.02
				2	4	1.250	943.71	1708.28	-2296.63	
36	24.10	360.0	-84.0	1	1	1.000	-969.58	0.00	2172.75	53.07
				2	1	1.000	-1044.46	0.00	2220.43	
				1	4	1.250	992.86	-1708.54	-1927.38	-15.52
				2	4	1.250	943.71	1708.28	-2296.63	
37	28.10	408.0	-84.0	1	1	1.000	-969.58	0.00	2172.75	50.04
				2	1	1.000	-1044.46	0.00	2220.43	
				1	4	1.250	992.86	-1708.54	-1927.38	-12.02
				2	4	1.250	943.71	1708.28	-2296.63	

Note:

Only max. force in piles is considered for design.
Pile coordinates X and Z are from the most left edge of the footing.

Max. Pile Reaction Used in Design: (without selfweight and surcharge)
==========

Working Stress pile reaction = 79.69 kips

Reinforcement Schedule:
==========:

Dir	Quantity	Size	Bar dist. in	As total in^2	From ft	To ft	Hook
X	10	# 9	6.00	10.00	0.50	35.50	None
X	26	# 7	22.00	15.60	0.50	35.50	Both

H. W. Lochner, Inc. PHONE: 859-224-4476
1040 Monarch St. Suite 300 Lexington, KY 40513
SHEET 9 OF 12
JOB NO. HLB#145
PROGRAM: RC-PIER® v4.1.0 LEAP Software Inc., Tampa, Florida
BY JMJ DATE Jun/18/2006
PHONE : TOLL-FREE 1-800-451-5327 TAMPA AREA: 813-985-9170
CKD. DATE

PROJECT: BONNER BRIDGE - OREGON INLET NORTH CAROLINA

X	31	# 11	51.00	48.36	0.50	35.50	Both
Z	37	# 5	52.02	11.47	----	----	Both
Z	80	# 11	20.86	124.80	----	----	Both
Z	14	# 11	7.27	21.84	----	----	None
Z	37	# 5	5.12	11.47	----	----	Both

Flexure:
========

X direction

Loc ft	Mmax Mmin kft	Comb Comb	Asb_req Asb_req in^2	Asb_prv Asb_prv in^2	Asb_eff Asb_eff in^2	Ast_req Ast_req in^2	Ast_prv Ast_prv in^2	Ast_eff Ast_eff in^2
-5.90	0.0	2	0.00	0.00	0.00	0.00	0.00	0.00
	0.0	2	0.00	0.00	0.00	0.00	0.00	0.00
-5.41	0.0	2	0.00	0.00	0.00	0.00	0.00	0.00
	0.0	2	0.00	0.00	0.00	0.00	0.00	0.00
-4.94	0.0	2	0.00	25.60	10.83	0.00	48.36	14.67
	0.0	2	0.00	25.60	11.42	0.00	48.36	14.67
-4.43	0.0	2	0.00	25.60	22.30	0.00	48.36	30.66
	0.0	2	0.00	25.60	23.52	0.00	48.36	30.66
-3.94	0.0	2	0.00	25.60	25.60	0.00	48.36	46.16
	0.0	2	0.00	25.60	25.60	0.00	48.36	46.16
-3.46	141.7	2	2.80	25.60	25.60	0.00	48.36	48.36
	0.0	2	0.00	25.60	25.60	0.00	48.36	48.36
-2.97	297.5	2	5.95	25.60	25.60	0.00	48.36	48.36
	0.0	2	0.00	25.60	25.60	0.00	48.36	48.36
-2.48	453.4	2	9.13	25.60	25.60	0.00	48.36	48.36
	0.0	2	0.00	25.60	25.60	0.00	48.36	48.36
-1.99	609.2	2	12.35	25.60	25.60	0.00	48.36	48.36
	0.0	2	0.00	25.60	25.60	0.00	48.36	48.36
-1.50	765.1	2	15.59	25.60	25.60	0.00	48.36	48.36
	0.0	2	0.00	25.60	25.60	0.00	48.36	48.36
0.00	0.0	2	0.00	25.60	25.60	0.00	48.36	48.36
	0.0	2	0.00	25.60	25.60	0.00	48.36	48.36
1.50	46.5	2	0.91	25.60	25.60	0.00	48.36	48.36
	0.0	2	0.00	25.60	25.60	0.00	48.36	48.36
4.94	0.0	2	0.00	25.60	25.60	0.00	48.36	48.36
	-2271.0	2	0.00	25.60	25.60	38.16	48.36	48.36
6.82	0.0	2	0.00	25.60	25.60	0.00	48.36	48.36
	-2971.9	2	0.00	25.60	25.60	50.42	48.36 *	48.36
9.48	0.0	2	0.00	25.60	25.60	0.00	48.36	48.36
	-3813.0	2	0.00	25.60	25.60	65.34	48.36 *	48.36
12.14	0.0	2	0.00	25.60	25.60	0.00	48.36	48.36
	-3744.7	2	0.00	25.60	25.60	64.12	48.36 *	48.36
14.79	0.0	2	0.00	25.60	25.60	0.00	48.36	48.36
	-3676.5	2	0.00	25.60	25.60	62.91	48.36 *	48.36
17.45	0.0	2	0.00	25.60	25.60	0.00	48.36	48.36
	-2858.0	2	0.00	25.60	25.60	48.42	48.36 *	48.36
19.33	0.0	2	0.00	25.60	25.60	0.00	48.36	48.36
	-2210.3	2	0.00	25.60	25.60	37.11	48.36	48.36
22.77	38.1	2	0.75	25.60	25.60	0.00	48.36	48.36
	0.0	2	0.00	25.60	25.60	0.00	48.36	48.36
24.27	0.0	2	0.00	25.60	25.60	0.00	48.36	48.36
	0.0	2	0.00	25.60	25.60	0.00	48.36	48.36
25.77	742.4	2	15.12	25.60	25.60	0.00	48.36	48.36
	0.0	2	0.00	25.60	25.60	0.00	48.36	48.36

H. W. Lochner, Inc. PHONE: 859-224-4476
1040 Monarch St. Suite 300 Lexington, KY 40513

JOB NO. HLB#145
PROGRAM: RC-PIER® v4.1.0 LEAP Software Inc., Tampa, Florida
BY JMJ DATE Jun/18/2006
PHONE : TOLL-FREE 1-800-451-5327 TAMPA AREA: 813-985-9170
CKD. DATE

PROJECT: BONNER BRIDGE - OREGON INLET NORTH CAROLINA

26.25	589.1	2	11.93	25.60	25.60	0.00	48.36	48.36
	0.0	2	0.00	25.60	25.60	0.00	48.36	48.36
26.73	435.8	2	8.77	25.60	25.60	0.00	48.36	48.36
	0.0	2	0.00	25.60	25.60	0.00	48.36	48.36
27.21	282.4	2	5.64	25.60	25.60	0.00	48.36	48.36
	0.0	2	0.00	25.60	25.60	0.00	48.36	48.36
27.70	129.1	2	2.55	25.60	25.60	0.00	48.36	48.36
	0.0	2	0.00	25.60	25.60	0.00	48.36	48.36
28.18	0.0	2	0.00	25.60	25.48	0.00	48.36	45.16
	0.0	2	0.00	25.60	25.60	0.00	48.36	45.16
28.66	0.0	2	0.00	25.60	22.09	0.00	48.36	29.91
	0.0	2	0.00	25.60	23.28	0.00	48.36	29.91
29.21	0.0	2	0.00	25.60	9.17	0.00	48.36	12.42
	0.0	2	0.00	25.60	9.66	0.00	48.36	12.42
29.62	0.0	2	0.00	0.00	0.00	0.00	0.00	0.00
	0.0	2	0.00	0.00	0.00	0.00	0.00	0.00
30.10	0.0	2	0.00	0.00	0.00	0.00	0.00	0.00
	0.0	2	0.00	0.00	0.00	0.00	0.00	0.00

Z direction

Loc ft	Mmax kft	Comb	Asb_req in^2	Asb_prv in^2	Asb_eff in^2	Ast_req in^2	Ast_prv in^2	Ast_eff in^2
-3.32	2380.4	2	51.90	158.11	158.11	0.00	11.47	11.47
3.32	2782.6	2	60.98	158.11	158.11	0.00	11.47	11.47

Note:
* The provided reinforcement is not adequate, either less than required or larger than maximum allowed.

One Way Shear:
==========

Col	Dist ft	Comb	d in	V kips	Vc kips
X direction					
1	-4.94	2	39.74	0.0	502.7
	4.94	2	41.25	390.0	521.8
2	19.33	2	41.25	377.1	521.8
	29.21	2	39.74	0.0	502.7
Z direction					
	-6.58	2	39.16	422.8	990.7
	6.58	2	39.16	483.2	990.7

Two Way Shear:
==========

#	Bo ft	Ao ft^2	Comb	Avg. d in	V kips	Vc kips

H. W. Lochner, Inc. PHONE: 859-224-4476
1040 Monarch St. Suite 300 Lexington, KY 40513
SHEET 11 OF 12
JOB NO. HLB#145
PROGRAM: RC-PIER® v4.1.0 LEAP Software Inc., Tampa, Florida
BY JMJ DATE Jun/18/2006
PHONE : TOLL-FREE 1-800-451-5327 TAMPA AREA: 813-985-9170
CKD. DATE

PROJECT: BONNER BRIDGE - OREGON INLET NORTH CAROLINA

Columns:

1	32.55	62.90	2	39.83	1488.5	1634.1
2	32.55	62.90	2	39.83	1460.2	1634.1

Piles - max:

10	16.19	20.85	2	39.83	0.0	858.3

Piles - min:

1	6.02	15.61	2	39.83	0.0	319.4

Note:
TWO WAY SHEAR IN FOOTING IS NOT DESIGNED AND STIRRUPS ARE NOT CONSIDERED.