LOCHNER

PROJECT: BONNER BRIDGE - OREGON INLET NORTH CAROLINA — JMJ May-06
SUBJECT: PRESTRESSED GIRDER ANALYSIS — WDB Jun-06
BEAM REACTIONS

HIGH LEVEL BENT 143

Beam No.	Self Wt.	Topping (Deck + Haunch)	DL - Precast	Interior Diaphragms	D.L.-Comp	Total D.L.
Exterior						
Span 143	17.40	23.30	0.70	1.00	3.30	45.70
Span 144	68.40				6.27	74.67
Totals	85.80	23.30	0.70	1.00	9.57	120.37
Interior						
Span 143	17.40	21.60	0.70	1.90	3.10	44.70
Span 144	68.04				6.31	74.35
Totals	85.44	21.60	0.70	1.90	9.41	119.05

LIVE LOAD (Bent 143)

HS-20 AXLE LOAD (LFD - APPENDIX A)

Span 143 = 61.5' --> R_{143} = 61.1k
Span 144 = 160.958' --> R_{144} = 77.5k

HS-20 WHEEL LOAD

$W_{143} = R_{143} / 2 = 30.5$ k

w/Impact = $30.5 * \left(\frac{50}{61.5 + 125} + 1 \right) = 38.7$ k

$W_{144} = R_{144} / 2 = 38.8$ k

w/Impact = $38.8 * \left(\frac{50}{160.96 + 125} + 1 \right) = 45.6$ k

Max. NEGATIVE MOMENT

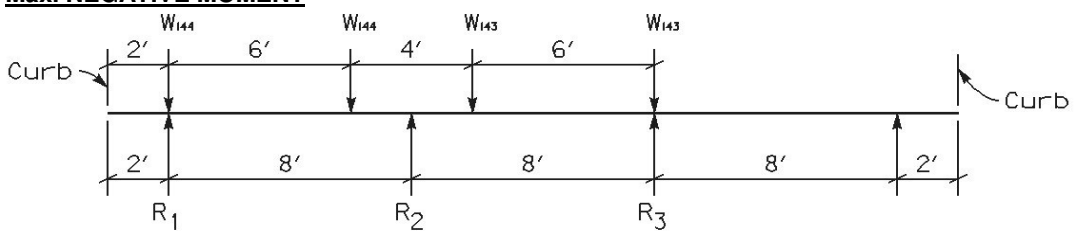

w/ Impact

$R_1 = 45.6 + 45.6 * (2 / 8) = 57.0$ k

$R_2 = (45.6 + 38.7) * (6 / 8) = 63.2$ k

$R_3 = 38.7 + 38.7 * (2 / 8) = 48.4$ k

w/o Impact

$R_1 = 38.8 + 38.8 * (2 / 8) = 48.5$ k

$R_2 = (38.8 + 30.5) * (6 / 8) = 52.0$ k

$R_3 = 30.5 + 30.5 * (2 / 8) = 38.1$ k

H. W. LOCHNER, INC.

PROJECT: BONNER BRIDGE - OREGON INLET NORTH CAROLINA JMJ Jun-06
SUBJECT: HIGH LEVEL BENT ANALYSIS WDB Jun-06
HIGH LEVEL BENTS

LIVE LOAD **(Bent 143)**

MAX. POSITIVE MOMENT

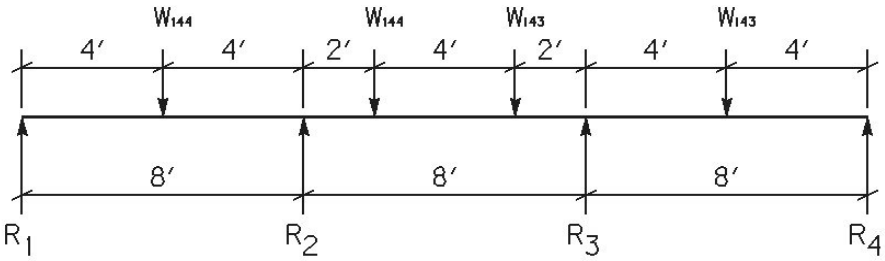

w/ Impact

R_1 = 45.6 * (4 / 8) = 22.8 k

R_2 = 22.8 + 45.6 * (6 / 8) + 38.7 * (2 / 8) = 66.7 k

R_3 = 45.6 * (2 / 8) + 38.7 * (6 / 8) + 38.7 * (4 / 8) = 59.8 k

R_4 = 38.7 * (4 / 8) = 19.4 k

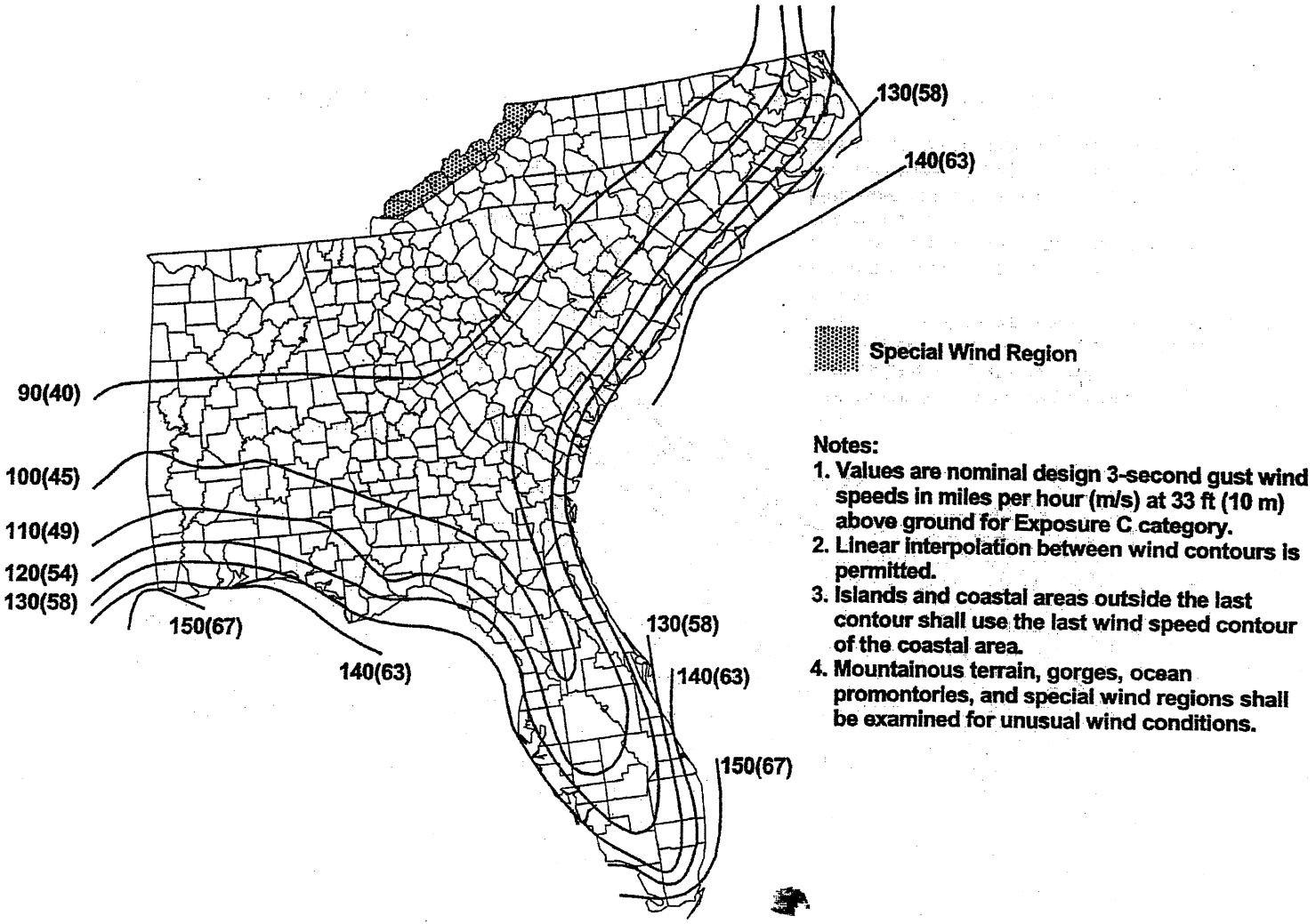

FIGURE 6-1b. Basic Wind Speed—Eastern Gulf of Mexico and Southeastern U.S. Hurricane Coastline

LOADING

Earth Loads

Assume No Earth Loading on Bents or Pile Cap.

Wind Loads (AASHTO 3.15)

Design Wind Speed = 130 MPH (Original Design Speed)

Ratio = (130)^2 / (100)^2 = 1.69

Wind on Superstructure (AASHTO 3.15.2.1) --> SPAN 143

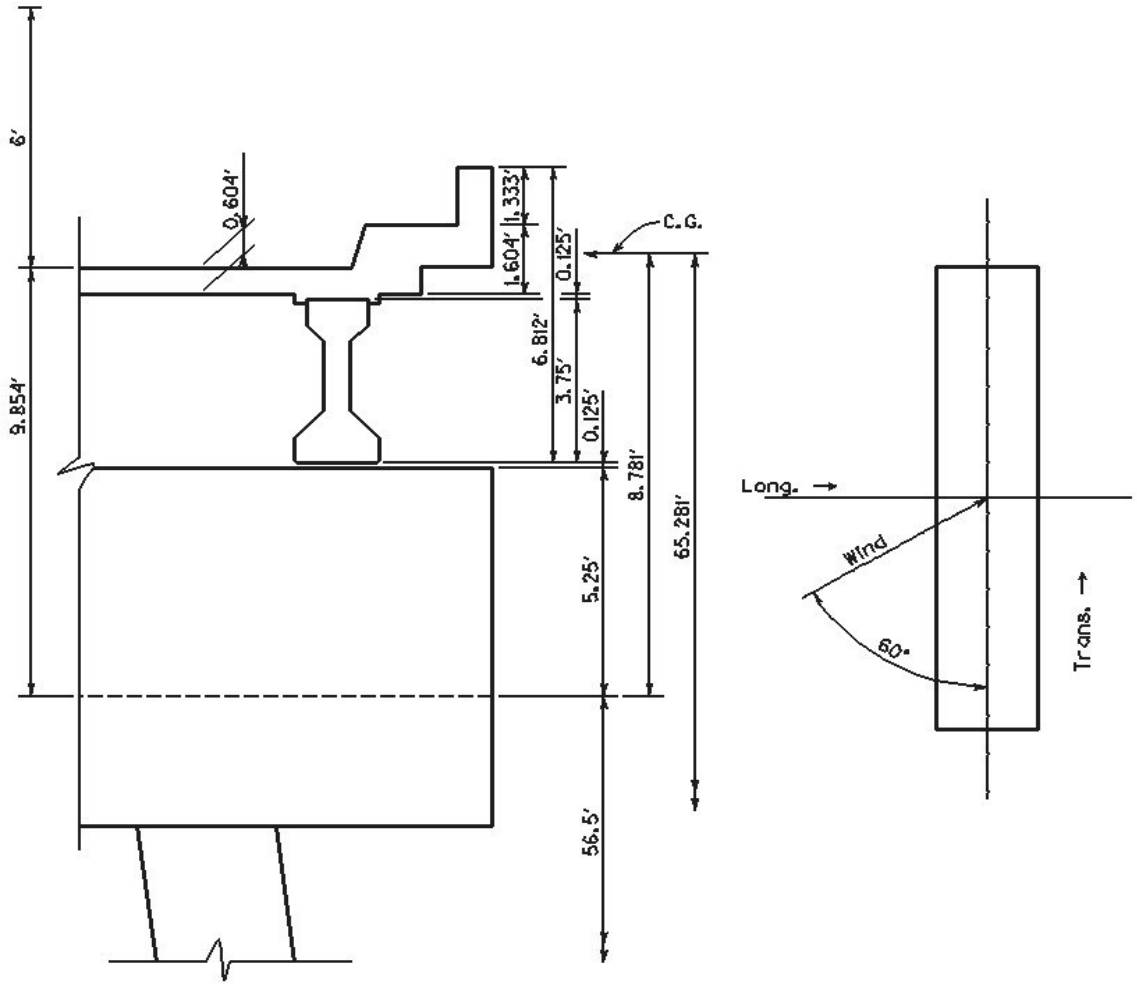

Assume Wind @ 60° Skew

Long. = (0.019 k/Ft^2)(1.69 Ratio) = 0.032 k/Ft^2
Trans. = (0.017 k/Ft^2)(1.69 Ratio) = 0.029 k/Ft^2

Assume Adjacent Bent 142 Takes 1/2 Load

Load Length = 61.583 / 2 = 30.792 Ft.

Long. Force = (0.032 k/Ft^2)(6.812 Ft.) (30.792 Ft.) = 6.712 k
Trans. Force = (0.029 k/Ft^2)(6.812 Ft.) (30.792 Ft.) = 6.083 k

Moment Factor

M_F = 65.281 / 56.50 = 1.155

Modify & Apply to Jt. 2 & 3

Long. Wind	= (	6.712 k)	* (	1.155) /	2 =	3.876 k/Jt
Trans. Wind	= (	6.083 k)	* (	1.155) /	2 =	3.513 k/Jt

Wind on Live Load (AASHTO 3.15.2.1.2) --> SPAN 143

Assume Wind @ 60° Skew & Apply @ 6' above Deck

Long.	=	(	0.038 k/Ft^2)			
Trans.	=	(	0.034 k/Ft^2)			
Long. Force	= (	0.038 k/Ft^2)	* (	30.792 Ft.)	=	1.170 k
Trans. Force	= (	0.034 k/Ft^2)	* (	30.792 Ft.)	=	1.046 k

Moment Factor = (56.500 Ft. + 9.854 Ft. + 6.000 Ft.) / 56.500 Ft. = 1.281

Modify & Apply to Jt. 2 & 3

Long. Wind	= (	1.170 k)	* (	1.281) /	2.000 =	0.749 k/Jt
Trans. Wind	= (	1.046 k)	* (	1.281) /	2.000 =	0.670 k/Jt

Additional Dead Load Due to Voided Slabs

Height = 3.500 Ft.

Thickness = 1.500 Ft.

Weight = (3.500 ') * (1.500 ') * (0.150)k/Ft^3 = 0.788 k/Ft

Wind on Superstructure (AASHTO 3.15.2.1) --> SPAN 144

Average Beam Depth by Area=
[(15')(72+3/4+3/4)+(12')(72+1 5/8+1 5/8)+(53')(72+2+2)]/80'=6.285'

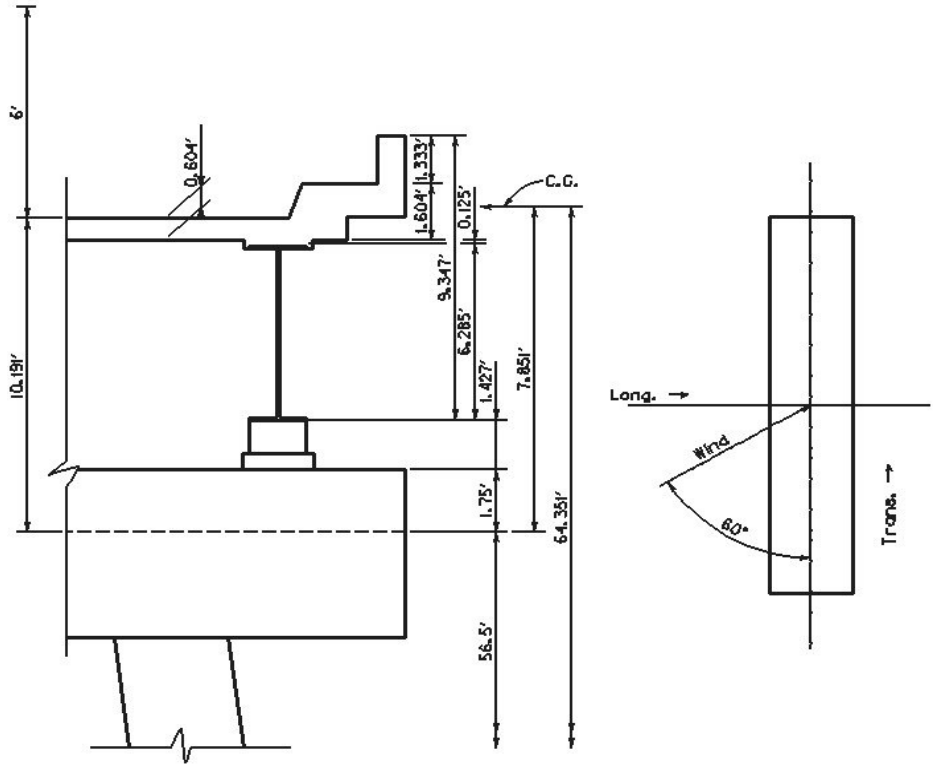

Assume Wind @ 60° Skew

Long. = (0.032 k/Ft^2)
Trans. = (0.029 k/Ft^2)

Assume Bent 144 takes 1/2 Load

Load Length = 160.958 / 2 = 80.479 Ft.

Long. Force = (0.032 k/Ft^2) * (9.347 Ft.) * (80.479 Ft.) = 24.072 k
Trans. Force = (0.029 k/Ft^2) * (9.347 Ft.) * (80.479 Ft.) = 21.815 k

Moment Factor

M_F = (64.351 ' / 56.5 ') = 1.139

Modify & Apply to Jt. 2 & 3

Long. Wind = (24.072 k) * (1.139) / 2.000 = 13.709 k/Jt
Trans. Wind = (21.815 k) * (1.139) / 2.000 = 12.424 k/Jt

Wind on Live Load (AASHTO 3.15.2.1.2) --> SPAN 144

Assume Wind @ 60° Skew & Apply at 6 Ft. above Deck

Long. = (0.038 k/Ft^2)
Trans. = (0.034 k/Ft^2)

Long. Force = (0.038 k/Ft^2) * (80.479 Ft.) = 3.058 k
Trans. Force = (0.034 k/Ft^2) * (80.479 Ft.) = 2.736 k

Moment Factor

M_F = (56.500 + 10.191 + 6) / 56.500 = 1.287

Modify & Apply to Jt. 2 & 3

Long. Wind = (3.058 k) * (1.287) / 2.000 = 1.968 k/Jt
Trans. Wind = (2.736 k) * (1.287) / 2.000 = 1.761 k/Jt

Additional Dead Load - Bearings & Concrete

Apply 1.100k under each Girder on Centerline of Bent.

Wind on Superstructure

Wind Pressure = 0.040 k/Ft^2 * 1.690 = 0.068 k/Ft^2
Long. = 0.068 k/Ft^2 * sin 60.000 = 0.059 k/Ft^2
Trans. = 0.068 k/Ft^2 * cos 60.000 = 0.034 k/Ft^2

Cap

W_z = 0.059 k/Ft^2 * 7.000 Ft. = 0.413 k/Ft *on Members 1-3*
Fx = 0.034 k/Ft^2 *[3.500 Ft. * 4.000 Ft. + (3.5 Ft.) * (1.500 Ft.)] = 0.655 k/Ft *at Jt. 4*

Columns

Members 4 & 5

W_z =	0.059 k/Ft^2	*	3.500 Ft.	=	0.207 k/Ft	
Wx =	0.034 k/Ft^2	*	3.953 Ft.	=	0.134 k/Ft	

Members 7 & 8

W_z =	0.207 k/Ft				
Wx =	0.034 k/Ft^2	*	5.078 Ft.	=	0.173 k/Ft

Members 10 & 11

W_z =	0.207 k/Ft				
Wx =	0.034 k/Ft^2	*	6.132 Ft.	=	0.208 k/Ft

Members 13 & 14

W_z =	0.207 k/Ft^2				
Wx =	0.034 k/Ft^2	*	6.773 Ft.	=	0.230 k/Ft

Struts

Members 6 & 9

W_z =	0.059 k/Ft^2	*	3.500 Ft.	=	0.207 k/Ft

Member 12

W_z =	0.059 k/Ft^2	*	5.000 Ft.	=	0.295 k/Ft

Longitudinal Forces (AASHTO 3.9) --> SPAN 143

Lane Loading

2 Lanes, HS20, No Reduction (AASHTO 3.12.1)

LF = [(0.64 k/Ft * 30.792 ') + 18 k] * 2 Lanes * 0.05 = 3.771 k

Modify & Apply to Jts. 2 & 3

M_F = 1.281 *from Wind on L.L.*

Fz = (3.771 k * 1.281) / 2 = 2.415 k/Jt

Longitudinal Forces (AASHTO 3.9) --> SPAN 144

Lane Loading

2 Lanes, HS20, No Reduction (AASHTO 3.12.1)

LF = [(0.64 k/Ft * 80.479 ') + 18 k] * 2 Lanes * 0.05 = 6.951 k

Modify & Apply to Jts. 2 & 3

M_F = 1.287 *from Wind on L.L.*

Fz = (6.951 k * 1.287) / 2 = 4.473 k/Jt

H. W. LOCHNER, INC.

PROJECT: BONNER BRIDGE - OREGON INLET NORTH CAROLINA JMJ May-06
SUBJECT: HIGH LEVEL BENT ANALYSIS WDB Jun-06
H.L.B. #143

Thermal Forces (AASHTO 3.16)

Longitudinal - Structure Free @ End Piers, No. Long. Forces Do To Temp.

Transverse

Assume $45^{o}\ \Delta T$

Thermal = 0.000006 (AASHTO 8.5.3)

Shrinkage = 0.0002 (AASHTO 8.5.4)

$$\text{Ratio} = \frac{S}{T^{*}\Delta T} = \frac{0.0002}{0.000006 \quad * \quad 45} = 0.741 \qquad \text{use } 1.741$$

Stream Forces (AASHTO 3.18.1)

Tidal, Stream, & Storm Surge Forces Beyond Scope

Seismic Loading (AASHTO 3.1)

Since Acceleration = 4 % --> SPC = A --> No Seismic Analysis Required

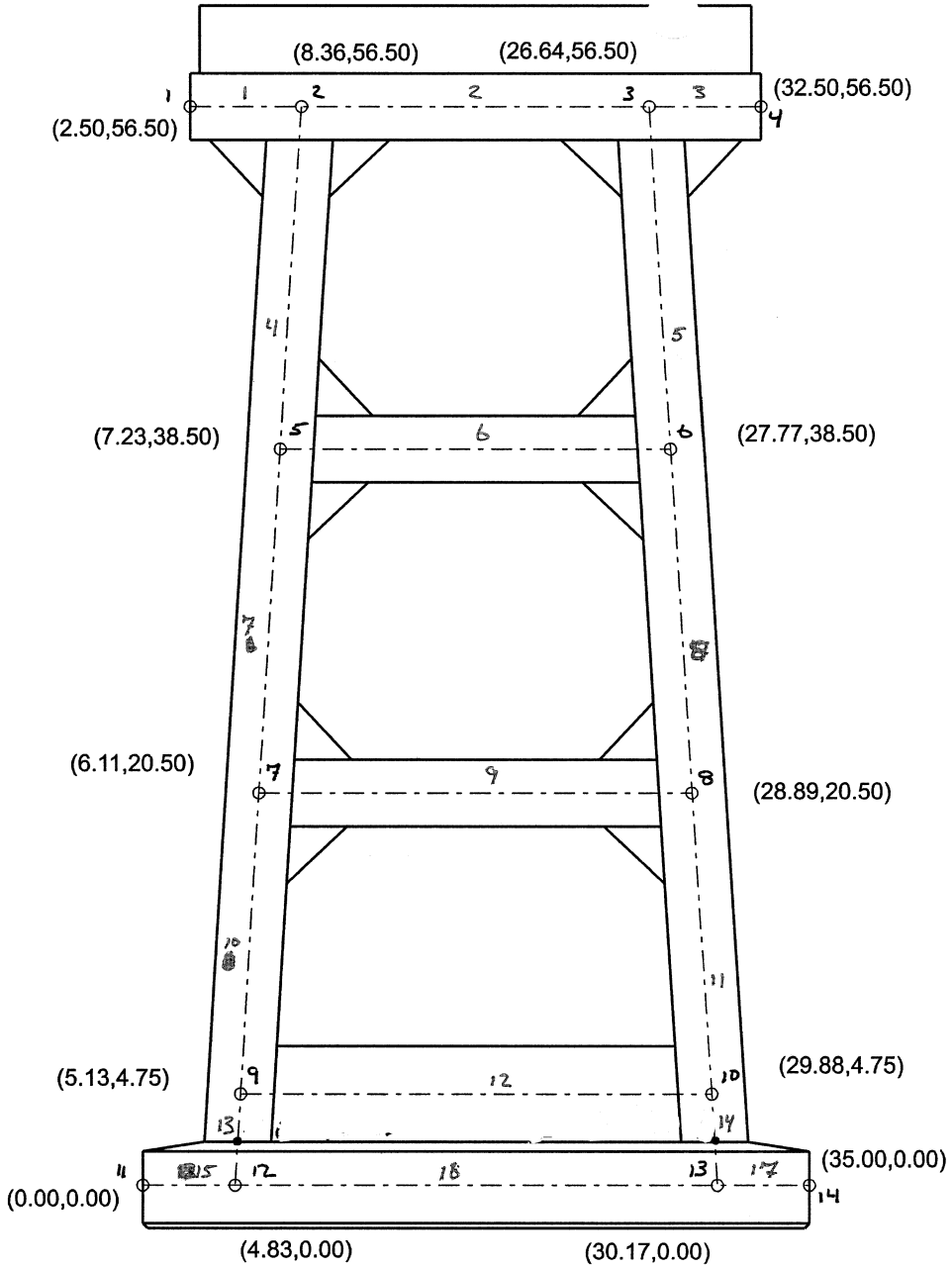

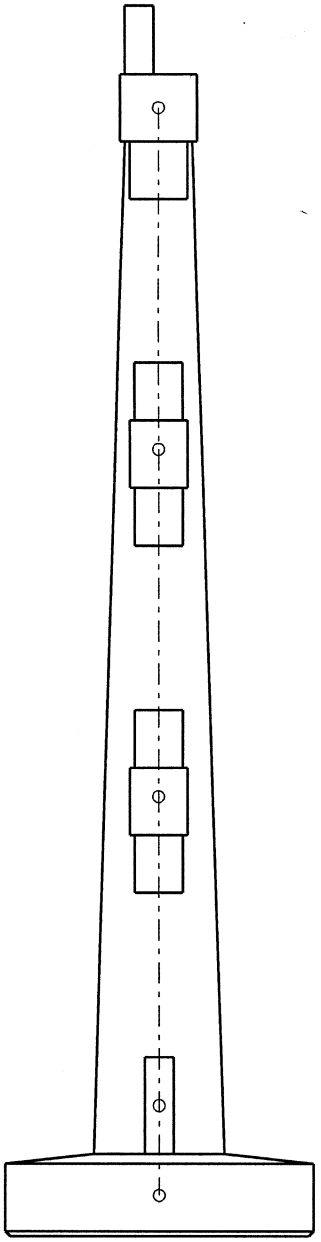

ADD (3')(3')(2.5')(0.150 K/FT³) = 3.375K FOR CRUTCH.

BENT 143
TRIPLE STRUT
PRESTRESSED GIRDER - WELDED STEEL GIRDER

```
**************************************************
*                                                *
*          STAAD.Pro                             *
*          Version  2004    Bld 1002.US          *
*          Proprietary Program of                *
*          Research Engineers,  Intl.            *
*          Date=    JUL 21, 2006                 *
*          Time=    10: 9: 4                     *
*                                                *
*     USER ID: H.W. Lochner                      *
**************************************************
```

JMJ 6/06
WDB 6/06

```
    1. STAAD SPACE BONNER BRIDGE, HLB143
INPUT FILE: HLB143.STD
    2. START JOB INFORMATION
    3. JOB NAME BONNER BRIDGE
    4. JOB CLIENT NORTH CAROLINA
    5. ENGINEER NAME JMJ
    6. ENGINEER DATE MAY 2006
    7. END JOB INFORMATION
    8. INPUT WIDTH 72
    9. PAGE LENGTH 62
   10. UNIT FEET KIP
   11. JOINT COORDINATES
   12. 1 2.5 56.5 0; 2 8.36 56.5 0; 3 26.64 56.5 0; 4 32.5 56.5 0
   13. 5 7.23 38.5 0; 6 27.77 38.5 0; 7 6.11 20.5 0; 8 28.89 20.5 0
   14. 9 5.13 4.75 0; 10 29.88 4.75 0; 11 0 0 0; 12 4.83 0 0; 13 30.17 0 0
   15. 14 35 0 0
   16. MEMBER INCIDENCES
   17. 1 1 2; 2 2 3; 3 3 4; 4 2 5; 5 3 6; 6 5 6; 7 5 7; 8 6 8; 9 7 8; 10 7 9
   18. 11 8 10; 12 9 10; 13 9 12; 14 10 13; 15 11 12; 16 12 13; 17 13 14
   19. DEFINE MATERIAL START
   20. ISOTROPIC CONCRETE
   21. E 453600
   22. POISSON 0.17
   23. DENSITY 0.14999
   24. ALPHA 5.5E-006
   25. DAMP 0.05
   26. END DEFINE MATERIAL
   27. MEMBER PROPERTY AMERICAN
   28. 1 TO 3 PRIS YD 3.5 ZD 4
   29. 4 5 PRIS YD 3.493 ZD 3.953
   30. 6 PRIS YD 3.5 ZD 3
   31. 7 8 PRIS YD 3.493 ZD 5.078
   32. 9 PRIS YD 3.5 ZD 3
   33. 10 11 PRIS YD 3.493 ZD 6.132
   34. 12 PRIS YD 5 ZD 1.5
   35. 13 14 PRIS YD 3.493 ZD 6.773
   36. 15 TO 17 PRIS YD 4.5 ZD 16
   37. CONSTANTS
   38. MATERIAL CONCRETE MEMB 1 TO 17
   39. SUPPORTS
   40. 11 TO 14 FIXED
   41. DRAW MEMBER JOINT SUPPORT
```


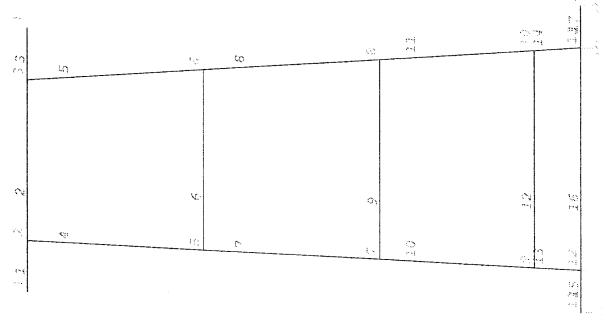

```
42. **
43. **DEAD LOAD
44. **
45. LOAD 2 DEAD
46. SELFWEIGHT Y -1
47. MEMBER LOAD
48. 1 CON GY -120.37 3
49. 2 CON GY -119.05 5.14
50. 2 CON GY -119.05 13.14
51. 3 CON GY -120.37 2.86
52. 1 CON GY -1.1 3
53. 2 CON GY -1.1 5.14
54. 2 CON GY -1.1 13.14
55. 3 CON GY -1.1 2.86
56. 1 TO 3 UNI GY -0.788
57. JOINT LOAD
58. 2 3 5 6 7 8 FY -3.375
59. **
60. **MAXIMUM NEGATIVE MOMENT
61. **
62. LOAD 11 LIVELOAD + IMPACT FOR JT. 2 MEM 1 AND 2
63. MEMBER LOAD
64. 1 CON Y -57.0 3
65. 2 CON Y -63.2 5.14
66. 2 CON Y -48.4 13.14
67. LOAD 12 LIVELOAD + IMPACT FOR JT. 3  MEM. 2 AND 3
68. MEMBER LOAD
69. 2 CON Y -48.4 5.14
70. 2 CON Y -63.2 13.14
71. 3 CON Y -57.0 2.86
72. **
73. **MAXIMUM POSITIVE MOMENT
74. **
75. LOAD 13 LIVELOAD + IMPACT  MEM 2
76. MEMBER LOAD
77. 1 CON Y -22.8 3
78. 2 CON Y -66.7 5.14
79. 2 CON Y -59.8 13.14
80. 3 CON Y -19.4 2.86
81. **
82. **LOADS ON FOOTINGS
83. **
84. LOAD 14 LIVELOAD NO IMPACT JT. 12
85. MEMBER LOAD
86. 1 CON Y -48.5 3
87. 2 CON Y -52.0 5.14
88. 2 CON Y -38.1 13.14
89. LOAD 15 LIVELOAD NO IMPACT FOR JT. 13
90. MEMBER LOAD
91. 2 CON Y -38.1 5.14
92. 2 CON Y -52.0 13.14
93. 3 CON Y -48.5 2.86
94. **
95. **WIND
96. **
97. LOAD 4 WIND
98. JOINT LOAD
99. 2 3 FX -3.513 FZ -3.876
100. 2 3 FX -12.424 FZ -13.709
101. 4 FX -0.655
```



```
102. MEMBER LOAD
103. 1 TO 3 UNI GZ -0.413
104. 4 5 7 8 10 11 13 14 UNI GZ -0.207
105. 4 5 UNI GX -0.134
106. 7 8 UNI GX -0.173
107. 10 11 UNI GX -0.208
108. 13 14 UNI GX -0.230
109. 6 9 UNI GZ -0.207
110. 12 UNI GZ -0.295
111. **
112. LOAD 5 WIND ON LL
113. JOINT LOAD
114. 2 3 FX -0.670 FZ -0.749
115. 2 3 FX -1.761 FZ -1.968
116. **
117. LOAD 6 LONGITUDINAL FORCE
118. JOINT LOAD
119. 2 3 FZ -2.415
120. 2 3 FZ -4.473
121. **
122. LOAD 7 TEMP LOAD
123. TEMPERATURE LOAD
124. 1 TO 17 TEMP -45
125. **
126. LOAD 8 STREAM LOAD
127. MEMBER LOAD
128. 15 TO 17 UNI GZ -0.15
129. **
130. LOAD COMB 10 GROUP 1
131. 8 1.0
132. LOAD COMB 20 GROUP 2
133. 4 1.0 8 1.0
134. LOAD COMB 30 GROUP 3
135. 4 0.3 5 1.0 6 1.0 8 1.0
136. LOAD COMB 40 GROUP 4
137. 7 1.74 8 1.0
138. LOAD COMB 50 GROUP 5
139. 4 1.0 7 1.74 8 1.0
140. LOAD COMB 60 GROUP 6
141. 4 0.3 5 1.0 6 1.0 7 1.74 8 1.0
142. LOAD COMB 100 USED TO DETERMINE LOCATION OF MAX FACTORED POSITIVE MOMENT
143. 2 1.0 13 1.67
144. PERFORM ANALYSIS


        P R O B L E M   S T A T I S T I C S
        -----------------------------------

  NUMBER OF JOINTS/MEMBER+ELEMENTS/SUPPORTS =    14/    17/     4
  ORIGINAL/FINAL BAND-WIDTH=     3/     3/     24 DOF
  TOTAL PRIMARY LOAD CASES =   11, TOTAL DEGREES OF FREEDOM =     60
  SIZE OF STIFFNESS MATRIX =        2 DOUBLE  KILO-WORDS
  REQRD/AVAIL. DISK SPACE  =     12.1/ 110758.2 MB


145. PRINT MEMBER FORCES LIST 2 4 5 6 7 8 9 10 11 13 14
```

MEMBER END FORCES STRUCTURE TYPE = SPACE

ALL UNITS ARE -- KIP FEET

MEMBER	LOAD	JT	AXIAL	SHEAR-Y	SHEAR-Z	TORSION	MOM-Y	MOM-Z	
					V_{DL}				
2	2	2	25.60	146.55	0.00	0.00	0.00	478.53	– Max. Neg. M_{DL}
		3	-25.60	146.54	0.00	0.00	0.00	-478.47	
	11	2	10.75	63.80	0.00	0.00	0.00	201.95	– Max. Neg. M_{LL+I}
		3	-10.75	47.80	0.00	0.00	0.00	-114.83	
	12	2	10.75	47.80 V_{LL+I}	0.00	0.00	0.00	114.85	
		3	-10.75	63.80	0.00	0.00	0.00	-201.93	
	13	2	12.92	65.00	0.00	0.00	0.00	169.70	
		3	-12.92	61.50	0.00	0.00	0.00	-165.33	
	14	2	8.60	52.14	0.00	0.00	0.00	166.18	
		3	-8.60	37.96	0.00	0.00	0.00	-92.24	
	15	2	8.60	37.96	0.00	0.00	0.00	92.25	
		3	-8.60	52.14	0.00	0.00	0.00	-166.17	
	4	2	0.33	20.31	3.77	0.00	6.35	185.64	
		3	-0.33	-20.31	3.78	0.00	-6.34	185.67	
	5	2	0.00	2.78	0.00	0.00	1.15	25.42	
		3	0.00	-2.78	0.00	0.00	-1.15	25.42	
	6	2	0.00	0.00	0.00	0.00	2.91	0.00	
		3	0.00	0.00	0.00	0.00	-2.91	0.00	
	7	2	-0.37	0.00	0.00	0.00	0.00	-0.93	
		3	0.37	0.00	0.00	0.00	0.00	0.93	
	8	2	0.00	0.00	0.00	0.00	0.00	0.00	
		3	0.00	0.00	0.00	0.00	0.00	0.00	
	10	2	0.00	0.00	0.00	0.00	0.00	0.00	
		3	0.00	0.00	0.00	0.00	0.00	0.00	
	20	2	0.33	20.31	3.77	0.00	6.35	185.64	
		3	-0.33	-20.31	3.78	0.00	-6.34	185.67	
	30	2	0.10	8.87	1.13	0.00	5.96	81.11	
		3	-0.10	-8.87	1.13	0.00	-5.95	81.12	
	40	2	-0.64	0.00	0.00	0.00	0.00	-1.62	
		3	0.64	0.00	0.00	0.00	0.00	1.62	
	50	2	-0.31	20.31	3.77	0.00	6.35	184.02	
		3	0.31	-20.31	3.78	0.00	-6.34	187.28	
	60	2	-0.54	8.87	1.13	0.00	5.96	79.49	
		3	0.54	-8.87	1.13	0.00	-5.95	82.74	
	100	2	47.18	255.10	0.00	0.00	0.00	761.94	
		3	-47.18	249.25	0.00	0.00	0.00	-754.56	
4	2	2	289.35	7.49	0.00	0.00	0.00	81.55	
		5	-326.63	-5.15	0.00	0.00	0.00	32.36	
	11	2	121.24	3.16	0.00	0.00	0.00	38.93	
		5	-121.24	-3.16	0.00	0.00	0.00	18.15	
	12	2	48.38	7.74	0.00	0.00	0.00	114.85	
		5	-48.38	-7.74	0.00	0.00	0.00	24.72	
	13	2	88.44	7.39	0.00	0.00	0.00	104.49	
		5	-88.44	-7.39	0.00	0.00	0.00	28.86	
	14	2	100.98	2.28	0.00	0.00	0.00	27.47	
		5	-100.98	-2.28	0.00	0.00	0.00	13.64	
	15	2	38.43	6.21	0.00	0.00	0.00	92.25	
		5	-38.43	-6.21	0.00	0.00	0.00	19.68	

MEMBER END FORCES STRUCTURE TYPE = SPACE

ALL UNITS ARE -- KIP FEET

MEMBER	LOAD	JT	AXIAL	SHEAR-Y	SHEAR-Z	TORSION	MOM-Y	MOM-Z
	4	2	21.29	14.96	23.78	13.41	-0.85	185.64
		5	-21.44	-17.37	-27.51	-13.41	-461.70	105.89
	5	2	2.93	2.25	2.72	1.14	-0.07	25.42
		5	-2.93	-2.25	-2.72	-1.14	-48.93	15.19
	6	2	0.00	0.00	6.89	2.90	-0.18	0.00
		5	0.00	0.00	-6.89	-2.90	-124.04	0.00
	7	2	-0.02	-0.37	0.00	0.00	0.00	-0.93
		5	0.02	0.37	0.00	0.00	0.00	-5.66
	8	2	0.00	0.00	0.00	0.00	0.00	0.00
		5	0.00	0.00	0.00	0.00	0.00	0.00
	10	2	0.00	0.00	0.00	0.00	0.00	0.00
		5	0.00	0.00	0.00	0.00	0.00	0.00
	20	2	21.29	14.96	23.78	13.41	-0.85	185.64
		5	-21.44	-17.37	-27.51	-13.41	-461.70	105.89
	30	2	9.32	6.74	16.74	8.07	-0.51	81.11
		5	-9.36	-7.46	-17.86	-8.07	-311.48	46.96
	40	2	-0.04	-0.64	0.00	0.00	0.00	-1.62
		5	0.04	0.64	0.00	0.00	0.00	-9.84
	50	2	21.25	14.32	23.78	13.41	-0.85	184.02
		5	-21.40	-16.73	-27.51	-13.41	-461.70	96.05
	60	2	9.28	6.10	16.74	8.07	-0.51	79.49
		5	-9.32	-6.83	-17.86	-8.07	-311.48	37.12
	100	2	437.04	19.83	0.00	0.00	0.00	256.05
		5	-474.32	-17.49	0.00	0.00	0.00	80.56
5	2	3	289.35	7.49	0.00	0.00	0.00	81.48
		6	-326.63	-5.15	0.00	0.00	0.00	32.43
	11	3	48.38	7.74	0.00	0.00	0.00	114.83
		6	-48.38	-7.74	0.00	0.00	0.00	24.74
	12	3	121.24	3.16	0.00	0.00	0.00	38.91
		6	-121.24	-3.16	0.00	0.00	0.00	18.16
	13	3	81.55	7.83	0.00	0.00	0.00	109.84
		6	-81.55	-7.83	0.00	0.00	0.00	31.31
	14	3	38.43	6.21	0.00	0.00	0.00	92.24
		6	-38.43	-6.21	0.00	0.00	0.00	19.70
	15	3	100.98	2.28	0.00	0.00	0.00	27.46
		6	-100.98	-2.28	0.00	0.00	0.00	13.65
	4	3	-21.29	-14.96	-23.78	-13.41	0.84	-185.67
		6	21.44	17.37	27.51	13.41	461.72	-105.92
	5	3	-2.93	-2.25	-2.72	-1.14	0.07	-25.42
		6	2.93	2.25	2.72	1.14	48.93	-15.19
	6	3	0.00	0.00	-6.89	-2.90	0.18	0.00
		6	0.00	0.00	6.89	2.90	124.05	0.00
	7	3	-0.02	-0.37	0.00	0.00	0.00	-0.93
		6	0.02	0.37	0.00	0.00	0.00	-5.66
	8	3	0.00	0.00	0.00	0.00	0.00	0.00
		6	0.00	0.00	0.00	0.00	0.00	0.00
	10	3	0.00	0.00	0.00	0.00	0.00	0.00
		6	0.00	0.00	0.00	0.00	0.00	0.00
	20	3	-21.29	-14.96	-23.78	-13.41	0.84	-185.67
		6	21.44	17.37	27.51	13.41	461.72	-105.92

MEMBER END FORCES STRUCTURE TYPE = SPACE

ALL UNITS ARE -- KIP FEET

MEMBER	LOAD	JT	AXIAL	SHEAR-Y	SHEAR-Z	TORSION	MOM-Y	MOM-Z	
	30	3	-9.32	-6.74	-16.74	-8.07	0.50	-81.12	
		6	9.36	7.46	17.86	8.07	311.49	-46.97	
	40	3	-0.04	-0.64	0.00	0.00	0.00	-1.62	
		6	0.04	0.64	0.00	0.00	0.00	-9.84	
	50	3	-21.33	-15.60	-23.78	-13.41	0.84	-187.28	
		6	21.48	18.01	27.51	13.41	461.72	-115.77	
	60	3	-9.36	-7.38	-16.74	-8.07	0.50	-82.74	
		6	9.40	8.10	17.86	8.07	311.49	-56.81	
	100	3	425.54	20.56	0.00	0.00	0.00	264.92	
		6	-462.82	-18.22	0.00	0.00	0.00	84.72	
6	2	5	-0.28	16.19	0.00	0.00	0.00	53.13	- MAX. NEG. MDL
		6	0.28	16.16	0.00	0.00	0.00	-52.85	
	11	5	-6.62	-2.62	0.00	0.00	0.00	-21.62	
		6	6.62	2.62	0.00	0.00	0.00	-32.18	
	12	5	-6.62	2.62	0.00	0.00	0.00	32.23	- MAX. NEG. MLL+I
		6	6.62	-2.62	0.00	0.00	0.00	21.68	
	13	5	-9.23	-0.31	0.00	0.00	0.00	4.31	
		6	9.23	0.31	0.00	0.00	0.00	-10.69	
	14	5	-5.16	-2.26	0.00	0.00	0.00	-19.15	
		6	5.16	2.26	0.00	0.00	0.00	-27.33	
	15	5	-5.15	2.27	0.00	0.00	0.00	27.38	
		6	5.15	-2.27	0.00	0.00	0.00	19.19	
	4	5	0.00	25.55	2.13	-0.01	4.93	262.39	
		6	0.00	-25.55	2.12	0.01	-4.95	262.41	
	5	5	0.00	3.21	0.00	0.00	0.65	32.94	
		6	0.00	-3.21	0.00	0.00	-0.65	32.94	
	6	5	0.00	0.00	0.00	0.00	1.64	0.00	
		6	0.00	0.00	0.00	0.00	-1.64	0.00	
	7	5	2.44	0.00	0.00	0.00	0.00	2.55	
		6	-2.44	0.00	0.00	0.00	0.00	-2.55	
	8	5	0.00	0.00	0.00	0.00	0.00	0.00	
		6	0.00	0.00	0.00	0.00	0.00	0.00	
	10	5	0.00	0.00	0.00	0.00	0.00	0.00	
		6	0.00	0.00	0.00	0.00	0.00	0.00	
	20	5	0.00	25.55	2.13	-0.01	4.93	262.39	
		6	0.00	-25.55	2.12	0.01	-4.95	262.41	
	30	5	0.00	10.87	0.64	0.00	3.77	111.66	
		6	0.00	-10.87	0.64	0.00	-3.78	111.66	
	40	5	4.25	0.00	0.00	0.00	0.00	4.43	
		6	-4.25	0.00	0.00	0.00	0.00	-4.44	
	50	5	4.25	25.55	2.13	-0.01	4.93	266.82	
		6	-4.25	-25.55	2.12	0.01	-4.95	257.97	
	60	5	4.25	10.87	0.64	0.00	3.77	116.09	
		6	-4.25	-10.87	0.64	0.00	-3.78	107.22	
	100	5	-15.68	15.67	0.00	0.00	0.00	60.33	
		6	15.68	16.68	0.00	0.00	0.00	-70.70	
7	2	5	346.14	3.83	0.00	0.00	0.00	20.77	
		7	-394.03	-0.86	0.00	0.00	0.00	21.52	
	11	5	118.21	-3.22	0.00	0.00	0.00	-39.77	
		7	-118.21	3.22	0.00	0.00	0.00	-18.23	

MEMBER END FORCES STRUCTURE TYPE = SPACE

ALL UNITS ARE -- KIP FEET

MEMBER	LOAD	JT	AXIAL	SHEAR-Y	SHEAR-Z	TORSION	MOM-Y	MOM-Z
	12	5	50.58	0.99	0.00	0.00	0.00	7.52
		7	-50.58	-0.99	0.00	0.00	0.00	10.41
	13	5	87.55	-1.75	0.00	0.00	0.00	-24.55
		7	-87.55	1.75	0.00	0.00	0.00	-6.94
	14	5	98.40	-2.67	0.00	0.00	0.00	-32.79
		7	-98.40	2.67	0.00	0.00	0.00	-15.37
	15	5	40.37	0.94	0.00	0.00	0.00	7.70
		7	-40.37	-0.94	0.00	0.00	0.00	9.28
	4	5	46.93	15.80	29.64	18.08	461.39	156.50
		7	-47.13	-18.91	-33.37	-18.08	-1029.61	156.46
	5	5	6.13	2.05	2.72	1.76	48.89	17.74
		7	-6.13	-2.05	-2.72	-1.76	-97.89	19.30
	6	5	0.00	0.00	6.89	4.47	123.94	0.00
		7	0.00	0.00	-6.89	-4.47	-248.17	0.00
	7	5	0.13	2.07	0.00	0.00	0.00	8.20
		7	-0.13	-2.07	0.00	0.00	0.00	29.15
	8	5	0.00	0.00	0.00	0.00	0.00	0.00
		7	0.00	0.00	0.00	0.00	0.00	0.00
	10	5	0.00	0.00	0.00	0.00	0.00	0.00
		7	0.00	0.00	0.00	0.00	0.00	0.00
	20	5	46.93	15.80	29.64	18.08	461.39	156.50
		7	-47.13	-18.91	-33.37	-18.08	-1029.61	156.46
	30	5	20.21	6.79	18.50	11.66	311.25	64.70
		7	-20.27	-7.73	-19.62	-11.66	-654.94	66.24
	40	5	0.22	3.60	0.00	0.00	0.00	14.27
		7	-0.22	-3.60	0.00	0.00	0.00	50.73
	50	5	47.16	19.40	29.64	18.08	461.39	170.77
		7	-47.35	-22.51	-33.37	-18.08	-1029.61	207.19
	60	5	20.43	10.40	18.50	11.66	311.25	78.97
		7	-20.49	-11.33	-19.62	-11.66	-654.94	116.97
	100	5	492.34	0.92	0.00	0.00	0.00	-20.23
		7	-540.23	2.06	0.00	0.00	0.00	9.94
8	2	6	346.10	3.84	0.00	0.00	0.00	20.42
		8	-393.99	-0.86	0.00	0.00	0.00	21.91
	11	6	50.57	0.99	0.00	0.00	0.00	7.44
		8	-50.57	-0.99	0.00	0.00	0.00	10.47
	12	6	118.21	-3.21	0.00	0.00	0.00	-39.83
		8	-118.21	3.21	0.00	0.00	0.00	-18.13
	13	6	81.28	-1.36	0.00	0.00	0.00	-20.62
		8	-81.28	1.36	0.00	0.00	0.00	-3.84
	14	6	40.36	0.94	0.00	0.00	0.00	7.64
		8	-40.36	-0.94	0.00	0.00	0.00	9.33
	15	6	98.39	-2.67	0.00	0.00	0.00	-32.84
		8	-98.39	2.67	0.00	0.00	0.00	-15.29
	4	6	-46.93	-15.80	-29.64	-18.09	-461.42	-156.49
		8	47.13	18.91	33.37	18.09	1029.61	-156.50
	5	6	-6.13	-2.05	-2.72	-1.76	-48.89	-17.75
		8	6.13	2.05	2.72	1.76	97.89	-19.31
	6	6	0.00	0.00	-6.89	-4.47	-123.95	0.00
		8	0.00	0.00	6.89	4.47	248.17	0.00

MEMBER END FORCES STRUCTURE TYPE = SPACE

ALL UNITS ARE -- KIP FEET

MEMBER	LOAD	JT	AXIAL	SHEAR-Y	SHEAR-Z	TORSION	MOM-Y	MOM-Z	
	7	6	0.13	2.07	0.00	0.00	0.00	8.21	
		8	-0.13	-2.07	0.00	0.00	0.00	29.15	
	8	6	0.00	0.00	0.00	0.00	0.00	0.00	
		8	0.00	0.00	0.00	0.00	0.00	0.00	
	10	6	0.00	0.00	0.00	0.00	0.00	0.00	
		8	0.00	0.00	0.00	0.00	0.00	0.00	
	20	6	-46.93	-15.80	-29.64	-18.09	-461.42	-156.49	
		8	47.13	18.91	33.37	18.09	1029.61	-156.50	
	30	6	-20.21	-6.79	-18.50	-11.66	-311.27	-64.69	
		8	20.27	7.73	19.62	11.66	654.95	-66.26	
	40	6	0.22	3.60	0.00	0.00	0.00	14.28	
		8	-0.22	-3.60	0.00	0.00	0.00	50.71	
	50	6	-46.71	-12.19	-29.64	-18.09	-461.42	-142.20	
		8	46.90	15.31	33.37	18.09	1029.61	-105.79	
	60	6	-19.98	-3.19	-18.50	-11.66	-311.27	-50.41	
		8	20.04	4.12	19.62	11.66	654.95	-15.55	
	100	6	481.85	1.57	0.00	0.00	0.00	-14.02	
		8	-529.74	1.41	0.00	0.00	0.00	15.51	
9	2	7	6.16	17.99	0.00	0.00	0.00	61.80	– MAX. NEG. MDL
		8	-6.16	17.89	0.00	0.00	0.00	-60.63	
	11	7	1.32	-2.19	0.00	0.00	0.00	-25.97	
		8	-1.32	2.19	0.00	0.00	0.00	-23.92	
	12	7	1.33	2.21	0.00	0.00	0.00	24.15	
		8	-1.33	-2.21	0.00	0.00	0.00	26.20	– MAX. NEG. MLL+I
	13	7	1.85	-0.20	0.00	0.00	0.00	-3.66	
		8	-1.85	0.20	0.00	0.00	0.00	-1.00	
	14	7	1.02	-1.88	0.00	0.00	0.00	-22.24	
		8	-1.02	1.88	0.00	0.00	0.00	-20.63	
	15	7	1.03	1.90	0.00	0.00	0.00	20.82	
		8	-1.03	-1.90	0.00	0.00	0.00	22.44	
	4	7	-0.01	20.35	2.36	-0.01	-0.32	231.76	
		8	0.01	-20.35	2.35	0.01	0.21	231.74	
	5	7	0.00	2.26	0.00	0.00	0.33	25.75	
		8	0.00	-2.26	0.00	0.00	-0.34	25.75	
	6	7	0.00	0.00	0.00	0.00	0.83	0.00	
		8	0.00	0.00	0.00	0.00	-0.85	0.00	
	7	7	12.83	0.00	0.00	0.00	0.00	-7.57	
		8	-12.83	0.00	0.00	0.00	0.00	7.55	
	8	7	0.00	0.00	0.00	0.00	0.00	0.00	
		8	0.00	0.00	0.00	0.00	0.00	0.00	
	10	7	0.00	0.00	0.00	0.00	0.00	0.00	
		8	0.00	0.00	0.00	0.00	0.00	0.00	
	20	7	-0.01	20.35	2.36	-0.01	-0.32	231.76	
		8	0.01	-20.35	2.35	0.01	0.21	231.74	
	30	7	-0.01	8.36	0.71	0.00	1.06	95.28	
		8	0.01	-8.36	0.70	0.00	-1.12	95.27	
	40	7	22.32	0.00	0.00	0.00	0.00	-13.17	
		8	-22.32	0.00	0.00	0.00	0.00	13.13	
	50	7	22.30	20.34	2.36	-0.01	-0.32	218.59	
		8	-22.30	-20.34	2.35	0.01	0.21	244.87	

MEMBER END FORCES STRUCTURE TYPE = SPACE

ALL UNITS ARE -- KIP FEET

MEMBER	LOAD	JT	AXIAL	SHEAR-Y	SHEAR-Z	TORSION	MOM-Y	MOM-Z
	60	7	22.31	8.36	0.71	0.00	1.06	82.11
		8	-22.31	-8.36	0.70	0.00	-1.12	108.40
	100	7	9.26	17.65	0.00	0.00	0.00	55.69
		8	-9.26	18.23	0.00	0.00	0.00	-62.30
10	2	7	415.73	5.68	0.00	0.00	0.00	40.28
		9	-466.33	-2.53	0.00	0.00	0.00	24.52
	11	7	116.11	-1.77	0.00	0.00	0.00	-7.74
		9	-116.11	1.77	0.00	0.00	0.00	-20.13
	12	7	52.87	2.18	0.00	0.00	0.00	13.74
		9	-52.87	-2.18	0.00	0.00	0.00	20.71
	13	7	87.46	0.12	0.00	0.00	0.00	3.28
		9	-87.46	-0.12	0.00	0.00	0.00	-1.44
	14	7	96.58	-1.53	0.00	0.00	0.00	-6.87
		9	-96.58	1.53	0.00	0.00	0.00	-17.32
	15	7	42.33	1.86	0.00	0.00	0.00	11.53
		9	-42.33	-1.86	0.00	0.00	0.00	17.75
	4	7	67.43	17.63	35.74	17.76	1029.62	75.29
		9	-67.64	-20.91	-39.00	-17.76	-1619.32	228.81
	5	7	8.38	1.91	2.72	2.09	97.87	6.45
		9	-8.38	-1.91	-2.72	-2.09	-140.75	23.73
	6	7	0.00	0.00	6.89	5.30	248.12	0.00
		9	0.00	0.00	-6.89	-5.30	-356.83	0.00
	7	7	0.92	14.87	0.00	0.00	0.00	-36.72
		9	-0.92	-14.87	0.00	0.00	0.00	271.43
	8	7	0.00	0.00	0.00	0.00	0.00	0.00
		9	0.00	0.00	0.00	0.00	0.00	0.00
	10	7	0.00	0.00	0.00	0.00	0.00	0.00
		9	0.00	0.00	0.00	0.00	0.00	0.00
	20	7	67.43	17.63	35.74	17.76	1029.62	75.29
		9	-67.64	-20.91	-39.00	-17.76	-1619.32	228.81
	30	7	28.61	7.20	20.33	12.72	654.87	29.04
		9	-28.68	-8.18	-21.31	-12.72	-983.37	92.37
	40	7	1.61	25.88	0.00	0.00	0.00	-63.90
		9	-1.61	-25.88	0.00	0.00	0.00	472.29
	50	7	69.04	43.51	35.74	17.76	1029.62	11.40
		9	-69.25	-46.79	-39.00	-17.76	-1619.32	701.10
	60	7	30.22	33.08	20.33	12.72	654.87	-34.86
		9	-30.28	-34.06	-21.31	-12.72	-983.37	564.66
	100	7	561.79	5.87	0.00	0.00	0.00	45.75
		9	-612.39	-2.73	0.00	0.00	0.00	22.11
11	2	8	415.60	5.43	0.00	0.00	0.00	38.71
		10	-466.20	-2.25	0.00	0.00	0.00	21.82
	11	8	52.84	2.14	0.00	0.00	0.00	13.46
		10	-52.84	-2.14	0.00	0.00	0.00	20.27
	12	8	116.08	-1.82	0.00	0.00	0.00	-8.08
		10	-116.08	1.82	0.00	0.00	0.00	-20.70
	13	8	81.60	0.43	0.00	0.00	0.00	4.84
		10	-81.60	-0.43	0.00	0.00	0.00	1.94
	14	8	42.31	1.82	0.00	0.00	0.00	11.30
		10	-42.31	-1.82	0.00	0.00	0.00	17.39

MEMBER END FORCES STRUCTURE TYPE = SPACE

ALL UNITS ARE -- KIP FEET

MEMBER	LOAD	JT	AXIAL	SHEAR-Y	SHEAR-Z	TORSION	MOM-Y	MOM-Z
	15	8	96.56	-1.58	0.00	0.00	0.00	-7.15
		10	-96.56	1.58	0.00	0.00	0.00	-17.79
	4	8	-67.45	-17.62	-35.72	-18.54	-1029.62	-75.24
		10	67.65	20.90	38.99	18.54	1619.17	-228.66
	5	8	-8.39	-1.91	-2.72	-2.16	-97.87	-6.44
		10	8.39	1.91	2.72	2.16	140.74	-23.71
	6	8	0.00	0.00	-6.89	-5.48	-248.12	0.00
		10	0.00	0.00	6.89	5.48	356.80	0.00
	7	8	0.94	14.87	0.00	0.00	0.00	-36.69
		10	-0.94	-14.87	0.00	0.00	0.00	271.40
	8	8	0.00	0.00	0.00	0.00	0.00	0.00
		10	0.00	0.00	0.00	0.00	0.00	0.00
	10	8	0.00	0.00	0.00	0.00	0.00	0.00
		10	0.00	0.00	0.00	0.00	0.00	0.00
	20	8	-67.45	-17.62	-35.72	-18.54	-1029.62	-75.24
		10	67.65	20.90	38.99	18.54	1619.17	-228.66
	30	8	-28.62	-7.20	-20.32	-13.20	-654.87	-29.01
		10	28.68	8.18	21.30	13.20	983.29	-92.31
	40	8	1.63	25.88	0.00	0.00	0.00	-63.84
		10	-1.63	-25.88	0.00	0.00	0.00	472.23
	50	8	-65.82	8.26	-35.72	-18.54	-1029.62	-139.08
		10	66.02	-4.98	38.99	18.54	1619.17	243.57
	60	8	-26.99	18.68	-20.32	-13.20	-654.87	-92.86
		10	27.05	-17.70	21.30	13.20	983.29	379.93
	100	8	551.88	6.14	0.00	0.00	0.00	46.79
		10	-602.47	-2.96	0.00	0.00	0.00	25.05
13	2	9	480.31	2.50	0.00	0.00	0.00	27.36
		12	-497.17	-1.43	0.00	0.00	0.00	-18.01
	11	9	115.18	-2.22	0.00	0.00	0.00	8.89
		12	-115.18	2.22	0.00	0.00	0.00	-19.48
	12	9	53.75	1.64	0.00	0.00	0.00	-9.62
		12	-53.75	-1.64	0.00	0.00	0.00	17.42
	13	9	87.35	-0.45	0.00	0.00	0.00	0.37
		12	-87.35	0.45	0.00	0.00	0.00	-2.51
	14	9	95.79	-1.90	0.00	0.00	0.00	7.67
		12	-95.79	1.90	0.00	0.00	0.00	-16.71
	15	9	43.08	1.41	0.00	0.00	0.00	-8.23
		12	-43.08	-1.41	0.00	0.00	0.00	14.97
	4	9	76.56	20.32	42.66	4.75	1620.21	-118.40
		12	-76.63	-21.41	-43.64	-4.75	-1825.59	217.71
	5	9	9.28	1.85	2.72	2.23	140.75	-12.61
		12	-9.28	-1.85	-2.72	-2.23	-153.68	21.42
	6	9	0.00	0.00	6.89	5.65	356.82	0.00
		12	0.00	0.00	-6.89	-5.65	-389.61	0.00
	7	9	-27.28	-431.71	0.00	0.00	0.00	-422.64
		12	27.28	431.71	0.00	0.00	0.00	-1632.05
	8	9	0.00	0.00	0.00	0.00	0.00	0.00
		12	0.00	0.00	0.00	0.00	0.00	0.00
	10	9	0.00	0.00	0.00	0.00	0.00	0.00
		12	0.00	0.00	0.00	0.00	0.00	0.00

MEMBER END FORCES STRUCTURE TYPE = SPACE

ALL UNITS ARE -- KIP FEET

MEMBER	LOAD	JT	AXIAL	SHEAR-Y	SHEAR-Z	TORSION	MOM-Y	MOM-Z
	20	9	76.56	20.32	42.66	4.75	1620.21	-118.40
		12	-76.63	-21.41	-43.64	-4.75	-1825.59	217.71
	30	9	32.25	7.95	22.41	9.31	983.63	-48.13
		12	-32.27	-8.28	-22.70	-9.31	-1090.97	86.73
	40	9	-47.46	-751.17	0.00	0.00	0.00	-735.39
		12	47.46	751.17	0.00	0.00	0.00	-2839.77
	50	9	29.10	-730.85	42.66	4.75	1620.21	-853.79
		12	-29.17	729.76	-43.64	-4.75	-1825.59	-2622.06
	60	9	-15.21	-743.22	22.41	9.31	983.63	-783.52
		12	15.19	742.89	-22.70	-9.31	-1090.97	-2753.03
	100	9	626.18	1.75	0.00	0.00	0.00	27.98
		12	-643.03	-0.68	0.00	0.00	0.00	-22.20
14	2	10	480.16	3.51	0.00	0.00	0.00	29.98
		13	-497.02	-2.48	0.00	0.00	0.00	-15.71
	11	10	53.71	1.77	0.00	0.00	0.00	-9.22
		13	-53.71	-1.77	0.00	0.00	0.00	17.64
	12	10	115.16	-2.00	0.00	0.00	0.00	9.44
		13	-115.16	2.00	0.00	0.00	0.00	-18.95
	13	10	81.66	0.08	0.00	0.00	0.00	-0.94
		13	-81.66	-0.08	0.00	0.00	0.00	1.32
	14	10	43.05	1.52	0.00	0.00	0.00	-7.90
		13	-43.05	-1.52	0.00	0.00	0.00	15.14
	15	10	95.77	-1.71	0.00	0.00	0.00	8.12
		13	-95.77	1.71	0.00	0.00	0.00	-16.27
	4	10	-76.52	-20.44	-42.64	-1.24	-1620.08	118.24
		13	76.59	21.53	43.62	1.24	1825.33	-218.10
	5	10	-9.28	-1.87	-2.72	-1.93	-140.74	12.59
		13	9.28	1.87	2.72	1.93	153.67	-21.47
	6	10	0.00	0.00	-6.89	-4.89	-356.81	0.00
		13	0.00	0.00	6.89	4.89	389.58	0.00
	7	10	-26.35	-431.76	0.00	0.00	0.00	-422.38
		13	26.35	431.76	0.00	0.00	0.00	-1632.31
	8	10	0.00	0.00	0.00	0.00	0.00	0.00
		13	0.00	0.00	0.00	0.00	0.00	0.00
	10	10	0.00	0.00	0.00	0.00	0.00	0.00
		13	0.00	0.00	0.00	0.00	0.00	0.00
	20	10	-76.52	-20.44	-42.64	-1.24	-1620.08	118.24
		13	76.59	21.53	43.62	1.24	1825.33	-218.10
	30	10	-32.23	-8.00	-22.39	-7.19	-983.58	48.06
		13	32.25	8.33	22.69	7.19	1090.85	-86.90
	40	10	-45.85	-751.27	0.00	0.00	0.00	-734.94
		13	45.85	751.27	0.00	0.00	0.00	-2840.22
	50	10	-122.37	-771.71	-42.64	-1.24	-1620.08	-616.71
		13	122.44	772.80	43.62	1.24	1825.33	-3058.32
	60	10	-78.08	-759.27	-22.39	-7.19	-983.58	-686.89
		13	78.10	759.59	22.69	7.19	1090.85	-2927.12
	100	10	616.53	3.65	0.00	0.00	0.00	28.41
		13	-633.38	-2.62	0.00	0.00	0.00	-13.50

********** END OF LATEST ANALYSIS RESULT **********

146. SECTION 0.53 MEMB 13 14
147. PRINT MEMBER SECTION FORCES LIST 13 14

MEMBER FORCES AT INTERMEDIATE SECTIONS

ALL UNITS ARE -- KIP FEET

MEMB	LOAD	SEC	SHEAR-Y	SHEAR-Z	MOM-Y	MOM-Z
13	2	0.53	1.93	0.00	0.00	21.78
	11	0.53	-2.22	0.00	0.00	14.50
	12	0.53	1.64	0.00	0.00	-13.76
	13	0.53	-0.45	0.00	0.00	1.50
	14	0.53	-1.90	0.00	0.00	12.46
	15	0.53	1.41	0.00	0.00	-11.80
	4	0.53	20.90	43.18	1728.48	-170.39
	5	0.53	1.85	2.72	147.60	-17.28
	6	0.53	0.00	6.89	374.20	0.00
	7	0.53	-431.71	0.00	0.00	666.35
	8	0.53	0.00	0.00	0.00	0.00
	10	0.53	0.00	0.00	0.00	0.00
	20	0.53	20.90	43.18	1728.48	-170.39
	30	0.53	8.12	22.56	1040.35	-68.39
	40	0.53	-751.17	0.00	0.00	1159.44
	50	0.53	-730.27	43.18	1728.48	989.06
	60	0.53	-743.05	22.56	1040.35	1091.05
	100	0.53	1.18	0.00	0.00	24.29
14	2	0.53	2.97	0.00	0.00	21.81
	11	0.53	1.77	0.00	0.00	-13.68
	12	0.53	-2.00	0.00	0.00	14.48
	13	0.53	0.08	0.00	0.00	-1.14
	14	0.53	1.52	0.00	0.00	-11.74
	15	0.53	-1.71	0.00	0.00	12.44
	4	0.53	-21.02	-43.16	-1728.28	170.51
	5	0.53	-1.87	-2.72	-147.60	17.29
	6	0.53	0.00	-6.89	-374.18	0.00
	7	0.53	-431.76	0.00	0.00	666.61
	8	0.53	0.00	0.00	0.00	0.00
	10	0.53	0.00	0.00	0.00	0.00
	20	0.53	-21.02	-43.16	-1728.28	170.51
	30	0.53	-8.17	-22.55	-1040.25	68.45
	40	0.53	-751.27	0.00	0.00	1159.89
	50	0.53	-772.28	-43.16	-1728.28	1330.41
	60	0.53	-759.44	-22.55	-1040.25	1228.34
	100	0.53	3.10	0.00	0.00	19.90

********** END OF LATEST ANALYSIS RESULT **********

148. LOAD LIST 2 13 100
149. SECTION 0.49 0.5 0.51 MEMB 2
150. PRINT MEMBER SECTION FORCES LIST 2

MEMBER FORCES AT INTERMEDIATE SECTIONS

ALL UNITS ARE -- KIP FEET

MEMB	LOAD	SEC	SHEAR-Y	SHEAR-Z	MOM-Y	MOM-Z	
2	2	0.49	0.53	0.00	0.00	-259.65	
		0.50	0.00	0.00	0.00	-259.69	– MAX. POS. MOM
		0.51	-0.52	0.00	0.00	-259.65	
	13	0.49	-1.70	0.00	0.00	-157.90	
		0.50	-1.70	0.00	0.00	-157.59	– MAX. POS. MULT I
		0.51	-1.70	0.00	0.00	-157.28	
	100	0.49	-2.31	0.00	0.00	-523.34	
		0.50	-2.84	0.00	0.00	-522.87	– MAX. POS. FACT. M
		0.51	-3.36	0.00	0.00	-522.30	

********** END OF LATEST ANALYSIS RESULT **********

151. SECTION 0.48 0.49 0.5 MEMB 6 9
152. PRINT MEMBER SECTION FORCES LIST 6 9

MEMBER FORCES AT INTERMEDIATE SECTIONS

ALL UNITS ARE -- KIP FEET

MEMB	LOAD	SEC	SHEAR-Y	SHEAR-Z	MOM-Y	MOM-Z	
6	2	0.48	0.66	0.00	0.00	-29.93	
		0.49	0.34	0.00	0.00	-30.03	– MAX. POS. MOL
		0.50	0.01	0.00	0.00	-30.07	
	13	0.48	-0.31	0.00	0.00	7.37	
		0.49	-0.31	0.00	0.00	7.44	– MAX. POS. MLLTI
		0.50	-0.31	0.00	0.00	7.50	
	100	0.48	0.14	0.00	0.00	-17.61	
		0.49	-0.18	0.00	0.00	-17.61	– MAX. POS. FACT. M
		0.50	-0.51	0.00	0.00	-17.54	
9	2	0.48	0.77	0.00	0.00	-40.76	
		0.49	0.41	0.00	0.00	-40.89	– MAX. POS. MOL
		0.50	0.05	0.00	0.00	-40.94	
	13	0.48	-0.20	0.00	0.00	-1.42	
		0.49	-0.20	0.00	0.00	-1.37	– MAX. POS MLLTI
		0.50	-0.20	0.00	0.00	-1.33	
	100	0.48	0.43	0.00	0.00	-43.13	
		0.49	0.07	0.00	0.00	-43.19	– MAX. POS. FACT. M
		0.50	-0.29	0.00	0.00	-43.16	

********** END OF LATEST ANALYSIS RESULT **********

153. FINISH

********** END OF THE STAAD.Pro RUN **********

**** DATE= JUL 21,2006 TIME= 10: 9: 5 ****

```
**************************************************************
*        For questions on STAAD.Pro, please contact          *
*   Research Engineers Offices at the following locations    *
*                                                            *
*              Telephone                  Email              *
*  USA:      +1 (714)974-2500       support@reiusa.com        *
*  CANADA    +1 (905)632-4771       detech@odandetech.com     *
*  UK        +44(1454)207-000       support@reel.co.uk        *
*  FRANCE    +33(0)1 64551084       support@reel.co.uk        *
*  GERMANY   +49/931/40468-71       info@reig.de              *
*  NORWAY    +47 67 57 21 30        support@reel.co.uk        *
*  SINGAPORE +65 6225-6015/16       support@reiasia.net       *
*  INDIA     +91(033)2357-3575 support@calcutta.reiusa.com    *
*  JAPAN     +81(03)5952-6500       eng-eye@crc.co.jp         *
*  CHINA     +86(411)363-1983       support@reiasia.net       *
*                                                            *
*  North America                   support@reiusa.com        *
*  Europe                          support@reel.co.uk        *
*  Asia                            support@reiasia.net       *
**************************************************************
```

H. W. LOCHNER, INC.

PROJECT: BONNER BRIDGE - OREGON INLET NORTH CAROLINA JMJ Jul-06
SUBJECT: HIGH LEVEL BENT ANALYSIS WDB 7/06
HLB 143 MEM. 4 JT. 2

COLUMN LOADS

PMAX

HLB 143 MEMBER 4 JOINT 2

	GROUP 1				GROUP 2		
	P	MY	MZ		P	MY	MZ
DL	289.35	0.00	81.55	DL	289.35	0.00	81.55
LL	121.24	0.00	38.93	LL	0.00	0.00	0.00
GROUP 1	0.00	0.00	0.00	GROUP 2	21.29	-0.85	185.64
SERVICE	410.59	0.00	120.48	SERVICE	310.64	-0.85	267.19
STRENGTH	638.84	0.00	190.36	STRENGTH	403.83	-1.11	347.35

	GROUP 3				GROUP 4		
	P	MY	MZ		P	MY	MZ
DL	289.35	0.00	81.55	DL	289.35	0.00	81.55
LL	121.24	0.00	38.93	LL	121.24	0.00	38.93
GROUP 3	9.32	-0.51	81.11	GROUP 4	-0.04	0.00	-1.62
SERVICE	419.91	-0.51	201.59	SERVICE	410.55	0.00	118.86
STRENGTH	545.88	-0.66	262.07	STRENGTH	533.72	0.00	154.52

	GROUP 5				GROUP 6		
	P	MY	MZ		P	MY	MZ
DL	289.35	0.00	81.55	DL	289.35	0.00	81.55
LL	0.00	0.00	0.00	LL	121.24	0.00	38.93
GROUP 5	21.25	-0.85	184.02	GROUP 6	9.28	-0.51	79.49
SERVICE	310.60	-0.85	265.57	SERVICE	419.87	-0.51	199.97
STRENGTH	388.25	-1.06	331.96	STRENGTH	524.84	-0.64	249.96

SLENDERNESS EFFECTS IN COMPRESSION MEMBERS (AASHTO 8.16.5)

f'c = 3000 psi PHI = 0.70 W_C = 150 PCF

$E_C = W_C$^$^{1.5}$ *33*f'c^$^{0.5}$ = 3320561 PSI Width of Rect. Col. = B = 41.916 In.

Depth of Rect. Col = D = 47.436 In.

r_Y = 0.30*D = 14.23 In. L_Y = 8.5 Ft. K_Y = 2.0

r_Z = 0.30*B = 12.57 In. L_Z = 16.25 Ft. K_Z = 1.2

I_{YY} = B*D^^{3}/12 I_{YY} = 372840 In^4

I_{ZZ} = D*B^^{3}/12 I_{ZZ} = 291116 In^5

K_YL_Y/r = 14.3 < 22 NO SLENDERNESS EFFECT

K_ZL_Z/r = 18.6 < 22 NO SLENDERNESS EFFECT

H. W. LOCHNER, INC.

PROJECT: BONNER BRIDGE - OREGON INLET NORTH CAROLINA
SUBJECT: HIGH LEVEL BENT ANALYSIS
HLB 143 MEM. 4 JT. 2

JMJ Jul-06
WDB 7/07

SLENDERNESS EFFECTS IN RECTANGULAR COMPRESSION MEMBERS (AASHTO 8.16.5)

GROUP 1

	B	D	KL/R	M_U	M_{DL}	B_D	P_U	P_C	δ_b	δ_s	M_C	
	In.	In.		Ft. Kips	Ft. Kips		Kips	Kips			Ft. Kips	
MY	41.916	47.436	14.3	0.00	0.00	0.000	639	0	1.000	1.000	108	*
MZ	41.916	47.436	18.6	190.36	106.02	0.557	639	0	1.000	1.000	190	

GROUP 2

	B	D	KL/R	M_U	M_{DL}	B_D	P_U	P_C	δ_b	δ_s	M_C	
	In.	In.		Ft. Kips	Ft. Kips		Kips	Kips			Ft. Kips	
MY	41.916	47.436	14.3	1.11	0.00	0.000	404	0	1.000	1.000	68	*
MZ	41.916	47.436	18.6	347.35	106.02	0.305	404	0	1.000	1.000	347	

GROUP 3

	B	D	KL/R	M_U	M_{DL}	B_D	P_U	P_C	δ_b	δ_s	M_C	
	In.	In.		Ft. Kips	Ft. Kips		Kips	Kips			Ft. Kips	
MY	41.916	47.436	14.3	0.66	0.00	0.000	546	0	1.000	1.000	92	*
MZ	41.916	47.436	18.6	262.07	106.02	0.405	546	0	1.000	1.000	262	

GROUP 4

	B	D	KL/R	M_U	M_{DL}	B_D	P_U	P_C	δ_b	δ_s	M_C	
	In.	In.		Ft. Kips	Ft. Kips		Kips	Kips			Ft. Kips	
MY	41.916	47.436	14.3	0.00	0.00	0.000	534	0	1.000	1.000	90	*
MZ	41.916	47.436	18.6	154.52	106.02	0.686	534	0	1.000	1.000	155	

GROUP 5

	B	D	KL/R	M_U	M_{DL}	B_D	P_U	P_C	δ_b	δ_s	M_C	
	In.	In.		Ft. Kips	Ft. Kips		Kips	Kips			Ft. Kips	
MY	41.916	47.436	14.3	1.06	0.00	0.000	388	0	1.000	1.000	65	*
MZ	41.916	47.436	18.6	331.96	106.02	0.319	388	0	1.000	1.000	332	

GROUP 6

	B	D	KL/R	M_U	M_{DL}	B_D	P_U	P_C	δ_b	δ_s	M_C	
	In.	In.		Ft. Kips	Ft. Kips		Kips	Kips			Ft. Kips	
MY	41.916	47.436	14.3	0.64	0.00	0.000	525	0	1.000	1.000	88	*
MZ	41.916	47.436	18.6	249.96	106.02	0.424	525	0	1.000	1.000	250	

* MINIMUM MOMENT CONTROLS

H. W. LOCHNER, INC.

PROJECT: BONNER BRIDGE - OREGON INLET NORTH CAROLINA JMJ Jul-06
SUBJECT: HIGH LEVEL BENT ANALYSIS WDB 7/06
HLB 143 MEM. 4 JT. 2

COLUMN LOADS

PMIN

HLB 143 MEMBER 4 JOINT 2

GROUP 1

	P	MY	MZ
DL	217.01	0.00	81.55
LL	48.38	0.00	114.85
GROUP 1	0.00	0.00	0.00
SERVICE	265.39	0.00	196.40
STRENGTH	386.94	0.00	354.86

GROUP 2

	P	MY	MZ
DL	217.01	0.00	81.55
LL	0.00	0.00	0.00
GROUP 2	21.29	-0.85	185.64
SERVICE	238.30	-0.85	267.19
STRENGTH	309.79	-1.11	347.35

GROUP 3

	P	MY	MZ
DL	217.01	0.00	81.55
LL	48.38	0.00	114.85
GROUP 3	9.32	-0.51	81.11
SERVICE	274.71	-0.51	277.51
STRENGTH	357.13	-0.66	360.76

GROUP 4

	P	MY	MZ
DL	217.01	0.00	81.55
LL	48.38	0.00	114.85
GROUP 4	-0.04	0.00	-1.62
SERVICE	265.35	0.00	194.78
STRENGTH	344.96	0.00	253.21

GROUP 5

	P	MY	MZ
DL	217.01	0.00	81.55
LL	0.00	0.00	0.00
GROUP 5	21.25	-0.85	184.02
SERVICE	238.26	-0.85	265.57
STRENGTH	297.83	-1.06	331.96

GROUP 6

	P	MY	MZ
DL	217.01	0.00	81.55
LL	48.38	0.00	114.85
GROUP 6	9.28	-0.51	79.49
SERVICE	274.67	-0.51	275.89
STRENGTH	343.34	-0.64	344.86

SLENDERNESS EFFECTS IN COMPRESSION MEMBERS (AASHTO 8.16.5)

f'c = 3000 psi PHI = 0.70 W_C = 150 PCF

$E_C = W_C^{1.5} * 33 * f'c^{0.5}$ = 3320561 PSI Width of Rect. Col. = B = 41.916 In.

Depth of Rect. Col = D = 47.436 In.

$r_Y = 0.30*D$ = 14.23 In. L_Y = 8.5 Ft. K_Y = 2.0

$r_Z = 0.30*B$ = 12.57 In. L_Z = 16.25 Ft. K_Z = 1.2

I_{YY} = $B*D^3/12$ I_{YY} = 372840 In^4

I_{ZZ} = $D*B^3/12$ I_{ZZ} = 291116 In^5

$K_Y L_Y/r$ = 14.3 < 22 NO SLENDERNESS EFFECT

$K_Z L_Z/r$ = 18.6 < 22 NO SLENDERNESS EFFECT

H. W. LOCHNER, INC.

PROJECT: BONNER BRIDGE - OREGON INLET NORTH CAROLINA JMJ Jul-06
SUBJECT: HIGH LEVEL BENT ANALYSIS WDB 7/06
HLB 143 MEM. 4 JT. 2

SLENDERNESS EFFECTS IN RECTANGULAR COMPRESSION MEMBERS (AASHTO 8.16.5)

GROUP 1

	B	D	KL/R	M_U	M_{DL}	B_D	P_U	P_C	δ_b	δ_s	M_C	
	In.	In.		Ft. Kips	Ft. Kips		Kips	Kips			Ft. Kips	
MY	41.916	47.436	14.3	0.00	0.00	0.000	387	0	1.000	1.000	65	*
MZ	41.916	47.436	18.6	354.86	106.02	0.299	387	0	1.000	1.000	355	

GROUP 2

	B	D	KL/R	M_U	M_{DL}	B_D	P_U	P_C	δ_b	δ_s	M_C	
	In.	In.		Ft. Kips	Ft. Kips		Kips	Kips			Ft. Kips	
MY	41.916	47.436	14.3	1.11	0.00	0.000	310	0	1.000	1.000	52	*
MZ	41.916	47.436	18.6	347.35	106.02	0.305	310	0	1.000	1.000	347	

GROUP 3

	B	D	KL/R	M_U	M_{DL}	B_D	P_U	P_C	δ_b	δ_s	M_C	
	In.	In.		Ft. Kips	Ft. Kips		Kips	Kips			Ft. Kips	
MY	41.916	47.436	14.3	0.66	0.00	0.000	357	0	1.000	1.000	60	*
MZ	41.916	47.436	18.6	360.76	106.02	0.294	357	0	1.000	1.000	361	

GROUP 4

	B	D	KL/R	M_U	M_{DL}	B_D	P_U	P_C	δ_b	δ_s	M_C	
	In.	In.		Ft. Kips	Ft. Kips		Kips	Kips			Ft. Kips	
MY	41.916	47.436	14.3	0.00	0.00	0.000	345	0	1.000	1.000	58	*
MZ	41.916	47.436	18.6	253.21	106.02	0.419	345	0	1.000	1.000	253	

GROUP 5

	B	D	KL/R	M_U	M_{DL}	B_D	P_U	P_C	δ_b	δ_s	M_C	
	In.	In.		Ft. Kips	Ft. Kips		Kips	Kips			Ft. Kips	
MY	41.916	47.436	14.3	1.06	0.00	0.000	298	0	1.000	1.000	50	*
MZ	41.916	47.436	18.6	331.96	106.02	0.319	298	0	1.000	1.000	332	

GROUP 6

	B	D	KL/R	M_U	M_{DL}	B_D	P_U	P_C	δ_b	δ_s	M_C	
	In.	In.		Ft. Kips	Ft. Kips		Kips	Kips			Ft. Kips	
MY	41.916	47.436	14.3	0.64	0.00	0.000	343	0	1.000	1.000	58	*
MZ	41.916	47.436	18.6	344.86	106.02	0.307	343	0	1.000	1.000	345	

* MINIMUM MOMENT CONTROLS

H. W. LOCHNER, INC.

PROJECT: BONNER BRIDGE - OREGON INLET NORTH CAROLINA JMJ Jul-06
SUBJECT: HIGH LEVEL BENT ANALYSIS WDB 7/06
HLB 143 MEM. 4 JT. 5

COLUMN LOADS

PMAX

HLB 143 MEMBER 4 JOINT 5

	GROUP 1				GROUP 2		
	P	MY	MZ		P	MY	MZ
DL	-326.63	0.00	32.36	DL	-326.63	0.00	32.36
LL	-121.24	0.00	18.15	LL	0.00	0.00	0.00
GROUP 1	0.00	0.00	0.00	GROUP 2	-21.44	-461.70	105.89
SERVICE	-447.87	0.00	50.51	SERVICE	-348.07	-461.70	138.25
STRENGTH	-687.31	0.00	81.39	STRENGTH	-452.49	-600.21	179.73

	GROUP 3				GROUP 4		
	P	MY	MZ		P	MY	MZ
DL	-326.63	0.00	32.36	DL	-326.63	0.00	32.36
LL	-121.24	0.00	18.15	LL	-121.24	0.00	18.15
GROUP 3	-9.36	-311.48	46.96	GROUP 4	0.04	0.00	-9.84
SERVICE	-457.23	-311.48	97.47	SERVICE	-447.83	0.00	40.67
STRENGTH	-594.40	-404.92	126.71	STRENGTH	-582.18	0.00	52.87

	GROUP 5				GROUP 6		
	P	MY	MZ		P	MY	MZ
DL	-326.63	0.00	32.36	DL	-326.63	0.00	32.36
LL	0.00	0.00	0.00	LL	-121.24	0.00	18.15
GROUP 5	-21.40	-461.70	96.05	GROUP 6	-9.32	-311.48	37.12
SERVICE	-348.03	-461.70	128.41	SERVICE	-457.19	-311.48	87.63
STRENGTH	-435.04	-577.13	160.51	STRENGTH	-571.49	-389.35	109.54

SLENDERNESS EFFECTS IN COMPRESSION MEMBERS (AASHTO 8.16.5)

$f'c =$ 3000 psi PHI = 0.70 $W_C =$ 150 PCF

$E_C = W_C^{1.5} * 33 * f'c^{0.5} =$ 3320561 PSI Width of Rect. Col. = B = 41.916 In.

Depth of Rect. Col = D = 47.436 In.

$r_Y = 0.30*D =$ 14.23 In. $L_Y =$ 8.5 Ft. $K_Y =$ 2.0

$r_Z = 0.30*B =$ 12.57 In. $L_Z =$ 16.25 Ft. $K_Z =$ 1.2

$I_{YY} =$ $B*D^3/12$ $I_{YY} =$ 372840 In^4

$I_{ZZ} =$ $D*B^3/12$ $I_{ZZ} =$ 291116 In^5

$K_Y L_Y/r$ = 14.3 < 22 NO SLENDERNESS EFFECT

$K_Z L_Z/r$ = 18.6 < 22 NO SLENDERNESS EFFECT

H. W. LOCHNER, INC.

PROJECT: BONNER BRIDGE - OREGON INLET NORTH CAROLINA JMJ Jul-06
SUBJECT: HIGH LEVEL BENT ANALYSIS
HLB 143 MEM. 4 JT. 5 WDB 7/06

SLENDERNESS EFFECTS IN RECTANGULAR COMPRESSION MEMBERS (AASHTO 8.16.5)

GROUP 1

	B	D	KL/R	M_U	M_{DL}	B_D	P_U	P_C	δ_b	δ_s	M_C	
	In.	In.		Ft. Kips	Ft. Kips		Kips	Kips			Ft. Kips	
MY	41.916	47.436	14.3	0.00	0.00	0.000	687	0	1.000	1.000	116	*
MZ	41.916	47.436	18.6	81.39	42.07	0.517	687	0	1.000	1.000	106	*

GROUP 2

	B	D	KL/R	M_U	M_{DL}	B_D	P_U	P_C	δ_b	δ_s	M_C
	In.	In.		Ft. Kips	Ft. Kips		Kips	Kips			Ft. Kips
MY	41.916	47.436	14.3	600.21	0.00	0.000	452	0	1.000	1.000	600
MZ	41.916	47.436	18.6	179.73	42.07	0.234	452	0	1.000	1.000	180

GROUP 3

	B	D	KL/R	M_U	M_{DL}	B_D	P_U	P_C	δ_b	δ_s	M_C
	In.	In.		Ft. Kips	Ft. Kips		Kips	Kips			Ft. Kips
MY	41.916	47.436	14.3	404.92	0.00	0.000	594	0	1.000	1.000	405
MZ	41.916	47.436	18.6	126.71	42.07	0.332	594	0	1.000	1.000	127

GROUP 4

	B	D	KL/R	M_U	M_{DL}	B_D	P_U	P_C	δ_b	δ_s	M_C	
	In.	In.		Ft. Kips	Ft. Kips		Kips	Kips			Ft. Kips	
MY	41.916	47.436	14.3	0.00	0.00	0.000	582	0	1.000	1.000	98	*
MZ	41.916	47.436	18.6	52.87	42.07	0.796	582	0	1.000	1.000	90	*

GROUP 5

	B	D	KL/R	M_U	M_{DL}	B_D	P_U	P_C	δ_b	δ_s	M_C
	In.	In.		Ft. Kips	Ft. Kips		Kips	Kips			Ft. Kips
MY	41.916	47.436	14.3	577.13	0.00	0.000	435	0	1.000	1.000	577
MZ	41.916	47.436	18.6	160.51	42.07	0.262	435	0	1.000	1.000	161

GROUP 6

	B	D	KL/R	M_U	M_{DL}	B_D	P_U	P_C	δ_b	δ_s	M_C
	In.	In.		Ft. Kips	Ft. Kips		Kips	Kips			Ft. Kips
MY	41.916	47.436	14.3	389.35	0.00	0.000	571	0	1.000	1.000	389
MZ	41.916	47.436	18.6	109.54	42.07	0.384	571	0	1.000	1.000	110

* MINIMUM MOMENT CONTROLS

H. W. LOCHNER, INC.

PROJECT: BONNER BRIDGE - OREGON INLET NORTH CAROLINA JMJ Jul-06
SUBJECT: HIGH LEVEL BENT ANALYSIS WDB 7/06
HLB 143 MEM. 4 JT. 5

COLUMN LOADS

PMIN

HLB 143 MEMBER 4 JOINT 5

GROUP 1

	P	MY	MZ
DL	-244.97	0.00	32.36
LL	-48.38	0.00	24.72
GROUP 1	0.00	0.00	0.00
SERVICE	-293.35	0.00	57.08
STRENGTH	-423.29	0.00	95.63

GROUP 2

	P	MY	MZ
DL	-244.97	0.00	32.36
LL	0.00	0.00	0.00
GROUP 2	-21.44	-461.70	105.89
SERVICE	-266.41	-461.70	138.25
STRENGTH	-346.34	-600.21	179.73

GROUP 3

	P	MY	MZ
DL	-244.97	0.00	32.36
LL	-48.38	0.00	24.72
GROUP 3	-9.36	-311.48	46.96
SERVICE	-302.71	-311.48	104.04
STRENGTH	-393.53	-404.92	135.25

GROUP 4

	P	MY	MZ
DL	-244.97	0.00	32.36
LL	-48.38	0.00	24.72
GROUP 4	0.04	0.00	-9.84
SERVICE	-293.31	0.00	47.24
STRENGTH	-381.31	0.00	61.41

GROUP 5

	P	MY	MZ
DL	-244.97	0.00	32.36
LL	0.00	0.00	0.00
GROUP 5	-21.40	-461.70	96.05
SERVICE	-266.37	-461.70	128.41
STRENGTH	-332.97	-577.13	160.51

GROUP 6

	P	MY	MZ
DL	-244.97	0.00	32.36
LL	-48.38	0.00	24.72
GROUP 6	-9.32	-311.48	37.12
SERVICE	-302.67	-311.48	94.20
STRENGTH	-378.34	-389.35	117.75

SLENDERNESS EFFECTS IN COMPRESSION MEMBERS (AASHTO 8.16.5)

f'c = 3000 psi PHI = 0.70 W_C = 150 PCF

$E_C = W_C^{1.5} * 33 * f'c^{0.5}$ = 3320561 PSI Width of Rect. Col. = B = 41.916 In.

Depth of Rect. Col = D = 47.436 In.

$r_Y = 0.30*D$ = 14.23 In. L_Y = 8.5 Ft. K_Y = 2.0

$r_Z = 0.30*B$ = 12.57 In. L_Z = 16.25 Ft. K_Z = 1.2

I_{YY} = $B*D^3/12$ I_{YY} = 372840 In^4

I_{ZZ} = $D*B^3/12$ I_{ZZ} = 291116 In^5

$K_Y L_Y/r$ = 14.3 < 22 NO SLENDERNESS EFFECT

$K_Z L_Z/r$ = 18.6 < 22 NO SLENDERNESS EFFECT

H. W. LOCHNER, INC.

PROJECT: BONNER BRIDGE - OREGON INLET NORTH CAROLINA
SUBJECT: HIGH LEVEL BENT ANALYSIS
HLB 143 MEM. 4 JT. 5

JMJ Jul-06
WDB 7/06

SLENDERNESS EFFECTS IN RECTANGULAR COMPRESSION MEMBERS (AASHTO 8.16.5)

GROUP 1

	B	D	KL/R	M_U	M_{DL}	B_D	P_U	P_C	δ_b	δ_s	M_C	
	In.	In.		Ft. Kips	Ft. Kips		Kips	Kips			Ft. Kips	
MY	41.916	47.436	14.3	0.00	0.00	0.000	423	0	1.000	1.000	71	*
MZ	41.916	47.436	18.6	95.63	42.07	0.440	423	0	1.000	1.000	96	

GROUP 2

	B	D	KL/R	M_U	M_{DL}	B_D	P_U	P_C	δ_b	δ_s	M_C
	In.	In.		Ft. Kips	Ft. Kips		Kips	Kips			Ft. Kips
MY	41.916	47.436	14.3	600.21	0.00	0.000	346	0	1.000	1.000	600
MZ	41.916	47.436	18.6	179.73	42.07	0.234	346	0	1.000	1.000	180

GROUP 3

	B	D	KL/R	M_U	M_{DL}	B_D	P_U	P_C	δ_b	δ_s	M_C
	In.	In.		Ft. Kips	Ft. Kips		Kips	Kips			Ft. Kips
MY	41.916	47.436	14.3	404.92	0.00	0.000	394	0	1.000	1.000	405
MZ	41.916	47.436	18.6	135.25	42.07	0.311	394	0	1.000	1.000	135

GROUP 4

	B	D	KL/R	M_U	M_{DL}	B_D	P_U	P_C	δ_b	δ_s	M_C	
	In.	In.		Ft. Kips	Ft. Kips		Kips	Kips			Ft. Kips	
MY	41.916	47.436	14.3	0.00	0.00	0.000	381	0	1.000	1.000	64	*
MZ	41.916	47.436	18.6	61.41	42.07	0.685	381	0	1.000	1.000	61	

GROUP 5

	B	D	KL/R	M_U	M_{DL}	B_D	P_U	P_C	δ_b	δ_s	M_C
	In.	In.		Ft. Kips	Ft. Kips		Kips	Kips			Ft. Kips
MY	41.916	47.436	14.3	577.13	0.00	0.000	333	0	1.000	1.000	577
MZ	41.916	47.436	18.6	160.51	42.07	0.262	333	0	1.000	1.000	161

GROUP 6

	B	D	KL/R	M_U	M_{DL}	B_D	P_U	P_C	δ_b	δ_s	M_C
	In.	In.		Ft. Kips	Ft. Kips		Kips	Kips			Ft. Kips
MY	41.916	47.436	14.3	389.35	0.00	0.000	378	0	1.000	1.000	389
MZ	41.916	47.436	18.6	117.75	42.07	0.357	378	0	1.000	1.000	118

* MINIMUM MOMENT CONTROLS

JMS 7/06

WDB 7/06

```
OOOOOOO    OOOOO    OOOOO    OOOOO    OOOOO   OO
OO    OO   OO  OO   OO  OO   OO  OO   OO  OO   OO
OO    OO   OO  OO   OO  OO   OO  OO   OO  OO   OO
OO    OO   OO       OO  OO   OO       OO  OO   OO
OO    OO   OO       OOOOOOO  OO       OO  OO   OO
OOOOOOO    OO  OO   OO  OO   OO  OO   OO  OO   OO
OO         OO  OO   OO  OO   OO  OO   OO  OO   OO
OO          OOOOO   OO  OO    OOOOO    OOOOO   OOOOO  (TM)
```

==========
Computer program for the Strength Design of Reinforced Concrete Sections
==========

Licensee stated above acknowledges that Portland Cement Association (PCA) is not and cannot be responsible for either the accuracy or adequacy of the material supplied as input for processing by the PCACOL(tm) computer program. Furthermore, PCA neither makes any warranty expressed nor implied with respect to the correctness of the output prepared by the PCACOL(tm) program. Although PCA has endeavored to produce PCACOL(tm) error free, the program is not and can't be certified infallible. The final and only responsibility for analysis, design and engineering documents is the licensees. Accordingly, PCA disclaims all responsibility in contract, negligence or other tort for any analysis, design or engineering documents prepared in connection with the use of the PCACOL(tm) program.

BASED ON PLANS.

General Information:
==========

File Name: S:\DGN-ST\NORTHC~1\BONNER~1\ANALYSIS\PIERS\HLB143~1\PCACOL~1\M4PLAN.COL
Project: BONNER BRIDGE - OREGON INLET
Column: HLB #143 Engineer: JMJ
Code: ACI 318-95 Units: English

Run Option: Investigation Slenderness: Not considered
Run Axis: Biaxial Column Type: Structural

Material Properties:
==========

f'c = 3 ksi fy = 40 ksi
Ec = 3122.02 ksi Es = 29000 ksi
fc = 2.55 ksi Rupture strain = Infinity
Ultimate strain = 0.003 in/in
Beta1 = 0.85

Section:
==========

Rectangular: Width = 41.9 in Depth = 47.4 in

Gross section area, Ag = 1986.06 in^2
Ix = 371850 in^4 Iy = 290562 in^4
Xo = 0 in Yo = 0 in

Reinforcement:
==========

Rebar Database: User-defined

Size	Diam (in)	Area (in^2)	Size	Diam (in)	Area (in^2)	Size	Diam (in)	Area (in^2)
# 1	0.00	0.00	# 3	0.38	0.11	# 4	0.50	0.20
# 5	0.63	0.31	# 6	0.75	0.44	# 7	0.88	0.60
# 8	1.00	0.79	# 9	1.13	1.00	# 10	1.27	1.27
# 11	1.41	1.56	# 14	1.69	2.25	# 18	2.26	4.00

Confinement: Tied; #1 ties with #9 bars, #1 with larger bars.
phi(a) = 0.8, phi(b) = 0.9, phi(c) = 0.7

Layout: Rectangular
Pattern: Equal Bar Spacing (Cover to longitudinal reinforcement)
Total steel area, As = 37.44 in^2 at 1.89%
24 #11 Cover = 5 in

Factored Loads and Moments with Corresponding Capacities: (see user's manual for notation)
==========

No.	Pu kip	Mux k-ft	Muy k-ft	fMnx k-ft	fMny k-ft	fMn/Mu
1	639.0	108.0	190.0	1007.9	1778.7	9.355
2	404.0	68.0	347.0	390.3	1989.0	5.732
3	546.0	92.0	262.0	672.6	1907.0	7.282
4	534.0	90.0	155.0	1023.8	1763.2	11.375
5	388.0	65.0	332.0	389.3	1985.5	5.981
6	525.0	88.0	250.0	670.0	1912.5	7.646
7	387.0	65.0	355.0	363.9	1989.9	5.605
8	310.0	52.0	347.0	299.8	1978.5	5.703
9	357.0	60.0	361.0	328.7	1988.2	5.507
10	345.0	58.0	253.0	447.8	1963.2	7.758
11	298.0	50.0	332.0	297.6	1974.7	5.948
12	343.0	58.0	345.0	336.3	1982.8	5.749
13	687.0	116.0	106.0	1565.5	1435.0	13.514
14	452.0	600.0	180.0	2183.4	652.3	3.638
15	594.0	405.0	127.0	2138.8	672.0	5.282

16	582.0	98.0	90.0	1529.7	1403.4	15.602
17	435.0	577.0	161.0	2201.7	610.3	3.814
18	571.0	389.0	110.0	2176.1	615.4	5.594
19	423.0	71.0	96.0	1235.0	1666.1	17.369
20	346.0	600.0	180.0	2168.6	647.7	3.613
21	394.0	405.0	135.0	2147.7	716.2	5.303
22	381.0	64.0	61.0	1536.4	1465.4	24.014
23	333.0	577.0	161.0	2181.7	607.7	3.781
24	378.0	389.0	118.0	2170.2	661.5	5.581

*** Program completed as requested! ***

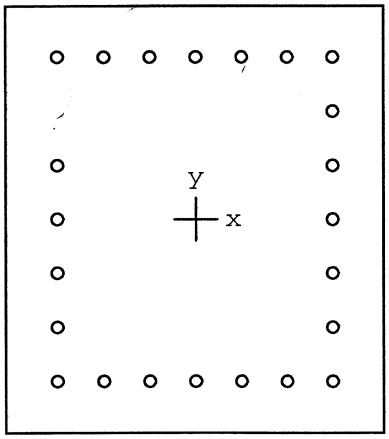

41.9 x 47.4 in

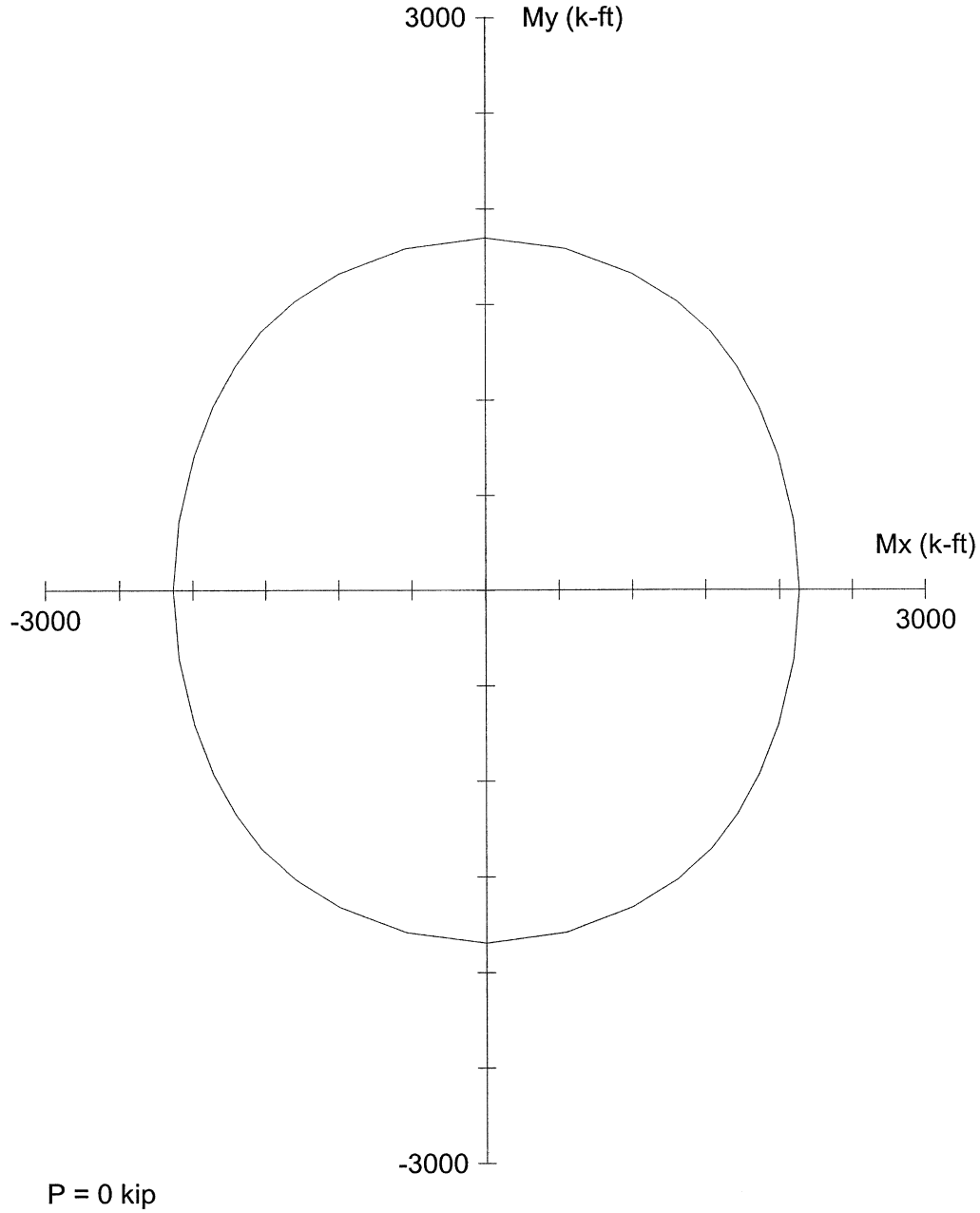

Code: ACI 318-95

Units: English

Run axis: Biaxial

Run option: Investigation

Slenderness: Not considered

mn type: Structural

Bars: User-defined

Date: 07/21/06

Time: 12:16:33

PCACOL V3.00 (PCA 1999) - Licensed to: Licensee name not yet specified.

File: S:\DGN-ST\NORTHC~1\BONNER~1\ANALYSIS\PIERS\HLB143~1\PCACOL~1\M4PLAN.COL

Project: BONNER BRIDGE - OREGON INLET

Column: HLB #143		Engineer: JMJ	
f'c = 3 ksi	fy = 40 ksi	Ag = 1986.06 in^2	24 #11 bars
Ec = 3122 ksi	Es = 29000 ksi	As = 37.44 in^2	Rho = 1.89%
fc = 2.55 ksi	e_rup = Infinity	Xo = 0.00 in	Ix = 371850 in^4
u = 0.003 in/in		Yo = 0.00 in	Iy = 290562 in^4
Beta1 = 0.85		Clear spacing = 3.67 in	Clear cover = 5.00 in
Confinement: Tied	phi(a) = 0.8, phi(b) = 0.9, phi(c) = 0.7		

JMJ 7/06
WDB 7/07

```
OOOOOOO    OOOOO    OOOOO    OOOOO    OOOOO   OO
OO    OO   OO  OO   OO  OO   OO  OO   OO  OO   OO
OO    OO   OO  OO   OO  OO   OO  OO   OO  OO   OO
OO    OO   OO       OO  OO   OO       OO  OO   OO
OO    OO   OO       OOOOOOO  OO       OO  OO   OO
OOOOOOO    OO  OO   OO  OO   OO  OO   OO  OO   OO
OO         OO  OO   OO  OO   OO  OO   OO  OO   OO
OO          OOOOO   OO  OO    OOOOO    OOOOO   OOOOO  (TM)
```

==========
Computer program for the Strength Design of Reinforced Concrete Sections
==========

Licensee stated above acknowledges that Portland Cement Association (PCA) is not and cannot be responsible for either the accuracy or adequacy of the material supplied as input for processing by the PCACOL(tm) computer program. Furthermore, PCA neither makes any warranty expressed nor implied with respect to the correctness of the output prepared by the PCACOL(tm) program. Although PCA has endeavored to produce PCACOL(tm) error free, the program is not and can't be certified infallible. The final and only responsibility for analysis, design and engineering documents is the licensees. Accordingly, PCA disclaims all responsibility in contract, negligence or other tort for any analysis, design or engineering documents prepared in connection with the use of the PCACOL(tm) program.

BASED ON FIELD DATA.
ASSUME 50% OVER LOSS.

General Information:
==========

File Name: S:\DGN-ST\NORTHC~1\BONNER~1\ANALYSIS\PIERS\HLB143~1\PCACOL~1\M4ACT.COL
Project: BONNER BRIDGE - OREGON INLET
Column: HLB #143 Engineer: JMJ
Code: ACI 318-95 Units: English

Run Option: Investigation Slenderness: Not considered
Run Axis: Biaxial Column Type: Structural

Material Properties:
==========

f'c = 4.4 ksi fy = 40 ksi
Ec = 3780.96 ksi Es = 29000 ksi
fc = 3.74 ksi Rupture strain = Infinity
Ultimate strain = 0.003 in/in
Beta1 = 0.83

Section:
==========

Rectangular: Width = 36.9 in Depth = 42.4 in

Gross section area, Ag = 1564.56 in^2
Ix = 234392 in^4 Iy = 177527 in^4
Xo = 0 in Yo = 0 in

Reinforcement:
==========

Rebar Database: User-defined

Size	Diam (in)	Area (in^2)	Size	Diam (in)	Area (in^2)	Size	Diam (in)	Area (in^2)
# 1	0.00	0.00	# 3	0.38	0.11	# 4	0.50	0.20
# 5	0.63	0.31	# 6	0.75	0.44	# 7	0.88	0.60
# 8	1.00	0.79	# 9	1.13	1.00	# 10	1.27	1.27
# 11	1.41	1.56	# 14	1.69	2.25	# 18	2.26	4.00

Confinement: Tied; #1 ties with #9 bars, #1 with larger bars.
phi(a) = 0.8, phi(b) = 0.9, phi(c) = 0.7

Layout: Rectangular
Pattern: Equal Bar Spacing (Cover to longitudinal reinforcement)
Total steel area, As = 37.44 in^2 at 2.39%
24 #11 Cover = 2.5 in

Factored Loads and Moments with Corresponding Capacities: (see user's manual for notation)
==========

No.	Pu kip	Mux k-ft	Muy k-ft	fMnx k-ft	fMny k-ft	fMn/Mu
1	639.0	108.0	190.0	1003.4	1761.2	9.275
2	404.0	68.0	347.0	378.1	1936.1	5.579
3	546.0	92.0	262.0	663.9	1899.7	7.247
4	534.0	90.0	155.0	1023.7	1757.6	11.348
5	388.0	65.0	332.0	377.6	1930.4	5.814
6	525.0	88.0	250.0	666.8	1895.5	7.581
7	387.0	65.0	355.0	351.2	1934.7	5.448
8	310.0	52.0	347.0	285.3	1915.5	5.519
9	357.0	60.0	361.0	320.1	1928.7	5.343
10	345.0	58.0	253.0	433.5	1903.0	7.519
11	298.0	50.0	332.0	290.5	1909.4	5.753
12	343.0	58.0	345.0	326.0	1922.2	5.573
13	687.0	116.0	106.0	1535.5	1401.5	13.230
14	452.0	600.0	180.0	2157.7	646.6	3.596
15	594.0	405.0	127.0	2162.4	677.6	5.339

16	582.0	98.0	90.0	1549.0	1426.9	15.828
17	435.0	577.0	161.0	2169.1	607.7	3.760
18	571.0	389.0	110.0	2195.0	617.7	5.641
19	423.0	71.0	96.0	1222.4	1647.0	17.178
20	346.0	600.0	180.0	2125.4	635.9	3.541
21	394.0	405.0	135.0	2114.1	703.2	5.219
22	381.0	64.0	61.0	1516.3	1447.0	23.706
23	333.0	577.0	161.0	2135.8	597.8	3.702
24	378.0	389.0	118.0	2134.2	644.0	5.484

*** Program completed as requested! ***

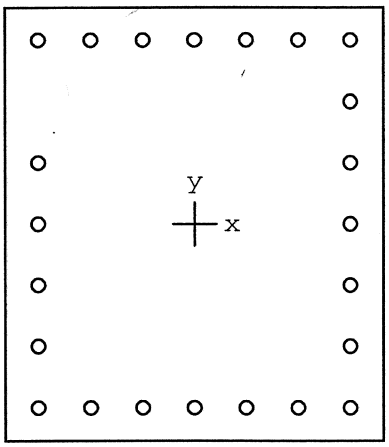

36.9 x 42.4 in

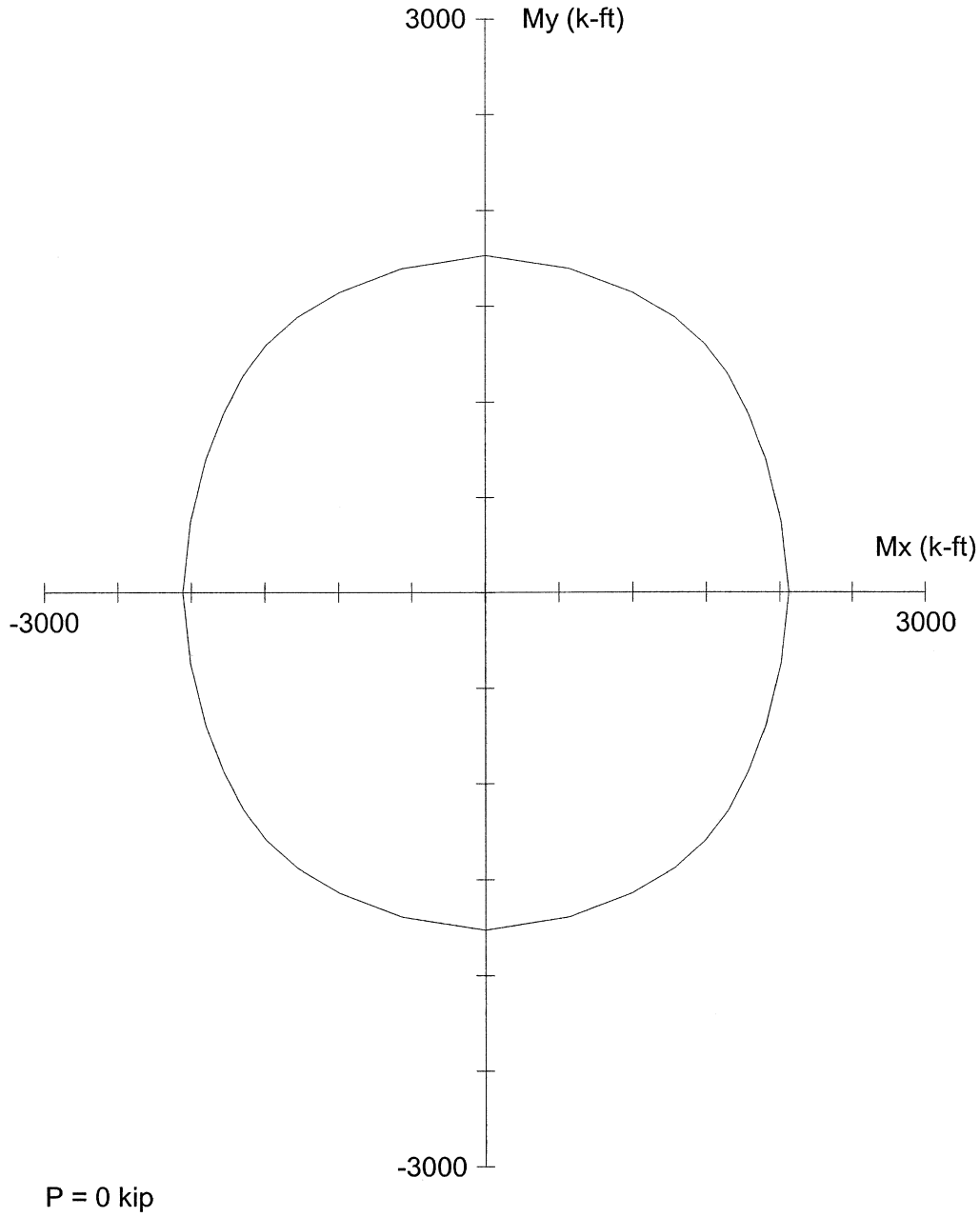

Code: ACI 318-95

Units: English

Run axis: Biaxial

Run option: Investigation

Slenderness: Not considered

mn type: Structural

Bars: User-defined

Date: 07/25/06

Time: 13:40:14

PCACOL V3.00 (PCA 1999) - Licensed to: Licensee name not yet specified.

File: S:\DGN-ST\NORTHC~1\BONNER~1\ANALYSIS\PIERS\HLB143~1\PCACOL~1\M4ACT.COL

Project: BONNER BRIDGE - OREGON INLET

Column: HLB #143		Engineer: JMJ	
f'c = 4.4 ksi	fy = 40 ksi	Ag = 1564.56 in^2	24 #11 bars
Ec = 3781 ksi	Es = 29000 ksi	As = 37.44 in^2	Rho = 2.39%
fc = 3.74 ksi	e_rup = Infinity	Xo = 0.00 in	Ix = 234392 in^4
ı = 0.003 in/in		Yo = 0.00 in	Iy = 177527 in^4
Beta1 = 0.83		Clear spacing = 3.67 in	Clear cover = 2.50 in
Confinement: Tied	phi(a) = 0.8, phi(b) = 0.9, phi(c) = 0.7		

H. W. LOCHNER, INC.

PROJECT: BONNER BRIDGE - OREGON INLET NORTH CAROLINA JMJ Jul-06
SUBJECT: HIGH LEVEL BENT ANALYSIS WDB 7/06
HLB 143 MEM. 5 JT. 3

COLUMN LOADS

PMAX

HLB 143 MEMBER 5 JOINT 3

	GROUP 1				GROUP 2		
	P	MY	MZ		P	MY	MZ
DL	289.35	0.00	81.48	DL	289.35	0.00	81.48
LL	121.24	0.00	38.91	LL	0.00	0.00	0.00
GROUP 1	0.00	0.00	0.00	GROUP 2	-21.29	0.84	-185.67
SERVICE	410.59	0.00	120.39	SERVICE	268.06	0.84	-104.19
STRENGTH	638.84	0.00	190.23	STRENGTH	348.48	1.09	-135.45

	GROUP 3				GROUP 4		
	P	MY	MZ		P	MY	MZ
DL	289.35	0.00	81.48	DL	289.35	0.00	81.48
LL	121.24	0.00	38.91	LL	121.24	0.00	38.91
GROUP 3	-9.32	0.50	-81.12	GROUP 4	-0.04	0.00	-1.62
SERVICE	401.27	0.50	39.27	SERVICE	410.55	0.00	118.77
STRENGTH	521.65	0.65	51.05	STRENGTH	533.72	0.00	154.40

	GROUP 5				GROUP 6		
	P	MY	MZ		P	MY	MZ
DL	289.35	0.00	81.48	DL	289.35	0.00	81.48
LL	0.00	0.00	0.00	LL	121.24	0.00	38.91
GROUP 5	-21.33	0.84	-187.28	GROUP 6	-9.36	0.50	-82.74
SERVICE	268.02	0.84	-105.80	SERVICE	401.23	0.50	37.65
STRENGTH	335.03	1.05	-132.25	STRENGTH	501.54	0.63	47.06

SLENDERNESS EFFECTS IN COMPRESSION MEMBERS (AASHTO 8.16.5)

f'c = 3000 psi PHI = 0.70 W_C = 150 PCF

$E_C = W_C^{1.5} * 33 * f'c^{0.5}$ = 3320561 PSI Width of Rect. Col. = B = 41.916 In.

Depth of Rect. Col = D = 47.436 In.

$r_Y = 0.30*D$ = 14.23 In. L_Y = 8.5 Ft. K_Y = 2.0

$r_Z = 0.30*B$ = 12.57 In. L_Z = 16.25 Ft. K_Z = 1.2

I_{YY} = $B*D^3/12$ I_{YY} = 372840 In^4

I_{ZZ} = $D*B^3/12$ I_{ZZ} = 291116 In^5

$K_Y L_Y/r$	=	14.3	<	22	NO SLENDERNESS EFFECT
$K_Z L_Z/r$	=	18.6	<	22	NO SLENDERNESS EFFECT

H. W. LOCHNER, INC.

PROJECT: BONNER BRIDGE - OREGON INLET NORTH CAROLINA JMJ Jul-06
SUBJECT: HIGH LEVEL BENT ANALYSIS WDB 7/06
HLB 143 MEM. 5 JT. 3

SLENDERNESS EFFECTS IN RECTANGULAR COMPRESSION MEMBERS (AASHTO 8.16.5)

GROUP 1

	B	D	KL/R	M_U	M_{DL}	B_D	P_U	P_C	δ_b	δ_s	M_C	
	In.	In.		Ft. Kips	Ft. Kips		Kips	Kips			Ft. Kips	
MY	41.916	47.436	14.3	0.00	0.00	0.000	639	0	1.000	1.000	108	*
MZ	41.916	47.436	18.6	190.23	105.92	0.557	639	0	1.000	1.000	190	

GROUP 2

	B	D	KL/R	M_U	M_{DL}	B_D	P_U	P_C	δ_b	δ_s	M_C	
	In.	In.		Ft. Kips	Ft. Kips		Kips	Kips			Ft. Kips	
MY	41.916	47.436	14.3	1.09	0.00	0.000	348	0	1.000	1.000	59	*
MZ	41.916	47.436	18.6	135.45	105.92	0.782	348	0	1.000	1.000	135	

GROUP 3

	B	D	KL/R	M_U	M_{DL}	B_D	P_U	P_C	δ_b	δ_s	M_C	
	In.	In.		Ft. Kips	Ft. Kips		Kips	Kips			Ft. Kips	
MY	41.916	47.436	14.3	0.65	0.00	0.000	522	0	1.000	1.000	88	*
MZ	41.916	47.436	18.6	51.05	105.92	2.075	522	0	1.000	1.000	81	*

GROUP 4

	B	D	KL/R	M_U	M_{DL}	B_D	P_U	P_C	δ_b	δ_s	M_C	
	In.	In.		Ft. Kips	Ft. Kips		Kips	Kips			Ft. Kips	
MY	41.916	47.436	14.3	0.00	0.00	0.000	534	0	1.000	1.000	90	*
MZ	41.916	47.436	18.6	154.40	105.92	0.686	534	0	1.000	1.000	154	

GROUP 5

	B	D	KL/R	M_U	M_{DL}	B_D	P_U	P_C	δ_b	δ_s	M_C	
	In.	In.		Ft. Kips	Ft. Kips		Kips	Kips			Ft. Kips	
MY	41.916	47.436	14.3	1.05	0.00	0.000	335	0	1.000	1.000	56	*
MZ	41.916	47.436	18.6	132.25	105.92	0.801	335	0	1.000	1.000	132	

GROUP 6

	B	D	KL/R	M_U	M_{DL}	B_D	P_U	P_C	δ_b	δ_s	M_C	
	In.	In.		Ft. Kips	Ft. Kips		Kips	Kips			Ft. Kips	
MY	41.916	47.436	14.3	0.63	0.00	0.000	502	0	1.000	1.000	85	*
MZ	41.916	47.436	18.6	47.06	105.92	2.251	502	0	1.000	1.000	78	*

* MINIMUM MOMENT CONTROLS

H. W. LOCHNER, INC.

PROJECT: BONNER BRIDGE - OREGON INLET NORTH CAROLINA JMJ Jul-06
SUBJECT: HIGH LEVEL BENT ANALYSIS WDB 7/06
HLB 143 MEM. 5 JT. 3

COLUMN LOADS

PMIN

HLB 143 MEMBER 5 JOINT 3

GROUP 1

	P	MY	MZ
DL	217.01	0.00	81.48
LL	48.38	0.00	114.83
GROUP 1	0.00	0.00	0.00
SERVICE	265.39	0.00	196.31
STRENGTH	386.94	0.00	354.72

GROUP 2

	P	MY	MZ
DL	217.01	0.00	81.48
LL	0.00	0.00	0.00
GROUP 2	-21.29	0.84	-185.67
SERVICE	195.72	0.84	-104.19
STRENGTH	254.44	1.09	-135.45

GROUP 3

	P	MY	MZ
DL	217.01	0.00	81.48
LL	48.38	0.00	114.83
GROUP 3	-9.32	0.50	-81.12
SERVICE	256.07	0.50	115.19
STRENGTH	332.89	0.65	149.75

GROUP 4

	P	MY	MZ
DL	217.01	0.00	81.48
LL	48.38	0.00	114.83
GROUP 4	-0.04	0.00	-1.62
SERVICE	265.35	0.00	194.69
STRENGTH	344.96	0.00	253.10

GROUP 5

	P	MY	MZ
DL	217.01	0.00	81.48
LL	0.00	0.00	0.00
GROUP 5	-21.33	0.84	-187.28
SERVICE	195.68	0.84	-105.80
STRENGTH	244.60	1.05	-132.25

GROUP 6

	P	MY	MZ
DL	217.01	0.00	81.48
LL	48.38	0.00	114.83
GROUP 6	-9.36	0.50	-82.74
SERVICE	256.03	0.50	113.57
STRENGTH	320.04	0.63	141.96

SLENDERNESS EFFECTS IN COMPRESSION MEMBERS (AASHTO 8.16.5)

f'c = 3000 psi PHI = 0.70 W_C = 150 PCF

$E_C = W_C^{1.5} * 33 * f'c^{0.5}$ = 3320561 PSI Width of Rect. Col. = B = 41.916 In.

Depth of Rect. Col = D = 47.436 In.

$r_Y = 0.30*D$ = 14.23 In. L_Y = 8.5 Ft. K_Y = 2.0

$r_Z = 0.30*B$ = 12.57 In. L_Z = 16.25 Ft. K_Z = 1.2

I_{YY} = $B*D^3/12$ I_{YY} = 372840 In^4

I_{ZZ} = $D*B^3/12$ I_{ZZ} = 291116 In^5

$K_Y L_Y/r$ = 14.3 < 22 NO SLENDERNESS EFFECT

$K_Z L_Z/r$ = 18.6 < 22 NO SLENDERNESS EFFECT

H. W. LOCHNER, INC.

PROJECT: BONNER BRIDGE - OREGON INLET NORTH CAROLINA JMJ Jul-06
SUBJECT: HIGH LEVEL BENT ANALYSIS WDB 7/06
HLB 143 MEM. 5 JT. 3

SLENDERNESS EFFECTS IN RECTANGULAR COMPRESSION MEMBERS (AASHTO 8.16.5)

GROUP 1

	B	D	KL/R	M_U	M_{DL}	B_D	P_U	P_C	δ_b	δ_s	M_C	
	In.	In.		Ft. Kips	Ft. Kips		Kips	Kips			Ft. Kips	
MY	41.916	47.436	14.3	0.00	0.00	0.000	387	0	1.000	1.000	65	*
MZ	41.916	47.436	18.6	354.72	105.92	0.299	387	0	1.000	1.000	355	

GROUP 2

	B	D	KL/R	M_U	M_{DL}	B_D	P_U	P_C	δ_b	δ_s	M_C	
	In.	In.		Ft. Kips	Ft. Kips		Kips	Kips			Ft. Kips	
MY	41.916	47.436	14.3	1.09	0.00	0.000	254	0	1.000	1.000	43	*
MZ	41.916	47.436	18.6	135.45	105.92	0.782	254	0	1.000	1.000	135	

GROUP 3

	B	D	KL/R	M_U	M_{DL}	B_D	P_U	P_C	δ_b	δ_s	M_C	
	In.	In.		Ft. Kips	Ft. Kips		Kips	Kips			Ft. Kips	
MY	41.916	47.436	14.3	0.65	0.00	0.000	333	0	1.000	1.000	56	*
MZ	41.916	47.436	18.6	149.75	105.92	0.707	333	0	1.000	1.000	150	

GROUP 4

	B	D	KL/R	M_U	M_{DL}	B_D	P_U	P_C	δ_b	δ_s	M_C	
	In.	In.		Ft. Kips	Ft. Kips		Kips	Kips			Ft. Kips	
MY	41.916	47.436	14.3	0.00	0.00	0.000	345	0	1.000	1.000	58	*
MZ	41.916	47.436	18.6	253.10	105.92	0.419	345	0	1.000	1.000	253	

GROUP 5

	B	D	KL/R	M_U	M_{DL}	B_D	P_U	P_C	δ_b	δ_s	M_C	
	In.	In.		Ft. Kips	Ft. Kips		Kips	Kips			Ft. Kips	
MY	41.916	47.436	14.3	1.05	0.00	0.000	245	0	1.000	1.000	41	*
MZ	41.916	47.436	18.6	132.25	105.92	0.801	245	0	1.000	1.000	132	

GROUP 6

	B	D	KL/R	M_U	M_{DL}	B_D	P_U	P_C	δ_b	δ_s	M_C	
	In.	In.		Ft. Kips	Ft. Kips		Kips	Kips			Ft. Kips	
MY	41.916	47.436	14.3	0.63	0.00	0.000	320	0	1.000	1.000	54	*
MZ	41.916	47.436	18.6	141.96	105.92	0.746	320	0	1.000	1.000	142	

* MINIMUM MOMENT CONTROLS

H. W. LOCHNER, INC.

PROJECT: BONNER BRIDGE - OREGON INLET NORTH CAROLINA JMJ Jul-06
SUBJECT: HIGH LEVEL BENT ANALYSIS WDB 7/06
HLB 143 MEM. 5 JT. 6

COLUMN LOADS

PMAX

HLB 143 MEMBER 5 JOINT 6

GROUP 1

	P	MY	MZ
DL	-326.63	0.00	32.43
LL	-121.24	0.00	18.16
GROUP 1	0.00	0.00	0.00
SERVICE	-447.87	0.00	50.59
STRENGTH	-687.31	0.00	81.51

GROUP 2

	P	MY	MZ
DL	-326.63	0.00	32.43
LL	0.00	0.00	0.00
GROUP 2	21.44	461.72	-105.92
SERVICE	-305.19	461.72	-73.49
STRENGTH	-396.75	600.24	-95.54

GROUP 3

	P	MY	MZ
DL	-326.63	0.00	32.43
LL	-121.24	0.00	18.16
GROUP 3	9.36	311.49	-46.97
SERVICE	-438.51	311.49	3.62
STRENGTH	-570.06	404.94	4.71

GROUP 4

	P	MY	MZ
DL	-326.63	0.00	32.43
LL	-121.24	0.00	18.16
GROUP 4	0.04	0.00	-9.84
SERVICE	-447.83	0.00	40.75
STRENGTH	-582.18	0.00	52.98

GROUP 5

	P	MY	MZ
DL	-326.63	0.00	32.43
LL	0.00	0.00	0.00
GROUP 5	21.48	461.72	-115.77
SERVICE	-305.15	461.72	-83.34
STRENGTH	-381.44	577.15	-104.18

GROUP 6

	P	MY	MZ
DL	-326.63	0.00	32.43
LL	-121.24	0.00	18.16
GROUP 6	9.40	311.49	-56.81
SERVICE	-438.47	311.49	-6.22
STRENGTH	-548.09	389.36	-7.78

SLENDERNESS EFFECTS IN COMPRESSION MEMBERS (AASHTO 8.16.5)

f'c = 3000 psi PHI = 0.70 W_C = 150 PCF

$E_C = W_C^{1.5} * 33 * f'c^{0.5}$ = 3320561 PSI Width of Rect. Col. = B = 41.916 In.

Depth of Rect. Col = D = 47.436 In.

$r_Y = 0.30*D$ = 14.23 In. L_Y = 8.5 Ft. K_Y = 2.0

$r_Z = 0.30*B$ = 12.57 In. L_Z = 16.25 Ft. K_Z = 1.2

I_{YY} = $B*D^3/12$ I_{YY} = 372840 In^4

I_{ZZ} = $D*B^3/12$ I_{ZZ} = 291116 In^5

$K_Y L_Y/r$	=	14.3	<	22	NO SLENDERNESS EFFECT
$K_Z L_Z/r$	=	18.6	<	22	NO SLENDERNESS EFFECT

H. W. LOCHNER, INC.

PROJECT: BONNER BRIDGE - OREGON INLET NORTH CAROLINA
SUBJECT: HIGH LEVEL BENT ANALYSIS
HLB 143 MEM. 5 JT. 6

JMJ Jul-06
WDB 7/06

SLENDERNESS EFFECTS IN RECTANGULAR COMPRESSION MEMBERS (AASHTO 8.16.5)

GROUP 1

	B	D	KL/R	M_U	M_{DL}	B_D	P_U	P_C	δ_b	δ_s	M_C	
	In.	In.		Ft. Kips	Ft. Kips		Kips	Kips			Ft. Kips	
MY	41.916	47.436	14.3	0.00	0.00	0.000	687	0	1.000	1.000	116	*
MZ	41.916	47.436	18.6	81.51	42.16	0.517	687	0	1.000	1.000	106	*

GROUP 2

	B	D	KL/R	M_U	M_{DL}	B_D	P_U	P_C	δ_b	δ_s	M_C
	In.	In.		Ft. Kips	Ft. Kips		Kips	Kips			Ft. Kips
MY	41.916	47.436	14.3	600.24	0.00	0.000	397	0	1.000	1.000	600
MZ	41.916	47.436	18.6	95.54	42.16	0.441	397	0	1.000	1.000	96

GROUP 3

	B	D	KL/R	M_U	M_{DL}	B_D	P_U	P_C	δ_b	δ_s	M_C	
	In.	In.		Ft. Kips	Ft. Kips		Kips	Kips			Ft. Kips	
MY	41.916	47.436	14.3	404.94	0.00	0.000	570	0	1.000	1.000	405	
MZ	41.916	47.436	18.6	4.71	42.16	8.959	570	0	1.000	1.000	88	*

GROUP 4

	B	D	KL/R	M_U	M_{DL}	B_D	P_U	P_C	δ_b	δ_s	M_C	
	In.	In.		Ft. Kips	Ft. Kips		Kips	Kips			Ft. Kips	
MY	41.916	47.436	14.3	0.00	0.00	0.000	582	0	1.000	1.000	98	*
MZ	41.916	47.436	18.6	52.98	42.16	0.796	582	0	1.000	1.000	90	*

GROUP 5

	B	D	KL/R	M_U	M_{DL}	B_D	P_U	P_C	δ_b	δ_s	M_C
	In.	In.		Ft. Kips	Ft. Kips		Kips	Kips			Ft. Kips
MY	41.916	47.436	14.3	577.15	0.00	0.000	381	0	1.000	1.000	577
MZ	41.916	47.436	18.6	104.18	42.16	0.405	381	0	1.000	1.000	104

GROUP 6

	B	D	KL/R	M_U	M_{DL}	B_D	P_U	P_C	δ_b	δ_s	M_C	
	In.	In.		Ft. Kips	Ft. Kips		Kips	Kips			Ft. Kips	
MY	41.916	47.436	14.3	389.36	0.00	0.000	548	0	1.000	1.000	389	
MZ	41.916	47.436	18.6	7.78	42.16	5.422	548	0	1.000	1.000	85	*

* MINIMUM MOMENT CONTROLS

H. W. LOCHNER, INC.

PROJECT: BONNER BRIDGE - OREGON INLET NORTH CAROLINA JMJ Jul-06
SUBJECT: HIGH LEVEL BENT ANALYSIS WDB 7/06
HLB 143 MEM. 5 JT. 6

COLUMN LOADS

PMIN

HLB 143 MEMBER 5 JOINT 6

GROUP 1

	P	MY	MZ
DL	-244.97	0.00	32.43
LL	-48.38	0.00	24.74
GROUP 1	0.00	0.00	0.00
SERVICE	-293.35	0.00	57.17
STRENGTH	-423.29	0.00	95.76

GROUP 2

	P	MY	MZ
DL	-244.97	0.00	32.43
LL	0.00	0.00	0.00
GROUP 2	21.44	461.72	-105.92
SERVICE	-223.53	461.72	-73.49
STRENGTH	-290.59	600.24	-95.54

GROUP 3

	P	MY	MZ
DL	-244.97	0.00	32.43
LL	-48.38	0.00	24.74
GROUP 3	9.36	311.49	-46.97
SERVICE	-283.99	311.49	10.20
STRENGTH	-369.19	404.94	13.26

GROUP 4

	P	MY	MZ
DL	-244.97	0.00	32.43
LL	-48.38	0.00	24.74
GROUP 4	0.04	0.00	-9.84
SERVICE	-293.31	0.00	47.33
STRENGTH	-381.31	0.00	61.53

GROUP 5

	P	MY	MZ
DL	-244.97	0.00	32.43
LL	0.00	0.00	0.00
GROUP 5	21.48	461.72	-115.77
SERVICE	-223.49	461.72	-83.34
STRENGTH	-279.37	577.15	-104.18

GROUP 6

	P	MY	MZ
DL	-244.97	0.00	32.43
LL	-48.38	0.00	24.74
GROUP 6	9.40	311.49	-56.81
SERVICE	-283.95	311.49	0.36
STRENGTH	-354.94	389.36	0.45

SLENDERNESS EFFECTS IN COMPRESSION MEMBERS (AASHTO 8.16.5)

f'c = 3000 psi PHI = 0.70 W_C = 150 PCF

$E_C = W_C^{1.5} * 33 * f'c^{0.5}$ = 3320561 PSI Width of Rect. Col. = B = 41.916 In.

Depth of Rect. Col = D = 47.436 In.

$r_Y = 0.30*D$ = 14.23 In. L_Y = 8.5 Ft. K_Y = 2.0

$r_Z = 0.30*B$ = 12.57 In. L_Z = 16.25 Ft. K_Z = 1.2

I_{YY} = $B*D^3/12$ I_{YY} = 372840 In^4

I_{ZZ} = $D*B^3/12$ I_{ZZ} = 291116 In^5

$K_Y L_Y/r$ = 14.3 < 22 NO SLENDERNESS EFFECT

$K_Z L_Z/r$ = 18.6 < 22 NO SLENDERNESS EFFECT

H. W. LOCHNER, INC.

PROJECT: BONNER BRIDGE - OREGON INLET NORTH CAROLINA
SUBJECT: HIGH LEVEL BENT ANALYSIS
HLB 143 MEM. 5 JT. 6

JMJ Jul-06
WDB 7/06

SLENDERNESS EFFECTS IN RECTANGULAR COMPRESSION MEMBERS (AASHTO 8.16.5)

GROUP 1

	B	D	KL/R	M_U	M_{DL}	B_D	P_U	P_C	δ_b	δ_s	M_C	
	In.	In.		Ft. Kips	Ft. Kips		Kips	Kips			Ft. Kips	
MY	41.916	47.436	14.3	0.00	0.00	0.000	423	0	1.000	1.000	71	*
MZ	41.916	47.436	18.6	95.76	42.16	0.440	423	0	1.000	1.000	96	

GROUP 2

	B	D	KL/R	M_U	M_{DL}	B_D	P_U	P_C	δ_b	δ_s	M_C
	In.	In.		Ft. Kips	Ft. Kips		Kips	Kips			Ft. Kips
MY	41.916	47.436	14.3	600.24	0.00	0.000	291	0	1.000	1.000	600
MZ	41.916	47.436	18.6	95.54	42.16	0.441	291	0	1.000	1.000	96

GROUP 3

	B	D	KL/R	M_U	M_{DL}	B_D	P_U	P_C	δ_b	δ_s	M_C	
	In.	In.		Ft. Kips	Ft. Kips		Kips	Kips			Ft. Kips	
MY	41.916	47.436	14.3	404.94	0.00	0.000	369	0	1.000	1.000	405	
MZ	41.916	47.436	18.6	13.26	42.16	3.179	369	0	1.000	1.000	57	*

GROUP 4

	B	D	KL/R	M_U	M_{DL}	B_D	P_U	P_C	δ_b	δ_s	M_C	
	In.	In.		Ft. Kips	Ft. Kips		Kips	Kips			Ft. Kips	
MY	41.916	47.436	14.3	0.00	0.00	0.000	381	0	1.000	1.000	64	*
MZ	41.916	47.436	18.6	61.53	42.16	0.685	381	0	1.000	1.000	62	

GROUP 5

	B	D	KL/R	M_U	M_{DL}	B_D	P_U	P_C	δ_b	δ_s	M_C
	In.	In.		Ft. Kips	Ft. Kips		Kips	Kips			Ft. Kips
MY	41.916	47.436	14.3	577.15	0.00	0.000	279	0	1.000	1.000	577
MZ	41.916	47.436	18.6	104.18	42.16	0.405	279	0	1.000	1.000	104

GROUP 6

	B	D	KL/R	M_U	M_{DL}	B_D	P_U	P_C	δ_b	δ_s	M_C	
	In.	In.		Ft. Kips	Ft. Kips		Kips	Kips			Ft. Kips	
MY	41.916	47.436	14.3	389.36	0.00	0.000	355	0	1.000	1.000	389	
MZ	41.916	47.436	18.6	0.45	42.16	93.687	355	0	1.000	1.000	55	*

* MINIMUM MOMENT CONTROLS

JMJ 7/06

WDB 7/06

```
OOOOOOO    OOOOO    OOOOO    OOOOO    OOOOO    OO
OO    OO   OO  OO   OO  OO   OO  OO   OO  OO   OO
OO    OO   OO  OO   OO  OO   OO  OO   OO  OO   OO
OO    OO   OO       OO  OO   OO       OO  OO   OO
OO    OO   OO       OOOOOOO  OO       OO  OO   OO
OOOOOOO    OO  OO   OO  OO   OO  OO   OO  OO   OO
OO         OO  OO   OO  OO   OO  OO   OO  OO   OO
OO          OOOOO   OO  OO    OOOOO    OOOOO    OOOOO  (TM)
```

==========
Computer program for the Strength Design of Reinforced Concrete Sections
==========

Licensee stated above acknowledges that Portland Cement Association (PCA) is not and cannot be responsible for either the accuracy or adequacy of the material supplied as input for processing by the PCACOL(tm) computer program. Furthermore, PCA neither makes any warranty expressed nor implied with respect to the correctness of the output prepared by the PCACOL(tm) program. Although PCA has endeavored to produce PCACOL(tm) error free, the program is not and can't be certified infallible. The final and only responsibility for analysis, design and engineering documents is the licensees. Accordingly, PCA disclaims all responsibility in contract, negligence or other tort for any analysis, design or engineering documents prepared in connection with the use of the PCACOL(tm) program.

BASED ON PLANS.

General Information:
==========

File Name: S:\DGN-ST\NORTHC~1\BONNER~1\ANALYSIS\PIERS\HLB143~1\PCACOL~1\M5PLAN.COL
Project: BONNER BRIDGE - OREGON INLET
Column: HLB #143 Engineer: JMJ
Code: ACI 318-95 Units: English

Run Option: Investigation Slenderness: Not considered
Run Axis: Biaxial Column Type: Structural

Material Properties:
==========

f'c = 3 ksi fy = 40 ksi
Ec = 3122.02 ksi Es = 29000 ksi
fc = 2.55 ksi Rupture strain = Infinity
Ultimate strain = 0.003 in/in
Beta1 = 0.85

Section:
==========

Rectangular: Width = 41.9 in Depth = 47.4 in

Gross section area, Ag = 1986.06 in^2
Ix = 371850 in^4 Iy = 290562 in^4
Xo = 0 in Yo = 0 in

Reinforcement:
==========

Rebar Database: User-defined

Size	Diam (in)	Area (in^2)	Size	Diam (in)	Area (in^2)	Size	Diam (in)	Area (in^2)
# 1	0.00	0.00	# 3	0.38	0.11	# 4	0.50	0.20
# 5	0.63	0.31	# 6	0.75	0.44	# 7	0.88	0.60
# 8	1.00	0.79	# 9	1.13	1.00	# 10	1.27	1.27
# 11	1.41	1.56	# 14	1.69	2.25	# 18	2.26	4.00

Confinement: Tied; #1 ties with #9 bars, #1 with larger bars.
phi(a) = 0.8, phi(b) = 0.9, phi(c) = 0.7

Layout: Rectangular
Pattern: Equal Bar Spacing (Cover to longitudinal reinforcement)
Total steel area, As = 37.44 in^2 at 1.89%
24 #11 Cover = 5 in

Factored Loads and Moments with Corresponding Capacities: (see user's manual for notation)
==========

No.	Pu kip	Mux k-ft	Muy k-ft	fMnx k-ft	fMny k-ft	fMn/Mu
1	639.0	108.0	190.0	1007.9	1778.7	9.355
2	348.0	59.0	135.0	815.3	1857.6	13.769
3	522.0	88.0	81.0	1546.6	1422.3	17.568
4	534.0	90.0	154.0	1026.1	1762.0	11.431
5	335.0	56.0	132.0	789.9	1863.7	14.117
6	502.0	85.0	78.0	1556.2	1423.2	18.280
7	387.0	65.0	355.0	363.9	1989.9	5.605
8	254.0	43.0	135.0	604.6	1897.9	14.059
9	333.0	56.0	150.0	703.1	1890.7	12.599
10	345.0	58.0	253.0	447.8	1963.2	7.758
11	245.0	41.0	132.0	591.7	1898.8	14.389
12	320.0	54.0	142.0	717.6	1883.1	13.265
13	687.0	116.0	106.0	1565.5	1435.0	13.514
14	397.0	600.0	96.0	2285.8	369.7	3.811
15	570.0	405.0	88.0	2236.5	487.4	5.523

16	582.0	98.0	90.0	1529.7	1403.4	15.602
17	381.0	577.0	104.0	2269.3	409.4	3.933
18	548.0	389.0	85.0	2240.2	491.6	5.760
19	423.0	71.0	96.0	1235.0	1666.1	17.369
20	291.0	600.0	96.0	2253.5	356.8	3.755
21	369.0	405.0	57.0	2289.7	323.7	5.654
22	381.0	64.0	62.0	1522.9	1476.5	23.805
23	279.0	577.0	104.0	2236.5	403.0	3.876
24	355.0	389.0	55.0	2284.8	325.7	5.874

*** Program completed as requested! ***

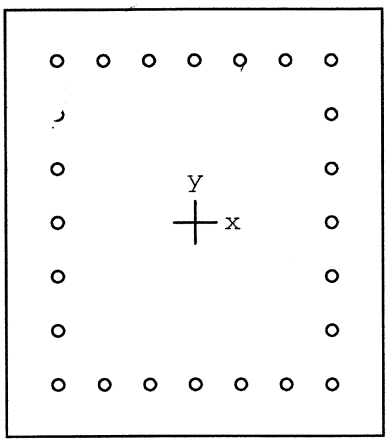

41.9 x 47.4 in

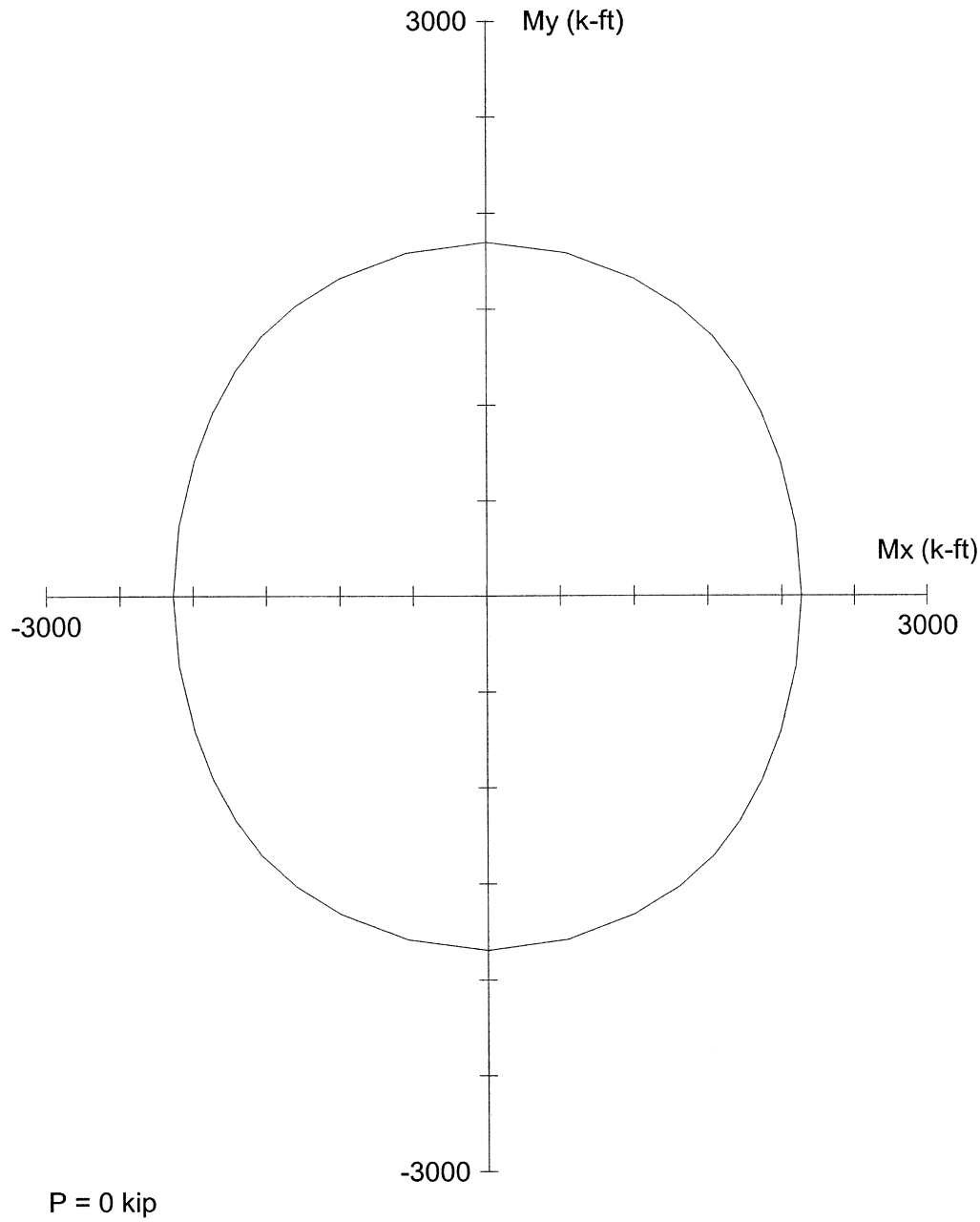

Code: ACI 318-95

Units: English

Run axis: Biaxial

Run option: Investigation

Slenderness: Not considered

ımn type: Structural

Bars: User-defined

Date: 07/21/06

Time: 12:56:43

PCACOL V3.00 (PCA 1999) - Licensed to: Licensee name not yet specified.

File: S:\DGN-ST\NORTHC~1\BONNER~1\ANALYSIS\PIERS\HLB143~1\PCACOL~1\M5PLAN.COL

Project: BONNER BRIDGE - OREGON INLET

Column: HLB #143		Engineer: JMJ	
f'c = 3 ksi	fy = 40 ksi	Ag = 1986.06 in^2	24 #11 bars
Ec = 3122 ksi	Es = 29000 ksi	As = 37.44 in^2	Rho = 1.89%
fc = 2.55 ksi	e_rup = Infinity	Xo = 0.00 in	Ix = 371850 in^4
ɯ = 0.003 in/in		Yo = 0.00 in	Iy = 290562 in^4
Beta1 = 0.85		Clear spacing = 3.67 in	Clear cover = 5.00 in
Confinement: Tied	phi(a) = 0.8, phi(b) = 0.9, phi(c) = 0.7		

JMJ 7/06

WDB 7/06

```
OOOOOOO    OOOOO    OOOOO    OOOOO    OOOOO   OO
OO    OO   OO  OO   OO  OO   OO  OO   OO  OO   OO
OO    OO   OO  OO   OO  OO   OO  OO   OO  OO   OO
OO    OO   OO       OO  OO   OO       OO  OO   OO
OO    OO   OO       OOOOOOO  OO       OO  OO   OO
OOOOOOO    OO  OO   OO  OO   OO  OO   OO  OO   OO
OO         OO  OO   OO  OO   OO  OO   OO  OO   OO
OO          OOOOO   OO  OO    OOOOO    OOOOO   OOOOO  (TM)
```

==========
Computer program for the Strength Design of Reinforced Concrete Sections
==========

Licensee stated above acknowledges that Portland Cement Association (PCA) is not and cannot be responsible for either the accuracy or adequacy of the material supplied as input for processing by the PCACOL(tm) computer program. Furthermore, PCA neither makes any warranty expressed nor implied with respect to the correctness of the output prepared by the PCACOL(tm) program. Although PCA has endeavored to produce PCACOL(tm) error free, the program is not and can't be certified infallible. The final and only responsibility for analysis, design and engineering documents is the licensees. Accordingly, PCA disclaims all responsibility in contract, negligence or other tort for any analysis, design or engineering documents prepared in connection with the use of the PCACOL(tm) program.

BASED ON FIELD DATA
ASSUME 50% OVERLOSS.

General Information:
==========

File Name: S:\DGN-ST\NORTHC~1\BONNER~1\ANALYSIS\PIERS\HLB143~1\PCACOL~1\M5ACT.COL
Project: BONNER BRIDGE - OREGON INLET
Column: HLB #143 Engineer: JMJ
Code: ACI 318-95 Units: English

Run Option: Investigation Slenderness: Not considered
Run Axis: Biaxial Column Type: Structural

Material Properties:
==========

f'c = 4.4 ksi fy = 40 ksi
Ec = 3780.96 ksi Es = 29000 ksi
fc = 3.74 ksi Rupture strain = Infinity
Ultimate strain = 0.003 in/in
Beta1 = 0.83

Section:
==========

Rectangular: Width = 36.9 in Depth = 42.4 in

Gross section area, Ag = 1564.56 in^2
Ix = 234392 in^4 Iy = 177527 in^4
Xo = 0 in Yo = 0 in

Reinforcement:
==========

Rebar Database: User-defined

Size	Diam (in)	Area (in^2)	Size	Diam (in)	Area (in^2)	Size	Diam (in)	Area (in^2)
# 1	0.00	0.00	# 3	0.38	0.11	# 4	0.50	0.20
# 5	0.63	0.31	# 6	0.75	0.44	# 7	0.88	0.60
# 8	1.00	0.79	# 9	1.13	1.00	# 10	1.27	1.27
# 11	1.41	1.56	# 14	1.69	2.25	# 18	2.26	4.00

Confinement: Tied; #1 ties with #9 bars, #1 with larger bars.
phi(a) = 0.8, phi(b) = 0.9, phi(c) = 0.7

Layout: Rectangular
Pattern: Equal Bar Spacing (Cover to longitudinal reinforcement)
Total steel area, As = 37.44 in^2 at 2.39%
24 #11 Cover = 2.5 in

Factored Loads and Moments with Corresponding Capacities: (see user's manual for notation)
==========

No.	Pu kip	Mux k-ft	Muy k-ft	fMnx k-ft	fMny k-ft	fMn/Mu
1	639.0	108.0	190.0	1003.4	1761.2	9.275
2	348.0	59.0	135.0	792.5	1809.8	13.410
3	522.0	88.0	81.0	1552.7	1430.3	17.651
4	534.0	90.0	154.0	1023.7	1757.6	11.403
5	335.0	56.0	132.0	771.8	1811.9	13.735
6	502.0	85.0	78.0	1558.3	1425.4	18.306
7	387.0	65.0	355.0	351.2	1934.7	5.448
8	254.0	43.0	135.0	586.2	1831.1	13.570
9	333.0	56.0	150.0	688.0	1836.8	12.250
10	345.0	58.0	253.0	433.5	1903.0	7.519
11	245.0	41.0	132.0	571.7	1830.1	13.871
12	320.0	54.0	142.0	697.1	1829.4	12.886
13	687.0	116.0	106.0	1535.5	1401.5	13.230
14	397.0	600.0	96.0	2242.1	359.5	3.737
15	570.0	405.0	88.0	2245.8	486.6	5.545

16	582.0	98.0	90.0	1549.0	1426.9	15.828
17	381.0	577.0	104.0	2224.4	400.9	3.855
18	548.0	389.0	85.0	2241.7	491.4	5.764
19	423.0	71.0	96.0	1222.4	1647.0	17.178
20	291.0	600.0	96.0	2194.1	353.9	3.658
21	369.0	405.0	57.0	2241.6	313.9	5.534
22	381.0	64.0	62.0	1501.7	1457.6	23.486
23	279.0	577.0	104.0	2176.8	394.4	3.773
24	355.0	389.0	55.0	2234.9	315.5	5.745

*** Program completed as requested! ***

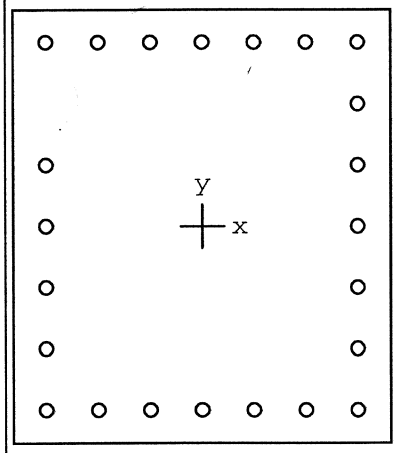

36.9 x 42.4 in

Code: ACI 318-95

Units: English

Run axis: Biaxial

Run option: Investigation

Slenderness: Not considered

mn type: Structural

Bars: User-defined

Date: 07/25/06

Time: 13:41:47

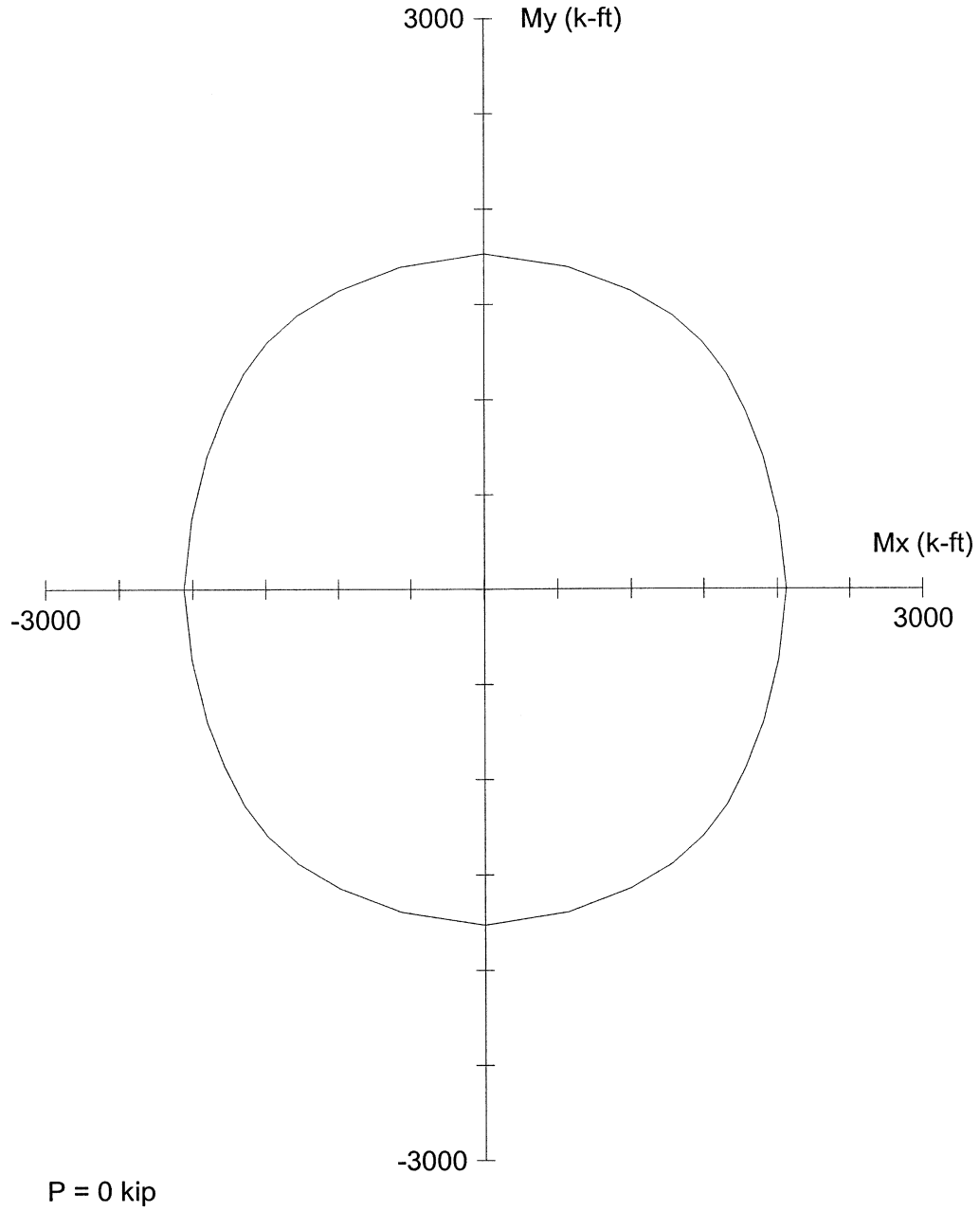

PCACOL V3.00 (PCA 1999) - Licensed to: Licensee name not yet specified.

File: S:\DGN-ST\NORTHC~1\BONNER~1\ANALYSIS\PIERS\HLB143~1\PCACOL~1\M5ACT.COL

Project: BONNER BRIDGE - OREGON INLET

Column: HLB #143		Engineer: JMJ	
f'c = 4.4 ksi	fy = 40 ksi	Ag = 1564.56 in^2	24 #11 bars
Ec = 3781 ksi	Es = 29000 ksi	As = 37.44 in^2	Rho = 2.39%
fc = 3.74 ksi	e_rup = Infinity	Xo = 0.00 in	Ix = 234392 in^4
ɹ = 0.003 in/in		Yo = 0.00 in	Iy = 177527 in^4
Beta1 = 0.83		Clear spacing = 3.67 in	Clear cover = 2.50 in
Confinement: Tied	phi(a) = 0.8, phi(b) = 0.9, phi(c) = 0.7		

H. W. LOCHNER, INC.

PROJECT: BONNER BRIDGE - OREGON INLET NORTH CAROLINA JMJ Jul-06
SUBJECT: HIGH LEVEL BENT ANALYSIS WDB 7/06
HLB 143 MEM. 7 JT. 5

COLUMN LOADS

PMAX

HLB 143 MEMBER 7 JOINT 5

GROUP 1

	P	MY	MZ
DL	346.14	0.00	20.77
LL	118.21	0.00	-39.77
GROUP 1	0.00	0.00	0.00
SERVICE	464.35	0.00	-19.00
STRENGTH	706.10	0.00	-59.17

GROUP 2

	P	MY	MZ
DL	346.14	0.00	20.77
LL	0.00	0.00	0.00
GROUP 2	46.93	461.39	156.50
SERVICE	393.07	461.39	177.27
STRENGTH	510.99	599.81	230.45

GROUP 3

	P	MY	MZ
DL	346.14	0.00	20.77
LL	118.21	0.00	-39.77
GROUP 3	20.21	311.25	64.70
SERVICE	484.56	311.25	45.70
STRENGTH	629.93	404.63	59.41

GROUP 4

	P	MY	MZ
DL	346.14	0.00	20.77
LL	118.21	0.00	-39.77
GROUP 4	0.22	0.00	14.27
SERVICE	464.57	0.00	-4.73
STRENGTH	603.94	0.00	-6.15

GROUP 5

	P	MY	MZ
DL	346.14	0.00	20.77
LL	0.00	0.00	0.00
GROUP 5	47.16	461.39	170.77
SERVICE	393.30	461.39	191.54
STRENGTH	491.63	576.74	239.43

GROUP 6

	P	MY	MZ
DL	346.14	0.00	20.77
LL	118.21	0.00	-39.77
GROUP 6	20.43	311.25	78.97
SERVICE	484.78	311.25	59.97
STRENGTH	605.98	389.06	74.96

SLENDERNESS EFFECTS IN COMPRESSION MEMBERS (AASHTO 8.16.5)

f'c = 3000 psi PHI = 0.70 W_C = 150 PCF

$E_C = W_C^{1.5} * 33 * f'c^{0.5}$ = 3320561 PSI Width of Rect. Col. = B = 41.916 In.

Depth of Rect. Col = D = 60.936 In.

$r_Y = 0.30*D$ = 18.28 In. L_Y = 8.5 Ft. K_Y = 2.0

$r_Z = 0.30*B$ = 12.57 In. L_Z = 18 Ft. K_Z = 1.2

I_{YY} = $B*D^3/12$ I_{YY} = 790352 In^4

I_{ZZ} = $D*B^3/12$ I_{ZZ} = 373966 In^5

$K_Y L_Y/r$ = 11.2 < 22 NO SLENDERNESS EFFECT

$K_Z L_Z/r$ = 20.6 < 22 NO SLENDERNESS EFFECT

H. W. LOCHNER, INC.

PROJECT: BONNER BRIDGE - OREGON INLET NORTH CAROLINA JMJ Jul-06
SUBJECT: HIGH LEVEL BENT ANALYSIS
HLB 143 MEM. 7 JT. 5 WDB 7/06

SLENDERNESS EFFECTS IN RECTANGULAR COMPRESSION MEMBERS (AASHTO 8.16.5)

GROUP 1

	B	D	KL/R	M_U	M_{DL}	B_D	P_U	P_C	δ_b	δ_s	M_C	
	In.	In.		Ft. Kips	Ft. Kips		Kips	Kips			Ft. Kips	
MY	41.916	60.936	11.2	0.00	0.00	0.000	706	0	1.000	1.000	143	*
MZ	41.916	60.936	20.6	59.17	27.00	0.456	706	0	1.000	1.000	109	*

GROUP 2

	B	D	KL/R	M_U	M_{DL}	B_D	P_U	P_C	δ_b	δ_s	M_C
	In.	In.		Ft. Kips	Ft. Kips		Kips	Kips			Ft. Kips
MY	41.916	60.936	11.2	599.81	0.00	0.000	511	0	1.000	1.000	600
MZ	41.916	60.936	20.6	230.45	27.00	0.117	511	0	1.000	1.000	230

GROUP 3

	B	D	KL/R	M_U	M_{DL}	B_D	P_U	P_C	δ_b	δ_s	M_C	
	In.	In.		Ft. Kips	Ft. Kips		Kips	Kips			Ft. Kips	
MY	41.916	60.936	11.2	404.63	0.00	0.000	630	0	1.000	1.000	405	
MZ	41.916	60.936	20.6	59.41	27.00	0.454	630	0	1.000	1.000	98	*

GROUP 4

	B	D	KL/R	M_U	M_{DL}	B_D	P_U	P_C	δ_b	δ_s	M_C	
	In.	In.		Ft. Kips	Ft. Kips		Kips	Kips			Ft. Kips	
MY	41.916	60.936	11.2	0.00	0.00	0.000	604	0	1.000	1.000	122	*
MZ	41.916	60.936	20.6	6.15	27.00	4.391	604	0	1.000	1.000	93	*

GROUP 5

	B	D	KL/R	M_U	M_{DL}	B_D	P_U	P_C	δ_b	δ_s	M_C
	In.	In.		Ft. Kips	Ft. Kips		Kips	Kips			Ft. Kips
MY	41.916	60.936	11.2	576.74	0.00	0.000	492	0	1.000	1.000	577
MZ	41.916	60.936	20.6	239.43	27.00	0.113	492	0	1.000	1.000	239

GROUP 6

	B	D	KL/R	M_U	M_{DL}	B_D	P_U	P_C	δ_b	δ_s	M_C	
	In.	In.		Ft. Kips	Ft. Kips		Kips	Kips			Ft. Kips	
MY	41.916	60.936	11.2	389.06	0.00	0.000	606	0	1.000	1.000	389	
MZ	41.916	60.936	20.6	74.96	27.00	0.360	606	0	1.000	1.000	94	*

* MINIMUM MOMENT CONTROLS

H. W. LOCHNER, INC.

PROJECT: BONNER BRIDGE - OREGON INLET NORTH CAROLINA JMJ Jul-06
SUBJECT: HIGH LEVEL BENT ANALYSIS WDB 7/06
HLB 143 MEM. 7 JT. 5

COLUMN LOADS

PMIN

HLB 143 MEMBER 7 JOINT 5

GROUP 1

	P	MY	MZ
DL	259.61	0.00	20.77
LL	50.58	0.00	7.52
GROUP 1	0.00	0.00	0.00
SERVICE	310.19	0.00	28.29
STRENGTH	447.08	0.00	43.29

GROUP 2

	P	MY	MZ
DL	259.61	0.00	20.77
LL	0.00	0.00	0.00
GROUP 2	46.93	461.39	156.50
SERVICE	306.54	461.39	177.27
STRENGTH	398.50	599.81	230.45

GROUP 3

	P	MY	MZ
DL	259.61	0.00	20.77
LL	50.58	0.00	7.52
GROUP 3	20.21	311.25	64.70
SERVICE	330.40	311.25	92.99
STRENGTH	429.51	404.63	120.89

GROUP 4

	P	MY	MZ
DL	259.61	0.00	20.77
LL	50.58	0.00	7.52
GROUP 4	0.22	0.00	14.27
SERVICE	310.41	0.00	42.56
STRENGTH	403.53	0.00	55.33

GROUP 5

	P	MY	MZ
DL	259.61	0.00	20.77
LL	0.00	0.00	0.00
GROUP 5	47.16	461.39	170.77
SERVICE	306.77	461.39	191.54
STRENGTH	383.46	576.74	239.43

GROUP 6

	P	MY	MZ
DL	259.61	0.00	20.77
LL	50.58	0.00	7.52
GROUP 6	20.43	311.25	78.97
SERVICE	330.62	311.25	107.26
STRENGTH	413.27	389.06	134.08

SLENDERNESS EFFECTS IN COMPRESSION MEMBERS (AASHTO 8.16.5)

f'c = 3000 psi PHI = 0.70 W_C = 150 PCF

$E_C = W_C^{1.5} * 33 * f'c^{0.5}$ = 3320561 PSI Width of Rect. Col. = B = 41.916 In.

Depth of Rect. Col = D = 60.936 In.

$r_Y = 0.30*D$ = 18.28 In. L_Y = 8.5 Ft. K_Y = 2.0

$r_Z = 0.30*B$ = 12.57 In. L_Z = 18 Ft. K_Z = 1.2

I_{YY} = $B*D^3/12$ I_{YY} = 790352 In^4

I_{ZZ} = $D*B^3/12$ I_{ZZ} = 373966 In^5

$K_Y L_Y/r$ = 11.2 < 22 NO SLENDERNESS EFFECT

$K_Z L_Z/r$ = 20.6 < 22 NO SLENDERNESS EFFECT

H. W. LOCHNER, INC.

PROJECT: BONNER BRIDGE - OREGON INLET NORTH CAROLINA
SUBJECT: HIGH LEVEL BENT ANALYSIS
HLB 143 MEM. 7 JT. 5

JMJ Jul-06
WDB 7/06

SLENDERNESS EFFECTS IN RECTANGULAR COMPRESSION MEMBERS (AASHTO 8.16.5)

GROUP 1

	B	D	KL/R	M_U	M_{DL}	B_D	P_U	P_C	δ_b	δ_s	M_C	
	In.	In.		Ft. Kips	Ft. Kips		Kips	Kips			Ft. Kips	
MY	41.916	60.936	11.2	0.00	0.00	0.000	447	0	1.000	1.000	90	*
MZ	41.916	60.936	20.6	43.29	27.00	0.624	447	0	1.000	1.000	69	*

GROUP 2

	B	D	KL/R	M_U	M_{DL}	B_D	P_U	P_C	δ_b	δ_s	M_C
	In.	In.		Ft. Kips	Ft. Kips		Kips	Kips			Ft. Kips
MY	41.916	60.936	11.2	599.81	0.00	0.000	398	0	1.000	1.000	600
MZ	41.916	60.936	20.6	230.45	27.00	0.117	398	0	1.000	1.000	230

GROUP 3

	B	D	KL/R	M_U	M_{DL}	B_D	P_U	P_C	δ_b	δ_s	M_C
	In.	In.		Ft. Kips	Ft. Kips		Kips	Kips			Ft. Kips
MY	41.916	60.936	11.2	404.63	0.00	0.000	430	0	1.000	1.000	405
MZ	41.916	60.936	20.6	120.89	27.00	0.223	430	0	1.000	1.000	121

GROUP 4

	B	D	KL/R	M_U	M_{DL}	B_D	P_U	P_C	δ_b	δ_s	M_C	
	In.	In.		Ft. Kips	Ft. Kips		Kips	Kips			Ft. Kips	
MY	41.916	60.936	11.2	0.00	0.00	0.000	404	0	1.000	1.000	82	*
MZ	41.916	60.936	20.6	55.33	27.00	0.488	404	0	1.000	1.000	62	*

GROUP 5

	B	D	KL/R	M_U	M_{DL}	B_D	P_U	P_C	δ_b	δ_s	M_C
	In.	In.		Ft. Kips	Ft. Kips		Kips	Kips			Ft. Kips
MY	41.916	60.936	11.2	576.74	0.00	0.000	383	0	1.000	1.000	577
MZ	41.916	60.936	20.6	239.43	27.00	0.113	383	0	1.000	1.000	239

GROUP 6

	B	D	KL/R	M_U	M_{DL}	B_D	P_U	P_C	δ_b	δ_s	M_C
	In.	In.		Ft. Kips	Ft. Kips		Kips	Kips			Ft. Kips
MY	41.916	60.936	11.2	389.06	0.00	0.000	413	0	1.000	1.000	389
MZ	41.916	60.936	20.6	134.08	27.00	0.201	413	0	1.000	1.000	134

* MINIMUM MOMENT CONTROLS

H. W. LOCHNER, INC.

PROJECT: BONNER BRIDGE - OREGON INLET NORTH CAROLINA
SUBJECT: HIGH LEVEL BENT ANALYSIS
HLB 143 MEM. 7 JT. 7

JMJ Jul-06
WDB 7/06

COLUMN LOADS

PMAX

HLB 143 MEMBER 7 JOINT 7

GROUP 1

	P	MY	MZ
DL	-394.03	0.00	21.52
LL	-118.21	0.00	-18.23
GROUP 1	0.00	0.00	0.00
SERVICE	-512.24	0.00	3.29
STRENGTH	-768.36	0.00	-11.52

GROUP 2

	P	MY	MZ
DL	-394.03	0.00	21.52
LL	0.00	0.00	0.00
GROUP 2	-47.13	-1029.61	156.46
SERVICE	-441.16	-1029.61	177.98
STRENGTH	-573.51	-1338.49	231.37

GROUP 3

	P	MY	MZ
DL	-394.03	0.00	21.52
LL	-118.21	0.00	-18.23
GROUP 3	-20.27	-654.94	66.24
SERVICE	-532.51	-654.94	69.53
STRENGTH	-692.26	-851.42	90.39

GROUP 4

	P	MY	MZ
DL	-394.03	0.00	21.52
LL	-118.21	0.00	-18.23
GROUP 4	-0.22	0.00	50.73
SERVICE	-512.46	0.00	54.02
STRENGTH	-666.20	0.00	70.23

GROUP 5

	P	MY	MZ
DL	-394.03	0.00	21.52
LL	0.00	0.00	0.00
GROUP 5	-47.35	-1029.61	207.19
SERVICE	-441.38	-1029.61	228.71
STRENGTH	-551.73	-1287.01	285.89

GROUP 6

	P	MY	MZ
DL	-394.03	0.00	21.52
LL	-118.21	0.00	-18.23
GROUP 6	-20.49	-654.94	116.97
SERVICE	-532.73	-654.94	120.26
STRENGTH	-665.91	-818.68	150.33

SLENDERNESS EFFECTS IN COMPRESSION MEMBERS (AASHTO 8.16.5)

f'c = 3000 psi PHI = 0.70 W_C = 150 PCF

$E_C = W_C^{1.5} * 33 * f'c^{0.5}$ = 3320561 PSI Width of Rect. Col. = B = 41.916 In.

Depth of Rect. Col = D = 60.936 In.

$r_Y = 0.30*D$ = 18.28 In. L_Y = 8.5 Ft. K_Y = 2.0

$r_Z = 0.30*B$ = 12.57 In. L_Z = 18 Ft. K_Z = 1.2

I_{YY} = $B*D^3/12$ I_{YY} = 790352 In^4

I_{ZZ} = $D*B^3/12$ I_{ZZ} = 373966 In^5

$K_Y L_Y/r$ = 11.2 < 22 NO SLENDERNESS EFFECT

$K_Z L_Z/r$ = 20.6 < 22 NO SLENDERNESS EFFECT

H. W. LOCHNER, INC.

PROJECT: BONNER BRIDGE - OREGON INLET NORTH CAROLINA
SUBJECT: HIGH LEVEL BENT ANALYSIS
HLB 143 MEM. 7 JT. 7

JMJ Jul-06
WDB 7/06

SLENDERNESS EFFECTS IN RECTANGULAR COMPRESSION MEMBERS (AASHTO 8.16.5)

GROUP 1

	B	D	KL/R	M_U	M_{DL}	B_D	P_U	P_C	δ_b	δ_s	M_C	
	In.	In.		Ft. Kips	Ft. Kips		Kips	Kips			Ft. Kips	
MY	41.916	60.936	11.2	0.00	0.00	0.000	768	0	1.000	1.000	155	*
MZ	41.916	60.936	20.6	11.52	27.98	2.428	768	0	1.000	1.000	119	*

GROUP 2

	B	D	KL/R	M_U	M_{DL}	B_D	P_U	P_C	δ_b	δ_s	M_C
	In.	In.		Ft. Kips	Ft. Kips		Kips	Kips			Ft. Kips
MY	41.916	60.936	11.2	1338.49	0.00	0.000	574	0	1.000	1.000	1338
MZ	41.916	60.936	20.6	231.37	27.98	0.121	574	0	1.000	1.000	231

GROUP 3

	B	D	KL/R	M_U	M_{DL}	B_D	P_U	P_C	δ_b	δ_s	M_C	
	In.	In.		Ft. Kips	Ft. Kips		Kips	Kips			Ft. Kips	
MY	41.916	60.936	11.2	851.42	0.00	0.000	692	0	1.000	1.000	851	
MZ	41.916	60.936	20.6	90.39	27.98	0.310	692	0	1.000	1.000	107	*

GROUP 4

	B	D	KL/R	M_U	M_{DL}	B_D	P_U	P_C	δ_b	δ_s	M_C	
	In.	In.		Ft. Kips	Ft. Kips		Kips	Kips			Ft. Kips	
MY	41.916	60.936	11.2	0.00	0.00	0.000	666	0	1.000	1.000	135	*
MZ	41.916	60.936	20.6	70.23	27.98	0.398	666	0	1.000	1.000	103	*

GROUP 5

	B	D	KL/R	M_U	M_{DL}	B_D	P_U	P_C	δ_b	δ_s	M_C
	In.	In.		Ft. Kips	Ft. Kips		Kips	Kips			Ft. Kips
MY	41.916	60.936	11.2	1287.01	0.00	0.000	552	0	1.000	1.000	1287
MZ	41.916	60.936	20.6	285.89	27.98	0.098	552	0	1.000	1.000	286

GROUP 6

	B	D	KL/R	M_U	M_{DL}	B_D	P_U	P_C	δ_b	δ_s	M_C
	In.	In.		Ft. Kips	Ft. Kips		Kips	Kips			Ft. Kips
MY	41.916	60.936	11.2	818.68	0.00	0.000	666	0	1.000	1.000	819
MZ	41.916	60.936	20.6	150.33	27.98	0.186	666	0	1.000	1.000	150

* MINIMUM MOMENT CONTROLS

H. W. LOCHNER, INC.

PROJECT: BONNER BRIDGE - OREGON INLET NORTH CAROLINA JMJ Jul-06
SUBJECT: HIGH LEVEL BENT ANALYSIS WDB 7/06
HLB 143 MEM. 7 JT. 7

COLUMN LOADS

PMIN

HLB 143 MEMBER 7 JOINT 7

GROUP 1

	P	MY	MZ
DL	-295.52	0.00	21.52
LL	-50.58	0.00	10.41
GROUP 1	0.00	0.00	0.00
SERVICE	-346.10	0.00	31.93
STRENGTH	-493.77	0.00	50.53

GROUP 2

	P	MY	MZ
DL	-295.52	0.00	21.52
LL	0.00	0.00	0.00
GROUP 2	-47.13	-1029.61	156.46
SERVICE	-342.65	-1029.61	177.98
STRENGTH	-445.45	-1338.49	231.37

GROUP 3

	P	MY	MZ
DL	-295.52	0.00	21.52
LL	-50.58	0.00	10.41
GROUP 3	-20.27	-654.94	66.24
SERVICE	-366.37	-654.94	98.17
STRENGTH	-476.28	-851.42	127.62

GROUP 4

	P	MY	MZ
DL	-295.52	0.00	21.52
LL	-50.58	0.00	10.41
GROUP 4	-0.22	0.00	50.73
SERVICE	-346.32	0.00	82.66
STRENGTH	-450.22	0.00	107.46

GROUP 5

	P	MY	MZ
DL	-295.52	0.00	21.52
LL	0.00	0.00	0.00
GROUP 5	-47.35	-1029.61	207.19
SERVICE	-342.87	-1029.61	228.71
STRENGTH	-428.59	-1287.01	285.89

GROUP 6

	P	MY	MZ
DL	-295.52	0.00	21.52
LL	-50.58	0.00	10.41
GROUP 6	-20.49	-654.94	116.97
SERVICE	-366.59	-654.94	148.90
STRENGTH	-458.24	-818.68	186.13

SLENDERNESS EFFECTS IN COMPRESSION MEMBERS (AASHTO 8.16.5)

f'c = 3000 psi PHI = 0.70 W_C = 150 PCF

$E_C = W_C^{1.5} * 33 * f'c^{0.5}$ = 3320561 PSI Width of Rect. Col. = B = 41.916 In.

Depth of Rect. Col = D = 60.936 In.

$r_Y = 0.30*D$ = 18.28 In. L_Y = 8.5 Ft. K_Y = 2.0

$r_Z = 0.30*B$ = 12.57 In. L_Z = 18 Ft. K_Z = 1.2

I_{YY} = $B*D^3/12$ I_{YY} = 790352 In^4

I_{ZZ} = $D*B^3/12$ I_{ZZ} = 373966 In^5

$K_Y L_Y/r$ = 11.2 < 22 NO SLENDERNESS EFFECT

$K_Z L_Z/r$ = 20.6 < 22 NO SLENDERNESS EFFECT

H. W. LOCHNER, INC.

PROJECT: BONNER BRIDGE - OREGON INLET NORTH CAROLINA
SUBJECT: HIGH LEVEL BENT ANALYSIS
HLB 143 MEM. 7 JT. 7

JMJ Jul-06
WDB 7/06

SLENDERNESS EFFECTS IN RECTANGULAR COMPRESSION MEMBERS (AASHTO 8.16.5)

GROUP 1

	B	D	KL/R	M_U	M_{DL}	B_D	P_U	P_C	δ_b	δ_s	M_C	
	In.	In.		Ft. Kips	Ft. Kips		Kips	Kips			Ft. Kips	
MY	41.916	60.936	11.2	0.00	0.00	0.000	494	0	1.000	1.000	100	*
MZ	41.916	60.936	20.6	50.53	27.98	0.554	494	0	1.000	1.000	76	*

GROUP 2

	B	D	KL/R	M_U	M_{DL}	B_D	P_U	P_C	δ_b	δ_s	M_C
	In.	In.		Ft. Kips	Ft. Kips		Kips	Kips			Ft. Kips
MY	41.916	60.936	11.2	1338.49	0.00	0.000	445	0	1.000	1.000	1338
MZ	41.916	60.936	20.6	231.37	27.98	0.121	445	0	1.000	1.000	231

GROUP 3

	B	D	KL/R	M_U	M_{DL}	B_D	P_U	P_C	δ_b	δ_s	M_C
	In.	In.		Ft. Kips	Ft. Kips		Kips	Kips			Ft. Kips
MY	41.916	60.936	11.2	851.42	0.00	0.000	476	0	1.000	1.000	851
MZ	41.916	60.936	20.6	127.62	27.98	0.219	476	0	1.000	1.000	128

GROUP 4

	B	D	KL/R	M_U	M_{DL}	B_D	P_U	P_C	δ_b	δ_s	M_C	
	In.	In.		Ft. Kips	Ft. Kips		Kips	Kips			Ft. Kips	
MY	41.916	60.936	11.2	0.00	0.00	0.000	450	0	1.000	1.000	91	*
MZ	41.916	60.936	20.6	107.46	27.98	0.260	450	0	1.000	1.000	107	

GROUP 5

	B	D	KL/R	M_U	M_{DL}	B_D	P_U	P_C	δ_b	δ_s	M_C
	In.	In.		Ft. Kips	Ft. Kips		Kips	Kips			Ft. Kips
MY	41.916	60.936	11.2	1287.01	0.00	0.000	429	0	1.000	1.000	1287
MZ	41.916	60.936	20.6	285.89	27.98	0.098	429	0	1.000	1.000	286

GROUP 6

	B	D	KL/R	M_U	M_{DL}	B_D	P_U	P_C	δ_b	δ_s	M_C
	In.	In.		Ft. Kips	Ft. Kips		Kips	Kips			Ft. Kips
MY	41.916	60.936	11.2	818.68	0.00	0.000	458	0	1.000	1.000	819
MZ	41.916	60.936	20.6	186.13	27.98	0.150	458	0	1.000	1.000	186

* MINIMUM MOMENT CONTROLS

JMJ 7/06

WDB 7/06

```
OOOOOOO    OOOOO    OOOOO    OOOOO    OOOOO    OO
OO    OO   OO  OO   OO  OO   OO  OO   OO  OO   OO
OO    OO   OO  OO   OO  OO   OO  OO   OO  OO   OO
OO    OO   OO       OO  OO   OO       OO  OO   OO
OO    OO   OO       OOOOOOO  OO       OO  OO   OO
OOOOOOO    OO  OO   OO  OO   OO  OO   OO  OO   OO
OO         OO  OO   OO  OO   OO  OO   OO  OO   OO
OO          OOOOO   OO  OO    OOOOO    OOOOO    OOOOO  (TM)
```

==========
Computer program for the Strength Design of Reinforced Concrete Sections
==========

Licensee stated above acknowledges that Portland Cement Association (PCA) is not and cannot be responsible for either the accuracy or adequacy of the material supplied as input for processing by the PCACOL(tm) computer program. Furthermore, PCA neither makes any warranty expressed nor implied with respect to the correctness of the output prepared by the PCACOL(tm) program. Although PCA has endeavored to produce PCACOL(tm) error free, the program is not and can't be certified infallible. The final and only responsibility for analysis, design and engineering documents is the licensees. Accordingly, PCA disclaims all responsibility in contract, negligence or other tort for any analysis, design or engineering documents prepared in connection with the use of the PCACOL(tm) program.

BASED ON PLANS.

General Information:
==========

File Name: S:\DGN-ST\NORTHC~1\BONNER~1\ANALYSIS\PIERS\HLB143~1\PCACOL~1\M7PLAN.COL
Project: BONNER BRIDGE - OREGON INLET
Column: HLB #143 Engineer: JMJ
Code: ACI 318-95 Units: English

Run Option: Investigation Slenderness: Not considered
Run Axis: Biaxial Column Type: Structural

Material Properties:
==========

f'c = 3 ksi fy = 40 ksi
Ec = 3122.02 ksi Es = 29000 ksi
fc = 2.55 ksi Rupture strain = Infinity
Ultimate strain = 0.003 in/in
Beta1 = 0.85

Section:
==========

Rectangular: Width = 41.9 in Depth = 60.9 in

Gross section area, Ag = 2551.71 in^2
Ix = 788651 in^4 Iy = 373317 in^4
Xo = 0 in Yo = 0 in

Reinforcement:
==========

Rebar Database: User-defined

Size	Diam (in)	Area (in^2)	Size	Diam (in)	Area (in^2)	Size	Diam (in)	Area (in^2)
# 1	0.00	0.00	# 3	0.38	0.11	# 4	0.50	0.20
# 5	0.63	0.31	# 6	0.75	0.44	# 7	0.88	0.60
# 8	1.00	0.79	# 9	1.13	1.00	# 10	1.27	1.27
# 11	1.41	1.56	# 14	1.69	2.25	# 18	2.26	4.00

Confinement: Tied; #1 ties with #9 bars, #1 with larger bars.
phi(a) = 0.8, phi(b) = 0.9, phi(c) = 0.7

Layout: Rectangular
Pattern: Equal Bar Spacing (Cover to longitudinal reinforcement)
Total steel area, As = 37.44 in^2 at 1.47%
24 #11 Cover = 5 in

Factored Loads and Moments with Corresponding Capacities: (see user's manual for notation)
==========

No.	Pu kip	Mux k-ft	Muy k-ft	fMnx k-ft	fMny k-ft	fMn/Mu
1	706.0	143.0	109.0	2205.4	1683.3	15.430
2	511.0	600.0	230.0	2884.9	1103.2	4.807
3	630.0	405.0	98.0	3151.7	767.9	7.785
4	604.0	122.0	93.0	2211.9	1685.3	18.127
5	492.0	577.0	239.0	2816.8	1170.8	4.884
6	606.0	389.0	94.0	3151.9	759.3	8.101
7	447.0	90.0	69.0	2185.8	1673.8	24.276
8	398.0	600.0	230.0	2838.0	1089.7	4.731
9	430.0	405.0	121.0	2992.6	899.7	7.393
10	404.0	82.0	62.0	2192.6	1656.5	26.731
11	383.0	577.0	239.0	2781.5	1150.8	4.820
12	413.0	389.0	134.0	2911.0	1002.7	7.483
13	768.0	155.0	119.0	2187.9	1677.1	14.107
14	574.0	1338.0	231.0	3245.1	562.6	2.426
15	692.0	851.0	107.0	3335.5	417.7	3.919

16	666.0	135.0	103.0	2210.0	1685.9	16.370
17	552.0	1287.0	286.0	3166.8	707.5	2.461
18	666.0	819.0	150.0	3251.9	595.6	3.971
19	494.0	100.0	76.0	2206.3	1673.4	22.046
20	445.0	1338.0	231.0	3185.7	551.2	2.381
21	476.0	851.0	128.0	3233.0	483.8	3.799
22	450.0	91.0	107.0	1643.0	1926.6	18.026
23	429.0	1287.0	286.0	3110.0	694.2	2.417
24	458.0	819.0	186.0	3124.1	704.1	3.813

*** Program completed as requested! ***

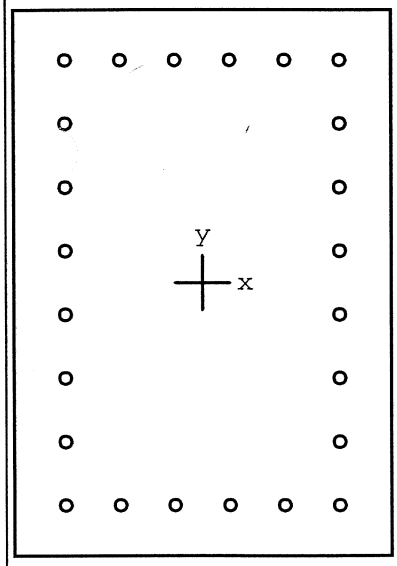

41.9 x 60.9 in

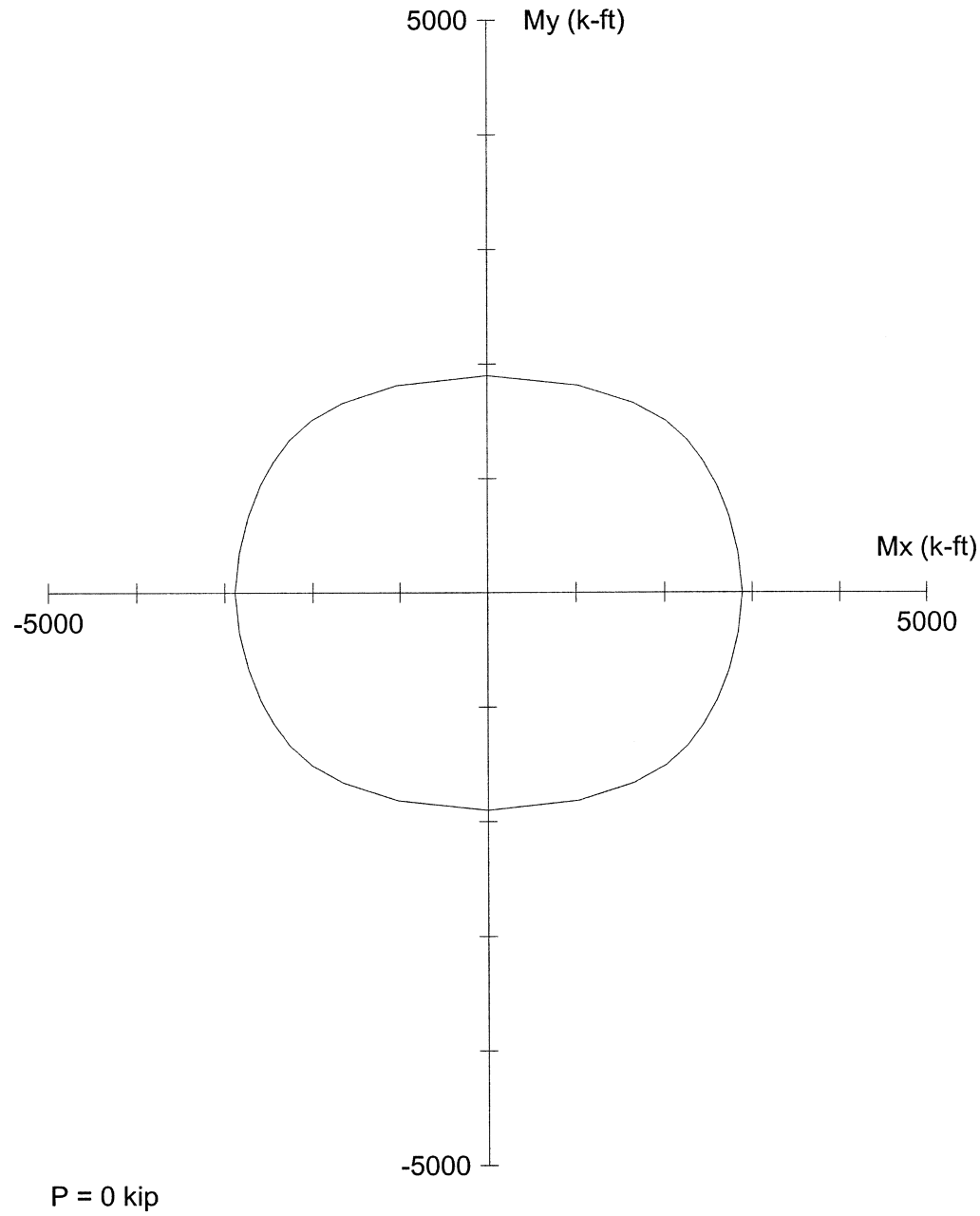

Code: ACI 318-95

Units: English

Run axis: Biaxial

Run option: Investigation

Slenderness: Not considered

mn type: Structural

Bars: User-defined

Date: 07/21/06

Time: 13:00:31

PCACOL V3.00 (PCA 1999) - Licensed to: Licensee name not yet specified.

File: S:\DGN-ST\NORTHC~1\BONNER~1\ANALYSIS\PIERS\HLB143~1\PCACOL~1\M7PLAN.COL

Project: BONNER BRIDGE - OREGON INLET

Column: HLB #143		Engineer: JMJ	
f'c = 3 ksi	fy = 40 ksi	Ag = 2551.71 in^2	24 #11 bars
Ec = 3122 ksi	Es = 29000 ksi	As = 37.44 in^2	Rho = 1.47%
fc = 2.55 ksi	e_rup = Infinity	Xo = 0.00 in	Ix = 788651 in^4
J = 0.003 in/in		Yo = 0.00 in	Iy = 373317 in^4
Beta1 = 0.85		Clear spacing = 4.69 in	Clear cover = 5.00 in
Confinement: Tied	phi(a) = 0.8, phi(b) = 0.9, phi(c) = 0.7		

DMS 7/06

WDB 7/06

```
OOOOOOO    OOOOO    OOOOO    OOOOO    OOOOO   OO
OO    OO   OO  OO   OO  OO   OO  OO   OO  OO   OO
OO    OO   OO  OO   OO  OO   OO  OO   OO  OO   OO
OO    OO   OO       OO  OO   OO       OO  OO   OO
OO    OO   OO       OOOOOOO  OO       OO  OO   OO
OOOOOOO    OO  OO   OO  OO   OO  OO   OO  OO   OO
OO         OO  OO   OO  OO   OO  OO   OO  OO   OO
OO          OOOOO   OO  OO    OOOOO    OOOOO   OOOOO  (TM)
```

==========
Computer program for the Strength Design of Reinforced Concrete Sections
==========

Licensee stated above acknowledges that Portland Cement Association (PCA) is not and cannot be responsible for either the accuracy or adequacy of the material supplied as input for processing by the PCACOL(tm) computer program. Furthermore, PCA neither makes any warranty expressed nor implied with respect to the correctness of the output prepared by the PCACOL(tm) program. Although PCA has endeavored to produce PCACOL(tm) error free, the program is not and can't be certified infallible. The final and only responsibility for analysis, design and engineering documents is the licensees. Accordingly, PCA disclaims all responsibility in contract, negligence or other tort for any analysis, design or engineering documents prepared in connection with the use of the PCACOL(tm) program.

BASED ON FIELD DATA.

ASSUME 50% COVER LOSS.

General Information:
==========
File Name: S:\DGN-ST\NORTHC~1\BONNER~1\ANALYSIS\PIERS\HLB143~1\PCACOL~1\M7ACT.COL
Project: BONNER BRIDGE - OREGON INLET
Column: HLB #143 Engineer: JMJ
Code: ACI 318-95 Units: English

Run Option: Investigation Slenderness: Not considered
Run Axis: Biaxial Column Type: Structural

Material Properties:
==========
f'c = 4.4 ksi fy = 40 ksi
Ec = 3780.96 ksi Es = 29000 ksi
fc = 3.74 ksi Rupture strain = Infinity
Ultimate strain = 0.003 in/in
Beta1 = 0.83

Section:
==========
Rectangular: Width = 36.9 in Depth = 55.9 in

Gross section area, Ag = 2062.71 in^2
Ix = 537132 in^4 Iy = 234051 in^4
Xo = 0 in Yo = 0 in

Reinforcement:
==========
Rebar Database: User-defined

Size	Diam (in)	Area (in^2)	Size	Diam (in)	Area (in^2)	Size	Diam (in)	Area (in^2)
# 1	0.00	0.00	# 3	0.38	0.11	# 4	0.50	0.20
# 5	0.63	0.31	# 6	0.75	0.44	# 7	0.88	0.60
# 8	1.00	0.79	# 9	1.13	1.00	# 10	1.27	1.27
# 11	1.41	1.56	# 14	1.69	2.25	# 18	2.26	4.00

Confinement: Tied; #1 ties with #9 bars, #1 with larger bars.
phi(a) = 0.8, phi(b) = 0.9, phi(c) = 0.7

Layout: Rectangular
Pattern: Equal Bar Spacing (Cover to longitudinal reinforcement)
Total steel area, As = 37.44 in^2 at 1.82%
24 #11 Cover = 2.5 in

Factored Loads and Moments with Corresponding Capacities: (see user's manual for notation)
==========

No.	Pu kip	Mux k-ft	Muy k-ft	fMnx k-ft	fMny k-ft	fMn/Mu
1	706.0	143.0	109.0	2237.7	1711.5	15.668
2	511.0	600.0	230.0	2881.5	1103.5	4.802
3	630.0	405.0	98.0	3187.2	769.6	7.869
4	604.0	122.0	93.0	2225.0	1694.1	18.230
5	492.0	577.0	239.0	2814.1	1169.8	4.880
6	606.0	389.0	94.0	3172.8	771.4	8.159
7	447.0	90.0	69.0	2165.3	1656.2	24.038
8	398.0	600.0	230.0	2816.0	1077.1	4.692
9	430.0	405.0	121.0	2975.9	892.6	7.350
10	404.0	82.0	62.0	2162.8	1635.2	26.375
11	383.0	577.0	239.0	2751.7	1142.9	4.771
12	413.0	389.0	134.0	2892.7	992.1	7.433
13	768.0	155.0	119.0	2243.5	1718.7	14.463
14	574.0	1338.0	231.0	3250.7	566.9	2.430
15	692.0	851.0	107.0	3377.6	425.9	3.969

16	666.0	135.0	103.0	2234.3	1705.0	16.551
17	552.0	1287.0	286.0	3168.7	709.9	2.463
18	666.0	819.0	150.0	3295.2	599.8	4.023
19	494.0	100.0	76.0	2191.1	1665.2	21.911
20	445.0	1338.0	231.0	3158.5	547.9	2.361
21	476.0	851.0	128.0	3210.2	486.2	3.773
22	450.0	91.0	107.0	1605.1	1891.2	17.660
23	429.0	1287.0	286.0	3082.8	685.0	2.395
24	458.0	819.0	186.0	3096.1	707.8	3.782

*** Program completed as requested! ***

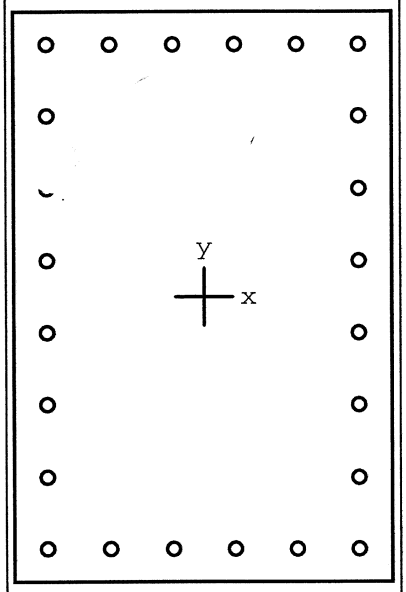

36.9 x 55.9 in

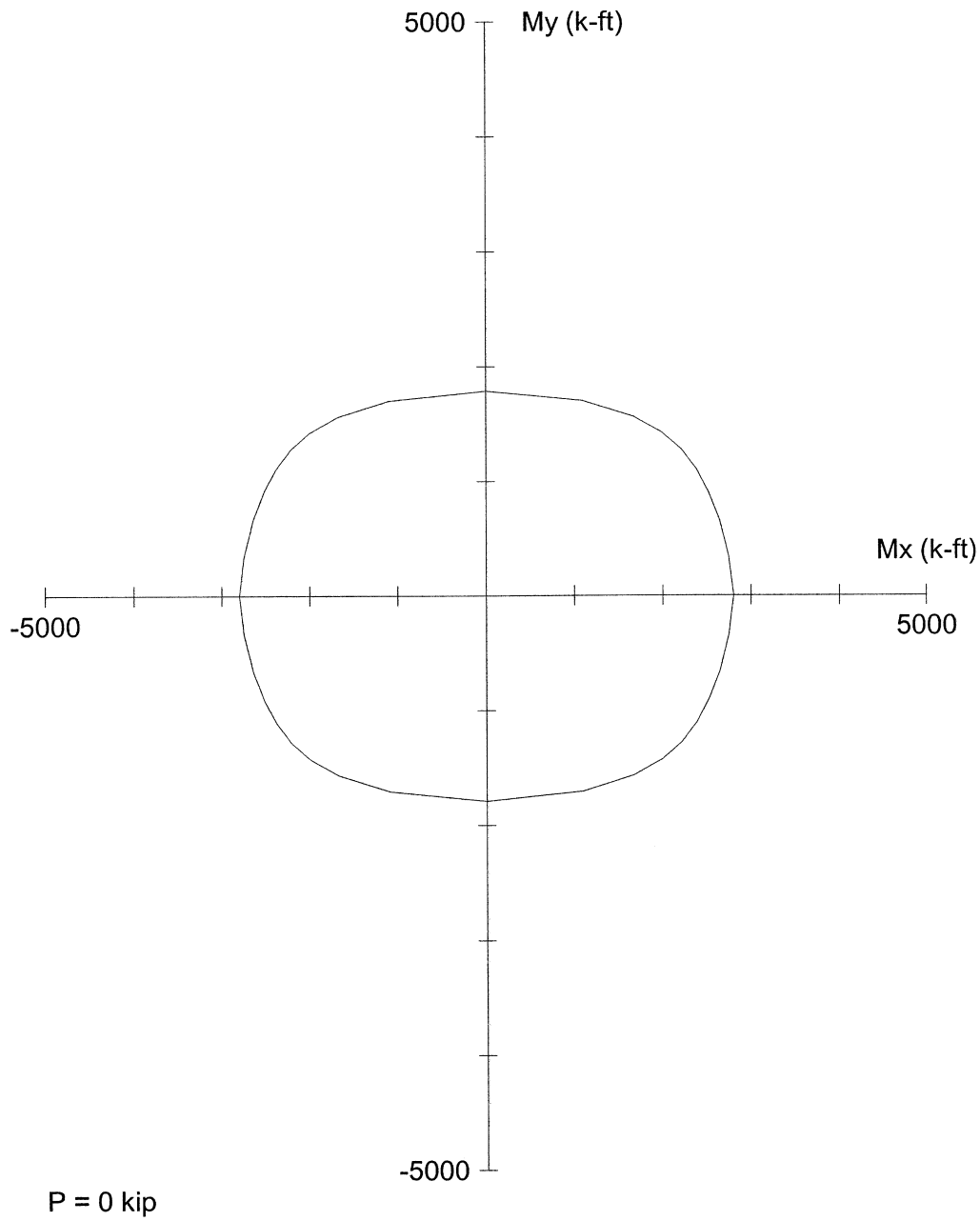

Code: ACI 318-95

Units: English

Run axis: Biaxial

Run option: Investigation

Slenderness: Not considered

.mn type: Structural

Bars: User-defined

Date: 07/25/06

Time: 13:43:00

PCACOL V3.00 (PCA 1999) - Licensed to: Licensee name not yet specified.

File: S:\DGN-ST\NORTHC~1\BONNER~1\ANALYSIS\PIERS\HLB143~1\PCACOL~1\M7ACT.COL

Project: BONNER BRIDGE - OREGON INLET

Column: HLB #143		Engineer: JMJ	
f'c = 4.4 ksi	fy = 40 ksi	Ag = 2062.71 in^2	24 #11 bars
Ec = 3781 ksi	Es = 29000 ksi	As = 37.44 in^2	Rho = 1.82%
fc = 3.74 ksi	e_rup = Infinity	Xo = 0.00 in	Ix = 537132 in^4
.u = 0.003 in/in		Yo = 0.00 in	Iy = 234051 in^4
Beta1 = 0.83		Clear spacing = 4.69 in	Clear cover = 2.50 in
Confinement: Tied	phi(a) = 0.8, phi(b) = 0.9, phi(c) = 0.7		

H. W. LOCHNER, INC.

PROJECT: BONNER BRIDGE - OREGON INLET NORTH CAROLINA JMJ Jul-06
SUBJECT: HIGH LEVEL BENT ANALYSIS WDB 7/06
HLB 143 MEM. 8 JT. 6

COLUMN LOADS

PMAX

HLB 143 MEMBER 8 JOINT 6

GROUP 1

	P	MY	MZ
DL	346.10	0.00	20.42
LL	118.21	0.00	-39.83
GROUP 1	0.00	0.00	0.00
SERVICE	464.31	0.00	-19.41
STRENGTH	706.05	0.00	-59.75

GROUP 2

	P	MY	MZ
DL	346.10	0.00	20.42
LL	0.00	0.00	0.00
GROUP 2	-46.93	-461.42	-156.49
SERVICE	299.17	-461.42	-136.07
STRENGTH	388.92	-599.85	-176.89

GROUP 3

	P	MY	MZ
DL	346.10	0.00	20.42
LL	118.21	0.00	-39.83
GROUP 3	-20.21	-311.27	-64.69
SERVICE	444.10	-311.27	-84.10
STRENGTH	577.33	-404.65	-109.33

GROUP 4

	P	MY	MZ
DL	346.10	0.00	20.42
LL	118.21	0.00	-39.83
GROUP 4	0.22	0.00	14.28
SERVICE	464.53	0.00	-5.13
STRENGTH	603.89	0.00	-6.67

GROUP 5

	P	MY	MZ
DL	346.10	0.00	20.42
LL	0.00	0.00	0.00
GROUP 5	-46.71	-461.42	-142.20
SERVICE	299.39	-461.42	-121.78
STRENGTH	374.24	-576.78	-152.23

GROUP 6

	P	MY	MZ
DL	346.10	0.00	20.42
LL	118.21	0.00	-39.83
GROUP 6	-19.98	-311.27	-50.41
SERVICE	444.33	-311.27	-69.82
STRENGTH	555.41	-389.09	-87.28

SLENDERNESS EFFECTS IN COMPRESSION MEMBERS (AASHTO 8.16.5)

f'c = 3000 psi PHI = 0.70 W_C = 150 PCF

$E_C = W_C^{1.5} * 33 * f'c^{0.5}$ = 3320561 PSI Width of Rect. Col. = B = 41.916 In.

Depth of Rect. Col = D = 60.936 In.

$r_Y = 0.30*D$ = 18.28 In. L_Y = 8.5 Ft. K_Y = 2.0

$r_Z = 0.30*B$ = 12.57 In. L_Z = 18 Ft. K_Z = 1.2

I_{YY} = $B*D^3/12$ I_{YY} = 790352 In^4

I_{ZZ} = $D*B^3/12$ I_{ZZ} = 373966 In^5

$K_Y L_Y/r$ = 11.2 < 22 NO SLENDERNESS EFFECT

$K_Z L_Z/r$ = 20.6 < 22 NO SLENDERNESS EFFECT

H. W. LOCHNER, INC.

PROJECT: BONNER BRIDGE - OREGON INLET NORTH CAROLINA JMJ Jul-06
SUBJECT: HIGH LEVEL BENT ANALYSIS
HLB 143 MEM. 8 JT. 6

WLB 7/06

SLENDERNESS EFFECTS IN RECTANGULAR COMPRESSION MEMBERS (AASHTO 8.16.5)

GROUP 1

	B	D	KL/R	M_U	M_{DL}	B_D	P_U	P_C	δ_b	δ_s	M_C	
	In.	In.		Ft. Kips	Ft. Kips		Kips	Kips			Ft. Kips	
MY	41.916	60.936	11.2	0.00	0.00	0.000	706	0	1.000	1.000	143	*
MZ	41.916	60.936	20.6	59.75	26.55	0.444	706	0	1.000	1.000	109	*

GROUP 2

	B	D	KL/R	M_U	M_{DL}	B_D	P_U	P_C	δ_b	δ_s	M_C
	In.	In.		Ft. Kips	Ft. Kips		Kips	Kips			Ft. Kips
MY	41.916	60.936	11.2	599.85	0.00	0.000	389	0	1.000	1.000	600
MZ	41.916	60.936	20.6	176.89	26.55	0.150	389	0	1.000	1.000	177

GROUP 3

	B	D	KL/R	M_U	M_{DL}	B_D	P_U	P_C	δ_b	δ_s	M_C
	In.	In.		Ft. Kips	Ft. Kips		Kips	Kips			Ft. Kips
MY	41.916	60.936	11.2	404.65	0.00	0.000	577	0	1.000	1.000	405
MZ	41.916	60.936	20.6	109.33	26.55	0.243	577	0	1.000	1.000	109

GROUP 4

	B	D	KL/R	M_U	M_{DL}	B_D	P_U	P_C	δ_b	δ_s	M_C	
	In.	In.		Ft. Kips	Ft. Kips		Kips	Kips			Ft. Kips	
MY	41.916	60.936	11.2	0.00	0.00	0.000	604	0	1.000	1.000	122	*
MZ	41.916	60.936	20.6	6.67	26.55	3.981	604	0	1.000	1.000	93	*

GROUP 5

	B	D	KL/R	M_U	M_{DL}	B_D	P_U	P_C	δ_b	δ_s	M_C
	In.	In.		Ft. Kips	Ft. Kips		Kips	Kips			Ft. Kips
MY	41.916	60.936	11.2	576.78	0.00	0.000	374	0	1.000	1.000	577
MZ	41.916	60.936	20.6	152.23	26.55	0.174	374	0	1.000	1.000	152

GROUP 6

	B	D	KL/R	M_U	M_{DL}	B_D	P_U	P_C	δ_b	δ_s	M_C
	In.	In.		Ft. Kips	Ft. Kips		Kips	Kips			Ft. Kips
MY	41.916	60.936	11.2	389.09	0.00	0.000	555	0	1.000	1.000	389
MZ	41.916	60.936	20.6	87.28	26.55	0.304	555	0	1.000	1.000	87

* MINIMUM MOMENT CONTROLS

H. W. LOCHNER, INC.

PROJECT: BONNER BRIDGE - OREGON INLET NORTH CAROLINA JMJ Jul-06
SUBJECT: HIGH LEVEL BENT ANALYSIS WDB 7/06
HLB 143 MEM. 8 JT. 6

COLUMN LOADS

PMIN

HLB 143 MEMBER 8 JOINT 6

GROUP 1

	P	MY	MZ
DL	259.58	0.00	20.42
LL	50.57	0.00	7.44
GROUP 1	0.00	0.00	0.00
SERVICE	310.15	0.00	27.86
STRENGTH	447.02	0.00	42.67

GROUP 2

	P	MY	MZ
DL	259.58	0.00	20.42
LL	0.00	0.00	0.00
GROUP 2	-46.93	-461.42	-156.49
SERVICE	212.65	-461.42	-136.07
STRENGTH	276.44	-599.85	-176.89

GROUP 3

	P	MY	MZ
DL	259.58	0.00	20.42
LL	50.57	0.00	7.44
GROUP 3	-20.21	-311.27	-64.69
SERVICE	289.94	-311.27	-36.83
STRENGTH	376.92	-404.65	-47.88

GROUP 4

	P	MY	MZ
DL	259.58	0.00	20.42
LL	50.57	0.00	7.44
GROUP 4	0.22	0.00	14.28
SERVICE	310.37	0.00	42.14
STRENGTH	403.47	0.00	54.78

GROUP 5

	P	MY	MZ
DL	259.58	0.00	20.42
LL	0.00	0.00	0.00
GROUP 5	-46.71	-461.42	-142.20
SERVICE	212.87	-461.42	-121.78
STRENGTH	266.08	-576.78	-152.23

GROUP 6

	P	MY	MZ
DL	259.58	0.00	20.42
LL	50.57	0.00	7.44
GROUP 6	-19.98	-311.27	-50.41
SERVICE	290.17	-311.27	-22.55
STRENGTH	362.71	-389.09	-28.19

SLENDERNESS EFFECTS IN COMPRESSION MEMBERS (AASHTO 8.16.5)

f'c = 3000 psi PHI = 0.70 W_C = 150 PCF

$E_C = W_C^{1.5} * 33 * f'c^{0.5}$ = 3320561 PSI Width of Rect. Col. = B = 41.916 In.

Depth of Rect. Col = D = 60.936 In.

$r_Y = 0.30*D$ = 18.28 In. L_Y = 8.5 Ft. K_Y = 2.0

$r_Z = 0.30*B$ = 12.57 In. L_Z = 18 Ft. K_Z = 1.2

I_{YY} = $B*D^3/12$ I_{YY} = 790352 In^4

I_{ZZ} = $D*B^3/12$ I_{ZZ} = 373966 In^5

$K_Y L_Y/r$ = 11.2 < 22 NO SLENDERNESS EFFECT

$K_Z L_Z/r$ = 20.6 < 22 NO SLENDERNESS EFFECT

H. W. LOCHNER, INC.

PROJECT: BONNER BRIDGE - OREGON INLET NORTH CAROLINA JMJ Jul-06
SUBJECT: HIGH LEVEL BENT ANALYSIS WDB 7/06
HLB 143 MEM. 8 JT. 6

SLENDERNESS EFFECTS IN RECTANGULAR COMPRESSION MEMBERS (AASHTO 8.16.5)

GROUP 1

	B	D	KL/R	M_U	M_{DL}	B_D	P_U	P_C	δ_b	δ_s	M_C	
	In.	In.		Ft. Kips	Ft. Kips		Kips	Kips			Ft. Kips	
MY	41.916	60.936	11.2	0.00	0.00	0.000	447	0	1.000	1.000	90	*
MZ	41.916	60.936	20.6	42.67	26.55	0.622	447	0	1.000	1.000	69	*

GROUP 2

	B	D	KL/R	M_U	M_{DL}	B_D	P_U	P_C	δ_b	δ_s	M_C
	In.	In.		Ft. Kips	Ft. Kips		Kips	Kips			Ft. Kips
MY	41.916	60.936	11.2	599.85	0.00	0.000	276	0	1.000	1.000	600
MZ	41.916	60.936	20.6	176.89	26.55	0.150	276	0	1.000	1.000	177

GROUP 3

	B	D	KL/R	M_U	M_{DL}	B_D	P_U	P_C	δ_b	δ_s	M_C	
	In.	In.		Ft. Kips	Ft. Kips		Kips	Kips			Ft. Kips	
MY	41.916	60.936	11.2	404.65	0.00	0.000	377	0	1.000	1.000	405	
MZ	41.916	60.936	20.6	47.88	26.55	0.554	377	0	1.000	1.000	58	*

GROUP 4

	B	D	KL/R	M_U	M_{DL}	B_D	P_U	P_C	δ_b	δ_s	M_C	
	In.	In.		Ft. Kips	Ft. Kips		Kips	Kips			Ft. Kips	
MY	41.916	60.936	11.2	0.00	0.00	0.000	403	0	1.000	1.000	82	*
MZ	41.916	60.936	20.6	54.78	26.55	0.485	403	0	1.000	1.000	62	*

GROUP 5

	B	D	KL/R	M_U	M_{DL}	B_D	P_U	P_C	δ_b	δ_s	M_C
	In.	In.		Ft. Kips	Ft. Kips		Kips	Kips			Ft. Kips
MY	41.916	60.936	11.2	576.78	0.00	0.000	266	0	1.000	1.000	577
MZ	41.916	60.936	20.6	152.23	26.55	0.174	266	0	1.000	1.000	152

GROUP 6

	B	D	KL/R	M_U	M_{DL}	B_D	P_U	P_C	δ_b	δ_s	M_C	
	In.	In.		Ft. Kips	Ft. Kips		Kips	Kips			Ft. Kips	
MY	41.916	60.936	11.2	389.09	0.00	0.000	363	0	1.000	1.000	389	
MZ	41.916	60.936	20.6	28.19	26.55	0.942	363	0	1.000	1.000	56	*

* MINIMUM MOMENT CONTROLS

H. W. LOCHNER, INC.

PROJECT: BONNER BRIDGE - OREGON INLET NORTH CAROLINA JMJ Jul-06
SUBJECT: HIGH LEVEL BENT ANALYSIS WDB 7/06
HLB 143 MEM. 8 JT. 8

COLUMN LOADS

PMAX

HLB 143 MEMBER 8 JOINT 8

GROUP 1

	P	MY	MZ
DL	-393.99	0.00	21.91
LL	-118.21	0.00	-18.13
GROUP 1	0.00	0.00	0.00
SERVICE	-512.20	0.00	3.78
STRENGTH	-768.31	0.00	-10.80

GROUP 2

	P	MY	MZ
DL	-393.99	0.00	21.91
LL	0.00	0.00	0.00
GROUP 2	47.13	1029.61	-156.50
SERVICE	-346.86	1029.61	-134.59
STRENGTH	-450.92	1338.49	-174.97

GROUP 3

	P	MY	MZ
DL	-393.99	0.00	21.91
LL	-118.21	0.00	-18.13
GROUP 3	20.27	654.95	-66.26
SERVICE	-491.93	654.95	-62.48
STRENGTH	-639.51	851.44	-81.22

GROUP 4

	P	MY	MZ
DL	-393.99	0.00	21.91
LL	-118.21	0.00	-18.13
GROUP 4	-0.22	0.00	50.71
SERVICE	-512.42	0.00	54.49
STRENGTH	-666.15	0.00	70.84

GROUP 5

	P	MY	MZ
DL	-393.99	0.00	21.91
LL	0.00	0.00	0.00
GROUP 5	46.90	1029.61	-105.79
SERVICE	-347.09	1029.61	-83.88
STRENGTH	-433.86	1287.01	-104.85

GROUP 6

	P	MY	MZ
DL	-393.99	0.00	21.91
LL	-118.21	0.00	-18.13
GROUP 6	20.04	654.95	-15.55
SERVICE	-492.16	654.95	-11.77
STRENGTH	-615.20	818.69	-14.71

SLENDERNESS EFFECTS IN COMPRESSION MEMBERS (AASHTO 8.16.5)

f'c = 3000 psi PHI = 0.70 W_C = 150 PCF

$E_C = W_C$^$^{1.5}$ *33*f'c^$^{0.5}$ = 3320561 PSI Width of Rect. Col. = B = 41.916 In.

Depth of Rect. Col = D = 60.936 In.

r_Y = 0.30*D = 18.28 In. L_Y = 8.5 Ft. K_Y = 2.0

r_Z = 0.30*B = 12.57 In. L_Z = 18 Ft. K_Z = 1.2

I_{YY} = B*D^^{3}/12 I_{YY} = 790352 In^4

I_{ZZ} = D*B^^{3}/12 I_{ZZ} = 373966 In^5

K_YL_Y/r = 11.2 < 22 NO SLENDERNESS EFFECT

K_ZL_Z/r = 20.6 < 22 NO SLENDERNESS EFFECT

H. W. LOCHNER, INC.

PROJECT: BONNER BRIDGE - OREGON INLET NORTH CAROLINA
SUBJECT: HIGH LEVEL BENT ANALYSIS
HLB 143 MEM. 8 JT. 8

JMJ Jul-06
WDB 7/06

SLENDERNESS EFFECTS IN RECTANGULAR COMPRESSION MEMBERS (AASHTO 8.16.5)

GROUP 1

	B	D	KL/R	M_U	M_{DL}	B_D	P_U	P_C	δ_b	δ_s	M_C	
	In.	In.		Ft. Kips	Ft. Kips		Kips	Kips			Ft. Kips	
MY	41.916	60.936	11.2	0.00	0.00	0.000	768	0	1.000	1.000	155	*
MZ	41.916	60.936	20.6	10.80	28.48	2.638	768	0	1.000	1.000	119	*

GROUP 2

	B	D	KL/R	M_U	M_{DL}	B_D	P_U	P_C	δ_b	δ_s	M_C
	In.	In.		Ft. Kips	Ft. Kips		Kips	Kips			Ft. Kips
MY	41.916	60.936	11.2	1338.49	0.00	0.000	451	0	1.000	1.000	1338
MZ	41.916	60.936	20.6	174.97	28.48	0.163	451	0	1.000	1.000	175

GROUP 3

	B	D	KL/R	M_U	M_{DL}	B_D	P_U	P_C	δ_b	δ_s	M_C	
	In.	In.		Ft. Kips	Ft. Kips		Kips	Kips			Ft. Kips	
MY	41.916	60.936	11.2	851.44	0.00	0.000	640	0	1.000	1.000	851	
MZ	41.916	60.936	20.6	81.22	28.48	0.351	640	0	1.000	1.000	99	*

GROUP 4

	B	D	KL/R	M_U	M_{DL}	B_D	P_U	P_C	δ_b	δ_s	M_C	
	In.	In.		Ft. Kips	Ft. Kips		Kips	Kips			Ft. Kips	
MY	41.916	60.936	11.2	0.00	0.00	0.000	666	0	1.000	1.000	135	*
MZ	41.916	60.936	20.6	70.84	28.48	0.402	666	0	1.000	1.000	103	*

GROUP 5

	B	D	KL/R	M_U	M_{DL}	B_D	P_U	P_C	δ_b	δ_s	M_C
	In.	In.		Ft. Kips	Ft. Kips		Kips	Kips			Ft. Kips
MY	41.916	60.936	11.2	1287.01	0.00	0.000	434	0	1.000	1.000	1287
MZ	41.916	60.936	20.6	104.85	28.48	0.272	434	0	1.000	1.000	105

GROUP 6

	B	D	KL/R	M_U	M_{DL}	B_D	P_U	P_C	δ_b	δ_s	M_C	
	In.	In.		Ft. Kips	Ft. Kips		Kips	Kips			Ft. Kips	
MY	41.916	60.936	11.2	818.69	0.00	0.000	615	0	1.000	1.000	819	
MZ	41.916	60.936	20.6	14.71	28.48	1.936	615	0	1.000	1.000	95	*

* MINIMUM MOMENT CONTROLS

H. W. LOCHNER, INC.

PROJECT: BONNER BRIDGE - OREGON INLET NORTH CAROLINA JMJ Jul-06
SUBJECT: HIGH LEVEL BENT ANALYSIS WDB 7/06
HLB 143 MEM. 8 JT. 8

COLUMN LOADS

PMIN

HLB 143 MEMBER 8 JOINT 8

GROUP 1

	P	MY	MZ
DL	-295.49	0.00	21.91
LL	-50.57	0.00	10.47
GROUP 1	0.00	0.00	0.00
SERVICE	-346.06	0.00	32.38
STRENGTH	-493.71	0.00	51.17

GROUP 2

	P	MY	MZ
DL	-295.49	0.00	21.91
LL	0.00	0.00	0.00
GROUP 2	47.13	1029.61	-156.50
SERVICE	-248.36	1029.61	-134.59
STRENGTH	-322.87	1338.49	-174.97

GROUP 3

	P	MY	MZ
DL	-295.49	0.00	21.91
LL	-50.57	0.00	10.47
GROUP 3	20.27	654.95	-66.26
SERVICE	-325.79	654.95	-33.88
STRENGTH	-423.53	851.44	-44.04

GROUP 4

	P	MY	MZ
DL	-295.49	0.00	21.91
LL	-50.57	0.00	10.47
GROUP 4	-0.22	0.00	50.71
SERVICE	-346.28	0.00	83.09
STRENGTH	-450.17	0.00	108.02

GROUP 5

	P	MY	MZ
DL	-295.49	0.00	21.91
LL	0.00	0.00	0.00
GROUP 5	46.90	1029.61	-105.79
SERVICE	-248.59	1029.61	-83.88
STRENGTH	-310.74	1287.01	-104.85

GROUP 6

	P	MY	MZ
DL	-295.49	0.00	21.91
LL	-50.57	0.00	10.47
GROUP 6	20.04	654.95	-15.55
SERVICE	-326.02	654.95	16.83
STRENGTH	-407.53	818.69	21.04

SLENDERNESS EFFECTS IN COMPRESSION MEMBERS (AASHTO 8.16.5)

f'c = 3000 psi PHI = 0.70 W_C = 150 PCF

$E_C = W_C^{1.5} * 33 * f'c^{0.5}$ = 3320561 PSI Width of Rect. Col. = B = 41.916 In.

Depth of Rect. Col = D = 60.936 In.

$r_Y = 0.30*D$ = 18.28 In. L_Y = 8.5 Ft. K_Y = 2.0

$r_Z = 0.30*B$ = 12.57 In. L_Z = 18 Ft. K_Z = 1.2

I_{YY} = $B*D^3/12$ I_{YY} = 790352 In^4

I_{ZZ} = $D*B^3/12$ I_{ZZ} = 373966 In^5

$K_Y L_Y/r$ = 11.2 < 22 NO SLENDERNESS EFFECT

$K_Z L_Z/r$ = 20.6 < 22 NO SLENDERNESS EFFECT

H. W. LOCHNER, INC.

PROJECT: BONNER BRIDGE - OREGON INLET NORTH CAROLINA
SUBJECT: HIGH LEVEL BENT ANALYSIS
HLB 143 MEM. 8 JT. 8

JMJ Jul-06
WDB 7/06

SLENDERNESS EFFECTS IN RECTANGULAR COMPRESSION MEMBERS (AASHTO 8.16.5)

GROUP 1

	B	D	KL/R	M_U	M_{DL}	B_D	P_U	P_C	δ_b	δ_s	M_C	
	In.	In.		Ft. Kips	Ft. Kips		Kips	Kips			Ft. Kips	
MY	41.916	60.936	11.2	0.00	0.00	0.000	494	0	1.000	1.000	100	*
MZ	41.916	60.936	20.6	51.17	28.48	0.557	494	0	1.000	1.000	76	*

GROUP 2

	B	D	KL/R	M_U	M_{DL}	B_D	P_U	P_C	δ_b	δ_s	M_C
	In.	In.		Ft. Kips	Ft. Kips		Kips	Kips			Ft. Kips
MY	41.916	60.936	11.2	1338.49	0.00	0.000	323	0	1.000	1.000	1338
MZ	41.916	60.936	20.6	174.97	28.48	0.163	323	0	1.000	1.000	175

GROUP 3

	B	D	KL/R	M_U	M_{DL}	B_D	P_U	P_C	δ_b	δ_s	M_C	
	In.	In.		Ft. Kips	Ft. Kips		Kips	Kips			Ft. Kips	
MY	41.916	60.936	11.2	851.44	0.00	0.000	424	0	1.000	1.000	851	
MZ	41.916	60.936	20.6	44.04	28.48	0.647	424	0	1.000	1.000	66	*

GROUP 4

	B	D	KL/R	M_U	M_{DL}	B_D	P_U	P_C	δ_b	δ_s	M_C	
	In.	In.		Ft. Kips	Ft. Kips		Kips	Kips			Ft. Kips	
MY	41.916	60.936	11.2	0.00	0.00	0.000	450	0	1.000	1.000	91	*
MZ	41.916	60.936	20.6	108.02	28.48	0.264	450	0	1.000	1.000	108	

GROUP 5

	B	D	KL/R	M_U	M_{DL}	B_D	P_U	P_C	δ_b	δ_s	M_C
	In.	In.		Ft. Kips	Ft. Kips		Kips	Kips			Ft. Kips
MY	41.916	60.936	11.2	1287.01	0.00	0.000	311	0	1.000	1.000	1287
MZ	41.916	60.936	20.6	104.85	28.48	0.272	311	0	1.000	1.000	105

GROUP 6

	B	D	KL/R	M_U	M_{DL}	B_D	P_U	P_C	δ_b	δ_s	M_C	
	In.	In.		Ft. Kips	Ft. Kips		Kips	Kips			Ft. Kips	
MY	41.916	60.936	11.2	818.69	0.00	0.000	408	0	1.000	1.000	819	
MZ	41.916	60.936	20.6	21.04	28.48	1.354	408	0	1.000	1.000	63	*

* MINIMUM MOMENT CONTROLS

```
OOOOOOO    OOOOO    OOOOO    OOOOO    OOOOO    OO
OO    OO   OO  OO   OO  OO   OO  OO   OO  OO   OO
OO    OO   OO  OO   OO  OO   OO  OO   OO  OO   OO
OO    OO   OO       OO  OO   OO       OO  OO   OO
OO    OO   OO       OOOOOOO  OO       OO  OO   OO
OOOOOOO    OO  OO   OO  OO   OO  OO   OO  OO   OO
OO         OO  OO   OO  OO   OO  OO   OO  OO   OO
OO          OOOOO   OO  OO    OOOOO    OOOOO    OOOOO  (TM)
```

JMJ 7/06

WDB 7/06

==========
Computer program for the Strength Design of Reinforced Concrete Sections
==========

Licensee stated above acknowledges that Portland Cement Association (PCA) is not and cannot be responsible for either the accuracy or adequacy of the material supplied as input for processing by the PCACOL(tm) computer program. Furthermore, PCA neither makes any warranty expressed nor implied with respect to the correctness of the output prepared by the PCACOL(tm) program. Although PCA has endeavored to produce PCACOL(tm) error free, the program is not and can't be certified infallible. The final and only responsibility for analysis, design and engineering documents is the licensees. Accordingly, PCA disclaims all responsibility in contract, negligence or other tort for any analysis, design or engineering documents prepared in connection with the use of the PCACOL(tm) program.

BASED ON PLANS.

General Information:
==========

File Name: S:\DGN-ST\NORTHC~1\BONNER~1\ANALYSIS\PIERS\HLB143~1\PCACOL~1\M8PLAN.COL
Project: BONNER BRIDGE - OREGON INLET
Column: HLB #143 Engineer: JMJ
Code: ACI 318-95 Units: English

Run Option: Investigation Slenderness: Not considered
Run Axis: Biaxial Column Type: Structural

Material Properties:
==========

f'c = 3 ksi fy = 40 ksi
Ec = 3122.02 ksi Es = 29000 ksi
fc = 2.55 ksi Rupture strain = Infinity
Ultimate strain = 0.003 in/in
Beta1 = 0.85

Section:
==========

Rectangular: Width = 41.9 in Depth = 60.9 in

Gross section area, Ag = 2551.71 in^2
Ix = 788651 in^4 Iy = 373317 in^4
Xo = 0 in Yo = 0 in

Reinforcement:
==========

Rebar Database: User-defined

Size	Diam (in)	Area (in^2)	Size	Diam (in)	Area (in^2)	Size	Diam (in)	Area (in^2)
# 1	0.00	0.00	# 3	0.38	0.11	# 4	0.50	0.20
# 5	0.63	0.31	# 6	0.75	0.44	# 7	0.88	0.60
# 8	1.00	0.79	# 9	1.13	1.00	# 10	1.27	1.27
# 11	1.41	1.56	# 14	1.69	2.25	# 18	2.26	4.00

Confinement: Tied; #1 ties with #9 bars, #1 with larger bars.
phi(a) = 0.8, phi(b) = 0.9, phi(c) = 0.7

Layout: Rectangular
Pattern: Equal Bar Spacing (Cover to longitudinal reinforcement)
Total steel area, As = 37.44 in^2 at 1.47%
24 #11 Cover = 5 in

Factored Loads and Moments with Corresponding Capacities: (see user's manual for notation)
==========

No.	Pu kip	Mux k-ft	Muy k-ft	fMnx k-ft	fMny k-ft	fMn/Mu
1	706.0	143.0	109.0	2205.4	1683.3	15.430
2	389.0	600.0	177.0	2980.0	881.5	4.968
3	577.0	405.0	109.0	3097.8	835.8	7.650
4	604.0	122.0	93.0	2211.9	1685.3	18.127
5	374.0	577.0	152.0	3021.6	793.0	5.235
6	555.0	389.0	87.0	3165.8	710.8	8.140
7	447.0	90.0	69.0	2185.8	1673.8	24.276
8	276.0	600.0	177.0	2909.4	857.4	4.849
9	377.0	405.0	58.0	3176.8	458.2	7.845
10	403.0	82.0	62.0	2192.8	1656.1	26.730
11	266.0	577.0	152.0	2944.6	777.5	5.104
12	363.0	389.0	56.0	3167.2	452.5	8.141
13	768.0	155.0	119.0	2187.9	1677.1	14.107
14	451.0	1338.0	175.0	3241.6	423.1	2.423
15	640.0	851.0	99.0	3336.5	382.4	3.920

16	666.0	135.0	103.0	2210.0	1685.9	16.370
17	434.0	1287.0	105.0	3273.9	267.8	2.544
18	615.0	819.0	95.0	3328.7	384.5	4.064
19	494.0	100.0	76.0	2206.3	1673.4	22.046
20	323.0	1338.0	175.0	3145.2	414.4	2.351
21	424.0	851.0	66.0	3268.8	258.7	3.842
22	450.0	91.0	108.0	1624.2	1933.3	17.879
23	311.0	1287.0	105.0	3178.7	255.7	2.470
24	408.0	819.0	63.0	3259.2	249.0	3.979

*** Program completed as requested! ***

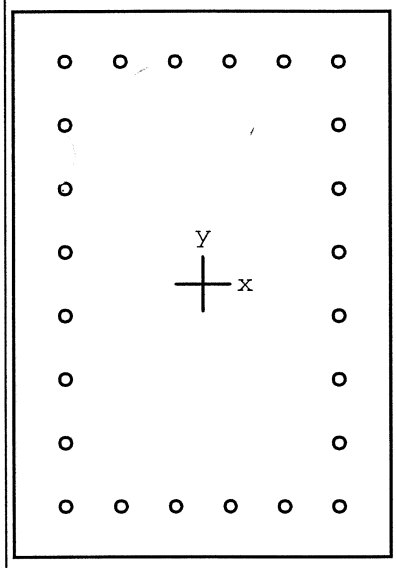

41.9 x 60.9 in

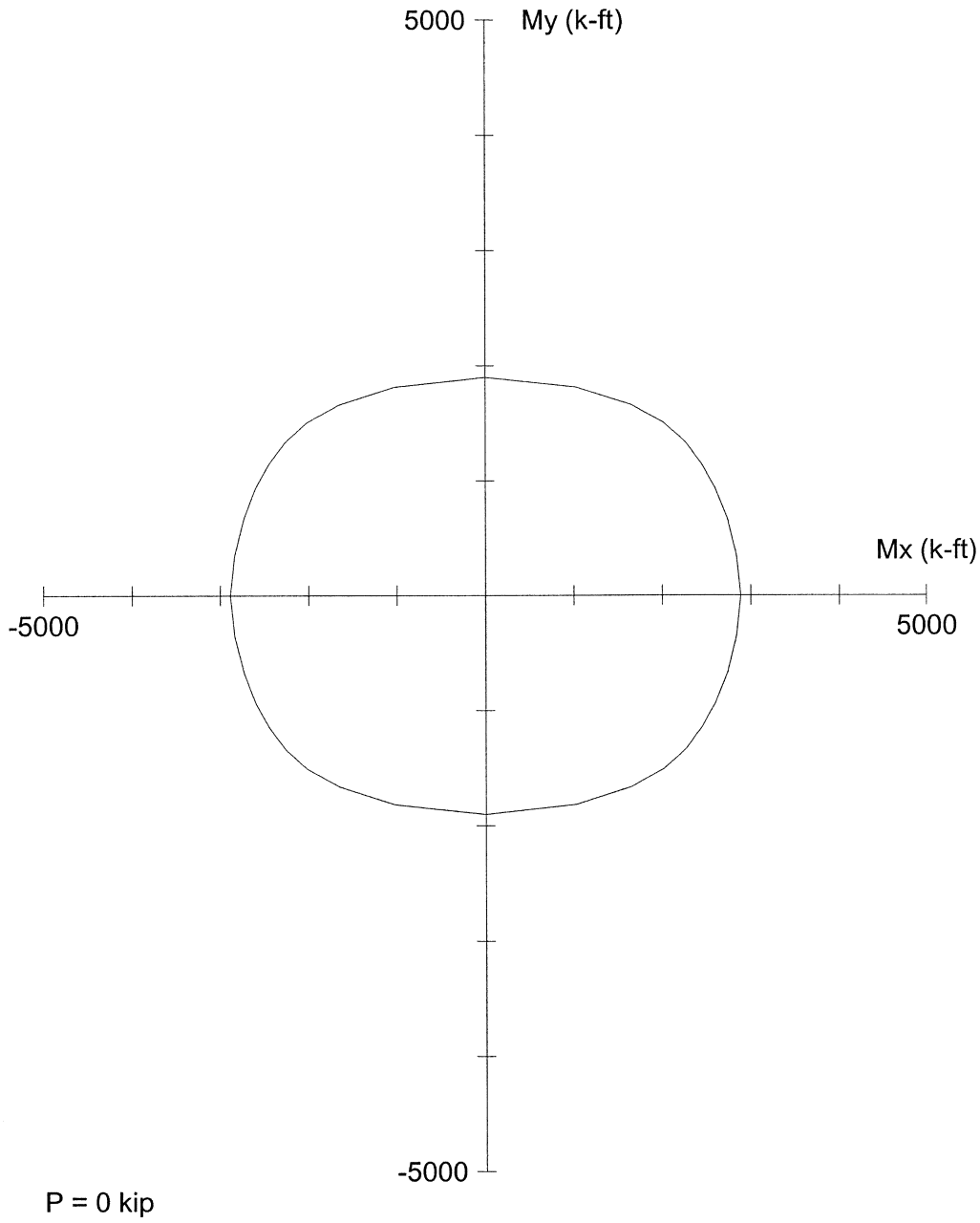

Code: ACI 318-95

Units: English

Run axis: Biaxial

Run option: Investigation

Slenderness: Not considered

mn type: Structural

Bars: User-defined

Date: 07/24/06

Time: 16:09:52

PCACOL V3.00 (PCA 1999) - Licensed to: Licensee name not yet specified.

File: S:\DGN-ST\NORTHC~1\BONNER~1\ANALYSIS\PIERS\HLB143~1\PCACOL~1\M8PLAN.COL

Project: BONNER BRIDGE - OREGON INLET

Column: HLB #143		Engineer: JMJ	
f'c = 3 ksi	fy = 40 ksi	Ag = 2551.71 in^2	24 #11 bars
Ec = 3122 ksi	Es = 29000 ksi	As = 37.44 in^2	Rho = 1.47%
fc = 2.55 ksi	e_rup = Infinity	Xo = 0.00 in	Ix = 788651 in^4
u = 0.003 in/in		Yo = 0.00 in	Iy = 373317 in^4
Beta1 = 0.85		Clear spacing = 4.69 in	Clear cover = 5.00 in
Confinement: Tied	phi(a) = 0.8, phi(b) = 0.9, phi(c) = 0.7		

JMJ 7/06

WDB 7/06

```
OOOOOOO    OOOOO    OOOOO    OOOOO    OOOOO    OO
OO    OO   OO  OO   OO  OO   OO  OO   OO  OO   OO
OO    OO   OO  OO   OO  OO   OO  OO   OO  OO   OO
OO    OO   OO       OO  OO   OO       OO  OO   OO
OO    OO   OO       OOOOOOO  OO       OO  OO   OO
OOOOOOO    OO  OO   OO  OO   OO  OO   OO  OO   OO
OO         OO  OO   OO  OO   OO  OO   OO  OO   OO
OO          OOOOO   OO  OO    OOOOO    OOOOO    OOOOO   (TM)
```

==========
Computer program for the Strength Design of Reinforced Concrete Sections
==========

Licensee stated above acknowledges that Portland Cement Association (PCA) is not and cannot be responsible for either the accuracy or adequacy of the material supplied as input for processing by the PCACOL(tm) computer program. Furthermore, PCA neither makes any warranty expressed nor implied with respect to the correctness of the output prepared by the PCACOL(tm) program. Although PCA has endeavored to produce PCACOL(tm) error free, the program is not and can't be certified infallible. The final and only responsibility for analysis, design and engineering documents is the licensees. Accordingly, PCA disclaims all responsibility in contract, negligence or other tort for any analysis, design or engineering documents prepared in connection with the use of the PCACOL(tm) program.

BASED ON FIELD DATA

ASSUME 50% CORE LOSS

General Information:
==========

File Name: S:\DGN-ST\NORTHC~1\BONNER~1\ANALYSIS\PIERS\HLB143~1\PCACOL~1\M8ACT.COL
Project: BONNER BRIDGE - OREGON INLET
Column: HLB #143 Engineer: JMJ
Code: ACI 318-95 Units: English

Run Option: Investigation Slenderness: Not considered
Run Axis: Biaxial Column Type: Structural

Material Properties:
==========

f'c = 4.4 ksi fy = 40 ksi
Ec = 3780.96 ksi Es = 29000 ksi
fc = 3.74 ksi Rupture strain = Infinity
Ultimate strain = 0.003 in/in
Beta1 = 0.83

Section:
==========

Rectangular: Width = 36.9 in Depth = 55.9 in

Gross section area, Ag = 2062.71 in^2
Ix = 537132 in^4 Iy = 234051 in^4
Xo = 0 in Yo = 0 in

Reinforcement:
==========

Rebar Database: User-defined

Size	Diam (in)	Area (in^2)	Size	Diam (in)	Area (in^2)	Size	Diam (in)	Area (in^2)
# 1	0.00	0.00	# 3	0.38	0.11	# 4	0.50	0.20
# 5	0.63	0.31	# 6	0.75	0.44	# 7	0.88	0.60
# 8	1.00	0.79	# 9	1.13	1.00	# 10	1.27	1.27
# 11	1.41	1.56	# 14	1.69	2.25	# 18	2.26	4.00

Confinement: Tied; #1 ties with #9 bars, #1 with larger bars.
phi(a) = 0.8, phi(b) = 0.9, phi(c) = 0.7

Layout: Rectangular
Pattern: Equal Bar Spacing (Cover to longitudinal reinforcement)
Total steel area, As = 37.44 in^2 at 1.82%
24 #11 Cover = 2.5 in

Factored Loads and Moments with Corresponding Capacities: (see user's manual for notation)
==========

No.	Pu kip	Mux k-ft	Muy k-ft	fMnx k-ft	fMny k-ft	fMn/Mu
1	706.0	143.0	109.0	2237.7	1711.5	15.668
2	389.0	600.0	177.0	2950.9	874.3	4.920
3	577.0	405.0	109.0	3115.7	834.6	7.691
4	604.0	122.0	93.0	2225.0	1694.1	18.230
5	374.0	577.0	152.0	2986.2	783.0	5.174
6	555.0	389.0	87.0	3169.2	713.3	8.149
7	447.0	90.0	69.0	2165.3	1656.2	24.038
8	276.0	600.0	177.0	2858.7	848.5	4.767
9	377.0	405.0	58.0	3131.0	449.4	7.731
10	403.0	82.0	62.0	2162.7	1634.7	26.371
11	266.0	577.0	152.0	2894.0	766.7	5.018
12	363.0	389.0	56.0	3116.5	452.6	8.013
13	768.0	155.0	119.0	2243.5	1718.7	14.463
14	451.0	1338.0	175.0	3208.8	422.0	2.398
15	640.0	851.0	99.0	3363.5	390.3	3.952

16	666.0	135.0	103.0	2234.3	1705.0	16.551
17	434.0	1287.0	105.0	3236.1	264.0	2.514
18	615.0	819.0	95.0	3348.8	390.2	4.089
19	494.0	100.0	76.0	2191.1	1665.2	21.911
20	323.0	1338.0	175.0	3091.8	404.3	2.311
21	424.0	851.0	66.0	3229.7	253.2	3.795
22	450.0	91.0	108.0	1592.4	1895.4	17.529
23	311.0	1287.0	105.0	3121.1	255.9	2.425
24	408.0	819.0	63.0	3215.4	251.6	3.926

*** Program completed as requested! ***

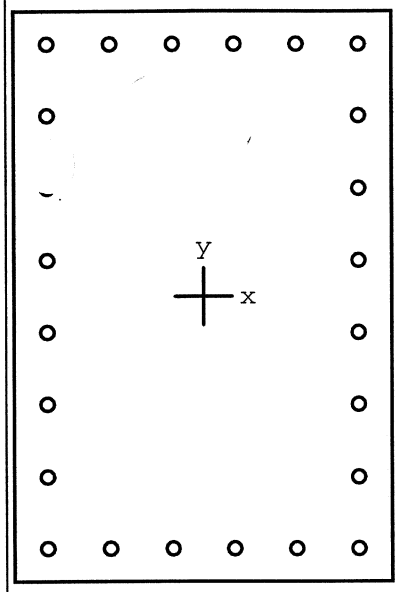

36.9 x 55.9 in

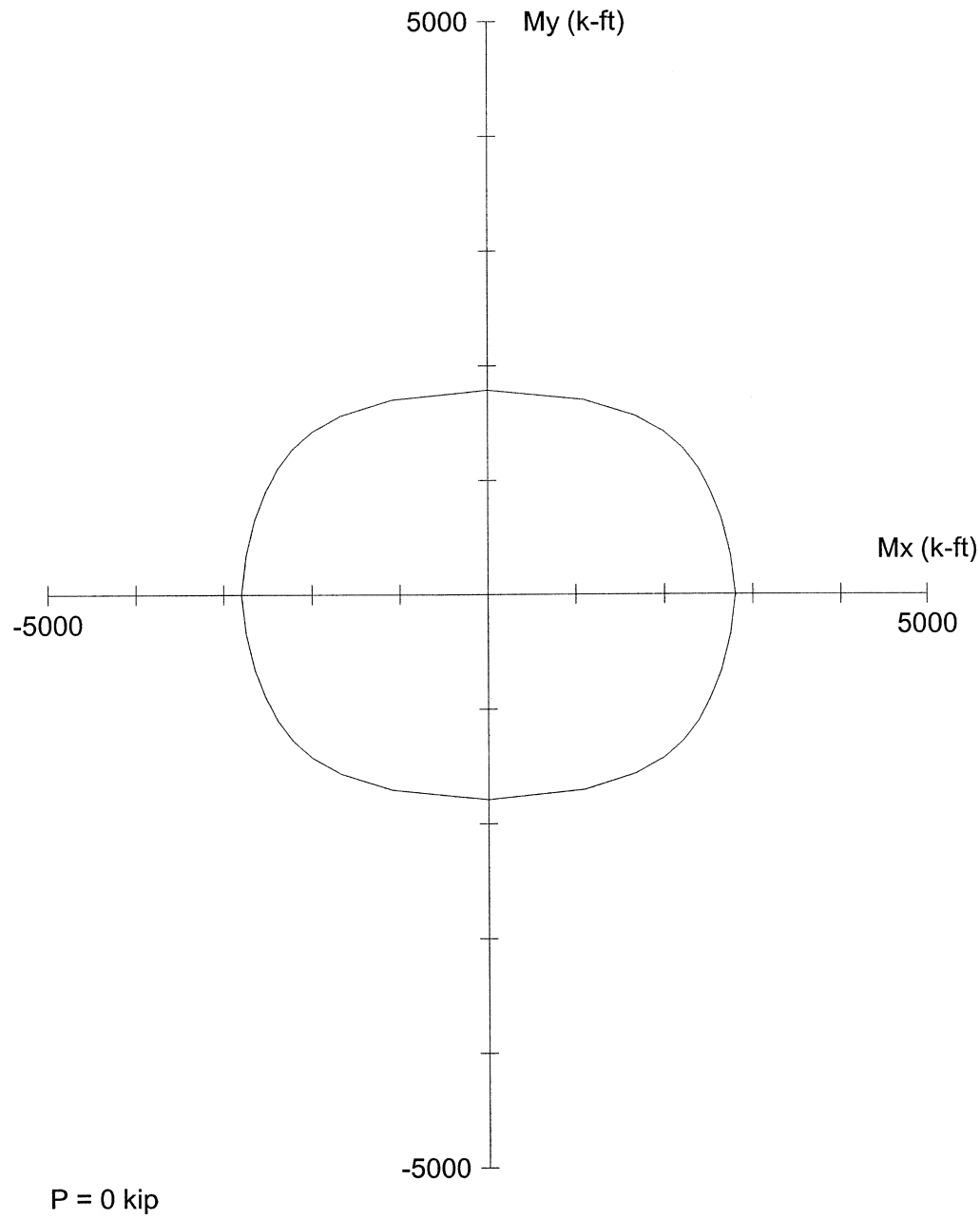

Code: ACI 318-95

Units: English

Run axis: Biaxial

Run option: Investigation

Slenderness: Not considered

mn type: Structural

Bars: User-defined

Date: 07/25/06

Time: 13:44:39

PCACOL V3.00 (PCA 1999) - Licensed to: Licensee name not yet specified.

File: S:\DGN-ST\NORTHC~1\BONNER~1\ANALYSIS\PIERS\HLB143~1\PCACOL~1\M8ACT.COL

Project: BONNER BRIDGE - OREGON INLET

Column: HLB #143		Engineer: JMJ	
f'c = 4.4 ksi	fy = 40 ksi	Ag = 2062.71 in^2	24 #11 bars
Ec = 3781 ksi	Es = 29000 ksi	As = 37.44 in^2	Rho = 1.82%
fc = 3.74 ksi	e_rup = Infinity	Xo = 0.00 in	Ix = 537132 in^4
u = 0.003 in/in		Yo = 0.00 in	Iy = 234051 in^4
Beta1 = 0.83		Clear spacing = 4.69 in	Clear cover = 2.50 in
Confinement: Tied	phi(a) = 0.8, phi(b) = 0.9, phi(c) = 0.7		

H. W. LOCHNER, INC.

PROJECT: BONNER BRIDGE - OREGON INLET NORTH CAROLINA JMJ Jul-06
SUBJECT: HIGH LEVEL BENT ANALYSIS WDB 7/06
HLB 143 MEM. 10 JT. 7

COLUMN LOADS

PMAX

HLB 143 MEMBER 10 JOINT 7

	GROUP 1				GROUP 2		
	P	MY	MZ		P	MY	MZ
DL	415.73	0.00	40.28	DL	415.73	0.00	40.28
LL	116.11	0.00	-7.74	LL	0.00	0.00	0.00
GROUP 1	0.00	0.00	0.00	GROUP 2	67.43	1029.62	75.29
SERVICE	531.84	0.00	32.54	SERVICE	483.16	1029.62	115.57
STRENGTH	792.02	0.00	35.59	STRENGTH	628.11	1338.51	150.24

	GROUP 3				GROUP 4		
	P	MY	MZ		P	MY	MZ
DL	415.73	0.00	40.28	DL	415.73	0.00	40.28
LL	116.11	0.00	-7.74	LL	116.11	0.00	-7.74
GROUP 3	28.61	654.87	29.04	GROUP 4	1.61	0.00	-63.90
SERVICE	560.45	654.87	61.58	SERVICE	533.45	0.00	-31.36
STRENGTH	728.59	851.33	80.05	STRENGTH	693.49	0.00	-40.77

	GROUP 5				GROUP 6		
	P	MY	MZ		P	MY	MZ
DL	415.73	0.00	40.28	DL	415.73	0.00	40.28
LL	0.00	0.00	0.00	LL	116.11	0.00	-7.74
GROUP 5	69.04	1029.62	11.40	GROUP 6	30.22	654.87	-34.86
SERVICE	484.77	1029.62	51.68	SERVICE	562.06	654.87	-2.32
STRENGTH	605.96	1287.03	64.60	STRENGTH	702.58	818.59	-2.90

SLENDERNESS EFFECTS IN COMPRESSION MEMBERS (AASHTO 8.16.5)

f'c = 3000 psi PHI = 0.70 W_C = 150 PCF

$E_C = W_C^{1.5} * 33 * f'c^{0.5}$ = 3320561 PSI Width of Rect. Col. = B = 41.916 In.

Depth of Rect. Col = D = 73.584 In.

$r_Y = 0.30*D$ = 22.08 In. L_Y = 8.5 Ft. K_Y = 2.0

$r_Z = 0.30*B$ = 12.57 In. L_Z = 15.75 Ft. K_Z = 1.2

I_{YY} = $B*D^3/12$ I_{YY} = 1391710 In^4

I_{ZZ} = $D*B^3/12$ I_{ZZ} = 451587 In^5

$K_Y L_Y/r$ = 9.2 < 22 NO SLENDERNESS EFFECT

$K_Z L_Z/r$ = 18.0 < 22 NO SLENDERNESS EFFECT

H. W. LOCHNER, INC.

PROJECT: BONNER BRIDGE - OREGON INLET NORTH CAROLINA JMJ Jul-06
SUBJECT: HIGH LEVEL BENT ANALYSIS WDB 7/06
HLB 143 MEM. 10 JT. 7

SLENDERNESS EFFECTS IN RECTANGULAR COMPRESSION MEMBERS (AASHTO 8.16.5)

GROUP 1

	B	D	KL/R	M_U	M_{DL}	B_D	P_U	P_C	δ_b	δ_s	M_C	
	In.	In.		Ft. Kips	Ft. Kips		Kips	Kips			Ft. Kips	
MY	41.916	73.584	9.2	0.00	0.00	0.000	792	0	1.000	1.000	185	*
MZ	41.916	73.584	18.0	35.59	52.36	1.471	792	0	1.000	1.000	123	*

GROUP 2

	B	D	KL/R	M_U	M_{DL}	B_D	P_U	P_C	δ_b	δ_s	M_C
	In.	In.		Ft. Kips	Ft. Kips		Kips	Kips			Ft. Kips
MY	41.916	73.584	9.2	1338.51	0.00	0.000	628	0	1.000	1.000	1339
MZ	41.916	73.584	18.0	150.24	52.36	0.349	628	0	1.000	1.000	150

GROUP 3

	B	D	KL/R	M_U	M_{DL}	B_D	P_U	P_C	δ_b	δ_s	M_C	
	In.	In.		Ft. Kips	Ft. Kips		Kips	Kips			Ft. Kips	
MY	41.916	73.584	9.2	851.33	0.00	0.000	729	0	1.000	1.000	851	
MZ	41.916	73.584	18.0	80.05	52.36	0.654	729	0	1.000	1.000	113	*

GROUP 4

	B	D	KL/R	M_U	M_{DL}	B_D	P_U	P_C	δ_b	δ_s	M_C	
	In.	In.		Ft. Kips	Ft. Kips		Kips	Kips			Ft. Kips	
MY	41.916	73.584	9.2	0.00	0.00	0.000	693	0	1.000	1.000	162	*
MZ	41.916	73.584	18.0	40.77	52.36	1.284	693	0	1.000	1.000	107	*

GROUP 5

	B	D	KL/R	M_U	M_{DL}	B_D	P_U	P_C	δ_b	δ_s	M_C	
	In.	In.		Ft. Kips	Ft. Kips		Kips	Kips			Ft. Kips	
MY	41.916	73.584	9.2	1287.03	0.00	0.000	606	0	1.000	1.000	1287	
MZ	41.916	73.584	18.0	64.60	52.36	0.811	606	0	1.000	1.000	94	*

GROUP 6

	B	D	KL/R	M_U	M_{DL}	B_D	P_U	P_C	δ_b	δ_s	M_C	
	In.	In.		Ft. Kips	Ft. Kips		Kips	Kips			Ft. Kips	
MY	41.916	73.584	9.2	818.59	0.00	0.000	703	0	1.000	1.000	819	
MZ	41.916	73.584	18.0	2.90	52.36	18.057	703	0	1.000	1.000	109	*

* MINIMUM MOMENT CONTROLS

H. W. LOCHNER, INC.

PROJECT: BONNER BRIDGE - OREGON INLET NORTH CAROLINA JMJ Jul-06
SUBJECT: HIGH LEVEL BENT ANALYSIS WDB 7/06
HLB 143 MEM. 10 JT. 7

COLUMN LOADS

PMIN

HLB 143 MEMBER 10 JOINT 7

GROUP 1

	P	MY	MZ
DL	311.80	0.00	40.28
LL	52.87	0.00	13.74
GROUP 1	0.00	0.00	0.00
SERVICE	364.67	0.00	54.02
STRENGTH	519.89	0.00	82.13

GROUP 2

	P	MY	MZ
DL	311.80	0.00	40.28
LL	0.00	0.00	0.00
GROUP 2	67.43	1029.62	75.29
SERVICE	379.23	1029.62	115.57
STRENGTH	493.00	1338.51	150.24

GROUP 3

	P	MY	MZ
DL	311.80	0.00	40.28
LL	52.87	0.00	13.74
GROUP 3	28.61	654.87	29.04
SERVICE	393.28	654.87	83.06
STRENGTH	511.26	851.33	107.98

GROUP 4

	P	MY	MZ
DL	311.80	0.00	40.28
LL	52.87	0.00	13.74
GROUP 4	1.61	0.00	-63.90
SERVICE	366.28	0.00	-9.88
STRENGTH	476.16	0.00	-12.84

GROUP 5

	P	MY	MZ
DL	311.80	0.00	40.28
LL	0.00	0.00	0.00
GROUP 5	69.04	1029.62	11.40
SERVICE	380.84	1029.62	51.68
STRENGTH	476.05	1287.03	64.60

GROUP 6

	P	MY	MZ
DL	311.80	0.00	40.28
LL	52.87	0.00	13.74
GROUP 6	30.22	654.87	-34.86
SERVICE	394.89	654.87	19.16
STRENGTH	493.61	818.59	23.95

SLENDERNESS EFFECTS IN COMPRESSION MEMBERS (AASHTO 8.16.5)

f'c = 3000 psi PHI = 0.70 W_C = 150 PCF

$E_C = W_C^{1.5} * 33 * f'c^{0.5}$ = 3320561 PSI Width of Rect. Col. = B = 41.916 In.

Depth of Rect. Col = D = 73.584 In.

$r_Y = 0.30*D$ = 22.08 In. L_Y = 8.5 Ft. K_Y = 2.0

$r_Z = 0.30*B$ = 12.57 In. L_Z = 15.75 Ft. K_Z = 1.2

I_{YY} = $B*D^3/12$ I_{YY} = 1391710 In^4

I_{ZZ} = $D*B^3/12$ I_{ZZ} = 451587 In^5

$K_Y L_Y/r$ = 9.2 < 22 NO SLENDERNESS EFFECT

$K_Z L_Z/r$ = 18.0 < 22 NO SLENDERNESS EFFECT

H. W. LOCHNER, INC.

PROJECT: BONNER BRIDGE - OREGON INLET NORTH CAROLINA JMJ Jul-06
SUBJECT: HIGH LEVEL BENT ANALYSIS WDB 7/06
HLB 143 MEM. 10 JT. 7

SLENDERNESS EFFECTS IN RECTANGULAR COMPRESSION MEMBERS (AASHTO 8.16.5)

GROUP 1

	B	D	KL/R	M_U	M_{DL}	B_D	P_U	P_C	δ_b	δ_s	M_C	
	In.	In.		Ft. Kips	Ft. Kips		Kips	Kips			Ft. Kips	
MY	41.916	73.584	9.2	0.00	0.00	0.000	520	0	1.000	1.000	122	*
MZ	41.916	73.584	18.0	82.13	52.36	0.638	520	0	1.000	1.000	82	

GROUP 2

	B	D	KL/R	M_U	M_{DL}	B_D	P_U	P_C	δ_b	δ_s	M_C
	In.	In.		Ft. Kips	Ft. Kips		Kips	Kips			Ft. Kips
MY	41.916	73.584	9.2	1338.51	0.00	0.000	493	0	1.000	1.000	1339
MZ	41.916	73.584	18.0	150.24	52.36	0.349	493	0	1.000	1.000	150

GROUP 3

	B	D	KL/R	M_U	M_{DL}	B_D	P_U	P_C	δ_b	δ_s	M_C
	In.	In.		Ft. Kips	Ft. Kips		Kips	Kips			Ft. Kips
MY	41.916	73.584	9.2	851.33	0.00	0.000	511	0	1.000	1.000	851
MZ	41.916	73.584	18.0	107.98	52.36	0.485	511	0	1.000	1.000	108

GROUP 4

	B	D	KL/R	M_U	M_{DL}	B_D	P_U	P_C	δ_b	δ_s	M_C	
	In.	In.		Ft. Kips	Ft. Kips		Kips	Kips			Ft. Kips	
MY	41.916	73.584	9.2	0.00	0.00	0.000	476	0	1.000	1.000	111	*
MZ	41.916	73.584	18.0	12.84	52.36	4.077	476	0	1.000	1.000	74	*

GROUP 5

	B	D	KL/R	M_U	M_{DL}	B_D	P_U	P_C	δ_b	δ_s	M_C	
	In.	In.		Ft. Kips	Ft. Kips		Kips	Kips			Ft. Kips	
MY	41.916	73.584	9.2	1287.03	0.00	0.000	476	0	1.000	1.000	1287	
MZ	41.916	73.584	18.0	64.60	52.36	0.811	476	0	1.000	1.000	74	*

GROUP 6

	B	D	KL/R	M_U	M_{DL}	B_D	P_U	P_C	δ_b	δ_s	M_C	
	In.	In.		Ft. Kips	Ft. Kips		Kips	Kips			Ft. Kips	
MY	41.916	73.584	9.2	818.59	0.00	0.000	494	0	1.000	1.000	819	
MZ	41.916	73.584	18.0	23.95	52.36	2.186	494	0	1.000	1.000	76	*

* MINIMUM MOMENT CONTROLS

H. W. LOCHNER, INC.

PROJECT: BONNER BRIDGE - OREGON INLET NORTH CAROLINA JMJ Jul-06
SUBJECT: HIGH LEVEL BENT ANALYSIS WDB 7/06
HLB 143 MEM. 10 JT. 9

COLUMN LOADS

PMAX

HLB 143 MEMBER 10 JOINT 9

GROUP 1

	P	MY	MZ
DL	-466.33	0.00	24.52
LL	-116.11	0.00	-20.13
GROUP 1	0.00	0.00	0.00
SERVICE	-582.44	0.00	4.39
STRENGTH	-857.80	0.00	-11.74

GROUP 2

	P	MY	MZ
DL	-466.33	0.00	24.52
LL	0.00	0.00	0.00
GROUP 2	-67.64	-1619.32	228.81
SERVICE	-533.97	-1619.32	253.33
STRENGTH	-694.16	-2105.12	329.33

GROUP 3

	P	MY	MZ
DL	-466.33	0.00	24.52
LL	-116.11	0.00	-20.13
GROUP 3	-28.68	-983.37	92.37
SERVICE	-611.12	-983.37	96.76
STRENGTH	-794.46	-1278.38	125.79

GROUP 4

	P	MY	MZ
DL	-466.33	0.00	24.52
LL	-116.11	0.00	-20.13
GROUP 4	-1.61	0.00	472.29
SERVICE	-584.05	0.00	476.68
STRENGTH	-759.27	0.00	619.68

GROUP 5

	P	MY	MZ
DL	-466.33	0.00	24.52
LL	0.00	0.00	0.00
GROUP 5	-69.25	-1619.32	701.10
SERVICE	-535.58	-1619.32	725.62
STRENGTH	-669.48	-2024.15	907.03

GROUP 6

	P	MY	MZ
DL	-466.33	0.00	24.52
LL	-116.11	0.00	-20.13
GROUP 6	-30.28	-983.37	564.66
SERVICE	-612.72	-983.37	569.05
STRENGTH	-765.90	-1229.21	711.31

SLENDERNESS EFFECTS IN COMPRESSION MEMBERS (AASHTO 8.16.5)

f'c = 3000 psi PHI = 0.70 W_C = 150 PCF

$E_C = W_C^{1.5} * 33 * f'c^{0.5}$ = 3320561 PSI Width of Rect. Col. = B = 41.916 In.

Depth of Rect. Col = D = 73.584 In.

$r_Y = 0.30*D$ = 22.08 In. L_Y = 8.5 Ft. K_Y = 2.0

$r_Z = 0.30*B$ = 12.57 In. L_Z = 15.75 Ft. K_Z = 1.2

I_{YY} = $B*D^3/12$ I_{YY} = 1391710 In^4

I_{ZZ} = $D*B^3/12$ I_{ZZ} = 451587 In^5

$K_Y L_Y/r$ = 9.2 < 22 NO SLENDERNESS EFFECT

$K_Z L_Z/r$ = 18.0 < 22 NO SLENDERNESS EFFECT

H. W. LOCHNER, INC.

PROJECT: BONNER BRIDGE - OREGON INLET NORTH CAROLINA JMJ Jul-06
SUBJECT: HIGH LEVEL BENT ANALYSIS WDB 7/06
HLB 143 MEM. 10 JT. 9

SLENDERNESS EFFECTS IN RECTANGULAR COMPRESSION MEMBERS (AASHTO 8.16.5)

GROUP 1

	B	D	KL/R	M_U	M_{DL}	B_D	P_U	P_C	δ_b	δ_s	M_C	
	In.	In.		Ft. Kips	Ft. Kips		Kips	Kips			Ft. Kips	
MY	41.916	73.584	9.2	0.00	0.00	0.000	858	0	1.000	1.000	201	*
MZ	41.916	73.584	18.0	11.74	31.88	2.715	858	0	1.000	1.000	133	*

GROUP 2

	B	D	KL/R	M_U	M_{DL}	B_D	P_U	P_C	δ_b	δ_s	M_C
	In.	In.		Ft. Kips	Ft. Kips		Kips	Kips			Ft. Kips
MY	41.916	73.584	9.2	2105.12	0.00	0.000	694	0	1.000	1.000	2105
MZ	41.916	73.584	18.0	329.33	31.88	0.097	694	0	1.000	1.000	329

GROUP 3

	B	D	KL/R	M_U	M_{DL}	B_D	P_U	P_C	δ_b	δ_s	M_C
	In.	In.		Ft. Kips	Ft. Kips		Kips	Kips			Ft. Kips
MY	41.916	73.584	9.2	1278.38	0.00	0.000	794	0	1.000	1.000	1278
MZ	41.916	73.584	18.0	125.79	31.88	0.253	794	0	1.000	1.000	126

GROUP 4

	B	D	KL/R	M_U	M_{DL}	B_D	P_U	P_C	δ_b	δ_s	M_C	
	In.	In.		Ft. Kips	Ft. Kips		Kips	Kips			Ft. Kips	
MY	41.916	73.584	9.2	0.00	0.00	0.000	759	0	1.000	1.000	178	*
MZ	41.916	73.584	18.0	619.68	31.88	0.051	759	0	1.000	1.000	620	

GROUP 5

	B	D	KL/R	M_U	M_{DL}	B_D	P_U	P_C	δ_b	δ_s	M_C
	In.	In.		Ft. Kips	Ft. Kips		Kips	Kips			Ft. Kips
MY	41.916	73.584	9.2	2024.15	0.00	0.000	669	0	1.000	1.000	2024
MZ	41.916	73.584	18.0	907.03	31.88	0.035	669	0	1.000	1.000	907

GROUP 6

	B	D	KL/R	M_U	M_{DL}	B_D	P_U	P_C	δ_b	δ_s	M_C
	In.	In.		Ft. Kips	Ft. Kips		Kips	Kips			Ft. Kips
MY	41.916	73.584	9.2	1229.21	0.00	0.000	766	0	1.000	1.000	1229
MZ	41.916	73.584	18.0	711.31	31.88	0.045	766	0	1.000	1.000	711

* MINIMUM MOMENT CONTROLS

H. W. LOCHNER, INC.

PROJECT: BONNER BRIDGE - OREGON INLET NORTH CAROLINA JMJ Jul-06
SUBJECT: HIGH LEVEL BENT ANALYSIS WDB 7/06
HLB 143 MEM. 10 JT. 9

COLUMN LOADS

PMIN

HLB 143 MEMBER 10 JOINT 9

GROUP 1

	P	MY	MZ
DL	-349.75	0.00	24.52
LL	-52.87	0.00	20.71
GROUP 1	0.00	0.00	0.00
SERVICE	-402.62	0.00	45.23
STRENGTH	-569.22	0.00	76.75

GROUP 2

	P	MY	MZ
DL	-349.75	0.00	24.52
LL	0.00	0.00	0.00
GROUP 2	-67.64	-1619.32	228.81
SERVICE	-417.39	-1619.32	253.33
STRENGTH	-542.60	-2105.12	329.33

GROUP 3

	P	MY	MZ
DL	-349.75	0.00	24.52
LL	-52.87	0.00	20.71
GROUP 3	-28.68	-983.37	92.37
SERVICE	-431.30	-983.37	137.60
STRENGTH	-560.69	-1278.38	178.88

GROUP 4

	P	MY	MZ
DL	-349.75	0.00	24.52
LL	-52.87	0.00	20.71
GROUP 4	-1.61	0.00	472.29
SERVICE	-404.23	0.00	517.52
STRENGTH	-525.50	0.00	672.78

GROUP 5

	P	MY	MZ
DL	-349.75	0.00	24.52
LL	0.00	0.00	0.00
GROUP 5	-69.25	-1619.32	701.10
SERVICE	-419.00	-1619.32	725.62
STRENGTH	-523.75	-2024.15	907.03

GROUP 6

	P	MY	MZ
DL	-349.75	0.00	24.52
LL	-52.87	0.00	20.71
GROUP 6	-30.28	-983.37	564.66
SERVICE	-432.90	-983.37	609.89
STRENGTH	-541.12	-1229.21	762.36

SLENDERNESS EFFECTS IN COMPRESSION MEMBERS (AASHTO 8.16.5)

f'c = 3000 psi PHI = 0.70 W_C = 150 PCF

$E_C = W_C^{1.5} * 33 * f'c^{0.5}$ = 3320561 PSI Width of Rect. Col. = B = 41.916 In.

Depth of Rect. Col = D = 73.584 In.

$r_Y = 0.30*D$ = 22.08 In. L_Y = 8.5 Ft. K_Y = 2.0

$r_Z = 0.30*B$ = 12.57 In. L_Z = 15.75 Ft. K_Z = 1.2

I_{YY} = $B*D^3/12$ I_{YY} = 1391710 In^4

I_{ZZ} = $D*B^3/12$ I_{ZZ} = 451587 In^5

$K_Y L_Y/r$ = 9.2 < 22 NO SLENDERNESS EFFECT

$K_Z L_Z/r$ = 18.0 < 22 NO SLENDERNESS EFFECT

H. W. LOCHNER, INC.

PROJECT: BONNER BRIDGE - OREGON INLET NORTH CAROLINA
SUBJECT: HIGH LEVEL BENT ANALYSIS
HLB 143 MEM. 10 JT. 9

JMJ Jul-06
WDB 7/06

SLENDERNESS EFFECTS IN RECTANGULAR COMPRESSION MEMBERS (AASHTO 8.16.5)

GROUP 1

	B	D	KL/R	M_U	M_{DL}	B_D	P_U	P_C	δ_b	δ_s	M_C	
	In.	In.		Ft. Kips	Ft. Kips		Kips	Kips			Ft. Kips	
MY	41.916	73.584	9.2	0.00	0.00	0.000	569	0	1.000	1.000	133	*
MZ	41.916	73.584	18.0	76.75	31.88	0.415	569	0	1.000	1.000	88	*

GROUP 2

	B	D	KL/R	M_U	M_{DL}	B_D	P_U	P_C	δ_b	δ_s	M_C
	In.	In.		Ft. Kips	Ft. Kips		Kips	Kips			Ft. Kips
MY	41.916	73.584	9.2	2105.12	0.00	0.000	543	0	1.000	1.000	2105
MZ	41.916	73.584	18.0	329.33	31.88	0.097	543	0	1.000	1.000	329

GROUP 3

	B	D	KL/R	M_U	M_{DL}	B_D	P_U	P_C	δ_b	δ_s	M_C
	In.	In.		Ft. Kips	Ft. Kips		Kips	Kips			Ft. Kips
MY	41.916	73.584	9.2	1278.38	0.00	0.000	561	0	1.000	1.000	1278
MZ	41.916	73.584	18.0	178.88	31.88	0.178	561	0	1.000	1.000	179

GROUP 4

	B	D	KL/R	M_U	M_{DL}	B_D	P_U	P_C	δ_b	δ_s	M_C	
	In.	In.		Ft. Kips	Ft. Kips		Kips	Kips			Ft. Kips	
MY	41.916	73.584	9.2	0.00	0.00	0.000	525	0	1.000	1.000	123	*
MZ	41.916	73.584	18.0	672.78	31.88	0.047	525	0	1.000	1.000	673	

GROUP 5

	B	D	KL/R	M_U	M_{DL}	B_D	P_U	P_C	δ_b	δ_s	M_C
	In.	In.		Ft. Kips	Ft. Kips		Kips	Kips			Ft. Kips
MY	41.916	73.584	9.2	2024.15	0.00	0.000	524	0	1.000	1.000	2024
MZ	41.916	73.584	18.0	907.03	31.88	0.035	524	0	1.000	1.000	907

GROUP 6

	B	D	KL/R	M_U	M_{DL}	B_D	P_U	P_C	δ_b	δ_s	M_C
	In.	In.		Ft. Kips	Ft. Kips		Kips	Kips			Ft. Kips
MY	41.916	73.584	9.2	1229.21	0.00	0.000	541	0	1.000	1.000	1229
MZ	41.916	73.584	18.0	762.36	31.88	0.042	541	0	1.000	1.000	762

* MINIMUM MOMENT CONTROLS

JMJ 7/06

WDB 7/06

```
OOOOOOO    OOOOO    OOOOO    OOOOO    OOOOO    OO
OO    OO   OO  OO   OO  OO   OO  OO   OO  OO   OO
OO    OO   OO  OO   OO  OO   OO  OO   OO  OO   OO
OO    OO   OO       OO  OO   OO       OO  OO   OO
OO    OO   OO       OOOOOOO  OO       OO  OO   OO
OOOOOOO    OO  OO   OO  OO   OO  OO   OO  OO   OO
OO         OO  OO   OO  OO   OO  OO   OO  OO   OO
OO          OOOOO   OO  OO    OOOOO    OOOOO    OOOOO   (TM)
```

==========
Computer program for the Strength Design of Reinforced Concrete Sections
==========

Licensee stated above acknowledges that Portland Cement Association (PCA) is not and cannot be responsible for either the accuracy or adequacy of the material supplied as input for processing by the PCACOL(tm) computer program. Furthermore, PCA neither makes any warranty expressed nor implied with respect to the correctness of the output prepared by the PCACOL(tm) program. Although PCA has endeavored to produce PCACOL(tm) error free, the program is not and can't be certified infallible. The final and only responsibility for analysis, design and engineering documents is the licensees. Accordingly, PCA disclaims all responsibility in contract, negligence or other tort for any analysis, design or engineering documents prepared in connection with the use of the PCACOL(tm) program.

BASED ON PLANS.

General Information:
==========

File Name: S:\DGN-ST\NORTHC~1\BONNER~1\ANALYSIS\PIERS\HLB143~1\PCACOL~1\M10PLAN.COL
Project: BONNER BRIDGE - OREGON INLET
Column: HLB #143 Engineer: JMJ
Code: ACI 318-95 Units: English

Run Option: Investigation Slenderness: Not considered
Run Axis: Biaxial Column Type: Structural

Material Properties:
==========

f'c = 3 ksi fy = 40 ksi
Ec = 3122.02 ksi Es = 29000 ksi
fc = 2.55 ksi Rupture strain = Infinity
Ultimate strain = 0.003 in/in
Beta1 = 0.85

Section:
==========

Rectangular: Width = 41.9 in Depth = 73.6 in

Gross section area, Ag = 3083.84 in^2
Ix = 1.39209e+006 in^4 Iy = 451168 in^4
Xo = 0 in Yo = 0 in

Reinforcement:
==========

Rebar Database: User-defined

Size	Diam (in)	Area (in^2)	Size	Diam (in)	Area (in^2)	Size	Diam (in)	Area (in^2)
# 1	0.00	0.00	# 3	0.38	0.11	# 4	0.50	0.20
# 5	0.63	0.31	# 6	0.75	0.44	# 7	0.88	0.60
# 8	1.00	0.79	# 9	1.13	1.00	# 10	1.27	1.27
# 11	1.41	1.56	# 14	1.69	2.25	# 18	2.26	4.00

Confinement: Tied; #1 ties with #9 bars, #1 with larger bars.
phi(a) = 0.8, phi(b) = 0.9, phi(c) = 0.7

Layout: Rectangular
Pattern: Equal Bar Spacing (Cover to longitudinal reinforcement)
Total steel area, As = 37.44 in^2 at 1.21%
24 #11 Cover = 5 in

Factored Loads and Moments with Corresponding Capacities: (see user's manual for notation)
==========

No.	Pu kip	Mux k-ft	Muy k-ft	fMnx k-ft	fMny k-ft	fMn/Mu
1	792.0	185.0	123.0	2880.5	1922.2	15.588
2	628.0	1339.0	150.0	4285.3	477.8	3.200
3	729.0	851.0	113.0	4318.3	574.2	5.075
4	693.0	162.0	107.0	2880.8	1899.4	17.773
5	606.0	1287.0	94.0	4325.6	319.8	3.361
6	703.0	819.0	109.0	4300.3	579.0	5.252
7	520.0	122.0	82.0	2785.3	1873.4	22.835
8	493.0	1339.0	150.0	4169.8	460.9	3.114
9	511.0	851.0	108.0	4158.3	530.0	4.887
10	476.0	111.0	74.0	2777.2	1851.4	25.019
11	476.0	1287.0	74.0	4218.1	241.0	3.277
12	494.0	819.0	76.0	4200.4	382.7	5.128
13	858.0	201.0	133.0	2895.0	1918.7	14.410
14	694.0	2105.0	329.0	4246.6	668.1	2.018
15	794.0	1278.0	126.0	4418.5	435.6	3.457

16	759.0	178.0	620.0	711.0	2491.9	4.017
17	669.0	2024.0	907.0	3453.1	1547.3	1.706
18	766.0	1229.0	711.0	3107.9	1797.1	2.529
19	569.0	133.0	88.0	2842.6	1874.1	21.350
20	543.0	2105.0	329.0	4133.4	652.5	1.964
21	561.0	1278.0	179.0	4182.6	582.8	3.272
22	525.0	123.0	673.0	430.5	2373.0	3.525
23	524.0	2024.0	907.0	3390.6	1517.0	1.675
24	541.0	1229.0	762.0	2931.5	1815.3	2.384

*** Program completed as requested! ***

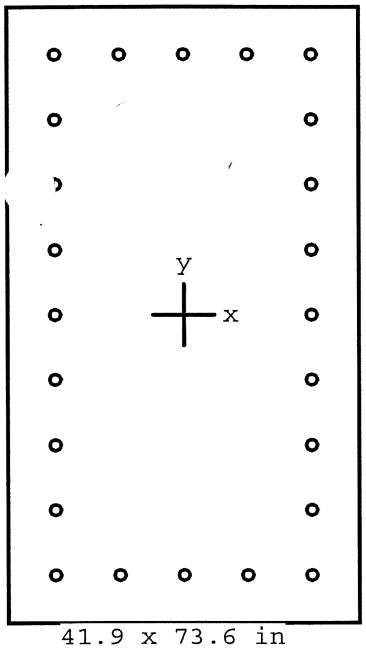

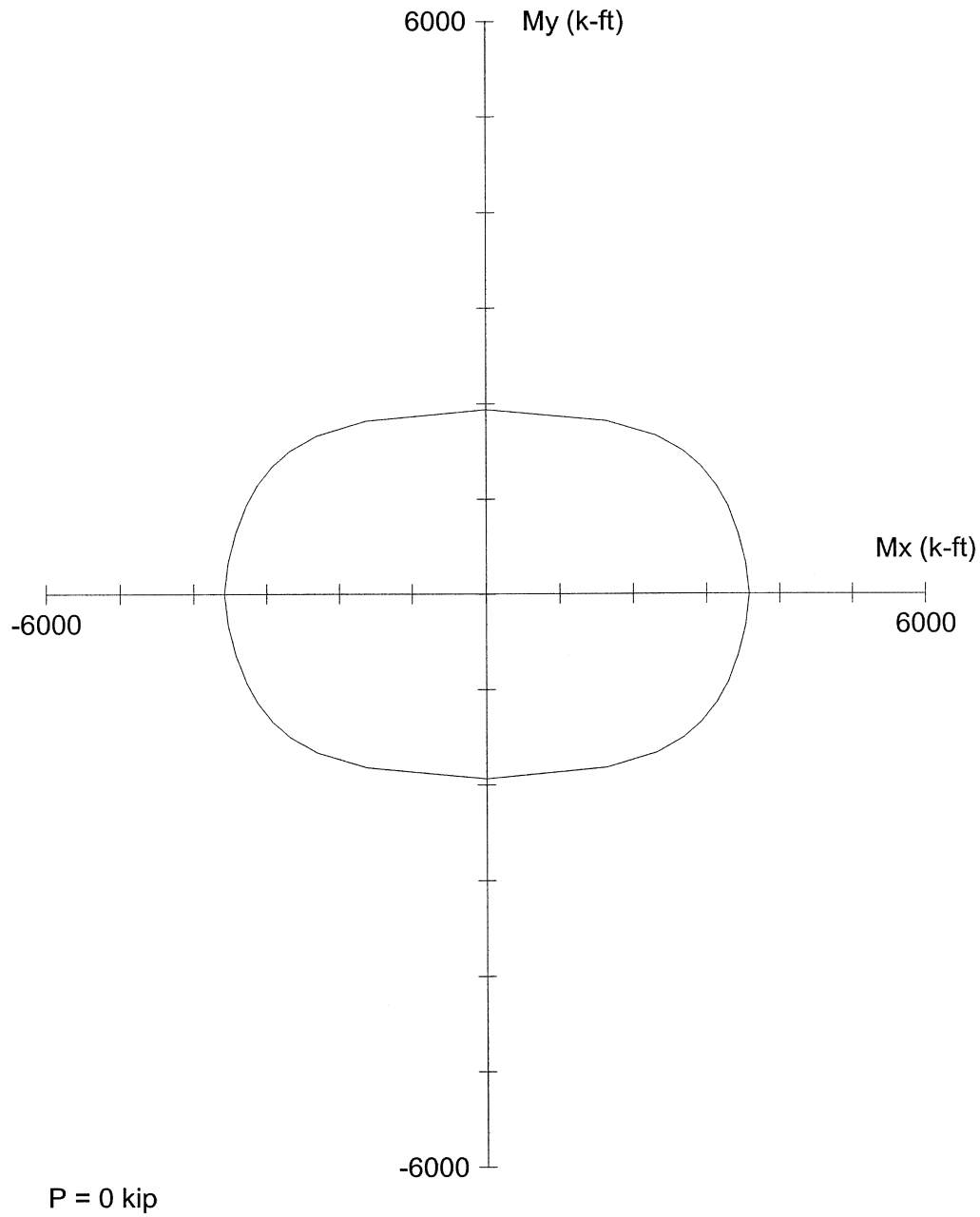

Code: ACI 318-95

Units: English

Run axis: Biaxial

Run option: Investigation

Slenderness: Not considered

mn type: Structural

Bars: User-defined

Date: 07/21/06

Time: 13:22:05

PCACOL V3.00 (PCA 1999) - Licensed to: Licensee name not yet specified.

File: S:\DGN-ST\NORTHC~1\BONNER~1\ANALYSIS\PIERS\HLB143~1\PCACOL~1\M10PLAN.COL

Project: BONNER BRIDGE - OREGON INLET

Column: HLB #143		Engineer: JMJ	
f'c = 3 ksi	fy = 40 ksi	Ag = 3083.84 in^2	24 #11 bars
Ec = 3122 ksi	Es = 29000 ksi	As = 37.44 in^2	Rho = 1.21%
fc = 2.55 ksi	e_rup = Infinity	Xo = 0.00 in	Ix = 1.39209e+006 in^4
ı = 0.003 in/in		Yo = 0.00 in	Iy = 451168 in^4
Beta1 = 0.85		Clear spacing = 6.21 in	Clear cover = 5.00 in
Confinement: Tied	phi(a) = 0.8, phi(b) = 0.9, phi(c) = 0.7		

JMJ 7/06
WDB 7/06

```
OOOOOOO    OOOOO    OOOOO    OOOOO    OOOOO   OO
OO    OO  OO   OO  OO   OO  OO   OO  OO   OO  OO
OO    OO  OO   OO  OO   OO  OO   OO  OO   OO  OO
OO    OO  OO       OO   OO  OO       OO   OO  OO
OO    OO  OO       OOOOOOO  OO       OO   OO  OO
OOOOOOO   OO   OO  OO   OO  OO   OO  OO   OO  OO
OO        OO   OO  OO   OO  OO   OO  OO   OO  OO
OO         OOOOO   OO   OO   OOOOO    OOOOO   OOOOO  (TM)
```

==========
Computer program for the Strength Design of Reinforced Concrete Sections
==========

Licensee stated above acknowledges that Portland Cement Association (PCA) is not and cannot be responsible for either the accuracy or adequacy of the material supplied as input for processing by the PCACOL(tm) computer program. Furthermore, PCA neither makes any warranty expressed nor implied with respect to the correctness of the output prepared by the PCACOL(tm) program. Although PCA has endeavored to produce PCACOL(tm) error free, the program is not and can't be certified infallible. The final and only responsibility for analysis, design and engineering documents is the licensees. Accordingly, PCA disclaims all responsibility in contract, negligence or other tort for any analysis, design or engineering documents prepared in connection with the use of the PCACOL(tm) program.

BASED ON FIELD DATA
ASSUME 50% COVER LOSS.

General Information:
==========

File Name: S:\DGN-ST\NORTHC~1\BONNER~1\ANALYSIS\PIERS\HLB143~1\PCACOL~1\M10ACT.COL
Project: BONNER BRIDGE - OREGON INLET
Column: HLB #143 Engineer: JMJ
Code: ACI 318-95 Units: English

Run Option: Investigation Slenderness: Not considered
Run Axis: Biaxial Column Type: Structural

Material Properties:
==========

f'c = 4.4 ksi fy = 40 ksi
Ec = 3780.96 ksi Es = 29000 ksi
fc = 3.74 ksi Rupture strain = Infinity
Ultimate strain = 0.003 in/in
Beta1 = 0.83

Section:
==========

Rectangular: Width = 36.9 in Depth = 68.6 in

Gross section area, Ag = 2531.34 in^2
Ix = 992699 in^4 Iy = 287225 in^4
Xo = 0 in Yo = 0 in

Reinforcement:
==========

Rebar Database: User-defined

Size	Diam (in)	Area (in^2)	Size	Diam (in)	Area (in^2)	Size	Diam (in)	Area (in^2)
# 1	0.00	0.00	# 3	0.38	0.11	# 4	0.50	0.20
# 5	0.63	0.31	# 6	0.75	0.44	# 7	0.88	0.60
# 8	1.00	0.79	# 9	1.13	1.00	# 10	1.27	1.27
# 11	1.41	1.56	# 14	1.69	2.25	# 18	2.26	4.00

Confinement: Tied; #1 ties with #9 bars, #1 with larger bars.
phi(a) = 0.8, phi(b) = 0.9, phi(c) = 0.7

Layout: Rectangular
Pattern: Equal Bar Spacing (Cover to longitudinal reinforcement)
Total steel area, As = 37.44 in^2 at 1.48%
24 #11 Cover = 2.5 in

Factored Loads and Moments with Corresponding Capacities: (see user's manual for notation)
==========

No.	Pu kip	Mux k-ft	Muy k-ft	fMnx k-ft	fMny k-ft	fMn/Mu
1	792.0	185.0	123.0	2929.5	1944.1	15.826
2	628.0	1339.0	150.0	4310.7	484.7	3.220
3	729.0	851.0	113.0	4379.1	577.3	5.145
4	693.0	162.0	107.0	2896.3	1908.1	17.864
5	606.0	1287.0	94.0	4338.1	322.9	3.371
6	703.0	819.0	109.0	4350.7	581.7	5.313
7	520.0	122.0	82.0	2757.1	1855.3	22.608
8	493.0	1339.0	150.0	4149.5	463.6	3.099
9	511.0	851.0	108.0	4151.2	523.1	4.877
10	476.0	111.0	74.0	2740.4	1830.4	24.703
11	476.0	1287.0	74.0	4189.4	236.3	3.255
12	494.0	819.0	76.0	4174.0	389.7	5.097
13	858.0	201.0	133.0	2960.7	1958.3	14.728
14	694.0	2105.0	329.0	4301.0	668.9	2.043
15	794.0	1278.0	126.0	4499.6	437.9	3.520

16	759.0	178.0	620.0	700.7	2437.9	3.932
17	669.0	2024.0	907.0	3486.0	1566.6	1.723
18	766.0	1229.0	711.0	3154.4	1826.8	2.567
19	569.0	133.0	88.0	2811.6	1866.8	21.162
20	543.0	2105.0	329.0	4136.2	645.5	1.965
21	561.0	1278.0	179.0	4186.3	585.9	3.276
22	525.0	123.0	673.0	418.8	2292.7	3.407
23	524.0	2024.0	907.0	3388.6	1520.5	1.675
24	541.0	1229.0	762.0	2911.7	1805.8	2.369

*** Program completed as requested! ***

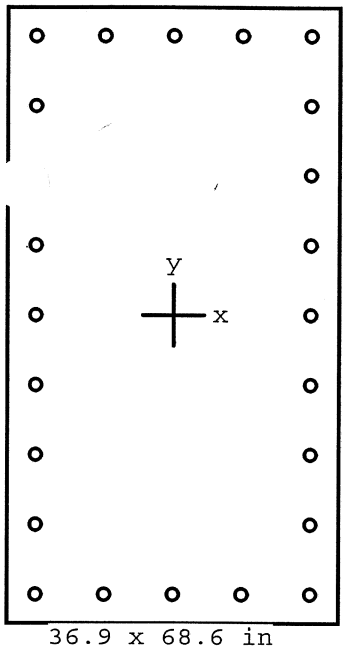

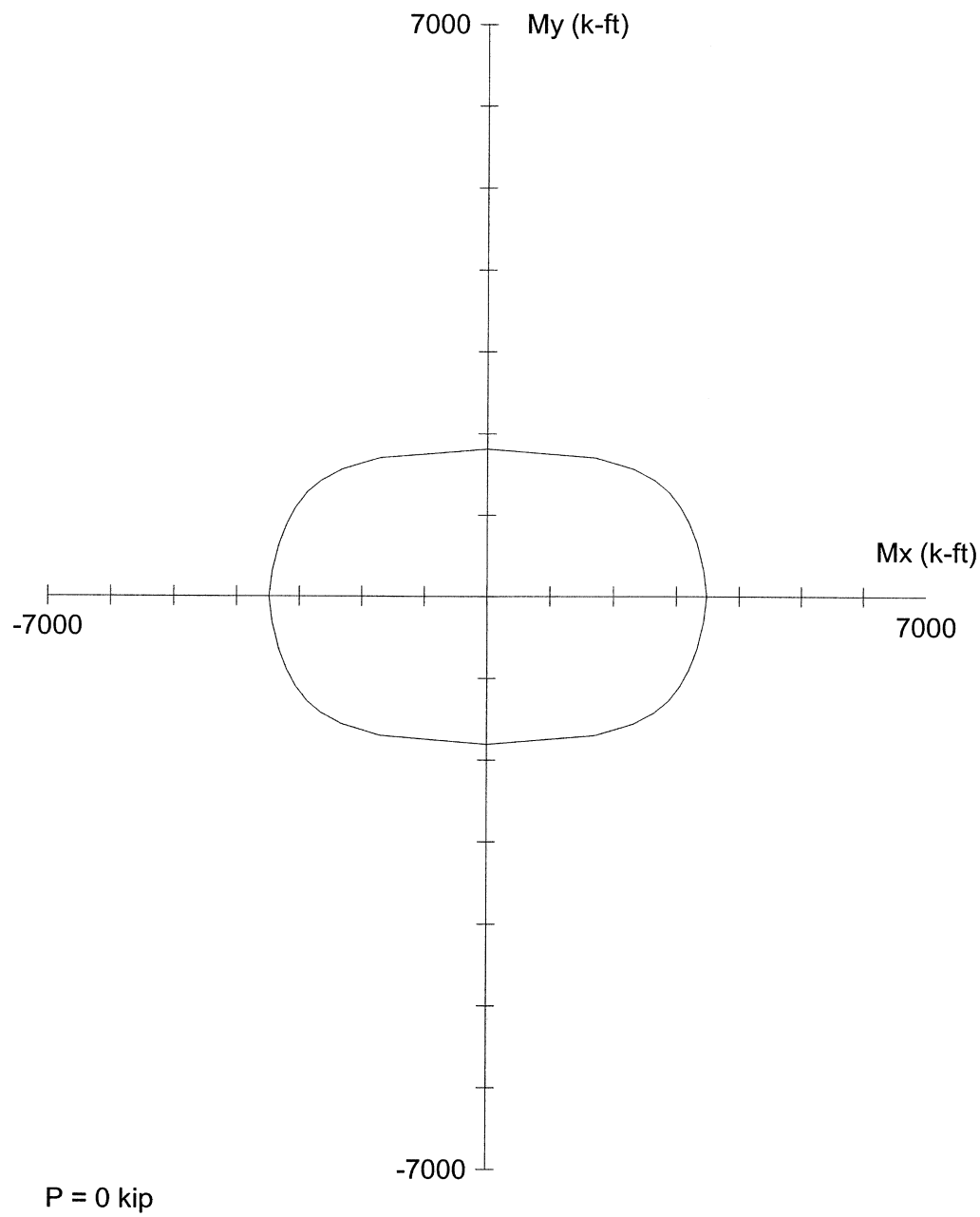

Code: ACI 318-95

Units: English

Run axis: Biaxial

Run option: Investigation

Slenderness: Not considered

mn type: Structural

Bars: User-defined

Date: 07/25/06

Time: 13:45:55

PCACOL V3.00 (PCA 1999) - Licensed to: Licensee name not yet specified.

File: S:\DGN-ST\NORTHC~1\BONNER~1\ANALYSIS\PIERS\HLB143~1\PCACOL~1\M10ACT.COL

Project: BONNER BRIDGE - OREGON INLET

Column: HLB #143		Engineer: JMJ	
f'c = 4.4 ksi	fy = 40 ksi	Ag = 2531.34 in^2	24 #11 bars
Ec = 3781 ksi	Es = 29000 ksi	As = 37.44 in^2	Rho = 1.48%
fc = 3.74 ksi	e_rup = Infinity	Xo = 0.00 in	Ix = 992699 in^4
u = 0.003 in/in		Yo = 0.00 in	Iy = 287225 in^4
Beta1 = 0.83		Clear spacing = 6.21 in	Clear cover = 2.50 in
Confinement: Tied	phi(a) = 0.8, phi(b) = 0.9, phi(c) = 0.7		

H. W. LOCHNER, INC.

PROJECT: BONNER BRIDGE - OREGON INLET NORTH CAROLINA JMJ Jul-06
SUBJECT: HIGH LEVEL BENT ANALYSIS
HLB 143 MEM. 11 JT. 8 WDB 7/06

COLUMN LOADS

PMAX

HLB 143 MEMBER 11 JOINT 8

GROUP 1

	P	MY	MZ
DL	415.60	0.00	38.71
LL	116.08	0.00	-8.08
GROUP 1	0.00	0.00	0.00
SERVICE	531.68	0.00	30.63
STRENGTH	791.79	0.00	32.82

GROUP 2

	P	MY	MZ
DL	415.60	0.00	38.71
LL	0.00	0.00	0.00
GROUP 2	-67.45	-1029.62	-75.24
SERVICE	348.15	-1029.62	-36.53
STRENGTH	452.60	-1338.51	-47.49

GROUP 3

	P	MY	MZ
DL	415.60	0.00	38.71
LL	116.08	0.00	-8.08
GROUP 3	-28.62	-654.87	-29.01
SERVICE	503.06	-654.87	1.62
STRENGTH	653.98	-851.33	2.11

GROUP 4

	P	MY	MZ
DL	415.60	0.00	38.71
LL	116.08	0.00	-8.08
GROUP 4	1.63	0.00	-63.84
SERVICE	533.31	0.00	-33.21
STRENGTH	693.30	0.00	-43.17

GROUP 5

	P	MY	MZ
DL	415.60	0.00	38.71
LL	0.00	0.00	0.00
GROUP 5	-65.82	-1029.62	-139.08
SERVICE	349.78	-1029.62	-100.37
STRENGTH	437.23	-1287.03	-125.46

GROUP 6

	P	MY	MZ
DL	415.60	0.00	38.71
LL	116.08	0.00	-8.08
GROUP 6	-26.99	-654.87	-92.86
SERVICE	504.69	-654.87	-62.23
STRENGTH	630.86	-818.59	-77.79

SLENDERNESS EFFECTS IN COMPRESSION MEMBERS (AASHTO 8.16.5)

f'c = 3000 psi PHI = 0.70 W_C = 150 PCF

$E_C = W_C^{1.5} * 33 * f'c^{0.5}$ = 3320561 PSI Width of Rect. Col. = B = 41.916 In.

Depth of Rect. Col = D = 73.584 In.

$r_Y = 0.30*D$ = 22.08 In. L_Y = 8.5 Ft. K_Y = 2.0

$r_Z = 0.30*B$ = 12.57 In. L_Z = 15.75 Ft. K_Z = 1.2

I_{YY} = $B*D^3/12$ I_{YY} = 1391710 In^4

I_{ZZ} = $D*B^3/12$ I_{ZZ} = 451587 In^5

$K_Y L_Y/r$ = 9.2 < 22 NO SLENDERNESS EFFECT

$K_Z L_Z/r$ = 18.0 < 22 NO SLENDERNESS EFFECT

H. W. LOCHNER, INC.

PROJECT: BONNER BRIDGE - OREGON INLET NORTH CAROLINA
SUBJECT: HIGH LEVEL BENT ANALYSIS
HLB 143 MEM. 11 JT. 8

JMJ Jul-06
WDR 7/06

SLENDERNESS EFFECTS IN RECTANGULAR COMPRESSION MEMBERS (AASHTO 8.16.5)

GROUP 1

	B	D	KL/R	M_U	M_{DL}	B_D	P_U	P_C	δ_b	δ_s	M_C	
	In.	In.		Ft. Kips	Ft. Kips		Kips	Kips			Ft. Kips	
MY	41.916	73.584	9.2	0.00	0.00	0.000	792	0	1.000	1.000	185	*
MZ	41.916	73.584	18.0	32.82	50.32	1.533	792	0	1.000	1.000	123	*

GROUP 2

	B	D	KL/R	M_U	M_{DL}	B_D	P_U	P_C	δ_b	δ_s	M_C	
	In.	In.		Ft. Kips	Ft. Kips		Kips	Kips			Ft. Kips	
MY	41.916	73.584	9.2	1338.51	0.00	0.000	453	0	1.000	1.000	1339	
MZ	41.916	73.584	18.0	47.49	50.32	1.060	453	0	1.000	1.000	70	*

GROUP 3

	B	D	KL/R	M_U	M_{DL}	B_D	P_U	P_C	δ_b	δ_s	M_C	
	In.	In.		Ft. Kips	Ft. Kips		Kips	Kips			Ft. Kips	
MY	41.916	73.584	9.2	851.33	0.00	0.000	654	0	1.000	1.000	851	
MZ	41.916	73.584	18.0	2.11	50.32	23.895	654	0	1.000	1.000	101	*

GROUP 4

	B	D	KL/R	M_U	M_{DL}	B_D	P_U	P_C	δ_b	δ_s	M_C	
	In.	In.		Ft. Kips	Ft. Kips		Kips	Kips			Ft. Kips	
MY	41.916	73.584	9.2	0.00	0.00	0.000	693	0	1.000	1.000	162	*
MZ	41.916	73.584	18.0	43.17	50.32	1.166	693	0	1.000	1.000	107	*

GROUP 5

	B	D	KL/R	M_U	M_{DL}	B_D	P_U	P_C	δ_b	δ_s	M_C
	In.	In.		Ft. Kips	Ft. Kips		Kips	Kips			Ft. Kips
MY	41.916	73.584	9.2	1287.03	0.00	0.000	437	0	1.000	1.000	1287
MZ	41.916	73.584	18.0	125.46	50.32	0.401	437	0	1.000	1.000	125

GROUP 6

	B	D	KL/R	M_U	M_{DL}	B_D	P_U	P_C	δ_b	δ_s	M_C	
	In.	In.		Ft. Kips	Ft. Kips		Kips	Kips			Ft. Kips	
MY	41.916	73.584	9.2	818.59	0.00	0.000	631	0	1.000	1.000	819	
MZ	41.916	73.584	18.0	77.79	50.32	0.647	631	0	1.000	1.000	98	*

* MINIMUM MOMENT CONTROLS

H. W. LOCHNER, INC.

PROJECT: BONNER BRIDGE - OREGON INLET NORTH CAROLINA JMJ Jul-06
SUBJECT: HIGH LEVEL BENT ANALYSIS
HLB 143 MEM. 11 JT. 8 WDB 7/06

COLUMN LOADS

PMIN

HLB 143 MEMBER 11 JOINT 8

GROUP 1

	P	MY	MZ
DL	311.70	0.00	38.71
LL	52.84	0.00	13.46
GROUP 1	0.00	0.00	0.00
SERVICE	364.54	0.00	52.17
STRENGTH	519.70	0.00	79.49

GROUP 2

	P	MY	MZ
DL	311.70	0.00	38.71
LL	0.00	0.00	0.00
GROUP 2	-67.45	-1029.62	-75.24
SERVICE	244.25	-1029.62	-36.53
STRENGTH	317.53	-1338.51	-47.49

GROUP 3

	P	MY	MZ
DL	311.70	0.00	38.71
LL	52.84	0.00	13.46
GROUP 3	-28.62	-654.87	-29.01
SERVICE	335.92	-654.87	23.16
STRENGTH	436.70	-851.33	30.11

GROUP 4

	P	MY	MZ
DL	311.70	0.00	38.71
LL	52.84	0.00	13.46
GROUP 4	1.63	0.00	-63.84
SERVICE	366.17	0.00	-11.67
STRENGTH	476.02	0.00	-15.17

GROUP 5

	P	MY	MZ
DL	311.70	0.00	38.71
LL	0.00	0.00	0.00
GROUP 5	-65.82	-1029.62	-139.08
SERVICE	245.88	-1029.62	-100.37
STRENGTH	307.35	-1287.03	-125.46

GROUP 6

	P	MY	MZ
DL	311.70	0.00	38.71
LL	52.84	0.00	13.46
GROUP 6	-26.99	-654.87	-92.86
SERVICE	337.55	-654.87	-40.69
STRENGTH	421.94	-818.59	-50.86

SLENDERNESS EFFECTS IN COMPRESSION MEMBERS (AASHTO 8.16.5)

f'c = 3000 psi PHI = 0.70 W_C = 150 PCF

$E_C = W_C^{1.5} * 33 * f'c^{0.5}$ = 3320561 PSI Width of Rect. Col. = B = 41.916 In.

Depth of Rect. Col = D = 73.584 In.

$r_Y = 0.30*D$ = 22.08 In. L_Y = 8.5 Ft. K_Y = 2.0

$r_Z = 0.30*B$ = 12.57 In. L_Z = 15.75 Ft. K_Z = 1.2

I_{YY} = $B*D^3/12$ I_{YY} = 1391710 In^4

I_{ZZ} = $D*B^3/12$ I_{ZZ} = 451587 In^5

$K_Y L_Y/r$ = 9.2 < 22 NO SLENDERNESS EFFECT

$K_Z L_Z/r$ = 18.0 < 22 NO SLENDERNESS EFFECT

H. W. LOCHNER, INC.

PROJECT: BONNER BRIDGE - OREGON INLET NORTH CAROLINA JMJ Jul-06
SUBJECT: HIGH LEVEL BENT ANALYSIS
HLB 143 MEM. 11 JT. 8 WDB 7/06

SLENDERNESS EFFECTS IN RECTANGULAR COMPRESSION MEMBERS (AASHTO 8.16.5)

GROUP 1

	B	D	KL/R	M_U	M_{DL}	B_D	P_U	P_C	δ_b	δ_s	M_C	
	In.	In.		Ft. Kips	Ft. Kips		Kips	Kips			Ft. Kips	
MY	41.916	73.584	9.2	0.00	0.00	0.000	520	0	1.000	1.000	122	*
MZ	41.916	73.584	18.0	79.49	50.32	0.633	520	0	1.000	1.000	80	*

GROUP 2

	B	D	KL/R	M_U	M_{DL}	B_D	P_U	P_C	δ_b	δ_s	M_C	
	In.	In.		Ft. Kips	Ft. Kips		Kips	Kips			Ft. Kips	
MY	41.916	73.584	9.2	1338.51	0.00	0.000	318	0	1.000	1.000	1339	
MZ	41.916	73.584	18.0	47.49	50.32	1.060	318	0	1.000	1.000	49	*

GROUP 3

	B	D	KL/R	M_U	M_{DL}	B_D	P_U	P_C	δ_b	δ_s	M_C	
	In.	In.		Ft. Kips	Ft. Kips		Kips	Kips			Ft. Kips	
MY	41.916	73.584	9.2	851.33	0.00	0.000	437	0	1.000	1.000	851	
MZ	41.916	73.584	18.0	30.11	50.32	1.671	437	0	1.000	1.000	68	*

GROUP 4

	B	D	KL/R	M_U	M_{DL}	B_D	P_U	P_C	δ_b	δ_s	M_C	
	In.	In.		Ft. Kips	Ft. Kips		Kips	Kips			Ft. Kips	
MY	41.916	73.584	9.2	0.00	0.00	0.000	476	0	1.000	1.000	111	*
MZ	41.916	73.584	18.0	15.17	50.32	3.317	476	0	1.000	1.000	74	*

GROUP 5

	B	D	KL/R	M_U	M_{DL}	B_D	P_U	P_C	δ_b	δ_s	M_C
	In.	In.		Ft. Kips	Ft. Kips		Kips	Kips			Ft. Kips
MY	41.916	73.584	9.2	1287.03	0.00	0.000	307	0	1.000	1.000	1287
MZ	41.916	73.584	18.0	125.46	50.32	0.401	307	0	1.000	1.000	125

GROUP 6

	B	D	KL/R	M_U	M_{DL}	B_D	P_U	P_C	δ_b	δ_s	M_C	
	In.	In.		Ft. Kips	Ft. Kips		Kips	Kips			Ft. Kips	
MY	41.916	73.584	9.2	818.59	0.00	0.000	422	0	1.000	1.000	819	
MZ	41.916	73.584	18.0	50.86	50.32	0.989	422	0	1.000	1.000	65	*

* MINIMUM MOMENT CONTROLS

H. W. LOCHNER, INC.

PROJECT: BONNER BRIDGE - OREGON INLET NORTH CAROLINA JMJ Jul-06
SUBJECT: HIGH LEVEL BENT ANALYSIS
HLB 143 MEM. 11 JT. 10 WDB 7/06

COLUMN LOADS

PMAX

HLB 143 MEMBER 11 JOINT 10

GROUP 1

	P	MY	MZ
DL	-466.20	0.00	21.82
LL	-116.08	0.00	-20.70
GROUP 1	0.00	0.00	0.00
SERVICE	-582.28	0.00	1.12
STRENGTH	-857.57	0.00	-16.48

GROUP 2

	P	MY	MZ
DL	-466.20	0.00	21.82
LL	0.00	0.00	0.00
GROUP 2	67.65	1619.17	-228.66
SERVICE	-398.55	1619.17	-206.84
STRENGTH	-518.12	2104.92	-268.89

GROUP 3

	P	MY	MZ
DL	-466.20	0.00	21.82
LL	-116.08	0.00	-20.70
GROUP 3	28.68	983.29	-92.31
SERVICE	-553.60	983.29	-91.19
STRENGTH	-719.68	1278.28	-118.55

GROUP 4

	P	MY	MZ
DL	-466.20	0.00	21.82
LL	-116.08	0.00	-20.70
GROUP 4	-1.63	0.00	472.23
SERVICE	-583.91	0.00	473.35
STRENGTH	-759.08	0.00	615.36

GROUP 5

	P	MY	MZ
DL	-466.20	0.00	21.82
LL	0.00	0.00	0.00
GROUP 5	66.02	1619.17	243.57
SERVICE	-400.18	1619.17	265.39
STRENGTH	-500.23	2023.96	331.74

GROUP 6

	P	MY	MZ
DL	-466.20	0.00	21.82
LL	-116.08	0.00	-20.70
GROUP 6	27.05	983.29	379.93
SERVICE	-555.23	983.29	381.05
STRENGTH	-694.04	1229.11	476.31

SLENDERNESS EFFECTS IN COMPRESSION MEMBERS (AASHTO 8.16.5)

f'c = 3000 psi PHI = 0.70 W_C = 150 PCF

$E_C = W_C^{1.5} * 33 * f'c^{0.5}$ = 3320561 PSI Width of Rect. Col. = B = 41.916 In.

Depth of Rect. Col = D = 73.584 In.

$r_Y = 0.30*D$ = 22.08 In. L_Y = 8.5 Ft. K_Y = 2.0

$r_Z = 0.30*B$ = 12.57 In. L_Z = 15.75 Ft. K_Z = 1.2

I_{YY} = $B*D^3/12$ I_{YY} = 1391710 In^4

I_{ZZ} = $D*B^3/12$ I_{ZZ} = 451587 In^5

$K_Y L_Y/r$ = 9.2 < 22 NO SLENDERNESS EFFECT

$K_Z L_Z/r$ = 18.0 < 22 NO SLENDERNESS EFFECT

H. W. LOCHNER, INC.

PROJECT: BONNER BRIDGE - OREGON INLET NORTH CAROLINA
SUBJECT: HIGH LEVEL BENT ANALYSIS
HLB 143 MEM. 11 JT. 10

JMJ Jul-06
WDB 7/06

SLENDERNESS EFFECTS IN RECTANGULAR COMPRESSION MEMBERS (AASHTO 8.16.5)

GROUP 1

	B	D	KL/R	M_U	M_{DL}	B_D	P_U	P_C	δ_b	δ_s	M_C	
	In.	In.		Ft. Kips	Ft. Kips		Kips	Kips			Ft. Kips	
MY	41.916	73.584	9.2	0.00	0.00	0.000	858	0	1.000	1.000	201	*
MZ	41.916	73.584	18.0	16.48	28.37	1.721	858	0	1.000	1.000	133	*

GROUP 2

	B	D	KL/R	M_U	M_{DL}	B_D	P_U	P_C	δ_b	δ_s	M_C
	In.	In.		Ft. Kips	Ft. Kips		Kips	Kips			Ft. Kips
MY	41.916	73.584	9.2	2104.92	0.00	0.000	518	0	1.000	1.000	2105
MZ	41.916	73.584	18.0	268.89	28.37	0.105	518	0	1.000	1.000	269

GROUP 3

	B	D	KL/R	M_U	M_{DL}	B_D	P_U	P_C	δ_b	δ_s	M_C
	In.	In.		Ft. Kips	Ft. Kips		Kips	Kips			Ft. Kips
MY	41.916	73.584	9.2	1278.28	0.00	0.000	720	0	1.000	1.000	1278
MZ	41.916	73.584	18.0	118.55	28.37	0.239	720	0	1.000	1.000	119

GROUP 4

	B	D	KL/R	M_U	M_{DL}	B_D	P_U	P_C	δ_b	δ_s	M_C	
	In.	In.		Ft. Kips	Ft. Kips		Kips	Kips			Ft. Kips	
MY	41.916	73.584	9.2	0.00	0.00	0.000	759	0	1.000	1.000	178	*
MZ	41.916	73.584	18.0	615.36	28.37	0.046	759	0	1.000	1.000	615	

GROUP 5

	B	D	KL/R	M_U	M_{DL}	B_D	P_U	P_C	δ_b	δ_s	M_C
	In.	In.		Ft. Kips	Ft. Kips		Kips	Kips			Ft. Kips
MY	41.916	73.584	9.2	2023.96	0.00	0.000	500	0	1.000	1.000	2024
MZ	41.916	73.584	18.0	331.74	28.37	0.086	500	0	1.000	1.000	332

GROUP 6

	B	D	KL/R	M_U	M_{DL}	B_D	P_U	P_C	δ_b	δ_s	M_C
	In.	In.		Ft. Kips	Ft. Kips		Kips	Kips			Ft. Kips
MY	41.916	73.584	9.2	1229.11	0.00	0.000	694	0	1.000	1.000	1229
MZ	41.916	73.584	18.0	476.31	28.37	0.060	694	0	1.000	1.000	476

* MINIMUM MOMENT CONTROLS

H. W. LOCHNER, INC.

PROJECT: BONNER BRIDGE - OREGON INLET NORTH CAROLINA JMJ Jul-06
SUBJECT: HIGH LEVEL BENT ANALYSIS WDB 7/06
HLB 143 MEM. 11 JT. 10

COLUMN LOADS

PMIN

HLB 143 MEMBER 11 JOINT 10

GROUP 1

	P	MY	MZ
DL	-349.65	0.00	21.82
LL	-52.84	0.00	20.27
GROUP 1	0.00	0.00	0.00
SERVICE	-402.49	0.00	42.09
STRENGTH	-569.03	0.00	72.28

GROUP 2

	P	MY	MZ
DL	-349.65	0.00	21.82
LL	0.00	0.00	0.00
GROUP 2	67.65	1619.17	-228.66
SERVICE	-282.00	1619.17	-206.84
STRENGTH	-366.60	2104.92	-268.89

GROUP 3

	P	MY	MZ
DL	-349.65	0.00	21.82
LL	-52.84	0.00	20.27
GROUP 3	28.68	983.29	-92.31
SERVICE	-373.81	983.29	-50.22
STRENGTH	-485.95	1278.28	-65.29

GROUP 4

	P	MY	MZ
DL	-349.65	0.00	21.82
LL	-52.84	0.00	20.27
GROUP 4	-1.63	0.00	472.23
SERVICE	-404.12	0.00	514.32
STRENGTH	-525.36	0.00	668.62

GROUP 5

	P	MY	MZ
DL	-349.65	0.00	21.82
LL	0.00	0.00	0.00
GROUP 5	66.02	1619.17	243.57
SERVICE	-283.63	1619.17	265.39
STRENGTH	-354.54	2023.96	331.74

GROUP 6

	P	MY	MZ
DL	-349.65	0.00	21.82
LL	-52.84	0.00	20.27
GROUP 6	27.05	983.29	379.93
SERVICE	-375.44	983.29	422.02
STRENGTH	-469.30	1229.11	527.53

SLENDERNESS EFFECTS IN COMPRESSION MEMBERS (AASHTO 8.16.5)

f'c = 3000 psi PHI = 0.70 W_C = 150 PCF

$E_C = W_C^{1.5} * 33 * f'c^{0.5}$ = 3320561 PSI Width of Rect. Col. = B = 41.916 In.

Depth of Rect. Col = D = 73.584 In.

$r_Y = 0.30*D$ = 22.08 In. L_Y = 8.5 Ft. K_Y = 2.0

$r_Z = 0.30*B$ = 12.57 In. L_Z = 15.75 Ft. K_Z = 1.2

I_{YY} = $B*D^3/12$ I_{YY} = 1391710 In^4

I_{ZZ} = $D*B^3/12$ I_{ZZ} = 451587 In^5

$K_Y L_Y/r$ = 9.2 < 22 NO SLENDERNESS EFFECT

$K_Z L_Z/r$ = 18.0 < 22 NO SLENDERNESS EFFECT

H. W. LOCHNER, INC.

PROJECT: BONNER BRIDGE - OREGON INLET NORTH CAROLINA JMJ Jul-06
SUBJECT: HIGH LEVEL BENT ANALYSIS
HLB 143 MEM. 11 JT. 10 WDB 7/06

SLENDERNESS EFFECTS IN RECTANGULAR COMPRESSION MEMBERS (AASHTO 8.16.5)

GROUP 1

	B	D	KL/R	M_U	M_{DL}	B_D	P_U	P_C	δ_b	δ_s	M_C	
	In.	In.		Ft. Kips	Ft. Kips		Kips	Kips			Ft. Kips	
MY	41.916	73.584	9.2	0.00	0.00	0.000	569	0	1.000	1.000	133	*
MZ	41.916	73.584	18.0	72.28	28.37	0.392	569	0	1.000	1.000	88	*

GROUP 2

	B	D	KL/R	M_U	M_{DL}	B_D	P_U	P_C	δ_b	δ_s	M_C
	In.	In.		Ft. Kips	Ft. Kips		Kips	Kips			Ft. Kips
MY	41.916	73.584	9.2	2104.92	0.00	0.000	367	0	1.000	1.000	2105
MZ	41.916	73.584	18.0	268.89	28.37	0.105	367	0	1.000	1.000	269

GROUP 3

	B	D	KL/R	M_U	M_{DL}	B_D	P_U	P_C	δ_b	δ_s	M_C	
	In.	In.		Ft. Kips	Ft. Kips		Kips	Kips			Ft. Kips	
MY	41.916	73.584	9.2	1278.28	0.00	0.000	486	0	1.000	1.000	1278	
MZ	41.916	73.584	18.0	65.29	28.37	0.434	486	0	1.000	1.000	75	*

GROUP 4

	B	D	KL/R	M_U	M_{DL}	B_D	P_U	P_C	δ_b	δ_s	M_C	
	In.	In.		Ft. Kips	Ft. Kips		Kips	Kips			Ft. Kips	
MY	41.916	73.584	9.2	0.00	0.00	0.000	525	0	1.000	1.000	123	*
MZ	41.916	73.584	18.0	668.62	28.37	0.042	525	0	1.000	1.000	669	

GROUP 5

	B	D	KL/R	M_U	M_{DL}	B_D	P_U	P_C	δ_b	δ_s	M_C
	In.	In.		Ft. Kips	Ft. Kips		Kips	Kips			Ft. Kips
MY	41.916	73.584	9.2	2023.96	0.00	0.000	355	0	1.000	1.000	2024
MZ	41.916	73.584	18.0	331.74	28.37	0.086	355	0	1.000	1.000	332

GROUP 6

	B	D	KL/R	M_U	M_{DL}	B_D	P_U	P_C	δ_b	δ_s	M_C
	In.	In.		Ft. Kips	Ft. Kips		Kips	Kips			Ft. Kips
MY	41.916	73.584	9.2	1229.11	0.00	0.000	469	0	1.000	1.000	1229
MZ	41.916	73.584	18.0	527.53	28.37	0.054	469	0	1.000	1.000	528

* MINIMUM MOMENT CONTROLS

JMJ 7/06

WDB 7/06

```
OOOOOOO    OOOOO    OOOOO    OOOOO    OOOOO   OO
OO    OO   OO  OO   OO  OO   OO  OO   OO  OO   OO
OO    OO   OO  OO   OO  OO   OO  OO   OO  OO   OO
OO    OO   OO       OO  OO   OO       OO  OO   OO
OO    OO   OO       OOOOOOO  OO       OO  OO   OO
OOOOOOO    OO  OO   OO  OO   OO  OO   OO  OO   OO
OO         OO  OO   OO  OO   OO  OO   OO  OO   OO
OO          OOOOO   OO  OO    OOOOO    OOOOO   OOOOO  (TM)
```

==========
Computer program for the Strength Design of Reinforced Concrete Sections
==========

Licensee stated above acknowledges that Portland Cement Association (PCA) is not and cannot be responsible for either the accuracy or adequacy of the material supplied as input for processing by the PCACOL(tm) computer program. Furthermore, PCA neither makes any warranty expressed nor implied with respect to the correctness of the output prepared by the PCACOL(tm) program. Although PCA has endeavored to produce PCACOL(tm) error free, the program is not and can't be certified infallible. The final and only responsibility for analysis, design and engineering documents is the licensees. Accordingly, PCA disclaims all responsibility in contract, negligence or other tort for any analysis, design or engineering documents prepared in connection with the use of the PCACOL(tm) program.

BASED ON PLANS,

General Information:
==========

File Name: S:\DGN-ST\NORTHC~1\BONNER~1\ANALYSIS\PIERS\HLB143~1\PCACOL~1\M11PLAN.COL
Project: BONNER BRIDGE - OREGON INLET
Column: HLB #143 Engineer: JMJ
Code: ACI 318-95 Units: English

Run Option: Investigation Slenderness: Not considered
Run Axis: Biaxial Column Type: Structural

Material Properties:
==========

f'c = 3 ksi fy = 40 ksi
Ec = 3122.02 ksi Es = 29000 ksi
fc = 2.55 ksi Rupture strain = Infinity
Ultimate strain = 0.003 in/in
Beta1 = 0.85

Section:
==========

Rectangular: Width = 41.9 in Depth = 73.6 in

Gross section area, Ag = 3083.84 in^2
Ix = 1.39209e+006 in^4 Iy = 451168 in^4
Xo = 0 in Yo = 0 in

Reinforcement:
==========

Rebar Database: User-defined

Size	Diam (in)	Area (in^2)	Size	Diam (in)	Area (in^2)	Size	Diam (in)	Area (in^2)
# 1	0.00	0.00	# 3	0.38	0.11	# 4	0.50	0.20
# 5	0.63	0.31	# 6	0.75	0.44	# 7	0.88	0.60
# 8	1.00	0.79	# 9	1.13	1.00	# 10	1.27	1.27
# 11	1.41	1.56	# 14	1.69	2.25	# 18	2.26	4.00

Confinement: Tied; #1 ties with #9 bars, #1 with larger bars.
phi(a) = 0.8, phi(b) = 0.9, phi(c) = 0.7

Layout: Rectangular
Pattern: Equal Bar Spacing (Cover to longitudinal reinforcement)
Total steel area, As = 37.44 in^2 at 1.21%
24 #11 Cover = 5 in

Factored Loads and Moments with Corresponding Capacities: (see user's manual for notation)
==========

No.	Pu kip	Mux k-ft	Muy k-ft	fMnx k-ft	fMny k-ft	fMn/Mu
1	792.0	185.0	123.0	2880.5	1922.2	15.588
2	453.0	1339.0	70.0	4196.3	219.1	3.134
3	654.0	851.0	101.0	4293.3	510.3	5.045
4	693.0	162.0	107.0	2880.8	1899.4	17.773
5	437.0	1287.0	125.0	4128.7	403.0	3.208
6	631.0	819.0	98.0	4272.3	516.4	5.217
7	520.0	122.0	80.0	2828.0	1854.9	23.182
8	318.0	1339.0	49.0	4044.3	146.2	3.020
9	437.0	851.0	68.0	4150.7	325.4	4.877
10	476.0	111.0	74.0	2777.2	1851.4	25.019
11	307.0	1287.0	125.0	3967.8	382.8	3.083
12	422.0	819.0	65.0	4132.4	325.7	5.045
13	858.0	201.0	133.0	2895.0	1918.7	14.410
14	518.0	2105.0	269.0	4162.9	535.5	1.978
15	720.0	1278.0	119.0	4382.3	408.4	3.429

16	759.0	178.0	615.0	724.4	2490.6	4.051
17	500.0	2024.0	332.0	4083.1	670.4	2.017
18	694.0	1229.0	476.0	3638.1	1406.5	2.959
19	569.0	133.0	88.0	2842.6	1874.1	21.350
20	367.0	2105.0	269.0	4005.5	509.4	1.903
21	486.0	1278.0	75.0	4228.8	243.8	3.309
22	525.0	123.0	669.0	435.2	2372.7	3.546
23	355.0	2024.0	332.0	3929.1	643.5	1.941
24	469.0	1229.0	528.0	3412.3	1463.6	2.776

*** Program completed as requested! ***

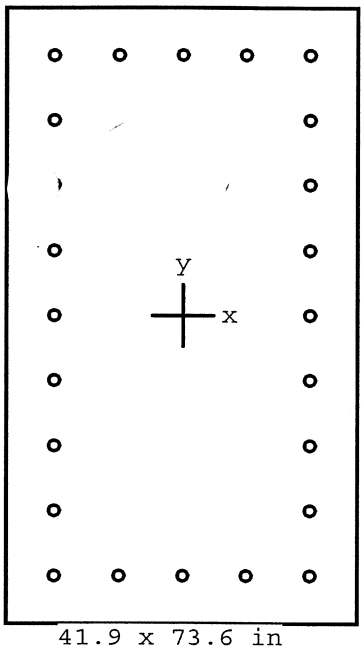

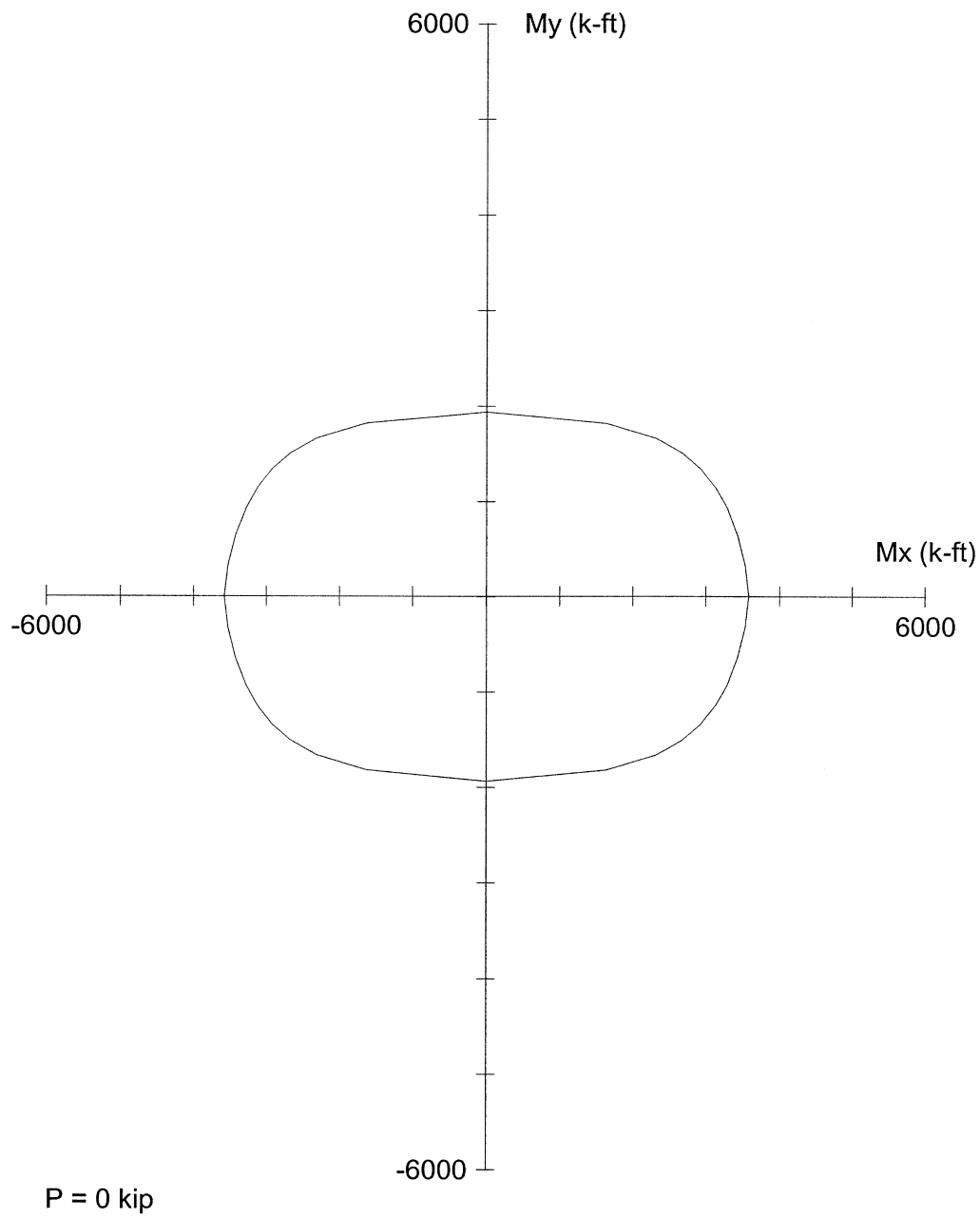

Code: ACI 318-95

Units: English

Run axis: Biaxial

Run option: Investigation

Slenderness: Not considered

mn type: Structural

Bars: User-defined

Date: 07/21/06

Time: 13:25:42

PCACOL V3.00 (PCA 1999) - Licensed to: Licensee name not yet specified.

File: S:\DGN-ST\NORTHC~1\BONNER~1\ANALYSIS\PIERS\HLB143~1\PCACOL~1\M11PLAN.COL

Project: BONNER BRIDGE - OREGON INLET

Column: HLB #143		Engineer: JMJ	
f'c = 3 ksi	fy = 40 ksi	Ag = 3083.84 in^2	24 #11 bars
Ec = 3122 ksi	Es = 29000 ksi	As = 37.44 in^2	Rho = 1.21%
fc = 2.55 ksi	e_rup = Infinity	Xo = 0.00 in	Ix = 1.39209e+006 in^4
u = 0.003 in/in		Yo = 0.00 in	Iy = 451168 in^4
Beta1 = 0.85		Clear spacing = 6.21 in	Clear cover = 5.00 in
Confinement: Tied	phi(a) = 0.8, phi(b) = 0.9, phi(c) = 0.7		

JMJ 7/06

WDB 7/06

```
OOOOOOO    OOOOO    OOOOO    OOOOO    OOOOO   OO
OO    OO  OO   OO  OO   OO  OO   OO  OO   OO  OO
OO    OO  OO   OO  OO   OO  OO   OO  OO   OO  OO
OO    OO  OO       OO   OO  OO       OO   OO  OO
OO    OO  OO       OOOOOOO  OO       OO   OO  OO
OOOOOOO   OO   OO  OO   OO  OO   OO  OO   OO  OO
OO        OO   OO  OO   OO  OO   OO  OO   OO  OO
OO         OOOOO   OO   OO   OOOOO    OOOOO   OOOOO  (TM)
```

==========
Computer program for the Strength Design of Reinforced Concrete Sections
==========

Licensee stated above acknowledges that Portland Cement Association (PCA) is not and cannot be responsible for either the accuracy or adequacy of the material supplied as input for processing by the PCACOL(tm) computer program. Furthermore, PCA neither makes any warranty expressed nor implied with respect to the correctness of the output prepared by the PCACOL(tm) program. Although PCA has endeavored to produce PCACOL(tm) error free, the program is not and can't be certified infallible. The final and only responsibility for analysis, design and engineering documents is the licensees. Accordingly, PCA disclaims all responsibility in contract, negligence or other tort for any analysis, design or engineering documents prepared in connection with the use of the PCACOL(tm) program.

BASED ON FIELD DATA.
ASSUME 50% COVER LOSS.

General Information:
==========

File Name: S:\DGN-ST\NORTHC~1\BONNER~1\ANALYSIS\PIERS\HLB143~1\PCACOL~1\M11ACT.COL
Project: BONNER BRIDGE - OREGON INLET
Column: HLB #143 Engineer: JMJ
Code: ACI 318-95 Units: English

Run Option: Investigation Slenderness: Not considered
Run Axis: Biaxial Column Type: Structural

Material Properties:
==========

f'c = 4.4 ksi fy = 40 ksi
Ec = 3780.96 ksi Es = 29000 ksi
fc = 3.74 ksi Rupture strain = Infinity
Ultimate strain = 0.003 in/in
Beta1 = 0.83

Section:
==========

Rectangular: Width = 36.9 in Depth = 68.6 in

Gross section area, Ag = 2531.34 in^2
Ix = 992699 in^4 Iy = 287225 in^4
Xo = 0 in Yo = 0 in

Reinforcement:
==========

Rebar Database: User-defined

Size	Diam (in)	Area (in^2)	Size	Diam (in)	Area (in^2)	Size	Diam (in)	Area (in^2)
# 1	0.00	0.00	# 3	0.38	0.11	# 4	0.50	0.20
# 5	0.63	0.31	# 6	0.75	0.44	# 7	0.88	0.60
# 8	1.00	0.79	# 9	1.13	1.00	# 10	1.27	1.27
# 11	1.41	1.56	# 14	1.69	2.25	# 18	2.26	4.00

Confinement: Tied; #1 ties with #9 bars, #1 with larger bars.
phi(a) = 0.8, phi(b) = 0.9, phi(c) = 0.7

Layout: Rectangular
Pattern: Equal Bar Spacing (Cover to longitudinal reinforcement)
Total steel area, As = 37.44 in^2 at 1.48%
24 #11 Cover = 2.5 in

Factored Loads and Moments with Corresponding Capacities: (see user's manual for notation)
==========

No.	Pu kip	Mux k-ft	Muy k-ft	fMnx k-ft	fMny k-ft	fMn/Mu
1	792.0	185.0	123.0	2929.5	1944.1	15.826
2	453.0	1339.0	70.0	4161.1	223.3	3.108
3	654.0	851.0	101.0	4328.1	514.4	5.086
4	693.0	162.0	107.0	2896.3	1908.1	17.864
5	437.0	1287.0	125.0	4094.4	392.9	3.181
6	631.0	819.0	98.0	4304.6	507.6	5.255
7	520.0	122.0	80.0	2804.8	1835.9	22.978
8	318.0	1339.0	49.0	3983.2	151.6	2.975
9	437.0	851.0	68.0	4114.4	323.9	4.834
10	476.0	111.0	74.0	2740.4	1830.4	24.703
11	307.0	1287.0	125.0	3910.0	381.3	3.038
12	422.0	819.0	65.0	4093.5	323.2	4.998
13	858.0	201.0	133.0	2960.7	1958.3	14.728
14	518.0	2105.0	269.0	4159.0	525.4	1.975
15	720.0	1278.0	119.0	4436.2	412.9	3.471

16	759.0	178.0	615.0	706.3	2437.4	3.964
17	500.0	2024.0	332.0	4069.6	670.9	2.011
18	694.0	1229.0	476.0	3681.1	1431.8	2.997
19	569.0	133.0	88.0	2811.6	1866.8	21.162
20	367.0	2105.0	269.0	3959.7	501.9	1.881
21	486.0	1278.0	75.0	4200.0	249.2	3.286
22	525.0	123.0	669.0	419.9	2292.6	3.426
23	355.0	2024.0	332.0	3889.5	640.9	1.922
24	469.0	1229.0	528.0	3393.8	1460.7	2.762

*** Program completed as requested! ***

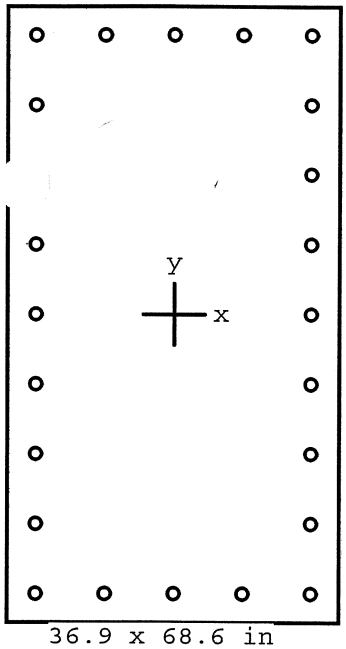

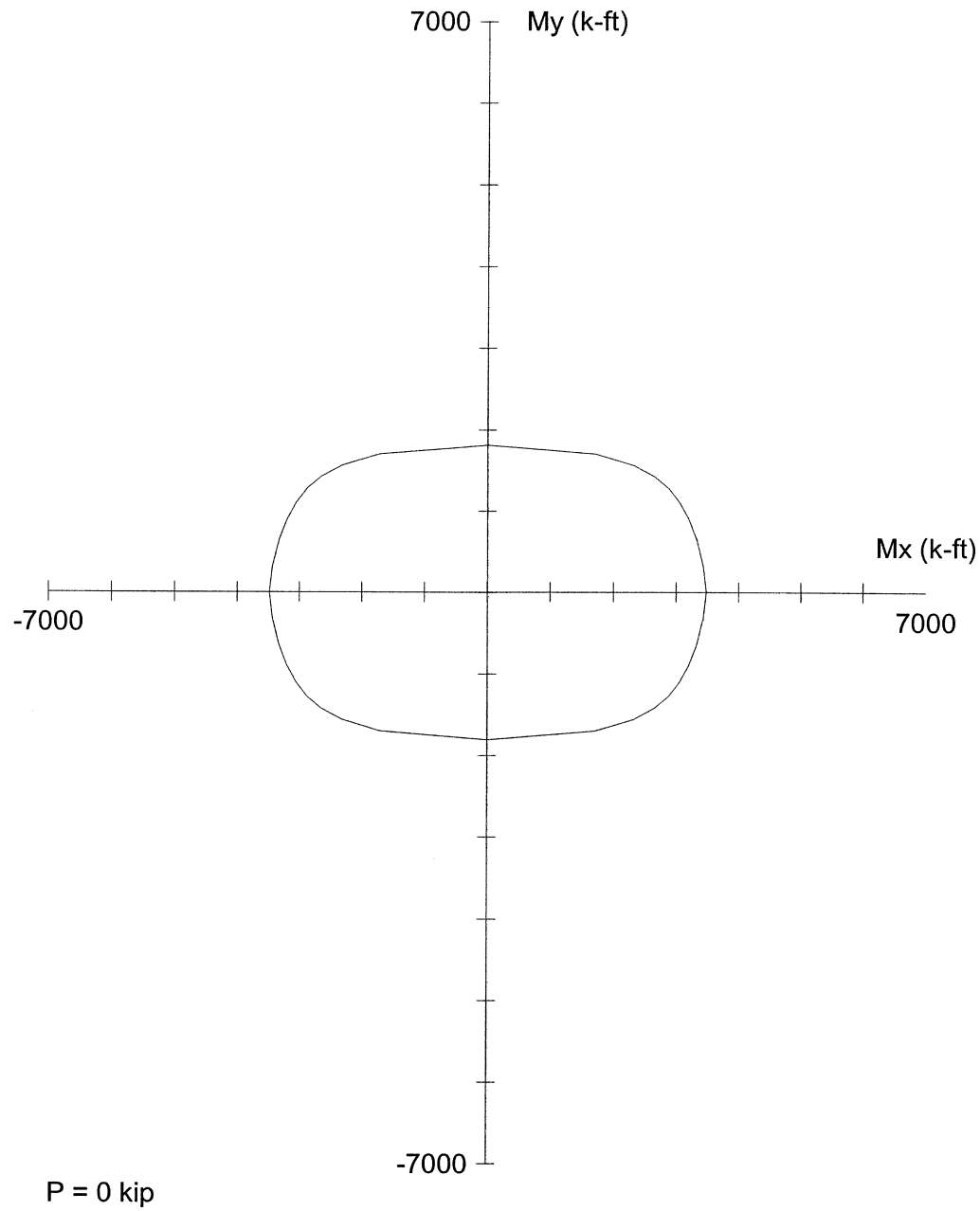

Code: ACI 318-95

Units: English

Run axis: Biaxial

Run option: Investigation

Slenderness: Not considered

.mn type: Structural

Bars: User-defined

Date: 07/25/06

Time: 13:47:20

PCACOL V3.00 (PCA 1999) - Licensed to: Licensee name not yet specified.

File: S:\DGN-ST\NORTHC~1\BONNER~1\ANALYSIS\PIERS\HLB143~1\PCACOL~1\M11ACT.COL

Project: BONNER BRIDGE - OREGON INLET

Column: HLB #143		Engineer: JMJ	
f'c = 4.4 ksi	fy = 40 ksi	Ag = 2531.34 in^2	24 #11 bars
Ec = 3781 ksi	Es = 29000 ksi	As = 37.44 in^2	Rho = 1.48%
fc = 3.74 ksi	e_rup = Infinity	Xo = 0.00 in	Ix = 992699 in^4
_u = 0.003 in/in		Yo = 0.00 in	Iy = 287225 in^4
Beta1 = 0.83		Clear spacing = 6.21 in	Clear cover = 2.50 in
Confinement: Tied	phi(a) = 0.8, phi(b) = 0.9, phi(c) = 0.7		

H. W. LOCHNER, INC.

PROJECT: BONNER BRIDGE - OREGON INLET NORTH CAROLINA JMJ Jul-06
SUBJECT: HIGH LEVEL BENT ANALYSIS WDB 7/06
HLB 143 MEM. 13 JT. 9

COLUMN LOADS

PMAX

HLB 143 MEMBER 13 JOINT 9

GROUP 1

	P	MY	MZ
DL	480.31	0.00	27.36
LL	115.18	0.00	8.89
GROUP 1	0.00	0.00	0.00
SERVICE	595.49	0.00	36.25
STRENGTH	873.96	0.00	54.83

GROUP 2

	P	MY	MZ
DL	480.31	0.00	27.36
LL	0.00	0.00	0.00
GROUP 2	76.56	1620.21	-118.40
SERVICE	556.87	1620.21	-91.04
STRENGTH	723.93	2106.27	-118.35

GROUP 3

	P	MY	MZ
DL	480.31	0.00	27.36
LL	115.18	0.00	8.89
GROUP 3	32.25	983.63	-48.13
SERVICE	627.74	983.63	-11.88
STRENGTH	816.06	1278.72	-15.44

GROUP 4

	P	MY	MZ
DL	480.31	0.00	27.36
LL	115.18	0.00	8.89
GROUP 4	-47.46	0.00	-735.39
SERVICE	548.03	0.00	-699.14
STRENGTH	712.44	0.00	-908.88

GROUP 5

	P	MY	MZ
DL	480.31	0.00	27.36
LL	0.00	0.00	0.00
GROUP 5	29.10	1620.21	-853.79
SERVICE	509.41	1620.21	-826.43
STRENGTH	636.76	2025.26	-1033.04

GROUP 6

	P	MY	MZ
DL	480.31	0.00	27.36
LL	115.18	0.00	8.89
GROUP 6	-15.21	983.63	-783.52
SERVICE	580.28	983.63	-747.27
STRENGTH	725.35	1229.54	-934.09

SLENDERNESS EFFECTS IN COMPRESSION MEMBERS (AASHTO 8.16.5)

f'c = 3000 psi PHI = 0.70 W_C = 150 PCF

$E_C = W_C$^1.5 *33*f'c^0.5 = 3320561 PSI Width of Rect. Col. = B = 41.916 In.

Depth of Rect. Col = D = 81.276 In.

r_Y = 0.30*D = 24.38 In. L_Y = 0 Ft. K_Y = 2.0

r_Z = 0.30*B = 12.57 In. L_Z = 2.5 Ft. K_Z = 1.2

I_{YY} = B*D^3/12 I_{YY} = 1875364 In^4

I_{ZZ} = D*B^3/12 I_{ZZ} = 498793 In^5

K_YL_Y/r = 0.0 < 22 NO SLENDERNESS EFFECT

K_ZL_Z/r = 2.9 < 22 NO SLENDERNESS EFFECT

H. W. LOCHNER, INC.

PROJECT: BONNER BRIDGE - OREGON INLET NORTH CAROLINA
SUBJECT: HIGH LEVEL BENT ANALYSIS
HLB 143 MEM. 13 JT. 9

JMJ Jul-06
WDB 7/06

SLENDERNESS EFFECTS IN RECTANGULAR COMPRESSION MEMBERS (AASHTO 8.16.5)

GROUP 1

	B	D	KL/R	M_U	M_{DL}	B_D	P_U	P_C	δ_b	δ_s	M_C	
	In.	In.		Ft. Kips	Ft. Kips		Kips	Kips			Ft. Kips	
MY	41.916	81.276	0.0	0.00	0.00	0.000	874	0	1.000	1.000	221	*
MZ	41.916	81.276	2.9	54.83	35.57	0.649	874	0	1.000	1.000	135	*

GROUP 2

	B	D	KL/R	M_U	M_{DL}	B_D	P_U	P_C	δ_b	δ_s	M_C
	In.	In.		Ft. Kips	Ft. Kips		Kips	Kips			Ft. Kips
MY	41.916	81.276	0.0	2106.27	0.00	0.000	724	0	1.000	1.000	2106
MZ	41.916	81.276	2.9	118.35	35.57	0.301	724	0	1.000	1.000	118

GROUP 3

	B	D	KL/R	M_U	M_{DL}	B_D	P_U	P_C	δ_b	δ_s	M_C	
	In.	In.		Ft. Kips	Ft. Kips		Kips	Kips			Ft. Kips	
MY	41.916	81.276	0.0	1278.72	0.00	0.000	816	0	1.000	1.000	1279	
MZ	41.916	81.276	2.9	15.44	35.57	2.303	816	0	1.000	1.000	126	*

GROUP 4

	B	D	KL/R	M_U	M_{DL}	B_D	P_U	P_C	δ_b	δ_s	M_C	
	In.	In.		Ft. Kips	Ft. Kips		Kips	Kips			Ft. Kips	
MY	41.916	81.276	0.0	0.00	0.00	0.000	712	0	1.000	1.000	180	*
MZ	41.916	81.276	2.9	908.88	35.57	0.039	712	0	1.000	1.000	909	

GROUP 5

	B	D	KL/R	M_U	M_{DL}	B_D	P_U	P_C	δ_b	δ_s	M_C
	In.	In.		Ft. Kips	Ft. Kips		Kips	Kips			Ft. Kips
MY	41.916	81.276	0.0	2025.26	0.00	0.000	637	0	1.000	1.000	2025
MZ	41.916	81.276	2.9	1033.04	35.57	0.034	637	0	1.000	1.000	1033

GROUP 6

	B	D	KL/R	M_U	M_{DL}	B_D	P_U	P_C	δ_b	δ_s	M_C
	In.	In.		Ft. Kips	Ft. Kips		Kips	Kips			Ft. Kips
MY	41.916	81.276	0.0	1229.54	0.00	0.000	725	0	1.000	1.000	1230
MZ	41.916	81.276	2.9	934.09	35.57	0.038	725	0	1.000	1.000	934

* MINIMUM MOMENT CONTROLS

H. W. LOCHNER, INC.

PROJECT: BONNER BRIDGE - OREGON INLET NORTH CAROLINA JMJ Jul-06
SUBJECT: HIGH LEVEL BENT ANALYSIS
HLB 143 MEM. 13 JT. 9 WDB 7/06

COLUMN LOADS

PMIN

HLB 143 MEMBER 13 JOINT 9

	GROUP 1				GROUP 2		
	P	MY	MZ		P	MY	MZ
DL	360.23	0.00	27.36	DL	360.23	0.00	27.36
LL	53.75	0.00	-9.62	LL	0.00	0.00	0.00
GROUP 1	0.00	0.00	0.00	GROUP 2	76.56	1620.21	-118.40
SERVICE	413.98	0.00	17.74	SERVICE	436.79	1620.21	-91.04
STRENGTH	584.76	0.00	14.72	STRENGTH	567.83	2106.27	-118.35

	GROUP 3				GROUP 4		
	P	MY	MZ		P	MY	MZ
DL	360.23	0.00	27.36	DL	360.23	0.00	27.36
LL	53.75	0.00	-9.62	LL	53.75	0.00	-9.62
GROUP 3	32.25	983.63	-48.13	GROUP 4	-47.46	0.00	-735.39
SERVICE	446.23	983.63	-30.39	SERVICE	366.52	0.00	-717.65
STRENGTH	580.10	1278.72	-39.51	STRENGTH	476.48	0.00	-932.95

	GROUP 5				GROUP 6		
	P	MY	MZ		P	MY	MZ
DL	360.23	0.00	27.36	DL	360.23	0.00	27.36
LL	0.00	0.00	0.00	LL	53.75	0.00	-9.62
GROUP 5	29.10	1620.21	-853.79	GROUP 6	-15.21	983.63	-783.52
SERVICE	389.33	1620.21	-826.43	SERVICE	398.77	983.63	-765.78
STRENGTH	486.67	2025.26	-1033.04	STRENGTH	498.47	1229.54	-957.23

SLENDERNESS EFFECTS IN COMPRESSION MEMBERS (AASHTO 8.16.5)

f'c = 3000 psi PHI = 0.70 W_C = 150 PCF

$E_C = W_C^{1.5} * 33 * f'c^{0.5}$ = 3320561 PSI Width of Rect. Col. = B = 41.916 In.

Depth of Rect. Col = D = 81.276 In.

$r_Y = 0.30*D$ = 24.38 In. L_Y = 0 Ft. K_Y = 2.0

$r_Z = 0.30*B$ = 12.57 In. L_Z = 2.5 Ft. K_Z = 1.2

I_{YY} = $B*D^3/12$ I_{YY} = 1875364 In^4

I_{ZZ} = $D*B^3/12$ I_{ZZ} = 498793 In^5

$K_Y L_Y/r$ = 0.0 < 22 NO SLENDERNESS EFFECT

$K_Z L_Z/r$ = 2.9 < 22 NO SLENDERNESS EFFECT

H. W. LOCHNER, INC.

PROJECT: BONNER BRIDGE - OREGON INLET NORTH CAROLINA
SUBJECT: HIGH LEVEL BENT ANALYSIS
HLB 143 MEM. 13 JT. 9

JMJ Jul-06
WDB 7/06

SLENDERNESS EFFECTS IN RECTANGULAR COMPRESSION MEMBERS (AASHTO 8.16.5)

GROUP 1

	B	D	KL/R	M_U	M_{DL}	B_D	P_U	P_C	δ_b	δ_s	M_C	
	In.	In.		Ft. Kips	Ft. Kips		Kips	Kips			Ft. Kips	
MY	41.916	81.276	0.0	0.00	0.00	0.000	585	0	1.000	1.000	148	*
MZ	41.916	81.276	2.9	14.72	35.57	2.416	585	0	1.000	1.000	91	*

GROUP 2

	B	D	KL/R	M_U	M_{DL}	B_D	P_U	P_C	δ_b	δ_s	M_C
	In.	In.		Ft. Kips	Ft. Kips		Kips	Kips			Ft. Kips
MY	41.916	81.276	0.0	2106.27	0.00	0.000	568	0	1.000	1.000	2106
MZ	41.916	81.276	2.9	118.35	35.57	0.301	568	0	1.000	1.000	118

GROUP 3

	B	D	KL/R	M_U	M_{DL}	B_D	P_U	P_C	δ_b	δ_s	M_C	
	In.	In.		Ft. Kips	Ft. Kips		Kips	Kips			Ft. Kips	
MY	41.916	81.276	0.0	1278.72	0.00	0.000	580	0	1.000	1.000	1279	
MZ	41.916	81.276	2.9	39.51	35.57	0.900	580	0	1.000	1.000	90	*

GROUP 4

	B	D	KL/R	M_U	M_{DL}	B_D	P_U	P_C	δ_b	δ_s	M_C	
	In.	In.		Ft. Kips	Ft. Kips		Kips	Kips			Ft. Kips	
MY	41.916	81.276	0.0	0.00	0.00	0.000	476	0	1.000	1.000	121	*
MZ	41.916	81.276	2.9	932.95	35.57	0.038	476	0	1.000	1.000	933	

GROUP 5

	B	D	KL/R	M_U	M_{DL}	B_D	P_U	P_C	δ_b	δ_s	M_C
	In.	In.		Ft. Kips	Ft. Kips		Kips	Kips			Ft. Kips
MY	41.916	81.276	0.0	2025.26	0.00	0.000	487	0	1.000	1.000	2025
MZ	41.916	81.276	2.9	1033.04	35.57	0.034	487	0	1.000	1.000	1033

GROUP 6

	B	D	KL/R	M_U	M_{DL}	B_D	P_U	P_C	δ_b	δ_s	M_C
	In.	In.		Ft. Kips	Ft. Kips		Kips	Kips			Ft. Kips
MY	41.916	81.276	0.0	1229.54	0.00	0.000	498	0	1.000	1.000	1230
MZ	41.916	81.276	2.9	957.23	35.57	0.037	498	0	1.000	1.000	957

* MINIMUM MOMENT CONTROLS

H. W. LOCHNER, INC.

PROJECT: BONNER BRIDGE - OREGON INLET NORTH CAROLINA JMJ Jul-06
SUBJECT: HIGH LEVEL BENT ANALYSIS WDB 7/06
HLB 143 MEM. 13 JT. FOOTING

COLUMN LOADS

PMAX

HLB 143 MEMBER 13 JOINT FOOTING

GROUP 1

	P	MY	MZ
DL	489.25	0.00	21.78
LL	115.18	0.00	14.50
GROUP 1	0.00	0.00	0.00
SERVICE	604.43	0.00	36.28
STRENGTH	885.58	0.00	59.73

GROUP 2

	P	MY	MZ
DL	489.25	0.00	21.78
LL	0.00	0.00	0.00
GROUP 2	76.60	1728.48	-170.39
SERVICE	565.84	1728.48	-148.61
STRENGTH	735.59	2247.02	-193.19

GROUP 3

	P	MY	MZ
DL	489.25	0.00	21.78
LL	115.18	0.00	14.50
GROUP 3	32.26	1040.35	-68.39
SERVICE	636.69	1040.35	-32.11
STRENGTH	827.69	1352.46	-41.74

GROUP 4

	P	MY	MZ
DL	489.25	0.00	21.78
LL	115.18	0.00	14.50
GROUP 4	-47.46	0.00	1159.44
SERVICE	556.97	0.00	1195.72
STRENGTH	724.06	0.00	1554.44

GROUP 5

	P	MY	MZ
DL	489.25	0.00	21.78
LL	0.00	0.00	0.00
GROUP 5	29.14	1728.48	989.06
SERVICE	518.38	1728.48	1010.84
STRENGTH	647.98	2160.60	1263.55

GROUP 6

	P	MY	MZ
DL	489.25	0.00	21.78
LL	115.18	0.00	14.50
GROUP 6	-15.20	1040.35	1091.05
SERVICE	589.23	1040.35	1127.33
STRENGTH	736.53	1300.44	1409.16

SLENDERNESS EFFECTS IN COMPRESSION MEMBERS (AASHTO 8.16.5)

f'c = 3000 psi PHI = 0.70 W_C = 150 PCF

$E_C = W_C^{1.5} * 33 * f'c^{0.5}$ = 3320561 PSI Width of Rect. Col. = B = 41.916 In.

Depth of Rect. Col = D = 81.276 In.

$r_Y = 0.30*D$ = 24.38 In. L_Y = 0 Ft. K_Y = 2.0

$r_Z = 0.30*B$ = 12.57 In. L_Z = 2.5 Ft. K_Z = 1.2

I_{YY} = $B*D^3/12$ I_{YY} = 1875364 In^4

I_{ZZ} = $D*B^3/12$ I_{ZZ} = 498793 In^5

$K_Y L_Y/r$ = 0.0 < 22 NO SLENDERNESS EFFECT

$K_Z L_Z/r$ = 2.9 < 22 NO SLENDERNESS EFFECT

H. W. LOCHNER, INC.

PROJECT: BONNER BRIDGE - OREGON INLET NORTH CAROLINA
SUBJECT: HIGH LEVEL BENT ANALYSIS
HLB 143 MEM. 13 JT. FOOTING

JMJ Jul-06
WDB 7/06

SLENDERNESS EFFECTS IN RECTANGULAR COMPRESSION MEMBERS (AASHTO 8.16.5)

GROUP 1

	B	D	KL/R	M_U	M_{DL}	B_D	P_U	P_C	δ_b	δ_s	M_C	
	In.	In.		Ft. Kips	Ft. Kips		Kips	Kips			Ft. Kips	
MY	41.916	81.276	0.0	0.00	0.00	0.000	886	0	1.000	1.000	224	*
MZ	41.916	81.276	2.9	59.73	28.31	0.474	886	0	1.000	1.000	137	*

GROUP 2

	B	D	KL/R	M_U	M_{DL}	B_D	P_U	P_C	δ_b	δ_s	M_C
	In.	In.		Ft. Kips	Ft. Kips		Kips	Kips			Ft. Kips
MY	41.916	81.276	0.0	2247.02	0.00	0.000	736	0	1.000	1.000	2247
MZ	41.916	81.276	2.9	193.19	28.31	0.147	736	0	1.000	1.000	193

GROUP 3

	B	D	KL/R	M_U	M_{DL}	B_D	P_U	P_C	δ_b	δ_s	M_C	
	In.	In.		Ft. Kips	Ft. Kips		Kips	Kips			Ft. Kips	
MY	41.916	81.276	0.0	1352.46	0.00	0.000	828	0	1.000	1.000	1352	
MZ	41.916	81.276	2.9	41.74	28.31	0.678	828	0	1.000	1.000	128	*

GROUP 4

	B	D	KL/R	M_U	M_{DL}	B_D	P_U	P_C	δ_b	δ_s	M_C	
	In.	In.		Ft. Kips	Ft. Kips		Kips	Kips			Ft. Kips	
MY	41.916	81.276	0.0	0.00	0.00	0.000	724	0	1.000	1.000	183	*
MZ	41.916	81.276	2.9	1554.44	28.31	0.018	724	0	1.000	1.000	1554	

GROUP 5

	B	D	KL/R	M_U	M_{DL}	B_D	P_U	P_C	δ_b	δ_s	M_C
	In.	In.		Ft. Kips	Ft. Kips		Kips	Kips			Ft. Kips
MY	41.916	81.276	0.0	2160.60	0.00	0.000	648	0	1.000	1.000	2161
MZ	41.916	81.276	2.9	1263.55	28.31	0.022	648	0	1.000	1.000	1264

GROUP 6

	B	D	KL/R	M_U	M_{DL}	B_D	P_U	P_C	δ_b	δ_s	M_C
	In.	In.		Ft. Kips	Ft. Kips		Kips	Kips			Ft. Kips
MY	41.916	81.276	0.0	1300.44	0.00	0.000	737	0	1.000	1.000	1300
MZ	41.916	81.276	2.9	1409.16	28.31	0.020	737	0	1.000	1.000	1409

* MINIMUM MOMENT CONTROLS

H. W. LOCHNER, INC.

PROJECT: BONNER BRIDGE - OREGON INLET NORTH CAROLINA JMJ Jul-06
SUBJECT: HIGH LEVEL BENT ANALYSIS
HLB 143 MEM. 13 JT. FOOTING WDS 7/06

COLUMN LOADS

PMIN

HLB 143 MEMBER 13 JOINT FOOTING

GROUP 1

	P	MY	MZ
DL	366.93	0.00	21.78
LL	53.75	0.00	-13.76
GROUP 1	0.00	0.00	0.00
SERVICE	420.68	0.00	8.02
STRENGTH	593.47	0.00	-1.50

GROUP 2

	P	MY	MZ
DL	366.93	0.00	21.78
LL	0.00	0.00	0.00
GROUP 2	76.60	1728.48	-170.39
SERVICE	443.53	1728.48	-148.61
STRENGTH	576.59	2247.02	-193.19

GROUP 3

	P	MY	MZ
DL	366.93	0.00	21.78
LL	53.75	0.00	-13.76
GROUP 3	32.26	1040.35	-68.39
SERVICE	452.94	1040.35	-60.37
STRENGTH	588.83	1352.46	-78.48

GROUP 4

	P	MY	MZ
DL	366.93	0.00	21.78
LL	53.75	0.00	-13.76
GROUP 4	-47.46	0.00	1159.44
SERVICE	373.22	0.00	1167.46
STRENGTH	485.19	0.00	1517.70

GROUP 5

	P	MY	MZ
DL	366.93	0.00	21.78
LL	0.00	0.00	0.00
GROUP 5	29.14	1728.48	989.06
SERVICE	396.07	1728.48	1010.84
STRENGTH	495.09	2160.60	1263.55

GROUP 6

	P	MY	MZ
DL	366.93	0.00	21.78
LL	53.75	0.00	-13.76
GROUP 6	-15.20	1040.35	1091.05
SERVICE	405.48	1040.35	1099.07
STRENGTH	506.86	1300.44	1373.84

SLENDERNESS EFFECTS IN COMPRESSION MEMBERS (AASHTO 8.16.5)

f'c = 3000 psi PHI = 0.70 W_C = 150 PCF

$E_C = W_C^{1.5} * 33 * f'c^{0.5}$ = 3320561 PSI Width of Rect. Col. = B = 41.916 In.

Depth of Rect. Col = D = 81.276 In.

$r_Y = 0.30*D$ = 24.38 In. L_Y = 0 Ft. K_Y = 2.0

$r_Z = 0.30*B$ = 12.57 In. L_Z = 2.5 Ft. K_Z = 1.2

I_{YY} = $B*D^3/12$ I_{YY} = 1875364 In^4

I_{ZZ} = $D*B^3/12$ I_{ZZ} = 498793 In^5

$K_Y L_Y/r$ = 0.0 < 22 NO SLENDERNESS EFFECT

$K_Z L_Z/r$ = 2.9 < 22 NO SLENDERNESS EFFECT

H. W. LOCHNER, INC.

PROJECT: BONNER BRIDGE - OREGON INLET NORTH CAROLINA JMJ Jul-06
SUBJECT: HIGH LEVEL BENT ANALYSIS
HLB 143 MEM. 13 JT. FOOTING WDB 7/06

SLENDERNESS EFFECTS IN RECTANGULAR COMPRESSION MEMBERS (AASHTO 8.16.5)

GROUP 1

	B	D	KL/R	M_U	M_{DL}	B_D	P_U	P_C	δ_b	δ_s	M_C	
	In.	In.		Ft. Kips	Ft. Kips		Kips	Kips			Ft. Kips	
MY	41.916	81.276	0.0	0.00	0.00	0.000	593	0	1.000	1.000	150	*
MZ	41.916	81.276	2.9	1.50	28.31	18.884	593	0	1.000	1.000	92	*

GROUP 2

	B	D	KL/R	M_U	M_{DL}	B_D	P_U	P_C	δ_b	δ_s	M_C
	In.	In.		Ft. Kips	Ft. Kips		Kips	Kips			Ft. Kips
MY	41.916	81.276	0.0	2247.02	0.00	0.000	577	0	1.000	1.000	2247
MZ	41.916	81.276	2.9	193.19	28.31	0.147	577	0	1.000	1.000	193

GROUP 3

	B	D	KL/R	M_U	M_{DL}	B_D	P_U	P_C	δ_b	δ_s	M_C	
	In.	In.		Ft. Kips	Ft. Kips		Kips	Kips			Ft. Kips	
MY	41.916	81.276	0.0	1352.46	0.00	0.000	589	0	1.000	1.000	1352	
MZ	41.916	81.276	2.9	78.48	28.31	0.361	589	0	1.000	1.000	91	*

GROUP 4

	B	D	KL/R	M_U	M_{DL}	B_D	P_U	P_C	δ_b	δ_s	M_C	
	In.	In.		Ft. Kips	Ft. Kips		Kips	Kips			Ft. Kips	
MY	41.916	81.276	0.0	0.00	0.00	0.000	485	0	1.000	1.000	123	*
MZ	41.916	81.276	2.9	1517.70	28.31	0.019	485	0	1.000	1.000	1518	

GROUP 5

	B	D	KL/R	M_U	M_{DL}	B_D	P_U	P_C	δ_b	δ_s	M_C
	In.	In.		Ft. Kips	Ft. Kips		Kips	Kips			Ft. Kips
MY	41.916	81.276	0.0	2160.60	0.00	0.000	495	0	1.000	1.000	2161
MZ	41.916	81.276	2.9	1263.55	28.31	0.022	495	0	1.000	1.000	1264

GROUP 6

	B	D	KL/R	M_U	M_{DL}	B_D	P_U	P_C	δ_b	δ_s	M_C
	In.	In.		Ft. Kips	Ft. Kips		Kips	Kips			Ft. Kips
MY	41.916	81.276	0.0	1300.44	0.00	0.000	507	0	1.000	1.000	1300
MZ	41.916	81.276	2.9	1373.84	28.31	0.021	507	0	1.000	1.000	1374

* MINIMUM MOMENT CONTROLS

JMJ 7/06

WDB 7/06

```
OOOOOOO    OOOOO    OOOOO    OOOOO    OOOOO    OO
OO    OO   OO  OO   OO  OO   OO  OO   OO  OO   OO
OO    OO   OO  OO   OO  OO   OO  OO   OO  OO   OO
OO    OO   OO       OO  OO   OO       OO  OO   OO
OO    OO   OO       OOOOOOO  OO       OO  OO   OO
OOOOOOO    OO  OO   OO  OO   OO  OO   OO  OO   OO
OO         OO  OO   OO  OO   OO  OO   OO  OO   OO
OO          OOOOO   OO  OO    OOOOO    OOOOO    OOOOO  (TM)
```

==========
Computer program for the Strength Design of Reinforced Concrete Sections
==========

Licensee stated above acknowledges that Portland Cement Association (PCA) is not and cannot be responsible for either the accuracy or adequacy of the material supplied as input for processing by the PCACOL(tm) computer program. Furthermore, PCA neither makes any warranty expressed nor implied with respect to the correctness of the output prepared by the PCACOL(tm) program. Although PCA has endeavored to produce PCACOL(tm) error free, the program is not and can't be certified infallible. The final and only responsibility for analysis, design and engineering documents is the licensees. Accordingly, PCA disclaims all responsibility in contract, negligence or other tort for any analysis, design or engineering documents prepared in connection with the use of the PCACOL(tm) program.

BASED ON PLANS.

General Information:
==========

File Name: S:\DGN-ST\NORTHC~1\BONNER~1\ANALYSIS\PIERS\HLB143~1\PCACOL~1\M13PLAN.COL
Project: BONNER BRIDGE - OREGON INLET
Column: HLB #143 Engineer: JMJ
Code: ACI 318-95 Units: English

Run Option: Investigation Slenderness: Not considered
Run Axis: Biaxial Column Type: Structural

Material Properties:
==========

f'c = 3 ksi fy = 40 ksi
Ec = 3122.02 ksi Es = 29000 ksi
fc = 2.55 ksi Rupture strain = Infinity
Ultimate strain = 0.003 in/in
Beta1 = 0.85

Section:
==========

Rectangular: Width = 41.9 in Depth = 81.3 in

Gross section area, Ag = 3406.47 in^2
Ix = 1.87631e+006 in^4 Iy = 498369 in^4
Xo = 0 in Yo = 0 in

Reinforcement:
==========

Rebar Database: User-defined

Size	Diam (in)	Area (in^2)	Size	Diam (in)	Area (in^2)	Size	Diam (in)	Area (in^2)
# 1	0.00	0.00	# 3	0.38	0.11	# 4	0.50	0.20
# 5	0.63	0.31	# 6	0.75	0.44	# 7	0.88	0.60
# 8	1.00	0.79	# 9	1.13	1.00	# 10	1.27	1.27
# 11	1.41	1.56	# 14	1.69	2.25	# 18	2.26	4.00

Confinement: Tied; #1 ties with #9 bars, #1 with larger bars.
phi(a) = 0.8, phi(b) = 0.9, phi(c) = 0.7

Layout: Rectangular
Pattern: Equal Bar Spacing (Cover to longitudinal reinforcement)
Total steel area, As = 37.44 in^2 at 1.10%
24 #11 Cover = 5 in

Factored Loads and Moments with Corresponding Capacities: (see user's manual for notation)
==========

No.	Pu kip	Mux k-ft	Muy k-ft	fMnx k-ft	fMny k-ft	fMn/Mu
1	874.0	221.0	135.0	3340.7	2047.3	15.129
2	724.0	2106.0	118.0	5098.2	278.1	2.421
3	816.0	1279.0	126.0	5097.3	504.1	3.986
4	712.0	180.0	909.0	504.0	2561.5	2.817
5	637.0	2025.0	1033.0	3593.6	1836.9	1.775
6	725.0	1230.0	934.0	2850.9	2169.2	2.320
7	585.0	148.0	91.0	3206.8	1977.2	21.684
8	568.0	2106.0	118.0	4916.7	277.1	2.335
9	580.0	1279.0	90.0	4911.8	351.1	3.841
10	476.0	121.0	933.0	306.6	2392.3	2.564
11	487.0	2025.0	1033.0	3507.1	1783.0	1.731
12	498.0	1230.0	957.0	2690.8	2088.5	2.186
13	886.0	224.0	137.0	3344.3	2048.6	14.936
14	736.0	2247.0	193.0	5055.2	426.6	2.249
15	828.0	1352.0	128.0	5112.8	491.6	3.782

16	724.0	183.0	1554.0	305.6	2579.6	1.660
17	648.0	2161.0	1264.0	3356.7	1956.4	1.552
18	737.0	1300.0	1409.0	2177.6	2354.6	1.673
19	593.0	150.0	92.0	3224.1	1975.6	21.489
20	577.0	2247.0	193.0	4884.0	426.8	2.174
21	589.0	1352.0	91.0	4930.9	324.8	3.647
22	485.0	123.0	1518.0	191.7	2401.3	1.582
23	495.0	2161.0	1264.0	3247.9	1901.9	1.503
24	507.0	1300.0	1374.0	2112.6	2225.4	1.622

*** Program completed as requested! ***

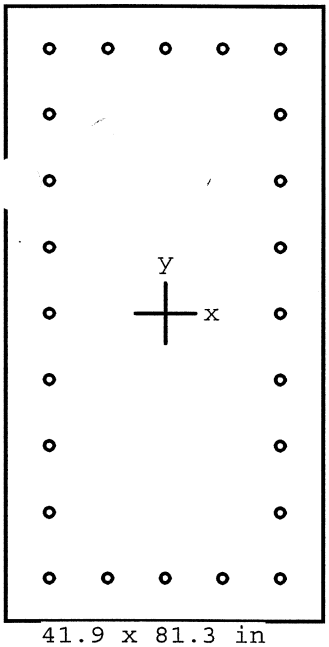

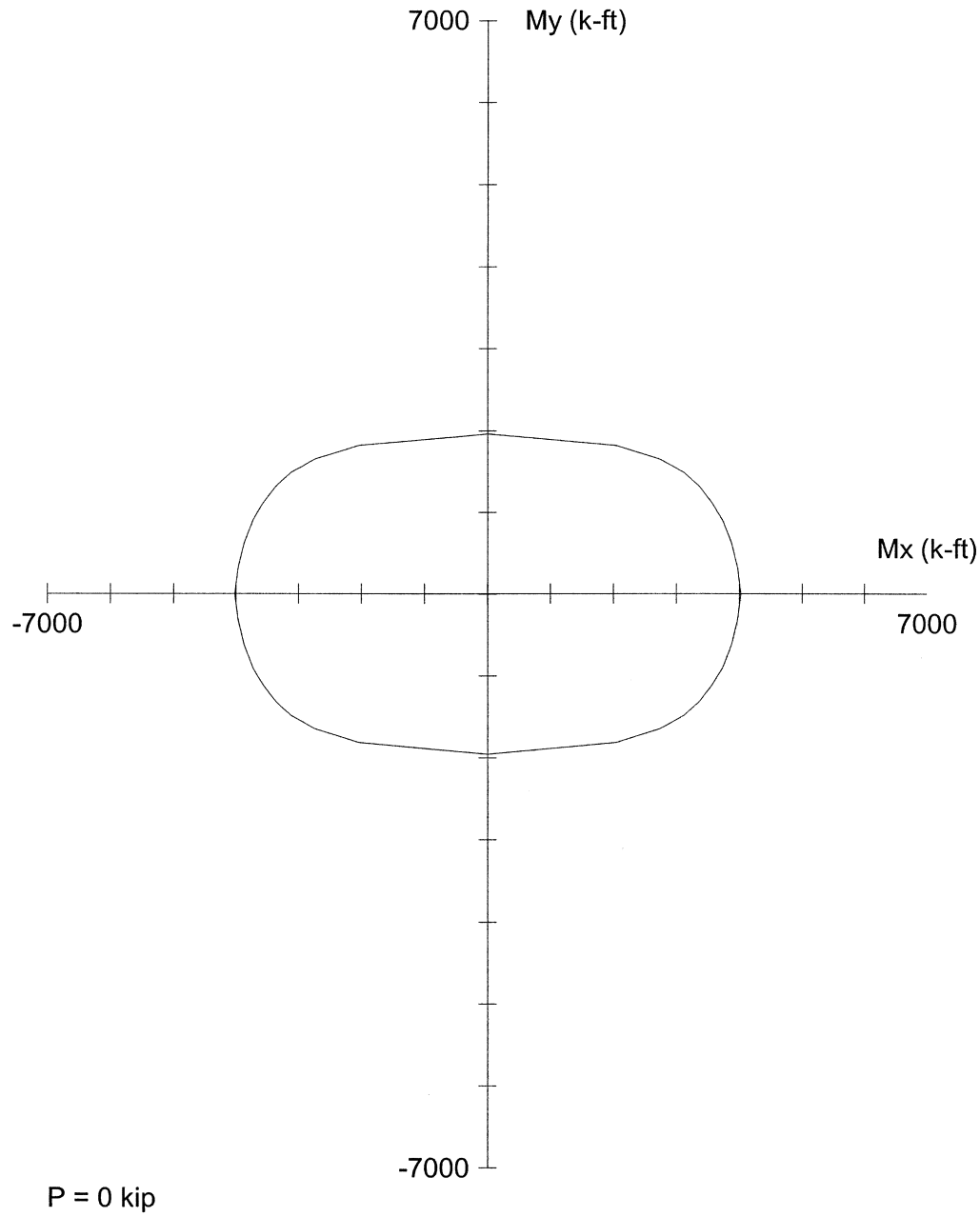

Code: ACI 318-95

Units: English

Run axis: Biaxial

Run option: Investigation

Slenderness: Not considered

mn type: Structural

Bars: User-defined

Date: 07/24/06

Time: 16:12:53

PCACOL V3.00 (PCA 1999) - Licensed to: Licensee name not yet specified.

File: S:\DGN-ST\NORTHC~1\BONNER~1\ANALYSIS\PIERS\HLB143~1\PCACOL~1\M13PLAN.COL

Project: BONNER BRIDGE - OREGON INLET

Column: HLB #143		Engineer: JMJ	
f'c = 3 ksi	fy = 40 ksi	Ag = 3406.47 in^2	24 #11 bars
Ec = 3122 ksi	Es = 29000 ksi	As = 37.44 in^2	Rho = 1.10%
fc = 2.55 ksi	e_rup = Infinity	Xo = 0.00 in	Ix = 1.87631e+006 in^4
u = 0.003 in/in		Yo = 0.00 in	Iy = 498369 in^4
Beta1 = 0.85		Clear spacing = 6.21 in	Clear cover = 5.00 in
Confinement: Tied	phi(a) = 0.8, phi(b) = 0.9, phi(c) = 0.7		

SMS 7/06

WDB 7/06

```
OOOOOOO    OOOOO    OOOOO    OOOOO    OOOOO   OO
OO    OO  OO   OO  OO   OO  OO   OO  OO   OO  OO
OO    OO  OO   OO  OO   OO  OO   OO  OO   OO  OO
OO    OO  OO       OO   OO  OO       OO   OO  OO
OO    OO  OO       OOOOOOO  OO       OO   OO  OO
OOOOOOO   OO   OO  OO   OO  OO   OO  OO   OO  OO
OO        OO   OO  OO   OO  OO   OO  OO   OO  OO
OO         OOOOO   OO   OO   OOOOO    OOOOO   OOOOO  (TM)
```

==========
Computer program for the Strength Design of Reinforced Concrete Sections
==========

Licensee stated above acknowledges that Portland Cement Association (PCA) is not and cannot be responsible for either the accuracy or adequacy of the material supplied as input for processing by the PCACOL(tm) computer program. Furthermore, PCA neither makes any warranty expressed nor implied with respect to the correctness of the output prepared by the PCACOL(tm) program. Although PCA has endeavored to produce PCACOL(tm) error free, the program is not and can't be certified infallible. The final and only responsibility for analysis, design and engineering documents is the licensees. Accordingly, PCA disclaims all responsibility in contract, negligence or other tort for any analysis, design or engineering documents prepared in connection with the use of the PCACOL(tm) program.

BASED ON FIELD DATA.
ASSUME 50% COVER LOSS.

General Information:
==========

File Name: S:\DGN-ST\NORTHC~1\BONNER~1\ANALYSIS\PIERS\HLB143~1\PCACOL~1\M13ACT.COL
Project: BONNER BRIDGE - OREGON INLET
Column: HLB #143 Engineer: JMJ
Code: ACI 318-95 Units: English

Run Option: Investigation Slenderness: Not considered
Run Axis: Biaxial Column Type: Structural

Material Properties:
==========

f'c = 4.4 ksi fy = 40 ksi
Ec = 3780.96 ksi Es = 29000 ksi
fc = 3.74 ksi Rupture strain = Infinity
Ultimate strain = 0.003 in/in
Beta1 = 0.83

Section:
==========

Rectangular: Width = 36.9 in Depth = 76.3 in

Gross section area, Ag = 2815.47 in^2
Ix = 1.3659e+006 in^4 Iy = 319464 in^4
Xo = 0 in Yo = 0 in

Reinforcement:
==========

Rebar Database: User-defined

Size	Diam (in)	Area (in^2)	Size	Diam (in)	Area (in^2)	Size	Diam (in)	Area (in^2)
# 1	0.00	0.00	# 3	0.38	0.11	# 4	0.50	0.20
# 5	0.63	0.31	# 6	0.75	0.44	# 7	0.88	0.60
# 8	1.00	0.79	# 9	1.13	1.00	# 10	1.27	1.27
# 11	1.41	1.56	# 14	1.69	2.25	# 18	2.26	4.00

Confinement: Tied; #1 ties with #9 bars, #1 with larger bars.
phi(a) = 0.8, phi(b) = 0.9, phi(c) = 0.7

Layout: Rectangular
Pattern: Equal Bar Spacing (Cover to longitudinal reinforcement)
Total steel area, As = 37.44 in^2 at 1.33%
24 #11 Cover = 2.5 in

Factored Loads and Moments with Corresponding Capacities: (see user's manual for notation)
==========

No.	Pu kip	Mux k-ft	Muy k-ft	fMnx k-ft	fMny k-ft	fMn/Mu
1	874.0	221.0	135.0	3393.1	2071.9	15.352
2	724.0	2106.0	118.0	5143.5	288.6	2.442
3	816.0	1279.0	126.0	5185.5	518.6	4.055
4	712.0	180.0	909.0	490.3	2485.8	2.734
5	637.0	2025.0	1033.0	3601.5	1839.6	1.779
6	725.0	1230.0	934.0	2840.8	2153.7	2.308
7	585.0	148.0	91.0	3184.9	1958.2	21.519
8	568.0	2106.0	118.0	4910.6	275.5	2.332
9	580.0	1279.0	90.0	4910.5	346.1	3.839
10	476.0	121.0	933.0	294.7	2287.7	2.452
11	487.0	2025.0	1033.0	3475.4	1765.4	1.715
12	498.0	1230.0	957.0	2622.6	2040.3	2.132
13	886.0	224.0	137.0	3400.7	2075.5	15.173
14	736.0	2247.0	193.0	5118.0	437.3	2.278
15	828.0	1352.0	128.0	5212.2	490.5	3.855

16	724.0	183.0	1554.0	292.2	2504.5	1.611
17	648.0	2161.0	1264.0	3342.6	1948.2	1.545
18	737.0	1300.0	1409.0	2138.8	2314.2	1.644
19	593.0	150.0	92.0	3193.9	1961.0	21.299
20	577.0	2247.0	193.0	4883.0	419.4	2.173
21	589.0	1352.0	91.0	4929.8	327.5	3.646
22	485.0	123.0	1518.0	189.1	2297.3	1.514
23	495.0	2161.0	1264.0	3205.7	1879.1	1.484
24	507.0	1300.0	1374.0	2040.9	2163.3	1.572

*** Program completed as requested! ***

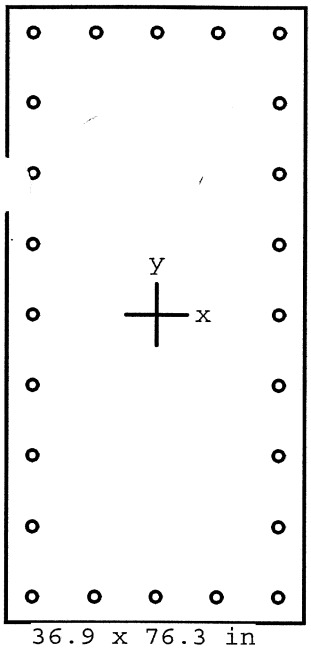

36.9 x 76.3 in

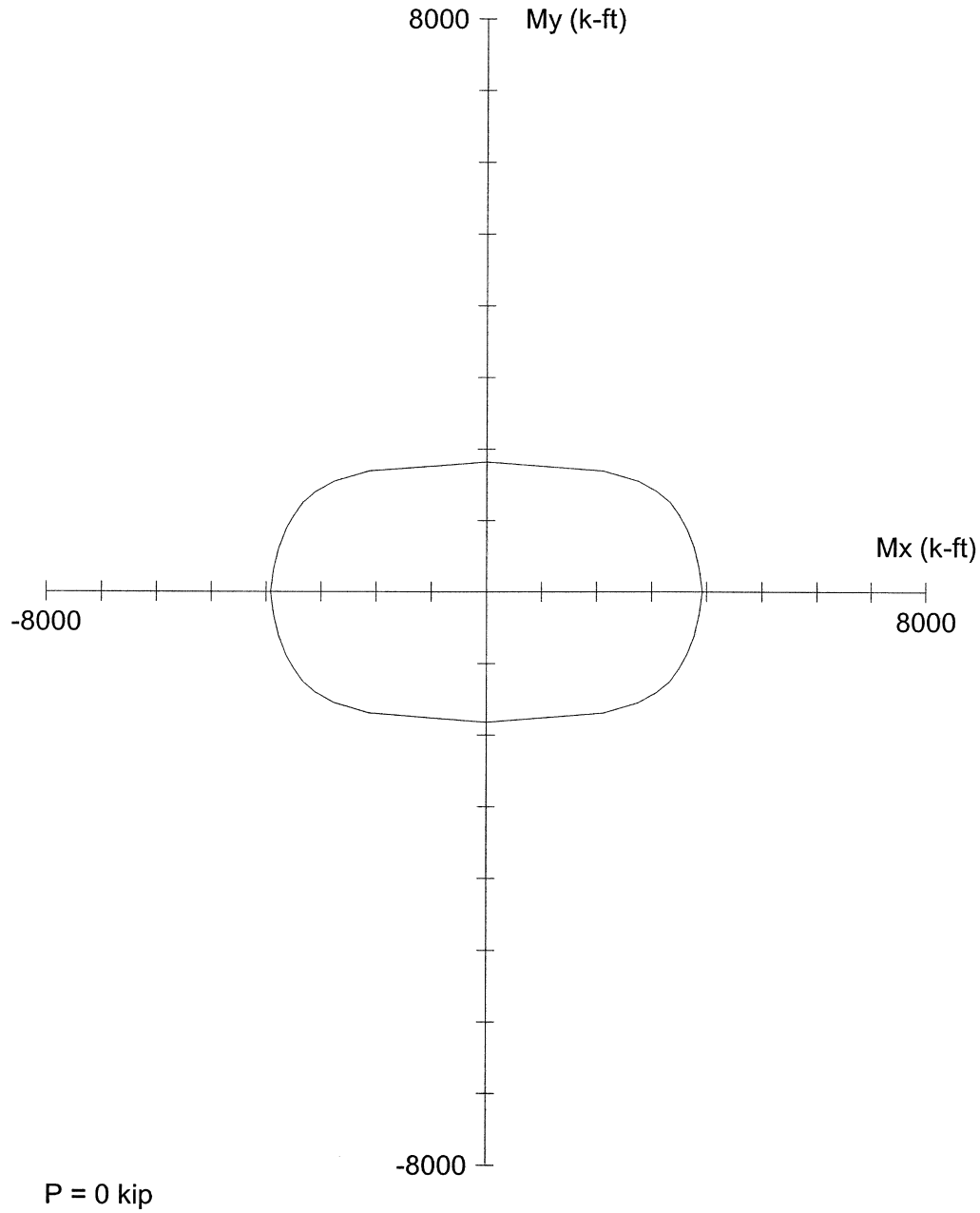

Code: ACI 318-95

Units: English

Run axis: Biaxial

Run option: Investigation

Slenderness: Not considered

mn type: Structural

Bars: User-defined

Date: 07/25/06

Time: 13:48:31

PCACOL V3.00 (PCA 1999) - Licensed to: Licensee name not yet specified.

File: S:\DGN-ST\NORTHC~1\BONNER~1\ANALYSIS\PIERS\HLB143~1\PCACOL~1\M13ACT.COL

Project: BONNER BRIDGE - OREGON INLET

Column: HLB #143		Engineer: JMJ	
f'c = 4.4 ksi	fy = 40 ksi	Ag = 2815.47 in^2	24 #11 bars
Ec = 3781 ksi	Es = 29000 ksi	As = 37.44 in^2	Rho = 1.33%
fc = 3.74 ksi	e_rup = Infinity	Xo = 0.00 in	Ix = 1.3659e+006 in^4
u = 0.003 in/in		Yo = 0.00 in	Iy = 319464 in^4
Beta1 = 0.83		Clear spacing = 6.21 in	Clear cover = 2.50 in
Confinement: Tied	phi(a) = 0.8, phi(b) = 0.9, phi(c) = 0.7		

H. W. LOCHNER, INC.

PROJECT: BONNER BRIDGE - OREGON INLET NORTH CAROLINA JMJ Jul-06
SUBJECT: HIGH LEVEL BENT ANALYSIS WDB 7/06
HLB 143 MEM. 14 JT. 10

COLUMN LOADS

PMAX

HLB 143 MEMBER 14 JOINT 10

GROUP 1

	P	MY	MZ
DL	480.16	0.00	29.98
LL	115.16	0.00	9.44
GROUP 1	0.00	0.00	0.00
SERVICE	595.32	0.00	39.42
STRENGTH	873.72	0.00	59.43

GROUP 2

	P	MY	MZ
DL	480.16	0.00	29.98
LL	0.00	0.00	0.00
GROUP 2	-76.52	-1620.08	118.24
SERVICE	403.64	-1620.08	148.22
STRENGTH	524.73	-2106.10	192.69

GROUP 3

	P	MY	MZ
DL	480.16	0.00	29.98
LL	115.16	0.00	9.44
GROUP 3	-32.23	-983.58	48.06
SERVICE	563.09	-983.58	87.48
STRENGTH	732.02	-1278.65	113.72

GROUP 4

	P	MY	MZ
DL	480.16	0.00	29.98
LL	115.16	0.00	9.44
GROUP 4	-45.85	0.00	-734.94
SERVICE	549.47	0.00	-695.52
STRENGTH	714.31	0.00	-904.18

GROUP 5

	P	MY	MZ
DL	480.16	0.00	29.98
LL	0.00	0.00	0.00
GROUP 5	-122.37	-1620.08	-616.71
SERVICE	357.79	-1620.08	-586.73
STRENGTH	447.24	-2025.10	-733.41

GROUP 6

	P	MY	MZ
DL	480.16	0.00	29.98
LL	115.16	0.00	9.44
GROUP 6	-78.08	-983.58	-686.89
SERVICE	517.24	-983.58	-647.47
STRENGTH	646.55	-1229.48	-809.34

SLENDERNESS EFFECTS IN COMPRESSION MEMBERS (AASHTO 8.16.5)

f'c = 3000 psi PHI = 0.70 W_C = 150 PCF

$E_C = W_C^{1.5} * 33 * f'c^{0.5}$ = 3320561 PSI Width of Rect. Col. = B = 41.916 In.

Depth of Rect. Col = D = 81.276 In.

$r_Y = 0.30*D$ = 24.38 In. L_Y = 0 Ft. K_Y = 2.0

$r_Z = 0.30*B$ = 12.57 In. L_Z = 2.5 Ft. K_Z = 1.2

I_{YY} = $B*D^3/12$ I_{YY} = 1875364 In^4

I_{ZZ} = $D*B^3/12$ I_{ZZ} = 498793 In^5

$K_Y L_Y/r$ = 0.0 < 22 NO SLENDERNESS EFFECT

$K_Z L_Z/r$ = 2.9 < 22 NO SLENDERNESS EFFECT

H. W. LOCHNER, INC.

PROJECT: BONNER BRIDGE - OREGON INLET NORTH CAROLINA
SUBJECT: HIGH LEVEL BENT ANALYSIS
HLB 143 MEM. 14 JT. 10

JMJ Jul-06
WDB 7/06

SLENDERNESS EFFECTS IN RECTANGULAR COMPRESSION MEMBERS (AASHTO 8.16.5)

GROUP 1

	B	D	KL/R	M_U	M_{DL}	B_D	P_U	P_C	δ_b	δ_s	M_C	
	In.	In.		Ft. Kips	Ft. Kips		Kips	Kips			Ft. Kips	
MY	41.916	81.276	0.0	0.00	0.00	0.000	874	0	1.000	1.000	221	*
MZ	41.916	81.276	2.9	59.43	38.97	0.656	874	0	1.000	1.000	135	*

GROUP 2

	B	D	KL/R	M_U	M_{DL}	B_D	P_U	P_C	δ_b	δ_s	M_C
	In.	In.		Ft. Kips	Ft. Kips		Kips	Kips			Ft. Kips
MY	41.916	81.276	0.0	2106.10	0.00	0.000	525	0	1.000	1.000	2106
MZ	41.916	81.276	2.9	192.69	38.97	0.202	525	0	1.000	1.000	193

GROUP 3

	B	D	KL/R	M_U	M_{DL}	B_D	P_U	P_C	δ_b	δ_s	M_C
	In.	In.		Ft. Kips	Ft. Kips		Kips	Kips			Ft. Kips
MY	41.916	81.276	0.0	1278.65	0.00	0.000	732	0	1.000	1.000	1279
MZ	41.916	81.276	2.9	113.72	38.97	0.343	732	0	1.000	1.000	114

GROUP 4

	B	D	KL/R	M_U	M_{DL}	B_D	P_U	P_C	δ_b	δ_s	M_C	
	In.	In.		Ft. Kips	Ft. Kips		Kips	Kips			Ft. Kips	
MY	41.916	81.276	0.0	0.00	0.00	0.000	714	0	1.000	1.000	181	*
MZ	41.916	81.276	2.9	904.18	38.97	0.043	714	0	1.000	1.000	904	

GROUP 5

	B	D	KL/R	M_U	M_{DL}	B_D	P_U	P_C	δ_b	δ_s	M_C
	In.	In.		Ft. Kips	Ft. Kips		Kips	Kips			Ft. Kips
MY	41.916	81.276	0.0	2025.10	0.00	0.000	447	0	1.000	1.000	2025
MZ	41.916	81.276	2.9	733.41	38.97	0.053	447	0	1.000	1.000	733

GROUP 6

	B	D	KL/R	M_U	M_{DL}	B_D	P_U	P_C	δ_b	δ_s	M_C
	In.	In.		Ft. Kips	Ft. Kips		Kips	Kips			Ft. Kips
MY	41.916	81.276	0.0	1229.48	0.00	0.000	647	0	1.000	1.000	1229
MZ	41.916	81.276	2.9	809.34	38.97	0.048	647	0	1.000	1.000	809

* MINIMUM MOMENT CONTROLS

H. W. LOCHNER, INC.

PROJECT: BONNER BRIDGE - OREGON INLET NORTH CAROLINA JMJ Jul-06
SUBJECT: HIGH LEVEL BENT ANALYSIS WDR 7/06
HLB 143 MEM. 14 JT. 10

COLUMN LOADS

PMIN

HLB 143 MEMBER 14 JOINT 10

	GROUP 1				GROUP 2		
	P	MY	MZ		P	MY	MZ
DL	360.12	0.00	29.98	DL	360.12	0.00	29.98
LL	53.71	0.00	-9.22	LL	0.00	0.00	0.00
GROUP 1	0.00	0.00	0.00	GROUP 2	-76.52	-1620.08	118.24
SERVICE	413.83	0.00	20.76	SERVICE	283.60	-1620.08	148.22
STRENGTH	584.53	0.00	19.00	STRENGTH	368.68	-2106.10	192.69

	GROUP 3				GROUP 4		
	P	MY	MZ		P	MY	MZ
DL	360.12	0.00	29.98	DL	360.12	0.00	29.98
LL	53.71	0.00	-9.22	LL	53.71	0.00	-9.22
GROUP 3	-32.23	-983.58	48.06	GROUP 4	-45.85	0.00	-734.94
SERVICE	381.60	-983.58	68.82	SERVICE	367.98	0.00	-714.18
STRENGTH	496.08	-1278.65	89.47	STRENGTH	478.37	0.00	-928.43

	GROUP 5				GROUP 6		
	P	MY	MZ		P	MY	MZ
DL	360.12	0.00	29.98	DL	360.12	0.00	29.98
LL	0.00	0.00	0.00	LL	53.71	0.00	-9.22
GROUP 5	-122.37	-1620.08	-616.71	GROUP 6	-78.08	-983.58	-686.89
SERVICE	237.75	-1620.08	-586.73	SERVICE	335.75	-983.58	-666.13
STRENGTH	297.19	-2025.10	-733.41	STRENGTH	419.69	-1229.48	-832.66

SLENDERNESS EFFECTS IN COMPRESSION MEMBERS (AASHTO 8.16.5)

f'c = 3000 psi PHI = 0.70 W_C = 150 PCF

$E_C = W_C$^1.5 *33*f'c^0.5 = 3320561 PSI Width of Rect. Col. = B = 41.916 In.

Depth of Rect. Col = D = 81.276 In.

r_Y = 0.30*D = 24.38 In. L_Y = 0 Ft. K_Y = 2.0

r_Z = 0.30*B = 12.57 In. L_Z = 2.5 Ft. K_Z = 1.2

I_{YY} = B*D^3/12 I_{YY} = 1875364 In^4

I_{ZZ} = D*B^3/12 I_{ZZ} = 498793 In^5

$K_Y L_Y/r$ = 0.0 < 22 NO SLENDERNESS EFFECT

$K_Z L_Z/r$ = 2.9 < 22 NO SLENDERNESS EFFECT

H. W. LOCHNER, INC.

PROJECT: BONNER BRIDGE - OREGON INLET NORTH CAROLINA
SUBJECT: HIGH LEVEL BENT ANALYSIS
HLB 143 MEM. 14 JT. 10

JMJ Jul-06
WDB 7/06

SLENDERNESS EFFECTS IN RECTANGULAR COMPRESSION MEMBERS (AASHTO 8.16.5)

GROUP 1

	B	D	KL/R	M_U	M_{DL}	B_D	P_U	P_C	δ_b	δ_s	M_C	
	In.	In.		Ft. Kips	Ft. Kips		Kips	Kips			Ft. Kips	
MY	41.916	81.276	0.0	0.00	0.00	0.000	585	0	1.000	1.000	148	*
MZ	41.916	81.276	2.9	19.00	38.97	2.052	585	0	1.000	1.000	90	*

GROUP 2

	B	D	KL/R	M_U	M_{DL}	B_D	P_U	P_C	δ_b	δ_s	M_C
	In.	In.		Ft. Kips	Ft. Kips		Kips	Kips			Ft. Kips
MY	41.916	81.276	0.0	2106.10	0.00	0.000	369	0	1.000	1.000	2106
MZ	41.916	81.276	2.9	192.69	38.97	0.202	369	0	1.000	1.000	193

GROUP 3

	B	D	KL/R	M_U	M_{DL}	B_D	P_U	P_C	δ_b	δ_s	M_C
	In.	In.		Ft. Kips	Ft. Kips		Kips	Kips			Ft. Kips
MY	41.916	81.276	0.0	1278.65	0.00	0.000	496	0	1.000	1.000	1279
MZ	41.916	81.276	2.9	89.47	38.97	0.436	496	0	1.000	1.000	89

GROUP 4

	B	D	KL/R	M_U	M_{DL}	B_D	P_U	P_C	δ_b	δ_s	M_C	
	In.	In.		Ft. Kips	Ft. Kips		Kips	Kips			Ft. Kips	
MY	41.916	81.276	0.0	0.00	0.00	0.000	478	0	1.000	1.000	121	*
MZ	41.916	81.276	2.9	928.43	38.97	0.042	478	0	1.000	1.000	928	

GROUP 5

	B	D	KL/R	M_U	M_{DL}	B_D	P_U	P_C	δ_b	δ_s	M_C
	In.	In.		Ft. Kips	Ft. Kips		Kips	Kips			Ft. Kips
MY	41.916	81.276	0.0	2025.10	0.00	0.000	297	0	1.000	1.000	2025
MZ	41.916	81.276	2.9	733.41	38.97	0.053	297	0	1.000	1.000	733

GROUP 6

	B	D	KL/R	M_U	M_{DL}	B_D	P_U	P_C	δ_b	δ_s	M_C
	In.	In.		Ft. Kips	Ft. Kips		Kips	Kips			Ft. Kips
MY	41.916	81.276	0.0	1229.48	0.00	0.000	420	0	1.000	1.000	1229
MZ	41.916	81.276	2.9	832.66	38.97	0.047	420	0	1.000	1.000	833

* MINIMUM MOMENT CONTROLS

H. W. LOCHNER, INC.

PROJECT: BONNER BRIDGE - OREGON INLET NORTH CAROLINA JMJ Jul-06
SUBJECT: HIGH LEVEL BENT ANALYSIS
HLB 143 MEM. 14 JT. FOOTING WDB 7/06

COLUMN LOADS

PMAX

HLB 143 MEMBER 14 JOINT FOOTING

GROUP 1

	P	MY	MZ
DL	489.10	0.00	21.81
LL	115.16	0.00	14.48
GROUP 1	0.00	0.00	0.00
SERVICE	604.26	0.00	36.29
STRENGTH	885.34	0.00	59.73

GROUP 2

	P	MY	MZ
DL	489.10	0.00	21.81
LL	0.00	0.00	0.00
GROUP 2	-76.56	-1728.28	170.51
SERVICE	412.54	-1728.28	192.32
STRENGTH	536.30	-2246.76	250.02

GROUP 3

	P	MY	MZ
DL	489.10	0.00	21.81
LL	115.16	0.00	14.48
GROUP 3	-32.24	-1040.25	68.45
SERVICE	572.02	-1040.25	104.74
STRENGTH	743.62	-1352.33	136.16

GROUP 4

	P	MY	MZ
DL	489.10	0.00	21.81
LL	115.16	0.00	14.48
GROUP 4	-45.85	0.00	1159.89
SERVICE	558.41	0.00	1196.18
STRENGTH	725.93	0.00	1555.03

GROUP 5

	P	MY	MZ
DL	489.10	0.00	21.81
LL	0.00	0.00	0.00
GROUP 5	-122.41	-1728.28	1330.41
SERVICE	366.69	-1728.28	1352.22
STRENGTH	458.36	-2160.35	1690.28

GROUP 6

	P	MY	MZ
DL	489.10	0.00	21.81
LL	115.16	0.00	14.48
GROUP 6	-78.09	-1040.25	1228.34
SERVICE	526.17	-1040.25	1264.63
STRENGTH	657.71	-1300.31	1580.79

SLENDERNESS EFFECTS IN COMPRESSION MEMBERS (AASHTO 8.16.5)

f'c = 3000 psi PHI = 0.70 W_C = 150 PCF

$E_C = W_C$^1.5 *33*f'c^0.5 = 3320561 PSI Width of Rect. Col. = B = 41.916 In.

Depth of Rect. Col = D = 81.276 In.

r_Y = 0.30*D = 24.38 In. L_Y = 0 Ft. K_Y = 2.0

r_Z = 0.30*B = 12.57 In. L_Z = 2.5 Ft. K_Z = 1.2

I_{YY} = B*D^3/12 I_{YY} = 1875364 In^4

I_{ZZ} = D*B^3/12 I_{ZZ} = 498793 In^5

K_YL_Y/r = 0.0 < 22 NO SLENDERNESS EFFECT

K_ZL_Z/r = 2.9 < 22 NO SLENDERNESS EFFECT

H. W. LOCHNER, INC.

PROJECT: BONNER BRIDGE - OREGON INLET NORTH CAROLINA JMJ Jul-06
SUBJECT: HIGH LEVEL BENT ANALYSIS
HLB 143 MEM. 14 JT. FOOTING WDB 7/06

SLENDERNESS EFFECTS IN RECTANGULAR COMPRESSION MEMBERS (AASHTO 8.16.5)

GROUP 1

	B	D	KL/R	M_U	M_{DL}	B_D	P_U	P_C	δ_b	δ_s	M_C	
	In.	In.		Ft. Kips	Ft. Kips		Kips	Kips			Ft. Kips	
MY	41.916	81.276	0.0	0.00	0.00	0.000	885	0	1.000	1.000	224	*
MZ	41.916	81.276	2.9	59.73	28.35	0.475	885	0	1.000	1.000	137	*

GROUP 2

	B	D	KL/R	M_U	M_{DL}	B_D	P_U	P_C	δ_b	δ_s	M_C
	In.	In.		Ft. Kips	Ft. Kips		Kips	Kips			Ft. Kips
MY	41.916	81.276	0.0	2246.76	0.00	0.000	536	0	1.000	1.000	2247
MZ	41.916	81.276	2.9	250.02	28.35	0.113	536	0	1.000	1.000	250

GROUP 3

	B	D	KL/R	M_U	M_{DL}	B_D	P_U	P_C	δ_b	δ_s	M_C
	In.	In.		Ft. Kips	Ft. Kips		Kips	Kips			Ft. Kips
MY	41.916	81.276	0.0	1352.33	0.00	0.000	744	0	1.000	1.000	1352
MZ	41.916	81.276	2.9	136.16	28.35	0.208	744	0	1.000	1.000	136

GROUP 4

	B	D	KL/R	M_U	M_{DL}	B_D	P_U	P_C	δ_b	δ_s	M_C	
	In.	In.		Ft. Kips	Ft. Kips		Kips	Kips			Ft. Kips	
MY	41.916	81.276	0.0	0.00	0.00	0.000	726	0	1.000	1.000	184	*
MZ	41.916	81.276	2.9	1555.03	28.35	0.018	726	0	1.000	1.000	1555	

GROUP 5

	B	D	KL/R	M_U	M_{DL}	B_D	P_U	P_C	δ_b	δ_s	M_C
	In.	In.		Ft. Kips	Ft. Kips		Kips	Kips			Ft. Kips
MY	41.916	81.276	0.0	2160.35	0.00	0.000	458	0	1.000	1.000	2160
MZ	41.916	81.276	2.9	1690.28	28.35	0.017	458	0	1.000	1.000	1690

GROUP 6

	B	D	KL/R	M_U	M_{DL}	B_D	P_U	P_C	δ_b	δ_s	M_C
	In.	In.		Ft. Kips	Ft. Kips		Kips	Kips			Ft. Kips
MY	41.916	81.276	0.0	1300.31	0.00	0.000	658	0	1.000	1.000	1300
MZ	41.916	81.276	2.9	1580.79	28.35	0.018	658	0	1.000	1.000	1581

* MINIMUM MOMENT CONTROLS

H. W. LOCHNER, INC.

PROJECT: BONNER BRIDGE - OREGON INLET NORTH CAROLINA JMJ Jul-06
SUBJECT: HIGH LEVEL BENT ANALYSIS
HLB 143 MEM. 14 JT. FOOTING WDB 7/06

COLUMN LOADS

PMIN

HLB 143 MEMBER 14 JOINT FOOTING

GROUP 1

	P	MY	MZ
DL	366.82	0.00	21.81
LL	53.71	0.00	-13.68
GROUP 1	0.00	0.00	0.00
SERVICE	420.53	0.00	8.13
STRENGTH	593.24	0.00	-1.29

GROUP 2

	P	MY	MZ
DL	366.82	0.00	21.81
LL	0.00	0.00	0.00
GROUP 2	-76.56	-1728.28	170.51
SERVICE	290.27	-1728.28	192.32
STRENGTH	377.35	-2246.76	250.02

GROUP 3

	P	MY	MZ
DL	366.82	0.00	21.81
LL	53.71	0.00	-13.68
GROUP 3	-32.24	-1040.25	68.45
SERVICE	388.29	-1040.25	76.58
STRENGTH	504.78	-1352.33	99.55

GROUP 4

	P	MY	MZ
DL	366.82	0.00	21.81
LL	53.71	0.00	-13.68
GROUP 4	-45.85	0.00	1159.89
SERVICE	374.68	0.00	1168.02
STRENGTH	487.09	0.00	1518.43

GROUP 5

	P	MY	MZ
DL	366.82	0.00	21.81
LL	0.00	0.00	0.00
GROUP 5	-122.41	-1728.28	1330.41
SERVICE	244.42	-1728.28	1352.22
STRENGTH	305.52	-2160.35	1690.28

GROUP 6

	P	MY	MZ
DL	366.82	0.00	21.81
LL	53.71	0.00	-13.68
GROUP 6	-78.09	-1040.25	1228.34
SERVICE	342.44	-1040.25	1236.47
STRENGTH	428.05	-1300.31	1545.59

SLENDERNESS EFFECTS IN COMPRESSION MEMBERS (AASHTO 8.16.5)

f'c = 3000 psi PHI = 0.70 W_C = 150 PCF

$E_C = W_C^{1.5} * 33 * f'c^{0.5}$ = 3320561 PSI Width of Rect. Col. = B = 41.916 In.

Depth of Rect. Col = D = 81.276 In.

$r_Y = 0.30*D$ = 24.38 In. L_Y = 0 Ft. K_Y = 2.0

$r_Z = 0.30*B$ = 12.57 In. L_Z = 2.5 Ft. K_Z = 1.2

I_{YY} = $B*D^3/12$ I_{YY} = 1875364 In^4

I_{ZZ} = $D*B^3/12$ I_{ZZ} = 498793 In^5

$K_Y L_Y/r$ = 0.0 < 22 NO SLENDERNESS EFFECT

$K_Z L_Z/r$ = 2.9 < 22 NO SLENDERNESS EFFECT

H. W. LOCHNER, INC.

PROJECT: BONNER BRIDGE - OREGON INLET NORTH CAROLINA
SUBJECT: HIGH LEVEL BENT ANALYSIS
HLB 143 MEM. 14 JT. FOOTING

JMJ Jul-06
WDB 7/06

SLENDERNESS EFFECTS IN RECTANGULAR COMPRESSION MEMBERS (AASHTO 8.16.5)

GROUP 1

	B	D	KL/R	M_U	M_{DL}	B_D	P_U	P_C	δ_b	δ_s	M_C	
	In.	In.		Ft. Kips	Ft. Kips		Kips	Kips			Ft. Kips	
MY	41.916	81.276	0.0	0.00	0.00	0.000	593	0	1.000	1.000	150	*
MZ	41.916	81.276	2.9	1.29	28.35	22.030	593	0	1.000	1.000	92	*

GROUP 2

	B	D	KL/R	M_U	M_{DL}	B_D	P_U	P_C	δ_b	δ_s	M_C
	In.	In.		Ft. Kips	Ft. Kips		Kips	Kips			Ft. Kips
MY	41.916	81.276	0.0	2246.76	0.00	0.000	377	0	1.000	1.000	2247
MZ	41.916	81.276	2.9	250.02	28.35	0.113	377	0	1.000	1.000	250

GROUP 3

	B	D	KL/R	M_U	M_{DL}	B_D	P_U	P_C	δ_b	δ_s	M_C
	In.	In.		Ft. Kips	Ft. Kips		Kips	Kips			Ft. Kips
MY	41.916	81.276	0.0	1352.33	0.00	0.000	505	0	1.000	1.000	1352
MZ	41.916	81.276	2.9	99.55	28.35	0.285	505	0	1.000	1.000	100

GROUP 4

	B	D	KL/R	M_U	M_{DL}	B_D	P_U	P_C	δ_b	δ_s	M_C	
	In.	In.		Ft. Kips	Ft. Kips		Kips	Kips			Ft. Kips	
MY	41.916	81.276	0.0	0.00	0.00	0.000	487	0	1.000	1.000	123	*
MZ	41.916	81.276	2.9	1518.43	28.35	0.019	487	0	1.000	1.000	1518	

GROUP 5

	B	D	KL/R	M_U	M_{DL}	B_D	P_U	P_C	δ_b	δ_s	M_C
	In.	In.		Ft. Kips	Ft. Kips		Kips	Kips			Ft. Kips
MY	41.916	81.276	0.0	2160.35	0.00	0.000	306	0	1.000	1.000	2160
MZ	41.916	81.276	2.9	1690.28	28.35	0.017	306	0	1.000	1.000	1690

GROUP 6

	B	D	KL/R	M_U	M_{DL}	B_D	P_U	P_C	δ_b	δ_s	M_C
	In.	In.		Ft. Kips	Ft. Kips		Kips	Kips			Ft. Kips
MY	41.916	81.276	0.0	1300.31	0.00	0.000	428	0	1.000	1.000	1300
MZ	41.916	81.276	2.9	1545.59	28.35	0.018	428	0	1.000	1.000	1546

* MINIMUM MOMENT CONTROLS

SMS 7/06

WDB 7/06

```
OOOOOOO    OOOOO    OOOOO    OOOOO    OOOOO   OO
OO    OO   OO  OO   OO  OO   OO  OO   OO  OO   OO
OO    OO   OO  OO   OO  OO   OO  OO   OO  OO   OO
OO    OO   OO       OO  OO   OO       OO  OO   OO
OO    OO   OO       OOOOOOO  OO       OO  OO   OO
OOOOOOO    OO  OO   OO  OO   OO  OO   OO  OO   OO
OO         OO  OO   OO  OO   OO  OO   OO  OO   OO
OO          OOOOO   OO  OO    OOOOO    OOOOO   OOOOO  (TM)
```

==========
Computer program for the Strength Design of Reinforced Concrete Sections
==========

Licensee stated above acknowledges that Portland Cement Association (PCA) is not and cannot be responsible for either the accuracy or adequacy of the material supplied as input for processing by the PCACOL(tm) computer program. Furthermore, PCA neither makes any warranty expressed nor implied with respect to the correctness of the output prepared by the PCACOL(tm) program. Although PCA has endeavored to produce PCACOL(tm) error free, the program is not and can't be certified infallible. The final and only responsibility for analysis, design and engineering documents is the licensees. Accordingly, PCA disclaims all responsibility in contract, negligence or other tort for any analysis, design or engineering documents prepared in connection with the use of the PCACOL(tm) program.

BASED ON PLANS.

General Information:
==========

File Name: S:\DGN-ST\NORTHC~1\BONNER~1\ANALYSIS\PIERS\HLB143~1\PCACOL~1\M14PLAN.COL
Project: BONNER BRIDGE - OREGON INLET
Column: HLB #143 Engineer: JMJ
Code: ACI 318-95 Units: English

Run Option: Investigation Slenderness: Not considered
Run Axis: Biaxial Column Type: Structural

Material Properties:
==========

f'c = 3 ksi fy = 40 ksi
Ec = 3122.02 ksi Es = 29000 ksi
fc = 2.55 ksi Rupture strain = Infinity
Ultimate strain = 0.003 in/in
Beta1 = 0.85

Section:
==========

Rectangular: Width = 41.9 in Depth = 81.3 in

Gross section area, Ag = 3406.47 in^2
Ix = 1.87631e+006 in^4 Iy = 498369 in^4
Xo = 0 in Yo = 0 in

Reinforcement:
==========

Rebar Database: User-defined

Size	Diam (in)	Area (in^2)	Size	Diam (in)	Area (in^2)	Size	Diam (in)	Area (in^2)
# 1	0.00	0.00	# 3	0.38	0.11	# 4	0.50	0.20
# 5	0.63	0.31	# 6	0.75	0.44	# 7	0.88	0.60
# 8	1.00	0.79	# 9	1.13	1.00	# 10	1.27	1.27
# 11	1.41	1.56	# 14	1.69	2.25	# 18	2.26	4.00

Confinement: Tied; #1 ties with #9 bars, #1 with larger bars.
phi(a) = 0.8, phi(b) = 0.9, phi(c) = 0.7

Layout: Rectangular
Pattern: Equal Bar Spacing (Cover to longitudinal reinforcement)
Total steel area, As = 37.44 in^2 at 1.10%
24 #11 Cover = 5 in

Factored Loads and Moments with Corresponding Capacities: (see user's manual for notation)
==========

No.	Pu kip	Mux k-ft	Muy k-ft	fMnx k-ft	fMny k-ft	fMn/Mu
1	874.0	221.0	135.0	3340.7	2047.3	15.129
2	525.0	2106.0	193.0	4810.3	433.9	2.284
3	732.0	1279.0	114.0	5040.1	453.8	3.941
4	714.0	181.0	904.0	513.3	2562.3	2.834
5	447.0	2025.0	733.0	3978.2	1439.0	1.964
6	647.0	1229.0	809.0	3111.3	2044.9	2.530
7	585.0	148.0	90.0	3235.8	1966.1	21.859
8	369.0	2106.0	193.0	4582.9	415.4	2.176
9	496.0	1279.0	89.0	4800.2	333.7	3.753
10	478.0	121.0	928.0	310.1	2393.9	2.579
11	297.0	2025.0	733.0	3826.5	1384.6	1.890
12	420.0	1229.0	833.0	2911.2	1972.2	2.368
13	885.0	224.0	137.0	3344.7	2048.2	14.937
14	536.0	2247.0	250.0	4787.3	526.9	2.130
15	744.0	1352.0	136.0	5031.0	502.8	3.721

16	726.0	184.0	1555.0	304.1	2581.0	1.660
17	458.0	2160.0	1690.0	2653.6	2069.9	1.227
18	658.0	1300.0	1581.0	1936.2	2358.2	1.491
19	593.0	150.0	92.0	3224.1	1975.6	21.489
20	377.0	2247.0	250.0	4563.5	505.9	2.031
21	505.0	1352.0	100.0	4807.3	353.6	3.556
22	487.0	123.0	1518.0	196.4	2403.0	1.583
23	306.0	2160.0	1690.0	2538.8	1984.9	1.175
24	428.0	1300.0	1546.0	1869.4	2215.5	1.435

*** Program completed as requested! ***

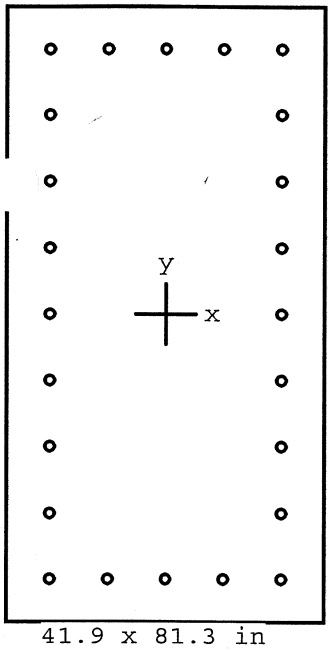

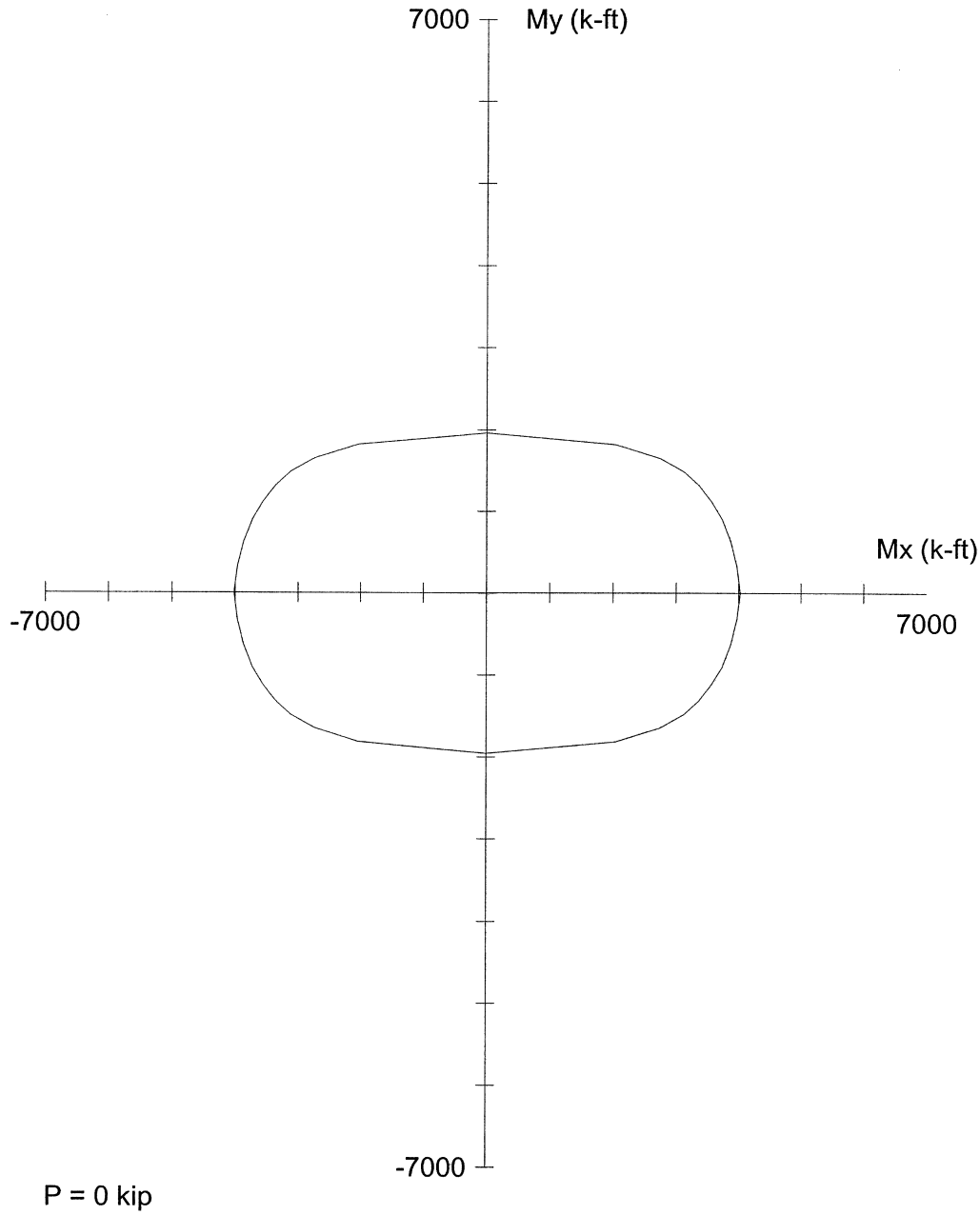

Code: ACI 318-95

Units: English

Run axis: Biaxial

Run option: Investigation

Slenderness: Not considered

mn type: Structural

Bars: User-defined

Date: 07/21/06

Time: 12:03:26

PCACOL V3.00 (PCA 1999) - Licensed to: Licensee name not yet specified.

File: S:\DGN-ST\NORTHC~1\BONNER~1\ANALYSIS\PIERS\HLB143~1\PCACOL~1\M14PLAN.COL

Project: BONNER BRIDGE - OREGON INLET

Column: HLB #143		Engineer: JMJ	
f'c = 3 ksi	fy = 40 ksi	Ag = 3406.47 in^2	24 #11 bars
Ec = 3122 ksi	Es = 29000 ksi	As = 37.44 in^2	Rho = 1.10%
fc = 2.55 ksi	e_rup = Infinity	Xo = 0.00 in	Ix = 1.87631e+006 in^4
u = 0.003 in/in		Yo = 0.00 in	Iy = 498369 in^4
Beta1 = 0.85		Clear spacing = 6.21 in	Clear cover = 5.00 in
Confinement: Tied	phi(a) = 0.8, phi(b) = 0.9, phi(c) = 0.7		

JMJ 7/06

WDB 7/06

```
OOOOOOO    OOOOO    OOOOO    OOOOO    OOOOO   OO
OO    OO   OO  OO   OO  OO   OO  OO   OO  OO   OO
OO    OO   OO  OO   OO  OO   OO  OO   OO  OO   OO
OO    OO   OO       OO  OO   OO       OO  OO   OO
OO    OO   OO       OOOOOOO  OO       OO  OO   OO
OOOOOOO    OO  OO   OO  OO   OO  OO   OO  OO   OO
OO         OO  OO   OO  OO   OO  OO   OO  OO   OO
OO          OOOOO   OO  OO    OOOOO    OOOOO   OOOOO  (TM)
```

==========
Computer program for the Strength Design of Reinforced Concrete Sections
==========

Licensee stated above acknowledges that Portland Cement Association (PCA) is not and cannot be responsible for either the accuracy or adequacy of the material supplied as input for processing by the PCACOL(tm) computer program. Furthermore, PCA neither makes any warranty expressed nor implied with respect to the correctness of the output prepared by the PCACOL(tm) program. Although PCA has endeavored to produce PCACOL(tm) error free, the program is not and can't be certified infallible. The final and only responsibility for analysis, design and engineering documents is the licensees. Accordingly, PCA disclaims all responsibility in contract, negligence or other tort for any analysis, design or engineering documents prepared in connection with the use of the PCACOL(tm) program.

BASED ON FIELD DATA.
ASSUME 50% COVER LOSS.

General Information:
==========

File Name: S:\DGN-ST\NORTHC~1\BONNER~1\ANALYSIS\PIERS\HLB143~1\PCACOL~1\M14ACT.COL
Project: BONNER BRIDGE - OREGON INLET
Column: HLB #143 Engineer: JMJ
Code: ACI 318-95 Units: English

Run Option: Investigation Slenderness: Not considered
Run Axis: Biaxial Column Type: Structural

Material Properties:
==========

f'c = 4.4 ksi fy = 40 ksi
Ec = 3780.96 ksi Es = 29000 ksi
fc = 3.74 ksi Rupture strain = Infinity
Ultimate strain = 0.003 in/in
Beta1 = 0.83

Section:
==========

Rectangular: Width = 36.9 in Depth = 76.3 in

Gross section area, Ag = 2815.47 in^2
Ix = 1.3659e+006 in^4 Iy = 319464 in^4
Xo = 0 in Yo = 0 in

Reinforcement:
==========

Rebar Database: User-defined

Size	Diam (in)	Area (in^2)	Size	Diam (in)	Area (in^2)	Size	Diam (in)	Area (in^2)
# 1	0.00	0.00	# 3	0.38	0.11	# 4	0.50	0.20
# 5	0.63	0.31	# 6	0.75	0.44	# 7	0.88	0.60
# 8	1.00	0.79	# 9	1.13	1.00	# 10	1.27	1.27
# 11	1.41	1.56	# 14	1.69	2.25	# 18	2.26	4.00

Confinement: Tied; #1 ties with #9 bars, #1 with larger bars.
phi(a) = 0.8, phi(b) = 0.9, phi(c) = 0.7

Layout: Rectangular
Pattern: Equal Bar Spacing (Cover to longitudinal reinforcement)
Total steel area, As = 37.44 in^2 at 1.33%
24 #11 Cover = 2.5 in

Factored Loads and Moments with Corresponding Capacities: (see user's manual for notation)
==========

No.	Pu kip	Mux k-ft	Muy k-ft	fMnx k-ft	fMny k-ft	fMn/Mu
1	874.0	221.0	135.0	3393.1	2071.9	15.352
2	525.0	2106.0	193.0	4791.6	441.6	2.275
3	732.0	1279.0	114.0	5108.6	446.8	3.994
4	714.0	181.0	904.0	498.9	2486.7	2.751
5	447.0	2025.0	733.0	3959.8	1432.8	1.955
6	647.0	1229.0	809.0	3093.8	2030.8	2.515
7	585.0	148.0	90.0	3205.9	1950.7	21.665
8	369.0	2106.0	193.0	4538.2	412.3	2.155
9	496.0	1279.0	89.0	4777.3	339.0	3.736
10	478.0	121.0	928.0	302.2	2289.4	2.468
11	297.0	2025.0	733.0	3781.9	1361.5	1.866
12	420.0	1229.0	833.0	2843.3	1926.7	2.313
13	885.0	224.0	137.0	3400.9	2074.9	15.172
14	536.0	2247.0	250.0	4775.8	535.0	2.126
15	744.0	1352.0	136.0	5095.2	514.9	3.769

16	726.0	184.0	1555.0	294.6	2506.1	1.611
17	458.0	2160.0	1690.0	2587.1	2017.0	1.196
18	658.0	1300.0	1581.0	1898.0	2302.7	1.458
19	593.0	150.0	92.0	3193.9	1961.0	21.299
20	377.0	2247.0	250.0	4520.9	501.2	2.012
21	505.0	1352.0	100.0	4788.2	351.9	3.541
22	487.0	123.0	1518.0	186.3	2299.2	1.515
23	306.0	2160.0	1690.0	2454.9	1921.2	1.137
24	428.0	1300.0	1546.0	1796.9	2130.4	1.380

*** Program completed as requested! ***

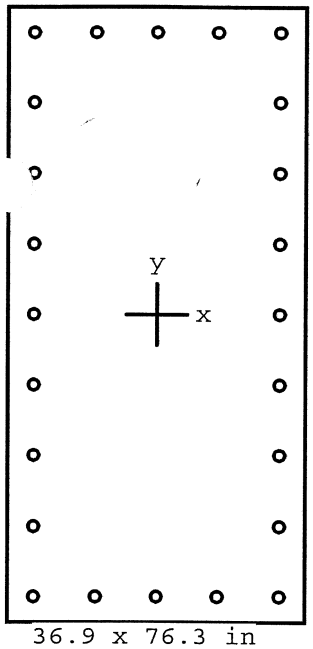

36.9 x 76.3 in

Code: ACI 318-95

Units: English

Run axis: Biaxial

Run option: Investigation

Slenderness: Not considered

.mn type: Structural

Bars: User-defined

Date: 07/25/06

Time: 13:49:29

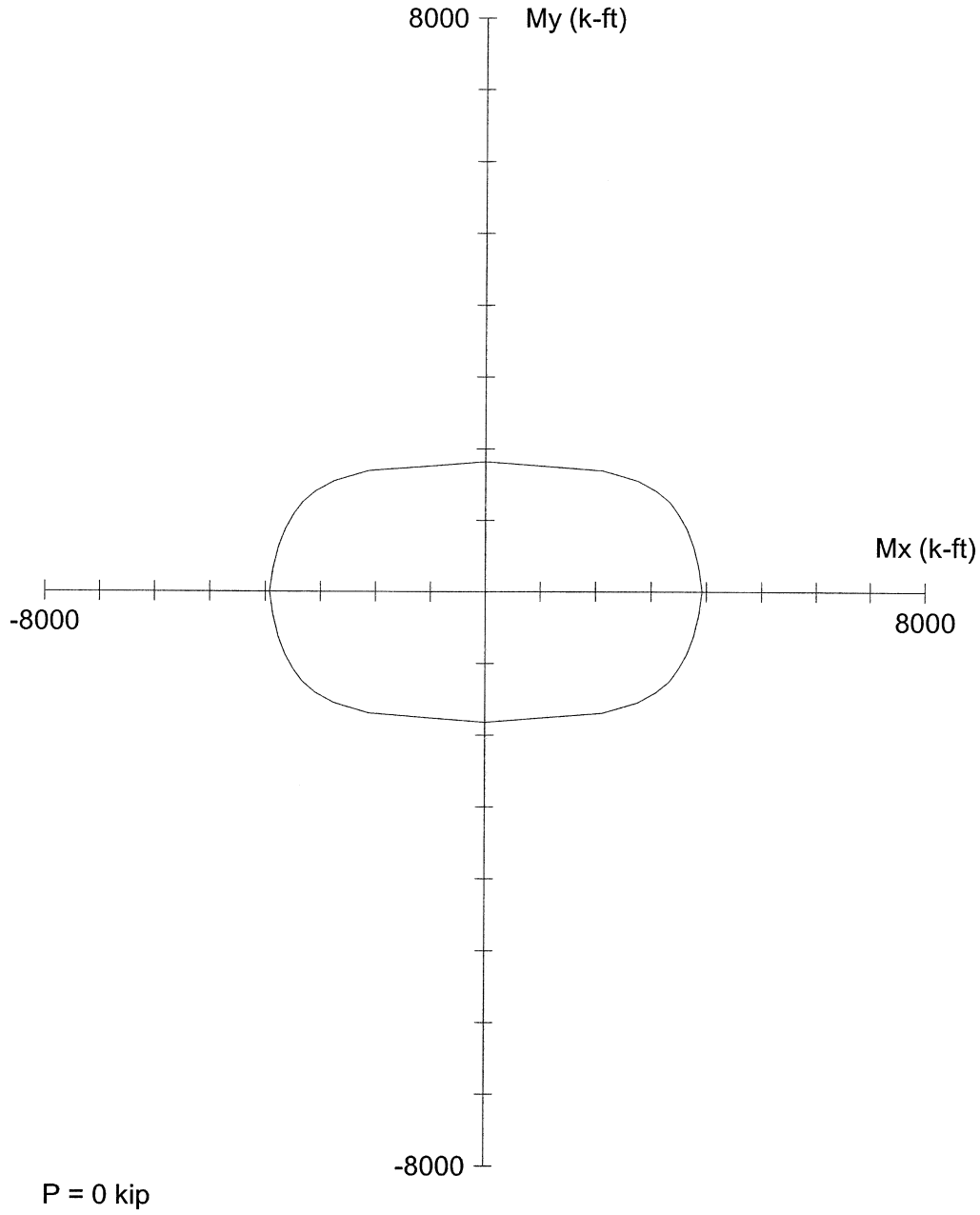

PCACOL V3.00 (PCA 1999) - Licensed to: Licensee name not yet specified.

File: S:\DGN-ST\NORTHC~1\BONNER~1\ANALYSIS\PIERS\HLB143~1\PCACOL~1\M14ACT.COL

Project: BONNER BRIDGE - OREGON INLET

Column: HLB #143		Engineer: JMJ	
f'c = 4.4 ksi	fy = 40 ksi	Ag = 2815.47 in^2	24 #11 bars
Ec = 3781 ksi	Es = 29000 ksi	As = 37.44 in^2	Rho = 1.33%
fc = 3.74 ksi	e_rup = Infinity	Xo = 0.00 in	Ix = 1.3659e+006 in^4
.u = 0.003 in/in		Yo = 0.00 in	Iy = 319464 in^4
Beta1 = 0.83		Clear spacing = 6.21 in	Clear cover = 2.50 in
Confinement: Tied	phi(a) = 0.8, phi(b) = 0.9, phi(c) = 0.7		

LOCHNER

PROJECT: BONNER BRIDGE - OREGON INLET NORTH CAROLINA
SUBJECT: HIGH LEVEL BENT #143
SUBJECT: TOP OF CAP - BASED ON PLAN DIMENSIONS

SHEET
JMJ Jul-06
WDB 7/06

CONCRETE DESIGN - CAP

INPUT

Dead Load Moment	478.530	Ft. Kips	Working Stress Mom.		680.480	Ft. Kips
Live Load Moment	201.950	Ft. Kips	Load Factor Mom.		1060.522	Ft. Kips
Avrg. Bar Clearance	3.625	In.	Z For Steel Dist.		170	
Cover	3.000	In.	f'c	=	3.000	Ksi
Width of Member (b)	48.000	In.	fy	=	40.000	Ksi
Depth of Member (h)	42.000	In.				

AREA OF STEEL

Bar Size	11		d_C =	4.330	In.
No. Bars	8		d_C' =	2.705	In.
A_S	12.49	Sq. In.	d =	37.670	In.

RESULTS

A	=	2.00 x 5.63 x 2.705	=	30.43	
f_S Allow	=	170.00 / (30.43 x 2.705)^.33	=	39.09 Ksi	36.00 Max
a	=	(12.49 x 40.00) / 0.85 x 3.00 x 48.00	=	4.082 In.	
jd	=	37.670 - 4.08 / 2.00	=	35.63	
f_S Act	=	(680.48 x 12.00) / 12.49 x 35.63	=	18.35 Ksi	
θM_N	=	0.90 x 12.49 x 40.00 x 35.63 / 12	=	1335.19 Ft. Kips	

AASHTO 8.17.1 Min. Reinforcement $\phi M_n >$ 1.2Mcr Mcr = fr Ig/yt

fr	=	$7.5 (f'c)^{1/2}$			=	0.411 Ksi
Ig	=	$1/12 * b * h^3$ = 296352 $In.^4$	yt = h/2		=	21.00 In.
Mcr	=	0.411 x 296352 / 21.00 / 12			=	483.09 Ft. Kips

AASHTO 8.17.1 **ϕM_n = 1335.19 > 1.2 Mcr = 579.71 OK**

f_S Act = 18.35 < f_S Allow = 36.00 OK

ϕM_n = 1335.19 > Mu = 1060.52 OK

LOCHNER

PROJECT: BONNER BRIDGE - OREGON INLET NORTH CAROLINA
SUBJECT: HIGH LEVEL BENT #143
SUBJECT: BOTTOM OF CAP - BASED ON PLAN DIMENSIONS

SHEET
JMJ Jul-06
WDB 7/06

CONCRETE DESIGN - CAP

INPUT

Dead Load Moment	259.690	Ft. Kips	Working Stress Mom.		417.280	Ft. Kips
Live Load Moment	157.590	Ft. Kips	Load Factor Mom.		679.725	Ft. Kips
Bar Clearance	3.625	In.	Z For Steel Dist.		170	
Cover	3.000	In.	f'c	=	3.000	Ksi
Width of Member (b)	48.00	In.	fy	=	40.000	Ksi
Depth of Member (h)	42.00	In.				

AREA OF STEEL

Bar Size	11		d_C =	4.330	In.
No. Bars	8		d_C' =	2.705	In.
A_S	12.49	Sq. In.	d =	37.670	In.

RESULTS

A	=	2.00 x 5.63 x 2.705	=	30.43		
f_S Allow	=	170.00 / (30.43 x 2.705)^.33	=	39.09	Ksi	36.00 Max
a	=	(12.49 x 40.00) / 0.85 x 3.00 x 48.00	=	4.082	In.	
jd	=	37.670 - 4.08 / 2.00	=	35.63		
f_S Act	=	(417.28 x 12.00) / 12.49 x 35.63	=	11.25	Ksi	
θM_N	=	0.90 x 12.49 x 40.00 x 35.63 / 12	=	1335.19	Ft. Kips	

AASHTO 8.17.1 Min. Reinforcement $\phi M_n >$ 1.2Mcr Mcr = fr Ig/yt

fr	=	$7.5\ (f'c)^{1/2}$		=	0.411	Ksi
Ig	=	$1/12 * b * h^3$ = 296352 $In.^4$	yt = h/2	=	21.00	In.
Mcr	=	0.411 x 296352 / 21.00 / 12		=	483.09	Ft. Kips

AASHTO 8.17.1 **ϕM_n = 1335.19 > 1.2 Mcr = 579.71 OK**

f_S Act = 11.25 < f_S Allow = 36.00 OK

ϕM_n = 1335.19 > Mu = 679.72 OK

LOCHNER

PROJECT:	BONNER BRIDGE - OREGON INLET NORTH CAROLINA	SHEET	
SUBJECT:	HIGH LEVEL BENT #143	JMJ	Jul-06
	SHEAR - BASED ON PLAN DIMENSIONS	WDB	7/06

SHEAR DESIGN - CAP COMPLETE

V_{DL} = 146.55 KIPS V_{LL} = 63.80 KIPS F_V = 40000 PSI

d = 37.67 INCHES b = 48.00 INCHES f'c = 3000 PSI

V@ d DIST. FROM FACE OF SUPPORT Col. Width = D = 3.50 FT

ASSUME FACE OF SUPPORT D/4 = 0.875 FT. FROM CENTER OF COL.

$d_{DIST.}$ = 37.67 / 12.00 + 0.875 = 4.01 FT. W_{DL} CAP= 2.100 KIPS/FT

V_{DL} = V_{DL} - W_{DL} * d_{DIST} = 138.12

V_U = 1.3(V_{DL} +(1.67*V_{LL})) = 318.07

$V_U < q\,V_N$ $V_N = V_C + V_S$

$V_U < qV_C + qV_S$

V_C = 2*(f'c)^1/2* b* d = 198.07 KIPS

$qV_S = V_U - qV_C$

$V_S = V_U/q - V_C$ = 176.12 KIPS

$V_S = A_V * F_V * d / S$

USE # 5 STIRRUPS A_S= 0.31 SQ. IN.
No. of Bars = 2

$A_V = 2 \times A_S$ = 2 * 0.307 = 0.61359232 SQ. IN.

$S = A_V * F_V * d / V_S$ = 5.2 INCHES

$S_{MIN} = A_V * F_V /50 * b$ = 15.34 INCHES

S_{ACT} = 5.00 INCHES **OK**

LOCHNER

PROJECT: BONNER BRIDGE - OREGON INLET NORTH CAROLINA
SUBJECT: HIGH LEVEL BENT #143
SUBJECT: TOP OF CAP - BASED ON FIELD DATA, ASSUME 50% COVER LOSS EVERYWHERE

SHEET
JMJ Jul-06
WDB 7/06

CONCRETE DESIGN - CAP

INPUT

Dead Load Moment	478.530	Ft. Kips	Working Stress Mom.		680.480	Ft. Kips
Live Load Moment	201.950	Ft. Kips	Load Factor Mom.		1060.522	Ft. Kips
Avrg. Bar Clearance	3.625	In.	Z For Steel Dist.		170	
Cover	3.000	In.	f'c	=	4.400	Ksi
Width of Member (b)	45.000	In.	fy	=	40.000	Ksi
Depth of Member (h)	42.000	In.				

AREA OF STEEL

Bar Size	11		d_C =	4.330	In.
No. Bars	8		d_C' =	2.705	In.
A_S	12.49	Sq. In.	d =	37.670	In.

RESULTS

A	=	2.00 x 5.20 x 2.705	=	28.11		
f_S Allow	=	170.00 / (28.11 x 2.705)^.33	=	40.13	Ksi	36.00 Max
a	=	(12.49 x 40.00) / 0.85 x 4.40 x 45.00	=	2.969	In.	
jd	=	37.670 - 2.97 / 2.00	=	36.19		
f_S Act	=	(680.48 x 12.00) / 12.49 x 36.19	=	18.07	Ksi	
θM_N	=	0.90 x 12.49 x 40.00 x 36.19 / 12	=	1356.05	Ft. Kips	

AASHTO 8.17.1 Min. Reinforcement $\phi M_n >$ 1.2Mcr Mcr = fr Ig/yt

fr	=	$7.5 (f'c)^{1/2}$		=	0.497	Ksi
Ig	=	$1/12 * b * h^3$ = 277830 $In.^4$	yt = h/2	=	21.00	In.
Mcr	=	0.497 x 277830 / 21.00 / 12		=	548.49	Ft. Kips

AASHTO 8.17.1 **ϕM_n = 1356.05 > 1.2 Mcr = 658.18 OK**

f_S Act = 18.07 < f_S Allow = 36.00 OK

ϕM_n = 1356.05 > Mu = 1060.52 OK

LOCHNER

PROJECT: BONNER BRIDGE - OREGON INLET NORTH CAROLINA
SUBJECT: HIGH LEVEL BENT #143
SUBJECT: BOTTOM OF CAP - BASED ON FIELD DATA, ASSUME 50% COVER LOSS EVERYWHERE

SHEET
JMJ Jul-06
WDB 7/06

CONCRETE DESIGN - CAP

INPUT

Dead Load Moment	259.690	Ft. Kips	Working Stress Mom.		417.280	Ft. Kips
Live Load Moment	157.590	Ft. Kips	Load Factor Mom.		679.725	Ft. Kips
Bar Clearance	3.625	In.	Z For Steel Dist.		170	
Cover	3.000	In.	f'c	=	4.400	Ksi
Width of Member (b)	45.00	In.	fy	=	40.000	Ksi
Depth of Member (h)	42.00	In.				

AREA OF STEEL

Bar Size	11		d_C =	4.330	In.
No. Bars	8		d_C' =	2.705	In.
A_S	12.49	Sq. In.	d =	37.670	In.

RESULTS

A	=	2.00 x 5.20 x 2.705	=	28.11		
f_S Allow	=	170.00 / (28.11 x 2.705)^.33	=	40.13	Ksi	36.00 Max
a	=	(12.49 x 40.00) / 0.85 x 4.40 x 45.00	=	2.969	In.	
jd	=	37.670 - 2.97 / 2.00	=	36.19		
f_S Act	=	(417.28 x 12.00) / 12.49 x 36.19	=	11.08	Ksi	
θM_N	=	0.90 x 12.49 x 40.00 x 36.19 / 12	=	1356.05	Ft. Kips	

AASHTO 8.17.1 Min. Reinforcement ϕM_n > 1.2Mcr Mcr = fr Ig/yt

fr	=	$7.5\ (f'c)^{1/2}$			=	0.497 Ksi
Ig	=	$1/12 * b * h^3$ = 277830 $In.^4$	yt = h/2		=	21.00 In.
Mcr	=	0.497 x 277830 / 21.00 / 12			=	548.49 Ft. Kips

AASHTO 8.17.1 **ϕM_n = 1356.05 > 1.2 Mcr = 658.18 OK**

f_S Act = 11.08 < f_S Allow = 36.00 OK

ϕM_n = 1356.05 > Mu = 679.72 OK

LOCHNER

PROJECT: BONNER BRIDGE - OREGON INLET NORTH CAROLINA
SUBJECT: HIGH LEVEL BENT #143
SHEAR - BASED ON ACTUAL DIMENSIONS

SHEET
JMJ Jul-06
WDB 7/06

SHEAR DESIGN - CAP COMPLETE

V_{DL} = 146.55 KIPS V_{LL} = 63.80 KIPS F_V = 40000 PSI

d = 37.67 INCHES b = 45.00 INCHES f'c = 4400 PSI

V@ d DIST. FROM FACE OF SUPPORT Col. Width = D = 3.50 FT

ASSUME FACE OF SUPPORT D/4 = 0.875 FT. FROM CENTER OF COL.

$d_{DIST.}$ = 37.67 / 12.00 + 0.875 = 4.01 FT. W_{DL} CAP= 1.969 KIPS/FT

V_{DL} = $V_{DL} - W_{DL} * d_{DIST}$ = 138.65

V_U = $1.3(V_{DL} + (1.67*V_{LL}))$ = 318.75

$V_U < q\,V_N$ $V_N = V_C + V_S$

$V_U < qV_C + qV_S$

V_C = 2*(f'c)^1/2* b* d = 224.89 KIPS

$qV_S = V_U - qV_C$

$V_S = V_U/q - V_C$ = 150.11 KIPS

$V_S = A_V * F_V * d / S$

USE # 5 STIRRUPS A_S= 0.31 SQ. IN.
No. of Bars = 2

$A_V = 2 \times A_S$ = 2 * 0.307 = 0.61359232 SQ. IN.

$S = A_V * F_V * d / V_S$ = 6.2 INCHES

$S_{MIN} = A_V * F_V /50 * b$ = 16.36 INCHES

S_{ACT} = 5.00 INCHES **OK**

LOCHNER

PROJECT: BONNER BRIDGE - OREGON INLET NORTH CAROLINA
SUBJECT: HIGH LEVEL BENT #143 - TOP STRUT
SUBJECT: TOP OF STRUT - BASED ON PLAN DIMENSIONS

SHEET
JMJ Jul-06
WDB 7/06

CONCRETE DESIGN - STRUT

INPUT

Dead Load Moment	53.130	Ft. Kips	Working Stress Mom.		85.360	Ft. Kips
Live Load Moment	32.230	Ft. Kips	Load Factor Mom.		139.040	Ft. Kips
Avrg. Bar Clearance	5.625	In.	Z For Steel Dist.		170	
Cover	5.000	In.	f'c	=	3.000	Ksi
Width of Member (b)	36.000	In.	fy	=	40.000	Ksi
Depth of Member (h)	42.000	In.				

AREA OF STEEL

Bar Size	11		d_C =	6.330	In.
No. Bars	7		d_C' =	2.705	In.
A_S	10.93	Sq. In.	d =	35.670	In.

RESULTS

A	=	2.00 x 3.90 x 2.705	=	21.08		
f_S Allow	=	170.00 / (21.08 x 2.705)^.33	=	44.18	Ksi	36.00 Max
a	=	(10.93 x 40.00) / 0.85 x 3.00 x 36.00	=	4.763	In.	
jd	=	35.670 - 4.76 / 2.00	=	33.29		
f_S Act	=	(85.36 x 12.00) / 10.93 x 33.29	=	2.82	Ksi	
θM_N	=	0.90 x 10.93 x 40.00 x 33.29 / 12	=	1091.55	Ft. Kips	

AASHTO 8.17.1 Min. Reinforcement $\phi M_n >$ 1.2Mcr Mcr = fr Ig/yt

fr	=	$7.5 (f'c)^{1/2}$	=	0.411	Ksi	
Ig	=	$1/12 * b * h^3$ = 222264 $In.^4$	yt = h/2 =	21.00	In.	
Mcr	=	0.411 x 222264 / 21.00 / 12	=	362.32	Ft. Kips	

AASHTO 8.17.1 **ϕM_n = 1091.55 > 1.2 Mcr = 434.78 OK**

f_S Act = 2.82 < f_S Allow = 36.00 OK

ϕM_n = 1091.55 > Mu = 139.04 OK

LOCHNER

SHEET

PROJECT: BONNER BRIDGE - OREGON INLET NORTH CAROLINA — JMJ Jul-06

SUBJECT: HIGH LEVEL BENT #143 - TOP STRUT — WDB 7/06

SUBJECT: BOTTOM OF STRUT - BASED ON PLAN DIMENSIONS

CONCRETE DESIGN - STRUT

INPUT

Dead Load Moment	30.030	Ft. Kips	Working Stress Mom.		37.470	Ft. Kips
Live Load Moment	7.440	Ft. Kips	Load Factor Mom.		55.191	Ft. Kips
Bar Clearance	5.625	In.	Z For Steel Dist.		170	
Cover	5.000	In.	f'c	=	3.000	Ksi
Width of Member (b)	36.00	In.	fy	=	40.000	Ksi
Depth of Member (h)	42.00	In.				

AREA OF STEEL

Bar Size	11		d_C =	6.330	In.
No. Bars	7		d_C' =	2.705	In.
A_S	10.93	Sq. In.	d =	35.670	In.

RESULTS

A	=	2.00 x 3.90 x 2.705	=	21.08		
f_S Allow	=	170.00 / (21.08 x 2.705)^.33	=	44.18	Ksi	36.00 Max
a	=	(10.93 x 40.00) / 0.85 x 3.00 x 36.00	=	4.763	In.	
jd	=	35.670 - 4.76 / 2.00	=	33.29		
f_S Act	=	(37.47 x 12.00) / 10.93 x 33.29	=	1.24	Ksi	
θM_N	=	0.90 x 10.93 x 40.00 x 33.29 / 12	=	1091.55	Ft. Kips	

AASHTO 8.17.1 — Min. Reinforcement — ϕM_n > 1.2Mcr — Mcr = fr Ig/yt

fr	=	$7.5\ (f'c)^{1/2}$			=	0.411 Ksi
Ig	=	$1/12 * b * h^3$ = 222264 $In.^4$	yt = h/2		=	21.00 In.
Mcr	=	0.411 x 222264 / 21.00 / 12			=	362.32 Ft. Kips

AASHTO 8.17.1 — **ϕM_n = 1091.55 > 1.2 Mcr = 434.78 OK**

f_S Act = 1.24 < f_S Allow = 36.00 OK

ϕM_n = 1091.55 > Mu = 55.19 OK

LOCHNER

PROJECT:	BONNER BRIDGE - OREGON INLET NORTH CAROLINA	SHEET	
SUBJECT:	HIGH LEVEL BENT #143 - TOP STRUT	JMJ	Jul-06
	SHEAR - BASED ON PLAN DIMENSIONS	WDB	7/06

SHEAR DESIGN - STRUT COMPLETE

V_{DL} = 16.19 KIPS V_{LL} = 2.62 KIPS F_V = 40000 PSI

d = 35.67 INCHES b = 36.00 INCHES f'c = 3000 PSI

V@ d DIST. FROM FACE OF SUPPORT Col. Width = D = 3.50 FT

ASSUME FACE OF SUPPORT D/4 = 0.875 FT. FROM CENTER OF COL.

$d_{DIST.}$ = 35.67 / 12.00 + 0.875 = 3.85 FT. W_{DL} CAP= 1.575 KIPS/FT

V_{DL} = V_{DL} - W_{DL} * d_{DIST} = 10.13

V_U = 1.3(V_{DL} +(1.67*V_{LL})) = 18.86

$V_U < q\ V_N$ $V_N = V_C + V_S$

$V_U < qV_C + qV_S$

V_C = 2*(f'c)^1/2* b* d = 140.67 KIPS

$qV_S = V_U - qV_C$

$V_S = V_U/q - V_C$ = -118.48 KIPS

$V_S = A_V * F_V * d / S$

USE # 5 STIRRUPS A_S= 0.31 SQ. IN.
No. of Bars = 2

$A_V = 2 \times A_S$ = 2 * 0.307 = 0.61359232 SQ. IN.

$S = A_V * F_V * d / V_S$ = -7.4 INCHES

$S_{MIN} = A_V * F_V /50 * b$ = 20.45 INCHES

S_{ACT} = 14.00 INCHES **OK**

LOCHNER

PROJECT: BONNER BRIDGE - OREGON INLET NORTH CAROLINA
SUBJECT: HIGH LEVEL BENT #143 - TOP STRUT
SUBJECT: TOP OF STRUT - BASED ON FIELD DATA, ASSUME 50% COVER LOSS EVERYWHERE

SHEET
JMJ Jul-06
WDB 7/06

CONCRETE DESIGN - STRUT

INPUT

Dead Load Moment	53.130	Ft. Kips	Working Stress Mom.		85.360	Ft. Kips
Live Load Moment	32.230	Ft. Kips	Load Factor Mom.		139.040	Ft. Kips
Avrg. Bar Clearance	5.625	In.	Z For Steel Dist.		170	
Cover	5.000	In.	f'c	=	4.400	Ksi
Width of Member (b)	31.000	In.	fy	=	40.000	Ksi
Depth of Member (h)	42.000	In.				

AREA OF STEEL

Bar Size	11		d_C =	6.330	In.
No. Bars	7		d_C' =	2.705	In.
A_S	10.93	Sq. In.	d =	35.670	In.

RESULTS

A	=	2.00 x 3.06 x 2.705	=	16.57		
f_S Allow	=	170.00 / (16.57 x 2.705)^.33	=	47.87	Ksi	36.00 Max
a	=	(10.93 x 40.00) / 0.85 x 4.40 x 31.00	=	3.771	In.	
jd	=	35.670 - 3.77 / 2.00	=	33.78		
f_S Act	=	(85.36 x 12.00) / 10.93 x 33.78	=	2.77	Ksi	
θM_N	=	0.90 x 10.93 x 40.00 x 33.78 / 12	=	1107.81	Ft. Kips	

AASHTO 8.17.1 Min. Reinforcement $\phi M_n >$ 1.2Mcr Mcr = fr Ig/yt

fr	=	$7.5\ (f'c)^{1/2}$	=	0.497	Ksi	
Ig	=	$1/12 * b * h^3$ = 191394 $In.^4$	yt = h/2 =	21.00	In.	
Mcr	=	0.497 x 191394 / 21.00 / 12	=	377.85	Ft. Kips	

AASHTO 8.17.1 **ϕM_n = 1107.81 > 1.2 Mcr = 453.42 OK**

f_S Act = 2.77 < f_S Allow = 36.00 OK

ϕM_n = 1107.81 > Mu = 139.04 OK

LOCHNER

SHEET

PROJECT: BONNER BRIDGE - OREGON INLET NORTH CAROLINA — JMJ Jul-06

SUBJECT: HIGH LEVEL BENT #143 - TOP STRUT — WDB 7/06

SUBJECT: BOTTOM OF STRUT - BASED ON FIELD DATA, ASSUME 50% COVER LOSS EVERYWHERE

CONCRETE DESIGN - STRUT

INPUT

Dead Load Moment	30.030	Ft. Kips	Working Stress Mom.		37.470	Ft. Kips
Live Load Moment	7.440	Ft. Kips	Load Factor Mom.		55.191	Ft. Kips
Bar Clearance	3.125	In.	Z For Steel Dist.		170	
Cover	2.500	In.	f'c	=	4.400	Ksi
Width of Member (b)	31.00	In.	fy	=	40.000	Ksi
Depth of Member (h)	42.00	In.				

AREA OF STEEL

Bar Size	11		d_C =	3.830	In.
No. Bars	7		d_C' =	2.705	In.
A_S	10.93	Sq. In.	d =	38.170	In.

RESULTS

A	=	2.00 x 3.90 x 2.705	=	21.08		
f_S Allow	=	170.00 / (21.08 x 2.705)^.33	=	44.18	Ksi	36.00 Max
a	=	(10.93 x 40.00) / 0.85 x 4.40 x 31.00	=	3.771	In.	
jd	=	38.170 - 3.77 / 2.00	=	36.28		
f_S Act	=	(37.47 x 12.00) / 10.93 x 36.28	=	1.13	Ksi	
θM_N	=	0.90 x 10.93 x 40.00 x 36.28 / 12	=	1189.79	Ft. Kips	

AASHTO 8.17.1 — Min. Reinforcement — $\phi M_n >$ 1.2Mcr — Mcr = fr Ig/yt

fr	=	$7.5\ (f'c)^{1/2}$			=	0.497 Ksi
Ig	=	1/12 * b * h^3 = 191394 $In.^4$	yt = h/2		=	21.00 In.
Mcr	=	0.497 x 191394 / 21.00 / 12			=	377.85 Ft. Kips

AASHTO 8.17.1 — **ϕM_n = 1189.79 > 1.2 Mcr = 453.42 OK**

f_S Act = 1.13 < f_S Allow = 36.00 OK

ϕM_n = 1189.79 > Mu = 55.19 OK

LOCHNER

PROJECT:	BONNER BRIDGE - OREGON INLET NORTH CAROLINA	SHEET JMJ	Jul-06
SUBJECT:	HIGH LEVEL BENT #143 - TOP STRUT	WDB	7/06
	SHEAR - BASED ON FIELD DATA, ASSUME 50% COVER LOSS EVERYWHERE		

SHEAR DESIGN - STRUT COMPLETE

V_{DL} = 16.19 KIPS V_{LL} = 2.62 KIPS F_V = 40000 PSI

d = 38.17 INCHES b = 31.00 INCHES f'c = 4400 PSI

V@ d DIST. FROM FACE OF SUPPORT Col. Width = D = 3.50 FT

ASSUME FACE OF SUPPORT D/4 = 0.875 FT. FROM CENTER OF COL.

$d_{DIST.}$ = 38.17 / 12.00 + 0.875 = 4.06 FT. W_{DL} CAP= 1.356 KIPS/FT

V_{DL} = $V_{DL} - W_{DL} * d_{DIST}$ = 10.69

V_U = $1.3(V_{DL} + (1.67*V_{LL}))$ = 19.58

$V_U < q\ V_N$ $V_N = V_C + V_S$

$V_U < qV_C + qV_S$

V_C = 2*(f'c)^1/2* b* d = 156.98 KIPS

$qV_S = V_U - qV_C$

$V_S = V_U/q - V_C$ = -133.94 KIPS

$V_S = A_V * F_V * d / S$

USE # 5 STIRRUPS A_S= 0.31 SQ. IN.

No. of Bars = 2

$A_V = 2 \times A_S$ = 2 * 0.307 = 0.61359232 SQ. IN.

$S = A_V * F_V * d / V_S$ = -7.0 INCHES

$S_{MIN} = A_V * F_V / 50 * b$ = 23.75 INCHES

S_{ACT} = 14.00 INCHES **OK**

LOCHNER

PROJECT: BONNER BRIDGE - OREGON INLET NORTH CAROLINA
SUBJECT: HIGH LEVEL BENT #143 - BOTTOM STRUT
SUBJECT: TOP OF STRUT - BASED ON PLAN DIMENSIONS

SHEET
JMJ Jun-06
WDB 7/06

CONCRETE DESIGN - STRUT

INPUT

Dead Load Moment	61.800	Ft. Kips	Working Stress Mom.		88.000	Ft. Kips
Live Load Moment	26.200	Ft. Kips	Load Factor Mom.		137.220	Ft. Kips
Avrg. Bar Clearance	5.625	In.	Z For Steel Dist.		170	
Cover	5.000	In.	f'c	=	3.000	Ksi
Width of Member (b)	36.000	In.	fy	=	40.000	Ksi
Depth of Member (h)	42.000	In.				

AREA OF STEEL

Bar Size	11		d_C =	6.330	In.
No. Bars	7		d_C' =	2.705	In.
A_S	10.93	Sq. In.	d =	35.670	In.

RESULTS

A	=	2.00 x 3.90 x 2.705	=	21.08		
f_S Allow	=	170.00 / (21.08 x 2.705)^.33	=	44.18	Ksi	36.00 Max
a	=	(10.93 x 40.00) / 0.85 x 3.00 x 36.00	=	4.763	In.	
jd	=	35.670 - 4.76 / 2.00	=	33.29		
f_S Act	=	(88.00 x 12.00) / 10.93 x 33.29	=	2.90	Ksi	
θM_N	=	0.90 x 10.93 x 40.00 x 33.29 / 12	=	1091.55	Ft. Kips	

AASHTO 8.17.1 Min. Reinforcement $\phi M_n >$ 1.2Mcr Mcr = fr Ig/yt

fr	=	$7.5 (f'c)^{1/2}$	=	0.411	Ksi	
Ig	=	$1/12 * b * h^3$ = 222264 $In.^4$	yt = h/2	=	21.00	In.
Mcr	=	0.411 x 222264 / 21.00 / 12		=	362.32	Ft. Kips

AASHTO 8.17.1 **ϕM_n = 1091.55 > 1.2 Mcr = 434.78 OK**

f_S Act = 2.90 < f_S Allow = 36.00 OK

ϕM_n = 1091.55 > Mu = 137.22 OK

LOCHNER

PROJECT: BONNER BRIDGE - OREGON INLET NORTH CAROLINA
SUBJECT: HIGH LEVEL BENT #143 - BOTTOM STRUT
SUBJECT: BOTTOM OF STRUT - BASED ON PLAN DIMENSIONS

SHEET
JMJ Jun-06
WDB 7/06

CONCRETE DESIGN - STRUT

INPUT

Dead Load Moment	40.890	Ft. Kips	Working Stress Mom.		42.260	Ft. Kips
Live Load Moment	1.370	Ft. Kips	Load Factor Mom.		56.131	Ft. Kips
Bar Clearance	5.625	In.	Z For Steel Dist.		170	
Cover	5.000	In.	f'c	=	3.000	Ksi
Width of Member (b)	36.00	In.	fy	=	40.000	Ksi
Depth of Member (h)	42.00	In.				

AREA OF STEEL

Bar Size	11		d_C =	6.330	In.
No. Bars	7		d_C' =	2.705	In.
A_S	10.93	Sq. In.	d =	35.670	In.

RESULTS

A	=	2.00 x 3.90 x 2.705	=	21.08		
f_S Allow	=	170.00 / (21.08 x 2.705)^.33	=	44.18	Ksi	36.00 Max
a	=	(10.93 x 40.00) / 0.85 x 3.00 x 36.00	=	4.763	In.	
jd	=	35.670 - 4.76 / 2.00	=	33.29		
f_S Act	=	(42.26 x 12.00) / 10.93 x 33.29	=	1.39	Ksi	
θM_N	=	0.90 x 10.93 x 40.00 x 33.29 / 12	=	1091.55	Ft. Kips	

AASHTO 8.17.1 Min. Reinforcement ϕM_n > 1.2Mcr Mcr = fr Ig/yt

fr	=	$7.5\ (f'c)^{1/2}$			=	0.411 Ksi
Ig	=	$1/12 * b * h^3$ = 222264 $In.^4$	yt = h/2		=	21.00 In.
Mcr	=	0.411 x 222264 / 21.00 / 12			=	362.32 Ft. Kips

AASHTO 8.17.1 **ϕM_n = 1091.55 > 1.2 Mcr = 434.78 OK**

f_S Act = 1.39 < f_S Allow = 36.00 OK

ϕM_n = 1091.55 > Mu = 56.13 OK

LOCHNER

PROJECT:	BONNER BRIDGE - OREGON INLET NORTH CAROLINA	SHEET	
SUBJECT:	HIGH LEVEL BENT #143 - BOTTOM STRUT	JMJ	Jun-06
	SHEAR - BASED ON PLAN DIMENSIONS	WDB	7/06

SHEAR DESIGN - STRUT COMPLETE

V_{DL} = 17.99 KIPS V_{LL} = 2.21 KIPS F_V = 40000 PSI

d = 35.67 INCHES b = 36.00 INCHES f'c = 3000 PSI

V@ d DIST. FROM FACE OF SUPPORT Col. Width = D = 3.50 FT

ASSUME FACE OF SUPPORT D/4 = 0.875 FT. FROM CENTER OF COL.

$d_{DIST.}$ = 35.67 / 12.00 + 0.875 = 3.85 FT. W_{DL} CAP= 1.575 KIPS/FT

V_{DL} = $V_{DL} - W_{DL} * d_{DIST}$ = 11.93

V_U = $1.3(V_{DL} + (1.67*V_{LL}))$ = 20.31

$V_U < q\ V_N$ $V_N = V_C + V_S$

$V_U < qV_C + qV_S$

V_C = 2*(f'c)^1/2* b* d = 140.67 KIPS

$qV_S = V_U - qV_C$

$V_S = V_U/q - V_C$ = -116.78 KIPS

$V_S = A_V * F_V * d / S$

USE # 5 STIRRUPS A_S= 0.31 SQ. IN.

No. of Bars = 2

$A_V = 2 \times A_S$ = 2 * 0.307 = 0.61359232 SQ. IN.

$S = A_V * F_V * d / V_S$ = -7.5 INCHES

$S_{MIN} = A_V * F_V / 50 * b$ = 20.45 INCHES

S_{ACT} = 14.00 INCHES **OK**

LOCHNER

PROJECT: BONNER BRIDGE - OREGON INLET NORTH CAROLINA
SUBJECT: HIGH LEVEL BENT #143 - BOTTOM STRUT
SUBJECT: TOP OF STRUT - BASED ON FIELD DATA, ASSUME 50% COVER LOSS EVERYWHERE

SHEET
JMJ Jun-06
WDB 7/06

CONCRETE DESIGN - STRUT

INPUT

Dead Load Moment	61.800	Ft. Kips	Working Stress Mom.		88.000	Ft. Kips
Live Load Moment	26.200	Ft. Kips	Load Factor Mom.		137.220	Ft. Kips
Avrg. Bar Clearance	5.625	In.	Z For Steel Dist.		170	
Cover	5.000	In.	f'c	=	4.400	Ksi
Width of Member (b)	31.000	In.	fy	=	40.000	Ksi
Depth of Member (h)	42.000	In.				

AREA OF STEEL

Bar Size	11		d_C =	6.330	In.
No. Bars	7		d_C' =	2.705	In.
A_S	10.93	Sq. In.	d =	35.670	In.

RESULTS

A	=	2.00 x 3.06 x 2.705	=	16.57		
f_S Allow	=	170.00 / (16.57 x 2.705)^.33	=	47.87	Ksi	36.00 Max
a	=	(10.93 x 40.00) / 0.85 x 4.40 x 31.00	=	3.771	In.	
jd	=	35.670 - 3.77 / 2.00	=	33.78		
f_S Act	=	(88.00 x 12.00) / 10.93 x 33.78	=	2.86	Ksi	
θM_N	=	0.90 x 10.93 x 40.00 x 33.78 / 12	=	1107.81	Ft. Kips	

AASHTO 8.17.1 Min. Reinforcement ϕM_n > 1.2Mcr Mcr = fr Ig/yt

fr	=	$7.5\ (f'c)^{1/2}$		=	0.497	Ksi
Ig	=	$1/12 * b * h^3$ = 191394 $In.^4$	yt = h/2	=	21.00	In.
Mcr	=	0.497 x 191394 / 21.00 / 12		=	377.85	Ft. Kips

AASHTO 8.17.1 **ϕM_n = 1107.81 > 1.2 Mcr = 453.42 OK**

f_S Act = 2.86 < f_S Allow = 36.00 OK

ϕM_n = 1107.81 > Mu = 137.22 OK

LOCHNER

PROJECT: BONNER BRIDGE - OREGON INLET NORTH CAROLINA
SUBJECT: HIGH LEVEL BENT #143 - BOTTOM STRUT
SUBJECT: BOTTOM OF STRUT - BASED ON FIELD DATA, ASSUME 50% COVER LOSS EVERYWHERE

SHEET
JMJ Jun-06
WDB 7/06

CONCRETE DESIGN - STRUT

INPUT

Dead Load Moment	40.890	Ft. Kips	Working Stress Mom.		42.260	Ft. Kips
Live Load Moment	1.370	Ft. Kips	Load Factor Mom.		56.131	Ft. Kips
Bar Clearance	3.125	In.	Z For Steel Dist.		170	
Cover	2.500	In.	f'c	=	4.400	Ksi
Width of Member (b)	31.00	In.	fy	=	40.000	Ksi
Depth of Member (h)	42.00	In.				

AREA OF STEEL

Bar Size	11		d_C =	3.830	In.
No. Bars	7		d_C' =	2.705	In.
A_S	10.93	Sq. In.	d =	38.170	In.

RESULTS

A	=	2.00 x 3.90 x 2.705	=	21.08		
f_S Allow	=	170.00 / (21.08 x 2.705)^.33	=	44.18	Ksi	36.00 Max
a	=	(10.93 x 40.00) / 0.85 x 4.40 x 31.00	=	3.771	In.	
jd	=	38.170 - 3.77 / 2.00	=	36.28		
f_S Act	=	(42.26 x 12.00) / 10.93 x 36.28	=	1.28	Ksi	
θM_N	=	0.90 x 10.93 x 40.00 x 36.28 / 12	=	1189.79	Ft. Kips	

AASHTO 8.17.1 Min. Reinforcement $\phi M_n >$ 1.2Mcr Mcr = fr Ig/yt

fr	=	$7.5\ (f'c)^{1/2}$		=	0.497	Ksi
Ig	=	$1/12 * b * h^3$ = 191394 $In.^4$	yt = h/2	=	21.00	In.
Mcr	=	0.497 x 191394 / 21.00 / 12		=	377.85	Ft. Kips

AASHTO 8.17.1 **ϕM_n = 1189.79 > 1.2 Mcr = 453.42 OK**

f_S Act = 1.28 < f_S Allow = 36.00 OK

ϕM_n = 1189.79 > Mu = 56.13 OK

LOCHNER

PROJECT: BONNER BRIDGE - OREGON INLET NORTH CAROLINA
SUBJECT: HIGH LEVEL BENT #143 - BOTTOM STRUT
SHEAR - BASED ON FIELD DATA, ASSUME 50% COVER LOSS EVERYWHERE

SHEET
JMJ Jun-06
WDB 7/06

SHEAR DESIGN - STRUT COMPLETE

V_{DL} = 17.99 KIPS V_{LL} = 2.21 KIPS F_V = 40000 PSI

d = 38.17 INCHES b = 31.00 INCHES f'c = 4400 PSI

V@ d DIST. FROM FACE OF SUPPORT Col. Width = D = 3.50 FT

ASSUME FACE OF SUPPORT D/4 = 0.875 FT. FROM CENTER OF COL.

$d_{DIST.}$ = 38.17 / 12.00 + 0.875 = 4.06 FT. W_{DL} CAP= 1.356 KIPS/FT

V_{DL} = V_{DL} - W_{DL} * d_{DIST} = 12.49

V_U = $1.3(V_{DL} + (1.67*V_{LL}))$ = 21.03

$V_U < q\ V_N$ $V_N = V_C + V_S$

$V_U < qV_C + qV_S$

V_C = 2*(f'c)^1/2* b* d = 156.98 KIPS

$qV_S = V_U - qV_C$

$V_S = V_U/q - V_C$ = -132.23 KIPS

$V_S = A_V * F_V * d / S$

USE # 5 STIRRUPS A_S= 0.31 SQ. IN.
No. of Bars = 2

$A_V = 2 \times A_S$ = 2 * 0.307 = 0.61359232 SQ. IN.

$S = A_V * F_V * d / V_S$ = -7.1 INCHES

$S_{MIN} = A_V * F_V / 50 * b$ = 23.75 INCHES

S_{ACT} = 14.00 INCHES **OK**

H. W. LOCHNER, INC.

PROJECT: BONNER BRIDGE - OREGON INLET NORTH CAROLINA JMJ Jul-06
SUBJECT: HIGH LEVEL BENT ANALYSIS WDB 7/06
HLB 143 MEM. 13 JT. FOOTING

FOOTING LOADS

PMIN

HLB 143 MEMBER 13 JOINT FOOTING

GROUP 1

	P	MY	MZ
DL	489.25	0.00	21.78
LL	43.08	0.00	-11.80
GROUP 1	0.00	0.00	0.00
SERVICE	532.33	0.00	9.98
STRENGTH	729.37	0.00	2.75

GROUP 2

	P	MY	MZ
DL	489.25	0.00	21.78
LL	0.00	0.00	0.00
GROUP 2	76.60	1728.48	-170.39
SERVICE	565.85	1728.48	-148.61
STRENGTH	735.60	2247.02	-193.19

GROUP 3

	P	MY	MZ
DL	489.25	0.00	21.78
LL	43.08	0.00	-11.80
GROUP 3	32.26	1040.35	-68.39
SERVICE	564.59	1040.35	-58.41
STRENGTH	733.97	1352.46	-75.93

GROUP 4

	P	MY	MZ
DL	489.25	0.00	21.78
LL	43.08	0.00	-11.80
GROUP 4	-47.46	0.00	1159.44
SERVICE	484.87	0.00	1169.42
STRENGTH	630.33	0.00	1520.25

GROUP 5

	P	MY	MZ
DL	489.25	0.00	21.78
LL	0.00	0.00	0.00
GROUP 5	29.14	1728.48	989.06
SERVICE	518.39	1728.48	1010.84
STRENGTH	647.98	2160.60	1263.55

GROUP 6

	P	MY	MZ
DL	489.25	0.00	21.78
LL	43.08	0.00	-11.80
GROUP 6	-15.20	1040.35	1091.05
SERVICE	517.13	1040.35	1101.03
STRENGTH	646.41	1300.44	1376.29

H. W. LOCHNER, INC.

PROJECT: BONNER BRIDGE - OREGON INLET NORTH CAROLINA JMJ Jul-06
SUBJECT: HIGH LEVEL BENT ANALYSIS
HLB 143 MEM. 14 JT. FOOTING WDB 7/06

FOOTING LOADS

PMAX

HLB 143 MEMBER 14 JOINT FOOTING

GROUP 1

	P	MY	MZ
DL	489.10	0.00	21.81
LL	95.77	0.00	12.44
GROUP 1	0.00	0.00	0.00
SERVICE	584.87	0.00	34.25
STRENGTH	843.33	0.00	55.31

GROUP 2

	P	MY	MZ
DL	489.10	0.00	21.81
LL	0.00	0.00	0.00
GROUP 2	-76.56	-1728.28	170.51
SERVICE	412.55	-1728.28	192.32
STRENGTH	536.31	-2246.76	250.02

GROUP 3

	P	MY	MZ
DL	489.10	0.00	21.81
LL	95.77	0.00	12.44
GROUP 3	-32.24	-1040.25	68.45
SERVICE	552.63	-1040.25	102.70
STRENGTH	718.42	-1352.33	133.51

GROUP 4

	P	MY	MZ
DL	489.10	0.00	21.81
LL	95.77	0.00	12.44
GROUP 4	-45.85	0.00	1159.89
SERVICE	539.02	0.00	1194.14
STRENGTH	700.73	0.00	1552.38

GROUP 5

	P	MY	MZ
DL	489.10	0.00	21.81
LL	0.00	0.00	0.00
GROUP 5	-122.41	-1728.28	1330.41
SERVICE	366.69	-1728.28	1352.22
STRENGTH	458.36	-2160.35	1690.28

GROUP 6

	P	MY	MZ
DL	489.10	0.00	21.81
LL	95.77	0.00	12.44
GROUP 6	-78.09	-1040.25	1228.34
SERVICE	506.78	-1040.25	1262.59
STRENGTH	633.48	-1300.31	1578.24

H. W. Lochner, Inc. PHONE: 859-224-4476
1040 Monarch St. Suite 300 Lexington, KY 40513
SHEET 1 OF 10
JOB NO. HLB#143
PROGRAM: RC-PIER® v4.1.0 LEAP Software Inc., Tampa, Florida
BY JMJ DATE Jun/17/2006
PHONE : TOLL-FREE 1-800-451-5327 TAMPA AREA: 813-985-9170
CKD. DATE

PROJECT: BONNER BRIDGE - OREGON INLET NORTH CAROLINA

PROJECT DATA
==========

Project : BONNER BRIDGE - OREGON INLET NORTH CAROLINA
User Job No.: HLB#143
State : North Carolina State Job No. :
Code : AASHTO STANDARD (17th Edition 2002)
Comments : Bonner Bridge HLB #143 - Load Groups 1-3 (For Ease of Checking) - Per Field Data from HLB #146

JMJ 7/06

WDB 7/06

H. W. Lochner, Inc. PHONE: 859-224-4476
1040 Monarch St. Suite 300 Lexington, KY 40513

PROGRAM: RC-PIER® v4.1.0 LEAP Software Inc., Tampa, Florida
PHONE : TOLL-FREE 1-800-451-5327 TAMPA AREA: 813-985-9170

PROJECT: BONNER BRIDGE - OREGON INLET NORTH CAROLINA

LOADS
=====

Load Cases: 3

Loadcase ID: (L+In)1 Name: Group 1 Loadings
Multiplier = 1.000

Cap loads:

Type	Dir	Arm ft	Mag1 kip,kip/ft, kft	x1/L	Mag2 kip,kip/ft, kft	x2/L
Force	Y	0.00	-729.37	0.00	----	----
Force	Y	0.00	-843.33	1.00	----	----
Moment	Z	----	2.75	0.00	----	----
Moment	Z	----	55.31	1.00	----	----

Loadcase ID: (L+Ip)1 Name: Group 2 Loadings
Multiplier = 1.000

Cap loads:

Type	Dir	Arm ft	Mag1 kip,kip/ft, kft	x1/L	Mag2 kip,kip/ft, kft	x2/L
Force	Y	0.00	-735.60	0.00	----	----
Force	Y	0.00	-536.31	1.00	----	----
Moment	X	----	-2246.76	1.00	----	----
Moment	X	----	2247.02	0.00	----	----
Moment	Z	----	-193.19	0.00	----	----
Moment	Z	----	250.02	1.00	----	----

Loadcase ID: W1 Name: Group 3 Loadings
Multiplier = 1.000

Cap loads:

Type	Dir	Arm ft	Mag1 kip,kip/ft, kft	x1/L	Mag2 kip,kip/ft, kft	x2/L
Force	Y	0.00	-733.97	0.00	----	----
Force	Y	0.00	-718.42	1.00	----	----
Moment	X	----	-1352.33	1.00	----	----
Moment	X	----	1352.46	0.00	----	----
Moment	Z	----	-75.93	0.00	----	----
Moment	Z	----	133.51	1.00	----	----

Selected load groups:

SERVICE GROUP I
SERVICE GROUP IB
SERVICE GROUP II

H. W. Lochner, Inc. PHONE: 859-224-4476
1040 Monarch St. Suite 300 Lexington, KY 40513

PROGRAM: RC-PIER® v4.1.0 LEAP Software Inc., Tampa, Florida
PHONE : TOLL-FREE 1-800-451-5327 TAMPA AREA: 813-985-9170

PROJECT: BONNER BRIDGE - OREGON INLET NORTH CAROLINA

COMBINED FOOTING DESIGN

Code: AASHTO STANDARD (17th Edition 2002) - Service Load Design
Units: US

Geometry:
=========

Name : 1
Shape : Rectangular, Type : Pile/Shaft Cap

Bf(X) = 35.00 ft, Hf(Z) = 16.00 ft, Thickness(Y) = 54.00 in

Footing concentric.
Columns located on the footing:
Column No. 1 at x = 0.00 ft, Rectangular 36.00 in x 81.38 in
Column No. 2 at x = 25.06 ft, Rectangular 36.00 in x 81.38 in

Ag = 560.00 ft^2, Ix = 432.00 ft^2, Iz = 2148.50 ft^2

Surcharge = 0.00 ksf

Piles: Circular Size: 22.00 in Capacity: 100.00 kips

Design Parameters:
==========

f'c = 4400.00 psi fy = 40000.00 psi
Ec = 4021.4 ksi Es = 29000.0 ksi
Crack control factor z = 130.00 kips/in
Concrete Type : Normal Weight.

Pile Reactions, Service (Without the reduction of overstress allowance):
==========

Pile	Loc(X) ft	X in	Z in	Column Loads col#	comb	Ovs	P, kips	Mxx, kft	Mzz, kft	Pile Reac. kips
1	-3.00	24.0	72.0	1	2	1.000	-735.58	2246.12	-200.23	111.88*
				2	2	1.000	-536.33	-2245.86	250.18	
				1	4	1.250	733.96	-1351.92	83.14	-63.38
				2	4	1.250	718.43	1351.79	-133.57	
2	1.00	72.0	72.0	1	2	1.000	-735.58	2246.12	-200.23	106.07*
				2	2	1.000	-536.33	-2245.86	250.18	
				1	4	1.250	733.96	-1351.92	83.14	-62.32
				2	4	1.250	718.43	1351.79	-133.57	
3	6.50	138.0	72.0	1	1	1.000	-729.37	0.00	-4.54	106.74*
				2	1	1.000	-843.33	0.00	55.31	
				1	4	1.250	733.96	-1351.92	83.14	-60.86
				2	4	1.250	718.43	1351.79	-133.57	
4	12.50	210.0	72.0	1	1	1.000	-729.37	0.00	-4.54	108.96*
				2	1	1.000	-843.33	0.00	55.31	
				1	4	1.250	733.96	-1351.92	83.14	-59.27
				2	4	1.250	718.43	1351.79	-133.57	
5	18.50	282.0	72.0	1	1	1.000	-729.37	0.00	-4.54	111.17*
				2	1	1.000	-843.33	0.00	55.31	
				1	4	1.250	733.96	-1351.92	83.14	-57.68
				2	4	1.250	718.43	1351.79	-133.57	
6	28.00	396.0	72.0	1	1	1.000	-729.37	0.00	-4.54	114.68*
				2	1	1.000	-843.33	0.00	55.31	
				1	4	1.250	733.96	-1351.92	83.14	-55.16

H. W. Lochner, Inc. PHONE: 859-224-4476
1040 Monarch St. Suite 300 Lexington, KY 40513
PROGRAM: RC-PIER® v4.1.0 LEAP Software Inc., Tampa, Florida
PHONE : TOLL-FREE 1-800-451-5327 TAMPA AREA: 813-985-9170

SHEET 4 OF 10
JOB NO. HLB#143
BY JMJ DATE Jun/17/2006
CKD. DATE

PROJECT: BONNER BRIDGE - OREGON INLET NORTH CAROLINA

				2	4	1.250	718.43	1351.79	-133.57	
7	-3.00	24.0	0.0	1	2	1.000	-735.58	2246.12	-200.23	114.66*
				2	2	1.000	-536.33	-2245.86	250.18	
				1	4	1.250	733.96	-1351.92	83.14	-63.88
				2	4	1.250	718.43	1351.79	-133.57	
8	1.00	72.0	0.0	1	2	1.000	-735.58	2246.12	-200.23	108.85*
				2	2	1.000	-536.33	-2245.86	250.18	
				1	4	1.250	733.96	-1351.92	83.14	-62.82
				2	4	1.250	718.43	1351.79	-133.57	
9	12.50	210.0	0.0	1	1	1.000	-729.37	0.00	-4.54	108.25*
				2	1	1.000	-843.33	0.00	55.31	
				1	4	1.250	733.96	-1351.92	83.14	-59.78
				2	4	1.250	718.43	1351.79	-133.57	
10	18.50	282.0	0.0	1	1	1.000	-729.37	0.00	-4.54	110.46*
				2	1	1.000	-843.33	0.00	55.31	
				1	4	1.250	733.96	-1351.92	83.14	-58.19
				2	4	1.250	718.43	1351.79	-133.57	
11	24.00	348.0	0.0	1	1	1.000	-729.37	0.00	-4.54	112.49*
				2	1	1.000	-843.33	0.00	55.31	
				1	4	1.250	733.96	-1351.92	83.14	-56.73
				2	4	1.250	718.43	1351.79	-133.57	
12	28.00	396.0	0.0	1	1	1.000	-729.37	0.00	-4.54	113.97*
				2	1	1.000	-843.33	0.00	55.31	
				1	4	1.250	733.96	-1351.92	83.14	-55.67
				2	4	1.250	718.43	1351.79	-133.57	
13	-3.00	24.0	-72.0	1	2	1.000	-735.58	2246.12	-200.23	117.44*
				2	2	1.000	-536.33	-2245.86	250.18	
				1	4	1.250	733.96	-1351.92	83.14	-64.39
				2	4	1.250	718.43	1351.79	-133.57	
14	6.50	138.0	-72.0	1	1	1.000	-729.37	0.00	-4.54	105.33*
				2	1	1.000	-843.33	0.00	55.31	
				1	4	1.250	733.96	-1351.92	83.14	-61.87
				2	4	1.250	718.43	1351.79	-133.57	
15	12.50	210.0	-72.0	1	1	1.000	-729.37	0.00	-4.54	107.54*
				2	1	1.000	-843.33	0.00	55.31	
				1	4	1.250	733.96	-1351.92	83.14	-60.28
				2	4	1.250	718.43	1351.79	-133.57	
16	18.50	282.0	-72.0	1	1	1.000	-729.37	0.00	-4.54	109.76*
				2	1	1.000	-843.33	0.00	55.31	
				1	4	1.250	733.96	-1351.92	83.14	-58.69
				2	4	1.250	718.43	1351.79	-133.57	
17	24.00	348.0	-72.0	1	1	1.000	-729.37	0.00	-4.54	111.79*
				2	1	1.000	-843.33	0.00	55.31	
				1	4	1.250	733.96	-1351.92	83.14	-57.24
				2	4	1.250	718.43	1351.79	-133.57	
18	28.00	396.0	-72.0	1	1	1.000	-729.37	0.00	-4.54	113.26*
				2	1	1.000	-843.33	0.00	55.31	
				1	4	1.250	733.96	-1351.92	83.14	-56.18
				2	4	1.250	718.43	1351.79	-133.57	

Pile Reactions, Service (After the reduction of overstress allowance):

Pile	Loc(X) ft	X in	Z in	Column Loads col#	comb	Ovs	P, kips	Mxx, kft	Mzz, kft	Pile Reac. kips
1	-3.00	24.0	72.0	1	2	1.000	-735.58	2246.12	-200.23	111.88*
				2	2	1.000	-536.33	-2245.86	250.18	
				1	4	1.250	733.96	-1351.92	83.14	-50.70

H. W. Lochner, Inc. PHONE: 859-224-4476
1040 Monarch St. Suite 300 Lexington, KY 40513

PROGRAM: RC-PIER® v4.1.0 LEAP Software Inc., Tampa, Florida
BY JMJ DATE Jun/17/2006
PHONE : TOLL-FREE 1-800-451-5327 TAMPA AREA: 813-985-9170
CKD. DATE

PROJECT: BONNER BRIDGE - OREGON INLET NORTH CAROLINA

				2	4	1.250	718.43	1351.79	-133.57	
2	1.00	72.0	72.0	1	2	1.000	-735.58	2246.12	-200.23	106.07*
				2	2	1.000	-536.33	-2245.86	250.18	
				1	4	1.250	733.96	-1351.92	83.14	-49.85
				2	4	1.250	718.43	1351.79	-133.57	
3	6.50	138.0	72.0	1	1	1.000	-729.37	0.00	-4.54	106.74*
				2	1	1.000	-843.33	0.00	55.31	
				1	4	1.250	733.96	-1351.92	83.14	-48.69
				2	4	1.250	718.43	1351.79	-133.57	
4	12.50	210.0	72.0	1	1	1.000	-729.37	0.00	-4.54	108.96*
				2	1	1.000	-843.33	0.00	55.31	
				1	4	1.250	733.96	-1351.92	83.14	-47.42
				2	4	1.250	718.43	1351.79	-133.57	
5	18.50	282.0	72.0	1	1	1.000	-729.37	0.00	-4.54	111.17*
				2	1	1.000	-843.33	0.00	55.31	
				1	4	1.250	733.96	-1351.92	83.14	-46.15
				2	4	1.250	718.43	1351.79	-133.57	
6	28.00	396.0	72.0	1	1	1.000	-729.37	0.00	-4.54	114.68*
				2	1	1.000	-843.33	0.00	55.31	
				1	4	1.250	733.96	-1351.92	83.14	-44.13
				2	4	1.250	718.43	1351.79	-133.57	
7	-3.00	24.0	0.0	1	2	1.000	-735.58	2246.12	-200.23	114.66*
				2	2	1.000	-536.33	-2245.86	250.18	
				1	4	1.250	733.96	-1351.92	83.14	-51.11
				2	4	1.250	718.43	1351.79	-133.57	
8	1.00	72.0	0.0	1	2	1.000	-735.58	2246.12	-200.23	108.85*
				2	2	1.000	-536.33	-2245.86	250.18	
				1	4	1.250	733.96	-1351.92	83.14	-50.26
				2	4	1.250	718.43	1351.79	-133.57	
9	12.50	210.0	0.0	1	1	1.000	-729.37	0.00	-4.54	108.25*
				2	1	1.000	-843.33	0.00	55.31	
				1	4	1.250	733.96	-1351.92	83.14	-47.82
				2	4	1.250	718.43	1351.79	-133.57	
10	18.50	282.0	0.0	1	1	1.000	-729.37	0.00	-4.54	110.46*
				2	1	1.000	-843.33	0.00	55.31	
				1	4	1.250	733.96	-1351.92	83.14	-46.55
				2	4	1.250	718.43	1351.79	-133.57	
11	24.00	348.0	0.0	1	1	1.000	-729.37	0.00	-4.54	112.49*
				2	1	1.000	-843.33	0.00	55.31	
				1	4	1.250	733.96	-1351.92	83.14	-45.38
				2	4	1.250	718.43	1351.79	-133.57	
12	28.00	396.0	0.0	1	1	1.000	-729.37	0.00	-4.54	113.97*
				2	1	1.000	-843.33	0.00	55.31	
				1	4	1.250	733.96	-1351.92	83.14	-44.54
				2	4	1.250	718.43	1351.79	-133.57	
13	-3.00	24.0	-72.0	1	2	1.000	-735.58	2246.12	-200.23	117.44*
				2	2	1.000	-536.33	-2245.86	250.18	
				1	4	1.250	733.96	-1351.92	83.14	-51.51
				2	4	1.250	718.43	1351.79	-133.57	
14	6.50	138.0	-72.0	1	1	1.000	-729.37	0.00	-4.54	105.33*
				2	1	1.000	-843.33	0.00	55.31	
				1	4	1.250	733.96	-1351.92	83.14	-49.50
				2	4	1.250	718.43	1351.79	-133.57	
15	12.50	210.0	-72.0	1	1	1.000	-729.37	0.00	-4.54	107.54*
				2	1	1.000	-843.33	0.00	55.31	
				1	4	1.250	733.96	-1351.92	83.14	-48.23
				2	4	1.250	718.43	1351.79	-133.57	
16	18.50	282.0	-72.0	1	1	1.000	-729.37	0.00	-4.54	109.76*
				2	1	1.000	-843.33	0.00	55.31	
				1	4	1.250	733.96	-1351.92	83.14	-46.95
				2	4	1.250	718.43	1351.79	-133.57	

H. W. Lochner, Inc. PHONE: 859-224-4476
1040 Monarch St. Suite 300 Lexington, KY 40513
PROGRAM: RC-PIER® v4.1.0 LEAP Software Inc., Tampa, Florida
PHONE : TOLL-FREE 1-800-451-5327 TAMPA AREA: 813-985-9170

SHEET 6 OF 10
JOB NO. HLB#143
BY JMJ DATE Jun/17/2006
CKD. DATE

PROJECT: BONNER BRIDGE - OREGON INLET NORTH CAROLINA

17	24.00	348.0	-72.0	1	1	1.000	-729.37	0.00	-4.54	111.79*
				2	1	1.000	-843.33	0.00	55.31	
				1	4	1.250	733.96	-1351.92	83.14	-45.79
				2	4	1.250	718.43	1351.79	-133.57	
18	28.00	396.0	-72.0	1	1	1.000	-729.37	0.00	-4.54	113.26*
				2	1	1.000	-843.33	0.00	55.31	
				1	4	1.250	733.96	-1351.92	83.14	-44.94
				2	4	1.250	718.43	1351.79	-133.57	

Note:
* Force in pile is greater than pile capacity.

Only max. force in piles is considered for design.
Pile coordinates X and Z are from the most left edge of the footing.

Max. Pile Reaction Used in Design: (without selfweight and surcharge)
==========

Working Stress pile reaction = 95.38 kips

Reinforcement Schedule:
==========:

Dir	Quantity	Size	Bar dist. in	As total in^2	From ft	To ft	Hook
X	6	# 6	6.00	2.64	0.50	34.50	None
X	31	# 11	48.50	48.36	0.50	34.50	Both
X	31	# 6	22.00	13.64	0.50	34.50	Both
Z	30	# 5	49.52	9.30	----	----	Both
Z	61	# 11	20.92	95.16	----	----	Both
Z	12	# 11	7.08	18.72	----	----	None
Z	30	# 5	5.31	9.30	----	----	Both

Flexure:
========

X direction

Loc ft	Mmax Mmin kft	Comb Comb	Asb_req Asb_req in^2	Asb_prv Asb_prv in^2	Asb_eff Asb_eff in^2	Ast_req Ast_req in^2	Ast_prv Ast_prv in^2	Ast_eff Ast_eff in^2
-5.00	0.0	2	0.00	0.00	0.00	0.00	0.00	0.00
	0.0	2	0.00	0.00	0.00	0.00	0.00	0.00
-4.61	0.0	2	0.00	0.00	0.00	0.00	0.00	0.00
	0.0	2	0.00	0.00	0.00	0.00	0.00	0.00
-4.38	0.0	2	0.00	16.28	2.58	0.00	48.36	4.00
	0.0	2	0.00	16.28	2.53	0.00	48.36	4.00
-3.83	0.0	2	0.00	16.28	14.70	0.00	48.36	22.75
	0.0	2	0.00	16.28	14.40	0.00	48.36	22.75
-3.44	0.0	2	0.00	16.28	16.28	0.00	48.36	36.02
	0.0	2	0.00	16.28	16.28	0.00	48.36	36.02
-3.06	0.0	2	0.00	16.28	16.28	0.00	48.36	48.36
	0.0	2	0.00	16.28	16.28	0.00	48.36	48.36

H. W. Lochner, Inc. PHONE: 859-224-4476
1040 Monarch St. Suite 300 Lexington, KY 40513

PROGRAM: RC-PIER® v4.1.0 LEAP Software Inc., Tampa, Florida

PHONE : TOLL-FREE 1-800-451-5327 TAMPA AREA: 813-985-9170

PROJECT: BONNER BRIDGE - OREGON INLET NORTH CAROLINA

-2.67	95.4	2	2.25	16.28	16.28	0.00	48.36	48.36
	0.0	2	0.00	16.28	16.28	0.00	48.36	48.36
-2.28	206.7	2	4.93	16.28	16.28	0.00	48.36	48.36
	0.0	2	0.00	16.28	16.28	0.00	48.36	48.36
-1.89	317.9	2	7.64	16.28	16.28	0.00	48.36	48.36
	0.0	2	0.00	16.28	16.28	0.00	48.36	48.36
-1.50	429.2	2	10.38	16.28	16.28	0.00	48.36	48.36
	0.0	2	0.00	16.28	16.28	0.00	48.36	48.36
0.00	0.0	2	0.00	16.28	16.28	0.00	48.36	48.36
	0.0	2	0.00	16.28	16.28	0.00	48.36	48.36
1.50	126.4	2	2.99	16.28	16.28	0.00	48.36	48.36
	0.0	2	0.00	16.28	16.28	0.00	48.36	48.36
4.38	0.0	2	0.00	16.28	16.28	0.00	48.36	48.36
	-913.9	2	0.00	16.28	16.28	15.80	48.36	48.36
7.02	0.0	2	0.00	16.28	16.28	0.00	48.36	48.36
	-1765.5	2	0.00	16.28	16.28	31.09	48.36	48.36
9.77	0.0	2	0.00	16.28	16.28	0.00	48.36	48.36
	-2234.6	2	0.00	16.28	16.28	39.66	48.36	48.36
12.53	0.0	2	0.00	16.28	16.28	0.00	48.36	48.36
	-2694.6	2	0.00	16.28	16.28	48.16	48.36	48.36
15.29	0.0	2	0.00	16.28	16.28	0.00	48.36	48.36
	-2374.5	2	0.00	16.28	16.28	42.24	48.36	48.36
18.05	0.0	2	0.00	16.28	16.28	0.00	48.36	48.36
	-2054.5	2	0.00	16.28	16.28	36.36	48.36	48.36
20.68	0.0	2	0.00	16.28	16.28	0.00	48.36	48.36
	-1125.1	2	0.00	16.28	16.28	19.55	48.36	48.36
23.56	34.3	2	0.80	16.28	16.28	0.00	48.36	48.36
	0.0	2	0.00	16.28	16.28	0.00	48.36	48.36
25.06	0.0	2	0.00	16.28	16.28	0.00	48.36	48.36
	0.0	2	0.00	16.28	16.28	0.00	48.36	48.36
26.56	411.2	2	9.94	16.28	16.28	0.00	48.36	48.36
	0.0	2	0.00	16.28	16.28	0.00	48.36	48.36
26.94	301.9	2	7.25	16.28	16.28	0.00	48.36	48.36
	0.0	2	0.00	16.28	16.28	0.00	48.36	48.36
27.33	192.6	2	4.59	16.28	16.28	0.00	48.36	48.36
	0.0	2	0.00	16.28	16.28	0.00	48.36	48.36
27.71	83.4	2	1.96	16.28	16.28	0.00	48.36	48.36
	0.0	2	0.00	16.28	16.28	0.00	48.36	48.36
28.09	0.0	2	0.00	16.28	16.28	0.00	48.36	48.10
	0.0	2	0.00	16.28	16.28	0.00	48.36	48.10
28.47	0.0	2	0.00	16.28	16.28	0.00	48.36	35.07
	0.0	2	0.00	16.28	16.28	0.00	48.36	35.07
28.85	0.0	2	0.00	16.28	14.24	0.00	48.36	22.03
	0.0	2	0.00	16.28	13.94	0.00	48.36	22.03
29.24	0.0	2	0.00	16.28	5.82	0.00	48.36	9.00
	0.0	2	0.00	16.28	5.70	0.00	48.36	9.00
29.45	0.0	2	0.00	16.28	1.19	0.00	48.36	1.85
	0.0	2	0.00	16.28	1.17	0.00	48.36	1.85
30.00	0.0	2	0.00	0.00	0.00	0.00	0.00	0.00
	0.0	2	0.00	0.00	0.00	0.00	0.00	0.00

Z direction

Loc ft	Mmax kft	Comb	Asb_req in^2	Asb_prv in^2	Asb_eff in^2	Ast_req in^2	Ast_prv in^2	Ast_eff in^2
-3.39	1493.3	2	34.68	123.18	123.18	0.00	9.30	9.30
3.39	1493.3	2	34.68	123.18	123.18	0.00	9.30	9.30

H. W. Lochner, Inc. PHONE: 859-224-4476
1040 Monarch St. Suite 300 Lexington, KY 40513
PROGRAM: RC-PIER® v4.1.0 LEAP Software Inc., Tampa, Florida
PHONE : TOLL-FREE 1-800-451-5327 TAMPA AREA: 813-985-9170

SHEET 8 OF 10
JOB NO. HLB#143
BY JMJ DATE Jun/17/2006
CKD. DATE

PROJECT: BONNER BRIDGE - OREGON INLET NORTH CAROLINA

One Way Shear:
==========

Col	Dist ft	Comb	d in	V kips	Vc kips
X direction					
1	-4.38	2	34.87	0.0	421.9
	4.38	2	34.59	360.8	418.6
2	20.68	2	34.59	402.2	418.6
	29.45	2	34.87	0.0	421.9
Z direction					
	-6.42	2	36.36	137.9	962.4
	6.42	2	36.36	137.9	962.4

Two Way Shear:
==========

#	Bo ft	Ao ft^2	Comb	Avg. d in	V kips	Vc kips
Columns:						
1	31.41	58.09	2	35.55	837.7	1497.5
2	31.41	58.09	2	35.55	879.1	1497.5
Piles - max:						
8	15.07	18.06	2	35.55	0.0	767.3
Piles - min:						
1	5.88	14.72	2	35.55	0.0	299.6

Note:
TWO WAY SHEAR IN FOOTING IS NOT DESIGNED AND STIRRUPS ARE NOT CONSIDERED.

H. W. Lochner, Inc. PHONE: 859-224-4476
1040 Monarch St. Suite 300 Lexington, KY 40513
SHEET 1 OF 10
JOB NO. HLB#143
PROGRAM: RC-PIER® v4.1.0 LEAP Software Inc., Tampa, Florida
BY JMJ DATE Jun/17/2006
PHONE : TOLL-FREE 1-800-451-5327 TAMPA AREA: 813-985-9170
CKD. DATE

PROJECT: BONNER BRIDGE - OREGON INLET NORTH CAROLINA

PROJECT DATA
==========

Project : BONNER BRIDGE - OREGON INLET NORTH CAROLINA
User Job No.: HLB#143
State : North Carolina State Job No. :
Code : AASHTO STANDARD (17th Edition 2002)
Comments : Bonner Bridge HLB #143 - Load Groups 4-6 (For Ease of Checking) - Per Field Data from HLB #146

JMJ 7/06
WAB 7/06

H. W. Lochner, Inc. PHONE: 859-224-4476
1040 Monarch St. Suite 300 Lexington, KY 40513
SHEET 2 OF 10
JOB NO. HLB#143
PROGRAM: RC-PIER® v4.1.0 LEAP Software Inc., Tampa, Florida
BY JMJ DATE Jun/17/2006
PHONE : TOLL-FREE 1-800-451-5327 TAMPA AREA: 813-985-9170
CKD. DATE

PROJECT: BONNER BRIDGE - OREGON INLET NORTH CAROLINA

LOADS

Load Cases: 3

Loadcase ID: (L+In)1 Name: Group 4 Loadings
Multiplier = 1.000

Cap loads:

Type	Dir	Arm ft	Mag1 kip,kip/ft, kft	x1/L	Mag2 kip,kip/ft, kft	x2/L
Force	Y	0.00	-630.33	0.00	----	----
Force	Y	0.00	-700.73	1.00	----	----
Moment	Z	----	1520.25	0.00	----	----
Moment	Z	----	1552.38	1.00	----	----

Loadcase ID: (L+Ip)1 Name: Group 5 Loadings
Multiplier = 1.000

Cap loads:

Type	Dir	Arm ft	Mag1 kip,kip/ft, kft	x1/L	Mag2 kip,kip/ft, kft	x2/L
Force	Y	0.00	-647.98	0.00	----	----
Force	Y	0.00	-458.36	1.00	----	----
Moment	X	----	-2160.35	1.00	----	----
Moment	X	----	2160.60	0.00	----	----
Moment	Z	----	1263.55	0.00	----	----
Moment	Z	----	1690.28	1.00	----	----

Loadcase ID: W1 Name: Group 6 Loadings
Multiplier = 1.000

Cap loads:

Type	Dir	Arm ft	Mag1 kip,kip/ft, kft	x1/L	Mag2 kip,kip/ft, kft	x2/L
Force	Y	0.00	-646.41	0.00	----	----
Force	Y	0.00	-633.48	1.00	----	----
Moment	X	----	-1300.31	1.00	----	----
Moment	X	----	1300.44	0.00	----	----
Moment	Z	----	1376.29	0.00	----	----
Moment	Z	----	1578.24	1.00	----	----

Selected load groups:

SERVICE GROUP I
SERVICE GROUP IB
SERVICE GROUP II

H. W. Lochner, Inc. PHONE: 859-224-4476
1040 Monarch St. Suite 300 Lexington, KY 40513

PROGRAM: RC-PIER® v4.1.0 LEAP Software Inc., Tampa, Florida

PHONE : TOLL-FREE 1-800-451-5327 TAMPA AREA: 813-985-9170

PROJECT: BONNER BRIDGE - OREGON INLET NORTH CAROLINA

COMBINED FOOTING DESIGN

Code: AASHTO STANDARD (17th Edition 2002) - Service Load Design
Units: US

Geometry:
=========

Name : 1
Shape : Rectangular, Type : Pile/Shaft Cap

Bf(X) = 35.00 ft, Hf(Z) = 16.00 ft, Thickness(Y) = 54.00 in

Footing concentric.
Columns located on the footing:
Column No. 1 at x = 0.00 ft, Rectangular 36.00 in x 81.38 in
Column No. 2 at x = 25.06 ft, Rectangular 36.00 in x 81.38 in

Ag = 560.00 ft^2, Ix = 432.00 ft^2, Iz = 2148.50 ft^2

Surcharge = 0.00 ksf

Piles: Circular Size: 22.00 in Capacity: 100.00 kips

Design Parameters:
==========

f'c = 4400.00 psi fy = 40000.00 psi
Ec = 4021.4 ksi Es = 29000.0 ksi
Crack control factor z = 130.00 kips/in
Concrete Type : Normal Weight.

Pile Reactions, Service (Without the reduction of overstress allowance):
==========

Pile	Loc(X) ft	X in	Z in	Column Loads col#	comb	Ovs	P, kips	Mxx, kft	Mzz, kft	Pile Reac. kips
1	-3.00	24.0	72.0	1	2	1.000	-648.10	2159.74	1255.06	120.71*
				2	2	1.000	-458.24	-2159.49	1689.27	
				1	4	1.250	646.54	-1299.92	-1367.63	-72.40
				2	4	1.250	633.35	1299.79	-1577.14	
2	1.00	72.0	72.0	1	2	1.000	-648.10	2159.74	1255.06	109.72*
				2	2	1.000	-458.24	-2159.49	1689.27	
				1	4	1.250	646.54	-1299.92	-1367.63	-65.99
				2	4	1.250	633.35	1299.79	-1577.14	
3	6.50	138.0	72.0	1	1	1.000	-630.48	0.00	1511.52	100.64*
				2	1	1.000	-700.58	0.00	1551.17	
				1	4	1.250	646.54	-1299.92	-1367.63	-57.18
				2	4	1.250	633.35	1299.79	-1577.14	
4	12.50	210.0	72.0	1	1	1.000	-630.48	0.00	1511.52	92.91
				2	1	1.000	-700.58	0.00	1551.17	
				1	4	1.250	646.54	-1299.92	-1367.63	-47.57
				2	4	1.250	633.35	1299.79	-1577.14	
5	18.50	282.0	72.0	1	1	1.000	-630.48	0.00	1511.52	85.18
				2	1	1.000	-700.58	0.00	1551.17	
				1	4	1.250	646.54	-1299.92	-1367.63	-37.96
				2	4	1.250	633.35	1299.79	-1577.14	
6	28.00	396.0	72.0	1	1	1.000	-630.48	0.00	1511.52	72.93
				2	1	1.000	-700.58	0.00	1551.17	
				1	4	1.250	646.54	-1299.92	-1367.63	-22.75

H. W. Lochner, Inc. PHONE: 859-224-4476 | SHEET 4 OF 10
1040 Monarch St. Suite 300 Lexington, KY 40513 | JOB NO. HLB#143
PROGRAM: RC-PIER® v4.1.0 LEAP Software Inc., Tampa, Florida | BY JMJ DATE Jun/17/2006
PHONE : TOLL-FREE 1-800-451-5327 TAMPA AREA: 813-985-9170 | CKD. DATE

PROJECT: BONNER BRIDGE - OREGON INLET NORTH CAROLINA

				2	4	1.250	633.35	1299.79	-1577.14	
7	-3.00	24.0	0.0	1	2	1.000	-648.10	2159.74	1255.06	125.98*
				2	2	1.000	-458.24	-2159.49	1689.27	
				1	4	1.250	646.54	-1299.92	-1367.63	-75.46
				2	4	1.250	633.35	1299.79	-1577.14	
8	1.00	72.0	0.0	1	2	1.000	-648.10	2159.74	1255.06	114.98*
				2	2	1.000	-458.24	-2159.49	1689.27	
				1	4	1.250	646.54	-1299.92	-1367.63	-69.06
				2	4	1.250	633.35	1299.79	-1577.14	
9	12.50	210.0	0.0	1	1	1.000	-630.48	0.00	1511.52	95.38
				2	1	1.000	-700.58	0.00	1551.17	
				1	4	1.250	646.54	-1299.92	-1367.63	-50.64
				2	4	1.250	633.35	1299.79	-1577.14	
10	18.50	282.0	0.0	1	1	1.000	-630.48	0.00	1511.52	87.65
				2	1	1.000	-700.58	0.00	1551.17	
				1	4	1.250	646.54	-1299.92	-1367.63	-41.03
				2	4	1.250	633.35	1299.79	-1577.14	
11	24.00	348.0	0.0	1	1	1.000	-630.48	0.00	1511.52	80.56
				2	1	1.000	-700.58	0.00	1551.17	
				1	4	1.250	646.54	-1299.92	-1367.63	-32.22
				2	4	1.250	633.35	1299.79	-1577.14	
12	28.00	396.0	0.0	1	1	1.000	-630.48	0.00	1511.52	75.40
				2	1	1.000	-700.58	0.00	1551.17	
				1	4	1.250	646.54	-1299.92	-1367.63	-25.81
				2	4	1.250	633.35	1299.79	-1577.14	
13	-3.00	24.0	-72.0	1	2	1.000	-648.10	2159.74	1255.06	131.24*
				2	2	1.000	-458.24	-2159.49	1689.27	
				1	4	1.250	646.54	-1299.92	-1367.63	-78.53
				2	4	1.250	633.35	1299.79	-1577.14	
14	6.50	138.0	-72.0	1	3	1.250	-646.54	1299.92	1367.63	106.30*
				2	3	1.250	-633.35	-1299.79	1577.14	
				1	4	1.250	646.54	-1299.92	-1367.63	-63.32
				2	4	1.250	633.35	1299.79	-1577.14	
15	12.50	210.0	-72.0	1	1	1.000	-630.48	0.00	1511.52	97.85
				2	1	1.000	-700.58	0.00	1551.17	
				1	4	1.250	646.54	-1299.92	-1367.63	-53.71
				2	4	1.250	633.35	1299.79	-1577.14	
16	18.50	282.0	-72.0	1	1	1.000	-630.48	0.00	1511.52	90.12
				2	1	1.000	-700.58	0.00	1551.17	
				1	4	1.250	646.54	-1299.92	-1367.63	-44.10
				2	4	1.250	633.35	1299.79	-1577.14	
17	24.00	348.0	-72.0	1	1	1.000	-630.48	0.00	1511.52	83.03
				2	1	1.000	-700.58	0.00	1551.17	
				1	4	1.250	646.54	-1299.92	-1367.63	-35.29
				2	4	1.250	633.35	1299.79	-1577.14	
18	28.00	396.0	-72.0	1	1	1.000	-630.48	0.00	1511.52	77.87
				2	1	1.000	-700.58	0.00	1551.17	
				1	4	1.250	646.54	-1299.92	-1367.63	-28.88
				2	4	1.250	633.35	1299.79	-1577.14	

Pile Reactions, Service (After the reduction of overstress allowance):

Pile	Loc(X) ft	X in	Z in	Column Loads col#	comb	Ovs	P, kips	Mxx, kft	Mzz, kft	Pile Reac. kips
1	-3.00	24.0	72.0	1	2	1.000	-648.10	2159.74	1255.06	120.71*
				2	2	1.000	-458.24	-2159.49	1689.27	
				1	4	1.250	646.54	-1299.92	-1367.63	-57.92

H. W. Lochner, Inc. PHONE: 859-224-4476
1040 Monarch St. Suite 300 Lexington, KY 40513

JOB NO. HLB#143
PROGRAM: RC-PIER® v4.1.0 LEAP Software Inc., Tampa, Florida
BY JMJ DATE Jun/17/2006
PHONE : TOLL-FREE 1-800-451-5327 TAMPA AREA: 813-985-9170
CKD. DATE

PROJECT: BONNER BRIDGE - OREGON INLET NORTH CAROLINA

				2	4	1.250	633.35	1299.79	-1577.14	
2	1.00	72.0	72.0	1	2	1.000	-648.10	2159.74	1255.06	109.72*
				2	2	1.000	-458.24	-2159.49	1689.27	
				1	4	1.250	646.54	-1299.92	-1367.63	-52.79
				2	4	1.250	633.35	1299.79	-1577.14	
3	6.50	138.0	72.0	1	1	1.000	-630.48	0.00	1511.52	100.64*
				2	1	1.000	-700.58	0.00	1551.17	
				1	4	1.250	646.54	-1299.92	-1367.63	-45.74
				2	4	1.250	633.35	1299.79	-1577.14	
4	12.50	210.0	72.0	1	1	1.000	-630.48	0.00	1511.52	92.91
				2	1	1.000	-700.58	0.00	1551.17	
				1	4	1.250	646.54	-1299.92	-1367.63	-38.06
				2	4	1.250	633.35	1299.79	-1577.14	
5	18.50	282.0	72.0	1	1	1.000	-630.48	0.00	1511.52	85.18
				2	1	1.000	-700.58	0.00	1551.17	
				1	4	1.250	646.54	-1299.92	-1367.63	-30.37
				2	4	1.250	633.35	1299.79	-1577.14	
6	28.00	396.0	72.0	1	1	1.000	-630.48	0.00	1511.52	72.93
				2	1	1.000	-700.58	0.00	1551.17	
				1	4	1.250	646.54	-1299.92	-1367.63	-18.20
				2	4	1.250	633.35	1299.79	-1577.14	
7	-3.00	24.0	0.0	1	2	1.000	-648.10	2159.74	1255.06	125.98*
				2	2	1.000	-458.24	-2159.49	1689.27	
				1	4	1.250	646.54	-1299.92	-1367.63	-60.37
				2	4	1.250	633.35	1299.79	-1577.14	
8	1.00	72.0	0.0	1	2	1.000	-648.10	2159.74	1255.06	114.98*
				2	2	1.000	-458.24	-2159.49	1689.27	
				1	4	1.250	646.54	-1299.92	-1367.63	-55.25
				2	4	1.250	633.35	1299.79	-1577.14	
9	12.50	210.0	0.0	1	1	1.000	-630.48	0.00	1511.52	95.38
				2	1	1.000	-700.58	0.00	1551.17	
				1	4	1.250	646.54	-1299.92	-1367.63	-40.51
				2	4	1.250	633.35	1299.79	-1577.14	
10	18.50	282.0	0.0	1	1	1.000	-630.48	0.00	1511.52	87.65
				2	1	1.000	-700.58	0.00	1551.17	
				1	4	1.250	646.54	-1299.92	-1367.63	-32.82
				2	4	1.250	633.35	1299.79	-1577.14	
11	24.00	348.0	0.0	1	1	1.000	-630.48	0.00	1511.52	80.56
				2	1	1.000	-700.58	0.00	1551.17	
				1	4	1.250	646.54	-1299.92	-1367.63	-25.78
				2	4	1.250	633.35	1299.79	-1577.14	
12	28.00	396.0	0.0	1	1	1.000	-630.48	0.00	1511.52	75.40
				2	1	1.000	-700.58	0.00	1551.17	
				1	4	1.250	646.54	-1299.92	-1367.63	-20.65
				2	4	1.250	633.35	1299.79	-1577.14	
13	-3.00	24.0	-72.0	1	2	1.000	-648.10	2159.74	1255.06	131.24*
				2	2	1.000	-458.24	-2159.49	1689.27	
				1	4	1.250	646.54	-1299.92	-1367.63	-62.82
				2	4	1.250	633.35	1299.79	-1577.14	
14	6.50	138.0	-72.0	1	1	1.000	-630.48	0.00	1511.52	105.58*
				2	1	1.000	-700.58	0.00	1551.17	
				1	4	1.250	646.54	-1299.92	-1367.63	-50.65
				2	4	1.250	633.35	1299.79	-1577.14	
15	12.50	210.0	-72.0	1	1	1.000	-630.48	0.00	1511.52	97.85
				2	1	1.000	-700.58	0.00	1551.17	
				1	4	1.250	646.54	-1299.92	-1367.63	-42.97
				2	4	1.250	633.35	1299.79	-1577.14	
16	18.50	282.0	-72.0	1	1	1.000	-630.48	0.00	1511.52	90.12
				2	1	1.000	-700.58	0.00	1551.17	
				1	4	1.250	646.54	-1299.92	-1367.63	-35.28
				2	4	1.250	633.35	1299.79	-1577.14	

H. W. Lochner, Inc. PHONE: 859-224-4476
1040 Monarch St. Suite 300 Lexington, KY 40513

PROGRAM: RC-PIER® v4.1.0 LEAP Software Inc., Tampa, Florida
PHONE : TOLL-FREE 1-800-451-5327 TAMPA AREA: 813-985-9170

PROJECT: BONNER BRIDGE - OREGON INLET NORTH CAROLINA

17	24.00	348.0	-72.0	1	1	1.000	-630.48	0.00	1511.52	83.03
				2	1	1.000	-700.58	0.00	1551.17	
				1	4	1.250	646.54	-1299.92	-1367.63	-28.23
				2	4	1.250	633.35	1299.79	-1577.14	
18	28.00	396.0	-72.0	1	1	1.000	-630.48	0.00	1511.52	77.87
				2	1	1.000	-700.58	0.00	1551.17	
				1	4	1.250	646.54	-1299.92	-1367.63	-23.11
				2	4	1.250	633.35	1299.79	-1577.14	

Note:
* Force in pile is greater than pile capacity.

Only max. force in piles is considered for design.
Pile coordinates X and Z are from the most left edge of the footing.

Max. Pile Reaction Used in Design: (without selfweight and surcharge)
==========

Working Stress pile reaction = 109.18 kips

Reinforcement Schedule:
==========:

Dir	Quantity	Size	Bar dist. in	As total in^2	From ft	To ft	Hook
X	6	# 6	6.00	2.64	0.50	34.50	None
X	31	# 11	48.50	48.36	0.50	34.50	Both
X	31	# 6	22.00	13.64	0.50	34.50	Both
Z	30	# 5	49.52	9.30	----	----	Both
Z	61	# 11	20.92	95.16	----	----	Both
Z	12	# 11	7.08	18.72	----	----	None
Z	30	# 5	5.31	9.30	----	----	Both

Flexure:
========

X direction

Loc ft	Mmax Mmin kft	Comb Comb	Asb_req Asb_req in^2	Asb_prv Asb_prv in^2	Asb_eff Asb_eff in^2	Ast_req Ast_req in^2	Ast_prv Ast_prv in^2	Ast_eff Ast_eff in^2
-5.00	0.0	2	0.00	0.00	0.00	0.00	0.00	0.00
	0.0	2	0.00	0.00	0.00	0.00	0.00	0.00
-4.61	0.0	2	0.00	0.00	0.00	0.00	0.00	0.00
	0.0	2	0.00	0.00	0.00	0.00	0.00	0.00
-4.38	0.0	2	0.00	16.28	2.58	0.00	48.36	4.00
	0.0	2	0.00	16.28	2.53	0.00	48.36	4.00
-3.83	0.0	2	0.00	16.28	14.70	0.00	48.36	22.75
	0.0	2	0.00	16.28	14.40	0.00	48.36	22.75
-3.44	0.0	2	0.00	16.28	16.28	0.00	48.36	36.02
	0.0	2	0.00	16.28	16.28	0.00	48.36	36.02
-3.06	0.0	2	0.00	16.28	16.28	0.00	48.36	48.36
	0.0	2	0.00	16.28	16.28	0.00	48.36	48.36

H. W. Lochner, Inc. PHONE: 859-224-4476
1040 Monarch St. Suite 300 Lexington, KY 40513
SHEET 7 OF 10
JOB NO. HLB#143
PROGRAM: RC-PIER® v4.1.0 LEAP Software Inc., Tampa, Florida
BY JMJ DATE Jun/17/2006
PHONE : TOLL-FREE 1-800-451-5327 TAMPA AREA: 813-985-9170
CKD. DATE

PROJECT: BONNER BRIDGE - OREGON INLET NORTH CAROLINA

-2.67	109.2	2	2.58	16.28	16.28	0.00	48.36	48.36
	0.0	2	0.00	16.28	16.28	0.00	48.36	48.36
-2.28	236.6	2	5.65	16.28	16.28	0.00	48.36	48.36
	0.0	2	0.00	16.28	16.28	0.00	48.36	48.36
-1.89	363.9	2	8.77	16.28	16.28	0.00	48.36	48.36
	0.0	2	0.00	16.28	16.28	0.00	48.36	48.36
-1.50	491.3	2	11.92	16.28	16.28	0.00	48.36	48.36
	0.0	2	0.00	16.28	16.28	0.00	48.36	48.36
0.00	0.0	2	0.00	16.28	16.28	0.00	48.36	48.36
	0.0	2	0.00	16.28	16.28	0.00	48.36	48.36
1.50	144.7	2	3.43	16.28	16.28	0.00	48.36	48.36
	0.0	2	0.00	16.28	16.28	0.00	48.36	48.36
4.38	0.0	2	0.00	16.28	16.28	0.00	48.36	48.36
	-1046.1	2	0.00	16.28	16.28	18.14	48.36	48.36
7.02	0.0	2	0.00	16.28	16.28	0.00	48.36	48.36
	-2021.0	2	0.00	16.28	16.28	35.75	48.36	48.36
9.77	0.0	2	0.00	16.28	16.28	0.00	48.36	48.36
	-2557.9	2	0.00	16.28	16.28	45.63	48.36	48.36
12.53	0.0	2	0.00	16.28	16.28	0.00	48.36	48.36
	-3084.5	2	0.00	16.28	16.28	55.43	48.36 *	48.36
15.29	0.0	2	0.00	16.28	16.28	0.00	48.36	48.36
	-2718.1	2	0.00	16.28	16.28	48.60	48.36 *	48.36
18.05	0.0	2	0.00	16.28	16.28	0.00	48.36	48.36
	-2351.8	2	0.00	16.28	16.28	41.82	48.36	48.36
20.68	0.0	2	0.00	16.28	16.28	0.00	48.36	48.36
	-1287.9	2	0.00	16.28	16.28	22.46	48.36	48.36
23.56	39.3	2	0.92	16.28	16.28	0.00	48.36	48.36
	0.0	2	0.00	16.28	16.28	0.00	48.36	48.36
25.06	0.0	2	0.00	16.28	16.28	0.00	48.36	48.36
	0.0	2	0.00	16.28	16.28	0.00	48.36	48.36
26.56	470.7	2	11.41	16.28	16.28	0.00	48.36	48.36
	0.0	2	0.00	16.28	16.28	0.00	48.36	48.36
26.94	345.6	2	8.32	16.28	16.28	0.00	48.36	48.36
	0.0	2	0.00	16.28	16.28	0.00	48.36	48.36
27.33	220.5	2	5.26	16.28	16.28	0.00	48.36	48.36
	0.0	2	0.00	16.28	16.28	0.00	48.36	48.36
27.71	95.4	2	2.25	16.28	16.28	0.00	48.36	48.36
	0.0	2	0.00	16.28	16.28	0.00	48.36	48.36
28.09	0.0	2	0.00	16.28	16.28	0.00	48.36	48.10
	0.0	2	0.00	16.28	16.28	0.00	48.36	48.10
28.47	0.0	2	0.00	16.28	16.28	0.00	48.36	35.07
	0.0	2	0.00	16.28	16.28	0.00	48.36	35.07
28.85	0.0	2	0.00	16.28	14.24	0.00	48.36	22.03
	0.0	2	0.00	16.28	13.94	0.00	48.36	22.03
29.24	0.0	2	0.00	16.28	5.82	0.00	48.36	9.00
	0.0	2	0.00	16.28	5.70	0.00	48.36	9.00
29.45	0.0	2	0.00	16.28	1.19	0.00	48.36	1.85
	0.0	2	0.00	16.28	1.17	0.00	48.36	1.85
30.00	0.0	2	0.00	0.00	0.00	0.00	0.00	0.00
	0.0	2	0.00	0.00	0.00	0.00	0.00	0.00

Z direction

Loc ft	Mmax kft	Comb	Asb_req in^2	Asb_prv in^2	Asb_eff in^2	Ast_req in^2	Ast_prv in^2	Ast_eff in^2
-3.39	1709.3	2	39.85	123.18	123.18	0.00	9.30	9.30
3.39	1709.3	2	39.85	123.18	123.18	0.00	9.30	9.30

Note:

H. W. Lochner, Inc. PHONE: 859-224-4476
1040 Monarch St. Suite 300 Lexington, KY 40513

PROGRAM: RC-PIER® v4.1.0 LEAP Software Inc., Tampa, Florida
PHONE : TOLL-FREE 1-800-451-5327 TAMPA AREA: 813-985-9170

PROJECT: BONNER BRIDGE - OREGON INLET NORTH CAROLINA

* The provided reinforcement is not adequate, either less than required or larger than maximum allowed.

One Way Shear:
==========

Col	Dist ft	Comb	d in	V kips	Vc kips
X direction					
1	-4.38	2	34.87	0.0	421.9
	4.38	2	34.59	413.0	418.6
2	20.68	2	34.59	460.4 *	418.6
	29.45	2	34.87	0.0	421.9
Z direction					
	-6.42	2	36.36	157.9	962.4
	6.42	2	36.36	157.9	962.4

Note:
* Shear resistance is less than applied shear force.
You may increase the footing depth or provide stirrups.

Two Way Shear:
==========

#	Bo ft	Ao ft^2	Comb	Avg. d in	V kips	Vc kips
Columns:						
1	31.41	58.09	2	35.55	958.9	1497.5
2	31.41	58.09	2	35.55	1006.3	1497.5
Piles - max:						
8	15.07	18.06	2	35.55	0.0	767.3
Piles - min:						
1	5.88	14.72	2	35.55	0.0	299.6

Note:
TWO WAY SHEAR IN FOOTING IS NOT DESIGNED AND STIRRUPS ARE NOT CONSIDERED.

H. W. Lochner, Inc. PHONE: 859-224-4476
1040 Monarch St. Suite 300 Lexington, KY 40513
PROGRAM: RC-PIER® v4.1.0 LEAP Software Inc., Tampa, Florida
PHONE : TOLL-FREE 1-800-451-5327 TAMPA AREA: 813-985-9170

SHEET 1 OF 10
JOB NO. HLB#143
BY JMJ DATE Jun/17/2006
CKD. DATE

PROJECT: BONNER BRIDGE - OREGON INLET NORTH CAROLINA

PROJECT DATA
==========

Project : BONNER BRIDGE - OREGON INLET NORTH CAROLINA
User Job No.: HLB#143
State : North Carolina State Job No. :
Code : AASHTO STANDARD (17th Edition 2002)
Comments : Bonner Bridge HLB #143 - Load Groups 1-3 (For Ease of Checking) - Per Pla
n Dimensions

JMS 7/06

WDB 7/06

H. W. Lochner, Inc. PHONE: 859-224-4476
1040 Monarch St. Suite 300 Lexington, KY 40513

PROGRAM: RC-PIER® v4.1.0 LEAP Software Inc., Tampa, Florida | BY JMJ DATE Jun/17/2006
PHONE : TOLL-FREE 1-800-451-5327 TAMPA AREA: 813-985-9170 | CKD. DATE

PROJECT: BONNER BRIDGE - OREGON INLET NORTH CAROLINA

LOADS

Load Cases: 3

Loadcase ID: (L+In)1 Name: Group 1 Loadings
Multiplier = 1.000

Cap loads:

Type	Dir	Arm ft	Mag1 kip,kip/ft, kft	x1/L	Mag2 kip,kip/ft, kft	x2/L
Force	Y	0.00	-729.37	0.00	----	----
Force	Y	0.00	-843.33	1.00	----	----
Moment	Z	----	2.75	0.00	----	----
Moment	Z	----	55.31	1.00	----	----

Loadcase ID: (L+Ip)1 Name: Group 2 Loadings
Multiplier = 1.000

Cap loads:

Type	Dir	Arm ft	Mag1 kip,kip/ft, kft	x1/L	Mag2 kip,kip/ft, kft	x2/L
Force	Y	0.00	-735.60	0.00	----	----
Force	Y	0.00	-536.31	1.00	----	----
Moment	X	----	-2246.76	1.00	----	----
Moment	X	----	2247.02	0.00	----	----
Moment	Z	----	-193.19	0.00	----	----
Moment	Z	----	250.02	1.00	----	----

Loadcase ID: W1 Name: Group 3 Loadings
Multiplier = 1.000

Cap loads:

Type	Dir	Arm ft	Mag1 kip,kip/ft, kft	x1/L	Mag2 kip,kip/ft, kft	x2/L
Force	Y	0.00	-733.97	0.00	----	----
Force	Y	0.00	-718.42	1.00	----	----
Moment	X	----	-1352.33	1.00	----	----
Moment	X	----	1352.46	0.00	----	----
Moment	Z	----	-75.93	0.00	----	----
Moment	Z	----	133.51	1.00	----	----

Selected load groups:

SERVICE GROUP I
SERVICE GROUP IB
SERVICE GROUP II

H. W. Lochner, Inc. PHONE: 859-224-4476
1040 Monarch St. Suite 300 Lexington, KY 40513
SHEET 3 OF 10
JOB NO. HLB#143
PROGRAM: RC-PIER® v4.1.0 LEAP Software Inc., Tampa, Florida
BY JMJ DATE Jun/17/2006
PHONE : TOLL-FREE 1-800-451-5327 TAMPA AREA: 813-985-9170
CKD. DATE

PROJECT: BONNER BRIDGE - OREGON INLET NORTH CAROLINA

COMBINED FOOTING DESIGN

Code: AASHTO STANDARD (17th Edition 2002) - Service Load Design
Units: US

Geometry:
=========
Name : 1
Shape : Rectangular, Type : Pile/Shaft Cap

Bf(X) = 35.00 ft, Hf(Z) = 16.00 ft, Thickness(Y) = 54.00 in

Footing concentric.
Columns located on the footing:
Column No. 1 at x = 0.00 ft, Rectangular 36.00 in x 81.38 in
Column No. 2 at x = 25.06 ft, Rectangular 36.00 in x 81.38 in

Ag = 560.00 ft^2, Ix = 504.00 ft^2, Iz = 2451.00 ft^2

Surcharge = 0.00 ksf

Piles: Circular Size: 22.00 in Capacity: 100.00 kips

Design Parameters:
==========
f'c = 3000.00 psi fy = 40000.00 psi
Ec = 3320.6 ksi Es = 29000.0 ksi
Crack control factor z = 130.00 kips/in
Concrete Type : Normal Weight.

Pile Reactions, Service (Without the reduction of overstress allowance):
==========

Pile	Loc(X) ft	X in	Z in	Column Loads col#	comb	Ovs	P, kips	Mxx, kft	Mzz, kft	Pile Reac. kips
1	-3.00	24.0	72.0	1	2	1.000	-735.58	2246.12	-200.23	94.42
				2	2	1.000	-536.33	-2245.86	250.18	
				1	4	1.250	733.96	-1351.92	83.14	-52.42
				2	4	1.250	718.43	1351.79	-133.57	
2	1.00	72.0	72.0	1	2	1.000	-735.58	2246.12	-200.23	90.33
				2	2	1.000	-536.33	-2245.86	250.18	
				1	4	1.250	733.96	-1351.92	83.14	-52.10
				2	4	1.250	718.43	1351.79	-133.57	
3	6.50	138.0	72.0	1	1	1.000	-729.37	0.00	-4.54	89.40
				2	1	1.000	-843.33	0.00	55.31	
				1	4	1.250	733.96	-1351.92	83.14	-51.65
				2	4	1.250	718.43	1351.79	-133.57	
4	12.50	210.0	72.0	1	1	1.000	-729.37	0.00	-4.54	92.89
				2	1	1.000	-843.33	0.00	55.31	
				1	4	1.250	733.96	-1351.92	83.14	-51.16
				2	4	1.250	718.43	1351.79	-133.57	
5	18.50	282.0	72.0	1	1	1.000	-729.37	0.00	-4.54	96.38
				2	1	1.000	-843.33	0.00	55.31	
				1	4	1.250	733.96	-1351.92	83.14	-50.67
				2	4	1.250	718.43	1351.79	-133.57	
6	24.00	348.0	72.0	1	1	1.000	-729.37	0.00	-4.54	99.59
				2	1	1.000	-843.33	0.00	55.31	
				1	4	1.250	733.96	-1351.92	83.14	-50.23

H. W. Lochner, Inc. PHONE: 859-224-4476
1040 Monarch St. Suite 300 Lexington, KY 40513
SHEET 4 OF 10
JOB NO. HLB#143
PROGRAM: RC-PIER® v4.1.0 LEAP Software Inc., Tampa, Florida
BY JMJ DATE Jun/17/2006
PHONE : TOLL-FREE 1-800-451-5327 TAMPA AREA: 813-985-9170
CKD. DATE

PROJECT: BONNER BRIDGE - OREGON INLET NORTH CAROLINA

				2	4	1.250	718.43	1351.79	-133.57	
7	28.00	396.0	72.0	1	1	1.000	-729.37	0.00	-4.54	101.91*
				2	1	1.000	-843.33	0.00	55.31	
				1	4	1.250	733.96	-1351.92	83.14	-49.90
				2	4	1.250	718.43	1351.79	-133.57	
8	-3.00	24.0	0.0	1	2	1.000	-735.58	2246.12	-200.23	94.42
				2	2	1.000	-536.33	-2245.86	250.18	
				1	4	1.250	733.96	-1351.92	83.14	-52.42
				2	4	1.250	718.43	1351.79	-133.57	
9	1.00	72.0	0.0	1	2	1.000	-735.58	2246.12	-200.23	90.33
				2	2	1.000	-536.33	-2245.86	250.18	
				1	4	1.250	733.96	-1351.92	83.14	-52.10
				2	4	1.250	718.43	1351.79	-133.57	
10	6.50	138.0	0.0	1	1	1.000	-729.37	0.00	-4.54	89.40
				2	1	1.000	-843.33	0.00	55.31	
				1	4	1.250	733.96	-1351.92	83.14	-51.65
				2	4	1.250	718.43	1351.79	-133.57	
11	12.50	210.0	0.0	1	1	1.000	-729.37	0.00	-4.54	92.89
				2	1	1.000	-843.33	0.00	55.31	
				1	4	1.250	733.96	-1351.92	83.14	-51.16
				2	4	1.250	718.43	1351.79	-133.57	
12	18.50	282.0	0.0	1	1	1.000	-729.37	0.00	-4.54	96.38
				2	1	1.000	-843.33	0.00	55.31	
				1	4	1.250	733.96	-1351.92	83.14	-50.67
				2	4	1.250	718.43	1351.79	-133.57	
13	24.00	348.0	0.0	1	1	1.000	-729.37	0.00	-4.54	99.59
				2	1	1.000	-843.33	0.00	55.31	
				1	4	1.250	733.96	-1351.92	83.14	-50.23
				2	4	1.250	718.43	1351.79	-133.57	
14	28.00	396.0	0.0	1	1	1.000	-729.37	0.00	-4.54	101.91*
				2	1	1.000	-843.33	0.00	55.31	
				1	4	1.250	733.96	-1351.92	83.14	-49.90
				2	4	1.250	718.43	1351.79	-133.57	
15	-3.00	24.0	-72.0	1	2	1.000	-735.58	2246.12	-200.23	94.42
				2	2	1.000	-536.33	-2245.86	250.18	
				1	4	1.250	733.96	-1351.92	83.14	-52.42
				2	4	1.250	718.43	1351.79	-133.57	
16	1.00	72.0	-72.0	1	2	1.000	-735.58	2246.12	-200.23	90.33
				2	2	1.000	-536.33	-2245.86	250.18	
				1	4	1.250	733.96	-1351.92	83.14	-52.10
				2	4	1.250	718.43	1351.79	-133.57	
17	6.50	138.0	-72.0	1	1	1.000	-729.37	0.00	-4.54	89.40
				2	1	1.000	-843.33	0.00	55.31	
				1	4	1.250	733.96	-1351.92	83.14	-51.65
				2	4	1.250	718.43	1351.79	-133.57	
18	12.50	210.0	-72.0	1	1	1.000	-729.37	0.00	-4.54	92.89
				2	1	1.000	-843.33	0.00	55.31	
				1	4	1.250	733.96	-1351.92	83.14	-51.16
				2	4	1.250	718.43	1351.79	-133.57	
19	18.50	282.0	-72.0	1	1	1.000	-729.37	0.00	-4.54	96.38
				2	1	1.000	-843.33	0.00	55.31	
				1	4	1.250	733.96	-1351.92	83.14	-50.67
				2	4	1.250	718.43	1351.79	-133.57	
20	24.00	348.0	-72.0	1	1	1.000	-729.37	0.00	-4.54	99.59
				2	1	1.000	-843.33	0.00	55.31	
				1	4	1.250	733.96	-1351.92	83.14	-50.22
				2	4	1.250	718.43	1351.79	-133.57	
21	28.00	396.0	-72.0	1	1	1.000	-729.37	0.00	-4.54	101.91*
				2	1	1.000	-843.33	0.00	55.31	
				1	4	1.250	733.96	-1351.92	83.14	-49.90
				2	4	1.250	718.43	1351.79	-133.57	

H. W. Lochner, Inc. PHONE: 859-224-4476
1040 Monarch St. Suite 300 Lexington, KY 40513
SHEET 5 OF 10
JOB NO. HLB#143
PROGRAM: RC-PIER® v4.1.0 LEAP Software Inc., Tampa, Florida
BY JMJ DATE Jun/17/2006
PHONE : TOLL-FREE 1-800-451-5327 TAMPA AREA: 813-985-9170
CKD. DATE

PROJECT: BONNER BRIDGE - OREGON INLET NORTH CAROLINA

Pile Reactions, Service (After the reduction of overstress allowance):

Pile	Loc(X) ft	X in	Z in	Column Loads col#	comb	Ovs	P, kips	Mxx, kft	Mzz, kft	Pile Reac. kips
1	-3.00	24.0	72.0	1	2	1.000	-735.58	2246.12	-200.23	94.42
				2	2	1.000	-536.33	-2245.86	250.18	
				1	4	1.250	733.96	-1351.92	83.14	-41.94
				2	4	1.250	718.43	1351.79	-133.57	
2	1.00	72.0	72.0	1	2	1.000	-735.58	2246.12	-200.23	90.33
				2	2	1.000	-536.33	-2245.86	250.18	
				1	4	1.250	733.96	-1351.92	83.14	-41.68
				2	4	1.250	718.43	1351.79	-133.57	
3	6.50	138.0	72.0	1	1	1.000	-729.37	0.00	-4.54	89.40
				2	1	1.000	-843.33	0.00	55.31	
				1	4	1.250	733.96	-1351.92	83.14	-41.32
				2	4	1.250	718.43	1351.79	-133.57	
4	12.50	210.0	72.0	1	1	1.000	-729.37	0.00	-4.54	92.89
				2	1	1.000	-843.33	0.00	55.31	
				1	4	1.250	733.96	-1351.92	83.14	-40.93
				2	4	1.250	718.43	1351.79	-133.57	
5	18.50	282.0	72.0	1	1	1.000	-729.37	0.00	-4.54	96.38
				2	1	1.000	-843.33	0.00	55.31	
				1	4	1.250	733.96	-1351.92	83.14	-40.54
				2	4	1.250	718.43	1351.79	-133.57	
6	24.00	348.0	72.0	1	1	1.000	-729.37	0.00	-4.54	99.59
				2	1	1.000	-843.33	0.00	55.31	
				1	4	1.250	733.96	-1351.92	83.14	-40.18
				2	4	1.250	718.43	1351.79	-133.57	
7	28.00	396.0	72.0	1	1	1.000	-729.37	0.00	-4.54	101.91*
				2	1	1.000	-843.33	0.00	55.31	
				1	4	1.250	733.96	-1351.92	83.14	-39.92
				2	4	1.250	718.43	1351.79	-133.57	
8	-3.00	24.0	0.0	1	2	1.000	-735.58	2246.12	-200.23	94.42
				2	2	1.000	-536.33	-2245.86	250.18	
				1	4	1.250	733.96	-1351.92	83.14	-41.94
				2	4	1.250	718.43	1351.79	-133.57	
9	1.00	72.0	0.0	1	2	1.000	-735.58	2246.12	-200.23	90.33
				2	2	1.000	-536.33	-2245.86	250.18	
				1	4	1.250	733.96	-1351.92	83.14	-41.68
				2	4	1.250	718.43	1351.79	-133.57	
10	6.50	138.0	0.0	1	1	1.000	-729.37	0.00	-4.54	89.40
				2	1	1.000	-843.33	0.00	55.31	
				1	4	1.250	733.96	-1351.92	83.14	-41.32
				2	4	1.250	718.43	1351.79	-133.57	
11	12.50	210.0	0.0	1	1	1.000	-729.37	0.00	-4.54	92.89
				2	1	1.000	-843.33	0.00	55.31	
				1	4	1.250	733.96	-1351.92	83.14	-40.93
				2	4	1.250	718.43	1351.79	-133.57	
12	18.50	282.0	0.0	1	1	1.000	-729.37	0.00	-4.54	96.38
				2	1	1.000	-843.33	0.00	55.31	
				1	4	1.250	733.96	-1351.92	83.14	-40.54
				2	4	1.250	718.43	1351.79	-133.57	
13	24.00	348.0	0.0	1	1	1.000	-729.37	0.00	-4.54	99.59
				2	1	1.000	-843.33	0.00	55.31	
				1	4	1.250	733.96	-1351.92	83.14	-40.18
				2	4	1.250	718.43	1351.79	-133.57	

H. W. Lochner, Inc. PHONE: 859-224-4476
1040 Monarch St. Suite 300 Lexington, KY 40513
SHEET 6 OF 10
JOB NO. HLB#143
PROGRAM: RC-PIER® v4.1.0 LEAP Software Inc., Tampa, Florida
BY JMJ DATE Jun/17/2006
PHONE : TOLL-FREE 1-800-451-5327 TAMPA AREA: 813-985-9170
CKD. DATE

PROJECT: BONNER BRIDGE - OREGON INLET NORTH CAROLINA

14	28.00	396.0	0.0	1	1	1.000	-729.37	0.00	-4.54	101.91*
				2	1	1.000	-843.33	0.00	55.31	
				1	4	1.250	733.96	-1351.92	83.14	-39.92
				2	4	1.250	718.43	1351.79	-133.57	
15	-3.00	24.0	-72.0	1	2	1.000	-735.58	2246.12	-200.23	94.42
				2	2	1.000	-536.33	-2245.86	250.18	
				1	4	1.250	733.96	-1351.92	83.14	-41.94
				2	4	1.250	718.43	1351.79	-133.57	
16	1.00	72.0	-72.0	1	2	1.000	-735.58	2246.12	-200.23	90.33
				2	2	1.000	-536.33	-2245.86	250.18	
				1	4	1.250	733.96	-1351.92	83.14	-41.68
				2	4	1.250	718.43	1351.79	-133.57	
17	6.50	138.0	-72.0	1	1	1.000	-729.37	0.00	-4.54	89.40
				2	1	1.000	-843.33	0.00	55.31	
				1	4	1.250	733.96	-1351.92	83.14	-41.32
				2	4	1.250	718.43	1351.79	-133.57	
18	12.50	210.0	-72.0	1	1	1.000	-729.37	0.00	-4.54	92.89
				2	1	1.000	-843.33	0.00	55.31	
				1	4	1.250	733.96	-1351.92	83.14	-40.93
				2	4	1.250	718.43	1351.79	-133.57	
19	18.50	282.0	-72.0	1	1	1.000	-729.37	0.00	-4.54	96.38
				2	1	1.000	-843.33	0.00	55.31	
				1	4	1.250	733.96	-1351.92	83.14	-40.54
				2	4	1.250	718.43	1351.79	-133.57	
20	24.00	348.0	-72.0	1	1	1.000	-729.37	0.00	-4.54	99.59
				2	1	1.000	-843.33	0.00	55.31	
				1	4	1.250	733.96	-1351.92	83.14	-40.18
				2	4	1.250	718.43	1351.79	-133.57	
21	28.00	396.0	-72.0	1	1	1.000	-729.37	0.00	-4.54	101.91*
				2	1	1.000	-843.33	0.00	55.31	
				1	4	1.250	733.96	-1351.92	83.14	-39.92
				2	4	1.250	718.43	1351.79	-133.57	

Note:
* Force in pile is greater than pile capacity.

Only max. force in piles is considered for design.
Pile coordinates X and Z are from the most left edge of the footing.

Max. Pile Reaction Used in Design: (without selfweight and surcharge)
==========

Working Stress pile reaction = 83.91 kips

Reinforcement Schedule:
==========:

Dir	Quantity	Size	Bar dist. in	As total in^2	From ft	To ft	Hook
X	6	# 6	6.00	2.64	0.50	34.50	None
X	31	# 11	48.50	48.36	0.50	34.50	Both
X	31	# 6	22.00	13.64	0.50	34.50	Both
Z	30	# 5	49.52	9.30	----	----	Both
Z	61	# 11	20.92	95.16	----	----	Both
Z	12	# 11	7.08	18.72	----	----	None
Z	30	# 5	5.31	9.30	----	----	Both

H. W. Lochner, Inc. PHONE: 859-224-4476
1040 Monarch St. Suite 300 Lexington, KY 40513
PROGRAM: RC-PIER® v4.1.0 LEAP Software Inc., Tampa, Florida
PHONE : TOLL-FREE 1-800-451-5327 TAMPA AREA: 813-985-9170

SHEET 7 OF 10
JOB NO. HLB#143
BY JMJ DATE Jun/17/2006
CKD. DATE

PROJECT: BONNER BRIDGE - OREGON INLET NORTH CAROLINA

Flexure:
========

X direction

Loc ft	Mmax Mmin kft	Comb Comb	Asb_req Asb_req in^2	Asb_prv Asb_prv in^2	Asb_eff Asb_eff in^2	Ast_req Ast_req in^2	Ast_prv Ast_prv in^2	Ast_eff Ast_eff in^2
-5.00	0.0	1	0.00	0.00	0.00	0.00	0.00	0.00
	0.0	1	0.00	0.00	0.00	0.00	0.00	0.00
-4.61	0.0	1	0.00	0.00	0.00	0.00	0.00	0.00
	0.0	1	0.00	0.00	0.00	0.00	0.00	0.00
-4.38	0.0	1	0.00	16.28	2.18	0.00	48.36	3.30
	0.0	1	0.00	16.28	2.09	0.00	48.36	3.30
-3.83	0.0	1	0.00	16.28	12.43	0.00	48.36	18.79
	0.0	1	0.00	16.28	11.89	0.00	48.36	18.79
-3.44	0.0	1	0.00	16.28	16.28	0.00	48.36	29.74
	0.0	1	0.00	16.28	16.28	0.00	48.36	29.74
-3.06	0.0	1	0.00	16.28	16.28	0.00	48.36	40.70
	0.0	1	0.00	16.28	16.28	0.00	48.36	40.70
-2.67	83.9	1	1.98	16.28	16.28	0.00	48.36	48.36
	0.0	1	0.00	16.28	16.28	0.00	48.36	48.36
-2.28	181.8	1	4.34	16.28	16.28	0.00	48.36	48.36
	0.0	1	0.00	16.28	16.28	0.00	48.36	48.36
-1.89	279.7	1	6.73	16.28	16.28	0.00	48.36	48.36
	0.0	1	0.00	16.28	16.28	0.00	48.36	48.36
-1.50	377.6	1	9.15	16.28	16.28	0.00	48.36	48.36
	0.0	1	0.00	16.28	16.28	0.00	48.36	48.36
0.00	0.0	1	0.00	16.28	16.28	0.00	48.36	48.36
	0.0	1	0.00	16.28	16.28	0.00	48.36	48.36
1.50	0.0	1	0.00	16.28	16.28	0.00	48.36	48.36
	-66.3	1	0.00	16.28	16.28	1.11	48.36	48.36
4.38	0.0	1	0.00	16.28	16.28	0.00	48.36	48.36
	-1161.3	1	0.00	16.28	16.28	20.30	48.36	48.36
7.02	0.0	1	0.00	16.28	16.28	0.00	48.36	48.36
	-2031.5	1	0.00	16.28	16.28	36.18	48.36	48.36
9.77	0.0	1	0.00	16.28	16.28	0.00	48.36	48.36
	-2384.7	1	0.00	16.28	16.28	42.74	48.36	48.36
12.53	0.0	1	0.00	16.28	16.28	0.00	48.36	48.36
	-2730.0	1	0.00	16.28	16.28	49.20	48.36 *	48.36
15.29	0.0	1	0.00	16.28	16.28	0.00	48.36	48.36
	-2389.0	1	0.00	16.28	16.28	42.82	48.36	48.36
18.05	0.0	1	0.00	16.28	16.28	0.00	48.36	48.36
	-2048.0	1	0.00	16.28	16.28	36.49	48.36	48.36
20.68	0.0	1	0.00	16.28	16.28	0.00	48.36	48.36
	-1173.6	1	0.00	16.28	16.28	20.53	48.36	48.36
23.56	0.0	1	0.00	16.28	16.28	0.00	48.36	48.36
	-91.3	1	0.00	16.28	16.28	1.53	48.36	48.36
25.06	0.0	1	0.00	16.28	16.28	0.00	48.36	48.36
	0.0	1	0.00	16.28	16.28	0.00	48.36	48.36
26.56	361.8	1	8.76	16.28	16.28	0.00	48.36	48.36
	0.0	1	0.00	16.28	16.28	0.00	48.36	48.36
26.94	265.6	1	6.39	16.28	16.28	0.00	48.36	48.36
	0.0	1	0.00	16.28	16.28	0.00	48.36	48.36
27.33	169.5	1	4.04	16.28	16.28	0.00	48.36	48.36
	0.0	1	0.00	16.28	16.28	0.00	48.36	48.36
27.71	73.3	1	1.73	16.28	16.28	0.00	48.36	48.36

H. W. Lochner, Inc. PHONE: 859-224-4476
1040 Monarch St. Suite 300 Lexington, KY 40513

PROGRAM: RC-PIER® v4.1.0 LEAP Software Inc., Tampa, Florida
PHONE : TOLL-FREE 1-800-451-5327 TAMPA AREA: 813-985-9170

PROJECT: BONNER BRIDGE - OREGON INLET NORTH CAROLINA

	0.0	1	0.00	16.28	16.28	0.00	48.36	48.36
28.09	0.0	1	0.00	16.28	16.28	0.00	48.36	39.72
	0.0	1	0.00	16.28	16.28	0.00	48.36	39.72
28.47	0.0	1	0.00	16.28	16.28	0.00	48.36	28.96
	0.0	1	0.00	16.28	16.28	0.00	48.36	28.96
28.85	0.0	1	0.00	16.28	12.03	0.00	48.36	18.19
	0.0	1	0.00	16.28	11.51	0.00	48.36	18.19
29.24	0.0	1	0.00	16.28	4.92	0.00	48.36	7.43
	0.0	1	0.00	16.28	4.70	0.00	48.36	7.43
29.45	0.0	1	0.00	16.28	1.01	0.00	48.36	1.52
	0.0	1	0.00	16.28	0.97	0.00	48.36	1.52
30.00	0.0	1	0.00	0.00	0.00	0.00	0.00	0.00
	0.0	1	0.00	0.00	0.00	0.00	0.00	0.00

Z direction

Loc ft	Mmax kft	Comb	Asb_req in^2	Asb_prv in^2	Asb_eff in^2	Ast_req in^2	Ast_prv in^2	Ast_eff in^2
-3.39	1532.7	1	35.82	123.18	123.18	0.00	9.30	9.30
3.39	1532.7	1	35.82	123.18	123.18	0.00	9.30	9.30

Note:
* The provided reinforcement is not adequate, either less than required or larger than maximum allowed.

One Way Shear:
==========

Col	Dist ft	Comb	d in	V kips	Vc kips
X direction					
1	-4.38	1	35.17	0.0	351.4
	4.38	1	34.59	379.8 *	345.6
2	20.68	1	34.59	375.4 *	345.6
	29.45	1	35.17	0.0	351.4
Z direction					
	-6.42	1	36.36	141.6	794.7
	6.42	1	36.36	141.6	794.7

Note:
* Shear resistance is less than applied shear force. You may increase the footing depth or provide stirrups.

Two Way Shear:
==========

#	Bo ft	Ao ft^2	Comb	Avg. d in	V kips	Vc kips

Columns:

H. W. Lochner, Inc. PHONE: 859-224-4476
1040 Monarch St. Suite 300 Lexington, KY 40513
SHEET 9 OF 10
JOB NO. HLB#143
PROGRAM: RC-PIER® v4.1.0 LEAP Software Inc., Tampa, Florida
BY JMJ DATE Jun/17/2006
PHONE : TOLL-FREE 1-800-451-5327 TAMPA AREA: 813-985-9170
CKD. DATE

PROJECT: BONNER BRIDGE - OREGON INLET NORTH CAROLINA

1	31.44	58.19	1	35.62	883.3	1240.1
2	31.44	58.19	1	35.62	878.9	1240.1

Piles - max:

9	15.09	18.11	1	35.62	0.0	635.8

Piles - min:

1	5.89	14.74	1	35.62	0.0	248.1

Note:
TWO WAY SHEAR IN FOOTING IS NOT DESIGNED AND STIRRUPS ARE NOT CONSIDERED.

H. W. Lochner, Inc. PHONE: 859-224-4476
1040 Monarch St. Suite 300 Lexington, KY 40513
SHEET 1 OF 10
JOB NO. HLB#143
PROGRAM: RC-PIER® v4.1.0 LEAP Software Inc., Tampa, Florida
BY JMJ DATE Jun/17/2006
PHONE : TOLL-FREE 1-800-451-5327 TAMPA AREA: 813-985-9170
CKD. DATE

PROJECT: BONNER BRIDGE - OREGON INLET NORTH CAROLINA

PROJECT DATA
==========

Project : BONNER BRIDGE - OREGON INLET NORTH CAROLINA
User Job No.: HLB#143
State : North Carolina State Job No. :
Code : AASHTO STANDARD (17th Edition 2002)
Comments : Bonner Bridge HLB #143 - Load Groups 4-6 (For Ease of Checking) - Per Pla
n Dimensions

JMJ 7/06

WDB 7/06

H. W. Lochner, Inc. PHONE: 859-224-4476
1040 Monarch St. Suite 300 Lexington, KY 40513

PROGRAM: RC-PIER® v4.1.0 LEAP Software Inc., Tampa, Florida | BY JMJ DATE Jun/17/2006
PHONE : TOLL-FREE 1-800-451-5327 TAMPA AREA: 813-985-9170 | CKD. DATE

PROJECT: BONNER BRIDGE - OREGON INLET NORTH CAROLINA

LOADS

Load Cases: 3

Loadcase ID: (L+In)1 Name: Group 4 Loadings
Multiplier = 1.000

Cap loads:

Type	Dir	Arm ft	Mag1 kip,kip/ft, kft	x1/L	Mag2 kip,kip/ft, kft	x2/L
Force	Y	0.00	-630.33	0.00	----	----
Force	Y	0.00	-700.73	1.00	----	----
Moment	Z	----	1520.25	0.00	----	----
Moment	Z	----	1552.38	1.00	----	----

Loadcase ID: (L+Ip)1 Name: Group 5 Loadings
Multiplier = 1.000

Cap loads:

Type	Dir	Arm ft	Mag1 kip,kip/ft, kft	x1/L	Mag2 kip,kip/ft, kft	x2/L
Force	Y	0.00	-647.98	0.00	----	----
Force	Y	0.00	-458.36	1.00	----	----
Moment	X	----	-2160.35	1.00	----	----
Moment	X	----	2160.60	0.00	----	----
Moment	Z	----	1263.55	0.00	----	----
Moment	Z	----	1690.28	1.00	----	----

Loadcase ID: W1 Name: Group 6 Loadings
Multiplier = 1.000

Cap loads:

Type	Dir	Arm ft	Mag1 kip,kip/ft, kft	x1/L	Mag2 kip,kip/ft, kft	x2/L
Force	Y	0.00	-646.41	0.00	----	----
Force	Y	0.00	-633.48	1.00	----	----
Moment	X	----	-1300.31	1.00	----	----
Moment	X	----	1300.44	0.00	----	----
Moment	Z	----	1376.29	0.00	----	----
Moment	Z	----	1578.24	1.00	----	----

Selected load groups:

SERVICE GROUP I
SERVICE GROUP IB
SERVICE GROUP II

H. W. Lochner, Inc. PHONE: 859-224-4476
1040 Monarch St. Suite 300 Lexington, KY 40513
SHEET 3 OF 10
JOB NO. HLB#143
PROGRAM: RC-PIER® v4.1.0 LEAP Software Inc., Tampa, Florida
BY JMJ DATE Jun/17/2006
PHONE : TOLL-FREE 1-800-451-5327 TAMPA AREA: 813-985-9170
CKD. DATE

PROJECT: BONNER BRIDGE - OREGON INLET NORTH CAROLINA

COMBINED FOOTING DESIGN

Code: AASHTO STANDARD (17th Edition 2002) - Service Load Design
Units: US

Geometry:
=========

Name : 1
Shape : Rectangular, Type : Pile/Shaft Cap

Bf(X) = 35.00 ft, Hf(Z) = 16.00 ft, Thickness(Y) = 54.00 in

Footing concentric.
Columns located on the footing:
Column No. 1 at x = 0.00 ft, Rectangular 36.00 in x 81.38 in
Column No. 2 at x = 25.06 ft, Rectangular 36.00 in x 81.38 in

Ag = 560.00 ft^2, Ix = 504.00 ft^2, Iz = 2451.00 ft^2

Surcharge = 0.00 ksf

Piles: Circular Size: 22.00 in Capacity: 100.00 kips

Design Parameters:
==========

f'c = 3000.00 psi fy = 40000.00 psi
Ec = 3320.6 ksi Es = 29000.0 ksi
Crack control factor z = 130.00 kips/in
Concrete Type : Normal Weight.

Pile Reactions, Service (Without the reduction of overstress allowance):
==========

Pile	Loc(X) ft	X in	Z in	Column Loads col#	comb	Ovs	P, kips	Mxx, kft	Mzz, kft	Pile Reac. kips
1	-3.00	24.0	72.0	1	2	1.000	-648.10	2159.74	1255.06	104.13*
				2	2	1.000	-458.24	-2159.49	1689.27	
				1	4	1.250	646.54	-1299.92	-1367.63	-62.36
				2	4	1.250	633.35	1299.79	-1577.14	
2	1.00	72.0	72.0	1	2	1.000	-648.10	2159.74	1255.06	95.50
				2	2	1.000	-458.24	-2159.49	1689.27	
				1	4	1.250	646.54	-1299.92	-1367.63	-57.35
				2	4	1.250	633.35	1299.79	-1577.14	
3	6.50	138.0	72.0	1	1	1.000	-630.48	0.00	1511.52	86.63
				2	1	1.000	-700.58	0.00	1551.17	
				1	4	1.250	646.54	-1299.92	-1367.63	-50.46
				2	4	1.250	633.35	1299.79	-1577.14	
4	12.50	210.0	72.0	1	1	1.000	-630.48	0.00	1511.52	81.38
				2	1	1.000	-700.58	0.00	1551.17	
				1	4	1.250	646.54	-1299.92	-1367.63	-42.95
				2	4	1.250	633.35	1299.79	-1577.14	
5	18.50	282.0	72.0	1	1	1.000	-630.48	0.00	1511.52	76.14
				2	1	1.000	-700.58	0.00	1551.17	
				1	4	1.250	646.54	-1299.92	-1367.63	-35.43
				2	4	1.250	633.35	1299.79	-1577.14	
6	24.00	348.0	72.0	1	1	1.000	-630.48	0.00	1511.52	71.33
				2	1	1.000	-700.58	0.00	1551.17	
				1	4	1.250	646.54	-1299.92	-1367.63	-28.55

H. W. Lochner, Inc. PHONE: 859-224-4476
1040 Monarch St. Suite 300 Lexington, KY 40513
SHEET 4 OF 10
JOB NO. HLB#143
PROGRAM: RC-PIER® v4.1.0 LEAP Software Inc., Tampa, Florida
BY JMJ DATE Jun/17/2006
PHONE : TOLL-FREE 1-800-451-5327 TAMPA AREA: 813-985-9170
CKD. DATE

PROJECT: BONNER BRIDGE - OREGON INLET NORTH CAROLINA

				2	4	1.250	633.35	1299.79	-1577.14	
7	28.00	396.0	72.0	1	1	1.000	-630.48	0.00	1511.52	67.84
				2	1	1.000	-700.58	0.00	1551.17	
				1	4	1.250	646.54	-1299.92	-1367.63	-23.54
				2	4	1.250	633.35	1299.79	-1577.14	
8	-3.00	24.0	0.0	1	2	1.000	-648.10	2159.74	1255.06	104.13*
				2	2	1.000	-458.24	-2159.49	1689.27	
				1	4	1.250	646.54	-1299.92	-1367.63	-62.36
				2	4	1.250	633.35	1299.79	-1577.14	
9	1.00	72.0	0.0	1	2	1.000	-648.10	2159.74	1255.06	95.50
				2	2	1.000	-458.24	-2159.49	1689.27	
				1	4	1.250	646.54	-1299.92	-1367.63	-57.35
				2	4	1.250	633.35	1299.79	-1577.14	
10	6.50	138.0	0.0	1	1	1.000	-630.48	0.00	1511.52	86.63
				2	1	1.000	-700.58	0.00	1551.17	
				1	4	1.250	646.54	-1299.92	-1367.63	-50.46
				2	4	1.250	633.35	1299.79	-1577.14	
11	12.50	210.0	0.0	1	1	1.000	-630.48	0.00	1511.52	81.38
				2	1	1.000	-700.58	0.00	1551.17	
				1	4	1.250	646.54	-1299.92	-1367.63	-42.95
				2	4	1.250	633.35	1299.79	-1577.14	
12	18.50	282.0	0.0	1	1	1.000	-630.48	0.00	1511.52	76.14
				2	1	1.000	-700.58	0.00	1551.17	
				1	4	1.250	646.54	-1299.92	-1367.63	-35.43
				2	4	1.250	633.35	1299.79	-1577.14	
13	24.00	348.0	0.0	1	1	1.000	-630.48	0.00	1511.52	71.33
				2	1	1.000	-700.58	0.00	1551.17	
				1	4	1.250	646.54	-1299.92	-1367.63	-28.54
				2	4	1.250	633.35	1299.79	-1577.14	
14	28.00	396.0	0.0	1	1	1.000	-630.48	0.00	1511.52	67.84
				2	1	1.000	-700.58	0.00	1551.17	
				1	4	1.250	646.54	-1299.92	-1367.63	-23.53
				2	4	1.250	633.35	1299.79	-1577.14	
15	-3.00	24.0	-72.0	1	2	1.000	-648.10	2159.74	1255.06	104.13*
				2	2	1.000	-458.24	-2159.49	1689.27	
				1	4	1.250	646.54	-1299.92	-1367.63	-62.36
				2	4	1.250	633.35	1299.79	-1577.14	
16	1.00	72.0	-72.0	1	2	1.000	-648.10	2159.74	1255.06	95.49
				2	2	1.000	-458.24	-2159.49	1689.27	
				1	4	1.250	646.54	-1299.92	-1367.63	-57.35
				2	4	1.250	633.35	1299.79	-1577.14	
17	6.50	138.0	-72.0	1	1	1.000	-630.48	0.00	1511.52	86.63
				2	1	1.000	-700.58	0.00	1551.17	
				1	4	1.250	646.54	-1299.92	-1367.63	-50.46
				2	4	1.250	633.35	1299.79	-1577.14	
18	12.50	210.0	-72.0	1	1	1.000	-630.48	0.00	1511.52	81.38
				2	1	1.000	-700.58	0.00	1551.17	
				1	4	1.250	646.54	-1299.92	-1367.63	-42.95
				2	4	1.250	633.35	1299.79	-1577.14	
19	18.50	282.0	-72.0	1	1	1.000	-630.48	0.00	1511.52	76.14
				2	1	1.000	-700.58	0.00	1551.17	
				1	4	1.250	646.54	-1299.92	-1367.63	-35.43
				2	4	1.250	633.35	1299.79	-1577.14	
20	24.00	348.0	-72.0	1	1	1.000	-630.48	0.00	1511.52	71.33
				2	1	1.000	-700.58	0.00	1551.17	
				1	4	1.250	646.54	-1299.92	-1367.63	-28.54
				2	4	1.250	633.35	1299.79	-1577.14	
21	28.00	396.0	-72.0	1	1	1.000	-630.48	0.00	1511.52	67.84
				2	1	1.000	-700.58	0.00	1551.17	
				1	4	1.250	646.54	-1299.92	-1367.63	-23.53
				2	4	1.250	633.35	1299.79	-1577.14	

H. W. Lochner, Inc. PHONE: 859-224-4476
1040 Monarch St. Suite 300 Lexington, KY 40513
PROGRAM: RC-PIER® v4.1.0 LEAP Software Inc., Tampa, Florida
PHONE : TOLL-FREE 1-800-451-5327 TAMPA AREA: 813-985-9170

SHEET 5 OF 10
JOB NO. HLB#143
BY JMJ DATE Jun/17/2006
CKD. DATE

PROJECT: BONNER BRIDGE - OREGON INLET NORTH CAROLINA

Pile Reactions, Service (After the reduction of overstress allowance):

Pile	Loc(X) ft	X in	Z in	Column Loads col#	comb	Ovs	P, kips	Mxx, kft	Mzz, kft	Pile Reac. kips
1	-3.00	24.0	72.0	1	2	1.000	-648.10	2159.74	1255.06	104.13*
				2	2	1.000	-458.24	-2159.49	1689.27	
				1	4	1.250	646.54	-1299.92	-1367.63	-49.89
				2	4	1.250	633.35	1299.79	-1577.14	
2	1.00	72.0	72.0	1	2	1.000	-648.10	2159.74	1255.06	95.50
				2	2	1.000	-458.24	-2159.49	1689.27	
				1	4	1.250	646.54	-1299.92	-1367.63	-45.88
				2	4	1.250	633.35	1299.79	-1577.14	
3	6.50	138.0	72.0	1	1	1.000	-630.48	0.00	1511.52	86.63
				2	1	1.000	-700.58	0.00	1551.17	
				1	4	1.250	646.54	-1299.92	-1367.63	-40.37
				2	4	1.250	633.35	1299.79	-1577.14	
4	12.50	210.0	72.0	1	1	1.000	-630.48	0.00	1511.52	81.38
				2	1	1.000	-700.58	0.00	1551.17	
				1	4	1.250	646.54	-1299.92	-1367.63	-34.36
				2	4	1.250	633.35	1299.79	-1577.14	
5	18.50	282.0	72.0	1	1	1.000	-630.48	0.00	1511.52	76.14
				2	1	1.000	-700.58	0.00	1551.17	
				1	4	1.250	646.54	-1299.92	-1367.63	-28.35
				2	4	1.250	633.35	1299.79	-1577.14	
6	24.00	348.0	72.0	1	1	1.000	-630.48	0.00	1511.52	71.33
				2	1	1.000	-700.58	0.00	1551.17	
				1	4	1.250	646.54	-1299.92	-1367.63	-22.84
				2	4	1.250	633.35	1299.79	-1577.14	
7	28.00	396.0	72.0	1	1	1.000	-630.48	0.00	1511.52	67.84
				2	1	1.000	-700.58	0.00	1551.17	
				1	4	1.250	646.54	-1299.92	-1367.63	-18.83
				2	4	1.250	633.35	1299.79	-1577.14	
8	-3.00	24.0	0.0	1	2	1.000	-648.10	2159.74	1255.06	104.13*
				2	2	1.000	-458.24	-2159.49	1689.27	
				1	4	1.250	646.54	-1299.92	-1367.63	-49.89
				2	4	1.250	633.35	1299.79	-1577.14	
9	1.00	72.0	0.0	1	2	1.000	-648.10	2159.74	1255.06	95.50
				2	2	1.000	-458.24	-2159.49	1689.27	
				1	4	1.250	646.54	-1299.92	-1367.63	-45.88
				2	4	1.250	633.35	1299.79	-1577.14	
10	6.50	138.0	0.0	1	1	1.000	-630.48	0.00	1511.52	86.63
				2	1	1.000	-700.58	0.00	1551.17	
				1	4	1.250	646.54	-1299.92	-1367.63	-40.37
				2	4	1.250	633.35	1299.79	-1577.14	
11	12.50	210.0	0.0	1	1	1.000	-630.48	0.00	1511.52	81.38
				2	1	1.000	-700.58	0.00	1551.17	
				1	4	1.250	646.54	-1299.92	-1367.63	-34.36
				2	4	1.250	633.35	1299.79	-1577.14	
12	18.50	282.0	0.0	1	1	1.000	-630.48	0.00	1511.52	76.14
				2	1	1.000	-700.58	0.00	1551.17	
				1	4	1.250	646.54	-1299.92	-1367.63	-28.35
				2	4	1.250	633.35	1299.79	-1577.14	
13	24.00	348.0	0.0	1	1	1.000	-630.48	0.00	1511.52	71.33
				2	1	1.000	-700.58	0.00	1551.17	
				1	4	1.250	646.54	-1299.92	-1367.63	-22.84
				2	4	1.250	633.35	1299.79	-1577.14	

H. W. Lochner, Inc. PHONE: 859-224-4476
1040 Monarch St. Suite 300 Lexington, KY 40513
SHEET 6 OF 10
JOB NO. HLB#143
PROGRAM: RC-PIER® v4.1.0 LEAP Software Inc., Tampa, Florida
BY JMJ DATE Jun/17/2006
PHONE : TOLL-FREE 1-800-451-5327 TAMPA AREA: 813-985-9170
CKD. DATE

PROJECT: BONNER BRIDGE - OREGON INLET NORTH CAROLINA

14	28.00	396.0	0.0	1	1	1.000	-630.48	0.00	1511.52	67.84
				2	1	1.000	-700.58	0.00	1551.17	
				1	4	1.250	646.54	-1299.92	-1367.63	-18.83
				2	4	1.250	633.35	1299.79	-1577.14	
15	-3.00	24.0	-72.0	1	2	1.000	-648.10	2159.74	1255.06	104.13*
				2	2	1.000	-458.24	-2159.49	1689.27	
				1	4	1.250	646.54	-1299.92	-1367.63	-49.89
				2	4	1.250	633.35	1299.79	-1577.14	
16	1.00	72.0	-72.0	1	2	1.000	-648.10	2159.74	1255.06	95.49
				2	2	1.000	-458.24	-2159.49	1689.27	
				1	4	1.250	646.54	-1299.92	-1367.63	-45.88
				2	4	1.250	633.35	1299.79	-1577.14	
17	6.50	138.0	-72.0	1	1	1.000	-630.48	0.00	1511.52	86.63
				2	1	1.000	-700.58	0.00	1551.17	
				1	4	1.250	646.54	-1299.92	-1367.63	-40.37
				2	4	1.250	633.35	1299.79	-1577.14	
18	12.50	210.0	-72.0	1	1	1.000	-630.48	0.00	1511.52	81.38
				2	1	1.000	-700.58	0.00	1551.17	
				1	4	1.250	646.54	-1299.92	-1367.63	-34.36
				2	4	1.250	633.35	1299.79	-1577.14	
19	18.50	282.0	-72.0	1	1	1.000	-630.48	0.00	1511.52	76.14
				2	1	1.000	-700.58	0.00	1551.17	
				1	4	1.250	646.54	-1299.92	-1367.63	-28.34
				2	4	1.250	633.35	1299.79	-1577.14	
20	24.00	348.0	-72.0	1	1	1.000	-630.48	0.00	1511.52	71.33
				2	1	1.000	-700.58	0.00	1551.17	
				1	4	1.250	646.54	-1299.92	-1367.63	-22.83
				2	4	1.250	633.35	1299.79	-1577.14	
21	28.00	396.0	-72.0	1	1	1.000	-630.48	0.00	1511.52	67.84
				2	1	1.000	-700.58	0.00	1551.17	
				1	4	1.250	646.54	-1299.92	-1367.63	-18.83
				2	4	1.250	633.35	1299.79	-1577.14	

Note:
* Force in pile is greater than pile capacity.

Only max. force in piles is considered for design.
Pile coordinates X and Z are from the most left edge of the footing.

Max. Pile Reaction Used in Design: (without selfweight and surcharge)
==========

Working Stress pile reaction = 86.13 kips

Reinforcement Schedule:
==========:

Dir	Quantity	Size	Bar dist. in	As total in^2	From ft	To ft	Hook
X	6	# 6	6.00	2.64	0.50	34.50	None
X	31	# 11	48.50	48.36	0.50	34.50	Both
X	31	# 6	22.00	13.64	0.50	34.50	Both
Z	30	# 5	49.52	9.30	----	----	Both
Z	61	# 11	20.92	95.16	----	----	Both
Z	12	# 11	7.08	18.72	----	----	None
Z	30	# 5	5.31	9.30	----	----	Both

H. W. Lochner, Inc. PHONE: 859-224-4476
1040 Monarch St. Suite 300 Lexington, KY 40513
PROGRAM: RC-PIER® v4.1.0 LEAP Software Inc., Tampa, Florida
PHONE : TOLL-FREE 1-800-451-5327 TAMPA AREA: 813-985-9170

SHEET 7 OF 10
JOB NO. HLB#143
BY JMJ DATE Jun/17/2006
CKD. DATE

PROJECT: BONNER BRIDGE - OREGON INLET NORTH CAROLINA

Flexure:
========

X direction

Loc ft	Mmax Mmin kft	Comb Comb	Asb_req Asb_req in^2	Asb_prv Asb_prv in^2	Asb_eff Asb_eff in^2	Ast_req Ast_req in^2	Ast_prv Ast_prv in^2	Ast_eff Ast_eff in^2
-5.00	0.0	2	0.00	0.00	0.00	0.00	0.00	0.00
	0.0	2	0.00	0.00	0.00	0.00	0.00	0.00
-4.61	0.0	2	0.00	0.00	0.00	0.00	0.00	0.00
	0.0	2	0.00	0.00	0.00	0.00	0.00	0.00
-4.38	0.0	2	0.00	16.28	2.18	0.00	48.36	3.30
	0.0	2	0.00	16.28	2.09	0.00	48.36	3.30
-3.83	0.0	2	0.00	16.28	12.43	0.00	48.36	18.79
	0.0	2	0.00	16.28	11.89	0.00	48.36	18.79
-3.44	0.0	2	0.00	16.28	16.28	0.00	48.36	29.74
	0.0	2	0.00	16.28	16.28	0.00	48.36	29.74
-3.06	0.0	2	0.00	16.28	16.28	0.00	48.36	40.70
	0.0	2	0.00	16.28	16.28	0.00	48.36	40.70
-2.67	86.1	2	2.03	16.28	16.28	0.00	48.36	48.36
	0.0	2	0.00	16.28	16.28	0.00	48.36	48.36
-2.28	186.6	2	4.46	16.28	16.28	0.00	48.36	48.36
	0.0	2	0.00	16.28	16.28	0.00	48.36	48.36
-1.89	287.1	2	6.91	16.28	16.28	0.00	48.36	48.36
	0.0	2	0.00	16.28	16.28	0.00	48.36	48.36
-1.50	387.6	2	9.40	16.28	16.28	0.00	48.36	48.36
	0.0	2	0.00	16.28	16.28	0.00	48.36	48.36
0.00	0.0	2	0.00	16.28	16.28	0.00	48.36	48.36
	0.0	2	0.00	16.28	16.28	0.00	48.36	48.36
1.50	0.0	2	0.00	16.28	16.28	0.00	48.36	48.36
	-68.0	2	0.00	16.28	16.28	1.14	48.36	48.36
4.38	0.0	2	0.00	16.28	16.28	0.00	48.36	48.36
	-1191.9	2	0.00	16.28	16.28	20.86	48.36	48.36
7.02	0.0	2	0.00	16.28	16.28	0.00	48.36	48.36
	-2085.1	2	0.00	16.28	16.28	37.18	48.36	48.36
9.77	0.0	2	0.00	16.28	16.28	0.00	48.36	48.36
	-2447.7	2	0.00	16.28	16.28	43.92	48.36	48.36
12.53	0.0	2	0.00	16.28	16.28	0.00	48.36	48.36
	-2802.2	2	0.00	16.28	16.28	50.56	48.36 *	48.36
15.29	0.0	2	0.00	16.28	16.28	0.00	48.36	48.36
	-2452.1	2	0.00	16.28	16.28	44.00	48.36	48.36
18.05	0.0	2	0.00	16.28	16.28	0.00	48.36	48.36
	-2102.1	2	0.00	16.28	16.28	37.49	48.36	48.36
20.68	0.0	2	0.00	16.28	16.28	0.00	48.36	48.36
	-1204.6	2	0.00	16.28	16.28	21.09	48.36	48.36
23.56	0.0	2	0.00	16.28	16.28	0.00	48.36	48.36
	-93.7	2	0.00	16.28	16.28	1.57	48.36	48.36
25.06	0.0	2	0.00	16.28	16.28	0.00	48.36	48.36
	0.0	2	0.00	16.28	16.28	0.00	48.36	48.36
26.56	371.3	2	8.99	16.28	16.28	0.00	48.36	48.36
	0.0	2	0.00	16.28	16.28	0.00	48.36	48.36
26.94	272.6	2	6.56	16.28	16.28	0.00	48.36	48.36
	0.0	2	0.00	16.28	16.28	0.00	48.36	48.36
27.33	174.0	2	4.15	16.28	16.28	0.00	48.36	48.36
	0.0	2	0.00	16.28	16.28	0.00	48.36	48.36
27.71	75.3	2	1.78	16.28	16.28	0.00	48.36	48.36

H. W. Lochner, Inc. PHONE: 859-224-4476
1040 Monarch St. Suite 300 Lexington, KY 40513
SHEET 8 OF 10
JOB NO. HLB#143
PROGRAM: RC-PIER® v4.1.0 LEAP Software Inc., Tampa, Florida
BY JMJ DATE Jun/17/2006
PHONE : TOLL-FREE 1-800-451-5327 TAMPA AREA: 813-985-9170
CKD. DATE

PROJECT: BONNER BRIDGE - OREGON INLET NORTH CAROLINA

	0.0	2	0.00	16.28	16.28	0.00	48.36	48.36
28.09	0.0	2	0.00	16.28	16.28	0.00	48.36	39.72
	0.0	2	0.00	16.28	16.28	0.00	48.36	39.72
28.47	0.0	2	0.00	16.28	16.28	0.00	48.36	28.96
	0.0	2	0.00	16.28	16.28	0.00	48.36	28.96
28.85	0.0	2	0.00	16.28	12.03	0.00	48.36	18.19
	0.0	2	0.00	16.28	11.51	0.00	48.36	18.19
29.24	0.0	2	0.00	16.28	4.92	0.00	48.36	7.43
	0.0	2	0.00	16.28	4.70	0.00	48.36	7.43
29.45	0.0	2	0.00	16.28	1.01	0.00	48.36	1.52
	0.0	2	0.00	16.28	0.97	0.00	48.36	1.52
30.00	0.0	2	0.00	0.00	0.00	0.00	0.00	0.00
	0.0	2	0.00	0.00	0.00	0.00	0.00	0.00

Z direction

Loc ft	Mmax kft	Comb	Asb_req in^2	Asb_prv in^2	Asb_eff in^2	Ast_req in^2	Ast_prv in^2	Ast_eff in^2
-3.39	1573.2	2	36.80	123.18	123.18	0.00	9.30	9.30
3.39	1573.2	2	36.80	123.18	123.18	0.00	9.30	9.30

Note:
* The provided reinforcement is not adequate, either less than required or larger than maximum allowed.

One Way Shear:
==========

Col	Dist ft	Comb	d in	V kips	Vc kips
X direction					
1	-4.38	2	35.17	0.0	351.4
	4.38	2	34.59	389.9 *	345.6
2	20.68	2	34.59	385.3 *	345.6
	29.45	2	35.17	0.0	351.4
Z direction					
	-6.42	2	36.36	145.3	794.7
	6.42	2	36.36	145.3	794.7

Note:
* Shear resistance is less than applied shear force.
You may increase the footing depth or provide stirrups.

Two Way Shear:
==========

#	Bo ft	Ao ft^2	Comb	Avg. d in	V kips	Vc kips
Columns:						

H. W. Lochner, Inc. PHONE: 859-224-4476
1040 Monarch St. Suite 300 Lexington, KY 40513
SHEET 9 OF 10
JOB NO. HLB#143
PROGRAM: RC-PIER® v4.1.0 LEAP Software Inc., Tampa, Florida
BY JMJ DATE Jun/17/2006
PHONE : TOLL-FREE 1-800-451-5327 TAMPA AREA: 813-985-9170
CKD. DATE

PROJECT: BONNER BRIDGE - OREGON INLET NORTH CAROLINA

1	31.44	58.19	2	35.62	906.7	1240.1
2	31.44	58.19	2	35.62	902.1	1240.1

Piles - max:

9	15.09	18.11	2	35.62	0.0	635.8

Piles - min:

1	5.89	14.74	2	35.62	0.0	248.1

Note:
TWO WAY SHEAR IN FOOTING IS NOT DESIGNED AND STIRRUPS ARE NOT CONSIDERED.