LOCHNER

PROJECT: BONNER BRIDGE - OREGON INLET NORTH CAROLINA
SUBJECT: PRESTRESSED GIRDER ANALYSIS
BEAM REACTIONS

JMJ May-06
KBM May-06

HIGH LEVEL BENT 142

Beam No.	Self Wt.	Topping (Deck + Haunch)	DL - Precast	Interior Diaphragms	D.L.-Comp	Total D.L.
Exterior						
Span 142	17.40	23.30	0.70	1.00	3.30	45.70
Span 143	17.40	23.30	0.70	1.00	3.30	45.70
Totals	34.80	46.60	1.40	2.00	6.60	91.40
Interior						
Span 142	17.40	21.60	0.70	1.90	3.10	44.70
Span 143	17.40	21.60	0.70	1.90	3.10	44.70
Totals	34.80	43.20	1.40	3.80	6.20	89.40

LIVE LOAD (Bents 137, 142, 160)

HS-20 AXLE LOAD

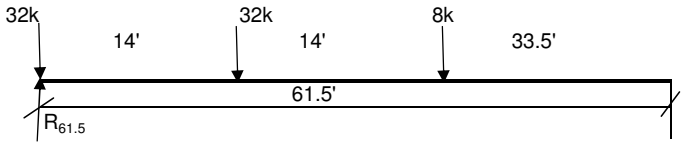

$R_{61.5}$ = 32 + 32 * (47.5 / 61.5) + 8 * (33.5 / 61.5) = 61.1 k

HS-20 WHEEL LOAD

$W_{61.5}$ = $R_{61.5}$ / 2 = 30.5 k

w/Impact = $30.5 * \left(\frac{50}{61.5 + 125} + 1 \right) = 38.7$ k

Max. NEGATIVE MOMENT

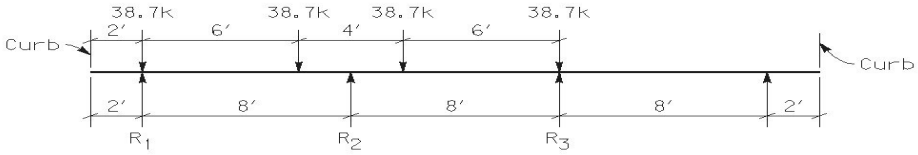

w/ Impact

R_1 = 38.7 + 38.7 * (2 / 8) = 48.4 k = R_3

R_2 = 38.7 * 2 * (6 / 8) = 58.1 k

w/o Impact

R_1 = 30.5 + 30.5 * (2 / 8) = 38.1 k = R_3

R_2 = (30.5 * 2 * (6 / 8) = 45.8 k

LIVE LOAD **(Bents 137, 142, 160)**

MAX. POSITIVE MOMENT

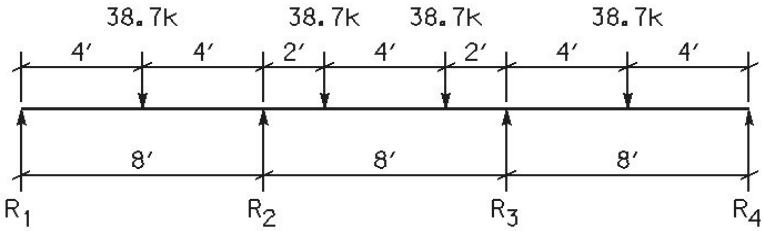

w/ Impact

$R_1 = R_4$ = 38.7 * (4 / 8) = 19.4 k

$R_2 = R_3$ = 19.4 + 38.7 * (6 / 8) + (38.7 * (2 / 8) = 58.1 k

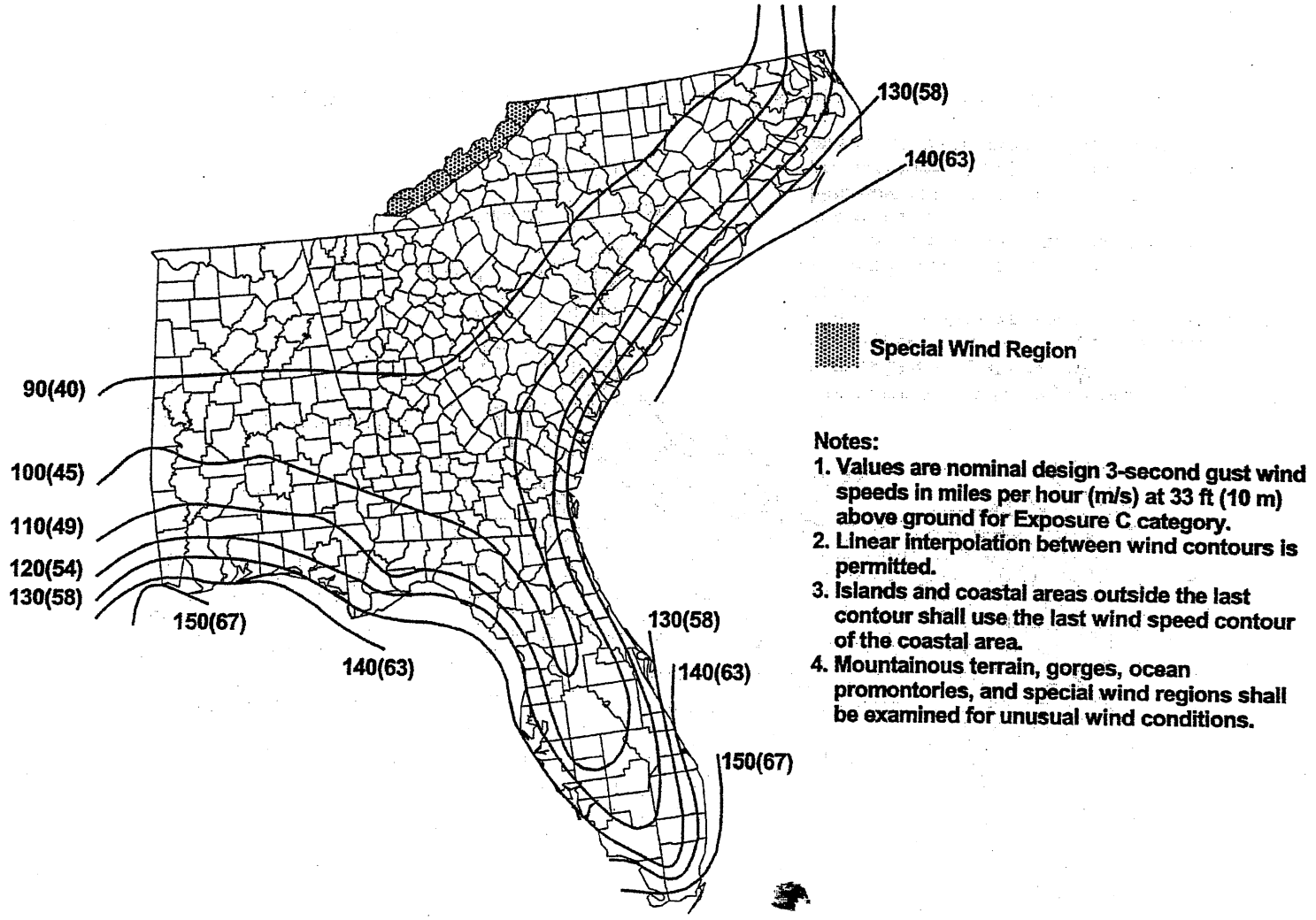

FIGURE 6-1b. Basic Wind Speed—Eastern Gulf of Mexico and Southeastern U.S. Hurricane Coastline

LOADING

Earth Loads

Assume No Earth Loading on Bents or Pile Cap.

Wind Loads (AASHTO 3.15)

Design Wind Speed = 130 MPH (Original Design Speed)

Ratio = (130)^2 / (100)^2 = 1.69

Wind on Superstructure (AASHTO 3.15.2.1)

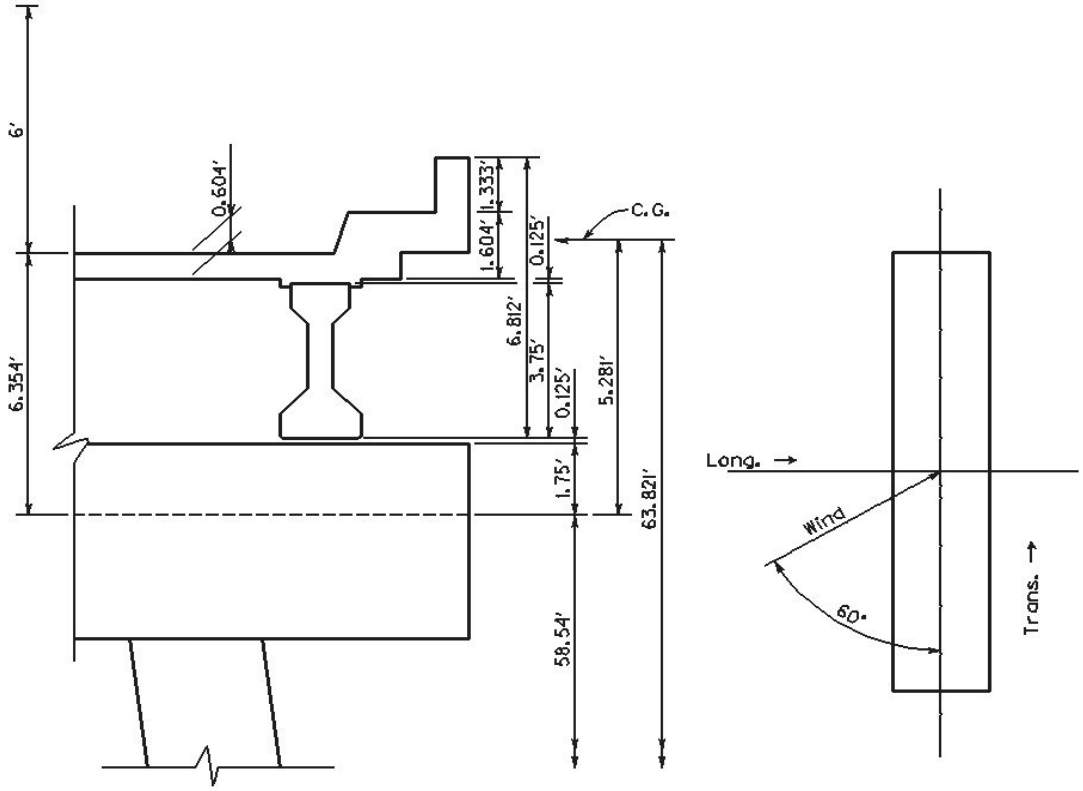

Assume Wind @ 60° Skew

Long. = (0.019 k/Ft^2)(1.69 Ratio) = 0.032 k/Ft^2
Trans. = (0.017 k/Ft^2)(1.69 Ratio) = 0.029 k/Ft^2

Assume Adjacent Bent Takes 1/2 Load

Load Length = 61.500 * 2 / 2 = 61.500 Ft.

Long. Force = (0.032 k/Ft^2)(6.812 Ft.) (61.500 Ft.) = 13.406 k
Trans. Force = (0.029 k/Ft^2)(6.812 Ft.) (61.500 Ft.) = 12.149 k

Moment Factor M_F = 63.821 / 58.54 = 1.090

Modify & Apply to Jt. 2 & 3

Long. Wind	= (	13.406 k)	* (	1.090	) /	2 =	7.306 k/Jt	
Trans. Wind	= (	12.149 k)	* (	1.090	) /	2 =	6.621 k/Jt	

Wind on Live Load (AASHTO 3.15.2.1.2)

Assume Wind @ 60° Skew & Apply @ 6' above Deck

Long.	=	(	0.038 k/Ft^2	)				
Trans.	=	(	0.034 k/Ft^2	)				
Long. Force	= (	0.038 k/Ft^2	) * (	61.500 Ft.)		=	2.337 k	
Trans. Force	= (	0.034 k/Ft^2	) * (	61.500 Ft.)		=	2.091 k	

Moment Factor = (58.540 Ft. + 6.354 Ft. + 6.000 Ft.) / 58.540 Ft. = 1.211

Modify & Apply to Jt. 2 & 3

Long. Wind	= (	2.337 k)	* (	1.211	) /	2.000 =	1.415 k/Jt	
Trans. Wind	= (	2.091 k)	* (	1.211	) /	2.000 =	1.266 k/Jt	

Wind on Superstructure

Wind Pressure =	0.040 k/Ft^2	*	1.690	=	0.068 k/Ft^2
Long. =	0.068 k/Ft^2	*	sin 60.000	=	0.059 k/Ft^2
Trans. =	0.068 k/Ft^2	*	cos 60.000	=	0.034 k/Ft^2

Cap

W_z =	0.059 k/Ft^2	*	3.500 Ft.	=	0.207 k/Ft
Wx =	0.034 k/Ft^2	*	3.500 Ft. * 3.000 Ft.	=	0.357 k/Ft

Columns

Members 4 & 5

W_z =	0.059 k/Ft^2	*	3.000 Ft.	=	0.177 k/Ft
Wx =	0.034 k/Ft^2	*	2.948 Ft.	=	0.100 k/Ft

Members 7 & 8

W_z =	0.177 k/Ft				
Wx =	0.034 k/Ft^2	*	4.052 Ft.	=	0.138 k/Ft

Members 10 & 11

W_z =	0.177 k/Ft				
Wx =	0.034 k/Ft^2	*	5.179 Ft.	=	0.176 k/Ft

Members 13 & 14

W_z =	0.177 k/Ft^2				
Wx =	0.034 k/Ft^2	*	5.905 Ft.	=	0.201 k/Ft

Struts
Members 6 & 9
W_z = 0.177 k/Ft

Member 12
W_z = 0.059 k/Ft^2 * 5.000 Ft. = 0.295 k/Ft

Longitudinal Forces (AASHTO 3.9)

Lane Loading
2 Lanes, HS20, No Reduction (AASHTO 3.12.1)
LF = [(0.64 k/Ft * 61.500 ') + 18 k] * 2 Lanes * 0.05 = 5.736 k

Modify & Apply to Jts. 2 & 3
M_F = 1.211 *from Wind on L.L.*
Fz = (5.736 k * 1.211) / 2 = 3.473 k/Jt

Thermal Forces (AASHTO 3.16)

Longitudinal - Structure Free to move at Brgs., No Long. Forces From ΔT
Transverse
Assume 45° ΔT
Thermal = 0.000006 (AASHTO 8.5.3)
Shrinkage = 0.0002 (AASHTO 8.5.4)

$$\text{Ratio} = \frac{S}{T*\Delta T} = \frac{0.0002}{0.000006 * 45} = 0.741 \quad \text{use } 1.741$$

Stream Forces (AASHTO 3.18.1)

Tidal, Stream, & Surge Forces Beyond Scope

Seismic Loading (AASHTO 3.1)

Since Acceleration = 4 % --> SPC = A --> No Seismic Analysis Required

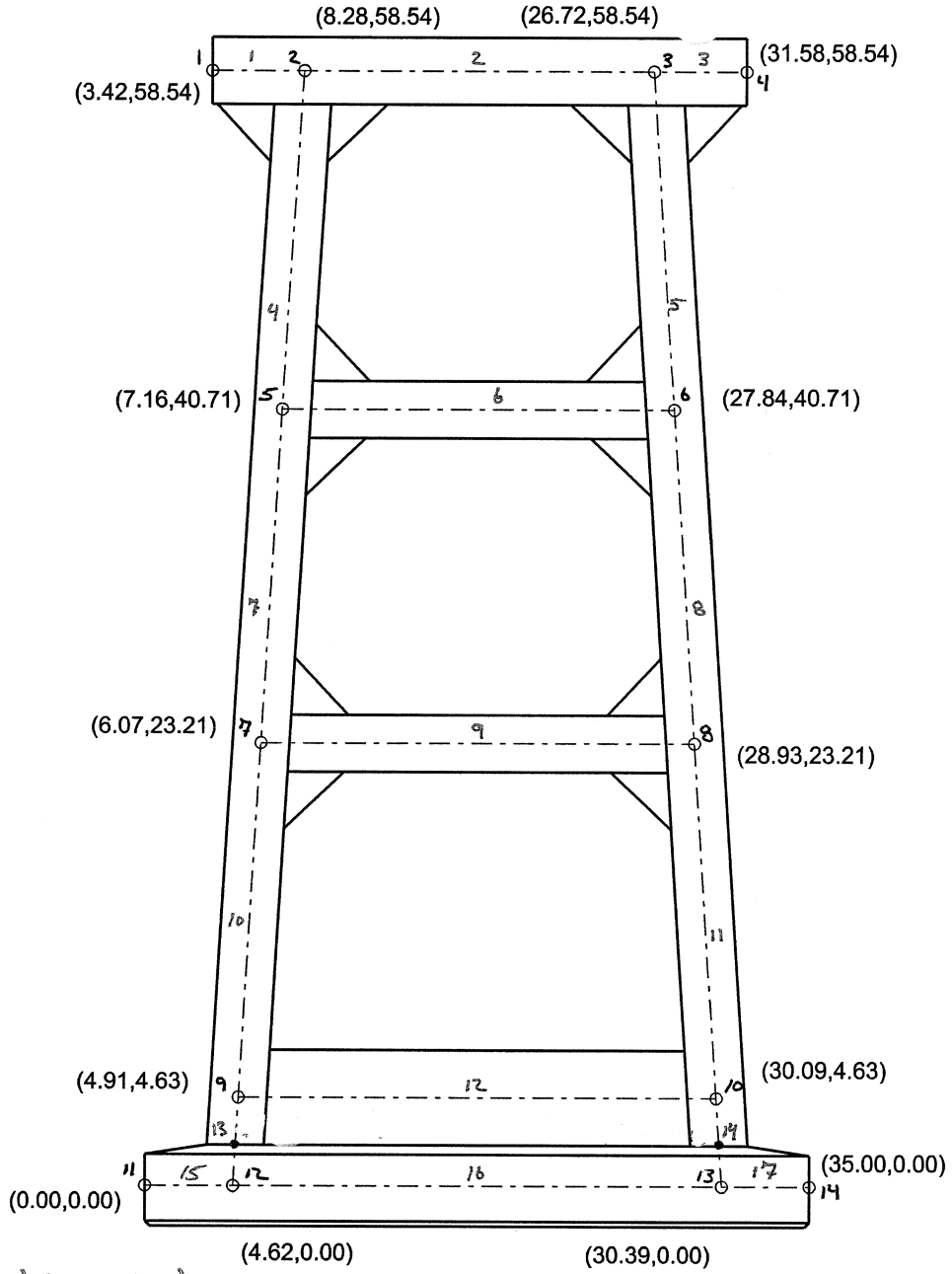

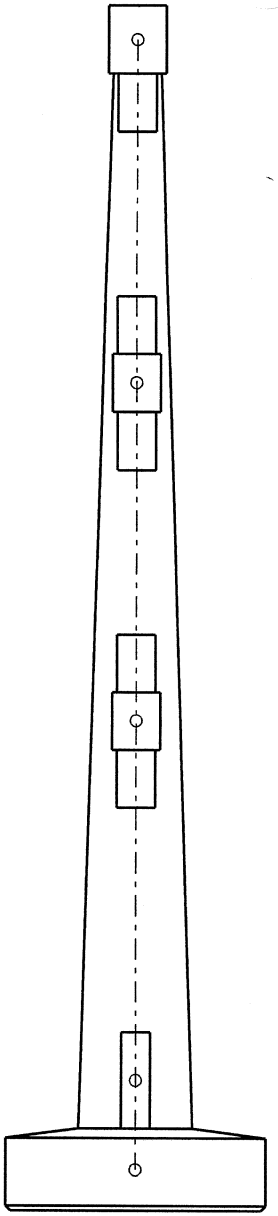

ADD (3')(3')(2')(.150 k/ft³)
= 2.7 k FOR CRUTCH

BENT 142
TRIPLE STRUT
PRESTRESSED GIRDER - PRESTRESSED GIRDER

```
**************************************************
*                                                *
*          STAAD.Pro                             *
*          Version  2004    Bld 1002.US          *
*          Proprietary Program of                *
*          Research Engineers,  Intl.            *
*          Date=    JUL 20, 2006                 *
*          Time=    10: 5:35                     *
*                                                *
*     USER ID: H.W. Lochner                      *
**************************************************
```

JMJ 7/06

WDB 7/06

```
     1. STAAD SPACE BONNER BRIDGE, HLB142
INPUT FILE: HLB142.STD
     2. START JOB INFORMATION
     3. JOB NAME BONNER BRIDGE
     4. JOB CLIENT NORTH CAROLINA
     5. ENGINEER NAME JMJ
     6. ENGINEER DATE MAY 2006
     7. END JOB INFORMATION
     8. INPUT WIDTH 72
     9. PAGE LENGTH 62
    10. UNIT FEET KIP
    11. JOINT COORDINATES
    12. 1 3.42 58.54 0; 2 8.28 58.54 0; 3 26.72 58.54 0; 4 31.58 58.54 0
    13. 5 7.16 40.71 0; 6 27.84 40.71 0; 7 6.07 23.21 0; 8 28.93 23.21 0
    14. 9 4.91 4.63 0; 10 30.09 4.63 0; 11 0 0 0; 12 4.62 0 0; 13 30.39 0 0
    15. 14 35 0 0
    16. MEMBER INCIDENCES
    17. 1 1 2; 2 2 3; 3 3 4; 4 2 5; 5 3 6; 6 5 6; 7 5 7; 8 6 8; 9 7 8; 10 7 9
    18. 11 8 10; 12 9 10; 13 9 12; 14 10 13; 15 11 12; 16 12 13; 17 13 14
    19. DEFINE MATERIAL START
    20. ISOTROPIC CONCRETE
    21. E 453600
    22. POISSON 0.17
    23. DENSITY 0.14999
    24. ALPHA 5.5E-006
    25. DAMP 0.05
    26. END DEFINE MATERIAL
    27. MEMBER PROPERTY AMERICAN
    28. 1 TO 3 PRIS YD 3.5 ZD 3
    29. 4 5 PRIS YD 2.994 ZD 2.948
    30. 6 PRIS YD 3 ZD 2.5
    31. 7 8 PRIS YD 2.994 ZD 4.052
    32. 9 PRIS YD 3 ZD 2.5
    33. 10 11 PRIS YD 2.994 ZD 5.179
    34. 12 PRIS YD 5 ZD 1.5
    35. 13 14 PRIS YD 2.994 ZD 5.905
    36. 15 TO 17 PRIS YD 4.25 ZD 13.5
    37. CONSTANTS
    38. MATERIAL CONCRETE MEMB 1 TO 17
    39. SUPPORTS
    40. 11 TO 14 FIXED
    41. DRAW JOINT MEMBER SUPPORT
```


S T A A D -III
REV: 2004

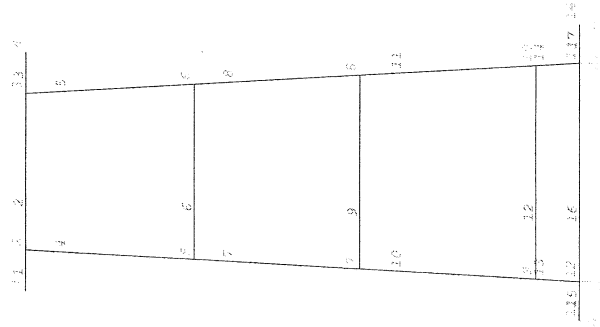

STRUCTURE DATA:

TYPE = SPACE
NJ = 14
NM = 17
NE = 0
NS = 4
NL = 0
UNIT FEET KIP
XMAX= 35.0
YMAX= 56.5
ZMAX= 0.0

DATE:JUL 20,2006
TIME: 10: 5:35

DRAW JOINT MEMBER SUPPORT

```
42. **
43. **DEAD LOAD
44. **
45. LOAD 2 DEAD
46. SELFWEIGHT Y -1
47. MEMBER LOAD
48. 1 CON GY -91.4 2.08
49. 2 CON GY -89.4 5.22
50. 2 CON GY -89.4 13.22
51. 3 CON GY -91.4 2.78
52. JOINT LOAD
53. 2 3 5 6 7 8 FY -2.7
54. **
55. **MAXIMUM NEGATIVE MOMENT
56. **
57. LOAD 11 LIVELOAD + IMPACT FOR JT. 2 MEM 1 AND 2
58. MEMBER LOAD
59. 1 CON Y -48.4 2.08
60. 2 CON Y -58.1 5.22
61. 2 CON Y -48.4 13.22
62. LOAD 12 LIVELOAD + IMPACT FOR JT. 3  MEM. 2 AND 3
63. MEMBER LOAD
64. 2 CON Y -48.4 5.22
65. 2 CON Y -58.1 13.22
66. 3 CON Y -48.4 2.78
67. **
68. **MAXIMUM POSITIVE MOMENT
69. **
70. LOAD 13 LIVELOAD + IMPACT  MEM 2
71. MEMBER LOAD
72. 1 CON Y -19.4 2.08
73. 2 CON Y -58.1 5.22
74. 2 CON Y -58.1 13.22
75. 3 CON Y -19.4 2.78
76. **
77. **LOADS ON FOOTINGS
78. **
79. LOAD 14 LIVELOAD NO IMPACT JT. 12
80. MEMBER LOAD
81. 1 CON Y -38.1 2.08
82. 2 CON Y -45.8 5.22
83. 2 CON Y -38.1 13.22
84. LOAD 15 LIVELOAD NO IMPACT FOR JT. 13
85. MEMBER LOAD
86. 2 CON Y -38.1 5.22
87. 2 CON Y -45.8 13.22
88. 3 CON Y -38.1 2.78
89. **
90. **WIND
91. **
92. LOAD 4 WIND
93. JOINT LOAD
94. 2 3 FX -6.621 FZ -7.306
95. 4 FX -0.357
96. MEMBER LOAD
97. 1 TO 3 UNI GZ -0.207
98. 4 5 7 8 10 11 13 14 UNI GZ -0.177
99. 4 5 UNI GX -0.100
100. 7 8 UNI GX -0.138
101. 10 11 UNI GX -0.176
```



```
102. 13 14 UNI GX -0.201
103. 6 9 UNI GZ -0.177
104. 12 UNI GZ -0.295
105. **
106. LOAD 5 WIND ON LL
107. JOINT LOAD
108. 2 3 FX -1.266 FZ -1.415
109. **
110. LOAD 6 LONGITUDINAL FORCE
111. JOINT LOAD
112. 2 3 FZ -3.473
113. **
114. LOAD 7 TEMP LOAD
115. TEMPERATURE LOAD
116. 1 TO 17 TEMP -45
117. **
118. LOAD 8 STREAM LOAD
119. MEMBER LOAD
120. 15 TO 17 UNI GZ -0
121. **
122. LOAD COMB 10 GROUP 1
123. 8 1.0
124. LOAD COMB 20 GROUP 2
125. 4 1.0 8 1.0
126. LOAD COMB 30 GROUP 3
127. 4 0.3 5 1.0 6 1.0 8 1.0
128. LOAD COMB 40 GROUP 4
129. 7 1.74 8 1.0
130. LOAD COMB 50 GROUP 5
131. 4 1.0 7 1.74 8 1.0
132. LOAD COMB 60 GROUP 6
133. 4 0.3 5 1.0 6 1.0 7 1.74 8 1.0
134. LOAD COMB 100 USED TO DETERMINE LOCATION OF MAX FACTORED POSITIVE MOMENT
135. 2 1.0 13 1.67
136. PERFORM ANALYSIS


        P R O B L E M   S T A T I S T I C S
        -----------------------------------

  NUMBER OF JOINTS/MEMBER+ELEMENTS/SUPPORTS =    14/    17/     4
  ORIGINAL/FINAL BAND-WIDTH=     3/     3/     24 DOF
  TOTAL PRIMARY LOAD CASES =   11, TOTAL DEGREES OF FREEDOM =     60
  SIZE OF STIFFNESS MATRIX =        2 DOUBLE  KILO-WORDS
  REQRD/AVAIL. DISK SPACE  =     12.1/ 110687.6 MB


137. PRINT MEMBER FORCES LIST 2 4 5 6 7 8 9 10 11 13 14
```

MEMBER END FORCES STRUCTURE TYPE = SPACE

ALL UNITS ARE -- KIP FEET

MEMBER	LOAD	JT	AXIAL	SHEAR-Y	SHEAR-Z	TORSION	MOM-Y	MOM-Z	
					V_{DL}				
2	2	2	18.26	103.92	0.00	0.00	0.00	330.36	– MAX. NEG M_{DL}
		3	-18.26	103.92	0.00	0.00	0.00	-330.35	
	11	2	9.82	59.50	0.00	0.00	0.00	173.41	– MAX. NEG. M_{LL+I}
		3	-9.82	47.00	0.00	0.00	0.00	-96.94	
	12	2	9.82	47.00 V_{LL+I}	0.00	0.00	0.00	96.94	
		3	-9.82	59.50	0.00	0.00	0.00	-173.41	
	13	2	11.02	58.10	0.00	0.00	0.00	138.16	
		3	-11.02	58.10	0.00	0.00	0.00	-138.16	
	14	2	7.74	46.88	0.00	0.00	0.00	136.56	
		3	-7.74	37.02	0.00	0.00	0.00	-76.38	
	15	2	7.74	37.02	0.00	0.00	0.00	76.38	
		3	-7.74	46.88	0.00	0.00	0.00	-136.56	
	4	2	0.18	9.06	1.91	0.00	4.82	83.50	
		3	-0.18	-9.06	1.91	0.00	-4.83	83.52	
	5	2	0.00	1.45	0.00	0.00	0.63	13.39	
		3	0.00	-1.45	0.00	0.00	-0.63	13.39	
	6	2	0.00	0.00	0.00	0.00	1.56	0.00	
		3	0.00	0.00	0.00	0.00	-1.56	0.00	
	7	2	0.13	0.00	0.00	0.00	0.00	0.41	
		3	-0.13	0.00	0.00	0.00	0.00	-0.41	
	8	2	0.00	0.00	0.00	0.00	0.00	0.00	
		3	0.00	0.00	0.00	0.00	0.00	0.00	
	10	2	0.00	0.00	0.00	0.00	0.00	0.00	
		3	0.00	0.00	0.00	0.00	0.00	0.00	
	20	2	0.18	9.06	1.91	0.00	4.82	83.50	
		3	-0.18	-9.06	1.91	0.00	-4.83	83.52	
	30	2	0.05	4.17	0.57	0.00	3.64	38.44	
		3	-0.05	-4.17	0.57	0.00	-3.64	38.45	
	40	2	0.22	0.00	0.00	0.00	0.00	0.71	
		3	-0.22	0.00	0.00	0.00	0.00	-0.71	
	50	2	0.40	9.06	1.91	0.00	4.82	84.21	
		3	-0.40	-9.06	1.91	0.00	-4.83	82.81	
	60	2	0.28	4.17	0.57	0.00	3.64	39.15	
		3	-0.28	-4.17	0.57	0.00	-3.64	37.74	
	100	2	36.67	200.95	0.00	0.00	0.00	561.09	
		3	-36.67	200.95	0.00	0.00	0.00	-561.08	
4	2	2	206.42	5.33	0.00	0.00	0.00	57.66	
		5	-230.02	-3.85	0.00	0.00	0.00	24.36	
	11	2	108.30	3.04	0.00	0.00	0.00	38.85	
		5	-108.30	-3.04	0.00	0.00	0.00	15.39	
	12	2	47.52	6.85	0.00	0.00	0.00	96.94	
		5	-47.52	-6.85	0.00	0.00	0.00	25.51	
	13	2	78.04	6.14	0.00	0.00	0.00	84.23	
		5	-78.04	-6.14	0.00	0.00	0.00	25.45	
	14	2	85.30	2.39	0.00	0.00	0.00	30.64	
		5	-85.30	-2.39	0.00	0.00	0.00	12.12	
	15	2	37.43	5.40	0.00	0.00	0.00	76.38	
		5	-37.43	-5.40	0.00	0.00	0.00	20.11	

MEMBER END FORCES STRUCTURE TYPE = SPACE

ALL UNITS ARE -- KIP FEET

MEMBER	LOAD	JT	AXIAL	SHEAR-Y	SHEAR-Z	TORSION	MOM-Y	MOM-Z
	4	2	9.47	6.22	10.22	7.25	-0.45	83.50
		5	-9.58	-8.00	-13.38	-7.25	-210.39	43.50
	5	2	1.53	1.17	1.42	0.63	-0.04	13.39
		5	-1.53	-1.17	-1.42	-0.63	-25.24	7.55
	6	2	0.00	0.00	3.47	1.55	-0.10	0.00
		5	0.00	0.00	-3.47	-1.55	-61.95	0.00
	7	2	0.01	0.13	0.00	0.00	0.00	0.41
		5	-0.01	-0.13	0.00	0.00	0.00	1.89
	8	2	0.00	0.00	0.00	0.00	0.00	0.00
		5	0.00	0.00	0.00	0.00	0.00	0.00
	10	2	0.00	0.00	0.00	0.00	0.00	0.00
		5	0.00	0.00	0.00	0.00	0.00	0.00
	20	2	9.47	6.22	10.22	7.25	-0.45	83.50
		5	-9.58	-8.00	-13.38	-7.25	-210.39	43.50
	30	2	4.37	3.04	7.95	4.36	-0.27	38.44
		5	-4.40	-3.57	-8.90	-4.36	-150.31	20.60
	40	2	0.01	0.22	0.00	0.00	0.00	0.71
		5	-0.01	-0.22	0.00	0.00	0.00	3.29
	50	2	9.48	6.44	10.22	7.25	-0.45	84.21
		5	-9.59	-8.22	-13.38	-7.25	-210.39	46.79
	60	2	4.38	3.26	7.95	4.36	-0.27	39.15
		5	-4.42	-3.80	-8.90	-4.36	-150.31	23.89
	100	2	336.74	15.59	0.00	0.00	0.00	198.33
		5	-360.34	-14.10	0.00	0.00	0.00	66.86
5	2	3	206.41	5.33	0.00	0.00	0.00	57.66
		6	-230.02	-3.85	0.00	0.00	0.00	24.36
	11	3	47.52	6.85	0.00	0.00	0.00	96.94
		6	-47.52	-6.85	0.00	0.00	0.00	25.51
	12	3	108.30	3.04	0.00	0.00	0.00	38.85
		6	-108.30	-3.04	0.00	0.00	0.00	15.39
	13	3	78.04	6.14	0.00	0.00	0.00	84.23
		6	-78.04	-6.14	0.00	0.00	0.00	25.45
	14	3	37.43	5.40	0.00	0.00	0.00	76.38
		6	-37.43	-5.40	0.00	0.00	0.00	20.11
	15	3	85.30	2.39	0.00	0.00	0.00	30.64
		6	-85.30	-2.39	0.00	0.00	0.00	12.12
	4	3	-9.47	-6.22	-10.22	-7.26	0.46	-83.52
		6	9.58	8.00	13.38	7.26	210.37	-43.52
	5	3	-1.53	-1.17	-1.41	-0.63	0.04	-13.39
		6	1.53	1.17	1.41	0.63	25.24	-7.55
	6	3	0.00	0.00	-3.47	-1.55	0.10	0.00
		6	0.00	0.00	3.47	1.55	61.95	0.00
	7	3	0.01	0.13	0.00	0.00	0.00	0.41
		6	-0.01	-0.13	0.00	0.00	0.00	1.89
	8	3	0.00	0.00	0.00	0.00	0.00	0.00
		6	0.00	0.00	0.00	0.00	0.00	0.00
	10	3	0.00	0.00	0.00	0.00	0.00	0.00
		6	0.00	0.00	0.00	0.00	0.00	0.00
	20	3	-9.47	-6.22	-10.22	-7.26	0.46	-83.52
		6	9.58	8.00	13.38	7.26	210.37	-43.52

MEMBER END FORCES STRUCTURE TYPE = SPACE

ALL UNITS ARE -- KIP FEET

MEMBER	LOAD	JT	AXIAL	SHEAR-Y	SHEAR-Z	TORSION	MOM-Y	MOM-Z
	30	3	-4.37	-3.04	-7.95	-4.37	0.28	-38.45
		6	4.40	3.57	8.90	4.37	150.30	-20.61
	40	3	0.01	0.22	0.00	0.00	0.00	0.71
		6	-0.01	-0.22	0.00	0.00	0.00	3.29
	50	3	-9.45	-6.00	-10.22	-7.26	0.46	-82.81
		6	9.56	7.78	13.38	7.26	210.37	-40.22
	60	3	-4.36	-2.81	-7.95	-4.37	0.28	-37.74
		6	4.39	3.35	8.90	4.37	150.30	-17.31
	100	3	336.74	15.59	0.00	0.00	0.00	198.32
		6	-360.34	-14.10	0.00	0.00	0.00	66.87
6	2	5	-0.44	11.63	0.00	0.00	0.00	38.54
		6	0.44	11.63	0.00	0.00	0.00	-38.52
	11	5	-6.11	-2.29	0.00	0.00	0.00	-18.72
		6	6.11	2.29	0.00	0.00	0.00	-28.66
	12	5	-6.11	2.29	0.00	0.00	0.00	28.67
		6	6.11	-2.29	0.00	0.00	0.00	18.73
	13	5	-7.57	0.00	0.00	0.00	0.00	6.23
		6	7.57	0.00	0.00	0.00	0.00	-6.23
	14	5	-4.81	-1.81	0.00	0.00	0.00	-14.75
		6	4.81	1.81	0.00	0.00	0.00	-22.58
	15	5	-4.82	1.81	0.00	0.00	0.00	22.59
		6	4.82	-1.81	0.00	0.00	0.00	14.75
	4	5	0.00	11.94	1.83	0.01	2.23	123.48
		6	0.00	-11.94	1.83	-0.01	-2.22	123.49
	5	5	0.00	1.64	0.00	0.00	0.36	16.96
		6	0.00	-1.64	0.00	0.00	-0.36	16.96
	6	5	0.00	0.00	0.00	0.00	0.88	0.00
		6	0.00	0.00	0.00	0.00	-0.88	0.00
	7	5	-1.18	0.00	0.00	0.00	0.00	-0.90
		6	1.18	0.00	0.00	0.00	0.00	0.91
	8	5	0.00	0.00	0.00	0.00	0.00	0.00
		6	0.00	0.00	0.00	0.00	0.00	0.00
	10	5	0.00	0.00	0.00	0.00	0.00	0.00
		6	0.00	0.00	0.00	0.00	0.00	0.00
	20	5	0.00	11.94	1.83	0.01	2.23	123.48
		6	0.00	-11.94	1.83	-0.01	-2.22	123.49
	30	5	0.00	5.22	0.55	0.00	1.91	54.01
		6	0.00	-5.22	0.55	0.00	-1.90	54.01
	40	5	-2.05	0.00	0.00	0.00	0.00	-1.57
		6	2.05	0.00	0.00	0.00	0.00	1.58
	50	5	-2.05	11.94	1.83	0.01	2.23	121.91
		6	2.05	-11.94	1.83	-0.01	-2.22	125.07
	60	5	-2.05	5.22	0.55	0.00	1.91	52.44
		6	2.05	-5.22	0.55	0.00	-1.90	55.59
	100	5	-13.09	11.63	0.00	0.00	0.00	48.95
		6	13.09	11.63	0.00	0.00	0.00	-48.92
7	2	5	244.30	2.64	0.00	0.00	0.00	14.19
		7	-276.14	-0.66	0.00	0.00	0.00	14.76
	11	5	105.64	-2.86	0.00	0.00	0.00	-34.11
		7	-105.64	2.86	0.00	0.00	0.00	-16.07

V_{DL} — Max. Neg. M_{DL}

V_{LL+I} — Max. Neg. M_{LL+I}

MEMBER END FORCES STRUCTURE TYPE = SPACE

ALL UNITS ARE -- KIP FEET

MEMBER	LOAD	JT	AXIAL	SHEAR-Y	SHEAR-Z	TORSION	MOM-Y	MOM-Z
	12	5	49.43	0.64	0.00	0.00	0.00	3.16
		7	-49.43	-0.64	0.00	0.00	0.00	8.04
	13	5	77.56	-1.38	0.00	0.00	0.00	-19.22
		7	-77.56	1.38	0.00	0.00	0.00	-4.96
	14	5	83.20	-2.25	0.00	0.00	0.00	-26.87
		7	-83.20	2.25	0.00	0.00	0.00	-12.66
	15	5	38.93	0.50	0.00	0.00	0.00	2.48
		7	-38.93	-0.50	0.00	0.00	0.00	6.34
	4	5	21.49	7.26	15.21	9.37	210.26	79.99
		7	-21.64	-9.68	-18.32	-9.37	-504.21	68.56
	5	5	3.17	1.07	1.41	0.98	25.22	9.41
		7	-3.17	-1.07	-1.41	-0.98	-50.03	9.37
	6	5	0.00	0.00	3.47	2.40	61.90	0.00
		7	0.00	0.00	-3.47	-2.40	-122.79	0.00
	7	5	-0.06	-1.05	0.00	0.00	0.00	-2.79
		7	0.06	1.05	0.00	0.00	0.00	-15.55
	8	5	0.00	0.00	0.00	0.00	0.00	0.00
		7	0.00	0.00	0.00	0.00	0.00	0.00
	10	5	0.00	0.00	0.00	0.00	0.00	0.00
		7	0.00	0.00	0.00	0.00	0.00	0.00
	20	5	21.49	7.26	15.21	9.37	210.26	79.99
		7	-21.64	-9.68	-18.32	-9.37	-504.21	68.56
	30	5	9.61	3.25	9.45	6.19	150.19	33.41
		7	-9.66	-3.98	-10.38	-6.19	-324.08	29.94
	40	5	-0.11	-1.82	0.00	0.00	0.00	-4.86
		7	0.11	1.82	0.00	0.00	0.00	-27.05
	50	5	21.38	5.44	15.21	9.37	210.26	75.13
		7	-21.53	-7.86	-18.32	-9.37	-504.21	41.51
	60	5	9.50	1.43	9.45	6.19	150.19	28.54
		7	-9.55	-2.15	-10.38	-6.19	-324.08	2.89
	100	5	373.83	0.34	0.00	0.00	0.00	-17.91
		7	-405.67	1.64	0.00	0.00	0.00	6.46
8	2	6	244.29	2.64	0.00	0.00	0.00	14.16
		8	-276.14	-0.66	0.00	0.00	0.00	14.79
	11	6	49.43	0.64	0.00	0.00	0.00	3.15
		8	-49.43	-0.64	0.00	0.00	0.00	8.06
	12	6	105.64	-2.86	0.00	0.00	0.00	-34.11
		8	-105.64	2.86	0.00	0.00	0.00	-16.07
	13	6	77.56	-1.38	0.00	0.00	0.00	-19.23
		8	-77.56	1.38	0.00	0.00	0.00	-4.96
	14	6	38.93	0.50	0.00	0.00	0.00	2.47
		8	-38.93	-0.50	0.00	0.00	0.00	6.35
	15	6	83.20	-2.25	0.00	0.00	0.00	-26.87
		8	-83.20	2.25	0.00	0.00	0.00	-12.66
	4	6	-21.49	-7.26	-15.21	-9.37	-210.23	-79.97
		8	21.64	9.68	18.32	9.37	504.19	-68.55
	5	6	-3.17	-1.07	-1.42	-0.98	-25.22	-9.41
		8	3.17	1.07	1.42	0.98	50.03	-9.37
	6	6	0.00	0.00	-3.47	-2.40	-61.89	0.00
		8	0.00	0.00	3.47	2.40	122.79	0.00

MEMBER END FORCES STRUCTURE TYPE = SPACE

ALL UNITS ARE -- KIP FEET

MEMBER	LOAD	JT	AXIAL	SHEAR-Y	SHEAR-Z	TORSION	MOM-Y	MOM-Z	
	7	6	-0.07	-1.05	0.00	0.00	0.00	-2.80	
		8	0.07	1.05	0.00	0.00	0.00	-15.54	
	8	6	0.00	0.00	0.00	0.00	0.00	0.00	
		8	0.00	0.00	0.00	0.00	0.00	0.00	
	10	6	0.00	0.00	0.00	0.00	0.00	0.00	
		8	0.00	0.00	0.00	0.00	0.00	0.00	
	20	6	-21.49	-7.26	-15.21	-9.37	-210.23	-79.97	
		8	21.64	9.68	18.32	9.37	504.19	-68.55	
	30	6	-9.61	-3.25	-9.45	-6.18	-150.18	-33.40	
		8	9.66	3.97	10.38	6.18	324.07	-29.94	
	40	6	-0.11	-1.82	0.00	0.00	0.00	-4.87	
		8	0.11	1.82	0.00	0.00	0.00	-27.04	
	50	6	-21.61	-9.08	-15.21	-9.37	-210.23	-84.84	
		8	21.76	11.50	18.32	9.37	504.19	-95.59	
	60	6	-9.73	-5.07	-9.45	-6.18	-150.18	-38.27	
		8	9.77	5.79	10.38	6.18	324.07	-56.98	
	100	6	373.82	0.34	0.00	0.00	0.00	-17.95	
		8	-405.67	1.64	0.00	0.00	0.00	6.51	
9	2	7	4.36	12.86	0.00	0.00	0.00	44.58	- MAX. NEG. M_{DL}
		8	-4.36	12.85	0.00	0.00	0.00	-44.48	
	11	7	1.32	-1.96	0.00	0.00	0.00	-23.35	
		8	-1.32	1.96	0.00	0.00	0.00	-21.43	
	12	7	1.33	1.96	0.00	0.00	0.00	21.45	
		8	-1.33	-1.96	0.00	0.00	0.00	23.37	- MAX. NEG. M_{LL+I}
	13	7	1.65	0.00	0.00	0.00	0.00	-1.14	
		8	-1.65	0.00	0.00	0.00	0.00	1.16	
	14	7	1.04	-1.54	0.00	0.00	0.00	-18.39	
		8	-1.04	1.54	0.00	0.00	0.00	-16.88	
	15	7	1.04	1.54	0.00	0.00	0.00	16.90	
		8	-1.04	-1.54	0.00	0.00	0.00	18.41	
	4	7	0.00	11.06	2.02	0.01	-1.23	126.42	
		8	0.00	-11.06	2.03	-0.01	1.33	126.43	
	5	7	0.00	1.24	0.00	0.00	0.17	14.19	
		8	0.00	-1.24	0.00	0.00	-0.17	14.19	
	6	7	0.00	0.00	0.00	0.00	0.43	0.00	
		8	0.00	0.00	0.00	0.00	-0.41	0.00	
	7	7	13.96	0.00	0.00	0.00	0.00	5.26	
		8	-13.96	0.00	0.00	0.00	0.00	-5.24	
	8	7	0.00	0.00	0.00	0.00	0.00	0.00	
		8	0.00	0.00	0.00	0.00	0.00	0.00	
	10	7	0.00	0.00	0.00	0.00	0.00	0.00	
		8	0.00	0.00	0.00	0.00	0.00	0.00	
	20	7	0.00	11.06	2.02	0.01	-1.23	126.42	
		8	0.00	-11.06	2.03	-0.01	1.33	126.43	
	30	7	0.00	4.56	0.60	0.01	0.23	52.12	
		8	0.00	-4.56	0.61	-0.01	-0.18	52.12	
	40	7	24.28	0.00	0.00	0.00	0.00	9.16	
		8	-24.28	0.00	0.00	0.00	0.00	-9.12	
	50	7	24.28	11.06	2.02	0.01	-1.23	135.58	
		8	-24.28	-11.06	2.03	-0.01	1.33	117.31	

MEMBER END FORCES STRUCTURE TYPE = SPACE

ALL UNITS ARE -- KIP FEET

MEMBER	LOAD	JT	AXIAL	SHEAR-Y	SHEAR-Z	TORSION	MOM-Y	MOM-Z
	60	7	24.28	4.56	0.60	0.01	0.23	61.27
		8	-24.28	-4.56	0.61	-0.01	-0.18	43.00
	100	7	7.11	12.86	0.00	0.00	0.00	42.67
		8	-7.11	12.85	0.00	0.00	0.00	-42.54
10	2	7	291.94	4.00	0.00	0.00	0.00	29.82
		9	-335.15	-1.30	0.00	0.00	0.00	19.53
	11	7	103.76	-1.43	0.00	0.00	0.00	-7.28
		9	-103.76	1.43	0.00	0.00	0.00	-19.42
	12	7	51.47	1.83	0.00	0.00	0.00	13.41
		9	-51.47	-1.83	0.00	0.00	0.00	20.71
	13	7	77.67	0.25	0.00	0.00	0.00	3.82
		9	-77.67	-0.25	0.00	0.00	0.00	0.86
	14	7	81.72	-1.13	0.00	0.00	0.00	-5.73
		9	-81.72	1.13	0.00	0.00	0.00	-15.29
	15	7	40.53	1.44	0.00	0.00	0.00	10.56
		9	-40.53	-1.44	0.00	0.00	0.00	16.31
	4	7	32.68	8.99	20.34	8.22	504.29	57.86
		9	-32.89	-12.26	-23.63	-8.22	-913.52	139.85
	5	7	4.41	0.99	1.41	1.16	50.02	4.82
		9	-4.41	-0.99	-1.41	-1.16	-76.35	13.67
	6	7	0.00	0.00	3.47	2.84	122.77	0.00
		9	0.00	0.00	-3.47	-2.84	-187.40	0.00
	7	7	0.81	12.88	0.00	0.00	0.00	20.81
		9	-0.81	-12.88	0.00	0.00	0.00	219.02
	8	7	0.00	0.00	0.00	0.00	0.00	0.00
		9	0.00	0.00	0.00	0.00	0.00	0.00
	10	7	0.00	0.00	0.00	0.00	0.00	0.00
		9	0.00	0.00	0.00	0.00	0.00	0.00
	20	7	32.68	8.99	20.34	8.22	504.29	57.86
		9	-32.89	-12.26	-23.63	-8.22	-913.52	139.85
	30	7	14.21	3.69	10.99	6.47	324.07	22.18
		9	-14.27	-4.67	-11.98	-6.47	-537.82	55.63
	40	7	1.40	22.42	0.00	0.00	0.00	36.21
		9	-1.40	-22.42	0.00	0.00	0.00	381.10
	50	7	34.09	31.40	20.34	8.22	504.29	94.07
		9	-34.29	-34.67	-23.63	-8.22	-913.52	520.95
	60	7	15.61	26.11	10.99	6.47	324.07	58.39
		9	-15.67	-27.09	-11.98	-6.47	-537.82	436.73
	100	7	421.65	4.42	0.00	0.00	0.00	36.21
		9	-464.86	-1.72	0.00	0.00	0.00	20.96
11	2	8	291.93	4.00	0.00	0.00	0.00	29.70
		10	-335.14	-1.30	0.00	0.00	0.00	19.67
	11	8	51.46	1.83	0.00	0.00	0.00	13.37
		10	-51.46	-1.83	0.00	0.00	0.00	20.72
	12	8	103.76	-1.43	0.00	0.00	0.00	-7.30
		10	-103.76	1.43	0.00	0.00	0.00	-19.36
	13	8	77.67	0.25	0.00	0.00	0.00	3.79
		10	-77.67	-0.25	0.00	0.00	0.00	0.89
	14	8	40.53	1.44	0.00	0.00	0.00	10.53
		10	-40.53	-1.44	0.00	0.00	0.00	16.32

MEMBER END FORCES STRUCTURE TYPE = SPACE

ALL UNITS ARE -- KIP FEET

MEMBER	LOAD	JT	AXIAL	SHEAR-Y	SHEAR-Z	TORSION	MOM-Y	MOM-Z
	15	8	81.72	-1.13	0.00	0.00	0.00	-5.75
		10	-81.72	1.13	0.00	0.00	0.00	-15.25
	4	8	-32.68	-8.99	-20.34	-8.12	-504.26	-57.87
		10	32.89	12.26	23.64	8.12	913.65	-139.88
	5	8	-4.41	-0.99	-1.42	-1.15	-50.02	-4.82
		10	4.41	0.99	1.42	1.15	76.36	-13.68
	6	8	0.00	0.00	-3.47	-2.82	-122.76	0.00
		10	0.00	0.00	3.47	2.82	187.43	0.00
	7	8	0.80	12.88	0.00	0.00	0.00	20.78
		10	-0.80	-12.88	0.00	0.00	0.00	219.05
	8	8	0.00	0.00	0.00	0.00	0.00	0.00
		10	0.00	0.00	0.00	0.00	0.00	0.00
	10	8	0.00	0.00	0.00	0.00	0.00	0.00
		10	0.00	0.00	0.00	0.00	0.00	0.00
	20	8	-32.68	-8.99	-20.34	-8.12	-504.26	-57.87
		10	32.89	12.26	23.64	8.12	913.65	-139.88
	30	8	-14.21	-3.69	-10.99	-6.41	-324.05	-22.18
		10	14.27	4.67	11.98	6.41	537.89	-55.64
	40	8	1.40	22.42	0.00	0.00	0.00	36.16
		10	-1.40	-22.42	0.00	0.00	0.00	381.15
	50	8	-31.29	13.43	-20.34	-8.12	-504.26	-21.71
		10	31.49	-10.16	23.64	8.12	913.65	241.27
	60	8	-12.81	18.73	-10.99	-6.41	-324.05	13.98
		10	12.87	-17.75	11.98	6.41	537.89	325.51
	100	8	421.63	4.42	0.00	0.00	0.00	36.03
		10	-464.84	-1.72	0.00	0.00	0.00	21.15
13	2	9	349.58	4.39	0.00	0.00	0.00	30.90
		12	-361.86	-3.62	0.00	0.00	0.00	-12.32
	11	9	102.65	-1.85	0.00	0.00	0.00	5.74
		12	-102.65	1.85	0.00	0.00	0.00	-14.30
	12	9	52.54	1.32	0.00	0.00	0.00	-6.92
		12	-52.54	-1.32	0.00	0.00	0.00	13.05
	13	9	77.64	-0.27	0.00	0.00	0.00	-0.75
		12	-77.64	0.27	0.00	0.00	0.00	-0.51
	14	9	80.85	-1.45	0.00	0.00	0.00	4.52
		12	-80.85	1.45	0.00	0.00	0.00	-11.26
	15	9	41.38	1.04	0.00	0.00	0.00	-5.45
		12	-41.38	-1.04	0.00	0.00	0.00	10.28
	4	9	40.04	11.78	27.34	-6.29	914.45	-49.65
		12	-40.10	-12.71	-28.16	6.29	-1043.18	106.46
	5	9	5.08	0.95	1.41	1.19	76.35	-5.19
		12	-5.08	-0.95	-1.41	-1.19	-82.91	9.59
	6	9	0.00	0.00	3.47	2.91	187.40	0.00
		12	0.00	0.00	-3.47	-2.91	-203.51	0.00
	7	9	-22.31	-356.38	0.00	0.00	0.00	-403.39
		12	22.31	356.38	0.00	0.00	0.00	-1249.87
	8	9	0.00	0.00	0.00	0.00	0.00	0.00
		12	0.00	0.00	0.00	0.00	0.00	0.00
	10	9	0.00	0.00	0.00	0.00	0.00	0.00
		12	0.00	0.00	0.00	0.00	0.00	0.00

MEMBER END FORCES STRUCTURE TYPE = SPACE

ALL UNITS ARE -- KIP FEET

MEMBER	LOAD	JT	AXIAL	SHEAR-Y	SHEAR-Z	TORSION	MOM-Y	MOM-Z
	20	9	40.04	11.78	27.34	-6.29	914.45	-49.65
		12	-40.10	-12.71	-28.16	6.29	-1043.18	106.46
	30	9	17.09	4.48	13.09	2.21	538.09	-20.08
		12	-17.11	-4.76	-13.33	-2.21	-599.38	41.52
	40	9	-38.82	-620.10	0.00	0.00	0.00	-701.90
		12	38.82	620.10	0.00	0.00	0.00	-2174.77
	50	9	1.22	-608.31	27.34	-6.29	914.45	-751.54
		12	-1.27	607.38	-28.16	6.29	-1043.18	-2068.31
	60	9	-21.73	-615.61	13.09	2.21	538.09	-721.98
		12	21.72	615.33	-13.33	-2.21	-599.38	-2133.25
	100	9	479.24	3.94	0.00	0.00	0.00	29.66
		12	-491.52	-3.17	0.00	0.00	0.00	-13.17
14	2	10	349.51	3.64	0.00	0.00	0.00	29.88
		13	-361.78	-2.85	0.00	0.00	0.00	-14.82
	11	10	52.52	1.18	0.00	0.00	0.00	-7.11
		13	-52.52	-1.18	0.00	0.00	0.00	12.59
	12	10	102.63	-2.04	0.00	0.00	0.00	5.48
		13	-102.63	2.04	0.00	0.00	0.00	-14.93
	13	10	77.63	-0.44	0.00	0.00	0.00	-0.97
		13	-77.63	0.44	0.00	0.00	0.00	-1.05
	14	10	41.36	0.93	0.00	0.00	0.00	-5.60
		13	-41.36	-0.93	0.00	0.00	0.00	9.92
	15	10	80.83	-1.61	0.00	0.00	0.00	4.31
		13	-80.83	1.61	0.00	0.00	0.00	-11.76
	4	10	-40.07	-11.74	-27.36	4.54	-914.59	49.70
		13	40.13	12.67	28.18	-4.54	1043.42	-106.31
	5	10	-5.08	-0.94	-1.42	-1.33	-76.36	5.20
		13	5.08	0.94	1.42	1.33	82.93	-9.57
	6	10	0.00	0.00	-3.47	-3.27	-187.42	0.00
		13	0.00	0.00	3.47	3.27	203.54	0.00
	7	10	-23.10	-356.33	0.00	0.00	0.00	-403.63
		13	23.10	356.33	0.00	0.00	0.00	-1249.63
	8	10	0.00	0.00	0.00	0.00	0.00	0.00
		13	0.00	0.00	0.00	0.00	0.00	0.00
	10	10	0.00	0.00	0.00	0.00	0.00	0.00
		13	0.00	0.00	0.00	0.00	0.00	0.00
	20	10	-40.07	-11.74	-27.36	4.54	-914.59	49.70
		13	40.13	12.67	28.18	-4.54	1043.42	-106.31
	30	10	-17.10	-4.46	-13.10	-3.25	-538.16	20.11
		13	17.12	4.74	13.34	3.25	599.50	-41.46
	40	10	-40.19	-620.01	0.00	0.00	0.00	-702.31
		13	40.19	620.01	0.00	0.00	0.00	-2174.35
	50	10	-80.26	-631.74	-27.36	4.54	-914.59	-652.61
		13	80.32	632.68	28.18	-4.54	1043.42	-2280.66
	60	10	-57.29	-624.47	-13.10	-3.25	-538.16	-682.20
		13	57.31	624.75	13.34	3.25	599.50	-2215.81
	100	10	479.14	2.92	0.00	0.00	0.00	28.26
		13	-491.42	-2.12	0.00	0.00	0.00	-16.58

********** END OF LATEST ANALYSIS RESULT **********

138. SECTION 0.54 MEMB 13 14
139. PRINT MEMBER SECTION FORCES LIST 13 14

MEMBER FORCES AT INTERMEDIATE SECTIONS

ALL UNITS ARE -- KIP FEET

MEMB	LOAD	SEC	SHEAR-Y	SHEAR-Z	MOM-Y	MOM-Z
13	2	0.54	3.97	0.00	0.00	20.43
	11	0.54	-1.85	0.00	0.00	10.36
	12	0.54	1.32	0.00	0.00	-10.23
	13	0.54	-0.27	0.00	0.00	-0.07
	14	0.54	-1.45	0.00	0.00	8.16
	15	0.54	1.04	0.00	0.00	-8.06
	4	0.54	12.28	27.78	983.49	-79.79
	5	0.54	0.95	1.41	79.90	-7.56
	6	0.54	0.00	3.47	196.10	0.00
	7	0.54	-356.38	0.00	0.00	489.37
	8	0.54	0.00	0.00	0.00	0.00
	10	0.54	0.00	0.00	0.00	0.00
	20	0.54	12.28	27.78	983.49	-79.79
	30	0.54	4.63	13.22	571.04	-31.50
	40	0.54	-620.10	0.00	0.00	851.50
	50	0.54	-607.81	27.78	983.49	771.71
	60	0.54	-615.46	13.22	571.04	820.00
	100	0.54	3.52	0.00	0.00	20.31
14	2	0.54	3.21	0.00	0.00	21.29
	11	0.54	1.18	0.00	0.00	-10.07
	12	0.54	-2.04	0.00	0.00	10.58
	13	0.54	-0.44	0.00	0.00	0.12
	14	0.54	0.93	0.00	0.00	-7.93
	15	0.54	-1.61	0.00	0.00	8.33
	4	0.54	-12.24	-27.80	-983.68	79.73
	5	0.54	-0.94	-1.42	-79.91	7.56
	6	0.54	0.00	-3.47	-196.13	0.00
	7	0.54	-356.33	0.00	0.00	489.13
	8	0.54	0.00	0.00	0.00	0.00
	10	0.54	0.00	0.00	0.00	0.00
	20	0.54	-12.24	-27.80	-983.68	79.73
	30	0.54	-4.61	-13.23	-571.14	31.48
	40	0.54	-620.01	0.00	0.00	851.09
	50	0.54	-632.25	-27.80	-983.68	930.82
	60	0.54	-624.62	-13.23	-571.14	882.56
	100	0.54	2.49	0.00	0.00	21.49

********** END OF LATEST ANALYSIS RESULT **********

140. LOAD LIST 2 13 100
141. SECTION 0.45 0.5 0.55 MEMB 2 6 9
142. PRINT MEMBER SECTION FORCES LIST 2 6 9

MEMBER FORCES AT INTERMEDIATE SECTIONS

ALL UNITS ARE -- KIP FEET

MEMB	LOAD	SEC	SHEAR-Y	SHEAR-Z	MOM-Y	MOM-Z	
2	2	0.45	1.45	0.00	0.00	-202.58	
		0.50	0.00	0.00	0.00	-203.25	- MAX. POS. MDL
		0.55	-1.45	0.00	0.00	-202.58	
	13	0.45	0.00	0.00	0.00	-165.12	
		0.50	0.00	0.00	0.00	-165.12	- MAX. POS. MLL+I
		0.55	0.00	0.00	0.00	-165.12	
	100	0.45	1.45	0.00	0.00	-478.33	
		0.50	0.00	0.00	0.00	-479.00	- MAX. POS. FACT. M
		0.55	-1.45	0.00	0.00	-478.33	
6	2	0.45	1.16	0.00	0.00	-21.00	
		0.50	0.00	0.00	0.00	-21.61	- MAX. POS. MDL
		0.55	-1.16	0.00	0.00	-21.01	
	13	0.45	0.00	0.00	0.00	6.23	
		0.50	0.00	0.00	0.00	6.23	- MAX. POS. MLL+I
		0.55	0.00	0.00	0.00	6.23	
	100	0.45	1.16	0.00	0.00	-10.60	
		0.50	0.00	0.00	0.00	-11.20	- MAX. POS. FACT. M
		0.55	-1.16	0.00	0.00	-10.60	
9	2	0.45	1.29	0.00	0.00	-28.21	
		0.50	0.00	0.00	0.00	-28.95	- MAX. POS. MDL
		0.55	-1.28	0.00	0.00	-28.22	
	13	0.45	0.00	0.00	0.00	-1.15	
		0.50	0.00	0.00	0.00	-1.15	- MAX. POS. MLL+I
		0.55	0.00	0.00	0.00	-1.15	
	100	0.45	1.29	0.00	0.00	-30.14	
		0.50	0.01	0.00	0.00	-30.88	- MAX. POS. FACT. M.
		0.55	-1.28	0.00	0.00	-30.15	

********** END OF LATEST ANALYSIS RESULT **********

143. FINISH

********** END OF THE STAAD.Pro RUN **********

**** DATE= JUL 20,2006 TIME= 10: 5:35 ****

```
**************************************************************
*        For questions on STAAD.Pro, please contact          *
*   Research Engineers Offices at the following locations    *
*                                                            *
*              Telephone              Email                  *
*  USA:      +1 (714)974-2500      support@reiusa.com         *
*  CANADA    +1 (905)632-4771      detech@odandetech.com      *
*  UK        +44(1454)207-000      support@reel.co.uk         *
*  FRANCE    +33(0)1 64551084      support@reel.co.uk         *
*  GERMANY   +49/931/40468-71      info@reig.de               *
*  NORWAY    +47 67 57 21 30       support@reel.co.uk         *
*  SINGAPORE +65 6225-6015/16      support@reiasia.net        *
```

H. W. LOCHNER, INC.

PROJECT: BONNER BRIDGE - OREGON INLET NORTH CAROLINA JMJ Jul-06
SUBJECT: HIGH LEVEL BENT ANALYSIS
HLB 142 MEM. 4 JT. 2 WDB 7/06

COLUMN LOADS

PMAX

HLB 142 MEMBER 4 JOINT 2

GROUP 1

	P	MY	MZ
DL	206.42	0.00	57.66
LL	108.30	0.00	38.85
GROUP 1	0.00	0.00	0.00
SERVICE	314.72	0.00	96.51
STRENGTH	503.00	0.00	159.13

GROUP 2

	P	MY	MZ
DL	206.42	0.00	57.66
LL	0.00	0.00	0.00
GROUP 2	9.47	-0.45	83.50
SERVICE	215.89	-0.45	141.16
STRENGTH	280.66	-0.59	183.51

GROUP 3

	P	MY	MZ
DL	206.42	0.00	57.66
LL	108.30	0.00	38.85
GROUP 3	4.37	-0.27	38.44
SERVICE	319.09	-0.27	134.95
STRENGTH	414.82	-0.35	175.44

GROUP 4

	P	MY	MZ
DL	206.42	0.00	57.66
LL	108.30	0.00	38.85
GROUP 4	0.01	0.00	0.71
SERVICE	314.73	0.00	97.22
STRENGTH	409.15	0.00	126.39

GROUP 5

	P	MY	MZ
DL	206.42	0.00	57.66
LL	0.00	0.00	0.00
GROUP 5	9.48	-0.45	84.21
SERVICE	215.90	-0.45	141.87
STRENGTH	269.88	-0.56	177.34

GROUP 6

	P	MY	MZ
DL	206.42	0.00	57.66
LL	108.30	0.00	38.85
GROUP 6	4.38	-0.27	39.15
SERVICE	319.10	-0.27	135.66
STRENGTH	398.88	-0.34	169.58

SLENDERNESS EFFECTS IN COMPRESSION MEMBERS (AASHTO 8.16.5)

f'c = 3000 psi PHI = 0.70 W_C = 150 PCF

$E_C = W_C^{1.5} * 33 * f'c^{0.5}$ = 3320561 PSI Width of Rect. Col. = B = 35.928 In.

Depth of Rect. Col = D = 35.376 In.

$r_Y = 0.30*D$ = 10.61 In. L_Y = 8.583 Ft. K_Y = 2.0

$r_Z = 0.30*B$ = 10.78 In. L_Z = 16.083 Ft. K_Z = 1.2

I_{YY} = $B*D^3/12$ I_{YY} = 132549 In^4

I_{ZZ} = $D*B^3/12$ I_{ZZ} = 136718 In^5

$K_Y L_Y/r$ = 19.4 < 22 NO SLENDERNESS EFFECT

$K_Z L_Z/r$ = 21.5 < 22 NO SLENDERNESS EFFECT

H. W. LOCHNER, INC.

PROJECT: BONNER BRIDGE - OREGON INLET NORTH CAROLINA JMJ Jul-06
SUBJECT: HIGH LEVEL BENT ANALYSIS
HLB 142 MEM. 4 JT. 2 WDB 7/06

SLENDERNESS EFFECTS IN RECTANGULAR COMPRESSION MEMBERS (AASHTO 8.16.5)

GROUP 1

	B	D	KL/R	M_U	M_{DL}	B_D	P_U	P_C	δ_b	δ_s	M_C	
	In.	In.		Ft. Kips	Ft. Kips		Kips	Kips			Ft. Kips	
MY	35.928	35.376	19.4	0.00	0.00	0.000	503	0	1.000	1.000	70	*
MZ	35.928	35.376	21.5	159.13	74.96	0.471	503	0	1.000	1.000	159	

GROUP 2

	B	D	KL/R	M_U	M_{DL}	B_D	P_U	P_C	δ_b	δ_s	M_C	
	In.	In.		Ft. Kips	Ft. Kips		Kips	Kips			Ft. Kips	
MY	35.928	35.376	19.4	0.59	0.00	0.000	281	0	1.000	1.000	39	*
MZ	35.928	35.376	21.5	183.51	74.96	0.408	281	0	1.000	1.000	184	

GROUP 3

	B	D	KL/R	M_U	M_{DL}	B_D	P_U	P_C	δ_b	δ_s	M_C	
	In.	In.		Ft. Kips	Ft. Kips		Kips	Kips			Ft. Kips	
MY	35.928	35.376	19.4	0.35	0.00	0.000	415	0	1.000	1.000	57	*
MZ	35.928	35.376	21.5	175.44	74.96	0.427	415	0	1.000	1.000	175	

GROUP 4

	B	D	KL/R	M_U	M_{DL}	B_D	P_U	P_C	δ_b	δ_s	M_C	
	In.	In.		Ft. Kips	Ft. Kips		Kips	Kips			Ft. Kips	
MY	35.928	35.376	19.4	0.00	0.00	0.000	409	0	1.000	1.000	57	*
MZ	35.928	35.376	21.5	126.39	74.96	0.593	409	0	1.000	1.000	126	

GROUP 5

	B	D	KL/R	M_U	M_{DL}	B_D	P_U	P_C	δ_b	δ_s	M_C	
	In.	In.		Ft. Kips	Ft. Kips		Kips	Kips			Ft. Kips	
MY	35.928	35.376	19.4	0.56	0.00	0.000	270	0	1.000	1.000	37	*
MZ	35.928	35.376	21.5	177.34	74.96	0.423	270	0	1.000	1.000	177	

GROUP 6

	B	D	KL/R	M_U	M_{DL}	B_D	P_U	P_C	δ_b	δ_s	M_C	
	In.	In.		Ft. Kips	Ft. Kips		Kips	Kips			Ft. Kips	
MY	35.928	35.376	19.4	0.34	0.00	0.000	399	0	1.000	1.000	55	*
MZ	35.928	35.376	21.5	169.58	74.96	0.442	399	0	1.000	1.000	170	

* MINIMUM MOMENT CONTROLS

H. W. LOCHNER, INC.

PROJECT: BONNER BRIDGE - OREGON INLET NORTH CAROLINA JMJ Jul-06
SUBJECT: HIGH LEVEL BENT ANALYSIS
HLB 142 MEM. 4 JT. 2 WDB 7/06

COLUMN LOADS

PMIN

HLB 142 MEMBER 4 JOINT 2

GROUP 1

	P	MY	MZ
DL	154.82	0.00	57.66
LL	47.52	0.00	96.94
GROUP 1	0.00	0.00	0.00
SERVICE	202.34	0.00	154.60
STRENGTH	304.22	0.00	284.99

GROUP 2

	P	MY	MZ
DL	154.82	0.00	57.66
LL	0.00	0.00	0.00
GROUP 2	9.47	-0.45	83.50
SERVICE	164.29	-0.45	141.16
STRENGTH	213.57	-0.59	183.51

GROUP 3

	P	MY	MZ
DL	154.82	0.00	57.66
LL	47.52	0.00	96.94
GROUP 3	4.37	-0.27	38.44
SERVICE	206.71	-0.27	193.04
STRENGTH	268.72	-0.35	250.95

GROUP 4

	P	MY	MZ
DL	154.82	0.00	57.66
LL	47.52	0.00	96.94
GROUP 4	0.01	0.00	0.71
SERVICE	202.35	0.00	155.31
STRENGTH	263.05	0.00	201.90

GROUP 5

	P	MY	MZ
DL	154.82	0.00	57.66
LL	0.00	0.00	0.00
GROUP 5	9.48	-0.45	84.21
SERVICE	164.30	-0.45	141.87
STRENGTH	205.37	-0.56	177.34

GROUP 6

	P	MY	MZ
DL	154.82	0.00	57.66
LL	47.52	0.00	96.94
GROUP 6	4.38	-0.27	39.15
SERVICE	206.72	-0.27	193.75
STRENGTH	258.39	-0.34	242.19

SLENDERNESS EFFECTS IN COMPRESSION MEMBERS (AASHTO 8.16.5)

f'c = 3000 psi PHI = 0.70 W_C = 150 PCF

$E_C = W_C^{1.5} * 33 * f'c^{0.5}$ = 3320561 PSI Width of Rect. Col. = B = 35.928 In.

Depth of Rect. Col = D = 35.376 In.

$r_Y = 0.30*D$ = 10.61 In. L_Y = 8.583 Ft. K_Y = 2.0

$r_Z = 0.30*B$ = 10.78 In. L_Z = 16.083 Ft. K_Z = 1.2

I_{YY} = $B*D^3/12$ I_{YY} = 132549 In^4

I_{ZZ} = $D*B^3/12$ I_{ZZ} = 136718 In^5

$K_Y L_Y/r$ = 19.4 < 22 NO SLENDERNESS EFFECT

$K_Z L_Z/r$ = 21.5 < 22 NO SLENDERNESS EFFECT

H. W. LOCHNER, INC.

PROJECT: BONNER BRIDGE - OREGON INLET NORTH CAROLINA JMJ Jul-06
SUBJECT: HIGH LEVEL BENT ANALYSIS
HLB 142 MEM. 4 JT. 2 WDB 7/06

SLENDERNESS EFFECTS IN RECTANGULAR COMPRESSION MEMBERS (AASHTO 8.16.5)

GROUP 1

	B	D	KL/R	M_U	M_{DL}	B_D	P_U	P_C	δ_b	δ_s	M_C	
	In.	In.		Ft. Kips	Ft. Kips		Kips	Kips			Ft. Kips	
MY	35.928	35.376	19.4	0.00	0.00	0.000	304	0	1.000	1.000	42	*
MZ	35.928	35.376	21.5	284.99	74.96	0.263	304	0	1.000	1.000	285	

GROUP 2

	B	D	KL/R	M_U	M_{DL}	B_D	P_U	P_C	δ_b	δ_s	M_C	
	In.	In.		Ft. Kips	Ft. Kips		Kips	Kips			Ft. Kips	
MY	35.928	35.376	19.4	0.59	0.00	0.000	214	0	1.000	1.000	30	*
MZ	35.928	35.376	21.5	183.51	74.96	0.408	214	0	1.000	1.000	184	

GROUP 3

	B	D	KL/R	M_U	M_{DL}	B_D	P_U	P_C	δ_b	δ_s	M_C	
	In.	In.		Ft. Kips	Ft. Kips		Kips	Kips			Ft. Kips	
MY	35.928	35.376	19.4	0.35	0.00	0.000	269	0	1.000	1.000	37	*
MZ	35.928	35.376	21.5	250.95	74.96	0.299	269	0	1.000	1.000	251	

GROUP 4

	B	D	KL/R	M_U	M_{DL}	B_D	P_U	P_C	δ_b	δ_s	M_C	
	In.	In.		Ft. Kips	Ft. Kips		Kips	Kips			Ft. Kips	
MY	35.928	35.376	19.4	0.00	0.00	0.000	263	0	1.000	1.000	36	*
MZ	35.928	35.376	21.5	201.90	74.96	0.371	263	0	1.000	1.000	202	

GROUP 5

	B	D	KL/R	M_U	M_{DL}	B_D	P_U	P_C	δ_b	δ_s	M_C	
	In.	In.		Ft. Kips	Ft. Kips		Kips	Kips			Ft. Kips	
MY	35.928	35.376	19.4	0.56	0.00	0.000	205	0	1.000	1.000	28	*
MZ	35.928	35.376	21.5	177.34	74.96	0.423	205	0	1.000	1.000	177	

GROUP 6

	B	D	KL/R	M_U	M_{DL}	B_D	P_U	P_C	δ_b	δ_s	M_C	
	In.	In.		Ft. Kips	Ft. Kips		Kips	Kips			Ft. Kips	
MY	35.928	35.376	19.4	0.34	0.00	0.000	258	0	1.000	1.000	36	*
MZ	35.928	35.376	21.5	242.19	74.96	0.310	258	0	1.000	1.000	242	

* MINIMUM MOMENT CONTROLS

H. W. LOCHNER, INC.

PROJECT: BONNER BRIDGE - OREGON INLET NORTH CAROLINA JMJ Jun-06
SUBJECT: HIGH LEVEL BENT ANALYSIS
HLB 142 MEM. 4 JT. 5 WDB 7/06

COLUMN LOADS

PMAX

HLB 142 MEMBER 4 JOINT 5

GROUP 1

	P	MY	MZ
DL	-230.02	0.00	24.36
LL	-108.30	0.00	15.39
GROUP 1	0.00	0.00	0.00
SERVICE	-338.32	0.00	39.75
STRENGTH	-533.68	0.00	65.01

GROUP 2

	P	MY	MZ
DL	-230.02	0.00	24.36
LL	0.00	0.00	0.00
GROUP 2	-9.58	-210.39	43.50
SERVICE	-239.60	-210.39	67.86
STRENGTH	-311.48	-273.51	88.22

GROUP 3

	P	MY	MZ
DL	-230.02	0.00	24.36
LL	-108.30	0.00	15.39
GROUP 3	-4.40	-150.31	20.60
SERVICE	-342.72	-150.31	60.35
STRENGTH	-445.54	-195.40	78.46

GROUP 4

	P	MY	MZ
DL	-230.02	0.00	24.36
LL	-108.30	0.00	15.39
GROUP 4	-0.01	0.00	3.29
SERVICE	-338.33	0.00	43.04
STRENGTH	-439.83	0.00	55.95

GROUP 5

	P	MY	MZ
DL	-230.02	0.00	24.36
LL	0.00	0.00	0.00
GROUP 5	-9.59	-210.39	46.79
SERVICE	-239.61	-210.39	71.15
STRENGTH	-299.51	-262.99	88.94

GROUP 6

	P	MY	MZ
DL	-230.02	0.00	24.36
LL	-108.30	0.00	15.39
GROUP 6	-4.42	-150.31	23.89
SERVICE	-342.74	-150.31	63.64
STRENGTH	-428.43	-187.89	79.55

SLENDERNESS EFFECTS IN COMPRESSION MEMBERS (AASHTO 8.16.5)

f'c = 3000 psi PHI = 0.70 W_C = 150 PCF

$E_C = W_C^{1.5} * 33 * f'c^{0.5}$ = 3320561 PSI Width of Rect. Col. = B = 35.928 In.

Depth of Rect. Col = D = 35.376 In.

$r_Y = 0.30*D$ = 10.61 In. L_Y = 8.583 Ft. K_Y = 2.0

$r_Z = 0.30*B$ = 10.78 In. L_Z = 16.083 Ft. K_Z = 1.2

I_{YY} = $B*D^3/12$ I_{YY} = 132549 In^4

I_{ZZ} = $D*B^3/12$ I_{ZZ} = 136718 In^5

$K_Y L_Y/r$ = 19.4 < 22 NO SLENDERNESS EFFECT

$K_Z L_Z/r$ = 21.5 < 22 NO SLENDERNESS EFFECT

H. W. LOCHNER, INC.

PROJECT: BONNER BRIDGE - OREGON INLET NORTH CAROLINA JMJ Jun-06
SUBJECT: HIGH LEVEL BENT ANALYSIS
HLB 142 MEM. 4 JT. 5 WDB 7/06

SLENDERNESS EFFECTS IN RECTANGULAR COMPRESSION MEMBERS (AASHTO 8.16.5)

GROUP 1

	B	D	KL/R	M_U	M_{DL}	B_D	P_U	P_C	δ_b	δ_s	M_C	
	In.	In.		Ft. Kips	Ft. Kips		Kips	Kips			Ft. Kips	
MY	35.928	35.376	19.4	0.00	0.00	0.000	534	0	1.000	1.000	74	*
MZ	35.928	35.376	21.5	65.01	31.67	0.487	534	0	1.000	1.000	75	*

GROUP 2

	B	D	KL/R	M_U	M_{DL}	B_D	P_U	P_C	δ_b	δ_s	M_C
	In.	In.		Ft. Kips	Ft. Kips		Kips	Kips			Ft. Kips
MY	35.928	35.376	19.4	273.51	0.00	0.000	311	0	1.000	1.000	274
MZ	35.928	35.376	21.5	88.22	31.67	0.359	311	0	1.000	1.000	88

GROUP 3

	B	D	KL/R	M_U	M_{DL}	B_D	P_U	P_C	δ_b	δ_s	M_C
	In.	In.		Ft. Kips	Ft. Kips		Kips	Kips			Ft. Kips
MY	35.928	35.376	19.4	195.40	0.00	0.000	446	0	1.000	1.000	195
MZ	35.928	35.376	21.5	78.46	31.67	0.404	446	0	1.000	1.000	78

GROUP 4

	B	D	KL/R	M_U	M_{DL}	B_D	P_U	P_C	δ_b	δ_s	M_C	
	In.	In.		Ft. Kips	Ft. Kips		Kips	Kips			Ft. Kips	
MY	35.928	35.376	19.4	0.00	0.00	0.000	440	0	1.000	1.000	61	*
MZ	35.928	35.376	21.5	55.95	31.67	0.566	440	0	1.000	1.000	61	*

GROUP 5

	B	D	KL/R	M_U	M_{DL}	B_D	P_U	P_C	δ_b	δ_s	M_C
	In.	In.		Ft. Kips	Ft. Kips		Kips	Kips			Ft. Kips
MY	35.928	35.376	19.4	262.99	0.00	0.000	300	0	1.000	1.000	263
MZ	35.928	35.376	21.5	88.94	31.67	0.356	300	0	1.000	1.000	89

GROUP 6

	B	D	KL/R	M_U	M_{DL}	B_D	P_U	P_C	δ_b	δ_s	M_C
	In.	In.		Ft. Kips	Ft. Kips		Kips	Kips			Ft. Kips
MY	35.928	35.376	19.4	187.89	0.00	0.000	428	0	1.000	1.000	188
MZ	35.928	35.376	21.5	79.55	31.67	0.398	428	0	1.000	1.000	80

* MINIMUM MOMENT CONTROLS

H. W. LOCHNER, INC.

PROJECT: BONNER BRIDGE - OREGON INLET NORTH CAROLINA JMJ Jun-06
SUBJECT: HIGH LEVEL BENT ANALYSIS
HLB 142 MEM. 4 JT. 5 WDB 7/06

COLUMN LOADS

PMIN

HLB 142 MEMBER 4 JOINT 5

	GROUP 1				GROUP 2		
	P	MY	MZ		P	MY	MZ
DL	-172.52	0.00	24.36	DL	-172.52	0.00	24.36
LL	-47.52	0.00	25.51	LL	0.00	0.00	0.00
GROUP 1	0.00	0.00	0.00	GROUP 2	-9.58	-210.39	43.50
SERVICE	-220.04	0.00	49.87	SERVICE	-182.10	-210.39	67.86
STRENGTH	-327.23	0.00	86.94	STRENGTH	-236.72	-273.51	88.22

	GROUP 3				GROUP 4		
	P	MY	MZ		P	MY	MZ
DL	-172.52	0.00	24.36	DL	-172.52	0.00	24.36
LL	-47.52	0.00	25.51	LL	-47.52	0.00	25.51
GROUP 3	-4.40	-150.31	20.60	GROUP 4	-0.01	0.00	3.29
SERVICE	-224.44	-150.31	70.47	SERVICE	-220.05	0.00	53.16
STRENGTH	-291.77	-195.40	91.61	STRENGTH	-286.06	0.00	69.11

	GROUP 5				GROUP 6		
	P	MY	MZ		P	MY	MZ
DL	-172.52	0.00	24.36	DL	-172.52	0.00	24.36
LL	0.00	0.00	0.00	LL	-47.52	0.00	25.51
GROUP 5	-9.59	-210.39	46.79	GROUP 6	-4.42	-150.31	23.89
SERVICE	-182.11	-210.39	71.15	SERVICE	-224.46	-150.31	73.76
STRENGTH	-227.63	-262.99	88.94	STRENGTH	-280.57	-187.89	92.20

SLENDERNESS EFFECTS IN COMPRESSION MEMBERS (AASHTO 8.16.5)

f'c = 3000 psi PHI = 0.70 W_C = 150 PCF

$E_C = W_C^{1.5} * 33 * f'c^{0.5}$ = 3320561 PSI Width of Rect. Col. = B = 35.928 In.

Depth of Rect. Col = D = 35.376 In.

$r_Y = 0.30*D$ = 10.61 In. L_Y = 8.583 Ft. K_Y = 2.0

$r_Z = 0.30*B$ = 10.78 In. L_Z = 16.083 Ft. K_Z = 1.2

I_{YY} = $B*D^3/12$ I_{YY} = 132549 In^4

I_{ZZ} = $D*B^3/12$ I_{ZZ} = 136718 In^5

$K_Y L_Y/r$ = 19.4 < 22 NO SLENDERNESS EFFECT

$K_Z L_Z/r$ = 21.5 < 22 NO SLENDERNESS EFFECT

H. W. LOCHNER, INC.

PROJECT: BONNER BRIDGE - OREGON INLET NORTH CAROLINA JMJ Jun-06
SUBJECT: HIGH LEVEL BENT ANALYSIS
HLB 142 MEM. 4 JT. 5 WDB 7/06

SLENDERNESS EFFECTS IN RECTANGULAR COMPRESSION MEMBERS (AASHTO 8.16.5)

GROUP 1

	B	D	KL/R	M_U	M_{DL}	B_D	P_U	P_C	δ_b	δ_s	M_C	
	In.	In.		Ft. Kips	Ft. Kips		Kips	Kips			Ft. Kips	
MY	35.928	35.376	19.4	0.00	0.00	0.000	327	0	1.000	1.000	45	*
MZ	35.928	35.376	21.5	86.94	31.67	0.364	327	0	1.000	1.000	87	

GROUP 2

	B	D	KL/R	M_U	M_{DL}	B_D	P_U	P_C	δ_b	δ_s	M_C
	In.	In.		Ft. Kips	Ft. Kips		Kips	Kips			Ft. Kips
MY	35.928	35.376	19.4	273.51	0.00	0.000	237	0	1.000	1.000	274
MZ	35.928	35.376	21.5	88.22	31.67	0.359	237	0	1.000	1.000	88

GROUP 3

	B	D	KL/R	M_U	M_{DL}	B_D	P_U	P_C	δ_b	δ_s	M_C
	In.	In.		Ft. Kips	Ft. Kips		Kips	Kips			Ft. Kips
MY	35.928	35.376	19.4	195.40	0.00	0.000	292	0	1.000	1.000	195
MZ	35.928	35.376	21.5	91.61	31.67	0.346	292	0	1.000	1.000	92

GROUP 4

	B	D	KL/R	M_U	M_{DL}	B_D	P_U	P_C	δ_b	δ_s	M_C	
	In.	In.		Ft. Kips	Ft. Kips		Kips	Kips			Ft. Kips	
MY	35.928	35.376	19.4	0.00	0.00	0.000	286	0	1.000	1.000	40	*
MZ	35.928	35.376	21.5	69.11	31.67	0.458	286	0	1.000	1.000	69	

GROUP 5

	B	D	KL/R	M_U	M_{DL}	B_D	P_U	P_C	δ_b	δ_s	M_C
	In.	In.		Ft. Kips	Ft. Kips		Kips	Kips			Ft. Kips
MY	35.928	35.376	19.4	262.99	0.00	0.000	228	0	1.000	1.000	263
MZ	35.928	35.376	21.5	88.94	31.67	0.356	228	0	1.000	1.000	89

GROUP 6

	B	D	KL/R	M_U	M_{DL}	B_D	P_U	P_C	δ_b	δ_s	M_C
	In.	In.		Ft. Kips	Ft. Kips		Kips	Kips			Ft. Kips
MY	35.928	35.376	19.4	187.89	0.00	0.000	281	0	1.000	1.000	188
MZ	35.928	35.376	21.5	92.20	31.67	0.343	281	0	1.000	1.000	92

* MINIMUM MOMENT CONTROLS

SMS 7/06

WDB 7/06

```
OOOOOOO    OOOOO    OOOOO    OOOOO    OOOOO    OO
OO    OO   OO  OO   OO  OO   OO  OO   OO  OO   OO
OO    OO   OO  OO   OO  OO   OO  OO   OO  OO   OO
OO    OO   OO       OO  OO   OO       OO  OO   OO
OO    OO   OO       OOOOOOO  OO       OO  OO   OO
OOOOOOO    OO  OO   OO  OO   OO  OO   OO  OO   OO
OO         OO  OO   OO  OO   OO  OO   OO  OO   OO
OO          OOOOO   OO  OO    OOOOO    OOOOO    OOOOO  (TM)
```

==========
Computer program for the Strength Design of Reinforced Concrete Sections
==========

Licensee stated above acknowledges that Portland Cement Association (PCA) is not and cannot be responsible for either the accuracy or adequacy of the material supplied as input for processing by the PCACOL(tm) computer program. Furthermore, PCA neither makes any warranty expressed nor implied with respect to the correctness of the output prepared by the PCACOL(tm) program. Although PCA has endeavored to produce PCACOL(tm) error free, the program is not and can't be certified infallible. The final and only responsibility for analysis, design and engineering documents is the licensees. Accordingly, PCA disclaims all responsibility in contract, negligence or other tort for any analysis, design or engineering documents prepared in connection with the use of the PCACOL(tm) program.

BASED ON PLANS.

General Information:
==========

File Name: S:\DGN-ST\NORTHC~1\BONNER~1\ANALYSIS\PIERS\HLB142\PCACOL~1\M4PLAN.COL
Project: BONNER BRIDGE - OREGON INLET
Column: HLB #142 Engineer: JMJ
Code: ACI 318-95 Units: English

Run Option: Investigation Slenderness: Not considered
Run Axis: Biaxial Column Type: Structural

Material Properties:
==========

f'c = 3 ksi fy = 40 ksi
Ec = 3122.02 ksi Es = 29000 ksi
fc = 2.55 ksi Rupture strain = Infinity
Ultimate strain = 0.003 in/in
Beta1 = 0.85

Section:
==========

Rectangular: Width = 36 in Depth = 35.4 in

Gross section area, Ag = 1274.4 in^2
Ix = 133086 in^4 Iy = 137635 in^4
Xo = 0 in Yo = 0 in

Reinforcement:
==========

Rebar Database: User-defined

Size	Diam (in)	Area (in^2)	Size	Diam (in)	Area (in^2)	Size	Diam (in)	Area (in^2)
# 1	0.00	0.00	# 3	0.38	0.11	# 4	0.50	0.20
# 5	0.63	0.31	# 6	0.75	0.44	# 7	0.88	0.60
# 8	1.00	0.79	# 9	1.13	1.00	# 10	1.27	1.27
# 11	1.41	1.56	# 14	1.69	2.25	# 18	2.26	4.00

Confinement: Tied; #1 ties with #9 bars, #1 with larger bars.
phi(a) = 0.8, phi(b) = 0.9, phi(c) = 0.7

Layout: Rectangular
Pattern: Equal Bar Spacing (Cover to longitudinal reinforcement)
Total steel area, As = 28.08 in^2 at 2.20%
18 #11 Cover = 5 in

Factored Loads and Moments with Corresponding Capacities: (see user's manual for notation)
==========

No.	Pu kip	Mux k-ft	Muy k-ft	fMnx k-ft	fMny k-ft	fMn/Mu
1	503.0	70.0	159.0	475.4	1075.5	6.768
2	281.0	39.0	184.0	243.4	1150.4	6.252
3	415.0	57.0	175.0	356.5	1093.2	6.248
4	409.0	57.0	126.0	468.3	1031.9	8.194
5	270.0	37.0	177.0	239.7	1152.1	6.508
6	399.0	55.0	170.0	352.7	1086.7	6.394
7	304.0	42.0	285.0	171.1	1168.0	4.098
8	214.0	30.0	184.0	191.0	1161.1	6.312
9	269.0	37.0	251.0	172.0	1168.8	4.656
10	263.0	36.0	202.0	206.3	1160.5	5.744
11	205.0	28.0	177.0	183.8	1161.8	6.564
12	258.0	36.0	242.0	173.6	1168.2	4.827
13	534.0	74.0	75.0	811.7	823.3	10.973
14	311.0	274.0	88.0	1107.9	354.1	4.041
15	446.0	195.0	78.0	1083.3	433.3	5.556

16	440.0	61.0	61.0	794.6	795.6	13.035
17	300.0	263.0	89.0	1102.4	371.8	4.190
18	428.0	188.0	80.0	1062.3	453.3	5.653
19	327.0	45.0	87.0	524.0	1011.2	11.627
20	237.0	274.0	88.0	1110.6	355.1	4.052
21	292.0	195.0	92.0	1041.1	492.3	5.341
22	286.0	40.0	69.0	573.5	990.0	14.345
23	228.0	263.0	89.0	1103.1	374.7	4.196
24	281.0	188.0	92.0	1034.9	506.8	5.506

*** Program completed as requested! ***

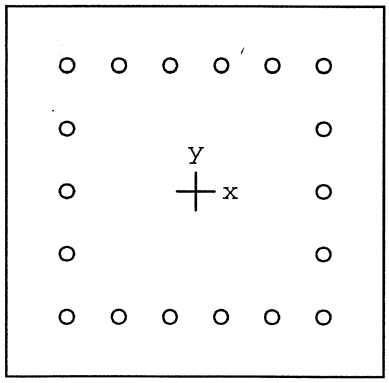

36 x 35.4 in

Code: ACI 318-95

Units: English

Run axis: Biaxial

Run option: Investigation

Slenderness: Not considered

umn type: Structural

Bars: User-defined

Date: 07/20/06

Time: 12:33:45

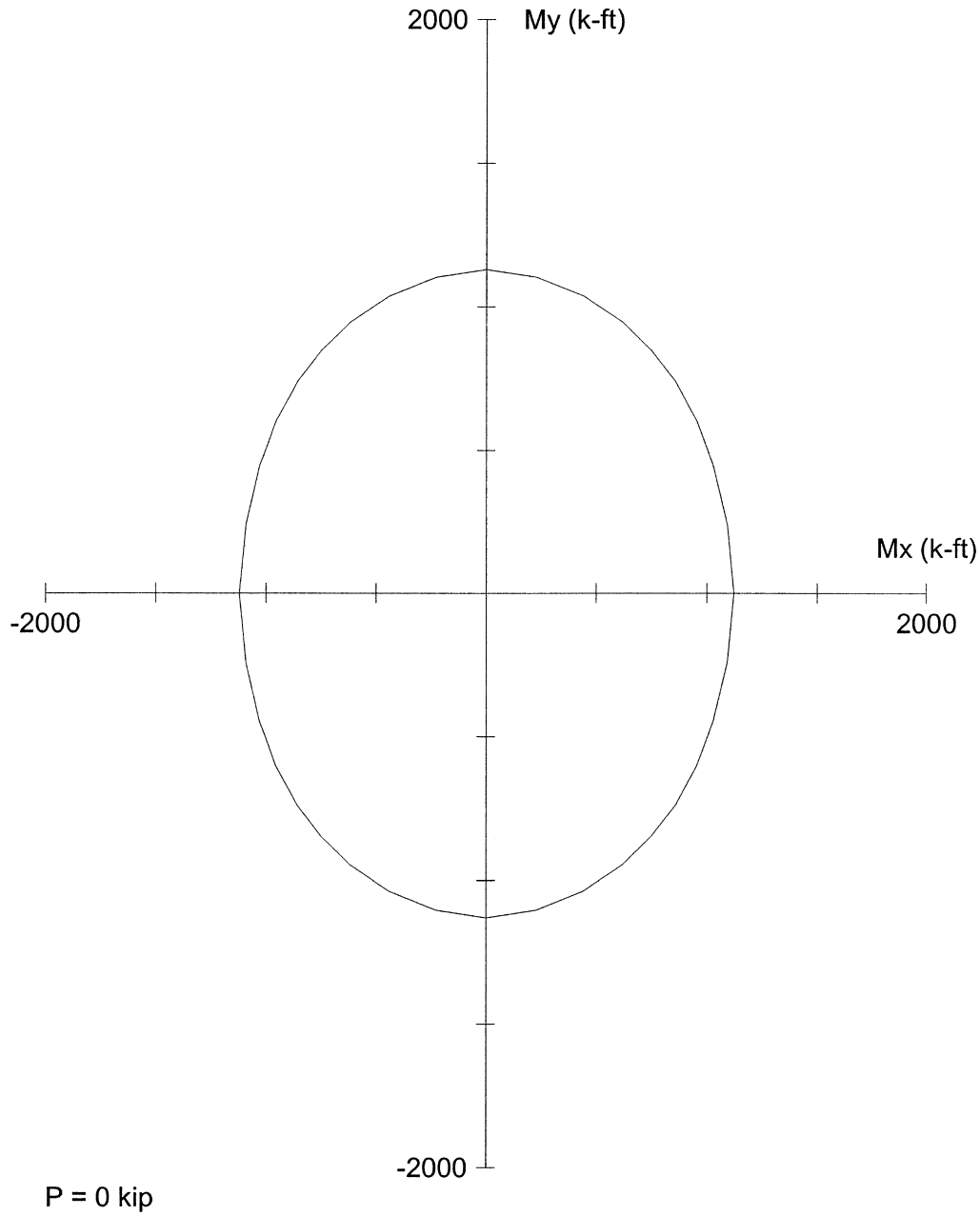

PCACOL V3.00 (PCA 1999) - Licensed to: Licensee name not yet specified.

File: S:\DGN-ST\NORTHC~1\BONNER~1\ANALYSIS\PIERS\HLB142\PCACOL~1\M4PLAN.COL

Project: BONNER BRIDGE - OREGON INLET

Column: HLB #142		Engineer: JMJ	
f'c = 3 ksi	fy = 40 ksi	Ag = 1274.4 in^2	18 #11 bars
Ec = 3122 ksi	Es = 29000 ksi	As = 28.08 in^2	Rho = 2.20%
fc = 2.55 ksi	e_rup = Infinity	Xo = 0.00 in	Ix = 133086 in^4
_u = 0.003 in/in		Yo = 0.00 in	Iy = 137635 in^4
Beta1 = 0.85		Clear spacing = 3.51 in	Clear cover = 5.00 in
Confinement: Tied	phi(a) = 0.8, phi(b) = 0.9, phi(c) = 0.7		

JMJ 7/06
WDB 7/06

```
OOOOOOO    OOOOO    OOOOO    OOOOO    OOOOO   OO
OO    OO   OO  OO   OO  OO   OO  OO   OO  OO   OO
OO    OO   OO  OO   OO  OO   OO  OO   OO  OO   OO
OO    OO   OO       OO  OO   OO       OO  OO   OO
OO    OO   OO       OOOOOOO  OO       OO  OO   OO
OOOOOOO    OO  OO   OO  OO   OO  OO   OO  OO   OO
OO         OO  OO   OO  OO   OO  OO   OO  OO   OO
OO          OOOOO   OO  OO    OOOOO    OOOOO   OOOOO  (TM)
```

==========
Computer program for the Strength Design of Reinforced Concrete Sections
==========

Licensee stated above acknowledges that Portland Cement Association (PCA) is not and cannot be responsible for either the accuracy or adequacy of the material supplied as input for processing by the PCACOL(tm) computer program. Furthermore, PCA neither makes any warranty expressed nor implied with respect to the correctness of the output prepared by the PCACOL(tm) program. Although PCA has endeavored to produce PCACOL(tm) error free, the program is not and can't be certified infallible. The final and only responsibility for analysis, design and engineering documents is the licensees. Accordingly, PCA disclaims all responsibility in contract, negligence or other tort for any analysis, design or engineering documents prepared in connection with the use of the PCACOL(tm) program.

50% COVER LOSS
f'_c = 4400 PSI

General Information:
==========

File Name: S:\DGN-ST\NORTHC~1\BONNER~1\ANALYSIS\PIERS\HLB142\PCACOL~1\M4ACT.COL
Project: BONNER BRIDGE - OREGON INLET
Column: HLB #142 Engineer: JMJ
Code: ACI 318-95 Units: English

Run Option: Investigation Slenderness: Not considered
Run Axis: Biaxial Column Type: Structural

Material Properties:
==========

f'c = 4.4 ksi fy = 40 ksi
Ec = 3780.96 ksi Es = 29000 ksi
fc = 3.74 ksi Rupture strain = Infinity
Ultimate strain = 0.003 in/in
Beta1 = 0.83

Section:
==========

Rectangular: Width = 31 in Depth = 30.4 in

Gross section area, Ag = 942.4 in^2
Ix = 72577.4 in^4 Iy = 75470.5 in^4
Xo = 0 in Yo = 0 in

Reinforcement:
==========

Rebar Database: User-defined

Size	Diam (in)	Area (in^2)	Size	Diam (in)	Area (in^2)	Size	Diam (in)	Area (in^2)
# 1	0.00	0.00	# 3	0.38	0.11	# 4	0.50	0.20
# 5	0.63	0.31	# 6	0.75	0.44	# 7	0.88	0.60
# 8	1.00	0.79	# 9	1.13	1.00	# 10	1.27	1.27
# 11	1.41	1.56	# 14	1.69	2.25	# 18	2.26	4.00

Confinement: Tied; #1 ties with #9 bars, #1 with larger bars.
phi(a) = 0.8, phi(b) = 0.9, phi(c) = 0.7

Layout: Rectangular
Pattern: Equal Bar Spacing (Cover to longitudinal reinforcement)
Total steel area, As = 28.08 in^2 at 2.98%
18 #11 Cover = 2.5 in

Factored Loads and Moments with Corresponding Capacities: (see user's manual for notation)
==========

No.	Pu kip	Mux k-ft	Muy k-ft	fMnx k-ft	fMny k-ft	fMn/Mu
1	503.0	70.0	159.0	450.1	1017.5	6.404
2	281.0	39.0	184.0	231.5	1092.5	5.937
3	415.0	57.0	175.0	336.7	1034.7	5.912
4	409.0	57.0	126.0	445.5	980.8	7.789
5	270.0	37.0	177.0	228.4	1092.5	6.172
6	399.0	55.0	170.0	336.8	1039.9	6.118
7	304.0	42.0	285.0	164.0	1110.5	3.897
8	214.0	30.0	184.0	179.4	1098.6	5.971
9	269.0	37.0	251.0	164.2	1108.6	4.417
10	263.0	36.0	202.0	196.4	1100.3	5.447
11	205.0	28.0	177.0	172.3	1099.0	6.207
12	258.0	36.0	242.0	165.5	1107.4	4.576
13	534.0	74.0	75.0	770.4	782.2	10.420
14	311.0	274.0	88.0	1056.5	339.7	3.856
15	446.0	195.0	78.0	1020.7	408.9	5.236

16	440.0	61.0	61.0	752.3	752.8	12.337
17	300.0	263.0	89.0	1050.6	355.8	3.995
18	428.0	188.0	80.0	1001.3	426.9	5.328
19	327.0	45.0	87.0	501.1	972.0	11.165
20	237.0	274.0	88.0	1054.9	337.6	3.849
21	292.0	195.0	92.0	997.6	469.6	5.114
22	286.0	40.0	69.0	547.8	947.6	13.724
23	228.0	263.0	89.0	1048.3	353.0	3.984
24	281.0	188.0	92.0	989.7	483.6	5.263

*** Program completed as requested! ***

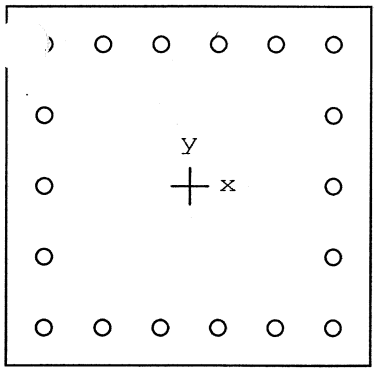

31 x 30.4 in

Code: ACI 318-95

Units: English

Run axis: Biaxial

Run option: Investigation

Slenderness: Not considered

Column type: Structural

Bars: User-defined

Date: 07/25/06

Time: 13:46:23

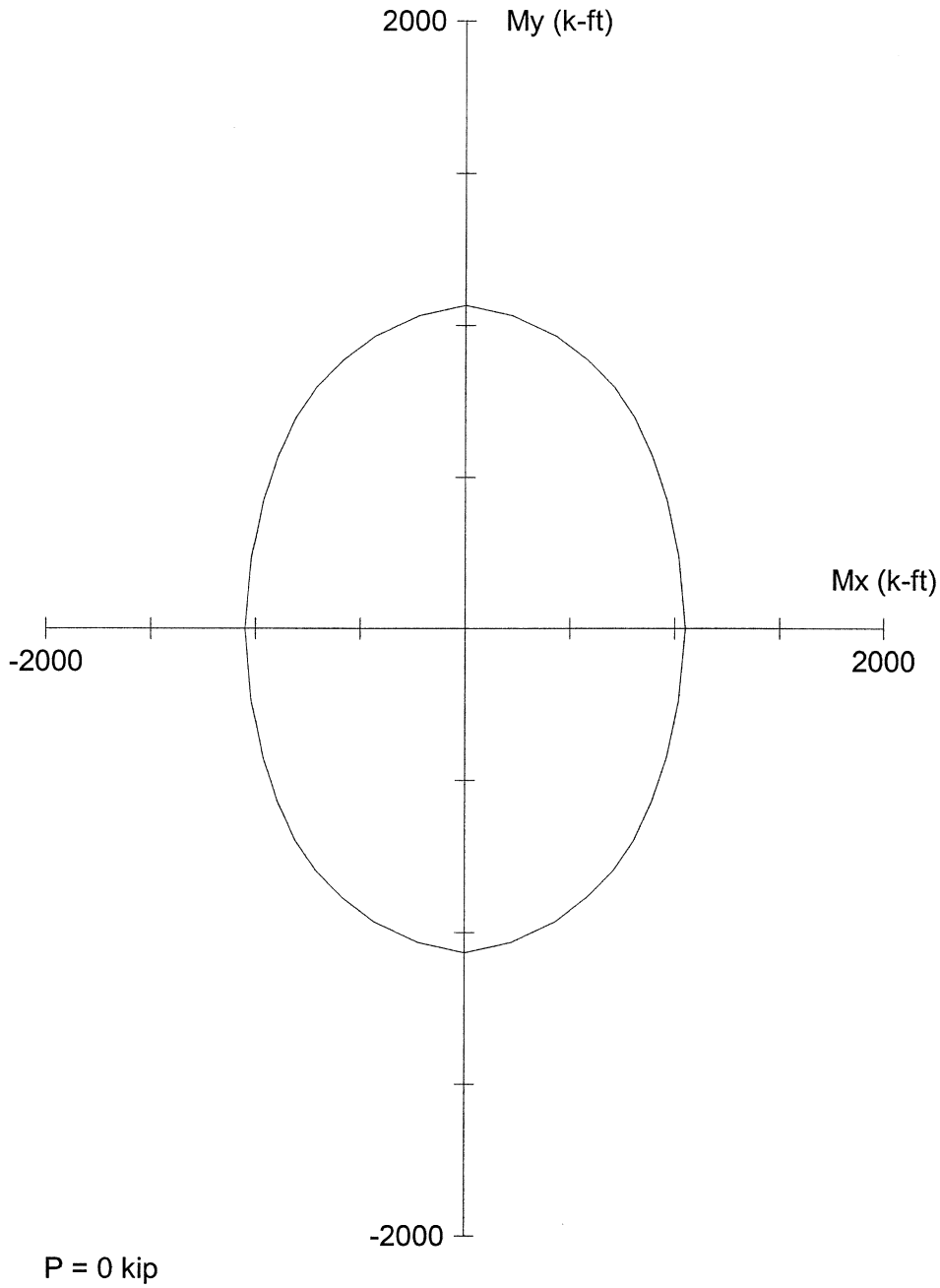

PCACOL V3.00 (PCA 1999) - Licensed to: Licensee name not yet specified.

File: S:\DGN-ST\NORTHC~1\BONNER~1\ANALYSIS\PIERS\HLB142\PCACOL~1\M4ACT.COL

Project: BONNER BRIDGE - OREGON INLET

Column: HLB #142		Engineer: JMJ	
f'c = 4.4 ksi	fy = 40 ksi	Ag = 942.4 in^2	18 #11 bars
Ec = 3781 ksi	Es = 29000 ksi	As = 28.08 in^2	Rho = 2.98%
fc = 3.74 ksi	e_rup = Infinity	Xo = 0.00 in	Ix = 72577.4 in^4
e_u = 0.003 in/in		Yo = 0.00 in	Iy = 75470.5 in^4
Beta1 = 0.83		Clear spacing = 3.51 in	Clear cover = 2.50 in
Confinement: Tied	phi(a) = 0.8, phi(b) = 0.9, phi(c) = 0.7		

H. W. LOCHNER, INC.

PROJECT: BONNER BRIDGE - OREGON INLET NORTH CAROLINA JMJ Jun-06
SUBJECT: HIGH LEVEL BENT ANALYSIS
HLB 142 MEM. 5 JT. 3 WDB 7/06

COLUMN LOADS

PMAX

HLB 142 MEMBER 5 JOINT 3

	GROUP 1				GROUP 2		
	P	MY	MZ		P	MY	MZ
DL	206.41	0.00	57.66	DL	206.41	0.00	57.66
LL	108.30	0.00	38.85	LL	0.00	0.00	0.00
GROUP 1	0.00	0.00	0.00	GROUP 2	-9.47	0.46	-83.52
SERVICE	314.71	0.00	96.51	SERVICE	196.94	0.46	-25.86
STRENGTH	502.98	0.00	159.13	STRENGTH	256.02	0.60	-33.62

	GROUP 3				GROUP 4		
	P	MY	MZ		P	MY	MZ
DL	206.41	0.00	57.66	DL	206.41	0.00	57.66
LL	108.30	0.00	38.85	LL	108.30	0.00	38.85
GROUP 3	-4.37	0.28	-38.45	GROUP 4	0.01	0.00	0.71
SERVICE	310.34	0.28	58.06	SERVICE	314.72	0.00	97.22
STRENGTH	403.44	0.36	75.48	STRENGTH	409.14	0.00	126.39

	GROUP 5				GROUP 6		
	P	MY	MZ		P	MY	MZ
DL	206.41	0.00	57.66	DL	206.41	0.00	57.66
LL	0.00	0.00	0.00	LL	108.30	0.00	38.85
GROUP 5	-9.45	0.46	-82.81	GROUP 6	-4.36	0.28	-37.74
SERVICE	196.96	0.46	-25.15	SERVICE	310.35	0.28	58.77
STRENGTH	246.20	0.58	-31.44	STRENGTH	387.94	0.35	73.46

SLENDERNESS EFFECTS IN COMPRESSION MEMBERS (AASHTO 8.16.5)

f'c = 3000 psi PHI = 0.70 W_C = 150 PCF

$E_C = W_C$^1.5 *33*f'c^0.5 = 3320561 PSI Width of Rect. Col. = B = 35.928 In.

Depth of Rect. Col = D = 35.376 In.

r_Y = 0.30*D = 10.61 In. L_Y = 8.583 Ft. K_Y = 2.0

r_Z = 0.30*B = 10.78 In. L_Z = 16.083 Ft. K_Z = 1.2

I_{YY} = B*D^3/12 I_{YY} = 132549 In^4

I_{ZZ} = D*B^3/12 I_{ZZ} = 136718 In^5

K_YL_Y/r = 19.4 < 22 NO SLENDERNESS EFFECT

K_ZL_Z/r = 21.5 < 22 NO SLENDERNESS EFFECT

H. W. LOCHNER, INC.

PROJECT: BONNER BRIDGE - OREGON INLET NORTH CAROLINA JMJ Jun-06
SUBJECT: HIGH LEVEL BENT ANALYSIS
HLB 142 MEM. 5 JT. 3 WDB 7/06

SLENDERNESS EFFECTS IN RECTANGULAR COMPRESSION MEMBERS (AASHTO 8.16.5)

GROUP 1

	B	D	KL/R	M_U	M_{DL}	B_D	P_U	P_C	δ_b	δ_s	M_C	
	In.	In.		Ft. Kips	Ft. Kips		Kips	Kips			Ft. Kips	
MY	35.928	35.376	19.4	0.00	0.00	0.000	503	0	1.000	1.000	70	*
MZ	35.928	35.376	21.5	159.13	74.96	0.471	503	0	1.000	1.000	159	

GROUP 2

	B	D	KL/R	M_U	M_{DL}	B_D	P_U	P_C	δ_b	δ_s	M_C	
	In.	In.		Ft. Kips	Ft. Kips		Kips	Kips			Ft. Kips	
MY	35.928	35.376	19.4	0.60	0.00	0.000	256	0	1.000	1.000	35	*
MZ	35.928	35.376	21.5	33.62	74.96	2.230	256	0	1.000	1.000	36	*

GROUP 3

	B	D	KL/R	M_U	M_{DL}	B_D	P_U	P_C	δ_b	δ_s	M_C	
	In.	In.		Ft. Kips	Ft. Kips		Kips	Kips			Ft. Kips	
MY	35.928	35.376	19.4	0.36	0.00	0.000	403	0	1.000	1.000	56	*
MZ	35.928	35.376	21.5	75.48	74.96	0.993	403	0	1.000	1.000	75	

GROUP 4

	B	D	KL/R	M_U	M_{DL}	B_D	P_U	P_C	δ_b	δ_s	M_C	
	In.	In.		Ft. Kips	Ft. Kips		Kips	Kips			Ft. Kips	
MY	35.928	35.376	19.4	0.00	0.00	0.000	409	0	1.000	1.000	57	*
MZ	35.928	35.376	21.5	126.39	74.96	0.593	409	0	1.000	1.000	126	

GROUP 5

	B	D	KL/R	M_U	M_{DL}	B_D	P_U	P_C	δ_b	δ_s	M_C	
	In.	In.		Ft. Kips	Ft. Kips		Kips	Kips			Ft. Kips	
MY	35.928	35.376	19.4	0.58	0.00	0.000	246	0	1.000	1.000	34	*
MZ	35.928	35.376	21.5	31.44	74.96	2.384	246	0	1.000	1.000	34	*

GROUP 6

	B	D	KL/R	M_U	M_{DL}	B_D	P_U	P_C	δ_b	δ_s	M_C	
	In.	In.		Ft. Kips	Ft. Kips		Kips	Kips			Ft. Kips	
MY	35.928	35.376	19.4	0.35	0.00	0.000	388	0	1.000	1.000	54	*
MZ	35.928	35.376	21.5	73.46	74.96	1.020	388	0	1.000	1.000	73	

* MINIMUM MOMENT CONTROLS

H. W. LOCHNER, INC.

PROJECT: BONNER BRIDGE - OREGON INLET NORTH CAROLINA JMJ Jun-06
SUBJECT: HIGH LEVEL BENT ANALYSIS
HLB 142 MEM. 5 JT. 3 WDB 7/06

COLUMN LOADS

PMIN

HLB 142 MEMBER 5 JOINT 3

GROUP 1

	P	MY	MZ
DL	154.81	0.00	57.66
LL	47.52	0.00	96.94
GROUP 1	0.00	0.00	0.00
SERVICE	202.33	0.00	154.60
STRENGTH	304.21	0.00	284.99

GROUP 2

	P	MY	MZ
DL	154.81	0.00	57.66
LL	0.00	0.00	0.00
GROUP 2	-9.47	0.46	-83.52
SERVICE	145.34	0.46	-25.86
STRENGTH	188.94	0.60	-33.62

GROUP 3

	P	MY	MZ
DL	154.81	0.00	57.66
LL	47.52	0.00	96.94
GROUP 3	-4.37	0.28	-38.45
SERVICE	197.96	0.28	116.15
STRENGTH	257.34	0.36	151.00

GROUP 4

	P	MY	MZ
DL	154.81	0.00	57.66
LL	47.52	0.00	96.94
GROUP 4	0.01	0.00	0.71
SERVICE	202.34	0.00	155.31
STRENGTH	263.04	0.00	201.90

GROUP 5

	P	MY	MZ
DL	154.81	0.00	57.66
LL	0.00	0.00	0.00
GROUP 5	-9.45	0.46	-82.81
SERVICE	145.36	0.46	-25.15
STRENGTH	181.70	0.58	-31.44

GROUP 6

	P	MY	MZ
DL	154.81	0.00	57.66
LL	47.52	0.00	96.94
GROUP 6	-4.36	0.28	-37.74
SERVICE	197.97	0.28	116.86
STRENGTH	247.46	0.35	146.08

SLENDERNESS EFFECTS IN COMPRESSION MEMBERS (AASHTO 8.16.5)

f'c = 3000 psi PHI = 0.70 W_C = 150 PCF

$E_C = W_C^{1.5} * 33 * f'c^{0.5}$ = 3320561 PSI Width of Rect. Col. = B = 35.928 In.

Depth of Rect. Col = D = 35.376 In.

$r_Y = 0.30*D$ = 10.61 In. L_Y = 8.583 Ft. K_Y = 2.0

$r_Z = 0.30*B$ = 10.78 In. L_Z = 16.083 Ft. K_Z = 1.2

I_{YY} = $B*D^3/12$ I_{YY} = 132549 In^4

I_{ZZ} = $D*B^3/12$ I_{ZZ} = 136718 In^5

$K_Y L_Y/r$ = 19.4 < 22 NO SLENDERNESS EFFECT

$K_Z L_Z/r$ = 21.5 < 22 NO SLENDERNESS EFFECT

H. W. LOCHNER, INC.

PROJECT: BONNER BRIDGE - OREGON INLET NORTH CAROLINA JMJ Jun-06
SUBJECT: HIGH LEVEL BENT ANALYSIS
HLB 142 MEM. 5 JT. 3 WDB 7/06

SLENDERNESS EFFECTS IN RECTANGULAR COMPRESSION MEMBERS (AASHTO 8.16.5)

GROUP 1

	B	D	KL/R	M_U	M_{DL}	B_D	P_U	P_C	δ_b	δ_s	M_C	
	In.	In.		Ft. Kips	Ft. Kips		Kips	Kips			Ft. Kips	
MY	35.928	35.376	19.4	0.00	0.00	0.000	304	0	1.000	1.000	42	*
MZ	35.928	35.376	21.5	284.99	74.96	0.263	304	0	1.000	1.000	285	

GROUP 2

	B	D	KL/R	M_U	M_{DL}	B_D	P_U	P_C	δ_b	δ_s	M_C	
	In.	In.		Ft. Kips	Ft. Kips		Kips	Kips			Ft. Kips	
MY	35.928	35.376	19.4	0.60	0.00	0.000	189	0	1.000	1.000	26	*
MZ	35.928	35.376	21.5	33.62	74.96	2.230	189	0	1.000	1.000	34	

GROUP 3

	B	D	KL/R	M_U	M_{DL}	B_D	P_U	P_C	δ_b	δ_s	M_C	
	In.	In.		Ft. Kips	Ft. Kips		Kips	Kips			Ft. Kips	
MY	35.928	35.376	19.4	0.36	0.00	0.000	257	0	1.000	1.000	36	*
MZ	35.928	35.376	21.5	151.00	74.96	0.496	257	0	1.000	1.000	151	

GROUP 4

	B	D	KL/R	M_U	M_{DL}	B_D	P_U	P_C	δ_b	δ_s	M_C	
	In.	In.		Ft. Kips	Ft. Kips		Kips	Kips			Ft. Kips	
MY	35.928	35.376	19.4	0.00	0.00	0.000	263	0	1.000	1.000	36	*
MZ	35.928	35.376	21.5	201.90	74.96	0.371	263	0	1.000	1.000	202	

GROUP 5

	B	D	KL/R	M_U	M_{DL}	B_D	P_U	P_C	δ_b	δ_s	M_C	
	In.	In.		Ft. Kips	Ft. Kips		Kips	Kips			Ft. Kips	
MY	35.928	35.376	19.4	0.58	0.00	0.000	182	0	1.000	1.000	25	*
MZ	35.928	35.376	21.5	31.44	74.96	2.384	182	0	1.000	1.000	31	

GROUP 6

	B	D	KL/R	M_U	M_{DL}	B_D	P_U	P_C	δ_b	δ_s	M_C	
	In.	In.		Ft. Kips	Ft. Kips		Kips	Kips			Ft. Kips	
MY	35.928	35.376	19.4	0.35	0.00	0.000	247	0	1.000	1.000	34	*
MZ	35.928	35.376	21.5	146.08	74.96	0.513	247	0	1.000	1.000	146	

* MINIMUM MOMENT CONTROLS

H. W. LOCHNER, INC.

PROJECT: BONNER BRIDGE - OREGON INLET NORTH CAROLINA JMJ Jun-06
SUBJECT: HIGH LEVEL BENT ANALYSIS
HLB 142 MEM. 5 JT. 6 WJB 7/06

COLUMN LOADS

PMAX

HLB 142 MEMBER 5 JOINT 6

GROUP 1

	P	MY	MZ
DL	-230.02	0.00	24.36
LL	-108.30	0.00	15.39
GROUP 1	0.00	0.00	0.00
SERVICE	-338.32	0.00	39.75
STRENGTH	-533.68	0.00	65.01

GROUP 2

	P	MY	MZ
DL	-230.02	0.00	24.36
LL	0.00	0.00	0.00
GROUP 2	9.58	210.37	-43.52
SERVICE	-220.44	210.37	-19.16
STRENGTH	-286.57	273.48	-24.91

GROUP 3

	P	MY	MZ
DL	-230.02	0.00	24.36
LL	-108.30	0.00	15.39
GROUP 3	4.40	150.30	-20.61
SERVICE	-333.92	150.30	19.14
STRENGTH	-434.10	195.39	24.88

GROUP 4

	P	MY	MZ
DL	-230.02	0.00	24.36
LL	-108.30	0.00	15.39
GROUP 4	-0.01	0.00	3.29
SERVICE	-338.33	0.00	43.04
STRENGTH	-439.83	0.00	55.95

GROUP 5

	P	MY	MZ
DL	-230.02	0.00	24.36
LL	0.00	0.00	0.00
GROUP 5	9.56	210.37	-40.22
SERVICE	-220.46	210.37	-15.86
STRENGTH	-275.58	262.96	-19.83

GROUP 6

	P	MY	MZ
DL	-230.02	0.00	24.36
LL	-108.30	0.00	15.39
GROUP 6	4.39	150.30	-17.31
SERVICE	-333.93	150.30	22.44
STRENGTH	-417.41	187.88	28.05

SLENDERNESS EFFECTS IN COMPRESSION MEMBERS (AASHTO 8.16.5)

f'c = 3000 psi PHI = 0.70 W_C = 150 PCF

$E_C = W_C^{1.5} * 33 * f'c^{0.5}$ = 3320561 PSI Width of Rect. Col. = B = 35.928 In.

Depth of Rect. Col = D = 35.376 In.

$r_Y = 0.30*D$ = 10.61 In. L_Y = 8.583 Ft. K_Y = 2.0

$r_Z = 0.30*B$ = 10.78 In. L_Z = 16.083 Ft. K_Z = 1.2

I_{YY} = $B*D^3/12$ I_{YY} = 132549 In^4

I_{ZZ} = $D*B^3/12$ I_{ZZ} = 136718 In^5

$K_Y L_Y/r$ = 19.4 < 22 NO SLENDERNESS EFFECT

$K_Z L_Z/r$ = 21.5 < 22 NO SLENDERNESS EFFECT

H. W. LOCHNER, INC.

PROJECT: BONNER BRIDGE - OREGON INLET NORTH CAROLINA JMJ Jun-06
SUBJECT: HIGH LEVEL BENT ANALYSIS WDB 7/06
HLB 142 MEM. 5 JT. 6

SLENDERNESS EFFECTS IN RECTANGULAR COMPRESSION MEMBERS (AASHTO 8.16.5)

GROUP 1

	B	D	KL/R	M_U	M_{DL}	B_D	P_U	P_C	δ_b	δ_s	M_C	
	In.	In.		Ft. Kips	Ft. Kips		Kips	Kips			Ft. Kips	
MY	35.928	35.376	19.4	0.00	0.00	0.000	534	0	1.000	1.000	74	*
MZ	35.928	35.376	21.5	65.01	31.67	0.487	534	0	1.000	1.000	75	*

GROUP 2

	B	D	KL/R	M_U	M_{DL}	B_D	P_U	P_C	δ_b	δ_s	M_C	
	In.	In.		Ft. Kips	Ft. Kips		Kips	Kips			Ft. Kips	
MY	35.928	35.376	19.4	273.48	0.00	0.000	287	0	1.000	1.000	273	
MZ	35.928	35.376	21.5	24.91	31.67	1.271	287	0	1.000	1.000	40	*

GROUP 3

	B	D	KL/R	M_U	M_{DL}	B_D	P_U	P_C	δ_b	δ_s	M_C	
	In.	In.		Ft. Kips	Ft. Kips		Kips	Kips			Ft. Kips	
MY	35.928	35.376	19.4	195.39	0.00	0.000	434	0	1.000	1.000	195	
MZ	35.928	35.376	21.5	24.88	31.67	1.273	434	0	1.000	1.000	61	*

GROUP 4

	B	D	KL/R	M_U	M_{DL}	B_D	P_U	P_C	δ_b	δ_s	M_C	
	In.	In.		Ft. Kips	Ft. Kips		Kips	Kips			Ft. Kips	
MY	35.928	35.376	19.4	0.00	0.00	0.000	440	0	1.000	1.000	61	*
MZ	35.928	35.376	21.5	55.95	31.67	0.566	440	0	1.000	1.000	61	*

GROUP 5

	B	D	KL/R	M_U	M_{DL}	B_D	P_U	P_C	δ_b	δ_s	M_C	
	In.	In.		Ft. Kips	Ft. Kips		Kips	Kips			Ft. Kips	
MY	35.928	35.376	19.4	262.96	0.00	0.000	276	0	1.000	1.000	263	
MZ	35.928	35.376	21.5	19.83	31.67	1.597	276	0	1.000	1.000	39	*

GROUP 6

	B	D	KL/R	M_U	M_{DL}	B_D	P_U	P_C	δ_b	δ_s	M_C	
	In.	In.		Ft. Kips	Ft. Kips		Kips	Kips			Ft. Kips	
MY	35.928	35.376	19.4	187.88	0.00	0.000	417	0	1.000	1.000	188	
MZ	35.928	35.376	21.5	28.05	31.67	1.129	417	0	1.000	1.000	58	*

* MINIMUM MOMENT CONTROLS

H. W. LOCHNER, INC.

PROJECT: BONNER BRIDGE - OREGON INLET NORTH CAROLINA JMJ Jun-06
SUBJECT: HIGH LEVEL BENT ANALYSIS
HLB 142 MEM. 5 JT. 6 WDB 7/06

COLUMN LOADS

PMIN

HLB 142 MEMBER 5 JOINT 6

GROUP 1	P	MY	MZ
DL	-172.52	0.00	24.36
LL	-47.52	0.00	25.51
GROUP 1	0.00	0.00	0.00
SERVICE	-220.04	0.00	49.87
STRENGTH	-327.23	0.00	86.94

GROUP 2	P	MY	MZ
DL	-172.52	0.00	24.36
LL	0.00	0.00	0.00
GROUP 2	9.58	210.37	-43.52
SERVICE	-162.94	210.37	-19.16
STRENGTH	-211.82	273.48	-24.91

GROUP 3	P	MY	MZ
DL	-172.52	0.00	24.36
LL	-47.52	0.00	25.51
GROUP 3	4.40	150.30	-20.61
SERVICE	-215.64	150.30	29.26
STRENGTH	-280.33	195.39	38.04

GROUP 4	P	MY	MZ
DL	-172.52	0.00	24.36
LL	-47.52	0.00	25.51
GROUP 4	-0.01	0.00	3.29
SERVICE	-220.05	0.00	53.16
STRENGTH	-286.06	0.00	69.11

GROUP 5	P	MY	MZ
DL	-172.52	0.00	24.36
LL	0.00	0.00	0.00
GROUP 5	9.56	210.37	-40.22
SERVICE	-162.96	210.37	-15.86
STRENGTH	-203.69	262.96	-19.83

GROUP 6	P	MY	MZ
DL	-172.52	0.00	24.36
LL	-47.52	0.00	25.51
GROUP 6	4.39	150.30	-17.31
SERVICE	-215.65	150.30	32.56
STRENGTH	-269.56	187.88	40.70

SLENDERNESS EFFECTS IN COMPRESSION MEMBERS (AASHTO 8.16.5)

f'c = 3000 psi PHI = 0.70 W_C = 150 PCF

$E_C = W_C^{1.5} * 33 * f'c^{0.5}$ = 3320561 PSI Width of Rect. Col. = B = 35.928 In.

Depth of Rect. Col = D = 35.376 In.

$r_Y = 0.30*D$ = 10.61 In. L_Y = 8.583 Ft. K_Y = 2.0

$r_Z = 0.30*B$ = 10.78 In. L_Z = 16.083 Ft. K_Z = 1.2

I_{YY} = $B*D^3/12$ I_{YY} = 132549 In^4

I_{ZZ} = $D*B^3/12$ I_{ZZ} = 136718 In^5

$K_Y L_Y/r$ = 19.4 < 22 NO SLENDERNESS EFFECT

$K_Z L_Z/r$ = 21.5 < 22 NO SLENDERNESS EFFECT

H. W. LOCHNER, INC.

PROJECT: BONNER BRIDGE - OREGON INLET NORTH CAROLINA JMJ Jun-06
SUBJECT: HIGH LEVEL BENT ANALYSIS
HLB 142 MEM. 5 JT. 6 WAB 7/06

SLENDERNESS EFFECTS IN RECTANGULAR COMPRESSION MEMBERS (AASHTO 8.16.5)

GROUP 1

	B	D	KL/R	M_U	M_{DL}	B_D	P_U	P_C	δ_b	δ_s	M_C	
	In.	In.		Ft. Kips	Ft. Kips		Kips	Kips			Ft. Kips	
MY	35.928	35.376	19.4	0.00	0.00	0.000	327	0	1.000	1.000	45	*
MZ	35.928	35.376	21.5	86.94	31.67	0.364	327	0	1.000	1.000	87	

GROUP 2

	B	D	KL/R	M_U	M_{DL}	B_D	P_U	P_C	δ_b	δ_s	M_C	
	In.	In.		Ft. Kips	Ft. Kips		Kips	Kips			Ft. Kips	
MY	35.928	35.376	19.4	273.48	0.00	0.000	212	0	1.000	1.000	273	
MZ	35.928	35.376	21.5	24.91	31.67	1.271	212	0	1.000	1.000	30	*

GROUP 3

	B	D	KL/R	M_U	M_{DL}	B_D	P_U	P_C	δ_b	δ_s	M_C	
	In.	In.		Ft. Kips	Ft. Kips		Kips	Kips			Ft. Kips	
MY	35.928	35.376	19.4	195.39	0.00	0.000	280	0	1.000	1.000	195	
MZ	35.928	35.376	21.5	38.04	31.67	0.833	280	0	1.000	1.000	39	*

GROUP 4

	B	D	KL/R	M_U	M_{DL}	B_D	P_U	P_C	δ_b	δ_s	M_C	
	In.	In.		Ft. Kips	Ft. Kips		Kips	Kips			Ft. Kips	
MY	35.928	35.376	19.4	0.00	0.00	0.000	286	0	1.000	1.000	40	*
MZ	35.928	35.376	21.5	69.11	31.67	0.458	286	0	1.000	1.000	69	

GROUP 5

	B	D	KL/R	M_U	M_{DL}	B_D	P_U	P_C	δ_b	δ_s	M_C	
	In.	In.		Ft. Kips	Ft. Kips		Kips	Kips			Ft. Kips	
MY	35.928	35.376	19.4	262.96	0.00	0.000	204	0	1.000	1.000	263	
MZ	35.928	35.376	21.5	19.83	31.67	1.597	204	0	1.000	1.000	28	*

GROUP 6

	B	D	KL/R	M_U	M_{DL}	B_D	P_U	P_C	δ_b	δ_s	M_C
	In.	In.		Ft. Kips	Ft. Kips		Kips	Kips			Ft. Kips
MY	35.928	35.376	19.4	187.88	0.00	0.000	270	0	1.000	1.000	188
MZ	35.928	35.376	21.5	40.70	31.67	0.778	270	0	1.000	1.000	41

* MINIMUM MOMENT CONTROLS

JMJ 7/06

WDB 7/06

```
OOOOOOO    OOOOO    OOOOO    OOOOO    OOOOO   OO
OO    OO   OO  OO   OO  OO   OO  OO   OO  OO   OO
OO    OO   OO  OO   OO  OO   OO  OO   OO  OO   OO
OO    OO   OO       OO  OO   OO       OO  OO   OO
OO    OO   OO       OOOOOOO  OO       OO  OO   OO
OOOOOOO    OO  OO   OO  OO   OO  OO   OO  OO   OO
OO         OO  OO   OO  OO   OO  OO   OO  OO   OO
OO          OOOOO   OO  OO    OOOOO    OOOOO   OOOOO  (TM)
```

==========
Computer program for the Strength Design of Reinforced Concrete Sections
==========

Licensee stated above acknowledges that Portland Cement Association (PCA) is not and cannot be responsible for either the accuracy or adequacy of the material supplied as input for processing by the PCACOL(tm) computer program. Furthermore, PCA neither makes any warranty expressed nor implied with respect to the correctness of the output prepared by the PCACOL(tm) program. Although PCA has endeavored to produce PCACOL(tm) error free, the program is not and can't be certified infallible. The final and only responsibility for analysis, design and engineering documents is the licensees. Accordingly, PCA disclaims all responsibility in contract, negligence or other tort for any analysis, design or engineering documents prepared in connection with the use of the PCACOL(tm) program.

BASED ON PLANS.

General Information:
==========

File Name: S:\DGN-ST\NORTHC~1\BONNER~1\ANALYSIS\PIERS\HLB142\PCACOL~1\M5PLAN.COL
Project: BONNER BRIDGE - OREGON INLET
Column: HLB #142 Engineer: JMJ
Code: ACI 318-95 Units: English

Run Option: Investigation Slenderness: Not considered
Run Axis: Biaxial Column Type: Structural

Material Properties:
==========

f'c = 3 ksi fy = 40 ksi
Ec = 3122.02 ksi Es = 29000 ksi
fc = 2.55 ksi Rupture strain = Infinity
Ultimate strain = 0.003 in/in
Beta1 = 0.85

Section:
==========

Rectangular: Width = 36 in Depth = 35.4 in

Gross section area, Ag = 1274.4 in^2
Ix = 133086 in^4 Iy = 137635 in^4
Xo = 0 in Yo = 0 in

Reinforcement:
==========

Rebar Database: User-defined

Size	Diam (in)	Area (in^2)	Size	Diam (in)	Area (in^2)	Size	Diam (in)	Area (in^2)
# 1	0.00	0.00	# 3	0.38	0.11	# 4	0.50	0.20
# 5	0.63	0.31	# 6	0.75	0.44	# 7	0.88	0.60
# 8	1.00	0.79	# 9	1.13	1.00	# 10	1.27	1.27
# 11	1.41	1.56	# 14	1.69	2.25	# 18	2.26	4.00

Confinement: Tied; #1 ties with #9 bars, #1 with larger bars.
phi(a) = 0.8, phi(b) = 0.9, phi(c) = 0.7

Layout: Rectangular
Pattern: Equal Bar Spacing (Cover to longitudinal reinforcement)
Total steel area, As = 28.08 in^2 at 2.20%
18 #11 Cover = 5 in

Factored Loads and Moments with Corresponding Capacities: (see user's manual for notation)
==========

No.	Pu kip	Mux k-ft	Muy k-ft	fMnx k-ft	fMny k-ft	fMn/Mu
1	503.0	70.0	159.0	475.4	1075.5	6.768
2	256.0	35.0	36.0	796.8	819.6	22.766
3	403.0	56.0	75.0	666.3	892.0	11.895
4	409.0	57.0	126.0	468.3	1031.9	8.194
5	246.0	34.0	34.0	810.0	810.0	23.823
6	388.0	54.0	73.0	657.1	891.0	12.192
7	304.0	42.0	285.0	171.1	1168.0	4.098
8	189.0	26.0	34.0	700.5	913.3	26.892
9	257.0	36.0	151.0	272.8	1141.3	7.559
10	263.0	36.0	202.0	206.3	1160.5	5.744
11	182.0	25.0	31.0	723.1	897.1	28.933
12	247.0	34.0	146.0	265.7	1144.4	7.837
13	534.0	74.0	75.0	811.7	823.3	10.973
14	287.0	273.0	40.0	1168.5	171.5	4.280
15	434.0	195.0	61.0	1117.5	348.9	5.730

16	440.0	61.0	61.0	794.6	795.6	13.035
17	276.0	263.0	39.0	1168.5	173.7	4.443
18	417.0	188.0	58.0	1110.4	342.6	5.907
19	327.0	45.0	87.0	524.0	1011.2	11.627
20	212.0	273.0	30.0	1171.3	128.9	4.291
21	280.0	195.0	39.0	1151.8	230.3	5.906
22	286.0	40.0	69.0	573.5	990.0	14.345
23	204.0	263.0	28.0	1170.6	124.7	4.451
24	270.0	188.0	41.0	1146.1	249.9	6.096

*** Program completed as requested! ***

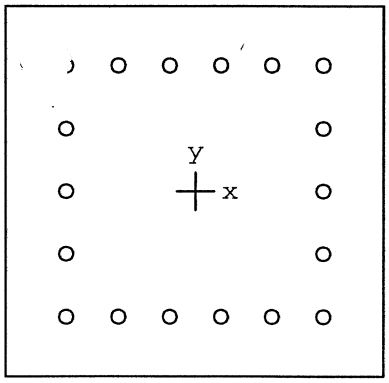

36 x 35.4 in

Code: ACI 318-95

Units: English

Run axis: Biaxial

Run option: Investigation

Slenderness: Not considered

mn type: Structural

Bars: User-defined

Date: 07/20/06

Time: 12:39:07

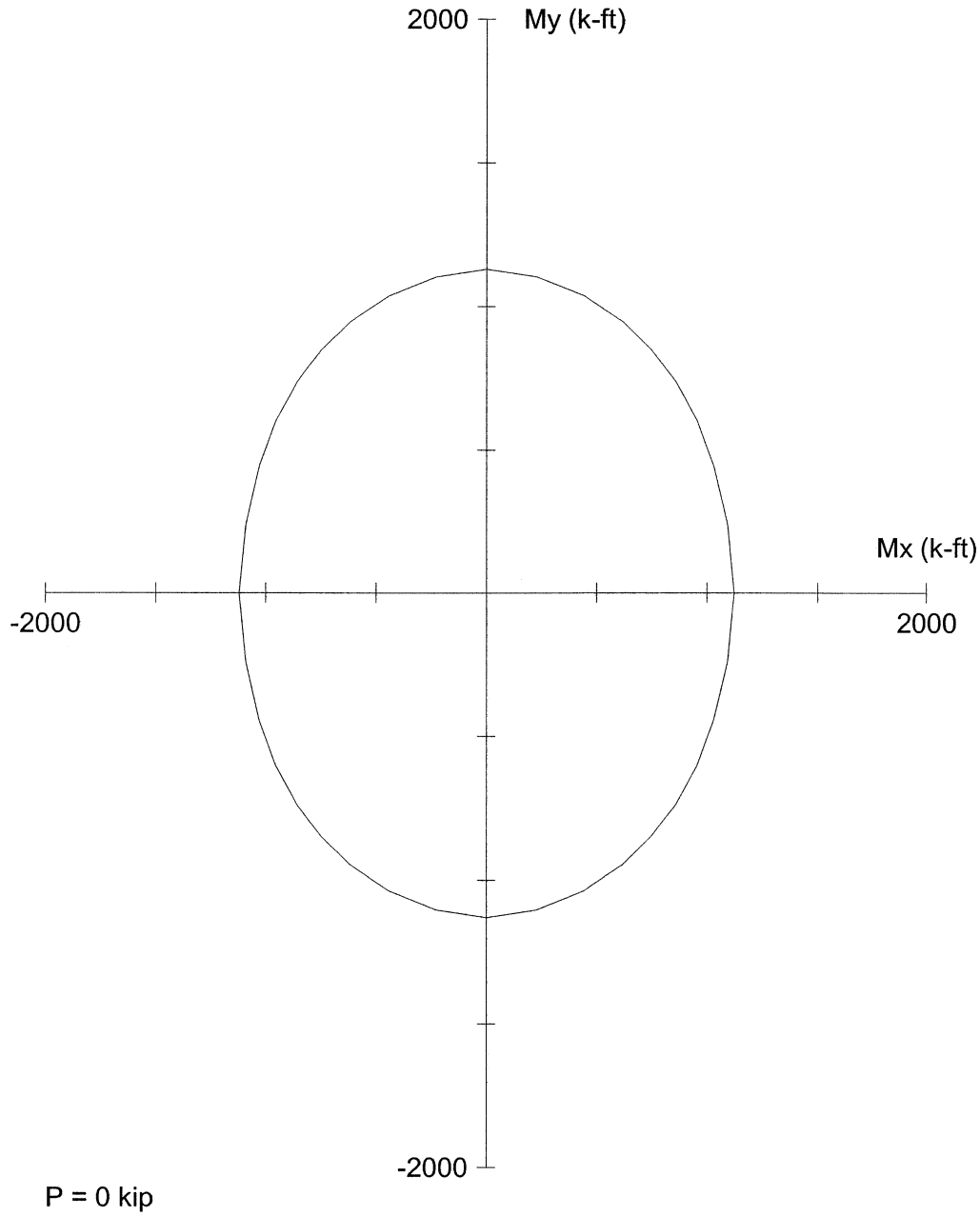

PCACOL V3.00 (PCA 1999) - Licensed to: Licensee name not yet specified.

File: S:\DGN-ST\NORTHC~1\BONNER~1\ANALYSIS\PIERS\HLB142\PCACOL~1\M5PLAN.COL

Project: BONNER BRIDGE - OREGON INLET

Column: HLB #142		Engineer: JMJ	
f'c = 3 ksi	fy = 40 ksi	Ag = 1274.4 in^2	18 #11 bars
Ec = 3122 ksi	Es = 29000 ksi	As = 28.08 in^2	Rho = 2.20%
fc = 2.55 ksi	e_rup = Infinity	Xo = 0.00 in	Ix = 133086 in^4
u = 0.003 in/in		Yo = 0.00 in	Iy = 137635 in^4
Beta1 = 0.85		Clear spacing = 3.51 in	Clear cover = 5.00 in
Confinement: Tied	phi(a) = 0.8, phi(b) = 0.9, phi(c) = 0.7		

JMS 7/06
WDB 7/06

```
OOOOOOO    OOOOO    OOOOO    OOOOO    OOOOO   OO
OO    OO   OO  OO   OO  OO   OO  OO   OO  OO   OO
OO    OO   OO  OO   OO  OO   OO  OO   OO  OO   OO
OO    OO   OO       OO  OO   OO       OO  OO   OO
OO    OO   OO       OOOOOOO  OO       OO  OO   OO
OOOOOOO    OO  OO   OO  OO   OO  OO   OO  OO   OO
OO         OO  OO   OO  OO   OO  OO   OO  OO   OO
OO          OOOOO   OO  OO    OOOOO    OOOOO   OOOOO   (TM)
```

==========
Computer program for the Strength Design of Reinforced Concrete Sections
==========

Licensee stated above acknowledges that Portland Cement Association (PCA) is not and cannot be responsible for either the accuracy or adequacy of the material supplied as input for processing by the PCACOL(tm) computer program. Furthermore, PCA neither makes any warranty expressed nor implied with respect to the correctness of the output prepared by the PCACOL(tm) program. Although PCA has endeavored to produce PCACOL(tm) error free, the program is not and can't be certified infallible. The final and only responsibility for analysis, design and engineering documents is the licensees. Accordingly, PCA disclaims all responsibility in contract, negligence or other tort for any analysis, design or engineering documents prepared in connection with the use of the PCACOL(tm) program.

50% COVER LOSS
f'_c = 4400 PSI

General Information:
==========

File Name: S:\DGN-ST\NORTHC~1\BONNER~1\ANALYSIS\PIERS\HLB142\PCACOL~1\M5ACT.COL
Project: BONNER BRIDGE - OREGON INLET
Column: HLB #142 Engineer: JMJ
Code: ACI 318-95 Units: English

Run Option: Investigation Slenderness: Not considered
Run Axis: Biaxial Column Type: Structural

Material Properties:
==========

f'c = 4.4 ksi fy = 40 ksi
Ec = 3780.96 ksi Es = 29000 ksi
fc = 3.74 ksi Rupture strain = Infinity
Ultimate strain = 0.003 in/in
Beta1 = 0.83

Section:
==========

Rectangular: Width = 31 in Depth = 30.4 in

Gross section area, Ag = 942.4 in^2
Ix = 72577.4 in^4 Iy = 75470.5 in^4
Xo = 0 in Yo = 0 in

Reinforcement:
==========

Rebar Database: User-defined

Size	Diam (in)	Area (in^2)	Size	Diam (in)	Area (in^2)	Size	Diam (in)	Area (in^2)
# 1	0.00	0.00	# 3	0.38	0.11	# 4	0.50	0.20
# 5	0.63	0.31	# 6	0.75	0.44	# 7	0.88	0.60
# 8	1.00	0.79	# 9	1.13	1.00	# 10	1.27	1.27
# 11	1.41	1.56	# 14	1.69	2.25	# 18	2.26	4.00

Confinement: Tied; #1 ties with #9 bars, #1 with larger bars.
phi(a) = 0.8, phi(b) = 0.9, phi(c) = 0.7

Layout: Rectangular
Pattern: Equal Bar Spacing (Cover to longitudinal reinforcement)
Total steel area, As = 28.08 in^2 at 2.98%
18 #11 Cover = 2.5 in

Factored Loads and Moments with Corresponding Capacities: (see user's manual for notation)
==========

No.	Pu kip	Mux k-ft	Muy k-ft	fMnx k-ft	fMny k-ft	fMn/Mu
1	503.0	70.0	159.0	450.1	1017.5	6.404
2	256.0	35.0	36.0	763.4	784.7	21.803
3	403.0	56.0	75.0	636.1	850.4	11.345
4	409.0	57.0	126.0	445.5	980.8	7.789
5	246.0	34.0	34.0	774.7	774.2	22.777
6	388.0	54.0	73.0	636.3	857.5	11.759
7	304.0	42.0	285.0	164.0	1110.5	3.897
8	189.0	26.0	34.0	666.1	872.3	25.643
9	257.0	36.0	151.0	258.1	1082.8	7.171
10	263.0	36.0	202.0	196.4	1100.3	5.447
11	182.0	25.0	31.0	688.1	855.6	27.570
12	247.0	34.0	146.0	252.3	1083.3	7.420
13	534.0	74.0	75.0	770.4	782.2	10.420
14	287.0	273.0	40.0	1115.5	161.7	4.085
15	434.0	195.0	61.0	1053.0	329.7	5.400

16	440.0	61.0	61.0	752.3	752.8	12.337
17	276.0	263.0	39.0	1114.1	163.9	4.236
18	417.0	188.0	58.0	1046.1	324.5	5.567
19	327.0	45.0	87.0	501.1	972.0	11.165
20	212.0	273.0	30.0	1113.6	122.0	4.079
21	280.0	195.0	39.0	1097.4	221.4	5.629
22	286.0	40.0	69.0	547.8	947.6	13.724
23	204.0	263.0	28.0	1112.9	117.9	4.232
24	270.0	188.0	41.0	1091.4	239.3	5.807

*** Program completed as requested! ***

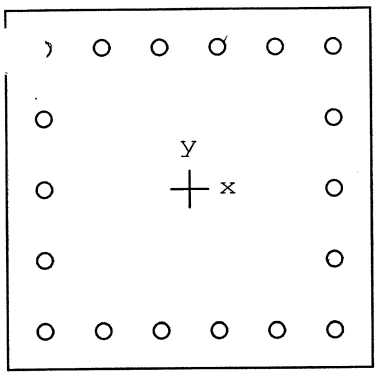

31 x 30.4 in

Code: ACI 318-95

Units: English

Run axis: Biaxial

Run option: Investigation

Slenderness: Not considered

Column type: Structural

Bars: User-defined

Date: 07/25/06

Time: 13:47:45

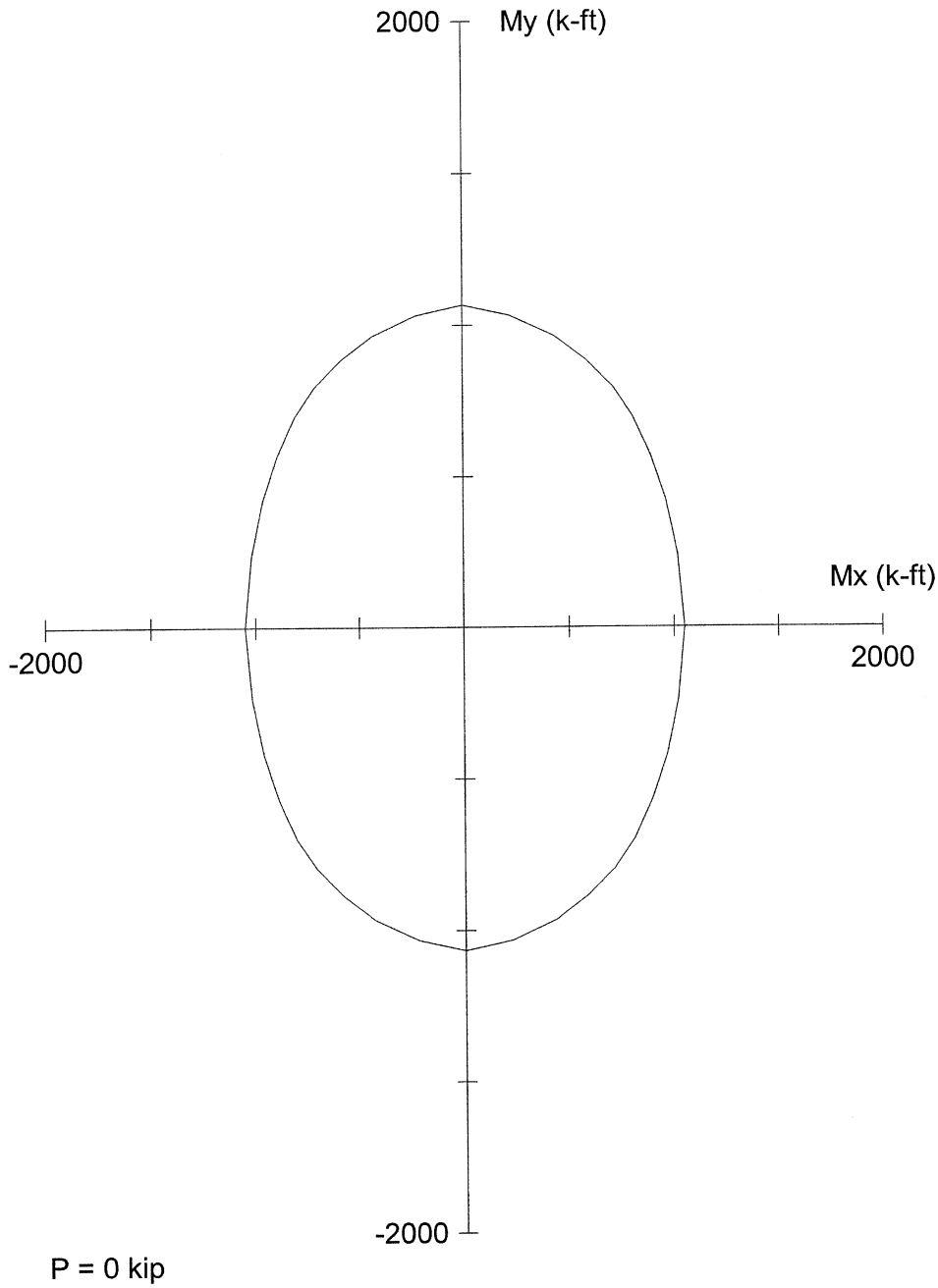

PCACOL V3.00 (PCA 1999) - Licensed to: Licensee name not yet specified.

File: S:\DGN-ST\NORTHC~1\BONNER~1\ANALYSIS\PIERS\HLB142\PCACOL~1\M5ACT.COL

Project: BONNER BRIDGE - OREGON INLET

Column: HLB #142		Engineer: JMJ	
f'c = 4.4 ksi	fy = 40 ksi	Ag = 942.4 in^2	18 #11 bars
Ec = 3781 ksi	Es = 29000 ksi	As = 28.08 in^2	Rho = 2.98%
fc = 3.74 ksi	e_rup = Infinity	Xo = 0.00 in	Ix = 72577.4 in^4
e_u = 0.003 in/in		Yo = 0.00 in	Iy = 75470.5 in^4
Beta1 = 0.83		Clear spacing = 3.51 in	Clear cover = 2.50 in
Confinement: Tied	phi(a) = 0.8, phi(b) = 0.9, phi(c) = 0.7		

H. W. LOCHNER, INC.

PROJECT: BONNER BRIDGE - OREGON INLET NORTH CAROLINA JMJ Jun-06
SUBJECT: HIGH LEVEL BENT ANALYSIS
HLB 142 MEM. 7 JT. 5 WDB 7/06

COLUMN LOADS

PMAX

HLB 142 MEMBER 7 JOINT 5

GROUP 1

	P	MY	MZ
DL	244.30	0.00	14.19
LL	105.64	0.00	-34.11
GROUP 1	0.00	0.00	0.00
SERVICE	349.94	0.00	-19.92
STRENGTH	546.48	0.00	-55.46

GROUP 2

	P	MY	MZ
DL	244.30	0.00	14.19
LL	0.00	0.00	0.00
GROUP 2	21.49	210.26	79.99
SERVICE	265.79	210.26	94.18
STRENGTH	345.53	273.34	122.43

GROUP 3

	P	MY	MZ
DL	244.30	0.00	14.19
LL	105.64	0.00	-34.11
GROUP 3	9.61	150.19	33.41
SERVICE	359.55	150.19	13.49
STRENGTH	467.42	195.25	17.54

GROUP 4

	P	MY	MZ
DL	244.30	0.00	14.19
LL	105.64	0.00	-34.11
GROUP 4	-0.11	0.00	-4.86
SERVICE	349.83	0.00	-24.78
STRENGTH	454.78	0.00	-32.21

GROUP 5

	P	MY	MZ
DL	244.30	0.00	14.19
LL	0.00	0.00	0.00
GROUP 5	21.38	210.26	75.13
SERVICE	265.68	210.26	89.32
STRENGTH	332.10	262.83	111.65

GROUP 6

	P	MY	MZ
DL	244.30	0.00	14.19
LL	105.64	0.00	-34.11
GROUP 6	9.50	150.19	28.54
SERVICE	359.44	150.19	8.62
STRENGTH	449.30	187.74	10.78

SLENDERNESS EFFECTS IN COMPRESSION MEMBERS (AASHTO 8.16.5)

f'c = 3000 psi PHI = 0.70 W_C = 150 PCF

$E_C = W_C$^1.5 *33*f'c^0.5 = 3320561 PSI Width of Rect. Col. = B = 35.928 In.

Depth of Rect. Col = D = 48.624 In.

r_Y = 0.30*D = 14.59 In. L_Y = 8.5 Ft. K_Y = 2.0

r_Z = 0.30*B = 10.78 In. L_Z = 17.5 Ft. K_Z = 1.2

I_{YY} = B*D^3/12 I_{YY} = 344194 In^4

I_{ZZ} = D*B^3/12 I_{ZZ} = 187918 In^5

K_YL_Y/r = 14.0 < 22 NO SLENDERNESS EFFECT

K_ZL_Z/r = 23.4 > 22 CONSIDER SLENDERNESS

H. W. LOCHNER, INC.

PROJECT: BONNER BRIDGE - OREGON INLET NORTH CAROLINA JMJ Jun-06
SUBJECT: HIGH LEVEL BENT ANALYSIS
HLB 142 MEM. 7 JT. 5 WAB 7/06

SLENDERNESS EFFECTS IN RECTANGULAR COMPRESSION MEMBERS (AASHTO 8.16.5)

GROUP 1

	B	D	KL/R	M_U	M_{DL}	B_D	P_U	P_C	δ_b	δ_s	M_C	
	In.	In.		Ft. Kips	Ft. Kips		Kips	Kips			Ft. Kips	
MY	35.928	48.624	14.0	0.00	0.00	0.000	546	0	1.000	1.000	94	*
MZ	35.928	48.624	23.4	55.46	18.45	0.333	546	29109	1.028	1.028	76	*

GROUP 2

	B	D	KL/R	M_U	M_{DL}	B_D	P_U	P_C	δ_b	δ_s	M_C
	In.	In.		Ft. Kips	Ft. Kips		Kips	Kips			Ft. Kips
MY	35.928	48.624	14.0	273.34	0.00	0.000	346	0	1.000	1.000	273
MZ	35.928	48.624	23.4	122.43	18.45	0.151	346	33712	1.015	1.015	124

GROUP 3

	B	D	KL/R	M_U	M_{DL}	B_D	P_U	P_C	δ_b	δ_s	M_C	
	In.	In.		Ft. Kips	Ft. Kips		Kips	Kips			Ft. Kips	
MY	35.928	48.624	14.0	195.25	0.00	0.000	467	0	1.000	1.000	195	
MZ	35.928	48.624	23.4	17.54	18.45	1.052	467	18905	1.037	1.037	65	*

GROUP 4

	B	D	KL/R	M_U	M_{DL}	B_D	P_U	P_C	δ_b	δ_s	M_C	
	In.	In.		Ft. Kips	Ft. Kips		Kips	Kips			Ft. Kips	
MY	35.928	48.624	14.0	0.00	0.00	0.000	455	0	1.000	1.000	78	*
MZ	35.928	48.624	23.4	32.21	18.45	0.573	455	24667	1.027	1.027	64	*

GROUP 5

	B	D	KL/R	M_U	M_{DL}	B_D	P_U	P_C	δ_b	δ_s	M_C
	In.	In.		Ft. Kips	Ft. Kips		Kips	Kips			Ft. Kips
MY	35.928	48.624	14.0	262.83	0.00	0.000	332	0	1.000	1.000	263
MZ	35.928	48.624	23.4	111.65	18.45	0.165	332	33291	1.014	1.014	113

GROUP 6

	B	D	KL/R	M_U	M_{DL}	B_D	P_U	P_C	δ_b	δ_s	M_C	
	In.	In.		Ft. Kips	Ft. Kips		Kips	Kips			Ft. Kips	
MY	35.928	48.624	14.0	187.74	0.00	0.000	449	0	1.000	1.000	188	
MZ	35.928	48.624	23.4	10.78	18.45	1.712	449	14304	1.047	1.047	63	*

* MINIMUM MOMENT CONTROLS

H. W. LOCHNER, INC.

PROJECT: BONNER BRIDGE - OREGON INLET NORTH CAROLINA JMJ Jun-06
SUBJECT: HIGH LEVEL BENT ANALYSIS
HLB 142 MEM. 7 JT. 5 WDB 7/06

COLUMN LOADS

PMIN

HLB 142 MEMBER 7 JOINT 5

GROUP 1

	P	MY	MZ
DL	183.23	0.00	14.19
LL	49.43	0.00	3.16
GROUP 1	0.00	0.00	0.00
SERVICE	232.66	0.00	17.35
STRENGTH	345.29	0.00	25.29

GROUP 2

	P	MY	MZ
DL	183.23	0.00	14.19
LL	0.00	0.00	0.00
GROUP 2	21.49	210.26	79.99
SERVICE	204.72	210.26	94.18
STRENGTH	266.13	273.34	122.43

GROUP 3

	P	MY	MZ
DL	183.23	0.00	14.19
LL	49.43	0.00	3.16
GROUP 3	9.61	150.19	33.41
SERVICE	242.27	150.19	50.76
STRENGTH	314.94	195.25	65.99

GROUP 4

	P	MY	MZ
DL	183.23	0.00	14.19
LL	49.43	0.00	3.16
GROUP 4	-0.11	0.00	-4.86
SERVICE	232.55	0.00	12.49
STRENGTH	302.31	0.00	16.24

GROUP 5

	P	MY	MZ
DL	183.23	0.00	14.19
LL	0.00	0.00	0.00
GROUP 5	21.38	210.26	75.13
SERVICE	204.61	210.26	89.32
STRENGTH	255.76	262.83	111.65

GROUP 6

	P	MY	MZ
DL	183.23	0.00	14.19
LL	49.43	0.00	3.16
GROUP 6	9.50	150.19	28.54
SERVICE	242.16	150.19	45.89
STRENGTH	302.69	187.74	57.36

SLENDERNESS EFFECTS IN COMPRESSION MEMBERS (AASHTO 8.16.5)

f'c = 3000 psi PHI = 0.70 W_C = 150 PCF

$E_C = W_C$^$^{1.5}$ *33*f'c^$^{0.5}$ = 3320561 PSI Width of Rect. Col. = B = 35.928 In.

Depth of Rect. Col = D = 48.624 In.

r_Y = 0.30*D = 14.59 In. L_Y = 8.5 Ft. K_Y = 2.0

r_Z = 0.30*B = 10.78 In. L_Z = 17.5 Ft. K_Z = 1.2

I_{YY} = B*D^^{3}/12 I_{YY} = 344194 In^4

I_{ZZ} = D*B^^{3}/12 I_{ZZ} = 187918 In^5

K_YL_Y/r = 14.0 < 22 NO SLENDERNESS EFFECT

K_ZL_Z/r = 23.4 > 22 CONSIDER SLENDERNESS

H. W. LOCHNER, INC.

PROJECT: BONNER BRIDGE - OREGON INLET NORTH CAROLINA JMJ Jun-06
SUBJECT: HIGH LEVEL BENT ANALYSIS
HLB 142 MEM. 7 JT. 5 WJB 7/06

SLENDERNESS EFFECTS IN RECTANGULAR COMPRESSION MEMBERS (AASHTO 8.16.5)

GROUP 1

	B	D	KL/R	M_U	M_{DL}	B_D	P_U	P_C	δ_b	δ_s	M_C	
	In.	In.		Ft. Kips	Ft. Kips		Kips	Kips			Ft. Kips	
MY	35.928	48.624	14.0	0.00	0.00	0.000	345	0	1.000	1.000	59	*
MZ	35.928	48.624	23.4	25.29	18.45	0.729	345	22432	1.022	1.022	48	*

GROUP 2

	B	D	KL/R	M_U	M_{DL}	B_D	P_U	P_C	δ_b	δ_s	M_C
	In.	In.		Ft. Kips	Ft. Kips		Kips	Kips			Ft. Kips
MY	35.928	48.624	14.0	273.34	0.00	0.000	266	0	1.000	1.000	273
MZ	35.928	48.624	23.4	122.43	18.45	0.151	266	33712	1.011	1.011	124

GROUP 3

	B	D	KL/R	M_U	M_{DL}	B_D	P_U	P_C	δ_b	δ_s	M_C
	In.	In.		Ft. Kips	Ft. Kips		Kips	Kips			Ft. Kips
MY	35.928	48.624	14.0	195.25	0.00	0.000	315	0	1.000	1.000	195
MZ	35.928	48.624	23.4	65.99	18.45	0.280	315	30317	1.015	1.015	67

GROUP 4

	B	D	KL/R	M_U	M_{DL}	B_D	P_U	P_C	δ_b	δ_s	M_C	
	In.	In.		Ft. Kips	Ft. Kips		Kips	Kips			Ft. Kips	
MY	35.928	48.624	14.0	0.00	0.00	0.000	302	0	1.000	1.000	52	*
MZ	35.928	48.624	23.4	16.24	18.45	1.136	302	18160	1.024	1.024	42	*

GROUP 5

	B	D	KL/R	M_U	M_{DL}	B_D	P_U	P_C	δ_b	δ_s	M_C
	In.	In.		Ft. Kips	Ft. Kips		Kips	Kips			Ft. Kips
MY	35.928	48.624	14.0	262.83	0.00	0.000	256	0	1.000	1.000	263
MZ	35.928	48.624	23.4	111.65	18.45	0.165	256	33291	1.011	1.011	113

GROUP 6

	B	D	KL/R	M_U	M_{DL}	B_D	P_U	P_C	δ_b	δ_s	M_C
	In.	In.		Ft. Kips	Ft. Kips		Kips	Kips			Ft. Kips
MY	35.928	48.624	14.0	187.74	0.00	0.000	303	0	1.000	1.000	188
MZ	35.928	48.624	23.4	57.36	18.45	0.322	303	29352	1.015	1.015	58

* MINIMUM MOMENT CONTROLS

H. W. LOCHNER, INC.

PROJECT: BONNER BRIDGE - OREGON INLET NORTH CAROLINA JMJ Jun-06
SUBJECT: HIGH LEVEL BENT ANALYSIS
HLB 142 MEM. 7 JT. 7 WAB 7/06

COLUMN LOADS

PMAX

HLB 142 MEMBER 7 JOINT 7

GROUP 1

	P	MY	MZ
DL	-276.14	0.00	14.76
LL	-105.64	0.00	-16.07
GROUP 1	0.00	0.00	0.00
SERVICE	-381.78	0.00	-1.31
STRENGTH	-587.87	0.00	-15.63

GROUP 2

	P	MY	MZ
DL	-276.14	0.00	14.76
LL	0.00	0.00	0.00
GROUP 2	-21.64	-504.21	68.56
SERVICE	-297.78	-504.21	83.32
STRENGTH	-387.11	-655.47	108.32

GROUP 3

	P	MY	MZ
DL	-276.14	0.00	14.76
LL	-105.64	0.00	-16.07
GROUP 3	-9.66	-324.08	29.94
SERVICE	-391.44	-324.08	28.63
STRENGTH	-508.87	-421.30	37.22

GROUP 4

	P	MY	MZ
DL	-276.14	0.00	14.76
LL	-105.64	0.00	-16.07
GROUP 4	0.11	0.00	-27.05
SERVICE	-381.67	0.00	-28.36
STRENGTH	-496.17	0.00	-36.87

GROUP 5

	P	MY	MZ
DL	-276.14	0.00	14.76
LL	0.00	0.00	0.00
GROUP 5	-21.53	-504.21	41.51
SERVICE	-297.67	-504.21	56.27
STRENGTH	-372.09	-630.26	70.34

GROUP 6

	P	MY	MZ
DL	-276.14	0.00	14.76
LL	-105.64	0.00	-16.07
GROUP 6	-9.55	-324.08	2.89
SERVICE	-391.33	-324.08	1.58
STRENGTH	-489.16	-405.10	1.98

SLENDERNESS EFFECTS IN COMPRESSION MEMBERS (AASHTO 8.16.5)

f'c = 3000 psi PHI = 0.70 W_C = 150 PCF

$E_C = W_C$^1.5 *33*f'c^0.5 = 3320561 PSI Width of Rect. Col. = B = 35.928 In.

Depth of Rect. Col = D = 48.624 In.

r_Y = 0.30*D = 14.59 In. L_Y = 8.5 Ft. K_Y = 2.0

r_Z = 0.30*B = 10.78 In. L_Z = 17.5 Ft. K_Z = 1.2

I_{YY} = B*D^3/12 I_{YY} = 344194 In^4

I_{ZZ} = D*B^3/12 I_{ZZ} = 187918 In^5

K_YL_Y/r = 14.0 < 22 NO SLENDERNESS EFFECT

K_ZL_Z/r = 23.4 > 22 CONSIDER SLENDERNESS

H. W. LOCHNER, INC.

PROJECT: BONNER BRIDGE - OREGON INLET NORTH CAROLINA JMJ Jun-06
SUBJECT: HIGH LEVEL BENT ANALYSIS
HLB 142 MEM. 7 JT. 7 WDB 7/06

SLENDERNESS EFFECTS IN RECTANGULAR COMPRESSION MEMBERS (AASHTO 8.16.5)

GROUP 1

	B	D	KL/R	M_U	M_{DL}	B_D	P_U	P_C	δ_b	δ_s	M_C	
	In.	In.		Ft. Kips	Ft. Kips		Kips	Kips			Ft. Kips	
MY	35.928	48.624	14.0	0.00	0.00	0.000	588	0	1.000	1.000	101	*
MZ	35.928	48.624	23.4	15.63	19.19	1.228	588	17414	1.051	1.051	82	*

GROUP 2

	B	D	KL/R	M_U	M_{DL}	B_D	P_U	P_C	δ_b	δ_s	M_C
	In.	In.		Ft. Kips	Ft. Kips		Kips	Kips			Ft. Kips
MY	35.928	48.624	14.0	655.47	0.00	0.000	387	0	1.000	1.000	655
MZ	35.928	48.624	23.4	108.32	19.19	0.177	387	32954	1.017	1.017	110

GROUP 3

	B	D	KL/R	M_U	M_{DL}	B_D	P_U	P_C	δ_b	δ_s	M_C	
	In.	In.		Ft. Kips	Ft. Kips		Kips	Kips			Ft. Kips	
MY	35.928	48.624	14.0	421.30	0.00	0.000	509	0	1.000	1.000	421	
MZ	35.928	48.624	23.4	37.22	19.19	0.516	509	25596	1.029	1.029	71	*

GROUP 4

	B	D	KL/R	M_U	M_{DL}	B_D	P_U	P_C	δ_b	δ_s	M_C	
	In.	In.		Ft. Kips	Ft. Kips		Kips	Kips			Ft. Kips	
MY	35.928	48.624	14.0	0.00	0.00	0.000	496	0	1.000	1.000	85	*
MZ	35.928	48.624	23.4	36.87	19.19	0.520	496	25513	1.029	1.029	69	*

GROUP 5

	B	D	KL/R	M_U	M_{DL}	B_D	P_U	P_C	δ_b	δ_s	M_C
	In.	In.		Ft. Kips	Ft. Kips		Kips	Kips			Ft. Kips
MY	35.928	48.624	14.0	630.26	0.00	0.000	372	0	1.000	1.000	630
MZ	35.928	48.624	23.4	70.34	19.19	0.273	372	30477	1.018	1.018	72

GROUP 6

	B	D	KL/R	M_U	M_{DL}	B_D	P_U	P_C	δ_b	δ_s	M_C	
	In.	In.		Ft. Kips	Ft. Kips		Kips	Kips			Ft. Kips	
MY	35.928	48.624	14.0	405.10	0.00	0.000	489	0	1.000	1.000	405	
MZ	35.928	48.624	23.4	1.98	19.19	9.715	489	3620	1.239	1.239	68	*

* MINIMUM MOMENT CONTROLS

H. W. LOCHNER, INC.

PROJECT: BONNER BRIDGE - OREGON INLET NORTH CAROLINA JMJ Jun-06
SUBJECT: HIGH LEVEL BENT ANALYSIS
HLB 142 MEM. 7 JT. 7 WDB 7/06

COLUMN LOADS

PMIN

HLB 142 MEMBER 7 JOINT 7

GROUP 1

	P	MY	MZ
DL	-207.11	0.00	14.76
LL	-49.43	0.00	8.04
GROUP 1	0.00	0.00	0.00
SERVICE	-256.54	0.00	22.80
STRENGTH	-376.33	0.00	36.61

GROUP 2

	P	MY	MZ
DL	-207.11	0.00	14.76
LL	0.00	0.00	0.00
GROUP 2	-21.64	-504.21	68.56
SERVICE	-228.75	-504.21	83.32
STRENGTH	-297.37	-655.47	108.32

GROUP 3

	P	MY	MZ
DL	-207.11	0.00	14.76
LL	-49.43	0.00	8.04
GROUP 3	-9.66	-324.08	29.94
SERVICE	-266.20	-324.08	52.74
STRENGTH	-346.05	-421.30	68.56

GROUP 4

	P	MY	MZ
DL	-207.11	0.00	14.76
LL	-49.43	0.00	8.04
GROUP 4	0.11	0.00	-27.05
SERVICE	-256.43	0.00	-4.25
STRENGTH	-333.35	0.00	-5.53

GROUP 5

	P	MY	MZ
DL	-207.11	0.00	14.76
LL	0.00	0.00	0.00
GROUP 5	-21.53	-504.21	41.51
SERVICE	-228.64	-504.21	56.27
STRENGTH	-285.79	-630.26	70.34

GROUP 6

	P	MY	MZ
DL	-207.11	0.00	14.76
LL	-49.43	0.00	8.04
GROUP 6	-9.55	-324.08	2.89
SERVICE	-266.09	-324.08	25.69
STRENGTH	-332.61	-405.10	32.11

SLENDERNESS EFFECTS IN COMPRESSION MEMBERS (AASHTO 8.16.5)

f'c = 3000 psi PHI = 0.70 W_C = 150 PCF

$E_C = W_C^{1.5} * 33 * f'c^{0.5}$ = 3320561 PSI Width of Rect. Col. = B = 35.928 In.

Depth of Rect. Col = D = 48.624 In.

$r_Y = 0.30*D$ = 14.59 In. L_Y = 8.5 Ft. K_Y = 2.0

$r_Z = 0.30*B$ = 10.78 In. L_Z = 17.5 Ft. K_Z = 1.2

I_{YY} = $B*D^3/12$ I_{YY} = 344194 In^4

I_{ZZ} = $D*B^3/12$ I_{ZZ} = 187918 In^5

$K_Y L_Y/r$ = 14.0 < 22 NO SLENDERNESS EFFECT

$K_Z L_Z/r$ = 23.4 > 22 CONSIDER SLENDERNESS

H. W. LOCHNER, INC.

PROJECT: BONNER BRIDGE - OREGON INLET NORTH CAROLINA JMJ Jun-06
SUBJECT: HIGH LEVEL BENT ANALYSIS
HLB 142 MEM. 7 JT. 7 WDB 7/06

SLENDERNESS EFFECTS IN RECTANGULAR COMPRESSION MEMBERS (AASHTO 8.16.5)

GROUP 1

	B	D	KL/R	M_U	M_{DL}	B_D	P_U	P_C	δ_b	δ_s	M_C	
	In.	In.		Ft. Kips	Ft. Kips		Kips	Kips			Ft. Kips	
MY	35.928	48.624	14.0	0.00	0.00	0.000	376	0	1.000	1.000	65	*
MZ	35.928	48.624	23.4	36.61	19.19	0.524	376	25451	1.022	1.022	53	*

GROUP 2

	B	D	KL/R	M_U	M_{DL}	B_D	P_U	P_C	δ_b	δ_s	M_C
	In.	In.		Ft. Kips	Ft. Kips		Kips	Kips			Ft. Kips
MY	35.928	48.624	14.0	655.47	0.00	0.000	297	0	1.000	1.000	655
MZ	35.928	48.624	23.4	108.32	19.19	0.177	297	32954	1.013	1.013	110

GROUP 3

	B	D	KL/R	M_U	M_{DL}	B_D	P_U	P_C	δ_b	δ_s	M_C
	In.	In.		Ft. Kips	Ft. Kips		Kips	Kips			Ft. Kips
MY	35.928	48.624	14.0	421.30	0.00	0.000	346	0	1.000	1.000	421
MZ	35.928	48.624	23.4	68.56	19.19	0.280	346	30309	1.017	1.017	70

GROUP 4

	B	D	KL/R	M_U	M_{DL}	B_D	P_U	P_C	δ_b	δ_s	M_C	
	In.	In.		Ft. Kips	Ft. Kips		Kips	Kips			Ft. Kips	
MY	35.928	48.624	14.0	0.00	0.00	0.000	333	0	1.000	1.000	57	*
MZ	35.928	48.624	23.4	5.53	19.19	3.473	333	8673	1.058	1.058	47	*

GROUP 5

	B	D	KL/R	M_U	M_{DL}	B_D	P_U	P_C	δ_b	δ_s	M_C
	In.	In.		Ft. Kips	Ft. Kips		Kips	Kips			Ft. Kips
MY	35.928	48.624	14.0	630.26	0.00	0.000	286	0	1.000	1.000	630
MZ	35.928	48.624	23.4	70.34	19.19	0.273	286	30477	1.014	1.014	71

GROUP 6

	B	D	KL/R	M_U	M_{DL}	B_D	P_U	P_C	δ_b	δ_s	M_C	
	In.	In.		Ft. Kips	Ft. Kips		Kips	Kips			Ft. Kips	
MY	35.928	48.624	14.0	405.10	0.00	0.000	333	0	1.000	1.000	405	
MZ	35.928	48.624	23.4	32.11	19.19	0.598	333	24282	1.020	1.020	47	*

* MINIMUM MOMENT CONTROLS

JMJ 7/06

WDB 7/06

```
OOOOOOO    OOOOO    OOOOO    OOOOO    OOOOO   OO
OO    OO   OO  OO   OO  OO   OO  OO   OO  OO   OO
OO    OO   OO  OO   OO  OO   OO  OO   OO  OO   OO
OO    OO   OO       OO  OO   OO       OO  OO   OO
OO    OO   OO       OOOOOOO  OO       OO  OO   OO
OOOOOOO    OO  OO   OO  OO   OO  OO   OO  OO   OO
OO         OO  OO   OO  OO   OO  OO   OO  OO   OO
OO          OOOOO   OO  OO    OOOOO    OOOOO   OOOOO  (TM)
```

==========
Computer program for the Strength Design of Reinforced Concrete Sections
==========

Licensee stated above acknowledges that Portland Cement Association (PCA) is not and cannot be responsible for either the accuracy or adequacy of the material supplied as input for processing by the PCACOL(tm) computer program. Furthermore, PCA neither makes any warranty expressed nor implied with respect to the correctness of the output prepared by the PCACOL(tm) program. Although PCA has endeavored to produce PCACOL(tm) error free, the program is not and can't be certified infallible. The final and only responsibility for analysis, design and engineering documents is the licensees. Accordingly, PCA disclaims all responsibility in contract, negligence or other tort for any analysis, design or engineering documents prepared in connection with the use of the PCACOL(tm) program.

BASED ON PLANS.

General Information:
==========

File Name: S:\DGN-ST\NORTHC~1\BONNER~1\ANALYSIS\PIERS\HLB142\PCACOL~1\M7PLAN.COL
Project: BONNER BRIDGE - OREGON INLET
Column: HLB #142 Engineer: JMJ
Code: ACI 318-95 Units: English

Run Option: Investigation Slenderness: Not considered
Run Axis: Biaxial Column Type: Structural

Material Properties:
==========

f'c = 3 ksi fy = 40 ksi
Ec = 3122.02 ksi Es = 29000 ksi
fc = 2.55 ksi Rupture strain = Infinity
Ultimate strain = 0.003 in/in
Beta1 = 0.85

Section:
==========

Rectangular: Width = 36 in Depth = 48.6 in

Gross section area, Ag = 1749.6 in^2
Ix = 344374 in^4 Iy = 188957 in^4
Xo = 0 in Yo = 0 in

Reinforcement:
==========

Rebar Database: User-defined

Size	Diam (in)	Area (in^2)	Size	Diam (in)	Area (in^2)	Size	Diam (in)	Area (in^2)
# 1	0.00	0.00	# 3	0.38	0.11	# 4	0.50	0.20
# 5	0.63	0.31	# 6	0.75	0.44	# 7	0.88	0.60
# 8	1.00	0.79	# 9	1.13	1.00	# 10	1.27	1.27
# 11	1.41	1.56	# 14	1.69	2.25	# 18	2.26	4.00

Confinement: Tied; #1 ties with #9 bars, #1 with larger bars.
phi(a) = 0.8, phi(b) = 0.9, phi(c) = 0.7

Layout: Rectangular
Pattern: Equal Bar Spacing (Cover to longitudinal reinforcement)
Total steel area, As = 28.08 in^2 at 1.60%
18 #11 Cover = 5 in

Factored Loads and Moments with Corresponding Capacities: (see user's manual for notation)
==========

No.	Pu kip	Mux k-ft	Muy k-ft	fMnx k-ft	fMny k-ft	fMn/Mu
1	546.0	94.0	76.0	1239.9	1002.5	13.190
2	346.0	273.0	124.0	1583.4	716.4	5.796
3	467.0	195.0	65.0	1709.4	567.4	8.763
4	456.0	78.0	64.0	1231.7	1014.2	15.814
5	332.0	263.0	113.0	1603.8	688.9	6.098
6	449.0	188.0	63.0	1705.6	573.1	9.075
7	345.0	59.0	48.0	1236.2	1009.2	20.981
8	266.0	273.0	124.0	1566.5	709.5	5.735
9	315.0	195.0	67.0	1679.0	577.8	8.612
10	302.0	52.0	42.0	1241.6	999.7	23.848
11	256.0	263.0	113.0	1586.4	678.6	6.028
12	303.0	188.0	58.0	1711.2	524.7	9.097
13	588.0	101.0	82.0	1257.1	1017.8	12.433
14	387.0	655.0	110.0	1843.6	309.2	2.814
15	509.0	421.0	71.0	1853.3	314.6	4.403

16	496.0	85.0	69.0	1234.7	1004.1	14.536
17	372.0	630.0	72.0	1873.4	214.7	2.974
18	489.0	405.0	68.0	1858.0	309.6	4.587
19	376.0	65.0	53.0	1238.0	1010.7	19.055
20	297.0	655.0	110.0	1813.6	306.3	2.769
21	346.0	421.0	70.0	1831.9	306.8	4.352
22	333.0	57.0	47.0	1229.5	1012.1	21.556
23	286.0	630.0	71.0	1844.3	209.2	2.928
24	333.0	405.0	47.0	1860.3	215.6	4.593

*** Program completed as requested! ***

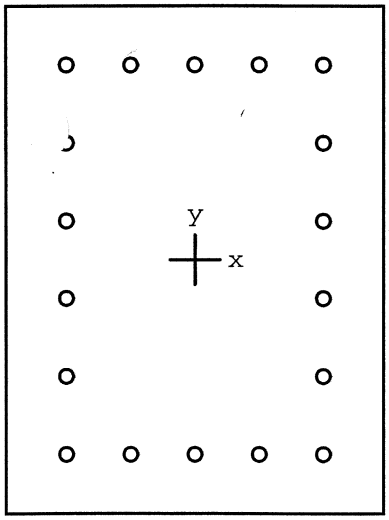

36 x 48.6 in

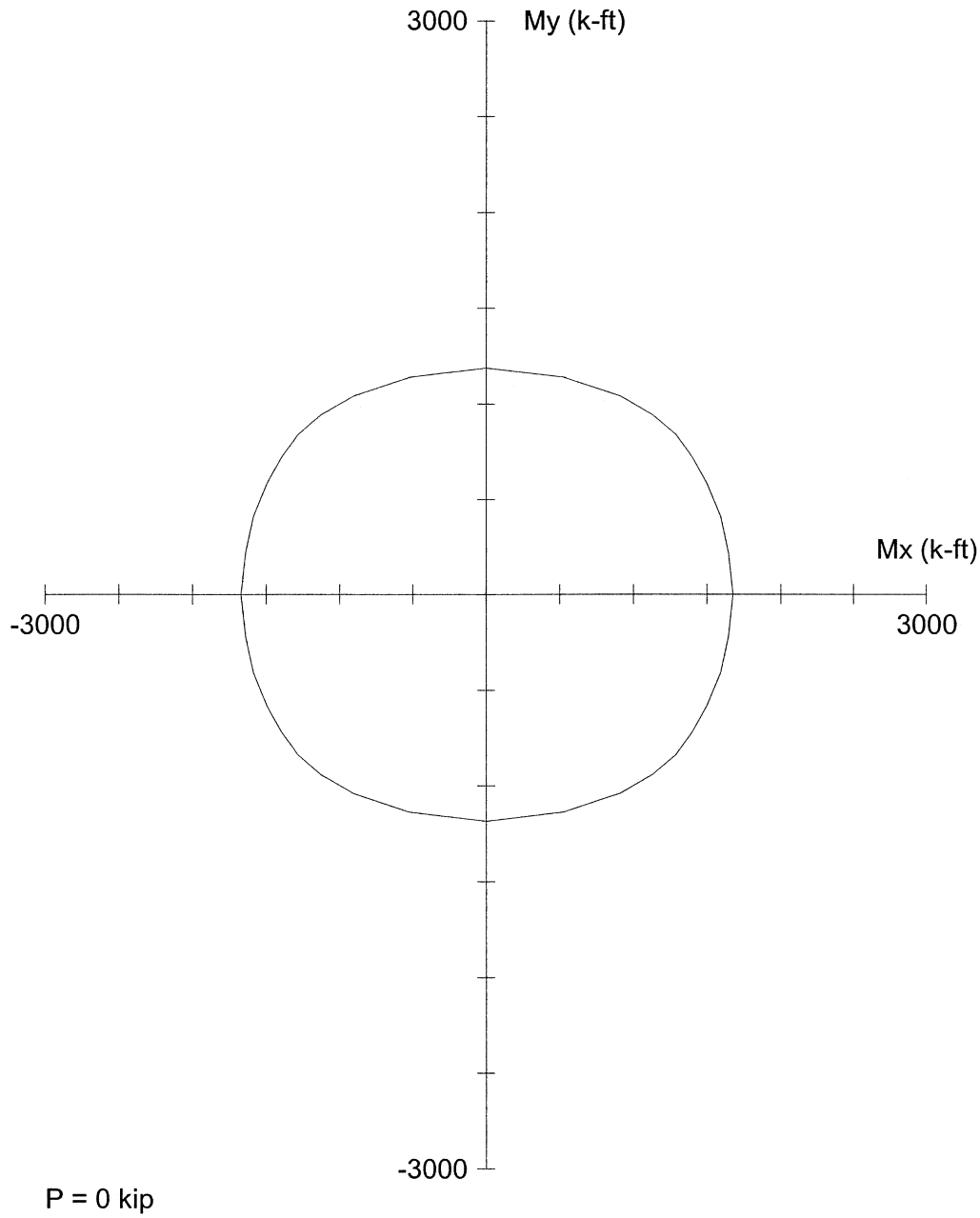

Code: ACI 318-95

Units: English

Run axis: Biaxial

Run option: Investigation

Slenderness: Not considered

mn type: Structural

Bars: User-defined

Date: 07/20/06

Time: 12:43:43

PCACOL V3.00 (PCA 1999) - Licensed to: Licensee name not yet specified.

File: S:\DGN-ST\NORTHC~1\BONNER~1\ANALYSIS\PIERS\HLB142\PCACOL~1\M7PLAN.COL

Project: BONNER BRIDGE - OREGON INLET

Column: HLB #142		Engineer: JMJ	
f'c = 3 ksi	fy = 40 ksi	Ag = 1749.6 in^2	18 #11 bars
Ec = 3122 ksi	Es = 29000 ksi	As = 28.08 in^2	Rho = 1.60%
fc = 2.55 ksi	e_rup = Infinity	Xo = 0.00 in	Ix = 344374 in^4
u = 0.003 in/in		Yo = 0.00 in	Iy = 188957 in^4
Beta1 = 0.85		Clear spacing = 4.74 in	Clear cover = 5.00 in
Confinement: Tied	phi(a) = 0.8, phi(b) = 0.9, phi(c) = 0.7		

JMJ 7/06
WOB 7/06

```
OOOOOOO    OOOOO    OOOOO    OOOOO    OOOOO   OO
OO    OO   OO  OO   OO  OO   OO  OO   OO  OO   OO
OO    OO   OO  OO   OO  OO   OO  OO   OO  OO   OO
OO    OO   OO       OO  OO   OO       OO  OO   OO
OO    OO   OO       OOOOOOO  OO       OO  OO   OO
OOOOOOO    OO  OO   OO  OO   OO  OO   OO  OO   OO
OO         OO  OO   OO  OO   OO  OO   OO  OO   OO
OO          OOOOO   OO  OO    OOOOO    OOOOO   OOOOO  (TM)
```

==========
Computer program for the Strength Design of Reinforced Concrete Sections
==========

Licensee stated above acknowledges that Portland Cement Association (PCA) is not and cannot be responsible for either the accuracy or adequacy of the material supplied as input for processing by the PCACOL(tm) computer program. Furthermore, PCA neither makes any warranty expressed nor implied with respect to the correctness of the output prepared by the PCACOL(tm) program. Although PCA has endeavored to produce PCACOL(tm) error free, the program is not and can't be certified infallible. The final and only responsibility for analysis, design and engineering documents is the licensees. Accordingly, PCA disclaims all responsibility in contract, negligence or other tort for any analysis, design or engineering documents prepared in connection with the use of the PCACOL(tm) program.

50% COVER LOCS

f'_c = 4400 PSI

General Information:
==========

File Name: S:\DGN-ST\NORTHC~1\BONNER~1\ANALYSIS\PIERS\HLB142\PCACOL~1\M7ACT.COL
Project: BONNER BRIDGE - OREGON INLET
Column: HLB #142 Engineer: JMJ
Code: ACI 318-95 Units: English

Run Option: Investigation Slenderness: Not considered
Run Axis: Biaxial Column Type: Structural

Material Properties:
==========

f'c = 4.4 ksi fy = 40 ksi
Ec = 3780.96 ksi Es = 29000 ksi
fc = 3.74 ksi Rupture strain = Infinity
Ultimate strain = 0.003 in/in
Beta1 = 0.83

Section:
==========

Rectangular: Width = 31 in Depth = 43.6 in

Gross section area, Ag = 1351.6 in^2
Ix = 214111 in^4 Iy = 108241 in^4
Xo = 0 in Yo = 0 in

Reinforcement:
==========

Rebar Database: User-defined

Size	Diam (in)	Area (in^2)	Size	Diam (in)	Area (in^2)	Size	Diam (in)	Area (in^2)
# 1	0.00	0.00	# 3	0.38	0.11	# 4	0.50	0.20
# 5	0.63	0.31	# 6	0.75	0.44	# 7	0.88	0.60
# 8	1.00	0.79	# 9	1.13	1.00	# 10	1.27	1.27
# 11	1.41	1.56	# 14	1.69	2.25	# 18	2.26	4.00

Confinement: Tied; #1 ties with #9 bars, #1 with larger bars.
phi(a) = 0.8, phi(b) = 0.9, phi(c) = 0.7

Layout: Rectangular
Pattern: Equal Bar Spacing (Cover to longitudinal reinforcement)
Total steel area, As = 28.08 in^2 at 2.08%
18 #11 Cover = 2.5 in

Factored Loads and Moments with Corresponding Capacities: (see user's manual for notation)
==========

No.	Pu kip	Mux k-ft	Muy k-ft	fMnx k-ft	fMny k-ft	fMn/Mu
1	546.0	94.0	76.0	1217.6	986.9	12.966
2	346.0	273.0	124.0	1543.7	700.6	5.654
3	467.0	195.0	65.0	1683.0	561.3	8.631
4	456.0	78.0	64.0	1212.0	991.2	15.518
5	332.0	263.0	113.0	1560.3	672.0	5.935
6	449.0	188.0	63.0	1676.5	564.8	8.923
7	345.0	59.0	48.0	1205.2	978.4	20.410
8	266.0	273.0	124.0	1517.7	688.1	5.558
9	315.0	195.0	67.0	1632.2	562.8	8.373
10	302.0	52.0	42.0	1198.0	969.3	23.055
11	256.0	263.0	113.0	1534.2	661.5	5.837
12	303.0	188.0	58.0	1662.9	510.5	8.841
13	588.0	101.0	82.0	1211.9	985.1	12.005
14	387.0	655.0	110.0	1798.6	303.1	2.746
15	509.0	421.0	71.0	1834.7	312.3	4.359

16	496.0	85.0	69.0	1218.2	988.6	14.330
17	372.0	630.0	72.0	1826.4	209.9	2.899
18	489.0	405.0	68.0	1831.0	309.5	4.522
19	376.0	65.0	53.0	1205.5	985.6	18.566
20	297.0	655.0	110.0	1758.7	297.2	2.685
21	346.0	421.0	70.0	1784.0	294.5	4.237
22	333.0	57.0	47.0	1191.3	982.2	20.899
23	286.0	630.0	71.0	1787.6	200.5	2.837
24	333.0	405.0	47.0	1808.1	212.6	4.465

*** Program completed as requested! ***

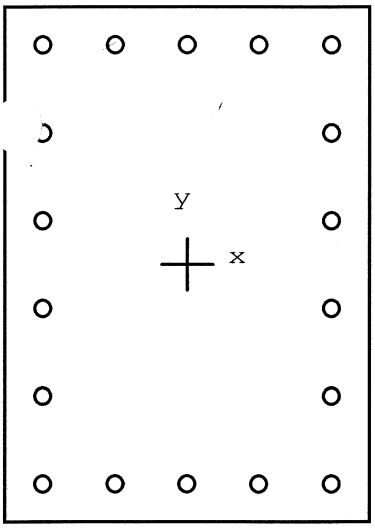

31 x 43.6 in

Code: ACI 318-95

Units: English

Run axis: Biaxial

Run option: Investigation

Slenderness: Not considered

Column type: Structural

Bars: User-defined

Date: 07/25/06

Time: 13:47:57

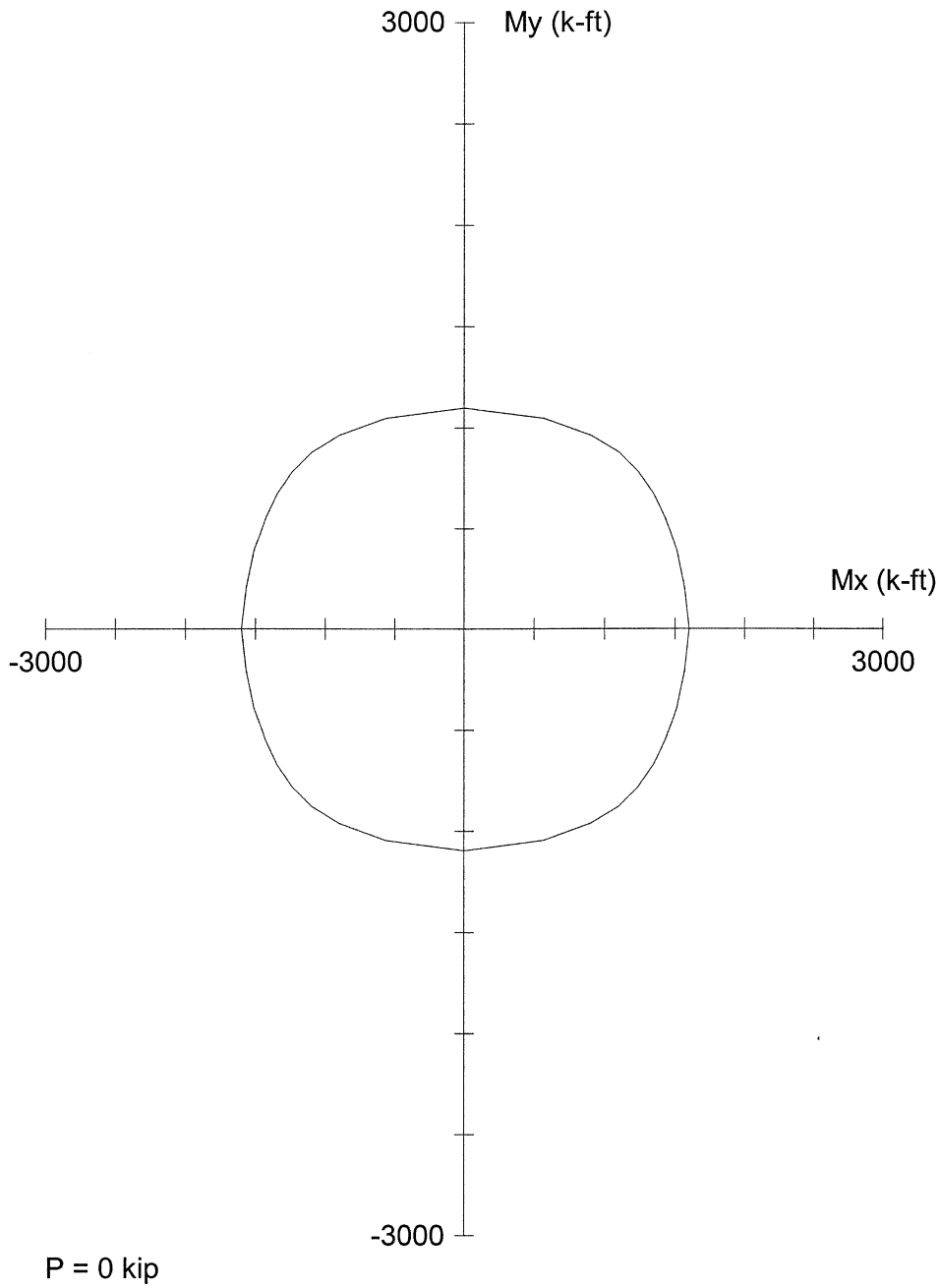

PCACOL V3.00 (PCA 1999) - Licensed to: Licensee name not yet specified.

File: S:\DGN-ST\NORTHC~1\BONNER~1\ANALYSIS\PIERS\HLB142\PCACOL~1\M7ACT.COL

Project: BONNER BRIDGE - OREGON INLET

Column: HLB #142		Engineer: JMJ	
f'c = 4.4 ksi	fy = 40 ksi	Ag = 1351.6 in^2	18 #11 bars
Ec = 3781 ksi	Es = 29000 ksi	As = 28.08 in^2	Rho = 2.08%
fc = 3.74 ksi	e_rup = Infinity	Xo = 0.00 in	Ix = 214111 in^4
e_u = 0.003 in/in		Yo = 0.00 in	Iy = 108241 in^4
Beta1 = 0.83		Clear spacing = 4.74 in	Clear cover = 2.50 in
Confinement: Tied	phi(a) = 0.8, phi(b) = 0.9, phi(c) = 0.7		

H. W. LOCHNER, INC.

PROJECT: BONNER BRIDGE - OREGON INLET NORTH CAROLINA JMJ Jun-06
SUBJECT: HIGH LEVEL BENT ANALYSIS
HLB 142 MEM. 8 JT. 6 WDB 7/06

COLUMN LOADS

PMAX

HLB 142 MEMBER 8 JOINT 6

GROUP 1

	P	MY	MZ
DL	244.29	0.00	14.16
LL	105.64	0.00	-34.11
GROUP 1	0.00	0.00	0.00
SERVICE	349.93	0.00	-19.95
STRENGTH	546.46	0.00	-55.50

GROUP 2

	P	MY	MZ
DL	244.29	0.00	14.16
LL	0.00	0.00	0.00
GROUP 2	-21.49	-210.23	-79.97
SERVICE	222.80	-210.23	-65.81
STRENGTH	289.64	-273.30	-85.55

GROUP 3

	P	MY	MZ
DL	244.29	0.00	14.16
LL	105.64	0.00	-34.11
GROUP 3	-9.61	-150.18	-33.40
SERVICE	340.32	-150.18	-53.35
STRENGTH	442.42	-195.23	-69.36

GROUP 4

	P	MY	MZ
DL	244.29	0.00	14.16
LL	105.64	0.00	-34.11
GROUP 4	-0.11	0.00	-4.87
SERVICE	349.82	0.00	-24.82
STRENGTH	454.77	0.00	-32.27

GROUP 5

	P	MY	MZ
DL	244.29	0.00	14.16
LL	0.00	0.00	0.00
GROUP 5	-21.61	-210.23	-84.84
SERVICE	222.68	-210.23	-70.68
STRENGTH	278.35	-262.79	-88.35

GROUP 6

	P	MY	MZ
DL	244.29	0.00	14.16
LL	105.64	0.00	-34.11
GROUP 6	-9.73	-150.18	-38.27
SERVICE	340.20	-150.18	-58.22
STRENGTH	425.25	-187.73	-72.78

SLENDERNESS EFFECTS IN COMPRESSION MEMBERS (AASHTO 8.16.5)

f'c = 3000 psi PHI = 0.70 W_C = 150 PCF

$E_C = W_C^{1.5} * 33 * f'c^{0.5}$ = 3320561 PSI Width of Rect. Col. = B = 35.928 In.

Depth of Rect. Col = D = 48.624 In.

$r_Y = 0.30*D$ = 14.59 In. L_Y = 8.5 Ft. K_Y = 2.0

$r_Z = 0.30*B$ = 10.78 In. L_Z = 17.5 Ft. K_Z = 1.2

I_{YY} = $B*D^3/12$ I_{YY} = 344194 In^4

I_{ZZ} = $D*B^3/12$ I_{ZZ} = 187918 In^5

$K_Y L_Y/r$	=	14.0	<	22	NO SLENDERNESS EFFECT
$K_Z L_Z/r$	=	23.4	>	22	CONSIDER SLENDERNESS

H. W. LOCHNER, INC.

PROJECT: BONNER BRIDGE - OREGON INLET NORTH CAROLINA JMJ Jun-06
SUBJECT: HIGH LEVEL BENT ANALYSIS
HLB 142 MEM. 8 JT. 6 WDB 7/06

SLENDERNESS EFFECTS IN RECTANGULAR COMPRESSION MEMBERS (AASHTO 8.16.5)

GROUP 1

	B	D	KL/R	M_U	M_{DL}	B_D	P_U	P_C	δ_b	δ_s	M_C	
	In.	In.		Ft. Kips	Ft. Kips		Kips	Kips			Ft. Kips	
MY	35.928	48.624	14.0	0.00	0.00	0.000	546	0	1.000	1.000	94	*
MZ	35.928	48.624	23.4	55.50	18.41	0.332	546	29130	1.028	1.028	76	*

GROUP 2

	B	D	KL/R	M_U	M_{DL}	B_D	P_U	P_C	δ_b	δ_s	M_C
	In.	In.		Ft. Kips	Ft. Kips		Kips	Kips			Ft. Kips
MY	35.928	48.624	14.0	273.30	0.00	0.000	290	0	1.000	1.000	273
MZ	35.928	48.624	23.4	85.55	18.41	0.215	290	31923	1.013	1.013	87

GROUP 3

	B	D	KL/R	M_U	M_{DL}	B_D	P_U	P_C	δ_b	δ_s	M_C
	In.	In.		Ft. Kips	Ft. Kips		Kips	Kips			Ft. Kips
MY	35.928	48.624	14.0	195.23	0.00	0.000	442	0	1.000	1.000	195
MZ	35.928	48.624	23.4	69.36	18.41	0.265	442	30655	1.021	1.021	71

GROUP 4

	B	D	KL/R	M_U	M_{DL}	B_D	P_U	P_C	δ_b	δ_s	M_C	
	In.	In.		Ft. Kips	Ft. Kips		Kips	Kips			Ft. Kips	
MY	35.928	48.624	14.0	0.00	0.00	0.000	455	0	1.000	1.000	78	*
MZ	35.928	48.624	23.4	32.27	18.41	0.571	455	24700	1.027	1.027	64	*

GROUP 5

	B	D	KL/R	M_U	M_{DL}	B_D	P_U	P_C	δ_b	δ_s	M_C
	In.	In.		Ft. Kips	Ft. Kips		Kips	Kips			Ft. Kips
MY	35.928	48.624	14.0	262.79	0.00	0.000	278	0	1.000	1.000	263
MZ	35.928	48.624	23.4	88.35	18.41	0.208	278	32103	1.013	1.013	89

GROUP 6

	B	D	KL/R	M_U	M_{DL}	B_D	P_U	P_C	δ_b	δ_s	M_C
	In.	In.		Ft. Kips	Ft. Kips		Kips	Kips			Ft. Kips
MY	35.928	48.624	14.0	187.73	0.00	0.000	425	0	1.000	1.000	188
MZ	35.928	48.624	23.4	72.78	18.41	0.253	425	30960	1.020	1.020	74

* MINIMUM MOMENT CONTROLS

H. W. LOCHNER, INC.

PROJECT: BONNER BRIDGE - OREGON INLET NORTH CAROLINA JMJ Jun-06
SUBJECT: HIGH LEVEL BENT ANALYSIS
HLB 142 MEM. 8 JT. 6 WPB 7/06

COLUMN LOADS

PMIN

HLB 142 MEMBER 8 JOINT 6

GROUP 1

	P	MY	MZ
DL	183.22	0.00	14.16
LL	49.43	0.00	3.15
GROUP 1	0.00	0.00	0.00
SERVICE	232.65	0.00	17.31
STRENGTH	345.28	0.00	25.23

GROUP 2

	P	MY	MZ
DL	183.22	0.00	14.16
LL	0.00	0.00	0.00
GROUP 2	-21.49	-210.23	-79.97
SERVICE	161.73	-210.23	-65.81
STRENGTH	210.25	-273.30	-85.55

GROUP 3

	P	MY	MZ
DL	183.22	0.00	14.16
LL	49.43	0.00	3.15
GROUP 3	-9.61	-150.18	-33.40
SERVICE	223.04	-150.18	-16.09
STRENGTH	289.95	-195.23	-20.92

GROUP 4

	P	MY	MZ
DL	183.22	0.00	14.16
LL	49.43	0.00	3.15
GROUP 4	-0.11	0.00	-4.87
SERVICE	232.54	0.00	12.44
STRENGTH	302.30	0.00	16.17

GROUP 5

	P	MY	MZ
DL	183.22	0.00	14.16
LL	0.00	0.00	0.00
GROUP 5	-21.61	-210.23	-84.84
SERVICE	161.61	-210.23	-70.68
STRENGTH	202.01	-262.79	-88.35

GROUP 6

	P	MY	MZ
DL	183.22	0.00	14.16
LL	49.43	0.00	3.15
GROUP 6	-9.73	-150.18	-38.27
SERVICE	222.92	-150.18	-20.96
STRENGTH	278.65	-187.73	-26.20

SLENDERNESS EFFECTS IN COMPRESSION MEMBERS (AASHTO 8.16.5)

f'c = 3000 psi PHI = 0.70 W_C = 150 PCF

$E_C = W_C^{1.5} * 33 * f'c^{0.5}$ = 3320561 PSI Width of Rect. Col. = B = 35.928 In.

Depth of Rect. Col = D = 48.624 In.

$r_Y = 0.30*D$ = 14.59 In. L_Y = 8.5 Ft. K_Y = 2.0

$r_Z = 0.30*B$ = 10.78 In. L_Z = 17.5 Ft. K_Z = 1.2

I_{YY} = $B*D^3/12$ I_{YY} = 344194 In^4

I_{ZZ} = $D*B^3/12$ I_{ZZ} = 187918 In^5

K_YL_Y/r = 14.0 < 22 NO SLENDERNESS EFFECT

K_ZL_Z/r = 23.4 > 22 CONSIDER SLENDERNESS

H. W. LOCHNER, INC.

PROJECT: BONNER BRIDGE - OREGON INLET NORTH CAROLINA JMJ Jun-06
SUBJECT: HIGH LEVEL BENT ANALYSIS
HLB 142 MEM. 8 JT. 6 WAB 7/06

SLENDERNESS EFFECTS IN RECTANGULAR COMPRESSION MEMBERS (AASHTO 8.16.5)

GROUP 1

	B	D	KL/R	M_U	M_{DL}	B_D	P_U	P_C	δ_b	δ_s	M_C	
	In.	In.		Ft. Kips	Ft. Kips		Kips	Kips			Ft. Kips	
MY	35.928	48.624	14.0	0.00	0.00	0.000	345	0	1.000	1.000	59	*
MZ	35.928	48.624	23.4	25.23	18.41	0.730	345	22429	1.022	1.022	48	*

GROUP 2

	B	D	KL/R	M_U	M_{DL}	B_D	P_U	P_C	δ_b	δ_s	M_C
	In.	In.		Ft. Kips	Ft. Kips		Kips	Kips			Ft. Kips
MY	35.928	48.624	14.0	273.30	0.00	0.000	210	0	1.000	1.000	273
MZ	35.928	48.624	23.4	85.55	18.41	0.215	210	31923	1.009	1.009	86

GROUP 3

	B	D	KL/R	M_U	M_{DL}	B_D	P_U	P_C	δ_b	δ_s	M_C	
	In.	In.		Ft. Kips	Ft. Kips		Kips	Kips			Ft. Kips	
MY	35.928	48.624	14.0	195.23	0.00	0.000	290	0	1.000	1.000	195	
MZ	35.928	48.624	23.4	20.92	18.41	0.880	290	20633	1.020	1.020	41	*

GROUP 4

	B	D	KL/R	M_U	M_{DL}	B_D	P_U	P_C	δ_b	δ_s	M_C	
	In.	In.		Ft. Kips	Ft. Kips		Kips	Kips			Ft. Kips	
MY	35.928	48.624	14.0	0.00	0.00	0.000	302	0	1.000	1.000	52	*
MZ	35.928	48.624	23.4	16.17	18.41	1.138	302	18142	1.024	1.024	42	*

GROUP 5

	B	D	KL/R	M_U	M_{DL}	B_D	P_U	P_C	δ_b	δ_s	M_C
	In.	In.		Ft. Kips	Ft. Kips		Kips	Kips			Ft. Kips
MY	35.928	48.624	14.0	262.79	0.00	0.000	202	0	1.000	1.000	263
MZ	35.928	48.624	23.4	88.35	18.41	0.208	202	32103	1.009	1.009	89

GROUP 6

	B	D	KL/R	M_U	M_{DL}	B_D	P_U	P_C	δ_b	δ_s	M_C	
	In.	In.		Ft. Kips	Ft. Kips		Kips	Kips			Ft. Kips	
MY	35.928	48.624	14.0	187.73	0.00	0.000	279	0	1.000	1.000	188	
MZ	35.928	48.624	23.4	26.20	18.41	0.703	279	22784	1.018	1.018	39	*

* MINIMUM MOMENT CONTROLS

H. W. LOCHNER, INC.

PROJECT: BONNER BRIDGE - OREGON INLET NORTH CAROLINA JMJ Jul-06
SUBJECT: HIGH LEVEL BENT ANALYSIS
HLB 142 MEM. 8 JT. 8 WDB 7/06

COLUMN LOADS

PMAX

HLB 142 MEMBER 8 JOINT 8

GROUP 1

	P	MY	MZ
DL	-276.14	0.00	14.79
LL	-105.64	0.00	-16.07
GROUP 1	0.00	0.00	0.00
SERVICE	-381.78	0.00	-1.28
STRENGTH	-587.87	0.00	-15.59

GROUP 2

	P	MY	MZ
DL	-276.14	0.00	14.79
LL	0.00	0.00	0.00
GROUP 2	21.64	504.19	-68.55
SERVICE	-254.50	504.19	-53.76
STRENGTH	-330.85	655.45	-69.89

GROUP 3

	P	MY	MZ
DL	-276.14	0.00	14.79
LL	-105.64	0.00	-16.07
GROUP 3	9.66	324.07	-29.94
SERVICE	-372.12	324.07	-31.22
STRENGTH	-483.76	421.29	-40.59

GROUP 4

	P	MY	MZ
DL	-276.14	0.00	14.79
LL	-105.64	0.00	-16.07
GROUP 4	0.11	0.00	-27.04
SERVICE	-381.67	0.00	-28.32
STRENGTH	-496.17	0.00	-36.82

GROUP 5

	P	MY	MZ
DL	-276.14	0.00	14.79
LL	0.00	0.00	0.00
GROUP 5	21.76	504.19	-95.59
SERVICE	-254.38	504.19	-80.80
STRENGTH	-317.98	630.24	-101.00

GROUP 6

	P	MY	MZ
DL	-276.14	0.00	14.79
LL	-105.64	0.00	-16.07
GROUP 6	9.77	324.07	-56.98
SERVICE	-372.01	324.07	-58.26
STRENGTH	-465.01	405.09	-72.83

SLENDERNESS EFFECTS IN COMPRESSION MEMBERS (AASHTO 8.16.5)

f'c = 3000 psi PHI = 0.70 W_C = 150 PCF

$E_C = W_C^{1.5} * 33 * f'c^{0.5}$ = 3320561 PSI Width of Rect. Col. = B = 35.928 In.

Depth of Rect. Col = D = 48.624 In.

$r_Y = 0.30*D$ = 14.59 In. L_Y = 8.5 Ft. K_Y = 2.0

$r_Z = 0.30*B$ = 10.78 In. L_Z = 17.5 Ft. K_Z = 1.2

I_{YY} = $B*D^3/12$ I_{YY} = 344194 In^4

I_{ZZ} = $D*B^3/12$ I_{ZZ} = 187918 In^5

$K_Y L_Y/r$ = 14.0 < 22 NO SLENDERNESS EFFECT

$K_Z L_Z/r$ = 23.4 > 22 CONSIDER SLENDERNESS

H. W. LOCHNER, INC.

PROJECT: BONNER BRIDGE - OREGON INLET NORTH CAROLINA JMJ Jul-06
SUBJECT: HIGH LEVEL BENT ANALYSIS
HLB 142 MEM. 8 JT. 8 WDB 7/06

SLENDERNESS EFFECTS IN RECTANGULAR COMPRESSION MEMBERS (AASHTO 8.16.5)

GROUP 1

	B	D	KL/R	M_U	M_{DL}	B_D	P_U	P_C	δ_b	δ_s	M_C	
	In.	In.		Ft. Kips	Ft. Kips		Kips	Kips			Ft. Kips	
MY	35.928	48.624	14.0	0.00	0.00	0.000	588	0	1.000	1.000	101	*
MZ	35.928	48.624	23.4	15.59	19.23	1.233	588	17371	1.051	1.051	82	*

GROUP 2

	B	D	KL/R	M_U	M_{DL}	B_D	P_U	P_C	δ_b	δ_s	M_C
	In.	In.		Ft. Kips	Ft. Kips		Kips	Kips			Ft. Kips
MY	35.928	48.624	14.0	655.45	0.00	0.000	331	0	1.000	1.000	655
MZ	35.928	48.624	23.4	69.89	19.23	0.275	331	30422	1.016	1.016	71

GROUP 3

	B	D	KL/R	M_U	M_{DL}	B_D	P_U	P_C	δ_b	δ_s	M_C	
	In.	In.		Ft. Kips	Ft. Kips		Kips	Kips			Ft. Kips	
MY	35.928	48.624	14.0	421.29	0.00	0.000	484	0	1.000	1.000	421	
MZ	35.928	48.624	23.4	40.59	19.23	0.474	484	26322	1.027	1.027	68	*

GROUP 4

	B	D	KL/R	M_U	M_{DL}	B_D	P_U	P_C	δ_b	δ_s	M_C	
	In.	In.		Ft. Kips	Ft. Kips		Kips	Kips			Ft. Kips	
MY	35.928	48.624	14.0	0.00	0.00	0.000	496	0	1.000	1.000	85	*
MZ	35.928	48.624	23.4	36.82	19.23	0.522	496	25483	1.029	1.029	69	*

GROUP 5

	B	D	KL/R	M_U	M_{DL}	B_D	P_U	P_C	δ_b	δ_s	M_C
	In.	In.		Ft. Kips	Ft. Kips		Kips	Kips			Ft. Kips
MY	35.928	48.624	14.0	630.24	0.00	0.000	318	0	1.000	1.000	630
MZ	35.928	48.624	23.4	101.00	19.23	0.190	318	32588	1.014	1.014	102

GROUP 6

	B	D	KL/R	M_U	M_{DL}	B_D	P_U	P_C	δ_b	δ_s	M_C
	In.	In.		Ft. Kips	Ft. Kips		Kips	Kips			Ft. Kips
MY	35.928	48.624	14.0	405.09	0.00	0.000	465	0	1.000	1.000	405
MZ	35.928	48.624	23.4	72.83	19.23	0.264	465	30689	1.022	1.022	74

* MINIMUM MOMENT CONTROLS

H. W. LOCHNER, INC.

PROJECT: BONNER BRIDGE - OREGON INLET NORTH CAROLINA JMJ Jul-06
SUBJECT: HIGH LEVEL BENT ANALYSIS
HLB 142 MEM. 8 JT. 8 WDB 7/06

COLUMN LOADS

PMIN

HLB 142 MEMBER 8 JOINT 8

GROUP 1

	P	MY	MZ
DL	-207.11	0.00	14.79
LL	-49.43	0.00	8.06
GROUP 1	0.00	0.00	0.00
SERVICE	-256.54	0.00	22.85
STRENGTH	-376.33	0.00	36.69

GROUP 2

	P	MY	MZ
DL	-207.11	0.00	14.79
LL	0.00	0.00	0.00
GROUP 2	21.64	504.19	-68.55
SERVICE	-185.47	504.19	-53.76
STRENGTH	-241.10	655.45	-69.89

GROUP 3

	P	MY	MZ
DL	-207.11	0.00	14.79
LL	-49.43	0.00	8.06
GROUP 3	9.66	324.07	-29.94
SERVICE	-246.88	324.07	-7.09
STRENGTH	-320.94	421.29	-9.22

GROUP 4

	P	MY	MZ
DL	-207.11	0.00	14.79
LL	-49.43	0.00	8.06
GROUP 4	0.11	0.00	-27.04
SERVICE	-256.43	0.00	-4.19
STRENGTH	-333.35	0.00	-5.45

GROUP 5

	P	MY	MZ
DL	-207.11	0.00	14.79
LL	0.00	0.00	0.00
GROUP 5	21.76	504.19	-95.59
SERVICE	-185.35	504.19	-80.80
STRENGTH	-231.68	630.24	-101.00

GROUP 6

	P	MY	MZ
DL	-207.11	0.00	14.79
LL	-49.43	0.00	8.06
GROUP 6	9.77	324.07	-56.98
SERVICE	-246.77	324.07	-34.13
STRENGTH	-308.46	405.09	-42.66

SLENDERNESS EFFECTS IN COMPRESSION MEMBERS (AASHTO 8.16.5)

f'c = 3000 psi PHI = 0.70 W_C = 150 PCF

$E_C = W_C^{1.5} * 33 * f'c^{0.5}$ = 3320561 PSI Width of Rect. Col. = B = 35.928 In.

Depth of Rect. Col = D = 48.624 In.

$r_Y = 0.30*D$ = 14.59 In. L_Y = 8.5 Ft. K_Y = 2.0

$r_Z = 0.30*B$ = 10.78 In. L_Z = 17.5 Ft. K_Z = 1.2

I_{YY} = $B*D^3/12$ I_{YY} = 344194 In^4

I_{ZZ} = $D*B^3/12$ I_{ZZ} = 187918 In^5

$K_Y L_Y/r$ = 14.0 < 22 NO SLENDERNESS EFFECT

$K_Z L_Z/r$ = 23.4 > 22 CONSIDER SLENDERNESS

H. W. LOCHNER, INC.

PROJECT: BONNER BRIDGE - OREGON INLET NORTH CAROLINA JMJ Jul-06
SUBJECT: HIGH LEVEL BENT ANALYSIS
HLB 142 MEM. 8 JT. 8 WDB 7/06

SLENDERNESS EFFECTS IN RECTANGULAR COMPRESSION MEMBERS (AASHTO 8.16.5)

GROUP 1

	B	D	KL/R	M_U	M_{DL}	B_D	P_U	P_C	δ_b	δ_s	M_C	
	In.	In.		Ft. Kips	Ft. Kips		Kips	Kips			Ft. Kips	
MY	35.928	48.624	14.0	0.00	0.00	0.000	376	0	1.000	1.000	65	*
MZ	35.928	48.624	23.4	36.69	19.23	0.524	376	25453	1.022	1.022	53	*

GROUP 2

	B	D	KL/R	M_U	M_{DL}	B_D	P_U	P_C	δ_b	δ_s	M_C
	In.	In.		Ft. Kips	Ft. Kips		Kips	Kips			Ft. Kips
MY	35.928	48.624	14.0	655.45	0.00	0.000	241	0	1.000	1.000	655
MZ	35.928	48.624	23.4	69.89	19.23	0.275	241	30422	1.011	1.011	71

GROUP 3

	B	D	KL/R	M_U	M_{DL}	B_D	P_U	P_C	δ_b	δ_s	M_C	
	In.	In.		Ft. Kips	Ft. Kips		Kips	Kips			Ft. Kips	
MY	35.928	48.624	14.0	421.29	0.00	0.000	321	0	1.000	1.000	421	
MZ	35.928	48.624	23.4	9.22	19.23	2.086	321	12570	1.038	1.038	45	*

GROUP 4

	B	D	KL/R	M_U	M_{DL}	B_D	P_U	P_C	δ_b	δ_s	M_C	
	In.	In.		Ft. Kips	Ft. Kips		Kips	Kips			Ft. Kips	
MY	35.928	48.624	14.0	0.00	0.00	0.000	333	0	1.000	1.000	57	*
MZ	35.928	48.624	23.4	5.45	19.23	3.530	333	8564	1.059	1.059	47	*

GROUP 5

	B	D	KL/R	M_U	M_{DL}	B_D	P_U	P_C	δ_b	δ_s	M_C
	In.	In.		Ft. Kips	Ft. Kips		Kips	Kips			Ft. Kips
MY	35.928	48.624	14.0	630.24	0.00	0.000	232	0	1.000	1.000	630
MZ	35.928	48.624	23.4	101.00	19.23	0.190	232	32588	1.010	1.010	102

GROUP 6

	B	D	KL/R	M_U	M_{DL}	B_D	P_U	P_C	δ_b	δ_s	M_C
	In.	In.		Ft. Kips	Ft. Kips		Kips	Kips			Ft. Kips
MY	35.928	48.624	14.0	405.09	0.00	0.000	308	0	1.000	1.000	405
MZ	35.928	48.624	23.4	42.66	19.23	0.451	308	26740	1.017	1.017	43

* MINIMUM MOMENT CONTROLS

SMS 7/06

WDB 7/06

```
OOOOOOO    OOOOO    OOOOO    OOOOO    OOOOO    OO
OO    OO   OO  OO   OO  OO   OO  OO   OO  OO   OO
OO    OO   OO  OO   OO  OO   OO  OO   OO  OO   OO
OO    OO   OO       OO  OO   OO       OO  OO   OO
OO    OO   OO       OOOOOOO  OO       OO  OO   OO
OOOOOOO    OO  OO   OO  OO   OO  OO   OO  OO   OO
OO         OO  OO   OO  OO   OO  OO   OO  OO   OO
OO          OOOOO   OO  OO    OOOOO    OOOOO    OOOOO  (TM)
```

==========
Computer program for the Strength Design of Reinforced Concrete Sections
==========

Licensee stated above acknowledges that Portland Cement Association (PCA) is not and cannot be responsible for either the accuracy or adequacy of the material supplied as input for processing by the PCACOL(tm) computer program. Furthermore, PCA neither makes any warranty expressed nor implied with respect to the correctness of the output prepared by the PCACOL(tm) program. Although PCA has endeavored to produce PCACOL(tm) error free, the program is not and can't be certified infallible. The final and only responsibility for analysis, design and engineering documents is the licensees. Accordingly, PCA disclaims all responsibility in contract, negligence or other tort for any analysis, design or engineering documents prepared in connection with the use of the PCACOL(tm) program.

BASED ON PLANS.

General Information:
==========

File Name: S:\DGN-ST\NORTHC~1\BONNER~1\ANALYSIS\PIERS\HLB142\PCACOL~1\M8PLAN.COL
Project: BONNER BRIDGE - OREGON INLET
Column: HLB #142 Engineer: JMJ
Code: ACI 318-95 Units: English

Run Option: Investigation Slenderness: Not considered
Run Axis: Biaxial Column Type: Structural

Material Properties:
==========

f'c = 3 ksi fy = 40 ksi
Ec = 3122.02 ksi Es = 29000 ksi
fc = 2.55 ksi Rupture strain = Infinity
Ultimate strain = 0.003 in/in
Beta1 = 0.85

Section:
==========

Rectangular: Width = 36 in Depth = 48.6 in

Gross section area, Ag = 1749.6 in^2
Ix = 344374 in^4 Iy = 188957 in^4
Xo = 0 in Yo = 0 in

Reinforcement:
==========

Rebar Database: User-defined

Size	Diam (in)	Area (in^2)	Size	Diam (in)	Area (in^2)	Size	Diam (in)	Area (in^2)
# 1	0.00	0.00	# 3	0.38	0.11	# 4	0.50	0.20
# 5	0.63	0.31	# 6	0.75	0.44	# 7	0.88	0.60
# 8	1.00	0.79	# 9	1.13	1.00	# 10	1.27	1.27
# 11	1.41	1.56	# 14	1.69	2.25	# 18	2.26	4.00

Confinement: Tied; #1 ties with #9 bars, #1 with larger bars.
phi(a) = 0.8, phi(b) = 0.9, phi(c) = 0.7

Layout: Rectangular
Pattern: Equal Bar Spacing (Cover to longitudinal reinforcement)
Total steel area, As = 28.08 in^2 at 1.60%
18 #11 Cover = 5 in

Factored Loads and Moments with Corresponding Capacities: (see user's manual for notation)
==========

No.	Pu kip	Mux k-ft	Muy k-ft	fMnx k-ft	fMny k-ft	fMn/Mu
1	546.0	94.0	76.0	1239.9	1002.5	13.190
2	290.0	273.0	87.0	1697.1	539.8	6.216
3	442.0	195.0	71.0	1680.6	609.1	8.614
4	455.0	78.0	64.0	1232.0	1014.1	15.815
5	278.0	263.0	89.0	1676.0	564.1	6.369
6	425.0	188.0	74.0	1649.8	646.4	8.770
7	345.0	59.0	48.0	1236.2	1009.2	20.981
8	210.0	273.0	86.0	1670.7	526.7	6.120
9	290.0	195.0	41.0	1782.1	376.6	9.141
10	302.0	52.0	42.0	1241.6	999.7	23.848
11	202.0	263.0	89.0	1647.9	560.6	6.269
12	279.0	188.0	39.0	1781.4	366.6	9.473
13	588.0	101.0	82.0	1257.1	1017.8	12.433
14	331.0	655.0	71.0	1863.8	203.1	2.846
15	484.0	421.0	68.0	1863.2	300.2	4.425

16	496.0	85.0	69.0	1234.7	1004.1	14.536
17	318.0	630.0	102.0	1825.7	296.3	2.898
18	465.0	405.0	74.0	1846.4	334.4	4.558
19	376.0	65.0	53.0	1238.0	1010.7	19.055
20	241.0	655.0	71.0	1824.1	199.2	2.785
21	321.0	421.0	45.0	1861.0	200.5	4.421
22	333.0	57.0	47.0	1229.5	1012.1	21.556
23	232.0	630.0	102.0	1790.1	288.5	2.841
24	308.0	405.0	43.0	1856.6	199.0	4.585

*** Program completed as requested! ***

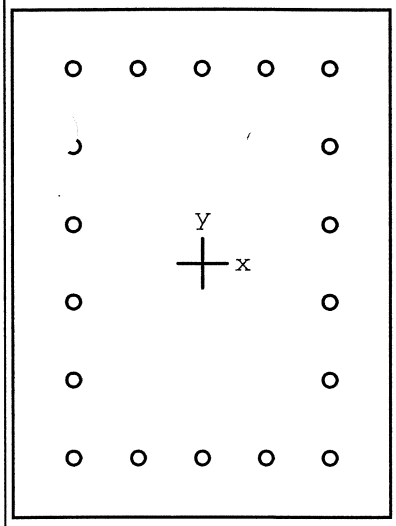

36 x 48.6 in

Code: ACI 318-95

Units: English

Run axis: Biaxial

Run option: Investigation

Slenderness: Not considered

mn type: Structural

Bars: User-defined

Date: 07/20/06

Time: 12:47:49

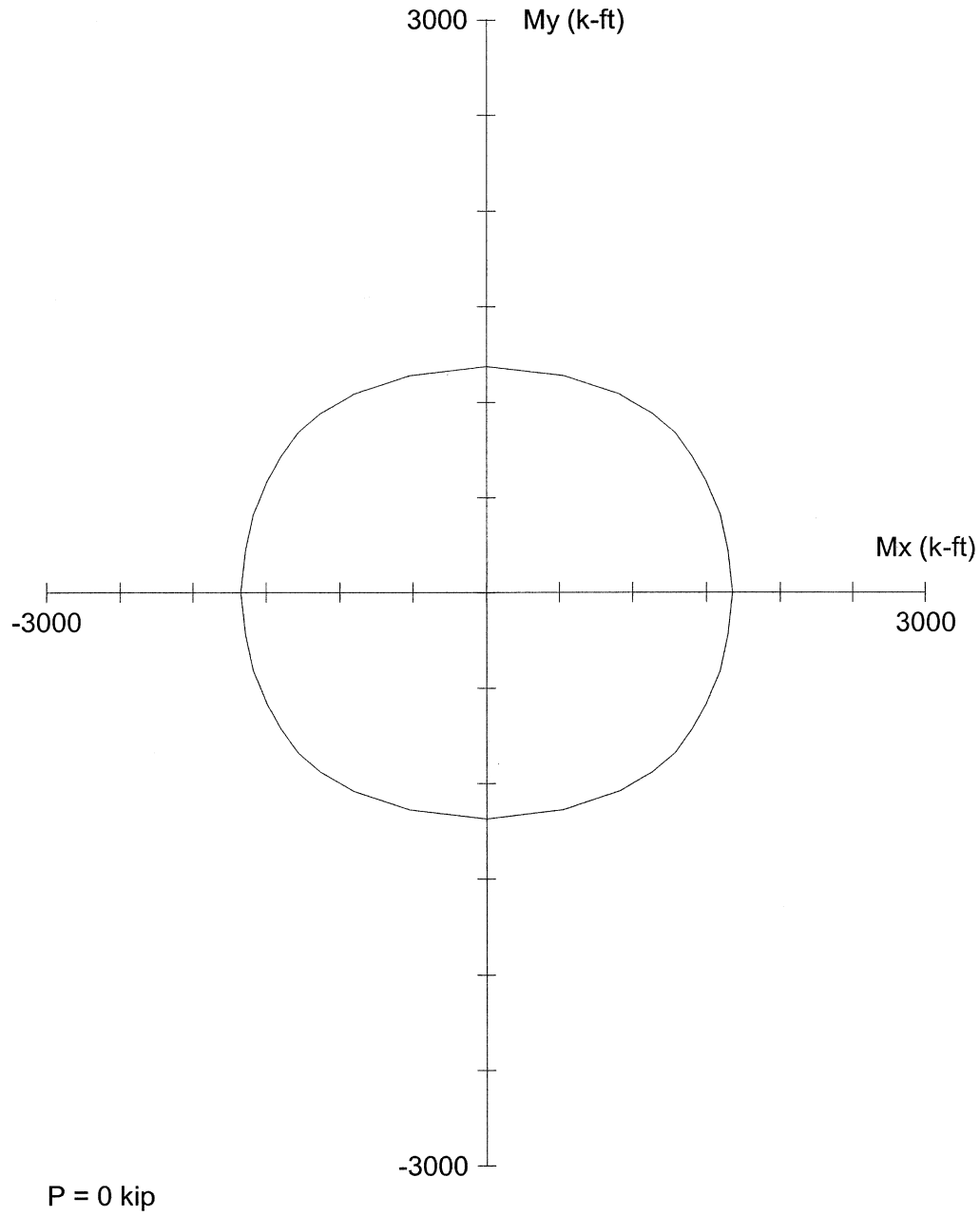

PCACOL V3.00 (PCA 1999) - Licensed to: Licensee name not yet specified.

File: S:\DGN-ST\NORTHC~1\BONNER~1\ANALYSIS\PIERS\HLB142\PCACOL~1\M8PLAN.COL

Project: BONNER BRIDGE - OREGON INLET

Column: HLB #142		Engineer: JMJ	
f'c = 3 ksi	fy = 40 ksi	Ag = 1749.6 in^2	18 #11 bars
Ec = 3122 ksi	Es = 29000 ksi	As = 28.08 in^2	Rho = 1.60%
fc = 2.55 ksi	e_rup = Infinity	Xo = 0.00 in	Ix = 344374 in^4
u = 0.003 in/in		Yo = 0.00 in	Iy = 188957 in^4
Beta1 = 0.85		Clear spacing = 4.74 in	Clear cover = 5.00 in
Confinement: Tied	phi(a) = 0.8, phi(b) = 0.9, phi(c) = 0.7		

JMS 7/06
WDB 7/06

```
OOOOOOO    OOOOO    OOOOO    OOOOO    OOOOO   OO
OO    OO   OO  OO   OO  OO   OO  OO   OO  OO   OO
OO    OO   OO  OO   OO  OO   OO  OO   OO  OO   OO
OO    OO   OO       OO  OO   OO       OO  OO   OO
OO    OO   OO       OOOOOOO  OO       OO  OO   OO
OOOOOOO    OO  OO   OO  OO   OO  OO   OO  OO   OO
OO         OO  OO   OO  OO   OO  OO   OO  OO   OO
OO          OOOOO   OO  OO    OOOOO    OOOOO   OOOOO  (TM)
```

==========
Computer program for the Strength Design of Reinforced Concrete Sections
==========

Licensee stated above acknowledges that Portland Cement Association (PCA) is not and cannot be responsible for either the accuracy or adequacy of the material supplied as input for processing by the PCACOL(tm) computer program. Furthermore, PCA neither makes any warranty expressed nor implied with respect to the correctness of the output prepared by the PCACOL(tm) program. Although PCA has endeavored to produce PCACOL(tm) error free, the program is not and can't be certified infallible. The final and only responsibility for analysis, design and engineering documents is the licensees. Accordingly, PCA disclaims all responsibility in contract, negligence or other tort for any analysis, design or engineering documents prepared in connection with the use of the PCACOL(tm) program.

50% COVER LOSS
f'_c = 4400 PSI

General Information:
==========

File Name: S:\DGN-ST\NORTHC~1\BONNER~1\ANALYSIS\PIERS\HLB142\PCACOL~1\M8ACT.COL
Project: BONNER BRIDGE - OREGON INLET
Column: HLB #142 Engineer: JMJ
Code: ACI 318-95 Units: English

Run Option: Investigation Slenderness: Not considered
Run Axis: Biaxial Column Type: Structural

Material Properties:
==========

f'c = 4.4 ksi fy = 40 ksi
Ec = 3780.96 ksi Es = 29000 ksi
fc = 3.74 ksi Rupture strain = Infinity
Ultimate strain = 0.003 in/in
Beta1 = 0.83

Section:
==========

Rectangular: Width = 31 in Depth = 43.6 in

Gross section area, Ag = 1351.6 in^2
Ix = 214111 in^4 Iy = 108241 in^4
Xo = 0 in Yo = 0 in

Reinforcement:
==========

Rebar Database: User-defined

Size	Diam (in)	Area (in^2)	Size	Diam (in)	Area (in^2)	Size	Diam (in)	Area (in^2)
# 1	0.00	0.00	# 3	0.38	0.11	# 4	0.50	0.20
# 5	0.63	0.31	# 6	0.75	0.44	# 7	0.88	0.60
# 8	1.00	0.79	# 9	1.13	1.00	# 10	1.27	1.27
# 11	1.41	1.56	# 14	1.69	2.25	# 18	2.26	4.00

Confinement: Tied; #1 ties with #9 bars, #1 with larger bars.
phi(a) = 0.8, phi(b) = 0.9, phi(c) = 0.7

Layout: Rectangular
Pattern: Equal Bar Spacing (Cover to longitudinal reinforcement)
Total steel area, As = 28.08 in^2 at 2.08%
18 #11 Cover = 2.5 in

Factored Loads and Moments with Corresponding Capacities: (see user's manual for notation)
==========

No.	Pu kip	Mux k-ft	Muy k-ft	fMnx k-ft	fMny k-ft	fMn/Mu
1	546.0	94.0	76.0	1217.6	986.9	12.966
2	290.0	273.0	87.0	1649.3	523.3	6.039
3	442.0	195.0	71.0	1648.4	602.6	8.457
4	455.0	78.0	64.0	1212.1	991.1	15.518
5	278.0	263.0	89.0	1626.1	548.5	6.181
6	425.0	188.0	74.0	1616.9	638.3	8.604
7	345.0	59.0	48.0	1205.2	978.4	20.410
8	210.0	273.0	86.0	1612.8	505.9	5.905
9	290.0	195.0	41.0	1726.8	364.1	8.856
10	302.0	52.0	42.0	1198.0	969.3	23.055
11	202.0	263.0	89.0	1591.9	536.3	6.050
12	279.0	188.0	39.0	1722.8	359.7	9.166
13	588.0	101.0	82.0	1211.9	985.1	12.005
14	331.0	655.0	71.0	1812.9	196.2	2.768
15	484.0	421.0	68.0	1835.0	295.9	4.358

16	496.0	85.0	69.0	1218.2	988.6	14.330
17	318.0	630.0	102.0	1773.3	287.7	2.815
18	465.0	405.0	74.0	1816.5	328.8	4.484
19	376.0	65.0	53.0	1205.5	985.6	18.566
20	241.0	655.0	71.0	1761.7	193.4	2.690
21	321.0	421.0	45.0	1809.2	193.3	4.297
22	333.0	57.0	47.0	1191.3	982.2	20.899
23	232.0	630.0	102.0	1729.3	281.6	2.745
24	308.0	405.0	43.0	1801.9	193.7	4.450

*** Program completed as requested! ***

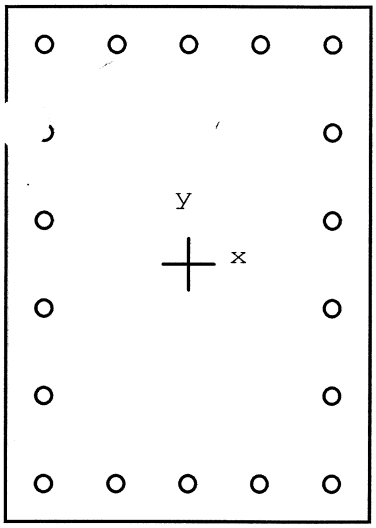

31 x 43.6 in

Code: ACI 318-95

Units: English

Run axis: Biaxial

Run option: Investigation

Slenderness: Not considered

Column type: Structural

Bars: User-defined

Date: 07/25/06

Time: 13:48:08

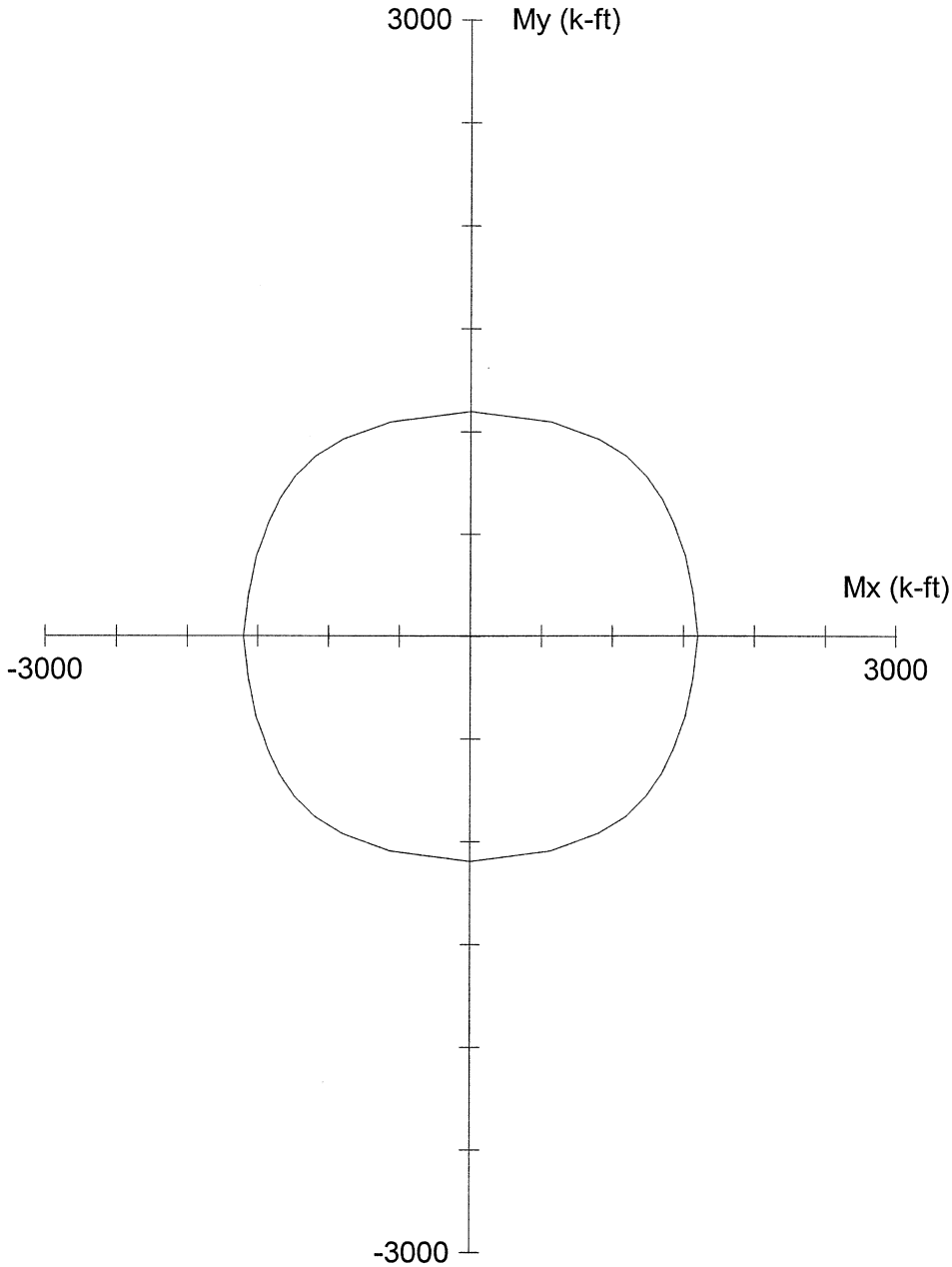

P = 0 kip

PCACOL V3.00 (PCA 1999) - Licensed to: Licensee name not yet specified.

File: S:\DGN-ST\NORTHC~1\BONNER~1\ANALYSIS\PIERS\HLB142\PCACOL~1\M8ACT.COL

Project: BONNER BRIDGE - OREGON INLET

Column: HLB #142		Engineer: JMJ	
f'c = 4.4 ksi	fy = 40 ksi	Ag = 1351.6 in^2	18 #11 bars
Ec = 3781 ksi	Es = 29000 ksi	As = 28.08 in^2	Rho = 2.08%
fc = 3.74 ksi	e_rup = Infinity	Xo = 0.00 in	Ix = 214111 in^4
e_u = 0.003 in/in		Yo = 0.00 in	Iy = 108241 in^4
Beta1 = 0.83		Clear spacing = 4.74 in	Clear cover = 2.50 in
Confinement: Tied	phi(a) = 0.8, phi(b) = 0.9, phi(c) = 0.7		

H. W. LOCHNER, INC.

PROJECT: BONNER BRIDGE - OREGON INLET NORTH CAROLINA JMJ Jun-06
SUBJECT: HIGH LEVEL BENT ANALYSIS WDB 7/06
HLB 142 MEM. 10 JT. 7

COLUMN LOADS

PMAX

HLB 142 MEMBER 10 JOINT 7

GROUP 1

	P	MY	MZ
DL	291.94	0.00	29.82
LL	103.76	0.00	-7.28
GROUP 1	0.00	0.00	0.00
SERVICE	395.70	0.00	22.54
STRENGTH	604.34	0.00	22.99

GROUP 2

	P	MY	MZ
DL	291.94	0.00	29.82
LL	0.00	0.00	0.00
GROUP 2	32.68	504.29	57.86
SERVICE	324.62	504.29	87.68
STRENGTH	422.01	655.58	113.98

GROUP 3

	P	MY	MZ
DL	291.94	0.00	29.82
LL	103.76	0.00	-7.28
GROUP 3	14.21	324.07	22.18
SERVICE	409.91	324.07	44.72
STRENGTH	532.88	421.29	58.14

GROUP 4

	P	MY	MZ
DL	291.94	0.00	29.82
LL	103.76	0.00	-7.28
GROUP 4	1.40	0.00	36.21
SERVICE	397.10	0.00	58.75
STRENGTH	516.23	0.00	76.38

GROUP 5

	P	MY	MZ
DL	291.94	0.00	29.82
LL	0.00	0.00	0.00
GROUP 5	34.09	504.29	94.07
SERVICE	326.03	504.29	123.89
STRENGTH	407.54	630.36	154.86

GROUP 6

	P	MY	MZ
DL	291.94	0.00	29.82
LL	103.76	0.00	-7.28
GROUP 6	15.61	324.07	58.39
SERVICE	411.31	324.07	80.93
STRENGTH	514.14	405.09	101.16

SLENDERNESS EFFECTS IN COMPRESSION MEMBERS (AASHTO 8.16.5)

f'c = 3000 psi PHI = 0.70 W_C = 150 PCF

$E_C = W_C^{1.5} * 33 * f'c^{0.5}$ = 3320561 PSI Width of Rect. Col. = B = 35.928 In.

Depth of Rect. Col = D = 62.148 In.

$r_Y = 0.30*D$ = 18.64 In. L_Y = 11.583 Ft. K_Y = 2.0

$r_Z = 0.30*B$ = 10.78 In. L_Z = 18.583 Ft. K_Z = 1.2

I_{YY} = $B*D^3/12$ I_{YY} = 718676 In^4

I_{ZZ} = $D*B^3/12$ I_{ZZ} = 240185 In^5

$K_Y L_Y/r$ = 14.9 < 22 NO SLENDERNESS EFFECT

$K_Z L_Z/r$ = 24.8 > 22 CONSIDER SLENDERNESS

H. W. LOCHNER, INC.

PROJECT: BONNER BRIDGE - OREGON INLET NORTH CAROLINA JMJ Jun-06
SUBJECT: HIGH LEVEL BENT ANALYSIS
HLB 142 MEM. 10 JT. 7 WDB 7/06

SLENDERNESS EFFECTS IN RECTANGULAR COMPRESSION MEMBERS (AASHTO 8.16.5)

GROUP 1

	B	D	KL/R	M_U	M_{DL}	B_D	P_U	P_C	δ_b	δ_s	M_C	
	In.	In.		Ft. Kips	Ft. Kips		Kips	Kips			Ft. Kips	
MY	35.928	62.148	14.9	0.00	0.00	0.000	604	0	1.000	1.000	124	*
MZ	35.928	62.148	24.8	22.99	38.77	1.686	604	16370	1.056	1.056	84	*

GROUP 2

	B	D	KL/R	M_U	M_{DL}	B_D	P_U	P_C	δ_b	δ_s	M_C
	In.	In.		Ft. Kips	Ft. Kips		Kips	Kips			Ft. Kips
MY	35.928	62.148	14.9	655.58	0.00	0.000	422	0	1.000	1.000	656
MZ	35.928	62.148	24.8	113.98	38.77	0.340	422	32811	1.019	1.019	116

GROUP 3

	B	D	KL/R	M_U	M_{DL}	B_D	P_U	P_C	δ_b	δ_s	M_C	
	In.	In.		Ft. Kips	Ft. Kips		Kips	Kips			Ft. Kips	
MY	35.928	62.148	14.9	421.29	0.00	0.000	533	0	1.000	1.000	421	
MZ	35.928	62.148	24.8	58.14	38.77	0.667	533	26380	1.030	1.030	75	*

GROUP 4

	B	D	KL/R	M_U	M_{DL}	B_D	P_U	P_C	δ_b	δ_s	M_C	
	In.	In.		Ft. Kips	Ft. Kips		Kips	Kips			Ft. Kips	
MY	35.928	62.148	14.9	0.00	0.00	0.000	516	0	1.000	1.000	106	*
MZ	35.928	62.148	24.8	76.38	38.77	0.508	516	29166	1.026	1.026	78	

GROUP 5

	B	D	KL/R	M_U	M_{DL}	B_D	P_U	P_C	δ_b	δ_s	M_C
	In.	In.		Ft. Kips	Ft. Kips		Kips	Kips			Ft. Kips
MY	35.928	62.148	14.9	630.36	0.00	0.000	408	0	1.000	1.000	630
MZ	35.928	62.148	24.8	154.86	38.77	0.250	408	35167	1.017	1.017	157

GROUP 6

	B	D	KL/R	M_U	M_{DL}	B_D	P_U	P_C	δ_b	δ_s	M_C
	In.	In.		Ft. Kips	Ft. Kips		Kips	Kips			Ft. Kips
MY	35.928	62.148	14.9	405.09	0.00	0.000	514	0	1.000	1.000	405
MZ	35.928	62.148	24.8	101.16	38.77	0.383	514	31789	1.024	1.024	104

* MINIMUM MOMENT CONTROLS

H. W. LOCHNER, INC.

PROJECT: BONNER BRIDGE - OREGON INLET NORTH CAROLINA JMJ Jun-06
SUBJECT: HIGH LEVEL BENT ANALYSIS
HLB 142 MEM. 10 JT. 7 VDB 7/06

COLUMN LOADS

PMIN

HLB 142 MEMBER 10 JOINT 7

	GROUP 1				GROUP 2		
	P	MY	MZ		P	MY	MZ
DL	218.96	0.00	29.82	DL	218.96	0.00	29.82
LL	51.47	0.00	13.41	LL	0.00	0.00	0.00
GROUP 1	0.00	0.00	0.00	GROUP 2	32.68	504.29	57.86
SERVICE	270.43	0.00	43.23	SERVICE	251.64	504.29	87.68
STRENGTH	396.16	0.00	67.82	STRENGTH	327.13	655.58	113.98

	GROUP 3				GROUP 4		
	P	MY	MZ		P	MY	MZ
DL	218.96	0.00	29.82	DL	218.96	0.00	29.82
LL	51.47	0.00	13.41	LL	51.47	0.00	13.41
GROUP 3	14.21	324.07	22.18	GROUP 4	1.40	0.00	36.21
SERVICE	284.64	324.07	65.41	SERVICE	271.83	0.00	79.44
STRENGTH	370.03	421.29	85.03	STRENGTH	353.37	0.00	103.27

	GROUP 5				GROUP 6		
	P	MY	MZ		P	MY	MZ
DL	218.96	0.00	29.82	DL	218.96	0.00	29.82
LL	0.00	0.00	0.00	LL	51.47	0.00	13.41
GROUP 5	34.09	504.29	94.07	GROUP 6	15.61	324.07	58.39
SERVICE	253.05	504.29	123.89	SERVICE	286.04	324.07	101.62
STRENGTH	316.31	630.36	154.86	STRENGTH	357.54	405.09	127.03

SLENDERNESS EFFECTS IN COMPRESSION MEMBERS (AASHTO 8.16.5)

f'c = 3000 psi PHI = 0.70 W_C = 150 PCF

$E_C = W_C$^$^{1.5}$ *33*f'c^$^{0.5}$ = 3320561 PSI Width of Rect. Col. = B = 35.928 In.

Depth of Rect. Col = D = 62.148 In.

r_Y = 0.30*D = 18.64 In. L_Y = 11.583 Ft. K_Y = 2.0

r_Z = 0.30*B = 10.78 In. L_Z = 18.583 Ft. K_Z = 1.2

I_{YY} = B*D^^{3}/12 I_{YY} = 718676 In^4

I_{ZZ} = D*B^^{3}/12 I_{ZZ} = 240185 In^5

K_YL_Y/r = 14.9 < 22 NO SLENDERNESS EFFECT

K_ZL_Z/r = 24.8 > 22 CONSIDER SLENDERNESS

H. W. LOCHNER, INC.

PROJECT: BONNER BRIDGE - OREGON INLET NORTH CAROLINA JMJ Jun-06
SUBJECT: HIGH LEVEL BENT ANALYSIS
HLB 142 MEM. 10 JT. 7

WDB 7/06

SLENDERNESS EFFECTS IN RECTANGULAR COMPRESSION MEMBERS (AASHTO 8.16.5)

GROUP 1

	B	D	KL/R	M_U	M_{DL}	B_D	P_U	P_C	δ_b	δ_s	M_C	
	In.	In.		Ft. Kips	Ft. Kips		Kips	Kips			Ft. Kips	
MY	35.928	62.148	14.9	0.00	0.00	0.000	396	0	1.000	1.000	81	*
MZ	35.928	62.148	24.8	67.82	38.77	0.572	396	27978	1.021	1.021	69	

GROUP 2

	B	D	KL/R	M_U	M_{DL}	B_D	P_U	P_C	δ_b	δ_s	M_C
	In.	In.		Ft. Kips	Ft. Kips		Kips	Kips			Ft. Kips
MY	35.928	62.148	14.9	655.58	0.00	0.000	327	0	1.000	1.000	656
MZ	35.928	62.148	24.8	113.98	38.77	0.340	327	32811	1.014	1.014	116

GROUP 3

	B	D	KL/R	M_U	M_{DL}	B_D	P_U	P_C	δ_b	δ_s	M_C
	In.	In.		Ft. Kips	Ft. Kips		Kips	Kips			Ft. Kips
MY	35.928	62.148	14.9	421.29	0.00	0.000	370	0	1.000	1.000	421
MZ	35.928	62.148	24.8	85.03	38.77	0.456	370	30202	1.018	1.018	87

GROUP 4

	B	D	KL/R	M_U	M_{DL}	B_D	P_U	P_C	δ_b	δ_s	M_C	
	In.	In.		Ft. Kips	Ft. Kips		Kips	Kips			Ft. Kips	
MY	35.928	62.148	14.9	0.00	0.00	0.000	353	0	1.000	1.000	73	*
MZ	35.928	62.148	24.8	103.27	38.77	0.375	353	31970	1.016	1.016	105	

GROUP 5

	B	D	KL/R	M_U	M_{DL}	B_D	P_U	P_C	δ_b	δ_s	M_C
	In.	In.		Ft. Kips	Ft. Kips		Kips	Kips			Ft. Kips
MY	35.928	62.148	14.9	630.36	0.00	0.000	316	0	1.000	1.000	630
MZ	35.928	62.148	24.8	154.86	38.77	0.250	316	35167	1.013	1.013	157

GROUP 6

	B	D	KL/R	M_U	M_{DL}	B_D	P_U	P_C	δ_b	δ_s	M_C
	In.	In.		Ft. Kips	Ft. Kips		Kips	Kips			Ft. Kips
MY	35.928	62.148	14.9	405.09	0.00	0.000	358	0	1.000	1.000	405
MZ	35.928	62.148	24.8	127.03	38.77	0.305	358	33689	1.015	1.015	129

* MINIMUM MOMENT CONTROLS

H. W. LOCHNER, INC.

PROJECT: BONNER BRIDGE - OREGON INLET NORTH CAROLINA JMJ Jul-06
SUBJECT: HIGH LEVEL BENT ANALYSIS
HLB 142 MEM. 10 JT. 9 WPB 7/06

COLUMN LOADS

PMAX

HLB 142 MEMBER 10 JOINT 9

GROUP 1

	P	MY	MZ
DL	-335.15	0.00	19.53
LL	-103.76	0.00	-19.42
GROUP 1	0.00	0.00	0.00
SERVICE	-438.91	0.00	0.11
STRENGTH	-660.51	0.00	-16.69

GROUP 2

	P	MY	MZ
DL	-335.15	0.00	19.53
LL	0.00	0.00	0.00
GROUP 2	-32.89	-913.52	139.85
SERVICE	-368.04	-913.52	159.38
STRENGTH	-478.45	-1187.58	207.19

GROUP 3

	P	MY	MZ
DL	-335.15	0.00	19.53
LL	-103.76	0.00	-19.42
GROUP 3	-14.27	-537.82	55.63
SERVICE	-453.18	-537.82	55.74
STRENGTH	-589.13	-699.17	72.46

GROUP 4

	P	MY	MZ
DL	-335.15	0.00	19.53
LL	-103.76	0.00	-19.42
GROUP 4	-1.40	0.00	381.10
SERVICE	-440.31	0.00	381.21
STRENGTH	-572.40	0.00	495.57

GROUP 5

	P	MY	MZ
DL	-335.15	0.00	19.53
LL	0.00	0.00	0.00
GROUP 5	-34.29	-913.52	520.95
SERVICE	-369.44	-913.52	540.48
STRENGTH	-461.80	-1141.90	675.60

GROUP 6

	P	MY	MZ
DL	-335.15	0.00	19.53
LL	-103.76	0.00	-19.42
GROUP 6	-15.67	-537.82	436.73
SERVICE	-454.58	-537.82	436.84
STRENGTH	-568.23	-672.28	546.05

SLENDERNESS EFFECTS IN COMPRESSION MEMBERS (AASHTO 8.16.5)

f'c = 3000 psi PHI = 0.70 W_C = 150 PCF

$E_C = W_C$^1.5 *33*f'c^0.5 = 3320561 PSI Width of Rect. Col. = B = 35.928 In.

Depth of Rect. Col = D = 62.148 In.

r_Y = 0.30*D = 18.64 In. L_Y = 11.583 Ft. K_Y = 2.0

r_Z = 0.30*B = 10.78 In. L_Z = 18.583 Ft. K_Z = 1.2

I_{YY} = B*D^3/12 I_{YY} = 718676 In^4

I_{ZZ} = D*B^3/12 I_{ZZ} = 240185 In^5

$K_Y L_Y/r$ = 14.9 < 22 NO SLENDERNESS EFFECT

$K_Z L_Z/r$ = 24.8 > 22 CONSIDER SLENDERNESS

H. W. LOCHNER, INC.

PROJECT: BONNER BRIDGE - OREGON INLET NORTH CAROLINA JMJ Jul-06
SUBJECT: HIGH LEVEL BENT ANALYSIS
HLB 142 MEM. 10 JT. 9 WDB 7/06

SLENDERNESS EFFECTS IN RECTANGULAR COMPRESSION MEMBERS (AASHTO 8.16.5)

GROUP 1

	B	D	KL/R	M_U	M_{DL}	B_D	P_U	P_C	δ_b	δ_s	M_C	
	In.	In.		Ft. Kips	Ft. Kips		Kips	Kips			Ft. Kips	
MY	35.928	62.148	14.9	0.00	0.00	0.000	661	0	1.000	1.000	136	*
MZ	35.928	62.148	24.8	16.69	25.39	1.521	661	17439	1.057	1.057	92	*

GROUP 2

	B	D	KL/R	M_U	M_{DL}	B_D	P_U	P_C	δ_b	δ_s	M_C
	In.	In.		Ft. Kips	Ft. Kips		Kips	Kips			Ft. Kips
MY	35.928	62.148	14.9	1187.58	0.00	0.000	478	0	1.000	1.000	1188
MZ	35.928	62.148	24.8	207.19	25.39	0.123	478	39170	1.018	1.018	211

GROUP 3

	B	D	KL/R	M_U	M_{DL}	B_D	P_U	P_C	δ_b	δ_s	M_C	
	In.	In.		Ft. Kips	Ft. Kips		Kips	Kips			Ft. Kips	
MY	35.928	62.148	14.9	699.17	0.00	0.000	589	0	1.000	1.000	699	
MZ	35.928	62.148	24.8	72.46	25.39	0.350	589	32562	1.027	1.027	82	*

GROUP 4

	B	D	KL/R	M_U	M_{DL}	B_D	P_U	P_C	δ_b	δ_s	M_C	
	In.	In.		Ft. Kips	Ft. Kips		Kips	Kips			Ft. Kips	
MY	35.928	62.148	14.9	0.00	0.00	0.000	572	0	1.000	1.000	118	*
MZ	35.928	62.148	24.8	495.57	25.39	0.051	572	41827	1.020	1.020	505	

GROUP 5

	B	D	KL/R	M_U	M_{DL}	B_D	P_U	P_C	δ_b	δ_s	M_C
	In.	In.		Ft. Kips	Ft. Kips		Kips	Kips			Ft. Kips
MY	35.928	62.148	14.9	1141.90	0.00	0.000	462	0	1.000	1.000	1142
MZ	35.928	62.148	24.8	675.60	25.39	0.038	462	42378	1.016	1.016	686

GROUP 6

	B	D	KL/R	M_U	M_{DL}	B_D	P_U	P_C	δ_b	δ_s	M_C
	In.	In.		Ft. Kips	Ft. Kips		Kips	Kips			Ft. Kips
MY	35.928	62.148	14.9	672.28	0.00	0.000	568	0	1.000	1.000	672
MZ	35.928	62.148	24.8	546.05	25.39	0.046	568	42017	1.020	1.020	557

* MINIMUM MOMENT CONTROLS

H. W. LOCHNER, INC.

PROJECT: BONNER BRIDGE - OREGON INLET NORTH CAROLINA JMJ Jul-06
SUBJECT: HIGH LEVEL BENT ANALYSIS
HLB 142 MEM. 10 JT. 9 WDB 7/06

COLUMN LOADS

PMIN

HLB 142 MEMBER 10 JOINT 9

GROUP 1

	P	MY	MZ
DL	-251.36	0.00	19.53
LL	-51.47	0.00	20.71
GROUP 1	0.00	0.00	0.00
SERVICE	-302.83	0.00	40.24
STRENGTH	-438.29	0.00	70.26

GROUP 2

	P	MY	MZ
DL	-251.36	0.00	19.53
LL	0.00	0.00	0.00
GROUP 2	-32.89	-913.52	139.85
SERVICE	-284.25	-913.52	159.38
STRENGTH	-369.53	-1187.58	207.19

GROUP 3

	P	MY	MZ
DL	-251.36	0.00	19.53
LL	-51.47	0.00	20.71
GROUP 3	-14.27	-537.82	55.63
SERVICE	-317.10	-537.82	95.87
STRENGTH	-412.23	-699.17	124.63

GROUP 4

	P	MY	MZ
DL	-251.36	0.00	19.53
LL	-51.47	0.00	20.71
GROUP 4	-1.40	0.00	381.10
SERVICE	-304.23	0.00	421.34
STRENGTH	-395.50	0.00	547.74

GROUP 5

	P	MY	MZ
DL	-251.36	0.00	19.53
LL	0.00	0.00	0.00
GROUP 5	-34.29	-913.52	520.95
SERVICE	-285.65	-913.52	540.48
STRENGTH	-357.07	-1141.90	675.60

GROUP 6

	P	MY	MZ
DL	-251.36	0.00	19.53
LL	-51.47	0.00	20.71
GROUP 6	-15.67	-537.82	436.73
SERVICE	-318.50	-537.82	476.97
STRENGTH	-398.13	-672.28	596.21

SLENDERNESS EFFECTS IN COMPRESSION MEMBERS (AASHTO 8.16.5)

f'c = 3000 psi PHI = 0.70 W_C = 150 PCF

$E_C = W_C^{1.5} * 33 * f'c^{0.5}$ = 3320561 PSI Width of Rect. Col. = B = 35.928 In.

Depth of Rect. Col = D = 62.148 In.

$r_Y = 0.30*D$ = 18.64 In. L_Y = 11.583 Ft. K_Y = 2.0

$r_Z = 0.30*B$ = 10.78 In. L_Z = 18.583 Ft. K_Z = 1.2

I_{YY} = $B*D^3/12$ I_{YY} = 718676 In^4

I_{ZZ} = $D*B^3/12$ I_{ZZ} = 240185 In^5

$K_Y L_Y/r$ = 14.9 < 22 NO SLENDERNESS EFFECT

$K_Z L_Z/r$ = 24.8 > 22 CONSIDER SLENDERNESS

H. W. LOCHNER, INC.

PROJECT: BONNER BRIDGE - OREGON INLET NORTH CAROLINA JMJ Jul-06
SUBJECT: HIGH LEVEL BENT ANALYSIS
HLB 142 MEM. 10 JT. 9 WDB 7/06

SLENDERNESS EFFECTS IN RECTANGULAR COMPRESSION MEMBERS (AASHTO 8.16.5)

GROUP 1

	B	D	KL/R	M_U	M_{DL}	B_D	P_U	P_C	δ_b	δ_s	M_C	
	In.	In.		Ft. Kips	Ft. Kips		Kips	Kips			Ft. Kips	
MY	35.928	62.148	14.9	0.00	0.00	0.000	438	0	1.000	1.000	90	*
MZ	35.928	62.148	24.8	70.26	25.39	0.361	438	32299	1.020	1.020	72	

GROUP 2

	B	D	KL/R	M_U	M_{DL}	B_D	P_U	P_C	δ_b	δ_s	M_C
	In.	In.		Ft. Kips	Ft. Kips		Kips	Kips			Ft. Kips
MY	35.928	62.148	14.9	1187.58	0.00	0.000	370	0	1.000	1.000	1188
MZ	35.928	62.148	24.8	207.19	25.39	0.123	370	39170	1.014	1.014	210

GROUP 3

	B	D	KL/R	M_U	M_{DL}	B_D	P_U	P_C	δ_b	δ_s	M_C
	In.	In.		Ft. Kips	Ft. Kips		Kips	Kips			Ft. Kips
MY	35.928	62.148	14.9	699.17	0.00	0.000	412	0	1.000	1.000	699
MZ	35.928	62.148	24.8	124.63	25.39	0.204	412	36529	1.016	1.016	127

GROUP 4

	B	D	KL/R	M_U	M_{DL}	B_D	P_U	P_C	δ_b	δ_s	M_C	
	In.	In.		Ft. Kips	Ft. Kips		Kips	Kips			Ft. Kips	
MY	35.928	62.148	14.9	0.00	0.00	0.000	396	0	1.000	1.000	81	*
MZ	35.928	62.148	24.8	547.74	25.39	0.046	396	42022	1.014	1.014	555	

GROUP 5

	B	D	KL/R	M_U	M_{DL}	B_D	P_U	P_C	δ_b	δ_s	M_C
	In.	In.		Ft. Kips	Ft. Kips		Kips	Kips			Ft. Kips
MY	35.928	62.148	14.9	1141.90	0.00	0.000	357	0	1.000	1.000	1142
MZ	35.928	62.148	24.8	675.60	25.39	0.038	357	42378	1.012	1.012	684

GROUP 6

	B	D	KL/R	M_U	M_{DL}	B_D	P_U	P_C	δ_b	δ_s	M_C
	In.	In.		Ft. Kips	Ft. Kips		Kips	Kips			Ft. Kips
MY	35.928	62.148	14.9	672.28	0.00	0.000	398	0	1.000	1.000	672
MZ	35.928	62.148	24.8	596.21	25.39	0.043	398	42174	1.014	1.014	604

* MINIMUM MOMENT CONTROLS

JMS 7/06

WDB 7/06

```
OOOOOOO    OOOOO    OOOOO    OOOOO    OOOOO    OO
OO    OO   OO  OO   OO  OO   OO  OO   OO  OO   OO
OO    OO   OO  OO   OO  OO   OO  OO   OO  OO   OO
OO    OO   OO       OO  OO   OO       OO  OO   OO
OO    OO   OO       OOOOOOO  OO       OO  OO   OO
OOOOOOO    OO  OO   OO  OO   OO  OO   OO  OO   OO
OO         OO  OO   OO  OO   OO  OO   OO  OO   OO
OO          OOOOO   OO  OO    OOOOO    OOOOO    OOOOO  (TM)
```

==========
Computer program for the Strength Design of Reinforced Concrete Sections
==========

Licensee stated above acknowledges that Portland Cement Association (PCA) is not and cannot be responsible for either the accuracy or adequacy of the material supplied as input for processing by the PCACOL(tm) computer program. Furthermore, PCA neither makes any warranty expressed nor implied with respect to the correctness of the output prepared by the PCACOL(tm) program. Although PCA has endeavored to produce PCACOL(tm) error free, the program is not and can't be certified infallible. The final and only responsibility for analysis, design and engineering documents is the licensees. Accordingly, PCA disclaims all responsibility in contract, negligence or other tort for any analysis, design or engineering documents prepared in connection with the use of the PCACOL(tm) program.

BASED ON PLANS

General Information:
==========
File Name: S:\DGN-ST\NORTHC~1\BONNER~1\ANALYSIS\PIERS\HLB142\PCACOL~1\M10PLAN.COL
Project: BONNER BRIDGE - OREGON INLET
Column: HLB #142 Engineer: JMJ
Code: ACI 318-95 Units: English

Run Option: Investigation Slenderness: Not considered
Run Axis: Biaxial Column Type: Structural

Material Properties:
==========
f'c = 3 ksi fy = 40 ksi
Ec = 3122.02 ksi Es = 29000 ksi
fc = 2.55 ksi Rupture strain = Infinity
Ultimate strain = 0.003 in/in
Beta1 = 0.85

Section:
==========
Rectangular: Width = 36 in Depth = 62.1 in

Gross section area, Ag = 2235.6 in^2
Ix = 718449 in^4 Iy = 241445 in^4
Xo = 0 in Yo = 0 in

Reinforcement:
==========
Rebar Database: User-defined

Size	Diam (in)	Area (in^2)	Size	Diam (in)	Area (in^2)	Size	Diam (in)	Area (in^2)
# 1	0.00	0.00	# 3	0.38	0.11	# 4	0.50	0.20
# 5	0.63	0.31	# 6	0.75	0.44	# 7	0.88	0.60
# 8	1.00	0.79	# 9	1.13	1.00	# 10	1.27	1.27
# 11	1.41	1.56	# 14	1.69	2.25	# 18	2.26	4.00

Confinement: Tied; #1 ties with #9 bars, #1 with larger bars.
phi(a) = 0.8, phi(b) = 0.9, phi(c) = 0.7

Layout: Rectangular
Pattern: Equal Bar Spacing (Cover to longitudinal reinforcement)
Total steel area, As = 28.08 in^2 at 1.26%
18 #11 Cover = 5 in

Factored Loads and Moments with Corresponding Capacities: (see user's manual for notation)
==========

No.	Pu kip	Mux k-ft	Muy k-ft	fMnx k-ft	fMny k-ft	fMn/Mu
1	604.0	124.0	84.0	1758.2	1194.8	14.193
2	422.0	656.0	116.0	2548.2	448.3	3.884
3	533.0	421.0	75.0	2602.8	462.5	6.182
4	516.0	106.0	78.0	1667.4	1226.7	15.729
5	408.0	630.0	157.0	2434.3	605.8	3.864
6	514.0	405.0	104.0	2475.8	636.8	6.114
7	396.0	81.0	69.0	1477.4	1259.7	18.247
8	327.0	656.0	116.0	2479.1	435.4	3.778
9	370.0	421.0	87.0	2474.1	507.9	5.875
10	353.0	73.0	105.0	956.4	1377.3	13.112
11	316.0	630.0	157.0	2374.2	591.0	3.768
12	358.0	405.0	129.0	2298.0	731.3	5.674
13	661.0	136.0	92.0	1761.2	1187.4	12.936
14	478.0	1188.0	211.0	2576.9	457.3	2.169
15	589.0	699.0	82.0	2701.6	317.5	3.865

16	572.0	118.0	505.0	365.4	1558.8	3.087
17	462.0	1142.0	686.0	1862.1	1122.3	1.632
18	568.0	672.0	557.0	1551.2	1286.3	2.309
19	438.0	90.0	72.0	1560.6	1247.4	17.334
20	370.0	1188.0	210.0	2513.3	442.3	2.115
21	412.0	699.0	127.0	2535.6	458.1	3.627
22	396.0	81.0	555.0	217.2	1488.2	2.681
23	357.0	1142.0	684.0	1830.6	1098.1	1.604
24	398.0	672.0	604.0	1425.2	1277.8	2.118

*** Program completed as requested! ***

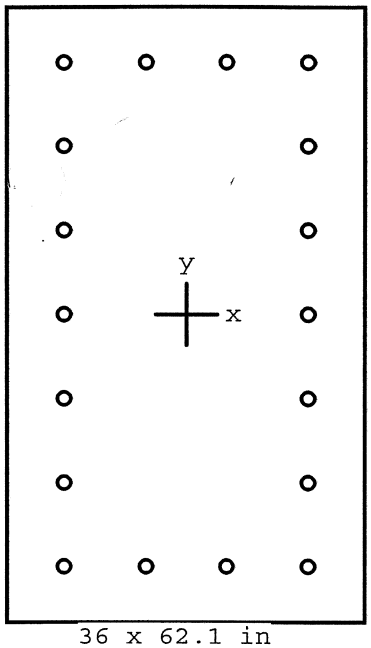

36 x 62.1 in

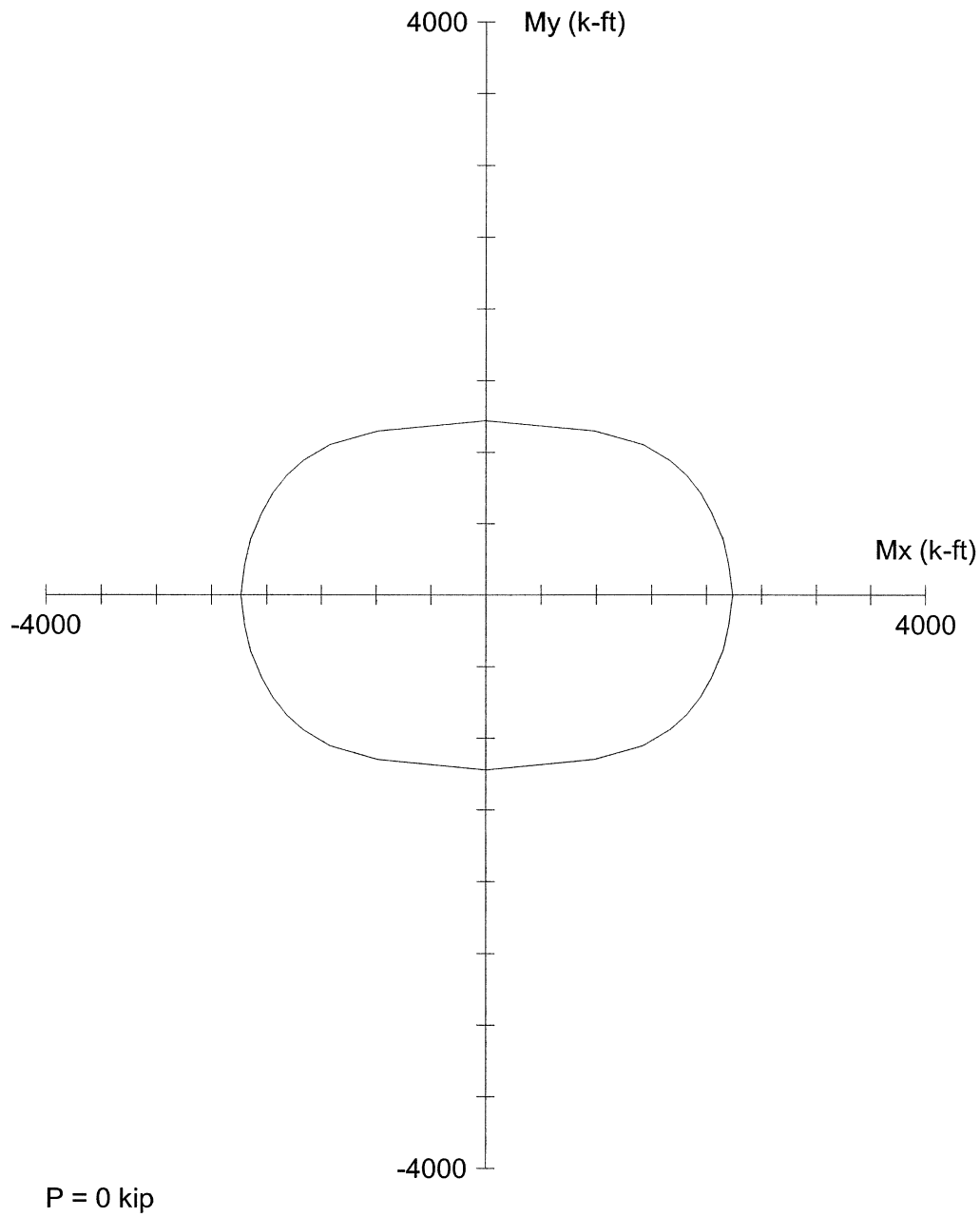

Code: ACI 318-95

Units: English

Run axis: Biaxial

Run option: Investigation

Slenderness: Not considered

mn type: Structural

Bars: User-defined

Date: 07/20/06

Time: 13:01:04

PCACOL V3.00 (PCA 1999) - Licensed to: Licensee name not yet specified.

File: S:\DGN-ST\NORTHC~1\BONNER~1\ANALYSIS\PIERS\HLB142\PCACOL~1\M10PLAN.COL

Project: BONNER BRIDGE - OREGON INLET

Column: HLB #142		Engineer: JMJ	
f'c = 3 ksi	fy = 40 ksi	Ag = 2235.6 in^2	18 #11 bars
Ec = 3122 ksi	Es = 29000 ksi	As = 28.08 in^2	Rho = 1.26%
fc = 2.55 ksi	e_rup = Infinity	Xo = 0.00 in	Ix = 718449 in^4
u = 0.003 in/in		Yo = 0.00 in	Iy = 241445 in^4
Beta1 = 0.85		Clear spacing = 6.79 in	Clear cover = 5.00 in
Confinement: Tied	phi(a) = 0.8, phi(b) = 0.9, phi(c) = 0.7		

JMJ 7/06
WDB 7/06

```
OOOOOOO    OOOOO    OOOOO    OOOOO    OOOOO    OO
OO    OO   OO  OO   OO  OO   OO  OO   OO  OO   OO
OO    OO   OO  OO   OO  OO   OO  OO   OO  OO   OO
OO    OO   OO       OO  OO   OO       OO  OO   OO
OO    OO   OO       OOOOOOO  OO       OO  OO   OO
OOOOOOO    OO  OO   OO  OO   OO  OO   OO  OO   OO
OO         OO  OO   OO  OO   OO  OO   OO  OO   OO
OO          OOOOO   OO  OO    OOOOO    OOOOO    OOOOO  (TM)
```

==========
Computer program for the Strength Design of Reinforced Concrete Sections
==========

Licensee stated above acknowledges that Portland Cement Association (PCA) is not and cannot be responsible for either the accuracy or adequacy of the material supplied as input for processing by the PCACOL(tm) computer program. Furthermore, PCA neither makes any warranty expressed nor implied with respect to the correctness of the output prepared by the PCACOL(tm) program. Although PCA has endeavored to produce PCACOL(tm) error free, the program is not and can't be certified infallible. The final and only responsibility for analysis, design and engineering documents is the licensees. Accordingly, PCA disclaims all responsibility in contract, negligence or other tort for any analysis, design or engineering documents prepared in connection with the use of the PCACOL(tm) program.

50% COVER LOSS
f'_c = 4000 PSI

General Information:
==========

File Name: S:\DGN-ST\NORTHC~1\BONNER~1\ANALYSIS\PIERS\HLB142\PCACOL~1\M10ACT.COL
Project: BONNER BRIDGE - OREGON INLET
Column: HLB #142 Engineer: JMJ
Code: ACI 318-95 Units: English

Run Option: Investigation Slenderness: Not considered
Run Axis: Biaxial Column Type: Structural

Material Properties:
==========

f'c = 4.4 ksi fy = 40 ksi
Ec = 3780.96 ksi Es = 29000 ksi
fc = 3.74 ksi Rupture strain = Infinity
Ultimate strain = 0.003 in/in
Beta1 = 0.83

Section:
==========

Rectangular: Width = 31 in Depth = 57.1 in

Gross section area, Ag = 1770.1 in^2
Ix = 480938 in^4 Iy = 141756 in^4
Xo = 0 in Yo = 0 in

Reinforcement:
==========

Rebar Database: User-defined

Size	Diam (in)	Area (in^2)	Size	Diam (in)	Area (in^2)	Size	Diam (in)	Area (in^2)
# 1	0.00	0.00	# 3	0.38	0.11	# 4	0.50	0.20
# 5	0.63	0.31	# 6	0.75	0.44	# 7	0.88	0.60
# 8	1.00	0.79	# 9	1.13	1.00	# 10	1.27	1.27
# 11	1.41	1.56	# 14	1.69	2.25	# 18	2.26	4.00

Confinement: Tied; #1 ties with #9 bars, #1 with larger bars.
phi(a) = 0.8, phi(b) = 0.9, phi(c) = 0.7

Layout: Rectangular
Pattern: Equal Bar Spacing (Cover to longitudinal reinforcement)
Total steel area, As = 28.08 in^2 at 1.59%
18 #11 Cover = 2.5 in

Factored Loads and Moments with Corresponding Capacities: (see user's manual for notation)
==========

No.	Pu kip	Mux k-ft	Muy k-ft	fMnx k-ft	fMny k-ft	fMn/Mu
1	604.0	124.0	84.0	1747.2	1183.7	14.091
2	422.0	656.0	116.0	2507.8	443.6	3.823
3	533.0	421.0	75.0	2585.9	462.6	6.143
4	516.0	106.0	78.0	1625.3	1200.2	15.352
5	408.0	630.0	157.0	2395.9	597.0	3.803
6	514.0	405.0	104.0	2456.3	629.3	6.064
7	396.0	81.0	69.0	1424.0	1213.5	17.583
8	327.0	656.0	116.0	2423.4	427.4	3.694
9	370.0	421.0	87.0	2427.8	501.2	5.767
10	353.0	73.0	105.0	907.0	1305.5	12.430
11	316.0	630.0	157.0	2324.2	582.0	3.690
12	358.0	405.0	129.0	2257.6	715.8	5.572
13	661.0	136.0	92.0	1759.4	1191.1	12.940
14	478.0	1188.0	211.0	2553.4	449.2	2.149
15	589.0	699.0	82.0	2705.1	316.5	3.870

16	572.0	118.0	505.0	350.2	1496.3	2.963
17	462.0	1142.0	686.0	1829.1	1097.7	1.601
18	568.0	672.0	557.0	1517.3	1256.7	2.257
19	438.0	90.0	72.0	1506.5	1206.9	16.748
20	370.0	1188.0	210.0	2461.4	437.3	2.072
21	412.0	699.0	127.0	2493.5	453.1	3.567
22	396.0	81.0	555.0	203.4	1406.1	2.533
23	357.0	1142.0	684.0	1777.9	1066.1	1.557
24	398.0	672.0	604.0	1369.0	1231.5	2.038

*** Program completed as requested! ***

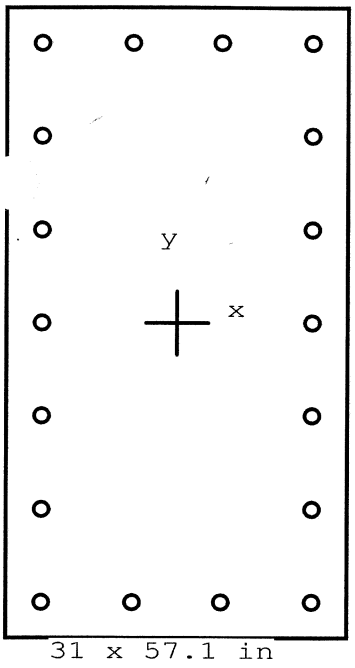

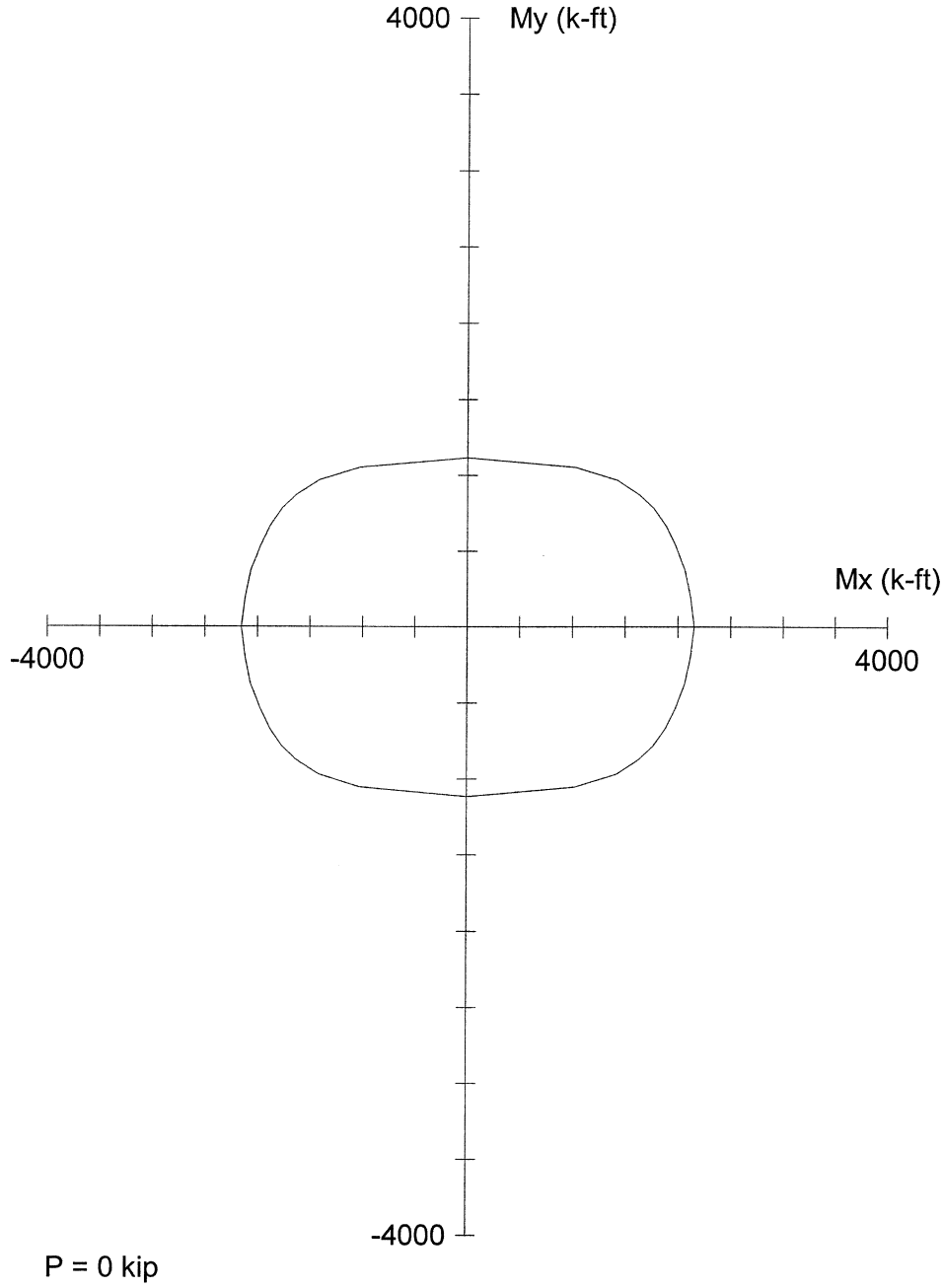

Code: ACI 318-95

Units: English

Run axis: Biaxial

Run option: Investigation

Slenderness: Not considered

Column type: Structural

Bars: User-defined

Date: 07/25/06

Time: 13:48:17

PCACOL V3.00 (PCA 1999) - Licensed to: Licensee name not yet specified.

File: S:\DGN-ST\NORTHC~1\BONNER~1\ANALYSIS\PIERS\HLB142\PCACOL~1\M10ACT.COL

Project: BONNER BRIDGE - OREGON INLET

Column: HLB #142		Engineer: JMJ	
f'c = 4.4 ksi	fy = 40 ksi	Ag = 1770.1 in^2	18 #11 bars
Ec = 3781 ksi	Es = 29000 ksi	As = 28.08 in^2	Rho = 1.59%
fc = 3.74 ksi	e_rup = Infinity	Xo = 0.00 in	Ix = 480938 in^4
e_u = 0.003 in/in		Yo = 0.00 in	Iy = 141756 in^4
Beta1 = 0.83		Clear spacing = 6.79 in	Clear cover = 2.50 in
Confinement: Tied	phi(a) = 0.8, phi(b) = 0.9, phi(c) = 0.7		

H. W. LOCHNER, INC.

PROJECT: BONNER BRIDGE - OREGON INLET NORTH CAROLINA JMJ Jul-06
SUBJECT: HIGH LEVEL BENT ANALYSIS
HLB 142 MEM. 11 JT. 8 WDB 7/06

COLUMN LOADS

PMAX

HLB 142 MEMBER 11 JOINT 8

	GROUP 1				GROUP 2		
	P	MY	MZ		P	MY	MZ
DL	291.93	0.00	29.70	DL	291.93	0.00	29.70
LL	103.76	0.00	-7.30	LL	0.00	0.00	0.00
GROUP 1	0.00	0.00	0.00	GROUP 2	-32.68	-504.26	-57.87
SERVICE	395.69	0.00	22.40	SERVICE	259.25	-504.26	-28.17
STRENGTH	604.32	0.00	22.79	STRENGTH	337.03	-655.54	-36.62

	GROUP 3				GROUP 4		
	P	MY	MZ		P	MY	MZ
DL	291.93	0.00	29.70	DL	291.93	0.00	29.70
LL	103.76	0.00	-7.30	LL	103.76	0.00	-7.30
GROUP 3	-14.21	-324.05	-22.18	GROUP 4	1.40	0.00	36.16
SERVICE	381.48	-324.05	0.22	SERVICE	397.09	0.00	58.56
STRENGTH	495.92	-421.27	0.29	STRENGTH	516.22	0.00	76.13

	GROUP 5				GROUP 6		
	P	MY	MZ		P	MY	MZ
DL	291.93	0.00	29.70	DL	291.93	0.00	29.70
LL	0.00	0.00	0.00	LL	103.76	0.00	-7.30
GROUP 5	-31.29	-504.26	-21.71	GROUP 6	-12.81	-324.05	13.98
SERVICE	260.64	-504.26	7.99	SERVICE	382.88	-324.05	36.38
STRENGTH	325.80	-630.33	9.99	STRENGTH	478.60	-405.06	45.48

SLENDERNESS EFFECTS IN COMPRESSION MEMBERS (AASHTO 8.16.5)

f'c = 3000 psi PHI = 0.70 W_C = 150 PCF

$E_C = W_C^{1.5} * 33 * f'c^{0.5}$ = 3320561 PSI Width of Rect. Col. = B = 35.928 In.

Depth of Rect. Col = D = 62.148 In.

$r_Y = 0.30*D$ = 18.64 In. L_Y = 11.583 Ft. K_Y = 2.0

$r_Z = 0.30*B$ = 10.78 In. L_Z = 18.583 Ft. K_Z = 1.2

I_{YY} = $B*D^3/12$ I_{YY} = 718676 In^4

I_{ZZ} = $D*B^3/12$ I_{ZZ} = 240185 In^5

$K_Y L_Y/r$ = 14.9 < 22 NO SLENDERNESS EFFECT

$K_Z L_Z/r$ = 24.8 > 22 CONSIDER SLENDERNESS

H. W. LOCHNER, INC.

PROJECT: BONNER BRIDGE - OREGON INLET NORTH CAROLINA JMJ Jul-06
SUBJECT: HIGH LEVEL BENT ANALYSIS
HLB 142 MEM. 11 JT. 8 WDB 7/06

SLENDERNESS EFFECTS IN RECTANGULAR COMPRESSION MEMBERS (AASHTO 8.16.5)

GROUP 1

	B	D	KL/R	M_U	M_{DL}	B_D	P_U	P_C	δ_b	δ_s	M_C	
	In.	In.		Ft. Kips	Ft. Kips		Kips	Kips			Ft. Kips	
MY	35.928	62.148	14.9	0.00	0.00	0.000	604	0	1.000	1.000	124	*
MZ	35.928	62.148	24.8	22.79	38.61	1.694	604	16322	1.056	1.056	84	*

GROUP 2

	B	D	KL/R	M_U	M_{DL}	B_D	P_U	P_C	δ_b	δ_s	M_C	
	In.	In.		Ft. Kips	Ft. Kips		Kips	Kips			Ft. Kips	
MY	35.928	62.148	14.9	655.54	0.00	0.000	337	0	1.000	1.000	656	
MZ	35.928	62.148	24.8	36.62	38.61	1.054	337	21404	1.023	1.023	47	*

GROUP 3

	B	D	KL/R	M_U	M_{DL}	B_D	P_U	P_C	δ_b	δ_s	M_C	
	In.	In.		Ft. Kips	Ft. Kips		Kips	Kips			Ft. Kips	
MY	35.928	62.148	14.9	421.27	0.00	0.000	496	0	1.000	1.000	421	
MZ	35.928	62.148	24.8	0.29	38.61	########	496	323	-0.839	-0.839	69	*

GROUP 4

	B	D	KL/R	M_U	M_{DL}	B_D	P_U	P_C	δ_b	δ_s	M_C	
	In.	In.		Ft. Kips	Ft. Kips		Kips	Kips			Ft. Kips	
MY	35.928	62.148	14.9	0.00	0.00	0.000	516	0	1.000	1.000	106	*
MZ	35.928	62.148	24.8	76.13	38.61	0.507	516	29174	1.026	1.026	78	

GROUP 5

	B	D	KL/R	M_U	M_{DL}	B_D	P_U	P_C	δ_b	δ_s	M_C	
	In.	In.		Ft. Kips	Ft. Kips		Kips	Kips			Ft. Kips	
MY	35.928	62.148	14.9	630.33	0.00	0.000	326	0	1.000	1.000	630	
MZ	35.928	62.148	24.8	9.99	38.61	3.866	326	9037	1.054	1.054	46	*

GROUP 6

	B	D	KL/R	M_U	M_{DL}	B_D	P_U	P_C	δ_b	δ_s	M_C	
	In.	In.		Ft. Kips	Ft. Kips		Kips	Kips			Ft. Kips	
MY	35.928	62.148	14.9	405.06	0.00	0.000	479	0	1.000	1.000	405	
MZ	35.928	62.148	24.8	45.48	38.61	0.849	479	23780	1.030	1.030	67	*

* MINIMUM MOMENT CONTROLS

H. W. LOCHNER, INC.

PROJECT: BONNER BRIDGE - OREGON INLET NORTH CAROLINA JMJ Jul-06
SUBJECT: HIGH LEVEL BENT ANALYSIS
HLB 142 MEM. 11 JT. 8 WDB 7/06

COLUMN LOADS

PMIN

HLB 142 MEMBER 11 JOINT 8

	GROUP 1				GROUP 2		
	P	MY	MZ		P	MY	MZ
DL	218.95	0.00	29.70	DL	218.95	0.00	29.70
LL	51.46	0.00	13.37	LL	0.00	0.00	0.00
GROUP 1	0.00	0.00	0.00	GROUP 2	-32.68	-504.26	-57.87
SERVICE	270.41	0.00	43.07	SERVICE	186.27	-504.26	-28.17
STRENGTH	396.13	0.00	67.58	STRENGTH	242.15	-655.54	-36.62

	GROUP 3				GROUP 4		
	P	MY	MZ		P	MY	MZ
DL	218.95	0.00	29.70	DL	218.95	0.00	29.70
LL	51.46	0.00	13.37	LL	51.46	0.00	13.37
GROUP 3	-14.21	-324.05	-22.18	GROUP 4	1.40	0.00	36.16
SERVICE	256.20	-324.05	20.89	SERVICE	271.81	0.00	79.23
STRENGTH	333.06	-421.27	27.16	STRENGTH	353.35	0.00	103.00

	GROUP 5				GROUP 6		
	P	MY	MZ		P	MY	MZ
DL	218.95	0.00	29.70	DL	218.95	0.00	29.70
LL	0.00	0.00	0.00	LL	51.46	0.00	13.37
GROUP 5	-31.29	-504.26	-21.71	GROUP 6	-12.81	-324.05	13.98
SERVICE	187.66	-504.26	7.99	SERVICE	257.60	-324.05	57.05
STRENGTH	234.57	-630.33	9.99	STRENGTH	322.00	-405.06	71.31

SLENDERNESS EFFECTS IN COMPRESSION MEMBERS (AASHTO 8.16.5)

f'c = 3000 psi PHI = 0.70 W_C = 150 PCF

$E_C = W_C$^$^{1.5}$ *33*f'c^$^{0.5}$ = 3320561 PSI Width of Rect. Col. = B = 35.928 In.

Depth of Rect. Col = D = 62.148 In.

r_Y = 0.30*D = 18.64 In. L_Y = 11.583 Ft. K_Y = 2.0

r_Z = 0.30*B = 10.78 In. L_Z = 18.583 Ft. K_Z = 1.2

I_{YY} = B*D^^{3}/12 I_{YY} = 718676 In^4

I_{ZZ} = D*B^^{3}/12 I_{ZZ} = 240185 In^5

K_YL_Y/r = 14.9 < 22 NO SLENDERNESS EFFECT

K_ZL_Z/r = 24.8 > 22 CONSIDER SLENDERNESS

H. W. LOCHNER, INC.

PROJECT: BONNER BRIDGE - OREGON INLET NORTH CAROLINA JMJ Jul-06
SUBJECT: HIGH LEVEL BENT ANALYSIS
HLB 142 MEM. 11 JT. 8 WDB 7/06

SLENDERNESS EFFECTS IN RECTANGULAR COMPRESSION MEMBERS (AASHTO 8.16.5)

GROUP 1

	B	D	KL/R	M_U	M_{DL}	B_D	P_U	P_C	δ_b	δ_s	M_C	
	In.	In.		Ft. Kips	Ft. Kips		Kips	Kips			Ft. Kips	
MY	35.928	62.148	14.9	0.00	0.00	0.000	396	0	1.000	1.000	81	*
MZ	35.928	62.148	24.8	67.58	38.61	0.571	396	27983	1.021	1.021	69	

GROUP 2

	B	D	KL/R	M_U	M_{DL}	B_D	P_U	P_C	δ_b	δ_s	M_C
	In.	In.		Ft. Kips	Ft. Kips		Kips	Kips			Ft. Kips
MY	35.928	62.148	14.9	655.54	0.00	0.000	242	0	1.000	1.000	656
MZ	35.928	62.148	24.8	36.62	38.61	1.054	242	21404	1.016	1.016	37

GROUP 3

	B	D	KL/R	M_U	M_{DL}	B_D	P_U	P_C	δ_b	δ_s	M_C	
	In.	In.		Ft. Kips	Ft. Kips		Kips	Kips			Ft. Kips	
MY	35.928	62.148	14.9	421.27	0.00	0.000	333	0	1.000	1.000	421	
MZ	35.928	62.148	24.8	27.16	38.61	1.422	333	18157	1.027	1.027	47	*

GROUP 4

	B	D	KL/R	M_U	M_{DL}	B_D	P_U	P_C	δ_b	δ_s	M_C	
	In.	In.		Ft. Kips	Ft. Kips		Kips	Kips			Ft. Kips	
MY	35.928	62.148	14.9	0.00	0.00	0.000	353	0	1.000	1.000	73	*
MZ	35.928	62.148	24.8	103.00	38.61	0.375	353	31982	1.016	1.016	105	

GROUP 5

	B	D	KL/R	M_U	M_{DL}	B_D	P_U	P_C	δ_b	δ_s	M_C	
	In.	In.		Ft. Kips	Ft. Kips		Kips	Kips			Ft. Kips	
MY	35.928	62.148	14.9	630.33	0.00	0.000	235	0	1.000	1.000	630	
MZ	35.928	62.148	24.8	9.99	38.61	3.866	235	9037	1.039	1.039	33	*

GROUP 6

	B	D	KL/R	M_U	M_{DL}	B_D	P_U	P_C	δ_b	δ_s	M_C
	In.	In.		Ft. Kips	Ft. Kips		Kips	Kips			Ft. Kips
MY	35.928	62.148	14.9	405.06	0.00	0.000	322	0	1.000	1.000	405
MZ	35.928	62.148	24.8	71.31	38.61	0.541	322	28526	1.016	1.016	72

* MINIMUM MOMENT CONTROLS

H. W. LOCHNER, INC.

PROJECT: BONNER BRIDGE - OREGON INLET NORTH CAROLINA JMJ Jul-06
SUBJECT: HIGH LEVEL BENT ANALYSIS
HLB 142 MEM. 11 JT. 10 WDB 7/06

COLUMN LOADS

PMAX

HLB 142 MEMBER 11 JOINT 10

GROUP 1

	P	MY	MZ
DL	-335.14	0.00	19.67
LL	-103.76	0.00	-19.36
GROUP 1	0.00	0.00	0.00
SERVICE	-438.90	0.00	0.31
STRENGTH	-660.50	0.00	-16.38

GROUP 2

	P	MY	MZ
DL	-335.14	0.00	19.67
LL	0.00	0.00	0.00
GROUP 2	32.89	913.65	-139.88
SERVICE	-302.25	913.65	-120.21
STRENGTH	-392.93	1187.75	-156.27

GROUP 3

	P	MY	MZ
DL	-335.14	0.00	19.67
LL	-103.76	0.00	-19.36
GROUP 3	14.27	537.89	-55.64
SERVICE	-424.63	537.89	-55.33
STRENGTH	-552.02	699.26	-71.93

GROUP 4

	P	MY	MZ
DL	-335.14	0.00	19.67
LL	-103.76	0.00	-19.36
GROUP 4	-1.40	0.00	381.15
SERVICE	-440.30	0.00	381.46
STRENGTH	-572.39	0.00	495.90

GROUP 5

	P	MY	MZ
DL	-335.14	0.00	19.67
LL	0.00	0.00	0.00
GROUP 5	31.49	913.65	241.27
SERVICE	-303.65	913.65	260.94
STRENGTH	-379.56	1142.06	326.18

GROUP 6

	P	MY	MZ
DL	-335.14	0.00	19.67
LL	-103.76	0.00	-19.36
GROUP 6	12.87	537.89	325.51
SERVICE	-426.03	537.89	325.82
STRENGTH	-532.54	672.36	407.28

SLENDERNESS EFFECTS IN COMPRESSION MEMBERS (AASHTO 8.16.5)

f'c = 3000 psi PHI = 0.70 W_C = 150 PCF

$E_C = W_C^{1.5} * 33 * f'c^{0.5}$ = 3320561 PSI Width of Rect. Col. = B = 35.928 In.

Depth of Rect. Col = D = 62.148 In.

$r_Y = 0.30*D$ = 18.64 In. L_Y = 11.583 Ft. K_Y = 2.0

$r_Z = 0.30*B$ = 10.78 In. L_Z = 18.583 Ft. K_Z = 1.2

I_{YY} = $B*D^3/12$ I_{YY} = 718676 In^4

I_{ZZ} = $D*B^3/12$ I_{ZZ} = 240185 In^5

$K_Y L_Y/r$ = 14.9 < 22 NO SLENDERNESS EFFECT

$K_Z L_Z/r$ = 24.8 > 22 CONSIDER SLENDERNESS

H. W. LOCHNER, INC.

PROJECT: BONNER BRIDGE - OREGON INLET NORTH CAROLINA JMJ Jul-06
SUBJECT: HIGH LEVEL BENT ANALYSIS
HLB 142 MEM. 11 JT. 10 WDB 7/06

SLENDERNESS EFFECTS IN RECTANGULAR COMPRESSION MEMBERS (AASHTO 8.16.5)

GROUP 1

	B	D	KL/R	M_U	M_{DL}	B_D	P_U	P_C	δ_b	δ_s	M_C	
	In.	In.		Ft. Kips	Ft. Kips		Kips	Kips			Ft. Kips	
MY	35.928	62.148	14.9	0.00	0.00	0.000	660	0	1.000	1.000	136	*
MZ	35.928	62.148	24.8	16.38	25.57	1.562	660	17166	1.058	1.058	92	*

GROUP 2

	B	D	KL/R	M_U	M_{DL}	B_D	P_U	P_C	δ_b	δ_s	M_C
	In.	In.		Ft. Kips	Ft. Kips		Kips	Kips			Ft. Kips
MY	35.928	62.148	14.9	1187.75	0.00	0.000	393	0	1.000	1.000	1188
MZ	35.928	62.148	24.8	156.27	25.57	0.164	393	37787	1.015	1.015	159

GROUP 3

	B	D	KL/R	M_U	M_{DL}	B_D	P_U	P_C	δ_b	δ_s	M_C	
	In.	In.		Ft. Kips	Ft. Kips		Kips	Kips			Ft. Kips	
MY	35.928	62.148	14.9	699.26	0.00	0.000	552	0	1.000	1.000	699	
MZ	35.928	62.148	24.8	71.93	25.57	0.356	552	32438	1.025	1.025	77	*

GROUP 4

	B	D	KL/R	M_U	M_{DL}	B_D	P_U	P_C	δ_b	δ_s	M_C	
	In.	In.		Ft. Kips	Ft. Kips		Kips	Kips			Ft. Kips	
MY	35.928	62.148	14.9	0.00	0.00	0.000	572	0	1.000	1.000	118	*
MZ	35.928	62.148	24.8	495.90	25.57	0.052	572	41814	1.020	1.020	506	

GROUP 5

	B	D	KL/R	M_U	M_{DL}	B_D	P_U	P_C	δ_b	δ_s	M_C
	In.	In.		Ft. Kips	Ft. Kips		Kips	Kips			Ft. Kips
MY	35.928	62.148	14.9	1142.06	0.00	0.000	380	0	1.000	1.000	1142
MZ	35.928	62.148	24.8	326.18	25.57	0.078	380	40774	1.013	1.013	331

GROUP 6

	B	D	KL/R	M_U	M_{DL}	B_D	P_U	P_C	δ_b	δ_s	M_C
	In.	In.		Ft. Kips	Ft. Kips		Kips	Kips			Ft. Kips
MY	35.928	62.148	14.9	672.36	0.00	0.000	533	0	1.000	1.000	672
MZ	35.928	62.148	24.8	407.28	25.57	0.063	533	41373	1.019	1.019	415

* MINIMUM MOMENT CONTROLS

H. W. LOCHNER, INC.

PROJECT: BONNER BRIDGE - OREGON INLET NORTH CAROLINA JMJ Jul-06
SUBJECT: HIGH LEVEL BENT ANALYSIS
HLB 142 MEM. 11 JT. 10 WDB 7/06

COLUMN LOADS

PMIN

HLB 142 MEMBER 11 JOINT 10

	GROUP 1				GROUP 2		
	P	MY	MZ		P	MY	MZ
DL	-251.36	0.00	19.67	DL	-251.36	0.00	19.67
LL	-51.46	0.00	20.72	LL	0.00	0.00	0.00
GROUP 1	0.00	0.00	0.00	GROUP 2	32.89	913.65	-139.88
SERVICE	-302.82	0.00	40.39	SERVICE	-218.47	913.65	-120.21
STRENGTH	-438.26	0.00	70.46	STRENGTH	-284.00	1187.75	-156.27

	GROUP 3				GROUP 4		
	P	MY	MZ		P	MY	MZ
DL	-251.36	0.00	19.67	DL	-251.36	0.00	19.67
LL	-51.46	0.00	20.72	LL	-51.46	0.00	20.72
GROUP 3	14.27	537.89	-55.64	GROUP 4	-1.40	0.00	381.15
SERVICE	-288.55	537.89	-15.25	SERVICE	-304.22	0.00	421.54
STRENGTH	-375.11	699.26	-19.83	STRENGTH	-395.48	0.00	548.00

	GROUP 5				GROUP 6		
	P	MY	MZ		P	MY	MZ
DL	-251.36	0.00	19.67	DL	-251.36	0.00	19.67
LL	0.00	0.00	0.00	LL	-51.46	0.00	20.72
GROUP 5	31.49	913.65	241.27	GROUP 6	12.87	537.89	325.51
SERVICE	-219.87	913.65	260.94	SERVICE	-289.95	537.89	365.90
STRENGTH	-274.83	1142.06	326.18	STRENGTH	-362.43	672.36	457.38

SLENDERNESS EFFECTS IN COMPRESSION MEMBERS (AASHTO 8.16.5)

f'c = 3000 psi PHI = 0.70 W_C = 150 PCF

$E_C = W_C$^$^{1.5}$ *33*f'c^$^{0.5}$ = 3320561 PSI Width of Rect. Col. = B = 35.928 In.

Depth of Rect. Col = D = 62.148 In.

r_Y = 0.30*D = 18.64 In. L_Y = 11.583 Ft. K_Y = 2.0

r_Z = 0.30*B = 10.78 In. L_Z = 18.583 Ft. K_Z = 1.2

I_{YY} = B*D^^{3}/12 I_{YY} = 718676 In^4

I_{ZZ} = D*B^^{3}/12 I_{ZZ} = 240185 In^5

K_YL_Y/r = 14.9 < 22 NO SLENDERNESS EFFECT

K_ZL_Z/r = 24.8 > 22 CONSIDER SLENDERNESS

H. W. LOCHNER, INC.

PROJECT: BONNER BRIDGE - OREGON INLET NORTH CAROLINA JMJ Jul-06
SUBJECT: HIGH LEVEL BENT ANALYSIS
HLB 142 MEM. 11 JT. 10 WDB 7/06

SLENDERNESS EFFECTS IN RECTANGULAR COMPRESSION MEMBERS (AASHTO 8.16.5)

GROUP 1

	B	D	KL/R	M_U	M_{DL}	B_D	P_U	P_C	δ_b	δ_s	M_C	
	In.	In.		Ft. Kips	Ft. Kips		Kips	Kips			Ft. Kips	
MY	35.928	62.148	14.9	0.00	0.00	0.000	438	0	1.000	1.000	90	*
MZ	35.928	62.148	24.8	70.46	25.57	0.363	438	32262	1.020	1.020	72	

GROUP 2

	B	D	KL/R	M_U	M_{DL}	B_D	P_U	P_C	δ_b	δ_s	M_C
	In.	In.		Ft. Kips	Ft. Kips		Kips	Kips			Ft. Kips
MY	35.928	62.148	14.9	1187.75	0.00	0.000	284	0	1.000	1.000	1188
MZ	35.928	62.148	24.8	156.27	25.57	0.164	284	37787	1.011	1.011	158

GROUP 3

	B	D	KL/R	M_U	M_{DL}	B_D	P_U	P_C	δ_b	δ_s	M_C	
	In.	In.		Ft. Kips	Ft. Kips		Kips	Kips			Ft. Kips	
MY	35.928	62.148	14.9	699.26	0.00	0.000	375	0	1.000	1.000	699	
MZ	35.928	62.148	24.8	19.83	25.57	1.290	375	19202	1.029	1.029	52	*

GROUP 4

	B	D	KL/R	M_U	M_{DL}	B_D	P_U	P_C	δ_b	δ_s	M_C	
	In.	In.		Ft. Kips	Ft. Kips		Kips	Kips			Ft. Kips	
MY	35.928	62.148	14.9	0.00	0.00	0.000	395	0	1.000	1.000	81	*
MZ	35.928	62.148	24.8	548.00	25.57	0.047	395	42010	1.014	1.014	555	

GROUP 5

	B	D	KL/R	M_U	M_{DL}	B_D	P_U	P_C	δ_b	δ_s	M_C
	In.	In.		Ft. Kips	Ft. Kips		Kips	Kips			Ft. Kips
MY	35.928	62.148	14.9	1142.06	0.00	0.000	275	0	1.000	1.000	1142
MZ	35.928	62.148	24.8	326.18	25.57	0.078	275	40774	1.010	1.010	329

GROUP 6

	B	D	KL/R	M_U	M_{DL}	B_D	P_U	P_C	δ_b	δ_s	M_C
	In.	In.		Ft. Kips	Ft. Kips		Kips	Kips			Ft. Kips
MY	35.928	62.148	14.9	672.36	0.00	0.000	362	0	1.000	1.000	672
MZ	35.928	62.148	24.8	457.38	25.57	0.056	362	41642	1.013	1.013	463

* MINIMUM MOMENT CONTROLS

JMJ 7/06

WDB 7/06

```
OOOOOOO    OOOOO    OOOOO    OOOOO    OOOOO   OO
OO    OO   OO  OO   OO  OO   OO  OO   OO  OO   OO
OO    OO   OO  OO   OO  OO   OO  OO   OO  OO   OO
OO    OO   OO       OO  OO   OO       OO  OO   OO
OO    OO   OO       OOOOOOO  OO       OO  OO   OO
OOOOOOO    OO  OO   OO  OO   OO  OO   OO  OO   OO
OO         OO  OO   OO  OO   OO  OO   OO  OO   OO
OO          OOOOO   OO  OO    OOOOO    OOOOO   OOOOO  (TM)
```

==========
Computer program for the Strength Design of Reinforced Concrete Sections
==========

Licensee stated above acknowledges that Portland Cement Association (PCA) is not and cannot be responsible for either the accuracy or adequacy of the material supplied as input for processing by the PCACOL(tm) computer program. Furthermore, PCA neither makes any warranty expressed nor implied with respect to the correctness of the output prepared by the PCACOL(tm) program. Although PCA has endeavored to produce PCACOL(tm) error free, the program is not and can't be certified infallible. The final and only responsibility for analysis, design and engineering documents is the licensees. Accordingly, PCA disclaims all responsibility in contract, negligence or other tort for any analysis, design or engineering documents prepared in connection with the use of the PCACOL(tm) program.

BASED ON PLANS.

General Information:
==========

File Name: S:\DGN-ST\NORTHC~1\BONNER~1\ANALYSIS\PIERS\HLB142\PCACOL~1\M11PLAN.COL
Project: BONNER BRIDGE - OREGON INLET
Column: HLB #142 Engineer: JMJ
Code: ACI 318-95 Units: English

Run Option: Investigation Slenderness: Not considered
Run Axis: Biaxial Column Type: Structural

Material Properties:
==========

f'c = 3 ksi fy = 40 ksi
Ec = 3122.02 ksi Es = 29000 ksi
fc = 2.55 ksi Rupture strain = Infinity
Ultimate strain = 0.003 in/in
Beta1 = 0.85

Section:
==========

Rectangular: Width = 36 in Depth = 62.1 in

Gross section area, Ag = 2235.6 in^2
Ix = 718449 in^4 Iy = 241445 in^4
Xo = 0 in Yo = 0 in

Reinforcement:
==========

Rebar Database: User-defined

Size	Diam (in)	Area (in^2)	Size	Diam (in)	Area (in^2)	Size	Diam (in)	Area (in^2)
# 1	0.00	0.00	# 3	0.38	0.11	# 4	0.50	0.20
# 5	0.63	0.31	# 6	0.75	0.44	# 7	0.88	0.60
# 8	1.00	0.79	# 9	1.13	1.00	# 10	1.27	1.27
# 11	1.41	1.56	# 14	1.69	2.25	# 18	2.26	4.00

Confinement: Tied; #1 ties with #9 bars, #1 with larger bars.
phi(a) = 0.8, phi(b) = 0.9, phi(c) = 0.7

Layout: Rectangular
Pattern: Equal Bar Spacing (Cover to longitudinal reinforcement)
Total steel area, As = 28.08 in^2 at 1.26%
18 #11 Cover = 5 in

Factored Loads and Moments with Corresponding Capacities: (see user's manual for notation)
==========

No.	Pu kip	Mux k-ft	Muy k-ft	fMnx k-ft	fMny k-ft	fMn/Mu
1	604.0	124.0	84.0	1758.2	1194.8	14.193
2	337.0	656.0	47.0	2589.7	185.6	3.948
3	496.0	421.0	69.0	2603.0	430.5	6.184
4	516.0	106.0	78.0	1667.4	1226.7	15.729
5	326.0	630.0	46.0	2579.4	188.0	4.094
6	479.0	405.0	67.0	2594.6	428.9	6.406
7	396.0	81.0	69.0	1477.4	1259.7	18.247
8	242.0	656.0	37.0	2506.5	144.2	3.821
9	333.0	421.0	47.0	2549.8	285.7	6.057
10	353.0	73.0	105.0	956.4	1377.3	13.112
11	235.0	630.0	33.0	2502.5	127.5	3.972
12	322.0	405.0	72.0	2473.5	437.5	6.106
13	660.0	136.0	92.0	1761.7	1187.3	12.939
14	393.0	1188.0	159.0	2576.3	344.9	2.169
15	552.0	699.0	77.0	2701.6	297.9	3.865

16	572.0	118.0	506.0	366.1	1558.7	3.082
17	380.0	1142.0	331.0	2357.8	679.9	2.064
18	533.0	672.0	415.0	1848.0	1143.8	2.752
19	438.0	90.0	72.0	1560.6	1247.4	17.334
20	284.0	1188.0	158.0	2487.0	330.8	2.093
21	375.0	699.0	52.0	2617.7	196.4	3.745
22	395.0	81.0	555.0	219.4	1487.6	2.681
23	275.0	1142.0	329.0	2289.0	656.8	2.004
24	362.0	672.0	463.0	1698.0	1167.0	2.525

*** Program completed as requested! ***

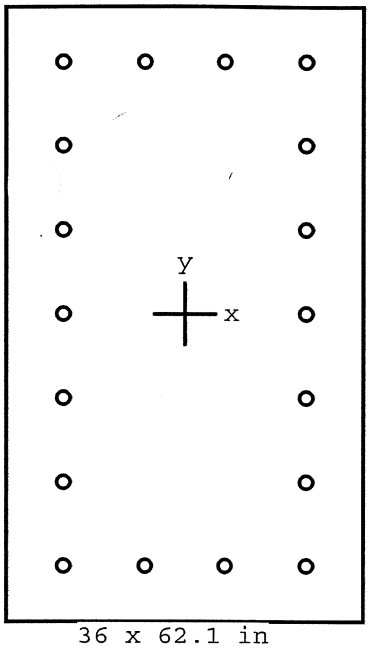

36 x 62.1 in

Code: ACI 318-95

Units: English

Run axis: Biaxial

Run option: Investigation

Slenderness: Not considered

mn type: Structural

Bars: User-defined

Date: 07/20/06

Time: 14:08:02

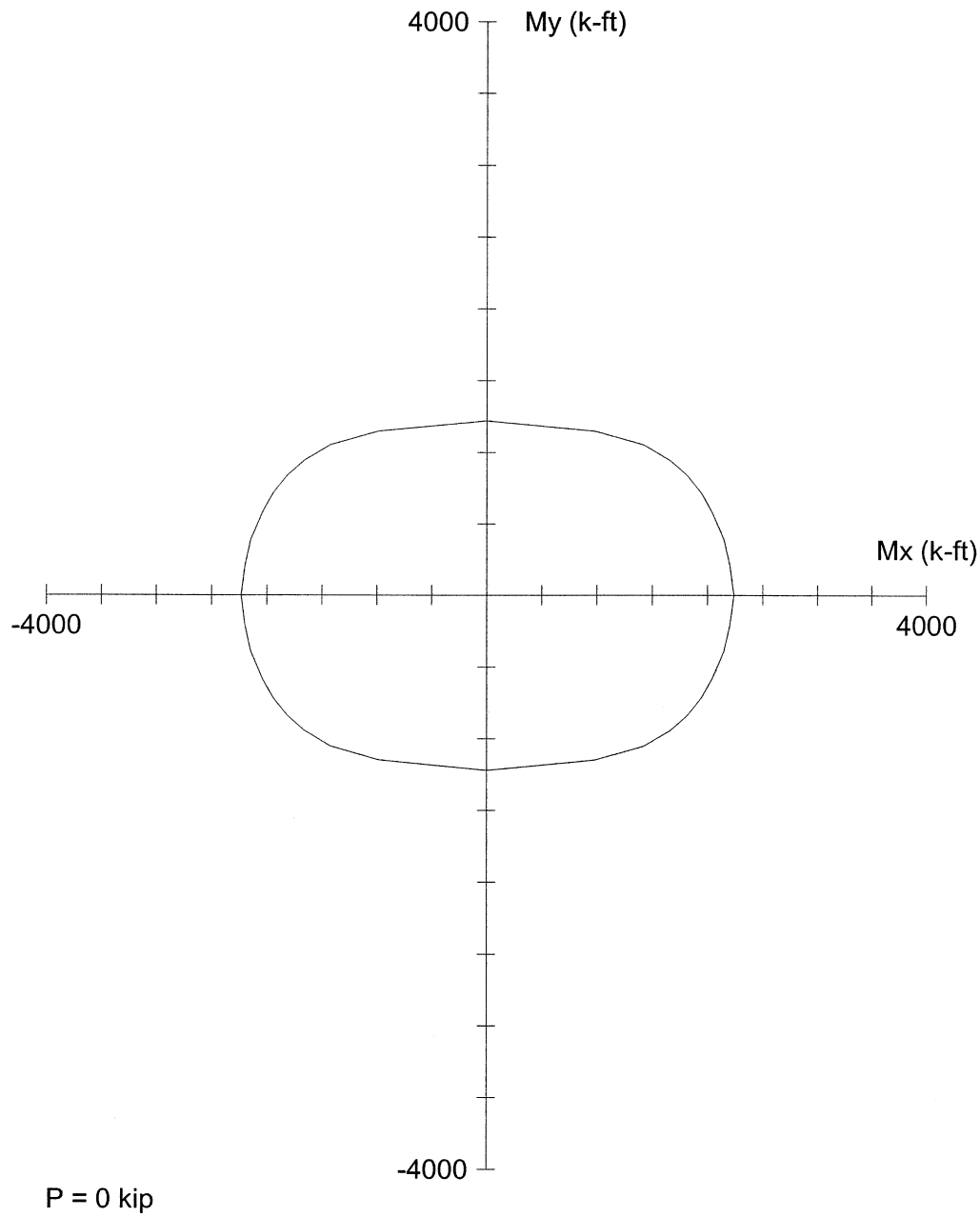

PCACOL V3.00 (PCA 1999) - Licensed to: Licensee name not yet specified.

File: S:\DGN-ST\NORTHC~1\BONNER~1\ANALYSIS\PIERS\HLB142\PCACOL~1\M11PLAN.COL

Project: BONNER BRIDGE - OREGON INLET

Column: HLB #142		Engineer: JMJ	
f'c = 3 ksi	fy = 40 ksi	Ag = 2235.6 in^2	18 #11 bars
Ec = 3122 ksi	Es = 29000 ksi	As = 28.08 in^2	Rho = 1.26%
fc = 2.55 ksi	e_rup = Infinity	Xo = 0.00 in	Ix = 718449 in^4
u = 0.003 in/in		Yo = 0.00 in	Iy = 241445 in^4
Beta1 = 0.85		Clear spacing = 6.79 in	Clear cover = 5.00 in
Confinement: Tied	phi(a) = 0.8, phi(b) = 0.9, phi(c) = 0.7		

JMJ 7/06
WDB 7/06

```
OOOOOOO    OOOOO    OOOOO    OOOOO    OOOOO   OO
OO    OO   OO  OO   OO  OO   OO  OO   OO  OO   OO
OO    OO   OO  OO   OO  OO   OO  OO   OO  OO   OO
OO    OO   OO       OO  OO   OO       OO  OO   OO
OO    OO   OO       OOOOOOO  OO       OO  OO   OO
OOOOOOO    OO  OO   OO  OO   OO  OO   OO  OO   OO
OO         OO  OO   OO  OO   OO  OO   OO  OO   OO
OO          OOOOO   OO  OO    OOOOO    OOOOO   OOOOO  (TM)
```

==========
Computer program for the Strength Design of Reinforced Concrete Sections
==========

Licensee stated above acknowledges that Portland Cement Association (PCA) is not and cannot be responsible for either the accuracy or adequacy of the material supplied as input for processing by the PCACOL(tm) computer program. Furthermore, PCA neither makes any warranty expressed nor implied with respect to the correctness of the output prepared by the PCACOL(tm) program. Although PCA has endeavored to produce PCACOL(tm) error free, the program is not and can't be certified infallible. The final and only responsibility for analysis, design and engineering documents is the licensees. Accordingly, PCA disclaims all responsibility in contract, negligence or other tort for any analysis, design or engineering documents prepared in connection with the use of the PCACOL(tm) program.

50% COVER LOSS
f'c = 4400 PSI

General Information:
==========

File Name: S:\DGN-ST\NORTHC~1\BONNER~1\ANALYSIS\PIERS\HLB142\PCACOL~1\M11ACT.COL
Project: BONNER BRIDGE - OREGON INLET
Column: HLB #142 Engineer: JMJ
Code: ACI 318-95 Units: English

Run Option: Investigation Slenderness: Not considered
Run Axis: Biaxial Column Type: Structural

Material Properties:
==========

f'c = 4.4 ksi fy = 40 ksi
Ec = 3780.96 ksi Es = 29000 ksi
fc = 3.74 ksi Rupture strain = Infinity
Ultimate strain = 0.003 in/in
Beta1 = 0.83

Section:
==========

Rectangular: Width = 31 in Depth = 57.1 in

Gross section area, Ag = 1770.1 in^2
Ix = 480938 in^4 Iy = 141756 in^4
Xo = 0 in Yo = 0 in

Reinforcement:
==========

Rebar Database: User-defined

Size	Diam (in)	Area (in^2)	Size	Diam (in)	Area (in^2)	Size	Diam (in)	Area (in^2)
# 1	0.00	0.00	# 3	0.38	0.11	# 4	0.50	0.20
# 5	0.63	0.31	# 6	0.75	0.44	# 7	0.88	0.60
# 8	1.00	0.79	# 9	1.13	1.00	# 10	1.27	1.27
# 11	1.41	1.56	# 14	1.69	2.25	# 18	2.26	4.00

Confinement: Tied; #1 ties with #9 bars, #1 with larger bars.
phi(a) = 0.8, phi(b) = 0.9, phi(c) = 0.7

Layout: Rectangular
Pattern: Equal Bar Spacing (Cover to longitudinal reinforcement)
Total steel area, As = 28.08 in^2 at 1.59%
18 #11 Cover = 2.5 in

Factored Loads and Moments with Corresponding Capacities: (see user's manual for notation)
==========

No.	Pu kip	Mux k-ft	Muy k-ft	fMnx k-ft	fMny k-ft	fMn/Mu
1	604.0	124.0	84.0	1747.2	1183.7	14.091
2	337.0	656.0	47.0	2535.2	185.0	3.865
3	496.0	421.0	69.0	2584.3	421.5	6.138
4	516.0	106.0	78.0	1625.3	1200.2	15.352
5	326.0	630.0	46.0	2522.7	188.5	4.005
6	479.0	405.0	67.0	2567.0	427.2	6.339
7	396.0	81.0	69.0	1424.0	1213.5	17.583
8	242.0	656.0	37.0	2441.2	134.5	3.721
9	333.0	421.0	47.0	2498.1	274.6	5.933
10	353.0	73.0	105.0	907.0	1305.5	12.430
11	235.0	630.0	33.0	2434.3	128.5	3.864
12	322.0	405.0	72.0	2417.3	429.4	5.969
13	660.0	136.0	92.0	1759.7	1190.8	12.940
14	393.0	1188.0	159.0	2531.1	335.8	2.130
15	552.0	699.0	77.0	2685.9	296.1	3.842

16	572.0	118.0	506.0	347.0	1496.6	2.957
17	380.0	1142.0	331.0	2312.5	672.7	2.026
18	533.0	672.0	415.0	1823.7	1127.8	2.715
19	438.0	90.0	72.0	1506.5	1206.9	16.748
20	284.0	1188.0	158.0	2426.7	324.6	2.043
21	375.0	699.0	52.0	2571.9	187.9	3.679
22	395.0	81.0	555.0	206.7	1405.3	2.533
23	275.0	1142.0	329.0	2234.5	646.9	1.957
24	362.0	672.0	463.0	1632.3	1128.3	2.432

*** Program completed as requested! ***

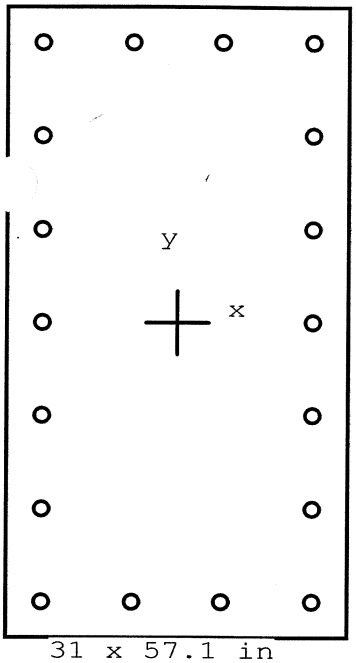

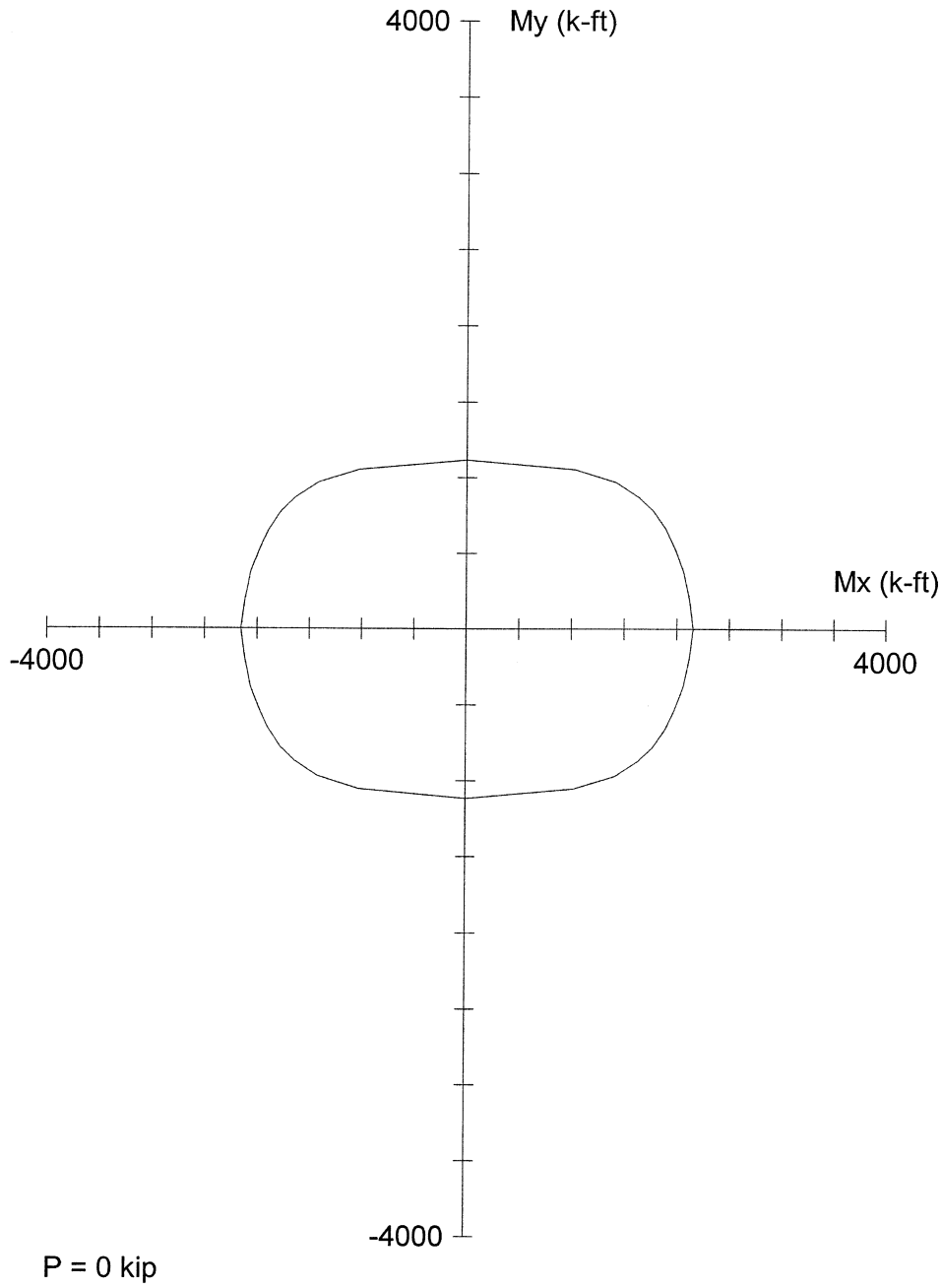

Code: ACI 318-95

Units: English

Run axis: Biaxial

Run option: Investigation

Slenderness: Not considered

Column type: Structural

Bars: User-defined

Date: 07/25/06

Time: 13:48:25

PCACOL V3.00 (PCA 1999) - Licensed to: Licensee name not yet specified.

File: S:\DGN-ST\NORTHC~1\BONNER~1\ANALYSIS\PIERS\HLB142\PCACOL~1\M11ACT.COL

Project: BONNER BRIDGE - OREGON INLET

Column: HLB #142		Engineer: JMJ	
f'c = 4.4 ksi	fy = 40 ksi	Ag = 1770.1 in^2	18 #11 bars
Ec = 3781 ksi	Es = 29000 ksi	As = 28.08 in^2	Rho = 1.59%
fc = 3.74 ksi	e_rup = Infinity	Xo = 0.00 in	Ix = 480938 in^4
e_u = 0.003 in/in		Yo = 0.00 in	Iy = 141756 in^4
Beta1 = 0.83		Clear spacing = 6.79 in	Clear cover = 2.50 in
Confinement: Tied	phi(a) = 0.8, phi(b) = 0.9, phi(c) = 0.7		

H. W. LOCHNER, INC.

PROJECT: BONNER BRIDGE - OREGON INLET NORTH CAROLINA JMJ Jul-06
SUBJECT: HIGH LEVEL BENT ANALYSIS
HLB 142 MEM. 13 JT. 9 WDB 7/06

COLUMN LOADS

PMAX

HLB 142 MEMBER 13 JOINT 9

GROUP 1

	P	MY	MZ
DL	349.58	0.00	30.90
LL	102.65	0.00	5.74
GROUP 1	0.00	0.00	0.00
SERVICE	452.23	0.00	36.64
STRENGTH	676.86	0.00	52.61

GROUP 2

	P	MY	MZ
DL	349.58	0.00	30.90
LL	0.00	0.00	0.00
GROUP 2	40.04	914.45	-49.65
SERVICE	389.62	914.45	-18.75
STRENGTH	506.51	1188.79	-24.38

GROUP 3

	P	MY	MZ
DL	349.58	0.00	30.90
LL	102.65	0.00	5.74
GROUP 3	17.09	538.09	-20.08
SERVICE	469.32	538.09	16.56
STRENGTH	610.12	699.52	21.53

GROUP 4

	P	MY	MZ
DL	349.58	0.00	30.90
LL	102.65	0.00	5.74
GROUP 4	-38.82	0.00	-701.90
SERVICE	413.41	0.00	-665.26
STRENGTH	537.43	0.00	-864.84

GROUP 5

	P	MY	MZ
DL	349.58	0.00	30.90
LL	0.00	0.00	0.00
GROUP 5	1.22	914.45	-751.54
SERVICE	350.80	914.45	-720.64
STRENGTH	438.50	1143.06	-900.80

GROUP 6

	P	MY	MZ
DL	349.58	0.00	30.90
LL	102.65	0.00	5.74
GROUP 6	-21.73	538.09	-721.98
SERVICE	430.50	538.09	-685.34
STRENGTH	538.13	672.61	-856.68

SLENDERNESS EFFECTS IN COMPRESSION MEMBERS (AASHTO 8.16.5)

f'c = 3000 psi PHI = 0.70 W_C = 150 PCF

$E_C = W_C^{1.5} * 33 * f'c^{0.5}$ = 3320561 PSI Width of Rect. Col. = B = 35.928 In.

Depth of Rect. Col = D = 70.86 In.

$r_Y = 0.30*D$ = 21.26 In. L_Y = 0 Ft. K_Y = 2.0

$r_Z = 0.30*B$ = 10.78 In. L_Z = 2.5 Ft. K_Z = 1.2

I_{YY} = $B*D^3/12$ I_{YY} = 1065259 In^4

I_{ZZ} = $D*B^3/12$ I_{ZZ} = 273854 In^5

$K_Y L_Y/r$ = 0.0 < 22 NO SLENDERNESS EFFECT

$K_Z L_Z/r$ = 3.3 < 22 NO SLENDERNESS EFFECT

H. W. LOCHNER, INC.

PROJECT: BONNER BRIDGE - OREGON INLET NORTH CAROLINA JMJ Jul-06
SUBJECT: HIGH LEVEL BENT ANALYSIS
HLB 142 MEM. 13 JT. 9

WDB 7/06

SLENDERNESS EFFECTS IN RECTANGULAR COMPRESSION MEMBERS (AASHTO 8.16.5)

GROUP 1

	B	D	KL/R	M_U	M_{DL}	B_D	P_U	P_C	δ_b	δ_s	M_C	
	In.	In.		Ft. Kips	Ft. Kips		Kips	Kips			Ft. Kips	
MY	35.928	70.86	0.0	0.00	0.00	0.000	677	0	1.000	1.000	154	*
MZ	35.928	70.86	3.3	52.61	40.17	0.764	677	0	1.000	1.000	95	*

GROUP 2

	B	D	KL/R	M_U	M_{DL}	B_D	P_U	P_C	δ_b	δ_s	M_C	
	In.	In.		Ft. Kips	Ft. Kips		Kips	Kips			Ft. Kips	
MY	35.928	70.86	0.0	1188.79	0.00	0.000	507	0	1.000	1.000	1189	
MZ	35.928	70.86	3.3	24.38	40.17	1.648	507	0	1.000	1.000	71	*

GROUP 3

	B	D	KL/R	M_U	M_{DL}	B_D	P_U	P_C	δ_b	δ_s	M_C	
	In.	In.		Ft. Kips	Ft. Kips		Kips	Kips			Ft. Kips	
MY	35.928	70.86	0.0	699.52	0.00	0.000	610	0	1.000	1.000	700	
MZ	35.928	70.86	3.3	21.53	40.17	1.866	610	0	1.000	1.000	85	*

GROUP 4

	B	D	KL/R	M_U	M_{DL}	B_D	P_U	P_C	δ_b	δ_s	M_C	
	In.	In.		Ft. Kips	Ft. Kips		Kips	Kips			Ft. Kips	
MY	35.928	70.86	0.0	0.00	0.00	0.000	537	0	1.000	1.000	122	*
MZ	35.928	70.86	3.3	864.84	40.17	0.046	537	0	1.000	1.000	865	

GROUP 5

	B	D	KL/R	M_U	M_{DL}	B_D	P_U	P_C	δ_b	δ_s	M_C
	In.	In.		Ft. Kips	Ft. Kips		Kips	Kips			Ft. Kips
MY	35.928	70.86	0.0	1143.06	0.00	0.000	439	0	1.000	1.000	1143
MZ	35.928	70.86	3.3	900.80	40.17	0.045	439	0	1.000	1.000	901

GROUP 6

	B	D	KL/R	M_U	M_{DL}	B_D	P_U	P_C	δ_b	δ_s	M_C
	In.	In.		Ft. Kips	Ft. Kips		Kips	Kips			Ft. Kips
MY	35.928	70.86	0.0	672.61	0.00	0.000	538	0	1.000	1.000	673
MZ	35.928	70.86	3.3	856.68	40.17	0.047	538	0	1.000	1.000	857

* MINIMUM MOMENT CONTROLS

H. W. LOCHNER, INC.

PROJECT: BONNER BRIDGE - OREGON INLET NORTH CAROLINA JMJ Jul-06
SUBJECT: HIGH LEVEL BENT ANALYSIS
HLB 142 MEM. 13 JT. 9 WDB 7/06

COLUMN LOADS

PMIN

HLB 142 MEMBER 13 JOINT 9

GROUP 1

	P	MY	MZ
DL	262.19	0.00	30.90
LL	52.54	0.00	-6.92
GROUP 1	0.00	0.00	0.00
SERVICE	314.73	0.00	23.98
STRENGTH	454.68	0.00	25.18

GROUP 2

	P	MY	MZ
DL	262.19	0.00	30.90
LL	0.00	0.00	0.00
GROUP 2	40.04	914.45	-49.65
SERVICE	302.23	914.45	-18.75
STRENGTH	392.89	1188.79	-24.38

GROUP 3

	P	MY	MZ
DL	262.19	0.00	30.90
LL	52.54	0.00	-6.92
GROUP 3	17.09	538.09	-20.08
SERVICE	331.82	538.09	3.90
STRENGTH	431.36	699.52	5.07

GROUP 4

	P	MY	MZ
DL	262.19	0.00	30.90
LL	52.54	0.00	-6.92
GROUP 4	-38.82	0.00	-701.90
SERVICE	275.91	0.00	-677.92
STRENGTH	358.68	0.00	-881.30

GROUP 5

	P	MY	MZ
DL	262.19	0.00	30.90
LL	0.00	0.00	0.00
GROUP 5	1.22	914.45	-751.54
SERVICE	263.41	914.45	-720.64
STRENGTH	329.26	1143.06	-900.80

GROUP 6

	P	MY	MZ
DL	262.19	0.00	30.90
LL	52.54	0.00	-6.92
GROUP 6	-21.73	538.09	-721.98
SERVICE	293.00	538.09	-698.00
STRENGTH	366.24	672.61	-872.50

SLENDERNESS EFFECTS IN COMPRESSION MEMBERS (AASHTO 8.16.5)

f'c = 3000 psi PHI = 0.70 W_C = 150 PCF

$E_C = W_C^{1.5} * 33 * f'c^{0.5}$ = 3320561 PSI Width of Rect. Col. = B = 35.928 In.

Depth of Rect. Col = D = 70.86 In.

$r_Y = 0.30*D$ = 21.26 In. L_Y = 0 Ft. K_Y = 2.0

$r_Z = 0.30*B$ = 10.78 In. L_Z = 2.5 Ft. K_Z = 1.2

I_{YY} = $B*D^3/12$ I_{YY} = 1065259 In^4

I_{ZZ} = $D*B^3/12$ I_{ZZ} = 273854 In^5

$K_Y L_Y/r$ = 0.0 < 22 NO SLENDERNESS EFFECT

$K_Z L_Z/r$ = 3.3 < 22 NO SLENDERNESS EFFECT

H. W. LOCHNER, INC.

PROJECT: BONNER BRIDGE - OREGON INLET NORTH CAROLINA JMJ Jul-06
SUBJECT: HIGH LEVEL BENT ANALYSIS
HLB 142 MEM. 13 JT. 9 WDB 7/06

SLENDERNESS EFFECTS IN RECTANGULAR COMPRESSION MEMBERS (AASHTO 8.16.5)

GROUP 1

	B	D	KL/R	M_U	M_{DL}	B_D	P_U	P_C	δ_b	δ_s	M_C	
	In.	In.		Ft. Kips	Ft. Kips		Kips	Kips			Ft. Kips	
MY	35.928	70.86	0.0	0.00	0.00	0.000	455	0	1.000	1.000	103	*
MZ	35.928	70.86	3.3	25.18	40.17	1.596	455	0	1.000	1.000	64	*

GROUP 2

	B	D	KL/R	M_U	M_{DL}	B_D	P_U	P_C	δ_b	δ_s	M_C	
	In.	In.		Ft. Kips	Ft. Kips		Kips	Kips			Ft. Kips	
MY	35.928	70.86	0.0	1188.79	0.00	0.000	393	0	1.000	1.000	1189	
MZ	35.928	70.86	3.3	24.38	40.17	1.648	393	0	1.000	1.000	55	*

GROUP 3

	B	D	KL/R	M_U	M_{DL}	B_D	P_U	P_C	δ_b	δ_s	M_C	
	In.	In.		Ft. Kips	Ft. Kips		Kips	Kips			Ft. Kips	
MY	35.928	70.86	0.0	699.52	0.00	0.000	431	0	1.000	1.000	700	
MZ	35.928	70.86	3.3	5.07	40.17	7.923	431	0	1.000	1.000	60	*

GROUP 4

	B	D	KL/R	M_U	M_{DL}	B_D	P_U	P_C	δ_b	δ_s	M_C	
	In.	In.		Ft. Kips	Ft. Kips		Kips	Kips			Ft. Kips	
MY	35.928	70.86	0.0	0.00	0.00	0.000	359	0	1.000	1.000	81	*
MZ	35.928	70.86	3.3	881.30	40.17	0.046	359	0	1.000	1.000	881	

GROUP 5

	B	D	KL/R	M_U	M_{DL}	B_D	P_U	P_C	δ_b	δ_s	M_C
	In.	In.		Ft. Kips	Ft. Kips		Kips	Kips			Ft. Kips
MY	35.928	70.86	0.0	1143.06	0.00	0.000	329	0	1.000	1.000	1143
MZ	35.928	70.86	3.3	900.80	40.17	0.045	329	0	1.000	1.000	901

GROUP 6

	B	D	KL/R	M_U	M_{DL}	B_D	P_U	P_C	δ_b	δ_s	M_C
	In.	In.		Ft. Kips	Ft. Kips		Kips	Kips			Ft. Kips
MY	35.928	70.86	0.0	672.61	0.00	0.000	366	0	1.000	1.000	673
MZ	35.928	70.86	3.3	872.50	40.17	0.046	366	0	1.000	1.000	873

* MINIMUM MOMENT CONTROLS

H. W. LOCHNER, INC.

PROJECT: BONNER BRIDGE - OREGON INLET NORTH CAROLINA JMJ Jul-06
SUBJECT: HIGH LEVEL BENT ANALYSIS
HLB 142 MEM. 13 JT. FOOTING WDB 7/06

COLUMN LOADS

PMAX

HLB 142 MEMBER 13 JOINT FOOTING

GROUP 1

	P	MY	MZ
DL	356.21	0.00	20.43
LL	102.65	0.00	10.36
GROUP 1	0.00	0.00	0.00
SERVICE	458.86	0.00	30.79
STRENGTH	685.48	0.00	49.01

GROUP 2

	P	MY	MZ
DL	356.21	0.00	20.43
LL	0.00	0.00	0.00
GROUP 2	40.07	983.49	-79.79
SERVICE	396.28	983.49	-59.36
STRENGTH	515.17	1278.54	-77.17

GROUP 3

	P	MY	MZ
DL	356.21	0.00	20.43
LL	102.65	0.00	10.36
GROUP 3	17.10	571.04	-31.50
SERVICE	475.96	571.04	-0.71
STRENGTH	618.75	742.35	-0.92

GROUP 4

	P	MY	MZ
DL	356.21	0.00	20.43
LL	102.65	0.00	10.36
GROUP 4	-38.82	0.00	851.50
SERVICE	420.04	0.00	882.29
STRENGTH	546.05	0.00	1146.98

GROUP 5

	P	MY	MZ
DL	356.21	0.00	20.43
LL	0.00	0.00	0.00
GROUP 5	1.25	983.49	771.71
SERVICE	357.46	983.49	792.14
STRENGTH	446.82	1229.36	990.18

GROUP 6

	P	MY	MZ
DL	356.21	0.00	20.43
LL	102.65	0.00	10.36
GROUP 6	-21.73	571.04	820.00
SERVICE	437.14	571.04	850.79
STRENGTH	546.42	713.80	1063.49

SLENDERNESS EFFECTS IN COMPRESSION MEMBERS (AASHTO 8.16.5)

f'c = 3000 psi PHI = 0.70 W_C = 150 PCF

$E_C = W_C^{1.5} * 33 * f'c^{0.5}$ = 3320561 PSI Width of Rect. Col. = B = 35.928 In.

Depth of Rect. Col = D = 70.86 In.

$r_Y = 0.30*D$ = 21.26 In. L_Y = 0 Ft. K_Y = 2.0

$r_Z = 0.30*B$ = 10.78 In. L_Z = 2.5 Ft. K_Z = 1.2

I_{YY} = $B*D^3/12$ I_{YY} = 1065259 In^4

I_{ZZ} = $D*B^3/12$ I_{ZZ} = 273854 In^5

$K_Y L_Y/r$ = 0.0 < 22 NO SLENDERNESS EFFECT

$K_Z L_Z/r$ = 3.3 < 22 NO SLENDERNESS EFFECT

H. W. LOCHNER, INC.

PROJECT: BONNER BRIDGE - OREGON INLET NORTH CAROLINA JMJ Jul-06
SUBJECT: HIGH LEVEL BENT ANALYSIS
HLB 142 MEM. 13 JT. FOOTING WLB 7/06

SLENDERNESS EFFECTS IN RECTANGULAR COMPRESSION MEMBERS (AASHTO 8.16.5)

GROUP 1

	B	D	KL/R	M_U	M_{DL}	B_D	P_U	P_C	δ_b	δ_s	M_C	
	In.	In.		Ft. Kips	Ft. Kips		Kips	Kips			Ft. Kips	
MY	35.928	70.86	0.0	0.00	0.00	0.000	685	0	1.000	1.000	156	*
MZ	35.928	70.86	3.3	49.01	26.56	0.542	685	0	1.000	1.000	96	*

GROUP 2

	B	D	KL/R	M_U	M_{DL}	B_D	P_U	P_C	δ_b	δ_s	M_C
	In.	In.		Ft. Kips	Ft. Kips		Kips	Kips			Ft. Kips
MY	35.928	70.86	0.0	1278.54	0.00	0.000	515	0	1.000	1.000	1279
MZ	35.928	70.86	3.3	77.17	26.56	0.344	515	0	1.000	1.000	77

GROUP 3

	B	D	KL/R	M_U	M_{DL}	B_D	P_U	P_C	δ_b	δ_s	M_C	
	In.	In.		Ft. Kips	Ft. Kips		Kips	Kips			Ft. Kips	
MY	35.928	70.86	0.0	742.35	0.00	0.000	619	0	1.000	1.000	742	
MZ	35.928	70.86	3.3	0.92	26.56	28.775	619	0	1.000	1.000	87	*

GROUP 4

	B	D	KL/R	M_U	M_{DL}	B_D	P_U	P_C	δ_b	δ_s	M_C	
	In.	In.		Ft. Kips	Ft. Kips		Kips	Kips			Ft. Kips	
MY	35.928	70.86	0.0	0.00	0.00	0.000	546	0	1.000	1.000	124	*
MZ	35.928	70.86	3.3	1146.98	26.56	0.023	546	0	1.000	1.000	1147	

GROUP 5

	B	D	KL/R	M_U	M_{DL}	B_D	P_U	P_C	δ_b	δ_s	M_C
	In.	In.		Ft. Kips	Ft. Kips		Kips	Kips			Ft. Kips
MY	35.928	70.86	0.0	1229.36	0.00	0.000	447	0	1.000	1.000	1229
MZ	35.928	70.86	3.3	990.18	26.56	0.027	447	0	1.000	1.000	990

GROUP 6

	B	D	KL/R	M_U	M_{DL}	B_D	P_U	P_C	δ_b	δ_s	M_C
	In.	In.		Ft. Kips	Ft. Kips		Kips	Kips			Ft. Kips
MY	35.928	70.86	0.0	713.80	0.00	0.000	546	0	1.000	1.000	714
MZ	35.928	70.86	3.3	1063.49	26.56	0.025	546	0	1.000	1.000	1063

* MINIMUM MOMENT CONTROLS

H. W. LOCHNER, INC.

PROJECT: BONNER BRIDGE - OREGON INLET NORTH CAROLINA JMJ Jul-06
SUBJECT: HIGH LEVEL BENT ANALYSIS
HLB 142 MEM. 13 JT. FOOTING WDB 7/06

COLUMN LOADS

PMIN

HLB 142 MEMBER 13 JOINT FOOTING

GROUP 1

	P	MY	MZ
DL	267.16	0.00	20.43
LL	52.54	0.00	-10.23
GROUP 1	0.00	0.00	0.00
SERVICE	319.70	0.00	10.20
STRENGTH	461.14	0.00	4.39

GROUP 2

	P	MY	MZ
DL	267.16	0.00	20.43
LL	0.00	0.00	0.00
GROUP 2	40.07	983.49	-79.79
SERVICE	307.23	983.49	-59.36
STRENGTH	399.40	1278.54	-77.17

GROUP 3

	P	MY	MZ
DL	267.16	0.00	20.43
LL	52.54	0.00	-10.23
GROUP 3	17.10	571.04	-31.50
SERVICE	336.80	571.04	-21.30
STRENGTH	437.84	742.35	-27.69

GROUP 4

	P	MY	MZ
DL	267.16	0.00	20.43
LL	52.54	0.00	-10.23
GROUP 4	-38.82	0.00	851.50
SERVICE	280.88	0.00	861.70
STRENGTH	365.14	0.00	1120.21

GROUP 5

	P	MY	MZ
DL	267.16	0.00	20.43
LL	0.00	0.00	0.00
GROUP 5	1.25	983.49	771.71
SERVICE	268.40	983.49	792.14
STRENGTH	335.50	1229.36	990.18

GROUP 6

	P	MY	MZ
DL	267.16	0.00	20.43
LL	52.54	0.00	-10.23
GROUP 6	-21.73	571.04	820.00
SERVICE	297.97	571.04	830.20
STRENGTH	372.47	713.80	1037.75

SLENDERNESS EFFECTS IN COMPRESSION MEMBERS (AASHTO 8.16.5)

f'c = 3000 psi PHI = 0.70 W_C = 150 PCF

$E_C = W_C^{1.5} * 33 * f'c^{0.5}$ = 3320561 PSI Width of Rect. Col. = B = 35.928 In.

Depth of Rect. Col = D = 70.86 In.

$r_Y = 0.30*D$ = 21.26 In. L_Y = 0 Ft. K_Y = 2.0

$r_Z = 0.30*B$ = 10.78 In. L_Z = 2.5 Ft. K_Z = 1.2

I_{YY} = $B*D^3/12$ I_{YY} = 1065259 In^4

I_{ZZ} = $D*B^3/12$ I_{ZZ} = 273854 In^5

$K_Y L_Y/r$ = 0.0 < 22 NO SLENDERNESS EFFECT

$K_Z L_Z/r$ = 3.3 < 22 NO SLENDERNESS EFFECT

H. W. LOCHNER, INC.

PROJECT: BONNER BRIDGE - OREGON INLET NORTH CAROLINA JMJ Jul-06
SUBJECT: HIGH LEVEL BENT ANALYSIS
HLB 142 MEM. 13 JT. FOOTING WDB 7/06

SLENDERNESS EFFECTS IN RECTANGULAR COMPRESSION MEMBERS (AASHTO 8.16.5)

GROUP 1

	B	D	KL/R	M_U	M_{DL}	B_D	P_U	P_C	δ_b	δ_s	M_C	
	In.	In.		Ft. Kips	Ft. Kips		Kips	Kips			Ft. Kips	
MY	35.928	70.86	0.0	0.00	0.00	0.000	461	0	1.000	1.000	105	*
MZ	35.928	70.86	3.3	4.39	26.56	6.044	461	0	1.000	1.000	64	*

GROUP 2

	B	D	KL/R	M_U	M_{DL}	B_D	P_U	P_C	δ_b	δ_s	M_C
	In.	In.		Ft. Kips	Ft. Kips		Kips	Kips			Ft. Kips
MY	35.928	70.86	0.0	1278.54	0.00	0.000	399	0	1.000	1.000	1279
MZ	35.928	70.86	3.3	77.17	26.56	0.344	399	0	1.000	1.000	77

GROUP 3

	B	D	KL/R	M_U	M_{DL}	B_D	P_U	P_C	δ_b	δ_s	M_C	
	In.	In.		Ft. Kips	Ft. Kips		Kips	Kips			Ft. Kips	
MY	35.928	70.86	0.0	742.35	0.00	0.000	438	0	1.000	1.000	742	
MZ	35.928	70.86	3.3	27.69	26.56	0.959	438	0	1.000	1.000	61	*

GROUP 4

	B	D	KL/R	M_U	M_{DL}	B_D	P_U	P_C	δ_b	δ_s	M_C	
	In.	In.		Ft. Kips	Ft. Kips		Kips	Kips			Ft. Kips	
MY	35.928	70.86	0.0	0.00	0.00	0.000	365	0	1.000	1.000	83	*
MZ	35.928	70.86	3.3	1120.21	26.56	0.024	365	0	1.000	1.000	1120	

GROUP 5

	B	D	KL/R	M_U	M_{DL}	B_D	P_U	P_C	δ_b	δ_s	M_C
	In.	In.		Ft. Kips	Ft. Kips		Kips	Kips			Ft. Kips
MY	35.928	70.86	0.0	1229.36	0.00	0.000	336	0	1.000	1.000	1229
MZ	35.928	70.86	3.3	990.18	26.56	0.027	336	0	1.000	1.000	990

GROUP 6

	B	D	KL/R	M_U	M_{DL}	B_D	P_U	P_C	δ_b	δ_s	M_C
	In.	In.		Ft. Kips	Ft. Kips		Kips	Kips			Ft. Kips
MY	35.928	70.86	0.0	713.80	0.00	0.000	372	0	1.000	1.000	714
MZ	35.928	70.86	3.3	1037.75	26.56	0.026	372	0	1.000	1.000	1038

* MINIMUM MOMENT CONTROLS

JMS 7/06

WDB 7/06

```
OOOOOOO    OOOOO    OOOOO    OOOOO    OOOOO   OO
OO    OO   OO  OO   OO  OO   OO  OO   OO  OO   OO
OO    OO   OO  OO   OO  OO   OO  OO   OO  OO   OO
OO    OO   OO       OO  OO   OO       OO  OO   OO
OO    OO   OO       OOOOOOO  OO       OO  OO   OO
OOOOOOO    OO  OO   OO  OO   OO  OO   OO  OO   OO
OO         OO  OO   OO  OO   OO  OO   OO  OO   OO
OO          OOOOO   OO  OO    OOOOO    OOOOO   OOOOO  (TM)
```

==========
Computer program for the Strength Design of Reinforced Concrete Sections
==========

Licensee stated above acknowledges that Portland Cement Association (PCA) is not and cannot be responsible for either the accuracy or adequacy of the material supplied as input for processing by the PCACOL(tm) computer program. Furthermore, PCA neither makes any warranty expressed nor implied with respect to the correctness of the output prepared by the PCACOL(tm) program. Although PCA has endeavored to produce PCACOL(tm) error free, the program is not and can't be certified infallible. The final and only responsibility for analysis, design and engineering documents is the licensees. Accordingly, PCA disclaims all responsibility in contract, negligence or other tort for any analysis, design or engineering documents prepared in connection with the use of the PCACOL(tm) program.

BASED ON PLANS.

General Information:
==========

File Name: S:\DGN-ST\NORTHC~1\BONNER~1\ANALYSIS\PIERS\HLB142\PCACOL~1\M13PLAN.COL
Project: BONNER BRIDGE - OREGON INLET
Column: HLB #142 Engineer: JMJ
Code: ACI 318-95 Units: English

Run Option: Investigation Slenderness: Not considered
Run Axis: Biaxial Column Type: Structural

Material Properties:
==========

f'c = 3 ksi fy = 40 ksi
Ec = 3122.02 ksi Es = 29000 ksi
fc = 2.55 ksi Rupture strain = Infinity
Ultimate strain = 0.003 in/in
Beta1 = 0.85

Section:
==========

Rectangular: Width = 36 in Depth = 70.9 in

Gross section area, Ag = 2552.4 in^2
Ix = 1.0692e+006 in^4 Iy = 275659 in^4
Xo = 0 in Yo = 0 in

Reinforcement:
==========

Rebar Database: User-defined

Size	Diam (in)	Area (in^2)	Size	Diam (in)	Area (in^2)	Size	Diam (in)	Area (in^2)
# 1	0.00	0.00	# 3	0.38	0.11	# 4	0.50	0.20
# 5	0.63	0.31	# 6	0.75	0.44	# 7	0.88	0.60
# 8	1.00	0.79	# 9	1.13	1.00	# 10	1.27	1.27
# 11	1.41	1.56	# 14	1.69	2.25	# 18	2.26	4.00

Confinement: Tied; #1 ties with #9 bars, #1 with larger bars.
phi(a) = 0.8, phi(b) = 0.9, phi(c) = 0.7

Layout: Rectangular
Pattern: Equal Bar Spacing (Cover to longitudinal reinforcement)
Total steel area, As = 28.08 in^2 at 1.10%
18 #11 Cover = 5 in

Factored Loads and Moments with Corresponding Capacities: (see user's manual for notation)
==========

No.	Pu kip	Mux k-ft	Muy k-ft	fMnx k-ft	fMny k-ft	fMn/Mu
1	677.0	154.0	95.0	2124.8	1311.5	13.800
2	507.0	1189.0	71.0	3271.9	190.3	2.752
3	610.0	700.0	85.0	3270.9	399.0	4.673
4	537.0	122.0	865.0	231.3	1623.1	1.877
5	439.0	1143.0	901.0	1727.3	1357.2	1.509
6	538.0	673.0	857.0	1197.6	1523.0	1.778
7	455.0	103.0	64.0	2040.5	1272.6	19.832
8	393.0	1189.0	55.0	3161.0	151.4	2.659
9	431.0	700.0	60.0	3159.8	275.9	4.515
10	359.0	81.0	881.0	139.8	1511.8	1.716
11	329.0	1143.0	901.0	1666.1	1316.1	1.459
12	366.0	673.0	873.0	1113.6	1439.8	1.651
13	685.0	156.0	96.0	2127.1	1311.7	13.643
14	515.0	1279.0	77.0	3275.1	202.2	2.561
15	619.0	742.0	87.0	3283.2	389.0	4.425

16	546.0	124.0	1147.0	174.4	1629.4	1.420
17	447.0	1229.0	990.0	1699.2	1368.7	1.383
18	546.0	714.0	1063.0	1039.6	1551.4	1.458
19	461.0	105.0	64.0	2078.9	1263.1	19.782
20	399.0	1279.0	77.0	3157.2	194.5	2.469
21	438.0	742.0	61.0	3175.5	256.3	4.279
22	365.0	83.0	1120.0	113.1	1516.2	1.354
23	336.0	1229.0	990.0	1642.0	1326.4	1.338
24	372.0	714.0	1038.0	1003.7	1459.1	1.406

*** Program completed as requested! ***

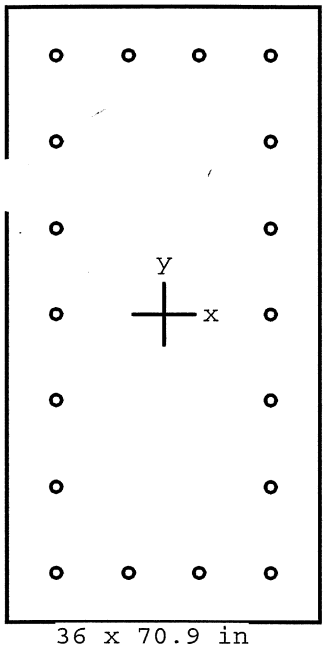

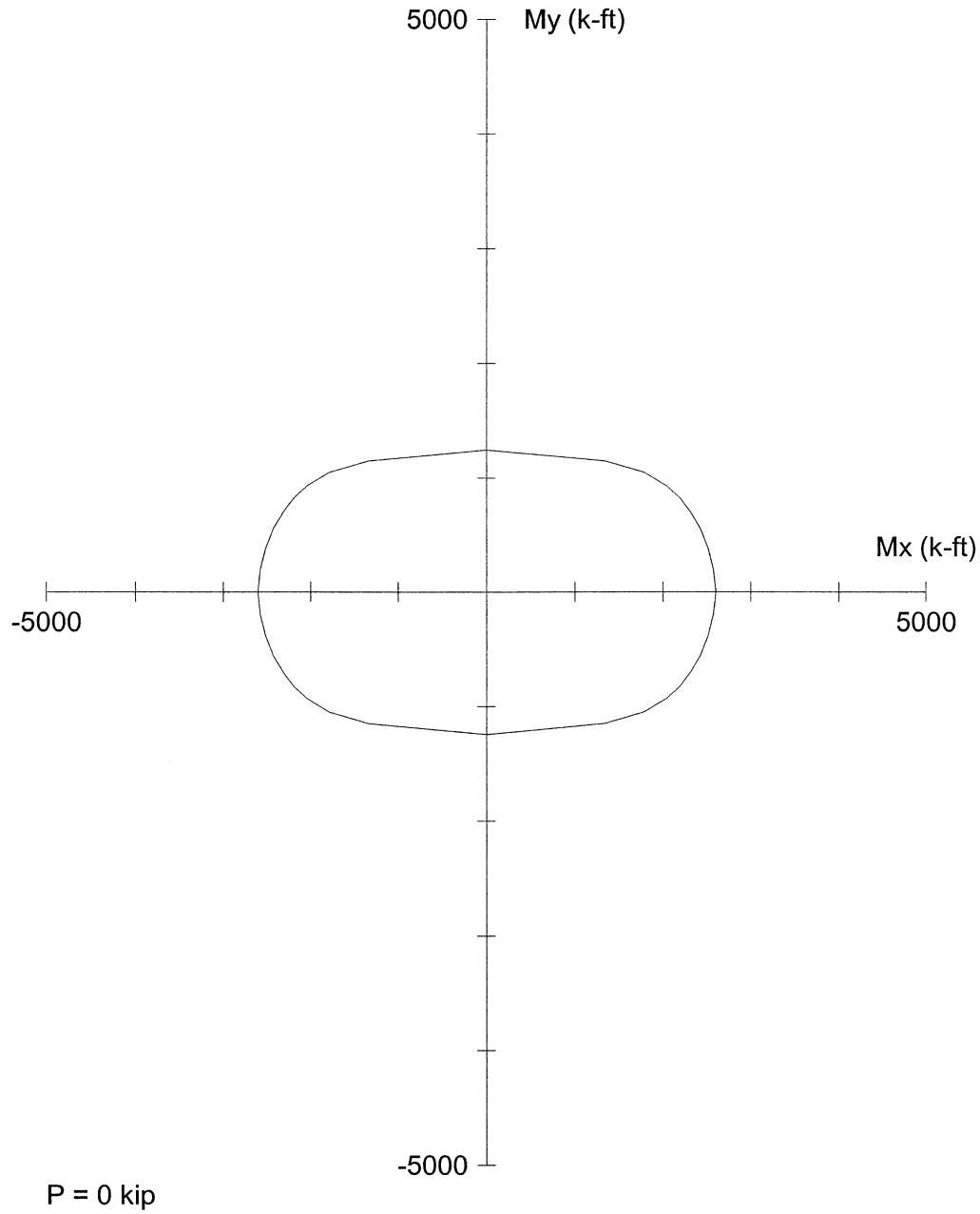

Code: ACI 318-95

Units: English

Run axis: Biaxial

Run option: Investigation

Slenderness: Not considered

mn type: Structural

Bars: User-defined

Date: 07/21/06

Time: 14:31:19

PCACOL V3.00 (PCA 1999) - Licensed to: Licensee name not yet specified.

File: S:\DGN-ST\NORTHC~1\BONNER~1\ANALYSIS\PIERS\HLB142\PCACOL~1\M13PLAN.COL

Project: BONNER BRIDGE - OREGON INLET

Column: HLB #142		Engineer: JMJ	
f'c = 3 ksi	fy = 40 ksi	Ag = 2552.4 in^2	18 #11 bars
Ec = 3122 ksi	Es = 29000 ksi	As = 28.08 in^2	Rho = 1.10%
fc = 2.55 ksi	e_rup = Infinity	Xo = 0.00 in	Ix = 1.0692e+006 in^4
ɹ = 0.003 in/in		Yo = 0.00 in	Iy = 275659 in^4
Beta1 = 0.85		Clear spacing = 6.79 in	Clear cover = 5.00 in
Confinement: Tied	phi(a) = 0.8, phi(b) = 0.9, phi(c) = 0.7		

JMJ 7/06
WOB 7/06

```
OOOOOOO    OOOOO    OOOOO    OOOOO    OOOOO   OO
OO    OO   OO  OO   OO  OO   OO  OO   OO  OO   OO
OO    OO   OO  OO   OO  OO   OO  OO   OO  OO   OO
OO    OO   OO       OO  OO   OO       OO  OO   OO
OO    OO   OO       OOOOOOO  OO       OO  OO   OO
OOOOOOO    OO  OO   OO  OO   OO  OO   OO  OO   OO
OO         OO  OO   OO  OO   OO  OO   OO  OO   OO
OO          OOOOO   OO  OO    OOOOO    OOOOO   OOOOO  (TM)
```

==========
Computer program for the Strength Design of Reinforced Concrete Sections
==========

Licensee stated above acknowledges that Portland Cement Association (PCA) is not and cannot be responsible for either the accuracy or adequacy of the material supplied as input for processing by the PCACOL(tm) computer program. Furthermore, PCA neither makes any warranty expressed nor implied with respect to the correctness of the output prepared by the PCACOL(tm) program. Although PCA has endeavored to produce PCACOL(tm) error free, the program is not and can't be certified infallible. The final and only responsibility for analysis, design and engineering documents is the licensees. Accordingly, PCA disclaims all responsibility in contract, negligence or other tort for any analysis, design or engineering documents prepared in connection with the use of the PCACOL(tm) program.

50% COVER LOSS
f_c = 4400 PSI

General Information:
==========

File Name: S:\DGN-ST\NORTHC~1\BONNER~1\ANALYSIS\PIERS\HLB142\PCACOL~1\M13ACT.COL
Project: BONNER BRIDGE - OREGON INLET
Column: HLB #142 Engineer: JMJ
Code: ACI 318-95 Units: English

Run Option: Investigation Slenderness: Not considered
Run Axis: Biaxial Column Type: Structural

Material Properties:
==========

f'c = 4.4 ksi fy = 40 ksi
Ec = 3780.96 ksi Es = 29000 ksi
fc = 3.74 ksi Rupture strain = Infinity
Ultimate strain = 0.003 in/in
Beta1 = 0.83

Section:
==========

Rectangular: Width = 31 in Depth = 65.9 in

Gross section area, Ag = 2042.9 in^2
Ix = 739327 in^4 Iy = 163602 in^4
Xo = 0 in Yo = 0 in

Reinforcement:
==========

Rebar Database: User-defined

Size	Diam (in)	Area (in^2)	Size	Diam (in)	Area (in^2)	Size	Diam (in)	Area (in^2)
# 1	0.00	0.00	# 3	0.38	0.11	# 4	0.50	0.20
# 5	0.63	0.31	# 6	0.75	0.44	# 7	0.88	0.60
# 8	1.00	0.79	# 9	1.13	1.00	# 10	1.27	1.27
# 11	1.41	1.56	# 14	1.69	2.25	# 18	2.26	4.00

Confinement: Tied; #1 ties with #9 bars, #1 with larger bars.
phi(a) = 0.8, phi(b) = 0.9, phi(c) = 0.7

Layout: Rectangular
Pattern: Equal Bar Spacing (Cover to longitudinal reinforcement)
Total steel area, As = 28.08 in^2 at 1.37%
18 #11 Cover = 2.5 in

Factored Loads and Moments with Corresponding Capacities: (see user's manual for notation)
==========

No.	Pu kip	Mux k-ft	Muy k-ft	fMnx k-ft	fMny k-ft	fMn/Mu
1	677.0	154.0	95.0	2108.9	1297.9	13.685
2	507.0	1189.0	71.0	3244.4	197.1	2.729
3	610.0	700.0	85.0	3271.8	394.5	4.674
4	537.0	122.0	865.0	217.4	1537.0	1.777
5	439.0	1143.0	901.0	1654.7	1307.5	1.449
6	538.0	673.0	857.0	1142.3	1452.4	1.696
7	455.0	103.0	64.0	1977.2	1230.3	19.204
8	393.0	1189.0	55.0	3113.9	141.9	2.619
9	431.0	700.0	60.0	3124.5	269.8	4.464
10	359.0	81.0	881.0	129.9	1411.9	1.603
11	329.0	1143.0	901.0	1589.3	1251.0	1.390
12	366.0	673.0	873.0	1045.2	1359.1	1.555
13	685.0	156.0	96.0	2113.1	1299.7	13.544
14	515.0	1279.0	77.0	3253.2	197.9	2.544
15	619.0	742.0	87.0	3285.8	386.0	4.428

16	546.0	124.0	1147.0	166.9	1544.0	1.346
17	447.0	1229.0	990.0	1630.2	1317.1	1.328
18	546.0	714.0	1063.0	989.0	1477.7	1.389
19	461.0	105.0	64.0	2005.9	1225.3	19.115
20	399.0	1279.0	77.0	3111.6	185.3	2.433
21	438.0	742.0	61.0	3136.3	262.8	4.227
22	365.0	83.0	1120.0	104.3	1416.5	1.265
23	336.0	1229.0	990.0	1568.4	1259.7	1.275
24	372.0	714.0	1038.0	948.7	1375.9	1.327

*** Program completed as requested! ***

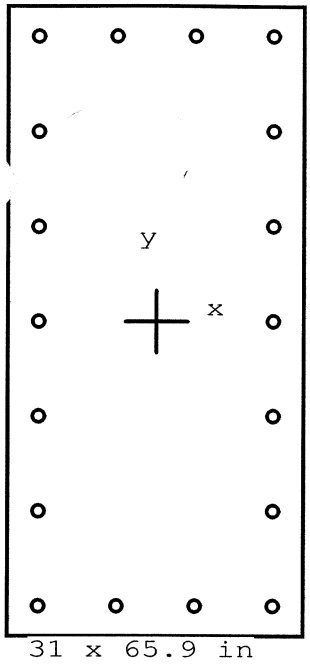

Code: ACI 318-95

Units: English

Run axis: Biaxial

Run option: Investigation

Slenderness: Not considered

Column type: Structural

Bars: User-defined

Date: 07/25/06

Time: 13:48:37

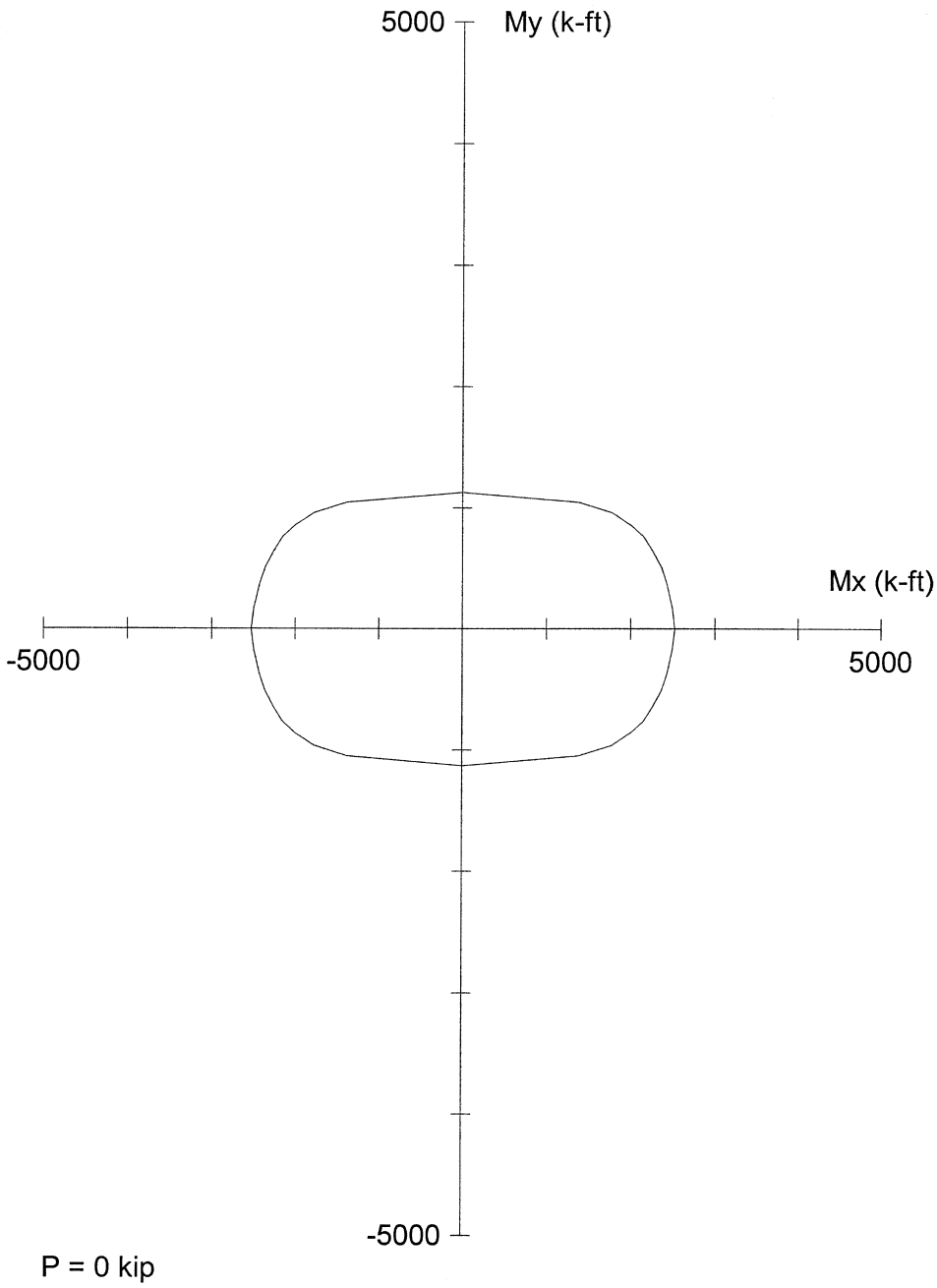

PCACOL V3.00 (PCA 1999) - Licensed to: Licensee name not yet specified.

File: S:\DGN-ST\NORTHC~1\BONNER~1\ANALYSIS\PIERS\HLB142\PCACOL~1\M13ACT.COL

Project: BONNER BRIDGE - OREGON INLET

Column: HLB #142		Engineer: JMJ	
f'c = 4.4 ksi	fy = 40 ksi	Ag = 2042.9 in^2	18 #11 bars
Ec = 3781 ksi	Es = 29000 ksi	As = 28.08 in^2	Rho = 1.37%
fc = 3.74 ksi	e_rup = Infinity	Xo = 0.00 in	Ix = 739327 in^4
e_u = 0.003 in/in		Yo = 0.00 in	Iy = 163602 in^4
Beta1 = 0.83		Clear spacing = 6.79 in	Clear cover = 2.50 in
Confinement: Tied	phi(a) = 0.8, phi(b) = 0.9, phi(c) = 0.7		

H. W. LOCHNER, INC.

PROJECT: BONNER BRIDGE - OREGON INLET NORTH CAROLINA JMJ Jul-06
SUBJECT: HIGH LEVEL BENT ANALYSIS WPB 7/06
HLB 142 MEM. 14 JT. 10

COLUMN LOADS

PMAX

HLB 142 MEMBER 14 JOINT 10

	GROUP 1				GROUP 2		
	P	MY	MZ		P	MY	MZ
DL	349.51	0.00	29.88	DL	349.51	0.00	29.88
LL	102.63	0.00	5.48	LL	0.00	0.00	0.00
GROUP 1	0.00	0.00	0.00	GROUP 2	-40.07	-914.59	49.70
SERVICE	452.14	0.00	35.36	SERVICE	309.44	-914.59	79.58
STRENGTH	676.73	0.00	50.72	STRENGTH	402.27	-1188.97	103.45

	GROUP 3				GROUP 4		
	P	MY	MZ		P	MY	MZ
DL	349.51	0.00	29.88	DL	349.51	0.00	29.88
LL	102.63	0.00	5.48	LL	102.63	0.00	5.48
GROUP 3	-17.10	-538.16	20.11	GROUP 4	-40.19	0.00	-702.31
SERVICE	435.04	-538.16	55.47	SERVICE	411.95	0.00	-666.95
STRENGTH	565.55	-699.61	72.11	STRENGTH	535.54	0.00	-867.04

	GROUP 5				GROUP 6		
	P	MY	MZ		P	MY	MZ
DL	349.51	0.00	29.88	DL	349.51	0.00	29.88
LL	0.00	0.00	0.00	LL	102.63	0.00	5.48
GROUP 5	-80.26	-914.59	-652.61	GROUP 6	-57.29	-538.16	-682.20
SERVICE	269.25	-914.59	-622.73	SERVICE	394.85	-538.16	-646.84
STRENGTH	336.56	-1143.24	-778.41	STRENGTH	493.56	-672.70	-808.55

SLENDERNESS EFFECTS IN COMPRESSION MEMBERS (AASHTO 8.16.5)

f'c = 3000 psi PHI = 0.70 W_C = 150 PCF

$E_C = W_C^{1.5} * 33 * f'c^{0.5}$ = 3320561 PSI Width of Rect. Col. = B = 35.928 In.

Depth of Rect. Col = D = 70.86 In.

$r_Y = 0.30*D$ = 21.26 In. L_Y = 0 Ft. K_Y = 2.0

$r_Z = 0.30*B$ = 10.78 In. L_Z = 2.5 Ft. K_Z = 1.2

I_{YY} = $B*D^3/12$ I_{YY} = 1065259 In^4

I_{ZZ} = $D*B^3/12$ I_{ZZ} = 273854 In^5

$K_Y L_Y/r$ = 0.0 < 22 NO SLENDERNESS EFFECT

$K_Z L_Z/r$ = 3.3 < 22 NO SLENDERNESS EFFECT

H. W. LOCHNER, INC.

PROJECT: BONNER BRIDGE - OREGON INLET NORTH CAROLINA JMJ Jul-06
SUBJECT: HIGH LEVEL BENT ANALYSIS
HLB 142 MEM. 14 JT. 10 WAB 7/06

SLENDERNESS EFFECTS IN RECTANGULAR COMPRESSION MEMBERS (AASHTO 8.16.5)

GROUP 1

	B	D	KL/R	M_U	M_{DL}	B_D	P_U	P_C	δ_b	δ_s	M_C	
	In.	In.		Ft. Kips	Ft. Kips		Kips	Kips			Ft. Kips	
MY	35.928	70.86	0.0	0.00	0.00	0.000	677	0	1.000	1.000	154	*
MZ	35.928	70.86	3.3	50.72	38.84	0.766	677	0	1.000	1.000	95	*

GROUP 2

	B	D	KL/R	M_U	M_{DL}	B_D	P_U	P_C	δ_b	δ_s	M_C
	In.	In.		Ft. Kips	Ft. Kips		Kips	Kips			Ft. Kips
MY	35.928	70.86	0.0	1188.97	0.00	0.000	402	0	1.000	1.000	1189
MZ	35.928	70.86	3.3	103.45	38.84	0.375	402	0	1.000	1.000	103

GROUP 3

	B	D	KL/R	M_U	M_{DL}	B_D	P_U	P_C	δ_b	δ_s	M_C	
	In.	In.		Ft. Kips	Ft. Kips		Kips	Kips			Ft. Kips	
MY	35.928	70.86	0.0	699.61	0.00	0.000	566	0	1.000	1.000	700	
MZ	35.928	70.86	3.3	72.11	38.84	0.539	566	0	1.000	1.000	79	*

GROUP 4

	B	D	KL/R	M_U	M_{DL}	B_D	P_U	P_C	δ_b	δ_s	M_C	
	In.	In.		Ft. Kips	Ft. Kips		Kips	Kips			Ft. Kips	
MY	35.928	70.86	0.0	0.00	0.00	0.000	536	0	1.000	1.000	122	*
MZ	35.928	70.86	3.3	867.04	38.84	0.045	536	0	1.000	1.000	867	

GROUP 5

	B	D	KL/R	M_U	M_{DL}	B_D	P_U	P_C	δ_b	δ_s	M_C
	In.	In.		Ft. Kips	Ft. Kips		Kips	Kips			Ft. Kips
MY	35.928	70.86	0.0	1143.24	0.00	0.000	337	0	1.000	1.000	1143
MZ	35.928	70.86	3.3	778.41	38.84	0.050	337	0	1.000	1.000	778

GROUP 6

	B	D	KL/R	M_U	M_{DL}	B_D	P_U	P_C	δ_b	δ_s	M_C
	In.	In.		Ft. Kips	Ft. Kips		Kips	Kips			Ft. Kips
MY	35.928	70.86	0.0	672.70	0.00	0.000	494	0	1.000	1.000	673
MZ	35.928	70.86	3.3	808.55	38.84	0.048	494	0	1.000	1.000	809

* MINIMUM MOMENT CONTROLS

H. W. LOCHNER, INC.

PROJECT: BONNER BRIDGE - OREGON INLET NORTH CAROLINA JMJ Jul-06
SUBJECT: HIGH LEVEL BENT ANALYSIS
HLB 142 MEM. 14 JT. 10 WLB 7/06

COLUMN LOADS

PMIN

HLB 142 MEMBER 14 JOINT 10

GROUP 1

	P	MY	MZ
DL	262.13	0.00	29.88
LL	52.52	0.00	-7.11
GROUP 1	0.00	0.00	0.00
SERVICE	314.65	0.00	22.77
STRENGTH	454.57	0.00	23.44

GROUP 2

	P	MY	MZ
DL	262.13	0.00	29.88
LL	0.00	0.00	0.00
GROUP 2	-40.07	-914.59	49.70
SERVICE	222.06	-914.59	79.58
STRENGTH	288.68	-1188.97	103.45

GROUP 3

	P	MY	MZ
DL	262.13	0.00	29.88
LL	52.52	0.00	-7.11
GROUP 3	-17.10	-538.16	20.11
SERVICE	297.55	-538.16	42.88
STRENGTH	386.82	-699.61	55.74

GROUP 4

	P	MY	MZ
DL	262.13	0.00	29.88
LL	52.52	0.00	-7.11
GROUP 4	-40.19	0.00	-702.31
SERVICE	274.46	0.00	-679.54
STRENGTH	356.80	0.00	-883.40

GROUP 5

	P	MY	MZ
DL	262.13	0.00	29.88
LL	0.00	0.00	0.00
GROUP 5	-80.26	-914.59	-652.61
SERVICE	181.87	-914.59	-622.73
STRENGTH	227.34	-1143.24	-778.41

GROUP 6

	P	MY	MZ
DL	262.13	0.00	29.88
LL	52.52	0.00	-7.11
GROUP 6	-57.29	-538.16	-682.20
SERVICE	257.36	-538.16	-659.43
STRENGTH	321.70	-672.70	-824.29

SLENDERNESS EFFECTS IN COMPRESSION MEMBERS (AASHTO 8.16.5)

f'c = 3000 psi PHI = 0.70 W_C = 150 PCF

$E_C = W_C^{1.5} * 33 * f'c^{0.5}$ = 3320561 PSI Width of Rect. Col. = B = 35.928 In.

Depth of Rect. Col = D = 70.86 In.

$r_Y = 0.30*D$ = 21.26 In. L_Y = 0 Ft. K_Y = 2.0

$r_Z = 0.30*B$ = 10.78 In. L_Z = 2.5 Ft. K_Z = 1.2

I_{YY} = $B*D^3/12$ I_{YY} = 1065259 In^4

I_{ZZ} = $D*B^3/12$ I_{ZZ} = 273854 In^5

$K_Y L_Y/r$ = 0.0 < 22 NO SLENDERNESS EFFECT

$K_Z L_Z/r$ = 3.3 < 22 NO SLENDERNESS EFFECT

H. W. LOCHNER, INC.

PROJECT: BONNER BRIDGE - OREGON INLET NORTH CAROLINA JMJ Jul-06
SUBJECT: HIGH LEVEL BENT ANALYSIS
HLB 142 MEM. 14 JT. 10 WDB 7/06

SLENDERNESS EFFECTS IN RECTANGULAR COMPRESSION MEMBERS (AASHTO 8.16.5)

GROUP 1

	B	D	KL/R	M_U	M_{DL}	B_D	P_U	P_C	δ_b	δ_s	M_C	
	In.	In.		Ft. Kips	Ft. Kips		Kips	Kips			Ft. Kips	
MY	35.928	70.86	0.0	0.00	0.00	0.000	455	0	1.000	1.000	103	*
MZ	35.928	70.86	3.3	23.44	38.84	1.657	455	0	1.000	1.000	64	*

GROUP 2

	B	D	KL/R	M_U	M_{DL}	B_D	P_U	P_C	δ_b	δ_s	M_C
	In.	In.		Ft. Kips	Ft. Kips		Kips	Kips			Ft. Kips
MY	35.928	70.86	0.0	1188.97	0.00	0.000	289	0	1.000	1.000	1189
MZ	35.928	70.86	3.3	103.45	38.84	0.375	289	0	1.000	1.000	103

GROUP 3

	B	D	KL/R	M_U	M_{DL}	B_D	P_U	P_C	δ_b	δ_s	M_C
	In.	In.		Ft. Kips	Ft. Kips		Kips	Kips			Ft. Kips
MY	35.928	70.86	0.0	699.61	0.00	0.000	387	0	1.000	1.000	700
MZ	35.928	70.86	3.3	55.74	38.84	0.697	387	0	1.000	1.000	56

GROUP 4

	B	D	KL/R	M_U	M_{DL}	B_D	P_U	P_C	δ_b	δ_s	M_C	
	In.	In.		Ft. Kips	Ft. Kips		Kips	Kips			Ft. Kips	
MY	35.928	70.86	0.0	0.00	0.00	0.000	357	0	1.000	1.000	81	*
MZ	35.928	70.86	3.3	883.40	38.84	0.044	357	0	1.000	1.000	883	

GROUP 5

	B	D	KL/R	M_U	M_{DL}	B_D	P_U	P_C	δ_b	δ_s	M_C
	In.	In.		Ft. Kips	Ft. Kips		Kips	Kips			Ft. Kips
MY	35.928	70.86	0.0	1143.24	0.00	0.000	227	0	1.000	1.000	1143
MZ	35.928	70.86	3.3	778.41	38.84	0.050	227	0	1.000	1.000	778

GROUP 6

	B	D	KL/R	M_U	M_{DL}	B_D	P_U	P_C	δ_b	δ_s	M_C
	In.	In.		Ft. Kips	Ft. Kips		Kips	Kips			Ft. Kips
MY	35.928	70.86	0.0	672.70	0.00	0.000	322	0	1.000	1.000	673
MZ	35.928	70.86	3.3	824.29	38.84	0.047	322	0	1.000	1.000	824

* MINIMUM MOMENT CONTROLS

H. W. LOCHNER, INC.

PROJECT: BONNER BRIDGE - OREGON INLET NORTH CAROLINA JMJ Jul-06
SUBJECT: HIGH LEVEL BENT ANALYSIS
HLB 142 MEM. 14 JT. FOOTING WDB 7/06

COLUMN LOADS

PMAX

HLB 142 MEMBER 14 JOINT FOOTING

	GROUP 1				GROUP 2		
	P	MY	MZ		P	MY	MZ
DL	356.14	0.00	21.29	DL	356.14	0.00	21.29
LL	102.63	0.00	10.58	LL	0.00	0.00	0.00
GROUP 1	0.00	0.00	0.00	GROUP 2	-40.10	-983.68	79.73
SERVICE	458.77	0.00	31.87	SERVICE	316.04	-983.68	101.02
STRENGTH	685.34	0.00	50.60	STRENGTH	410.85	-1278.78	131.33

	GROUP 3				GROUP 4		
	P	MY	MZ		P	MY	MZ
DL	356.14	0.00	21.29	DL	356.14	0.00	21.29
LL	102.63	0.00	10.58	LL	102.63	0.00	10.58
GROUP 3	-17.11	-571.14	31.48	GROUP 4	-40.19	0.00	851.09
SERVICE	441.66	-571.14	63.35	SERVICE	418.58	0.00	882.96
STRENGTH	574.15	-742.48	82.36	STRENGTH	544.15	0.00	1147.85

	GROUP 5				GROUP 6		
	P	MY	MZ		P	MY	MZ
DL	356.14	0.00	21.29	DL	356.14	0.00	21.29
LL	0.00	0.00	0.00	LL	102.63	0.00	10.58
GROUP 5	-80.29	-983.69	930.82	GROUP 6	-57.30	-571.14	882.56
SERVICE	275.85	-983.69	952.11	SERVICE	401.47	-571.14	914.43
STRENGTH	344.81	-1229.61	1190.14	STRENGTH	501.83	-713.93	1143.04

SLENDERNESS EFFECTS IN COMPRESSION MEMBERS (AASHTO 8.16.5)

f'c = 3000 psi PHI = 0.70 W_C = 150 PCF

$E_C = W_C^{1.5} * 33 * f'c^{0.5}$ = 3320561 PSI Width of Rect. Col. = B = 35.928 In.

Depth of Rect. Col = D = 70.86 In.

$r_Y = 0.30*D$ = 21.26 In. L_Y = 0 Ft. K_Y = 2.0

$r_Z = 0.30*B$ = 10.78 In. L_Z = 2.5 Ft. K_Z = 1.2

I_{YY} = $B*D^3/12$ I_{YY} = 1065259 In^4

I_{ZZ} = $D*B^3/12$ I_{ZZ} = 273854 In^5

$K_Y L_Y/r$ = 0.0 < 22 NO SLENDERNESS EFFECT

$K_Z L_Z/r$ = 3.3 < 22 NO SLENDERNESS EFFECT

H. W. LOCHNER, INC.

PROJECT: BONNER BRIDGE - OREGON INLET NORTH CAROLINA JMJ Jul-06
SUBJECT: HIGH LEVEL BENT ANALYSIS
HLB 142 MEM. 14 JT. FOOTING WDB 7/06

SLENDERNESS EFFECTS IN RECTANGULAR COMPRESSION MEMBERS (AASHTO 8.16.5)

GROUP 1

	B	D	KL/R	M_U	M_{DL}	B_D	P_U	P_C	δ_b	δ_s	M_C	
	In.	In.		Ft. Kips	Ft. Kips		Kips	Kips			Ft. Kips	
MY	35.928	70.86	0.0	0.00	0.00	0.000	685	0	1.000	1.000	156	*
MZ	35.928	70.86	3.3	50.60	27.68	0.547	685	0	1.000	1.000	96	*

GROUP 2

	B	D	KL/R	M_U	M_{DL}	B_D	P_U	P_C	δ_b	δ_s	M_C
	In.	In.		Ft. Kips	Ft. Kips		Kips	Kips			Ft. Kips
MY	35.928	70.86	0.0	1278.78	0.00	0.000	411	0	1.000	1.000	1279
MZ	35.928	70.86	3.3	131.33	27.68	0.211	411	0	1.000	1.000	131

GROUP 3

	B	D	KL/R	M_U	M_{DL}	B_D	P_U	P_C	δ_b	δ_s	M_C
	In.	In.		Ft. Kips	Ft. Kips		Kips	Kips			Ft. Kips
MY	35.928	70.86	0.0	742.48	0.00	0.000	574	0	1.000	1.000	742
MZ	35.928	70.86	3.3	82.36	27.68	0.336	574	0	1.000	1.000	82

GROUP 4

	B	D	KL/R	M_U	M_{DL}	B_D	P_U	P_C	δ_b	δ_s	M_C	
	In.	In.		Ft. Kips	Ft. Kips		Kips	Kips			Ft. Kips	
MY	35.928	70.86	0.0	0.00	0.00	0.000	544	0	1.000	1.000	124	*
MZ	35.928	70.86	3.3	1147.85	27.68	0.024	544	0	1.000	1.000	1148	

GROUP 5

	B	D	KL/R	M_U	M_{DL}	B_D	P_U	P_C	δ_b	δ_s	M_C
	In.	In.		Ft. Kips	Ft. Kips		Kips	Kips			Ft. Kips
MY	35.928	70.86	0.0	1229.61	0.00	0.000	345	0	1.000	1.000	1230
MZ	35.928	70.86	3.3	1190.14	27.68	0.023	345	0	1.000	1.000	1190

GROUP 6

	B	D	KL/R	M_U	M_{DL}	B_D	P_U	P_C	δ_b	δ_s	M_C
	In.	In.		Ft. Kips	Ft. Kips		Kips	Kips			Ft. Kips
MY	35.928	70.86	0.0	713.93	0.00	0.000	502	0	1.000	1.000	714
MZ	35.928	70.86	3.3	1143.04	27.68	0.024	502	0	1.000	1.000	1143

* MINIMUM MOMENT CONTROLS

H. W. LOCHNER, INC.

PROJECT: BONNER BRIDGE - OREGON INLET NORTH CAROLINA JMJ Jul-06
SUBJECT: HIGH LEVEL BENT ANALYSIS
HLB 142 MEM. 14 JT. FOOTING WDB 7/06

COLUMN LOADS

PMIN

HLB 142 MEMBER 14 JOINT FOOTING

GROUP 1

	P	MY	MZ
DL	267.10	0.00	21.29
LL	52.52	0.00	-10.07
GROUP 1	0.00	0.00	0.00
SERVICE	319.62	0.00	11.22
STRENGTH	461.03	0.00	5.86

GROUP 2

	P	MY	MZ
DL	267.10	0.00	21.29
LL	0.00	0.00	0.00
GROUP 2	-40.10	-983.68	79.73
SERVICE	227.00	-983.68	101.02
STRENGTH	295.10	-1278.78	131.33

GROUP 3

	P	MY	MZ
DL	267.10	0.00	21.29
LL	52.52	0.00	-10.07
GROUP 3	-17.11	-571.14	31.48
SERVICE	302.51	-571.14	42.70
STRENGTH	393.27	-742.48	55.51

GROUP 4

	P	MY	MZ
DL	267.10	0.00	21.29
LL	52.52	0.00	-10.07
GROUP 4	-40.19	0.00	851.09
SERVICE	279.43	0.00	862.31
STRENGTH	363.26	0.00	1121.00

GROUP 5

	P	MY	MZ
DL	267.10	0.00	21.29
LL	0.00	0.00	0.00
GROUP 5	-80.29	-983.69	930.82
SERVICE	186.81	-983.69	952.11
STRENGTH	233.51	-1229.61	1190.14

GROUP 6

	P	MY	MZ
DL	267.10	0.00	21.29
LL	52.52	0.00	-10.07
GROUP 6	-57.30	-571.14	882.56
SERVICE	262.32	-571.14	893.78
STRENGTH	327.90	-713.93	1117.23

SLENDERNESS EFFECTS IN COMPRESSION MEMBERS (AASHTO 8.16.5)

f'c = 3000 psi PHI = 0.70 W_C = 150 PCF

$E_C = W_C^{1.5} * 33 * f'c^{0.5}$ = 3320561 PSI Width of Rect. Col. = B = 35.928 In.

Depth of Rect. Col = D = 70.86 In.

$r_Y = 0.30*D$ = 21.26 In. L_Y = 0 Ft. K_Y = 2.0

$r_Z = 0.30*B$ = 10.78 In. L_Z = 2.5 Ft. K_Z = 1.2

I_{YY} = $B*D^3/12$ I_{YY} = 1065259 In^4

I_{ZZ} = $D*B^3/12$ I_{ZZ} = 273854 In^5

$K_Y L_Y/r$ = 0.0 < 22 NO SLENDERNESS EFFECT

$K_Z L_Z/r$ = 3.3 < 22 NO SLENDERNESS EFFECT

H. W. LOCHNER, INC.

PROJECT: BONNER BRIDGE - OREGON INLET NORTH CAROLINA
SUBJECT: HIGH LEVEL BENT ANALYSIS
HLB 142 MEM. 14 JT. FOOTING

JMJ Jul-06
WDB 7/06

SLENDERNESS EFFECTS IN RECTANGULAR COMPRESSION MEMBERS (AASHTO 8.16.5)

GROUP 1

	B	D	KL/R	M_U	M_{DL}	B_D	P_U	P_C	δ_b	δ_s	M_C	
	In.	In.		Ft. Kips	Ft. Kips		Kips	Kips			Ft. Kips	
MY	35.928	70.86	0.0	0.00	0.00	0.000	461	0	1.000	1.000	105	*
MZ	35.928	70.86	3.3	5.86	27.68	4.724	461	0	1.000	1.000	64	*

GROUP 2

	B	D	KL/R	M_U	M_{DL}	B_D	P_U	P_C	δ_b	δ_s	M_C
	In.	In.		Ft. Kips	Ft. Kips		Kips	Kips			Ft. Kips
MY	35.928	70.86	0.0	1278.78	0.00	0.000	295	0	1.000	1.000	1279
MZ	35.928	70.86	3.3	131.33	27.68	0.211	295	0	1.000	1.000	131

GROUP 3

	B	D	KL/R	M_U	M_{DL}	B_D	P_U	P_C	δ_b	δ_s	M_C
	In.	In.		Ft. Kips	Ft. Kips		Kips	Kips			Ft. Kips
MY	35.928	70.86	0.0	742.48	0.00	0.000	393	0	1.000	1.000	742
MZ	35.928	70.86	3.3	55.51	27.68	0.499	393	0	1.000	1.000	56

GROUP 4

	B	D	KL/R	M_U	M_{DL}	B_D	P_U	P_C	δ_b	δ_s	M_C	
	In.	In.		Ft. Kips	Ft. Kips		Kips	Kips			Ft. Kips	
MY	35.928	70.86	0.0	0.00	0.00	0.000	363	0	1.000	1.000	83	*
MZ	35.928	70.86	3.3	1121.00	27.68	0.025	363	0	1.000	1.000	1121	

GROUP 5

	B	D	KL/R	M_U	M_{DL}	B_D	P_U	P_C	δ_b	δ_s	M_C
	In.	In.		Ft. Kips	Ft. Kips		Kips	Kips			Ft. Kips
MY	35.928	70.86	0.0	1229.61	0.00	0.000	234	0	1.000	1.000	1230
MZ	35.928	70.86	3.3	1190.14	27.68	0.023	234	0	1.000	1.000	1190

GROUP 6

	B	D	KL/R	M_U	M_{DL}	B_D	P_U	P_C	δ_b	δ_s	M_C
	In.	In.		Ft. Kips	Ft. Kips		Kips	Kips			Ft. Kips
MY	35.928	70.86	0.0	713.93	0.00	0.000	328	0	1.000	1.000	714
MZ	35.928	70.86	3.3	1117.23	27.68	0.025	328	0	1.000	1.000	1117

* MINIMUM MOMENT CONTROLS

JMJ 7/06

WDB 7/06

```
OOOOOOO    OOOOO    OOOOO    OOOOO    OOOOO   OO
OO    OO   OO  OO   OO  OO   OO  OO   OO  OO   OO
OO    OO   OO  OO   OO  OO   OO  OO   OO  OO   OO
OO    OO   OO       OO  OO   OO       OO  OO   OO
OO    OO   OO       OOOOOOO  OO       OO  OO   OO
OOOOOOO    OO  OO   OO  OO   OO  OO   OO  OO   OO
OO         OO  OO   OO  OO   OO  OO   OO  OO   OO
OO          OOOOO   OO  OO    OOOOO    OOOOO   OOOOO  (TM)
```

==========
Computer program for the Strength Design of Reinforced Concrete Sections
==========

Licensee stated above acknowledges that Portland Cement Association (PCA) is not and cannot be responsible for either the accuracy or adequacy of the material supplied as input for processing by the PCACOL(tm) computer program. Furthermore, PCA neither makes any warranty expressed nor implied with respect to the correctness of the output prepared by the PCACOL(tm) program. Although PCA has endeavored to produce PCACOL(tm) error free, the program is not and can't be certified infallible. The final and only responsibility for analysis, design and engineering documents is the licensees. Accordingly, PCA disclaims all responsibility in contract, negligence or other tort for any analysis, design or engineering documents prepared in connection with the use of the PCACOL(tm) program.

BASED ON PLANS.

General Information:
==========

File Name: S:\DGN-ST\NORTHC~1\BONNER~1\ANALYSIS\PIERS\HLB142\PCACOL~1\M14PLAN.COL
Project: BONNER BRIDGE - OREGON INLET
Column: HLB #142 Engineer: JMJ
Code: ACI 318-95 Units: English

Run Option: Investigation Slenderness: Not considered
Run Axis: Biaxial Column Type: Structural

Material Properties:
==========

f'c = 3 ksi fy = 40 ksi
Ec = 3122.02 ksi Es = 29000 ksi
fc = 2.55 ksi Rupture strain = Infinity
Ultimate strain = 0.003 in/in
Beta1 = 0.85

Section:
==========

Rectangular: Width = 36 in Depth = 70.9 in

Gross section area, Ag = 2552.4 in^2
Ix = 1.0692e+006 in^4 Iy = 275659 in^4
Xo = 0 in Yo = 0 in

Reinforcement:
==========

Rebar Database: User-defined

Size	Diam (in)	Area (in^2)	Size	Diam (in)	Area (in^2)	Size	Diam (in)	Area (in^2)
# 1	0.00	0.00	# 3	0.38	0.11	# 4	0.50	0.20
# 5	0.63	0.31	# 6	0.75	0.44	# 7	0.88	0.60
# 8	1.00	0.79	# 9	1.13	1.00	# 10	1.27	1.27
# 11	1.41	1.56	# 14	1.69	2.25	# 18	2.26	4.00

Confinement: Tied; #1 ties with #9 bars, #1 with larger bars.
phi(a) = 0.8, phi(b) = 0.9, phi(c) = 0.7

Layout: Rectangular
Pattern: Equal Bar Spacing (Cover to longitudinal reinforcement)
Total steel area, As = 28.08 in^2 at 1.10%
18 #11 Cover = 5 in

Factored Loads and Moments with Corresponding Capacities: (see user's manual for notation)
==========

No.	Pu kip	Mux k-ft	Muy k-ft	fMnx k-ft	fMny k-ft	fMn/Mu
1	677.0	154.0	95.0	2124.8	1311.5	13.800
2	402.0	1189.0	103.0	3132.1	266.3	2.634
3	566.0	700.0	79.0	3251.0	369.1	4.645
4	536.0	122.0	867.0	226.7	1622.6	1.871
5	337.0	1143.0	778.0	1857.9	1267.3	1.627
6	494.0	673.0	809.0	1243.1	1492.9	1.846
7	455.0	103.0	64.0	2040.5	1272.6	19.832
8	289.0	1189.0	103.0	2998.3	262.4	2.522
9	387.0	700.0	56.0	3120.2	254.7	4.458
10	357.0	81.0	883.0	140.6	1510.4	1.711
11	227.0	1143.0	778.0	1793.1	1218.8	1.568
12	322.0	673.0	824.0	1146.2	1407.0	1.706
13	685.0	156.0	96.0	2127.1	1311.7	13.643
14	411.0	1279.0	131.0	3119.1	318.8	2.439
15	574.0	742.0	82.0	3260.5	363.7	4.395

16	544.0	124.0	1148.0	176.8	1628.2	1.418
17	345.0	1230.0	1190.0	1419.6	1376.2	1.155
18	502.0	714.0	1143.0	962.6	1539.4	1.347
19	461.0	105.0	64.0	2078.9	1263.1	19.782
20	295.0	1279.0	131.0	2989.4	306.4	2.337
21	393.0	742.0	56.0	3135.4	234.5	4.225
22	363.0	83.0	1121.0	114.8	1514.8	1.351
23	234.0	1230.0	1190.0	1361.4	1314.9	1.106
24	328.0	714.0	1117.0	922.0	1441.4	1.291

*** Program completed as requested! ***

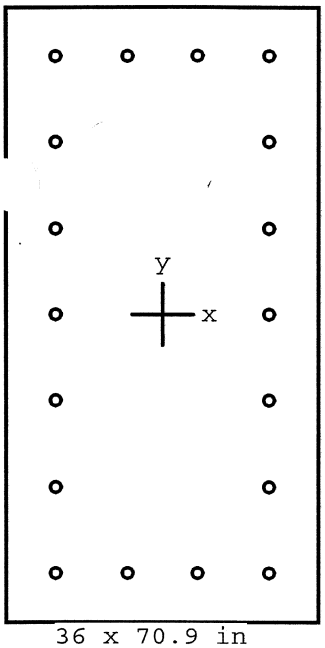

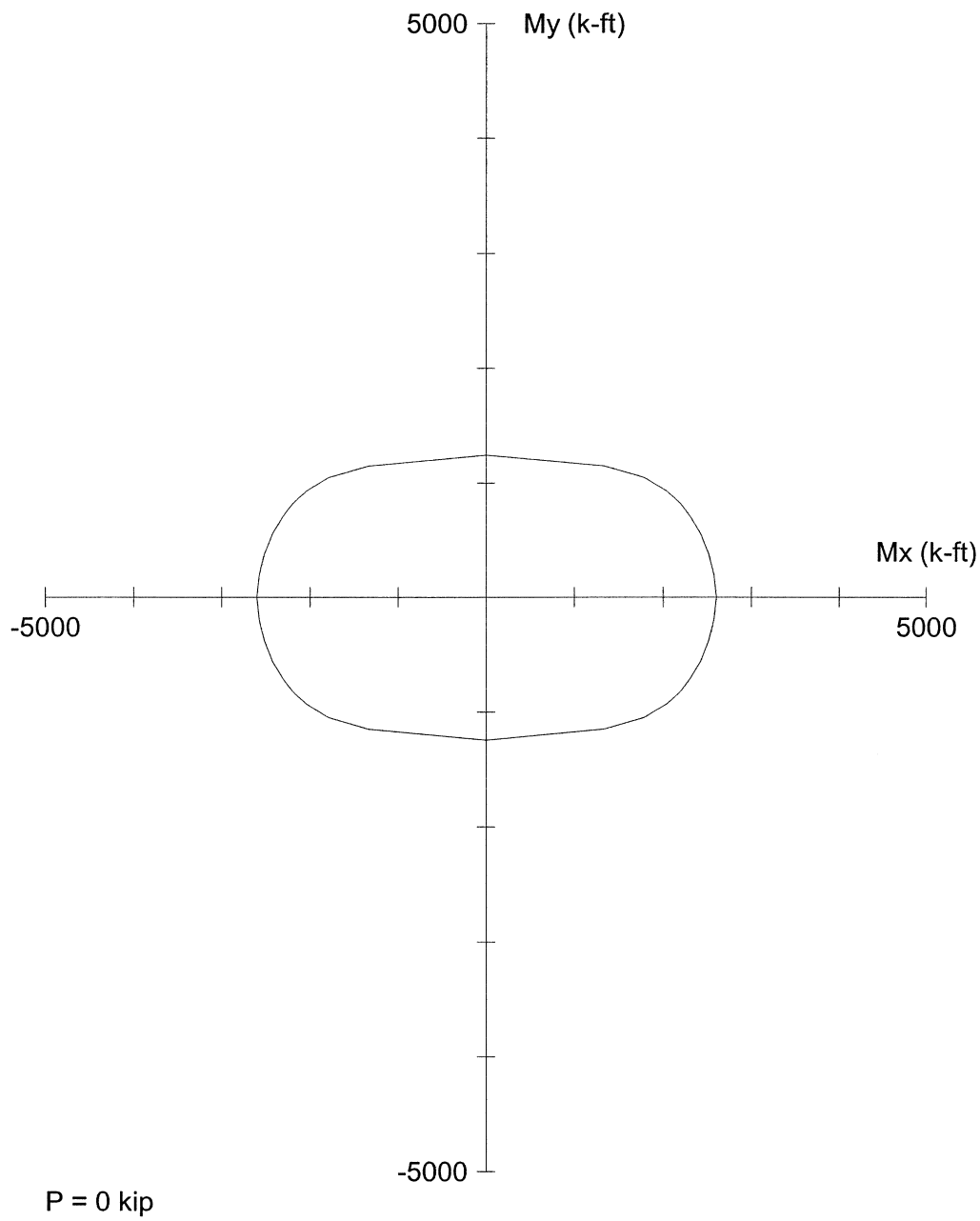

Code: ACI 318-95

Units: English

Run axis: Biaxial

Run option: Investigation

Slenderness: Not considered

mn type: Structural

Bars: User-defined

Date: 07/20/06

Time: 14:19:11

PCACOL V3.00 (PCA 1999) - Licensed to: Licensee name not yet specified.

File: S:\DGN-ST\NORTHC~1\BONNER~1\ANALYSIS\PIERS\HLB142\PCACOL~1\M14PLAN.COL

Project: BONNER BRIDGE - OREGON INLET

Column: HLB #142		Engineer: JMJ	
f'c = 3 ksi	fy = 40 ksi	Ag = 2552.4 in^2	18 #11 bars
Ec = 3122 ksi	Es = 29000 ksi	As = 28.08 in^2	Rho = 1.10%
fc = 2.55 ksi	e_rup = Infinity	Xo = 0.00 in	Ix = 1.0692e+006 in^4
u = 0.003 in/in		Yo = 0.00 in	Iy = 275659 in^4
Beta1 = 0.85		Clear spacing = 6.79 in	Clear cover = 5.00 in
Confinement: Tied	phi(a) = 0.8, phi(b) = 0.9, phi(c) = 0.7		

JMJ 7/06
WDB 7/06

```
OOOOOOO    OOOOO    OOOOO    OOOOO    OOOOO   OO
OO    OO   OO  OO   OO  OO   OO  OO   OO  OO   OO
OO    OO   OO  OO   OO  OO   OO  OO   OO  OO   OO
OO    OO   OO       OO  OO   OO       OO  OO   OO
OO    OO   OO       OOOOOOO  OO       OO  OO   OO
OOOOOOO    OO  OO   OO  OO   OO  OO   OO  OO   OO
OO         OO  OO   OO  OO   OO  OO   OO  OO   OO
OO          OOOOO   OO  OO    OOOOO    OOOOO   OOOOO  (TM)
```

==========
Computer program for the Strength Design of Reinforced Concrete Sections
==========

Licensee stated above acknowledges that Portland Cement Association (PCA) is not and cannot be responsible for either the accuracy or adequacy of the material supplied as input for processing by the PCACOL(tm) computer program. Furthermore, PCA neither makes any warranty expressed nor implied with respect to the correctness of the output prepared by the PCACOL(tm) program. Although PCA has endeavored to produce PCACOL(tm) error free, the program is not and can't be certified infallible. The final and only responsibility for analysis, design and engineering documents is the licensees. Accordingly, PCA disclaims all responsibility in contract, negligence or other tort for any analysis, design or engineering documents prepared in connection with the use of the PCACOL(tm) program.

50% cover loss
f_c = 4400 psi

General Information:
==========
File Name: S:\DGN-ST\NORTHC~1\BONNER~1\ANALYSIS\PIERS\HLB142\PCACOL~1\M14ACT.COL
Project: BONNER BRIDGE - OREGON INLET
Column: HLB #142 Engineer: JMJ
Code: ACI 318-95 Units: English

Run Option: Investigation Slenderness: Not considered
Run Axis: Biaxial Column Type: Structural

Material Properties:
==========
f'c = 4.4 ksi fy = 40 ksi
Ec = 3780.96 ksi Es = 29000 ksi
fc = 3.74 ksi Rupture strain = Infinity
Ultimate strain = 0.003 in/in
Beta1 = 0.83

Section:
==========
Rectangular: Width = 31 in Depth = 65.9 in

Gross section area, Ag = 2042.9 in^2
Ix = 739327 in^4 Iy = 163602 in^4
Xo = 0 in Yo = 0 in

Reinforcement:
==========
Rebar Database: User-defined

Size	Diam (in)	Area (in^2)	Size	Diam (in)	Area (in^2)	Size	Diam (in)	Area (in^2)
# 1	0.00	0.00	# 3	0.38	0.11	# 4	0.50	0.20
# 5	0.63	0.31	# 6	0.75	0.44	# 7	0.88	0.60
# 8	1.00	0.79	# 9	1.13	1.00	# 10	1.27	1.27
# 11	1.41	1.56	# 14	1.69	2.25	# 18	2.26	4.00

Confinement: Tied; #1 ties with #9 bars, #1 with larger bars.
phi(a) = 0.8, phi(b) = 0.9, phi(c) = 0.7

Layout: Rectangular
Pattern: Equal Bar Spacing (Cover to longitudinal reinforcement)
Total steel area, As = 28.08 in^2 at 1.37%
18 #11 Cover = 2.5 in

Factored Loads and Moments with Corresponding Capacities: (see user's manual for notation)
==========

No.	Pu kip	Mux k-ft	Muy k-ft	fMnx k-ft	fMny k-ft	fMn/Mu
1	677.0	154.0	95.0	2108.9	1297.9	13.685
2	402.0	1189.0	103.0	3086.8	272.7	2.597
3	566.0	700.0	79.0	3240.8	361.5	4.629
4	536.0	122.0	867.0	218.6	1536.3	1.772
5	337.0	1143.0	778.0	1789.9	1215.0	1.565
6	494.0	673.0	809.0	1178.5	1421.5	1.755
7	455.0	103.0	64.0	1977.2	1230.3	19.204
8	289.0	1189.0	103.0	2939.0	253.0	2.472
9	387.0	700.0	56.0	3077.2	250.0	4.396
10	357.0	81.0	883.0	129.6	1410.4	1.597
11	227.0	1143.0	778.0	1701.2	1161.2	1.490
12	322.0	673.0	824.0	1081.2	1325.3	1.608
13	685.0	156.0	96.0	2113.1	1299.7	13.544
14	411.0	1279.0	131.0	3078.3	315.0	2.407
15	574.0	742.0	82.0	3252.2	356.4	4.383

16	544.0	124.0	1148.0	169.1	1542.6	1.344
17	345.0	1230.0	1190.0	1348.7	1301.8	1.095
18	502.0	714.0	1143.0	910.8	1461.7	1.278
19	461.0	105.0	64.0	2005.9	1225.3	19.115
20	295.0	1279.0	131.0	2931.5	300.0	2.292
21	393.0	742.0	56.0	3091.4	230.7	4.166
22	363.0	83.0	1121.0	104.3	1415.1	1.262
23	234.0	1230.0	1190.0	1282.0	1237.0	1.041
24	328.0	714.0	1117.0	869.9	1356.0	1.215

*** Program completed as requested! ***

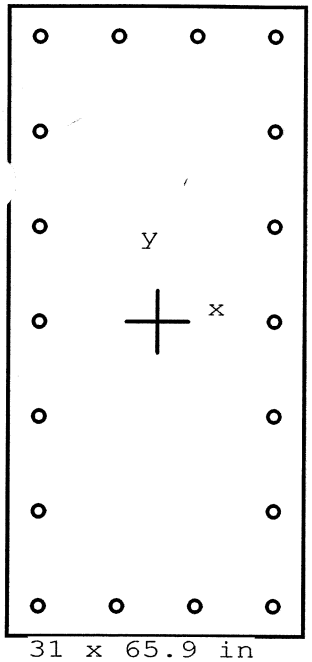

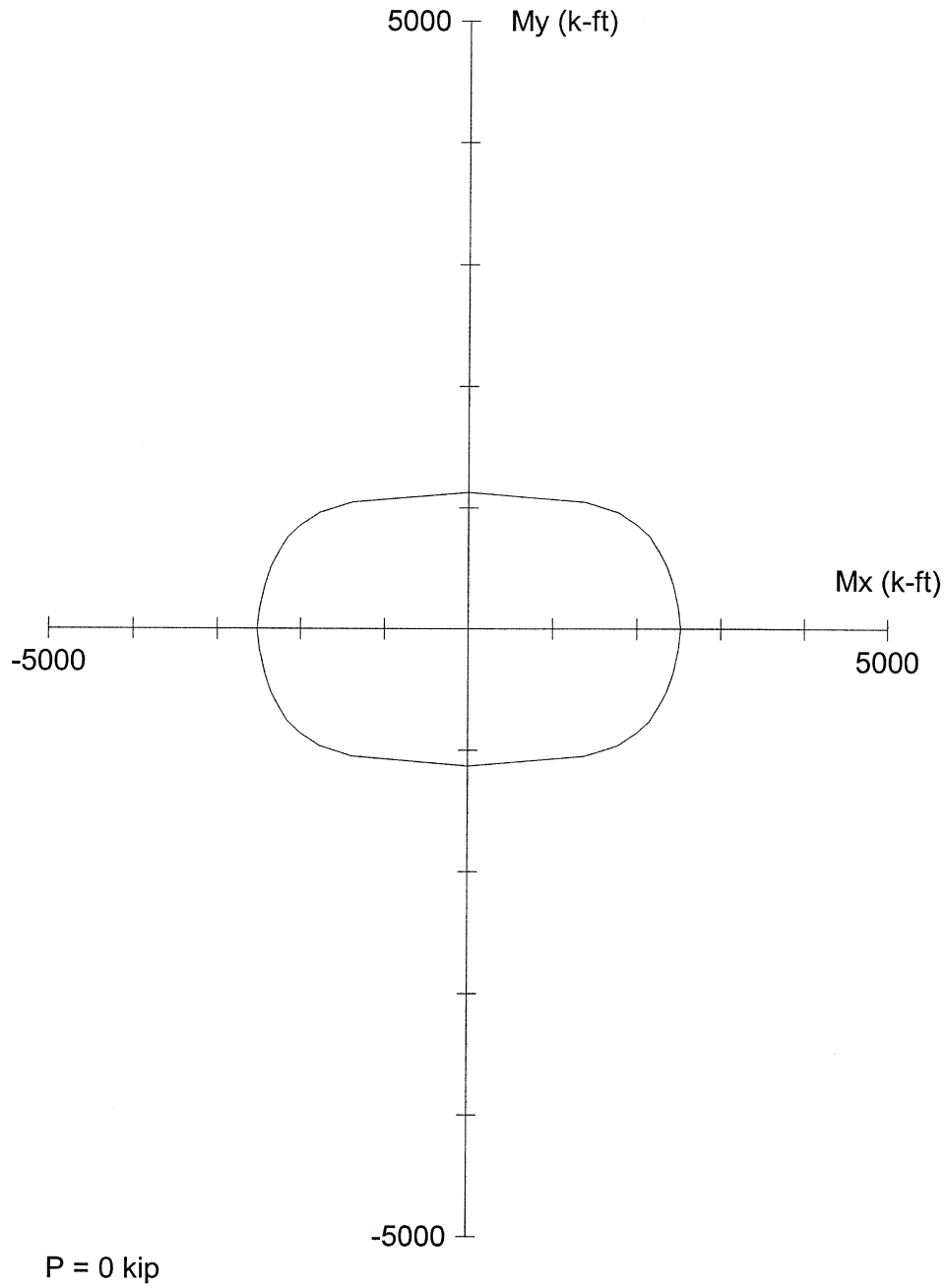

Code: ACI 318-95

Units: English

Run axis: Biaxial

Run option: Investigation

Slenderness: Not considered

Column type: Structural

Bars: User-defined

Date: 07/25/06

Time: 13:48:48

PCACOL V3.00 (PCA 1999) - Licensed to: Licensee name not yet specified.

File: S:\DGN-ST\NORTHC~1\BONNER~1\ANALYSIS\PIERS\HLB142\PCACOL~1\M14ACT.COL

Project: BONNER BRIDGE - OREGON INLET

Column: HLB #142		Engineer: JMJ	
f'c = 4.4 ksi	fy = 40 ksi	Ag = 2042.9 in^2	18 #11 bars
Ec = 3781 ksi	Es = 29000 ksi	As = 28.08 in^2	Rho = 1.37%
fc = 3.74 ksi	e_rup = Infinity	Xo = 0.00 in	Ix = 739327 in^4
e_u = 0.003 in/in		Yo = 0.00 in	Iy = 163602 in^4
Beta1 = 0.83		Clear spacing = 6.79 in	Clear cover = 2.50 in
Confinement: Tied	phi(a) = 0.8, phi(b) = 0.9, phi(c) = 0.7		

LOCHNER

PROJECT: BONNER BRIDGE - OREGON INLET NORTH CAROLINA
SUBJECT: HIGH LEVEL BENT #142
SUBJECT: TOP OF CAP - BASED ON PLAN DIMENSIONS

SHEET
JMJ Jun-06
KBM Jun-06

CONCRETE DESIGN - CAP

INPUT

Dead Load Moment	330.360	Ft. Kips	Working Stress Mom.		503.770	Ft. Kips
Live Load Moment	173.410	Ft. Kips	Load Factor Mom.		805.941	Ft. Kips
Avrg. Bar Clearance	3.625	In.	Z For Steel Dist.		170	
Cover	3.000	In.	f'c	=	3.000	Ksi
Width of Member (b)	36.000	In.	fy	=	40.000	Ksi
Depth of Member (h)	42.000	In.				

AREA OF STEEL

Bar Size	11		d_C =	4.330	In.
No. Bars	7		d_C' =	2.705	In.
A_S	10.93	Sq. In.	d =	37.670	In.

RESULTS

A	=	2.00 x 4.56 x 2.705	=	24.68	
f_S Allow	=	170.00 / (24.68 x 2.705)^.33	=	41.91	Ksi 36.00 Max
a	=	(10.93 x 40.00) / 0.85 x 3.00 x 36.00	=	4.763	In.
jd	=	37.670 - 4.76 / 2.00	=	35.29	
f_S Act	=	(503.77 x 12.00) / 10.93 x 35.29	=	15.67	Ksi
θM_N	=	0.90 x 10.93 x 40.00 x 35.29 / 12	=	1157.13	Ft. Kips

AASHTO 8.17.1 Min. Reinforcement ϕM_n > 1.2Mcr Mcr = fr Ig/yt

fr	=	$7.5 (f'c)^{1/2}$			=	0.411 Ksi
Ig	=	$1/12 * b * h^3$ = 222264 $In.^4$	yt = h/2		=	21.00 In.
Mcr	=	0.411 x 222264 / 21.00 / 12			=	362.32 Ft. Kips

AASHTO 8.17.1 **ϕM_n = 1157.13 > 1.2 Mcr = 434.78 OK**

f_S Act = 15.67 < f_S Allow = 36.00 OK

ϕM_n = 1157.13 > Mu = 805.94 OK

LOCHNER

		SHEET	
PROJECT:	BONNER BRIDGE - OREGON INLET NORTH CAROLINA	JMJ	Jun-06
SUBJECT:	HIGH LEVEL BENT #142	KBM	Jun-06
SUBJECT:	BOTTOM OF CAP - BASED ON PLAN DIMENSIONS		

CONCRETE DESIGN - CAP

INPUT

Dead Load Moment	203.250	Ft. Kips	Working Stress Mom.		368.370	Ft. Kips
Live Load Moment	165.120	Ft. Kips	Load Factor Mom.		622.701	Ft. Kips
Bar Clearance	3.625	In.	Z For Steel Dist.		170	
Cover	3.000	In.	f'c	=	3.000	Ksi
Width of Member (b)	36.00	In.	fy	=	40.000	Ksi
Depth of Member (h)	42.00	In.				

AREA OF STEEL

Bar Size	11		d_C =	4.330	In.
No. Bars	5		d_C' =	2.705	In.
A_S	7.81	Sq. In.	d =	37.670	In.

RESULTS

A	=	2.00 x 6.84 x 2.705	=	37.02		
f_S Allow	=	170.00 / (37.02 x 2.705)^.33	=	36.61	Ksi	36.00 Max
a	=	(7.81 x 40.00) / 0.85 x 3.00 x 36.00	=	3.402	In.	
jd	=	37.670 - 3.40 / 2.00	=	35.97		
f_S Act	=	(368.37 x 12.00) / 7.81 x 35.97	=	15.74	Ksi	
θM_N	=	0.90 x 7.81 x 40.00 x 35.97 / 12	=	842.46	Ft. Kips	

AASHTO 8.17.1 Min. Reinforcement $\phi M_n >$ 1.2Mcr Mcr = fr Ig/yt

fr	=	$7.5\ (f'c)^{1/2}$		=	0.411	Ksi
Ig	=	$1/12 * b * h^3$ = 222264 $In.^4$	yt = h/2	=	21.00	In.
Mcr	=	0.411 x 222264 / 21.00 / 12		=	362.32	Ft. Kips

AASHTO 8.17.1 **ϕM_n = 842.46 > 1.2 Mcr = 434.78 OK**

f_S Act = 15.74 < f_S Allow = 36.00 OK

ϕM_n = 842.46 > Mu = 622.70 OK

LOCHNER

PROJECT:	BONNER BRIDGE - OREGON INLET NORTH CAROLINA	SHEET	
SUBJECT:	HIGH LEVEL BENT #142	JMJ	Jun-06
	SHEAR - BASED ON PLAN DIMENSIONS	KBM	Jun-06

SHEAR DESIGN - CAP COMPLETE

V_{DL} = 103.92 KIPS V_{LL} = 59.50 KIPS F_V = 40000 PSI

d = 37.67 INCHES b = 36.00 INCHES f'c = 3000 PSI

V@ d DIST. FROM FACE OF SUPPORT Col. Width = D = 3.00 FT

ASSUME FACE OF SUPPORT D/4 = 0.75 FT. FROM CENTER OF COL.

$d_{DIST.}$ = 37.67 / 12.00 + 0.750 = 3.89 FT. W_{DL} CAP= 1.575 KIPS/FT

V_{DL} = V_{DL} - W_{DL} * d_{DIST} = 97.79

V_U = 1.3(V_{DL} +(1.67*V_{LL})) = 256.31

$V_U < q\ V_N$ $V_N = V_C + V_S$

$V_U < qV_C + qV_S$

V_C = 2*(f'c)^1/2* b* d = 148.56 KIPS

$qV_S = V_U - qV_C$

$V_S = V_U/q - V_C$ = 152.98 KIPS

$V_S = A_V * F_V * d / S$

USE # 5 STIRRUPS A_S= 0.31 SQ. IN.
No. of Bars = 2

$A_V = 2 \times A_S$ = 2 * 0.307 = 0.61359232 SQ. IN.

$S = A_V * F_V * d / V_S$ = 6.0 INCHES

$S_{MIN} = A_V * F_V /50 * b$ = 20.45 INCHES

S_{ACT} = 6.00 INCHES **OK**

LOCHNER

SHEET

PROJECT: BONNER BRIDGE - OREGON INLET NORTH CAROLINA — JMJ Jul-06

SUBJECT: HIGH LEVEL BENT #142

SUBJECT: TOP OF CAP - BASED ON FIELD DATA, ASSUME 50% COVER LOSS EVERYWHERE — WDB 7/06

CONCRETE DESIGN - CAP

INPUT

Dead Load Moment	330.360	Ft. Kips	Working Stress Mom.		503.770	Ft. Kips
Live Load Moment	173.410	Ft. Kips	Load Factor Mom.		805.941	Ft. Kips
Avrg. Bar Clearance	3.625	In.	Z For Steel Dist.		170	
Cover	3.000	In.	f'c	=	4.400	Ksi
Width of Member (b)	33.000	In.	fy	=	40.000	Ksi
Depth of Member (h)	42.000	In.				

AREA OF STEEL

Bar Size	11		d_C =	4.330	In.
No. Bars	7		d_C' =	2.705	In.
A_S	10.93	Sq. In.	d =	37.670	In.

RESULTS

A	=	2.00 x 4.06 x 2.705	=	21.98		
f_S Allow	=	170.00 / (21.98 x 2.705)^.33	=	43.56	Ksi	36.00 Max
a	=	(10.93 x 40.00) / 0.85 x 4.40 x 33.00	=	3.542	In.	
jd	=	37.670 - 3.54 / 2.00	=	35.90		
f_S Act	=	(503.77 x 12.00) / 10.93 x 35.90	=	15.41	Ksi	
θM_N	=	0.90 x 10.93 x 40.00 x 35.90 / 12	=	1177.14	Ft. Kips	

AASHTO 8.17.1 — Min. Reinforcement — $\phi M_n >$ 1.2Mcr — Mcr = fr Ig/yt

fr	=	$7.5\ (f'c)^{1/2}$			=	0.497 Ksi
Ig	=	$1/12 * b * h^3$ = 203742 $In.^4$	yt = h/2		=	21.00 In.
Mcr	=	0.497 x 203742 / 21.00 / 12			=	402.22 Ft. Kips

AASHTO 8.17.1 — **ϕM_n = 1177.14 > 1.2 Mcr = 482.67 OK**

f_S Act = 15.41 < f_S Allow = 36.00 OK

ϕM_n = 1177.14 > Mu = 805.94 OK

LOCHNER

PROJECT: BONNER BRIDGE - OREGON INLET NORTH CAROLINA
SUBJECT: HIGH LEVEL BENT #142
SUBJECT: BOTTOM OF CAP - BASED ON FIELD DATA, ASSUME 50% COVER LOSS EVERYWHERE

SHEET
JMJ Jul-06
WAB 7/06

CONCRETE DESIGN - CAP

INPUT

Dead Load Moment	203.250	Ft. Kips	Working Stress Mom.		368.370	Ft. Kips
Live Load Moment	165.120	Ft. Kips	Load Factor Mom.		622.701	Ft. Kips
Bar Clearance	3.625	In.	Z For Steel Dist.		170	
Cover	3.000	In.	f'c	=	4.400	Ksi
Width of Member (b)	33.00	In.	fy	=	40.000	Ksi
Depth of Member (h)	42.00	In.				

AREA OF STEEL

Bar Size	11		d_C =	4.330	In.
No. Bars	5		d_C' =	2.705	In.
A_S	7.81	Sq. In.	d =	37.670	In.

RESULTS

A	=	2.00 x 6.09 x 2.705	=	32.97		
f_S Allow	=	170.00 / (32.97 x 2.705)^.33	=	38.06	Ksi	36.00 Max
a	=	(7.81 x 40.00) / 0.85 x 4.40 x 33.00	=	2.530	In.	
jd	=	37.670 - 2.53 / 2.00	=	36.40		
f_S Act	=	(368.37 x 12.00) / 7.81 x 36.40	=	15.55	Ksi	
θM_N	=	0.90 x 7.81 x 40.00 x 36.40 / 12	=	852.67	Ft. Kips	

AASHTO 8.17.1 Min. Reinforcement $\phi M_n >$ 1.2Mcr Mcr = fr Ig/yt

fr	=	$7.5\ (f'c)^{1/2}$		=	0.497	Ksi
Ig	=	$1/12 * b * h^3$ = 203742 $In.^4$	yt = h/2	=	21.00	In.
Mcr	=	0.497 x 203742 / 21.00 / 12		=	402.22	Ft. Kips

AASHTO 8.17.1 **ϕM_n = 852.67 > 1.2 Mcr = 482.67 OK**

f_S Act = 15.55 < f_S Allow = 36.00 OK

ϕM_n = 852.67 > Mu = 622.70 OK

LOCHNER

PROJECT:	BONNER BRIDGE - OREGON INLET NORTH CAROLINA	SHEET	
SUBJECT:	HIGH LEVEL BENT #142	JMJ	Jul-06
	SHEAR - BASED ON FIELD DATA, ASSUME 5-% COVER LOSS EVERYWHERE	WDB	7/06

SHEAR DESIGN - CAP COMPLETE

V_{DL} = 103.92 KIPS V_{LL} = 59.50 KIPS F_V = 40000 PSI

d = 37.67 INCHES b = 33.00 INCHES f'c = 4400 PSI

V@ d DIST. FROM FACE OF SUPPORT Col. Width = D = 3.00 FT

ASSUME FACE OF SUPPORT D/4 = 0.75 FT. FROM CENTER OF COL.

$d_{DIST.}$ = 37.67 / 12.00 + 0.750 = 3.89 FT. W_{DL} CAP= 1.444 KIPS/FT

V_{DL} = $V_{DL} - W_{DL} * d_{DIST}$ = 98.31

V_U = $1.3(V_{DL} + (1.67*V_{LL}))$ = 256.97

$V_U < q\ V_N$ $V_N = V_C + V_S$

$V_U < qV_C + qV_S$

$V_C = 2*(f'c)^{1/2}* b* d$ = 164.92 KIPS

$qV_S = V_U - qV_C$

$V_S = V_U/q - V_C$ = 137.40 KIPS

$V_S = A_V* F_V * d / S$

USE # 5 STIRRUPS A_S= 0.31 SQ. IN.
No. of Bars = 2

$A_V = 2\ x\ A_S$ = 2 * 0.307 = 0.61359232 SQ. IN.

$S = A_V * F_V* d / V_S$ = 6.7 INCHES

$S_{MIN} = A_V * F_V /50 *b$ = 22.31 INCHES

S_{ACT} = 6.00 INCHES **OK**

LOCHNER

		SHEET	
PROJECT:	BONNER BRIDGE - OREGON INLET NORTH CAROLINA	JMJ	Jun-06
SUBJECT:	HIGH LEVEL BENT #142 - TOP STRUT	KBM	Jun-06
SUBJECT:	TOP OF STRUT - BASED ON PLAN DIMENSIONS		

CONCRETE DESIGN - STRUT

INPUT

Dead Load Moment	38.540	Ft. Kips	Working Stress Mom.		67.210	Ft. Kips
Live Load Moment	28.670	Ft. Kips	Load Factor Mom.		112.345	Ft. Kips
Avrg. Bar Clearance	3.625	In.	Z For Steel Dist.		170	
Cover	3.000	In.	f'c	=	3.000	Ksi
Width of Member (b)	30.000	In.	fy	=	40.000	Ksi
Depth of Member (h)	36.000	In.				

AREA OF STEEL

Bar Size	11		d_C =	4.330	In.
No. Bars	5		d_C' =	2.705	In.
A_S	7.81	Sq. In.	d =	31.670	In.

RESULTS

A	=	2.00 x 5.34 x 2.705	=	28.91		
f_S Allow	=	170.00 / (28.91 x 2.705)^.33	=	39.76	Ksi	36.00 Max
a	=	(7.81 x 40.00) / 0.85 x 3.00 x 30.00	=	4.082	In.	
jd	=	31.670 - 4.08 / 2.00	=	29.63		
f_S Act	=	(67.21 x 12.00) / 7.81 x 29.63	=	3.49	Ksi	
θM_N	=	0.90 x 7.81 x 40.00 x 29.63 / 12	=	693.96	Ft. Kips	

AASHTO 8.17.1 Min. Reinforcement $\phi M_n >$ 1.2Mcr Mcr = fr Ig/yt

fr	=	$7.5\ (f'c)^{1/2}$			=	0.411 Ksi
Ig	=	$1/12 * b * h^3$ = 116640 $In.^4$	yt = h/2		=	18.00 In.
Mcr	=	0.411 x 116640 / 18.00 / 12			=	221.83 Ft. Kips

AASHTO 8.17.1 **ϕM_n = 693.96 > 1.2 Mcr = 266.19 OK**

f_S Act = 3.49 < f_S Allow = 36.00 OK

ϕM_n = 693.96 > Mu = 112.34 OK

LOCHNER

		SHEET	
PROJECT:	BONNER BRIDGE - OREGON INLET NORTH CAROLINA	JMJ	Jun-06
SUBJECT:	HIGH LEVEL BENT #142 - TOP STRUT	KBM	Jun-06
SUBJECT:	BOTTOM OF STRUT - BASED ON PLAN DIMENSIONS		

CONCRETE DESIGN - STRUT

INPUT

Dead Load Moment	21.610	Ft. Kips	Working Stress Mom.		27.840	Ft. Kips
Live Load Moment	6.230	Ft. Kips	Load Factor Mom.		41.618	Ft. Kips
Bar Clearance	3.625	In.	Z For Steel Dist.		170	
Cover	3.000	In.	f'c	=	3.000	Ksi
Width of Member (b)	30.00	In.	fy	=	40.000	Ksi
Depth of Member (h)	36.00	In.				

AREA OF STEEL

Bar Size	11		d_C =	4.330	In.
No. Bars	5		d_C' =	2.705	In.
A_S	7.81	Sq. In.	d =	31.670	In.

RESULTS

A	=	2.00 x 5.34 x 2.705	=	28.91		
f_S Allow	=	170.00 / (28.91 x 2.705)^.33	=	39.76	Ksi	36.00 Max
a	=	(7.81 x 40.00) / 0.85 x 3.00 x 30.00	=	4.082	In.	
jd	=	31.670 - 4.08 / 2.00	=	29.63		
f_S Act	=	(27.84 x 12.00) / 7.81 x 29.63	=	1.44	Ksi	
θM_N	=	0.90 x 7.81 x 40.00 x 29.63 / 12	=	693.96	Ft. Kips	

AASHTO 8.17.1 Min. Reinforcement $\phi M_n >$ 1.2Mcr Mcr = fr Ig/yt

fr	=	$7.5 (f'c)^{1/2}$		=	0.411	Ksi
Ig	=	$1/12 * b * h^3$ = 116640 $In.^4$	yt = h/2	=	18.00	In.
Mcr	=	0.411 x 116640 / 18.00 / 12		=	221.83	Ft. Kips

AASHTO 8.17.1 **ϕM_n = 693.96 > 1.2 Mcr = 266.19 OK**

f_S Act = 1.44 < f_S Allow = 36.00 OK

ϕM_n = 693.96 > Mu = 41.62 OK

LOCHNER

PROJECT:	BONNER BRIDGE - OREGON INLET NORTH CAROLINA	SHEET	
SUBJECT:	HIGH LEVEL BENT #142 - TOP STRUT	JMJ	Jun-06
	SHEAR - BASED ON PLAN DIMENSIONS	KBM	Jun-06

SHEAR DESIGN - STRUT COMPLETE

V_{DL} = 11.63 KIPS V_{LL} = 2.29 KIPS F_V = 40000 PSI

d = 31.67 INCHES b = 30.00 INCHES f'c = 3000 PSI

V@ d DIST. FROM FACE OF SUPPORT Col. Width = D = 3.00 FT

ASSUME FACE OF SUPPORT D/4 = 0.75 FT. FROM CENTER OF COL.

$d_{DIST.}$ = 31.67 / 12.00 + 0.750 = 3.39 FT. W_{DL} CAP= 1.125 KIPS/FT

V_{DL} = $V_{DL} - W_{DL} * d_{DIST}$ = 7.82

V_U = $1.3(V_{DL} + (1.67*V_{LL}))$ = 15.13

$V_U < q\,V_N$ $V_N = V_C + V_S$

$V_U < qV_C + qV_S$

V_C = 2*(f'c)^1/2* b* d = 104.08 KIPS

$qV_S = V_U - qV_C$

$V_S = V_U/q - V_C$ = -86.27 KIPS

$V_S = A_V * F_V * d / S$

USE # 5 STIRRUPS A_S= 0.31 SQ. IN.

No. of Bars = 2

$A_V = 2 \times A_S$ = 2 * 0.307 = 0.61359232 SQ. IN.

$S = A_V * F_V * d / V_S$ = -9.0 INCHES

$S_{MIN} = A_V * F_V / 50 * b$ = 24.54 INCHES

S_{ACT} = 14.00 INCHES **OK**

LOCHNER

PROJECT: BONNER BRIDGE - OREGON INLET NORTH CAROLINA
SUBJECT: HIGH LEVEL BENT #142 - TOP STRUT
SUBJECT: TOP OF STRUT - BASED ON FIELD DATA, ASSUME 50% COVER LOSS EVERYWHERE

SHEET
JMJ Jun-06
WDB 7/06

CONCRETE DESIGN - STRUT

INPUT

Dead Load Moment	38.540	Ft. Kips	Working Stress Mom.		67.210	Ft. Kips
Live Load Moment	28.670	Ft. Kips	Load Factor Mom.		112.345	Ft. Kips
Avrg. Bar Clearance	3.625	In.	Z For Steel Dist.		170	
Cover	3.000	In.	f'c	=	4.400	Ksi
Width of Member (b)	27.000	In.	fy	=	40.000	Ksi
Depth of Member (h)	36.000	In.				

AREA OF STEEL

Bar Size	11		d_C =	4.330	In.
No. Bars	5		d_C' =	2.705	In.
A_S	7.81	Sq. In.	d =	31.670	In.

RESULTS

A	=	2.00 x 4.59 x 2.705	=	24.85	
f_S Allow	=	170.00 / (24.85 x 2.705)^.33	=	41.82 Ksi	36.00 Max
a	=	(7.81 x 40.00) / 0.85 x 4.40 x 27.00	=	3.093 In.	
jd	=	31.670 - 3.09 / 2.00	=	30.12	
f_S Act	=	(67.21 x 12.00) / 7.81 x 30.12	=	3.43 Ksi	
θM_N	=	0.90 x 7.81 x 40.00 x 30.12 / 12	=	705.55 Ft. Kips	

AASHTO 8.17.1 Min. Reinforcement $\phi M_n >$ 1.2Mcr Mcr = fr Ig/yt

fr	=	$7.5\ (f'c)^{1/2}$			=	0.497 Ksi
Ig	=	$1/12 * b * h^3$ = 104976 $In.^4$	yt = h/2		=	18.00 In.
Mcr	=	0.497 x 104976 / 18.00 / 12			=	241.78 Ft. Kips

AASHTO 8.17.1 **ϕM_n = 705.55 > 1.2 Mcr = 290.14 OK**

f_S Act = 3.43 < f_S Allow = 36.00 OK

ϕM_n = 705.55 > Mu = 112.34 OK

LOCHNER

SHEET

PROJECT: BONNER BRIDGE - OREGON INLET NORTH CAROLINA — JMJ Jun-06

SUBJECT: HIGH LEVEL BENT #142 - TOP STRUT — WDB 7/06

SUBJECT: BOTTOM OF STRUT - BASED ON FIELD DATA, ASSUME 50% COVER LOSS EVERYWHERE

CONCRETE DESIGN - STRUT

INPUT

Dead Load Moment	21.610	Ft. Kips	Working Stress Mom.		27.840	Ft. Kips
Live Load Moment	6.230	Ft. Kips	Load Factor Mom.		41.618	Ft. Kips
Bar Clearance	3.625	In.	Z For Steel Dist.		170	
Cover	3.000	In.	f'c	=	4.400	Ksi
Width of Member (b)	27.00	In.	fy	=	40.000	Ksi
Depth of Member (h)	36.00	In.				

AREA OF STEEL

Bar Size	11		d_C =	4.330	In.
No. Bars	5		d_C' =	2.705	In.
A_S	7.81	Sq. In.	d =	31.670	In.

RESULTS

A	=	2.00 x 4.59 x 2.705	=	24.85		
f_S Allow	=	170.00 / (24.85 x 2.705)^.33	=	41.82	Ksi	36.00 Max
a	=	(7.81 x 40.00) / 0.85 x 4.40 x 27.00	=	3.093	In.	
jd	=	31.670 - 3.09 / 2.00	=	30.12		
f_S Act	=	(27.84 x 12.00) / 7.81 x 30.12	=	1.42	Ksi	
θM_N	=	0.90 x 7.81 x 40.00 x 30.12 / 12	=	705.55	Ft. Kips	

AASHTO 8.17.1 — Min. Reinforcement — $\phi M_n >$ 1.2Mcr — Mcr = fr Ig/yt

fr	=	$7.5\,(f'c)^{1/2}$		=	0.497	Ksi
Ig	=	$1/12 * b * h^3$ = 104976 $In.^4$	yt = h/2	=	18.00	In.
Mcr	=	0.497 x 104976 / 18.00 / 12		=	241.78	Ft. Kips

AASHTO 8.17.1 — **ϕM_n = 705.55 > 1.2 Mcr = 290.14 OK**

f_S Act = 1.42 < f_S Allow = 36.00 OK

ϕM_n = 705.55 > Mu = 41.62 OK

LOCHNER

PROJECT:	BONNER BRIDGE - OREGON INLET NORTH CAROLINA	SHEET JMJ	Jun-06
SUBJECT:	HIGH LEVEL BENT #142 - TOP STRUT	WDB	7/06
	SHEAR - BASED ON FIELD DATA, ASSUME 50% COVER LOSS EVERYWHERE		

SHEAR DESIGN - STRUT COMPLETE

V_{DL} = 11.63 KIPS V_{LL} = 2.29 KIPS F_V = 40000 PSI

d = 31.67 INCHES b = 27.00 INCHES f'c = 4400 PSI

V@ d DIST. FROM FACE OF SUPPORT Col. Width = D = 3.00 FT

ASSUME FACE OF SUPPORT D/4 = 0.75 FT. FROM CENTER OF COL.

$d_{DIST.}$ = 31.67 / 12.00 + 0.750 = 3.39 FT. W_{DL} CAP= 1.013 KIPS/FT

V_{DL} = V_{DL} - W_{DL} * d_{DIST} = 8.20

V_U = 1.3(V_{DL} +(1.67*V_{LL})) = 15.63

$V_U < q\ V_N$ $V_N = V_C + V_S$

$V_U < qV_C + qV_S$

V_C = 2*(f'c)^1/2* b* d = 113.44 KIPS

$qV_S = V_U - qV_C$

$V_S = V_U/q - V_C$ = -95.05 KIPS

$V_S = A_V * F_V * d / S$

USE # 5 STIRRUPS A_S= 0.31 SQ. IN.
No. of Bars = 2

$A_V = 2 \times A_S$ = 2 * 0.307 = 0.61359232 SQ. IN.

$S = A_V * F_V * d / V_S$ = -8.2 INCHES

$S_{MIN} = A_V * F_V /50 * b$ = 27.27 INCHES

S_{ACT} = 14.00 INCHES **OK**

LOCHNER

PROJECT: BONNER BRIDGE - OREGON INLET NORTH CAROLINA
SUBJECT: HIGH LEVEL BENT #142 - BOTTOM STRUT
SUBJECT: TOP OF STRUT - BASED ON PLAN DIMENSIONS

SHEET
JMJ Jun-06
KBM Jun-06

CONCRETE DESIGN - STRUT

INPUT

Dead Load Moment	44.580	Ft. Kips	Working Stress Mom.		67.950	Ft. Kips
Live Load Moment	23.370	Ft. Kips	Load Factor Mom.		108.690	Ft. Kips
Avrg. Bar Clearance	3.625	In.	Z For Steel Dist.		170	
Cover	3.000	In.	f'c	=	3.000	Ksi
Width of Member (b)	30.000	In.	fy	=	40.000	Ksi
Depth of Member (h)	36.000	In.				

AREA OF STEEL

Bar Size	11		d_C =	4.330	In.
No. Bars	5		d_C' =	2.705	In.
A_S	7.81	Sq. In.	d =	31.670	In.

RESULTS

A	=	2.00 x 5.34 x 2.705	=	28.91		
f_S Allow	=	170.00 / (28.91 x 2.705)^.33	=	39.76	Ksi	36.00 Max
a	=	(7.81 x 40.00) / 0.85 x 3.00 x 30.00	=	4.082	In.	
jd	=	31.670 - 4.08 / 2.00	=	29.63		
f_S Act	=	(67.95 x 12.00) / 7.81 x 29.63	=	3.52	Ksi	
θM_N	=	0.90 x 7.81 x 40.00 x 29.63 / 12	=	693.96	Ft. Kips	

AASHTO 8.17.1 Min. Reinforcement $\phi M_n >$ 1.2Mcr Mcr = fr Ig/yt

fr	=	$7.5 (f'c)^{1/2}$		=	0.411	Ksi
Ig	=	$1/12 * b * h^3$ = 116640 $In.^4$	yt = h/2	=	18.00	In.
Mcr	=	0.411 x 116640 / 18.00 / 12		=	221.83	Ft. Kips

AASHTO 8.17.1 **ϕM_n = 693.96 > 1.2 Mcr = 266.19 OK**

f_S Act = 3.52 < f_S Allow = 36.00 OK

ϕM_n = 693.96 > Mu = 108.69 OK

LOCHNER

		SHEET	
PROJECT:	BONNER BRIDGE - OREGON INLET NORTH CAROLINA	JMJ	Jun-06
SUBJECT:	HIGH LEVEL BENT #142 - BOTTOM STRUT	KBM	Jun-06
SUBJECT:	BOTTOM OF STRUT - BASED ON PLAN DIMENSIONS		

CONCRETE DESIGN - STRUT

INPUT

Dead Load Moment	28.950	Ft. Kips	Working Stress Mom.		30.100	Ft. Kips
Live Load Moment	1.150	Ft. Kips	Load Factor Mom.		40.132	Ft. Kips
Bar Clearance	3.625	In.	Z For Steel Dist.		170	
Cover	3.000	In.	f'c	=	3.000	Ksi
Width of Member (b)	30.00	In.	fy	=	40.000	Ksi
Depth of Member (h)	36.00	In.				

AREA OF STEEL

Bar Size	11		d_C =	4.330	In.
No. Bars	5		d_C' =	2.705	In.
A_S	7.81	Sq. In.	d =	31.670	In.

RESULTS

A	=	2.00 x 5.34 x 2.705	=	28.91		
f_S Allow	=	170.00 / (28.91 x 2.705)^.33	=	39.76	Ksi	36.00 Max
a	=	(7.81 x 40.00) / 0.85 x 3.00 x 30.00	=	4.082	In.	
jd	=	31.670 - 4.08 / 2.00	=	29.63		
f_S Act	=	(30.10 x 12.00) / 7.81 x 29.63	=	1.56	Ksi	
θM_N	=	0.90 x 7.81 x 40.00 x 29.63 / 12	=	693.96	Ft. Kips	

AASHTO 8.17.1 Min. Reinforcement $\phi M_n >$ 1.2Mcr Mcr = fr Ig/yt

fr	=	$7.5 (f'c)^{1/2}$		=	0.411	Ksi
Ig	=	$1/12 * b * h^3$ = 116640 $In.^4$	yt = h/2	=	18.00	In.
Mcr	=	0.411 x 116640 / 18.00 / 12		=	221.83	Ft. Kips

AASHTO 8.17.1 **ϕM_n = 693.96 > 1.2 Mcr = 266.19 OK**

f_S Act = 1.56 < f_S Allow = 36.00 OK

ϕM_n = 693.96 > Mu = 40.13 OK

SHEAR DESIGN - STRUT COMPLETE

V_{DL} = 12.86 KIPS V_{LL} = 1.96 KIPS F_V = 40000 PSI

d = 31.67 INCHES b = 30.00 INCHES f'c = 3000 PSI

V@ d DIST. FROM FACE OF SUPPORT Col. Width = D = 3.00 FT

ASSUME FACE OF SUPPORT D/4 = 0.75 FT. FROM CENTER OF COL.

$d_{DIST.}$ = 31.67 / 12.00 + 0.750 = 3.39 FT. W_{DL} CAP= 1.125 KIPS/FT

V_{DL} = $V_{DL} - W_{DL} * d_{DIST}$ = 9.05

V_U = $1.3(V_{DL} + (1.67*V_{LL}))$ = 16.02

$V_U < q\ V_N$ $V_N = V_C + V_S$

$V_U < qV_C + qV_S$

$V_C = 2*(f'c)^{1/2}* b* d$ = 104.08 KIPS

$qV_S = V_U - qV_C$

$V_S = V_U/q - V_C$ = -85.24 KIPS

$V_S = A_V * F_V * d / S$

USE # 5 STIRRUPS A_S= 0.31 SQ. IN.

No. of Bars = 2

$A_V = 2 \times A_S$ = 2 * 0.307 = 0.61359232 SQ. IN.

$S = A_V * F_V * d / V_S$ = -9.1 INCHES

$S_{MIN} = A_V * F_V /50 *b$ = 24.54 INCHES

S_{ACT} = 14.00 INCHES **OK**

LOCHNER

SHEET

PROJECT: BONNER BRIDGE - OREGON INLET NORTH CAROLINA — JMJ Jun-06

SUBJECT: HIGH LEVEL BENT #142 - BOTTOM STRUT — WDB 7/06

SUBJECT: TOP OF STRUT - BASED ON FIELD DATA, ASSUME 50% COVER LOSS EVERYWHERE

CONCRETE DESIGN - STRUT

INPUT

Dead Load Moment	44.580	Ft. Kips	Working Stress Mom.		67.950	Ft. Kips
Live Load Moment	23.370	Ft. Kips	Load Factor Mom.		108.690	Ft. Kips
Avrg. Bar Clearance	3.625	In.	Z For Steel Dist.		170	
Cover	3.000	In.	f'c	=	4.400	Ksi
Width of Member (b)	27.000	In.	fy	=	40.000	Ksi
Depth of Member (h)	36.000	In.				

AREA OF STEEL

Bar Size	11		d_C =	4.330	In.
No. Bars	5		d_C' =	2.705	In.
A_S	7.81	Sq. In.	d =	31.670	In.

RESULTS

A	=	2.00 x 4.59 x 2.705	=	24.85	
f_S Allow	=	170.00 / (24.85 x 2.705)^.33	=	41.82 Ksi	36.00 Max
a	=	(7.81 x 40.00) / 0.85 x 4.40 x 27.00	=	3.093 In.	
jd	=	31.670 - 3.09 / 2.00	=	30.12	
f_S Act	=	(67.95 x 12.00) / 7.81 x 30.12	=	3.47 Ksi	
θM_N	=	0.90 x 7.81 x 40.00 x 30.12 / 12	=	705.55 Ft. Kips	

AASHTO 8.17.1 — Min. Reinforcement — $\phi M_n >$ 1.2Mcr — Mcr = fr Ig/yt

fr	=	$7.5 (f'c)^{1/2}$			=	0.497 Ksi
Ig	=	$1/12 * b * h^3$ = 104976 $In.^4$	yt = h/2		=	18.00 In.
Mcr	=	0.497 x 104976 / 18.00 / 12			=	241.78 Ft. Kips

AASHTO 8.17.1 — **ϕM_n = 705.55 > 1.2 Mcr = 290.14 OK**

f_S Act = 3.47 < f_S Allow = 36.00 OK

ϕM_n = 705.55 > Mu = 108.69 OK

LOCHNER

SHEET

PROJECT: BONNER BRIDGE - OREGON INLET NORTH CAROLINA — JMJ Jun-06

SUBJECT: HIGH LEVEL BENT #142 - BOTTOM STRUT — NDB 7/06

SUBJECT: BOTTOM OF STRUT - BASED ON FIELD DATA, ASSUME 50% COVER LOSS EVERYWHERE

CONCRETE DESIGN - STRUT

INPUT

Dead Load Moment	28.950	Ft. Kips	Working Stress Mom.		30.100	Ft. Kips
Live Load Moment	1.150	Ft. Kips	Load Factor Mom.		40.132	Ft. Kips
Bar Clearance	3.625	In.	Z For Steel Dist.		170	
Cover	3.000	In.	f'c	=	4.400	Ksi
Width of Member (b)	27.00	In.	fy	=	40.000	Ksi
Depth of Member (h)	36.00	In.				

AREA OF STEEL

Bar Size	11		d_C =	4.330	In.
No. Bars	5		d_C' =	2.705	In.
A_S	7.81	Sq. In.	d =	31.670	In.

RESULTS

A	=	2.00 x 4.59 x 2.705	=	24.85	
f_S Allow	=	170.00 / (24.85 x 2.705)^.33	=	41.82	Ksi 36.00 Max
a	=	(7.81 x 40.00) / 0.85 x 4.40 x 27.00	=	3.093	In.
jd	=	31.670 - 3.09 / 2.00	=	30.12	
f_S Act	=	(30.10 x 12.00) / 7.81 x 30.12	=	1.54	Ksi
θM_N	=	0.90 x 7.81 x 40.00 x 30.12 / 12	=	705.55	Ft. Kips

AASHTO 8.17.1 Min. Reinforcement $\phi M_n >$ 1.2Mcr Mcr = fr Ig/yt

fr	=	$7.5 (f'c)^{1/2}$			=	0.497 Ksi
Ig	=	$1/12 * b * h^3$ = 104976 $In.^4$	yt = h/2		=	18.00 In.
Mcr	=	0.497 x 104976 / 18.00 / 12			=	241.78 Ft. Kips

AASHTO 8.17.1 **ϕM_n = 705.55 > 1.2 Mcr = 290.14 OK**

f_S Act = 1.54 < f_S Allow = 36.00 OK

ϕM_n = 705.55 > Mu = 40.13 OK

LOCHNER

PROJECT:	BONNER BRIDGE - OREGON INLET NORTH CAROLINA	SHEET	
SUBJECT:	HIGH LEVEL BENT #142 - BOTTOM STRUT	JMJ	Jun-06
	SHEAR - BASED ON FIELD DATA, ASSUME 50% COVER LOSS EVERYWHERE	WDB	7/06

SHEAR DESIGN - STRUT COMPLETE

V_{DL} = 12.86 KIPS V_{LL} = 1.96 KIPS F_V = 40000 PSI

d = 31.67 INCHES b = 27.00 INCHES f'c = 4400 PSI

V@ d DIST. FROM FACE OF SUPPORT Col. Width = D = 3.00 FT

ASSUME FACE OF SUPPORT D/4 = 0.75 FT. FROM CENTER OF COL.

$d_{DIST.}$ = 31.67 / 12.00 + 0.750 = 3.39 FT. W_{DL} CAP= 1.013 KIPS/FT

V_{DL} = V_{DL} - W_{DL} * d_{DIST} = 9.43

V_U = 1.3(V_{DL} +(1.67*V_{LL})) = 16.51

$V_U < q\ V_N$ $V_N = V_C + V_S$

$V_U < qV_C + qV_S$

V_C = 2*(f'c)^1/2* b* d = 113.44 KIPS

$qV_S = V_U - qV_C$

$V_S = V_U/q - V_C$ = -94.01 KIPS

$V_S = A_V * F_V * d / S$

USE # 5 STIRRUPS A_S= 0.31 SQ. IN.
No. of Bars = 2

$A_V = 2 \times A_S$ = 2 * 0.307 = 0.61359232 SQ. IN.

$S = A_V * F_V * d / V_S$ = -8.3 INCHES

$S_{MIN} = A_V * F_V /50 * b$ = 27.27 INCHES

S_{ACT} = 14.00 INCHES **OK**

H. W. LOCHNER, INC.

PROJECT: BONNER BRIDGE - OREGON INLET NORTH CAROLINA
SUBJECT: HIGH LEVEL BENT ANALYSIS
HLB 142 MEM. 13 JT. FOOTING

JMJ Jul-06
WDB 7/06

FOOTING LOADS

PMIN

HLB 142 MEMBER 13 JOINT FOOTING

GROUP 1

	P	MY	MZ
DL	356.21	0.00	20.43
LL	41.38	0.00	-8.06
GROUP 1	0.00	0.00	0.00
SERVICE	397.59	0.00	12.37
STRENGTH	552.73	0.00	9.10

GROUP 2

	P	MY	MZ
DL	356.21	0.00	20.43
LL	0.00	0.00	0.00
GROUP 2	40.07	983.49	-79.79
SERVICE	396.28	983.49	-59.36
STRENGTH	515.16	1278.54	-77.17

GROUP 3

	P	MY	MZ
DL	356.21	0.00	20.43
LL	41.38	0.00	-8.06
GROUP 3	17.10	571.04	-31.50
SERVICE	414.69	571.04	-19.13
STRENGTH	539.10	742.35	-24.87

GROUP 4

	P	MY	MZ
DL	356.21	0.00	20.43
LL	41.38	0.00	-8.06
GROUP 4	-38.82	0.00	851.50
SERVICE	358.77	0.00	863.87
STRENGTH	466.40	0.00	1123.03

GROUP 5

	P	MY	MZ
DL	356.21	0.00	20.43
LL	0.00	0.00	0.00
GROUP 5	1.25	983.49	771.71
SERVICE	357.46	983.49	792.14
STRENGTH	446.83	1229.36	990.18

GROUP 6

	P	MY	MZ
DL	356.21	0.00	20.43
LL	41.38	0.00	-8.06
GROUP 6	-21.73	571.04	820.00
SERVICE	375.86	571.04	832.37
STRENGTH	469.83	713.80	1040.46

H. W. LOCHNER, INC.

PROJECT: BONNER BRIDGE - OREGON INLET NORTH CAROLINA JMJ Jul-06
SUBJECT: HIGH LEVEL BENT ANALYSIS
HLB 142 MEM. 14 JT. FOOTING WDB 7/06

FOOTING LOADS

PMAX

HLB 142 MEMBER 14 JOINT FOOTING

GROUP 1

	P	MY	MZ
DL	356.14	0.00	21.29
LL	80.83	0.00	8.33
GROUP 1	0.00	0.00	0.00
SERVICE	436.97	0.00	29.62
STRENGTH	638.11	0.00	45.73

GROUP 2

	P	MY	MZ
DL	356.14	0.00	21.29
LL	0.00	0.00	0.00
GROUP 2	-40.10	-983.68	79.73
SERVICE	316.04	-983.68	101.02
STRENGTH	410.85	-1278.78	131.33

GROUP 3

	P	MY	MZ
DL	356.14	0.00	21.29
LL	80.83	0.00	8.33
GROUP 3	-17.11	-571.14	31.48
SERVICE	419.86	-571.14	61.10
STRENGTH	545.82	-742.48	79.43

GROUP 4

	P	MY	MZ
DL	356.14	0.00	21.29
LL	80.83	0.00	8.33
GROUP 4	-40.19	0.00	851.09
SERVICE	396.78	0.00	880.71
STRENGTH	515.81	0.00	1144.92

GROUP 5

	P	MY	MZ
DL	356.14	0.00	21.29
LL	0.00	0.00	0.00
GROUP 5	-80.29	-983.69	930.82
SERVICE	275.85	-983.69	952.11
STRENGTH	344.81	-1229.61	1190.14

GROUP 6

	P	MY	MZ
DL	356.14	0.00	21.29
LL	80.83	0.00	8.33
GROUP 6	-57.30	-571.14	882.56
SERVICE	379.67	-571.14	912.18
STRENGTH	474.59	-713.93	1140.23

H. W. Lochner, Inc. PHONE: 859-224-4476
1040 Monarch St. Suite 300 Lexington, KY 40513
SHEET 1 OF 9
JOB NO. HLB#142
PROGRAM: RC-PIER® v4.1.0 LEAP Software Inc., Tampa, Florida
BY JMJ DATE Jun/15/2006
PHONE : TOLL-FREE 1-800-451-5327 TAMPA AREA: 813-985-9170
CKD. DATE

PROJECT: BONNER BRIDGE - OREGON INLET NORTH CAROLINA

PROJECT DATA
==========

Project : BONNER BRIDGE - OREGON INLET NORTH CAROLINA
User Job No.: HLB#142
State : North Carolina State Job No. :
Code : AASHTO STANDARD (17th Edition 2002)
Comments : Bonner Bridge HLB #142 - Load Groups 1-3 (For Ease of Checking) - Per Pla
n Dimensions

JMJ 7/06
WDB 7/06

H. W. Lochner, Inc. PHONE: 859-224-4476
1040 Monarch St. Suite 300 Lexington, KY 40513

JOB NO. HLB#142
PROGRAM: RC-PIER® v4.1.0 LEAP Software Inc., Tampa, Florida
BY JMJ DATE Jun/15/2006
PHONE : TOLL-FREE 1-800-451-5327 TAMPA AREA: 813-985-9170
CKD. DATE

PROJECT: BONNER BRIDGE - OREGON INLET NORTH CAROLINA

LOADS
=====

Load Cases: 3

Loadcase ID: (L+In)1 Name: Group 1 Loadings
Multiplier = 1.000

Cap loads:

Type	Dir	Arm ft	Mag1 kip,kip/ft, kft	x1/L	Mag2 kip,kip/ft, kft	x2/L
Force	Y	0.00	-552.73	0.00	----	----
Force	Y	0.00	-638.11	1.00	----	----
Moment	Z	----	9.10	0.00	----	----
Moment	Z	----	45.73	1.00	----	----

Loadcase ID: (L+Ip)1 Name: Group 2 Loadings
Multiplier = 1.000

Cap loads:

Type	Dir	Arm ft	Mag1 kip,kip/ft, kft	x1/L	Mag2 kip,kip/ft, kft	x2/L
Force	Y	0.00	-515.16	0.00	----	----
Force	Y	0.00	-410.85	1.00	----	----
Moment	X	----	-1278.78	1.00	----	----
Moment	X	----	1278.54	0.00	----	----
Moment	Z	----	-77.17	0.00	----	----
Moment	Z	----	131.33	1.00	----	----

Loadcase ID: W1 Name: Group 3 Loadings
Multiplier = 1.000

Cap loads:

Type	Dir	Arm ft	Mag1 kip,kip/ft, kft	x1/L	Mag2 kip,kip/ft, kft	x2/L
Force	Y	0.00	-539.10	0.00	----	----
Force	Y	0.00	-545.82	1.00	----	----
Moment	X	----	-742.48	1.00	----	----
Moment	X	----	742.35	0.00	----	----
Moment	Z	----	-24.87	0.00	----	----
Moment	Z	----	79.43	1.00	----	----

Selected load groups:

SERVICE GROUP I
SERVICE GROUP IB
SERVICE GROUP II

H. W. Lochner, Inc. PHONE: 859-224-4476
1040 Monarch St. Suite 300 Lexington, KY 40513
SHEET 3 OF 9
JOB NO. HLB#142
PROGRAM: RC-PIER® v4.1.0 LEAP Software Inc., Tampa, Florida
BY JMJ DATE Jun/15/2006
PHONE : TOLL-FREE 1-800-451-5327 TAMPA AREA: 813-985-9170
CKD. DATE

PROJECT: BONNER BRIDGE - OREGON INLET NORTH CAROLINA

COMBINED FOOTING DESIGN

Code: AASHTO STANDARD (17th Edition 2002) - Service Load Design
Units: US

Geometry:
=========
Name : 1
Shape : Rectangular, Type : Pile/Shaft Cap

Bf(X) = 35.00 ft, Hf(Z) = 13.50 ft, Thickness(Y) = 51.00 in

Footing concentric.
Columns located on the footing:
Column No. 1 at x = 0.00 ft, Rectangular 36.00 in x 71.00 in
Column No. 2 at x = 25.50 ft, Rectangular 36.00 in x 71.00 in

Ag = 472.50 ft^2, Ix = 225.63 ft^2, Iz = 1825.50 ft^2

Surcharge = 0.00 ksf

Piles: Circular Size: 22.00 in Capacity: 100.00 kips

Design Parameters:
==========
f'c = 3000.00 psi fy = 40000.00 psi
Ec = 3320.6 ksi Es = 29000.0 ksi
Crack control factor z = 130.00 kips/in
Concrete Type : Normal Weight.

Pile Reactions, Service (Without the reduction of overstress allowance):
==========

Pile	Loc(X) ft	X in	Z in	Column Loads col#	comb	Ovs	P, kips	Mxx, kft	Mzz, kft	Pile Reac. kips
1	-2.80	24.0	57.0	1	2	1.000	-515.15	1278.04	-82.20	93.13
				2	2	1.000	-410.86	-1278.28	131.39	
				1	4	1.250	539.10	-742.06	30.22	-51.47
				2	4	1.250	545.82	742.19	-79.45	
2	4.70	114.0	57.0	1	1	1.000	-552.73	0.00	3.56	94.66
				2	1	1.000	-638.11	0.00	45.72	
				1	4	1.250	539.10	-742.06	30.22	-51.85
				2	4	1.250	545.82	742.19	-79.45	
3	12.70	210.0	57.0	1	1	1.000	-552.73	0.00	3.56	99.47
				2	1	1.000	-638.11	0.00	45.72	
				1	4	1.250	539.10	-742.06	30.22	-52.24
				2	4	1.250	545.82	742.19	-79.45	
4	20.70	306.0	57.0	1	1	1.000	-552.73	0.00	3.56	104.29*
				2	1	1.000	-638.11	0.00	45.72	
				1	4	1.250	539.10	-742.06	30.22	-52.64
				2	4	1.250	545.82	742.19	-79.45	
5	28.20	396.0	57.0	1	1	1.000	-552.73	0.00	3.56	108.80*
				2	1	1.000	-638.11	0.00	45.72	
				1	4	1.250	539.10	-742.06	30.22	-53.01
				2	4	1.250	545.82	742.19	-79.45	
6	-2.80	24.0	0.0	1	2	1.000	-515.15	1278.04	-82.20	93.13
				2	2	1.000	-410.86	-1278.28	131.39	
				1	4	1.250	539.10	-742.06	30.22	-51.48

PROJECT: BONNER BRIDGE - OREGON INLET NORTH CAROLINA

				2	4	1.250	545.82	742.19	-79.45	
7	4.70	114.0	0.0	1	1	1.000	-552.73	0.00	3.56	94.66
				2	1	1.000	-638.11	0.00	45.72	
				1	4	1.250	539.10	-742.06	30.22	-51.85
				2	4	1.250	545.82	742.19	-79.45	
8	12.70	210.0	0.0	1	1	1.000	-552.73	0.00	3.56	99.47
				2	1	1.000	-638.11	0.00	45.72	
				1	4	1.250	539.10	-742.06	30.22	-52.25
				2	4	1.250	545.82	742.19	-79.45	
9	20.70	306.0	0.0	1	1	1.000	-552.73	0.00	3.56	104.29*
				2	1	1.000	-638.11	0.00	45.72	
				1	4	1.250	539.10	-742.06	30.22	-52.64
				2	4	1.250	545.82	742.19	-79.45	
10	28.20	396.0	0.0	1	1	1.000	-552.73	0.00	3.56	108.80*
				2	1	1.000	-638.11	0.00	45.72	
				1	4	1.250	539.10	-742.06	30.22	-53.02
				2	4	1.250	545.82	742.19	-79.45	
11	-2.80	24.0	-57.0	1	2	1.000	-515.15	1278.04	-82.20	93.14
				2	2	1.000	-410.86	-1278.28	131.39	
				1	4	1.250	539.10	-742.06	30.22	-51.48
				2	4	1.250	545.82	742.19	-79.45	
12	4.70	114.0	-57.0	1	1	1.000	-552.73	0.00	3.56	94.66
				2	1	1.000	-638.11	0.00	45.72	
				1	4	1.250	539.10	-742.06	30.22	-51.85
				2	4	1.250	545.82	742.19	-79.45	
13	12.70	210.0	-57.0	1	1	1.000	-552.73	0.00	3.56	99.47
				2	1	1.000	-638.11	0.00	45.72	
				1	4	1.250	539.10	-742.06	30.22	-52.25
				2	4	1.250	545.82	742.19	-79.45	
14	20.70	306.0	-57.0	1	1	1.000	-552.73	0.00	3.56	104.29*
				2	1	1.000	-638.11	0.00	45.72	
				1	4	1.250	539.10	-742.06	30.22	-52.65
				2	4	1.250	545.82	742.19	-79.45	
15	28.20	396.0	-57.0	1	1	1.000	-552.73	0.00	3.56	108.80*
				2	1	1.000	-638.11	0.00	45.72	
				1	4	1.250	539.10	-742.06	30.22	-53.02
				2	4	1.250	545.82	742.19	-79.45	

Pile Reactions, Service (After the reduction of overstress allowance):

Pile	Loc(X) ft	X in	Z in	Column Loads col#	comb	Ovs	P, kips	Mxx, kft	Mzz, kft	Pile Reac. kips
1	-2.80	24.0	57.0	1	2	1.000	-515.15	1278.04	-82.20	93.13
				2	2	1.000	-410.86	-1278.28	131.39	
				1	4	1.250	539.10	-742.06	30.22	-41.18
				2	4	1.250	545.82	742.19	-79.45	
2	4.70	114.0	57.0	1	1	1.000	-552.73	0.00	3.56	94.66
				2	1	1.000	-638.11	0.00	45.72	
				1	4	1.250	539.10	-742.06	30.22	-41.48
				2	4	1.250	545.82	742.19	-79.45	
3	12.70	210.0	57.0	1	1	1.000	-552.73	0.00	3.56	99.47
				2	1	1.000	-638.11	0.00	45.72	
				1	4	1.250	539.10	-742.06	30.22	-41.80
				2	4	1.250	545.82	742.19	-79.45	
4	20.70	306.0	57.0	1	1	1.000	-552.73	0.00	3.56	104.29*
				2	1	1.000	-638.11	0.00	45.72	
				1	4	1.250	539.10	-742.06	30.22	-42.11

PROJECT: BONNER BRIDGE - OREGON INLET NORTH CAROLINA

				2	4	1.250	545.82	742.19	-79.45	
5	28.20	396.0	57.0	1	1	1.000	-552.73	0.00	3.56	108.80*
				2	1	1.000	-638.11	0.00	45.72	
				1	4	1.250	539.10	-742.06	30.22	-42.41
				2	4	1.250	545.82	742.19	-79.45	
6	-2.80	24.0	0.0	1	2	1.000	-515.15	1278.04	-82.20	93.13
				2	2	1.000	-410.86	-1278.28	131.39	
				1	4	1.250	539.10	-742.06	30.22	-41.18
				2	4	1.250	545.82	742.19	-79.45	
7	4.70	114.0	0.0	1	1	1.000	-552.73	0.00	3.56	94.66
				2	1	1.000	-638.11	0.00	45.72	
				1	4	1.250	539.10	-742.06	30.22	-41.48
				2	4	1.250	545.82	742.19	-79.45	
8	12.70	210.0	0.0	1	1	1.000	-552.73	0.00	3.56	99.47
				2	1	1.000	-638.11	0.00	45.72	
				1	4	1.250	539.10	-742.06	30.22	-41.80
				2	4	1.250	545.82	742.19	-79.45	
9	20.70	306.0	0.0	1	1	1.000	-552.73	0.00	3.56	104.29*
				2	1	1.000	-638.11	0.00	45.72	
				1	4	1.250	539.10	-742.06	30.22	-42.12
				2	4	1.250	545.82	742.19	-79.45	
10	28.20	396.0	0.0	1	1	1.000	-552.73	0.00	3.56	108.80*
				2	1	1.000	-638.11	0.00	45.72	
				1	4	1.250	539.10	-742.06	30.22	-42.41
				2	4	1.250	545.82	742.19	-79.45	
11	-2.80	24.0	-57.0	1	2	1.000	-515.15	1278.04	-82.20	93.14
				2	2	1.000	-410.86	-1278.28	131.39	
				1	4	1.250	539.10	-742.06	30.22	-41.18
				2	4	1.250	545.82	742.19	-79.45	
12	4.70	114.0	-57.0	1	1	1.000	-552.73	0.00	3.56	94.66
				2	1	1.000	-638.11	0.00	45.72	
				1	4	1.250	539.10	-742.06	30.22	-41.48
				2	4	1.250	545.82	742.19	-79.45	
13	12.70	210.0	-57.0	1	1	1.000	-552.73	0.00	3.56	99.47
				2	1	1.000	-638.11	0.00	45.72	
				1	4	1.250	539.10	-742.06	30.22	-41.80
				2	4	1.250	545.82	742.19	-79.45	
14	20.70	306.0	-57.0	1	1	1.000	-552.73	0.00	3.56	104.29*
				2	1	1.000	-638.11	0.00	45.72	
				1	4	1.250	539.10	-742.06	30.22	-42.12
				2	4	1.250	545.82	742.19	-79.45	
15	28.20	396.0	-57.0	1	1	1.000	-552.73	0.00	3.56	108.80*
				2	1	1.000	-638.11	0.00	45.72	
				1	4	1.250	539.10	-742.06	30.22	-42.42
				2	4	1.250	545.82	742.19	-79.45	

Note:
* Force in pile is greater than pile capacity.

Only max. force in piles is considered for design.
Pile coordinates X and Z are from the most left edge of the footing.

Max. Pile Reaction Used in Design: (without selfweight and surcharge)
==========

Working Stress pile reaction = 88.72 kips

H. W. Lochner, Inc. PHONE: 859-224-4476
1040 Monarch St. Suite 300 Lexington, KY 40513

JOB NO. HLB#142
PROGRAM: RC-PIER® v4.1.0 LEAP Software Inc., Tampa, Florida
BY JMJ DATE Jun/15/2006
PHONE : TOLL-FREE 1-800-451-5327 TAMPA AREA: 813-985-9170
CKD. DATE

PROJECT: BONNER BRIDGE - OREGON INLET NORTH CAROLINA

Reinforcement Schedule:
==========:

Dir	Quantity	Size	Bar dist. in	As total in^2	From ft	To ft	Hook
X	8	# 6	6.00	3.52	0.50	34.50	None
X	20	# 6	22.00	8.80	0.50	34.50	Both
X	18	# 10	45.50	22.86	0.50	34.50	Both
Z	28	# 5	46.45	8.68	----	----	Both
Z	52	# 5	21.13	16.12	----	----	Both
Z	8	# 11	7.08	12.48	----	----	None
Z	28	# 5	5.31	8.68	----	----	Both

Flexure:
========

X direction

Loc ft	Mmax Mmin kft	Comb Comb	Asb_req Asb_req in^2	Asb_prv Asb_prv in^2	Asb_eff Asb_eff in^2	Ast_req Ast_req in^2	Ast_prv Ast_prv in^2	Ast_eff Ast_eff in^2
-4.80	0.0	1	0.00	0.00	0.00	0.00	0.00	0.00
	0.0	1	0.00	0.00	0.00	0.00	0.00	0.00
-4.43	0.0	1	0.00	0.00	0.00	0.00	0.00	0.00
	0.0	1	0.00	0.00	0.00	0.00	0.00	0.00
-4.30	0.0	1	0.00	12.32	0.03	0.00	22.86	0.04
	0.0	1	0.00	12.32	0.03	0.00	22.86	0.04
-3.70	0.0	1	0.00	12.32	8.74	0.00	22.86	8.87
	0.0	1	0.00	12.32	8.10	0.00	22.86	8.87
-3.33	0.0	1	0.00	12.32	12.32	0.00	22.86	14.30
	0.0	1	0.00	12.32	12.32	0.00	22.86	14.30
-2.97	0.0	1	0.00	12.32	12.32	0.00	22.86	19.72
	0.0	1	0.00	12.32	12.32	0.00	22.86	19.72
-2.60	53.2	1	1.29	12.32	12.32	0.00	22.86	22.86
	0.0	1	0.00	12.32	12.32	0.00	22.86	22.86
-2.23	150.8	1	3.71	12.32	12.32	0.00	22.86	22.86
	0.0	1	0.00	12.32	12.32	0.00	22.86	22.86
-1.87	248.4	1	6.17	12.32	12.32	0.00	22.86	22.86
	0.0	1	0.00	12.32	12.32	0.00	22.86	22.86
-1.50	346.0	1	8.67	12.32	12.32	0.00	22.86	22.86
	0.0	1	0.00	12.32	12.32	0.00	22.86	22.86
0.00	0.0	1	0.00	12.32	12.32	0.00	22.86	22.86
	0.0	1	0.00	12.32	12.32	0.00	22.86	22.86
1.50	142.5	1	3.50	12.32	12.32	0.00	22.86	22.86
	0.0	1	0.00	12.32	12.32	0.00	22.86	22.86
4.30	0.0	1	0.00	12.32	12.32	0.00	22.86	22.86
	-981.7	1	0.00	12.32	12.32	18.37	22.86	22.86
7.13	0.0	1	0.00	12.32	12.32	0.00	22.86	22.86
	-1472.5	1	0.00	12.32	12.32	27.93	22.86 *	22.86
9.94	0.0	1	0.00	12.32	12.32	0.00	22.86	22.86
	-1854.1	1	0.00	12.32	12.32	35.49	22.86 *	22.86
12.75	0.0	1	0.00	12.32	12.32	0.00	22.86	22.86
	-2222.4	1	0.00	12.32	12.32	41.79	22.86 *	22.86
15.56	0.0	1	0.00	12.32	12.32	0.00	22.86	22.86
	-1855.5	1	0.00	12.32	12.32	35.51	22.86 *	22.86
18.38	0.0	1	0.00	12.32	12.32	0.00	22.86	22.86
	-1488.5	1	0.00	12.32	12.32	28.25	22.86 *	22.86

PROJECT: BONNER BRIDGE - OREGON INLET NORTH CAROLINA

21.20	0.0	1	0.00	12.32	12.32	0.00	22.86	22.86
	-985.9	1	0.00	12.32	12.32	18.45	22.86	22.86
24.00	123.7	1	3.04	12.32	12.32	0.00	22.86	22.86
	0.0	1	0.00	12.32	12.32	0.00	22.86	22.86
25.50	0.0	1	0.00	12.32	12.32	0.00	22.86	22.86
	0.0	1	0.00	12.32	12.32	0.00	22.86	22.86
27.00	319.4	1	7.99	12.32	12.32	0.00	22.86	22.86
	0.0	1	0.00	12.32	12.32	0.00	22.86	22.86
27.36	224.8	1	5.58	12.32	12.32	0.00	22.86	22.86
	0.0	1	0.00	12.32	12.32	0.00	22.86	22.86
27.71	130.1	1	3.20	12.32	12.32	0.00	22.86	22.86
	0.0	1	0.00	12.32	12.32	0.00	22.86	22.86
28.07	35.5	1	0.86	12.32	12.32	0.00	22.86	22.86
	0.0	1	0.00	12.32	12.32	0.00	22.86	22.86
28.42	0.0	1	0.00	12.32	12.32	0.00	22.86	18.90
	0.0	1	0.00	12.32	12.32	0.00	22.86	18.90
28.78	0.0	1	0.00	12.32	12.32	0.00	22.86	13.64
	0.0	1	0.00	12.32	12.32	0.00	22.86	13.64
29.13	0.0	1	0.00	12.32	8.26	0.00	22.86	8.38
	0.0	1	0.00	12.32	7.65	0.00	22.86	8.38
29.49	0.0	1	0.00	12.32	3.08	0.00	22.86	3.12
	0.0	1	0.00	12.32	2.85	0.00	22.86	3.12
29.80	0.0	1	0.00	0.00	0.00	0.00	0.00	0.00
	0.0	1	0.00	0.00	0.00	0.00	0.00	0.00
30.20	0.0	1	0.00	0.00	0.00	0.00	0.00	0.00
	0.0	1	0.00	0.00	0.00	0.00	0.00	0.00

Z direction

Loc ft	Mmax kft	Comb	Asb_req in^2	Asb_prv in^2	Asb_eff in^2	Ast_req in^2	Ast_prv in^2	Ast_eff in^2
-2.96	794.8	1	17.32	37.28	37.28	0.00	8.68	8.68
2.96	794.8	1	17.32	37.28	37.28	0.00	8.68	8.68

Note:
* The provided reinforcement is not adequate, either less than required or larger than maximum allowed.

One Way Shear:
==========

Col	Dist ft	Comb	d in	V kips	Vc kips
X direction					
1	-4.30	1	34.41	0.0	290.1
	4.30	1	33.57	327.2 *	283.0
2	21.20	1	33.57	336.5 *	283.0
	29.80	1	48.00	0.0	404.6
Z direction					
	-6.15	1	38.26	0.0	836.1
	6.15	1	38.26	0.0	836.1

H. W. Lochner, Inc. PHONE: 859-224-4476
1040 Monarch St. Suite 300 Lexington, KY 40513
SHEET 8 OF 9
JOB NO. HLB#142
PROGRAM: RC-PIER® v4.1.0 LEAP Software Inc., Tampa, Florida
BY JMJ DATE Jun/15/2006
PHONE : TOLL-FREE 1-800-451-5327 TAMPA AREA: 813-985-9170
CKD. DATE

PROJECT: BONNER BRIDGE - OREGON INLET NORTH CAROLINA

Note:
* Shear resistance is less than applied shear force.
  You may increase the footing depth or provide stirrups.

Two Way Shear:
==========

#	Bo ft	Ao ft^2	Comb	Avg. d in	V kips	Vc kips
Columns:						
1	29.87	53.66	1	36.12	668.0	1276.8
2	29.87	53.66	1	39.52	662.8	1276.8
Piles - max:						
7	15.22	18.43	1	37.82	0.0	650.4
Piles - min:						
1	5.90	14.84	1	37.82	0.0	252.2

Note:
TWO WAY SHEAR IN FOOTING IS NOT DESIGNED AND STIRRUPS ARE NOT CONSIDERED.

H. W. Lochner, Inc. PHONE: 859-224-4476
1040 Monarch St. Suite 300 Lexington, KY 40513
SHEET 1 OF 9
JOB NO. HLB#142
PROGRAM: RC-PIER® v4.1.0 LEAP Software Inc., Tampa, Florida
BY JMJ DATE Jun/15/2006
PHONE : TOLL-FREE 1-800-451-5327 TAMPA AREA: 813-985-9170
CKD. DATE

PROJECT: BONNER BRIDGE - OREGON INLET NORTH CAROLINA

PROJECT DATA
==========

Project : BONNER BRIDGE - OREGON INLET NORTH CAROLINA
User Job No.: HLB#142
State : North Carolina State Job No. :
Code : AASHTO STANDARD (17th Edition 2002)
Comments : Bonner Bridge HLB #142 - Load Groups 4-6 (For Ease of Checking) - Per Pla
n Dimensions

JMJ 7/06

WDB 7/06

PROJECT: BONNER BRIDGE - OREGON INLET NORTH CAROLINA

LOADS
=====

Load Cases: 3

Loadcase ID: (L+In)1 Name: Group 4 Loadings
Multiplier = 1.000

Cap loads:

Type	Dir	Arm ft	Mag1 kip,kip/ft, kft	x1/L	Mag2 kip,kip/ft, kft	x2/L
Force	Y	0.00	-466.40	0.00	----	----
Force	Y	0.00	-515.81	1.00	----	----
Moment	Z	----	1123.03	0.00	----	----
Moment	Z	----	1144.92	1.00	----	----

Loadcase ID: (L+Ip)1 Name: Group 5 Loadings
Multiplier = 1.000

Cap loads:

Type	Dir	Arm ft	Mag1 kip,kip/ft, kft	x1/L	Mag2 kip,kip/ft, kft	x2/L
Force	Y	0.00	-446.83	0.00	----	----
Force	Y	0.00	-344.81	1.00	----	----
Moment	X	----	-1229.61	1.00	----	----
Moment	X	----	1229.36	0.00	----	----
Moment	Z	----	990.18	0.00	----	----
Moment	Z	----	1190.14	1.00	----	----

Loadcase ID: W1 Name: Group 6 Loadings
Multiplier = 1.000

Cap loads:

Type	Dir	Arm ft	Mag1 kip,kip/ft, kft	x1/L	Mag2 kip,kip/ft, kft	x2/L
Force	Y	0.00	-469.83	0.00	----	----
Force	Y	0.00	-474.59	1.00	----	----
Moment	X	----	-713.93	1.00	----	----
Moment	X	----	713.80	0.00	----	----
Moment	Z	----	1040.46	0.00	----	----
Moment	Z	----	1140.23	1.00	----	----

Selected load groups:

SERVICE GROUP I
SERVICE GROUP IB
SERVICE GROUP II

H. W. Lochner, Inc. PHONE: 859-224-4476
1040 Monarch St. Suite 300 Lexington, KY 40513
SHEET 3 OF 9
JOB NO. HLB#142
PROGRAM: RC-PIER® v4.1.0 LEAP Software Inc., Tampa, Florida
BY JMJ DATE Jun/15/2006
PHONE : TOLL-FREE 1-800-451-5327 TAMPA AREA: 813-985-9170
CKD. DATE

PROJECT: BONNER BRIDGE - OREGON INLET NORTH CAROLINA

COMBINED FOOTING DESIGN

Code: AASHTO STANDARD (17th Edition 2002) - Service Load Design
Units: US

Geometry:
=========

Name : 1
Shape : Rectangular, Type : Pile/Shaft Cap

Bf(X) = 35.00 ft, Hf(Z) = 13.50 ft, Thickness(Y) = 51.00 in

Footing concentric.
Columns located on the footing:
Column No. 1 at x = 0.00 ft, Rectangular 36.00 in x 71.00 in
Column No. 2 at x = 25.50 ft, Rectangular 36.00 in x 71.00 in

Ag = 472.50 ft^2, Ix = 225.63 ft^2, Iz = 1825.50 ft^2

Surcharge = 0.00 ksf

Piles: Circular Size: 22.00 in Capacity: 100.00 kips

Design Parameters:
==========

f'c = 3000.00 psi fy = 40000.00 psi
Ec = 3320.6 ksi Es = 29000.0 ksi
Crack control factor z = 130.00 kips/in
Concrete Type : Normal Weight.

Pile Reactions, Service (Without the reduction of overstress allowance):
==========

Pile	Loc(X) ft	X in	Z in	Column Loads col#	comb	Ovs	P, kips	Mxx, kft	Mzz, kft	Pile Reac. kips
1	-2.80	24.0	57.0	1	2	1.000	-446.92	1228.88	984.16	102.04*
				2	2	1.000	-344.72	-1229.13	1189.36	
				1	4	1.250	469.93	-713.52	-1034.13	-60.44
				2	4	1.250	474.49	713.65	-1139.41	
2	4.70	114.0	57.0	1	1	1.000	-466.50	0.00	1116.61	92.50
				2	1	1.000	-515.71	0.00	1144.04	
				1	4	1.250	469.93	-713.52	-1034.13	-51.94
				2	4	1.250	474.49	713.65	-1139.41	
3	12.70	210.0	57.0	1	1	1.000	-466.50	0.00	1116.61	85.56
				2	1	1.000	-515.71	0.00	1144.04	
				1	4	1.250	469.93	-713.52	-1034.13	-42.88
				2	4	1.250	474.49	713.65	-1139.41	
4	20.70	306.0	57.0	1	1	1.000	-466.50	0.00	1116.61	78.62
				2	1	1.000	-515.71	0.00	1144.04	
				1	4	1.250	469.93	-713.52	-1034.13	-33.81
				2	4	1.250	474.49	713.65	-1139.41	
5	28.20	396.0	57.0	1	1	1.000	-466.50	0.00	1116.61	72.11
				2	1	1.000	-515.71	0.00	1144.04	
				1	4	1.250	469.93	-713.52	-1034.13	-25.32
				2	4	1.250	474.49	713.65	-1139.41	
6	-2.80	24.0	0.0	1	2	1.000	-446.92	1228.88	984.16	102.04*
				2	2	1.000	-344.72	-1229.13	1189.36	
				1	4	1.250	469.93	-713.52	-1034.13	-60.44

PROJECT: BONNER BRIDGE - OREGON INLET NORTH CAROLINA

				2	4	1.250	474.49	713.65	-1139.41	
7	4.70	114.0	0.0	1	1	1.000	-466.50	0.00	1116.61	92.50
				2	1	1.000	-515.71	0.00	1144.04	
				1	4	1.250	469.93	-713.52	-1034.13	-51.94
				2	4	1.250	474.49	713.65	-1139.41	
8	12.70	210.0	0.0	1	1	1.000	-466.50	0.00	1116.61	85.56
				2	1	1.000	-515.71	0.00	1144.04	
				1	4	1.250	469.93	-713.52	-1034.13	-42.88
				2	4	1.250	474.49	713.65	-1139.41	
9	20.70	306.0	0.0	1	1	1.000	-466.50	0.00	1116.61	78.62
				2	1	1.000	-515.71	0.00	1144.04	
				1	4	1.250	469.93	-713.52	-1034.13	-33.82
				2	4	1.250	474.49	713.65	-1139.41	
10	28.20	396.0	0.0	1	1	1.000	-466.50	0.00	1116.61	72.11
				2	1	1.000	-515.71	0.00	1144.04	
				1	4	1.250	469.93	-713.52	-1034.13	-25.32
				2	4	1.250	474.49	713.65	-1139.41	
11	-2.80	24.0	-57.0	1	2	1.000	-446.92	1228.88	984.16	102.05*
				2	2	1.000	-344.72	-1229.13	1189.36	
				1	4	1.250	469.93	-713.52	-1034.13	-60.44
				2	4	1.250	474.49	713.65	-1139.41	
12	4.70	114.0	-57.0	1	1	1.000	-466.50	0.00	1116.61	92.50
				2	1	1.000	-515.71	0.00	1144.04	
				1	4	1.250	469.93	-713.52	-1034.13	-51.95
				2	4	1.250	474.49	713.65	-1139.41	
13	12.70	210.0	-57.0	1	1	1.000	-466.50	0.00	1116.61	85.56
				2	1	1.000	-515.71	0.00	1144.04	
				1	4	1.250	469.93	-713.52	-1034.13	-42.88
				2	4	1.250	474.49	713.65	-1139.41	
14	20.70	306.0	-57.0	1	1	1.000	-466.50	0.00	1116.61	78.62
				2	1	1.000	-515.71	0.00	1144.04	
				1	4	1.250	469.93	-713.52	-1034.13	-33.82
				2	4	1.250	474.49	713.65	-1139.41	
15	28.20	396.0	-57.0	1	1	1.000	-466.50	0.00	1116.61	72.11
				2	1	1.000	-515.71	0.00	1144.04	
				1	4	1.250	469.93	-713.52	-1034.13	-25.32
				2	4	1.250	474.49	713.65	-1139.41	

Pile Reactions, Service (After the reduction of overstress allowance):

Pile	Loc(X) ft	X in	Z in	Column Loads col#	comb	Ovs	P, kips	Mxx, kft	Mzz, kft	Pile Reac. kips
1	-2.80	24.0	57.0	1	2	1.000	-446.92	1228.88	984.16	102.04*
				2	2	1.000	-344.72	-1229.13	1189.36	
				1	4	1.250	469.93	-713.52	-1034.13	-48.35
				2	4	1.250	474.49	713.65	-1139.41	
2	4.70	114.0	57.0	1	1	1.000	-466.50	0.00	1116.61	92.50
				2	1	1.000	-515.71	0.00	1144.04	
				1	4	1.250	469.93	-713.52	-1034.13	-41.55
				2	4	1.250	474.49	713.65	-1139.41	
3	12.70	210.0	57.0	1	1	1.000	-466.50	0.00	1116.61	85.56
				2	1	1.000	-515.71	0.00	1144.04	
				1	4	1.250	469.93	-713.52	-1034.13	-34.30
				2	4	1.250	474.49	713.65	-1139.41	
4	20.70	306.0	57.0	1	1	1.000	-466.50	0.00	1116.61	78.62
				2	1	1.000	-515.71	0.00	1144.04	
				1	4	1.250	469.93	-713.52	-1034.13	-27.05

PROJECT: BONNER BRIDGE - OREGON INLET NORTH CAROLINA

				2	4	1.250	474.49	713.65	-1139.41	
5	28.20	396.0	57.0	1	1	1.000	-466.50	0.00	1116.61	72.11
				2	1	1.000	-515.71	0.00	1144.04	
				1	4	1.250	469.93	-713.52	-1034.13	-20.25
				2	4	1.250	474.49	713.65	-1139.41	
6	-2.80	24.0	0.0	1	2	1.000	-446.92	1228.88	984.16	102.04*
				2	2	1.000	-344.72	-1229.13	1189.36	
				1	4	1.250	469.93	-713.52	-1034.13	-48.35
				2	4	1.250	474.49	713.65	-1139.41	
7	4.70	114.0	0.0	1	1	1.000	-466.50	0.00	1116.61	92.50
				2	1	1.000	-515.71	0.00	1144.04	
				1	4	1.250	469.93	-713.52	-1034.13	-41.55
				2	4	1.250	474.49	713.65	-1139.41	
8	12.70	210.0	0.0	1	1	1.000	-466.50	0.00	1116.61	85.56
				2	1	1.000	-515.71	0.00	1144.04	
				1	4	1.250	469.93	-713.52	-1034.13	-34.30
				2	4	1.250	474.49	713.65	-1139.41	
9	20.70	306.0	0.0	1	1	1.000	-466.50	0.00	1116.61	78.62
				2	1	1.000	-515.71	0.00	1144.04	
				1	4	1.250	469.93	-713.52	-1034.13	-27.05
				2	4	1.250	474.49	713.65	-1139.41	
10	28.20	396.0	0.0	1	1	1.000	-466.50	0.00	1116.61	72.11
				2	1	1.000	-515.71	0.00	1144.04	
				1	4	1.250	469.93	-713.52	-1034.13	-20.26
				2	4	1.250	474.49	713.65	-1139.41	
11	-2.80	24.0	-57.0	1	2	1.000	-446.92	1228.88	984.16	102.05*
				2	2	1.000	-344.72	-1229.13	1189.36	
				1	4	1.250	469.93	-713.52	-1034.13	-48.35
				2	4	1.250	474.49	713.65	-1139.41	
12	4.70	114.0	-57.0	1	1	1.000	-466.50	0.00	1116.61	92.50
				2	1	1.000	-515.71	0.00	1144.04	
				1	4	1.250	469.93	-713.52	-1034.13	-41.56
				2	4	1.250	474.49	713.65	-1139.41	
13	12.70	210.0	-57.0	1	1	1.000	-466.50	0.00	1116.61	85.56
				2	1	1.000	-515.71	0.00	1144.04	
				1	4	1.250	469.93	-713.52	-1034.13	-34.31
				2	4	1.250	474.49	713.65	-1139.41	
14	20.70	306.0	-57.0	1	1	1.000	-466.50	0.00	1116.61	78.62
				2	1	1.000	-515.71	0.00	1144.04	
				1	4	1.250	469.93	-713.52	-1034.13	-27.06
				2	4	1.250	474.49	713.65	-1139.41	
15	28.20	396.0	-57.0	1	1	1.000	-466.50	0.00	1116.61	72.11
				2	1	1.000	-515.71	0.00	1144.04	
				1	4	1.250	469.93	-713.52	-1034.13	-20.26
				2	4	1.250	474.49	713.65	-1139.41	

Note:
* Force in pile is greater than pile capacity.

Only max. force in piles is considered for design.
Pile coordinates X and Z are from the most left edge of the footing.

Max. Pile Reaction Used in Design: (without selfweight and surcharge)
==========

Working Stress pile reaction = 81.96 kips

H. W. Lochner, Inc. PHONE: 859-224-4476
1040 Monarch St. Suite 300 Lexington, KY 40513

PROGRAM: RC-PIER® v4.1.0 LEAP Software Inc., Tampa, Florida
PHONE : TOLL-FREE 1-800-451-5327 TAMPA AREA: 813-985-9170

PROJECT: BONNER BRIDGE - OREGON INLET NORTH CAROLINA

Reinforcement Schedule:
==========:

Dir	Quantity	Size	Bar dist. in	As total in^2	From ft	To ft	Hook
X	8	# 6	6.00	3.52	0.50	34.50	None
X	20	# 6	22.00	8.80	0.50	34.50	Both
X	18	# 10	45.50	22.86	0.50	34.50	Both
Z	28	# 5	46.45	8.68	----	----	Both
Z	52	# 5	21.13	16.12	----	----	Both
Z	8	# 11	7.08	12.48	----	----	None
Z	28	# 5	5.31	8.68	----	----	Both

Flexure:
========

X direction

Loc ft	Mmax Mmin kft	Comb Comb	Asb_req Asb_req in^2	Asb_prv Asb_prv in^2	Asb_eff Asb_eff in^2	Ast_req Ast_req in^2	Ast_prv Ast_prv in^2	Ast_eff Ast_eff in^2
-4.80	0.0	2	0.00	0.00	0.00	0.00	0.00	0.00
	0.0	2	0.00	0.00	0.00	0.00	0.00	0.00
-4.43	0.0	2	0.00	0.00	0.00	0.00	0.00	0.00
	0.0	2	0.00	0.00	0.00	0.00	0.00	0.00
-4.30	0.0	2	0.00	12.32	0.03	0.00	22.86	0.04
	0.0	2	0.00	12.32	0.03	0.00	22.86	0.04
-3.70	0.0	2	0.00	12.32	8.74	0.00	22.86	8.87
	0.0	2	0.00	12.32	8.10	0.00	22.86	8.87
-3.33	0.0	2	0.00	12.32	12.32	0.00	22.86	14.30
	0.0	2	0.00	12.32	12.32	0.00	22.86	14.30
-2.97	0.0	2	0.00	12.32	12.32	0.00	22.86	19.72
	0.0	2	0.00	12.32	12.32	0.00	22.86	19.72
-2.60	49.2	2	1.19	12.32	12.32	0.00	22.86	22.86
	0.0	2	0.00	12.32	12.32	0.00	22.86	22.86
-2.23	139.3	2	3.43	12.32	12.32	0.00	22.86	22.86
	0.0	2	0.00	12.32	12.32	0.00	22.86	22.86
-1.87	229.5	2	5.70	12.32	12.32	0.00	22.86	22.86
	0.0	2	0.00	12.32	12.32	0.00	22.86	22.86
-1.50	319.7	2	7.99	12.32	12.32	0.00	22.86	22.86
	0.0	2	0.00	12.32	12.32	0.00	22.86	22.86
0.00	0.0	2	0.00	12.32	12.32	0.00	22.86	22.86
	0.0	2	0.00	12.32	12.32	0.00	22.86	22.86
1.50	131.6	2	3.23	12.32	12.32	0.00	22.86	22.86
	0.0	2	0.00	12.32	12.32	0.00	22.86	22.86
4.30	0.0	2	0.00	12.32	12.32	0.00	22.86	22.86
	-907.0	2	0.00	12.32	12.32	16.93	22.86	22.86
7.13	0.0	2	0.00	12.32	12.32	0.00	22.86	22.86
	-1360.4	2	0.00	12.32	12.32	25.73	22.86 *	22.86
9.94	0.0	2	0.00	12.32	12.32	0.00	22.86	22.86
	-1712.9	2	0.00	12.32	12.32	32.68	22.86 *	22.86
12.75	0.0	2	0.00	12.32	12.32	0.00	22.86	22.86
	-2053.2	2	0.00	12.32	12.32	39.46	22.86 *	22.86
15.56	0.0	2	0.00	12.32	12.32	0.00	22.86	22.86
	-1714.2	2	0.00	12.32	12.32	32.71	22.86 *	22.86
18.38	0.0	2	0.00	12.32	12.32	0.00	22.86	22.86
	-1375.2	2	0.00	12.32	12.32	26.02	22.86 *	22.86

H. W. Lochner, Inc. PHONE: 859-224-4476
1040 Monarch St. Suite 300 Lexington, KY 40513
SHEET 7 OF 9
JOB NO. HLB#142
PROGRAM: RC-PIER® v4.1.0 LEAP Software Inc., Tampa, Florida
BY JMJ DATE Jun/15/2006
PHONE : TOLL-FREE 1-800-451-5327 TAMPA AREA: 813-985-9170
CKD. DATE

PROJECT: BONNER BRIDGE - OREGON INLET NORTH CAROLINA

21.20	0.0	2	0.00	12.32	12.32	0.00	22.86	22.86
	-910.9	2	0.00	12.32	12.32	17.00	22.86	22.86
24.00	114.3	2	2.80	12.32	12.32	0.00	22.86	22.86
	0.0	2	0.00	12.32	12.32	0.00	22.86	22.86
25.50	0.0	2	0.00	12.32	12.32	0.00	22.86	22.86
	0.0	2	0.00	12.32	12.32	0.00	22.86	22.86
27.00	295.1	2	7.36	12.32	12.32	0.00	22.86	22.86
	0.0	2	0.00	12.32	12.32	0.00	22.86	22.86
27.36	207.6	2	5.14	12.32	12.32	0.00	22.86	22.86
	0.0	2	0.00	12.32	12.32	0.00	22.86	22.86
27.71	120.2	2	2.95	12.32	12.32	0.00	22.86	22.86
	0.0	2	0.00	12.32	12.32	0.00	22.86	22.86
28.07	32.8	2	0.79	12.32	12.32	0.00	22.86	22.86
	0.0	2	0.00	12.32	12.32	0.00	22.86	22.86
28.42	0.0	2	0.00	12.32	12.32	0.00	22.86	18.90
	0.0	2	0.00	12.32	12.32	0.00	22.86	18.90
28.78	0.0	2	0.00	12.32	12.32	0.00	22.86	13.64
	0.0	2	0.00	12.32	12.32	0.00	22.86	13.64
29.13	0.0	2	0.00	12.32	8.26	0.00	22.86	8.38
	0.0	2	0.00	12.32	7.65	0.00	22.86	8.38
29.49	0.0	2	0.00	12.32	3.08	0.00	22.86	3.12
	0.0	2	0.00	12.32	2.85	0.00	22.86	3.12
29.80	0.0	2	0.00	0.00	0.00	0.00	0.00	0.00
	0.0	2	0.00	0.00	0.00	0.00	0.00	0.00
30.20	0.0	2	0.00	0.00	0.00	0.00	0.00	0.00
	0.0	2	0.00	0.00	0.00	0.00	0.00	0.00

Z direction

Loc ft	Mmax kft	Comb	Asb_req in^2	Asb_prv in^2	Asb_eff in^2	Ast_req in^2	Ast_prv in^2	Ast_eff in^2
-2.96	734.3	2	15.97	37.28	37.28	0.00	8.68	8.68
2.96	734.3	2	15.97	37.28	37.28	0.00	8.68	8.68

Note:
* The provided reinforcement is not adequate, either less than required or larger than maximum allowed.

One Way Shear:
==========

Col	Dist ft	Comb	d in	V kips	Vc kips
X direction					
1	-4.30	2	34.41	0.0	290.1
	4.30	2	33.57	302.3 *	283.0
2	21.20	2	33.57	310.9 *	283.0
	29.80	2	48.00	0.0	404.6
Z direction					
	-6.15	2	38.26	0.0	836.1
	6.15	2	38.26	0.0	836.1

H. W. Lochner, Inc. PHONE: 859-224-4476
1040 Monarch St. Suite 300 Lexington, KY 40513
SHEET 8 OF 9
JOB NO. HLB#142
PROGRAM: RC-PIER® v4.1.0 LEAP Software Inc., Tampa, Florida
BY JMJ DATE Jun/15/2006
PHONE : TOLL-FREE 1-800-451-5327 TAMPA AREA: 813-985-9170
CKD. DATE

PROJECT: BONNER BRIDGE - OREGON INLET NORTH CAROLINA

Note:
* Shear resistance is less than applied shear force.
  You may increase the footing depth or provide stirrups.

Two Way Shear:
==========

#	Bo ft	Ao ft^2	Comb	Avg. d in	V kips	Vc kips
Columns:						
1	29.87	53.66	2	36.12	617.1	1276.8
2	29.87	53.66	2	39.52	612.3	1276.8
Piles - max:						
7	15.22	18.43	2	37.82	0.0	650.4
Piles - min:						
1	5.90	14.84	2	37.82	0.0	252.2

Note:
TWO WAY SHEAR IN FOOTING IS NOT DESIGNED AND STIRRUPS ARE NOT CONSIDERED.

H. W. Lochner, Inc. PHONE: 859-224-4476
1040 Monarch St. Suite 300 Lexington, KY 40513
SHEET 1 OF 8
JOB NO. HLB#142
PROGRAM: RC-PIER® v4.1.0 LEAP Software Inc., Tampa, Florida
BY JMJ DATE Jun/15/2006
PHONE : TOLL-FREE 1-800-451-5327 TAMPA AREA: 813-985-9170
CKD. DATE

PROJECT: BONNER BRIDGE - OREGON INLET NORTH CAROLINA

PROJECT DATA
==========

Project : BONNER BRIDGE - OREGON INLET NORTH CAROLINA
User Job No.: HLB#142
State : North Carolina State Job No. :
Code : AASHTO STANDARD (17th Edition 2002)
Comments : Bonner Bridge HLB #142 - Load Groups 1-3 (For Ease of Checking) - Per Field Data

JMJ 7/06

WDB 7/06

H. W. Lochner, Inc. PHONE: 859-224-4476
1040 Monarch St. Suite 300 Lexington, KY 40513
SHEET 2 OF 8
JOB NO. HLB#142
PROGRAM: RC-PIER® v4.1.0 LEAP Software Inc., Tampa, Florida
BY JMJ DATE Jun/15/2006
PHONE : TOLL-FREE 1-800-451-5327 TAMPA AREA: 813-985-9170
CKD. DATE

PROJECT: BONNER BRIDGE - OREGON INLET NORTH CAROLINA

LOADS

Load Cases: 3

Loadcase ID: (L+In)1 Name: Group 1 Loadings
Multiplier = 1.000

Cap loads:

Type	Dir	Arm ft	Mag1 kip,kip/ft, kft	x1/L	Mag2 kip,kip/ft, kft	x2/L
Force	Y	0.00	-552.73	0.00	----	----
Force	Y	0.00	-638.11	1.00	----	----
Moment	Z	----	9.10	0.00	----	----
Moment	Z	----	45.73	1.00	----	----

Loadcase ID: (L+Ip)1 Name: Group 2 Loadings
Multiplier = 1.000

Cap loads:

Type	Dir	Arm ft	Mag1 kip,kip/ft, kft	x1/L	Mag2 kip,kip/ft, kft	x2/L
Force	Y	0.00	-515.16	0.00	----	----
Force	Y	0.00	-410.85	1.00	----	----
Moment	X	----	-1278.78	1.00	----	----
Moment	X	----	1278.54	0.00	----	----
Moment	Z	----	-77.17	0.00	----	----
Moment	Z	----	131.33	1.00	----	----

Loadcase ID: W1 Name: Group 3 Loadings
Multiplier = 1.000

Cap loads:

Type	Dir	Arm ft	Mag1 kip,kip/ft, kft	x1/L	Mag2 kip,kip/ft, kft	x2/L
Force	Y	0.00	-539.10	0.00	----	----
Force	Y	0.00	-545.82	1.00	----	----
Moment	X	----	-742.48	1.00	----	----
Moment	X	----	742.35	0.00	----	----
Moment	Z	----	-24.87	0.00	----	----
Moment	Z	----	79.43	1.00	----	----

Selected load groups:

SERVICE GROUP I
SERVICE GROUP IB
SERVICE GROUP II

H. W. Lochner, Inc. PHONE: 859-224-4476
1040 Monarch St. Suite 300 Lexington, KY 40513
PROGRAM: RC-PIER® v4.1.0 LEAP Software Inc., Tampa, Florida
PHONE : TOLL-FREE 1-800-451-5327 TAMPA AREA: 813-985-9170

SHEET 3 OF 8
JOB NO. HLB#142
BY JMJ DATE Jun/15/2006
CKD. DATE

PROJECT: BONNER BRIDGE - OREGON INLET NORTH CAROLINA

COMBINED FOOTING DESIGN

Code: AASHTO STANDARD (17th Edition 2002) - Service Load Design
Units: US

Geometry:
=========

Name : 1
Shape : Rectangular, Type : Pile/Shaft Cap

Bf(X) = 35.00 ft, Hf(Z) = 13.50 ft, Thickness(Y) = 51.00 in

Footing concentric.
Columns located on the footing:
Column No. 1 at x = 0.00 ft, Rectangular 36.00 in x 71.00 in
Column No. 2 at x = 25.50 ft, Rectangular 36.00 in x 71.00 in

Ag = 472.50 ft^2, Ix = 225.63 ft^2, Iz = 1825.50 ft^2

Surcharge = 0.00 ksf

Piles: Circular Size: 22.00 in Capacity: 100.00 kips

Design Parameters:
==========

f'c = 4400.00 psi fy = 40000.00 psi
Ec = 4021.4 ksi Es = 29000.0 ksi
Crack control factor z = 130.00 kips/in
Concrete Type : Normal Weight.

Pile Reactions, Service (Without the reduction of overstress allowance):
==========

Pile	Loc(X) ft	X in	Z in	Column Loads col#	comb	Ovs	P, kips	Mxx, kft	Mzz, kft	Pile Reac. kips
1	-2.80	24.0	57.0	1	2	1.000	-515.15	1278.04	-82.20	93.13
				2	2	1.000	-410.86	-1278.28	131.39	
				1	4	1.250	539.10	-742.06	30.22	-51.47
				2	4	1.250	545.82	742.19	-79.45	
2	4.70	114.0	57.0	1	1	1.000	-552.73	0.00	3.56	94.66
				2	1	1.000	-638.11	0.00	45.72	
				1	4	1.250	539.10	-742.06	30.22	-51.85
				2	4	1.250	545.82	742.19	-79.45	
3	12.70	210.0	57.0	1	1	1.000	-552.73	0.00	3.56	99.47
				2	1	1.000	-638.11	0.00	45.72	
				1	4	1.250	539.10	-742.06	30.22	-52.24
				2	4	1.250	545.82	742.19	-79.45	
4	20.70	306.0	57.0	1	1	1.000	-552.73	0.00	3.56	104.29*
				2	1	1.000	-638.11	0.00	45.72	
				1	4	1.250	539.10	-742.06	30.22	-52.64
				2	4	1.250	545.82	742.19	-79.45	
5	28.20	396.0	57.0	1	1	1.000	-552.73	0.00	3.56	108.80*
				2	1	1.000	-638.11	0.00	45.72	
				1	4	1.250	539.10	-742.06	30.22	-53.01
				2	4	1.250	545.82	742.19	-79.45	
6	-2.80	24.0	0.0	1	2	1.000	-515.15	1278.04	-82.20	93.13
				2	2	1.000	-410.86	-1278.28	131.39	
				1	4	1.250	539.10	-742.06	30.22	-51.48

H. W. Lochner, Inc. PHONE: 859-224-4476 | SHEET 4 OF 8
1040 Monarch St. Suite 300 Lexington, KY 40513 | JOB NO. HLB#142
PROGRAM: RC-PIER® v4.1.0 LEAP Software Inc., Tampa, Florida | BY JMJ DATE Jun/15/2006
PHONE : TOLL-FREE 1-800-451-5327 TAMPA AREA: 813-985-9170 | CKD. DATE

PROJECT: BONNER BRIDGE - OREGON INLET NORTH CAROLINA

				2	4	1.250	545.82	742.19	-79.45	
7	4.70	114.0	0.0	1	1	1.000	-552.73	0.00	3.56	94.66
				2	1	1.000	-638.11	0.00	45.72	
				1	4	1.250	539.10	-742.06	30.22	-51.85
				2	4	1.250	545.82	742.19	-79.45	
8	12.70	210.0	0.0	1	1	1.000	-552.73	0.00	3.56	99.47
				2	1	1.000	-638.11	0.00	45.72	
				1	4	1.250	539.10	-742.06	30.22	-52.25
				2	4	1.250	545.82	742.19	-79.45	
9	20.70	306.0	0.0	1	1	1.000	-552.73	0.00	3.56	104.29*
				2	1	1.000	-638.11	0.00	45.72	
				1	4	1.250	539.10	-742.06	30.22	-52.64
				2	4	1.250	545.82	742.19	-79.45	
10	28.20	396.0	0.0	1	1	1.000	-552.73	0.00	3.56	108.80*
				2	1	1.000	-638.11	0.00	45.72	
				1	4	1.250	539.10	-742.06	30.22	-53.02
				2	4	1.250	545.82	742.19	-79.45	
11	-2.80	24.0	-57.0	1	2	1.000	-515.15	1278.04	-82.20	93.14
				2	2	1.000	-410.86	-1278.28	131.39	
				1	4	1.250	539.10	-742.06	30.22	-51.48
				2	4	1.250	545.82	742.19	-79.45	
12	4.70	114.0	-57.0	1	1	1.000	-552.73	0.00	3.56	94.66
				2	1	1.000	-638.11	0.00	45.72	
				1	4	1.250	539.10	-742.06	30.22	-51.85
				2	4	1.250	545.82	742.19	-79.45	
13	12.70	210.0	-57.0	1	1	1.000	-552.73	0.00	3.56	99.47
				2	1	1.000	-638.11	0.00	45.72	
				1	4	1.250	539.10	-742.06	30.22	-52.25
				2	4	1.250	545.82	742.19	-79.45	
14	20.70	306.0	-57.0	1	1	1.000	-552.73	0.00	3.56	104.29*
				2	1	1.000	-638.11	0.00	45.72	
				1	4	1.250	539.10	-742.06	30.22	-52.65
				2	4	1.250	545.82	742.19	-79.45	
15	28.20	396.0	-57.0	1	1	1.000	-552.73	0.00	3.56	108.80*
				2	1	1.000	-638.11	0.00	45.72	
				1	4	1.250	539.10	-742.06	30.22	-53.02
				2	4	1.250	545.82	742.19	-79.45	

Pile Reactions, Service (After the reduction of overstress allowance):

Pile	Loc(X) ft	X in	Z in	Column Loads col#	comb	Ovs	P, kips	Mxx, kft	Mzz, kft	Pile Reac. kips
1	-2.80	24.0	57.0	1	2	1.000	-515.15	1278.04	-82.20	93.13
				2	2	1.000	-410.86	-1278.28	131.39	
				1	4	1.250	539.10	-742.06	30.22	-41.18
				2	4	1.250	545.82	742.19	-79.45	
2	4.70	114.0	57.0	1	1	1.000	-552.73	0.00	3.56	94.66
				2	1	1.000	-638.11	0.00	45.72	
				1	4	1.250	539.10	-742.06	30.22	-41.48
				2	4	1.250	545.82	742.19	-79.45	
3	12.70	210.0	57.0	1	1	1.000	-552.73	0.00	3.56	99.47
				2	1	1.000	-638.11	0.00	45.72	
				1	4	1.250	539.10	-742.06	30.22	-41.80
				2	4	1.250	545.82	742.19	-79.45	
4	20.70	306.0	57.0	1	1	1.000	-552.73	0.00	3.56	104.29*
				2	1	1.000	-638.11	0.00	45.72	
				1	4	1.250	539.10	-742.06	30.22	-42.11

H. W. Lochner, Inc. PHONE: 859-224-4476
1040 Monarch St. Suite 300 Lexington, KY 40513
SHEET 5 OF 8
JOB NO. HLB#142
PROGRAM: RC-PIER® v4.1.0 LEAP Software Inc., Tampa, Florida
BY JMJ DATE Jun/15/2006
PHONE : TOLL-FREE 1-800-451-5327 TAMPA AREA: 813-985-9170
CKD. DATE

PROJECT: BONNER BRIDGE - OREGON INLET NORTH CAROLINA

				2	4	1.250	545.82	742.19	-79.45	
5	28.20	396.0	57.0	1	1	1.000	-552.73	0.00	3.56	108.80*
				2	1	1.000	-638.11	0.00	45.72	
				1	4	1.250	539.10	-742.06	30.22	-42.41
				2	4	1.250	545.82	742.19	-79.45	
6	-2.80	24.0	0.0	1	2	1.000	-515.15	1278.04	-82.20	93.13
				2	2	1.000	-410.86	-1278.28	131.39	
				1	4	1.250	539.10	-742.06	30.22	-41.18
				2	4	1.250	545.82	742.19	-79.45	
7	4.70	114.0	0.0	1	1	1.000	-552.73	0.00	3.56	94.66
				2	1	1.000	-638.11	0.00	45.72	
				1	4	1.250	539.10	-742.06	30.22	-41.48
				2	4	1.250	545.82	742.19	-79.45	
8	12.70	210.0	0.0	1	1	1.000	-552.73	0.00	3.56	99.47
				2	1	1.000	-638.11	0.00	45.72	
				1	4	1.250	539.10	-742.06	30.22	-41.80
				2	4	1.250	545.82	742.19	-79.45	
9	20.70	306.0	0.0	1	1	1.000	-552.73	0.00	3.56	104.29*
				2	1	1.000	-638.11	0.00	45.72	
				1	4	1.250	539.10	-742.06	30.22	-42.12
				2	4	1.250	545.82	742.19	-79.45	
10	28.20	396.0	0.0	1	1	1.000	-552.73	0.00	3.56	108.80*
				2	1	1.000	-638.11	0.00	45.72	
				1	4	1.250	539.10	-742.06	30.22	-42.41
				2	4	1.250	545.82	742.19	-79.45	
11	-2.80	24.0	-57.0	1	2	1.000	-515.15	1278.04	-82.20	93.14
				2	2	1.000	-410.86	-1278.28	131.39	
				1	4	1.250	539.10	-742.06	30.22	-41.18
				2	4	1.250	545.82	742.19	-79.45	
12	4.70	114.0	-57.0	1	1	1.000	-552.73	0.00	3.56	94.66
				2	1	1.000	-638.11	0.00	45.72	
				1	4	1.250	539.10	-742.06	30.22	-41.48
				2	4	1.250	545.82	742.19	-79.45	
13	12.70	210.0	-57.0	1	1	1.000	-552.73	0.00	3.56	99.47
				2	1	1.000	-638.11	0.00	45.72	
				1	4	1.250	539.10	-742.06	30.22	-41.80
				2	4	1.250	545.82	742.19	-79.45	
14	20.70	306.0	-57.0	1	1	1.000	-552.73	0.00	3.56	104.29*
				2	1	1.000	-638.11	0.00	45.72	
				1	4	1.250	539.10	-742.06	30.22	-42.12
				2	4	1.250	545.82	742.19	-79.45	
15	28.20	396.0	-57.0	1	1	1.000	-552.73	0.00	3.56	108.80*
				2	1	1.000	-638.11	0.00	45.72	
				1	4	1.250	539.10	-742.06	30.22	-42.42
				2	4	1.250	545.82	742.19	-79.45	

Note:
* Force in pile is greater than pile capacity.

Only max. force in piles is considered for design.
Pile coordinates X and Z are from the most left edge of the footing.

Max. Pile Reaction Used in Design: (without selfweight and surcharge)
==========

Working Stress pile reaction = 88.72 kips

H. W. Lochner, Inc. PHONE: 859-224-4476
1040 Monarch St. Suite 300 Lexington, KY 40513
SHEET 6 OF 8
JOB NO. HLB#142
PROGRAM: RC-PIER® v4.1.0 LEAP Software Inc., Tampa, Florida
BY JMJ DATE Jun/15/2006
PHONE : TOLL-FREE 1-800-451-5327 TAMPA AREA: 813-985-9170
CKD. DATE

PROJECT: BONNER BRIDGE - OREGON INLET NORTH CAROLINA

Reinforcement Schedule:
==========:

Dir	Quantity	Size	Bar dist. in	As total in^2	From ft	To ft	Hook
X	8	# 6	6.00	3.52	0.50	34.50	None
X	20	# 6	22.00	8.80	0.50	34.50	Both
X	18	# 10	45.50	22.86	0.50	34.50	Both
Z	28	# 5	46.45	8.68	----	----	Both
Z	52	# 5	21.13	16.12	----	----	Both
Z	8	# 11	7.08	12.48	----	----	None
Z	28	# 5	5.31	8.68	----	----	Both

Flexure:
========

X direction

Loc ft	Mmax Mmin kft	Comb Comb	Asb_req Asb_req in^2	Asb_prv Asb_prv in^2	Asb_eff Asb_eff in^2	Ast_req Ast_req in^2	Ast_prv Ast_prv in^2	Ast_eff Ast_eff in^2
-4.80	0.0	1	0.00	0.00	0.00	0.00	0.00	0.00
	0.0	1	0.00	0.00	0.00	0.00	0.00	0.00
-4.43	0.0	1	0.00	0.00	0.00	0.00	0.00	0.00
	0.0	1	0.00	0.00	0.00	0.00	0.00	0.00
-4.30	0.0	1	0.00	12.32	0.04	0.00	22.86	0.04
	0.0	1	0.00	12.32	0.04	0.00	22.86	0.04
-3.70	0.0	1	0.00	12.32	10.17	0.00	22.86	10.75
	0.0	1	0.00	12.32	9.81	0.00	22.86	10.75
-3.33	0.0	1	0.00	12.32	12.32	0.00	22.86	17.31
	0.0	1	0.00	12.32	12.32	0.00	22.86	17.31
-2.97	0.0	1	0.00	12.32	12.32	0.00	22.86	22.86
	0.0	1	0.00	12.32	12.32	0.00	22.86	22.86
-2.60	53.2	1	1.29	12.32	12.32	0.00	22.86	22.86
	0.0	1	0.00	12.32	12.32	0.00	22.86	22.86
-2.23	150.8	1	3.70	12.32	12.32	0.00	22.86	22.86
	0.0	1	0.00	12.32	12.32	0.00	22.86	22.86
-1.87	248.4	1	6.15	12.32	12.32	0.00	22.86	22.86
	0.0	1	0.00	12.32	12.32	0.00	22.86	22.86
-1.50	346.0	1	8.63	12.32	12.32	0.00	22.86	22.86
	0.0	1	0.00	12.32	12.32	0.00	22.86	22.86
0.00	0.0	1	0.00	12.32	12.32	0.00	22.86	22.86
	0.0	1	0.00	12.32	12.32	0.00	22.86	22.86
1.50	142.5	1	3.49	12.32	12.32	0.00	22.86	22.86
	0.0	1	0.00	12.32	12.32	0.00	22.86	22.86
4.30	0.0	1	0.00	12.32	12.32	0.00	22.86	22.86
	-981.7	1	0.00	12.32	12.32	18.27	22.86	22.86
7.13	0.0	1	0.00	12.32	12.32	0.00	22.86	22.86
	-1472.5	1	0.00	12.32	12.32	27.74	22.86 *	22.86
9.94	0.0	1	0.00	12.32	12.32	0.00	22.86	22.86
	-1854.1	1	0.00	12.32	12.32	35.22	22.86 *	22.86
12.75	0.0	1	0.00	12.32	12.32	0.00	22.86	22.86
	-2222.4	1	0.00	12.32	12.32	42.52	22.86 *	22.86
15.56	0.0	1	0.00	12.32	12.32	0.00	22.86	22.86
	-1855.5	1	0.00	12.32	12.32	35.25	22.86 *	22.86
18.38	0.0	1	0.00	12.32	12.32	0.00	22.86	22.86
	-1488.5	1	0.00	12.32	12.32	28.06	22.86 *	22.86

H. W. Lochner, Inc. PHONE: 859-224-4476
1040 Monarch St. Suite 300 Lexington, KY 40513
SHEET 7 OF 8
JOB NO. HLB#142
PROGRAM: RC-PIER® v4.1.0 LEAP Software Inc., Tampa, Florida
BY JMJ DATE Jun/15/2006
PHONE : TOLL-FREE 1-800-451-5327 TAMPA AREA: 813-985-9170
CKD. DATE

PROJECT: BONNER BRIDGE - OREGON INLET NORTH CAROLINA

21.20	0.0	1	0.00	12.32	12.32	0.00	22.86	22.86
	-985.9	1	0.00	12.32	12.32	18.35	22.86	22.86
24.00	123.7	1	3.03	12.32	12.32	0.00	22.86	22.86
	0.0	1	0.00	12.32	12.32	0.00	22.86	22.86
25.50	0.0	1	0.00	12.32	12.32	0.00	22.86	22.86
	0.0	1	0.00	12.32	12.32	0.00	22.86	22.86
27.00	319.4	1	7.95	12.32	12.32	0.00	22.86	22.86
	0.0	1	0.00	12.32	12.32	0.00	22.86	22.86
27.36	224.8	1	5.55	12.32	12.32	0.00	22.86	22.86
	0.0	1	0.00	12.32	12.32	0.00	22.86	22.86
27.71	130.1	1	3.19	12.32	12.32	0.00	22.86	22.86
	0.0	1	0.00	12.32	12.32	0.00	22.86	22.86
28.07	35.5	1	0.86	12.32	12.32	0.00	22.86	22.86
	0.0	1	0.00	12.32	12.32	0.00	22.86	22.86
28.42	0.0	1	0.00	12.32	12.32	0.00	22.86	22.86
	0.0	1	0.00	12.32	12.32	0.00	22.86	22.86
28.78	0.0	1	0.00	12.32	12.32	0.00	22.86	16.52
	0.0	1	0.00	12.32	12.32	0.00	22.86	16.52
29.13	0.0	1	0.00	12.32	9.61	0.00	22.86	10.15
	0.0	1	0.00	12.32	9.26	0.00	22.86	10.15
29.49	0.0	1	0.00	12.32	3.58	0.00	22.86	3.78
	0.0	1	0.00	12.32	3.45	0.00	22.86	3.78
29.80	0.0	1	0.00	0.00	0.00	0.00	0.00	0.00
	0.0	1	0.00	0.00	0.00	0.00	0.00	0.00
30.20	0.0	1	0.00	0.00	0.00	0.00	0.00	0.00
	0.0	1	0.00	0.00	0.00	0.00	0.00	0.00

Z direction

Loc ft	Mmax kft	Comb	Asb_req in^2	Asb_prv in^2	Asb_eff in^2	Ast_req in^2	Ast_prv in^2	Ast_eff in^2
-2.96	794.8	1	17.25	37.28	37.28	0.00	8.68	8.68
2.96	794.8	1	17.25	37.28	37.28	0.00	8.68	8.68

Note:
* The provided reinforcement is not adequate, either less than required or larger than maximum allowed.

One Way Shear:
==========

Col	Dist ft	Comb	d in	V kips	Vc kips
X direction					
1	-4.30	1	33.98	0.0	346.9
	4.30	1	33.57	327.2	342.7
2	21.20	1	33.57	336.5	342.7
	29.80	1	48.00	0.0	490.0
Z direction					
	-6.15	1	38.26	0.0	1012.5
	6.15	1	38.26	0.0	1012.5

H. W. Lochner, Inc. PHONE: 859-224-4476
1040 Monarch St. Suite 300 Lexington, KY 40513
PROGRAM: RC-PIER® v4.1.0 LEAP Software Inc., Tampa, Florida
PHONE : TOLL-FREE 1-800-451-5327 TAMPA AREA: 813-985-9170

SHEET 8 OF 8
JOB NO. HLB#142
BY JMJ DATE Jun/15/2006
CKD. DATE

PROJECT: BONNER BRIDGE - OREGON INLET NORTH CAROLINA

Two Way Shear:
==========

#	Bo ft	Ao ft^2	Comb	Avg. d in	V kips	Vc kips
Columns:						
1	29.84	53.52	1	36.02	668.0	1539.8
2	29.84	53.52	1	39.52	662.8	1539.8
Piles - max:						
7	15.19	18.36	1	37.77	0.0	783.8
Piles - min:						
1	5.90	14.82	1	37.77	0.0	304.4

Note:
TWO WAY SHEAR IN FOOTING IS NOT DESIGNED AND STIRRUPS ARE NOT CONSIDERED.

H. W. Lochner, Inc. PHONE: 859-224-4476
1040 Monarch St. Suite 300 Lexington, KY 40513
SHEET 1 OF 8
JOB NO. HLB#142
PROGRAM: RC-PIER® v4.1.0 LEAP Software Inc., Tampa, Florida
BY JMJ DATE Jun/15/2006
PHONE : TOLL-FREE 1-800-451-5327 TAMPA AREA: 813-985-9170
CKD. DATE

PROJECT: BONNER BRIDGE - OREGON INLET NORTH CAROLINA

PROJECT DATA
==========

Project : BONNER BRIDGE - OREGON INLET NORTH CAROLINA
User Job No.: HLB#142
State : North Carolina State Job No. :
Code : AASHTO STANDARD (17th Edition 2002)
Comments : Bonner Bridge HLB #142 - Load Groups 4-6 (For Ease of Checking) - Per Field Data

JMJ 7/06

WDB 7/06

H. W. Lochner, Inc. PHONE: 859-224-4476
1040 Monarch St. Suite 300 Lexington, KY 40513
PROGRAM: RC-PIER® v4.1.0 LEAP Software Inc., Tampa, Florida
PHONE : TOLL-FREE 1-800-451-5327 TAMPA AREA: 813-985-9170

SHEET 2 OF 8
JOB NO. HLB#142
BY JMJ DATE Jun/15/2006
CKD. DATE

PROJECT: BONNER BRIDGE - OREGON INLET NORTH CAROLINA

LOADS
=====

Load Cases: 3

Loadcase ID: (L+In)1 Name: Group 4 Loadings
Multiplier = 1.000

Cap loads:

Type	Dir	Arm ft	Mag1 kip,kip/ft, kft	x1/L	Mag2 kip,kip/ft, kft	x2/L
Force	Y	0.00	-466.40	0.00	----	----
Force	Y	0.00	-515.81	1.00	----	----
Moment	Z	----	1123.03	0.00	----	----
Moment	Z	----	1144.92	1.00	----	----

Loadcase ID: (L+Ip)1 Name: Group 5 Loadings
Multiplier = 1.000

Cap loads:

Type	Dir	Arm ft	Mag1 kip,kip/ft, kft	x1/L	Mag2 kip,kip/ft, kft	x2/L
Force	Y	0.00	-446.83	0.00	----	----
Force	Y	0.00	-344.81	1.00	----	----
Moment	X	----	-1229.61	1.00	----	----
Moment	X	----	1229.36	0.00	----	----
Moment	Z	----	990.18	0.00	----	----
Moment	Z	----	1190.14	1.00	----	----

Loadcase ID: W1 Name: Group 6 Loadings
Multiplier = 1.000

Cap loads:

Type	Dir	Arm ft	Mag1 kip,kip/ft, kft	x1/L	Mag2 kip,kip/ft, kft	x2/L
Force	Y	0.00	-469.83	0.00	----	----
Force	Y	0.00	-474.59	1.00	----	----
Moment	X	----	-713.93	1.00	----	----
Moment	X	----	713.80	0.00	----	----
Moment	Z	----	1040.46	0.00	----	----
Moment	Z	----	1140.23	1.00	----	----

Selected load groups:

SERVICE GROUP I
SERVICE GROUP IB
SERVICE GROUP II

H. W. Lochner, Inc. PHONE: 859-224-4476
1040 Monarch St. Suite 300 Lexington, KY 40513
SHEET 3 OF 8
JOB NO. HLB#142
PROGRAM: RC-PIER® v4.1.0 LEAP Software Inc., Tampa, Florida
BY JMJ DATE Jun/15/2006
PHONE : TOLL-FREE 1-800-451-5327 TAMPA AREA: 813-985-9170
CKD. DATE

PROJECT: BONNER BRIDGE - OREGON INLET NORTH CAROLINA

COMBINED FOOTING DESIGN

Code: AASHTO STANDARD (17th Edition 2002) - Service Load Design
Units: US

Geometry:
=========
Name : 1
Shape : Rectangular, Type : Pile/Shaft Cap

Bf(X) = 35.00 ft, Hf(Z) = 13.50 ft, Thickness(Y) = 51.00 in

Footing concentric.
Columns located on the footing:
Column No. 1 at x = 0.00 ft, Rectangular 36.00 in x 71.00 in
Column No. 2 at x = 25.50 ft, Rectangular 36.00 in x 71.00 in

Ag = 472.50 ft^2, Ix = 225.63 ft^2, Iz = 1825.50 ft^2

Surcharge = 0.00 ksf

Piles: Circular Size: 22.00 in Capacity: 100.00 kips

Design Parameters:
==========
f'c = 4400.00 psi fy = 40000.00 psi
Ec = 4021.4 ksi Es = 29000.0 ksi
Crack control factor z = 130.00 kips/in
Concrete Type : Normal Weight.

Pile Reactions, Service (Without the reduction of overstress allowance):
==========

Pile	Loc(X) ft	X in	Z in	Column Loads col#	comb	Ovs	P, kips	Mxx, kft	Mzz, kft	Pile Reac. kips
1	-2.80	24.0	57.0	1	2	1.000	-446.92	1228.88	984.16	102.04*
				2	2	1.000	-344.72	-1229.13	1189.36	
				1	4	1.250	469.93	-713.52	-1034.13	-60.44
				2	4	1.250	474.49	713.65	-1139.41	
2	4.70	114.0	57.0	1	1	1.000	-466.50	0.00	1116.61	92.50
				2	1	1.000	-515.71	0.00	1144.04	
				1	4	1.250	469.93	-713.52	-1034.13	-51.94
				2	4	1.250	474.49	713.65	-1139.41	
3	12.70	210.0	57.0	1	1	1.000	-466.50	0.00	1116.61	85.56
				2	1	1.000	-515.71	0.00	1144.04	
				1	4	1.250	469.93	-713.52	-1034.13	-42.88
				2	4	1.250	474.49	713.65	-1139.41	
4	20.70	306.0	57.0	1	1	1.000	-466.50	0.00	1116.61	78.62
				2	1	1.000	-515.71	0.00	1144.04	
				1	4	1.250	469.93	-713.52	-1034.13	-33.81
				2	4	1.250	474.49	713.65	-1139.41	
5	28.20	396.0	57.0	1	1	1.000	-466.50	0.00	1116.61	72.11
				2	1	1.000	-515.71	0.00	1144.04	
				1	4	1.250	469.93	-713.52	-1034.13	-25.32
				2	4	1.250	474.49	713.65	-1139.41	
6	-2.80	24.0	0.0	1	2	1.000	-446.92	1228.88	984.16	102.04*
				2	2	1.000	-344.72	-1229.13	1189.36	
				1	4	1.250	469.93	-713.52	-1034.13	-60.44

H. W. Lochner, Inc. PHONE: 859-224-4476
1040 Monarch St. Suite 300 Lexington, KY 40513

PROJECT: BONNER BRIDGE - OREGON INLET NORTH CAROLINA

				2	4	1.250	474.49	713.65	-1139.41	
7	4.70	114.0	0.0	1	1	1.000	-466.50	0.00	1116.61	92.50
				2	1	1.000	-515.71	0.00	1144.04	
				1	4	1.250	469.93	-713.52	-1034.13	-51.94
				2	4	1.250	474.49	713.65	-1139.41	
8	12.70	210.0	0.0	1	1	1.000	-466.50	0.00	1116.61	85.56
				2	1	1.000	-515.71	0.00	1144.04	
				1	4	1.250	469.93	-713.52	-1034.13	-42.88
				2	4	1.250	474.49	713.65	-1139.41	
9	20.70	306.0	0.0	1	1	1.000	-466.50	0.00	1116.61	78.62
				2	1	1.000	-515.71	0.00	1144.04	
				1	4	1.250	469.93	-713.52	-1034.13	-33.82
				2	4	1.250	474.49	713.65	-1139.41	
10	28.20	396.0	0.0	1	1	1.000	-466.50	0.00	1116.61	72.11
				2	1	1.000	-515.71	0.00	1144.04	
				1	4	1.250	469.93	-713.52	-1034.13	-25.32
				2	4	1.250	474.49	713.65	-1139.41	
11	-2.80	24.0	-57.0	1	2	1.000	-446.92	1228.88	984.16	102.05*
				2	2	1.000	-344.72	-1229.13	1189.36	
				1	4	1.250	469.93	-713.52	-1034.13	-60.44
				2	4	1.250	474.49	713.65	-1139.41	
12	4.70	114.0	-57.0	1	1	1.000	-466.50	0.00	1116.61	92.50
				2	1	1.000	-515.71	0.00	1144.04	
				1	4	1.250	469.93	-713.52	-1034.13	-51.95
				2	4	1.250	474.49	713.65	-1139.41	
13	12.70	210.0	-57.0	1	1	1.000	-466.50	0.00	1116.61	85.56
				2	1	1.000	-515.71	0.00	1144.04	
				1	4	1.250	469.93	-713.52	-1034.13	-42.88
				2	4	1.250	474.49	713.65	-1139.41	
14	20.70	306.0	-57.0	1	1	1.000	-466.50	0.00	1116.61	78.62
				2	1	1.000	-515.71	0.00	1144.04	
				1	4	1.250	469.93	-713.52	-1034.13	-33.82
				2	4	1.250	474.49	713.65	-1139.41	
15	28.20	396.0	-57.0	1	1	1.000	-466.50	0.00	1116.61	72.11
				2	1	1.000	-515.71	0.00	1144.04	
				1	4	1.250	469.93	-713.52	-1034.13	-25.32
				2	4	1.250	474.49	713.65	-1139.41	

Pile Reactions, Service (After the reduction of overstress allowance):

Pile	Loc(X) ft	X in	Z in	Column Loads col#	comb	Ovs	P, kips	Mxx, kft	Mzz, kft	Pile Reac. kips
1	-2.80	24.0	57.0	1	2	1.000	-446.92	1228.88	984.16	102.04*
				2	2	1.000	-344.72	-1229.13	1189.36	
				1	4	1.250	469.93	-713.52	-1034.13	-48.35
				2	4	1.250	474.49	713.65	-1139.41	
2	4.70	114.0	57.0	1	1	1.000	-466.50	0.00	1116.61	92.50
				2	1	1.000	-515.71	0.00	1144.04	
				1	4	1.250	469.93	-713.52	-1034.13	-41.55
				2	4	1.250	474.49	713.65	-1139.41	
3	12.70	210.0	57.0	1	1	1.000	-466.50	0.00	1116.61	85.56
				2	1	1.000	-515.71	0.00	1144.04	
				1	4	1.250	469.93	-713.52	-1034.13	-34.30
				2	4	1.250	474.49	713.65	-1139.41	
4	20.70	306.0	57.0	1	1	1.000	-466.50	0.00	1116.61	78.62
				2	1	1.000	-515.71	0.00	1144.04	
				1	4	1.250	469.93	-713.52	-1034.13	-27.05

H. W. Lochner, Inc. PHONE: 859-224-4476
1040 Monarch St. Suite 300 Lexington, KY 40513
SHEET 5 OF 8
JOB NO. HLB#142
PROGRAM: RC-PIER® v4.1.0 LEAP Software Inc., Tampa, Florida
BY JMJ DATE Jun/15/2006
PHONE : TOLL-FREE 1-800-451-5327 TAMPA AREA: 813-985-9170
CKD. DATE

PROJECT: BONNER BRIDGE - OREGON INLET NORTH CAROLINA

				2	4	1.250	474.49	713.65	-1139.41	
5	28.20	396.0	57.0	1	1	1.000	-466.50	0.00	1116.61	72.11
				2	1	1.000	-515.71	0.00	1144.04	
				1	4	1.250	469.93	-713.52	-1034.13	-20.25
				2	4	1.250	474.49	713.65	-1139.41	
6	-2.80	24.0	0.0	1	2	1.000	-446.92	1228.88	984.16	102.04*
				2	2	1.000	-344.72	-1229.13	1189.36	
				1	4	1.250	469.93	-713.52	-1034.13	-48.35
				2	4	1.250	474.49	713.65	-1139.41	
7	4.70	114.0	0.0	1	1	1.000	-466.50	0.00	1116.61	92.50
				2	1	1.000	-515.71	0.00	1144.04	
				1	4	1.250	469.93	-713.52	-1034.13	-41.55
				2	4	1.250	474.49	713.65	-1139.41	
8	12.70	210.0	0.0	1	1	1.000	-466.50	0.00	1116.61	85.56
				2	1	1.000	-515.71	0.00	1144.04	
				1	4	1.250	469.93	-713.52	-1034.13	-34.30
				2	4	1.250	474.49	713.65	-1139.41	
9	20.70	306.0	0.0	1	1	1.000	-466.50	0.00	1116.61	78.62
				2	1	1.000	-515.71	0.00	1144.04	
				1	4	1.250	469.93	-713.52	-1034.13	-27.05
				2	4	1.250	474.49	713.65	-1139.41	
10	28.20	396.0	0.0	1	1	1.000	-466.50	0.00	1116.61	72.11
				2	1	1.000	-515.71	0.00	1144.04	
				1	4	1.250	469.93	-713.52	-1034.13	-20.26
				2	4	1.250	474.49	713.65	-1139.41	
11	-2.80	24.0	-57.0	1	2	1.000	-446.92	1228.88	984.16	102.05*
				2	2	1.000	-344.72	-1229.13	1189.36	
				1	4	1.250	469.93	-713.52	-1034.13	-48.35
				2	4	1.250	474.49	713.65	-1139.41	
12	4.70	114.0	-57.0	1	1	1.000	-466.50	0.00	1116.61	92.50
				2	1	1.000	-515.71	0.00	1144.04	
				1	4	1.250	469.93	-713.52	-1034.13	-41.56
				2	4	1.250	474.49	713.65	-1139.41	
13	12.70	210.0	-57.0	1	1	1.000	-466.50	0.00	1116.61	85.56
				2	1	1.000	-515.71	0.00	1144.04	
				1	4	1.250	469.93	-713.52	-1034.13	-34.31
				2	4	1.250	474.49	713.65	-1139.41	
14	20.70	306.0	-57.0	1	1	1.000	-466.50	0.00	1116.61	78.62
				2	1	1.000	-515.71	0.00	1144.04	
				1	4	1.250	469.93	-713.52	-1034.13	-27.06
				2	4	1.250	474.49	713.65	-1139.41	
15	28.20	396.0	-57.0	1	1	1.000	-466.50	0.00	1116.61	72.11
				2	1	1.000	-515.71	0.00	1144.04	
				1	4	1.250	469.93	-713.52	-1034.13	-20.26
				2	4	1.250	474.49	713.65	-1139.41	

Note:
* Force in pile is greater than pile capacity.

Only max. force in piles is considered for design.
Pile coordinates X and Z are from the most left edge of the footing.

Max. Pile Reaction Used in Design: (without selfweight and surcharge)
==========

Working Stress pile reaction = 81.96 kips

H. W. Lochner, Inc. PHONE: 859-224-4476
1040 Monarch St. Suite 300 Lexington, KY 40513
SHEET 6 OF 8
JOB NO. HLB#142
PROGRAM: RC-PIER® v4.1.0 LEAP Software Inc., Tampa, Florida
BY JMJ DATE Jun/15/2006
PHONE : TOLL-FREE 1-800-451-5327 TAMPA AREA: 813-985-9170
CKD. DATE

PROJECT: BONNER BRIDGE - OREGON INLET NORTH CAROLINA

Reinforcement Schedule:
==========:

Dir	Quantity	Size	Bar dist. in	As total in^2	From ft	To ft	Hook
X	8	# 6	6.00	3.52	0.50	34.50	None
X	20	# 6	22.00	8.80	0.50	34.50	Both
X	18	# 10	45.50	22.86	0.50	34.50	Both
Z	28	# 5	46.45	8.68	----	----	Both
Z	52	# 5	21.13	16.12	----	----	Both
Z	8	# 11	7.08	12.48	----	----	None
Z	28	# 5	5.31	8.68	----	----	Both

Flexure:
========

X direction

Loc ft	Mmax Mmin kft	Comb Comb	Asb_req Asb_req in^2	Asb_prv Asb_prv in^2	Asb_eff Asb_eff in^2	Ast_req Ast_req in^2	Ast_prv Ast_prv in^2	Ast_eff Ast_eff in^2
-4.80	0.0	2	0.00	0.00	0.00	0.00	0.00	0.00
	0.0	2	0.00	0.00	0.00	0.00	0.00	0.00
-4.43	0.0	2	0.00	0.00	0.00	0.00	0.00	0.00
	0.0	2	0.00	0.00	0.00	0.00	0.00	0.00
-4.30	0.0	2	0.00	12.32	0.04	0.00	22.86	0.04
	0.0	2	0.00	12.32	0.04	0.00	22.86	0.04
-3.70	0.0	2	0.00	12.32	10.17	0.00	22.86	10.75
	0.0	2	0.00	12.32	9.81	0.00	22.86	10.75
-3.33	0.0	2	0.00	12.32	12.32	0.00	22.86	17.31
	0.0	2	0.00	12.32	12.32	0.00	22.86	17.31
-2.97	0.0	2	0.00	12.32	12.32	0.00	22.86	22.86
	0.0	2	0.00	12.32	12.32	0.00	22.86	22.86
-2.60	49.2	2	1.19	12.32	12.32	0.00	22.86	22.86
	0.0	2	0.00	12.32	12.32	0.00	22.86	22.86
-2.23	139.3	2	3.42	12.32	12.32	0.00	22.86	22.86
	0.0	2	0.00	12.32	12.32	0.00	22.86	22.86
-1.87	229.5	2	5.67	12.32	12.32	0.00	22.86	22.86
	0.0	2	0.00	12.32	12.32	0.00	22.86	22.86
-1.50	319.7	2	7.96	12.32	12.32	0.00	22.86	22.86
	0.0	2	0.00	12.32	12.32	0.00	22.86	22.86
0.00	0.0	2	0.00	12.32	12.32	0.00	22.86	22.86
	0.0	2	0.00	12.32	12.32	0.00	22.86	22.86
1.50	131.6	2	3.22	12.32	12.32	0.00	22.86	22.86
	0.0	2	0.00	12.32	12.32	0.00	22.86	22.86
4.30	0.0	2	0.00	12.32	12.32	0.00	22.86	22.86
	-907.0	2	0.00	12.32	12.32	16.84	22.86	22.86
7.13	0.0	2	0.00	12.32	12.32	0.00	22.86	22.86
	-1360.4	2	0.00	12.32	12.32	25.56	22.86 *	22.86
9.94	0.0	2	0.00	12.32	12.32	0.00	22.86	22.86
	-1712.9	2	0.00	12.32	12.32	32.45	22.86 *	22.86
12.75	0.0	2	0.00	12.32	12.32	0.00	22.86	22.86
	-2053.2	2	0.00	12.32	12.32	39.16	22.86 *	22.86
15.56	0.0	2	0.00	12.32	12.32	0.00	22.86	22.86
	-1714.2	2	0.00	12.32	12.32	32.47	22.86 *	22.86
18.38	0.0	2	0.00	12.32	12.32	0.00	22.86	22.86
	-1375.2	2	0.00	12.32	12.32	25.85	22.86 *	22.86

H. W. Lochner, Inc. PHONE: 859-224-4476
1040 Monarch St. Suite 300 Lexington, KY 40513
SHEET 7 OF 8
JOB NO. HLB#142
PROGRAM: RC-PIER® v4.1.0 LEAP Software Inc., Tampa, Florida
BY JMJ DATE Jun/15/2006
PHONE : TOLL-FREE 1-800-451-5327 TAMPA AREA: 813-985-9170
CKD. DATE

PROJECT: BONNER BRIDGE - OREGON INLET NORTH CAROLINA

21.20	0.0	2	0.00	12.32	12.32	0.00	22.86	22.86
	-910.9	2	0.00	12.32	12.32	16.91	22.86	22.86
24.00	114.3	2	2.79	12.32	12.32	0.00	22.86	22.86
	0.0	2	0.00	12.32	12.32	0.00	22.86	22.86
25.50	0.0	2	0.00	12.32	12.32	0.00	22.86	22.86
	0.0	2	0.00	12.32	12.32	0.00	22.86	22.86
27.00	295.1	2	7.33	12.32	12.32	0.00	22.86	22.86
	0.0	2	0.00	12.32	12.32	0.00	22.86	22.86
27.36	207.6	2	5.12	12.32	12.32	0.00	22.86	22.86
	0.0	2	0.00	12.32	12.32	0.00	22.86	22.86
27.71	120.2	2	2.94	12.32	12.32	0.00	22.86	22.86
	0.0	2	0.00	12.32	12.32	0.00	22.86	22.86
28.07	32.8	2	0.79	12.32	12.32	0.00	22.86	22.86
	0.0	2	0.00	12.32	12.32	0.00	22.86	22.86
28.42	0.0	2	0.00	12.32	12.32	0.00	22.86	22.86
	0.0	2	0.00	12.32	12.32	0.00	22.86	22.86
28.78	0.0	2	0.00	12.32	12.32	0.00	22.86	16.52
	0.0	2	0.00	12.32	12.32	0.00	22.86	16.52
29.13	0.0	2	0.00	12.32	9.61	0.00	22.86	10.15
	0.0	2	0.00	12.32	9.26	0.00	22.86	10.15
29.49	0.0	2	0.00	12.32	3.58	0.00	22.86	3.78
	0.0	2	0.00	12.32	3.45	0.00	22.86	3.78
29.80	0.0	2	0.00	0.00	0.00	0.00	0.00	0.00
	0.0	2	0.00	0.00	0.00	0.00	0.00	0.00
30.20	0.0	2	0.00	0.00	0.00	0.00	0.00	0.00
	0.0	2	0.00	0.00	0.00	0.00	0.00	0.00

Z direction

Loc ft	Mmax kft	Comb	Asb_req in^2	Asb_prv in^2	Asb_eff in^2	Ast_req in^2	Ast_prv in^2	Ast_eff in^2
-2.96	734.3	2	15.91	37.28	37.28	0.00	8.68	8.68
2.96	734.3	2	15.91	37.28	37.28	0.00	8.68	8.68

Note:
* The provided reinforcement is not adequate, either less than required or larger than maximum allowed.

One Way Shear:
==========

Col	Dist ft	Comb	d in	V kips	Vc kips

X direction

1	-4.30	2	33.98	0.0	346.9
	4.30	2	33.57	302.3	342.7
2	21.20	2	33.57	310.9	342.7
	29.80	2	48.00	0.0	490.0

Z direction

	-6.15	2	38.26	0.0	1012.5
	6.15	2	38.26	0.0	1012.5

H. W. Lochner, Inc. PHONE: 859-224-4476
1040 Monarch St. Suite 300 Lexington, KY 40513
SHEET 8 OF 8
JOB NO. HLB#142
PROGRAM: RC-PIER® v4.1.0 LEAP Software Inc., Tampa, Florida
BY JMJ DATE Jun/15/2006
PHONE : TOLL-FREE 1-800-451-5327 TAMPA AREA: 813-985-9170
CKD. DATE

PROJECT: BONNER BRIDGE - OREGON INLET NORTH CAROLINA

Two Way Shear:
==========

#	Bo ft	Ao ft^2	Comb	Avg. d in	V kips	Vc kips
Columns:						
1	29.84	53.52	2	36.02	617.1	1539.8
2	29.84	53.52	2	39.52	612.3	1539.8
Piles - max:						
7	15.19	18.36	2	37.77	0.0	783.8
Piles - min:						
1	5.90	14.82	2	37.77	0.0	304.4

Note:
TWO WAY SHEAR IN FOOTING IS NOT DESIGNED AND STIRRUPS ARE NOT CONSIDERED.