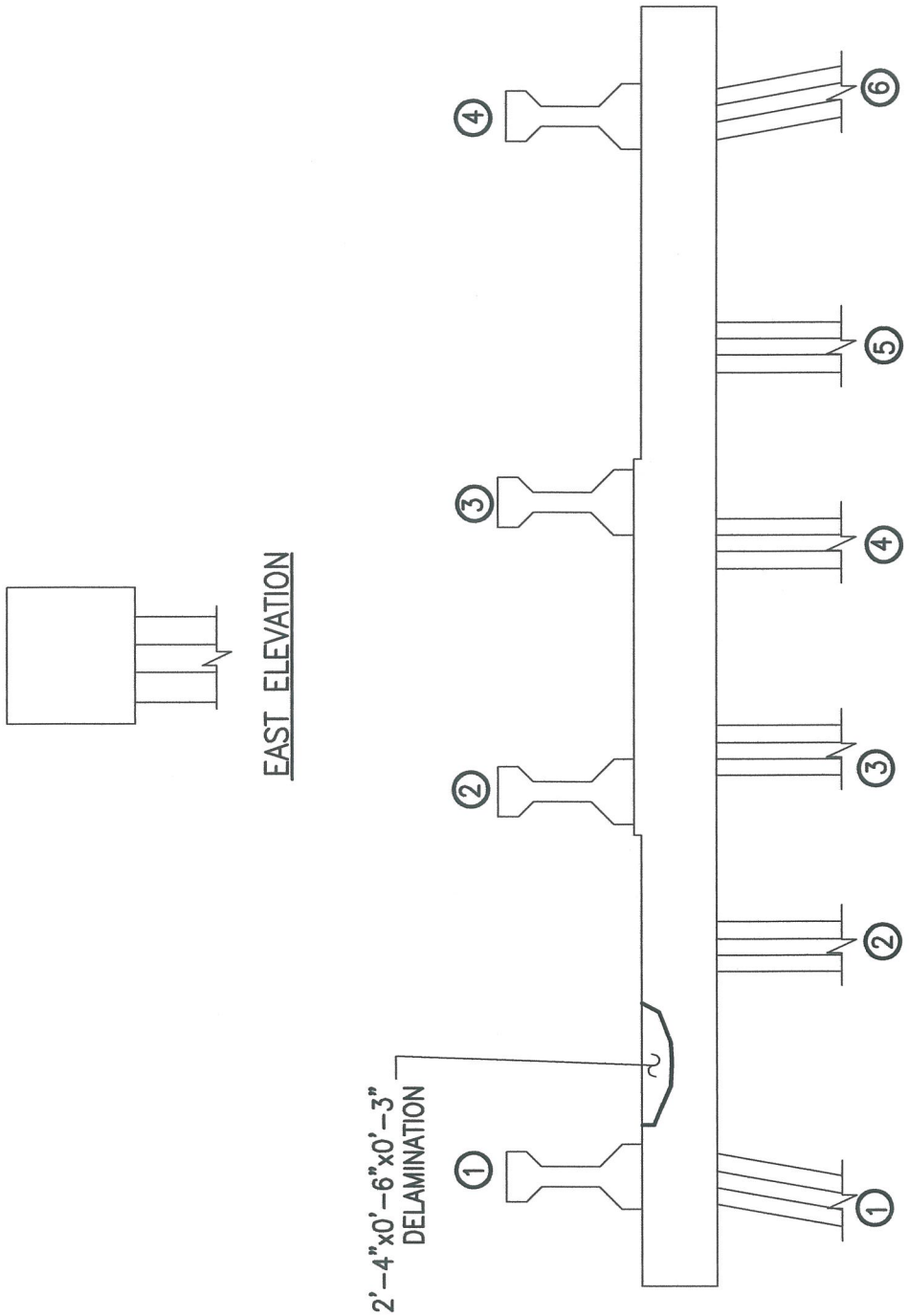

ALPHA & OMEGA GROUP
CIVIL & STRUCTURAL ENGINEERS
4911 Green Road Suite 107 Raleigh, NC 27616
Phone 919 981 0310 Fax 919 981 0451
Email info@aogroup.com www.aogroup.com

BRIDGE NO:	270011		
COUNTY:	DARE		
PREPARED BY:	OHS	CHECKED BY:	TGZ
SCALE:	NTS		
DATE:	6/20/06	SHT 398 OF 1347	

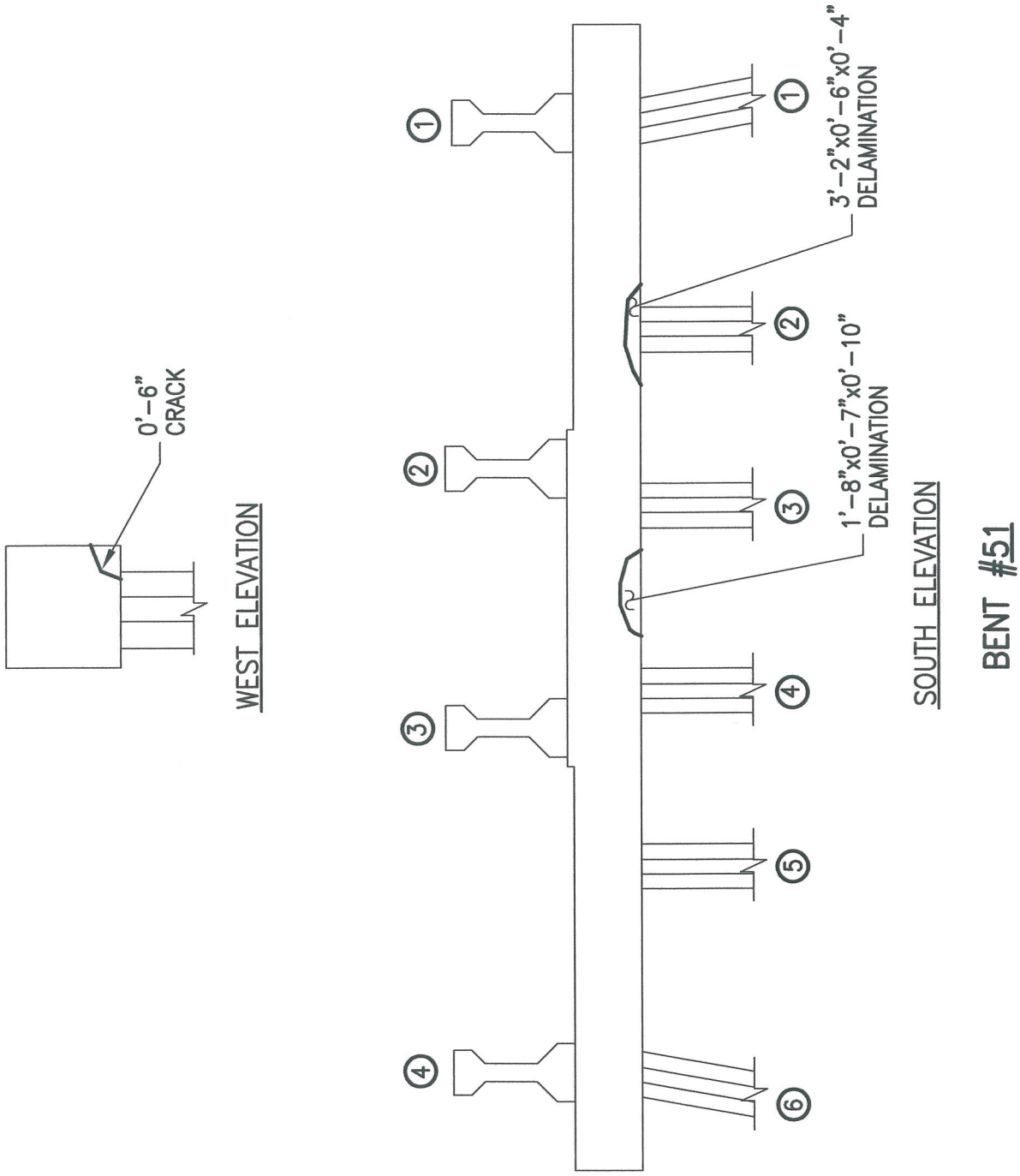

ALPHA & OMEGA GROUP
CIVIL & STRUCTURAL ENGINEERS
4911 Green Road Suite 107 Raleigh, NC 27616
Phone 919 981 0310 Fax 919 981 0451
Email info@aogroup.com www.aogroup.com

BRIDGE NO:	270011		
COUNTY:	DARE		
PREPARED BY:	OHS	CHECKED BY:	TGZ
SCALE:	NTS		
DATE:	6/20/06	SHT 401 OF 1347	

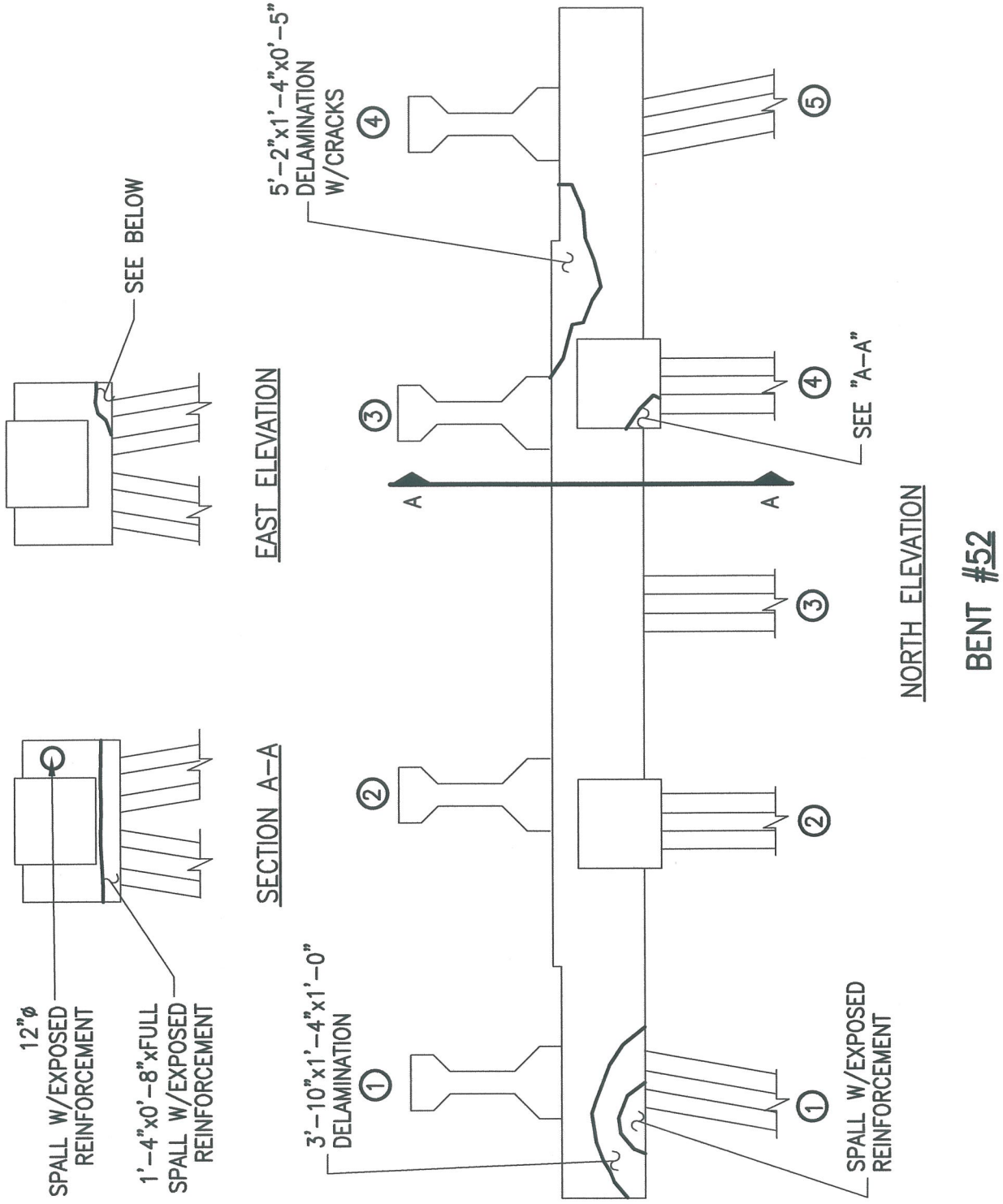

ALPHA & OMEGA GROUP
CIVIL & STRUCTURAL ENGINEERS
4911 Green Road Suite 107 Raleigh, NC 27616
Phone 919 981 0310 Fax 919 981 0451
Email info@aogroup.com www.aogroup.com

BRIDGE NO:	270011		
COUNTY:	DARE		
PREPARED BY:	OHS	CHECKED BY:	TGZ
SCALE:	NTS		
DATE:	6/20/06	SHT 404 OF 1347	

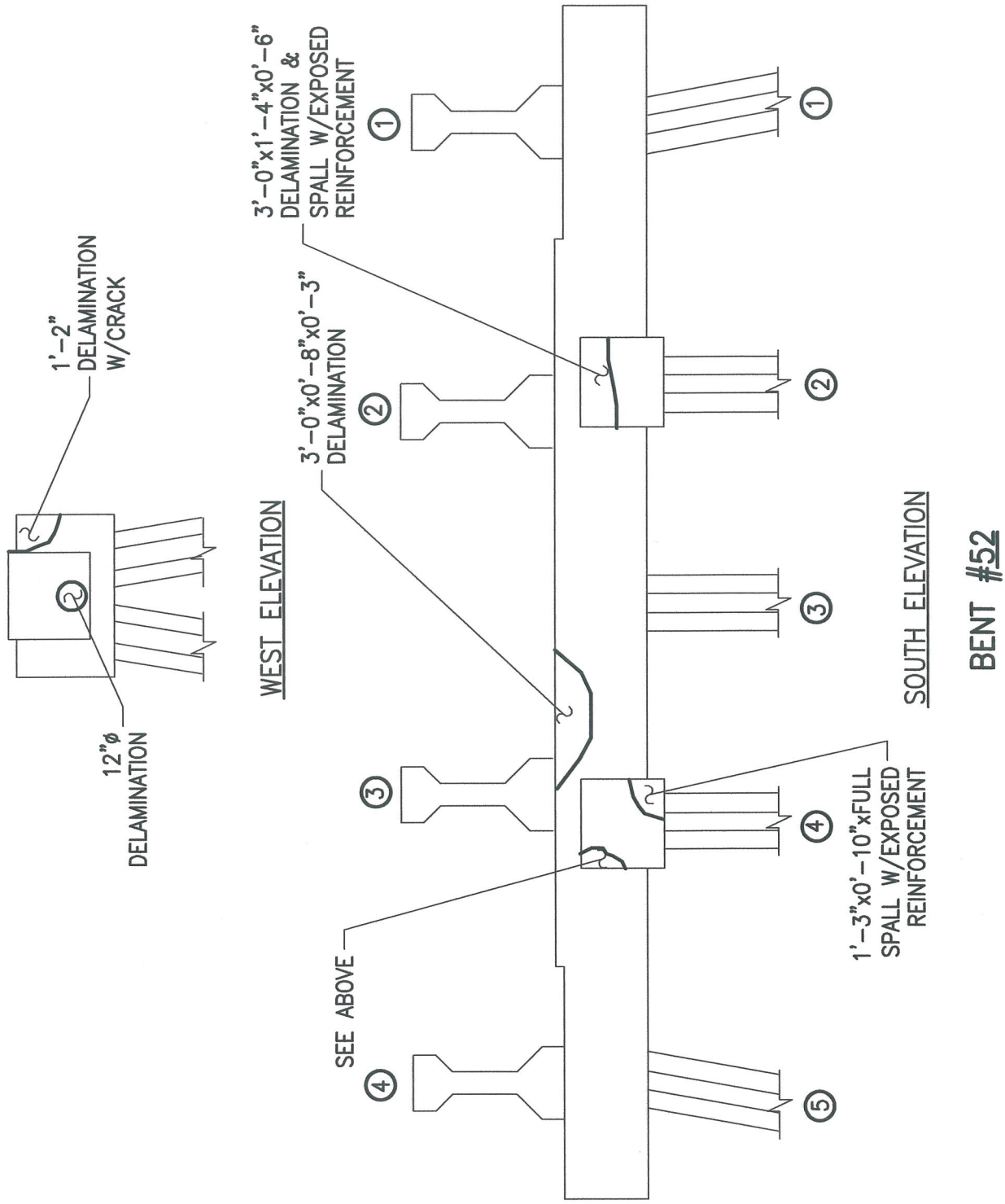

ALPHA & OMEGA GROUP
CIVIL & STRUCTURAL ENGINEERS
4911 Green Road Suite 107 Raleigh, NC 27616
Phone 919 981 0310 Fax 919 981 0451
Email info@aogroup.com www.aogroup.com

BRIDGE NO:	270011		
COUNTY:	DARE		
PREPARED BY:	OHS	CHECKED BY:	TGZ
SCALE:	NTS		
DATE:	6/20/06	SHT 407 OF 1347	

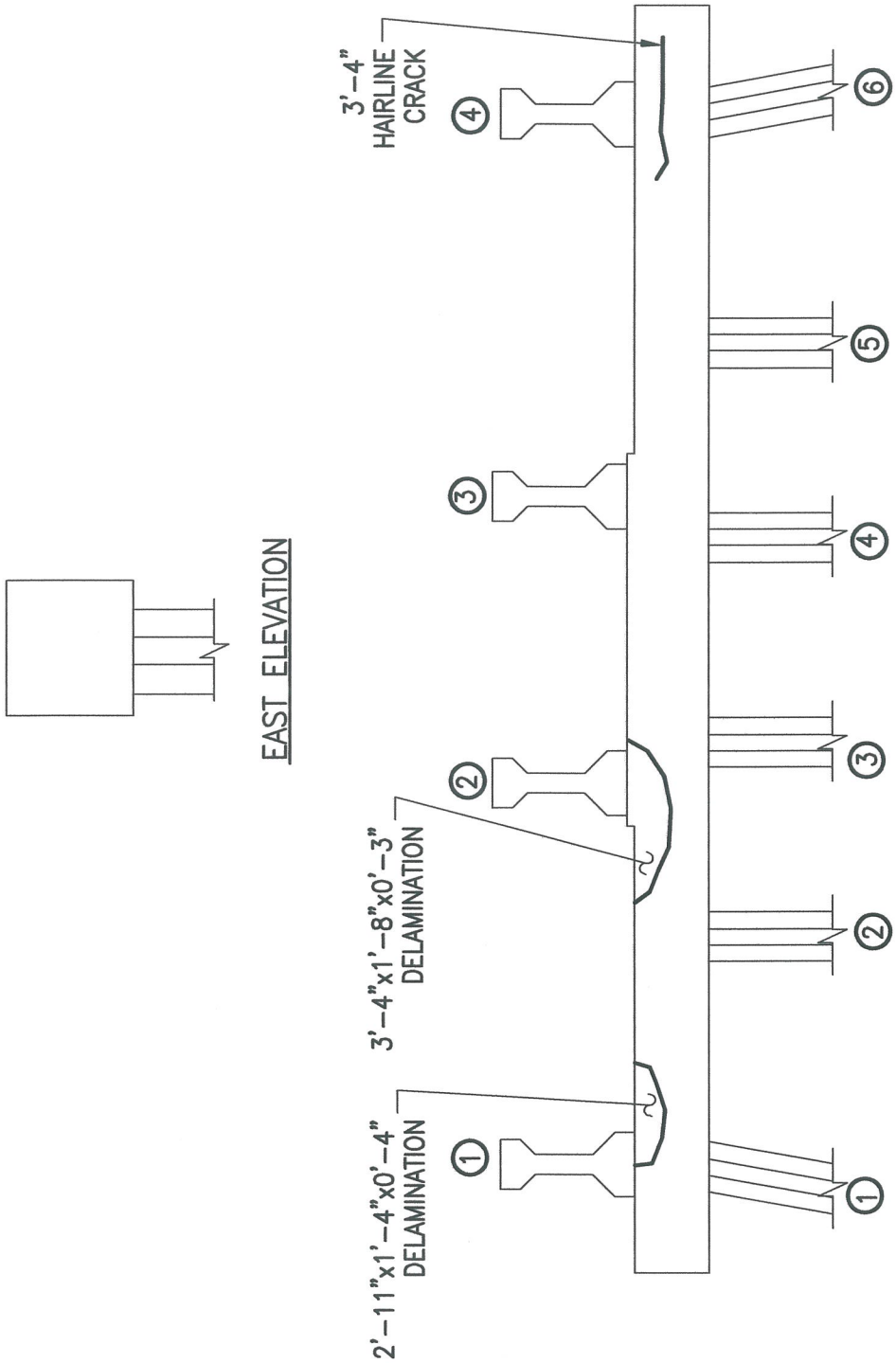

ALPHA & OMEGA GROUP
CIVIL & STRUCTURAL ENGINEERS
4911 Green Road Suite 107 Raleigh, NC 27616
Phone 919 981 0310 Fax 919 981 0451
Email info@aogroup.com www.aogroup.com

BRIDGE NO:	270011		
COUNTY:	DARE		
PREPARED BY:	OHS	CHECKED BY:	TGZ
SCALE:	NTS		
DATE:	6/20/06	SHT 410 OF 1347	

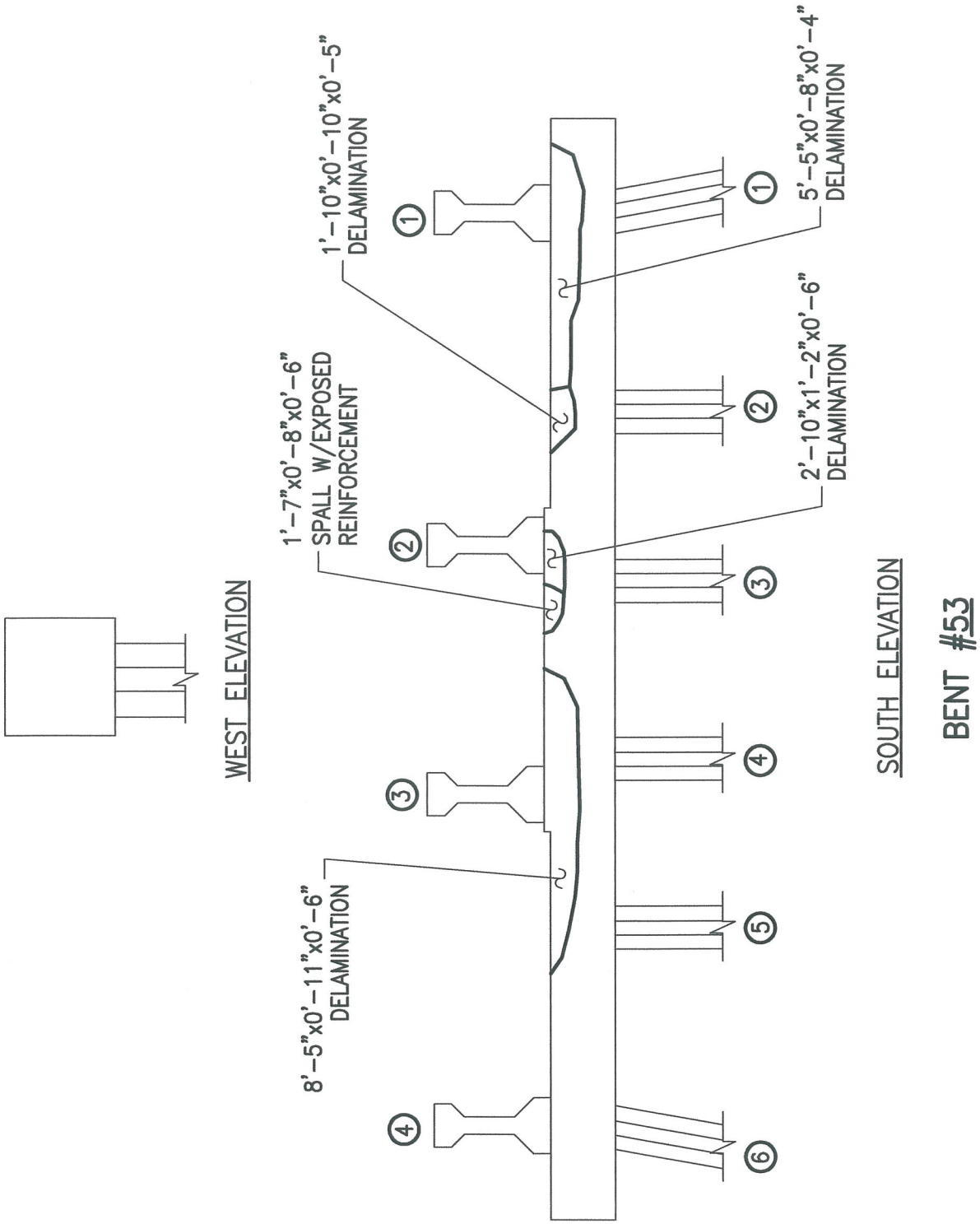

ALPHA & OMEGA GROUP
CIVIL & STRUCTURAL ENGINEERS
4911 Green Road Suite 107 Raleigh, NC 27616
Phone 919 981 0310 Fax 919 981 0451
Email info@aogroup.com www.aogroup.com

BRIDGE NO:	270011		
COUNTY:	DARE		
PREPARED BY:	OHS	CHECKED BY:	TGZ
SCALE:	NTS		
DATE:	6/20/06	SHT 413 OF 1347	

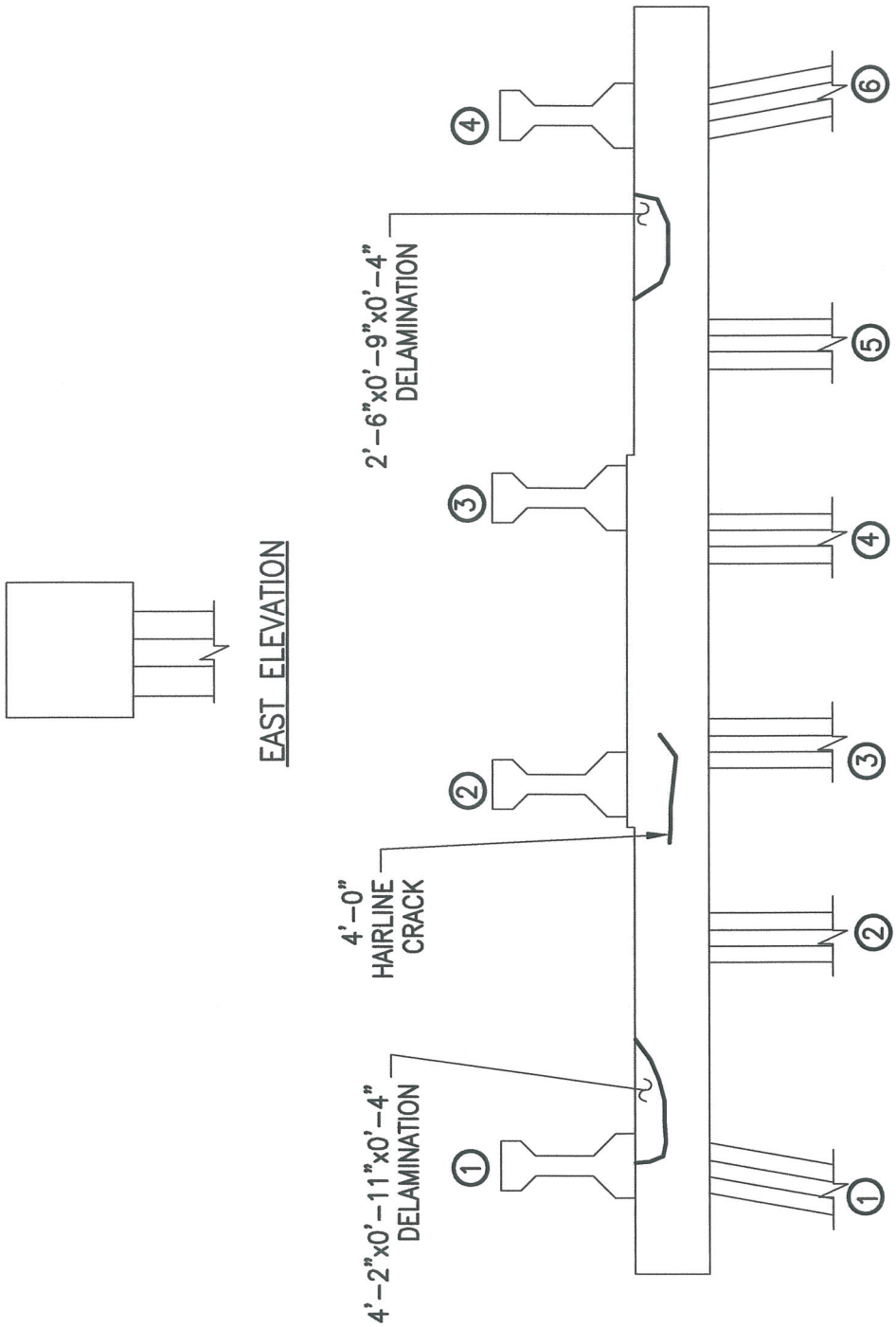

ALPHA & OMEGA GROUP
CIVIL & STRUCTURAL ENGINEERS
4911 Green Road Suite 107 Raleigh, NC 27616
Phone 919 981 0310 Fax 919 981 0451
Email info@aogroup.com www.aogroup.com

BRIDGE NO:	270011		
COUNTY:	DARE		
PREPARED BY:	OHS	CHECKED BY:	TGZ
SCALE:	NTS		
DATE:	6/20/06	SHT 416 OF 1347	

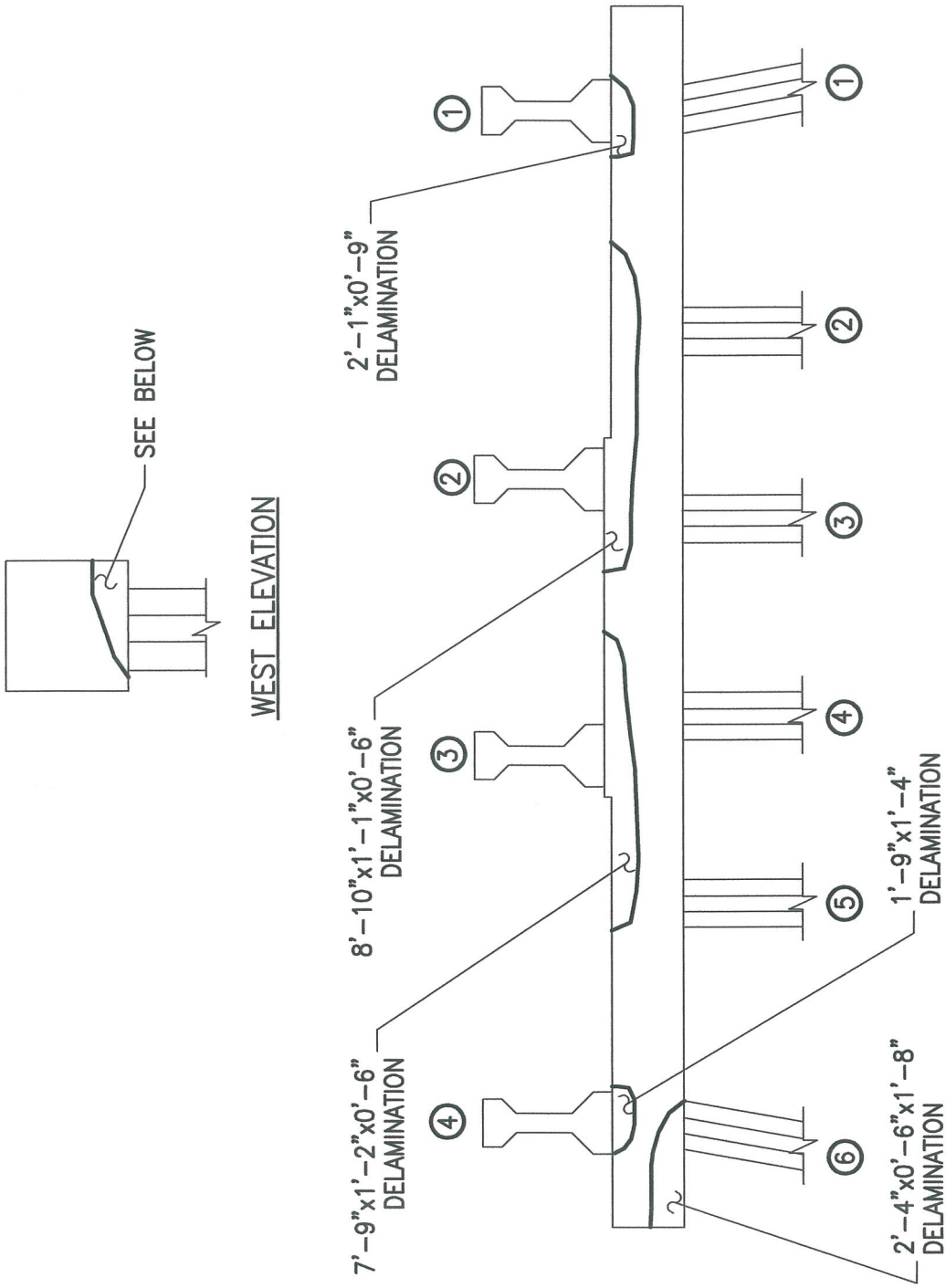

ALPHA & OMEGA GROUP
CIVIL & STRUCTURAL ENGINEERS
4911 Green Road Suite 107 Raleigh, NC 27616
Phone 919 981 0310 Fax 919 981 0451
Email info@aogroup.com www.aogroup.com

BRIDGE NO:	270011		
COUNTY:	DARE		
PREPARED BY:	OHS	CHECKED BY:	TGZ
SCALE:	NTS		
DATE:	6/20/06	SHT 419 OF 1347	

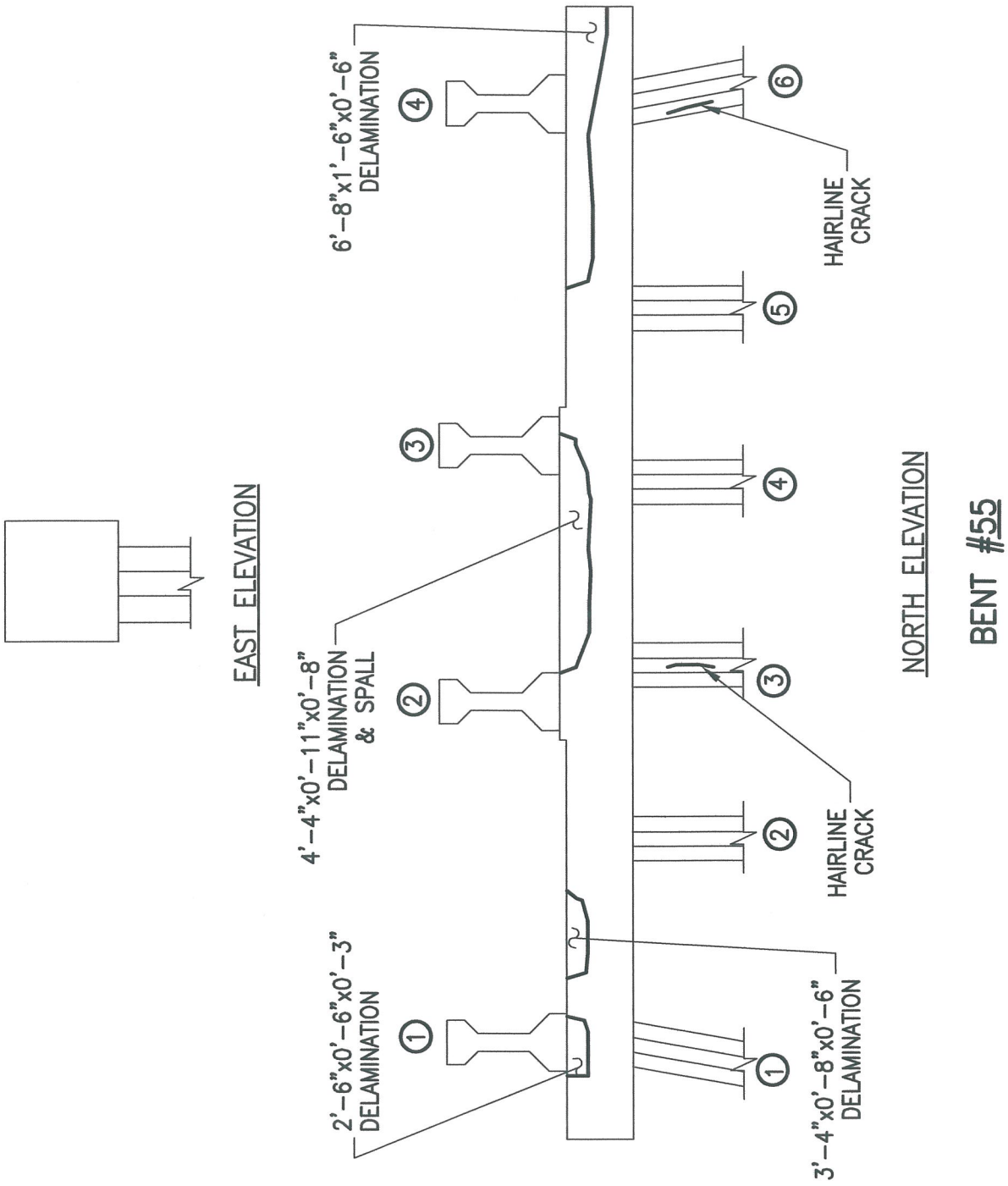

ALPHA & OMEGA GROUP
CIVIL & STRUCTURAL ENGINEERS
4911 Green Road Suite 107 Raleigh, NC 27616
Phone 919 981 0310 Fax 919 981 0451
Email info@aogroup.com www.aogroup.com

BRIDGE NO:	270011		
COUNTY:	DARE		
PREPARED BY:	OHS	CHECKED BY:	TGZ
SCALE:	NTS		
DATE:	6/20/06	SHT 422 OF 1347	

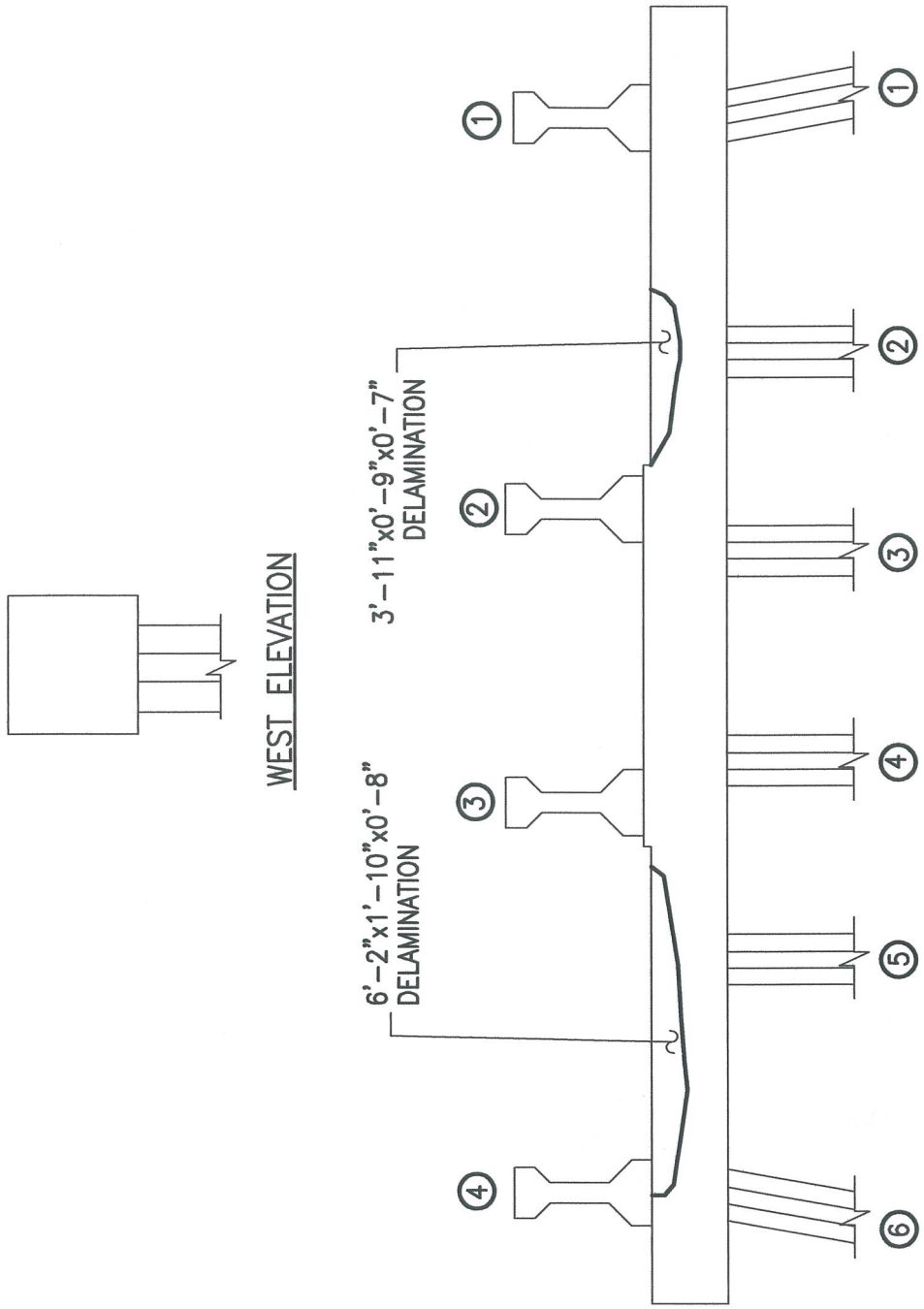

ALPHA & OMEGA GROUP
CIVIL & STRUCTURAL ENGINEERS
4911 Green Road Suite 107 Raleigh, NC 27616
Phone 919 981 0310 Fax 919 981 0451
Email info@aogroup.com www.aogroup.com

BRIDGE NO:	270011		
COUNTY:	DARE		
PREPARED BY:	OHS	CHECKED BY:	TGZ
SCALE:	NTS		
DATE:	6/20/06	SHT 426 OF 1347	

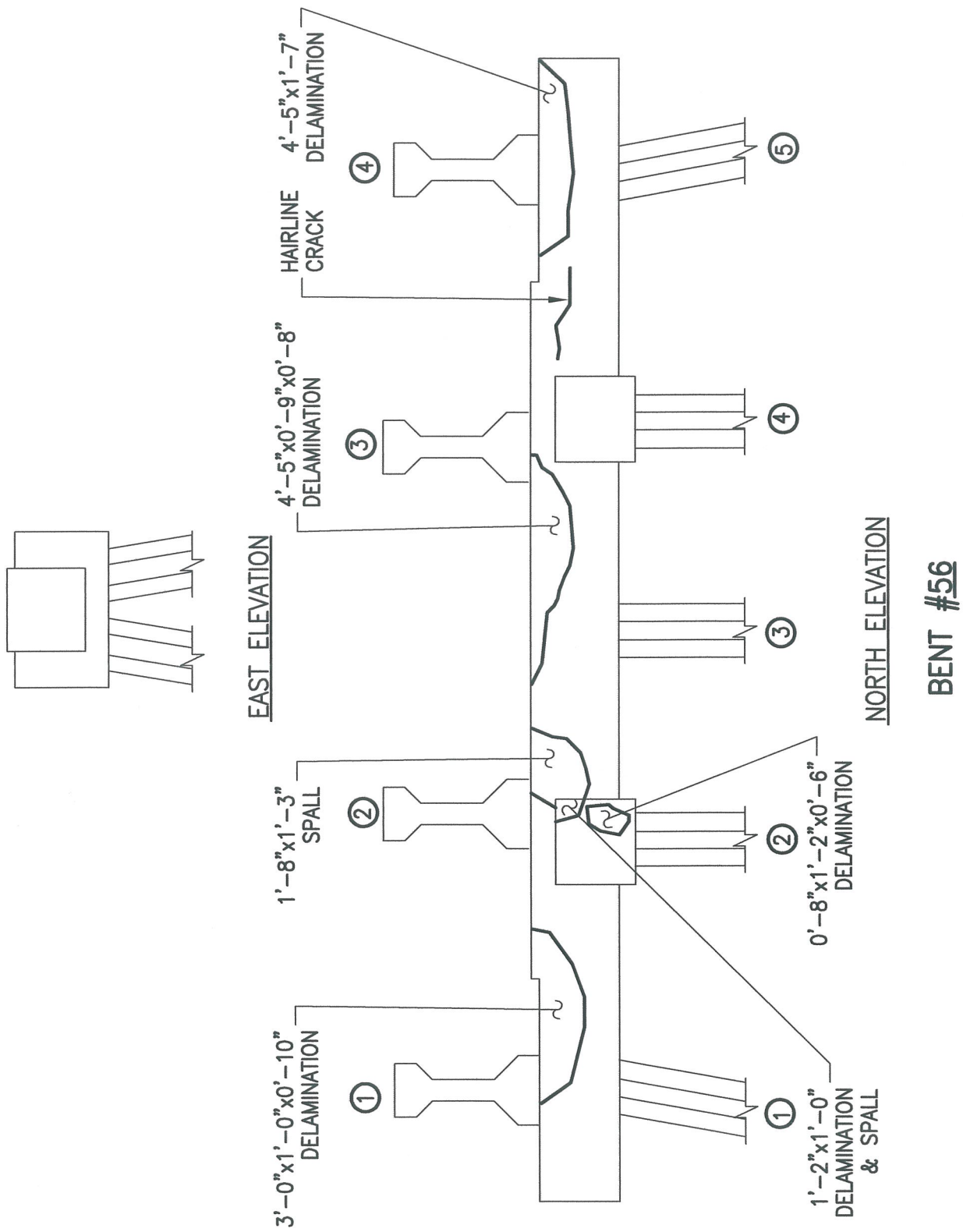

ALPHA & OMEGA GROUP
CIVIL & STRUCTURAL ENGINEERS
4911 Green Road Suite 107 Raleigh, NC 27616
Phone 919 981 0310 Fax 919 981 0451
Email info@aogroup.com www.aogroup.com

BRIDGE NO:	270011		
COUNTY:	DARE		
PREPARED BY:	OHS	CHECKED BY:	TGZ
SCALE:	NTS		
DATE:	6/20/06	SHT 428 OF 1347	

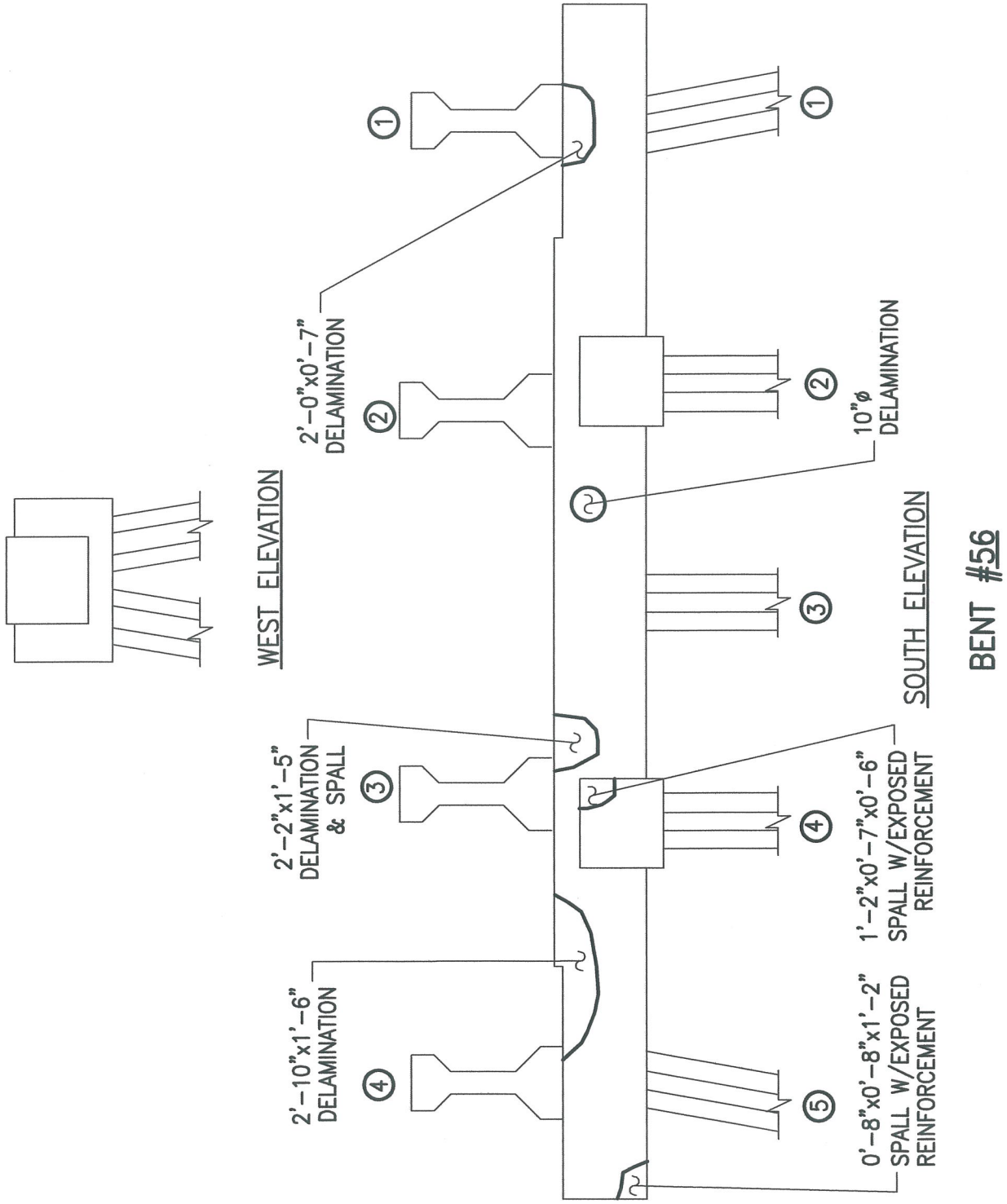

ALPHA & OMEGA GROUP
CIVIL & STRUCTURAL ENGINEERS
4911 Green Road Suite 107 Raleigh, NC 27616
Phone 919 981 0310 Fax 919 981 0451
Email info@aogroup.com www.aogroup.com

BRIDGE NO:	270011		
COUNTY:	DARE		
PREPARED BY:	OHS	CHECKED BY:	TGZ
SCALE:	NTS		
DATE:	6/20/06	SHT 431 OF 1347	

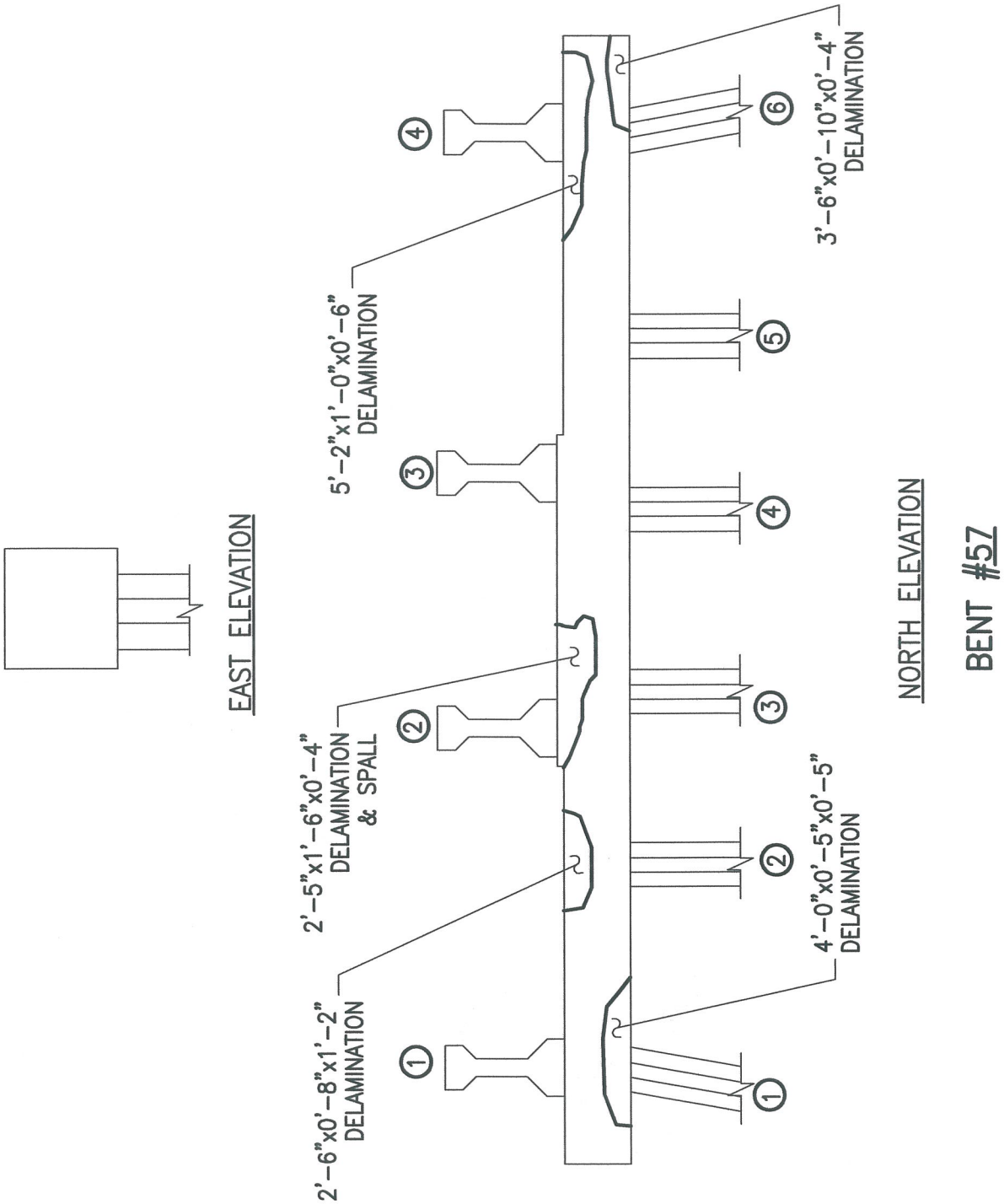

ALPHA & OMEGA GROUP
CIVIL & STRUCTURAL ENGINEERS
4911 Green Road Suite 107 Raleigh, NC 27616
Phone 919 981 0310 Fax 919 981 0451
Email info@aogroup.com www.aogroup.com

BRIDGE NO:	270011		
COUNTY:	DARE		
PREPARED BY:	OHS	CHECKED BY:	TGZ
SCALE:	NTS		
DATE:	6/20/06	SHT 434 OF 1347	

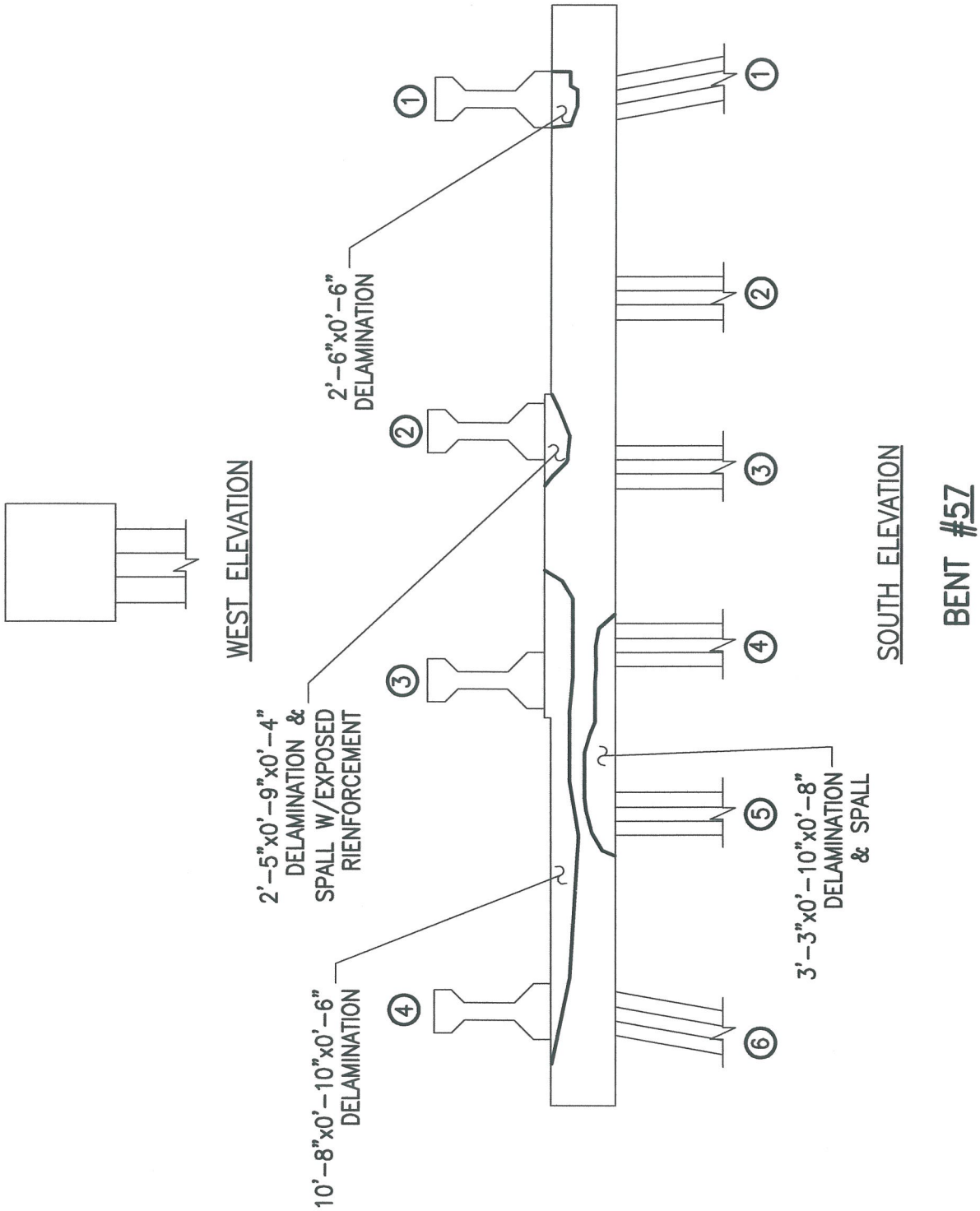

ALPHA & OMEGA GROUP
CIVIL & STRUCTURAL ENGINEERS
4911 Green Road Suite 107 Raleigh, NC 27616
Phone 919 981 0310 Fax 919 981 0451
Email info@aogroup.com www.aogroup.com

BRIDGE NO:	270011		
COUNTY:	DARE		
PREPARED BY:	OHS	CHECKED BY:	TGZ
SCALE:	NTS		
DATE:	6/20/06	SHT 437 OF 1347	

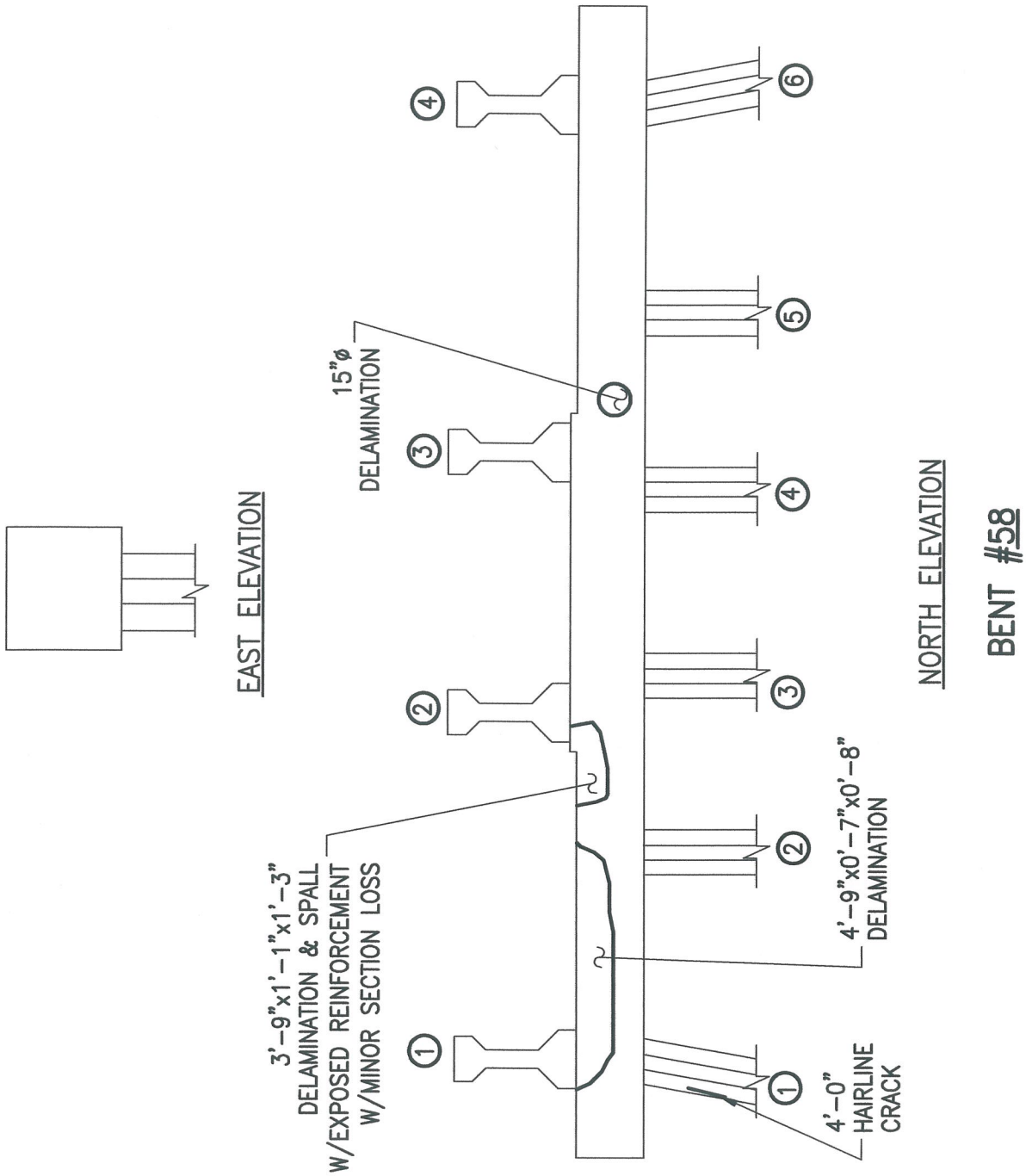

ALPHA & OMEGA GROUP
CIVIL & STRUCTURAL ENGINEERS
4911 Green Road Suite 107 Raleigh, NC 27616
Phone 919 981 0310 Fax 919 981 0451
Email info@aogroup.com www.aogroup.com

BRIDGE NO:	270011		
COUNTY:	DARE		
PREPARED BY:	OHS	CHECKED BY:	TGZ
SCALE:	NTS		
DATE:	6/20/06	SHT 440 OF 1347	

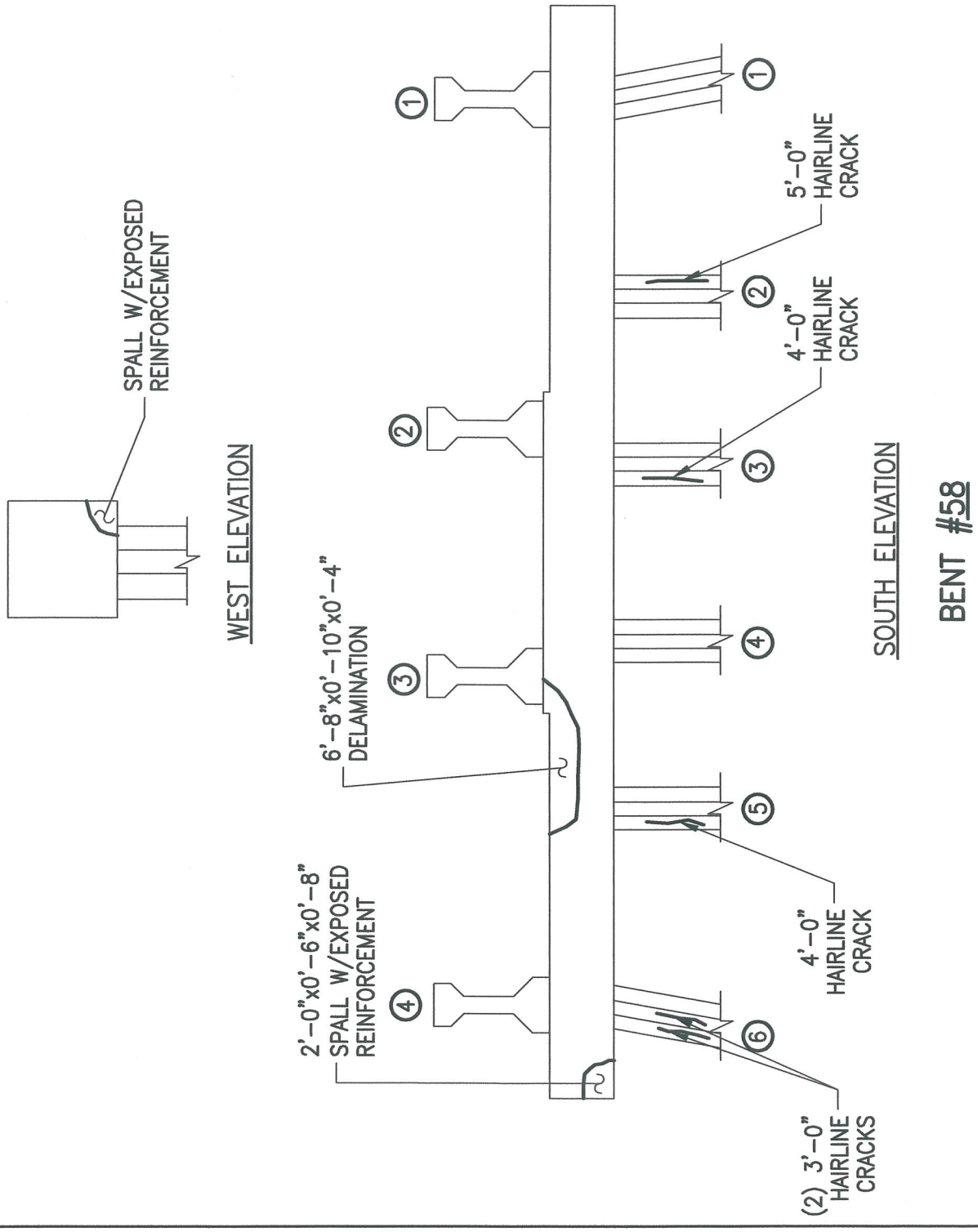

ALPHA & OMEGA GROUP
CIVIL & STRUCTURAL ENGINEERS
4911 Green Road Suite 107 Raleigh, NC 27616
Phone 919 981 0310 Fax 919 981 0451
Email info@aogroup.com www.aogroup.com

BRIDGE NO:	270011		
COUNTY:	DARE		
PREPARED BY:	OHS	CHECKED BY:	TGZ
SCALE:	NTS		
DATE:	6/20/06	SHT 443 OF 1347	

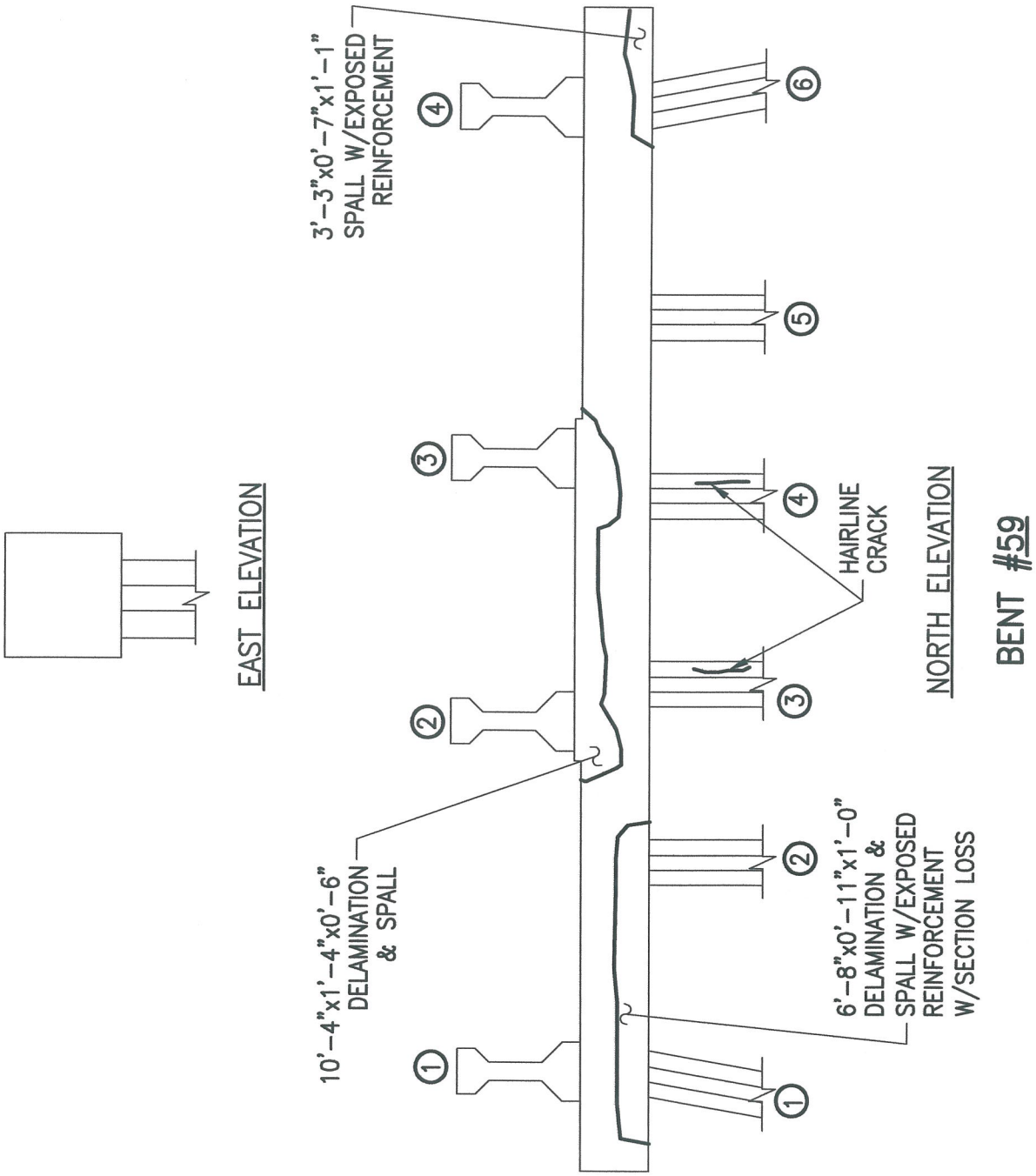

ALPHA & OMEGA GROUP
CIVIL & STRUCTURAL ENGINEERS
4911 Green Road Suite 107 Raleigh, NC 27616
Phone 919 981 0310 Fax 919 981 0451
Email info@aogroup.com www.aogroup.com

BRIDGE NO:	270011		
COUNTY:	DARE		
PREPARED BY:	OHS	CHECKED BY:	TGZ
SCALE:	NTS		
DATE:	6/20/06	SHT 446 OF 1347	

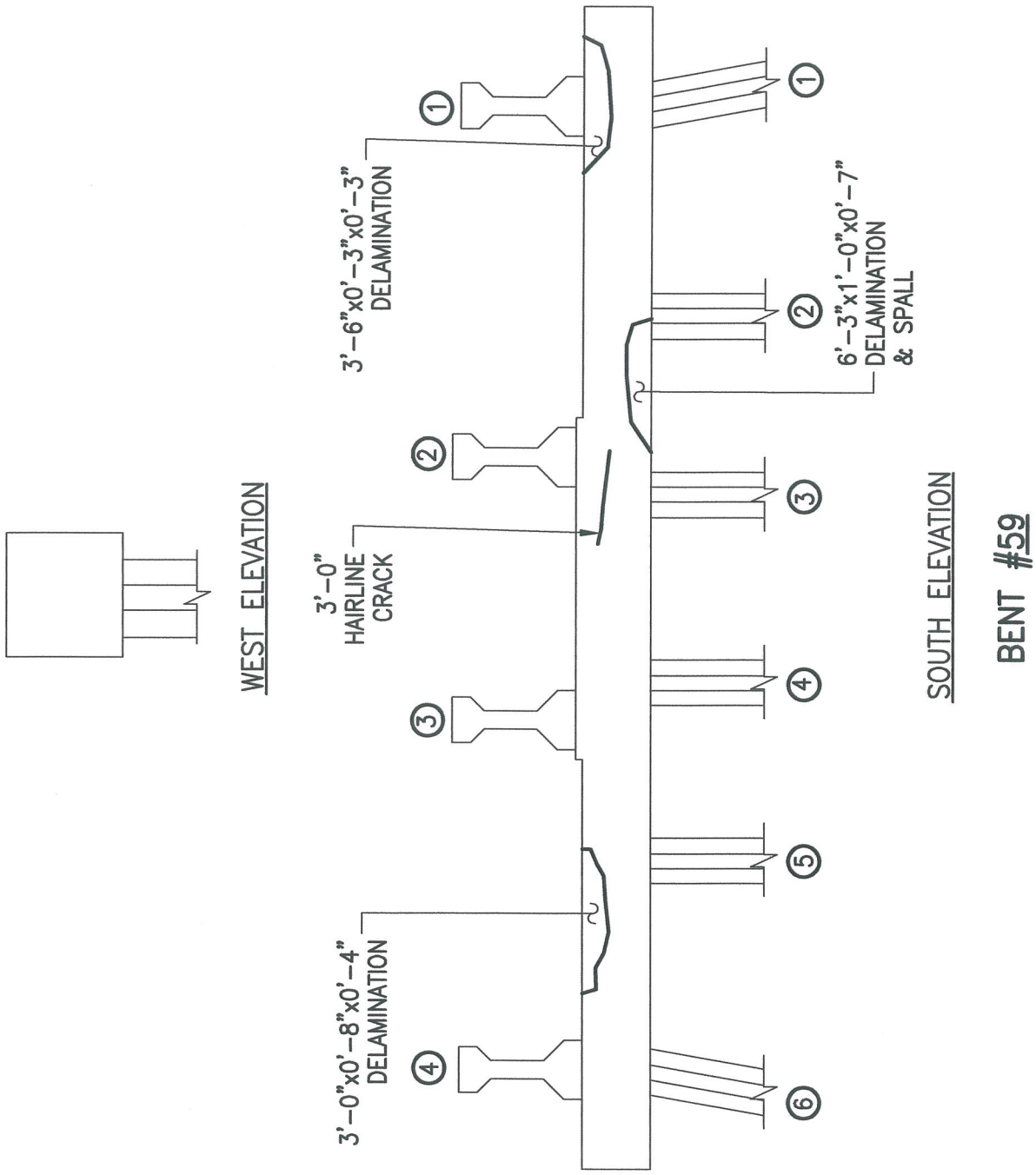

ALPHA & OMEGA GROUP
CIVIL & STRUCTURAL ENGINEERS
4911 Green Road Suite 107 Raleigh, NC 27616
Phone 919 981 0310 Fax 919 981 0451
Email info@aogroup.com www.aogroup.com

BRIDGE NO:	270011		
COUNTY:	DARE		
PREPARED BY:	OHS	CHECKED BY:	TGZ
SCALE:	NTS		
DATE:	6/20/06	SHT 449 OF 1347	

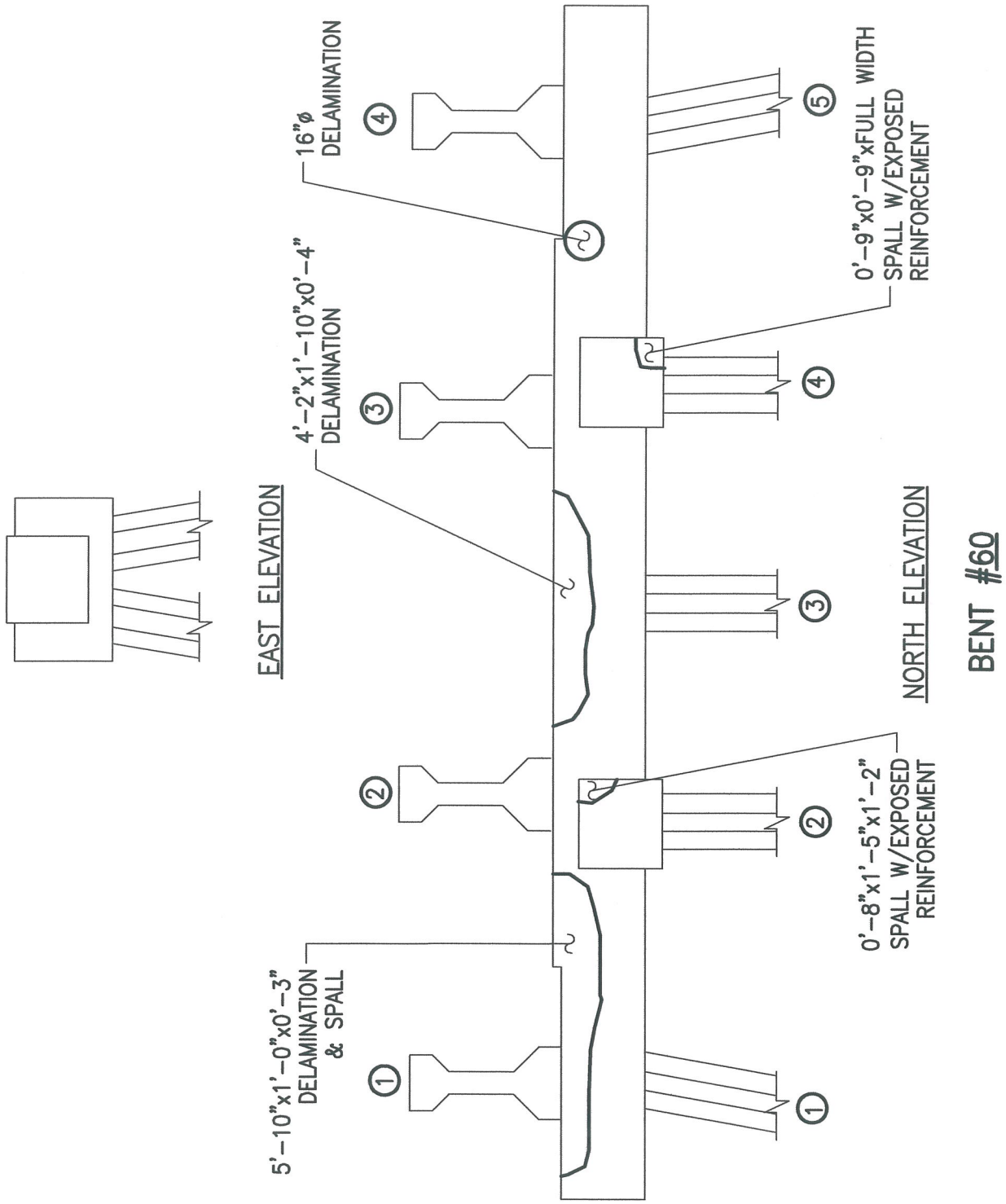

ALPHA & OMEGA GROUP
CIVIL & STRUCTURAL ENGINEERS
4911 Green Road Suite 107 Raleigh, NC 27616
Phone 919 981 0310 Fax 919 981 0451
Email info@aogroup.com www.aogroup.com

BRIDGE NO:	270011		
COUNTY:	DARE		
PREPARED BY:	OHS	CHECKED BY:	TGZ
SCALE:	NTS		
DATE:	6/20/06	SHT 45 OF 134	

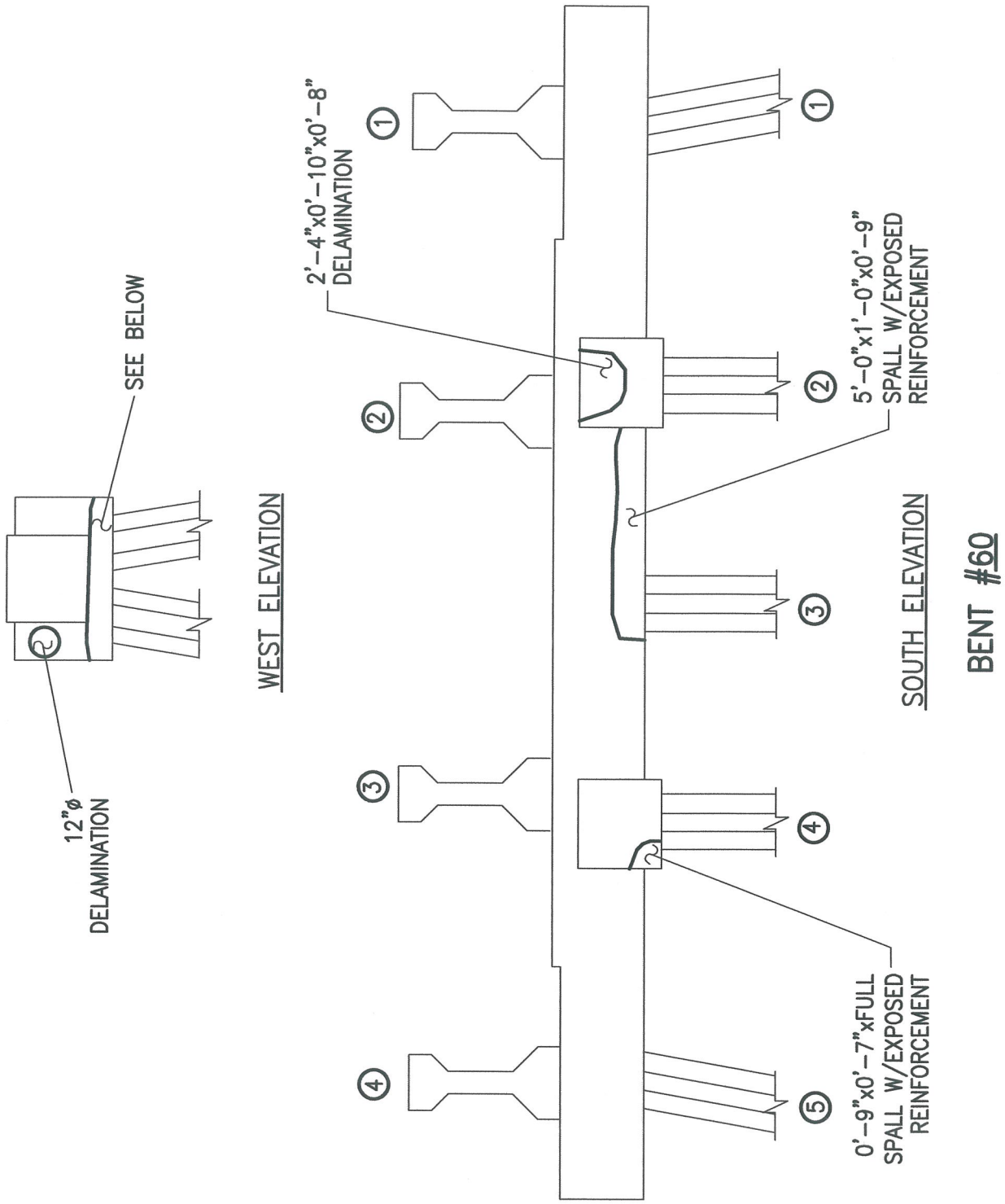

ALPHA & OMEGA GROUP
CIVIL & STRUCTURAL ENGINEERS
4911 Green Road Suite 107 Raleigh, NC 27616
Phone 919 981 0310 Fax 919 981 0451
Email info@aogroup.com www.aogroup.com

BRIDGE NO:	270011		
COUNTY:	DARE		
PREPARED BY:	OHS	CHECKED BY:	TGZ
SCALE:	NTS		
DATE:	6/20/06	SHT 455 OF 1347	

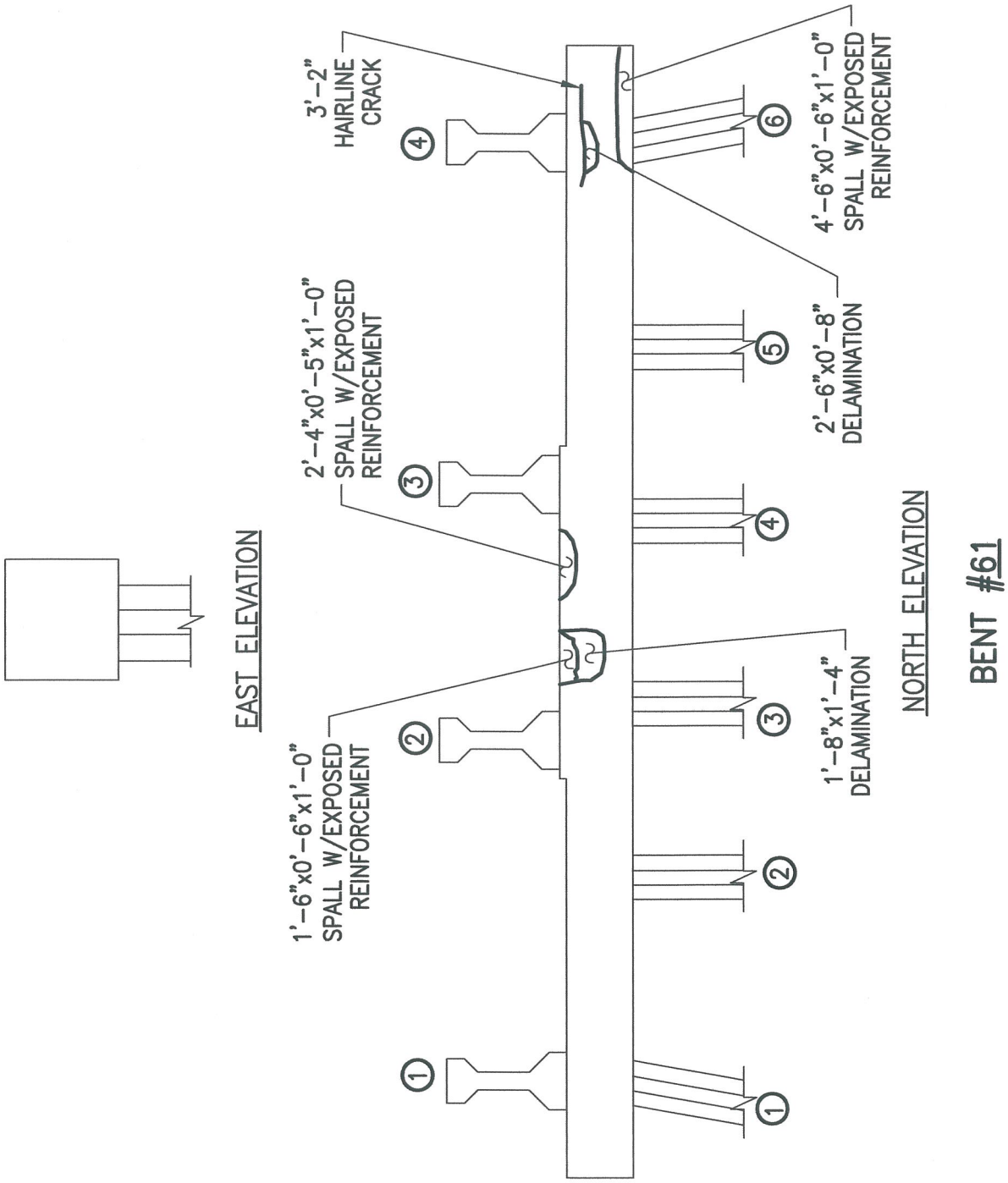

ALPHA & OMEGA GROUP
CIVIL & STRUCTURAL ENGINEERS
4911 Green Road Suite 107 Raleigh, NC 27616
Phone 919 981 0310 Fax 919 981 0451
Email info@aogroup.com www.aogroup.com

BRIDGE NO:	270011		
COUNTY:	DARE		
PREPARED BY:	OHS	CHECKED BY:	TGZ
SCALE:	NTS		
DATE:	6/20/06	SHT 458 OF 1347	

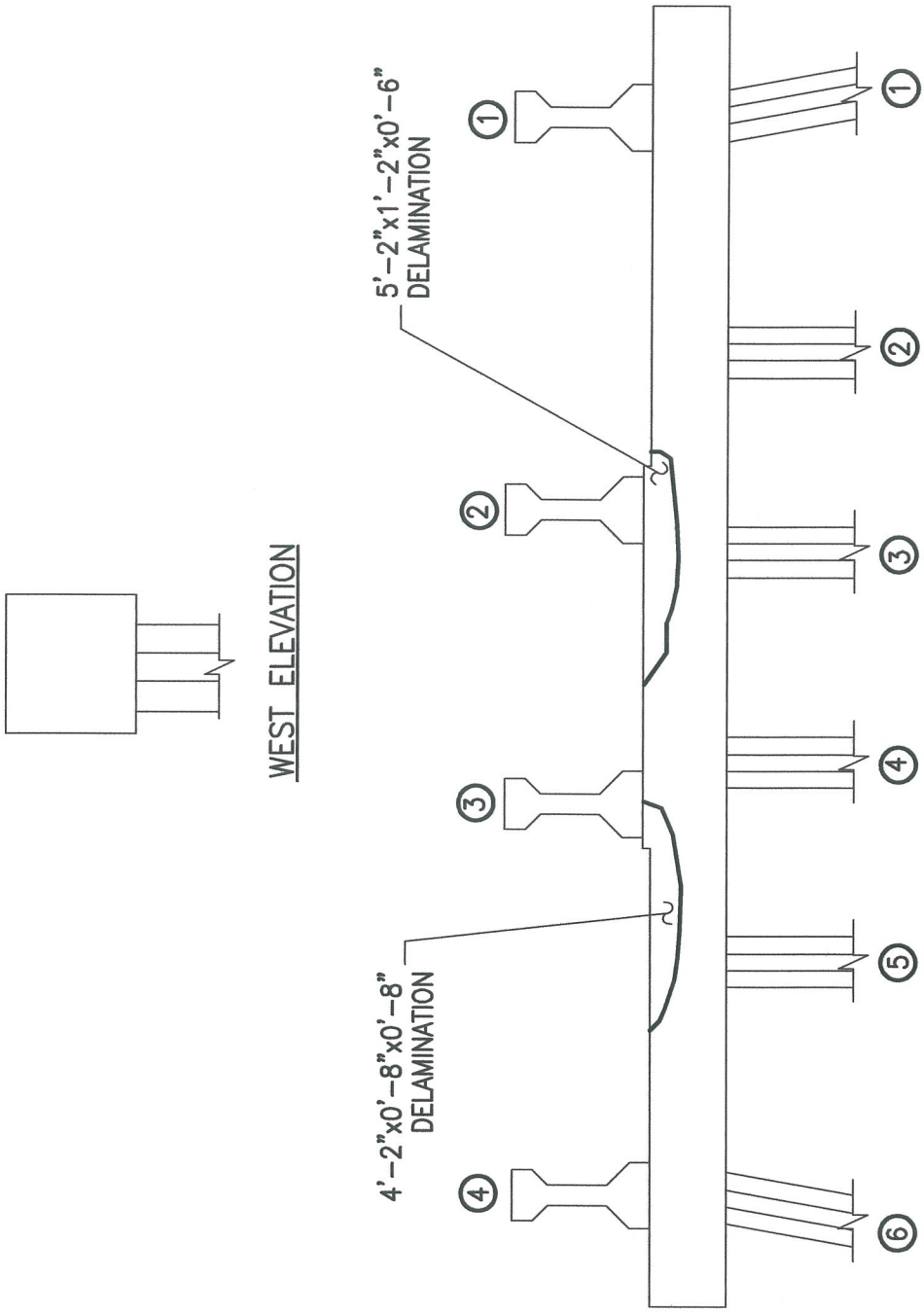

WEST ELEVATION

SOUTH ELEVATION

BENT #61

ALPHA & OMEGA GROUP
CIVIL & STRUCTURAL ENGINEERS
4911 Green Road Suite 107 Raleigh, NC 27616
Phone 919 981 0310 Fax 919 981 0451
Email info@aogroup.com www.aogroup.com

BRIDGE NO:	270011		
COUNTY:	DARE		
PREPARED BY:	OHS	CHECKED BY:	TGZ
SCALE:	NTS		
DATE:	6/20/06	SHT 461 OF 1347	

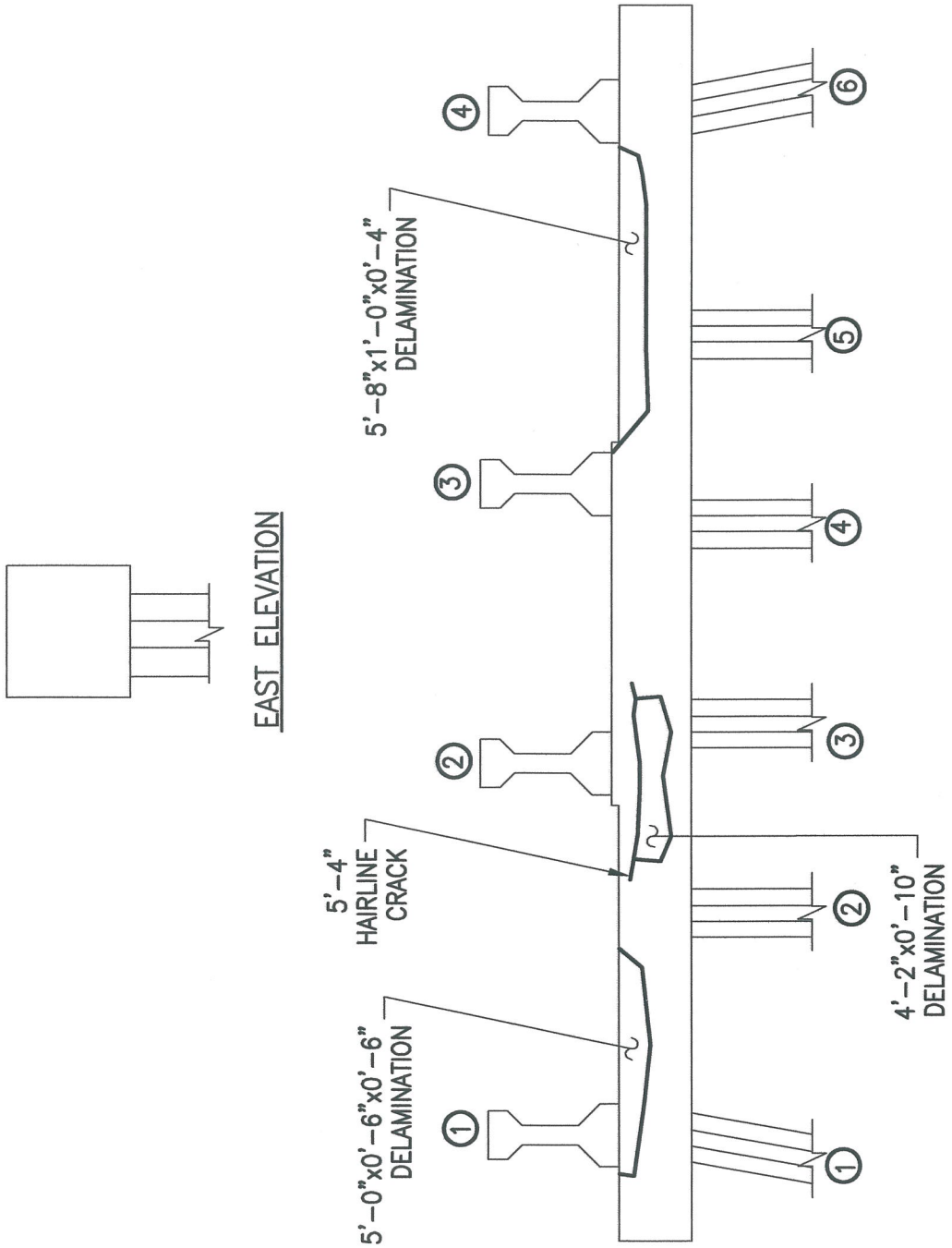

ALPHA & OMEGA GROUP
CIVIL & STRUCTURAL ENGINEERS
4911 Green Road Suite 107 Raleigh, NC 27616
Phone 919 981 0310 Fax 919 981 0451
Email info@aogroup.com www.aogroup.com

BRIDGE NO:	270011		
COUNTY:	DARE		
PREPARED BY:	OHS	CHECKED BY:	TGZ
SCALE:	NTS		
DATE:	6/20/06	SHT 464 OF 1347	

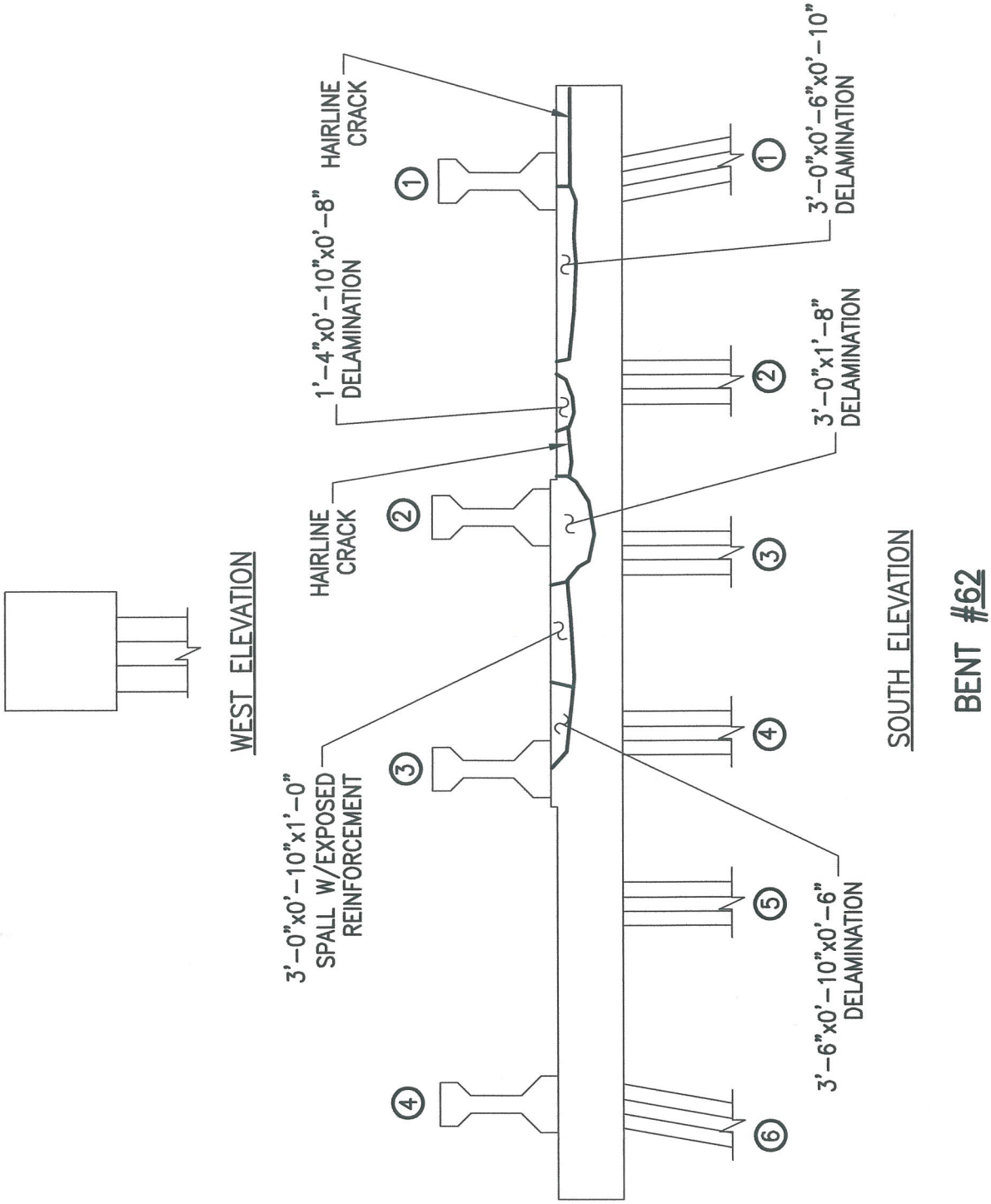

ALPHA & OMEGA GROUP
CIVIL & STRUCTURAL ENGINEERS
4911 Green Road Suite 107 Raleigh, NC 27616
Phone 919 981 0310 Fax 919 981 0451
Email info@aogroup.com www.aogroup.com

BRIDGE NO:	270011		
COUNTY:	DARE		
PREPARED BY:	OHS	CHECKED BY:	TGZ
SCALE:	NTS		
DATE:	6/20/06	SHT 467 OF 1347	

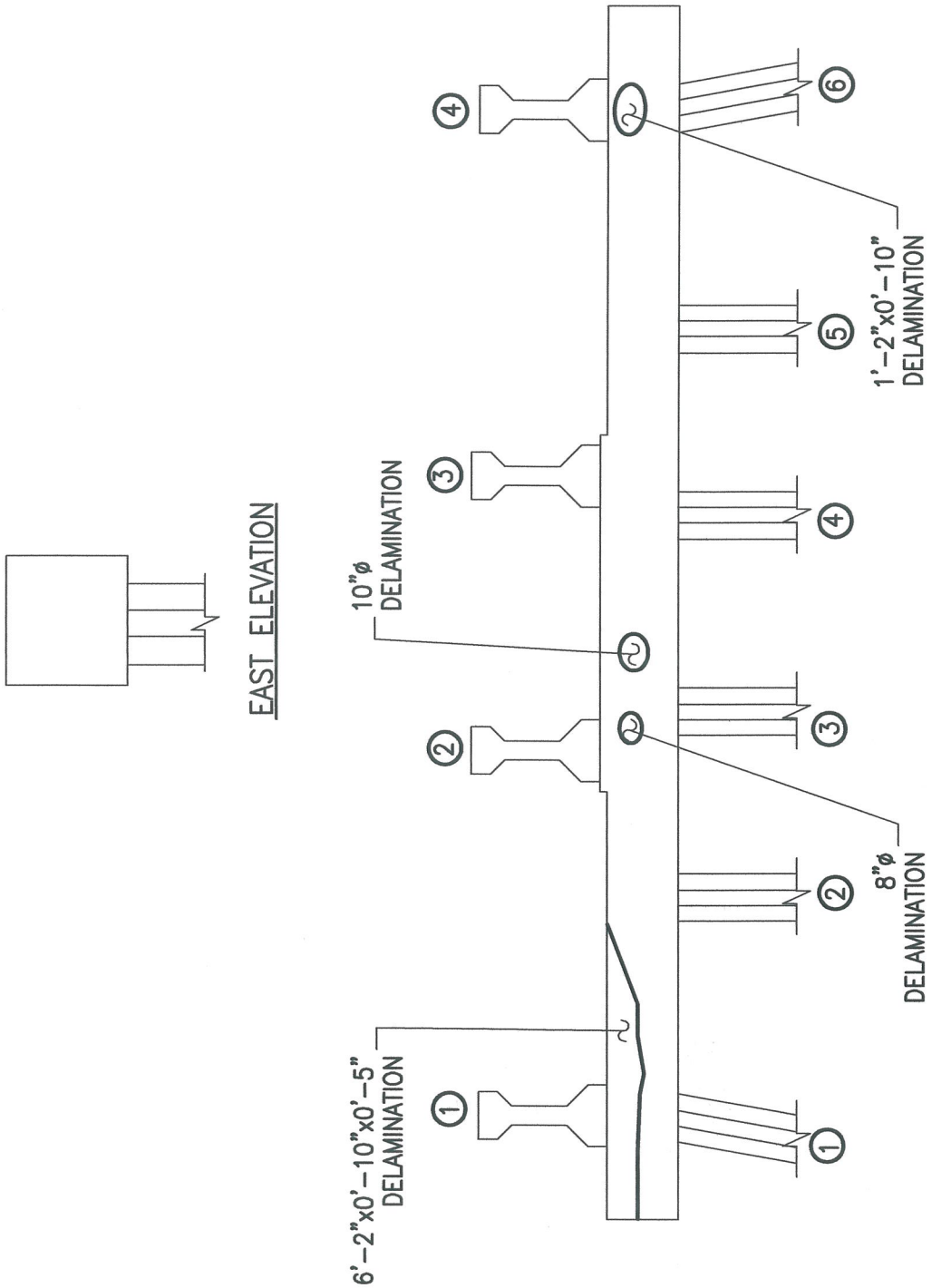

ALPHA & OMEGA GROUP
CIVIL & STRUCTURAL ENGINEERS
4911 Green Road Suite 107 Raleigh, NC 27616
Phone 919 981 0310 Fax 919 981 0451
Email info@aogroup.com www.aogroup.com

BRIDGE NO:	270011		
COUNTY:	DARE		
PREPARED BY:	OHS	CHECKED BY:	TGZ
SCALE:	NTS		
DATE:	6/20/06	SHT 470 OF 1347	

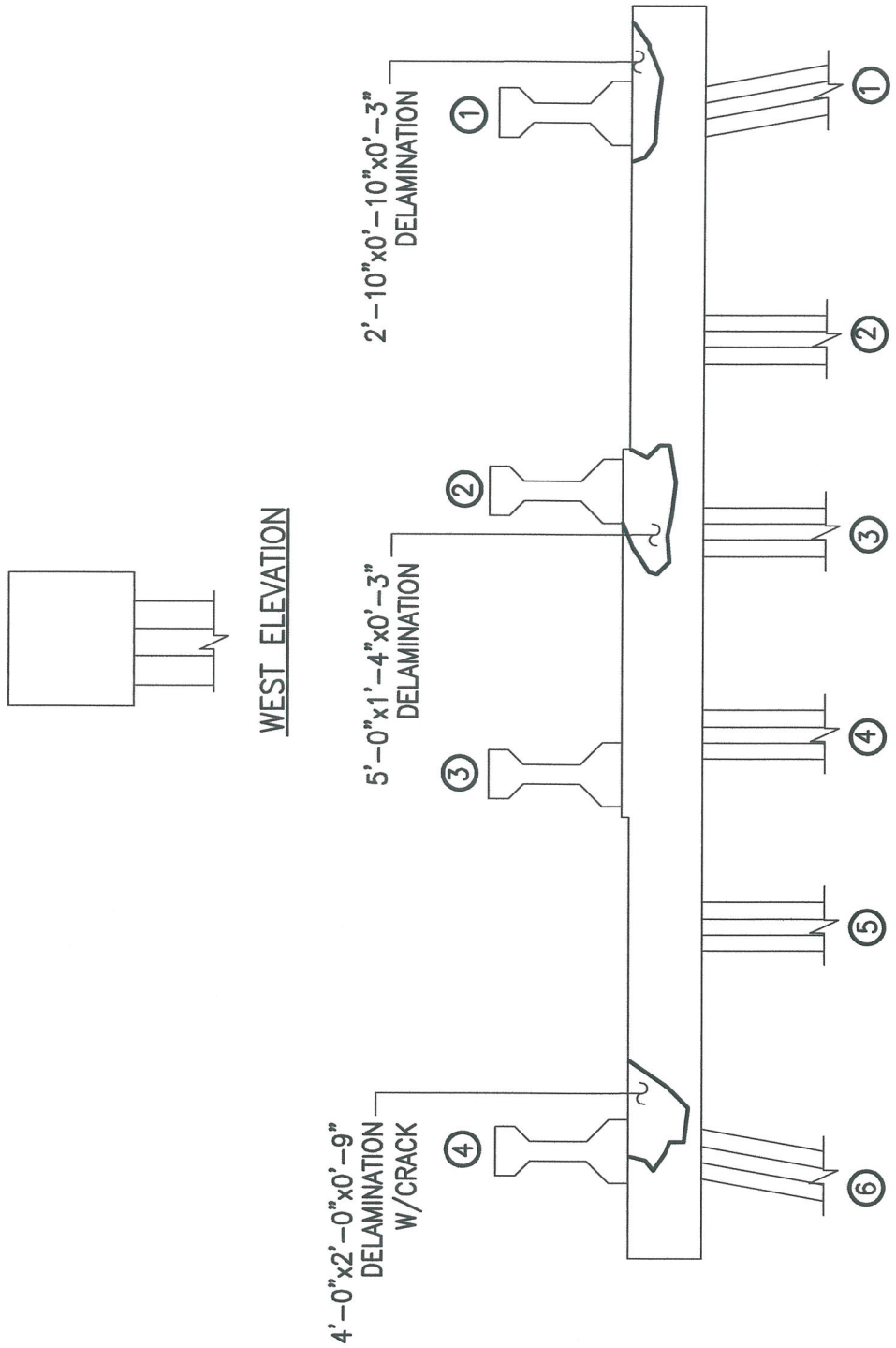

ALPHA & OMEGA GROUP
CIVIL & STRUCTURAL ENGINEERS
4911 Green Road Suite 107 Raleigh, NC 27616
Phone 919 981 0310 Fax 919 981 0451
Email info@aogroup.com www.aogroup.com

BRIDGE NO:	270011		
COUNTY:	DARE		
PREPARED BY:	OHS	CHECKED BY:	TGZ
SCALE:	NTS		
DATE:	6/20/06	SHT 473 OF 1347	

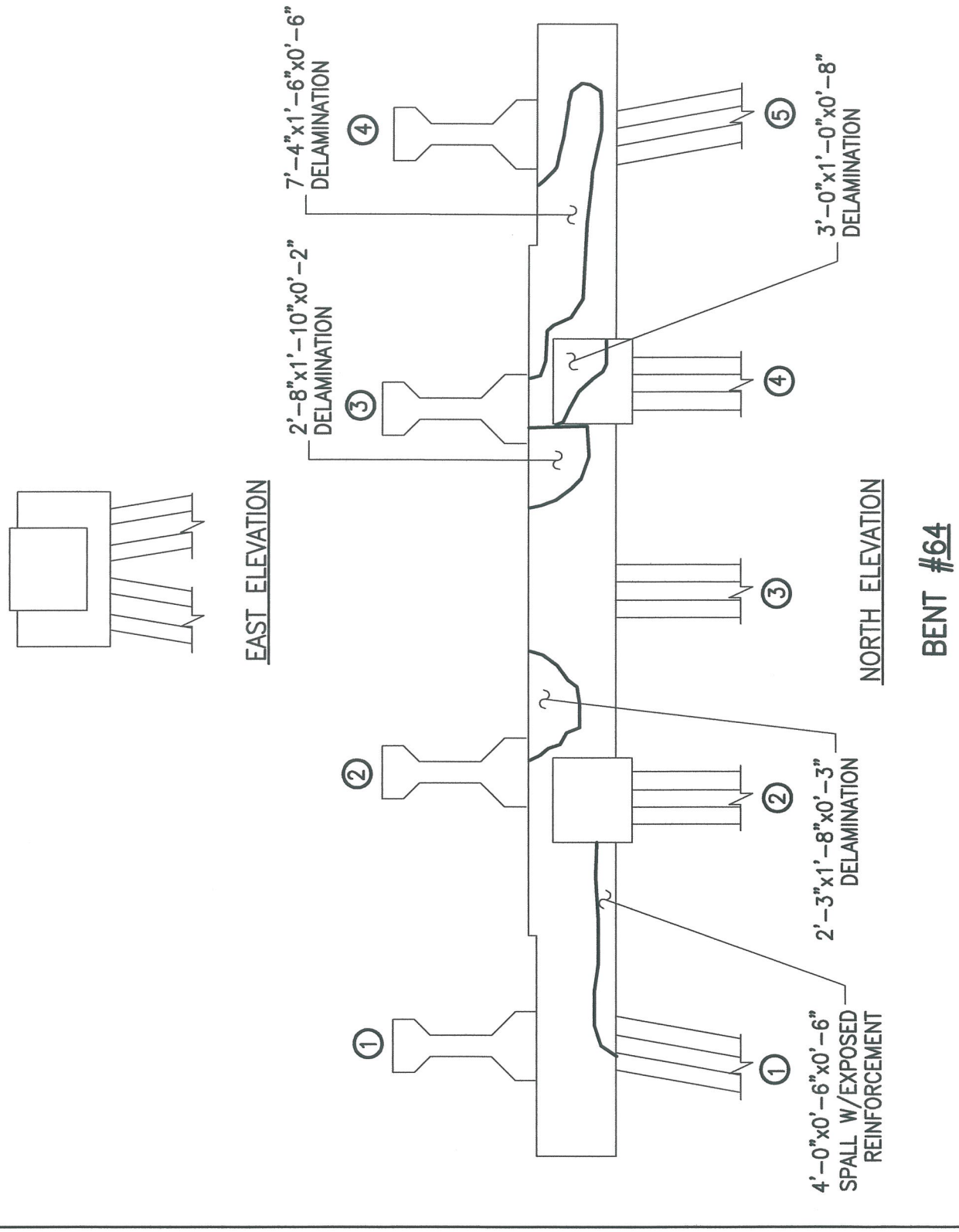

ALPHA & OMEGA GROUP
CIVIL & STRUCTURAL ENGINEERS
4911 Green Road Suite 107 Raleigh, NC 27616
Phone 919 981 0310 Fax 919 981 0451
Email info@aogroup.com www.aogroup.com

BRIDGE NO:	270011		
COUNTY:	DARE		
PREPARED BY:	OHS	CHECKED BY:	TGZ
SCALE:	NTS		
DATE:	6/20/06	SHT 476 OF 1347	

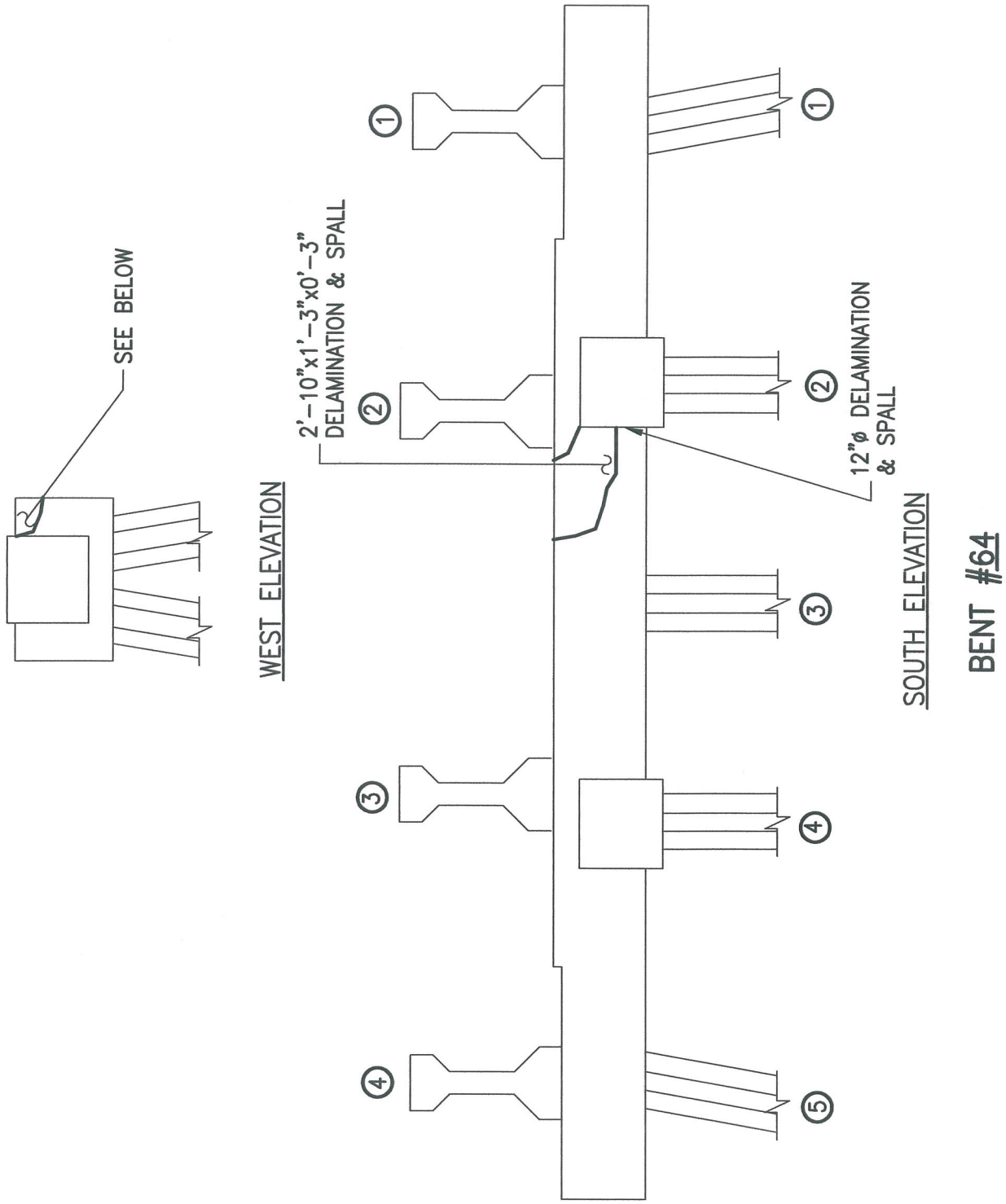

ALPHA & OMEGA GROUP
CIVIL & STRUCTURAL ENGINEERS
4911 Green Road Suite 107 Raleigh, NC 27616
Phone 919 981 0310 Fax 919 981 0451
Email info@aogroup.com www.aogroup.com

BRIDGE NO:	270011		
COUNTY:	DARE		
PREPARED BY:	OHS	CHECKED BY:	TGZ
SCALE:	NTS		
DATE:	6/20/06	SHT 479 OF 1347	

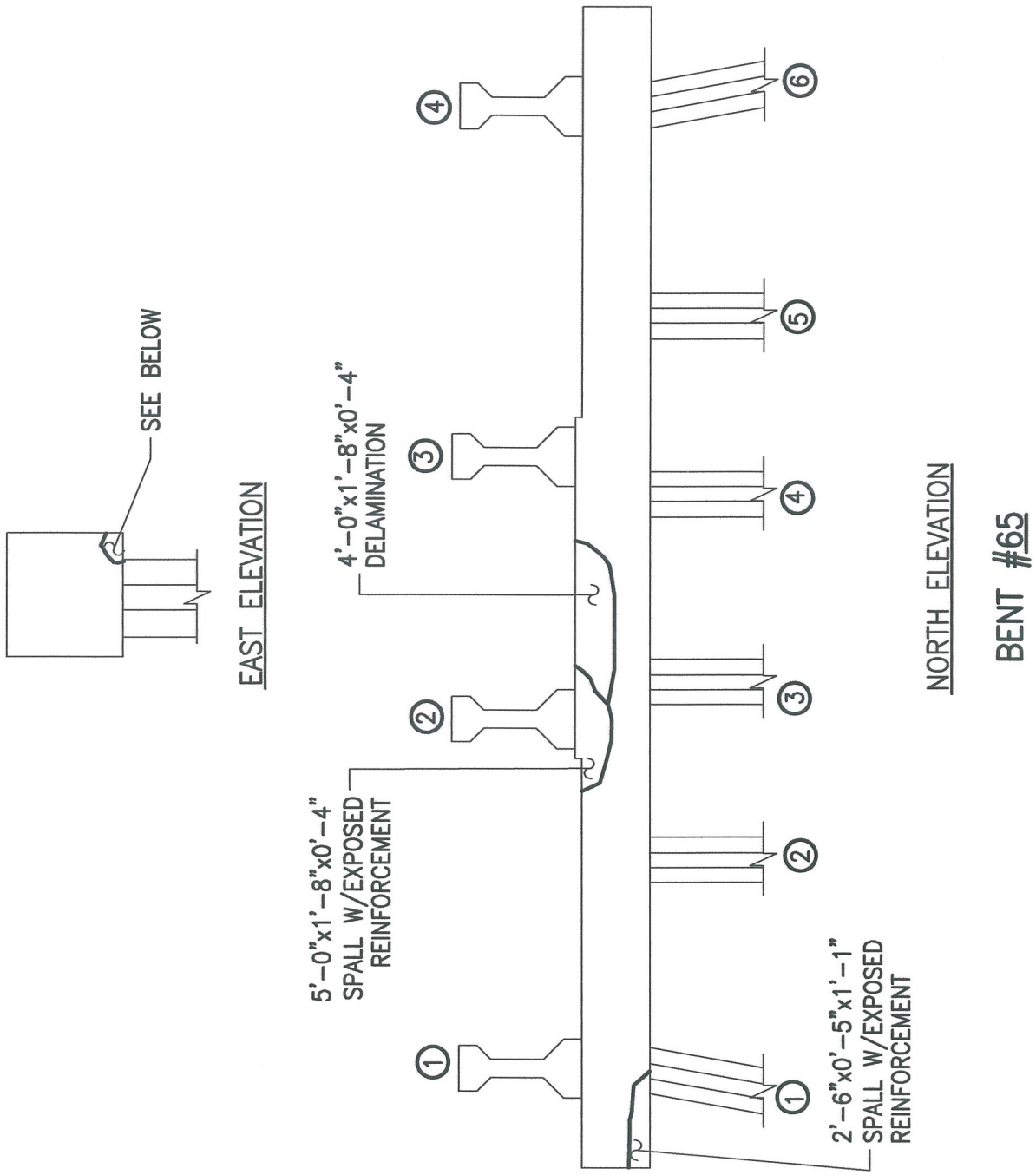

ALPHA & OMEGA GROUP
CIVIL & STRUCTURAL ENGINEERS
4911 Green Road Suite 107 Raleigh, NC 27616
Phone 919 981 0310 Fax 919 981 0451
Email info@aogroup.com www.aogroup.com

BRIDGE NO:	270011		
COUNTY:	DARE		
PREPARED BY:	OHS	CHECKED BY:	TGZ
SCALE:	NTS		
DATE:	6/20/06	SHT 482 OF 1347	

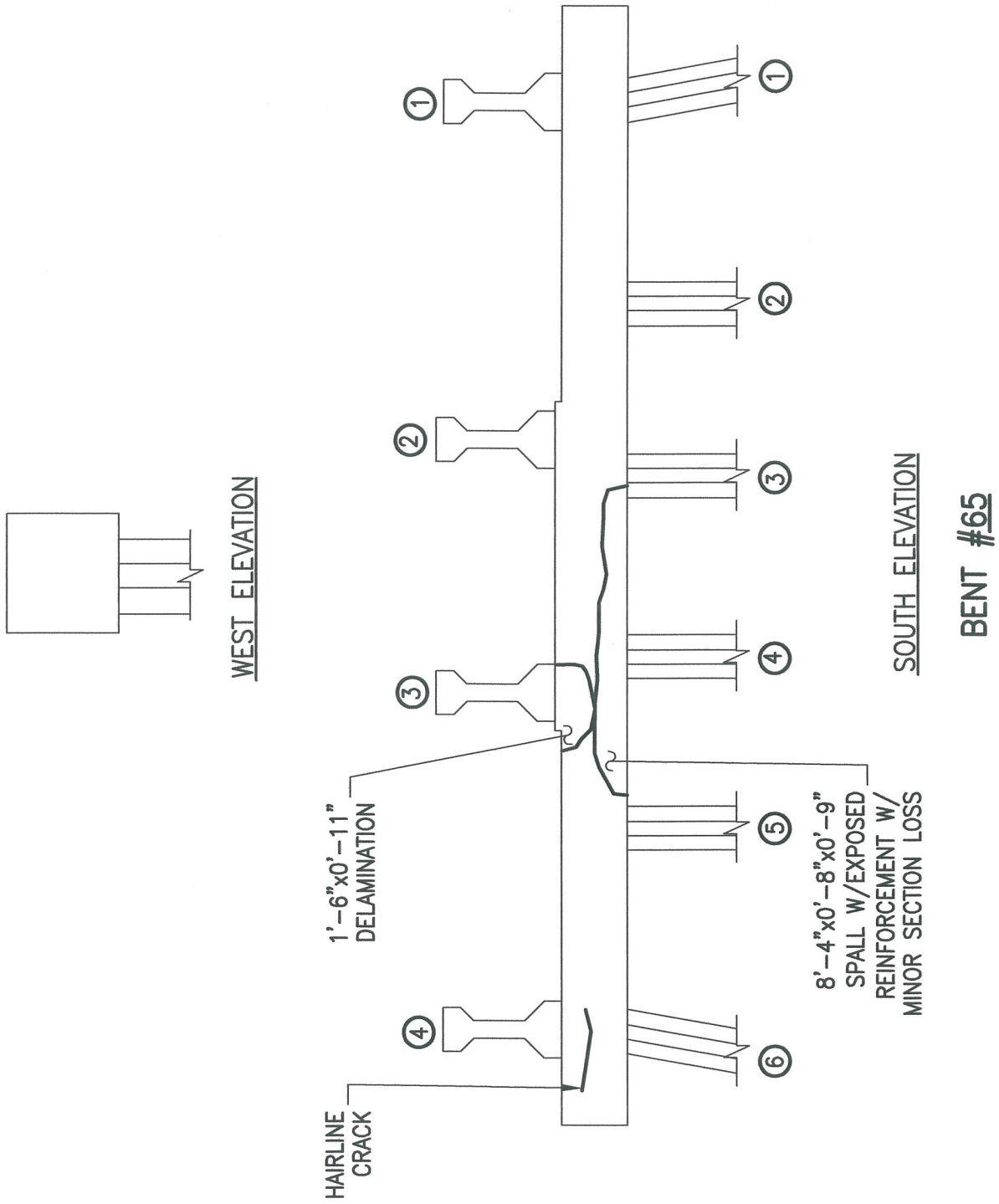

ALPHA & OMEGA GROUP
CIVIL & STRUCTURAL ENGINEERS
4911 Green Road Suite 107 Raleigh, NC 27616
Phone 919 981 0310 Fax 919 981 0451
Email info@aogroup.com www.aogroup.com

BRIDGE NO:	270011		
COUNTY:	DARE		
PREPARED BY:	OHS	CHECKED BY:	TGZ
SCALE:	NTS		
DATE:	6/20/06	SHT 485 OF 1347	

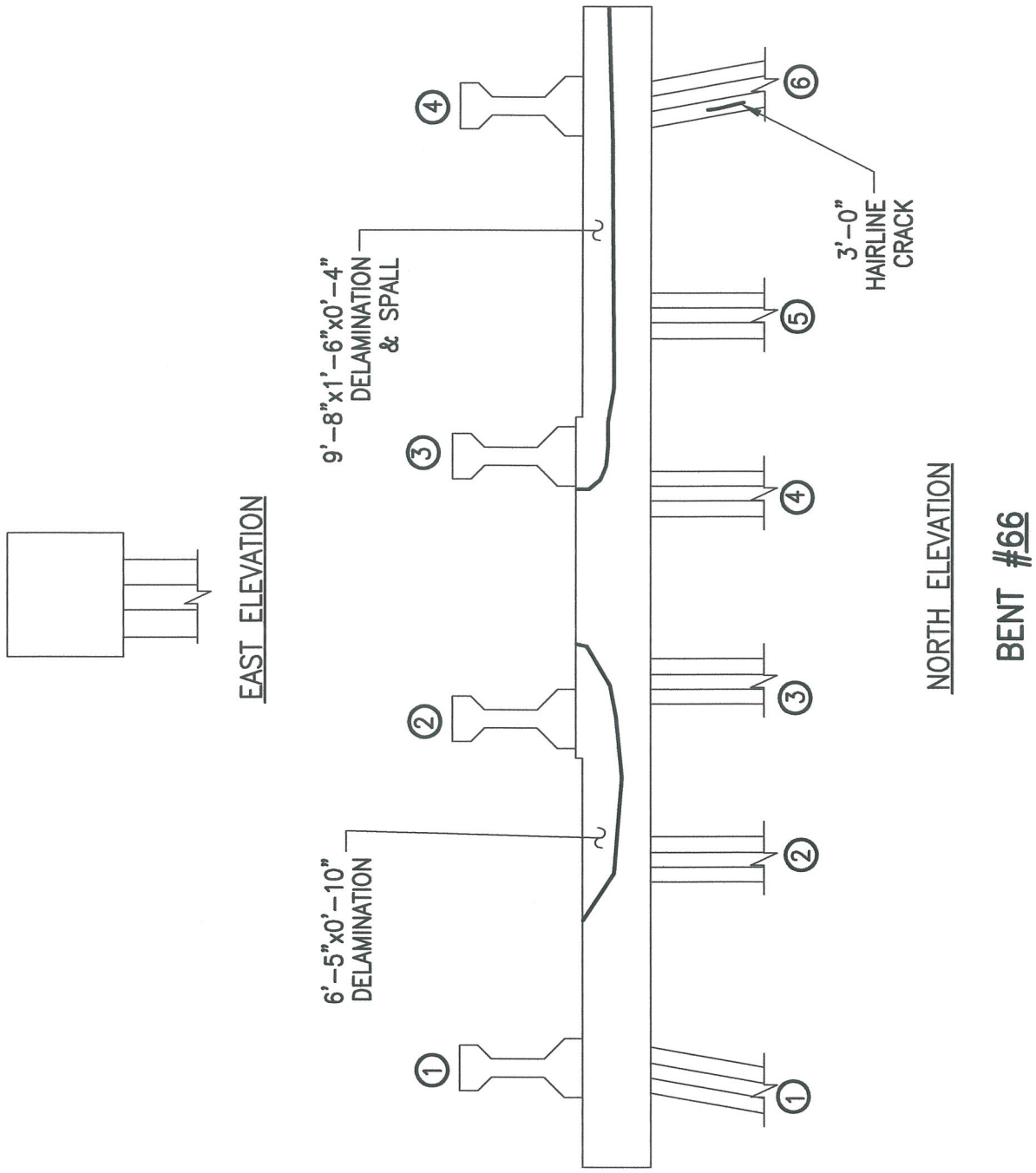

ALPHA & OMEGA GROUP
CIVIL & STRUCTURAL ENGINEERS
4911 Green Road Suite 107 Raleigh, NC 27616
Phone 919 981 0310 Fax 919 981 0451
Email info@aogroup.com www.aogroup.com

BRIDGE NO:	270011		
COUNTY:	DARE		
PREPARED BY:	OHS	CHECKED BY:	TGZ
SCALE:	NTS		
DATE:	6/20/06	SHT 488 OF 1347	

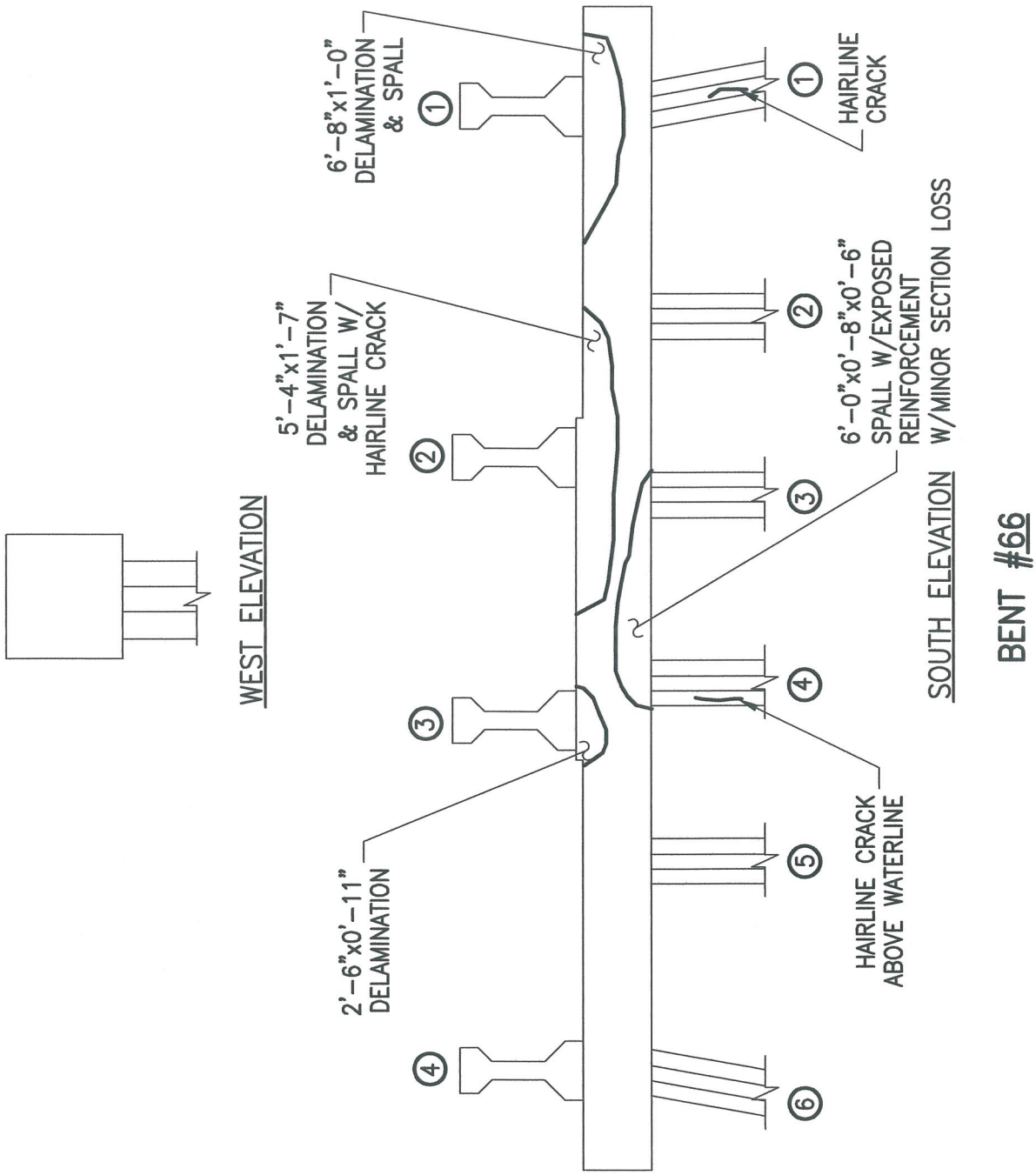

ALPHA & OMEGA GROUP
CIVIL & STRUCTURAL ENGINEERS
4911 Green Road Suite 107 Raleigh, NC 27616
Phone 919 981 0310 Fax 919 981 0451
Email info@aogroup.com www.aogroup.com

BRIDGE NO:	270011		
COUNTY:	DARE		
PREPARED BY:	OHS	CHECKED BY:	TGZ
SCALE:	NTS		
DATE:	6/20/06	SHT 491 OF 1347	

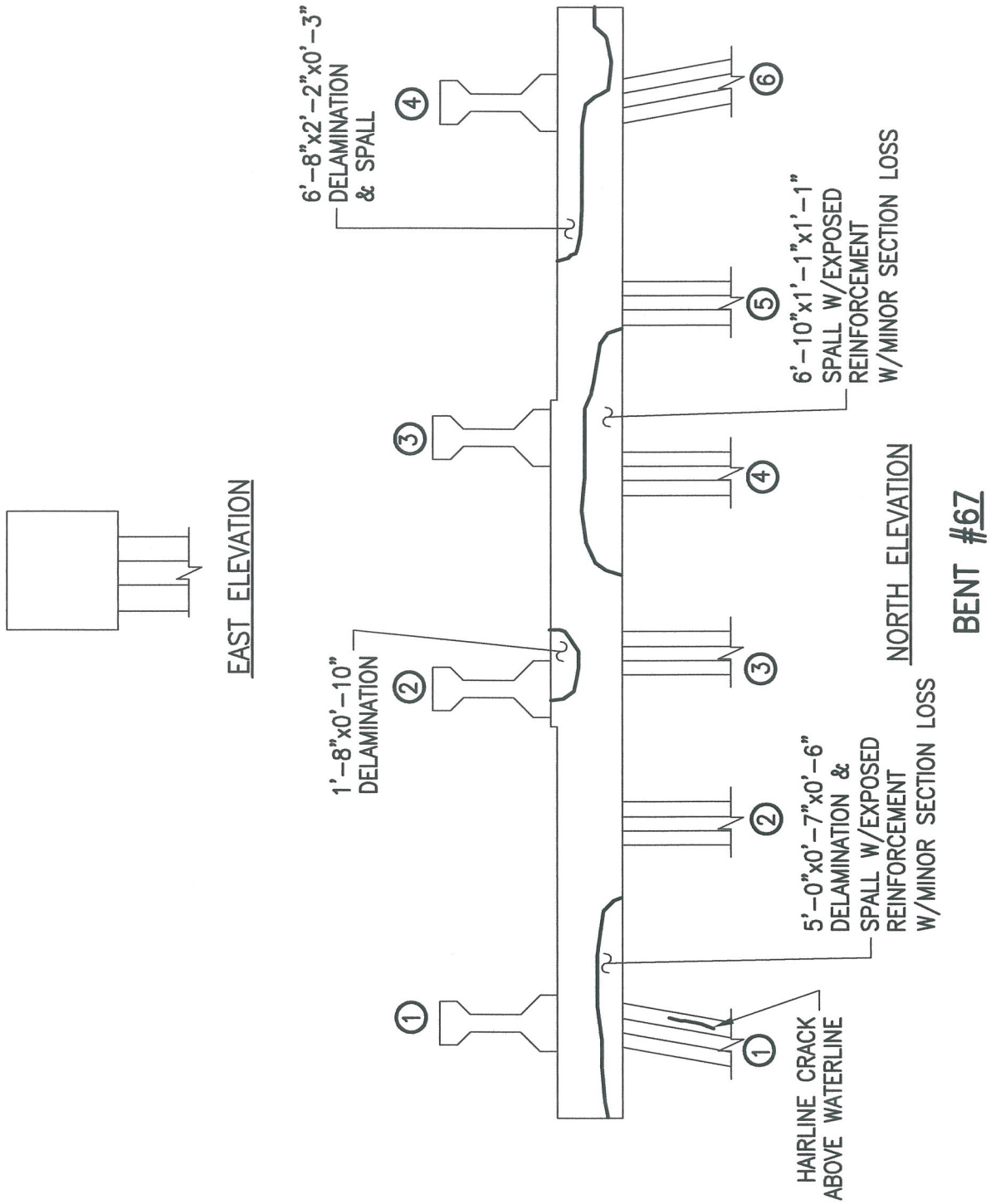

ALPHA & OMEGA GROUP
CIVIL & STRUCTURAL ENGINEERS
4911 Green Road Suite 107 Raleigh, NC 27616
Phone 919 981 0310 Fax 919 981 0451
Email info@aogroup.com www.aogroup.com

BRIDGE NO:	270011		
COUNTY:	DARE		
PREPARED BY:	OHS	CHECKED BY:	TGZ
SCALE:	NTS		
DATE:	6/20/06	SHT 494 OF 1347	

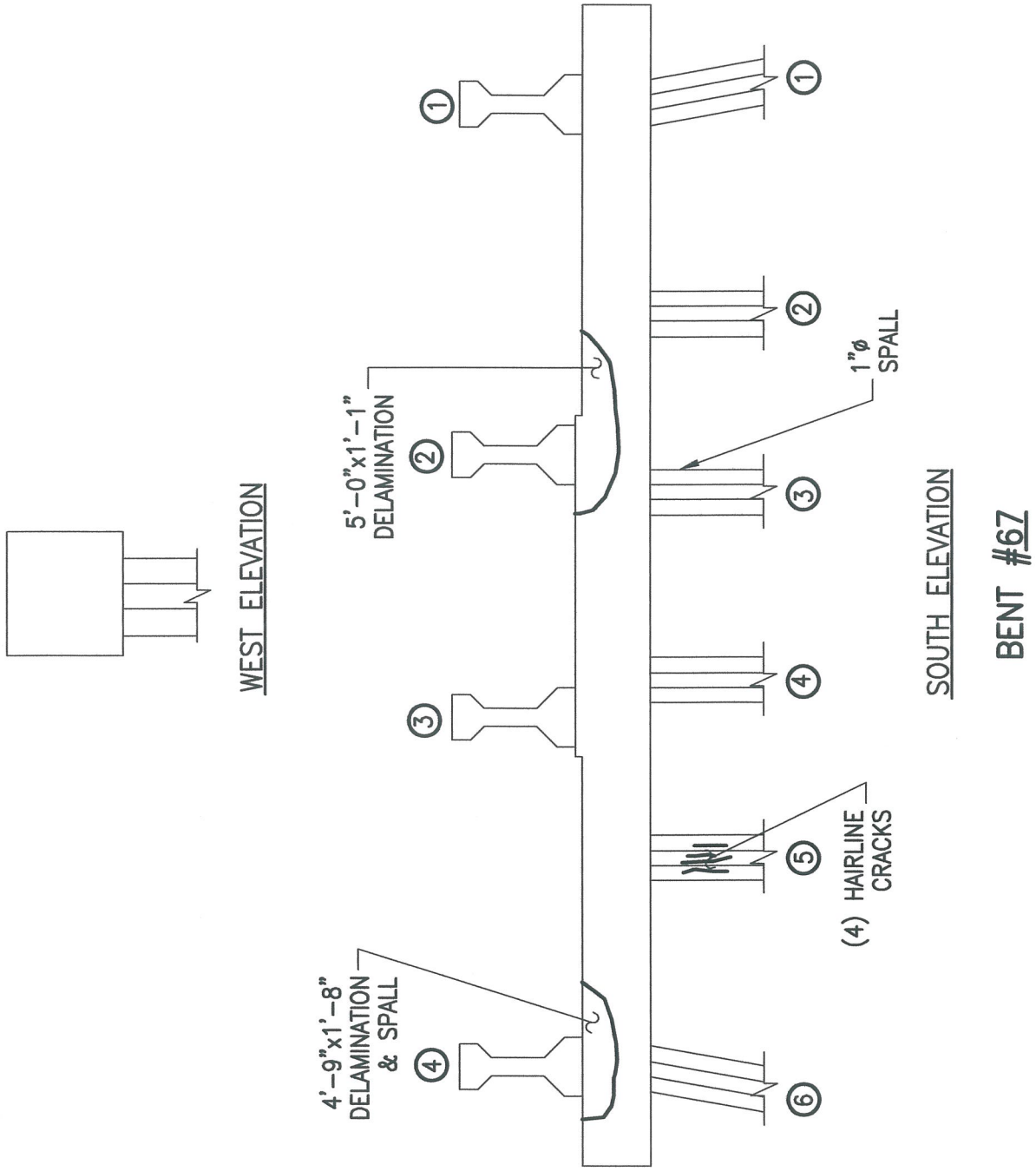

ALPHA & OMEGA GROUP
CIVIL & STRUCTURAL ENGINEERS
4911 Green Road Suite 107 Raleigh, NC 27616
Phone 919 981 0310 Fax 919 981 0451
Email info@aogroup.com www.aogroup.com

BRIDGE NO:	270011		
COUNTY:	DARE		
PREPARED BY:	OHS	CHECKED BY:	TGZ
SCALE:	NTS		
DATE:	6/20/06	SHT 497 OF 1347	

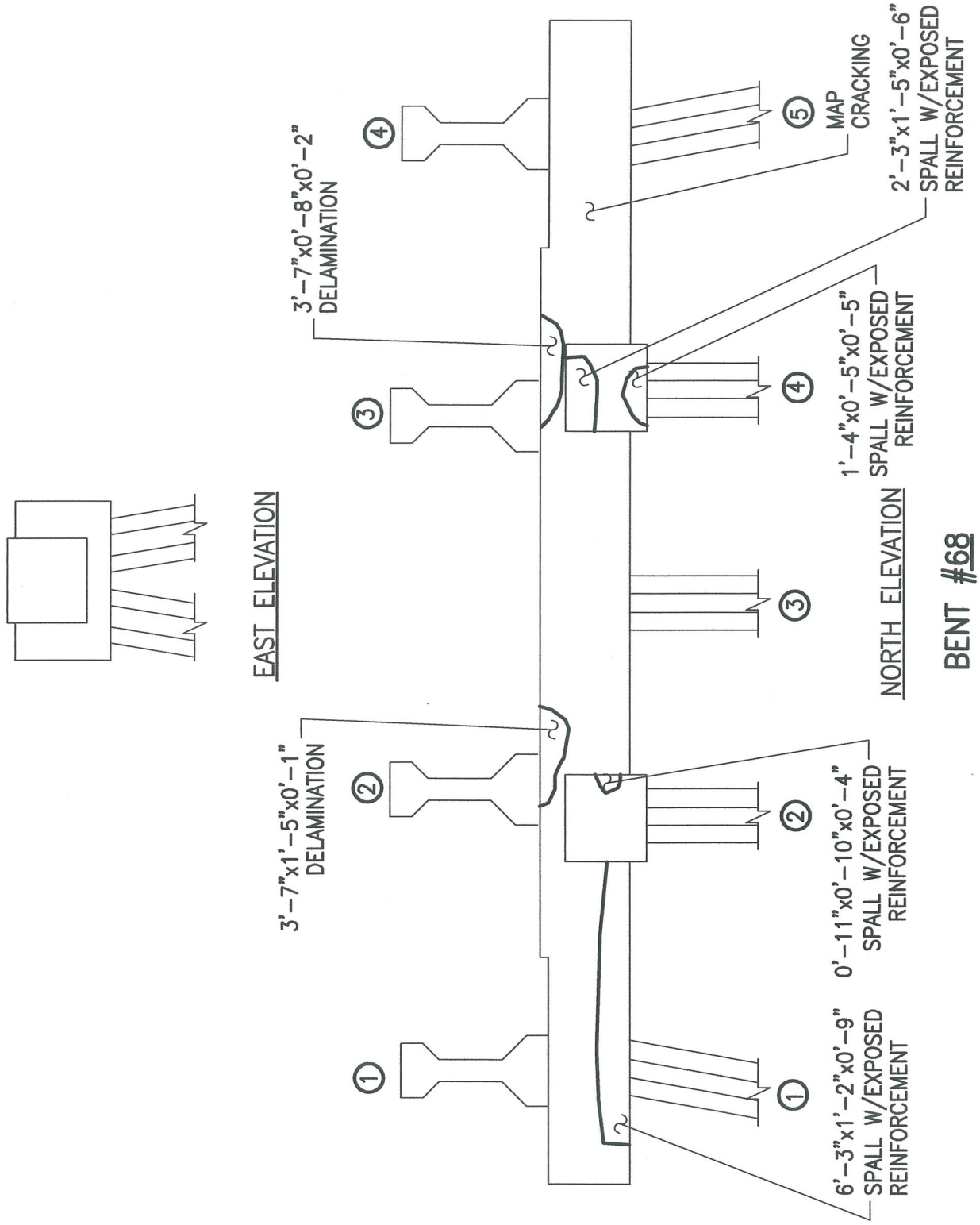

ALPHA & OMEGA GROUP
CIVIL & STRUCTURAL ENGINEERS
4911 Green Road Suite 107 Raleigh, NC 27616
Phone 919 981 0310 Fax 919 981 0451
Email info@aogroup.com www.aogroup.com

BRIDGE NO:	270011		
COUNTY:	DARE		
PREPARED BY:	OHS	CHECKED BY:	TGZ
SCALE:	NTS		
DATE:	6/20/06	SHT 500 OF 1347	

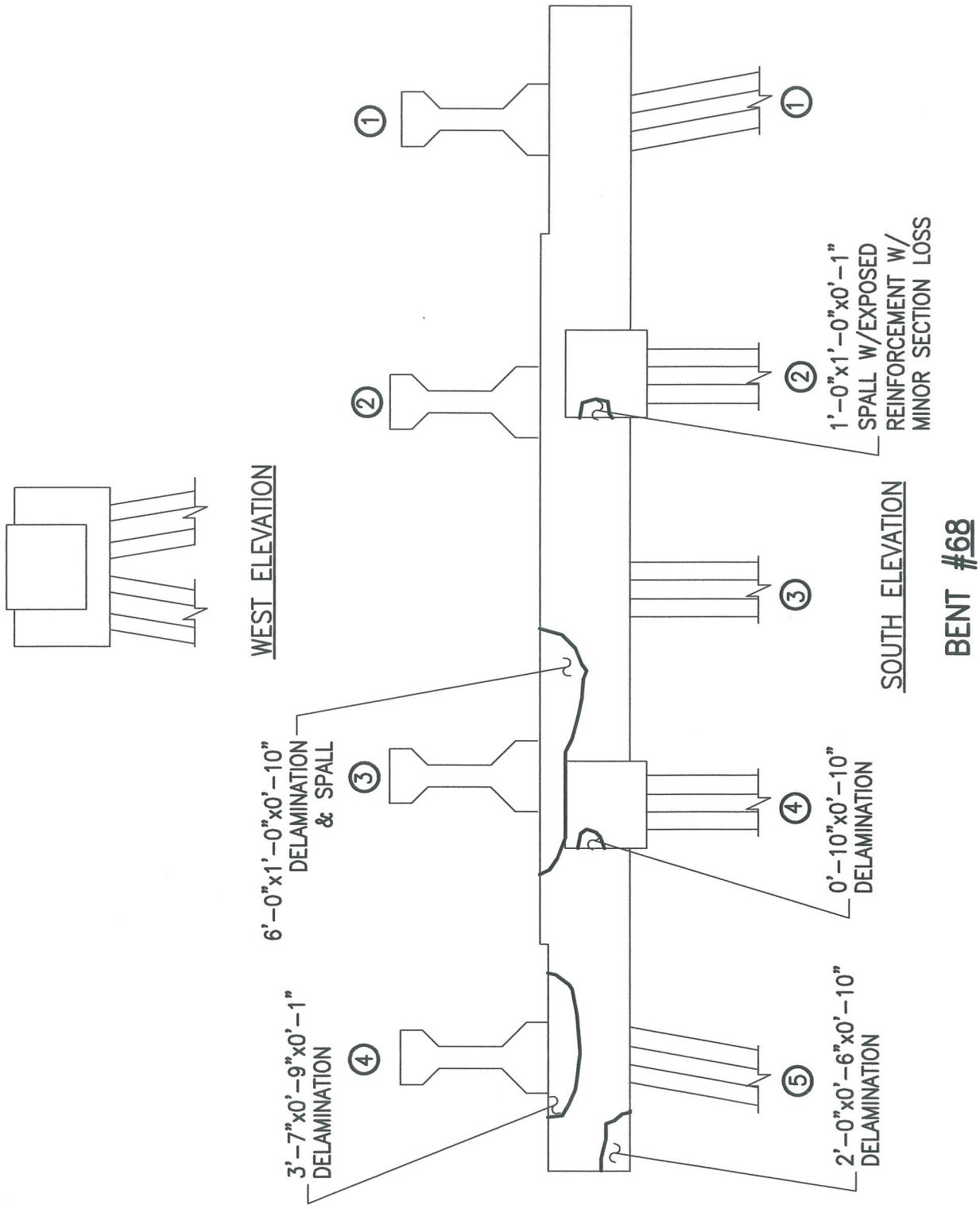

ALPHA & OMEGA GROUP
CIVIL & STRUCTURAL ENGINEERS
4911 Green Road Suite 107 Raleigh, NC 27616
Phone 919 981 0310 Fax 919 981 0451
Email info@aogroup.com www.aogroup.com

BRIDGE NO:	270011		
COUNTY:	DARE		
PREPARED BY:	OHS	CHECKED BY:	TGZ
SCALE:	NTS		
DATE:	6/20/06	SHT 503 OF 1347	

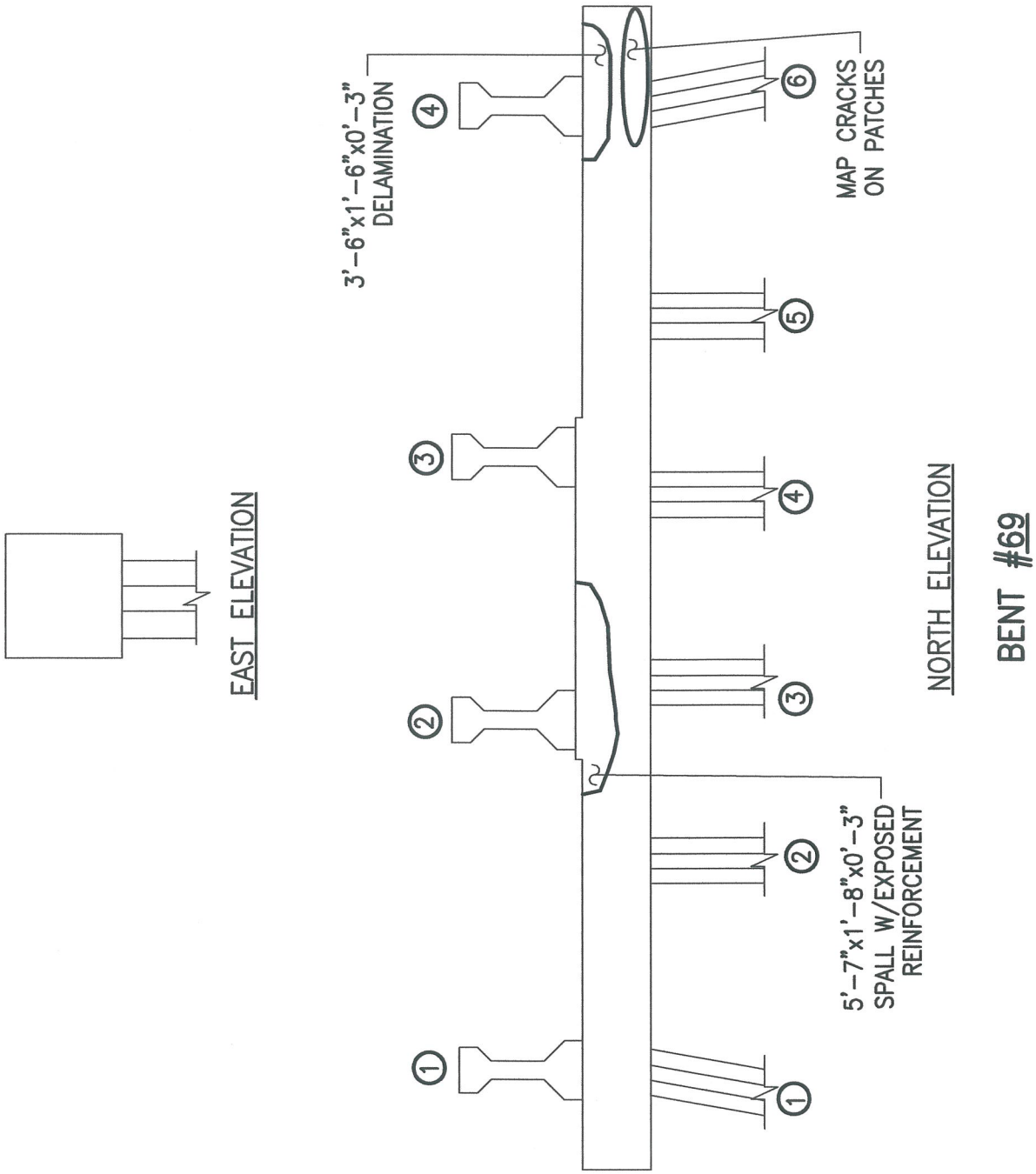

ALPHA & OMEGA GROUP
CIVIL & STRUCTURAL ENGINEERS
4911 Green Road Suite 107 Raleigh, NC 27616
Phone 919 981 0310 Fax 919 981 0451
Email info@aogroup.com www.aogroup.com

BRIDGE NO:	270011		
COUNTY:	DARE		
PREPARED BY:	OHS	CHECKED BY:	TGZ
SCALE:	NTS		
DATE:	6/20/06	SHT 506 OF 1347	

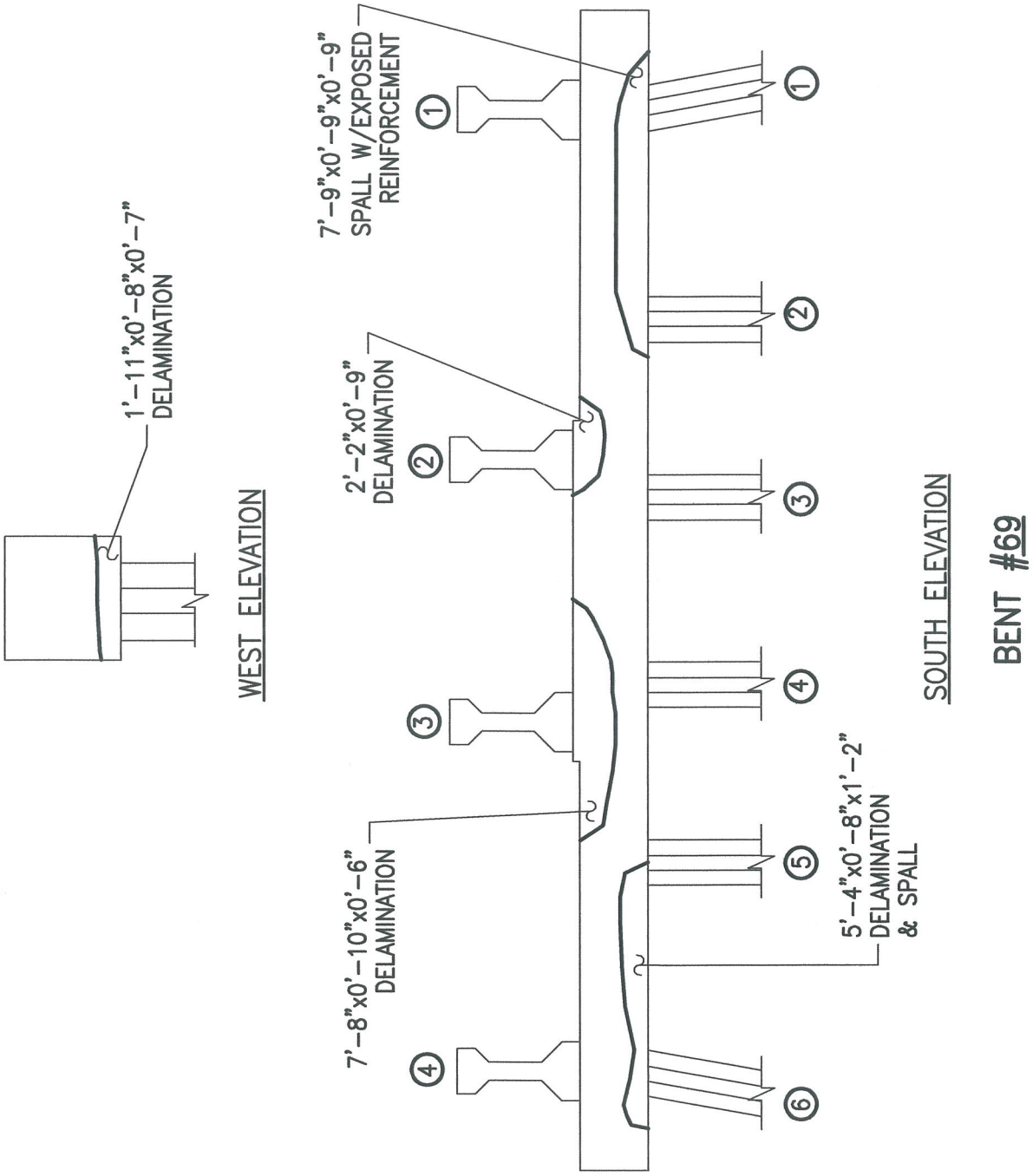

ALPHA & OMEGA GROUP
CIVIL & STRUCTURAL ENGINEERS

4911 Green Road Suite 107 Raleigh, NC 27616
Phone 919 981 0310 Fax 919 981 0451
Email info@aogroup.com www.aogroup.com

BRIDGE NO:	270011		
COUNTY:	DARE		
PREPARED BY:	OHS	CHECKED BY:	TGZ
SCALE:	NTS		
DATE:	6/20/06	SHT 509 OF 1347	

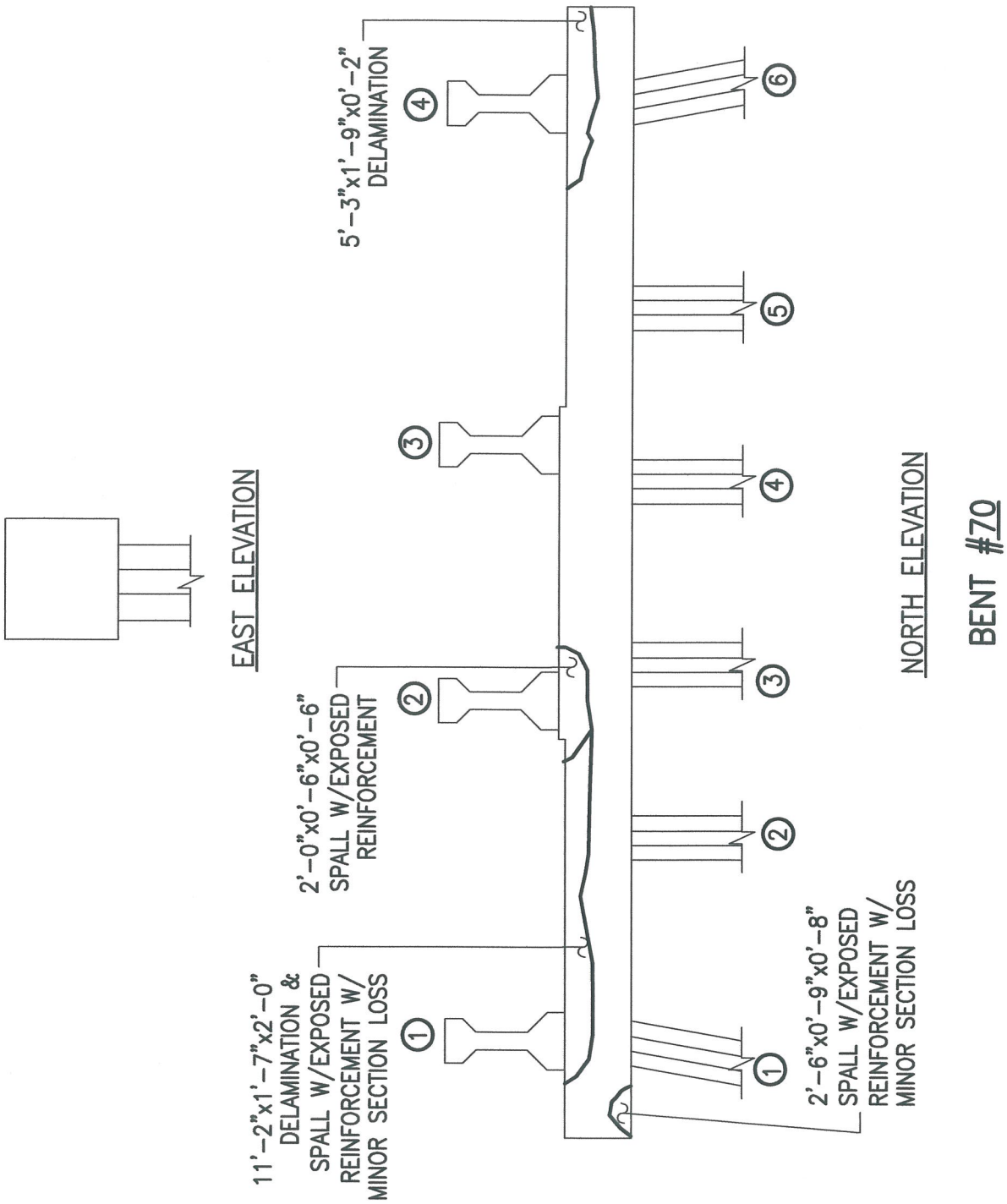

ALPHA & OMEGA GROUP
CIVIL & STRUCTURAL ENGINEERS
4911 Green Road Suite 107 Raleigh, NC 27616
Phone 919 981 0310 Fax 919 981 0451
Email info@aogroup.com www.aogroup.com

BRIDGE NO:	270011		
COUNTY:	DARE		
PREPARED BY:	OHS	CHECKED BY:	TGZ
SCALE:	NTS		
DATE:	6/20/06	SHT 512 OF 1347	

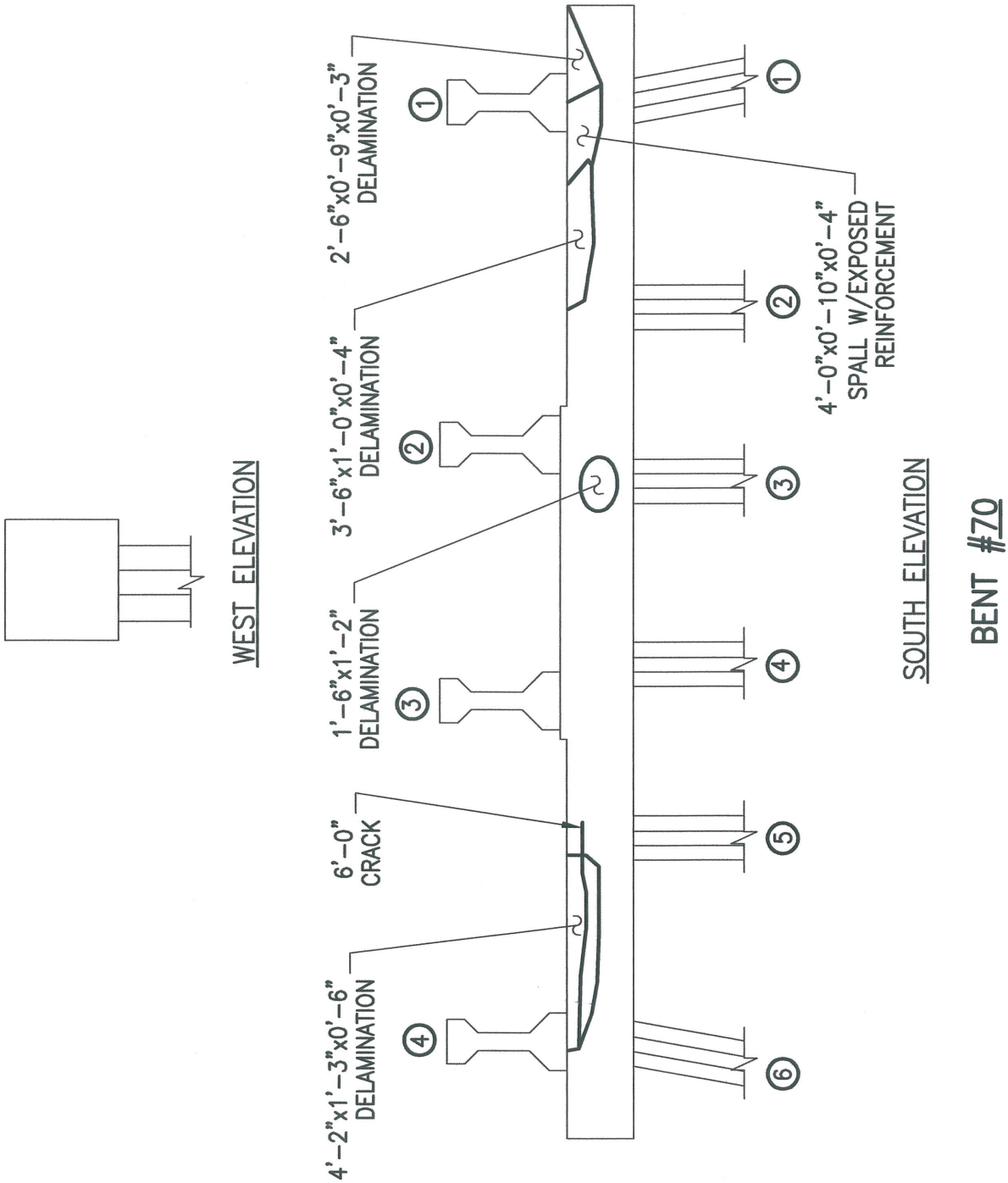

ALPHA & OMEGA GROUP
CIVIL & STRUCTURAL ENGINEERS
4911 Green Road Suite 107 Raleigh, NC 27616
Phone 919 981 0310 Fax 919 981 0451
Email info@aogroup.com www.aogroup.com

BRIDGE NO:	270011		
COUNTY:	DARE		
PREPARED BY:	OHS	CHECKED BY:	TGZ
SCALE:	NTS		
DATE:	6/20/06	SHT 515 OF 1347	

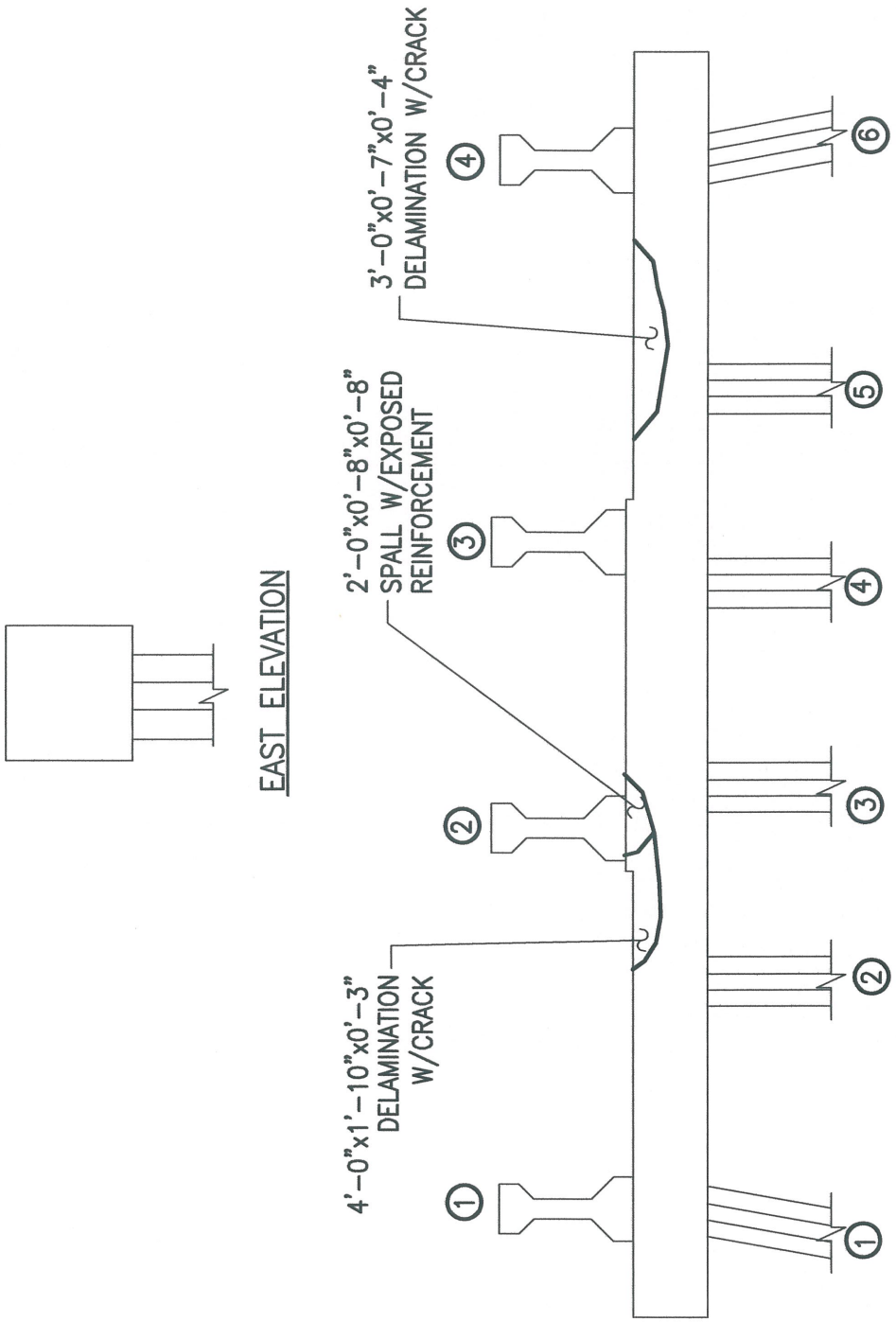

BENT #71

ALPHA & OMEGA GROUP
CIVIL & STRUCTURAL ENGINEERS
4911 Green Road Suite 107 Raleigh, NC 27616
Phone 919 981 0310 Fax 919 981 0451
Email info@aogroup.com www.aogroup.com

BRIDGE NO:	270011		
COUNTY:	DARE		
PREPARED BY:	OHS	CHECKED BY:	TGZ
SCALE:	NTS		
DATE:	6/20/06	SHT 518 OF 1347	

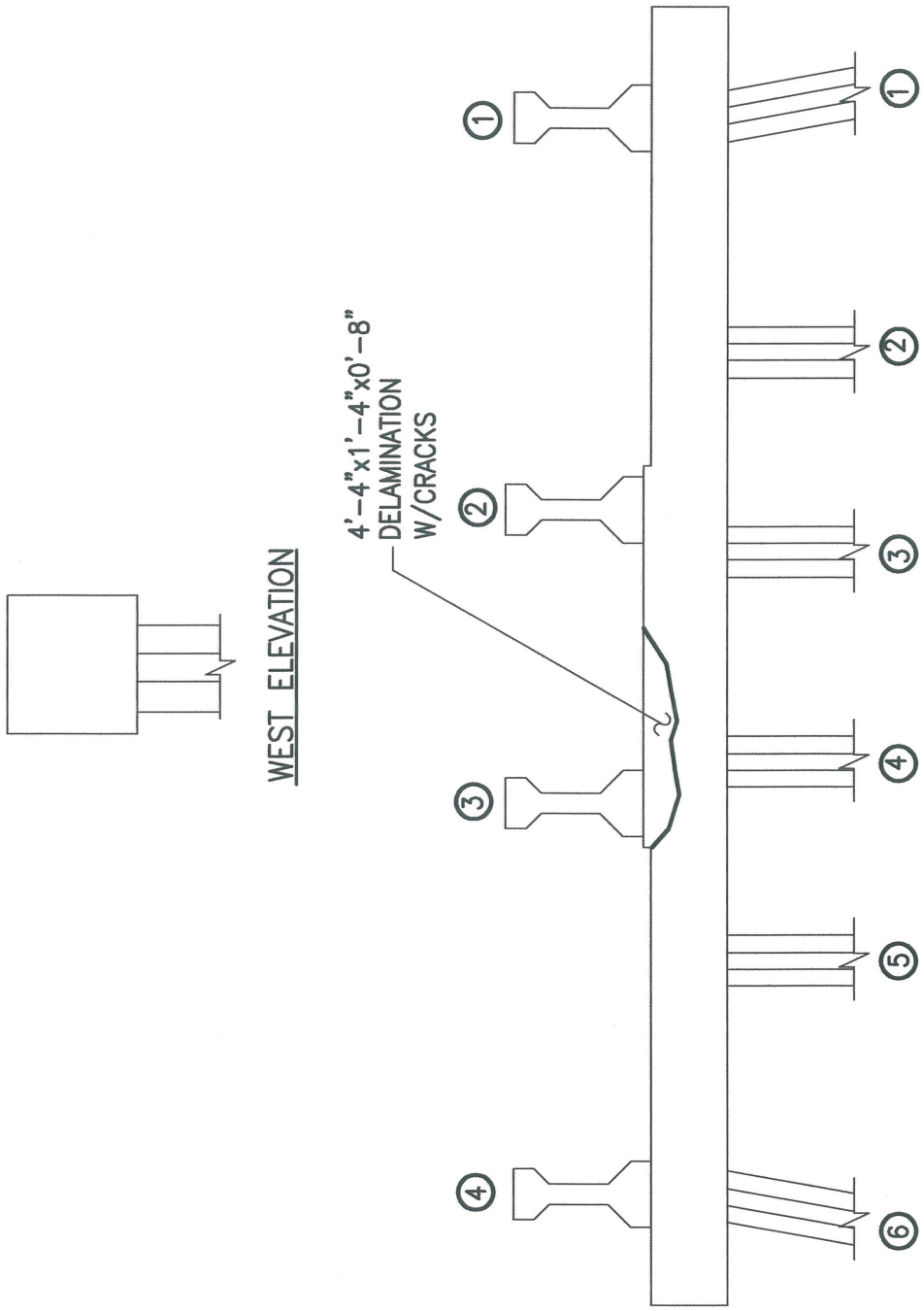

BENT #71

ALPHA & OMEGA GROUP
CIVIL & STRUCTURAL ENGINEERS
4911 Green Road Suite 107 Raleigh, NC 27616
Phone 919 981 0310 Fax 919 981 0451
Email info@aogroup.com www.aogroup.com

BRIDGE NO:	270011		
COUNTY:	DARE		
PREPARED BY:	OHS	CHECKED BY:	TGZ
SCALE:	NTS		
DATE:	6/20/06	SHT 521 OF 1347	

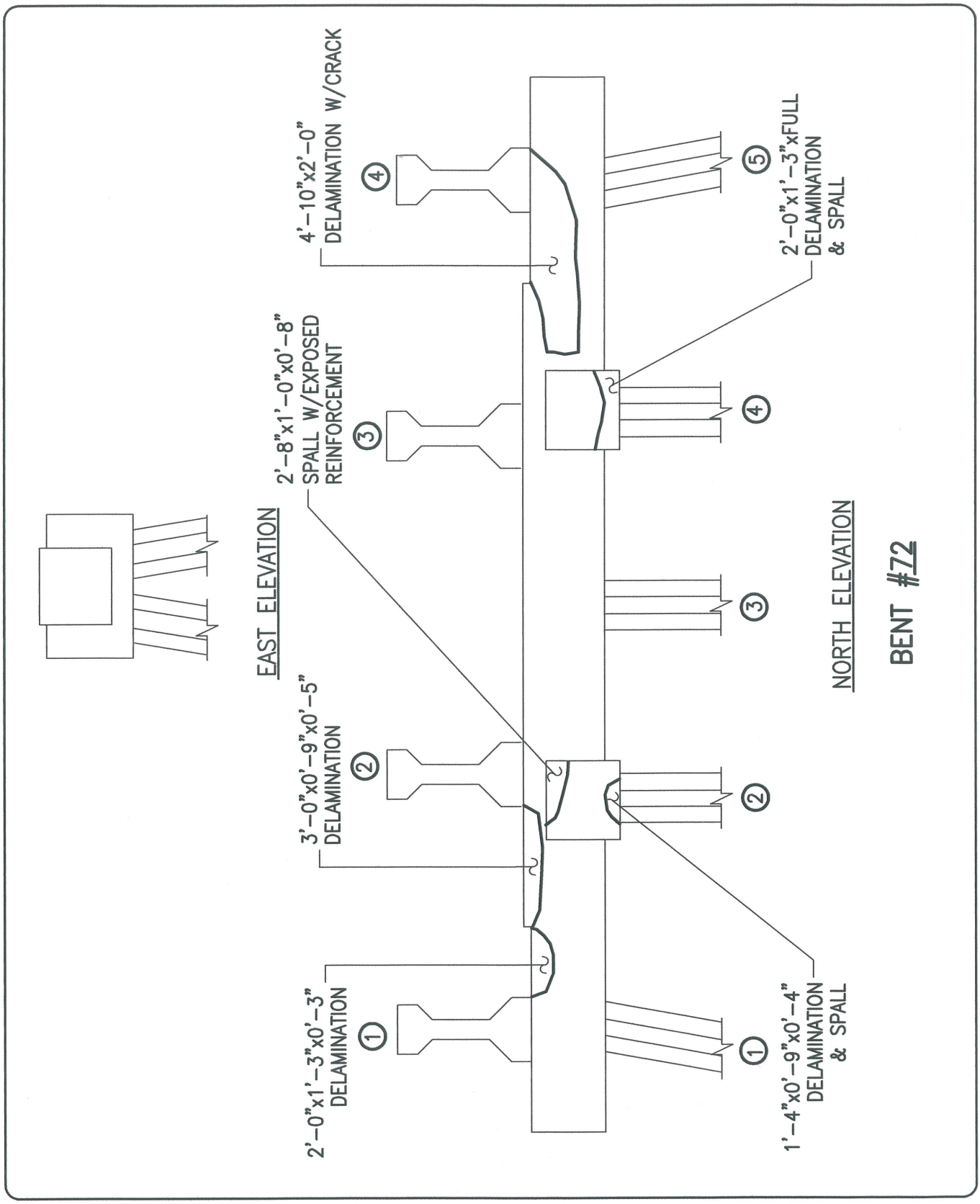

ALPHA & OMEGA GROUP
CIVIL & STRUCTURAL ENGINEERS
4911 Green Road Suite 107 Raleigh, NC 27616
Phone 919 981 0310 Fax 919 981 0451
Email info@aogroup.com www.aogroup.com

BRIDGE NO:	270011		
COUNTY:	DARE		
PREPARED BY:	OHS	CHECKED BY:	TGZ
SCALE:	NTS		
DATE:	6/20/06	SHT 524 OF 1347	

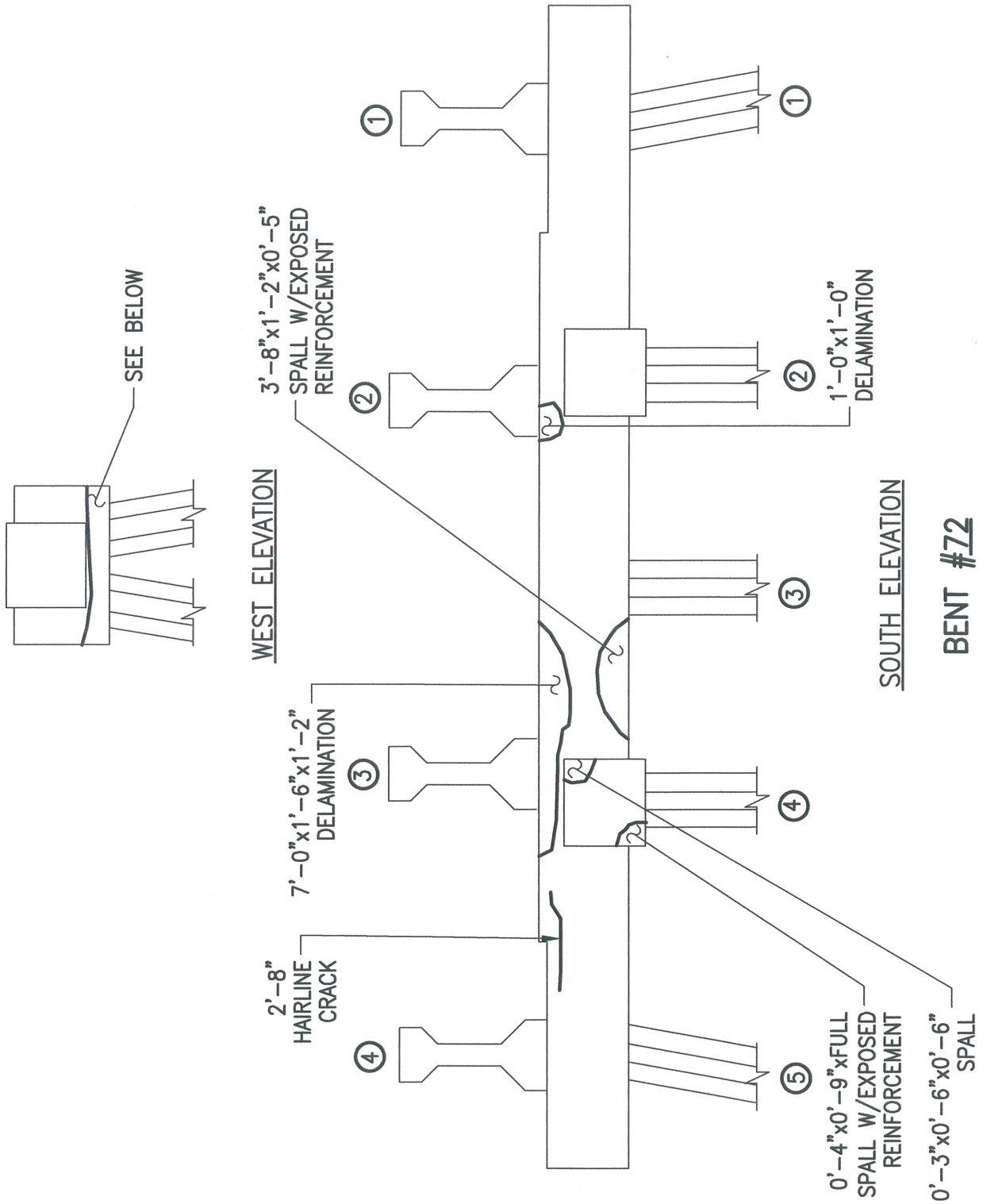

ALPHA & OMEGA GROUP
CIVIL & STRUCTURAL ENGINEERS
4911 Green Road Suite 107 Raleigh, NC 27616
Phone 919 981 0310 Fax 919 981 0451
Email info@aogroup.com www.aogroup.com

BRIDGE NO:	270011		
COUNTY:	DARE		
PREPARED BY:	OHS	CHECKED BY:	TGZ
SCALE:	NTS		
DATE:	6/20/06	SHT 527 OF 1347	

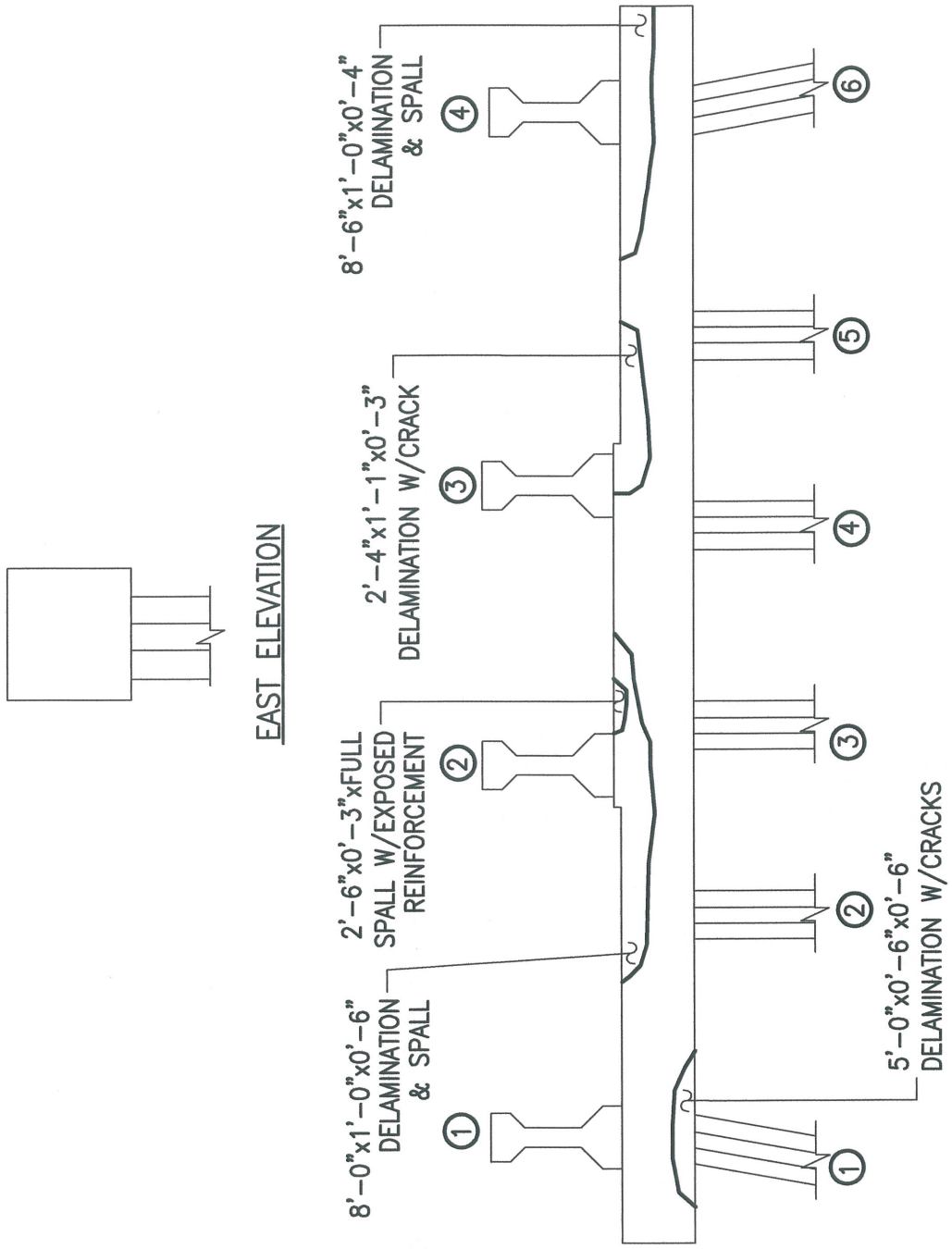

ALPHA & OMEGA GROUP
CIVIL & STRUCTURAL ENGINEERS
4911 Green Road Suite 107 Raleigh, NC 27616
Phone 919 981 0310 Fax 919 981 0451
Email info@aogroup.com www.aogroup.com

BRIDGE NO:	270011		
COUNTY:	DARE		
PREPARED BY:	OHS	CHECKED BY:	TGZ
SCALE:	NTS		
DATE:	6/20/06	SHT 530 OF 1347	

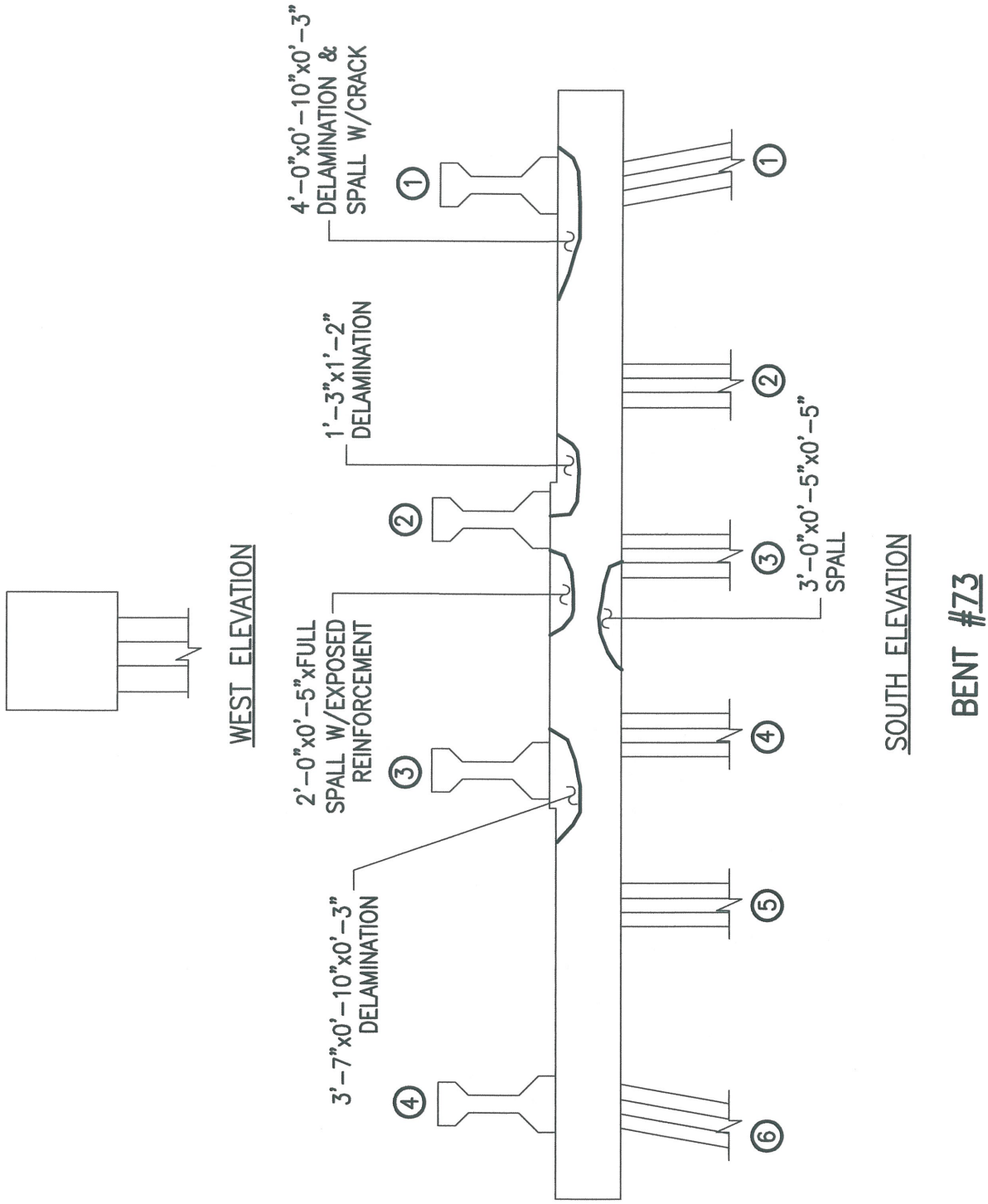

ALPHA & OMEGA GROUP
CIVIL & STRUCTURAL ENGINEERS

4911 Green Road Suite 107 Raleigh, NC 27616
Phone 919 981 0310 Fax 919 981 0451
Email info@aogroup.com www.aogroup.com

BRIDGE NO:	270011		
COUNTY:	DARE		
PREPARED BY:	OHS	CHECKED BY:	TGZ
SCALE:	NTS		
DATE:	6/20/06	SHT 533 OF 1347	

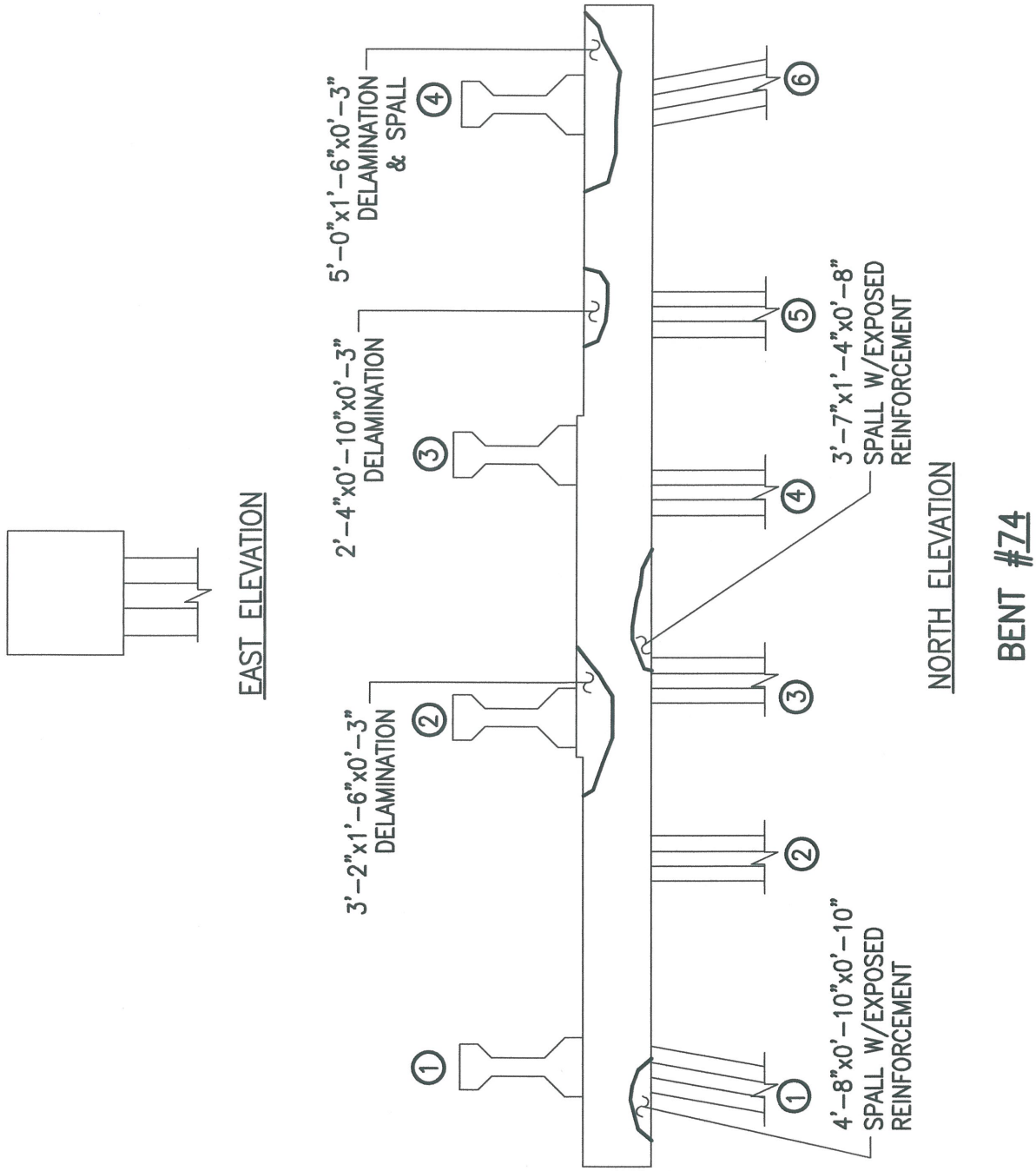

ALPHA & OMEGA GROUP
CIVIL & STRUCTURAL ENGINEERS
4911 Green Road Suite 107 Raleigh, NC 27616
Phone 919 981 0310 Fax 919 981 0451
Email info@aogroup.com www.aogroup.com

BRIDGE NO:	270011		
COUNTY:	DARE		
PREPARED BY:	OHS	CHECKED BY:	TGZ
SCALE:	NTS		
DATE:	6/20/06	SHT 536 OF 1347	

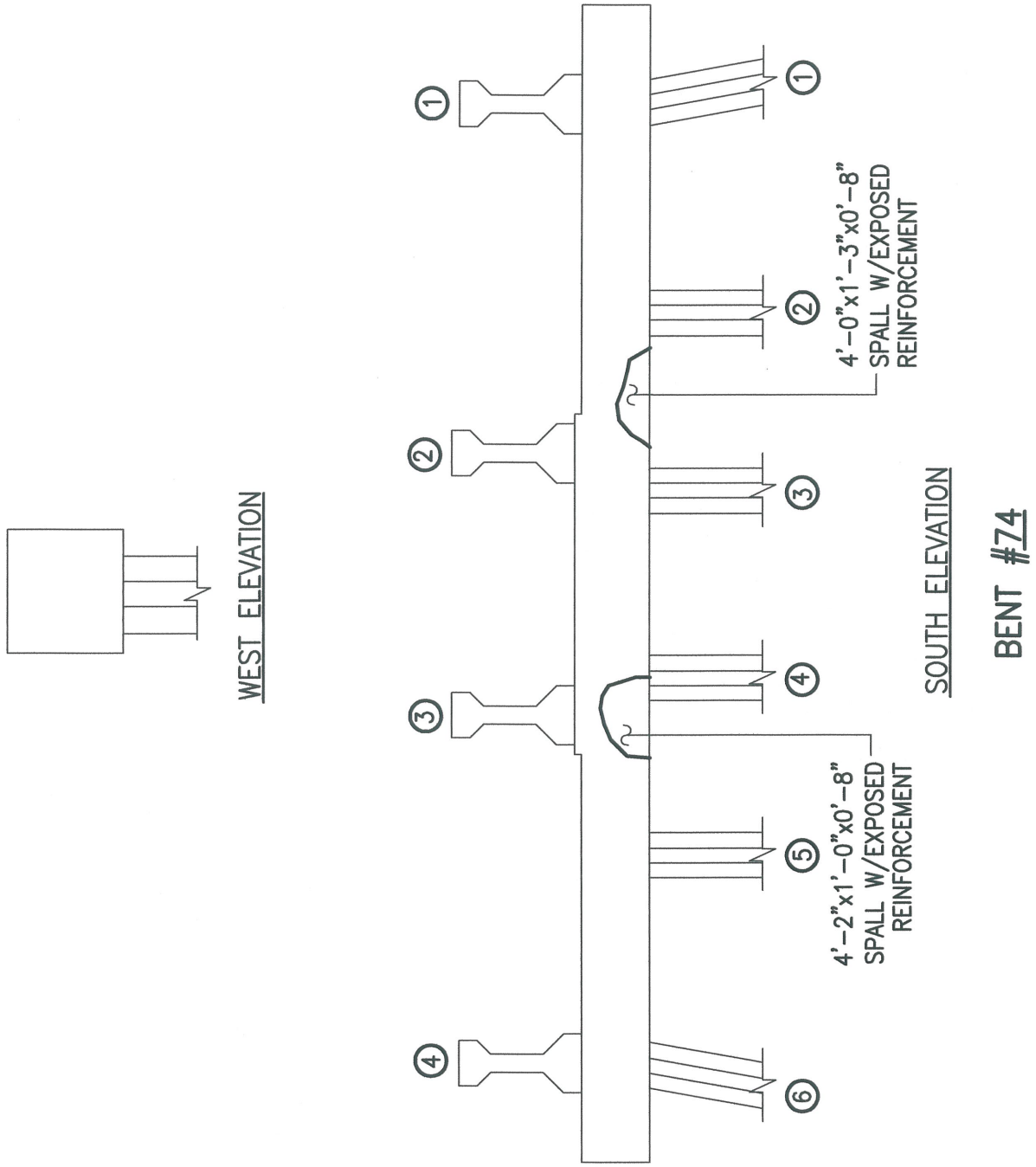

ALPHA & OMEGA GROUP
CIVIL & STRUCTURAL ENGINEERS
4911 Green Road Suite 107 Raleigh, NC 27616
Phone 919 981 0310 Fax 919 981 0451
Email info@aogroup.com www.aogroup.com

BRIDGE NO:	270011		
COUNTY:	DARE		
PREPARED BY:	OHS	CHECKED BY:	TGZ
SCALE:	NTS		
DATE:	6/20/06	SHT 539 OF 1347	

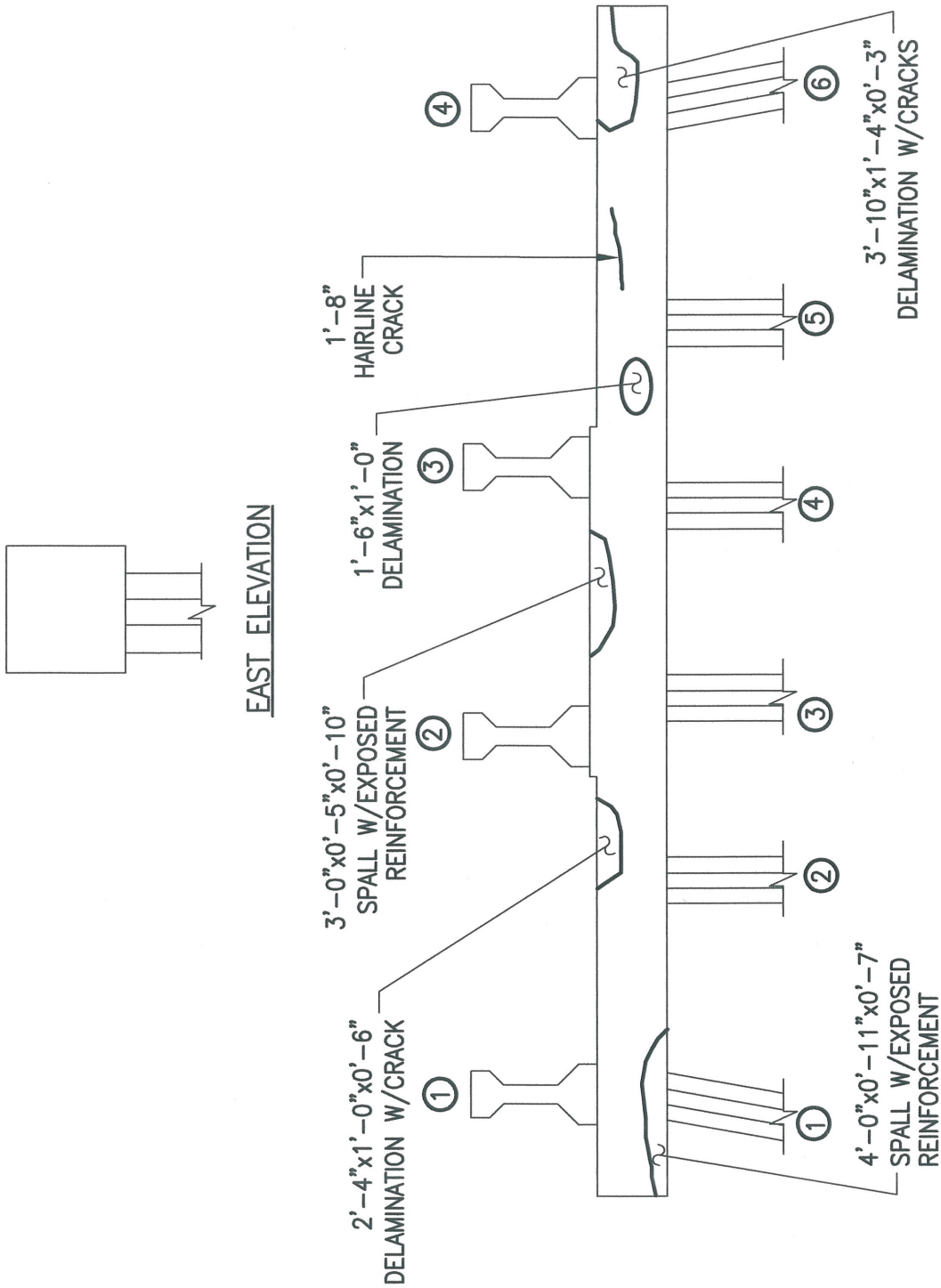

ALPHA & OMEGA GROUP
CIVIL & STRUCTURAL ENGINEERS
4911 Green Road Suite 107 Raleigh, NC 27616
Phone 919 981 0310 Fax 919 981 0451
Email info@aogroup.com www.aogroup.com

BRIDGE NO:	270011		
COUNTY:	DARE		
PREPARED BY:	OHS	CHECKED BY:	TGZ
SCALE:	NTS		
DATE:	6/20/06	SHT 542 OF 1347	

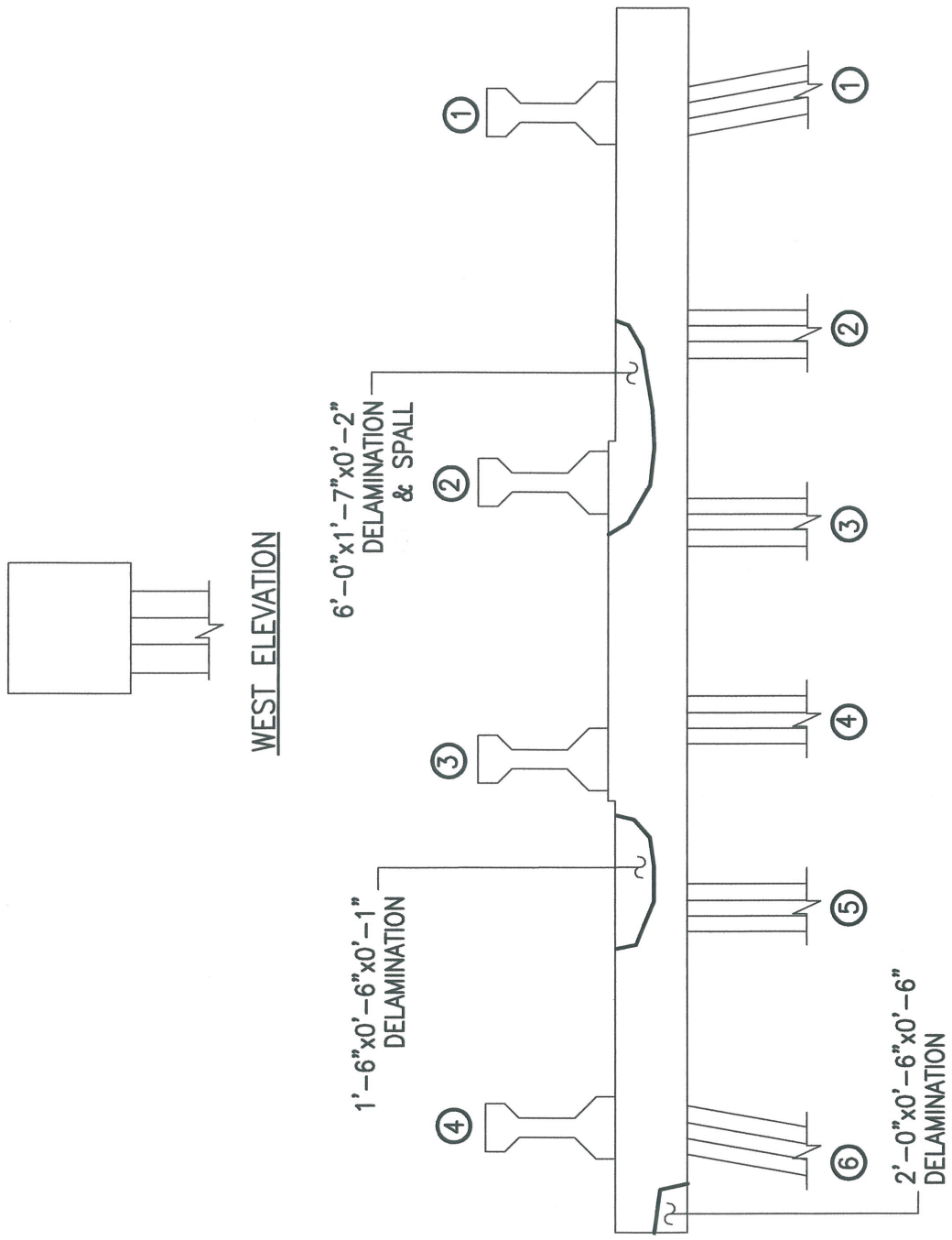

ALPHA & OMEGA GROUP
CIVIL & STRUCTURAL ENGINEERS
4911 Green Road Suite 107 Raleigh, NC 27616
Phone 919 981 0310 Fax 919 981 0451
Email info@aogroup.com www.aogroup.com

BRIDGE NO:	270011		
COUNTY:	DARE		
PREPARED BY:	OHS	CHECKED BY:	TGZ
SCALE:	NTS		
DATE:	6/20/06	SHT 545 OF 1347	

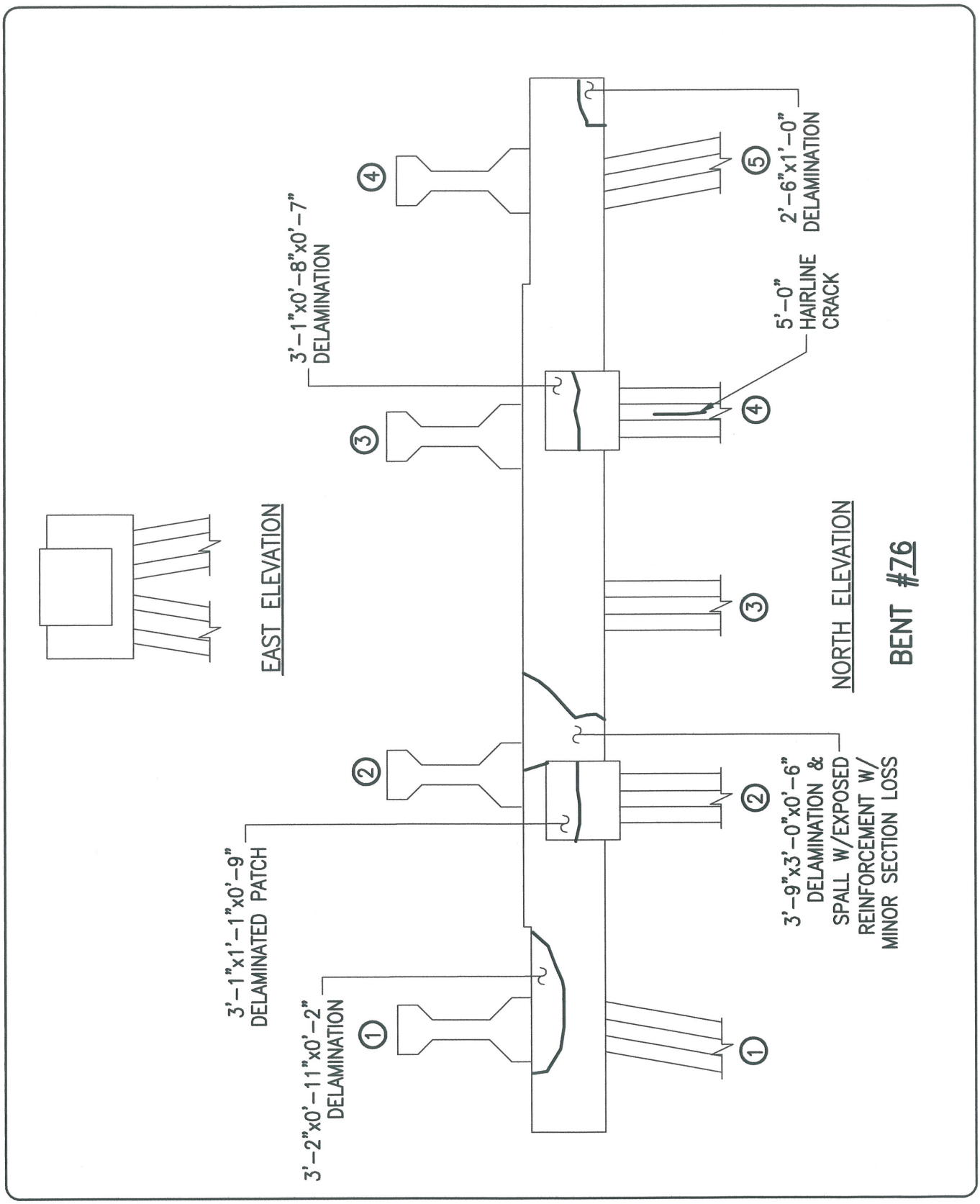

ALPHA & OMEGA GROUP
CIVIL & STRUCTURAL ENGINEERS
4911 Green Road Suite 107 Raleigh, NC 27616
Phone 919 981 0310 Fax 919 981 0451
Email info@aogroup.com www.aogroup.com

BRIDGE NO:	270011		
COUNTY:	DARE		
PREPARED BY:	OHS	CHECKED BY:	TGZ
SCALE:	NTS		
DATE:	6/20/06	SHT 548 OF 1347	

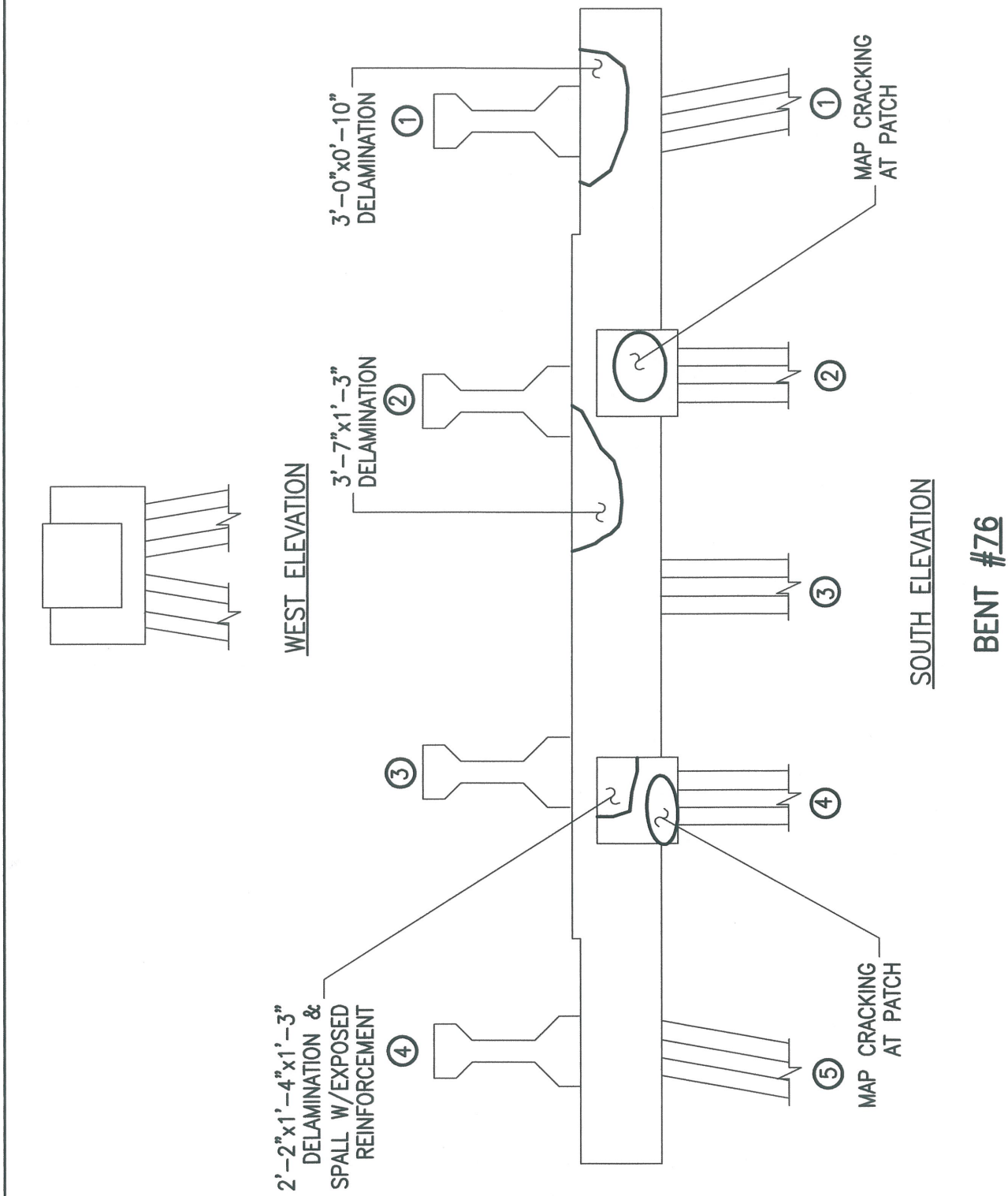

ALPHA & OMEGA GROUP
CIVIL & STRUCTURAL ENGINEERS
4911 Green Road Suite 107 Raleigh, NC 27616
Phone 919 981 0310 Fax 919 981 0451
Email info@aogroup.com www.aogroup.com

BRIDGE NO:	270011		
COUNTY:	DARE		
PREPARED BY:	OHS	CHECKED BY:	TGZ
SCALE:	NTS		
DATE:	6/20/06	SHT 551 OF 1347	

GENERAL NOTE:
1. PILES HAVE MINOR CORNER CHIPS AT RANDOM

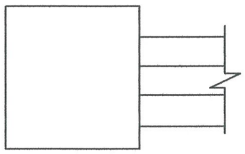

EAST ELEVATION

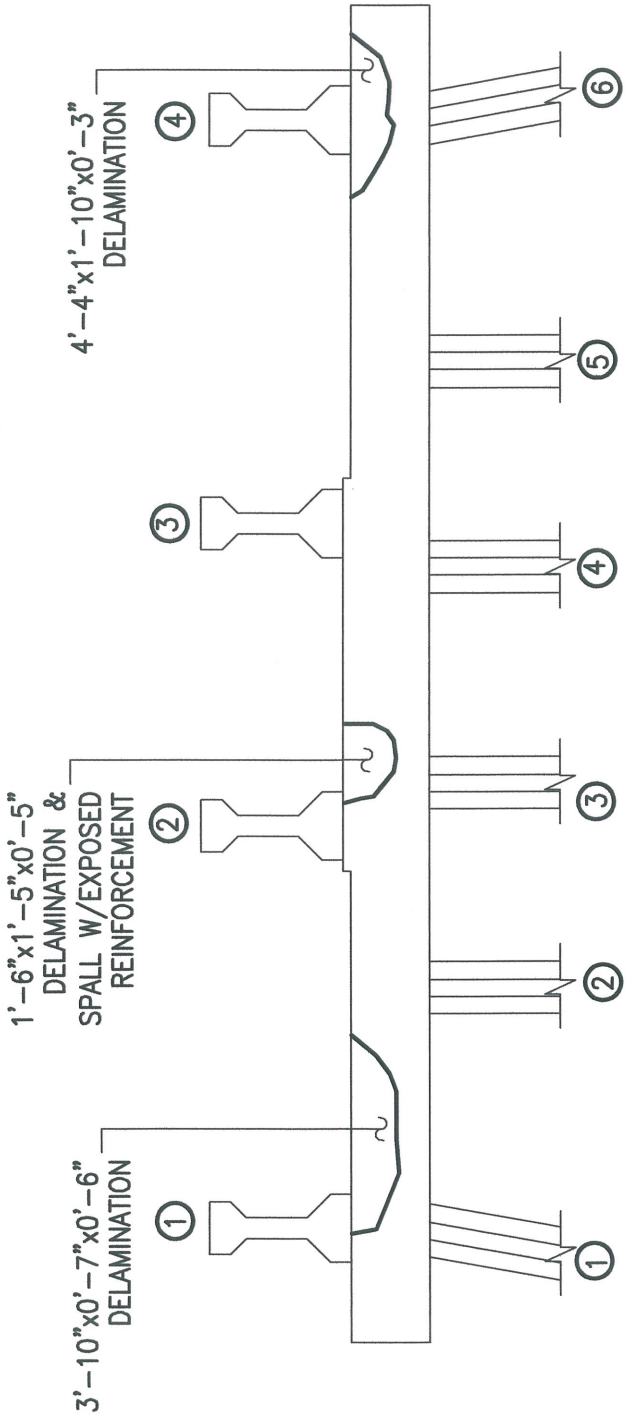

NORTH ELEVATION

BENT #77

ALPHA & OMEGA GROUP
CIVIL & STRUCTURAL ENGINEERS

4911 Green Road Suite 107 Raleigh, NC 27616
Phone 919 981 0310 Fax 919 981 0451
Email info@aogroup.com www.aogroup.com

BRIDGE NO:	270011		
COUNTY:	DARE		
PREPARED BY:	OHS	CHECKED BY:	TGZ
SCALE:	NTS		
DATE:	6/20/06	SHT 554 OF 1347	

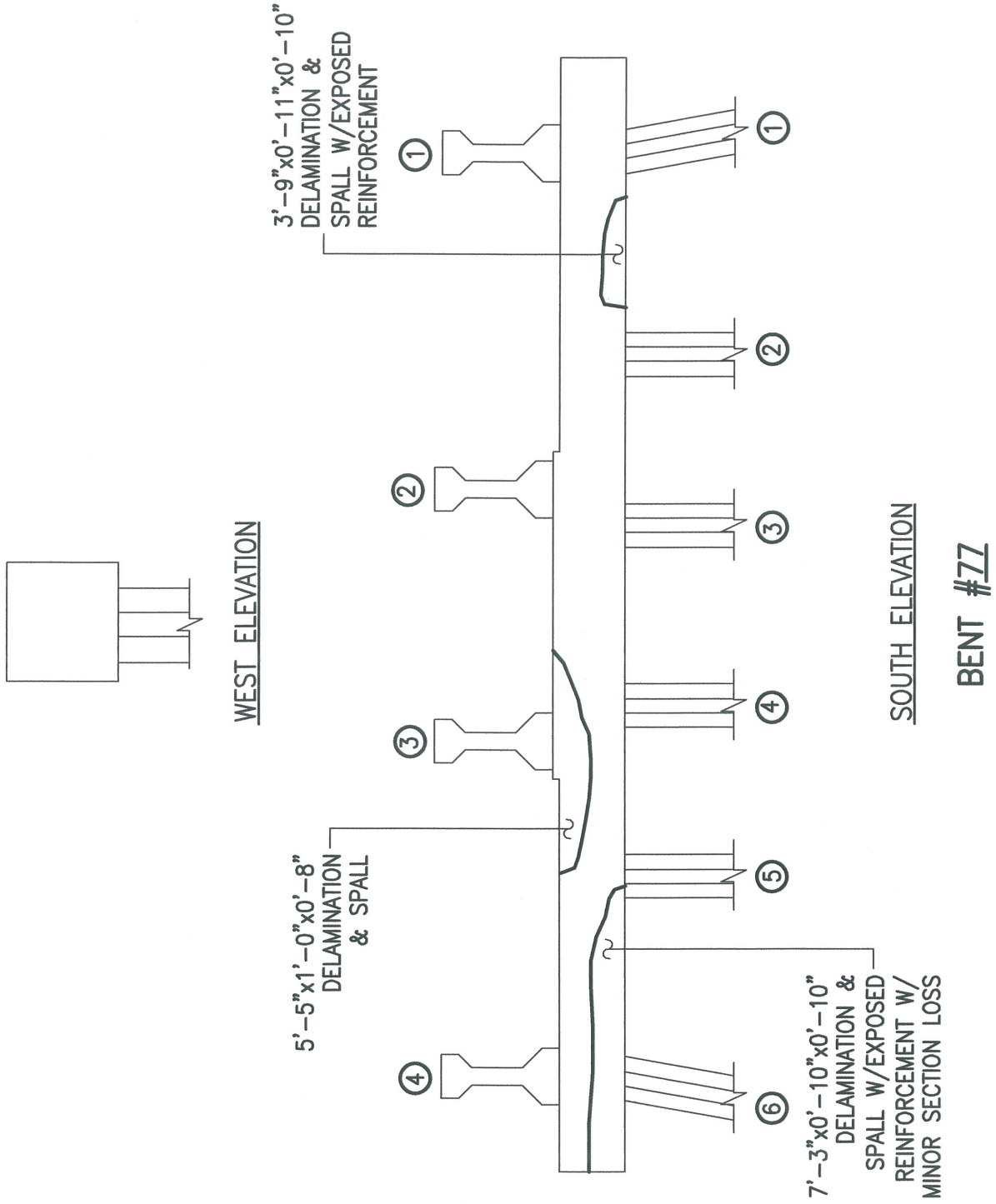

ALPHA & OMEGA GROUP
CIVIL & STRUCTURAL ENGINEERS
4911 Green Road Suite 107 Raleigh, NC 27616
Phone 919 981 0310 Fax 919 981 0451
Email info@aogroup.com www.aogroup.com

BRIDGE NO:	270011		
COUNTY:	DARE		
PREPARED BY:	OHS	CHECKED BY:	TGZ
SCALE:	NTS		
DATE:	6/20/06	SHT 55	OF 1347

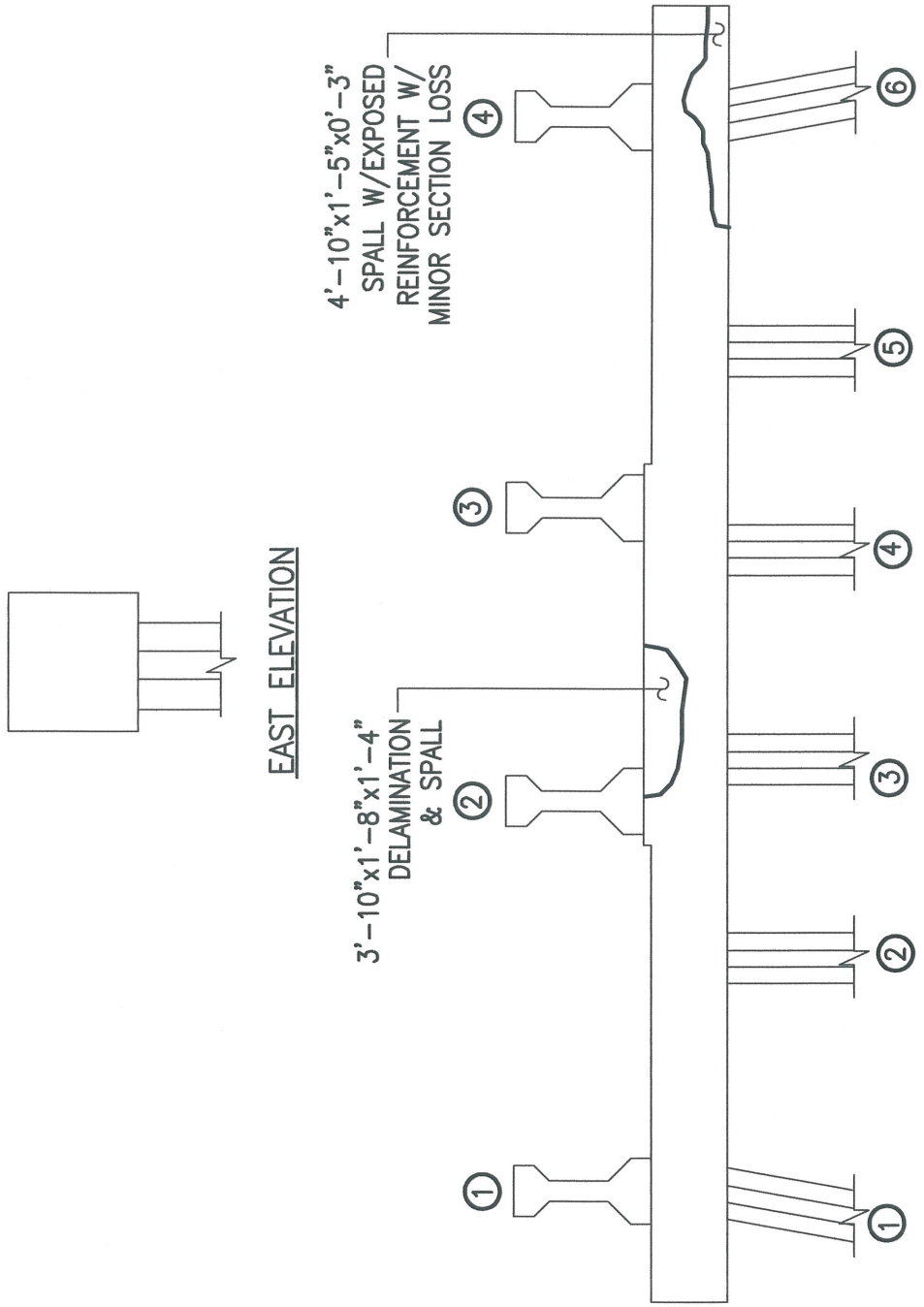

ALPHA & OMEGA GROUP
CIVIL & STRUCTURAL ENGINEERS
4911 Green Road Suite 107 Raleigh, NC 27616
Phone 919 981 0310 Fax 919 981 0451
Email info@aogroup.com www.aogroup.com

BRIDGE NO:	270011		
COUNTY:	DARE		
PREPARED BY:	OHS	CHECKED BY:	TGZ
SCALE:	NTS		
DATE:	6/20/06	SHT 60 OF 1347	

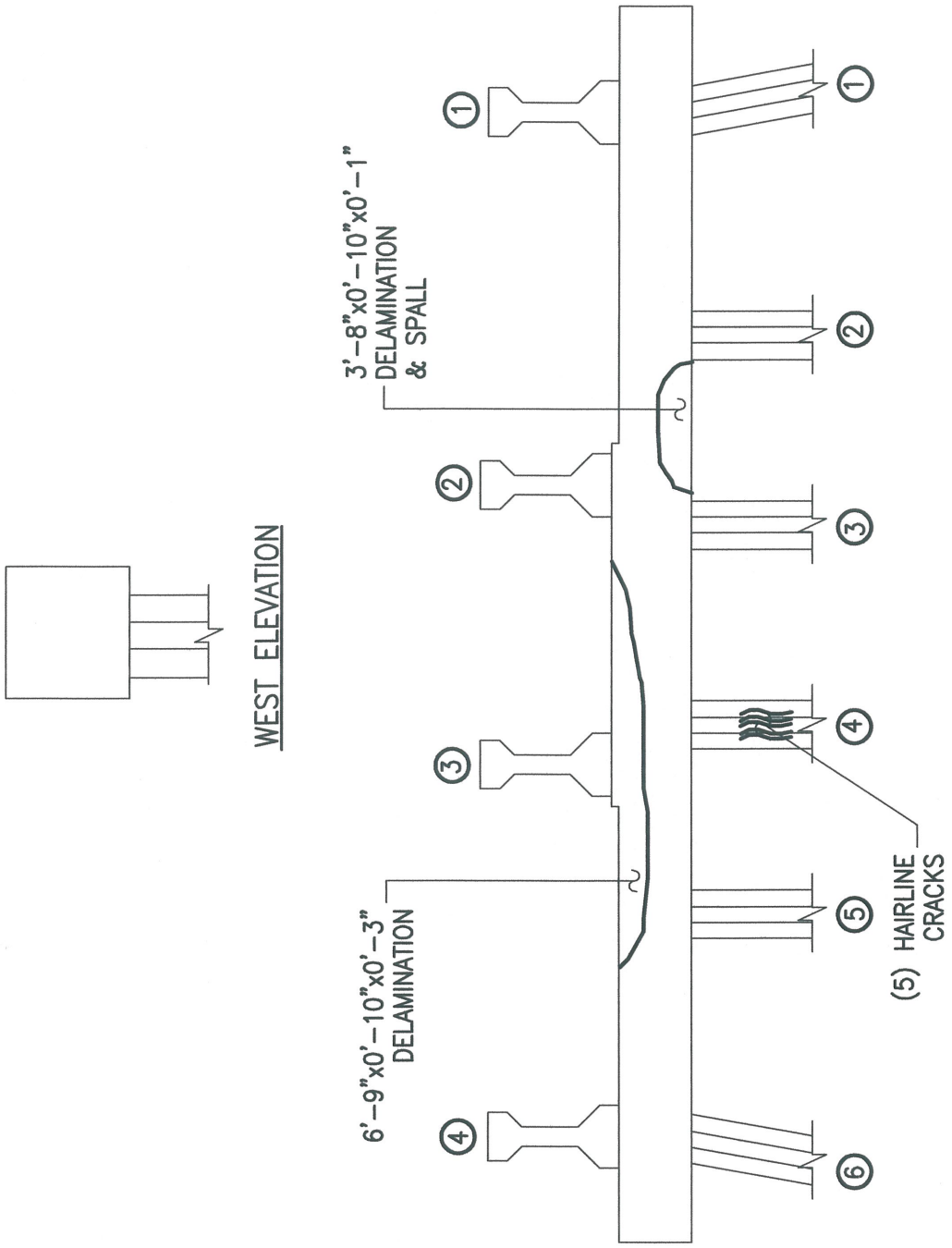

ALPHA & OMEGA GROUP
CIVIL & STRUCTURAL ENGINEERS
4911 Green Road Suite 107 Raleigh, NC 27616
Phone 919 981 0310 Fax 919 981 0451
Email info@aogroup.com www.aogroup.com

BRIDGE NO:	270011		
COUNTY:	DARE		
PREPARED BY:	OHS	CHECKED BY:	TGZ
SCALE:	NTS		
DATE:	6/20/06	SHT 863 OF 1347	

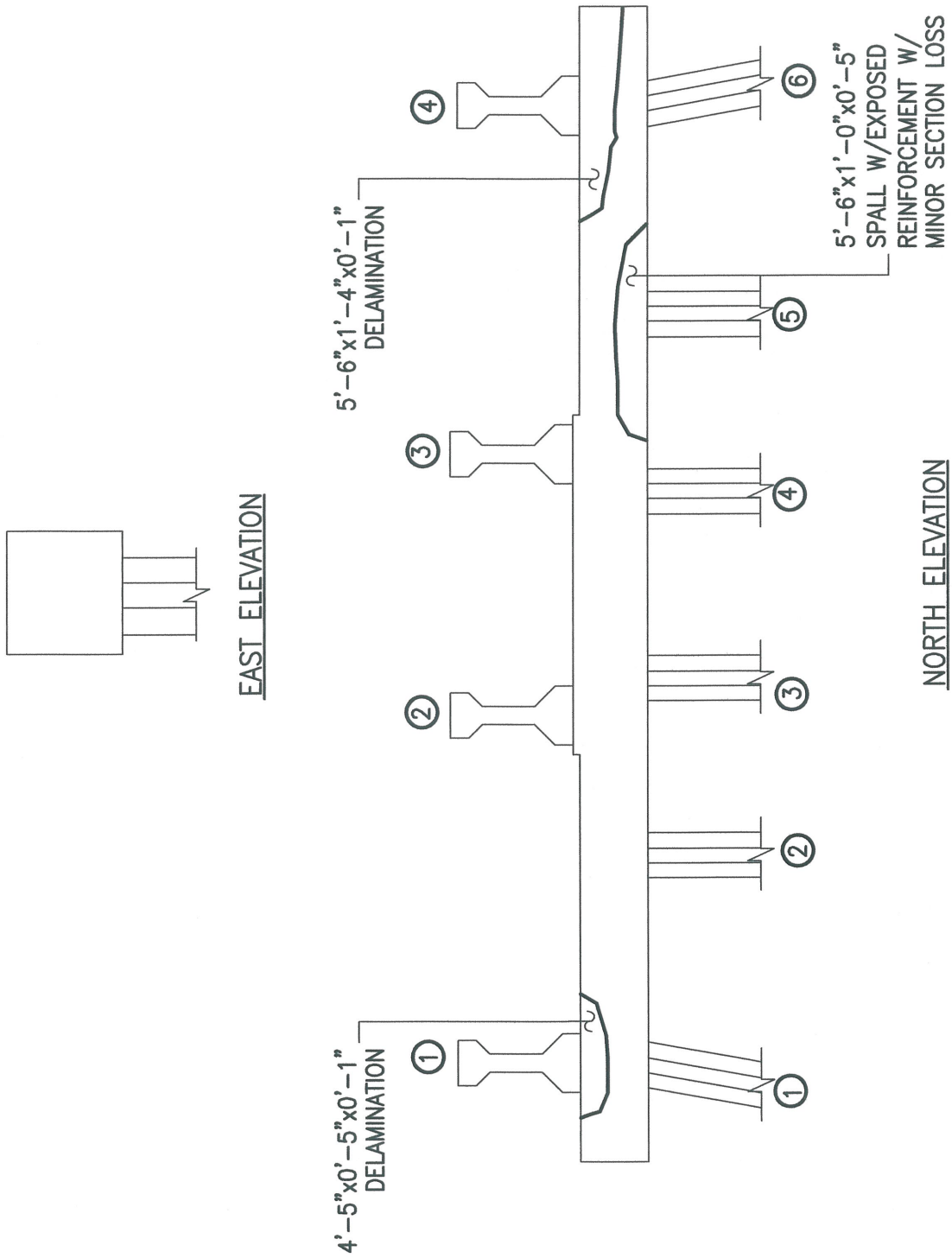

ALPHA & OMEGA GROUP
CIVIL & STRUCTURAL ENGINEERS
4911 Green Road Suite 107 Raleigh, NC 27616
Phone 919 981 0310 Fax 919 981 0451
Email info@aogroup.com www.aogroup.com

BRIDGE NO:	270011		
COUNTY:	DARE		
PREPARED BY:	OHS	CHECKED BY:	TGZ
SCALE:	NTS		
DATE:	6/20/06	SHT 566 OF 1347	

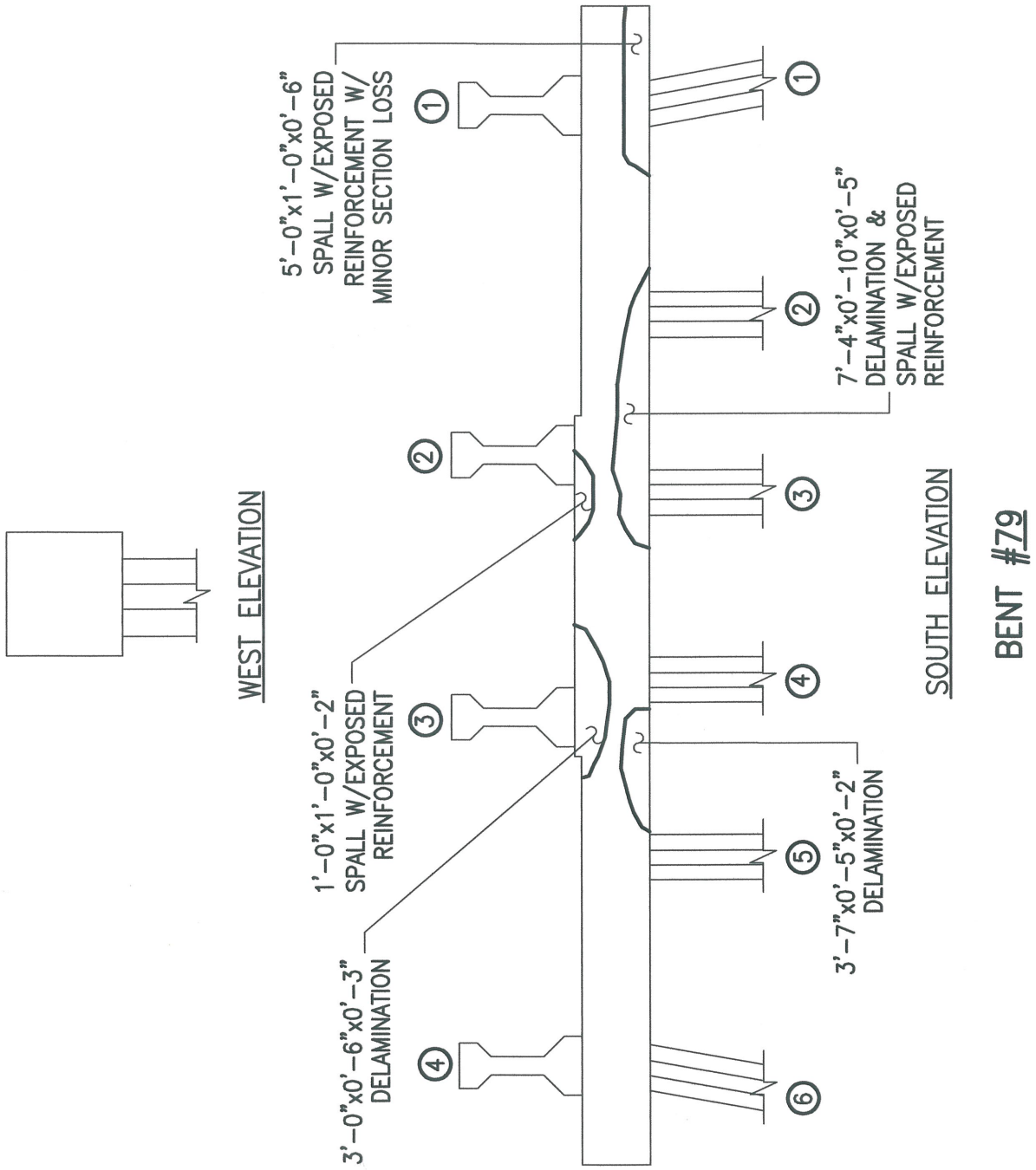

ALPHA & OMEGA GROUP
CIVIL & STRUCTURAL ENGINEERS

4911 Green Road Suite 107 Raleigh, NC 27616
Phone 919 981 0310 Fax 919 981 0451
Email info@aogroup.com www.aogroup.com

BRIDGE NO:	270011		
COUNTY:	DARE		
PREPARED BY:	OHS	CHECKED BY:	TGZ
SCALE:	NTS		
DATE:	6/20/06	SHT 59 OF 1347	

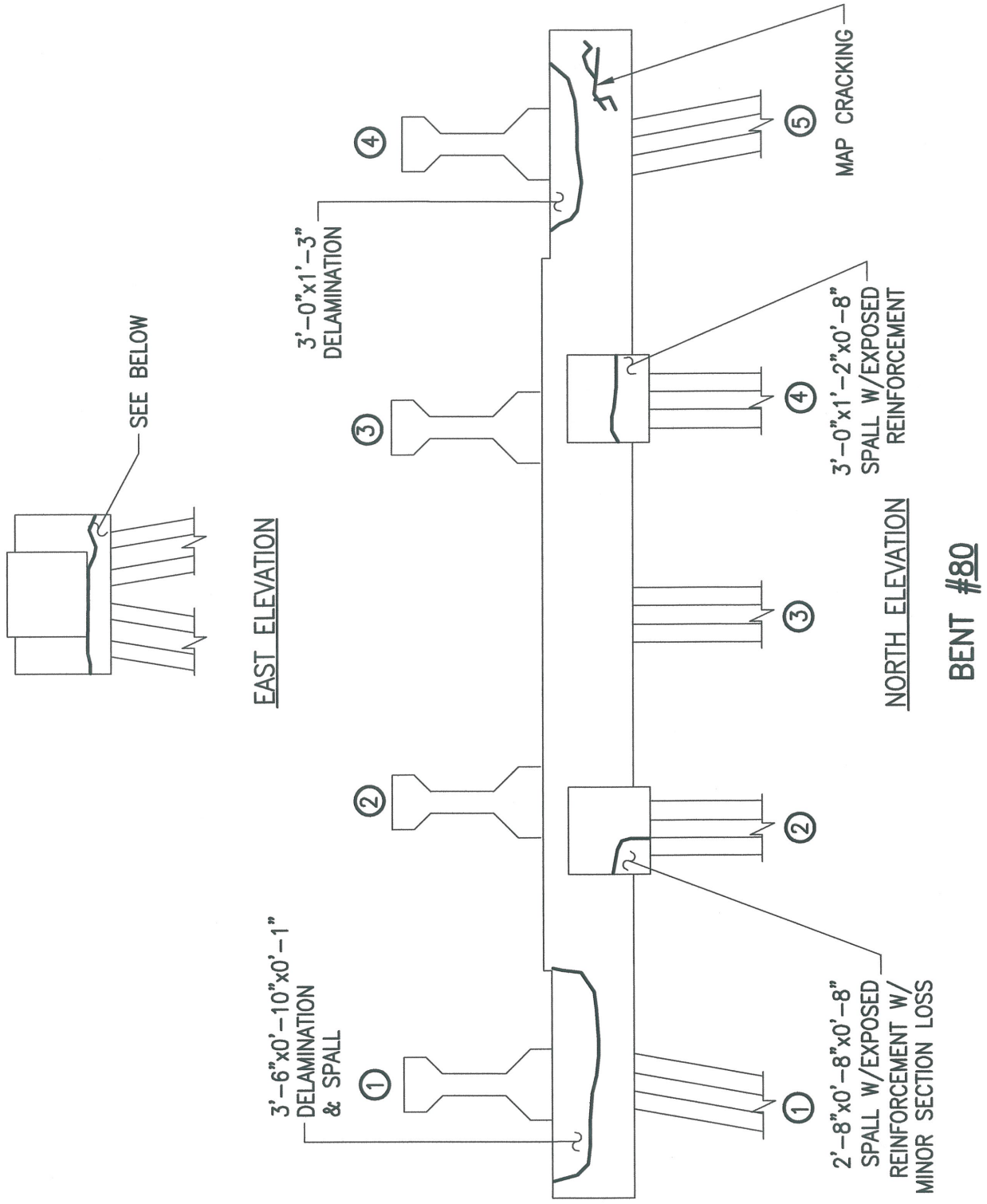

ALPHA & OMEGA GROUP
CIVIL & STRUCTURAL ENGINEERS
4911 Green Road Suite 107 Raleigh, NC 27616
Phone 919 981 0310 Fax 919 981 0451
Email info@aogroup.com www.aogroup.com

BRIDGE NO:	270011		
COUNTY:	DARE		
PREPARED BY:	OHS	CHECKED BY:	TGZ
SCALE:	NTS		
DATE:	6/20/06	SHT 572 OF 1347	

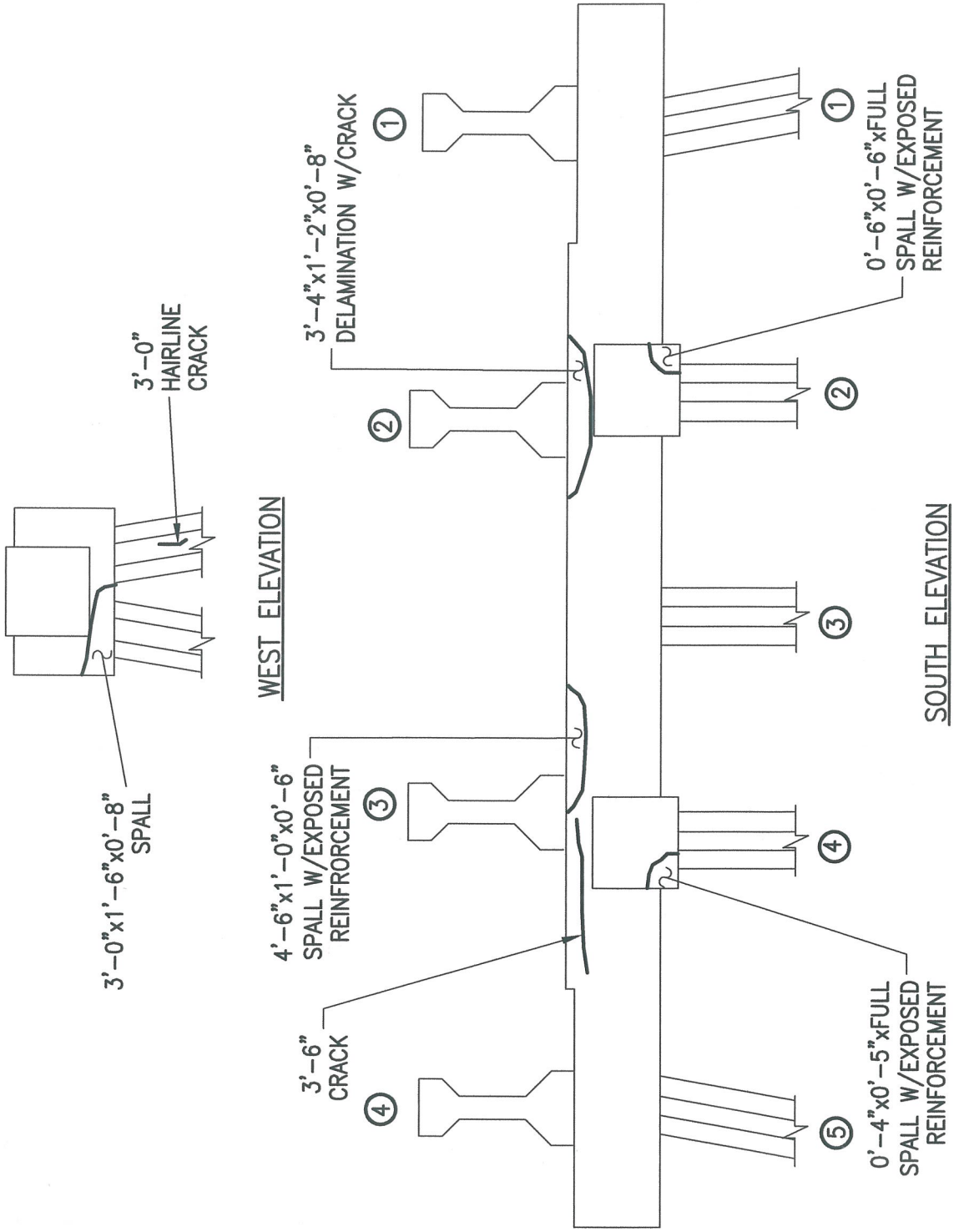

ALPHA & OMEGA GROUP
CIVIL & STRUCTURAL ENGINEERS
4911 Green Road Suite 107 Raleigh, NC 27616
Phone 919 981 0310 Fax 919 981 0451
Email info@aogroup.com www.aogroup.com

BRIDGE NO:	270011		
COUNTY:	DARE		
PREPARED BY:	OHS	CHECKED BY:	TGZ
SCALE:	NTS		
DATE:	6/20/06	SHT 575 OF 1347	

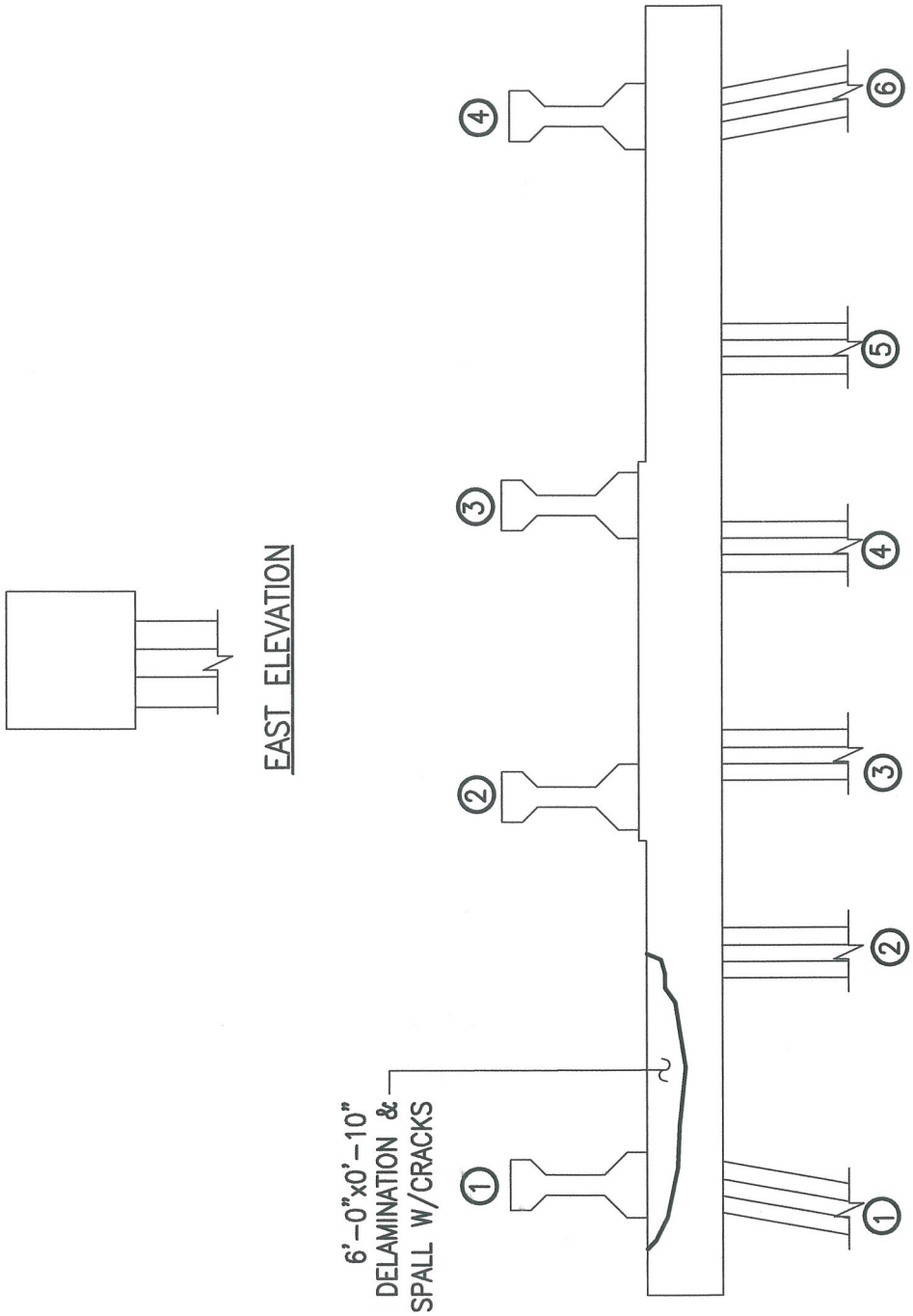

ALPHA & OMEGA GROUP
CIVIL & STRUCTURAL ENGINEERS
4911 Green Road Suite 107 Raleigh, NC 27616
Phone 919 981 0310 Fax 919 981 0451
Email info@aogroup.com www.aogroup.com

BRIDGE NO:	270011		
COUNTY:	DARE		
PREPARED BY:	OHS	CHECKED BY:	TGZ
SCALE:	NTS		
DATE:	6/20/06	SHT 57 OF 134	

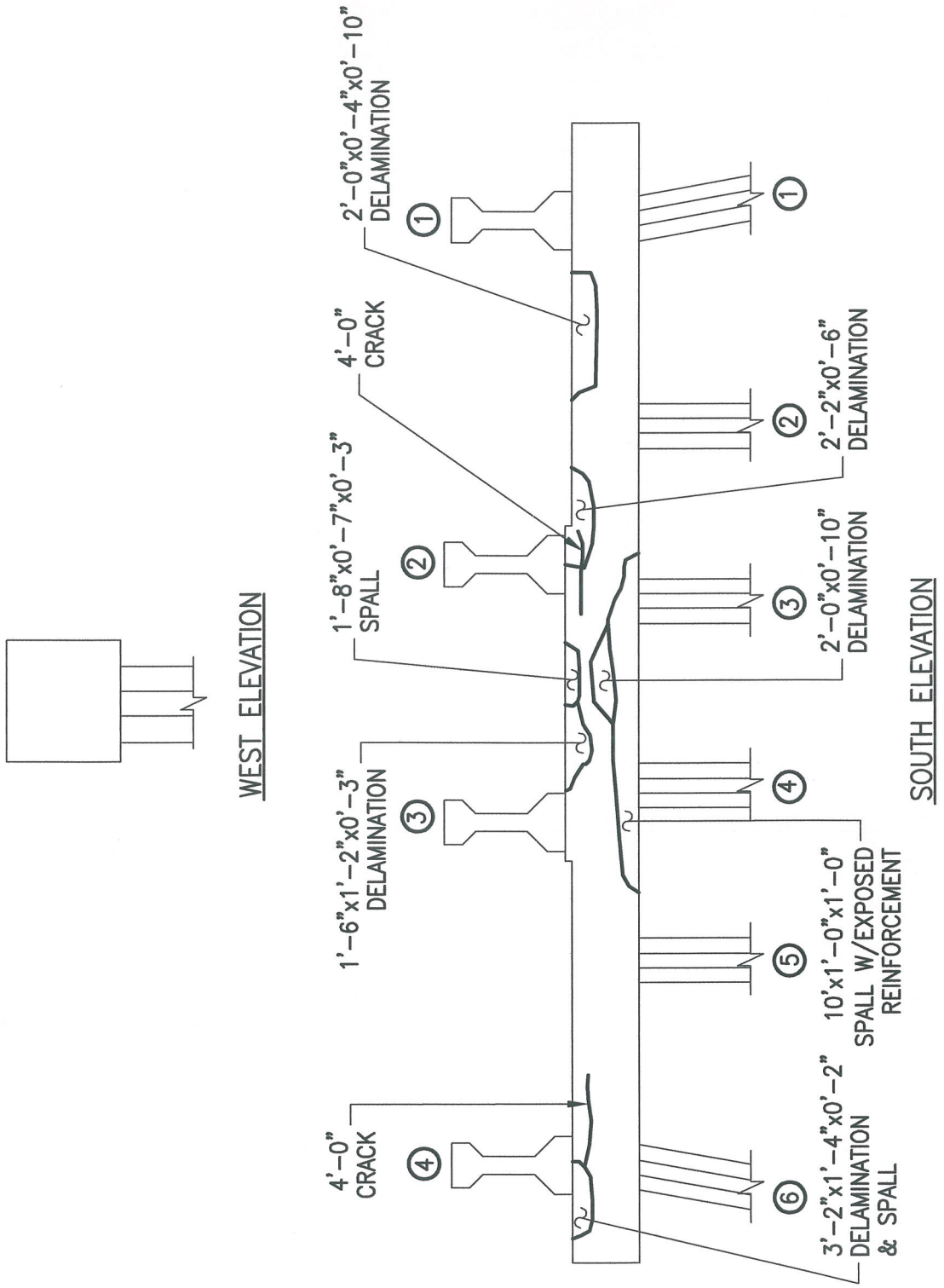

ALPHA & OMEGA GROUP
CIVIL & STRUCTURAL ENGINEERS
4911 Green Road Suite 107 Raleigh, NC 27616
Phone 919 981 0310 Fax 919 981 0451
Email info@aogroup.com www.aogroup.com

BRIDGE NO:	270011		
COUNTY:	DARE		
PREPARED BY:	OHS	CHECKED BY:	TGZ
SCALE:	NTS		
DATE:	6/20/06	SHT 581 OF 1347	

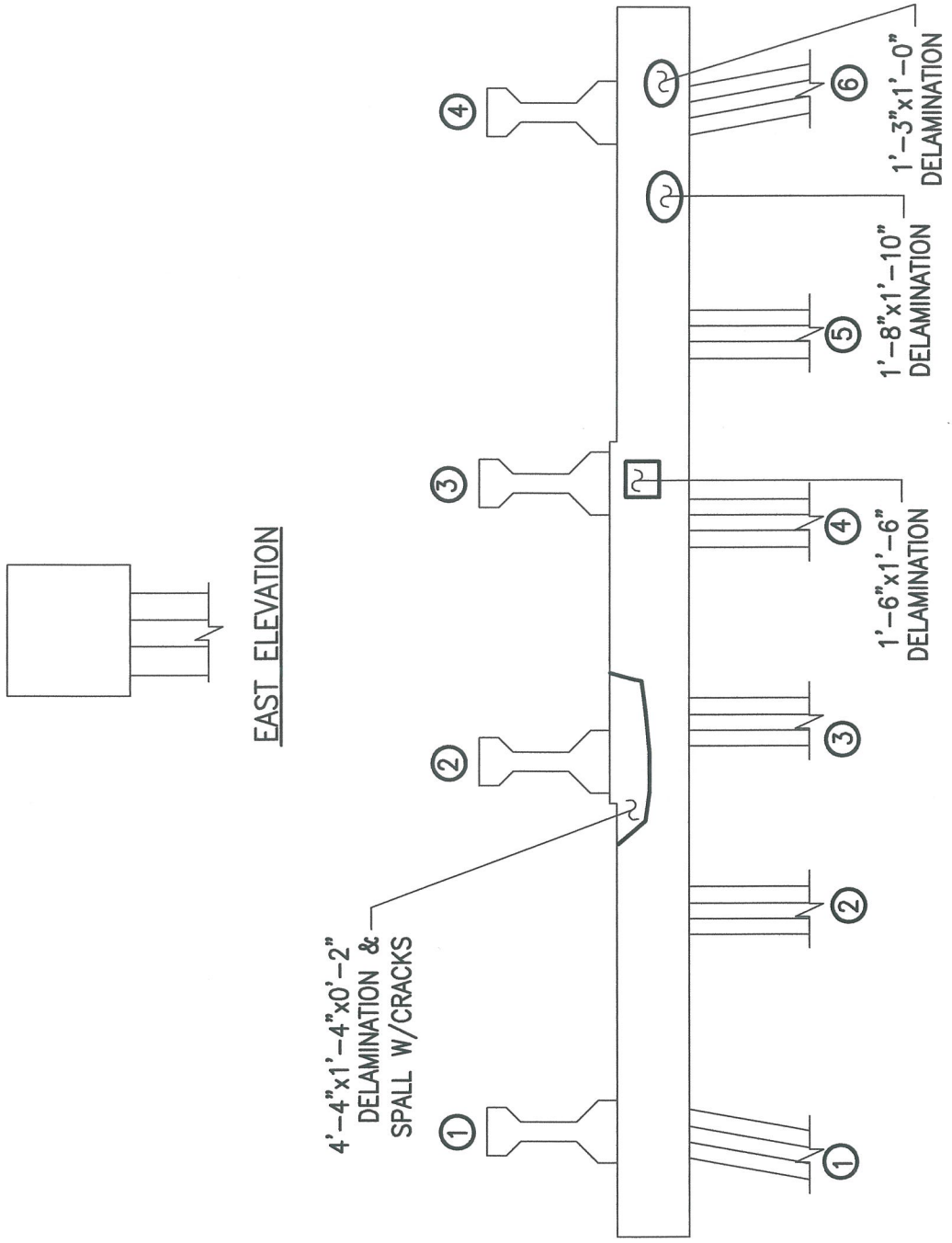

ALPHA & OMEGA GROUP
CIVIL & STRUCTURAL ENGINEERS
4911 Green Road Suite 107 Raleigh, NC 27616
Phone 919 981 0310 Fax 919 981 0451
Email info@aogroup.com www.aogroup.com

BRIDGE NO:	270011		
COUNTY:	DARE		
PREPARED BY:	OHS	CHECKED BY:	TGZ
SCALE:	NTS		
DATE:	6/20/06	SHT 584 OF 1347	

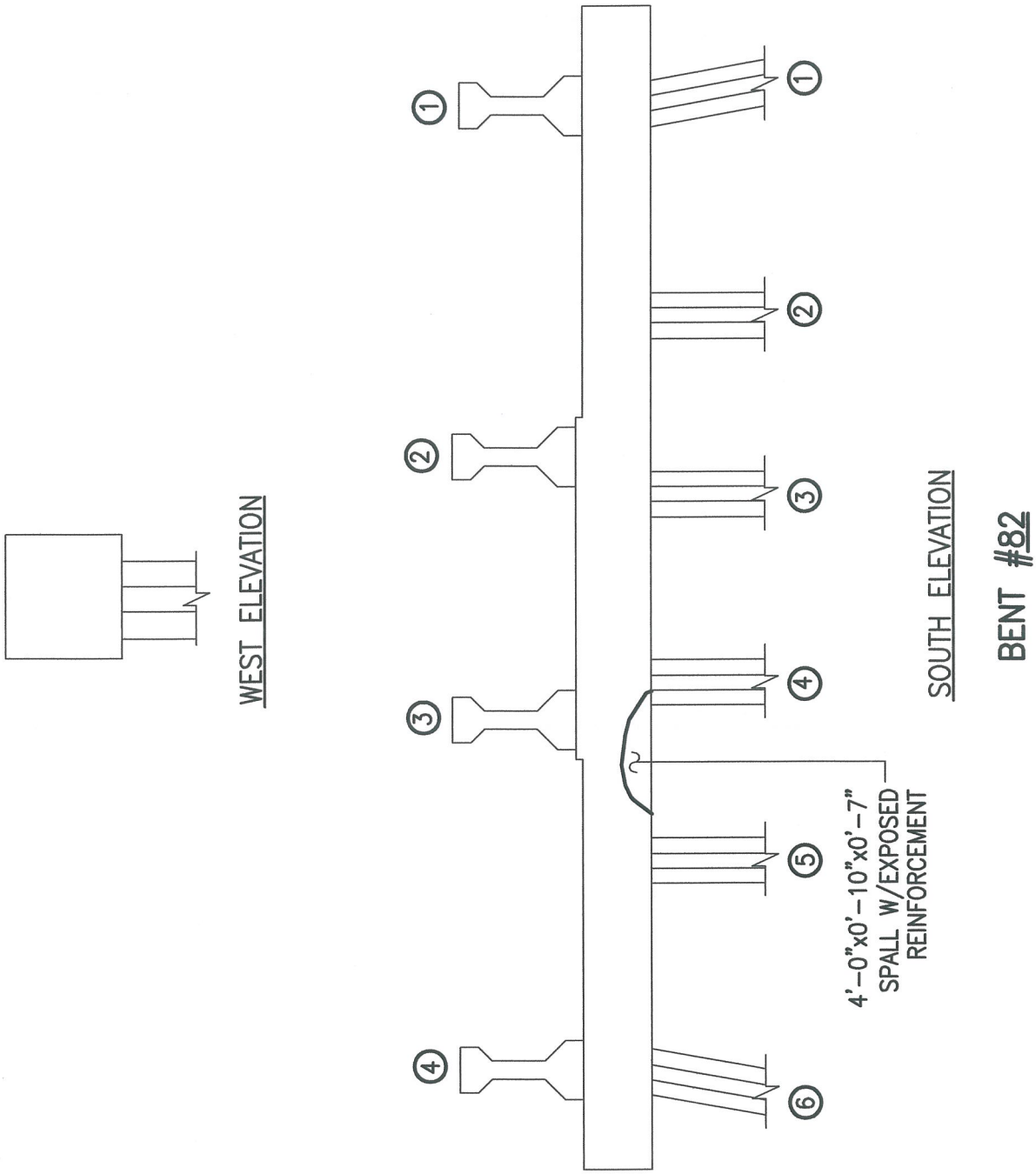

ALPHA & OMEGA GROUP
CIVIL & STRUCTURAL ENGINEERS
4911 Green Road Suite 107 Raleigh, NC 27616
Phone 919 981 0310 Fax 919 981 0451
Email info@aogroup.com www.aogroup.com

BRIDGE NO:	270011		
COUNTY:	DARE		
PREPARED BY:	OHS	CHECKED BY:	TGZ
SCALE:	NTS		
DATE:	6/20/06	SHT 567 OF 1347	

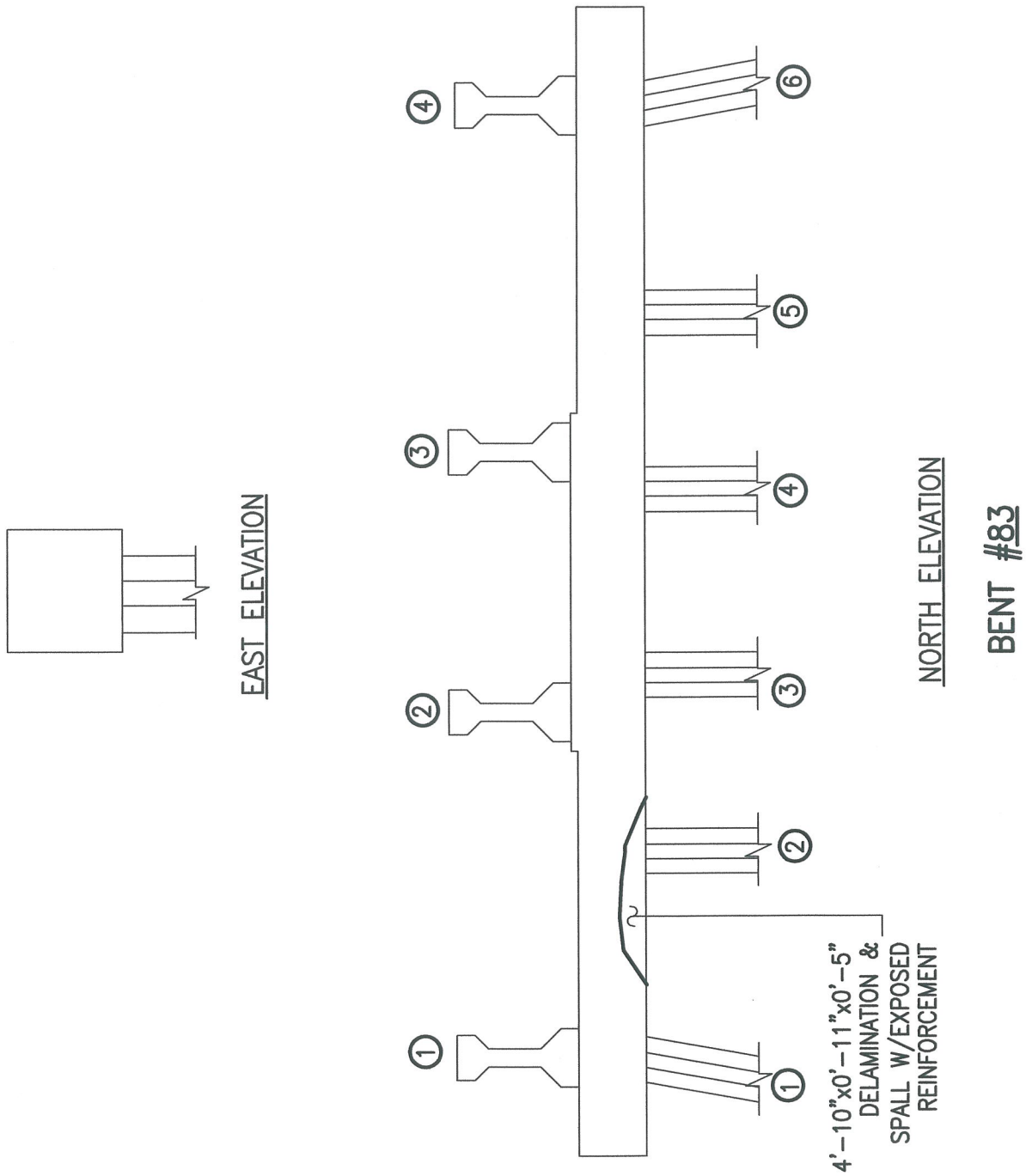

ALPHA & OMEGA GROUP
CIVIL & STRUCTURAL ENGINEERS
4911 Green Road Suite 107 Raleigh, NC 27616
Phone 919 981 0310 Fax 919 981 0451
Email info@aogroup.com www.aogroup.com

BRIDGE NO:	270011		
COUNTY:	DARE		
PREPARED BY:	OHS	CHECKED BY:	TGZ
SCALE:	NTS		
DATE:	6/20/06	SHT 590 OF 1347	

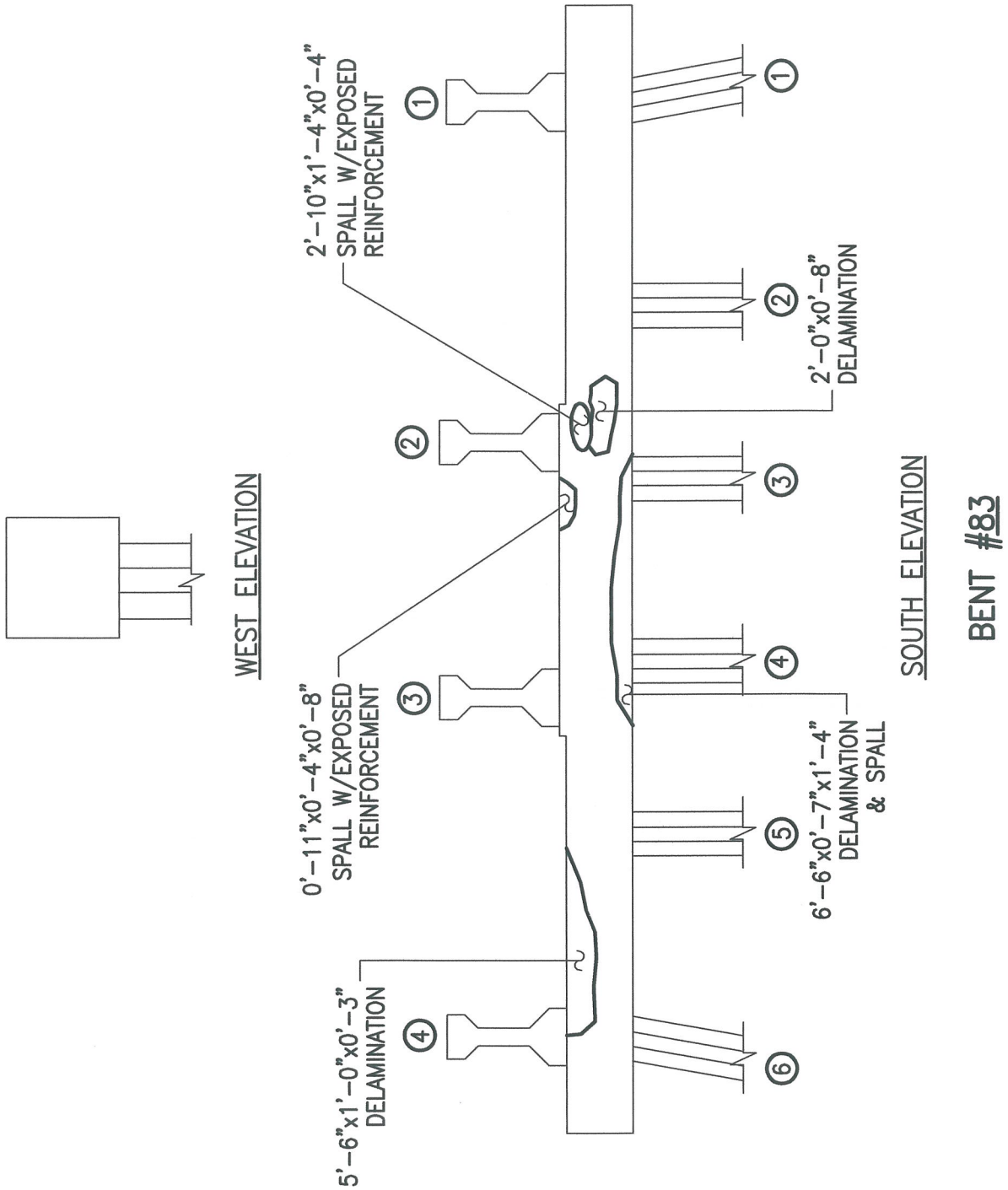

ALPHA & OMEGA GROUP
CIVIL & STRUCTURAL ENGINEERS

4911 Green Road Suite 107 Raleigh, NC 27616
Phone 919 981 0310 Fax 919 981 0451
Email info@aogroup.com www.aogroup.com

BRIDGE NO:	270011		
COUNTY:	DARE		
PREPARED BY:	OHS	CHECKED BY:	TGZ
SCALE:	NTS		
DATE:	6/20/06	SHT 5°3 OF 1347	

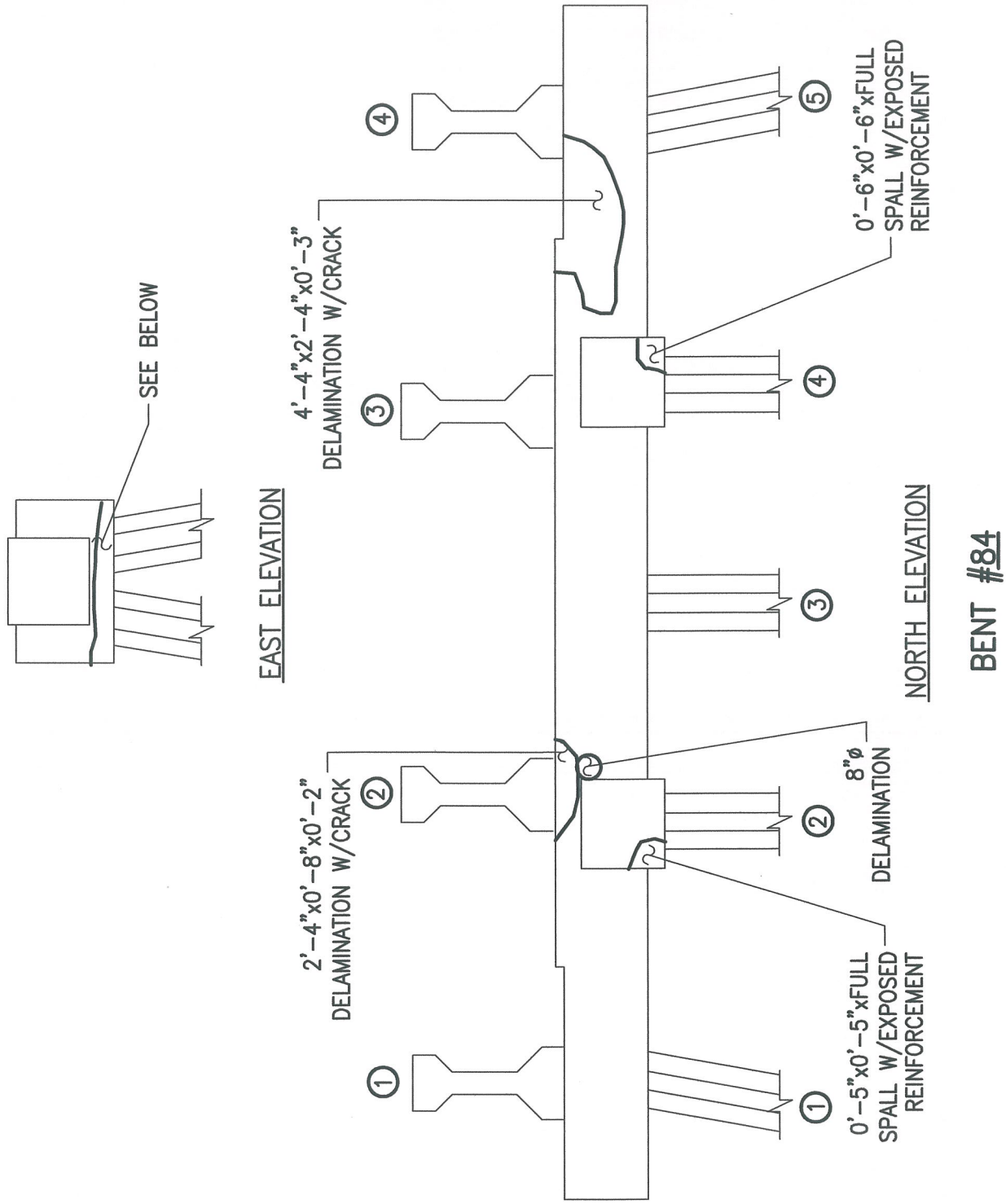

ALPHA & OMEGA GROUP
CIVIL & STRUCTURAL ENGINEERS
4911 Green Road Suite 107 Raleigh, NC 27616
Phone 919 981 0310 Fax 919 981 0451
Email info@aogroup.com www.aogroup.com

BRIDGE NO:	270011		
COUNTY:	DARE		
PREPARED BY:	OHS	CHECKED BY:	TGZ
SCALE:	NTS		
DATE:	6/20/06	SHT 596 OF 1347	

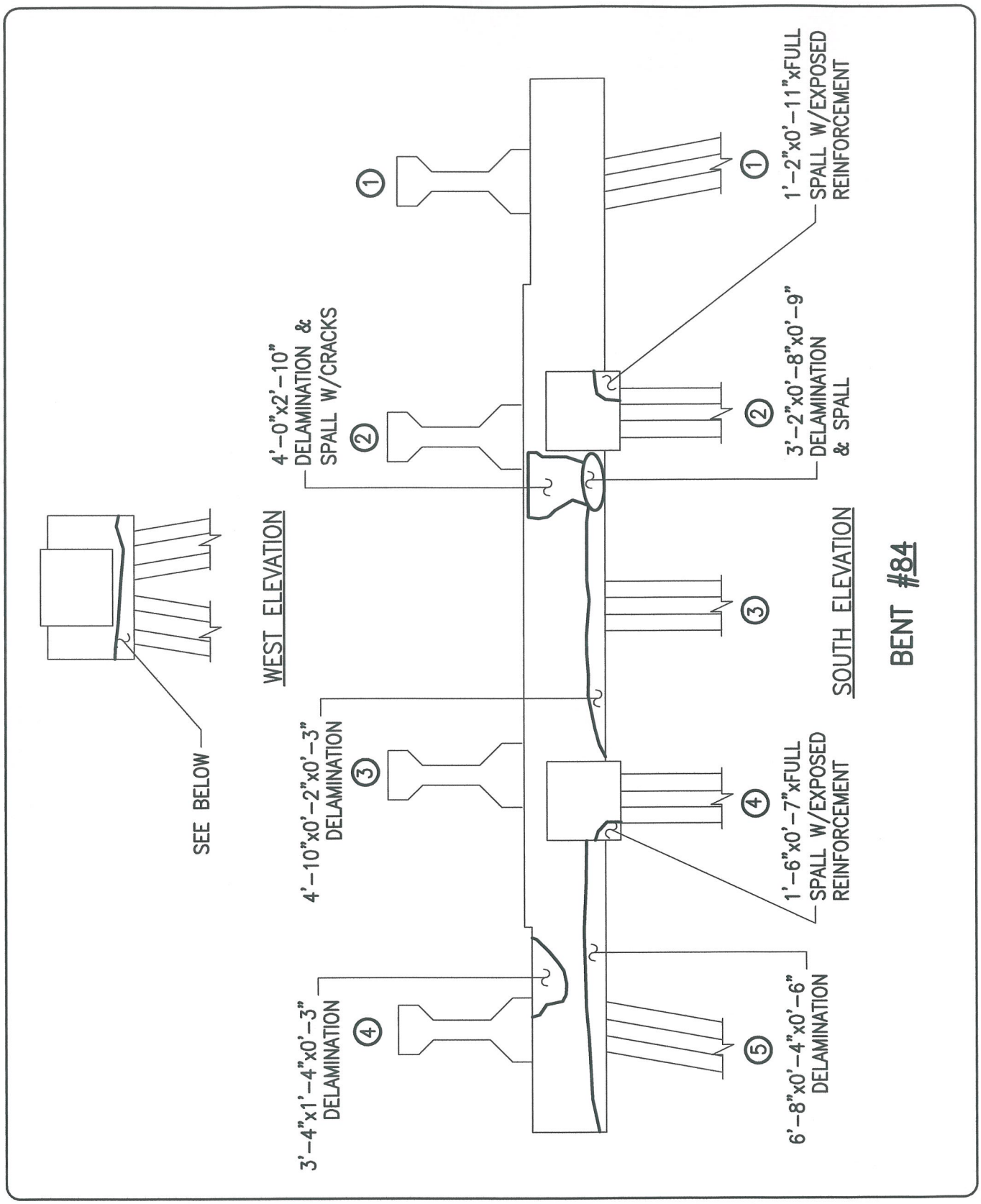

ALPHA & OMEGA GROUP
CIVIL & STRUCTURAL ENGINEERS
4911 Green Road Suite 107 Raleigh, NC 27616
Phone 919 981 0310 Fax 919 981 0451
Email info@aogroup.com www.aogroup.com

BRIDGE NO:	270011		
COUNTY:	DARE		
PREPARED BY:	OHS	CHECKED BY:	TGZ
SCALE:	NTS		
DATE:	6/20/06	SHT 59 OF 1347	

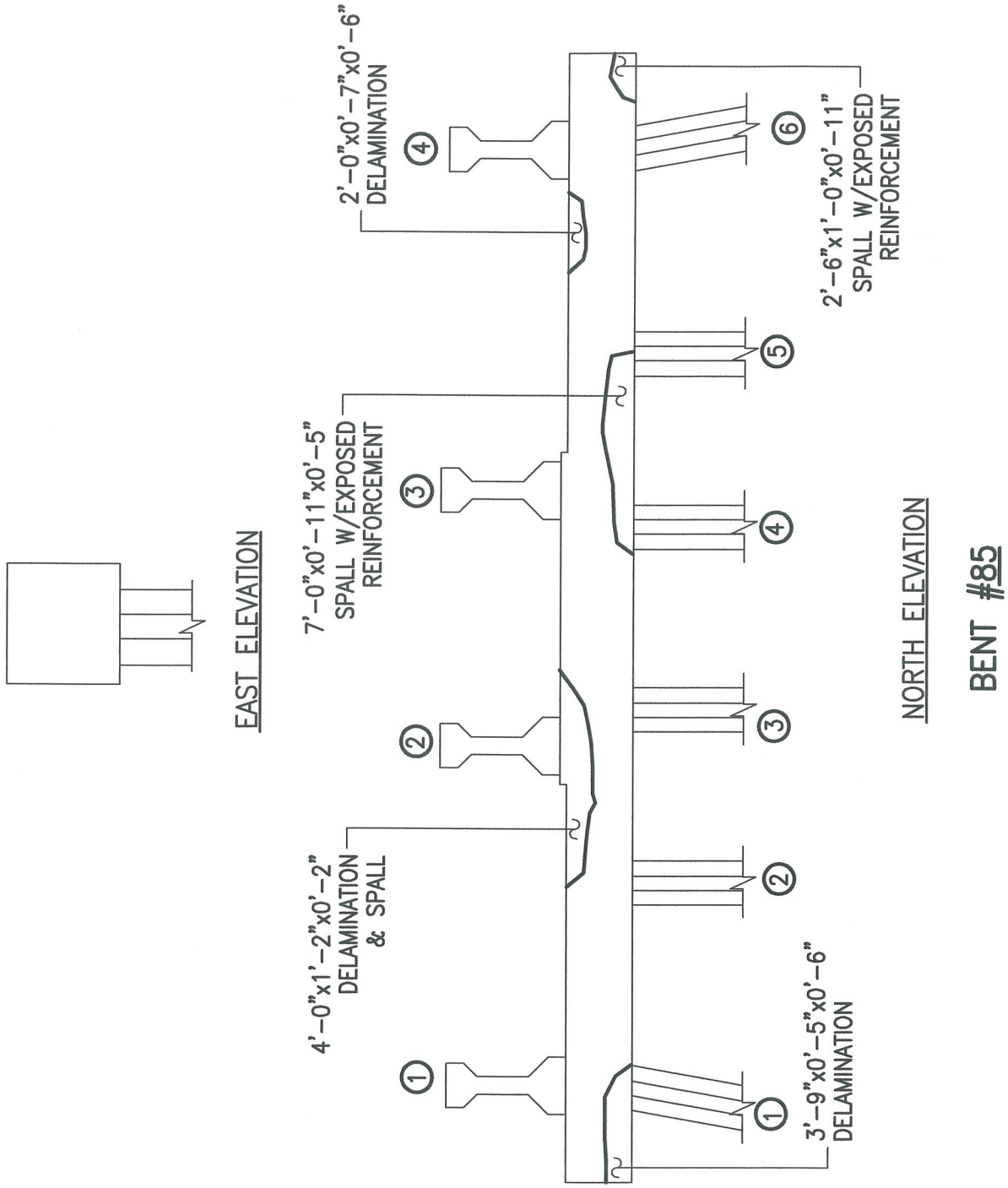

ALPHA & OMEGA GROUP
CIVIL & STRUCTURAL ENGINEERS
4911 Green Road Suite 107 Raleigh, NC 27616
Phone 919 981 0310 Fax 919 981 0451
Email info@aogroup.com www.aogroup.com

BRIDGE NO:	270011		
COUNTY:	DARE		
PREPARED BY:	OHS	CHECKED BY:	TGZ
SCALE:	NTS		
DATE:	6/20/06	SHT 602 OF 1347	

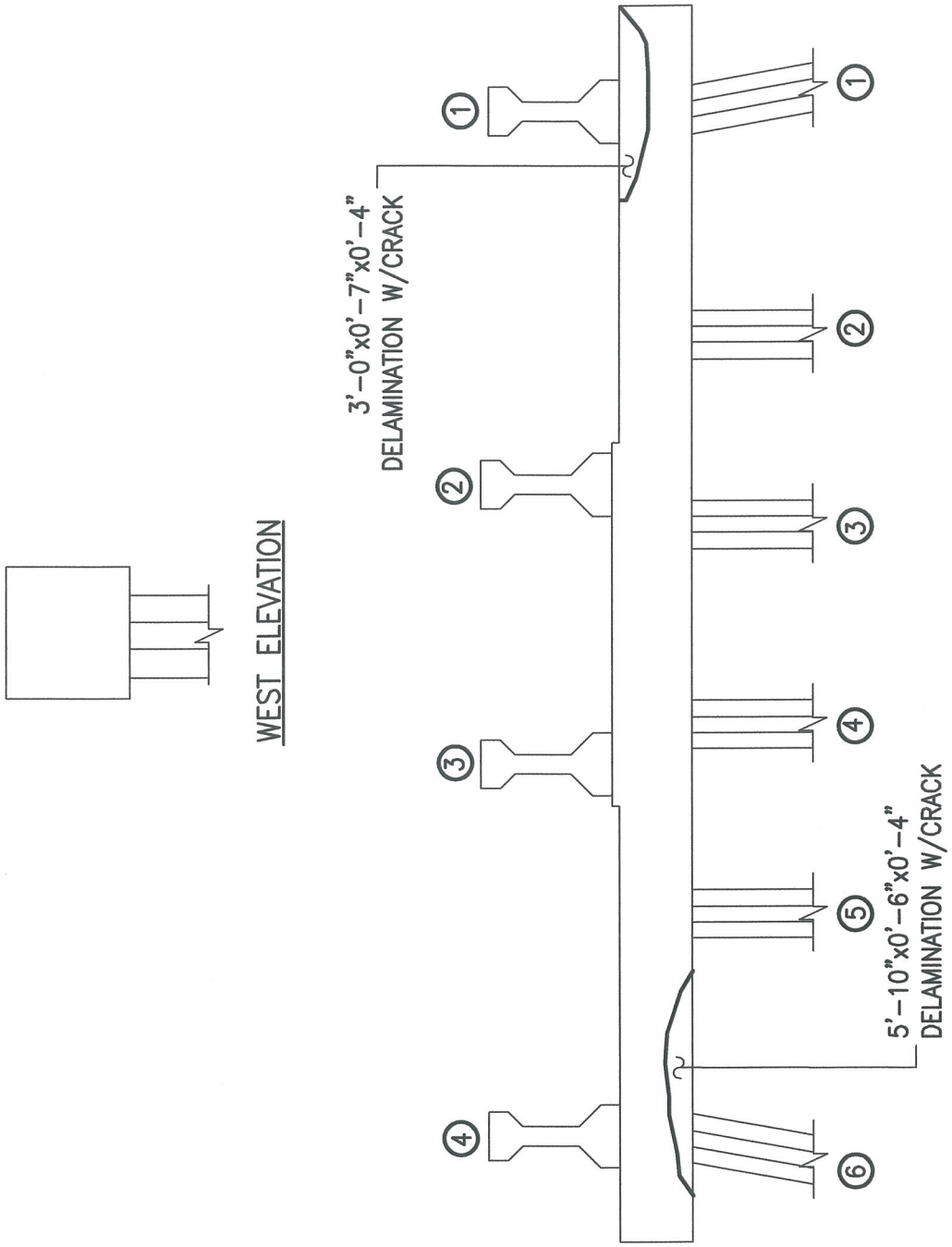

ALPHA & OMEGA GROUP
CIVIL & STRUCTURAL ENGINEERS
4911 Green Road Suite 107 Raleigh, NC 27616
Phone 919 981 0310 Fax 919 981 0451
Email info@aogroup.com www.aogroup.com

BRIDGE NO:	270011		
COUNTY:	DARE		
PREPARED BY:	OHS	CHECKED BY:	TGZ
SCALE:	NTS		
DATE:	6/20/06	SHT 605 OF 1347	

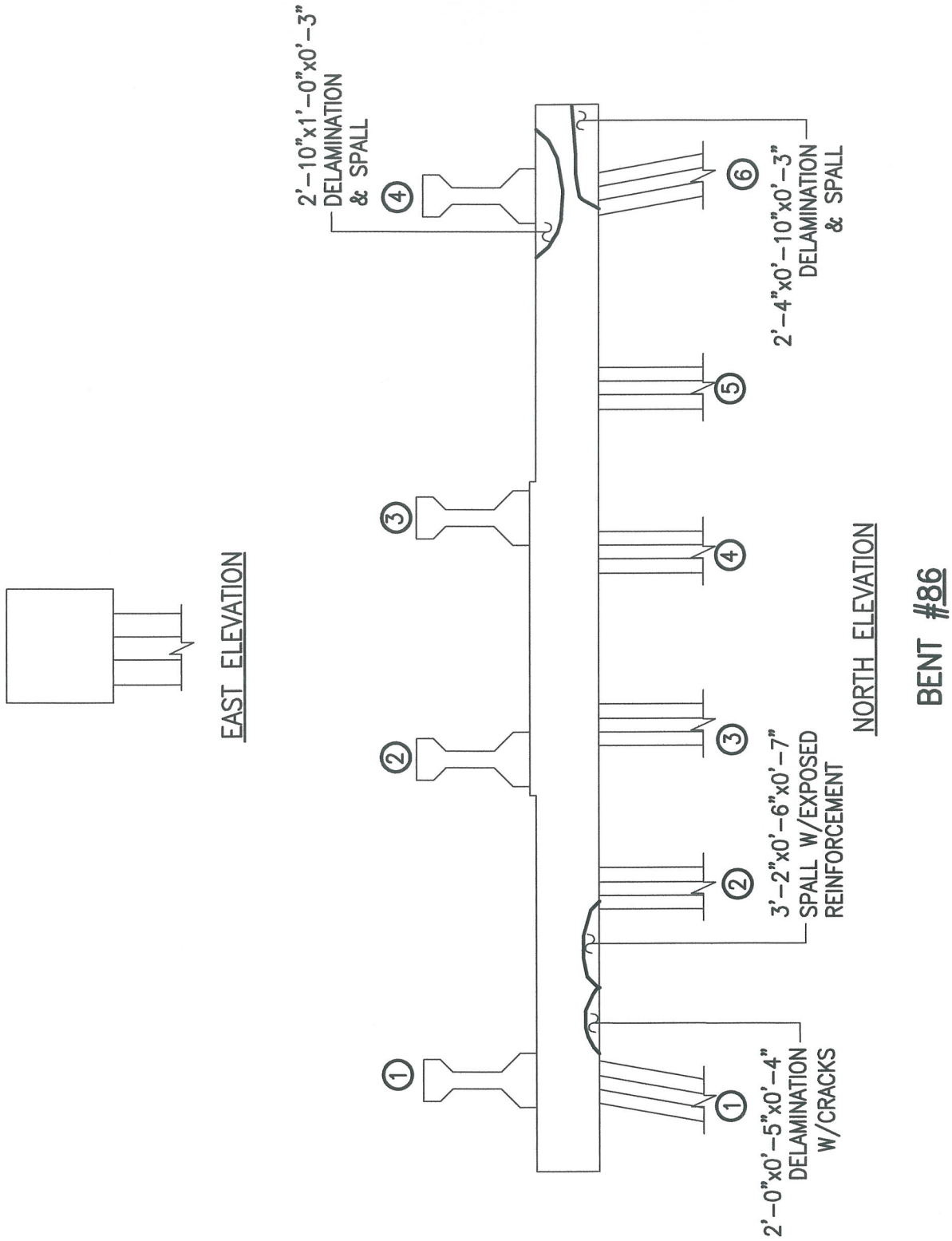

ALPHA & OMEGA GROUP
CIVIL & STRUCTURAL ENGINEERS
4911 Green Road Suite 107 Raleigh, NC 27616
Phone 919 981 0310 Fax 919 981 0451
Email info@aogroup.com www.aogroup.com

BRIDGE NO:	270011		
COUNTY:	DARE		
PREPARED BY:	OHS	CHECKED BY:	TGZ
SCALE:	NTS		
DATE:	6/20/06	SHT 608 OF 1347	

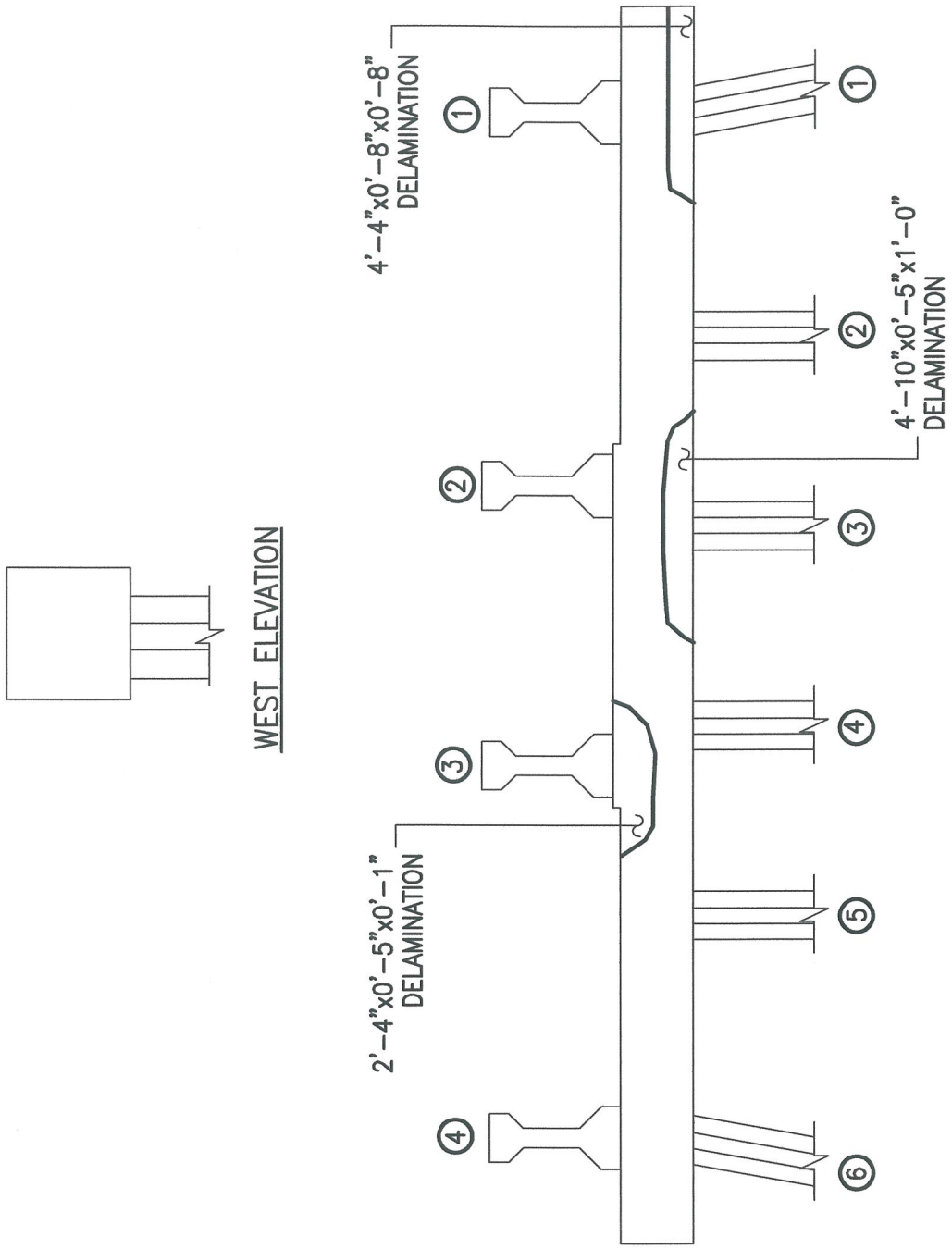

ALPHA & OMEGA GROUP
CIVIL & STRUCTURAL ENGINEERS
4911 Green Road Suite 107 Raleigh, NC 27616
Phone 919 981 0310 Fax 919 981 0451
Email info@aogroup.com www.aogroup.com

BRIDGE NO:	270011		
COUNTY:	DARE		
PREPARED BY:	OHS	CHECKED BY:	TGZ
SCALE:	NTS		
DATE:	6/20/06	SHT 611 OF 1347	

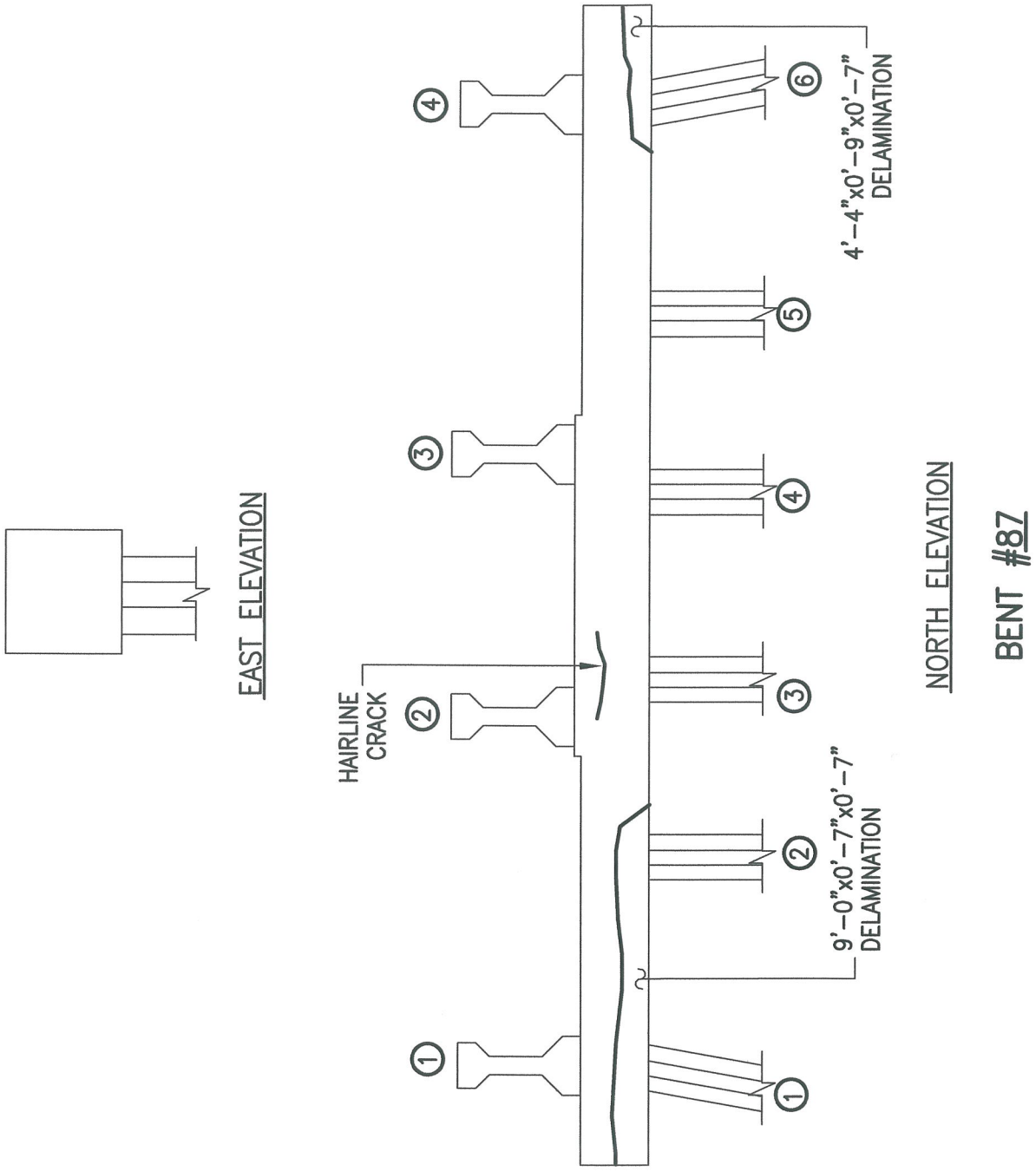

ALPHA & OMEGA GROUP
CIVIL & STRUCTURAL ENGINEERS
4911 Green Road Suite 107 Raleigh, NC 27616
Phone 919 981 0310 Fax 919 981 0451
Email info@aogroup.com www.aogroup.com

BRIDGE NO:	270011		
COUNTY:	DARE		
PREPARED BY:	OHS	CHECKED BY:	TGZ
SCALE:	NTS		
DATE:	6/20/06	SHT 614 OF 1347	

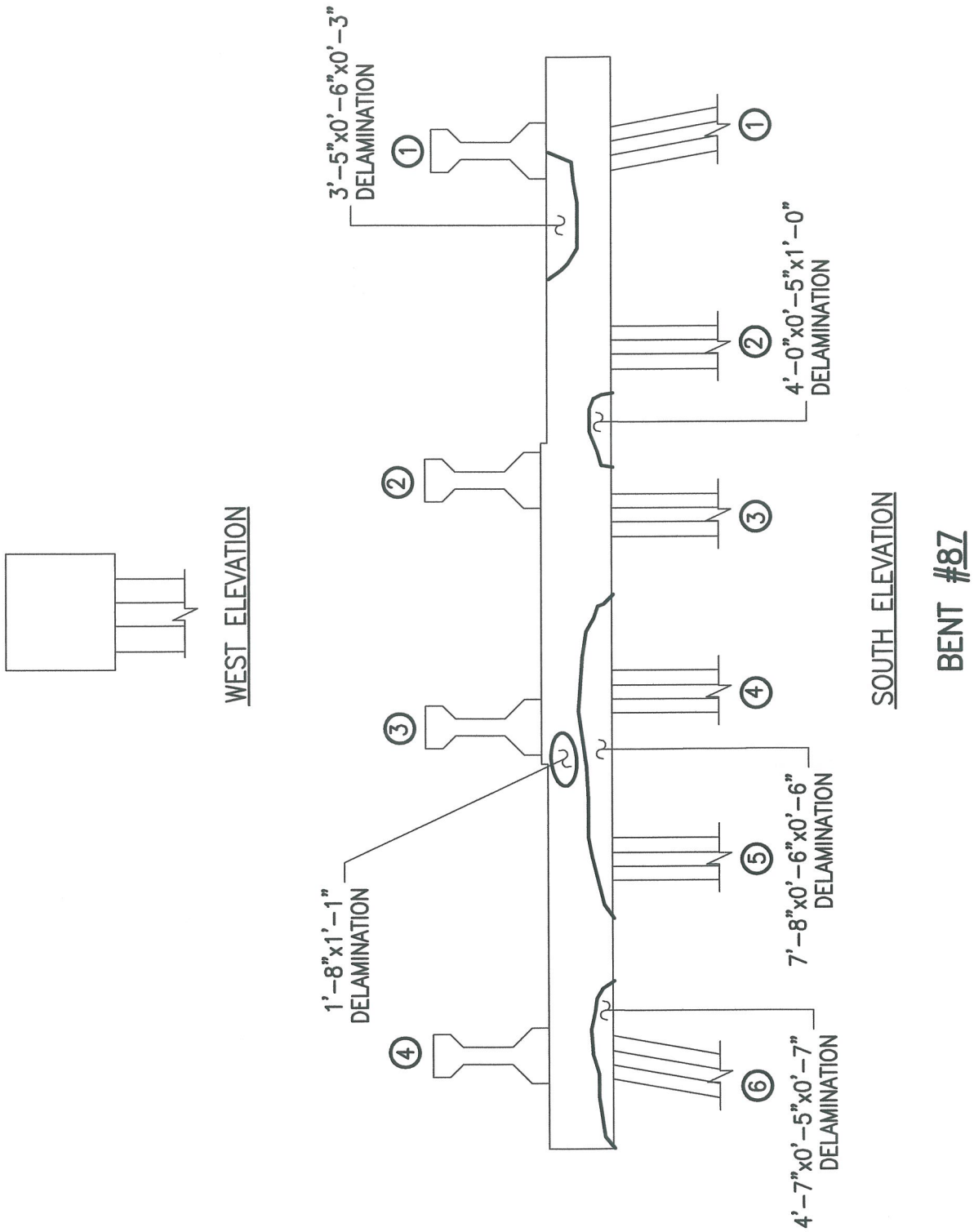

ALPHA & OMEGA GROUP
CIVIL & STRUCTURAL ENGINEERS
4911 Green Road Suite 107 Raleigh, NC 27616
Phone 919 981 0310 Fax 919 981 0451
Email info@aogroup.com www.aogroup.com

BRIDGE NO:	270011		
COUNTY:	DARE		
PREPARED BY:	OHS	CHECKED BY:	TGZ
SCALE:	NTS		
DATE:	6/20/06	SHT 67 OF 1347	

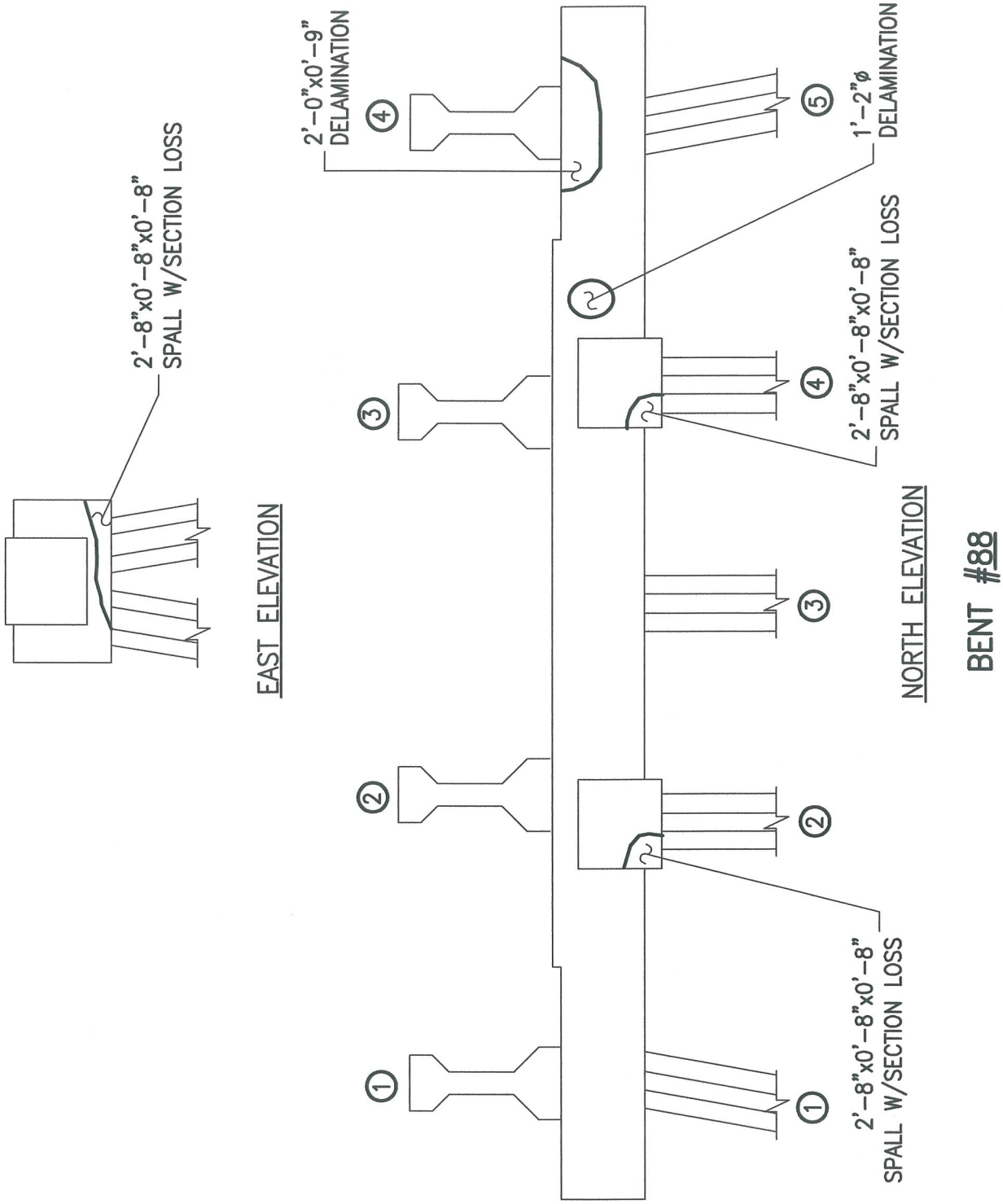

ALPHA & OMEGA GROUP
CIVIL & STRUCTURAL ENGINEERS
4911 Green Road Suite 107 Raleigh, NC 27616
Phone 919 981 0310 Fax 919 981 0451
Email info@aogroup.com www.aogroup.com

BRIDGE NO:	270011		
COUNTY:	DARE		
PREPARED BY:	OHS	CHECKED BY:	TGZ
SCALE:	NTS		
DATE:	6/20/06	SHT 620 OF 1347	

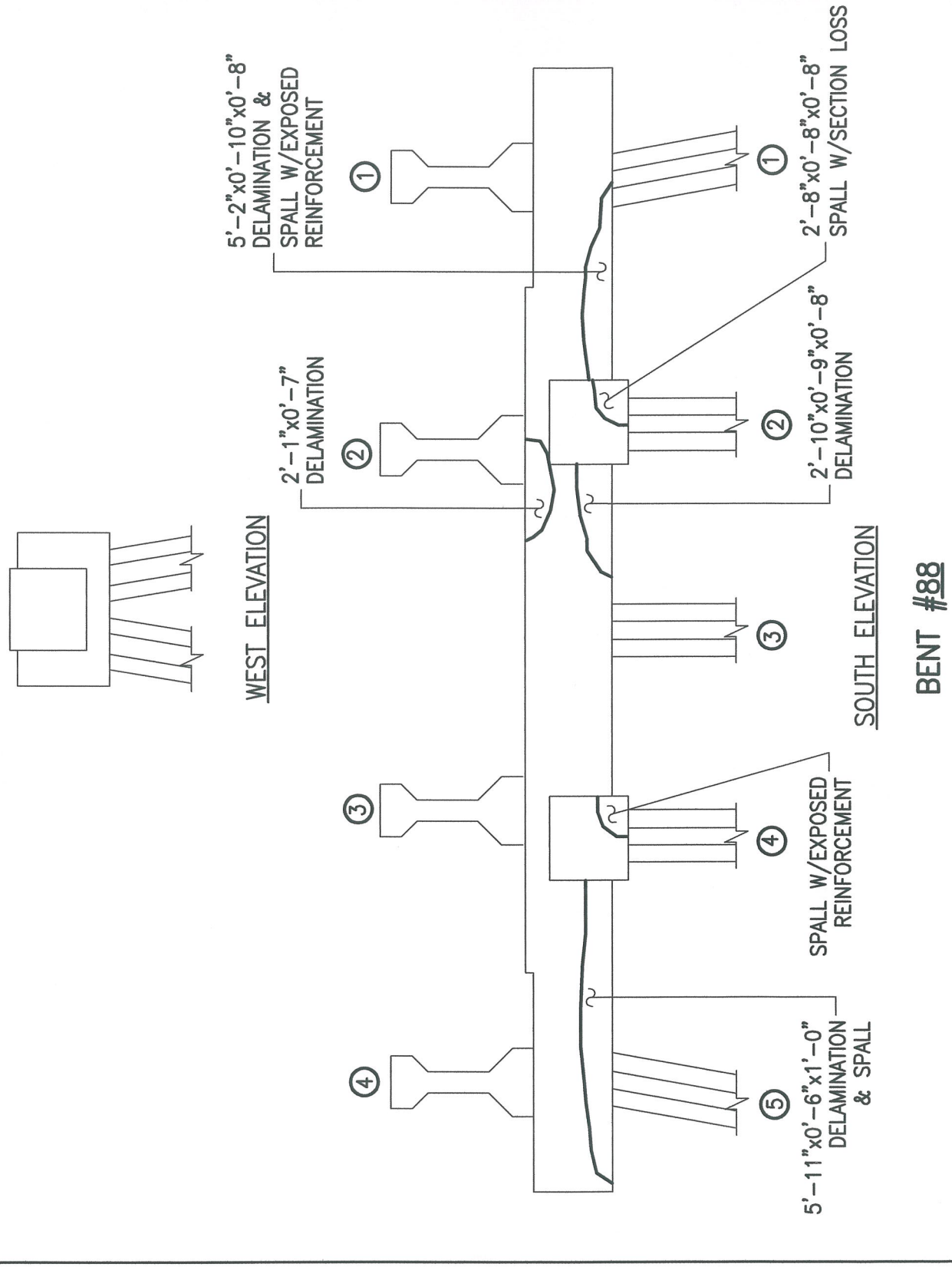

ALPHA & OMEGA GROUP
CIVIL & STRUCTURAL ENGINEERS
4911 Green Road Suite 107 Raleigh, NC 27616
Phone 919 981 0310 Fax 919 981 0451
Email info@aogroup.com www.aogroup.com

BRIDGE NO:	270011		
COUNTY:	DARE		
PREPARED BY:	OHS	CHECKED BY:	TGZ
SCALE:	NTS		
DATE:	6/20/06	SHT 623 OF 1347	

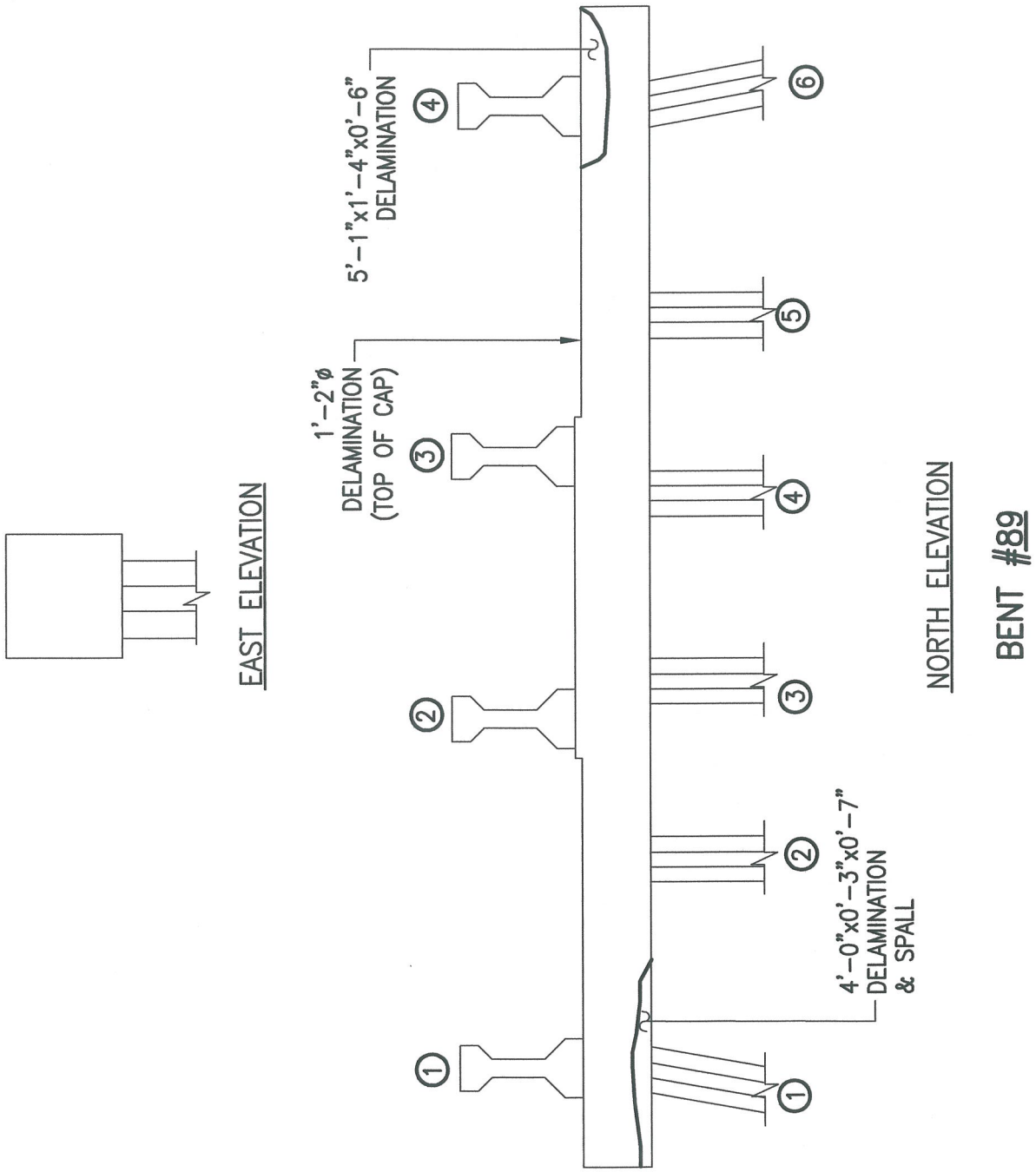

ALPHA & OMEGA GROUP
CIVIL & STRUCTURAL ENGINEERS
4911 Green Road Suite 107 Raleigh, NC 27616
Phone 919 981 0310 Fax 919 981 0451
Email info@aogroup.com www.aogroup.com

BRIDGE NO:	270011		
COUNTY:	DARE		
PREPARED BY:	OHS	CHECKED BY:	TGZ
SCALE:	NTS		
DATE:	6/20/06	SHT 676 OF 1347	

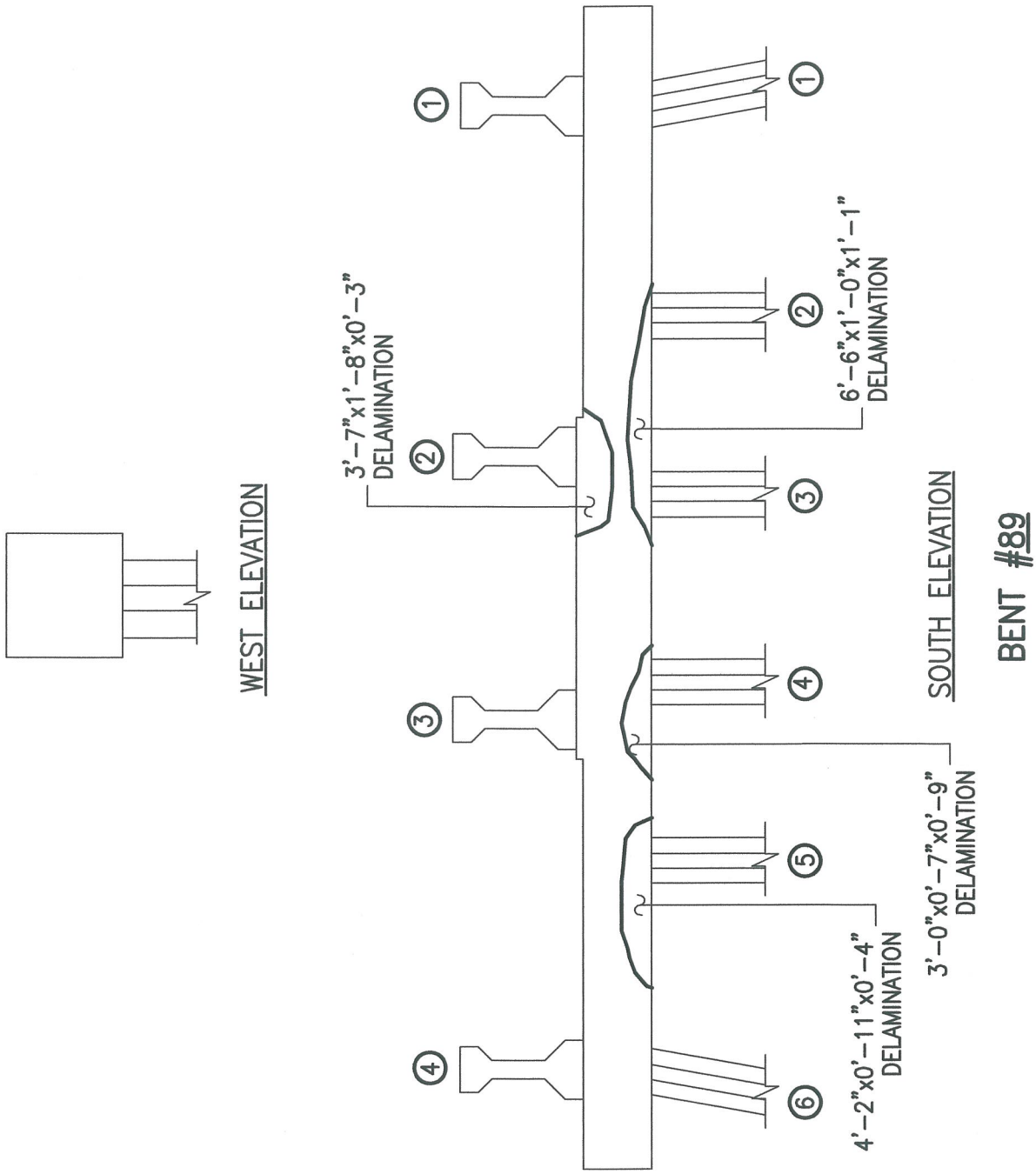

ALPHA & OMEGA GROUP
CIVIL & STRUCTURAL ENGINEERS
4911 Green Road Suite 107 Raleigh, NC 27616
Phone 919 981 0310 Fax 919 981 0451
Email info@aogroup.com www.aogroup.com

BRIDGE NO:	270011		
COUNTY:	DARE		
PREPARED BY:	OHS	CHECKED BY:	TGZ
SCALE:	NTS		
DATE:	6/20/06	SHT 629 OF 1347	

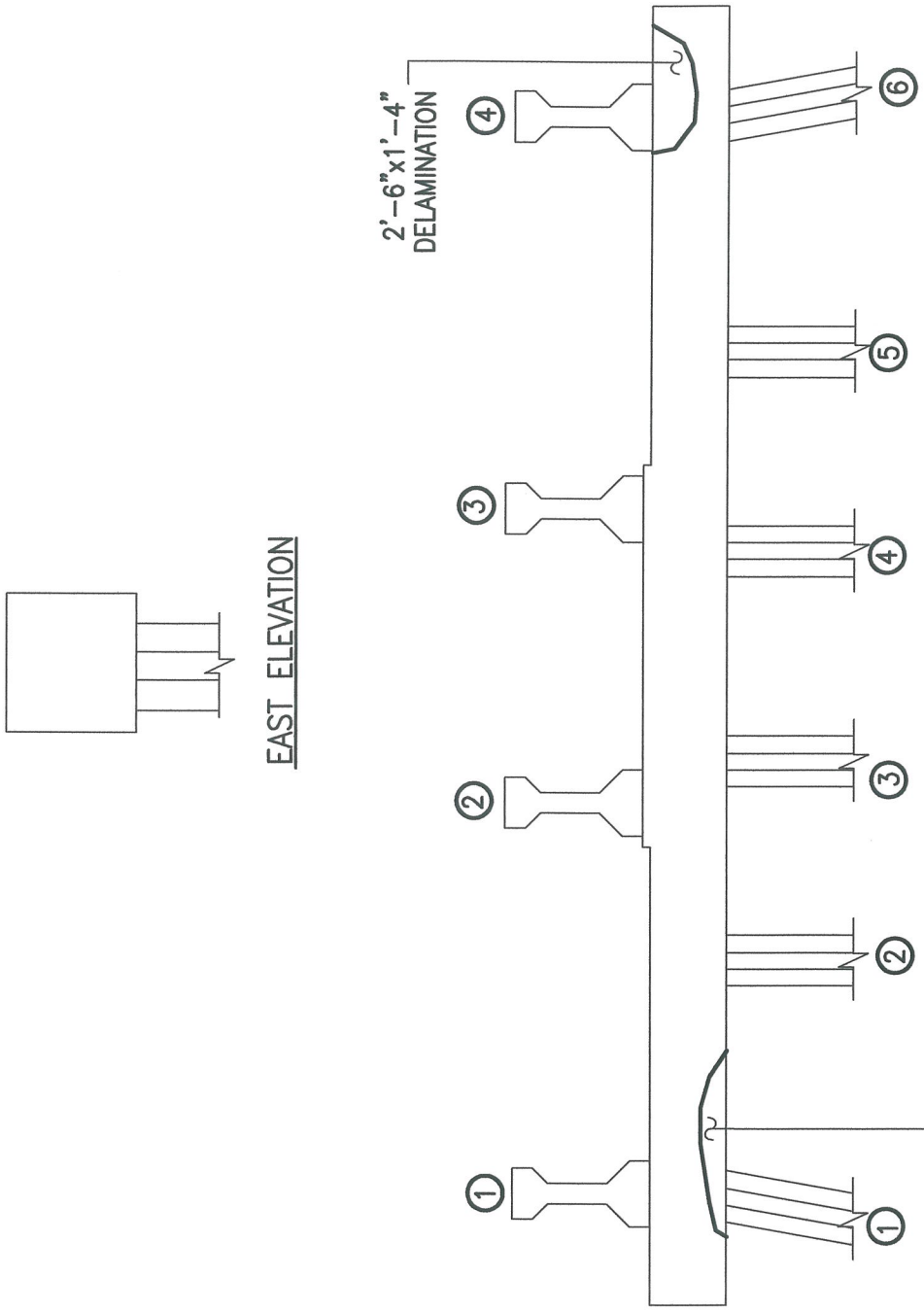

ALPHA & OMEGA GROUP
CIVIL & STRUCTURAL ENGINEERS
4911 Green Road Suite 107 Raleigh, NC 27616
Phone 919 981 0310 Fax 919 981 0451
Email info@aogroup.com www.aogroup.com

BRIDGE NO:	270011		
COUNTY:	DARE		
PREPARED BY:	OHS	CHECKED BY:	TGZ
SCALE:	NTS		
DATE:	6/20/06	SHT 632 OF 1347	

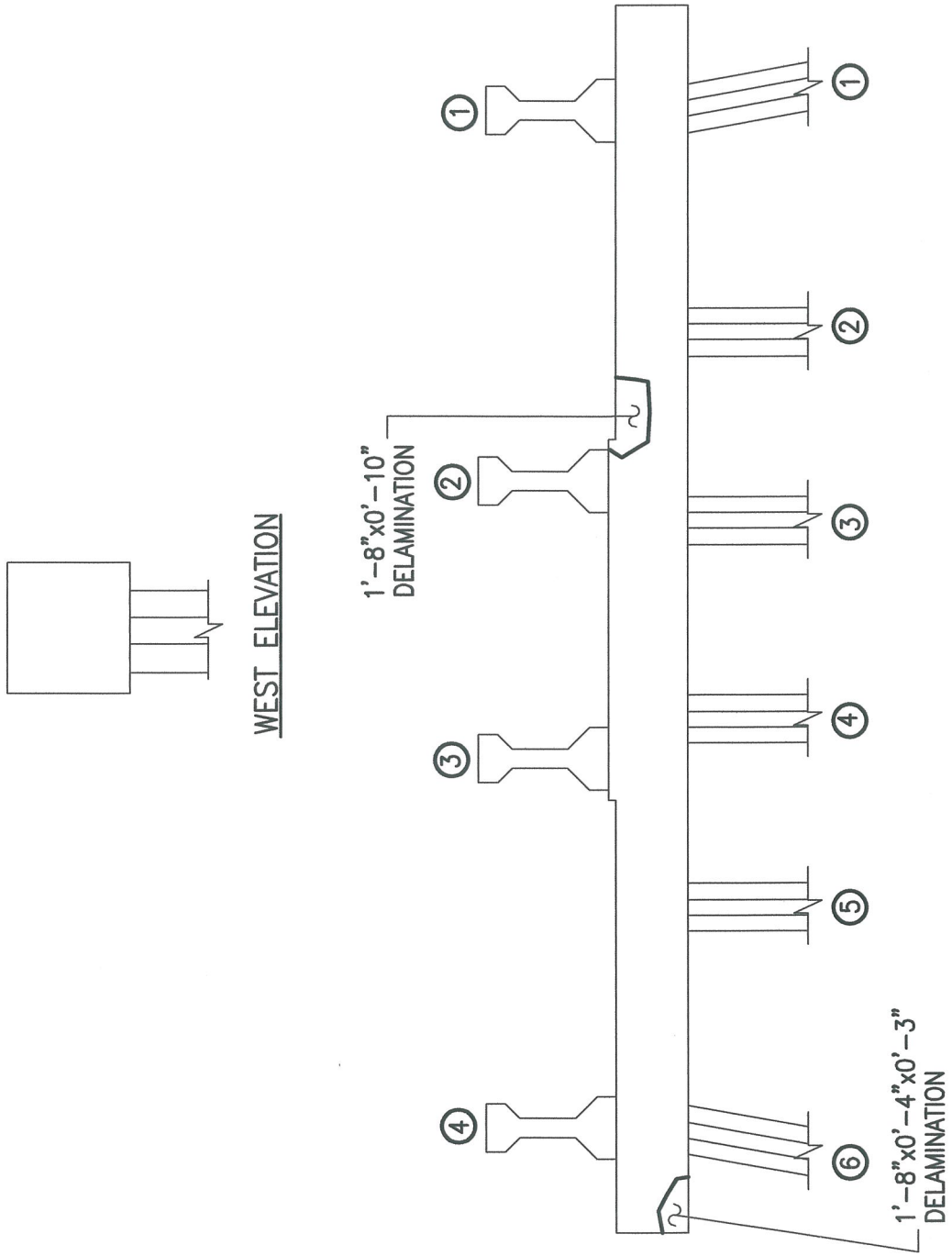

ALPHA & OMEGA GROUP
CIVIL & STRUCTURAL ENGINEERS
4911 Green Road Suite 107 Raleigh, NC 27616
Phone 919 981 0310 Fax 919 981 0451
Email info@aogroup.com www.aogroup.com

BRIDGE NO:	270011		
COUNTY:	DARE		
PREPARED BY:	OHS	CHECKED BY:	TGZ
SCALE:	NTS		
DATE:	6/20/06	SHT 63 OF 1347	

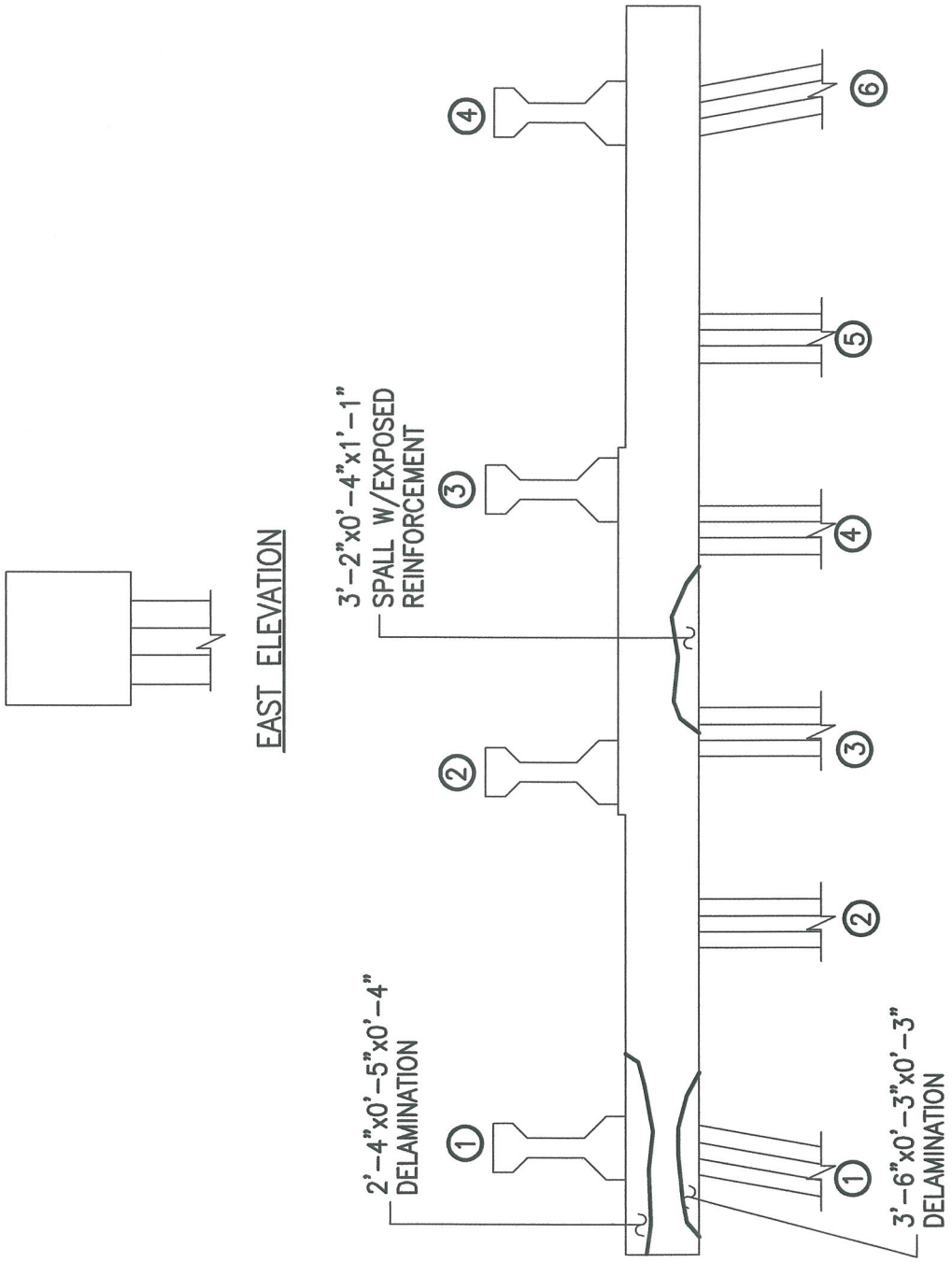

ALPHA & OMEGA GROUP
CIVIL & STRUCTURAL ENGINEERS
4911 Green Road Suite 107 Raleigh, NC 27616
Phone 919 981 0310 Fax 919 981 0451
Email info@aogroup.com www.aogroup.com

BRIDGE NO:	270011		
COUNTY:	DARE		
PREPARED BY:	OHS	CHECKED BY:	TGZ
SCALE:	NTS		
DATE:	6/20/06	SHT 638 OF 1347	

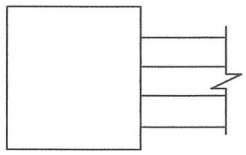

WEST ELEVATION

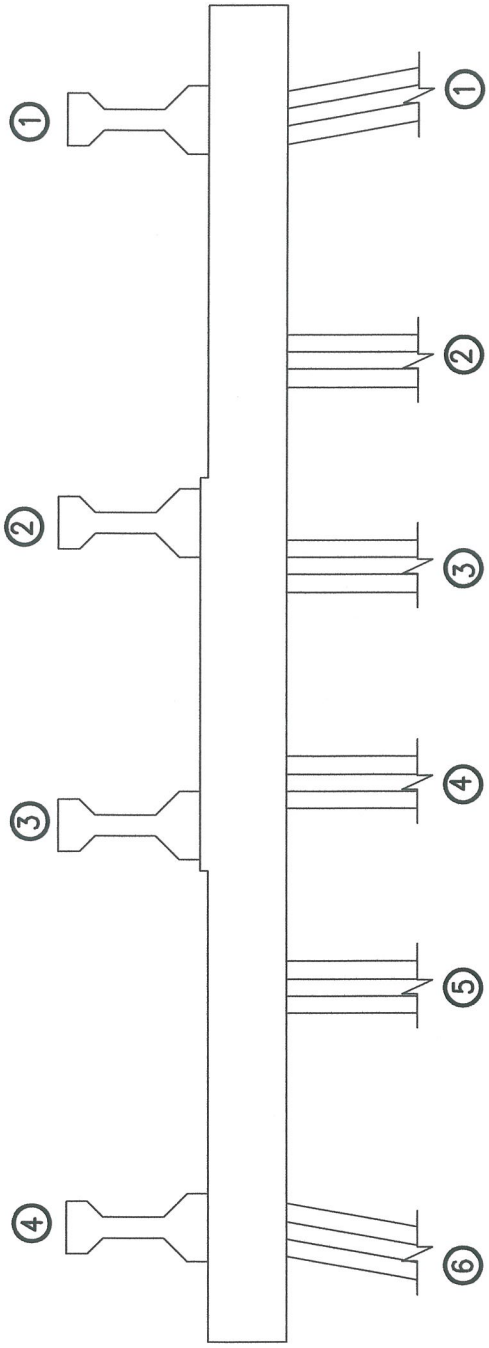

SOUTH ELEVATION

BENT #91

GENERAL NOTE:
NO SIGNIFICANT DEFICIENCIES NOTED.

ALPHA & OMEGA GROUP
CIVIL & STRUCTURAL ENGINEERS
4911 Green Road Suite 107 Raleigh, NC 27616
Phone 919 981 0310 Fax 919 981 0451
Email info@aogroup.com www.aogroup.com

BRIDGE NO:	270011		
COUNTY:	DARE		
PREPARED BY:	OHS	CHECKED BY:	TGZ
SCALE:	NTS		
DATE:	6/20/06	SHT 641 OF 1347	

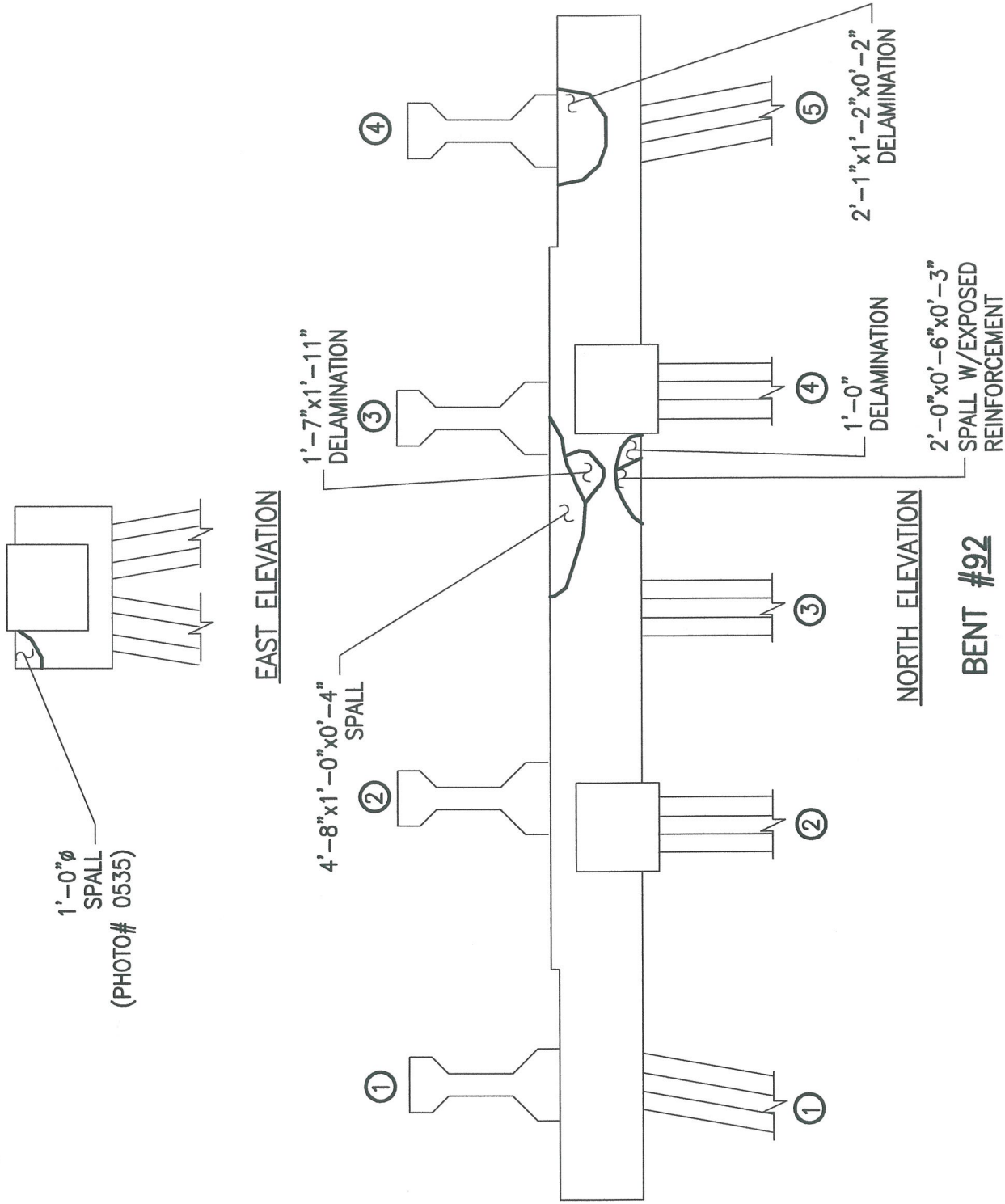

ALPHA & OMEGA GROUP
CIVIL & STRUCTURAL ENGINEERS
4911 Green Road Suite 107 Raleigh, NC 27616
Phone 919 981 0310 Fax 919 981 0451
Email info@aogroup.com www.aogroup.com

BRIDGE NO:	270011		
COUNTY:	DARE		
PREPARED BY:	OHS	CHECKED BY:	TGZ
SCALE:	NTS		
DATE:	6/20/06	SHT 644 OF 1347	

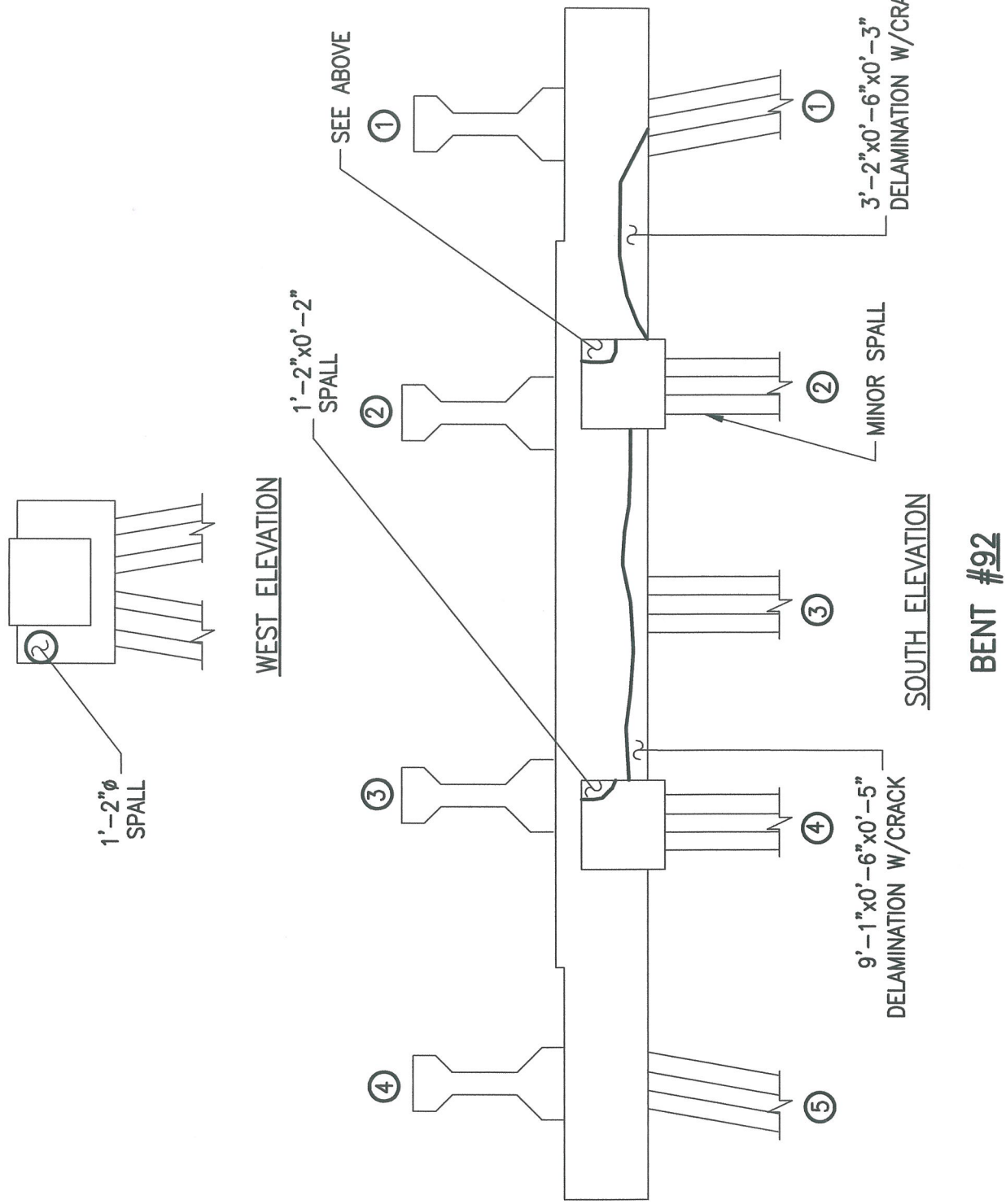

ALPHA & OMEGA GROUP
CIVIL & STRUCTURAL ENGINEERS
4911 Green Road Suite 107 Raleigh, NC 27616
Phone 919 981 0310 Fax 919 981 0451
Email info@aogroup.com www.aogroup.com

BRIDGE NO:	270011		
COUNTY:	DARE		
PREPARED BY:	OHS	CHECKED BY:	TGZ
SCALE:	NTS		
DATE:	6/20/06	SHT 647 OF 1347	

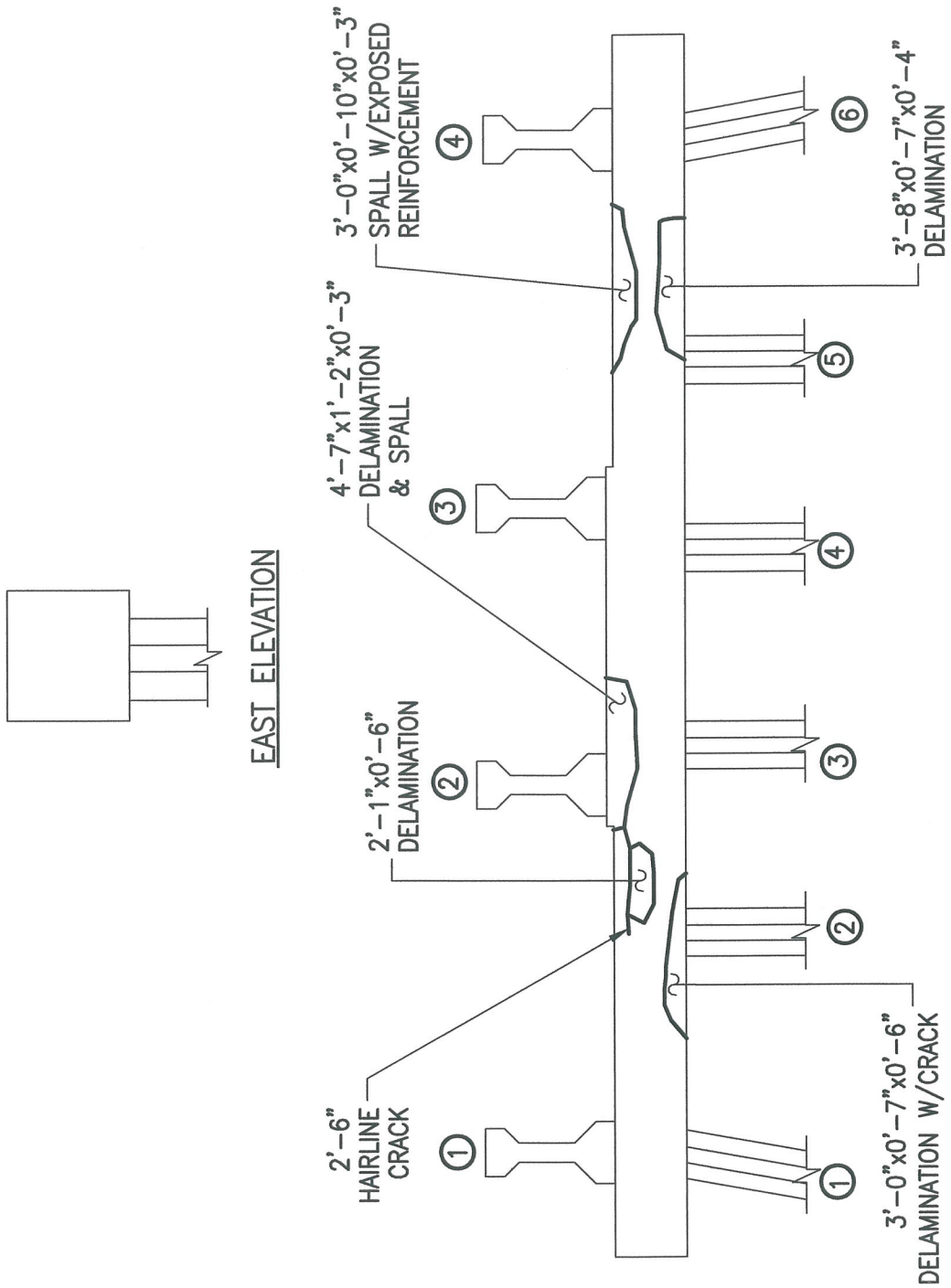

ALPHA & OMEGA GROUP
CIVIL & STRUCTURAL ENGINEERS
4911 Green Road Suite 107 Raleigh, NC 27616
Phone 919 981 0310 Fax 919 981 0451
Email info@aogroup.com www.aogroup.com

BRIDGE NO:	270011		
COUNTY:	DARE		
PREPARED BY:	OHS	CHECKED BY:	TGZ
SCALE:	NTS		
DATE:	6/20/06	SHT 650 OF 1347	

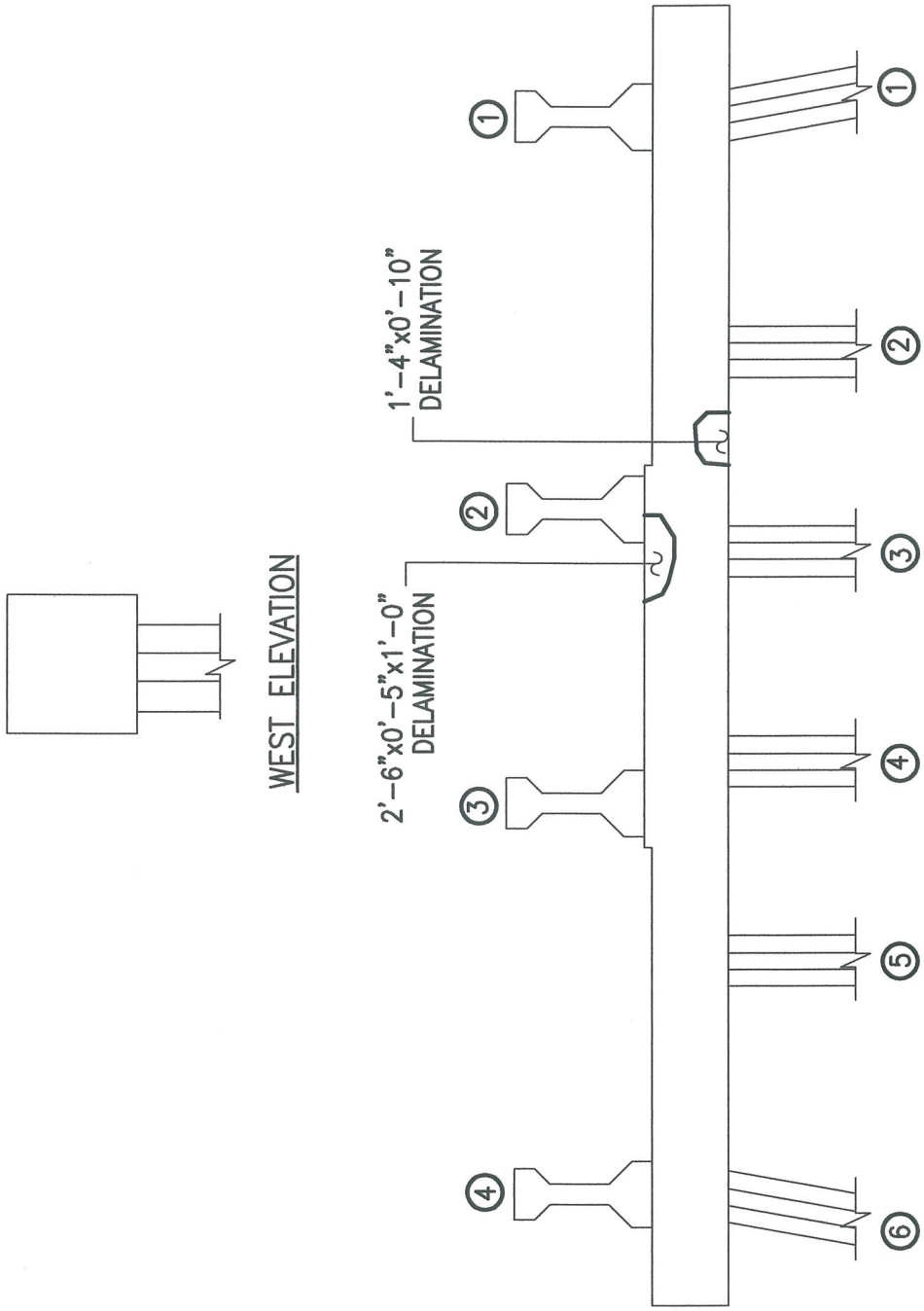

ALPHA & OMEGA GROUP
CIVIL & STRUCTURAL ENGINEERS
4911 Green Road Suite 107 Raleigh, NC 27616
Phone 919 981 0310 Fax 919 981 0451
Email info@aogroup.com www.aogroup.com

BRIDGE NO:	270011		
COUNTY:	DARE		
PREPARED BY:	OHS	CHECKED BY:	TGZ
SCALE:	NTS		
DATE:	6/20/06	SHT 63	OF 1347

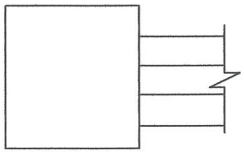

EAST ELEVATION

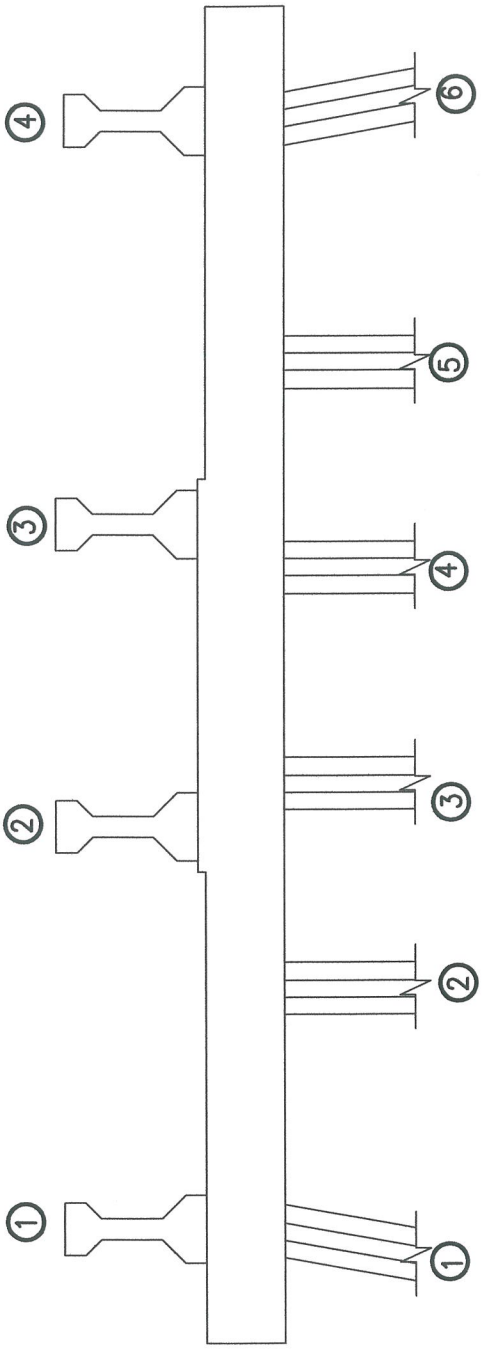

NORTH ELEVATION

BENT #94

GENERAL NOTE:
NO SIGNIFICANT DEFICIENCIES NOTED.

ALPHA & OMEGA GROUP
CIVIL & STRUCTURAL ENGINEERS
4911 Green Road Suite 107 Raleigh, NC 27616
Phone 919 981 0310 Fax 919 981 0451
Email info@aogroup.com www.aogroup.com

BRIDGE NO:	270011		
COUNTY:	DARE		
PREPARED BY:	OHS	CHECKED BY:	TGZ
SCALE:	NTS		
DATE:	6/20/06	SHT 656 OF 1347	

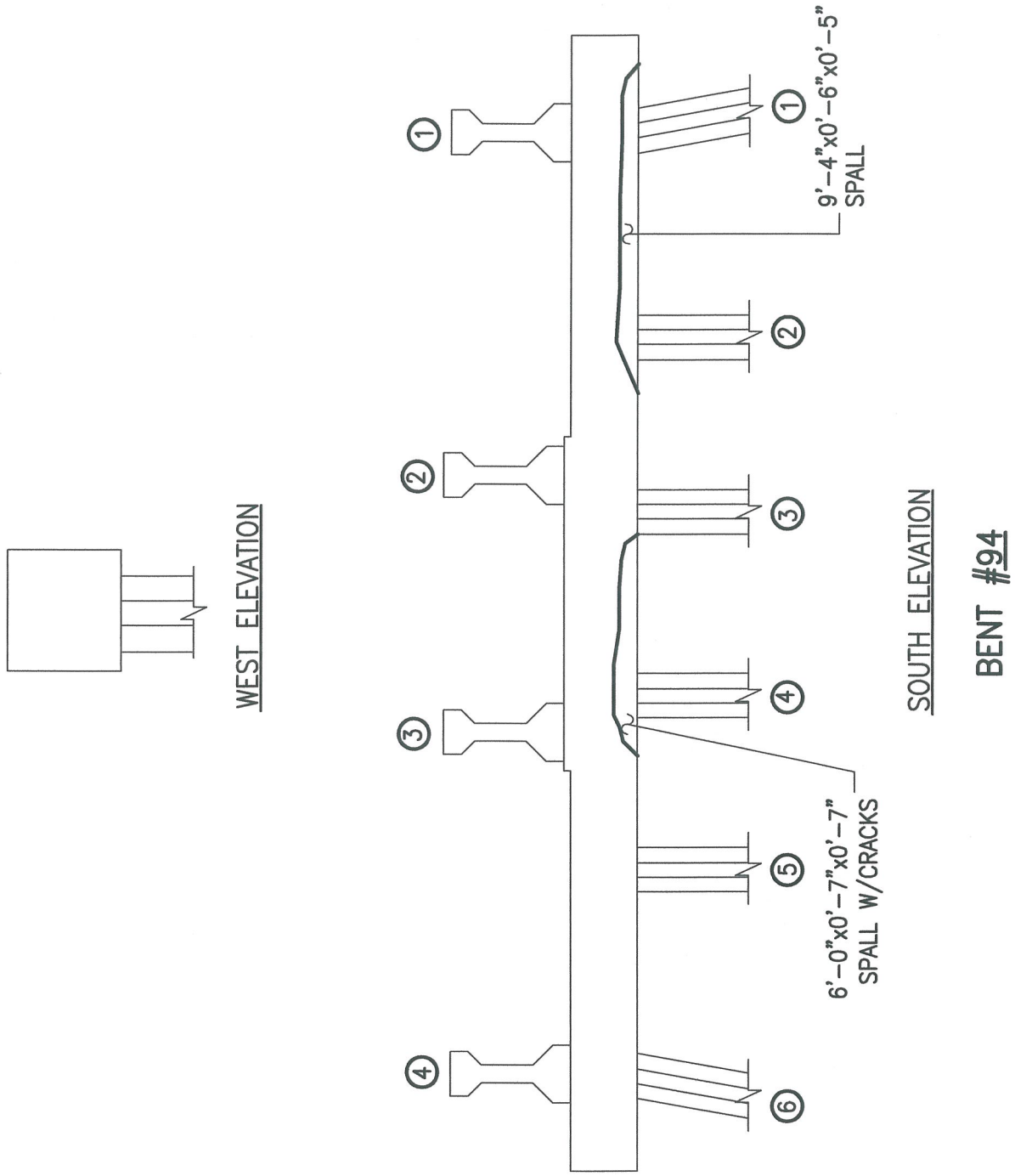

ALPHA & OMEGA GROUP
CIVIL & STRUCTURAL ENGINEERS
4911 Green Road Suite 107 Raleigh, NC 27616
Phone 919 981 0310 Fax 919 981 0451
Email info@aogroup.com www.aogroup.com

BRIDGE NO:	270011		
COUNTY:	DARE		
PREPARED BY:	OHS	CHECKED BY:	TGZ
SCALE:	NTS		
DATE:	6/20/06	SHT 659 OF 1347	

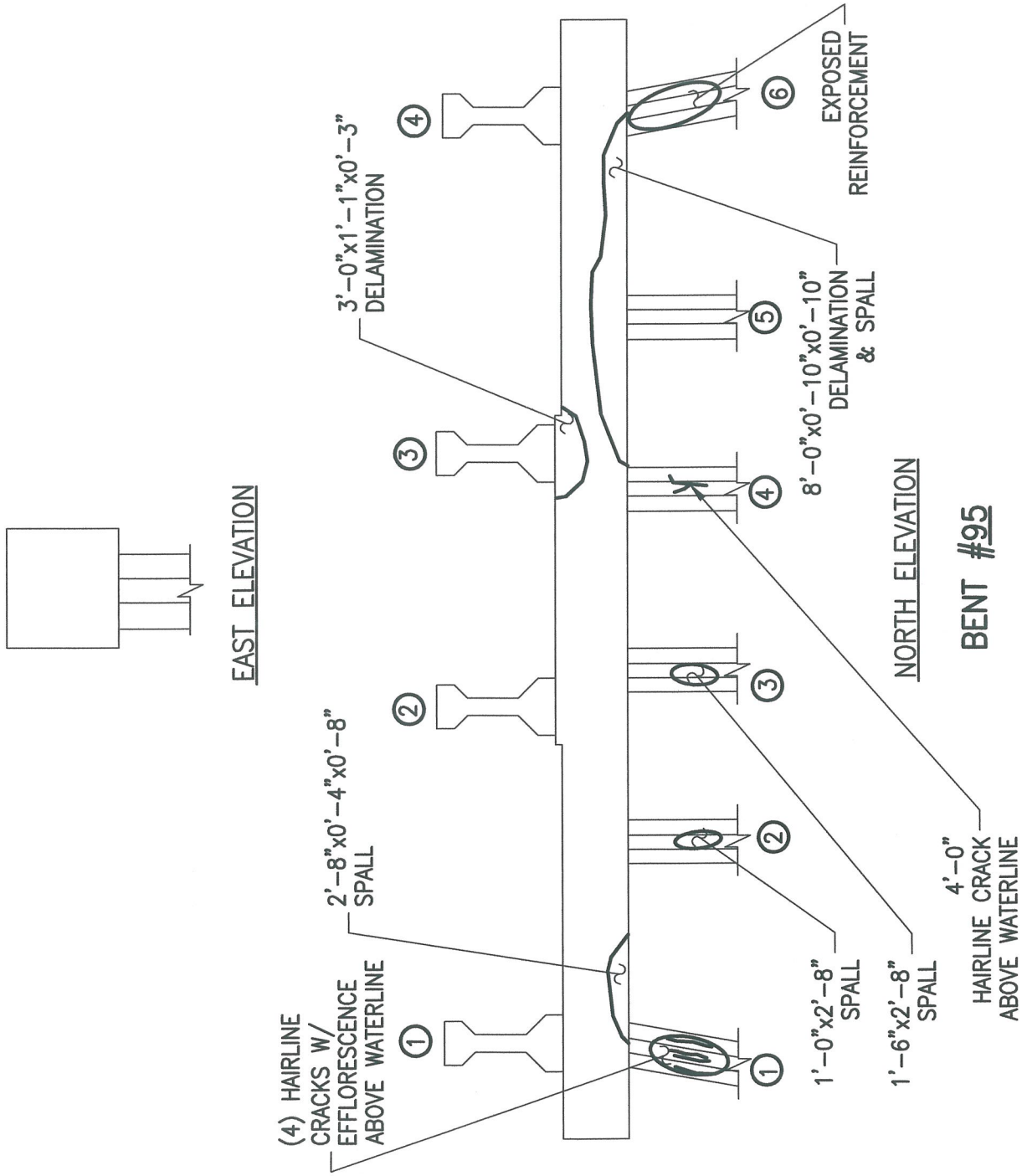

ALPHA & OMEGA GROUP
CIVIL & STRUCTURAL ENGINEERS
4911 Green Road Suite 107 Raleigh, NC 27616
Phone 919 981 0310 Fax 919 981 0451
Email info@aogroup.com www.aogroup.com

BRIDGE NO:	270011		
COUNTY:	DARE		
PREPARED BY:	OHS	CHECKED BY:	TGZ
SCALE:	NTS		
DATE:	6/20/06	SHT 662 OF 1347	

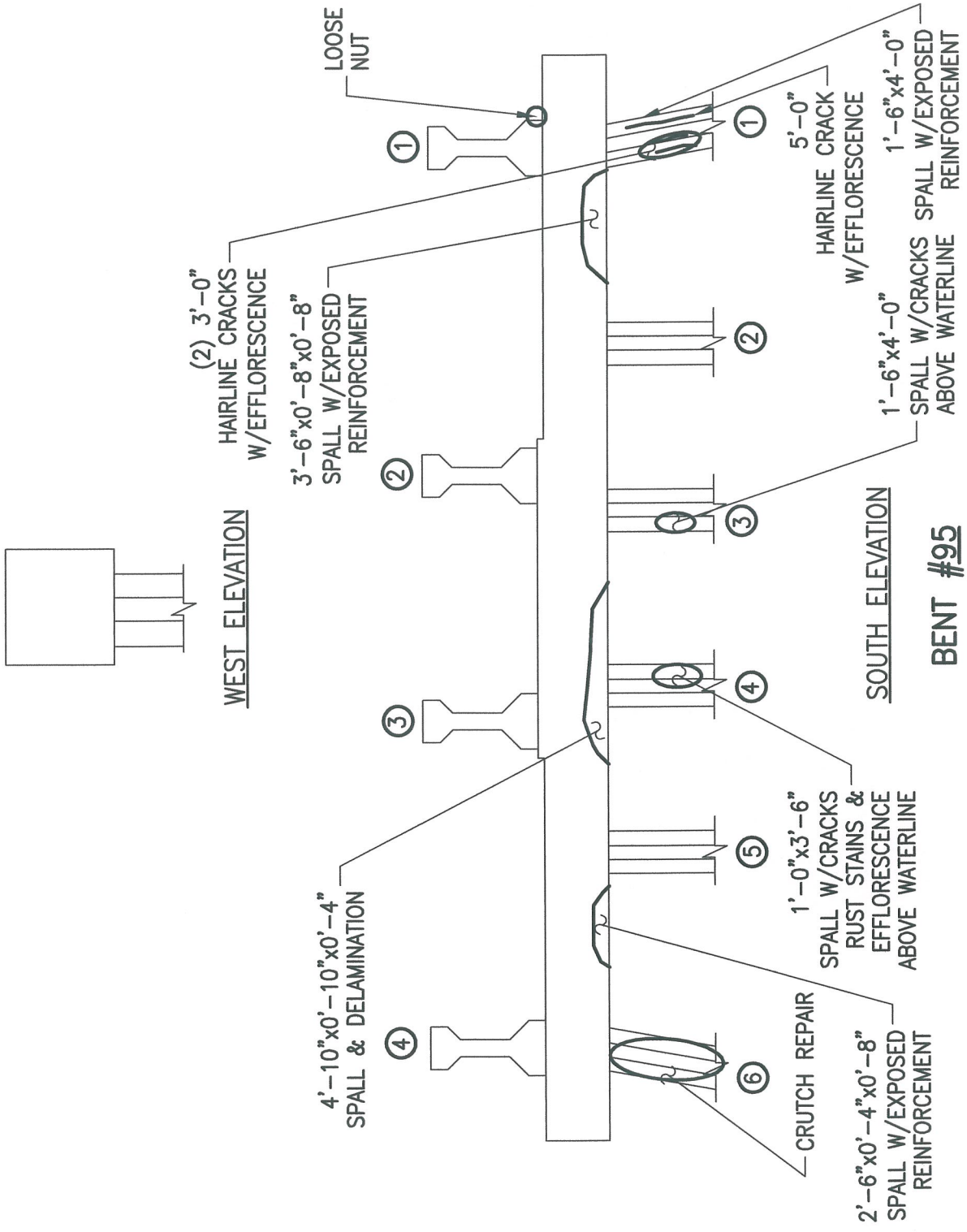

ALPHA & OMEGA GROUP
CIVIL & STRUCTURAL ENGINEERS
4911 Green Road Suite 107 Raleigh, NC 27616
Phone 919 981 0310 Fax 919 981 0451
Email info@aogroup.com www.aogroup.com

BRIDGE NO:	270011		
COUNTY:	DARE		
PREPARED BY:	OHS	CHECKED BY:	TGZ
SCALE:	NTS		
DATE:	6/20/06	SHT 66 OF 1347	

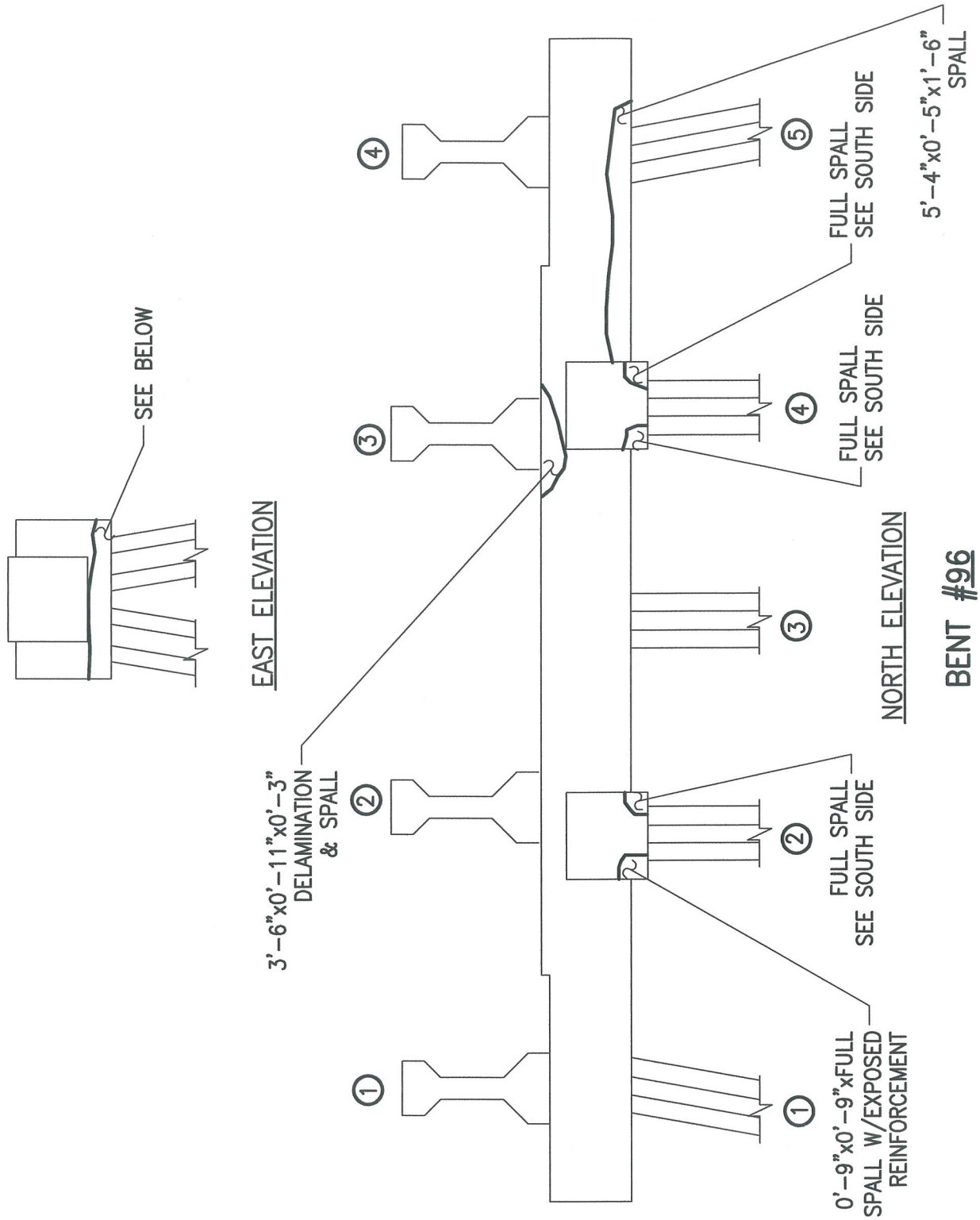

ALPHA & OMEGA GROUP
CIVIL & STRUCTURAL ENGINEERS
4911 Green Road Suite 107 Raleigh, NC 27616
Phone 919 981 0310 Fax 919 981 0451
Email info@aogroup.com www.aogroup.com

BRIDGE NO:	270011		
COUNTY:	DARE		
PREPARED BY:	OHS	CHECKED BY:	TGZ
SCALE:	NTS		
DATE:	6/20/06	SHT 668 OF 1347	

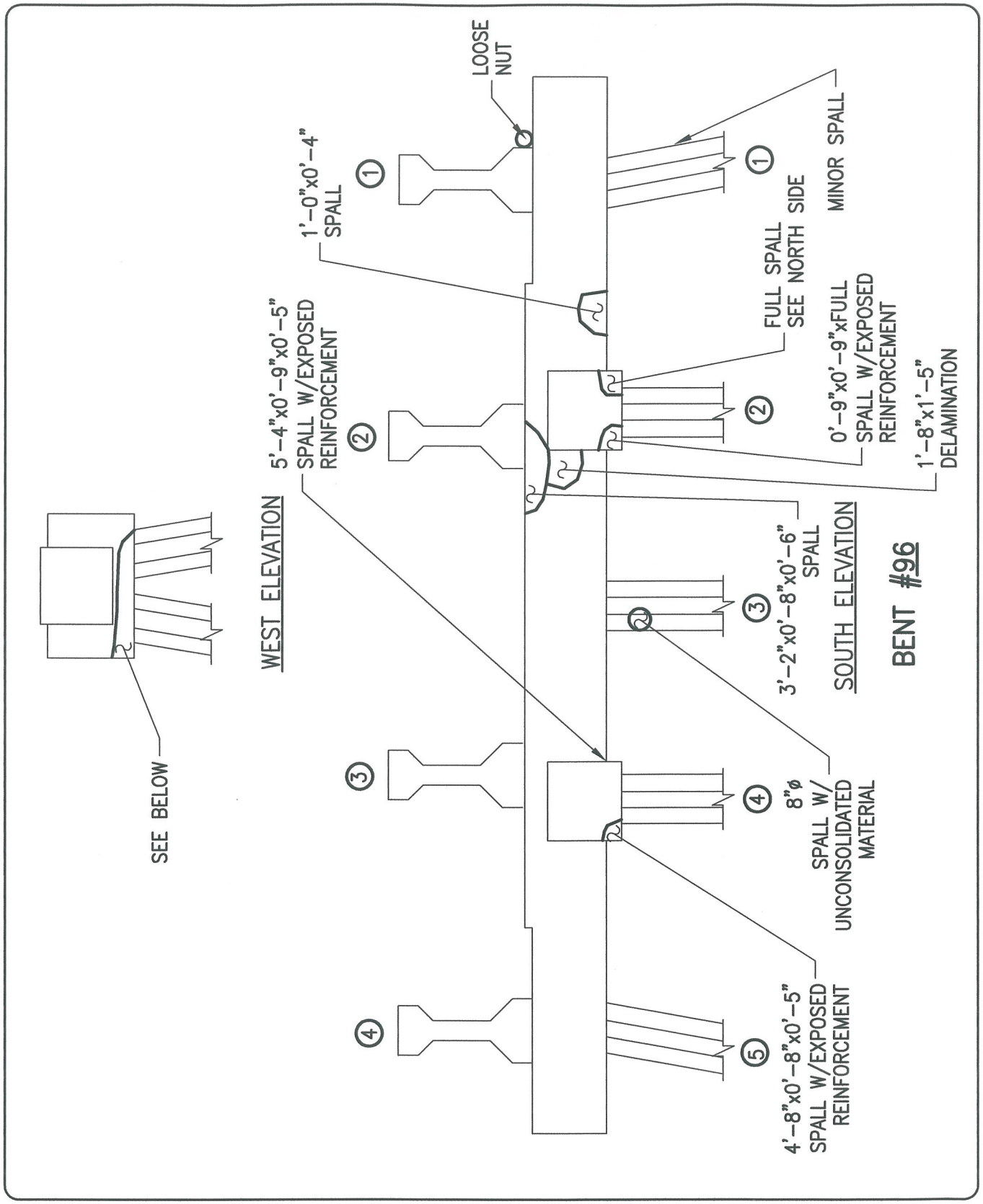

ALPHA & OMEGA GROUP
CIVIL & STRUCTURAL ENGINEERS
4911 Green Road Suite 107 Raleigh, NC 27616
Phone 919 981 0310 Fax 919 981 0451
Email info@aogroup.com www.aogroup.com

BRIDGE NO:	270011		
COUNTY:	DARE		
PREPARED BY:	OHS	CHECKED BY:	TGZ
SCALE:	NTS		
DATE:	6/20/06	SHT 671 OF 1347	

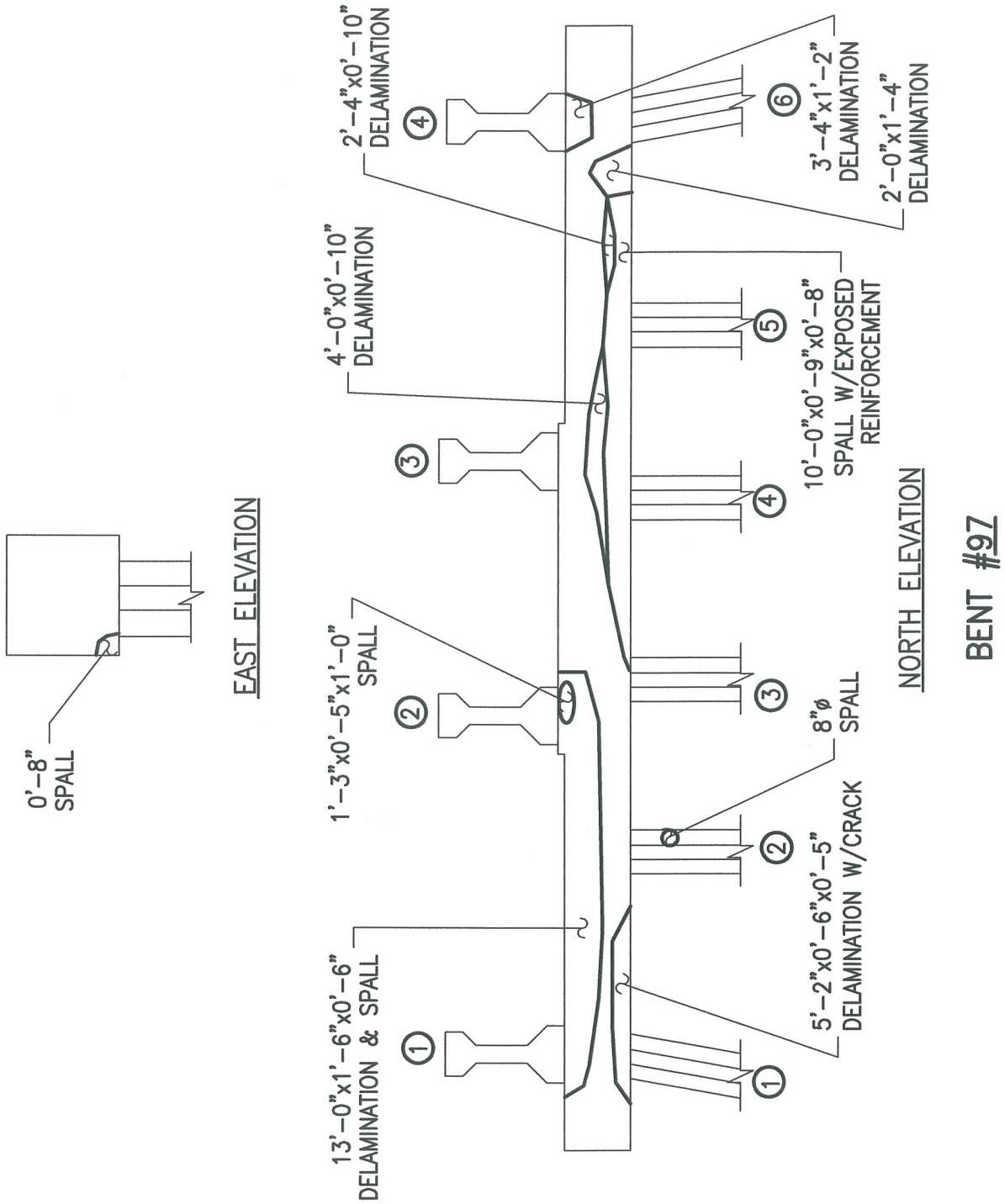

ALPHA & OMEGA GROUP
CIVIL & STRUCTURAL ENGINEERS
4911 Green Road Suite 107 Raleigh, NC 27616
Phone 919 981 0310 Fax 919 981 0451
Email info@aogroup.com www.aogroup.com

BRIDGE NO:	270011		
COUNTY:	DARE		
PREPARED BY:	OHS	CHECKED BY:	TGZ
SCALE:	NTS		
DATE:	6/20/06	SHT 674 OF 1347	

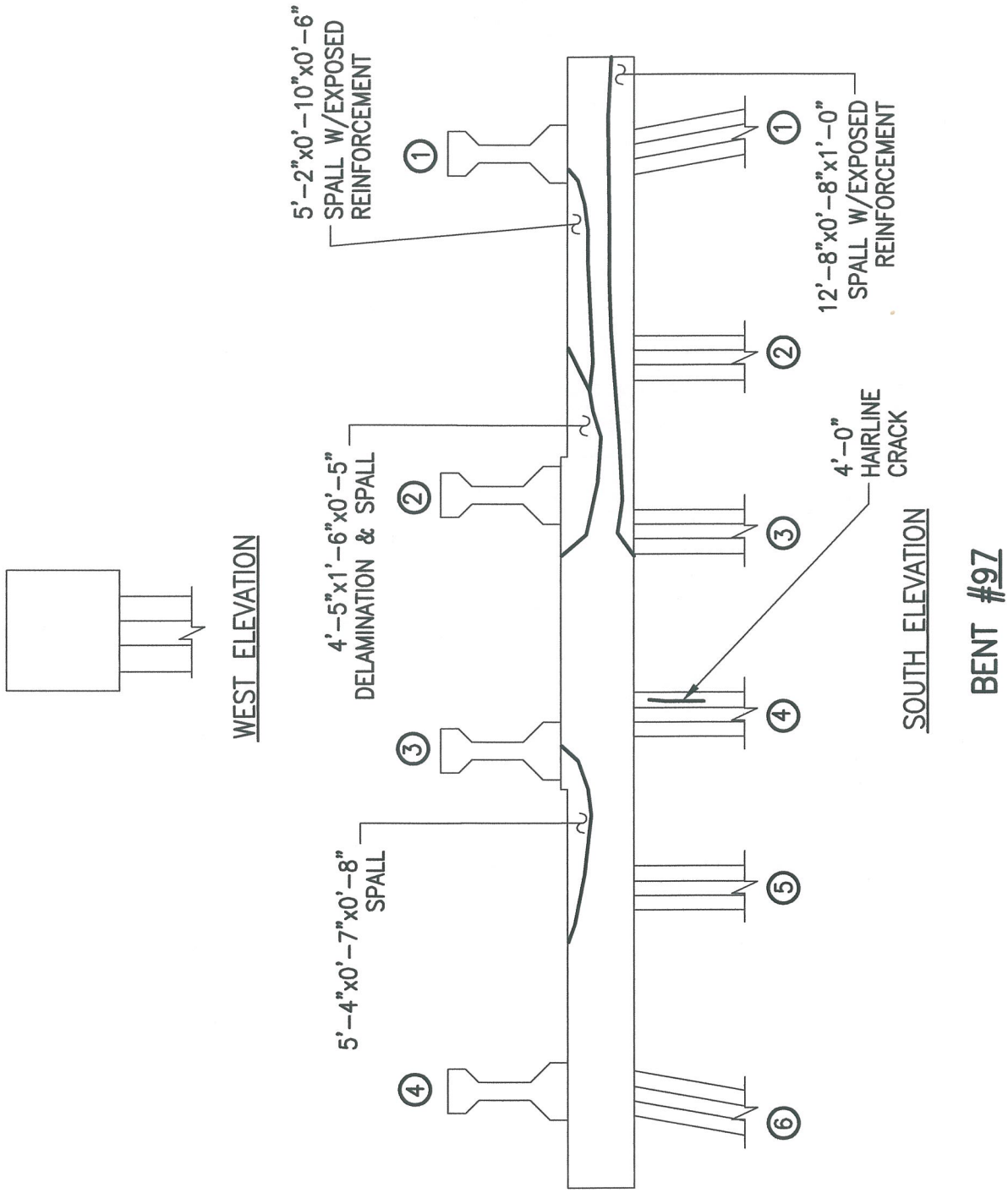

ALPHA & OMEGA GROUP
CIVIL & STRUCTURAL ENGINEERS

4911 Green Road Suite 107 Raleigh, NC 27616
Phone 919 981 0310 Fax 919 981 0451
Email info@aogroup.com www.aogroup.com

BRIDGE NO:	270011		
COUNTY:	DARE		
PREPARED BY:	OHS	CHECKED BY:	TGZ
SCALE:	NTS		
DATE:	6/20/06	SHT 677 OF 1347	

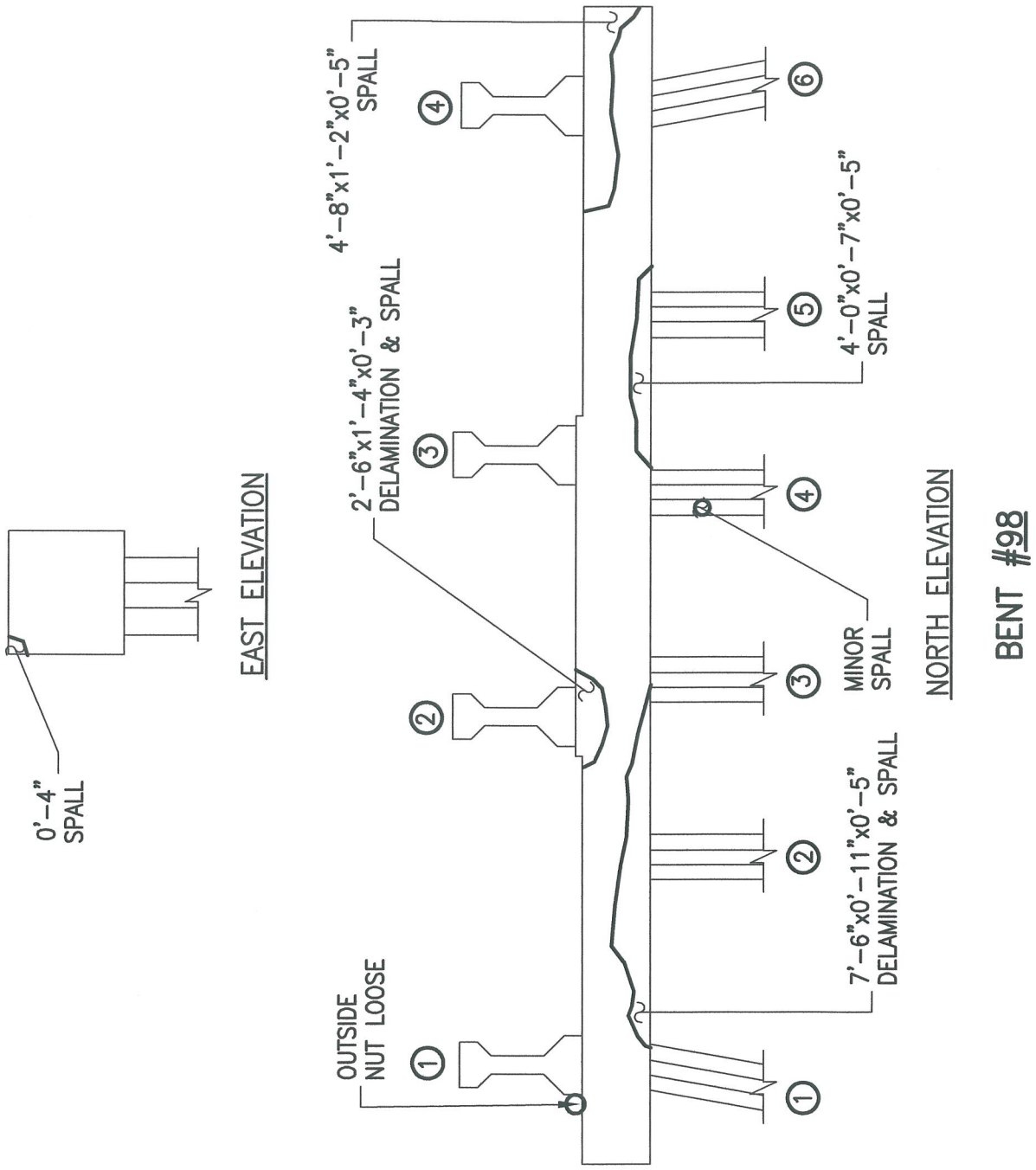

ALPHA & OMEGA GROUP
CIVIL & STRUCTURAL ENGINEERS
4911 Green Road Suite 107 Raleigh, NC 27616
Phone 919 981 0310 Fax 919 981 0451
Email info@aogroup.com www.aogroup.com

BRIDGE NO:	270011		
COUNTY:	DARE		
PREPARED BY:	OHS	CHECKED BY:	TGZ
SCALE:	NTS		
DATE:	6/20/06	SHT 660 OF 1347	

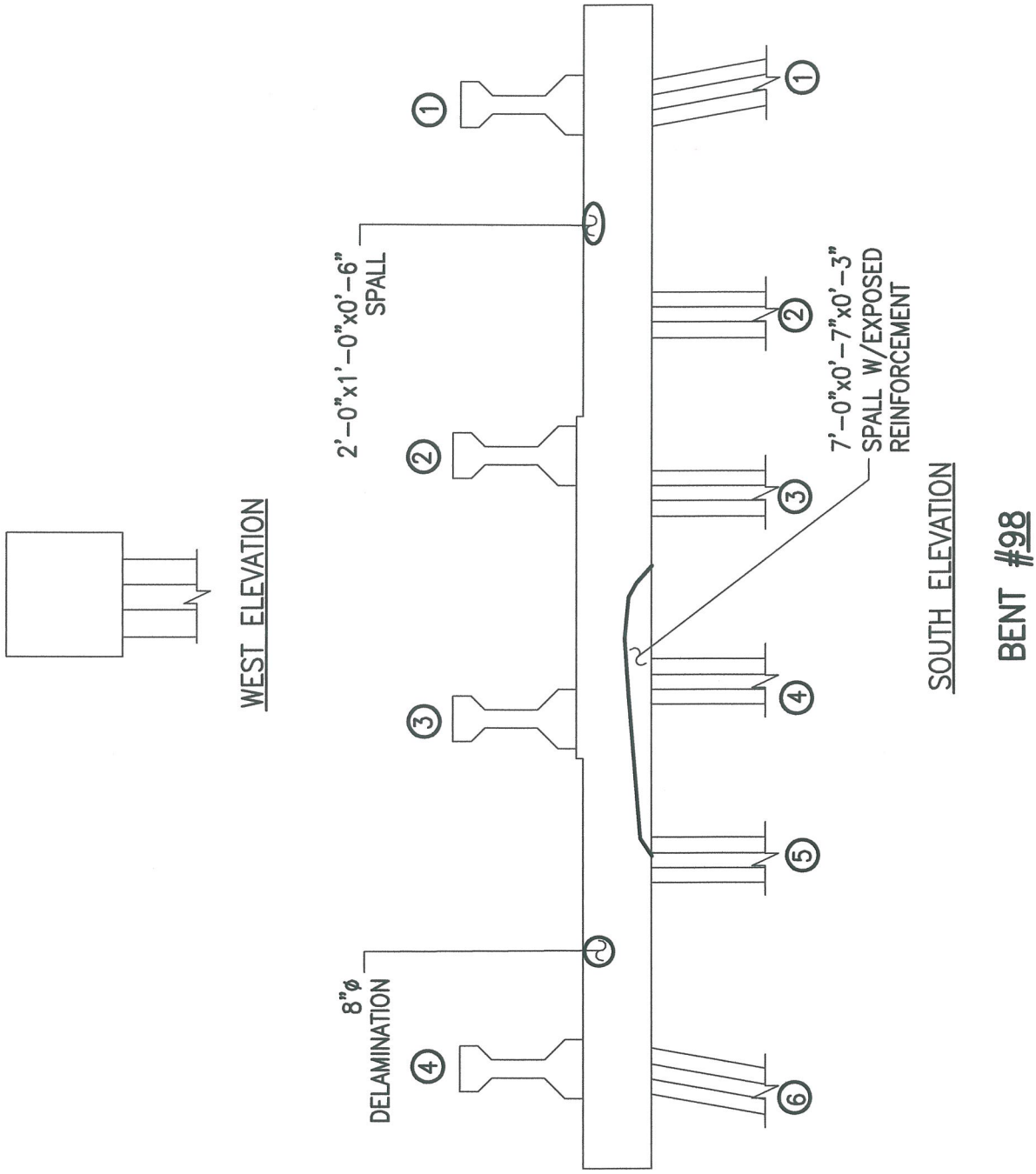

ALPHA & OMEGA GROUP
CIVIL & STRUCTURAL ENGINEERS

4911 Green Road Suite 107 Raleigh, NC 27616
Phone 919 981 0310 Fax 919 981 0451
Email info@aogroup.com www.aogroup.com

BRIDGE NO:	270011		
COUNTY:	DARE		
PREPARED BY:	OHS	CHECKED BY:	TGZ
SCALE:	NTS		
DATE:	6/20/06	SHT 683 OF 1347	

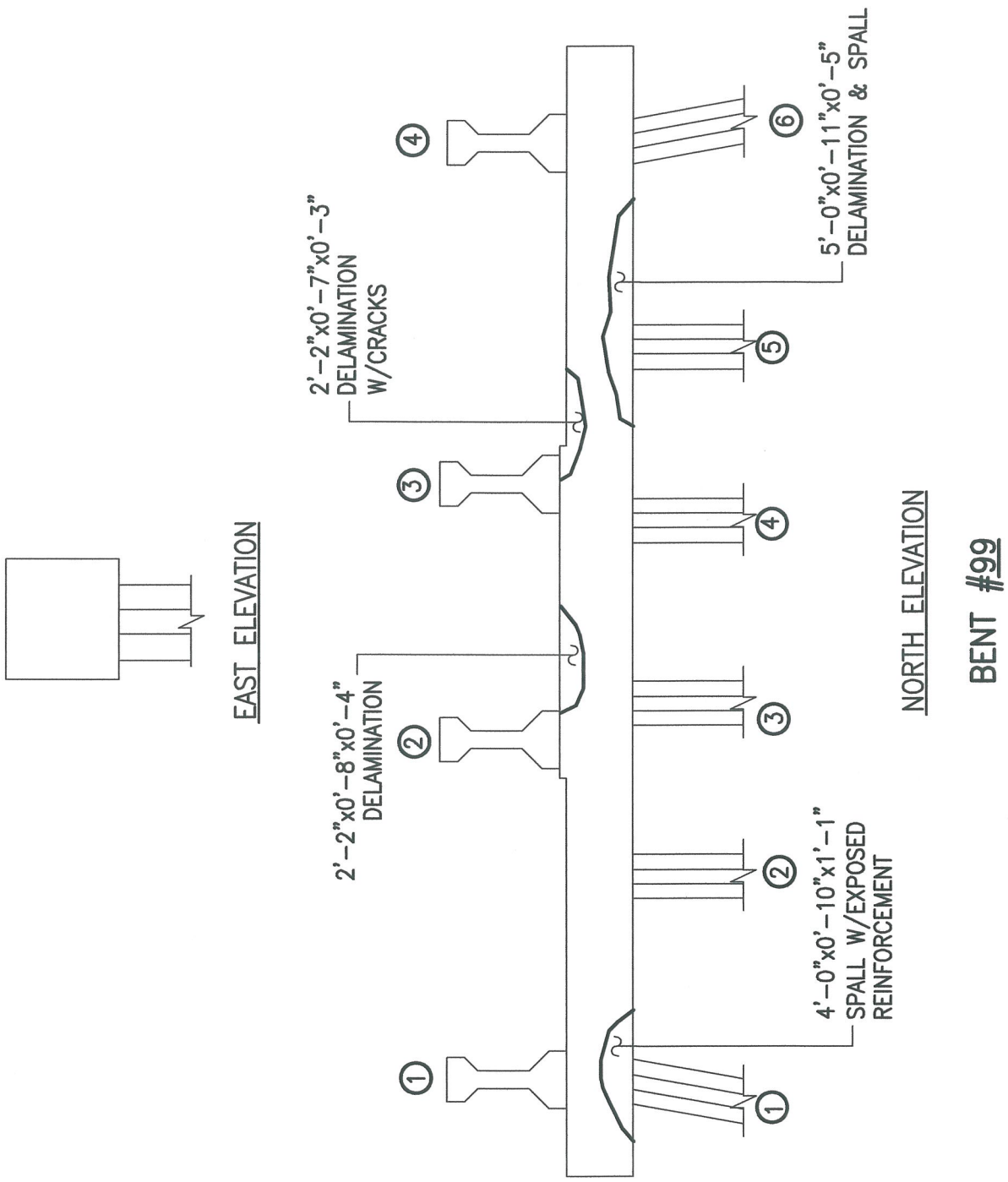

ALPHA & OMEGA GROUP
CIVIL & STRUCTURAL ENGINEERS
4911 Green Road Suite 107 Raleigh, NC 27616
Phone 919 981 0310 Fax 919 981 0451
Email info@aogroup.com www.aogroup.com

BRIDGE NO:	270011		
COUNTY:	DARE		
PREPARED BY:	OHS	CHECKED BY:	TGZ
SCALE:	NTS		
DATE:	6/20/06	SHT 686 OF 1347	

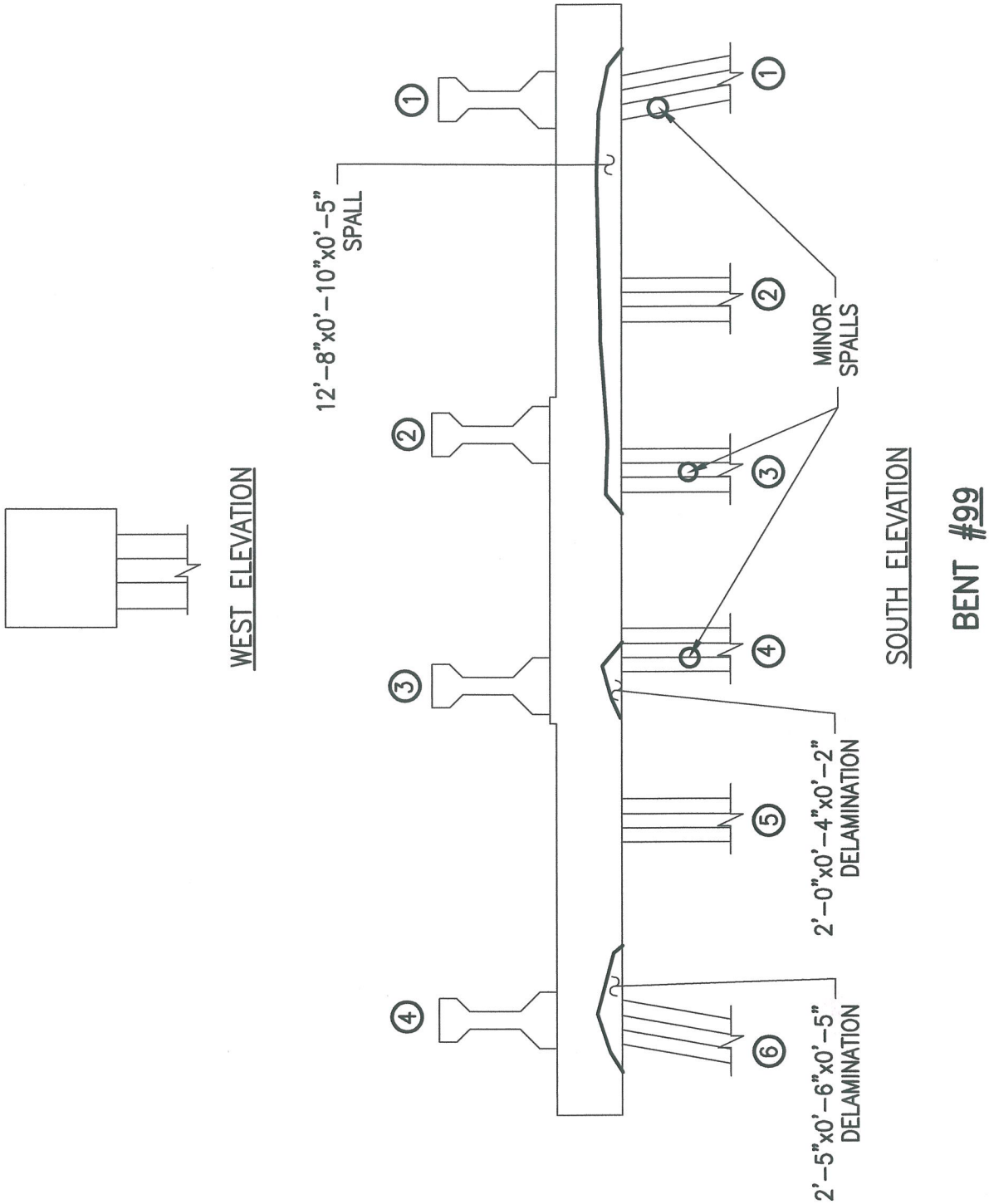

ALPHA & OMEGA GROUP
CIVIL & STRUCTURAL ENGINEERS
4911 Green Road Suite 107 Raleigh, NC 27616
Phone 919 981 0310 Fax 919 981 0451
Email info@aogroup.com www.aogroup.com

BRIDGE NO:	270011		
COUNTY:	DARE		
PREPARED BY:	OHS	CHECKED BY:	TGZ
SCALE:	NTS		
DATE:	6/20/06	SHT 669 OF 1347	

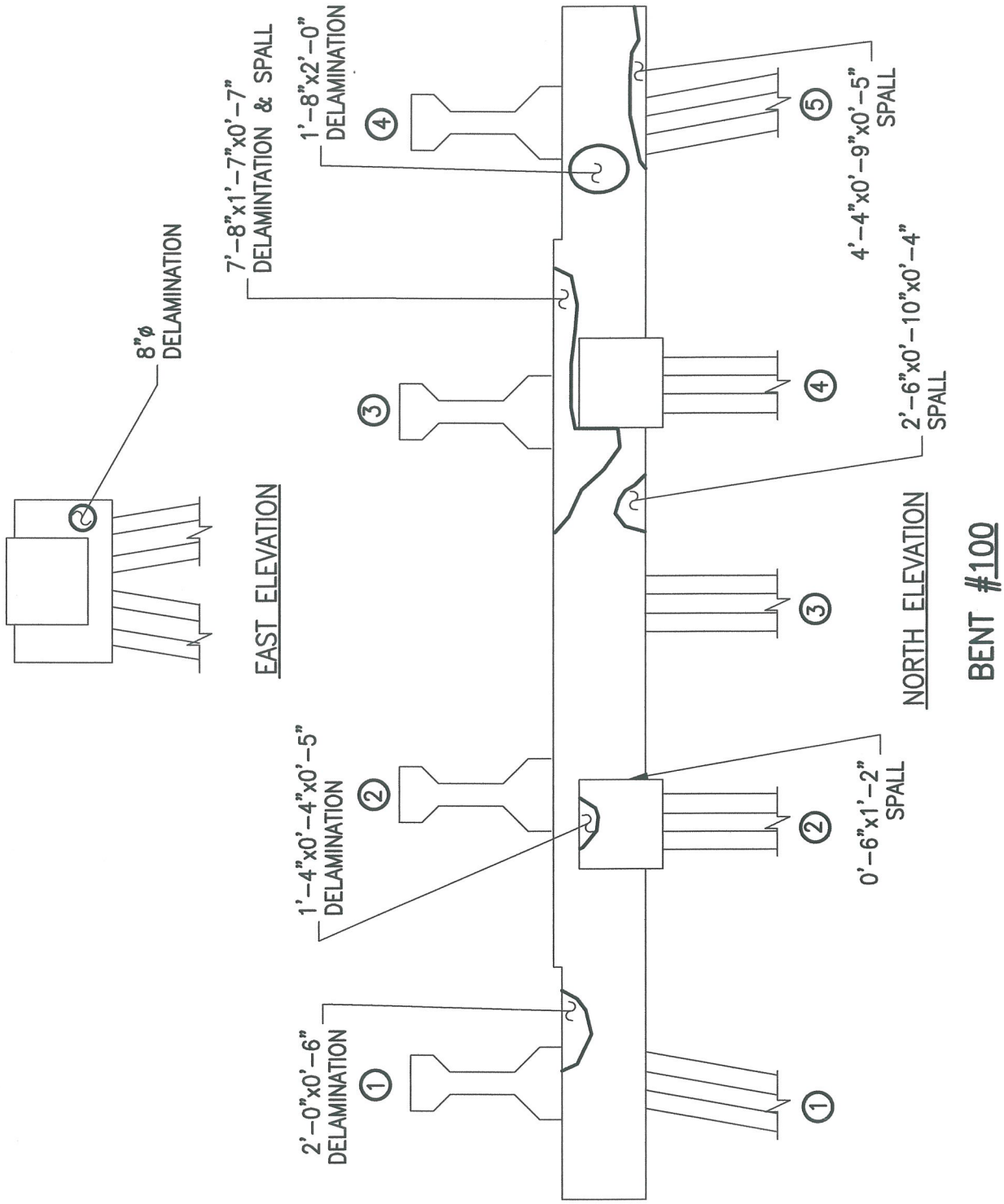

ALPHA & OMEGA GROUP
CIVIL & STRUCTURAL ENGINEERS
4911 Green Road Suite 107 Raleigh, NC 27616
Phone 919 981 0310 Fax 919 981 0451
Email info@aogroup.com www.aogroup.com

BRIDGE NO:	270011		
COUNTY:	DARE		
PREPARED BY:	OHS	CHECKED BY:	TGZ
SCALE:	NTS		
DATE:	6/20/06	SHT 97 OF 1347	

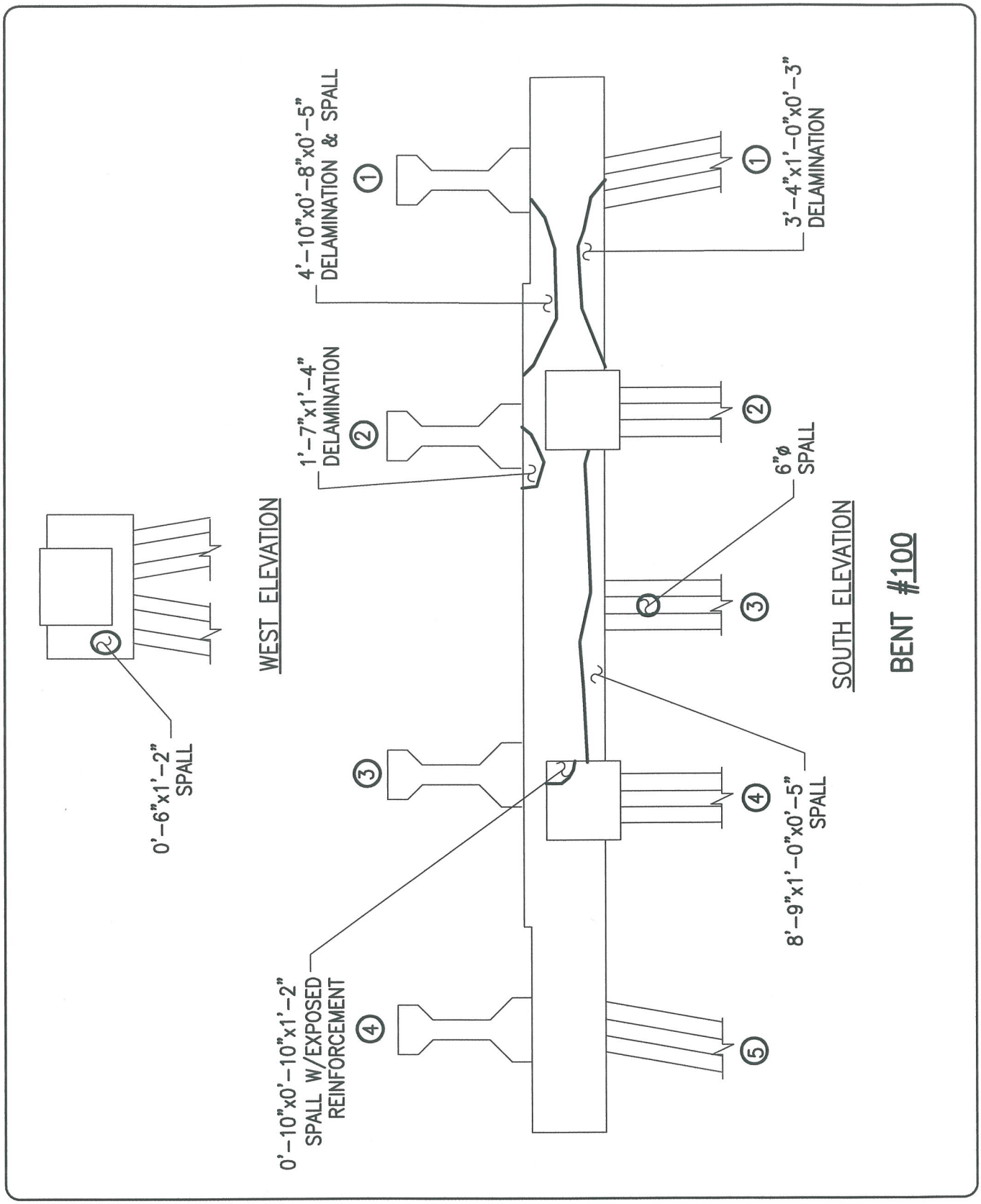

ALPHA & OMEGA GROUP
CIVIL & STRUCTURAL ENGINEERS
4911 Green Road Suite 107 Raleigh, NC 27616
Phone 919 981 0310 Fax 919 981 0451
Email info@aogroup.com www.aogroup.com

BRIDGE NO:	270011		
COUNTY:	DARE		
PREPARED BY:	OHS	CHECKED BY:	TGZ
SCALE:	NTS		
DATE:	6/20/06	SHT 095 OF 1347	