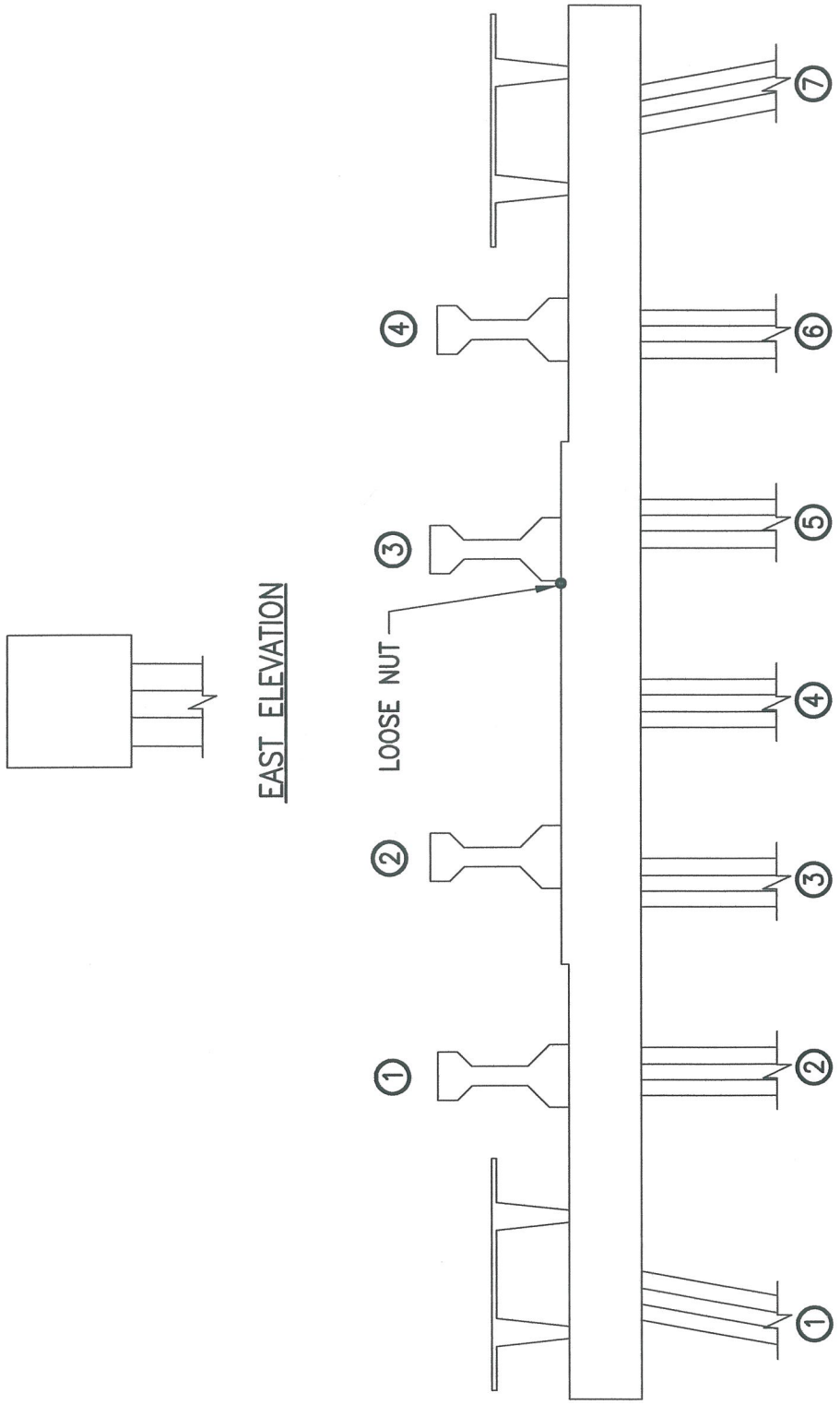

ALPHA & OMEGA GROUP
CIVIL & STRUCTURAL ENGINEERS
4911 Green Road Suite 107 Raleigh, NC 27616
Phone 919 981 0310 Fax 919 981 0451
Email info@aogroup.com www.aogroup.com

BRIDGE NO:	270011		
COUNTY:	DARE		
PREPARED BY:	OHS	CHECKED BY:	TGZ
SCALE:	NTS		
DATE:	6/20/06	SHT 114 OF 1347	

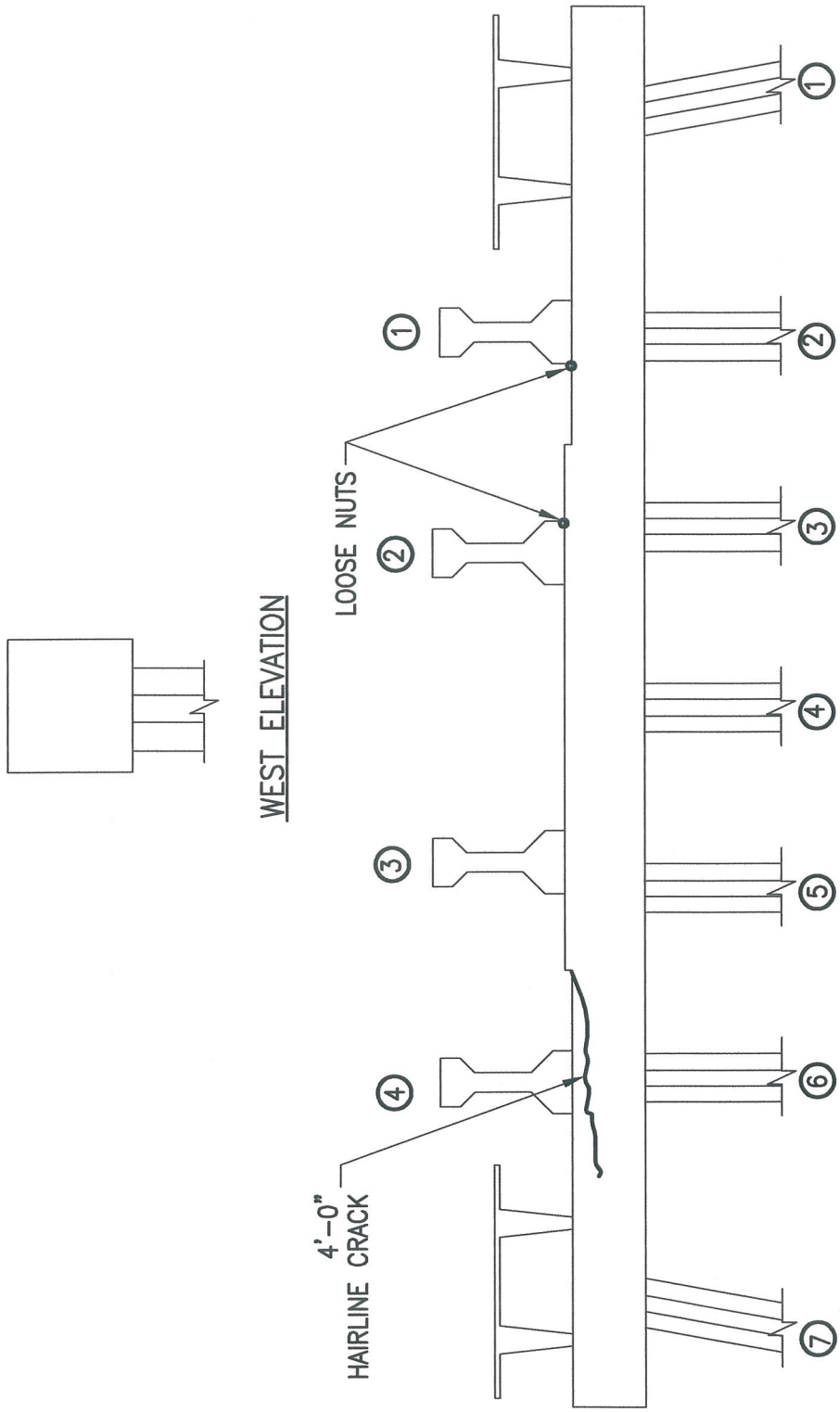

SOUTH ELEVATION

BENT #1

ALPHA & OMEGA GROUP
CIVIL & STRUCTURAL ENGINEERS
4911 Green Road Suite 107 Raleigh, NC 27616
Phone 919 981 0310 Fax 919 981 0451
Email info@aogroup.com www.aogroup.com

BRIDGE NO:	270011		
COUNTY:	DARE		
PREPARED BY:	OHS	CHECKED BY:	TGZ
SCALE:	NTS		
DATE:	6/20/06	SHT 116 OF 1347	

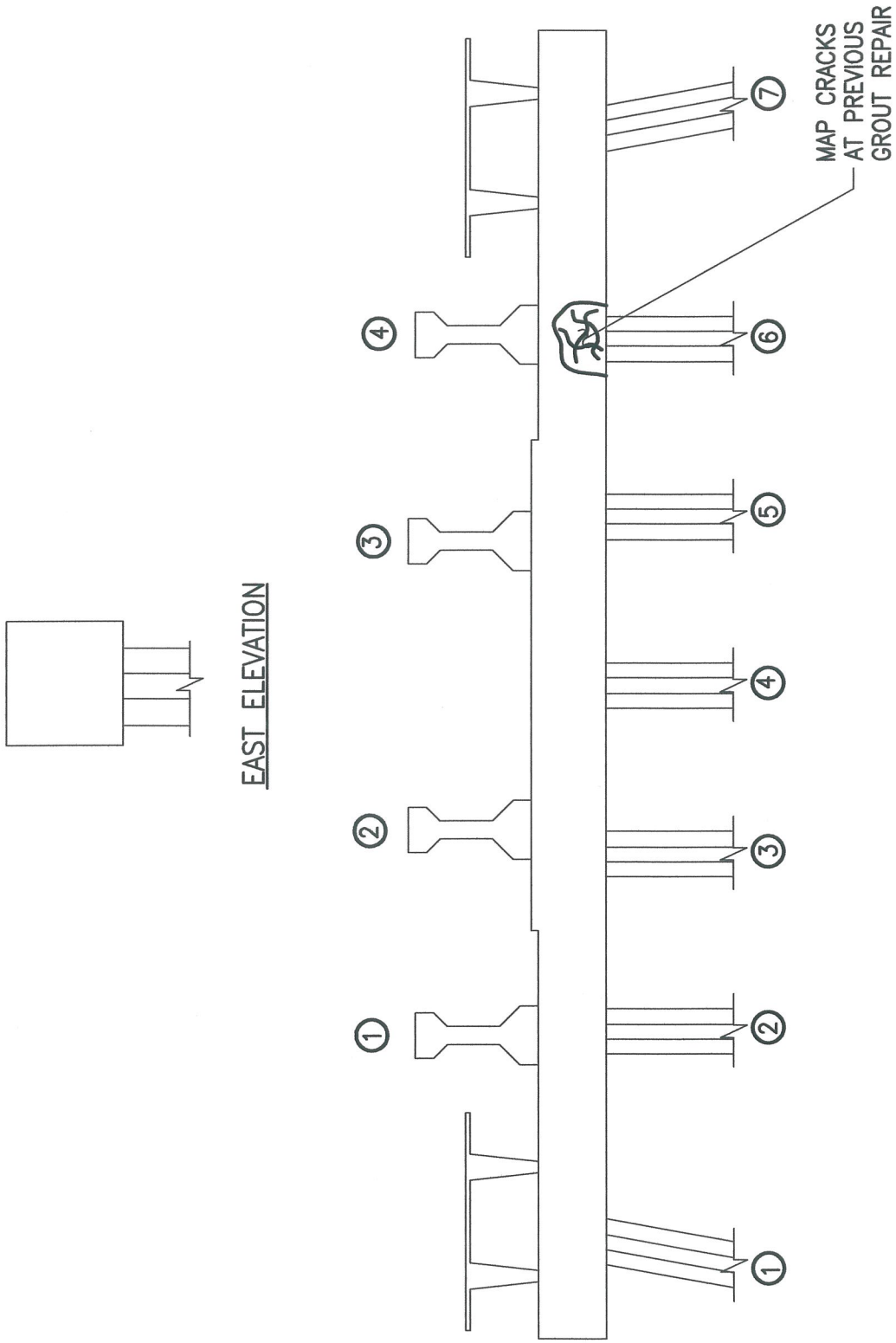

ALPHA & OMEGA GROUP
CIVIL & STRUCTURAL ENGINEERS
4911 Green Road Suite 107 Raleigh, NC 27616
Phone 919 981 0310 Fax 919 981 0451
Email info@aogroup.com www.aogroup.com

BRIDGE NO:	270011		
COUNTY:	DARE		
PREPARED BY:	OHS	CHECKED BY:	TGZ
SCALE:	NTS		
DATE:	6/20/06	SHT 119 OF 1347	

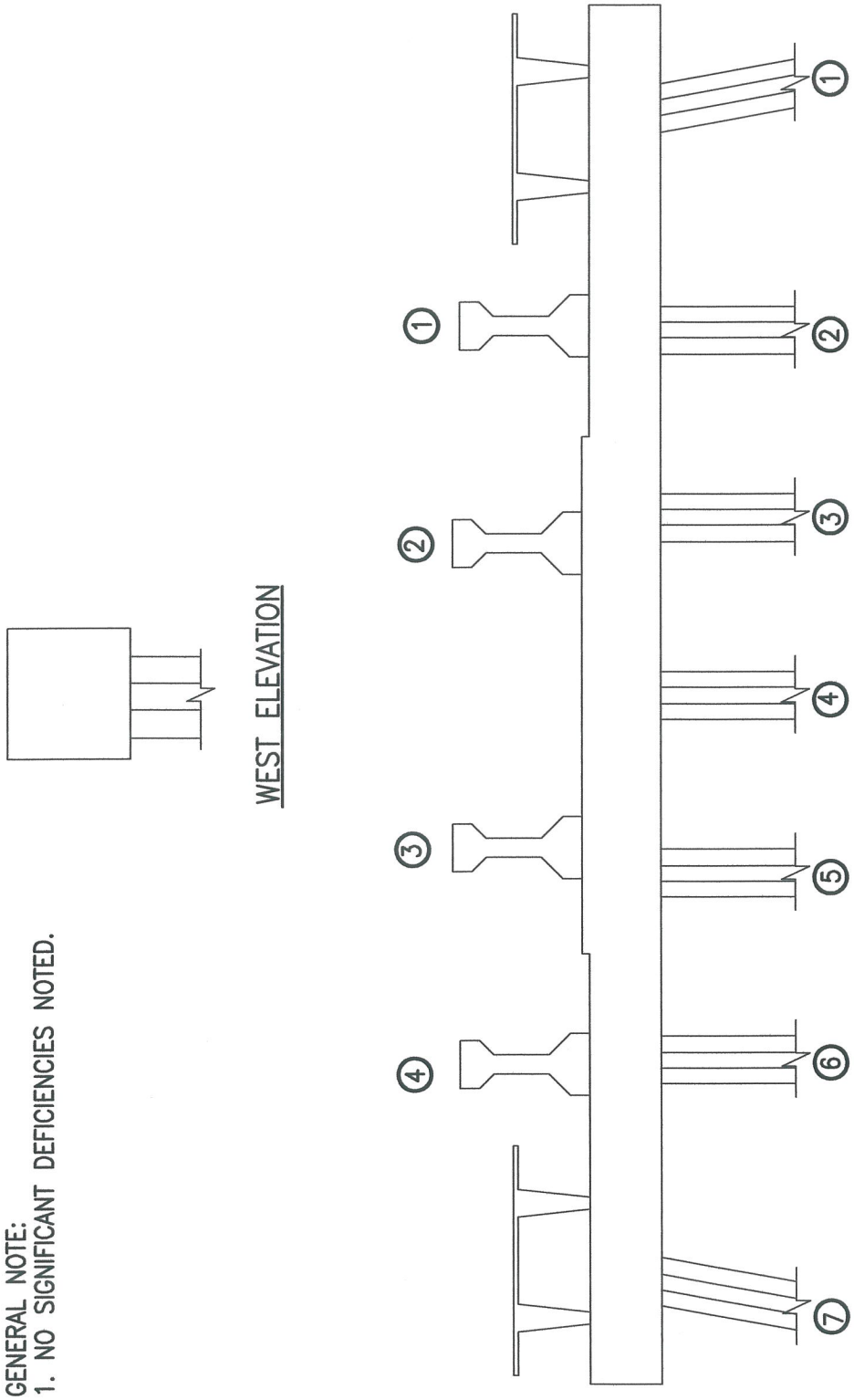

GENERAL NOTE:
1. NO SIGNIFICANT DEFICIENCIES NOTED.

ALPHA & OMEGA GROUP
CIVIL & STRUCTURAL ENGINEERS
4911 Green Road Suite 107 Raleigh, NC 27616
Phone 919 981 0310 Fax 919 981 0451
Email info@aogroup.com www.aogroup.com

BRIDGE NO:	270011		
COUNTY:	DARE		
PREPARED BY:	OHS	CHECKED BY:	TGZ
SCALE:	NTS		
DATE:	6/20/06	SHT 122 OF 1347	

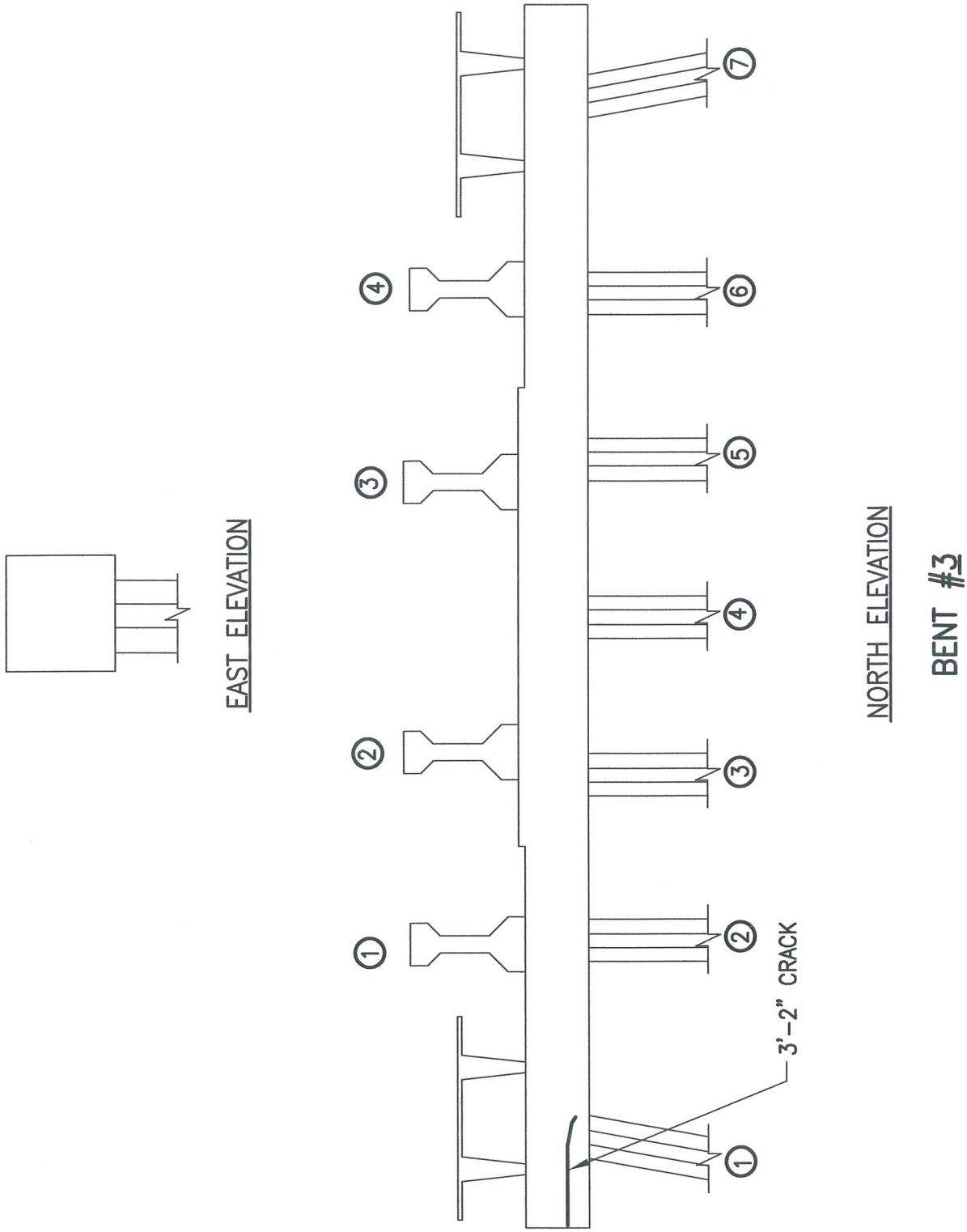

ALPHA & OMEGA GROUP
CIVIL & STRUCTURAL ENGINEERS
4911 Green Road Suite 107 Raleigh, NC 27616
Phone 919 981 0310 Fax 919 981 0451
Email info@aogroup.com www.aogroup.com

BRIDGE NO:	270011		
COUNTY:	DARE		
PREPARED BY:	OHS	CHECKED BY:	TGZ
SCALE:	NTS		
DATE:	6/20/06	SHT 125 OF 137	

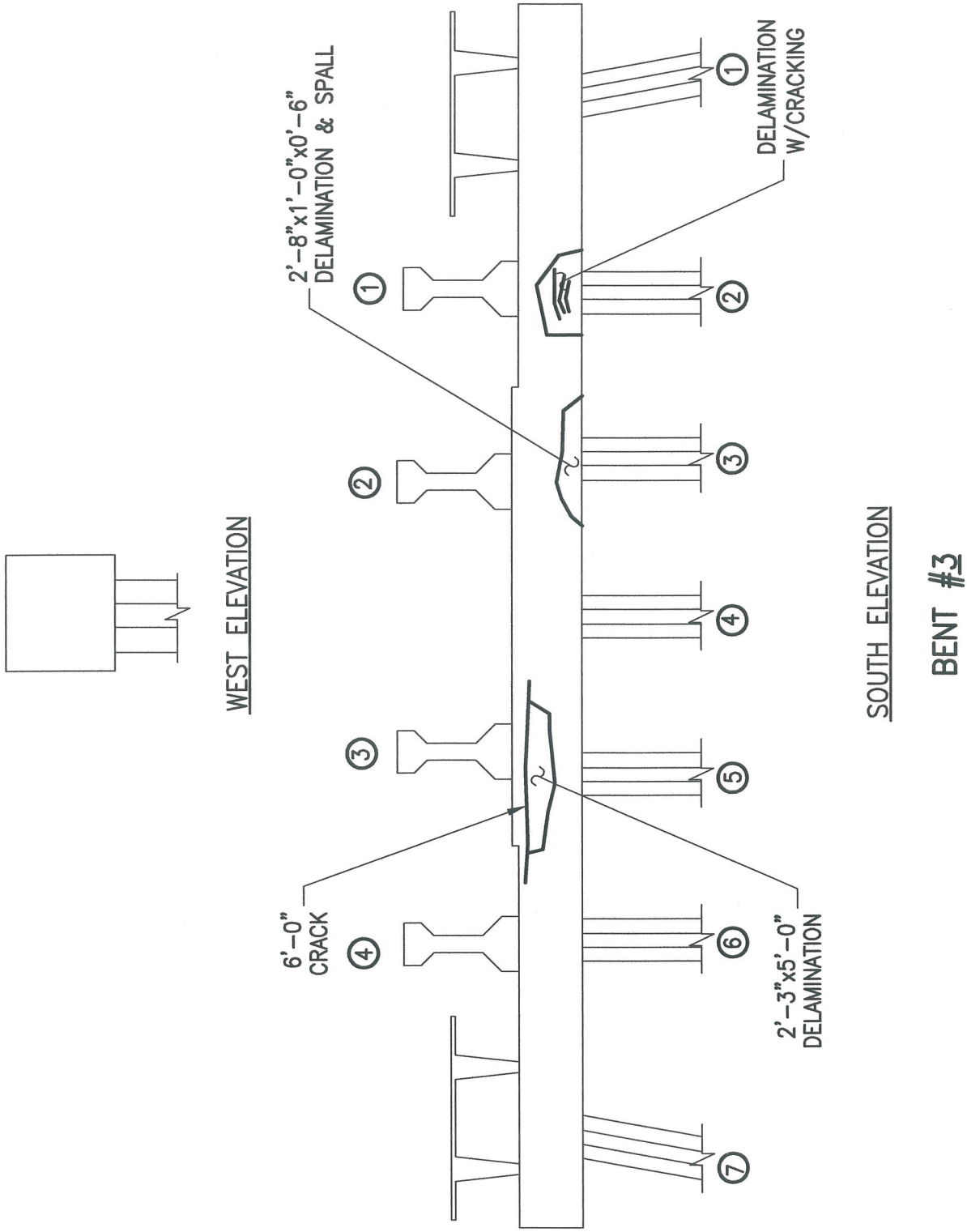

ALPHA & OMEGA GROUP
CIVIL & STRUCTURAL ENGINEERS
4911 Green Road Suite 107 Raleigh, NC 27616
Phone 919 981 0310 Fax 919 981 0451
Email info@aogroup.com www.aogroup.com

BRIDGE NO:	270011		
COUNTY:	DARE		
PREPARED BY:	OHS	CHECKED BY:	TGZ
SCALE:	NTS		
DATE:	6/20/06	SHT 128 OF 1347	

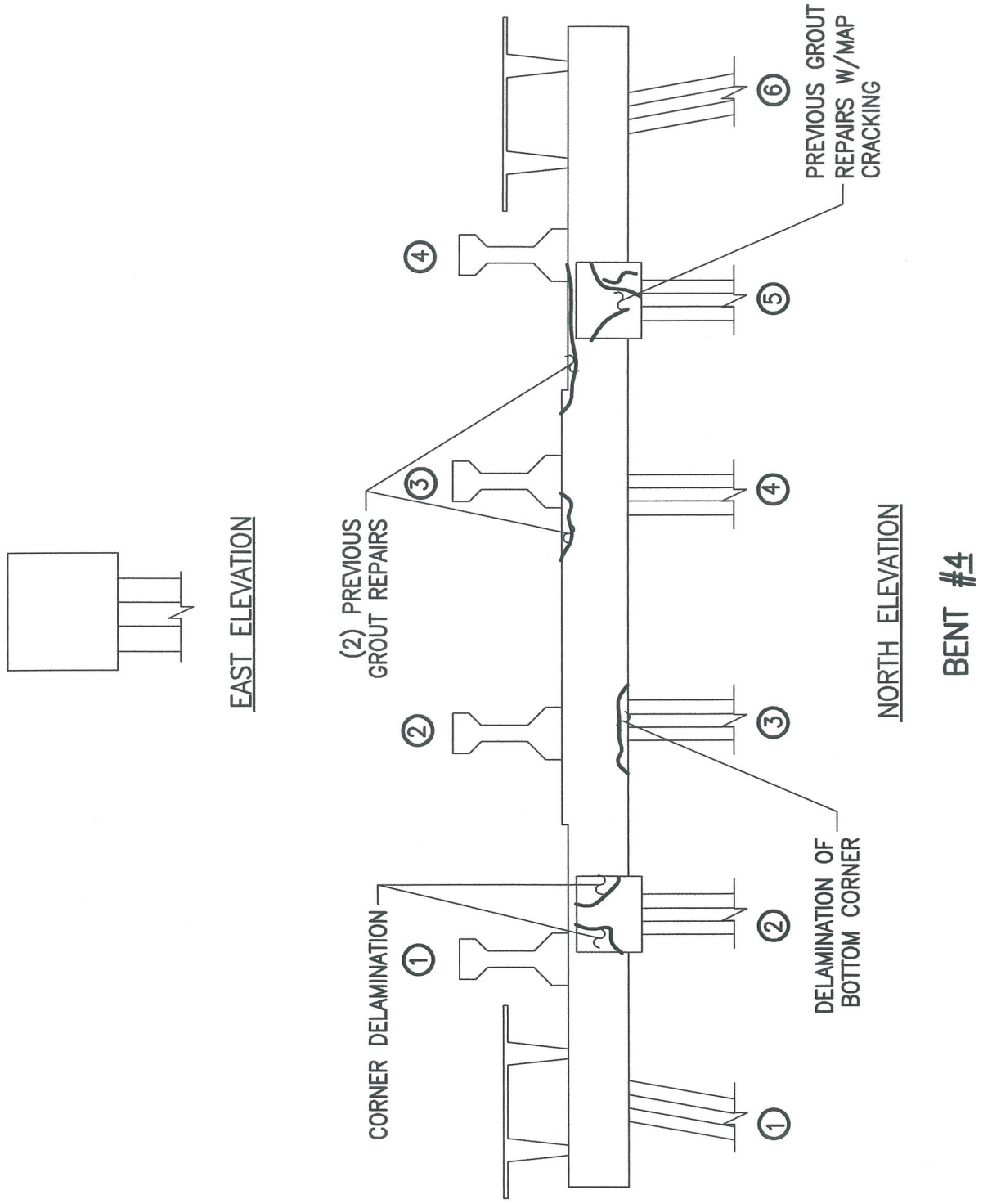

ALPHA & OMEGA GROUP
CIVIL & STRUCTURAL ENGINEERS
4911 Green Road Suite 107 Raleigh, NC 27616
Phone 919 981 0310 Fax 919 981 0451
Email info@aogroup.com www.aogroup.com

BRIDGE NO:	270011		
COUNTY:	DARE		
PREPARED BY:	OHS	CHECKED BY:	TGZ
SCALE:	NTS		
DATE:	6/20/06	SHT 131 OF 1347	

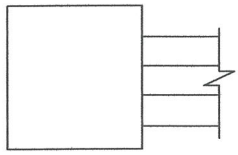

WEST ELEVATION

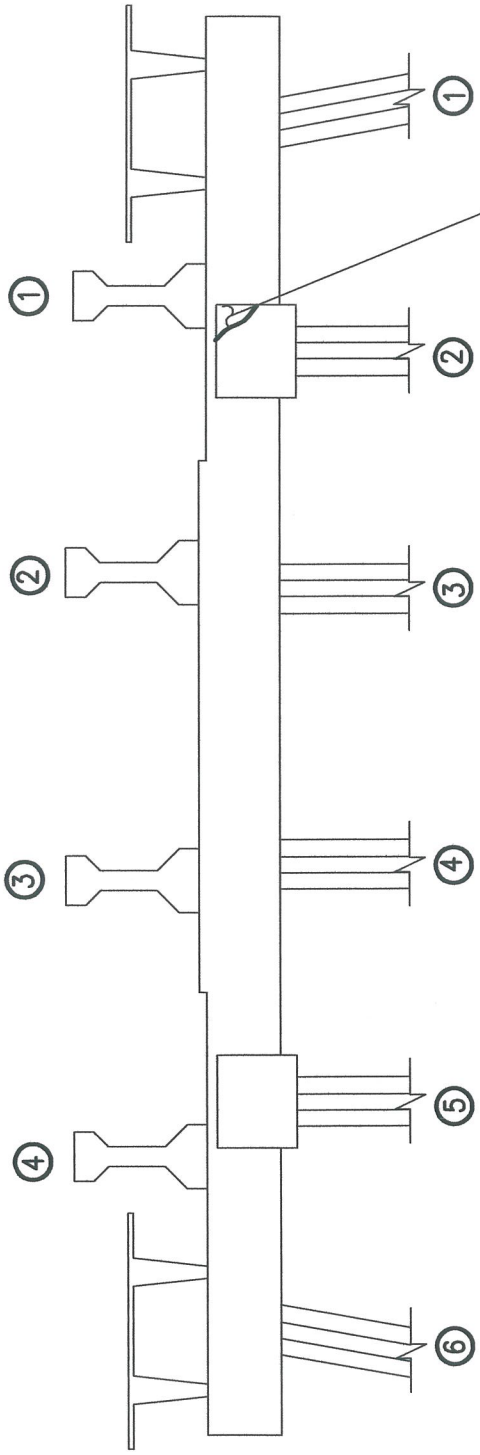

SOUTH ELEVATION

BENT #4

ALPHA & OMEGA GROUP
CIVIL & STRUCTURAL ENGINEERS

4911 Green Road Suite 107 Raleigh, NC 27616
Phone 919 981 0310 Fax 919 981 0451
Email info@aogroup.com www.aogroup.com

BRIDGE NO:	270011		
COUNTY:	DARE		
PREPARED BY:	OHS	CHECKED BY:	TGZ
SCALE:	NTS		
DATE:	6/20/06	SHT 134 OF 1347	

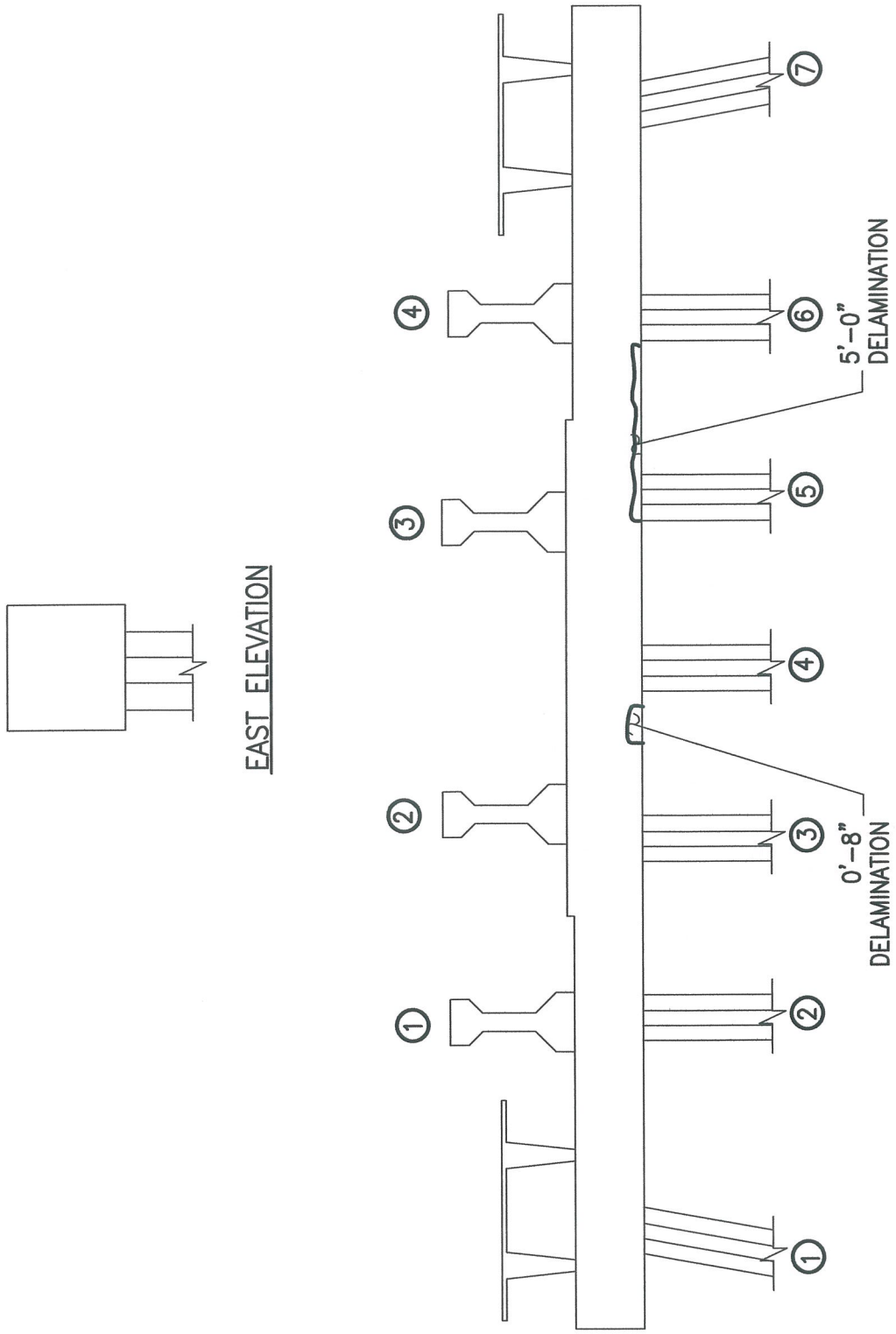

ALPHA & OMEGA GROUP
CIVIL & STRUCTURAL ENGINEERS
4911 Green Road Suite 107 Raleigh, NC 27616
Phone 919 981 0310 Fax 919 981 0451
Email info@aogroup.com www.aogroup.com

BRIDGE NO:	270011		
COUNTY:	DARE		
PREPARED BY:	OHS	CHECKED BY:	TGZ
SCALE:	NTS		
DATE:	6/20/06	SHT 137 OF 134/7	

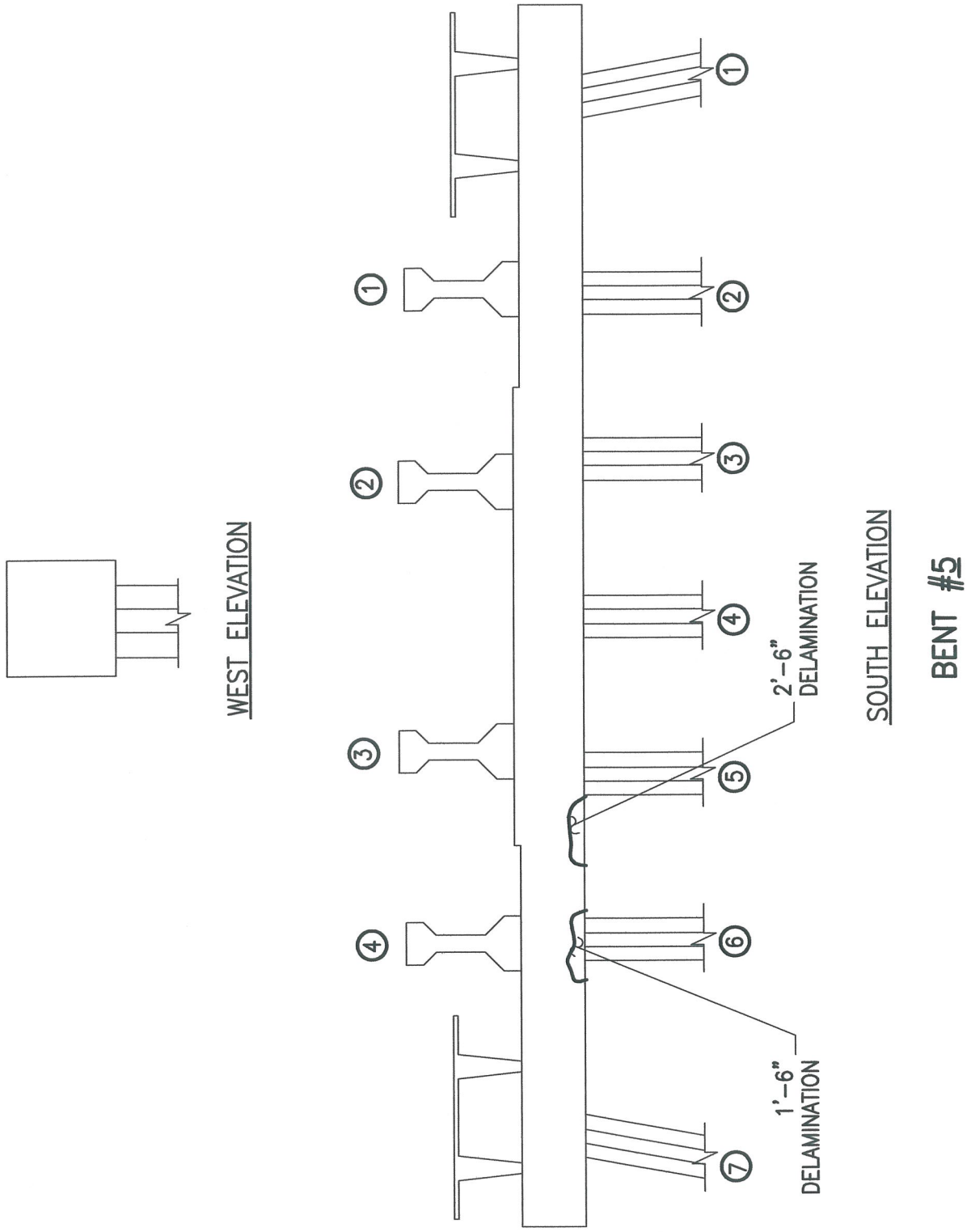

ALPHA & OMEGA GROUP
CIVIL & STRUCTURAL ENGINEERS
4911 Green Road Suite 107 Raleigh, NC 27616
Phone 919 981 0310 Fax 919 981 0451
Email info@aogroup.com www.aogroup.com

BRIDGE NO:	270011		
COUNTY:	DARE		
PREPARED BY:	OHS	CHECKED BY:	TGZ
SCALE:	NTS		
DATE:	6/20/06	SHT 139 OF 1347	

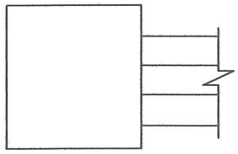

EAST ELEVATION

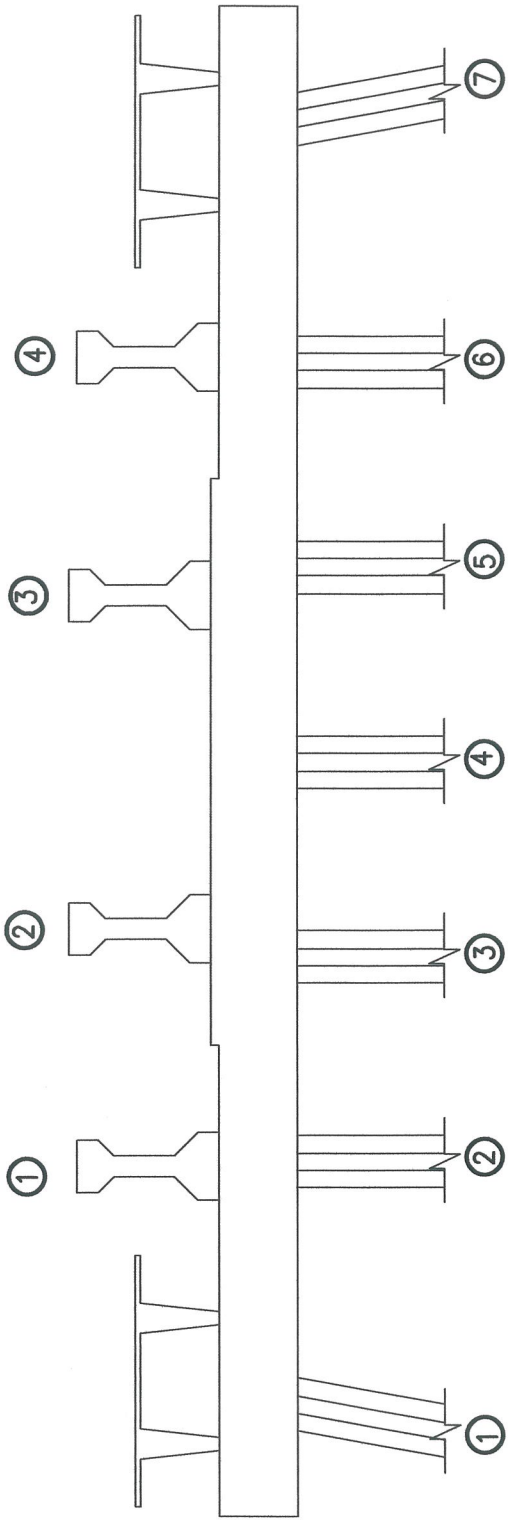

NORTH ELEVATION

BENT #6

GENERAL NOTE:
1. NO SIGNIFICANT DEFICIENCIES NOTED.

ALPHA & OMEGA GROUP
CIVIL & STRUCTURAL ENGINEERS
4911 Green Road Suite 107 Raleigh, NC 27616
Phone 919 981 0310 Fax 919 981 0451
Email info@aogroup.com www.aogroup.com

BRIDGE NO:	270011		
COUNTY:	DARE		
PREPARED BY:	OHS	CHECKED BY:	TGZ
SCALE:	NTS		
DATE:	6/20/06	SHT 142 OF 1347	

GENERAL NOTE:
1. NO SIGNIFICANT DEFICIENCIES NOTED.

ALPHA & OMEGA GROUP
CIVIL & STRUCTURAL ENGINEERS
4911 Green Road Suite 107 Raleigh, NC 27616
Phone 919 981 0310 Fax 919 981 0451
Email info@aogroup.com www.aogroup.com

BRIDGE NO:	270011		
COUNTY:	DARE		
PREPARED BY:	OHS	CHECKED BY:	TGZ
SCALE:	NTS		
DATE:	6/20/06	SHT 149 OF 1347	

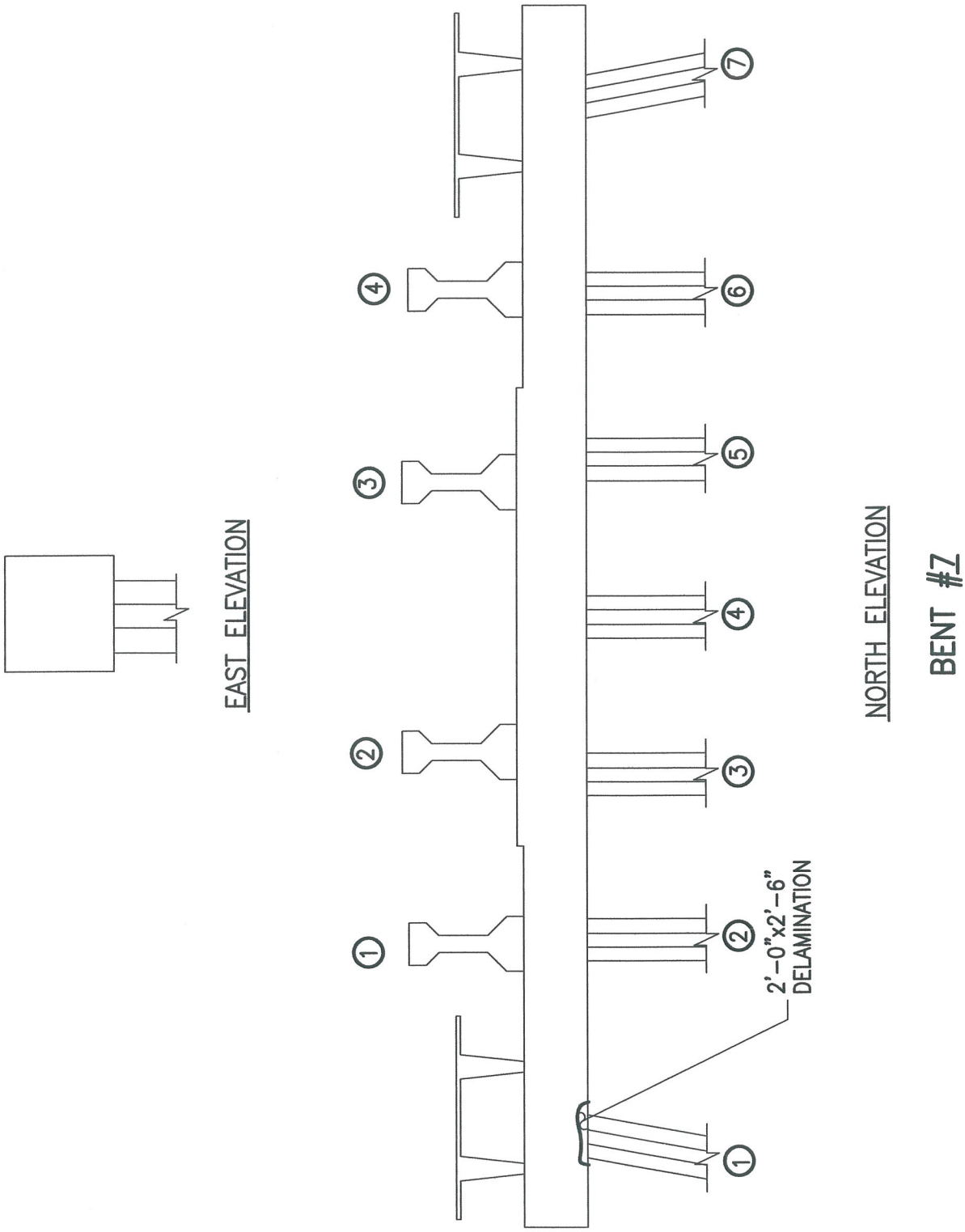

ALPHA & OMEGA GROUP
CIVIL & STRUCTURAL ENGINEERS
4911 Green Road Suite 107 Raleigh, NC 27616
Phone 919 981 0310 Fax 919 981 0451
Email info@aogroup.com www.aogroup.com

BRIDGE NO:	270011		
COUNTY:	DARE		
PREPARED BY:	OHS	CHECKED BY:	TGZ
SCALE:	NTS		
DATE:	6/20/06	SHT 147 OF 1347	

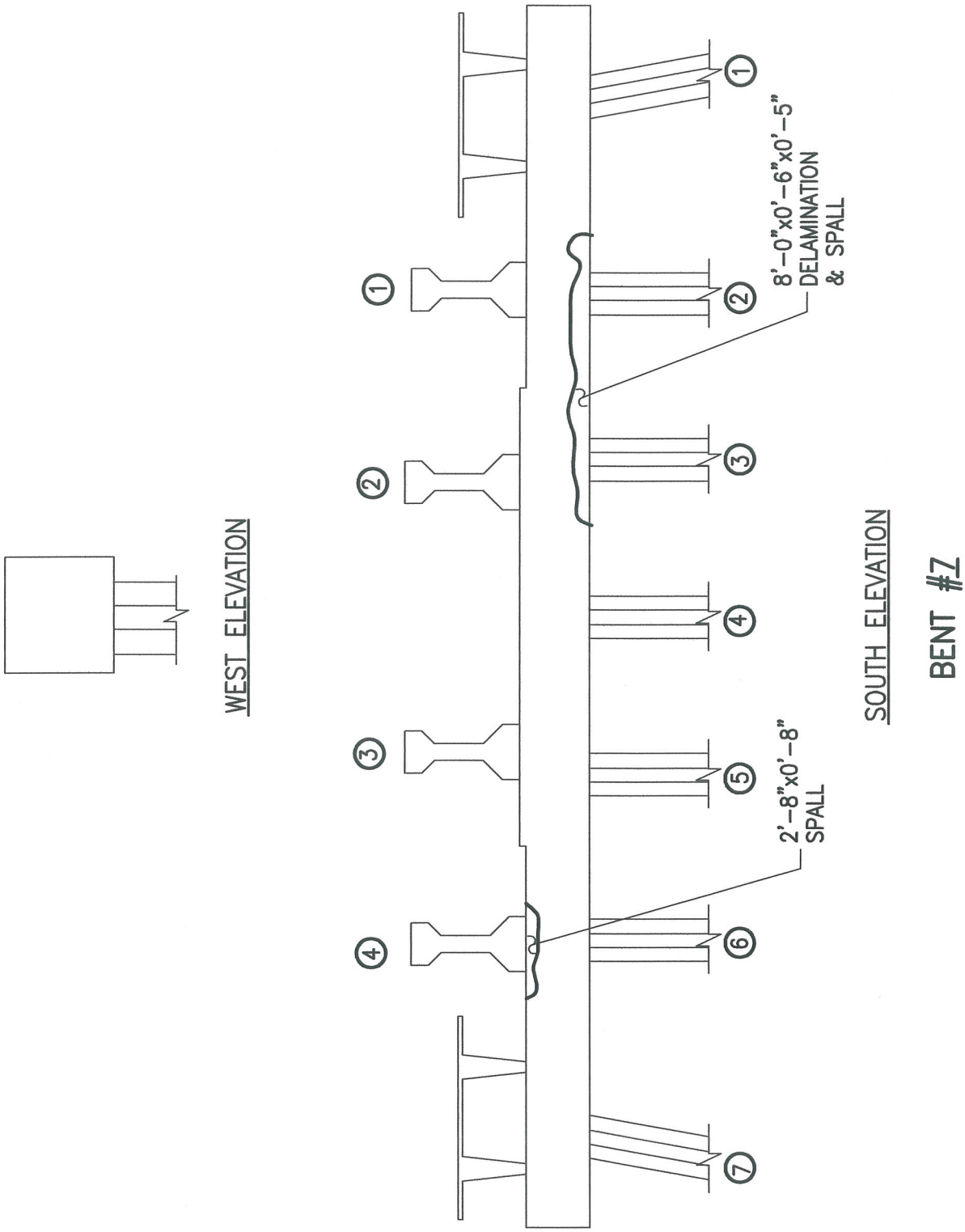

ALPHA & OMEGA GROUP
CIVIL & STRUCTURAL ENGINEERS
4911 Green Road Suite 107 Raleigh, NC 27616
Phone 919 981 0310 Fax 919 981 0451
Email info@aogroup.com www.aogroup.com

BRIDGE NO:	270011		
COUNTY:	DARE		
PREPARED BY:	OHS	CHECKED BY:	TGZ
SCALE:	NTS		
DATE:	6/20/06	SHT 149 OF 1347	

GENERAL NOTE:
1. NO SIGNIFICANT DEFICIENCIES NOTED.

EAST ELEVATION

NORTH ELEVATION

BENT #8

ALPHA & OMEGA GROUP
CIVIL & STRUCTURAL ENGINEERS
4911 Green Road Suite 107 Raleigh, NC 27616
Phone 919 981 0310 Fax 919 981 0451
Email info@aogroup.com www.aogroup.com

BRIDGE NO:	270011		
COUNTY:	DARE		
PREPARED BY:	OHS	CHECKED BY:	TGZ
SCALE:	NTS		
DATE:	6/20/06	SHT 152 OF 1347	

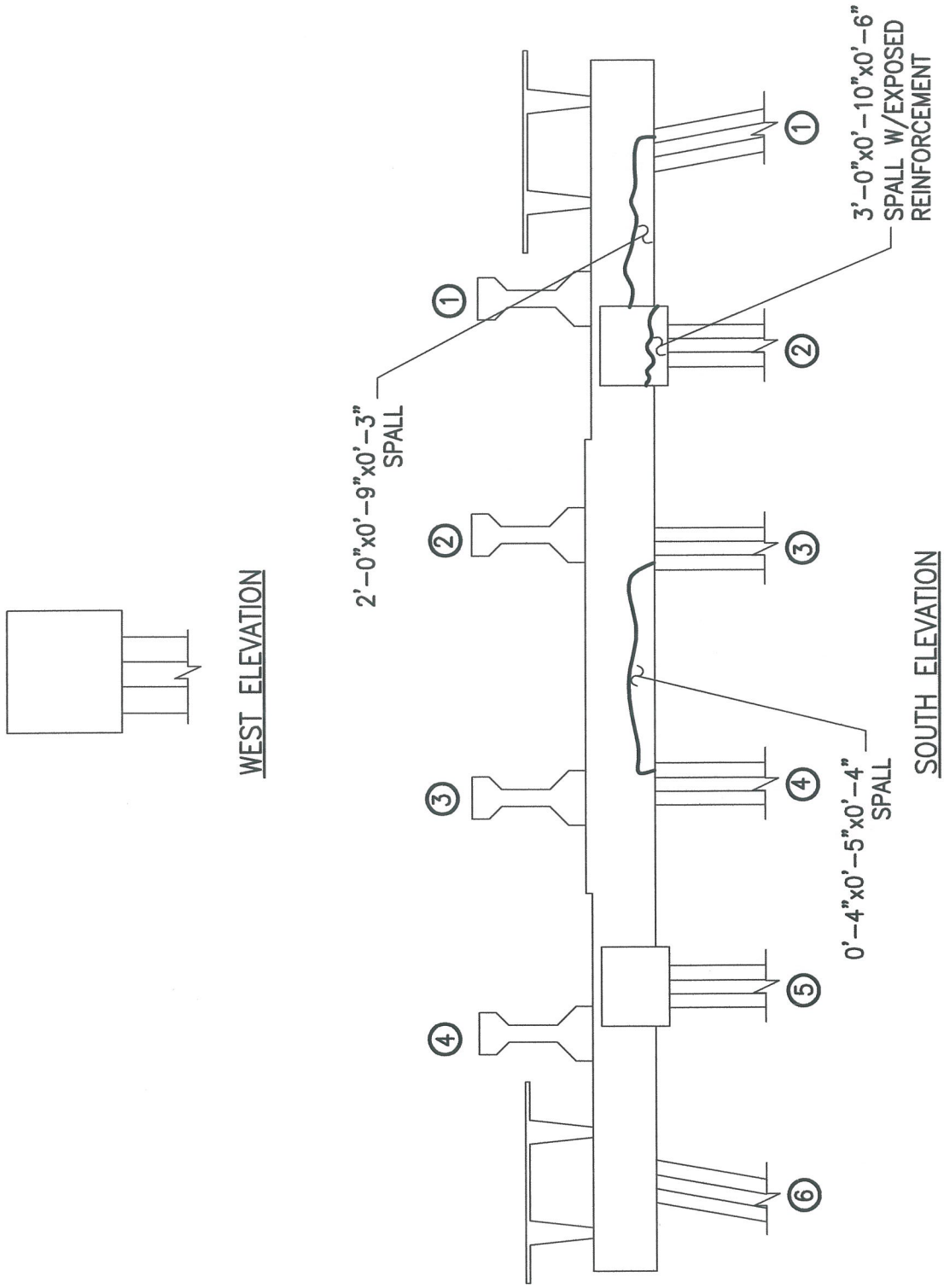

ALPHA & OMEGA GROUP
CIVIL & STRUCTURAL ENGINEERS
4911 Green Road Suite 107 Raleigh, NC 27616
Phone 919 981 0310 Fax 919 981 0451
Email info@aogroup.com www.aogroup.com

BRIDGE NO:	270011		
COUNTY:	DARE		
PREPARED BY:	OHS	CHECKED BY:	TGZ
SCALE:	NTS		
DATE:	6/20/06	SHT 154 OF 1347	

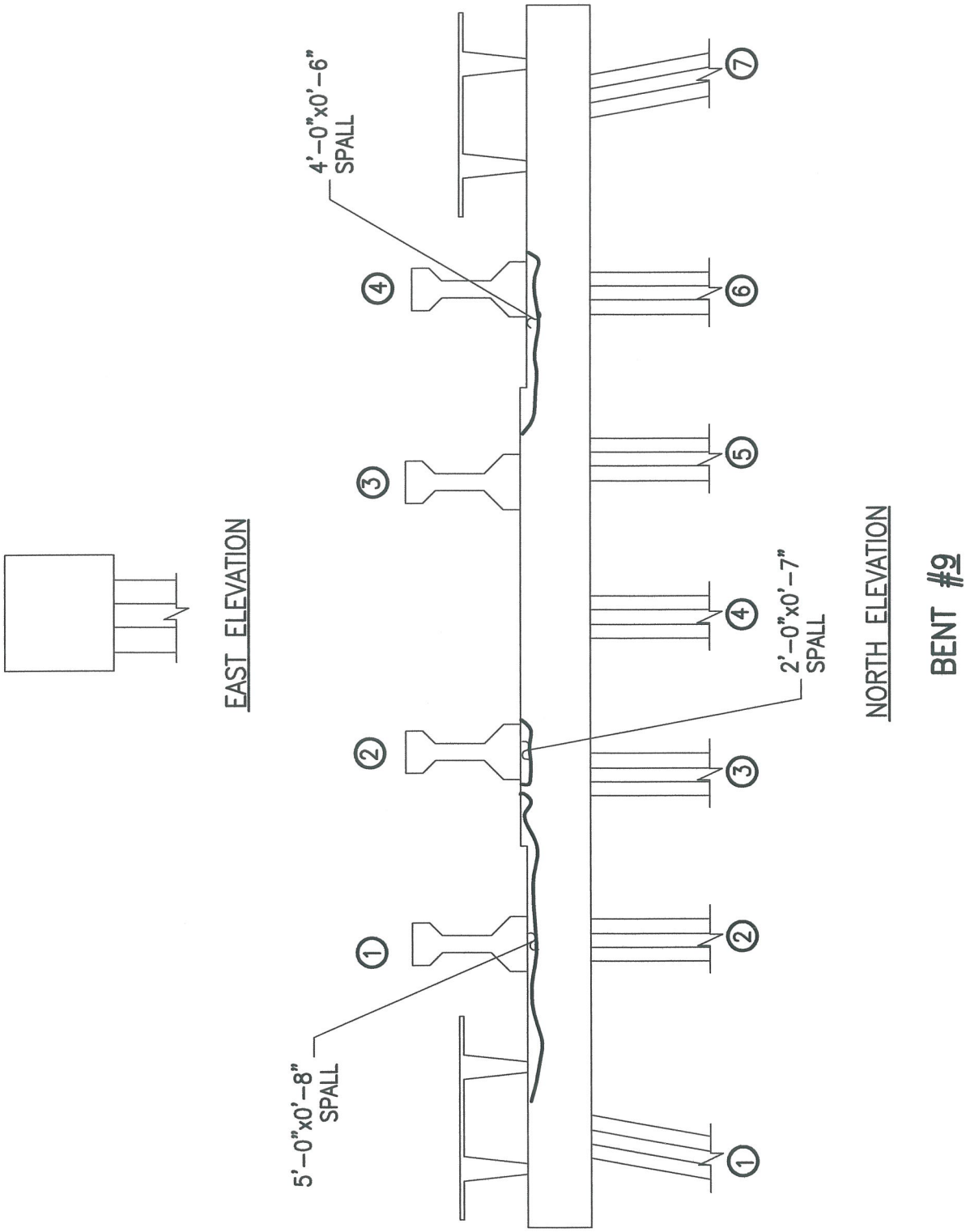

ALPHA & OMEGA GROUP
CIVIL & STRUCTURAL ENGINEERS
4911 Green Road Suite 107 Raleigh, NC 27616
Phone 919 981 0310 Fax 919 981 0451
Email info@aogroup.com www.aogroup.com

BRIDGE NO:	270011		
COUNTY:	DARE		
PREPARED BY:	OHS	CHECKED BY:	TGZ
SCALE:	NTS		
DATE:	6/20/06	SHT 157 OF 1347	

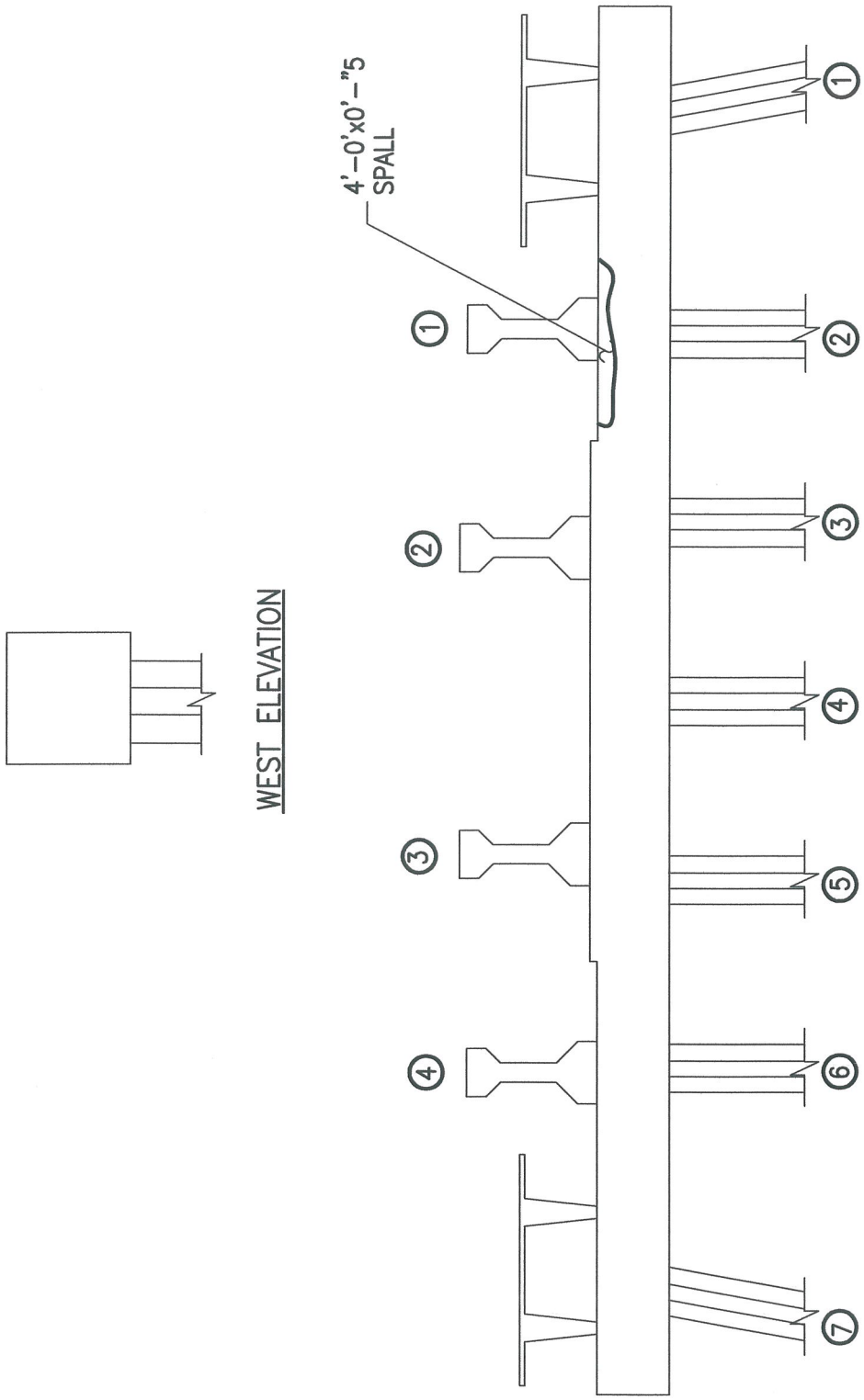

BENT #9

ALPHA & OMEGA GROUP
CIVIL & STRUCTURAL ENGINEERS
4911 Green Road Suite 107 Raleigh, NC 27616
Phone 919 981 0310 Fax 919 981 0451
Email info@aogroup.com www.aogroup.com

BRIDGE NO:	270011		
COUNTY:	DARE		
PREPARED BY:	OHS	CHECKED BY:	TGZ
SCALE:	NTS		
DATE:	6/20/06	SHT 159 OF 1347	

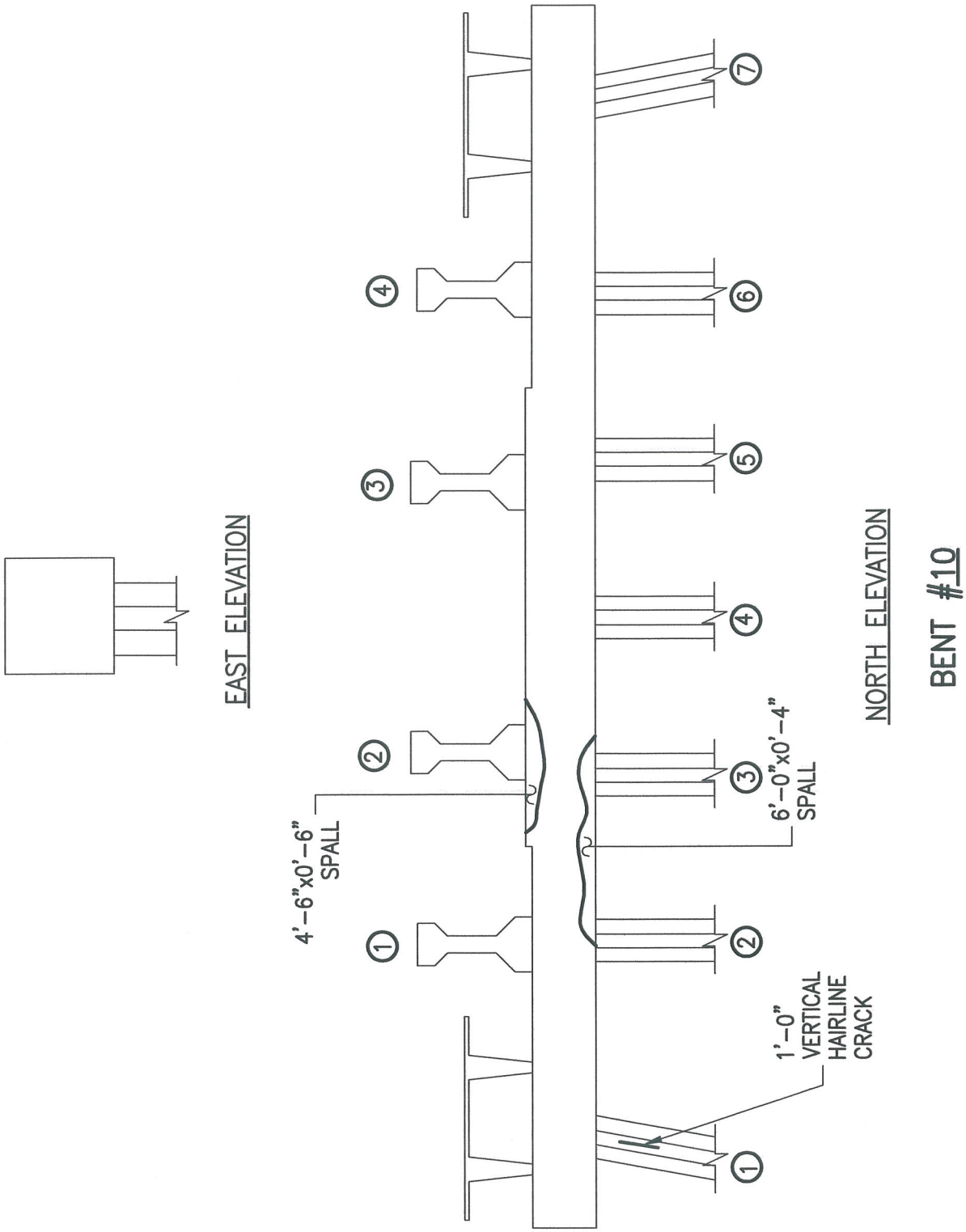

ALPHA & OMEGA GROUP
CIVIL & STRUCTURAL ENGINEERS
4911 Green Road Suite 107 Raleigh, NC 27616
Phone 919 981 0310 Fax 919 981 0451
Email info@aogroup.com www.aogroup.com

BRIDGE NO:	270011		
COUNTY:	DARE		
PREPARED BY:	OHS	CHECKED BY:	TGZ
SCALE:	NTS		
DATE:	6/20/06	SHT 162 OF 1317	

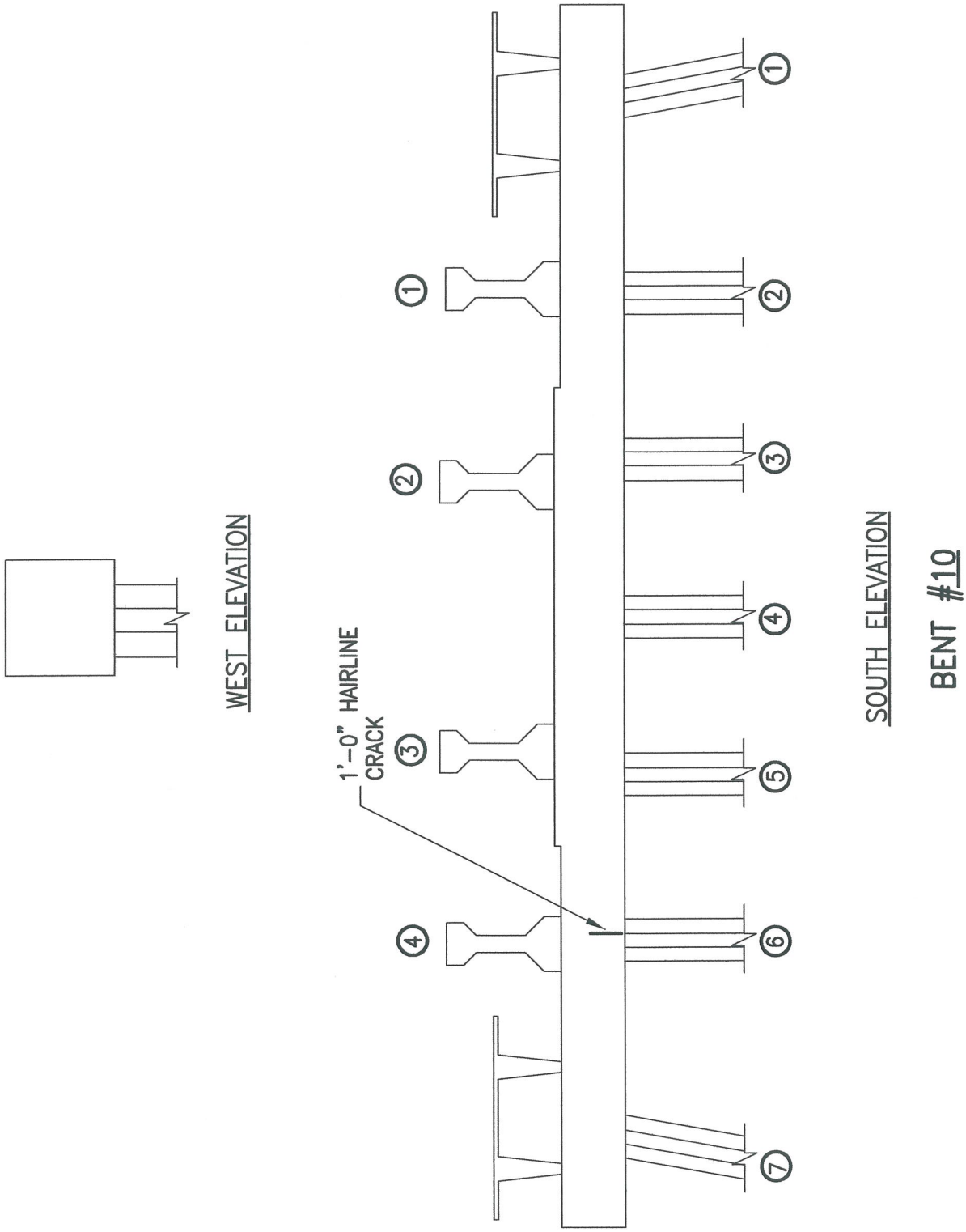

ALPHA & OMEGA GROUP
CIVIL & STRUCTURAL ENGINEERS
4911 Green Road Suite 107 Raleigh, NC 27616
Phone 919 981 0310 Fax 919 981 0451
Email info@aogroup.com www.aogroup.com

BRIDGE NO:	270011		
COUNTY:	DARE		
PREPARED BY:	OHS	CHECKED BY:	TGZ
SCALE:	NTS		
DATE:	6/20/06	SHT 164 OF 1347	

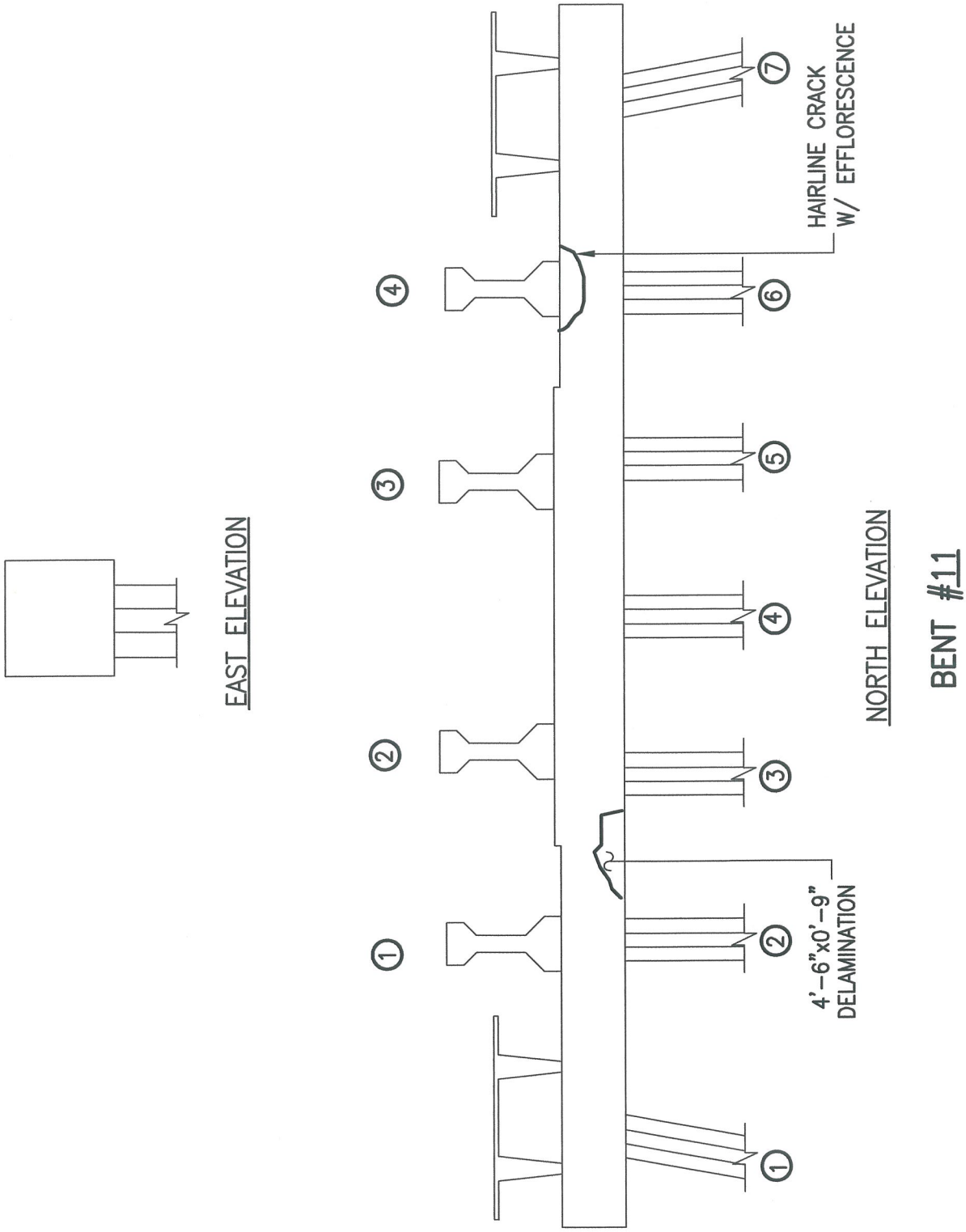

ALPHA & OMEGA GROUP
CIVIL & STRUCTURAL ENGINEERS
4911 Green Road Suite 107 Raleigh, NC 27616
Phone 919 981 0310 Fax 919 981 0451
Email info@aogroup.com www.aogroup.com

BRIDGE NO:	270011		
COUNTY:	DARE		
PREPARED BY:	OHS	CHECKED BY:	TGZ
SCALE:	NTS		
DATE:	6/20/06	SHT 167 OF 1347	

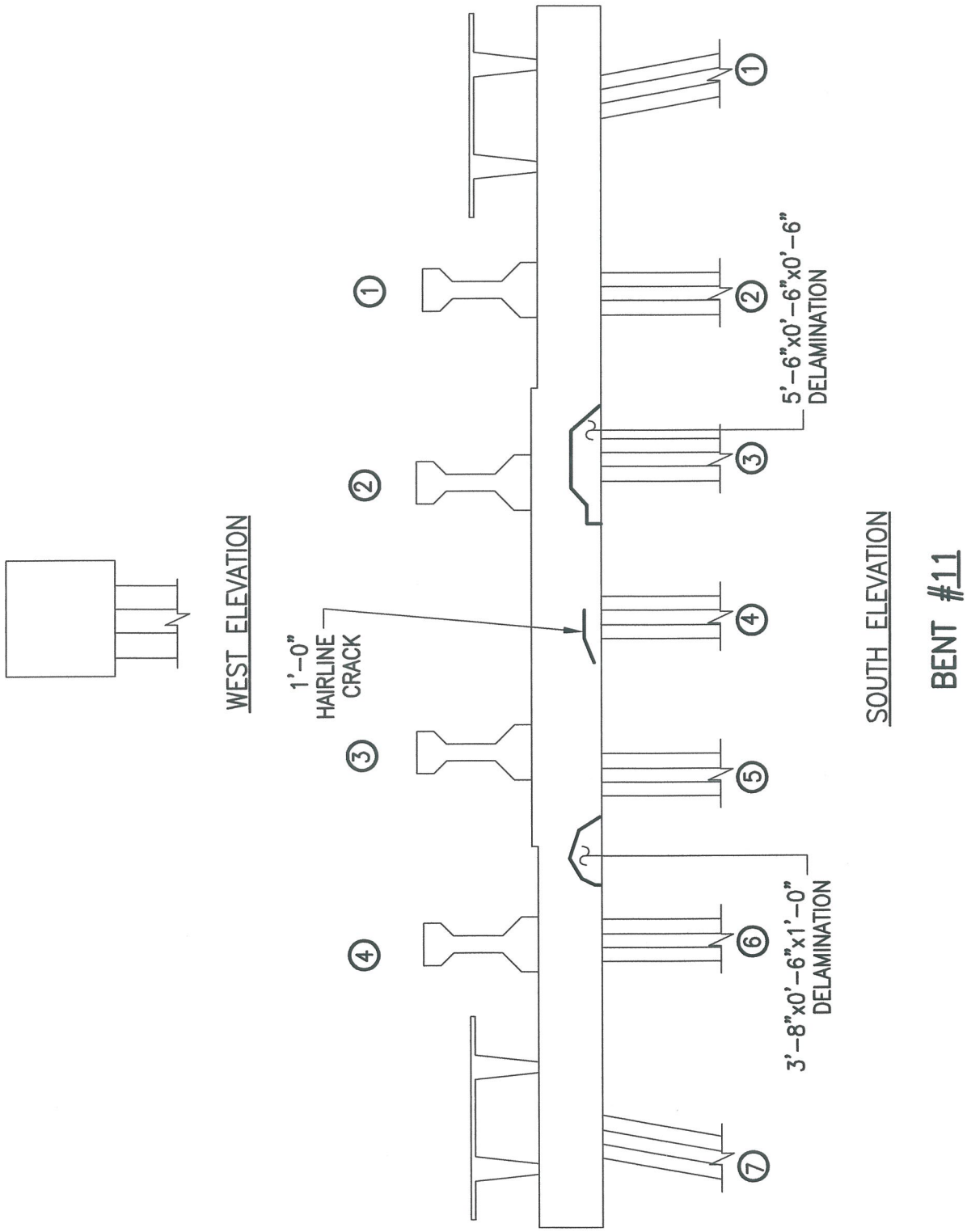

ALPHA & OMEGA GROUP
CIVIL & STRUCTURAL ENGINEERS
4911 Green Road Suite 107 Raleigh, NC 27616
Phone 919 981 0310 Fax 919 981 0451
Email info@aogroup.com www.aogroup.com

BRIDGE NO:	270011		
COUNTY:	DARE		
PREPARED BY:	OHS	CHECKED BY:	TGZ
SCALE:	NTS		
DATE:	6/20/06	SHT 169 OF 1347	

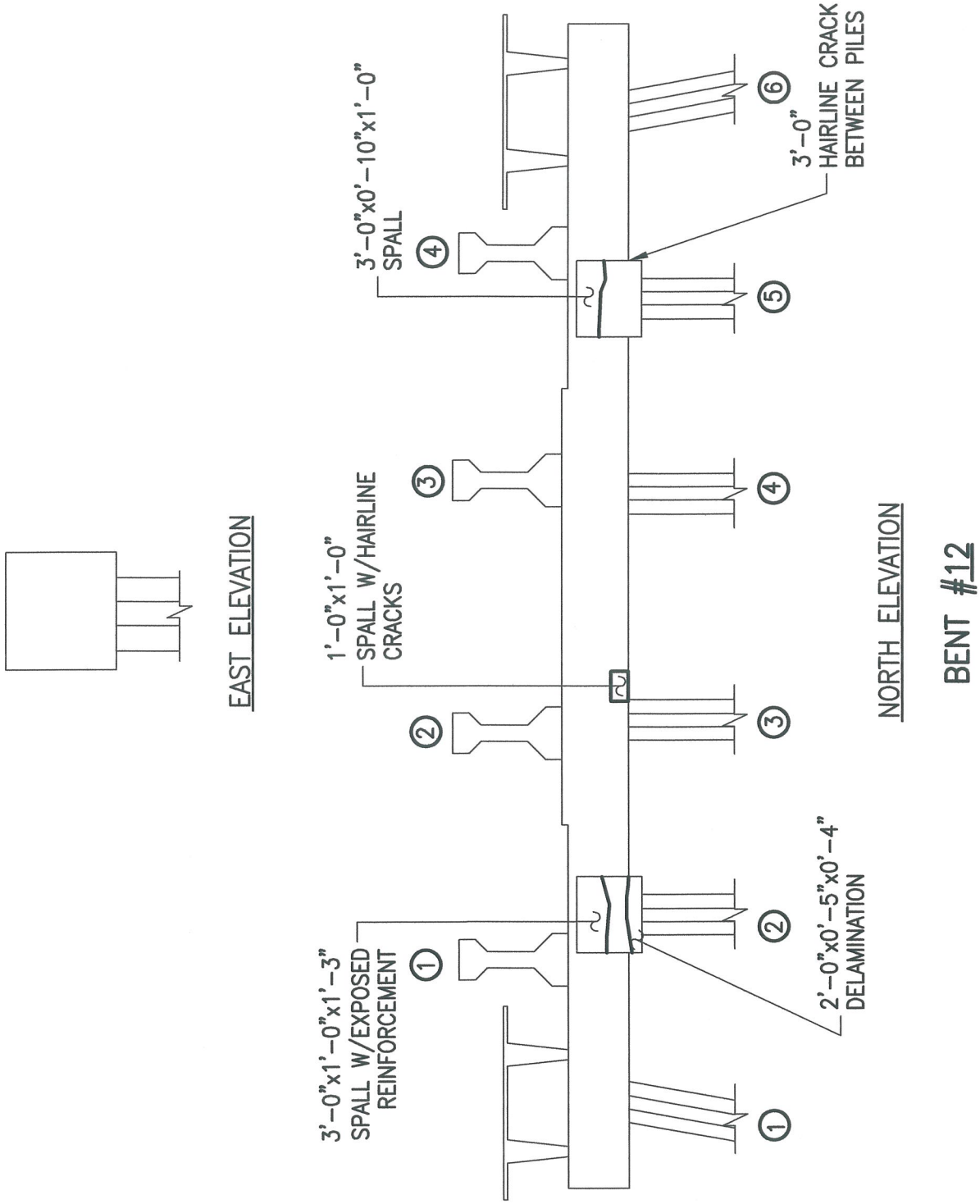

ALPHA & OMEGA GROUP
CIVIL & STRUCTURAL ENGINEERS
4911 Green Road Suite 107 Raleigh, NC 27616
Phone 919 981 0310 Fax 919 981 0451
Email info@aogroup.com www.aogroup.com

BRIDGE NO:	270011		
COUNTY:	DARE		
PREPARED BY:	OHS	CHECKED BY:	TGZ
SCALE:	NTS		
DATE:	6/20/06	SHT 172 OF 1347	

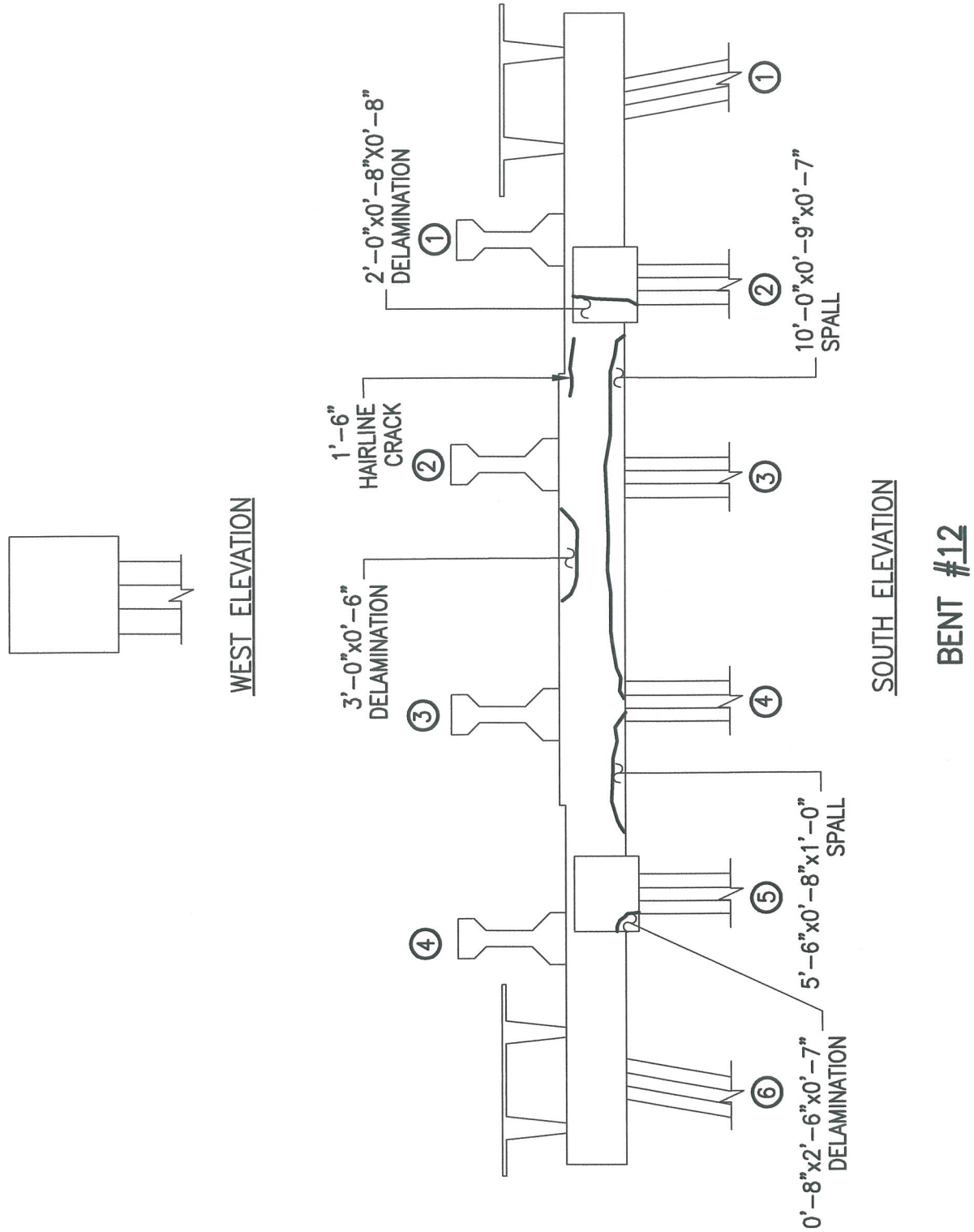

ALPHA & OMEGA GROUP
CIVIL & STRUCTURAL ENGINEERS
4911 Green Road Suite 107 Raleigh, NC 27616
Phone 919 981 0310 Fax 919 981 0451
Email info@aogroup.com www.aogroup.com

BRIDGE NO:	270011		
COUNTY:	DARE		
PREPARED BY:	OHS	CHECKED BY:	TGZ
SCALE:	NTS		
DATE:	6/20/06	SHT 174 OF 1347	

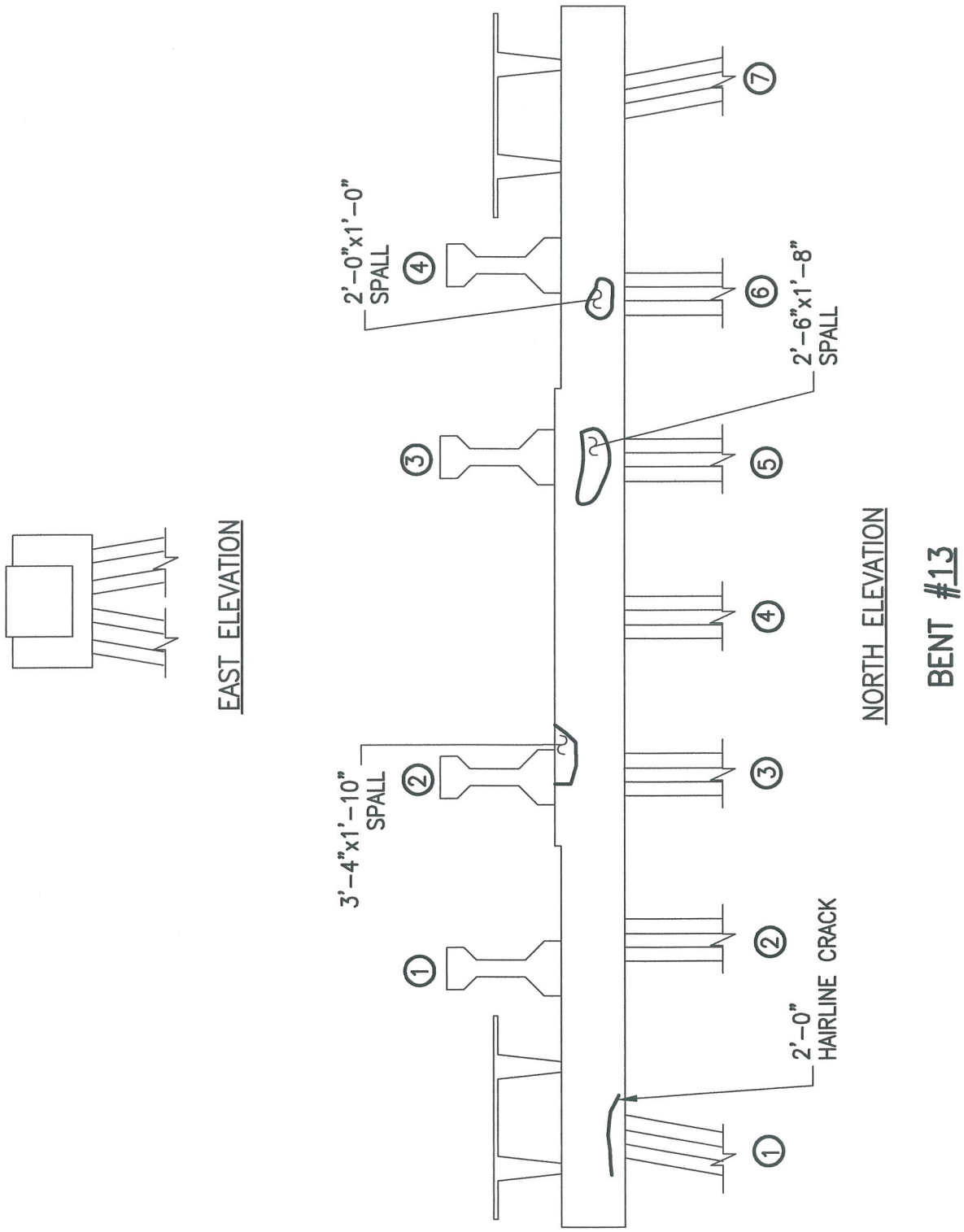

ALPHA & OMEGA GROUP
CIVIL & STRUCTURAL ENGINEERS
4911 Green Road Suite 107 Raleigh, NC 27616
Phone 919 981 0310 Fax 919 981 0451
Email info@aogroup.com www.aogroup.com

BRIDGE NO:	270011		
COUNTY:	DARE		
PREPARED BY:	EWL	CHECKED BY:	TGZ
SCALE:	NTS		
DATE:	6/20/06	SHT 177 OF 1347	

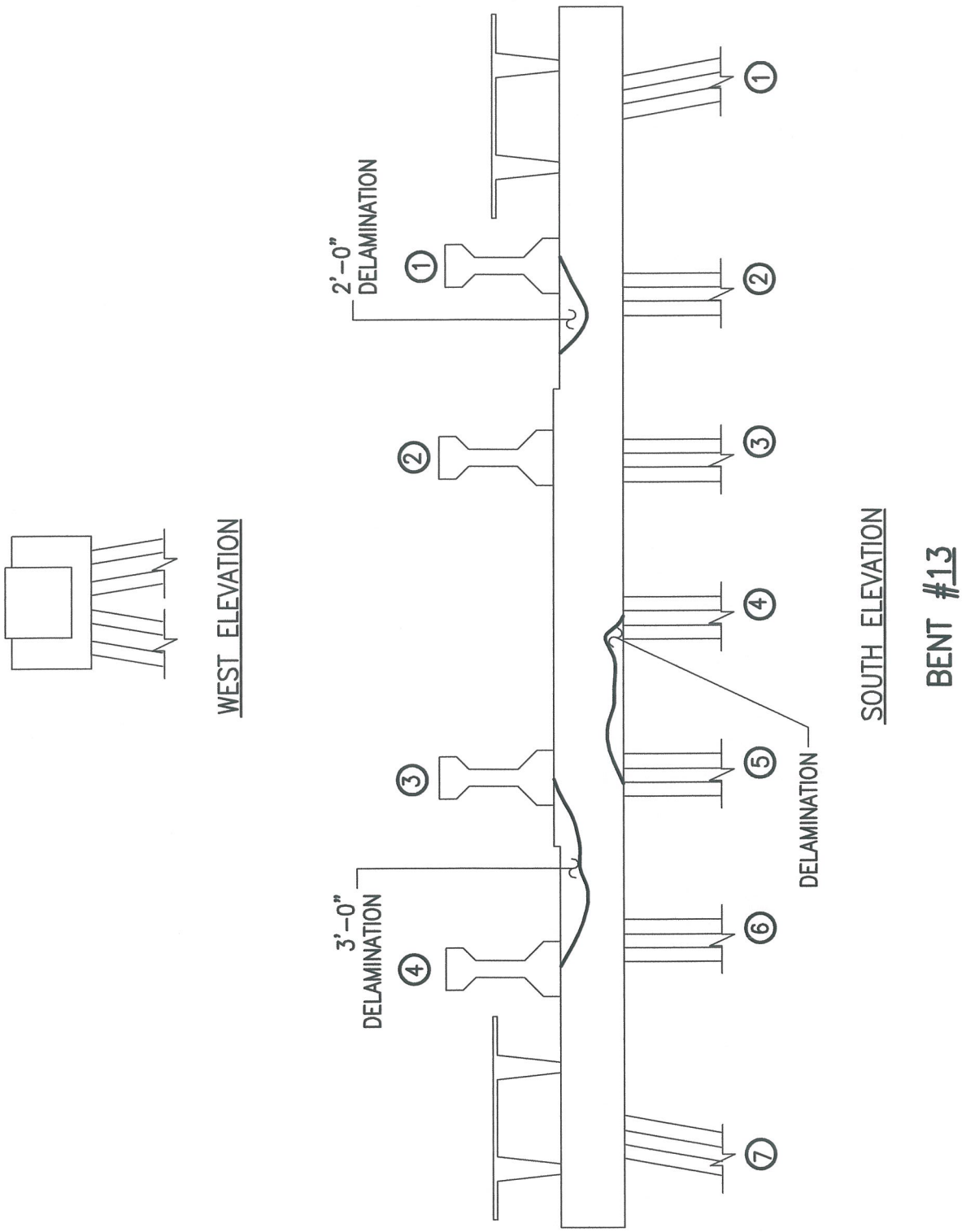

ALPHA & OMEGA GROUP
CIVIL & STRUCTURAL ENGINEERS
4911 Green Road Suite 107 Raleigh, NC 27616
Phone 919 981 0310 Fax 919 981 0451
Email info@aogroup.com www.aogroup.com

BRIDGE NO:	270011		
COUNTY:	DARE		
PREPARED BY:	EWL	CHECKED BY:	TGZ
SCALE:	NTS		
DATE:	6/20/06	SHT 180 OF 1347	

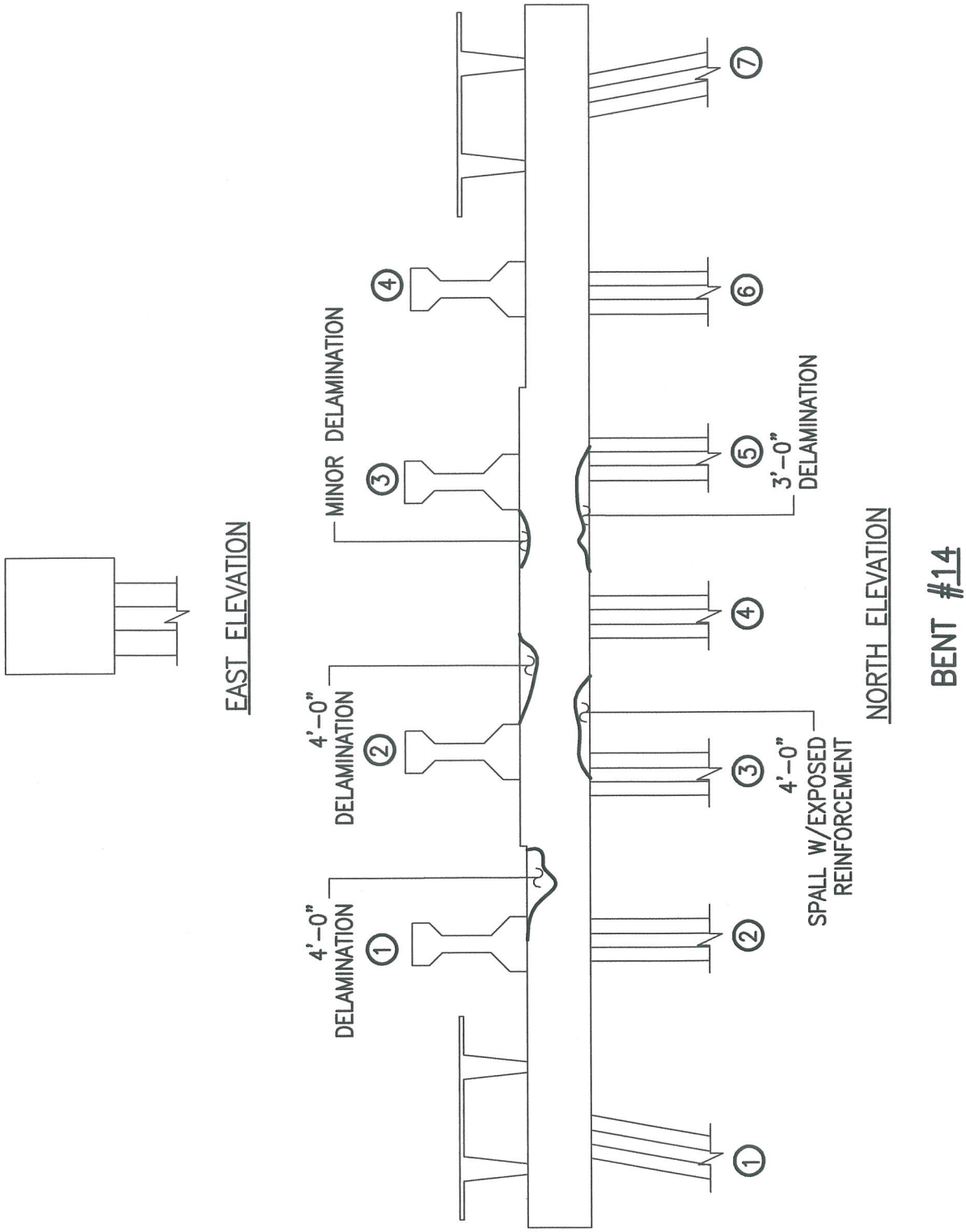

ALPHA & OMEGA GROUP
CIVIL & STRUCTURAL ENGINEERS
4911 Green Road Suite 107 Raleigh, NC 27616
Phone 919 981 0310 Fax 919 981 0451
Email info@aogroup.com www.aogroup.com

BRIDGE NO:	270011		
COUNTY:	DARE		
PREPARED BY:	EWL	CHECKED BY:	TGZ
SCALE:	NTS		
DATE:	6/20/06	SHT 183 OF 1347	

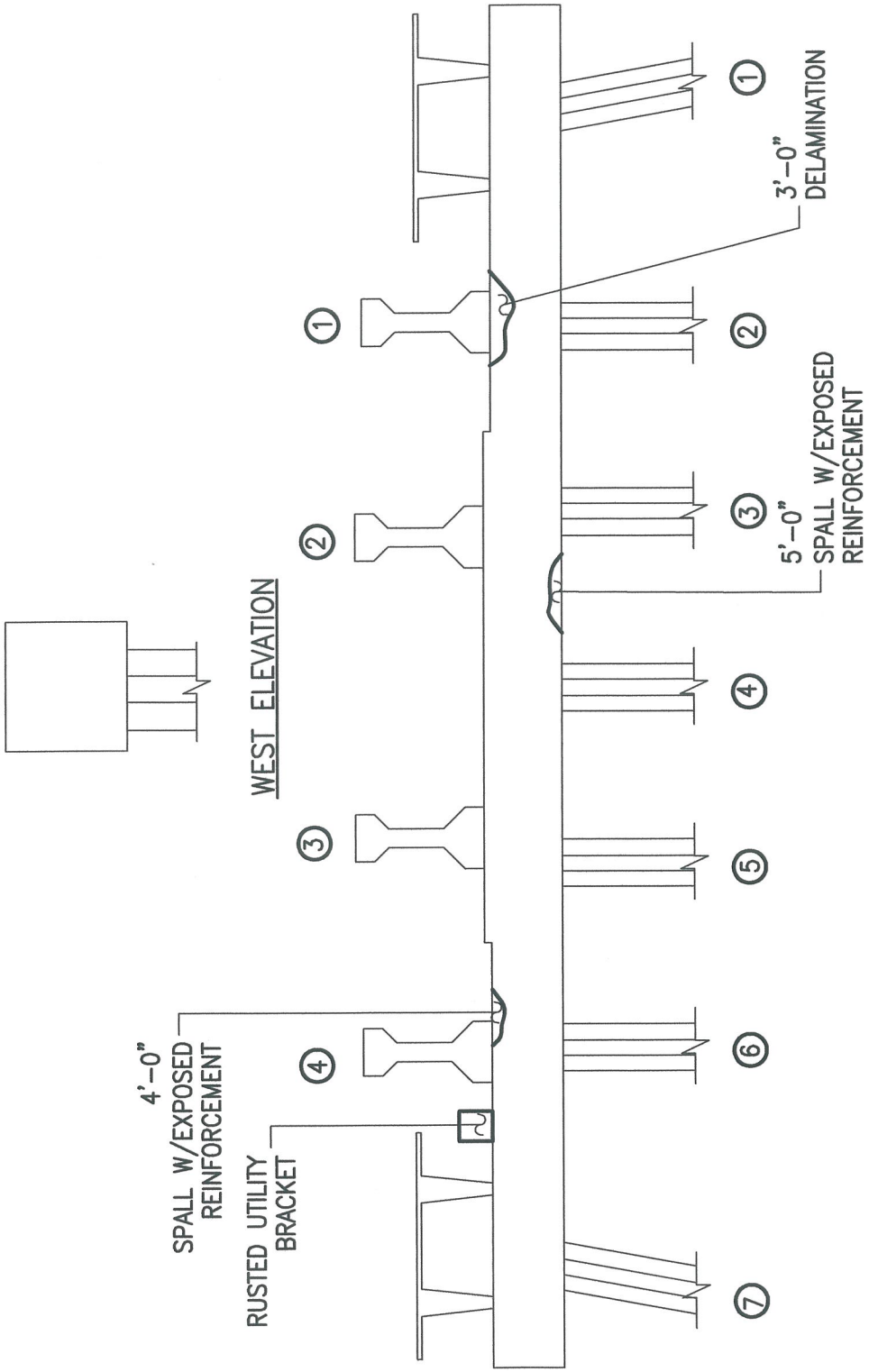

ALPHA & OMEGA GROUP
CIVIL & STRUCTURAL ENGINEERS
4911 Green Road Suite 107 Raleigh, NC 27616
Phone 919 981 0310 Fax 919 981 0451
Email info@aogroup.com www.aogroup.com

BRIDGE NO:	270011		
COUNTY:	DARE		
PREPARED BY:	EWL	CHECKED BY:	TGZ
SCALE:	NTS		
DATE:	6/20/06	SHT 186 OF 1347	

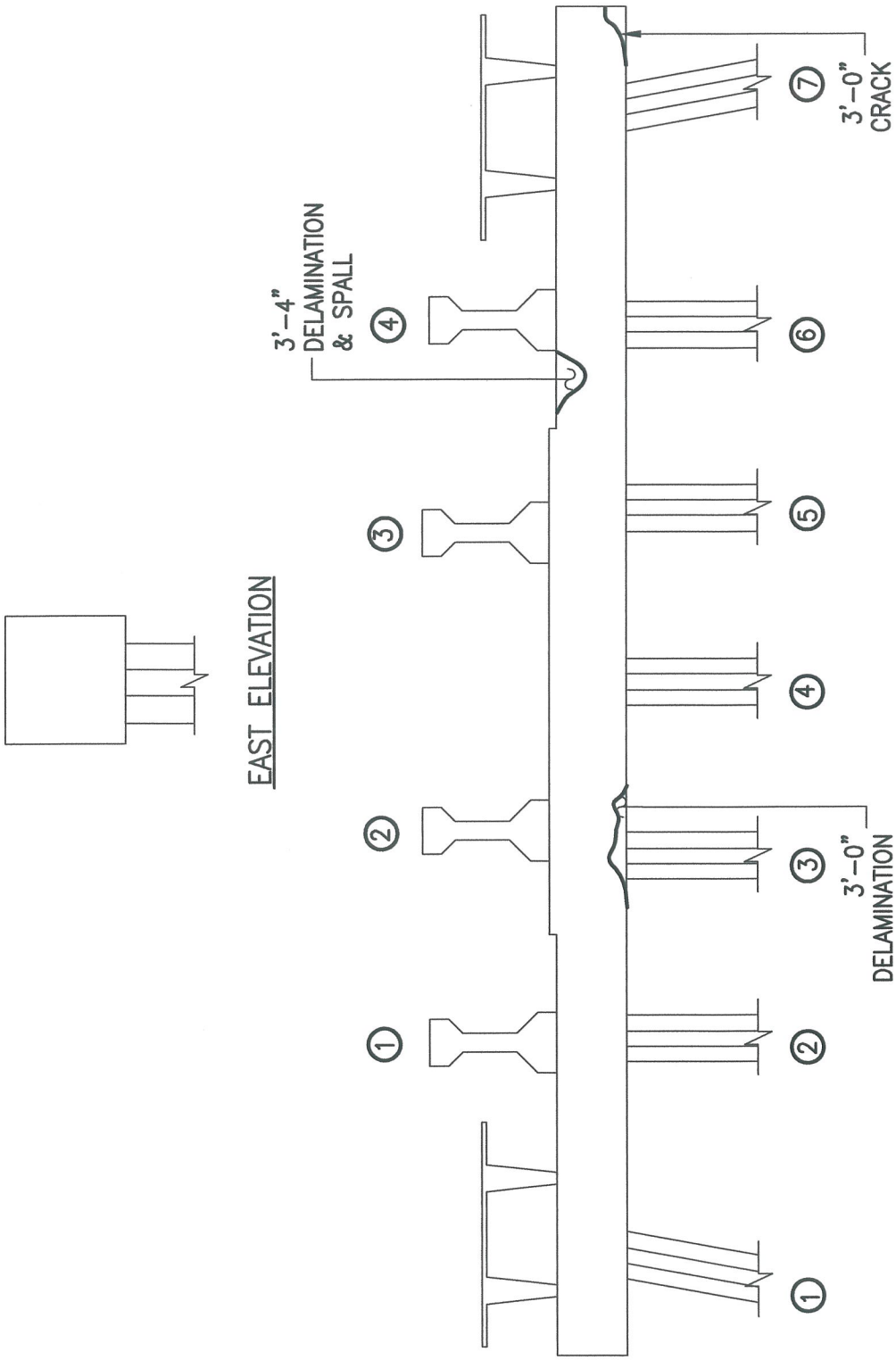

ALPHA & OMEGA GROUP
CIVIL & STRUCTURAL ENGINEERS
4911 Green Road Suite 107 Raleigh, NC 27616
Phone 919 981 0310 Fax 919 981 0451
Email info@aogroup.com www.aogroup.com

BRIDGE NO:	270011		
COUNTY:	DARE		
PREPARED BY:	EWL	CHECKED BY:	TGZ
SCALE:	NTS		
DATE:	6/20/06	SHT 189 OF 1347	

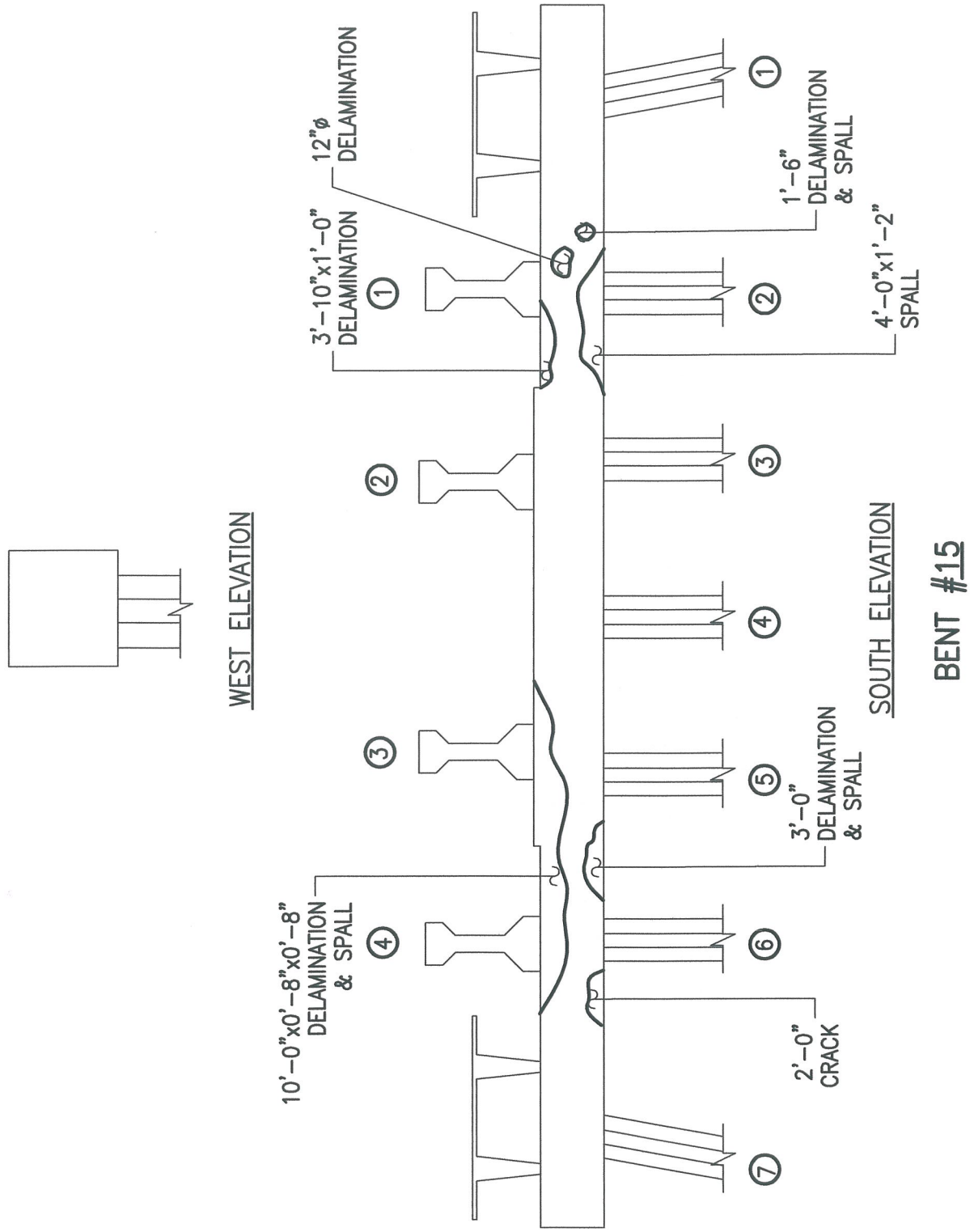

ALPHA & OMEGA GROUP
CIVIL & STRUCTURAL ENGINEERS
4911 Green Road Suite 107 Raleigh, NC 27616
Phone 919 981 0310 Fax 919 981 0451
Email info@aogroup.com www.aogroup.com

BRIDGE NO:	270011		
COUNTY:	DARE		
PREPARED BY:	EWL	CHECKED BY:	TGZ
SCALE:	NTS		
DATE:	6/20/06	SHT 192 OF 1347	

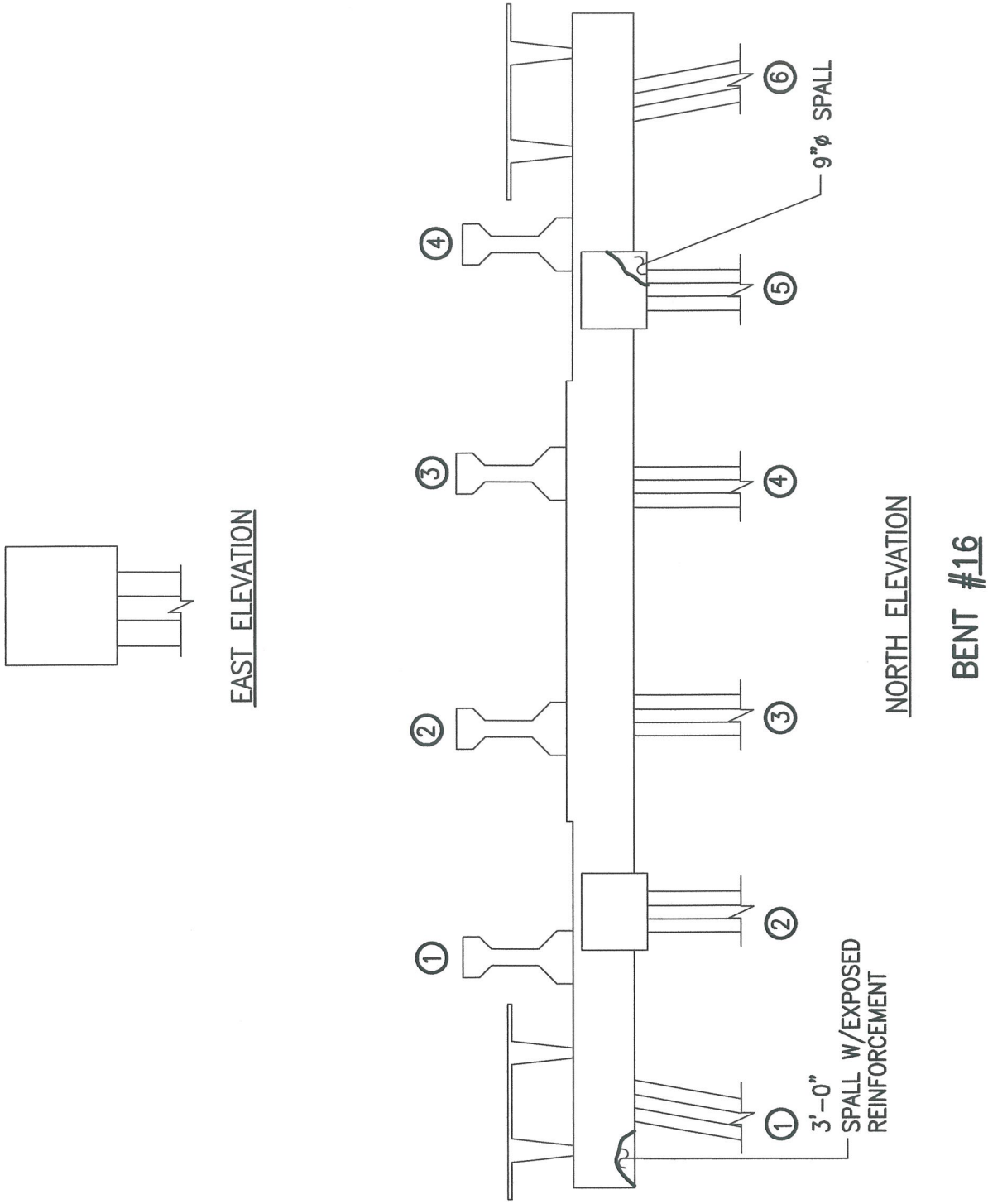

ALPHA & OMEGA GROUP
CIVIL & STRUCTURAL ENGINEERS
4911 Green Road Suite 107 Raleigh, NC 27616
Phone 919 981 0310 Fax 919 981 0451
Email info@aogroup.com www.aogroup.com

BRIDGE NO:	270011		
COUNTY:	DARE		
PREPARED BY:	OHS	CHECKED BY:	TGZ
SCALE:	NTS		
DATE:	6/20/06	SHT 195 OF 1347	

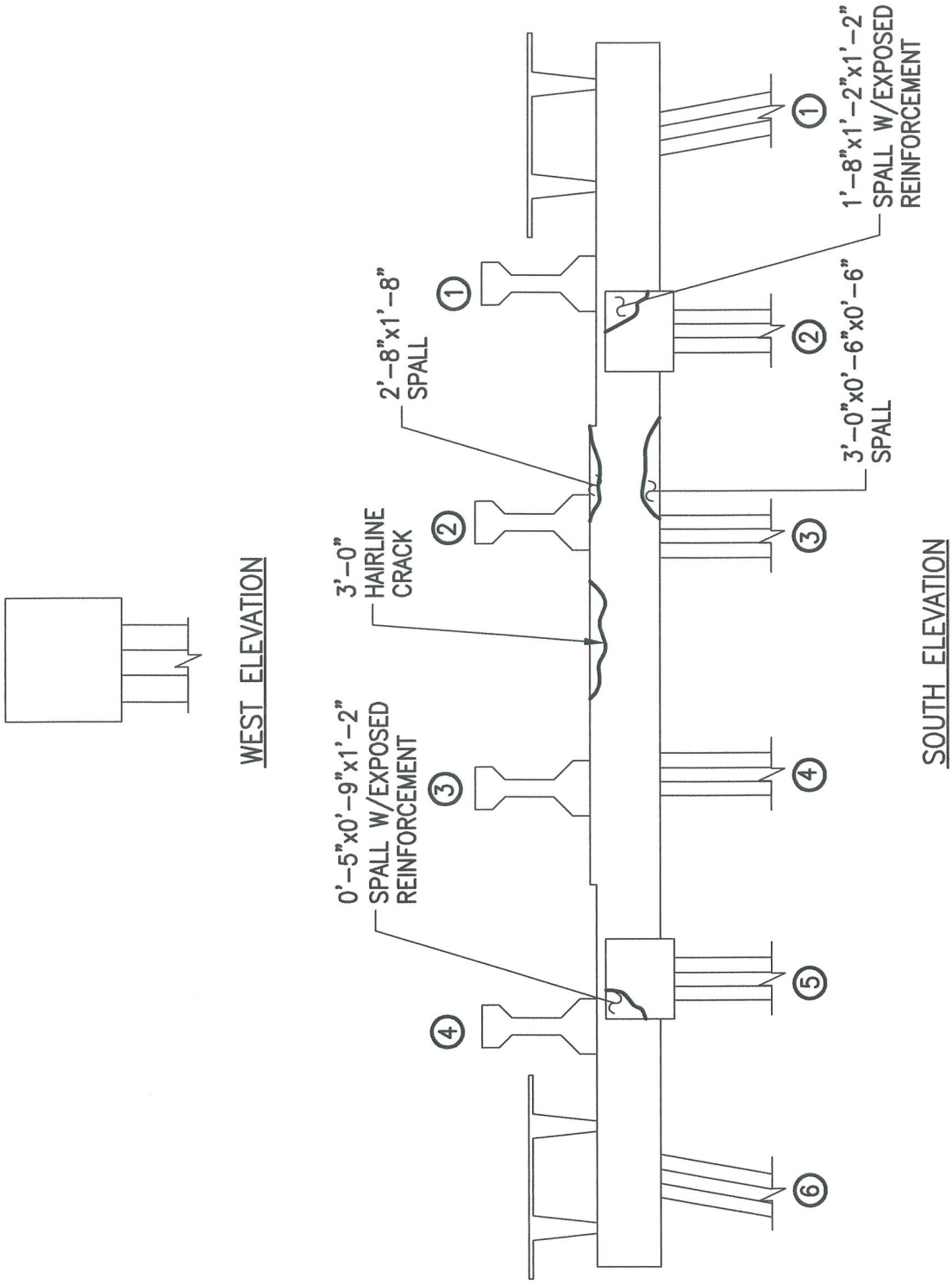

ALPHA & OMEGA GROUP
CIVIL & STRUCTURAL ENGINEERS
4911 Green Road Suite 107 Raleigh, NC 27616
Phone 919 981 0310 Fax 919 981 0451
Email info@aogroup.com www.aogroup.com

BRIDGE NO:	270011		
COUNTY:	DARE		
PREPARED BY:	OHS	CHECKED BY:	TGZ
SCALE:	NTS		
DATE:	6/20/06	SHT 198 OF 1347	

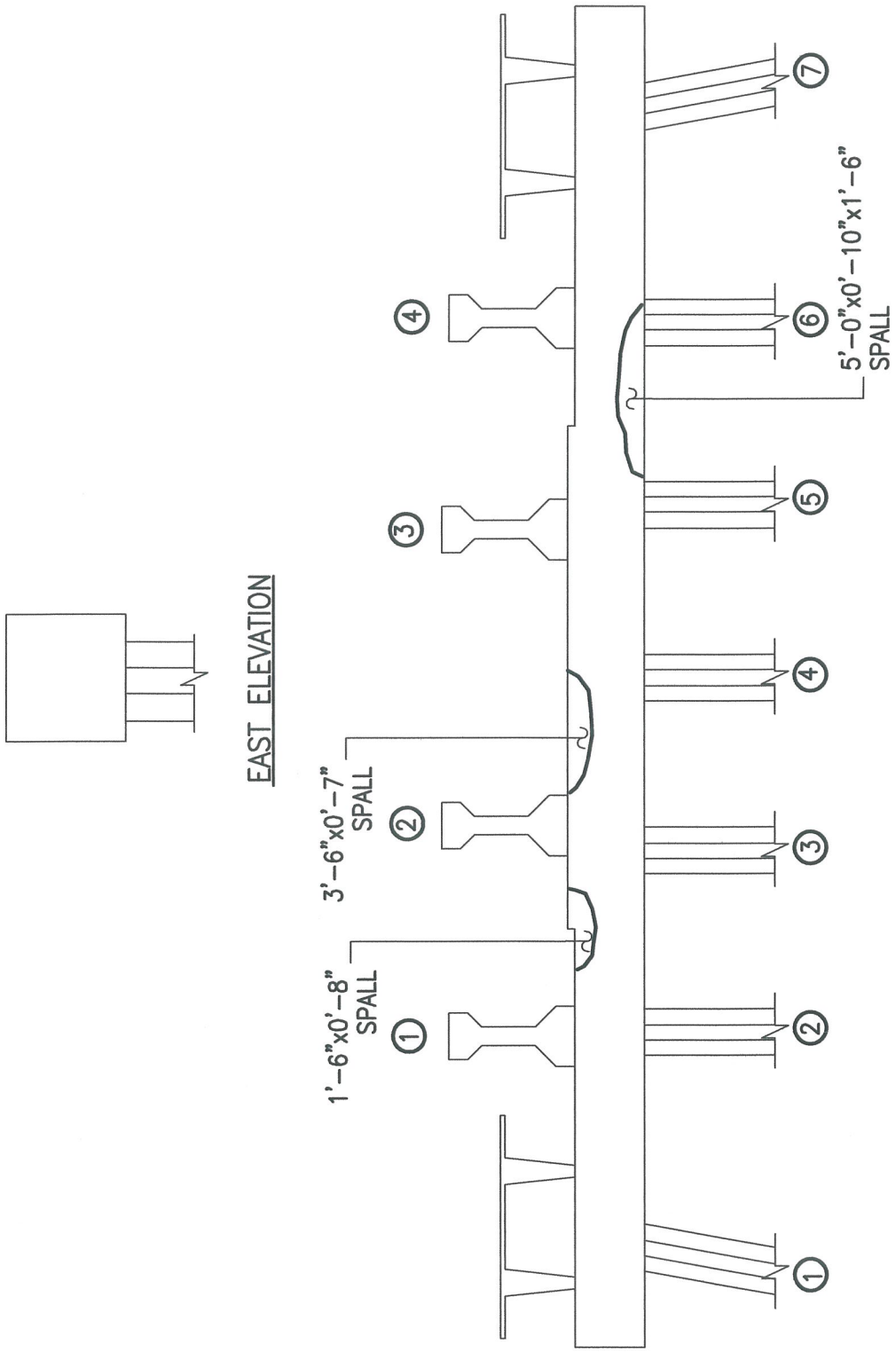

ALPHA & OMEGA GROUP
CIVIL & STRUCTURAL ENGINEERS
4911 Green Road Suite 107 Raleigh, NC 27616
Phone 919 981 0310 Fax 919 981 0451
Email info@aogroup.com www.aogroup.com

BRIDGE NO:	270011		
COUNTY:	DARE		
PREPARED BY:	OHS	CHECKED BY:	TGZ
SCALE:	NTS		
DATE:	6/20/06	SHT 201 OF 1347	

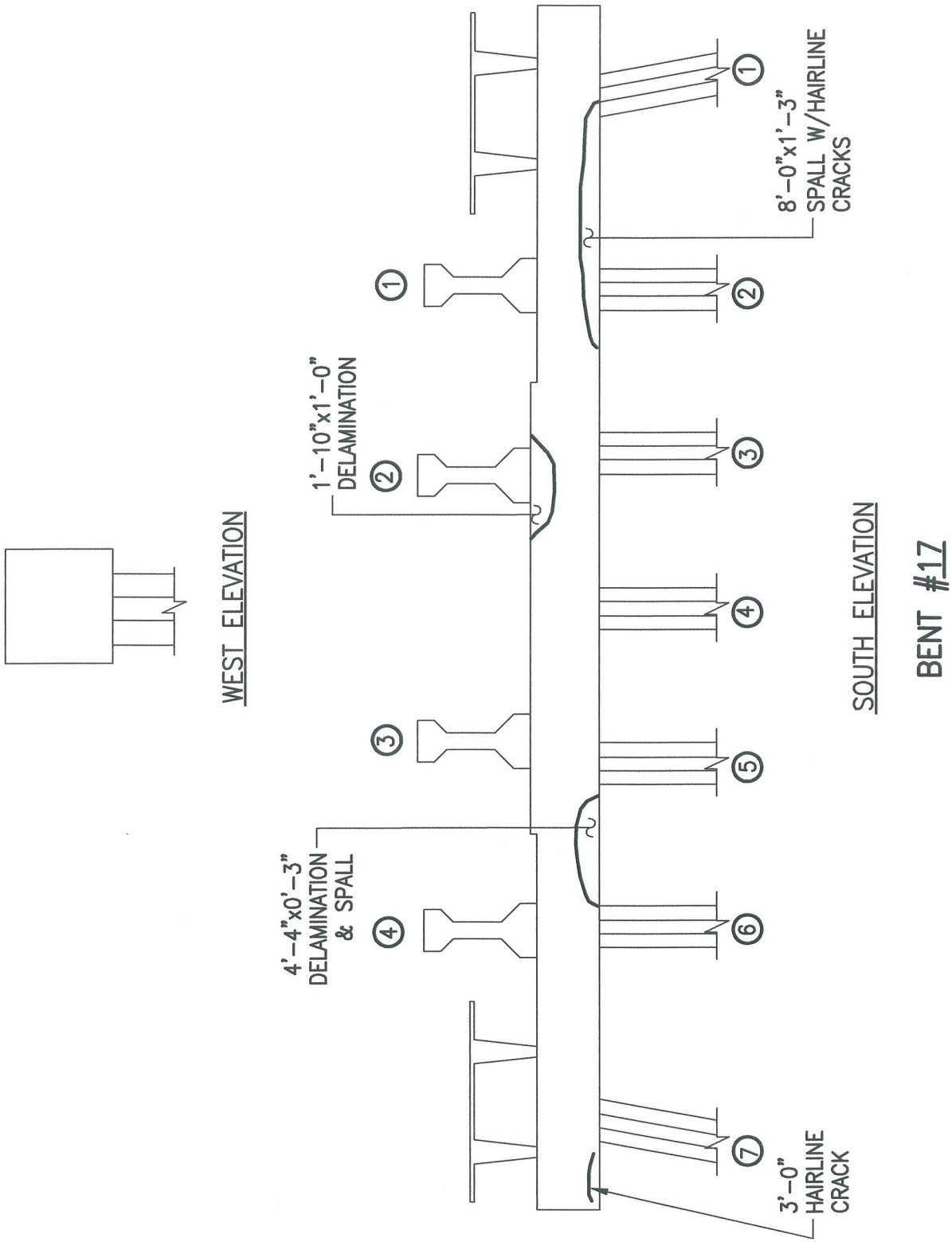

ALPHA & OMEGA GROUP
CIVIL & STRUCTURAL ENGINEERS
4911 Green Road Suite 107 Raleigh, NC 27616
Phone 919 981 0310 Fax 919 981 0451
Email info@aogroup.com www.aogroup.com

BRIDGE NO:	270011		
COUNTY:	DARE		
PREPARED BY:	OHS	CHECKED BY:	TGZ
SCALE:	NTS		
DATE:	6/20/06	SHT 204 OF 1347	

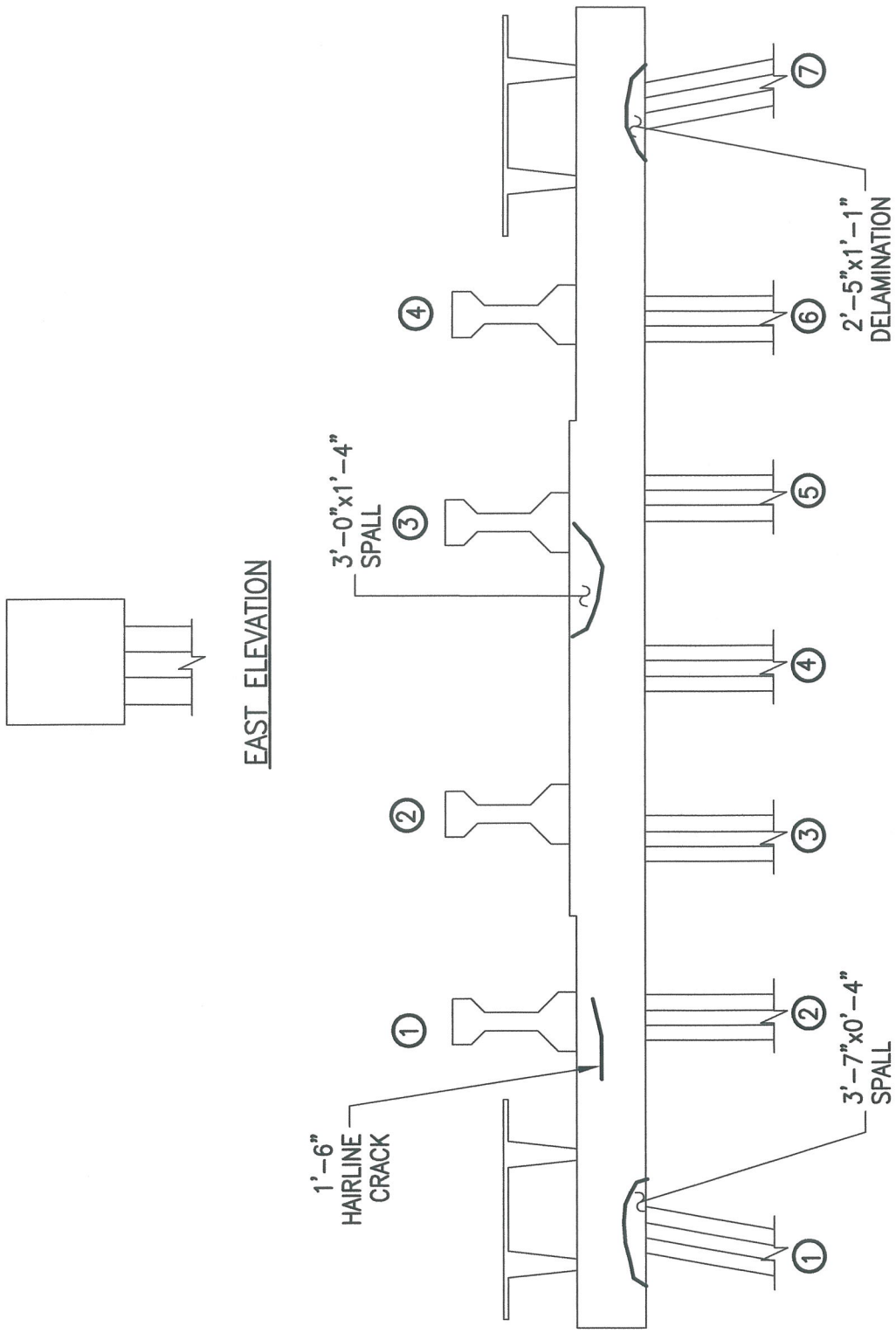

ALPHA & OMEGA GROUP
CIVIL & STRUCTURAL ENGINEERS
4911 Green Road Suite 107 Raleigh, NC 27616
Phone 919 981 0310 Fax 919 981 0451
Email info@aogroup.com www.aogroup.com

BRIDGE NO:	270011		
COUNTY:	DARE		
PREPARED BY:	OHS	CHECKED BY:	TGZ
SCALE:	NTS		
DATE:	6/20/06	SHT 207 OF 1347	

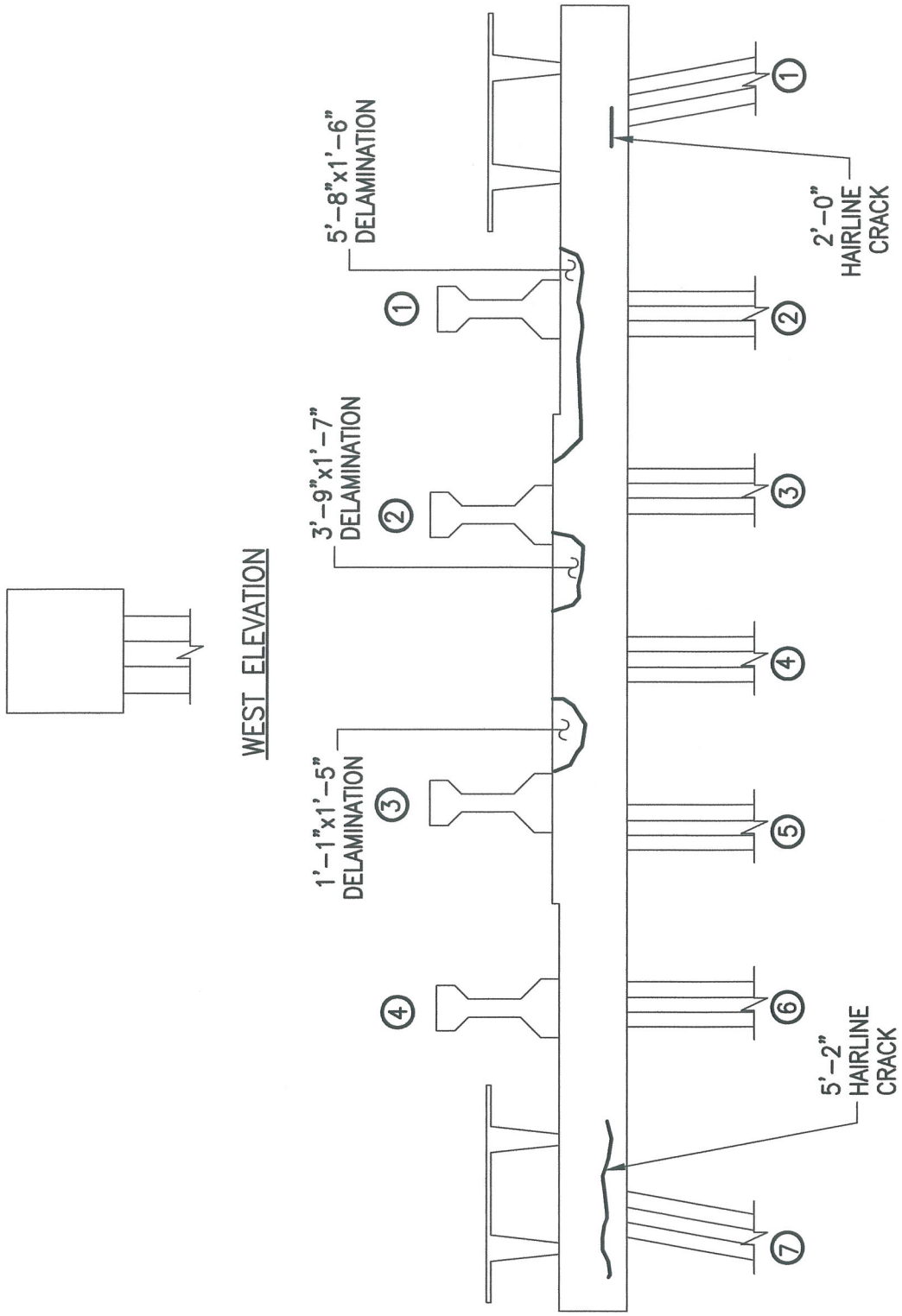

ALPHA & OMEGA GROUP
CIVIL & STRUCTURAL ENGINEERS
4911 Green Road Suite 107 Raleigh, NC 27616
Phone 919 981 0310 Fax 919 981 0451
Email info@aogroup.com www.aogroup.com

BRIDGE NO:	270011		
COUNTY:	DARE		
PREPARED BY:	OHS	CHECKED BY:	TGZ
SCALE:	NTS		
DATE:	6/20/06	SHT 209 OF 1347	

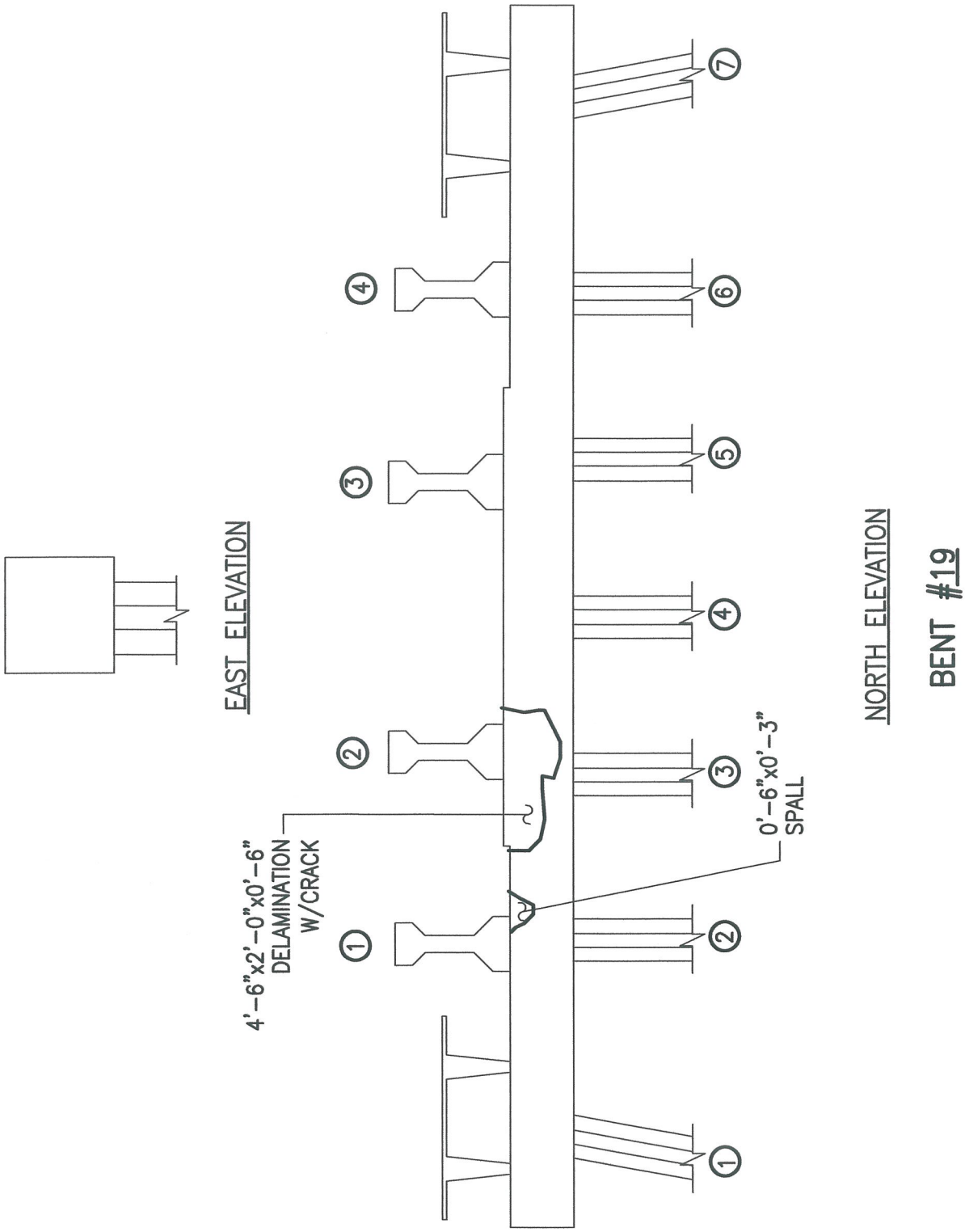

ALPHA & OMEGA GROUP
CIVIL & STRUCTURAL ENGINEERS
4911 Green Road Suite 107 Raleigh, NC 27616
Phone 919 981 0310 Fax 919 981 0451
Email info@aogroup.com www.aogroup.com

BRIDGE NO:	270011		
COUNTY:	DARE		
PREPARED BY:	OHS	CHECKED BY:	TGZ
SCALE:	NTS		
DATE:	6/20/06	SHT 212 OF 1347	

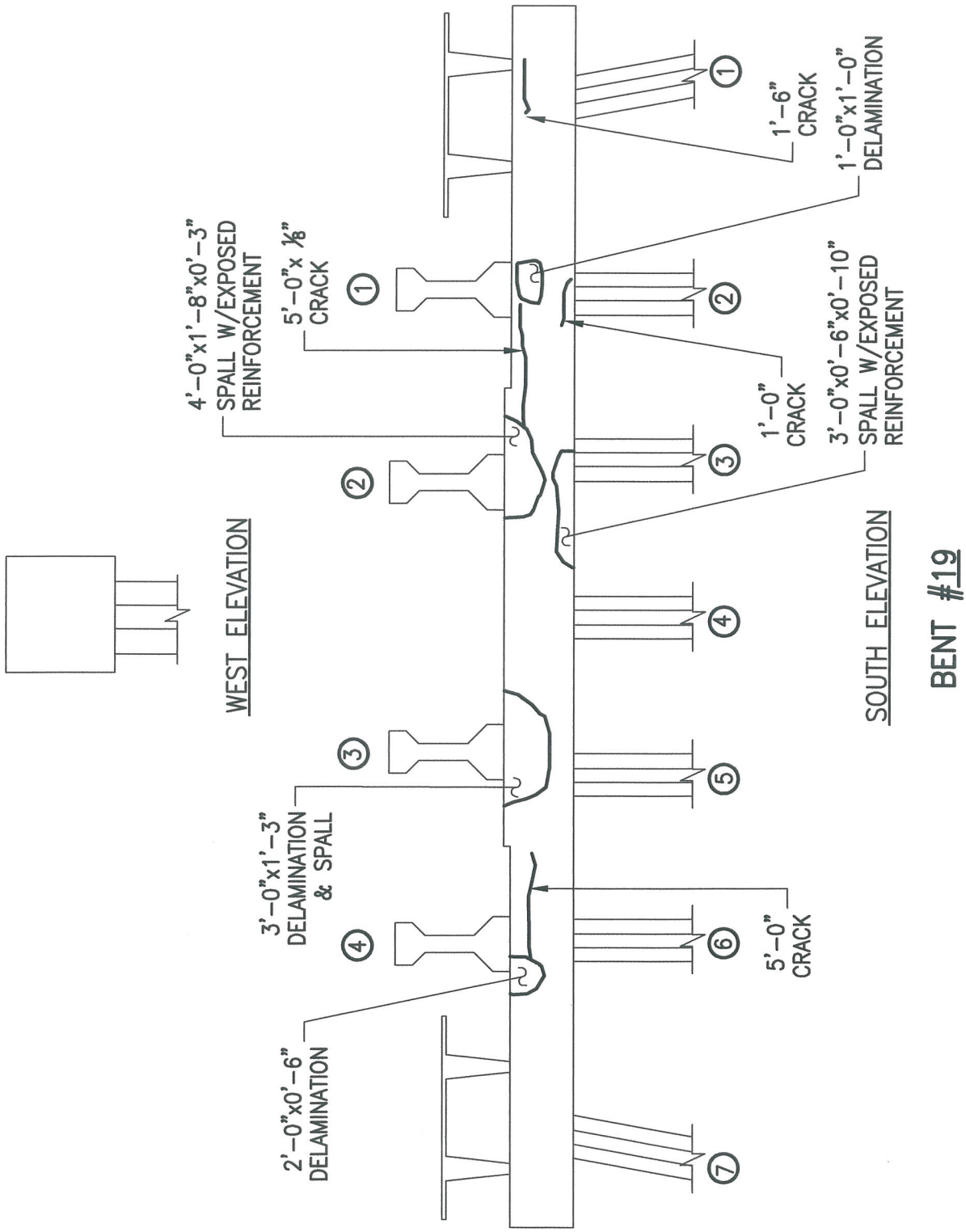

ALPHA & OMEGA GROUP
CIVIL & STRUCTURAL ENGINEERS
4911 Green Road Suite 107 Raleigh, NC 27616
Phone 919 981 0310 Fax 919 981 0451
Email info@aogroup.com www.aogroup.com

BRIDGE NO:	270011		
COUNTY:	DARE		
PREPARED BY:	OHS	CHECKED BY:	TGZ
SCALE:	NTS		
DATE:	6/20/06	SHT 215 OF 1347	

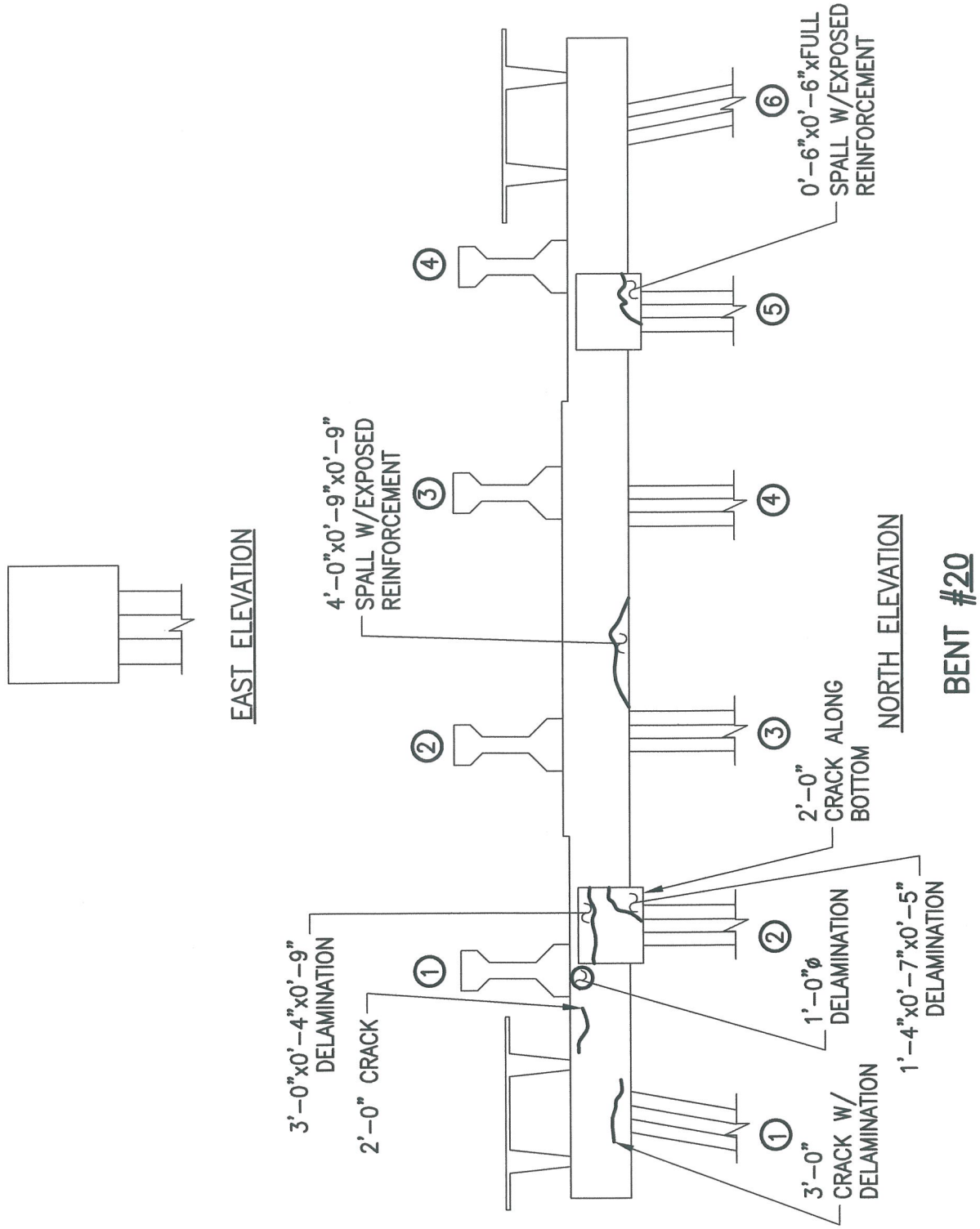

ALPHA & OMEGA GROUP
CIVIL & STRUCTURAL ENGINEERS

4911 Green Road Suite 107 Raleigh, NC 27616
Phone 919 981 0310 Fax 919 981 0451
Email info@aogroup.com www.aogroup.com

BRIDGE NO:	270011		
COUNTY:	DARE		
PREPARED BY:	OHS	CHECKED BY:	TGZ
SCALE:	NTS		
DATE:	6/20/06	SHT 218 OF 1347	

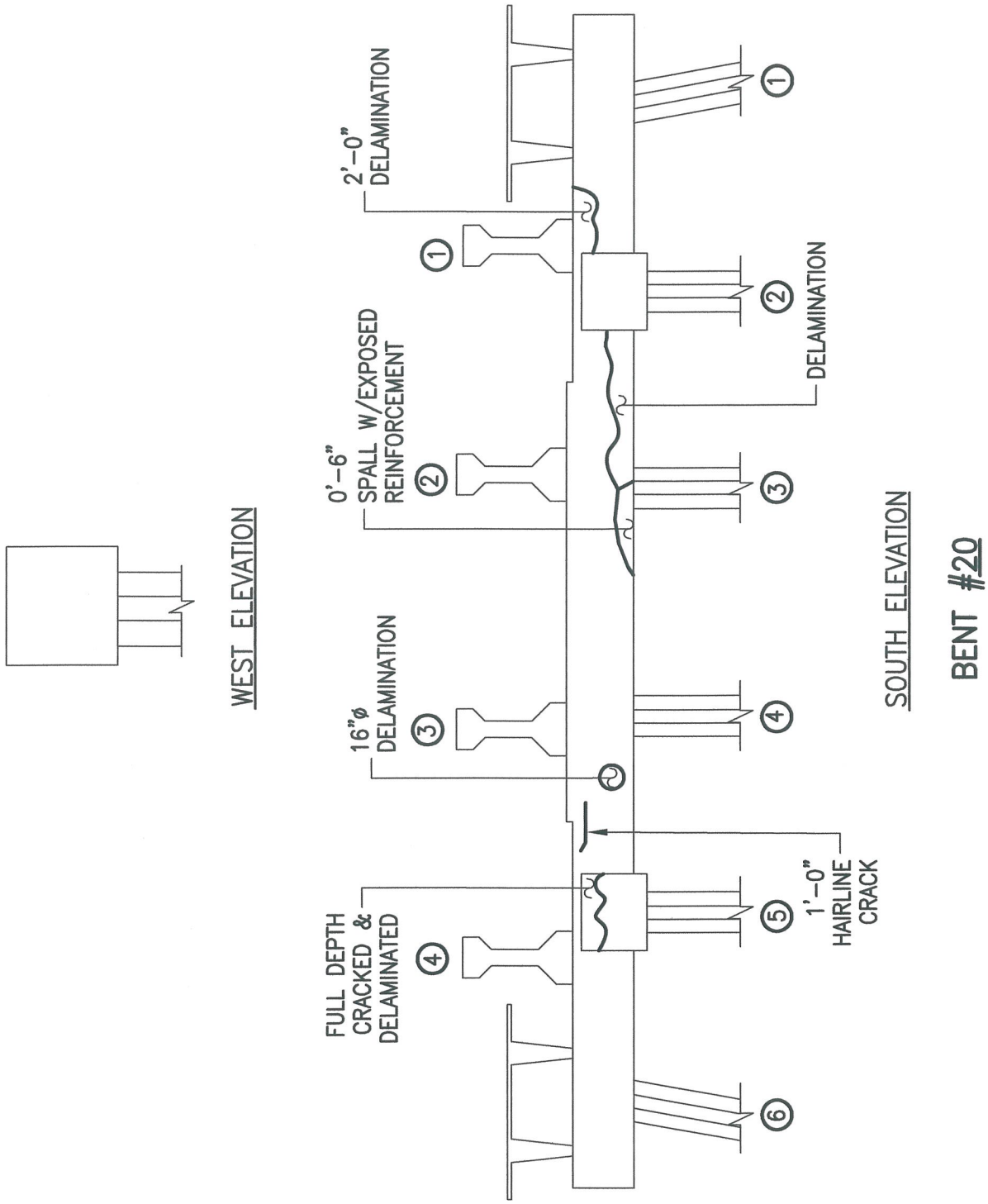

ALPHA & OMEGA GROUP
CIVIL & STRUCTURAL ENGINEERS
4911 Green Road Suite 107 Raleigh, NC 27616
Phone 919 981 0310 Fax 919 981 0451
Email info@aogroup.com www.aogroup.com

BRIDGE NO:	270011		
COUNTY:	DARE		
PREPARED BY:	OHS	CHECKED BY:	TGZ
SCALE:	NTS		
DATE:	6/20/06	SHT 221 OF 1347	

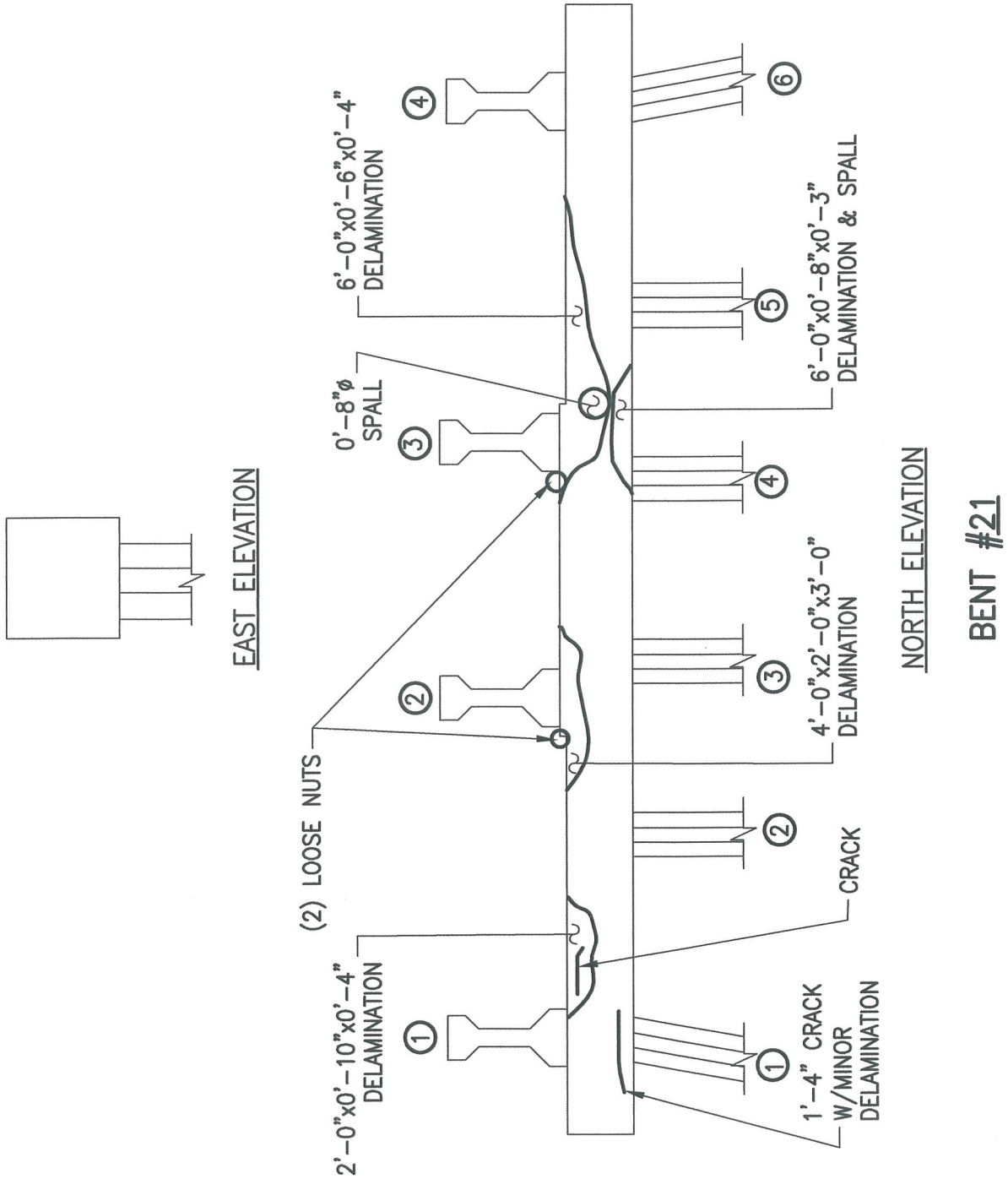

ALPHA & OMEGA GROUP
CIVIL & STRUCTURAL ENGINEERS
4911 Green Road Suite 107 Raleigh, NC 27616
Phone 919 981 0310 Fax 919 981 0451
Email info@aogroup.com www.aogroup.com

BRIDGE NO:	270011		
COUNTY:	DARE		
PREPARED BY:	OHS	CHECKED BY:	TGZ
SCALE:	NTS		
DATE:	6/20/06	SHT 224 OF 1347	

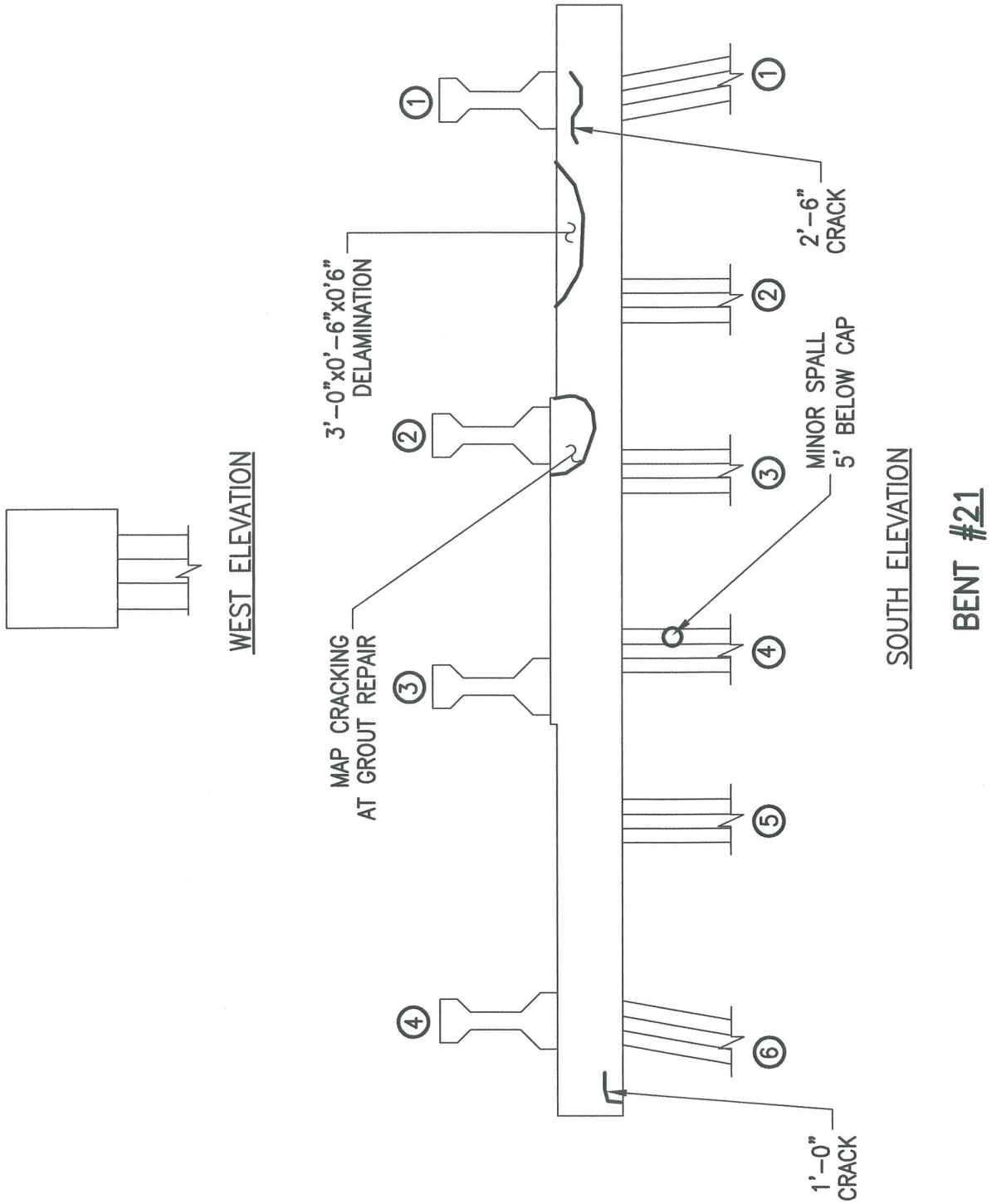

ALPHA & OMEGA GROUP
CIVIL & STRUCTURAL ENGINEERS
4911 Green Road Suite 107 Raleigh, NC 27616
Phone 919 981 0310 Fax 919 981 0451
Email info@aogroup.com www.aogroup.com

BRIDGE NO:	270011		
COUNTY:	DARE		
PREPARED BY:	OHS	CHECKED BY:	TGZ
SCALE:	NTS		
DATE:	6/20/06	SHT 227 OF 1347	

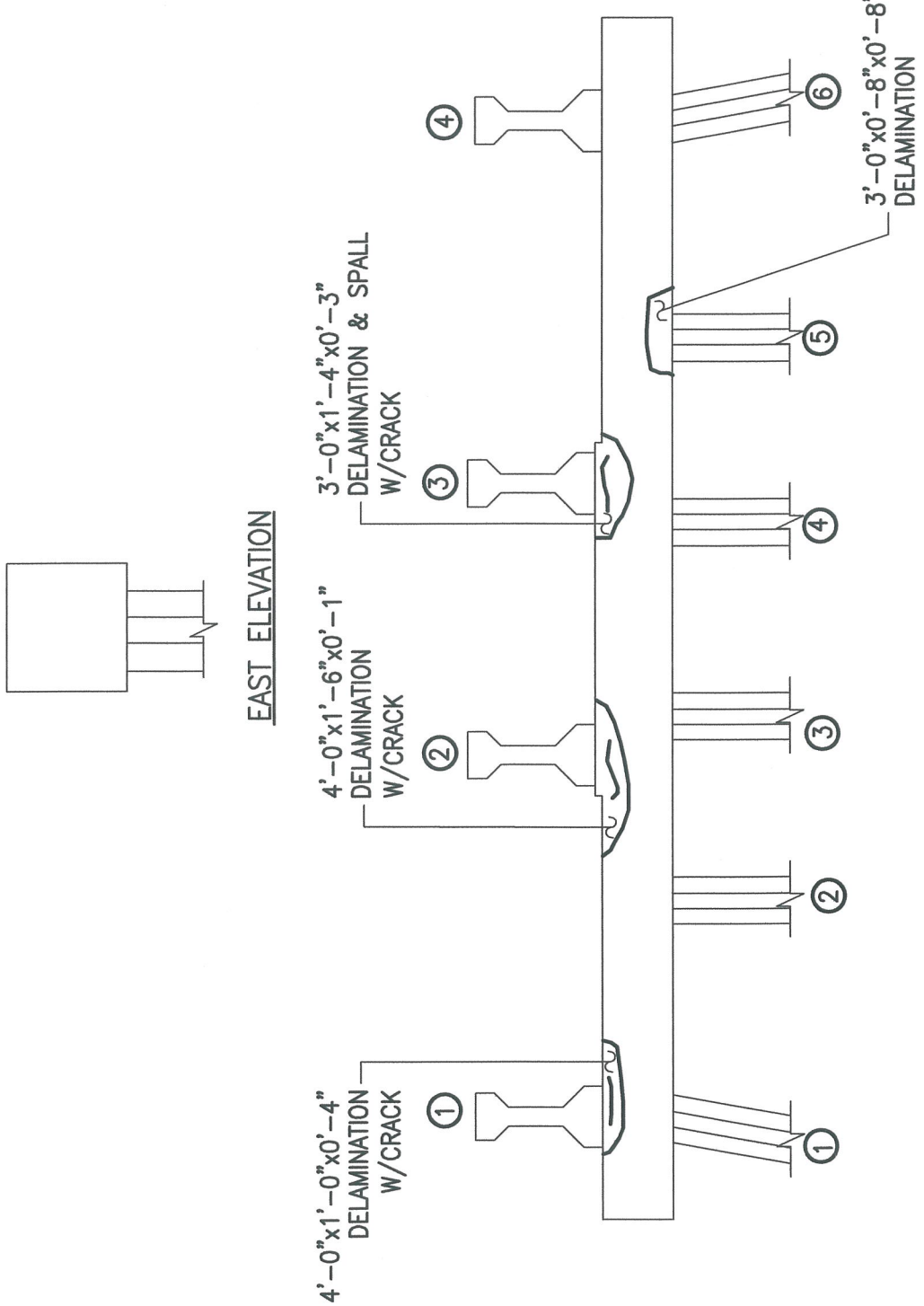

ALPHA & OMEGA GROUP
CIVIL & STRUCTURAL ENGINEERS
4911 Green Road Suite 107 Raleigh, NC 27616
Phone 919 981 0310 Fax 919 981 0451
Email info@aogroup.com www.aogroup.com

BRIDGE NO:	270011		
COUNTY:	DARE		
PREPARED BY:	OHS	CHECKED BY:	TGZ
SCALE:	NTS		
DATE:	6/20/06	SHT 230 OF 1347	

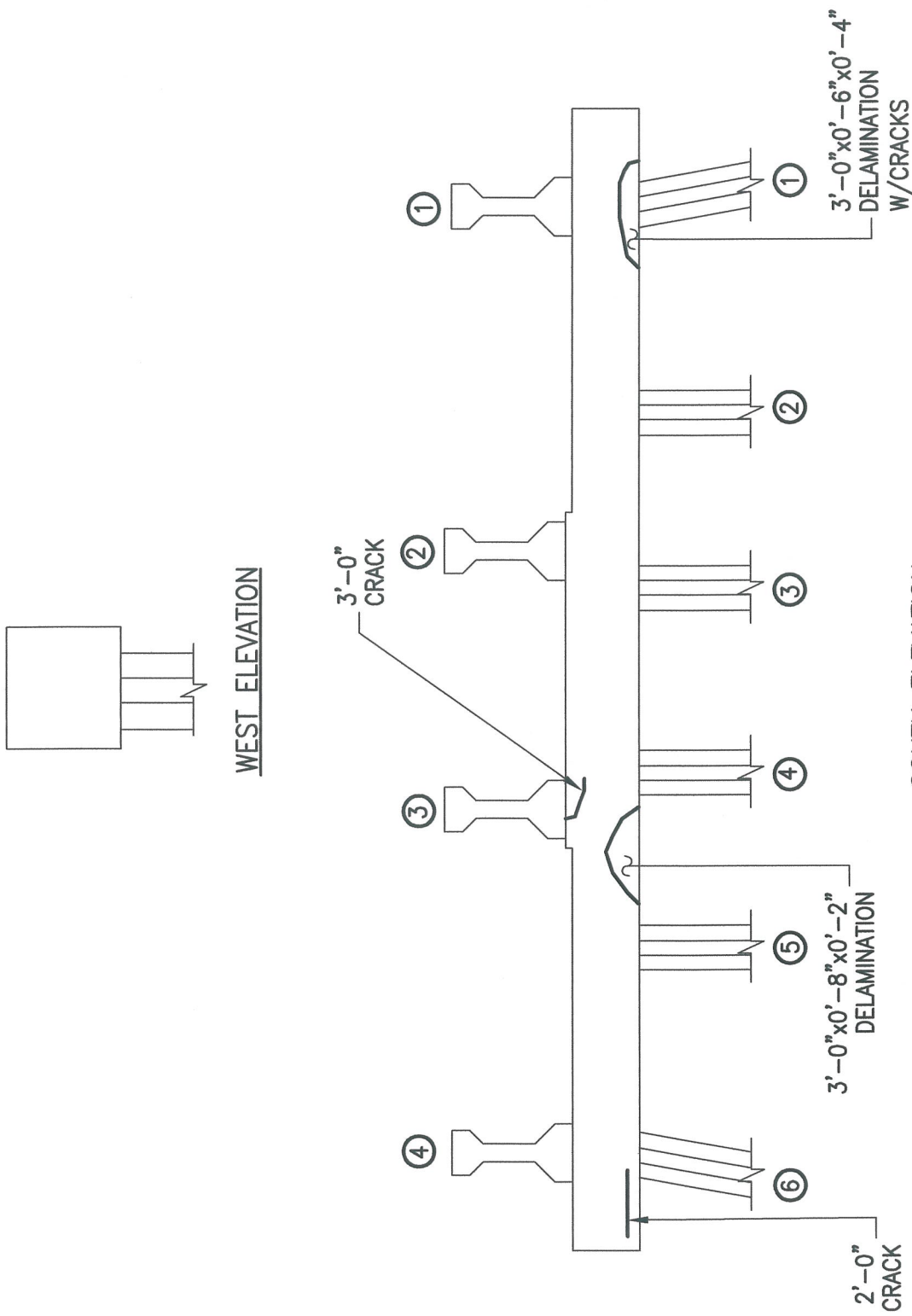

ALPHA & OMEGA GROUP
CIVIL & STRUCTURAL ENGINEERS
4911 Green Road Suite 107 Raleigh, NC 27616
Phone 919 981 0310 Fax 919 981 0451
Email info@aogroup.com www.aogroup.com

BRIDGE NO:	270011		
COUNTY:	DARE		
PREPARED BY:	OHS	CHECKED BY:	TGZ
SCALE:	NTS		
DATE:	6/20/06	SHT 232 OF 1347	

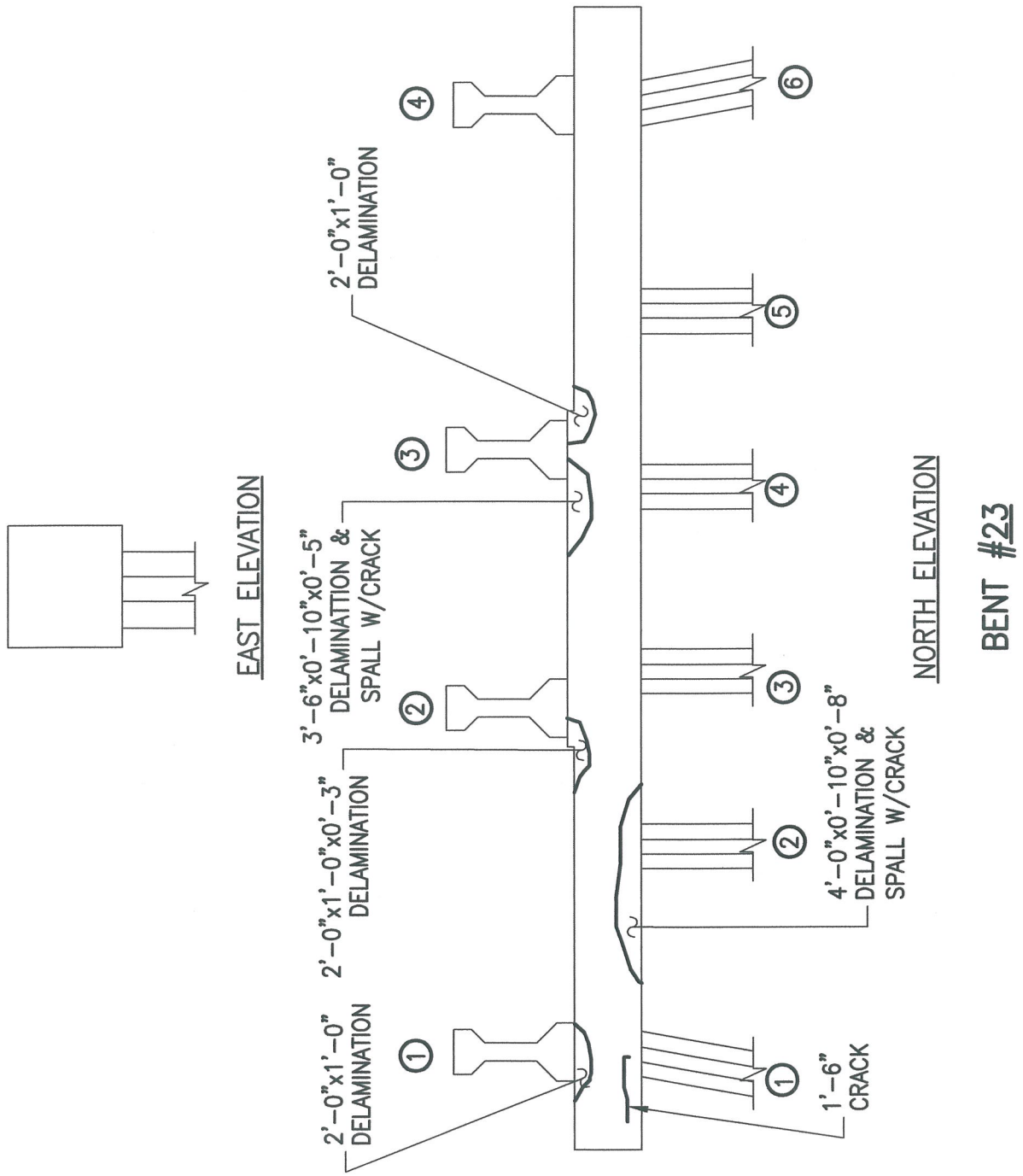

ALPHA & OMEGA GROUP
CIVIL & STRUCTURAL ENGINEERS
4911 Green Road Suite 107 Raleigh, NC 27616
Phone 919 981 0310 Fax 919 981 0451
Email info@aogroup.com www.aogroup.com

BRIDGE NO:	270011		
COUNTY:	DARE		
PREPARED BY:	OHS	CHECKED BY:	TGZ
SCALE:	NTS		
DATE:	6/20/06	SHT 235 OF 1347	

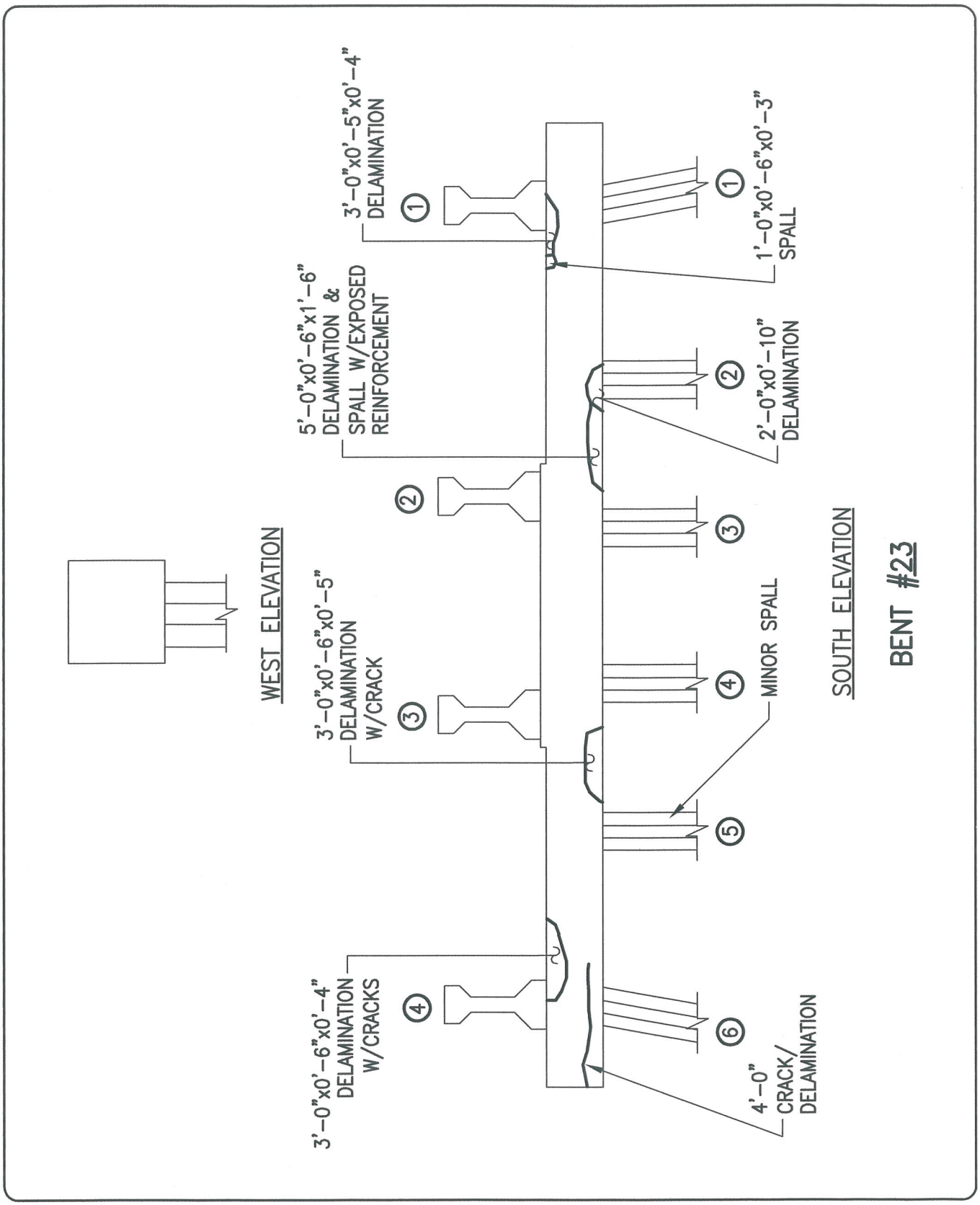

ALPHA & OMEGA GROUP
CIVIL & STRUCTURAL ENGINEERS
4911 Green Road Suite 107 Raleigh, NC 27616
Phone 919 981 0310 Fax 919 981 0451
Email info@aogroup.com www.aogroup.com

BRIDGE NO:	270011		
COUNTY:	DARE		
PREPARED BY:	OHS	CHECKED BY:	TGZ
SCALE:	NTS		
DATE:	6/20/06	SHT 238 OF 1347	

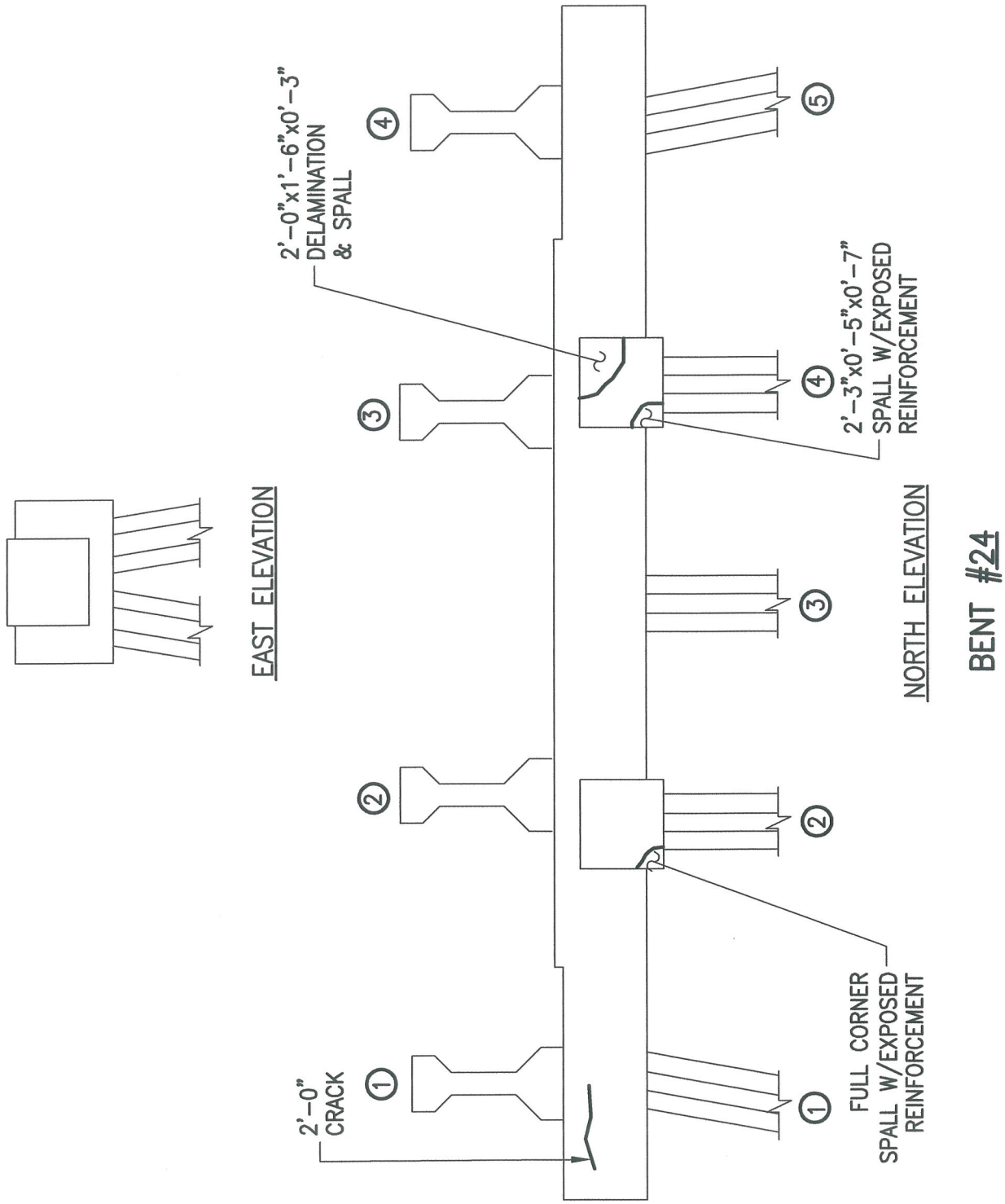

ALPHA & OMEGA GROUP
CIVIL & STRUCTURAL ENGINEERS
4911 Green Road Suite 107 Raleigh, NC 27616
Phone 919 981 0310 Fax 919 981 0451
Email info@aogroup.com www.aogroup.com

BRIDGE NO:	270011		
COUNTY:	DARE		
PREPARED BY:	OHS	CHECKED BY:	TGZ
SCALE:	NTS		
DATE:	6/20/06	SHT 241 OF 1347	

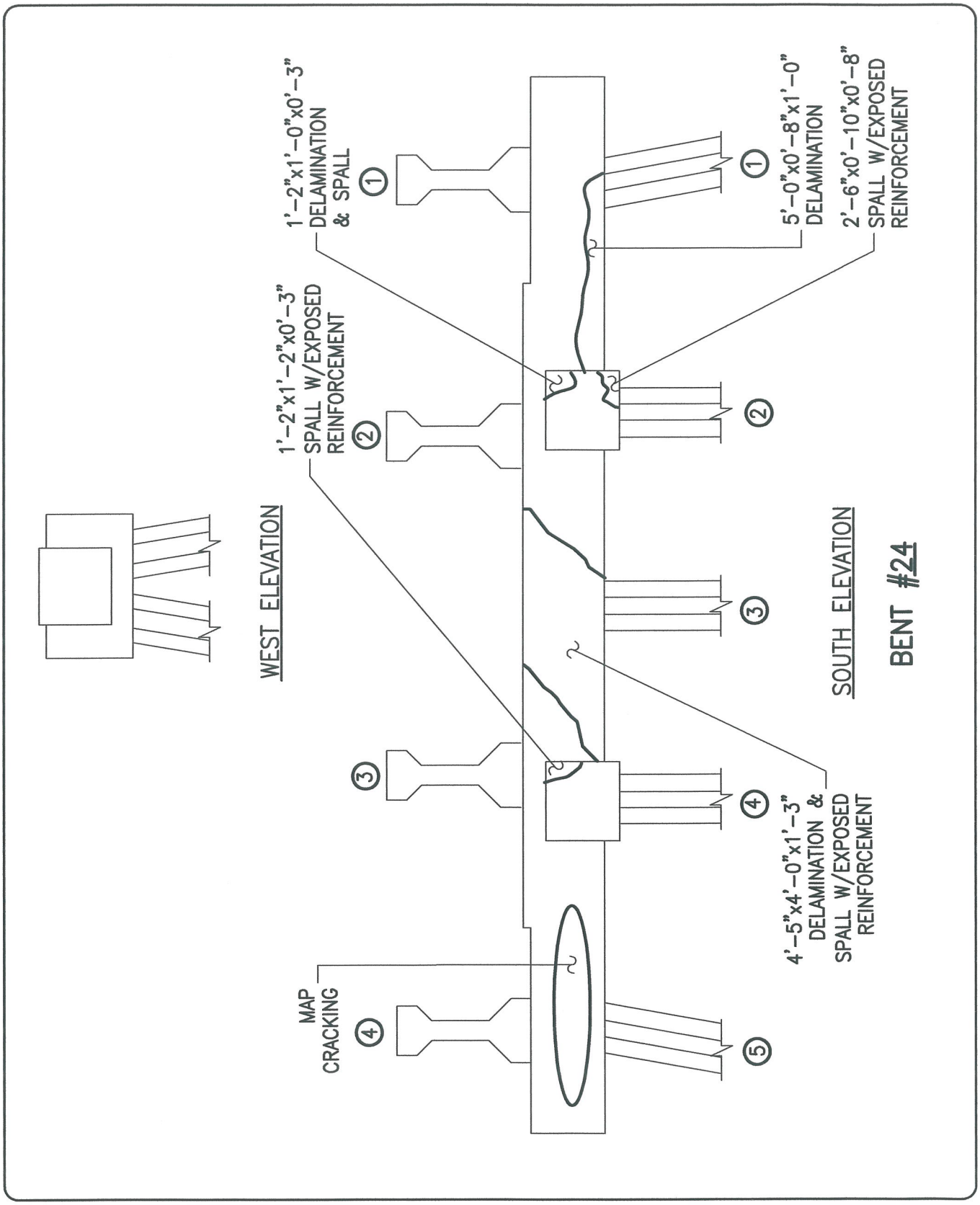

ALPHA & OMEGA GROUP
CIVIL & STRUCTURAL ENGINEERS
4911 Green Road Suite 107 Raleigh, NC 27616
Phone 919 981 0310 Fax 919 981 0451
Email info@aogroup.com www.aogroup.com

BRIDGE NO:	270011		
COUNTY:	DARE		
PREPARED BY:	OHS	CHECKED BY:	TGZ
SCALE:	NTS		
DATE:	6/20/06	SHT 244 OF 1347	

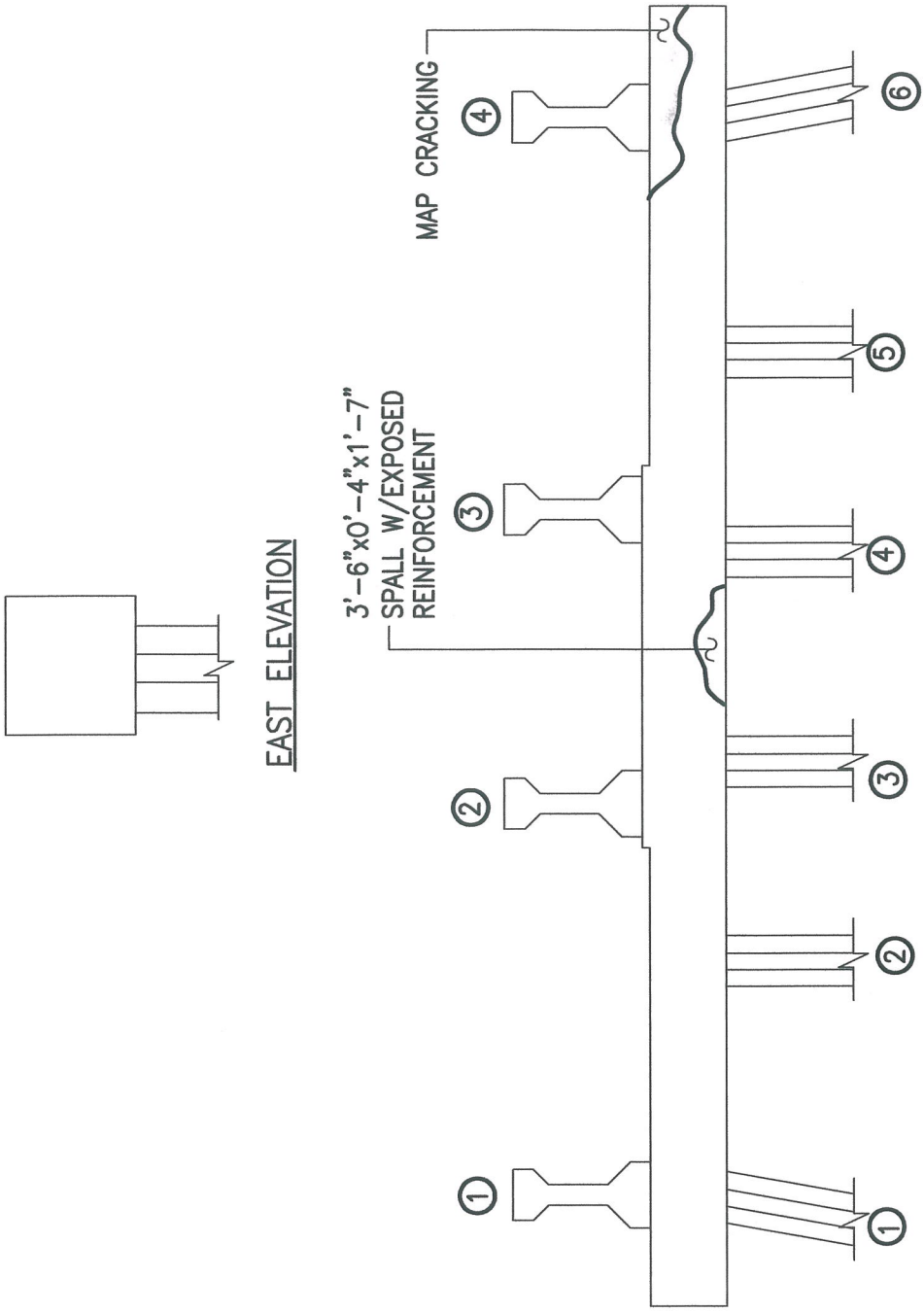

ALPHA & OMEGA GROUP
CIVIL & STRUCTURAL ENGINEERS
4911 Green Road Suite 107 Raleigh, NC 27616
Phone 919 981 0310 Fax 919 981 0451
Email info@aogroup.com www.aogroup.com

BRIDGE NO:	270011		
COUNTY:	DARE		
PREPARED BY:	OHS	CHECKED BY:	TGZ
SCALE:	NTS		
DATE:	6/20/06	SHT 247 OF 1347	

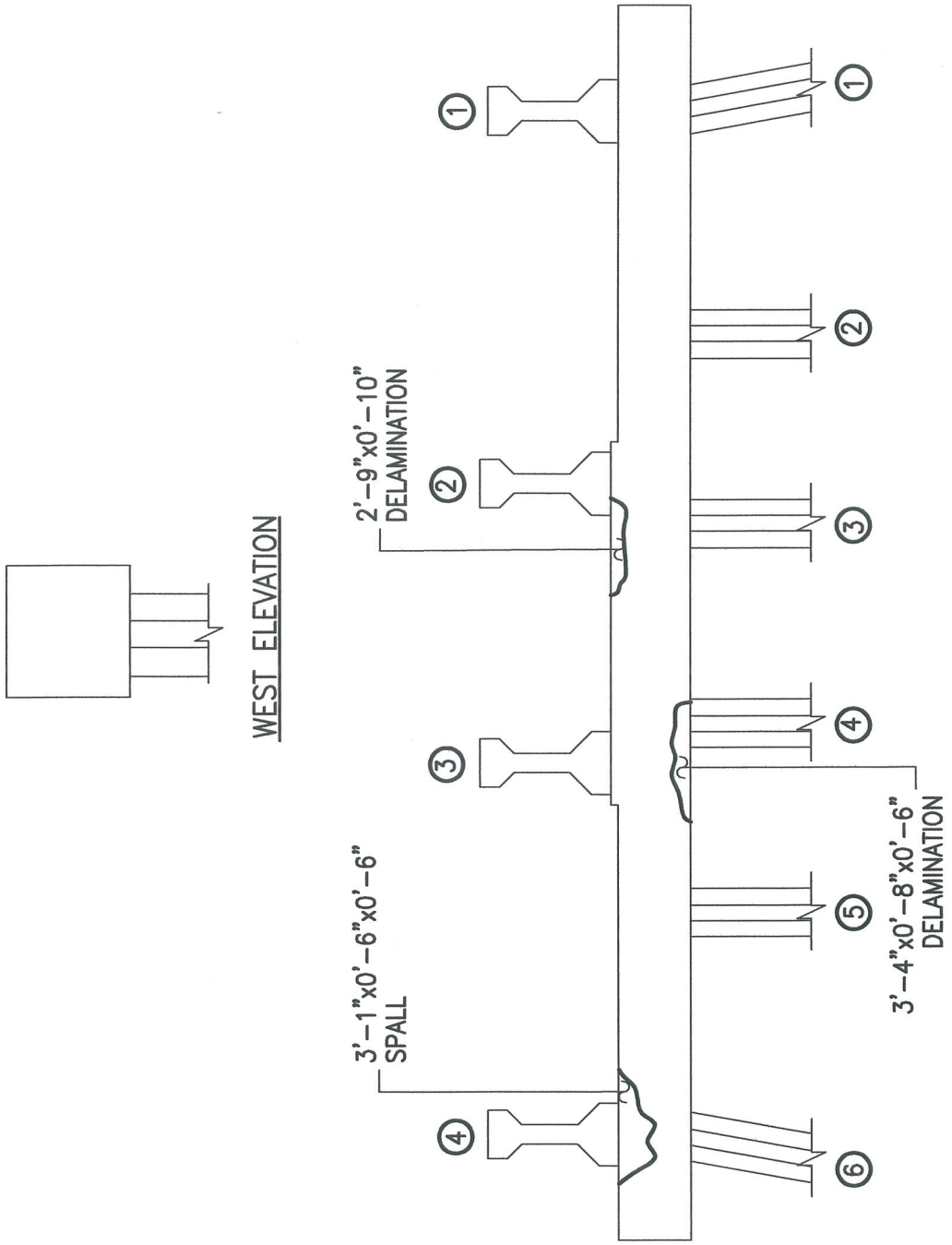

ALPHA & OMEGA GROUP
CIVIL & STRUCTURAL ENGINEERS
4911 Green Road Suite 107 Raleigh, NC 27616
Phone 919 981 0310 Fax 919 981 0451
Email info@aogroup.com www.aogroup.com

BRIDGE NO:	270011		
COUNTY:	DARE		
PREPARED BY:	OHS	CHECKED BY:	TGZ
SCALE:	NTS		
DATE:	6/20/06	SHT 250 OF	1347

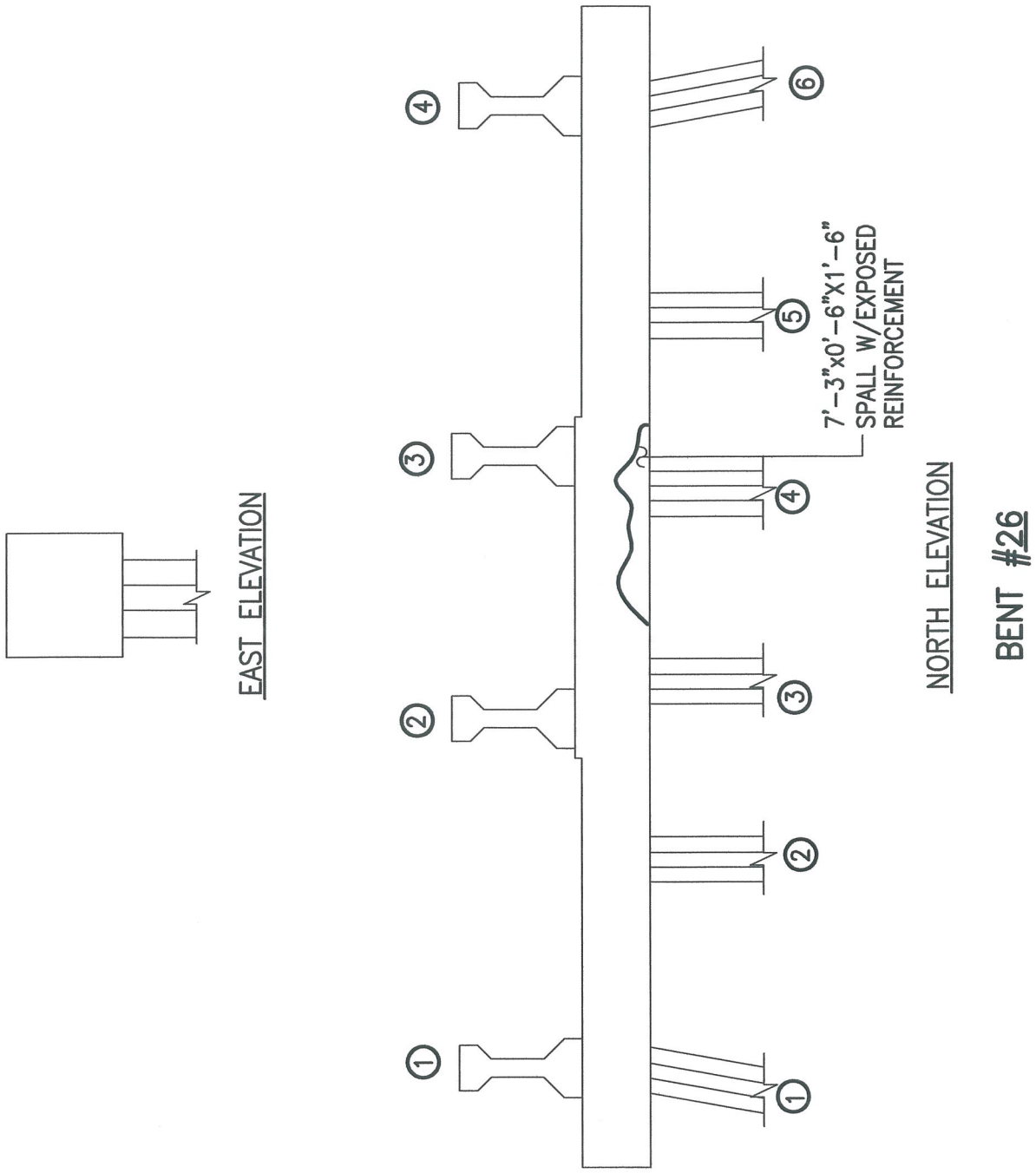

ALPHA & OMEGA GROUP
CIVIL & STRUCTURAL ENGINEERS
4911 Green Road Suite 107 Raleigh, NC 27616
Phone 919 981 0310 Fax 919 981 0451
Email info@aogroup.com www.aogroup.com

BRIDGE NO:	270011		
COUNTY:	DARE		
PREPARED BY:	OHS	CHECKED BY:	TGZ
SCALE:	NTS		
DATE:	6/20/06	SHT 253 OF 1347	

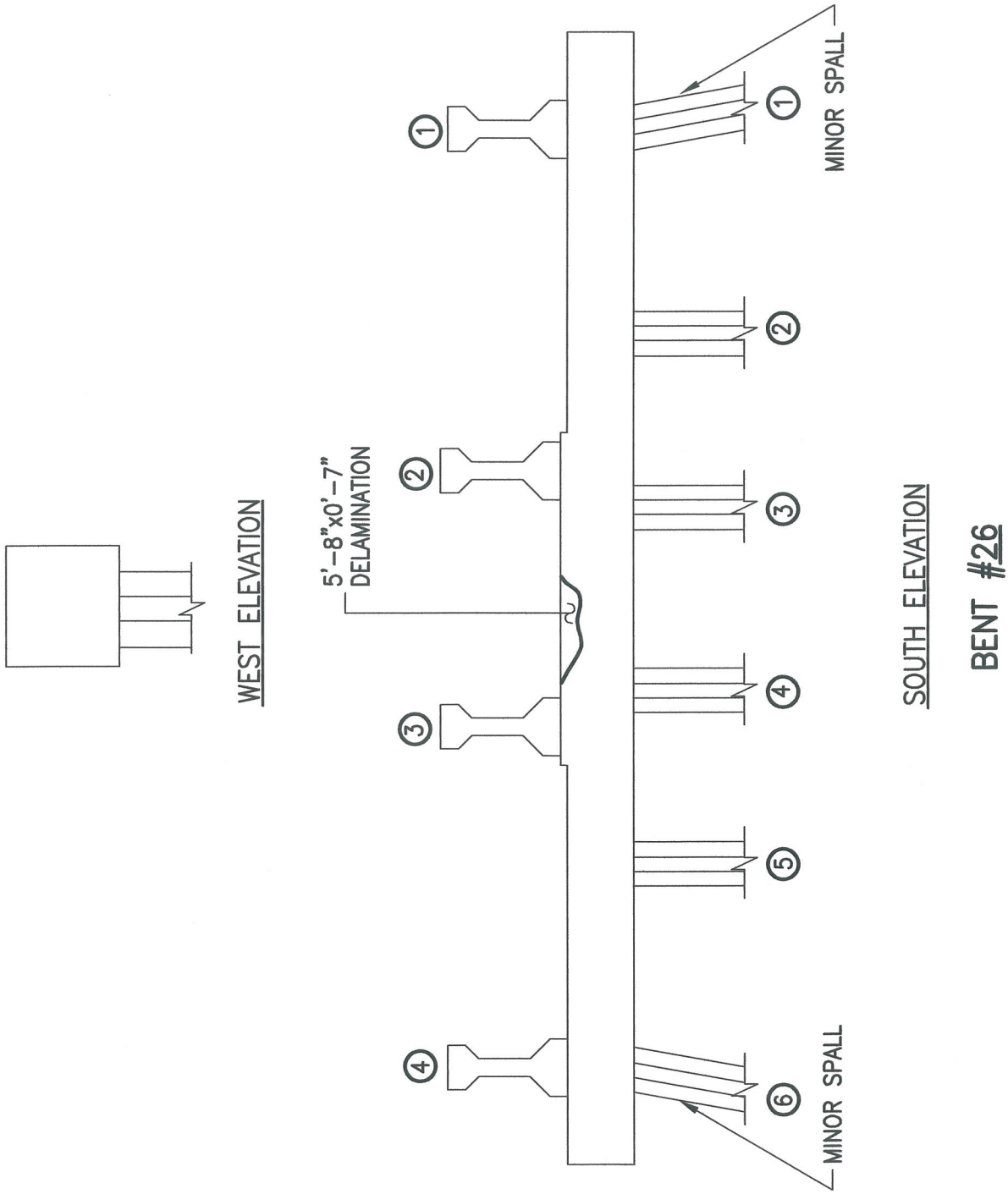

ALPHA & OMEGA GROUP
CIVIL & STRUCTURAL ENGINEERS
4911 Green Road Suite 107 Raleigh, NC 27616
Phone 919 981 0310 Fax 919 981 0451
Email info@aogroup.com www.aogroup.com

BRIDGE NO:	270011		
COUNTY:	DARE		
PREPARED BY:	OHS	CHECKED BY:	TGZ
SCALE:	NTS		
DATE:	6/20/06	SHT 256 OF 1347	

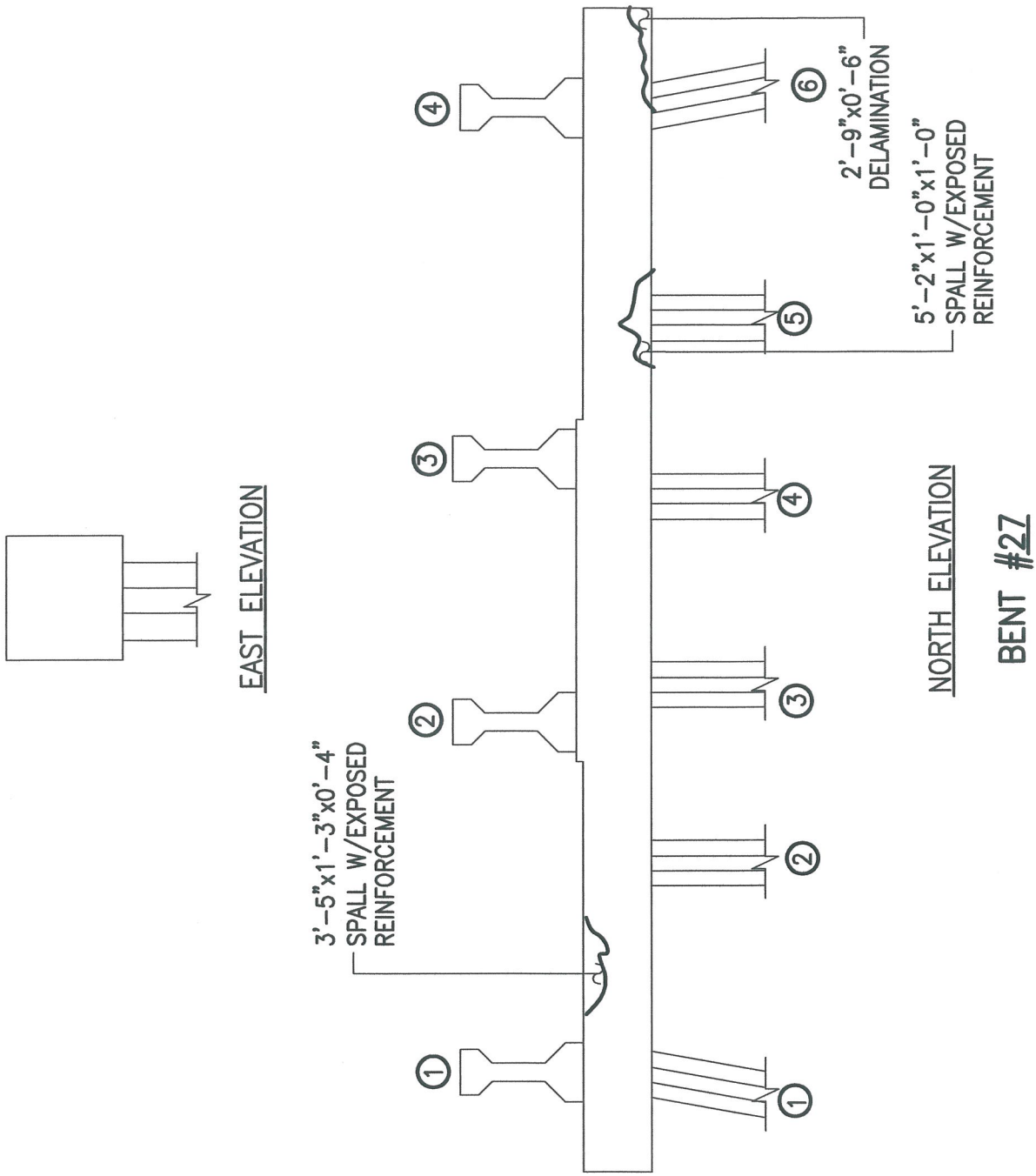

ALPHA & OMEGA GROUP
CIVIL & STRUCTURAL ENGINEERS
4911 Green Road Suite 107 Raleigh, NC 27616
Phone 919 981 0310 Fax 919 981 0451
Email info@aogroup.com www.aogroup.com

BRIDGE NO:	270011		
COUNTY:	DARE		
PREPARED BY:	OHS	CHECKED BY:	TGZ
SCALE:	NTS		
DATE:	6/20/06	SHT 259 OF 1347	

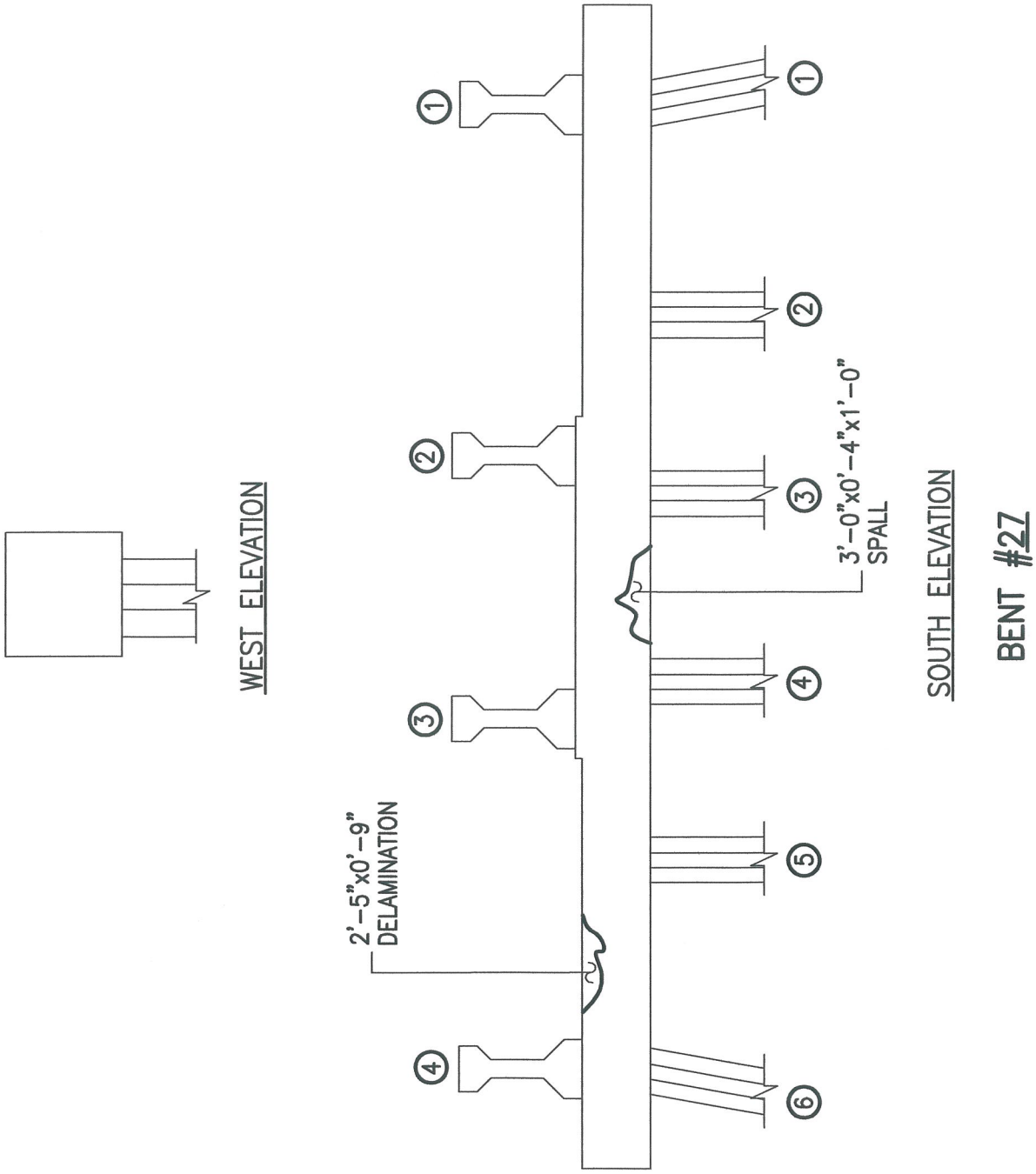

ALPHA & OMEGA GROUP
CIVIL & STRUCTURAL ENGINEERS
4911 Green Road Suite 107 Raleigh, NC 27616
Phone 919 981 0310 Fax 919 981 0451
Email info@aogroup.com www.aogroup.com

BRIDGE NO:	270011		
COUNTY:	DARE		
PREPARED BY:	OHS	CHECKED BY:	TGZ
SCALE:	NTS		
DATE:	6/20/06	SHT 262 OF 1347	

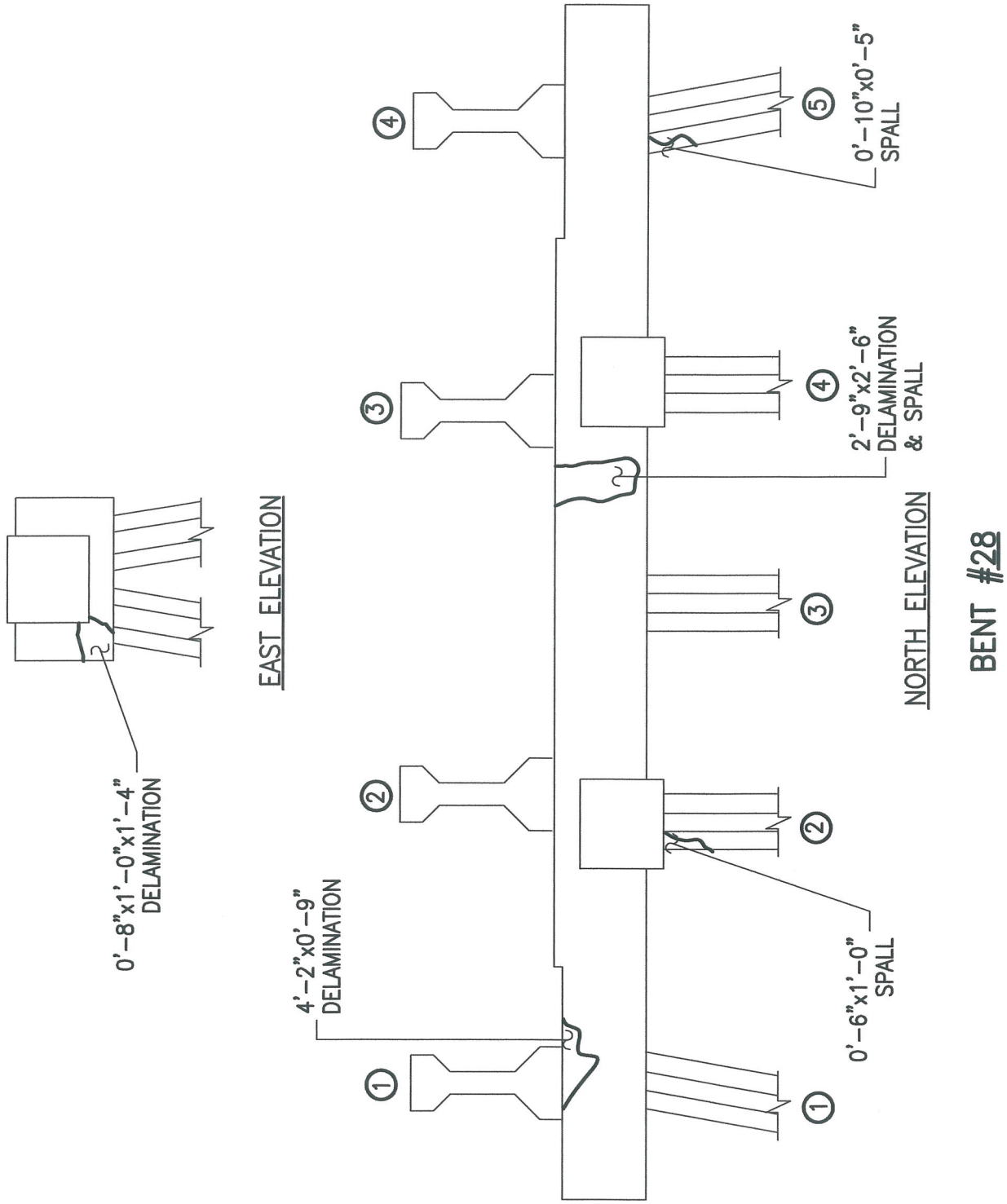

ALPHA & OMEGA GROUP
CIVIL & STRUCTURAL ENGINEERS

4911 Green Road Suite 107 Raleigh, NC 27616
Phone 919 981 0310 Fax 919 981 0451
Email info@aogroup.com www.aogroup.com

BRIDGE NO:	270011		
COUNTY:	DARE		
PREPARED BY:	OHS	CHECKED BY:	TGZ
SCALE:	NTS		
DATE:	6/20/06	SHT 265 OF 1347	

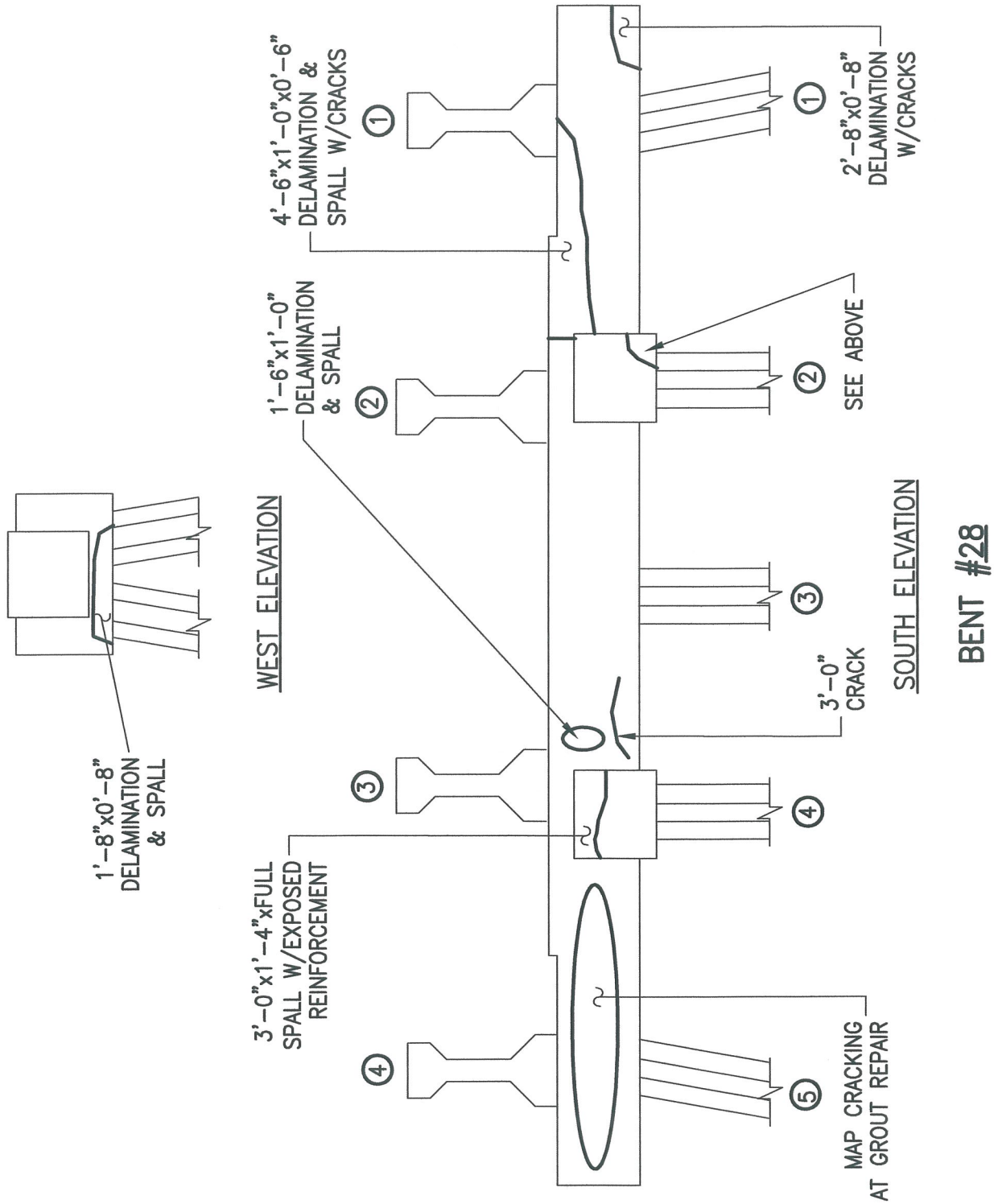

ALPHA & OMEGA GROUP
CIVIL & STRUCTURAL ENGINEERS
4911 Green Road Suite 107 Raleigh, NC 27616
Phone 919 981 0310 Fax 919 981 0451
Email info@aogroup.com www.aogroup.com

BRIDGE NO:	270011		
COUNTY:	DARE		
PREPARED BY:	OHS	CHECKED BY:	TGZ
SCALE:	NTS		
DATE:	6/20/06	SHT 267 OF 1347	

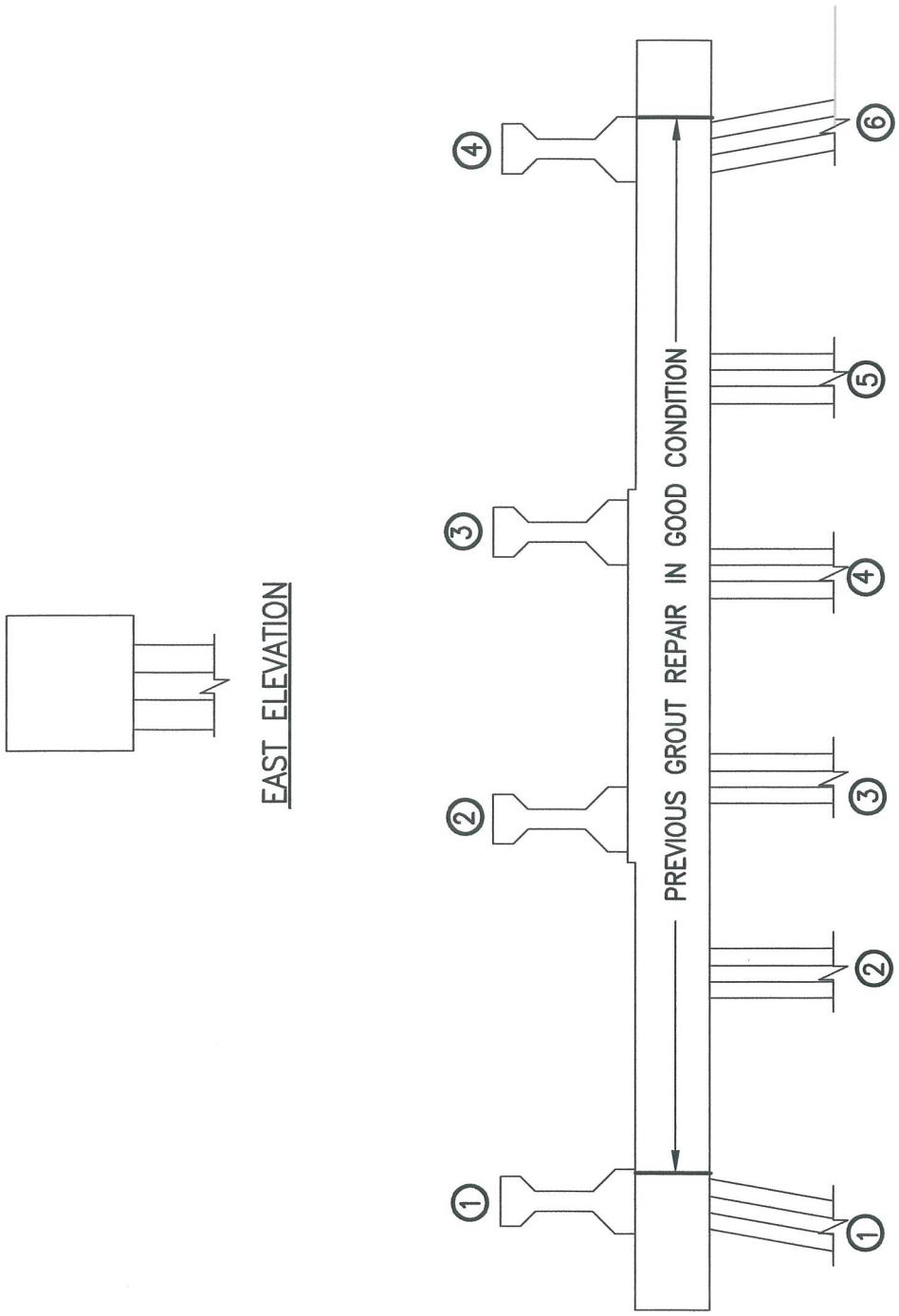

ALPHA & OMEGA GROUP
CIVIL & STRUCTURAL ENGINEERS
4911 Green Road Suite 107 Raleigh, NC 27616
Phone 919 981 0310 Fax 919 981 0451
Email info@aogroup.com www.aogroup.com

BRIDGE NO:	270011		
COUNTY:	DARE		
PREPARED BY:	OHS	CHECKED BY:	TGZ
SCALE:	NTS		
DATE:	6/20/06	SHT 270 OF 1347	

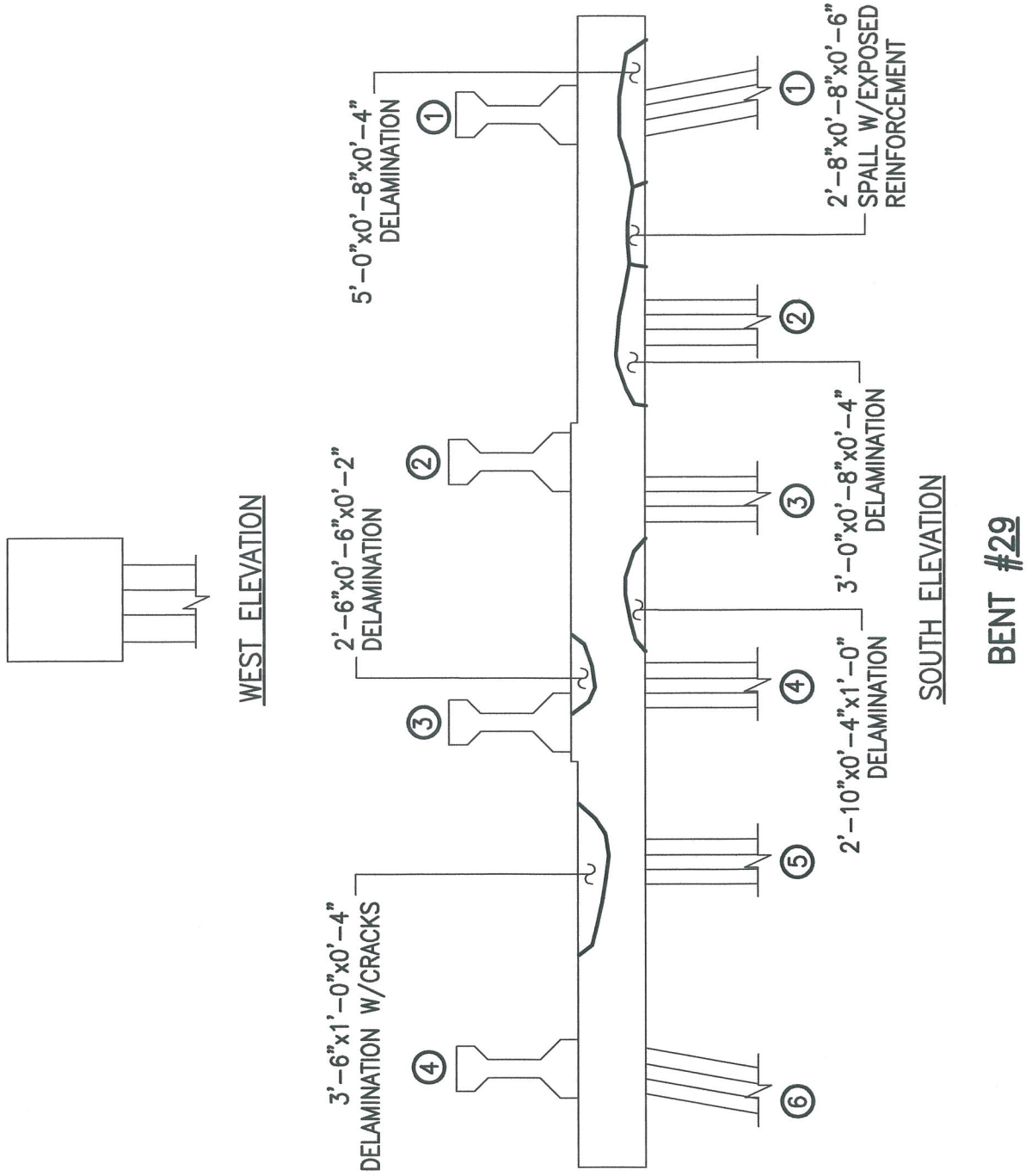

ALPHA & OMEGA GROUP
CIVIL & STRUCTURAL ENGINEERS
4911 Green Road Suite 107 Raleigh, NC 27616
Phone 919 981 0310 Fax 919 981 0451
Email info@aogroup.com www.aogroup.com

BRIDGE NO:	270011		
COUNTY:	DARE		
PREPARED BY:	OHS	CHECKED BY:	TGZ
SCALE:	NTS		
DATE:	6/20/06	SHT 273 OF 1347	

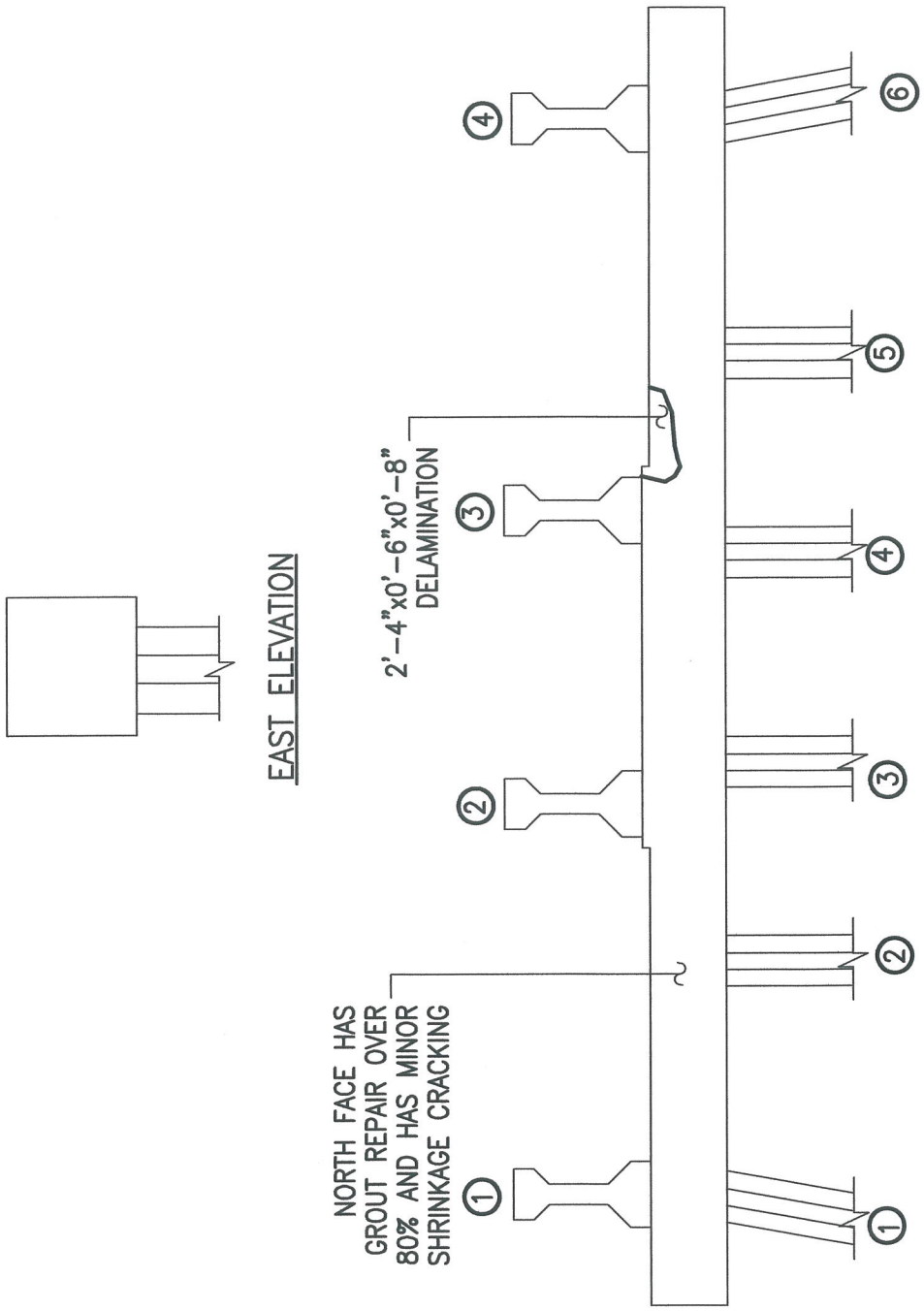

ALPHA & OMEGA GROUP
CIVIL & STRUCTURAL ENGINEERS
4911 Green Road Suite 107 Raleigh, NC 27616
Phone 919 981 0310 Fax 919 981 0451
Email info@aogroup.com www.aogroup.com

BRIDGE NO:	270011		
COUNTY:	DARE		
PREPARED BY:	OHS	CHECKED BY:	TGZ
SCALE:	NTS		
DATE:	6/20/06	SHT 276 OF 1347	

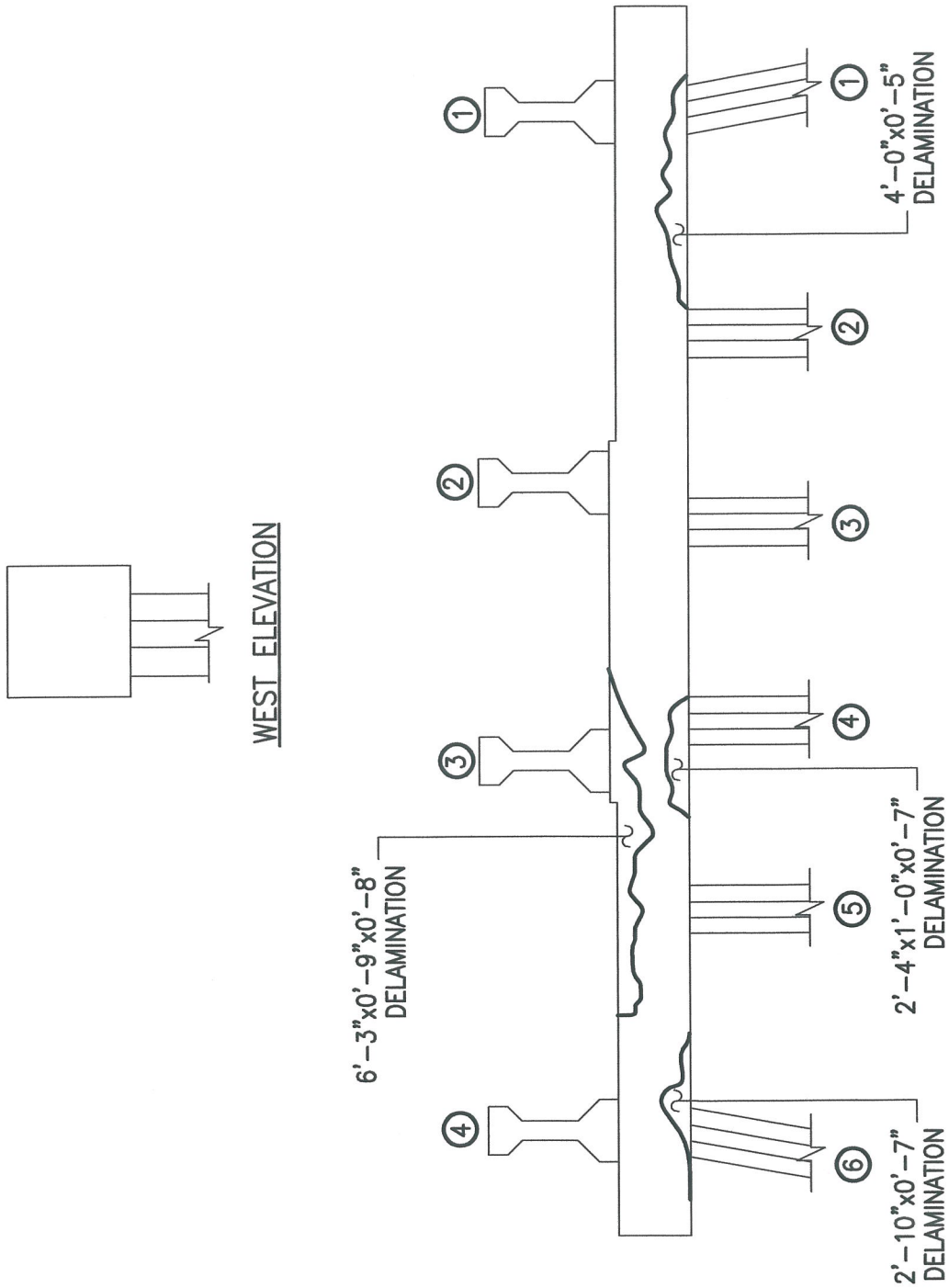

ALPHA & OMEGA GROUP
CIVIL & STRUCTURAL ENGINEERS
4911 Green Road Suite 107 Raleigh, NC 27616
Phone 919 981 0310 Fax 919 981 0451
Email info@aogroup.com www.aogroup.com

BRIDGE NO:	270011		
COUNTY:	DARE		
PREPARED BY:	OHS	CHECKED BY:	TGZ
SCALE:	NTS		
DATE:	6/20/06	SHT 279 OF 1347	

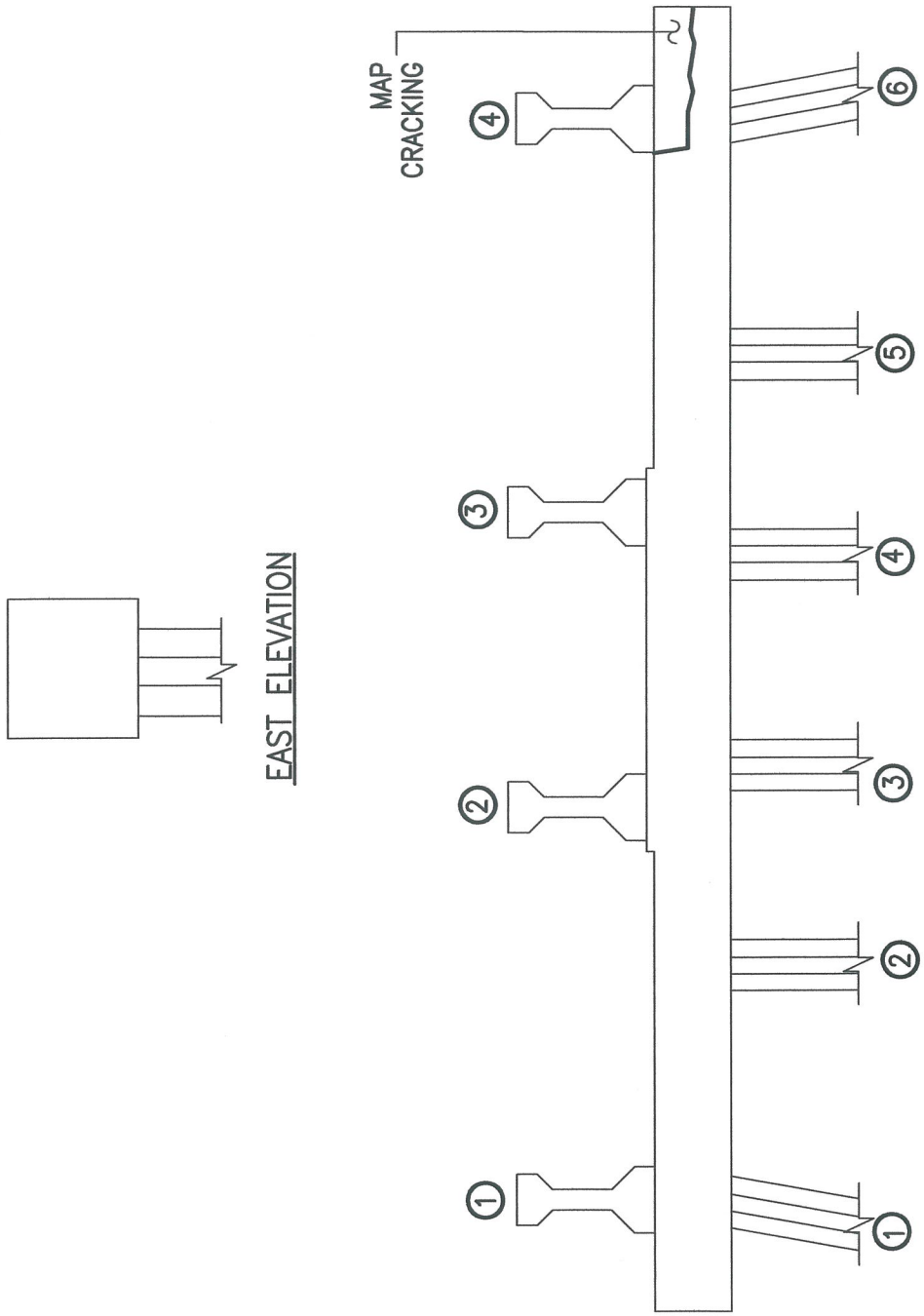

ALPHA & OMEGA GROUP
CIVIL & STRUCTURAL ENGINEERS
4911 Green Road Suite 107 Raleigh, NC 27616
Phone 919 981 0310 Fax 919 981 0451
Email info@aogroup.com www.aogroup.com

BRIDGE NO:	270011		
COUNTY:	DARE		
PREPARED BY:	OHS	CHECKED BY:	TGZ
SCALE:	NTS		
DATE:	6/20/06	SHT 282 OF 1347	

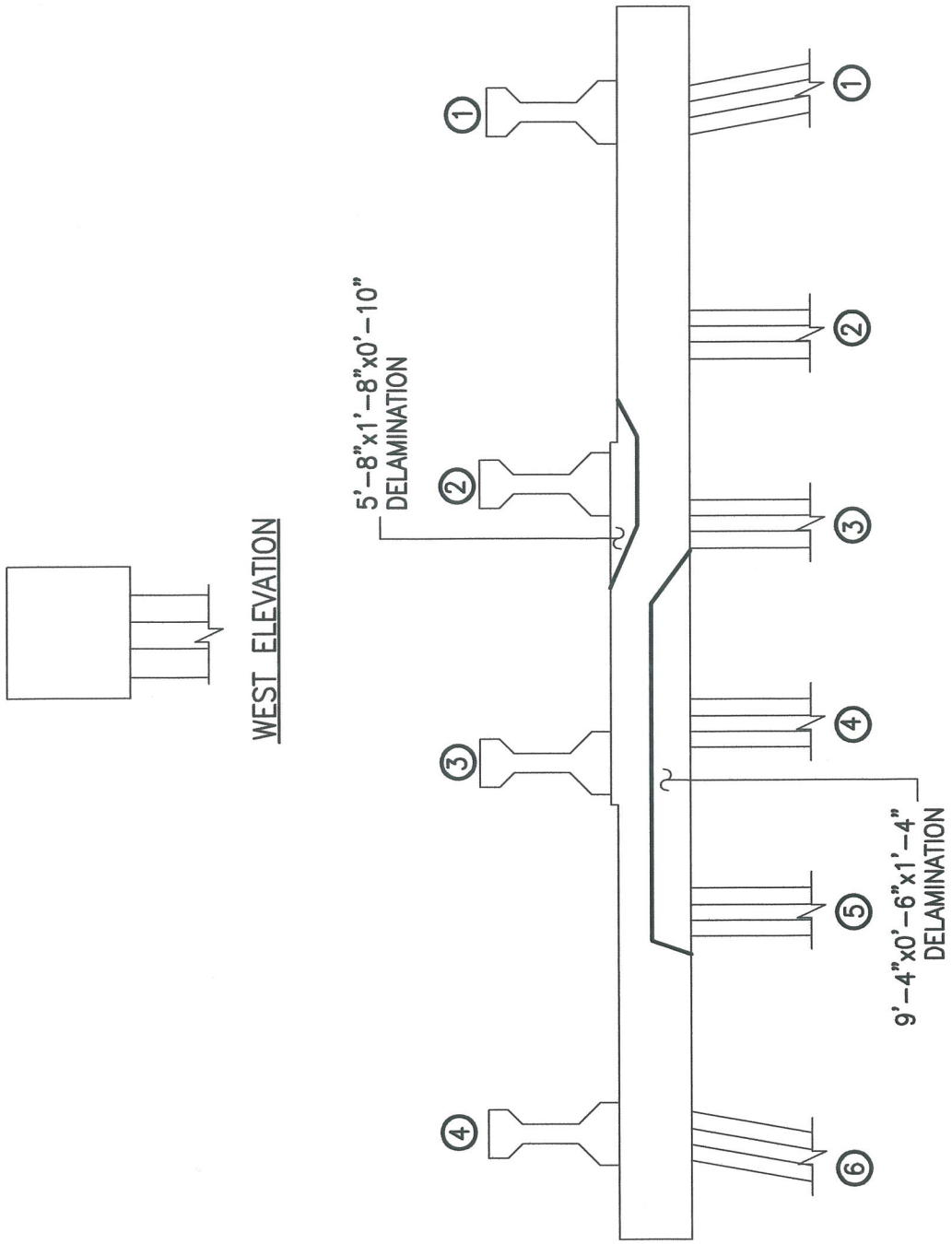

ALPHA & OMEGA GROUP
CIVIL & STRUCTURAL ENGINEERS
4911 Green Road Suite 107 Raleigh, NC 27616
Phone 919 981 0310 Fax 919 981 0451
Email info@aogroup.com www.aogroup.com

BRIDGE NO:	270011		
COUNTY:	DARE		
PREPARED BY:	OHS	CHECKED BY:	TGZ
SCALE:	NTS		
DATE:	6/20/06	SHT 284 OF 1347	

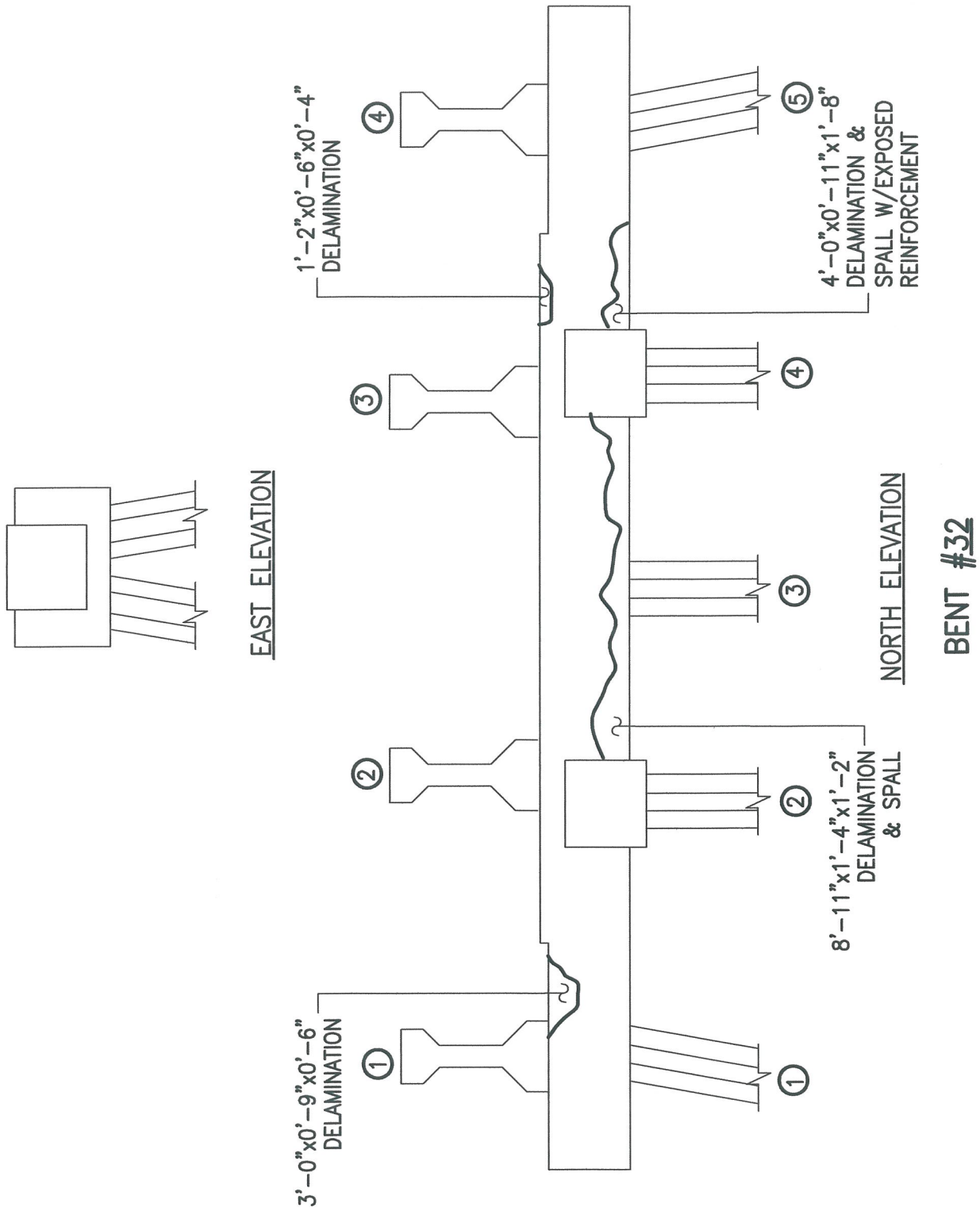

ALPHA & OMEGA GROUP
CIVIL & STRUCTURAL ENGINEERS
4911 Green Road Suite 107 Raleigh, NC 27616
Phone 919 981 0310 Fax 919 981 0451
Email info@aogroup.com www.aogroup.com

BRIDGE NO:	270011		
COUNTY:	DARE		
PREPARED BY:	OHS	CHECKED BY:	TGZ
SCALE:	NTS		
DATE:	6/20/06	SHT 287 OF 1347	

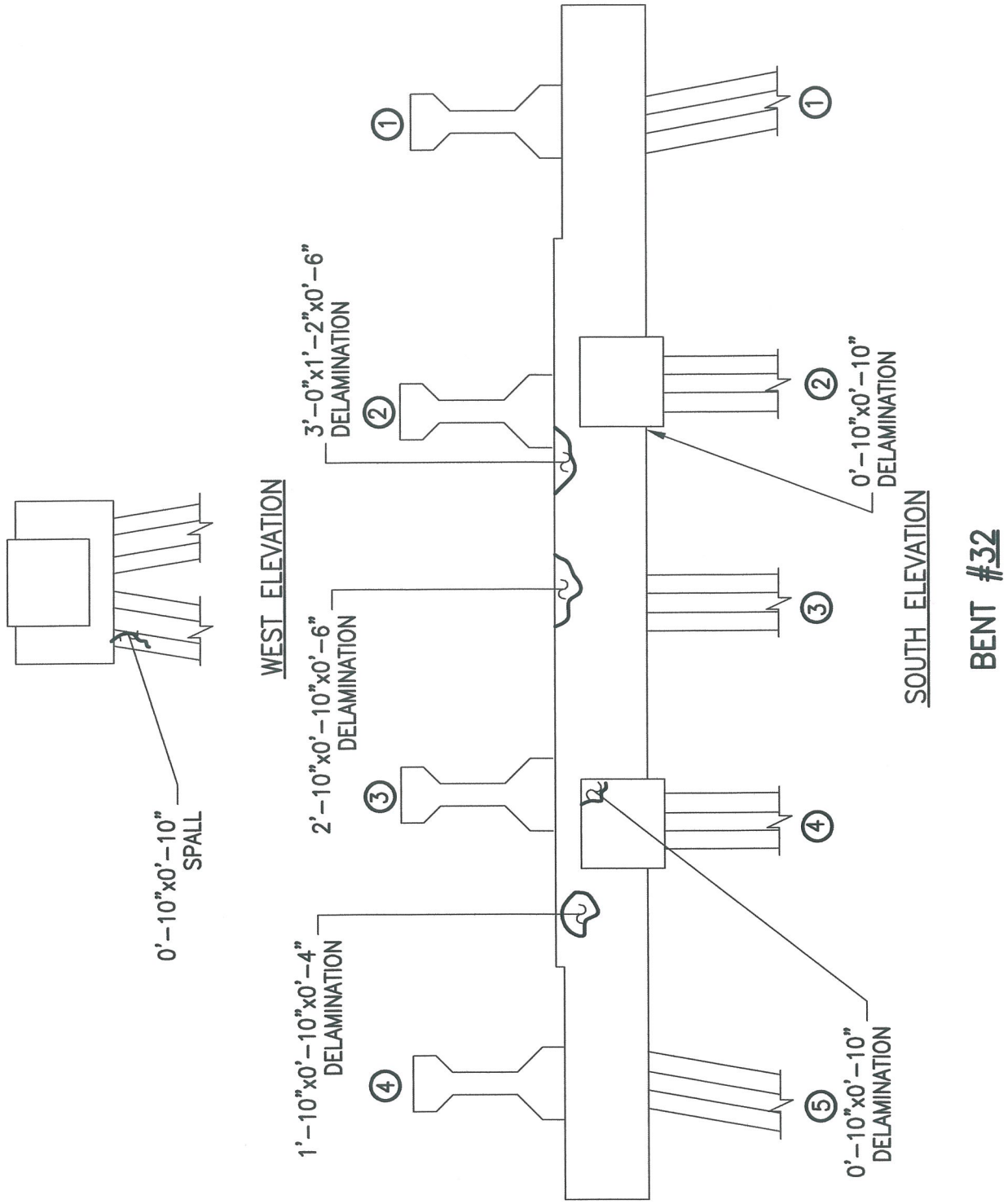

ALPHA & OMEGA GROUP
CIVIL & STRUCTURAL ENGINEERS
4911 Green Road Suite 107 Raleigh, NC 27616
Phone 919 981 0310 Fax 919 981 0451
Email info@aogroup.com www.aogroup.com

BRIDGE NO:	270011		
COUNTY:	DARE		
PREPARED BY:	OHS	CHECKED BY:	TGZ
SCALE:	NTS		
DATE:	6/20/06	SHT 289 OF 1347	

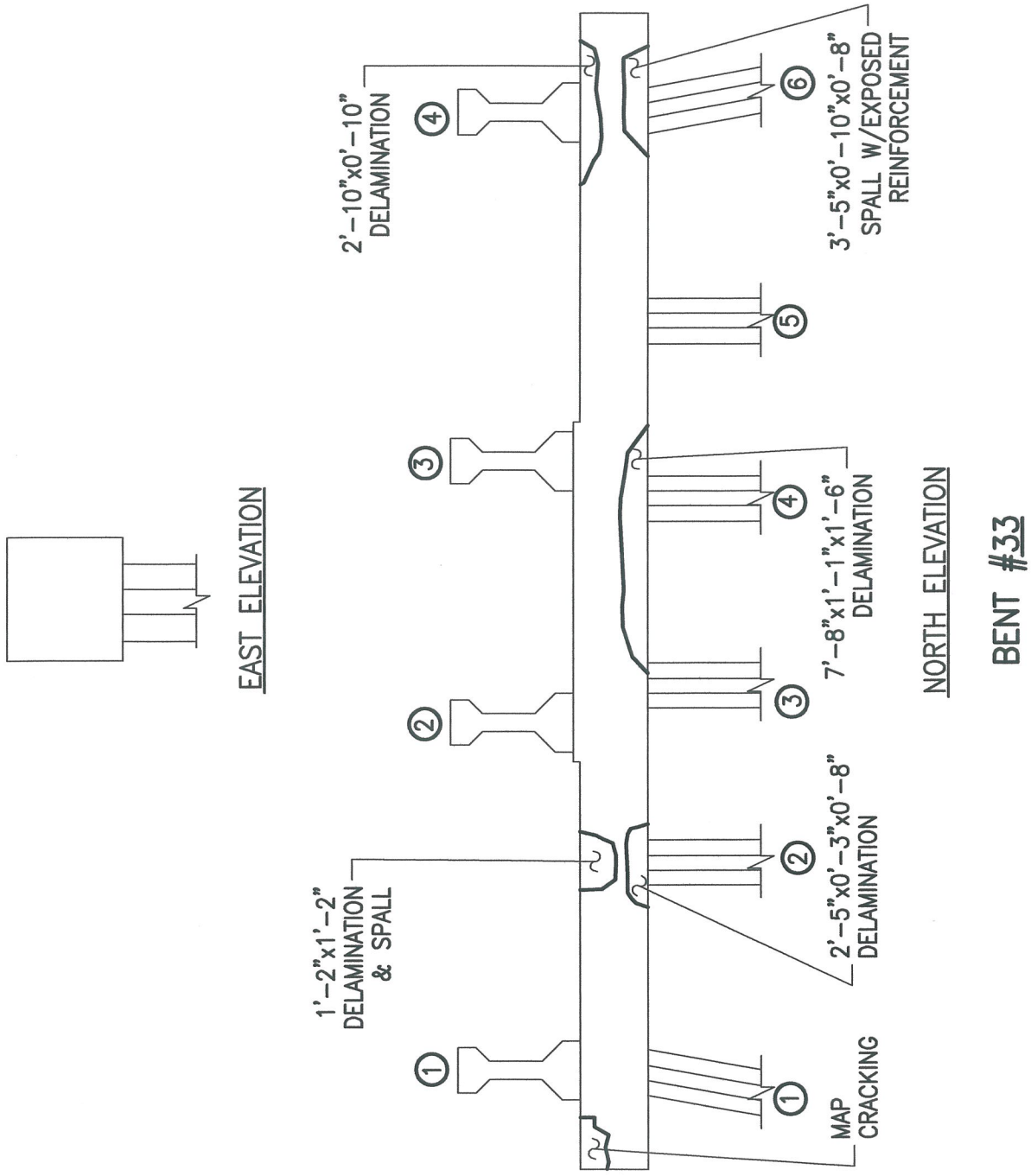

ALPHA & OMEGA GROUP
CIVIL & STRUCTURAL ENGINEERS
4911 Green Road Suite 107 Raleigh, NC 27616
Phone 919 981 0310 Fax 919 981 0451
Email info@aogroup.com www.aogroup.com

BRIDGE NO:	270011		
COUNTY:	DARE		
PREPARED BY:	OHS	CHECKED BY:	TGZ
SCALE:	NTS		
DATE:	6/20/06	SHT 292 OF 1347	

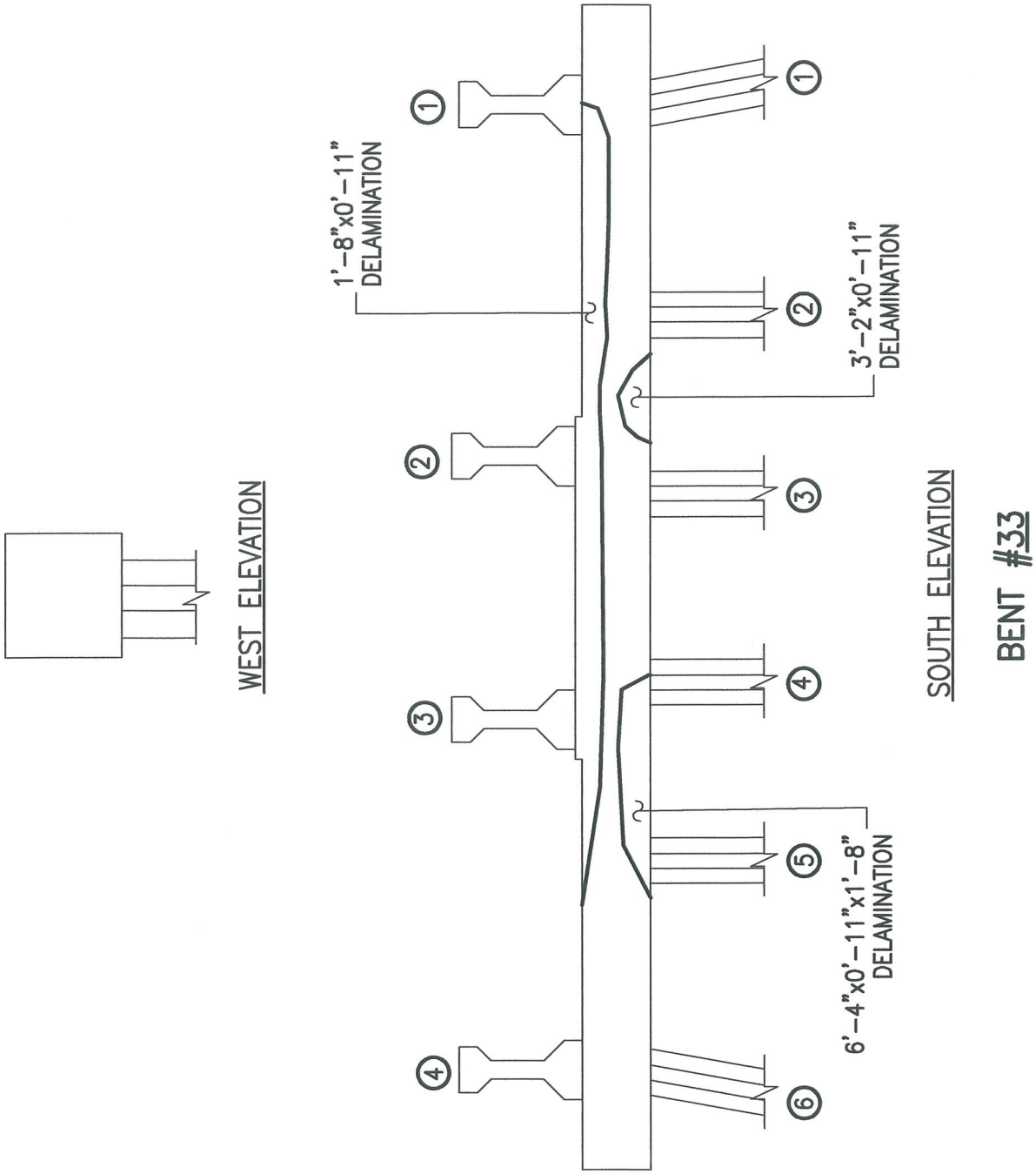

ALPHA & OMEGA GROUP
CIVIL & STRUCTURAL ENGINEERS
4911 Green Road Suite 107 Raleigh, NC 27616
Phone 919 981 0310 Fax 919 981 0451
Email info@aogroup.com www.aogroup.com

BRIDGE NO:	270011		
COUNTY:	DARE		
PREPARED BY:	OHS	CHECKED BY:	TGZ
SCALE:	NTS		
DATE:	6/20/06	SHT 295 OF 1347	

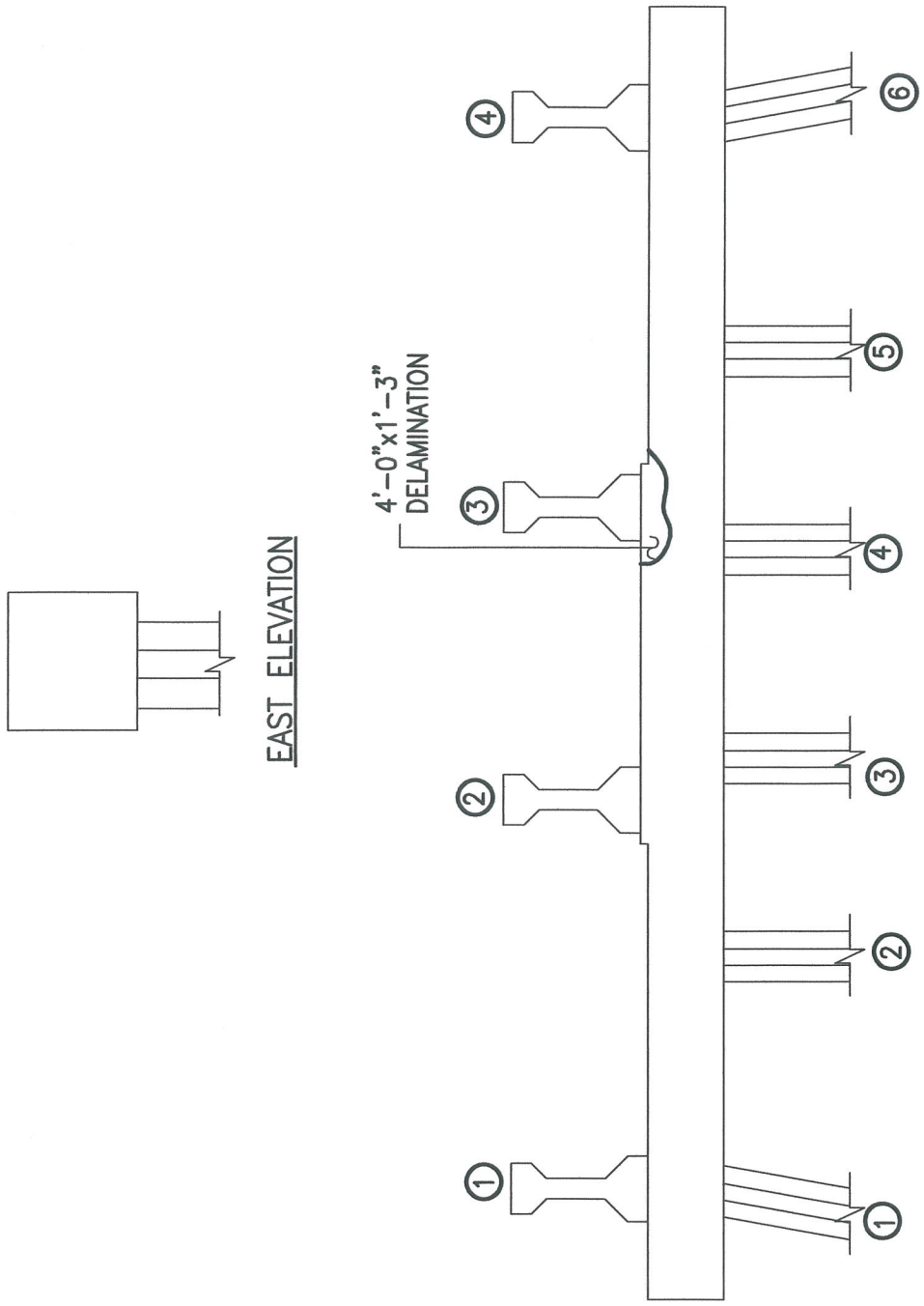

ALPHA & OMEGA GROUP
CIVIL & STRUCTURAL ENGINEERS
4911 Green Road Suite 107 Raleigh, NC 27616
Phone 919 981 0310 Fax 919 981 0451
Email info@aogroup.com www.aogroup.com

BRIDGE NO:	270011		
COUNTY:	DARE		
PREPARED BY:	OHS	CHECKED BY:	TGZ
SCALE:	NTS		
DATE:	6/20/06	SHT 298 OF 1347	

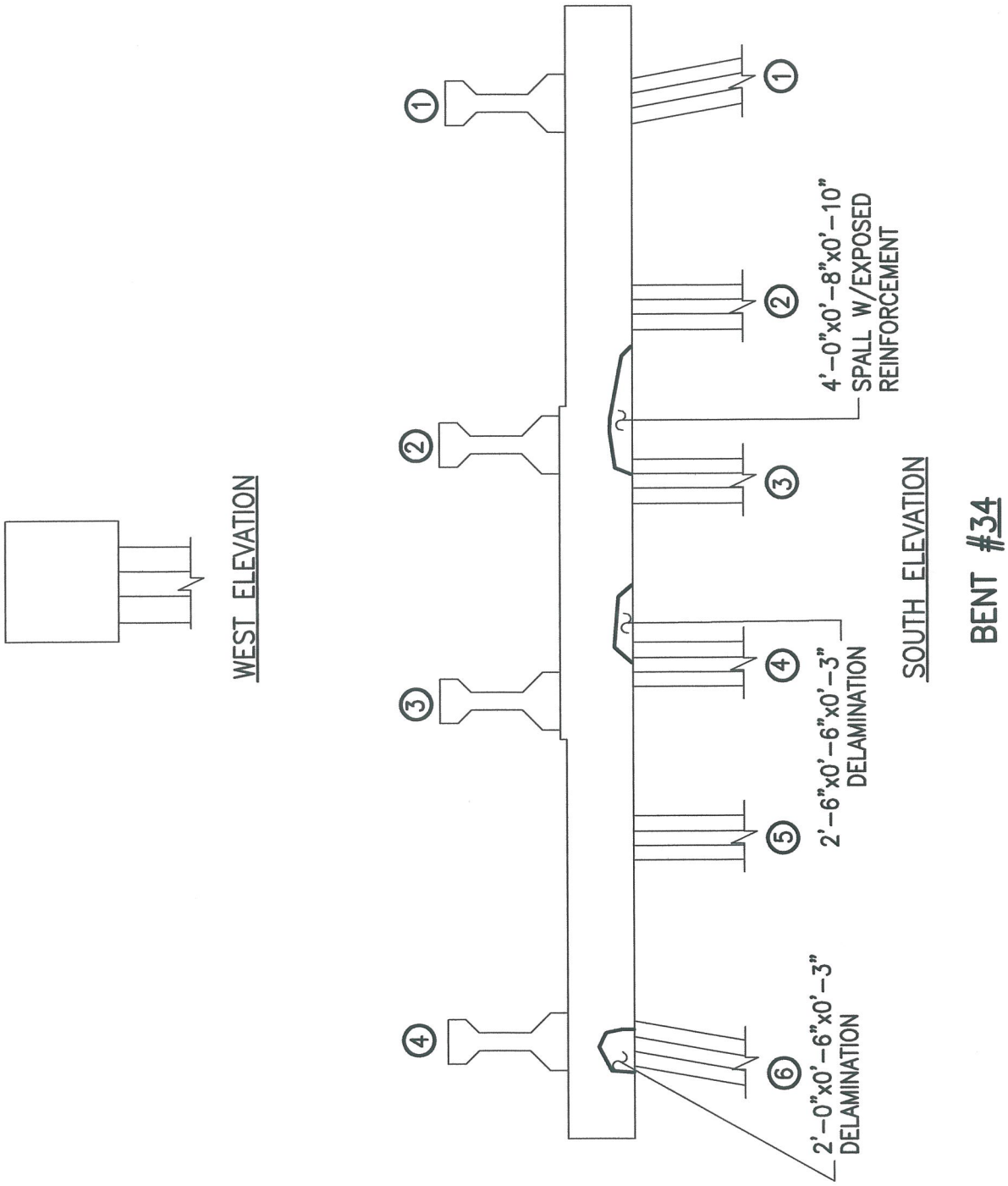

ALPHA & OMEGA GROUP
CIVIL & STRUCTURAL ENGINEERS
4911 Green Road Suite 107 Raleigh, NC 27616
Phone 919 981 0310 Fax 919 981 0451
Email info@aogroup.com www.aogroup.com

BRIDGE NO:	270011		
COUNTY:	DARE		
PREPARED BY:	OHS	CHECKED BY:	TGZ
SCALE:	NTS		
DATE:	6/20/06	SHT 300 OF 1347	

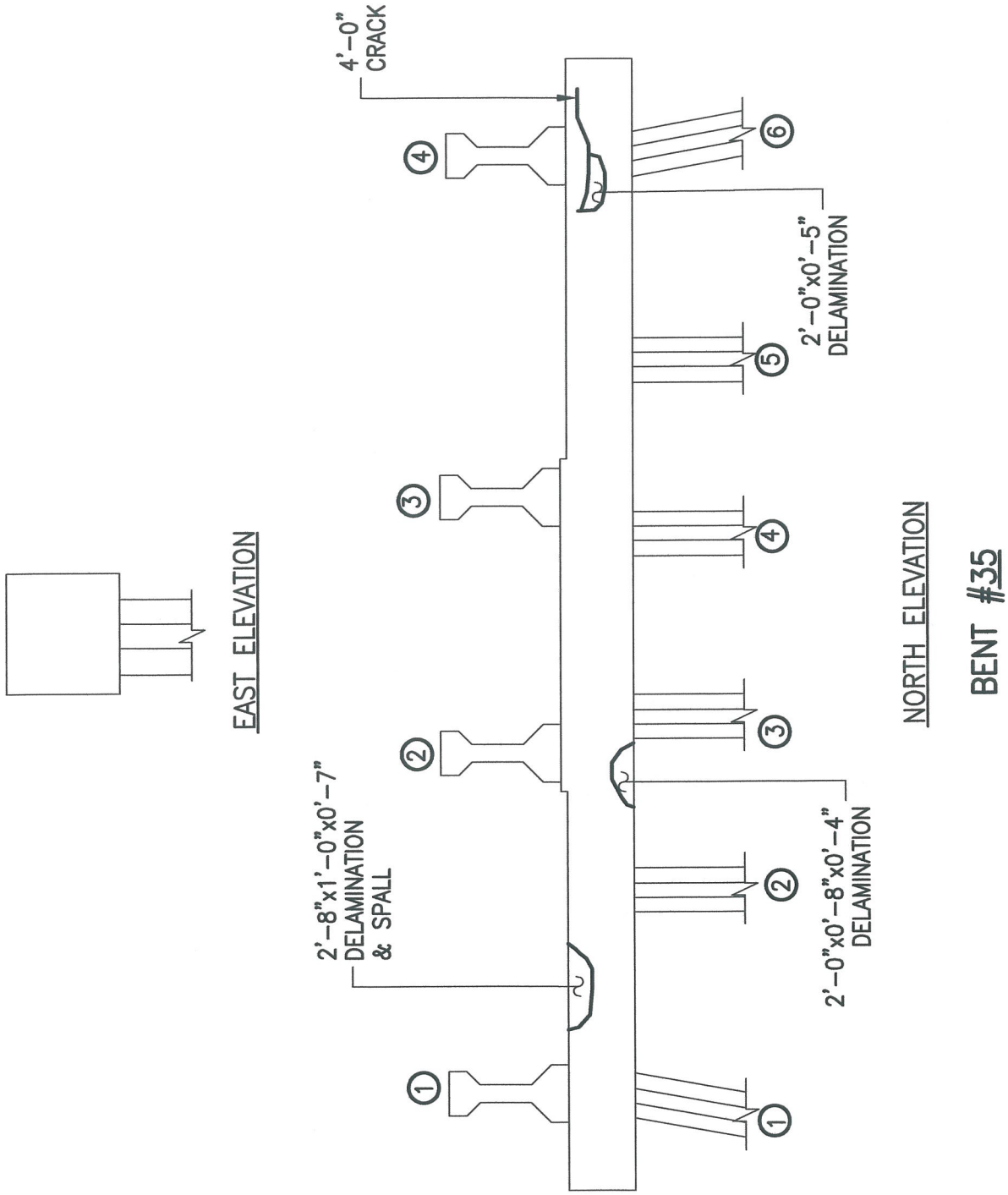

ALPHA & OMEGA GROUP
CIVIL & STRUCTURAL ENGINEERS
4911 Green Road Suite 107 Raleigh, NC 27616
Phone 919 981 0310 Fax 919 981 0451
Email info@aogroup.com www.aogroup.com

BRIDGE NO:	270011		
COUNTY:	DARE		
PREPARED BY:	OHS	CHECKED BY:	TGZ
SCALE:	NTS		
DATE:	6/20/06	SHT 30 OF 134	

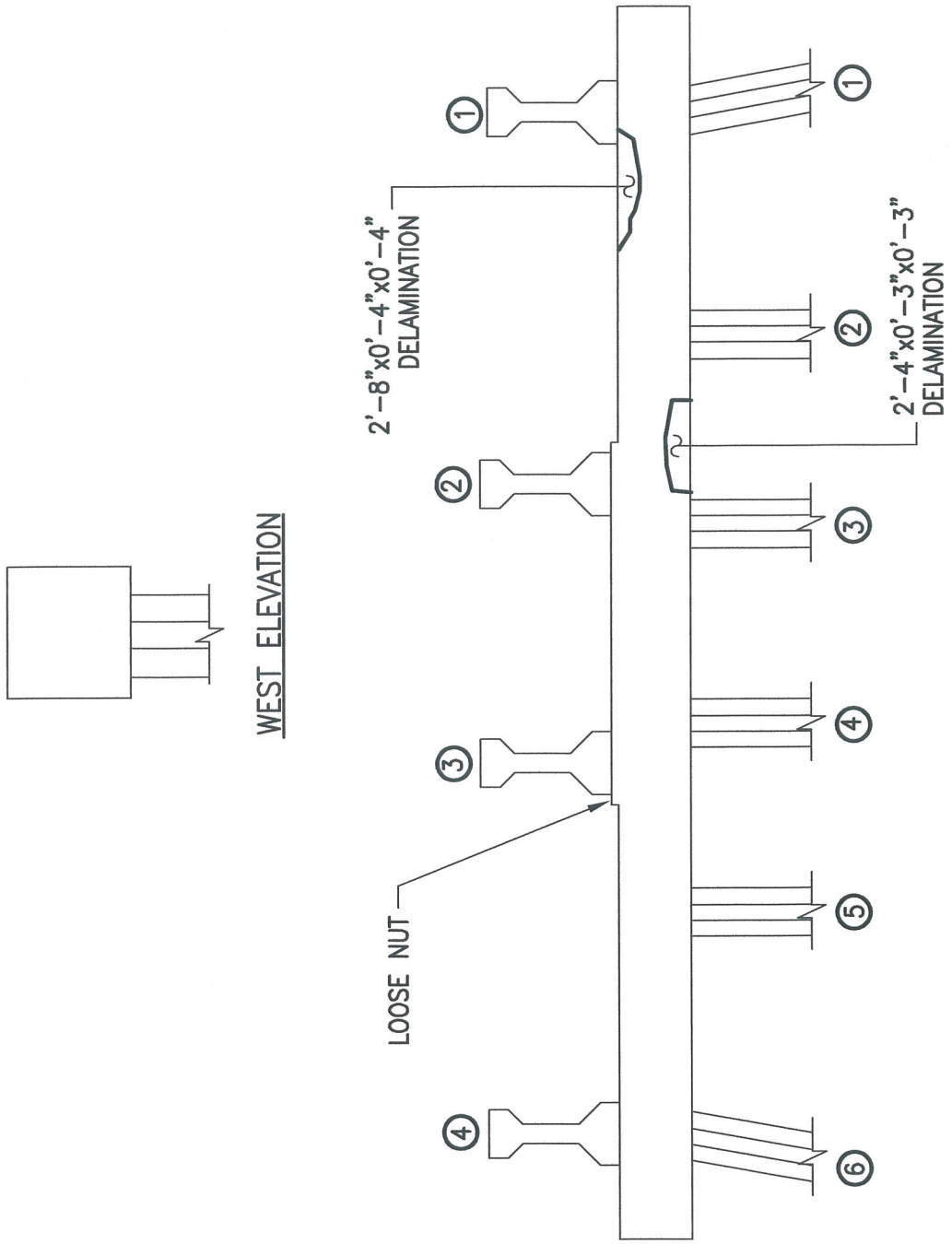

ALPHA & OMEGA GROUP
CIVIL & STRUCTURAL ENGINEERS
4911 Green Road Suite 107 Raleigh, NC 27616
Phone 919 981 0310 Fax 919 981 0451
Email info@aogroup.com www.aogroup.com

BRIDGE NO:	270011		
COUNTY:	DARE		
PREPARED BY:	OHS	CHECKED BY:	TGZ
SCALE:	NTS		
DATE:	6/20/06	SHT 306 OF 1347	

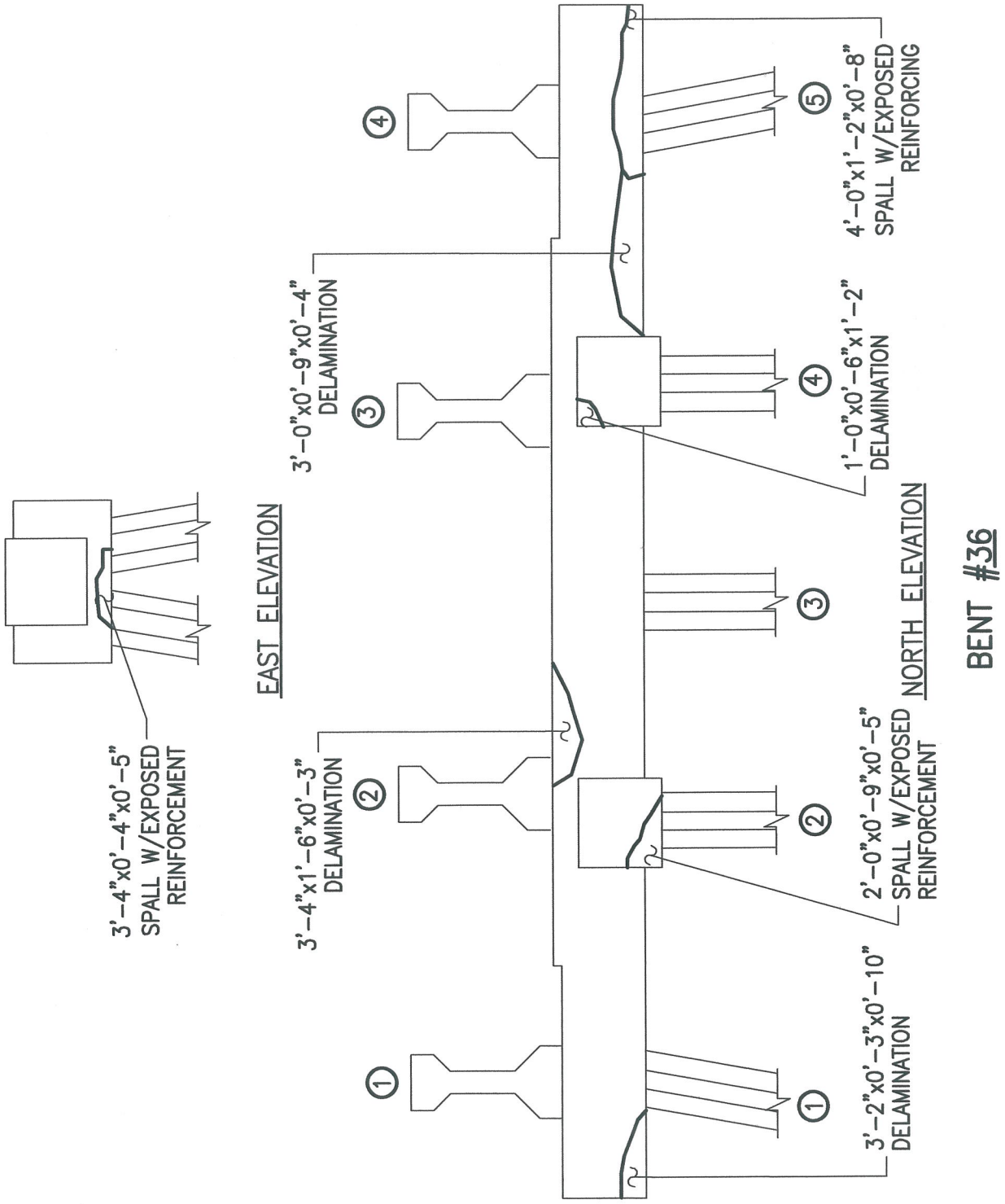

ALPHA & OMEGA GROUP
CIVIL & STRUCTURAL ENGINEERS
4911 Green Road Suite 107 Raleigh, NC 27616
Phone 919 981 0310 Fax 919 981 0451
Email info@aogroup.com www.aogroup.com

BRIDGE NO:	270011		
COUNTY:	DARE		
PREPARED BY:	OHS	CHECKED BY:	FER
SCALE:	NTS		
DATE:	6/20/06	SHT 309 OF 1347	

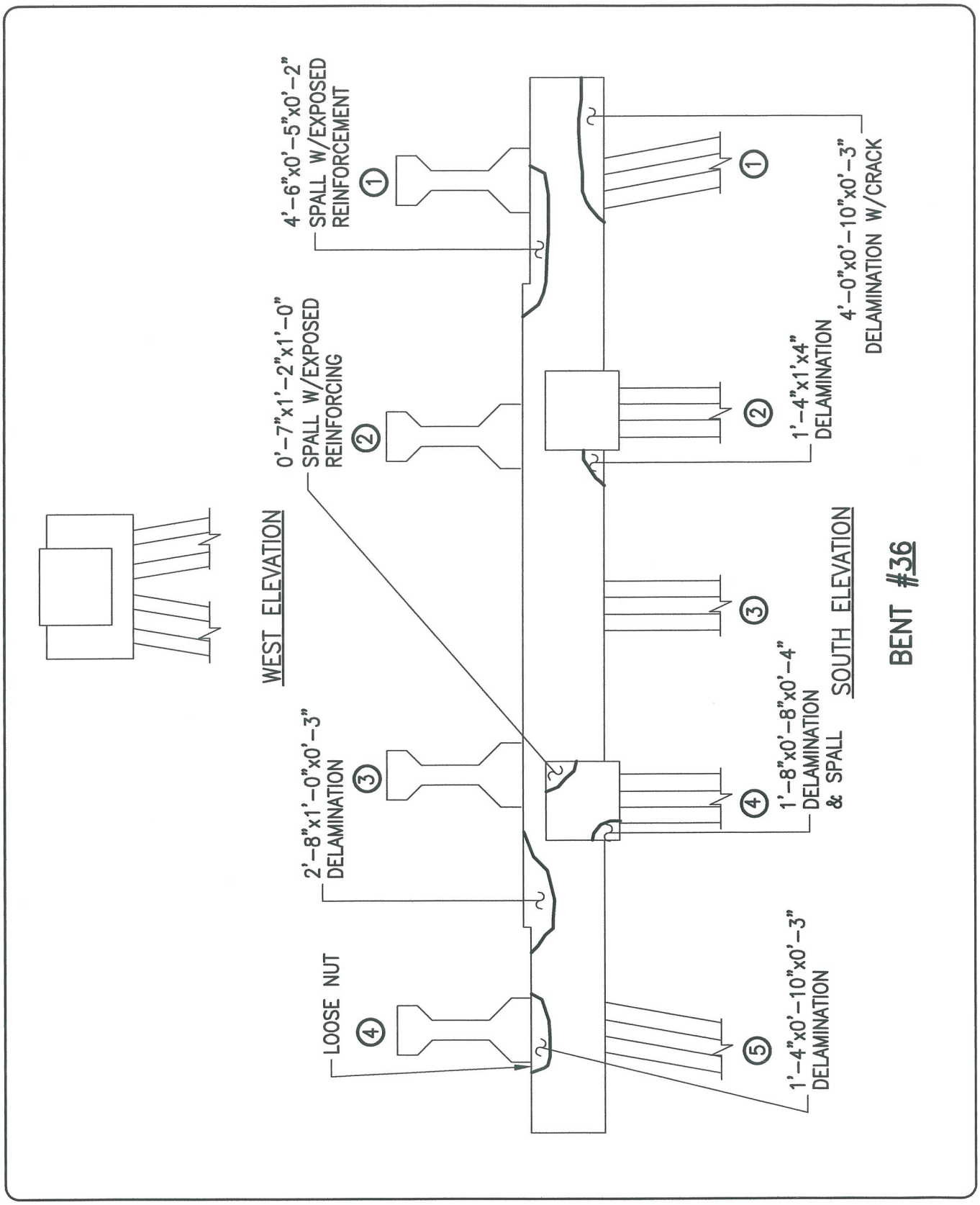

ALPHA & OMEGA GROUP
CIVIL & STRUCTURAL ENGINEERS

4911 Green Road Suite 107 Raleigh, NC 27616
Phone 919 981 0310 Fax 919 981 0451
Email info@aogroup.com www.aogroup.com

BRIDGE NO:	270011		
COUNTY:	DARE		
PREPARED BY:	OHS	CHECKED BY:	FER
SCALE:	NTS		
DATE:	6/20/06	SHT 312 OF 1347	

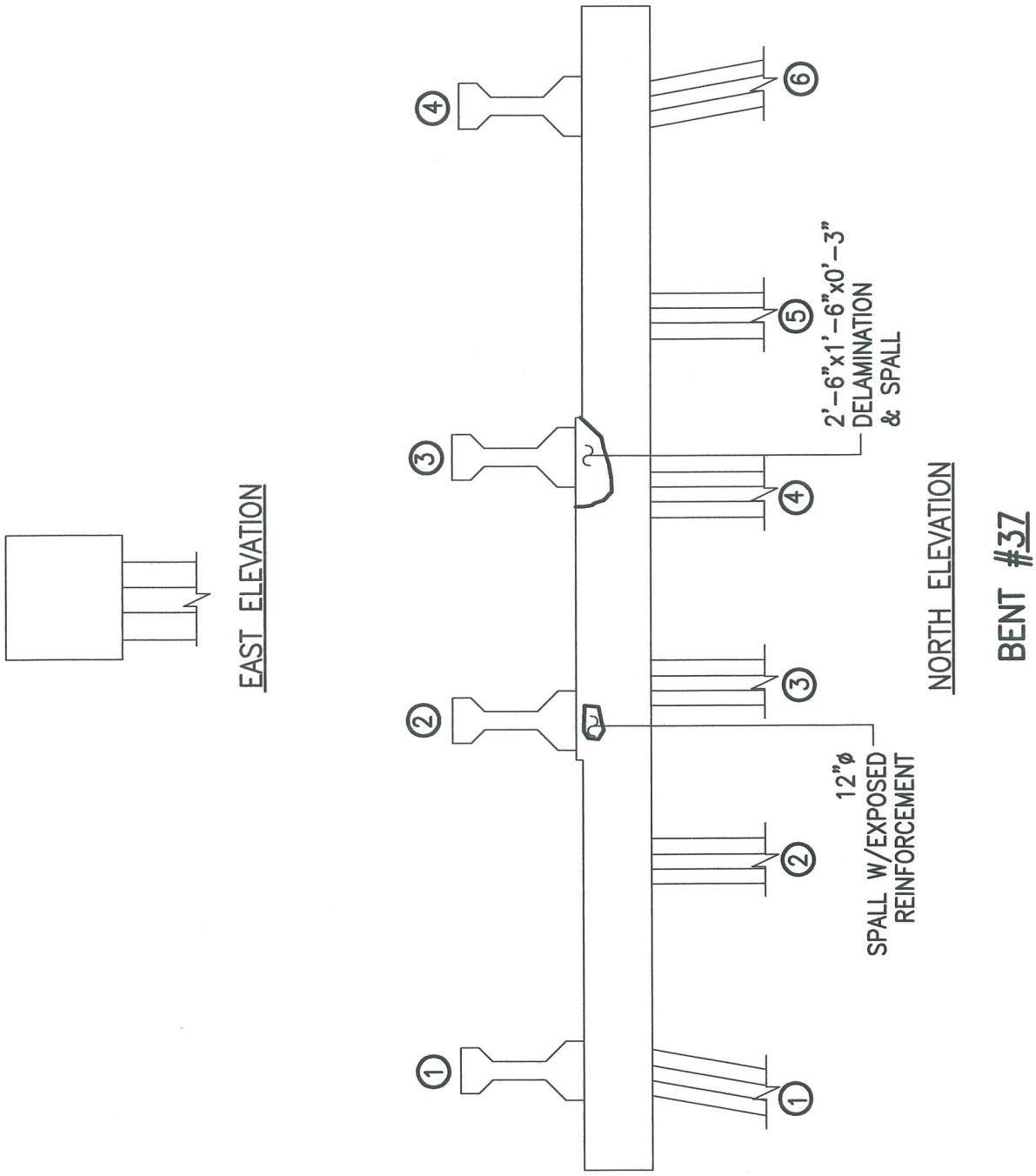

ALPHA & OMEGA GROUP
CIVIL & STRUCTURAL ENGINEERS
4911 Green Road Suite 107 Raleigh, NC 27616
Phone 919 981 0310 Fax 919 981 0451
Email info@aogroup.com www.aogroup.com

BRIDGE NO:	270011		
COUNTY:	DARE		
PREPARED BY:	OHS	CHECKED BY:	FER
SCALE:	NTS		
DATE:	6/20/06	SHT 315 OF 1347	

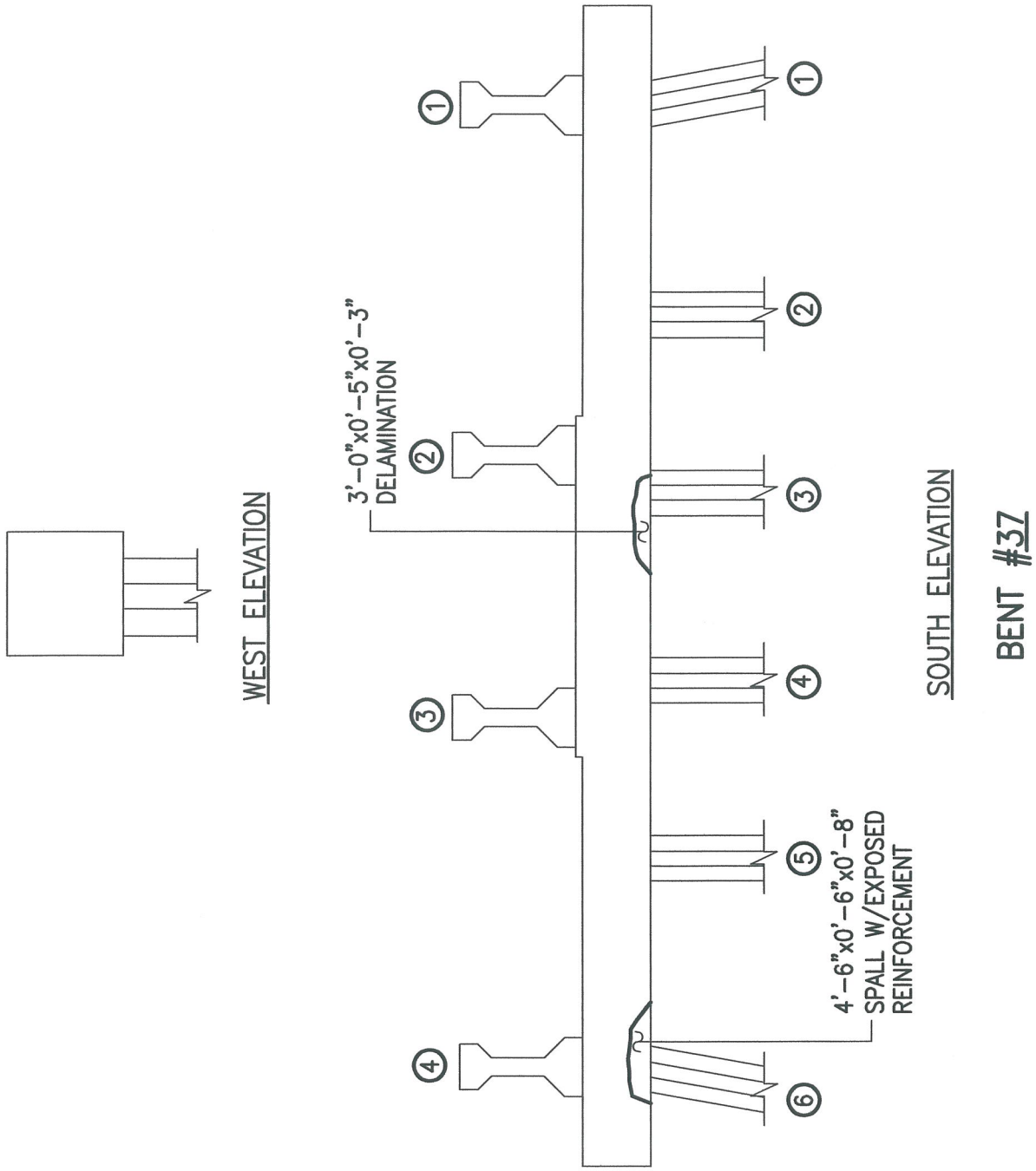

ALPHA & OMEGA GROUP
CIVIL & STRUCTURAL ENGINEERS
4911 Green Road Suite 107 Raleigh, NC 27616
Phone 919 981 0310 Fax 919 981 0451
Email info@aogroup.com www.aogroup.com

BRIDGE NO:	270011		
COUNTY:	DARE		
PREPARED BY:	OHS	CHECKED BY:	FER
SCALE:	NTS		
DATE:	6/20/06	SHT 318 OF 1347	

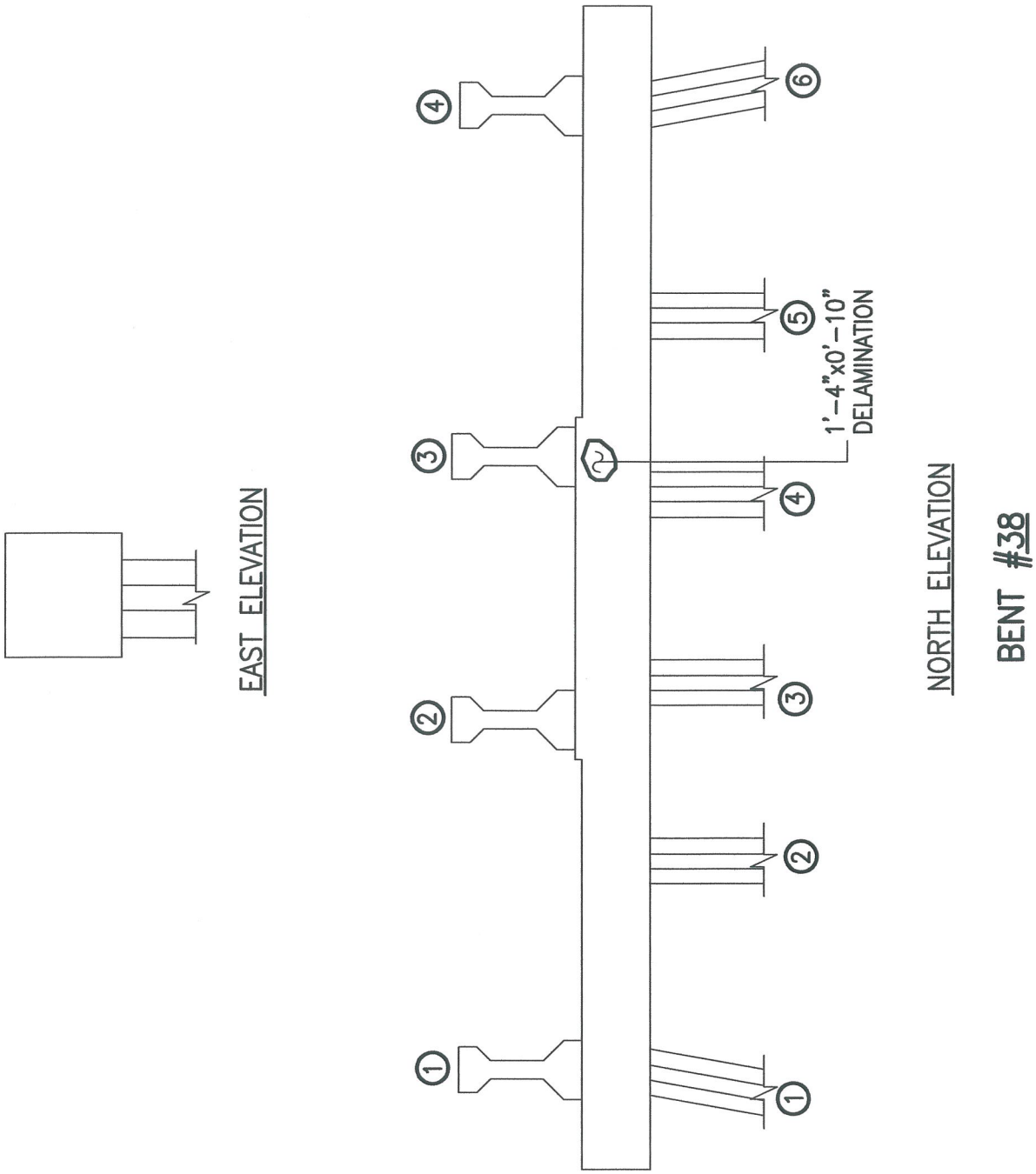

ALPHA & OMEGA GROUP
CIVIL & STRUCTURAL ENGINEERS
4911 Green Road Suite 107 Raleigh, NC 27616
Phone 919 981 0310 Fax 919 981 0451
Email info@aogroup.com www.aogroup.com

BRIDGE NO:	270011		
COUNTY:	DARE		
PREPARED BY:	OHS	CHECKED BY:	FER
SCALE:	NTS		
DATE:	6/20/06	SHT 321 OF 1347	

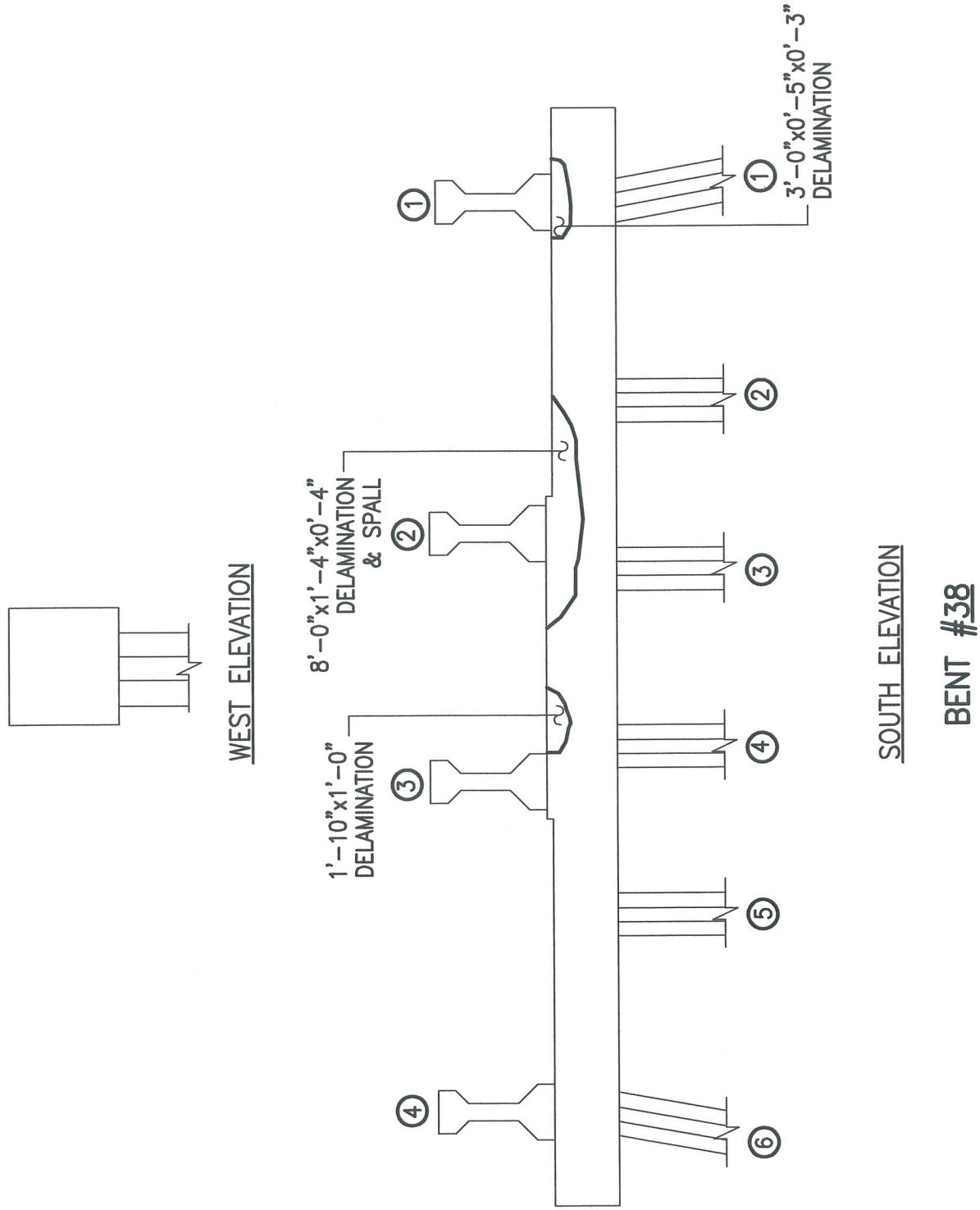

ALPHA & OMEGA GROUP
CIVIL & STRUCTURAL ENGINEERS
4911 Green Road Suite 107 Raleigh, NC 27616
Phone 919 981 0310 Fax 919 981 0451
Email info@aogroup.com www.aogroup.com

BRIDGE NO:	270011		
COUNTY:	DARE		
PREPARED BY:	OHS	CHECKED BY:	FER
SCALE:	NTS		
DATE:	6/20/06	SHT 324 OF 1347	

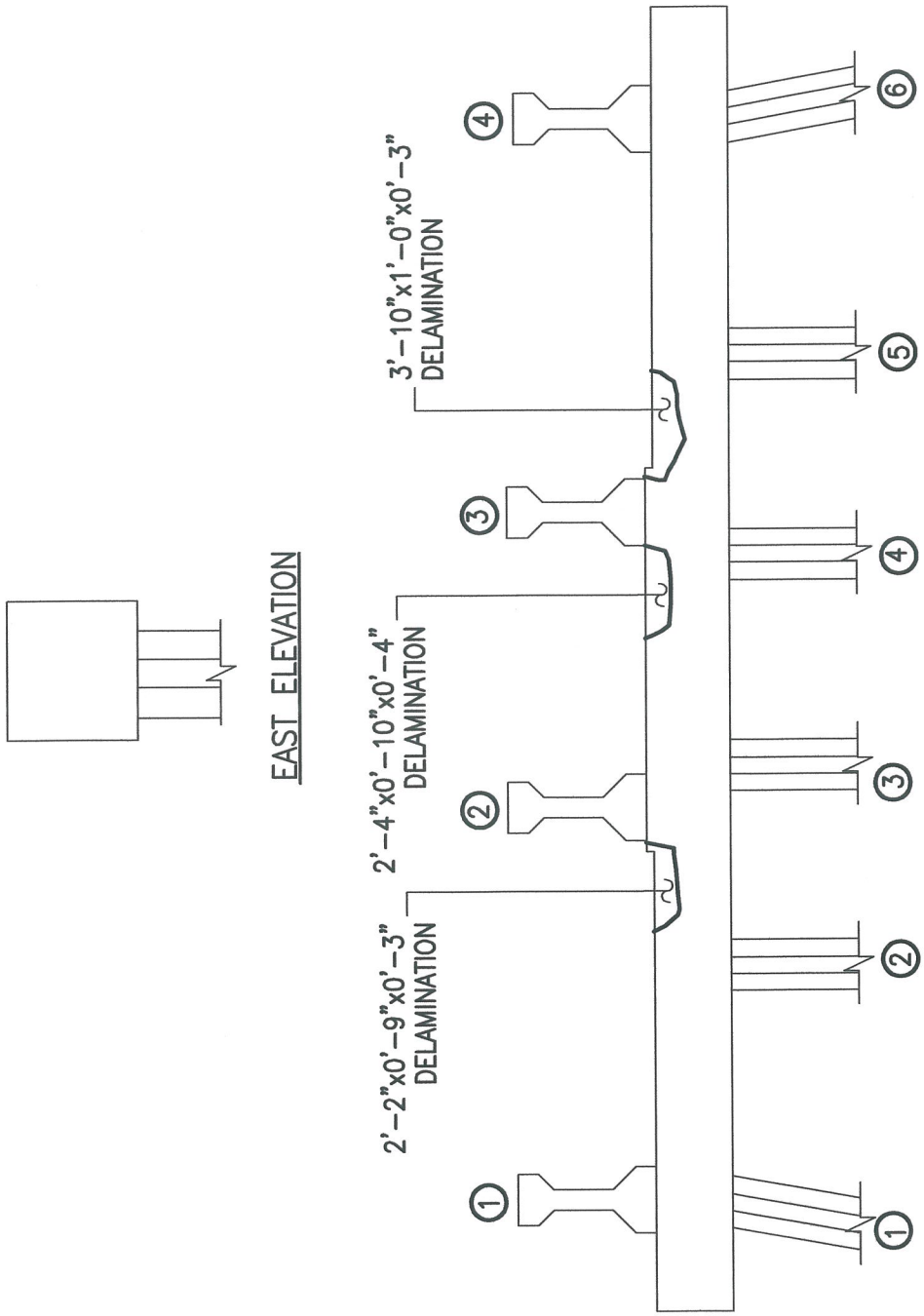

ALPHA & OMEGA GROUP
CIVIL & STRUCTURAL ENGINEERS
4911 Green Road Suite 107 Raleigh, NC 27616
Phone 919 981 0310 Fax 919 981 0451
Email info@aogroup.com www.aogroup.com

BRIDGE NO:	270011		
COUNTY:	DARE		
PREPARED BY:	OHS	CHECKED BY:	FER
SCALE:	NTS		
DATE:	6/20/06	SHT 327 OF 1347	

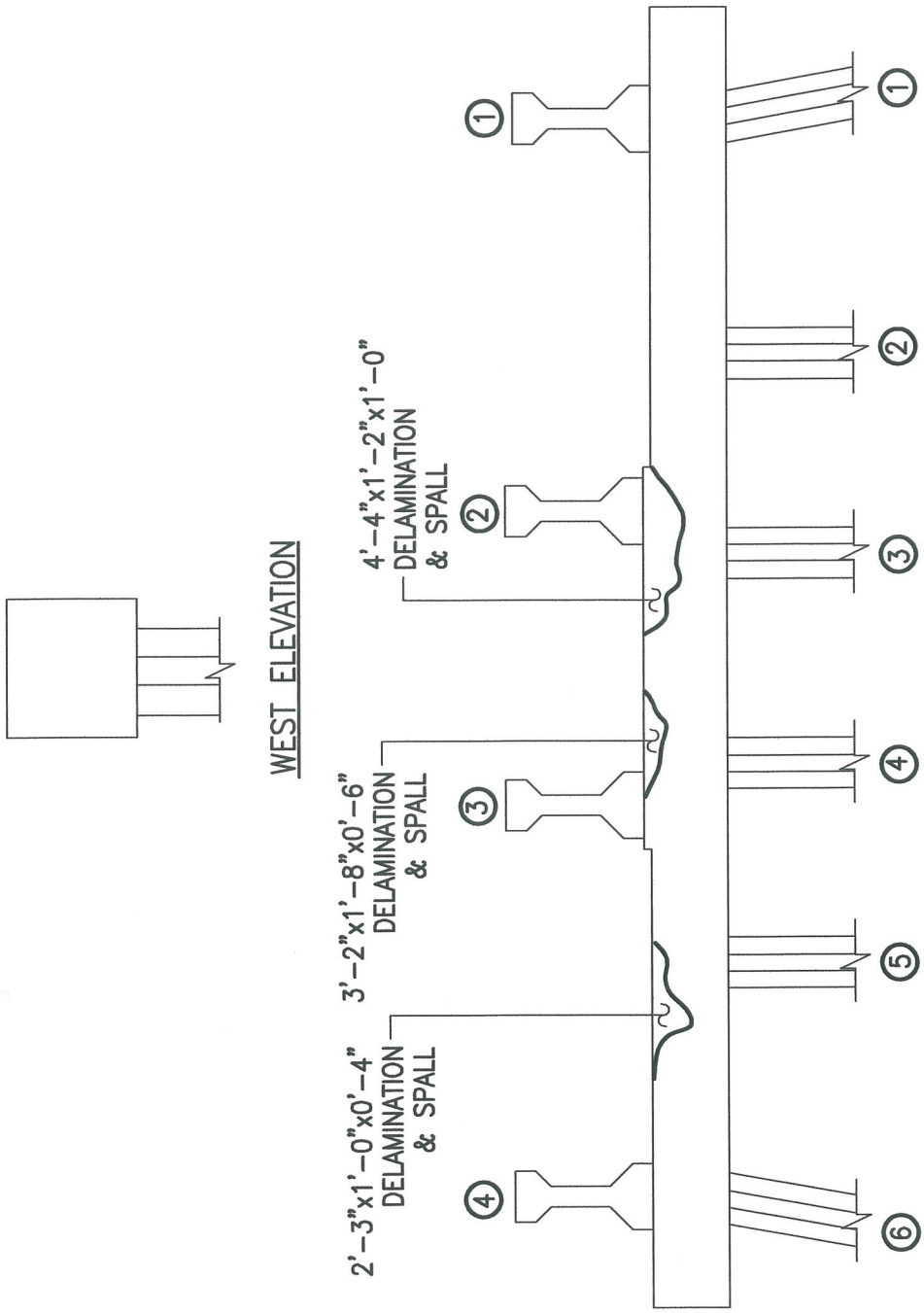

ALPHA & OMEGA GROUP
CIVIL & STRUCTURAL ENGINEERS
4911 Green Road Suite 107 Raleigh, NC 27616
Phone 919 981 0310 Fax 919 981 0451
Email info@aogroup.com www.aogroup.com

BRIDGE NO:	270011		
COUNTY:	DARE		
PREPARED BY:	OHS	CHECKED BY:	FER
SCALE:	NTS		
DATE:	6/20/06	SHT 330 OF 1347	

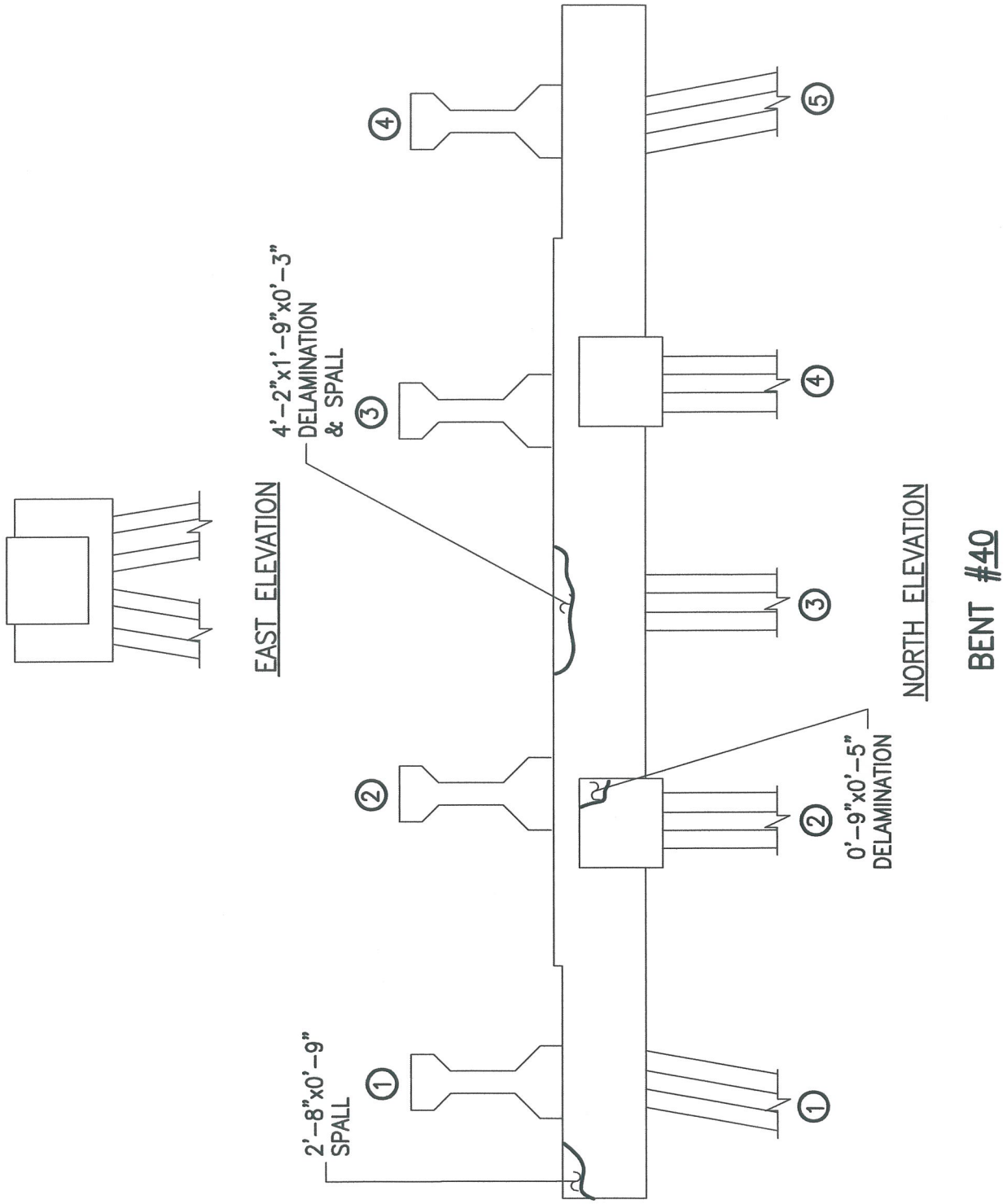

ALPHA & OMEGA GROUP
CIVIL & STRUCTURAL ENGINEERS
4911 Green Road Suite 107 Raleigh, NC 27616
Phone 919 981 0310 Fax 919 981 0451
Email info@aogroup.com www.aogroup.com

BRIDGE NO:	270011		
COUNTY:	DARE		
PREPARED BY:	OHS	CHECKED BY:	FER
SCALE:	NTS		
DATE:	6/20/06	SHT 333 OF 1347	

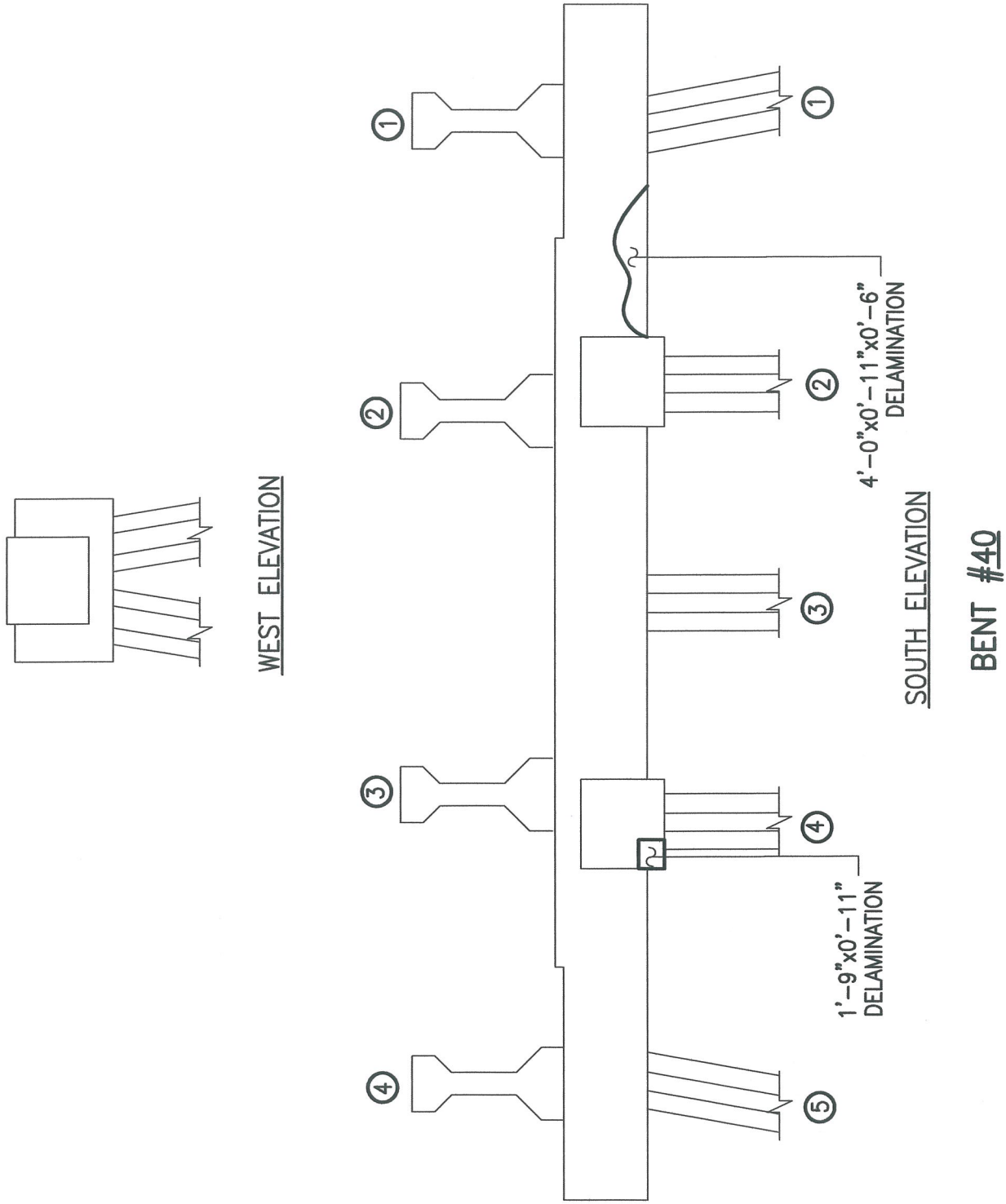

ALPHA & OMEGA GROUP
CIVIL & STRUCTURAL ENGINEERS
4911 Green Road Suite 107 Raleigh, NC 27616
Phone 919 981 0310 Fax 919 981 0451
Email info@aogroup.com www.aogroup.com

BRIDGE NO:	270011		
COUNTY:	DARE		
PREPARED BY:	OHS	CHECKED BY:	FER
SCALE:	NTS		
DATE:	6/20/06	SHT 336 OF 1347	

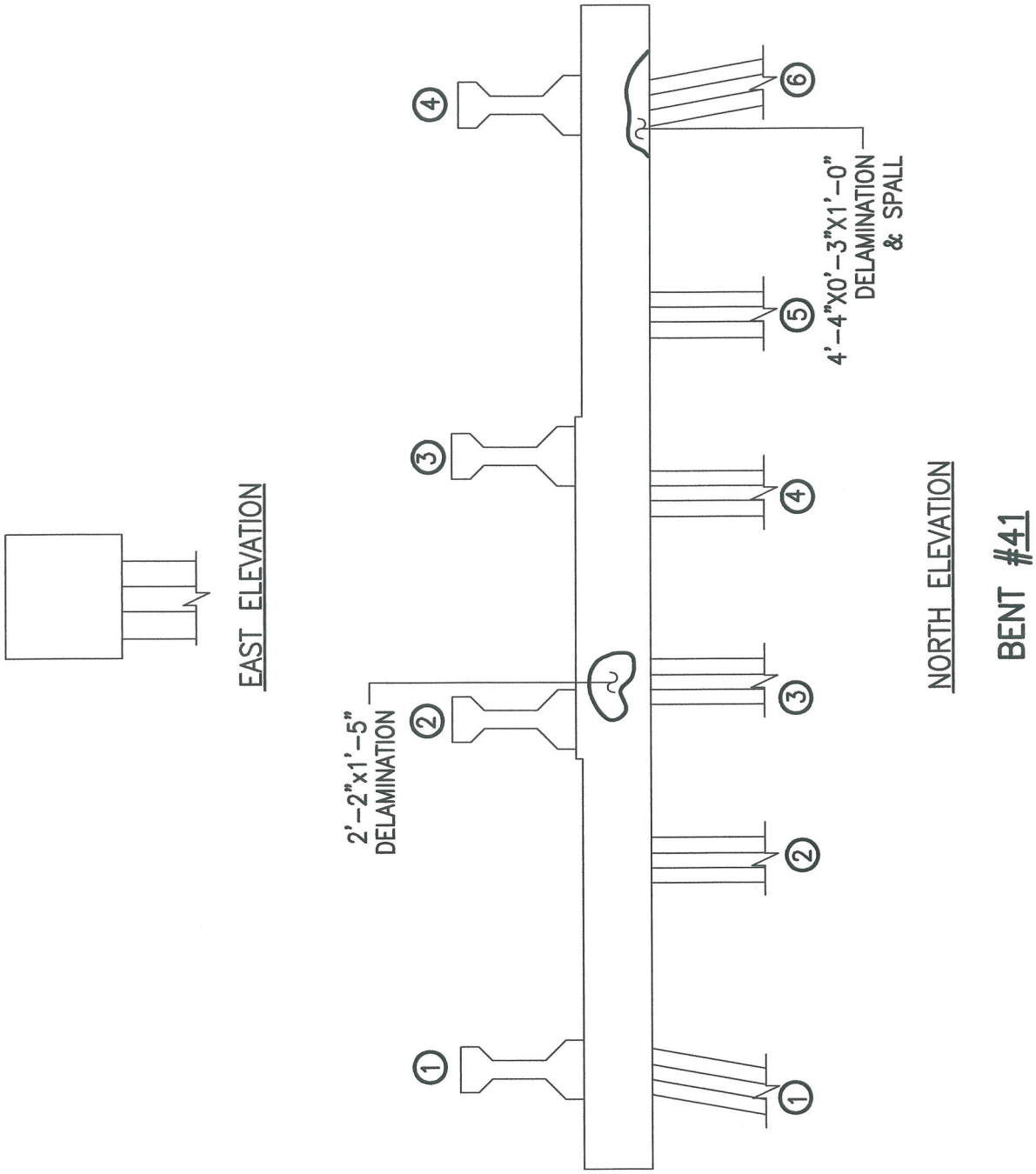

ALPHA & OMEGA GROUP
CIVIL & STRUCTURAL ENGINEERS
4911 Green Road Suite 107 Raleigh, NC 27616
Phone 919 981 0310 Fax 919 981 0451
Email info@aogroup.com www.aogroup.com

BRIDGE NO:	270011		
COUNTY:	DARE		
PREPARED BY:	OHS	CHECKED BY:	FER
SCALE:	NTS		
DATE:	6/20/06	SHT 339 OF 1347	

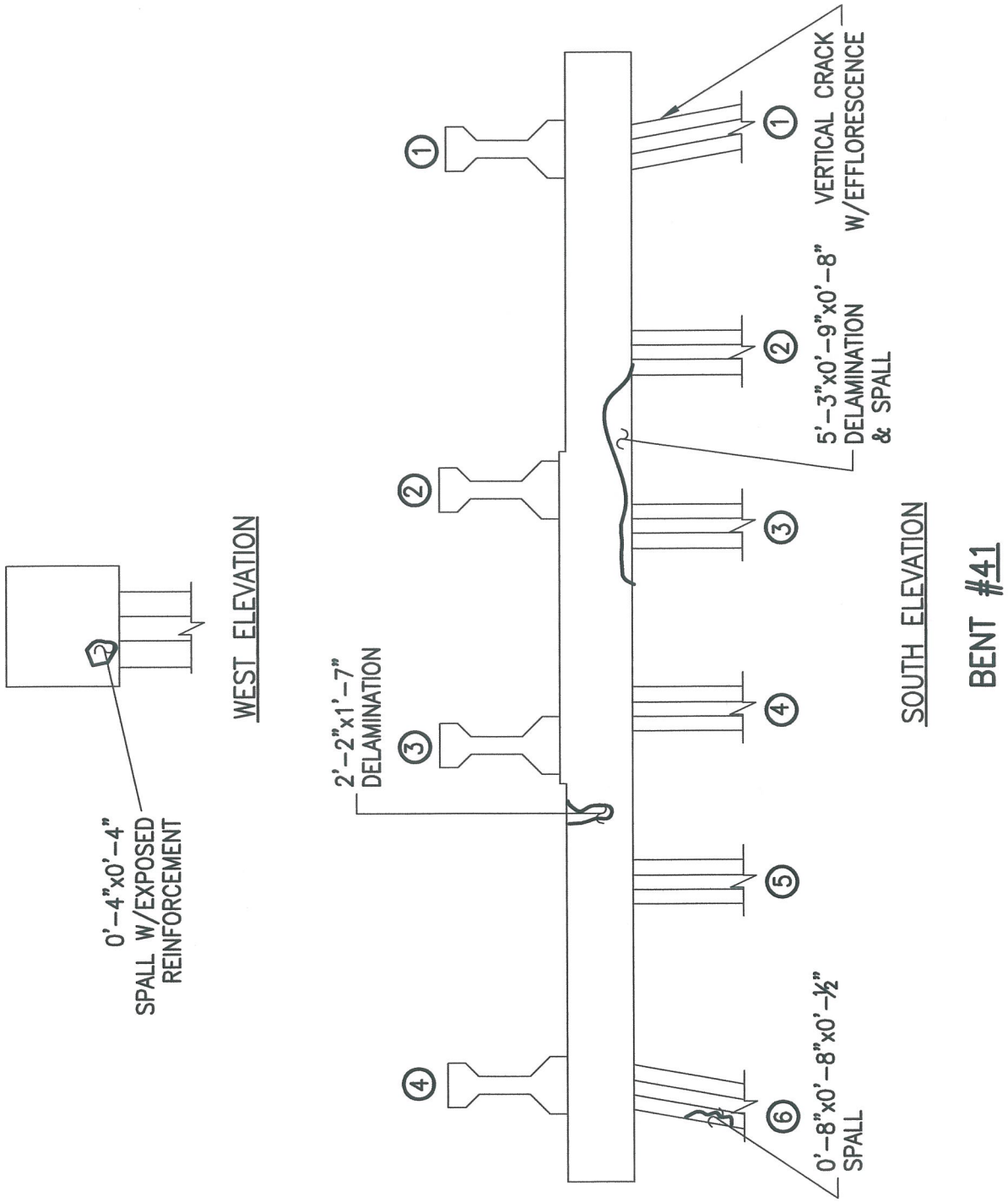

ALPHA & OMEGA GROUP
CIVIL & STRUCTURAL ENGINEERS
4911 Green Road Suite 107 Raleigh, NC 27616
Phone 919 981 0310 Fax 919 981 0451
Email info@aogroup.com www.aogroup.com

BRIDGE NO:	270011		
COUNTY:	DARE		
PREPARED BY:	OHS	CHECKED BY:	FER
SCALE:	NTS		
DATE:	6/20/06	SHT 342 OF 1347	

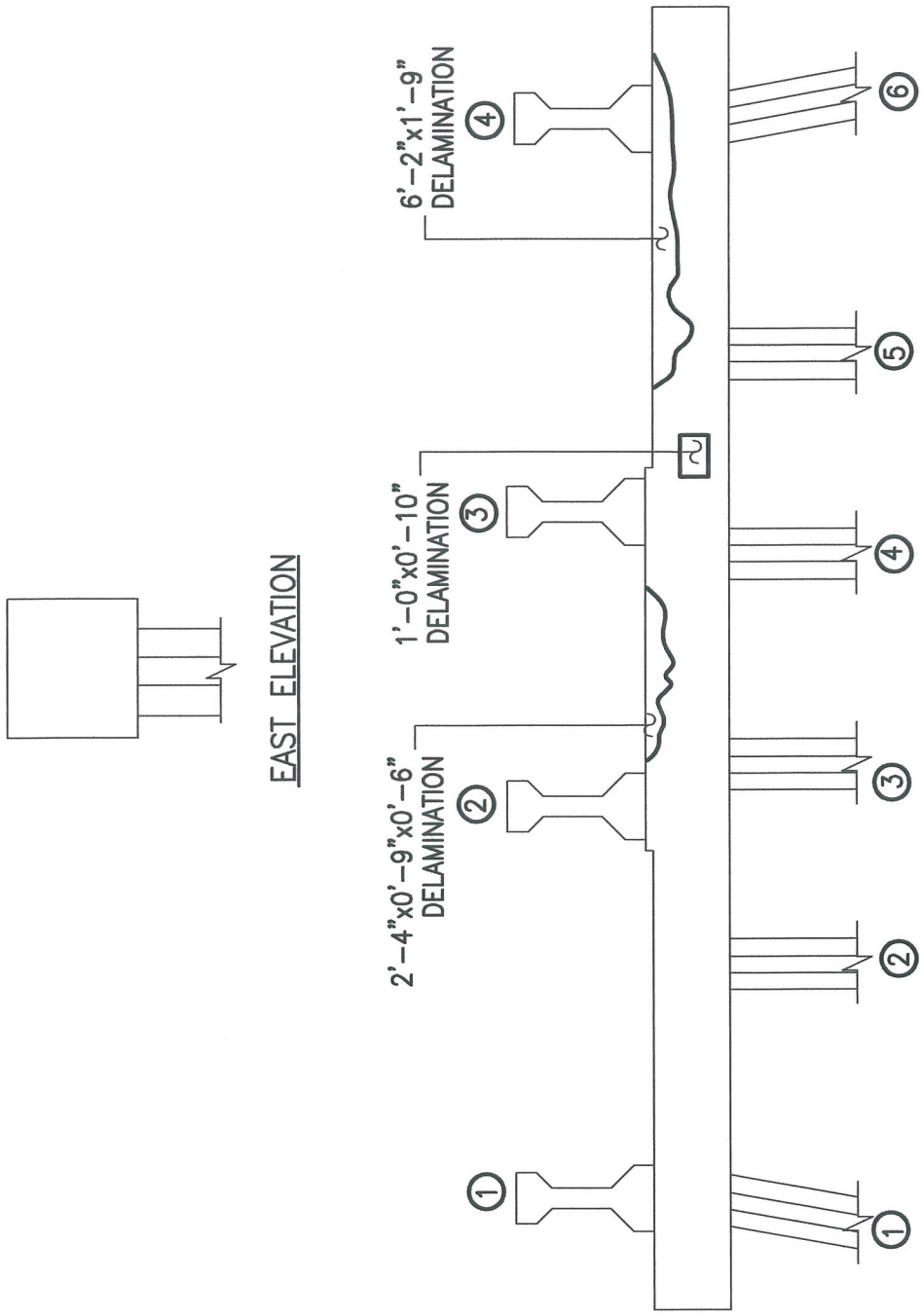

ALPHA & OMEGA GROUP
CIVIL & STRUCTURAL ENGINEERS
4911 Green Road Suite 107 Raleigh, NC 27616
Phone 919 981 0310 Fax 919 981 0451
Email info@aogroup.com www.aogroup.com

BRIDGE NO:	270011		
COUNTY:	DARE		
PREPARED BY:	OHS	CHECKED BY:	FER
SCALE:	NTS		
DATE:	6/20/06	SHT 345 OF 1347	

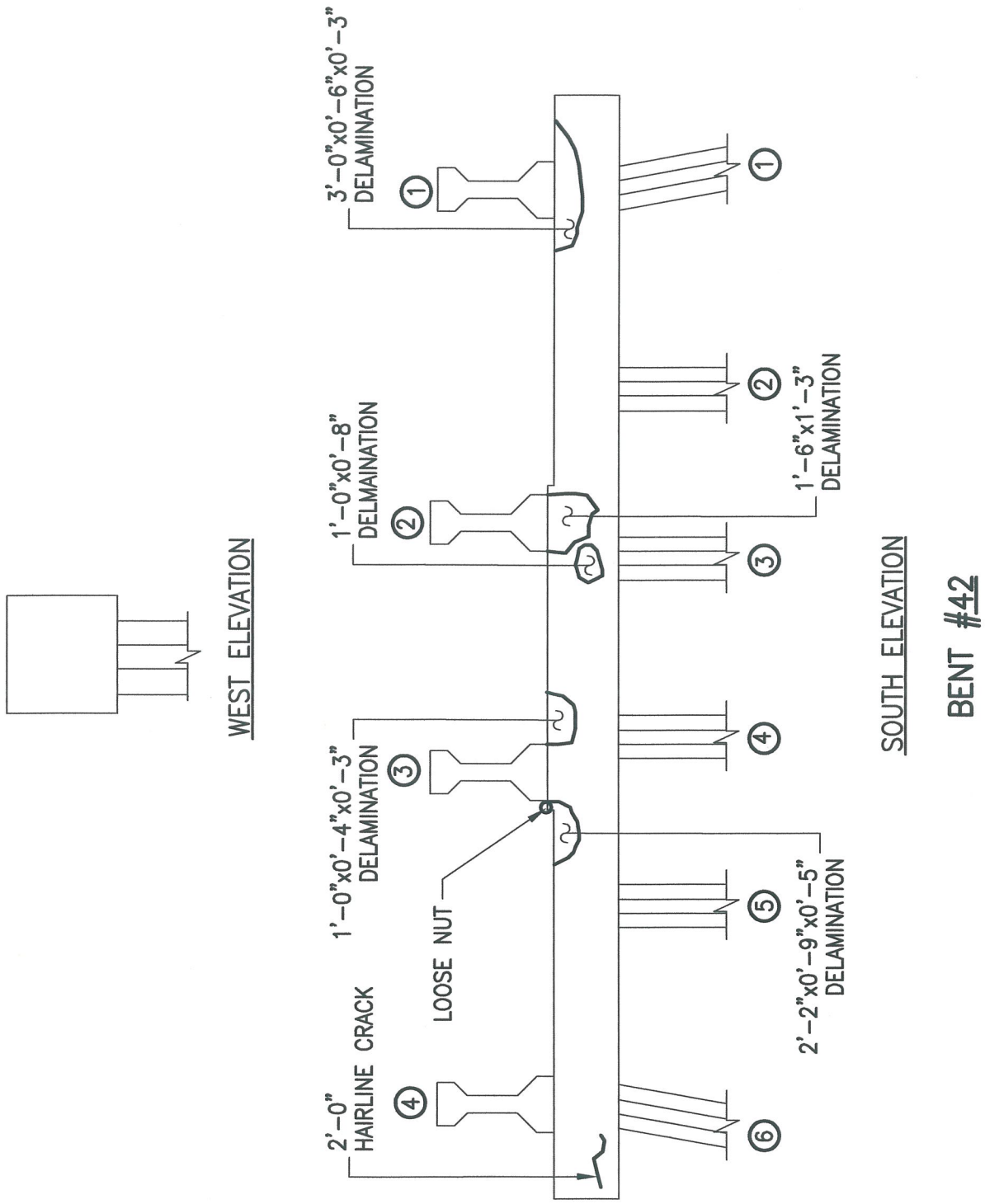

ALPHA & OMEGA GROUP
CIVIL & STRUCTURAL ENGINEERS
4911 Green Road Suite 107 Raleigh, NC 27616
Phone 919 981 0310 Fax 919 981 0451
Email info@aogroup.com www.aogroup.com

BRIDGE NO:	270011		
COUNTY:	DARE		
PREPARED BY:	OHS	CHECKED BY:	FER
SCALE:	NTS		
DATE:	6/20/06	SHT 348 OF 1347	

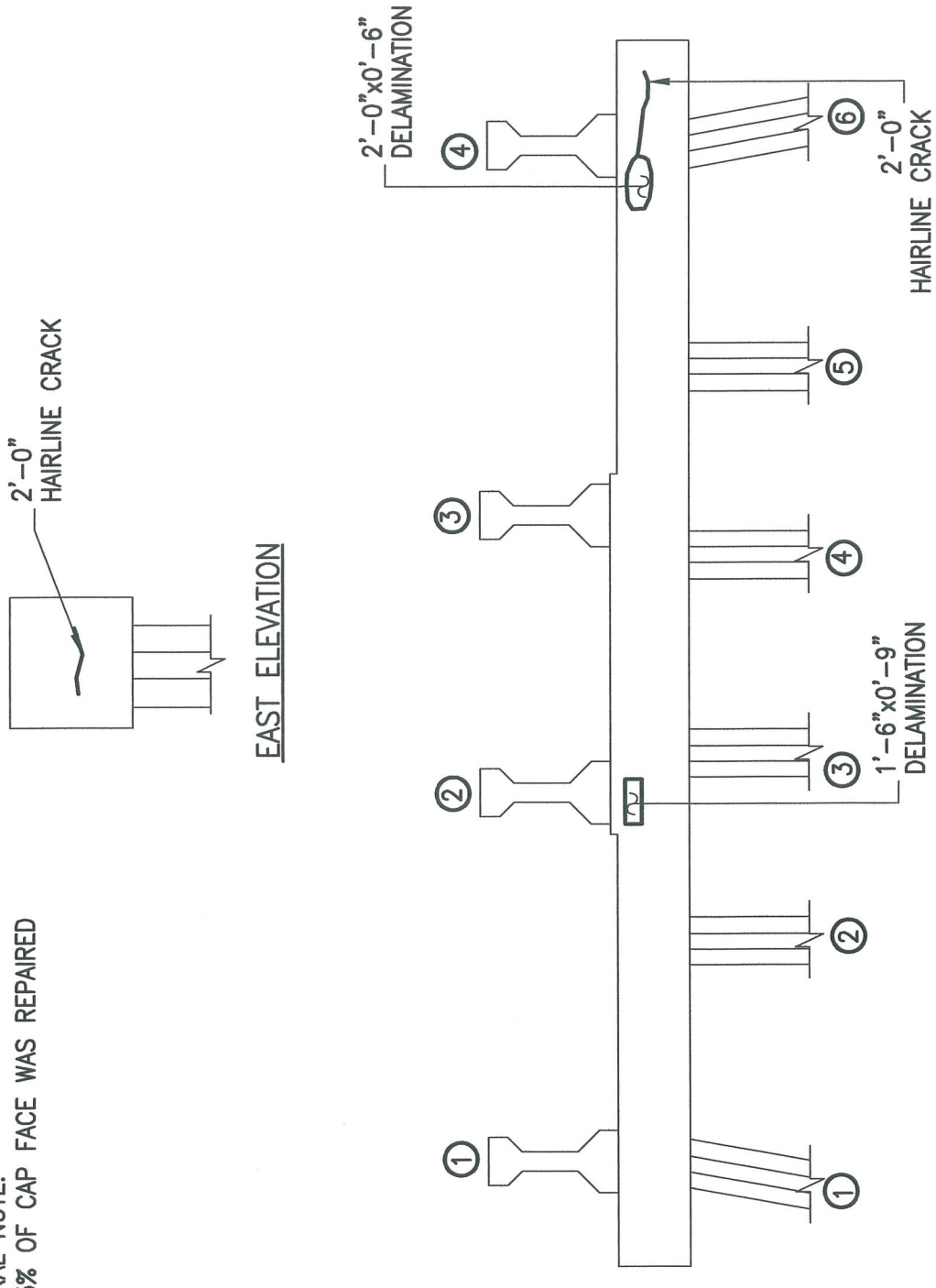

GENERAL NOTE:
1. 75% OF CAP FACE WAS REPAIRED

ALPHA & OMEGA GROUP
CIVIL & STRUCTURAL ENGINEERS
4911 Green Road Suite 107 Raleigh, NC 27616
Phone 919 981 0310 Fax 919 981 0451
Email info@aogroup.com www.aogroup.com

BRIDGE NO:	270011		
COUNTY:	DARE		
PREPARED BY:	OHS	CHECKED BY:	FER
SCALE:	NTS		
DATE:	6/20/06	SHT 351 OF 1347	

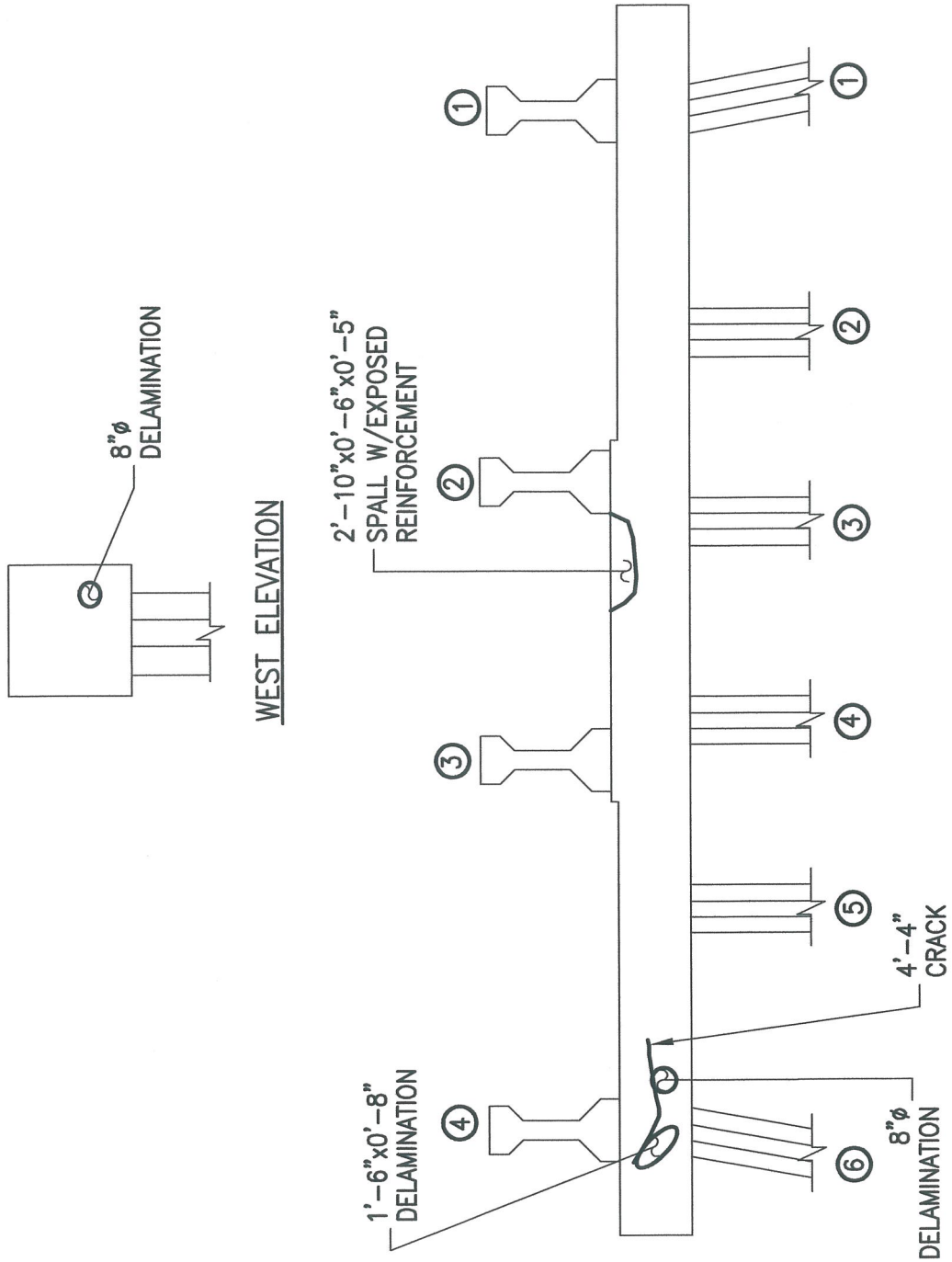

ALPHA & OMEGA GROUP
CIVIL & STRUCTURAL ENGINEERS
4911 Green Road Suite 107 Raleigh, NC 27616
Phone 919 981 0310 Fax 919 981 0451
Email info@aogroup.com www.aogroup.com

BRIDGE NO:	270011		
COUNTY:	DARE		
PREPARED BY:	OHS	CHECKED BY:	FER
SCALE:	NTS		
DATE:	6/20/06	SHT 354 OF 1347	

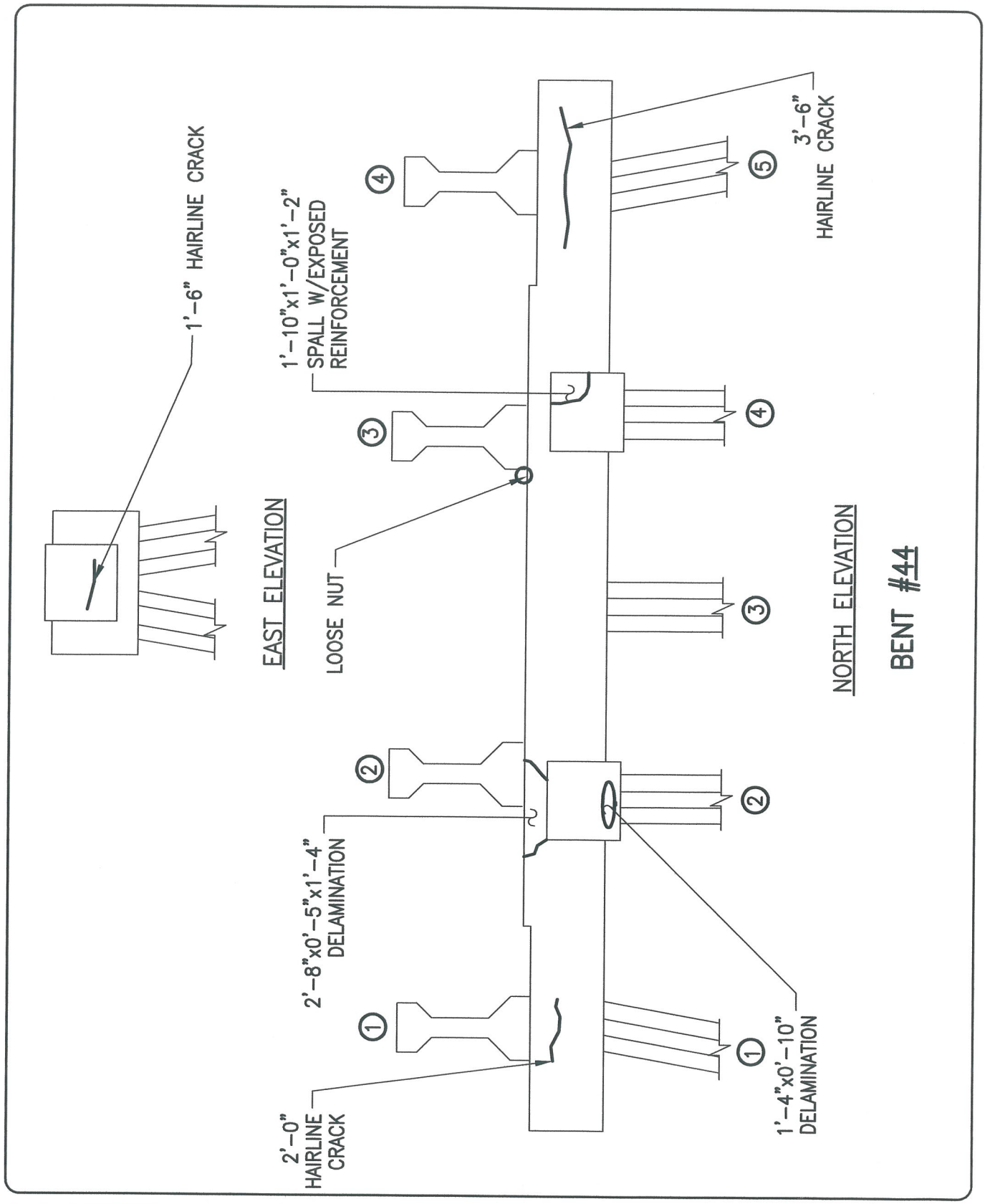

ALPHA & OMEGA GROUP
CIVIL & STRUCTURAL ENGINEERS
4911 Green Road Suite 107 Raleigh, NC 27616
Phone 919 981 0310 Fax 919 981 0451
Email info@aogroup.com www.aogroup.com

BRIDGE NO:	270011		
COUNTY:	DARE		
PREPARED BY:	OHS	CHECKED BY:	FER
SCALE:	NTS		
DATE:	6/20/06	SHT 357 OF 1347	

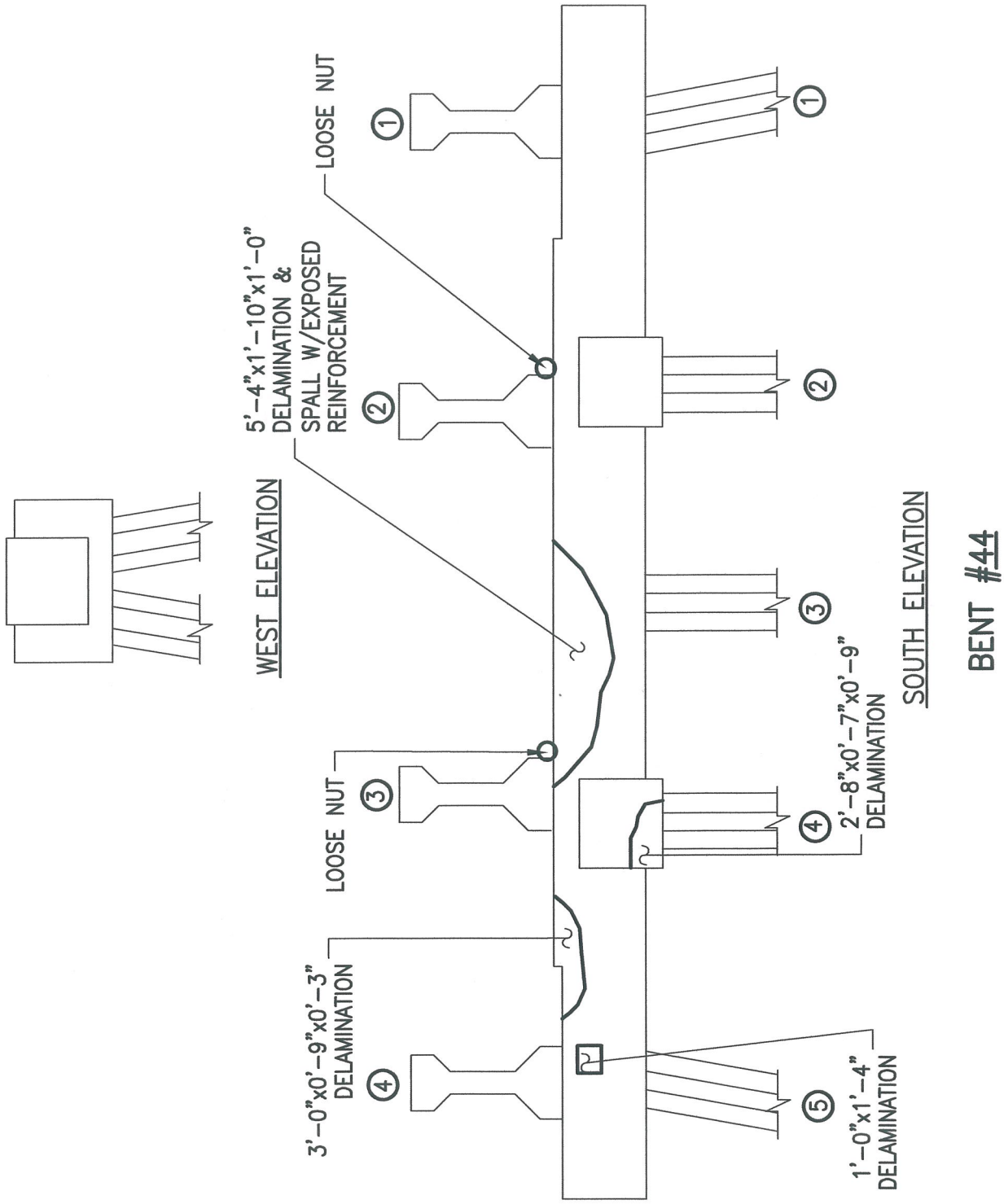

ALPHA & OMEGA GROUP
CIVIL & STRUCTURAL ENGINEERS
4911 Green Road Suite 107 Raleigh, NC 27616
Phone 919 981 0310 Fax 919 981 0451
Email info@aogroup.com www.aogroup.com

BRIDGE NO:	270011		
COUNTY:	DARE		
PREPARED BY:	OHS	CHECKED BY:	FER
SCALE:	NTS		
DATE:	6/20/06	SHT 360 OF 1347	

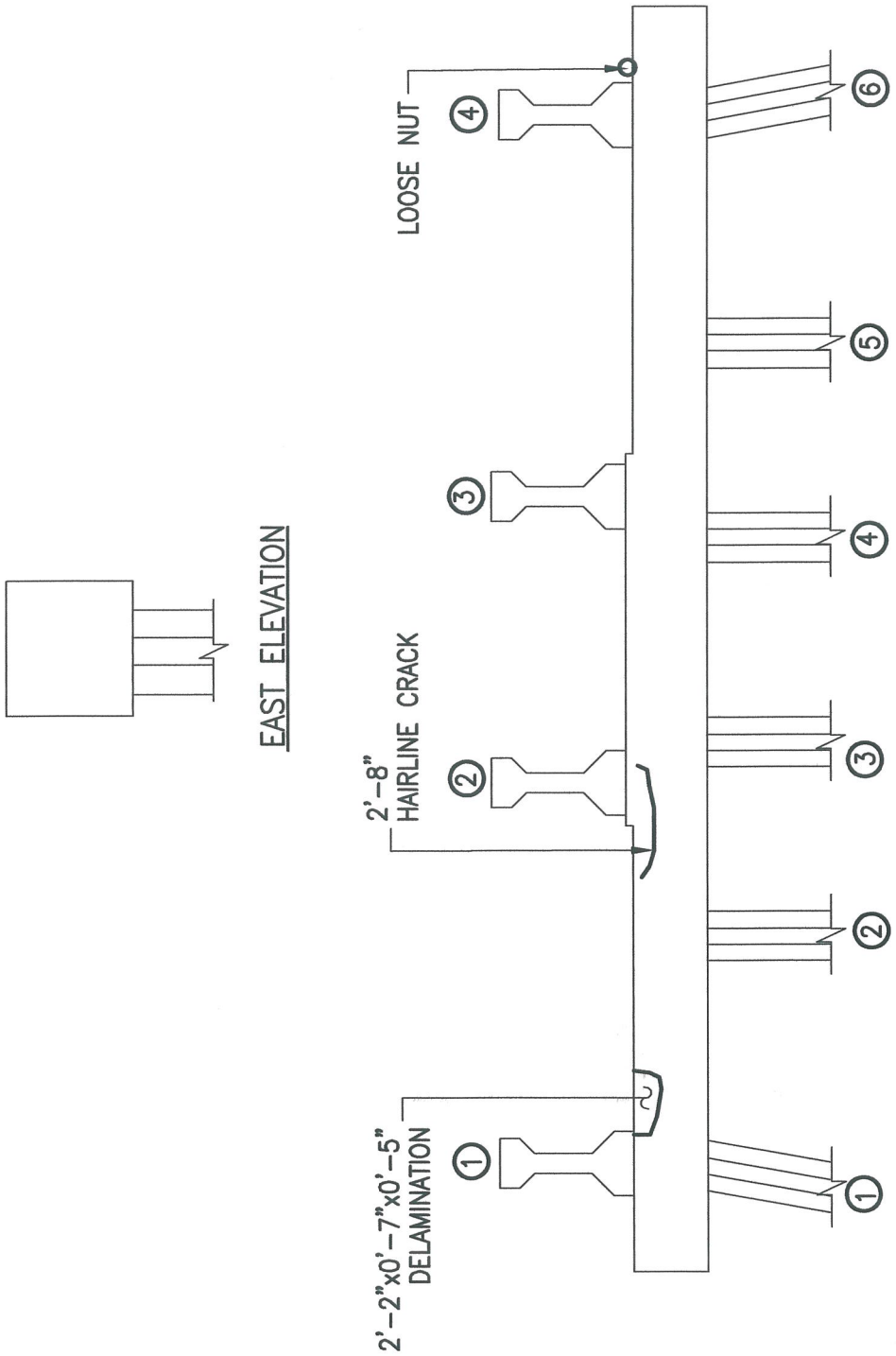

NORTH ELEVATION

BENT #45

ALPHA & OMEGA GROUP
CIVIL & STRUCTURAL ENGINEERS
4911 Green Road Suite 107 Raleigh, NC 27616
Phone 919 981 0310 Fax 919 981 0451
Email info@aogroup.com www.aogroup.com

BRIDGE NO:	270011		
COUNTY:	DARE		
PREPARED BY:	OHS	CHECKED BY:	FER
SCALE:	NTS		
DATE:	6/20/06	SHT 363 OF 1347	

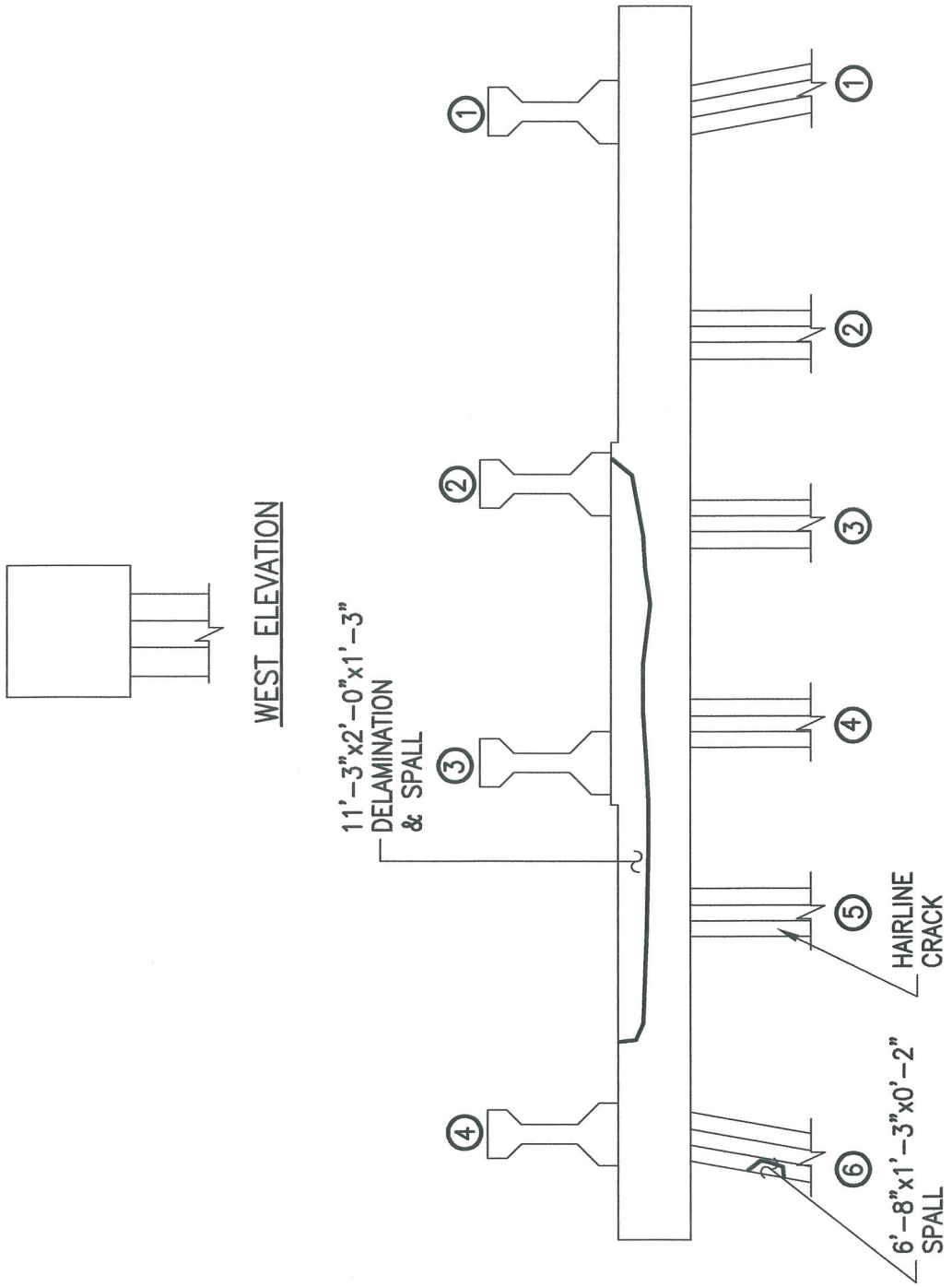

ALPHA & OMEGA GROUP
CIVIL & STRUCTURAL ENGINEERS
4911 Green Road Suite 107 Raleigh, NC 27616
Phone 919 981 0310 Fax 919 981 0451
Email info@aogroup.com www.aogroup.com

BRIDGE NO:	270011		
COUNTY:	DARE		
PREPARED BY:	OHS	CHECKED BY:	FER
SCALE:	NTS		
DATE:	6/20/06	SHT 365 OF 1347	

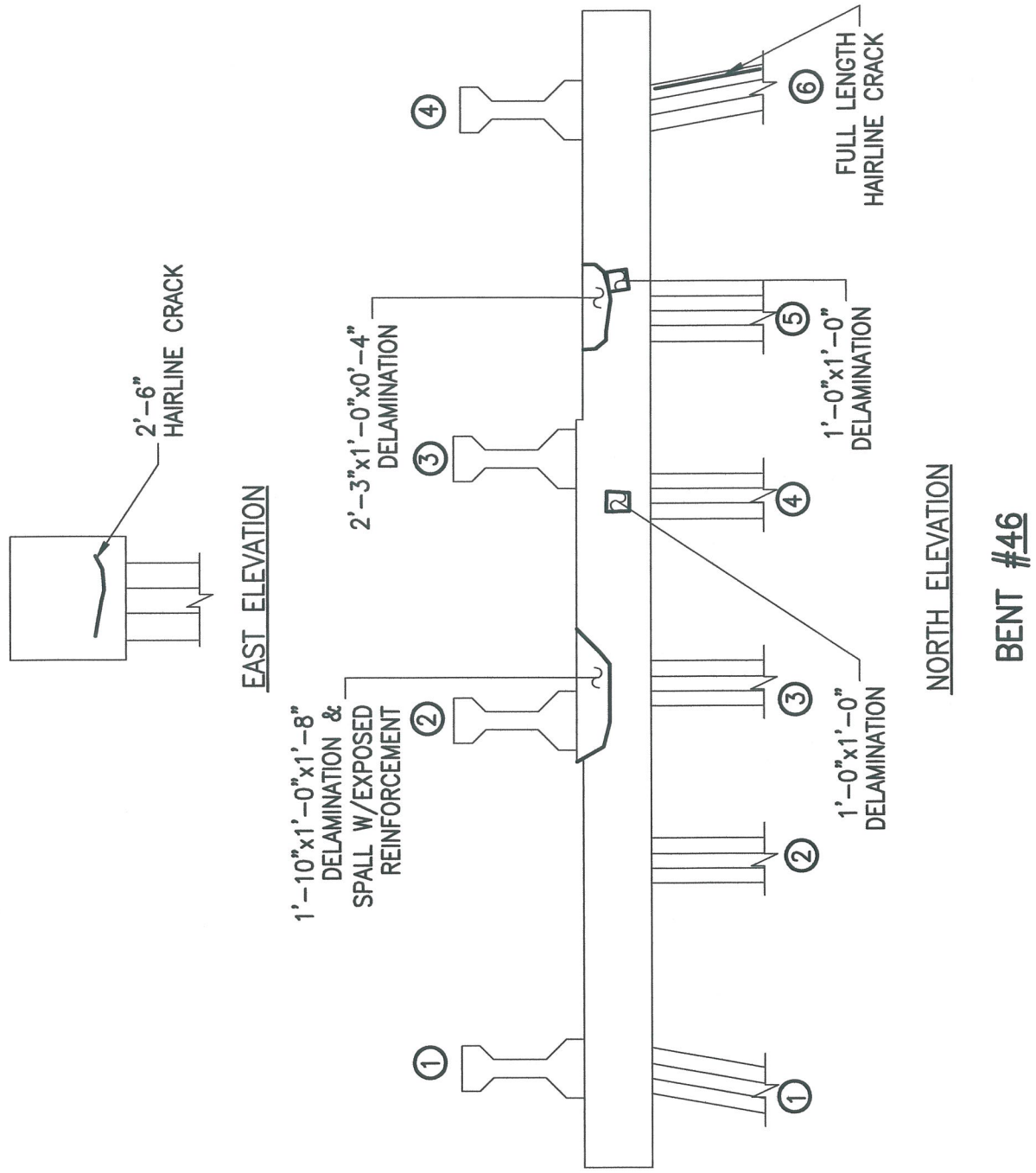

ALPHA & OMEGA GROUP
CIVIL & STRUCTURAL ENGINEERS
4911 Green Road Suite 107 Raleigh, NC 27616
Phone 919 981 0310 Fax 919 981 0451
Email info@aogroup.com www.aogroup.com

BRIDGE NO:	270011		
COUNTY:	DARE		
PREPARED BY:	OHS	CHECKED BY:	MTM
SCALE:	NTS		
DATE:	6/20/06	SHT 363 OF 1347	

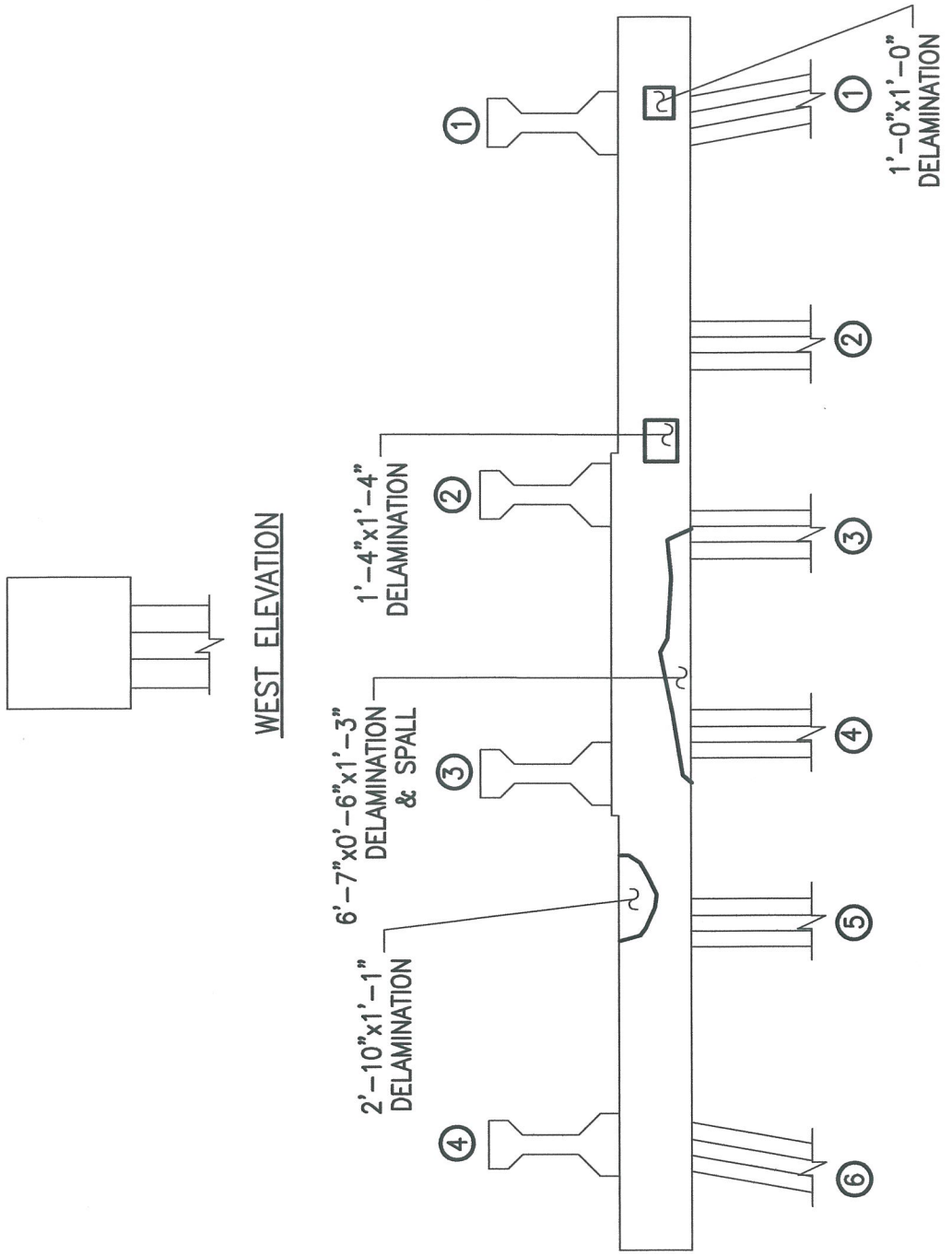

ALPHA & OMEGA GROUP
CIVIL & STRUCTURAL ENGINEERS
4911 Green Road Suite 107 Raleigh, NC 27616
Phone 919 981 0310 Fax 919 981 0451
Email info@aogroup.com www.aogroup.com

BRIDGE NO:	270011		
COUNTY:	DARE		
PREPARED BY:	OHS	CHECKED BY:	FER
SCALE:	NTS		
DATE:	6/20/06	SHT 371 OF 1347	

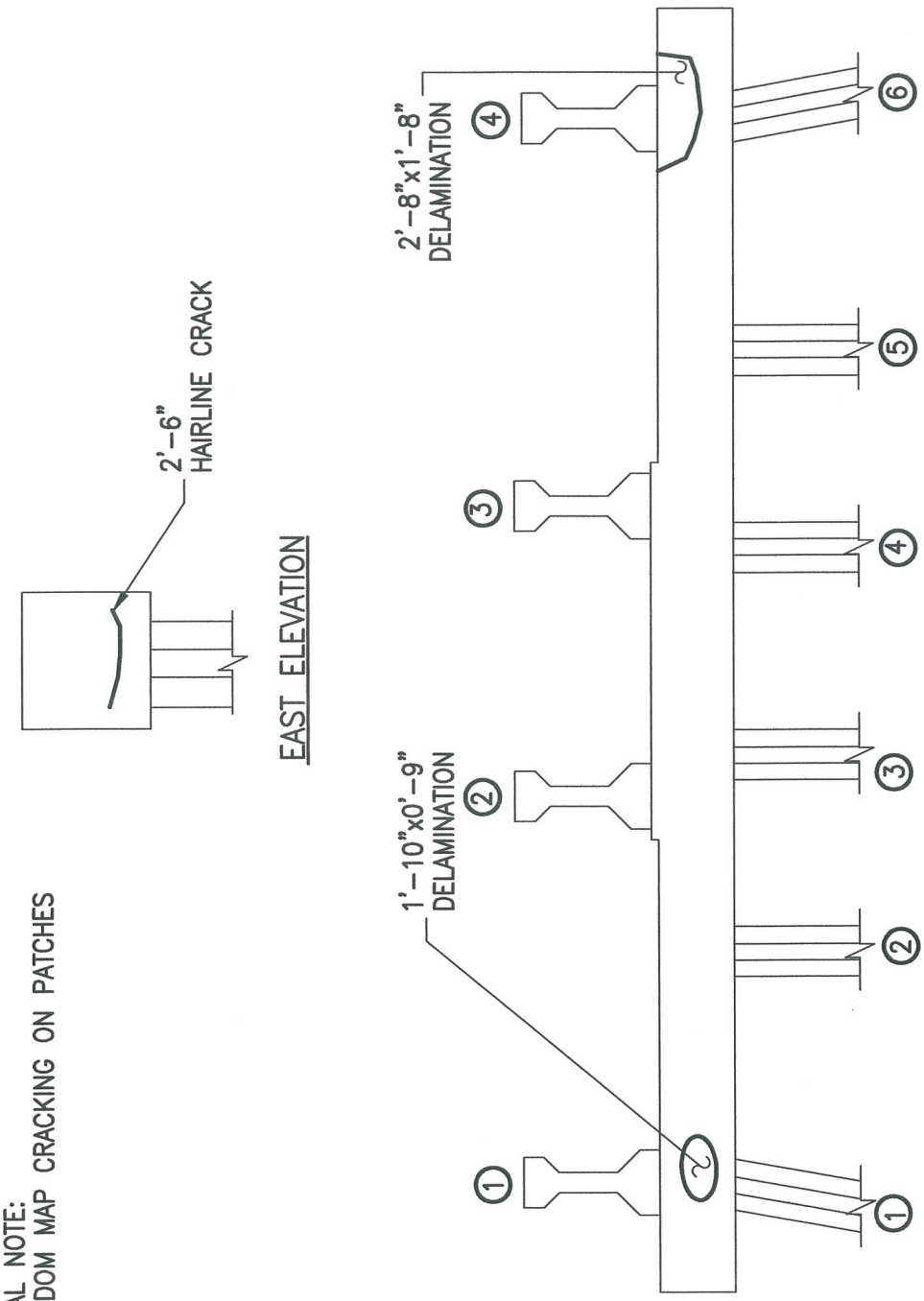

GENERAL NOTE:
1. RANDOM MAP CRACKING ON PATCHES

ALPHA & OMEGA GROUP
CIVIL & STRUCTURAL ENGINEERS
4911 Green Road Suite 107 Raleigh, NC 27616
Phone 919 981 0310 Fax 919 981 0451
Email info@aogroup.com www.aogroup.com

BRIDGE NO:	270011		
COUNTY:	DARE		
PREPARED BY:	OHS	CHECKED BY:	MTM
SCALE:	NTS		
DATE:	6/20/06	SHT 374 OF 1347	

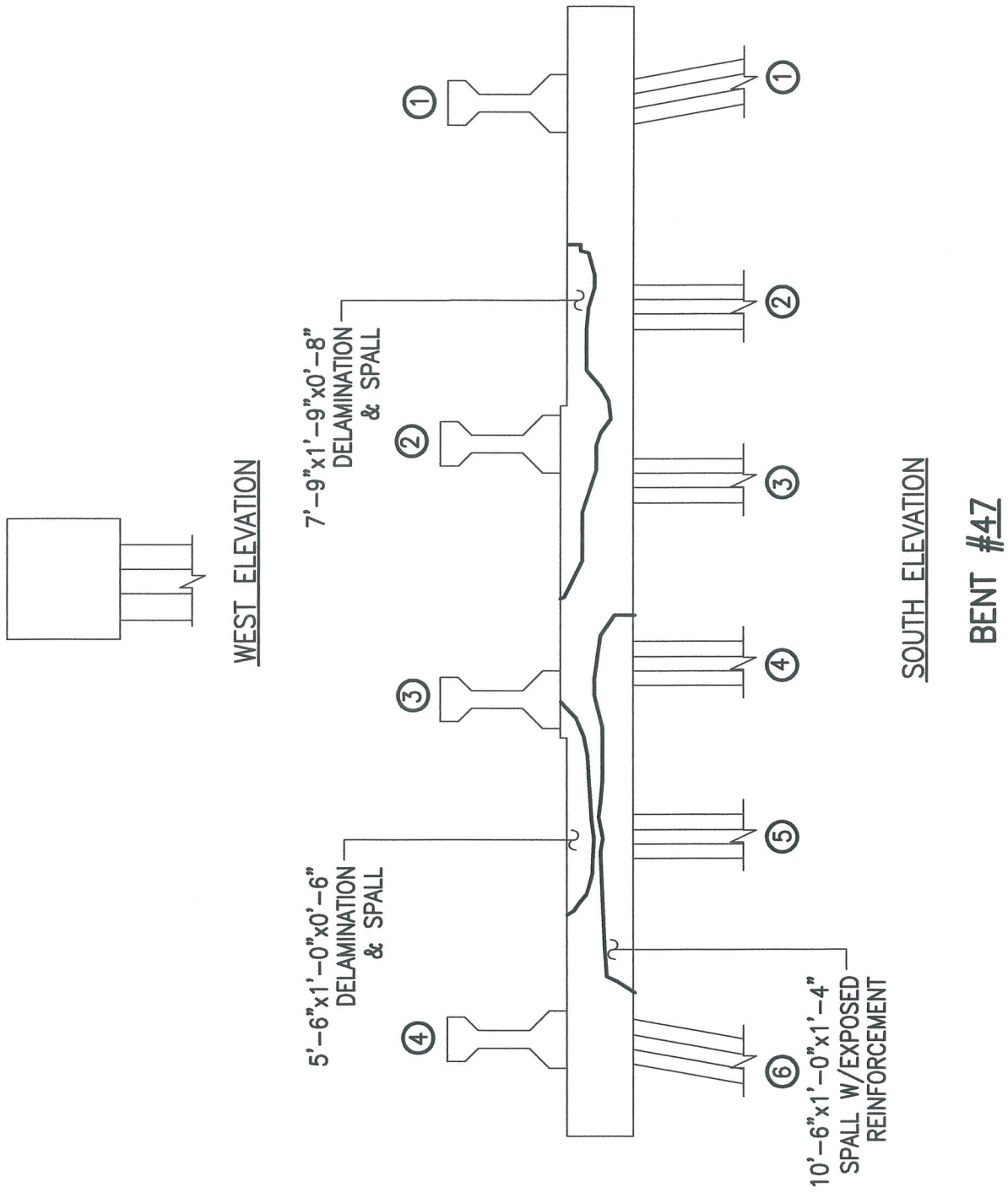

ALPHA & OMEGA GROUP
CIVIL & STRUCTURAL ENGINEERS
4911 Green Road Suite 107 Raleigh, NC 27616
Phone 919 981 0310 Fax 919 981 0451
Email info@aogroup.com www.aogroup.com

BRIDGE NO:	270011		
COUNTY:	DARE		
PREPARED BY:	OHS	CHECKED BY:	MTM
SCALE:	NTS		
DATE:	6/20/06	SHT 377 OF 1347	

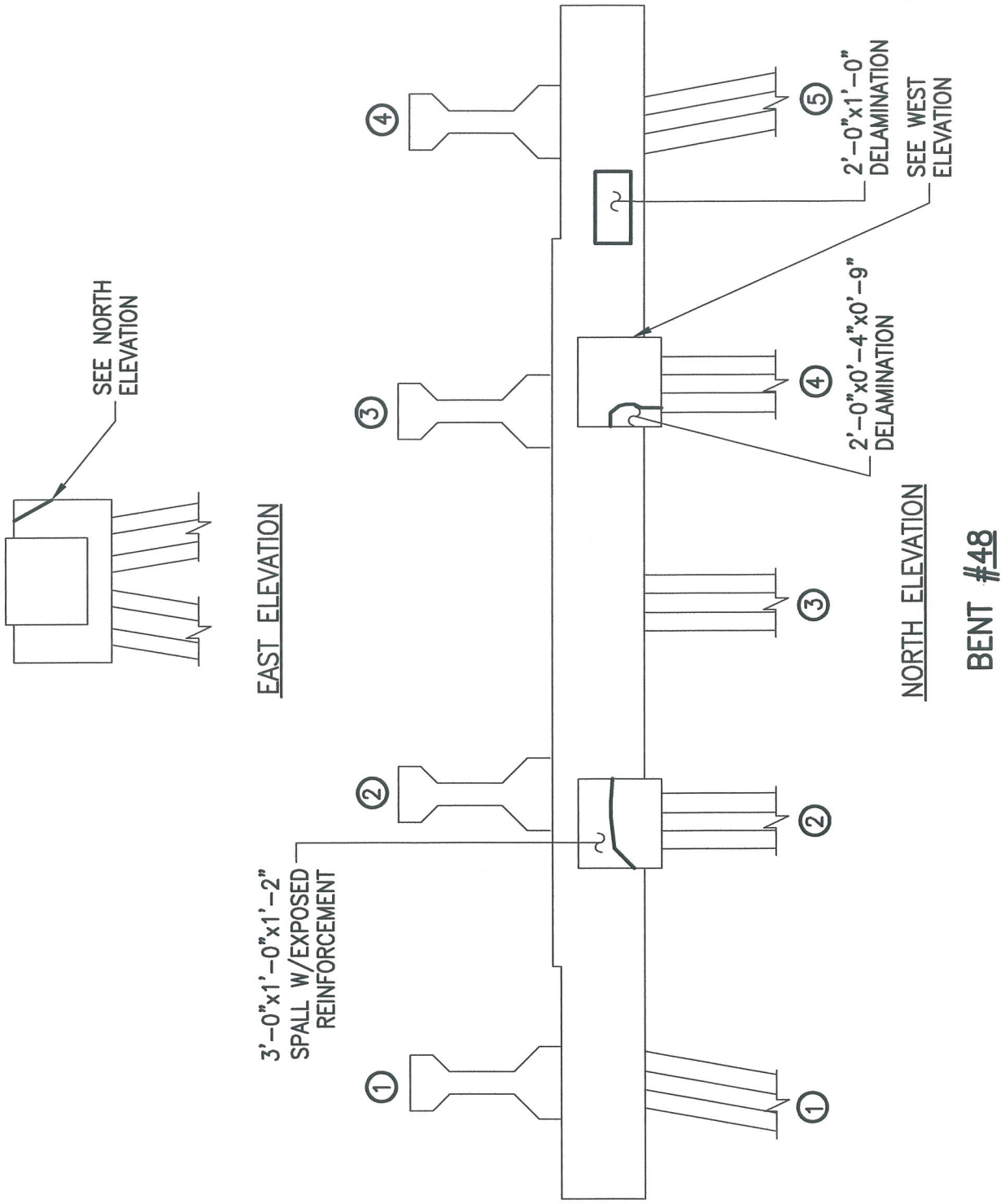

ALPHA & OMEGA GROUP
CIVIL & STRUCTURAL ENGINEERS
4911 Green Road Suite 107 Raleigh, NC 27616
Phone 919 981 0310 Fax 919 981 0451
Email info@aogroup.com www.aogroup.com

BRIDGE NO:	270011		
COUNTY:	DARE		
PREPARED BY:	OHS	CHECKED BY:	MTM
SCALE:	NTS		
DATE:	6/20/06	SHT 380 OF 1347	

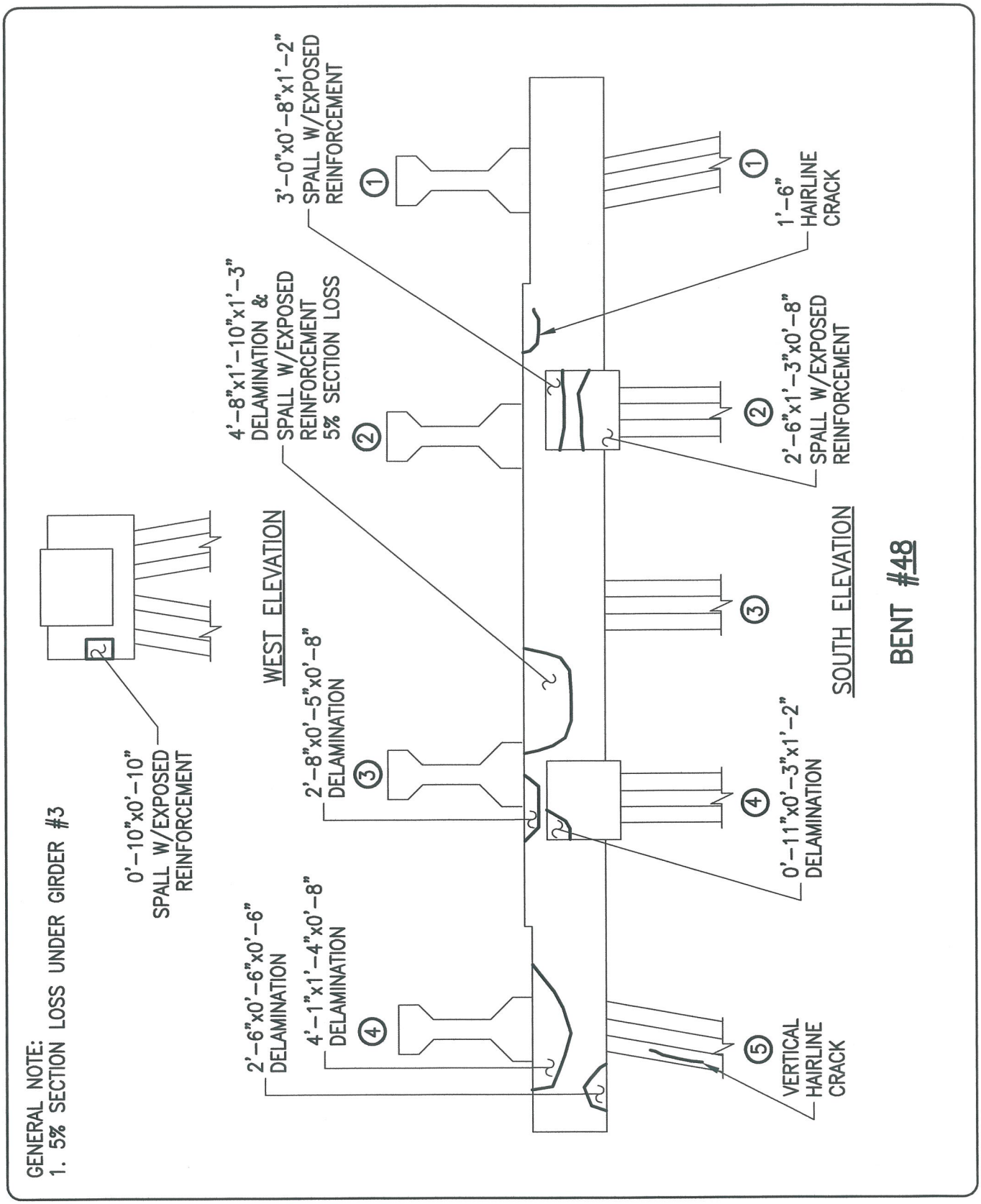

ALPHA & OMEGA GROUP
CIVIL & STRUCTURAL ENGINEERS
4911 Green Road Suite 107 Raleigh, NC 27616
Phone 919 981 0310 Fax 919 981 0451
Email info@aogroup.com www.aogroup.com

BRIDGE NO:	270011		
COUNTY:	DARE		
PREPARED BY:	OHS	CHECKED BY:	MTM
SCALE:	NTS		
DATE:	6/20/06	SHT 383 OF 1347	

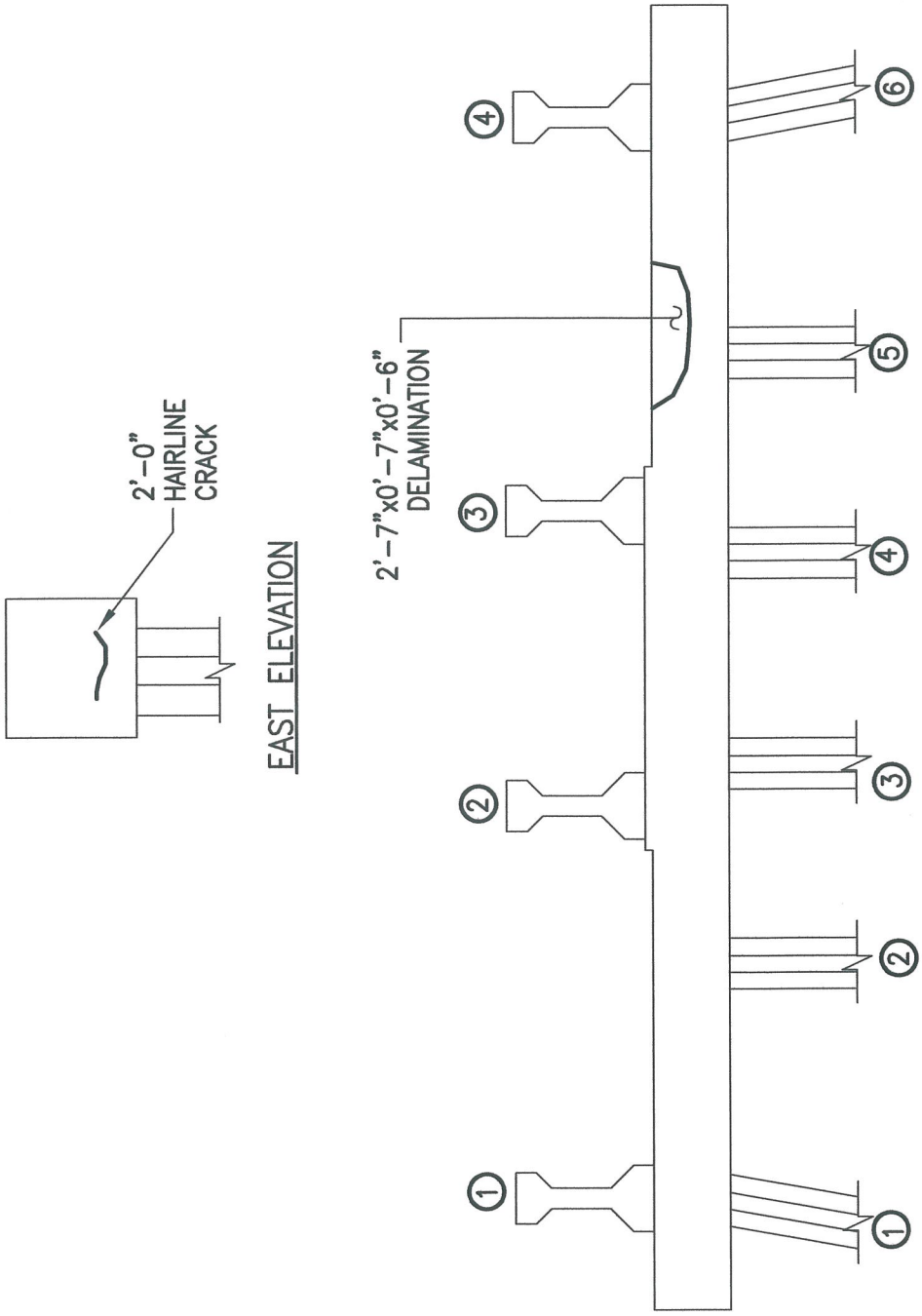

ALPHA & OMEGA GROUP
CIVIL & STRUCTURAL ENGINEERS
4911 Green Road Suite 107 Raleigh, NC 27616
Phone 919 981 0310 Fax 919 981 0451
Email info@aogroup.com www.aogroup.com

BRIDGE NO:	270011		
COUNTY:	DARE		
PREPARED BY:	OHS	CHECKED BY:	MTM
SCALE:	NTS		
DATE:	6/20/06	SHT 386 OF 1347	

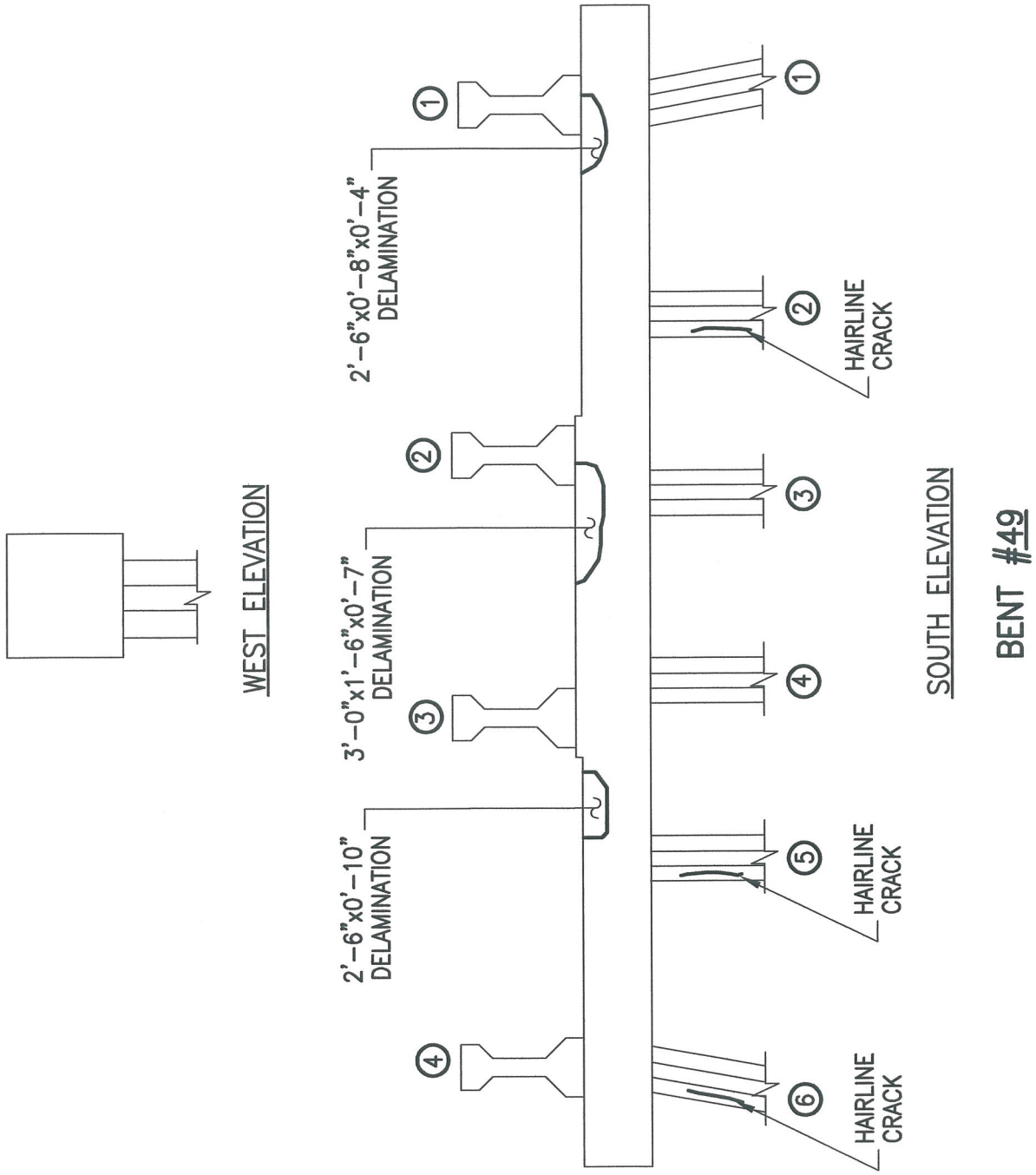

ALPHA & OMEGA GROUP
CIVIL & STRUCTURAL ENGINEERS
4911 Green Road Suite 107 Raleigh, NC 27616
Phone 919 981 0310 Fax 919 981 0451
Email info@aogroup.com www.aogroup.com

BRIDGE NO:	270011		
COUNTY:	DARE		
PREPARED BY:	OHS	CHECKED BY:	MTM
SCALE:	NTS		
DATE:	6/20/06	SHT 389 OF 1347	

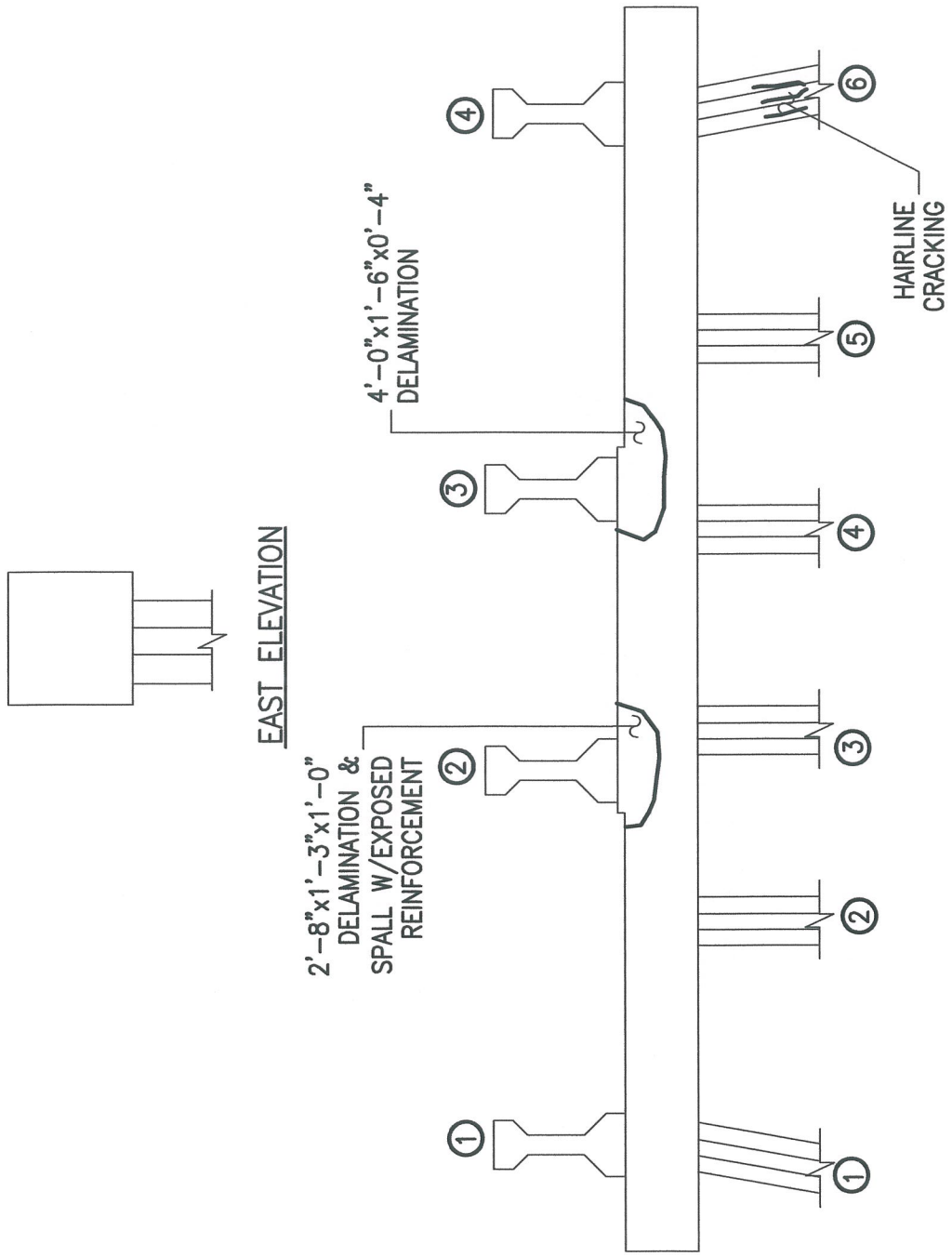

ALPHA & OMEGA GROUP
CIVIL & STRUCTURAL ENGINEERS
4911 Green Road Suite 107 Raleigh, NC 27616
Phone 919 981 0310 Fax 919 981 0451
Email info@aogroup.com www.aogroup.com

BRIDGE NO:	270011		
COUNTY:	DARE		
PREPARED BY:	OHS	CHECKED BY:	MTM
SCALE:	NTS		
DATE:	6/20/06	SHT 392 OF 1347	

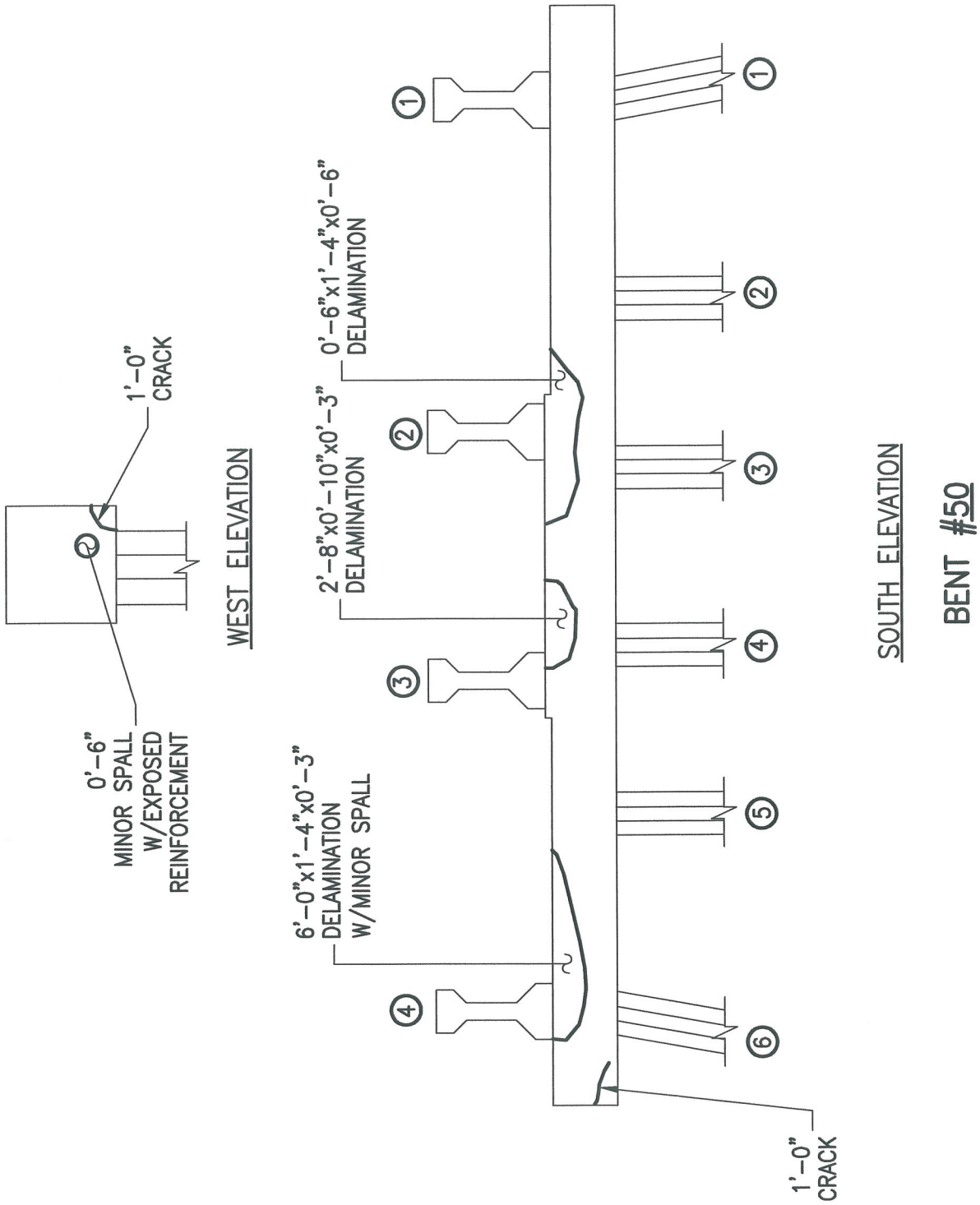

ALPHA & OMEGA GROUP
CIVIL & STRUCTURAL ENGINEERS
4911 Green Road Suite 107 Raleigh, NC 27616
Phone 919 981 0310 Fax 919 981 0451
Email info@aogroup.com www.aogroup.com

BRIDGE NO:	270011		
COUNTY:	DARE		
PREPARED BY:	OHS	CHECKED BY:	MTM
SCALE:	NTS		
DATE:	6/20/06	SHT 395 OF 1347	