Contract : C201679 K - 4703 Wilkes County - US 421 Visitor Center & Rest Area

STATE	NC	T.I.P. #	K-4703	SHEET #	1	of
WBS #		F.A. Project #		Description		
36401.1.1				P.E.		
				R/W		
36401.2.1				CONST.		

STATE OF NORTH CAROLINA
DIVISION OF HIGHWAYS

WILKES COUNTY

Location: New Rest Area off Northbound US 421, West of NC 115

Type of Work: New Building, Grading, Drainage, Paving, Site, and Utility Work

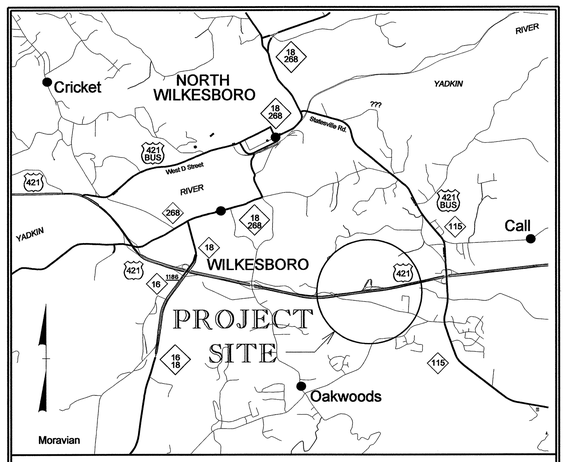

VICINITY MAP

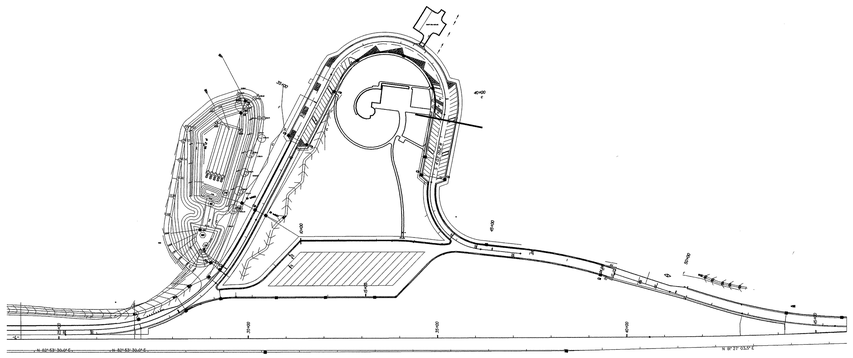

INDEX OF SHEETS

SITE/LANDSCAPE PLANS

L–1	Title
L–2	Site Plan
L–3	Grading Plan
L–4	Layout and Dimension Plan
L–5	Plant List
L–6	Planting Plan – Ground Covers
L–7	Planting Plan – Trees
L–8	Planting Plan – Beds
L–9	Planting Plan – Ditch
L–10	Planting Plan – Basin
L–11	Reforestation Detail/Schedule
L–12	Reforestation Plan
L–13	Reforestation Plan
L–14	Reforestation Plan
L–15	Retaining Wall
L–16	Welcome Sign, Pet Sign, and Spotlights
L–17	Cobblestone Sidewalk and Depressed Curb
L–18	Picnic Shelter /Table
L–19	Picnic Shelter /Table
L–20	Yard Hydrant /Irrigation Hydrant
L–21	Outdoor Telephone and Tree Planting Islands
L–22	Planting Details
L–23	Nature Trail Signs, Trail and Edging Detail
L–24	Nature Trail Steps and Log Bench Detail
L–25	Nature Trail "Crossing" Detail
SU–1	Site Utility Plan

BUILDING PLANS

Cover 1–4	Construction Document
A0.00–A7.04	Architectural
S0.01–S5.03	Structural
P0.00–P5.02	Plumbing
M0.00–M6.01	Mechanical
E1–7	Electrical

Site /Landscape Design

LANDSCAPE DESIGN & DEVELOPMENT

Roadside Environmental Unit
1 South Wilmington Street
1557 Mail Service Center
Raleigh, North Carolina 27601
Office (919) 733–2920 Fax (919) 733–9810

Site /Utility Design

REST AREA SECTION

Roadside Environmental Unit
1 South Wilmington Street
1557 Mail Service Center
Raleigh, North Carolina 27601
Office (919) 733–2920 Fax (919) 733–9810

Architectural/Engineering

Architect: Innovative Design, Inc.
850 W. Morgan St. Raleigh, NC 27603
(919) 832–6303

Mechanical/Plumbing: Padia Consulting, Inc.
51 Kilmayne Dr., Sutie 300 Cary, NC 27511
(919) 481–1777

Structural: Lysaght & Associates
120 St. Mary's St. Raleigh, NC 27605
(919) 833–0495

Electrical: Greentech Consulting, Inc.
1100 Crescent Green, Suite 103 Cary, NC 27518
(919) 859 8884

North Carolina Department of Transportation
Division of Highways
1 South Wilmington Street Raleigh, North Carolina

Plan :
Wilkes County – US 421
Visitor Center and Rest Area
New Construction

Plans Drawn By:	CSM – DAL
Scale	Not to Scale
Date	8 / 8 / 07
Letting Date	Nov. 20, 2007
2006 Standard Specifications	
Sheet Description	Title Sheet
Sheet #	L – 1

Utility Strip Detail A

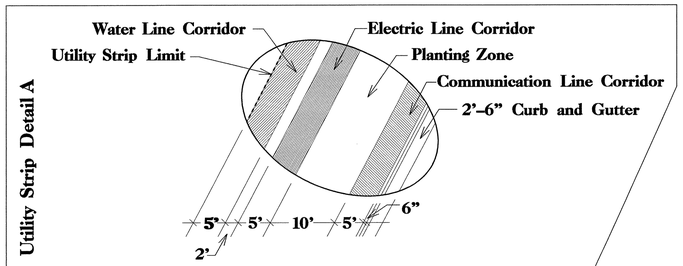

Utility Strip Detail B

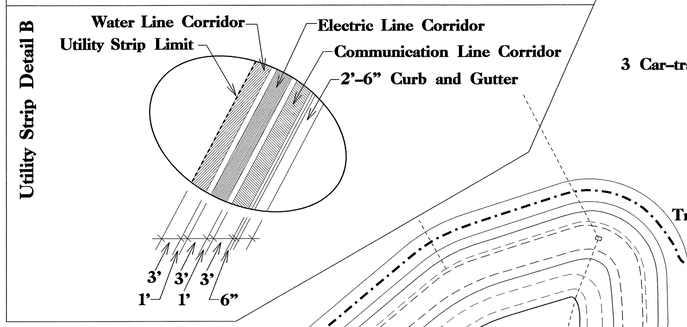

Nature Trail Landing Interpretive Signage and /or Bench Locations
Electrical Transformer Location
Water Meter
Sanitary Sewer Pump Station 25' x 25' Fenced
Nature Trail Signs
Nature Trail
Geothermal Well Site
Preferred Well Locations
Utility Strip – Sanitary Sewer
Dumpster
Well Layout Grid 10' x 10'
Alternate/Additional Well Locations
Storage Buildings
Utility Strip Limits
Utility Strip – Water
Utility Strip – Electric
Utility Strip – Communications
4 Bus /Car–trailer Parking Spaces
Planting Zone
3 Car–trailer Parking Spaces
Nature Trail Sign
35+00
Accessible Picnic Shelter
40+00
Tree Planting Islands
Restrooms and Vending
(3) R7 – 8E and Van Accessible Signs mounted at 84" height
Visitor Center
See Utility Strip Detail A
Retaining Wall
Covered Walkways
Cobblestone Walkway, Flag Pole, Welcome Sign and Spotlights (See Detail)
Bioretention Basin
Maintenance Access Path and Nature Trail
Nature Trail Sign
4" Concrete Sidewalk
Cobblestone Walkway
Cistern (above ground)
Nature Trail
Nature Trail Landing Interpretive Signage and /or Bench Locations
Tree Planting Islands
65 Car Parking Spaces (3 Accessible)
Bioretention Forebay
Drainage Swale
See Utility Strip Detail B
Nature Trail Sign
Hazardous Spill Basin
10+00
45+00
17 Truck Parking Spaces
15+00
N 20° 23' 41.4" E
S 4° 03' 09.2" W
N 82° 42' 14.7" E
N 89° 13' 11.2" E
N 82° 42' 15.9" E
-TR-ON-
-L2-

Key

- Street Light
- Post Top Light
- Accent Light
- Flag Pole
- Trash Receptacle
- Trash Receptacle
- Recycling Center
- Picnic Table
- Picnic Shelter
- Wheelchair Ramp
- Depressed Curb
- Yard Hydrant
- Irrigation Hydrant
- Fire Hydrant
- Telephone

0 40 80 120

North Carolina Department of Transportation
Roadside Environmental Unit
Landscape Design & Development Section

PROJECT TITLE :
Wilkes County – US 421
Visitor Center and Rest Area
New Construction

Plans Drawn By:	CSM
Scale	1" = 40'
Date	8 / 8 / 07
Sheet Description	Site Plan
T.I.P. #	K – 4703
Sheet #	L – 2

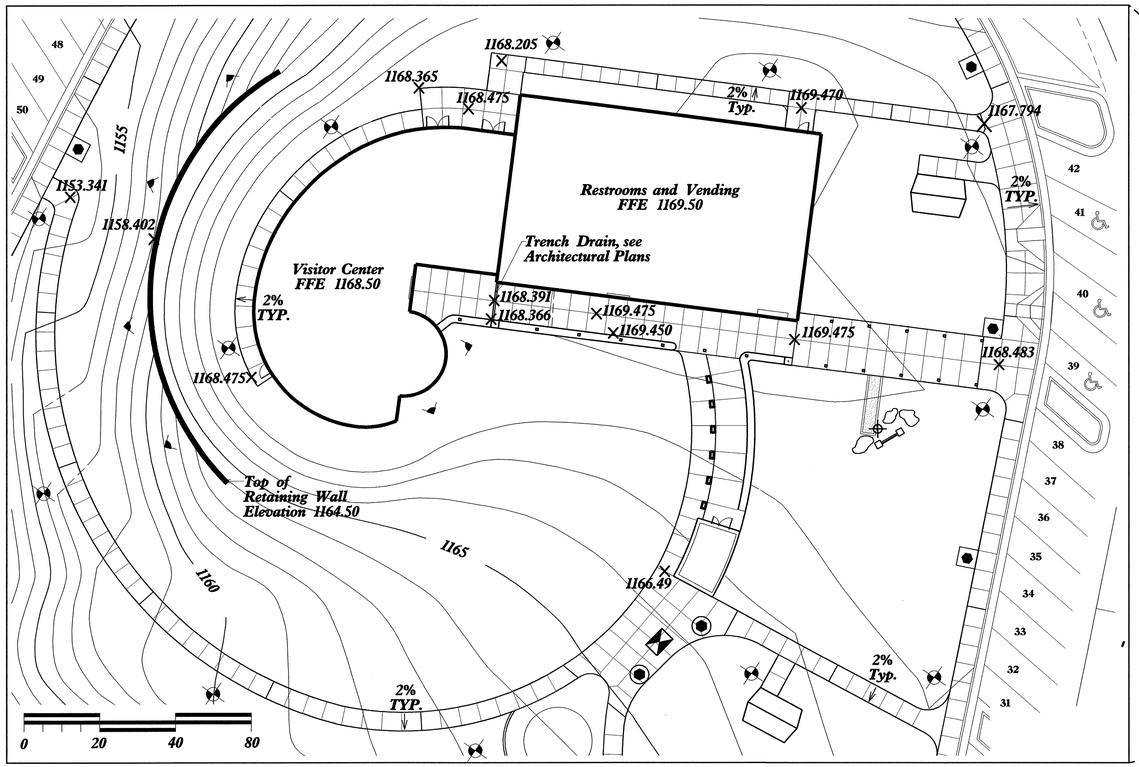

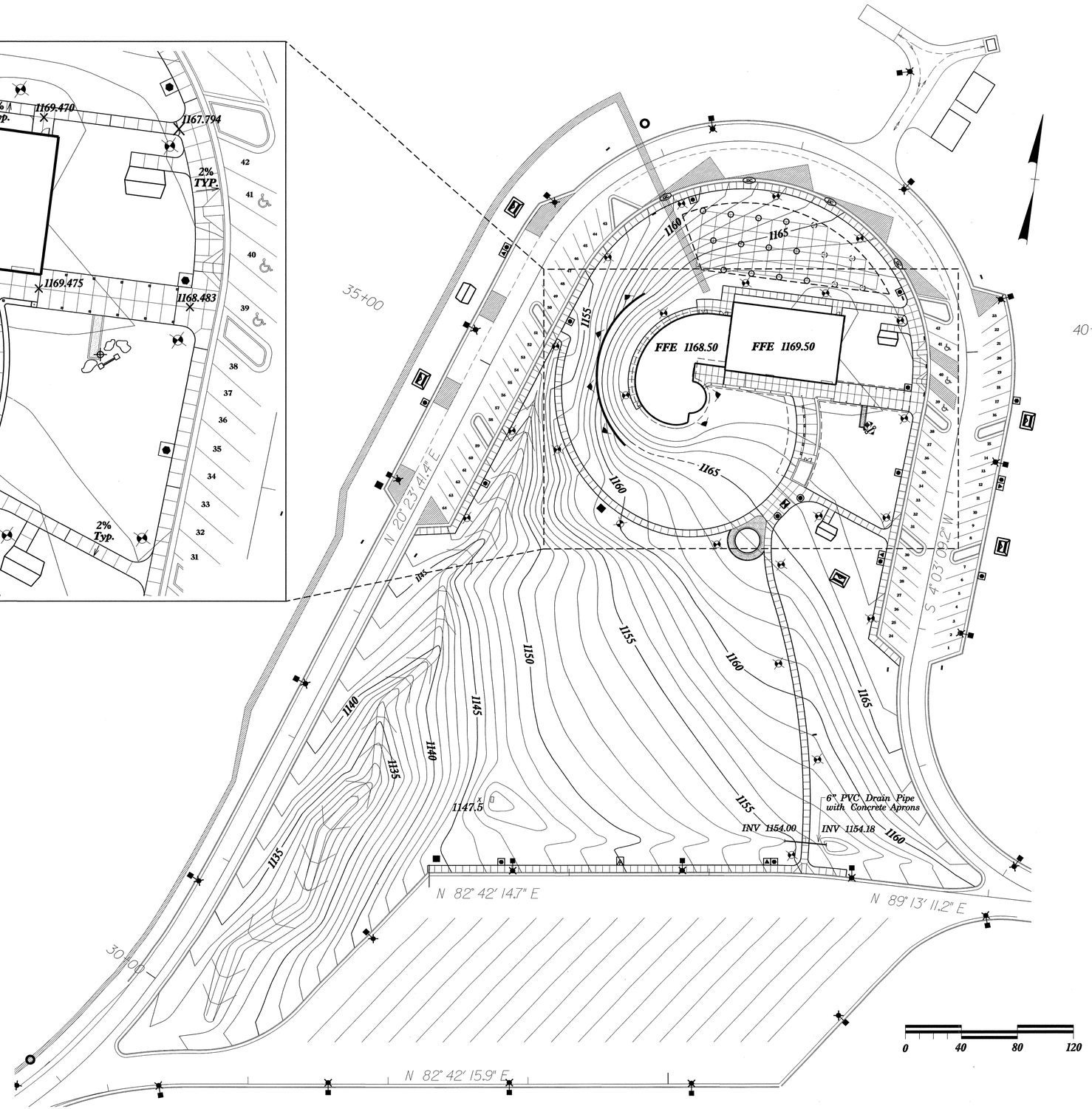

Key

	Street Light
	Post Top Light
	Accent Light
	Flag Pole
	Trash Receptacle
	Trash Receptacle
	Recycling Center
	Picnic Table
	Picnic Shelter
WC	Wheelchair Ramp
DC	Depressed Curb
	Yard Hydrant
	Irrigation Hydrant
	Fire Hydrant
	Telephone

North Carolina Department of Transportation

Roadside Environmental Unit

Landscape Design & Development Section

STATE OF NORTH CAROLINA · DEPARTMENT OF TRANSPORTATION

PROJECT TITLE :

Wilkes County – US 421
Visitor Center and Rest Area
New Construction

Plans Drawn By:	CSM
Scale	See Drawing
Date	8 / 8 / 07
Sheet Description	Grading Plan (Interior of Ramps and Parking)
T.I.P. #	K – 4703
Sheet #	L – 3

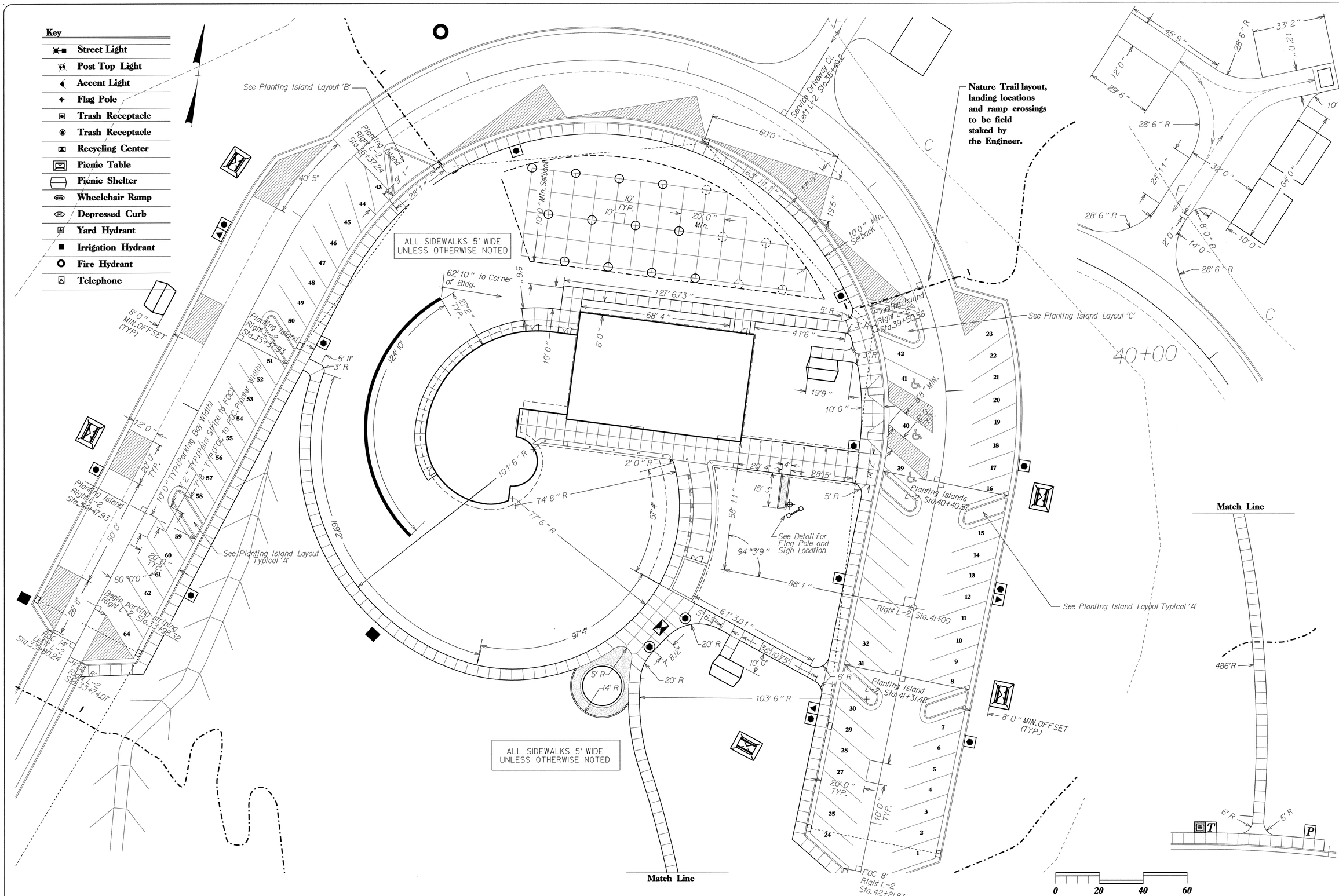

North Carolina Department of Transportation

Roadside Environmental Unit

Landscape Design & Development Section

PROJECT TITLE:

Wilkes County – US 421
Visitor Center and Rest Area
New Construction

Plans Drawn By:	CSM
Scale	1" = 20'
Date	8 / 8 / 07
Sheet Description	Layout and Dimension Plan Building Area
T.I.P. #	K – 4703
Sheet #	L – 4

Plant List

Quantity	Unit	Key	Botanical Name	Common Name	Furnish	ASNS
3	EA	ABF	*Abies fraseri*	Fraser Fir	7-8', B&B, LS	3.2.4
14	EA	AR1	*Acer rubrum*	Red Maple	6-8', Min. 3/4" Cal., B&B or Cont.	1.2.1
20	EA	AR2	*Acer rubrum*	Red Maple	2 - 2 1/2" Cal., B&B	1.2.1
14	EA	AS1	*Acer saccharum*	Sugar Maple	6-8', Min. 3/4" Cal., B&B or Cont.	1.2.1
12	EA	AS2	*Acer saccharum*	Sugar Maple	2 - 2 1/2" Cal., B&B	1.2.1
11	EA	AAB	*Amelanchier x grandiflora 'Autumn Brilliance'*	Serviceberry	2 - 2 1/2" Cal., B&B	1.2.3
68	EA	AMH	*Amsonia hubrichtii*	Willow Bluestar	4" Pot or Qt. Cont. - Deep	12.3
286	EA	AG1	*Andropogon glomeratus*	Bushy Bluestem	2 1/4" Sq.Pot, Tray of 32	12.4
12	EA	AG2	*Andropogon glomeratus*	Bushy Bluestem	3 1/2" - 4" Pot, Tray of 18	12.4
256	EA	ANT	*Andropogon tenarius*	Split-beard Broomsedge	2 1/4" Sq.Pot, Tray of 32	12.4
18	EA	AUU	*Arctostaphylos uva-ursi 'Massachusetts'*	Kinnikinnick	12" Min., Min. #1 Cont., N	4.2.1
124	EA	ARA	*Aronia arbutifolia 'Brilliantissima'*	Red Chokeberry	2-3', Min. #3 Cont.	2.2.3
288	EA	AST	*Asclepias tuberosa*	Butterfly Weed	4" Pot or Qt. Cont. - Deep	12.3
75	EA	ASL	*Aster laevis*	Smooth Blue Aster	4" Pot or Qt. Cont. - Deep	12.3
163	EA	ASN	*Aster novae-angliae*	New England Aster	4" Pot or Qt. Cont. - Deep	12.3
90	EA	BOA	*Boltonia asteroides*	False Aster	4" Pot or Qt. Cont. - Deep	12.3
141	EA	CAA	*Callicarpa americana*	Beautyberry	2-3', Min. #3 Cont.	2.2.3
6	EA	CAF	*Calycanthus floridus*	Carolina Allspice	18-24", Min. #3 Cont.	2.2.3
10	EA	CAC	*Carpinus caroliniana*	Hornbeam	5-6', B&B or Cont.	1.2.3
17	EA	CAO	*Carya ovata*	Shagbark Hickory	6-8', Min. 3/4" Cal., B&B or Cont.	1.2.1
11	EA	CAT	*Carya tomentosa*	Mockernut Hickory	6-8', Min. 3/4" Cal., B&B or Cont.	1.2.1
101	EA	CEA	*Ceanothus americanus*	New Jersey Tea	15-18", Min. #3 Cont.	2.2.2
9	EA	COS	*Cephalanthus occidentalis 'Sputnik'*	Buttonbush	2-3', Min. #3 Cont., N	2.2.3
7	EA	CC1	*Cercis canadensis*	Redbud	3-4', B&B or Cont.	1.2.3
8	EA	CC2	*Cercis canadensis*	Redbud	5-6', B&B or Cont.	1.2.3
3	EA	CFP	*Cercis canadensis 'Forest Pansy'*	Redbud	2 - 2 1/2" Cal., B&B	1.2.3
160	EA	CL1	*Chasmanthium latifolium*	River Oats	2 1/4" Sq.Pot, Tray of 32	12.4
19	EA	CL2	*Chasmanthium latifolium*	River Oats	3 1/2" - 4" Pot, Tray of 18	12.4
3	EA	CHV	*Chionanthus virginicus*	Fringe Tree	3-4', B&B or Cont.	1.2.3
3	EA	CIR	*Cimicifuga racemosa*	Bugbane	4" Pot or Qt. Cont. - Deep	12.3
10	EA	CLA	*Clethra alnifolia*	Sweet Pepperbush	18-24", Min. #3 Cont.	2.2.3
176	EA	CAH	*Clethra alnifolia 'Hummingbird'*	Sweet Pepperbush	15-18", Min. #3 Cont.	2.2.2
90	EA	COL	*Coreopsis lanceolata*	Tickseed	4" Pot or Qt. Cont. - Deep	12.3
3	EA	CCB	*Cornus florida 'Cherokee Brave'*	Flowering Dogwood	2 - 2 1/2" Cal., B&B	1.2.4
11	EA	CCP	*Cornus florida 'Cherokee Princess'*	Flowering Dogwood	2 - 2 1/2" Cal., B&B	1.2.4
9	EA	CSC	*Cornus sericea 'Cardinal'*	Redosier Dogwood	2-3', Min. #3 Cont.	2.2.3
64	EA	DC1	*Deschampsia cespitosa*	Tufted Hair Grass	2 1/4" Sq.Pot, Tray of 32	12.4
15	EA	DC2	*Deschampsia cespitosa*	Tufted Hair Grass	3 1/2" - 4" Pot, Tray of 18	12.4
161	EA	DSB	*Diervilla sessilifolia 'Butterfly'*	Bush Honeysuckle	15-18", Min. #3 Cont.	2.2.2
17	EA	DRM	*Dryopteris marginalis*	Marginal Shield Fern	4" Pot or Qt. Cont. - Deep	12.3
90	EA	EPA	*Echinacea pallida*	Pale Purple Coneflower	4" Pot or Qt. Cont. - Deep	12.3
411	EA	EPU	*Echinacea purpurea*	Purple Coneflower	4" Pot or Qt. Cont. - Deep	12.3
27	EA	ERS	*Echinacea purpurea 'Ruby Star'*	Purple Coneflower	4" Pot or Qt. Cont. - Deep	12.3
26	EA	EUM	*Eupatorium maculatum*	Joe Pye Weed	4" Pot or Qt. Cont. - Deep	12.3
12	EA	FAG	*Fagus grandifolia*	Beech	6-8', Min. 3/4" Cal., B&B or Cont.	1.2.2
11	EA	FOG	*Fothergilla gardenii*	Dwarf Fothergilla	15-18" Min., #3 Cont.	2.2.2
4	EA	FRA	*Fraxinus americana*	White Ash	2 - 2 1/2" Cal., B&B	1.2.1
75	EA	GAL	*Gaura lindheimeri*	Gaura	4" Pot or Qt. Cont. - Deep	12.3
31	EA	HAC	*Halesia carolina*	Silverbell	6-8', Min. 3/4" Cal., B&B or Cont.	1.2.3
15	EA	HAV	*Hamamelis virginiana*	Autumn Witch Hazel	2-3', Min. #3 Cont.	2.2.4
58	EA	HEA	*Helianthus angustifolius*	Swamp Sunflower	4" Pot or Qt. Cont. - Deep	12.3
78	EA	HEH	*Heliopsis helianthoides*	False Sunflower	4" Pot or Qt. Cont. - Deep	12.3
147	EA	HAD	*Hydrangea arborescens 'Dardom'*	White Dome Hydrangea	15-18", Min. #3 Cont.	2.2.1
2	EA	HSD	*Hydrangea quercifolia 'Sikes Dwarf'*	Oakleaf Hydrangea	18-24", Min. #3 Cont.	2.2.3
284	EA	HFS	*Hypericum frondosum 'Sunburst'*	Golden St. John's Wort	12-15", Min. #1 Cont., N	4.2.3
14	EA	IGC	*Ilex glabra 'Densa'*	Inkberry Holly	15-18", Min. #3 Cont., N	4.2.3
20	EA	ILO	*Ilex opaca*	American Holly	4-5', N	4.2.5
207	EA	IRS	*Ilex verticillata 'Red Sprite'*	Winterberry	15-18", Min. #3 Cont.	2.2.2
Note:	*Utilize I. v. 'Jim Dandy' for 10% of the total quantity of IRS for pollination purposes.*					
	Furnish like size plants. Use a minimum of 1 plant within each vicinity that contains IRS.					
17	EA	IWR	*Ilex verticillata 'Winter Red'*	Winterberry	18-24", Min. #3 Cont.	2.2.4
Note:	*Utilize I. v. 'Southern Gentleman' for 10% of the total quantity of IWR for pollination purposes.*					
	Furnish like size plants. Use a minimum of 1 plant within each vicinity that contains IRS.					
21	EA	ILF	*Illicium floridanum*	Florida Anise	18-24", Min. #3 Cont., N	4.2.4
191	EA	IHG	*Itea virginica 'Henry's Garnet'*	Virginia Sweetspire	15-18", Min. #3 Cont.	2.2.2
450	EA	JE1	*Juncus effusus*	Soft Rush	2 1/4" Sq.Pot, Tray of 32	12.4
19	EA	JE2	*Juncus effusus*	Soft Rush	3 1/2" - 4" Pot, Tray of 18	12.4
20	EA	JV1	*Juniperus virginiana*	Eastern Red Cedar	3-4' LS	3.2.4
14	EA	JV2	*Juniperus virginiana*	Eastern Red Cedar	6-7', B&B, LS	3.2.4
12	EA	JVB	*Juniperus virginiana 'Brodie'*	Eastern Red Cedar	5-6', LS	3.2.6
54	EA	KAL	*Kalmia latifolia*	Mountain Laurel	18-24", Min. #3 Cont., N	4.2.4
341	EA	LEF	*Leucothoe fontanesiana*	Drooping Leucothoe	12-15", Min. #1 Cont., N	4.2.2

Quantity	Unit	Key	Botanical Name	Common Name	Furnish	ASNS
12	EA	LS1	*Liquidambar styraciflua 'Rotundiloba'*	Sweetgum	6-8', Min. 3/4" Cal., B&B or Cont.	1.2.2
12	EA	LS2	*Liquidambar styraciflua 'Rotundiloba'*	Sweetgum	2 - 2 1/2" Cal., B&B	1.2.2
41	EA	LT1	*Liriodendron tulipifera*	Tulip Poplar	6-8', Min. 3/4" Cal., B&B or Cont.	1.2.1
19	EA	LT2	*Liriodendron tulipifera*	Tulip Poplar	2 - 2 1/2" Cal., B&B	1.2.1
10	EA	MAA	*Magnolia acuminata*	Cucumber Tree	6-8', Min. 3/4" Cal., B&B or Cont.	1.2.1
92	EA	MOD	*Monarda didyma*	Bee-balm	4" Pot or Qt. Cont. - Deep	12.3
90	EA	MOF	*Monarda fistulosa*	Wild Bergamot	4" Pot or Qt. Cont. - Deep	12.3
17	EA	OSV	*Ostrya virginiana*	Hophornbeam	1 1/2 - 2" Cal., B&B or Cont.	1.2.3
38	EA	OA1	*Oxydendrum arboreum*	Sourwood	5-6', B&B or Cont.	1.2.3
34	EA	OA2	*Oxydendrum arboreum*	Sourwood	1 1/2 - 2" Cal., B&B or Cont.	1.2.3
128	EA	PAV	*Panicum virgatum*	Switchgrass	2 1/4" Sq.Pot, Tray of 32	12.4
63	EA	PCN	*Panicum virgatum 'Cloud Nine'*	Switchgrass	3 1/2" - 4" Pot, Tray of 18	12.4
11	EA	PHH	*Panicum virgatum 'Hanse Herms'*	Switchgrass	3 1/2" - 4" Pot, Tray of 18	12.4
5	EA	PHM	*Panicum virgatum 'Heavy Metal'*	Switchgrass	3 1/2" - 4" Pot, Tray of 18	12.4
7	EA	PVS	*Panicum virgatum 'Shenandoah'*	Switchgrass	3 1/2" - 4" Pot, Tray of 18	12.4
110	EA	PSW	*Physocarpus opulifolius 'Summer Wine'*	Ninebark	15-18", Min. #3 Cont.	2.2.2
75	EA	PHV	*Physostegia virginiana*	Obedient Plant	4" Pot or Qt. Cont. - Deep	12.3
29	EA	PS1	*Pinus strobus*	White Pine	4-5', B&B, LS	3.2.4
16	EA	PS2	*Pinus strobus*	White Pine	6-7', B&B, LS	3.2.4
1	EA	PCI	*Pinus strobus 'Coney Island'*	White Pine	18-24", LS	3.2.3
3	EA	QUA	*Quercus alba*	White Oak	2 - 2 1/2" Cal., B&B	1.2.2
13	EA	QUC	*Quercus coccinea*	Scarlet Oak	1 - 1 1/4" Cal., B&B or Cont.	1.2.1
6	EA	QUF	*Quercus falcata*	Southern Red Oak	2 - 2 1/2" Cal., B&B	1.2.1
7	EA	QUI	*Quercus imbricaria*	Shingle Oak	6-8', Min. 3/4" Cal., B&B or Cont.	1.2.1
4	EA	QUL	*Quercus lyrata*	Overcup Oak	1 - 1 1/4" Cal., B&B or Cont.	1.2.1
4	EA	QMA	*Quercus macrocarpa*	Bur Oak	1 - 1 1/4" Cal., B&B	1.2.1
25	EA	QUN	*Quercus nuttallii*	Nuttall Oak	2 - 2 1/2" Cal., B&B	1.2.1
17	EA	QPH	*Quercus phellos*	Willow Oak	1 - 1 1/4" Cal., B&B or Cont.	1.2.1
10	EA	QPR	*Quercus prinus*	Chestnut Oak	2 - 2 1/2" Cal., B&B	1.2.1
28	EA	RFA	*Rhododendron calendulaceum*	Flame Azalea	18-24", Min. #3 Cont.	2.2.3
159	EA	RHC	*Rhododendron catawbiense*	Catawba Rhododendron	18-24", Min. #3 Cont., N	4.2.4
5	EA	RGL	*Rhus aromatica 'Gro-low'*	Fragrant Sumac	9-15", Min. #1 Cont.	2.2.2
102	EA	RHG	*Rhus glabra*	Smooth Sumac	9-15", Min. #1 Cont.	2.2.3
90	EA	RUF	*Rudbeckia fulgida*	Orange Coneflower	4" Pot or Qt. Cont. - Deep	12.3
20	EA	RFG	*Rudbeckia fulgida 'Goldstrum'*	Orange Coneflower	4" Pot or Qt. Cont. - Deep	12.3
78	EA	RUS	*Rudbeckia subtomentosa*	Sweet Black-Eyed Susan	4" Pot or Qt. Cont. - Deep	12.3
15	EA	RUT	*Rudbeckia triloba*	Brown-eyed Susan	4" Pot or Qt. Cont. - Deep	12.3
7	EA	SAC	*Sambucus canadensis*	American Elder	12-18", Min. #1 Cont.	2.2.3
45	EA	STB	*Schizachyrium scoparium 'The Blues'*	Little Bluestem	3 1/2" - 4" Pot, Tray of 18	12.4
311	EA	SCC	*Scirpus cyperinus*	Wool Grass	2 1/4" Sq.Pot, Tray of 32	12.4
45	EA	SIA	*Sisyrinchium angustifolium*	Blue-eyed Grass	4" Pot or Qt. Cont. - Deep	12.3
197	EA	SOC	*Solidago canadensis*	Common Goldenrod	4" Pot or Qt. Cont. - Deep	12.3
75	EA	SOR	*Solidago rigida*	Stiff Goldenrod	4" Pot or Qt. Cont. - Deep	12.3
6	EA	SOF	*Solidago 'Fireworks'*	Fireworks Goldenrod	4" Pot or Qt. Cont. - Deep	12.3
128	EA	SN1	*Sorghastrum nutans*	Indian Grass	2 1/4" Sq.Pot, Tray of 32	12.4
45	EA	SN2	*Sorghastrum nutans*	Indian Grass	3 1/2" - 4" Pot, Tray of 18	12.4
206	EA	SPB	*Spartina bakeri*	Cord Grass	2 1/4" Sq.Pot, Tray of 32	12.4
1444	EA	SH1	*Sporobolis heterolepis*	Prairie Drop Seed	2 1/4" Sq.Pot, Tray of 32	12.4
11	EA	SH2	*Sporobolis heterolepis*	Prairie Drop Seed	3 1/2" - 4" Pot, Tray of 18	12.4
1	EA	STO	*Stewartia ovata*	Mountain Stewartia	5-6', B&B or Cont.	1.2.3
1	EA	STA	*Styrax americana*	American Snowbell	6-8', Min. 3/4" Cal., B&B or Cont.	1.2.3
4	EA	THO	*Thuja occidentalis*	Arborvitae	6-7', B&B, LS	3.2.4
2	EA	TDS	*Thuja occidentalis 'Degroot's Spire'*	American Arborvitae	5-6', LS	3.2.6
3	EA	TGT	*Thuja occidentalis 'Golden Tuffet'*	American Arborvitae	15-18", LS	3.2.2
1	EA	TTG	*Thuja occidentalis 'Techny Gold'*	American Arborvitae	5-6', LS	3.2.4
15	EA	TRV	*Tradescantia virginiana*	Virginia Spiderwort	4" Pot or Qt. Cont. - Deep	12.3
19	EA	TC1	*Tsuga canadensis*	Canadian Hemlock	3-4', LS	3.2.4
8	EA	TC2	*Tsuga canadensis*	Canadian Hemlock	6-7' B&B, LS	3.2.4
3	EA	TCP	*Tsuga canadensis 'Cole's Prostrate'*	Canadian Hemlock	18-24", LS	3.2.1
1	EA	TCJ	*Tsuga canadensis 'Jeddeloh'*	Canadian Hemlock	18-24", LS	3.2.2
2	EA	TSD	*Tsuga canadensis 'Stockman's Dwarf'*	Canadian Hemlock	18-24", LS	3.2.2
13	EA	ULA	*Ulmus alata*	Winged Elm	6-8', Min. 3/4" Cal., B&B or Cont.	1.2.1
134	EA	VIA	*Viburnum acerifolium*	Mapleleaf Viburnum	18-24", Min. #3 Cont.	2.2.2
107	EA	VEN	*Vernonia noveboracensis*	New York Ironweed	4" Pot or Qt. Cont. - Deep	12.3

North Carolina Department of Transportation

Roadside Environmental Unit

Landscape Design & Development Section

PROJECT TITLE :

Wilkes County – US 421
Visitor Center and Rest Area
New Construction

Plans Drawn By:
CSM

Scale
NA

Date
8 / 8 / 07

Sheet Description
Plant List

T.I.P. #
K – 4703

Sheet #
L – 5

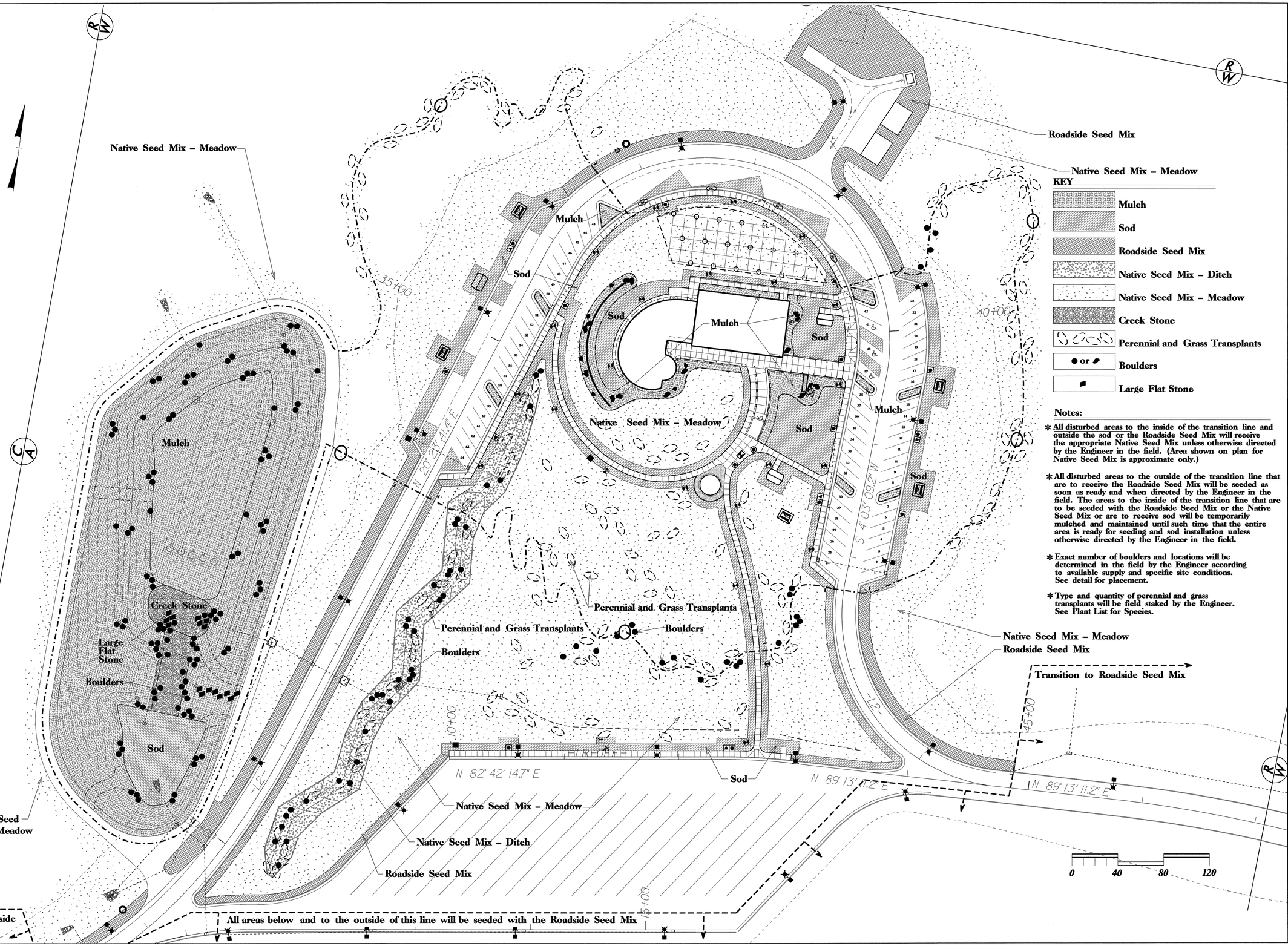

KEY

- Mulch
- Sod
- Roadside Seed Mix
- Native Seed Mix – Ditch
- Native Seed Mix – Meadow
- Creek Stone
- Perennial and Grass Transplants
- ● or ◢ Boulders
- ▬ Large Flat Stone

Notes:

* All disturbed areas to the inside of the transition line and outside the sod or the Roadside Seed Mix will receive the appropriate Native Seed Mix unless otherwise directed by the Engineer in the field. (Area shown on plan for Native Seed Mix is approximate only.)

* All disturbed areas to the outside of the transition line that are to receive the Roadside Seed Mix will be seeded as soon as ready and when directed by the Engineer in the field. The areas to the inside of the transition line that are to be seeded with the Roadside Seed Mix or the Native Seed Mix or are to receive sod will be temporarily mulched and maintained until such time that the entire area is ready for seeding and sod installation unless otherwise directed by the Engineer in the field.

* Exact number of boulders and locations will be determined in the field by the Engineer according to available supply and specific site conditions. See detail for placement.

* Type and quantity of perennial and grass transplants will be field staked by the Engineer. See Plant List for Species.

North Carolina Department of Transportation

Roadside Environmental Unit

Landscape Design & Development Section

PROJECT TITLE:

Wilkes County – US 421
Visitor Center and Rest Area
New Construction

Plans Drawn By:	CSM
Scale	1" = 40'
Date	8 / 8 / 07
Sheet Description	Planting Plan Ground Covers
T.I.P. #	K – 4703
Sheet #	L – 6

3 RFA
13 RHC
7 KAL
18 RHC
6 KAL
5 RFA
5 KAL
12 RHC
7 KAL
7 RFA
6 KAL
24 HAC
19 RHC
11 KAL
6 KAL
4 RFA
25 RHC
2 CHV
6 RHC
CHV
6 KAL
102 RHG

16 RHC
16 RHC
10 RHC
12 RHC
3 HAC
3 HAC
12 RHC
9 RFA

N 20° 23' 41.4" E
N 82° 42' 14.7" E
N 89° 13' 11.2" E
S 40° 03' 08" W
N 82° 42' 15.9" E
-TR-ON-
15+00
12+00

See Plant List Sheet L – 5 for Key

0 40 80 120

North Carolina Department of Transportation
Roadside Environmental Unit
Landscape Design & Development Section

PROJECT TITLE :
Wilkes County – US 421
Visitor Center and Rest Area
New Construction

Plans Drawn By:	CSM
Scale	1" = 40'
Date	8 / 8 / 07
Sheet Description	Planting Plan Trees
T.I.P. #	K – 4703
Sheet #	L – 7

46
47
48
49
Retaining Wall
Mulched Bed
AUU
Boulders
2 SN2
9 JE2
3 HFS
TCP
3 RGL
2 CAH
5 DSB
7 PVS
Sod
6 ERS
AUU
AUU
SN2
3 IRS
7 IHG
5 AG2
6 SOF
TCP
Accent Lights
3 PSW
Boulders
10 JE2
7 CAH
3 SN2
IRS
7 AG2
Mulched Bed
2 RGL
2 HFS
TCP
5 DSB
2 AUU
6 PHH
5 PHH
3 CAH
Native Seed Mix – Meadow
Sod
2 IGC
5 HAD
3 PSW
2 IGC
2 AUU
HSD
HSD
AUU
3 IHG
2 IGC
2 IGC
3 IGC
Mulched Bed
5 PHM
AUU
Boulders
TTG
3 CIR
4 IHG
8 AMH
Sod
Mulched Bed
3 FOG
TGT
IRS
SN2
IRS
3 SN2
7 ERS
2 TGT
5 FOG
20 RFG
9 STB
12 AST
PCI
15 DC2
9 CL2
2 AUU
2 SN2
IRS
TSD
3 HFS
3 IGC
Boulders
2 PCN
6 ERS
Accent Lights
PCN
9 HFS
STA
STO
TSD
8 ERS
TCJ
3 FOG
11 SH2
Accent Lights
5 SN2
10 CL2
Welcome Sign
Flag Pole
Mulched Bed
3 SN2
Boulders
7 AUU
2 TDS
17 DRM
Sod
CAF
Sod
DC
42
41
40
39
38
37
36
35
34
33
See Plant List Sheet L – 5 for Key
0 10 20 30

North Carolina Department of Transportation
Roadside Environmental Unit
Landscape Design & Development Section

PROJECT TITLE :
Wilkes County – US 421
Visitor Center and Rest Area
New Construction

Plans Drawn By:	CSM
Scale	1" = 10'
Date	8 / 8 / 07
Sheet Description	Planting Plan Beds
T.I.P. #	K – 4703
Sheet #	L – 8

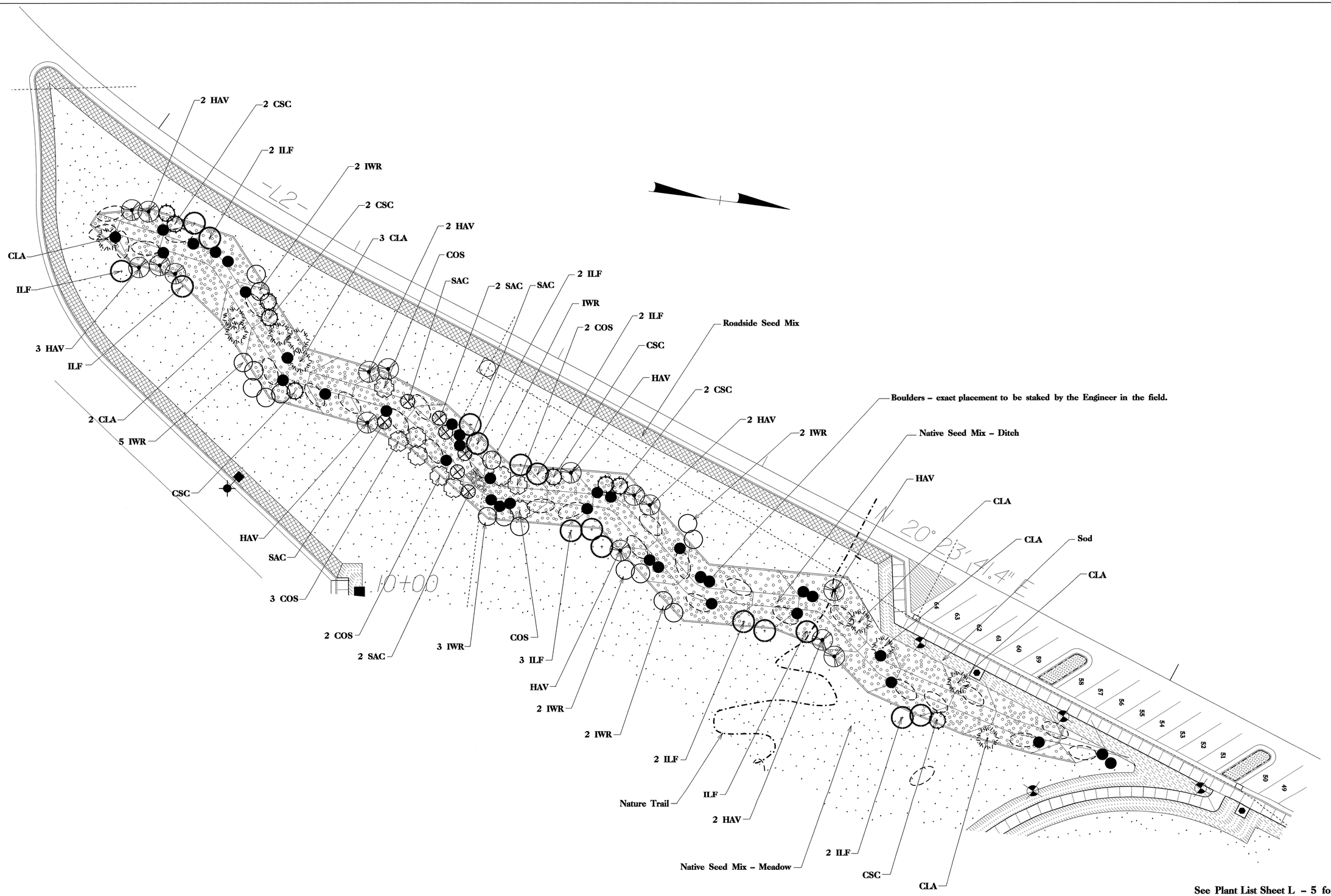

See Plant List Sheet L – 5 for Key

0 20 40 80

North Carolina Department of Transportation

Roadside Environmental Unit

Landscape Design & Development Section

PROJECT TITLE :

Wilkes County – US 421
Visitor Center and Rest Area
New Construction

Plans Drawn By:	CSM
Scale	1" = 20'
Date	8 / 8 / 07
Sheet Description	Planting Plan Ditch Detail
T.I.P. #	K – 4703
Sheet #	L – 9

Access point for maintenance; mulch and plant with Sporobolis as shown.

Large Flat Stone and Boulders installed in a combination to create a step–down waterfall effect from pipe outlet.

Access point for maintenance; mulch and plant with Sporobolis as shown.

C A

19 DSB (4' O.C.)

5' path berm planted with 645 SH1 (3' O.C.)

Ditch – plant to edge, but not inside

Maintenance Access Path and Nature Trail; mulch as shown on Trail and Edging Detail, adjust width as shown on this plan.

10'

Seeded Native Mix – Meadow

474 SH1 (3' O.C.)

5 CAF

9 IHG

6 SN2

141 CAA (5' O.C.)

124 ARA (5' O.C.)

Mulch

4 PCN

3 IHG

5 SN2

PCN

Hazardous Spill Basin Sod

SN2

PCN

3 IHG

6 SN2

ILF

Mulch

Hazardous Spill Basin, Line with 'Spillway' Creek Stone

2 IHG

4 IHG

3 SN2

4 IHG

2 PCN

4 SN2

Mulch

133 SH1 (3' O.C.)

3 PCN

JVB

OA2

OA1

200 IRS (4' O.C.)

3 PCN

138 HFS (3' O.C.)

Sediment Forebay ('Forebay' Creek Stone, No Mulch)

75 BOA (2' O.C.)

77 JE1 (3' O.C.)

27 SPB (5' O.C.)

16 PCN (5' O.C.)

49 SCC (3' O.C.)

24 AGI (4' O.C.)

186 AST (2' O.C.)

164 CAH (4' O.C.)

193 LEF

33 JE1 (3' O.C.)

46 AG1 (4' O.C.)

58 HEA (3' O.C.)

32 SPB (5' O.C.)

34 JE1 (3' O.C.)

77 MOD (2' O.C.)

142 HAD (4' O.C.)

JVB

132 DSB (4' O.C.)

Mulch Ditch

Mulch

212 EPU (2' O.C.)

55 SCC (3' O.C.)

30 PCN (5' O.C.)

19 SPB (5' O.C.)

26 EUM (4' O.C.)

39 AGI (4' O.C.)

94 EPU (2' O.C.)

104 PSW (4' O.C.)

148 IHG (4' O.C.)

148 LEF (3' O.C.)

40 VEN (2.5' O.C.)

73 ASN (2.5' O.C.)

100 JE1 (3' O.C.)

63 HEH (2.5' O.C.)

17 AGI (4' O.C.)

79 SCC (3' O.C.)

63 RUS (2.5' O.C.)

46 JE1 (3' O.C.)

62 SOC (2' O.C.)

52 VEN (2.5' O.C.)

129 HFS (3' O.C.)

Mulch Ditch

101 CEA (4' O.C.)

134 VIA (4' O.C.)

Mulch Ditch

Boulders – exact placement to be staked by Engineer in the field.

Access point for maintenance; mulch and plant with Sporobolis as shown.

Large Flat Stone laid to form continuous walking surface.

Large Flat Stone and Boulders installed in a combination to create a step–down waterfall effect from pipe outlet.

Mulch entire area inside of Maintence Access Path/Nature Trail unless otherwise indicated.

NOTE:

Grasses and perennials planted in the floor of the basin are to be planted in the groupings as shown. However, edges of groupings should meander into adjacent grouping of different species so as not to form distinct edges. Consult Engineer in field.

See Plant List Sheet L – 5 for Key

0 20 40 80

North Carolina Department of Transportation

Roadside Environmental Unit

Landscape Design & Development Section

PROJECT TITLE :

Wilkes County – US 421
Visitor Center and Rest Area
New Construction

Plans Drawn By: CSM

Scale: 1" = 20'

Date: 8/8/07

Sheet Description: Planting Plan Basin Detail

T.I.P. # K – 4703

Sheet # L – 10

REFORESTATION DETAILS

SEEDLING / LINER BAREROOT PLANTING DETAIL

HEALING IN

1. Locate a healing-in site in a shady, well protected area.

2. Excavate a flat bottom trench 12" deep and provide drainage.

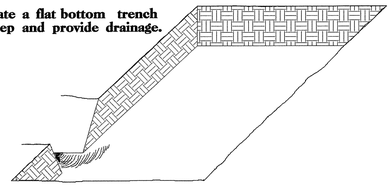

3. Backfill the trench with 2" well rotted sawdust. Place a 2" layer of well rotted sawdust at a sloping angle at one end of the trench.

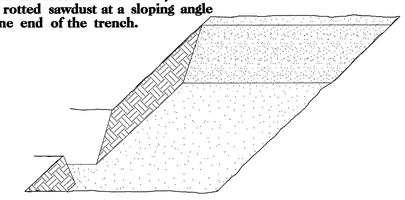

4. Place a single layer of plants against the sloping end so that the root collar is at ground level.

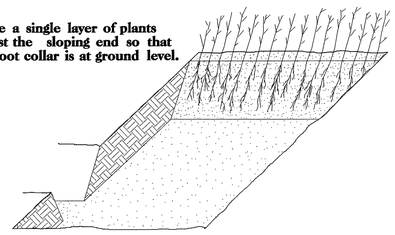

5. Place a 2" layer of well rotted sawdust over the roots maintaining a sloping angle.

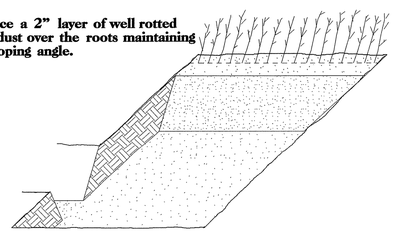

6. Repeat layers of plants and sawdust as necessary and water thoroughly.

DIBBLE PLANTING METHOD
USING THE KBC PLANTING BAR

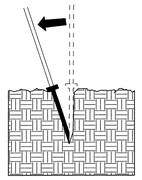

1. Insert planting bar as shown and pull handle toward planter.

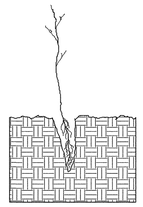

2. Remove planting bar and place seedling at correct depth.

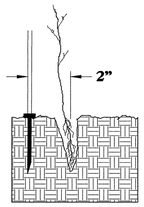

3. Insert planting bar 2" toward planter from seedling.

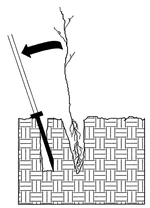

4. Pull handle of bar toward planter, firming soil at bottom.

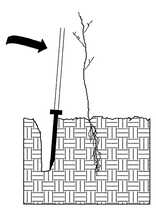

5. Push handle forward firming soil at top.

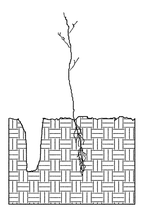

6. Leave compaction hole open. Water thoroughly.

PLANTING NOTES:

PLANTING BAG
During planting, seedlings shall be kept in a moist canvas bag or similar container to prevent the root systems from drying.

KBC PLANTING BAR
Planting bar shall have a blade with a triangular cross section, and shall be 12" long, 4" wide and 1" thick at center.

ROOT PRUNING
All seedlings shall be root pruned, if necessary, so that no roots extend more than 10 inches (10") below the root collar.

REFORESTATION SCHEDULE

EXACT AREAS TO BE REFORESTED WILL BE DETERMINED BY THE ENGINEER IN THE FIELD. QUANTITIES GIVEN ARE ESTIMATES ONLY, ADJUST ACCORDING TO FIELD CONDITIONS.

REFORESTATION – TYPE A – APPROXIMATELY .45 ACRES

MIXTURE, TYPE, SIZE, AND FURNISH SHALL CONFORM TO THE FOLLOWING:

Percent	Botanical Name	Common Name	Furnish	A.S.N.S
100%	Rhus glabra	Smooth Sumac	9 – 12" Seedling	10.2.1

Plant 5' to 9' on center, averaging 7' on center. Space randomly. Approximately 889 plants per acre.

REFORESTATION – TYPE B – APPROXIMATELY 1.17 ACRES

MIXTURE, TYPE, SIZE, AND FURNISH SHALL CONFORM TO THE FOLLOWING:

Percent	Botanical Name	Common Name	Furnish	A.S.N.S
15%	Acer rubrum	Red Maple	18 – 24" Seedling	10.2.1
15%	Aesculus octandra	Yellow Buckeye	12 – 18" Seedling	10.2.1
12%	Carya tomentosa	Mockernut Hickory	12 – 18" Seedling	10.2.1
8%	Magnolia acuminata	Cucumber Tree	12 – 18" Seedling	10.2.1
15%	* Oxydendron arboreum	Sourwood	12 – 18" Seedling	10.2.1
15%	Quercus prinus	Chestnut Oak	18 – 24" Seedling	10.2.1
12%	Quercus shumardii	Shumard Oak	18 – 24" Seedling	10.2.1
8%	Tsuga canadensis	Canadian Hemlock	12 – 18" Seedling	10.2.2

Plant 6' to 10' on center, averaging 8' on center. Space randomly. Approximately 680 plants per acre. Species with an * will be planted closer to the road edge of the reforested area.

REFORESTATION – TYPE C – APPROXIMATELY 2.91 ACRES

MIXTURE, TYPE, SIZE, AND FURNISH SHALL CONFORM TO THE FOLLOWING:

Percent	Botanical Name	Common Name	Furnish	A.S.N.S
15%	Acer rubrum	Red Maple	18 – 24" Seedling	10.2.1
15%	Betula nigra	River Birch	18 – 24" Seedling	10.2.1
20%	Liriodendron tulipifera	Tulip Poplar	18 – 24" Seedling	10.2.1
15%	Nyssa sylvatica	Black Gum	12 – 18" Seedling	10.2.1
20%	Quercus lyrata	Overcup Oak	12 – 18" Seedling	10.2.1
15%	Quercus nuttallii	Nuttall Oak	18 – 24" Seedling	10.2.1

Plant 6' to 10' on center, averaging 8' on center. Space randomly. Approximately 680 plants per acre.

North Carolina Department of Transportation
Roadside Environmental Unit
Landscape Design & Development Section

PROJECT TITLE :
Wilkes County – US 421
Visitor Center and Rest Area
New Construction

Plans Drawn By: CSM
Scale: Not to Scale
Date: 8 / 8 / 07
Sheet Description: Planting Plan Reforestation
T.I.P. # K – 4703
Sheet # L – 11

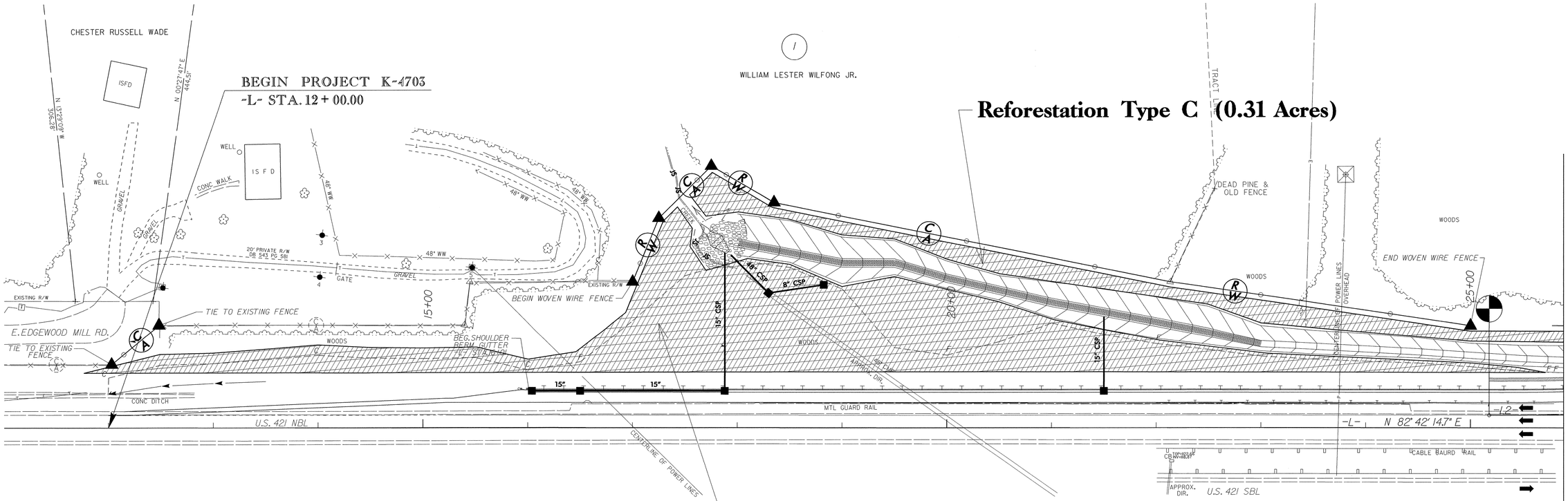

North Carolina Department of Transportation

Roadside Environmental Unit

Landscape Design & Development Section

PROJECT TITLE :

Wilkes County - US 421 Visitor Center and Rest Area New Construction

Plans Drawn By:	CSM
Scale	1" = 50'
Date	8 / 8 / 07
Sheet Description	Planting Plan Reforestation
T.I.P. #	K - 4703
Sheet #	L - 12

Reforestation Type B (0.31 Acres)

Reforestation Type A (0.24 Acres)

Reforestation Type C (0.03 Acres)

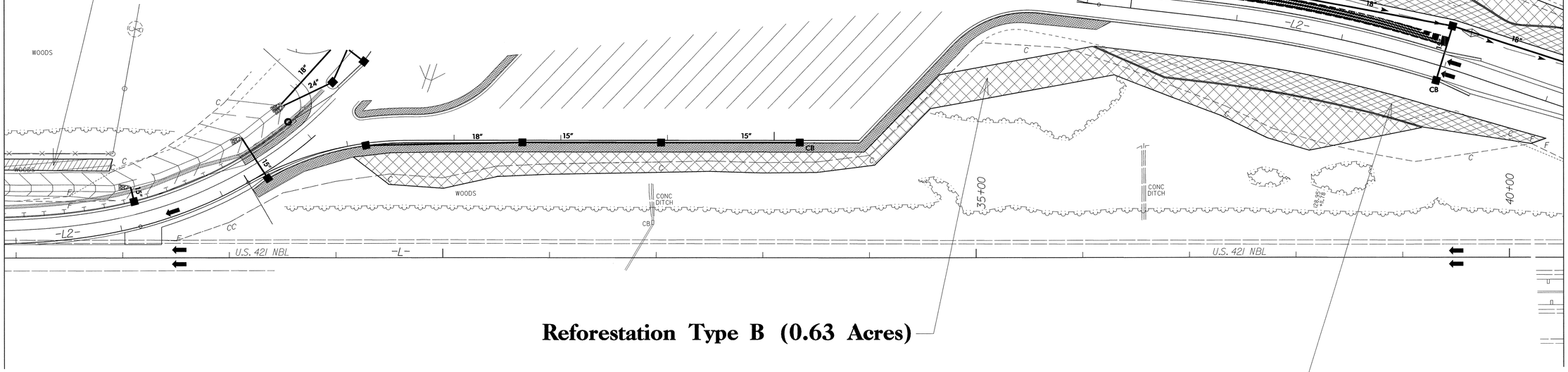

Reforestation Type B (0.63 Acres)

Reforestation Type A (0.19 Acres)

0 50 100 150

North Carolina Department of Transportation

Roadside Environmental Unit

Landscape Design & Development Section

PROJECT TITLE :

Wilkes County - US 421
Visitor Center and Rest Area
New Construction

Plans Drawn By:	CSM
Scale	1" = 50'
Date	8 / 8 / 07
Sheet Description	Planting Plan Reforestation
T.I.P. #	K - 4703
Sheet #	L - 13

Reforestation Type B (0.03 Acres)

Reforestation Type A (0.02 Acres)

Reforestation Type C (0.19 Acres)

Reforestation Type C (0.14 Acres)

Reforestation Type C (0.55 Acres)

Reforestation Type C (0.13 Acres)

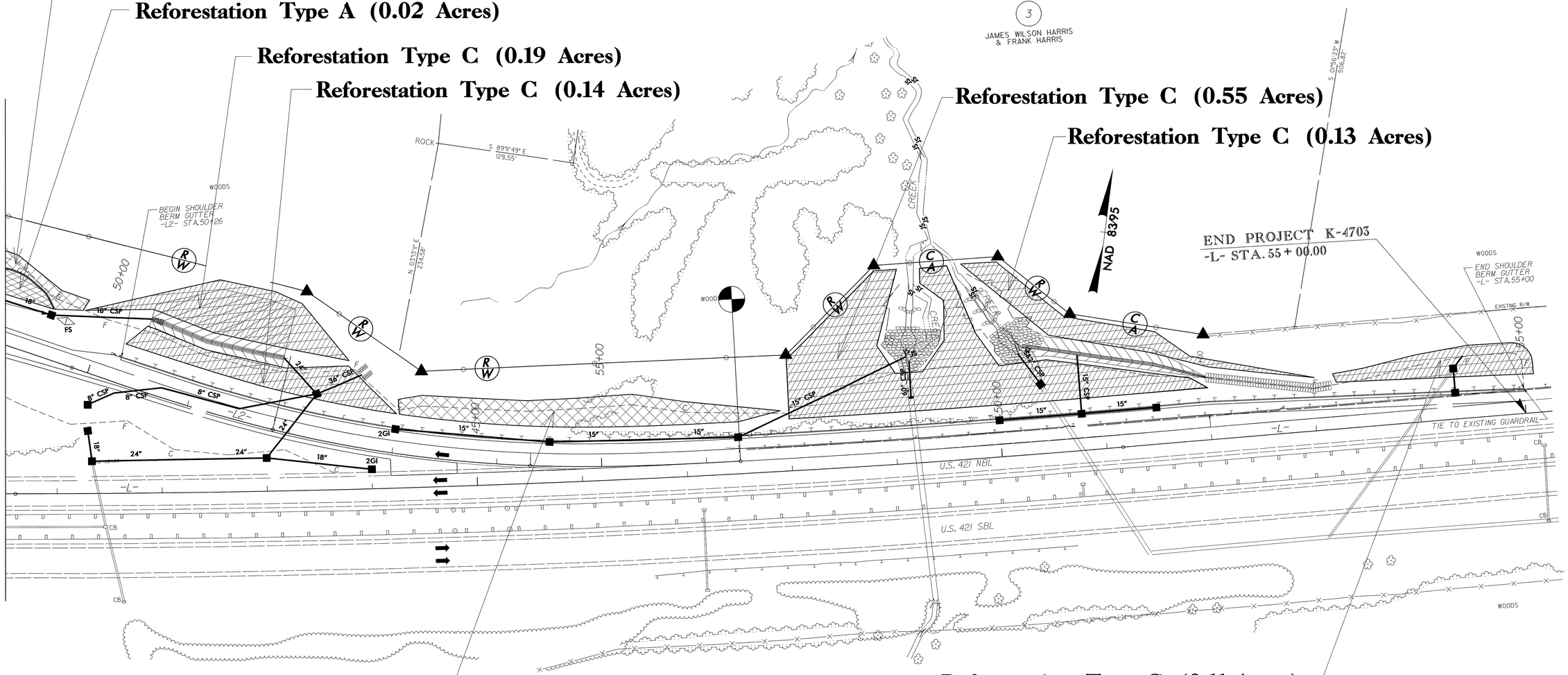

Reforestation Type C (0.11 Acres)

Reforestation Type B (0.20 Acres)

0 50 100 150

North Carolina Department of Transportation

Roadside Environmental Unit

Landscape Design & Development Section

PROJECT TITLE :

Wilkes County - US 421
Visitor Center and Rest Area
New Construction

Plans Drawn By:	CSM
Scale	1" = 50'
Date	8 / 8 / 07
Sheet Description	Planting Plan Reforestation
T.I.P. #	K - 4703
Sheet #	L - 14

NOTES:

1) SEE "FRONTAL WALL ELEVATION/PROFILE" FOR FOOTER SHAPE AND DEPTH.

2) ALL CMU SHALL BE POUR–THROUGH TYPE BOND BEAM UNITS.

3) STONE TREATMENT FOR WALL TO BE IRREG–ULARLY SIZED NATURAL STONE, RECESS MORTARED (TO APPEAR DRY STACKED), AND TIED INTO CMU WALL. (STONE & TREATMENT SHALL MATCH ON–SITE PICNIC SHELTER COLUMNS).

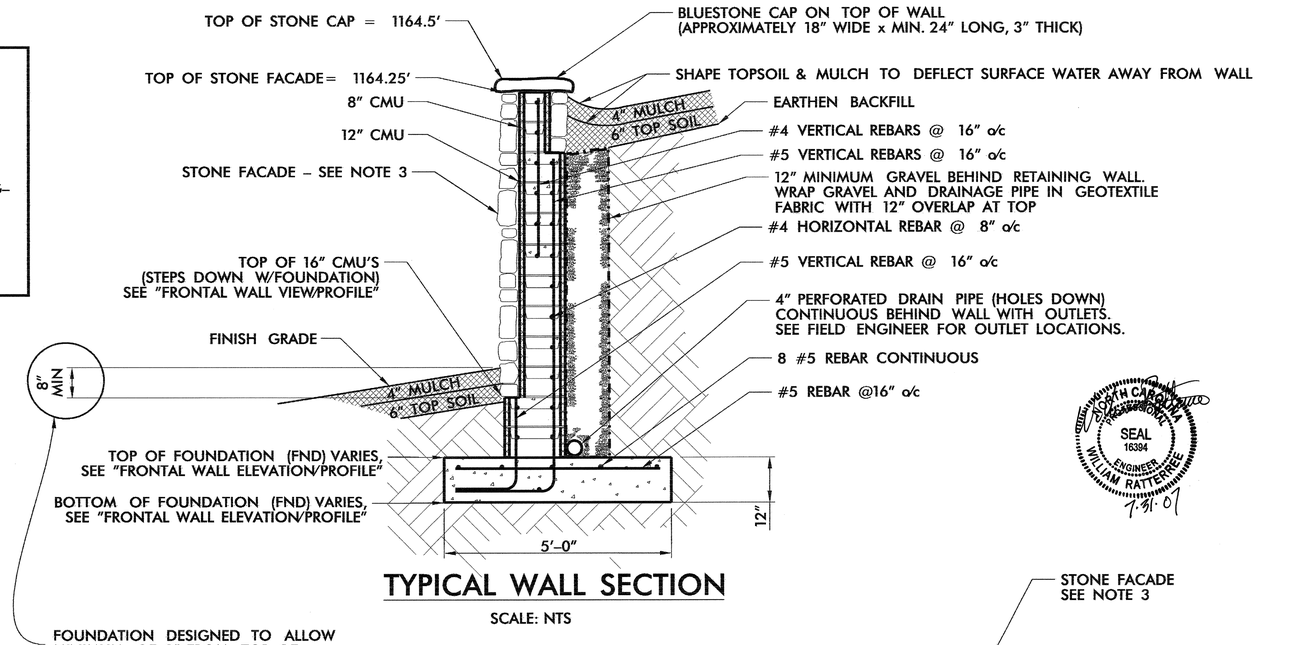

TYPICAL WALL SECTION

SCALE: NTS

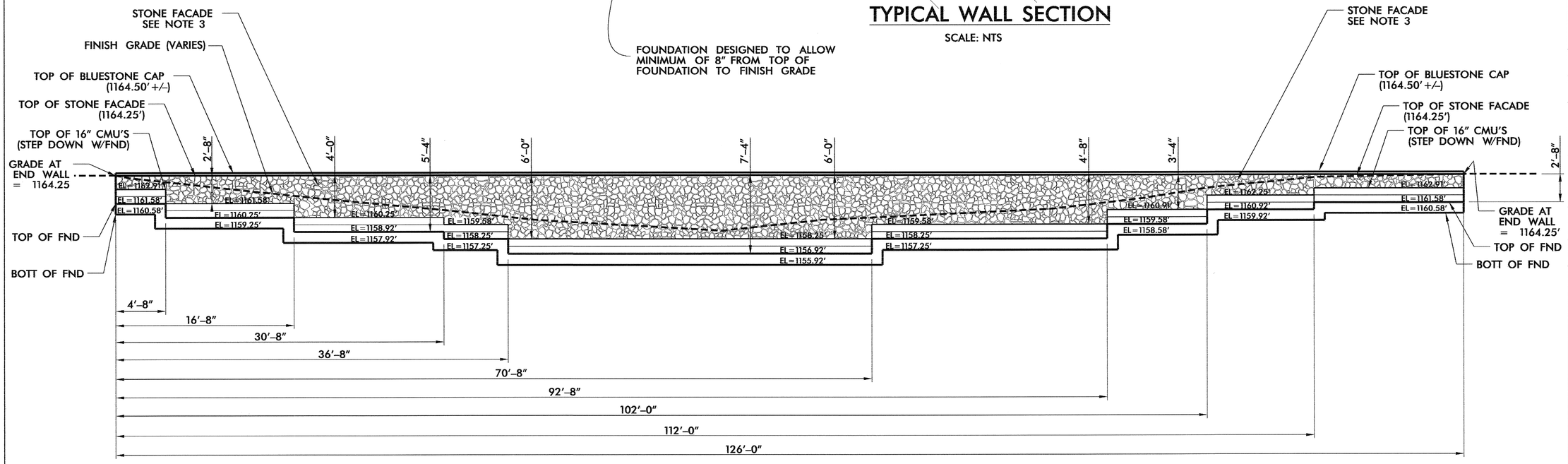

FRONTAL WALL ELEVATION/PROFILE

– LOOKING EAST –

5 0 5 10

Retaining Wall

North Carolina Department of Transportation
Roadside Environmental Unit
Landscape Design & Development Section

SEAL 16394 ENGINEER WILLIAM RATTERREE 7.31.07

PROJECT TITLE :
Wilkes County – US 421
Visitor Center and Rest Area
New Construction

Plans Drawn By:	CSM
Scale	AS NOTED
Date	7 / 13 / 07
Sheet Description	Details
T.I.P. #	K – 4703
Sheet #	L – 15

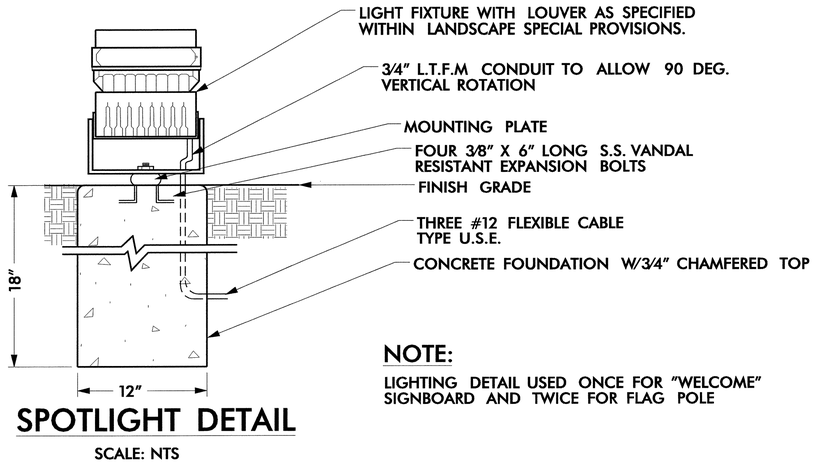

SPOTLIGHT DETAIL

SCALE: NTS

NOTE:

LIGHTING DETAIL USED ONCE FOR "WELCOME" SIGNBOARD AND TWICE FOR FLAG POLE

NOTES:

1) PRIOR TO CONSTRUCTING SIGN(S), FABRICATOR TO PRODUCE ARTWORK AS SHOWN HEREON AND SUBMIT FOR APPROVAL. FABRICATOR TO SUBMIT FONT OPTIONS AND COLOR CHARTS FOR SELECTION. AFTER ARTWORK IS REVIEWED, FABRICATOR TO SUBMIT FULL SCALE MOCKUP OF EACH SIGN IN DIMENSIONS REQUIRED WITH APPROPRIATE FONT AND COLORS FOR APPROVAL. DO NOT PRODUCE ACTUAL SIGNBOARDS UNTIL MOCKUP HAS BEEN APPROVED.

2) LETTER SIZES SHOWN ARE APPROXIMATE. FABRICATOR TO ADJUST AS APPROPRIATE.

3) BACKGROUND TO BE SANDBLASTED. LETTERS, BORDER, AND ART TO BE RAISED WITH MINIMUM 3/8" RELIEF. RELIEF DEPTH MAY VARY WITH COMPLEXITY OF SIGN ART AND LETTERING.

4) FINISH BACKSIDE OF EACH SIGN AND STAIN ALL WOOD POSTS. COLOR: TO MATCH BUILDING SOFFIT.

5) FABRICATOR TO FURNISH INSTRUCTIONS AND ALL HARDWARE FOR MOUNTING SIGNS AS INDICATED ON THESE DETAILS.

6) CONSULT FIELD ENGINEER PRIOR TO INSTALLATION.

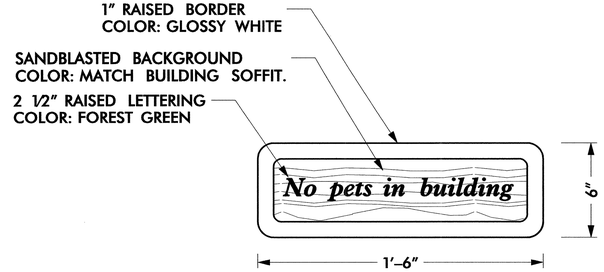

"PET" SIGN

THIS SIGN TO BE MOUNTED ON BUILDING PER FIELD ENGINEER

SCALE: NTS

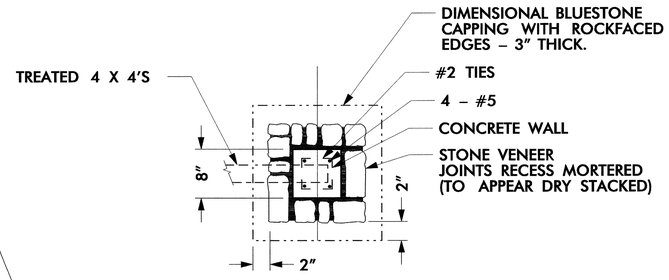

RIGHT HALF OF TOP VIEW
(LEFT HALF OPPOSITE HAND)

SCALE: NTS

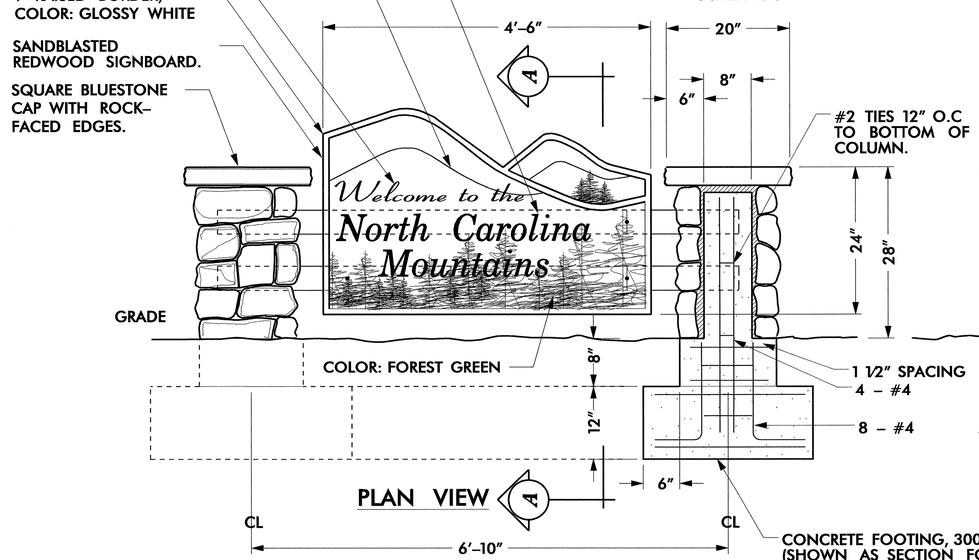

WELCOME CENTER SIGN

SCALE: NTS

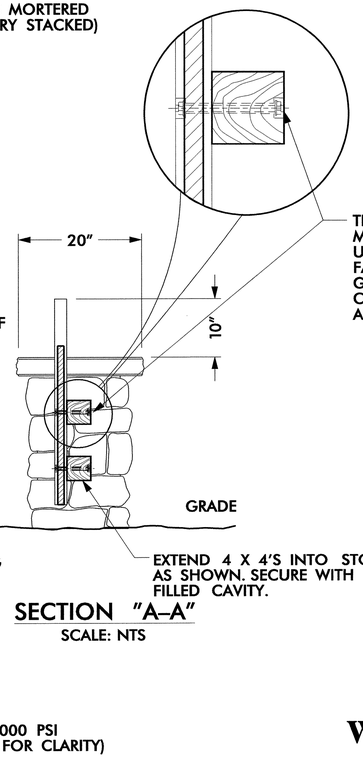

SECTION "A–A"

SCALE: NTS

Welcome Sign, Pet Sign & Spotllight Details

North Carolina Department of Transportation

Roadside Environmental Unit

Landscape Design & Development Section

PROJECT TITLE :

Wilkes County – US 421
Visitor Center and Rest Area
New Construction

Plans Drawn By:	CSM
Scale	AS NOTED
Date	8 / 8 / 07
Sheet Description	Details
T.I.P. #	K – 4703
Sheet #	L – 16

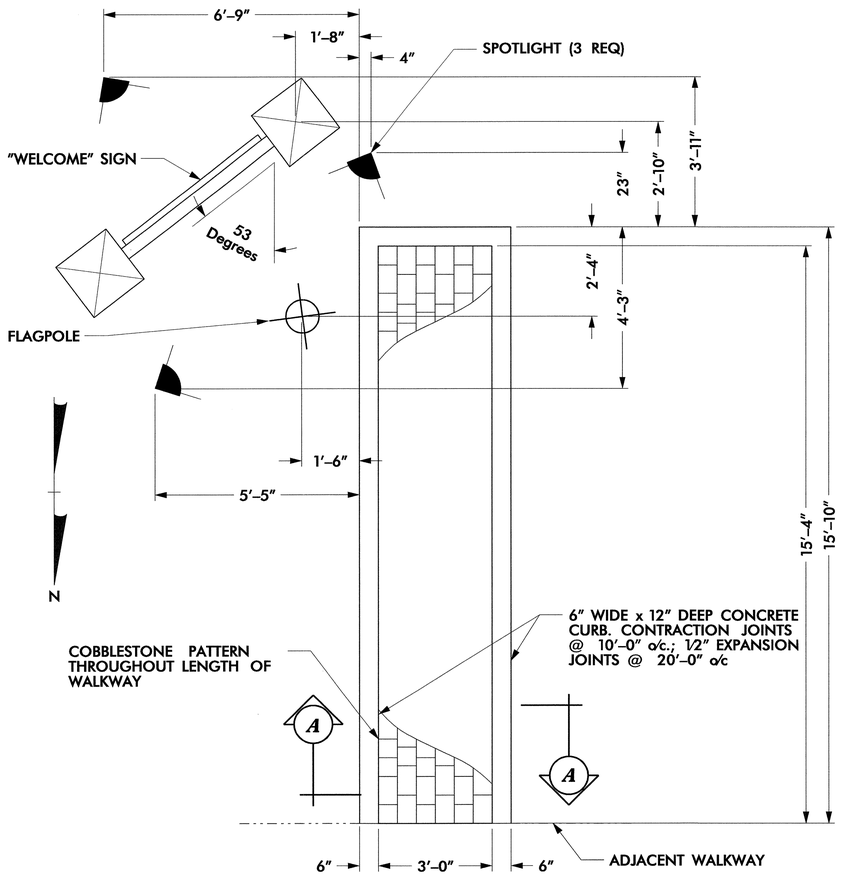

COBBLESTONE SIDEWALK TO FLAG POLE

SCALE: NTS

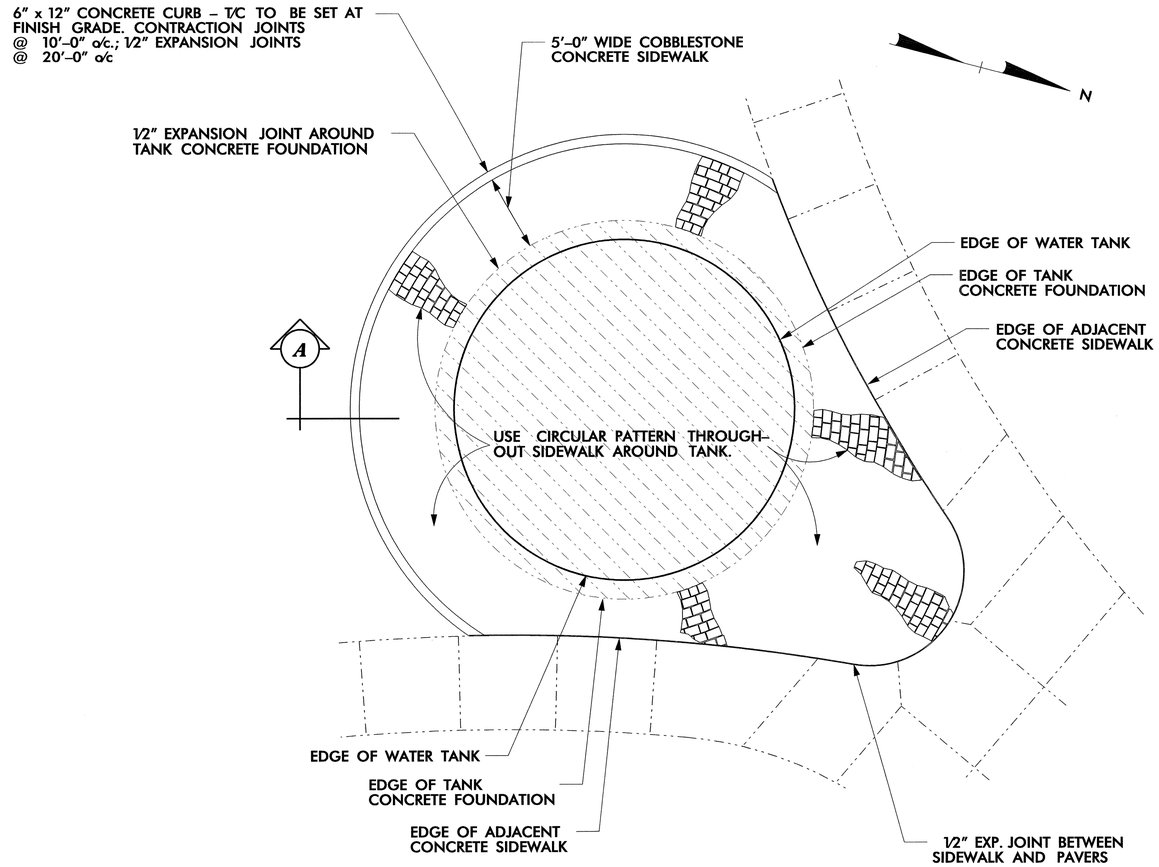

COBBLESTONE SIDEWALK AROUND WATER TANK

SCALE: NTS

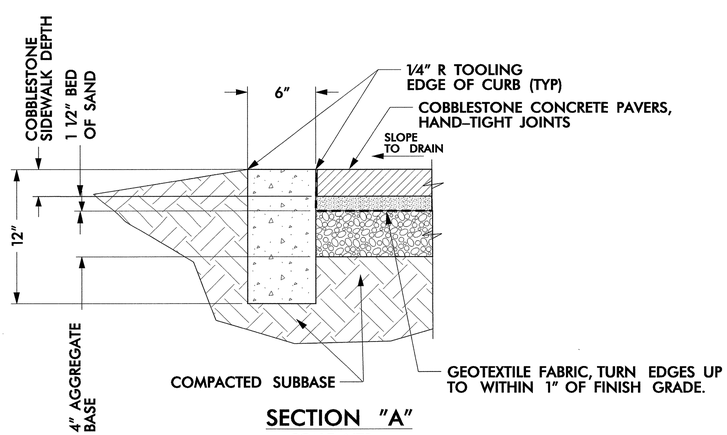

SECTION "A"

SCALE: NTS

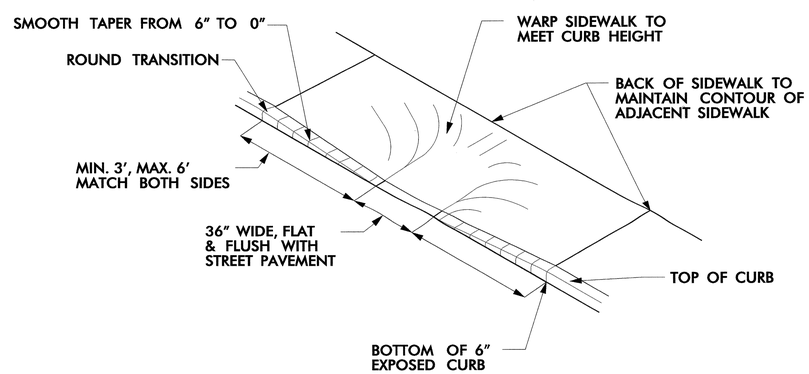

DEPRESSED CURB DETAIL

SCALE: NTS

Cobblestone Sidewalk & Depressed Curb Details

North Carolina Department of Transportation

Roadside Environmental Unit

Landscape Design & Development Section

PROJECT TITLE :

Wilkes County – US 421
Visitor Center and Rest Area
New Construction

Plans Drawn By:	CSM
Scale	AS NOTED
Date	8 / 8 / 07
Sheet Description	Details
T.I.P. #	K – 4703
Sheet #	L – 17

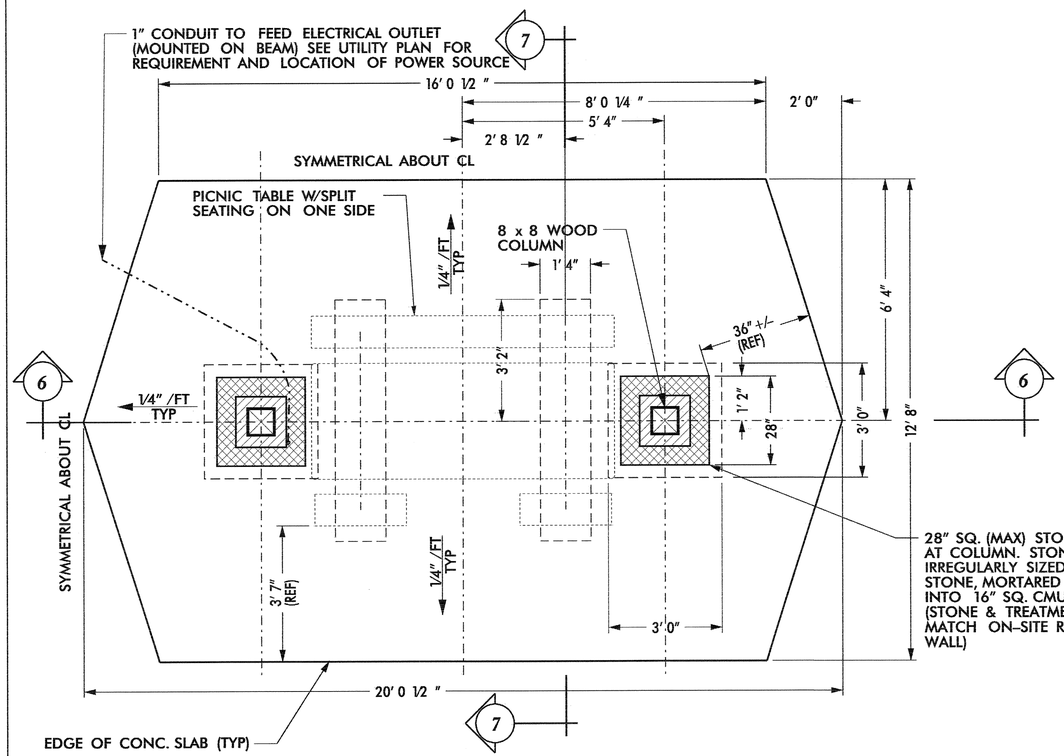

1 CONCRETE PAD PLAN

1/2" = 1' 0"

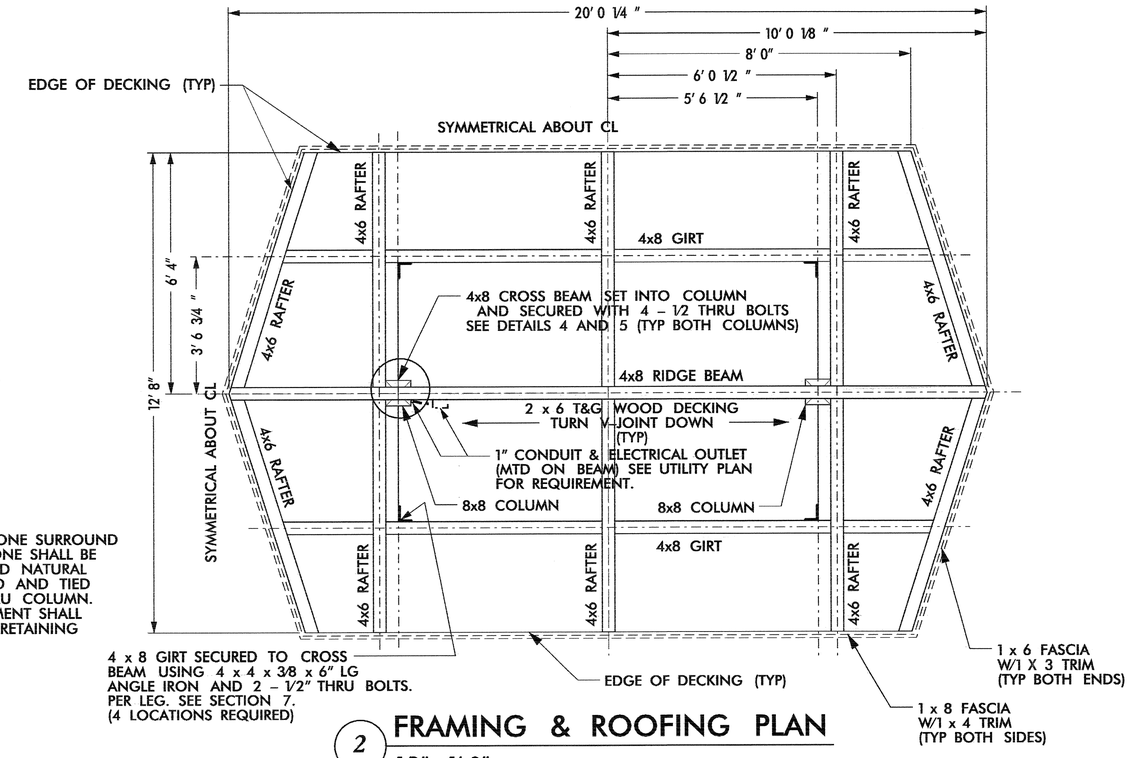

2 FRAMING & ROOFING PLAN

1/2" = 1' 0"

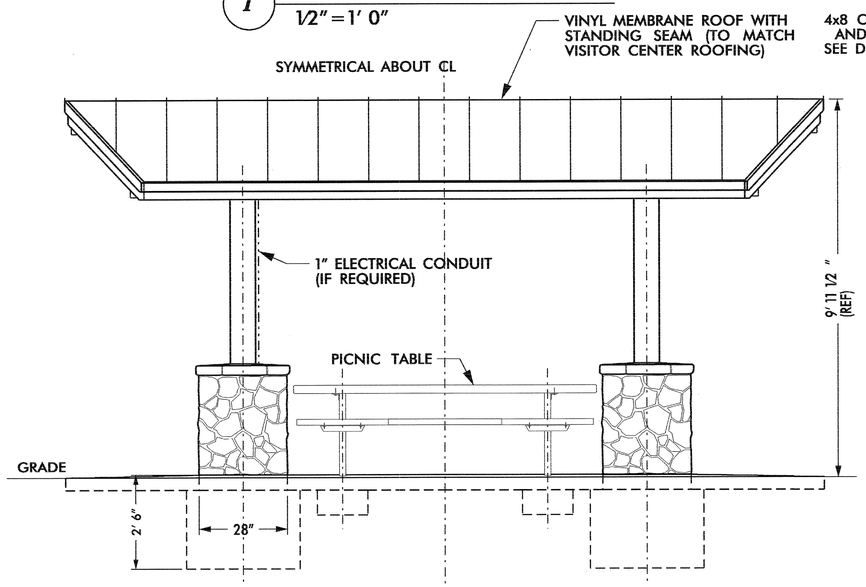

3 FRONT ELEVATION

1/2" = 1' 0"

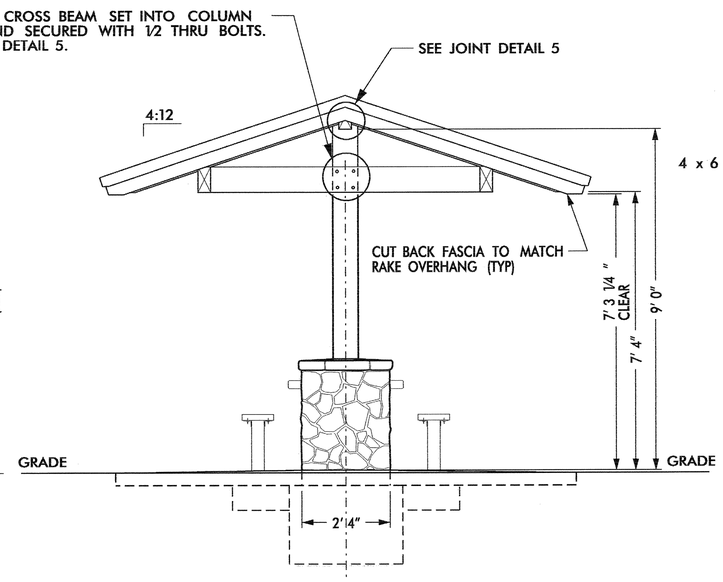

4 END ELEVATION

1/2" = 1' 0"

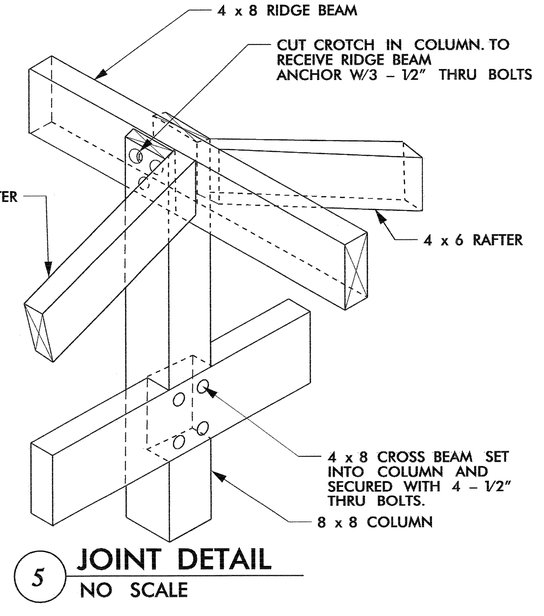

5 JOINT DETAIL

NO SCALE

Picnic Shelter /Table

North Carolina Department of Transportation
Roadside Environmental Unit
Landscape Design & Development Section

PROJECT TITLE :
Wilkes County - US 421
Visitor Center and Rest Area
New Construction

Plans Drawn By:	CSM
Scale	AS NOTED
Date	7 / 13 / 07
Sheet Description	Details
T.I.P. #	K - 4703
Sheet #	L - 18

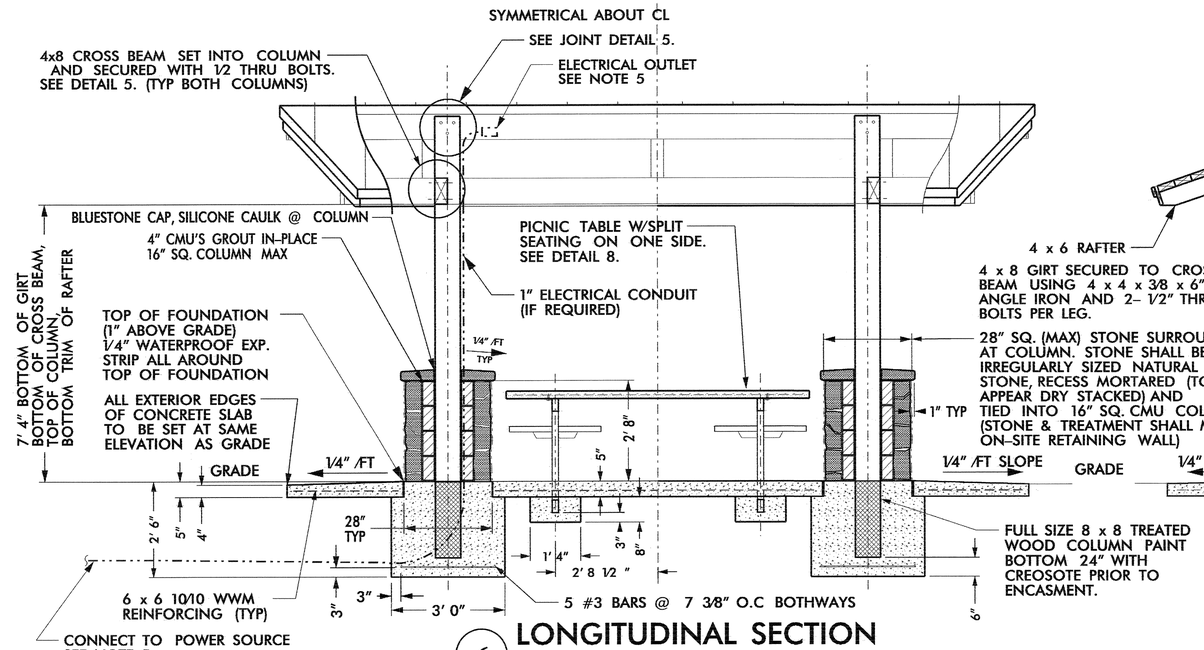

6 LONGITUDINAL SECTION

1/2" = 1' 0"

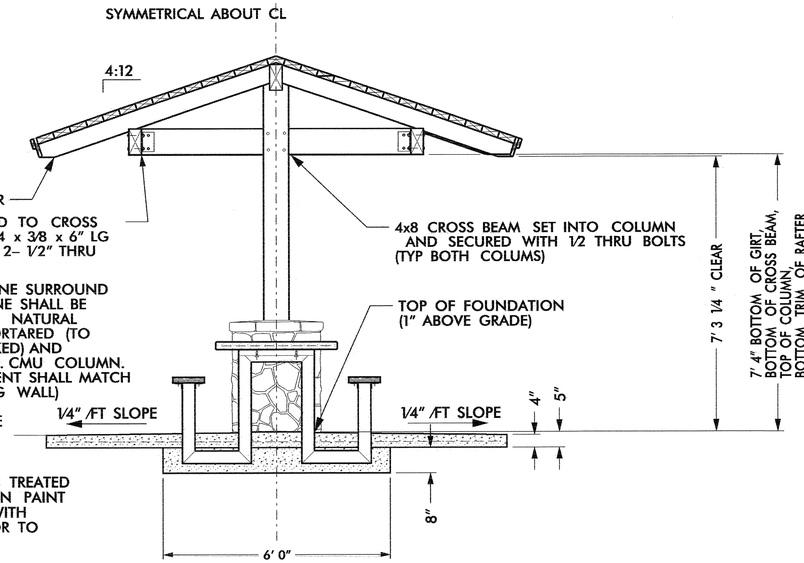

7 CROSS SECTION

1/2" = 1' 0"

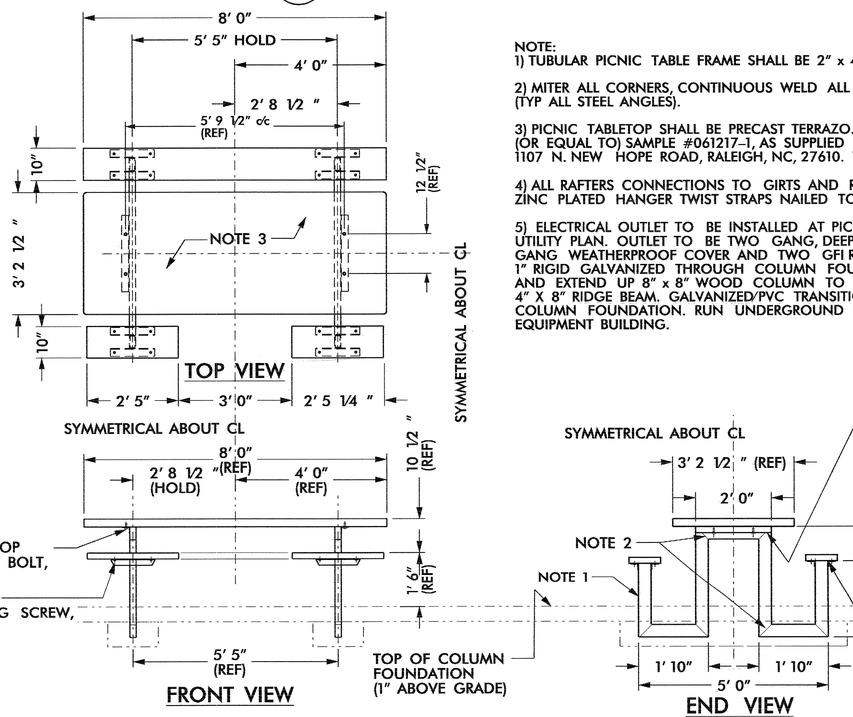

8 HANDICAP ACCESSABLE PICNIC TABLE

1/2" = 1' 0"

NOTE:
1) TUBULAR PICNIC TABLE FRAME SHALL BE 2" x 4" x 1/4" RECTANGULAR STEEL TUBING.

2) MITER ALL CORNERS, CONTINUOUS WELD ALL CONNECTIONS AND GRIND SMOOTH. (TYP ALL STEEL ANGLES).

3) PICNIC TABLETOP SHALL BE PRECAST TERRAZO. SPECIFICATION SHALL BE THE SAME AS (OR EQUAL TO) SAMPLE #061217-1, AS SUPPLIED BY PRECAST TERRAZZO ENTERPRIZES, INC., 1107 N. NEW HOPE ROAD, RALEIGH, NC, 27610. TELE: 800.849.8849/919.231-6200, EXT 105

4) ALL RAFTERS CONNECTIONS TO GIRTS AND RIDGE BEAM SHALL BE REINFORCED WITH ZINC PLATED HANGER TWIST STRAPS NAILED TO THE SUBJECT WOOD MEMBERS.

5) ELECTRICAL OUTLET TO BE INSTALLED AT PICNIC SHELTER AS DESIGNATED ON SITE UTILITY PLAN. OUTLET TO BE TWO GANG, DEEP, WEATHERPROOF OUTLET BOX WITH TWO GANG WEATHERPROOF COVER AND TWO GFI RECEPTACLES. ELECTRICAL CONDUIT TO BE 1" RIGID GALVANIZED THROUGH COLUMN FOUNDATION & STONE AND BLOCK COLUMN, AND EXTEND UP 8" x 8" WOOD COLUMN TO ELECTRICAL OUTLET MOUNTED ON SIDE OF 4" X 8" RIDGE BEAM. GALVANIZED/PVC TRANSITION POINT TO BE UNDERGROUND AND OUTSIDE COLUMN FOUNDATION. RUN UNDERGROUND CONDUIT TO POWER SOURCE AT CISTERN EQUIPMENT BUILDING.

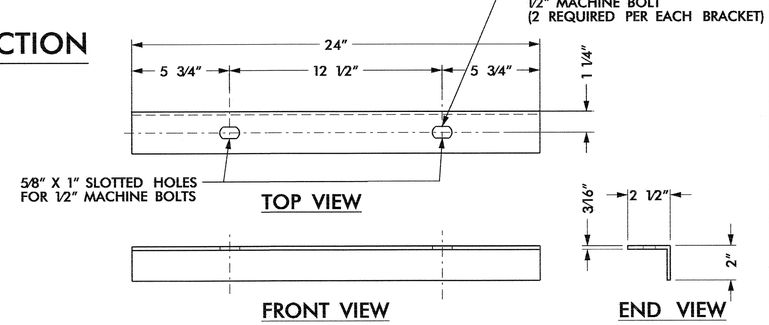

9 TABLETOP BRACKET - 2 REQ.

NO SCALE

NOTE: GRIND ALL METAL EDGES SMOOTH (TYP ALL STEEL ANGLES).

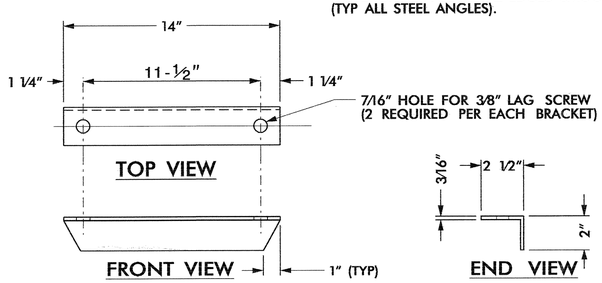

10 SEAT BRACKET - 8 REQ.

NO SCALE

Picnic Shelter /Table

North Carolina Department of Transportation
Roadside Environmental Unit
Landscape Design & Development Section

PROJECT TITLE:
Wilkes County - US 421
Visitor Center and Rest Area
New Construction

Plans Drawn By: CSM
Scale: AS NOTED
Date: 7 / 13 / 07
Sheet Description: Details
T.I.P. # K - 4703
Sheet # L - 19

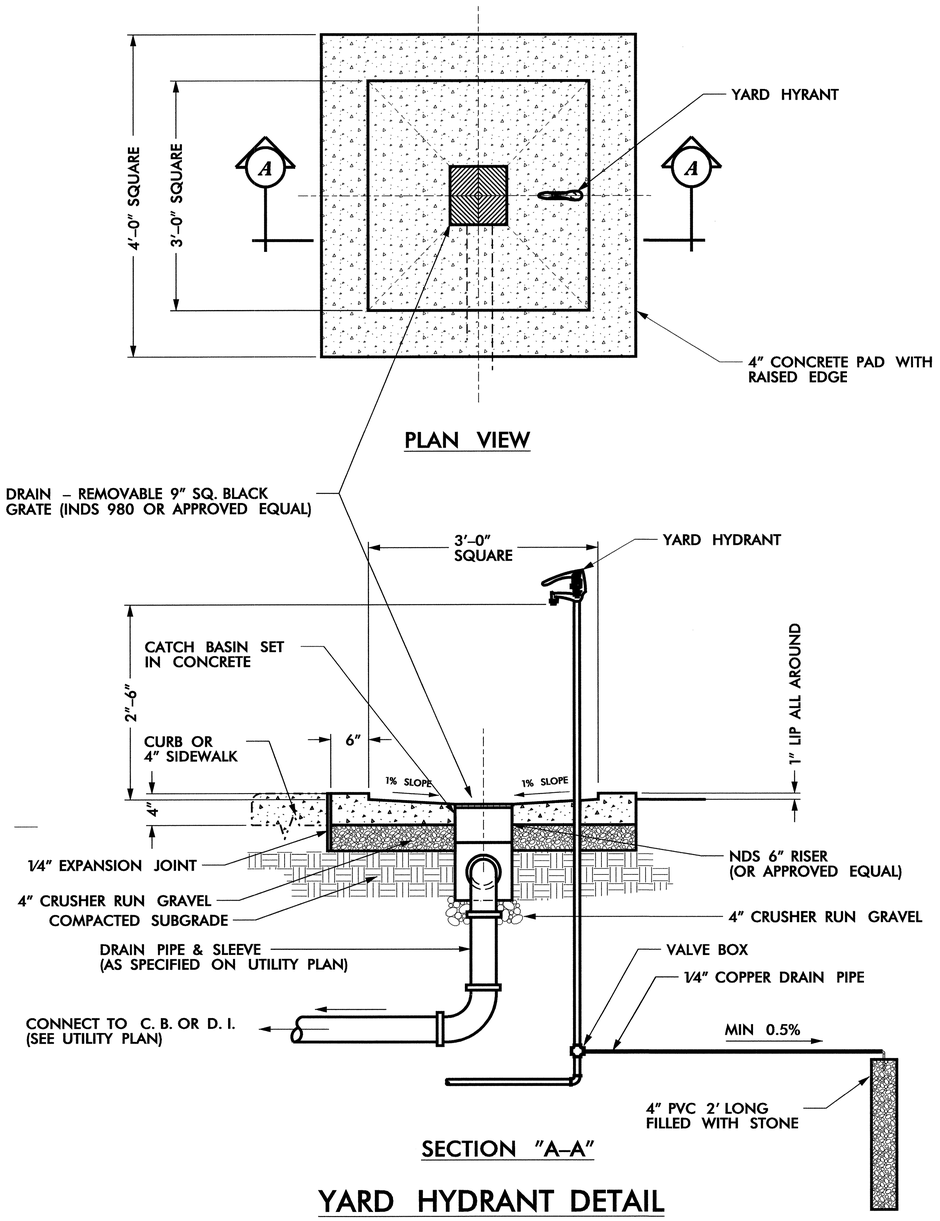

YARD HYDRANT DETAIL

SCALE: NTS

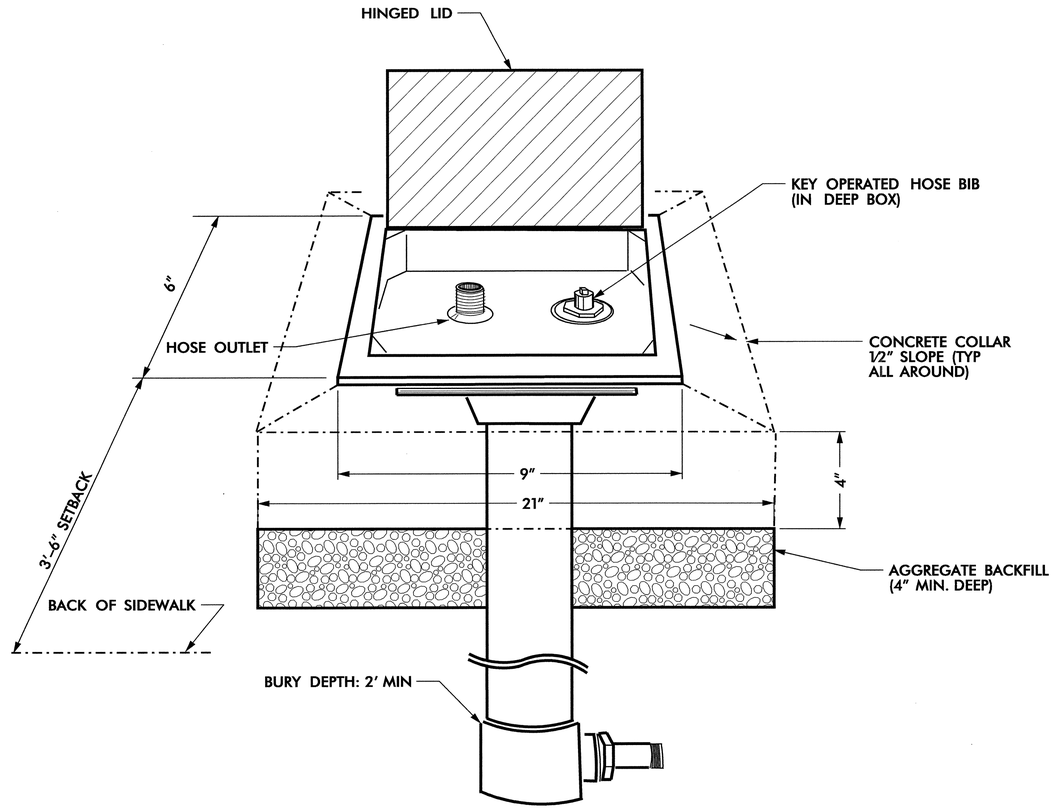

NOTES:

1) IRRIGATION – YARD HYDRANT INSTALLED 1/2" ABOVE SURROUNDING SURFACES.
2) FREEZELESS AND ANTI-SYPHON PROTECTION UNIT
3) FINISH – BLACK: BOX, DOOR, HEAD CASTING.
4) INLET – 3/4" NPT
5) DRAIN HOLE – 1/4" NPT
6) "KEY" PROVIDED TO ENGINEER FOR EVERY UNIT INSTALLED MURDOCK MODEL #V-475 (OR APPROVED EQUAL).

IRRIGATION HYDRANT DETAIL

SCALE: NTS

Yard Hydrant/Irrigation Hydrant Details

North Carolina Department of Transportation
Roadside Environmental Unit
Landscape Design & Development Section

PROJECT TITLE:
Wilkes County – US 421
Visitor Center and Rest Area
New Construction

Plans Drawn By: CSM
Scale: AS NOTED
Date: 8 / 8 / 07
Sheet Description: Details
T.I.P. #: K – 4703
Sheet #: L – 20

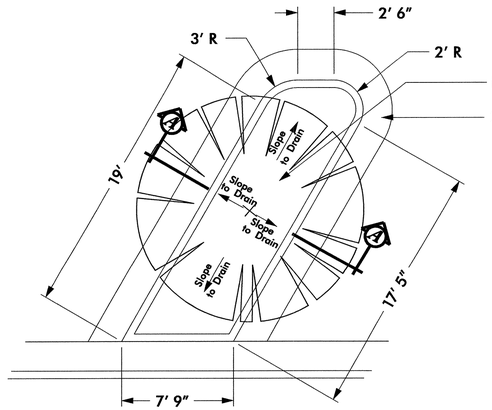

PLANTING ISLAND 'A'

Typical
SCALE: NTS

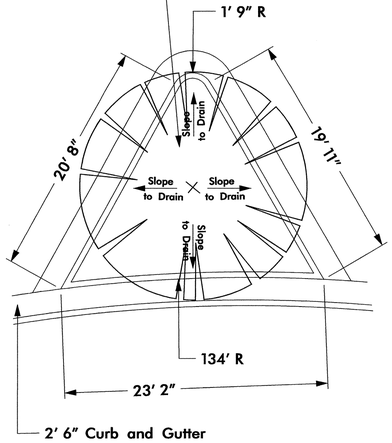

PLANTING ISLAND 'B'

SCALE: NTS

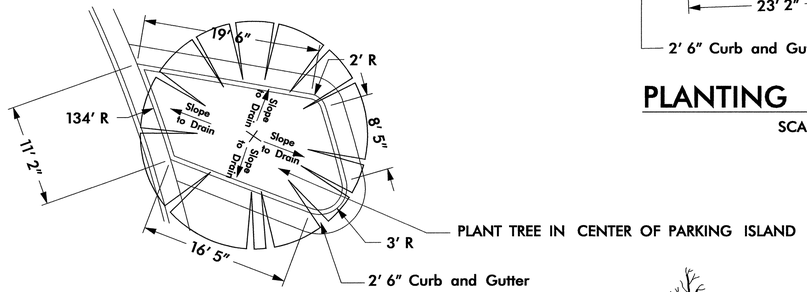

PLANTING ISLAND 'C'

SCALE: NTS

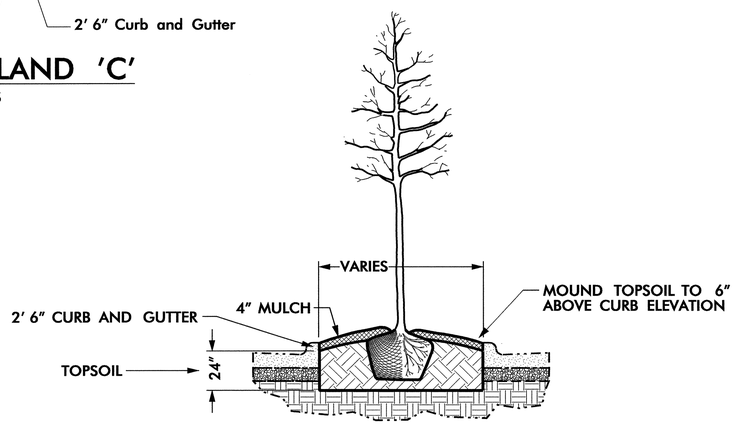

SECTION "A–A"

SCALE: NTS

TREE PLANTING ISLAND DETAILS

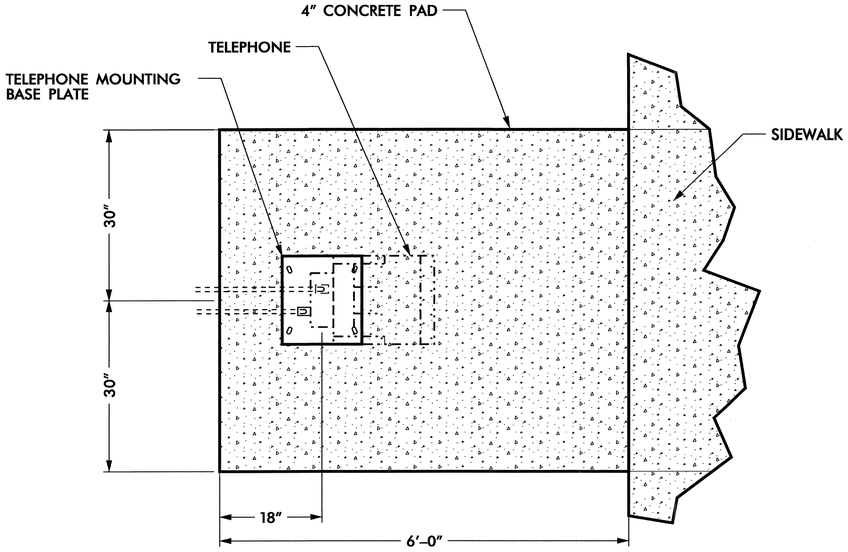

PLAN VIEW

SCALE: NTS

NOTE:
TELEPHONE SHALL MEET STATE AND FEDERAL HANDICAP ACCESSIBILITY REQUIREMENTS.

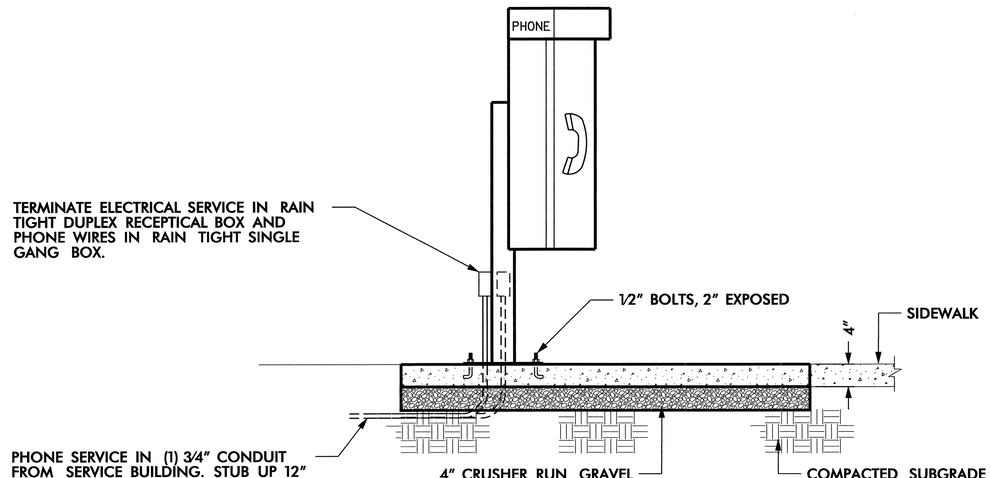

ELEVATION/ SECTION VIEW

NOTE:
TRANSFORMER IS APPROXIMATELY 10″ HIGH AND 5″ x 5″ SQUARE. STRAP TO SUPPORT POST.

OUTDOOR TELEPHONE INSTALLATION DETAIL

SCALE: NTS

TREE PLANTING ISLANDS AND OUTDOOR TELEPHONE INSTALLATION

North Carolina Department of Transportation
Roadside Environmental Unit
Landscape Design & Development Section

PROJECT TITLE :
Wilkes County – US 421
Visitor Center and Rest Area
New Construction

Plans Drawn By:	CSM
Scale	AS NOTED
Date	8 / 8 / 07
Sheet Description	Details
T.I.P. #	K – 4703
Sheet #	L – 21

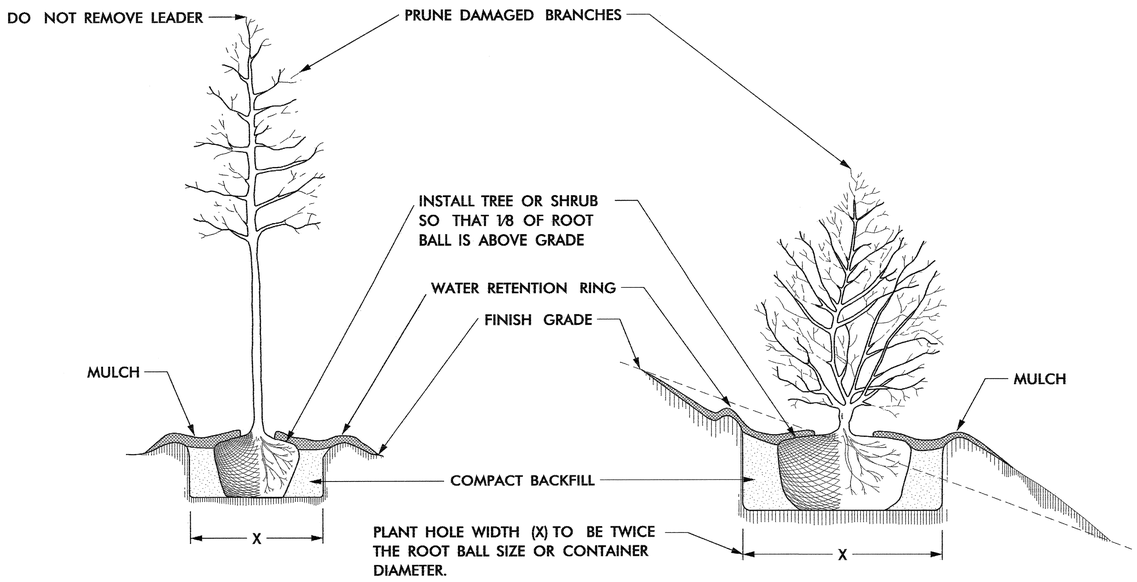

TREE OR SHRUB PLANTING DETAIL
(LEVEL GROUND)

TREE OR SHRUB PLANTING DETAIL
(SLOPING GROUND)

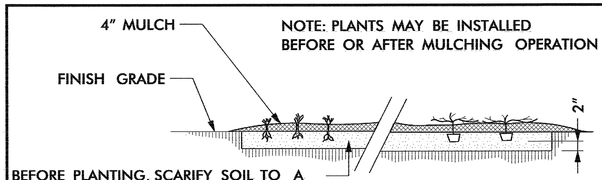

GROUND COVER/BEDDING PLANT DETAIL

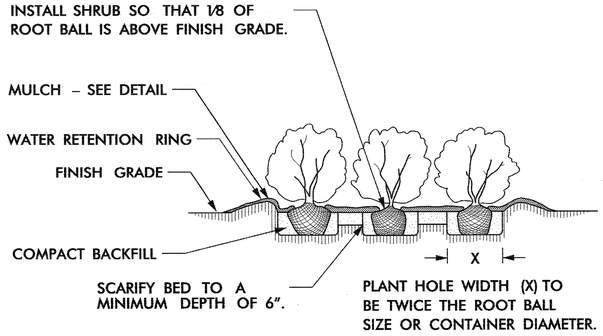

SHRUB BED PLANTING DETAIL

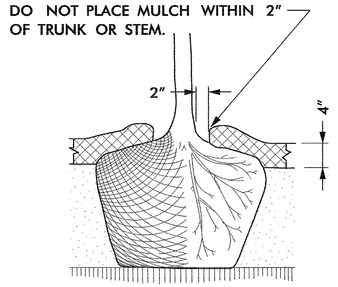

MULCH DETAIL

NOTES:

- SCHEDULE FOR PLANT HOLE SIZE: PLANT HOLE WIDTH (X) TO BE TWICE THE ROOT BALL SIZE OR CONTAINER DIAMETER.
- SEE STANDARD SPECIFICATIONS FOR PLANT BED FUMIGATION AND HERBICIDAL TREATMENT.
- APPLY FERTILIZER AT PLANTING TIME IN THE FORM OF A SLOW RELEASE PELLET OR TABLET. APPLY AT RATE RECOMMENDED BY MANUFACTURER. BOTH RATE AND FORMULATION MUST BE APPROVED BY FIELD ENGINEER PRIOR TO APPLICATION.
- REMOVE WIRE BASKET AND FOLD BURLAP BACK FROM TOP OF ROOT BALL BEFORE BACKFILLING IS COMPLETE.
- ALL PRUNING TO FOLLOW STANDARD ARBORICULTURAL PRACTICES AS SPECIFIED BY INTERNATIONAL SOCIETY OF ARBORICULTURE.
- DO NOT ATTEMPT TO STRAIGHTEN A TREE THAT HAS BEEN PLANTED AT AN ANGLE WITH THE USE OF STAKING OR GUYING. DIG TREE AND REPLANT TO UPRIGHT POSITION.

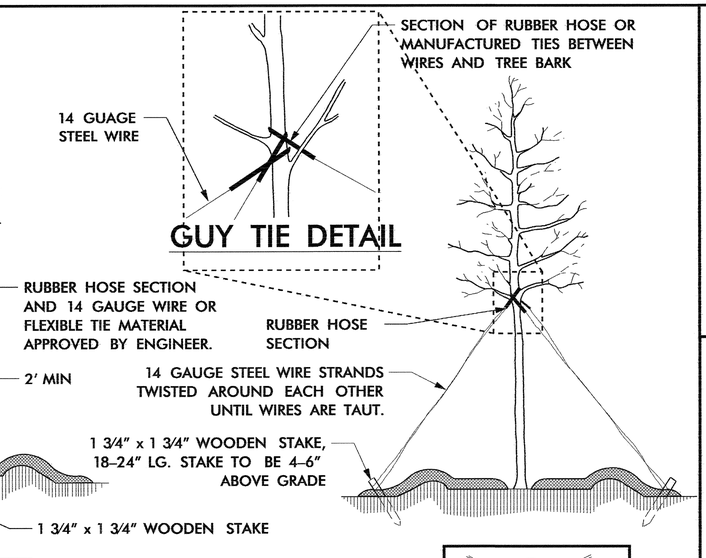

GUY TIE DETAIL

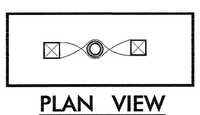

PLAN VIEW

STAKING DETAIL
(TREES 6'-10')

USE AS DIRECTED BY FIELD ENGINEER

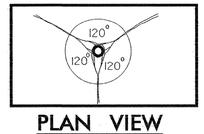

PLAN VIEW

GUYING DETAIL
(TREES 10' OR LARGER)

USE AS DIRECTED BY FIELD ENGINEER

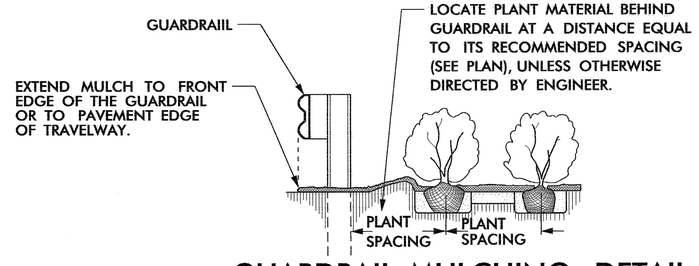

GUARDRAIL MULCHING DETAIL
USE AS DIRECTED BY FIELD ENGINEER

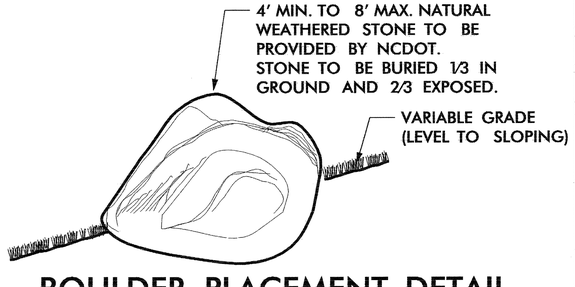

BOULDER PLACEMENT DETAIL TYPICAL

SCALE: NTS

MIN. 12" DEEP CLASS "A" STONE ON FILTER FABRIC LINER IN DITCH. PLACE STONE FLUSH WITH DITCH GRADE FOR MAXINUM WATER FLOW.

CLASS "A" STONE DITCH LINING DETAIL

Planting Details

North Carolina Department of Transportation
Roadside Environmental Unit
Landscape Design & Development Section

PROJECT TITLE:
Wilkes County - US 421
Visitor Center and Rest Area
New Construction

Plans Drawn By:	CSM
Scale	AS NOTED
Date	7 / 13 / 07
Sheet Description	Details
T.I.P. #	K - 4703
Sheet #	L - 22

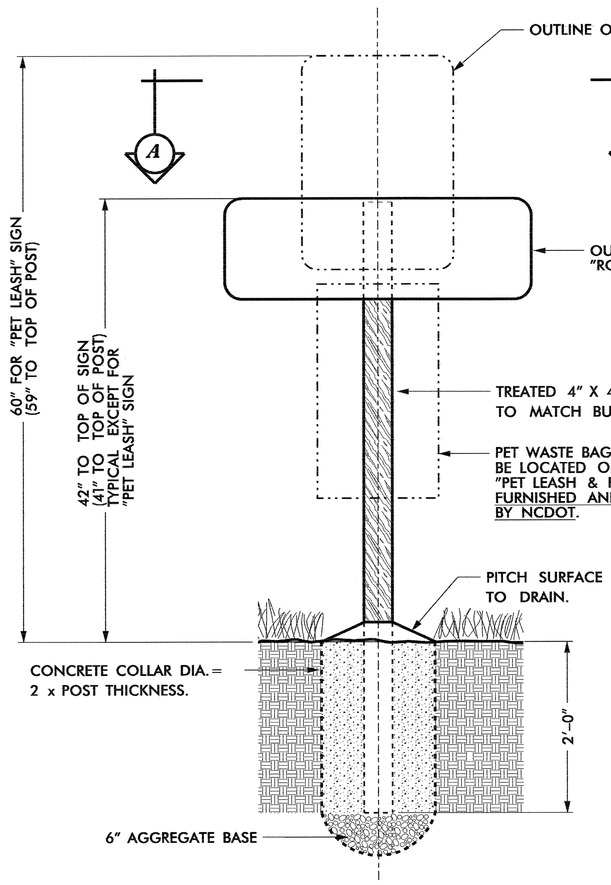

SIGN INSTALLATION

SCALE: NTS

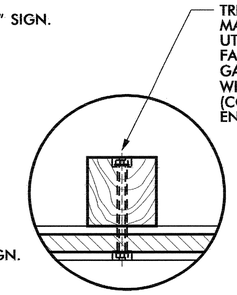

SECTION "A–A"

SCALE: NTS

NOTES:

1) PRIOR TO CONSTRUCTING SIGN(S), FABRICATOR TO PRODUCE ARTWORK AS SHOWN HEREON AND SUBMIT FOR APPROVAL. FABRICATOR TO SUBMIT FONT OPTIONS AND COLOR CHARTS FOR SELECTION. AFTER ARTWORK IS REVIEWED, FABRICATOR TO SUBMIT FULL SCALE MOCKUP OF EACH SIGN IN DIMENSIONS REQUIRED WITH APPROPRIATE FONT AND COLORS FOR APPROVAL. DO NOT PRODUCE ACTUAL SIGNBOARDS UNTIL MOCKUP HAS BEEN APPROVED.

2) LETTER SIZES SHOWN ARE APPROXIMATE. FABRICATOR TO ADJUST AS APPROPRIATE.

3) BACKGROUND TO BE SANDBLASTED. LETTERS, BORDER, AND ART TO BE RAISED WITH MINIMUM 3/8" RELIEF. RELIEF DEPTH MAY VARY WITH COMPLEXITY OF SIGN ART AND LETTERING.

4) FINISH BACKSIDE OF EACH SIGN AND STAIN ALL WOOD POSTS. COLOR: TO MATCH BUILDING SOFFIT.

5) FABRICATOR TO FURNISH INSTRUCTIONS AND ALL HARDWARE FOR MOUNTING SIGNS AS INDICATED ON THESE DETAILS.

6) A TOTAL OF TWELVE (12) "ROAD CROSSING" SIGNBOARDS TO BE PRODUCED; EIGHT (8) TO BE INSTALLED AND FOUR (4) TO BE FURNISHED TO ENGINEER FOR FUTURE REPLACEMENTS. A TOTAL OF FIFTEEN (15) "NATURE TRAIL" SIGNBOARDS TO BE PRODUCED; TEN (10) TO BE INSTALLED AND FIVE (5) TO BE FURNISHED TO ENGINEER FOR REPLACEMENTS. TWO (2) LOCATIONS REQUIRE ONE (1) "NATURE TRAIL" SIGNBOARD PER POST. EIGHT (8) LOCATIONS REQUIRE TWO (2) SIGNBOARDS PER POST – ONE (1) "NATURE TRAIL" AND ONE (1) "ROAD CROSSING".

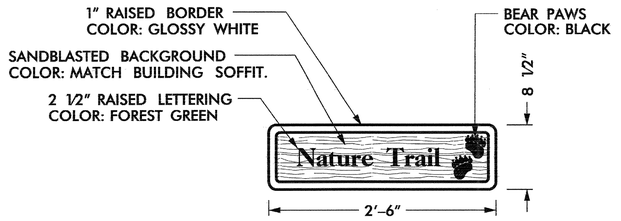

"NATURE TRAIL" SIGN

SCALE: NTS

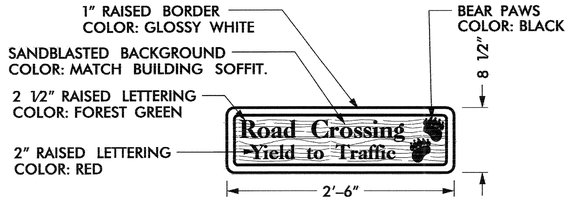

"ROAD CROSSING" SIGN

SCALE: NTS

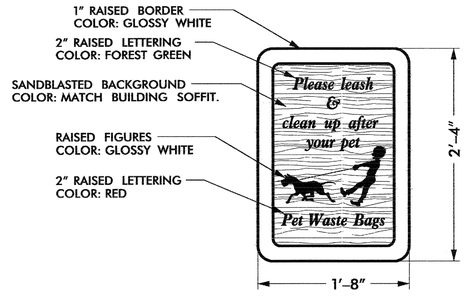

"PET LEASH & PET WASTE" SIGN

SCALE: NTS

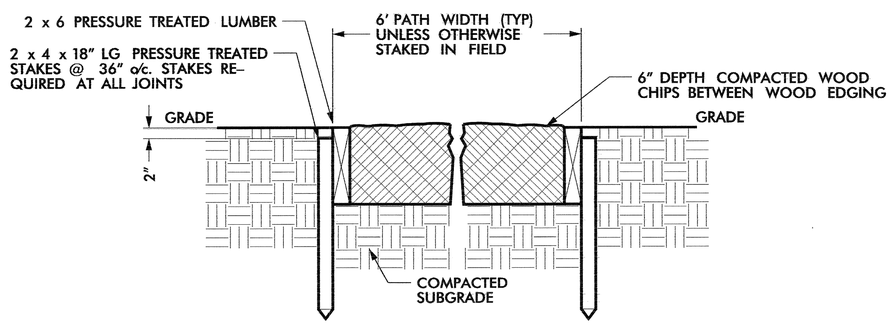

NATURE TRAIL & EDGING DETAIL

(AT LEVEL GRADE)

SCALE: NTS

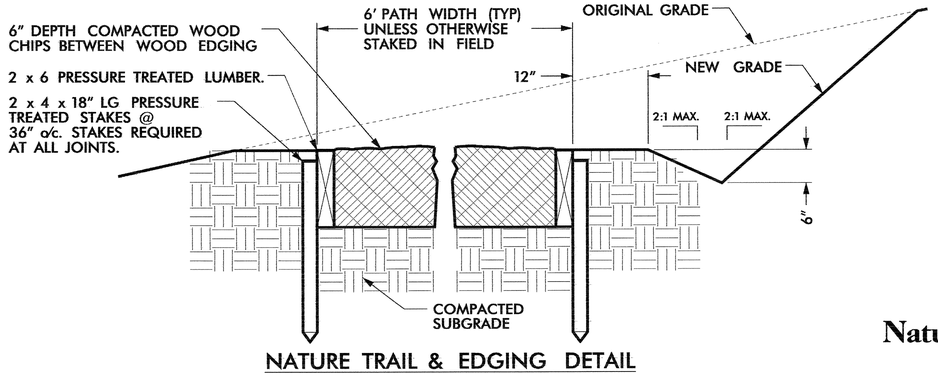

NATURE TRAIL & EDGING DETAIL

(AT SLOPING GRADE)

SCALE: NTS

Nature Trail Signs & Trail and Edging Details

North Carolina Department of Transportation
Roadside Environmental Unit
Landscape Design & Development Section

PROJECT TITLE:
Wilkes County - US 421
Visitor Center and Rest Area
New Construction

Plans Drawn By:	CSM
Scale	AS NOTED
Date	7 / 13 / 07
Sheet Description	Details
T.I.P. #	K - 4703
Sheet #	L - 23

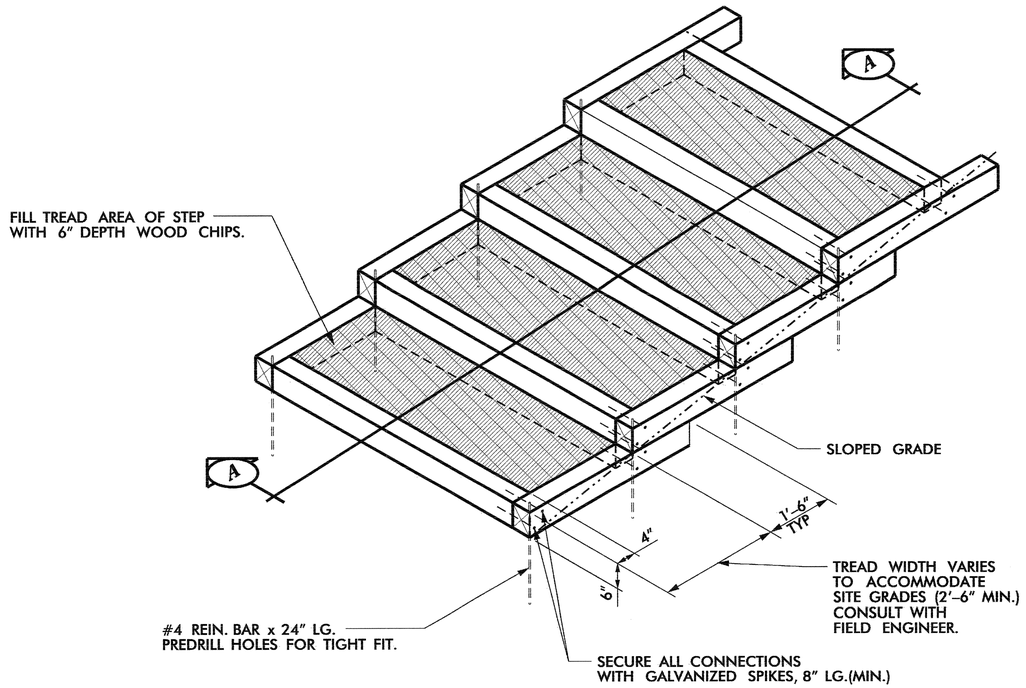

ISOMETRIC VIEW

NATURE TRAIL STEPS DETAIL

SCALE: NTS

NOTES:

1) LOCATION & NUMBER OF STEPS REQUIRED TO BE DETERMINED IN FIELD.

2) ALL WOOD SHALL BE 4 x 6 PRESSURE TREATED.

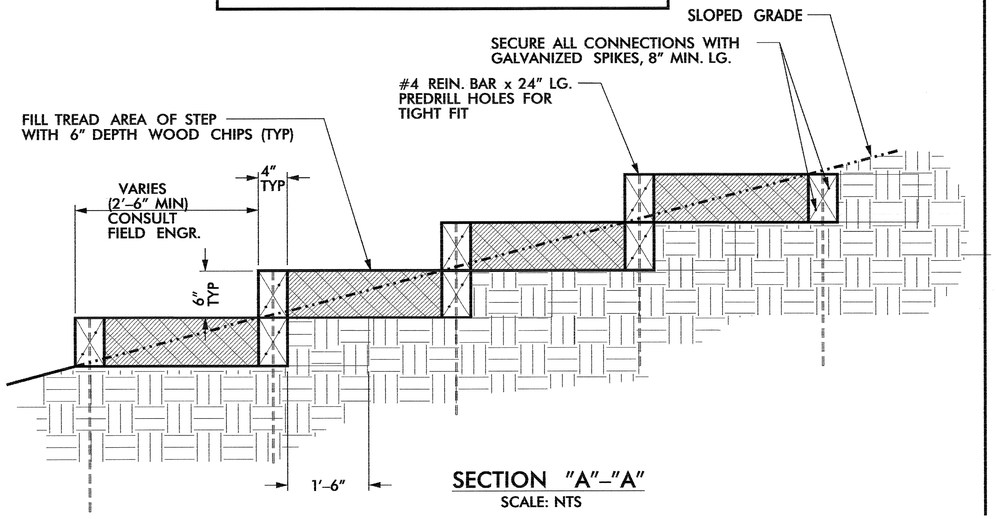

SECTION "A"–"A"

SCALE: NTS

PLAN VIEW

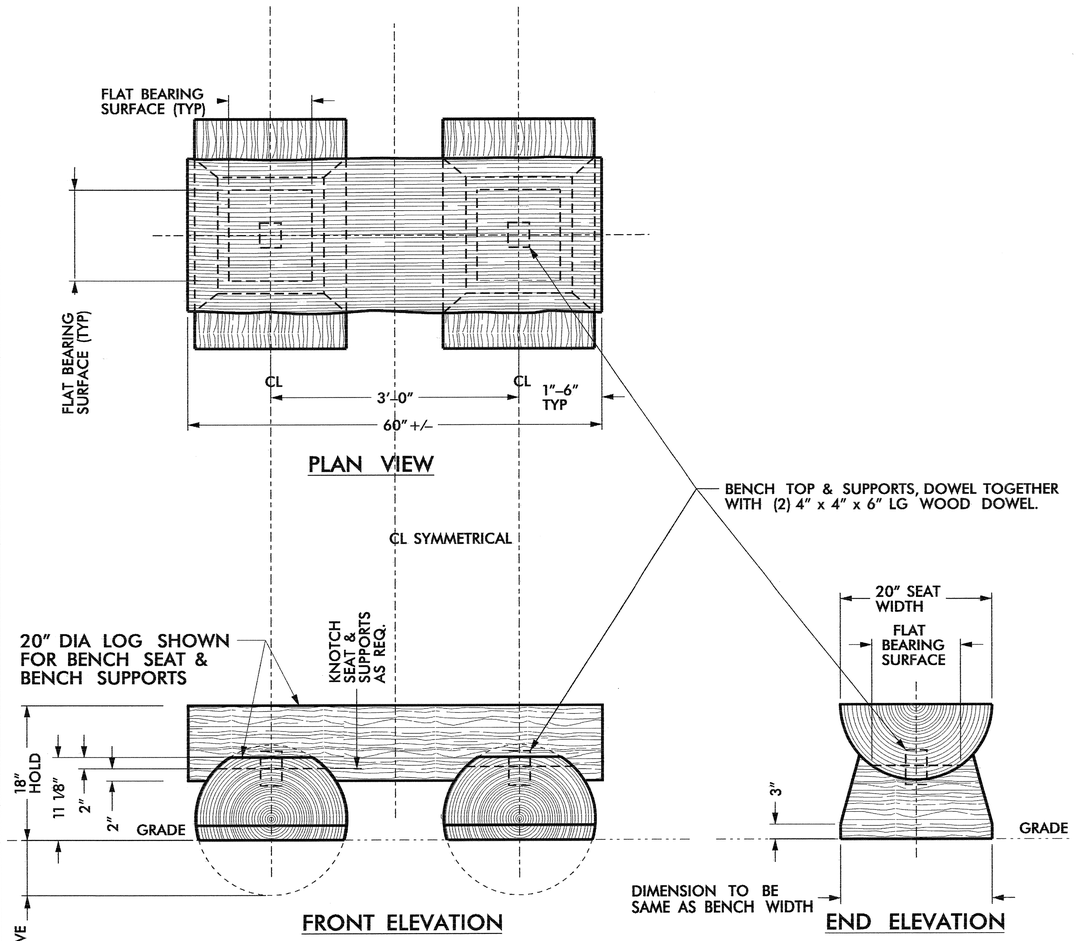

FRONT ELEVATION

END ELEVATION

LOG BENCH DETAIL

SCALE: NTS

NOTES:

1) LOG BENCH TO BE CREATED FROM ONSITE TIMBER CLEARED FOR CONSTRUCTION. CONSULT WITH FIELD ENGINEER ON TIMBER SELECTION PRIOR TO CLEARING AND GRUBBING OPERATIONS.

2) ALL WOOD TO HAVE LOOSE BARK REMOVED, STORED & SEASONED (WEATHER PROTECTED), BEFORE SHAPING.

3) BENCH SEAT TO BE PLANED FLAT & EDGES ROUNDED. ALL PIECES OF BENCH TO BE SANDED PRIOR TO APPLICATION OF PROTECTIVE FINISH.

3) PROTECTIVE FINISH APPLICATION TO CONSIST OF 2 COATS OF CLEAR POLYURETHANE .

4) LOCATION OF BENCHES TO BE STAKED BY ENGINEER IN THE FIELD. AREA IS TO BE GRADED RELATIVELY LEVEL WITH SLIGHT SLOPE TO DRAIN SURFACE.

Nature Trail Steps & Log Bench

North Carolina Department of Transportation
Roadside Environmental Unit
Landscape Design & Development Section

PROJECT TITLE :

Wilkes County - US 421 Visitor Center and Rest Area New Construction

Plans Drawn By:	CSM
Scale	AS NOTED
Date	7 / 13 / 07
Sheet Description	Details
T.I.P. #	K - 4703
Sheet #	L - 24

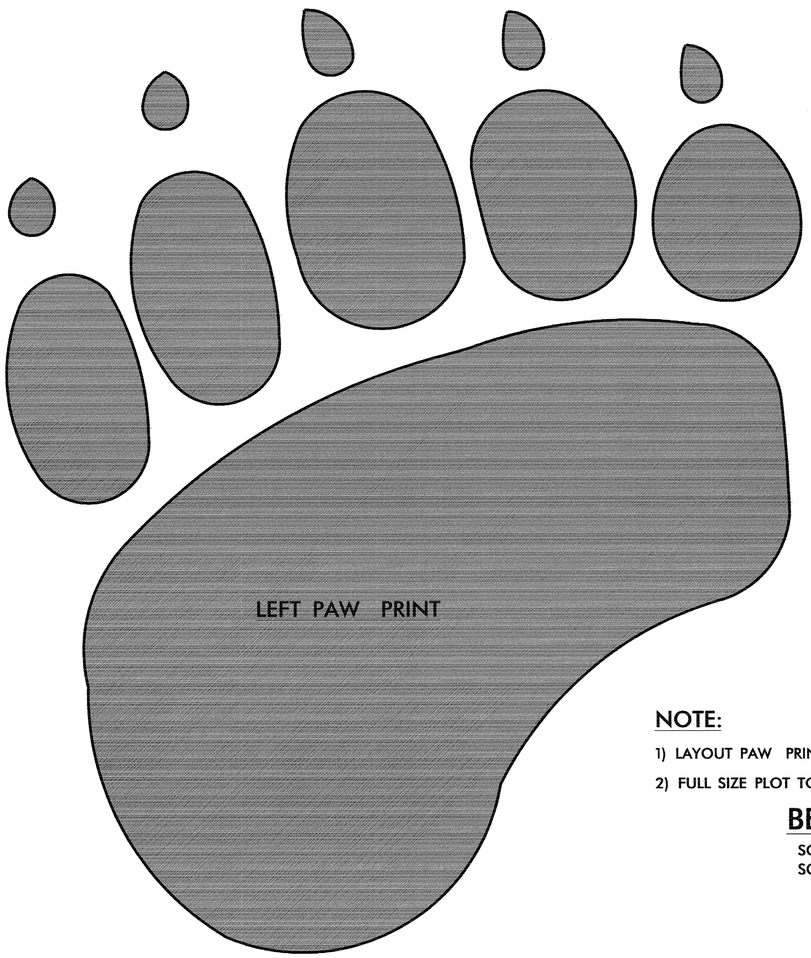

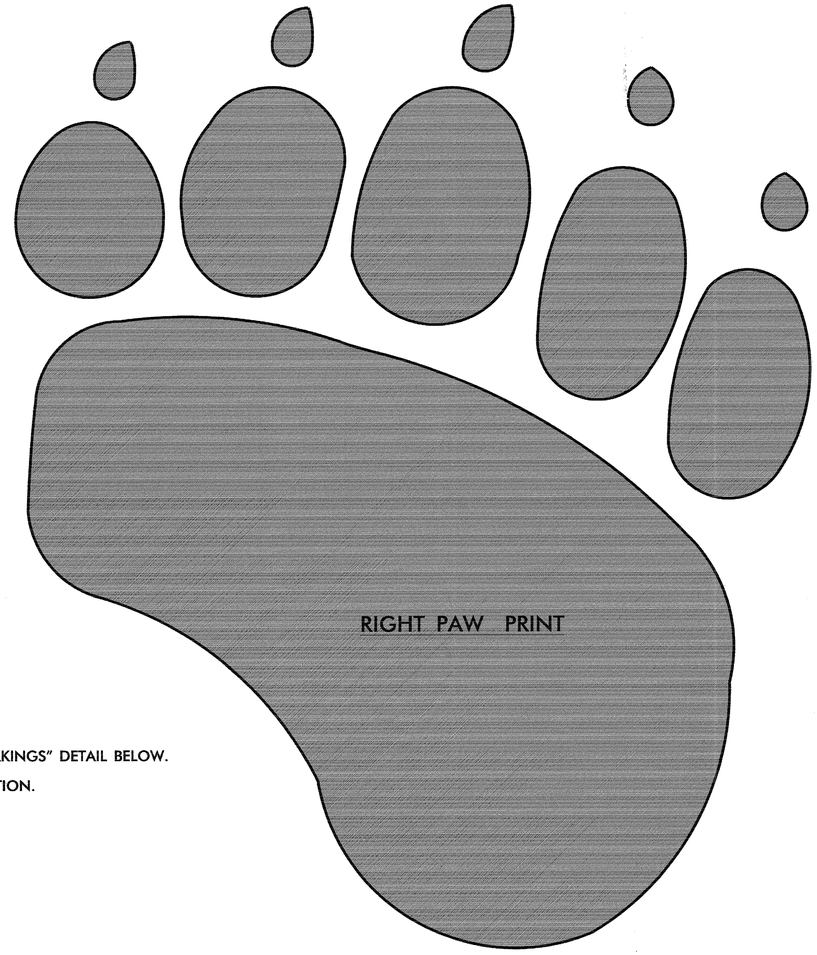

NOTE:

1) LAYOUT PAW PRINTS AS SHOWN ON "CROSSING MARKINGS" DETAIL BELOW.

2) FULL SIZE PLOT TO BE USED FOR PAW PRINT FABRICATION.

BEAR PAW DETAILS

SCALE: (PLOTTED 11" x 17") HALF SIZE
SCALE: (PLOTTED 22" x 34") FULL SIZE

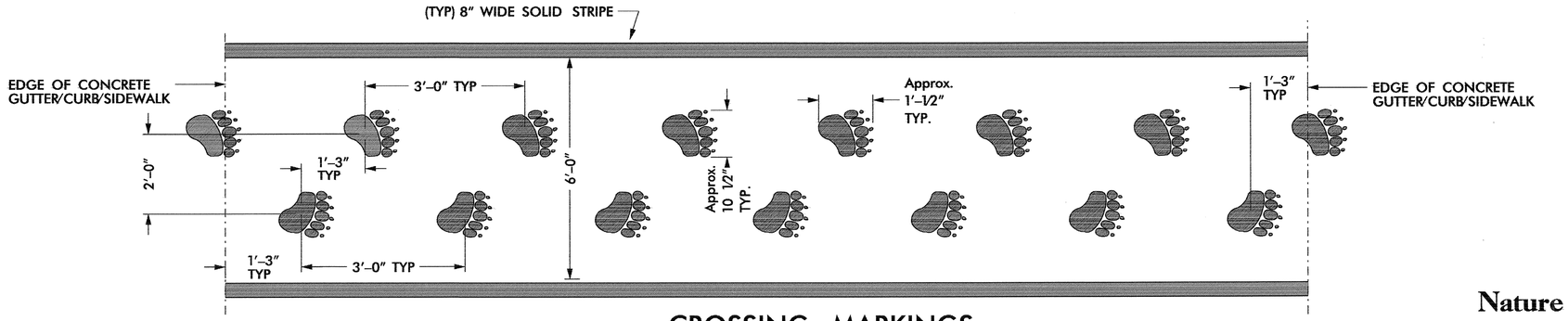

NOTE: STRIPES AND PAW PRINTS TO BE PAINTED ONTO PAVEMENT USING SAME MATERIALS AS PARKING LOT STRIPING

CROSSING MARKINGS

SCALE: NTS

Nature Trail "Crossing" Detail

North Carolina Department of Transportation
Roadside Environmental Unit
Landscape Design & Development Section

PROJECT TITLE:
Wilkes County - US 421
Visitor Center and Rest Area
New Construction

Plans Drawn By:	CSM
Scale	AS NOTED
Date	7 / 13 / 07
Sheet Description	Details
T.I.P. #	K - 4703
Sheet #	L - 25

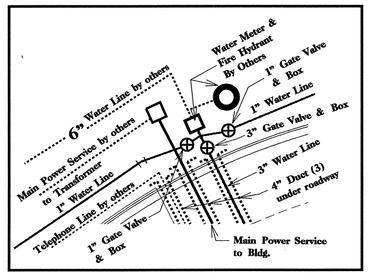

Main Utility Placement Detail

Contractor to Coordinate with the Towns of Wilkesboro and North Wilkesboro for their installation of the water and sewer service lines to the site.

Electrical Transformer Location

Water Meter & Fire Hydrant by others

Sanitary Sewer Pump Station By Others, coordinate connection

3" Water Line to Bldg.

Main Power Service to Bldg. from Transformer

6" PVC Gravity Sanitary Sewer Line

Utility Strip – Sanitary Sewer Shown for information only installation by others

Utility Strip – 6" Water Line By Others

6" Ductile Iron Gravity Sewer Line Under paved surfaces and within well area

See Main Utility Placement Detail

1" Water Line to Pump Station Cap 5' outside fence Others to make connection.

Maint. Building Storage Building

Utility Strip – Main Electric Line By Others

4" PVC Drain

1" Water Line to Utility Bldg. See Arch. Plans

Utility Strip – Communication lines to Bldg. Telephone Panel by Others

1" Water Line

4" Duct and Electrical Service to Utility and Storage Bldgs. See Bldg. Plans for more Info.

4" PVC Drain

3/4" PVC connection, Gate Valve & Box to Hydrant –Typical

Restrooms and Vending

1" Water Line

Visitor Center

Geothermal Well Sites
See Bldg. Mechanical Plans and Spec. for more information

Flood Lights– See Site Lighting Plans for power connection

3/4" tap to Hydrant, Typical

1" Gate Valve & Box (Typical each end of duct)

Connect power from Equip. Room sub–panel to receptacle on picnic shelter in 1" PVC conduit

4" Duct

1" Water Line

4" PVC Drain

Drainage Swale

1" Water Line

Cistern
See Bldg. Plumbing Plans and Spec. for more information

6" Sch 40 PVC overflow pipe from cistern, connect to catch basin

4" Duct

Phone line in 1" PVC Conduit from Phone Panel to Pedestal

1" Water Line

3/4" PVC connection, Gate Valve & Box to Hydrant, Typical

Hazardous Spill Basin

4" PVC Drain to catch basin

See Site Lighting Plans for power connection to phone booth

17 Truck Parking Spaces

NOTE: Install all Ducts and Drains prior to paving

0 40 80 120

Key

- Street Light
- Post Top Light
- Accent/Flood Light
- Flag Pole (1)
- Yard Hydrant (4)
- Irrigation Hydrant (3)
- Fire Hydrant (2)
- Telephone Pedestal (1)
- Gate Valve (17)
- Sanitary Sewer Cleanout (4)
- —T— Telephone Line
- —W— Water Line
- —SS— Sanitary Sewer Line
- —P— Power Line
- –D– Hydrant & Bldg. Drain Line
- Duct under pavement

North Carolina Department of Transportation

Roadside Environmental Unit

Landscape Design & Development Section

PROJECT TITLE :

Wilkes County – US 421
Visitor Center and Rest Area
New Construction

Plans Drawn By:	JPP
Scale	1" = 40'
Date	05 / 25 / 07
Sheet Description	Site Utility Plan
T.I.P. #	K – 4703
Sheet #	SU–1

PROJECT: WILKES COUNTY VISITOR'S CENTER

100% CONSTRUCTION DOCUMENT SUBMISSION NCDOT PROJECT NO. K-4703

OWNER: NC DEPARTMENT OF TRANSPORTATION

INDEX OF DRAWINGS:

90% CONSTRUCTION DOCUMENT

1– COVER 1 INDEX OF DRAWINGS/DESIGN TEAM
2– COVER 2 BUILDING DATA AND CODE SUMMARIES
3– COVER 3 BUILDING DATA, CODE SUMMARY
4– COVER 4 U.L. ASSEMBLIES

ARCHITECTURAL

5– A0.00 DOOR AND ROOM FINISH SCHEDULES. WALL TYPES
6– A0.01 DOOR & FRAME ELEV & DETAILS
7– A0.02 STOREFRONT AND WINDOW ELEV.
8– A0.03 WINDOW & DOOR DETAILS
9– A0.04 WINDOW DETAILS
10– A1.00 VISITOR'S CENTER PLAN GEOMETRY
11– A1.01 VISITOR'S CENTER FLOOR PLAN
12– A1.02 VISITOR'S CENTER ROOF PLAN
13– A1.03 VISITOR'S CENTER FLOOR FINISH PLAN
14– A1.04 MONITORING SYSTEMS & DATA PLAN
15– A1.10 STORAGE BUILDING FLOOR PLAN, ELEVATIONS AND SECTION
16– A1.20 MAINTENANCE BUILDING FLOOR PLAN, ELEVATIONS AND SECTION
17– AF1.00 ARCHITECTURAL FRAMING PLAN & SECTIONS
18– AF1.01 ARCHITECTURAL FRAMING PLAN & SECTIONS
19– AF1.02 ARCHITECTURAL FRAMING PLAN & SECTIONS
20– AF1.03 ARCHITECTURAL FRAMING PLAN & SECTIONS
21– AF1.04 ARCHITECTURAL FRAMING PLAN & SECTIONS
22– A2.00 VISITOR'S CENTER ELEVATIONS
23– A2.01 VISITOR'S CENTER ELEVATIONS
24– A2.02 BUILDING SECTIONS
25– A3.00 VISITOR'S CENTER INTERIOR ELEVATIONS
26– A3.01 VISITOR'S CENTER INTERIOR ELEVATIONS
27– A3.02 VISITOR'S CENTER INTERIOR ELEVATIONS
28– A3.03 VISITOR'S CENTER INTERIOR ELEVATIONS
29– A4.00 VISITOR'S CENTER REFLECTED CEILING PLAN
30– A5.00 VISITOR'S CENTER ENLARGED PLANS & DETAILS
31– A5.01 VISITOR'S CENTER ENLARGED PLANS & DETAILS
32– A5.02 VISITOR'S CENTER ENLARGED PLANS & DETAILS
33– A6.00 VISITOR'S CENTER WALL SECTIONS
34– A6.01 VISITOR'S CENTER WALL SECTIONS
35– A6.02 VISITOR'S CENTER WALL SECTIONS
36– A6.03 VISITOR'S CENTER WALL SECTIONS
37– A6.04 VISITOR'S CENTER WALL SECTIONS
38– A6.05 VISITOR'S CENTER WALL SECTIONS
39– A6.06 VISITOR'S CENTER WALL SECTIONS
40– A6.07 VISITOR'S CENTER WALL SECTIONS
41– A6.08 VISITOR'S CENTER WALL SECTIONS
42– A6.09 VISITOR'S CENTER WALL SECTIONS
43– A6.10 VISITOR'S CENTER WALL SECTIONS
44– A6.11 VISITOR'S CENTER WALL SECTIONS
45– A6.12 VISITOR'S CENTER WALL SECTIONS
46– A6.13 VISITOR'S CENTER WALL SECTIONS
47– A7.01 VISITOR'S CENTER CASEWORK DETAILS
48– A7.02 VISITOR'S CENTER CASEWORK DETAILS
49– A7.03 VISITOR'S CENTER ENLARGED DETAILS
50– A7.04 VISITOR'S CENTER ENLARGED DETAILS

STRUCTURAL

51– S0.01 STRUCTURAL NOTES
52– S0.02 LINTEL SCHEDULE & WALL CONSTRUCTION DETAILS
53– S1.00 VISITORS CENTER GEOMETRY LAYOUT
54– S1.01 VISITORS CENTER FOUNDATION PLAN
55– S2.01 VISITORS CENTER ROOF FRAMING PLAN
56– S2.02 STORAGE/MAINTENANCE BUILDING FOUNDATION & FRAMING PLANS
57– S3.01 CANOPY SECTIONS AND DETAILS
58– S4.01 FOUNDATIONS DETAILS
59– S4.02 FOUNDATIONS DETAILS
60– S5.01 FRAMING DETAILS
61– S5.02 FRAMING DETAILS
62– S5.03 FRAMING DETAILS

PLUMBING

63– P0.00 PLUMBING COVERSHEET
64– P0.01 PLUMBING DETAILS
65– P1.01 PLUMBING WASTE PLAN
66– P1.02 PLUMBING WASTE PLAN – STORAGE AND MAINTENANCE
67 – P2.01 PLUMBING WATER PLAN
68 – P2.02 MAINTENANCE BUILDING – WATER PLAN
69– P3.01 ENLARGED RAINWATER EQUIPMENT ROOM
70 – P4.01 PLUMBING WASTE, VENT AND WATER RISER
71 – P5.01 RAINWATER REUSE EQUIPMENT SCHEMATIC
72 – P5.02 SOLAR HOT WATER SYSTEM

MECHANICAL

73– M0.00 MECHANICAL COVERSHEET
74– M0.01 MECHANICAL SITE PLAN
75– M0.02 MECHANICAL SCHEMATIC PLAN
76 – M1.01 MECHANICAL PLAN
77 – M1.02 STORAGE & MAINTENANCE BUILDING MECHANICAL PLAN
78 – M2.01 MECHANICAL ROOF PLAN
79 – M3.01 MECHANICAL ENLARGED PLAN
80 – M4.01 MECHANICAL DETAILS
81 – M5.01 MECHANICAL CONTROL DIAGRAM PLAN
82 – M6.01 MECHANICAL SCHEDULES

ELECTRICAL

83 – E1 ELECTRICAL COVERSHEET
84 – E2 ELECTRICAL POWER PLAN
85 – E3 ELECTRICAL LIGHTING PLAN
86 – E4 ELECTRICAL PLANS – STORAGE AND MAINTENANCE BLDGS
87 – E5 ELECTRICAL RISER SHEET
88 – E6 LIGHTING SCHEDULE
89 – E7 PANELBOARD SCHEDULES

ARCHITECT:
INNOVATIVE DESIGN, INC.
850 WEST MORGAN STREET
RALEIGH, NC 27603 (919) 832-6303

STRUCTURAL:
LYSAGHT & ASSOCIATES
120 ST. MARY'S STREET
RALEIGH, NORTH CAROLINA 27605 (919) 833-0495

MECHANICAL/PLUMBING
PADIA CONSULTING, INC.
51 KILMAYNE DRIVE, SUITE 300
CARY, NORTH CAROLINA 27511 (919) 481-1777

ELECTRICAL:
GREENTECH CONSULTING, INC.
1100 CRESCENT GREEN, SUITE 103
CARY, NORTH CAROLINA 27518 (919) 859-8884

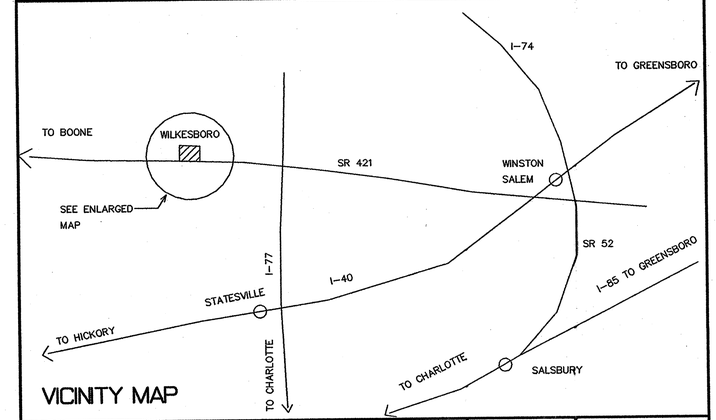

VICINITY MAP

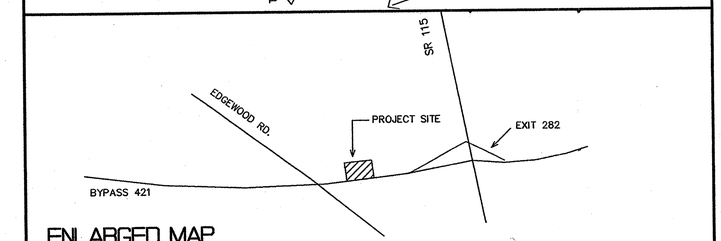

ENLARGED MAP

Innovative Design
850 WEST MORGAN STREET, RALEIGH, NORTH CAROLINA 27603, 919/832-6303

INNOVATIVE DESIGN, INC. CORPORATE SEAL NC

MICHAEL H. NICHOLAS REGISTERED ARCHITECT 2950 NORTH CAROLINA RALEIGH, N.C.
7/6/07

PROJECT: Wilkes County Visitor's Center K-4703
WILKESBORO, NC

OWNER: NC Department of Transportation

DRAWN BY: JZL
DATE: 06/01/2007
JOB NUMBER: 2320
REVISIONS:

DWG NAME: 320COVER1
H:\2320 – Wilkes\Mtec\4–DOT REVIEW\
PLOTTED: 7/5/2007

COVER SHEET 1
1 OF 89

VISITOR'S CENTER

BUILDING DATA

CONSTRUCTION TYPE: ☐I–A ☐II–A ☐III–A ☐IV ☐V–A
☐I–B ☐II–B ☐III–B ☒V–B
MIXED CONSTRUCTION ☐NO ☐YES TYPES –

SPRINKLERS: ☒ NO ☐ PARTIAL ☐ YES ☐ NFPA 13 ☐ NFPA 13R ☐ NFPA 13D
STANDPIPES: ☒ NO ☐ YES CLASS: ☐ I ☐ II ☐ III ☐ WET ☐ DRY
FIRE DISTRICT: ☒ NO ☐ YES FLOOD HAZARD AREA: ☒ NO ☐ YES
BUILDING HEIGHT: **29'–3"** FEET NUMBER OF STORIES 1
MEZZANINE: ☒ NO ☐ YES

GROSS BUILDING AREA:

FLOOR	EXISTING (SQ FT)	NEW (SQ FT)	SUB–TOTAL
6th FLOOR	–	–	–
5th FLOOR	–	–	–
4th FLOOR	–	–	–
3rd FLOOR	–	–	–
2nd FLOOR	–	–	–
MEZZANINE	–	–	–
1st FLOOR	–	**10,030.2**	**10,030.2**
BASEMENT	–	–	–
TOTAL	–	–	**10,030.2**

△1

ALLOWABLE AREA

PRIMARY OCCUPANCY: ☒ ASSEMBLY ☐ A–1 ☐ A–2 ☒ A–3 ☐ A–4 ☐ A–5
☐ BUSINESS ☐ EDUCATIONAL FACTORY ☐ F–1 MODERATE ☐ F–2 LOW
HAZARDOUS ☐ H–1 DETONATE ☐ H–2 DEFLAGRATE ☐ H–3 COMBUST ☐ H–4 HEALTH ☐ H–5 HPM
INSTITUTIONAL ☐ I–1 ☐ I–2 ☐ I–3 ☐ I–4
I–3 CONDITION ☐ 1 ☐ 2 ☐ 3 ☐ 4 ☐ 5
☐ MERCANTILE RESIDENTIAL ☐ R–1 ☐ R–2 ☐ R–3 ☐ R–4
☐ STORAGE ☐ S–1 MODERATE ☐ S–2 LOW ☐ HIGH–PILED
☐ UTILITY AND MISCELLANEOUS ☐ PARKING GARAGE ☐ OPEN ☐ ENCLOSED ☐ REPAIR GARAGE

SECONDARY OCCUPANCY: N/A

SPECIAL USES: ☐ 402 ☐ 403 ☐ 404 ☐ 405 ☐ 406 ☐ 407 ☐ 408 ☐ 409 ☐ 410 ☐ 411 ☐ 412
☐ 413 ☐ 414 ☐ 415 ☐ 416 ☐ 417 ☐ 418 ☐ 419 ☐ 420 ☐ 421
SPECIAL PROVISIONS: ☐ 508.2 ☐ 508.3 ☐ 508.4 ☐ 508.5 ☐ 508.6 ☐ 508.7 ☐ 508.8
MIXED OCCUPANCY: ☒ NO ☐ YES SEPARATION – Hr. EXCEPTION: –

☐ INCIDENTAL USE SEPARATION (302.1.1)
THIS SEPARATION IS NOT EXEMPT AS A NON–SEPARATED USE (SEE EXCEPTIONS)
☐ NON–SEPARATED USE (302.3.1)
THE REQUIRED TYPE OF CONSTRUCTION FOR THE BUILDING SHALL BE DETERMINED BY APPLYING THE HEIGHT AN AREA LIMITATIONS FOR EACH OF THE APPLICABLE OCCUPANCIES TO THE ENTIRE BUILDING. THE MOST RESTRICTIVE TYPE OF CONSTRUCTION, SO DETERMINED, SHALL APPLY TO THE ENTIRE BUILDING.

☐ SEPARATED USE (302.3.2) – SEE BELOW FOR AREA CALCULATIONS
FOR EACH STORY, THE AREA OF THE OCCUPANCY SHALL BE SUCH THAT THE SUM OF THE RATIOS OF THE ACTUAL FLOOR AREA OF EACH USE DIVIDED BY THE ALLOWABLE FLOOR AREA FOR EACH USE SHALL NOT EXCEED 1.

$$\frac{\text{ACTUAL AREA OF OCCUPANCY A}}{\text{ALLOWABLE AREA OF OCCUPANCY A}} + \frac{\text{ACTUAL AREA OF OCCUPANCY B}}{\text{ALLOWABLE AREA OF OCCUPANCY B}} \leq 1$$

$$\frac{-}{-} + \frac{-}{-} \leq 1$$

STORY NO.	DESCRIPTION AND USE	(A) BUILDING AREA PER STORY (ACTUAL) △1	(B) TABLE 503 (5) AREA	(C) AREA FOR OPEN SPACE INCREASE (1)	(D) AREA FOR SPRINKLER INCREASE (2)	(E) ALLOWABLE AREA OR UNLIMITED (3)	(F) MAXIMUM BUILDING AREA (4)
1	**A–3 ASSEMBLY**	**10,030.2**	**6,000**	**4,500**	**NA**	**10,500**	**10,500**
2	–	–	–	–	–	–	–
3	–	–	–	–	–	–	–
4	–	–	–	–	–	–	–
5	–	–	–	–	–	–	–

(1) FRONTAGE AREA INCREASES FROM SECTION 506.2 ARE COMPUTED THUS:
A. PERIMETER WHICH FRONTS A PUBLIC WAY OR OPEN SPACE HAVING 20 FEET MINIMUM WIDTH = **653'** (F)
B. TOTAL BUILDING PERIMETER = **653'** (P)
C. RATIO (F/P) = 1 (F/P)
D. W = MINIMUM WIDTH OF PUBLIC WAY = **30'** (W)
E. PERCENT OF FRONTAGE INCREASE: If = 100[F/P – 0.25] X W/30 = 100[1 – 0.25] X 30/30 = **75** (%)
(2) THE SPRINKLER INCREASE PER SECTION 506.3 IS AS FOLLOWS:
A. MULTI STORY BUILDING Is = 200%
B. SINGLE STORY BUILDING Is = 300%
(3) UNLIMITED AREA APPLICABLE UNDER CONDITIONS OF SECTIONS GROUP B, F, M, S, A–4 (507); GROUP A MOTION PICTURE (507.9); MALLS (402.6); AND H–2 AIRCRAFT PAINT HANGERS (507.7).
(4) MAXIMUM BUILDING AREA = TOTAL NUMBER OF STORIES IN THE BUILDING X E (506.4).
(5) THE MAXIMUM AREA OF PARKING GARAGES MUST COMPLY WITH 406.3.5. THE MAXIMUM AREA OF AIR TRAFFIC CONTROL TOWERS MUST COMPLY WITH 412.1.2.

ALLOWABLE HEIGHT

	ALLOWABLE (TABLE 503)	INCREASE FOR SPRINKLERS	SHOWN ON PLANS	CODE REF
TYPE OF CONSTRUCTION:	TYPE:	V–B	TYPE: V–B	602.4
BUILDING HEIGHT IN FEET:	FEET: 40	FEET = H + 20: NA	FEET: 29'–11"	T503
BUILDING HEIGHT IN STORIES:	STORIES: 1	STORIES + 1: NA	STORIES: 1	T503

FIRE PROTECTION REQUIREMENTS

LIFE SAFETY PLAN SHEET NUMBER, IF PROVIDED: NA

BUILDING ELEMENT	FIRE SEPARATION DISTANCE (FEET)	RATING REQ'D	RATING PROVIDED (W/____ REDUCTION)	DETAIL # AND SHEET #	DESIGN # FOR RATED ASSEMBLY	DESIGN # FOR RATED PENETRATION	DESIGN # FOR RATED JOINTS
STRUCTURAL FRAME, INCLUDING COLUMNS, GIRDERS TRUSSES	–	0	–	–	–	–	–
BEARING WALLS EXTERIOR							
NORTH	–	0	–	–	–	–	–
EAST	–	0	–	–	–	–	–
WEST	–	0	–	–	–	–	–
SOUTH	–	0	–	–	–	–	–
INTERIOR	–	0	–	–	–	–	–
NONBEARING WALLS AND PARTITIONS EXTERIOR							
NORTH	–	–	–	–	–	–	–
EAST	–	–	–	–	–	–	–
SOUTH	–	–	–	–	–	–	–
WEST	–	–	–	–	–	–	–
INTERIOR WALLS & PARTITIONS	–	–	–	–	–	–	–
FLOOR CONSTRUCTION INCLUDING SUPPORTING BEAMS AND JOISTS	X	0	–	–	–	–	–
ROOF CONSTRUCTION INCLUDING SUPPORTING BEAMS AND JOISTS	X	0	–	–	–	–	–
SHAFTS ENCLOSURES – EXIT	X	–	–	–	–	–	–
SHAFTS ENCLOSURES– OTHER	X	–	–	–	–	–	–
CORRIDOR SEPARATION	X	–	–	–	–	–	–
OCCUPANCY SEPARATION	X	–	–	–	–	–	–
PARTY/FIRE WALL SEPARATION	X	–	–	–	–	–	–
SMOKE BARRIER SEPARATION	X	–	–	–	–	–	–
TENANT SEPARATION	X	–	–	–	–	–	–
INCIDENTAL USE SEPARATION	X	–	–	–	–	–	–

* – INDICATE SECTION NUMBER PERMITTING REDUCTION

GENERAL BUILDING AND PROFESSIONAL INFORMATION

NAME OF PROJECT: **WILKES COUNTY VISITOR'S CENTER**
ADDRESS: **HIGHWAY 421 WESTBOUND, WILKESBORO, NC** ZIPCODE: **28659**
PROPOSED USE: **VISITOR'S CENTER AND HIGHWAY REST AREA**
OWNER OR AUTHORIZED AGENT: **NORTH CAROLINA DEPARTMENT OF TRANSPORTATION–JENNIFER PITTS** PHONE: **919 733 2920** EMAIL: **jpitts@dot.state.nc.us**
OWNED BY: ☐ CITY/COUNTY ☐ PRIVATE ☒ STATE
CODE ENFORCEMENT JURISDICTION: ☐ CITY ☒ COUNTY WILKES COUNTY ☐ STATE

LEAD DESIGN PROFESSIONAL: **INNOVATIVE DESIGN, INC**

DESIGNER:	FIRM	NAME	LICENSE #	PHONE #
ARCHITECTURAL	INNOVATIVE DESIGN, INC	MICHAEL NICKLAS, FAIA	2950	(919) 832–6303
CIVIL	NC DEPT OF TRANSPORTATION	–	–	–
ELECTRICAL	GREENTECH CONSULTING, INC.	HEMANT C. SURA	23527	(919) 859–8884
FIRE ALARM	GREENTECH CONSULTING, INC	HEMANT C. SURA	23527	(919) 859–8884
PLUMBING	PADIA CONSULTING	HARSHAD PADIA, PE	9069	(919) 481–1777
MECHANICAL	PADIA CONSULTING	HARSHAD PADIA, PE	9069	(919) 481–1777
SPRINKLER – STANDPIPE	–	–	–	(919) 481–1777
STRUCTURAL	LYSAGHT AND ASSOCIATES	JIM STRUFFOLINO, PE	15887	(919) 833–0495
RETAINING WALLS >5' HIGH	N/A	N/A	N/A	N/A
OTHER: N/A	–	–	–	–

2006 EDITION OF NC CODE FOR: ☒ NEW CONSTRUCTION ☐ ADDITION ☐ UPFIT
EXISTING: ☐ RECONSTRUCTION ☐ ALTERATION ☐ REPAIR
CONSTRUCTED ________ **ORIGINAL USE** ________ **RENNOVATED** ________ **CURRENT USE** ________

VISITOR'S CENTER, CONTINUED

LIFE SAFETY SYSTEM REQUIREMENTS

EMERGENCY LIGHTING: ☐ NO ☒ YES
EXIT SIGNS: ☐ NO ☒ YES
FIRE ALARM: ☐ NO ☒ YES
SMOKE DETECTION SYSTEMS: ☐ NO ☒ YES
PANIC HARDWARE: ☐ NO ☒ YES

EXIT REQUIREMENTS

NUMBER AND ARRANGEMENT OF EXITS

FLOOR, ROOM OR SPACE DESIGNATION	MINIMUM NUMBER OF EXITS (2) REQUIRED	SHOWN ON PLANS	TRAVEL DISTANCE: ALLOWABLE TRAVEL DISTANCE (TABLE 1015.1)	ACTUAL TRAVEL DISTANCE SHOWN ON PLANS	ARRANGEMENT MEANS OF EGRESS (1,3) (SECTION 1014.2): REQUIRED DISTANCE BETWEEN EXIT DOORS	ACTUAL DISTANCE SHOWN ON PLANS
PUBLIC BATHROOMS	–	–	200'	86'	0'	NA
VISITOR'S CENTER	2	2	200'	DIRECT EXIT	20'	50'

NOTE: ALL OTHER SPACES WITHIN BUILDING REQUIRE ONE EXIT (<50 OCCUPANTS). SEE SHEET A1.01 FOR OCCUPANCY LOADS FOR INDIVIDUAL ROOMS.

(1) CORRIDOR DEAD ENDS (1016.3)
(2) SINGLE EXITS (TABLE 1018.2)
(3) COMMON PATH OF TRAVEL (1013.3)

TABLE 1005.1 EGRESS WIDTH PER OCCUPANT SERVED

OCCUPANCY	(A) AREA (1) SQ. FT. △1	(B) AREA (1) PER OCCUPANT (TABLE 1004.1.2)	CALCULATED OCCUPANT LOAD	(C) EGRESS PER OCCUPANT (TABLE 1005.1) STAIR	LEVEL	EXIT WIDTH (IN) (2,3,4,5,6) REQUIRED WIDTH (SECTION 1005.1) (A/B) x C STAIR	LEVEL	ACTUAL WIDTH SHOWN ON PLANS STAIR	LEVEL
VISITOR'S CENTER	1,231	15 NET	83	–	.20"	–	2.96"	△1	72"
–	–	–		–	–	–	–	–	–
BUSSINESS AREA	1,340	100 GROSS	14	–	.20"	–	19.14"	–	72"
–	–	–		–	–	–	–	–	–
BATHROOM AREA	3,359.3	100 GROSS	34	–	.20"	–	19.76"	–	72"

(1) SEE TABLE 1004.1.2 TO DETERMINE WHETHER NET OR GROSS AREA IS APPLICABLE SEE DEFINITION "AREA, GROSS" AND "AREA, NET" (SECTION 1002)
(2) MINIMUM STAIRWAY WIDTH (SECTION 1005.1); MIN. CORRIDOR WIDTH (SECTION 1016.2); MIN DOOR WIDTH 1018.1)
(3) MINIMUM WIDTH OF EXIT PASSAGEWAY (SECTION 1020.2)
(4) SEE SECTION 1004.5 FOR CONVERGING EXITS
(5) THE LOSS OF ONE MEANS OF EGRESS SHALL NOT REDUCE THE AVAILABLE CAPACITY TO LESS THAN 50 PERCENT OF THE TOTAL REQUIRED (SECTION 1005.1)
(6) ASSEMBLY OCCUPANCIES (SECTION 1024)

STRUCTURAL DESIGN
DESIGN LOADS

IMPORTANCE FACTORS: WIND (Iw) **1.15**
SNOW (Is) **1.1**
SEISMIC (Ie) **1.25**

LIVE LOADS: ROOF **20** psf △1
MEZZANINE – psf
FLOOR **100** psf

SNOW LOAD: **20** psf △1

WIND LOAD: BASIC WIND SPEED **100** mph (ASCE–7–02)
EXPOSURE CATEGORY **C** EXPOSURE CATEGORY
WIND BASE SHEARS (FOR MWFRS) Vx = **34 kips** Vy = **119 kips**

SEISMIC DESIGN CATEGORY A
COMPLIANCE WITH SECTION 1616.4 ONLY? ☒ YES ☐ NO

SEISMIC DESIGN CATEGORY ☐ B ☐ C ☐ D
PROVIDE THE FOLLOWING SEISMIC DESIGN PARAMETERS:
SEISMIC USE GROUP: **II**
SPECTRAL RESPONSE ACCELERATION: Ss **19.5** %g S1 **9.5** %g
SITE CLASSIFICATION: **D** ☐ FIELD TEST ☐ PRESUMPTIVE ☐ HISTORICAL DATA
BASIC STRUCTURAL SYSTEM:
X BEARING WALL ____ DUAL w/SPECIAL MOMENT FRAME
____ BUILDING FRAME ____ DUAL w/INTERMEDIATE R/C OR SPECIAL STEEL
____ MOMENT FRAME ____ INVERTED PENDULUM
SEISMIC BASE SHEAR: Vx = **181 kips** Vy = **181 kips**
ANALYSIS PROCEDURE: ____ SIMPLIFIED **X** EQUIVALENT LATERAL FORCE ____ MODAL
ARCHITECTURAL, MECHANICAL, COMPONENTS ANCHORED? ☒ YES ☐ NO

LATERAL DESIGN CONTROL: **X** EARTHQUAKE ____ WIND

SOIL BEARING CAPACITIES
FIELD TEST (PROVIDE COPY OF TEST REPORT) **3000** psf
PRESUMPTIVE BEARING CAPACITY ____ psf
PILE SIZE, TYPE AND CAPACITY ________

STORAGE BUILDING

CONSTRUCTION TYPE: ☐I–A ☐II–A ☐III–A ☐IV ☐V–A
☐I–B ☐II–B ☐III–B ☒V–B
MIXED CONSTRUCTION ☐NO ☐YES TYPES –

SPRINKLERS: ☒ NO ☐ PARTIAL ☐ YES ☐ NFPA 13 ☐ NFPA 13R ☐ NFPA 13D
STANDPIPES: ☒ NO ☐ YES CLASS: ☐ I ☐ II ☐ III ☐ WET ☐ DRY
FIRE DISTRICT: ☒ NO ☐ YES FLOOD HAZARD AREA: ☒ NO ☐ YES
BUILDING HEIGHT: 16' FEET 1 NUMBER OF STORIES
MEZZANINE: ☒ NO ☐ YES

GROSS BUILDING AREA:

FLOOR	EXISTING (SQ FT)	NEW (SQ FT)	SUB–TOTAL
6th FLOOR	–	–	–
5th FLOOR	–	–	–
4th FLOOR	–	–	–
3rd FLOOR	–	–	–
2nd FLOOR	–	–	–
MEZZANINE	–	–	–
1st FLOOR	–	**378**	**378**
BASEMENT	–	–	–
TOTAL	–	**378**	**378**

△1

ALLOWABLE AREA

PRIMARY OCCUPANCY: ☐ ASSEMBLY ☐ A–1 ☐ A–2 ☐ A–3 ☐ A–4 ☐ A–5
☐ BUSINESS ☐ EDUCATIONAL FACTORY ☐ F–1 MODERATE ☐ F–2 LOW
HAZARDOUS ☐ H–1 DETONATE ☐ H–2 DEFLAGRATE ☐ H–3 COMBUST ☐ H–4 HEALTH ☐ H–5 HPM
☐ INSTITUTIONAL ☐ I–1 ☐ I–2 ☐ I–3 ☐ I–4
☐ I–3 CONDITION ☐ 1 ☐ 2 ☐ 3 ☐ 4 ☐ 5
☐ MERCANTILE ☐ RESIDENTIAL ☐ R–1 ☐ R–2 ☐ R–3 ☐ R–4
☒ STORAGE ☒ S–1 MODERATE ☐ S–2 LOW ☐ HIGH–PILED
☐ UTILITY AND MISCELLANEOUS PARKING GARAGE ☐ OPEN ☐ ENCLOSED ☐ REPAIR GARAGE

SECONDARY OCCUPANCY: N/A

SPECIAL USES: ☐ 402 ☐ 403 ☐ 404 ☐ 405 ☐ 406 ☐ 407 ☐ 408 ☐ 409 ☐ 410 ☐ 411 ☐ 412
☐ 413 ☐ 414 ☐ 415 ☐ 416 ☐ 417 ☐ 418 ☐ 419 ☐ 420 ☐ 421

SPECIAL PROVISIONS: ☐ 508.2 ☐ 508.3 ☐ 508.4 ☐ 508.5 ☐ 508.6 ☐ 508.7 ☐ 508.8
MIXED OCCUPANCY: ☒ NO ☐ YES SEPARATION – Hr. EXCEPTION: –

☐ INCIDENTAL USE SEPARATION (302.1.1)
THIS SEPARATION IS NOT EXEMPT AS A NON–SEPARATED USE (SEE EXEMPTIONS)
☐ NON–SEPARATED USE (302.3.1)
THE REQUIRED TYPE OF CONSTRUCTION FOR THE BUILDING SHALL BE DETERMINED BY APPLYING THE HEIGHT AND AREA LIMITATIONS FOR EACH OF THE APPLICABLE OCCUPANCIES TO THE ENTIRE BUILDING. THE MOST RESTRICTIVE TYPE OF CONSTRUCTION, SO DETERMINED, SHALL APPLY TO THE ENTIRE BUILDING.

☐ SEPARATED USE (302.3.2) – SEE BELOW FOR AREA CALCULATIONS
FOR EACH STORY, THE AREA OF THE OCCUPANCY SHALL BE SUCH THAT THE SUM OF THE RATIOS OF THE ACTUAL FLOOR AREA OF EACH USE DIVIDED BY THE ALLOWABLE FLOOR AREA FOR EACH USE SHALL NOT EXCEED 1.

$$\frac{\text{ACTUAL AREA OF OCCUPANCY A}}{\text{ALLOWABLE AREA OF OCCUPANCY A}} + \frac{\text{ACTUAL AREA OF OCCUPANCY B}}{\text{ALLOWABLE AREA OF OCCUPANCY B}} \leq 1$$

$$____ + ____ = \leq 1$$

STORY NO.	DESCRIPTION AND USE	(A) BUILDING AREA PER STORY (ACTUAL)	(B) TABLE 503 (5) AREA	(C) AREA FOR FRONTAGE INCREASE (1)	(D) AREA FOR SPRINKLER INCREASE (2)	(E) ALLOWABLE AREA OR UNLIMITED (3)	(F) MAXIMUM BUILDING AREA (4)
1	**STORAGE (S–1)**	378 △1	**9,000**	**6,750**	**NA**	**15,750**	**15,750**
2	–	–	–	–	–	–	–
3	–	–	–	–	–	–	–
4	–	–	–	–	–	–	–
5	–	–	–	–	–	–	–

(1) FRONTAGE AREA INCREASES FROM SECTION 506.2 ARE COMPUTED THUS:
A. PERIMETER WHICH FRONTS A PUBLIC WAY OR OPEN SPACE HAVING 20 FEET MINIMUM WIDTH = **84'** (F)
B. TOTAL BUILDING PERIMETER = **84'** (P)
C. RATIO (F/P) = 1 (F/P)
D. W = MINIMUM WIDTH OF PUBLIC WAY = **30'** (W)
E. PERCENT OF FRONTAGE INCREASE: If = 100[F/P – 0.25] X W/30 = **75** (%)
(2) THE SPRINKLER INCREASE PER SECTION 506.3 IS AS FOLLOWS:
A. MULTI STORY BUILDING Is = 200%
B. SINGLE STORY BUILDING Is = 300%
(3) UNLIMITED AREA APPLICABLE UNDER CONDITIONS OF SECTIONS GROUP B, F, M, S, A–4 (507); GROUP A MOTION PICTURE (507.9); MALLS (402.6); AND H–2 AIRCRAFT PAINT HANGERS (507.7).
(4) MAXIMUM BUILDING AREA = TOTAL NUMBER OF STORIES IN THE BUILDING X E (506.4)
(5) THE MAXIMUM AREA OF PARKING GARAGES MUST COMPLY WITH 406.3.5. THE MAXIMUM AREA OF AIR TRAFFIC CONTROL TOWERS MUST COMPLY WITH 412.1.2.

ALLOWABLE HEIGHT

	ALLOWABLE (TABLE 503)	INCREASE FOR SPRINKLERS	SHOWN ON PLANS	CODE REF
TYPE OF CONSTRUCTION:	TYPE:	V–B	TYPE: V–B	602.2
BUILDING HEIGHT IN FEET:	FEET: 40	FEET = H + 20: NA	FEET: 16'	T503
BUILDING HEIGHT IN STORIES:	STORIES: 1	STORIES + 1: NA	STORIES: 1	T503

FIRE PROTECTION REQUIREMENTS

LIFE SAFETY PLAN SHEET NUMBER, IF PROVIDED: –

STORAGE BUILDING, CONTINUED

BUILDING ELEMENT	FIRE SEPARATION DISTANCE (FEET)	RATING REQ'D	RATING PROVIDED (W/____ REDUCTION)	DETAIL # AND SHEET #	DESIGN # FOR RATED ASSEMBLY	DESIGN # FOR RATED PENETRATION	DESIGN # FOR RATED JOINTS
STRUCTURAL FRAME, INCLUDING COLUMNS, GIRDERS TRUSSES	–	0	–	0	–	–	–
BEARING WALLS EXTERIOR							
NORTH	–	0	–	–	–	–	–
EAST	–	0	–	–	–	–	–
WEST	–	0	–	–	–	–	–
SOUTH	–	0	–	–	–	–	–
INTERIOR	–	0	–	–	–	–	–
NONBEARING WALLS AND PARTITIONS EXTERIOR							
NORTH	–	–	–	–	–	–	–
EAST	–	–	–	–	–	–	–
SOUTH	–	–	–	–	–	–	–
WEST	–	–	–	–	–	–	–
INTERIOR	–	–	–	–	–	–	–
FLOOR CONSTRUCTION INCLUDING SUPPORTING BEAMS AND JOISTS	X	0	–	0	–	–	–
ROOF CONSTRUCTION INCLUDING SUPPORTING BEAMS AND JOISTS	X	0	–	0	–	–	–
SHAFTS – EXIT	X	–	–	–	–	–	–
SHAFTS – OTHER	X	–	–	–	–	–	–
CORRIDOR SEPARATION	X	–	–	–	–	–	–
OCCUPANCY SEPARATION	X	–	–	–	–	–	–
PARTY/FIRE WALL SEPARATION	X	–	–	–	–	–	–
SMOKE BARRIER SEPARATION	X	–	–	–	–	–	–
TENANT SEPARATION	X	–	–	–	–	–	–

* – INDICATE SECTION NUMBER PERMITTING REDUCTION

LIFE SAFETY SYSTEM REQUIREMENTS △1

EMERGENCY LIGHTING: ☐ YES ☒ NO
EXIT SIGNS: ☐ YES ☒ NO
FIRE ALARM: ☐ YES ☒ NO
SMOKE DETECTION SYSTEMS: ☐ YES ☒ NO
PANIC HARDWARE: ☐ YES ☒ NO

EXIT REQUIREMENTS

NUMBER AND ARRANGEMENT OF EXITS

FLOOR, ROOM OR SPACE DESIGNATION	MINIMUM (2) NUMBER OF EXITS REQUIRED	SHOWN ON PLANS	TRAVEL DISTANCE: ALLOWABLE TRAVEL DISTANCE (TABLE 1015.1)	ACTUAL TRAVEL DISTANCE SHOWN ON PLANS	ARRANGEMENT MEANS OF EGRESS (1,3) (SECTION 1004.2): REQUIRED DISTANCE BETWEEN EXIT DOORS	ACTUAL DISTANCE SHOWN ON PLANS
STORAGE	1	1	200'	DIRECT	NA	NA
–	–	–	–	–	–	–
–						
–						

(1) CORRIDOR DEAD ENDS (1016.3)
(2) SINGLE EXITS (TABLE 1018.2.)
(3) COMMON PATH OF TRAVEL (1013.3)

EXIT WIDTH

USE GROUP OR SPACE DESCRIPTION	(A) AREA (1) SQ. FT.	(B) AREA (1) PER OCCUPANT (TABLE 1003.2.2.2)	CALCULATED OCCUPANT LOAD	(C) EGRESS PER OCCUPANT (TABLE 1003.2.3) STAIR	LEVEL	EXIT WIDTH (IN) (2,3,4,5,6) REQUIRED WIDTH (SECTION 1003.2.3) (A/B) x C STAIR	LEVEL	ACTUAL WIDTH SHOWN ON PLANS STAIR	LEVEL
STORAGE	378	300 GR	2	–	.20	–	0.40	–	34.0
–	–	–		–	–	–	–	–	–
–	–	–		–	–	–	–	–	–
–	–	–		–	–	–	–	–	–
–	–	–		–	–	–	–	–	–

(1) SEE TABLE 1004.1.2 TO DETERMINE WHETHER NET OR GROSS AREA IS APPLICABLE SEE DEFINITION "AREA, GROSS" AND "AREA, NET" (SECTION 1002)
(2) MINIMUM STAIRWAY WIDTH (SECTION 1005.1); MIN. CORRIDOR WIDTH (SECTION 1016.2); MIN. DOOR WIDTH (SECTION 1018.1)
(3) MINIMUM WIDTH OF EXIT PASSAGEWAY (SECTION 1020.2)
(4) SEE SECTION 1004.5 FOR CONVERGING EXITS
(5) THE LOSS OF ONE MEANS OF EGRESS SHALL NOT REDUCE THE AVAILABLE CAPACITY TO LESS THAN 50 PERCENT OF THE TOTAL REQUIRED (SECTION 1005.1)
(6) ASSEMBLY OCCUPANCIES (SECTION 1024)

STRUCTURAL DESIGN
DESIGN LOADS

IMPORTANCE FACTORS: WIND (Iw) **1.15**
SNOW (Is) **1.1**
SEISMIC (Ie) **1.25**

LIVE LOADS: ROOF **20** psf △1
MEZZANINE – psf
FLOOR **100** psf

SNOW LOAD: **20** psf △1

WIND LOAD: BASIC WIND SPEED **100** mph (ASCE–7–98)
EXPOSURE CATEGORY **C** EXPOSURE CATEGORY
WIND BASE SHEARS (FOR MWFRS) Vx = **34 kips** Vy = **119 kips**

SEISMIC DESIGN CATEGORY A

COMPLIANCE WITH SECTION 1616.4 ONLY? ☒ YES ☐ NO

SEISMIC DESIGN CATEGORY ☐B ☐C ☐D
PROVIDE THE FOLLOWING SEISMIC DESIGN PARAMETERS:
SEISMIC USE GROUP: **II**
SPECTRAL RESPONSE ACCELERATION: Ss **19.5** %g S1 **9.5** %g
SITE CLASSIFICATION: **D** ☐FIELD TEST ☐PRESUMPTIVE ☐HISTORICAL DATA
BASIC STRUCTURAL SYSTEM:
X BEARING WALL ____ DUAL w/SPECIAL MOMENT FRAME
____ BUILDING FRAME ____ DUAL w/INTERMEDIATE R/C OR SPECIAL STEEL
____ MOMENT FRAME ____ INVERTED PENDULUM
SEISMIC BASE SHEAR: Vx = **181 kips** Vy = **181 kips**
ANALYSIS PROCEDURE: ____ SIMPLIFIED **X** EQUIVALENT LATERAL FORCE ____ MODAL
ARCHITECTURAL, MECHANICAL, COMPONENTS ANCHORED? ☒ YES ☐ NO

LATERAL DESIGN CONTROL: **X** EARTHQUAKE ____ WIND

SOIL BEARING CAPACITIES
FIELD TEST (PROVIDE COPY OF TEST REPORT) **3000** psf
PRESUMPTIVE BEARING CAPACITY ____ psf
PILE SIZE, TYPE AND CAPACITY ________

Innovative Design
[ ] MORGAN STREET, RALEIGH, NORTH CAROLINA 27603, 919/832–6303

INNOVATIVE DESIGN, INC. CORPORATE SEAL NC

MICHAEL H. NICKLAS REGISTERED ARCHITECT 2950 NORTH CAROLINA RALEIGH, N. C.
7/18/07

PROJECT: Wilkes County Visitor's Center K–4703
WILKESBORO, NC
OWNER: NC Department of Transportation

DRAWN BY: WRD
DATE: 06/01/2007
JOB NUMBER: 2320
REVISIONS:
△1 07–18–07

DWG NAME: 320COVER2–3
H:\2320 – Wilkes\Mtec\4–DOI REVIEW\
PLOTTED: 7/30/2007

COVER SHEET 2

MAINTENANCE BUILDING

CONSTRUCTION TYPE: ☐ I–A ☐ II–A ☐ III–A ☐ IV ☐ V–A
☐ I–B ☐ II–B ☐ III–B ☒ V–B

SPRINKLERS: ☒ NO ☐ PARTIAL ☐ YES ☐ NFPA 13 ☐ NFPA 13R ☐ NFPA 13D
STANDPIPES: ☒ NO ☐ YES CLASS: ☐ I ☐ II ☐ III ☐ WET ☐ DRY
FIRE DISTRICT: ☒ NO ☐ YES FLOOD HAZARD: ☒ NO ☐ YES
BUILDING HEIGHT: 16 FEET 1 NUMBER OF STORIES
MEZZANINE: ☒ NO ☐ YES

GROSS BUILDING AREA:

FLOOR	EXISTING (SQ FT)	NEW (SQ FT)	SUB–TOTAL
6th FLOOR	–	–	–
5th FLOOR	–	–	–
4th FLOOR	–	–	–
3rd FLOOR	–	–	–
2nd FLOOR	–	–	–
MEZZANINE	–	–	–
1st FLOOR	–	378	378
BASEMENT	–	–	–
TOTAL	–	378	378

ALLOWABLE AREA △1

PRIMARY OCCUPANCY: ☐ ASSEMBLY ☐ A–1 ☐ A–2 ☐ A–3 ☐ A–4 ☐ A–5
☐ BUSINESS ☐ EDUCATIONAL ☐ FACTORY ☐ F–1 MODERATE ☐ F–2 LOW
HAZARDOUS ☐ H–1 DETONATE ☐ H–2 DEFLAGRATE ☐ H–3 COMBUST ☐ H–4 HEALTH ☐ H–5 HPM
☐ INSTITUTIONAL ☐ I–1 ☐ I–2 ☐ I–3 ☐ I–4
I–3 CONDITION ☐ 1 ☐ 2 ☐ 3 ☐ 4 ☐ 5
☐ MERCANTILE ☐ RESIDENTIAL ☐ R–1 ☐ R–2 ☐ R–3 ☐ R–4
STORAGE ☒ S–1 MODERATE ☐ S–2 LOW ☐ HIGH–PILED
☐ UTILITY AND MISCELLANEOUS PARKING GARAGE ☐ OPEN ☐ ENCLOSED ☐ REPAIR GARAGE

SECONDARY OCCUPANCY: N/A

SPECIAL USES: ☐ 402 ☐ 403 ☐ 404 ☐ 405 ☐ 406 ☐ 407 ☐ 408 ☐ 409 ☐ 410 ☐ 411 ☐ 412
☐ 413 ☐ 414 ☐ 415 ☐ 416 ☐ 417 ☐ 418 ☐ 419 ☐ 420 ☐ 421
SPECIAL PROVISIONS: ☐ 508.2 ☐ 508.3 ☐ 508.4 ☐ 508.5 ☐ 508.6 ☐ 508.7 ☐ 508.8
MIXED OCCUPANCY: ☒ NO ☐ YES SEPARATION – Hr. EXCEPTION: –

☐ INCIDENTAL USE SEPARATION (302.1.1)
THIS SEPARATION IS NOT EXEMPT AS A NON–SEPARATED USE (SEE EXCEPTIONS)

☐ NON–SEPARATED MIXED USE (302.3.1)
THE REQUIRED TYPE OF CONSTRUCTION FOR THE BUILDING SHALL BE DETERMINED BY APPLYING THE HEIGHT AND AREA LIMITATIONS FOR EACH OF THE APPLICABLE OCCUPANCIES TO THE ENTIRE BUILDING. THE MOST RESTRICTIVE TYPE OF CONSTRUCTION, SO DETERMINED, SHALL APPLY TO THE ENTIRE BUILDING.

☐ SEPARATED USE (302.3.2) – SEE BELOW FOR AREA CALCULATIONS
FOR EACH STORY, THE AREA OF THE OCCUPANCY SHALL BE SUCH THAT THE SUM OF THE RATIOS OF THE ACTUAL FLOOR AREA OF EACH USE DIVIDED BY THE ALLOWABLE FLOOR AREA FOR EACH USE SHALL NOT EXCEED 1.

$$\frac{\text{ACTUAL AREA OF OCCUPANCY A}}{\text{ALLOWABLE AREA OF OCCUPANCY A}} + \frac{\text{ACTUAL AREA OF OCCUPANCY B}}{\text{ALLOWABLE AREA OF OCCUPANCY B}} \leq 1$$

$$\frac{\quad}{\quad} + \frac{\quad}{\quad} = \leq 1$$

STORY NO.	DESCRIPTION AND USE	(A) BUILDING AREA PER STORY (ACTUAL)	(B) TABLE 503 (5) AREA	(C) AREA FOR OPEN SPACE INCREASE (1)	(D) AREA FOR SPRINKLER INCREASE (2)	(E) ALLOWABLE AREA OR UNLIMITED (3)	(F) MAXIMUM BUILDING AREA (4)
1	STORAGE (S–1)	378 △1	9,000	6,750	NA	15,750	15,750
2	–	–	–	–	–	–	–
3	–	–	–	–	–	–	–
4	–	–	–	–	–	–	–
5	–	–	–	–	–	–	–

(1) FRONTAGE AREA INCREASES FROM SECTION 506.2 ARE COMPUTED THUS:
A. PERIMETER WHICH FRONTS A PUBLIC WAY OR OPEN SPACE HAVING 20 FEET MINIMUM WIDTH = 84' (F)
B. TOTAL BUILDING PERIMETER = 84' (P)
C. RATIO (F/P) = 1 (F/P)
D. W = MINIMUM WIDTH OF PUBLIC WAY = 30' (W)
E. PERCENT OF FRONTAGE INCREASE: If = 100[F/P – 0.25] X W/30 = 75 (%)
(2) THE SPRINKLER INCREASE PER SECTION 506.3 IS AS FOLLOWS:
A. MULTI STORY BUILDING Is = 200%
B. SINGLE STORY BUILDING Is = 300%
(3) UNLIMITED AREA APPLICABLE UNDER CONDITIONS OF SECTIONS GROUP B, F, M, S, A–4 (507); GROUP A MOTION PICTURE (507.9); MALLS (402.6); AND H–2 AIRCRAFT PAINT HANGERS (507.7).
(4) MAXIMUM BUILDING AREA = TOTAL NUMBER OF STORIES IN THE BUILDING X E (506.4)
(5) THE MAXIMUM AREA OF PARKING GARAGES MUST COMPLY WITH 406.3.5. THE MAXIMUM AREA OF AIR TRAFFIC CONTROL TOWERS MUST COMPLY WITH 412.1.2.

ALLOWABLE HEIGHT

	ALLOWABLE (TABLE 503)	INCREASE FOR SPRINKLERS	SHOWN ON PLANS	CODE REF
TYPE OF CONSTRUCTION:	TYPE: V–B		TYPE: V–B	602.2
BUILDING HEIGHT IN FEET:	FEET: 40	FEET = H + 20: NA	FEET: –	T503
BUILDING HEIGHT IN STORIES:	STORIES: 1	STORIES + 1: NA	STORIES: 1	T503

FIRE PROTECTION REQUIREMENTS
LIFE SAFETY PLAN SHEET NUMBER, IF PROVIDED: –

BUILDING ELEMENT	FIRE SEPARATION DISTANCE (FEET)	RATING REQ'D	RATING PROVIDED (W/___ REDUCTION)	DETAIL # AND SHEET #	DESIGN # FOR RATED ASSEMBLY	DESIGN # FOR RATED PENETRATION	DESIGN # FOR RATED JOINTS
STRUCTURAL FRAME, INCLUDING COLUMNS, GIRDERS TRUSSES	–	0	–	–	–	–	–
BEARING WALLS							
EXTERIOR							
NORTH	–	0	–	–	–	–	–
EAST	–	0	–	–	–	–	–
WEST	–	0	–	–	–	–	–
SOUTH	–	0	–	–	–	–	–
INTERIOR	–	0	–	–	–	–	–
NONBEARING WALLS AND PARTITIONS							
EXTERIOR							
NORTH	–	–	–	–	–	–	–
EAST	–	–	–	–	–	–	–
SOUTH	–	–	–	–	–	–	–
WEST	–	–	–	–	–	–	–
INTERIOR	–	–	–	–	–	–	–
FLOOR CONSTRUCTION INCLUDING SUPPORTING BEAMS AND JOISTS	X	0	–	–	–	–	–
ROOF CONSTRUCTION INCLUDING SUPPORTING BEAMS AND JOISTS	X	0	–	– –	–	–	–
SHAFTS – EXIT	X	–	–	–	–	–	–
SHAFTS – OTHER	X	–	–	–	–	–	–
CORRIDOR SEPARATION	X	–	–	–	–	–	–
OCCUPANCY SEPARATION	X	–	–	–	–	–	–
PARTY/FIRE WALL SEPARATION	X	–	–	–	–	–	–
SMOKE BARRIER SEPARATION	X	–	–	–	–	–	–
TENANT SEPARATION	X	–	–	–	–	–	–

* – INDICATE SECTION NUMBER PERMITTING REDUCTION

MAINTENANCE BUILDING, CONTINUED

LIFE SAFETY SYSTEM REQUIREMENTS △1

EMERGENCY LIGHTING:	☐ YES	☒ NO
EXIT SIGNS:	☐ YES	☒ NO
FIRE ALARM:	☐ YES	☒ NO
SMOKE DETECTION SYSTEMS:	☐ YES	☒ NO
PANIC HARDWARE:	☐ YES	☒ NO

EXIT REQUIREMENTS
NUMBER AND ARRANGEMENT OF EXITS

FLOOR, ROOM OR SPACE DESIGNATION	MINIMUM NUMBER OF EXITS: REQUIRED	MINIMUM NUMBER OF EXITS: SHOWN ON PLANS	TRAVEL DISTANCE: ALLOWABLE TRAVEL DISTANCE (TABLE 1015.1)	TRAVEL DISTANCE: ACTUAL TRAVEL DISTANCE SHOWN ON PLANS	ARRANGEMENT MEANS OF EGRESS (1,3) (SECTION 1014.2): REQUIRED DISTANCE BETWEEN EXIT DOORS	ARRANGEMENT MEANS OF EGRESS (1,3) (SECTION 1014.2): ACTUAL DISTANCE SHOWN ON PLANS
MAINTENANCE	1	1	200'	DIRECT	NA	NA
–	–	–	–	–	–	–
–						
–						

(1) CORRIDOR DEAD ENDS (1016.3)
(2) SINGLE EXITS (TABLE 1018.2)
(3) COMMON PATH OF TRAVEL (1013.3)

EXIT WIDTH

USE GROUP OR SPACE DESCRIPTION	(A) AREA (1) SQ. FT.	(B) AREA (1) PER OCCUPANT (TABLE 1003.2.2.2)	CALCULATED OCCUPANT LOAD	(C) EGRESS PER OCCUPANT (TABLE 1005.1): STAIR	(C) LEVEL	EXIT WIDTH (IN) (2,3,4,5,6) REQUIRED WIDTH (SECTION 1005.1) (A/B) x C: STAIR	REQUIRED WIDTH: LEVEL	ACTUAL WIDTH SHOWN ON PLANS: STAIR	ACTUAL WIDTH: LEVEL
MAINTENANCE	378	300 GROSS		–	.20	–	0.40	–	34.0
–	–	–		–	–	–	–	–	–
–	–	–		–	–	–	–	–	–
–	–	–		–	–	–	–	–	–
–	–	–		–	–	–	–	–	–

(1) SEE TABLE 1004.1.2 TO DETERMINE WHETHER NET OR GROSS AREA IS APPLICABLE SEE DEFINITION "AREA, GROSS" AND "AREA, NET" (SECTION 1002)
(2) MINIMUM STAIRWAY WIDTH (SECTION 1005.1); MIN. CORRIDOR WIDTH (SECTION 1016.2); MIN. DOOR WIDTH (SECTION 1018.1)
(3) MINIMUM WIDTH OF EXIT PASSAGEWAY (SECTION 1020.2)
(4) SEE SECTION 1004.5 FOR CONVERGING EXITS
(5) THE LOSS OF ONE MEANS OF EGRESS SHALL NOT REDUCE THE AVAILABLE CAPACITY TO LESS THAN 50 PERCENT OF THE TOTAL REQUIRED (SECTION 1005.1)
(6) ASSEMBLY OCCUPANCIES (SECTION 1024)

STRUCTURAL DESIGN
DESIGN LOADS

IMPORTANCE FACTORS: WIND (Iw) 1.15
SNOW (Is) 1.1
SEISMIC (Ie) 1.25

LIVE LOADS: ROOF 20 psf △1
MEZZANINE – psf
FLOOR 100 psf

SNOW LOAD: 20 psf △1

WIND LOAD: BASIC WIND SPEED 100 mph (ASCE–7–98)
EXPOSURE CATEGORY C EXPOSURE CATEGORY
WIND BASE SHEARS (FOR MWFRS) Vx = 34 kips Vy = 119 kips

SEISMIC DESIGN CATEGORY A
COMPLIANCE WITH SECTION 1616.4 ONLY? ☒ YES ☐ NO

SEISMIC DESIGN CATEGORY B, C, D
PROVIDE THE FOLLOWING SEISMIC DESIGN PARAMETERS:
SEISMIC USE GROUP: II
SPECTRAL RESPONSE ACCELERATION: Sms 19.5 %g Sm1 9.5 %g
SITE CLASSIFICATION: D
BASIC STRUCTURAL SYSTEM:
X BEARING WALL ___ DUAL w/SPECIAL MOMENT FRAME
___ BUILDING FRAME ___ DUAL w/INTERMEDIATE R/C OR SPECIAL STEEL
___ MOMENT FRAME ___ INVERTED PENDULUM
SEISMIC BASE SHEAR: Vx = 181 kips Vy = 181 kips
ANALYSIS PROCEDURE: ___ SIMPLIFIED X EQUIVALENT LATERAL FORCE ___ MODAL
ARCHITECTURAL, MECHANICAL, COMPONENTS ANCHORED? ☒ YES ☐ NO

LATERAL DESIGN CONTROL: X EARTHQUAKE ___ WIND

SOIL BEARING CAPACITIES
FIELD TEST (PROVIDE COPY OF TEST REPORT) 3000 psf
PRESUMPTIVE BEARING CAPACITY ___ psf
PILE SIZE, TYPE AND CAPACITY ___

ENERGY CODE SUMMARY

ENERGY REQUIREMENTS:
The following data shall be considered minimum and any special attribute required to meet the energy code shall also be provided. Each Designer shall furnish the required portions of the project information for the plan data sheet. If energy cost budget method, state the annual energy cost budget vs allowable annual energy cost budget.

THERMAL ENVELOPE

Method of Compliance:
☒ Prescriptive ☐ Performance ☐ Energy Cost Budget

Roof/ceiling Assembly (each assembly)
Description of assembly:
Single ply over over plywood deck and lumber joists and batt insulation
U–Value of total assembly: .026
R–Value of insulation: R–38
Skylights in each assembly – N/A
U–Value of skylight – N/A
total square footage of skylights in each assembly – N/A

Exterior Walls (each assembly)
Description of assembly: 8" CMU w/ masonry face
U–Value of total assembly: .04
R–Value of insulation: 19.64
Openings (windows or doors with glazing)
U–Value of assembly: .49
shading coefficient: .53
projection factor: .32
low e required, if applicable: at north, east and west and under the south light shelves.
Door R–Values: 6 @ glass

Description of assembly: 8" CMU w/ EIFS
U–Value of total assembly: .13
R–Value of insulation: 5
Openings (windows or doors with glazing)
U–Value of assembly: .49
shading coefficient: .53
projection factor: .32
low e required, if applicable: at north, east and west and under the south light shelves.
Door R–Values: 6 @ glass

Description of assembly: 4" metal studs w/ DAFS
U–Value of total assembly: .07
R–Value of insulation: 13
Openings (windows or doors with glazing)
U–Value of assembly: .49
shading coefficient: .53
projection factor: .32
low e required, if applicable: at north, east and west and under the south light shelves.
Door R–Values: N/A, stud walls only @ roof top "daylight monitors"

Walls adjacent to unconditioned space (each assembly)
Description of assembly – N/A
U–Value of total assembly
R–Value of insulation
Openings (windows or doors with glazing)
U–Value of assembly
Low e required, if applicable
Door R–Values

Walls below grade (each assembly)
Description of assembly – N/A
U–Value of total assembly
R–Value of insulation

Floors over unconditioned space (each assembly)
Description of assembly – N/A
U–Value of total assembly
R–Value of insulation

Floors slab on grade
Description of assembly: 4" reinforced slab over 6 mil poly V.B. over stone base
U–Value of total assembly: 1.92
R–Value of insulation: 10 @ 24" perimeter
Horizontal/vertical requirement – N/A
slab heated: no

ABBREVIATIONS

@	AT	GL	GLASS/CEILING
APC	ACOUSTICAL PANEL CEILING	GM	GLASED MASONRY
BD	BOARD	GR	GRADE
BS	BOTH SIDES		
BR	BRICK	GYP	GYPSUM
CL	CENTER LINE	HDWE	HARDWARE
C	CARPET	HT	HEIGHT
CB	CEMENTITIOUS BOARD	HM	HOLLOW METAL
CAC	CERAMIC ACOUSTICAL CEILING	INSUL	INSULATION
CJ	CONTROL JOINT	JT	JOINT
CLG	CEILING	LAV	LAVATORY
CMU	CONC. MASONRY UNIT	M	METAL
COL	COLUMN	MO	MASONRY OPENING
CONC	CONCRETE	MAX	MAXIMUM
C TO C	CENTER TO CENTER	MDP	MAIN DISTRIBUTION PANEL
CP	CERAMIC PAVER	MECH	MECHANICAL
CT	CERAMIC TILE	MH	MAN HOLE
CTB	CERAMIC TILE BASE	MT	MARBLE THRESHOLD
DET	DETAIL	NIC	NOT IN CONTRACT
DIA	DIAMETER	NO	NUMBER
DIM	DIMENSION	OC	ON CENTER
DN	DOWN	O/H	OVERHEAD
EA	EMBOSSED ALUMINUM	OPP	OPPOSITE
EGCB	EXTERIOR GYPSUM CEILING BOARD	P	PAINT
EIFS	EXTERIOR INSULATION & FINISH SYSTEM	PK	POCKET DOOR
		PL	PLATE
ELECT	ELECTRICAL	PLUMB	PLUMBING
ELEV	ELEVATION	QT	QUARRY TILE
EP	EPOXY PAINT	R	RESILENT
EWC	ELEC. WATER COOLER	REIN	REINFORCED
EQ	EQUAL		
EXIST	EXISTING	SA	SOUND ATTENUATION
EJ	EXPANSION JOINT	SC	SEALED CONRETE
ES	EXPOSED STRUCTURE	SCW	SOLID CORE WOOD
F	FLUSH	SIM	SIMILAR
FE	FIRE EXTINGUISHER	SS	STAINLESS STEEL
FEC	FIRE EXTINGUISHER CABINET		
FIN	FINISHED		
FG	FULL GLASS	TP	TACKABLE PANEL
FL	FLOOR	TS	TACKABLE SURFACE
FD	FLOOR DRAIN	TOPO	TOPOGRAPHY
FS	FLOOR SINK	TYP	TYPICAL
GALV	GALVANIZED	V	VINYL
GB	GYPSUM BOARD	VCT	VINYL COMPOSTION TILE
GCT	GLAZED CERAMIC TILE	VB	VIEW BOX
		WD	WOOD

GENERAL NOTES

DRAWING SYMBOL LEGEND

ELEVATION INDICATOR
BLDG. SECTION INDICATOR
DETAIL INDICATOR
WALL SECTION INDICATOR
1 HOUR RATED WALL
2 HOUR RATED WALL
BRICK
CMU MASONRY WALL
STONE VENEER
RIGID/FOAM IN PLACE INSULATION
BATT INSULATION
EIFS FINISH/GYP. BD./GROUT
PARTITION TYPE INDICATOR
SEE PARTITION SCHEDULE
WINDOW INDICATOR
ROOM NUMBER
ROOM NAME
DOOR INDICATOR
MANUFACTURED CASEWORK IND.
MILLWORK IND.

Innovative Design
850 MORGAN STREET, RALEIGH, NORTH CAROLINA 27603, 919/832–6303

INNOVATIVE DESIGN, INC. CORPORATE SEAL NC

MICHAEL H. NICHOLAS REGISTERED ARCHITECT 2950 NORTH CAROLINA RALEIGH, N. C.
7/18/07

PROJECT: Wilkes County Visitor's Center K–4703
WILKESBORO, NC
OWNER: NC Department of Transportation

DRAWN BY: WRD
DATE: 06/01/2007
JOB NUMBER: 2320
REVISIONS:
△1 07–18–07

DWG NAME: 320COVER2–3
H:\2320 – Wilkes\Mtec\4–DOI REVIEW\
PLOTTED: 7/30/2007

COVER
SHEET 3
3 OF 91

UL ASSEMBLIES

Design No. U314
Bearing Wall Rating — 1 HR.
Finish Rating — 26 Min.

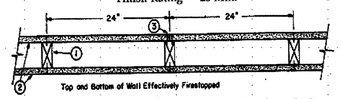

1. **Wood Studs —** Nom 2 by 4 in., spaced 24 in. OC, effectively fire stopped.
2. **Gypsum Board*** — 3/8 in. thick, 4 ft wide. Gypsum boards nailed to studs and bearing plates 7 in. OC with 6d cement coated nails 1-7/8 in. long, 0.0915 in. shank diam and 1/4 in. diam head.
   CANADIAN GYPSUM COMPANY —Types AR, IP-AR, IP-X1, SCX, SHX, WRX, FRX.
   NATIONAL GYPSUM CO —Type FR or WR.
   UNITED STATES GYPSUM CO —Type AR, FRX, FRX-G, IP-AR, IP-X1, SCX, SHX or WRX.
   USG MEXICO S A DE C V —Type AR, IP-AR, IP-X1, SCX, SHX or WRX.

2A. **Gypsum Board*** — (As an alternate to Item 2) — Nom 3/4 in. thick, 4 ft wide, installed as described in Item 2.
   CANADIAN GYPSUM COMPANY —Types AR, IP-AR.
   UNITED STATES GYPSUM CO —Types AR, IP-AR.
   USG MEXICO S A DE C V —Types AR, IP-AR.

2B. **Gypsum Board*** —

(As an alternate to Items 2 and 2A) — 5/8 in. thick, 2 ft. wide, tongue and groove edge, applied horizontally to one side of the assembly. Secured as described in Item 2. Joint covering (Item 3) not required.
   CANADIAN GYPSUM COMPANY —Type SHX.
   UNITED STATES GYPSUM CO —Type SHX.
   USG MEXICO S A DE C V —Type SHX.

2C. **Gypsum Board*** — (As an alternate to Item 2) — 5/8 in. thick, 8 ft wide, attached as described in Item 2.
   CANADIAN GYPSUM COMPANY —Type FRX.
   UNITED STATES GYPSUM CO —Type FRX.

3. **Joints and Nailheads —** Wallboard joints covered with paper tape and joint compound. Nailheads covered with joint compound. As an alternate, nom 3/32 in. thick gypsum veneer plaster may be applied to the entire surface of Classified veneer baseboard. Joints reinforced.
4. **Steel Corner Fasteners** — (Optional) — For use at wall corners. Channel shaped, 2 in. long by 1 in. high on the back side with two 1/8 in. wide cleats protruding into the 5/8 in. wide channel, fabricated from 24 gauge galv steel. Fasteners applied only to the end or cut edge (not along tapered edges) of the wallboard, no greater than 2 in. from corner of wallboard, max spacing 16 in. OC. Nailed to adjacent stud through tab using one No. 6d cement coated nail per fastener. Corners of wallboard shall be nailed to top and bottom plate using No. 6d cement coated nails.
5. **Batts and Blankets*** — (Optional, Not Shown) — Mineral wool insulation placed in stud cavities.
   THERMAFIBER L L C —Type SAFB.

*Bearing the UL Classification Marking.

Design No. U906
Bearing Wall Rating — 2 HR.
Nonbearing Wall Rating — 2 HR.

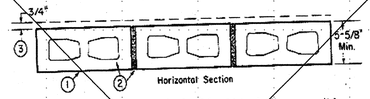

1. **Concrete Blocks*** — Nominal 6 by 8 by 16 in, hollow or solid. Classification D-2 (2 hr).
   ANCHOR CONCRETE PRODUCTS INC
   Allowable compressive stress of 57% of max allowable compressive stress in accordance with the empirical design method.
   BETCO BLOCK & PRODUCTS INC, DBA
   ARTHUR WHITCOMB
   WESTBROOK CONCRETE BLOCK CO INC
   Allowable compressive stress of 75.6% of max allowable compressive stress in accordance with the empirical design method.
2. **Mortar —** Blocks laid in full bed of mortar, nom. 3/8 in. thick, of not less than 2-1/4 and not more than 3-1/2 parts of clean sharp sand to 1 part Portland cement (proportioned by volume) and not more than 50 percent hydrated lime (by cement volume). Vertical joints staggered.
3. **Portland Cement Stucco or Gypsum Plaster** — Add 1/2 hr to Classification if used. Attached to concrete blocks (Item 1).
4. **Foamed Plastic*** — (Optional-Not Shown) — 1-1/2 in. thick max, 4 ft wide sheathing attached to concrete blocks (Item 1).
   BPB AMERICA INC
   —Type Thermax

*Bearing the UL Classification Mark

NOT USED

△1

Design No. U905

March 17, 2004

Bearing Wall Rating — 2 HR.

Nonbearing Wall Rating — 2 HR

Load Restricted for Canadian Applications — See Guide BXUV7

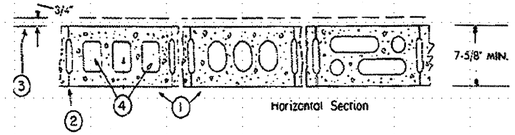

1. **Concrete Blocks*** — Various designs. Classification D-2 (2 hr).

See Concrete Blocks category for list of eligible manufacturers.

2. **Mortar** — Blocks laid in full bed of mortar, nom. 3/8 in. thick, of not less than 2-1/4 and not more than 3-1/2 parts of clean sharp sand to 1 part Portland cement (proportioned by volume) and not more than 50 percent hydrated lime (by cement volume). Vertical joints staggered.

3. **Portland Cement Stucco or Gypsum Plaster** — Add 1/2 hr to classification if used. Where combustible members are framed in wall, plaster or stucco must be applied on the face opposite framing to achieve a max. Classification of 1-1/2 hr. Attached to concrete blocks (Item 1).

4. **Loose Masonry Fill** — If all core spaces are filled with loose dry expanded slag, expanded clay or shale (Rotary Kiln Process), water repellant vermiculite masonry fill insulation, or silicone treated perlite loose fill insulation add 2 hr to classification.

5. **Foamed Plastic*** — (Optional-Not Shown) — 1-1/2 in. thick max, 4 ft wide sheathing attached to concrete blocks (Item 1).

THE DOW CHEMICAL CO — Type Thermax

*Bearing the UL Classification Mark

Innovative Design
1008 WILMINGTON STREET, RALEIGH, NORTH CAROLINA 27603, 919/832-6303

INNOVATIVE DESIGN, INC. CORPORATE SEAL NC

MICHAEL H. NICHOLAS REGISTERED PROFESSIONAL ENGINEER 2950 NORTH CAROLINA RALEIGH, N.C.
7/12/07

PROJECT: Wilkes County Visitor's Center K-4703
WILKESBORO, NC
OWNER: NC Department of Transportation

DRAWN BY: WRD
DATE: 06/01/2007
JOB NUMBER: 2320
REVISIONS:
△1 07-18-07

DWG NAME: 320COVER2-3
H:\2320 - Wilkes\Mtec\4-DOI REVIEW\
PLOTTED: 7/30/2007

COVER SHEET 4

H01 WALL TYPES

H24 TDD SIGNAGE

ROOM NAME	ROOM #	FLOOR MATERIAL	FLOOR FINISH	BASE	WALLS MATERIAL	NORTH	SOUTH	EAST	WEST	CEILING MATERIAL	CEILING FINISH	HEIGHT	REMARKS
VESTIBULE	001	CONC	STAIN	STONE	STONE	STONE	STONE	–	–	WD	STN	VARIES	–
VISITOR'S CENTER	002	CONC	STAIN	STONE/CMU	STONE/CMU	STONE/CMU	SEE ELEV. / DETAILS			WD	STN	VARIES	–
OFFICE	003	CPT	–	RUB	GYP BD	CMU/PNT	PNT	PNT	PNT	ACT	–	8'-0"	–
BREAK ROOM	004	LINO	–	RUB	GYP BD	CMU/PNT	PNT	PNT	PNT	ACT	–	8'-0"	–
TOILET	005	LINO	–	RUB	GYP BD	CMU/PNT	PNT	PNT	PNT	ACT	–	8'-0"	–
ELECTRICAL	006	CONC	SEAL	RUB	GYP BD	PNT	PNT	PNT	PNT	GYP BD	PNT	8'-0"	–
WORK	007	CONC	SEAL	RUB	GYP BD	PNT	PNT	PNT	PNT	–	–	–	–
MECHANICAL	008	CONC	SEAL	RUB	CMU/GB	PNT	PNT	PNT	PNT	–	–	–	–
CORRIDOR	009	CONC	SEAL	RUB	GYP BD	PNT	PNT	PNT	PNT	GYP BD	PNT	8'-0"	–
DATA	010	CONC	SEAL	RUB	GYP BD	PNT	PNT	PNT	PNT	GYP BD	PNT	8'-0"	–
FIREPLACE	011	CONC	–	–	–	–	–	–	–	–	–	–	–
VESTIBULE	101	QT	–	QT	CMU	SEE	ELEVATIONS		–	GYP BD	PNT	10'-0"	–
STORAGE	102	CONC	SEAL	RUB	CMU	PNT	PNT	PNT	PNT	GYP BD	PNT	10'-0"	–
MEN	103	QT/CONC	STAIN	CMU	CMU	SEE	ELEVATIONS		–	GYP BD	PNT	VARIES	–
WET WALL CHASE	104	CONC	SEAL	RUB	CMU	PNT	PNT	PNT	PNT	–	–	–	–
MEN	105	QT/CONC	STAIN	CMU	CMU	SEE	ELEVATIONS		–	GYP BD	PNT	VARIES	–
WOMEN	106	QT/CONC	STAIN	CMU	CMU	SEE	ELEVATIONS		–	GYP BD	PNT	VARIES	–
WET WALL CHASE	107	CONC	SEAL	RUB	CMU	PNT	PNT	PNT	PNT	–	–	–	–
WOMEN	108	QT/CONC	STAIN	CMU	CMU	SEE	ELEVATIONS		–	GYP BD	PNT	VARIES	–
FAMILY RESTROOM	109	QT/CONC	STAIN	CMU	CMU	SEE	ELEVATIONS		–	GYP BD	PNT	10'-0"	–
VENDING	110	CONC	STAIN	CMU	CMU	–	–	–	–	GYP BD	PNT	VARIES	–
VENDING CLOSET	111	CONC	SEAL	RUB	CMU	PNT	PNT	PNT	PNT	–	–	–	–

FINISH SCHEDULE NOTES
1. ALL SURFACES, TO RECEIVE NEW FINISHES. ANY SURFACES NOT SPECIFICALLY IDENTIFIED IN THIS SCHEDULE ARE TO RECEIVE ONE PRIMER AND TWO FINISH COATS OF PAINT – COLOR TO BE SELECTED BY ARCHITECT

FINISH SCHEDULE LEGEND
- CONC CONCRETE
- CPT CARPET – SEE SHEET A1.03 FOR COLORS AND LOCATIONS
- QT QUARRY TILE
- WD WOOD
- STAIN CONCRETE STAIN – SEE SHEET A1.03 FOR COLORS AND PATTERNS
- SEAL CLEAR SEAL FOR CONCRETE
- LINO LINOLEUM
- STONE ROUGH CUT STONE VENEER – SEE SPECIFICATIONS
- RUB RUBBER BASE – SEE SHEET A1.03
- CT CERAMIC TILE – SEE SHEET A1.03 FOR COLORS AND PATTERNS
- GYP BD 5/8" TYPE "X" GYPSUM BOARD IN ALL LOCATIONS
- ACT ACOUSTICAL CEILING TILE
- DECK OPEN TO DECK ABOVE
- BLACK PAINT FLAT BLACK
- PNT PAINT – SEE INTERIOR ELEVATIONS

Q01 FINISH SCHEDULE

VISITORS CENTER ENTRANCE SIGN

PROVIDE 8" CAST METAL ALUMINUM LETTERS WITH NATURAL SATIN FINISH COLOR. LETTERS TO BE MOUNTED ON MASONRY WALL WITH PROJECTED STAINLESS STEEL JAM NUT MOUNTING STUDS SET IN ADHESIVE CEMENT.

Q14 MASONRY MOUNTED ENTRANCE SIGN

Q19 ORIENTATION SIGN

Q24 ENLARGED SECTION

OPENING #	DOOR SIZE W	H	Th	DOOR TYPE	DOOR MAT'L	FRAME TYPE	FRAME MAT'L	DETAIL HEAD	JAMB	SILL	HARDWARE SET	FUNCTION	RATING	GLAZING TYPE	GLAZING SIZE	OPENING #	SIGNAGE	REMARKS
001A	AUTOMATIC SLIDING		–	–	ALUM	–	ALUM	SEE L09/A0.02			1	–	–	TI	–	001A	–	AUTOMATIC SLIDING DOOR
002A	AUTOMATIC SLIDING		–	–	ALUM	–	ALUM	SEE L09/A0.02			–	–	–	T	–	002A	–	AUTOMATIC SLIDING DOOR
002B	3'-0"	7'-0"	2"	D1	ALUM	F3	HM	V01/A0.03	V06/A0.03	V15/A0.03	1	–	–	TI	SEE F3	002B	–	–
002C △1	2'-8"	7'-0"	1-3/4"	D1	WD	F1	HM	H-2	J-2	–	2	–	–	–	–	002C	–	–
003A	3'-0"	7'-0"	1-3/4"	D2	WD	F1	HM	H-2	J-2	–	3	OFFICE	–	T	3X33	003A	A	–
003B	1'-2"	7'-0"	1-3/4"	D1	WD	F1	HM	H-2	J-2	–	2	CLOSET	–	–	–	003A	–	–
004A	3'-0"	7'-0"	1-3/4"	D1	WD	F1	HM	H-2	J-2	–	3	BREAK RM	–	–	–	004A	A	–
005A	3'-0"	7'-0"	1-3/4"	D1	WD	F1	HM	H-2	J-2	–	4	PRIVACY	–	–	–	005A	B	–
006A	3'-0"	7'-0"	1-3/4"	D1	HM	F1	HM	H-2	J-2	–	5	STORAGE	–	–	–	006A	A	–
007A	3'-0"	7'-0"	1-3/4"	D1	WD	F1	HM	H-2	J-2	–	6	STORAGE	–	–	–	007A	A	–
007B △1	pr 3'-0"	7'-0"	1-3/4"	D1	HM	F4	HM	H-4	J-4	S-4	7	STORAGE	–	–	–	007B	–	–
007C	pr2'-0"/3'-0"	7'-0"	1-3/4"	D1	HM	F1	HM	H-2	J-2	–	8	COPY	–	–	–	007B	–	–
008A	3'-0"	7'-0"	1-3/4"	D1	HM		HM	H-3	J-3	–	9	STORAGE	45 Min	–	–	008A	–	–
008B	pr 3'-0"	7'-0"	1-3/4"	D1	HM	F5	HM	H-4	J-4	S-4	10	STORAGE	–	–	–	008B	–	–
010A	3'-0"	7'-0"	1-3/4"	D1	HM	F4	HM	H-4	J-4	S-4	11	STORAGE	–	–	–	010A	–	–
~~011A~~	~~2'-0"~~	~~7'-0"~~	~~1-3/4"~~	~~D1~~	~~HM~~	~~F4~~	~~HM~~	~~H-3~~	~~J-3~~	–	~~5~~	~~STORAGE~~	–	–	–	~~011A~~	–	–
101A	AUTOMATIC SLIDING		–	–	ALUM	–	ALUM	SEE L09/A0.02			1	–	–	TI	–	101A	–	AUTOMATIC SLIDING DOOR
102A	3'-0"	7'-0"	1-3/4"	D1	WD	F1	HM	H-3	J-3	–	9	STORAGE	45 Min	–	–	102A	A	–
104A	3'-0"	7'-0"	1-3/4"	D1	WD	F1	HM	H-3	J-3	–	12	STORAGE	45 Min △1	–	–	104A	A	–
107A	3'-0"	7'-0"	1-3/4"	D1	WD	F1	HM	H-3	J-3	–	12	STORAGE	45 Min	–	–	107A	A	–
109A	3'-0"	7'-0"	1-3/4"	D1	WD	F1	HM	H-3	J-3	–	13	PRIVACY	–	–	–	109A	B	–
111A	3'-0"	7'-0"	1-3/4"	D1	HM	F1	HM	H-3	J-3	–	14	STORAGE	45 Min △1	–	–	111A	A	
111B	3'-0"	7'-0"	1-3/4"	D1	HM	F4	HM	H-5	J-5	S-5	15	STORAGE	–	–	–	111B	–	–
201A	3'/2'-0"	7'-0"	1-3/4"	D1	HM	F4	HM	H-6	J-6	S-6	10	STORAGE	–	–	–	201A	A	–
301A	3'-0"	7'-0"	1-3/4"	D1	HM	F2	HM	H-3	J-3	–	14	STORAGE	–	TI	SEE F2	301A	SEE F2	–
301B	8'-0"	10'-0"	–	D3	STL	–	–	–	–	–	–	–	–	–	–	301B	–	OVERHEAD DOOR
401A	3'-0"	7'-0"	1-3/4"	D1	HM	F2	HM	H-3	J-3	–	14	STORAGE	–	TI	SEE F2	401A	SEE F2	–
401B	8'-0"	10'-0"	–	D3	STL	–	–	–	–	–	–	–	–	–	–	401B	–	OVERHEAD DOOR
–	–	–	–	–	–	–	–	–	–	–	–	–	–	–	–	–	–	–
–	–	–	–	–	–	–	–	–	–	–	–	–	–	–	–	–	–	–

NOTE: GLAZING CODES: T = CLEAR–TEMPERED 1/4", TI = LOW–E, CLEAR TEMPERED INSULATED 1", T2 = CLEAR – TEMPERED INSULATED 1"

FOR DOOR & FRAME ELEVATIONS, SEE SHEET A0.01

V01 DOOR SCHEDULE

V14 ROOM SIGNAGE SCHEDULE

V19 D.O.T. ENTRANCE DISPLAY & SIGN

V24 ENLARGED SECTION

Innovative Design
851 MORGAN STREET, RALEIGH, NORTH CAROLINA 27603, 919/832-6303

INNOVATIVE DESIGN, INC. CORPORATE SEAL NC

MICHAEL H. NICKLAS REGISTERED ARCHITECT 2950 NORTH CAROLINA RALEIGH, N. C.
7/18/07

PROJECT: Wilkes County Visitor's Center K-4703
WILKESBORO, NC
OWNER: NC Department of Transportation

DRAWN BY: JZL
DATE: 06/01/2007
JOB NUMBER: 2320
REVISIONS:
△1 07-18-07

DWG NAME: 320A000
H:\2320 – Wilkes\Mtec\4-DOI REVIEW\
PLOTTED: 7/30/2007

A0.00

NOT USED

H-1 J-1 S-3

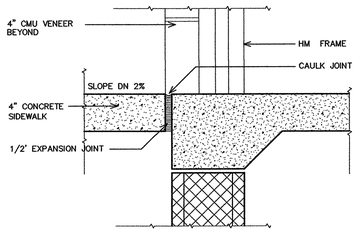

H-4 J-4

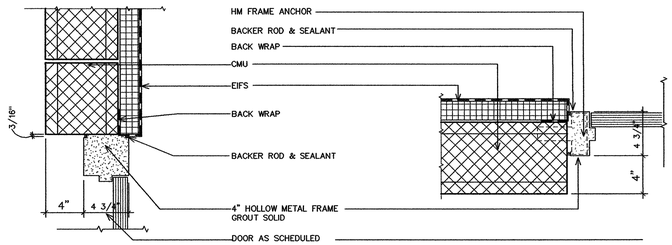

S-4

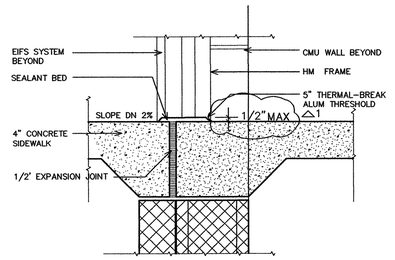

H-2 J-2

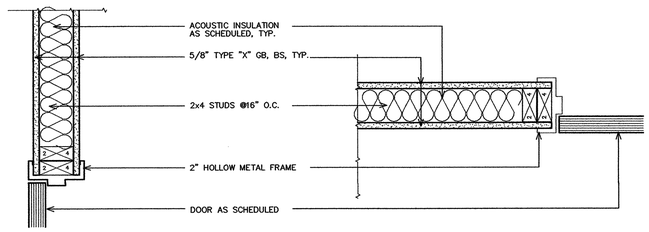

H-5 J-5

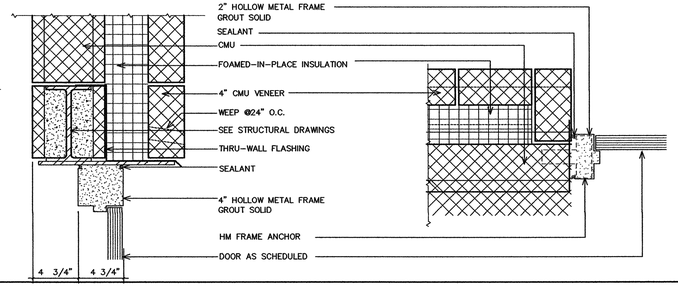

S-5

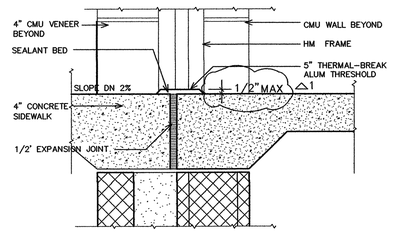

H-3 J-3

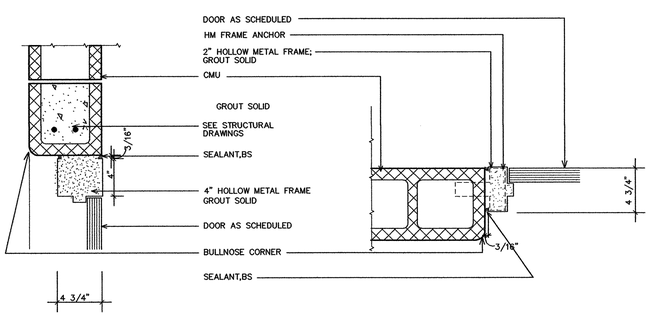

H-6 J-6

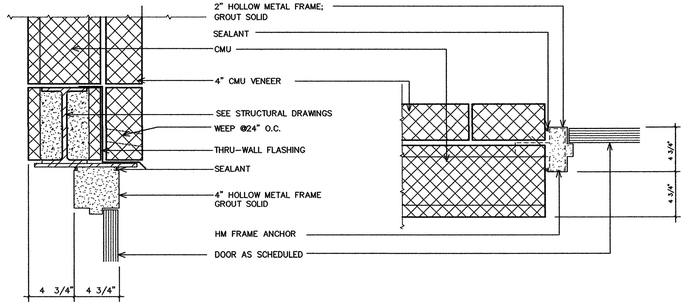

S-6

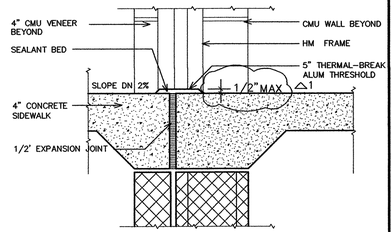

Q01 DOOR DETAILS SCALE 1' 1/2" = 1'-0"

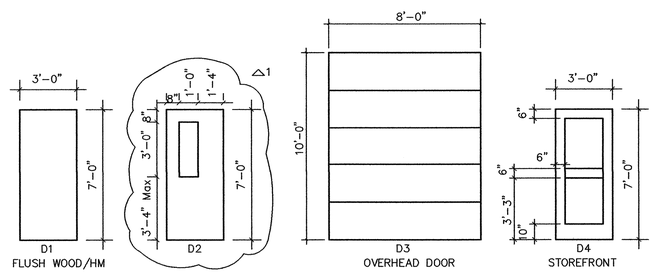

V01 DOOR ELEVATIONS 1/4" = 1'-0"

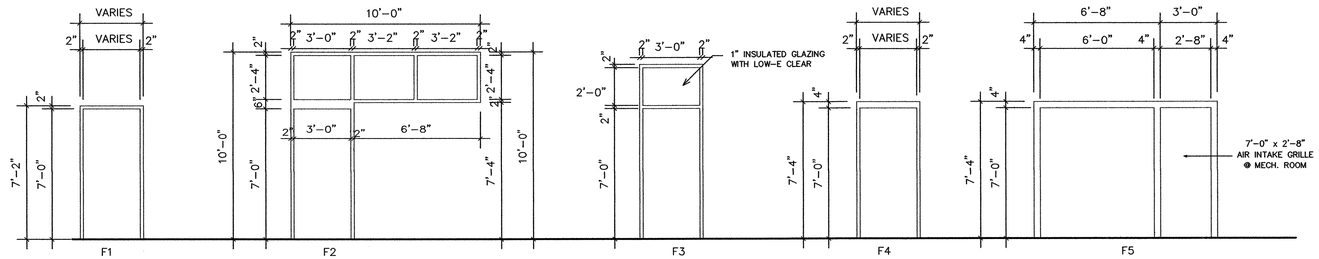

V11 FRAME ELEVATIONS 1/4" = 1'-0"

Innovative Design
INNOVATIVE DESIGN, INC.
CORPORATE SEAL
NC
1308 MORGAN STREET, RALEIGH, NORTH CAROLINA 27603, 919/832-6303

MICHAEL H. NICHOLAS
REGISTERED ARCHITECT
2950
NORTH CAROLINA
RALEIGH, N. C.
7/10/07

PROJECT: Wilkes County Visitor's Center K-4703
WILKESBORO, NC
OWNER: NC Department of Transportation

DRAWN BY: JZL
DATE: 06/01/2007
JOB NUMBER: 2320
REVISIONS:
△1 07-18-07

DWG NAME: 320A001
H:\2320 - Wilkes\Mtec\4-DOT REVIEW\
PLOTTED: 7/30/2007

A0.01

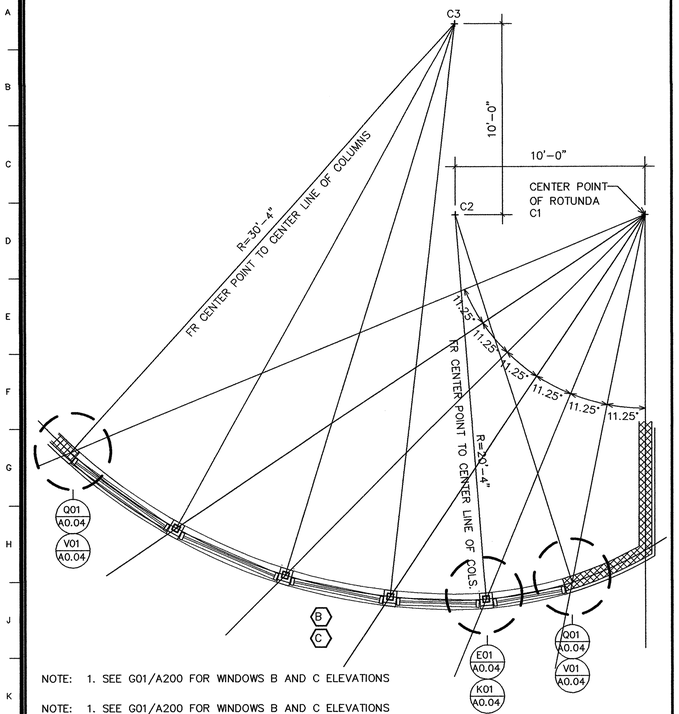

NOTE: 1. SEE G01/A200 FOR WINDOWS B AND C ELEVATIONS

NOTE: 1. SEE G01/A200 FOR WINDOWS B AND C ELEVATIONS
2. CENTER OF EACH COLUMN SHALL BE LOCATED AT CENTER LINE OF 8" CMU WALL FROM C1 AT 11.25 DEGREE AS SHOWN. ROTATE COLUMN INSIDE FACE OF TUBE PERPENDICULAR TO C2 & C3 AS SHOWN.

L01 ALUMINUM WINDOW B AND C – PLAN SCALE : 1/4" = 1'-0"

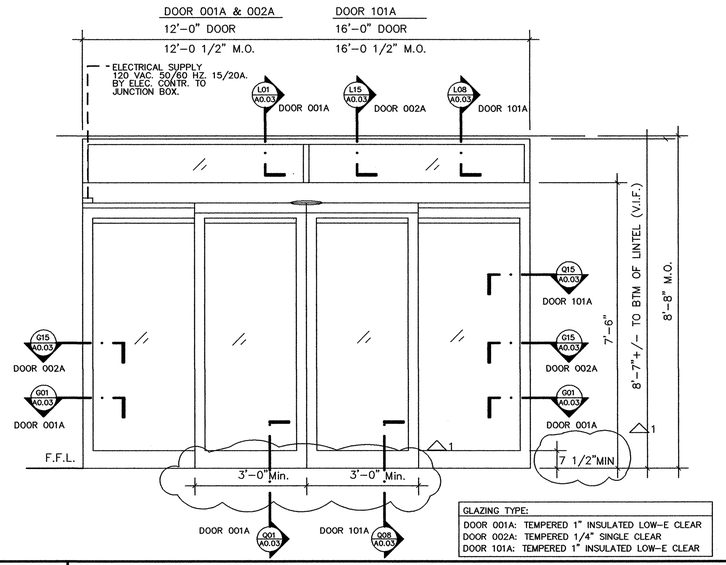

GLAZING TYPE:
DOOR 001A: TEMPERED 1" INSULATED LOW-E CLEAR
DOOR 002A: TEMPERED 1/4" SINGLE CLEAR
DOOR 101A: TEMPERED 1" INSULATED LOW-E CLEAR

L09 SLIDING DOOR EXTERIOR ELEVATION SCALE : 1/2" = 1'-0"

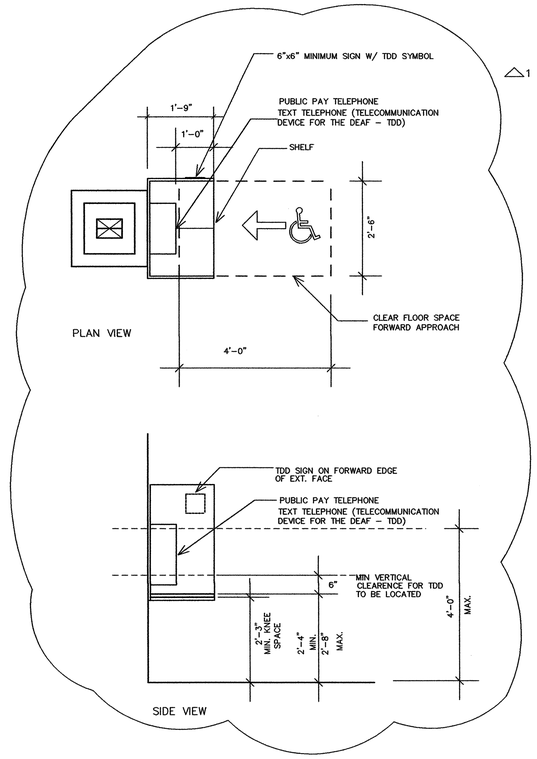

L21 ENLARGED DETAILS PUBLIC (TDD) TELEPHONE SCALE : 1/2" = 1'-0"

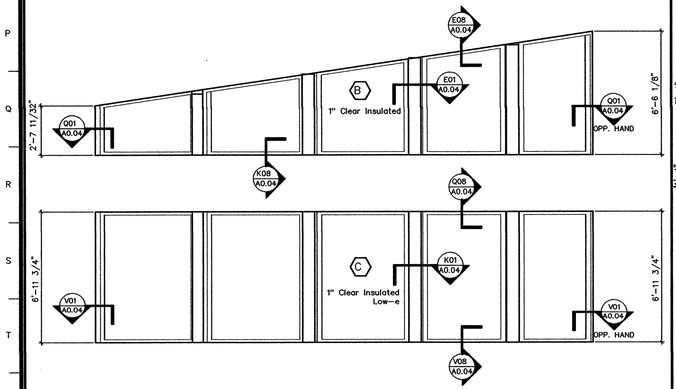

NOTE: 1. FIELD VERIFY ALL APERTURES PRIOR TO FABRICATION

V01 ALUMINUM WINDOW B AND C – EXTERIOR ELEVATION SCALE : 1/4" = 1'-0"

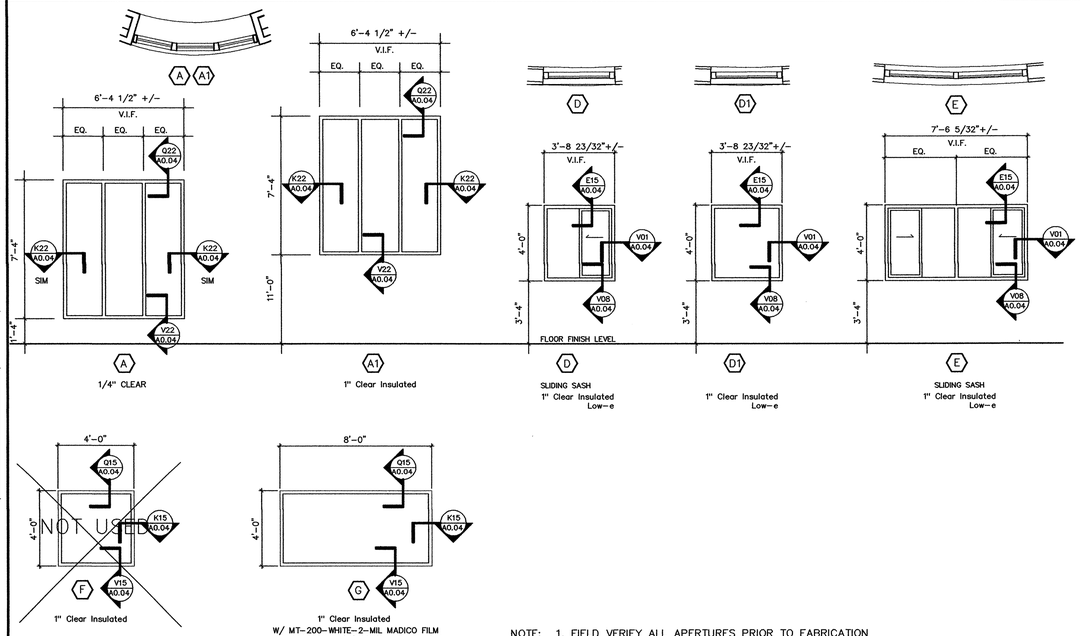

NOTE: 1. FIELD VERIFY ALL APERTURES PRIOR TO FABRICATION

V09 WINDOWS PLANS & EXTERIOR ELEVATIONS SCALE : 1/4" = 1'-0"

Innovative Design
CORPORATE OFFICE: 2000 MORGAN STREET, RALEIGH, NORTH CAROLINA 27603, 919/832-6303

INNOVATIVE DESIGN, INC. CORPORATE SEAL NC

MICHAEL H. NICHOLAS REGISTERED ARCHITECT 2950 NORTH CAROLINA RALEIGH, N.C. 7/18/07

PROJECT: Wilkes County Visitor's Center K-4703
WILKESBORO, NC
OWNER: NC Department of Transportation

DRAWN BY: JZL
DATE: 06/01/2007
JOB NUMBER: 2320
REVISIONS:
△1 07-18-07

DWG NAME: 320A002
H:\2320 – Wilkes\Mtec\4-DOI REVIEW\
PLOTTED: 7/30/2007

A0.02
7 OF 21

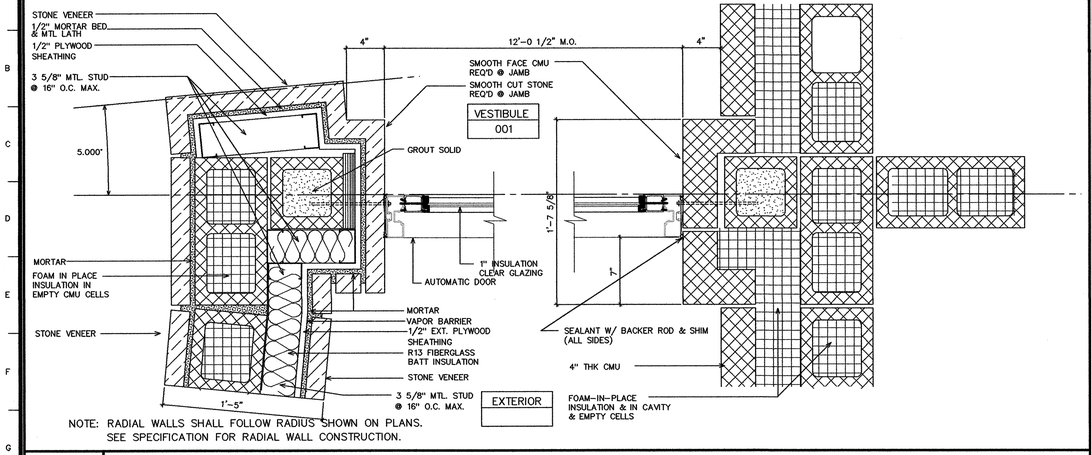

NOTE: RADIAL WALLS SHALL FOLLOW RADIUS SHOWN ON PLANS.
SEE SPECIFICATION FOR RADIAL WALL CONSTRUCTION.

G01 DOOR 001A – JAMB DETAIL SCALE : 1 1/2" = 1'–0"

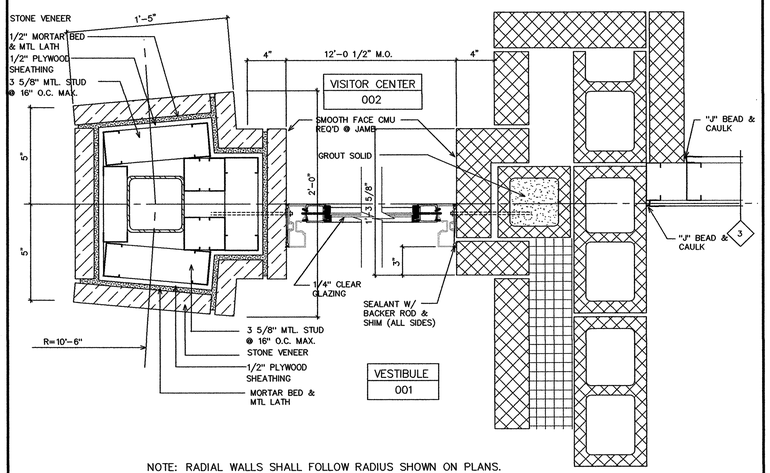

NOTE: RADIAL WALLS SHALL FOLLOW RADIUS SHOWN ON PLANS.
SEE SPECIFICATION FOR RADIAL WALL CONSTRUCTION.

G15 DOOR 002A – JAMB DETAIL SCALE : 1 1/2" = 1'–0"

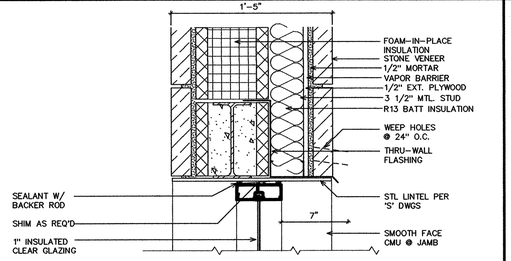

L01 DOOR 001A – HEAD DETAIL SCALE : 1 1/2" = 1'–0"

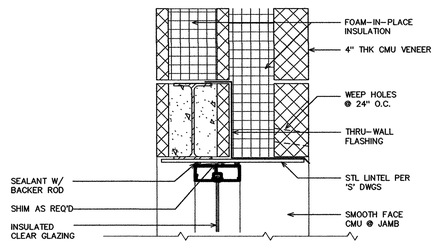

L08 DOOR 101A – HEAD DETAIL SCALE : 1 1/2" = 1'–0"

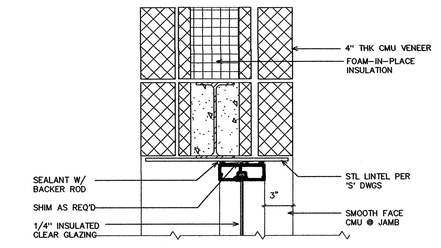

L15 DOOR 002A – HEAD DETAIL SCALE : 1 1/2" = 1'–0"

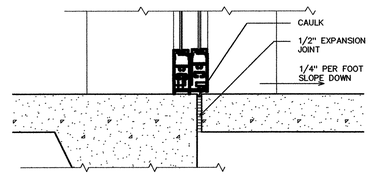

Q01 DOOR 001A – SILL DETAIL SCALE : 1 1/2" = 1'–0"

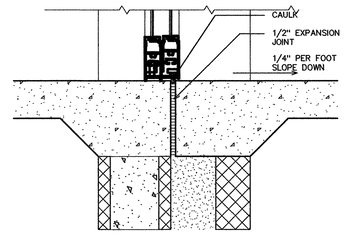

Q08 DOOR 101A – SILL DETAIL SCALE : 1 1/2" = 1'–0"

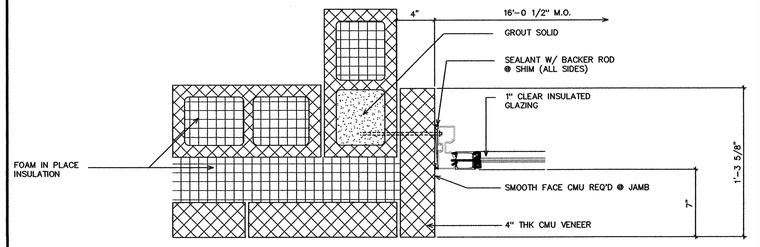

Q15 DOOR 101A – JAMB DETAIL SCALE : 1 1/2" = 1'–0"

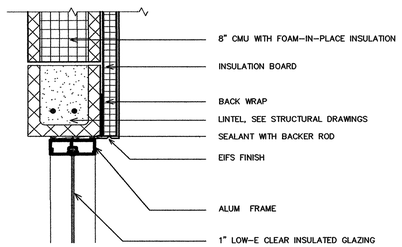

V01 HEAD DETAIL SCALE : 1 1/2" = 1'–0"

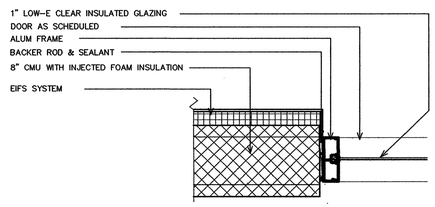

V06 JAMB DETAIL SCALE : 1 1/2" = 1'–0"

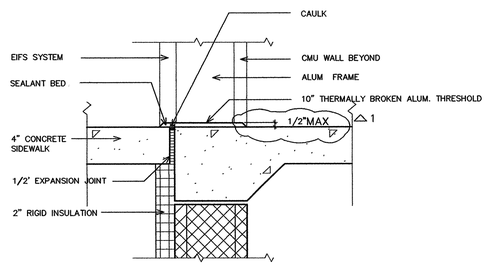

V15 SILL DETAIL SCALE : 1 1/2" = 1'–0"

Innovative Design
CORPORATE SEAL
NC
MICHAEL H. NELLAS
REGISTERED LANDSCAPE ARCHITECT
2950
NORTH CAROLINA
RALEIGH, N.C.
7/30/07

PROJECT: Wilkes County Visitor's Center K-4703
WILKESBORO, NC

OWNER: NC Department of Transportation

DRAWN BY: JZL
DATE: 06/01/2007
JOB NUMBER: 2320
REVISIONS:
△1 07-18-07

DWG NAME: 320A003
H:\2320 - Wilkes\Attec\4-DOT REVIEW\
PLOTTED: 7/30/2007

A0.03

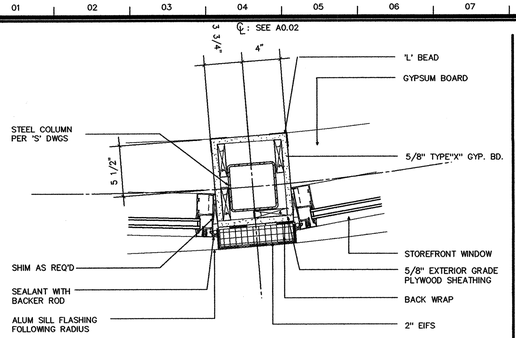

E01 ALUMINUM WINDOW B – JAMB SCALE : 1 1/2" = 1'–0"

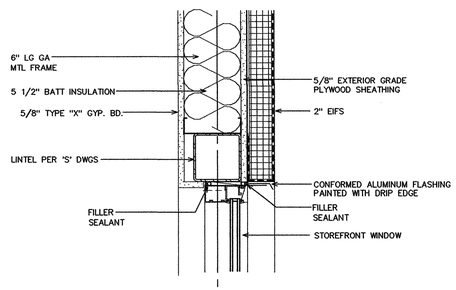

E08 ALUMINUM WINDOW B – HEAD SCALE : 1 1/2" = 1'–0"

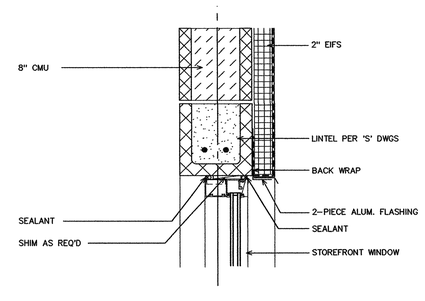

E15 ALUMINUM WINDOW D & E – HEAD SCALE : 1 1/2" = 1'–0"

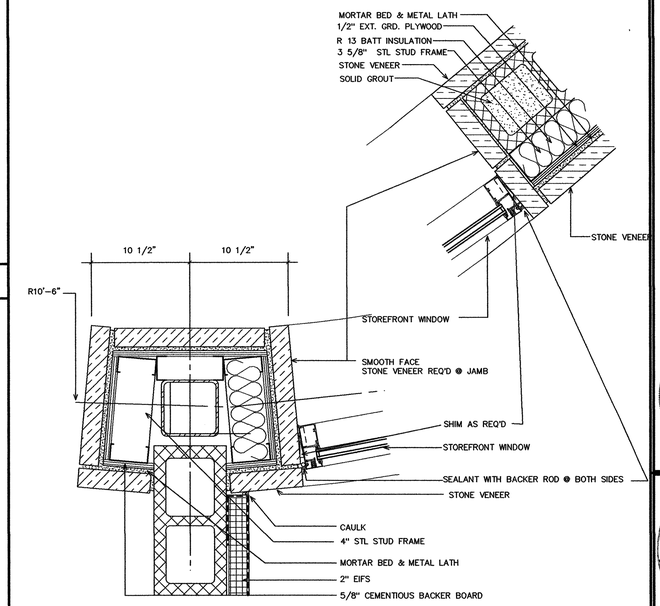

K22 ALUMINUM WINDOW A & A1 – JAMB SCALE : 1 1/2" = 1'–0"

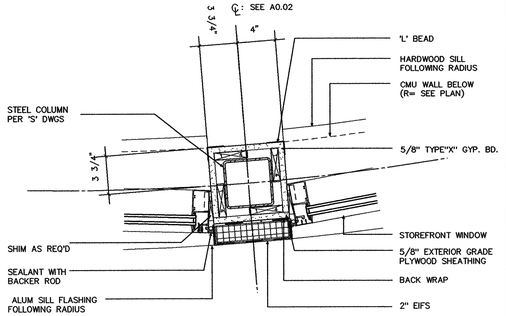

K01 ALUMINUM WINDOW C – JAMB SCALE : 1 1/2" = 1'–0"

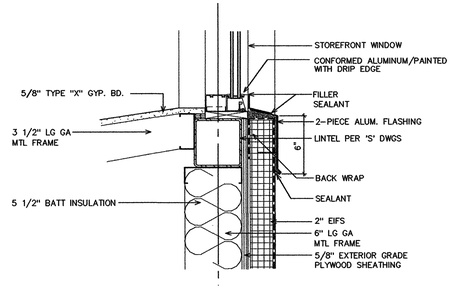

K08 ALUMINUM WINDOW B – SILL SCALE : 1 1/2" = 1'–0"

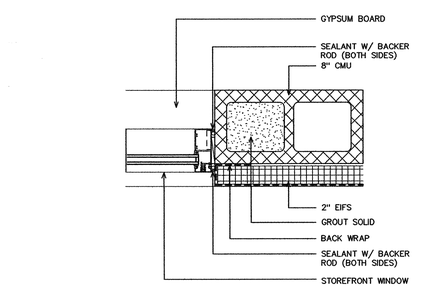

K15 ALUMINUM WINDOW G – JAMB SCALE : 1 1/2" = 1'–0"

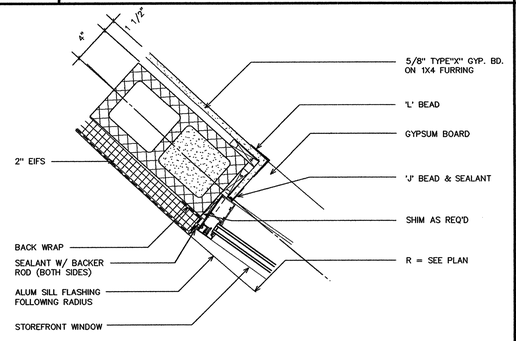

Q01 ALUMINUM WINDOW B – JAMB SCALE : 1 1/2" = 1'–0"

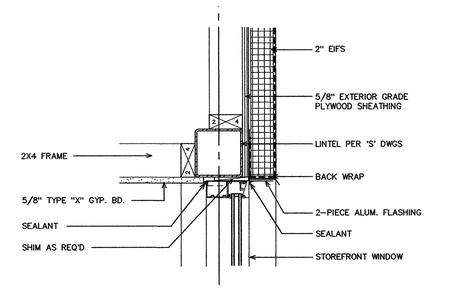

Q08 ALUMINUM WINDOW C – HEAD SCALE : 1 1/2" = 1'–0"

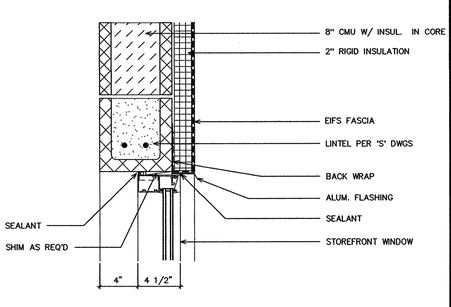

Q15 ALUMINUM WINDOW G – HEAD SCALE : 1 1/2" = 1'–0"

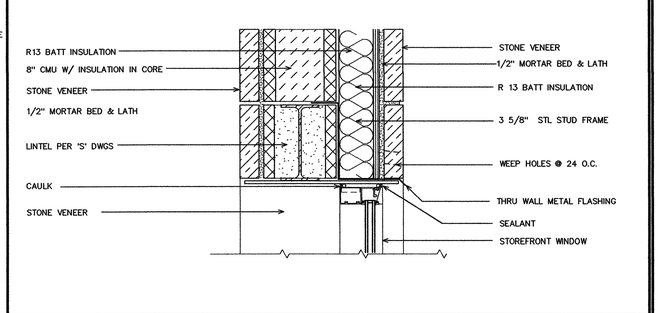

Q22 ALUMINUM WINDOW A & A1 – HEAD SCALE : 1 1/2" = 1'–0"

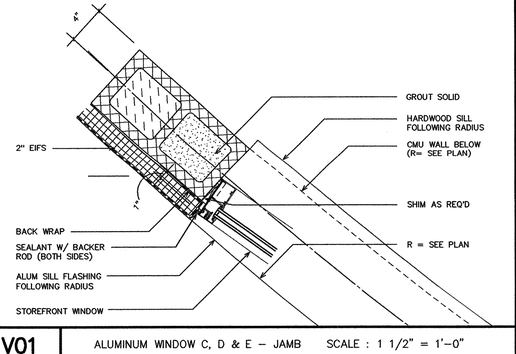

V01 ALUMINUM WINDOW C, D & E – JAMB SCALE : 1 1/2" = 1'–0"

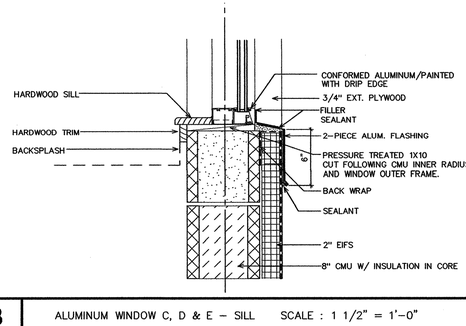

V08 ALUMINUM WINDOW C, D & E – SILL SCALE : 1 1/2" = 1'–0"

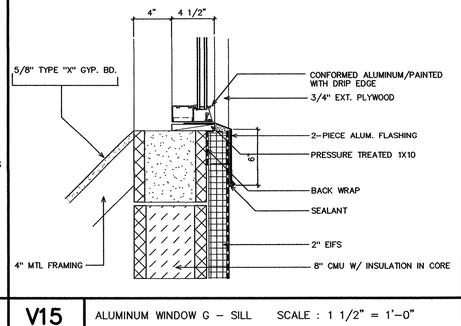

V15 ALUMINUM WINDOW G – SILL SCALE : 1 1/2" = 1'–0"

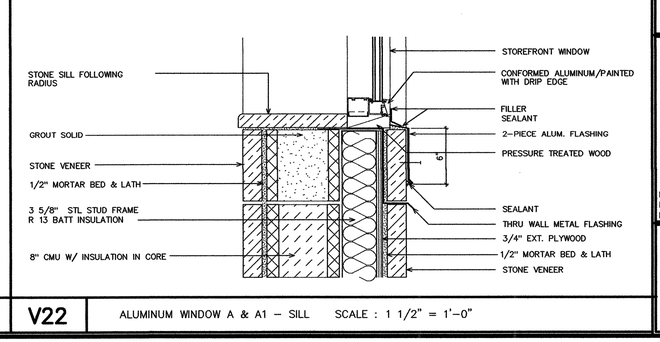

V22 ALUMINUM WINDOW A & A1 – SILL SCALE : 1 1/2" = 1'–0"

Innovative Design
INNOVATIVE DESIGN, INC.
CORPORATE SEAL
NC
MICHAEL H. NICHOLAS
REGISTERED ARCHITECT
2950
NORTH CAROLINA
RALEIGH, N. C.
7/18/07

PROJECT: Wilkes County Visitor's Center K-4703
WILKESBORO, NC
OWNER: NC Department of Transportation

DRAWN BY: JZL
DATE: 06/01/2007
JOB NUMBER: 2320
REVISIONS:

DWG NAME: 320A004
H:\2320 – Wilkes\Mtec\4–DOI REVIEW\
PLOTTED: 7/30/2007

A0.04
9 OF 89

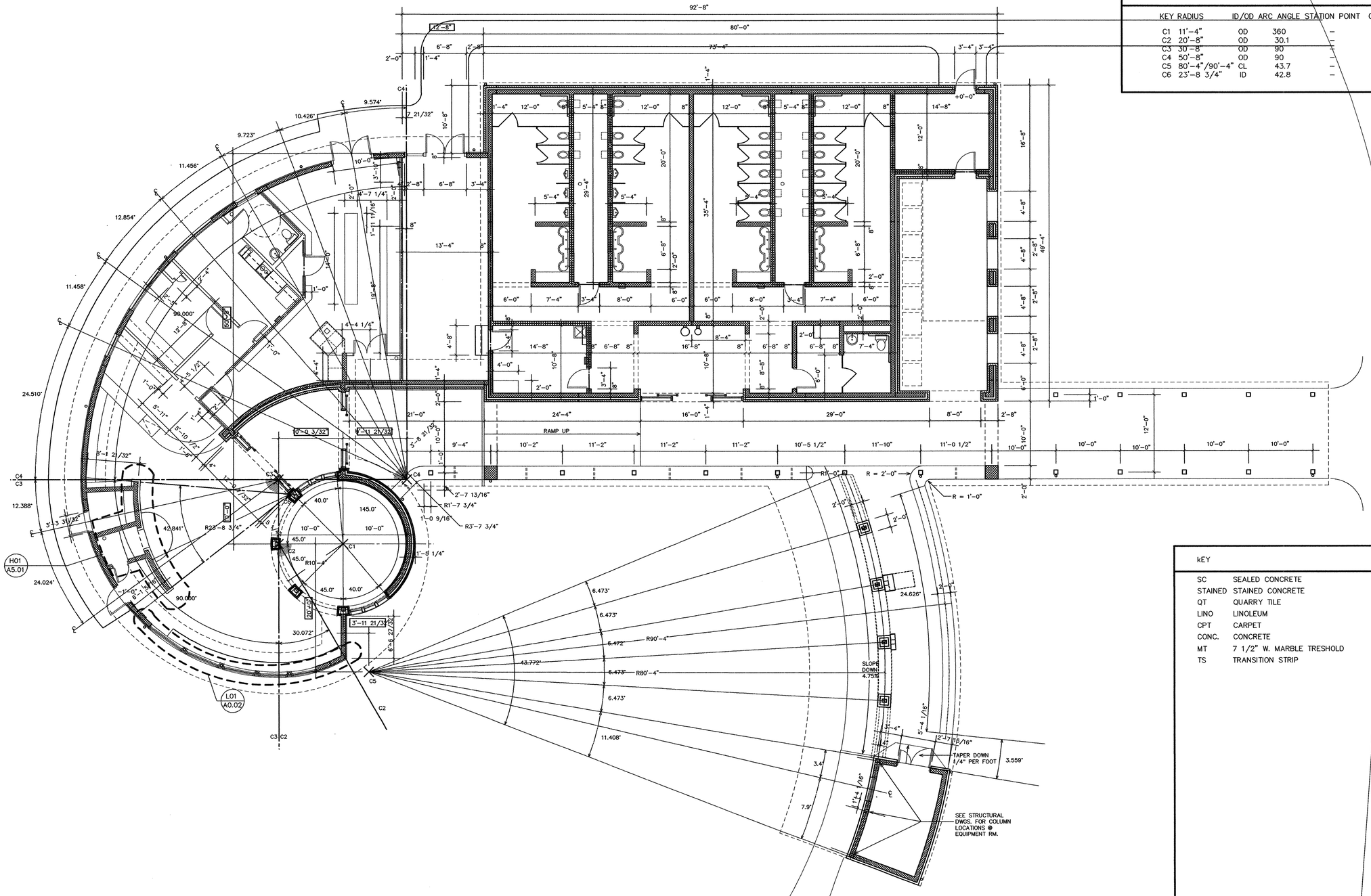

LAYOUT CURVE DATA

KEY	RADIUS	ID/OD	ARC ANGLE	STATION POINT	OFFSET
C1	11'-4"	OD	360	–	–
C2	20'-8"	OD	30.1	–	–
C3	30'-8"	OD	90	–	–
C4	50'-8"	OD	90	–	–
C5	80'-4"/90'-4"	CL	43.7	–	–
C6	23'-8 3/4"	ID	42.8	–	–

KEY

SC	SEALED CONCRETE
STAINED	STAINED CONCRETE
QT	QUARRY TILE
LINO	LINOLEUM
CPT	CARPET
CONC.	CONCRETE
MT	7 1/2" W. MARBLE TRESHOLD
TS	TRANSITION STRIP

MAGNETIC NORTH

MAGNETIC DECLINATION: 7 DEG 6 MIN WEST

V15 FLOOR PLAN – GEOMETRY DESCRIPTION SCALE : 1/8" = 1'-0"

Innovative Design
MORGAN STREET, RALEIGH, NORTH CAROLINA 27603, 919/832-6303

INNOVATIVE DESIGN, INC. CORPORATE SEAL NC

MICHAEL H. NICOLAS REGISTERED ARCHITECT 2950 NORTH CAROLINA RALEIGH, N.C.

7/18/07

PROJECT: Wilkes County Visitor's Center K-4703
WILKESBORO, NC

OWNER: NC Department of Transportation

DRAWN BY: BWK/JZL
DATE: 06/01/2007
JOB NUMBER: 2320
REVISIONS:

DWG NAME: 320A100
H:\2320 – Wilkes\Mtec\4-DOI REVIEW\
PLOTTED: 7/30/2007

A1.00

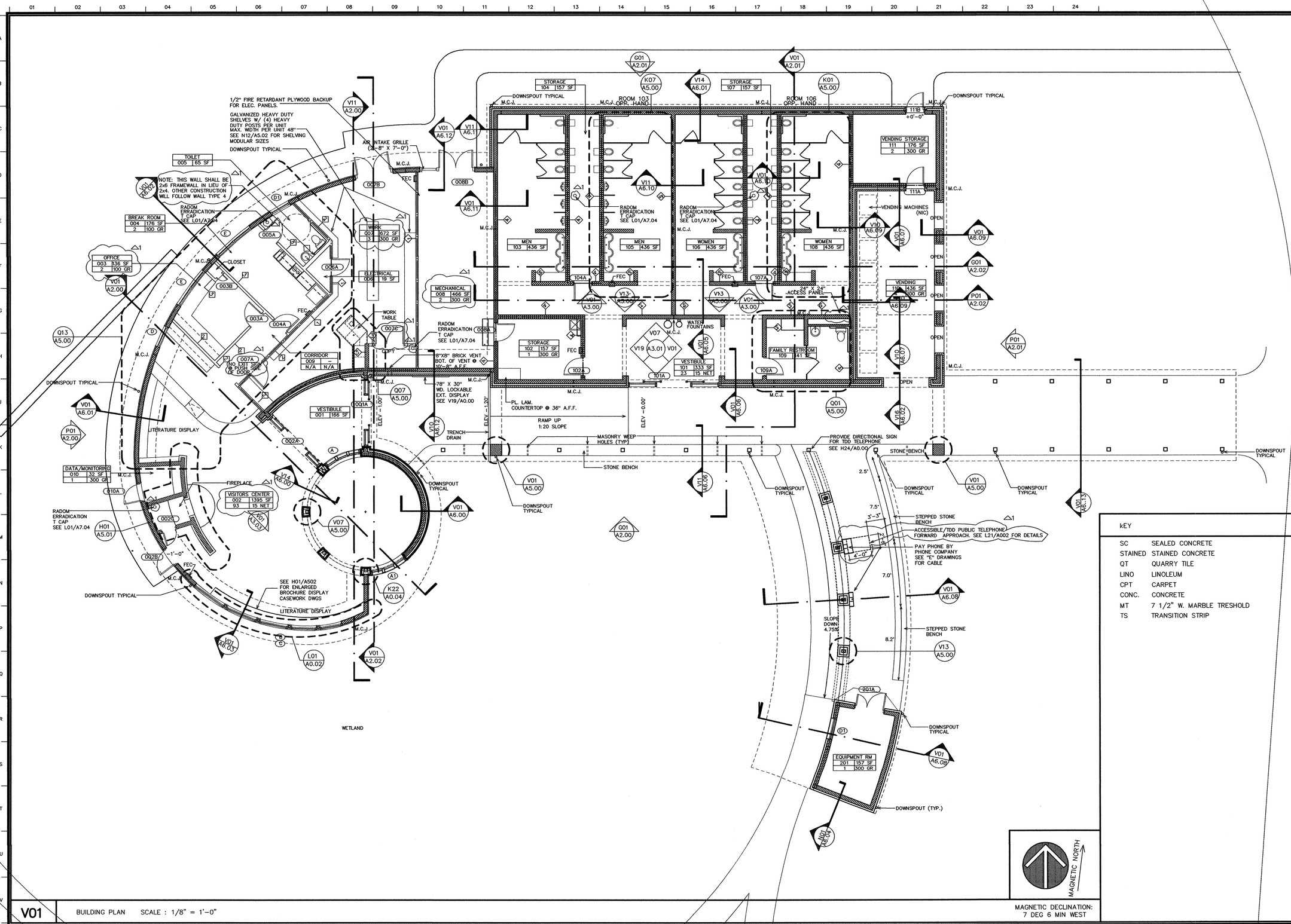

kEY	
SC	SEALED CONCRETE
STAINED	STAINED CONCRETE
QT	QUARRY TILE
LINO	LINOLEUM
CPT	CARPET
CONC.	CONCRETE
MT	7 1/2" W. MARBLE TRESHOLD
TS	TRANSITION STRIP

V01 BUILDING PLAN SCALE : 1/8" = 1'-0"

MAGNETIC DECLINATION: 7 DEG 6 MIN WEST

Innovative Design
ORGAN STREET, RALEIGH, NORTH CAROLINA 27603, 919/832-6303

INNOVATIVE DESIGN, INC. CORPORATE SEAL NC

MICHAEL H. NICHOLAS REGISTERED ARCHITECT 2950 NORTH CAROLINA RALEIGH, N.C.

7/18/07

PROJECT: Wilkes County Visitor's Center K-4703
WILKESBORO, NC

OWNER: NC Department of Transportation

DRAWN BY: BWK/JZL
DATE: 06/01/2007
JOB NUMBER: 2320
REVISIONS:
△1 07-18-07

DWG NAME: 320A100
H:\2320 - Wilkes\Mtec\4-DOI REVIEW\
PLOTTED: 7/30/2007

A1.01

11 OF 81

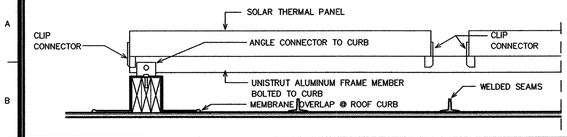

C01 ROOF CURB DETAIL SCALE : 1" = 1'-0"

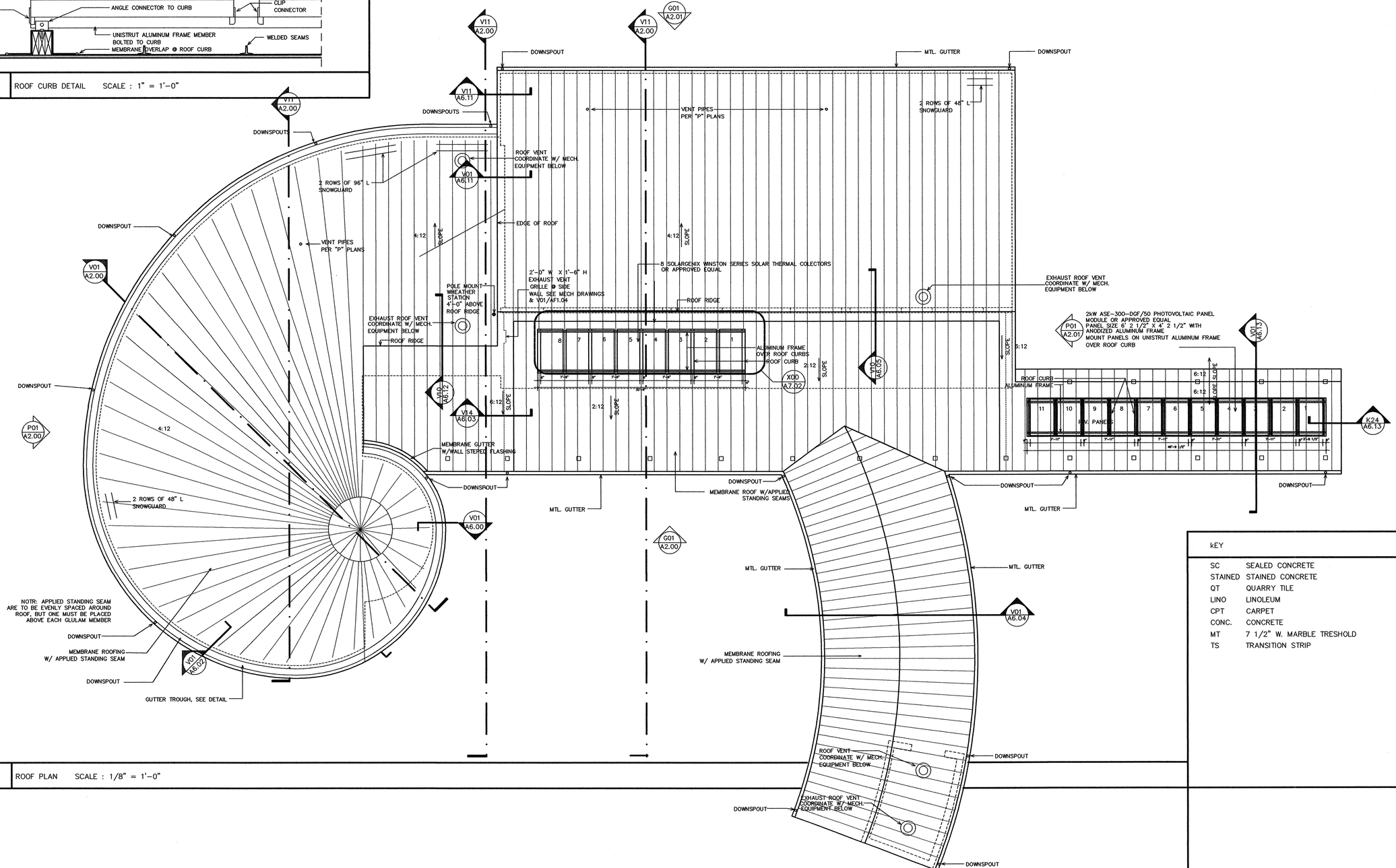

R01 ROOF PLAN SCALE : 1/8" = 1'-0"

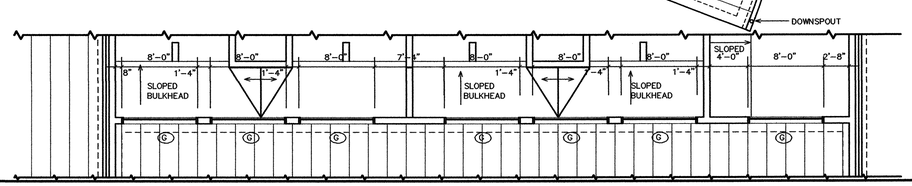

V01 MONITOR WINDOW PLAN SCALE : 1/8" = 1'-0"

MAGNETIC NORTH

MAGNETIC DECLINATION: 7 DEG 6 MIN WEST

KEY	
SC	SEALED CONCRETE
STAINED	STAINED CONCRETE
QT	QUARRY TILE
LINO	LINOLEUM
CPT	CARPET
CONC.	CONCRETE
MT	7 1/2" W. MARBLE TRESHOLD
TS	TRANSITION STRIP

Innovative Design
ARCHITECTURE
CORPORATE SEAL
INNOVATIVE DESIGN, INC. CORPORATE SEAL NC
MICHAEL H. WILKES REGISTERED ARCHITECT 2850 NORTH CAROLINA RALEIGH, N.C.
7/30/07
1000 MORGAN STREET, RALEIGH, NORTH CAROLINA 27603, 919/832-6303

PROJECT: Wilkes County Visitor's Center K-4703
WILKESBORO, NC

OWNER: NC Department of Transportation

DRAWN BY: BWK/JZL
DATE: 06/01/2007
JOB NUMBER: 2320
REVISIONS:

DWG NAME: 320A100
H:\2320 - Wilkes\Mtec\4-DOI REVIEW\
PLOTTED: 7/30/2007

A1.02
12 OF 39

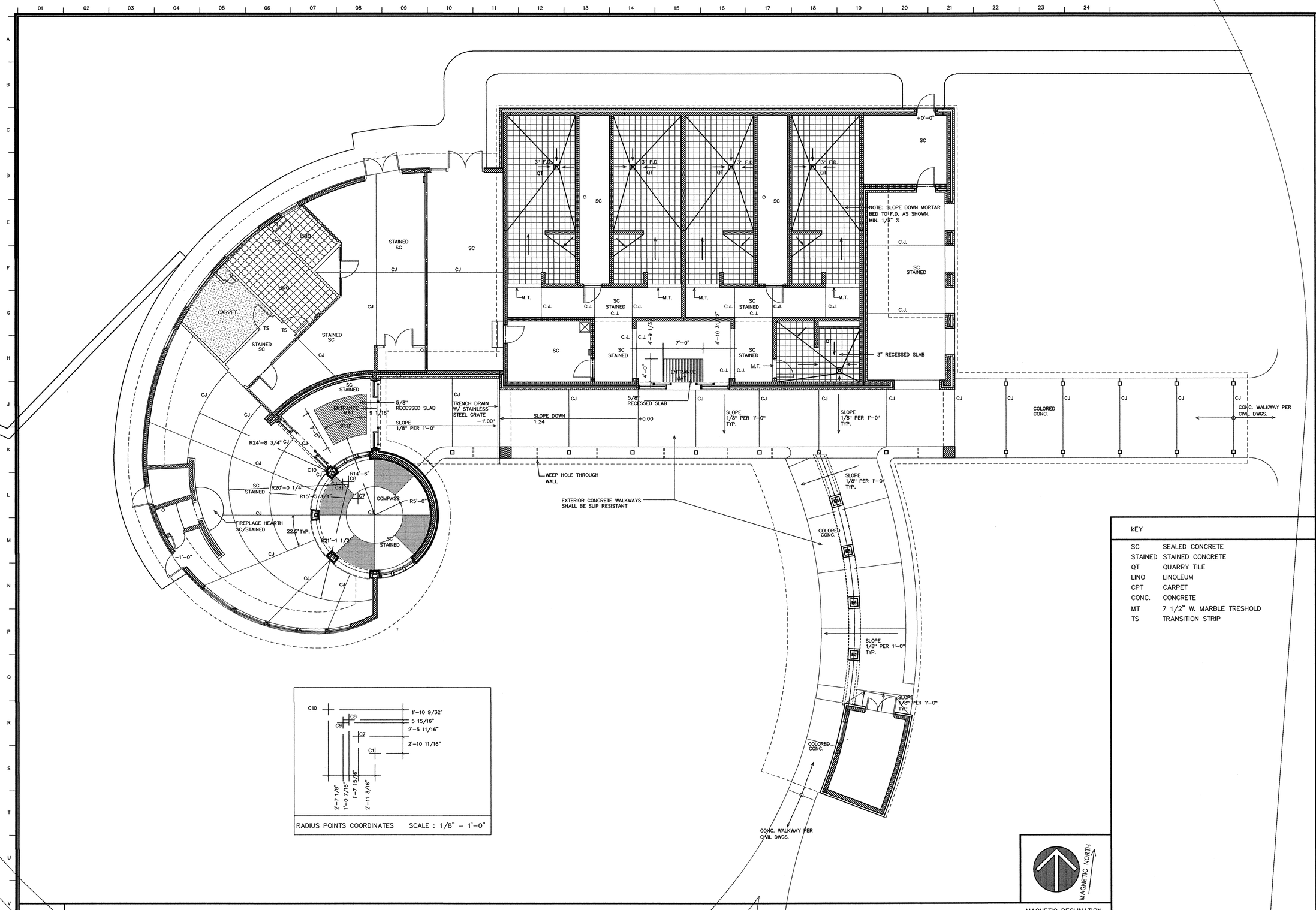

KEY

SC	SEALED CONCRETE
STAINED	STAINED CONCRETE
QT	QUARRY TILE
LINO	LINOLEUM
CPT	CARPET
CONC.	CONCRETE
MT	7 1/2" W. MARBLE TRESHOLD
TS	TRANSITION STRIP

MAGNETIC DECLINATION: 7 DEG 6 MIN WEST

V01 FLOOR FINISH PLAN SCALE : 1/8" = 1'-0"

Innovative Design
350 MORGAN STREET, RALEIGH, NORTH CAROLINA 27603, 919/832-6303

INNOVATIVE DESIGN, INC. CORPORATE SEAL NC

MICHAEL H. NICOLAS REGISTERED ARCHITECT 2950 NORTH CAROLINA RALEIGH, N.C.

7/18/07

PROJECT: Wilkes County Visitor's Center K-4703
WILKESBORO, NC

OWNER: NC Department of Transportation

DRAWN BY: EWK/JZL
DATE: 06/01/2007
JOB NUMBER: 2320
REVISIONS:

DWG NAME: 320A100
H:\2320 - Wilkes\Mtec\4-DOI REVIEW\
PLOTTED: 7/30/2007

A1.03

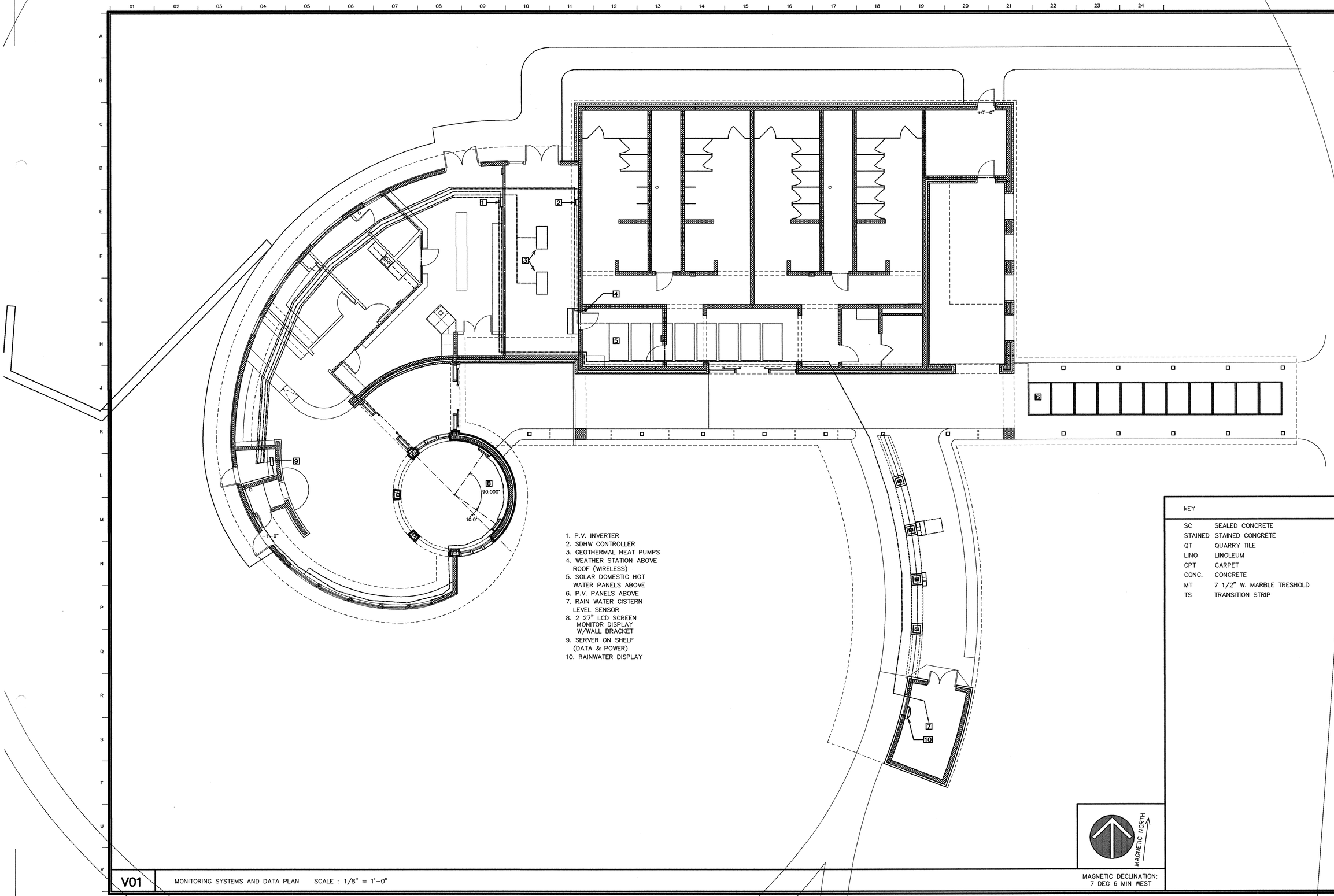

1. P.V. INVERTER
2. SDHW CONTROLLER
3. GEOTHERMAL HEAT PUMPS
4. WEATHER STATION ABOVE ROOF (WIRELESS)
5. SOLAR DOMESTIC HOT WATER PANELS ABOVE
6. P.V. PANELS ABOVE
7. RAIN WATER CISTERN LEVEL SENSOR
8. 2 27" LCD SCREEN MONITOR DISPLAY W/WALL BRACKET
9. SERVER ON SHELF (DATA & POWER)
10. RAINWATER DISPLAY

KEY

SC	SEALED CONCRETE
STAINED	STAINED CONCRETE
QT	QUARRY TILE
LINO	LINOLEUM
CPT	CARPET
CONC.	CONCRETE
MT	7 1/2" W. MARBLE TRESHOLD
TS	TRANSITION STRIP

V01 MONITORING SYSTEMS AND DATA PLAN SCALE : 1/8" = 1'-0"

MAGNETIC DECLINATION: 7 DEG 6 MIN WEST

Innovative Design
8300 MORGAN STREET, RALEIGH, NORTH CAROLINA 27603, 919/832-6303

INNOVATIVE DESIGN, INC. CORPORATE SEAL NC

MICHAEL H. NICHOLAS REGISTERED ARCHITECT 2950 NORTH CAROLINA RALEIGH, N.C.

7/10/07

PROJECT: Wilkes County Visitor's Center K-4703
WILKESBORO, NC

OWNER: NC Department of Transportation

DRAWN BY: BWK/JZL
DATE: 06/01/2007
JOB NUMBER: 2320
REVISIONS:

DWG NAME: 320A100
H:\2320 - Wilkes\Mtec\4-DOI REVIEW\
PLOTTED: 7/30/2007

A1.04

14 OF 81

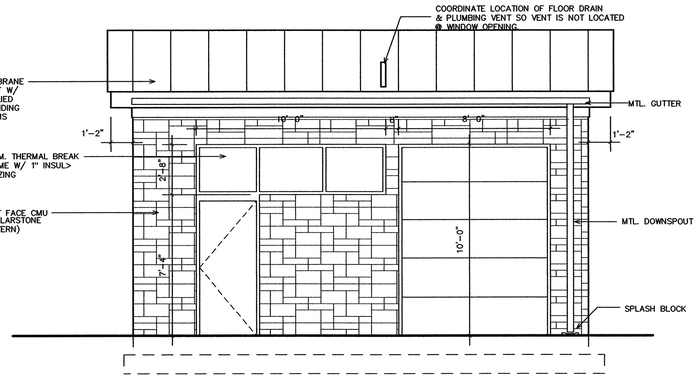

F01 STORAGE BUILDING SOUTH ELEVATION SCALE : 1/4" = 1'-0"

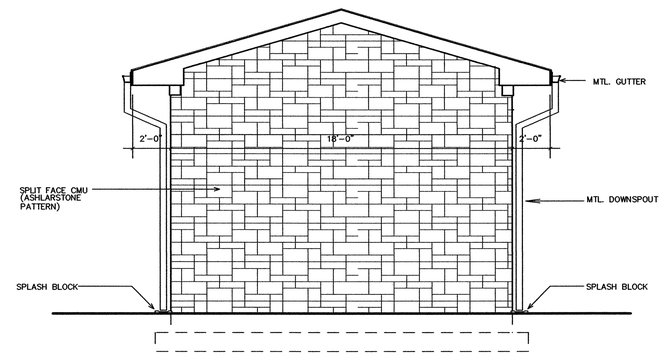

F11 STORAGE BUILDNG EAST ELEVATION SCALE : 1/4" = 1'-0"

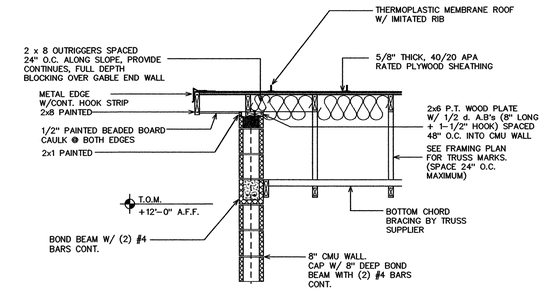

F20 GABLE END WALL SECTION SCALE : 1/2" = 1'-0"

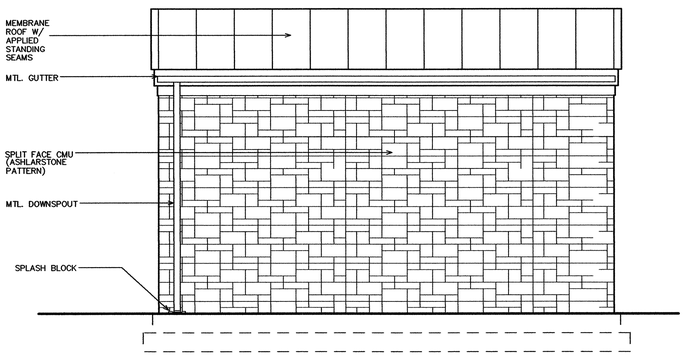

M01 STORAGE BUILDING NORTH ELEVATION SCALE : 1/4" = 1'-0"

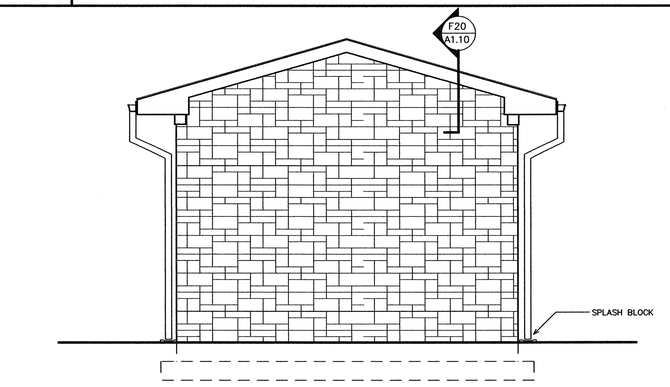

M11 STORAGE BUILDNG WEST ELEVATION SCALE : 1/4" = 1'-0"

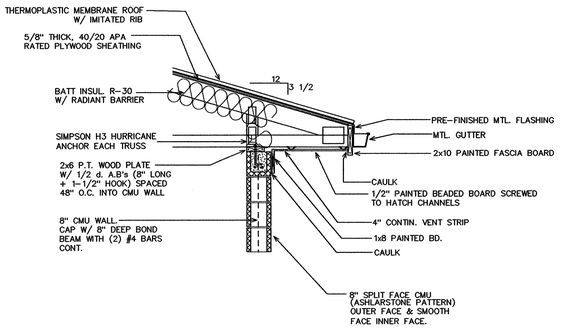

M20 TRUSS END & WALL CONNECTION SCALE : 1/2" = 1'-0"

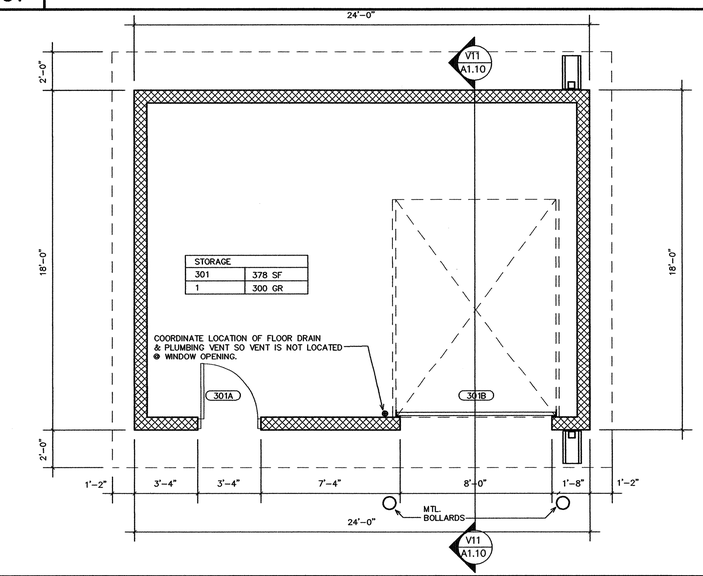

V01 STORAGE BUILDING PLAN SCALE : 1/4" = 1'-0"

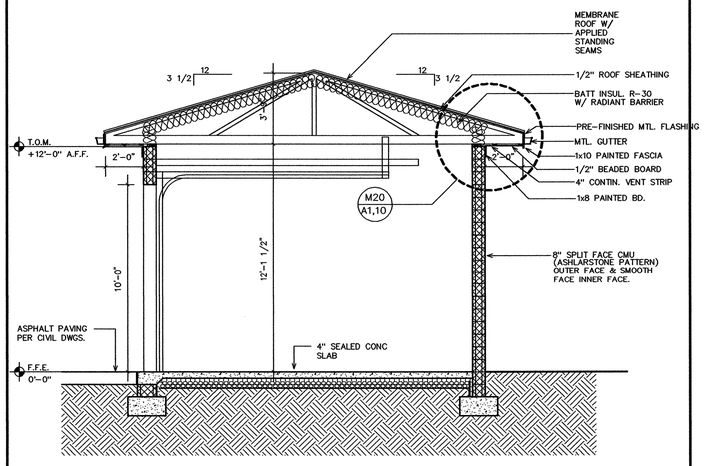

V11 STORAGE BUILDING SECTION SCALE : 1/4" = 1'-0"

Innovative Design
ARCHITECTURE
1400 MORGAN STREET, RALEIGH, NORTH CAROLINA 27603, 919/832-6303

INNOVATIVE DESIGN, INC. CORPORATE SEAL NC

MICHAEL H. MIKLAS REGISTERED ARCHITECT 2950 NORTH CAROLINA RALEIGH, N.C.

7/30/07

PROJECT: Wilkes County Visitor's Center K-4703
WILKESBORO, NC

OWNER: NC Department of Transportation

DRAWN BY: JZL
DATE: 06/01/2007
JOB NUMBER: 2320
REVISIONS:

DWG NAME: 320A110
H:\2320 - Wilkes\Mtec\4-DOI REVIEW\
PLOTTED: 7/30/2007

A1.10

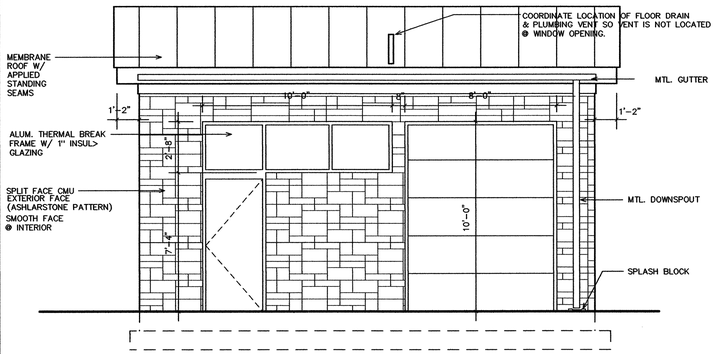

F01 MAINTENANCE BUILDING SOUTH ELEVATION SCALE : 1/4" = 1'-0"

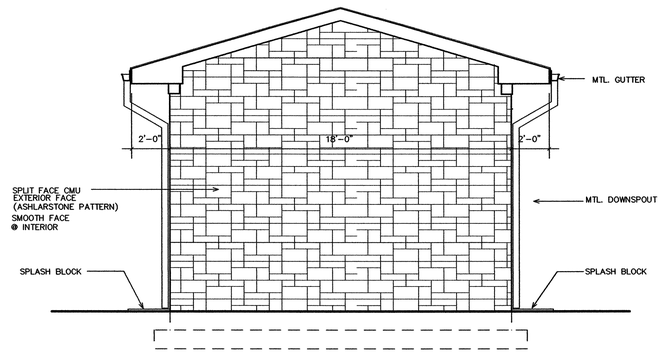

F11 MAINTENANCE BUILDNG EAST ELEVATION SCALE : 1/4" = 1'-0"

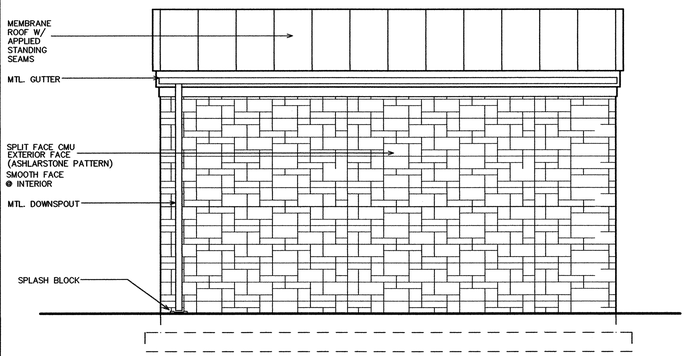

M01 MAINTENANCE BUILDING NORTH ELEVATION SCALE : 1/4" = 1'-0"

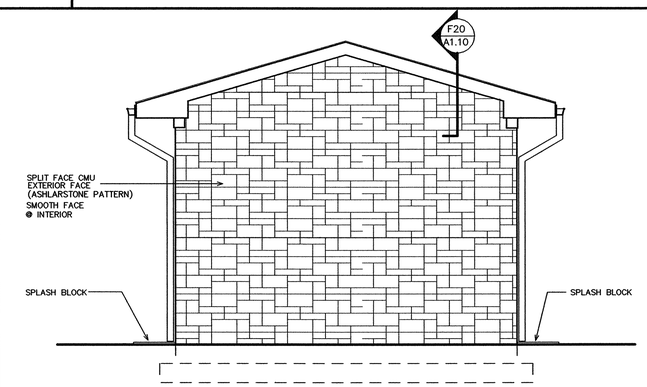

M11 MAINTENANCE BUILDNG WEST ELEVATION SCALE : 1/4" = 1'-0"

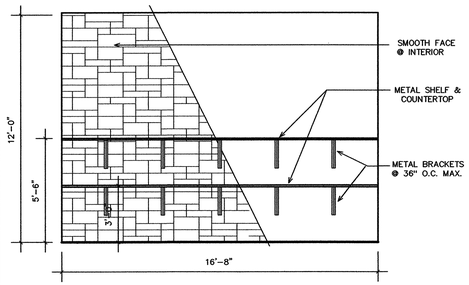

M20 MAINTENANCE BUILDNG INTERIOR ELEVATION SCALE : 1/4" = 1'-0"

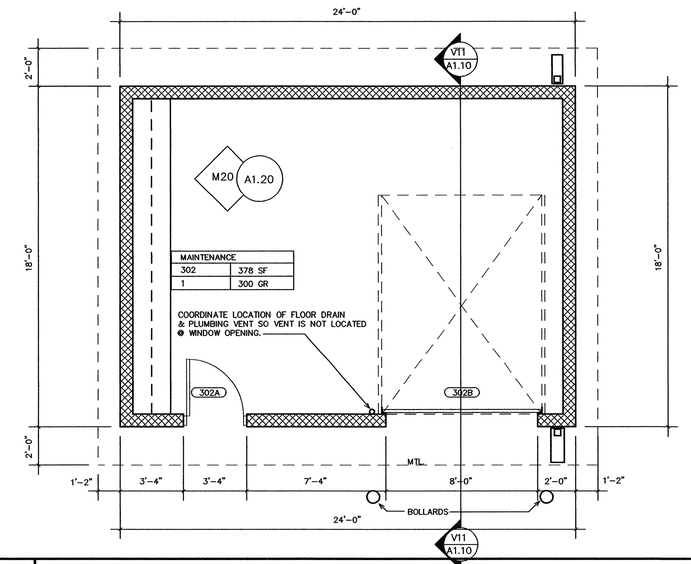

V01 MAINTENANCE BUILIDNG PLAN SCALE : 1/4" = 1'-0"

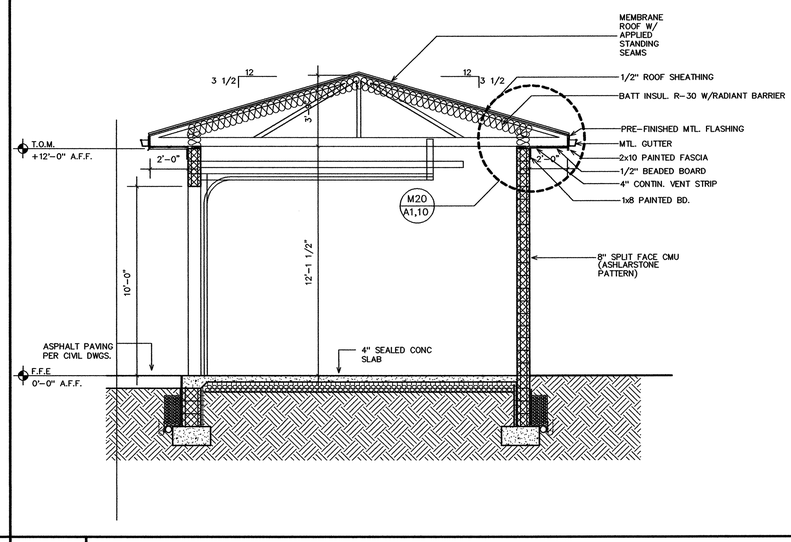

V11 MAINTENANCE BUILDING SECTION SCALE : 1/4" = 1'-0"

Innovative Design
ARCHITECTURE
MORGAN STREET, RALEIGH, NORTH CAROLINA 27603, 919/832-6303

INNOVATIVE DESIGN, INC. CORPORATE SEAL NC

MICHAEL H. NICKLAS REGISTERED ARCHITECT 2950 NORTH CAROLINA RALEIGH, N.C.
7/18/07

PROJECT: Wilkes County Visitor's Center K-4703
WILKESBORO, NC
OWNER: NC Department of Transportation

DRAWN BY: JZL
DATE: 06/01/2007
JOB NUMBER: 2320
REVISIONS:

DWG NAME: 320A120
H:\2320 - Wilkes\Mtec\4-DOI REVIEW\
PLOTTED: 7/30/2007

A1.20

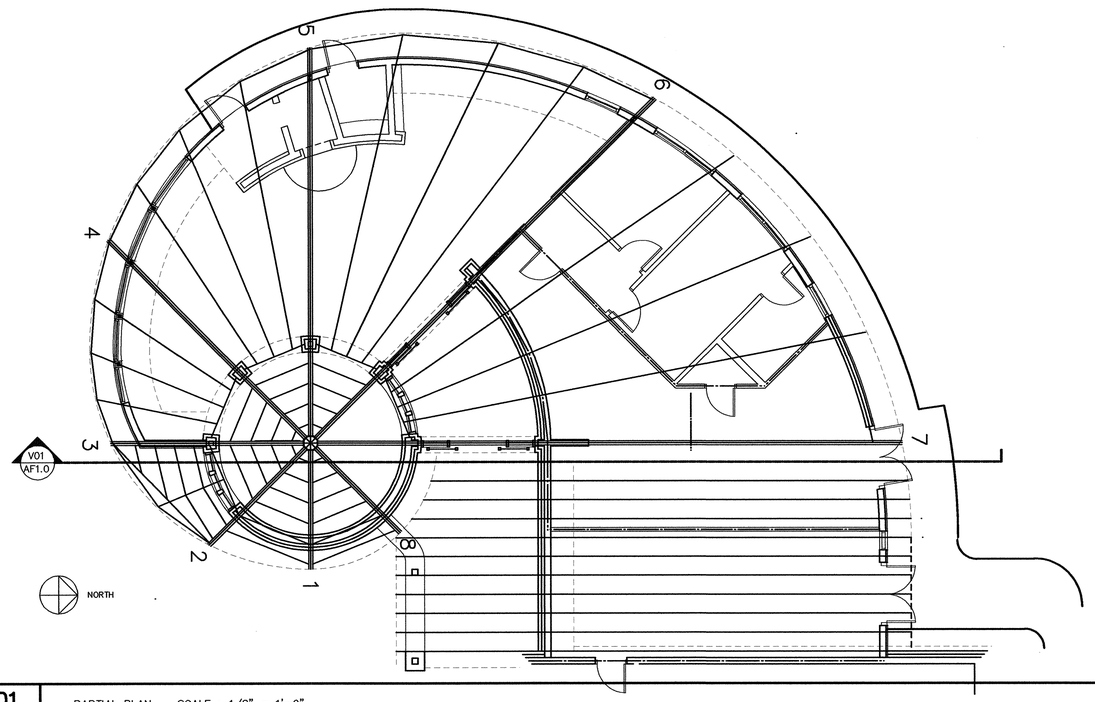

P01 PARTIAL PLAN SCALE : 1/8" = 1'-0"

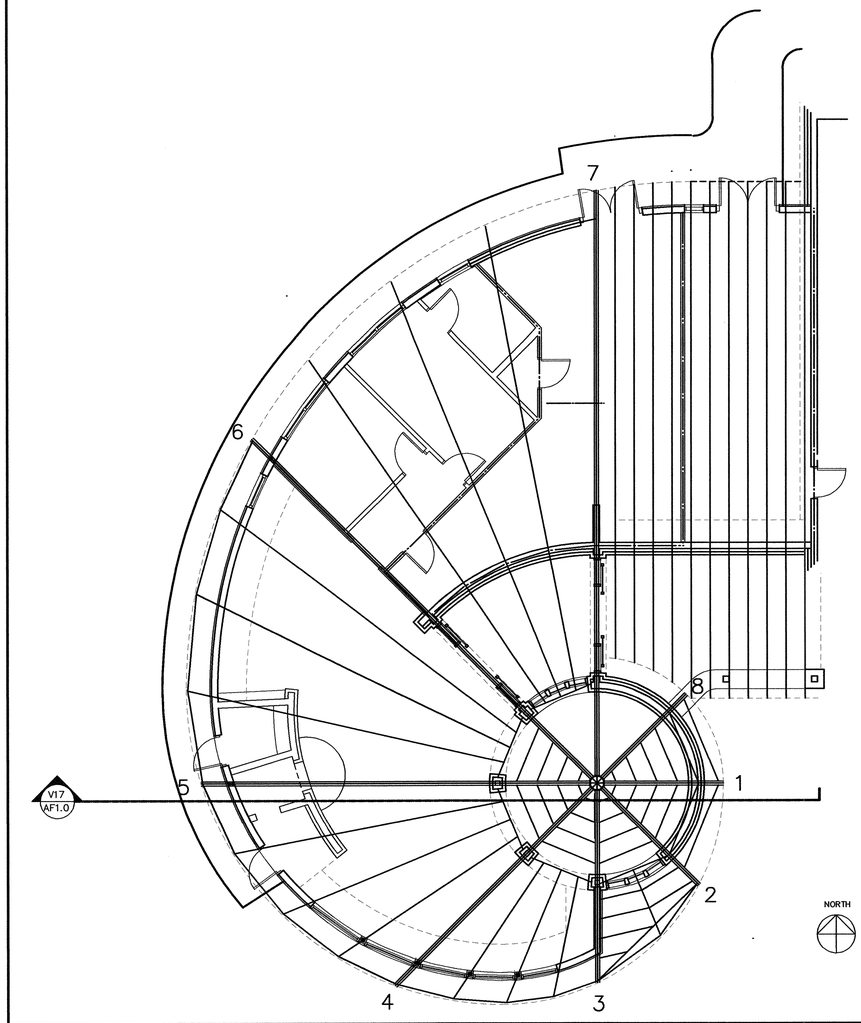

P17 PARTIAL PLAN SCALE : 1/8" = 1'-0"

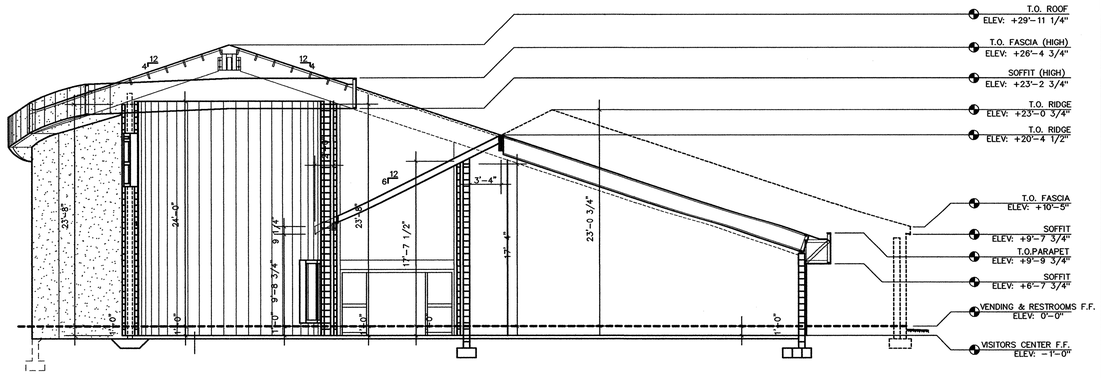

V01 BUILDING SECTION SCALE : 1/8" = 1'-0"

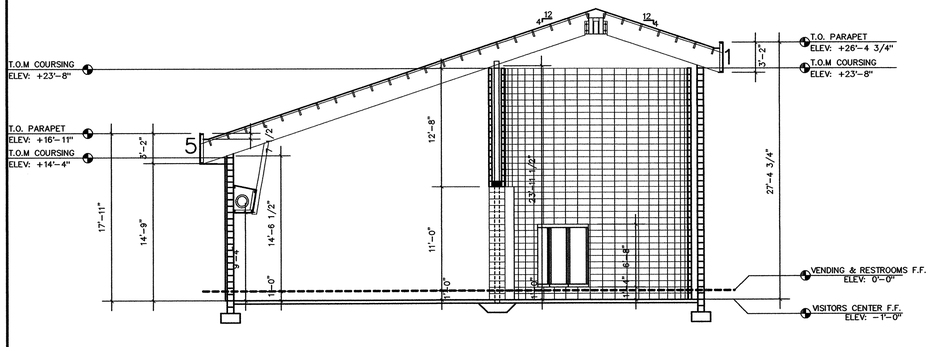

V17 BUILDING SECTION SCALE : 1/8" = 1'-0"

Innovative Design
MORGAN STREET, RALEIGH, NORTH CAROLINA 27603, 919/832-6303

INNOVATIVE DESIGN, INC. CORPORATE SEAL NC

MICHAEL H. NICOLAS REGISTERED ARCHITECT 2950 NORTH CAROLINA RALEIGH, N.C.

7/16/07

PROJECT: Wilkes County Visitor's Center K-4703
WILKESBORO, NC

OWNER: NC Department of Transportation

DRAWN BY: JZL
DATE: 06/01/2007
JOB NUMBER: 2320
REVISIONS:

DWG NAME: 320AROOFFRAMING
H:\2320 - Wilkes\Mtec\4-DOI REVIEW\
PLOTTED: 7/30/2007

AF1.00

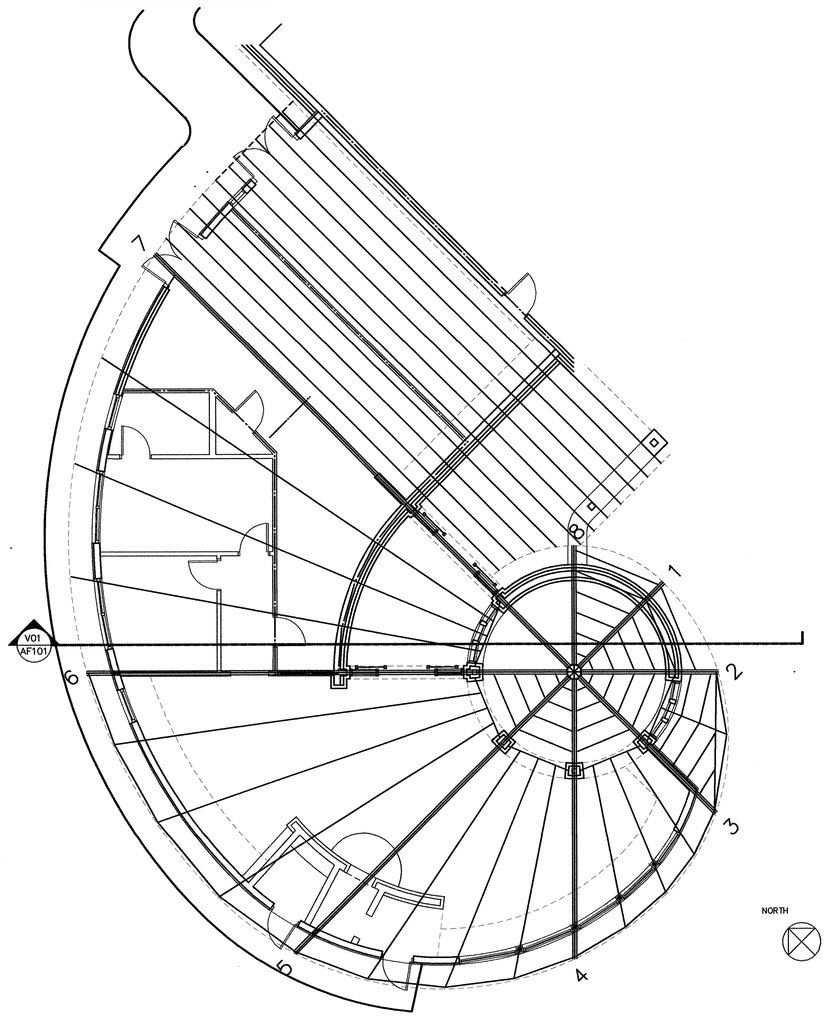

P01 PARTIAL PLAN SCALE : 1/8" = 1'-0"

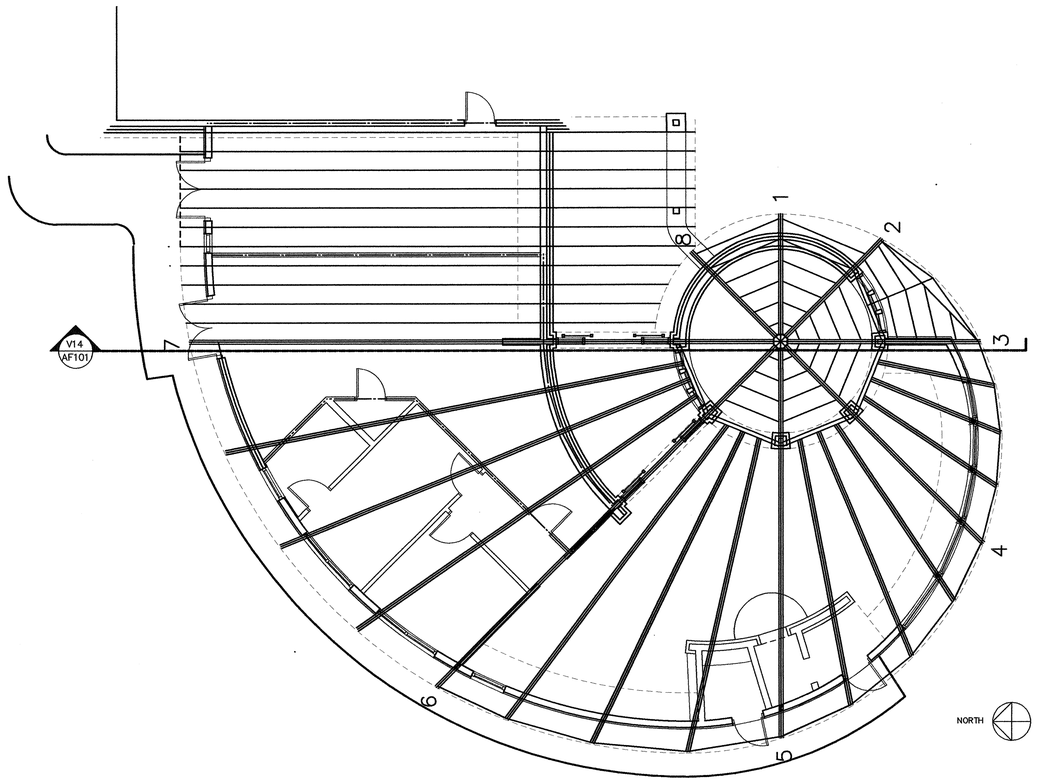

P14 PARTIAL PLAN SCALE : 1/8" = 1'-0"

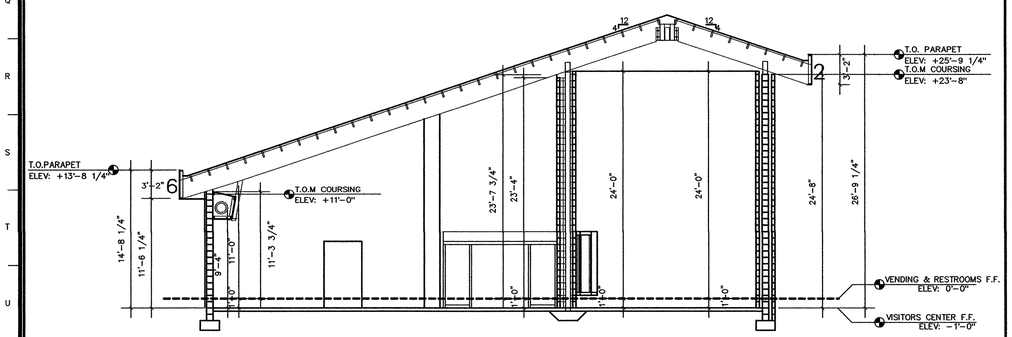

V01 BUILDING SECTION SCALE : 1/8" = 1'-0"

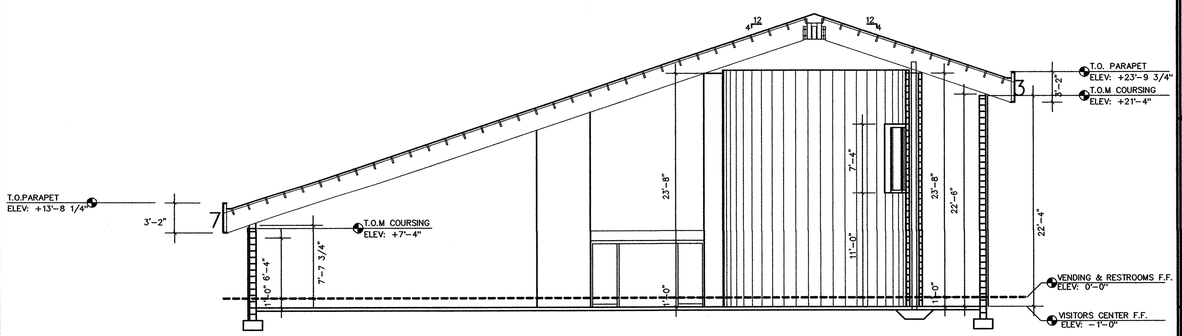

V14 BUILDING SECTION SCALE : 1/8" = 1'-0"

Innovative Design
INNOVATIVE DESIGN CORPORATION, INC.
1308 MORGAN STREET, RALEIGH, NORTH CAROLINA 27603, 919/832-6303

SEAL

MICHAEL H. NICHOLAS
REGISTERED ARCHITECT
2950
NORTH CAROLINA
RALEIGH, N. C.
7/10/07

PROJECT: Wilkes County Visitor's Center K-4703
WILKESBORO, NC
OWNER: NC Department of Transportation

DRAWN BY: JZL
DATE: 06/01/2007
JOB NUMBER: 2320
REVISIONS:

DWG NAME: 320AROOFFRAMING
H:\2320 - Wilkes\Mtec\4-DOT REVIEW\
PLOTTED: 7/30/2007

AF1.01
18 OF 61

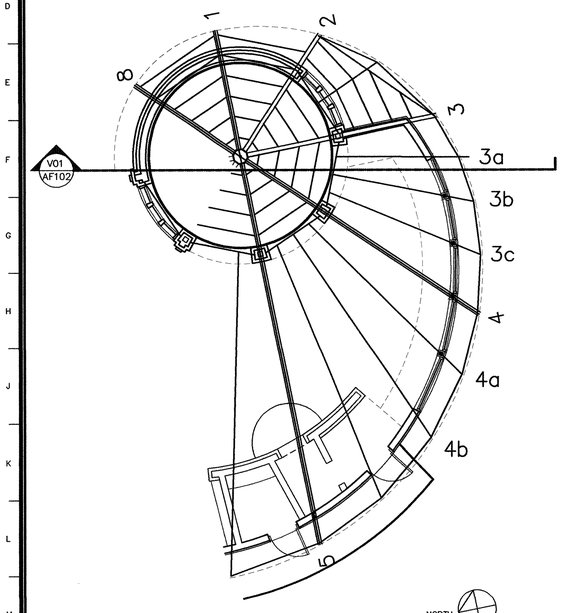

P01 PARTIAL PLAN SCALE : 1/8" = 1'-0"

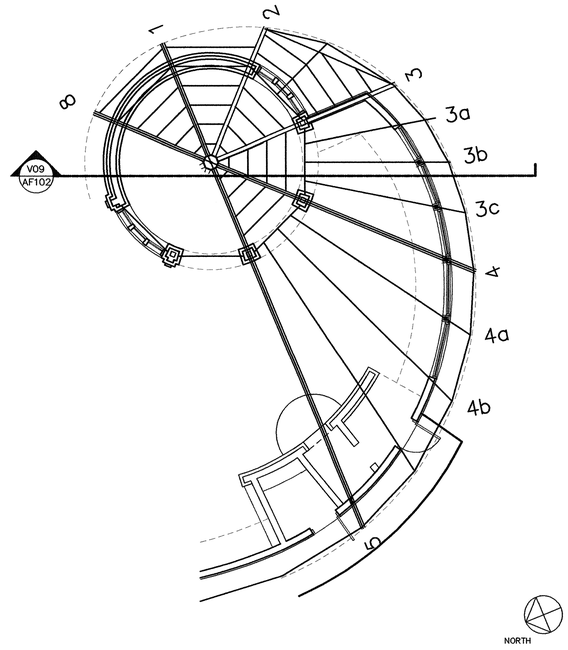

P09 PARTIAL PLAN SCALE : 1/8" = 1'-0"

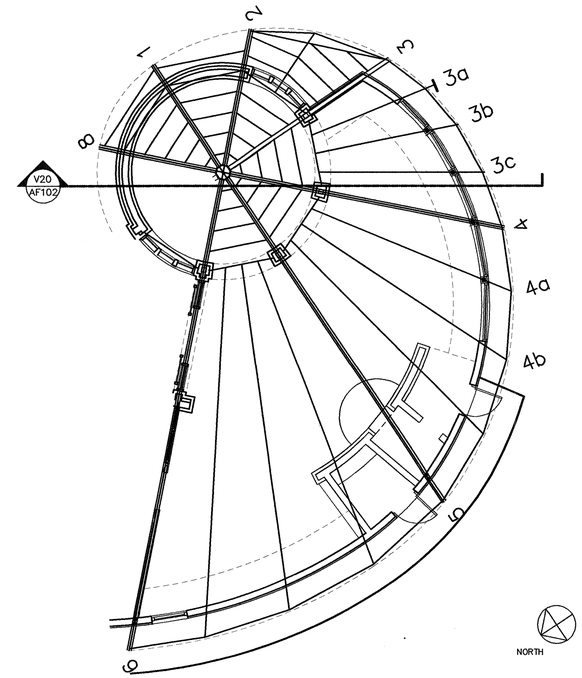

P20 PARTIAL PLAN SCALE : 1/8" = 1'-0"

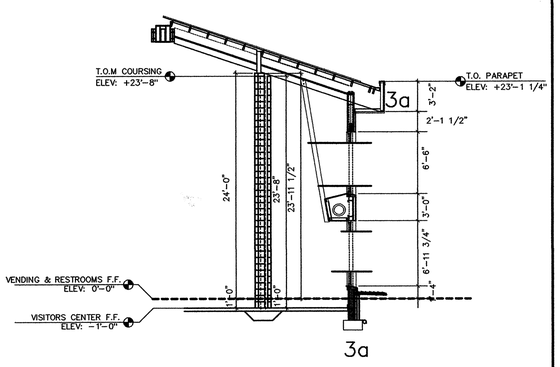

3a

V01 BUILDING SECTION SCALE : 1/8" = 1'-0"

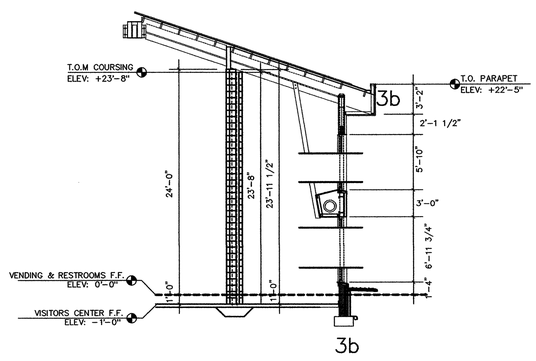

3b

V09 BUILDING SECTION SCALE : 1/8" = 1'-0"

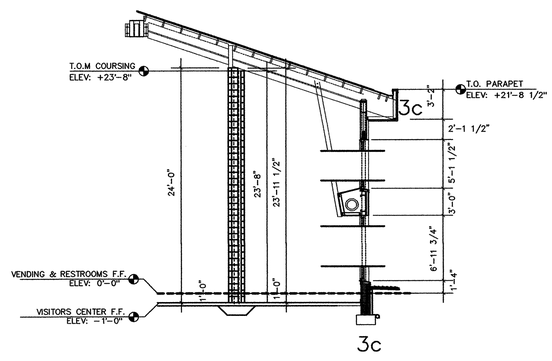

3c

V20 BUILDING SECTION SCALE : 1/8" = 1'-0"

Innovative Design
380 S. MORGAN STREET, RALEIGH, NORTH CAROLINA 27603, 919/832-6303

INNOVATIVE DESIGN CORPORATION NC SEAL

MICHAEL H. MILLS 2950 REGISTERED LANDSCAPE ARCHITECT NORTH CAROLINA RALEIGH, N.C. 7/30/07

PROJECT: Wilkes County Visitor's Center K-4703
WILKESBORO, NC

OWNER: NC Department of Transportation

DRAWN BY: JZL
DATE: 06/01/2007
JOB NUMBER: 2320
REVISIONS:

DWG NAME: 320AROOFFRAMING
H:\2320 - Wilkes\Mtec\4-DOI REVIEW\
PLOTTED: 7/30/2007

AF1.02

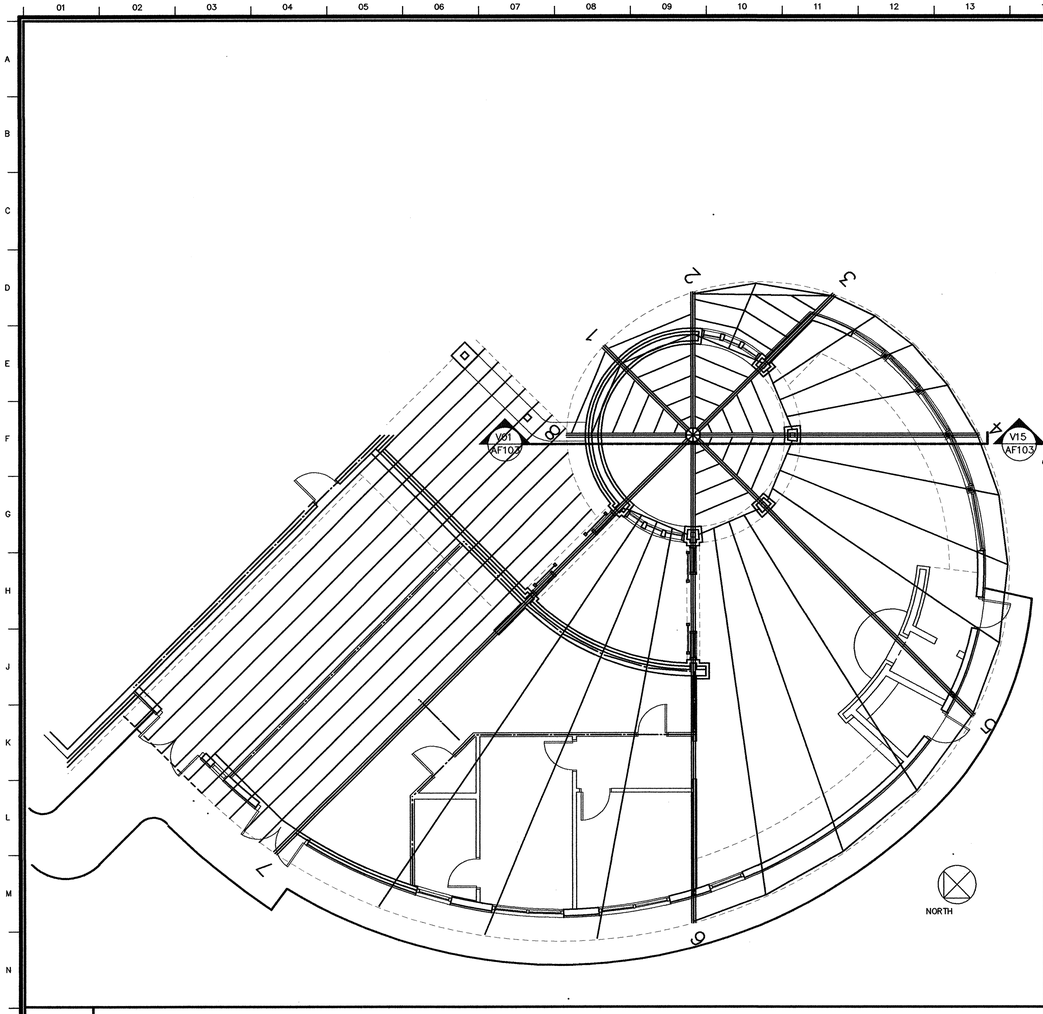

P01 PARTIAL PLAN SCALE : 1/8" = 1'-0"

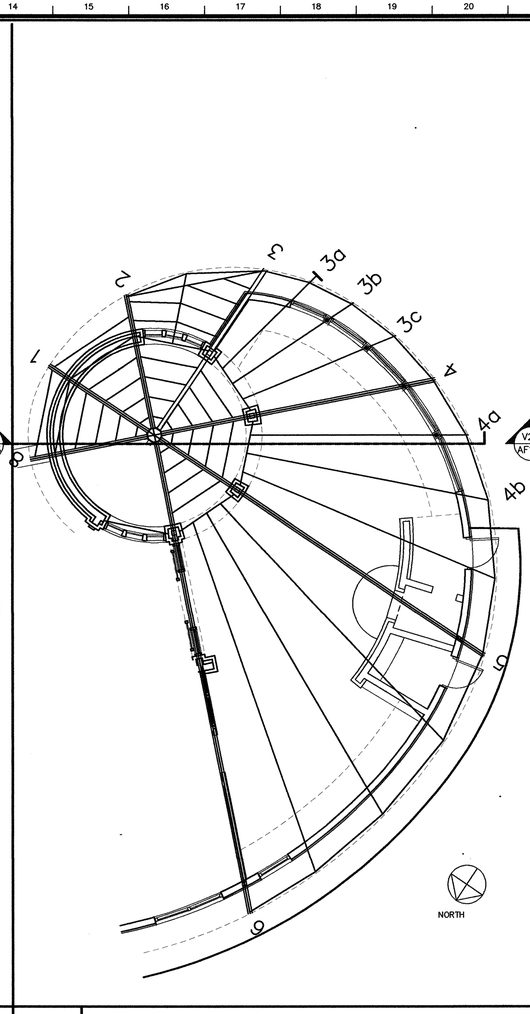

P14 PARTIAL PLAN SCALE : 1/8" = 1'-0"

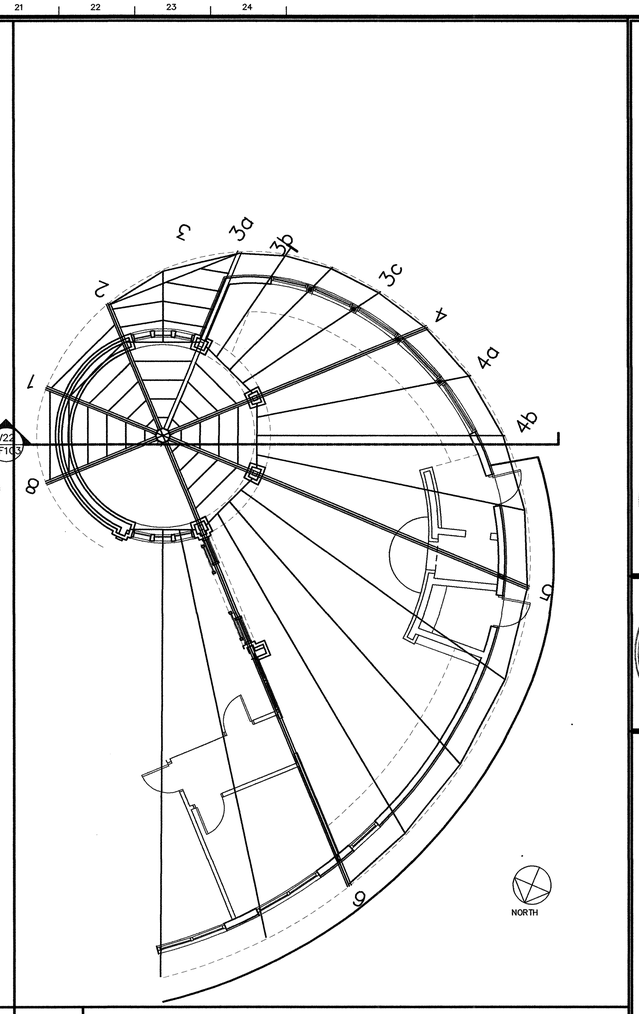

P21 PARTIAL PLAN SCALE : 1/8" = 1'-0"

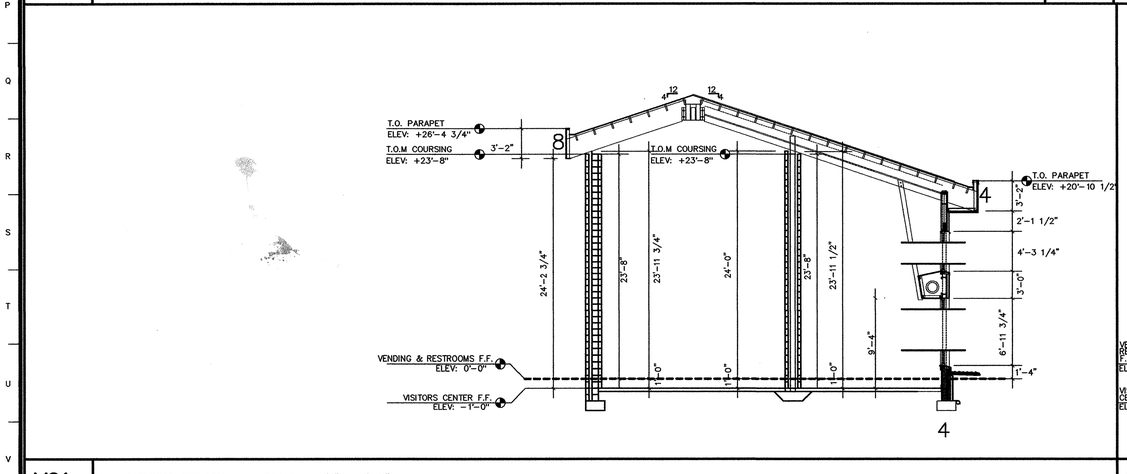

V01 BUILDING SECTION SCALE : 1/8" = 1'-0"

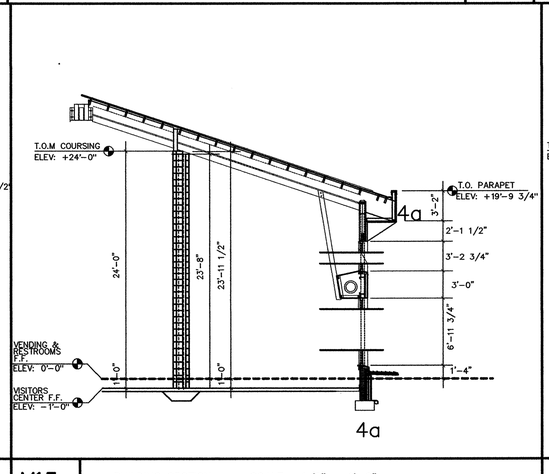

V15 BUILDING SECTION SCALE : 1/8" = 1'-0"

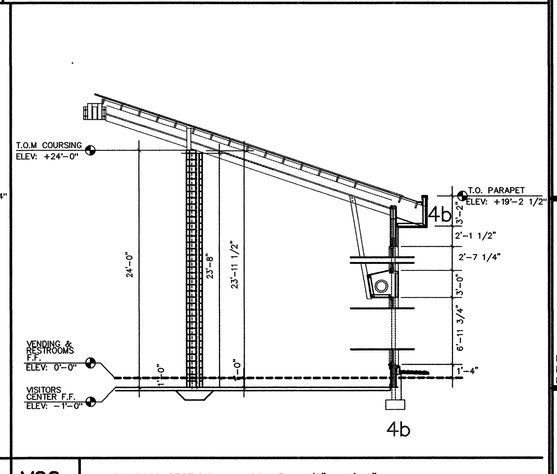

V22 BUILDING SECTION SCALE : 1/8" = 1'-0"

Innovative Design
MORGAN STREET, RALEIGH, NORTH CAROLINA 27603, 919/832-6303

INNOVATIVE DESIGN, INC. CORPORATE SEAL NC

MICHAEL H. NICOLAS REGISTERED ARCHITECT 2950 NORTH CAROLINA RALEIGH, N.C.
7/10/07

PROJECT: Wilkes County Visitor's Center K-4703
WILKESBORO, NC

OWNER: NC Department of Transportation

DRAWN BY: JZL
DATE: 06/01/2007
JOB NUMBER: 2320
REVISIONS:

DWG NAME: 320AROOFFRAMING
H:\2320 - Wilkes\Mtec\4-DOI REVIEW\
PLOTTED: 7/30/2007

AF1.03

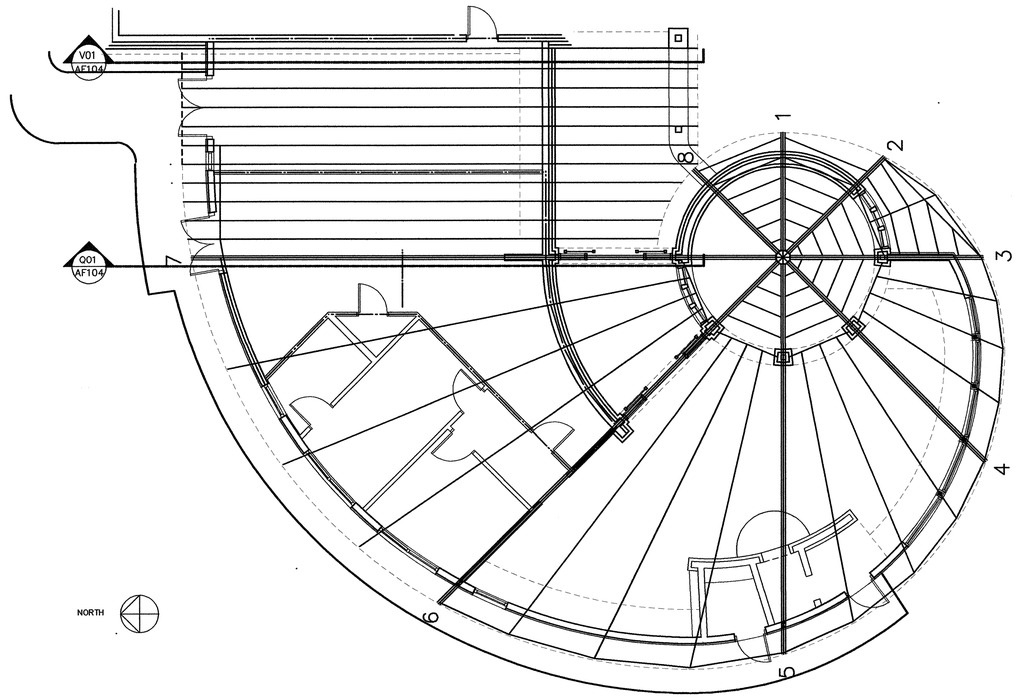

K01 PARTIAL PLAN SCALE : 1/8" = 1'-0"

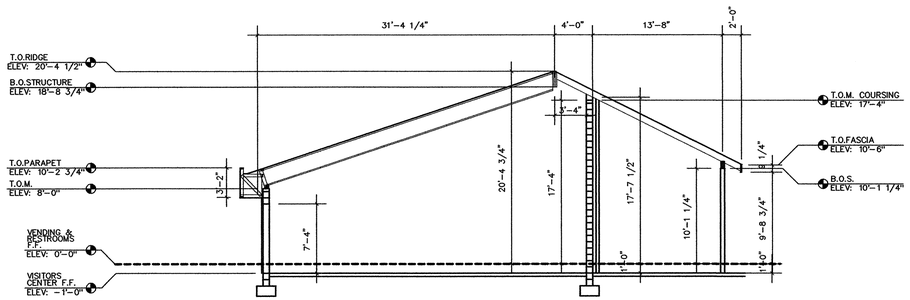

Q01 BUILDING SECTION SCALE : 1/8" = 1'-0"

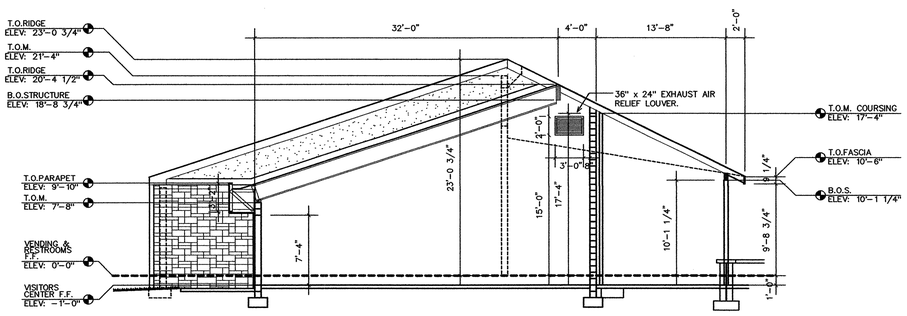

V01 BUILDING SECTION SCALE : 1/8" = 1'-0"

Innovative Design
INNOVATIVE DESIGN, INC. CORPORATE SEAL NC
MICHAEL H. NICHOLAS REGISTERED ARCHITECT 2950 NORTH CAROLINA RALEIGH, N. C. 7/10/07

PROJECT: Wilkes County Visitor's Center K-4703
WILKESBORO, NC

OWNER: NC Department of Transportation

DRAWN BY: JZL
DATE: 06/01/2007
JOB NUMBER: 2320
REVISIONS:

DWG NAME: 320AROOFFRAMING
H:\2320 – Wilkes\Mtec\4-DOI REVIEW\
PLOTTED: 7/30/2007

AF1.04

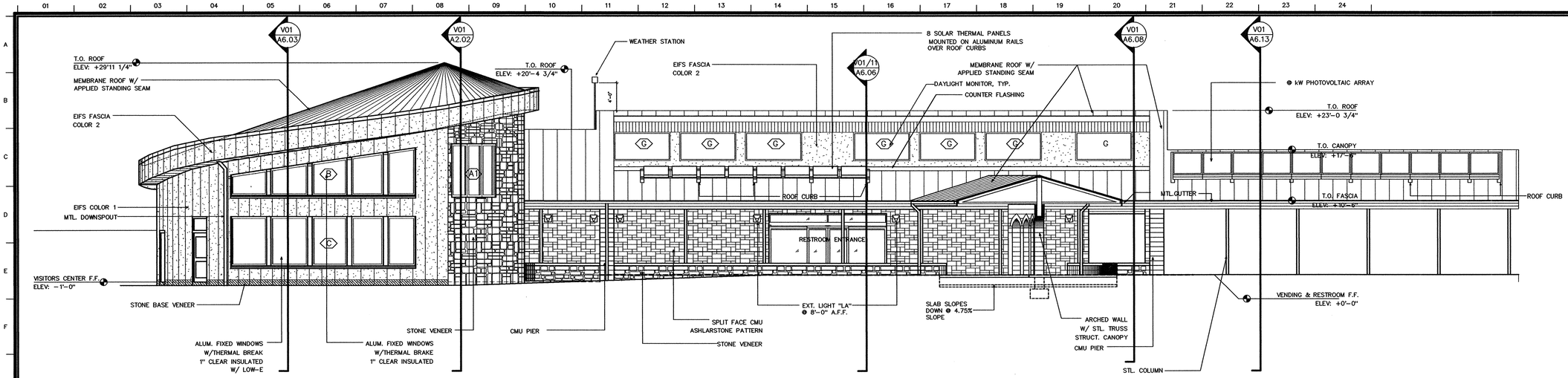

G01 SOUTH ELEVATION SCALE : 1/8" = 1'-0"

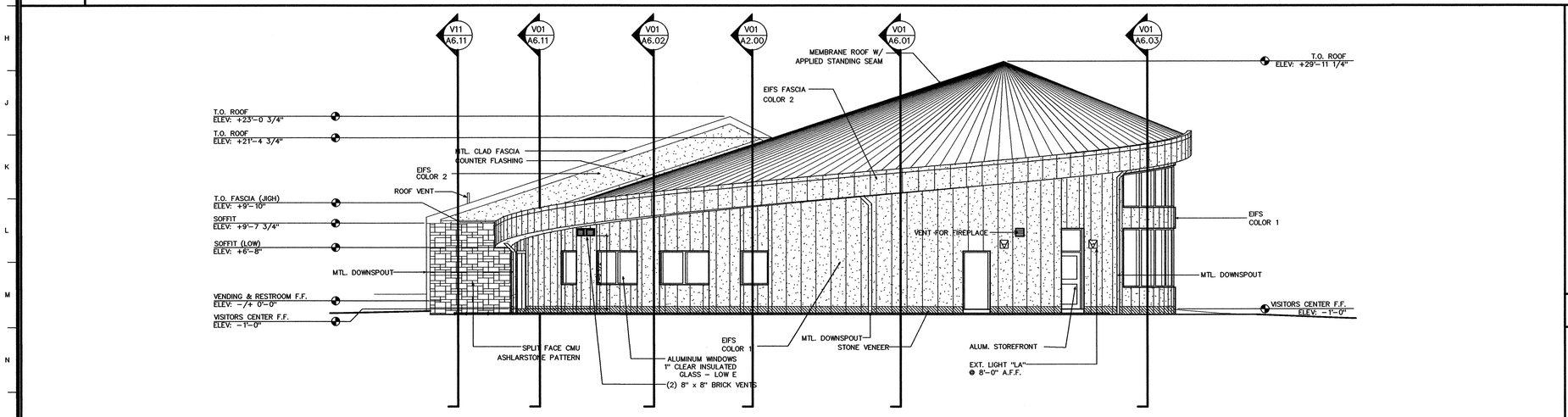

P01 EAST ELEVATION SCALE : 1/8" = 1'-0"

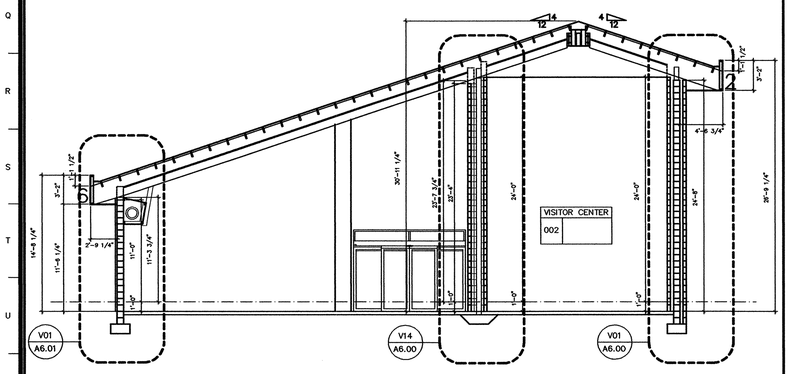

V01 BUILDING SECTION LOOKING NORTHWEST SCALE : 1/8" = 1'-0"

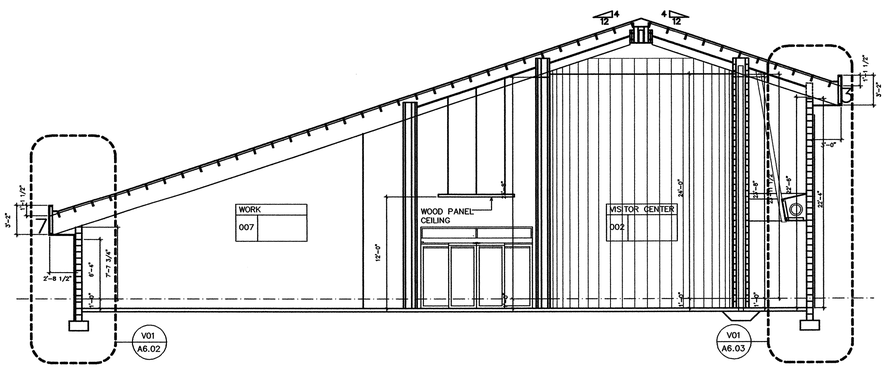

V11 BUILDING SECTION LOOKING EAST SCALE : 1/8" = 1'-0"

MATERIALS LEGEND

GENERAL NOTES

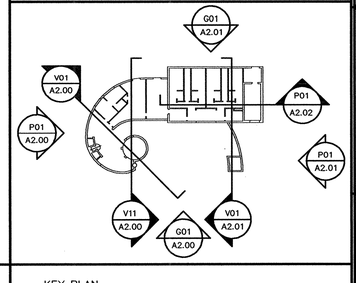

KEY PLAN

Innovative Design
MORGAN STREET, RALEIGH, NORTH CAROLINA 27603, 919/832-6303

INNOVATIVE DESIGN, INC. CORPORATE SEAL NC

MICHAEL H. NICKLAS REGISTERED ARCHITECT 2950 NORTH CAROLINA RALEIGH, N.C.

7/18/07

PROJECT: Wilkes County Visitor's Center K-4703
WILKESBORO, NC

OWNER: NC Department of Transportation

DRAWN BY: JZL
DATE: 06/01/2007
JOB NUMBER: 2320
REVISIONS:

DWG NAME: 320A200
H:\2320 - Wilkes\Mtec\4-DOI REVIEW\
PLOTTED: 7/30/2007

A2.00

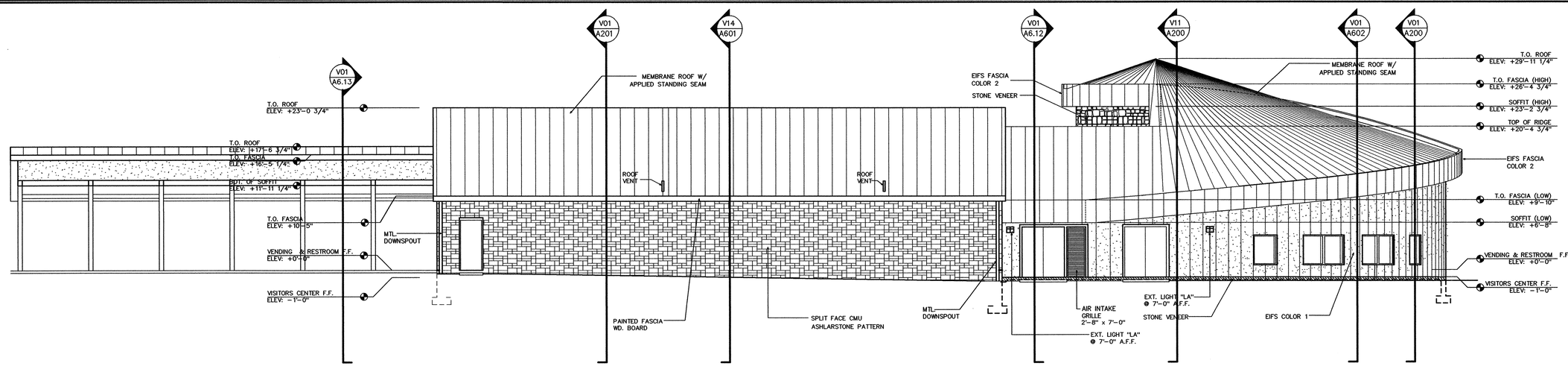

G01 NORTH ELEVATION SCALE : 1/8" = 1'-0"

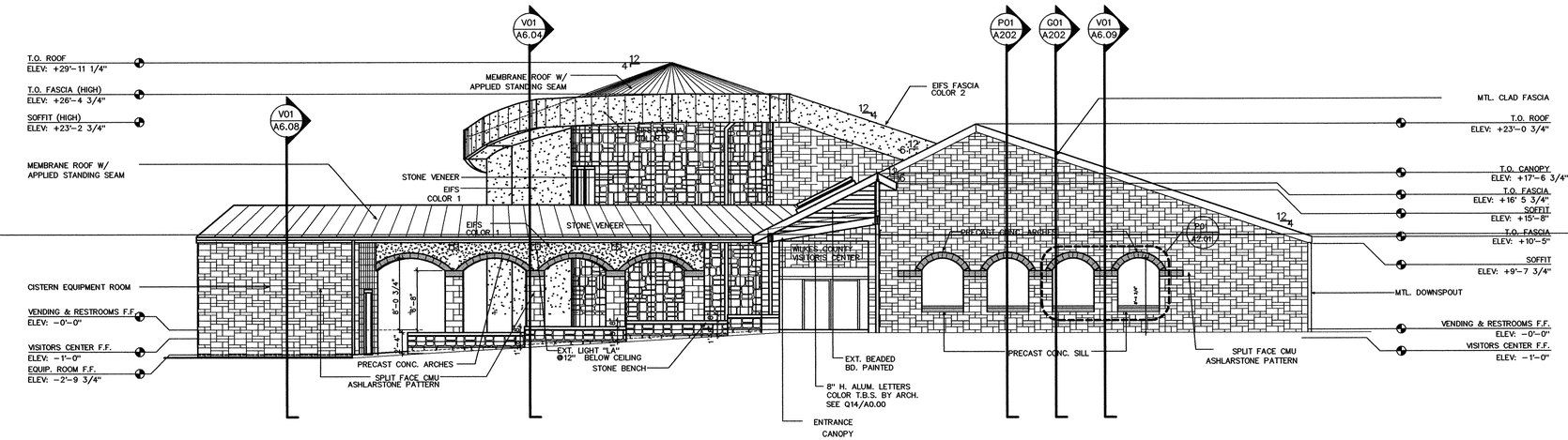

P01 WEST ELEVATION SCALE : 1/8" = 1'-0"

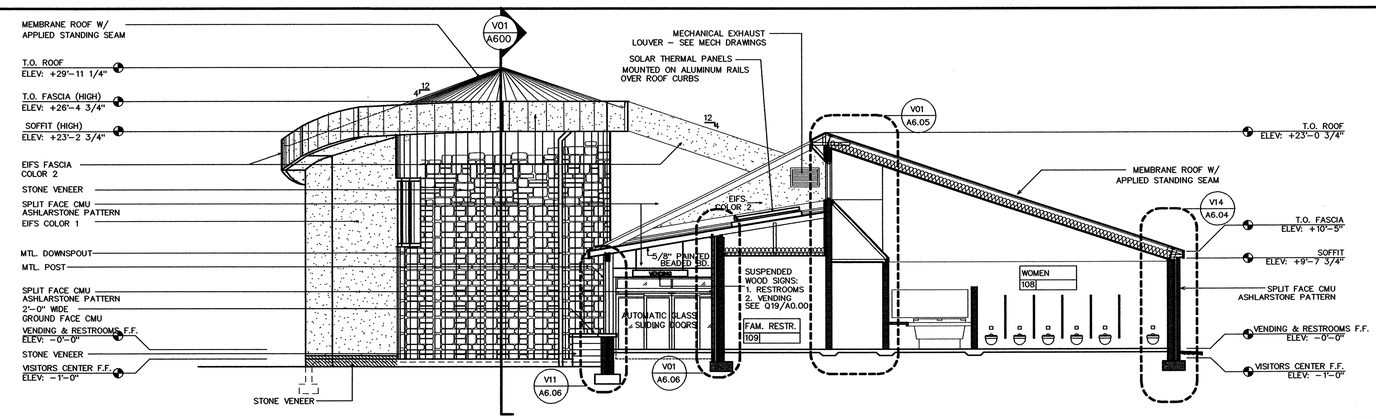

V01 BUILDING SECTION LOOKING EAST SCALE : 1/8" = 1'-0"

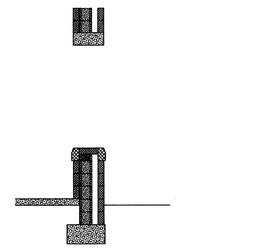

L24 ARCH DETAIL SCALE : 1/4" = 1'-0"

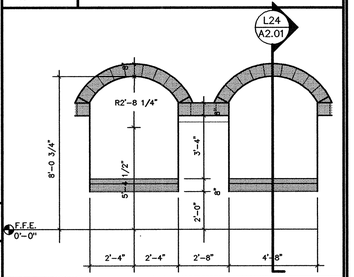

Q24 ARCH DETAIL SCALE : 1/4" = 1'-0"

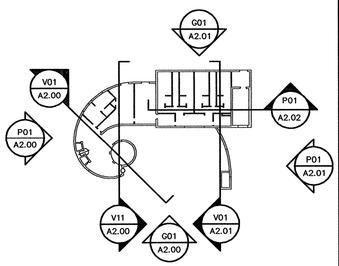

KEY PLAN

Innovative Design
1201 MORGAN STREET, RALEIGH, NORTH CAROLINA 27603, 919/832-6303

INNOVATIVE DESIGN, INC. CORPORATE SEAL NC

MICHAEL H. NICHOLS REGISTERED ARCHITECT 2850 NORTH CAROLINA RALEIGH, N.C. 7/10/07

PROJECT: Wilkes County Visitor's Center K-4703
WILKESBORO, NC
OWNER: NC Department of Transportation

DRAWN BY: JZL
DATE: 06/01/2007
JOB NUMBER: 2320
REVISIONS:

DWG NAME: 320A201
H:\2320 - Wilkes\Mtec\4-DOT REVIEW\
PLOTTED: 7/30/2007

A2.01
23 OF 31

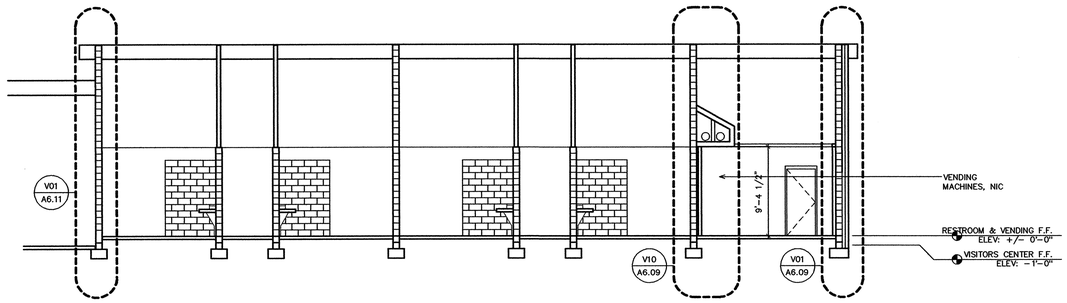

G01 BUILDING SECTION LOOKING NORTH SCALE : 1/8" = 1'-0"

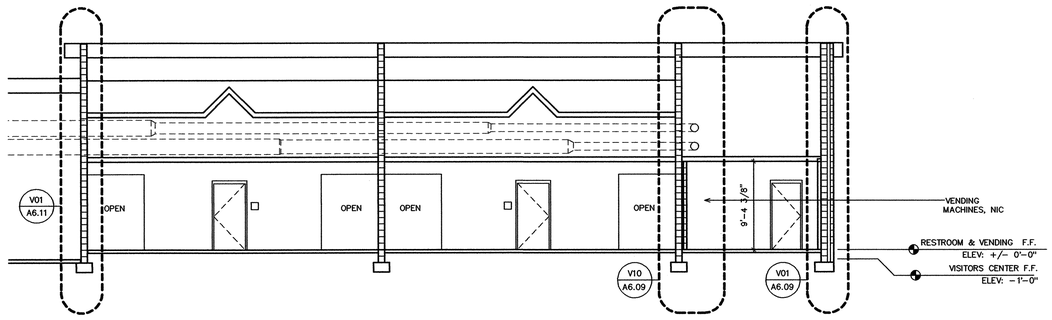

P01 BUILDING SECTION LOOKING NORTH SCALE : 1/8" = 1'-0"

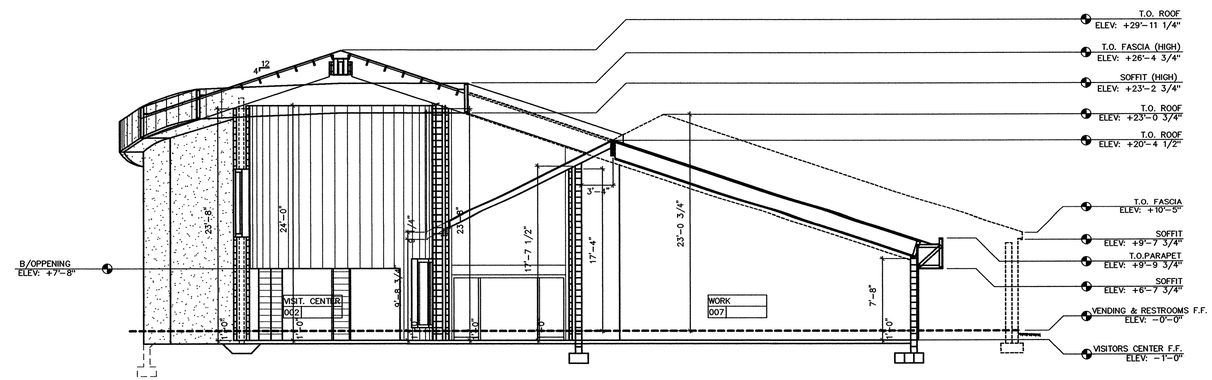

V01 BUILDING SECTION LOOKING EAST SCALE : 1/8" = 1'-0"

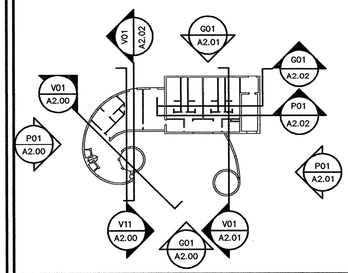

KEY PLAN

Innovative Design
1430 MORGAN STREET, RALEIGH, NORTH CAROLINA 27603, 919/832-6303

INNOVATIVE DESIGN, INC. CORPORATE SEAL NC

MICHAEL H. NICOLAS REGISTERED ARCHITECT 2950 NORTH CAROLINA RALEIGH, N.C.

7/10/07

PROJECT: Wilkes County Visitor's Center K-4703
WILKESBORO, NC

OWNER: NC Department of Transportation

DRAWN BY: JZL
DATE: 06/01/2007
JOB NUMBER: 2320
REVISIONS:

DWG NAME: 320A202
H:\2320 - Wilkes\Mtec\4-DOI REVIEW\
PLOTTED: 7/30/2007

A2.02

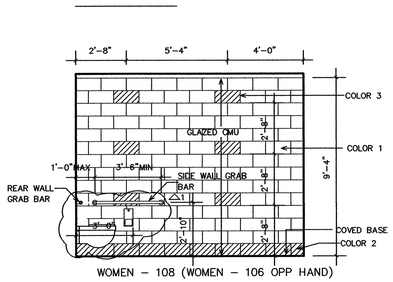

WOMEN – 108 (WOMEN – 106 OPP HAND)

G01 INTERIOR ELEVATION SCALE : 1/4" = 1'-0"

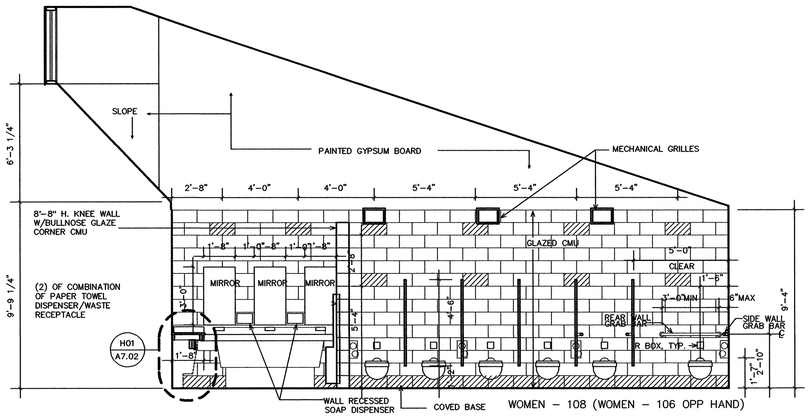

WOMEN – 108 (WOMEN – 106 OPP HAND)

G07 INTERIOR ELEVATION SCALE : 1/4" = 1'-0"

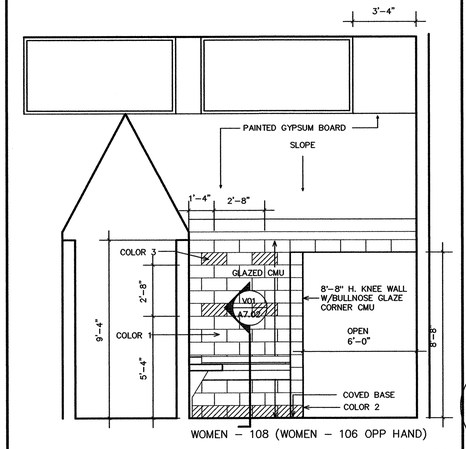

WOMEN – 108 (WOMEN – 106 OPP HAND)

G19 INTERIOR ELEVATION SCALE : 1/4" = 1'-0"

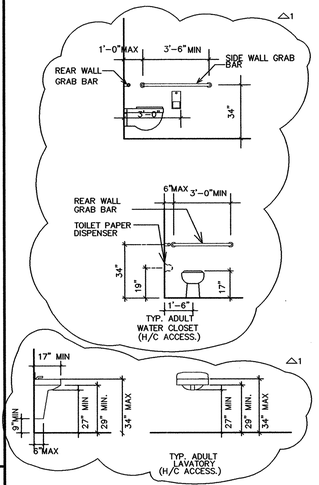

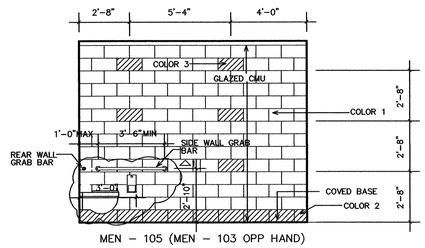

MEN – 105 (MEN – 103 OPP HAND)

P01 INTERIOR ELEVATION SCALE : 1/4" = 1'-0"

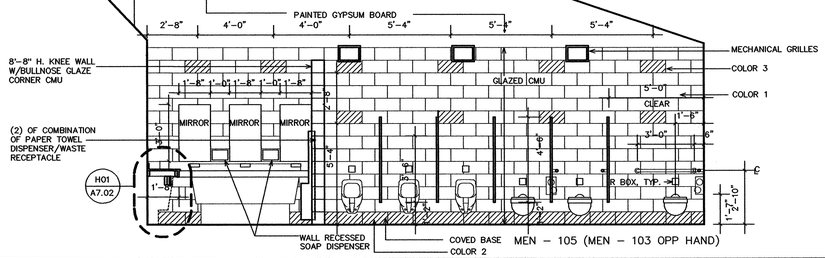

MEN – 105 (MEN – 103 OPP HAND)

P07 INTERIOR ELEVATION SCALE : 1/4" = 1'-0"

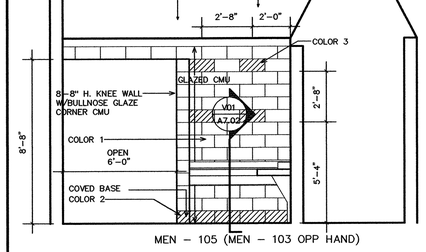

MEN – 105 (MEN – 103 OPP HAND)

P19 INTERIOR ELEVATION SCALE : 1/4" = 1'-0"

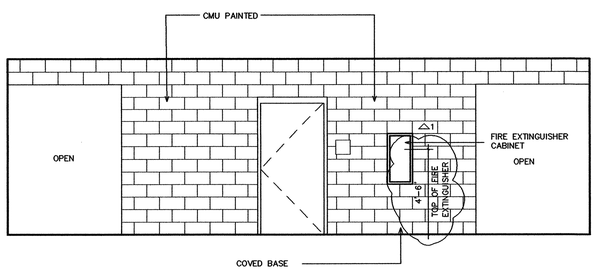

MEN 103 & 105
(WOMEN 106 & 108 OPP. HAND)

V01 INTERIOR ELEVATIONS SCALE : 1/4" = 1'-0"

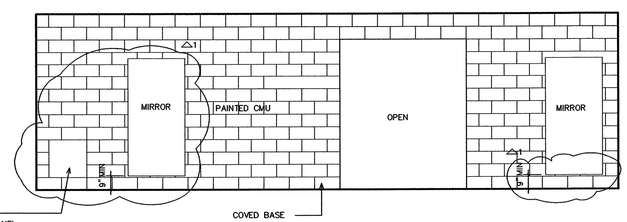

MEN 103 & 105
(WOMEN 106 & 108 OPP. HAND)

V13 INTERIOR ELEVATIONS SCALE : 1/4" = 1'-0"

Innovative Design
CORPORATE
SEAL
INNOVATIVE DESIGN, INC.
1 MORGAN STREET, RALEIGH, NORTH CAROLINA 27603, 919/832-6303

MICHAEL H. NICHOLAS
REGISTERED ARCHITECT
2950
NORTH CAROLINA
RALEIGH, N. C.
7/18/07

PROJECT: Wilkes County Visitor's Center K-4703
WILKESBORO, NC
OWNER: NC Department of Transportation

DRAWN BY: JZL
DATE: 06/01/2007
JOB NUMBER: 2320
REVISIONS:
△1 07-18-07

DWG NAME: 320A300
H:\2320 – Wilkes\Mtec\4-DOT REVIEW\
PLOTTED: 7/30/2007

A3.00
25 OF 69

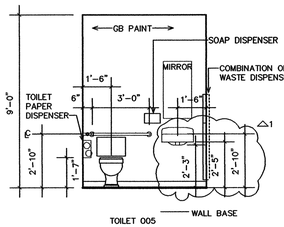

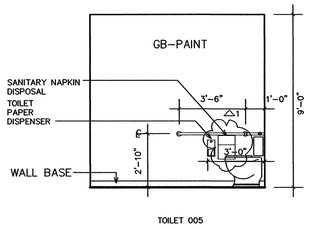

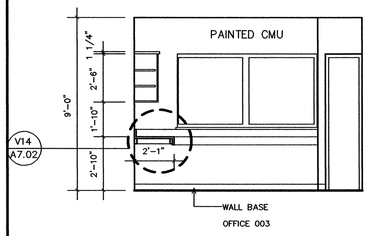

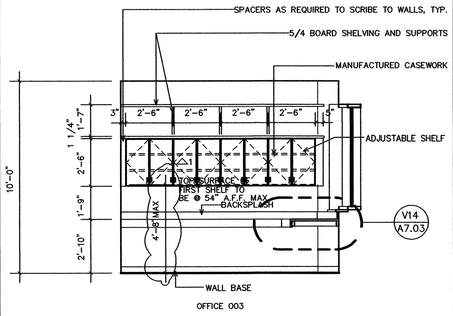

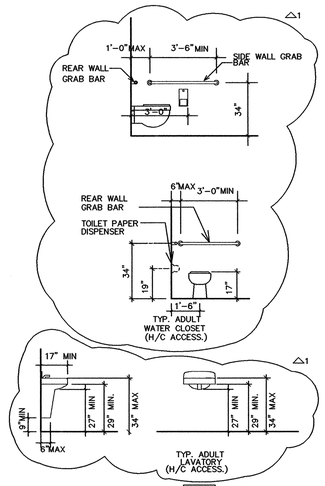

G01	INTERIOR ELEVATION SCALE : 1/4" = 1'-0"	G07	INTERIOR ELEVATION SCALE : 1/4" = 1'-0"	G13	INTERIOR ELEVATION SCALE : 1/4" = 1'-0"	G19	INTERIOR ELEVATION SCALE : 1/4" = 1'-0"

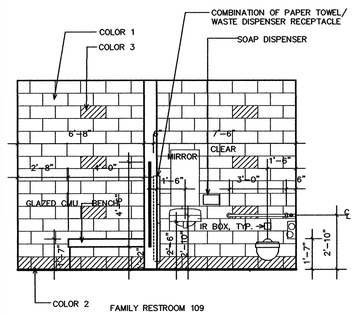

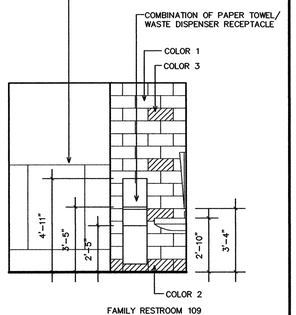

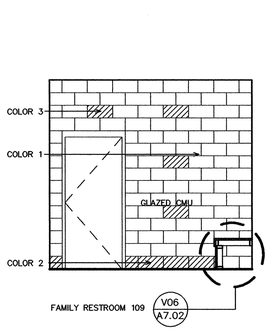

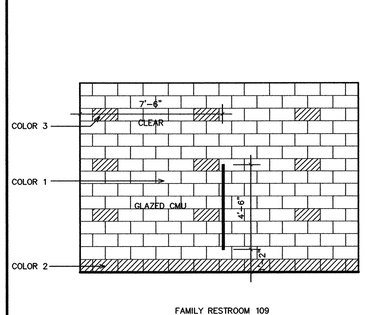

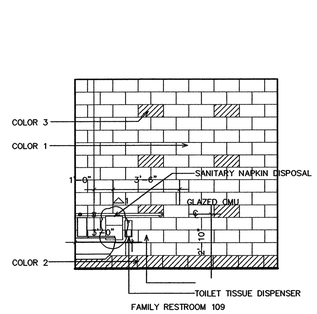

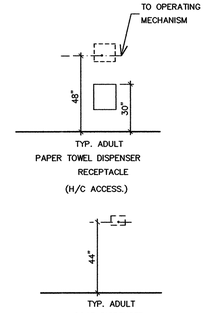

P01	INTERIOR ELEVATION SCALE : 1/4" = 1'-0"	P05	INTERIOR ELEVATION SCALE : 1/4" = 1'-0"	P10	INTERIOR ELEVATION SCALE:1/4" = 1'-0"	P14	INTERIOR ELEVATION SCALE : 1/4" = 1'-0"	P19	INTERIOR ELEVATION SCALE : 1/4" = 1'-0"

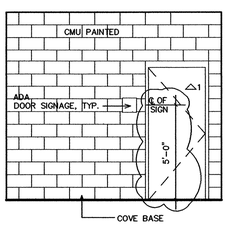

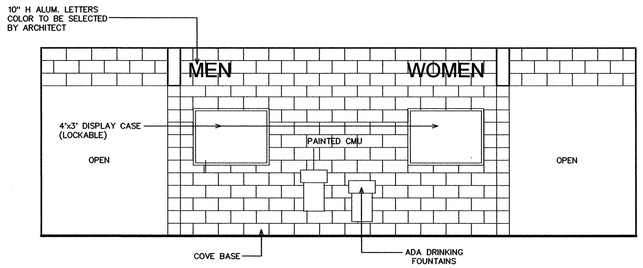

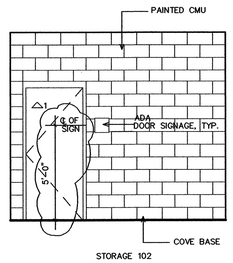

V01	INTERIOR ELEVATIONS SCALE : 1/4" = 1'-0"	V07	INTERIOR ELEVATIONS SCALE : 1/4" = 1'-0"	V19	INTERIOR ELEVATIONS SCALE : 1/4" = 1'-0"

Innovative Design
INNOVATIVE DESIGN, INC. CORPORATE SEAL NC
1 MORGAN STREET, RALEIGH, NORTH CAROLINA 27603, 919/832-6303

MICHAEL N. WILLIAMS REGISTERED ARCHITECT 2950 NORTH CAROLINA RALEIGH, N. C.
7/18/07

PROJECT: Wilkes County Visitor's Center K-4703
WILKESBORO, NC
OWNER: NC Department of Transportation

DRAWN BY: JZL
DATE: 06/01/2007
JOB NUMBER: 2320
REVISIONS:
△1 07-18-07

DWG NAME: 320A301
H:\2320 - Wilkes\Mtec\4-DOI REVIEW\
PLOTTED: 7/30/2007

A3.01

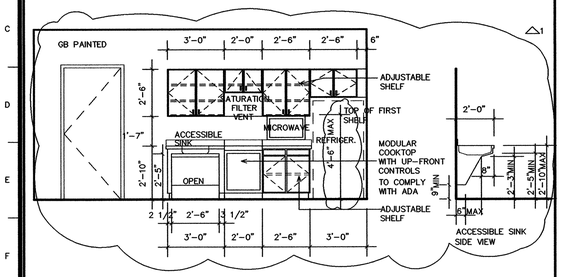

G01 INTERIOR ELEVATION SCALE : 1/4" = 1'-0"

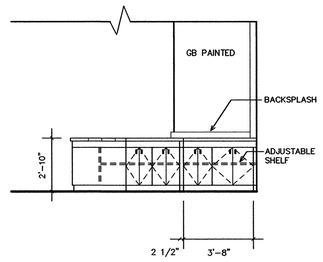

G08 STORAGE RM – WORK TABLE ELEV. SCALE : 1/4" = 1'-0"

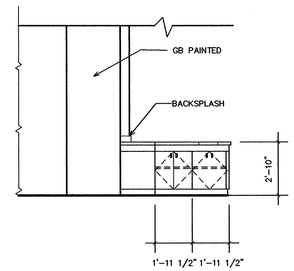

G14 STORAGE RM – WORK TABLE ELEV. SCALE : 1/4" = 1'-0"

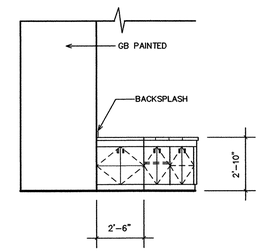

G20 STORAGE RM – WORK TABLE ELEV.

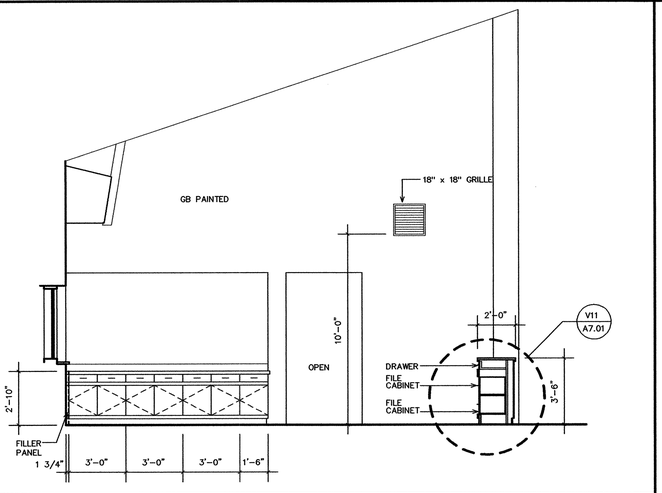

P01 INTERIOR ELEVATION SCALE : 1/4" = 1'-0"

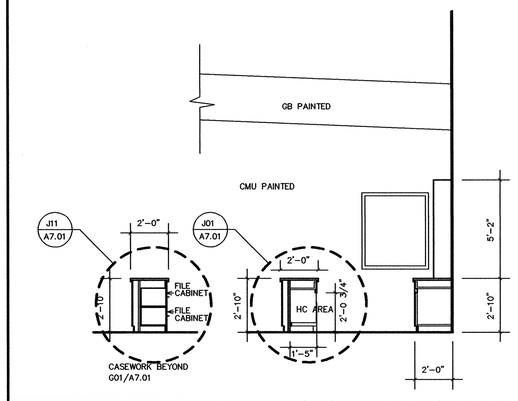

P11 INTERIOR ELEVATION SCALE : 1/4" = 1'-0"

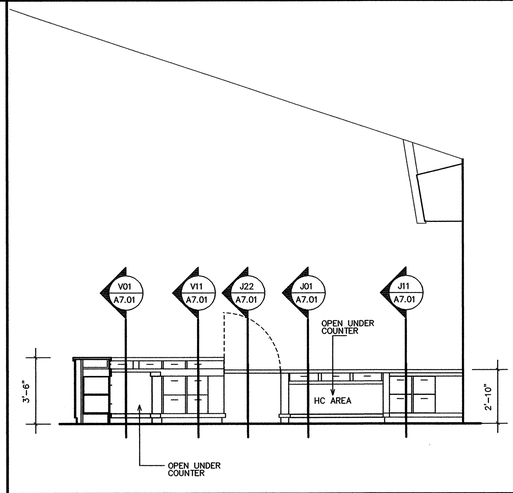

P18 INTERIOR ELEVATION SCALE : 1/4" = 1'-0"

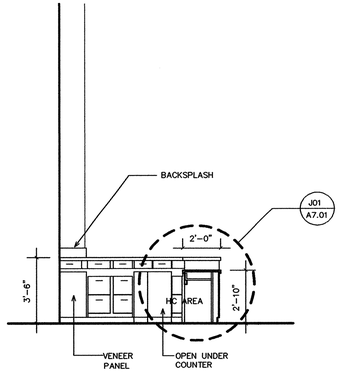

V01 INTERIOR ELEVATIONS SCALE : 1/4" = 1'-0"

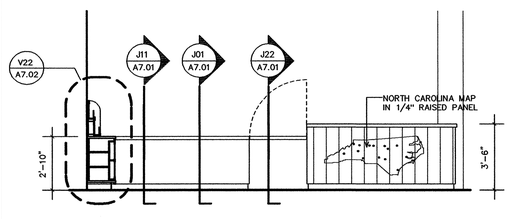

V06 INTERIOR ELEVATIONS SCALE : 1/4" = 1'-0"

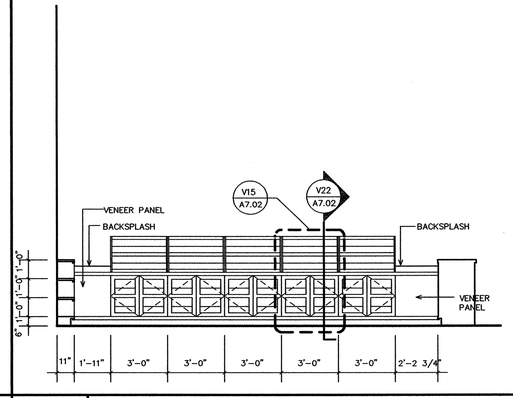

V13 INTERIOR ELEVATIONS SCALE : 1/4" = 1'-0"

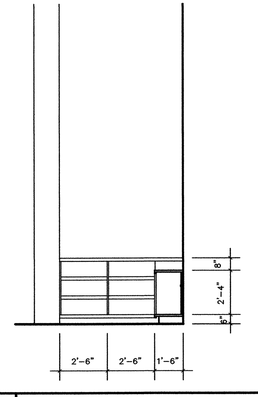

V20 INTERIOR ELEVATIONS SCALE : 1/4" = 1'-0"

Innovative Design
ARCHITECTURE
INTERIORS
PLANNING
SPACE PLANNING
CORPORATE IDENTITY
GRAPHICS
224 MORGAN STREET, RALEIGH, NORTH CAROLINA 27603, 919/832-6303

INNOVATIVE DESIGN, INC. CORPORATE SEAL NC

MICHAEL H. NICHOLAS REGISTERED ARCHITECT 2450 NORTH CAROLINA RALEIGH, N.C.
7/18/07

PROJECT: Wilkes County Visitor's Center K-4703
WILKESBORO, NC
OWNER: NC Department of Transportation

DRAWN BY: JZL
DATE: 06/01/2007
JOB NUMBER: 2320
REVISIONS:
△1 07/18/07

DWG NAME: 320A302
H:\2320 – Wilkes\Mtec\4–DOI REVIEW\
PLOTTED: 7/30/2007

A3.02
27 OF 91

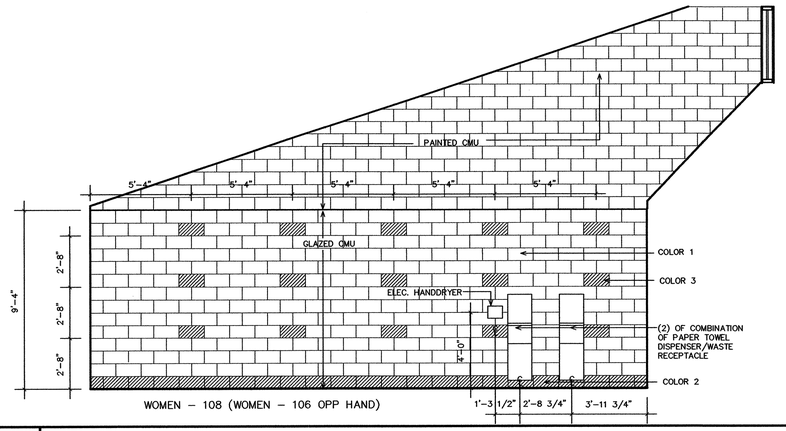

WOMEN – 108 (WOMEN – 106 OPP HAND)

G01 INTERIOR ELEVATION SCALE : 1/4" = 1'-0"

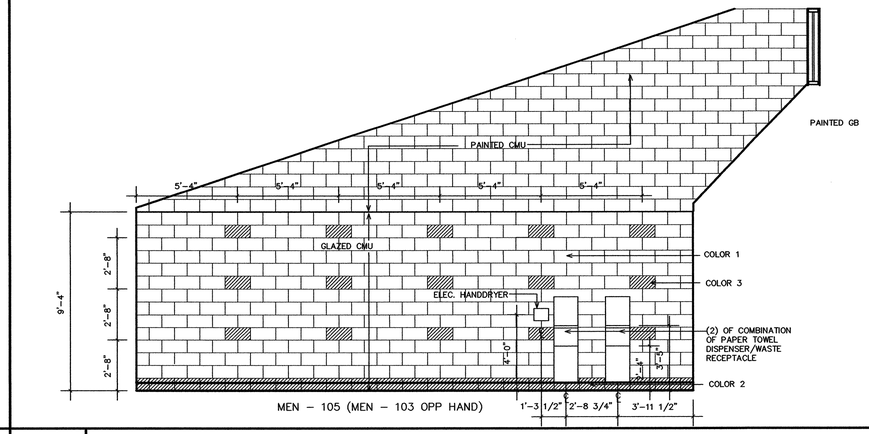

MEN – 105 (MEN – 103 OPP HAND)

G13 INTERIOR ELEVATION SCALE : 1/4" = 1'-0"

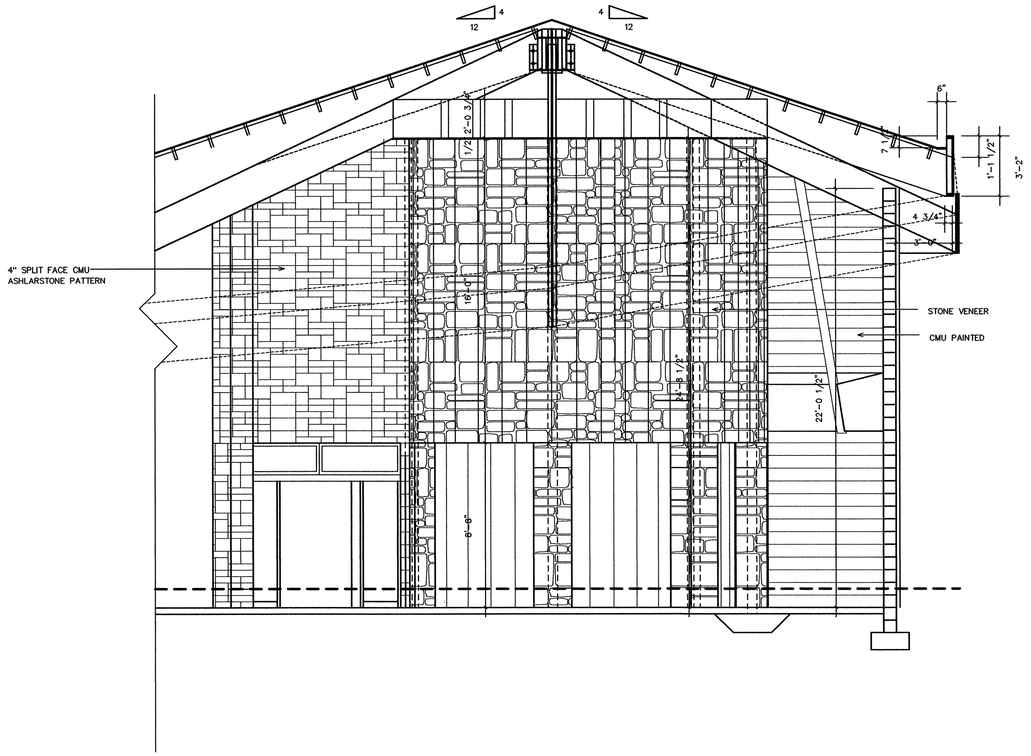

V01 INTERIOR ELEVATION SCALE : 1/4" = 1'-0"

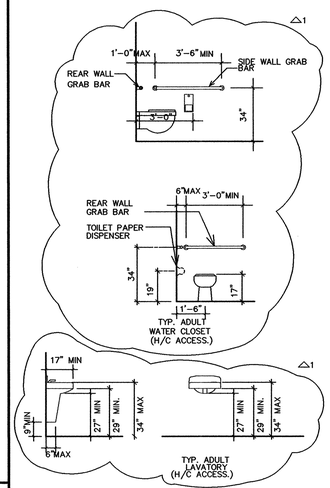

TYP. ADULT WATER CLOSET (H/C ACCESS.)

TYP. ADULT LAVATORY (H/C ACCESS.)

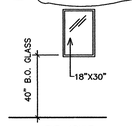

TYP. ADULT MIRROR (H/C ACCESS.)

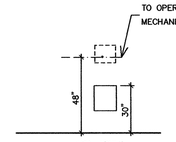

TYP. ADULT PAPER TOWEL DISPENSER RECEPTACLE (H/C ACCESS.)

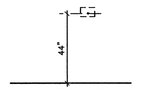

TYP. ADULT SOAP DISPENSER (H/C ACCESS.)

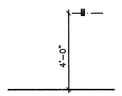

TYP. ADULT ROBE HOOK (H/C ACCESS.)

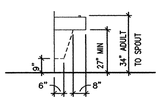

TYPICAL ADULT EWC (H/C ACCESS)

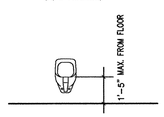

TYPICAL ADULT URINAL (H/C ACCESS)

Innovative Design
INNOVATIVE DESIGN, INC. CORPORATE SEAL NC
ARCHITECTURE
ENGINEERING
INTERIORS
PLANNING
1201 MORGAN STREET, RALEIGH, NORTH CAROLINA 27603, 919/832-6303

MICHAEL H. MATLAS REGISTERED ARCHITECT 2950 NORTH CAROLINA RALEIGH, N.C. 7/18/07

PROJECT: Wilkes County Visitor's Center K-4703
WILKESBORO, NC
OWNER: NC Department of Transportation

DRAWN BY: JZL
DATE: 06/01/2007
JOB NUMBER: 2320
REVISIONS:
△1 07-18-07

DWG NAME: 320A303
H:\2320 - Wilkes\Mtec\4-DOI REVIEW\
PLOTTED: 7/30/2007

A3.03
28 OF 28

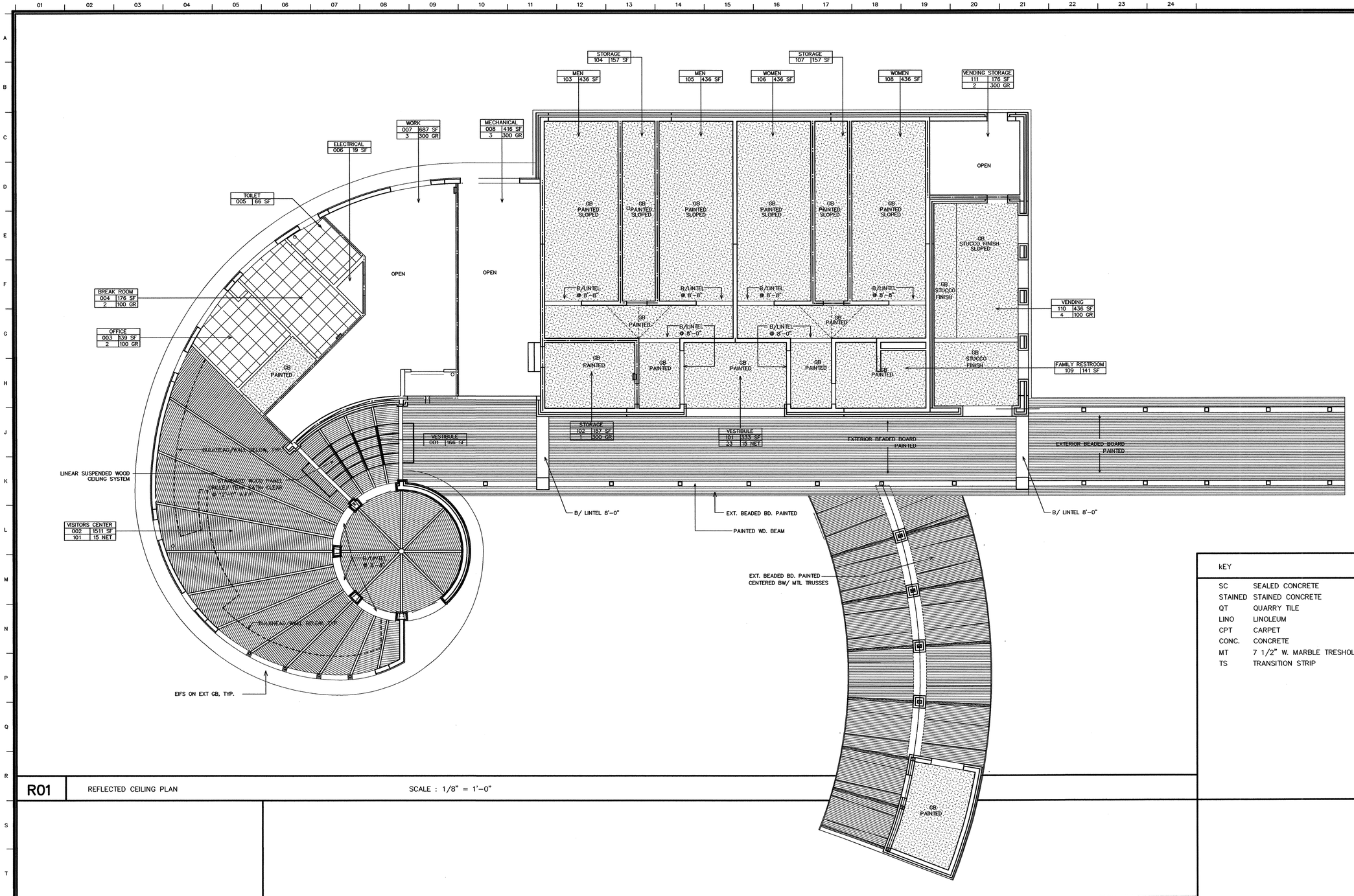

KEY	
SC	SEALED CONCRETE
STAINED	STAINED CONCRETE
QT	QUARRY TILE
LINO	LINOLEUM
CPT	CARPET
CONC.	CONCRETE
MT	7 1/2" W. MARBLE TRESHOLD
TS	TRANSITION STRIP

R01 REFLECTED CEILING PLAN — SCALE : 1/8" = 1'-0"

MAGNETIC NORTH

MAGNETIC DECLINATION: 7 DEG 6 MIN WEST

Innovative Design
INNOVATIVE DESIGN, INC. CORPORATE SEAL NC
MICHAEL H. NICKLAS REGISTERED ARCHITECT 2950 NORTH CAROLINA RALEIGH, N. C. 7/30/07

PROJECT: Wilkes County Visitor's Center K-4703
WILKESBORO, NC
OWNER: NC Department of Transportation

DRAWN BY: EWK/JZL
DATE: 06/01/2007
JOB NUMBER: 2320
REVISIONS:

DWG NAME: 320A100
H:\2320 - Wilkes\Mtec\4-DOI REVIEW\
PLOTTED: 7/30/2007

A4.00

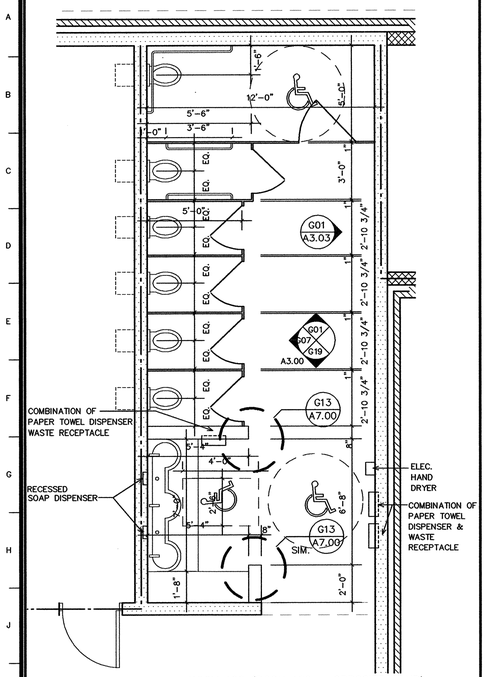

ROOM 108 (ROOM 106 – OPPOSITE HAND)

K01 ENLARGED BATHROOM PLAN SCALE : 1/4" = 1'-0"

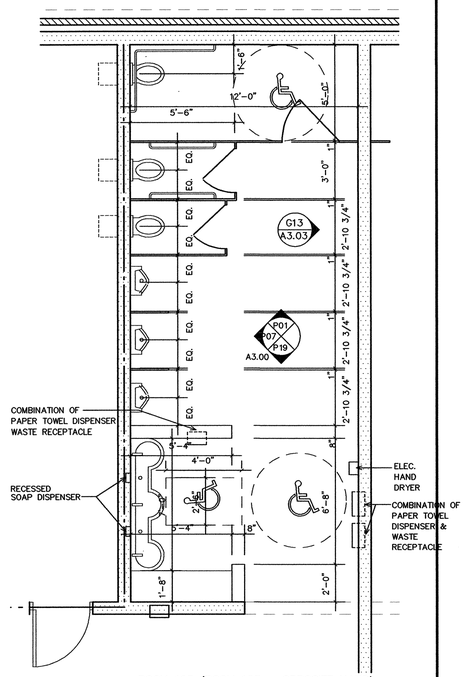

ROOM 105 (ROOM 103 – OPPOSITE HAND)

K07 ENLARGED BATHROOM PLAN SCALE : 1/4" = 1'-0"

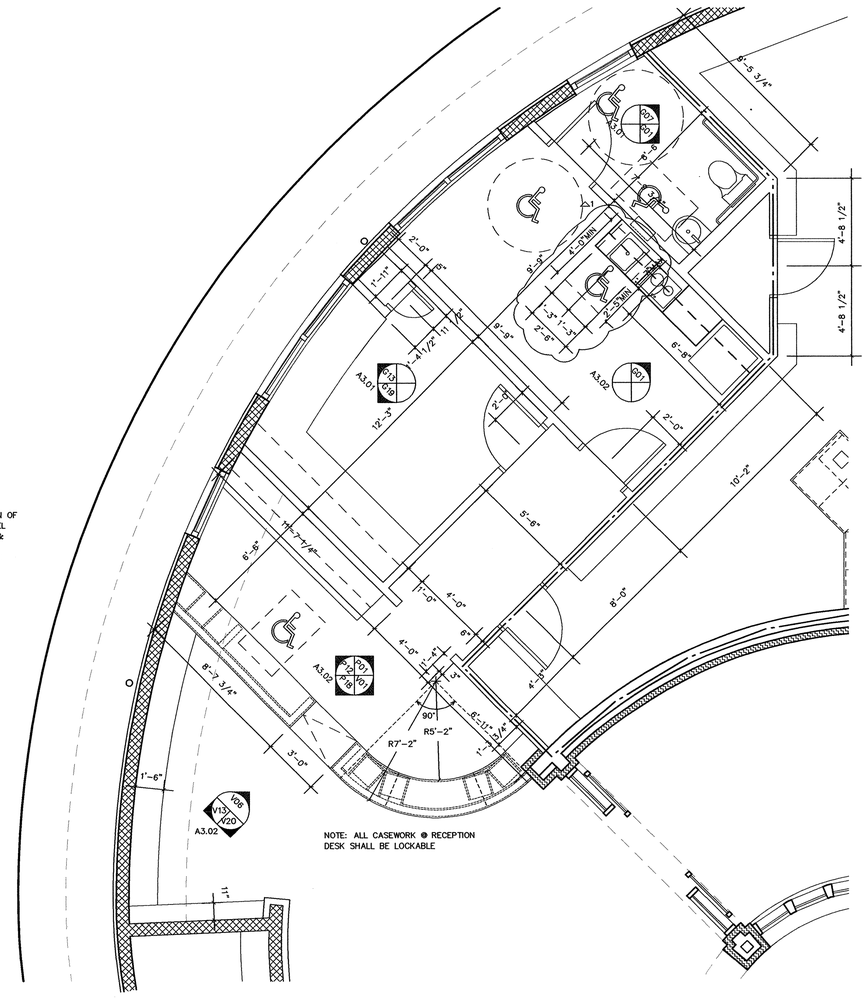

ROOMS 003, 004, 005 AND INFORMATION DESK

Q13 ENLARGED PLAN SCALE : 1/4" = 1'-0"

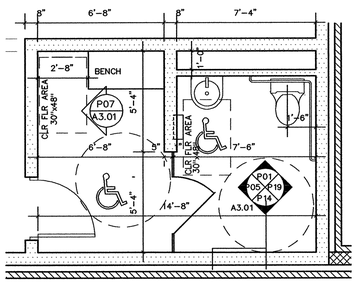

ROOM 109

Q01 ENLARGED BATHROOM PLAN SCALE : 1/4" = 1'-0"

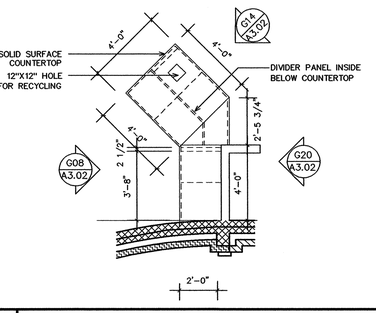

Q07 STORAGE ROOM WORK TABLE SCALE : 1/4" = 1'-0"

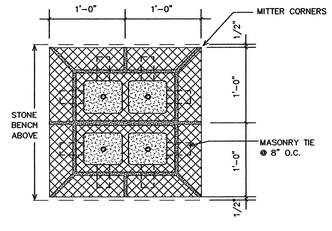

V01 WALKWAY COLUMN PIER DETAIL SCALE : 1" = 1'-0"

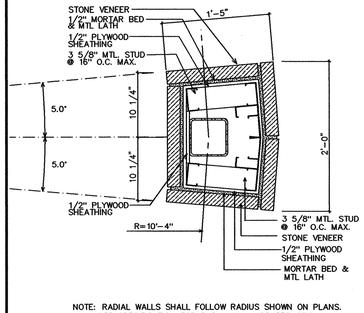

NOTE: RADIAL WALLS SHALL FOLLOW RADIUS SHOWN ON PLANS. SEE SPECIFICATION FOR RADIAL WALL CONSTRUCTION.

V07 WALKWAY COLUMN PIER DETAIL SCALE : 1" = 1'-0"

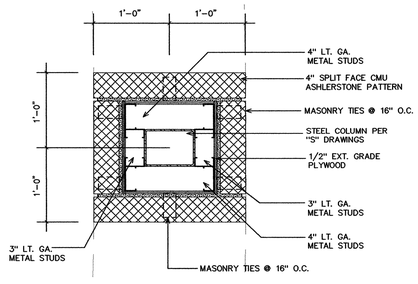

V13 WALKWAY COLUMN PIER DETAIL SCALE : 1" = 1'-0"

Innovative Design
ORGAN STREET, RALEIGH, NORTH CAROLINA 27603, 919/832-6303

INNOVATIVE DESIGN, INC. CORPORATE SEAL NC

MICHAEL H. NICKLAS REGISTERED ARCHITECT 2950 NORTH CAROLINA RALEIGH, N.C.

7/10/07

PROJECT: Wilkes County Visitor's Center K-4703
WILKESBORO, NC

OWNER: NC Department of Transportation

DRAWN BY: JZL
DATE: 06/01/2007
JOB NUMBER: 2320
REVISIONS:
△1 07-18-07

DWG NAME: 320A500
H:\2320 – Wilkes\Mtec\4-DOI REVIEW\
PLOTTED: 7/30/2007

A5.00

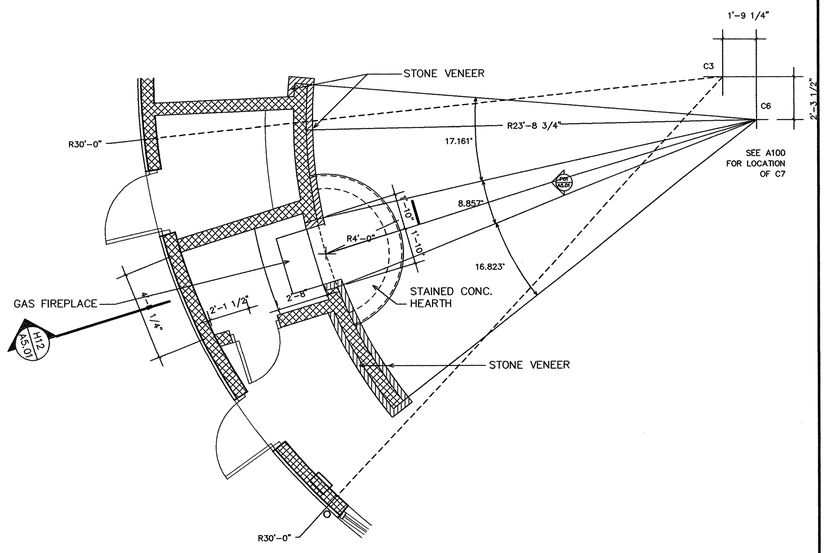

H01 ENLARGED FIREPLACE PLAN SCALE : 1/4" = 1'-0"

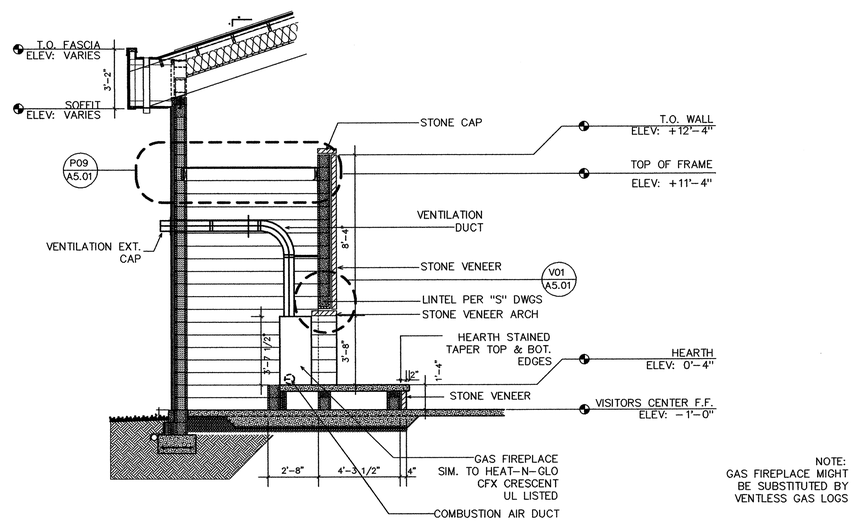

NOTE:
GAS FIREPLACE MIGHT
BE SUBSTITUTED BY
VENTLESS GAS LOGS

H12 ENLARGED FIREPLACE SECTION SCALE : 1/4" = 1'-0"

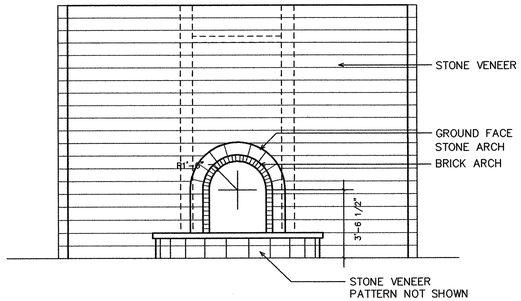

P01 ENLARGED FIREPLACE ELEVATION SCALE : 1/4" = 1'-0"

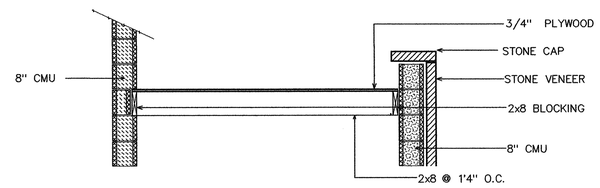

P09 FIREPLACE PLANTER DETAIL SCALE : 1/2" = 1'-0"

P18 RAINWATER CISTERN SECTION SCALE : 1/4" = 1'-0"

NOTE: PIPE CONNECTIONS & ACCESSORIES ARE NOT SHOWN FOR CLARITY

V01 WATERCATCHMENT STEEL TANK SCALE : 1/4" = 1'-0"

V15 WALL/ ROOF DETAIL SCALE : 1/4" = 1'-0"

Innovative Design
INNOVATIVE DESIGN, INC.
CORPORATE SEAL
NC
MICHAEL H. NICHOLAS
REGISTERED LANDSCAPE ARCHITECT
2950
NORTH CAROLINA
RALEIGH, N.C.
7/30/07

PROJECT: Wilkes County Visitor's Center K-4703
WILKESBORO, NC
OWNER: NC Department of Transportation

DRAWN BY: JZL
DATE: 06/01/2007
JOB NUMBER: 2320
REVISIONS:

DWG NAME: 320A501
H:\2320 - Wilkes\Mtec\4-DOT REVIEW\
PLOTTED: 7/30/2007

A5.01

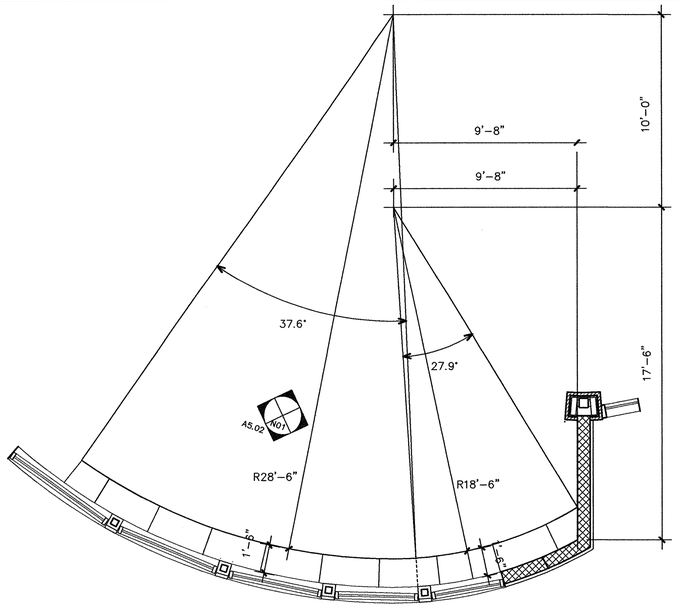

J01 DISPLAY RACK @ VISITOR'S CENTER SCALE : 1/4" = 1'-0"

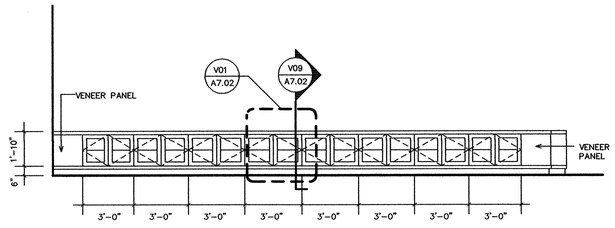

N01 DISPLAY RACK @ VISITOR'S CENTER SCALE : 1/4" = 1'-0"

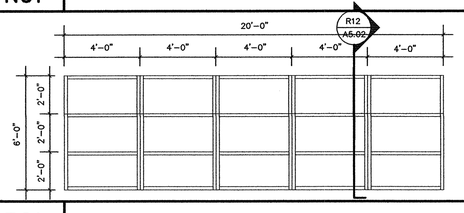

MODULAR
GALVANIZED HEAVY DUTY
SHELVES W/ (4) HEAVY
DUTY POSTS PER UNIT
MAX. WIDTH PER UNIT 48"
SEE N12/A5.02 FOR NUMBER OF
MODULAR UNITS

R01 HEAVY DUTTY MODULAR SHELVE ELEVATION @ WORK AREA SCALE : 1/4" = 1'-0"

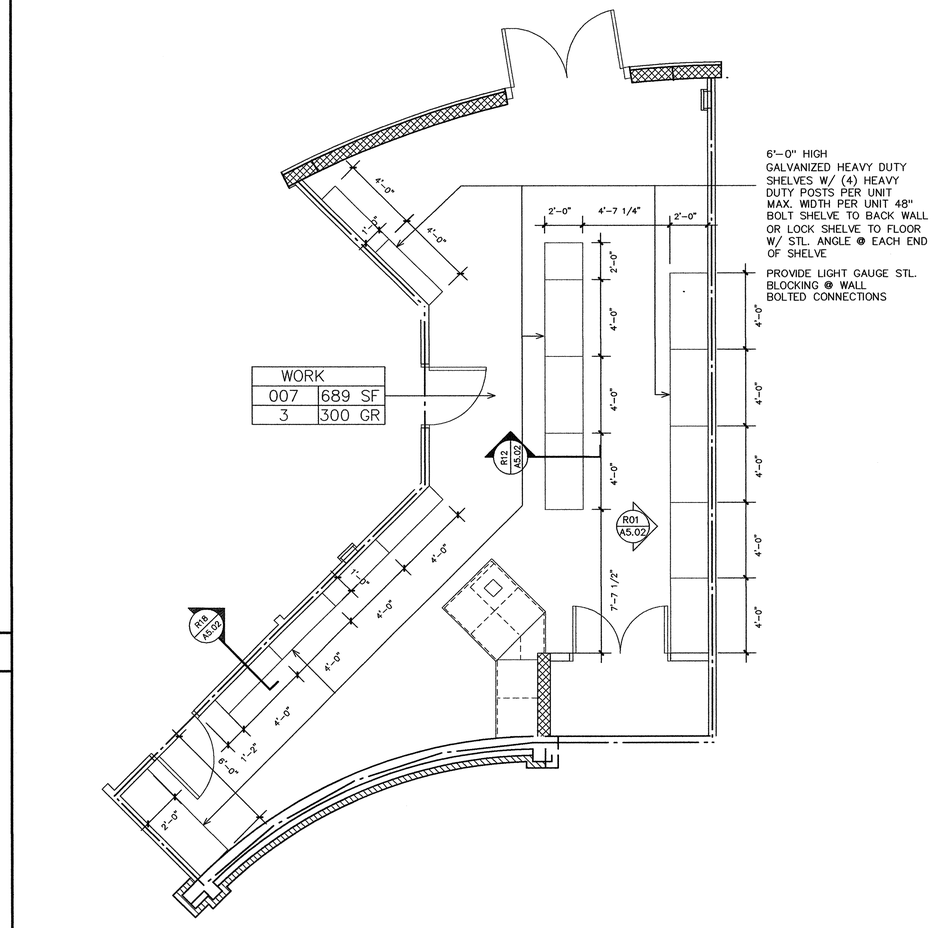

N12 MODULAR SHELVES @ WORKROOM SCALE : 1/4" = 1'-0"

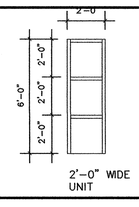

2'-0" WIDE
UNIT

R12 MODULAR SHELVE SECTION SCALE : 1/4" = 1'-0"

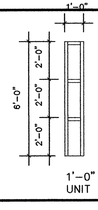

1'-0" WIDE
UNIT

R18 MODULAR SHELVE SECTION SCALE : 1/4" = 1'-0"

Innovative Design
CORPORATE SEAL
INNOVATIVE DESIGN, INC.
NC
SEAL
MICHAEL H. NICHOLAS
REGISTERED ARCHITECT
2950
NORTH CAROLINA
RALEIGH, N.C.
7/10/07

PROJECT: Wilkes County Visitor's Center K-4703
WILKESBORO, NC

OWNER: NC Department of Transportation

DRAWN BY: JZL
DATE: 06/01/2007
JOB NUMBER: 2320
REVISIONS:

DWG NAME: 320A502
H:\2320 - Wilkes\Mtec\4-DOI REVIEW\
PLOTTED: 7/30/2007

A5.02

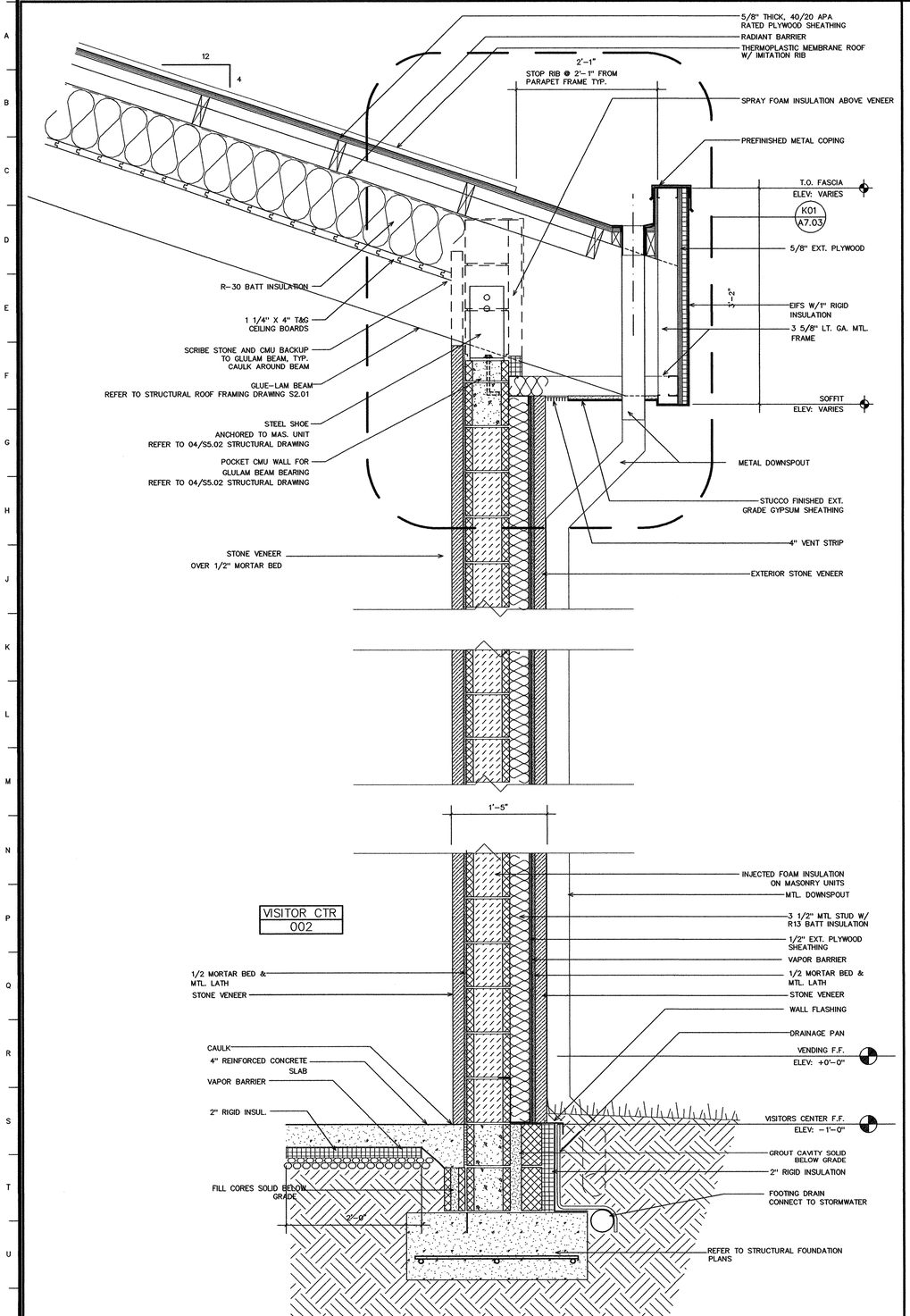

V01 WALL SECTION SCALE : 1" = 1'-0"

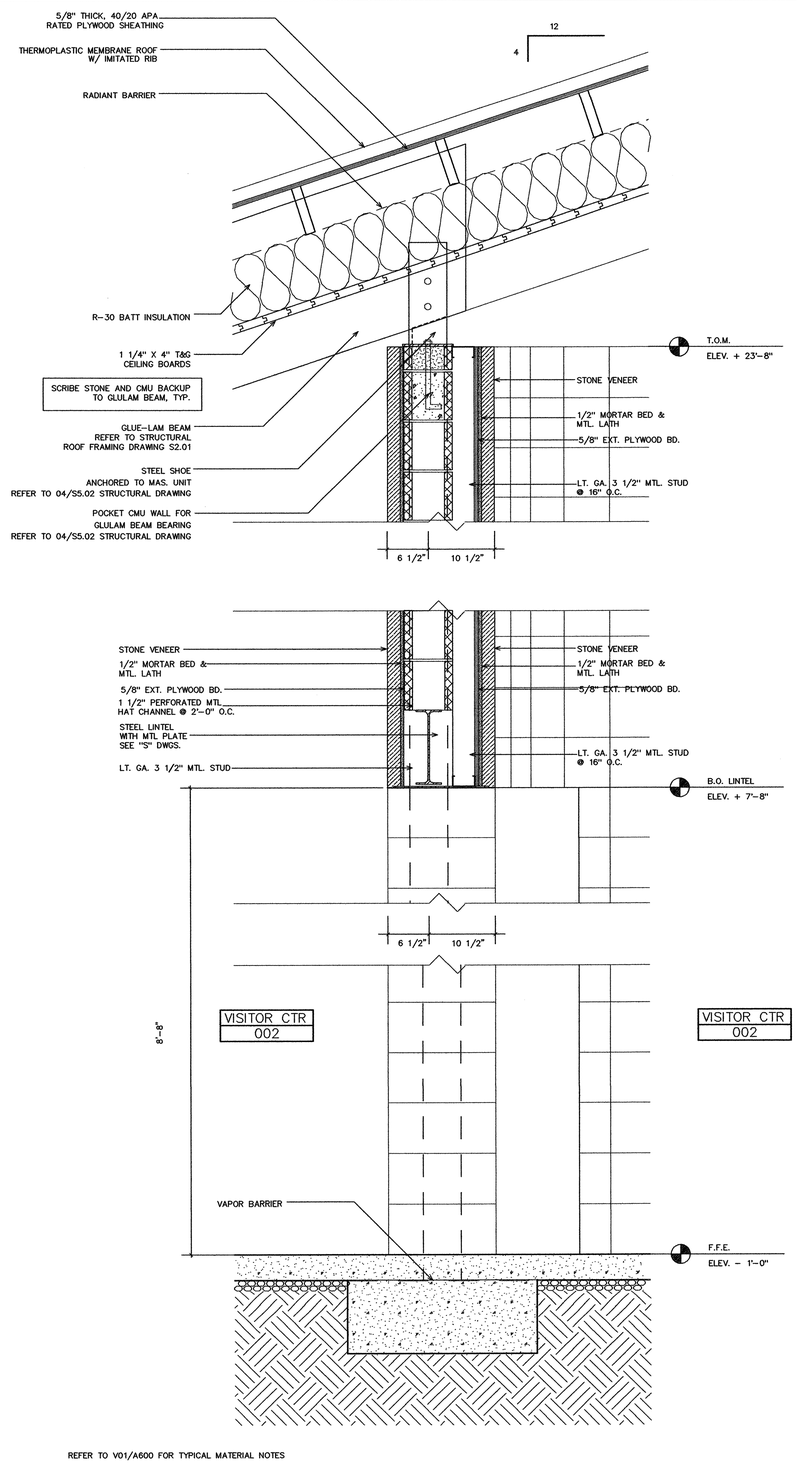

REFER TO V01/A600 FOR TYPICAL MATERIAL NOTES

V14 WALL SECTION SCALE : 1" = 1'-0"

Innovative Design
MORGAN STREET, RALEIGH, NORTH CAROLINA 27603, 919/832-6303

INNOVATIVE DESIGN, INC. CORPORATE SEAL NC

MICHAEL H. NICKLAS REGISTERED ARCHITECT 2950 NORTH CAROLINA RALEIGH, N.C.
7/18/07

PROJECT: Wilkes County Visitor's Center K-4703
WILKESBORO, NC
OWNER: NC Department of Transportation

DRAWN BY: JZL
DATE: 06/01/2007
JOB NUMBER: 2320
REVISIONS:

DWG NAME: 320A600
H:\2320 - Wilkes\Mtec\4-DOI REVIEW\
PLOTTED: 7/30/2007

A6.00

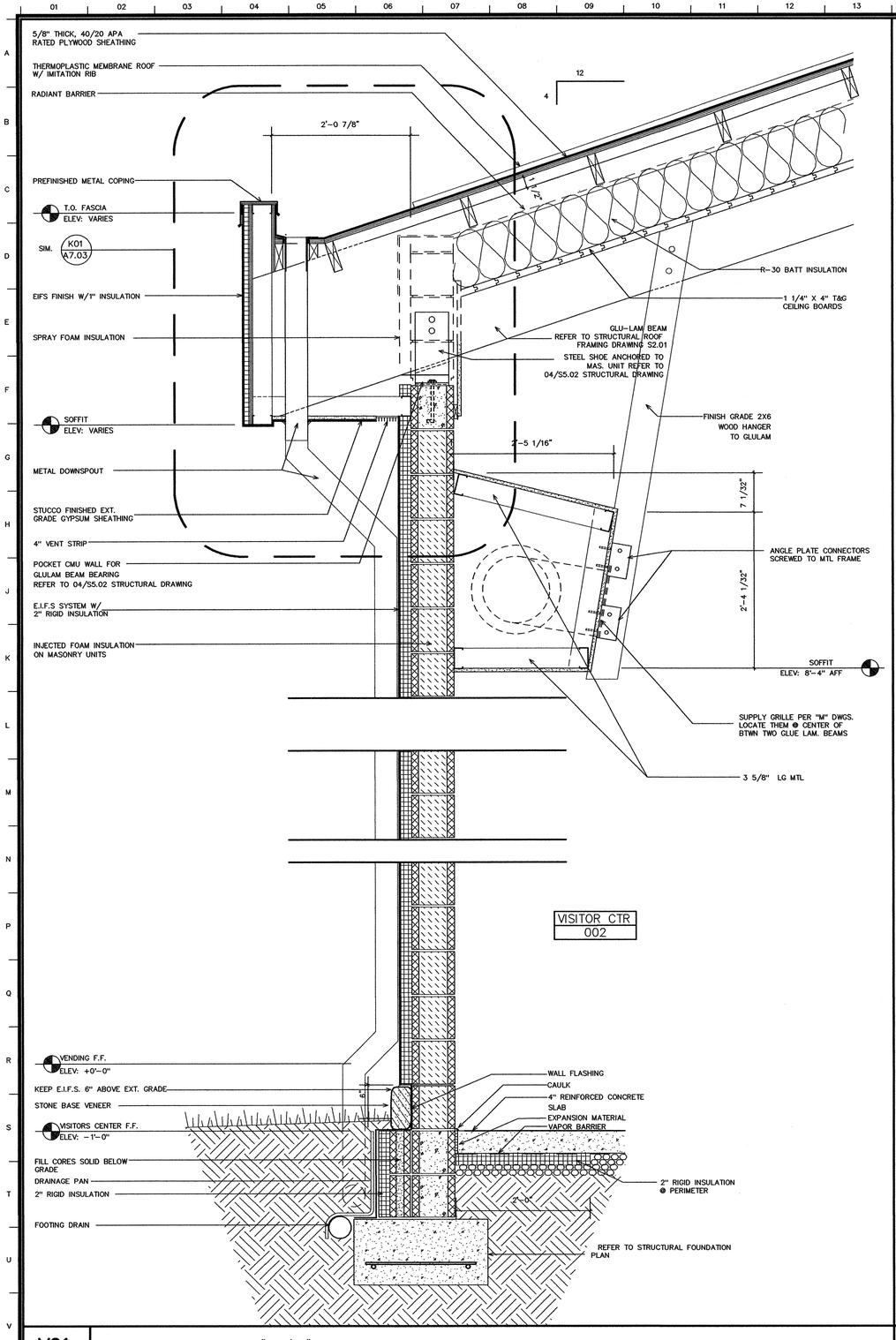

V01 WALL SECTION SCALE : 1" = 1'-0"

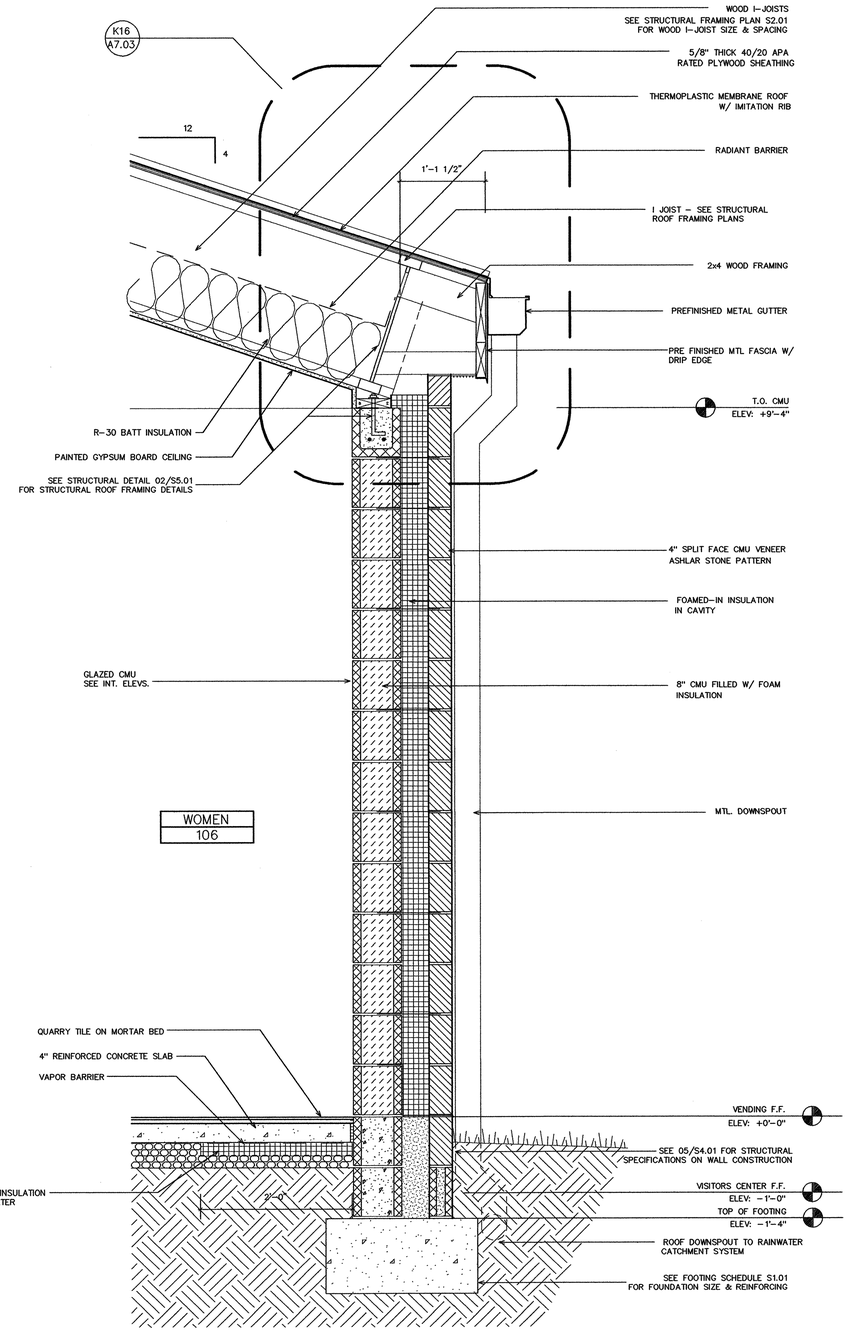

V14 WALL SECTION SCALE : 1" = 1'-0"

Innovative Design
MORGAN STREET, RALEIGH, NORTH CAROLINA 27603, 919/832-6303

INNOVATIVE DESIGN, INC CORPORATE SEAL NC

MICHAEL H. NICKLAS REGISTERED 3950 NORTH CAROLINA PROFESSIONAL ENGINEER RALEIGH, N.C. 7/16/07

PROJECT: Wilkes County Visitor's Center K-4703
WILKESBORO, NC
OWNER: NC Department of Transportation

DRAWN BY: JZL/MK
DATE: 06/01/2007
JOB NUMBER: 2320
REVISIONS:

DWG NAME: 320A601
H:\2320 - Wilkes\Mfac\4-DOI REVIEW\
PLOTTED: 7/30/2007

A6.01
34 OF 81

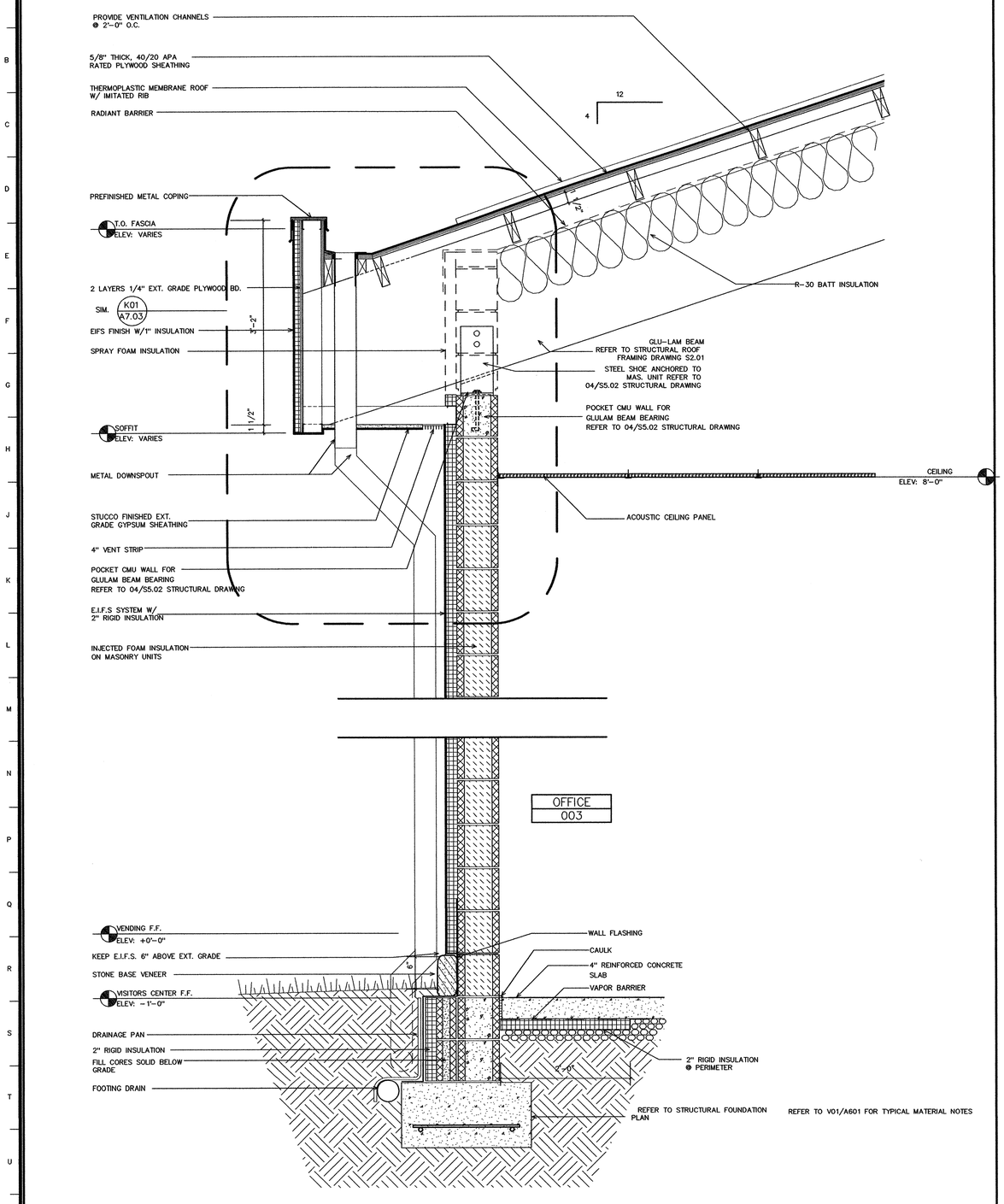

V01 WALL SECTION SCALE : 1" = 1'-0"

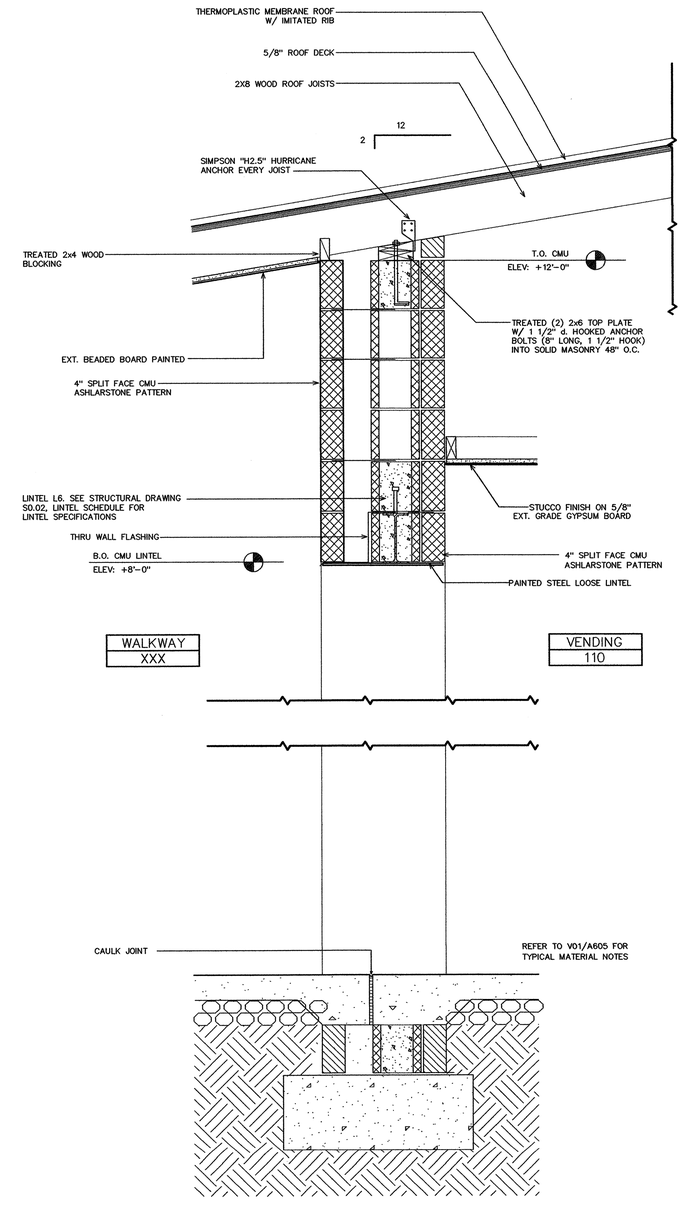

V16 WALL SECTION SCALE : 1" = 1'-0"

Innovative Design
ORGAN STREET, RALEIGH, NORTH CAROLINA 27603, 919/832-6303

INNOVATIVE DESIGN, INC. CORPORATE SEAL NC

MICHAEL H. NICHOLAS REGISTERED ARCHITECT 2950 NORTH CAROLINA RALEIGH, N.C. 7/10/07

PROJECT: Wilkes County Visitor's Center K-4703
WILKESBORO, NC
OWNER: NC Department of Transportation

DRAWN BY: JZL
DATE: 06/01/2007
JOB NUMBER: 2320
REVISIONS:

DWG NAME: 320A602
H:\2320 - Wilkes\Mtec\4-DOI REVIEW\
PLOTTED: 7/30/2007

A6.02
35 OF 81

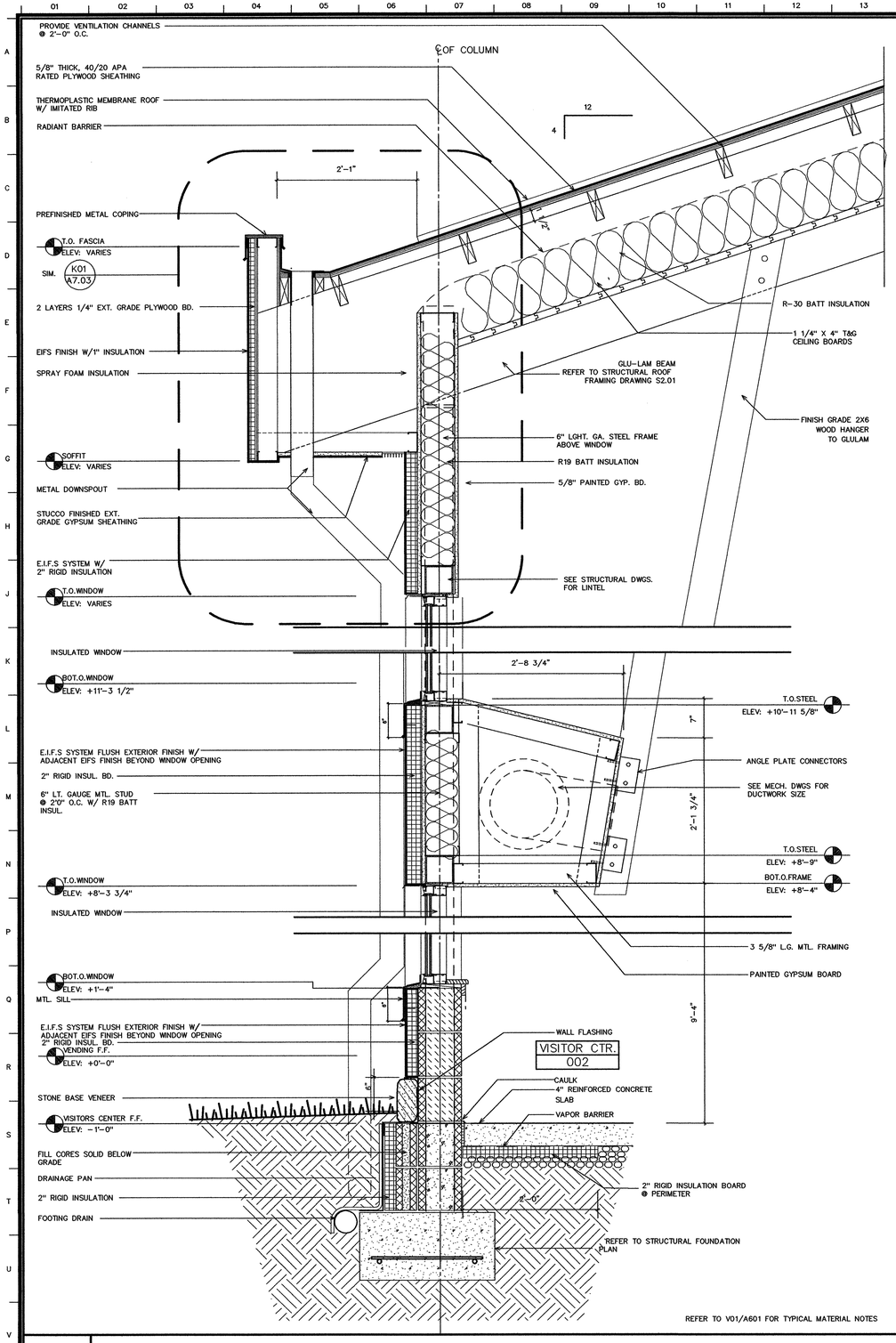

V01 WALL SECTION SCALE : 1" = 1'-0"

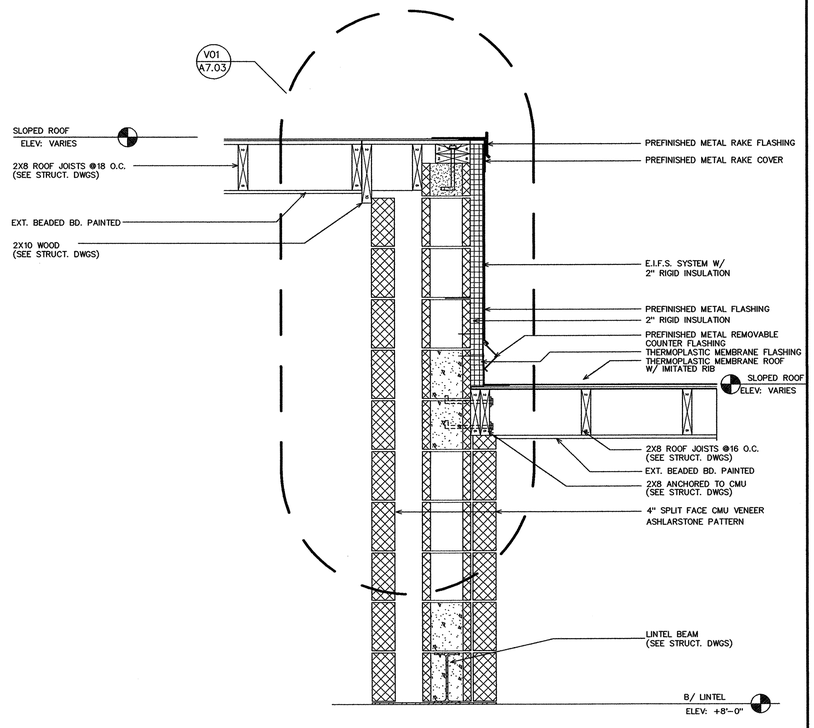

V14 WALL SECTION SCALE : 1" = 1'-0"

Innovative Design
MORGAN STREET, RALEIGH, NORTH CAROLINA 27603, 919/832-6303

INNOVATIVE DESIGN, INC. CORPORATE SEAL NC

MICHAEL H. NICHOLAS REGISTERED ARCHITECT 2950 NORTH CAROLINA RALEIGH, N.C.

7/18/07

PROJECT: Wilkes County Visitor's Center K-4703
WILKESBORO, NC

OWNER: NC Department of Transportation

DRAWN BY: JZL
DATE: 06/01/2007
JOB NUMBER: 2320
REVISIONS:

DWG NAME: 320A603
H:\2320 - Wilkes\Mtec\4-DOI REVIEW\
PLOTTED: 7/30/2007

A6.03

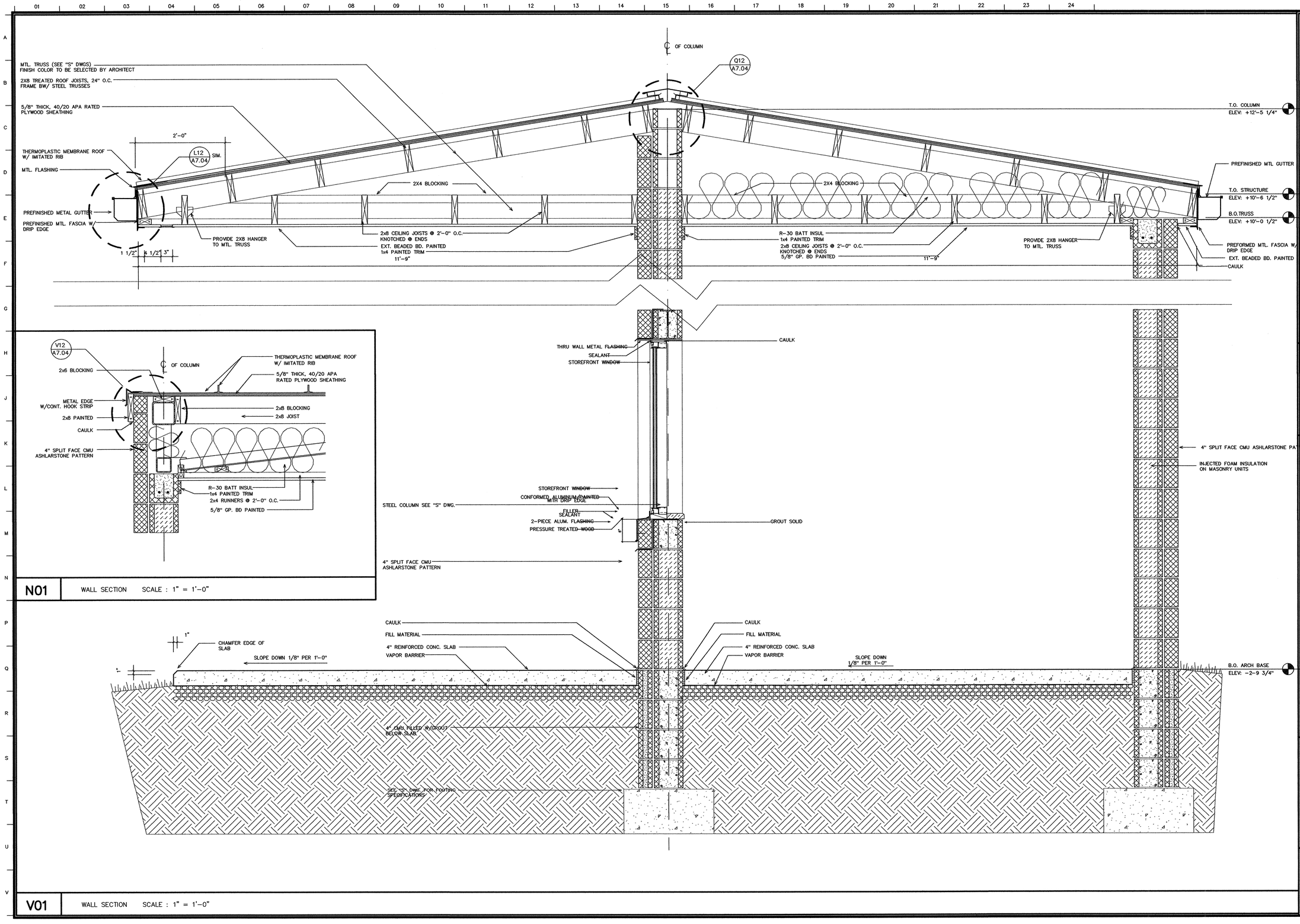

N01 WALL SECTION SCALE : 1" = 1'-0"

V01 WALL SECTION SCALE : 1" = 1'-0"

Innovative Design
MORGAN STREET, RALEIGH, NORTH CAROLINA 27603, 919/832-6303

INNOVATIVE DESIGN, INC. CORPORATE SEAL NC

MICHAEL H. NICOLAS REGISTERED ARCHITECT 2950 NORTH CAROLINA RALEIGH, N.C.
7/18/07

PROJECT: Wilkes County Visitor's Center K-4703
WILKESBORO, NC

OWNER: NC Department of Transportation

DRAWN BY: JZL
DATE: 06/01/2007
JOB NUMBER: 2320
REVISIONS:

DWG NAME: 320A604
H:\2320 - Wilkes\Mtec\4-DOI REVIEW\
PLOTTED: 7/30/2007

A6.04

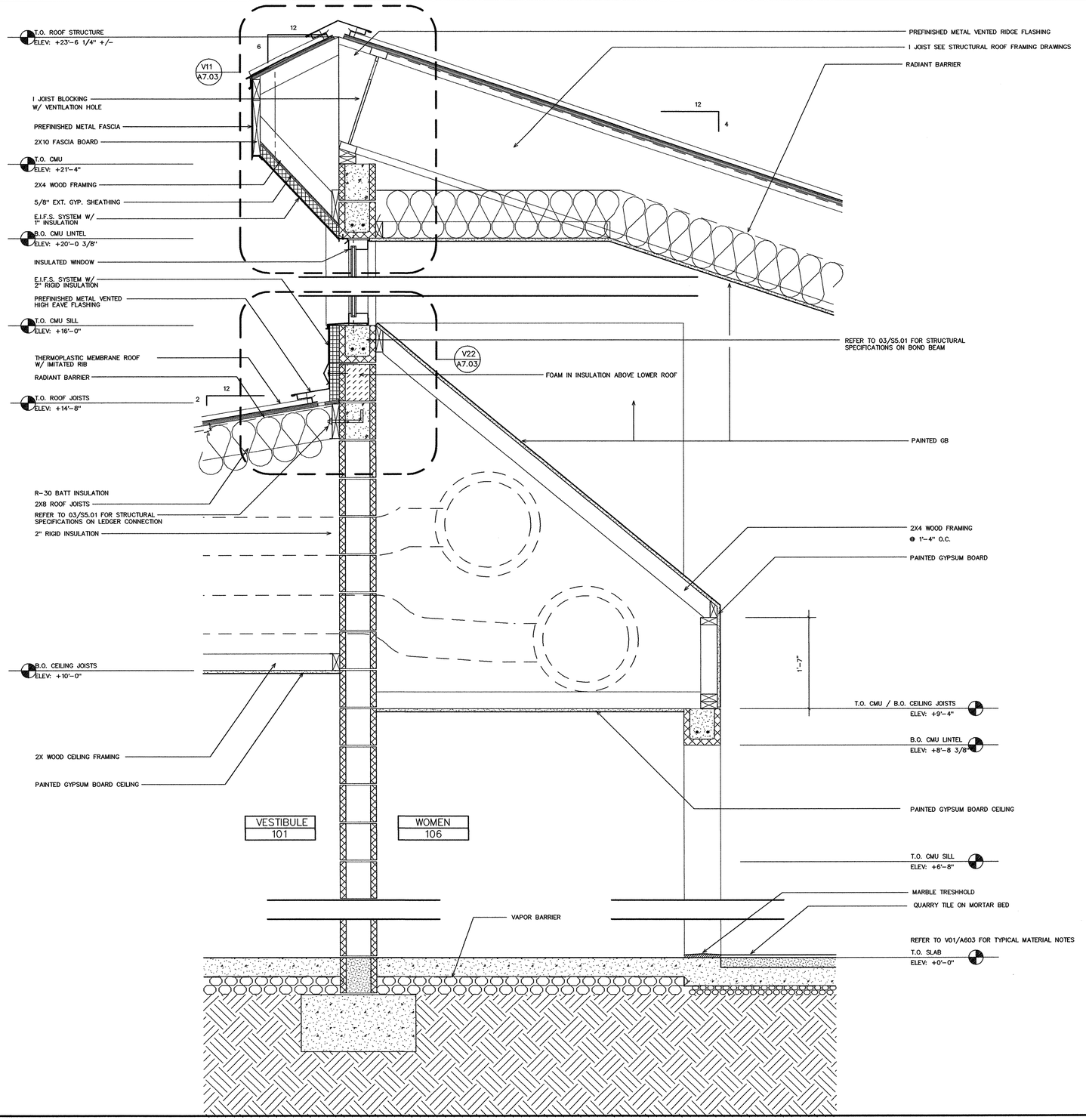

V01 WALL SECTION SCALE : 1" = 1'-0"

Innovative Design
INNOVATIVE DESIGN, INC.
CORPORATE SEAL
NC
MORGAN STREET, RALEIGH, NORTH CAROLINA 27603, 919/832-6303

MICHAEL H. NICKAS
REGISTERED ARCHITECT
2950
NORTH CAROLINA
RALEIGH, N. C.
7/10/07

PROJECT: Wilkes County Visitor's Center K-4703
WILKESBORO, NC
OWNER: NC Department of Transportation

DRAWN BY: MF
DATE: 06/01/2007
JOB NUMBER: 2320
REVISIONS:

DWG NAME: 320A605
H:\2320 - Wilkes\Mtec\4-DOI REVIEW\
PLOTTED: 7/30/2007

A6.05

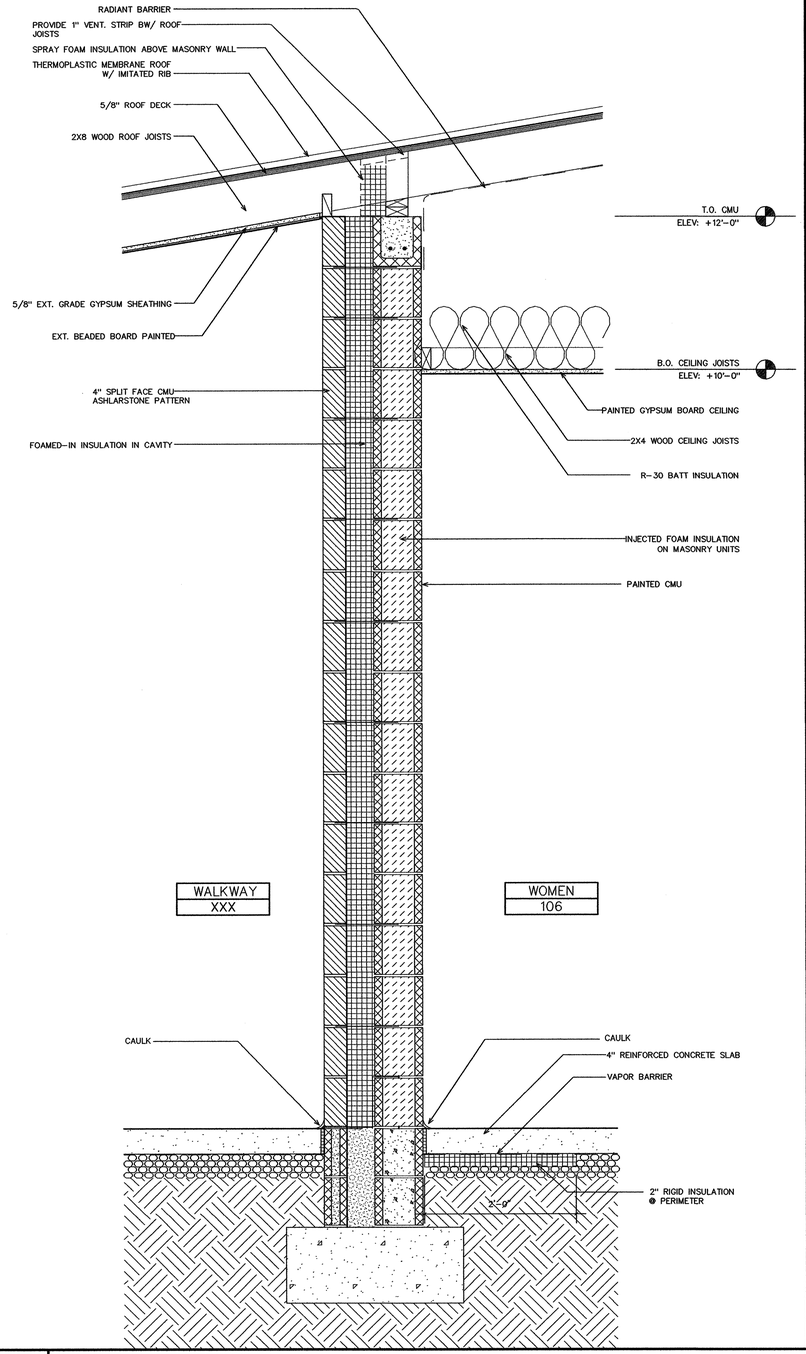

V01 WALL SECTION SCALE : 1" = 1'-0"

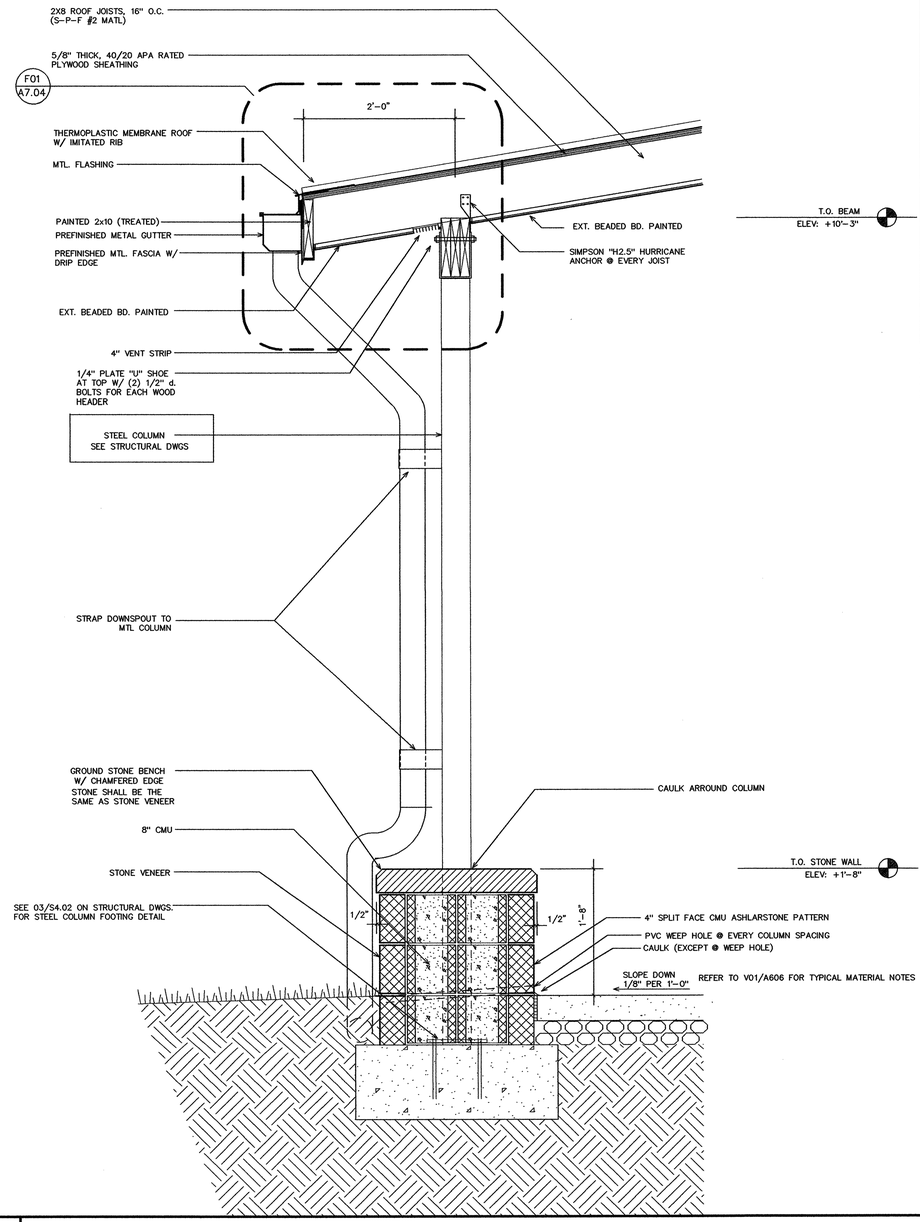

V11 WALL SECTION SCALE : 1" = 1'-0"

Innovative Design
MORGAN STREET, RALEIGH, NORTH CAROLINA 27603, 919/832-6303

INNOVATIVE DESIGN, INC. CORPORATE SEAL NC

MICHAEL H. NICKLAS REGISTERED ARCHITECT 2950 NORTH CAROLINA RALEIGH, N.C.
7/10/07

PROJECT: Wilkes County Visitor's Center K-4703
WILKESBORO, NC

OWNER: NC Department of Transportation

DRAWN BY: JZL
DATE: 06/01/2007
JOB NUMBER: 2320
REVISIONS:

DWG NAME: 320A606
H:\2320 - Wilkes\Mtec\4-DOI REVIEW\
PLOTTED: 7/30/2007

A6.06

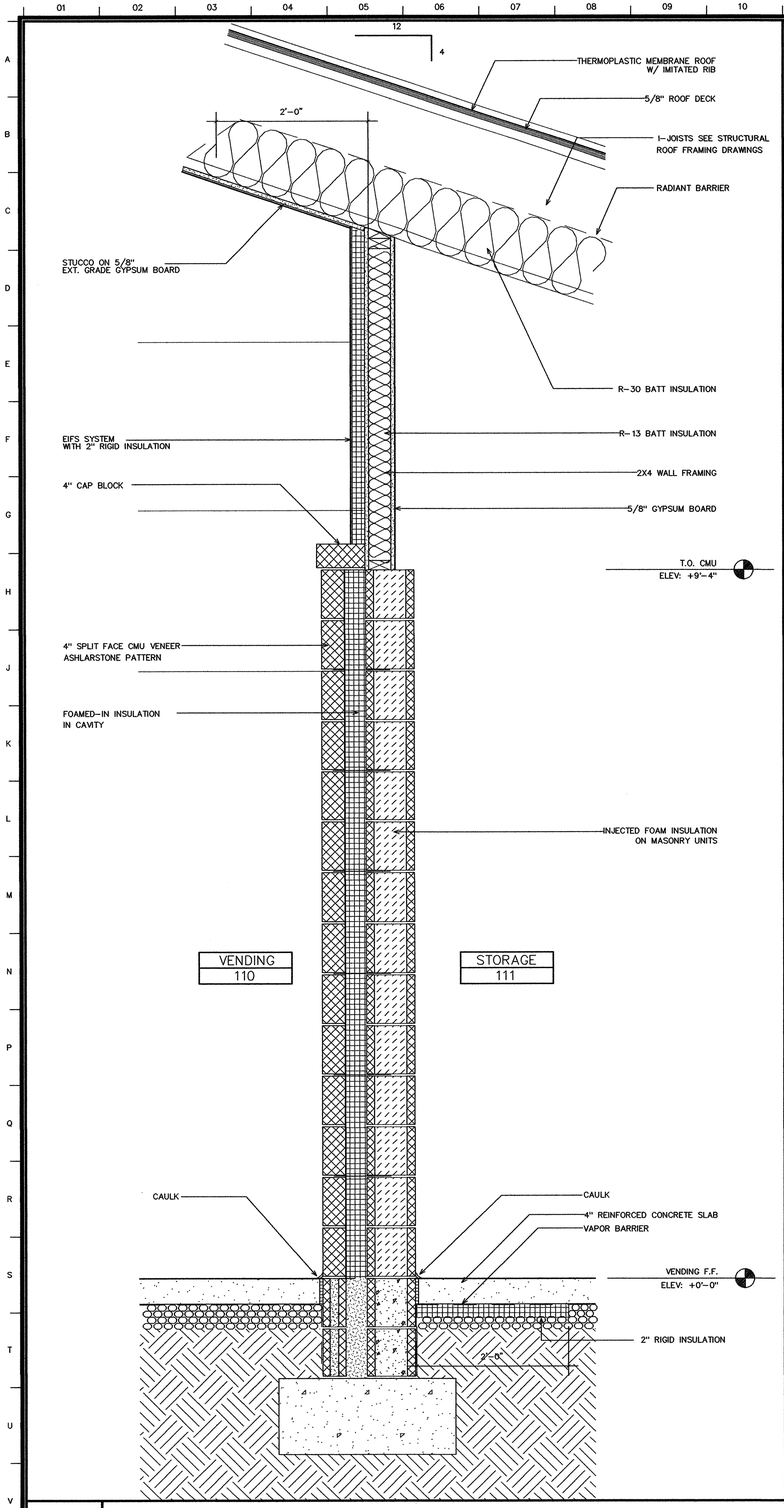

V01 WALL SECTION SCALE : 1" = 1'-0"

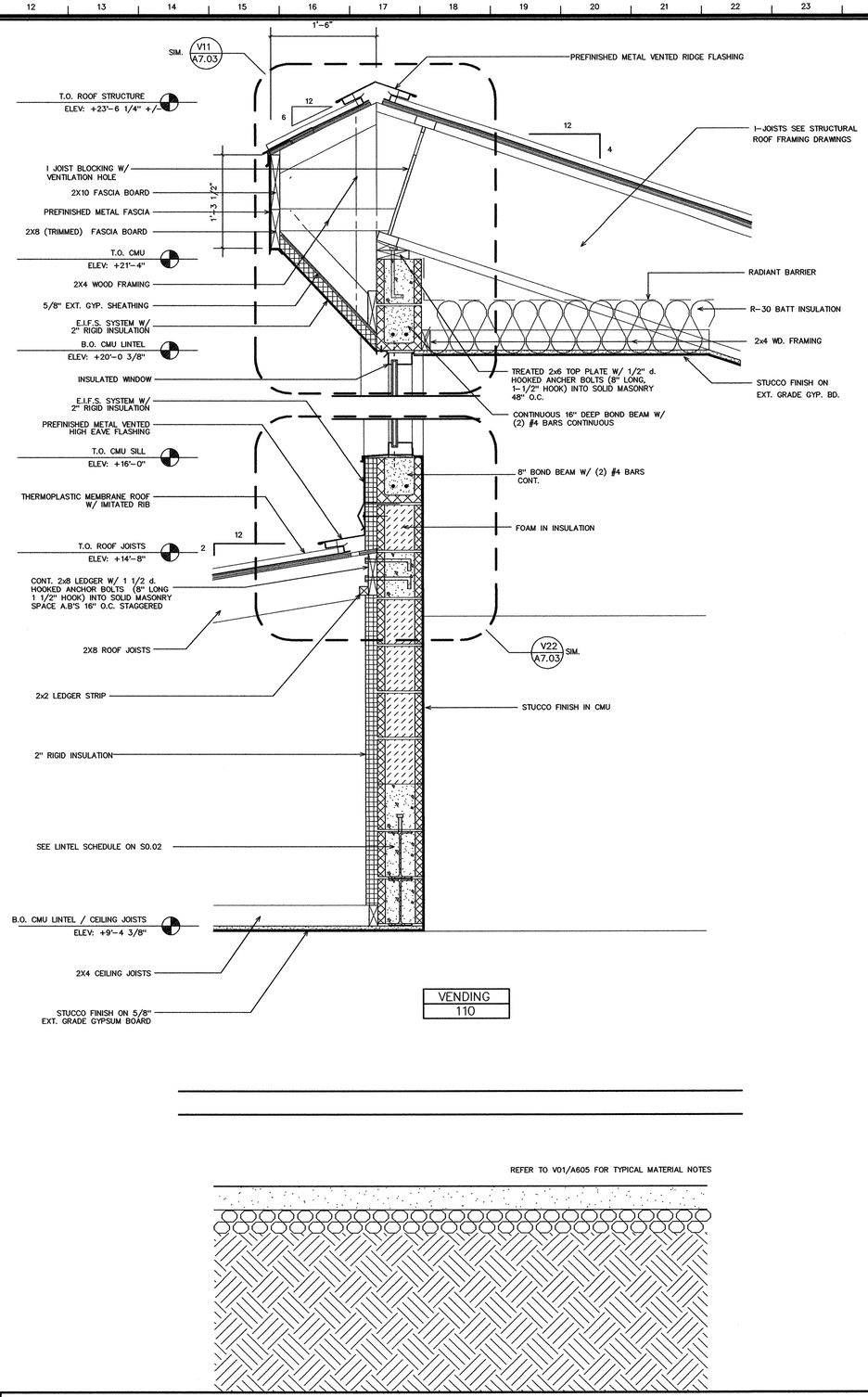

V10 WALL SECTION SCALE : 1" = 1'-0"

REFER TO V01/A605 FOR TYPICAL MATERIAL NOTES

Innovative Design
300 MORGAN STREET, RALEIGH, NORTH CAROLINA 27603, 919/832-6303

INNOVATIVE DESIGN, INC. CORPORATE SEAL NC

MICHAEL H. MILLER REGISTERED ARCHITECT 2950 NORTH CAROLINA RALEIGH, N.C.
7/19/07

PROJECT: Wilkes County Visitor's Center K-4703
WILKESBORO, NC
OWNER: NC Department of Transportation

DRAWN BY: MF/JZL
DATE: 06/01/2007
JOB NUMBER: 2320
REVISIONS:

DWG NAME: 320A607
H:\2320 - Wilkes\Mtec\4-DOI REVIEW\
PLOTTED: 7/30/2007

A6.07
40 OF 81

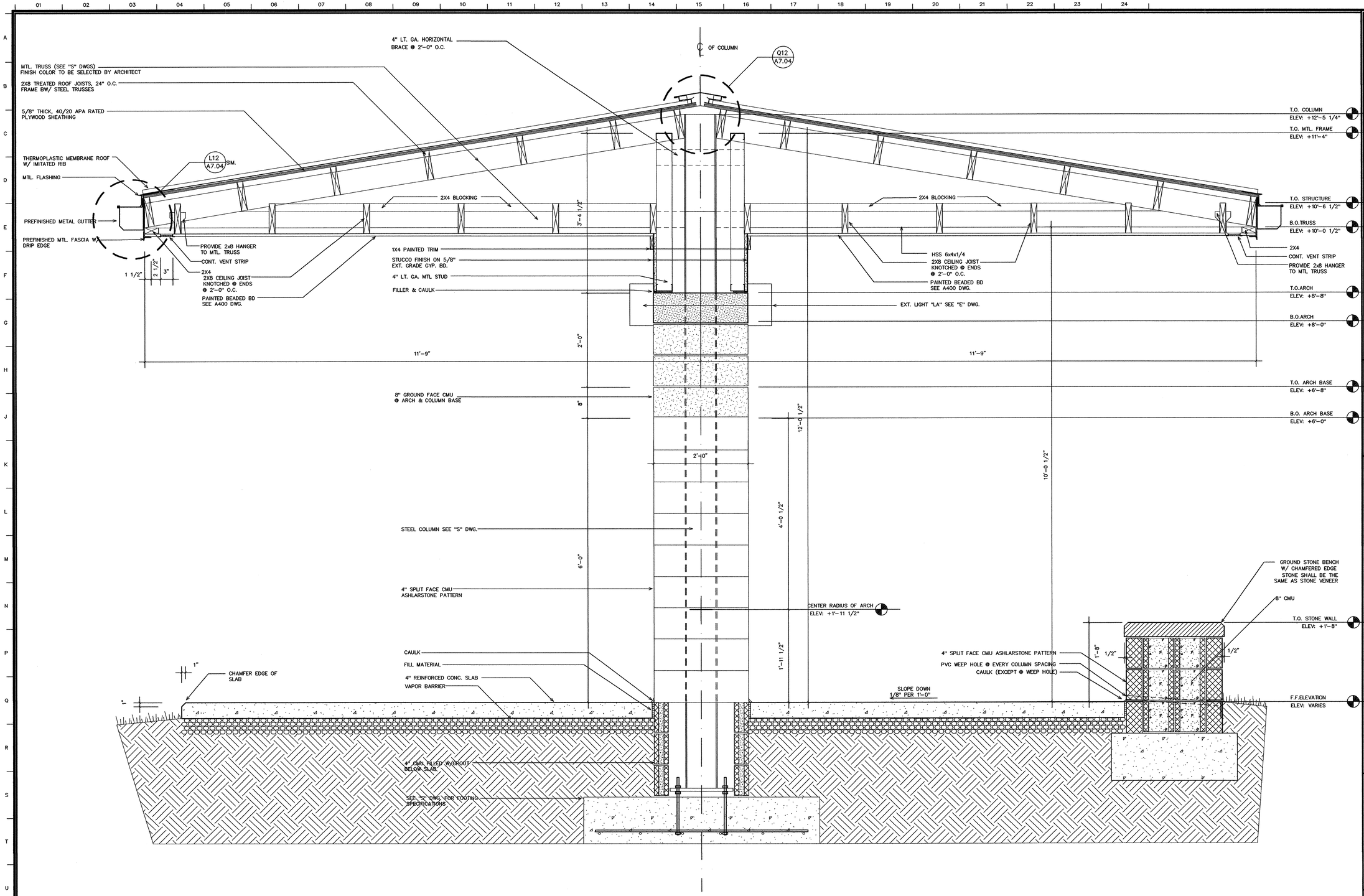

V01 WALL SECTION SCALE : 1" = 1'-0"

Innovative Design
MORGAN STREET, RALEIGH, NORTH CAROLINA 27603, 919/832-6303

INNOVATIVE DESIGN, INC. CORPORATE SEAL NC

MICHAEL H. NICOLAS REGISTERED ARCHITECT 2950 NORTH CAROLINA RALEIGH, N.C.
7/18/07

PROJECT: Wilkes County Visitor's Center K-4703
WILKESBORO, NC

OWNER: NC Department of Transportation

DRAWN BY: JZL
DATE: 06/01/2007
JOB NUMBER: 2320
REVISIONS:

DWG NAME: 320A608
H:\2320 - Wilkes\Mtec\4-DOI REVIEW\
PLOTTED: 7/30/2007

A6.08

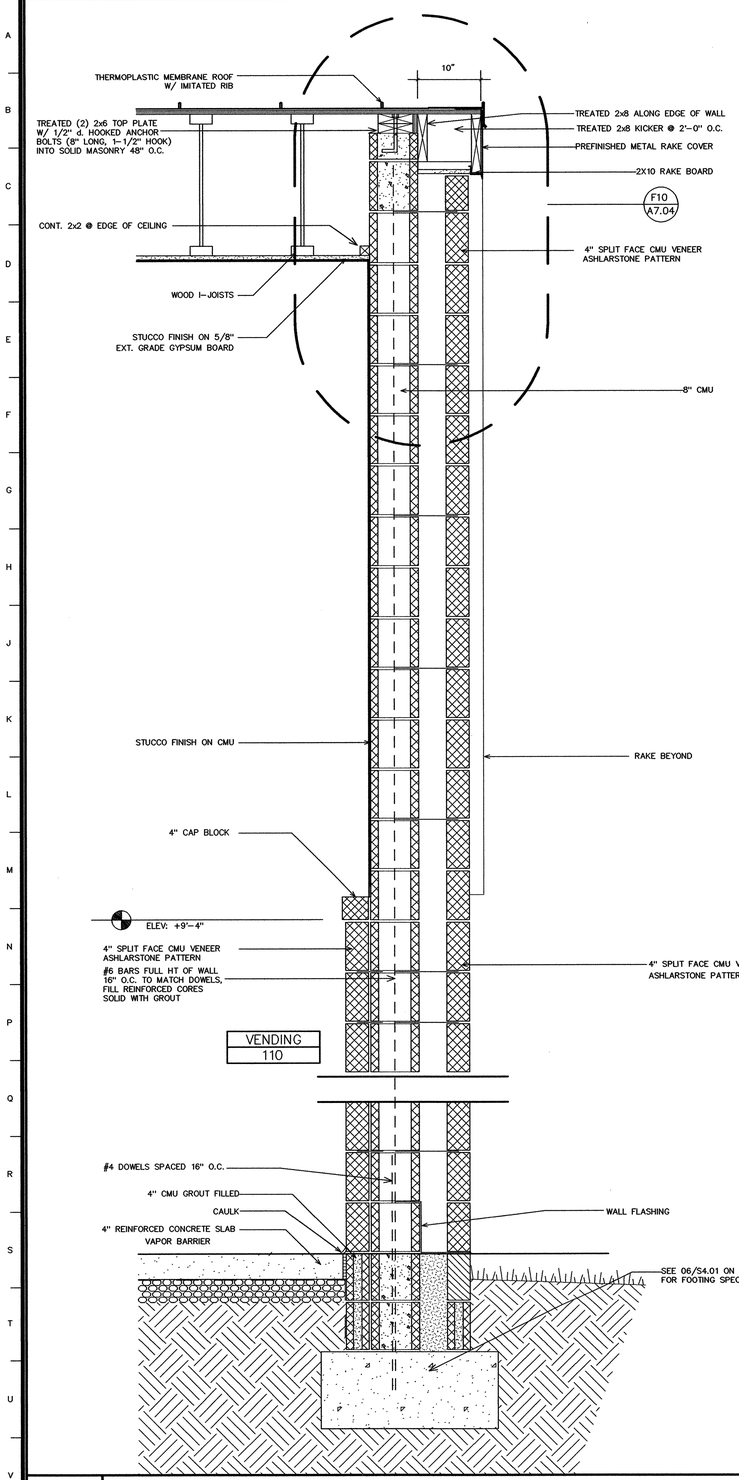

V01 WALL SECTION SCALE : 1" = 1'-0"

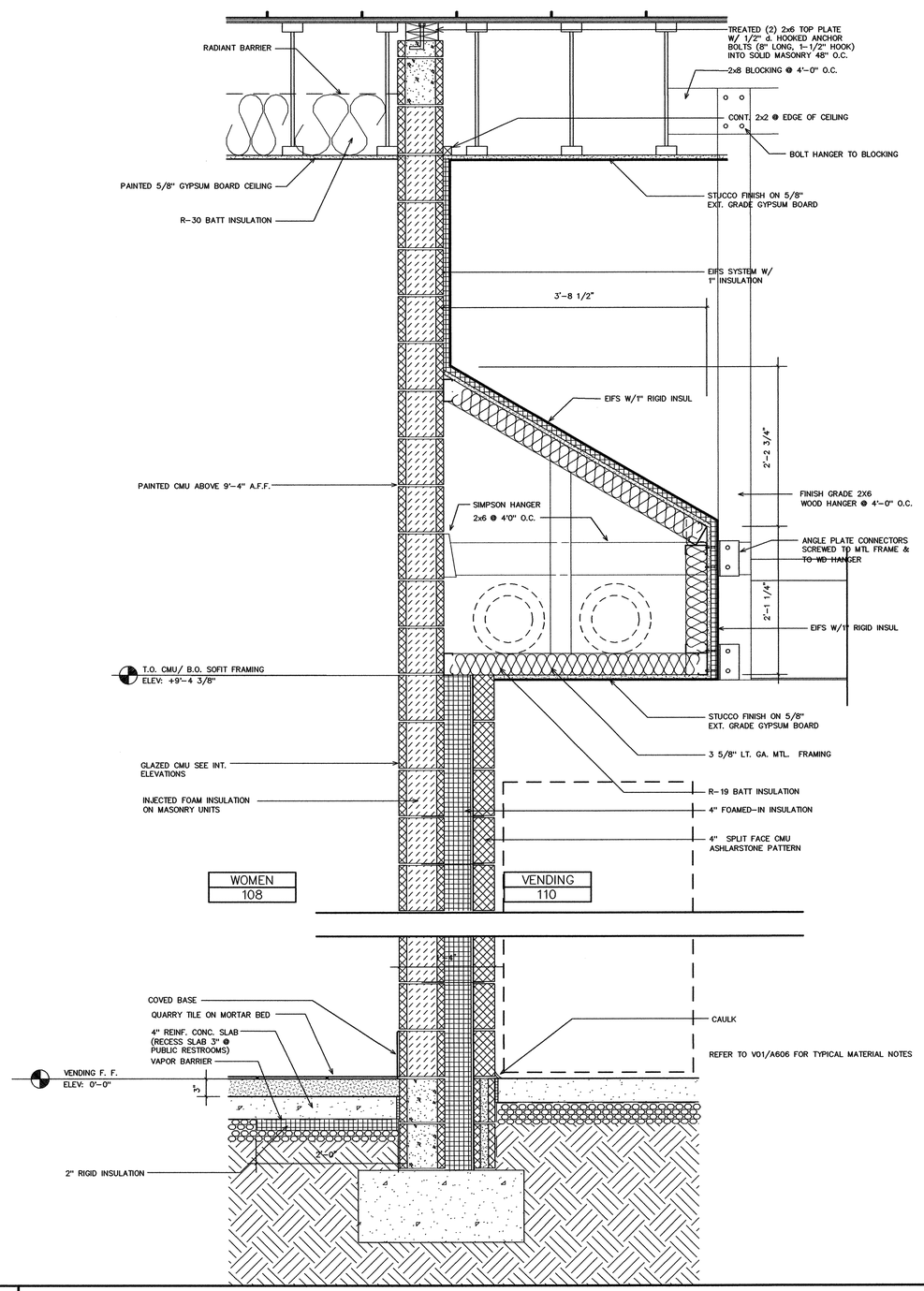

V10 WALL SECTION SCALE : 1" = 1'-0"

Innovative Design
380 MORGAN STREET, RALEIGH, NORTH CAROLINA 27603, 919/832-6303

INNOVATIVE DESIGN, INC. CORPORATE SEAL NC

MICHAEL H. NICHOLAS REGISTERED LANDSCAPE ARCHITECT 2950 NORTH CAROLINA RALEIGH, N.C. 7/30/07

PROJECT: Wilkes County Visitor's Center K-4703
WILKESBORO, NC
OWNER: NC Department of Transportation

DRAWN BY: MF/JZL
DATE: 06/01/2007
JOB NUMBER: 2320
REVISIONS:

DWG NAME: 320A609
H:\2320 - Wilkes\Mtec\4-DOT REVIEW\
PLOTTED: 7/30/2007

A6.09
42 OF 91

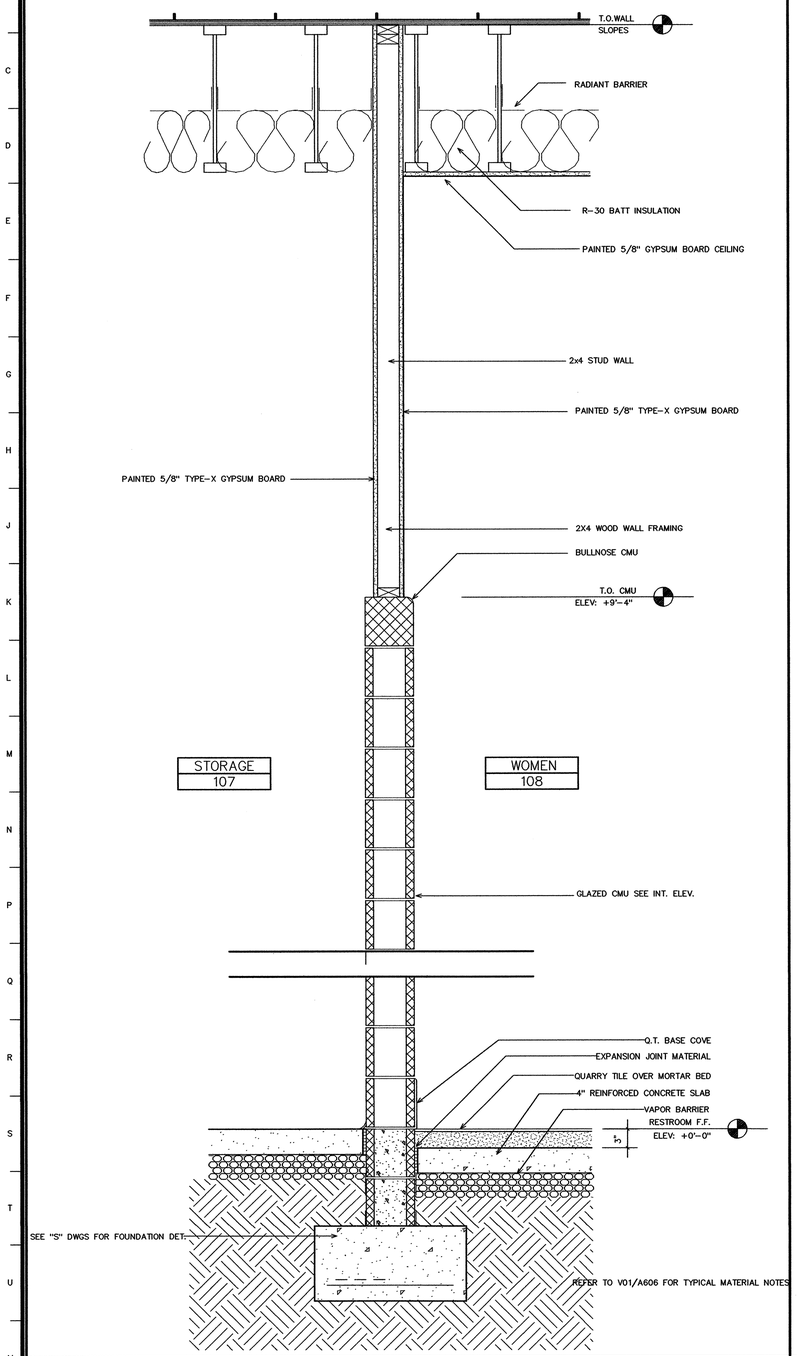

V01 WALL SECTION SCALE : 1" = 1'-0"

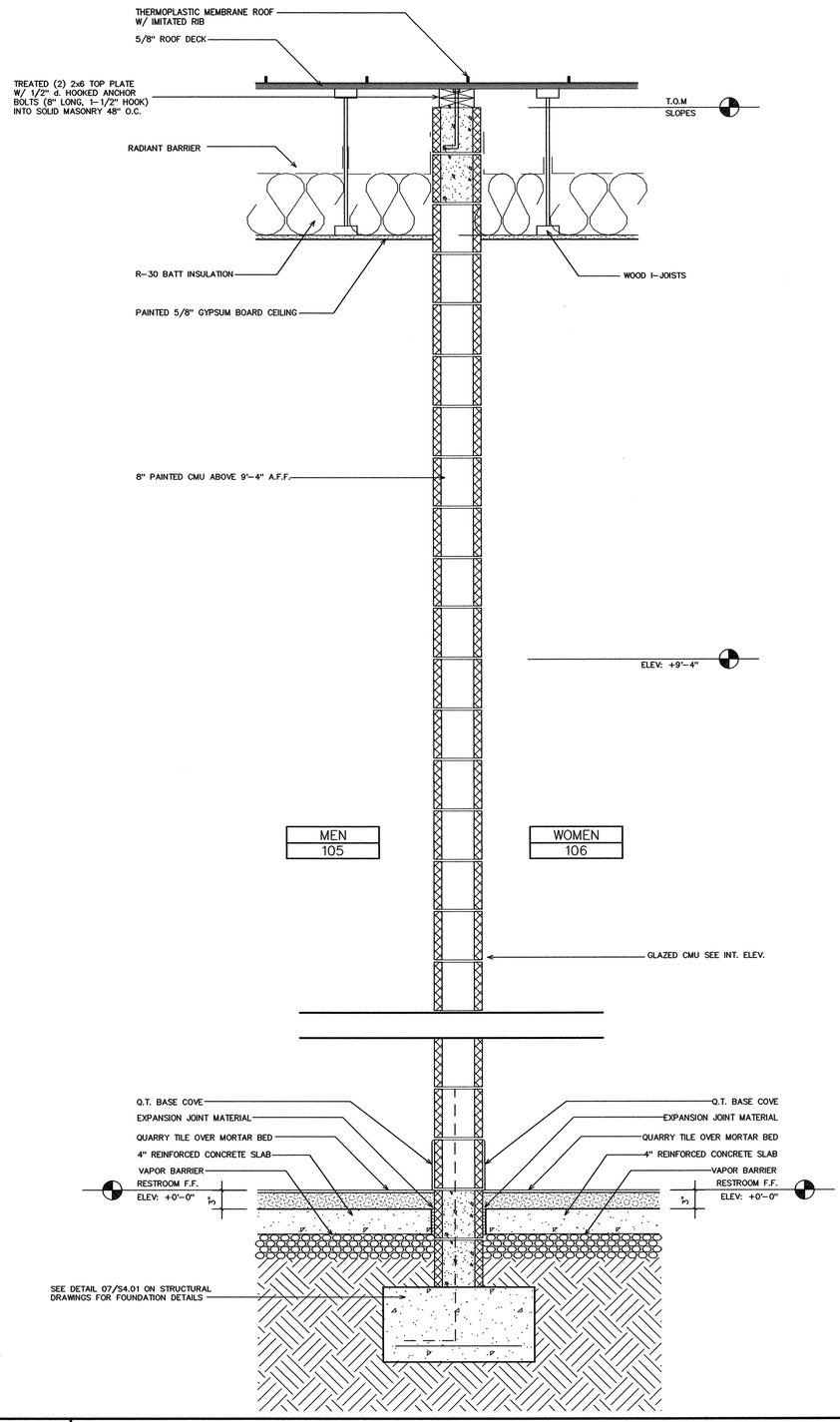

V11 WALL SECTION SCALE : 1" = 1'-0"

Innovative Design
MORGAN STREET, RALEIGH, NORTH CAROLINA 27603, 919/832-6303

INNOVATIVE DESIGN, INC. CORPORATE SEAL NC

MICHAEL H. NICOLAS REGISTERED ARCHITECT 2950 NORTH CAROLINA RALEIGH, N.C.

7/18/07

PROJECT: Wilkes County Visitor's Center K-4703
WILKESBORO, NC

OWNER: NC Department of Transportation

DRAWN BY: MF/JZL
DATE: 06/01/2007
JOB NUMBER: 2320
REVISIONS:

DWG NAME: 320A610
H:\2320 - Wilkes\Mtec\4-DOI REVIEW\
PLOTTED: 7/30/2007

A6.10

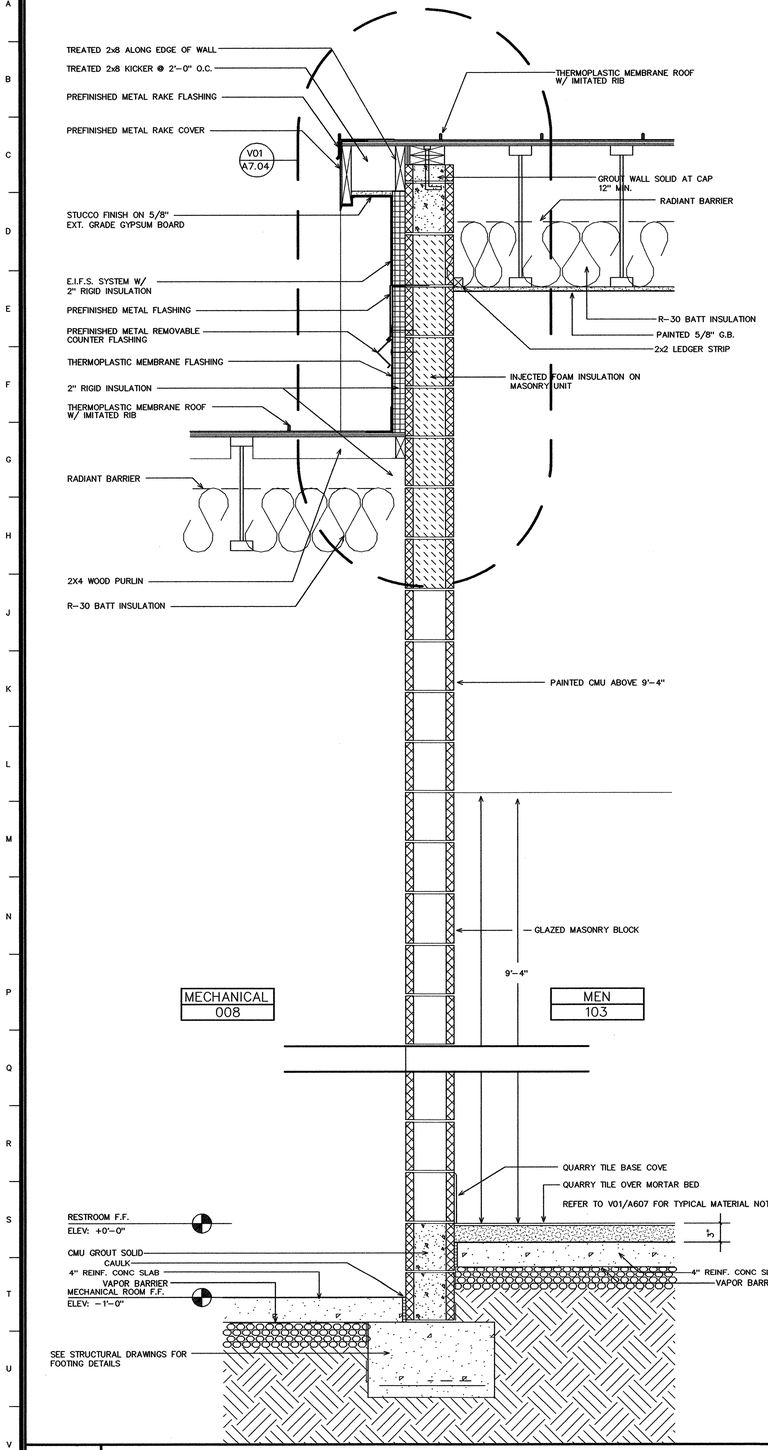

V01 WALL SECTION SCALE : 1" = 1'-0"

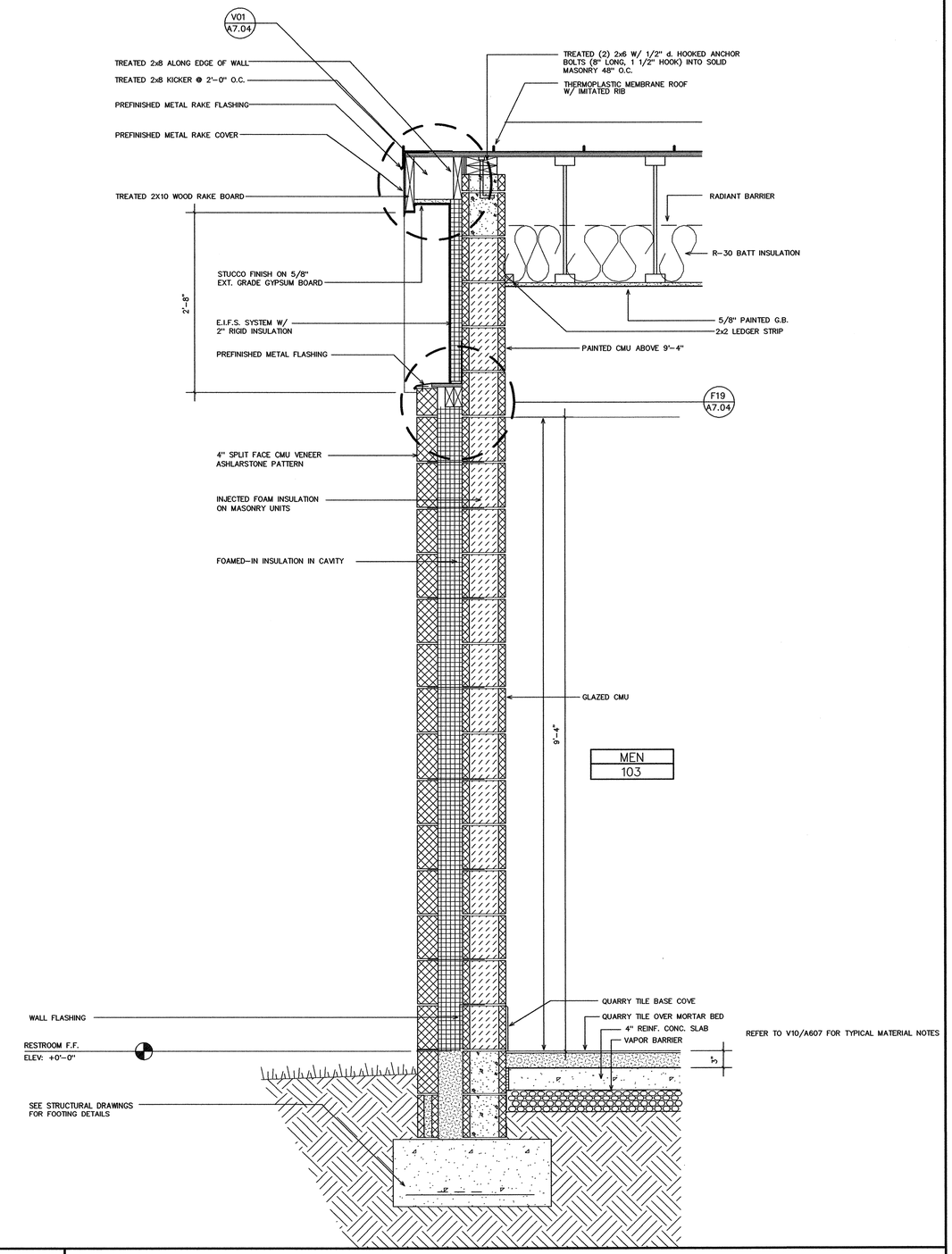

V11 WALL SECTION SCALE : 1" = 1'-0"

Innovative Design
MORGAN STREET, RALEIGH, NORTH CAROLINA 27603, 919/832-6303

INNOVATIVE DESIGN, INC. CORPORATE SEAL NC

MICHAEL H. NICKLAS REGISTERED ARCHITECT 2950 NORTH CAROLINA RALEIGH, N.C.

7/18/07

PROJECT: Wilkes County Visitor's Center K-4703
WILKESBORO, NC

OWNER: NC Department of Transportation

DRAWN BY: MF
DATE: 06/01/2007
JOB NUMBER: 2320
REVISIONS:

DWG NAME: 320A611
H:\2320 - Wilkes\Mtec\4-DOI REVIEW\
PLOTTED: 7/30/2007

A6.11

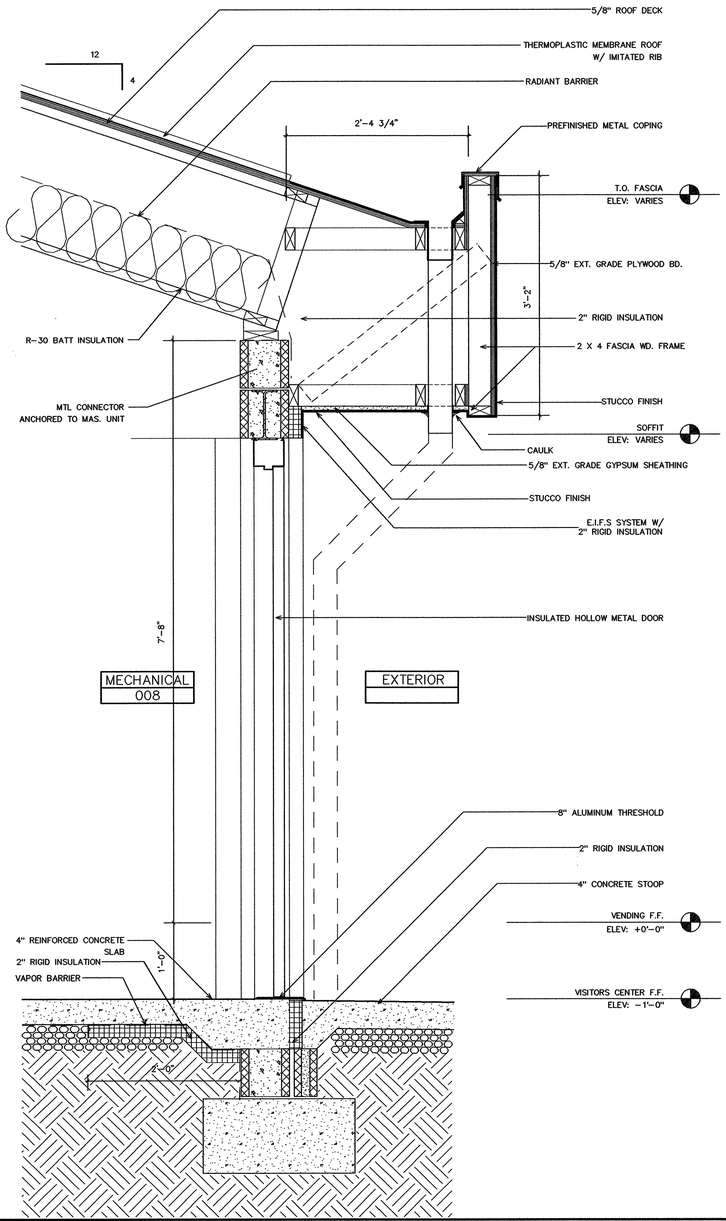

V01 WALL SECTION SCALE : 1" = 1'-0"

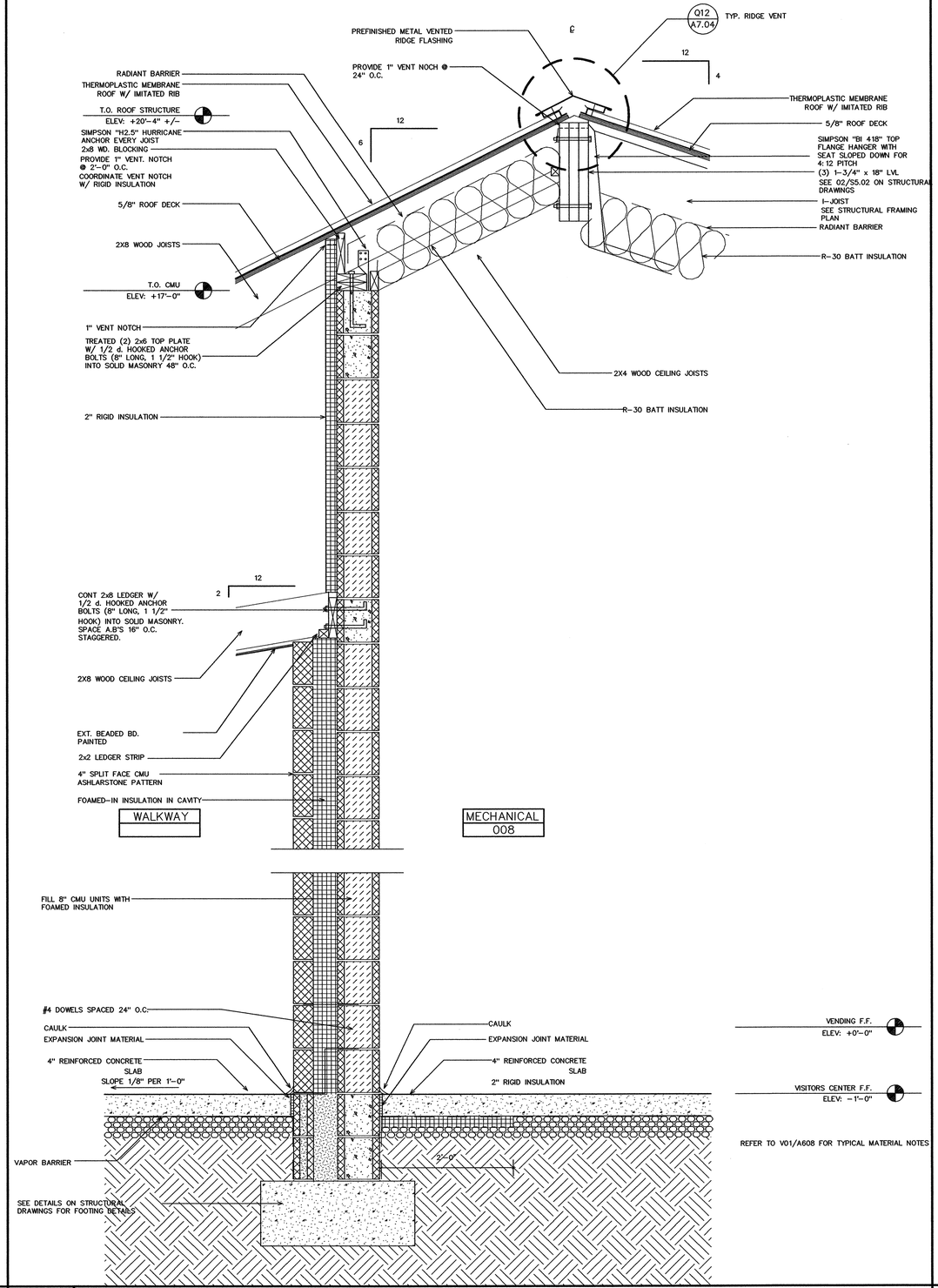

V10 WALL SECTION SCALE : 1" = 1'-0"

REFER TO V01/A608 FOR TYPICAL MATERIAL NOTES

Innovative Design
INNOVATIVE DESIGN, INC.
CORPORATE SEAL
NC
MICHAEL H. NICHOLAS
REGISTERED ARCHITECT
2950
NORTH CAROLINA
RALEIGH, N. C.
7/18/07
MORGAN STREET, RALEIGH, NORTH CAROLINA 27603, 919/832-6303

PROJECT: Wilkes County Visitor's Center K-4703
WILKESBORO, NC
OWNER: NC Department of Transportation

DRAWN BY: MF/JZL
DATE: 06/01/2007
JOB NUMBER: 2320
REVISIONS:

DWG NAME: 320A612
H:\2320 - Wilkes\Mtec\4-DOI REVIEW\
PLOTTED: 7/30/2007

A6.12
45 OF 89

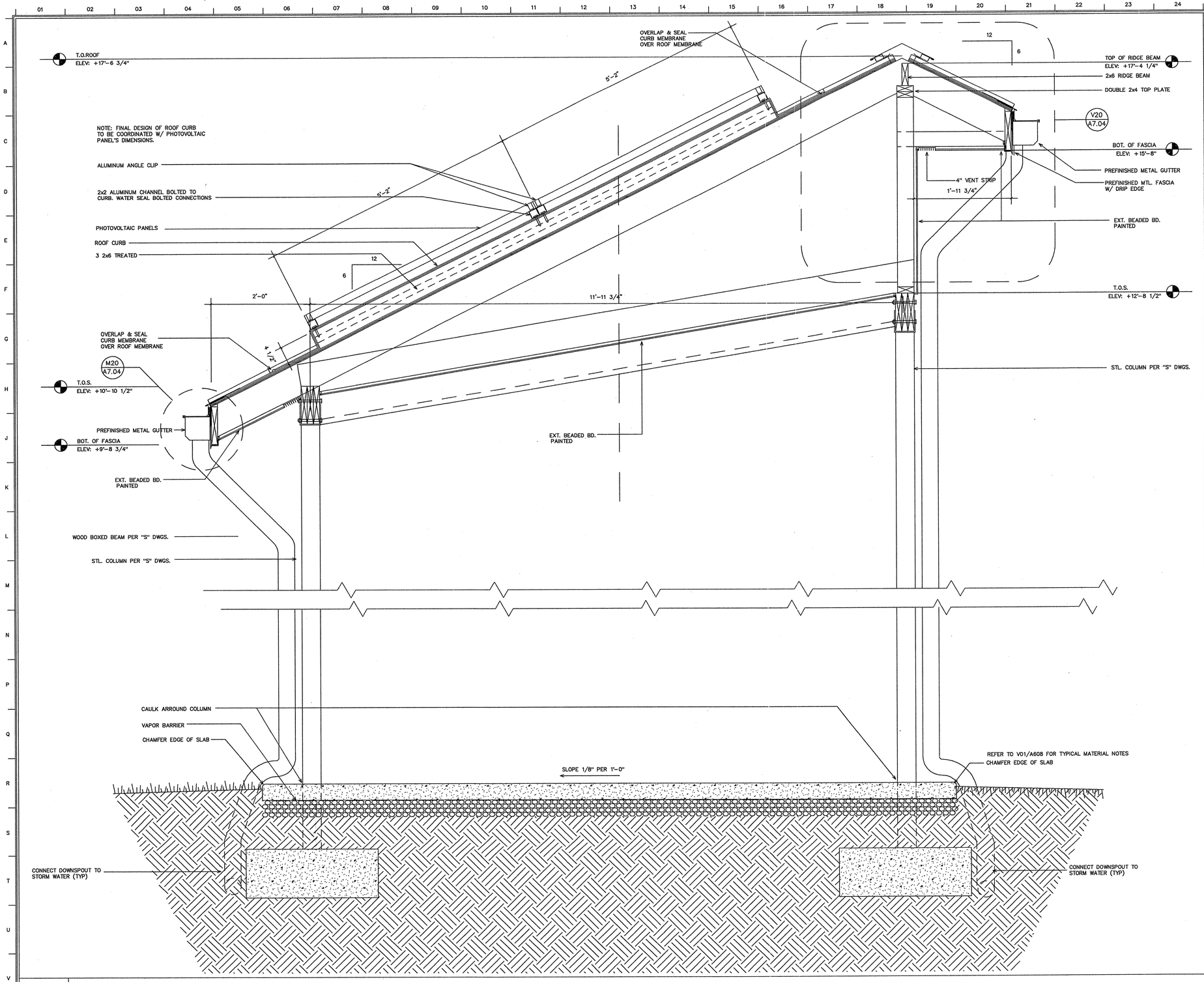

V01 WALL SECTION SCALE : 1" = 1'-0"

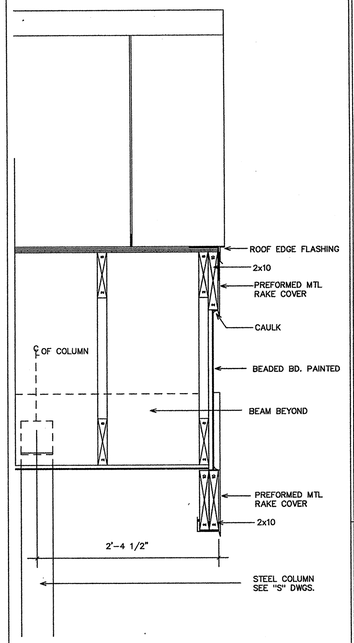

EDGE OF ROOF @ END OF WALKWAY

K24 WALL SECTION SCALE : 1" = 1'-0"

Innovative Design
300 S. WILMINGTON STREET, RALEIGH, NORTH CAROLINA 27603, 919/832-6303

STATE OF SOUTH CAROLINA REGISTERED ARCHITECTS INNOVATIVE DESIGN INC RALEIGH, N. C. 6358 C-3159

MICHAEL H. MIKLAS REGISTERED ARCHITECT 2950 NORTH CAROLINA RALEIGH, N.C.

PROJECT: Wilkes County Visitor's Center K-4703
WILKESBORO, NC
OWNER: NC Department of Transportation

DRAWN BY: JZL
DATE: 06/01/2007
JOB NUMBER: 2320
REVISIONS:

DWG NAME: 320A613
H:\2320 - Wilkes\Mtec\4-DOI REVIEW\
PLOTTED: 10/5/2007

A6.13

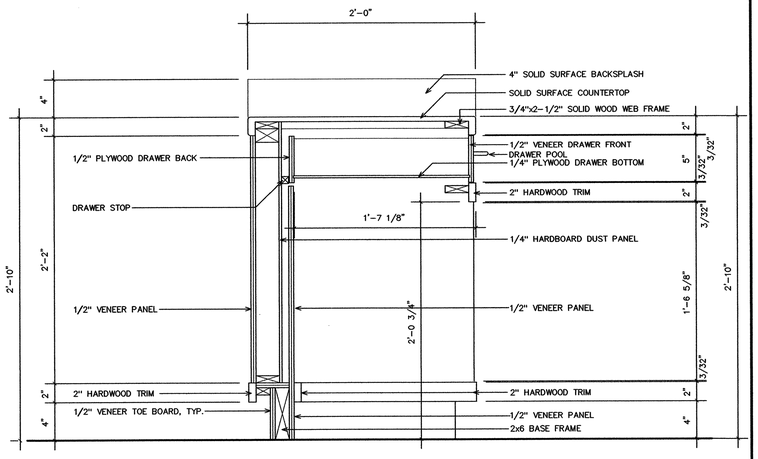

J01 CASEWORK DETAIL SCALE : 1-1/2" = 1'-0"

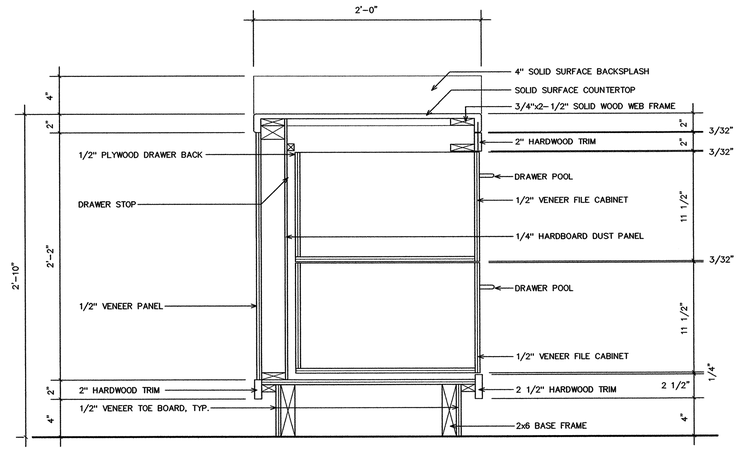

J11 CASEWORK DETAIL SCALE : 1-1/2" = 1'-0"

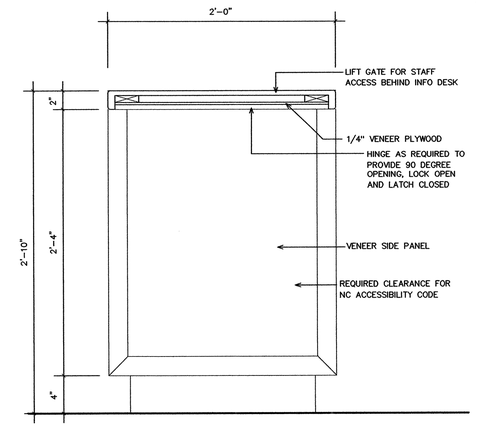

ALL NOTES SIMILAR TO G01/A701 UON

J22 CASEWORK DETAIL SCALE : 1-1/2" = 1'-0"

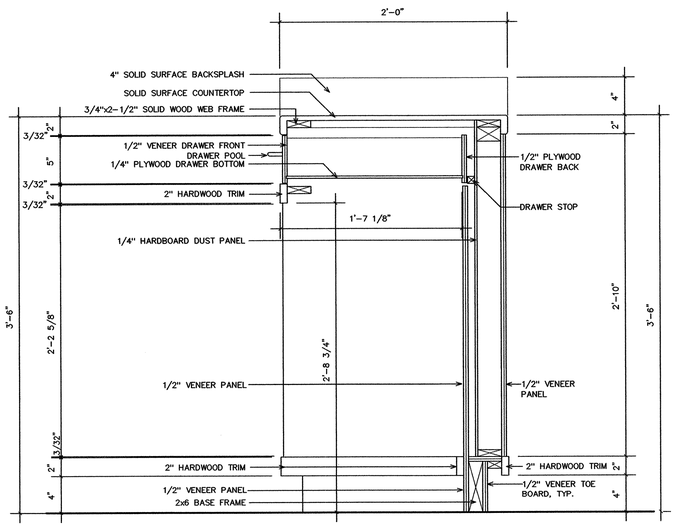

V01 CASEWORK DETAIL SCALE : 1-1/2" = 1'-0"

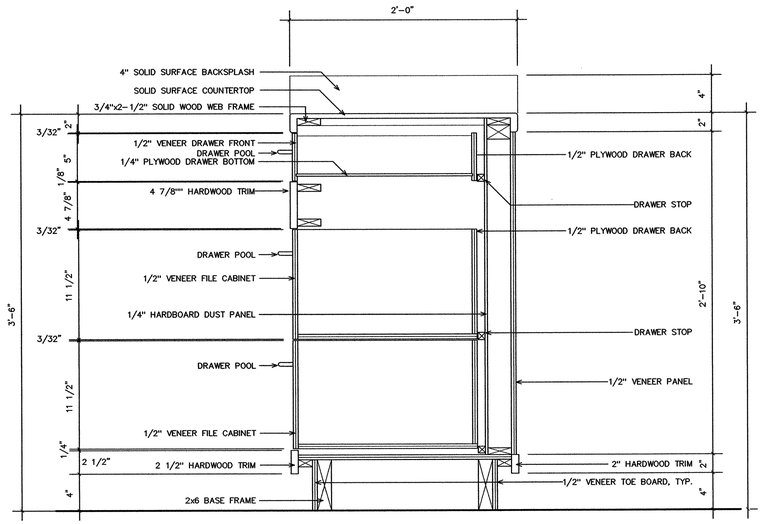

V11 CASEWORK DETAIL SCALE : 1-1/2" = 1'-0"

Innovative Design
1650 MORGAN STREET, RALEIGH, NORTH CAROLINA 27603, 919/832-6303

INNOVATIVE DESIGN, INC. CORPORATE SEAL NC

MICHAEL H. NICKLAS REGISTERED ARCHITECT 2950 NORTH CAROLINA RALEIGH, N.C.

7/16/07

PROJECT: Wilkes County Visitor's Center K-4703
WILKESBORO, NC

OWNER: NC Department of Transportation

DRAWN BY: MF/JZL
DATE: 06/01/2007
JOB NUMBER: 2320
REVISIONS:

DWG NAME: 320A701
H:\2320 - Wilkes\Mtec\4-DOI REVIEW\
PLOTTED: 7/30/2007

A7.01

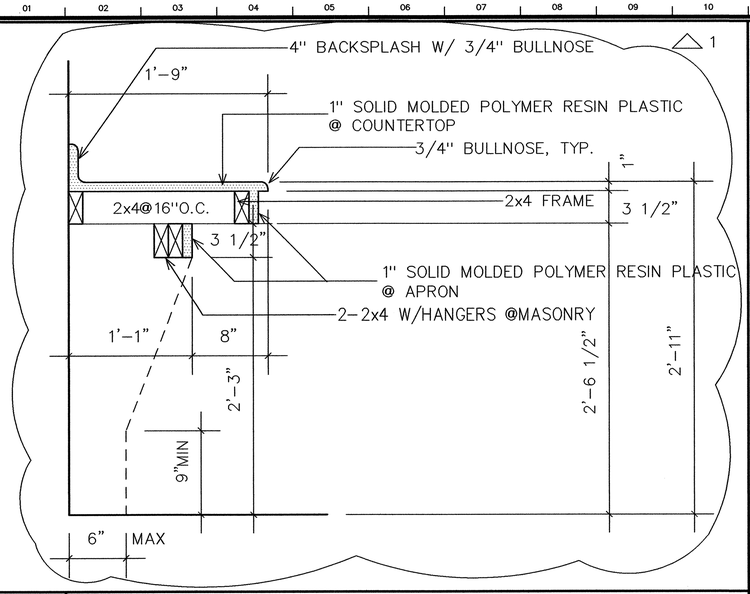

H01 DETAIL SCALE : 1-1/2" = 1'-0"

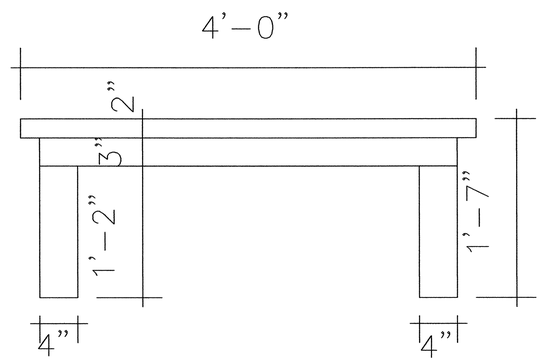

H11 BENCH DETAIL SCALE : 1-1/2" = 1'-0"

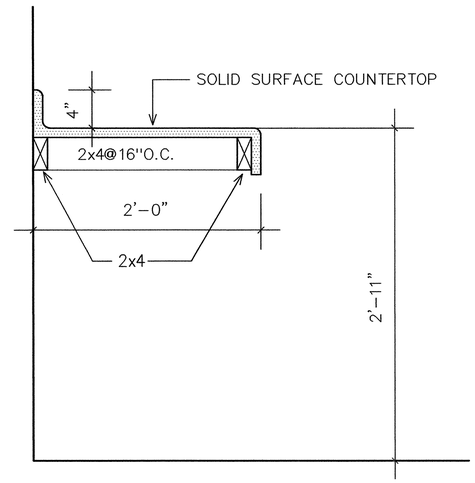

H22 COUNTERTOP DETAIL SCALE : 1-1/2" = 1'-0"

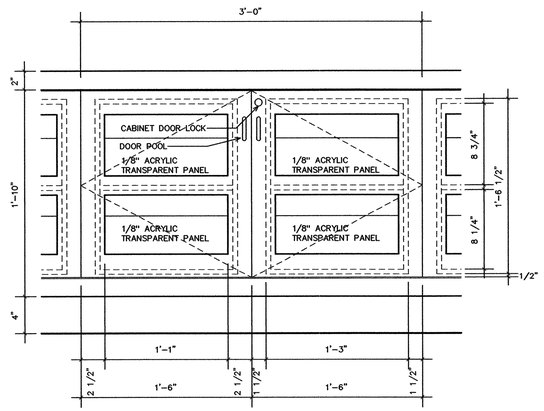

V01 CASEWORK DETAIL SCALE : 1-1/2" = 1'-0"

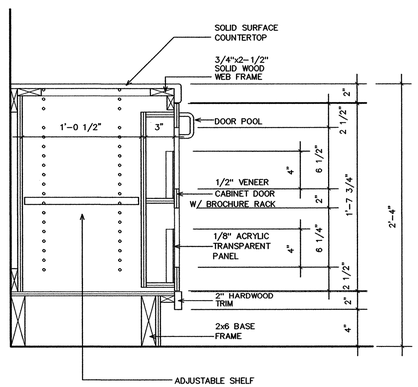

V09 CASEWORK DETAIL SCALE : 1-1/2" = 1'-0"

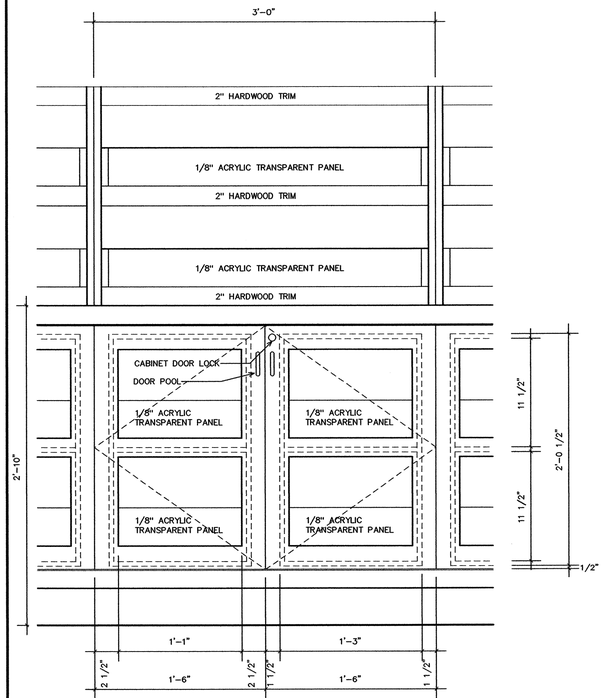

V15 CASEWORK DETAIL SCALE : 1-1/2" = 1'-0"

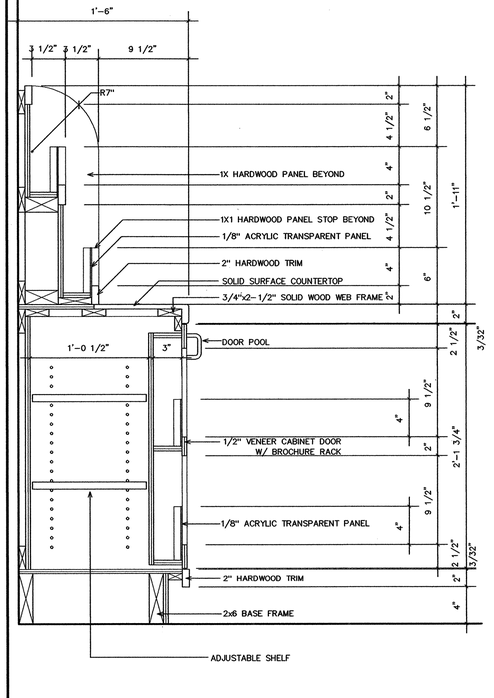

V22 CASEWORK DETAIL SCALE : 1-1/2" = 1'-0"

Innovative Design
MORGAN STREET, RALEIGH, NORTH CAROLINA 27603, 919/832-6303

INNOVATIVE DESIGN, INC. CORPORATE SEAL NC

MICHAEL H. NICKLAS REGISTERED ARCHITECT 2950 NORTH CAROLINA RALEIGH, N.C.
7/18/07

PROJECT: Wilkes County Visitor's Center K-4703
WILKESBORO, NC

OWNER: NC Department of Transportation

DRAWN BY: MF/JZL
DATE: 06/01/2007
JOB NUMBER: 2320
REVISIONS:
△1 07-18-07

DWG NAME: 320A702
H:\2320 - Wilkes\Mtec\4-DOI REVIEW\
PLOTTED: 7/30/2007

A7.02

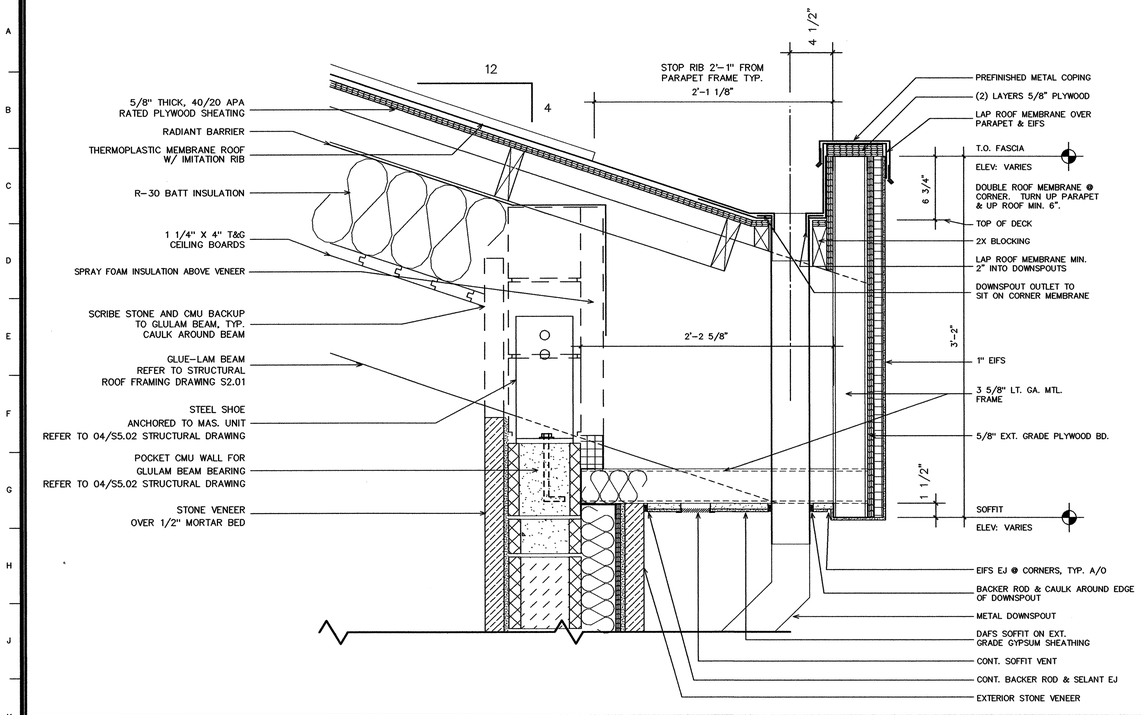

K01 PARAPET DETAIL SCALE : 1 1/2" = 1'-0"

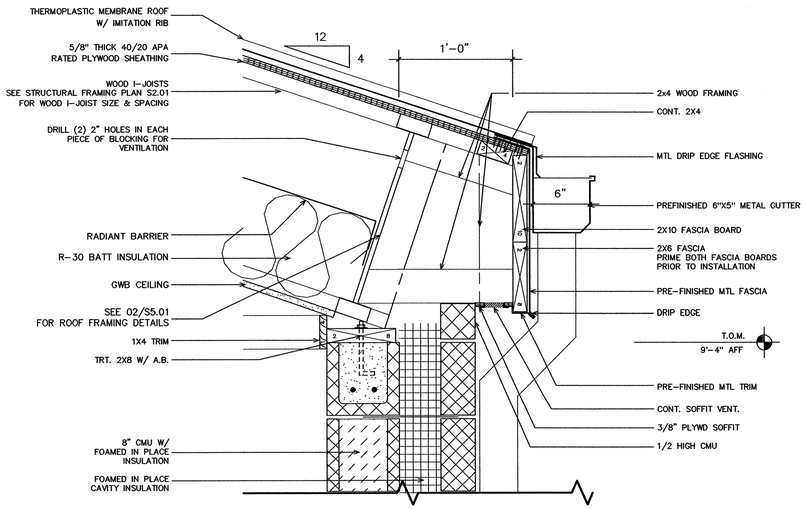

K16 FASCIA DETAIL SCALE : 1 1/2" = 1'-0"

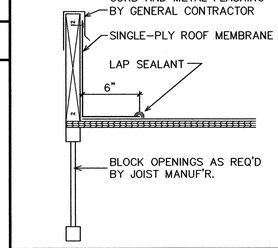

TYPICAL ROOF MEMBRANE NOTE:
HEAT WELD ALL LAP SEALANT JOINT ON ROOF MEMBRANE. FULLY ADHERE ALL ROOF MEMBRNAE ON VERTICAL SURFACES.

N22 EQUIPMENT CURB DETAIL SCALE : 1 1/2" = 1'-0"

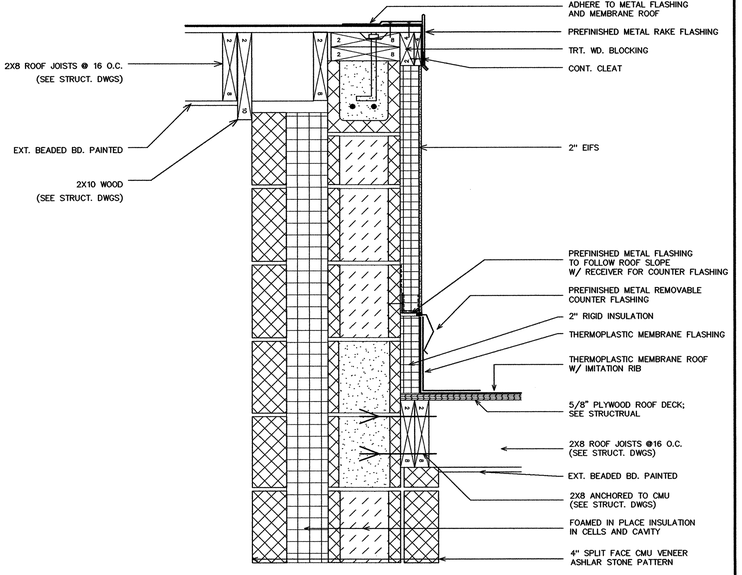

V01 ROOF DETAIL SCALE : 1 1/2" = 1'-0"

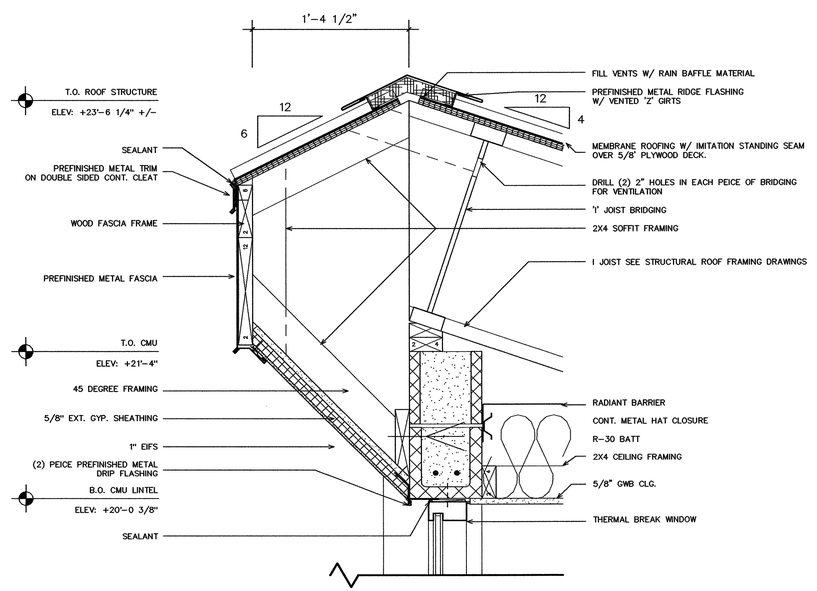

V11 ROOF DETAIL SCALE : 1 1/2" = 1'-0"

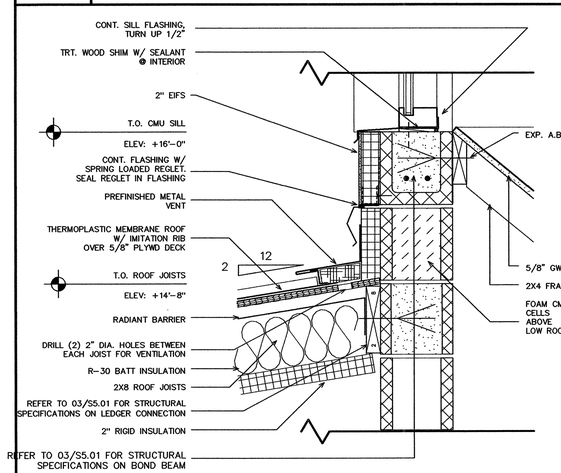

V22 ROOF DETAIL SCALE : 1 1/2" = 1'-0"

Innovative Design
ARCHITECTURE
INTERIORS
PLANNING
SUITE 200 ORGAN STREET, RALEIGH, NORTH CAROLINA 27603, 919/832-6303

INNOVATIVE DESIGN, INC. CORPORATE SEAL NC

REGISTERED ARCHITECT MICHAEL H. NICKLAS 2950 NORTH CAROLINA RALEIGH, N.C. 7/30/07

PROJECT: Wilkes County Visitor's Center K-4703
WILKESBORO, NC
OWNER: NC Department of Transportation

DRAWN BY: LJG
DATE: 06/01/2007
JOB NUMBER: 2320
REVISIONS:

DWG NAME: 320A703
H:\2320 - Wilkes\Mtec\4-DOT REVIEW\
PLOTTED: 7/30/2007

A7.03

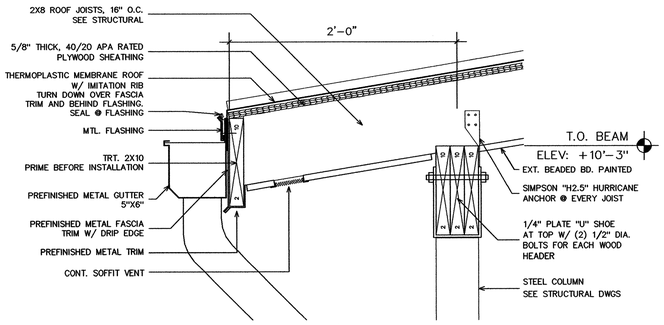

F01 SOFFIT DETAIL SCALE : 1 1/2" = 1'-0"

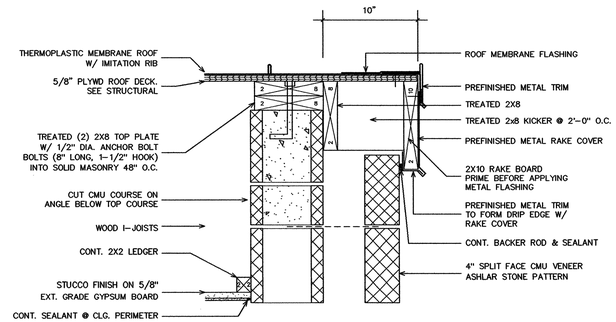

F10 RAKE DETAIL SCALE : 1 1/2" = 1'-0"

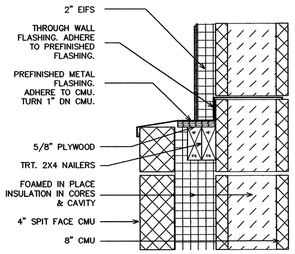

F19 DETAIL SCALE : 1 1/2" = 1'-0"

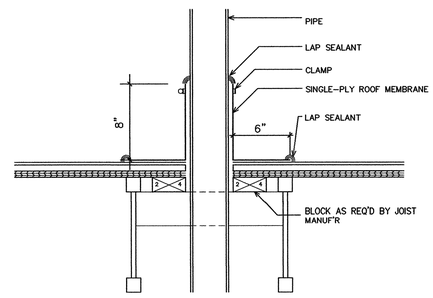

F23 ROOF PENETRATION DETAIL SCALE : 1 1/2" = 1'-0"

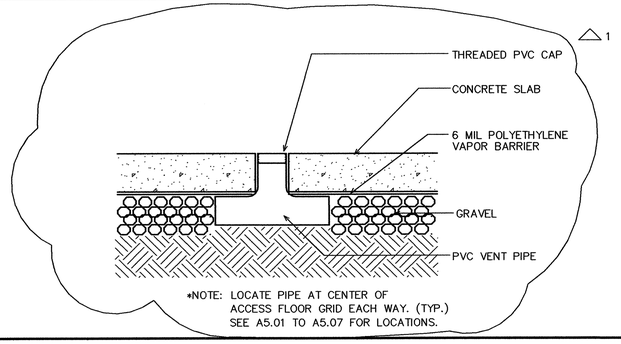

L01 RADOM ERRADICATION T CAP DETAIL SCALE : 3" = 1'-0"

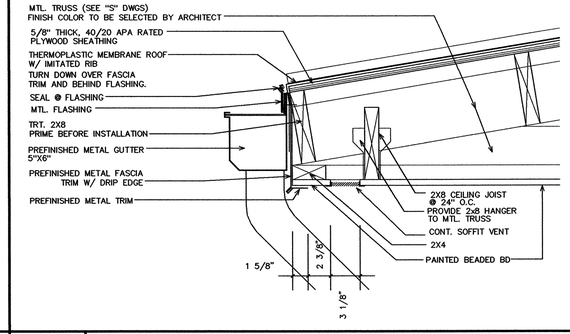

L12 GUTTER/SOFFIT DETAIL SCALE : 3" = 1'-0"

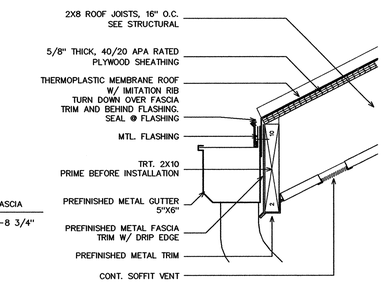

M20 GUTTER DETAIL SCALE : 1 1/2" = 1'-0"

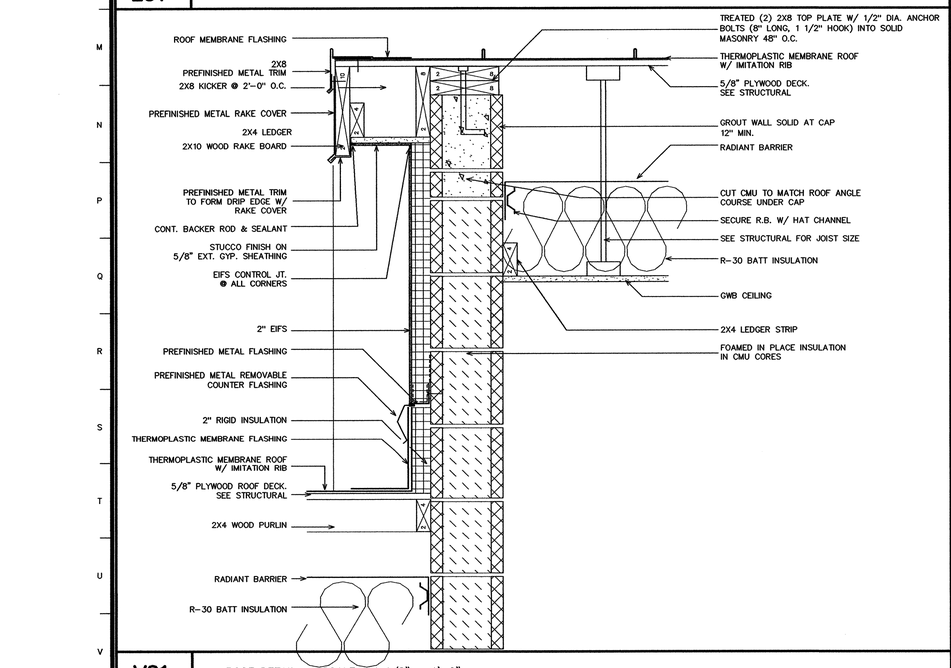

V01 ROOF DETAIL SCALE : 1 1/2" = 1'-0"

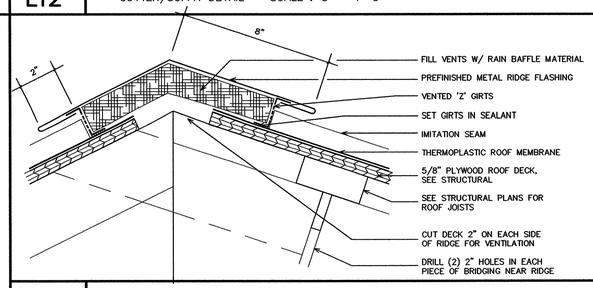

Q12 RIDGE VENT DETAIL SCALE : 3" = 1'-0"

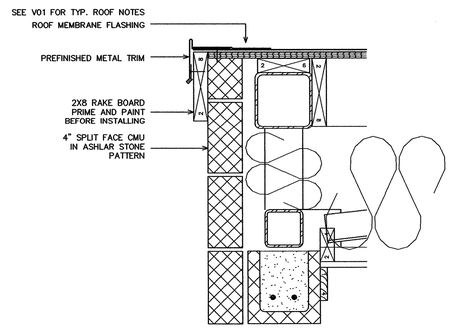

V12 ROOF DETAIL SCALE : 1 1/2" = 1'-0"

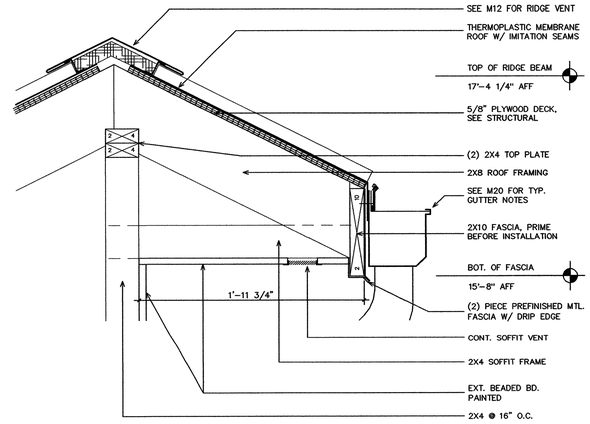

V20 SOFFIT DETAIL SCALE : 1 1/2" = 1'-0"

Innovative Design
ARCHITECTURE
1400 MORGAN STREET, RALEIGH, NORTH CAROLINA 27603, 919/832-6303
INNOVATIVE DESIGN, INC. CORPORATE SEAL NC
MICHAEL H. NICHOLS REGISTERED ARCHITECT 2950 NORTH CAROLINA RALEIGH, N.C.
7/18/07

PROJECT: Wilkes County Visitor's Center K-4703
WILKESBORO, NC
OWNER: NC Department of Transportation

DRAWN BY: LJG
DATE: 06/01/2007
JOB NUMBER: 2320
REVISIONS:
△ 07-18-07

DWG NAME: 320A704
H:\2320 - Wilkes\Mtec\4-DOT REVIEW\
PLOTTED: 7/30/2007

A7.04
50 OF 51

GENERAL

THESE DRAWINGS, AS INSTRUMENTS OF PROFESSIONAL SERVICE, ARE THE PROPERTY OF LYSAGHT & ASSOCIATES, P.A., FOR USE SOLELY WITH THIS PROJECT AND SHALL NOT BE REPRODUCED FOR OTHER PURPOSES.

THE PROFESSIONAL ENGINEER WHOSE SEAL APPEARS ON THESE DRAWINGS IS THE PROJECT STRUCTURAL ENGINEER-OF-RECORD (SER) WHO BEARS LEGAL RESPONSIBILITY FOR THE PERFORMANCE OF THE STRUCTURAL FRAMING RELATING TO PUBLIC HEALTH, SAFETY, AND WELFARE. NO OTHER PARTY, WHETHER OR NOT A PROFESSIONAL ENGINEER, MAY COMPLETE, CORRECT, REVISE, DELETE, OR ADD TO THESE CONSTRUCTION DOCUMENTS OR PERFORM INSPECTIONS OF THE WORK WITHOUT THE WRITTEN PERMISSION OF THE SER.

USE STRUCTURAL DRAWINGS IN CONJUNCTION WITH JOB SPECIFICATIONS, AND OTHER DRAWINGS.

SECTIONS AND DETAILS SHOWN SHALL BE CONSIDERED TYPICAL FOR ALL SIMILAR CONDITIONS.

ALL NON-STRUCTURAL ELEMENTS INDICATED ON THE STRUCTURAL DRAWINGS HAVE BEEN SHOWN IN GENERAL RELATIONSHIP TO THE STRUCTURAL ELEMENTS. THEY SHALL NOT BE ASSUMED TO BE ACCURATE AND REFERENCE MUST BE MADE TO THE APPROPRIATE CONSULTANT(S) PLANS AND SPECIFICATIONS.

CONTRACTOR SHALL VERIFY ALL CONDITIONS IN THE FIELD AND TAKE ALL NECESSARY FIELD MEASUREMENTS.

THE STRUCTURE SHOWN ON THESE DRAWINGS IS STRUCTURALLY SOUND ONLY IN ITS COMPLETED FORM. THE CONTRACTOR SHALL PROVIDE ALL NECESSARY BRACING TO STABILIZE THE BUILDING DURING CONSTRUCTION.

SCOPE OF STRUCTURAL ENGINEERING SERVICES

LYSAGHT & ASSOCIATES, P.A. HAS PERFORMED THE STRUCTURAL DESIGN AND PREPARED THE STRUCTURAL WORKING DRAWINGS FOR THIS PROJECT. "CONSTRUCTION REVIEW" SERVICES ARE ALSO A PART OF OUR CONTRACT. THE CONTRACTOR MUST NOTIFY THE STRUCTURAL ENGINEER AT THE FOLLOWING STAGES OF CONSTRUCTION FOR A FIELD REVIEW OF THE WORK:

1. AFTER PLACEMENT OF FOOTING REBAR, BEFORE CONCRETE POUR.
2. AFTER ERECTION OF THE ROOF FRAMING.
3. AFTER COMPLETION OF THE STRUCTURAL SYSTEM, BEFORE INTERIOR FINISHES ARE INSTALLED.
4. AT ANY STAGE OF CONSTRUCTION WHEN DESIGN OR CONSTRUCTION PROBLEMS ARE ENCOUNTERED.

A "CONSTRUCTION REVIEW REPORT" WILL BE SENT TO THE CONTRACTOR FOLLOWING EACH FIELD TRIP.

PORTIONS OF THE STRUCTURAL DESIGN (AS NOTED ON THE DRAWINGS AND IN THESE NOTES) ARE THE RESPONSIBILITY OF THE MATERIAL SUPPLIERS. SHOP DRAWINGS FOR EACH OF THE STRUCTURAL COMPONENTS MUST BE SUBMITTED TO THE STRUCTURAL ENGINEER FOR REVIEW PRIOR TO FABRICATION AND ERECTION.

THE STRUCTURAL ENGINEER IS RESPONSIBLE FOR THE DESIGN OF THE PRIMARY STRUCTURAL SYSTEM, EXCEPT FOR THE COMPONENTS NOTED ABOVE. RESPONSIBILITY FOR ANY SECONDARY STRUCTURAL AND NON-STRUCTURAL SYSTEMS NOT SHOWN ON THE STRUCTURAL PLANS RESTS WITH SOMEONE OTHER THAN THE STRUCTURAL ENGINEER.

THE STRUCTURAL ENGINEER HAS NOT DONE A SUBSURFACE INVESTIGATION (HE IS NOT A SOILS SPECIALIST). THE FOUNDATION DESIGN IS BASED UPON AN ASSUMED ALLOWABLE BEARING PRESSURE AS SHOWN IN THE "FOUNDATION" STRUCTURAL NOTES. THIS ALLOWABLE BEARING PRESSURE MUST BE VERIFIED BY THE CONTRACTOR OR OWNER. IF PROBLEMS ARE ENCOUNTERED, A SOILS ENGINEER SHOULD BE RETAINED TO EVALUATE THE CONDITIONS AND RECOMMEND THE APPROPRIATE FOUNDATION SYSTEM.

THE STRUCTURAL ENGINEER IS NOT RESPONSIBLE FOR, AND WILL NOT HAVE CONTROL OF, CONSTRUCTION MEANS, METHODS, TECHNIQUES, SEQUENCES OR PROCEDURES; OR FOR SAFETY PRECAUTIONS AND PROGRAMS IN CONNECTION WITH THE CONSTRUCTION WORK; NOR WILL HE BE RESPONSIBLE FOR THE CONTRACTOR'S FAILURE TO CARRY OUT THE CONSTRUCTION WORK IN ACCORDANCE WITH THE CONTRACT DOCUMENTS.

FIELD MEASUREMENTS AND THE VERIFICATION OF FIELD DIMENSIONS ARE NOT PART OF THE STRUCTURAL ENGINEER'S RESPONSIBILITY. THE CONTRACTOR MUST CHECK ALL (ASSUMED) EXISTING CONDITIONS SHOWN ON THESE DRAWINGS FOR ACCURACY AND NOTIFY THE STRUCTURAL ENGINEER OF ANY DISCREPANCIES.

ABBREVIATIONS

A.B.	ANCHOR BOLT
A.F.F.	ABOVE FINISH FLOOR
C.J.	CONTROL OR CONSTRUCTION JOINT IN SLAB
D.J.	DOUBLE JOIST
E.J.	EXPANSION JOINT
E.O.S.	EDGE OF SLAB
E.W.	EACH WAY
J.B.E.	JOIST BEARING ELEVATION
MCJ	MASONRY CONTROL JOINT
N.T.S.	NOT TO SCALE
O.C.	ON CENTER
P.T.	PRESSURE TREATED
S-P-F	SPRUCE PINE FIR LUMBER
SYP	SOUTHERN YELLOW PINE LUMBER
T.O.B.	TOP OF BEAM
T.O.F.	TOP OF FOOTING
T.O.S.	TOP OF STEEL
U.N.O.	UNLESS NOTED OTHERWISE
W.W.F.	WELDED WIRE FABRIC

CODE

NORTH CAROLINA STATE BUILDING CODE – 2006 EDITION

DESIGN LOADS

ROOF DEAD LOAD		20 PSF
ROOF LIVE LOAD		20 PSF
FLOOR LIVE LOAD		100 PSF
SNOW LOAD DATA :		
GROUND SNOW LOAD		20 PSF
IMPORTANCE FACTOR		1.0
THERMAL FACTOR		1.0
SNOW EXPOSURE FACTOR		1.0
FLAT ROOF SNOW LOAD		20.0 PSF
ROOF SLOPE FACTOR		1.0
PITCHED ROOF SNOW LOAD		14.0 PSF
WIND LOAD DATA :		
DESIGN WIND SPEED (ASCE 7-98)		90 MPH
BUILDING CATEGORY		II
WIND EXPOSURE		C
INTERNAL PRESSURE COEFFICIENTS		+0.18, -0.18
IMPORTANCE FACTOR		1.0
WIND BASE SHEAR (x-x DIRECTION)		41.0 KIPS
WIND BASE SHEAR (y-y DIRECTION)		64.0 KIPS
WIND PRESSURE FOR COMPONENTS / CLADDING		PER ASCE 7-02
SEISMIC LOAD DATA :		
MAPPED SPECTRAL RESPONSE ACCELERATION		0.276
MAPPED SPECTRAL RESPONSE ACCELERATION		0.091
SPECTRAL RESPONSE COEFFICIENT	SDS	0.291
SPECTRAL RESPONSE COEFFICIENT	SD1	0.146
SITE CLASS		D
SEISMIC USE GROUP		I
SEISMIC DESIGN CATEGORY		C
BASIC STRUCTURAL SYSTEM		Bearing Wall System
SEISMIC RESISTING SYSTEM		Reinf. Masonry Shear Walls
RESPONSE MODIFICATION COEFFICIENT		2.0
SYSTEM OVERSTRENGTH FACTOR		2.5
DEFLECTION AMPLIFICATION FACTOR		1.75
SEISMIC RESPONSE COEFFICIENT	Cs	0.145
ANALYSIS PROCEDURE		Equiv. Lateral Force
SEISMIC BASE SHEAR		178.0 KIPS
LATERAL DESIGN CONTROL		SEISMIC

FOUNDATIONS

ALL FOOTINGS SHALL REST ON SOIL CAPABLE OF SAFELY SUPPORTING 2000 PSF. CONTACT STRUCTURAL ENGINEER IF UNSATISFACTORY SUBSURFACE CONDITIONS ARE ENCOUNTERED.

FOOTINGS SHALL BE CARRIED TO A LOWER ELEVATION THAN THOSE INDICATED ON THESE DRAWINGS IF NECESSARY TO REACH FIRM UNDISTURBED SOIL.

THE BOTTOM OF ALL EXTERIOR FOOTINGS SHALL BE A MINIMUM OF 16" BELOW FINISHED GRADE UNLESS NOTED OTHERWISE.

SLAB ON GRADE SHALL BE FOUNDED ON STABLE NATURAL SOIL OR CONTROLLED COMPACTED FILL. THE MINIMUM BEARING CAPACITY SHALL BE 2000 PSF.

ALL FILL SHALL BE PLACED IN 8" MAXIMUM LOOSE LIFTS AND SHALL BE COMPACTED TO A MINIMUM OF 95 PERCENT MAXIMUM DRY DENSITY AS DETERMINED IN ACCORDANCE WITH ASTM D-698 (STANDARD PROCTOR METHOD). THIS REQUIREMENT SHOULD BE INCREASED TO 98 PERCENT OF ASTM D-698 IN THE FINAL FOOT BENEATH FOOTINGS, FLOOR SLABS, AND PAVEMENTS.

WALLS ACTING AS RETAINING WALLS SHALL NOT BE BACKFILLED WITHOUT BRACING UNTIL ALL SUPPORTING SOIL AND SLABS ARE IN PLACE.

CONCRETE

CONCRETE SHALL BE PROPORTIONED, MIXED AND PLACED IN ACCORDANCE WITH ACI 318, "BUILDING CODE REQUIREMENTS FOR REINFORCED CONCRETE", AND ACI 301, SPECIFICATIONS FOR STRUCTURAL CONCRETE FOR BUILDINGS". ANY ADMIXTURES MUST BE APPROVED BY THE STRUCTURAL ENGINEER.

ADMIXTURES CONTAINING CHLORIDE SALTS ARE NOT PERMITTED.

MINIMUM 28 DAY COMPRESSIVE STRENGTH OF CONCRETE SHALL BE 3000 PSI. USE NORMAL WEIGHT CONCRETE FOR FOOTINGS AND SLABS ON GRADE.

DO NOT CAST CONCRETE IN WATER OR ON FROZEN GROUND. FOR SLABS ON GRADE, LIGHTLY DAMPEN THE SUBGRADE BEFORE PLACING CONCRETE TO PREVENT THE SUBGRADE FROM ABSORBING WATER FROM THE CONCRETE MIX. APPLY WATER AT NEARLY THE SAME RATE IT SOAKS INTO THE SUBGRADE SURFACE.

CRACK CONTROL JOINTS SHALL BE PLACED IN SLABS ON GRADE IN SQUARE PATTERNS AT A MAXIMUM SPACING OF 20' UNLESS NOTED OTHERWISE. PLACE CONTROL JOINTS TO AVOID REENTRANT CORNERS. MAKE SAWCUTS TO FORM WEAKENED PLANE CONTROL JOINTS AS SOON AFTER CONCRETE PLACEMENT AS POSSIBLE.

START CURING FOR SLABS ON GRADE AS SOON AS THE FINISHERS ARE DONE. APPLY THE CURING COMPOUND IN TWO COATS AT RIGHT ANGLES TO EACH OTHER AND NOT MORE THAN 300 SQUARE FEET PER GALLON, ABOUT 15 MINUTES APART. DURING HOT WEATHER, USE A FOG SPRAY TO KEEP THE SURFACE DAMP BEFORE APPLYING A CURING COMPOUND.

REINFORCING STEEL

ALL DETAILING, FABRICATION AND PLACING OF REINFORCING STEEL SHALL BE IN ACCORDANCE WITH THE LATEST "MANUAL OF STANDARD PRACTICE FOR DETAILING REINFORCED CONCRETE STRUCTURES", ACI 315.

REINFORCING BARS SHALL BE NEW BILLET STEEL CONFORMING TO ASTM A615, GRADE 60. CLEAR CONCRETE COVER OVER BARS SHALL BE 3" FOR FOOTINGS.

ALL SLABS ON GRADE SHALL BE REINFORCED WITH 6 x 6 W 1.4 x W 1.4 W.W.F. SUPPORT THE MESH AS REQUIRED TO INSURE THAT IT WILL BE LOCATED 1" FROM THE TOP OF SLAB.

PROVIDE CORNER BARS AT ALL FOOTING STEPS AND CORNERS. BARS SHALL BE A MINIMUM OF 2'-6" LONG AND SHALL HAVE THE SAME SIZE AND SPACING AS HORIZONTAL REINFORCING.

LAP ALL SPLICES IN CAST-IN-PLACE CONCRETE AS SPECIFICALLY CALLED FOR, BUT AT LEAST 48 BAR DIAMETERS. LAP ALL SPLICES IN MASONRY 48 BAR DIAMETERS MINIMUM, UNLESS NOTED OTHERWISE.

SUBMIT SHOP DRAWINGS TO THE STRUCTURAL ENGINEER FOR REVIEW PRIOR TO FABRICATION.

BRICK MASONRY

BRICK VENEER SHALL BE OF A QUALITY AT LEAST EQUAL TO THAT REQUIRED BY ASTM SPECIFICATIONS (C62). THE COMPRESSIVE STRENGTH OF BRICK UNITS SHALL BE 4500 PSI MINIMUM.

MORTAR SHALL BE OF A QUALITY AT LEAST EQUAL TO THAT REQUIRED BY ASTM "STANDARD SPECIFICATIONS FOR MORTAR FOR UNIT MASONRY" (C270). USE TYPE "M" OR "S" MORTAR BELOW GRADE. TYPE "N" MORTAR IS PERMITTED ABOVE GRADE.

JOINT REINFORCEMENT FOR COMPOSITE AND CAVITY WALLS SHALL BE CORROSION RESISTANT (HOT DIP GALVANIZED AFTER FABRICATION) EQUIVALENT TO DUR-O-WALL LADDER TYPE. JOINT REINFORCEMENT SHALL BE SPACED AT 16" O.C. VERTICALLY UNLESS NOTED OTHERWISE ON THE PLANS.

SEE "CONCRETE MASONRY" NOTES FOR MASONRY CONTROL JOINT LOCATION/SPACING RECOMMENDATIONS.

CONCRETE MASONRY

CONCRETE MASONRY UNITS SHALL BE ERECTED AS LOAD BEARING CONCRETE MASONRY. COMPLY WITH THE REQUIREMENTS OF ACI 530.1 / ASCE 6 / TMS 602 SPECIFICATION FOR MASONRY STRUCTURES.

CONCRETE MASONRY UNITS SHALL CONFORM TO ASTM SPECIFICATIONS FOR HOLLOW LOAD-BEARING CONCRETE MASONRY UNITS (ASTM C90, ASA A79.1). MORTAR SHALL CONFORM TO THE REQUIREMENTS OF ASTM STANDARD SPECIFICATIONS FOR MORTAR FOR UNIT MASONRY (ASTM C270), TYPE "M" OR "S". THE MINIMUM NET COMPRESSIVE STRENGTH OF MASONRY UNITS SHALL BE 2000 PSI (f'm = 1500 PSI FOR MASONRY SYSTEM).

ALL GROUT USED TO FILL REINFORCED MASONRY CAVITIES AND SHOWN AT OTHER LOCATIONS ON THE PLANS SHALL CONFORM TO ASTM C476 AND SHALL HAVE A MINIMUM 28 DAY COMPRESSIVE STRENGTH OF 3000 PSI.

PROVIDE HORIZONTAL JOINT REINFORCEMENT AT 16" O.C. IN ALL CMU WALLS UNLESS NOTED OTHERWISE ON THE DRAWINGS. USE LADDER TYPE DUR-O-WALL REINFORCEMENT, HOT DIP GALVANIZED AFTER FABRICATION. LONGITUDINAL WIRES SHALL BE A MINIMUM OF (2) NO. 9 GAGE. LOCATE JOINT REINFORCEMENT IN FIRST AND SECOND BED JOINTS, 8" APART IMMEDIATELY ABOVE LINTELS AND BELOW SILLS AT OPENINGS. REINFORCEMENT SHALL NOT EXTEND THROUGH VERTICAL MASONRY CONTROL JOINTS.

WHERE INTERIOR CONCRETE MASONRY PARTITIONS MEET OTHER INTERIOR PARTITIONS OR EXTERIOR WALLS, PROVIDE A CONTROL JOINT WITH METAL STRAP ANCHORS BETWEEN WALLS.

PROVIDE BOND BEAMS AT THE TOP OF MASONRY ELEVATIONS AS SHOWN ON THE DRAWINGS. BOND BEAMS TO HAVE (2) #4 BARS CONTINUOUS UNLESS OTHERWISE NOTED. WHERE THE BOND BEAM IS INTERSECTED BY A CONTROL JOINT, CHANGE THE BARS TO SMOOTH ROUND BARS AND GREASE ONE END SO THAT LATERAL MOVEMENT WILL NOT BE RESTRAINED.

BACKFILLING AGAINST MASONRY WALLS SHALL NOT BE PERMITTED UNTIL SUFFICIENT LATERAL SUPPORT IS PROVIDED.

MASONRY WALLS ARE TO BE LATERALLY BRACED DURING CONSTRUCTION IN ACCORDANCE WITH "STANDARD PRACTICE FOR BRACING MASONRY WALLS UNDER CONSTRUCTION" BY THE COUNCIL FOR MASONRY WALL BRACING AND THE MASON CONTRACTORS ASSOCIATION OF AMERICA. TEMPORARY BRACING SHALL REMAIN IN PLACE UNTIL PERMANENT SUPPORTING ELEMENTS OF THE STRUCTURE ARE IN PLACE.

REFER TO THE ARCHITECTURAL PLANS FOR LOCATIONS OF MASONRY CONTROL JOINTS, OR IF NOT SHOWN, COORDINATE WITH ARCHITECT. IN GENERAL, CONTROL JOINTS SHOULD BE LOCATED WITH A MAXIMUM SPACING OF 30'-0".

STRUCTURAL STEEL

FABRICATE AND ERECT ALL STRUCTURAL STEEL IN ACCORDANCE WITH THE AMERICAN INSTITUTE OF STEEL CONSTRUCTION "SPECIFICATION FOR THE STRUCTURAL STEEL BUILDINGS – ALLOWABLE STRESS DESIGN AND PLASTIC DESIGN", WHERE THE MATERIAL USED CONSISTS OF PLATES, SHAPES OR BARS.

STRUCTURAL STEEL SHALL RECEIVE ONE SHOP COAT OF RUST-INHIBITIVE PAINT. STEEL COLUMNS BELOW GRADE THAT ARE NOT ENCASED IN CONCRETE SHALL BE FIELD PAINTED WITH A WATERPROOF MASTIC COMPOUND TO PREVENT CORROSION.

THE STEEL USED SHALL HAVE THE FOLLOWING MINIMUM YIELD STRESS:

WIDE FLANGE BEAMS ('W' SHAPES)	50 KSI	(A992)
CHANNELS, ANGLES, PLATES, MISC. SHAPES	36 KSI	(A36)
STRUCTURAL PIPE COLUMNS	35 KSI	(A53, B)
HSS TUBE COLUMNS	46 KSI	(A500, B)

USE 3/4" DIAMETER A-325N BOLTS FOR ALL STEEL TO STEEL CONNECTIONS U.N.O. BOLTS SHALL BE TIGHTENED TO THE SNUG TIGHT CONDITION UNLESS NOTED OTHERWISE. THE SNUG TIGHT CONDITION IS DEFINED AS THE TIGHTNESS THAT EXISTS WHEN ALL PLIES IN A JOINT ARE IN FIRM CONTACT.

USE F1554 (GRADE 36) RODS FOR ALL ANCHOR BOLTS U.N.O.
HEADED WELD STUDS SHALL BE MADE OF MATERIAL CONFORMING TO ASTM A108.
USE E-70 ELECTRODES FOR ALL SHOP AND FIELD WELDING.
ALL EXPANSION ANCHORS SHALL BE INSTALLED WITH STANDARD EMBEDMENT DEPTH.

FOR MISCELLANEOUS STEEL NOT SHOWN ON THESE DRAWINGS, SEE ARCHITECTURAL AND OTHER ENGINEERING DRAWINGS.

CONNECTIONS BETWEEN STRUCTURAL STEEL MEMBERS SHALL BE AS SHOWN ON STRUCTURAL DRAWING DETAILS. ALTERNATE CONNECTION DETAILS MUST BE APPROVED IN WRITING, BY THE STRUCTURAL ENGINEER OF RECORD, PRIOR TO THE SUBMITTAL OF SHOP DRAWINGS.

SUBMIT ERECTION AND SHOP DRAWINGS TO THE STRUCTURAL ENGINEER FOR REVIEW PRIOR TO FABRICATION.

STRUCTURAL GLUED LAMINATED WOOD

MATERIALS, MANUFACTURE AND QUALITY CONTROL SHALL BE IN CONFORMANCE WITH AMERICAN NATIONAL STANDARD ANSI/AITC A190.1–1992, "STRUCTURAL GLUED LAMINATED TIMBER".

LAMINATING COMBINATIONS SHALL MEET THE REQUIREMENTS OF ANSI/AITC A190.1–1992 , AND SHALL PROVIDE ALLOWABLE DESIGN VALUES OF 2400 PSI IN BENDING, 1700 PSI IN COMPRESSION PARALLEL TO GRAIN, 1150 PSI IN TENSION PARALLEL TO GRAIN, 740 PSI IN COMPRESSION PERPENDICULAR TO GRAIN, 200 PSI IN HORIZONTAL SHEAR, AND 1700000 PSI IN MODULUS OF ELASTICITY FOR DRY CONDITIONS OF SERVICE.

ADHESIVES SHALL MEET THE REQUIREMENTS FOR WET CONDITION OF SERVICE.

MEMBERS SHALL BE MARKED WITH QUALITY MARK, AND, IN ADDITION, A CERTIFICATE OF CONFORMANCE SHALL BE PROVIDED TO INDICATE CONFORMANCE WITH ANSI/AITC A190.1–1992.

CAREFULLY UNLOAD AND HANDLE THE LAMINATED MEMBERS AT JOBSITE TO PREVENT SURFACE MARRING AND DAMAGE. IF LAMINATED WOOD IS TO BE STORED BEFORE ERECTION, PLACE IT ON BLOCKS WELL OFF THE GROUND WITH INDIVIDUAL MEMBERS SEPARATED BY STRIPS SO THAT AIR MAY CIRCULATE. COVER THE TOP AND SIDES OF STORAGE PILES WITH MOISTURE-RESISTANT COVERING. (DO NOT USE CLEAR POLYETHYLENE FILMS). WHEN HOISTING MEMBERS INTO PLACE USE PADDED OR NON-MARRING SLINGS, AND PROTECT CORNERS WITH WOOD BLOCKING. ADEQUATELY BRACE MEMBERS AS THEY ARE ERECTED TO HOLD THEM IN A SAFE POSITION UNTIL FULL STABILITY IS PROVIDED.

SUBMIT SHOP DRAWINGS TO THE STRUCTURAL ENGINEER FOR REVIEW PRIOR TO FABRICATION.

SOLID WOOD FRAMING, HEADERS AND PLYWOOD

ALL SOLID WOOD FRAMING SHALL COMPLY WITH THE NATIONAL FOREST PRODUCTS ASSOCIATION "NATIONAL DESIGN SPECIFICATION FOR WOOD CONSTRUCTION."

ALL SOLID FRAMING SHALL BE SPRUCE-PINE-FIR #2 UNLESS NOTED OTHERWISE ON THE PLANS.

PLYWOOD SHALL CONFORM TO THE AMERICAN PLYWOOD ASSOCIATION "PLYWOOD DESIGN SPECIFICATION." PLYWOOD SHALL BE CDX (UNO). PLYWOOD CONSTRUCTION SHALL BE IN ACCORDANCE WITH THE APA "DESIGN/CONSTRUCTION GUIDE – RESIDENTIAL AND COMMERCIAL".

ALL MEMBERS SHALL BE FRAMED, ANCHORED, TIED AND BRACED IN ACCORDANCE WITH GOOD CONSTRUCTION PRACTICE AND THE NORTH CAROLINA STATE BUILDING CODE.

MICRO-LAM HEADERS (LVL'S) ARE MANUFACTURED BY Trus Joist MacMillan. (THE CONTRACTOR MAY SUBSTITUTE EQUIVALENT HEADERS IF PROPERLY DESIGNED BY THE MANUFACTURER.) MICRO-LAM HEADERS ARE ALWAYS DOUBLED AND MUST BE NAILED TOGETHER WITH 2 ROWS OF 16d NAILS @ 12" O.C. STAGGERED (EXCEPTION: CONNECT PLYS OF HEADER WITH 1/2"ø BOLTS WHERE INDICATED ON DRAWINGS)

ALL WOOD IN CONTACT WITH MASONRY OR EXPOSED TO THE WEATHER SHALL BE PRESSURE PRESERVATIVE TREATED TO THE RETENTIONS SHOWN IN TABLE 2303 OF THE BUILDING CODE.

ALL WOOD FRAMING SHALL BE FASTENED IN ACCORDANCE WITH TABLE 2304.9.1 OF THE BUILDING CODE.

LYSAGHT & ASSOCIATES, PA
STRUCTURAL ENGINEERS
120 SAINT MARYS STREET
RALEIGH, N.C. 27605
PHONE : (919) 833-0495
FAX : (919) 833-7630

QUALITY ASSURANCE FOR SEISMIC RESISTANCE

SEISMIC-RESISTING-SYSTEMS FOR THIS PROJECT INCLUDE ALL REINFORCED MASONRY WALLS, ALL PLYWOOD ROOF DIAPHRAGMS, AND STRUCTURAL STEEL CANOPY FRAMING.

EACH CONTRACTOR RESPONSIBLE FOR THE CONSTRUCTION OF A SEISMIC-FORCE-RESISTING SYSTEM SHALL SUBMIT A WRITTEN CONTRACTOR'S STATEMENT OF RESPONSIBILITY TO THE BUILDING INSPECTOR, OWNER, AND STRUCTURAL ENGINEER OF RECORD PRIOR TO THE COMMENCEMENT OF WORK. THE STATEMENT OF RESPONSIBILITY SHALL CONTAIN THE FOLLOWING:

ACKNOWLEDGEMENT OF AWARENESS OF SPECIAL CONSTRUCTION REQUIREMENTS AND SPECIAL INSPECTIONS REQUIRED FOR QUALITY ASSURANCE.

ACKNOWLEDGEMENT THAT QUALITY CONTROL WILL BE EXCERCISED TO OBTAIN CONFORMANCE WITH APPROVED CONSTRUCTION DOCUMENTS.

PROCEDURES FOR EXCERCISING QUALITY CONTROL, WITHIN THE CONTRACTOR'S ORGANIZATION.

IDENTIFICATION AND QUALIFICATIONS OF THE PERSONS EXCERCISING SUCH CONTROL AND THEIR POSITION IN THE ORGANIZATION.

SPECIAL INSPECTIONS

SPECIAL INSPECTORS SHALL BE EMPLOYED BY THE OWNER AND SHALL DEMONSTRATE COMPETENCE/QUALIFICATION TO THE SATISFACTION OF THE BUILDING OFFICIAL.

SPECIAL INSPECTORS SHALL KEEP RECORDS OF ALL INSPECTIONS. REPORTS SHALL BE FURNISHED TO THE BUILDING INSPECTOR, ARCHITECT, AND STRUCTURAL ENGINEER OF RECORD WITHIN TEN WORKING DAYS OF THE SITE VISIT.

SPECIAL INSPECTION ACTIVITIES FOR THIS PROJECT (IF REQUIRED BY THE LOCAL BUILDING OFFICIAL) ARE AS FOLLOWS:

STEEL CONSTRUCTION

VERIFY THAT FABRICATORS MAINTAIN DETAILED FABRICATION AND QUALITY CONTROL PROCEDURES THAT VERIFY THE FABRICATOR'S ABILITY TO CONFORM TO APPROVED CONSTRUCTION DOCUMENTS AND REFERENCED STANDARDS. THE SPECIAL INSPECTOR SHALL REVIEW PROCEDURES FOR COMPLETENESS AND ADEQUACY RELATIVE TO CONSTRUCTION DOCUMENT REQUIREMENTS FOR THE FABRICATOR'S SCOPE OF WORK. (EXCEPTION: FABRICATORS WITH AN A.I.S.C. QUALITY CERTIFICATION SHALL BE EXEMPT FROM REVIEW OF SHOP FABRICATION)

PERIODICALLY PERFORM A MATERIAL VERIFICATION OF HIGH STRENGTH BOLTS. IN ADDITION, FOR BOLTED JOINTS REQUIRED TO BE TIGHTENED TO THE SNUG TIGHT CONDITION, THE SPECIAL INSPECTOR SHALL PERIODICALLY VERIFY THAT CONNECTED MATERIALS HAVE BEEN DRAWN TOGETHER. NO FEWER THAN TEN PERCENT OF CONNECTIONS SHALL BE INSPECTED.

INSPECTION OF SINGLE PASS FILLET WELDS NOT EXCEEDING 5/16" AND ROOF DECK WELDS SHALL BE PERFORMED ON A PERIODIC BASIS. NO FEWER THAN TEN PERCENT OF SUCH WELDS SHALL BE VISUALLY INSPECTED.

CONCRETE CONSTRUCTION

CONCRETE TESTING SHALL BE IN ACCORDANCE WITH REQUIREMENTS OF ACI 318.

MASONRY CONSTRUCTION

AT THE START OF MASONRY CONSTRUCTION, THE SPECIAL INSPECTOR SHALL VERIFY COMPLIANCE OF THE PROPORTIONS OF SITE PREPARED MORTAR, CONSTRUCTION OF MORTAR JOINTS, AND LOCATION OF REINFORCEMENT.

THE SPECIAL INSPECTION PROGRAM SHALL PERIODICALLY VERIFY THE SIZE AND LOCATION OF STRUCTURAL ELEMENTS, DETAILS OF ANCHORAGE OF MASONRY TO STRUCTURAL MEMBERS, SIZE/GRADE/TYPE OF REINFORCEMENT, AND PROTECTION OF MASONRY DURING COLD OR HOT WEATHER.

PRIOR TO GROUTING BLOCK CORES, THE SPECIAL INSPECTOR SHALL VERIFY THAT THE GROUT SPACE IS CLEAN, ENSURE COMPLIANCE REGARDING PLACEMENT OF REINFORCEMENT, VERIFY PROPORTIONS OF SITE-PREPARED GROUT, AND REVIEW CONSTRUCTION OF MORTAR JOINTS. REVIEW OF THESE ITEMS SHALL BE PERFORMED PERIODICALLY FOR THE DURATION OF MASONRY ACTIVITIES.

INNOVATIVE DESIGN
850 W. MORGAN STREET, RALEIGH, NORTH CAROLINA 27603, 919/832-6303

NORTH CAROLINA PROFESSIONAL SEAL 15887 ENGINEER JAMES E. STRUFFOLINO 6/1/07

PROJECT: Wilkes County Visitor's Center K-4703
WILKESBORO, NORTH CAROLINA
OWNER: NC Department of Transportation

DRAWN BY: JES
CHECKED BY: JS
DATE: 6/1/07
REVISIONS:

SHEET: S0.01
51 of 89
-6375

STRUCTURAL NOTES

SCALE 1/8" = 1'-0"

LINTEL SCHEDULE

MARK	SIZE	MAX. SPAN	END BRNG	DETAIL
L1	8" DEEP BOND BEAM W/ (2) #5 CONT.	6'-0"	8"	
L1A	16" DEEP BOND BEAM W/ (2) #5 CONT.	8'-0"	8"	
L2	W8x13 W/ CONT. 1/4"x7" BOT. PL.	8'-8"	8"	FILL SOLID
L3	W16x26 W/ CONT. 1/4"x7" BOT. PL. PROVIDE 1/2"ø x4" STUDS 48" O.C. AT TOP FLANGE. FILL CORES SOLID @ STUDS.	16'-0"	8"	TIES AT 24" O.C.; FILL SOLID
L4 L4a	W8x10 W/ CONT. 5/16"x15" BOT. PL. W8x10 W/ CONT. 1/4" x 9-1/2" BOTTOM PL.	6'-0" 4'-0"	8" 8"	FILL SOLID; 3.5" 11 1/2" L4; 3.5" 6" L4a
L5	W16x26 W/ CONT. 5/16"x15" BOT. PL. PROVIDE 1/2"ø x4" STUDS 48" O.C. AT TOP FLANGE. FILL CORES SOLID @ STUDS.	16'-8"	8"	TIES AT 24" O.C.; FILL SOLID; 3.5" 11 1/2"
L6 L6a	W8x18 W/ CONT. 5/16" THICK BOT. PL. PROVIDE 1/2"ø x4" STUDS 48" O.C. AT TOP FLANGE. FILL CORES SOLID @ STUDS.	11'-0"	8"	FILL SOLID; 7 1/2" 11 1/2" L6; 11 1/2" 11 1/2" L6a
L7	8" DEEP PRECAST CONCRETE ARCH DESIGNED BY SUPPLIER FOR 1625 PLF UNIFORM LOAD (SEE ARCH. PLANS FOR RADIUS)	5'-4"	8"	1'-8"
L8	W8x10 W/ CONT. 5/16"x11" BOT. PL.	6'-0"	8"	FILL SOLID; 3.5" 7 1/2"
L9	W8x48 W/ CONT. CURVED 5/16"x16" BOT. PL. BEAM IS CURVED IN PLAN VIEW TO 10'-4" RADIUS AT CENTERLINE. PROVIDE 1/2"ø x4" STUDS 32" O.C. AT TOP FLANGE. GROUT CORES SOLID AT STUDS.	± 8'-1 1/2" (ARC LENGTH)	12/S5.02 AT STEEL COLUMNS 06/S5.03 AT L11 1'-0" AT SOUTH END CMU WALL CONN.	FILL SOLID; OUTSIDE FACE OF WALL; 6" 10"
L10	(3) HSS5x5x1/4 TUBES SUPPORT 6", 20ga LIGHT GAUGE FRAMING. TUBES ARE CURVED IN PLAN VIEW TO 30'-4" RADIUS AT CENTERLINE	6'-6" (ARC LENGTH)	SEE LINTEL SCHEDULE NOTES	VARIES; 10'-11 5/8"; 8'-4"
L11 L11a	W16x26 W/ CONT. 5/16"x19" BOT. PL. PROVIDE 1/2"ø x4" STUDS 48" O.C. AT TOP FLANGE. FILL CORES SOLID @ STUDS. W16x26 W/ CONT. 5/16"x15" BOT. PL. PROVIDE 1/2"ø x4" STUDS 48" O.C. AT TOP FLANGE. FILL CORES SOLID @ STUDS.	12'-8" 12'-8"	1'-4" 1'-0" AT P3 COPE END FOR BRNG ON L9. SUPPLIER TO DESIGN COPE REINFORCING FOR 14k REACTION	FILL SOLID; TIES AT 24" O.C.; 7 1/2" 11 1/2" L11; 7 1/2" 7 1/2" L11a

MECHANICAL OPENING LINTEL SCHEDULE

MARK	SIZE	MAX. SPAN	END BRNG	DETAIL
ML1 **	8" DEEP BOND BEAM W/ (2) #5 CONT.	4'-0" *	8"	
ML2	W8x13 W/ CONT. 5/16" THICK BOT. PL.	8'-0"	1'-0"	FILL SOLID

THE GENERAL CONTRACTOR IS RESPONSIBLE FOR PROVIDING ALL OPENINGS IN CMU WALLS FOR MECHANICAL PENETRATIONS. COORDINATE OPENING LOCATIONS WITH DUCT SUPPLIER'S SHOP DRAWINGS. DUCT LAYOUT SHOP DRAWINGS SHALL ALSO BE ROUTED TO THE STRUCTURAL ENGINEER FOR APPROVAL. CONTACT THE STRUCTURAL ENGINEER FOR CMU WALL OPENINGS EXCEEDING 8'-0".

MECHANICAL/ELECTRICAL/PLUMBING OPENINGS REQUIRED IN LIGHT GAGE PARTITION WALLS SHALL BE FRAMED BY THE LIGHT GAGE SUPPLIER. PROVIDE DOUBLE STUDS FULL HEIGHT ON EACH SIDE OF ALL OPENINGS.

* USE LINTEL "ML1" FOR ALL CMU WALL PENETRATIONS EXCEEDING 12" IN WIDTH.

** IF A STEEL BEAM OR BAR JOIST IS SUPPORTED BY THE MASONRY WALL ABOVE THE OPENING, AND IF THE LOAD IS LOCATED WITHIN THE SHADED ZONE SHOWN BELOW, PROVIDE A TYPE "ML2" LINTEL.

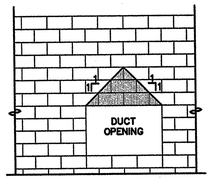

LINTEL SCHEDULE NOTES:

BOTTOM PLATES FOR LINTELS SHALL EXTEND THE FULL LENGTH OF THE LINTEL BEAM.

END BEARING DISTANCES ARE MEASURED ON SUPPORTING 8" CMU OR 12" CMU. SUPPORT BY 4" CMU VENEER OR 4" BRICK VENEER IS DISCOUNTED.

SHOP WELD (2) 3/4"ø x12" HEADED WELD STUDS TO ENDS OF LINTEL MARKS L3, L5, L6a, L11, AND L11a WHERE SUPPORTED BY MASONRY. (SEE DETAIL 11/S5.02)

FIELD WELD L10 LINTELS ALL AROUND EACH END AT STEEL COLUMN SUPPORTS (3/16" MIN. WELD THROAT). FOR CONNECTION TO MASONRY, PROVIDE L3x3x1/4 CLIP ANGLE TOP & BOTTOM WITH 3/4"ø EXPANSION ANCHORS INTO SOLID MASONRY.

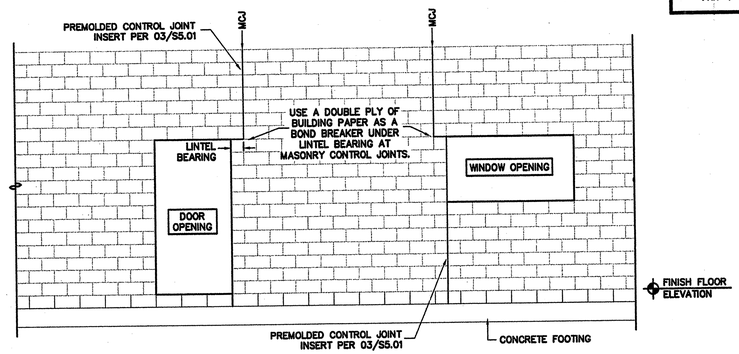

TYPICAL MASONRY CONTROL JOINT (MCJ) CONSTRUCTION

THE CONTRACTOR SHALL CONSTRUCT MASONRY CONTROL JOINTS (MCJ'S) AS SHOWN ABOVE WHEN LOCATED AT WALL OPENINGS. WHERE APPLICABLE, ALIGN JOINTS IN BLOCK & BRICK AND CAULK JOINTS IN BRICK.

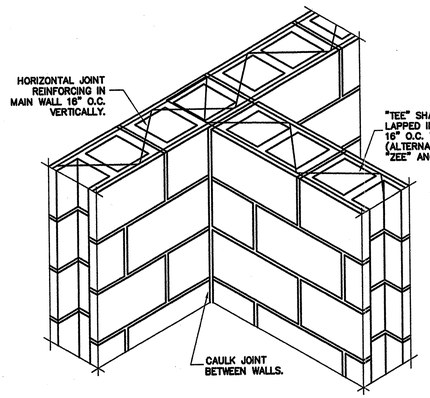

INTERSECTING CMU WALL CONSTRUCTION

USE DETAIL WHERE INTERIOR MASONRY WALLS MEET OTHER INTERIOR WALLS OR EXTERIOR WALLS. USE ELASTIC JOINT SEALANT BETWEEN WALLS.

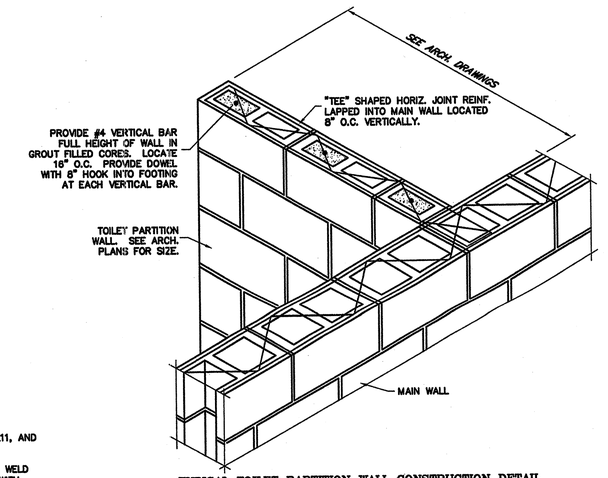

TYPICAL TOILET PARTITION WALL CONSTRUCTION DETAIL

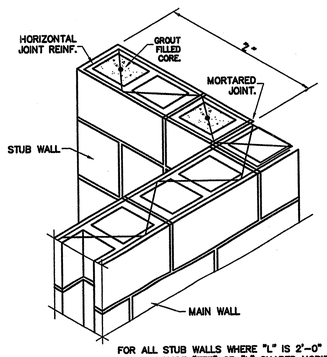

FOR ALL STUB WALLS WHERE "L" IS 2'-0" OR LESS, PROVIDE "TEE" OR "L" SHAPED HORIZ. JOINT REINFORCING LAPPED INTO THE MAIN WALL SPACED 8" O.C. VERTICALLY AND PROVIDE #4 VERTICAL BAR IN (2) CORES OF THE STUB WALL. GROUT SOLID FULL HEIGHT. LOCATE DOWEL W/ 8" HOOK INTO THE FOOTING AT EACH VERTICAL BAR.

TYPICAL STUB WALL CONSTRUCTION DETAIL

THE CONTRACTOR SHALL PROVIDED JOINT REINFORCING AS OUTLINED ABOVE FOR ALL STUB WALLS AT TOILET ENTRIES.

LYSAGHT & ASSOCIATES, PA
STRUCTURAL ENGINEERS
120 SAINT MARYS STREET
RALEIGH, N.C. 27605
PHONE : (919) 833-0495
FAX : (919) 833-7630

INNOVATIVE DESIGN
850 W. MORGAN STREET, RALEIGH, NORTH CAROLINA 27603, 919/832-6303

NORTH CAROLINA REGISTERED SEAL 15887 ENGINEER JAMES E. STRUFFOLINO 6/1/07

PROJECT: Wilkes County Visitor's Center K-4703
WILKESBORO, NORTH CAROLINA
OWNER: NC Department of Transportation

DRAWN BY: JES
CHECKED BY: JES
DATE: 6/1/07
REVISIONS:

SHEET: S0.02
52 of 99
A-6375

LINTEL SCHEDULE & WALL CONSTRUCTION DETAILS

SCALE 1/8" = 1'-0"

LYSAGHT & ASSOCIATES, PA
STRUCTURAL ENGINEERS
120 SAINT MARYS STREET
RALEIGH, N.C. 27605
PHONE : (919) 833-0495
FAX : (919) 833-7630

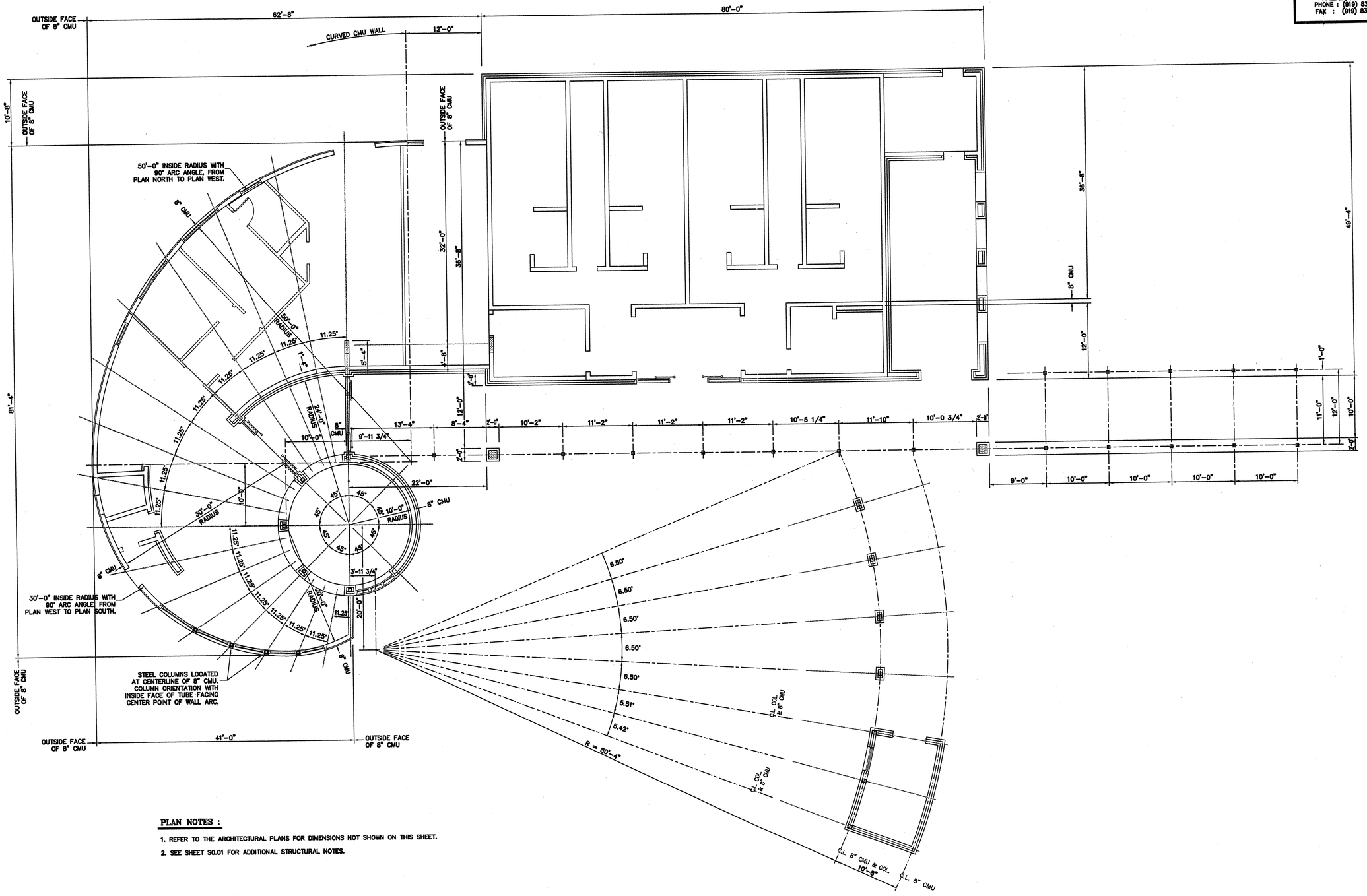

PLAN NOTES :

1. REFER TO THE ARCHITECTURAL PLANS FOR DIMENSIONS NOT SHOWN ON THIS SHEET.
2. SEE SHEET S0.01 FOR ADDITIONAL STRUCTURAL NOTES.

VISITORS CENTER GEOMETRY LAYOUT

SCALE 1/8" = 1'-0"

INNOVATIVE DESIGN
850 W. MORGAN STREET, RALEIGH, NORTH CAROLINA 27603, 919/832-6303

NORTH CAROLINA PROFESSIONAL SEAL 15887 ENGINEER JAMES E. STRUFFOLINO 6/1/07

PROJECT: Wilkes County Visitor's Center K-4703
WILKESBORO, NORTH CAROLINA
OWNER: NC Department of Transportation

DRAWN BY: JES
CHECKED BY: JS
DATE: 6/1/07
REVISIONS:

SHEET: S1.00
53 of 89 LA-6375

LYSAGHT & ASSOCIATES, PA
STRUCTURAL ENGINEERS
120 SAINT MARYS STREET
RALEIGH, N.C. 27605
PHONE : (919) 833-0495
FAX : (919) 833-7630

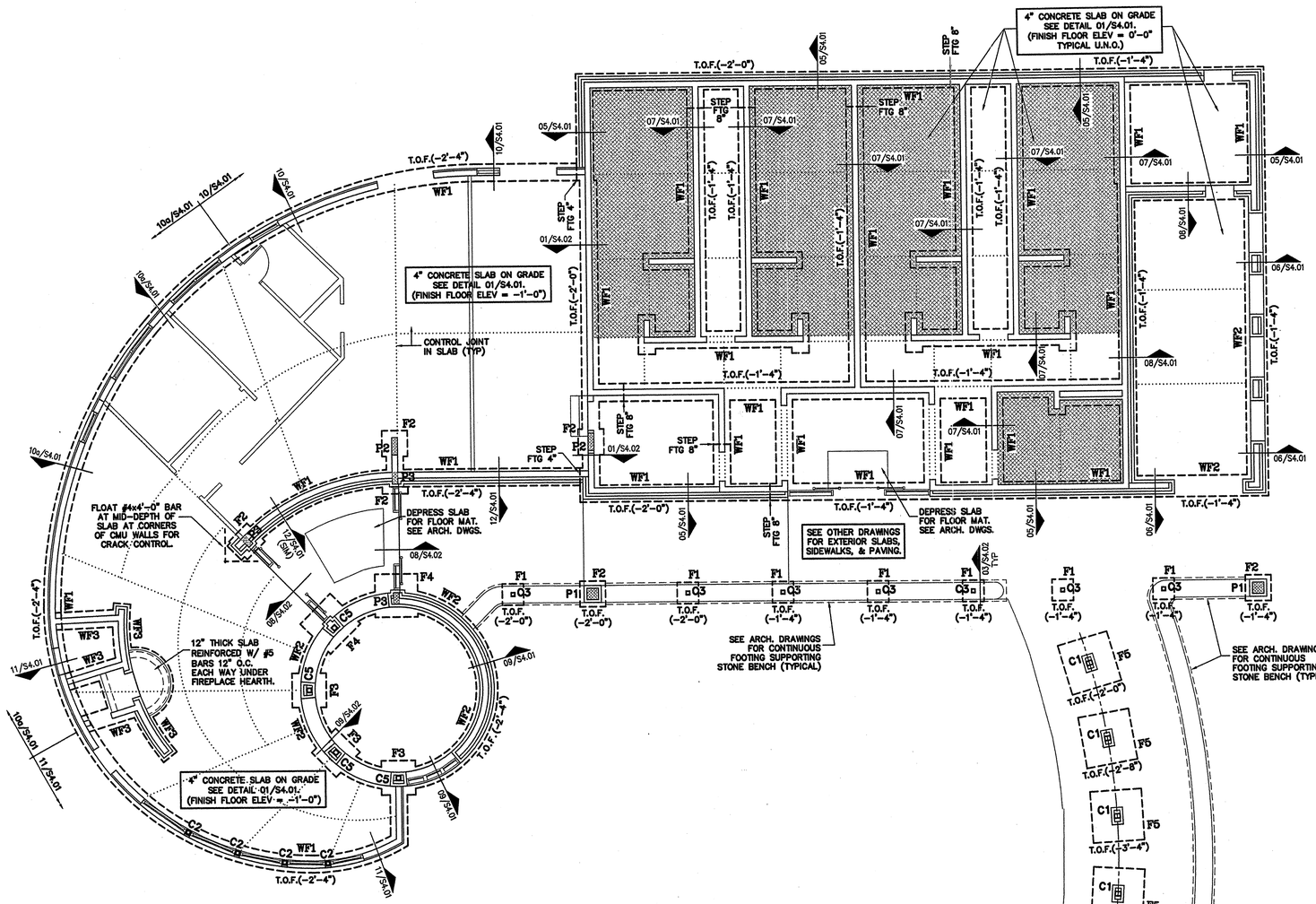

FOUNDATION PLAN NOTES :

1. THE REFERENCE FINISH FLOOR ELEVATION AT THE TOILET/VENDING AREA = 0'-0". SEE DETAIL 01/S4.01 FOR TYPICAL SLAB ON GRADE CONSTRUCTION.
2. SEE DETAIL 02/S4.01 FOR STEPPED FOOTING CONSTRUCTION. FOOTING STEPS ARE SHOWN IN APPROXIMATE LOCATIONS ON THE PLAN. THE GENERAL CONTRACTOR SHALL DETERMINE FINAL FOOTING STEP LOCATIONS BASED ON FINISH GRADES.
3. SEE THE ARCHITECTURAL PLANS FOR LOCATIONS OF MASONRY CONTROL JOINTS. REFER TO THE STRUCTURAL NOTES FOR MASONRY CONTROL JOINT SPACING LIMITATIONS. SEE DETAIL 03/S4.01 FOR MCJ CONSTRUCTION.
4. T.O.F.(-1'-4") DENOTES A TOP OF FOOTING ELEVATION 1'-4" BELOW THE REFERENCE FINISH FLOOR ELEVATION.
5. "Px" DENOTES A REINFORCED CMU PILASTER. SEE DETAIL 04/S4.01 FOR REINFORCING REQUIREMENTS.
6. COORDINATE LOCATIONS OF FLOOR DRAINS WITH OTHER DRAWINGS. PROVIDE SLOPE IN SLAB OR FINISH MATERIAL AS SPECIFIED.
7. SHADED AREAS ON THE PLAN DENOTE SLABS TO BE DEPRESSED FOR QUARRY TILE. COORDINATE SLAB DEPRESSION WITH ARCHITECTURAL DRAWINGS AND TILE INSTALLER.
8. SEE SHEET S1.00 FOR DIMENSIONS LOCATING LOAD BEARING MASONRY WALLS.
9. SEE SHEET S0.01 FOR ADDITIONAL STRUCTURAL NOTES.

COLUMN SCHEDULE

MARK	SIZE	BASE PLATE	A.B.'S
C1	HSS 8 x 6 x 1/2	PL. 3/4" x 16" x 1'-4"	(4) 1"ø, F1554
C2	HSS 5 x 5 x 1/4	PL. 1/2" x 12" x 1'-0"	(4) 3/4"ø, F1554
C3	HSS 5 x 5 x 1/4	PL. 1/2" x 12" x 1'-0"	(4) 3/4"ø, F1554
C4	HSS 5 x 5 x 1/4	PL. 3/4" x 12" x 1'-0"	(4) 3/4"ø, F1554
C5	HSS 6 x 6 x 5/16	PL. 3/4" x 12" x 1'-0"	(4) 3/4"ø, F1554

FOOTING SCHEDULE

MARK	SIZE	REINFORCING	DETAIL
WF1	2'-0" x 12" CONT.	(2) #5 CONT & #4 TIES 48" O.C.	SEE PLAN
WF2	2'-6" x 12" CONT.	(3) #5 CONT & #4 TIES 48" O.C.	SEE PLAN
WF3	SEE DETAIL	(2) #4 BARS CONT	11/S4.02
F1	2'-6" x 2'-6" x 12"	(4) #5 BARS EACH WAY	03/S4.02
F2	3'-0" x 3'-0" x 12"	(4) #5 BARS EACH WAY	04/S4.01
F3	4'-0" x 4'-0" x 12"	(5) #5 BARS EACH WAY	09/S4.02
F4	5'-0" x 5'-0" x 12"	(6) #5 BARS EACH WAY	04/S4.01 or 09/S4.02
F5	6'-0" x 6'-0" x 12"	(8) #5 BARS EACH WAY	05/S4.02

VISITORS CENTER FOUNDATION PLAN

SCALE 1/8" = 1'-0"

INNOVATIVE DESIGN
850 W. MORGAN STREET, RALEIGH, NORTH CAROLINA 27603, 919/832-6303

NORTH CAROLINA PROFESSIONAL SEAL 15887 ENGINEER JAMES E. STRUFFOLINO 6/1/07

PROJECT: Wilkes County Visitor's Center K-4703
WILKESBORO, NORTH CAROLINA
OWNER: NC Department of Transportation

DRAWN BY: JES
CHECKED BY: JM
DATE: 6/1/07
REVISIONS:

SHEET: S1.01
54 of 89
A-6375

LYSAGHT & ASSOCIATES, PA
STRUCTURAL ENGINEERS
120 SAINT MARYS STREET
RALEIGH, N.C. 27605
PHONE : (919) 833-0495
FAX : (919) 833-7630

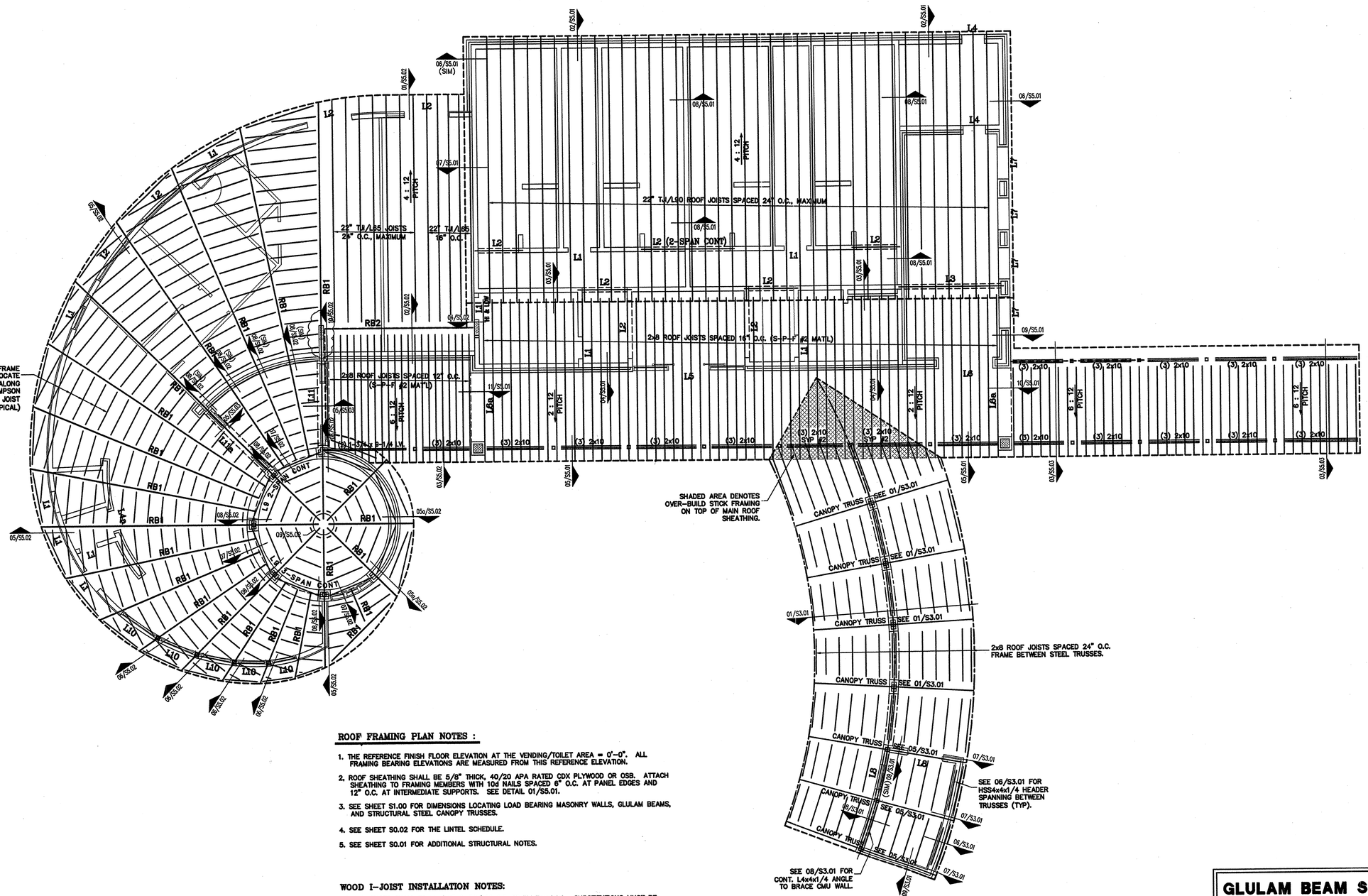

ROOF FRAMING PLAN NOTES :

1. THE REFERENCE FINISH FLOOR ELEVATION AT THE VENDING/TOILET AREA = 0'-0". ALL FRAMING BEARING ELEVATIONS ARE MEASURED FROM THIS REFERENCE ELEVATION.
2. ROOF SHEATHING SHALL BE 5/8" THICK, 40/20 APA RATED CDX PLYWOOD OR OSB. ATTACH SHEATHING TO FRAMING MEMBERS WITH 10d NAILS SPACED 6" O.C. AT PANEL EDGES AND 12" O.C. AT INTERMEDIATE SUPPORTS. SEE DETAIL 01/S5.01.
3. SEE SHEET S1.00 FOR DIMENSIONS LOCATING LOAD BEARING MASONRY WALLS, GLULAM BEAMS, AND STRUCTURAL STEEL CANOPY TRUSSES.
4. SEE SHEET S0.02 FOR THE LINTEL SCHEDULE.
5. SEE SHEET S0.01 FOR ADDITIONAL STRUCTURAL NOTES.

WOOD I-JOIST INSTALLATION NOTES:

WOOD I-JOISTS SHALL BE TJI/L65 & TJI/L90 SERIES BY TrusJoist. SUBSTITUTIONS MUST BE APPROVED IN WRITING BY THE PROJECT STRUCTURAL ENGINEER OF RECORD.

WEB STIFFENERS ARE REQUIRED AT ALL SUPPORTS FOR TJI ROOF JOISTS. WEB STIFFENER MATERIAL SHALL BE AS SPECIFIED BY TrusJoist. WEB STIFFENERS SHALL BE INSTALLED ON BOTH SIDES OF WEB, SNUG TO THE BOTTOM FLANGE, AND SHALL EXTEND TO ⅛" MINIMUM & 2⅜" MAXIMUM FROM THE TOP FLANGE. ATTACH WEB STIFFENERS WITH 16d NAILS SPACED 3" O.C.

SOLID, FULL-DEPTH BLOCKING SHALL BE INSTALLED BETWEEN JOISTS AT ALL SUPPORTS. BLOCKING SHALL CONSIST OF TJI/L90 MATERIAL OR 1½" TIMBERSTRAND LSL RIM BOARD. ATTACH ROOF SHEATHING TO BLOCKING WITH 10d NAILS SPACED 6" ON CENTER, & BLOCKING TO BEARING SUPPORTS WITH 12d NAILS 6" ON CENTER.

AT AREAS WHERE GYPSUM SHEATHING IS NOT DIRECTLY ATTACHED TO THE BOTTOM FLANGE OF JOISTS, THE G.C. SHALL INSTALL CONTINUOUS 1x4 BRIDGING, ATTACHED TO THE BOTTOM FLANGES OF ALL JOISTS, LOCATED 6'-0" ON CENTER.

GLULAM BEAM SCHEDULE

MARK	SIZE	LUMBER COMBINATION
RB1	5" x 24 3/4"	24FV5
RB2	5" x 22"	24FV3

ALL RB1 GLULAM ROOF BEAMS HAVE A 4:12 PITCH

DUE TO CONSTRUCTION TOLERANCES IN ERECTING MASONRY WALLS, IT IS RECOMMENDED THAT THE RB1 GLULAM BEAMS BE FABRICATED LONG WITH EAVE CONNECTIONS AT MASONRY WALLS TO BE FIELD FABRICATED.

VISITORS CENTER ROOF FRAMING PLAN

SCALE 1/8" = 1'-0"

INNOVATIVE DESIGN
850 W. MORGAN STREET, RALEIGH, NORTH CAROLINA 27603, 919/832-6303

NORTH CAROLINA PROFESSIONAL SEAL 15887 ENGINEER JAMES E STRUFFOLINO 6/1/07

PROJECT: Wilkes County Visitor's Center K-4703
WILKESBORO, NORTH CAROLINA
OWNER: NC Department of Transportation

DRAWN BY: JES
CHECKED BY: JES
DATE: 6/1/07
REVISIONS:

SHEET: S2.01
55 of 89 LA-6375

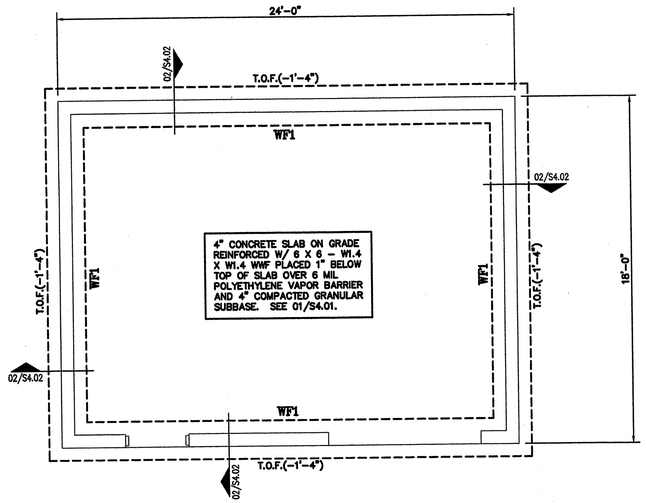

STORAGE BUILDING FOUNDATION PLAN NOTES :

1. THE REFERENCE FINISH FLOOR ELEVATION = 0'-0". SEE DETAIL 01/S4.01 FOR TYPICAL SLAB ON GRADE CONSTRUCTION.
2. SEE DETAIL 02/S4.01 FOR STEPPED FOOTING CONSTRUCTION. THE GENERAL CONTRACTOR SHALL DETERMINE FOOTING STEP LOCATIONS BASED ON FINISH GRADES.
3. SEE THE ARCHITECTURAL PLANS FOR LOCATIONS OF MASONRY CONTROL JOINTS. REFER TO THE STRUCTURAL NOTES FOR MASONRY CONTROL JOINT SPACING LIMITATIONS. SEE DETAIL 03/S4.01 FOR MCJ CONSTRUCTION.
4. T.O.F.(-1'-4") DENOTES A TOP OF FOOTING ELEVATION 1'-4" BELOW THE FINISH FLOOR.
5. SEE THE ARCHITECTURAL DRAWINGS FOR WALL DIMENSIONS NOT NOTED ON THIS PLAN.
6. SEE SHEET S0.01 FOR ADDITIONAL STRUCTURAL NOTES.

FOOTING SCHEDULE

MARK	SIZE	REINFORCING	DETAIL
WF1	2'-0" x 12" CONT.	(2) #5 CONT & #4 TIES 48" O.C.	02/S4.02

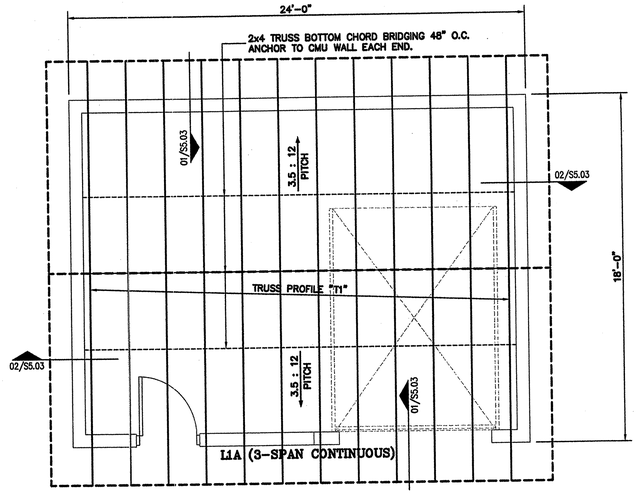

STORAGE BUILDING ROOF FRAMING PLAN NOTES :

1. THE REFERENCE FINISH FLOOR ELEVATION = 0'-0". ALL FRAMING BEARING ELEVATIONS ARE MEASURED FROM THIS REFERENCE ELEVATION.
2. ROOF SHEATHING SHALL BE 5/8" THICK, 40/20 APA RATED CDX PLYWOOD. ATTACH SHEATHING TO FRAMING MEMBERS WITH 10d NAILS SPACED 6" O.C. AT PANEL EDGES AND 12" O.C. AT INTERMEDIATE SUPPORTS. SEE DETAIL 01/S5.01.
3. SEE THE ARCHITECTURAL DRAWINGS FOR WALL DIMENSIONS NOT NOTED ON THIS PLAN AND FOR DIMENSIONS LOCATING MASONRY WALL OPENINGS.
4. SEE SHEET S0.02 FOR THE LINTEL SCHEDULE.
5. SEE SHEET S0.01 FOR ADDITIONAL STRUCTURAL NOTES.

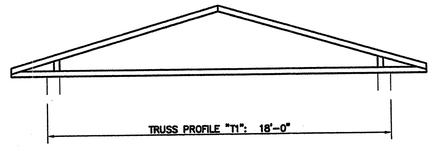

ROOF TRUSS DESIGN NOTES :

1. THE GENERAL CONTRACTOR SHALL VERIFY DIMENSIONS FOR ALL TRUSS TYPES IN THE FIELD PRIOR TO FABRICATION.
2. TRUSSES SHALL BE SPACED AT 24" O.C. MAXIMUM UNLESS OTHERWISE NOTED ON THE FRAMING PLANS.
3. FINAL TRUSS WEB CONFIGURATIONS ARE TO BE DETERMINED BY THE FABRICATOR.
4. THE SUPPLIER SHALL PROVIDE CALCULATIONS FOR TYPICAL TRUSS TYPES, SEALED BY A PROFESSIONAL ENGINEER REGISTERED IN NORTH CAROLINA, FOR REVIEW BY THE PROJECT STRUCTURAL ENGINEER OF RECORD PRIOR TO FABRICATION.
5. THE SUPPLIER SHALL DESIGN ALL TRUSS TYPES FOR A TOTAL ROOF DEAD LOAD OF 20 PSF (10 PSF AT THE TOP CHORD & 10 PSF AT THE BOTTOM CHORD). THE DESIGN ROOF LIVE LOAD IS 20 PSF ON THE TOP CHORD. DESIGN TRUSS BOTTOM CHORDS FOR A CONCENTRATED MECH. UNIT LOAD OF 150 LBS, APPLIED AT ANY LOCATION ALONG THE TRUSS, IN COMBINATION WITH THE DESIGN DEAD & LIVE LOADS.

   IN ADDITION TO THE DESIGN DEAD AND LIVE LOADS NOTED ABOVE, THE ROOF TRUSSES SHALL BE DESIGNED IN ACCORDANCE WITH ASCE 7-02 FOR A DESIGN WIND SPEED OF 90 MPH WITH EXPOSURE 'C'. 10 PSF MAXIMUM SHALL BE USED FOR THE DEAD LOAD WITH ALL WIND LOAD CASES.
7. THE ERECTION DRAWINGS SHALL NOTE ALL LOCATIONS OF TEMPORARY BRIDGING OR BRACING REQUIRED TO STABILIZE THE TRUSSES DURING ERECTION, PRIOR TO THE INSTALLATION OF ROOF SHEATHING.
8. THE CONTRACTOR SHALL CONSULT HIB-91 FOR ERECTION BRACING GUIDELINES. PROPER WOOD TRUSS HANDLING AND ERECTION BRACING ARE THE RESPONSIBILITY OF THE CONTRACTOR.

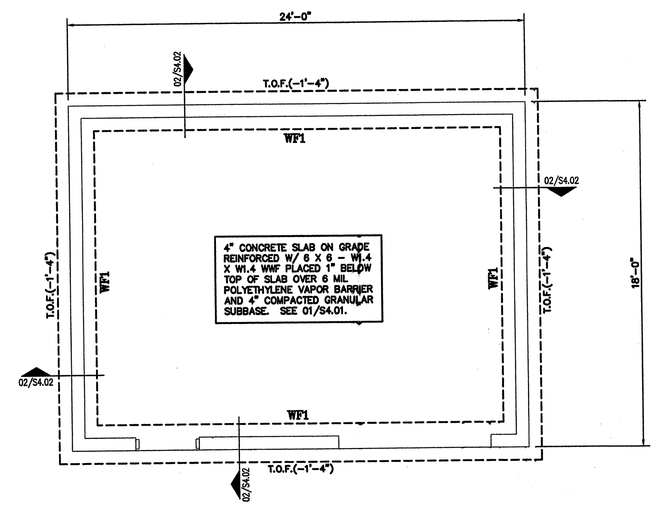

MAINTENANCE BUILDING FOUNDATION PLAN NOTES :

1. THE REFERENCE FINISH FLOOR ELEVATION = 0'-0". SEE DETAIL 01/S4.01 FOR TYPICAL SLAB ON GRADE CONSTRUCTION.
2. SEE DETAIL 02/S4.01 FOR STEPPED FOOTING CONSTRUCTION. THE GENERAL CONTRACTOR SHALL DETERMINE FOOTING STEP LOCATIONS BASED ON FINISH GRADES.
3. SEE THE ARCHITECTURAL PLANS FOR LOCATIONS OF MASONRY CONTROL JOINTS. REFER TO THE STRUCTURAL NOTES FOR MASONRY CONTROL JOINT SPACING LIMITATIONS. SEE DETAIL 03/S4.01 FOR MCJ CONSTRUCTION.
4. T.O.F.(-1'-4") DENOTES A TOP OF FOOTING ELEVATION 1'-4" BELOW THE FINISH FLOOR.
5. SEE THE ARCHITECTURAL DRAWINGS FOR WALL DIMENSIONS NOT NOTED ON THIS PLAN.
6. SEE SHEET S0.01 FOR ADDITIONAL STRUCTURAL NOTES.

FOOTING SCHEDULE

MARK	SIZE	REINFORCING	DETAIL
WF1	2'-0" x 12" CONT.	(2) #5 CONT & #4 TIES 48" O.C.	02/S4.02

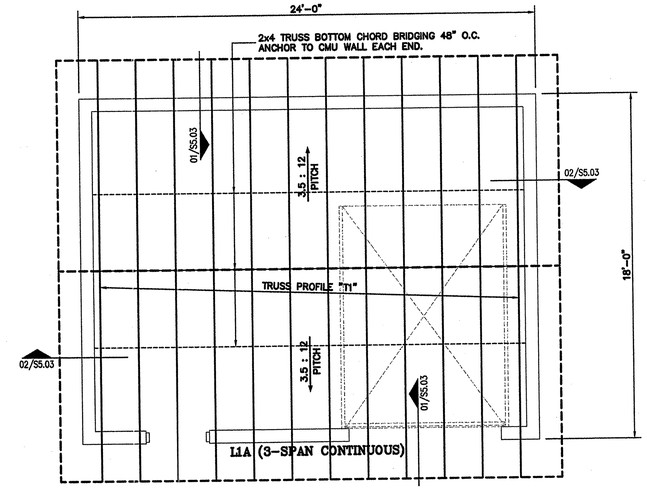

MAINTENANCE BUILDING ROOF FRAMING PLAN NOTES :

1. THE REFERENCE FINISH FLOOR ELEVATION = 0'-0". ALL FRAMING BEARING ELEVATIONS ARE MEASURED FROM THIS REFERENCE ELEVATION.
2. ROOF SHEATHING SHALL BE 5/8" THICK, 40/20 APA RATED CDX PLYWOOD. ATTACH SHEATHING TO FRAMING MEMBERS WITH 10d NAILS SPACED 6" O.C. AT PANEL EDGES AND 12" O.C. AT INTERMEDIATE SUPPORTS. SEE DETAIL 01/S5.01.
3. SEE THE ARCHITECTURAL DRAWINGS FOR WALL DIMENSIONS NOT NOTED ON THIS PLAN AND FOR DIMENSIONS LOCATING MASONRY WALL OPENINGS.
4. SEE SHEET S0.02 FOR THE LINTEL SCHEDULE.
5. SEE SHEET S0.01 FOR ADDITIONAL STRUCTURAL NOTES.

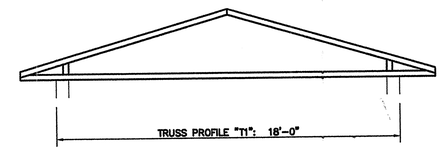

ROOF TRUSS DESIGN NOTES :

1. THE GENERAL CONTRACTOR SHALL VERIFY DIMENSIONS FOR ALL TRUSS TYPES IN THE FIELD PRIOR TO FABRICATION.
2. TRUSSES SHALL BE SPACED AT 24" O.C. MAXIMUM UNLESS OTHERWISE NOTED ON THE FRAMING PLANS.
3. FINAL TRUSS WEB CONFIGURATIONS ARE TO BE DETERMINED BY THE FABRICATOR.
4. THE SUPPLIER SHALL PROVIDE CALCULATIONS FOR TYPICAL TRUSS TYPES, SEALED BY A PROFESSIONAL ENGINEER REGISTERED IN NORTH CAROLINA, FOR REVIEW BY THE PROJECT STRUCTURAL ENGINEER OF RECORD PRIOR TO FABRICATION.
5. THE SUPPLIER SHALL DESIGN ALL TRUSS TYPES FOR A TOTAL ROOF DEAD LOAD OF 20 PSF (10 PSF AT THE TOP CHORD & 10 PSF AT THE BOTTOM CHORD). THE DESIGN ROOF LIVE LOAD IS 20 PSF ON THE TOP CHORD. DESIGN TRUSS BOTTOM CHORDS FOR A CONCENTRATED MECH. UNIT LOAD OF 150 LBS, APPLIED AT ANY LOCATION ALONG THE TRUSS, IN COMBINATION WITH THE DESIGN DEAD & LIVE LOADS.

   IN ADDITION TO THE DESIGN DEAD AND LIVE LOADS NOTED ABOVE, THE ROOF TRUSSES SHALL BE DESIGNED IN ACCORDANCE WITH ASCE 7-02 FOR A DESIGN WIND SPEED OF 90 MPH WITH EXPOSURE 'C'. 10 PSF MAXIMUM SHALL BE USED FOR THE DEAD LOAD WITH ALL WIND LOAD CASES.
7. THE ERECTION DRAWINGS SHALL NOTE ALL LOCATIONS OF TEMPORARY BRIDGING OR BRACING REQUIRED TO STABILIZE THE TRUSSES DURING ERECTION, PRIOR TO THE INSTALLATION OF ROOF SHEATHING.
8. THE CONTRACTOR SHALL CONSULT HIB-91 FOR ERECTION BRACING GUIDELINES. PROPER WOOD TRUSS HANDLING AND ERECTION BRACING ARE THE RESPONSIBILITY OF THE CONTRACTOR.

STORAGE / MAINTENANCE BUILDING FOUNDATION & FRAMING PLANS

SCALE 1/4" = 1'-0"

LYSAGHT & ASSOCIATES, PA
STRUCTURAL ENGINEERS
120 SAINT MARYS STREET
RALEIGH, N.C. 27605
PHONE : (919) 833-0495
FAX : (919) 833-7630

INNOVATIVE DESIGN
850 W. MORGAN STREET, RALEIGH, NORTH CAROLINA 27603, 919/832-6303

NORTH CAROLINA PROFESSIONAL SEAL 15887 ENGINEER JAMES E. STRUTFOLINO 6/1/07

PROJECT: Wilkes County Visitor's Center K-4703
WILKESBORO, NORTH CAROLINA
OWNER: NC Department of Transportation

DRAWN BY: JES
CHECKED BY: JES
DATE: 6/1/07
REVISIONS:

SHEET: S2.02

LYSAGHT & ASSOCIATES, PA
STRUCTURAL ENGINEERS
120 SAINT MARYS STREET
RALEIGH, N.C. 27605
PHONE : (919) 833-0495
FAX : (919) 833-7630

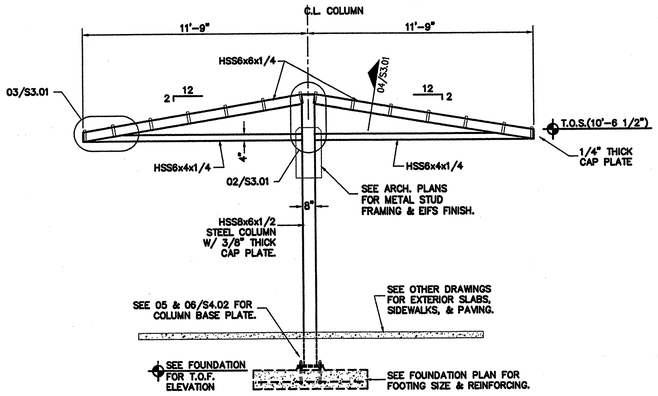

CANOPY FRAMING SECTION 01

SCALE : 1/4" = 1'-0"

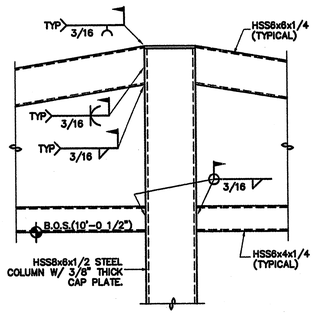

DETAIL 02 1" SCALE

TUBE FRAMING TO STEEL COLUMN CONNECTION

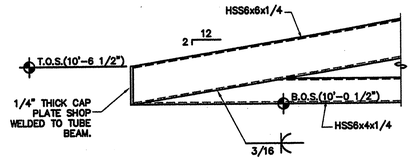

DETAIL 03 1" SCALE

TUBE FRAMING CONNECTION AT CANOPY

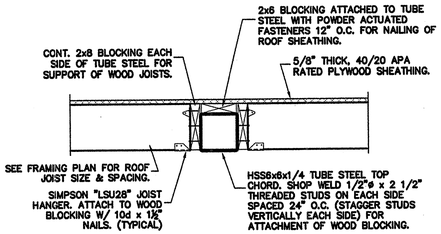

DETAIL 04 1" SCALE

ROOF FRAMING DETAIL AT CANOPY

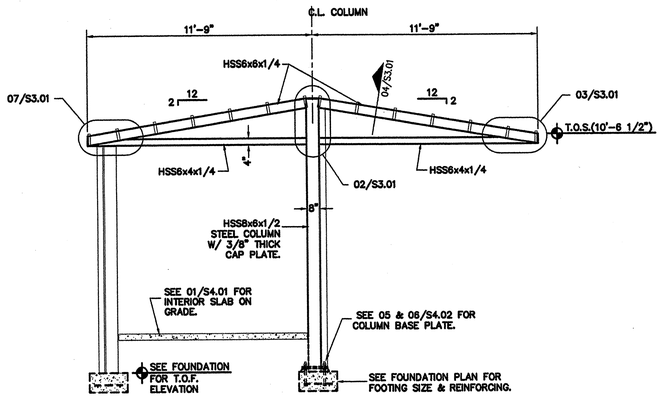

CANOPY FRAMING SECTION AT EQUIPMENT BUILDING 05

SCALE : 1/4" = 1'-0"

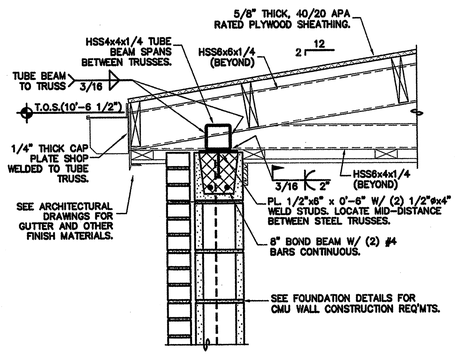

DETAIL 06 1" SCALE

ROOF FRAMING SECTION AT EQUIPMENT ROOM WALL

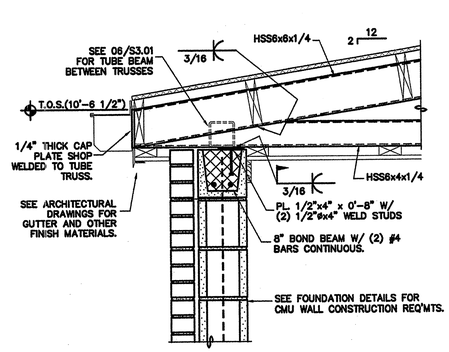

DETAIL 07 1" SCALE

TUBE FRAMING CONNECTION AT EQUIPMENT ROOM WALL

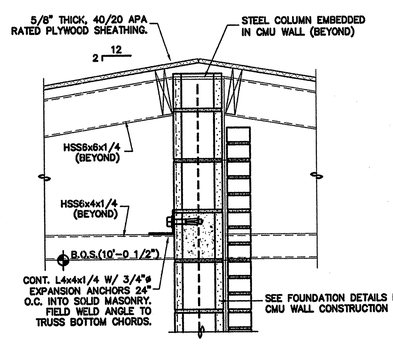

DETAIL 08 1" SCALE

ROOF FRAMING SECTION AT EQUIPMENT ROOM WALL

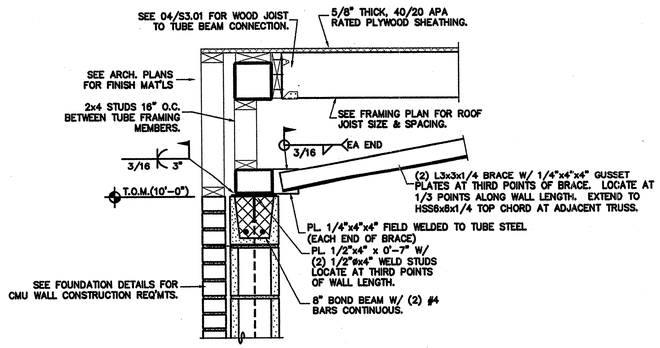

DETAIL 09 1" SCALE

ROOF FRAMING SECTION AT EQUIPMENT ROOM WALL

GENERAL NOTES :

1. ALL STRUCTURAL STEEL MATERIAL IS TO BE SHOP PRIMED AND FIELD PAINTED BY THE GENERAL CONTRACTOR.
2. PROVIDE SHOP WELDS WITH 3/16" MINIMUM THROAT THICKNESS ALL AROUND AT ALL CONNECTIONS OF TRUSS COMPONENTS.
3. THE ERECTOR SHALL GRIND ALL FIELD WELDS SMOOTH.
4. THE REFERENCE FINISH FLOOR ELEVATION FOR THE MAIN BUILDING IS 0'-0". ALL TOP OF STEEL (T.O.S.) AND BOTTOM OF STEEL (B.O.S.) ELEVATIONS ARE MEASURED FROM THIS REFERENCE DATUM.
5. SEE SHEET S0.01 FOR ADDITIONAL STRUCTURAL NOTES.

INNOVATIVE DESIGN
850 W. MORGAN STREET, RALEIGH, NORTH CAROLINA 27603, 919/832-6303

NORTH CAROLINA PROFESSIONAL SEAL 15887 ENGINEER JAMES E. STRUFFOLINO 6/1/07

PROJECT: Wilkes County Visitor's Center K-4703
WILKESBORO, NORTH CAROLINA
OWNER: NC Department of Transportation

DRAWN BY: JES
CHECKED BY: JES
DATE: 6/1/07
REVISIONS:

SHEET: S3.01
57 of 89
LA-6375

CANOPY SECTIONS AND DETAILS

SCALE 1/4" = 1'-0"

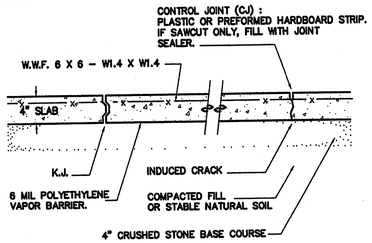

NOTES:

USE A KEYED CONSTRUCTION JOINT (K.J.) BETWEEN POURS.

SLAB IS ADEQUATE FOR A LIGHT COMMERCIAL OCCUPANCY WITH A MAXIMUM LIVE LOAD OF 100 PSF.

DETAIL 01 — 1" SCALE

TYP. SLAB ON GRADE, CONTROL JOINT, CONSTRUCTION JOINT

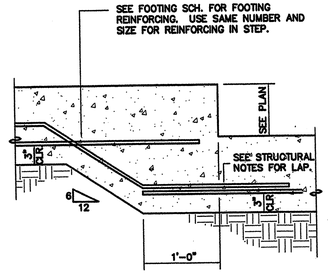

DETAIL 02 — 1" SCALE

TYPICAL STEPPED FOOTING DETAIL

NOTE : WHERE APPLICABLE, LINE UP CONTROL JOINTS IN BLOCK & BRICK AND CAULK JOINT IN BRICK.

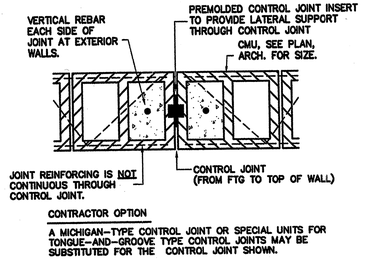

CONTRACTOR OPTION

A MICHIGAN–TYPE CONTROL JOINT OR SPECIAL UNITS FOR TONGUE–AND–GROOVE TYPE CONTROL JOINTS MAY BE SUBSTITUTED FOR THE CONTROL JOINT SHOWN.

DETAIL 03 — NO SCALE

CMU CONTROL JOINT

NOTES :

FILL ALL CORES OF PILASTERS SOLID W/ 3000 PSI PEA–GRAVEL CONCRETE OR GROUT.

PROVIDE DOWEL, SAME SIZE AS VERTICAL REINFORCING, AT EACH VERTICAL BAR W/ 8" HOOK INTO FOOTING. LAP ALL SPLICES 48 BAR DIAMETERS, MINIMUM.

NO PLUMBING/ELECTRICAL/ETC. CONDUIT IS PERMITTED IN THE CELLS OF MASONRY PILASTERS.

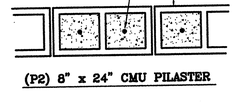

(P2) 8" x 24" CMU PILASTER

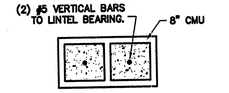

(P3) 8" x 16" CMU PILASTER

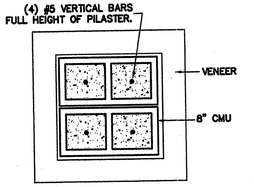

(P1) 16" x 16" CMU PILASTER

DETAIL 04 — 1" SCALE

MASONRY PILASTER CONSTRUCTION

G.C. / MASON SUBCONTRACTOR NOTE: ALL MASONRY WALLS FOR THIS PROJECT SHALL CONFORM TO THE FOLLOWING SEISMIC DESIGN REQUIREMENTS:

1) A VERTICAL BAR SHALL BE LOCATED AT ALL CORNERS.
2) A VERTICAL BAR SHALL BE LOCATED WITHIN 8" OF THE ENDS OF ALL WALLS.
3) A VERTICAL BAR SHALL BE LOCATED WITHIN 16" OF EACH SIDE OF ALL WALL OPENINGS.
4) A VERTICAL BAR SHALL BE LOCATED WITHIN 8" OF EACH SIDE OF ALL MASONRY CONTROL JOINTS.

DOWELS INTO THE FOOTING ARE NOT REQUIRED WHERE VERTICAL BARS ARE ADDED FOR THE FOUR CONDITIONS NOTED ABOVE.

SEE ARCH. PLANS FOR CMU & VENEER MATERIAL REQ'MTS.

LYSAGHT & ASSOCIATES, PA
STRUCTURAL ENGINEERS
120 SAINT MARYS STREET
RALEIGH, N.C. 27605
PHONE : (919) 833-0495
FAX : (919) 833-7630

INNOVATIVE DESIGN
850 W. MORGAN STREET, RALEIGH, NORTH CAROLINA 27603, 919/832-6303

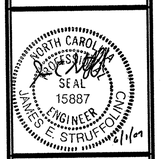

SLAB ON GRADE IS DEPRESSED FOR TILE AT SOME LOCATIONS. SEE SHEET S1.01.

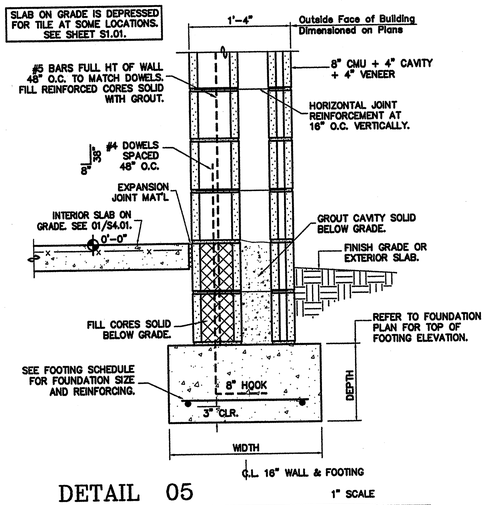

DETAIL 05 — 1" SCALE

EXTERIOR WALL FOOTING SECTION

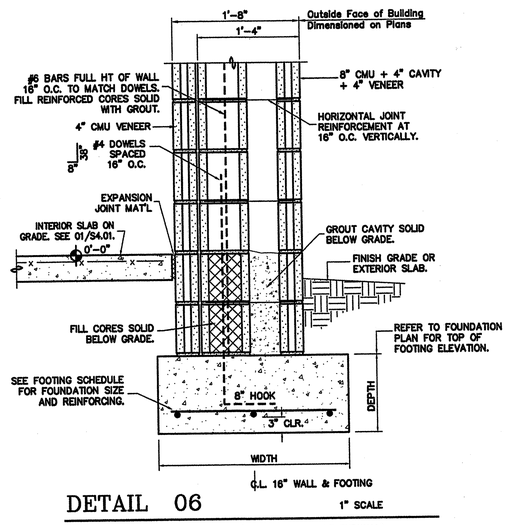

DETAIL 06 — 1" SCALE

EXTERIOR WALL FOOTING SECTION (AT VENDING GABLE ENDWALL)

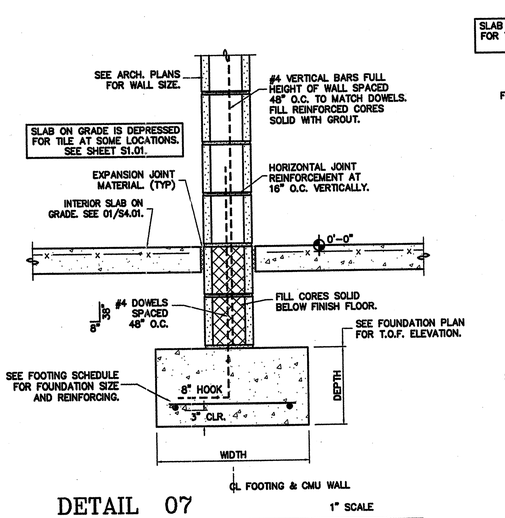

DETAIL 07 — 1" SCALE

TYPICAL INTERIOR WALL FOOTING SECTION

SLAB ON GRADE IS DEPRESSED FOR TILE AT SOME LOCATIONS. SEE SHEET S1.01.

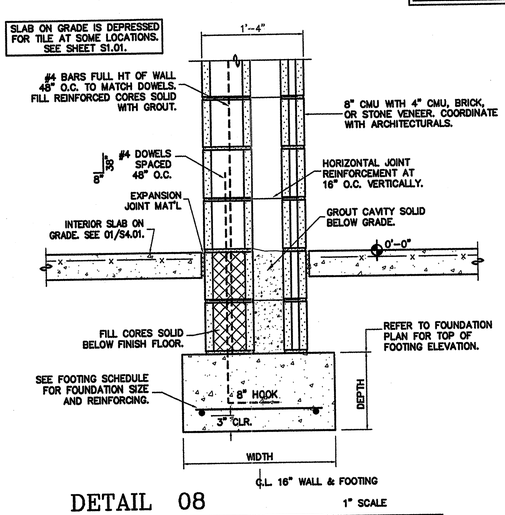

DETAIL 08 — 1" SCALE

INTERIOR WALL FOOTING SECTION (AT VENDING AREA)

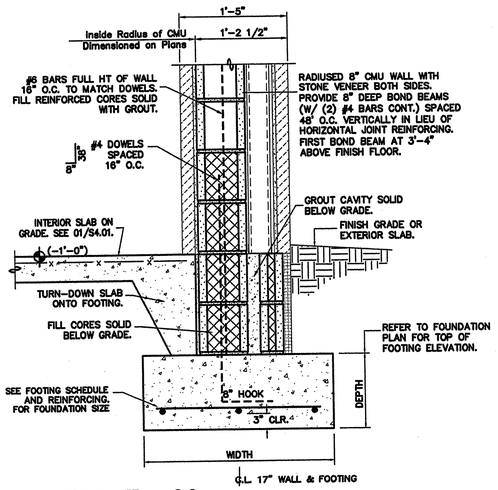

DETAIL 09 — 1" SCALE

EXTERIOR WALL FOOTING SECTION (AT VISITORS CENTER)

G.C. NOTE: DOWELS AND VERTICAL BARS TO BE LOCATED 24" O.C. AT DETAIL 10a/S4.01.

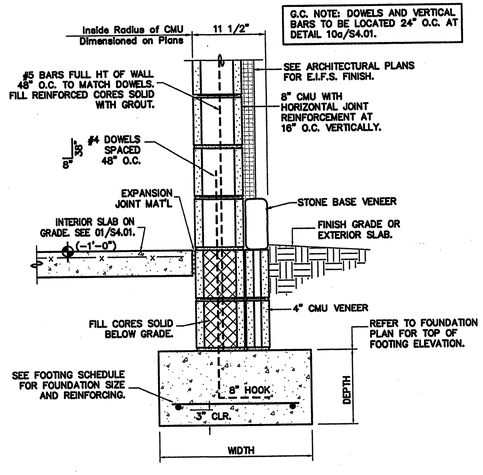

DETAIL 10/10a — 1" SCALE

EXTERIOR WALL FOOTING SECTION (AT VISITORS CENTER)

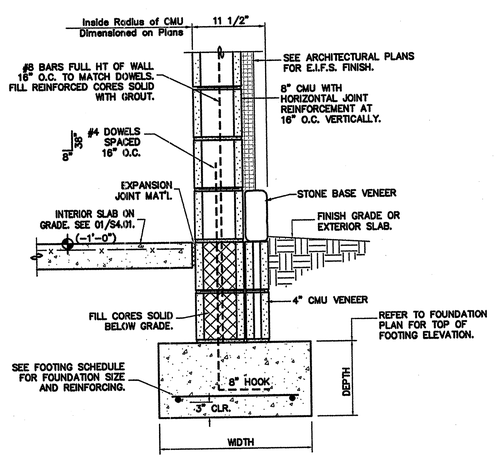

DETAIL 11 — 1" SCALE

EXTERIOR WALL FOOTING SECTION (AT VISITORS CENTER)

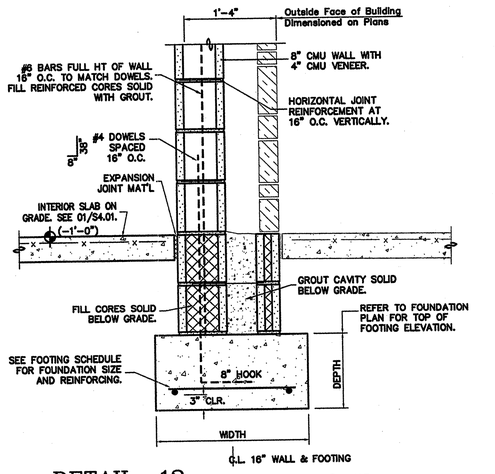

DETAIL 12 — 1" SCALE

EXTERIOR WALL FOOTING SECTION (AT VISITORS CENTER VESTIBULE)

PROJECT: Wilkes County Visitor's Center K-4703
WILKESBORO, NORTH CAROLINA

OWNER: NC Department of Transportation

DRAWN BY: JES
CHECKED BY: RA
DATE: 6/1/07
REVISIONS:

SHEET: S4.01
58 of 89
LA-6375

FOUNDATION DETAILS — SCALE 1" = 1'-0"

LYSAGHT & ASSOCIATES, PA
STRUCTURAL ENGINEERS
120 SAINT MARYS STREET
RALEIGH, N.C. 27603
PHONE : (919) 833-0495
FAX : (919) 833-7830

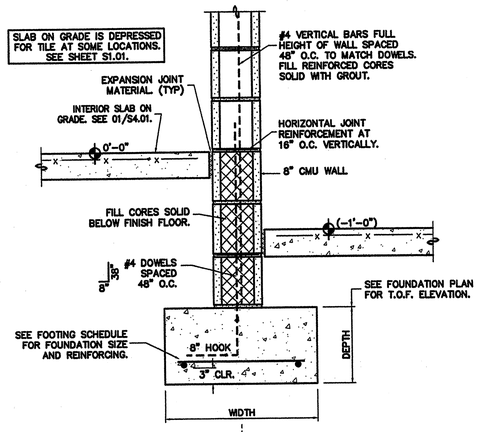

DETAIL 01 — 1" SCALE

INTERIOR WALL FOOTING SECTION

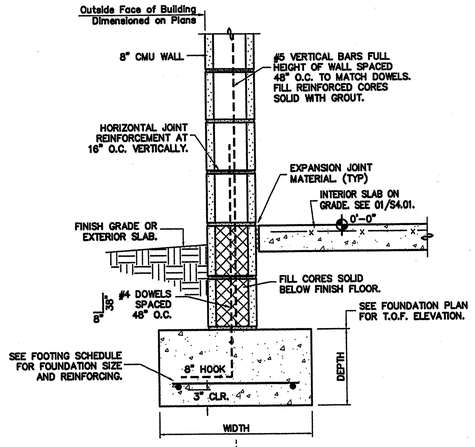

DETAIL 02 — 1" SCALE

EXTERIOR WALL FOOTING SECTION AT STORAGE / MAINTENANCE BUILDINGS

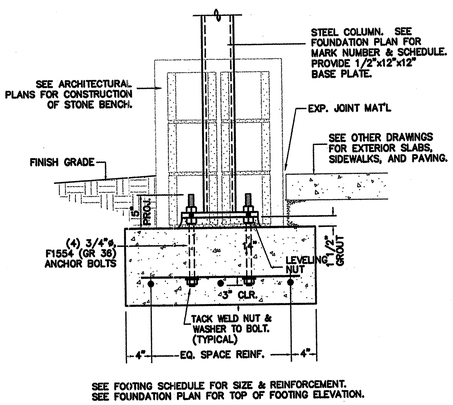

SEE FOOTING SCHEDULE FOR SIZE & REINFORCEMENT.
SEE FOUNDATION PLAN FOR TOP OF FOOTING ELEVATION.

DETAIL 03 — NO SCALE

CANOPY COLUMN SETTING DETAIL

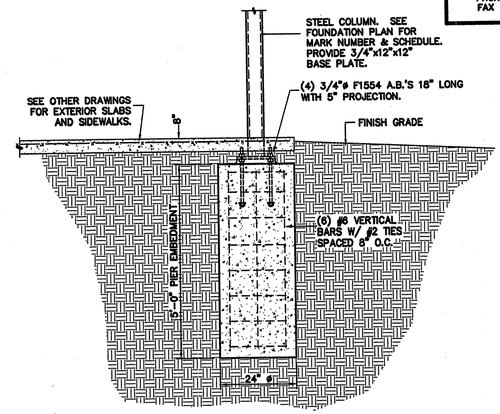

DETAIL 04 — 1/2" SCALE

TIMBER POST FOOTING AT COVERED WALKWAY

SEE 08/S4.02 FOR PLAN VIEW AT COLUMN BASE PLATE

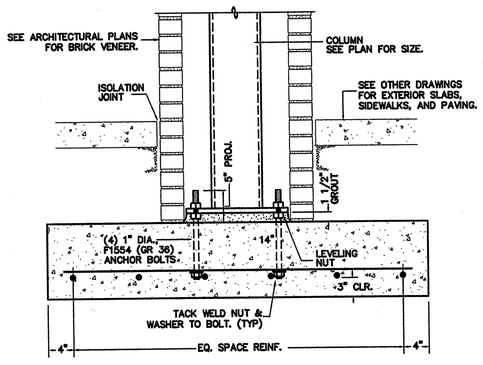

SEE FOOTING SCHEDULE FOR SIZE & REINFORCEMENT.
SEE FOUNDATION PLAN FOR TOP OF FOOTING ELEVATION.

DETAIL 05 — NO SCALE

C1 – CANOPY COLUMN SETTING DETAIL

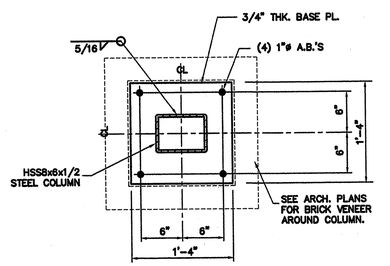

DETAIL 06 — 1" SCALE

PLAN @ C1 CANOPY COLUMN BASE PLATE – TUBE

G.C. / MASON SUBCONTRACTOR NOTE:

ALL MASONRY WALLS FOR THIS PROJECT SHALL CONFORM TO THE FOLLOWING SEISMIC DESIGN REQUIREMENTS:

1) A VERTICAL BAR SHALL BE LOCATED AT ALL CORNERS.
2) A VERTICAL BAR SHALL BE LOCATED WITHIN 8" OF THE ENDS OF ALL WALLS.
3) A VERTICAL BAR SHALL BE LOCATED WITHIN 16" OF EACH SIDE OF ALL WALL OPENINGS.
4) A VERTICAL BAR SHALL BE LOCATED WITHIN 8" OF EACH SIDE OF ALL MASONRY CONTROL JOINTS.

DOWELS INTO THE FOOTING ARE NOT REQUIRED WHERE VERTICAL BARS ARE ADDED FOR THE FOUR CONDITIONS NOTED ABOVE.

SEE ARCHITECTURAL DRAWINGS FOR CMU & VENEER MATERIAL REQUIREMENTS.

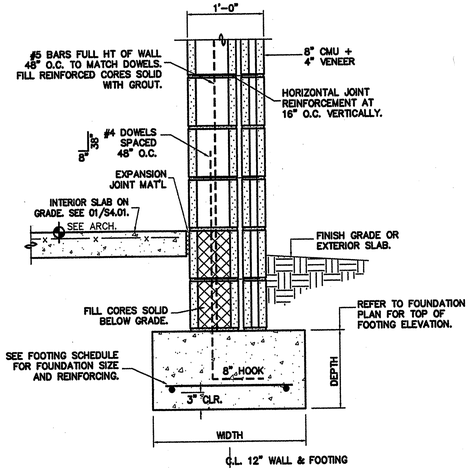

DETAIL 07 — 1" SCALE

EXTERIOR WALL FOOTING SECTION AT EQUIPMENT ROOM

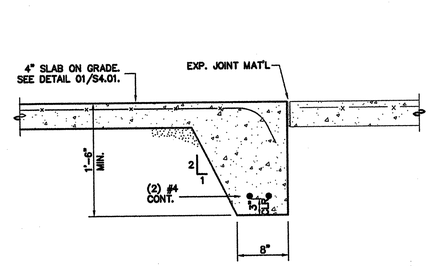

DETAIL 08 — 1" SCALE

TURNED DOWN SLAB CONSTRUCTION AT ENTRY

SEE DETAIL 10/S4.02 FOR PLAN VIEW AT COLUMN BASE PLATE

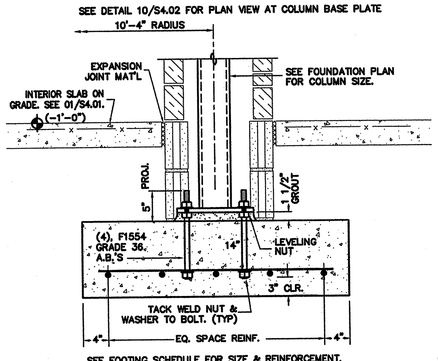

SEE FOOTING SCHEDULE FOR SIZE & REINFORCEMENT.
SEE FOUNDATION PLAN FOR TOP OF FOOTING ELEVATION.

DETAIL 09 — NO SCALE

C5 – COLUMN SETTING DETAIL

DIM.	HSS 5x5
A	4 1/2"
B	1'-0"

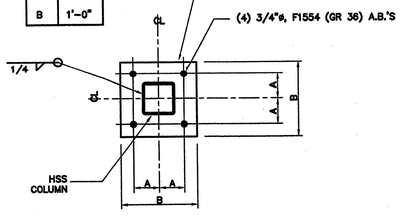

DETAIL 10 — 1" SCALE

PLAN @ C5 COLUMN BASE PLATE – TUBE

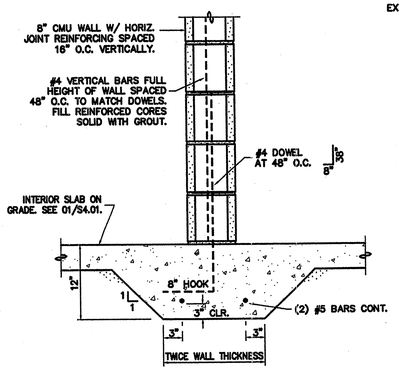

DETAIL 11 — 1" SCALE

THICKENED SLAB FOOTING AT PARTITION WALLS

FOUNDATION DETAILS — SCALE 1" = 1'-0"

INNOVATIVE DESIGN
850 W. MORGAN STREET, RALEIGH, NORTH CAROLINA 27603, 919/832-6303

NORTH CAROLINA PROFESSIONAL SEAL 15887 ENGINEER JAMES E. STRUFFOLINO 6/1/07

PROJECT: Wilkes County Visitor's Center K-4703
WILKESBORO, NORTH CAROLINA
OWNER: NC Department of Transportation

DRAWN BY: JES
CHECKED BY: JS
DATE: 6/1/07
REVISIONS:

SHEET: S4.02
59 of 89 LA-6375

PLYWOOD SHEATHING INSTALLATION NOTES :

THE ROOF SHEATHING SHALL BE 5/8" THICK, 40/20 APA RATED CDX PLYWOOD. FASTEN SHEATHING TO ROOF TRUSSES AND OTHER SUPPORTS WITH 10d NAILS SPACED 6" O.C. AT PANEL EDGES AND AT 12" O.C. AT INTERMEDIATE SUPPORT LOCATIONS.

ORIENT PLYWOOD SHEATHING PANELS AS SHOWN BELOW:

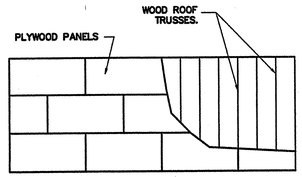

DETAIL 01
NO SCALE

ROOF SHEATHING ATTACHMENT

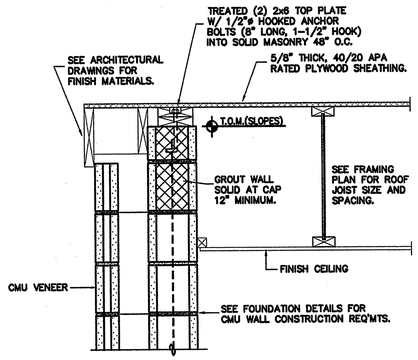

DETAIL 06
1" SCALE

ROOF FRAMING SECTION AT GABLE ENDWALL OF VENDING/TOILET AREA

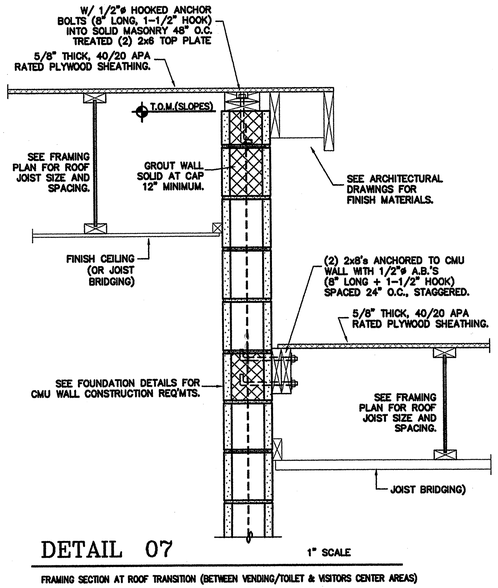

DETAIL 07
1" SCALE

FRAMING SECTION AT ROOF TRANSITION (BETWEEN VENDING/TOILET & VISITORS CENTER AREAS)

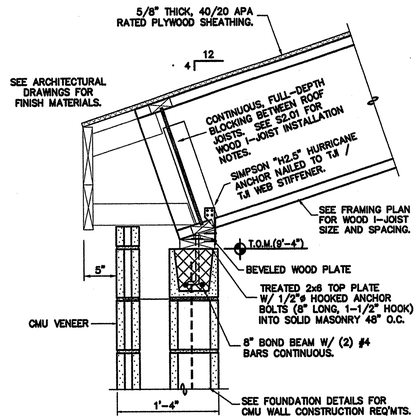

DETAIL 02
1" SCALE

ROOF FRAMING SECTION AT VENDING/TOILET AREA

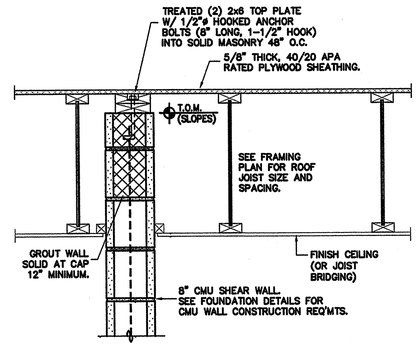

DETAIL 08
1" SCALE

ROOF FRAMING SECTION AT INTERIOR SHEAR WALL

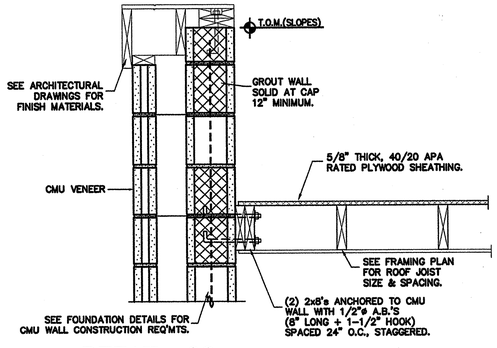

DETAIL 09
1" SCALE

ROOF FRAMING SECTION AT GABLE ENDWALL OF VENDING/TOILET AREA

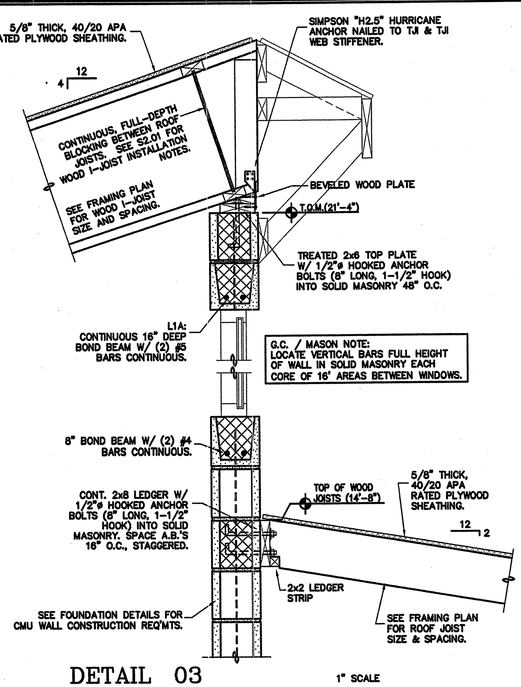

DETAIL 03
1" SCALE

ROOF FRAMING SECTION AT CLERESTORY WALL OF VENDING/TOILET AREA

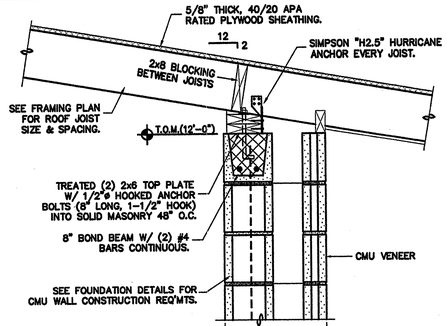

DETAIL 04
1" SCALE

ROOF FRAMING SECTION AT VENDING/TOILET AREA

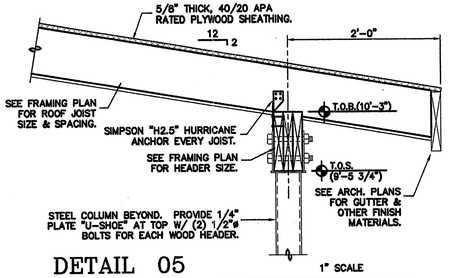

DETAIL 05
1" SCALE

ROOF FRAMING SECTION AT COVERED WALKWAY

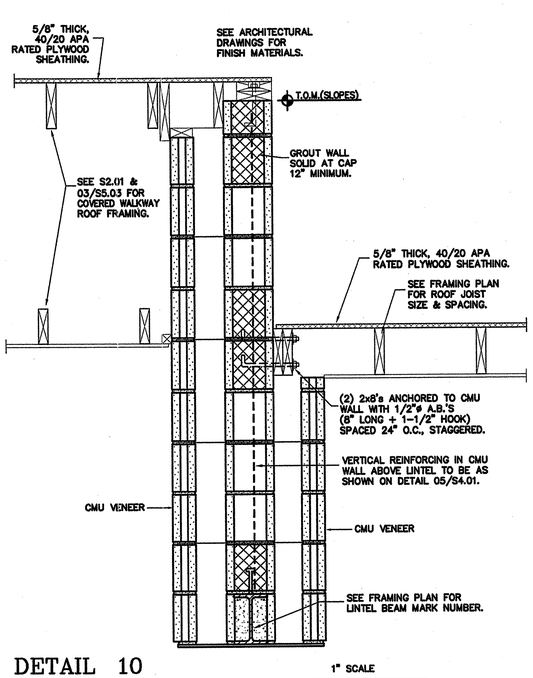

DETAIL 10
1" SCALE

FRAMING SECTION AT GABLE ENDWALL BETWEEN VENDING AREA & COVERED WALKWAY

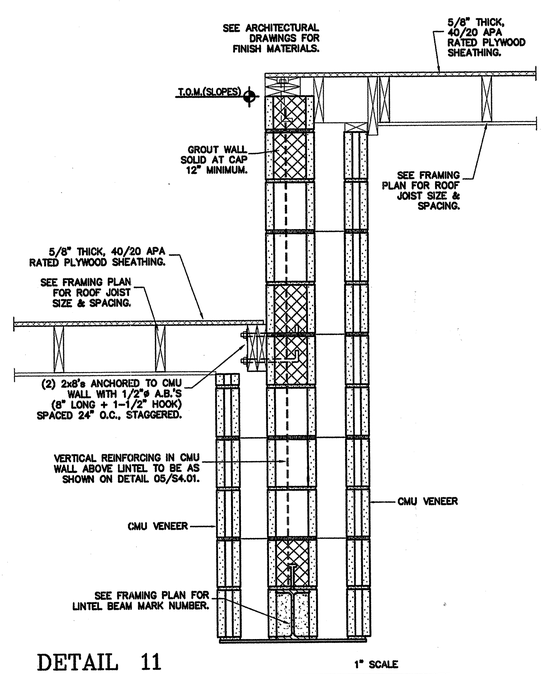

DETAIL 11
1" SCALE

FRAMING SECTION AT GABLE ENDWALL BETWEEN VENDING AREA & VISITOR CENTER AREA ROOF TRANSITION

FRAMING DETAILS

SCALE 1" = 1'-0"

LYSAGHT & ASSOCIATES, PA
STRUCTURAL ENGINEERS
120 SAINT MARYS STREET
RALEIGH, N.C. 27605
PHONE : (919) 833-0495
FAX : (919) 833-7630

INNOVATIVE DESIGN
850 W. MORGAN STREET, RALEIGH, NORTH CAROLINA 27603, 919/832-6303

NORTH CAROLINA PROFESSIONAL SEAL 15887 ENGINEER JAMES E. STRUFFOLINO 6/1/07

PROJECT: Wilkes County Visitor's Center K-4703
WILKESBORO, NORTH CAROLINA
OWNER: NC Department of Transportation

DRAWN BY: JES
CHECKED BY: RV
DATE: 6/1/07
REVISIONS:

SHEET: S5.01
60 of 69
LA-6375

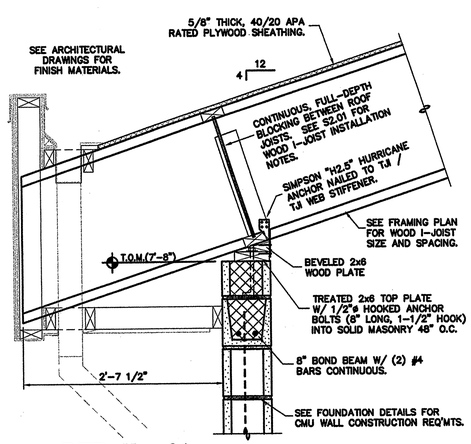

DETAIL 01

1" SCALE

ROOF FRAMING SECTION AT VISITOR CENTER MECHANICAL ROOM

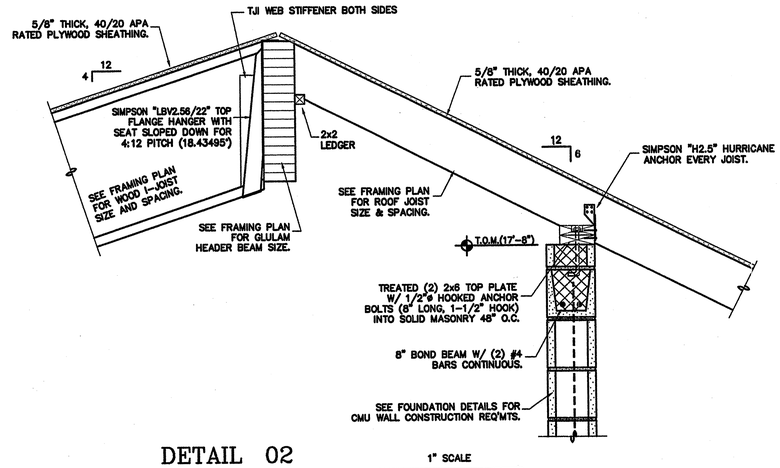

DETAIL 02

1" SCALE

ROOF FRAMING SECTION AT MECHANICAL ROOM

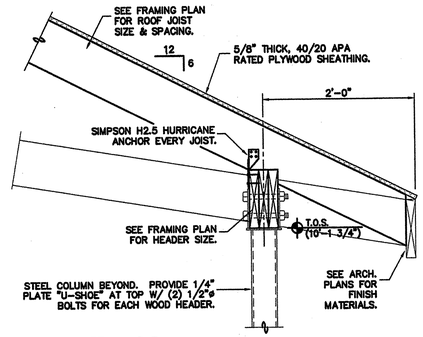

DETAIL 03

1" SCALE

ROOF FRAMING SECTION AT COVERED WALKWAY

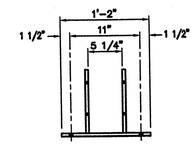

SECTION "A"

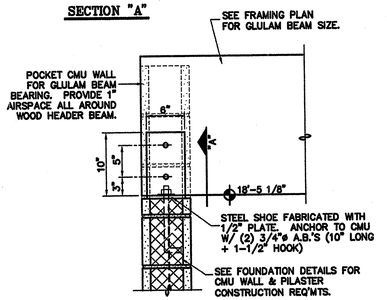

DETAIL 04

1" SCALE

LVL RIDGE BEAM TO CMU WALL CONNECTION

DETAIL 05/05a

1" SCALE

ROOF FRAMING SECTION AT EXTERIOR WALL OF VISITOR CENTER

SECTION "B"

DETAIL 06

1" SCALE

ROOF FRAMING SECTION AT EXTERIOR WALL OF VISITOR CENTER

DETAIL 07

1" SCALE

GLULAM BEAM TO CMU WALL AT VISITOR CENTER

DETAIL 08

1" SCALE

GLULAM BEAM TO CMU WALL AT VISITOR CENTER

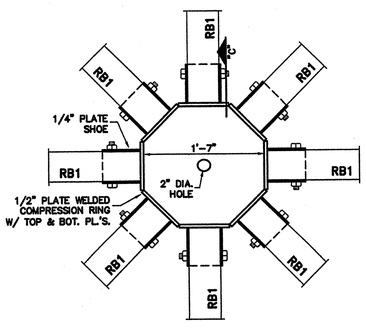

DETAIL 09

1" SCALE

GLULAM COMPRESSION RING

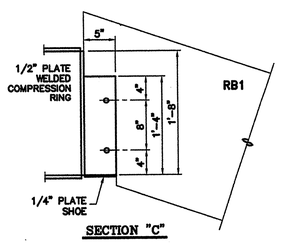

SECTION "C"

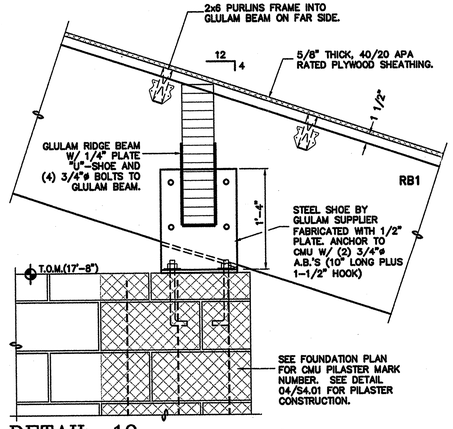

DETAIL 10

1" SCALE

GLULAM BEAM TO CMU WALL AT VISITOR CENTER

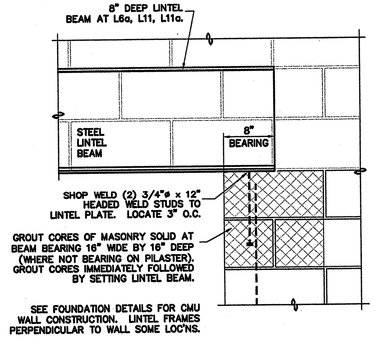

DETAIL 11

1" SCALE

L3, L5, L6a, L11, AND L11a LINTEL BEAM TO CMU WALL DETAIL

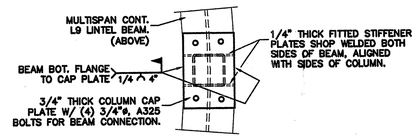

PLAN VIEW

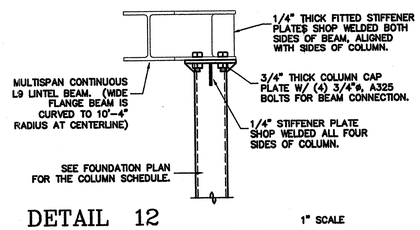

DETAIL 12

1" SCALE

L9 LINTEL BEARING ON C5 STEEL COLUMNS

FRAMING DETAILS

SCALE 1" = 1'-0"

LYSAGHT & ASSOCIATES, PA
STRUCTURAL ENGINEERS
120 SAINT MARYS STREET
RALEIGH, N.C. 27605
PHONE : (919) 833-0495
FAX : (919) 833-7630

INNOVATIVE DESIGN
850 W. MORGAN STREET, RALEIGH, NORTH CAROLINA 27603, 919/832-6303

NORTH CAROLINA PROFESSIONAL SEAL 15887 ENGINEER JAMES E. STRUEFOUND 5/1/07

PROJECT: Wilkes County Visitor's Center K-4703
WILKESBORO, NORTH CAROLINA
OWNER: NC Department of Transportation

DRAWN BY: JES
CHECKED BY: JES
DATE: 6/1/07
REVISIONS:

SHEET: S5.02
61 of 69 LA-6375

LYSAGHT & ASSOCIATES, PA
STRUCTURAL ENGINEERS
120 SAINT MARYS STREET
RALEIGH, N.C. 27605
PHONE : (919) 833-0495
FAX : (919) 833-7630

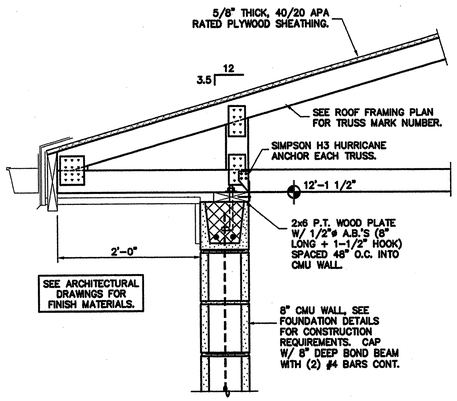

DETAIL 01 — 1" SCALE

ROOF TRUSS TO EXTERIOR WALL CONNECTION (STORAGE / MAINTENANCE BLDG)

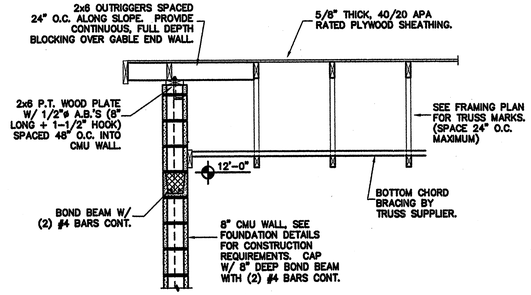

DETAIL 02 — 1/2" SCALE

GABLE END WALL SECTION AT STORAGE / MAINTENANCE BUILDINGS

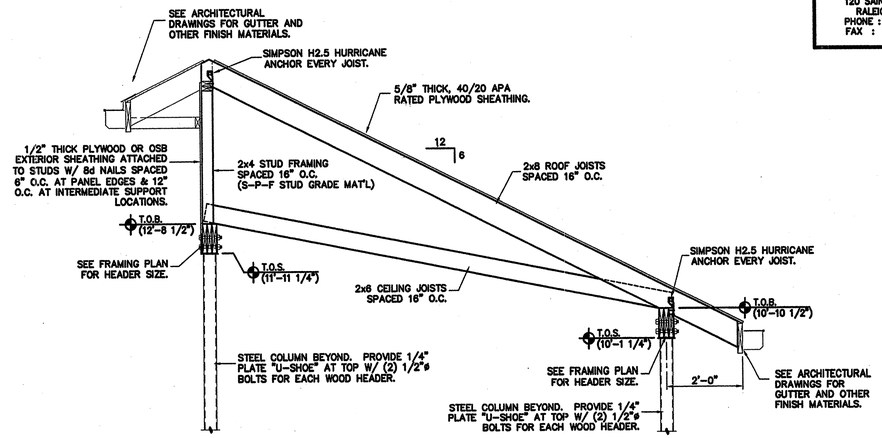

DETAIL 03 — 1/2" SCALE

ROOF FRAMING SECTION AT COVERED WALKWAY

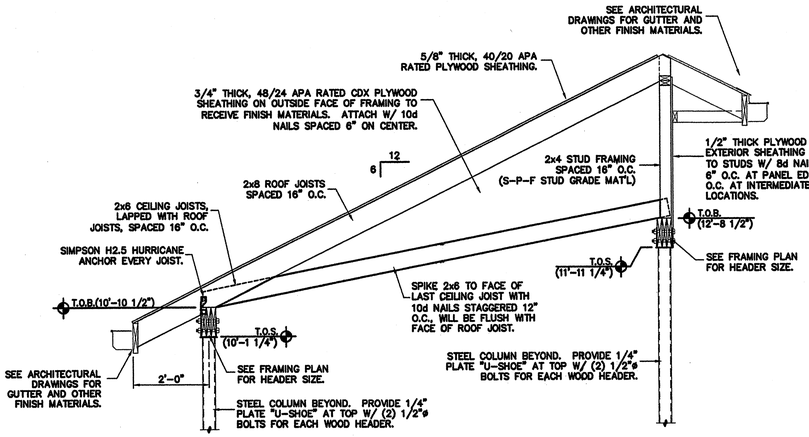

DETAIL 04 — 1/2" SCALE

ELEVATION AT COVERED WALKWAY GABLE END WALL

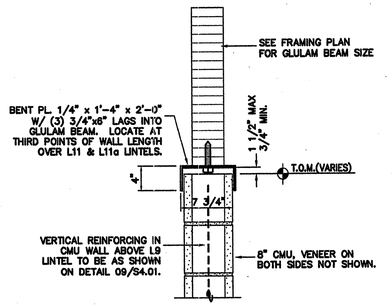

DETAIL 05 — 1" SCALE

CMU WALL LATERAL BRACING OVER L11 & L11a LINTELS

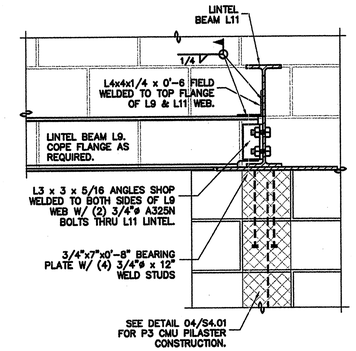

DETAIL 06 — 1" SCALE

L9 LINTEL CONNECTION TO L11 LINTEL

FRAMING DETAILS — SCALE 1" = 1'-0"

INNOVATIVE DESIGN
850 W. MORGAN STREET, RALEIGH, NORTH CAROLINA 27603, 919/832-6303

NORTH CAROLINA PROFESSIONAL SEAL 15887 ENGINEER JAMES E. STRUFFOLINO 6/1/07

PROJECT: Wilkes County Visitor's Center K-4703
WILKESBORO, NORTH CAROLINA
OWNER: NC Department of Transportation

DRAWN BY: JES
CHECKED BY: JES
DATE: 6/1/07
REVISIONS:

SHEET: S5.03
62 of 69
LA-6375

GENERAL NOTES:

1. ALL WORK SHALL BE DONE IN ACCORDANCE WITH THE LATEST EDITION OF THE STATE CODE, ALL LOCAL AND OTHER APPLICABLE CODES.
2. ALL WORK SHALL BE PERFORMED BY EXPERIENCED AND SKILLED CRAFTSMEN. THE PLUMBING CONTRACTOR (P.C.) SHALL COORDINATE ALL OF HIS WORK WITH ALL OTHER CONTRACTORS.
3. THE PLUMBING PLANS AND SPECIFICATIONS SHALL BE THOROUGHLY REVIEWED PRIOR TO PURCHASING MATERIALS AND INSTALLATION. ALL DISCREPANCIES OR INTERFERENCES SHALL BE BROUGHT TO THE ENGINEERS ATTENTION.
4. THESE PLANS ARE DIAGRAMMATIC AND MAY NOT SHOW MINOR DETAILS AND LOCATIONS. FOR DIMENSIONS, REFER TO THE ARCHITECTURAL PLANS.
5. THE P.C. SHALL PROVIDE ALL OPENINGS REQUIRED FOR THE PLUMBING WORK. THE PATCHING SHALL BE BY THE P.C. AND FINISHING BY GENERAL CONTRACTOR (G.C.).
6. WATER LINES BELOW GRADE SHALL BE TYPE "K" COPPER AND ABOVE GRADE TYPE "L", HARD DRAWN COPPER, SUPPORTED AS REQUIRED, AND SHALL BE HYDROSTATICALLY TESTED FOR TWO HOURS AT 125 PSI. TEST TO COMPLY WITH ALL EPA STANDARDS. THE ENTIRE WATER DISTRIBUTION SYSTEM SHALL BE DISINFECTED PRIOR TO PLACING IN SERVICE.
7. COLD WATER PIPING SHALL BE INSULATED WITH 1" GLASS FIBER. HOT WATER PIPING SHALL BE INSULATED WITH 1" GLASS FIBER.
8. IF THE WATER PRESSURE EXCEEDS 60 PSI, A PRESSURE REDUCING VALVE SHALL BE INSTALLED WHERE THE WATER ENTERS THE BUILDING AND SHALL BE SET AT 50 PSI.
9. THE P.C. SHALL BE RESPONSIBLE FOR ALL ELECTRICAL AND CONTROL CONNECTIONS TO THE EQUIPMENT FURNISHED UNDER HIS CONTRACT.
10. SANITARY SEWER AND VENT LINES SHALL BE CAST IRON. WASTE AND VENT PIPE SHALL BE GAS AND AIR TIGHT.
11. THE P.C. SHALL COORDINATE ALL WORK WITH OTHER TRADES PRIOR TO INSTALLATION OF ANY WORK.
12. VERIFY THE LOCATION OF ALL EQUIPMENT SUPPLIED BY OTHERS.
13. THE PLUMBING CONTRACTOR SHALL PROVIDE A DIELECTRIC UNION WHEN CONNECTING DISSIMILAR METALS.
14. ALL ELECTRICAL WORK SHALL BE PERFORMED BY A LICENSED ELECTRICIAN.
15. IT WILL BE THE RESPONSIBILITY OF THE CONTRACTOR TO INSURE THAT ITEMS TO BE FURNISHED UNDER THIS CONTRACT WILL FIT THE SPACE AVAILABLE. THEY SHALL MAKE NECESSARY FIELD MEASUREMENTS TO ASCERTAIN SPACE REQUIREMENTS, INCLUDING THOSE FOR CONNECTIONS, AND SHALL FURNISH AND INSTALL SUCH SIZES AND SHAPES OF EQUIPMENT THAT ARE THE TRUE INTENT AND MEANING OF THE DRAWINGS AND SPECIFICATIONS.
16. LAYOUT ALL UNDERGROUND PLUMBING AND SET GRADES TO AVOID FOOTING CONFLICTS.
17. THE CONTRACTOR SHALL PROVIDE AND INSTALL HIS OWN SUPPORT DEVICES. ALL LOCATIONS SHALL BE COORDINATED WITH THE GENERAL CONTRACTOR AND OTHER PRIME CONTRACTORS PRIOR TO INSTALLATION.
18. THE CONTRACTOR SHALL USE FIRE RATED SLEEVES IN ALL LOCATIONS WHERE PENETRATIONS OF RATED WALLS AND FLOORS ARE MADE. ALL OPENINGS WILL BE MADE FIREPROOF.
19. ALL NEW UNDERGROUND WATER PIPING SHALL BE INSTALLED BELOW THE FROST LINE BUT NOT LESS THAN 24" BELOW FINISHED GRADE TO PIPE CROWN.
20. ALL VENT LINES SHALL SLOPE UP TO VENT THRU ROOF. VENT THRU ROOF SHALL BE 10'-0" MINIMUM FROM ANY FRESH AIR INTAKES.
21. ALL WASTE STACKS SHALL HAVE A CLEANOUT AT THE BASE OF THE STACK. COORDINATE LOCATION OF CLEANOUTS WITH CASEWORK.
22. THE CONTRACTOR SHALL PROVIDE SHOCK ABSORBERS AT EACH LINE. SHOCK ABSORBERS IN ACCORDANCE WITH ASSE 1010 AND SHALL BE ACCESSIBLE.
23. AUTOMATIC TRAP PRIMERS SHALL BE USED FOR FLOOR DRAINS IN BATHROOMS. THE PRIMER SHALL BE THE PASSIVE TYPE FED OFF OF LOCAL SINK TRAPS OR NEAREST WATER LINE. NO MECHANICAL TRAP PRIMERS SHALL BE USED IN BATHROOMS.
24. HORIZONTAL DRAINAGE AND WASTE PIPING SHALL HAVE A MINIMUM SLOPE OR FALL OF 1/8" PER FOOT FOR SIZES GREATER THAN OR EQUAL TO 3" AND A MINIMUM SLOPE OF FALL OF 1/4" PER FOOT FOR SIZES LESS THAN 3".
25. PROVIDE MANUAL SHUT-OFF VALVES AT EACH BRANCH LINE OF ALL WATER PIPING.
26. PROVIDE ISOLATION VALVES AT ALL FIXTURES.
27. SEE ARCHITECTURAL DRAWINGS FOR MOUNTING HEIGHTS OF PLUMBING FIXTURES.
28. ALL WALL MOUNTED LAVATORIES TO HAVE INSULATION ON ANY EXPOSED PIPES PER A.D.A. REQUIREMENTS.
29. PROVIDE A BALL VALVE IN BRANCH PIPING TO ALL EXTERIOR HOSE BIB.
30. CONTRACTOR SHALL BE REQUIRED TO COMPLETELY ROD AND FLUSH OUT ALL SANITARY WASTE LINES AFTER BUILDING IS COMPLETED.
31. PROVIDE CHROME ESCUTCHEON RINGS AT ALL EXPOSED CEILING AND WALL PENETRATION.
32. CONTRACTOR TO DIMENSION ACTUAL LOCATION OF ALL UNDERGROUND WATER LINES ON AS-BUILT DRAWINGS. A MINIMUM OF TWO DIMENSIONS FROM BUILDING REFERENCE POINTS SHALL BE PROVIDED WITH A BURY DEPTH INDICATED.
33. PROVIDE TRAP PRIMERS FOR ALL MECHANICAL ROOM FLOOR DRAINS.
34. ALL UNDERGROUND LINES OUTSIDE BUILDING FOOTPRINT SHALL BE REQUIRED TO HAVE A MAGNETICTYPE WARNING TAPE INSTALLED IN THE BACKFILL AT LEAST 6 (SIX) INCHES BELOW GRADE.
35. COORDINATE ALL SLAB CUTTING AND POURBACK WITH ARCHITECTURAL AND STRUCTURAL FOR DEPRESSED SLAB REQUIREMENTS.
36. COORDINATE ALL PATCHING OF BUILDING WITH ARCHITECTURAL DRAWINGS.
37. CONTRACTOR SHALL REMOVE, PROTECT, AND STORE CEILING TILES FOR ANY AREAS WHERE OVERHEAD WORK IS TO BE DONE. CONTRACTOR SHALL REPLACE CEILING TILES AFTER WORK IS COMPLETE, ANY DAMAGED TILES SHALL BE REPLACED WITH MATCHING TILES.

PLUMBING FIXURE SCHEDULE

MARK	DESCRIPTION	DRAIN SIZE	COLD WATER	HOT WATER	REMARKS
WC1	WALL MOUNTED WATER CLOSET	4"	1"	–	---
WC2	WALL MOUNTED WATER CLOSET (ADA COMPLIANT)	4"	1"	–	1
WC3	FLOOR MOUNTED WATER CLOSET (ADA COMPLIANT)	4"	1"	–	1
U1	WALL MOUNTED WATERLESS URINAL	2"	–	–	---
U2	WALL MOUNTED WATERLESS URINAL (ADA COMPLIANT)	2"	–	–	1
L1	WALL MOUNTED LAVATORY (ADA COMPLIANT)	2"	1/2"	1/2"	1
L2	WALL MOUNTED LAVATORY STATION (ADA COMPLIANT)	2"	1/2"	–	1
S1	KITCHEN SINK	2"	1/2"	1/2"	---
DF1	DOUBLE DRINKING FOUNTAIN, WALL MOUNTED (ADA COMPLIANT)	2"	1/2"	–	1
IM	REFRIGERATOR ICE MACHINE VALVE BOX MOUNTED IN WALL	–	1/2"	–	---
FD1	FLOOR DRAIN FOR FINISHED AREAS (BATHROOM)	3"	–	–	---
FD2	FLOOR DRAIN FOR SERVICE AREAS (MECH ROOM)	3"	–	–	---
HB1	INTERIOR HOSEBIB, WALL BOX ENCLOSED)	–	1/2"	–	---
HB2	INTERIOR HOSEBIB, SERVICE AREAS	–	1/2"	–	---
FPWH	FREEZE PROOF WALL HYDRANT	–	1/2"	–	---
MSI	MOP SINK	3"	3/4"	3/4"	---

PLUMBING FIXTURE SCHEDULE NOTES:
1. ALL ADA COMPLIANT FIXTURES PROVIDED SHALL MEET THE STATE OF NORTH CAROLINA BUILDING CODES AND FEDERAL ADA ACCESSIBILITY GUIDELINES.

SHOCK ARRESTOR SCHEDULE

MANUFACTURER	P.D.I. UNITS	FIXTURE UNITS	PIPE SIZE	ARRESTOR LENGTH
ZURN SHOCKTROL SIZE Z-1700 SERIES #100	A	1-11	3/4"	3-3/4"
ZURN SHOCKTROL SIZE Z-1700 SERIES #200	B	12-32	1"	4-1/4"
ZURN SHOCKTROL SIZE Z-1700 SERIES #300	C	33-60	1"	5"
ZURN SHOCKTROL SIZE Z-1700 SERIES #400	D	61-113	1"	6-5/8"
ZURN SHOCKTROL SIZE Z-1700 SERIES #500	E	114-154	1"	8-1/4"
ZURN SHOCKTROL SIZE Z-1700 SERIES #600	F	155-330	1"	10"

SHOCK ARRESTOR SCHEDULE NOTES:
1. PROVIDE SHOCK ARRESTORS IN ACCORDANCE WITH PLUMBING AND DRAINAGE INSTITUTE STANDARD PDI-WH-201.
2. SEE MANUFACTURERS RECOMMENDATIONS FOR SIZING OF SHOCK ARRESTORS ON LENGTHS OF PIPE OVER 25'.
3. SHOCK ARRESTOR TO BE ALL STAINLESS STEEL CONSTRUCTION.
4. SHOCK ARRESTOR TO HAVE PISTON TYPE BELLOWS.

PLUMBING TOTAL CONNECTED LOAD

WATER FIXTURE UNITS	248 FU (95 GPM)
WASTE FIXTURE UNITS	133 FU

PLUMBING LEGEND

SYMBOL	ABBR.	DESCRIPTION
	W	SOIL, WASTE OR SANITARY SEWER PIPING
	V	VENT PIPING
	CW	COLD WATER PIPING
	HW	HOT WATER PIPING 110°F
NPW	NPW	NON-POTABLE WATER
	HWR	HOT WATER RETURN
GAS	GAS	LP GAS PIPING
		CHECK VALVE
	GCO	GROUND CLEAN OUT
	FCO	FLOOR CLEAN OUT
	FD	FLOOR DRAIN
	CO	WALL CLEAN OUT
	VTR	VENT THRU ROOF
		VALVE
	FPHW	FREEZE PROOF WALL HYDRANT
	HB1	HOSE BIB
		BACKFLOW PREVENTER
	TP	TRAP PRIMER

DETAIL NUMBER — XX
SHEET NUMBER — PX.XX
DETAIL DESCRIPTION
SCALE

WATER HEATER BOILER SCHEDULE

MARK	BASIS OF DESIGN MANUFACTURER / MODEL	GALLONS	POWER SOURCE	WATER CONNS.	FIRST HOUR RECOVERY	REMARKS
WH	A.O SMITH DRE-80	80	24 KW	2"	70 GALLONS @100°F RISE	ELECTRIC
ST-1	SIX RIVERS SOLAR TS-30-30-SZ-101015 SFI	100	–	1-1/2"	–	DOUBLE WALL

SOLAR STORAGE TANK

MARK	BASIS OF DESIGN MANUFACTURER / MODEL	GALLONS	WATER CONNS.	HEAT EXCHANGER	SQ.FT OF SURFACE AREA	REMARKS
ST-2	A.O SMITH HD20-80	80	2"	DW6-24	8	DOUBLE WALL

HOT WATER RECIRCULATING PUMP SCHEDULE

MARK	MANUFACTURER / MODEL	GPM	FT. OF HEAD	WATER CONNS.	HP	ELECTRICAL	REMARKS
HWRP-1	BELL & GOSSETT/SERIES LR	8	10	1"	1/12	120V/60HZ	–

PADIA consulting
High Performance Engineering
81 Klumayne Drive • Suite 300 • Cary, NC 27511
phone 919.481.1777 • fax 919.460.4888

INNOVATIVE DESIGN
850 W. MORGAN STREET, RALEIGH, NORTH CAROLINA 27603, 919/832-6303

NORTH CAROLINA PROFESSIONAL ENGINEER SEAL 90892 RISHAD RAY D. PADIA

PADIA CONSULTING, INC. CORPORATE SEAL N.C.

PROJECT: Wilkes County Visitor's Center K-4703
WILKESBORO, NC
OWNER: NC Department of Transportation

DRAWN BY: JWH
DATE: 06/01/2007
JOB NUMBER:
REVISIONS:

P0.00
63 of 89

PADIA consulting
High Performance Engineering
81 Kilmayne Drive • Suite 300 • Cary, NC 27511
phone 919.481.1777 • fax 919.460.8888

INNOVATIVE DESIGN
850 W. MORGAN STREET, RALEIGH, NORTH CAROLINA 27603, 919/832-6303

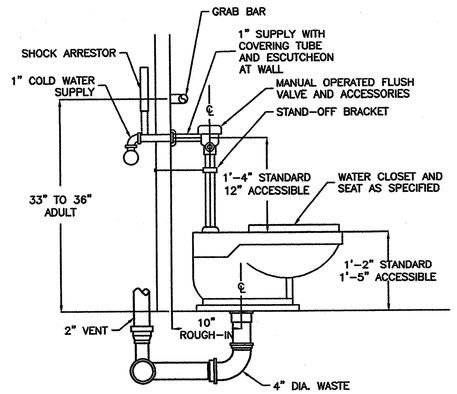

1 P0.1 FLOOR MOUNTED WATER CLOSET DETAIL
SCALE: NONE

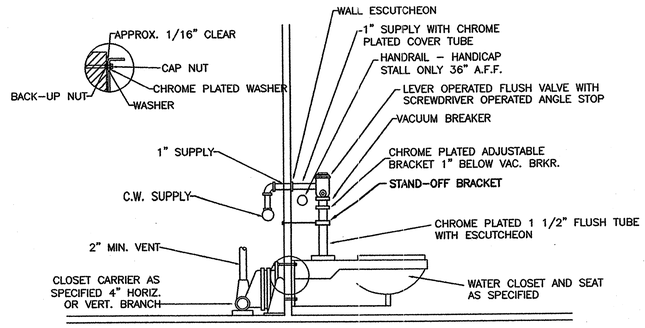

2 P0.1 WALL MOUNTED WATER CLOSET DETAIL
NOT TO SCALE

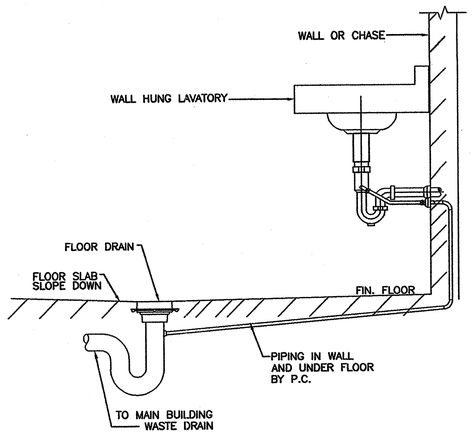

3 P0.1 PRIME-EZE WATER SAVER TRAP PRIMER
NOT TO SCALE

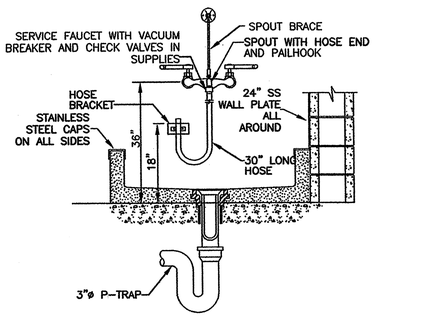

4 P0.1 MOP SINKS INSTALLATION DETAIL
SCALE: NONE

NOTE:
PROVIDE CHECK VALVES IN BOTH HOT & COLD WATER SUPPLY TO ALL MOP SINKS.

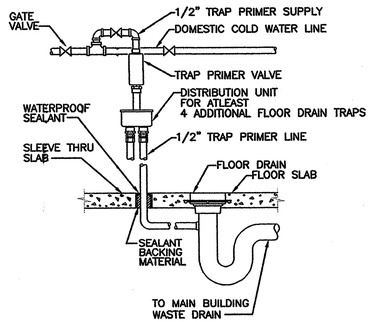

5 P0.1 TYPICAL FLOOR DRAIN TRAP PRIMER DETAIL
NOT TO SCALE

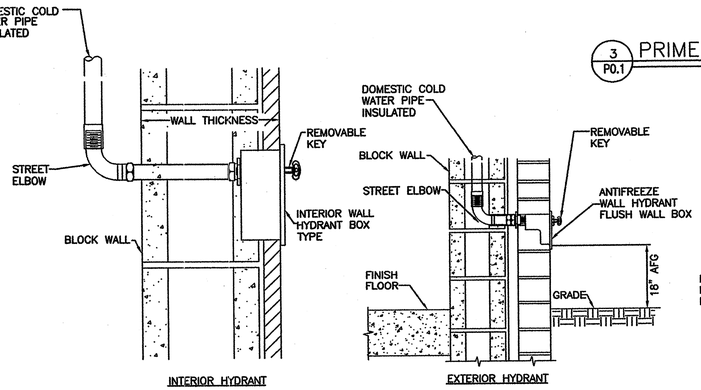

6 P0.1 RECESSED WALL HYDRANT DETAILS
NOT TO SCALE

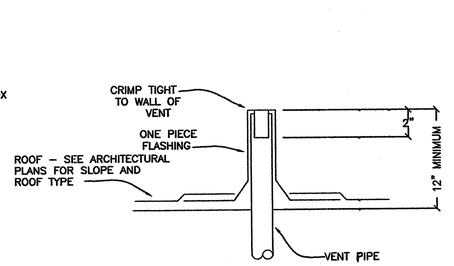

7 P0.1 VENT THROUGH ROOF DETAIL
NOT TO SCALE

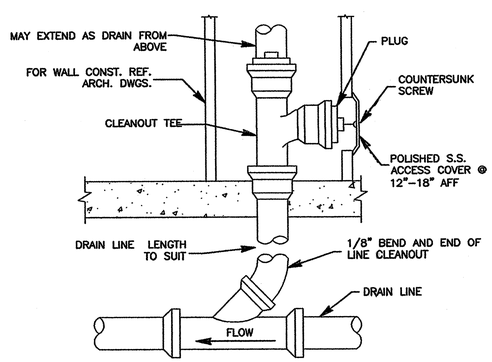

8 P0.1 WALL CLEANOUT DETAIL
NOT TO SCALE

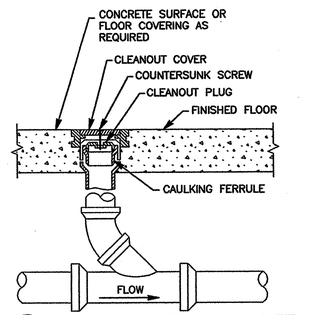

9 P0.1 FLOOR CLEANOUT DETAIL
NOT TO SCALE

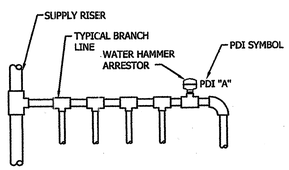

NOTES:
1. INSTALL WATER HAMMER ARRESTORS AT THE END OF BRANCH LINE BETWEEN THE LAST TWO FIXTURES SERVED.
2. ONE WATER HAMMER ARRESTOR PER 20' LINE, AND ANOTHER FOR BRANCHES OVER 20' IN LENGTH.
3. THE SUM OF FIXTURE UNIT RATING OF UNITS OVER 20' IN LENGTH SHALL BE EQUAL TO OR GREATER THAN THE DEMAND OF THE BRANCHES.

10 P0.1 WATER HAMMER ARRESTER INSTALLATION
NOT TO SCALE

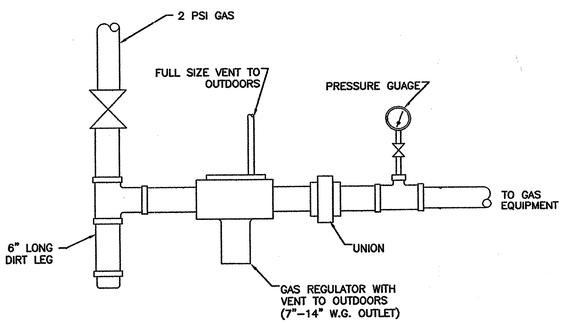

11 P0.1 GAS PRESSURE REGULATOR DETAIL
NOT TO SCALE

NORTH CAROLINA REGISTERED LANDSCAPE ARCHITECT SEAL 2169 SHADRAY D. PADIA
3/2/07

PADIA CONSULTING, INC. CORPORATE SEAL N.C.

PROJECT: Wilkes County Visitor's Center K-4703
WILKESBORO, NC
OWNER: NC Department of Transportation

DRAWN BY: JWH
DATE: 06/01/2007
JOB NUMBER:
REVISIONS:

P0.01
64 of 91

PADIA consulting
High Performance Engineering
61 Kilmayne Drive • Suite 200 • Cary, NC 27511
phone 919.481.1777 • fax 919.460.8888

INNOVATIVE DESIGN
850 W. MORGAN STREET, RALEIGH, NORTH CAROLINA 27603, 919/832-6303

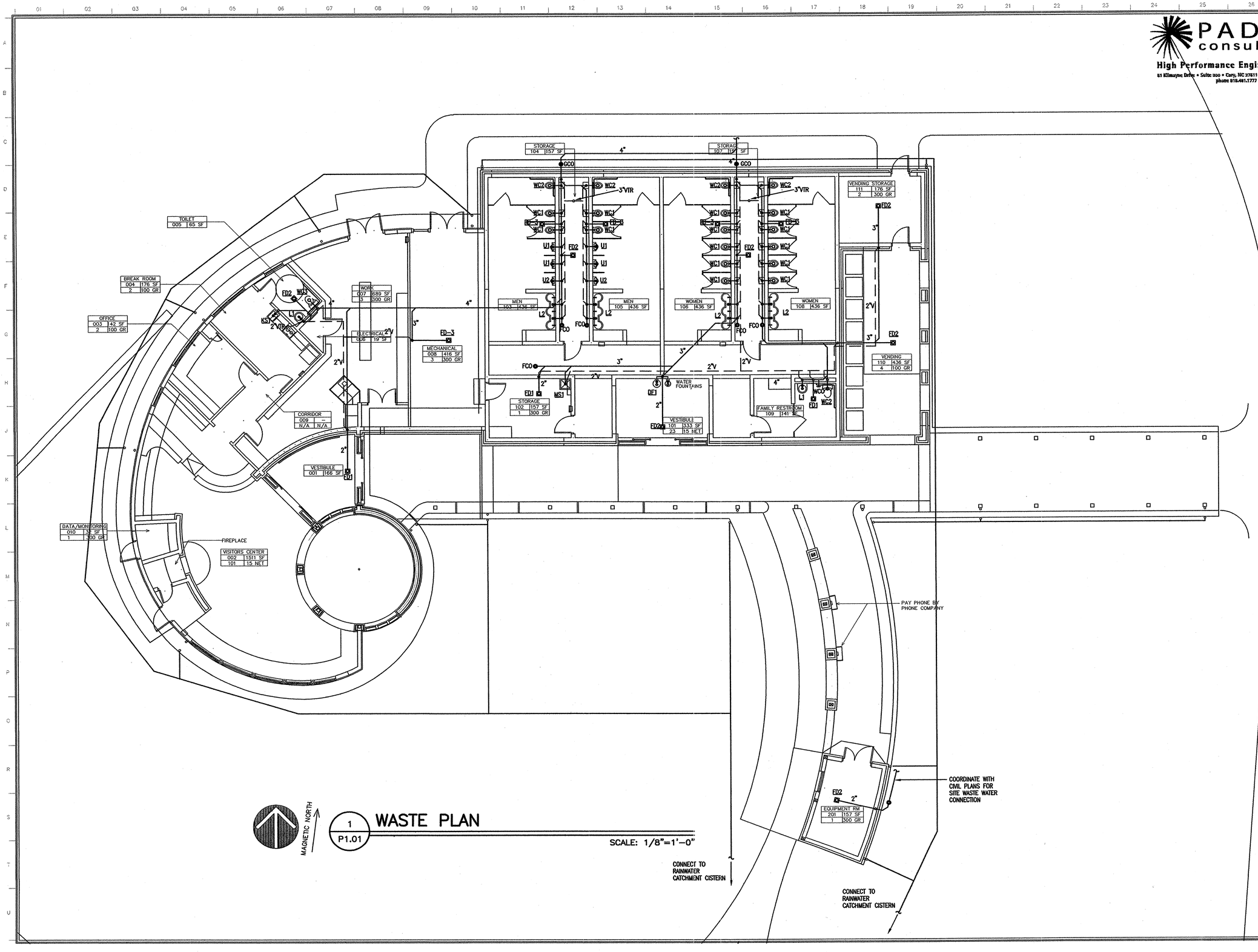

1 / P1.01 WASTE PLAN

SCALE: 1/8"=1'-0"

NORTH CAROLINA REGISTERED LANDSCAPE ARCHITECT SEAL 2068 SUADRAY D. PADIA
PADIA CONSULTING INC. CORPORATE SEAL N.C.

PROJECT: Wilkes County Visitor's Center K-4703
WILKESBORO, NC

OWNER: NC Department of Transportation

DRAWN BY: JWH
DATE: 06/01/2007
JOB NUMBER:
REVISIONS:

P1.01

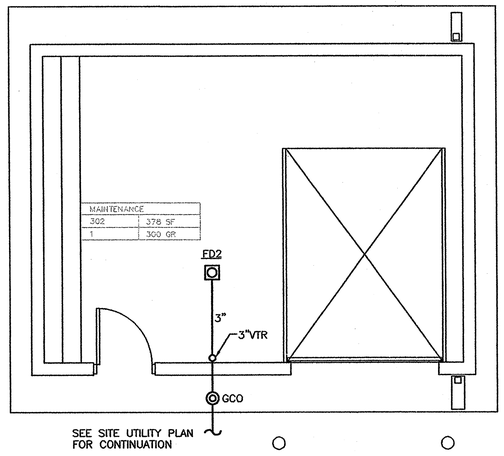

1
P1.02

MAINTENANCE BUILDING WASTE AND VENT PLAN

SCALE: 1/4"=1'-0"

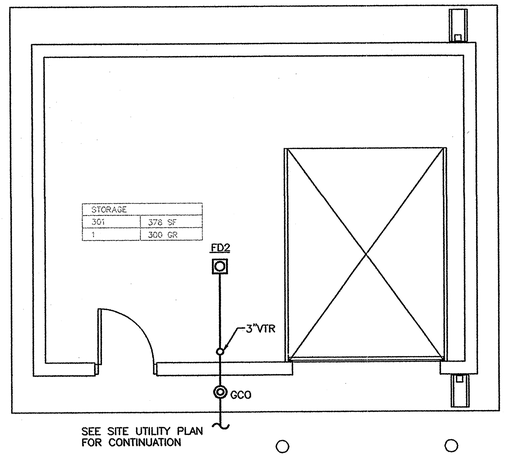

2
P1.02

STORAGE BUILDING WASTE AND VENT PLAN

SCALE: 1/4"=1'-0"

PADIA consulting
High Performance Engineering
61 Kilmayne Drive • Suite 300 • Cary, NC 27611
phone 919.481.1777 • fax 919.460.8888

INNOVATIVE DESIGN
850 W. MORGAN STREET, RALEIGH, NORTH CAROLINA 27603, 919/832-6303

NORTH CAROLINA PROFESSIONAL SEAL 20607 ENGINEER HARSHADRAY D. PADIA
06/02/2007

PADIA CONSULTING INC. CORPORATE SEAL N.C.

PROJECT: Wilkes County Visitor's Center K-4703
WILKESBORO, NC

OWNER: NC Department of Transportation

DRAWN BY: JWH
DATE: 06/01/2007
JOB NUMBER:
REVISIONS:

P1.02

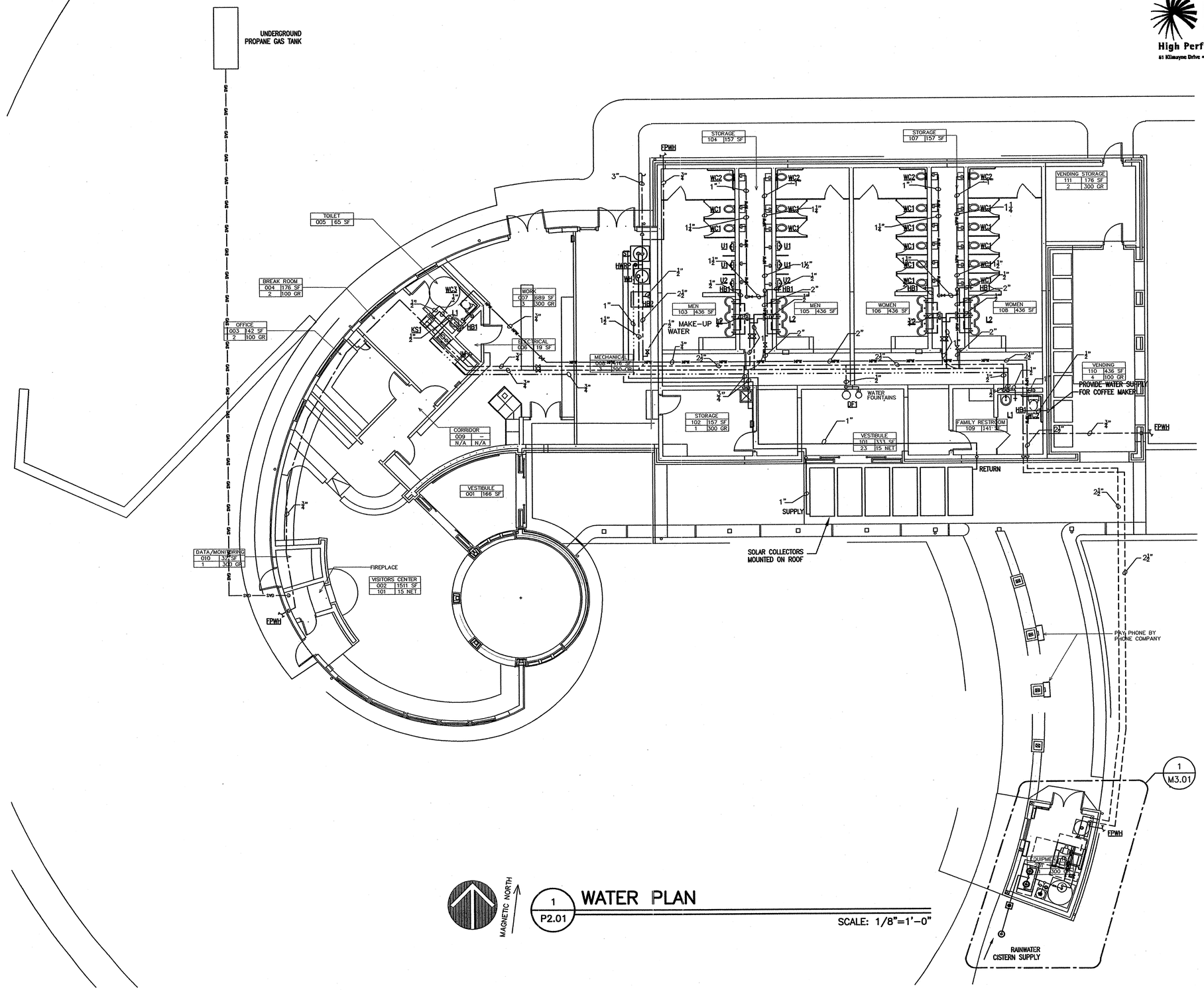

1 P2.01 WATER PLAN

SCALE: 1/8"=1'-0"

PADIA consulting
High Performance Engineering
81 Kilmayne Drive • Suite 300 • Cary, NC 27511
phone 919.481.1777 • fax 919.460.8699

INNOVATIVE DESIGN
850 W. MORGAN STREET, RALEIGH, NORTH CAROLINA 27603, 919/832-6303

NORTH CAROLINA PROFESSIONAL SEAL 9069 ENGINEER HASHADRAY D. PADIA 06/02/2007

PADIA CONSULTING INC. CORPORATE SEAL N.C.

PROJECT: Wilkes County Visitor's Center K-4703
WILKESBORO, NC

OWNER: NC Department of Transportation

DRAWN BY: JWH
DATE: 06/01/2007
JOB NUMBER:
REVISIONS:

P2.01

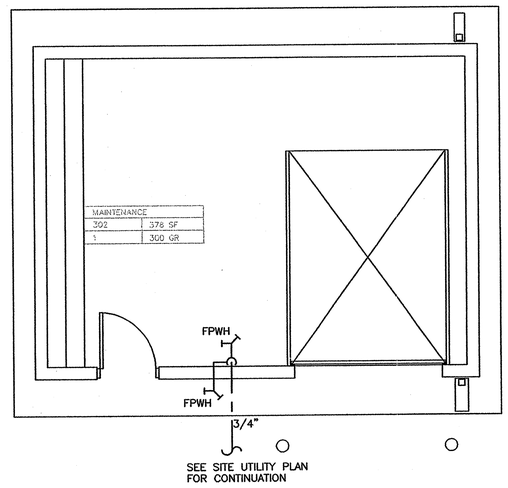

MAINTENANCE BUILDING WATER PLAN

1
P2.02

SCALE: 1/4"=1'-0"

PADIA consulting
High Performance Engineering
51 Kilmayne Drive • Suite 300 • Cary, NC 27611
phone 919.481.1777 • fax 919.460.8889

INNOVATIVE DESIGN
850 W. MORGAN STREET, RALEIGH, NORTH CAROLINA 27603, 919/832-6303

NORTH CAROLINA PROFESSIONAL SEAL 9069 ENGINEER HASHADRAY D. PADIA
06/02/2007

PADIA CONSULTING INC. CORPORATE SEAL N.C.

PROJECT: Wilkes County Visitor's Center K-4703
WILKESBORO, NC

OWNER: NC Department of Transportation

DRAWN BY: JWH
DATE: 06/01/2007
JOB NUMBER:
REVISIONS:

P2.02

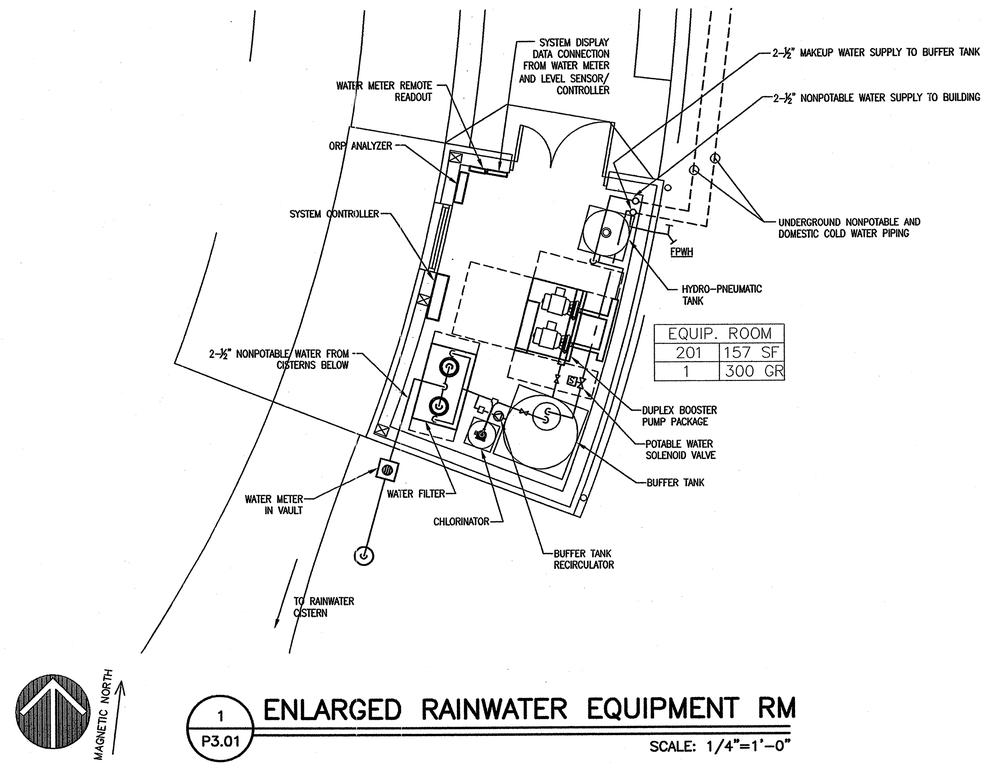

EQUIP. ROOM	
201	157 SF
1	300 GR

1 / P3.01 ENLARGED RAINWATER EQUIPMENT RM

SCALE: 1/4"=1'-0"

PADIA consulting
High Performance Engineering
61 Kilmayne Drive • Suite 300 • Cary, NC 27611
phone 919.481.1777 • fax 919.460.8888

INNOVATIVE DESIGN
850 W. MORGAN STREET, RALEIGH, NORTH CAROLINA 27603, 919/832-6303

NORTH CAROLINA PROFESSIONAL SEAL 9069 ENGINEER HASHADRAY D. PADIA
06/02/2007

PADIA CONSULTING INC. CORPORATE SEAL N.C.

PROJECT: Wilkes County Visitor's Center K-4703
WILKESBORO, NC
OWNER: NC Department of Transportation

DRAWN BY: JWH
DATE: 06/01/2007
JOB NUMBER:
REVISIONS:

P3.01

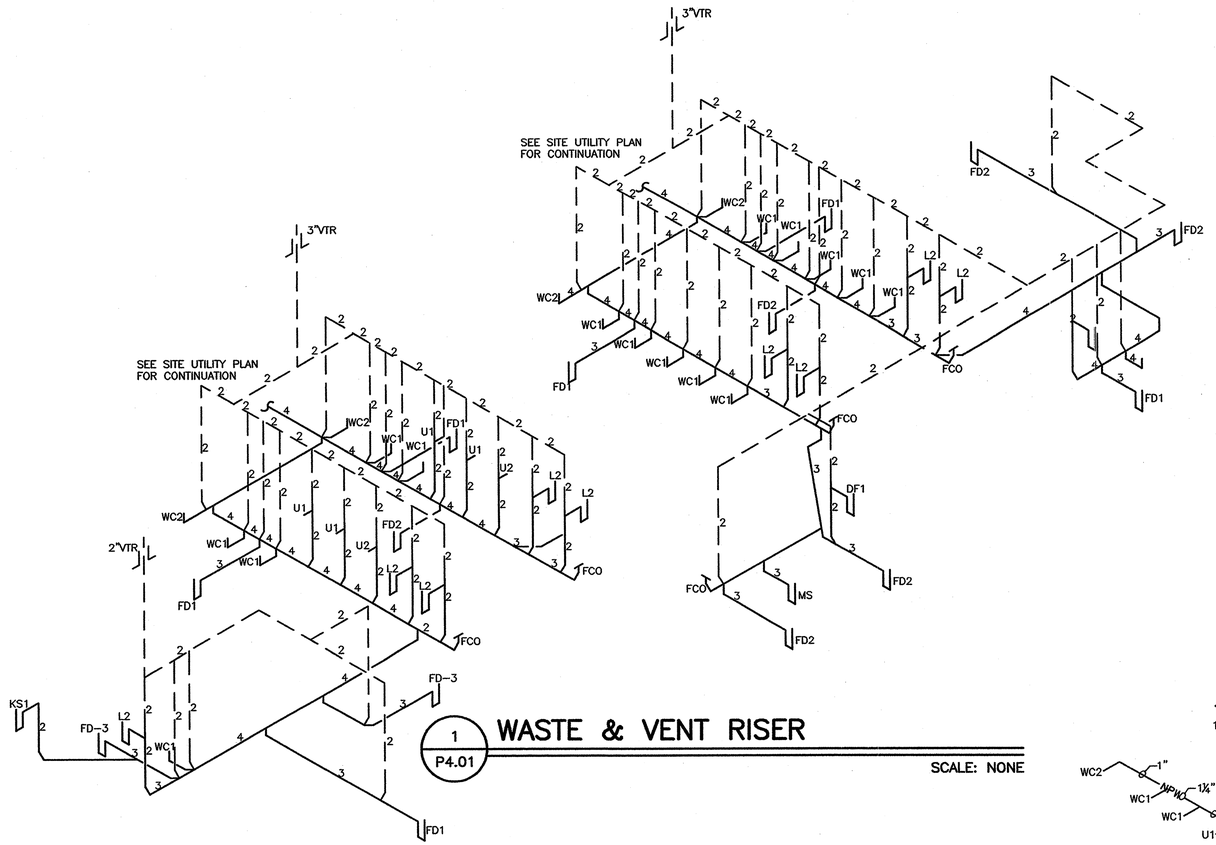

1 P4.01 WASTE & VENT RISER

SCALE: NONE

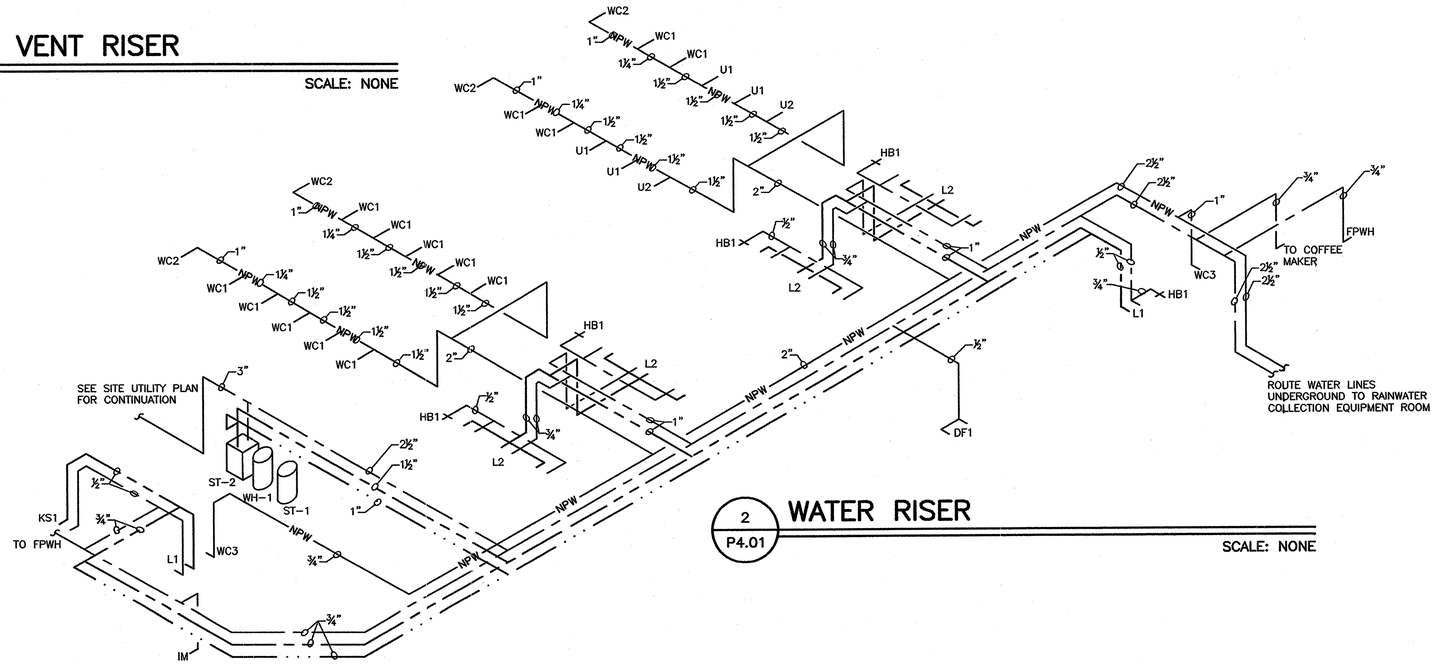

2 P4.01 WATER RISER

SCALE: NONE

PADIA consulting
High Performance Engineering
61 Kilmayne Drive • Suite 300 • Cary, NC 27611
phone 919.481.1777 • fax 919.460.8900

INNOVATIVE DESIGN
850 W. MORGAN STREET, RALEIGH, NORTH CAROLINA 27603, 919/832-6303

NORTH CAROLINA PROFESSIONAL ENGINEER SEAL 9068 SHADRAY D. PADIA 06/02/2007

PADIA CONSULTING Inc. CORPORATE SEAL N.C.

PROJECT: Wilkes County Visitor's Center K-4703
WILKESBORO, NC

OWNER: NC Department of Transportation

DRAWN BY: JWH
DATE: 06/01/2007
JOB NUMBER:
REVISIONS:

P4.01

NON–POTABLE WATER CONTROL SEQUENCE

THE BUFFER TANK SHALL HAVE THE INTERNAL WATER LEVEL CONSTANTLY MONITORED. UPON A FALL IN BUFFER TANK WATER LEVEL BELOW A USER DEFINED MAKE–UP WATER CUT–ON SETPOINT #1 (30% OF BUFFER TANK VOLUME), WET WELL PUMP SHALL CUT ON AND PUMP IN RAINWATER UNTIL THE BUFFER TANK REACHES THE WATER LEVEL CUT–OFF SETPOINT. UPON ADDITIONAL FALL IN BUFFER TANK WATER LEVEL BELOW A USER DEFINED MAKE–UP WATER CUT–ON SETPOINT #2 (15% OF BUFFER TANK VOLUME), POTABLE WATER SOLENOID VALVE SHALL OPEN UNTIL THE BUFFER TANK REACHES THE WATER LEVEL CUT–OFF SETPOINT.

A RISE IN BUFFER TANK WATER LEVEL ABOVE A USER DEFINED HIGH LEVEL (TOP OF TANK) SHALL GENERATE A COMMON ALARM. A FALL IN WATER LEVEL BELOW THE USER DEFINED LOW LEVEL (3 FT ABOVE BOTTOM OF TANK) SHALL GENERATE A COMMON ALARM.

BUFFER TANK RECIRCULATING PUMP SHALL RUN CONTINUOUSLY. ORP ANALYZER SHALL READ THE ORP LEVEL. IF ORP LEVEL IS LESS THAN PREDETERMINED AMOUNT, CHLORINATOR SHALL INJECT METERED AMOUNT (ADJUSTABLE) OF CHLORINE SOLUTION INTO NON–POTABLE WATER LINE. CHLORINE INJECTION VALVE SHALL BE INSTALLED DOWNSTREAM OF ORP ANALYZER.

THE PRESSURE BOOSTER SHALL CUT ON WHEN THE SYSTEM PRESSURE FALLS BELOW 61 PSI AND SHALL CUT OFF ONCE THE SYSTEM PRESSURE REACHES 100 PSI. THIS SHALL BE ACCOMPLISHED WITH BOOSTER PUMP FACTORY PROVIDED CONTROLS. AN ALARM OUTPUT SHALL GENERATE A COMMON ALARM.

UPON A FALL IN RAINWATER WET WELL LEVEL BELOW THE USER DEFINED LOW WATER CUT–OUT SETPOINT (25% WET WELL VOLUME), THE MAKE–UP WATER TO THE BUFFER TANK SHALL BE PROVIDED BY THE POTABLE WATER SOLENOID VALVE. WET WELL PUMP CONTROL SHALL BE DISABLED UNTIL THE RAINWATER WET WELL REACHES THE NORMAL WATER LEVEL.

UPON FAILURE OF WET WELL PUMP AS DETERMINED BY CURRENT SWITCH WHEN PUMP IS INDEXED ON, THE CONTROL OF BUFFER TANK WATER LEVEL SHALL BE CHANGED TO THE POTABLE WATER SOLENOID VALVE.

CHLORINATOR SHALL BE ENERGIZED WHEN CISTERN PUMP IS ENERGIZED AND SHALL BE DE–ENERGIZED WHEN THE CISTERN PUMP IS DE–ENERGIZED.

CONTROL POINTS LIST

Point Description	Hardware Output Digital Open/ Close	Hardware Output Digital Start/ Stop	Hardware Input Digital Current Switch	Hardware Input Digital Fault	Hardware Input Analog Level/ Volume	Software Alarms Status Failure	Software Alarms High Limit	Software Alarms Low Limit	Notes
Non–Potable Water to Building									
Rain Water Wet Well					X			X	
Cistern Pump		X	X			X			
ORP Controller				X					
Buffer Tank					X		X	X	
Solenoid Valve	X								
Booster Pump Package				X		X			
Non–Potable Water Meter					X				Record water meter reading from input in ASCII format.

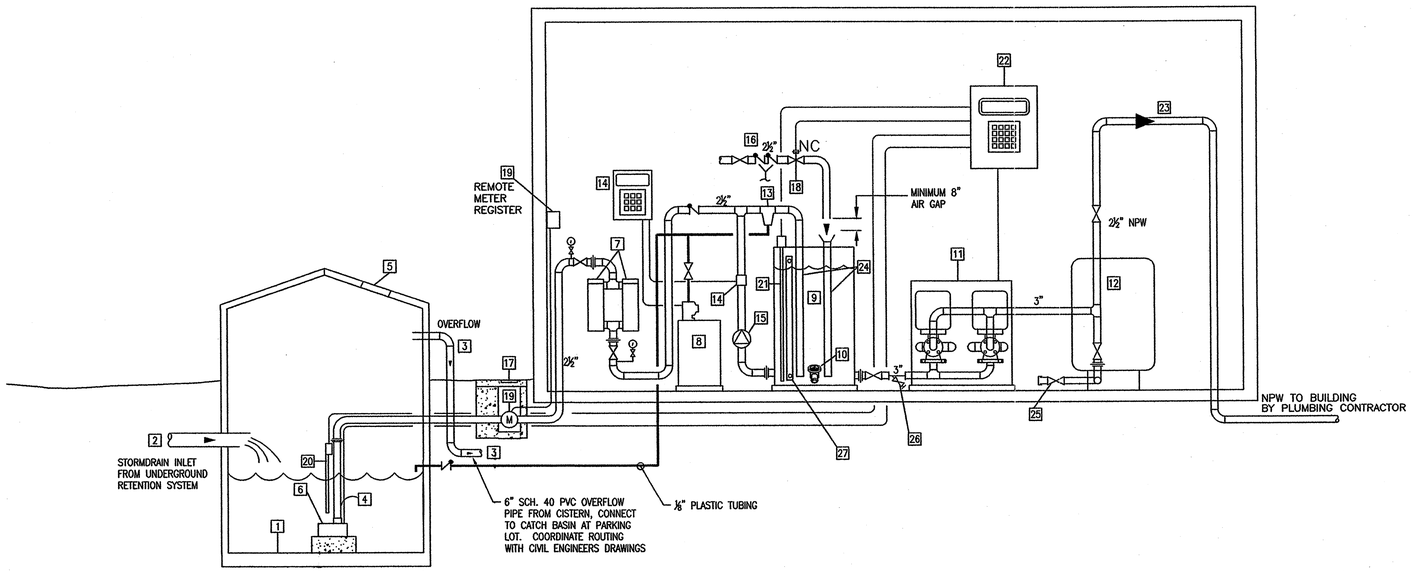

1 / P5.01 RAINWATER REUSE EQUIPMENT SCHEMATIC

NOT TO SCALE

KEY NOTES

1. RAINWATER CISTERN BY PLUMBING CONTRACTOR.
2. STORMWATER INLET BY PLUMBING CONTRACTOR
3. STORMWATER OVERFLOW PIPE BY PLUMBING CONTRACTOR
4. SUBMERSIBLE PUMP DISCHARGE PIPE – 2" SCH. 40 GALV. STEEL UP TO MANWAY.
5. CISTERN ACCESS MANWAY – BY PLUMBING CONTRACTOR.
6. CISTERN PUMP– EQUIVALENT TO BELL AND GOSSETT MODAL SW87 SUBMERSIBLE PUMP 160 GPM, 25 TDH, 480V, 3 PHASE MOTOR, 3500 RPM.
7. WATER FILTER – (1) REQUIRED, RATED AT 300 GPM, 304 STAINLESS STEEL DUPLEX FILTER HOUSING CONSTRUCTION, REMOVABLE 100 MICRON BAG FILTERS. EQUIVALENT TO KRYSTIL KLEAR MODEL L8823F415 FILTER HOUSING WITH MODEL K0100K25 FILTERS.
8. CHLORINATOR – (1) REQUIRED, A SYSTEM OF CONTINUOUS DISINFECTION BY CHLORINATION SHALL BE PROVIDED. SYSTEM SHALL BE HYPO–CHLORINATION TYPE, CONSISTING OF A CHEMICAL PUMP AND CHEMICAL SOLUTION TANK. EQUIVALENT TO PULSATRON MODEL LPK3, 0–14 GALLONS PER DAY, AND 16 GALLON SOLUTION TANK. PROVIDE CHLORINE INJECTION VALVE AND 6% SOLUTION CONCENTRATE OF SODIUM HYPOCHLORITE.
9. 500 GALLON BUFFER TANK – (1) REQUIRED, VERTICAL, POLYETHYLENE CONSTRUCTION WITH (3) 3" OUTLET FITTINGS, EQUIVALENT TO AMERICAN TANK COMPANY MODEL 0085–030.
10. DRAIN – (1) REQUIRED, 3/4" WITH HOSE CONNECTION.
11. DUPLEX PUMP PACKAGE – (1) REQUIRED, HORIZONTALLY MOUNTED, 105 GPM, (65 GPM EACH FOR SINGLE PUMP OPERATION) 80' TDH, 7.5 HP, 480V, 3 PHASE MOTOR, 3500 RPM. PROVIDE WITH INLINE STRAINER AND CHECK VALVE. EQUIVALENT TO BELL & GOSSETT SERIES 70E MODEL 2FB20CA4. INCLUDE SYSTEM CONTROLLER FOR SERIES 70E.
12. HYDRO–PNEUMATIC TANK – (1) REQUIRED, TANK SHALL ACCEPT 317 GALLONS AT A SYSTEM PRESSURE DIFFERENCE FROM 100 PSI TO 61 PSI; ASME STAMPED TANK WITH REMOVABLE BUTYL BLADDER EQUIVALENT TO WESSELS MODEL FXA 1200.
13. CHLORINE INJECTION VALVE – (1) REQUIRED. SEE CHLORINATOR.
14. ORP ANALYZER – (1) REQUIRED. MEASURE OXIDATION REDUCTION POTENTIAL AND CONTROL CHLORINATOR. EQUIVALENT TO PULSATROL MCT130B.
15. BUFFER TANK RECIRCULATING PUMP – (1) REQUIRED, 12 GPM, 6 TDH, 1/20 HP, 120 VOLT, 60 HZ, 1 PHASE MOTOR. EQUIVALENT TO BELL & GOSSETT MODEL LR–20BF.
16. POTABLE WATER SUPPLY – (1) REQUIRED, 2½" WITH WATT REGULATOR MODEL 009 AND AIR GAP WITH DOWN PIPE TO FLOOR DRAIN.
17. METER BOX– (1) REQUIRED. POLYMER–CONCRETE BODY AND COVER WITH LETTERING "WATER" IN COVER; AND SLOTTED, OPEN–BOTTOM BASE SECTION OF LENGTH TO FIT OVER SERVICE PIPING. INCLUDE VERTICAL AND LATERAL DESIGN LOADINGS OF 15,000 LB MINIMUM OVER 10 BY 10 INCHES SQUARE.
18. POTABLE WATER SOLENOID VALVE – (1) REQUIRED, ELECTRIC SOLENOID VALVE, 3" DIAMETER, 120V/1PH/60HZ.
19. NON POTABLE WATER METER – (1) REQUIRED, 3" SIZE, COMPLY WITH AWWA C701, TURBINE–TYPE, BRONZE MAIN CASE, FLANGED CONNECTIONS; REGISTER FLOW IN GALLONS. ENCODER REMOTE READING SYSTEM SHALL COMPLY WITH AWWA C707, ASCII FORMAT. EQUIVALENT TO HERSEY–METERS HORIZON SERIES WITH HERSEY TRANSLATOR ENCODER REGISTER AND HERSEY TRUREAD REMOTE VISUAL READ COUNTER.
20. WET WELL LEVEL SENSOR – (1) REQUIRED, LENGTH TO SUIT CISTERN DEPTH, RESISTANCE TAPE SENSOR, 4–20MA TRANSMITTER. EQUIVALENT TO AQUATAPE BY CONSILIUMUS (WWW.CONSILIUMUS.COM) TAPE SENSOR SHALL BE INSTALLED IN 1–1/2" SCH. 80 PVC PIPE OPEN AT BOTTOM.
21. BUFFER TANK LEVEL SENSOR – (1) REQUIRED, LENGTH TO SUIT CISTERN DEPTH, RESISTANCE TAPE SENSOR, 4–20MA TRANSMITTER. EQUIVALENT TO AQUATAPE BY CONSILIUMUS (WWW.CONSILIUMUS.COM) TAPE SENSOR SHALL BE INSTALLED IN 1–1/2" SCH. 80 PVC PIPE OPEN AT BOTTOM.
22. SYSTEM CONTROLLER – EQUIVALENT TO SIEBE MODEL LCM–84110 WITH KEYBOARD DISPLAY AND UNIVERSAL 16 INPUT AND 16 OUTPUT POINTS. BACNET COMPATIBLE.
23. NON–POTABLE WATER SUPPLY
24. BUFFER TANK FILL TUBES – 4" SCH. 80 PVC PIPE
25. 3/4" DRAIN VALVE WITH HOSE CONNECTION
26. WYE STRAINER WITH 3/4" BALL TYPE BLOWDOWN AND HOSE CONNECTION.
27. SIGHT GLASS WITH ISOLATION VALVES ON BUFFER TANK.

PADIA consulting
High Performance Engineering
61 Kilmayne Drive • Suite 300 • Cary, NC 27511
phone 919.461.1777 • fax 919.460.9999

INNOVATIVE DESIGN
850 W. MORGAN STREET, RALEIGH, NORTH CAROLINA 27603, 919/832–6303

NORTH CAROLINA PROFESSIONAL SEAL 029002 ENGINEER SHADRAY D. PADIA

PADIA CONSULTING, INC. CORPORATE SEAL N.C.

PROJECT: Wilkes County Visitor's Center K–4703
WILKESBORO, NC
OWNER: NC Department of Transportation

DRAWN BY: JWH
DATE: 06/01/2007
JOB NUMBER:
REVISIONS:

P5.01

PADIA consulting
High Performance Engineering
81 Kilmayne Drive • Suite 300 • Cary, NC 27611
phone 919.481.1777 • fax 919.460.8999

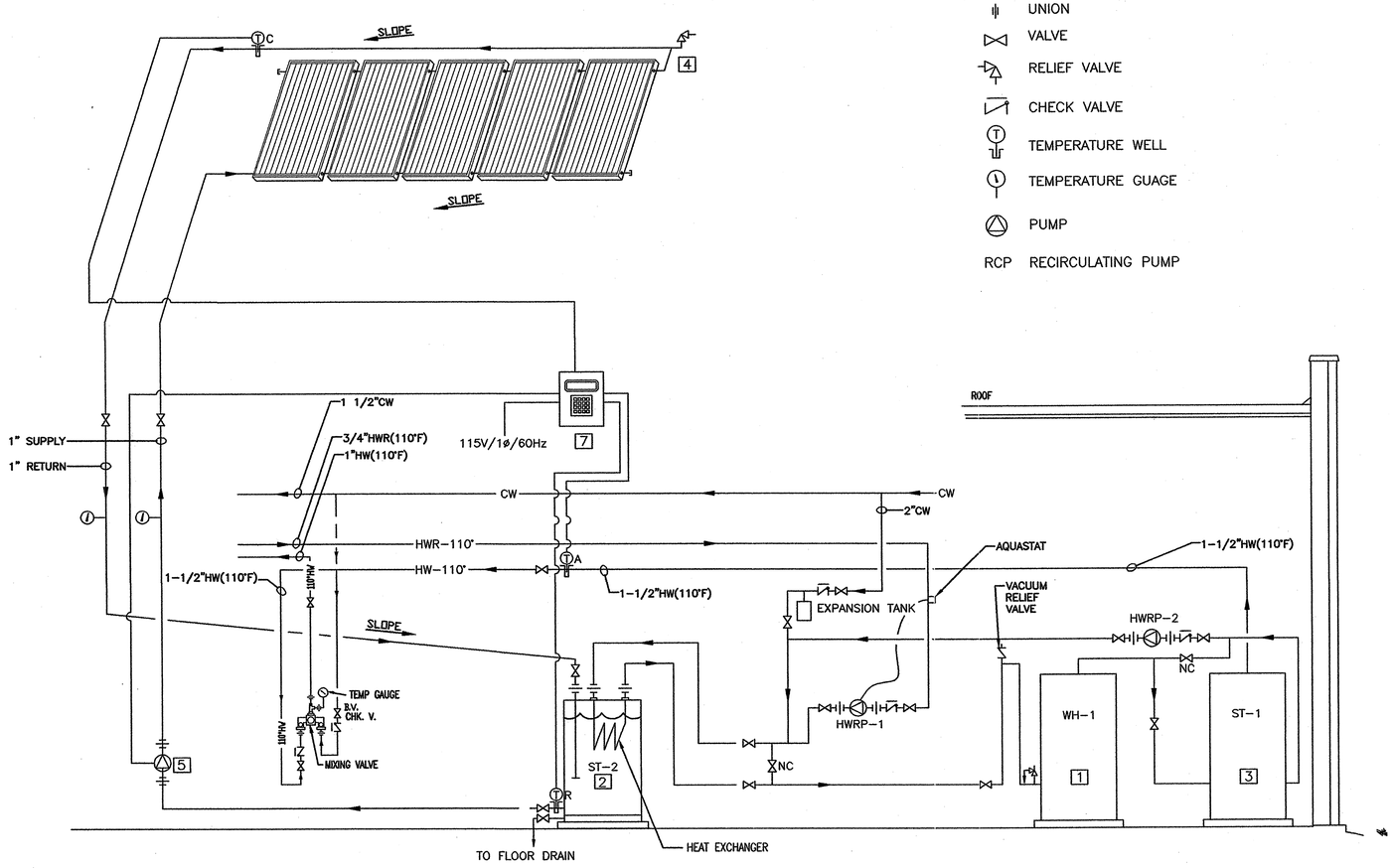

1 P5.02 **SOLAR HOT WATER SYSTEM**
SCALE: NONE

LEGEND

- PIPING WITH FLOW
- WIRING
- UNION
- VALVE
- RELIEF VALVE
- CHECK VALVE
- TEMPERATURE WELL
- TEMPERATURE GUAGE
- PUMP
- RCP RECIRCULATING PUMP

KEY NOTES

1. GAS WATER HEATER (WH-1): SEE WATER HEATER BOILER SCHEDULE ON P0.00
2. STORAGE TANK (ST-2); EQUAL TO A.O. SMITH SOLAR MODEL HD20-80. 80 GALLON CAPACITY FIT WITH INTERNAL DOUBLE WALL HEAT EXCHANGER FOR CONNECTION TO DOMESTIC WATER SYSTEM.
3. STORAGE TANK ST-1: SEE WATER HEATER BOILER SCHEDULE ON P0.00
4. FLAT PLATE SOLAR COLLECTOR. NOMINAL 4'X8'
5. CIRCULATING PUMP FOR SOLAR ARRAY. GRUNDFOS UPS15-58FC/FRC OR APPROVED EQUAL. 120V/1 PHASE. PUMP MUST BE MOUNTED 2 FEET BELOW THE LOW LEVEL OF THE STORAGE TANK.
6. NOT USED
7. SYSTEM CONTROLLER. THERMOMAX SMT 400 WITH THREE SENSORS OR APPROVED EQUAL.

CONTROL SEQUENCE

THE SMT 400 CONTROLLER CONTINUOUSLY MONITORS THE TEMPERATURES OF THE SYSTEM. PUMPS SHALL TURN ON ONLY WHEN THE TEMPERATURE AT THE COLLECTOR (TC) IS >10°F HIGHER THAN THE RETURN TEMPERATURE (TR).

SOLAR LOOP PUMP SHALL TURN ON IF THE DELTA T IS SATISFIED.

HEAT FOR HOT WATER SHALL BE NORMALLY SUPPLIED FROM THE HEAT EXCHANGER. IF THE FINAL SUPPLY TEMPERATURE (TA) DROPS BELOW 110°F, WATER HEATER SHALL COME ON.

SOLAR WATER PREHEATING NOTES:

1. FURNISH, INSTALL AND CHECK OUT A COMPLETE SYSTEM TO PROVIDE PREHEATING FOR DOMESTIC WATER.
2. INSTALL SOLAR PANELS ON BUILDING FRAME ACCORDING TO MANUFACTURERS RECOMMENDATIONS. SEE STRUCTURAL AND ARCHITECTURAL DRAWINGS FOR SUPPORT DETAILS.
3. HOT AND COLD WATER PIPING INSIDE BUILDING ABOVE GRADE SHALL BE TYPE "L" HARD COPPER. UNDERGROUND PIPING SHALL BE TYPE "K" SOFT COPPER. USE INSULATED ADAPTER FITTINGS AS REQUIRED IN MAKING TRANSITION FROM IRON TO COPPER PIPE, AND INSTALL ELECTRICAL BONDING JUMPER.

INNOVATIVE DESIGN
850 W. MORGAN STREET, RALEIGH, NORTH CAROLINA 27603, 919/832-6303

NORTH CAROLINA PROFESSIONAL SEAL 9069 ENGINEER RESHADRAY D. PADIA 06/02/2007

PADIA CONSULTING INC. CORPORATE SEAL N.C.

PROJECT: Wilkes County Visitor's Center K-4703
WILKESBORO, NC
OWNER: NC Department of Transportation

DRAWN BY: JWH
DATE: 06/01/2007
JOB NUMBER:
REVISIONS:

P5.02

GENERAL NOTES

1. MECHANICAL CONTRACTOR SHALL COORDINATE HIS WORK WITH THAT OF THE OTHER TRADES PRIOR TO INSTALLATION OF ANY PIPING, DUCTWORK, OR EQUIPMENT.
2. THE MECHANICAL CONTRACTOR SHALL MAKE A COMPLETE REVIEW OF THE MECHANICAL PLANS, SCHEDULES, AND DETAILS PRIOR TO INSTALLATION OF THE MECHANICAL SYSTEMS AND REVIEW ANY CONFLICTS THAT ARE NOTED WITH THE ENGINEER.
3. IT WILL BE THE RESPONSIBILITY OF THE MECHANICAL CONTRACTOR TO ENSURE THAT ITEMS TO BE FURNISHED UNDER HIS CONTRACT WILL FIT THE SPACE AVAILABLE. HE SHALL MAKE NECESSARY FIELD MEASUREMENTS TO ASCERTAIN SPACE REQUIREMENTS, INCLUDING THOSE FOR CONNECTIONS, AND SHALL FURNISH AND INSTALL SUCH SIZES AND SHAPES OF EQUIPMENT THAT ARE THE TRUE INTENT AND MEANING OF THE PLANS AND SPECIFICATIONS.
4. ALL EQUIPMENT SHALL BE LOCATED AND INSTALLED TO PROVIDE MAXIMUM SPACE FOR PROPER MAINTENANCE AND SERVICE.
5. ALL POWER WIRING AND ASSOCIATED CONDUIT SHALL BE PROVIDED TO HVAC EQUIPMENT BY THE ELECTRICAL CONTRACTOR. THE HVAC CONTRACTOR SHALL FURNISH ALL MOTOR STARTERS, DISCONNECT SWITCHES, AND COMBINATION STARTERS FOR HVAC EQUIPMENT AND TURN THEM OVER TO THE ELECTRICAL CONTRACTOR FOR INSTALLATION. ALL FINAL POWER WIRING CONNECTIONS TO HVAC EQUIPMENT SHALL BE MADE BY THE HVAC CONTRACTOR FROM SLACK WIRE LEFT BY THE ELECTRICAL CONTRACTOR. PROVIDE ALL CONTROL WIRING, IN CONDUIT, REQUIRED TO SATISFACTORILY CONTROL ALL EQUIPMENT INCLUDED IN THIS SECTION. FURNISH AND WIRE ALL CONTROL DEVICES SUCH AS THERMOSTATS, SWITCHES, RELAYS AND ANY OTHER DEVICES NECESSARY TO CONTROL THE EQUIPMENT FURNISHED IN THIS SECTION.
6. THE MECHANICAL CONTRACTOR SHALL PROVIDE AND INSTALL HIS OWN SUPPORT DEVICES. ALL LOCATIONS SHALL BE COORDINATED WITH THE GENERAL CONTRACTOR AND OTHER PRIME CONTRACTORS PRIOR TO INSTALLATION. DO NOT SUPPORT PIPING FROM BAR JOIST BRIDGING. MECHANICAL CONTRACTOR SHALL REINFORCE BAR JOISTS WHEN HANGERS FOR MECHANICAL PIPING ARE NOT LOCATED WITHIN 6" OF BAR JOIST PANEL POINTS.
7. THE MECHANICAL CONTRACTOR SHALL REFER TO THE ARCHITECTURAL PLANS FOR FLOOR PLAN DIMENSIONS. DO NOT SCALE THESE DRAWINGS.
8. INSTALL DUCTWORK IN CEILINGS HIGH ENOUGH TO AVOID LIGHTS, CONDUIT, & MISCELLANEOUS PIPING, BUT LOW ENOUGH TO ALLOW EASY ACCESS TO SYSTEM BALANCING DAMPERS.
9. THE MECHANICAL CONTRACTOR SHALL COORDINATE SIZE AND LOCATION OF ALL PENETRATIONS THROUGH THE ROOF WITH THE GENERAL CONTRACTOR AND ROOFING CONTRACTOR.
10. CONDENSATE DRAINS SHALL BE A MINIMUM OF 1" DIA. TYPE K COPPER WITH A 25/50 RATED CELLULAR FOAM INSULATION HAVING A NOMINAL WALL THICKNESS OF 1/2". A P-TRAP SHALL BE INSTALLED IN ALL CONDENSATE DRAIN LINES FOR ALL AIR HANDLING UNITS. ALL CONDENSATE DRAIN LINES SHALL BE ROUTED TO NEAREST RAISED HUB DRAIN THAT RUNS TO THE STORM SYSTEM.
11. INSTALL FLEXIBLE DUCT CONNECTION AT SUPPLY AND RETURN DUCT CONNECTIONS TO ALL AIR HANDLING UNITS, FANS, ETC.
12. PROVIDE SHEET METAL COLLARS AT ALL LOCATIONS WHERE DUCTS PENETRATE WALLS. COLLARS SHALL BE 14 GAUGE MINIMUM.
13. PROVIDE BALANCING DAMPERS AS INDICATED ON THE PLANS AND WHERE REQUIRED FOR SYSTEM BALANCING.
14. ALL ELBOWS IN DUCTWORK SHALL BE RADIUS ELBOWS, UNLESS OTHERWISE NOTED. WHERE SQUARE ELBOWS ARE SHOWN, PROVIDE TURNING VANES AS SPECIFIED.
15. THE MECHANICAL CONTRACTOR SHALL INSTALL DUCT SMOKE DETECTORS (FURNISHED AND WIRED BY THE ELECTRICAL CONTRACTOR) IN THE RETURN AIR DUCT OF EACH AIR HANDLING UNIT PRIOR TO THE POINT OF ENTRY OF OUTSIDE AIR.
16. VERIFY THAT ALL THERMOSTAT INSTALLATIONS COMPLY WITH FEDERAL ADA ACCESSIBILITY GUIDELINES AND THE STATE OF NORTH CAROLINA BUILDING CODE WITH REGARDS TO CLEAR FLOOR SPACE, FORWARD APPROACH, PARALLEL APPROACH AND MAXIMUM VERTICAL REACH TO CONTROLS AND OPERATING MECHANISMS.
17. UNLESS OTHERWISE NOTED, ALL DUCT DIMENSIONS ARE ACTUAL INSIDE DIMENSIONS.
18. ALL DUCTWORK, PIPING, AND EQUIPMENT LAYOUTS AND LOCATIONS SHOWN ARE DIAGRAMMATIC. THE CONTRACTOR SHALL FAMILIARIZE HIMSELF WITH THE PROJECT AND COORDINATE THE DUCT AND PIPING LAYOUTS WITH ALL CONTRACTORS PRIOR TO INSTALLATION. THIS CONTRACTOR SHALL PROVIDE, AT NO ADDITIONAL COST TO THE OWNER, ALL DUCT AND PIPING OFFSETS REQUIRED FOR THE SYSTEMS TO FIT THE SPACE PROVIDED WHETHER OR NOT THOSE OFFSETS ARE INDICATED ON THE PLANS
19. THE MECHANICAL CONTRACTOR SHALL COORDINATE THE ROUGH-IN OF ALL HYDRONIC PIPING AND DUCTWORK WITH THE GENERAL CONTRACTOR. DUCT AND PIPE PENETRATIONS THAT ARE 16" WIDE OR LESS SHALL BE PROVIDED BY THE MECHANICAL CONTRACTOR. DUCT AND PIPE PENETRATIONS WIDER THAN 16" SHALL BE PROVIDED BY THE GENERAL CONTRACTOR. MECHANICAL SHOP DRAWINGS SHALL BE PROVIDED TO ARCHITECT/ENGINEER AND GENERAL CONTRACTOR WITH ALL DUCT AND PIPE PENETRATIONS SIZED AND LOCATED. THESE SHOP DRAWINGS SHALL BE SUBMITTED DURING EARLY PHASES OF CONSTRUCTION SO NOT TO DELAY THE GENERAL CONSTRUCTION SCHEDULE.
20. ALL HYDRONIC PIPING SHALL BE PERMANENTLY IDENTIFIED BY THEIR CONTENT, FUNCTION, AND DIRECTION OF FLOW. ALL IDENTIFICATION MARKERS SHALL BE PERMANENTLY STENCILED OR ADHERED ON THE PIPING IN A LEGIBLE MANNER AT NO GREATER DISTANCE THAN 10'-0" ON CENTER, AT ALL TURNS, AND AT ALL WALL PARTITIONS. PIPING IN MECHANICAL ROOMS SHALL BE COLOR CODED.

ENERGY CODE DATA

MECHANICAL SYSTEMS, SERVICE SYSTEMS AND EQUIPMENT

METHOD OF COMPLIANCE
Prescriptive ■ Energy Cost Budget□

Thermal Zone	Zone 9B – Wilkes County
Exterior design conditions	
Winter Dry Bulb	18°F
Summer Dry Bulb	92°F
Summer Wet Bulb	74°F
Interior design conditions	
Winter Dry Bulb	72°F
Summer Dry Bulb	75°F
Relative Humidity	50 %
Heating Load	123,900 BTUH
Cooling Load	179,180 BTUH
Mechanical Spacing Conditioning System	
Geothermal Heatpumps	
Heating Capacity	Ground Coupled Heat Exchangers
Cooling Capacity	Ground Coupled Heat Exchangers
Equipment Efficiencies	
Geothermal Heatpump	16 SEER Minimum
Geothermal Heatpump	4.5 COP Minimum

Performance Schedule for Motors (Mechancal Systems)
Full-Load Minimum Efficiency for Single-Speed, Three Phase, Energy Efficient, Open Drip-Proof Motors

Motor Horsepower	RPM	Minimum Efficiency (%)	Power Factor (%)
1.0	1800	82	84
1.5	1800	84	85
2.0	1800	84	85

OUTSIDE (VENTILATION) AIR PER ASHRAE 62.2001

VISITOR CENTER VENTILATION	7.5 CFM PER PERSON
OFFICE VENTILATION	20 CFM PER PERSON
TOILET VENTILATION	75 CFM PER WC

DRAWING LEGEND

DESCRIPTION	NEW
GROUND LOOP SUPPLY PIPING	GLR
GROUND LOOP RETURN PIPING	GLS
GATE VALVE	
PIPING BRANCH	
PIPING REDUCER	
COOLING COIL CONDENSATE PIPING	D
PIPE ELBOW TURNS DOWN	
PIPE ELBOW TURNS UP	
CEILING SUPPLY AIR DIFFUSER	
CEILING RETURN AIR GRILLE	
CEILING EXHAUST AIR GRILLE	
FLEXIBLE DUCT INSTALLATION	
AIRFLOW BALANCING DAMPER, MANUAL	
DIFFUSER / GRILLE MARK WITH AIRFLOW (CFM)	VSD
WALL MOUNTED THERMOSTAT	T
ELECTRIC UNIT HEATER (EUH)	
DUCT FIRE DAMPER	
DUCT SMOKE DETECTOR	SD
PLAN KEY NOTE	1
BUILDING AUTOMATION SYSTEM CONTROL PANEL	BAS
DISCONNECT / STARTER / COMBINATION STARTER	D S

DETAIL NUMBER: XX
SHEET NUMBER: MX.X — DETAIL DESCRIPTION — SCALE

ABBREVIATIONS

AFC	ABOVE FINISHED CEILING
AFF	ABOVE FINISHED FLOOR
BTUH	BRITISH THERMAL UNIT PER HOUR
CFM	CUBIC FEET PER MINUTE
CU. FT.	CUBIC FEET
DB	DRY BULB TEMPERATURE
EAT	ENTERING AIR TEMPERATURE
E.C.	ELECTRICAL CONTRACTOR
EF	EXHAUST FAN
ESP	EXTERNAL STATIC PRESSURE, INCHES OF WATER GAGE
EUH	ELECTRIC UNIT HEATER
EWT	ENTERING WATER TEMPERTURE
F	FAHRENHEIT
HP	HORSEPOWER
GCHP	GROUND COUPLED HEAT PUMP
HZ	HERTZ
IN. WC	INCHES OF WATER COLUMN
KW	TOTAL POWER INPUT, KILOWATTS
LAT	LEAVING AIR TEMPERATURE
LBS	POUNDS
LRA	LOCKED ROTOR AMPS
LWT	LEAVING WATER TEMPERTURE
MC	MECHANICAL CONTRACTOR
MANUF	MANUFACTURER
MCA	MINIMUM CIRCUIT AMPS
MOCP	MAXIMUM OVER CURRENT PROTECTION
PH	PHASE
PSI	POUNDS PER SQUARE INCH
RA	RETURN AIR FLOW
REG	REGISTER
RLA	RATED LOAD AMPS
RPM	REVOLUTIONS PER MINUTE
SA	SUPPLY AIR FLOW
SP	STATIC PRESSURE
TEMP	TEMPERATURE
TON	12,000 BTUH OF COOLING CAPACITY
TYP	TYPICAL
WB	WET BULB TEMPERATURE

PADIA consulting
High Performance Engineering
61 Kilmayne Drive • Suite 200 • Cary, NC 27511
phone 919.481.1777 • fax 919.460.8888

INNOVATIVE DESIGN
850 W. MORGAN STREET, RALEIGH, NORTH CAROLINA 27603, 919/832-6303

NORTH CAROLINA REGISTERED PROFESSIONAL ENGINEER SEAL 20018 SHADRAY D. PADIA 06/01/07

PADIA CONSULTING, INC. CORPORATE SEAL N.C.

PROJECT: Wilkes County Visitor's Center K-4703
WILKESBORO, NC
OWNER: NC Department of Transportation

DRAWN BY: AFS
DATE: 06/01/2007
JOB NUMBER:
REVISIONS:

M0.00

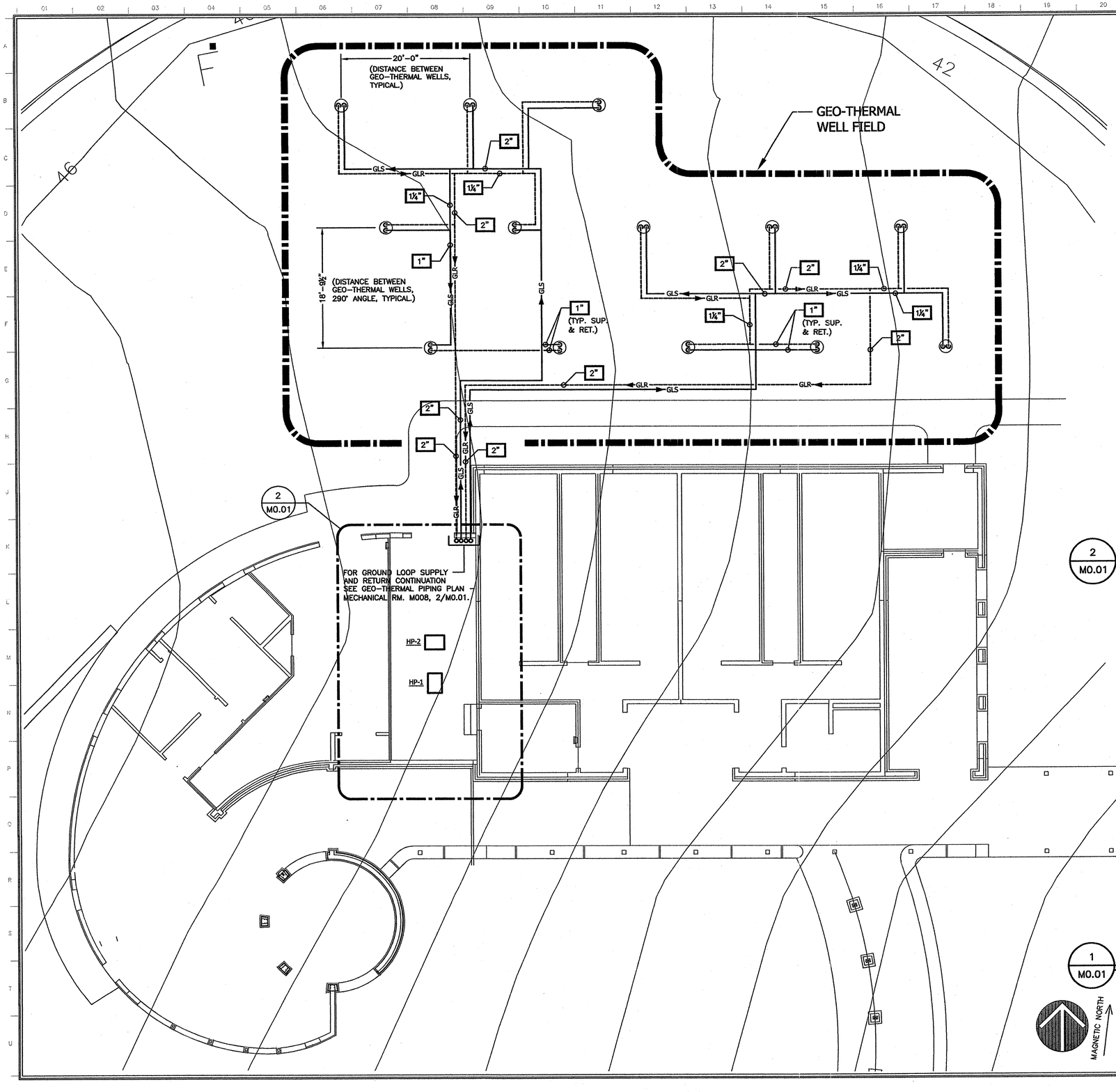

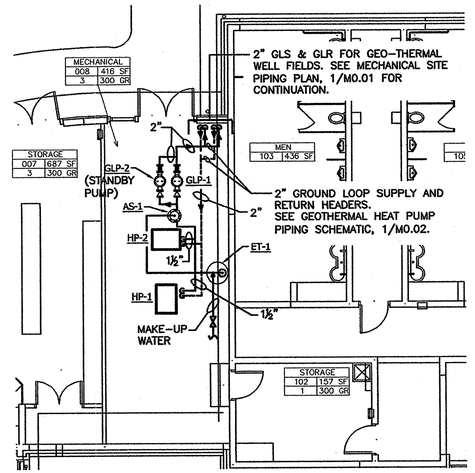

2 M0.01 GEO-THERMAL PIPING PLAN - MECHANICAL ROOM - M008

SCALE: 1/8"=1'-0"

MECHANICAL GENERAL NOTES:

1. VERTICAL BOREHOLE PIPING SHALL BE 1" DIAMETER.
2. GROUND LOOP HEAT EXCHANGER PIPING SHALL BE THERMALLY FUSED HIGH DENSITY POLYETHYLENE ASTM NUMBER PE 3406.
3. PIPING 2" AND GREATER SHALL BE SDR17.
4. PIPING LESS THAN 2" SHALL BE SDR11.
5. CONTRACTOR SHALL COORDINATE PIPING WITH NEW AND EXISTING SITE UTILITIES.
6. EACH WELL WILL BE 300 FEET DEEP.

1 M0.01 MECHANICAL SITE PIPING PLAN

SCALE: 1/8"=1'-0"

PADIA consulting
High Performance Engineering
61 Kilmayne Drive • Suite 300 • Cary, NC 27511
phone 919.461.1777 • fax 919.460.8888

INNOVATIVE DESIGN
850 W. MORGAN STREET, RALEIGH, NORTH CAROLINA 27603, 919/832-6303

NORTH CAROLINA PROFESSIONAL SEAL 9069 ENGINEER HARSHADRAY D. PADIA 06/02/2007

PADIA CONSULTING INC. CORPORATE SEAL N.C.

PROJECT: Wilkes County Visitor's Center K-4703
WILKESBORO, NC

OWNER: NC Department of Transportation

DRAWN BY: AFS
DATE: 06/01/2007
JOB NUMBER:
REVISIONS:

M0.01

PADIA consulting
High Performance Engineering
61 Kilmayne Drive • Suite 300 • Cary, NC 27511
phone 919.481.1777 • fax 919.460.9998

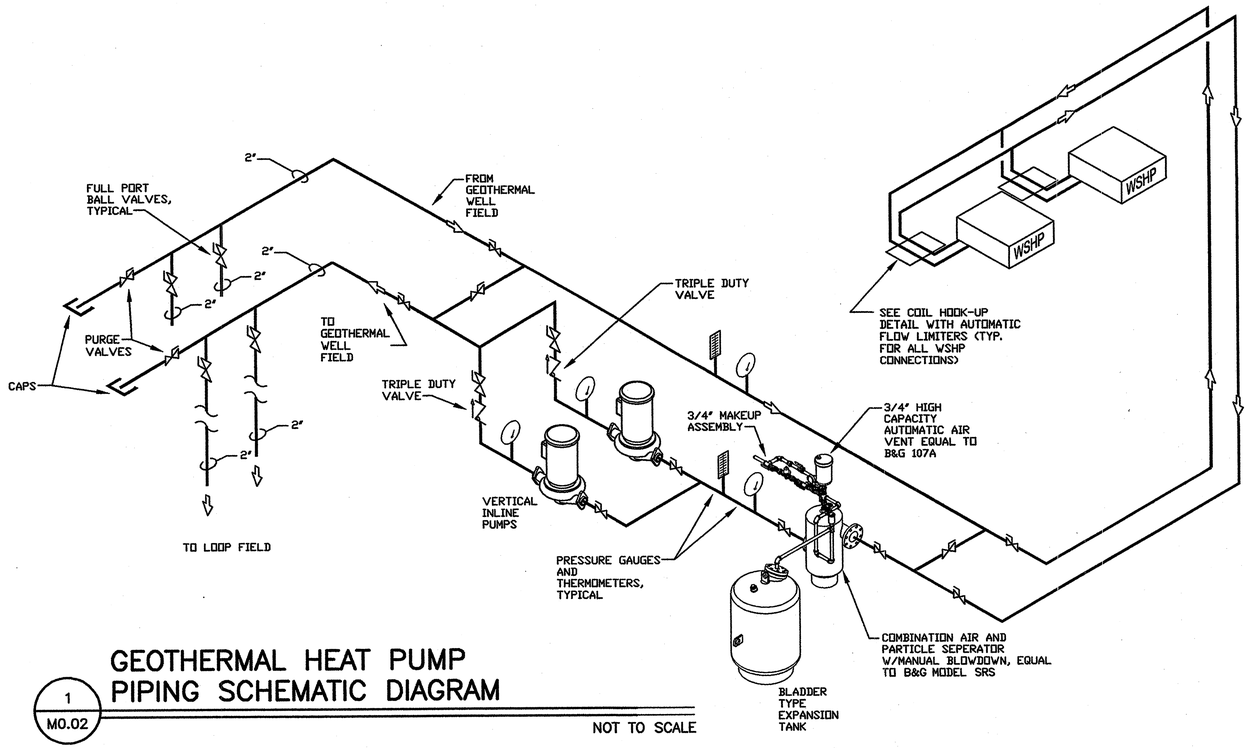

1 M0.02 GEOTHERMAL HEAT PUMP PIPING SCHEMATIC DIAGRAM

NOT TO SCALE

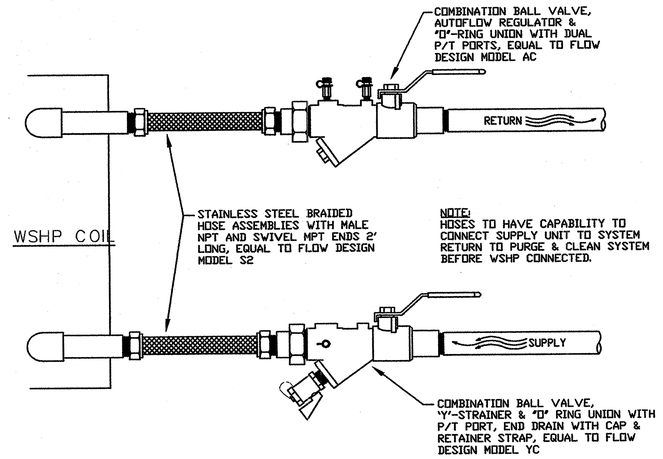

2 M0.02 GEOTHERMAL HEAT PUMP COIL HOOK-UP DETAIL

NOT TO SCALE

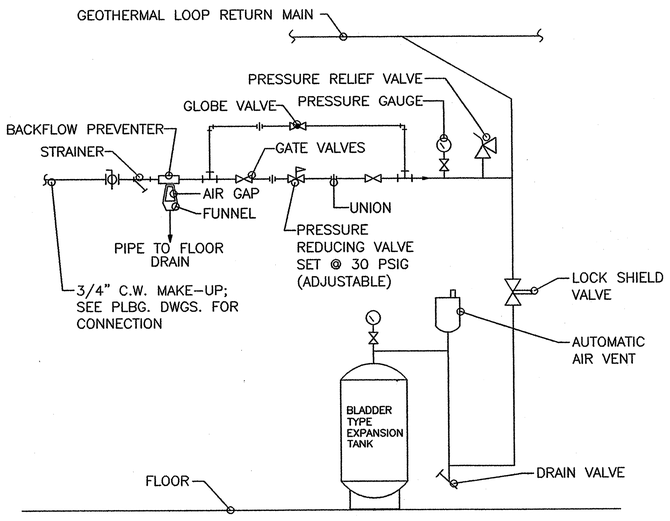

3 M0.02 EXPANSION TANK AND MAKE-UP WATER DETAIL

NOT TO SCALE

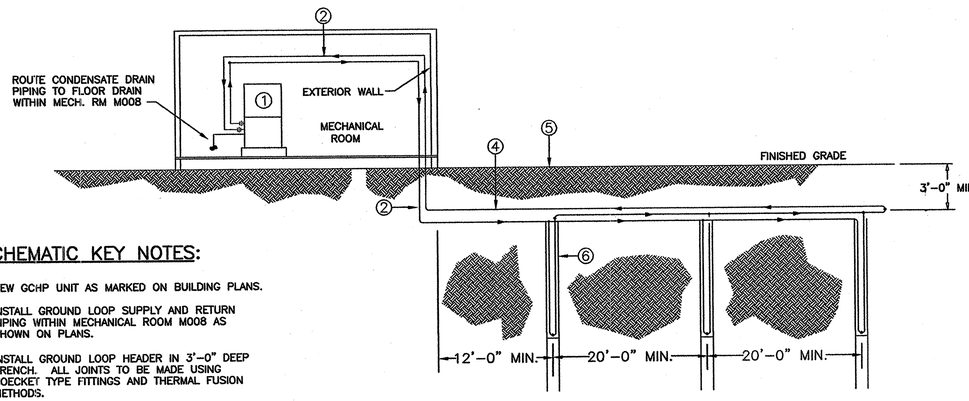

SCHEMATIC KEY NOTES:

1. NEW GCHP UNIT AS MARKED ON BUILDING PLANS.
2. INSTALL GROUND LOOP SUPPLY AND RETURN PIPING WITHIN MECHANICAL ROOM M008 AS SHOWN ON PLANS.
3. INSTALL GROUND LOOP HEADER IN 3'-0" DEEP TRENCH. ALL JOINTS TO BE MADE USING SOECKET TYPE FITTINGS AND THERMAL FUSION METHODS.
4. GROUND LOOP BOREHOLES SHALL BE LOCATED AS SHOWN ON SHEET M0.01 MECHANICAL SITE PLAN.
5. TYPICAL VERTICAL PIPING LOOP TO BE 1", INSTALLED IN 4" DIAMETER BOREHOLE. BOREHOLE TO BE COMPLETELY BACKFILLED AND CAPPED WITH BENTONITE GROUT. SINKING OF GROUND IN BOREHOLE LOCATIONS IS NOT ACCEPTABLE.
6. NUMBER OF BOREHOLES TO MINIMUM BOREHOLE DEPTH IS TO BE PROVIDED PER MECHANICAL SITE PLAN, 1/M0.01. BOREHOLE DEPTHS IN ANY SPECIFIC LOOP ARE TO BE EQUAL TO EACH OTHER. THE BOREHOLE LOOP DEPTHS SHALL BE 300 FEET MINIMUM, FOR EACH BOREHOLE WELL. MINIMUM BOREHOLE LENGTH SHALL BE ASJUSTED FOR SOIL CONDUCTIVITY VARIATIONS AS DETERMINED BY REVIEW OF TEST RESULTS.

4 M0.02 GROUND COUPLED HEAT PUMP SYSTEM SCHEMATIC

SCALE: NONE

INNOVATIVE DESIGN
850 W. MORGAN STREET, RALEIGH, NORTH CAROLINA 27603, 919/832-6303

NORTH CAROLINA PROFESSIONAL SEAL 026121 ENGINEER RAVINDRAY D. PADIA

PADIA CONSULTING INC. CORPORATE SEAL N.C.

PROJECT: Wilkes County Visitor's Center K-4703
WILKESBORO, NC
OWNER: NC Department of Transportation

DRAWN BY: AFS
DATE: 06/01/2007
JOB NUMBER:
REVISIONS:

M0.02

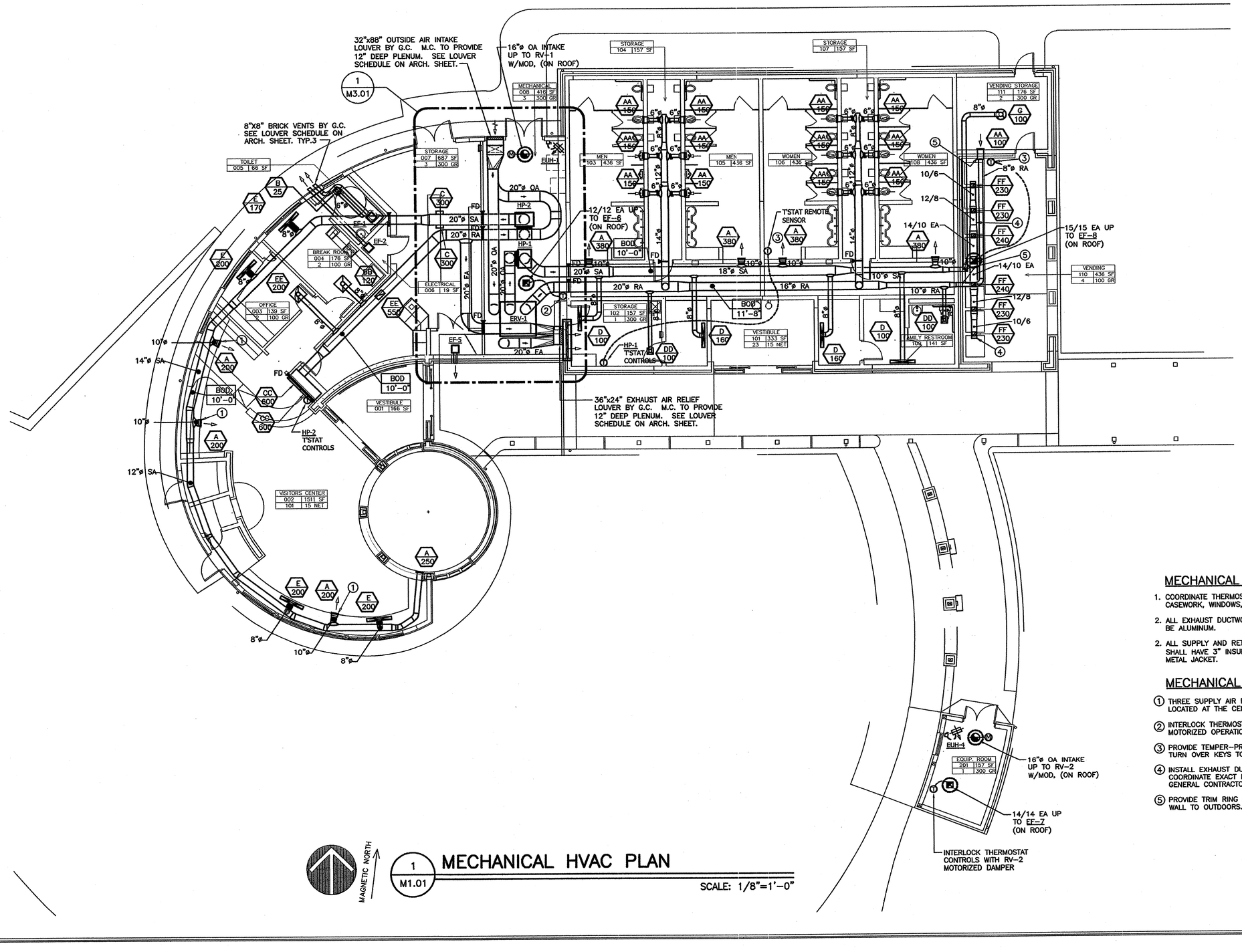

1 M1.01 MECHANICAL HVAC PLAN

SCALE: 1/8"=1'-0"

MECHANICAL GENERAL NOTES

1. COORDINATE THERMOSTAT LOCATIONS WITH LIGHT SWITCHES, CASEWORK, WINDOWS, ETC.
2. ALL EXHAUST DUCTWORK OUTDOORS IN VENDING AREA SHALL BE ALUMINUM.
2. ALL SUPPLY AND RETURN DUCTWORK EXPOSED TO OUTDOORS SHALL HAVE 3" INSULATION WITH WEATHER PROOF SHEET METAL JACKET.

MECHANICAL KEY NOTES:

1. THREE SUPPLY AIR DIFFUSER TYPE 'A' SHALL BE LOCATED AT THE CENTER BETWEEN GLUELAM BEAMS.
2. INTERLOCK THERMOSTAT CONTROLS WITH RV-1 MOTORIZED OPERATION DAMPER.
3. PROVIDE TEMPER-PROOF THERMOSTAT KEYED GUARD. TURN OVER KEYS TO GENERAL CONTRACTOR.
4. INSTALL EXHAUST DUCT 12" ABOVE VENDING MACHINES. COORDINATE EXACT HEIGHT OF VENDING MACHINES WITH GENERAL CONTRACTOR.
5. PROVIDE TRIM RING COLLAR WHEN DUCT PENETRATES WALL TO OUTDOORS.

PADIA consulting
High Performance Engineering
61 Kilmayne Drive • Suite 200 • Cary, NC 27511
phone 919.481.1777 • fax 919.460.8988

INNOVATIVE DESIGN
850 W. MORGAN STREET, RALEIGH, NORTH CAROLINA 27603, 919/832-6303

NORTH CAROLINA PROFESSIONAL SEAL ENGINEER HARDRAY D. PADIA 06/02/2007

PADIA CONSULTING INC. CORPORATE SEAL N.C.

PROJECT: Wilkes County Visitor's Center K-4703
WILKESBORO, NC

OWNER: NC Department of Transportation

DRAWN BY: AFS
DATE: 06/01/2007
JOB NUMBER:
REVISIONS:

M1.01

PADIA consulting
High Performance Engineering
61 Kilmayne Drive • Suite 300 • Cary, NC 27511
phone 919.481.1777 • fax 919.460.8598

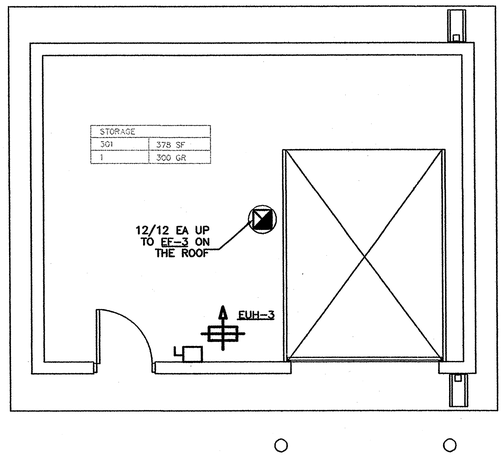

MAINTENANCE BUILDING MECHANICAL PLAN

1 / M1.02

SCALE: 1/4"=1'-0"

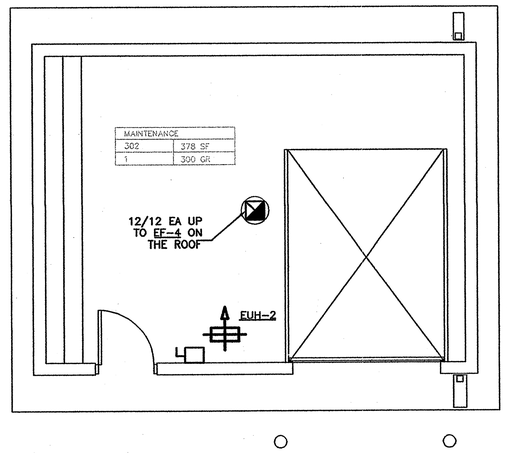

STORAGE BUILDING MECHANICAL PLAN

2 / M1.02

SCALE: 1/4"=1'-0"

INNOVATIVE DESIGN
850 W. MORGAN STREET, RALEIGH, NORTH CAROLINA 27603, 919/832-6303

NORTH CAROLINA PROFESSIONAL SEAL 028021 ENGINEER JOSHADRAY D. PADIA

PADIA CONSULTING INC CORPORATE SEAL N.C.

PROJECT: Wilkes County Visitor's Center K-4703
WILKESBORO, NC

OWNER: NC Department of Transportation

DRAWN BY: AFS
DATE: 06/01/2007
JOB NUMBER:
REVISIONS:

M1.02

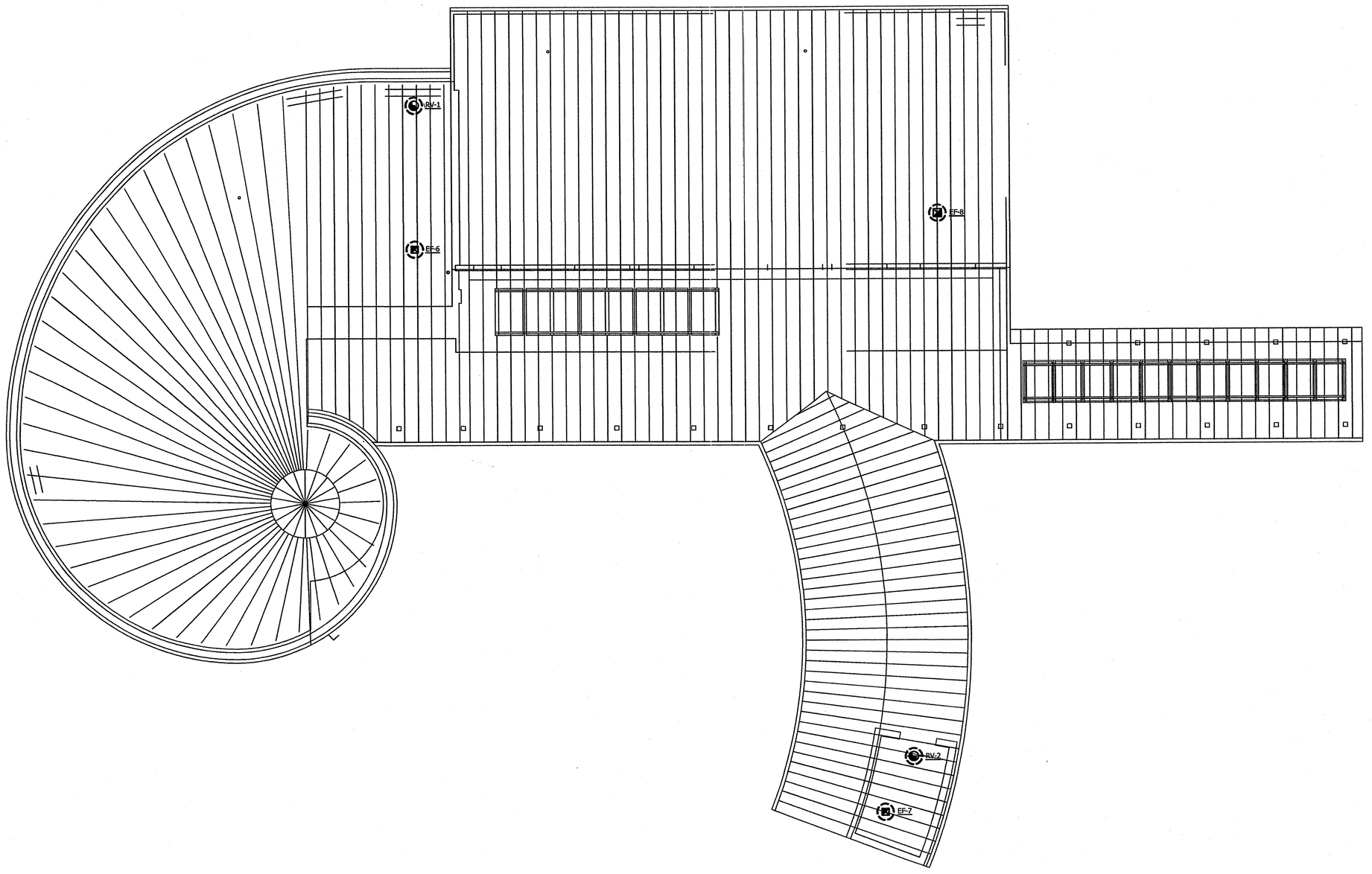

1
M2.01

MECHANICAL ROOF PLAN

SCALE: 1/8"=1'-0"

PADIA consulting
High Performance Engineering
81 Kilmayne Drive • Suite 300 • Cary, NC 27511
phone 919.481.1777 • fax 919.460.8990

INNOVATIVE DESIGN
850 W. MORGAN STREET, RALEIGH, NORTH CAROLINA 27603, 919/832-6303

NORTH CAROLINA PROFESSIONAL SEAL 9069 ENGINEER SHADRAY D. PADIA
06/02/2007

PADIA CONSULTING INC. CORPORATE SEAL N.C.

PROJECT: Wilkes County Visitor's Center K-4703
WILKESBORO, NC

OWNER: NC Department of Transportation

DRAWN BY: AFS
DATE: 06/01/2007
JOB NUMBER:
REVISIONS:

M2.01

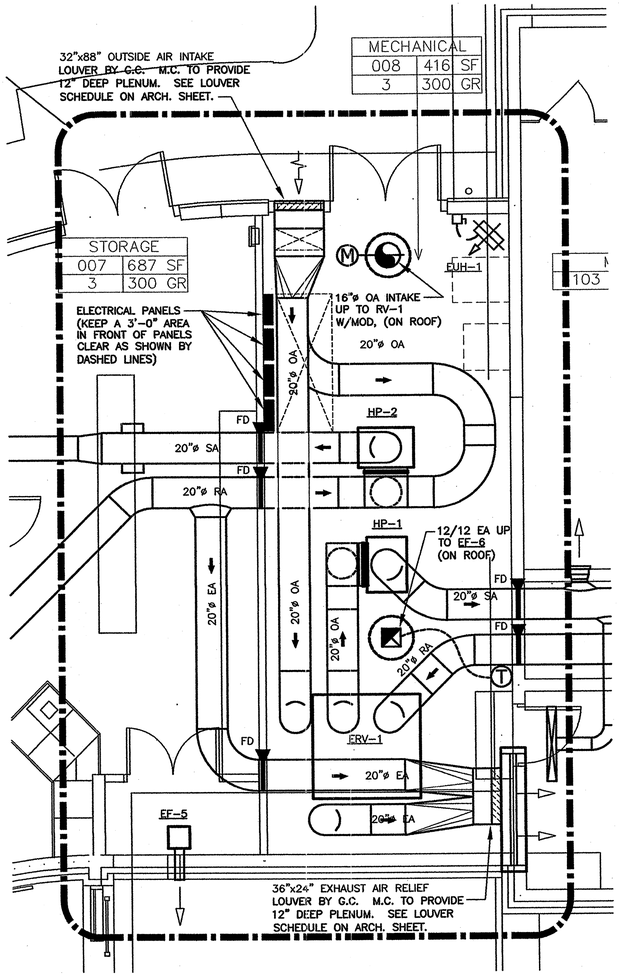

MECHANICAL ENLARGED PLAN
MECH 008

1
M3.01

SCALE: 1/4"=1'-0"

PADIA consulting
High Performance Engineering
61 Kilmayne Drive • Suite 200 • Cary, NC 27511
phone 919.481.1777 • fax 919.463.9809

INNOVATIVE DESIGN
850 W. MORGAN STREET, RALEIGH, NORTH CAROLINA 27603, 919/832-6303

NORTH CAROLINA PROFESSIONAL SEAL 30692 ENGINEER CHANDRAY D. PADIA 06/02/2008

PADIA CONSULTING INC. CORPORATE SEAL N.C.

PROJECT: Wilkes County Visitor's Center K-4703
WILKESBORO, NC
OWNER: NC Department of Transportation

DRAWN BY: AFS
DATE: 06/01/2007
JOB NUMBER:
REVISIONS:

M3.01

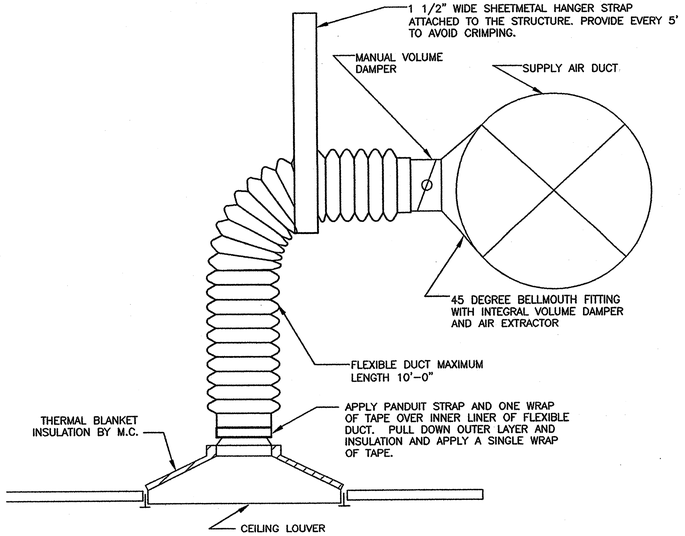

1 M4.01 **LAY-IN DIFFUSER DETAIL**

NOT TO SCALE

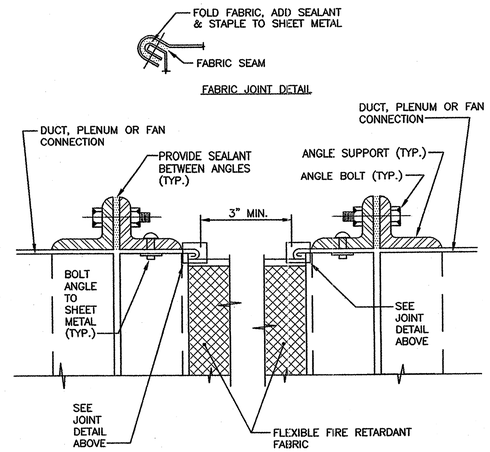

3 M4.01 **FLEXIBLE CONNECTION DETAILS**

NOT TO SCALE

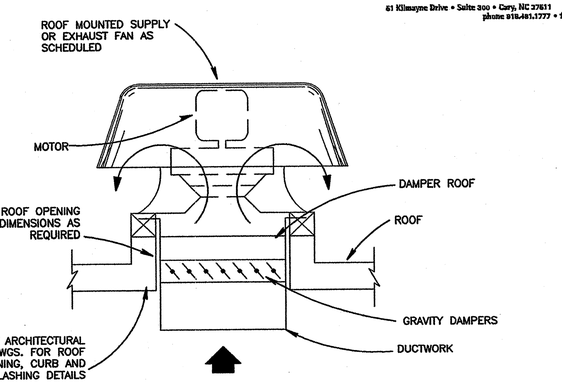

6 M4.01 **ROOFTOP EXHAUST FAN DETAIL**

NOT TO SCALE

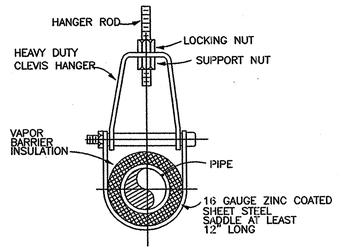

4 M4.01 **CLEVIS HANGER DETAIL**

NOT TO SCALE

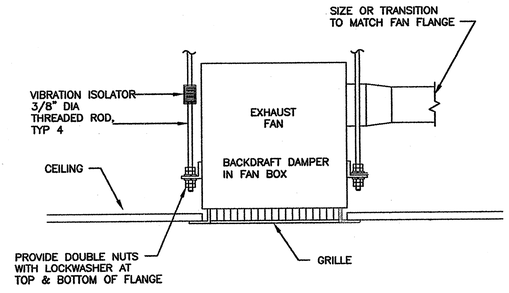

7 M4.01 **CEILING FAN DETAIL**

NOT TO SCALE

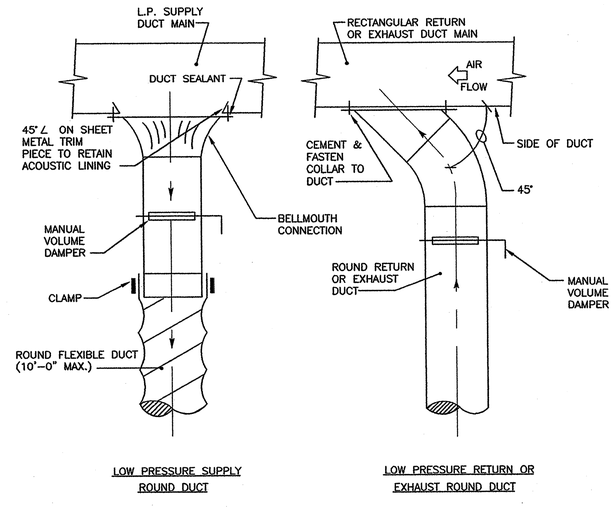

2 M4.01 **BRANCH DUCT TAKE-OFF DETAILS**

NOT TO SCALE

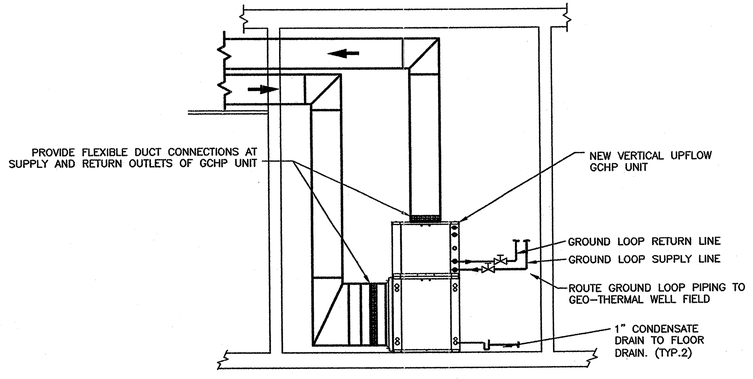

5 M4.01 **HEAT PUMP INSTALLATION DETAIL**

NOT TO SCALE

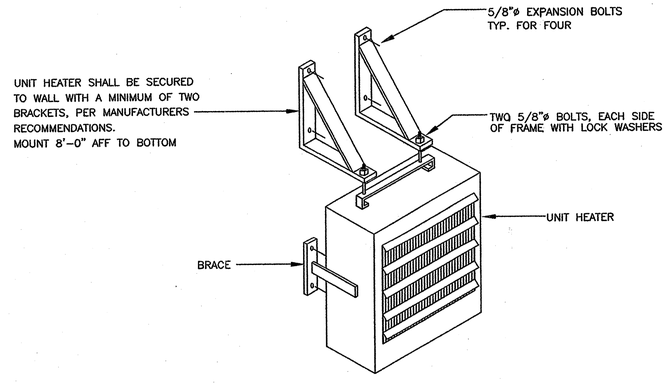

8 M4.01 **ELECTRIC UNIT HEATER INSTALLATION DETAIL**

NOT TO SCALE

PADIA consulting
High Performance Engineering
61 Kilmayne Drive • Suite 300 • Cary, NC 27511
phone 919.481.1777 • fax 919.460.8888

INNOVATIVE DESIGN
850 W. MORGAN STREET, RALEIGH, NORTH CAROLINA 27603, 919/832-6303

NORTH CAROLINA PROFESSIONAL ENGINEER SEAL 9068 GEORGE P. PADIA

PADIA CONSULTING, INC. CORPORATE SEAL N.C.

PROJECT: Wilkes County Visitor's Center K-4703
WILKESBORO, NC
OWNER: NC Department of Transportation

DRAWN BY:
DATE: 06/01/2007
JOB NUMBER:
REVISIONS:

M4.01

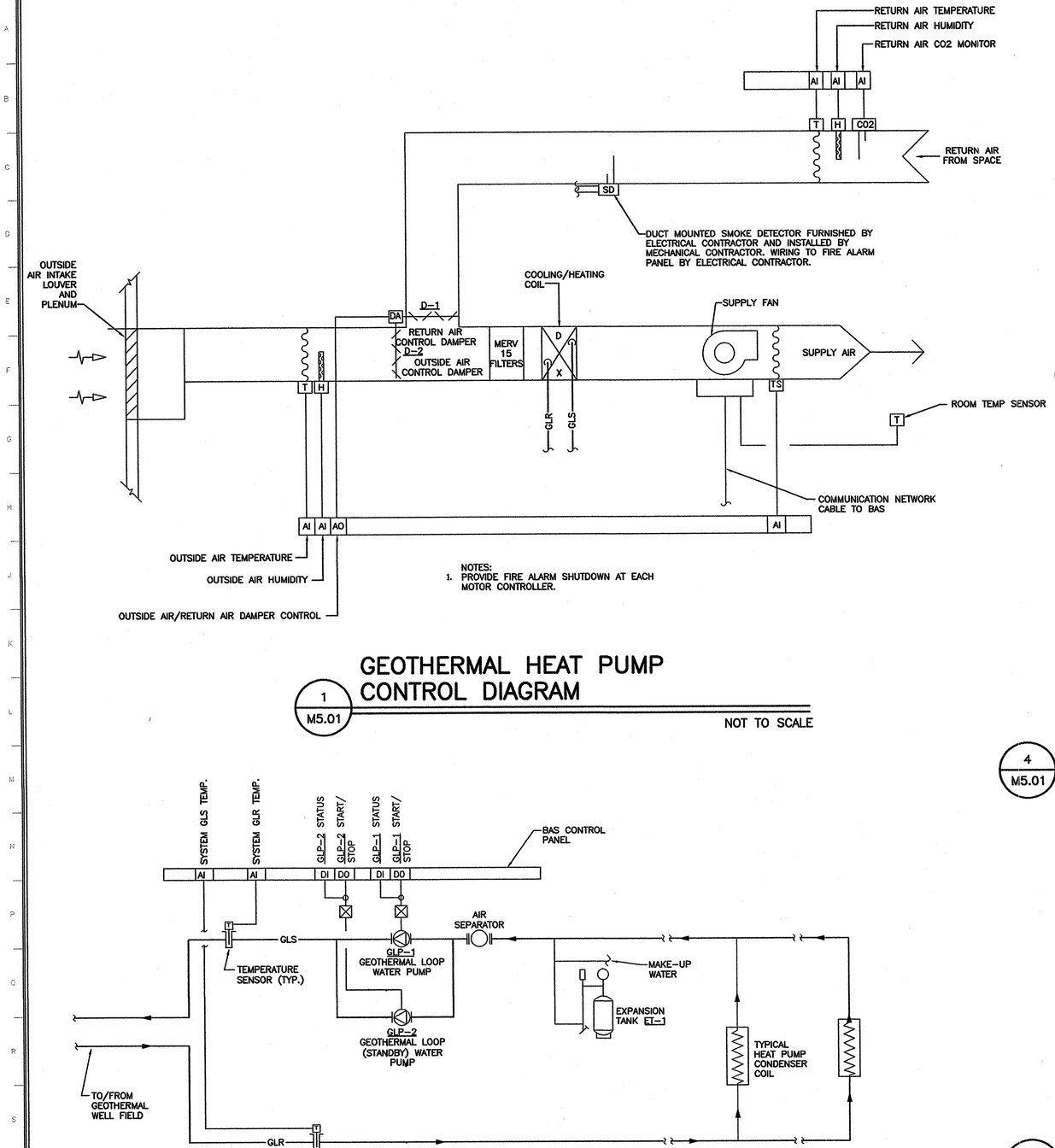

NOTES:
1. PROVIDE FIRE ALARM SHUTDOWN AT EACH MOTOR CONTROLLER.

GEOTHERMAL HEAT PUMP CONTROL DIAGRAM

1 / M5.01

NOT TO SCALE

GEOTHERMAL WATER SYSTEM CONTROL DIAGRAM

2 / M5.01

NOT TO SCALE

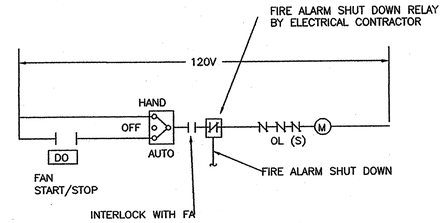

PROVIDE FIRE ALARM SHUTDOWN AT EACH MOTOR CONTROLLER.

AIR HANDLING UNIT SHUTDOWN SCHEMATIC CONTROL DIAGRAM

3 / M5.01

NOT TO SCALE

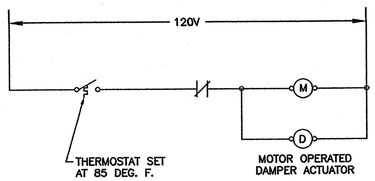

EXHAUST FAN CONTROL EF-1 & EF-3

4 / M5.01

NOT TO SCALE

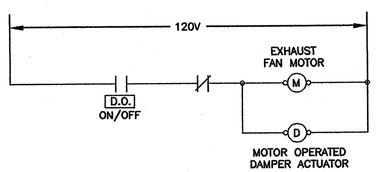

EXHAUST FAN CONTROL EF-2, EF-4, EF-5, EF-6 & EF-7

5 / M5.01

NOT TO SCALE

CONTROL LEGEND

DESCRIPTION	SYMBOL
PIPING	——
ELECTRICAL WIRING	——
ANALOG OUTPUT	AO
DIGITAL INPUT	DI
DIGITAL OUTPUT	DO
START/STOP	S/S
ALARM POINT	FAIL
TEMPERATURE SENSOR	T
CONTROL VALVE	
CURRENT SENSING RELAY	CS
MOTOR STARTER	STR
FAN	
FIRE ALARM SYSTEM	FAS
EMERGENCY SHUTDOWN SWITCH	ESS
DIFFERENTIAL PRESSURE TRANS	ΔPS
CO2 MONITOR	CO2
AIR FLOW MEASURING STATION	AFMS
SMOKE DAMPER	SD
SPACE TEMPERATURE SENSOR	TS
DAMPER ACTUATOR AND DAMPER	DA
STATIC PRESSURE SENSOR	SPS
NORMALLY OPEN	NO
NORMALLY CLOSED	NC
AVERAGING TEMPERATURE SENSOR	TS
FREEZESTAT (LOW LIMIT)	F
TRANSFORMER	T1 F1
HIGH PRESSURE SWITCH	HPS
ANALOG INPUT	AI
ANALOG OUTPUT	AO
DIGITAL INPUT	DI
DIGITAL OUTPUT	DO
COMB. MOTOR STARTER W/ HOA	
HUMIDITY SENSOR	H
FLOW METER	FM
FLOW SWITCH	FS
SMOKE DETECTOR	SD
AIR MONITORING STATION	AMS
BOILER MANAGEMENT SYSTEM	BMS
PUSH BUTTON SWITCH	

PADIA consulting
High Performance Engineering
61 Kilmayne Drive • Suite 300 • Cary, NC 27511
phone 919.481.7777 • fax 919.460.8898

INNOVATIVE DESIGN
850 W. MORGAN STREET, RALEIGH, NORTH CAROLINA 27603, 919/832-6303

NORTH CAROLINA PROFESSIONAL SEAL 30692 ENGINEER CHADRAY D. PADIA
8/20/2008

PADIA CONSULTING, INC. CORPORATE SEAL N.C.

PROJECT: Wilkes County Visitor's Center K-4703
WILKESBORO, NC
OWNER: NC Department of Transportation

DRAWN BY: AFS
DATE: 06/01/2007
JOB NUMBER:
REVISIONS:

M5.01
81 of 89

PADIA consulting
High Performance Engineering
61 Kilmayne Drive • Suite 300 • Cary, NC 27511
phone 919.481.1777 • fax 919.460.8888

GEOTHERMAL HEATPUMP SCHEDULE

UNIT MARK	BASIS OF DESIGN MANUF.	BASIS OF DESIGN MODEL/SIZE	LOCATION	SERVICE	TYPE	REFRIGERANT	SUPPLY AIRFLOW (CFM)	OUTSIDE AIRFLOW (CFM)	FAN SECTION DATA EXT. STATIC	FAN SECTION DATA MOTOR HP	PUMP DATA LOOP GPM	PUMP DATA PUMP HP	COOLING PERFORMANCE TC (BTUH)	SC (BTUH)	EWT	COIL EAT DB/WB	OUTDOOR EAT DB/WB	MINIMUM EER	HEATING PERFORMANCE TC (BTUH)	EWT	COIL EAT DB	OUTDOOR EAT DB	MINIMUM COP	ELECTRICAL DATA VOLTS/ Ø/HZ	COMPRESSOR FLA	FAN FLA	FAN FLA	MCA/MOCP	REMARKS
HP-1	FHP	ES061	MECHANICAL 008	REST AREA	VERTICAL CABINET	R410A	2,040	2,040	0.5	3/4	16	1/6	67,680	49,490	60	77.7/64.9	77.7/60.9	19.4	55.77	60	60.9	60.9	4.8	208/1/60	25.7	6.8	1.75	41/60	1,2,3,4,5,6
HP-2	FHP	ES070	MECHANICAL 008	VISITOR CENTER	VERTICAL CABINET	R410A	2,240	500	0.7	3/4	16	1/6	76,020	56,280	60	80/67	90/74	20.2	78,400	60	60.0	19	4.7	208/1/60	28.8	6.8	1.75	45/70	1,2,3,4,5

GEOTHERMAL HEATPUMP SCHEDULE REMARKS:
1. PROVIDE WITH SINGLE POINT POWER CONNECTION.
2. PROVIDE HEATPUMP WITH INTERNAL (OR EXTERNAL) LOOP CIRCULATING PUMP AS SCHEDULED.
3. PROVIDE HOT GAS REHEAT COIL, PIPING, AND CONTROL.
4. PROVIDE 7-DAY PROGRAMMABLE THERMOSTAT.
5. PROVIDE FUSED DISCONNECT INTEGRAL WITH CONTROLLER. SWITCH SHALL BE READILY ACCESSIBLE.
6. PROVIDE UNIT WITH 2-STAGE SCROLL COMPRESSOR.

ENERGY RECOVERY VENTILATOR SCHEDULE

UNIT MARK	BASIS OF DESIGN MANUF.	BASIS OF DESIGN MODEL/SIZE	LOCATION	SERVICE	TYPE	SUPPLY AIRFLOW (CFM)	EXHAUST AIRFLOW (CFM)	SUPPLY FAN EXT. STATIC	SUPPLY FAN MOTOR HP	EXHAUST FAN EXT. STATIC	EXHAUST FAN MOTOR HP	WHEEL EFFECTIVENESS SENSIBLE	WHEEL EFFECTIVENESS LATENT	SUMMER CONDITIONS OUTDOOR DB/WB	SUMMER CONDITIONS INDOOR DB/WB	SUMMER CONDITIONS LAT DB/WB	WINTER CONDITIONS OUTDOOR DB/WB	WINTER CONDITIONS INDOOR DB/WB	WINTER CONDITIONS LAT DB/WB	ELECTRICAL DATA VOLTS/ Ø/HZ	ELECTRICAL DATA FLA	ELECTRICAL DATA MCA/MOCP	REMARKS
ERV-1	COOK	ERV-4500	MECHANICAL 008	HP-1	ARRANGEMENT V	2,040	2,040	0.5	1/2	0.5	3/4	82.1%	79.2%	90/74	75/62.5	77.7/60.9	19/15	70/54	60.9/48.6	120/1/60	30.8	38.5/45	1,2

ENERGY RECOVERY VENTILATOR SCHEDULE REMARKS:
1. PROVIDE WITH SINGLE POINT POWER CONNECTION.
2. PROVIDE WITH (2) TWO SPARE FILTERS FOR SUPPLY AND EXHAUST.

PUMP SCHEDULE

MARK	BASIS OF DESIGN MANUFACTURER	BASIS OF DESIGN MODEL	BASIS OF DESIGN SIZE	LOCATION	TYPE	SERVICE	CAPACITY (GPM)	TOTAL HEAD	MINIMUM EFFIC. (%)	SPEED (RPM)	SUCTION SIZE (IN.)	DISCHARGE SIZE (IN.)	MINIMUM MOTOR HP	MOTOR TYPE	ELECTRICAL VOLTS/Ø/HZ	ELECTRICAL STARTER	REMARKS	MARK
GLP-1	BELL & GOSSETT	SERIES 90	1-1/2AA	MECHANICAL 008	VERTICAL INLINE	ALL WELL FIELDS	100	96	51.5	3450	1 1/2	1 1/2	5	ODP	208/3/60	MAGNETIC	1	GLP-1
GLP-2	BELL & GOSSETT	SERIES 90	1-1/2AA	MECHANICAL 008	VERTICAL INLINE	ALL WELL FIELDS	100	96	51.5	3450	1 1/2	1 1/2	5	ODP	208/3/60	MAGNETIC	1,2	GLP-2

PUMP SCHEDULE REMARKS:
1. PROVIDE PREMIUM EFFICIENCY MOTORS. 2. STANDBY PUMP.

AIR SEPARATOR SCHEDULE

MARK	BASIS OF DESIGN MANUFACTURER	BASIS OF DESIGN MODEL-SIZE	LOCATION	SERVICE	TYPE	FLOW (GPM)	MAX. WTR PD (FT. W.C.)	APPROX WEIGHT FULL(LBS)	REMARKS
AS-1	B & G	SRS-3	MECH 008	GEOTHERMAL SYSTEM	AIR/SEDIMENT REMOVAL	58	0.2	85	1,2,3,4

AIR SEPARATOR SCHEDULE REMARKS:
1. ASME SECTION VIII, DIVISION COMPLIANT CONSTRUCTION
2. UP TO 125 PSIG WORKING PRESSURE.
3. SEPARATOR SHALL BE PROVIDED WITH MANUAL BLOWDOWN IN BOTTOM.
4. TANK SHALL BE PROVIDED WITH HIGH CAPACITY, FLOAT TYPE, AUTOMATIC AIR VENT EQUAL TO B&G 107A.

EXPANSION TANK SCHEDULE

MARK	BASIS OF DESIGN MANUFACTURER	BASIS OF DESIGN MODEL NO.	TANK VOLUME GAL.	ACCEPTANCE VOLUME GAL.	LOCATION	SERVICE	TYPE	HEIGHT /DIA. (IN)	APPROX WEIGHT FULL(LBS)	REMARKS
ET-1	B & G	B-200	53	53	MECH. 008	GEOTHERMAL SYSTEM	BLADDER	37/24	629	1,2,3

EXPANSION TANK SCHEDULE REMARKS:
1. ASME SECTION VIII, DIVISION COMPLIANT CONSTRUCTION
2. DESIGNED FOR UP TO 125 PSIG WORKING PRESSURE.
3. EXPANSION TANK SHALL BE FLOOR MOUNTED.

ROOF VENTILATOR SCHEDULE

MARK	BASIS OF DESIGN MANUFACTURER	BASIS OF DESIGN MODEL	SERVICE	TYPE	AIRFLOW (CFM)	NUMBER OF TIERS	THROAT SIZE (IN.)	MAX S.P.D. (IN. H2O)	REMARKS
RV-1	COOK	16 PR	MECHANICAL ROOM 008	SPUN ALUMINUM VENTILATOR	700	1	16"ø	0.05	1,2,3,4
RV-2	COOK	16 PR	EQUIPMENT ROOM 201	SPUN ALUMINUM VENTILATOR	870	1	16"ø	0.05	1,2,3,4

ROOF VENTILATOR SCHEDULE REMARKS:
1. PROVIDE WITH SLOPED ROOF CURB, ALUMINUM CONSTRUCTION WITH INSULATION, WOOD NAILER, DAMPER TRAY,
2. PROVIDE ALUMINUM BIRDSCREEN.
3. PROVIDE VENTILATOR WITH 120 VAC, MOTORIZED DAMPER IN ROOF CURB.
4. COORDINATE FINISH AND COLOR SELECTION WITH OWNER/ARCHITECT.

ELECTRICAL UNIT HEATER SCHEDULE

MARK	BASIS OF DESIGN MANUFACTURER	BASIS OF DESIGN MODEL-SIZE	LOCATION	TYPE	ENT AIR TEMP(°F)	HEATER ELEMENT V/ø/HZ	HEATER ELEMENT KW	HEATER ELEMENT MINIMUM BTUH	FAN V/ø/HZ	FAN WATTS	FAN CFM	REMARKS
EUH-1	MARKEL	F2F5103N	MECHANICAL 008	HORIZONTAL FORCED AIR	55	208/3/60	3.3	11,200	208/3/60	6	400	1,2,3
EUH-2	MARKEL	F2F5103N	STORAGE BUILDING	HORIZONTAL FORCED AIR	55	208/3/60	3.3	11,200	208/3/60	6	400	1,2,3
EUH-3	MARKEL	F2F5103N	MAINT. BUILDING	HORIZONTAL FORCED AIR	55	208/3/60	3.3	11,200	208/3/60	6	400	1,2,3
EUH-4	MARKEL	F2F5103N	EQUIPMENT ROOM	HORIZONTAL FORCED AIR	55	208/3/60	3.3	11,200	208/3/60	6	400	1,2,3

ELECTRIC UNIT HEATER SCHEDULE REMARKS:
1. PROVIDE HORIZONTAL DISCHARGE WITH INTEGRAL THERMOSTAT. 2. MOUNT AT 8'0" AFF. 3. FURNISH WITH FUSED DISCONNECT FOR INSTALLATION BY ELECTRICAL CONTRACTOR (REFER TO ELECTRICAL PLANS FOR SIZE AND TYPE).

EXHAUST FAN SCHEDULE

MARK	SERVICE	LOCATION	BASIS OF DESIGN MANUFACTURER	BASIS OF DESIGN MODEL-SIZE	TYPE	CFM	STATIC PRESSURE (IN H2O)	FAN RPM	MAX SONES	DRIVE TYPE	MOTOR DATA HP(W)	MOTOR DATA VOLTS	MOTOR DATA PHASE	REMARKS
EF-1	TOILET EXHAUST	TOILET 005	COOK	GC-140	CEILING CABINET FAN	75	.2	1050	1.5	DIRECT	(44)	120	1	1,2,4
EF-2	ELEC. VENTILATION	ELEC 006	COOK	GC-140	CEILING CABINET FAN	50	0.15	765	0.7	DIRECT	(29)	120	1	1,2,3,4
EF-3	VENTILATION	MAINTENANCE BLDG	COOK	100C15DH	ROOF MOUNTED CENTRIFUGAL	625	.25	1370	9.1	DIRECT	1/8	120	1	1,2,4
EF-4	VENTILATION	STORAGE BLDG	COOK	100C15DH	ROOF MOUNTED CENTRIFUGAL	625	.25	1370	9.1	DIRECT	1/8	120	1	1,2,3,4
EF-5	VENTILATION	COPIER ROOM	COOK	GC-140	CEILING CABINET FAN	75	.2	1050	1.5	DIRECT	(44)	120	1	1,2,3,4,5
EF-6	VENTILATION	MECHANICAL 008	COOK	ACE-D	ROOF MTD - CENTRIFUGAL	700	.25	1467	10	DIRECT	1/8	120	1	1,2,3,4,7
EF-7	VENTILATION	EQUIP. RM 201	COOK	ACE-D	ROOF MTD - CENTRIFUGAL	870	.25	1106	6.3	DIRECT	1/4	120	1	1,2,3,4,7
EF-8	GENERAL VENTILATION	VENDING 110	COOK	ACE-D	ROOF MTD - CENTRIFUGAL	1531	.25	1550	6.3	DIRECT	1/4	120	1	1,2,3,4,7

EXHAUST FAN SCHEDULE REMARKS:
1. PROVIDE WITH BACKDRAFT DAMPER.
2. PROVIDE WITH UNIT-MOUNTED DISCONNECT.
3. FAN SHALL BE CONTROLLED BY WALL-MOUNTED THERMOSTAT. UNIT SHALL RUN WHEN TEMPERATURE RISES ABOVE 80° F.
4. PROVIDE WITH VARIABLE SPEED CONTROLLER.
5. PROVIDE WITH CEILING GRILLE, BACKDRAFT DAMPER, AND BRICK VENT.
6. PROVIDE WITH 30 MINUTE TWIST TIMER.
7. PROVIDE WITH SLOPED ROOF CURB, ALUMINUM CONSTUCTION WITH INSULATION, WOOD NAILER, DAMPER TRAY, AND HINGED BASE KIT.

DIFFUSER AND GRILLE SCHEDULE

	LETTER MARK	MANUFACTURER	MODEL NO.	INSTALLATION TYPE	NECK SIZE	BLOW	SLOT	PANEL/ REG. INCHES	CFM RANGE	MAX NC (NOISE CRITERIA RATING)	REMARKS
SUPPLY	A	PRICE	620DAL	SIDEWALL	12"/8"	22"	–	14"/10"	300-400	< 20	1,2,3
	B	PRICE	SCDA	LAY-IN CEILING	6"ø	4 WAY	–	12"/12"	25-100	< 20	3
	C	PRICE	RDR	DUCT MOUNTED	12"/6"	22"	–	14"/8"	300	< 20	2
	D	PRICE	TBD375	GYPSUM CEILING	8"ø	2 WAY	3	48"	100-200	< 20	1,2,3
	E	PRICE	TBD375	LAY-IN CEILING	8"ø	2 WAY	3	48"	100-200	< 20	3
	F	PRICE	620DAL	SIDEWALL	6"/6"	22"	–	8"/8"	100-200	< 20	1,2,3
	G	PRICE	RCDA	DUCT MOUNTED	8"ø	360°	–	10"ø	100-200	< 20	2,3
RETURN	AA	PRICE	98DAL	SIDEWALL	12"/8"	–	–	14"/10"	100-200	< 25	1,2,3
	BB	PRICE	80	LAY-IN CEILING	6"/6"	–	–	12"/12"	25-100	< 20	3
	CC	PRICE	98DAL	SIDEWALL	16"/16"	–	–	18"/18"	400-600	< 25	1,2,3
	DD	PRICE	80	GYPSUM CEILING	6"/6"	–	–	12"/12"	25-100	< 20	1,2,3
	EE	PRICE	80	DUCT MOUNTED	18"/10"	–	–	18"/10"	550	< 20	2,3
	FF	PRICE	630	DUCT MOUNTED	8"/8"	–	–	10"/10"	230-240	< 20	2,3

DIFFUSER AND GRILLE SCHEDULE REMARKS:
1. PROVIDE WITH PLASTER FRAME FOR FLUSH MOUNTING.
2. PROVIDE VOLUME DAMPER ADJUSTABLE FROM FACE.
3. PROVIDE FINISH TO MATCH LAY-IN CEILING TEES, DRYWALL CEILING FINISH WITH PLASTER RING, EXPOSED STRUCTURE, OR WALL FINISH.

INNOVATIVE DESIGN
850 W. MORGAN STREET, RALEIGH, NORTH CAROLINA 27603, 919/832-6303

NORTH CAROLINA PROFESSIONAL ENGINEER SEAL 30687 CHANDRAY D. PADIA

PADIA CONSULTING, INC. CORPORATE SEAL N.C.

PROJECT: Wilkes County Visitor's Center K-4703
WILKESBORO, NC
OWNER: NC Department of Transportation

DRAWN BY: AFS
DATE: 06/01/2007
JOB NUMBER:
REVISIONS:

M6.01
82 of 89

GENERAL NOTES

1. ALL WORK SHALL CONFORM TO THE 2006 NATIONAL ELECTRICAL CODE, STATE CODE, & LOCAL AUTHORITY REQUIREMENTS.

2. THE CONTRACTOR SHALL VISIT THE PREMISES AND THOROUGHLY FAMILIARIZE HIMSELF WITH ALL DETAILS OF THE WORK AND WORKING CONDITIONS. VERIFY ALL FIELD CONDITIONS INCLUDING LOCATION OF UTILITY LINES, STRUCTURES, AND ADVISE THE ENGINEER OF ANY DISCREPANCY THAT MAY PREVENT OR HINDER THE SPECIFIED WORK FROM BEING COMPLETED.

3. THE CONTRACTOR SHALL STUDY THE STRUCTURE AND FINISH CONDITIONS AFFECTING HIS WORK AND SHALL COORDINATE HIS WORK ACCORDINGLY. THE CONTRACTOR SHALL PROVIDE ALL ACCESSORIES, HANGERS, AND ANCHORS AS NECESSARY TO MEET SUCH CONDITIONS WITHOUT ANY ADDITIONAL COST TO THE OWNER.

4. PRIOR TO ACCOMPLISHING ANY WORK IN ANY AREA, ALL WORK SHALL BE PLANNED AND COORDINATED WITH OTHER TRADES AND THE OWNER. THE CONDUIT ROUTING SHALL BE COORDINATED WITH DUCT WORK, AND OTHER OBSTACLES SO AS TO PROVIDE THE MOST EFFICIENT AND AESTHETICALLY PLEASING INSTALLATION.

5. THE CONTRACTOR SHALL OBTAIN ALL REQUIRED PERMITS AND ARRANGE INSPECTIONS NECESSARY FOR THE INSTALLATION OF HIS WORK AND FURNISH THE ENGINEER WITH CERTIFICATES OF INSPECTIONS FROM ALL AUTHORITIES HAVING JURISDICTION.

6. PROPERLY SUPPORT ALL WORK AND EQUIPMENT INSTALLED UNDER THIS CONTRACT. STUDY ALL DRAWINGS, MANUFACTURER'S INSTRUCTIONS, AND CATALOG DATA TO DETERMINE HOW EQUIPMENT ACCESSORIES, AND RELATED ITEMS ARE TO BE SUPPORTED, MOUNTED, OR SUSPENDED. PROVIDE ALL BOLTS, INSERTS, BRACKETS, STRUCTURAL SUPPORTS, AND ACCESSORIES FOR PROPER SUPPORT OF EQUIPMENT FURNISHED UNDER THIS CONTRACT.

7. PROVIDE GREEN EQUIPMENT GROUNDING CONDUCTOR WITH ALL FEEDER AND BRANCH CIRCUITS.

8. MOUNTING HEIGHTS INDICATED ARE TO THE CENTER OF THE DEVICE, OR EQUIPMENT UNLESS NOTED OTHERWISE. RECEPTACLE AND DATA/TELEPHONE OUTLET SHOWN ADJACENT ON DRAWING SHALL BE MOUNTED 6" APART ON CENTER HORIZONTALLY.

9. COORDINATE ALL DEVICES AND OUTLETS ABOVE, OR BELOW WITH CASEWORK INSTALLATION AND THE ARCHITECT IN ORDER TO POSITION AT THE PROPER LOCATION AND THE HEIGHT.

10. THE CONTRACTOR SHALL USE THE ARCHITECTURAL PLANS FOR EXACT DIMENSIONS. DO NOT SCALE THESE PLANS.

11. ALL WORK SHALL BE PERFORMED BY A LICENSED ELECTRICAL CONTRACTOR.

12. ALL ELECTRICAL EQUIPMENT SHALL BE UL LABELED WHERE CATEGORY EXISTS FOR SUCH EQUIPMENT. OTHER THIRD PARTY LABELS ACCEPTABLE TO THE LOCAL INSPECTOR MAY BE USED.

13. ANY JUNCTION BOXES LOCATED ABOVE CEILING SHALL BE PLACED SO THAT IT IS READILY ACCESSIBLE THROUGH LIGHT FIXTURE OPENING OR ANY OTHER CEILING OPENINGS. WHEN SUCH CONDITION DOES NOT EXIST THEN PROVIDE ACCESS PANEL IN CEILING.

ENERGY SUMMARY

(PART OF NCSBC ADMINISTRATION & ENFORCEMENT CODE 2006 EDITION)
ELECTRICAL SYSTEM & EQUIPMENT

METHOD OF COMPLIANCE

☒ PRESCRIPTIVE ☐ PERFORMANCE ☐ ENERGY COST BUDGET

LIGHTING SCHEDULE

LAMP TYPE REQUIRED IN FIXTURE	REFER TO LUMINAIRE SCHEDULE
NUMBER OF LAMPS IN FIXTURE	REFER TO LUMINAIRE SCHEDULE
BALLAST TYPE USED IN THE FIXTURE	REFER TO LUMINAIRE SCHEDULE
NUMBER OF BALLASTS IN FIXTURE	REFER TO LUMINAIRE SCHEDULE
TOTAL WATTAGE PER FIXTURE	REFER TO LUMINAIRE SCHEDULE
TOTAL INTERIOR WATTAGE SPECIFIED VS ALLOWED (PER 2006 NCEC TABLE 805.5.2)	5.25 KW SPECIFIED VS 6.08 KW ALLOWED
TOTAL EXTERIOR WATTAGE SPECIFIED VS ALLOWED	MIN 45 LUMENS/WATT SPECIFIED
EQUIPMENT SCHEDULES WITH MOTORS (NOT USED FOR MECHANICAL SYSTEMS)	NOT APPLICABLE
MOTOR HORSEPOWER	NOT APPLICABLE
NUMBER FOR PHASES	NOT APPLICABLE
MINIMUM EFFICIENCY	NOT APPLICABLE
MOTOR TYPE	NOT APPLICABLE
# OF POLES	NOT APPLICABLE

ELECTRICAL LOAD SUMMARY

BUILDING SQ.FT. = 7,606

TYPE OF LOAD	NEC CODE REFERENCE			CONNECTED LOAD IN VA	NEC CODE REFERENCE			DEMAND FACTOR	DEMAND LOAD IN VA
LIGHTING	NEC 220.12	1	VA/SQFT	7606	NEC 220.42		7606	125%	9508
GENERAL PURPOSE RECEPTACLES	NEC 220.14(I)	180	VA/RECE.	13020	NEC 220.44	FIRST 10KVA @100%	10000	100%	10000
						REMAINDER OVER 10KVA @50%	3020	50%	1510
HVAC LOAD				48959	NEC 430.24	125% OF LARGEST MOTOR	3800	125%	4750.0
						100% OF OTHERS	45159	100%	45159.0
OTHER LOADS				42342	NEC 220-56		42342	100%	42342

TOTAL CONNECTED LOAD IN VA 111,927 — TOTAL DEMAND LOAD IN VA 113,269

DEMAND FACTOR 1.01 — SYSTEM VOLTAGE 208 — DEMAND AMPS 314

RECOMMENDED SERVICE 600A, 208Y/120V, 3PH, 4W — FUTURE 125% EXPANSION AMPS 393

1 / E1 MOUNTING HEIGHT REQUIREMENTS OF ELECTRICAL DEVICES

NOT TO SCALE

POWER LEGEND:

J	JUNCTION BOX
	DUPLEX RECEPTACLE, 120 VOLT, MOUNT @ 18" AFF TO THE CENTER, UNO
	QUADRUPLEX RECEPTACLE, MOUNT @ 18" AFF TO THE CENTER, UNO
	AS SUFFIX TO RECEPTACLES: (X)" MOUNT (X)" ABOVE FINISHED FLOOR G GROUND FAULT TP TAMPER PROOF WP WEATHER PROOF A 6" ABOVE COUNTER SPLASH B IN BASE OF OF TRIM
	PANELBOARD, SEE PANELBOARD SCHEDULE
	DISCONNECT SWITCH
	BRANCH CIRCUIT, OR FEEDER WIRING, RUN IN CONDUIT AND CIRCUIT HOMERUN TO PANELBOARD INDICATED. SINGLE PHASE CIRCUIT SHALL CONTAIN 1 #12 PHASE CONDUCTOR, 1 #12 NEUTRAL CONDUCTOR AND 1 #12 GROUNDING CONDUCTOR IN 3/4" CONDUIT, MINIMUM. CONDUCTORS LARGER THAN #12, AND CONDUIT LARGER THAN 3/4", SHALL BE AS INDICATED. WHERE "MULTIPLE PHASED" ELECTRICAL LOADS ARE REQUIRED, PROVIDE ADDITIONAL PHASE CONDUCTORS. MULTIPLE SINGLE PHASE CONDUCTORS MAY BE GROUPED TOGETHER IN A COMMON CONDUIT AS ALLOWED AND IN ACCORDANCE WITH THE NEC, AND/OR AT THE CONTRACTOR'S DISCRETION. CONTRACTOR SHALL PROVIDE ADDITIONAL "SWITCH LEG" CONDUCTORS, AS REQUIRED TO ACHIEVE FIXTURE CONTROL INDICATED ON PLANS. NEUTRAL AND GROUNDING CONDUCTORS SHALL BE SHARED IN ACCORDANCE WITH AND AS ALLOWED BY THE NEC.
	ENCLOSED CIRCUIT BREAKER
	MOTOR
SM	MOTOR SENTINEL SWITCH

COMMUNICATIONS LEGEND:

	VOICE/DATA OUTLET, MOUNT @ 18" AFF TO THE CENTER OF DEVICE, UNO; ONE VOICE DROP AND ONE DATA DROP PER OUTLET
	TELEPHONE TERMINAL BOARD

FIRE SAFETY LEGEND:

S	CEILING MOUNTED SMOKE DETECTOR
F	FIRE ALARM PULL STATION, MOUNT @ 48" AFF TO THE TOP OF DEVICE UNO
F	FIRE ALARM HORN/STROBE UNIT; WALL MOUNT @ MIN 80" TO BOTTOM OR MAX 96" AFF TO TOP OF DEVICE
S	FIRE ALARM STROBE UNIT; WALL MOUNT @ MIN 80" TO BOTTOM OR MAX 96" AFF TO TOP OF DEVICE
FAA	FIRE ALARM ANNUNCIATOR
FACP	FIRE ALARM CONTROL PANEL
MM	MONITOR MODULE

STANDARD ABBREVIATIONS

A	- AMPERES OR ABOVE COUNTER
AFF	- ABOVE FINISHED FLOOR
AFG	- ABOVE FINISHED GROUND
C	- CONDUIT
CATV	- CABLE TV
cd	- CANDELA RATING
dBA	- DECIBEL LEVEL
EC	- ELECTRICAL CONTRACTOR
FACP	- FIRE ALARM CONTROL PANEL
G	- EQUIPMENT GROUNDING CONDUCTOR OR GROUND FAULT CIRCUIT INTERRUPTER
GFCI	- GROUND FAULT CIRCUIT INTERRUPTER
GC	- GENERAL CONTRACTOR
LC	- LIGHTING CONTACTOR
MC	- MECHANICAL CONTRACTOR
N	- NEUTRAL CONDUCTOR
P	- POLE
PC	- PLUMBING CONTRACTOR
PH	- PHASE
PNL	- PANELBOARD
REC	- RECEPTACLE
SYN	- SYNCHRONIZATION
TTB	- TELEPHONE TERMINAL BACKBOARD
TYP	- TYPICAL
UNO	- UNLESS NOTED OTHERWISE
V	- VOLTS
W	- WATTS, WIRES
WP	- WEATHERPROOF

GreenTech Consulting, Inc.
Plumbing, Mechanical, Electrical Engineers
Sustainable & LEED Design Services
1100 Crescent Green, Suite 103
Cary , N.C. 27518
Voice . 919 . 859 . 8884
Fax . 919 . 859 . 8886
hsura@greentc.com

LIGHTING LEGEND:

	LED PATHWAY LIGHT
	WALL SCONCE, INDIRECT
	8' WALL MOUNTED INDIRECT
	RECESSED WALL WASHER
	2 X 4 RECESSED INDIRECT TROUGHER
	WALL SCONCE
	PENDANT/SURFACE LIGHT FIXTURE
	RECESSED CAN
	TRACK LIGHT
	EMERGENCY WALL PACK WITH (2) HEADS; MOUNT TO 96" AFF TO TOP OF HEAD BUT NO LESS THAN 80" AFF TO BOTTOM
	SINGLE FACE EXIT LIGHT, ARROW INDICATES PATH OF EGRESS; MOUNT TO 96" AFF TO TOP OF SIGN BUT NO LESS THAN 80" AFF TO BOTTOM
S	1 P TOGGLE SWITCH, MOUNT @ 46" AFF TO CENTER OF DEVICE UNO
S_3	3 WAY TOGGLE SWITCH, MOUNT @ 46" AFF TO CENTER OF DEVICE UNO
S_D	INCANDESCENT DIMMER SWITCH, MOUNT @ 46" AFF TO CENTER OF DEVICE UNO
PE	PHOTO CELL RELAY MOUNTED HIGH ON WALL FACING NORTH
S_K	KEYED SWITCH
RB	REMOTE BALLAST FOR EMERGENCY LIGHT

Innovative Design
850 W. MORGAN STREET, RALEIGH, NORTH CAROLINA 27603, 919/832-6303

NORTH CAROLINA PROFESSIONAL SEAL 023527 ENGINEER HEMANT C. SURA
07-30-2007

PROJECT: Wilkes County Visitor's Center K-4703
WILKESBORO, NC

OWNER: NC Department of Transportation

DRAWN BY:
DATE: 06/01/2007
JOB NUMBER: 2320
REVISIONS:

SHEET NAME
ELECTRICAL COVER SHEET

SHEET NUMBER
E1 83 OF 89

GreenTech Consulting, Inc.
Plumbing, Mechanical, Electrical Engineers
Sustainable & LEED Design Services
1100 Crescent Green, Suite 103
Cary . N.C. 27518
Voice . 919 . 859 . 8884
Fax . 919 . 859 . 8886
hsura@greentc.com

Innovative Design
850 W. MORGAN STREET, RALEIGH, NORTH CAROLINA 27603, 919/832-6303

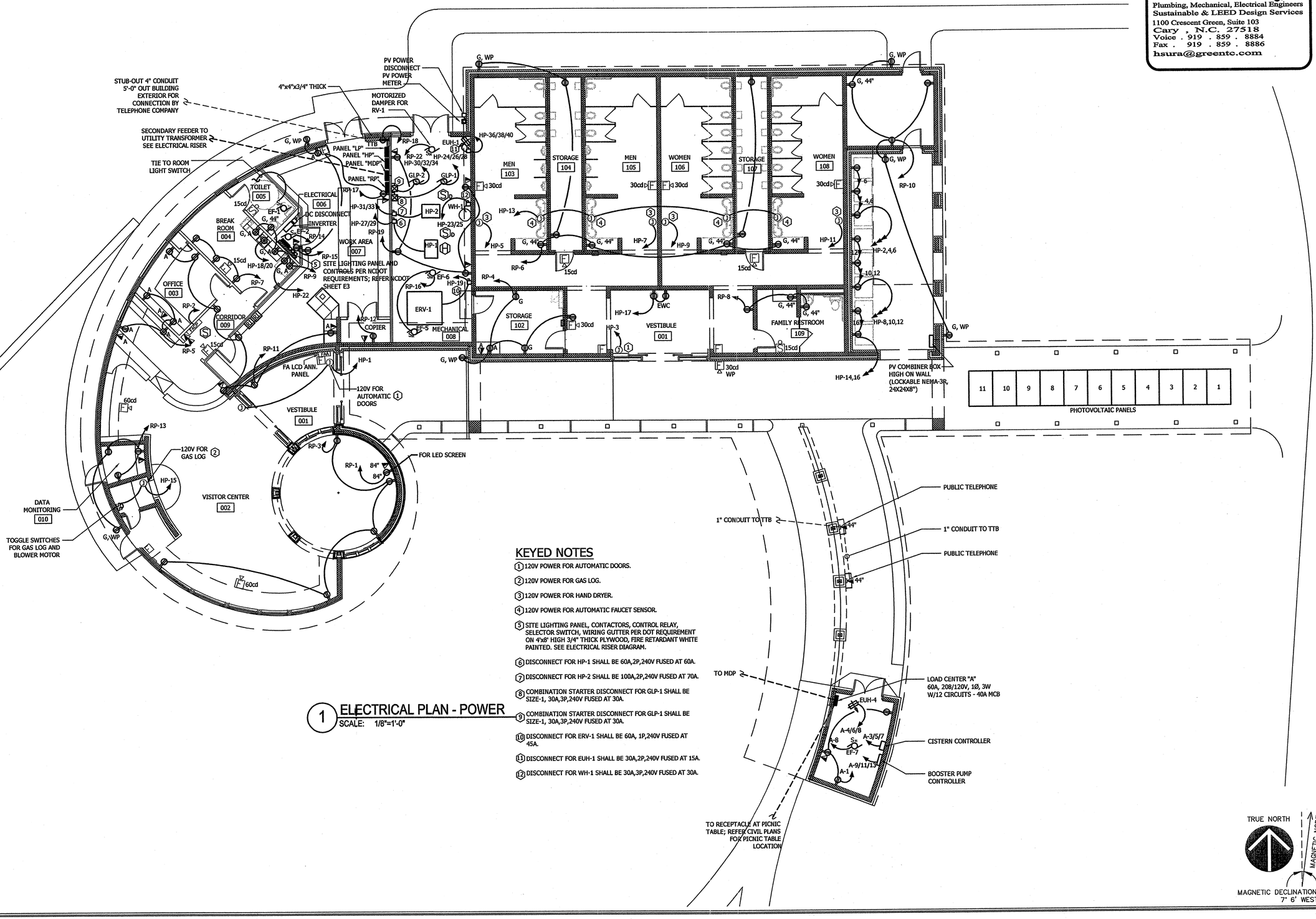

KEYED NOTES

1. 120V POWER FOR AUTOMATIC DOORS.
2. 120V POWER FOR GAS LOG.
3. 120V POWER FOR HAND DRYER.
4. 120V POWER FOR AUTOMATIC FAUCET SENSOR.
5. SITE LIGHTING PANEL, CONTACTORS, CONTROL RELAY, SELECTOR SWITCH, WIRING GUTTER PER DOT REQUIREMENT ON 4'x8' HIGH 3/4" THICK PLYWOOD, FIRE RETARDANT WHITE PAINTED. SEE ELECTRICAL RISER DIAGRAM.
6. DISCONNECT FOR HP-1 SHALL BE 60A,2P,240V FUSED AT 60A.
7. DISCONNECT FOR HP-2 SHALL BE 100A,2P,240V FUSED AT 70A.
8. COMBINATION STARTER DISCONNECT FOR GLP-1 SHALL BE SIZE-1, 30A,3P,240V FUSED AT 30A.
9. COMBINATION STARTER DISCONNECT FOR GLP-1 SHALL BE SIZE-1, 30A,3P,240V FUSED AT 30A.
10. DISCONNECT FOR ERV-1 SHALL BE 60A, 1P,240V FUSED AT 45A.
11. DISCONNECT FOR EUH-1 SHALL BE 30A,2P,240V FUSED AT 15A.
12. DISCONNECT FOR WH-1 SHALL BE 30A,3P,240V FUSED AT 30A.

1 ELECTRICAL PLAN - POWER
SCALE: 1/8"=1'-0"

TRUE NORTH
MAGNETIC NORTH
MAGNETIC DECLINATION: 7° 6' WEST

NORTH CAROLINA PROFESSIONAL ENGINEER SEAL 023527 HEMANT C. SURA
07-30-2007

PROJECT: Wilkes County Visitor's Center K-4703
WILKESBORO, NC
OWNER: NC Department of Transportation

DRAWN BY:
DATE: 06/01/2007
JOB NUMBER: 2320
REVISIONS:

SHEET NAME
ELECTRICAL POWER PLAN
SHEET NUMBER
E2 84 OF 89

GreenTech Consulting, Inc.
Plumbing, Mechanical, Electrical Engineers
Sustainable & LEED Design Services
1100 Crescent Green, Suite 103
Cary , N.C. 27518
Voice . 919 . 859 . 8884
Fax . 919 . 859 . 8886
hsura@greentc.com

Innovative Design
850 W. MORGAN STREET, RALEIGH, NORTH CAROLINA 27603. 919/832-6303

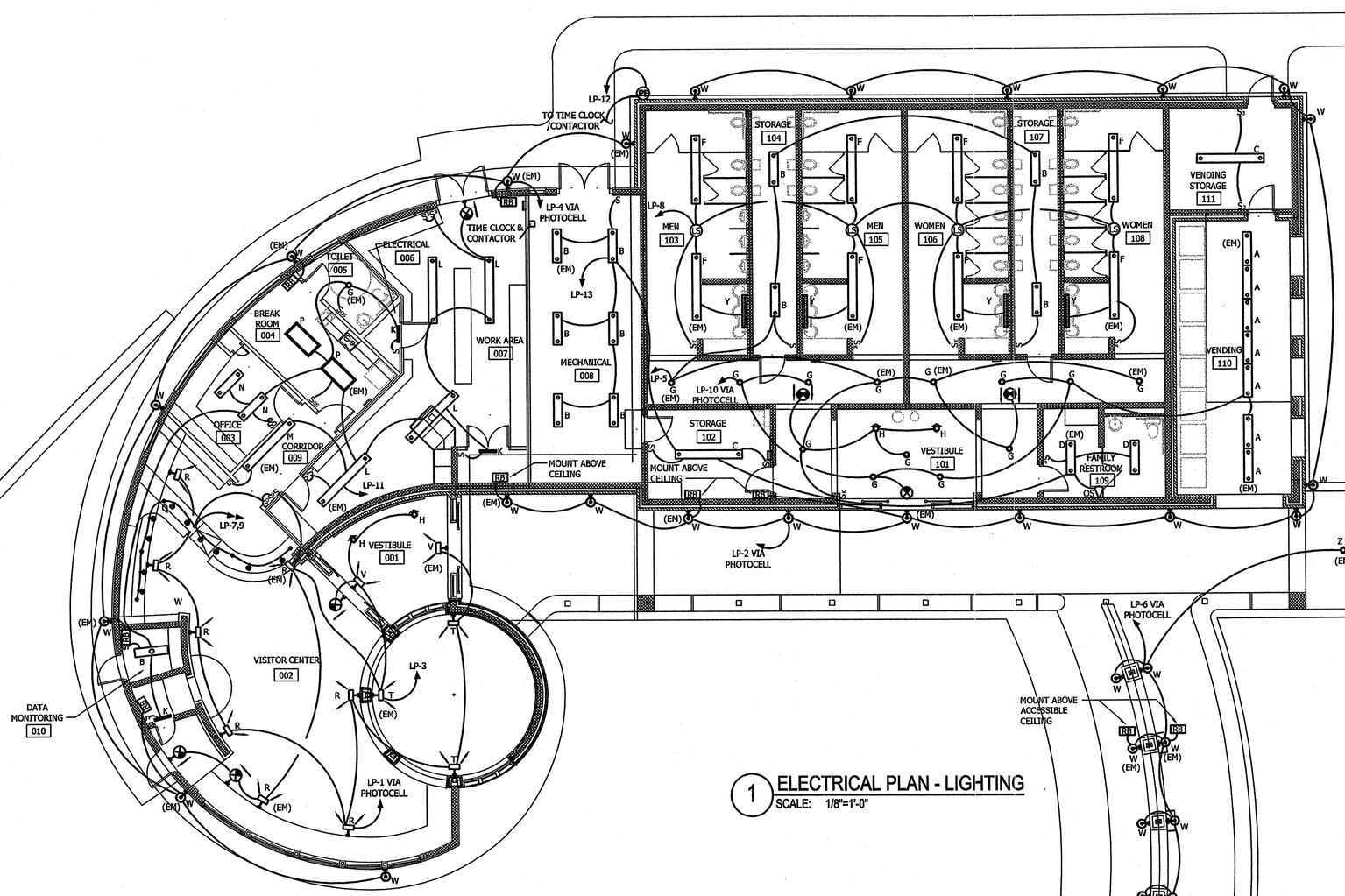

1 ELECTRICAL PLAN - LIGHTING
SCALE: 1/8"=1'-0"

NOTES:
1. CONNECT EMERGENCY LIGHT AHEAD OF LIGHT SWITCH TO AN UNSWITCHED CONDUCTOR.
2. FOR CONTINUOS DIMMING, THE LIGHT FIXTURE BALLAST, LAMPS AND DAY LIGHT SENSOR MUST BE COMPATIBLE WITH EACH OTHER AND WARRANTEE TOGETHER.
3. THE CONTRACTOR SHALL CONSIDER PROVIDING ACCESS PANELS AS REQUIRED FOR DEVIECS LOCATED ABOVE GYPSUM BOARD CEILING.

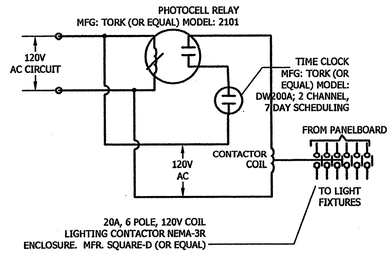

2 EXTERIOR LIGHTING CONTROLS
SCALE: NTS

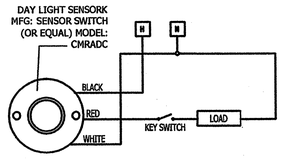

3 DAY LIGHT SENSOR CONTROLS
SCALE: NTS

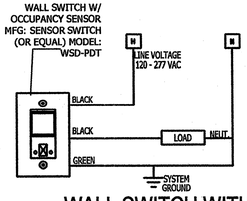

4 WALL SWITCH WITH OCCUPANCY SENSOR CONTROLS
SCALE: NTS

TRUE NORTH
MAGNETIC NORTH
MAGNETIC DECLINATION: 7° 6' WEST

NORTH CAROLINA PROFESSIONAL SEAL 023527 ENGINEER HEMANT C. SURA
07.30.2007

PROJECT: Wilkes County Visitor's Center K-4703
WILKESBORO, NC
OWNER: NC Department of Transportation

DRAWN BY:
DATE: 06/01/2007
JOB NUMBER: 2320
REVISIONS:

SHEET NAME
ELECTRICAL LIGHTING PLAN

SHEET NUMBER
E3 85 OF 89

GreenTech Consulting, Inc.
Plumbing, Mechanical, Electrical Engineers
Sustainable & LEED Design Services
1100 Crescent Green, Suite 103
Cary , N.C. 27518
Voice . 919 . 859 . 8884
Fax . 919 . 859 . 8886
hsura@greentc.com

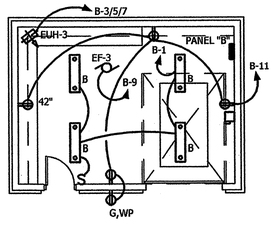

MAINTENANCE BLDG.

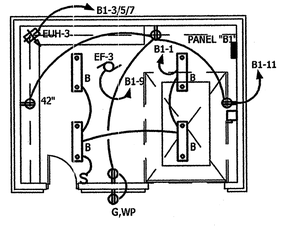

STORAGE BLDG.

1 ELECTRICAL PLANS - MAINTENANCE & STORAGE BUILDINGS
SCALE: 1/8"=1'-0"

TRUE NORTH
MAGNETIC NORTH
MAGNETIC DECLINATION: 7° 6' WEST

Innovative Design
850 W. MORGAN STREET, RALEIGH, NORTH CAROLINA 27603, 919/832-6303

NORTH CAROLINA PROFESSIONAL SEAL 023527 ENGINEER HEMANT C. SURA
07.30.2007

PROJECT: Wilkes County Visitor's Center K-4703
WILKESBORO, NC
OWNER: NC Department of Transportation

DRAWN BY:
DATE: 06/01/2007
JOB NUMBER: 2320
REVISIONS:

SHEET NAME
ELECTRICAL PLANS MAINT./STOR. BLDGS
SHEET NUMBER
E4 86 OF 89

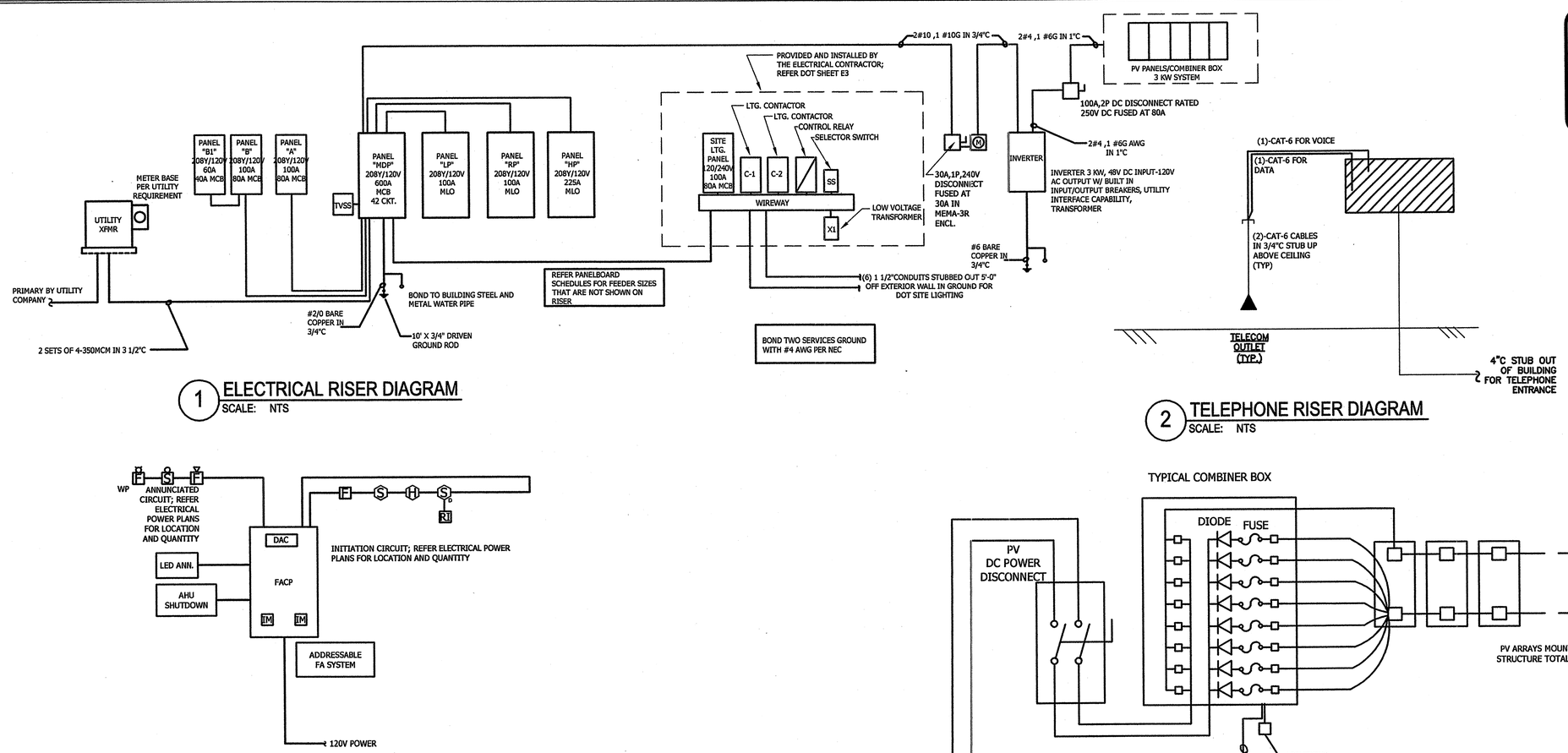

1 ELECTRICAL RISER DIAGRAM
SCALE: NTS

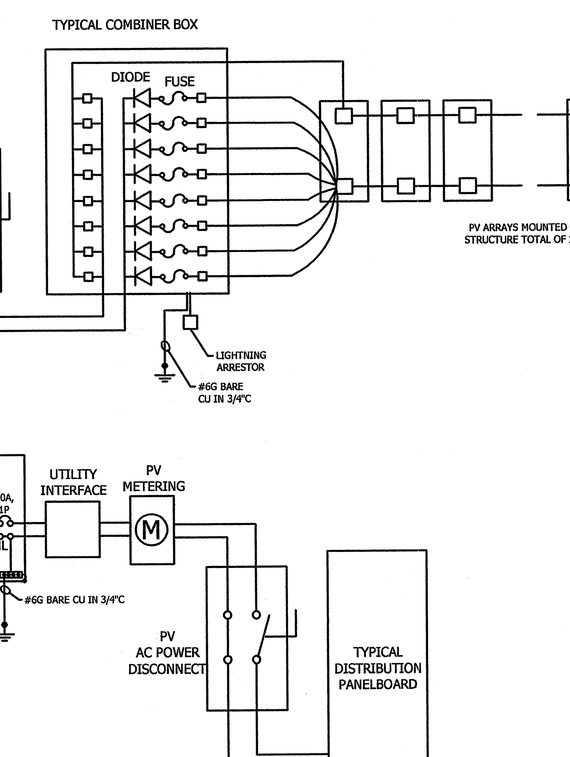

2 TELEPHONE RISER DIAGRAM
SCALE: NTS

3 FIRE ALARM RISER DIAGRAM
SCALE: NTS

KEYED NOTES:
(TYPICAL FOR ALL FIRE ALARM DRAWINGS)

1. LOCATE FIRE ALARM PULL STATION WITHIN 5' OF THE EXIT DOOR. (TYPICAL)
2. LOCATE SMOKE DETECTOR WITHIN 5' OF THE FA EQUIPMENT (FACP, FATC). (TYPICAL)
3. LOCATE FIRE ALARM HORN/STROBE WITHIN 15' OF THE END OF CORRIDOR OR EXIT. (TYPICAL)
4. LOCATION OF CEILING MOUNTED SMOKE/HEAT DETECTOR SHALL BE FIELD COORDINATED PRIOR TO ROUGH IN. THE DETECTOR SHALL BE 2' AWAY FROM LIGHT FIXTURE & 3' AWAY FROM AIR DISTRIBUTION DEVICES.

FIRE ALARM INTERLOCKS:

1) ACTIVATION OF AN ALARM ZONE SHALL CAUSE ALL AIR HANDLING EQUIPMENT SERVING THAT ZONE TO SHUT DOWN (ALL DAMPERS, AIR HANDLERS AND EXHAUST FANS MUST STOP).

GENERAL NOTES:

1. A FIRE ALARM SYSTEM IS PROVIDED TO COMPLY WITH THE CURRENT CODE.
2. AUDIBLE SIGNAL SOUND LEVEL SHALL BE AT LEAST 15dBA ABOVE THE AVERAGE AMBIENT SOUND LEVEL OR 5dBA ABOVE THE MAXIMUM SOUND LEVEL HAVING A DURATION OF 60 SECONDS MINIMUM, WHICHEVER IS LOUDER, MEASURED FIVE FEET ABOVE THE FLOOR IN THE OCCUPIABLE AREA.
3. THE TOTAL SOUND LEVEL PRODUCED BY COMBINING AMBIENT SOUND WITH ALL ALARM SIGNALS SHALL NOT EXCEED 120 dBA.
4. "cd" RATING IS CALCULATED PER NFPA AND IT IS MINIMUM. PROVIDE MINIMUM OR HIGHER.
5. IN MECHANICAL EQUIPMENT ROOMS, THE AVERAGE AMBIENT SOUND LEVEL SHALL BE AT LEAST 85dBA.

4 TYPICAL SOLAR POWER GRID CONNECTION SCHEMATIC
SCALE: NTS

GreenTech Consulting, Inc.
Plumbing, Mechanical, Electrical Engineers
Sustainable & LEED Design Services
1100 Crescent Green, Suite 103
Cary . N.C. 27518
Voice . 919 . 859 . 8884
Fax . 919 . 859 . 8886
hsura@greentc.com

Innovative Design
850 W. MORGAN STREET, RALEIGH, NORTH CAROLINA 27603, 919/832-6303

NORTH CAROLINA PROFESSIONAL ENGINEER SEAL 023527 HEMANT C. SURA
07-30-2007

PROJECT: Wilkes County Visitor's Center K-4703
WILKESBORO, NC
OWNER: NC Department of Transportation

DRAWN BY:
DATE: 06/01/2007
JOB NUMBER: 2320
REVISIONS:

SHEET NAME
ELECTRICAL RISER SHEET

SHEET NUMBER
E5 87 OF 89

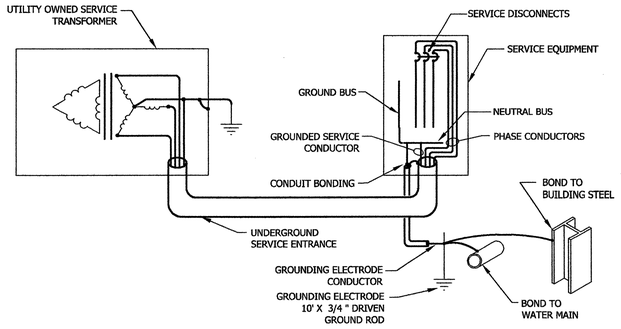

1 / E2 SERVICE ENTRANCE GROUNDING DETAIL
NTS

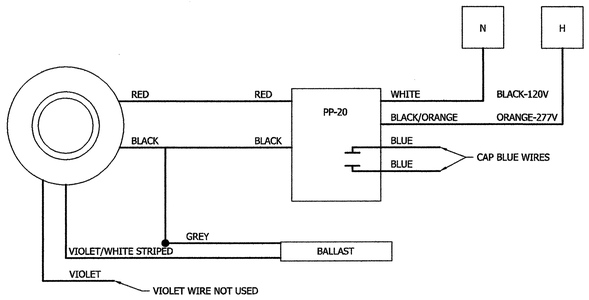

2 / E2 LIGHTING CONTROL DIAGRAM
NTS

LUMINAIRE FIXTURE SCHEDULE - WILKES COUNTY VISITORS CENTER

MARK	MANUFACTURER & CAT. NO. OR EQUAL	LAMPS TYPE	LAMPS NO.	LAMPS WATTS	VOLTAGE	MOUNTING	DESCRIPTION
A	H.E. WILLIAMS TYPE V816-4-232-A-WET/CC-EB2-120	T8	2	32	120	SURFACE MT. CEILING	VANDAL PROOF, ACRYLIC PRISMATIC DIFFUSERS, UL LISTED FOR WET LOCATION UNDER COVERED CEILING ,8' WIDE SURFACE WRAPAROUND, 4' LONG, (2)T8 LAMPS, 0 DEGREE ELECTRONIC BALLAST,
A(EM)	H.E. WILLIAMS TYPE V816-4-232-A-WET/CC-EB2-120-EM	T8	2	32	120	SURFACE MT. CEILING	VANDAL PROOF, ACRYLIC PRISMATIC DIFFUSERS, UL LISTED FOR WET LOCATION UNDER COVERED CEILING ,8' WIDE SURFACE WRAPAROUND, 4' LONG, (2)T8 LAMPS, ELECTRONIC BALLAST, WITH EMERGENCY BATTERY BACKUP MIN. 90 MIN.
B	H.E. WILLIAMS TYPE 82-4-232-CT-EB2-120	T8	2	32	120	SURFACE MT. CEILING	SURFACE INDUSTRIAL WRAPAROUND, 4' LONG, (2)T8 LAMPS, ELECTRONIC BALLAST, TURRET ENDS
B(EM)	H.E. WILLIAMS TYPE 82-4-232-CT-EB2-120-EM	T8	2	32	120	SURFACE MT. CEILING	SURFACE INDUSTRIAL WRAPAROUND, 4' LONG, (2)T8 LAMPS, ELECTRONIC BALLAST, TURRET ENDS,WITH EMERGENCY BATTERY BACKUP MIN. 90 MIN.
C	H.E. WILLIAMS TYPE 17-8-232-A-EB4-120	T8	4	32	120	SURFACE MT. CEILING	SURFACE LOW PROFILE WRAPAROUND, CLEAR ACRYLIC PRISMATIC DIFFUSER 8' LONG, (4)T8 LAMPS PER CROSS SECTION, ELECTRONIC BALLAST
D	H.E. WILLIAMS TYPE 23-4-232-A-EB2-120	T8	2	32	120	SURFACE MT. CEILING	SURFACE WRAPAROUND, 4' LONG, (2)T8 LAMPS, ELECTRONIC BALLAST,
D(EM)	H.E. WILLIAMS TYPE 23-4-232-A-EB2-120-EM	T8	2	32	120	SURFACE MT. CEILING	SURFACE WRAPAROUND, 4' LONG, (2)T8 LAMPS, ELECTRONIC BALLAST, W/ EMERGENCY BATTERY BACKUP MIN. 90 MIN.
E	NOT USED						
F	LITE CONTROL P-ID-9448-T8-PBSS-TCWM-ELB-120-PFCV-FAI/ACC	T8	4	59	120	PENDANT 24" BELOW CEILING	PENDANT LINEAR INDIRECT FLUORESCENT, PERFORATED BOTTOM HOUSING, 8' LONG, (2)T8 LAMPS IN CROSS SECTION, , DIE-FORMED STEEL, MATTE SATIN WHITE FINISH, INTERNAL JOINERS, SINGLE CIRCUIT, ELECTRONIC BALLAST
F(EM)	LITE CONTROL P-ID-9448-T8-PBSS-TCWM-ELB-120-PFCV-FAI/ACC-EM	T8	4	32	120	PENDANT 24" BELOW CEILING	PENDANT LINEAR INDIRECT FLUORESCENT, PERFORATED BOTTOM HOUSING, 8' LONG, (2)T8 LAMPS IN CROSS SECTION, , DIE-FORMED STEEL, MATTE SATIN WHITE FINISH, INTERNAL JOINERS, SINGLE CIRCUIT, ELECTRONIC BALLAST, WITH BATTERY BACKUP MIN. 90 MIN.
G	H.E. WILLIAMS TYPE PH60-226Q-G24q-3-120	COMPACT FLUORESCENT	2	26Q	120	RECESSED	6" RECESSED CAN LIGHT: W/ MATTE WHITE TRIM,2-COMPACT FLOURESCENT LAMPS, ELECTRONIC BALLAST, SEMI-SPECULAR LOW IRIDESCENT FINISH
G(EM)	H.E. WILLIAMS TYPE PH60-226Q-G24q-3-120-EM	COMPACT FLUORESCENT	2	26Q	120	RECESSED	6" RECESSED CAN LIGHT: W/ MATTE WHITE TRIM,2-COMPACT FLOURESCENT LAMPS, ELECTRONIC BALLAST, SEMI-SPECULAR LOW IRIDESCENT FINISH, W/EMERGENCY BATTERY BACKUP MIN. 90 MIN.
H	LIGHTWAVE CONCEPT L-010W TRACK W/ 2 HEADS	MR16	12	50	120	STEM MOUNTED	12V CHROME TRACK W/#L-1476 500W TRANSFORMERS, #L-630 STEMS, #L-040W POWER FEED, 50W EXZ LAMPS, # L-801W FIXTURE HEADS, SATIN NICKEL FINISH
K	H.E. WILLIAMS TYPE 20-2-117-A-EB-120	COMPACT FLUORESCENT	1	17	120	WALL @ 6" ABOVE DOOR	SURFACE WALL MOUNT, 2' LONG, (1)17WTB LAMP, ELECTRONIC BALLAST
L	LITE CONTROL P-ID-9469-T8-PBSS-TCWM-ELB-120-PFCV-FAI/ACC	T8	6	32	120	PENDANT 24" BELOW CEILING	PENDANT LINEAR INDIRECT FLUORESCENT, PERFORATED BOTTOM HOUSING, 8' LONG, (3)T8 LAMP, DIE-FORMED STEEL, MATTE SATIN WHITE FINISH, INTERNAL JOINERS, SINGLE CIRCUIT, ELECTRONIC BALLAST
L(EM)	LITE CONTROL P-ID-9469-T8-PBSS-TCWM-ELB-120-PFCV-FAI/ACC-EM	T8	6	32	120	PENDANT 24" BELOW CEILING	PENDANT LINEAR INDIRECT FLUORESCENT, PERFORATED BOTTOM HOUSING, 8' LONG, (3)T8 LAMP, DIE-FORMED STEEL, MATTE SATIN WHITE FINISH, INTERNAL JOINERS, SINGLE CIRCUIT, ELECTRONIC BALLAST WITH EMERGENCY BATTERY BACK UP MIN. 90 MIN.
M	LITE CONTROL W-AI-96P-2-8-T8-TCWM-ELB-120	T8	2	59	120	WALL MOUNT	WALL MOUNT ASYMMETRIC INDIRECT FLUORESCENT, 8' LONG, (2)T8 LAMP, DIE-FORMED STEEL, MATTE SATIN WHITE FINISH, INTERNAL JOINERS, SINGLE CIRCUIT, ELECTRONIC BALLAST
N	LITE CONTROL P-I-98PF34T8-TW-ELB-2CWQ-120-FAI/ACC	T8	3	32	120	PENDANT 12" BELOW CEILING	PENDANT LINEAR INDIRECT FLUORESCENT, PERFORATED BOTTOM HOUSING, 4' LONG, (3)T8 LAMP, DIE-FORMED STEEL, MATTE SATIN WHITE FINISH, INTERNAL JOINERS, SINGLE CIRCUIT, ELECTRONIC BALLAST
P	H.E.WILLIAMS DIG-S24-332-WPR-EB3-120	T8	3	32	120	SURFACE MT. CEILING	SURFACE MOUNT, RECESSED DIRECT/INDIRECT, DIE FORM HOUSING, 2X4, SINGLE CIRCUIT, ELECTRONIC BALLAST
P(EM)	H.E.WILLIAMS DIG-S24-332-WPR-EB3-120-EM	T8	3	32	120	SURFACE MT. CEILING	SURFACE MOUNT, RECESSED DIRECT/INDIRECT, DIE FORM HOUSING, 2 X 4, SINGLE CIRCUIT, ELECTRONIC BALLAST, WITH EMERGENCY BATTERY BACKUP MIN. 90 MIN.
Q	LIGHT WAVE CONCEPT 2001 FLEXIBLE 2 CIRCUIT TRACK 6 LAMPS PER CIRCUIT	MR16	12	50	120	STEM MOUNTED	12V FLEXIBLE CHROME TRACK W/(2) #2001-1476 750W TRANSFORMERS, #2001-5-36 STEMS, #2001-LF POWER FEED, 50W EXZ LAMPS, #2001-R, L-801W FIXTURE HEADS, SATIN NICKEL FINISH
R	PINNACLE LIGHTING PS-M150G-YI-120-S-V	T8	1	150	120	WALL MOUNT@126"AFF	ALUMINUM HOUSING W/DIE CAST END CAPS, MICRO PRISMATIC TEMPERED GLASS W/ ALUMINUM DOOR, ELECTRONIC HPF BALLAST, FULLY ROTATABLE HEAD, METALLIC SILVER FINISH
R(EM)	PINNACLE LIGHTING PS-M150G-YI-120-S-V-EM	T8	1	150	120	WALL MOUNT@126"AFF	ALUMINUM HOUSING W/DIE CAST END CAPS, MICRO PRISMATIC TEMPERED GLASS W/ ALUMINUM DOOR, ELECTRONIC HPF BALLAST, FULLY ROTATABLE HEAD, METALLIC SILVER FINISH,WITH EMERGENCY BATTERY BACKUP MIN. 90 MIN.
T	PINNACLE LIGHTING PS-M70G-YI-120-S-V	T8	1	70	120	WALL MOUNT@126"AFF	ALUMINUM HOUSING W/DIE CAST END CAPS, MICRO PRISMATIC TEMPERED GLASS W/ ALUMINUM DOOR, ELECTRONIC HPF BALLAST, FULLY ROTATABLE HEAD, METALLIC SILVER FINISH
T(EM)	PINNACLE LIGHTING PS-M70G-YI-120-S-V-EM	T8	1	70	120	WALL MOUNT@126"AFF	ALUMINUM HOUSING W/DIE CAST END CAPS, MICRO PRISMATIC TEMPERED GLASS W/ ALUMINUM DOOR, ELECTRONIC HPF BALLAST, FULLY ROTATABLE HEAD, METALLIC SILVER FINISH,WITH EMERGENCY BATTERY BACKUP MIN. 90 MIN.
V	PINNACLE LIGHTING PS-CF42-YI-120-S-V	CF32	1	42	120	WALL MOUNT@150"AFF	ALUMINUM HOUSING W/DIE CAST END CAPS, MICRO PRISMATIC TEMPERED GLASS W/ ALUMINUM DOOR, ELECTRONIC HPF BALLAST, FULLY ROTATABLE HEAD, METALLIC SILVER FINISH
V(EM)	PINNACLE LIGHTING PS-CF42-YI-120-S-V-EM	CF32	1	42	120	WALL MOUNT@150"AFF	ALUMINUM HOUSING W/DIE CAST END CAPS, MICRO PRISMATIC TEMPERED GLASS W/ ALUMINUM DOOR, ELECTRONIC HPF BALLAST, FULLY ROTATABLE HEAD, METALLIC SILVER FINISH,WITH EMERGENCY BATTERY BACKUP
W	LSI LIGHTING PTWS-FTM-42-CFL2-F-UE-BRZ-BB	COMPACT FLUORESCENT	2	42	120	WALL MOUNT 120" AFF	WALL-MOUNTED ENCLOSED AND GASKETED, DIE CAST ALUMINUM HOUSING, W/ 0 DEGREE ELECTRONIC BALLAST, COLOR SELECTED BY ARCHITECT
W(EM)	LSI LIGHTING PTWS-FTM-42-CFL2-F-UE-BRZ-BB	COMPACT FLUORESCENT	2	42	120	WALL MOUNT 120" AFF	WALL-MOUNTED ENCLOSED AND GASKETED, DIE CAST ALUMINUM HOUSING, W/ 0 DEGREE ELECTRONIC BALLAST, W/EMERGENCY BATTERY BACKUP & REMOTE EMERGENCY BALLAST FOR BOTH LAMPS MIN 90 MIN.
X	CHLORIDE CN-6-GC-A1-IC	LED INCLUDED			120	WALL /CEILING	SLIM PROFILE, DIE CAST ALUMINUM HOUSING, LED EDGE LIT, EXIT LIGHT
Y	H.E. WILLIAMS TYPE 29-4-232-A-CT-EB2-120	T8	2	32	120	VANITY ABOVE MIRROR	WALL MOUNT UP/DOWN , 4' LONG, (2)T8 LAMPS, ELECTRONIC BALLAST, DIE FORMED HOUSING, ACRYLIC PRISMATIC LENSE,
Z	H.E. WILLIAMS TYPE PH75-226Q-G24q-3-120	COMPACT FLUORESCENT	2	26Q	120	RECESSED	6" RECESSED CAN LIGHT: W/ MATTE WHITE TRIM,2-COMPACT FLOURESCENT LAMPS, ELECTRONIC BALLAST, SEMI-SPECULAR LOW IRIDESCENT FINISH, SUITABLE FOR WET LOCATION UNDER COVERED CEILING
Z(EM)	H.E. WILLIAMS TYPE PH75-226Q-G24q-3-120-EM	COMPACT FLUORESCENT	2	26Q	120	RECESSED	6" RECESSED CAN LIGHT: W/ MATTE WHITE TRIM,2-COMPACT FLOURESCENT LAMPS, 0 DEGREE ELECTRONIC BALLAST, SEMI-SPECULAR LOW IRIDESCENT FINISH,WITH EMERGENCY BATTERY BACKUP MIN. 90 MIN.,SUITABLE FOR WET LOCATION UNDER COVERED CEILING

GreenTech Consulting, Inc.
Plumbing, Mechanical, Electrical Engineers
Sustainable & LEED Design Services
1100 Crescent Green, Suite 103
Cary , N.C. 27518
Voice . 919 . 859 . 8884
Fax . 919 . 859 . 8886
hsura@greentc.com

Innovative Design
850 W. MORGAN STREET, RALEIGH, NORTH CAROLINA 27603, 919/832-6303

NORTH CAROLINA PROFESSIONAL ENGINEER SEAL 023527 HEMANT C. SURI
10-08-07

PROJECT: Wilkes County Visitor's Center K-4703
WILKESBORO, NC
OWNER: NC Department of Transportation

DRAWN BY:
DATE: 06/01/2007
JOB NUMBER: 2320
REVISIONS:

SHEET NAME
LIGHTING SCHEDULE & DETAILS

SHEET NUMBER
E6 88 OF 89

PANELBOARD "MDP"

PANEL SHALL BE UL LISTED FOR SERVICE RATED — 600 A MAIN BUS RATING

VOLTAGE : 208 Y/ 120V 3PH 4W — MOUNTING: SURFACE — TYPE: SQ-D NQOD — 600A MAIN CIRCUIT BREAKER

BRANCH CIRCUIT			DEVICE				PHASE LOADS				DEVICE			BRANCH CIRCUIT		
LOAD	WIRE SIZE	VA	TRIP	POLE	CKT	A	B	C	CKT	POLE	TRIP	VA	WIRE SIZE	LOAD
PANEL LP	4#3, 1#6G IN 1 1/4"C	4383 / 3009 / 2318	80	3	1 / 3 / 5	7576	7984	7878	2 / 4 / 6	3	80	3193 / 4984 / 5560	4#3, 1#6G IN 1 1/4"C	PANEL RP
PANEL HP	4-3/0, 1#6G IN 2"C	22436 / 19354 / 18624	200	3	7 / 9 / 11	25108	22578	22624	8 / 10 / 12	3	80	2672 / 3224 / 4000	4#3, 1#6G IN 1 1/4"C	PANEL B CISTERN EQUIPMENT
PANEL A STORAGE BLDG.	4#3, 1#6G IN 1 1/4"C	7513 / 6958 / 7094	80	3	13 / 15 / 17	14013	13458	7094	14 / 16 / 18	2	40	0 / 6500 / 6500	3#4, 1#6G IN 1 1/4"C	DOT SITE LIGHTING PANEL
SPACE		0			19	0			20			0	IN 3/4"C	P-V PANEL FEED BACK TIE-IN
SPACE		0			21		0		22			0		SPACE
SPACE		0			23			0	24			0		SPACE
SPACE		0			25	0			26			0		SPACE
SPACE		0			27		0		28			0		SPACE
SPACE		0			29			0	30			0		SPACE
SPACE		0			31	0			32			0		SPACE
SPACE		0			33		0		34			0		SPARE
SPACE		0			35			0	36			0		SPACE
TVSS	4#10, 1#10G IN 3/4"C	0 / 0	30	3	37 / 39	0	0		38 / 40			0 / 0		SPACE / SPACE
		0			41			0	42			0		SPACE

kVA LOAD 128.31 — LOAD PER PH IN VA: 46697 / 44020 / 37996 — 22,000 AMPS

AMPERE LOAD 356.16 — LOAD PER PH IN AMPS: 389.1 / 366.8 / 313.3 — MIN. INTERRUPTING CAP. (RMS SYM. AMPS)

DEMAND LOAD PER PH IN AMPS: 404.5 / 381.3 / 325.7

	CONNECTED	DEMAND
LIGHTING	23232	29040
RECEPTACLES	13380	11690
COMPUTERS	400	400
HVAC	49159	50109
OTHER	42142	42142
TOTAL DEMAND LOAD		133.38 kVA
DEMAND AMPS		370 AMPS

DEMAND FACTOR = 1.04

1. WIRESIZES ARE MINIMUM AND BASED ON 75deg CONDUCTORS. INCREASE IN CASE OF VOLTAGE DROP.
2. PROVIDE DOOR IN DOOR CONSTRUCTION.

PANELBOARD "HP"

225 A MAIN BUS RATING — MAIN LUGS ONLY

VOLTAGE : 208 Y/ 120V 3PH 4W — MOUNTING: SURFACE — TYPE: SQ-D NQOD

BRANCH CIRCUIT			DEVICE				PHASE LOADS				DEVICE			BRANCH CIRCUIT		
LOAD	WIRE SIZE	VA	TRIP	POLE	CKT	A	B	C	CKT	POLE	TRIP	VA	WIRE SIZE	LOAD
AUTO DOOR	2#12,1#12G IN 3/4"C	400	20	1	1	1200			2	1	20	800	4#12, 1#12G	VENDING MACHINES
AUTO DOOR	2#12,1#12G IN 3/4"C	400	20	1	3		1200		4	1	20	800		
HAIR DRYER	2#12,1#12G IN 3/4"C	1500	20	1	5			2300	6	1	20	800	IN 3/4"C	
HAIR DRYER	2#12,1#12G IN 3/4"C	1500	20	1	7	2300			8	1	20	800	4#12, 1#12G	VENDING MACHINES
HAIR DRYER	2#12,1#12G IN 3/4"C	1500	20	1	9		2300		10	1	20	800		
HAIR DRYER	2#12,1#12G IN 3/4"C	1500	20	1	11			2300	12	1	20	800	IN 3/4"C	
AUTO SENSOR	2#12,1#12G IN 3/4"C	400	20	1	13	1200			14	1	20	800	3#12, #12G	VENDING MACHINES
GAS LOG	2#12,1#12G IN 3/4"C	200	20	1	15		1000		16	1	20	800	IN 3/4"C	
WATER COOLER	2#12,1#12G IN 3/4"C	400	20	1	17			2400	18	2	30	2000	2#10, 1#10G	RANGE
ERV-1	2#6, 1#10G IN 3/4"C	3696	45	1	19	5696			20			2000	IN 3/4"C	
SPARE		0	20	1	21		800		22	1	20	800	2#12,1#12G IN 3/4"C	REFRIGERATOR
WH-1	2#10,1#10G IN 3/4"C	2250 / 2250	30	2	23 / 25	4255		4255	24			2005	3#10, 1#10G	GIP-1
HP-1	2#6, 1#10G IN 3/4"C	4264 / 4264	60	2	27 / 29		6269	6269	28 / 30			2005	IN 3/4"C	
HP-2	2#4,1#6G IN 1"C	4680 / 4680	70	2	31 / 33	6685	6685		32 / 34	3	30	2005 / 2005	3#10, 1#10G / IN 3/4"C	GIP-2
SPACE		0			35			1100	36			1100	3#12, 1#12G	EU/H-1
SPACE		0			37	1100			38	3	20	1100		
SPACE		0			39		1100		40			1100	IN 3/4"C	
SPACE		0			41			0	42			0		SPACE

kVA LOAD 60.41 — LOAD PER PH IN VA: 22436 / 19354 / 18624 — 22,000 AMPS

AMPERE LOAD 167.69 — LOAD PER PH IN AMPS: 187.0 / 161.3 / 155.2 — MIN. INTERRUPTING CAP. (RMS SYM. AMPS)

DEMAND LOAD PER PH IN AMPS: 189.9 / 163.8 / 157.6

	CONNECTED	DEMAND
LIGHTING	0	0
RECEPTACLES	0	0
COMPUTERS	0	0
HVAC	36914	37864
OTHER	23500	23500
TOTAL DEMAND LOAD		61.36 kVA
DEMAND AMPS		170 AMPS

DEMAND FACTOR = 1.02

1. WIRESIZES ARE MINIMUM AND BASED ON 75deg CONDUCTORS. INCREASE IN CASE OF VOLTAGE DROP.
2. PROVIDE DOOR IN DOOR CONSTRUCTION.

PANELBOARD "LP"

100 A MAIN BUS RATING — MAIN LUGS ONLY

VOLTAGE : 208 Y/ 120V 3PH 4W — MOUNTING: SURFACE — TYPE: SQ-D NQOD

BRANCH CIRCUIT			DEVICE				PHASE LOADS				DEVICE			BRANCH CIRCUIT		
LOAD	WIRE SIZE	VA	TRIP	POLE	CKT	A	B	C	CKT	POLE	TRIP	VA	WIRE SIZE	LOAD
LIGHTS	2#12 & 1#12G, 3/4"C.	1075	20	1	1	2335			2	1	20	1260	2#12 & 1#12G, 3/4"C.	EXTERIOR LIGHTS
LIGHTS	2#12 & 1#12G, 3/4"C.	475	20	1	3		1525		4	1	20	1050		
LIGHTS	2#12 & 1#12G, 3/4"C.	700	20	1	5			1296	6	1	20	596	2#12 & 1#12G, 3/4"C.	EXTERIOR LIGHTS
TRACK LIGHT	2#12 & 1#12G, 3/4"C.	750	20	1	7	1458			8	1	20	708	2#12 & 1#12G, 3/4"C.	LIGHTS
TRACK LIGHT	2#12 & 1#12G, 3/4"C.	750	20	1	9		1475		10	1	20	725		
LIGHTS	2#12 & 1#12G, 3/4"C.	972	20	1	11			1022	12	1	20	50	2#12 & 1#12G, 3/4"C.	PHOTOCELL RELAY
LIGHTS	2#12 & 1#12G, 3/4"C.	590	20	1	13	590			14	1	20	0		SPARE
SPARE		0	20	1	15		0		16	1	20	0		SPARE
SPARE		0	20	1	17			0	18	2	20	0		SPARE
SPARE		0	20	1	19	0			20			0		SPARE
SPARE		0	20	1	21		0		22	1	20	0		SPARE
SPARE		0	20	1	23			0	24	1	20	0		SPARE
SPARE		0	20	1	25	0			26	1	20	0		SPARE
SPARE		0	20	1	27		0		28	1	20	0		SPARE
SPARE		0	20	1	29			0	30	1	20	0		SPARE
SPARE		0	20	1	31	0			32			0		SPACE
SPACE		0			33		0		34			0		SPACE
SPACE		0			35			0	36			0		SPACE
SPACE		0			37	0			38			0		SPACE
SPACE		0			39		0		40			0		SPACE
SPACE		0			41			0	42			0		SPACE

kVA LOAD 9.70 — LOAD PER PH IN VA: 4383 / 3000 / 2318 — 22,000 AMPS

AMPERE LOAD 26.93 — LOAD PER PH IN AMPS: 36.5 / 25.0 / 19.3 — MIN. INTERRUPTING CAP. (RMS SYM. AMPS)

DEMAND LOAD PER PH IN AMPS: 49.2 / 33.7 / 26.0

	CONNECTED	DEMAND
LIGHTING	9701	12126
RECEPTACLES	0	0
COMPUTERS	0	0
HVAC	0	950
OTHER	0	0
TOTAL DEMAND LOAD		13.08 kVA
DEMAND AMPS		36 AMPS

DEMAND FACTOR = 1.35

1. WIRESIZES ARE MINIMUM AND BASED ON 75deg CONDUCTORS. INCREASE IN CASE OF VOLTAGE DROP.
2. PROVIDE DOOR IN DOOR CONSTRUCTION.

PANELBOARD "RP"

100 A MAIN BUS RATING — MAIN LUGS ONLY

VOLTAGE : 208 Y/ 120V 3PH 4W — MOUNTING: SURFACE — TYPE: SQ-D NQOD

BRANCH CIRCUIT			DEVICE				PHASE LOADS				DEVICE			BRANCH CIRCUIT		
LOAD	WIRE SIZE	VA	TRIP	POLE	CKT	A	B	C	CKT	POLE	TRIP	VA	WIRE SIZE	LOAD
RECEPTACLE RM 002	2#12, 1#12G IN 3/4"C	180	20	1	1	780			2	1	20	600	2#12, 1#12G IN 3/4"C	FACP (LOCKABLE CB)
RECEPTACLE RM 002	2#12, 1#12G IN 3/4"C	900	20	1	3		1800		4	1	20	900	2#12, 1#12G IN 3/4"C	RECEPTACLE RM 102
RECEPTACLE RM 003	2#12, 1#12G IN 3/4"C	720	20	1	5			1800	6	1	20	1080	2#12, 1#12G IN 3/4"C	RECEPTACLE RM 103-108
RECEPTACLE RM 004	2#12, 1#12G IN 3/4"C	540	20	1	7	1080			8	1	20	540	2#12, 1#12G IN 3/4"C	RECEPTACLE RM 101,109
RECEPTACLE RM 004/005	2#12, 1#12G IN 3/4"C	720	20	1	9		1800		10	1	20	1080	2#12, 1#12G IN 3/4"C	RECEPTACLE RM 111
RECEPT RM 001,003,009	2#12, 1#12G IN 3/4"C	1260	20	1	11			2460	12	1	20	1200	2#12, 1#12G IN 3/4"C	COPY MACHINE RECEPT
RECEPTACLE RM 010	2#12, 1#12G IN 3/4"C	360	20	1	13	433			14	1	20	73	2#12, 1#12G IN 3/4"C	EF- 2
RECEPTACLE RM 010	2#12, 1#12G IN 3/4"C	180	20	1	15		1184		16	1	20	1004	2#12, 1#12G IN 3/4"C	EF-5 & 6
RECEPTACLE RM 007	2#12, 1#12G IN 3/4"C	900	20	1	17			1300	18	1	20	400	2#12, 1#12G IN 3/4"C	RECE. TTB
RECEPTACLE RM 008	2#12, 1#12G IN 3/4"C	720	20	1	19	900			20	1	20	180	2#12, 1#12G IN 3/4"C	RECEPACLE FOR PICNIC TABLE
SPARE		0	20	1	21		200		22	1	20	200	2#12, 1#12G IN 3/4"C	MOTORIZED DAMPER RV-1
SPARE		0	20	1	23			0	24	1	20	0		SPARE
SPARE		0	20	1	25	0			26	1	20	0		SPARE
SPARE		0	20	1	27		0		28	1	20	0		SPARE
SPARE		0	20	1	29			0	30	1	20	0		SPARE
SPARE		0	20	1	31	0			32	1	20	0		SPARE
SPACE		0	20	1	33		0		34	1	20	0		SPACE
SPACE		0	20	1	35			0	36	1	20	0		SPACE
SPACE		0	20	1	37	0			38	1	20	0		SPACE
SPACE		0	20	1	39		0		40	1	20	0		SPACE
SPACE		0	20	1	41			0	42	1	20	0		SPACE

kVA LOAD 13.74 — LOAD PER PH IN VA: 3193 / 4984 / 5560 — 22,000 AMPS

AMPERE LOAD 38.13 — LOAD PER PH IN AMPS: 26.6 / 41.5 / 46.3 — MIN. INTERRUPTING CAP. (RMS SYM. AMPS)

DEMAND LOAD PER PH IN AMPS: 27.6 / 43.1 / 48.1

	CONNECTED	DEMAND
LIGHTING	0	0
RECEPTACLES	10860	10430
COMPUTERS	400	400
HVAC	1227	2227
OTHER	1200	1200
TOTAL DEMAND LOAD		14.26 kVA
DEMAND AMPS		40 AMPS

DEMAND FACTOR = 1.04

1. WIRESIZES ARE MINIMUM AND BASED ON 75deg CONDUCTORS. INCREASE IN CASE OF VOLTAGE DROP.
2. PROVIDE DOOR IN DOOR CONSTRUCTION.

PANELBOARD "A"

100 A MAIN BUS RATING — 60A MAIN CIRCUIT BREAKER

VOLTAGE : 208 Y/ 120V 3PH 4W — MOUNTING: SURFACE — TYPE: SQ-D NQOD

BRANCH CIRCUIT			DEVICE				PHASE LOADS				DEVICE			BRANCH CIRCUIT		
LOAD	WIRE SIZE	VA	TRIP	POLE	CKT	A	B	C	CKT	POLE	TRIP	VA	WIRE SIZE	LOAD
RECEPTACLES	2#12,1#12G IN 3/4"C	540	20	1	1	599			2	1	20	59	2#12,1#12G IN 3/4"C	LIGHTS
CISTERN CONTROLLER	2#10, 1#10G IN 3/4"C	2907 / 2907 / 2907	30	3	3 / 5 / 7		4007 / 4007		4 / 6 / 8	3	20	1100 / 1100 / 1100	2#12, 1#12G IN 3/4"C	UNIT HEATER #4
BOOSTER PUMP CONTROLLER	2#10, 1#10G IN 3/4"C	2907 / 2907 / 2907	30	3	9 / 11 / 13		2951 / 3087		10 / 12 / 14	1	20	44 / 180 / 0	2#12,1#12G IN 3/4"C	EXHAUST FAN / RECE. PICNIC TABLE / SPARE
SPARE		0	20	1	15		0		16	1	20	0		SPARE
SPARE		0	20	1	17			0	18			0		SPACE
SPACE		0			19	0			20			0		SPACE
SPACE		0			21		0		22			0		SPACE
SPACE		0			23			0	24			0		SPACE
SPACE		0			25	0			26			0		SPACE
SPACE		0			27		0		28			0		SPACE
SPACE		0			29			0	30			0		SPACE
SPACE		0			31	0			32			0		SPACE
SPACE		0			33		0		34			0		SPACE
SPACE		0			35			0	36			0		SPACE
SPACE		0			37	0			38			0		SPACE
SPACE		0			39		0		40			0		SPACE
SPACE		0			41			0	42			0		SPACE

kVA LOAD 21.57 — LOAD PER PH IN VA: 7513 / 6958 / 7094 — 10,000 AMPS

AMPERE LOAD 59.86 — LOAD PER PH IN AMPS: 62.6 / 58.0 / 59.1 — MIN. INTERRUPTING CAP. (RMS SYM. AMPS)

DEMAND LOAD PER PH IN AMPS: 65.4 / 60.6 / 61.8

	CONNECTED	DEMAND
LIGHTING	59	74
RECEPTACLES	720	720
COMPUTERS	0	0
HVAC	3344	4294
OTHER	17442	17442
TOTAL DEMAND LOAD		22.53 kVA
DEMAND AMPS		63 AMPS

DEMAND FACTOR = 1.04

1. WIRESIZES ARE MINIMUM AND BASED ON 75deg CONDUCTORS. INCREASE IN CASE OF VOLTAGE DROP.
2. PROVIDE DOOR IN DOOR CONSTRUCTION.

PANELBOARD "B"

100 A MAIN BUS RATING — 60A MAIN CIRCUIT BREAKER

VOLTAGE : 208 Y/ 120V 3PH 4W — MOUNTING: SURFACE — TYPE: SQ-D NQOD

BRANCH CIRCUIT			DEVICE				PHASE LOADS				DEVICE			BRANCH CIRCUIT		
LOAD	WIRE SIZE	VA	TRIP	POLE	CKT	A	B	C	CKT	POLE	TRIP	VA	WIRE SIZE	LOAD
LIGHTS	2#12,1#12G IN 3/4"C	236	20	1	1	1572			2			1336	4#8, 1#10G	TO LOAD CENTER B1
EU/H-2	3#12, 1#12G / IN 3/4"C	1100 / 1100 / 1100	30	3	3 / 5 / 7		2712	3100	4 / 6 / 8	3	40	1612 / 2000 / 0	2#12, IN 1"C	SPARE
EF-3	2#12,1#12G IN 3/4"C	512	20	1	9		512		10			0		SPARE
RECEPTACLES	2#12,1#12G IN 3/4"C	900	20	1	11			900	12			0		SPARE

kVA LOAD 9.00 — LOAD PER PH IN VA: 2672 / 3224 / 4000 — 22,000 AMPS

AMPERE LOAD 27.47 — LOAD PER PH IN AMPS: 22.3 / 26.9 / 33.3 — MIN. INTERRUPTING CAP. (RMS SYM. AMPS)

DEMAND LOAD PER PH IN AMPS: 24.7 / 29.8 / 36.9

	CONNECTED	DEMAND
LIGHTING	472	590
RECEPTACLES	1800	1800
COMPUTERS	0	0
HVAC	7624	8574
OTHER	0	0
TOTAL DEMAND LOAD		10.96 kVA
DEMAND AMPS		30 AMPS

DEMAND FACTOR = 1.11

1. WIRESIZES ARE MINIMUM AND BASED ON 75deg CONDUCTORS. INCREASE IN CASE OF VOLTAGE DROP.
2. PROVIDE DOOR IN DOOR CONSTRUCTION.

PANELBOARD "B1"

60 A MAIN BUS RATING — 40A MAIN CIRCUIT BREAKER

VOLTAGE : 208 Y/ 120V 3PH 4W — MOUNTING: SURFACE — TYPE: SQ-D NQOD

BRANCH CIRCUIT			DEVICE				PHASE LOADS				DEVICE			BRANCH CIRCUIT		
LOAD	WIRE SIZE	VA	TRIP	POLE	CKT	A	B	C	CKT	POLE	TRIP	VA	WIRE SIZE	LOAD
LIGHTS	2#12,1#12G IN 3/4"C	236	20	1	1	236			2	1	20	0		SPARE
EU/H-2	3#12, 1#12G / IN 3/4"C	1100 / 1100 / 1100	30	3	3 / 5 / 7		1100	1100	4 / 6 / 8	1	20	0		SPARE
EF-3	2#12,1#12G IN 3/4"C	512	20	1	9		512		10	1	20	0		SPARE
RECEPTACLES	2#12,1#12G IN 3/4"C	900	20	1	11			900	12	1	20	0		SPARE

kVA LOAD 4.95 — LOAD PER PH IN VA: 1336 / 1612 / 2000 — 10,000 AMPS

AMPERE LOAD 13.73 — LOAD PER PH IN AMPS: 11.1 / 13.4 / 16.7 — MIN. INTERRUPTING CAP. (RMS SYM. AMPS)

DEMAND LOAD PER PH IN AMPS: 13.4 / 16.2 / 20.1

	CONNECTED	DEMAND
LIGHTING	236	295
RECEPTACLES	900	900
COMPUTERS	0	0
HVAC	3812	4762
OTHER	0	0
TOTAL DEMAND LOAD		5.96 kVA
DEMAND AMPS		17 AMPS

DEMAND FACTOR = 1.20

1. WIRESIZES ARE MINIMUM AND BASED ON 75deg CONDUCTORS. INCREASE IN CASE OF VOLTAGE DROP.
2. PROVIDE DOOR IN DOOR CONSTRUCTION.

GreenTech Consulting, Inc.
Plumbing, Mechanical, Electrical Engineers
Sustainable & LEED Design Services
1100 Crescent Green, Suite 103
Cary , N.C. 27518
Voice . 919 . 859 . 8884
Fax . 919 . 859 . 8886
hsura@greentc.com

Innovative Design
850 W. MORGAN STREET, RALEIGH, NORTH CAROLINA 27603, 919/832-6303

NORTH CAROLINA PROFESSIONAL SEAL 023527 ENGINEER HEMANT C. SURA
07-20-2007

PROJECT: Wilkes County Visitor's Center K-4703
WILKESBORO, NC
OWNER: NC Department of Transportation

DRAWN BY:
DATE: 06/01/2007
JOB NUMBER: 2320
REVISIONS:

SHEET NAME
PANELBOARD SCHEDULES

SHEET NUMBER
E7 89 OF 89