STATE	STATE PROJECT REFERENCE NO.	SHEET NO.	TOTAL SHEETS
N.C.	B-0682		

STATE PROJ. NO.	F.A. PROJ. NO.	DESCRIPTION
32575.1.2	BRS-1813(1)	P.E.
32575.2.1	BRS-1813(1)	R/W & UTILITIES
32575.3.2	BRZ-1813(3)	CONST.

STATE OF NORTH CAROLINA
DIVISION OF HIGHWAYS

BRUNSWICK COUNTY

LOCATION: BRIDGE No. 198 OVER THE INTERCOASTAL WATERWAY AND APPROACHES ON SR 1172 AT SUNSET BEACH

TYPE OF WORK: GRADING, DRAINAGE, PAVING, AND STRUCTURE

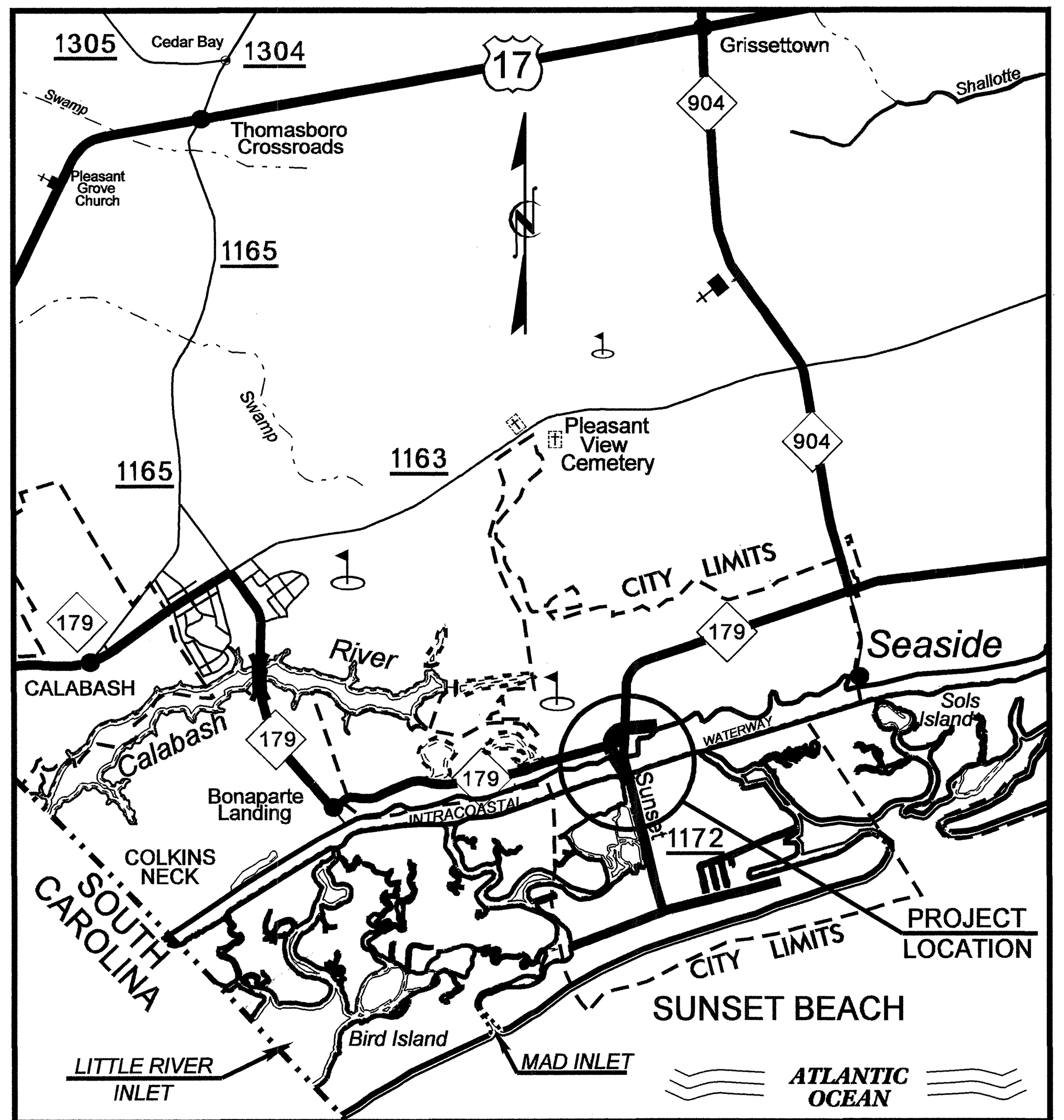

VICINITY MAP

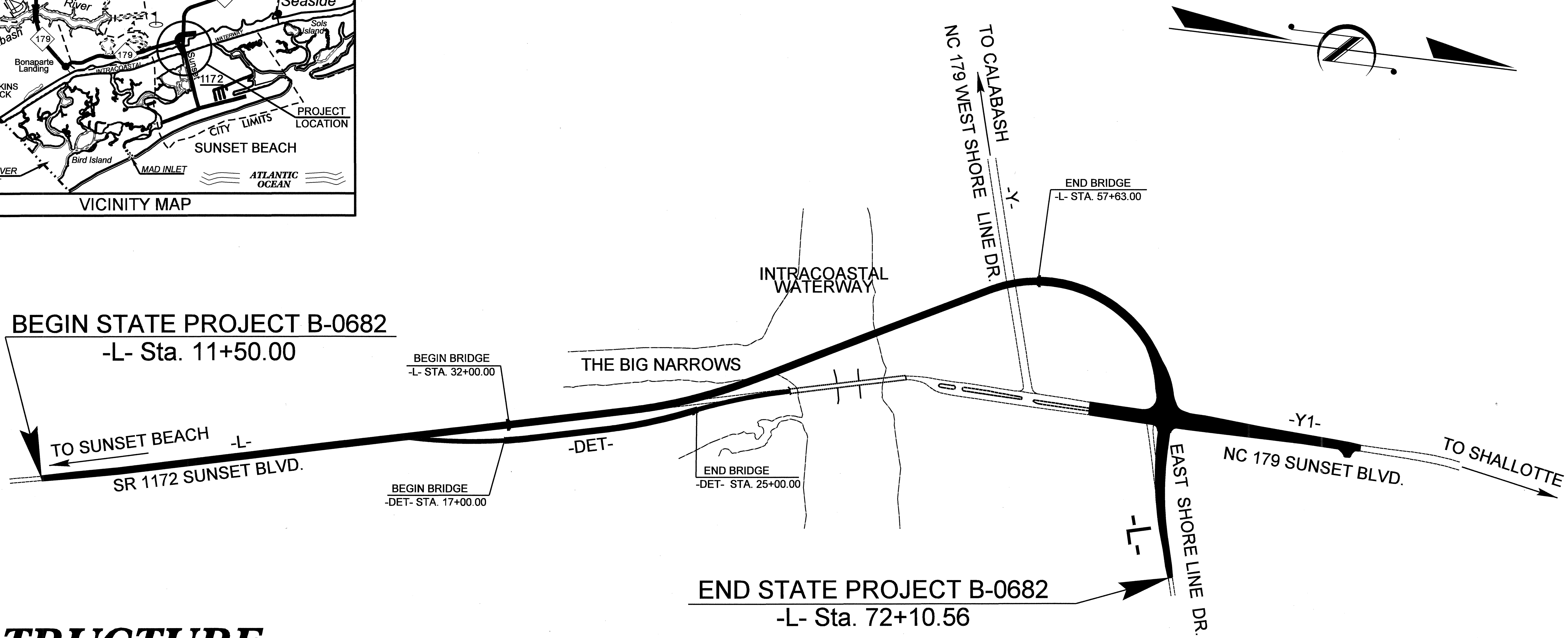

STRUCTURE

TIP PROJECT: B-0682

CONTRACT: C201882

28-FEB-2007 15:06
$$$$$$$$$$$$$$$$DGN$$$$$$$$$$$$$$$$$$$$
dcrutcher
09/08/99

DESIGN DATA

ADT 2005 = 4,300
ADT 2025 = 6,800
DHV = 12 %
D = 60 %
T = 3 % *
V = 40 MPH

* TTST 1% DUAL 2%

PROJECT LENGTH

LENGTH ROADWAY F.A. PROJECT No. BRZ-1813(3) = 0.663 Miles
LENGHT STRUCTURE F.A. PROJECT No. BRZ-1813(3) = 0.485 Miles

TOTAL LENGTH STATE TIP PROJECT No. B-0682 = 1.148 Miles

Prepared for the Office of:
DIVISION OF HIGHWAYS
1000 Birch Ridge Dr., Raleigh NC, 27610

2006 STANDARD SPECIFICATIONS

LETTING DATE:
September 18, 2007

DIVISION OF HIGHWAYS
STATE OF NORTH CAROLINA

P.E.
STATE HIGHWAY DESIGN ENGINEER

INDEX OF DRAWINGS

TITLE SHEET
1 INDEX OF DRAWINGS
2 GENERAL DRAWING PLAN AND ELEVATION (1 OF 6) - SHEET 1 OF 15
3 GENERAL DRAWING PLAN AND ELEVATION (2 OF 6) - SHEET 2 OF 15
4 GENERAL DRAWING PLAN AND ELEVATION (3 OF 6) - SHEET 3 OF 15
5 GENERAL DRAWING PLAN AND ELEVATION (4 OF 6) - SHEET 4 OF 15
6 GENERAL DRAWING PLAN AND ELEVATION (5 OF 6) - SHEET 5 OF 15
7 GENERAL DRAWING PLAN AND ELEVATION (6 OF 6) - SHEET 6 OF 15
8 GENERAL DRAWING FOUNDATION LAYOUT (1 OF 4) - SHEET 7 OF 15
9 GENERAL DRAWING FOUNDATION LAYOUT (2 OF 4) - SHEET 8 OF 15
10 GENERAL DRAWING FOUNDATION LAYOUT (3 OF 4) - SHEET 9 OF 15
11 GENERAL DRAWING FOUNDATION LAYOUT (4 OF 4) - SHEET 10 OF 15
12 GENERAL DRAWING LONG CHORD LAYOUT (1 OF 2) - SHEET 11 OF 15
13 GENERAL DRAWING LONG CHORD LAYOUT (2 OF 2) - SHEET 12 OF 15
14 GENERAL DRAWING LOCATION SKETCH ..... - SHEET 13 OF 15
15 GENERAL DRAWING GENERAL NOTES ..... - SHEET 14 OF 15
16 GENERAL DRAWING TOTAL BILL OF MATERIAL ..... - SHEET 15 OF 15
17 ERECTION SEQUENCE SPANS L-N
18 SUPERSTRUCTURE TYPICAL SECTION - SHEET 1 OF 11
19 SUPERSTRUCTURE TYPICAL SECTION - SHEET 2 OF 11
20 SUPERSTRUCTURE TYPICAL SECTION - SHEET 3 OF 11
21 SUPERSTRUCTURE TYPICAL SECTION - SHEET 4 OF 11
22 SUPERSTRUCTURE TYPICAL SECTION - SHEET 5 OF 11
23 SUPERSTRUCTURE TYPICAL SECTION - SHEET 6 OF 11
24 SUPERSTRUCTURE TYPICAL SECTION - SHEET 7 OF 11
25 SUPERSTRUCTURE TYPICAL SECTION - SHEET 8 OF 11
26 SUPERSTRUCTURE TYPICAL SECTION - SHEET 9 OF 11
27 SUPERSTRUCTURE TYPICAL SECTION - SHEET 10 OF 11
28 SUPERSTRUCTURE TYPICAL SECTION - SHEET 11 OF 11
29 SUPERSTRUCTURE PRECAST PRESTRESSED CONC DECK PANELS
30 SUPERSTRUCTURE PLAN OF SPAN A - SHEET 1 OF 24
31 SUPERSTRUCTURE PLAN OF SPAN B - SHEET 2 OF 24
32 SUPERSTRUCTURE PLAN OF SPAN C - SHEET 3 OF 24
33 SUPERSTRUCTURE PLAN OF SPAN D - SHEET 4 OF 24
34 SUPERSTRUCTURE PLAN OF SPAN E - SHEET 5 OF 23
35 SUPERSTRUCTURE PLAN OF SPAN F - SHEET 6 OF 24
36 SUPERSTRUCTURE PLAN OF SPAN G - SHEET 7 OF 24
37 SUPERSTRUCTURE PLAN OF SPAN H - SHEET 8 OF 24
38 SUPERSTRUCTURE PLAN OF SPAN I - SHEET 9 OF 24
39 SUPERSTRUCTURE PLAN OF SPAN J - SHEET 10 OF 24
40 SUPERSTRUCTURE PLAN OF SPAN K - SHEET 11 OF 24
41 SUPERSTRUCTURE PLAN OF SPAN L - SHEET 12 OF 24
42 SUPERSTRUCTURE PLAN OF SPAN M - SHEET 13 OF 24
43 SUPERSTRUCTURE PLAN OF SPAN M - SHEET 14 OF 24
44 SUPERSTRUCTURE PLAN OF SPAN N - SHEET 15 OF 24
45 SUPERSTRUCTURE PLAN OF SPAN O - SHEET 16 OF 24
46 SUPERSTRUCTURE PLAN OF SPAN P - SHEET 17 OF 24
47 SUPERSTRUCTURE PLAN OF SPAN Q - SHEET 18 OF 24
48 SUPERSTRUCTURE PLAN OF SPAN R - SHEET 19 OF 24
49 SUPERSTRUCTURE PLAN OF SPAN S - SHEET 20 OF 24
50 SUPERSTRUCTURE PLAN OF SPAN T - SHEET 21 OF 24
51 SUPERSTRUCTURE PLAN OF SPAN U - SHEET 22 OF 24
52 SUPERSTRUCTURE PLAN OF SPAN V - SHEET 23 OF 24
53 SUPERSTRUCTURE PLAN OF SPAN W - SHEET 24 OF 24
54 SUPERSTRUCTURE OVERHANG FALSEWORK - SHEET 1 OF 3
55 SUPERSTRUCTURE OVERHANG FALSEWORK - SHEET 2 OF 3
56 SUPERSTRUCTURE OVERHANG FALSEWORK - SHEET 3 OF 3
57 SUPERSTRUCTURE STRUCTURE DRAINAGE SYSTEM DETAILS - SHEET 1 OF 8
58 SUPERSTRUCTURE STRUCTURE DRAINAGE SYSTEM DETAILS - SHEET 2 OF 8
59 SUPERSTRUCTURE STRUCTURE DRAINAGE SYSTEM DETAILS - SHEET 3 OF 8
60 SUPERSTRUCTURE STRUCTURE DRAINAGE SYSTEM DETAILS - SHEET 4 OF 8
61 SUPERSTRUCTURE STRUCTURE DRAINAGE SYSTEM DETAILS - SHEET 5 OF 8
62 SUPERSTRUCTURE STRUCTURE DRAINAGE SYSTEM DETAILS - SHEET 6 OF 8
63 SUPERSTRUCTURE STRUCTURE DRAINAGE SYSTEM DETAILS - SHEET 7 OF 8
64 SUPERSTRUCTURE STRUCTURE DRAINAGE SYSTEM DETAILS - SHEET 8 OF 8
65 SUPERSTRUCTURE FRAMING PLAN SPAN A ..... - SHEET 1 OF 13
66 SUPERSTRUCTURE FRAMING PLAN SPANS B,C & D - SHEET 2 OF 13
67 SUPERSTRUCTURE FRAMING PLAN SPAN E ..... - SHEET 3 OF 13
68 SUPERSTRUCTURE FRAMING PLAN SPANS F,G,H & I - SHEET 4 OF 13
69 SUPERSTRUCTURE FRAMING PLAN SPAN J ..... - SHEET 5 OF 13
70 SUPERSTRUCTURE FRAMING PLAN SPAN K ..... - SHEET 6 OF 13
71 SUPERSTRUCTURE FRAMING PLAN SPANS L,M & N - SHEET 7 OF 13
72 SUPERSTRUCTURE FRAMING PLAN SPAN O ..... - SHEET 8 OF 13
73 SUPERSTRUCTURE FRAMING PLAN SPANS P,Q & R - SHEET 9 OF 13
74 SUPERSTRUCTURE FRAMING PLAN SPAN S ..... - SHEET 10 OF 13
75 SUPERSTRUCTURE FRAMING PLAN SPAN T ..... - SHEET 11 OF 13
76 SUPERSTRUCTURE FRAMING PLAN SPANS U & V ..... - SHEET 12 OF 13
77 SUPERSTRUCTURE FRAMING PLAN SPAN W ..... - SHEET 13 OF 13
78 SUPERSTRUCTURE 72"PRESTRESSED CONCRETE MBT SPAN A ..... - SHEET 1 OF 21
79 SUPERSTRUCTURE 72"PRESTRESSED CONCRETE MBT SPAN B ..... - SHEET 2 OF 21
80 SUPERSTRUCTURE 72"PRESTRESSED CONCRETE MBT SPAN C ..... - SHEET 3 OF 21
81 SUPERSTRUCTURE 72"PRESTRESSED CONCRETE MBT SPAN D ..... - SHEET 4 OF 21
82 SUPERSTRUCTURE 72"PRESTRESSED CONCRETE MBT SPAN E ..... - SHEET 5 OF 21
83 SUPERSTRUCTURE 72"PRESTRESSED CONCRETE MBT SPAN F ..... - SHEET 6 OF 21
84 SUPERSTRUCTURE 72"PRESTRESSED CONCRETE MBT SPAN G ..... - SHEET 7 OF 21
85 SUPERSTRUCTURE 72"PRESTRESSED CONCRETE MBT SPAN H ..... - SHEET 8 OF 21
86 SUPERSTRUCTURE 72"PRESTRESSED CONCRETE MBT SPAN I ..... - SHEET 9 OF 21
87 SUPERSTRUCTURE 72"PRESTRESSED CONCRETE MBT SPAN J ..... - SHEET 10 OF 21
88 SUPERSTRUCTURE 72"PRESTRESSED CONCRETE MBT SPAN K ..... - SHEET 11 OF 21
89 SUPERSTRUCTURE 72"PRESTRESSED CONCRETE MBT SPAN O ..... - SHEET 12 OF 21
90 SUPERSTRUCTURE 72"PRESTRESSED CONCRETE MBT SPAN P ..... - SHEET 13 OF 21
91 SUPERSTRUCTURE 72"PRESTRESSED CONCRETE MBT SPAN Q ..... - SHEET 14 OF 21
92 SUPERSTRUCTURE 72"PRESTRESSED CONCRETE MBT SPAN R ..... - SHEET 15 OF 21
93 SUPERSTRUCTURE 54"PRESTRESSED CONCRETE GIRDER SPAN S - SHEET 16 OF 21
94 SUPERSTRUCTURE 54"PRESTRESSED CONCRETE GIRDER SPAN T - SHEET 17 OF 21
95 SUPERSTRUCTURE 54"PRESTRESSED CONCRETE GIRDER SPAN U - SHEET 18 OF 21
96 SUPERSTRUCTURE 54"PRESTRESSED CONCRETE GIRDER SPAN V - SHEET 19 OF 21
97 SUPERSTRUCTURE 54"PRESTRESSED CONCRETE GIRDER SPAN W - SHEET 20 OF 21
98 SUPERSTRUCTURE PRESTRESSED CONCRETE GIRDER DETAILS ..... - SHEET 21 OF 21
99 SUPERSTRUCTURE 78"P/T CONCRETE GIRDER END SEGMENT SPANS L&N - SHEET 1 OF 4
100 SUPERSTRUCTURE 78"P/T CONCRETE GIRDER END SEGMENT SPANS L&N - SHEET 2 OF 4
101 SUPERSTRUCTURE 78"P/T CONCRETE GIRDER END SEGMENT SPANS L&N - SHEET 3 OF 4
102 SUPERSTRUCTURE 78"P/T CONCRETE GIRDER END SEGMENT SPANS L&N - SHEET 4 OF 4
103 SUPERSTRUCTURE 78"P/T CONCRETE GIRDER HAUNCHED SEGMENT SPANS L&M, M&N - SHEET 1 OF 2
104 SUPERSTRUCTURE 78"P/T CONCRETE GIRDER HAUNCHED SEGMENT SPANS L&M, M&N - SHEET 2 OF 2
105 SUPERSTRUCTURE 78"P/T CONCRETE GIRDER DROP-IN SEGMENT SPAN M - SHEET 1 OF 2
106 SUPERSTRUCTURE 78"P/T CONCRETE GIRDER DROP-IN SEGMENT SPAN M - SHEET 2 OF 2
107 SUPERSTRUCTURE 78"P/T CONCRETE GIRDER BILL OF MATERIALS
108 SUPERSTRUCTURE 78"P/T CONCRETE GIRDER DETAILS SPANS L-N
109 SUPERSTRUCTURE 78"P/T CONCRETE GIRDER POST-TENSIONING NOTES SPANS L-N - SHEET 1 OF 2
110 SUPERSTRUCTURE 78"P/T CONCRETE GIRDER POST-TENSIONING NOTES SPANS L-N - SHEET 2 OF 2
111 SUPERSTRUCTURE INTERMEDIATE STEEL DIAPHRAGMS ..... - SHEET 1 OF 3
112 SUPERSTRUCTURE INTERMEDIATE STEEL DIAPHRAGMS ..... - SHEET 2 OF 3
113 SUPERSTURCTURE STD INTERMEDIATE STEEL DIAPHRAGMS FOR TYPE II, III, & IV PRESTRESSED CONCRETE GIRDERS - SHEET 3 OF 3
114 SUPERSTRUCTURE ELASTOMERIC BEARING & SOLE PLATE DETAILS ..... - SHEET 1 OF 2
115 SUPERSTRUCTURE ELASTOMERIC BEARING & SOLE PLATE DETAILS SPANS L-N - SHEET 2 OF 2
116 SUPERSTRUCTURE CAMBER ..... - SHEET 1 OF 5
117 SUPERSTRUCTURE CAMBER ..... - SHEET 2 OF 5
118 SUPERSTRUCTURE CAMBER SPANS L-N - SHEET 3 OF 5
119 SUPERSTRUCTURE CAMBER ..... - SHEET 4 OF 5
120 SUPERSTRUCTURE CAMBER ..... - SHEET 5 OF 5
121 SUPERSTRUCTURE PLAN OF PARAPET & RAIL POST SPACINGS SPANS A-C ..... - SHEET 1 OF 10
122 SUPERSTRUCTURE PLAN OF PARAPET & RAIL POST SPACINGS SPANS D-I ..... - SHEET 2 OF 10
123 SUPERSTRUCTURE PLAN OF PARAPET & RAIL POST SPACINGS SPANS J-K ..... - SHEET 3 OF 10
124 SUPERSTRUCTURE PLAN OF PARAPET & RAIL POST SPACINGS SPANS L-N ..... - SHEET 4 OF 10
125 SUPERSTRUCTURE PLAN OF PARAPET & RAIL POST SPACINGS SPANS O-T ..... - SHEET 5 OF 10
126 SUPERSTRUCTURE PLAN OF PARAPET & RAIL POST SPACINGS SPANS U-W ..... - SHEET 6 OF 10
127 SUPERSTRUCTURE STANDARD 2 BAR METAL RAIL ..... - SHEET 7 OF 10
128 SUPERSTRUCTURE STANDARD 2 BAR METAL RAIL ..... - SHEET 8 OF 10
129 SUPERSTRUCTURE STANDARD GUARDRAIL ANCHORAGE DETAILS FOR METAL RAILS - SHEET 9 OF 10
130 SUPERSTRUCTURE PARAPET AND END POST DETAILS & BILL OF MATERIALS ..... - SHEET 10 OF 10
131 SOLAR ARRAY SUPPORT PLATFORM - SHEET 1 OF 8
132 SUPERSTRUCTURE BILL OF MATERIALS SPANS A,B,C - SHEET 2 OF 8
133 SUPERSTRUCTURE BILL OF MATERIALS SPANS D,E,F - SHEET 3 OF 8
134 SUPERSTRUCTURE BILL OF MATERIALS SPANS G,H,I - SHEET 4 OF 8
135 SUPERSTRUCTURE BILL OF MATERIALS SPANS J&K - SHEET 5 OF 8
136 SUPERSTRUCTURE BILL OF MATERIALS SPANS L,M,N - SHEET 6 OF 8
137 SUPERSTRUCTURE BILL OF MATERIALS SPANS O-R - SHEET 7 OF 8
138 SUPERSTRUCTURE BILL OF MATERIALS SPANS S&T - SHEET 8 OF 8
139 SUPERSTRUCTURE BILL OF MATERIALS SPANS U,V,W
140 SUBSTRUCTURE END BENT 1 ..... - SHEET 1 OF 3
141 SUBSTRUCTURE END BENT 1 ..... - SHEET 2 OF 3
142 SUBSTRUCTURE END BENT 1 DETAILS - SHEET 3 OF 3
143 SUBSTRUCTURE BENT 1 ..... - SHEET 1 OF 2
144 SUBSTRUCTURE BENT 1 DETAILS - SHEET 2 OF 2
145 SUBSTRUCTURE BENT 2 ..... - SHEET 1 OF 2
146 SUBSTRUCTURE BENT 2 DETAILS - SHEET 2 OF 2
147 SUBSTRUCTURE BENT 3 ..... - SHEET 1 OF 2
148 SUBSTRUCTURE BENT 3 DETAILS - SHEET 2 OF 2
149 SUBSTRUCTURE BENT 4 ..... - SHEET 1 OF 2
150 SUBSTRUCTURE BENT 4 DETAILS - SHEET 2 OF 2
151 SUBSTRUCTURE BENT 5 ..... - SHEET 1 OF 2
152 SUBSTRUCTURE BENT 5 DETAILS - SHEET 2 OF 2
153 SUBSTRUCTURE BENT 6 ..... - SHEET 1 OF 2
154 SUBSTRUCTURE BENT 6 DETAILS - SHEET 2 OF 2
155 SUBSTRUCTURE BENT 7 ..... - SHEET 1 OF 2
156 SUBSTRUCTURE BENT 7 DETAILS - SHEET 2 OF 2
157 SUBSTRUCTURE BENT 8 ..... - SHEET 1 OF 2
158 SUBSTRUCTURE BENT 8 DETAILS - SHEET 2 OF 2
159 SUBSTRUCTURE BENT 9 ..... - SHEET 1 OF 2
160 SUBSTRUCTURE BENT 9 DETAILS - SHEET 2 OF 2
161 SUBSTRUCTURE BENT 10 ..... - SHEET 1 OF 2
162 SUBSTRUCTURE BENT 10 DETAILS - SHEET 2 OF 2
163 SUBSTRUCTURE BENT 11 ..... - SHEET 1 OF 3
164 SUBSTRUCTURE BENT 11 DETAILS - SHEET 2 OF 3
165 SUBSTRUCTURE BENT 11 DETAILS - SHEET 3 OF 3
166 SUBSTRUCTURE BENT 12 ..... - SHEET 1 OF 3
167 SUBSTRUCTURE BENT 12 DETAILS - SHEET 2 OF 3
168 SUBSTRUCTURE BENT 12 DETAILS - SHEET 3 OF 3
169 SUBSTRUCTURE BENT 13 ..... - SHEET 1 OF 3
170 SUBSTRUCTURE BENT 13 DETAILS - SHEET 2 OF 3
171 SUBSTRUCTURE BENT 13 DETAILS - SHEET 3 OF 3
172 SUBSTRUCTURE BENT 14 ..... - SHEET 1 OF 3
173 SUBSTRUCTURE BENT 14 DETAILS - SHEET 2 OF 3
174 SUBSTRUCTURE BENT 14 DETAILS - SHEET 3 OF 3
175 SUBSTRUCTURE BENT 15 ..... - SHEET 1 OF 2
176 SUBSTRUCTURE BENT 15 DETAILS - SHEET 2 OF 2
177 SUBSTRUCTURE BENT 16 ..... - SHEET 1 OF 3
178 SUBSTRUCTURE BENT 16 ..... - SHEET 2 OF 3
179 SUBSTRUCTURE BENT 16 DETAILS - SHEET 3 OF 3
180 SUBSTRUCTURE BENT 17 ..... - SHEET 1 OF 3
181 SUBSTRUCTURE BENT 17 ..... - SHEET 2 OF 3
182 SUBSTRUCTURE BENT 17 DETAILS - SHEET 3 OF 3
183 SUBSTRUCTURE BENT 18 ..... - SHEET 1 OF 3
184 SUBSTRUCTURE BENT 18 ..... - SHEET 2 OF 3
185 SUBSTRUCTURE BENT 18 DETAILS - SHEET 3 OF 3
186 SUBSTRUCTURE BENT 19 ..... - SHEET 1 OF 3
187 SUBSTRUCTURE BENT 19 ..... - SHEET 2 OF 3
188 SUBSTRUCTURE BENT 19 DETAILS - SHEET 3 OF 3
189 SUBSTRUCTURE BENT 20 ..... - SHEET 1 OF 3
190 SUBSTRUCTURE BENT 20 ..... - SHEET 2 OF 3
191 SUBSTRUCTURE BENT 20 DETAILS - SHEET 3 OF 3
192 SUBSTRUCTURE BENT 21 ..... - SHEET 1 OF 3
192 SUBSTRUCTURE BENT 21 ..... - SHEET 2 OF 3
194 SUBSTRUCTURE BENT 21 DETAILS - SHEET 3 OF 3
195 SUBSTRUCTURE BENT 22 ..... - SHEET 1 OF 3
196 SUBSTRUCTURE BENT 22 ..... - SHEET 2 OF 3
197 SUBSTRUCTURE BENT 22 DETAILS - SHEET 3 OF 3
198 SUBSTRUCTURE END BENT 2 ..... - SHEET 1 OF 3
199 SUBSTRUCTURE END BENT 2 ..... - SHEET 2 OF 3
200 SUBSTRUCTURE END BENT 2 DETAILS - SHEET 3 OF 3
201 NAVIGATIONAL LIGHTING AND CONDUIT SYSTEM
202 AXIAL LOAD TEST
203 MESSENGER SYSTEM FOR BRIDGE ON SR 1172 OVER ATLANTIC INTRACOSTAL WATERWAY AT SUNSET BEACH
204 STANDARD RIP RAP DETAILS
205 STANDARD BRIDGE APPROACH SLAB FOR FLEXIBLE PAVEMENT - SHEET 1 OF 3
206 STANDARD BRIDGE APPROACH SLAB FOR FLEXIBLE PAVEMENT - SHEET 2 OF 3
207 STANDARD BRIDGE APPROACH SLAB DETAILS ..... - SHEET 3 OF 3

DRAWN BY : D. H. Carter DATE : JULY 2006
CHECKED BY : J. A. Lee DATE : JULY 2006

PROJECT NO. B-682
BRUNSWICK COUNTY
STATION: 47+08.03 -L- POT

NORTH CAROLINA PROFESSIONAL SEAL 15832 ENGINEER JOEL A. LEE 1-17-07

PLANS PREPARED BY:
PARSONS TRANSPORTATION GROUP
Engineers and Planners
RALEIGH, NORTH CAROLINA
JOB NO. 645615
DWG. NO.

STATE OF NORTH CAROLINA
DEPARTMENT OF TRANSPORTATION
RALEIGH

INDEX OF DRAWINGS

REVISIONS						SHEET NO.
NO.	BY:	DATE:	NO.	BY:	DATE:	5-1
1			3			TOTAL SHEETS
2			4			207

F. A. PROJECT NO. BRS-1813 (3)

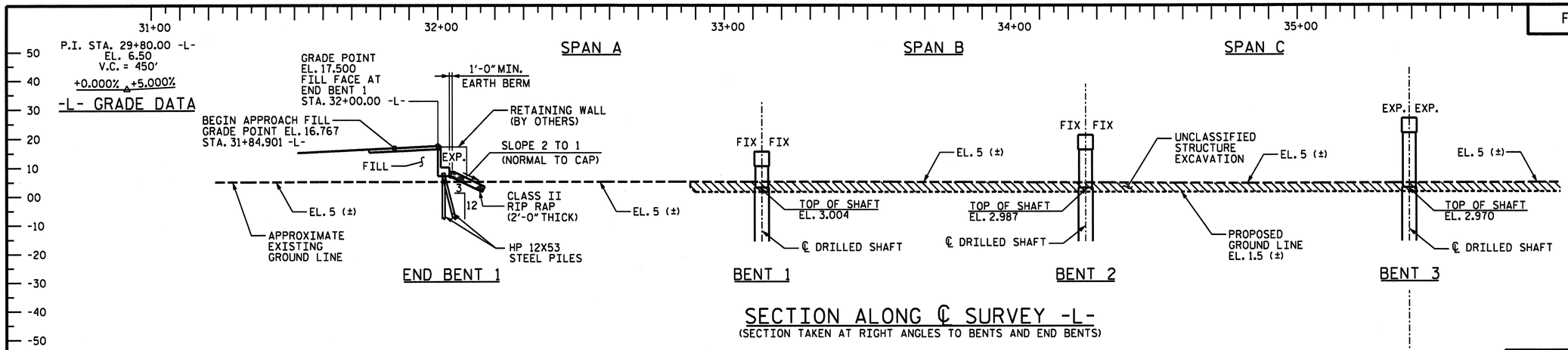

SECTION ALONG ℄ SURVEY -L-

(SECTION TAKEN AT RIGHT ANGLES TO BENTS AND END BENTS)

HYDRAULIC DATA

DESIGN DISCHARGE	N/A
FREQUENCY OF DESIGN FLOOD	100 YEARS
DESIGN HIGH WATER ELEVATION	11.7 SURGE
DRAINAGE AREA	UNDEFINED
BASIC DISCHARGE (Q100)	N/A
BASIC HIGH WATER ELEVATION	11.7

OVERTOPPING FLOOD DATA

OVERTOPPING DISCHARGE	N/A
FREQUENCY OF OVERTOPPING FLOOD	50
OVERTOPPING FLOOD ELEVATION	6.5

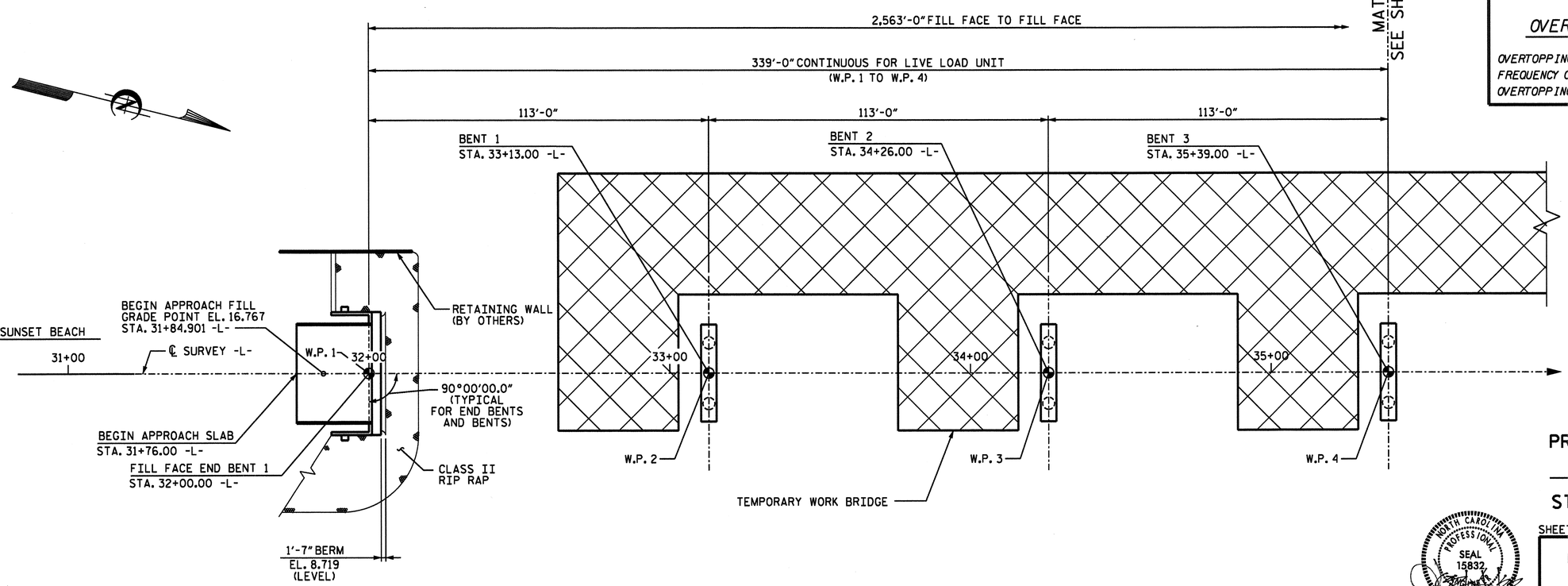

PLAN

PROJECT NO. B-682

BRUNSWICK COUNTY

STATION: 47+08.03 -L- POT

SHEET 1 OF 15 REPLACES BRIDGE NO. 198

NORTH CAROLINA PROFESSIONAL SEAL 15832 ENGINEER JOEL A. LEE 1-17-07

PLANS PREPARED BY:

PARSONS TRANSPORTATION GROUP
Engineers and Planners
RALEIGH, NORTH CAROLINA

JOB NO. 645615

DWG. NO.

STATE OF NORTH CAROLINA
DEPARTMENT OF TRANSPORTATION
RALEIGH

GENERAL DRAWING
PLAN AND ELEVATION (1 OF 6)

FOR BRIDGE ON SR 1172 OVER
ATLANTIC INTRACOASTAL
WATERWAY AT SUNSET BEACH

REVISIONS						SHEET NO.
NO.	BY:	DATE:	NO.	BY:	DATE:	5-2
1			3			TOTAL SHEETS
2			4			207

DRAWN BY : D. H. Carter DATE : JULY 2006
CHECKED BY : J. A. Lee DATE : JULY 2006

b682_sd_gpe_01.dgn 02/26/2007 11:04:30 AM

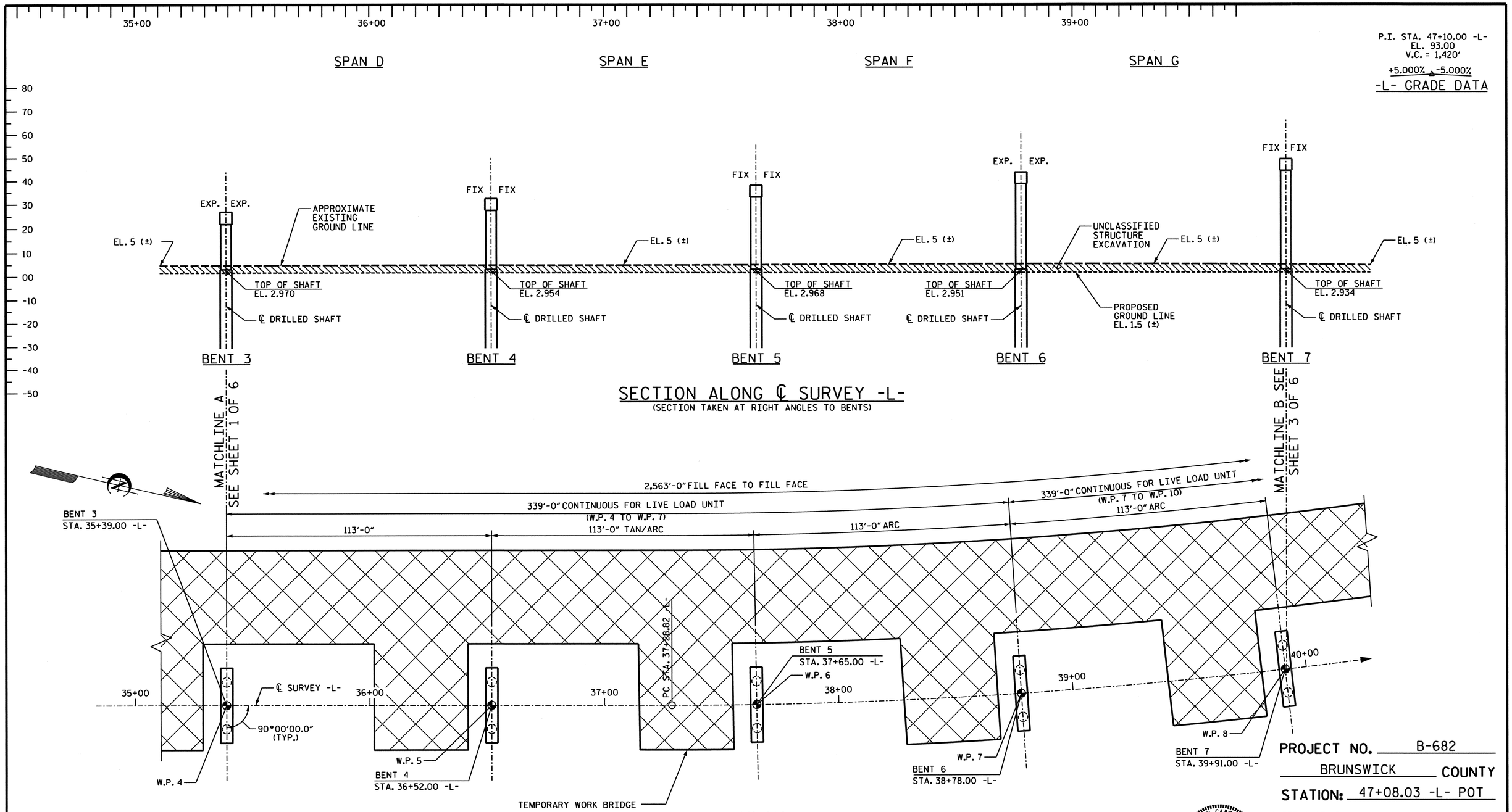

HORIZ. CURVE DATA ℄ SURVEY -L-
P.I. STA. = 40+10.40
Δ = 14°00'31.7" LT.
D = 2°30'00.0"
L = 560.35'
T = 281.58'
R = 2,291.83'

PROJECT NO. B-682

BRUNSWICK COUNTY

STATION: 47+08.03 -L- POT

SHEET 2 OF 15

NORTH CAROLINA PROFESSIONAL SEAL 15839 ENGINEER JOEL A. LEE 1-17-07

PLANS PREPARED BY:

PARSONS TRANSPORTATION GROUP
Engineers and Planners
RALEIGH, NORTH CAROLINA

JOB NO. 645615

DWG. NO.

STATE OF NORTH CAROLINA
DEPARTMENT OF TRANSPORTATION
RALEIGH

GENERAL DRAWING
PLAN AND ELEVATION (2 OF 6)

FOR BRIDGE ON SR 1172 OVER ATLANTIC INTRACOASTAL WATERWAY AT SUNSET BEACH

REVISIONS						SHEET NO.
NO.	BY:	DATE:	NO.	BY:	DATE:	5-3
1			3			TOTAL SHEETS
2			4			207

DRAWN BY : D. H. Carter DATE : JULY 2006
CHECKED BY : J. A. Lee DATE : JULY 2006

P.I. STA. 47+10.00 -L-
EL. 93.00
V.C. = 1,420'

+5.000% Δ -5.000%

-L- GRADE DATA

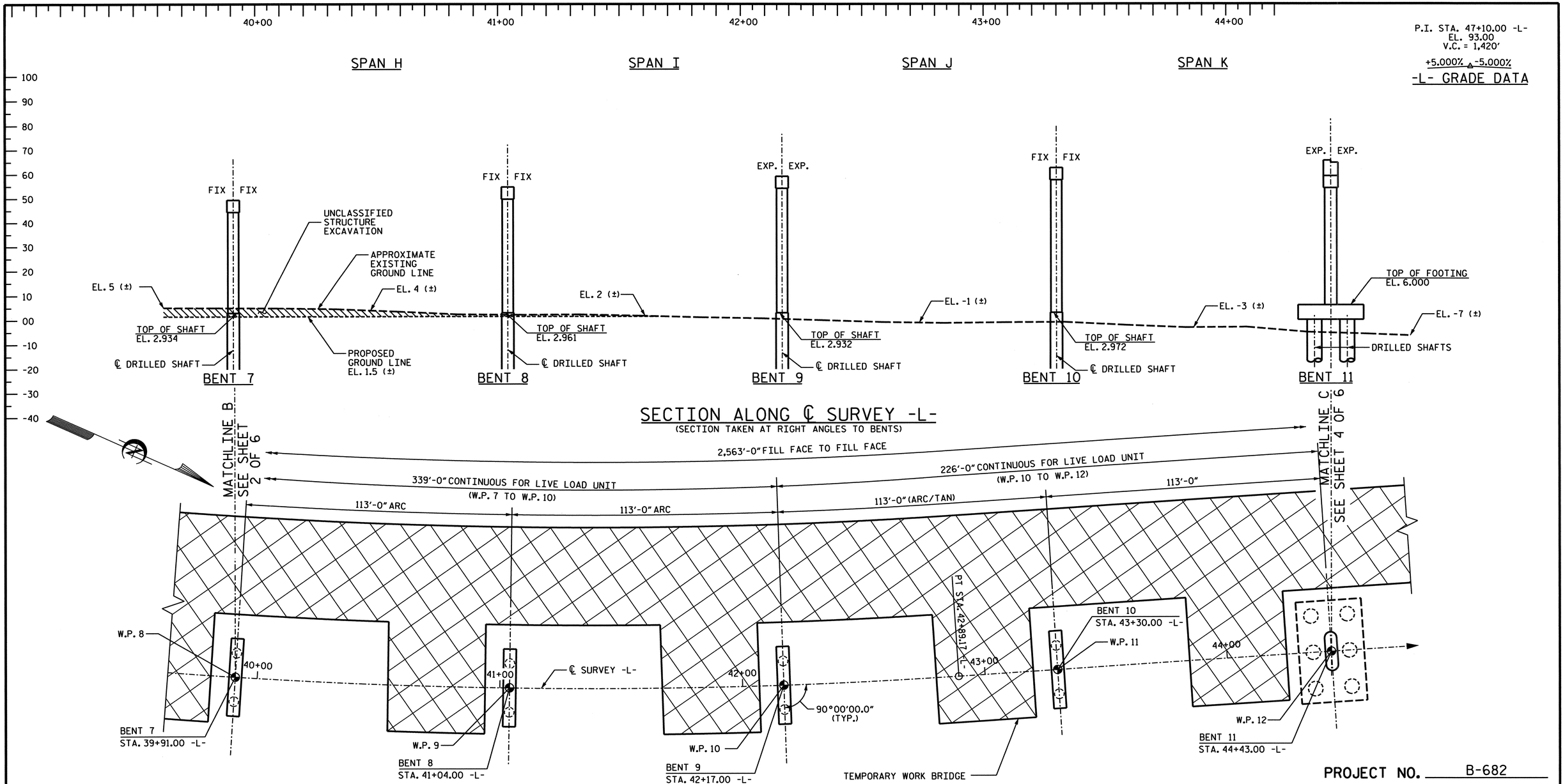

PLAN

HORIZ. CURVE DATA ℄ SURVEY -L-
P.I. STA. = 40+10.40
Δ = 14°00'31.7" LT.
D = 2°30'00.0"
L = 560.35'
T = 281.58'
R = 2,291.83'

PROJECT NO. B-682

BRUNSWICK COUNTY

STATION: 47+08.03 -L- POT

SHEET 3 OF 15

STATE OF NORTH CAROLINA
DEPARTMENT OF TRANSPORTATION
RALEIGH

GENERAL DRAWING
PLAN AND ELEVATION (3 OF 6)

FOR BRIDGE ON SR 1172 OVER ATLANTIC INTRACOASTAL WATERWAY AT SUNSET BEACH

NORTH CAROLINA PROFESSIONAL SEAL 15832 ENGINEER JOEL A. LEE
1-17-07

PLANS PREPARED BY:

PARSONS TRANSPORTATION GROUP
Engineers and Planners
RALEIGH, NORTH CAROLINA

JOB NO. 645615

DWG. NO.

REVISIONS								SHEET NO.
NO.	BY:	DATE:	NO.	BY:	DATE:			5-4
1			3					TOTAL SHEETS
2			4					207

DRAWN BY : D. H. Carter DATE : JULY 2006
CHECKED BY : J. A. Lee DATE : JULY 2006

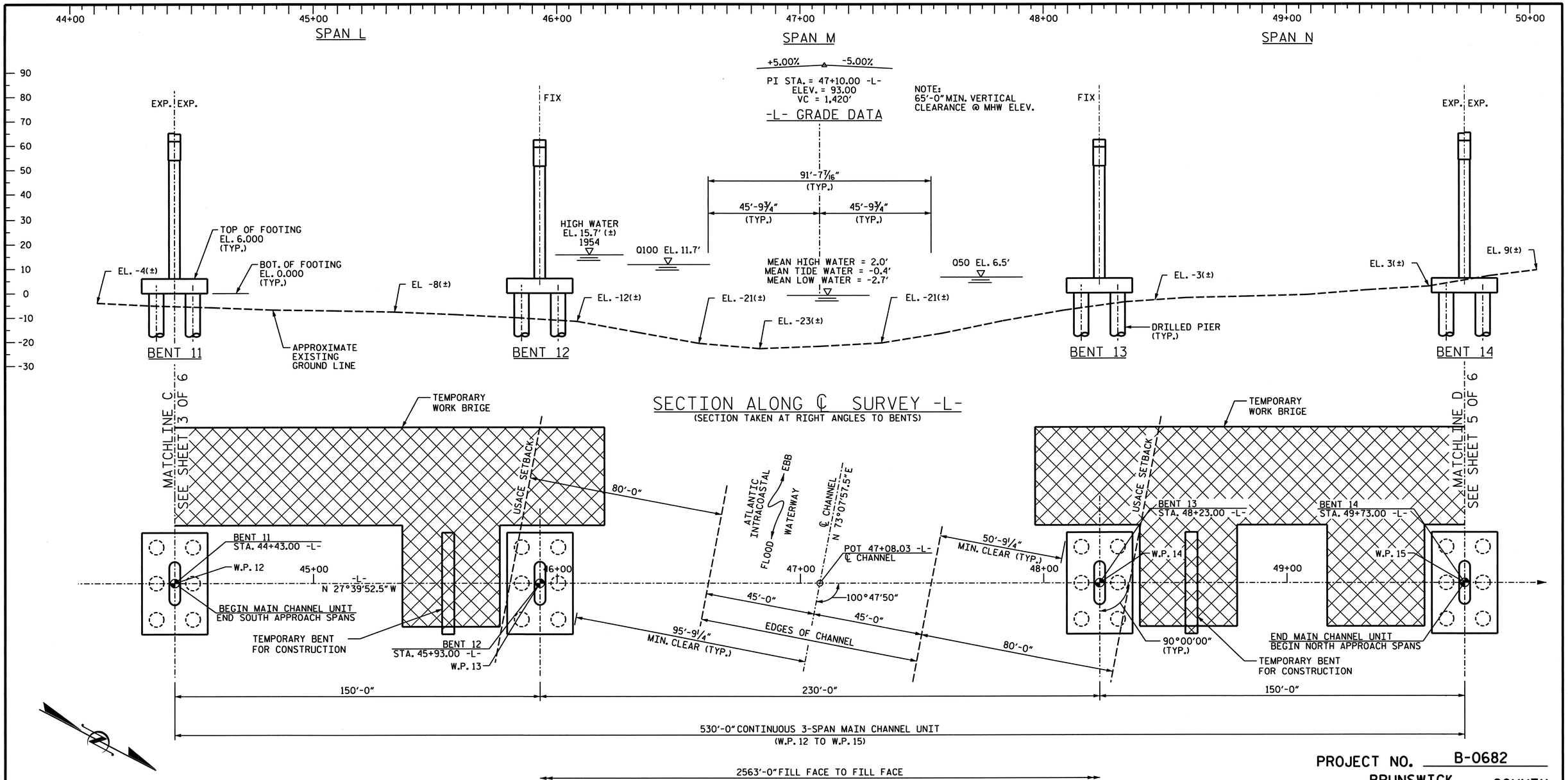

PLAN

PROJECT NO. B-0682

BRUNSWICK COUNTY

STATION: 47+08.03 -L- POT

SHEET 4 OF 15

STATE OF NORTH CAROLINA
DEPARTMENT OF TRANSPORTATION
RALEIGH

GENERAL PLAN
PLAN AND ELEVATION (4 OF 6)

FOR BRIDGE ON SR 1172 OVER
ATLANTIC INTRACOASTAL
WATERWAY AT SUNSET BEACH

NORTH CAROLINA PROFESSIONAL SEAL 024928 ENGINEER RODNEY E. MONEY 3/26/07

PREPARED IN THE OFFICE OF
TYLIN INTERNATIONAL
RALEIGH, NORTH CAROLINA
Copyright © 2006, TYLI

DWG NO.

REVISIONS						SHEET NO.
NO.	BY:	DATE:	NO	BY:	DATE:	5-5
1			3			TOTAL SHEETS
2			4			207

DRAWN BY : T. S. KELLEY DATE : NOV. 06
CHECKED BY : R.E. MONEY DATE : NOV. 06

DATE: $DATE$
FILE: $FILENAME$

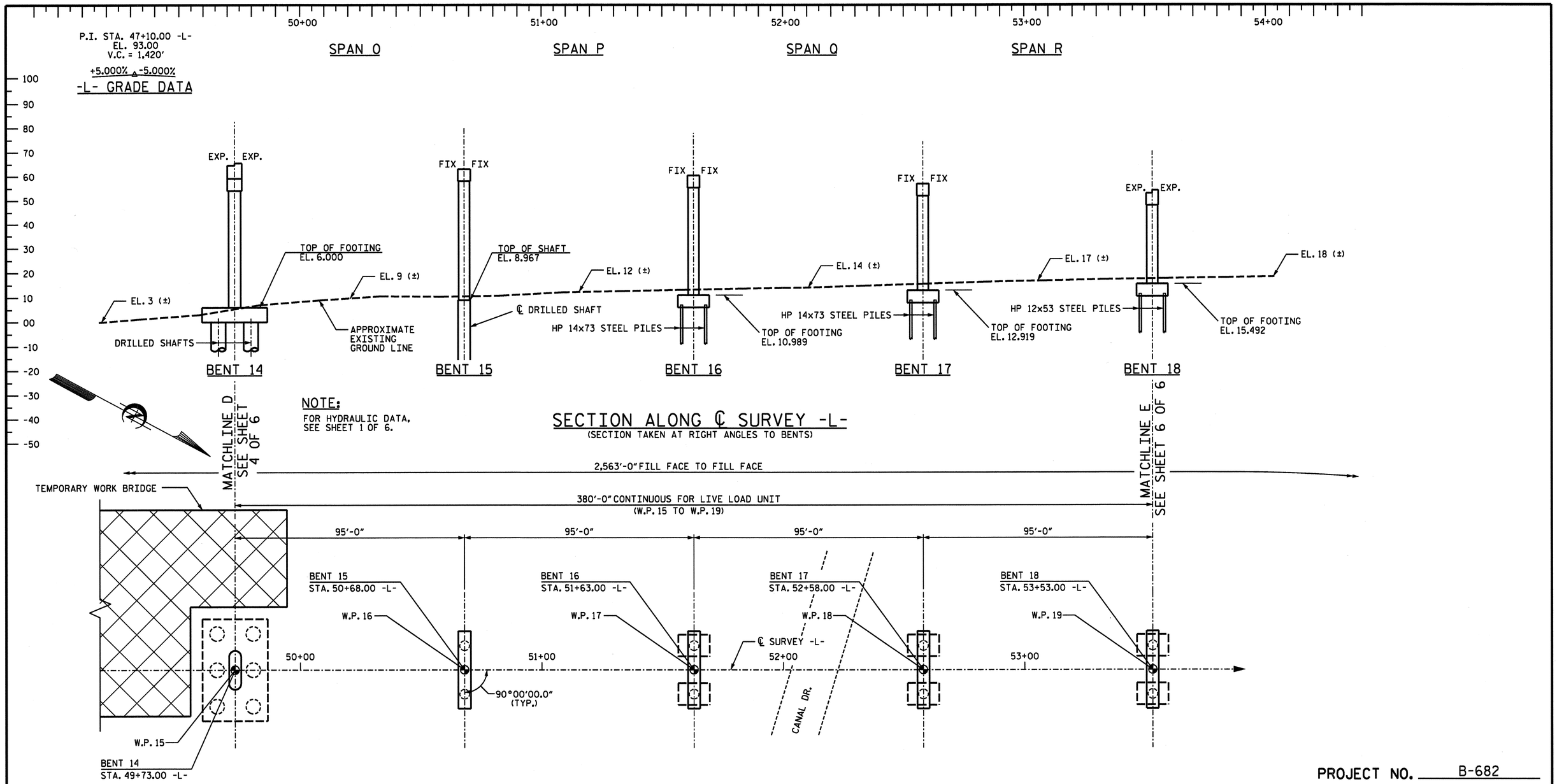

SECTION ALONG ℄ SURVEY -L-

(SECTION TAKEN AT RIGHT ANGLES TO BENTS)

NOTE:

FOR HYDRAULIC DATA, SEE SHEET 1 OF 6.

PLAN

(PILES NOT SHOWN FOR CLARITY)

PROJECT NO. B-682

BRUNSWICK COUNTY

STATION: 47+08.03 -L- POT

SHEET 5 OF 15

STATE OF NORTH CAROLINA
DEPARTMENT OF TRANSPORTATION
RALEIGH

GENERAL DRAWING
PLAN AND ELEVATION (5 OF 6)

FOR BRIDGE ON SR 1172 OVER ATLANTIC INTRACOASTAL WATERWAY AT SUNSET BEACH

NORTH CAROLINA PROFESSIONAL SEAL 15832 ENGINEER JOEL A. LEE 1-17-07

PLANS PREPARED BY:

PARSONS TRANSPORTATION GROUP
Engineers and Planners
RALEIGH, NORTH CAROLINA

JOB NO. 645615

DWG. NO.

REVISIONS						SHEET NO.
NO.	BY:	DATE:	NO.	BY:	DATE:	5-6
1			3			TOTAL SHEETS
2			4			207

DRAWN BY : D. H. Carter DATE : JULY 2006
CHECKED BY : J. A. Lee DATE : JULY 2006

b682_sd_gpe_05.dgn 02/26/2007 10:53:14 AM

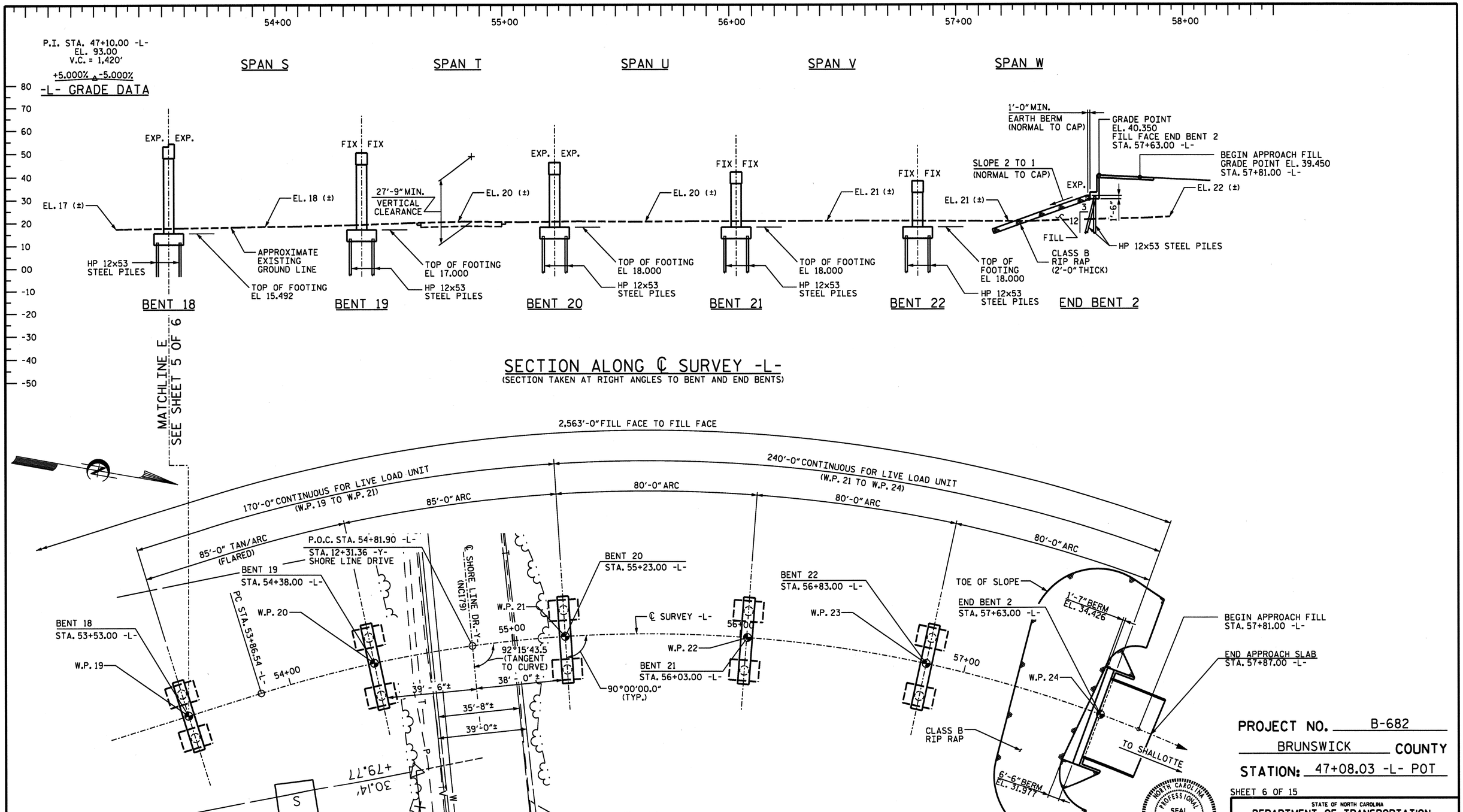

HORIZ. CURVE DATA ℄ SURVEY -L-
P.I. STA. = 62+17.02
Δ = 110°47'44.3" RT.
D = 10°00'00.0"
L = 1,107.96'
T = 830.48'
R = 572.96'

PROJECT NO. B-682

BRUNSWICK COUNTY

STATION: 47+08.03 -L- POT

SHEET 6 OF 15

STATE OF NORTH CAROLINA
DEPARTMENT OF TRANSPORTATION
RALEIGH

GENERAL DRAWING
PLAN AND ELEVATION (6 OF 6)

FOR BRIDGE ON SR 1172 OVER ATLANTIC INTRACOASTAL WATERWAY AT SUNSET BEACH

NORTH CAROLINA PROFESSIONAL SEAL 15832 ENGINEER JOEL A. LEE
1-17-07

PLANS PREPARED BY:

PARSONS TRANSPORTATION GROUP
Engineers and Planners
RALEIGH, NORTH CAROLINA

JOB NO. 645615

DWG. NO.

REVISIONS							SHEET NO.
NO.	BY:	DATE:	NO.	BY:	DATE:		5-7
1			3				TOTAL SHEETS
2			4				207

DRAWN BY : D. H. Carter DATE : JULY 2006
CHECKED BY : J. A. Lee DATE : JULY 2006

b682_sd_gpe_06.dgn 02/26/2007 11:00:53 AM

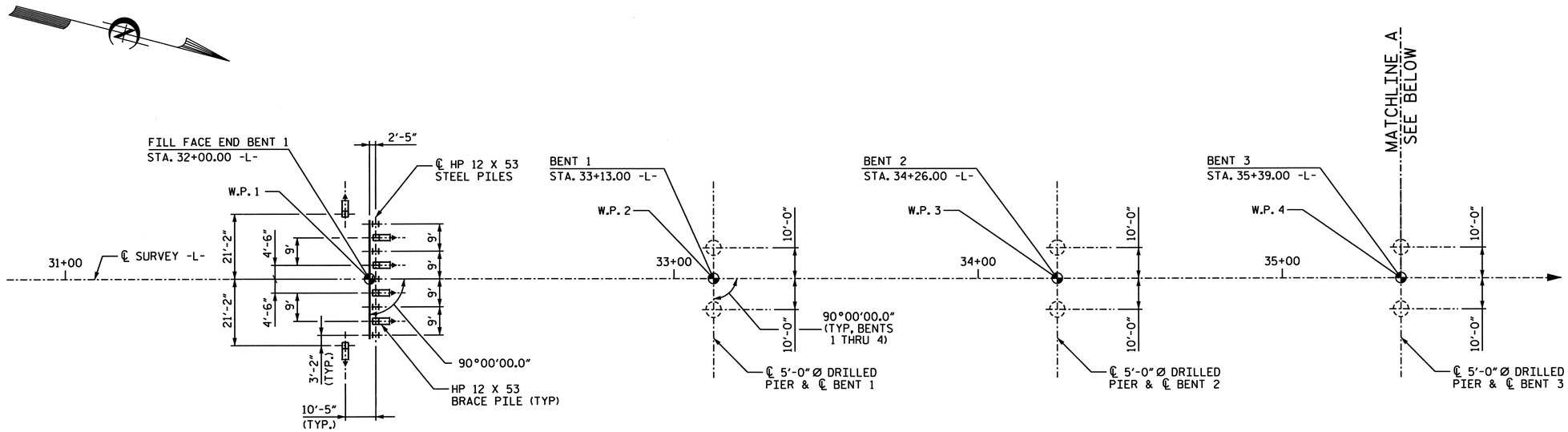

FOUNDATION LAYOUT

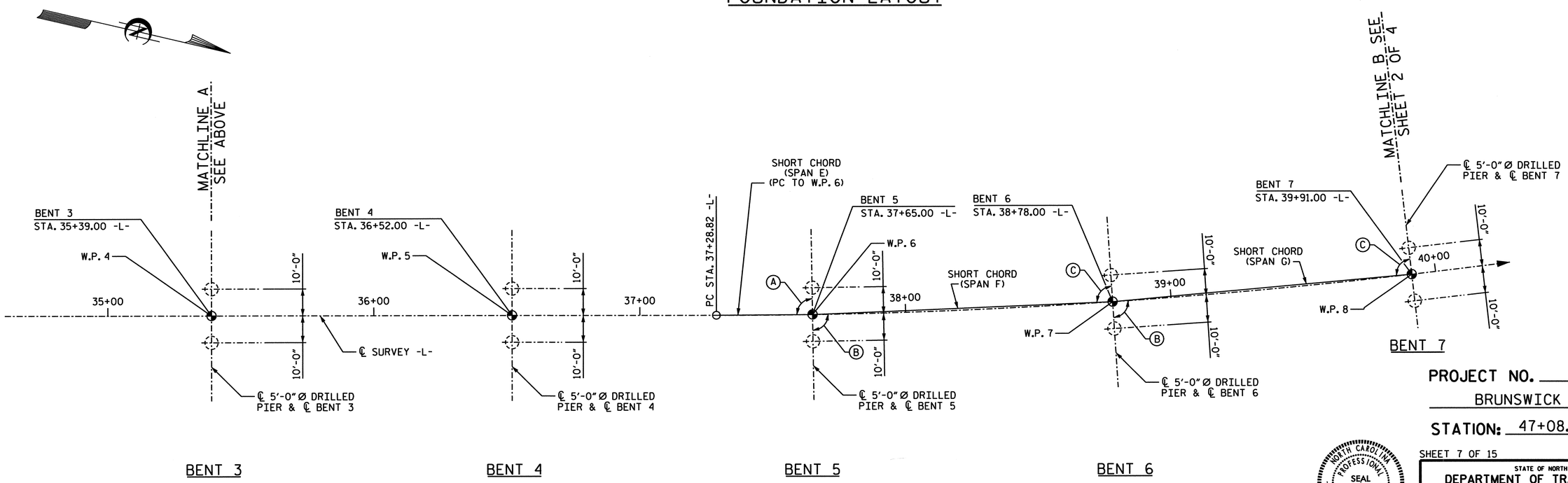

FOUNDATION LAYOUT

(A) 89°32'51.9"
(B) 91°24'45.0"
(C) 88°35'15.0"

PROJECT NO. B-682
BRUNSWICK COUNTY
STATION: 47+08.03 -L- POT

SHEET 7 OF 15

STATE OF NORTH CAROLINA
DEPARTMENT OF TRANSPORTATION
RALEIGH

GENERAL DRAWING

FOUNDATION LAYOUT
(1 OF 4)

NORTH CAROLINA PROFESSIONAL SEAL 15832 ENGINEER JOEL A. LEE 1-17-07

PLANS PREPARED BY:
PARSONS TRANSPORTATION GROUP
Engineers and Planners
RALEIGH, NORTH CAROLINA

JOB NO. 645615
DWG. NO.

REVISIONS						SHEET NO.
NO.	BY:	DATE:	NO.	BY:	DATE:	S-8
1			3			TOTAL SHEETS
2			4			207

DRAWN BY : D. H. Carter DATE : JULY 2006
CHECKED BY : J. A. Lee DATE : JULY 2006

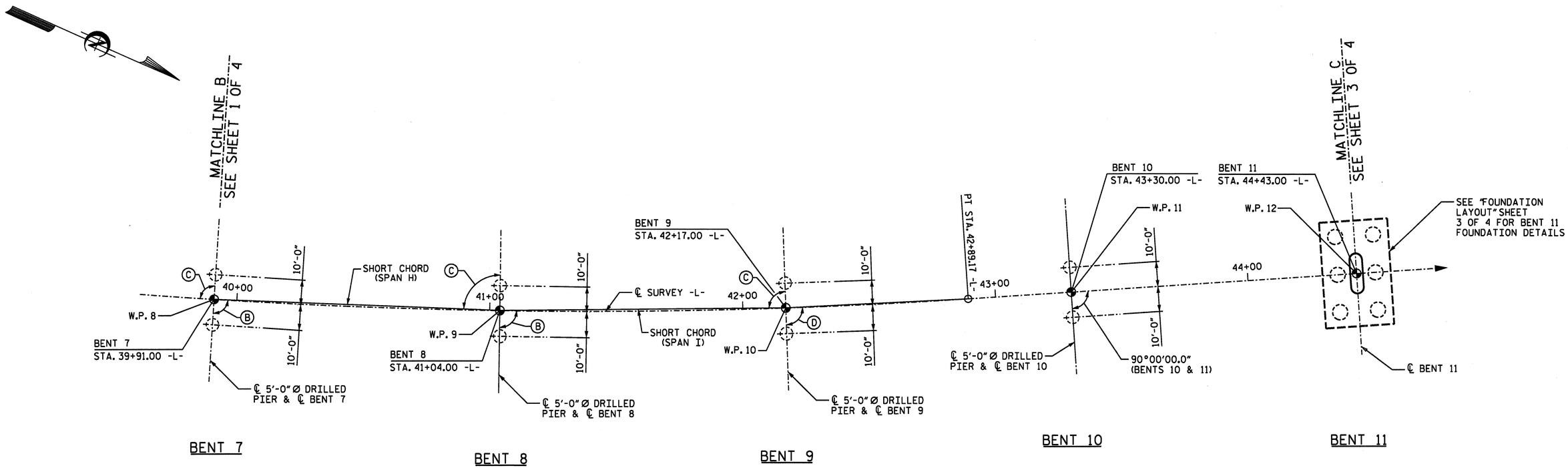

FOUNDATION LAYOUT

Ⓑ 91°24' 45.0"
Ⓒ 88°35' 15.5"
Ⓓ 90°54' 07.8"

PROJECT NO. B-682
BRUNSWICK COUNTY
STATION: 47+08.03 -L- POT

SHEET 8 OF 15

NORTH CAROLINA PROFESSIONAL SEAL 15832 ENGINEER JOEL A. LEE
1-17-07

PLANS PREPARED BY:

PARSONS
TRANSPORTATION GROUP
Engineers and Planners
RALEIGH, NORTH CAROLINA

JOB NO. 645615
DWG. NO.

STATE OF NORTH CAROLINA
DEPARTMENT OF TRANSPORTATION
RALEIGH

GENERAL DRAWING

FOUNDATION LAYOUT
(2 OF 4)

REVISIONS						
NO.	BY:	DATE:	NO.	BY:	DATE:	
1			3			
2			4			

SHEET NO. 5-9
TOTAL SHEETS 207

DRAWN BY : D. H. Carter DATE : JULY 2006
CHECKED BY : J. A. Lee DATE : JULY 2006

b682_sd_fdn_02.dgn 02/26/2007 11:05:34 AM

NOTES:

DIMENSIONS ARE SHOWN TO CENTERLINE OF DRILLED PIERS.

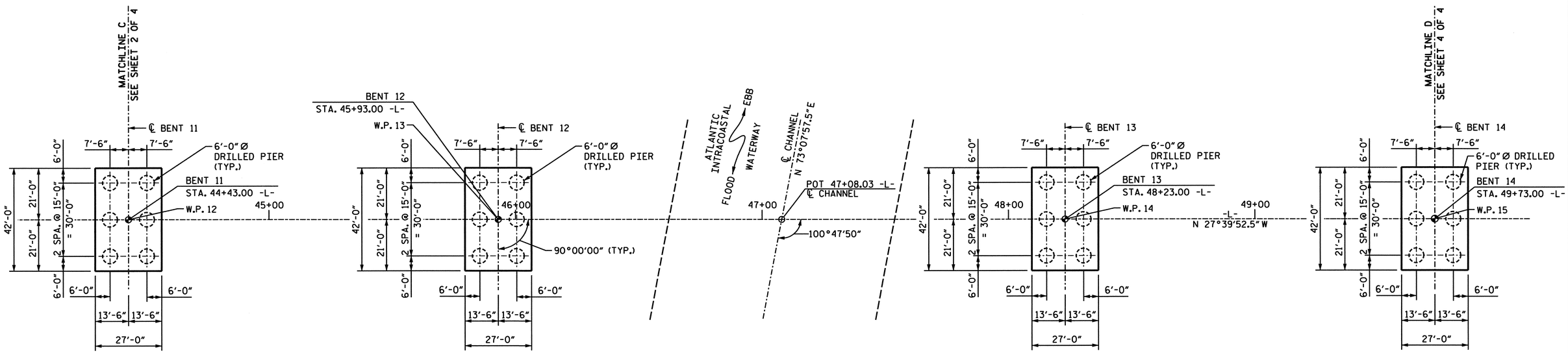

BENT 11 BENT 12 BENT 13 BENT 14

PLAN

PROJECT NO. B-0682

BRUNSWICK COUNTY

STATION: 47+08.03 -L- POT

SHEET 9 OF 15

STATE OF NORTH CAROLINA
DEPARTMENT OF TRANSPORTATION
RALEIGH

GENERAL DRAWING
FOUNDATION LAYOUT (3 OF 4)

SPANS L-N

NORTH CAROLINA PROFESSIONAL SEAL 024928 ENGINEER RODNEY E. MONEY 2/26/07

PREPARED IN THE OFFICE OF
TYLIN INTERNATIONAL
RALEIGH, NORTH CAROLINA
Copyright © 2006, TYLI

DWG NO.

REVISIONS						
NO.	BY:	DATE:	NO.	BY:	DATE:	
1			3			
2			4			

SHEET NO. 5-10

TOTAL SHEETS 207

DRAWN BY : T. S. KELLEY DATE : NOV. 06
CHECKED BY : R.E. MONEY DATE : NOV. 06

DATE: @DATE@
FILE: @FILENAME@

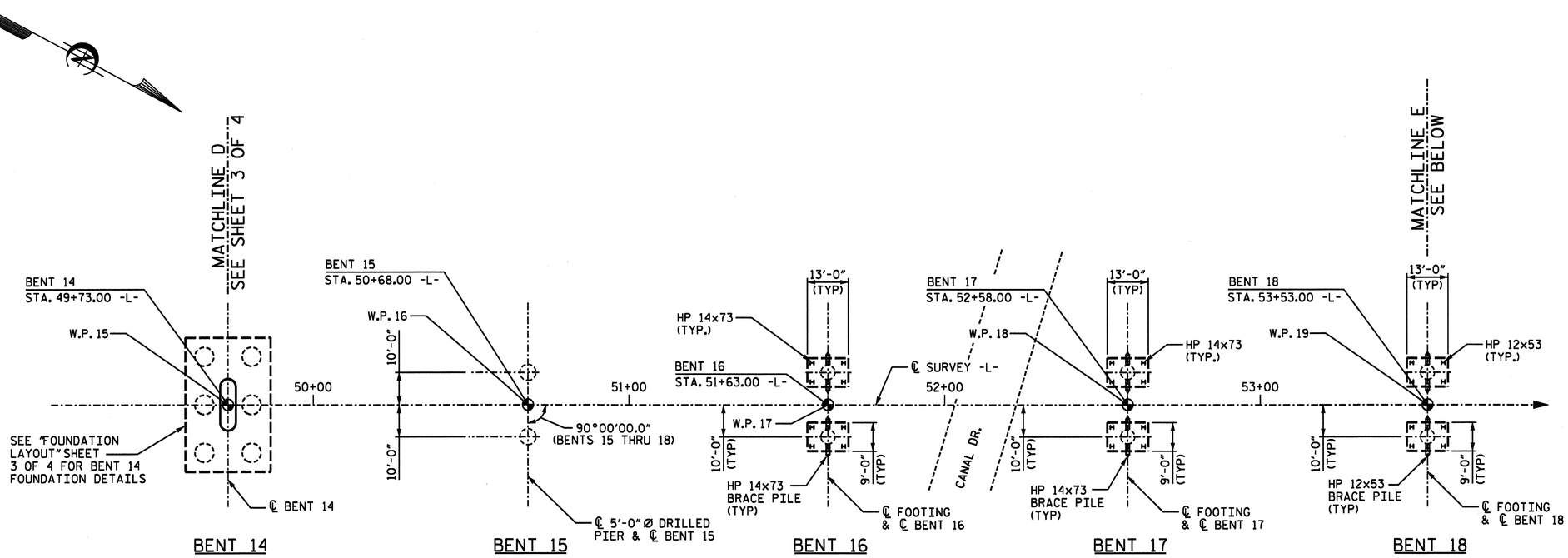

FOUNDATION LAYOUT

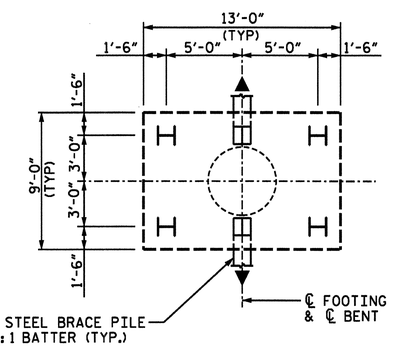

PILE LAYOUT

TYPICAL FOR BENTS 16 THRU 22

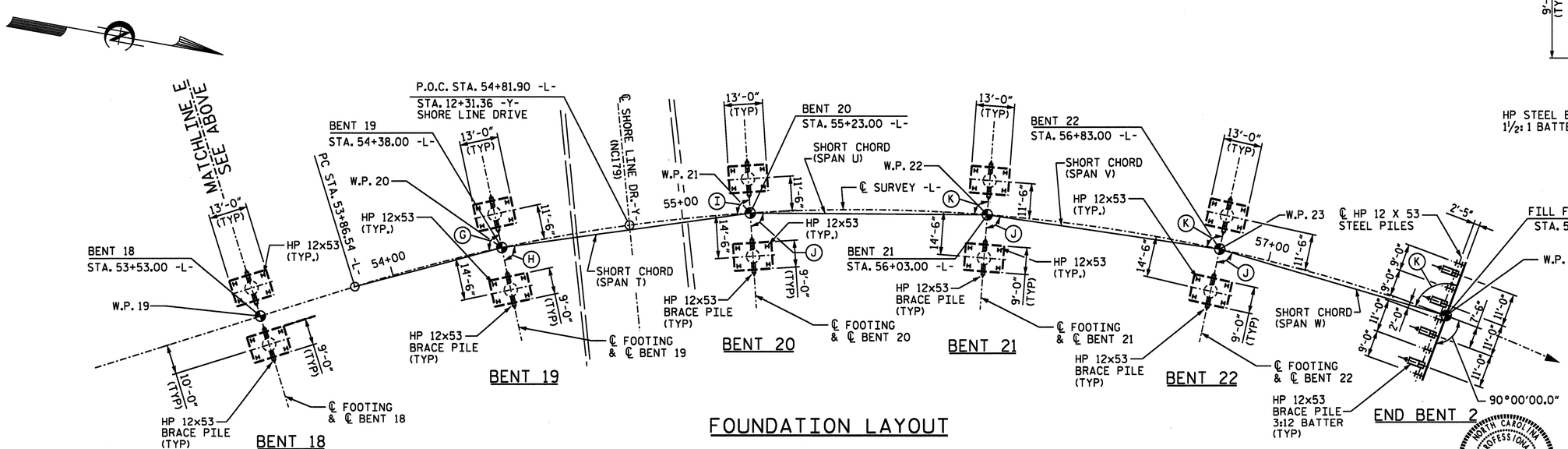

FOUNDATION LAYOUT

Ⓖ 92°34' 22.4" Ⓙ 86°00' 00.0"

Ⓗ 85°45' 00.0" Ⓚ 94°00' 00.0"

Ⓘ 94°15' 00.0"

PROJECT NO. B-682

BRUNSWICK COUNTY

STATION: 47+08.03 -L- POT

SHEET 10 OF 15

STATE OF NORTH CAROLINA
DEPARTMENT OF TRANSPORTATION
RALEIGH

GENERAL DRAWING

FOUNDATION LAYOUT
(4 OF 4)

NORTH CAROLINA PROFESSIONAL SEAL 15832 ENGINEER JOEL A. LEE
1-17-07

PLANS PREPARED BY:

PARSONS
TRANSPORTATION GROUP
Engineers and Planners
RALEIGH, NORTH CAROLINA

JOB NO. 645615

DWG. NO.

REVISIONS						SHEET NO.
NO.	BY:	DATE:	NO.	BY:	DATE:	5-11
1			3			TOTAL SHEETS
2			4			207

DRAWN BY : D. H. Carter DATE : JULY 2006
CHECKED BY : J. A. Lee DATE : JULY 2006

b682_sd_fdn_04.dgn 02/26/2007 11:31:38 AM

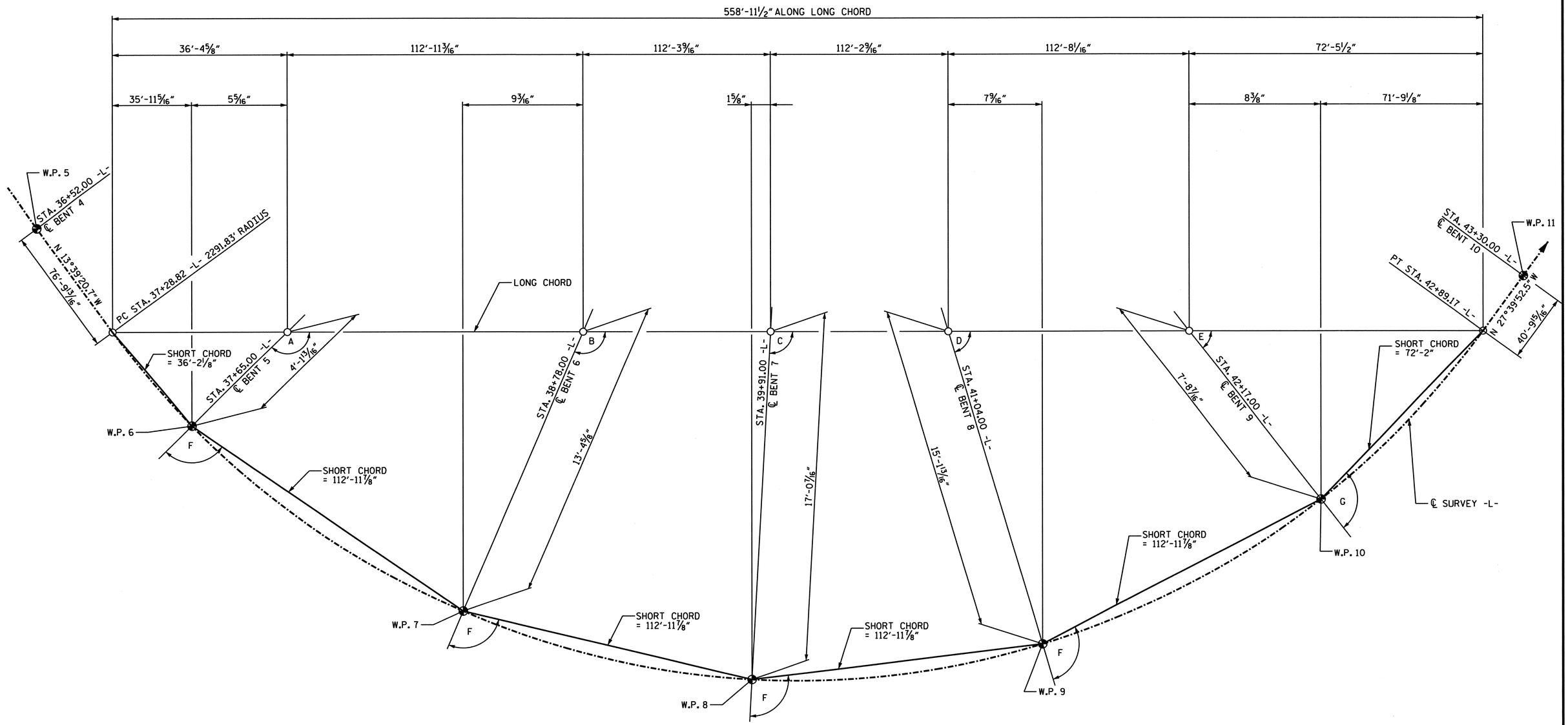

LONG CHORD LAYOUT

ALL BENTS ARE RADIAL
(SPANS E - J)

ANGLES	
A	96°05'59.7"
B	93°16'29.7"
C	90°26'59.7"
D	87°37'29.7"
E	84°47'59.7"
F	91°24'45.0"
G	90°54'07.8"

PROJECT NO. B-682
BRUNSWICK COUNTY
STATION: 47+08.03 -L- POT

SHEET 11 OF 15

NORTH CAROLINA PROFESSIONAL SEAL 15832 ENGINEER JOEL A. LEE
1-17-07

PLANS PREPARED BY:
PARSONS TRANSPORTATION GROUP
Engineers and Planners
RALEIGH, NORTH CAROLINA
JOB NO. 645615
DWG. NO.

STATE OF NORTH CAROLINA
DEPARTMENT OF TRANSPORTATION
RALEIGH

GENERAL DRAWING
LONG CHORD LAYOUT
(1 OF 2)

REVISIONS						SHEET NO.
NO.	BY:	DATE:	NO.	BY:	DATE:	S-12
1			3			TOTAL SHEETS
2			4			207

DRAWN BY : D. H. Carter DATE : JULY 2006
CHECKED BY : J. A. Lee DATE : JULY 2006

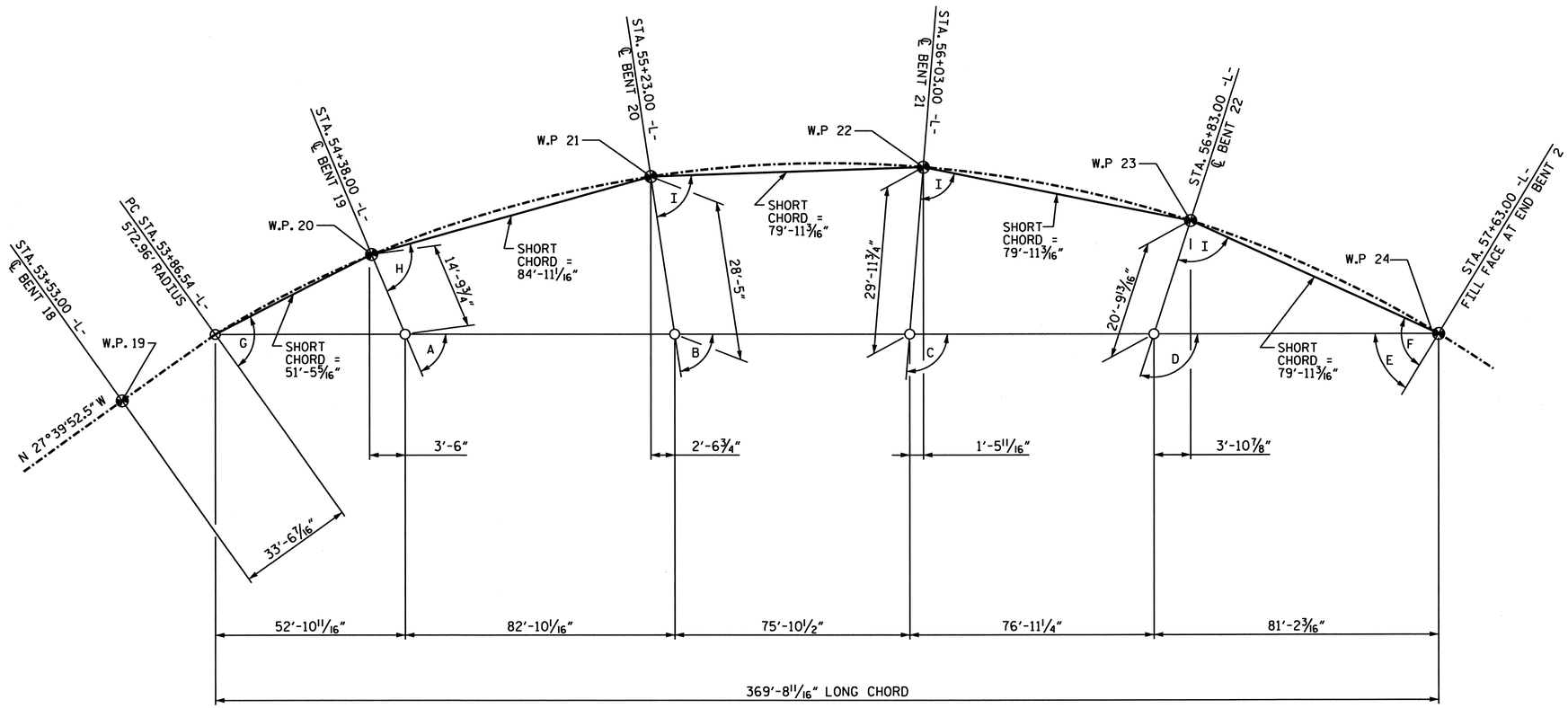

LONG CHORD LAYOUT

(ALL BENTS ARE RADIAL)
SPANS (S-W)

ANGLES	
A	76°19'22.8"
B	84°49'22.8"
C	92°49'22.8"
D	100°49'22.8"
E	71°10'37.2"
F	86°00'00.0"
G	87°25'38.0"
H	85°45'00.0"
I	86°00'00.0"

PROJECT NO. B-682
BRUNSWICK COUNTY
STATION: 47+08.03 -L- POT

SHEET 12 OF 15

STATE OF NORTH CAROLINA
DEPARTMENT OF TRANSPORTATION
RALEIGH

GENERAL DRAWING

LONG CHORD LAYOUT
(2 OF 2)

NORTH CAROLINA PROFESSIONAL SEAL 15832 ENGINEER JOEL A. LEE 1-17-07

PLANS PREPARED BY:
PARSONS TRANSPORTATION GROUP
Engineers and Planners
RALEIGH, NORTH CAROLINA
JOB NO. 645615
DWG. NO.

REVISIONS						SHEET NO.
NO.	BY:	DATE:	NO.	BY:	DATE:	S-13
1			3			TOTAL SHEETS
2			4			207

DRAWN BY : D. H. Carter DATE : JULY 2006
CHECKED BY : J. A. Lee DATE : JULY 2006

BENCH MARK: COPPER-CLAD STEEL ROD IN PVC PIPE SET IN CONCRETE
-BY1- STA. 5+74.36, 55.23' RT., EL. 20.02'

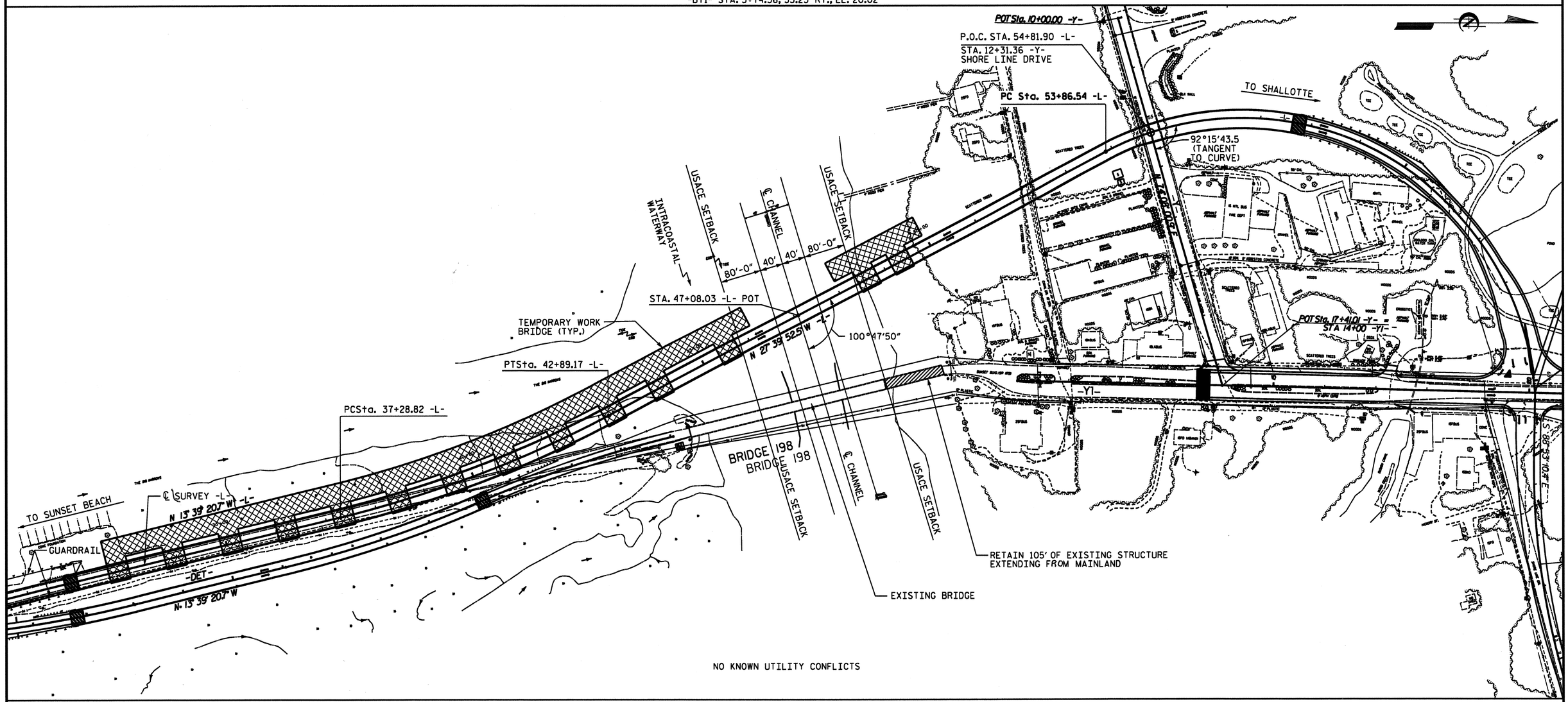

NO KNOWN UTILITY CONFLICTS

LOCATION SKETCH

PROJECT NO. B-682

BRUNSWICK COUNTY

STATION: 47+08.03 -L- POT

SHEET 13 OF 15

NOTES

INASMUCH AS THE PAINT SYSTEM ON THE EXISTING STRUCTURE STEEL CONTAINS LEAD, THE CONTRACTOR'S ATTENTION IS DIRECTED TO ARTICLE 107-1 OF THE STANDARD SPECIFICATIONS. ANY COSTS RESULTING FROM COMPLIANCE WITH APPLICABLE STATE OR FEDERAL REGULATIONS PERTAINING TO HANDLING OF MATERIALS CONTAINING LEAD BASED PAINT SHALL BE INCLUDED IN THE BID PRICE FOR "REMOVAL OF EXISTING STRUCTURE".

FOR NAVIGATIONAL CLEARANCE VERIFICATION AND WATERWAY INSPECTION, SEE SPECIAL PROVISIONS.

THE CONTRACTOR WILL BE REQUIRED TO CONSTRUCT, MAINTAIN AND AFTERWARDS REMOVE A TEMPORARY STRUCTURE FOR USE DURING CONSTRUCTION OF THE PROPOSED STRUCTURE. SEE SPECIAL PROVISIONS FOR CONSTRUCTION, MAINTAINANCE AND REMOVAL OF TEMPORARY STRUCTURE.

THE INSTALLATION, STRESSING AND GROUTING OF POST-TENSIONING TENDONS SHALL BE SUPERVISED, PERFORMED AND INSPECTED BY PERSONNEL WITH QUALIFICATIONS AND EXPERIENCE AS DESCRIBED IN APPENDIX B OF THE "POST-TENSIONING TENDON INSTALLATION AND GROUTING MANUAL" PUBLISHED BY THE FEDERAL HIGHWAY ADMINISTRATION. DOCUMENTATION OF THE QUALIFICATIONS AND EXPERIENCE SHALL BE SUBMITTED TO THE ENGINEER FOR APPROVAL.

NORTH CAROLINA PROFESSIONAL SEAL 15832 ENGINEER JOEL A. LEE
7-17-07

PLANS PREPARED BY:

PARSONS TRANSPORTATION GROUP
Engineers and Planners
RALEIGH, NORTH CAROLINA

JOB NO. 645615
DWG. NO.

STATE OF NORTH CAROLINA
DEPARTMENT OF TRANSPORTATION
RALEIGH

GENERAL DRAWING
FOR BRIDGE ON SR 1172 OVER ATLANTIC INTRACOASTAL WATERWAY AT SUNSET BEACH

REVISIONS						SHEET NO.
NO.	BY:	DATE:	NO.	BY:	DATE:	5-14
1			3			TOTAL SHEETS
2			4			207

DRAWN BY : D. H. Carter DATE : JULY 2006
CHECKED BY : J. A. Lee DATE : JULY 2006

b682_sd_LS_01.dgn 02/26/2007 12:11:57 PM

GENERAL NOTES:

ASSUMED LIVE LOAD = HS20 OR ALTERNATE LOADING.

THIS BRIDGE HAS BEEN DESIGNED IN ACCORDANCE WITH THE REQUIREMENTS OF THE AASHTO STANDARD SPECIFICATIONS FOR SEISMIC DESIGN OF HIGHWAY BRIDGES FOR SEISMIC PERFORMANCE CATEGORY A.

DESIGN WIND VELOCITY = 120 mph

THIS BRIDGE HAS BEEN DESIGNED BY THE STRENGTH DESIGN METHOD AS SPECIFIED IN AASHTO STANDARD SPECIFICATIONS.

THIS STRUCTURE HAS BEEN DESIGNED IN ACCORDANCE WITH HEC 18, "EVALUATING SCOUR AT BRIDGES", MAY, 2001.

THIS BRIDGE HAS BEEN DESIGNED IN ACCORDANCE WITH AASHTO'S "GUIDE SPECIFICATION AND COMMENTARY FOR VESSEL COLLISION DESIGN OF HIGHWAY BRIDGES", USING CRITICAL IMPORTANCE CLASSIFICATION, METHOD II CRITERIA. BENTS 1 THROUGH 14 ARE INCLUDED FOR VESSEL IMPACT CONSIDERATION.

FOR SUBMITTAL OF WORKING DRAWINGS, SEE SPECIAL PROVISIONS.

FOR CRANE SAFETY, SEE SPECIAL PROVISIONS.

FOR OTHER DESIGN DATA AND GENERAL NOTES, SEE SHEET SN.

FOR EROSION CONTROL MEASURES SEE EROSION CONTROL PLANS.

FOR SECURING OF VESSELS, SEE SPECIAL PROVISIONS.

FOR BRIDGE DECK RIDEABILITY AND GROOVING, SEE SPECIAL PROVISIONS.

FOR FALSEWORK AND FORMWORK, SEE SPECIAL PROVISIONS.

NEEDLE BEAMS WILL NOT BE ALLOWED UNLESS OTHERWISE CALLED FOR ON THE PLANS OR APPROVED BY THE ENGINEER.

THE CONTRACTOR SHALL PROVIDE INDEPENDENT ASSURANCE SAMPLES OF REINFORCING STEEL AS FOLLOWS: FOR PROJECTS REQUIRING UP TO 400 TONS OF REINFORCING STEEL, ONE 30 INCH SAMPLE OF EACH SIZE BAR USED, AND FOR PROJECTS REQUIRING OVER 400 TONS OF REINFORCING STEEL, TWO 30 INCH SAMPLES OF EACH SIZE BAR USED. THE BARS FROM WHICH THE SAMPLES ARE TAKEN MUST THEN BE SPLICED WITH REPLACEMENT BARS OF THE SIZE AND LENGTH OF THE SAMPLE, PLUS A MINIMUM LAP SPLICE OF THIRTY BAR DIAMETERS.

FOR CRACK REPAIR OF PRESTRESSED CONCRETE GIRDERS, SEE SPECIAL PROVISIONS.

FOR GROUT FOR STRUCTURES, SEE SPECIAL PROVISIONS.

FOR MAINTENANCE AND PROTECTION OF TRAFFIC BENEATH PROPOSED STRUCTURE, SEE SPECIAL PROVISIONS.

PREVIOUSLY CAST CONCRETE IN A CONTINUOUS UNIT SHALL HAVE ATTAINED A MINIMUM COMPRESSIVE STRENGTH OF 3,000 PSI BEFORE ADDITIONAL CONCRETE IS CAST IN THE UNIT.

GROOVED CONTRACTION JOINTS ½" IN DEPTH, SHALL BE TOOLED IN ALL EXPOSED FACES OF THE PARAPET IN ACCORDANCE WITH ARTICLE 825-10(B) OF THE STANDARD SPECIFICATIONS. THE CONTRACTION JOINTS SHALL BE LOCATED AT A SPACING OF 8 FEET TO 10 FEET BETWEEN EXPANSION JOINTS. NO CONTRACTION JOINTS WILL BE REQUIRED FOR SEGMENTS LESS THAN 10 FEET IN LENGTH.

STRUCTURAL STEEL DIAPHRAGM ERECTION SHALL BE COMPLETED BEFORE FALSEWORK OR FORMS ARE PLACED ON THE GIRDERS.

REMOVABLE FORMS ARE TO BE USED IN SPAN S THROUGH SPAN W.

WHERE PRECAST PANELS ARE USED, THEY SHALL BE DESIGNED FOR AN ALLOWABLE TENSILE STRESS OF 0 psi IN THE PRECOMPRESSED TENSILE ZONE UNDER ALL LOADING CONDITIONS.

FOR MAINTENANCE OF WATER TRAFFIC, SEE SPECIAL PROVISIONS.

FOR WORK IN, OVER, OR ADJACENT TO NAVIGABLE WATERS, SEE SPECIAL PROVISIONS.

AFTER SERVING AS A TEMPORARY STRUCTURE THE EXISTING STRUCTURE CONSISTING OF A SINGLE-LANE, FLOATING STEEL BARGE, SWING SPAN DRAW BRIDGE, WITH FIXED WOODEN APPROACH SPANS, AND LOCATED EAST OF THE PROPOSED STRUCTURE SHALL BE REMOVED, SEE SPECIAL PROVISIONS. THE EXISTING BRIDGE IS PRESENTLY NOT POSTED FOR LOAD LIMIT. SHOULD THE STRUCTURAL INTEGRITY OF THE BRIDGE DETERIORATE DURING CONSTRUCTION OF THE PROPOSED BRIDGE, A LOAD LIMIT MAY BE POSTED AND MAY BE REDUCED AS FOUND NECESSARY DURING THE LIFE OF THE PROJECT. NCDOT WILL BE RESPONSIBLE FOR MAINTENANCE OF THE EXISTING BRIDGE DURING CONSTRUCTION.

THE MATERIAL SHOWN IN THE CROSS-HATCHED AREA SHALL BE EXCAVATED FOR A DISTANCE OF 16 FT. EACH SIDE OF CENTERLINE ROADWAY AS DIRECTED BY THE ENGINEER. THIS WORK WILL BE MEASURED AND PAID FOR AS UNCLASSIFIED STRUCTURE EXCAVATION.

FOR EPOXY RESIN INJECTION, SEE SPECIAL PROVISIONS,

FOR VERTICAL CLEARANCE GAGES, SEE SPECIAL PROVISIONS.

FOR HIGH STRENGTH BOLTS, SEE SPECIAL PROVISIONS.

FOR MASS CONCRETE AT BENTS 11 THRU 14, SEE SPECIAL PROVISIONS.

FOR ROADWAY LIGHTING MESSENGER CABLE SYSTEM, SEE SPECIAL PROVISIONS.

FOR GIRDER BRACING REQUIREMENTS FOR DECK SLAB PLACEMENT, SEE SPECIAL PROVISIONS.

FOR CONSTRUCTION, MAINTENANCE AND REMOVAL OF TEMPORARY ACCESS, SEE SPECIAL PROVISIONS.

THE COST OF THE MATERIALS, LABOR AND ANY INCIDENTIAL ITEMS RELATED TO THE CONSTRUCTION, MAINTENANCE AND REMOVAL OF TEMPORARY SUPPORTS AND STRONG-BACKS SHALL BE INCLUDED IN THE PAY ITEM "CONSTRUCTION, MAINTENANCE AND REMOVAL OF TEMPORARY ACCESS".

THE EXACT LOCATION AND COMPLETE DESCRIPTION OF ALL INSERTS SHALL BE SHOWN ON WORKING DRAWINGS AND SUBMITTED TO THE DEPARTMENT FOR APPROVAL PRIOR TO CASTING OF CONCRETE MEMBER.

DRAWN BY :	D. H. Carter	DATE :	JULY 2006
CHECKED BY :	J. A. Lee	DATE :	JULY 2006

FOUNDATION NOTES:

DRILLED PIERS AT BENT NO. 1 THRU BENT NO. 15 ARE DESIGNED FOR BOTH SKIN FRICTION AND END BEARING. CHECK FIELD CONDITIONS FOR THE REQUIRED END BEARING CAPACITY OF 20 TSF.

DRILLED PIERS AT BENT NO. 1 AND BENT NO. 2 ARE DESIGNED FOR AN APPLIED LOAD OF 415 TONS EACH AT THE TOP OF THE COLUMN.

DRILLED PIERS AT BENT NO. 3, BENT NO. 4 AND BENT NO. 5 ARE DESIGNED FOR AN APPLIED LOAD OF 420 TONS EACH AT THE TOP OF THE COLUMN.

DRILLED PIERS AT BENT NO. 6 AND BENT NO. 7 ARE DESIGNED FOR AN APPLIED LOAD OF 425 TONS EACH AT THE TOP OF THE COLUMN.

DRILLED PIERS AT BENT NO. 8 AND BENT NO. 9 ARE DESIGNED FOR AN APPLIED LOAD OF 430 TONS EACH AT THE TOP OF THE COLUMN.

DRILLED PIERS AT BENT NO. 10 AND BENT NO. 15 ARE DESIGNED FOR AN APPLIED LOAD OF 435 TONS EACH AT THE TOP OF THE COLUMN.

DRILLED PIERS AT BENT NO. 11 AND BENT NO. 14 ARE DESIGNED FOR AN APPLIED LOAD OF 365 TONS EACH AT THE TOP OF THE PIER.

DRILLED PIERS AT BENT NO. 12 AND BENT NO. 13 ARE DESIGNED FOR AN APPLIED LOAD OF 510 TONS EACH AT THE TOP OF THE PIER.

PERMANENT STEEL CASING MAY BE REQUIRED FOR DRILLED PIERS AT BENT NO. 1 THRU BENT NO. 8 AND BENT NO. 14. IF REQUIRED, DO NOT EXTEND THE CASING BELOW ELEVATION -30 FT. WITHOUT PRIOR APPROVAL FROM THE ENGINEER. THE ENGINEER WILL DETERMINE THE NEED FOR PERMANENT STEEL CASING. SEE DRILLED PIERS SPECIAL PROVISION.

PERMANENT STEEL CASING IS REQUIRED FOR DRILLED PIERS AT BENT NO. 9 THRU BENT NO. 13. DO NOT EXTEND THE CASING BELOW ELEVATION -30 FT. WITHOUT PRIOR APPROVAL FROM THE ENGINEER. SEE DRILLED PIERS SPECIAL PROVISION.

PERMANENT STEEL CASING IS NOT REQUIRED FOR DRILLED PIERS AT BENT NO. 15.

PERMANENT STEEL CASING IS NOT REQUIRED FOR DEMONSTRATION PIER.

DRILLED PIERS AT BENT NO. 1 SHALL EXTEND TO AN ELEVATION NO HIGHER THAN -95 FT AND SATISFY THE REQUIRED END BEARING CAPACITY.

DRILLED PIERS AT BENT NO. 2 SHALL EXTEND TO AN ELEVATION NO HIGHER THAN -95 FT AND SATISFY THE REQUIRED END BEARING CAPACITY.

DRILLED PIERS AT BENT NO. 3 SHALL EXTEND TO AN ELEVATION NO HIGHER THAN -100 FT AND SATISFY THE REQUIRED END BEARING CAPACITY.

DRILLED PIERS AT BENT NO. 4 SHALL EXTEND TO AN ELEVATION NO HIGHER THAN -100 FT AND SATISFY THE REQUIRED END BEARING CAPACITY.

DRILLED PIERS AT BENT NO. 5 SHALL EXTEND TO AN ELEVATION NO HIGHER THAN -100 FT AND SATISFY THE REQUIRED END BEARING CAPACITY.

DRILLED PIERS AT BENT NO. 6 SHALL EXTEND TO AN ELEVATION NO HIGHER THAN -105 FT AND SATISFY THE REQUIRED END BEARING CAPACITY.

DRILLED PIERS AT BENT NO. 7 SHALL EXTEND TO AN ELEVATION NO HIGHER THAN -105 FT AND SATISFY THE REQUIRED END BEARING CAPACITY.

DRILLED PIERS AT BENT NO. 8 SHALL EXTEND TO AN ELEVATION NO HIGHER THAN -110 FT AND SATISFY THE REQUIRED END BEARING CAPACITY.

DRILLED PIERS AT BENT NO. 9 SHALL EXTEND TO AN ELEVATION NO HIGHER THAN -110 FT AND SATISFY THE REQUIRED END BEARING CAPACITY.

DRILLED PIERS AT BENT NO. 10 SHALL EXTEND TO AN ELEVATION NO HIGHER THAN -115 FT AND SATISFY THE REQUIRED END BEARING CAPACITY.

DRILLED PIERS AT BENT NO. 11 SHALL EXTEND TO AN ELEVATION NO HIGHER THAN -80 FT AND SATISFY THE REQUIRED END BEARING CAPACITY.

DRILLED PIERS AT BENT NO. 12 SHALL EXTEND TO AN ELEVATION NO HIGHER THAN -95 FT AND SATISFY THE REQUIRED END BEARING CAPACITY.

DRILLED PIERS AT BENT NO. 13 SHALL EXTEND TO AN ELEVATION NO HIGHER THAN -95 FT AND SATISFY THE REQUIRED END BEARING CAPACITY.

DRILLED PIERS AT BENT NO. 14 SHALL EXTEND TO AN ELEVATION NO HIGHER THAN -80 FT AND SATISFY THE REQUIRED END BEARING CAPACITY.

DRILLED PIERS AT BENT NO. 15 SHALL EXTEND TO AN ELEVATION NO HIGHER THAN -110 FT AND SATISFY THE REQUIRED END BEARING CAPACITY.

FOR DRILLED PIERS, SEE DRILLED PIERS SPECIAL PROVISION.

SPT TESTING IS REQUIRED TO DETERMINE THE END BEARING CAPACITY OF THE DRILLED PIERS AT BENT NO. 1 THRU BENT NO. 15. SEE DRILLED PIERS SPECIAL PROVISION.

SPT TESTING IS REQUIRED TO DETERMINE THE END BEARING CAPACITY OF THE DEMEONSTRATION PIER. SEE DRILLED PIERS SPECIAL PROVISION.

POLYMER SLURRY IS REQUIRED FOR DRILLED PIERS AT BENT NO. 1 THRU BENT NO. 15. SEE DRILLED PIERS SPECIAL PROVISION.

POLYMER SLURRY IS REQUIRED FOR THE DEMONSTRATION PIER. SEE DRILLED PIERS SPECIAL PROVISION.

SID INSPECTIONS ARE REQUIRED TO INSPECT THE BOTTOM CLEANLINESS OF THE DRILLED PIERS AT BENT NO. 1 THRU BENT NO. 15. SEE DRILLED PIERS SPECIAL PROVISION.

SID INSPECTIONS ARE REQUIRED TO INSPECT THE BOTTOM CLEANLINESS OF THE DEMONSTRATION PIER. SEE DRILLED PIERS SPECIAL PROVISION.

THE SCOUR CRITICAL ELEVATION FOR BENT NO. 1 THRU BENT NO. 10 AND BENT NO. 15 IS ELEVATION -30 FT. SCOUR CRITICAL ELEVATIONS ARE USED TO MONITOR POSSIBLE SCOUR PROBLEMS DURING THE LIFE OF THE STRUCTURE.

FOR AXIAL LOAD TEST, SEE AXIAL LOAD TEST SPECIAL PROVISION.

CSL TUBES ARE REQUIRED AND CSL TESTING MAY BE REQUIRED FOR THE DRILLED PIERS. THE ENGINEER WILL DETERMINE THE NEED FOR CSL TESTING. SEE CROSSHOLE SONIC LOGGING SPECIAL PROVISION.

CSL TUBES ARE REQUIRED AND CSL TESTING IS REQUIRED FOR THE DEMONSTRATION PIER SEE CROSSHOLE SONIC LOGGING SPECIAL PROVISION.

THE SCOUR CRITICAL ELEVATION FOR BENT NO. 11 THRU BENT NO. 14 IS ELEVATION -35 FT. SCOUR CRITICAL ELEVATIONS ARE USED TO MONITOR POSSIBLE SCOUR PROBLEMS DURING THE LIFE OF THE STRUCTURE.

DRIVE PILES AT END BENT NO. 1 AND END BENT NO. 2 TO A REQUIRED BEARING CAPACITY OF 100 TONS PER PILE. THE REQUIRED BEARING CAPACITY IS EQUAL TO THE ALLOWABLE BEARING CAPACITY WITH A MINIMUM FACTOR OF SAFETY OF TWO.

THE ALLOWABLE BEARING CAPACITY FOR PILES AT END BENT NO. 1 AND END BENT NO. 2 IS 50 TONS PER PILE.

DRIVE PILES AT BENT NO. 16 AND BENT NO. 17 TO A REQUIRED BEARING CAPACITY OF 150 TONS PER PILE. THE REQUIRED BEARING CAPACITY IS EQUAL TO THE ALLOWABLE BEARING CAPACITY WITH A MINIMUM FACTOR OF SAFETY OF TWO.

THE ALLOWABLE BEARING CAPACITY FOR PILES AT BENT NO. 16 AND BENT NO. 17 IS 75 TONS PER PILE.

DRIVE PILES AT BENT NO. 18 AND BENT NO. 19 TO A REQUIRED BEARING CAPACITY OF 130 TONS PER PILE. THE REQUIRED BEARING CAPACITY IS EQUAL TO THE ALLOWABLE BEARING CAPACITY WITH A MINIMUM FACTOR OF SAFETY OF TWO.

THE ALLOWABLE BEARING CAPACITY FOR PILES AT BENT NO. 18 AND BENT NO. 19 IS 65 TONS PER PILE.

DRIVE PILES AT BENT NO.20 THRU BENT NO. 22 TO A REQUIRED BEARING CAPACITY OF 120 TONS PER PILE. THE REQUIRED BEARING CAPACITY IS EQUAL TO THE ALLOWABLE BEARING CAPACITY WITH A MINIMUM FACTOR OF SAFETY OF TWO.

THE ALLOWABLE BEARING CAPACITY FOR PILES AT BENT NO. 20 AND BENT NO. 22 IS 60 TONS PER PILE.

ADHERE TO A 6 MONTH WAITING PERIOD AFTER CONSTRUCTING THE EMBANKMENT TO WITHIN 2 FT. OF FINISHED GRADE BEFORE BEGINNING END BENT OR REINFORCED BRIDGE APPROACH FILL CONSTRUCTION AT END BENT NO. 1 AND END BENT NO. 2.

TESTING PILES WITH THE PILE DRIVING ANALYZER (PDA) DURING DRIVING, RESTRIKING OR REDRIVING MAY BE REQUIRED. THE ENGINEER WILL DETERMINE THE NEED FOR PDA TESTING. SEE PILE DRIVING ANALYZER SPECIAL PROVISION.

SPECIAL NOTE ON PLANS:

DRILLED PIER TIP ELEVATIONS MAY BE ADJUSTED, HIGHER OR LOWER, A MAXIMUM OF 15 FT BASED UPON THE RESULTS OF THE DEMONSTRATION PIER AXIAL LOAD TEST. SEE AXIAL LOAD TEST SPECIAL PROVISION.

DEMONSTRATION PIER SHALL EXTEND TO ELEVATION -80 FT.

CONSTRUCT DEMONSTRATION PIER IN ACCORDANCE WITH THE DRILLED PIER SPECIAL PROVISION AND THE AXIAL LOAD TEST SPECIAL PROVISION.

SONIC CALIPER TESTING (SCT) IS REQUIRED TO INSPECT THE VERTICALITY AND DIAMETER OF THE DEMONSTRATION PIER. SEE SONIC CALIPER TESTING SPECIAL PROVISION.

CORROSION PROTECTION NOTES:

FOR CORROSION PROTECTION OF BRIDGE, SEE SPECIAL PROVISIONS.

THIS STRUCTURE CONTAINS THE NECESSARY CORROSION PROTECTION REQUIRED FOR A CORROSIVE SITE.

ALL BAR SUPPORTS IN THE PARAPET, DECK, BENT DIAPHRAGMS, BENT CAPS, COLUMNS, DRILLED PIERS AND FOOTINGS AND ALL INCIDENTAL REINFORCING STEEL SHALL BE EPOXY COATED IN ACCORDANCE WITH THE STANDARD SPECIFICATIONS.

PRESTRESSED CONCRETE GIRDERS ARE DESIGNED FOR 0 psi TENSION IN THE PRECOMPRESSED TENSILE ZONE UNDER ALL LOADING CONDITIONS.

THE DRILLED PIERS AT BENTS 11 THRU 14 SHALL CONTAIN SILICA FUME FROM TOP OF DRILLED PIER TO EL. -30.0. SILICA FUME SHALL BE SUBSTITUTED FOR 5% OF THE PORTLAND CEMENT BY WEIGHT. SEE CORROSION PROTECTION OF BRIDGE SPECIAL PROVISION.

ALL INSERTS AND MISCELLANEOUS REINFORCING STEEL EMBEDDED IN CAST-IN-PLACE CONCRETE SHALL BE CORROSION PROTECTED. INSERTS MAY BE HOT DIP GALVANIZED OR EPOXY COATED. REINFORCING STEEL SHALL BE EPOXY COATED. ELECTROPLATING WILL NOT BE ALLOWED.

PROJECT NO. B-682

BRUNSWICK COUNTY

STATION: 47+08.03 -L- POT

SHEET 14 OF 15

NORTH CAROLINA PROFESSIONAL SEAL 15832 ENGINEER JOEL A. LEE

1-17-07

PLANS PREPARED BY:

PARSONS TRANSPORTATION GROUP
Engineers and Planners
RALEIGH, NORTH CAROLINA

JOB NO. 645615

DWG. NO.

STATE OF NORTH CAROLINA
DEPARTMENT OF TRANSPORTATION
RALEIGH

GENERAL DRAWING

GENERAL NOTES

REVISIONS								SHEET NO.
NO.	BY:	DATE:	NO.	BY:	DATE:			5-15
1			3					TOTAL SHEETS
2			4					207

TOTAL BILL OF MATERIALS

	CONSTRUCTION, MAINTENANCE & REMOVAL OF TEMPORARY ACCESS	REMOVAL OF EXISTING STRUCTURE	FOUNDATION EXCAVATION	5'-0" DIA. DRILLED PIERS	6'-0" DIA. DRILLED PIERS	PERMANENT STEEL CASING FOR 5'-0" DIA. DRILLED PIER	PERMANENT STEEL CASING FOR 6'-0" DIA. DRILLED PIER	PDA TESTING	PDA ASSISTANCE	SID INSPECTION	SPT TESTING	CROSSHOLE SONIC LOGGING	UNCLASSIFIED STRUCTURE EXCAVATION	REINFORCED CONCRETE DECK SLAB	GROOVING BRIDGE FLOORS	CLASS AA CONCRETE	BRIDGE APPROACH SLABS	EPOXY COATED REINFORCING STEEL	EPOXY COATED SPIRAL COLUMN REINFORCING STEEL	54" PRESTRESSED CONCRETE GIRDERS		MODIFIED 72" PRESTRESSED CONCRETE GIRDERS		78" P/T PRESTRESSED CONCRETE GIRDERS		STRUCTURAL STEEL
	LUMP SUM	LUMP SUM	LUMP SUM	LIN. FT.	LIN. FT.	LIN. FT.	LIN. FT.	EA.	EA.	EA.	EA.	EA.	CU. YD.	SQ. FT.	SQ. FT.	CU. YD.	LUMP SUM	LB.	LB.	NO.	LIN. FT.	NO.	LIN. FT.	NO.	LIN. FT.	APPROX. LBS.
SUPERSTRUCTURE														89,918.0	77,110.0		LUMP SUM			20	1,607.513	60	6,431.221	20	2,088.200	41,100
END BENT 1																37.1		4,600								
BENT 1				196		66				2	2					41.3		41,412	6,694							
BENT 2				196		66				2	2					48.0		42,491	7,094							
BENT 3				206		66				2	2					54.6		48,355	7,870							
BENT 4				206		66				2	2					61.3		49,435	8,192							
BENT 5				206		66				2	2					68.7		50,483	8,592							
BENT 6				216		66				2	2					75.4		53,049	9,162							
BENT 7				216		66				2	2					82.0		54,127	9,564							
BENT 8				226		66				2	2					88.1		56,615	10,340							
BENT 9				226		66				2	2					93.3		57,456	10,580							
BENT 10				236		66				2	2					96.5		59,634	11,072							
BENT 11					481.75		180			6	6					457.0		200,330	12,179							
BENT 12					571.75		180			6	6					449.6		208,525	14,428							
BENT 13					571.75		180			6	6					449.7		208,525	14,428							
BENT 14			LUMP SUM		481.75		180			6	6					457.0		200,330	12,179							
BENT 15				238						2	2					90.3		58,923	10,876							
BENT 16			LUMP SUM													127.2		17,481	3,046							
BENT 17			LUMP SUM													120.4		16,637	2,726							
BENT 18			LUMP SUM													116.9		15,746	2,244							
BENT 19			LUMP SUM													114.4		15,870	2,004							
BENT 20			LUMP SUM													108.3		15,020	1,644							
BENT 21			LUMP SUM													103.5		14,367	1,362							
BENT 22			LUMP SUM													98.8		13,715	1,122							
END BENT 2																32.2		4,192								
TOTAL	LUMP SUM		LUMP SUM	LUMP SUM	2,368	2,107	660	720	4	11	46	46	5	3,236	89,918.0	77,110.0	3,471.6	LUMP SUM	1,507,318	167,398	20	1,607.513	60	6,431.221	20	2,088.200	41,100

TOTAL BILL OF MATERIALS

	HP 12 X 53 STEEL PILES		HP 14 X 73 STEEL PILES		PILE REDRIVES	TWO BAR METAL RAIL	1'-2" X 2'-6" CONCRETE PARAPET	RIP RAP CLASS B	RIP RAP CLASS II (2'-0" THICK)	FILTER FABRIC FOR DRAINAGE	ELASTOMERIC BEARINGS	EVAZOTE JOINT SEALS	STRUCTURE DRAINAGE SYSTEM	SOLAR ARRAY SUPPORT PLATFORM	4'-0" DIA. DRILLED PIERS (DEMONSTRATION PIER)	MESSENGER CABLE SYSTEM	POST-TENSIONING TENDONS	AXIAL LOAD TEST	SONIC CALIPER TESTING	CONSTRUCTION, MAINTENANCE & REMOVAL OF TEMPORARY STRUCTURE
	NO.	LIN. FT.	NO.	LIN. FT.	EA.	LIN. FT.	LIN. FT.	TON	TON	SQ. YD.	LUMP SUM	LUMP SUM	LUMP SUM	LUMP SUM	LIN. FT.	LIN. FT.	LUMP SUM	LUMP SUM	EA.	LUMP SUM
SUPERSTRUCTURE						5,105	5,105				LUMP SUM	LUMP SUM	LUMP SUM	LUMP SUM		2,860				
END BENT 1	11	715			5				219	243.3										
BENT 11																				
BENT 12																				
BENT 13																				
BENT 14																				
BENT 16			12	960	6															
BENT 17			12	960	6															
BENT 18	12	960			6															
BENT 19	12	960			6															
BENT 20	12	900			6															
BENT 21	12	900			6															
BENT 22	12	900			6															
END BENT 2	9	675			5			445		493.5										
TOTAL	80	6,010	24	1,920	52	5,105	5,105	445	219	736.8	LUMP SUM	LUMP SUM	LUMP SUM	LUMP SUM	81	2,860	LUMP SUM	LUMP SUM	1	LUMP SUM

DRAWN BY : D. H. Carter DATE : JULY 2006
CHECKED BY : J. A. Lee DATE : JULY 2006

PROJECT NO. B-682
BRUNSWICK COUNTY
STATION: 47+08.03 -L- POT

SHEET 15 OF 15

NORTH CAROLINA PROFESSIONAL SEAL 15832 ENGINEER JOEL A. LEE
1.17.07

PLANS PREPARED BY:

PARSONS TRANSPORTATION GROUP
Engineers and Planners
RALEIGH, NORTH CAROLINA

JOB NO. 645615
DWG. NO.

STATE OF NORTH CAROLINA
DEPARTMENT OF TRANSPORTATION
RALEIGH

GENERAL DRAWING
TOTAL BILL OF MATERIALS

REVISIONS						SHEET NO.
NO.	BY:	DATE:	NO.	BY:	DATE:	5-16
1			3			TOTAL SHEETS
2			4			207

b682_sd_TBM_01.dgn 02/26/2007 03:00:18 PM

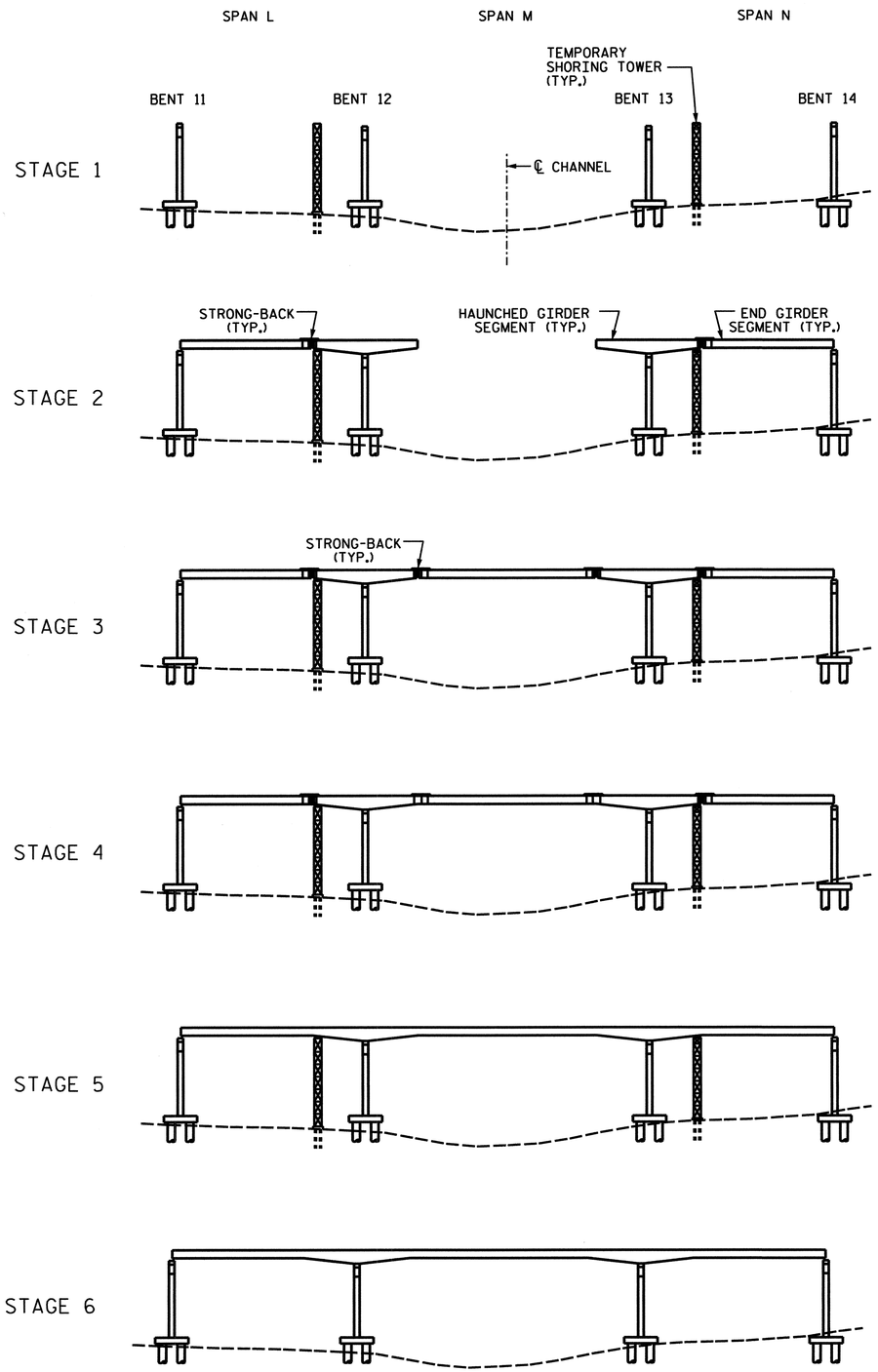

STAGE 1
1. CONSTRUCT BENT 11 THROUGH 14 AND ERECT TEMPORARY SUPPORTS IN SPANS L AND N.

STAGE 2
1. ERECT HAUNCHED GIRDER SEGMENTS AND SECURE TO TEMPORARY SUPPORTS. SECURE HAUNCHED GIRDER SEGMENTS TO TEMPORARY SUPPORT AND BENTS 12 AND 13 TO TRANSMIT WIND FORCES ASSUMING THE BEARING PROVIDES NO TRANSVERSE SUPPORT.

2. ERECT END GIRDER SEGMENTS AND SECURE TO HAUNCHED GIRDER SEGMENTS WITH STEEL STRONG-BACKS. SECURE END GIRDER SEGMENTS TO HAUNCHED GIRDER SEGMENTS AND BENTS 11 AND 14 TO TRANSMIT WIND FORCES ASSUMING THE BEARING PROVIDES NO TRANSVERSE SUPPORT.

3. THE HAUNCHED GIRDER SEGMENTS SHALL BE SECURED TO PREVENT UPLIFT DURING THE PLACEMENT OF THE DROP-IN GIRDER SEGMENTS DURING STAGE 3.

   AS A MINIMUM, GIRDER CONNECTIONS TO TEMPORARY SUPPORT SHALL BE CAPABLE OF TRANSMITTING DEAD LOAD REACTIONS SHOWN IN STAGE 3.

4. STAGE 2 DEAD LOAD REACTIONS ON TEMPORARY SUPPORTS, PER GIRDER (EXCLUDING CONSTRUCTION LOADS, WIND LOADS, ERECTION LOADS, IMPACT LOADS AND ANY OTHER MISCELLANEOUS LOADS):

   HAUNCHED GIRDER SEGMENT 0 Kips (UPWARD)

   DEAD LOAD REACTIONS ON STRONG-BACKS, PER GIRDER (EXCLUDING CONSTRUCTION LOADS, WIND LOADS, ERECTION LOADS, IMPACT LOADS AND ANY OTHER MISCELLANEOUS LOADS):

   END GIRDER SEGMENT 82 Kips (DOWNWARD)

   DEAD LOAD REACTIONS SHOWN SHALL BE ADJUSTED FOR ANY CONSTRUCTION LOADS, WIND LOADS, ERECTION LOADS, IMPACT LOADS AND ANY OTHER MISCELLANEOUS LOADS PROPOSED BY THE CONTRACTOR, INCLUDING THE WEIGHT OF THE STRONG-BACKS.

STAGE 3
1. CAST DIAPHRAGMS AT BENTS 12 AND 13 AND PLACE INTERMEDIATE DIAPHRAGMS.

2. ERECT DROP-IN GIRDER SEGMENTS AND SECURE TO HAUNCH GIRDER SEGMENTS WITH STEEL STRONG-BACKS. AS A MINIMUM, CONNECTIONS BETWEEN DROP-IN GIRDER SEGMENTS AND HAUNCHED GIRDER SEGMENTS SHALL BE CAPABLE OF RESISTING RELATIVE TWIST BETWEEN GIRDER SEGMENTS.

3. STAGE 3 DEAD LOAD REACTIONS ON TEMPORARY SUPPORTS, PER GIRDER (EXCLUDING CONSTRUCTION LOADS, WIND LOADS, ERECTION LOADS, IMPACT LOADS AND ANY OTHER MISCELLANEOUS LOADS):

   HAUNCHED GIRDER SEGMENT 95 Kips (UPWARD)

   DEAD LOAD REACTIONS ON STRONG-BACKS, PER GIRDER (EXCLUDING CONSTRUCTION LOADS, WIND LOADS, ERECTION LOADS, IMPACT LOADS AND ANY OTHER MISCELLANEOUS LOADS):

   END GIRDER SEGMENT 82 Kips (DOWNWARD)
   DROP-IN GIRDER SEGMENT 95 Kips (DOWNWARD)

   DEAD LOAD REACTIONS SHOWN SHALL BE ADJUSTED FOR ANY CONSTRUCTION LOADS, WIND LOADS, ERECTION LOADS, IMPACT LOADS AND ANY OTHER MISCELLANEOUS LOADS PROPOSED BY THE CONTRACTOR, INCLUDING THE WEIGHT OF THE STRONG-BACKS.

4. PLACE REMAINING INTERMEDIATE DIAPHRAGMS.

STAGE 4
1. STRUCTURAL STEEL DIAPHRAGM ERECTION SHALL BE COMPLETED BEFORE FALSEWORK OR FORMS ARE PLACED ON THE GIRDERS.

2. CAST CLOSURE SPLICE DIAPHRAGMS.

STAGE 5
1. DO NOT BEGIN THIS STAGE UNTIL CONCRETE STRENGTH FOR THE CLOSURE SPLICE REACHES 6500 psi.

2. LOOSEN BOLTS CONNECTING INTERMEDIATE DIAPHRAGMS TO GIRDERS.

3. FIRST STAGE POST-TENSIONING: AFTER CLOSURE SPLICE DIAPHRAGMS IN SPANS L THROUGH M HAVE ATTAINED REQUIRED STRENGTH OF 6500 psi, STRESS FIRST STAGE TENDONS (TENDONS 1 AND 2).

4. RELEASE GIRDERS FROM TEMPORARY SUPPORTS.

5. GROUT FIRST STAGE TENDONS.

   ENCASE POST-TENSIONING ANCHORAGES FOR TENDONS 1 AND 2 WITH EPOXY GROUT POUR-BACK OR APPROVED EQUIVALENT.

6. RETIGHTEN BOLTS CONNECTING INTERMEDIATE DIAPHRAGMS TO GIRDERS.

7. REMOVE STRONG-BACKS.

8. ERECT DECK FORMS IN SPANS L THROUGH N. CAST DECK AS PER APPROVED POURING SEQUENCE.

STAGE 6
1. SECOND STAGE POST-TENSIONING: AFTER THE DECK CONCRETE IN SPANS L THROUGH N HAS ATTAINED REQUIRED STRENGTH, STRESS SECOND STAGE TENDON (TENDON 3).

2. GROUT SECOND STAGE TENDON.

   ENCASE POST-TENSIONING ANCHORAGES FOR TENDON 3 WITH EPOXY GROUT POUR-BACK OR APPROVED EQUIVALENT.

3. CAST FINAL PORTION OF DECK AS PER APPROVED POURING SEQUENCE.

4. REMOVE TEMPORARY SUPPORTS IN SPANS L AND N.

NOTES
THIS BRIDGE IS DESIGNED FOR THE ERECTION SEQUENCE SHOWN. THE CONTRACTOR HAS THE OPTION TO DEVIATE FROM THE PROPOSED ERECTION SEQUENCE. IF THE CONTRACTOR CHOOSES TO DEVIATE FROM THE PROPOSED ERECTION SEQUENCE, HE WILL BE RESPONSIBLE FOR ANALYZING THE EFFECTS OF THE PROPOSED CHANGES TO THE PERMANENT STRUCTURE DURING THE CONSTRUCTION PHASE AND IN THE FINAL CONDITION. CALCULATIONS SHOWING REVISED EFFECTS MUST BE SUBMITTED FOR APPROVAL. ANY APPROVED CHANGES WILL BE REFLECTED IN REVISED CONTRACT PLANS FURNISHED BY THE CONTRACTOR. ALL ENGINEERING WORK FOR THE REVISION MUST BE PERFORMED BY A PROFESSIONAL ENGINEER REGISTERED IN NORTH CAROLINA. ANY WORK REQUIRED BY THE CONTRACTOR TO COMPLETE THE DEVIATION FROM THE PROPOSED ERECTION SEQUENCE SHALL BE PERFORMED AT NO ADDITIONAL COST TO THE DEPARTMENT.

THE CONTRACTOR IS RESPONSIBLE FOR DESIGNING THE TEMPORARY SUPPORTS, STRONG-BACKS AND A CONNECTION THAT WILL PREVENT RELATIVE ROTATION BETWEEN THE DROP-IN GIRDER SEGMENTS AND HAUNCH GIRDER SEGMENTS. THE DESIGNS SHALL FOLLOW THE AASHTO GUIDE DESIGN SPECIFICATIONS FOR BRIDGE TEMPORARY WORKS, 1995 AND SHALL BE COMPLETED BY A PROFESSIONAL ENGINEER REGISTERED IN NORTH CAROLINA. THE CONTRACTOR SHALL SUBMIT SIGNED AND SEALED WORKING DRAWINGS AND CALCULATIONS FOR APPROVAL BY THE ENGINEER.

THE CONTRACTOR SHALL ENSURE THAT BEARINGS ARE PROPERLY SEATED AND FUNCTIONING AFTER POST-TENSIONING IS COMPLETED.

GIRDERS SHALL NOT BE MORE THAN 1/4" OUT OF VERTICAL OR TRANSVERSE ALIGNMENT AT SPLICE LOCATIONS.

FOR DETAILS OF POST-TENSIONING OPERATIONS, SEE POST-TENSIONING NOTES SHEET.

THE COST OF MATERIALS, LABOR AND ANY INCIDENTAL ITEMS RELATED TO THE CONSTRUCTION, MAINTENANCE AND REMOVAL OF TEMPORARY SUPPORTS AND STRONG-BACKS SHALL BE INCLUDED IN THE PAY ITEM "CONSTRUCTION, MAINTENANCE AND REMOVAL OF TEMPORARY ACCESS".

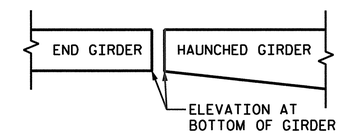

BOTTOM OF GIRDER DIAGRAM
(SHOWING ELEVATION LOCATIONS)

ELEVATIONS OF BOTTOM OF GIRDERS AT TEMPORARY SUPPORTS				
GIRDER NO.	END GIRDER SPAN L	HAUNCHED GIRDER SPAN L	HAUNCHED GIRDER SPAN N	END GIRDER SPAN N
1	66.646	66.686	66.730	66.691
2	66.826	66.866	66.910	66.871
3	67.006	67.046	67.090	67.051
4	67.186	67.226	67.270	67.231

PROJECT NO. B-0682
BRUNSWICK COUNTY
STATION: 47+08.03 -L- POT

NORTH CAROLINA PROFESSIONAL SEAL 024928 ENGINEER RODNEY E. MONEY 3/26/07

STATE OF NORTH CAROLINA
DEPARTMENT OF TRANSPORTATION
RALEIGH

ERECTION SEQUENCE

SPANS L - N

PREPARED IN THE OFFICE OF
TYLIN INTERNATIONAL
RALEIGH, NORTH CAROLINA
Copyright © 2006, TYLI

DWG NO.

REVISIONS						SHEET NO.
NO.	BY:	DATE:	NO.	BY:	DATE:	5-17
1			3			TOTAL SHEETS
2			4			207

DRAWN BY : T. S. KELLEY DATE : NOV. 06
CHECKED BY : R.E. MONEY DATE : NOV. 06

DATE: $DATE$
FILE: $FILENAME$

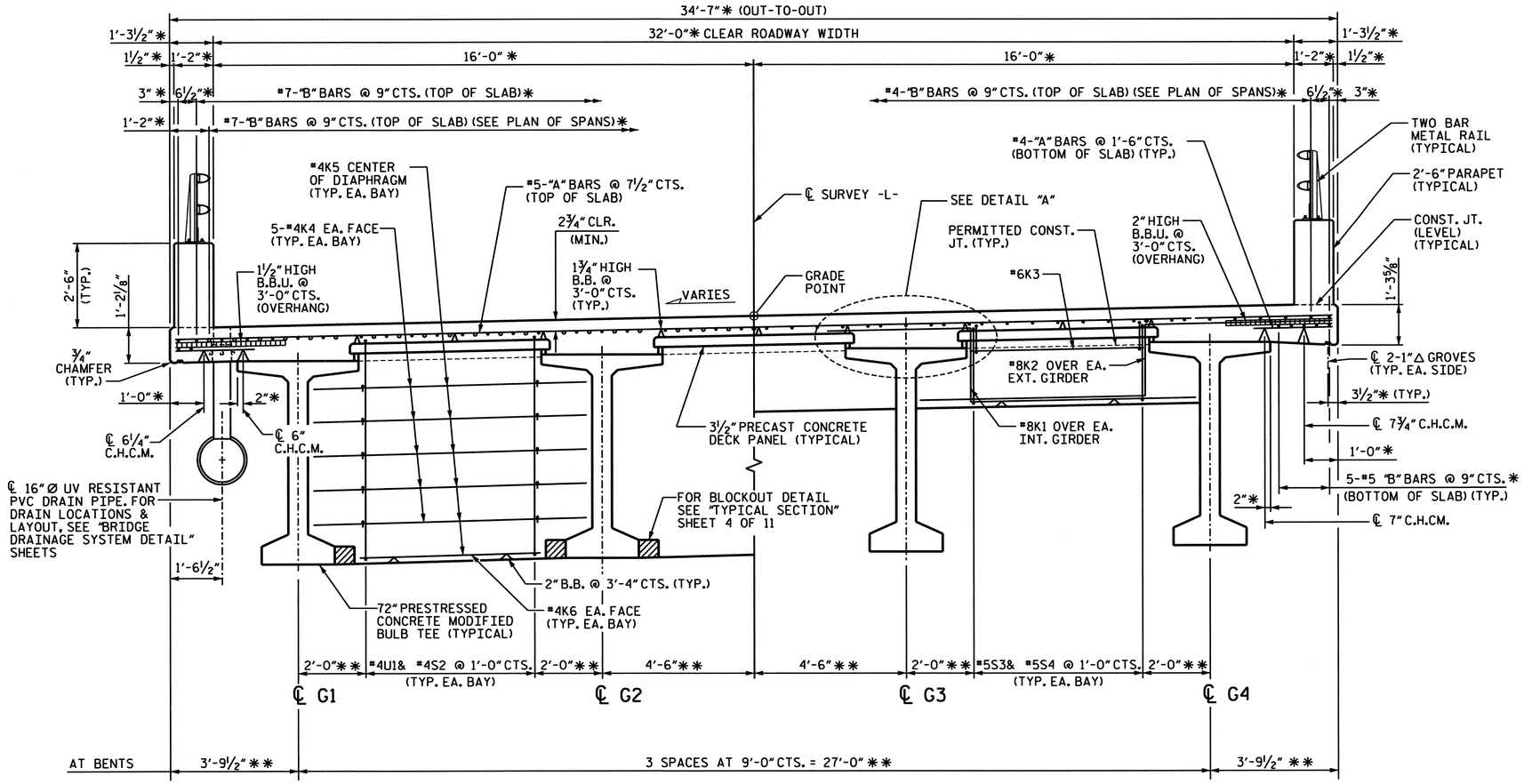

TYPICAL HALF SECTION
SHOWING DIAPHRAGMS @ BENTS 1, 2, 4, 5, 7, 8, 10

TYPICAL HALF SECTION
SHOWING DIAPHRAGMS @ END BENT 1 AND BENTS 3, 6, 9, 11

TYPICAL SECTION
(SPANS A-K)

* DIMENSIONS SHOWN ARE RADIAL TO ℄ -L- (IN HORIZONTAL CURVE ONLY)

** DIMENSIONS SHOWN ARE TO ARCS CONCENTRIC WITH THE ℄ -L-, GIRDERS ARE ON THE CHORDS OF CONCENTRIC ARCS. (IN HORIZONTAL CURVE ONLY)

NOTES

LONGITUDINAL STEEL MAY BE SHIFTED SLIGHTLY, AS NECESSARY, TO AVOID INTERFERENCE WITH STIRRUPS IN PRESTRESSED CONCRETE GIRDERS.

BARRIER RAIL IN EACH SPAN SHALL NOT BE CAST UNTIL ALL SLAB CONCRETE IN THAT SPAN HAS BEEN CAST AND HAS REACHED A MINIMUM COMPRESSIVE STRENGTH OF 3,000 PSI.

PRESTRESSED CONCRETE GIRDERS AND PRECAST DECK PANELS SHALL CONTAIN CALCIUM NITRITE CORROSION INHIBITOR.

FOR STRUCTURE DRAINAGE SYSTEM, SEE SPECIAL PROVISIONS.

STRUCTURAL STEEL ERECTION IN A CONTINUOUS UNIT SHALL BE COMPLETE BEFORE FALSEWORK OR FORMS ARE PLACED ON THE UNIT.

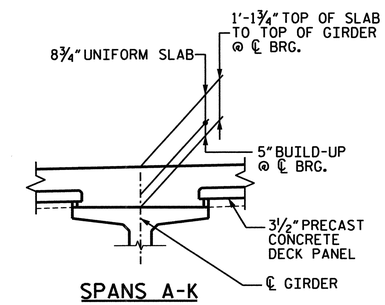

SPANS A-K

DETAIL A

PROJECT NO. B-682
BRUNSWICK COUNTY
STATION: 47+08.03 -L- POT

SHEET 1 OF 11

NORTH CAROLINA PROFESSIONAL SEAL 15832 ENGINEER JOEL A. LEE 1-17-07

PLANS PREPARED BY:
PARSONS TRANSPORTATION GROUP
Engineers and Planners
RALEIGH, NORTH CAROLINA

STATE OF NORTH CAROLINA
DEPARTMENT OF TRANSPORTATION
RALEIGH

SUPERSTRUCTURE

TYPICAL SECTION

REVISIONS						SHEET NO.
NO.	BY:	DATE:	NO.	BY:	DATE:	S-18
1			3			TOTAL SHEETS
2			4			207

JOB NO. 645615
DWG. NO.

DRAWN BY : D. H. Carter DATE : JULY 2006
CHECKED BY : J. A. Lee DATE : JULY 2006

NOTES:

LONGINTUDINAL STEEL MAY BE SHIFTED SLIGHTLY, AS NECESSARY, TO AVOID INTERFERENCE WITH STIRRUPS IN PRESTRESSED CONCRETE GIRDERS.

WHEN USING REMOVABLE FORMS, PROVIDE CONTINUOUS HIGH CHAIRS FOR METAL DECK (CHCM) AT 4'-0" CTS. WITH A HEIGHT TO SUPPORT THE BOTTOM MAT OF "A" BARS A CLEAR DISTANCE OF 1¼" ABOVE THE TOP OF THE REMOVABLE FORM.

ALL FALSEWORK AND FORMS FOR THE CAST-IN-PLACE DECK SLAB CONTINUOUS UNIT SHALL REMAIN IN PLACE UNTIL THE ENTIRE UNIT IS CAST AND CURED.

REMOVABLE FORMS ARE TO BE USED IN SPAN L THROUGH SPAN N.

FOR SECTIONS A-A & B-B, SEE SHEET 10 OF 11.

SOLAR ARRAY SUPPORT PLATFORM NOT SHOWN. SEE "SOLAR ARRAY SUPPORT PLATFORM" SHEET FOR DETAILS.

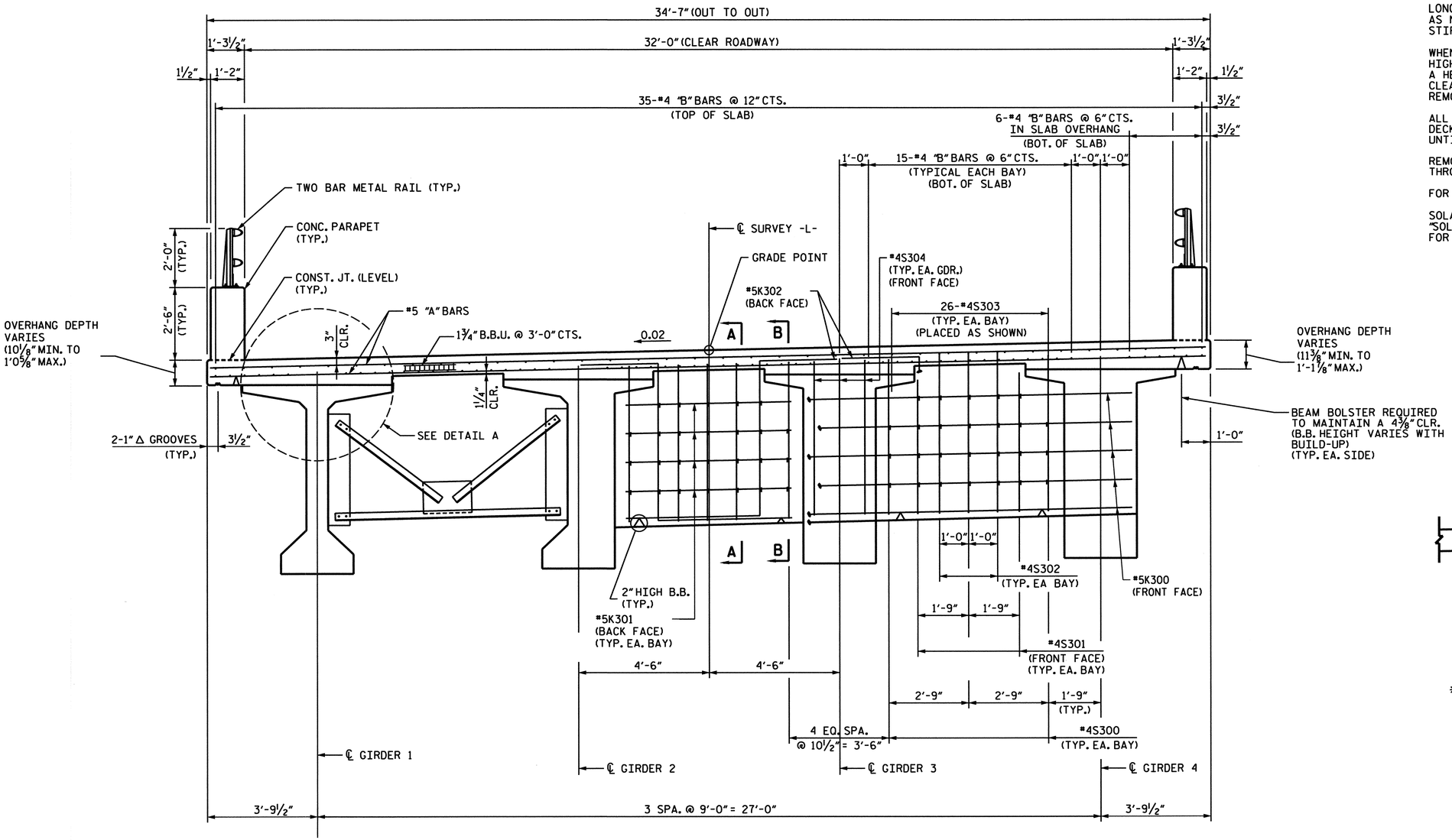

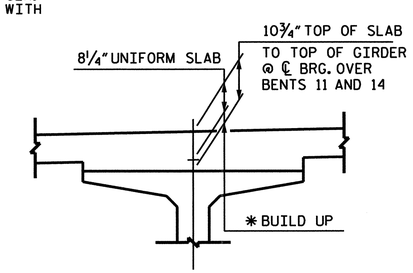

DETAIL A

✱ BUILD UP VARIES ALONG GIRDER (SEE CAMBER & DEFLECTIONS SHEET)

PART TYPICAL SECTION
AT MID-SPAN

PART TYPICAL SECTION
SHOWING FAR FACE END DIAPHRAGM REINFORCING

PART TYPICAL SECTION
SHOWING NEAR FACE END DIAPHRAGM REINFORCING AT JOINT

PROJECT NO. B-0682
BRUNSWICK COUNTY
STATION: 47+08.03 -L- POT

SHEET 2 OF 11

NORTH CAROLINA PROFESSIONAL SEAL 024928 ENGINEER RODNEY E. MONEY 2/26/07

STATE OF NORTH CAROLINA
DEPARTMENT OF TRANSPORTATION
RALEIGH

SUPERSTRUCTURE
TYPICAL SECTION

SPANS L-N

PREPARED IN THE OFFICE OF
TYLIN INTERNATIONAL
RALEIGH, NORTH CAROLINA
Copyright © 2006, TYLI

DWG NO.

REVISIONS						SHEET NO.
NO.	BY:	DATE:	NO.	BY:	DATE:	S-19
1			3			TOTAL SHEETS
2			4			207

DRAWN BY : T. S. KELLEY DATE : NOV. 06
CHECKED BY : R.E. MONEY DATE : NOV. 06

DATE: $DATE$
FILE: $FILENAME$

NOTE:

FOR SECTIONS C-C & D-D, SEE SHEET 11 OF 11.

FOR DETAIL "B" & "C", SEE SHEET 11 OF 11.

SOLAR ARRAY SUPPORT PLATFORM NOT SHOWN. SEE "SOLAR ARRAY SUPPORT PLATFORM" SHEET FOR DETAILS.

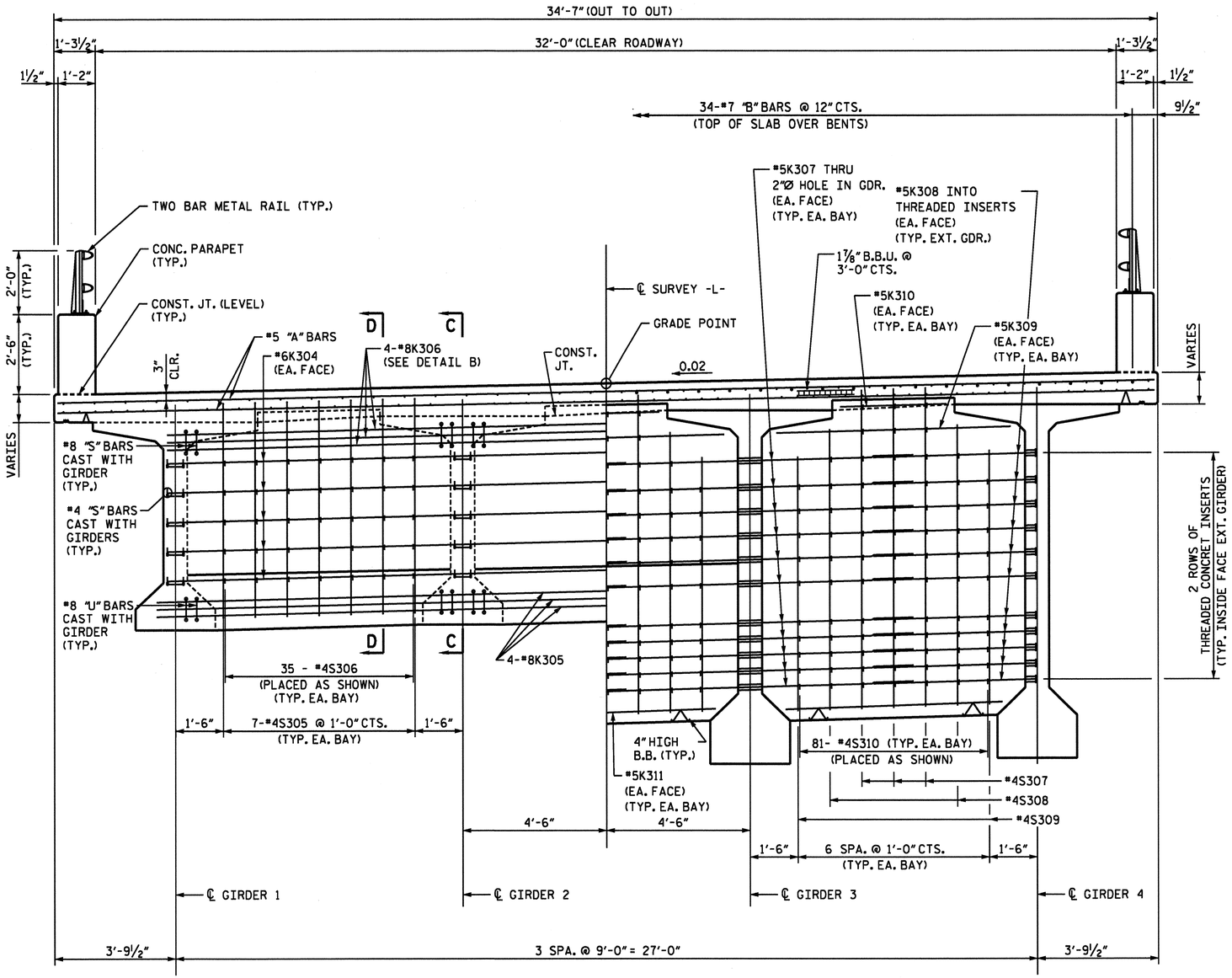

TYPICAL HALF SECTION
SHOWING CLOSURE POUR DIAPHRAGM

TYPICAL HALF SECTION
SHOWING DIAPHRAGM AT BENTS 12 AND 13

PROJECT NO. B-0682

BRUNSWICK COUNTY

STATION: 47+08.03 -L- POT

SHEET 3 OF 11

STATE OF NORTH CAROLINA
DEPARTMENT OF TRANSPORTATION
RALEIGH

SUPERSTRUCTURE TYPICAL SECTION

SPANS L-N

NORTH CAROLINA PROFESSIONAL SEAL 024928 ENGINEER RODNEY E. MONEY 2/26/07

PREPARED IN THE OFFICE OF
TYLIN INTERNATIONAL
RALEIGH, NORTH CAROLINA
Copyright © 2006, TYLI

DWG NO.

REVISIONS						
NO.	BY:	DATE:	NO.	BY:	DATE:
1			3		
2			4		

SHEET NO. 5-20
TOTAL SHEETS 207

DRAWN BY : T. S. KELLEY DATE : NOV. 06
CHECKED BY : R.E. MONEY DATE : NOV. 06

DATE: =DATE$
FILE: =FILENAME$

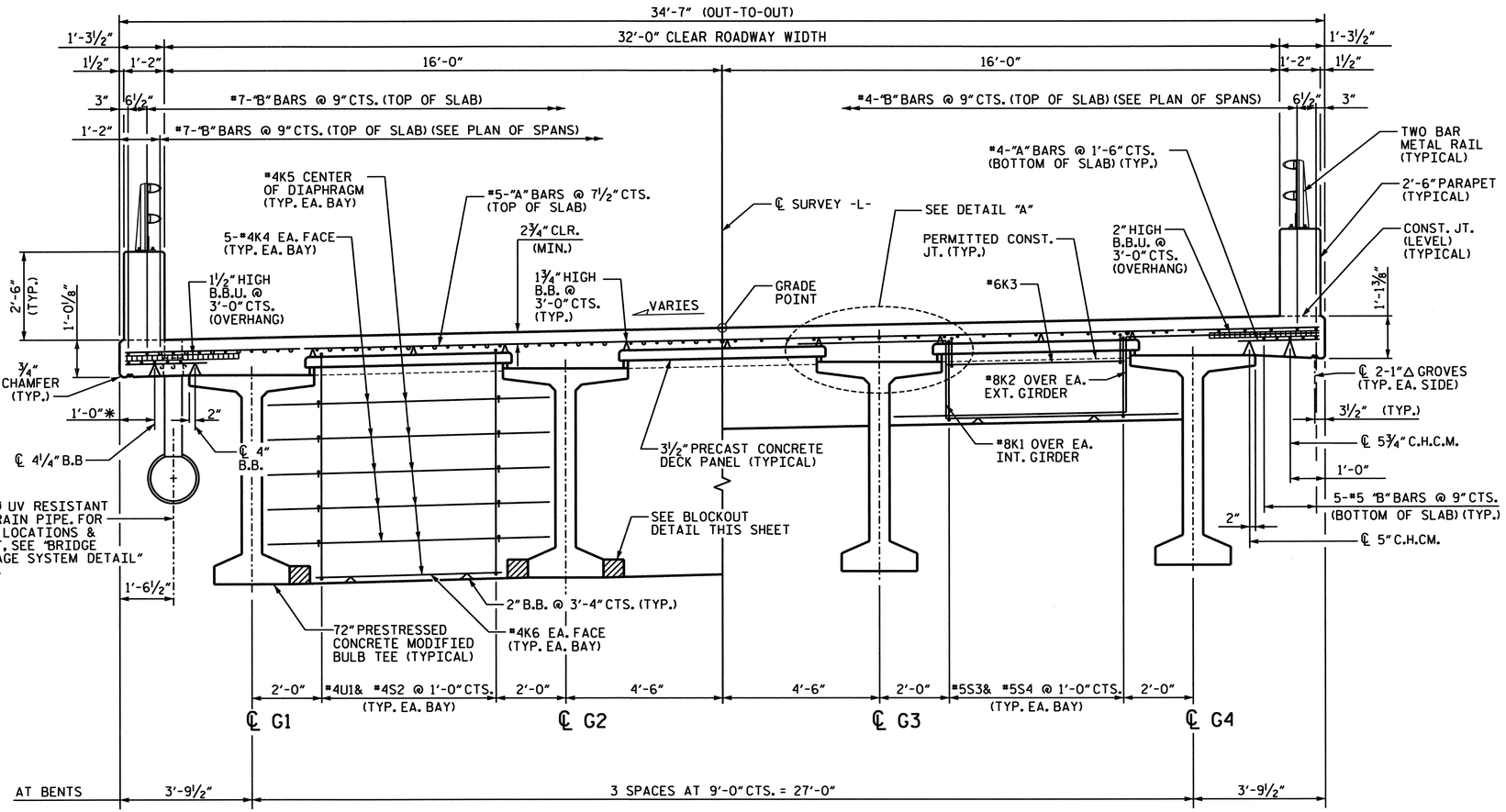

TYPICAL HALF SECTION
SHOWING DIAPHRAGMS @ BENTS 15, 16, 17

TYPICAL HALF SECTION
SHOWING DIAPHRAGMS @ BENTS 14 & 18

TYPICAL SECTION
(SPANS O-R)

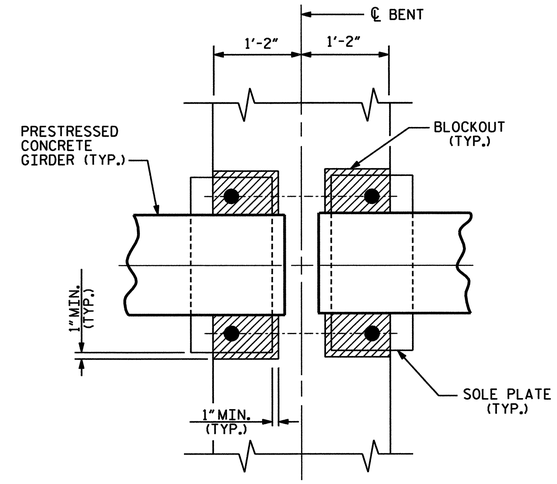

TYPICAL BENT DIAPHRAGM BLOCKOUT
PLAN VIEW

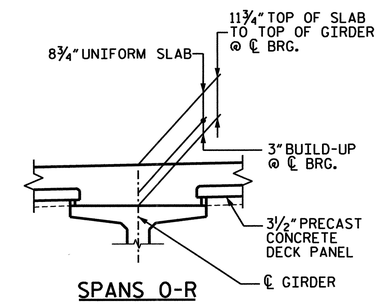

SPANS O-R

DETAIL A

PROJECT NO. B-682
BRUNSWICK COUNTY
STATION: 47+08.03 -L- POT

SHEET 4 OF 11

STATE OF NORTH CAROLINA
DEPARTMENT OF TRANSPORTATION
RALEIGH

SUPERSTRUCTURE

TYPICAL SECTION

NORTH CAROLINA PROFESSIONAL SEAL 18839 ENGINEER JOEL A. LEE
1.17.07

PLANS PREPARED BY:
PARSONS TRANSPORTATION GROUP
Engineers and Planners
RALEIGH, NORTH CAROLINA
JOB NO. 645615
DWG. NO.

REVISIONS						SHEET NO.
NO.	BY:	DATE:	NO.	BY:	DATE:	S-21
1			3			TOTAL SHEETS
2			4			207

DRAWN BY : D. H. Carter DATE : JULY 2006
CHECKED BY : J. A. Lee DATE : JULY 2006

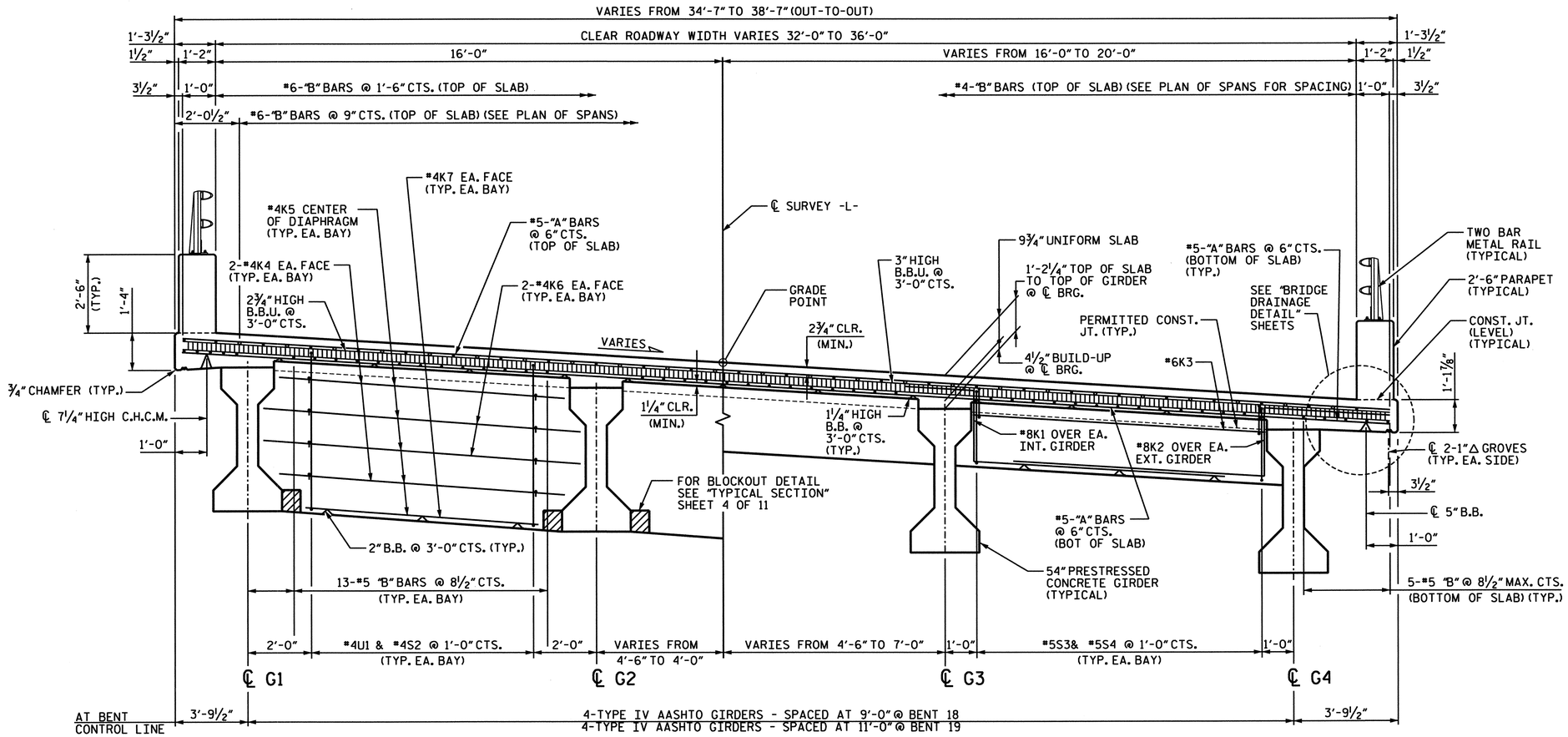

TYPICAL HALF SECTION
SHOWING BENT 19 DIAPHRAGM

TYPICAL HALF SECTION
SHOWING BENT 18 DIAPHRAGM

TYPICAL SECTION
(SPAN S)

PROJECT NO. B-682

BRUNSWICK COUNTY

STATION: 47+08.03 -L- POT

SHEET 5 OF 11

NORTH CAROLINA PROFESSIONAL SEAL 15832 ENGINEER JOEL A. LEE 1-17-07

PLANS PREPARED BY:

PARSONS TRANSPORTATION GROUP
Engineers and Planners
RALEIGH, NORTH CAROLINA

JOB NO. 645615

DWG. NO.

STATE OF NORTH CAROLINA
DEPARTMENT OF TRANSPORTATION
RALEIGH

SUPERSTRUCTURE

TYPICAL SECTION

REVISIONS						SHEET NO.
NO.	BY:	DATE:	NO.	BY:	DATE:	5-22
1			3			TOTAL SHEETS
2			4			207

DRAWN BY : D. H. Carter DATE : JULY 2006
CHECKED BY : J. A. Lee DATE : JULY 2006

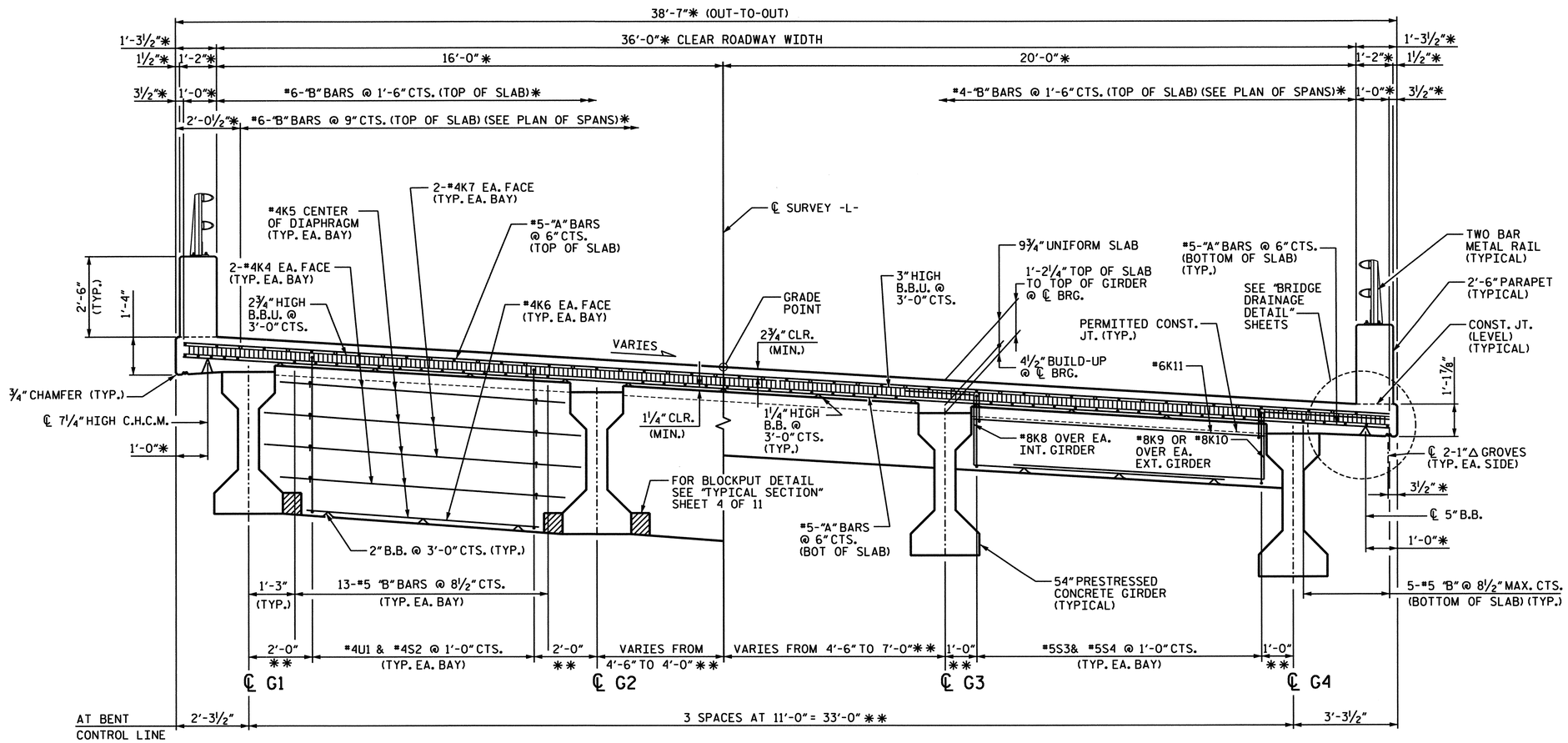

TYPICAL HALF SECTION
SHOWING BENTS 19,21 & 22 DIAPHRAGMS

TYPICAL HALF SECTION
SHOWING BENT 20 & END BENT 2 DIAPHRAGMS

TYPICAL SECTION
(SPANS T-W)

* DIMENSIONS SHOWN ARE RADIAL TO ℄ -L-

** DIMENSIONS SHOWN ARE TO ARCS CONCENTRIC WITH THE ℄ -L-. GIRDERS ARE ON THE CHORDS OF CONCENTRIC ARCS.

PROJECT NO. B-682

BRUNSWICK COUNTY

STATION: 47+08.03 -L- POT

SHEET 6 OF 11

NORTH CAROLINA PROFESSIONAL SEAL 18837 ENGINEER JOEL A. LEE 1-17-07

PLANS PREPARED BY:

PARSONS TRANSPORTATION GROUP
Engineers and Planners
RALEIGH, NORTH CAROLINA

JOB NO. 645615

DWG. NO.

STATE OF NORTH CAROLINA
DEPARTMENT OF TRANSPORTATION
RALEIGH

SUPERSTRUCTURE

TYPICAL SECTION

REVISIONS						SHEET NO.
NO.	BY:	DATE:	NO.	BY:	DATE:	5-23
1			3			TOTAL SHEETS
2			4			207

DRAWN BY : D. H. Carter DATE : JULY 2006
CHECKED BY : J. A. Lee DATE : JULY 2006

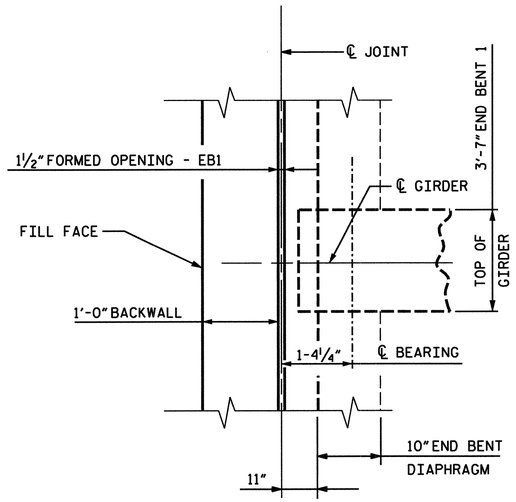

GIRDER AT END BENT 1
(72" MBT)

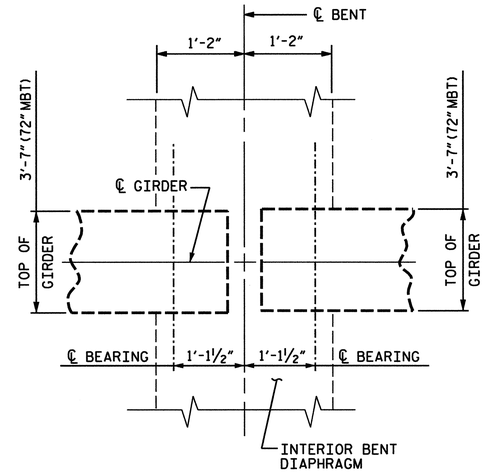

GIRDER AT FIXED BENTS
(72" MBT)

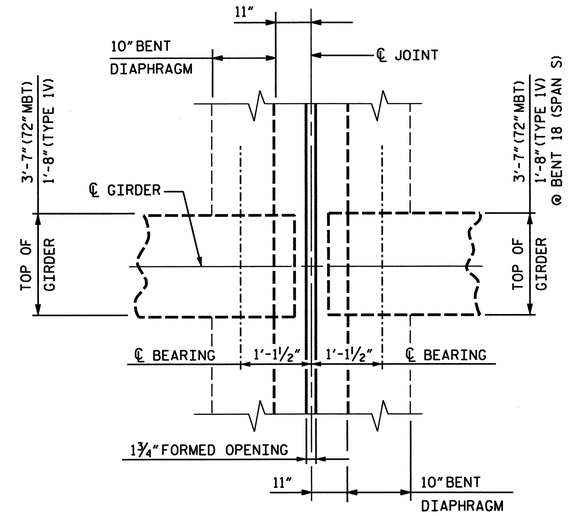

GIRDER AT EXPANSION BENTS
(72" MBT)

TYPICAL AT ALL EXPANSION BENTS EXCEPT BENTS 11 & 14 (SEE SHEET 10 OF 11)

PLAN OF GIRDERS

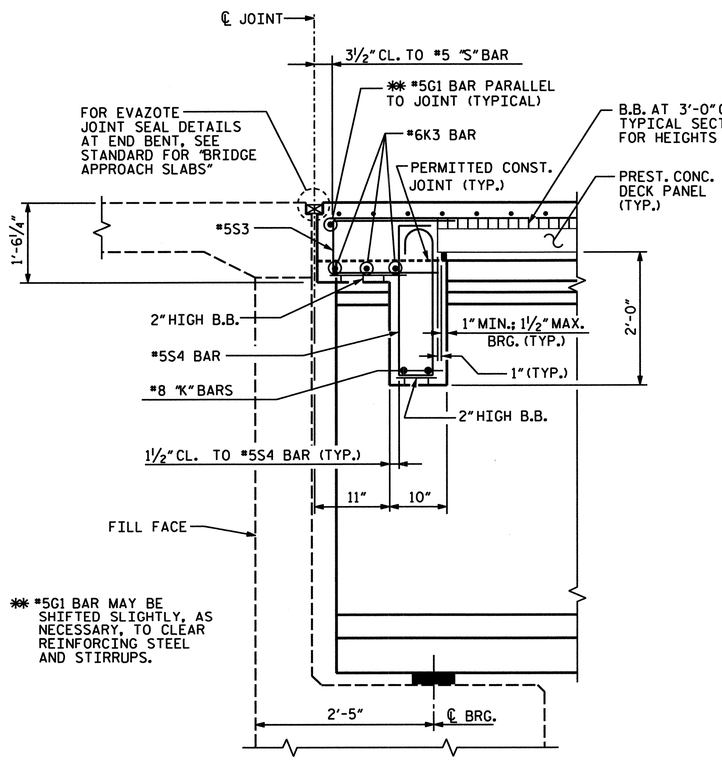

SECTION AT END BENT 1
DIAPHRAGM (72" MBT)

DIMENSIONS SHOWN ABOVE ARE NORMAL TO THE BENTS

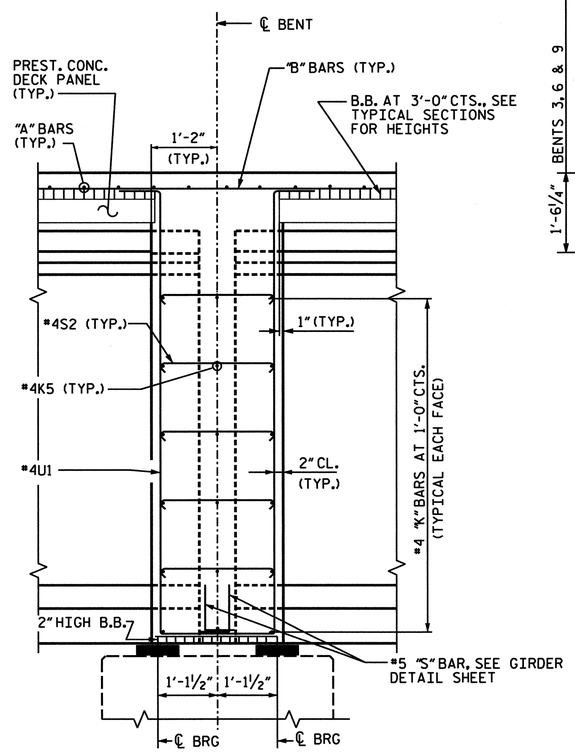

SECTION AT INTERIOR BENT
DIAPHRAGM-FIXED (72" MBT)

DIMENSIONS SHOWN ABOVE ARE NORMAL TO THE BENTS

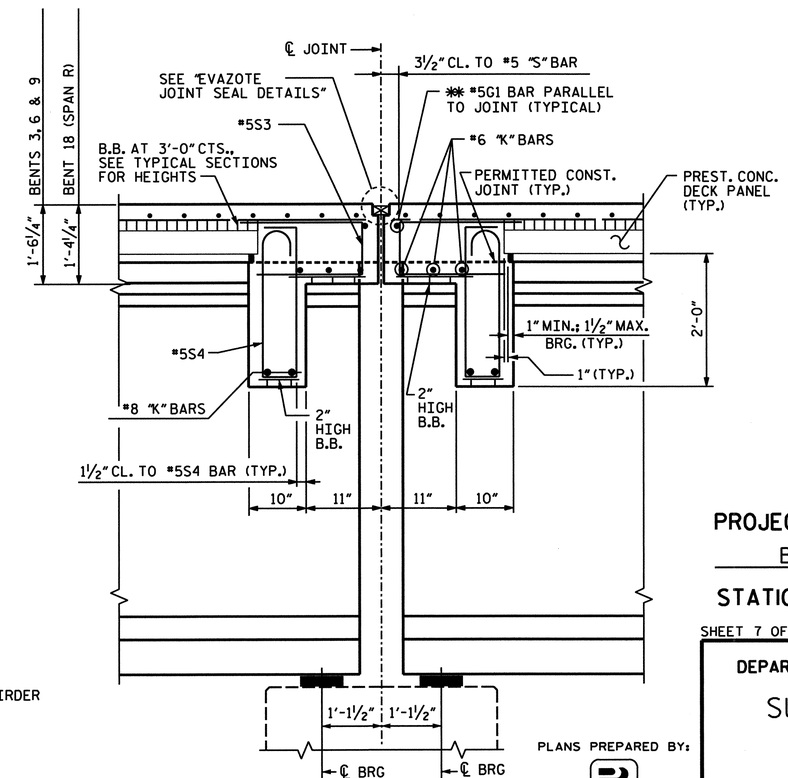

✱ SECTION AT INTERIOR BENT
DIAPHRAGM-EXPANSION (72" MBT)

DIMENSIONS SHOWN ABOVE ARE NORMAL TO THE BENTS

✱ TYPICAL AT ALL EXPANSION BENTS EXCEPT BENTS 11 & 14 (SEE SHEET 10 OF 11)

NORTH CAROLINA PROFESSIONAL SEAL 15832 ENGINEER JOEL A. LEE
1.17.07

PROJECT NO. B-682
BRUNSWICK COUNTY
STATION: 47+08.03 -L- POT

SHEET 7 OF 11

STATE OF NORTH CAROLINA
DEPARTMENT OF TRANSPORTATION
RALEIGH

SUPERSTRUCTURE

TYPICAL SECTION

PLANS PREPARED BY:
PARSONS TRANSPORTATION GROUP
Engineers and Planners
RALEIGH, NORTH CAROLINA
JOB NO. 645615
DWG. NO.

REVISIONS						SHEET NO.
NO.	BY:	DATE:	NO.	BY:	DATE:	5-24
1			3			TOTAL SHEETS
2			4			207

DRAWN BY : D. H. Carter DATE : JULY 2006
CHECKED BY : J. A. Lee DATE : JULY 2006

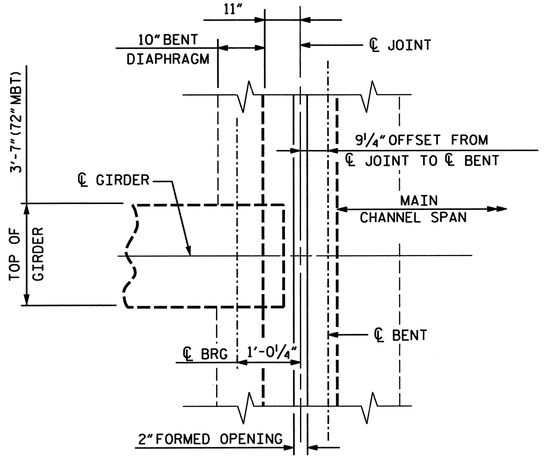

GIRDER AT JOINT OFFSET-BENTS 11 & 14

BENT 11 SHOWN, BENT 14 SIMILAR

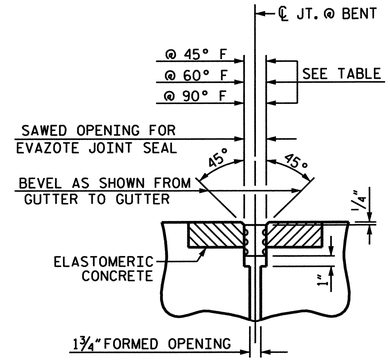

SECTION B-B

EVAZOTE JOINT SEAL

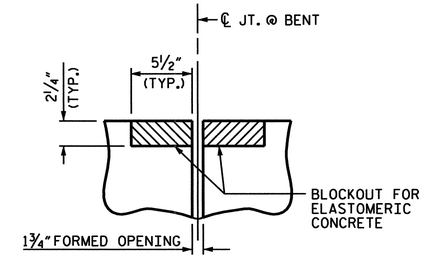

SECTION B-B

EVAZOTE JOINT SEAL
(PRE-SAWED ELASTOMERIC CONCRETE DIMENSIONS)

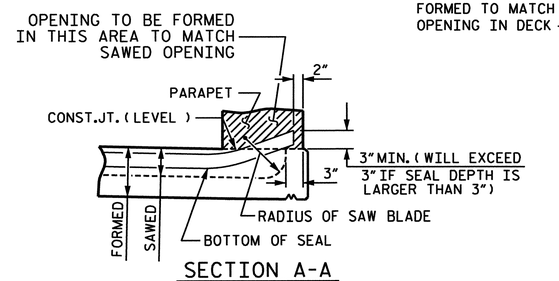

SECTION A-A

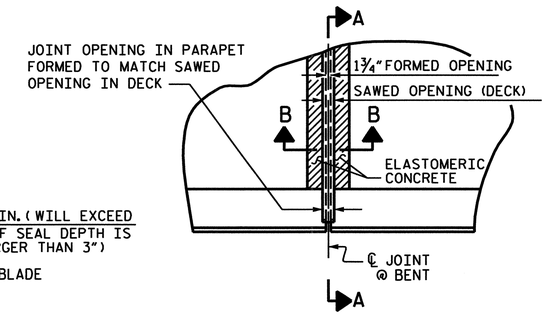

PLAN

EVAZOTE JOINT SEAL DETAILS

AT BENTS 3,6,9,18 & 20

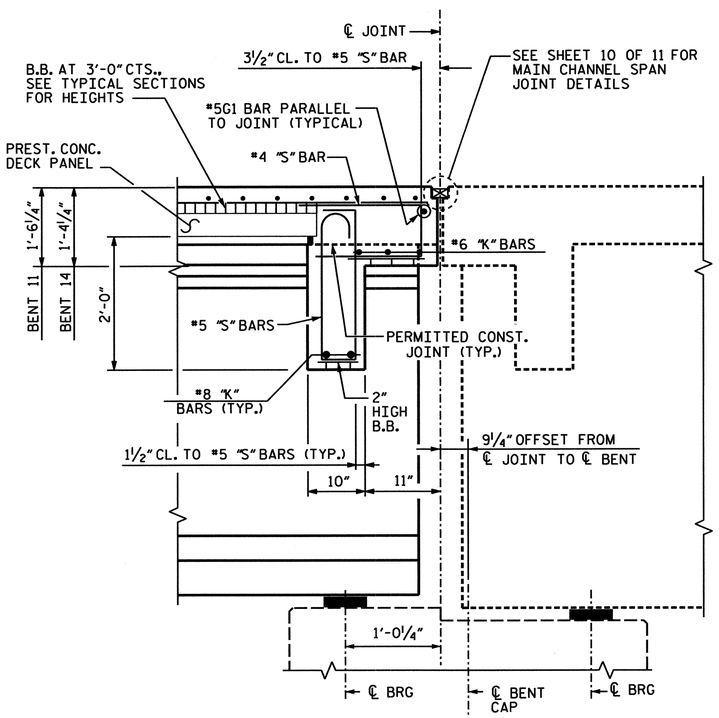

SECTION AT JOINT OFFSET-BENTS 11 & 14

DIMENSIONS SHOWN ARE NORMAL TO THE BENT

NOTES:

FOR ELASTOMERIC CONCRETE, SEE SPECIAL PROVISIONS.

FOR EVAZOTE JOINT SEALS, SEE SPECIAL PROVISIONS.

ELASTOMERIC CONCRETE	
BENT NO.	ELASTOMERIC CONCRETE * (CU. FT.)
3	5.5
6	5.5
9	5.5
18	5.5
20	6.2
TOTAL	28.2

* BASED ON THE MINIMUM BLOCKOUT SHOWN.

MOVEMENT AND SETTING AT EVAZOTE JOINT						
BENT NO.	SKEW ANGLE	NOMINAL UNCOMPRESSED SEAL WIDTH	TOTAL MOVEMENT (ALONG ℄ RDWY)	SAWED JOINT OPENING AT 45° F	SAWED JOINT OPENING AT 60° F	SAWED JOINT OPENING AT 90° F
3	90°	3 7/16"	2.07"	3⅛"	2¾"	2"
6	90°	3 7/16"	2.07"	3⅛"	2¾"	2"
9	90°	3 7/16"	1.73"	3"	2⅝"	2"
18	90°	3 7/16"	1.68"	3"	2⅝"	2"
20	90°	3 7/16"	1.70"	3"	2⅝"	2"

TOTAL MOVEMENT IS CALCULATED ALONG THE CENTERLINE OF ROADWAY.
JOINT OPENINGS ARE MEASURED PERPENDICULAR TO THE JOINT.

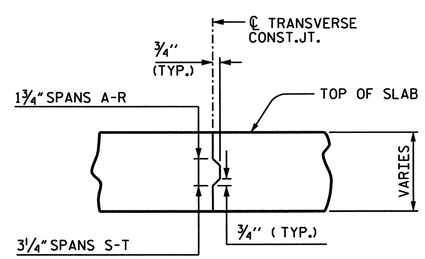

TRANSVERSE CONSTRUCTION JOINT DETAIL

NOTE: LONGITUDINAL REINFORCING STEEL SHALL BE CONTINUOUS THRU JOINT

PROJECT NO. B-682

BRUNSWICK COUNTY

STATION: 47+08.03 -L- POT

SHEET 8 OF 11

STATE OF NORTH CAROLINA
DEPARTMENT OF TRANSPORTATION
RALEIGH

SUPERSTRUCTURE

TYPICAL SECTION

NORTH CAROLINA PROFESSIONAL SEAL 15832 JOEL A. LEE 1-17-07

PLANS PREPARED BY:

PARSONS TRANSPORTATION GROUP
Engineers and Planners
RALEIGH, NORTH CAROLINA

JOB NO. 645615

DWG. NO.

REVISIONS							SHEET NO.
NO.	BY:	DATE:	NO.	BY:	DATE:		5-25
1			3				TOTAL SHEETS
2			4				207

DRAWN BY : D. H. Carter DATE : JULY 2006
CHECKED BY : J. A. Lee DATE : JULY 2006

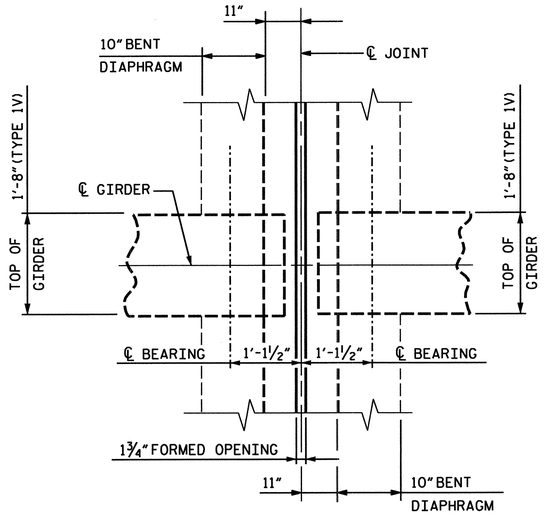

GIRDER AT EXPANSION BENTS
(54" GIRDERS)

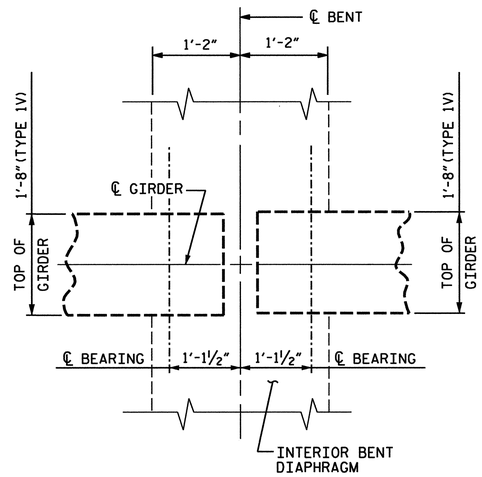

GIRDER AT FIXED BENTS
(54" GIRDERS)

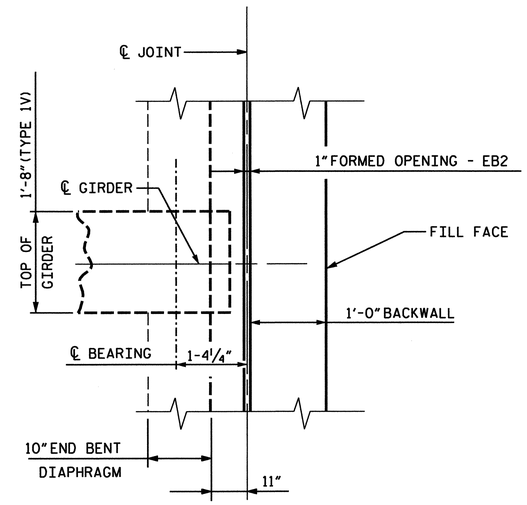

GIRDER AT END BENT 2
(54" GIRDERS)

PLAN OF GIRDERS

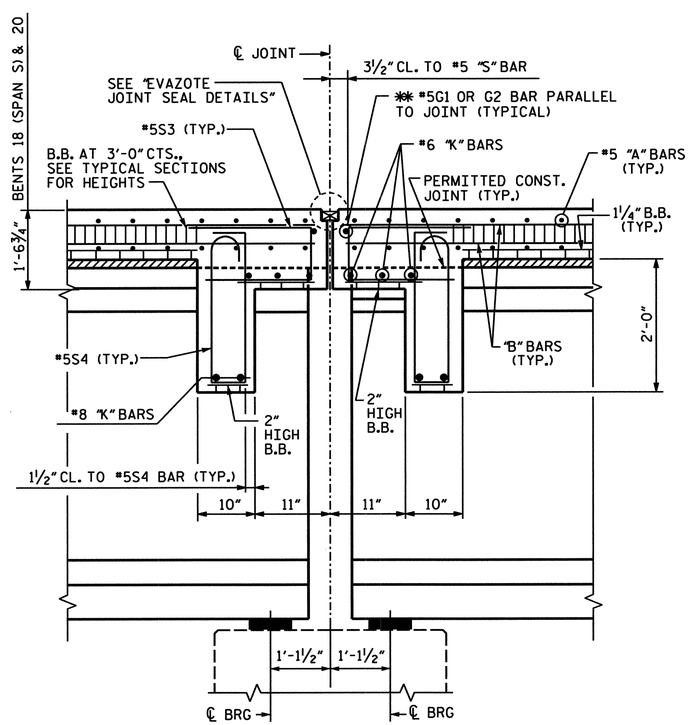

SECTION AT INTERIOR BENT
DIAPHRAGM-EXP. (54" GIRDER)
DIMENSIONS SHOWN ABOVE ARE NORMAL TO THE BENTS

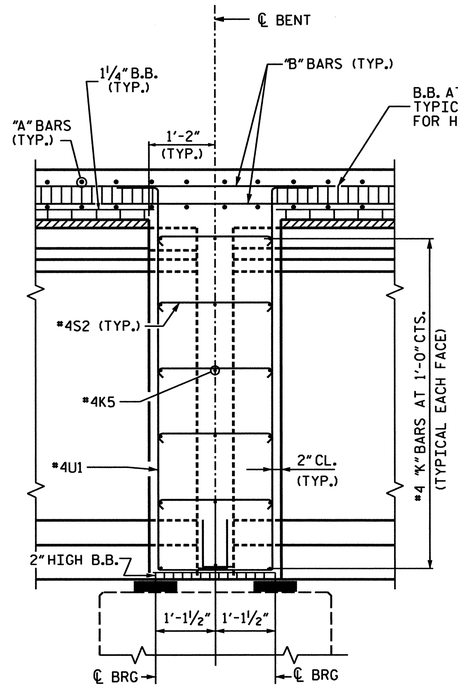

SECTION AT INTERIOR BENT
DIAPHRAGM-FIXED (54" GIRDER)
DIMENSIONS SHOWN ABOVE ARE NORMAL TO THE BENTS

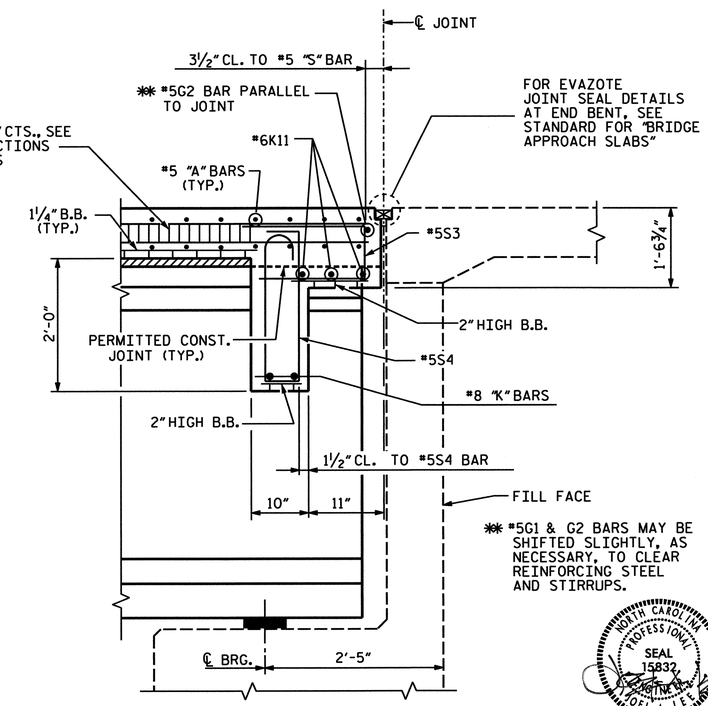

SECTION AT END BENT 2
DIAPHRAGM (54" GIRDER)
DIMENSIONS SHOWN ABOVE ARE NORMAL TO THE BENTS

PROJECT NO. B-682
BRUNSWICK COUNTY
STATION: 47+08.03 -L- POT

SHEET 9 OF 11

STATE OF NORTH CAROLINA
DEPARTMENT OF TRANSPORTATION
RALEIGH

SUPERSTRUCTURE

TYPICAL SECTION

NORTH CAROLINA PROFESSIONAL SEAL 15832 JOEL A. LEE 1-17-07

PLANS PREPARED BY:

PARSONS TRANSPORTATION GROUP
Engineers and Planners
RALEIGH, NORTH CAROLINA

JOB NO. 645615
DWG. NO.

REVISIONS							SHEET NO.
NO.	BY:	DATE:	NO.	BY:	DATE:		S-26
1			3				TOTAL SHEETS
2			4				207

DRAWN BY : D. H. Carter DATE : JULY 2006
CHECKED BY : J. A. Lee DATE : JULY 2006

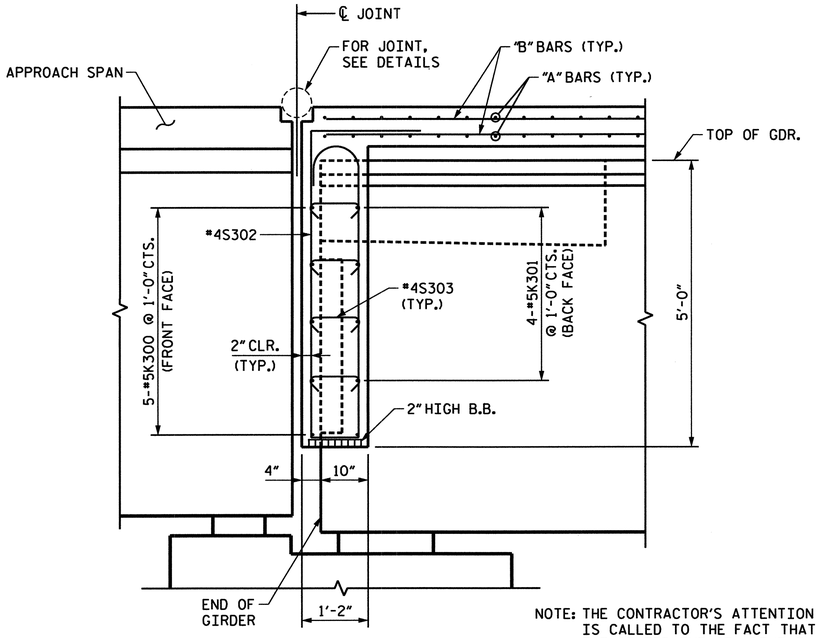

NOTE: THE CONTRACTOR'S ATTENTION IS CALLED TO THE FACT THAT THE CENTERLINE OF JOINT IN THE DECK SLAB IS OFFSET FROM THE CENTERLINE BENT.

SECTION A-A

SHOWING PARTIAL REINFORCING STEEL
FOR ADDITIONAL TYPICAL REINFORCING STEEL,
SEE SECTION B-B

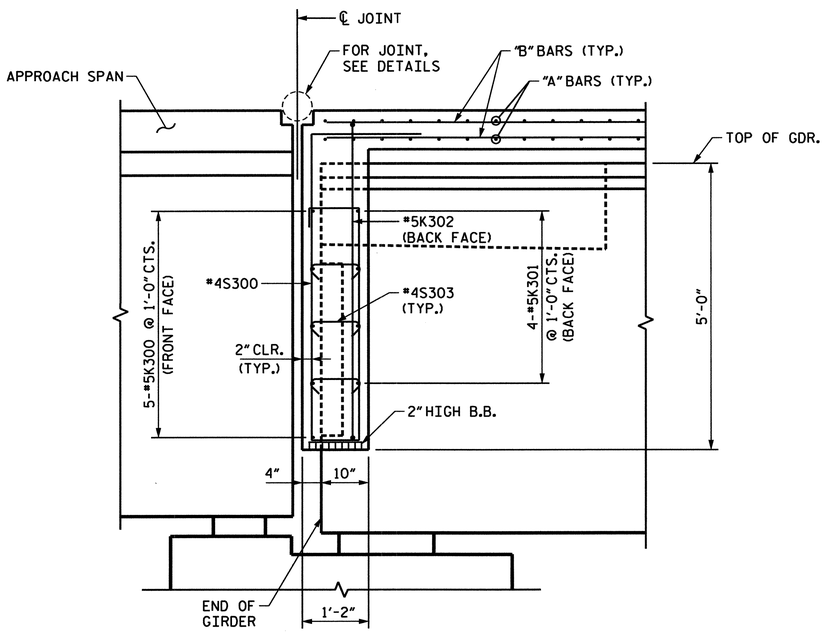

SECTION B-B

SHOWING PARTIAL REINFORCING STEEL
FOR ADDITIONAL TYPICAL REINFORCING STEEL,
SEE SECTION A-A

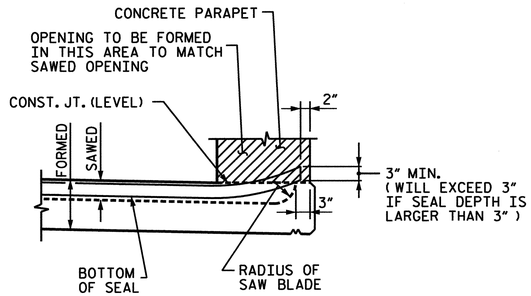

SECTION THRU PARAPET

FOR EVAZOTE JOINT SEAL, SEE SPECIAL PROVISIONS.

FOR ELASTOMERIC CONCRETE, SEE SPECIAL PROVISIONS.

THE NOMINAL UNCOMPRESSED SEAL WIDTH OF THE EVAZOTE JOINT SEAL SHALL BE 4 1/16".

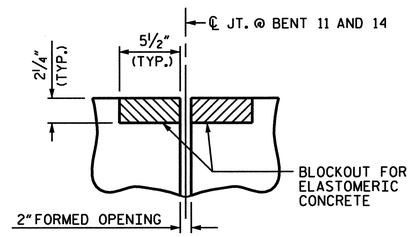

SECTION THRU JOINT

EVAZOTE JOINT SEAL
(PRE-SAWED ELASTOMERIC
CONCRETE DIMENSIONS)

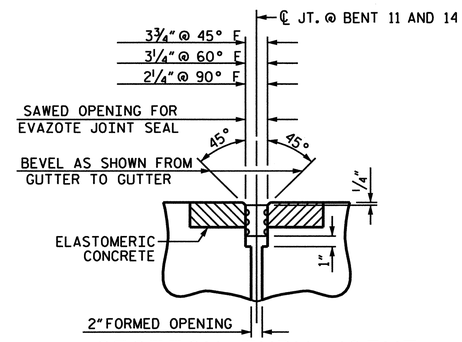

SECTION THRU JOINT

EVAZOTE JOINT SEAL
(EXPANSION)

ELASTOMERIC CONCRETE	
BENT NO.	ELASTOMERIC CONCRETE * (CU. FT.)
11	5.5
14	5.5
TOTAL	11.0

* BASED ON THE MINIMUM BLOCKOUT SHOWN.

EVAZOTE JOINT SEAL DETAILS

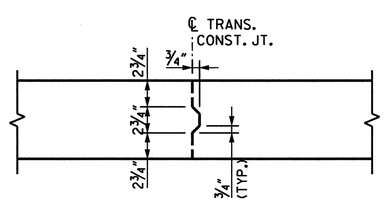

TRANSVERSE CONSTRUCTION JOINT DETAIL

NOTE: LONGITUDINAL SLAB REINFORCING STEEL SHALL BE CONTINUOUS THROUGH JOINT

PROJECT NO. B-0682
BRUNSWICK COUNTY
STATION: 47+08.03 -L- POT

SHEET 10 OF 11

STATE OF NORTH CAROLINA
DEPARTMENT OF TRANSPORTATION
RALEIGH

SUPERSTRUCTURE
TYPICAL SECTION DETAILS

SPANS L - N

NORTH CAROLINA PROFESSIONAL SEAL 024928 ENGINEER RODNEY E. MONEY 2/24/07

PREPARED IN THE OFFICE OF
TYLIN INTERNATIONAL
RALEIGH, NORTH CAROLINA
Copyright © 2006, TYLI
DWG NO.

REVISIONS						SHEET NO.
NO.	BY:	DATE:	NO.	BY:	DATE:	5-27
1			3			TOTAL SHEETS
2			4			207

DRAWN BY : T. S. KELLEY DATE : NOV. 06
CHECKED BY : R.E. MONEY DATE : NOV. 06

DATE: $DATE$
FILE: $$FILENAME$$

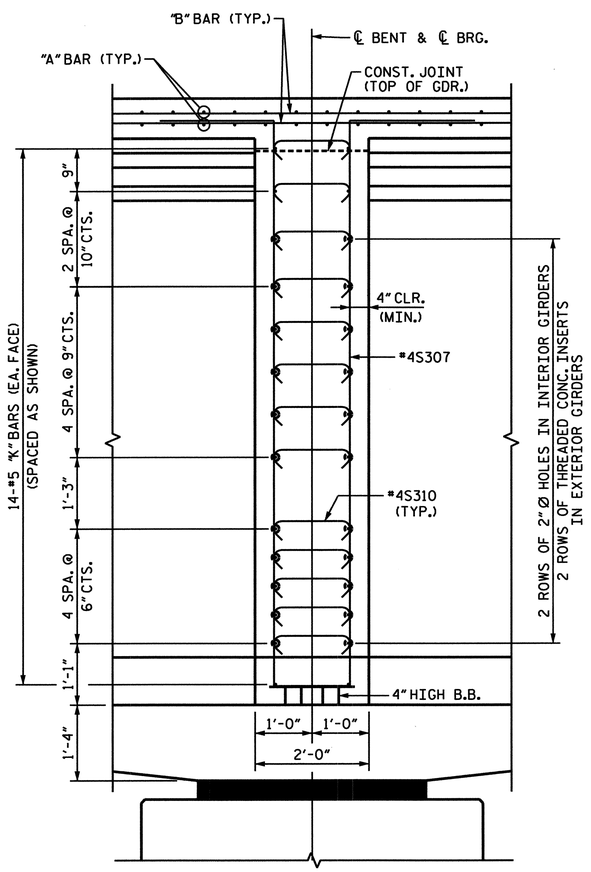

SECTION AT BENT DIAPRAGM

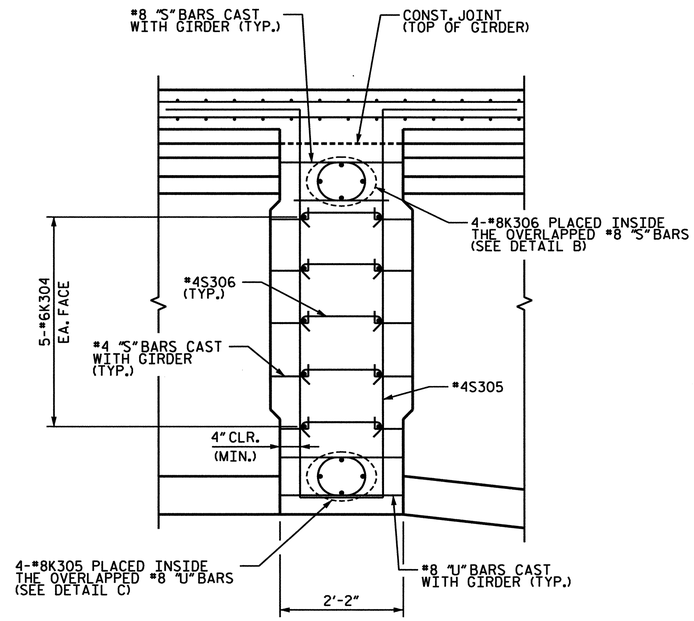

SECTION C-C

CLOSURE SPLICE DIAPHRAGM BETWEEN END OF GIRDERS

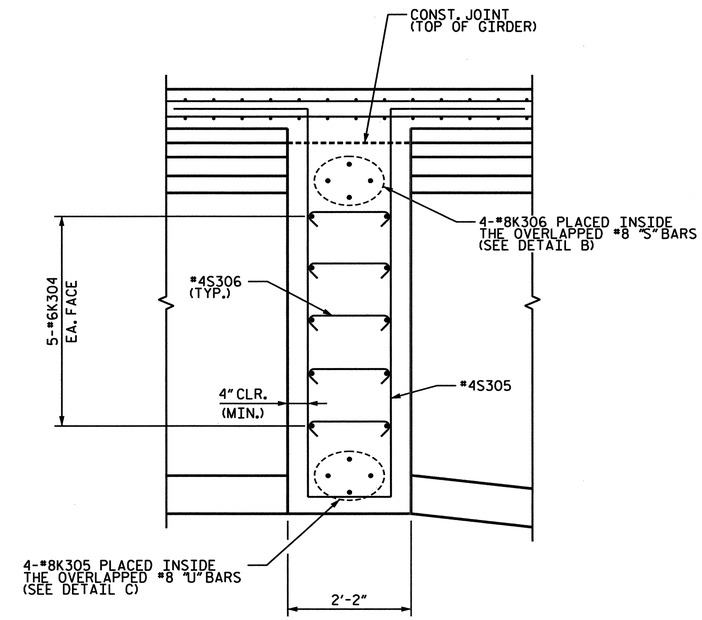

SECTION D-D

CLOSURE SPLICE DIAPHRAGM IN BAY BETWEEN GIRDERS

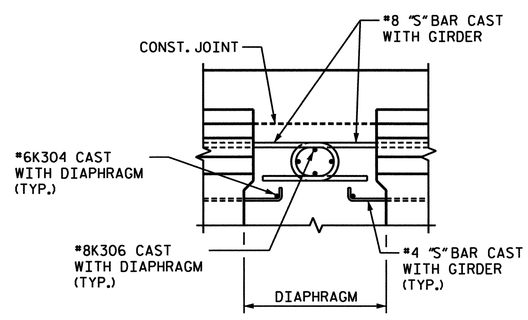

DETAIL B

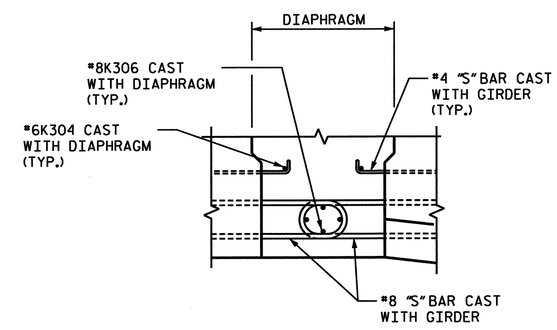

DETAIL C

PROJECT NO. B-0682

BRUNSWICK COUNTY

STATION: 47+08.03 -L- POT

SHEET 11 OF 11

STATE OF NORTH CAROLINA
DEPARTMENT OF TRANSPORTATION
RALEIGH

SUPERSTRUCTURE
TYPICAL SECTION DETAILS

SPANS L - N

NORTH CAROLINA PROFESSIONAL SEAL 024928 ENGINEER RODNEY E. MONEY 3/26/07

PREPARED IN THE OFFICE OF
TYLIN INTERNATIONAL
RALEIGH, NORTH CAROLINA
Copyright © 2006, TYLI

DWG NO.

REVISIONS						SHEET NO.
NO.	BY:	DATE:	NO.	BY:	DATE:	S-28
1			3			TOTAL SHEETS
2			4			207

DRAWN BY : T. S. KELLEY DATE : NOV. 06
CHECKED BY : R.E. MONEY DATE : NOV. 06

DATE: $DATE$
FILE: $$FILENAME$

DECK PANEL SUPPORTS

PRESTRESSED CONCRETE DECK PANELS SHALL BE SUPPORTED ON THE END BENT DIAPHRAGM BY LAYERS OF ½" THICK BITUMINOUS TYPE MATERIAL. THE BITUMINOUS TYPE MATERIAL SHALL HAVE A MINIMUM WIDTH OF 1" AND A MAXIMUM WIDTH OF 1½". THE DECK PANEL SHALL OVERHANG THE BITUMINOUS TYPE MATERIAL BY 1".

BITUMINOUS TYPE MATERIAL SHALL CONFORM TO THE REQUIREMENTS OF AASHTO M213.

THE CONTRACTOR MAY SELECT ONE OF THE TWO DECK PANEL SUPPORT SYSTEMS SHOWN, UNLESS OTHERWISE INDICATED, OR HE MAY SUBMIT A DECK PANEL SUPPORT SYSTEM OF HIS OWN DESIGN TO THE ENGINEER FOR APPROVAL.

A. GROUT BED SUPPORT SYSTEM

1. THE GROUT BED SHALL HAVE A MINIMUM WIDTH OF 1 1/2" AND A MAXIMUM WIDTH OF 2". THE VERTICAL FACES OF THE GROUT BED SHALL BE FORMED. ONE LAYER OF 1/2" THICK BITUMINOUS TYPE MATERIAL OF THE SAME WIDTH AS THE GROUT BED SHALL BE GLUED TO THE TOP OF THE GROUT BED; MORE THAN ONE LAYER IS NOT ALLOWED. THE ADHESIVE SHALL BE APPROVED BY THE ENGINEER. THE BITUMINOUS TYPE MATERIAL SHALL HAVE 1/2" SLOTS LOCATED AT 4'-0" CENTERS. THE GROUT BED SHALL HAVE 1/2" X 1/2" WIDE SLOTS OR OTHER EQUIVALENT SIZE OPENINGS @ 4'-0" CENTERS ALONG THE BOTTOM STAGGERED WITH THE SLOTS IN THE TOP.

2. THE GROUT SHALL BE NON-SHRINK, NON-METALLIC GROUT HAVING A MINIMUM 28 DAY COMPRESSIVE STRENGTH OF 2500 PSI. THE GROUT SHALL BE APPROVED BY THE ENGINEER.

B. POLYSTYRENE SUPPORT SYSTEM

1. ALL POLYSTYRENE SHALL BE DOW STYROFOAM 60 HIGH-LOAD, UC INDUSTRIES FOAMULAR 600 OR APPROVED EQUAL.

2. THE POLYSTYRENE SUPPORT SYSTEM SHALL CONSIST OF ONE LAYER WITH A MINIMUM WIDTH OF 1 1/2" AND A MAXIMUM WIDTH OF 2". THE POLYSTYRENE SHALL HAVE 1/2" X 1/2" WIDE SLOTS OR 1/2" DIAMETER HOLES AT 4'-0" CENTERS STAGGERED ALONG THE TOP AND BOTTOM.

3. THE POLYSTYRENE MAY BE CUT AND PLACED ON EDGE AS NECESSARY TO MATCH THE REQUIRED BUILDUP PROFILE ALONG THE GIRDER.

4. ADHESIVE, AS APPROVED BY THE ENGINEER, SHALL BE APPLIED TO THE TOP OF THE GIRDER IN A CONTINUOUS BEAD AND IN SUFFICIENT AMOUNT TO PREVENT THE POLYSTYRENE FROM BLOWING OUT AND TO PREVENT GAPS FROM FORMING BETWEEN THE POLYSTYRENE AND THE GIRDER. PRIOR TO PLACEMENT OF THE DECK PANELS, THE ADHESIVE SHALL ALSO BE APPLIED TO THE TOP OF THE POLYSTYRENE.

5. CONCRETE-FILLED BUCKETS, STACKS OF DECK PANELS, BUNDLED REINFORCING BARS OR OTHER HEAVY CONCENTRATED LOADS WILL NOT BE PERMITTED ON THE DECK PANEL ONCE THE PANEL HAS BEEN PLACED ON THE POLYSTYRENE SUPPORT SYSTEM.

GENERAL NOTES

1. THE DESIGN COMPRESSIVE STRENGTH (f'c) FOR THE CONCRETE IN PRESTRESSED PANELS SHALL BE 5000 PSI MINIMUM AT 28 DAYS. COMPRESSIVE STRENGTH OF CONCRETE AT TIME OF RELEASE OF STRANDS SHALL BE 4000 PSI MINIMUM.

2. THE PRECAST PRESTRESSED PANEL SHALL HAVE A THICKNESS OF 3 ½" WITH THE PRESTRESSED STRANDS LOCATED AT HALF THE DEPTH OF THE PANEL.

3. FOR SKEWED SPANS, TRAPEZOIDAL CLOSURE PANELS SHALL HAVE A MINIMUM WIDTH OF 2 FEET ON THE SHORT SIDE.

4. ALL PRESTRESSING STRANDS SHALL EXTEND 2" BEYOND THE PANEL EDGES.

5. SHEAR REINFORCING OF 0.60 SQ. INCHES OF REINFORCING STEEL PER 10 SQ. FEET OF PANEL SURFACE SHALL BE PROVIDED IN THE PANEL TO ENSURE COMPOSITE ACTION BETWEEN PANEL AND THE CAST-IN-PLACE CONCRETE. SHEAR REINFORCEMENT SHALL BE MADE OF WELDED WIRE HAVING A MINIMUM YIELD STRENGTH OF 60 KSI.

6. SHEAR REINFORCEMENT AND LIFTING DEVICES SHALL BE CONSTRUCTED AND PLACED SO AS TO AVOID ANY INTERFERENCE WITH REINFORCING STEEL IN THE CAST-IN-PLACE DECK SLAB AND TO ALLOW FOR PROPER CONCRETE CONSOLIDATION IN THE DECK PANEL.

7. SHIFT LONGITUDINAL "B" BARS AS NECESSARY TO OBTAIN A MINIMUM CLEAR DISTANCE OF 2 ½" TO THE RIGHT OR LEFT OF THE EDGE OF THE DECK PANEL. IF, IN SHIFTING TO OBTAIN THIS CLEARANCE, THE "B" BAR INTERFERES WITH THE STIRRUP IN THE TOP OF THE GIRDER THE "B" BAR MAY BE ELIMINATED.

8. WHEN CASTING THE DECK, PLACE CONCRETE FIRST OVER THE GIRDERS IN CONTINUOUS STRIPS A MINIMUM OF THREE PANEL LENGTHS AHEAD OF THE REST OF THE CONCRETE. CAREFULLY VIBRATE THE CONCRETE OVER THE GIRDERS SO THAT CONCRETE COMPLETELY FILLS THE AREA UNDER THE DECK PANEL OVERHANGS. THEN PLACE AND VIBRATE THE REMAINING DECK CONCRETE.

9. PRECAST PANELS SHALL BE DESIGNED FOR AN ALLOWABLE TENSILE STRESS OF 0 PSI IN THE PRECOMPRESSED TENSILE ZONE UNDER ALL LOADING CONDITIONS.

10. PRESTRESSED CONCRETE DECK PANELS SHALL CONTAIN CALCIUM NITRITE CORROSION INHIBITOR.

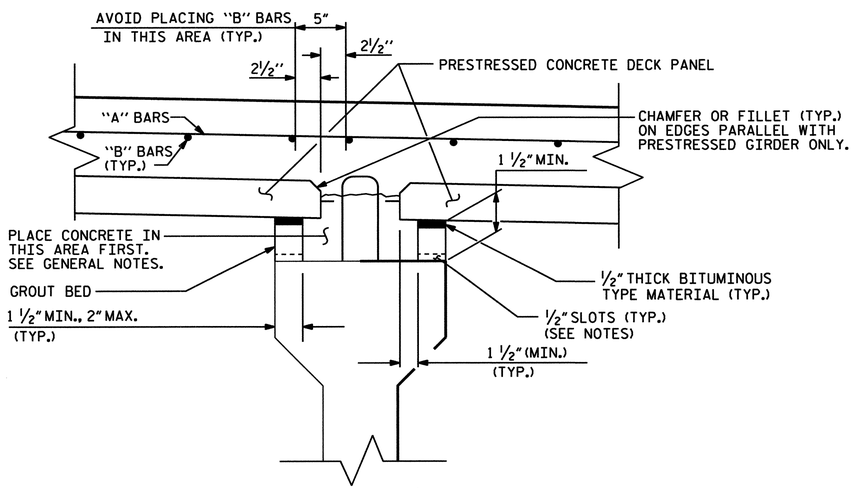

GROUT BED SUPPORT

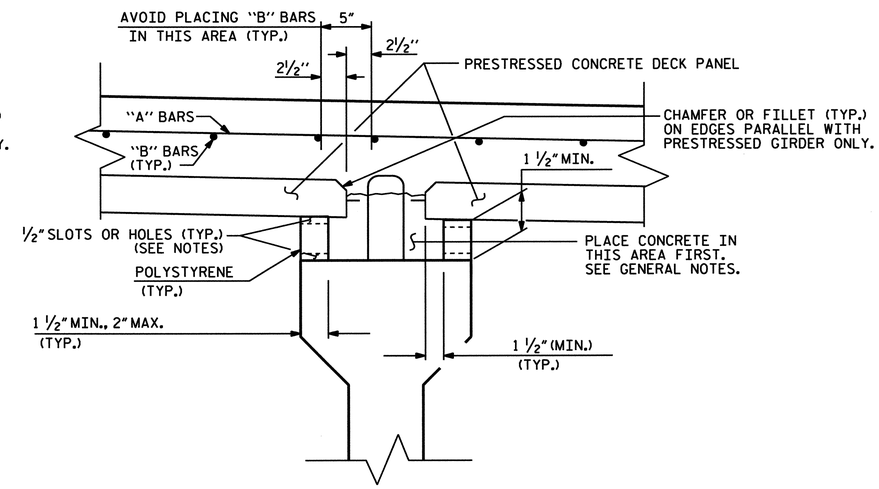

POLYSTYRENE SUPPORT

PROJECT NO. B-682

BRUNSWICK COUNTY

STATION: 47+08.03 -L- POT

THIS STANDARD DRAWING HAS BEEN REVIEWED AND ADAPTED FOR USE AT THE REFERENCED LOCATION BY THE UNDERSIGNED.

NORTH CAROLINA PROFESSIONAL SEAL 15832 ENGINEER JOEL A. LEE
1.17.07

PLANS PREPARED BY:

PARSONS TRANSPORTATION GROUP
Engineers and Planners
RALEIGH, NORTH CAROLINA

JOB NO. 645615

DWG. NO.

STATE OF NORTH CAROLINA
DEPARTMENT OF TRANSPORTATION
RALEIGH

STANDARD
PRECAST PRESTRESSED
CONCRETE DECK PANELS

REVISIONS						
NO.	BY:	DATE:	NO.	BY:	DATE:	
1			3			
2			4			

SHEET NO. S-29

TOTAL SHEETS 207

ASSEMBLED BY : D. H. Carter		DATE : July 2006	
CHECKED BY : J. A. Lee		DATE : July 2006	
DRAWN BY : ELR 1/92	REV. 3/3/93	ELR/RGW	
CHECKED BY : GRP 4/92	REV. 5/7/03R	RWW/JTE	
	REV. 5/1/06	TLA/GM	

STD. NO. PDP1

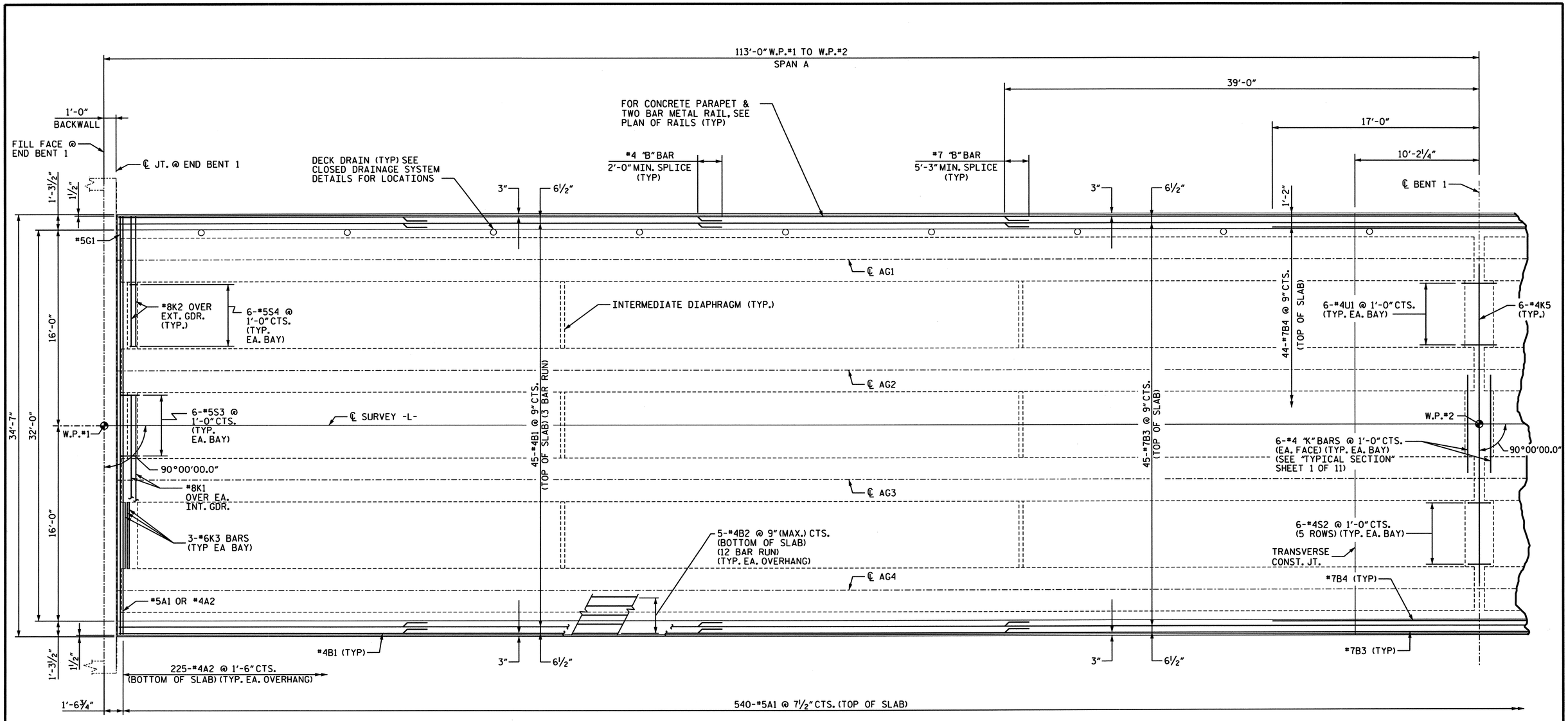

PLAN OF SPAN A

PROJECT NO. B-682

BRUNSWICK COUNTY

STATION: 47+08.03 -L- POT

SHEET 1 OF 24

STATE OF NORTH CAROLINA
DEPARTMENT OF TRANSPORTATION
RALEIGH

SUPERSTRUCTURE

PLAN OF SPAN A

NORTH CAROLINA PROFESSIONAL SEAL 15832 ENGINEER JOEL A. LEE
1-17-07

PLANS PREPARED BY:

PARSONS TRANSPORTATION GROUP
Engineers and Planners
RALEIGH, NORTH CAROLINA

JOB NO. 645615

DWG. NO.

REVISIONS							SHEET NO.
NO.	BY:	DATE:	NO.	BY:	DATE:		5-30
1			3				TOTAL SHEETS
2			4				207

DRAWN BY : D. H. Carter DATE : JULY 2006
CHECKED BY : J. A. Lee DATE : JULY 2006

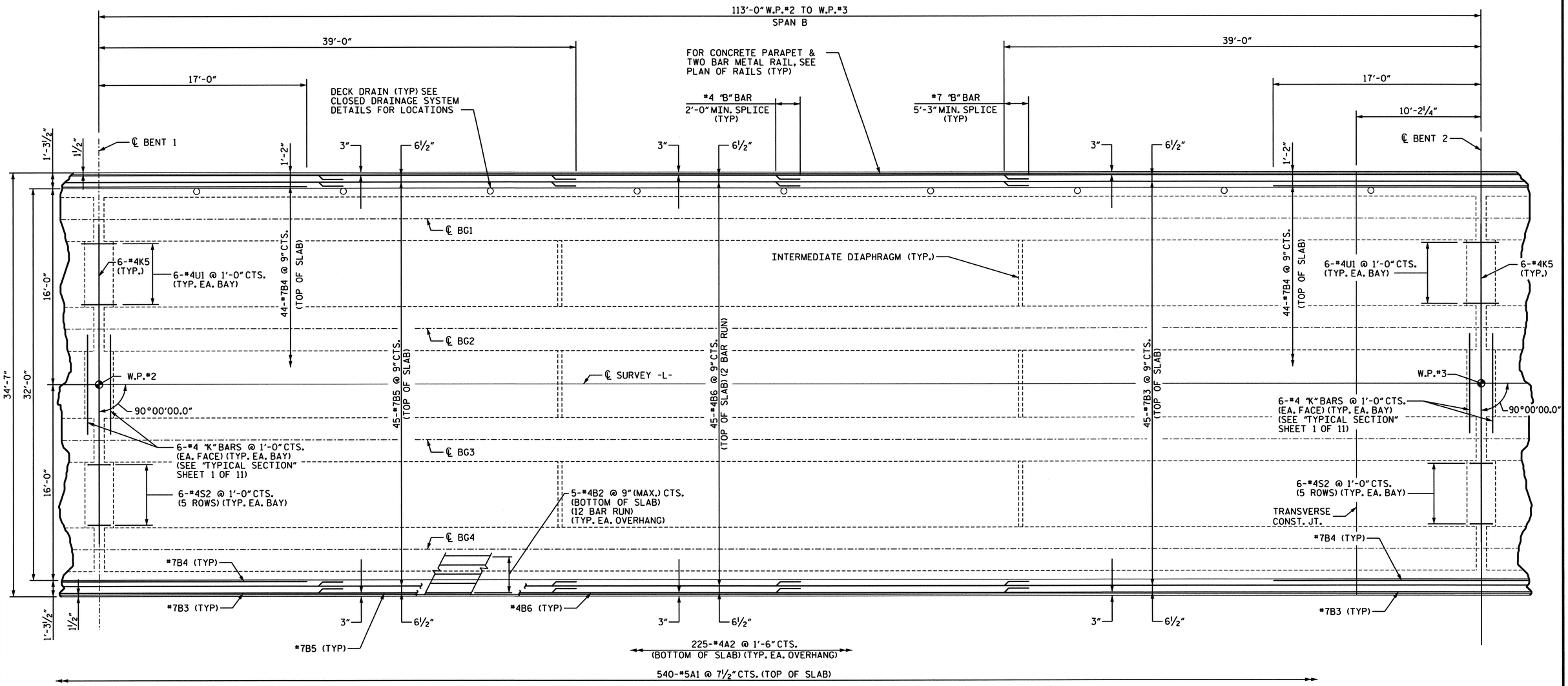

PLAN OF SPAN B

PROJECT NO. B-682

BRUNSWICK COUNTY

STATION: 47+08.03 -L- POT

SHEET 2 OF 24

NORTH CAROLINA PROFESSIONAL SEAL 15832 ENGINEER JOEL A. LEE 1-17-07

PLANS PREPARED BY:

PARSONS TRANSPORTATION GROUP
Engineers and Planners
RALEIGH, NORTH CAROLINA

JOB NO. 645615

DWG. NO.

STATE OF NORTH CAROLINA
DEPARTMENT OF TRANSPORTATION
RALEIGH

SUPERSTRUCTURE

PLAN OF SPAN B

REVISIONS								SHEET NO.
NO.	BY:	DATE:	NO.	BY:	DATE:			S-31
1			3					TOTAL SHEETS
2			4					207

DRAWN BY : D. H. Carter DATE : JULY 2006
CHECKED BY : J. A. Lee DATE : JULY 2006

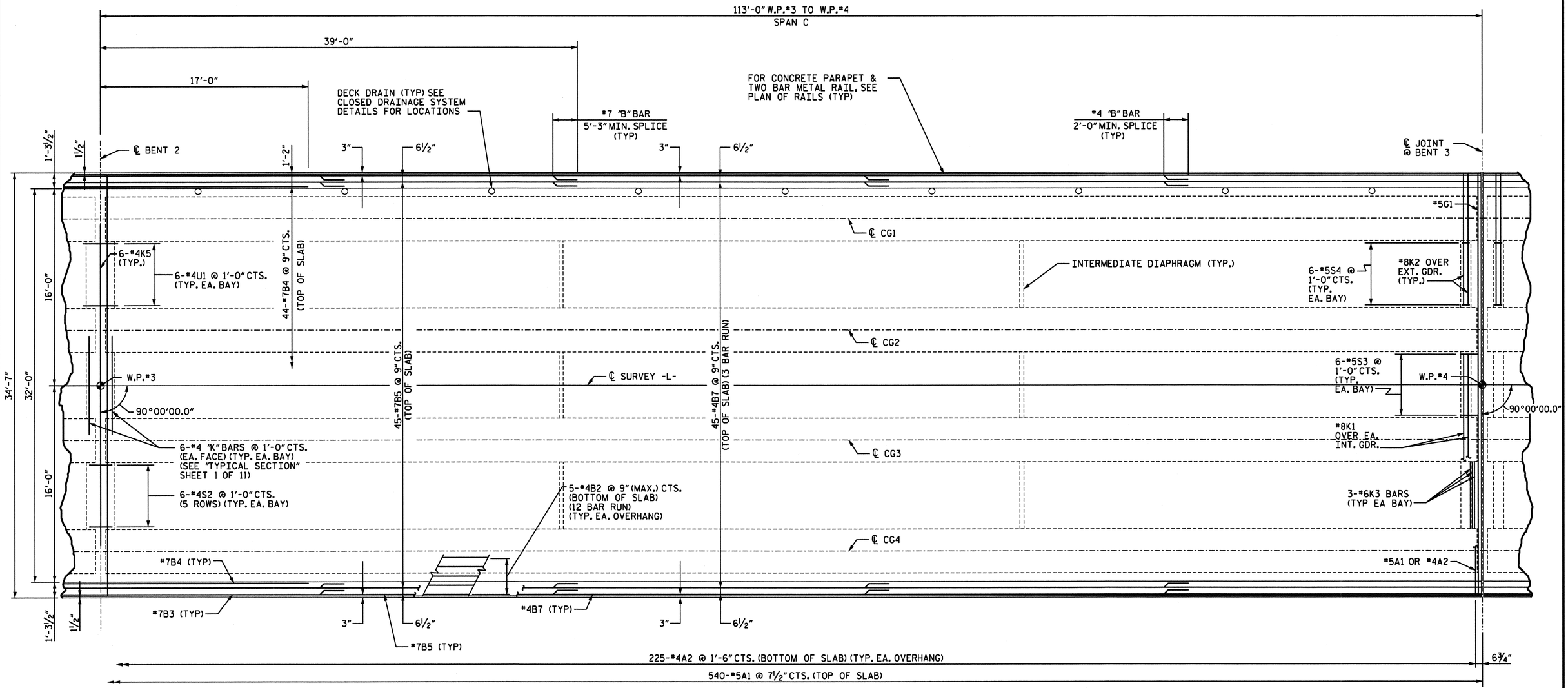

PLAN OF SPAN C

PROJECT NO. B-682

BRUNSWICK COUNTY

STATION: 47+08.03 -L- POT

SHEET 3 OF 24

NORTH CAROLINA PROFESSIONAL SEAL 15832 ENGINEER JOEL A. LEE 1-17-07

PLANS PREPARED BY:

PARSONS TRANSPORTATION GROUP
Engineers and Planners
RALEIGH, NORTH CAROLINA

JOB NO. 645615

DWG. NO.

STATE OF NORTH CAROLINA
DEPARTMENT OF TRANSPORTATION
RALEIGH

SUPERSTRUCTURE

PLAN OF SPAN C

REVISIONS						SHEET NO.
NO.	BY:	DATE:	NO.	BY:	DATE:	5-32
1			3			TOTAL SHEETS
2			4			207

DRAWN BY : D. H. Carter DATE : JULY 2006
CHECKED BY : J. A. Lee DATE : JULY 2006

b682_sd_PSc_03.dgn 02/26/2007 12:14:12 PM

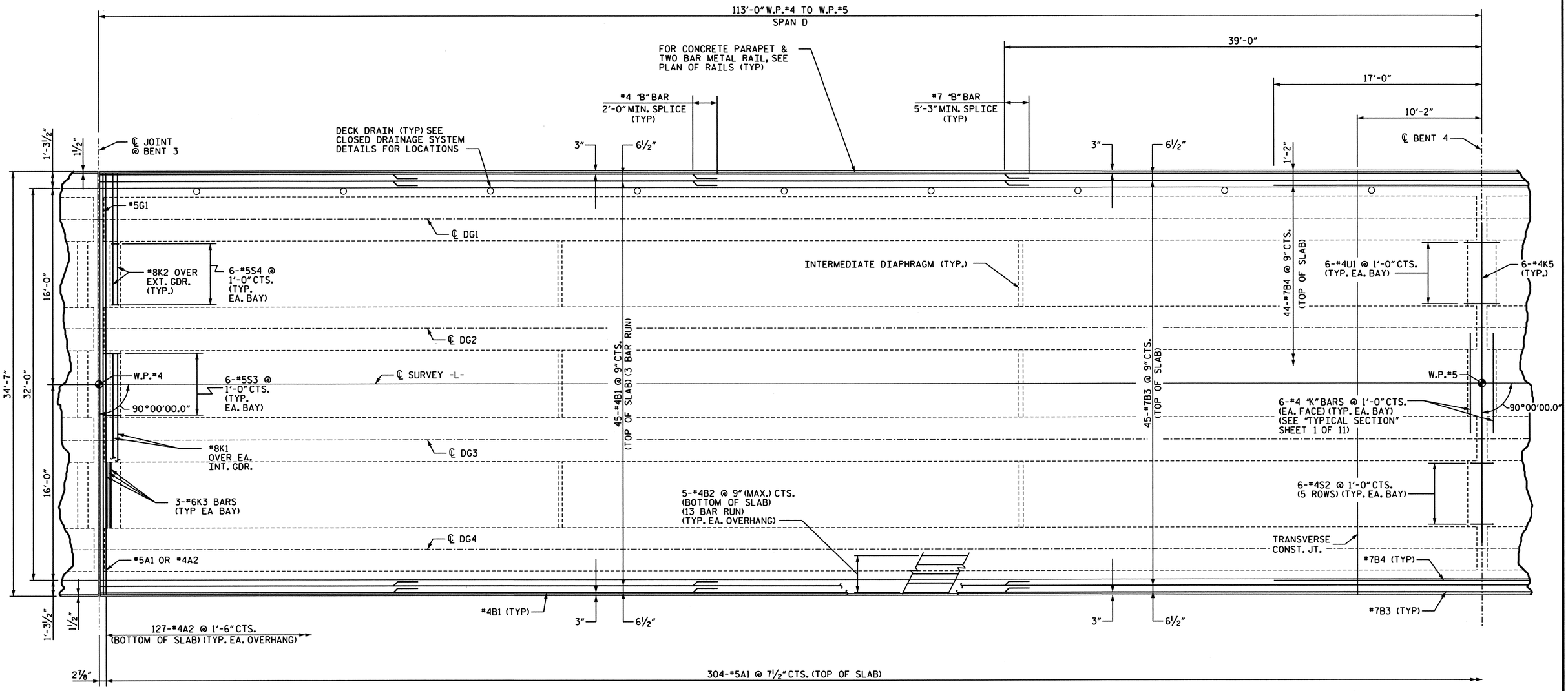

PLAN OF SPAN D

PROJECT NO. B-682

BRUNSWICK COUNTY

STATION: 47+08.03 -L- POT

SHEET 4 OF 24

NORTH CAROLINA PROFESSIONAL SEAL 15832 ENGINEER JOEL A. LEE 1-17-07

PLANS PREPARED BY:

PARSONS TRANSPORTATION GROUP
Engineers and Planners
RALEIGH, NORTH CAROLINA

JOB NO. 645615

DWG. NO.

STATE OF NORTH CAROLINA
DEPARTMENT OF TRANSPORTATION
RALEIGH

SUPERSTRUCTURE

PLAN OF SPAN D

REVISIONS						SHEET NO.
NO.	BY:	DATE:	NO.	BY:	DATE:	S-33
1			3			TOTAL SHEETS
2			4			207

DRAWN BY : D. H. Carter DATE : JULY 2006
CHECKED BY : J. A. Lee DATE : JULY 2006

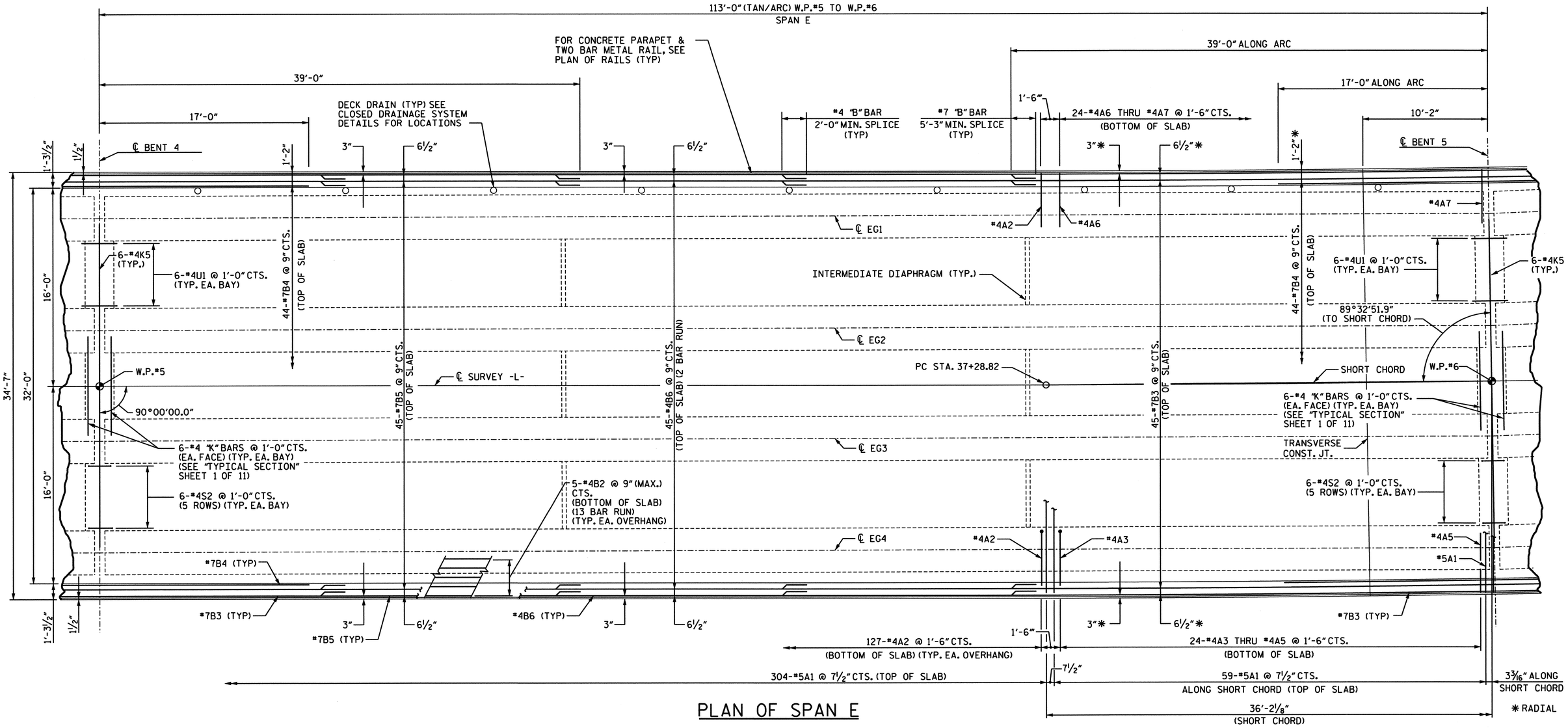

PLAN OF SPAN E

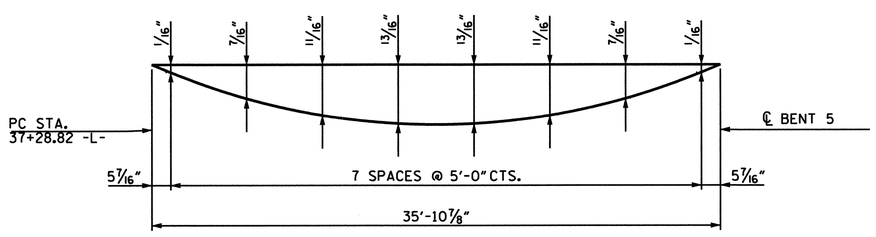

ARC OFFSETS - LEFT SIDE

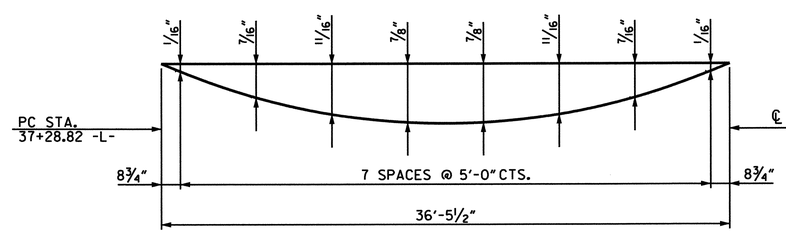

ARC OFFSETS - RIGHT SIDE

PROJECT NO. B-682

BRUNSWICK COUNTY

STATION: 47+08.03 -L- POT

SHEET 5 OF 24

STATE OF NORTH CAROLINA
DEPARTMENT OF TRANSPORTATION
RALEIGH

SUPERSTRUCTURE

PLAN OF SPAN E

NORTH CAROLINA PROFESSIONAL SEAL 15832 ENGINEER JOEL A. LEE 1-17-07

PLANS PREPARED BY:

PARSONS TRANSPORTATION GROUP
Engineers and Planners
RALEIGH, NORTH CAROLINA

JOB NO. 645615

DWG. NO.

REVISIONS								SHEET NO.
NO.	BY:	DATE:	NO.	BY:	DATE:			5-34
1			3					TOTAL SHEETS
2			4					207

DRAWN BY : D. H. Carter DATE : JULY 2006
CHECKED BY : J. A. Lee DATE : JULY 2006

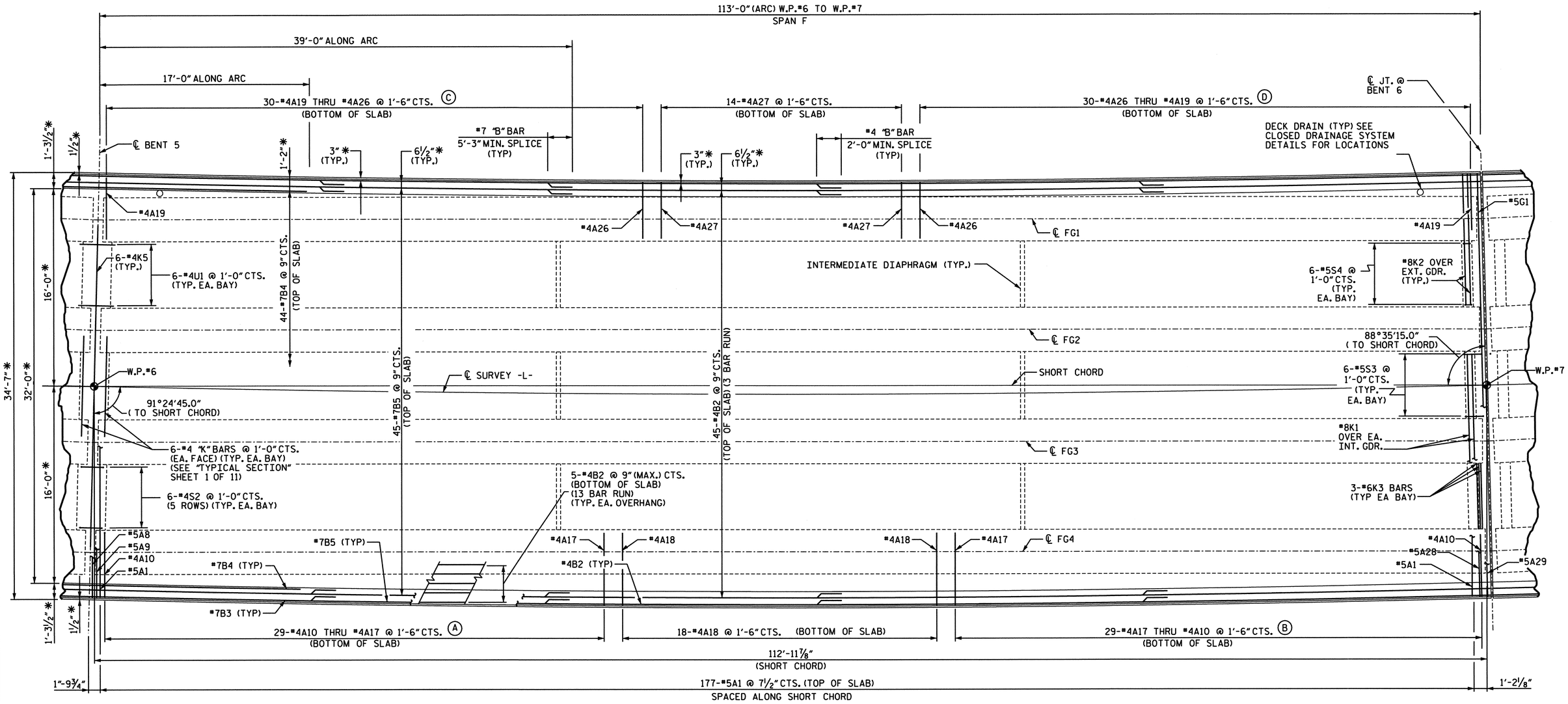

* RADIAL

(A) 2-#4A10 & #4A11
3-#4A12 THRU #4A14
4-#4A15 & #4A16
8-#4A17

(B) 2-#4A10 & #4A12
3-#4A11, #4A13 & #4A15
4-#4A14
5-#4A16
7-#4A17

(C) 2-#4A19 & #4A21
3-#4A20 & #4A22
4-#4A23 & #4A24
5-#4A25
7-#4A26

(D) 2-#4A19 & #4A20
3-#4A21 THRU #4A23
4-#4A24
5-#4A25
8-#4A26

PLAN OF SPAN F

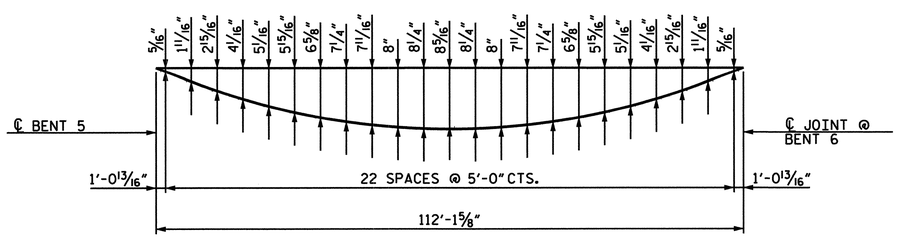

ARC OFFSETS - LEFT SIDE

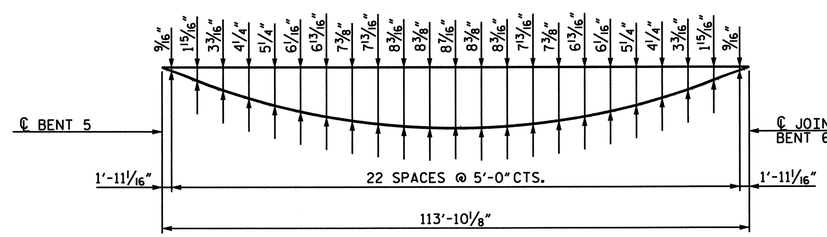

ARC OFFSETS - RIGHT SIDE

NORTH CAROLINA PROFESSIONAL SEAL 15832 ENGINEER JOEL A. LEE 1-17-07

PLANS PREPARED BY:

PARSONS
TRANSPORTATION GROUP
Engineers and Planners
RALEIGH, NORTH CAROLINA

JOB NO. 645615
DWG. NO.

PROJECT NO. B-682
BRUNSWICK COUNTY
STATION: 47+08.03 -L- POT

SHEET 6 OF 24

STATE OF NORTH CAROLINA
DEPARTMENT OF TRANSPORTATION
RALEIGH

SUPERSTRUCTURE

PLAN OF SPAN F

REVISIONS						SHEET NO.
NO.	BY:	DATE:	NO.	BY:	DATE:	S-35
1			3			TOTAL SHEETS
2			4			207

DRAWN BY : D. H. Carter DATE : JULY 2006
CHECKED BY : J. A. Lee DATE : JULY 2006

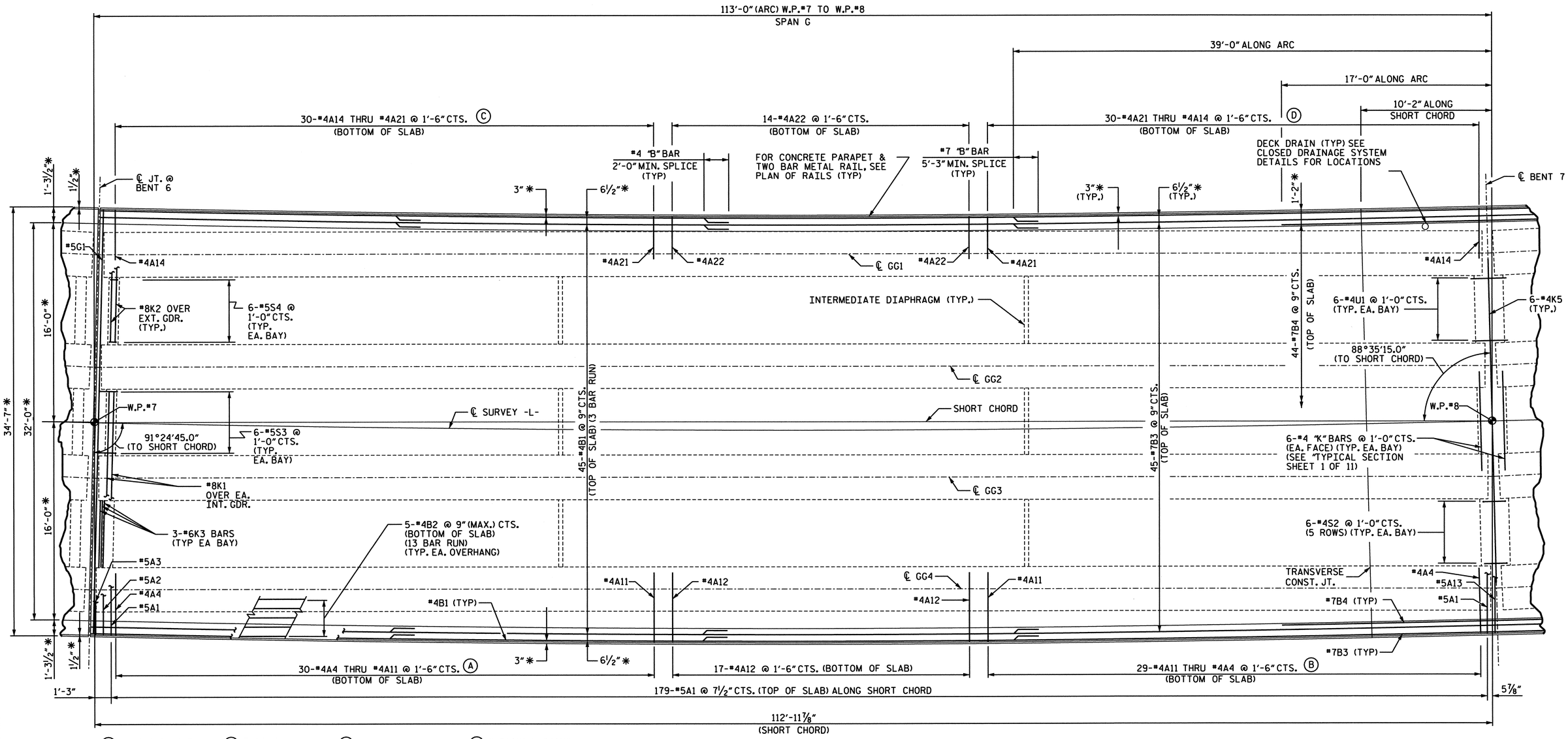

*RADIAL

(A) 3-#4A4, 2-#4A5
3-#4A6 THRU #4A8
4-#4A9, 5-#4A10
7-#4A11

(B) 7-#4A11
5-#4A10, 3-#4A9
4-#4A8, 3-#4A7
2-#4A6, 3-#4A5
2-#4A4

(C) 2-#4A14
3-#4A15 THRU #4A18
4-#4A19, 5-#4A20
7-#4A21

(D) 8-#4A21, 5-#4A20
4-#4A19
3-#4A18 THRU #4A15
2-#4A14

PLAN OF SPAN G

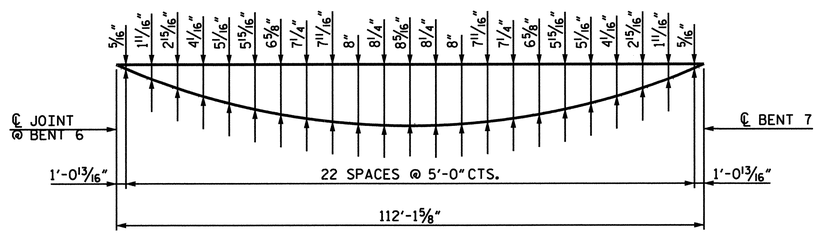

ARC OFFSETS - LEFT SIDE

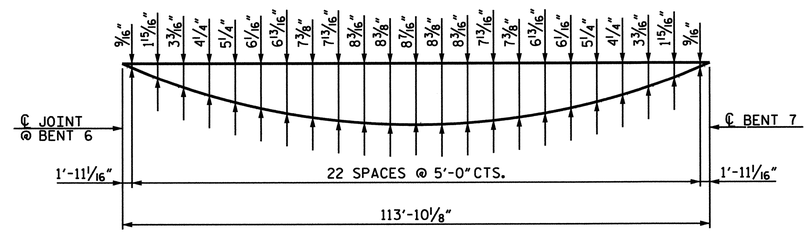

ARC OFFSETS - RIGHT SIDE

PROJECT NO. B-682

BRUNSWICK COUNTY

STATION: 47+08.03 -L- POT

SHEET 7 OF 24

NORTH CAROLINA PROFESSIONAL SEAL 15832 ENGINEER JOEL A. LEE 1-17-07

PLANS PREPARED BY:

PARSONS TRANSPORTATION GROUP
Engineers and Planners
RALEIGH, NORTH CAROLINA

JOB NO. 645615

DWG. NO.

STATE OF NORTH CAROLINA
DEPARTMENT OF TRANSPORTATION
RALEIGH

SUPERSTRUCTURE

PLAN OF SPAN G

REVISIONS							SHEET NO.
NO.	BY:	DATE:	NO.	BY:	DATE:		5-36
1			3				TOTAL SHEETS
2			4				207

DRAWN BY : D. H. Carter DATE : JULY 2006
CHECKED BY : J. A. Lee DATE : JULY 2006

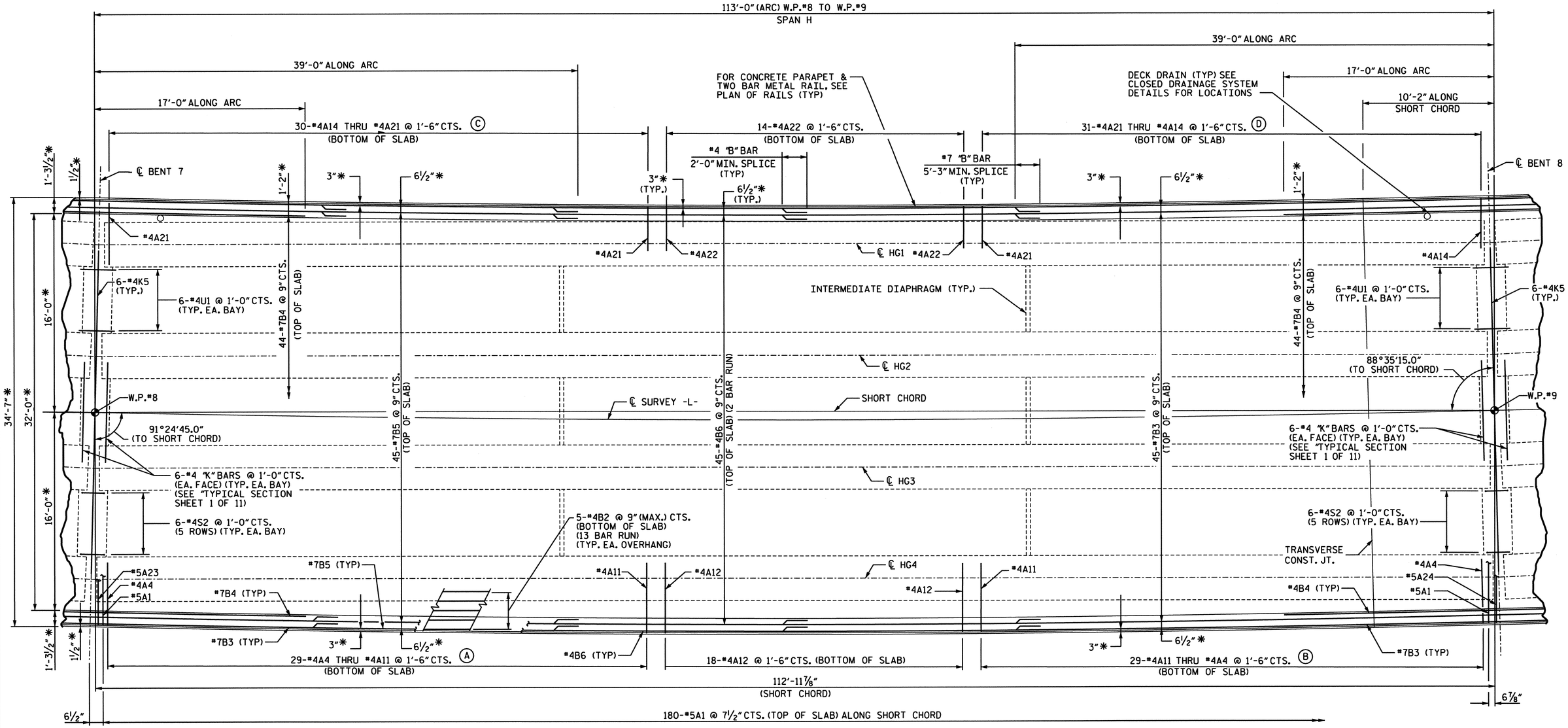

✱ RADIAL

(A) 2-#4A4
3-#4A5 THRU #4A8
4-#4A9 & #4A10
7-#4A11

(B) 7-#4A11
5-#4A10, 3-#4A9
4-#4A8, 3-#4A7
2-#4A6, 3-#4A5
2-#4A4

(C) 2-#4A14
3-#4A15, 2-#4A16
3-#4A17
4-#4A18 & #4A19
5-#4A20, 7-#4A21

(D) 8-#4A21, 5-#4A20
4-#4A19
3-#4A18 THRU #4A16
2-#4A15, 3-#4A14

PLAN OF SPAN H

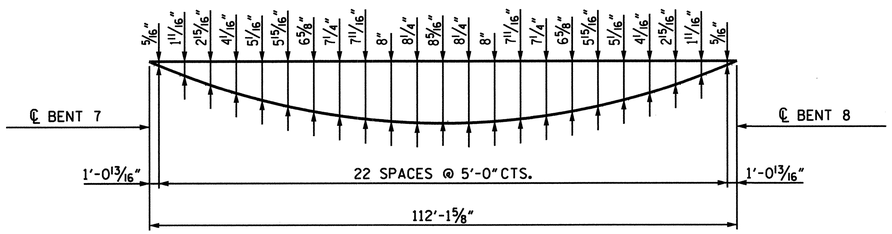

ARC OFFSETS - LEFT SIDE

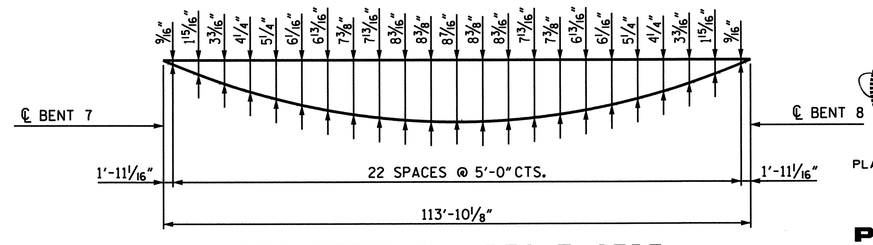

ARC OFFSETS - RIGHT SIDE

PROJECT NO. B-682
BRUNSWICK COUNTY
STATION: 47+08.03 -L- POT

SHEET 8 OF 24

STATE OF NORTH CAROLINA
DEPARTMENT OF TRANSPORTATION
RALEIGH

SUPERSTRUCTURE

PLAN OF SPAN H

NORTH CAROLINA PROFESSIONAL SEAL 15832 ENGINEER JOEL A. LEE 1-17-07

PLANS PREPARED BY:

PARSONS TRANSPORTATION GROUP
Engineers and Planners
RALEIGH, NORTH CAROLINA

JOB NO. 645615
DWG. NO.

REVISIONS						
NO.	BY:	DATE:	NO.	BY:	DATE:	
1			3			
2			4			

SHEET NO. 5-37
TOTAL SHEETS 207

DRAWN BY : D. H. Carter DATE : JULY 2006
CHECKED BY : J. A. Lee DATE : JULY 2006

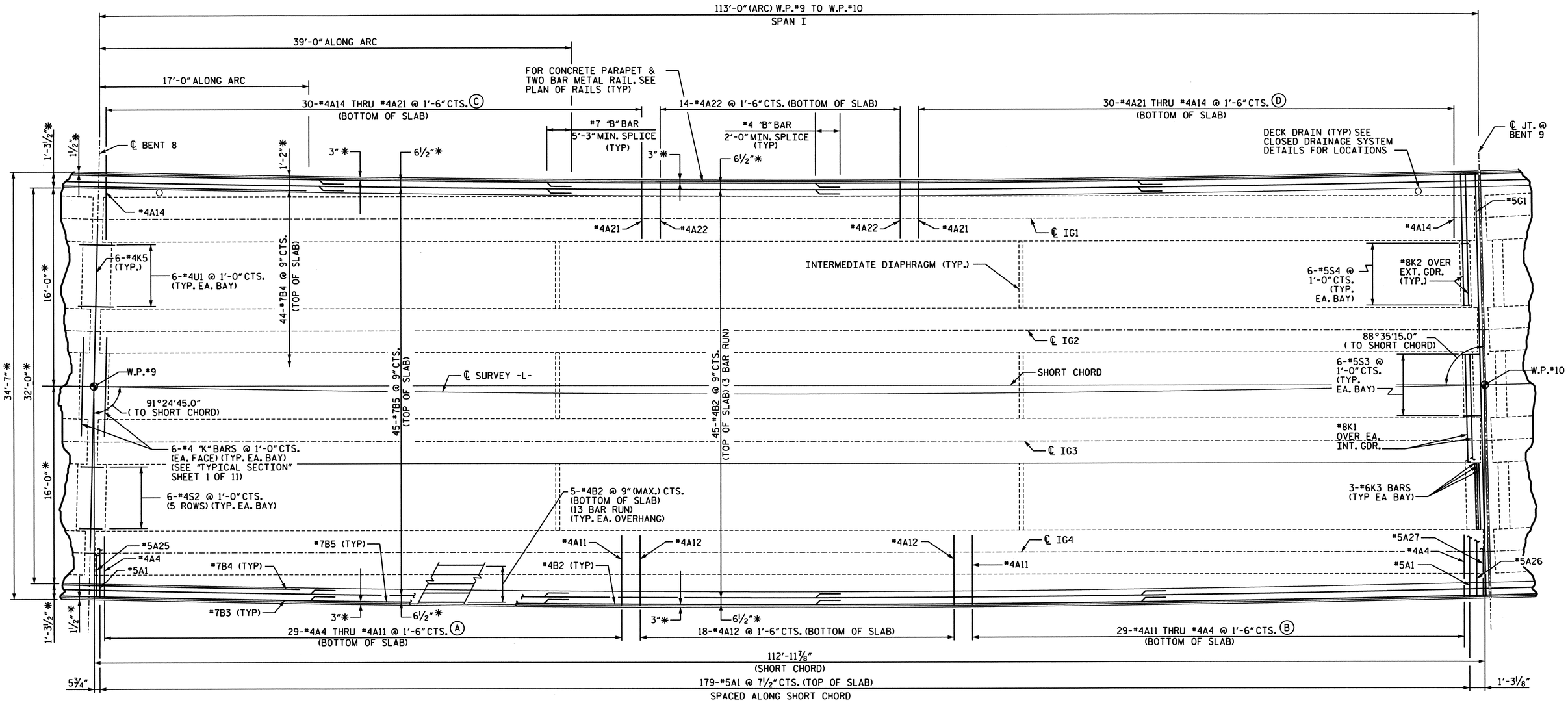

* RADIAL

(A) 2-#4A4
3-#4A5, 2-#4A6
3-#4A7
4-#4A8 THRU #4A10
7-#4A11

(B) 7-#4A11
4-#4A10 THRU #4A8
2-#4A7
3-#4A6, 3-#4A5
2-#4A4

(C) 2-#4A14
3-#4A15, 2-#4A16
3-#4A17
4-#4A18, 3-#4A19
5-#4A20, 8-#4A21

(D) 8-#4A21, 5-#4A20
4-#4A19
3-#4A18 THRU #4A16
2-#4A15, 2-#4A14

PLAN OF SPAN I

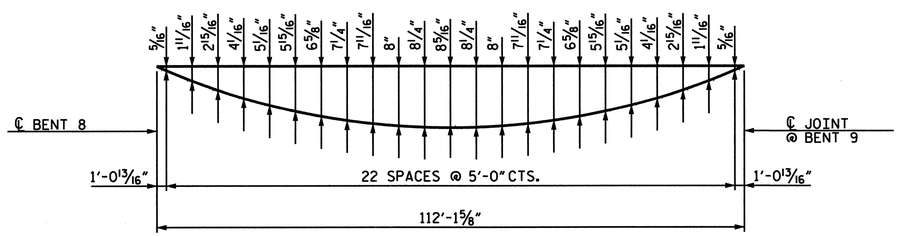

ARC OFFSETS - LEFT SIDE

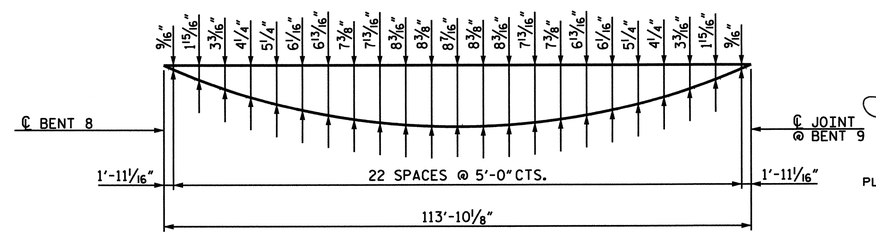

ARC OFFSETS - RIGHT SIDE

PROJECT NO. B-682

BRUNSWICK COUNTY

STATION: 47+08.03 -L- POT

SHEET 9 OF 24

STATE OF NORTH CAROLINA
DEPARTMENT OF TRANSPORTATION
RALEIGH

SUPERSTRUCTURE

PLAN OF SPAN I

NORTH CAROLINA PROFESSIONAL SEAL 15832 ENGINEER JOEL A. LEE 1.17.07

PLANS PREPARED BY:

PARSONS TRANSPORTATION GROUP
Engineers and Planners
RALEIGH, NORTH CAROLINA

JOB NO. 645615

DWG. NO.

REVISIONS						SHEET NO.
NO.	BY:	DATE:	NO.	BY:	DATE:	5-38
1			3			TOTAL SHEETS
2			4			207

DRAWN BY : D. H. Carter DATE : JULY 2006
CHECKED BY : J. A. Lee DATE : JULY 2006

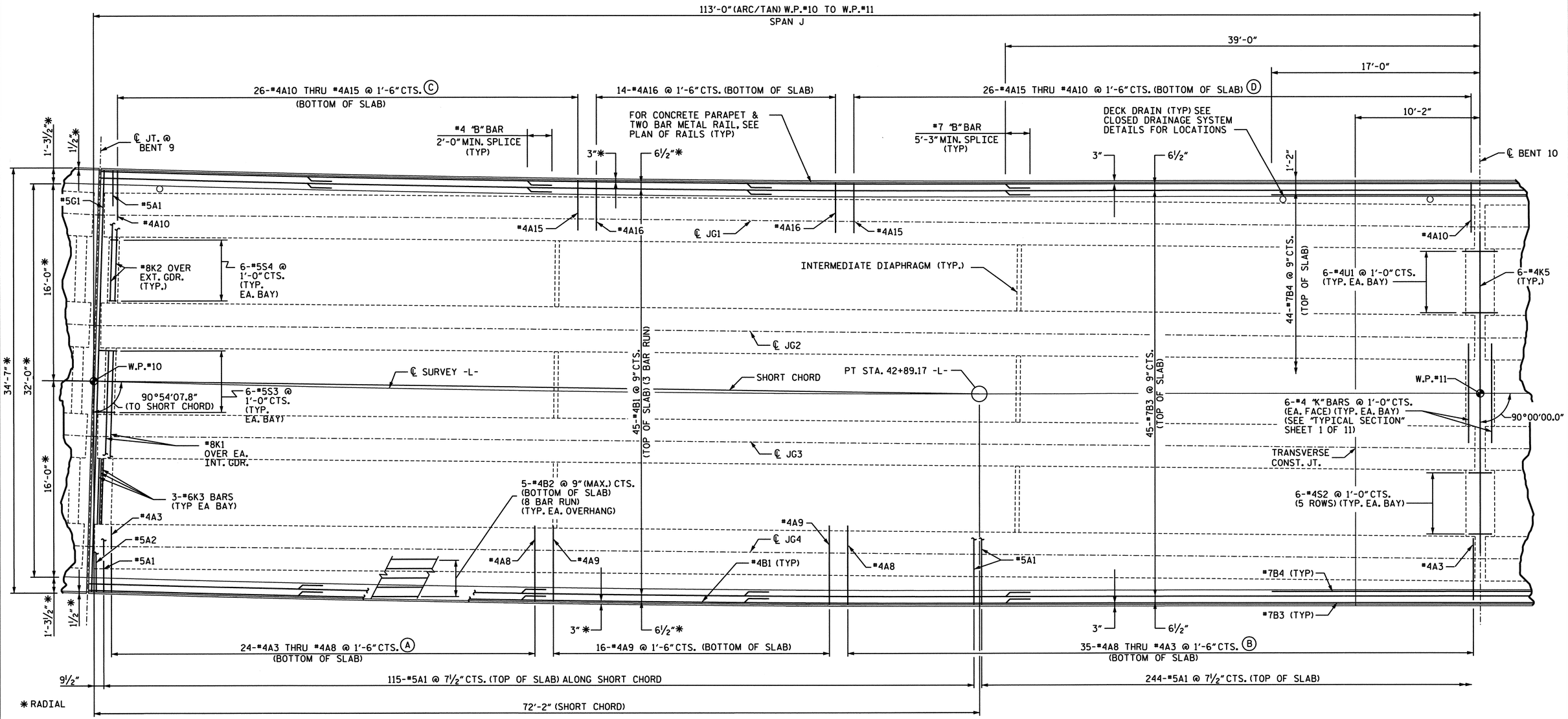

PLAN OF SPAN J

(A) 2-#4A3
3-#4A4, 3-#4A5
4-#4A6, 5-#4A7
7-#4A8

(B) 8-#4A8
5-#4A7, 6-#4A6
5-#4A5, 4-#4A4
5-#4A3

(C) 4-#4A10, 2-#4A11
3-#4A12, 4-#4A13
5-#4A14, 8-#4A15

(D) 7-#4A15
6-#4A14, 6-#4A13
5-#4A12, 6-#4A11
5-#4A10

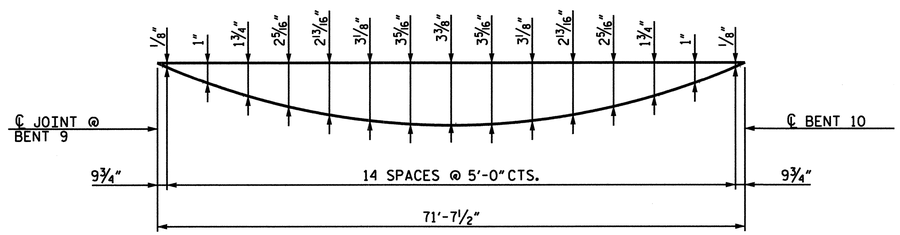

ARC OFFSETS - LEFT SIDE

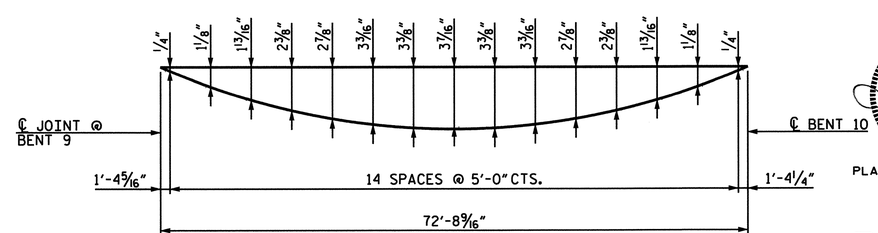

ARC OFFSETS - RIGHT SIDE

PROJECT NO. B-682

BRUNSWICK COUNTY

STATION: 47+08.03 -L- POT

SHEET 10 OF 24

NORTH CAROLINA PROFESSIONAL SEAL 15832 ENGINEER JOEL A. LEE 1.17.07

PLANS PREPARED BY:

PARSONS TRANSPORTATION GROUP
Engineers and Planners
RALEIGH, NORTH CAROLINA

JOB NO. 645615

DWG. NO.

STATE OF NORTH CAROLINA
DEPARTMENT OF TRANSPORTATION
RALEIGH

SUPERSTRUCTURE

PLAN OF SPAN J

REVISIONS									SHEET NO.
NO.	BY:	DATE:	NO.	BY:	DATE:				S-39
1			3						TOTAL SHEETS
2			4						207

DRAWN BY : D. H. Carter DATE : JULY 2006
CHECKED BY : J. A. Lee DATE : JULY 2006

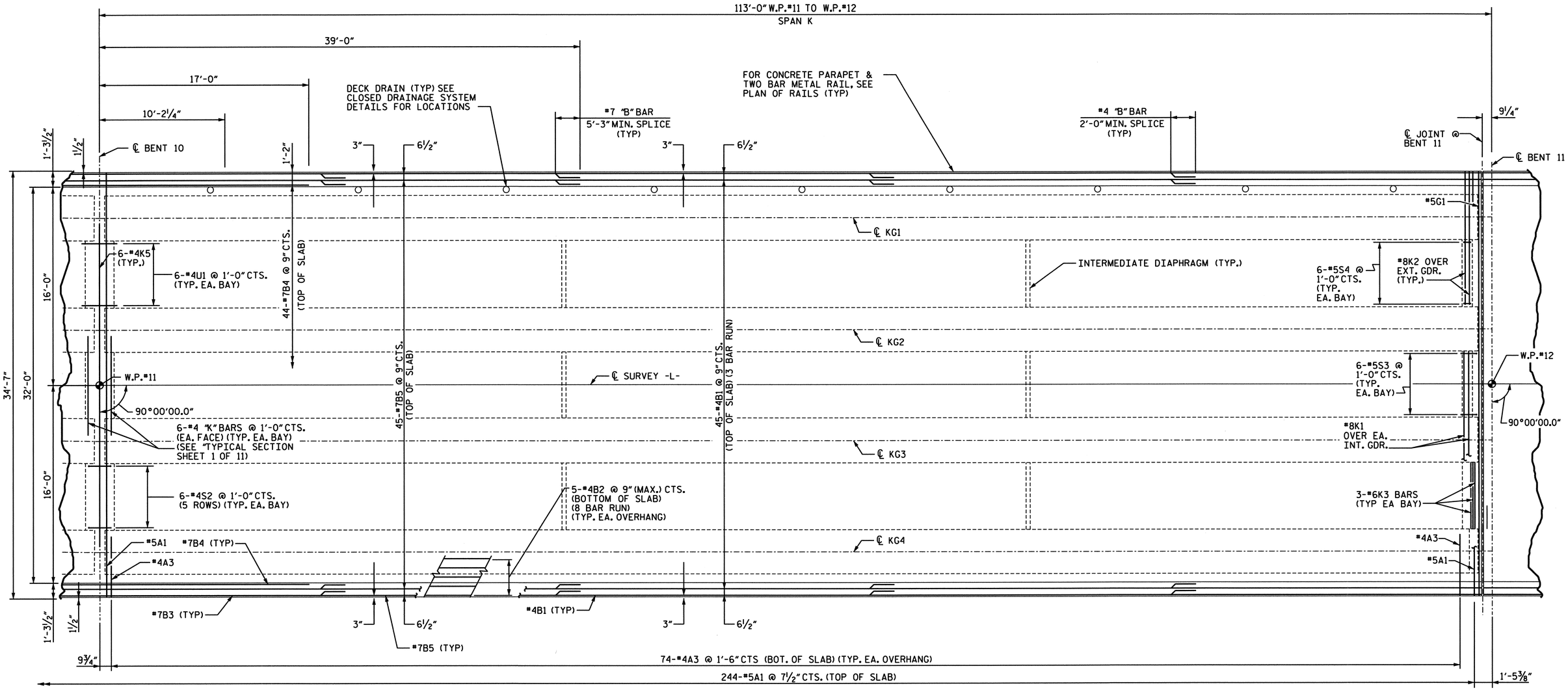

PLAN OF SPAN K

THE CONTRACTOR'S ATTENTION IS CALLED TO THE FACT THAT THE CENTERLINE OF JOINT IN THE DECK SLAB IS OFFSET FROM THE CENTERLINE OF BENT NO. 11

PROJECT NO. B-682

BRUNSWICK COUNTY

STATION: 47+08.03 -L- POT

SHEET 11 OF 24

NORTH CAROLINA PROFESSIONAL SEAL 15832 ENGINEER JOEL A. LEE 1.17.07

PLANS PREPARED BY:

PARSONS TRANSPORTATION GROUP
Engineers and Planners
RALEIGH, NORTH CAROLINA

JOB NO. 645615

DWG. NO.

STATE OF NORTH CAROLINA
DEPARTMENT OF TRANSPORTATION
RALEIGH

SUPERSTRUCTURE

PLAN OF SPAN K

REVISIONS						SHEET NO.
NO.	BY:	DATE:	NO.	BY:	DATE:	5-40
1			3			TOTAL SHEETS
2			4			207

DRAWN BY : D. H. Carter DATE : JULY 2006
CHECKED BY : J. A. Lee DATE : JULY 2006

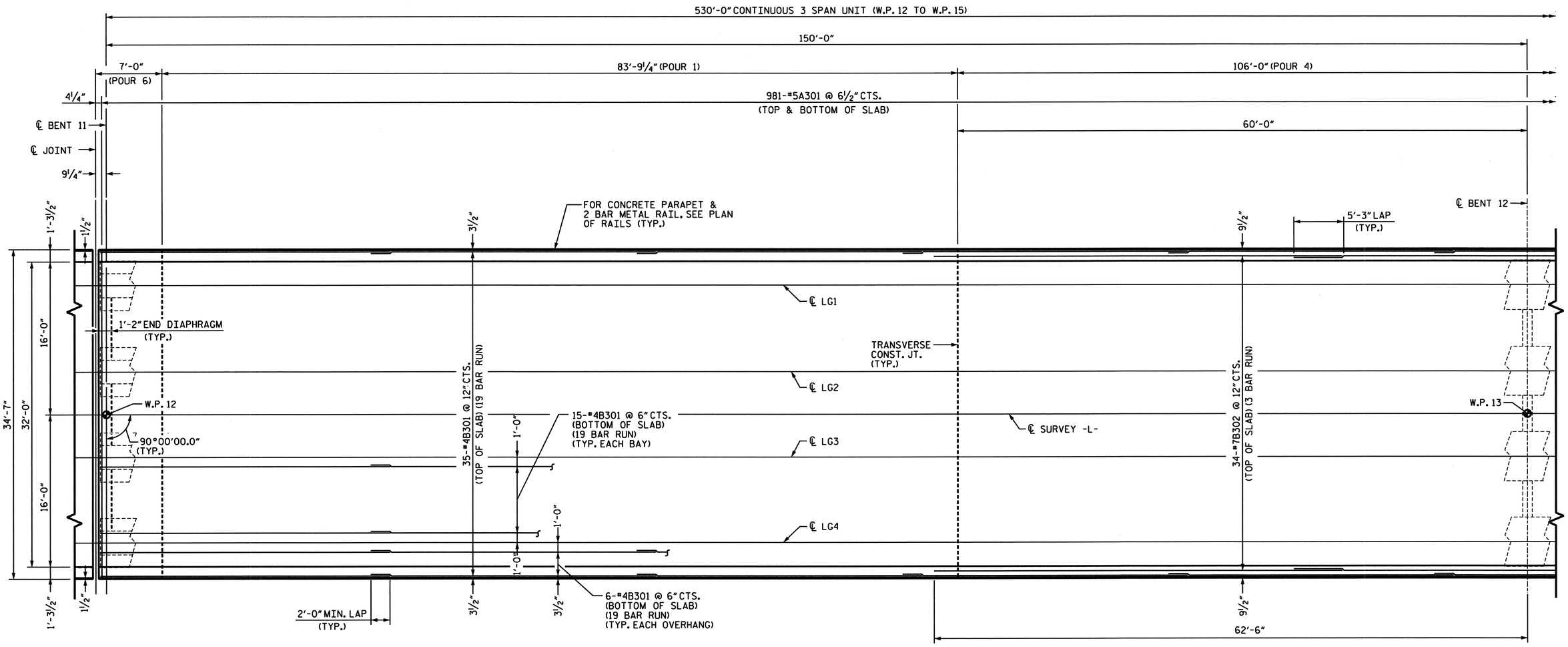

PLAN OF SPAN L

THE CONTRACTOR'S ATTENTION IS CALLED TO THE FACT THAT THE CENTERLINE JOINT IN THE DECK SLAB IS OFFSET FROM THE CENTERLINE BENT.

PROJECT NO. B-0682

BRUNSWICK COUNTY

STATION: 47+08.03 -L- POT

SHEET 12 OF 24

NORTH CAROLINA PROFESSIONAL SEAL 024928 ENGINEER RODNEY E. MONEY 8/24/07

STATE OF NORTH CAROLINA
DEPARTMENT OF TRANSPORTATION
RALEIGH

SUPERSTRUCTURE

PLAN OF SPAN L

PREPARED IN THE OFFICE OF
TYLIN INTERNATIONAL
RALEIGH, NORTH CAROLINA
Copyright © 2006, TYLI

DWG NO.

REVISIONS						SHEET NO.
NO.	BY:	DATE:	NO	BY:	DATE:	S-41
1			3			TOTAL SHEETS
2			4			207

DRAWN BY : T. S. KELLEY DATE : NOV. 06
CHECKED BY : J. W. WRIGHT DATE : NOV. 06

DATE: $DATE$
FILE: $$FILENAME$

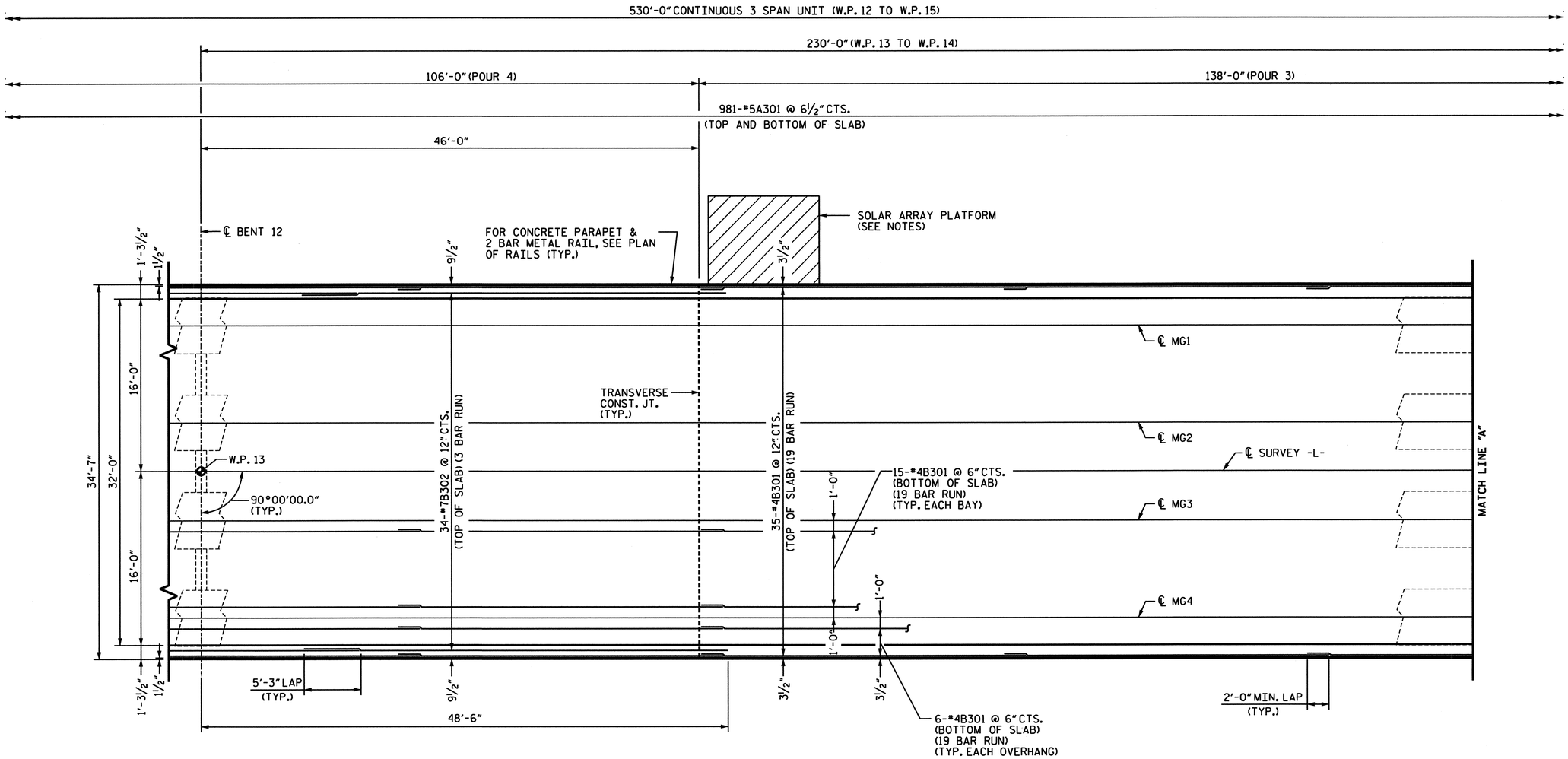

PLAN OF SPAN M

NOTES:

FOR SOLAR ARRAY PLATFORM LOCATION AND DETAILS, SEE "SOLAR ARRAY SUPPORT PLATFORM" SHEET.

FOR LOCATION OF 1" Ø RIGID CONDUIT, SEE "NAVIGATIONAL LIGHTING AND CONDUIT SYSTEM" SHEET.

PROJECT NO. B-0682
BRUNSWICK COUNTY
STATION: 47+08.03 -L- POT

SHEET 13 OF 24

NORTH CAROLINA PROFESSIONAL SEAL 024928 ENGINEER RODNEY E. MONKEY 2/24/07

STATE OF NORTH CAROLINA
DEPARTMENT OF TRANSPORTATION
RALEIGH

SUPERSTRUCTURE

PLAN OF SPAN M

PREPARED IN THE OFFICE OF
TYLIN INTERNATIONAL
RALEIGH, NORTH CAROLINA
Copyright © 2006, TYLI

DWG NO.

REVISIONS						
NO.	BY:	DATE:	NO.	BY:	DATE:	
1			3			
2			4			

SHEET NO. 5-42
TOTAL SHEETS 207

DRAWN BY : T. S. KELLEY DATE : NOV. 06
CHECKED BY : J. W. WRIGHT DATE : NOV. 06

DATE: $DATE$
FILE: $FILENAME$

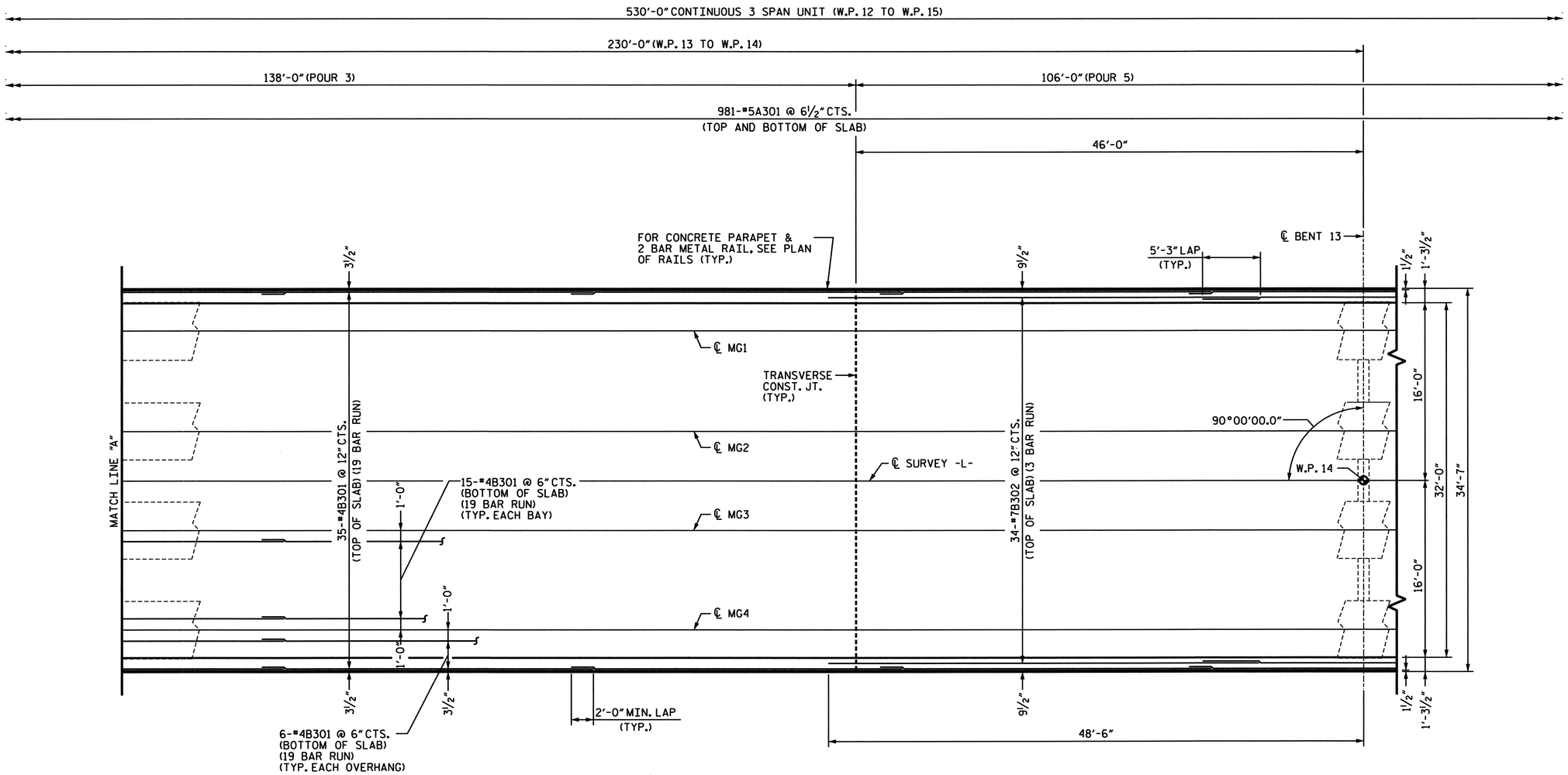

PLAN OF SPAN M

PROJECT NO. B-0682

BRUNSWICK COUNTY

STATION: 47+08.03 -L- POT

SHEET 14 OF 24

NORTH CAROLINA PROFESSIONAL SEAL 024928 ENGINEER RODNEY E. MONEY 12/26/07

STATE OF NORTH CAROLINA
DEPARTMENT OF TRANSPORTATION
RALEIGH

SUPERSTRUCTURE

PLAN OF SPAN M

PREPARED IN THE OFFICE OF
TYLIN INTERNATIONAL
RALEIGH, NORTH CAROLINA
Copyright © 2006, TYLI

DWG NO.

REVISIONS						SHEET NO.
NO.	BY:	DATE:	NO.	BY:	DATE:	S-43
1			3			TOTAL SHEETS
2			4			207

DRAWN BY : T. S. KELLEY DATE : NOV. 06
CHECKED BY : J. W. WRIGHT DATE : NOV. 06

DATE: $DATE$
FILE: $FILENAME$

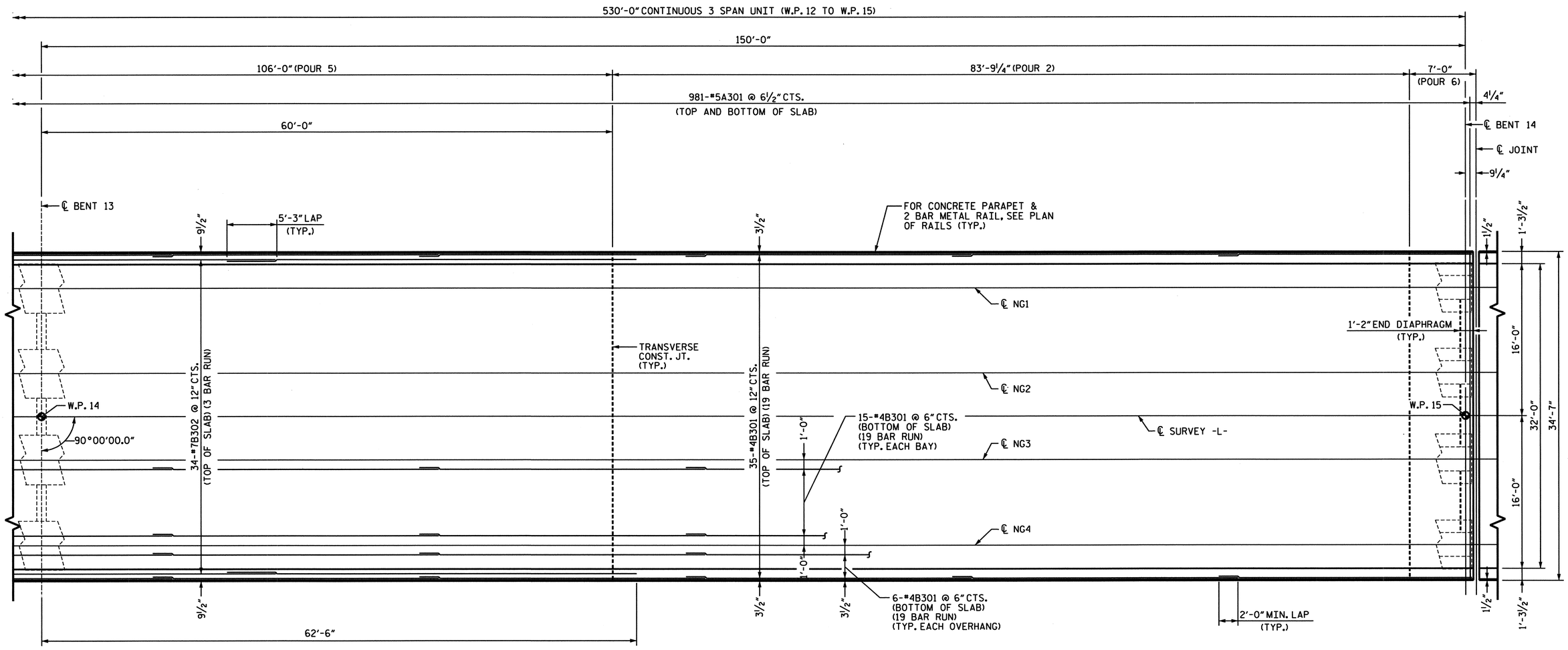

PLAN OF SPAN N

THE CONTRACTOR'S ATTENTION IS CALLED TO THE FACT THAT THE CENTERLINE JOINT IN THE DECK SLAB IS OFFSET FROM THE CENTERLINE BENT.

PROJECT NO. B-0682

BRUNSWICK COUNTY

STATION: 47+08.03 -L- POT

SHEET 15 OF 24

STATE OF NORTH CAROLINA
DEPARTMENT OF TRANSPORTATION
RALEIGH

SUPERSTRUCTURE

PLAN OF SPAN N

NORTH CAROLINA PROFESSIONAL SEAL 024928 ENGINEER RODNEY E. MONEY 2/26/07

PREPARED IN THE OFFICE OF
TYLIN INTERNATIONAL
RALEIGH, NORTH CAROLINA
Copyright © 2006, TYLI

DWG NO.

REVISIONS								SHEET NO.
NO.	BY:	DATE:	NO.	BY:	DATE:			S-44
1			3					TOTAL SHEETS
2			4					207

DRAWN BY : T. S. KELLEY DATE : NOV. 06
CHECKED BY : J. W. WRIGHT DATE : NOV. 06

DATE: $DATE$
FILE: $$FILENAME$$

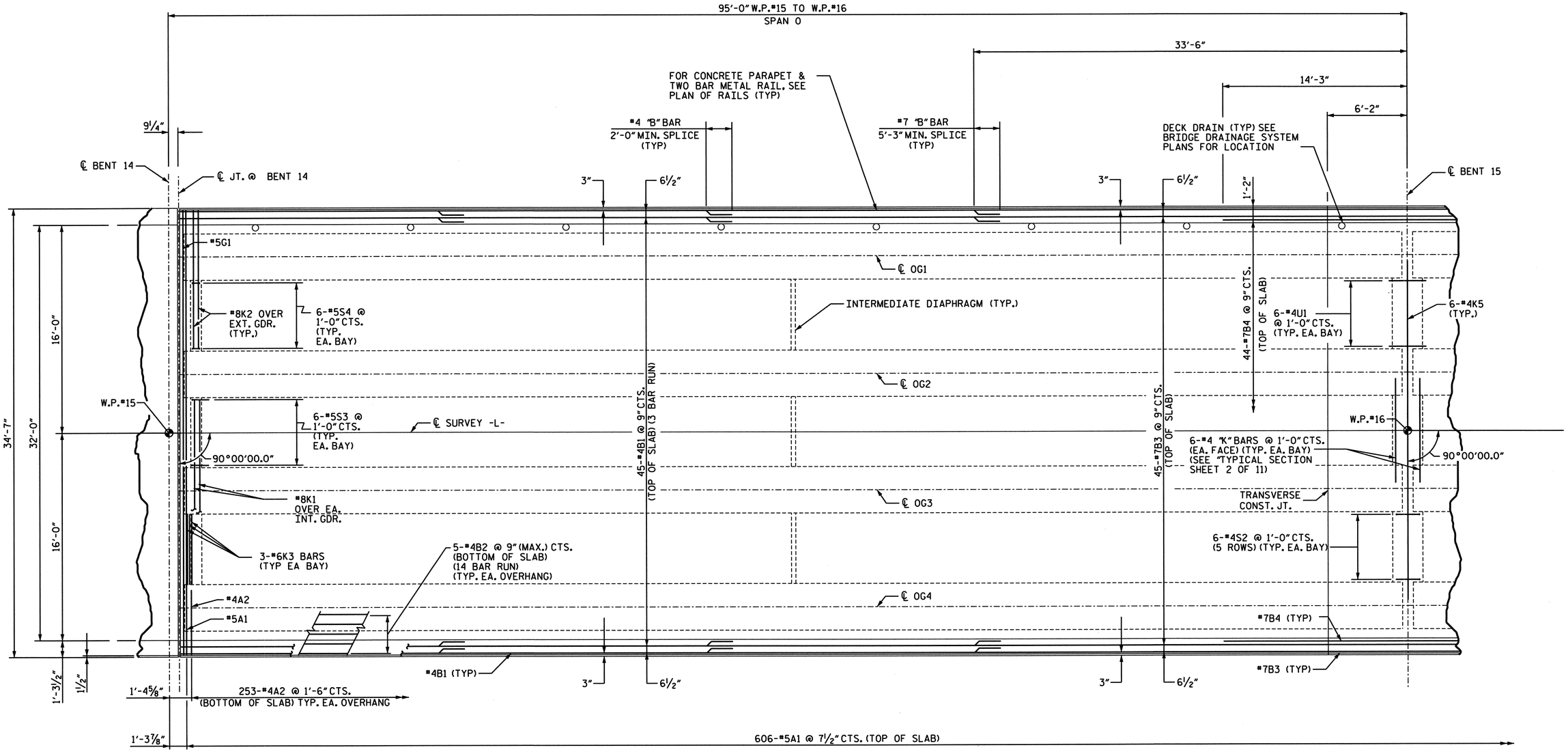

PLAN OF SPAN 0

THE CONTRACTOR'S ATTENTION IS CALLED TO THE FACT THAT THE CENTERLINE JOINT IN THE DECK SLAB IS OFFSET FROM THE CENTERLINE OF BENT NO. 14

PROJECT NO. B-682

BRUNSWICK COUNTY

STATION: 47+08.03 -L- POT

SHEET 16 OF 24

NORTH CAROLINA PROFESSIONAL SEAL 15832 ENGINEER JOEL A. LEE 1-17-07

PLANS PREPARED BY:

PARSONS TRANSPORTATION GROUP
Engineers and Planners
RALEIGH, NORTH CAROLINA

JOB NO. 645615

DWG. NO.

STATE OF NORTH CAROLINA
DEPARTMENT OF TRANSPORTATION
RALEIGH

SUPERSTRUCTURE

PLAN OF SPAN 0

REVISIONS						SHEET NO.
NO.	BY:	DATE:	NO.	BY:	DATE:	S-45
1			3			TOTAL SHEETS
2			4			207

DRAWN BY : D. H. Carter DATE : JULY 2006
CHECKED BY : J. A. Lee DATE : JULY 2006

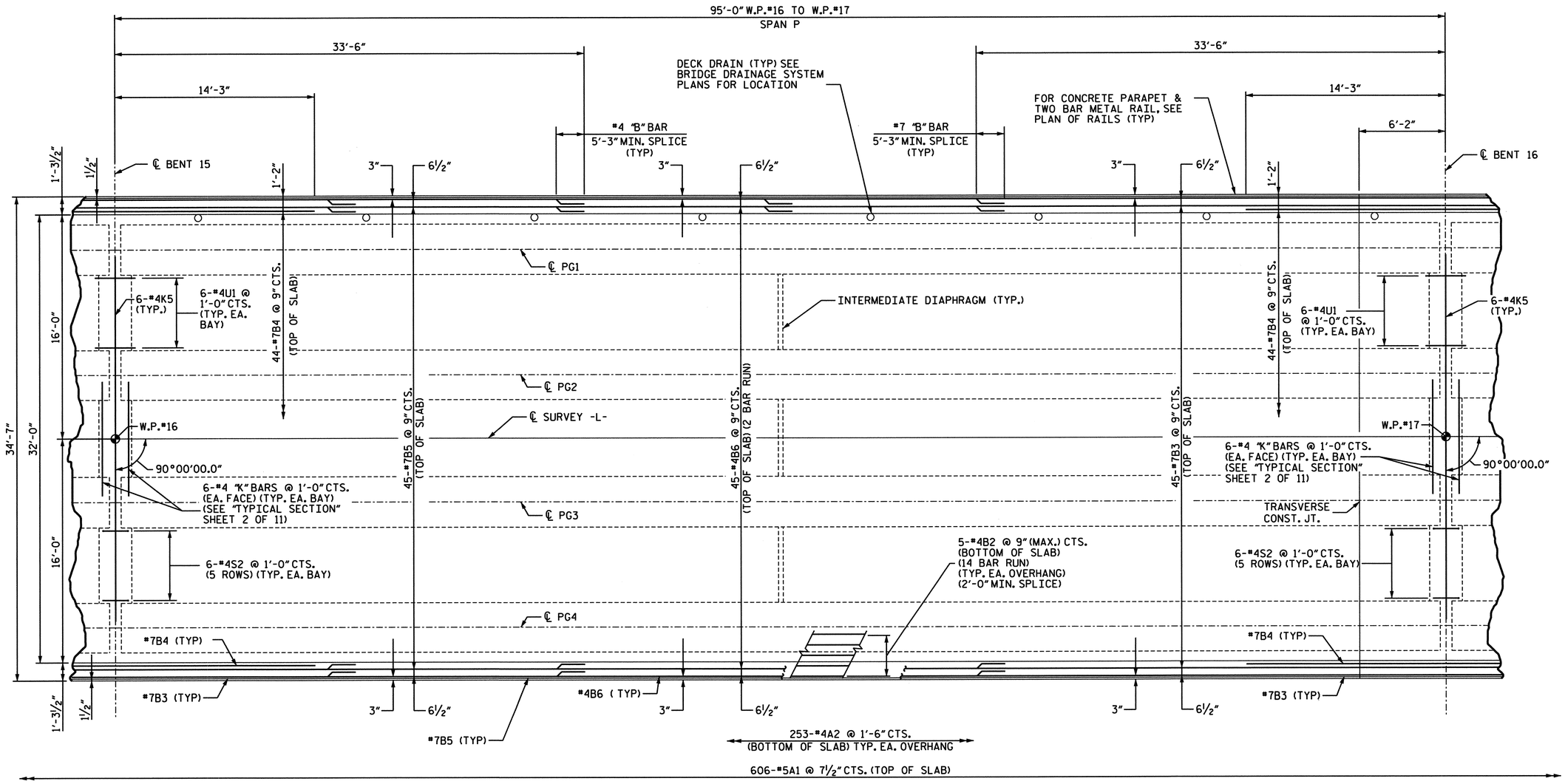

PLAN OF SPAN P

PROJECT NO. B-682

BRUNSWICK COUNTY

STATION: 47+08.03 -L- POT

SHEET 17 OF 24

NORTH CAROLINA PROFESSIONAL SEAL 15832 ENGINEER JOEL A. LEE 1-17-07

PLANS PREPARED BY:

PARSONS TRANSPORTATION GROUP
Engineers and Planners
RALEIGH, NORTH CAROLINA

JOB NO. 645615

DWG. NO.

STATE OF NORTH CAROLINA
DEPARTMENT OF TRANSPORTATION
RALEIGH

SUPERSTRUCTURE

PLAN OF SPAN P

REVISIONS						SHEET NO.
NO.	BY:	DATE:	NO.	BY:	DATE:	5-46
1			3			TOTAL SHEETS
2			4			207

DRAWN BY : D. H. Carter DATE : JULY 2006
CHECKED BY : J. A. Lee DATE : JULY 2006

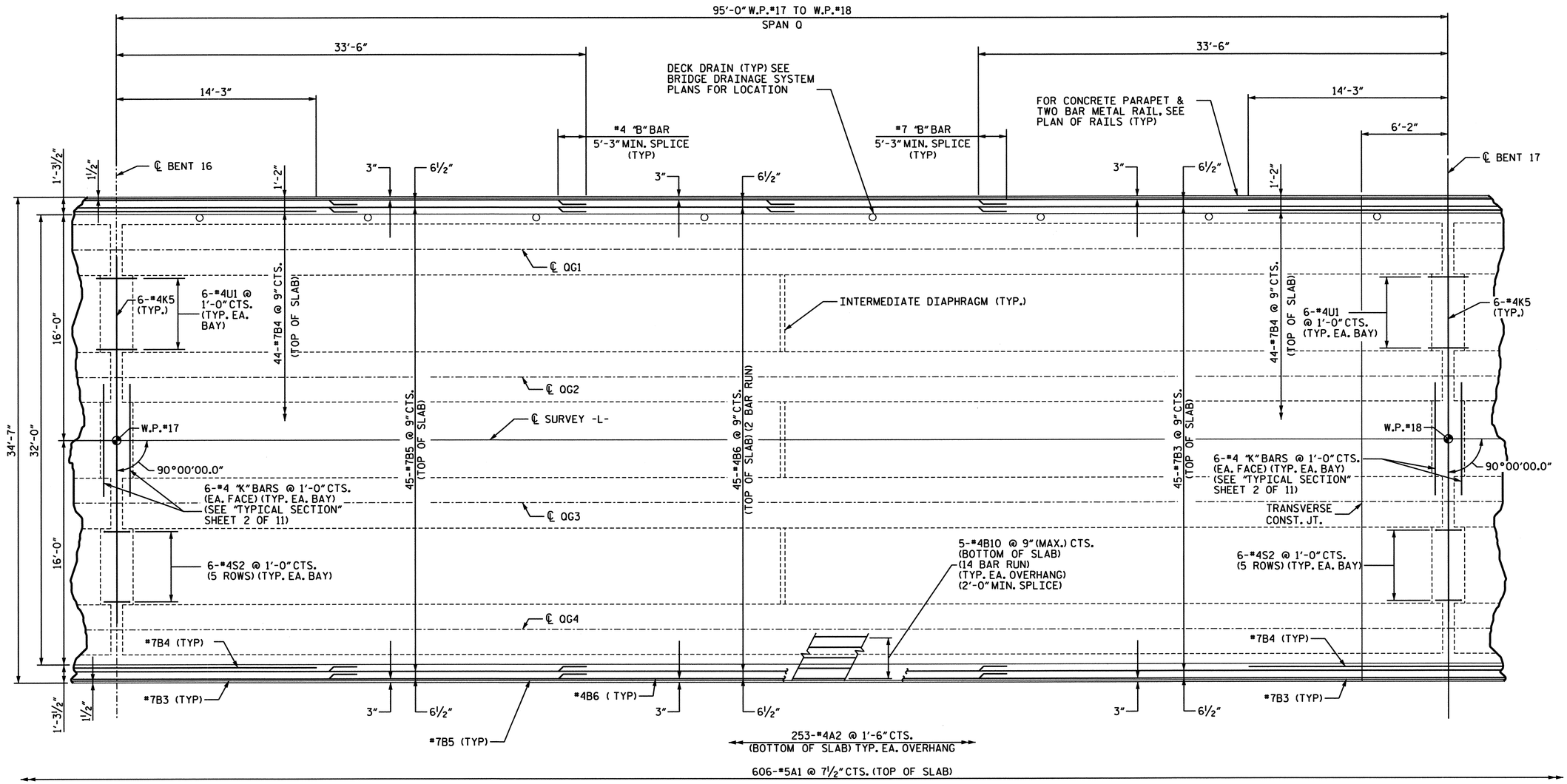

PLAN OF SPAN Q

PROJECT NO. B-682

BRUNSWICK COUNTY

STATION: 47+08.03 -L- POT

SHEET 18 OF 24

NORTH CAROLINA PROFESSIONAL SEAL 15832 ENGINEER JOEL A. LEE

1.17.07

PLANS PREPARED BY:

PARSONS TRANSPORTATION GROUP
Engineers and Planners
RALEIGH, NORTH CAROLINA

JOB NO. 645615

DWG. NO.

STATE OF NORTH CAROLINA
DEPARTMENT OF TRANSPORTATION
RALEIGH

SUPERSTRUCTURE

PLAN OF SPAN Q

REVISIONS						SHEET NO.
NO.	BY:	DATE:	NO.	BY:	DATE:	5-47
1			3			TOTAL SHEETS
2			4			207

DRAWN BY : D. H. Carter DATE : JULY 2006
CHECKED BY : J. A. Lee DATE : JULY 2006

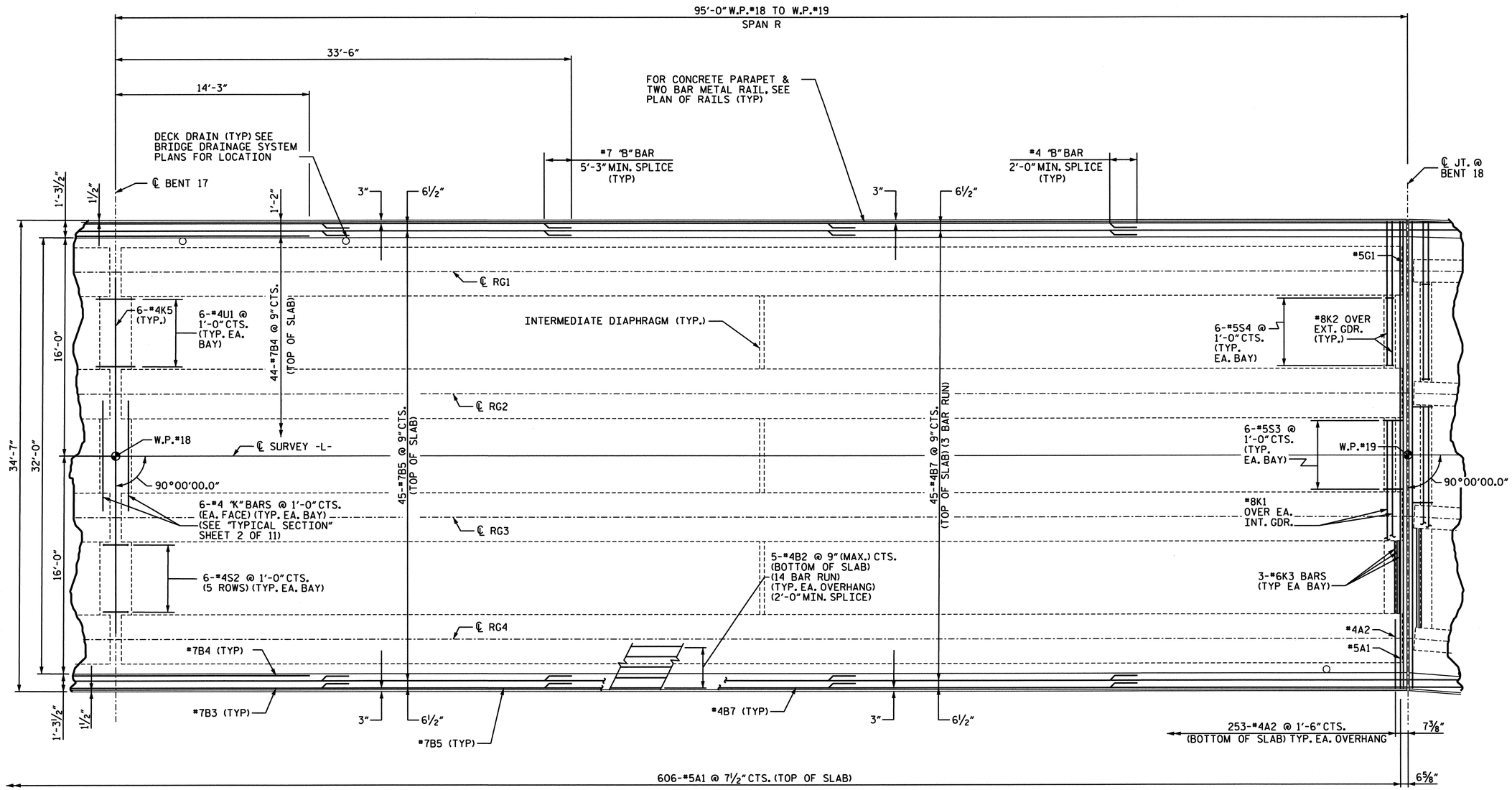

PLAN OF SPAN R

PROJECT NO. B-682

BRUNSWICK COUNTY

STATION: 47+08.03 -L- POT

SHEET 19 OF 24

STATE OF NORTH CAROLINA
DEPARTMENT OF TRANSPORTATION
RALEIGH

SUPERSTRUCTURE

PLAN OF SPAN R

NORTH CAROLINA PROFESSIONAL SEAL 15832 ENGINEER
1-17-07

PLANS PREPARED BY:

PARSONS TRANSPORTATION GROUP
Engineers and Planners
RALEIGH, NORTH CAROLINA

JOB NO. 645615

DWG. NO.

REVISIONS							SHEET NO.
NO.	BY:	DATE:	NO.	BY:	DATE:		5-48
1			3				TOTAL SHEETS
2			4				207

DRAWN BY : D. H. Carter DATE : JULY 2006
CHECKED BY : J. A. Lee DATE : JULY 2006

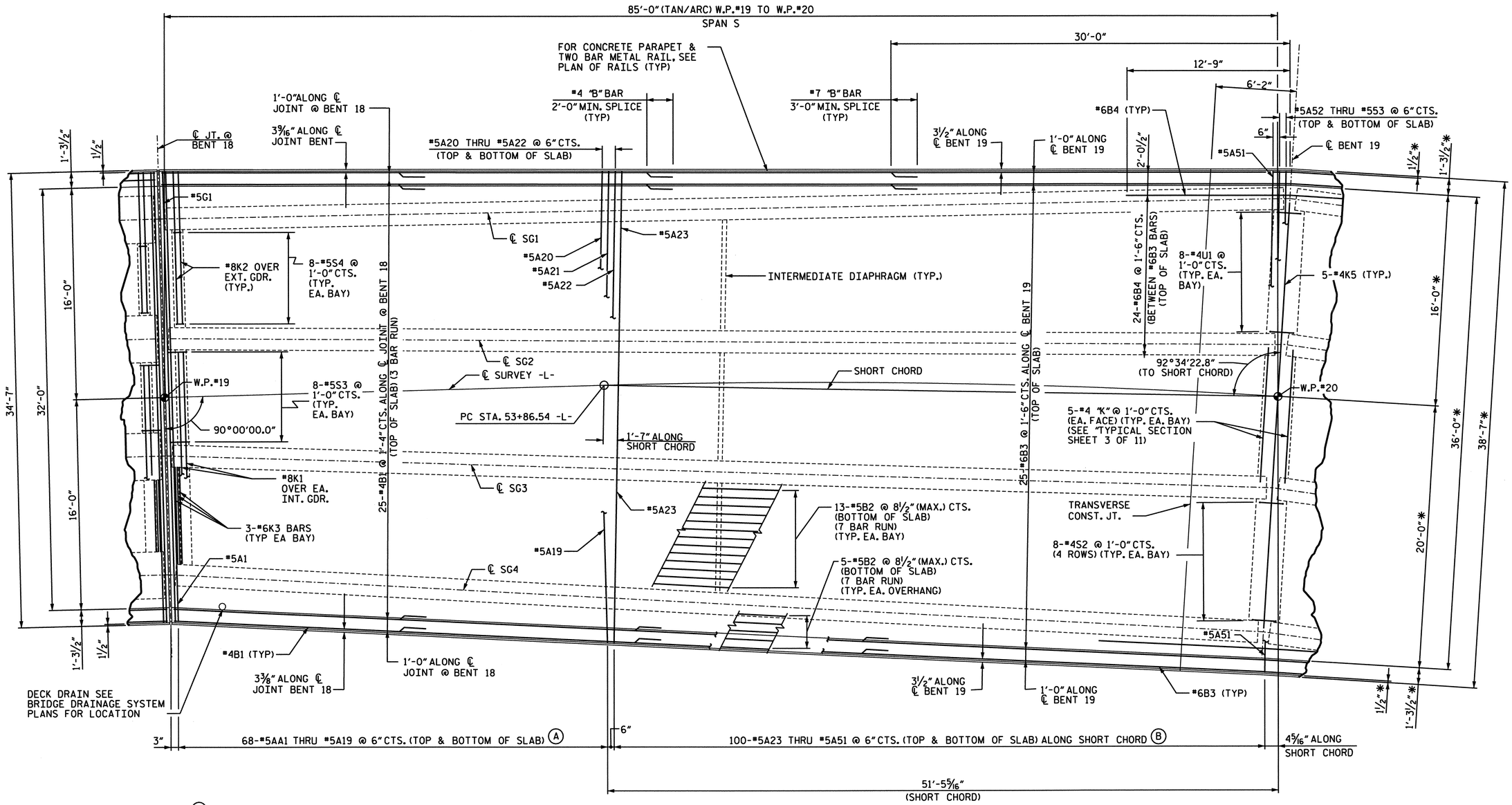

(A) 6-#5A1, A3, A5, A7, A10, A12, A14, A16, A18
8-#5A2, A4, A6, A8, A9, A11, A13, A15, A17
10-#5A19

(B) 6-#5A23, A24, A26, A29, A30, A32, A34, A36, A38, A40, A42, A44, A46, A49
8-#5A25, A27, A28, A31, A33, A35, A37, A41, A43, A45, A47, A48, A50
4-#5A51

PLAN OF SPAN S

* RADIAL

PROJECT NO. B-682
BRUNSWICK COUNTY
STATION: 47+08.03 -L- POT

SHEET 20 OF 24

NORTH CAROLINA PROFESSIONAL SEAL 15832 JOEL A. LEE 1-17-07

PLANS PREPARED BY:

PARSONS TRANSPORTATION GROUP
Engineers and Planners
RALEIGH, NORTH CAROLINA

STATE OF NORTH CAROLINA
DEPARTMENT OF TRANSPORTATION
RALEIGH

SUPERSTRUCTURE

PLAN OF SPAN S

REVISIONS							SHEET NO.
NO.	BY:	DATE:	NO.	BY:	DATE:		S-49
1			3				TOTAL SHEETS
2			4				207

JOB NO. 645615
DWG. NO.

DRAWN BY : D. H. Carter DATE : JULY 2006
CHECKED BY : J. A. Lee DATE : JULY 2006

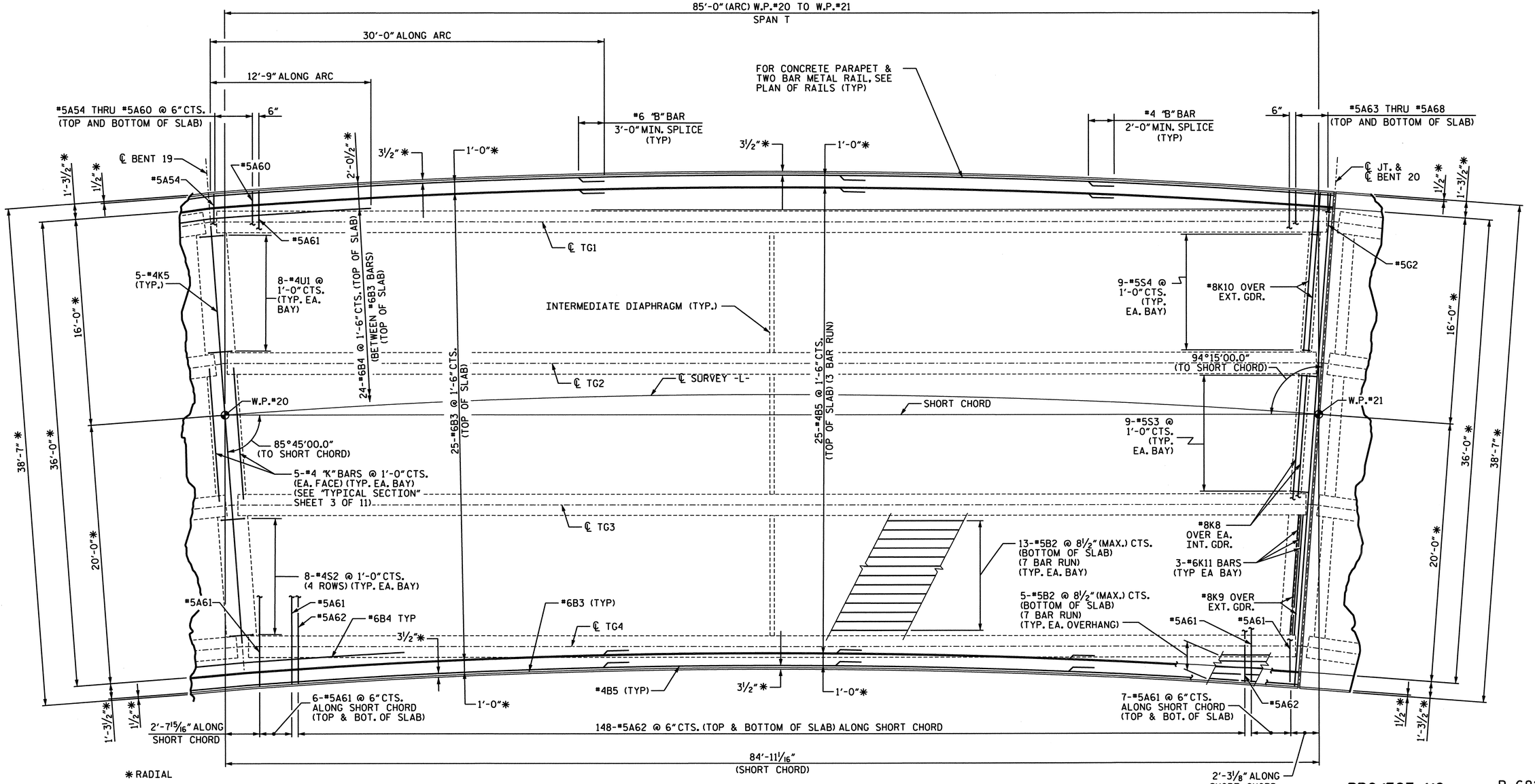

PLAN OF SPAN T

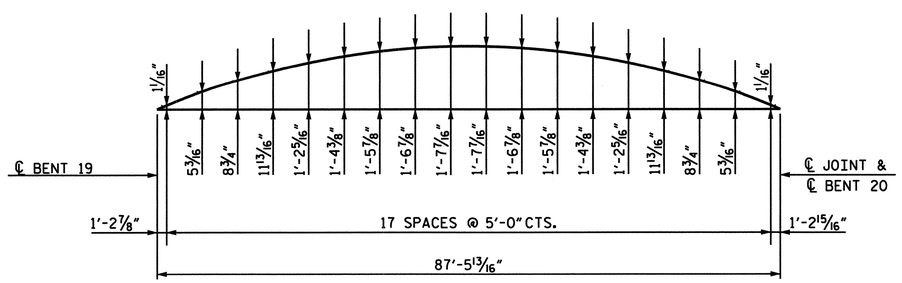

ARC OFFSETS - LEFT SIDE

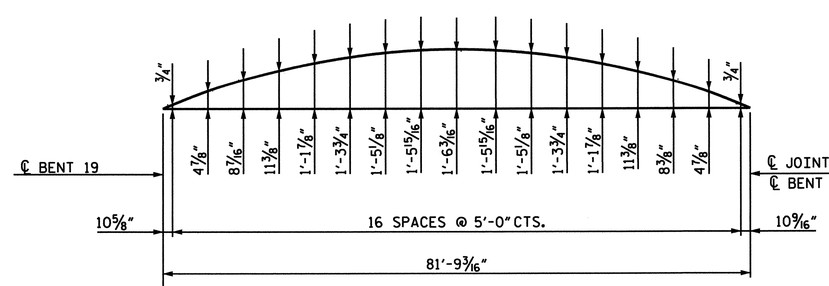

ARC OFFSETS - RIGHT SIDE

PROJECT NO. B-682

BRUNSWICK COUNTY

STATION: 47+08.03 -L- POT

SHEET 21 OF 24

STATE OF NORTH CAROLINA
DEPARTMENT OF TRANSPORTATION
RALEIGH

SUPERSTRUCTURE

PLAN OF SPAN T

NORTH CAROLINA PROFESSIONAL SEAL 15832 ENGINEER JOEL A. LEE 1.17.07

PLANS PREPARED BY:

PARSONS TRANSPORTATION GROUP
Engineers and Planners
RALEIGH, NORTH CAROLINA

JOB NO. 645615
DWG. NO.

REVISIONS						SHEET NO.
NO.	BY:	DATE:	NO.	BY:	DATE:	S-50
1			3			TOTAL SHEETS
2			4			207

DRAWN BY : D. H. Carter DATE : JULY 2006
CHECKED BY : J. A. Lee DATE : JULY 2006

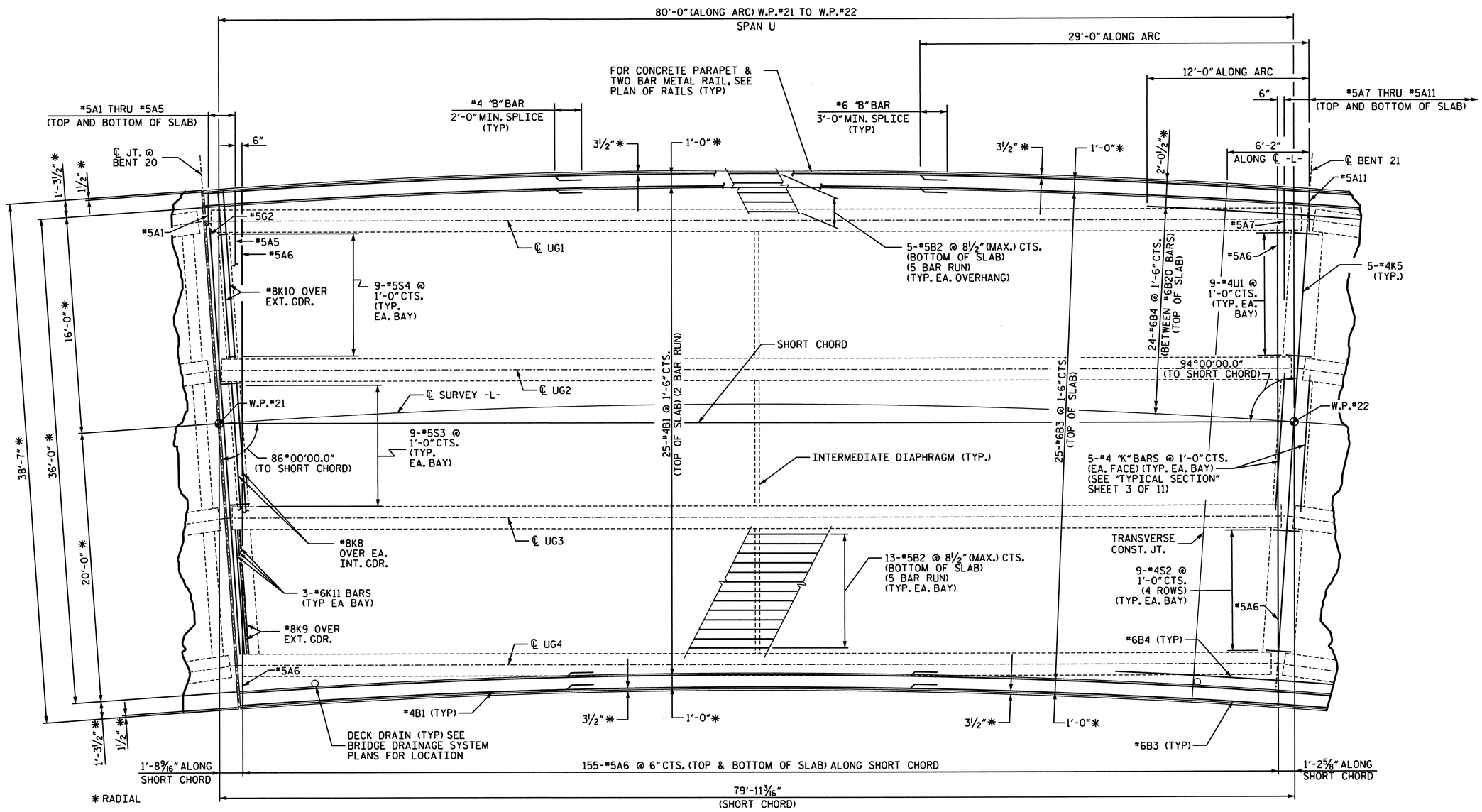

PLAN OF SPAN U

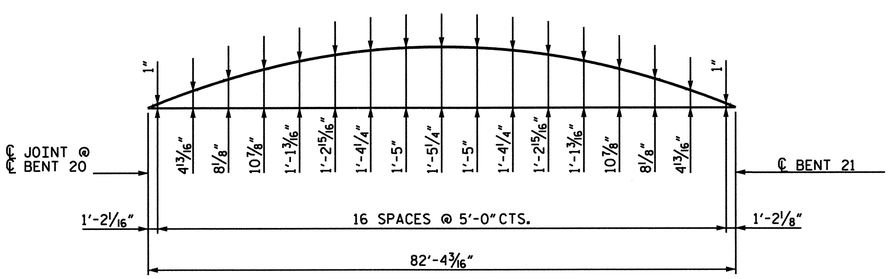

ARC OFFSETS - LEFT SIDE

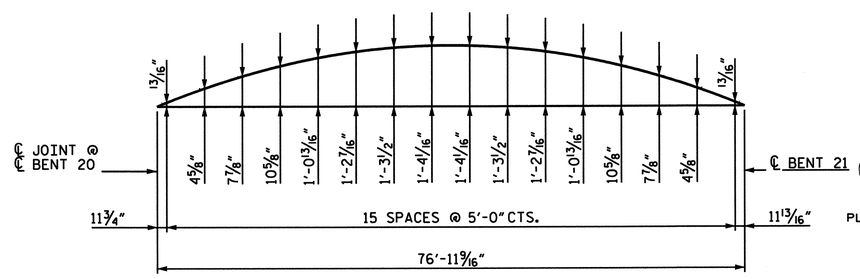

ARC OFFSETS - RIGHT SIDE

PROJECT NO. B-682

BRUNSWICK COUNTY

STATION: 47+08.03 -L- POT

SHEET 22 OF 24

STATE OF NORTH CAROLINA
DEPARTMENT OF TRANSPORTATION
RALEIGH

SUPERSTRUCTURE

PLAN OF SPAN U

NORTH CAROLINA PROFESSIONAL SEAL 15832 ENGINEER JOEL A. LEE 1.17.07

PLANS PREPARED BY:

PARSONS TRANSPORTATION GROUP
Engineers and Planners
RALEIGH, NORTH CAROLINA

JOB NO. 645615

DWG. NO.

REVISIONS						SHEET NO.
NO.	BY:	DATE:	NO.	BY:	DATE:	S-51
1			3			TOTAL SHEETS
2			4			207

DRAWN BY : D. H. Carter DATE : JULY 2006
CHECKED BY : J. A. Lee DATE : JULY 2006

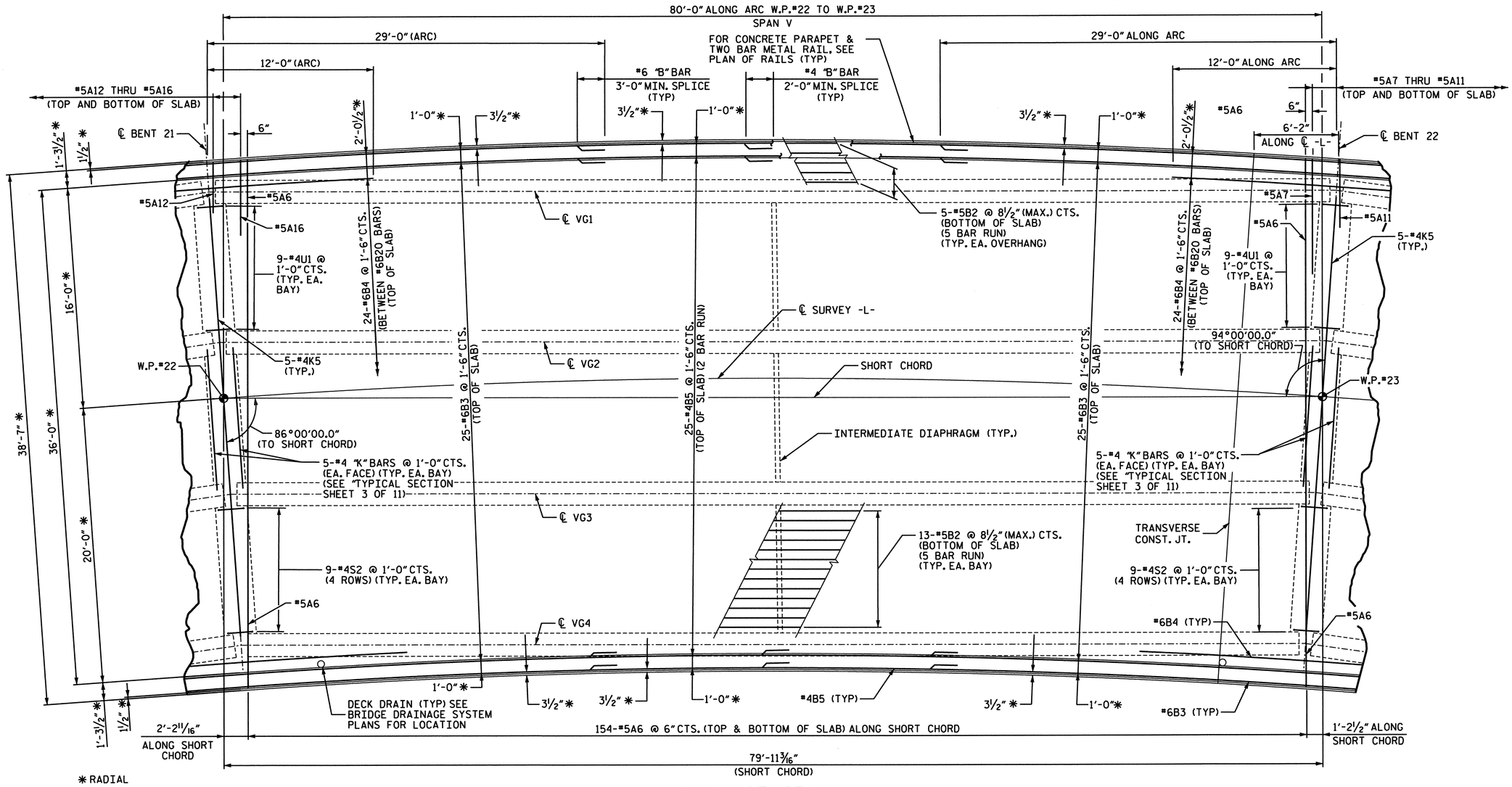

PLAN OF SPAN V

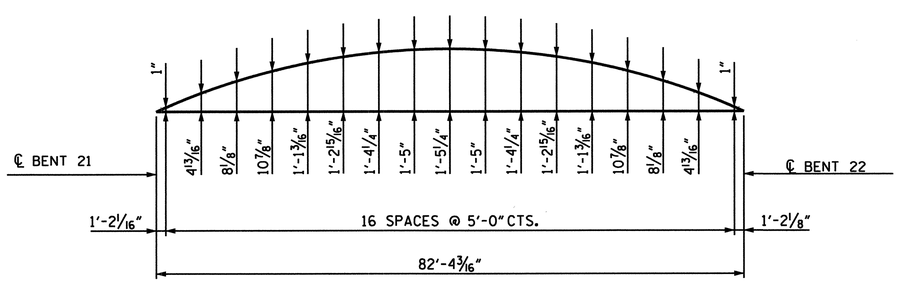

ARC OFFSETS - LEFT SIDE

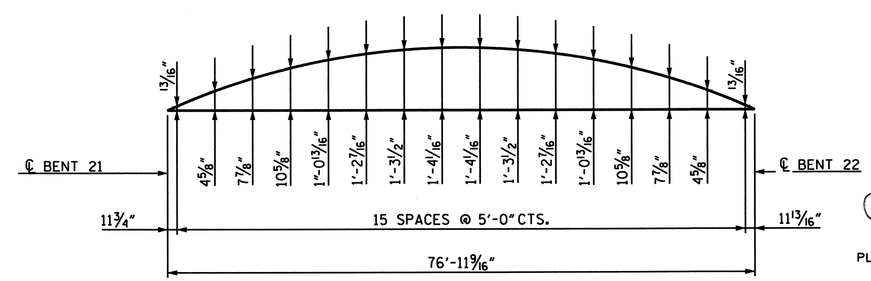

ARC OFFSETS - RIGHT SIDE

PROJECT NO. B-682

BRUNSWICK COUNTY

STATION: 47+08.03 -L- POT

SHEET 23 OF 24

STATE OF NORTH CAROLINA
DEPARTMENT OF TRANSPORTATION
RALEIGH

SUPERSTRUCTURE

PLAN OF SPAN V

NORTH CAROLINA PROFESSIONAL SEAL 15832 ENGINEER JOEL A. LEE 1.17.07

PLANS PREPARED BY:

PARSONS TRANSPORTATION GROUP
Engineers and Planners
RALEIGH, NORTH CAROLINA

JOB NO. 645615

DWG. NO.

REVISIONS						SHEET NO.
NO.	BY:	DATE:	NO.	BY:	DATE:	S-52
1			3			TOTAL SHEETS
2			4			207

DRAWN BY : D. H. Carter DATE : JULY 2006
CHECKED BY : J. A. Lee DATE : JULY 2006

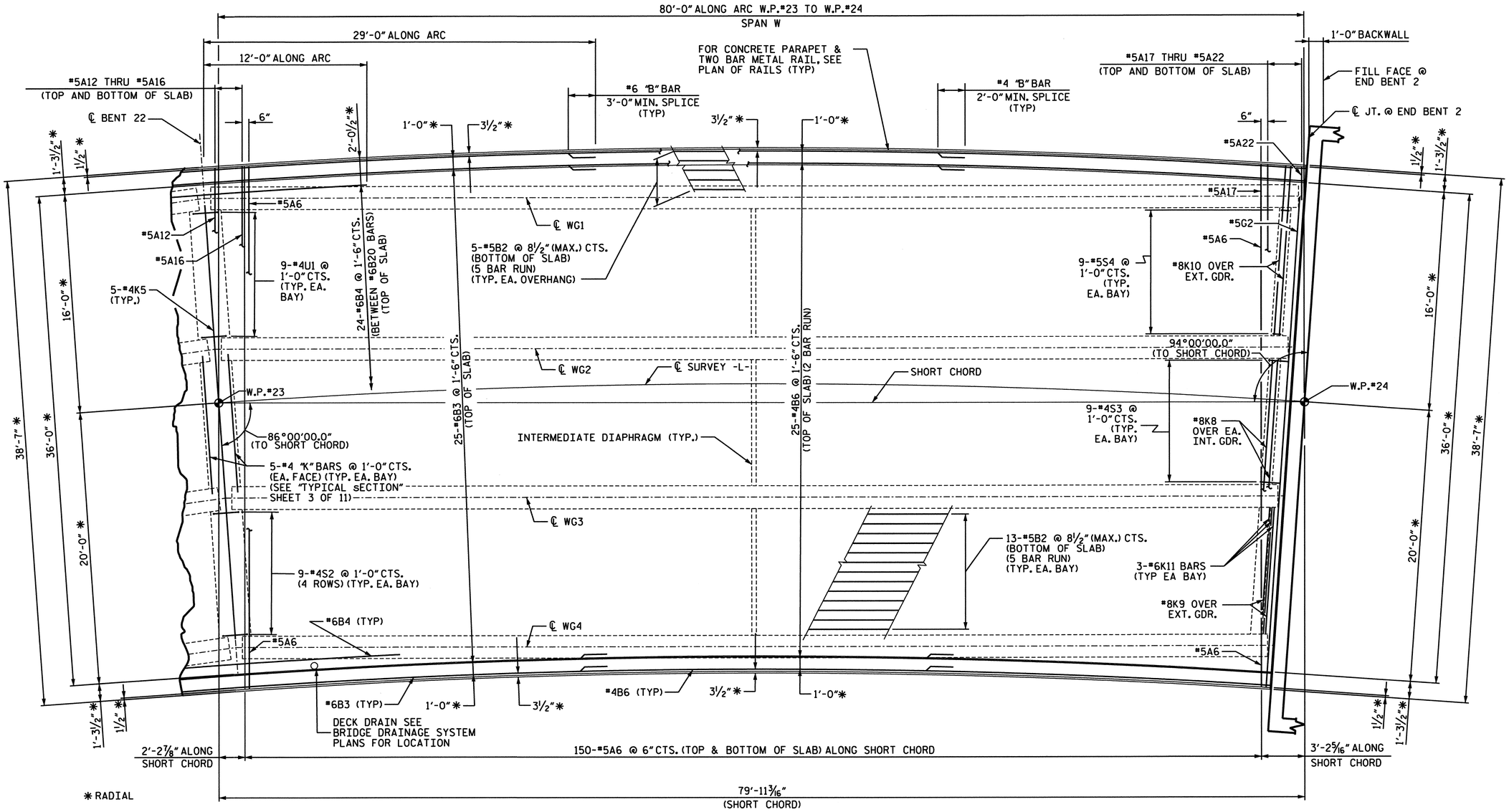

PLAN OF SPAN W

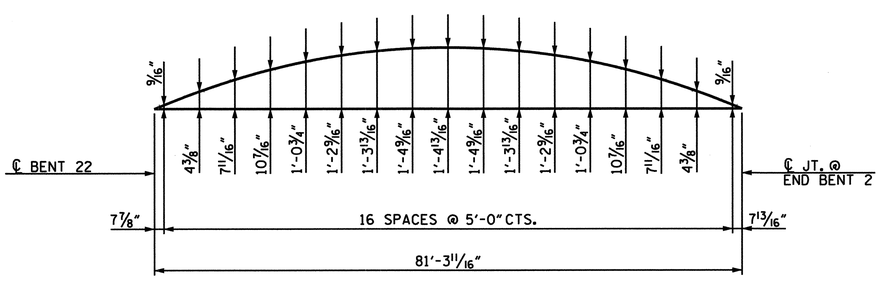

ARC OFFSETS - LEFT SIDE

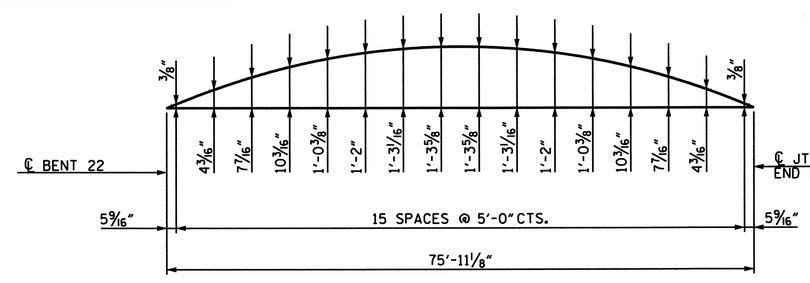

ARC OFFSETS - RIGHT SIDE

PROJECT NO. B-682

BRUNSWICK COUNTY

STATION: 47+08.03 -L- POT

SHEET 24 OF 24

STATE OF NORTH CAROLINA
DEPARTMENT OF TRANSPORTATION
RALEIGH

SUPERSTRUCTURE

PLAN OF SPAN W

NORTH CAROLINA PROFESSIONAL SEAL 15832 ENGINEER JOEL A. LEE 1.17.07

PLANS PREPARED BY:

PARSONS TRANSPORTATION GROUP
Engineers and Planners
RALEIGH, NORTH CAROLINA

JOB NO. 645615

DWG. NO.

REVISIONS								SHEET NO.
NO.	BY:	DATE:	NO.	BY:	DATE:			5-53
1			3					TOTAL SHEETS
2			4					207

DRAWN BY : D. H. Carter DATE : JULY 2006
CHECKED BY : J. A. Lee DATE : JULY 2006

OVERHANG BRACKET CALCULATION INSTRUCTIONS

AASHTO SHAPES - TYPES III, IV, V, AND VI

1. RECORD KNOWN INFORMATION ON "BRIDGE OVERHANG BRACKET SUMMARY" ON SHEET 2
2. CALCULATE THE MAXIMUM SCREED LOAD PER BRACKET (SLPB) WITH AN ESTIMATED R = 1.5. SLPB = R X W. ROUND VALUE UP TO NEAREST SLPB VALUE INDICATED ON APPROPRIATE TABLE 1-1, 1-2, 1-3, OR 1-4.
3. WITH THE ESTIMATED SLPB, OVERHANG SLAB THICKNESS, "K" VALUE, AND 45° HANGER SAFE WORKING LOAD (SWL), ENTER THE APPROPRIATE TABLE 1-1, 1-2, 1-3, OR 1-4 (BASED ON OVERHANG DIMENSION) AND DETERMINE THE BRACKET SPACING, S.
4. CALCULATE S/D1 AND S/D2, ROUNDING UP TO NEAREST VALUE IN TABLE 2. ENTER TABLE 2 AND DETERMINE R VALUE.
5. CALCULATE REVISED SLPB. ROUND VALUE UP TO NEAREST SLPB VALUE INDICATED ON APPROPRIATE TABLE 1-1, 1-2, 1-3, OR 1-4.
6. WITH THE REVISED SLPB, OVERHANG SLAB THICKNESS, "K" VALUE AND 45 HANGER SAFE WORKING LOAD (SWL), ENTER THE APPROPRIATE TABLE 1-1, 1-2, 1-3 OR 1-4 (BASED ON OVERHANG DIMENSION) AND DETERMINE REVISED BRACKET SPACING, S.
7. CONTINUE ITERATIONS OF STEPS 4-6 UNTIL THE REVISED BRACKET SPACING, S, IS THE SAME AS THE PREVIOUS S VALUE.
8. CHECK LUMBER JOIST SPACING: WITH BRACKET SPACING VALUE, S, ROUND THIS VALUE UP TO THE NEAREST VALUE OF ALLOWABLE SPAN LENGTH OF JOIST OF TABLE 3. USING THIS VALUE, ALONG WITH THE AVERAGE OVERHANG SLAB THICKNESS AND THE LUMBER JOIST SIZE, DETERMINE JOIST SPACING FROM TABLE 3. IF NECESSARY, ADJUST LUMBER JOIST SIZE AND/OR JOIST SPACING TO MEET ALLOWABLE SPAN LENGTH OF JOIST.
9. CONVERSELY, IF THE DESIRED JOIST SPACING IS KNOWN, USE THIS ALONG WITH THE AVERAGE OVERHANG SLAB THICKNESS AND THE LUMBER JOIST SIZE TO DETERMINE IF ALLOWABLE SPAN LENGTH OF JOIST IS GREATER THAN THE BRACKET SPACING, S. IF NECESSARY, ADJUST LUMBER JOIST SIZE TO MEET REQUIREMENTS OF ALLOWABLE SPAN LENGTH OF JOIST AND JOIST SPACING.
10. RECORD REMAINING INFORMATION ON "BRIDGE OVERHANG BRACKET SUMMARY" FORM.
11. SUBMIT FORM AND CALCULATIONS FOR REVIEW AND APPROVAL.

TABLE 1-1

(FOR USE ON **UP TO 2'-0" OVERHANG Ⓛ** & 54" HORIZONTAL LEG LENGTH OF THE OVERHANG BRACKET)

AVG. SLAB THICKNESS Ⓣ (in)	BRACKET Ⓚ DIMENSION (in)	SCREED LOAD PER BRACKET									45° HANGER SWL (lbs)
		2500 lbs.	2250 lbs.	2000 lbs.	1750 lbs.	1500 lbs.	1250 lbs.	1000 lbs.	750 lbs.	0 lbs.	
		BRACKET SPACING									
10	30				2'-1"	2'-7"	3'-2"	3'-8"	4'-2"	5'-9"	4000
		3'-6"	4'-0"	4'-5"	4'-9"	5'-1"	5'-3"	5'-5"	5'-7"	6'-7"	6000
	40				2'-1"	2'-7"	3'-2"	3'-8"	4'-2"	5'-9"	4000
		3'-6"	4'-0"	4'-5"	4'-9"	5'-1"	5'-3"	5'-5"	5'-7"	6'-7"	6000
	50				2'-1"	2'-7"	3'-2"	3'-8"	4'-2"	5'-9"	4000
		3'-6"	4'-0"	4'-5"	4'-9"	5'-1"	5'-3"	5'-5"	5'-7"	6'-7"	6000
12	30					2'-4"	2'-10"	3'-4"	3'-9"	5'-2"	4000
		3'-2"	3'-7"	4'-1"	4'-7"	5'-0"	5'-2"	5'-4"	5'-7"	6'-5"	6000
	40					2'-4"	2'-10"	3'-4"	3'-9"	5'-2"	4000
		3'-2"	3'-7"	4'-1"	4'-7"	5'-0"	5'-2"	5'-4"	5'-7"	6'-5"	6000
	50					2'-4"	2'-10"	3'-4"	3'-9"	5'-2"	4000
		3'-2"	3'-7"	4'-1"	4'-7"	5'-0"	5'-2"	5'-4"	5'-7"	6'-5"	6000
14	30					2'-2"	2'-7"	3'-0"	3'-5"	4'-9"	4000
		2'-10"	3'-4"	3'-9"	4'-2"	4'-7"	5'-0"	5'-4"	5'-7"	6'-4"	6000
	40					2'-2"	2'-7"	3'-0"	3'-5"	4'-9"	4000
		2'-10"	3'-4"	3'-9"	4'-2"	4'-7"	5'-0"	5'-4"	5'-7"	6'-4"	6000
	50					2'-2"	2'-7"	3'-0"	3'-5"	4'-9"	4000
		2'-10"	3'-4"	3'-9"	4'-2"	4'-7"	5'-0"	5'-4"	5'-7"	6'-4"	6000
16	30					2'-0"	2'-4"	2'-9"	3'-2"	4'-4"	4000
		2'-8"	3'-0"	3'-5"	3'-10"	4'-3"	4'-7"	5'-0"	5'-5"	6'-3"	6000
	40					2'-0"	2'-4"	2'-9"	3'-2"	4'-4"	4000
		2'-8"	3'-0"	3'-5"	3'-10"	4'-3"	4'-7"	5'-0"	5'-5"	6'-3"	6000
	50					2'-0"	2'-4"	2'-9"	3'-2"	4'-4"	4000
		2'-8"	3'-0"	3'-5"	3'-10"	4'-3"	4'-7"	5'-0"	5'-5"	6'-3"	6000

TABLE 1-2

(FOR USE ON **OVER 2'-0" TO 2'-6" OVERHANG Ⓛ** & 54" HORIZONTAL LEG LENGTH OF THE OVERHANG BRACKET)

AVG. SLAB THICKNESS Ⓣ (in)	BRACKET Ⓚ DIMENSION (in)	SCREED LOAD PER BRACKET									45° HANGER SWL (lbs)
		2500 lbs.	2250 lbs.	2000 lbs.	1750 lbs.	1500 lbs.	1250 lbs.	1000 lbs.	750 lbs.	0 lbs.	
		BRACKET SPACING									
10	30					2'-4"	2'-9"	3'-3"	3'-8"	5'-1"	4000
		3'-1"	3'-6"	4'-0"	4'-5"	4'-11"	5'-3"	5'-5"	5'-7"	6'-7"	6000
	40					2'-4"	2'-9"	3'-3"	3'-8"	5'-1"	4000
		3'-1"	3'-6"	4'-0"	4'-5"	4'-11"	5'-3"	5'-5"	5'-7"	6'-7"	6000
	50					2'-4"	2'-9"	3'-3"	3'-8"	5'-1"	4000
		3'-1"	3'-6"	4'-0"	4'-5"	4'-11"	5'-3"	5'-5"	5'-7"	6'-7"	6000
12	30					2'-1"	2'-6"	2'-11"	3'-4"	4'-6"	4000
		2'-9"	3'-2"	3'-7"	4'-0"	4'-5"	4'-10"	5'-3"	5'-7"	6'-5"	6000
	40					2'-1"	2'-6"	2'-11"	3'-4"	4'-6"	4000
		2'-9"	3'-2"	3'-7"	4'-0"	4'-5"	4'-10"	5'-3"	5'-7"	6'-5"	6000
	50					2'-1"	2'-6"	2'-11"	3'-4"	4'-6"	4000
		2'-9"	3'-2"	3'-7"	4'-0"	4'-5"	4'-10"	5'-3"	5'-7"	6'-5"	6000
14	30						2'-3"	2'-7"	3'-0"	4'-1"	4000
		2'-6"	2'-10"	3'-3"	3'-7"	4'-0"	4'-4"	4'-9"	5'-1"	6'-3"	6000
	40						2'-3"	2'-7"	3'-0"	4'-1"	4000
		2'-6"	2'-10"	3'-3"	3'-7"	4'-0"	4'-4"	4'-9"	5'-1"	6'-3"	6000
	50						2'-3"	2'-7"	3'-0"	4'-1"	4000
		2'-6"	2'-10"	3'-3"	3'-7"	4'-0"	4'-4"	4'-9"	5'-1"	6'-3"	6000
16	30						2'-1"	2'-5"	2'-9"	3'-9"	4000
		2'-3"	2'-7"	2'-11"	3'-4"	3'-8"	4'-0"	4'-4"	4'-8"	5'-8"	6000
	40						2'-1"	2'-5"	2'-9"	3'-9"	4000
		2'-3"	2'-7"	2'-11"	3'-4"	3'-8"	4'-0"	4'-4"	4'-8"	5'-8"	6000
	50						2'-1"	2'-5"	2'-9"	3'-9"	4000
		2'-3"	2'-7"	2'-11"	3'-4"	3'-8"	4'-0"	4'-4"	4'-8"	5'-8"	6000

TABLE 1-3

(FOR USE ON **OVER 2'-6" TO 3'-0" OVERHANG Ⓛ** & 54" HORIZONTAL LEG LENGTH OF THE OVERHANG BRACKET)

AVG. SLAB THICKNESS Ⓣ (in)	BRACKET Ⓚ DIMENSION (in)	SCREED LOAD PER BRACKET									45° HANGER SWL (lbs)
		2500 lbs.	2250 lbs.	2000 lbs.	1750 lbs.	1500 lbs.	1250 lbs.	1000 lbs.	750 lbs.	0 lbs.	
		BRACKET SPACING									
10	30					2'-1"	2'-6"	2'-11"	3'-4"	4'-6"	4000
						4'-5"	4'-10"	5'-3"	5'-7"	6'-7"	6000
	40					2'-1"	2'-6"	2'-11"	3'-4"	4'-6"	4000
		2'-9"	3'-2"	3'-7"	4'-0"	4'-5"	4'-10"	5'-3"	5'-7"	6'-7"	6000
	50					2'-1'	2'-6"	2'-11"	3'-4"	4'-6"	4000
		2'-9"	3'-2"	3'-7"	4'-0"	4'-5"	4'-10"	5'-3"	5'-7"	6'-7"	6000
12	30						2'-2"	2'-7"	2'-11"	4'-0"	4000
						3'-11"	4'-3"	4'-8"	5'-0"	6'-1"	6000
	40						2'-2"	2'-7"	2'-11"	4'-0"	4000
		2'-5"	2'-10"	3'-2"	3'-6"	3'-11"	4'-3"	4'-8"	5'-0"	6'-1"	6000
	50						2'-2"	2'-7"	2'-11"	4'-0"	4000
		2'-5"	2'-10"	3'-2"	3'-6"	3'-11"	4'-3"	4'-8"	5'-0"	6'-1"	6000
14	30						2'-0"	2'-4"	2-8"	3'-8"	4000
					3'-2"	3'-6"	3'-10"	4'-2"	4'-6"	5'-6"	6000
	40						2'-0"	2'-4"	2'-8"	3'-8"	4000
		2'-2"	2'-6"	2'-10"	3'-2"	3'-6"	3'-10"	4'-2"	4'-6"	5'-6"	6000
	50						2'-0"	2'-4"	2'-8"	3'-8"	4000
		2'-2"	2'-6"	2'-10"	3'-2"	3'-6"	3'-10"	4'-2"	4'-6"	5'-6"	6000
16	30							2'-1"	2'-5"	3'-4"	4000
					2'-11"	3'-2"	3'-6"	3'-10"	4'-1"	5'-0"	6000
	40							2'-1"	2'-5"	3'-4"	4000
		2'-0"	2'-4"	2'-7"	2'-11"	3'-2"	3'-6"	3'-10"	4'-1"	5'-0"	6000
	50							2'-1"	2'-5"	3'-4"	4000
		2'-0"	2'-4"	2'-7"	2'-11"	3'-2"	3'-6"	3'-10"	4'-1"	5'-0"	6000

TABLE 1-4

(FOR USE ON **OVER 3'-0" TO 3'-6" OVERHANG Ⓛ** & 54" HORIZONTAL LEG LENGTH OF THE OVERHANG BRACKET)

AVG. SLAB THICKNESS Ⓣ (in)	BRACKET Ⓚ DIMENSION (in)	SCREED LOAD PER BRACKET									45° HANGER SWL (lbs)
		2500 lbs.	2250 lbs.	2000 lbs.	1750 lbs.	1500 lbs.	1250 lbs.	1000 lbs.	750 lbs.	0 lbs.	
		BRACKET SPACING									
10	30						2'-1"	2'-5"	2'-9"	3'-10"	4000
						2'-3"	2'-11"	3'-7"	4'-3"	5'-9"	6000
	40						2'-1"	2'-5"	2'-9"	3'-10"	4000
				2'-4"	3'-0"	3'-7"	4'-1"	4'-5"	4'-9"	5'-9"	6000
	50						2'-1"	2'-5"	2'-9"	3'-10"	4000
		2'-4"	2'-8"	3'-0"	3'-4"	3'-8"	4'-1"	4'-5"	4'-9"	5'-9"	6000
12	30							2'-2"	2'-6"	3-5"	4000
						2'-1"	2'-8"	3'-4"	3'-11"	5'-2"	6000
	40							2'-2"	2'-6"	3'-5"	4000
				2'-2"	2'-9"	3'-4"	3'-7"	3'-11"	4'-3"	5'-2"	6000
	50							2'-2"	2'-6"	3'-5"	4000
		2'-1"	2'-4"	2'-8"	3'-0"	3'-4"	3'-7"	3'-11"	4'-3"	5'-2"	6000
14	30								2-3"	3'-1"	4000
						2'-0"	2'-6"	3'-1"	3'-8"	4'-8"	6000
	40								2'-3"	3'-1"	4000
				2'-0"	2'-7"	3'-0"	3'-3"	3'-6"	3'-10"	4'-8"	6000
	50								2'-3"	3'-1"	4000
			2'-2"	2'-5"	2'-8"	3'-0"	3'-3"	3'-6"	3'-10"	4'-8"	6000
16	30								2'-0"	2'-9"	4000
							2'-4"	2'-10"	3'-5"	4'-3"	6000
	40								2'-0"	2'-9"	4000
					2'-5"	2'-8"	2'-11"	3'-3"	3'-6"	4'-3"	6000
	50								2'-0"	2'-9"	4000
				2'-2"	2'-5"	2'-8"	2'-11"	3'-3"	3'-6"	4'-3"	6000

DEFINITIONS

SLPB = SCREED LOAD PER BRACKET (R x W)
R = SCREED LOAD FACTOR, OBTAINED FROM TABLE 2
W = WHEEL LOAD
S = BRACKET SPACING
T = AVERAGE SLAB THICKNESS
SWL = SAFE WORKING LOAD
K = DIMENSION DEFINED ON "BRIDGE OVERHANG BRACKET SUMMARY" ON SHEET 2
L = OVERHANG MEASURED FROM EDGE OF TOP FLANGE TO EDGE OF SUPERSTRUCTURE

PROJECT NO. B-682
BRUNSWICK COUNTY
STATION: 47+08.03 -L- POT

SHEET 1 OF 3

STATE OF NORTH CAROLINA
DEPARTMENT OF TRANSPORTATION
RALEIGH

STANDARD OVERHANG FALSEWORK

AASHTO TYPES
III, IV, V, AND VI

SPANS S-W

NORTH CAROLINA PROFESSIONAL SEAL 18788 ENGINEER CHANG-CHUAN VICTOR CHAO

Chang-Chuan V. Chao
2-28-2007

REVISIONS								SHEET NO.
NO.	BY:	DATE:	NO.	BY:	DATE:			S-54
1			3					TOTAL SHEETS
2			4					207

ASSEMBLED BY:	DATE:
CHECKED BY:	DATE:
DRAWN BY: R. WRIGHT 06/04	REV.
CHECKED BY: C. V. CHAO 06/04	

28-FEB-2007 09:57
D:\wdlr\victor\OverhangFalsework\TIEBAR&STRUT\B-682_TYPE_IV\B6820verHangSheets.dgn
vchao

BRIDGE OVERHANG BRACKET SUMMARY

TOTAL SCREED WEIGHT = _____ LBS.
NUMBER OF SCREED WHEELS = _____
SCREED WHEEL LOAD (W) = _____ LBS.
SCREED LOAD PER BRACKET = _____ LBS.

PROJECT No. : _____
COUNTY : _____
STATION : _____
DESCRIPTION : _____

DATE : _____
DESIGN BY : _____
CHECK BY : _____

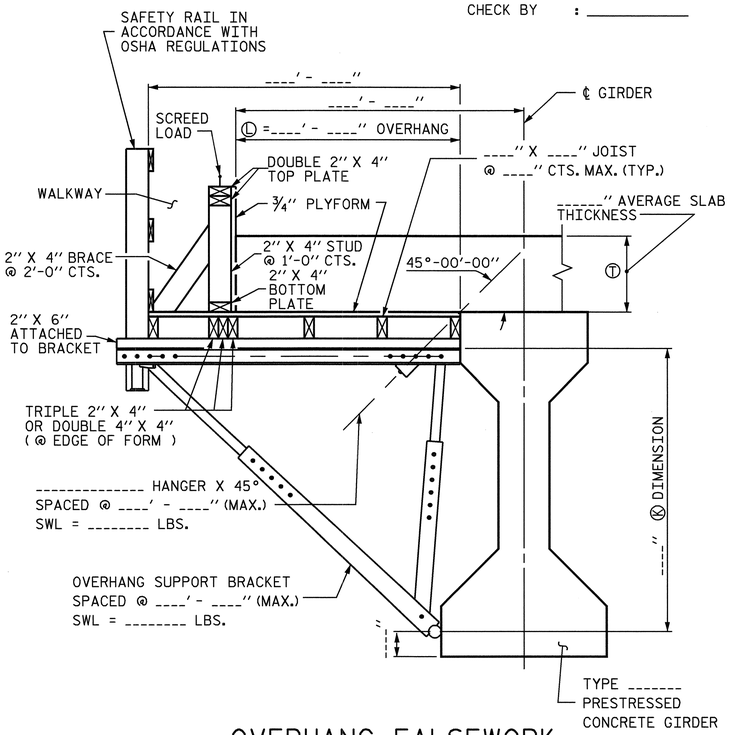

OVERHANG FALSEWORK

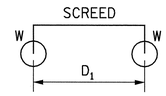

4-WHEEL MACHINE

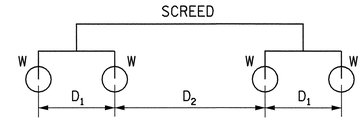

8-WHEEL MACHINE

4 WHEEL MACHINE	
S/D1	R
<= 1.0	1.00
1.1	1.09
1.2	1.17
1.3	1.23
1.4	1.29
1.5	1.33
1.6	1.38
1.7	1.41
1.8	1.44
1.9	1.47
2.0	1.50
2.2	1.55
2.4	1.58
2.6	1.62
2.8	1.64
3.0	1.67
3.5	1.71
4.0	1.75

TABLE 2: SCREED LOAD FACTOR "R"

	THE SCREED LOAD FACTOR R (FOR 8 WHEEL MACHINE)																	
	S/D_2																	
S/D_1	<= 1.0	1.1	1.2	1.3	1.4	1.5	1.6	1.7	1.8	1.9	2.0	2.2	2.4	2.6	2.8	3.0	3.5	4.0
<= 1.0	1.00	1.09	1.17	1.23	1.29	1.33	1.38	1.41	1.44	1.47	1.50	1.55	1.58	1.62	1.64	1.67	1.71	1.75
1.1	1.09	1.18	1.26	1.32	1.38	1.42	1.47	1.50	1.54	1.56	1.59	1.64	1.67	1.71	1.73	1.76	1.81	1.84
1.2	1.17	1.26	1.33	1.40	1.45	1.50	1.54	1.58	1.61	1.64	1.67	1.71	1.75	1.78	1.81	1.83	1.88	1.92
1.3	1.23	1.32	1.40	1.46	1.52	1.56	1.61	1.64	1.68	1.70	1.73	1.78	1.81	1.85	1.87	1.90	1.95	1.98
1.4	1.29	1.38	1.45	1.52	1.57	1.62	1.66	1.70	1.73	1.76	1.79	1.83	1.87	1.90	1.93	1.95	2.00	2.07
1.5	1.33	1.42	1.50	1.56	1.62	1.67	1.71	1.75	1.78	1.81	1.83	1.88	1.92	1.95	1.98	2.00	2.10	2.17
1.6	1.38	1.47	1.54	1.61	1.66	1.71	1.75	1.79	1.82	1.85	1.88	1.92	1.96	1.99	2.04	2.08	2.18	2.25
1.7	1.41	1.50	1.58	1.64	1.70	1.75	1.79	1.82	1.86	1.89	1.91	1.96	2.00	2.05	2.11	2.16	2.25	2.32
1.8	1.44	1.54	1.61	1.68	1.73	1.78	1.82	1.86	1.89	1.92	1.94	1.99	2.06	2.12	2.17	2.22	2.32	2.39
1.9	1.47	1.56	1.64	1.70	1.76	1.81	1.85	1.89	1.92	1.95	1.97	2.04	2.11	2.18	2.23	2.28	2.38	2.45
2.0	1.50	1.59	1.67	1.73	1.79	1.83	1.88	1.91	1.94	1.97	2.00	2.09	2.17	2.23	2.29	2.33	2.43	2.50
2.2	1.55	1.64	1.71	1.78	1.83	1.88	1.92	1.96	1.99	2.04	2.09	2.18	2.26	2.32	2.38	2.42	2.52	2.59
2.4	1.58	1.67	1.75	1.81	1.87	1.92	1.96	2.00	2.06	2.11	2.17	2.26	2.33	2.40	2.45	2.50	2.60	2.67
2.6	1.62	1.71	1.78	1.85	1.90	1.95	1.99	2.05	2.12	2.18	2.23	2.32	2.40	2.46	2.52	2.56	2.66	2.73
2.8	1.64	1.73	1.81	1.87	1.93	1.98	2.04	2.11	2.17	2.23	2.29	2.38	2.45	2.52	2.57	2.62	2.71	2.79
3.0	1.67	1.76	1.83	1.90	1.95	2.00	2.08	2.16	2.22	2.28	2.33	2.42	2.50	2.56	2.62	2.67	2.76	2.83
3.5	1.71	1.81	1.88	1.95	2.00	2.10	2.18	2.25	2.32	2.38	2.43	2.52	2.60	2.66	2.71	2.76	2.86	2.93
4.0	1.75	1.84	1.92	1.98	2.07	2.17	2.25	2.32	2.39	2.45	2.50	2.59	2.67	2.73	2.79	2.83	2.93	3.00

TABLE 3: ALLOWABLE SPAN LENGTH OF JOISTS AND JOIST SPACINGS

AVG. SLAB THICKNESS Ⓣ (IN)	LUMBER JOIST SIZE (IN X IN)	JOIST SPACINGS			
		15 IN	12 IN	10 IN	8 IN
		THE ALLOWABLE SPAN LENGTH OF JOISTS			
10	2 X 4	———	4' - 6"	4' - 9"	5' - 0"
	4 X 4	5' - 9"	6' - 3"	6' - 6"	6' - 7"
12	2 X 4	———	4' - 3"	4' - 9"	5' - 0"
	4 X 4	5' - 3"	6' - 0"	6' - 3"	6' - 5"
14	2 X 4	———	4' - 0"	4' - 6"	5' - 0"
	4 X 4	———	5' - 6"	6' - 0"	6' - 4"
16	2 X 4	———	4' - 0"	4' - 3"	4' - 9"
	4 X 4	———	5' - 3"	5' - 9"	6' - 3"

NOTES

DESIGN INCLUDES CONSTRUCTION LIVE LOAD 20 PSF ON THE AREA SUPPORTED AND 75 PLF AT THE OUTSIDE DECK OF OVERHANGS.

REQUIRED MINIMUM DIAGONAL LEG CAPACITY: 3600 LB WORKING LOAD

THE CONTRACTOR HAS THE OPTION OF SUBMITTING HIS OWN DESIGN FOR OVERHANG FALSEWORK IN ACCORDANCE WITH THE SPECIAL PROVISIONS.

SUBMITTALS UTILIZING THE INSTRUCTIONS AND PROCEDURES DESCRIBED ON SHEET 1 OF 3 SHALL BE IN ACCORDANCE WITH THE APPLICABLE SECTIONS OF THE SPECIFICATIONS AND SPECIAL PROVISIONS, EXCEPT THAT CALCULATIONS FOR OVERHANG FALSEWORK NEED NOT BE SEALED BY A REGISTERED ENGINEER.

FOR OVERHANG FALSEWORK BRACING DESIGN, SEE SHEET 3 OF 3.

PROJECT NO. B-682
BRUNSWICK COUNTY
STATION: 47+08.03 -L- POT

SHEET 2 OF 3

STATE OF NORTH CAROLINA
DEPARTMENT OF TRANSPORTATION
RALEIGH

STANDARD OVERHANG FALSEWORK

AASHTO TYPES III, IV, V, AND VI

SPANS S-W

NORTH CAROLINA PROFESSIONAL SEAL 18788 ENGINEER CHANG-CHUAN VICTOR CHAO
Chang-Chuan V. Chao
2-28-2007

ASSEMBLED BY:	DATE:
CHECKED BY:	DATE:
DRAWN BY: R. WRIGHT 06/04	REV.
CHECKED BY: C. V. CHAO 06/04	

REVISIONS						SHEET NO.
NO.	BY:	DATE:	NO.	BY:	DATE:	5-55
1			3			TOTAL SHEETS
2			4			207

28-FEB-2007 10:02
D:\wdlr\victor\OverhangFalsework\TIEBAR&STRUT\B-682_TYPE_IV\B6820verHangSheets.dgn
vchao

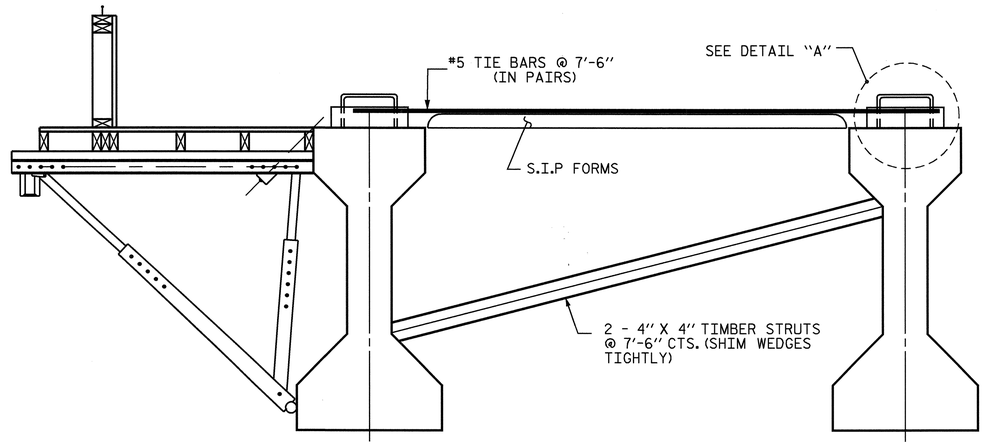

EXTERIOR GIRDER INTERIOR GIRDER

DETAIL OF REQUIRED OVERHANG FALSEWORK BRACING SYSTEM

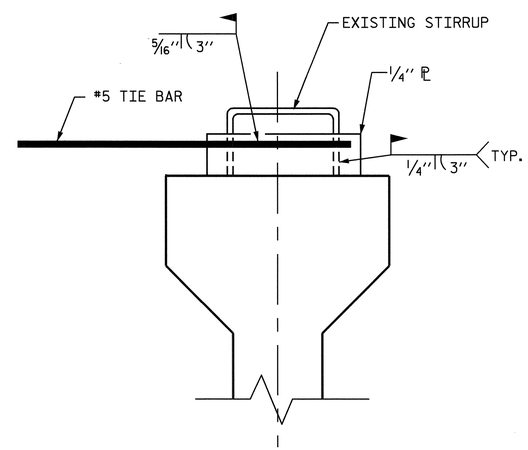

DETAIL "A"

NOTES:

EACH #5 TIE BAR SHALL BE WELDED TO ONE STIRRUP LOOP AS SHOWN IN DETAIL "A". #5 TIE BARS SHALL BE WELDED TO TWO ADJACENT STIRRUPS OF THE EXTERIOR GIRDER AND THE ADJACENT INTERIOR GIRDER BETWEEN PERMANENT DIAPHRAGMS. WELD STEEL PLATES IN BETWEEN THE TIE BARS AND THE STIRRUP LOOP. WELDING TWO TIE BARS TO THE SAME STIRRUP LOOP SHALL NOT BE PERMITTED.

MAXIMUM SPACING BETWEEN THE BRACING (TIE BARS-TIMBER STRUT) IS 7'-6" CTS. #5 TIE BARS SHALL BE LOCATED OVER A TIMBER STRUT.

INSTALL TIE BARS AND TIMBER STRUTS PRIOR TO PLACEMENT OF CONCRETE OR SCREED WEIGHT ONTO THE OVERHANG FALSEWORK.

PROJECT NO. B-682
BRUNSWICK COUNTY
STATION: 47+08.03 -L- POT

SHEET 3 OF 3

STATE OF NORTH CAROLINA
DEPARTMENT OF TRANSPORTATION
RALEIGH

STANDARD OVERHANG FALSEWORK

AASHTO TYPES
III, IV, V, AND VI

SPANS S-W

NORTH CAROLINA PROFESSIONAL SEAL 18788 ENGINEER CHANG-CHUAN VICTOR CHAO

Chang-Chuan V. Chao
2-28-2007

REVISIONS						SHEET NO.
NO.	BY:	DATE:	NO.	BY:	DATE:	S-56
1			3			TOTAL SHEETS
2			4			207

DRAWN BY: R. WRIGHT 06/04 DATE :
CHECKED BY: C. V. CHAO 06/04 DATE :

28-FEB-2007 10:00
D:\wdlr\victor\OverhangFalsework\TIEBAR&STRUT\B-682_TYPE_IV\B6820verHangSheets.dgn
vchao

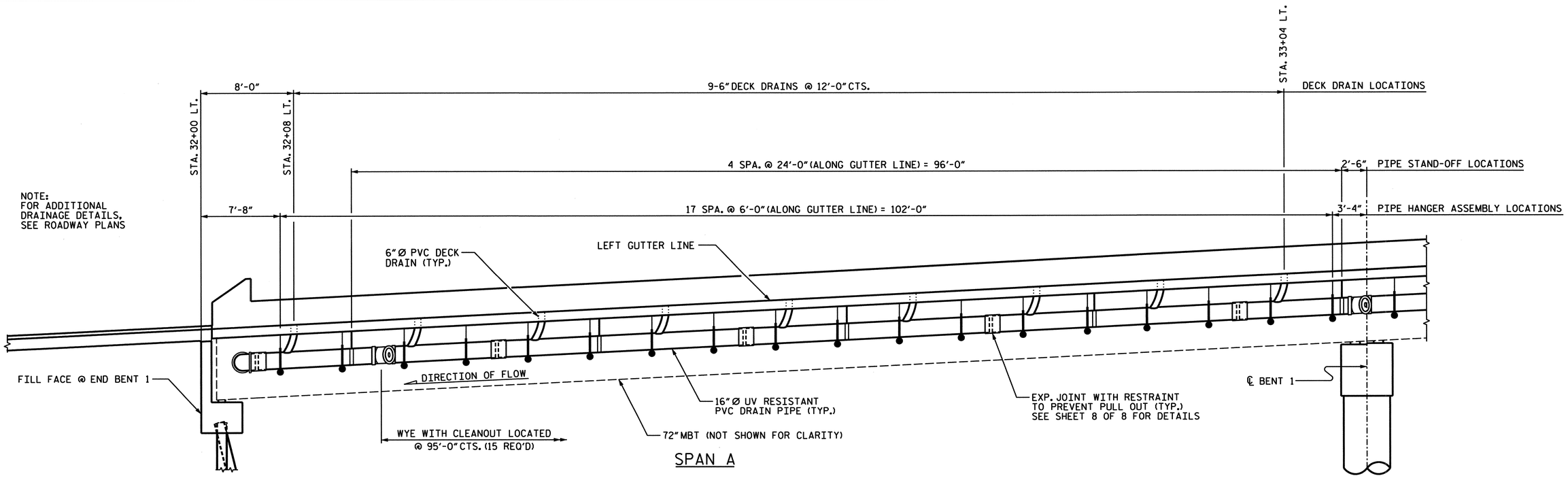

SPAN A

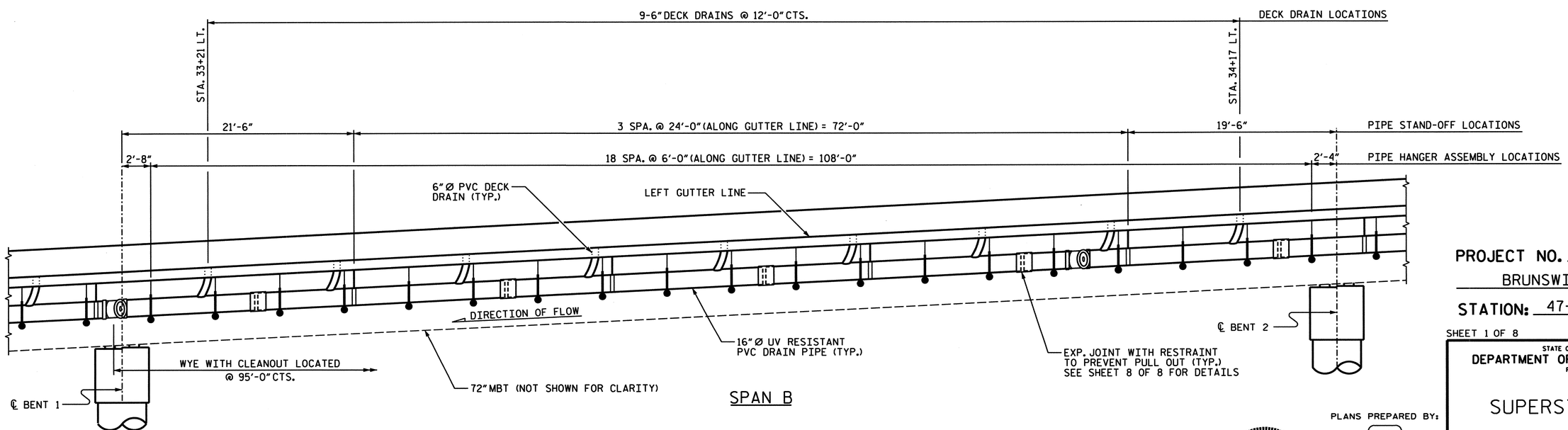

SPAN B

PROJECT NO. B-682

BRUNSWICK COUNTY

STATION: 47+08.03 -L- POT

SHEET 1 OF 8

STATE OF NORTH CAROLINA
DEPARTMENT OF TRANSPORTATION
RALEIGH

SUPERSTRUCTURE

STRUCTURE DRAINAGE SYSTEM DETAILS

PLANS PREPARED BY:

PARSONS
TRANSPORTATION GROUP
Engineers and Planners
RALEIGH, NORTH CAROLINA

JOB NO. 645615

DWG. NO.

NORTH CAROLINA PROFESSIONAL SEAL 15832 ENGINEER JOEL A. LEE
1·17·07

REVISIONS						
NO.	BY:	DATE:	NO.	BY:	DATE:	
1			3			
2			4			

SHEET NO. 5-57

TOTAL SHEETS 207

DRAWN BY : D. H. Carter DATE : JULY 2006
CHECKED BY : J. A. Lee DATE : JULY 2006

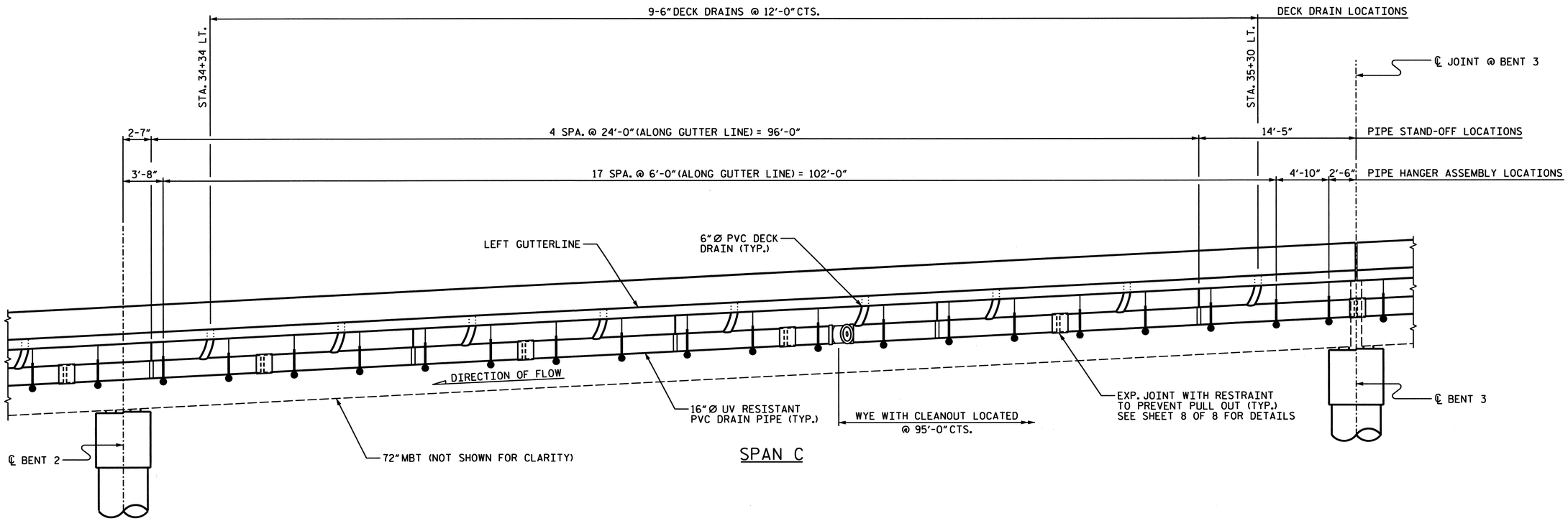

SPAN C

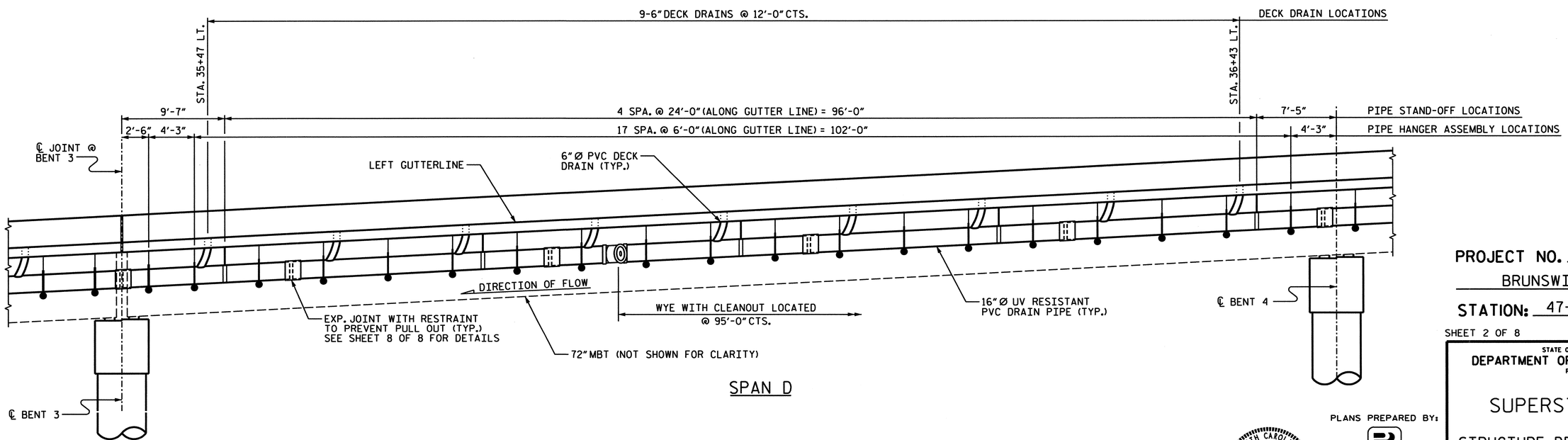

SPAN D

PROJECT NO. B-682

BRUNSWICK COUNTY

STATION: 47+08.03 -L- POT

SHEET 2 OF 8

STATE OF NORTH CAROLINA
DEPARTMENT OF TRANSPORTATION
RALEIGH

SUPERSTRUCTURE

STRUCTURE DRAINAGE SYSTEM DETAILS

PLANS PREPARED BY:

PARSONS TRANSPORTATION GROUP
Engineers and Planners
RALEIGH, NORTH CAROLINA

JOB NO. 645615
DWG. NO.

NORTH CAROLINA PROFESSIONAL SEAL 15832 ENGINEER JOSEPH A. LEE
1-17-07

REVISIONS						SHEET NO.
NO.	BY:	DATE:	NO.	BY:	DATE:	5-58
1			3			TOTAL SHEETS
2			4			207

DRAWN BY : D. H. Carter DATE : JULY 2006
CHECKED BY : J. A. Lee DATE : JULY 2006

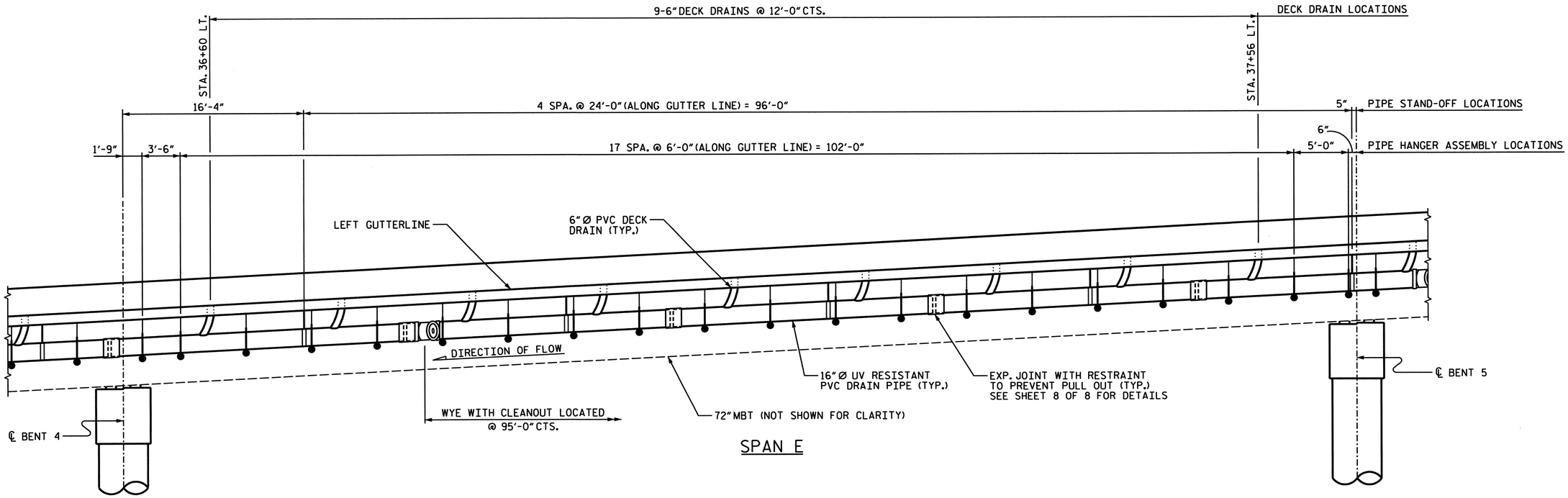

SPAN E

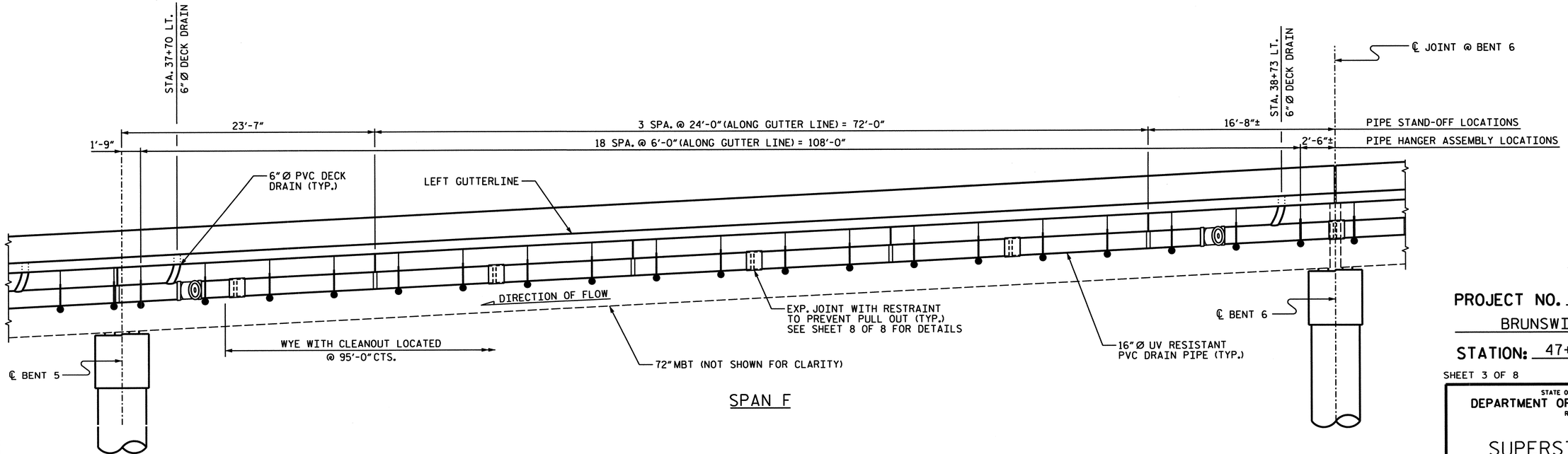

SPAN F

PROJECT NO. B-682

BRUNSWICK COUNTY

STATION: 47+08.03 -L- POT

SHEET 3 OF 8

STATE OF NORTH CAROLINA
DEPARTMENT OF TRANSPORTATION
RALEIGH

SUPERSTRUCTURE

STRUCTURE DRAINAGE SYSTEM DETAILS

PLANS PREPARED BY:

PARSONS TRANSPORTATION GROUP
Engineers and Planners
RALEIGH, NORTH CAROLINA

NORTH CAROLINA PROFESSIONAL SEAL 15832 ENGINEER JOELI A. LEE
1·17·07

REVISIONS						SHEET NO.
NO.	BY:	DATE:	NO.	BY:	DATE:	S-59
1			3			TOTAL SHEETS
2			4			207

JOB NO. 645615

DWG. NO.

DRAWN BY : D. H. Carter DATE : JULY 2006
CHECKED BY : J. A. Lee DATE : JULY 2006

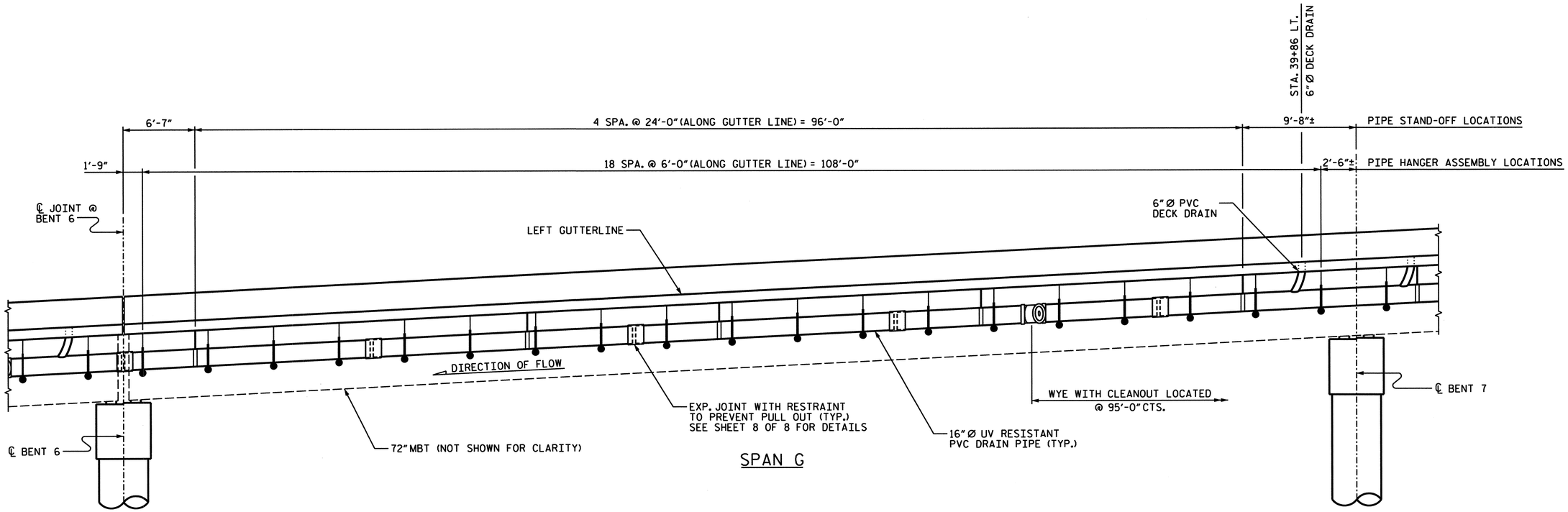

SPAN G

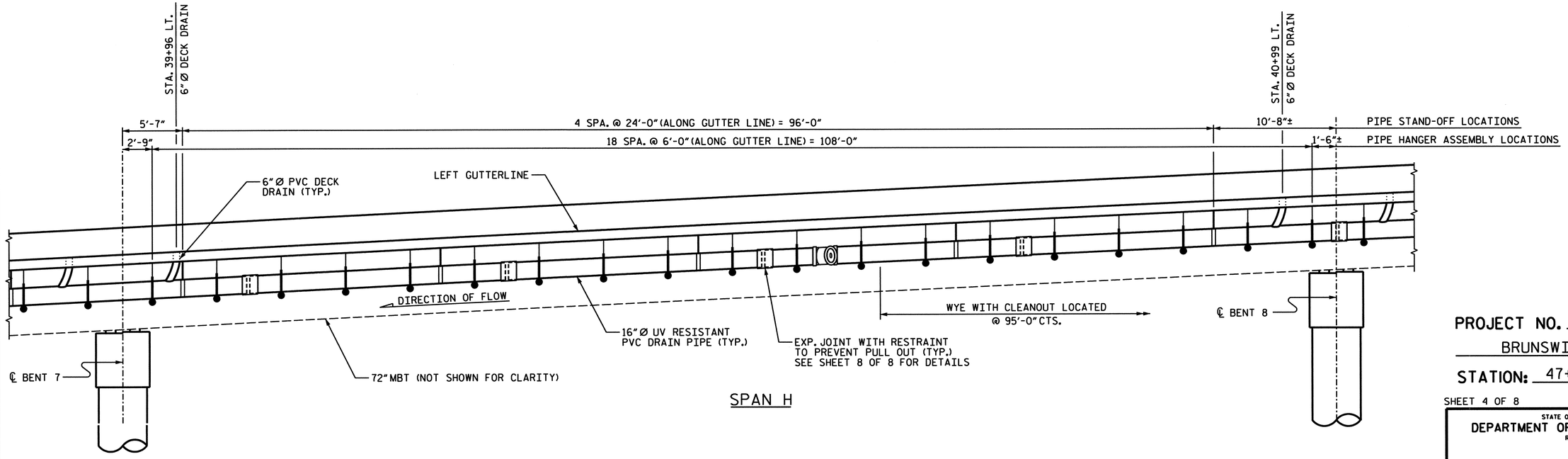

SPAN H

PROJECT NO. B-682

BRUNSWICK COUNTY

STATION: 47+08.03 -L- POT

SHEET 4 OF 8

STATE OF NORTH CAROLINA
DEPARTMENT OF TRANSPORTATION
RALEIGH

SUPERSTRUCTURE

STRUCTURE DRAINAGE SYSTEM DETAILS

NORTH CAROLINA PROFESSIONAL SEAL 15832 JOEL A. LEE
1·17·07

PLANS PREPARED BY:

PARSONS TRANSPORTATION GROUP
Engineers and Planners
RALEIGH, NORTH CAROLINA

JOB NO. 645615

DWG. NO.

REVISIONS							SHEET NO.
NO.	BY:	DATE:	NO.	BY:	DATE:		S-60
1			3				TOTAL SHEETS
2			4				207

DRAWN BY : D. H. Carter DATE : JULY 2006
CHECKED BY : J. A. Lee DATE : JULY 2006

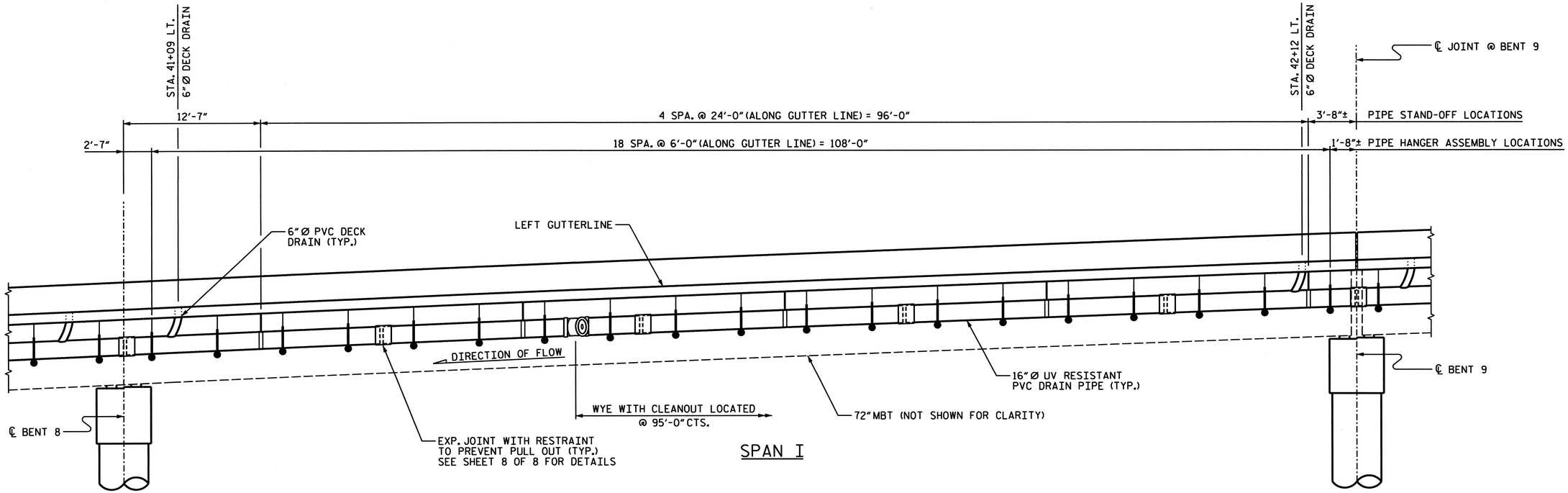

SPAN I

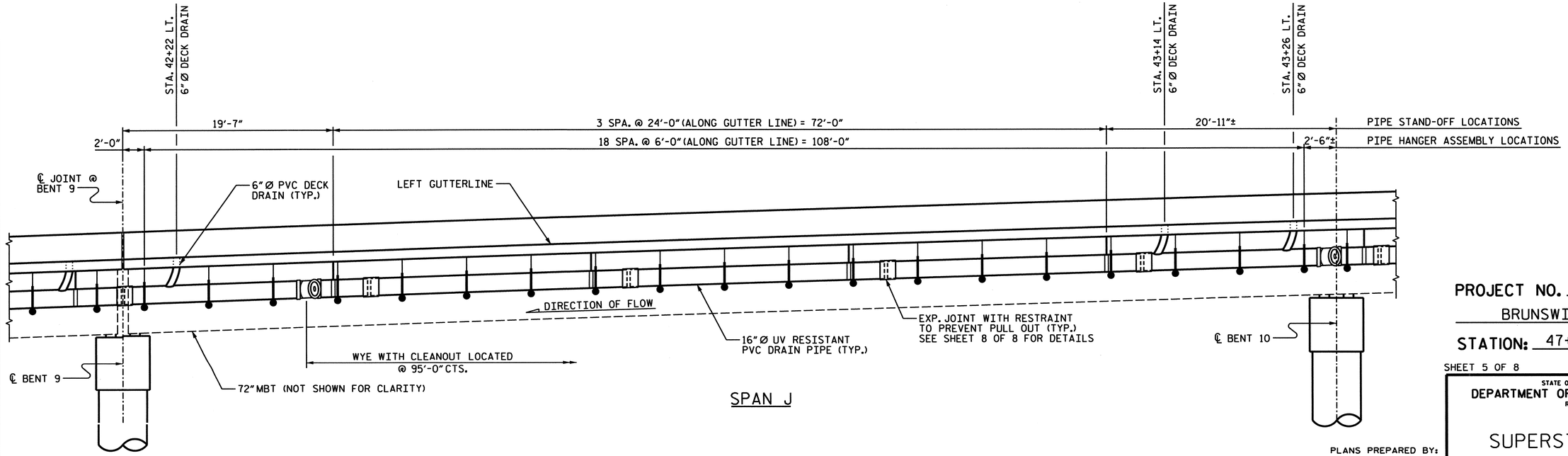

SPAN J

PROJECT NO. B-682

BRUNSWICK COUNTY

STATION: 47+08.03 -L- POT

SHEET 5 OF 8

STATE OF NORTH CAROLINA
DEPARTMENT OF TRANSPORTATION
RALEIGH

SUPERSTRUCTURE

STRUCTURE DRAINAGE SYSTEM DETAILS

PLANS PREPARED BY:

PARSONS TRANSPORTATION GROUP
Engineers and Planners
RALEIGH, NORTH CAROLINA

NORTH CAROLINA PROFESSIONAL SEAL 15832 ENGINEER JOEL A. LEE
1-17-07

REVISIONS							SHEET NO.
NO.	BY:	DATE:	NO.	BY:	DATE:		5-61
1			3				TOTAL SHEETS
2			4				207

JOB NO. 645615

DWG. NO.

DRAWN BY : D. H. Carter DATE : JULY 2006
CHECKED BY : J. A. Lee DATE : JULY 2006

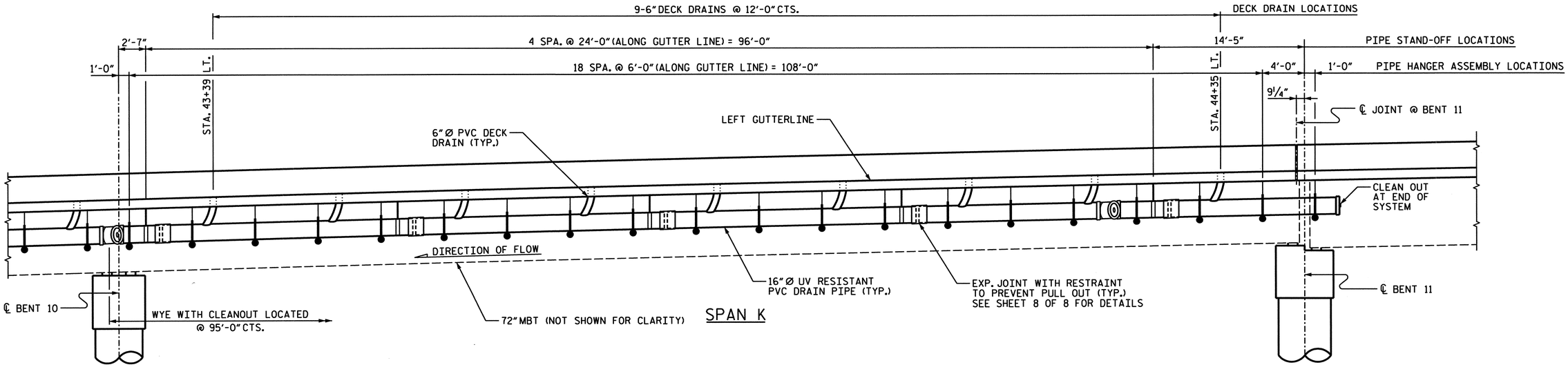

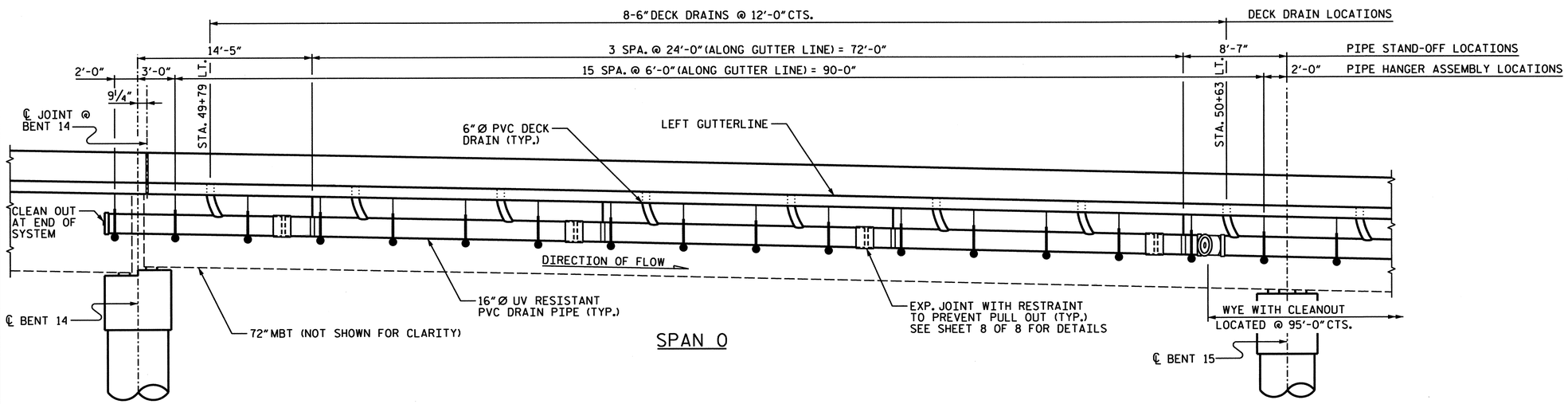

NOTE:
℄ JOINT IS OFFSET FROM ℄ BENT AT BENTS 11 AND 14.

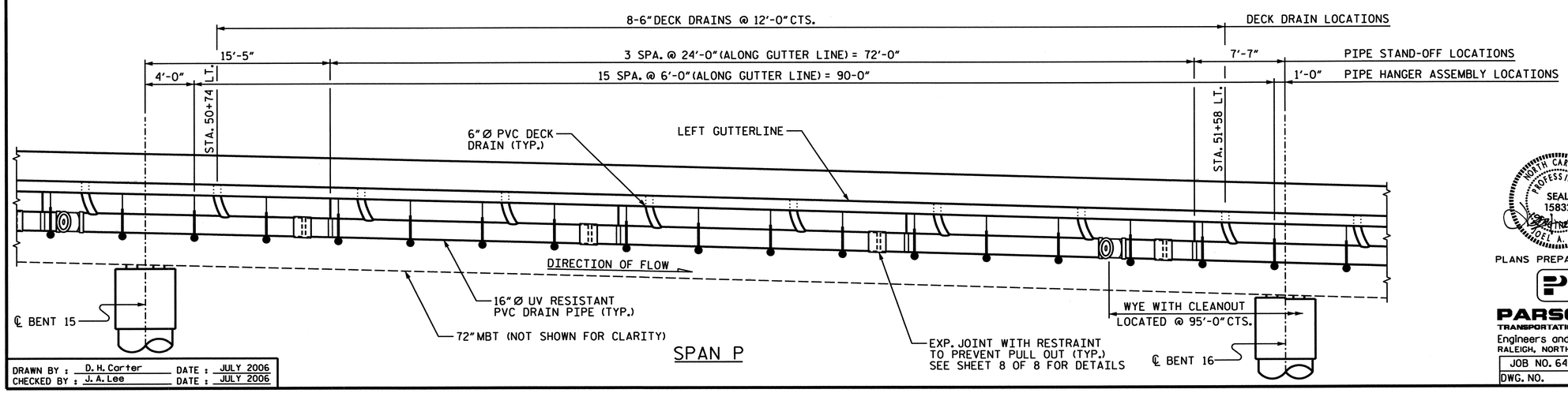

PROJECT NO. B-682
BRUNSWICK COUNTY
STATION: 47+08.03 -L- POT

SHEET 6 OF 8

NORTH CAROLINA PROFESSIONAL SEAL 15832 ENGINEER JOEL A. LEE 1-17-07

PLANS PREPARED BY:
PARSONS TRANSPORTATION GROUP
Engineers and Planners
RALEIGH, NORTH CAROLINA

STATE OF NORTH CAROLINA
DEPARTMENT OF TRANSPORTATION
RALEIGH

SUPERSTRUCTURE

STRUCTURE DRAINAGE SYSTEM DETAILS

REVISIONS						SHEET NO.
NO.	BY:	DATE:	NO.	BY:	DATE:	S-62
1			3			TOTAL SHEETS
2			4			207

JOB NO. 645615
DWG. NO.

DRAWN BY: D. H. Carter DATE: JULY 2006
CHECKED BY: J. A. Lee DATE: JULY 2006

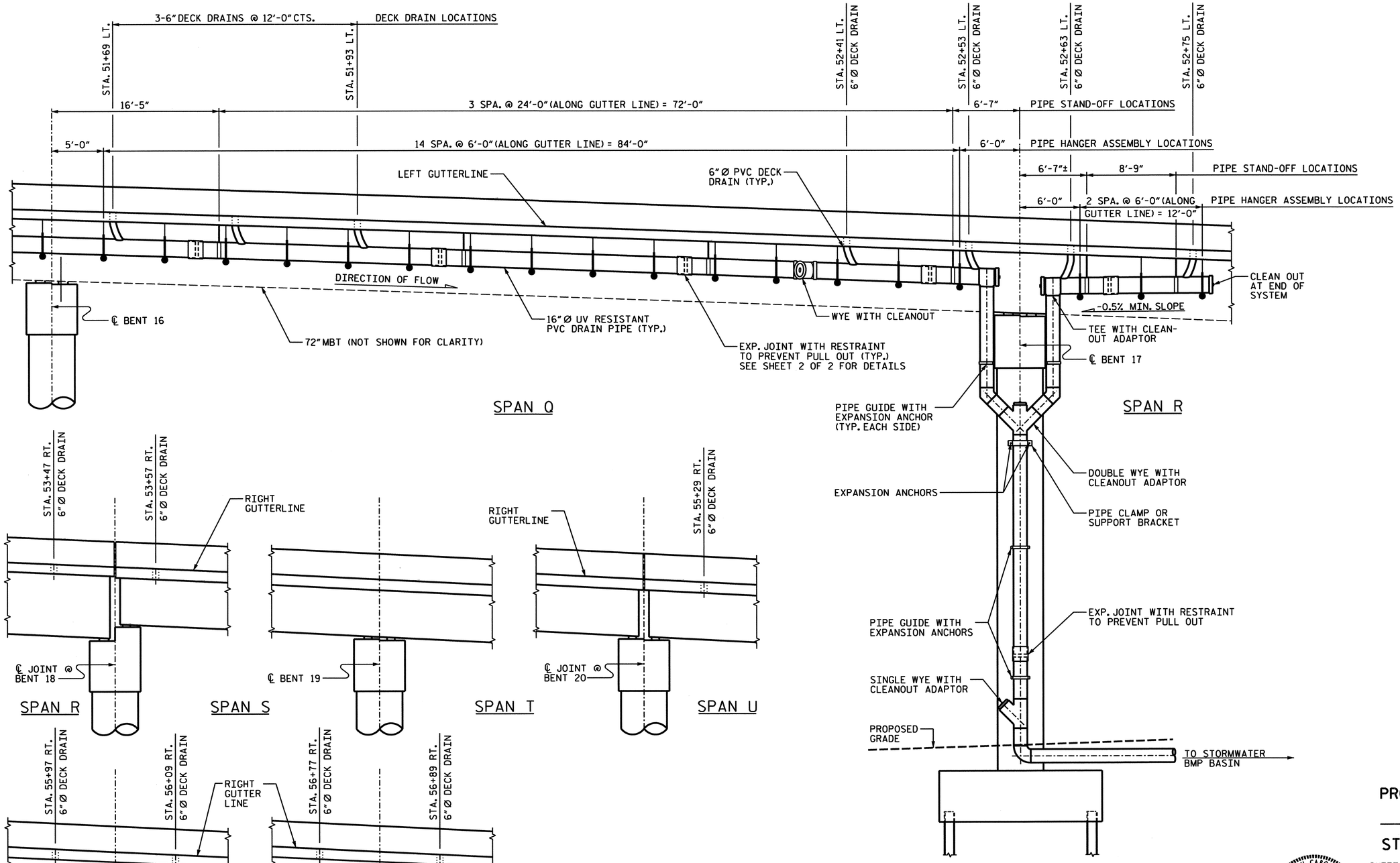

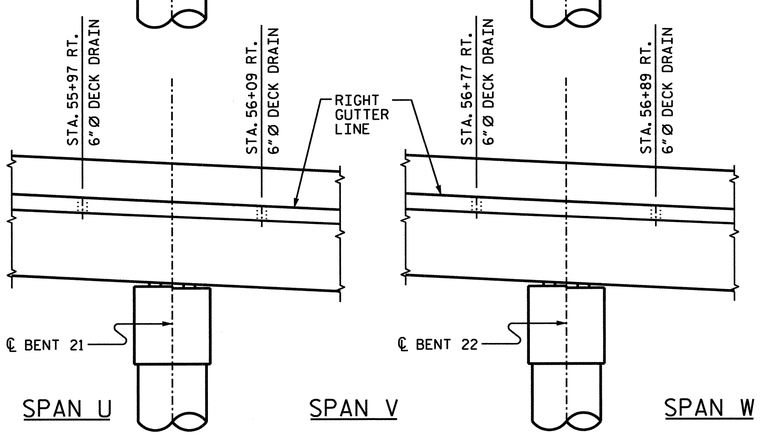

DRAWN BY : D. H. Carter DATE : JULY 2006
CHECKED BY : J. A. Lee DATE : JULY 2006

PROJECT NO. B-682
BRUNSWICK COUNTY
STATION: 47+08.03 -L- POT

SHEET 7 OF 8

NORTH CAROLINA PROFESSIONAL SEAL 15832 ENGINEER JOEL A. LEE
1-17-07

PLANS PREPARED BY:
PARSONS TRANSPORTATION GROUP
Engineers and Planners
RALEIGH, NORTH CAROLINA
JOB NO. 645615
DWG. NO.

STATE OF NORTH CAROLINA
DEPARTMENT OF TRANSPORTATION
RALEIGH

SUPERSTRUCTURE

STRUCTURE DRAINAGE SYSTEM DETAILS

REVISIONS						SHEET NO.
NO.	BY:	DATE:	NO.	BY:	DATE:	S-63
1			3			TOTAL SHEETS
2			4			207

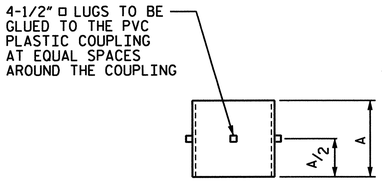

COUPLING DETAIL

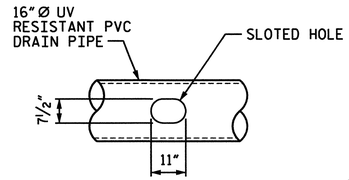

SLOT DETAIL

NOTES:

FOR LOCATIONS OF DECK DRAINS, SEE "CLOSED DRAINAGE SYSTEM DETAILS" SHEETS 1 OF 8 THRU 8 OF 8.

THE DRAINAGE SYSTEM DETAILS ARE SCHEMATIC DRAWINGS ONLY.

DRAINAGE SYSTEM WILL BE PAID FOR AS A LUMP SUM UNDER THE PAY ITEM "STRUCTURE DRAINAGE SYSTEM".

FOR "STRUCTURE DRAINAGE SYSTEM", SEE SPECIAL PROVISIONS.

THE CONTRACTOR SHALL SUBMIT A PLAN FOR THE DRAINAGE SYSTEM, INCLUDING BUT NOT LIMITED TO, ATTACHMENTS TO THE BRIDGE, DRAIN DETAILS, PIPE SUPPORT SYSTEM, PIPE ALIGNMENT AND PIPE LENGTHS, AND ALL NECESSARY FITTINGS, ELBOWS, WYES, ADAPTERS, GUIDES AND JOINTS.

PROVIDE EXPANSION JOINTS IN DRAINAGE SYSTEM PIPE AT A MAXIMUM SPACING OF 25-FEET.

TOP OF DECK DRAINS TO BE SET ⅜" BELOW SURFACE OF SLAB.

PVC PIPE AND FITTINGS SHALL BE SCHEDULE 40 AND CONFORM TO ASTM D1785.

PVC PIPE AND FITTINGS SHALL BE UV RESISTANT.

NOTE: COUPLING SHALL BE PLUMB. SEAL THE BOTTOM OF COUPLING AS NEEDED TO PREVENT INTRUSION OF CONCRETE DURING POURING OF DECK.

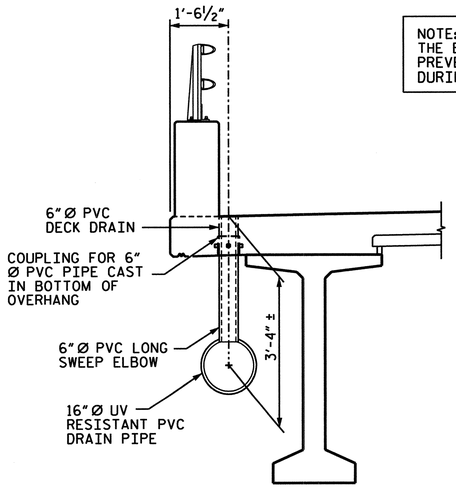

SECTION VIEW

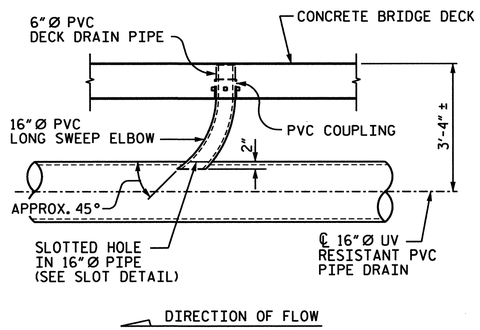

SIDE VIEW

DRAIN OUTLET DETAILS

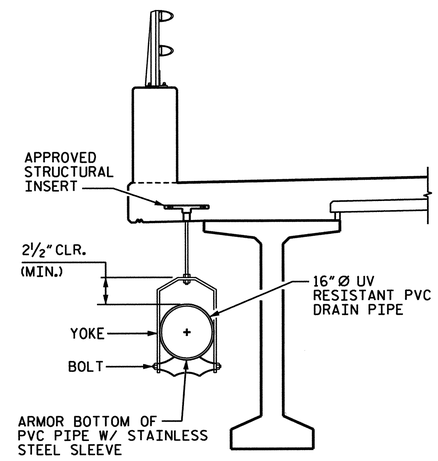

PIPE HANGER DETAIL

ALL COMPONENTS SHALL BE GALVANIZED AFTER FABRICATION

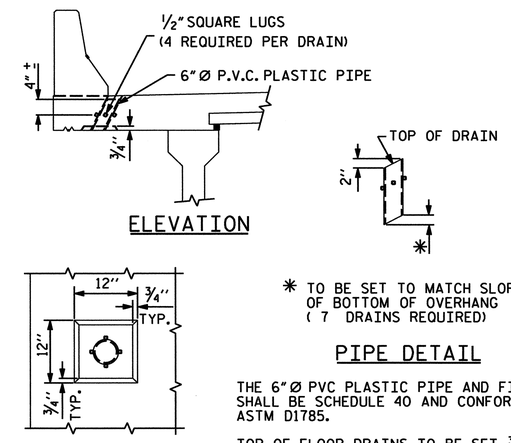

✱ TO BE SET TO MATCH SLOPE OF BOTTOM OF OVERHANG (7 DRAINS REQUIRED)

PIPE DETAIL

THE 6"Ø PVC PLASTIC PIPE AND FITTINGS SHALL BE SCHEDULE 40 AND CONFORM TO ASTM D1785.

TOP OF FLOOR DRAINS TO BE SET ⅜" BELOW SURFACE OF SLAB.

4 - ½" SQUARE LUGS TO BE GLUED TO THE P.V.C. PLASTIC PIPE AT EQUAL SPACES AROUND THE PIPE DRAIN.

DRAIN DETAILS

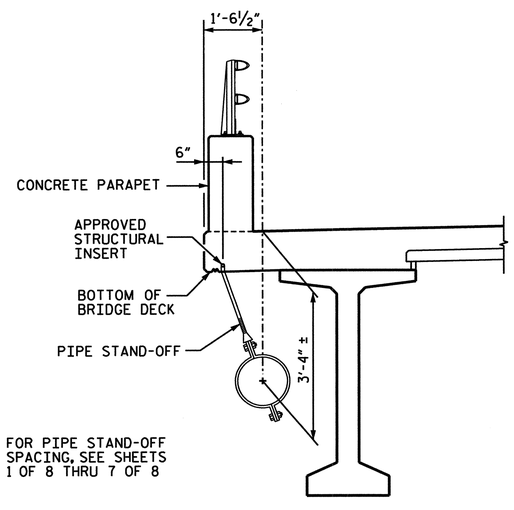

PIPE STAND-OFF DETAIL

ALL COMPONENTS SHALL BE GALVANIZED AFTER FABRICATION

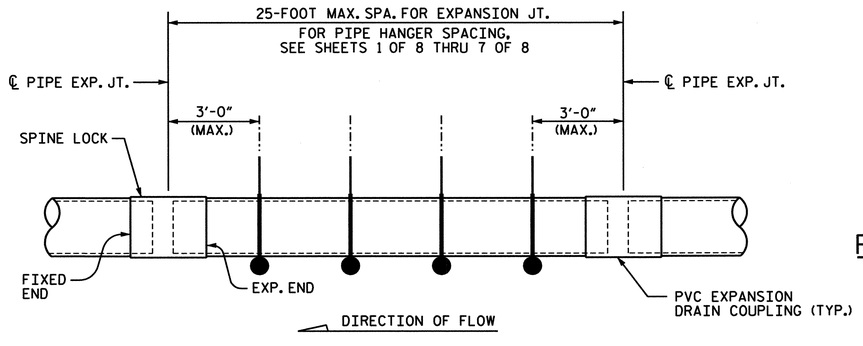

EXPANSION COUPLING DETAIL

PVC EXPANSION DRAIN COUPLINGS SHALL CONTAIN A METHOD OF RESTRAINT TO PREVENT PULLOUT

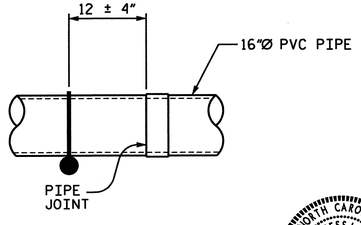

PIPE JOINT DETAIL

PROJECT NO. B-682

BRUNSWICK COUNTY

STATION: 47+08.03 -L- POT

SHEET 8 OF 8

STATE OF NORTH CAROLINA
DEPARTMENT OF TRANSPORTATION
RALEIGH

SUPERSTRUCTURE

STRUCTURE DRAINAGE SYSTEM DETAILS

NORTH CAROLINA PROFESSIONAL SEAL 15832 ENGINEER JOEL A. LEE 1.17.07

PLANS PREPARED BY:

PARSONS TRANSPORTATION GROUP
Engineers and Planners
RALEIGH, NORTH CAROLINA

JOB NO. 645615

DWG. NO.

REVISIONS						SHEET NO.
NO.	BY:	DATE:	NO.	BY:	DATE:	S-64
1			3			TOTAL SHEETS
2			4			207

DRAWN BY : D. H. Carter DATE : JULY 2006
CHECKED BY : J. A. Lee DATE : JULY 2006

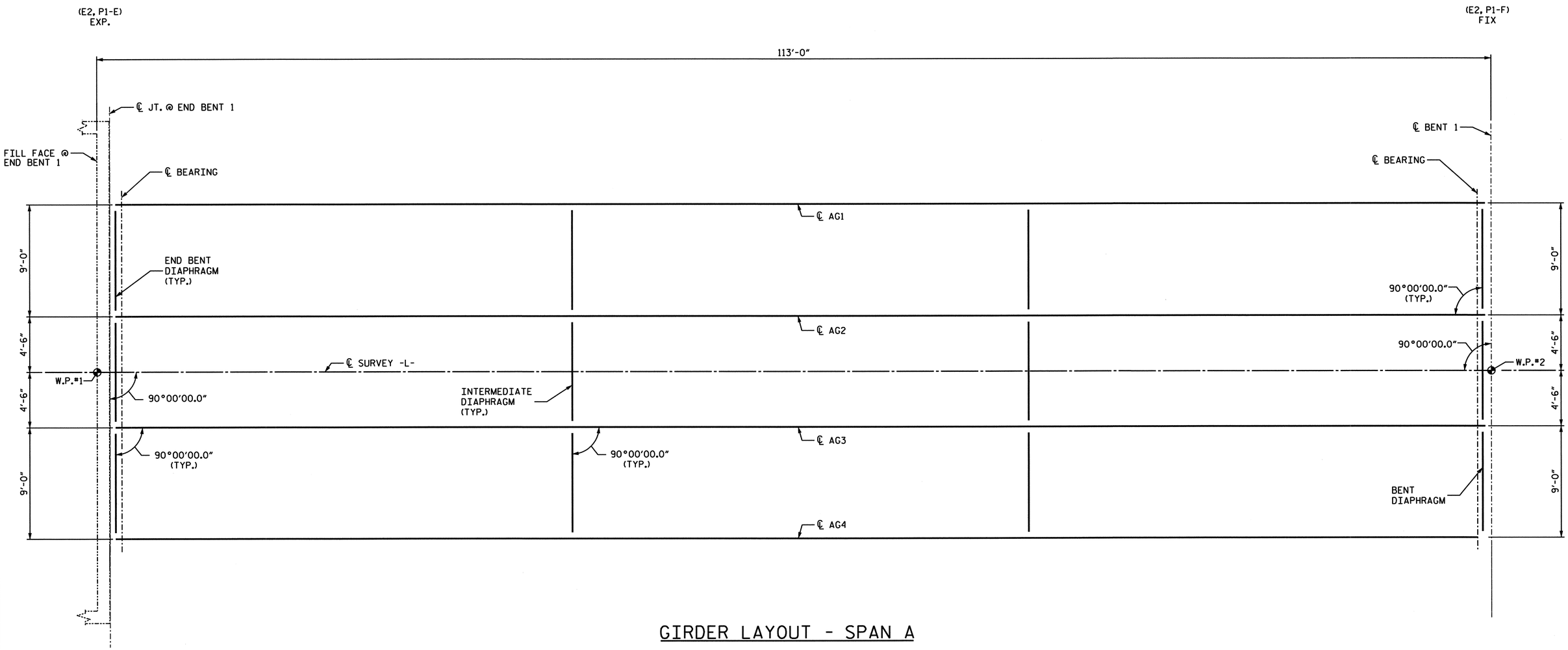

GIRDER LAYOUT - SPAN A

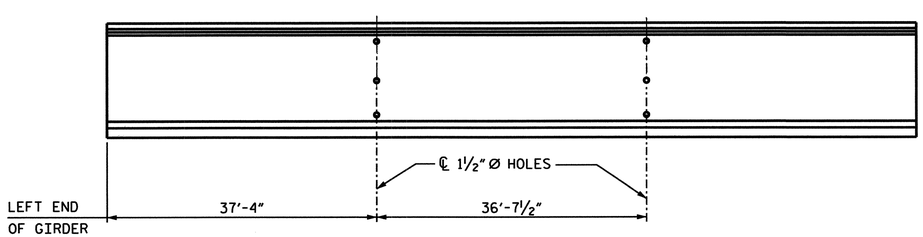

ELEVATION

PROJECT NO. B-682

BRUNSWICK COUNTY

STATION: 47+08.03 -L- POT

SHEET 1 OF 13

STATE OF NORTH CAROLINA
DEPARTMENT OF TRANSPORTATION
RALEIGH

SUPERSTRUCTURE

FRAMING PLAN
PLAN OF SPAN A

NORTH CAROLINA PROFESSIONAL SEAL 15832 ENGINEER JOEL A. LEE
1-17-07

PLANS PREPARED BY:

PARSONS
TRANSPORTATION GROUP
Engineers and Planners
RALEIGH, NORTH CAROLINA

JOB NO. 645615

DWG. NO.

REVISIONS						
NO.	BY:	DATE:	NO.	BY:	DATE:	
1			3			
2			4			

SHEET NO. 5-65

TOTAL SHEETS 207

DRAWN BY : D. H. Carter DATE : JULY 2006
CHECKED BY : J. A. Lee DATE : JULY 2006

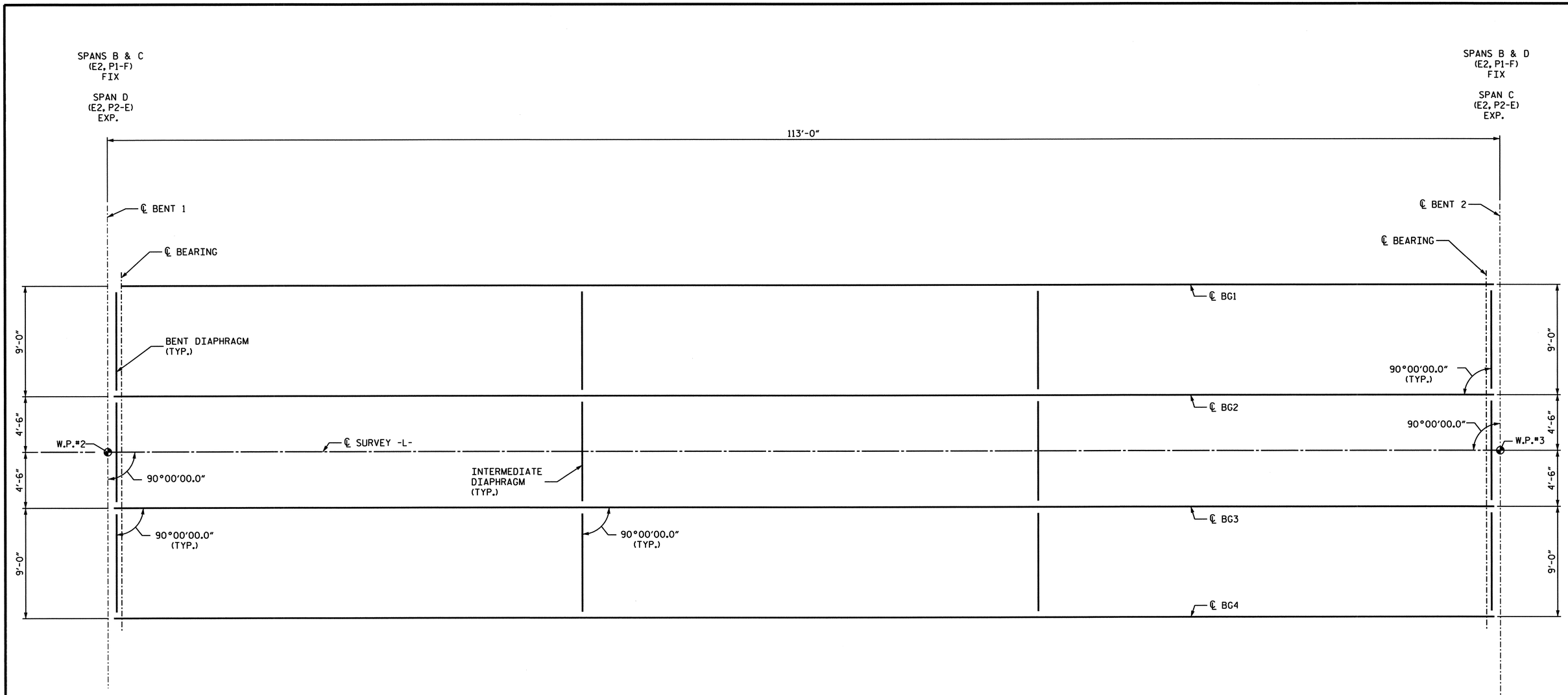

GIRDER LAYOUT - SPANS B, C & D

SPAN B SHOWN, SPANS C & D SIMILAR

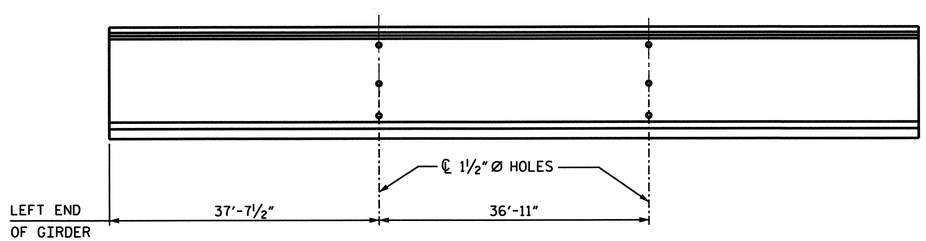

ELEVATION

PROJECT NO. B-682

BRUNSWICK COUNTY

STATION: 47+08.03 -L- POT

SHEET 2 OF 13

STATE OF NORTH CAROLINA
DEPARTMENT OF TRANSPORTATION
RALEIGH

SUPERSTRUCTURE

FRAMING PLAN
PLAN OF SPANS B,C & D

NORTH CAROLINA PROFESSIONAL SEAL 15832 ENGINEER JOEL A. LEE 1-17-07

PLANS PREPARED BY:

PARSONS
TRANSPORTATION GROUP
Engineers and Planners
RALEIGH, NORTH CAROLINA

JOB NO. 645615

DWG. NO.

REVISIONS						SHEET NO.
NO.	BY:	DATE:	NO.	BY:	DATE:	5-66
1			3			TOTAL SHEETS
2			4			207

DRAWN BY : D. H. Carter DATE : JULY 2006
CHECKED BY : J. A. Lee DATE : JULY 2006

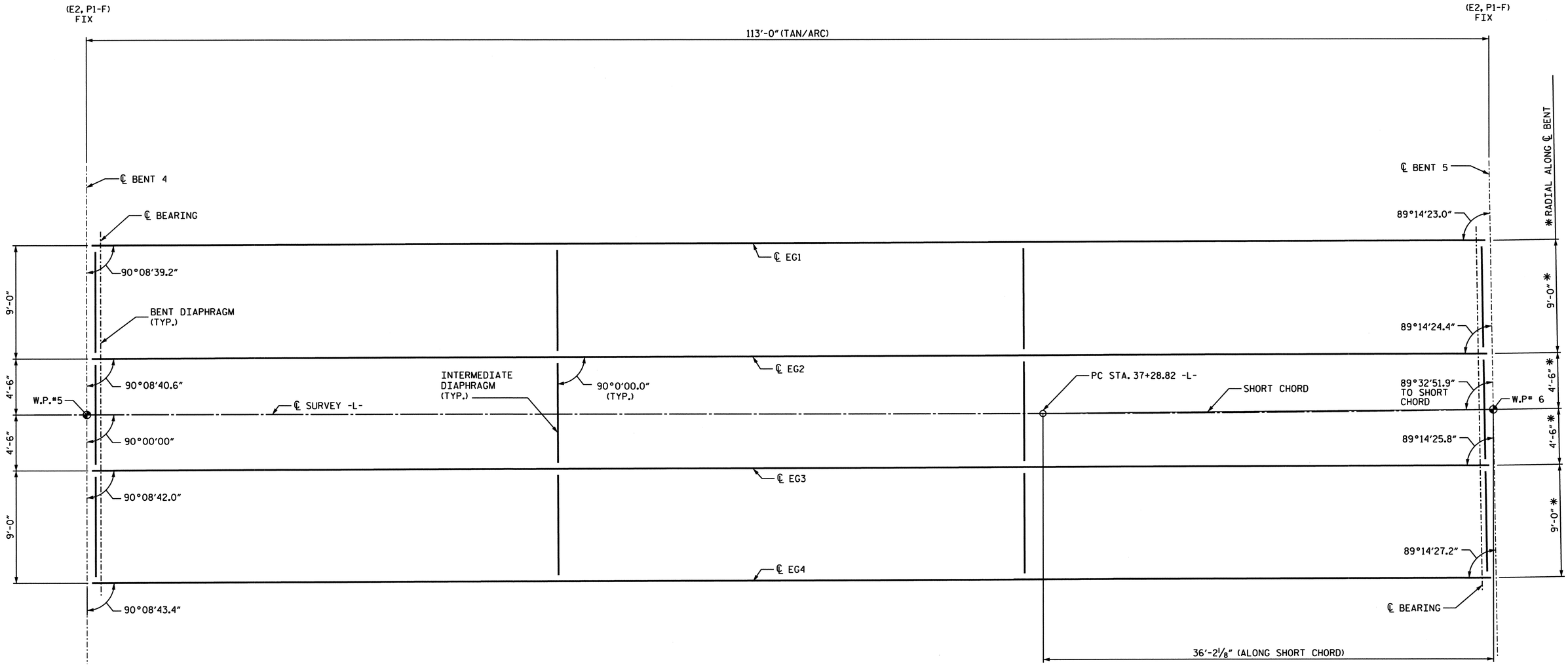

GIRDER LAYOUT - SPAN E

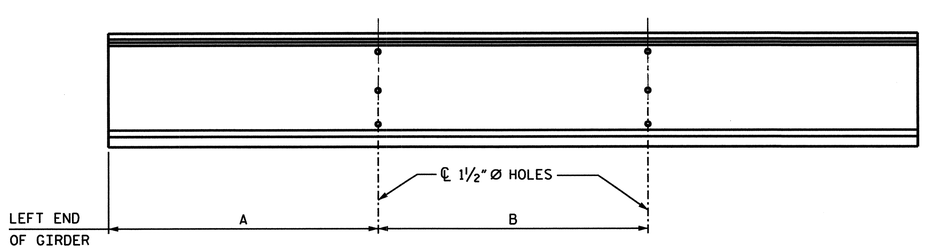

ELEVATION

GIRDER	A	B
E1	37'-6 5/8"	36'-10 1/8"
E2	37'-6 15/16"	36'-10 1/8"
E3	37'-7 3/16"	36'-10 1/8"
E4	37'-7 7/16"	36'-10 1/8"

PROJECT NO. B-682

BRUNSWICK COUNTY

STATION: 47+08.03 -L- POT

SHEET 3 OF 13

NORTH CAROLINA PROFESSIONAL SEAL 15832 ENGINEER JOEL A. LEE
1-17-07

PLANS PREPARED BY:

PARSONS TRANSPORTATION GROUP
Engineers and Planners
RALEIGH, NORTH CAROLINA

JOB NO. 645615

DWG. NO.

STATE OF NORTH CAROLINA
DEPARTMENT OF TRANSPORTATION
RALEIGH

SUPERSTRUCTURE

FRAMING PLAN
PLAN OF SPAN E

REVISIONS								SHEET NO.
NO.	BY:	DATE:	NO.	BY:	DATE:			S-67
1			3					TOTAL SHEETS
2			4					207

DRAWN BY : D. H. Carter DATE : JULY 2006
CHECKED BY : J. A. Lee DATE : JULY 2006

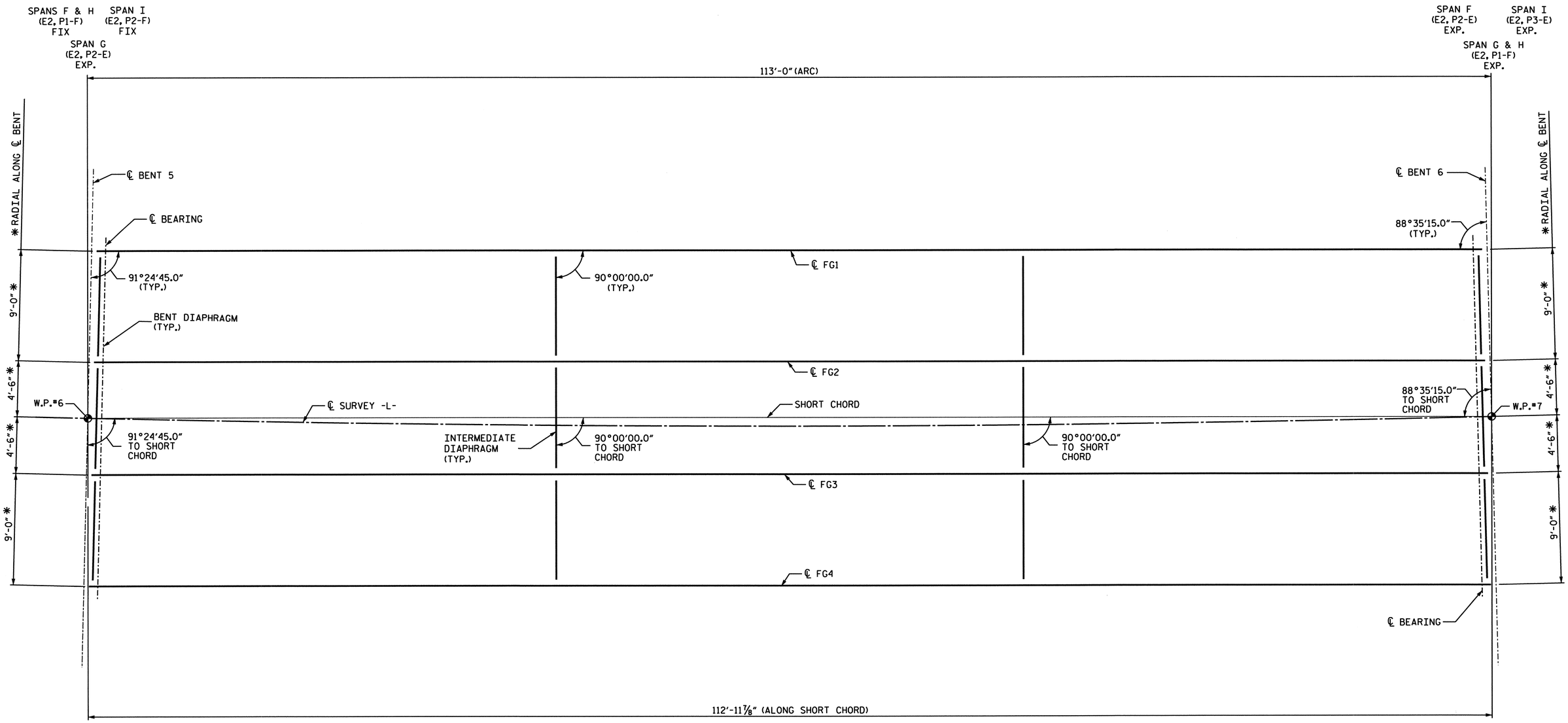

GIRDER LAYOUT - SPANS F,G,H & I

SPAN F SHOWN, SPANS G, H & I SIMILAR

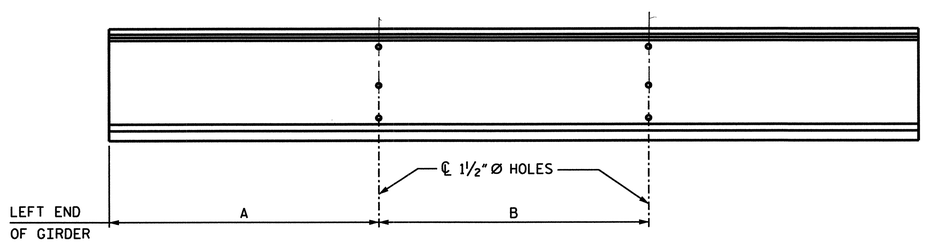

ELEVATION

GIRDER	A	B
F1	36'-10 15/16"	37'-8"
F2	37'-1 5/8"	37'-8"
F3	37'-4 1/4"	37'-8"
F4	37'-6 15/16"	37'-8"

PROJECT NO. B-682

BRUNSWICK COUNTY

STATION: 47+08.03 -L- POT

SHEET 4 OF 13

NORTH CAROLINA PROFESSIONAL SEAL 15832 ENGINEER JOEL A. LEE 1-17-07

PLANS PREPARED BY:

PARSONS TRANSPORTATION GROUP
Engineers and Planners
RALEIGH, NORTH CAROLINA

JOB NO. 645615

DWG. NO.

STATE OF NORTH CAROLINA
DEPARTMENT OF TRANSPORTATION
RALEIGH

SUPERSTRUCTURE

FRAMING PLAN
PLAN OF SPANS F,G,H & I

REVISIONS						SHEET NO.
NO.	BY:	DATE:	NO.	BY:	DATE:	S-68
1			3			TOTAL SHEETS
2			4			207

DRAWN BY : D. H. Carter DATE : JULY 2006
CHECKED BY : J. A. Lee DATE : JULY 2006

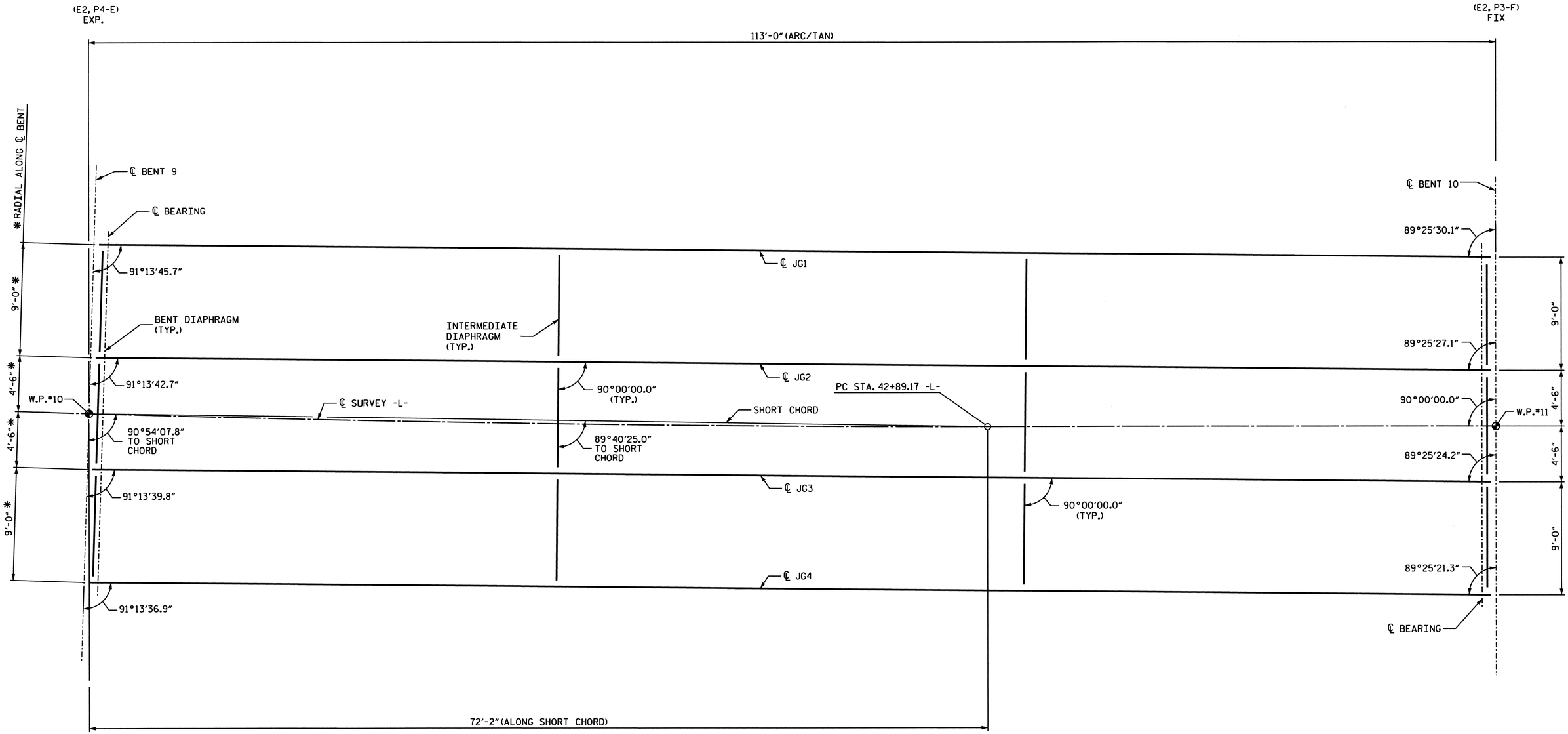

GIRDER LAYOUT - SPAN J

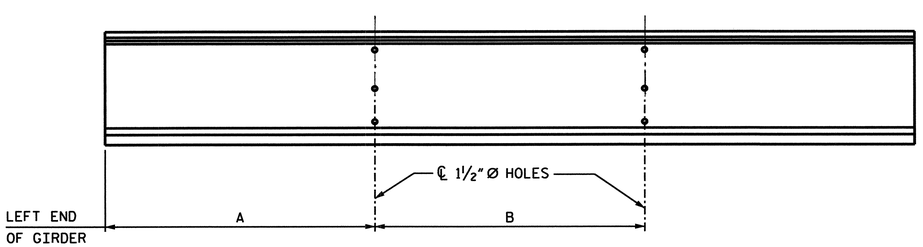

ELEVATION

GIRDER	A	B
J1	37'-5¾"	36'-9¼"
J2	37'-8 1/16"	36'-9¼"
J3	37'-10⅜"	36'-9¼"
J4	38'-0 11/16"	36'-9¼"

PROJECT NO. B-682

BRUNSWICK COUNTY

STATION: 47+08.03 -L- POT

SHEET 5 OF 13

NORTH CAROLINA PROFESSIONAL SEAL 15832 ENGINEER JOELVA LEE 1-17-07

PLANS PREPARED BY:

PARSONS TRANSPORTATION GROUP
Engineers and Planners
RALEIGH, NORTH CAROLINA

JOB NO. 645615

DWG. NO.

STATE OF NORTH CAROLINA
DEPARTMENT OF TRANSPORTATION
RALEIGH

SUPERSTRUCTURE

FRAMING PLAN
PLAN OF SPAN J

REVISIONS						
NO.	BY:	DATE:	NO.	BY:	DATE:	
1			3			
2			4			

SHEET NO. S-69

TOTAL SHEETS 207

DRAWN BY : D. H. Carter DATE : JULY 2006
CHECKED BY : J. A. Lee DATE : JULY 2006

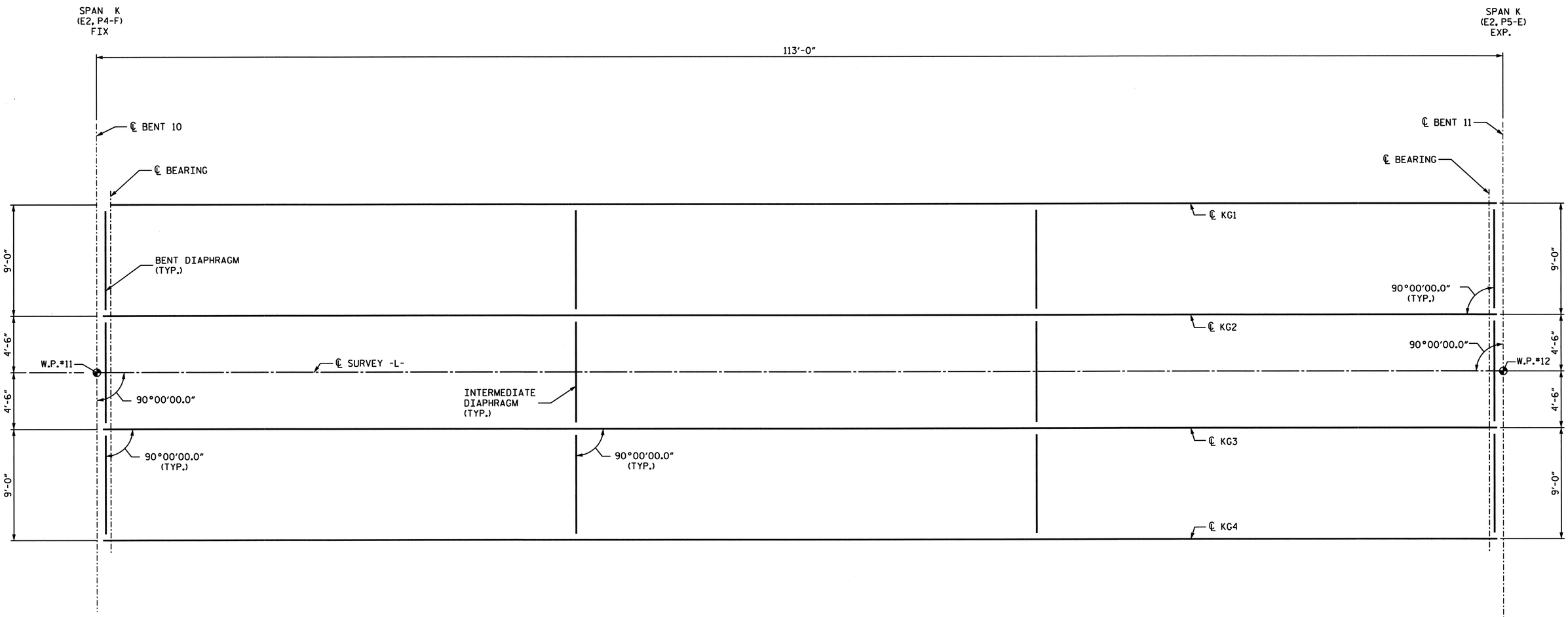

GIRDER LAYOUT - SPAN K

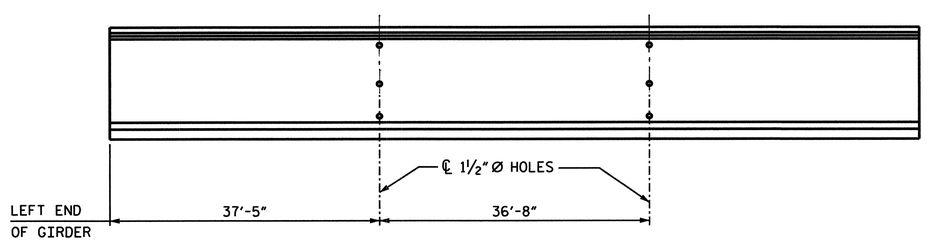

ELEVATION

PROJECT NO. B-682

BRUNSWICK COUNTY

STATION: 47+08.03 -L- POT

SHEET 6 OF 13

NORTH CAROLINA PROFESSIONAL SEAL 15832 ENGINEER JOELV. LEE 1.17.07

PLANS PREPARED BY:

PARSONS
TRANSPORTATION GROUP
Engineers and Planners
RALEIGH, NORTH CAROLINA

JOB NO. 645615

DWG. NO.

STATE OF NORTH CAROLINA
DEPARTMENT OF TRANSPORTATION
RALEIGH

SUPERSTRUCTURE

FRAMING PLAN
PLAN OF SPAN K

REVISIONS						
NO.	BY:	DATE:	NO.	BY:	DATE:	
1			3			
2			4			

SHEET NO. 5-70

TOTAL SHEETS 207

DRAWN BY : D. H. Carter DATE : JULY 2006
CHECKED BY : J. A. Lee DATE : JULY 2006

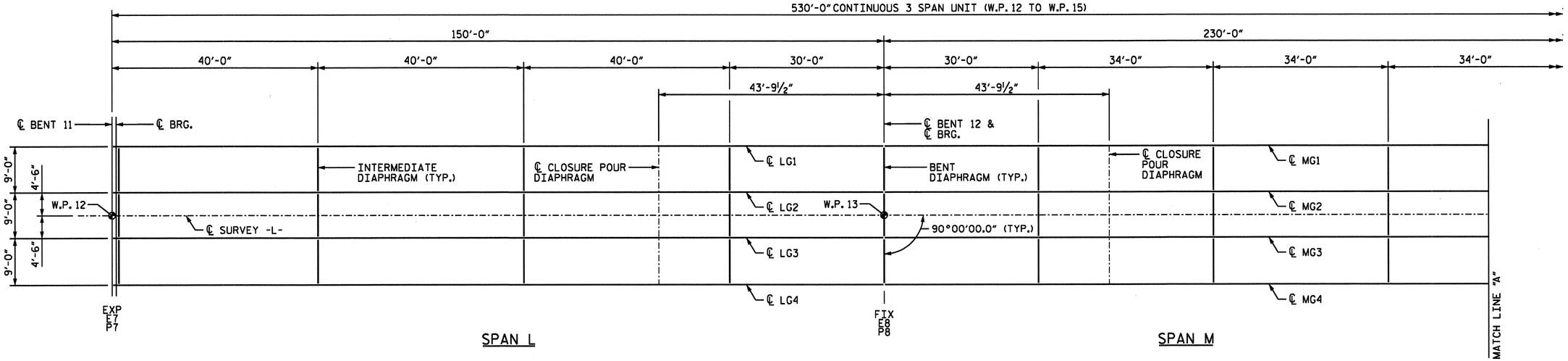

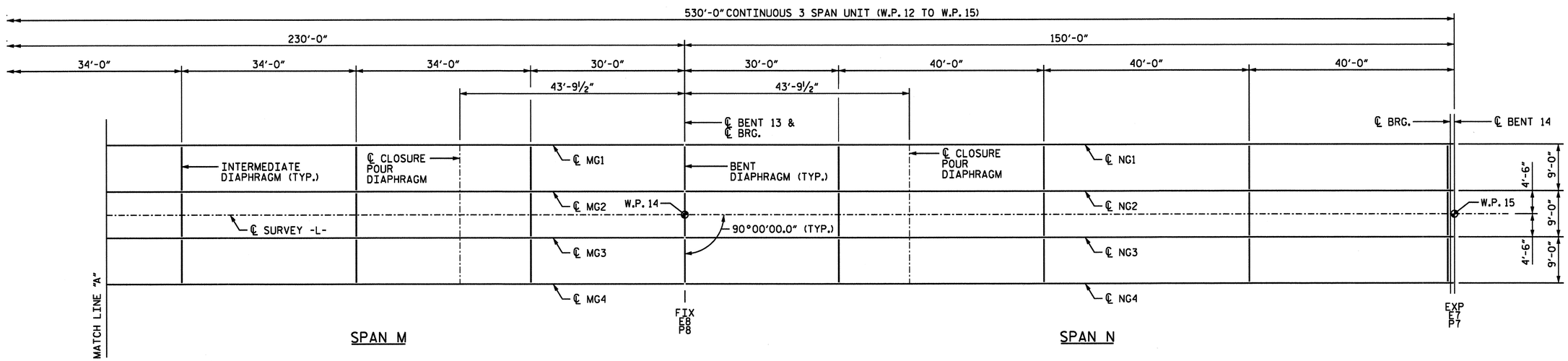

GIRDER LAYOUT SPANS L - N

DIMENSIONS ARE HORIZONTAL UNLESS OTHERWISE NOTED.

PROJECT NO. B-0682

BRUNSWICK COUNTY

STATION: 47+08.03 -L- POT

SHEET 7 OF 13

NORTH CAROLINA PROFESSIONAL SEAL 024928 ENGINEER RODNEY E. MONEY 2/26/07

STATE OF NORTH CAROLINA
DEPARTMENT OF TRANSPORTATION
RALEIGH

SUPERSTRUCTURE FRAMING PLAN

SPANS L-N

PREPARED IN THE OFFICE OF
TYLIN INTERNATIONAL
RALEIGH, NORTH CAROLINA
Copyright © 2006, TYLI

DWG NO.

REVISIONS						
NO.	BY:	DATE:	NO.	BY:	DATE:	
1			3			
2			4			

SHEET NO. S-71

TOTAL SHEETS 207

DRAWN BY : T. S. KELLEY DATE : NOV. 06
CHECKED BY : R.E. MONEY DATE : NOV. 06

DATE: $DATE$
FILE: $FILENAME$

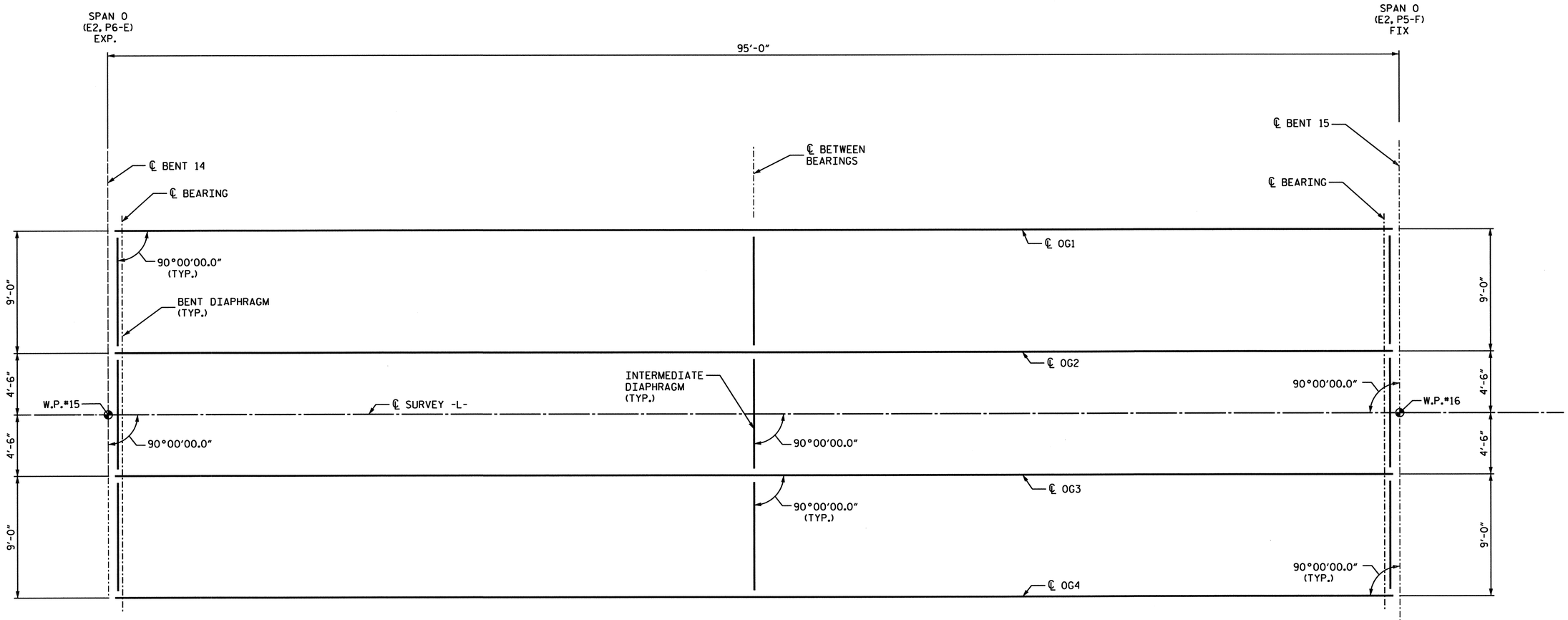

GIRDER LAYOUT - SPAN 0

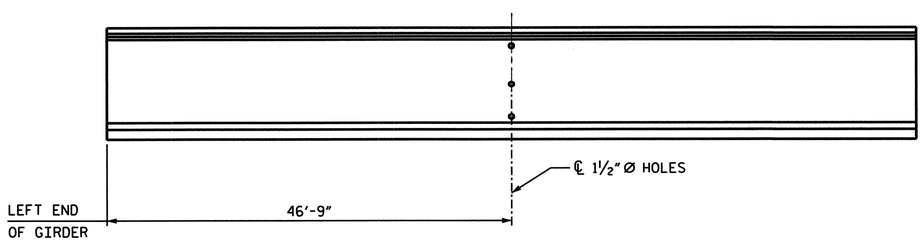

ELEVATION

PROJECT NO. B-682

BRUNSWICK COUNTY

STATION: 47+08.03 -L- POT

SHEET 8 OF 13

STATE OF NORTH CAROLINA
DEPARTMENT OF TRANSPORTATION
RALEIGH

SUPERSTRUCTURE

FRAMING PLAN
PLAN OF SPAN 0

NORTH CAROLINA PROFESSIONAL SEAL 15832 ENGINEER JOEL A. LEE 1-17-07

PLANS PREPARED BY:

PARSONS
TRANSPORTATION GROUP
Engineers and Planners
RALEIGH, NORTH CAROLINA

JOB NO. 645615

DWG. NO.

REVISIONS						SHEET NO.
NO.	BY:	DATE:	NO.	BY:	DATE:	5-72
1			3			TOTAL SHEETS
2			4			207

DRAWN BY : D. H. Carter DATE : JULY 2006
CHECKED BY : J. A. Lee DATE : JULY 2006

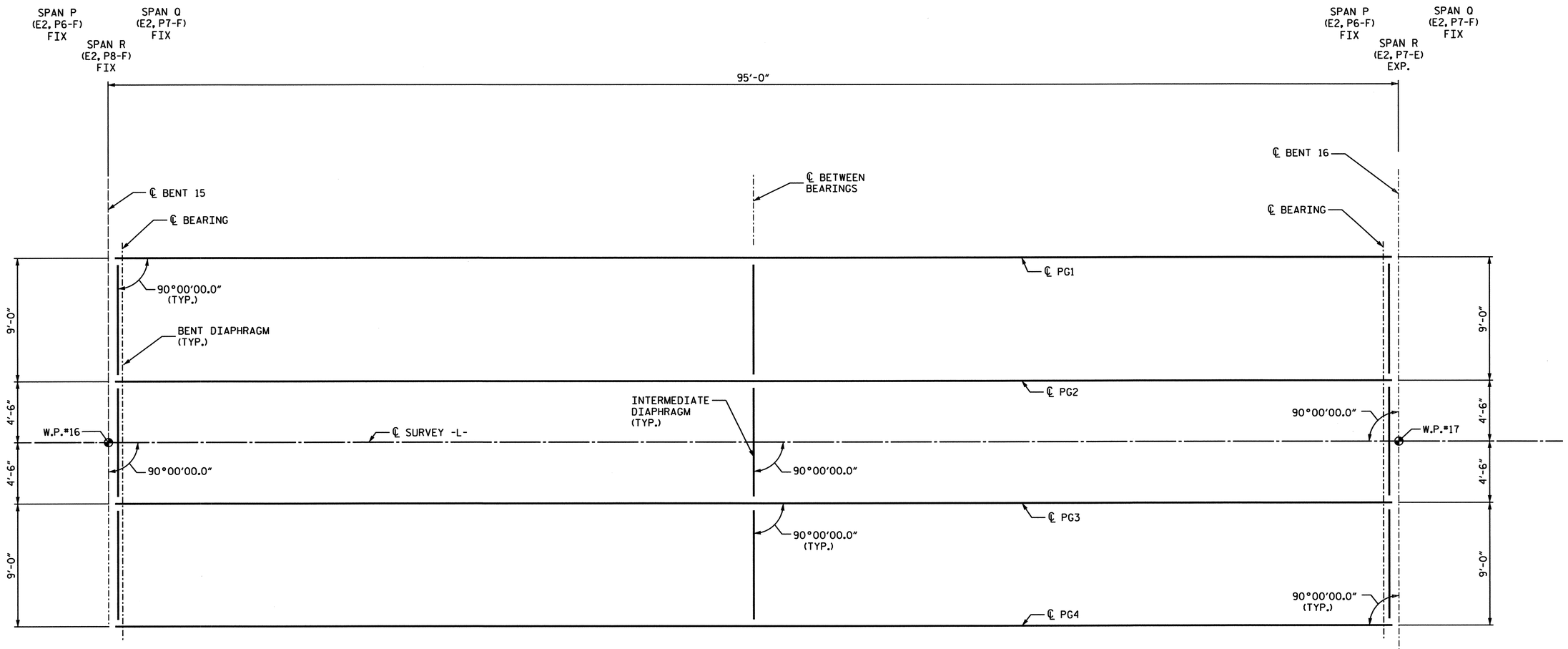

GIRDER LAYOUT - SPANS P,Q & R

SPAN P SHOWN, SPANS Q & R SIMILAR

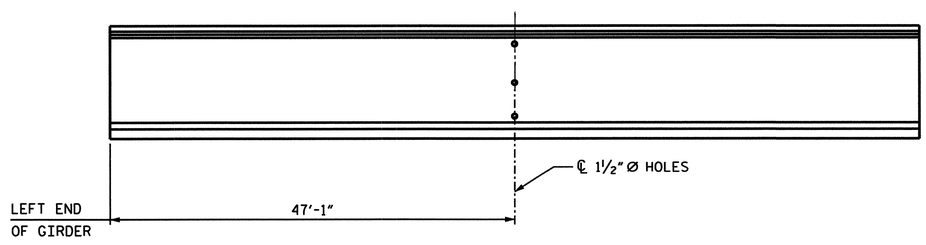

ELEVATION

PROJECT NO. B-682

BRUNSWICK COUNTY

STATION: 47+08.03 -L- POT

SHEET 9 OF 13

NORTH CAROLINA PROFESSIONAL SEAL 15832 ENGINEER JOEL A. LEE 1-17-07

PLANS PREPARED BY:

PARSONS TRANSPORTATION GROUP
Engineers and Planners
RALEIGH, NORTH CAROLINA

JOB NO. 645615

DWG. NO.

STATE OF NORTH CAROLINA
DEPARTMENT OF TRANSPORTATION
RALEIGH

SUPERSTRUCTURE

FRAMING PLAN
PLAN OF SPANS P,Q & R

REVISIONS						
NO.	BY:	DATE:	NO.	BY:	DATE:	
1			3			
2			4			

SHEET NO. 5-73

TOTAL SHEETS 207

DRAWN BY : D. H. Carter DATE : JULY 2006
CHECKED BY : J. A. Lee DATE : JULY 2006

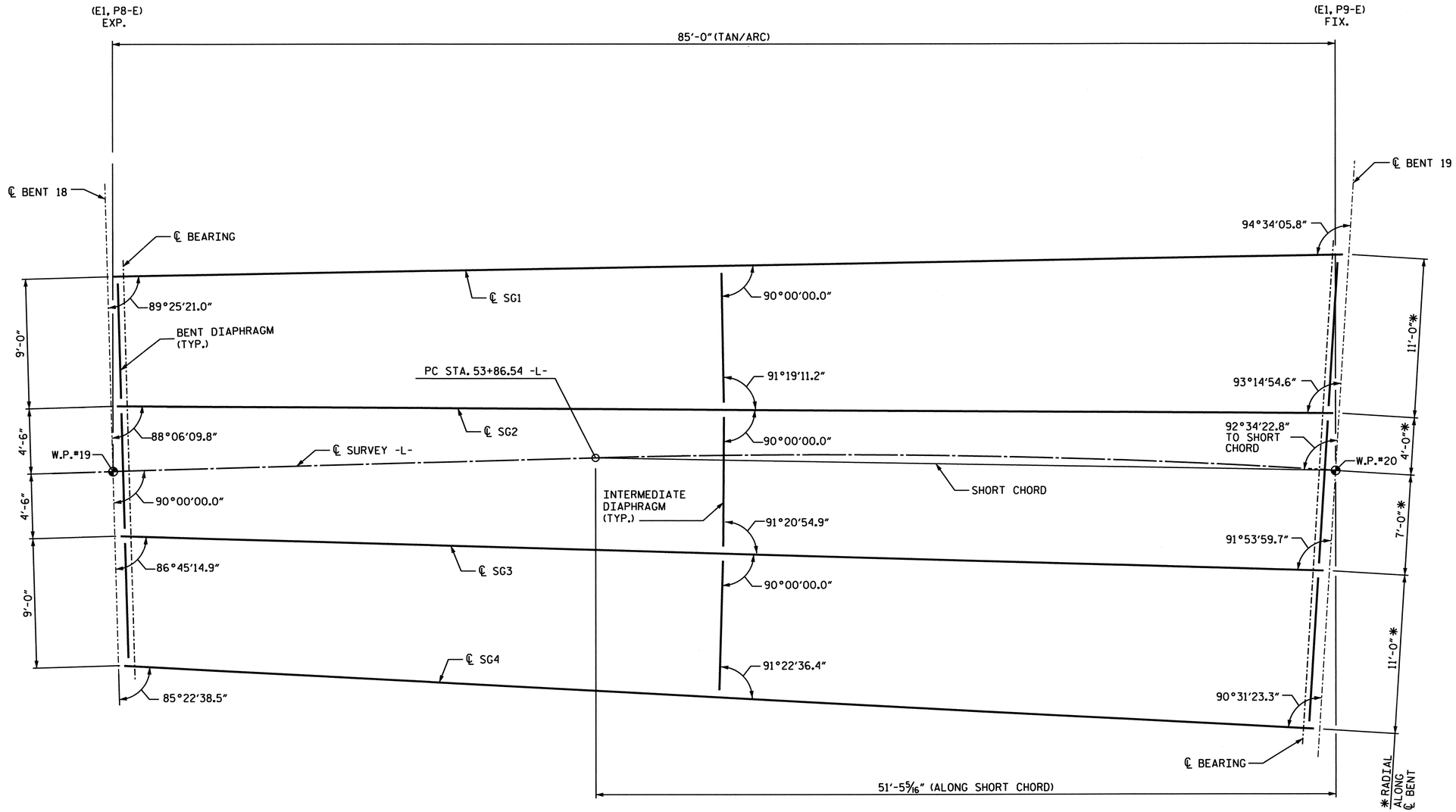

GIRDER LAYOUT - SPAN S

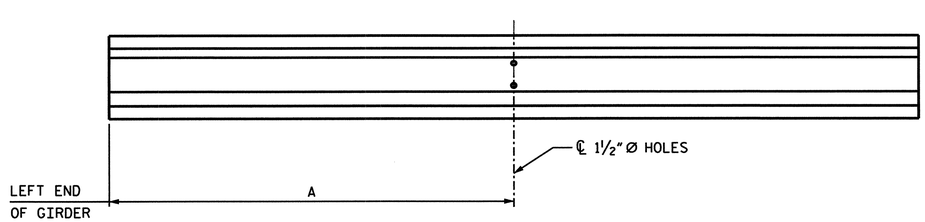

GIRDER	A
S1	43'-2"
S2	42'-8⅞"
S3	42'-4"
S4	41'-2¾"

ELEVATION

PROJECT NO. B-682

BRUNSWICK COUNTY

STATION: 47+08.03 -L- POT

SHEET 10 OF 13

NORTH CAROLINA PROFESSIONAL SEAL 15832 JOEL A. LEE

1-17-07

PLANS PREPARED BY:

PARSONS
TRANSPORTATION GROUP
Engineers and Planners
RALEIGH, NORTH CAROLINA

JOB NO. 645615

DWG. NO.

STATE OF NORTH CAROLINA
DEPARTMENT OF TRANSPORTATION
RALEIGH

SUPERSTRUCTURE

FRAMING PLAN
PLAN OF SPAN S

REVISIONS								SHEET NO.
NO.	BY:	DATE:	NO.	BY:	DATE:			S-74
1			3					TOTAL SHEETS
2			4					207

DRAWN BY : D. H. Carter DATE : JULY 2006
CHECKED BY : J. A. Lee DATE : JULY 2006

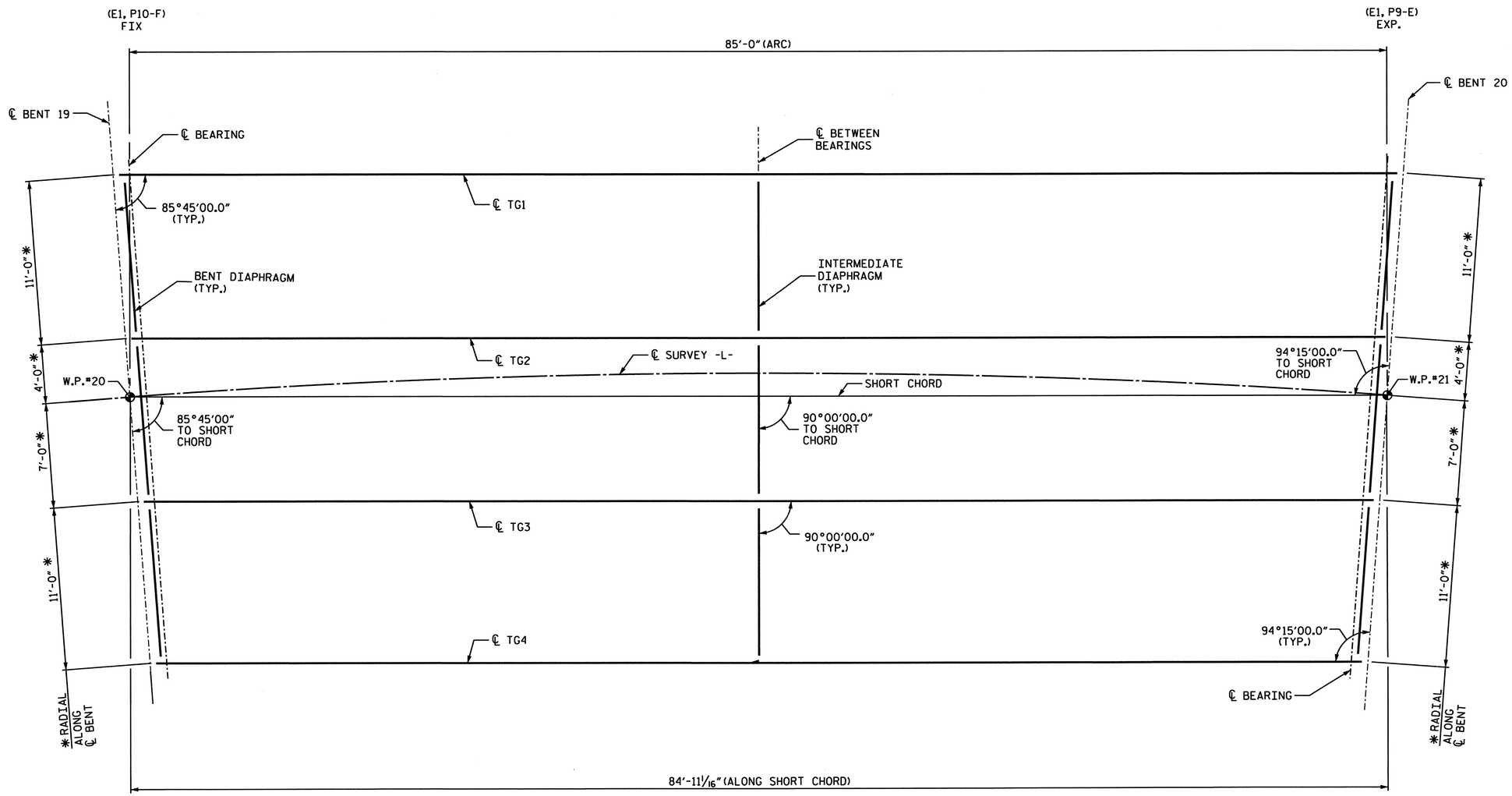

GIRDER LAYOUT - SPAN T

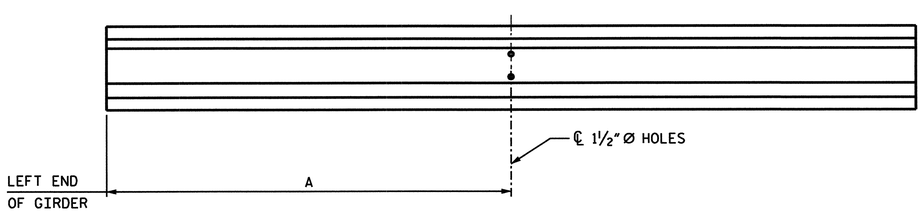

GIRDER	A
T1	43'-1 13/16"
T2	42'-4 1/16"
T3	41'-6 1/4"
T4	40'-8 1/2"

ELEVATION

PROJECT NO. B-682

BRUNSWICK COUNTY

STATION: 47+08.03 -L- POT

SHEET 11 OF 13

NORTH CAROLINA PROFESSIONAL SEAL 15832 ENGINEER JOEL A. LEE
1-17-07

PLANS PREPARED BY:

PARSONS
TRANSPORTATION GROUP
Engineers and Planners
RALEIGH, NORTH CAROLINA

JOB NO. 645615

DWG. NO.

STATE OF NORTH CAROLINA
DEPARTMENT OF TRANSPORTATION
RALEIGH

SUPERSTRUCTURE

FRAMING PLAN
PLAN OF SPAN T

REVISIONS								SHEET NO.
NO.	BY:	DATE:	NO.	BY:	DATE:			5-75
1			3					TOTAL SHEETS
2			4					207

DRAWN BY : D. H. Carter DATE : JULY 2006
CHECKED BY : J. A. Lee DATE : JULY 2006

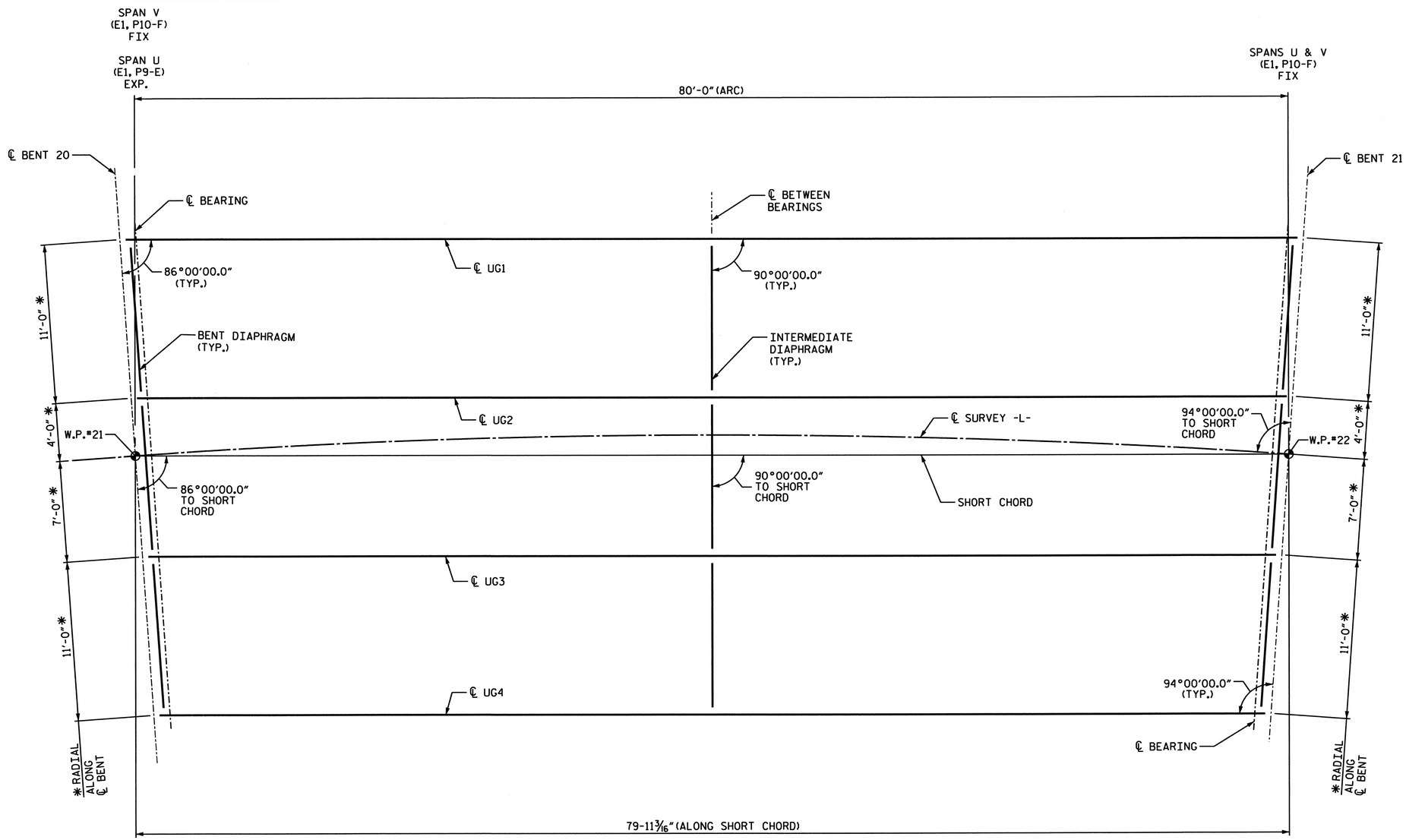

GIRDER LAYOUT - SPANS U & V

SPAN U SHOWN, SPAN V SIMILAR

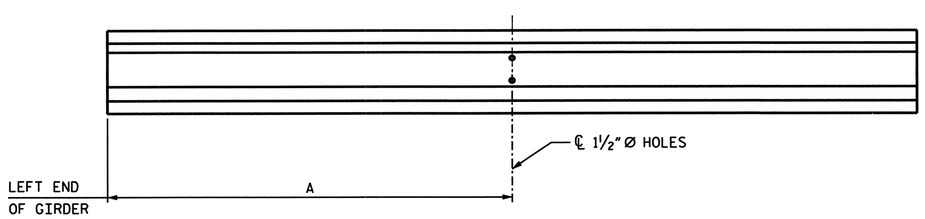

GIRDER	A
U1	40'-7 1/8"
U2	39'-9 15/16"
U3	39'-0 11/16"
U4	38'-3 1/2"

ELEVATION

PROJECT NO. B-682

BRUNSWICK COUNTY

STATION: 47+08.03 -L- POT

SHEET 12 OF 13

STATE OF NORTH CAROLINA
DEPARTMENT OF TRANSPORTATION
RALEIGH

SUPERSTRUCTURE

FRAMING PLAN
PLAN OF SPANS U & V

NORTH CAROLINA PROFESSIONAL SEAL 15832 ENGINEER JOEL A. LEE 1.17.07

PLANS PREPARED BY:

PARSONS TRANSPORTATION GROUP
Engineers and Planners
RALEIGH, NORTH CAROLINA

JOB NO. 645615

DWG. NO.

REVISIONS							
NO.	BY:	DATE:	NO.	BY:	DATE:		
1			3				
2			4				

SHEET NO. 5-76

TOTAL SHEETS 207

DRAWN BY : D. H. Carter DATE : JULY 2006
CHECKED BY : J. A. Lee DATE : JULY 2006

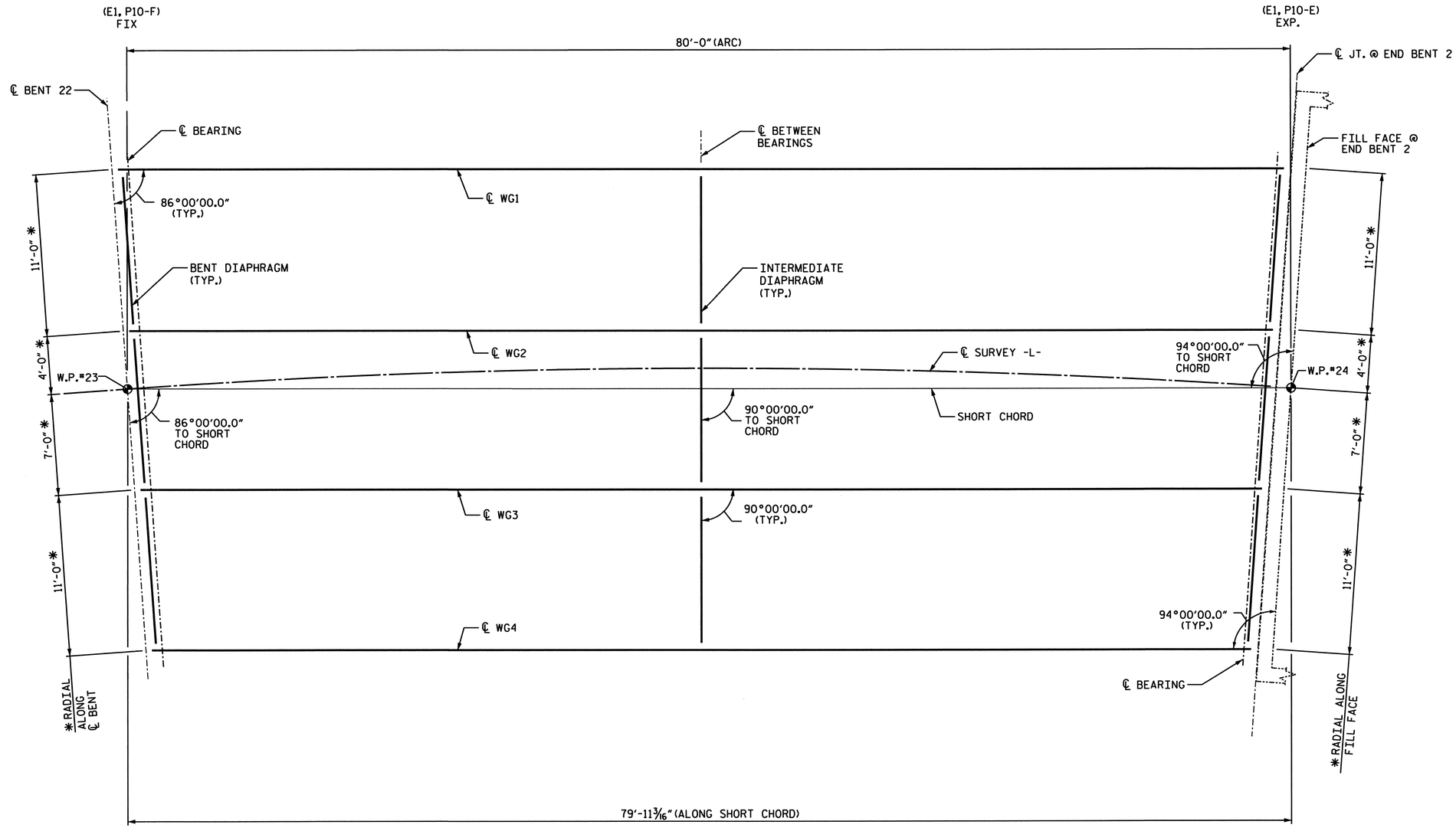

GIRDER LAYOUT - SPAN W

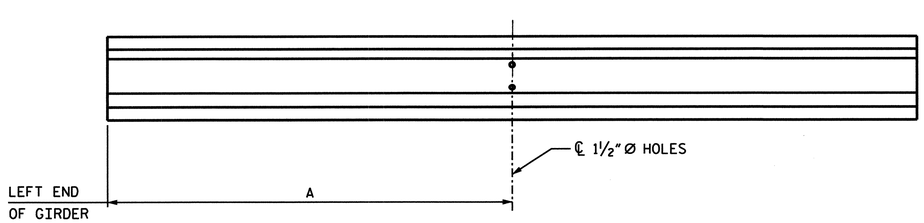

GIRDER	A
W1	40'-1 7/8"
W2	39'-4 5/8"
W3	38'-7 7/16"
W4	37'-10 1/4"

ELEVATION

PROJECT NO. B-682

BRUNSWICK COUNTY

STATION: 47+08.03 -L- POT

SHEET 13 OF 13

NORTH CAROLINA PROFESSIONAL SEAL 15832 ENGINEER JOEL A. LEE 1-17-07

PLANS PREPARED BY:

PARSONS TRANSPORTATION GROUP
Engineers and Planners
RALEIGH, NORTH CAROLINA

JOB NO. 645615

DWG. NO.

STATE OF NORTH CAROLINA
DEPARTMENT OF TRANSPORTATION
RALEIGH

SUPERSTRUCTURE

FRAMING PLAN
PLAN OF SPAN W

REVISIONS						SHEET NO.
NO.	BY:	DATE:	NO.	BY:	DATE:	S-77
1			3			TOTAL SHEETS
2			4			207

DRAWN BY : D. H. Carter DATE : JULY 2006
CHECKED BY : J. A. Lee DATE : JULY 2006

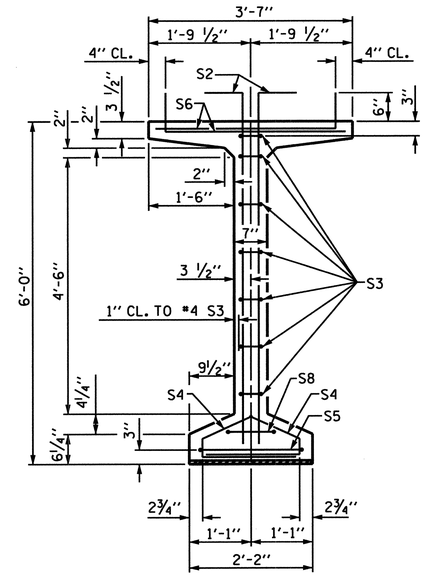

SECTION A-A

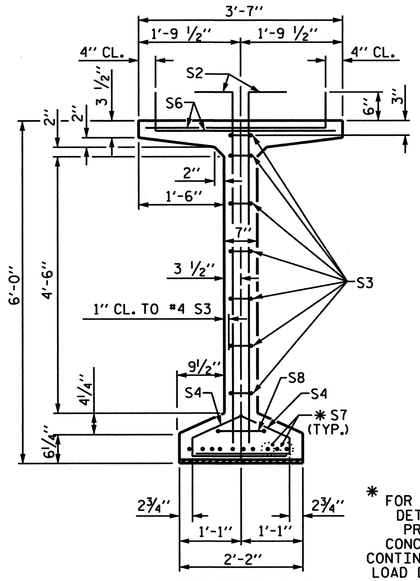

SECTION B-B

* FOR S7 BARS. SEE DETAIL "C" OF PRESTRESSED CONCRETE GIRDER CONTINUOUS FOR LIVE LOAD DETAILS SHEET

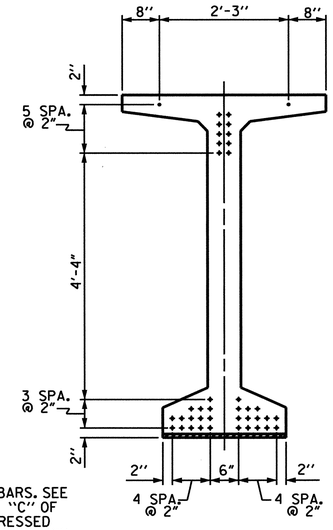

AT END OF GIRDER

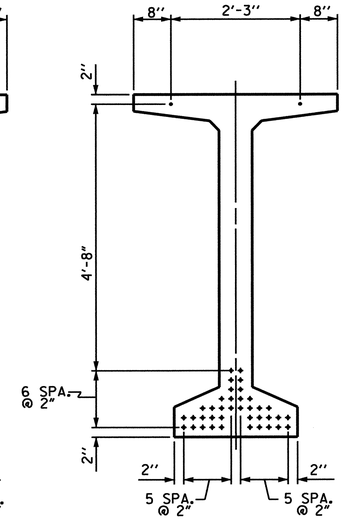

AT ℄ OF GIRDER

0.60 " Ø LOW RELAXATION STRAND LAYOUT

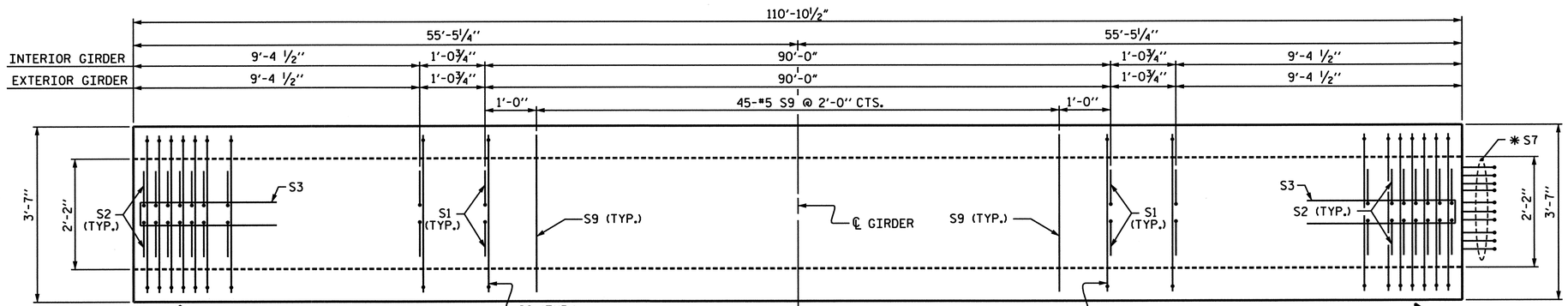

PLAN OF GIRDER

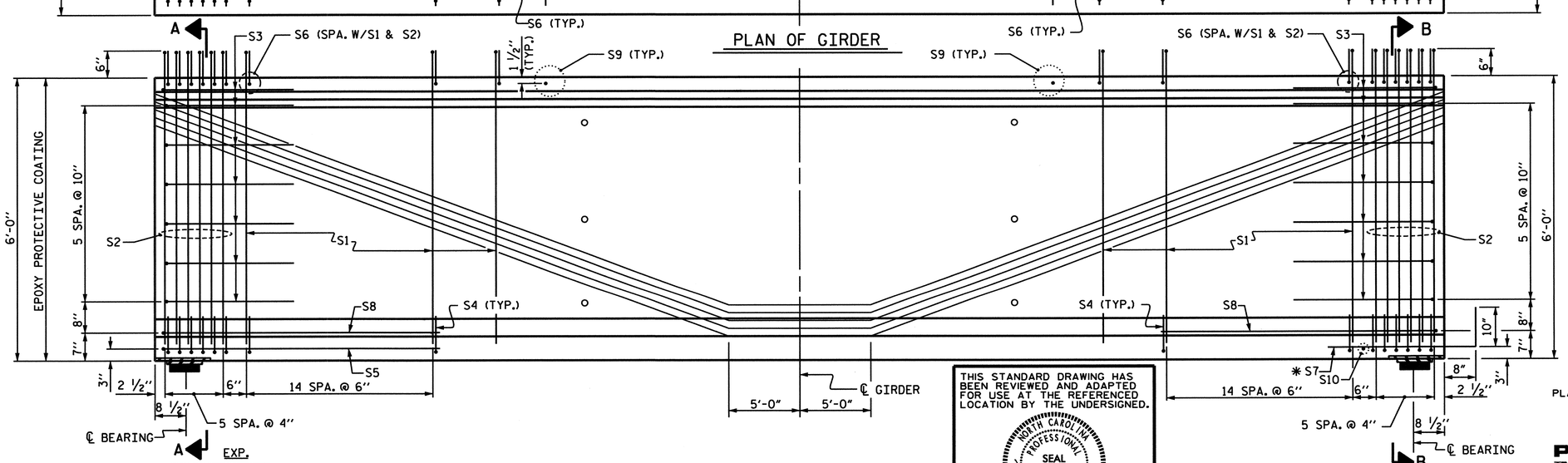

ELEVATION OF GIRDER

FOR LOCATION OF HOLES IN GIRDER WEB, SEE INTERMEDIATE STEEL DIAPHRAGM SHEET

THIS STANDARD DRAWING HAS BEEN REVIEWED AND ADAPTED FOR USE AT THE REFERENCED LOCATION BY THE UNDERSIGNED.

NORTH CAROLINA PROFESSIONAL SEAL 15832 ENGINEER JOEL A. LEE

1-17-07

0.60" Ø L. R. GRADE 270 STRANDS

AREA (SQUARE INCHES)	ULTIMATE STRENGTH (LBS. PER STRAND)	APPLIED PRESTRESS (LBS. PER STRAND)
0.217	58,600	43,950

REINFORCING STEEL FOR ONE GIRDER

	BAR	NUMBER	SIZE	TYPE	LENGTH	WEIGHT
INTERIOR GDR.	S1	152	#4	1	6'-10"	694
EXTERIOR GDR.	S1	152	#4	1	6'-10"	694
	S2	24	#5	1	6'-10"	171
	S3	14	#4	2	8'-5"	79
	S4	84	#4	3	3'-0"	168
	S5	1	#5	2	9'-10"	10
INTERIOR GDR.	S6	176	#5	1	3'-9"	688
EXTERIOR GDR.	S6	176	#5	1	3'-9"	688
	* S7	10	#5	STR	3'-8"	38
	S8	2	#5	2	9'-0"	19
	S9	45	#5	STR	3'-3"	153
	S10	1	#3	STR	1'-10"	1

* NOTE: S7 BARS SHALL BE BENT BEFORE SHIPMENT. HEAT BENDING SHALL NOT BE ALLOWED.

BAR TYPES

ALL BAR DIMENSIONS ARE OUT-TO-OUT

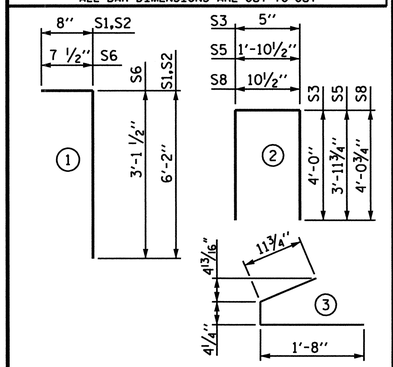

QUANTITIES FOR ONE GIRDER

	REINFORCING STEEL LB.	8,000 PSI CONCRETE C.Y.	0.60" Ø L.R. STRANDS No.
INTERIOR GIRDER	2021	23.8	40
EXTERIOR GIRDER	2021	23.8	40

GIRDERS REQUIRED

NUMBER	LENGTH	TOTAL LENGTH
4	110.875'	443.500'

PROJECT NO. B-682

BRUNSWICK COUNTY

STATION: 47+08.03 -L- POT

SHEET 1 OF 21

STATE OF NORTH CAROLINA
DEPARTMENT OF TRANSPORTATION
RALEIGH

STANDARD

72" PRESTRESSED CONCRETE MODIFIED BULB TEE CONTINUOUS FOR LIVE LOAD SPAN A

PLANS PREPARED BY:

PARSONS TRANSPORTATION GROUP
Engineers and Planners
RALEIGH, NORTH CAROLINA

JOB NO. 645615

DWG. NO.

REVISIONS						
NO.	BY:	DATE:	NO.	BY:	DATE:	
1			3			
2			4			

SHEET NO. S-78

TOTAL SHEETS 207

STD. NO. PCG10

ASSEMBLED BY : D. H. Carter		DATE : JULY 2005	
CHECKED BY : J. A. Lee		DATE : JULY 2005	
DRAWN BY : EEM 2/6/97	REV. 8/16/99	RWW/LES	
CHECKED BY : VAP 2/6/97	REV. 10/17/00	RWW/LES	
	REV. 5/1/06	TLA/GM	

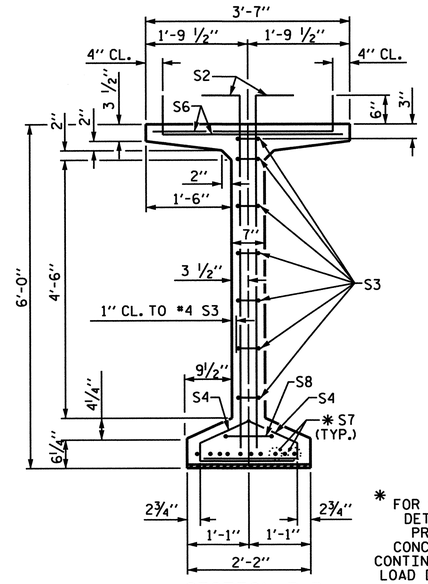

SECTION B-B

* FOR S7 BARS, SEE DETAIL "C" OF PRESTRESSED CONCRETE GIRDER CONTINUOUS FOR LIVE LOAD DETAILS SHEET

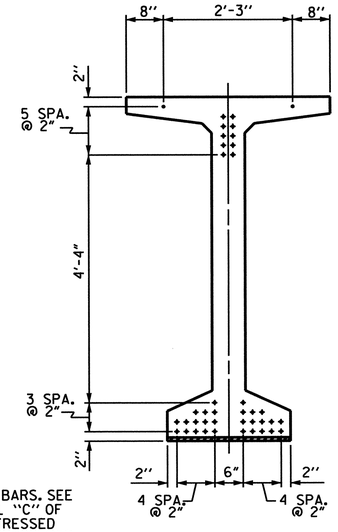

AT END OF GIRDER

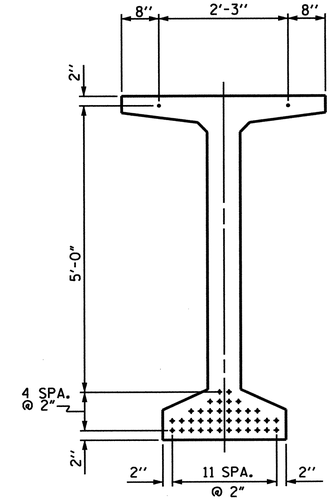

AT ℄ OF GIRDER

0.60 " Ø LOW RELAXATION STRAND LAYOUT

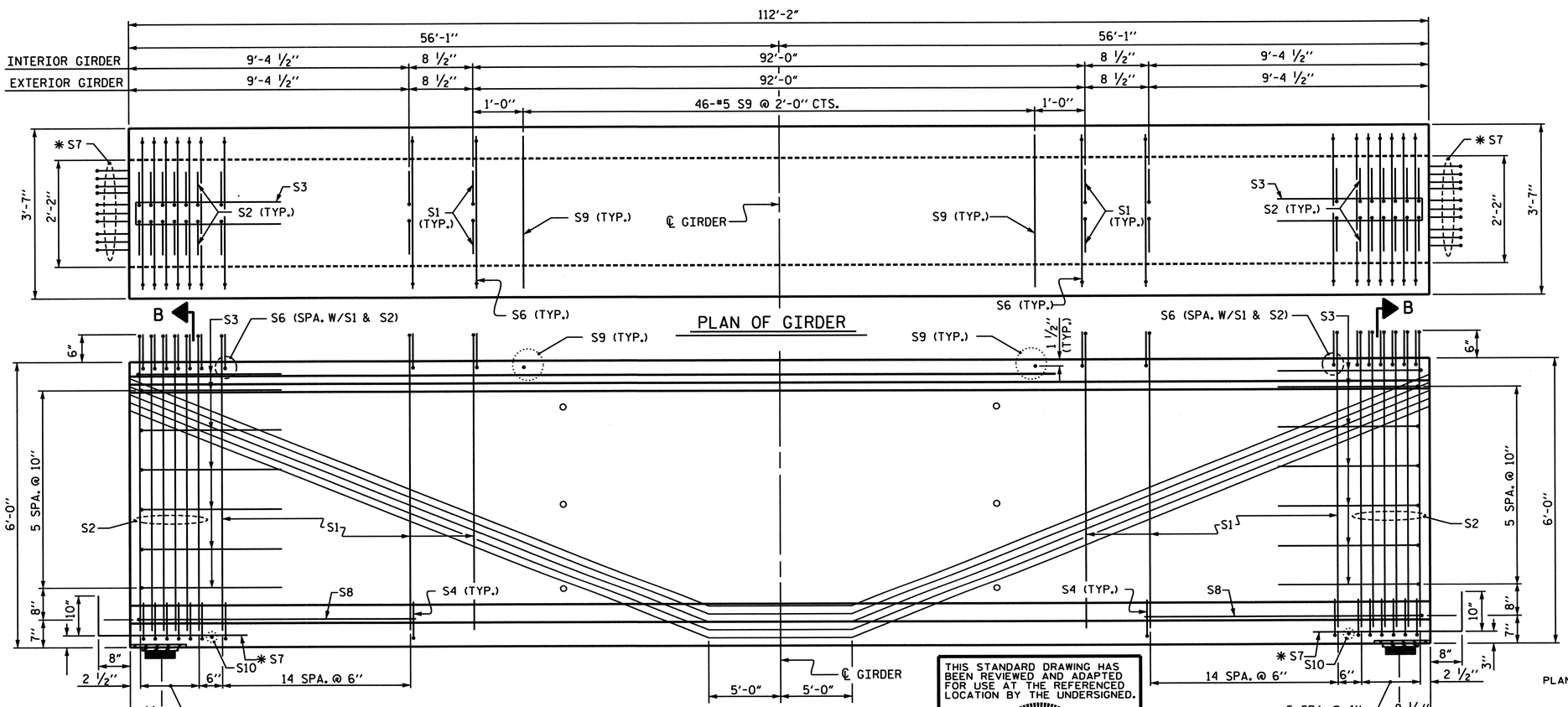

ELEVATION OF GIRDER

FOR LOCATION OF HOLES IN GIRDER WEB, SEE INTERMEDIATE STEEL DIAPHRAGM SHEET

0.60" Ø L. R. GRADE 270 STRANDS

AREA (SQUARE INCHES)	ULTIMATE STRENGTH (LBS. PER STRAND)	APPLIED PRESTRESS (LBS. PER STRAND)
0.217	58,600	43,950

REINFORCING STEEL FOR ONE GIRDER

	BAR	NUMBER	SIZE	TYPE	LENGTH	WEIGHT
INTERIOR GDR.	S1	154	#4	1	6'-10"	703
EXTERIOR GDR.	S1	154	#4	1	6'-10"	703
	S2	24	#5	1	6'-10"	171
	S3	14	#4	2	8'-5"	79
	S4	84	#4	3	3'-0"	168
	S5	1	#5	2	9'-10"	10
INTERIOR GDR.	S6	178	#5	1	3'-9"	696
EXTERIOR GDR.	S6	178	#5	1	3'-9"	696
	* S7	20	#5	STR	3'-8"	76
	S8	2	#5	2	9'-0"	19
	S9	46	#5	STR	3'-3"	156
	S10	1	#3	STR	1'-10"	1

* NOTE: S7 BARS SHALL BE BENT BEFORE SHIPMENT. HEAT BENDING SHALL NOT BE ALLOWED.

BAR TYPES

ALL BAR DIMENSIONS ARE OUT-TO-OUT

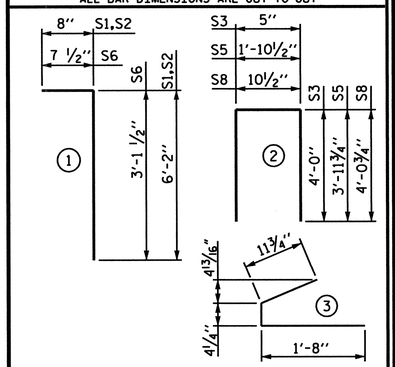

QUANTITIES FOR ONE GIRDER

	REINFORCING STEEL	8,000 PSI CONCRETE	0.60" Ø L.R. STRANDS
	LB.	C.Y.	No.
INTERIOR GIRDER	2079	24.0	40
EXTERIOR GIRDER	2079	24.0	40

GIRDERS REQUIRED

NUMBER	LENGTH	TOTAL LENGTH
4	112.167'	448.668'

PROJECT NO. B-682

BRUNSWICK COUNTY

STATION: 47+08.03 -L- POT

SHEET 2 OF 21

STATE OF NORTH CAROLINA
DEPARTMENT OF TRANSPORTATION
RALEIGH

STANDARD
72" PRESTRESSED CONCRETE
MODIFIED BULB TEE
CONTINUOUS FOR LIVE LOAD
SPAN B

THIS STANDARD DRAWING HAS BEEN REVIEWED AND ADAPTED FOR USE AT THE REFERENCED LOCATION BY THE UNDERSIGNED.

NORTH CAROLINA PROFESSIONAL SEAL 15832 ENGINEER JOEL A. LEE
1-17-07

PLANS PREPARED BY:

PARSONS TRANSPORTATION GROUP
Engineers and Planners
RALEIGH, NORTH CAROLINA

JOB NO. 645615
DWG. NO.

REVISIONS							
NO.	BY:	DATE:	NO.	BY:	DATE:	SHEET NO.	
1			3			S-79	
2			4			TOTAL SHEETS	
						207	

ASSEMBLED BY : D. H. Carter	DATE : JULY 2006		
CHECKED BY : J. A. Lee	DATE : JULY 2006		
DRAWN BY : EEM 2/6/97	REV. 8/16/99	RWW/LES	
CHECKED BY : VAP 2/6/97	REV. 10/17/00	RWW/LES	
	REV. 5/1/06	TLA/GM	

STD. NO. PCG10

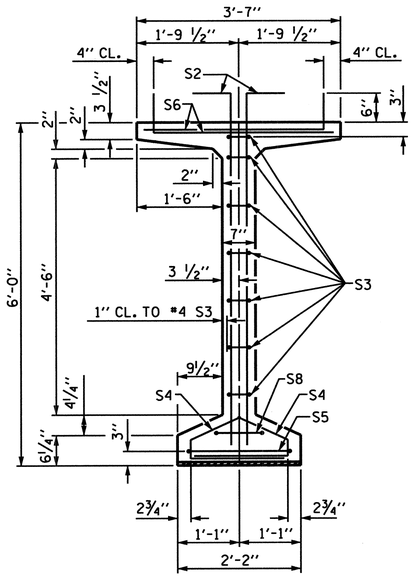

SECTION A-A

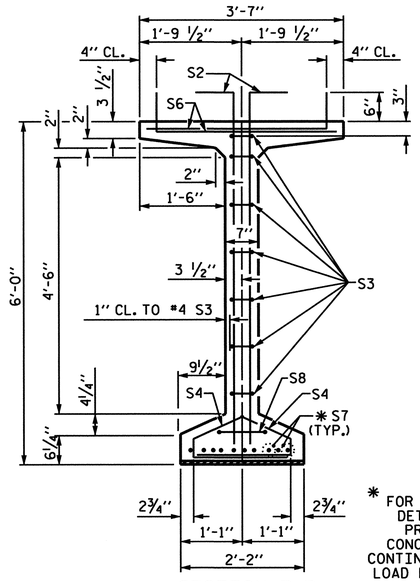

SECTION B-B

* FOR S7 BARS. SEE DETAIL "C" OF PRESTRESSED CONCRETE GIRDER CONTINUOUS FOR LIVE LOAD DETAILS SHEET

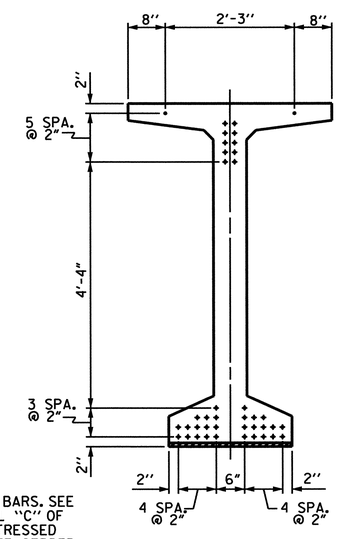

AT END OF GIRDER

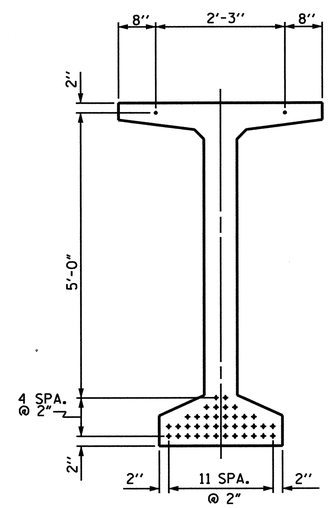

AT ℄ OF GIRDER

0.60 " Ø LOW RELAXATION STRAND LAYOUT

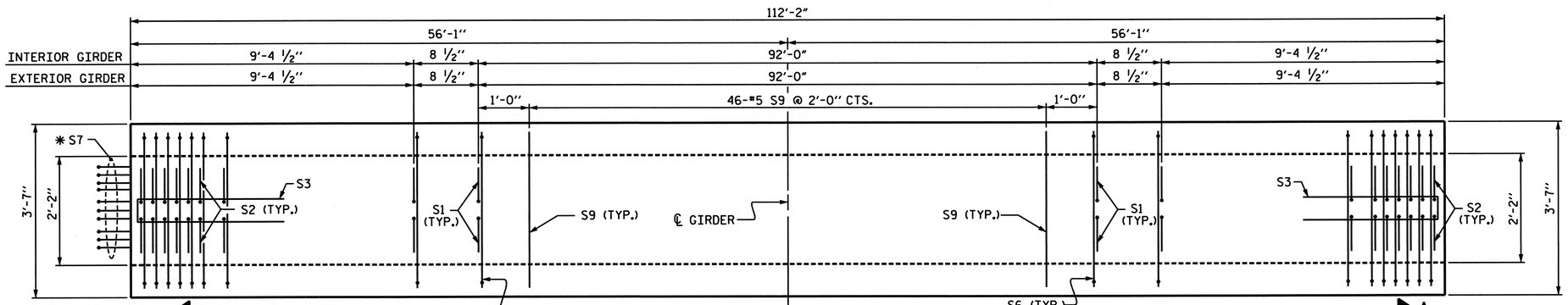

PLAN OF GIRDER

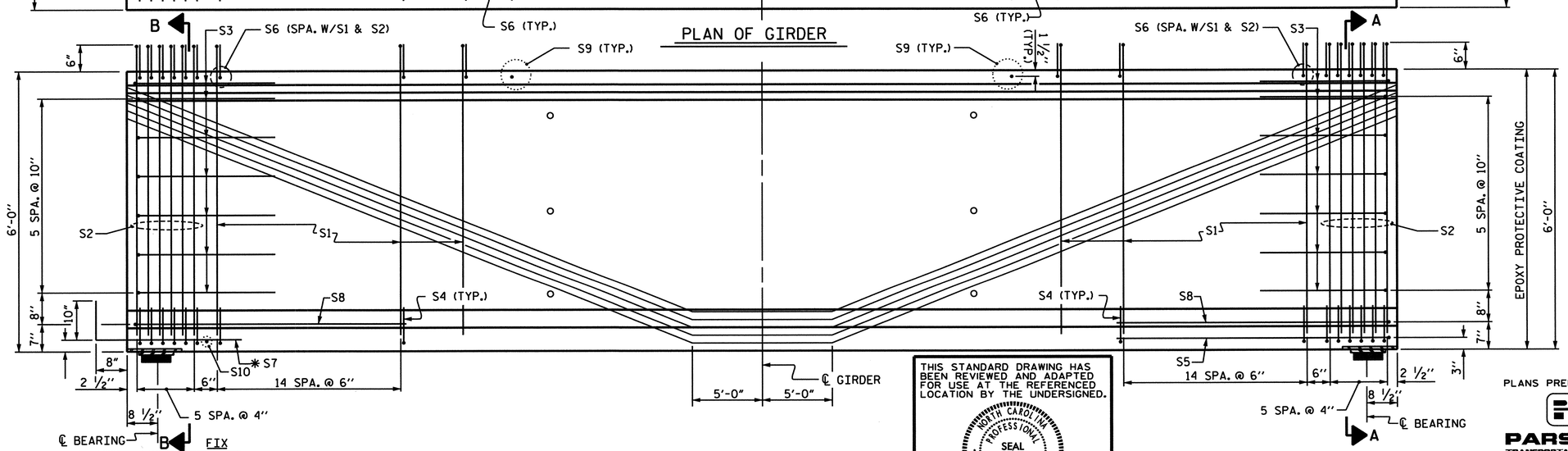

ELEVATION OF GIRDER

FOR LOCATION OF HOLES IN GIRDER WEB, SEE INTERMEDIATE STEEL DIAPHRAGM SHEET

THIS STANDARD DRAWING HAS BEEN REVIEWED AND ADAPTED FOR USE AT THE REFERENCED LOCATION BY THE UNDERSIGNED.

NORTH CAROLINA PROFESSIONAL SEAL 15832 ENGINEER JOEL A. LEE

1-17-07

0.60" Ø L. R. GRADE 270 STRANDS

AREA (SQUARE INCHES)	ULTIMATE STRENGTH (LBS. PER STRAND)	APPLIED PRESTRESS (LBS. PER STRAND)
0.217	58,600	43,950

REINFORCING STEEL FOR ONE GIRDER

	BAR	NUMBER	SIZE	TYPE	LENGTH	WEIGHT
INTERIOR GDR.	S1	154	#4	1	6'-10"	703
EXTERIOR GDR.	S1	154	#4	1	6'-10"	703
	S2	24	#5	1	6'-10"	171
	S3	14	#4	2	8'-5"	79
	S4	84	#4	3	3'-0"	168
	S5	1	#5	2	9'-10"	10
INTERIOR GDR.	S6	178	#5	1	3'-9"	696
EXTERIOR GDR.	S6	178	#5	1	3'-9"	696
	* S7	10	#5	STR	3'-8"	38
	S8	2	#5	2	9'-0"	19
	S9	46	#5	STR	3'-3"	156
	S10	1	#3	STR	1'-10"	1

* NOTE: S7 BARS SHALL BE BENT BEFORE SHIPMENT. HEAT BENDING SHALL NOT BE ALLOWED.

BAR TYPES

ALL BAR DIMENSIONS ARE OUT-TO-OUT

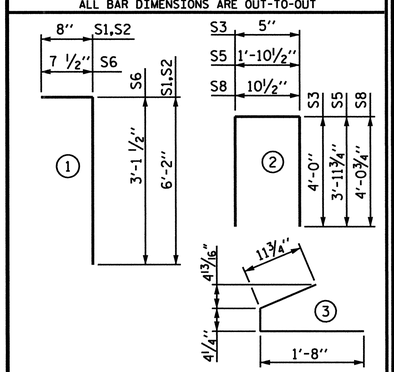

QUANTITIES FOR ONE GIRDER

	REINFORCING STEEL	8,000 PSI CONCRETE	0.60" Ø L.R. STRANDS
	LB.	C.Y.	No.
INTERIOR GIRDER	2041	24.0	40
EXTERIOR GIRDER	2041	24.0	40

GIRDERS REQUIRED

NUMBER	LENGTH	TOTAL LENGTH
4	112.167	448.668

PROJECT NO. B-682

BRUNSWICK COUNTY

STATION: 47+08.03 -L- POT

SHEET 3 OF 21

STATE OF NORTH CAROLINA
DEPARTMENT OF TRANSPORTATION
RALEIGH

STANDARD
72" PRESTRESSED CONCRETE MODIFIED BULB TEE CONTINUOUS FOR LIVE LOAD SPAN C

PLANS PREPARED BY:

PARSONS TRANSPORTATION GROUP
Engineers and Planners
RALEIGH, NORTH CAROLINA

JOB NO. 645615

DWG. NO.

REVISIONS							
NO.	BY:	DATE:	NO.	BY:	DATE:	SHEET NO.	
1			3			5-80	
2			4			TOTAL SHEETS 207	

STD. NO. PCG10

ASSEMBLED BY : D. H. Carter	DATE : JULY 2006		
CHECKED BY : J. A. Lee	DATE : JULY 2006		
DRAWN BY : EEM 2/6/97	REV. 8/16/99	RWW/LES	
CHECKED BY : VAP 2/6/97	REV. 10/17/00	RWW/LES	
	REV. 5/1/06	TLA/GM	

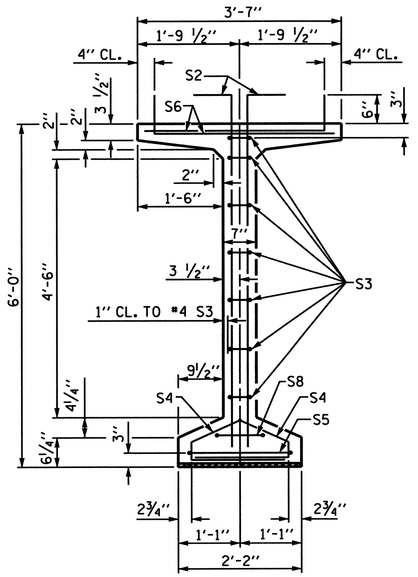

SECTION A-A

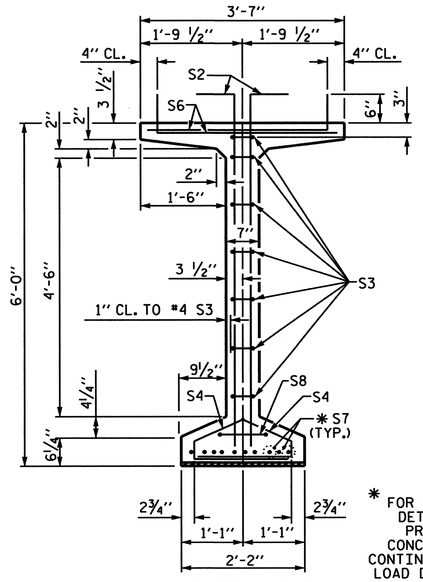

SECTION B-B

* FOR S7 BARS. SEE DETAIL "C" OF PRESTRESSED CONCRETE GIRDER CONTINUOUS FOR LIVE LOAD DETAILS SHEET

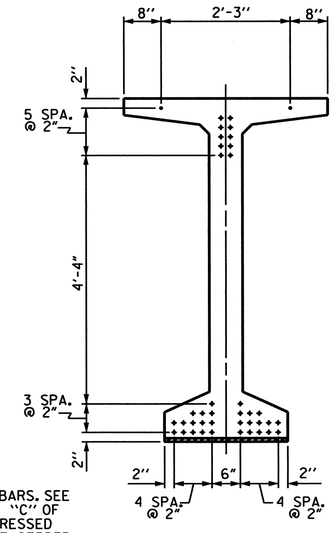

AT END OF GIRDER

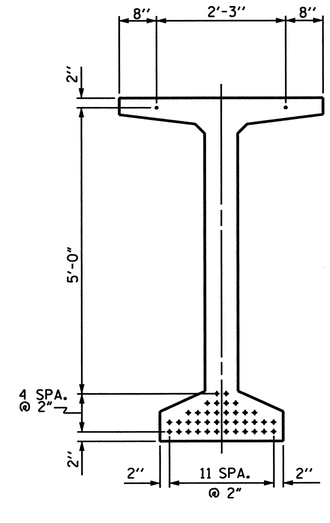

AT ℄ OF GIRDER

0.60 " Ø LOW RELAXATION STRAND LAYOUT

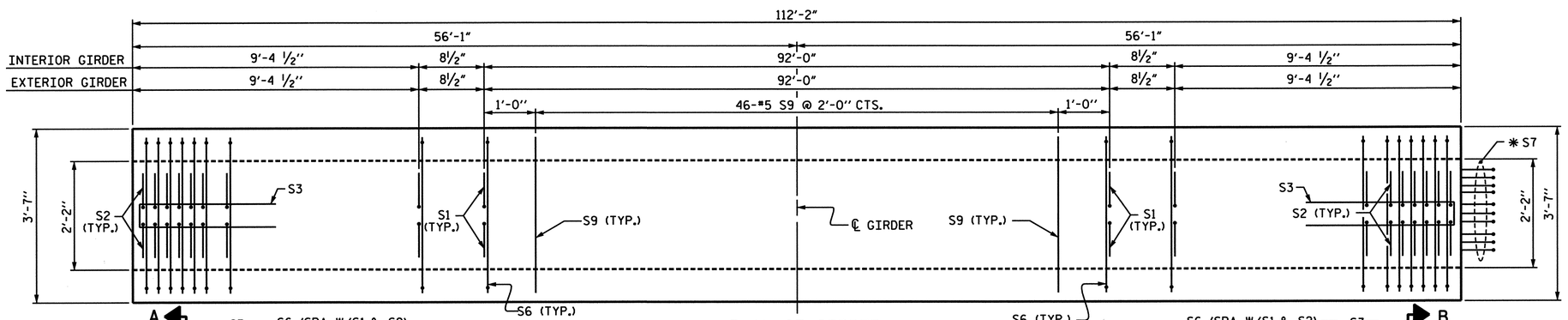

PLAN OF GIRDER

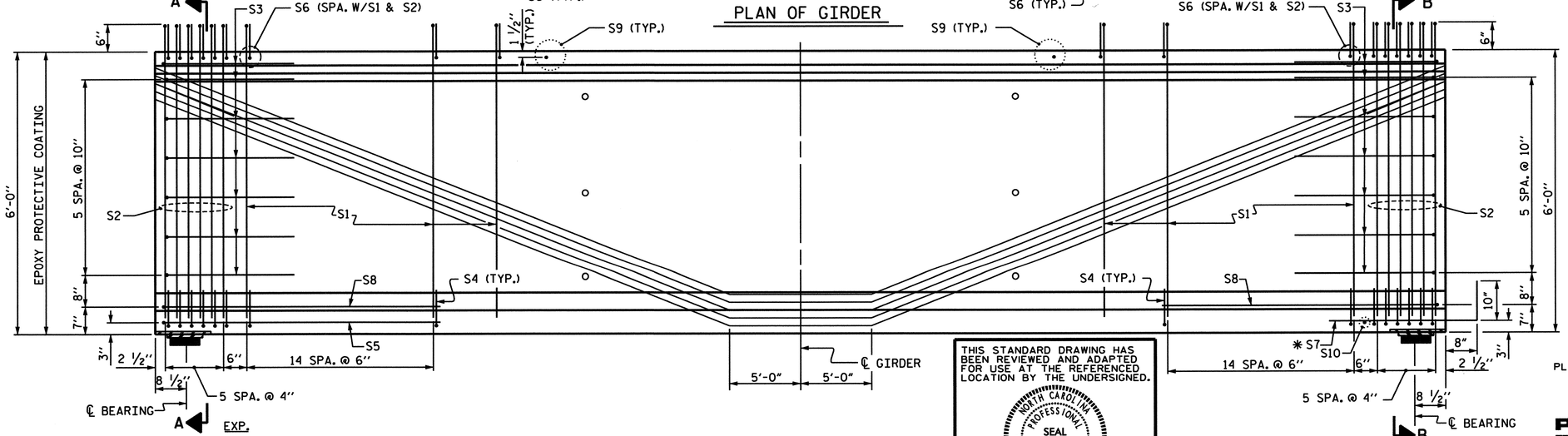

ELEVATION OF GIRDER

FOR LOCATION OF HOLES IN GIRDER WEB, SEE INTERMEDIATE STEEL DIAPHRAGM SHEET

THIS STANDARD DRAWING HAS BEEN REVIEWED AND ADAPTED FOR USE AT THE REFERENCED LOCATION BY THE UNDERSIGNED.

NORTH CAROLINA PROFESSIONAL SEAL 15832 ENGINEER JOELY A. LEE

1-17-07

0.60" Ø L. R. GRADE 270 STRANDS

AREA (SQUARE INCHES)	ULTIMATE STRENGTH (LBS. PER STRAND)	APPLIED PRESTRESS (LBS. PER STRAND)
0.217	58,600	43,950

REINFORCING STEEL FOR ONE GIRDER

	BAR	NUMBER	SIZE	TYPE	LENGTH	WEIGHT
INTERIOR GDR.	S1	154	#4	1	6'-10"	703
EXTERIOR GDR.	S1	154	#4	1	6'-10"	703
	S2	24	#5	1	6'-10"	171
	S3	14	#4	2	8'-5"	79
	S4	84	#4	3	3'-0"	168
	S5	1	#5	2	9'-10"	10
INTERIOR GDR.	S6	178	#5	1	3'-9"	696
EXTERIOR GDR.	S6	178	#5	1	3'-9"	696
	* S7	10	#5	STR	3'-8"	38
	S8	2	#5	2	9'-0"	19
	S9	46	#5	STR	3'-3"	156
	S10	1	#3	STR	1'-10"	1

* NOTE: S7 BARS SHALL BE BENT BEFORE SHIPMENT. HEAT BENDING SHALL NOT BE ALLOWED.

BAR TYPES

ALL BAR DIMENSIONS ARE OUT-TO-OUT

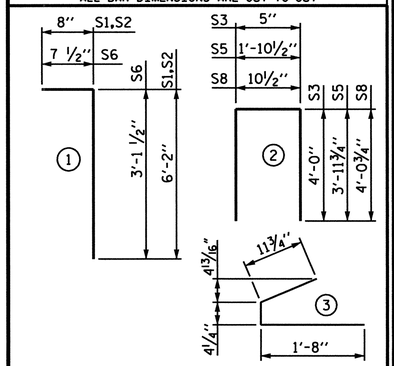

QUANTITIES FOR ONE GIRDER

	REINFORCING STEEL	8,000 PSI CONCRETE	0.60" Ø L.R. STRANDS
	LB.	C.Y.	No.
INTERIOR GIRDER	2041	24.0	40
EXTERIOR GIRDER	2041	24.0	40

GIRDERS REQUIRED

NUMBER	LENGTH	TOTAL LENGTH
4	112.167	448.668

PROJECT NO. B-682

BRUNSWICK COUNTY

STATION: 47+08.03 -L- POT

SHEET 4 OF 21

STATE OF NORTH CAROLINA
DEPARTMENT OF TRANSPORTATION
RALEIGH

STANDARD

72" PRESTRESSED CONCRETE MODIFIED BULB TEE CONTINUOUS FOR LIVE LOAD SPAN D

PLANS PREPARED BY:

PARSONS TRANSPORTATION GROUP
Engineers and Planners
RALEIGH, NORTH CAROLINA

JOB NO. 645615

DWG. NO.

REVISIONS							
NO.	BY:	DATE:	NO.	BY:	DATE:	SHEET NO.	5-81
1			3			TOTAL SHEETS	207
2			4				

STD. NO. PCG10

ASSEMBLED BY : D. H. Carter	DATE : JULY 2005		
CHECKED BY : J. A. Lee	DATE : JULY 2005		
DRAWN BY : EEM 2/6/97	REV. 8/16/99	RWW/LES	
CHECKED BY : VAP 2/6/97	REV. 10/17/00	RWW/LES	
	REV. 5/1/06	TLA/GM	

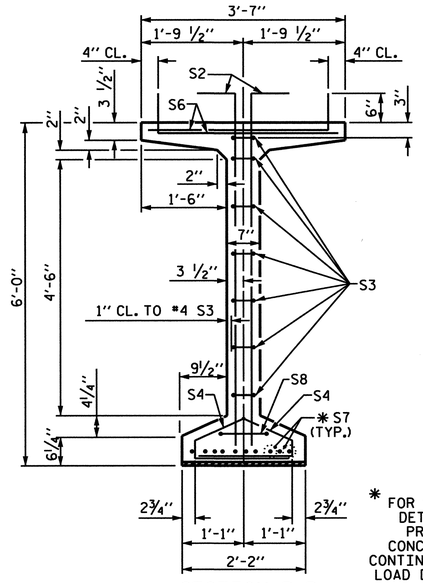

SECTION B-B

* FOR S7 BARS, SEE DETAIL "C" OF PRESTRESSED CONCRETE GIRDER CONTINUOUS FOR LIVE LOAD DETAILS SHEET

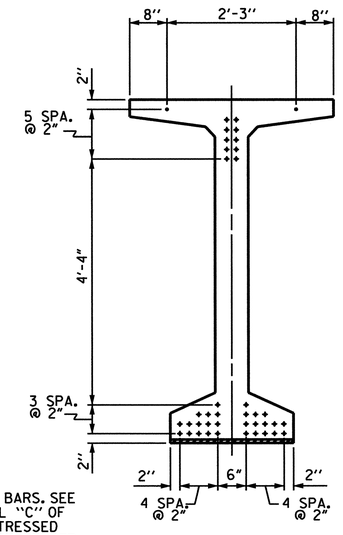

AT END OF GIRDER

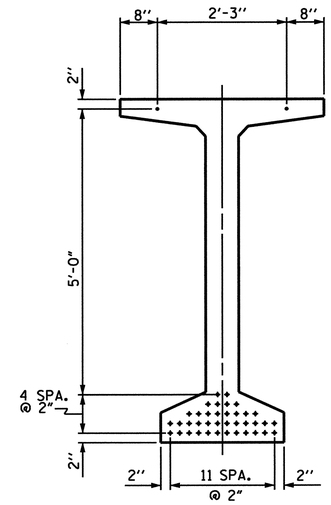

AT ℄ OF GIRDER

0.60 " Ø LOW RELAXATION STRAND LAYOUT

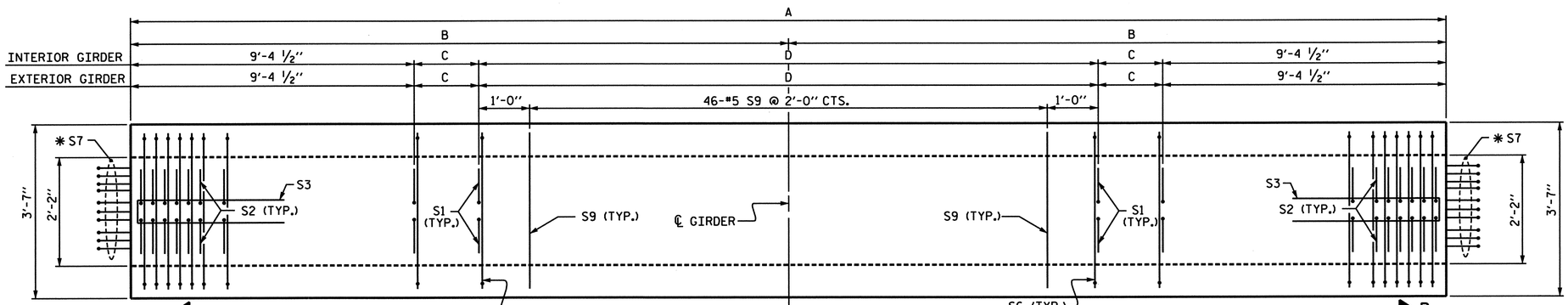

PLAN OF GIRDER

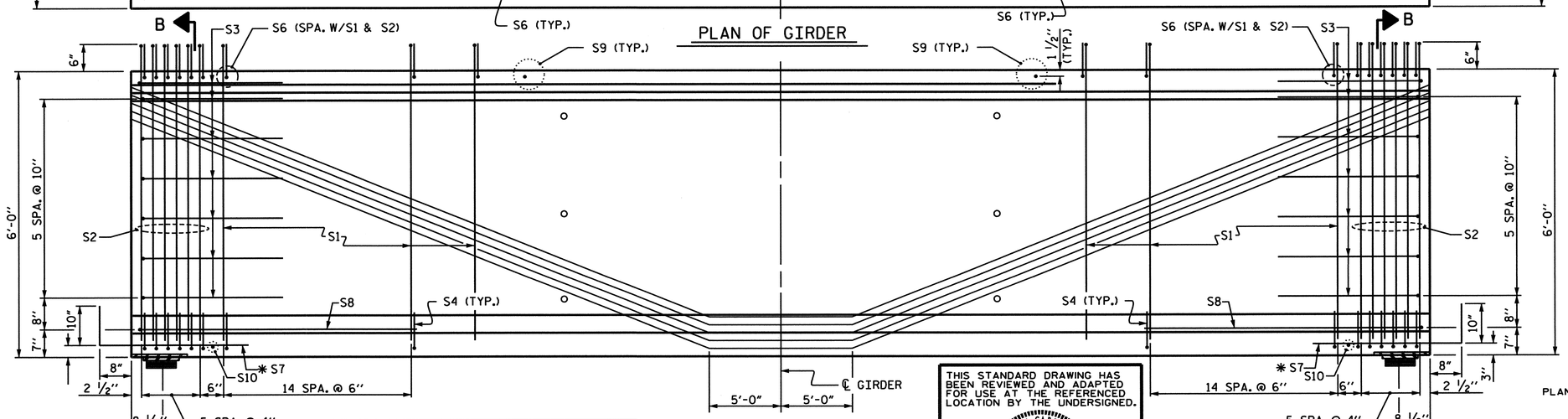

ELEVATION OF GIRDER

FOR LOCATION OF HOLES IN GIRDER WEB, SEE INTERMEDIATE STEEL DIAPHRAGM SHEET

GDR	A	B	C	D
E1	111'-11 3/8"	55'-11 11/16"	7 3/16"	92'-0"
E2	112'-1 1/8"	56'-0 9/16"	8 1/16"	92'-0"
E3	112'-2 3/4"	56'-1 3/8"	8 7/8"	92'-0"
E4	112'-4 1/2"	56'-2 1/4"	9 3/4"	92'-0"

THIS STANDARD DRAWING HAS BEEN REVIEWED AND ADAPTED FOR USE AT THE REFERENCED LOCATION BY THE UNDERSIGNED.

NORTH CAROLINA PROFESSIONAL SEAL 15832 ENGINEER LEONA A. LEE

1-17-07

0.60" Ø L. R. GRADE 270 STRANDS

AREA (SQUARE INCHES)	ULTIMATE STRENGTH (LBS. PER STRAND)	APPLIED PRESTRESS (LBS. PER STRAND)
0.217	58,600	43,950

GIRDER REINFORCING STEEL

	BAR	NUMBER	SIZE	TYPE	LENGTH	WEIGHT
INTERIOR GDR.	S1	154	#4	1	6'-10"	703
EXTERIOR GDR.	S1	154	#4	1	6'-10"	703
	S2	24	#5	1	6'-10"	171
	S3	14	#4	2	8'-5"	79
	S4	84	#4	3	3'-0"	168
	S5	1	#5	2	9'-10"	10
INTERIOR GDR.	S6	178	#5	1	3'-9"	696
EXTERIOR GDR.	S6	178	#5	1	3'-9"	696
	* S7	20	#5	STR	3'-8"	76
	S8	2	#5	2	9'-0"	19
	S9	46	#5	STR	3'-3"	156
	S10	1	#3	STR	1'-10"	1

* NOTE: S7 BARS SHALL BE BENT BEFORE SHIPMENT. HEAT BENDING SHALL NOT BE ALLOWED.

BAR TYPES

ALL BAR DIMENSIONS ARE OUT-TO-OUT

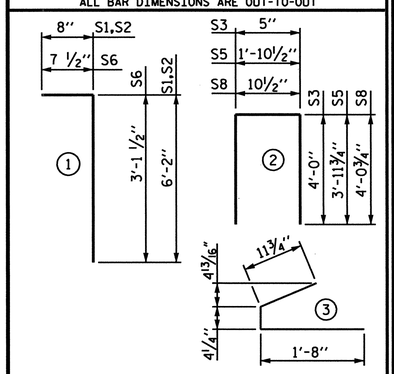

GIRDER QUANTITIES

	REINFORCING STEEL	8,000 PSI CONCRETE	0.60" Ø L.R. STRANDS
	LB.	C.Y.	No.
EXTERIOR-E1	2079	24.0	40
INTERIOR-E2	2079	24.0	40
INTERIOR-E3	2079	24.0	40
EXTERIOR-E4	2079	24.1	40

GIRDERS REQUIRED

NUMBER	LENGTH	TOTAL LENGTH
4	VARIES	448.656'

PROJECT NO. B-682

BRUNSWICK COUNTY

STATION: 47+08.03 -L- POT

SHEET 5 OF 21

STATE OF NORTH CAROLINA
DEPARTMENT OF TRANSPORTATION
RALEIGH

STANDARD
72" PRESTRESSED CONCRETE MODIFIED BULB TEE CONTINUOUS FOR LIVE LOAD SPAN E

PLANS PREPARED BY:
PARSONS TRANSPORTATION GROUP
Engineers and Planners
RALEIGH, NORTH CAROLINA
JOB NO. 645615
DWG. NO.

REVISIONS							
NO.	BY:	DATE:	NO.	BY:	DATE:	SHEET NO.	
1			3			S-82	
2			4			TOTAL SHEETS	
						207	

ASSEMBLED BY : D. H. Carter		DATE : JULY 2006	
CHECKED BY : J. A. Lee		DATE : JULY 2006	
DRAWN BY : EEM 2/6/97	REV. 8/16/99	RWW/LES	
CHECKED BY : VAP 2/6/97	REV. 10/17/00	RWW/LES	
	REV. 5/1/06	TLA/GM	

STD. NO. PCG10

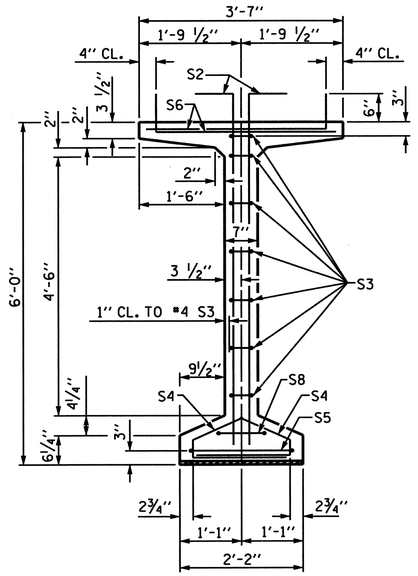

SECTION A-A

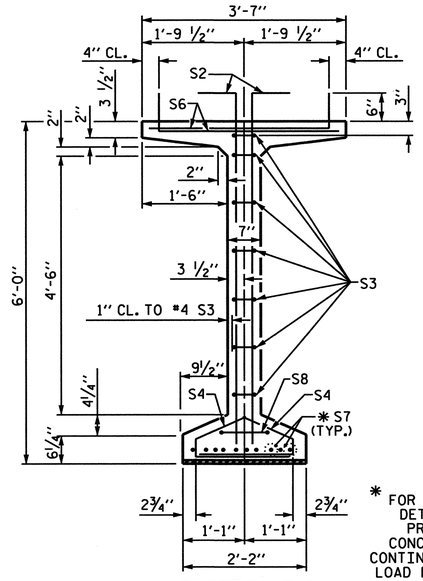

SECTION B-B

* FOR S7 BARS, SEE DETAIL "C" OF PRESTRESSED CONCRETE GIRDER CONTINUOUS FOR LIVE LOAD DETAILS SHEET

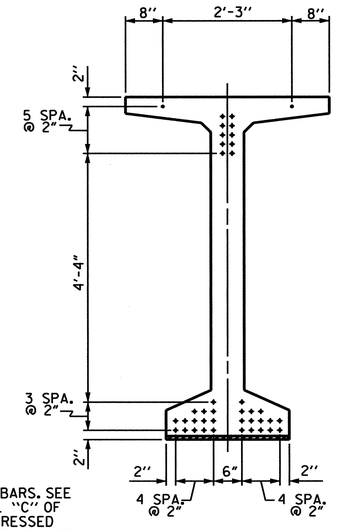

AT END OF GIRDER

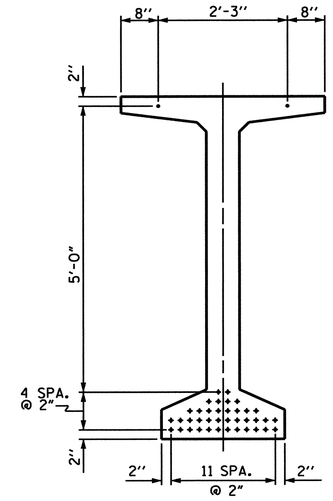

AT ℄ OF GIRDER

0.60 " Ø LOW RELAXATION STRAND LAYOUT

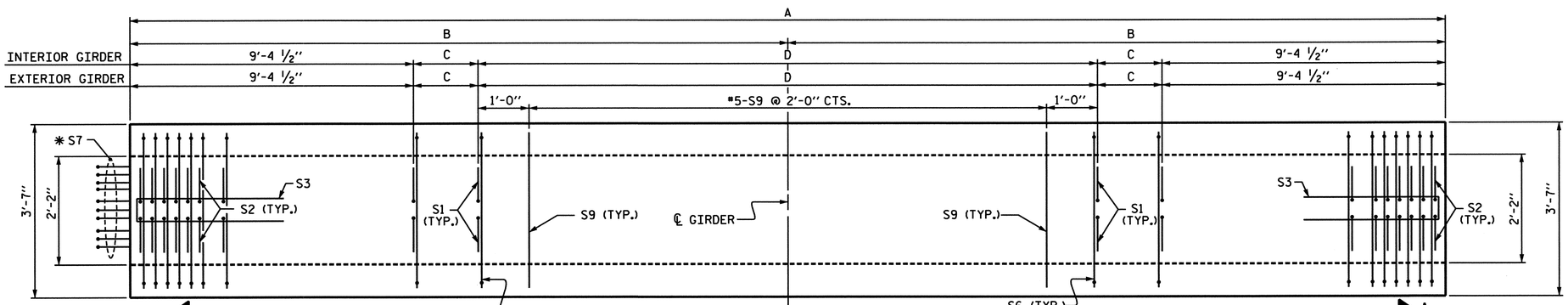

PLAN OF GIRDER

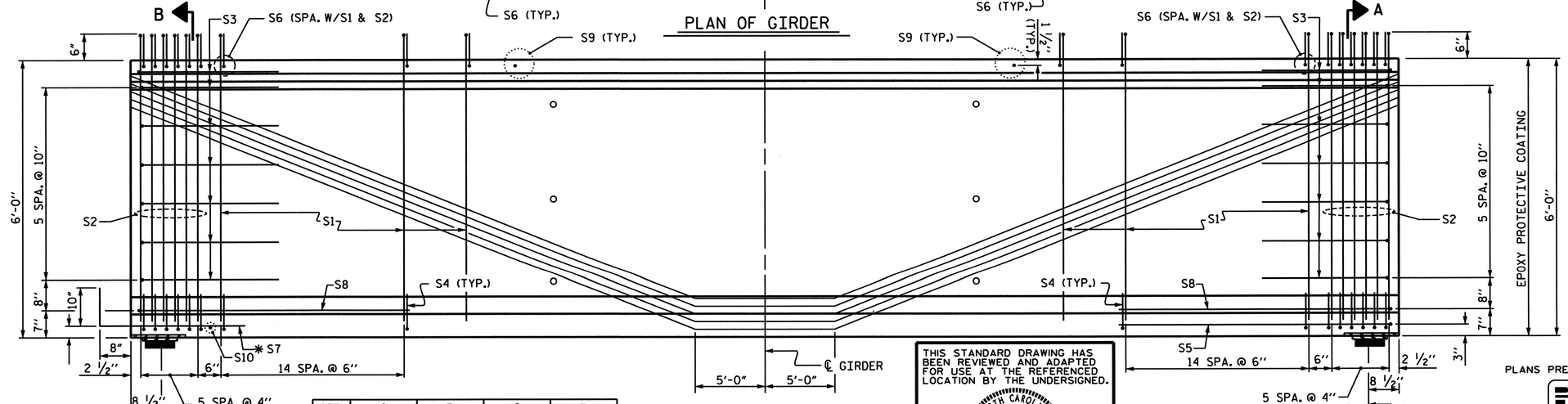

ELEVATION OF GIRDER

FOR LOCATION OF HOLES IN GIRDER WEB, SEE INTERMEDIATE STEEL DIAPHRAGM SHEET

GDR	A	B	C	D
F1	111'-5 7/8"	55'-8 15/16"	1'-4 7/16"	90'-0"
F2	111'-11 1/8"	55'-11 5/8"	7 1/8"	92'-0"
F3	112'-4 1/2"	56'-2 1/4"	9 3/4"	92'-0"
F4	112'-9 3/4"	56'-4 7/8"	1'-0 3/8"	92'-0"

THIS STANDARD DRAWING HAS BEEN REVIEWED AND ADAPTED FOR USE AT THE REFERENCED LOCATION BY THE UNDERSIGNED.

NORTH CAROLINA PROFESSIONAL SEAL 15832 ENGINEER JOEL A. LEE

1-17-07

0.60" Ø L. R. GRADE 270 STRANDS

AREA (SQUARE INCHES)	ULTIMATE STRENGTH (LBS. PER STRAND)	APPLIED PRESTRESS (LBS. PER STRAND)
0.217	58,600	43,950

GIRDER REINFORCING STEEL

	BAR	NUMBER	SIZE	TYPE	LENGTH	WEIGHT
GIRDER F1	S1	152	#4	1	6'-10"	694
GDR'S. F2, F3, F4	S1	154	#4	1	6'-10"	703
	S2	24	#5	1	6'-10"	171
	S3	14	#4	2	8'-5"	79
	S4	84	#4	3	3'-0"	168
	S5	1	#5	2	9'-10"	10
GIRDER F1	S6	176	#5	1	3'-9"	688
GDR'S. F2, F3, F4	S6	178	#5	1	3'-9"	696
	* S7	10	#5	STR	3'-8"	38
	S8	2	#5	2	9'-0"	19
GIRDER F1	S9	45	#5	STR	3'-3"	153
GDR'S. F2, F3, F4	S9	46	#5	STR	3'-3"	156
	S10	1	#3	STR	1'-10"	1

* NOTE: S7 BARS SHALL BE BENT BEFORE SHIPMENT. HEAT BENDING SHALL NOT BE ALLOWED.

BAR TYPES

ALL BAR DIMENSIONS ARE OUT-TO-OUT

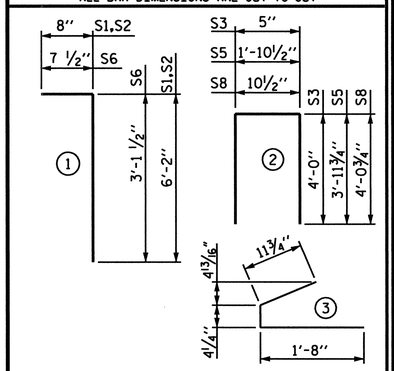

GIRDER QUANTITIES

	REINFORCING STEEL LB.	8,000 PSI CONCRETE C.Y.	0.60" Ø L.R. STRANDS No.
EXTERIOR-F1	2021	23.9	40
INTERIOR-F2	2041	23.9	40
INTERIOR-F3	2041	24.1	40
EXTERIOR-F4	2041	24.2	40

GIRDERS REQUIRED

NUMBER	LENGTH	TOTAL LENGTH
4	VARIES	448.604'

PROJECT NO. B-682

BRUNSWICK COUNTY

STATION: 47+08.03 -L- POT

SHEET 6 OF 21

STATE OF NORTH CAROLINA
DEPARTMENT OF TRANSPORTATION
RALEIGH

STANDARD
72" PRESTRESSED CONCRETE
MODIFIED BULB TEE
CONTINUOUS FOR LIVE LOAD
SPAN F

PLANS PREPARED BY:

PARSONS TRANSPORTATION GROUP
Engineers and Planners
RALEIGH, NORTH CAROLINA

JOB NO. 645615
DWG. NO.

REVISIONS							SHEET NO.
NO.	BY:	DATE:	NO.	BY:	DATE:		S-83
1			3				TOTAL SHEETS
2			4				207

STD. NO. PCG10

ASSEMBLED BY : D. H. Carter		DATE : JULY 2006	
CHECKED BY : J. A. Lee		DATE : JULY 2006	
DRAWN BY : EEM 2/6/97	REV. 8/16/99	RWW/LES	
CHECKED BY : VAP 2/6/97	REV. 10/17/00	RWW/LES	
	REV. 5/1/06	TLA/GM	

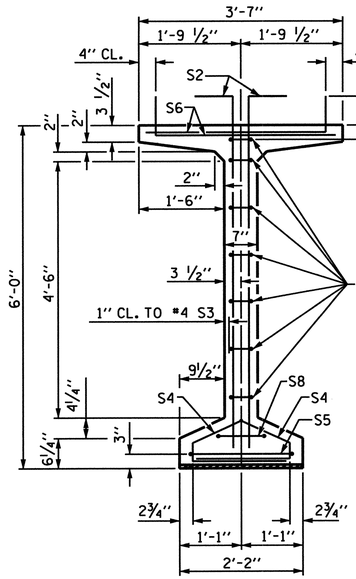

SECTION A-A

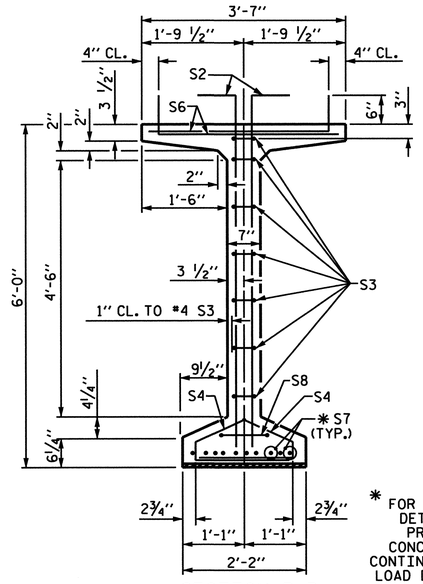

SECTION B-B

* FOR S7 BARS, SEE DETAIL "C" OF PRESTRESSED CONCRETE GIRDER CONTINUOUS FOR LIVE LOAD DETAILS SHEET

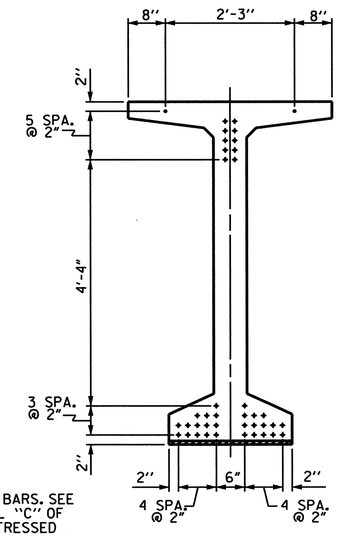

AT END OF GIRDER

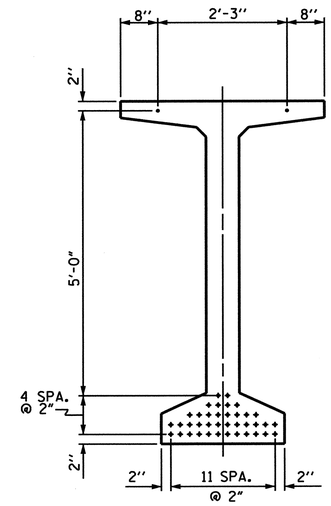

AT ℄ OF GIRDER

0.60 " Ø LOW RELAXATION STRAND LAYOUT

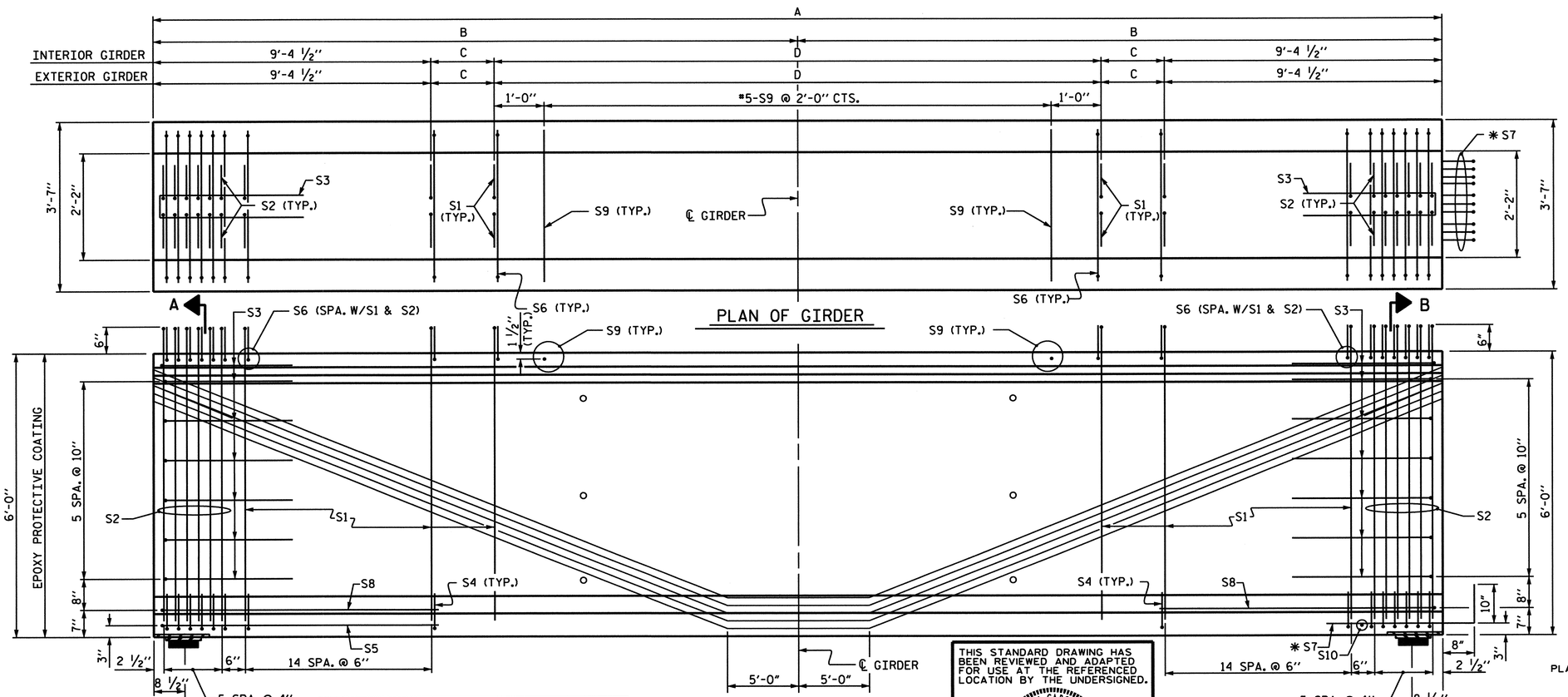

PLAN OF GIRDER

GDR	A	B	C	D
G1	111'-5 7/8"	55'-8 15/16"	1'-4 7/16"	90'-0"
G2	111'-11 1/8"	55'-11 5/8"	7 1/8"	92'-0"
G3	112'-4 1/2"	56'-2 1/4"	9 3/4"	92'-0"
G4	112'-9 3/4"	56'-4 7/8"	1'-0 3/8"	92'-0"

ELEVATION OF GIRDER

FOR LOCATION OF HOLES IN GIRDER WEB, SEE INTERMEDIATE STEEL DIAPHRAGM SHEET

THIS STANDARD DRAWING HAS BEEN REVIEWED AND ADAPTED FOR USE AT THE REFERENCED LOCATION BY THE UNDERSIGNED.

NORTH CAROLINA PROFESSIONAL SEAL 15832 ENGINEER JOEL A. LEE

1.17.07

0.60" Ø L. R. GRADE 270 STRANDS

AREA (SQUARE INCHES)	ULTIMATE STRENGTH (LBS. PER STRAND)	APPLIED PRESTRESS (LBS. PER STRAND)
0.217	58,600	43,950

GIRDER REINFORCING STEEL

	BAR	NUMBER	SIZE	TYPE	LENGTH	WEIGHT
GIRDER G1	S1	152	#4	1	6'-10"	694
GDR'S. G2, G3, G4	S1	154	#4	1	6'-10"	703
	S2	24	#5	1	6'-10"	171
	S3	14	#4	2	8'-5"	79
	S4	84	#4	3	3'-0"	168
	S5	1	#5	2	9'-10"	10
GIRDER G1	S6	176	#5	1	3'-9"	688
GDR'S. G2, G3, G4	S6	178	#5	1	3'-9"	696
	* S7	10	#5	STR	3'-8"	38
	S8	2	#5	2	9'-0"	19
GIRDER G1	S9	45	#5	STR	3'-3"	153
GDR'S. G2, G3, G4	S9	46	#5	STR	3'-3"	156
	S10	1	#3	STR	1'-10"	1

* NOTE: S7 BARS SHALL BE BENT BEFORE SHIPMENT. HEAT BENDING SHALL NOT BE ALLOWED.

BAR TYPES

ALL BAR DIMENSIONS ARE OUT-TO-OUT

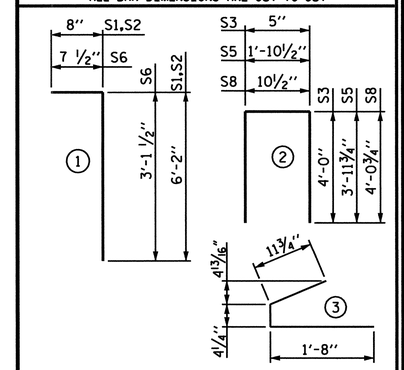

GIRDER QUANTITIES

	REINFORCING STEEL LB.	8,000 PSI CONCRETE C.Y.	0.60" Ø L.R. STRANDS No.
EXTERIOR-G1	2021	23.9	40
INTERIOR-G2	2041	23.9	40
INTERIOR-G3	2041	24.1	40
EXTERIOR-G4	2041	24.2	40

GIRDERS REQUIRED

NUMBER	LENGTH	TOTAL LENGTH
4	VARIES	448.604'

PROJECT NO. B-682

BRUNSWICK COUNTY

STATION: 47+08.03 -L- POT

SHEET 7 OF 21

STATE OF NORTH CAROLINA
DEPARTMENT OF TRANSPORTATION
RALEIGH

STANDARD
72" PRESTRESSED CONCRETE
MODIFIED BULB TEE
CONTINUOUS FOR LIVE LOAD
SPAN G

PLANS PREPARED BY:

PARSONS TRANSPORTATION GROUP
Engineers and Planners
RALEIGH, NORTH CAROLINA

JOB NO. 645615
DWG. NO.

REVISIONS							
NO.	BY:	DATE:	NO.	BY:	DATE:		
1			3				
2			4				

SHEET NO. S-84
TOTAL SHEETS 207

STD. NO. PCG10

ASSEMBLED BY : D. H. Carter		DATE : JULY 2006	
CHECKED BY : J. A. Lee		DATE : JULY 2006	
DRAWN BY : EEM 2/6/97	REV. 8/16/99	RWW/LES	
CHECKED BY : VAP 2/6/97	REV. 10/17/00	RWW/LES	
	REV. 5/1/06	TLA/GM	

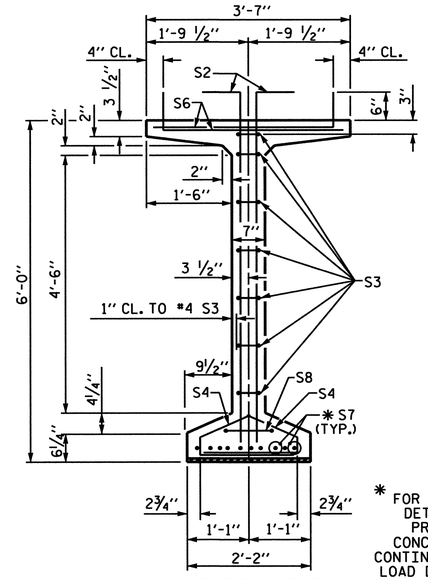

SECTION B-B

* FOR S7 BARS, SEE DETAIL "C" OF PRESTRESSED CONCRETE GIRDER CONTINUOUS FOR LIVE LOAD DETAILS SHEET

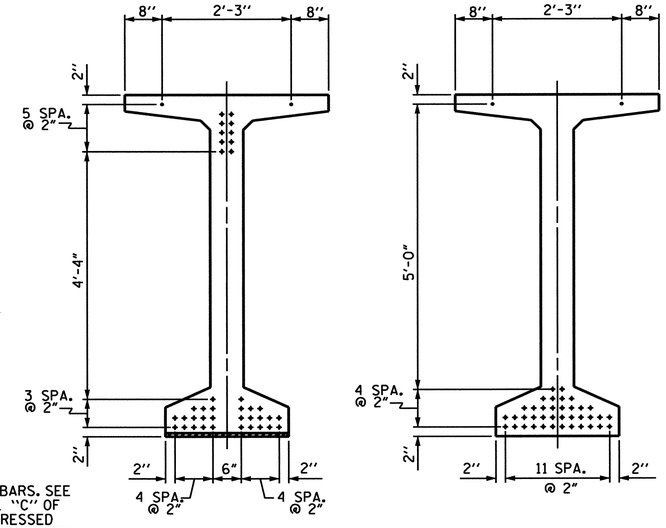

AT END OF GIRDER

AT ℄ OF GIRDER

0.60 " Ø LOW RELAXATION STRAND LAYOUT

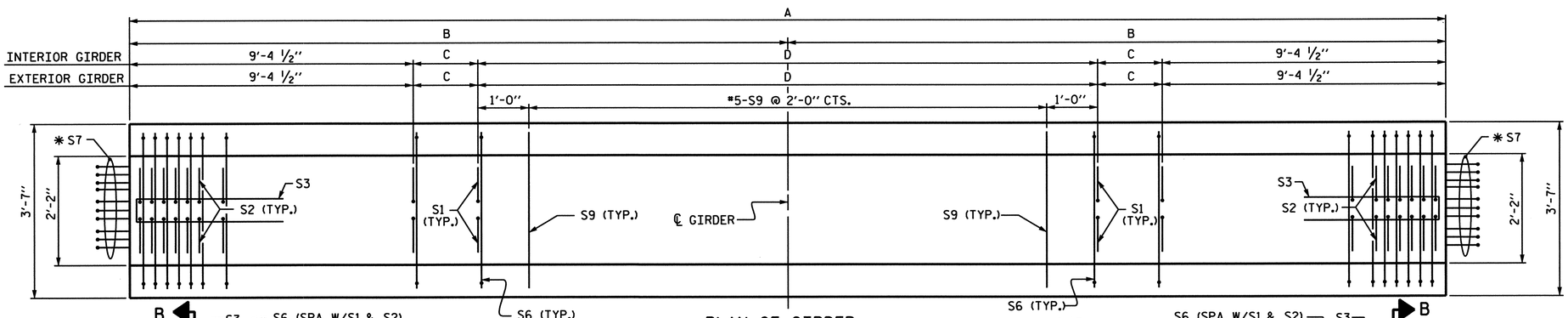

PLAN OF GIRDER

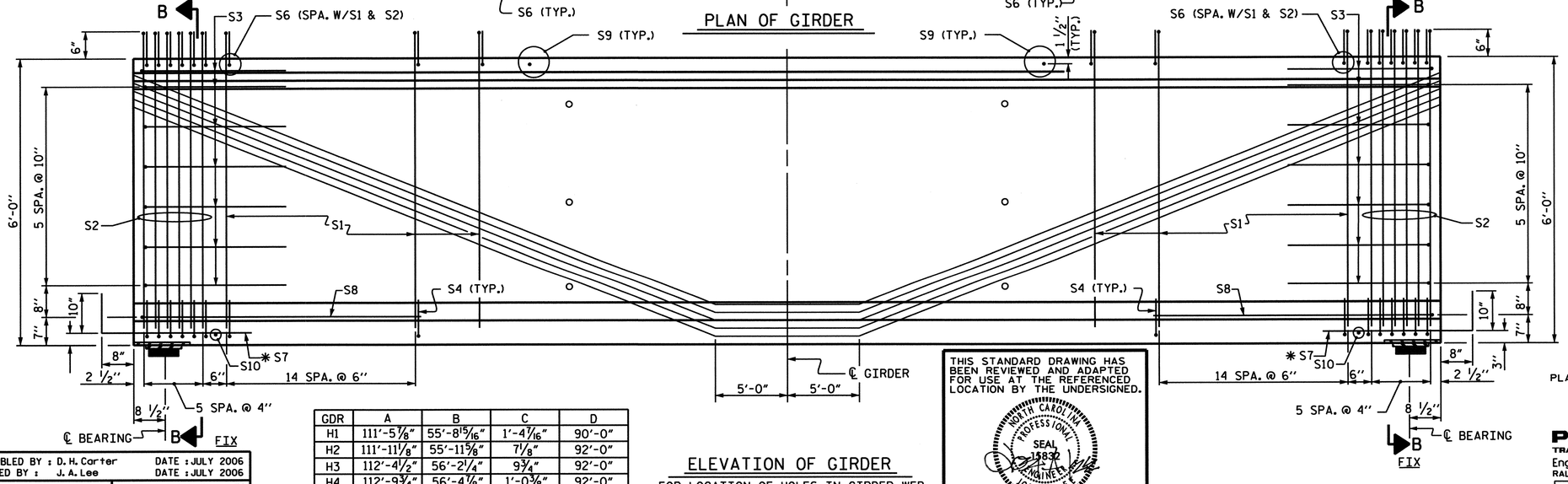

GDR	A	B	C	D
H1	111'-5 7/8"	55'-8 15/16"	1'-4 7/16"	90'-0"
H2	111'-11 1/8"	55'-11 5/8"	7 1/8"	92'-0"
H3	112'-4 1/2"	56'-2 1/4"	9 3/4"	92'-0"
H4	112'-9 3/4"	56'-4 7/8"	1'-0 3/8"	92'-0"

ELEVATION OF GIRDER

FOR LOCATION OF HOLES IN GIRDER WEB, SEE INTERMEDIATE STEEL DIAPHRAGM SHEET

THIS STANDARD DRAWING HAS BEEN REVIEWED AND ADAPTED FOR USE AT THE REFERENCED LOCATION BY THE UNDERSIGNED.

NORTH CAROLINA PROFESSIONAL SEAL 15832 ENGINEER JOEL A. LEE

1.17.07

0.60" Ø L. R. GRADE 270 STRANDS

AREA (SQUARE INCHES)	ULTIMATE STRENGTH (LBS. PER STRAND)	APPLIED PRESTRESS (LBS. PER STRAND)
0.217	58,600	43,950

GIRDER REINFORCING STEEL

	BAR	NUMBER	SIZE	TYPE	LENGTH	WEIGHT
GIRDER H1	S1	152	#4	1	6'-10"	694
GDR'S. H2, H3, H4	S1	154	#4	1	6'-10"	703
	S2	24	#5	1	6'-10"	171
	S3	14	#4	2	8'-5"	79
	S4	84	#4	3	3'-0"	168
	S5	1	#5	2	9'-10"	10
GIRDER H1	S6	176	#5	1	3'-9"	688
GDR'S. H2, H3, H4	S6	178	#5	1	3'-9"	696
	* S7	20	#5	STR	3'-8"	76
	S8	2	#5	2	9'-0"	19
GIRDER H1	S9	45	#5	STR	3'-3"	153
GDR'S. H2, H3, H4	S9	46	#5	STR	3'-3"	156
	S10	1	#3	STR	1'-10"	1

* NOTE: S7 BARS SHALL BE BENT BEFORE SHIPMENT. HEAT BENDING SHALL NOT BE ALLOWED.

BAR TYPES

ALL BAR DIMENSIONS ARE OUT-TO-OUT

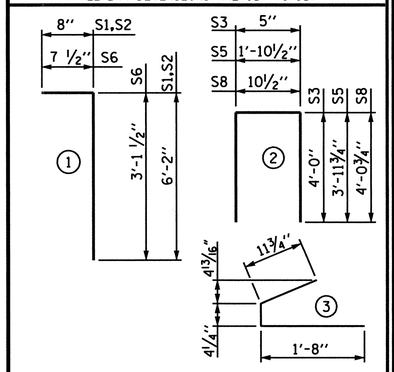

GIRDER QUANTITIES

	REINFORCING STEEL LB.	8,000 PSI CONCRETE C.Y.	0.60" Ø L.R. STRANDS No.
EXTERIOR-H1	2059	23.9	40
INTERIOR-H2	2079	23.9	40
INTERIOR-H3	2079	24.1	40
EXTERIOR-H4	2079	24.2	40

GIRDERS REQUIRED

NUMBER	LENGTH	TOTAL LENGTH
4	VARIES	448.604'

PROJECT NO. B-682

BRUNSWICK COUNTY

STATION: 47+08.03 -L- POT

SHEET 8 OF 21

STATE OF NORTH CAROLINA
DEPARTMENT OF TRANSPORTATION
RALEIGH

STANDARD
72" PRESTRESSED CONCRETE MODIFIED BULB TEE CONTINUOUS FOR LIVE LOAD SPAN H

PLANS PREPARED BY:

PARSONS TRANSPORTATION GROUP
Engineers and Planners
RALEIGH, NORTH CAROLINA

JOB NO. 645615
DWG. NO.

REVISIONS							
NO.	BY:	DATE:	NO.	BY:	DATE:	SHEET NO.	
1			3			5-85	
2			4			TOTAL SHEETS	
						207	

ASSEMBLED BY : D. H. Carter		DATE : JULY 2006	
CHECKED BY : J. A. Lee		DATE : JULY 2006	
DRAWN BY : EEM 2/6/97	REV. 8/16/99	RWW/LES	
CHECKED BY : VAP 2/6/97	REV. 10/17/00	RWW/LES	
	REV. 5/1/06	TLA/GM	

STD. NO. PCG10

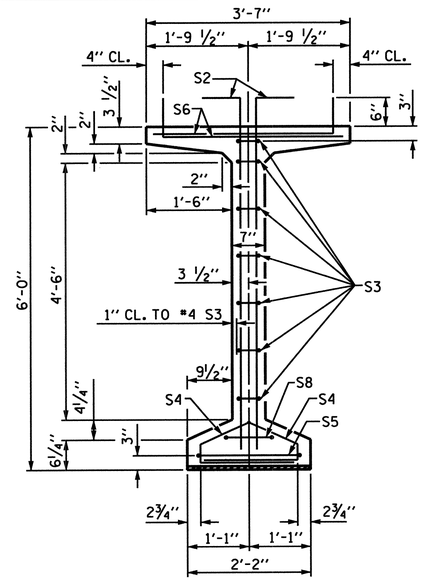

SECTION A-A

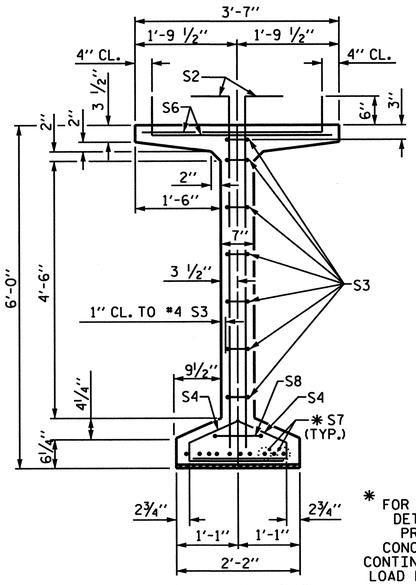

SECTION B-B

* FOR S7 BARS. SEE DETAIL "C" OF PRESTRESSED CONCRETE GIRDER CONTINUOUS FOR LIVE LOAD DETAILS SHEET

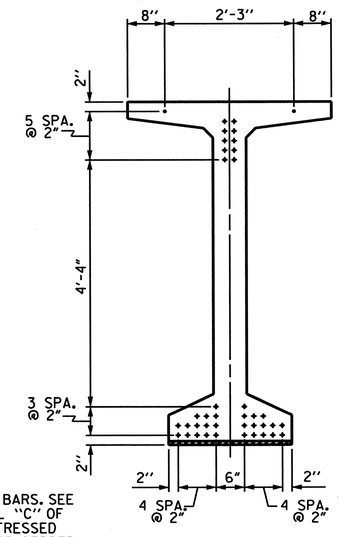

AT END OF GIRDER

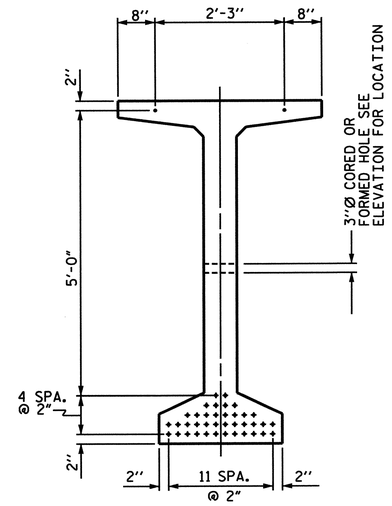

AT ℄ OF GIRDER

0.60 " Ø LOW RELAXATION STRAND LAYOUT

0.60" Ø L. R. GRADE 270 STRANDS		
AREA (SQUARE INCHES)	ULTIMATE STRENGTH (LBS. PER STRAND)	APPLIED PRESTRESS (LBS. PER STRAND)
0.217	58,600	43,950

GIRDER REINFORCING STEEL

	BAR	NUMBER	SIZE	TYPE	LENGTH	WEIGHT
GIRDER I1	S1	152	#4	1	6'-10"	694
GDR'S. I2, I3, I4	S1	154	#4	1	6'-10"	703
	S2	24	#5	1	6'-10"	171
	S3	14	#4	2	8'-5"	79
	S4	84	#4	3	3'-0"	168
	S5	1	#5	2	9'-10"	10
GIRDER I1	S6	176	#5	1	3'-9"	688
GDR'S. I2, I3, I4	S6	178	#5	1	3'-9"	696
	* S7	10	#5	STR	3'-8"	38
	S8	2	#5	2	9'-0"	19
GIRDER I1	S9	45	#5	STR	3'-3"	153
GDR'S. I2, I3, I4	S9	46	#5	STR	3'-3"	156
	S10	1	#3	STR	1'-10"	1

* NOTE: S7 BARS SHALL BE BENT BEFORE SHIPMENT. HEAT BENDING SHALL NOT BE ALLOWED.

BAR TYPES

ALL BAR DIMENSIONS ARE OUT-TO-OUT

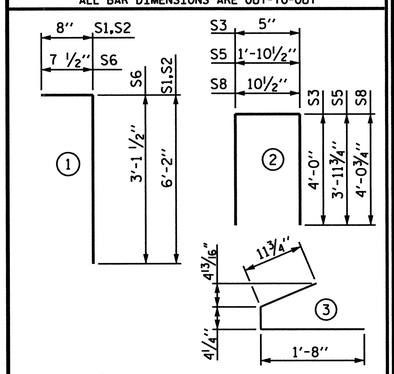

GIRDER QUANTITIES

	REINFORCING STEEL	8,000 PSI CONCRETE	0.60" Ø L.R. STRANDS
	LB.	C.Y.	No.
EXTERIOR-I1	2021	23.9	40
INTERIOR-I2	2041	23.9	40
INTERIOR-I3	2041	24.1	40
EXTERIOR-I4	2041	24.2	40

GIRDERS REQUIRED

NUMBER	LENGTH	TOTAL LENGTH
4	VARIES	448.604'

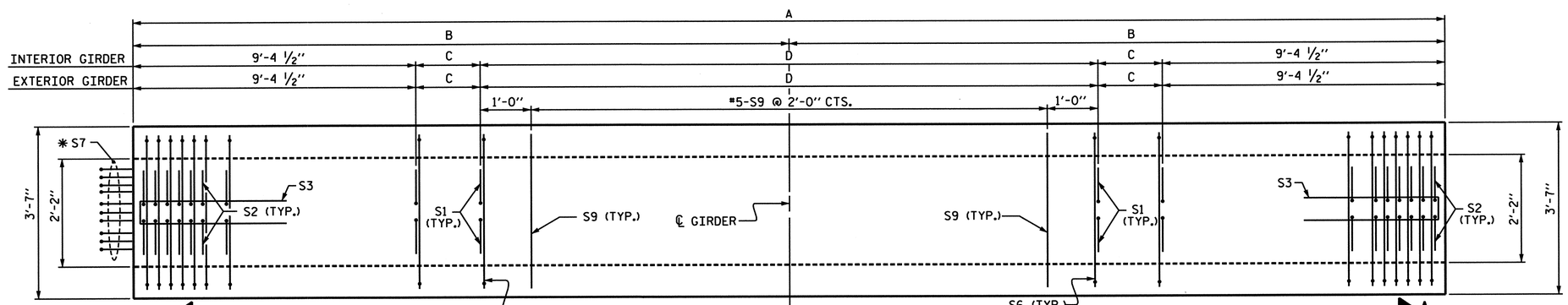

PLAN OF GIRDER

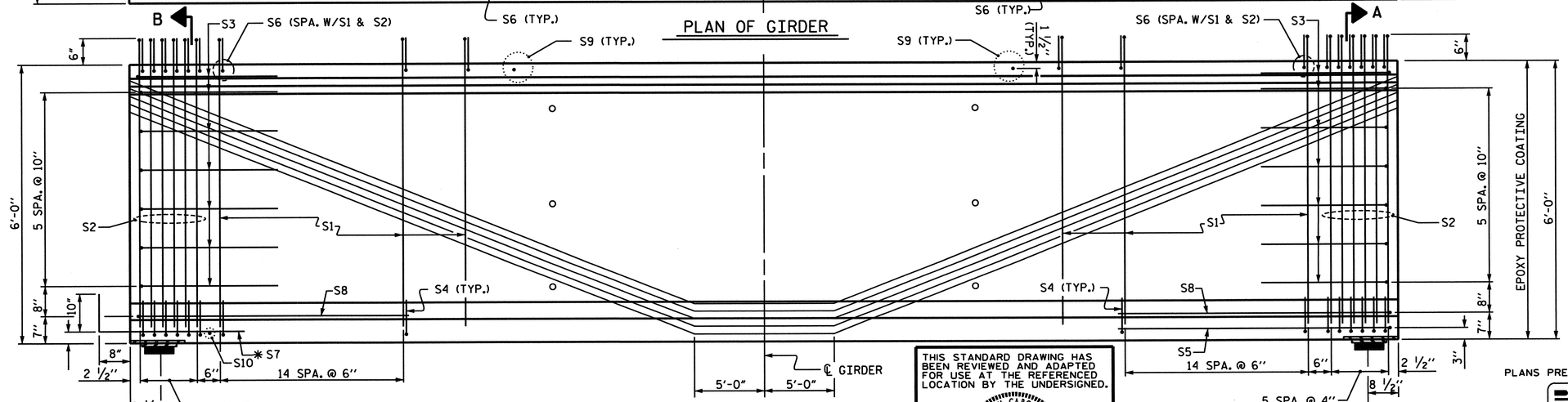

GDR	A	B	C	D
I1	111'-5 7/8"	55'-8 15/16"	1'-4 7/16"	90'-0"
I2	111'-11 1/8"	55'-11 5/8"	7 1/8"	92'-0"
I3	112'-4 1/2"	56'-2 1/4"	9 3/4"	92'-0"
I4	112'-9 3/4"	56'-4 7/8"	1'-0 3/8"	92'-0"

ELEVATION OF GIRDER

FOR LOCATION OF HOLES IN GIRDER WEB, SEE INTERMEDIATE STEEL DIAPHRAGM SHEET

THIS STANDARD DRAWING HAS BEEN REVIEWED AND ADAPTED FOR USE AT THE REFERENCED LOCATION BY THE UNDERSIGNED.

NORTH CAROLINA PROFESSIONAL SEAL 15832 ENGINEER JOEL A. LEE

1-17-07

PROJECT NO. B-682

BRUNSWICK COUNTY

STATION: 47+08.03 -L- POT

SHEET 9 OF 21

STATE OF NORTH CAROLINA
DEPARTMENT OF TRANSPORTATION
RALEIGH

STANDARD

72" PRESTRESSED CONCRETE MODIFIED BULB TEE CONTINUOUS FOR LIVE LOAD SPAN I

PLANS PREPARED BY:

PARSONS TRANSPORTATION GROUP
Engineers and Planners
RALEIGH, NORTH CAROLINA

JOB NO. 645615
DWG. NO.

REVISIONS						
NO.	BY:	DATE:	NO.	BY:	DATE:	
1			3			
2			4			

SHEET NO. S-86

TOTAL SHEETS 207

STD. NO. PCG10

ASSEMBLED BY : D. H. Carter		DATE : JULY 2006	
CHECKED BY : J. A. Lee		DATE : JULY 2006	
DRAWN BY : EEM 2/6/97	REV. 8/16/99	RWW/LES	
CHECKED BY : VAP 2/6/97	REV. 10/17/00	RWW/LES	
	REV. 5/1/06	TLA/GM	

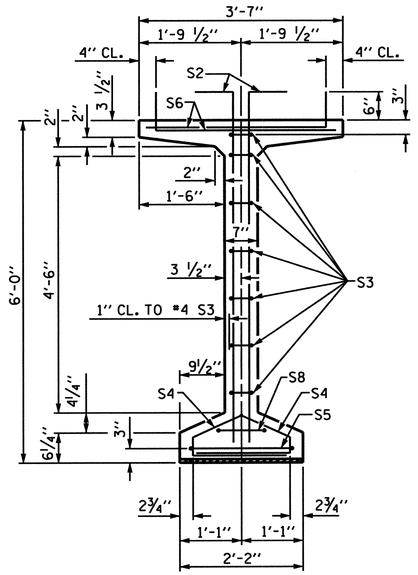

SECTION A-A

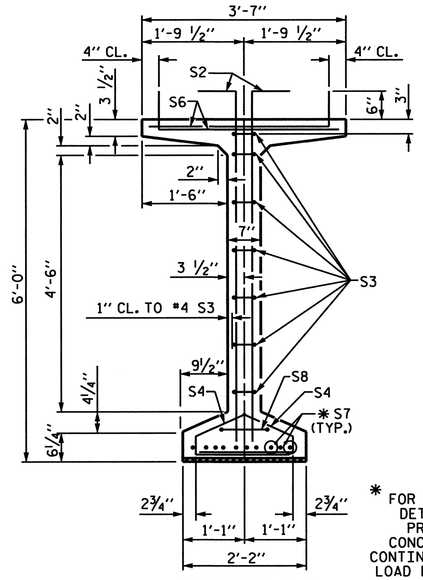

SECTION B-B

* FOR S7 BARS, SEE DETAIL "C" OF PRESTRESSED CONCRETE GIRDER CONTINUOUS FOR LIVE LOAD DETAILS SHEET

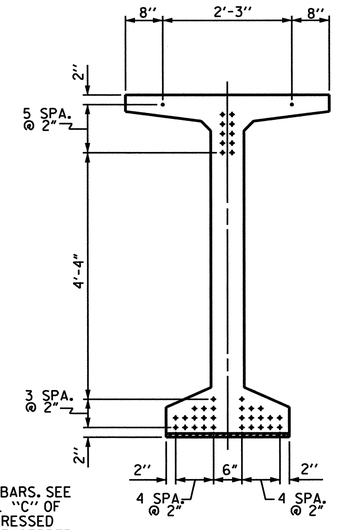

AT END OF GIRDER

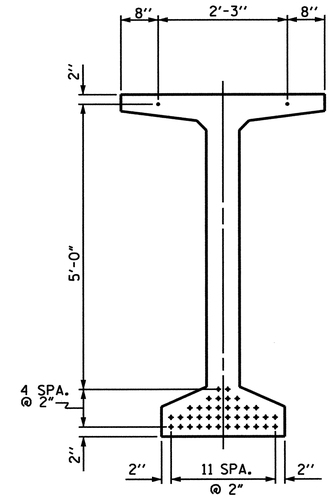

AT ℄ OF GIRDER

0.60 " Ø LOW RELAXATION STRAND LAYOUT

0.60" Ø L. R. GRADE 270 STRANDS

AREA (SQUARE INCHES)	ULTIMATE STRENGTH (LBS. PER STRAND)	APPLIED PRESTRESS (LBS. PER STRAND)
0.217	58,600	43,950

GIRDER REINFORCING STEEL

	BAR	NUMBER	SIZE	TYPE	LENGTH	WEIGHT
GIRDER J1	S1	152	#4	1	6'-10"	694
GDR'S. J2, J3, J4	S1	154	#4	1	6'-10"	703
	S2	24	#5	1	6'-10"	171
	S3	14	#4	2	8'-5"	79
	S4	84	#4	3	3'-0"	168
	S5	1	#5	2	9'-10"	10
GIRDER J1	S6	176	#5	1	3'-9"	688
GDR'S. J2, J3, J4	S6	178	#5	1	3'-9"	696
	* S7	10	#5	STR	3'-8"	38
	S8	2	#5	2	9'-0"	19
GIRDER J1	S9	45	#5	STR	3'-3"	153
GDR'S. J2, J3, J4	S9	46	#5	STR	3'-3"	156
	S10	1	#3	STR	1'-10"	1

* NOTE: S7 BARS SHALL BE BENT BEFORE SHIPMENT. HEAT BENDING SHALL NOT BE ALLOWED.

BAR TYPES

ALL BAR DIMENSIONS ARE OUT-TO-OUT

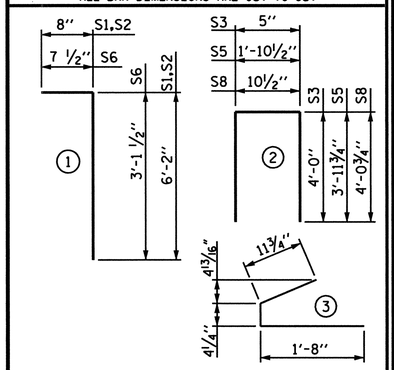

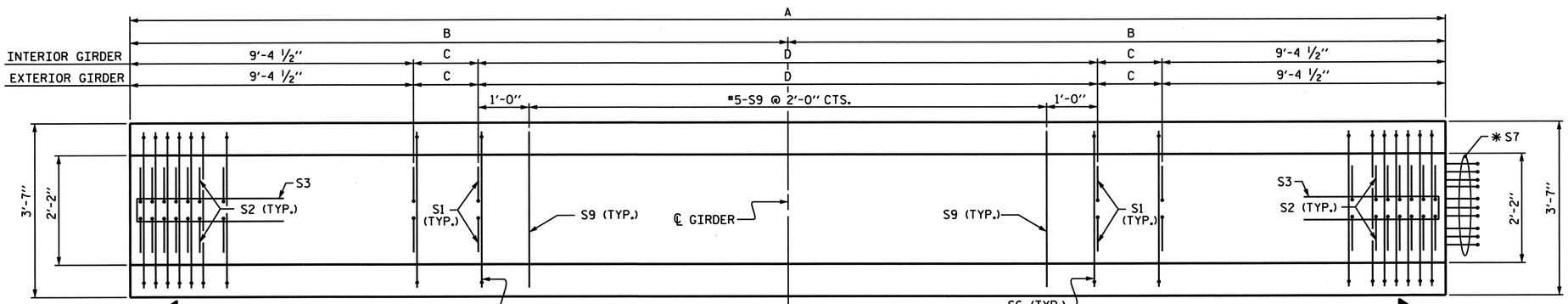

PLAN OF GIRDER

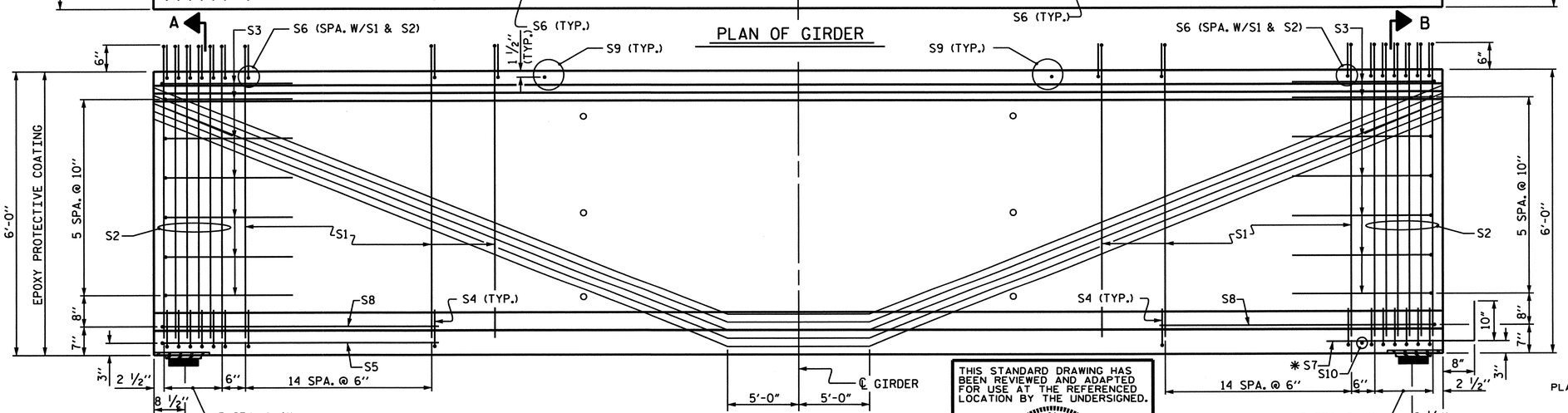

ELEVATION OF GIRDER

FOR LOCATION OF HOLES IN GIRDER WEB, SEE INTERMEDIATE STEEL DIAPHRAGM SHEET

GDR	A	B	C	D
J1	111'-8 3/4"	55'-10 3/8"	1'-5 7/8"	90'-0"
J2	112'-0 1/4"	56'-0 1/8"	7 5/8"	92'-0"
J3	112'-3 5/8"	56'-1 13/16"	9 5/16"	92'-0"
J4	112'-7"	56'-3 1/2"	11"	92'-0"

THIS STANDARD DRAWING HAS BEEN REVIEWED AND ADAPTED FOR USE AT THE REFERENCED LOCATION BY THE UNDERSIGNED.

NORTH CAROLINA PROFESSIONAL SEAL 15832 ENGINEER JOEL A. LEE

1-17-07

GIRDER QUANTITIES

	REINFORCING STEEL LB.	8,000 PSI CONCRETE C.Y.	0.60" Ø L.R. STRANDS No.
EXTERIOR-J1	2021	23.9	40
INTERIOR-J2	2041	24.0	40
INTERIOR-J3	2041	24.1	40
EXTERIOR-J4	2041	24.1	40

GIRDERS REQUIRED

NUMBER	LENGTH	TOTAL LENGTH
4	VARIES	448.641

PROJECT NO. B-682

BRUNSWICK COUNTY

STATION: 47+08.03 -L- POT

SHEET 10 OF 21

STATE OF NORTH CAROLINA
DEPARTMENT OF TRANSPORTATION
RALEIGH

STANDARD

72" PRESTRESSED CONCRETE MODIFIED BULB TEE CONTINUOUS FOR LIVE LOAD SPAN J

PLANS PREPARED BY:

PARSONS TRANSPORTATION GROUP
Engineers and Planners
RALEIGH, NORTH CAROLINA

JOB NO. 645615

DWG. NO.

REVISIONS							SHEET NO.
NO.	BY:	DATE:	NO.	BY:	DATE:		5-87
1			3				TOTAL SHEETS
2			4				207

STD. NO. PCG10

ASSEMBLED BY : D. H. Carter		DATE : JULY 2006	
CHECKED BY : J. A. Lee		DATE : JULY 2006	
DRAWN BY : EEM 2/6/97	REV. 8/16/99	RWW/LES	
CHECKED BY : VAP 2/6/97	REV. 10/17/00	RWW/LES	
	REV. 5/1/06	TLA/GM	

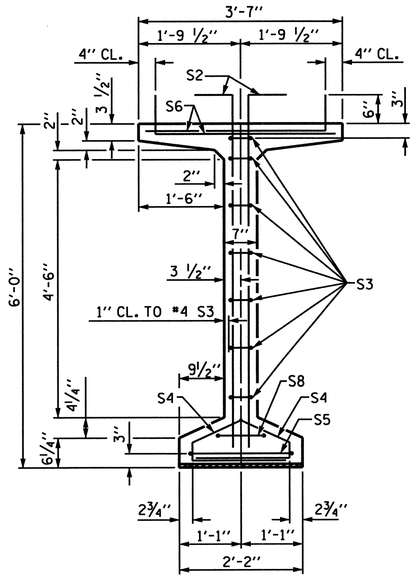

SECTION A-A

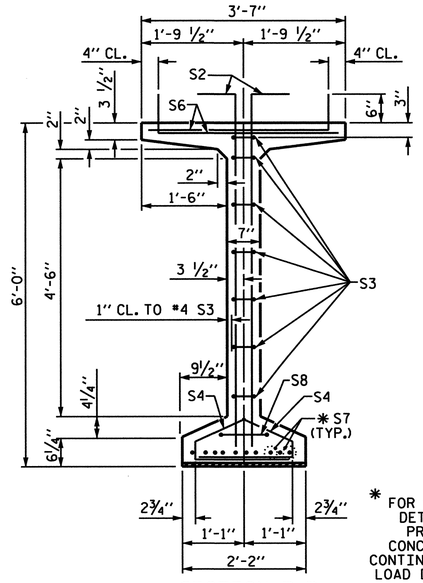

SECTION B-B

* FOR S7 BARS, SEE DETAIL "C" OF PRESTRESSED CONCRETE GIRDER CONTINUOUS FOR LIVE LOAD DETAILS SHEET

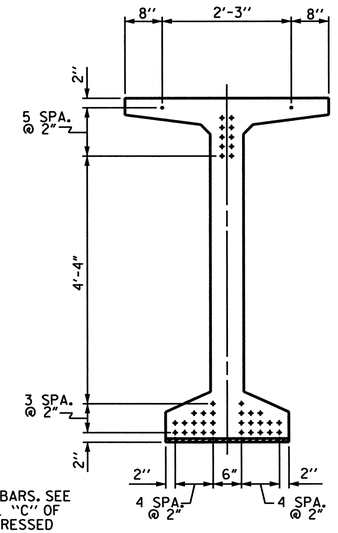

AT END OF GIRDER

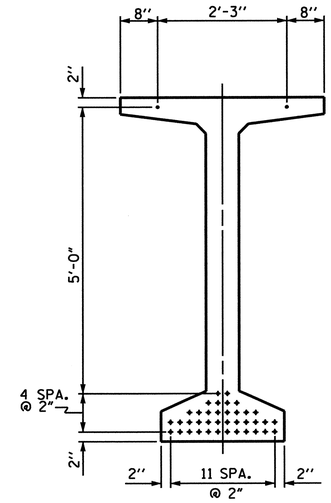

AT ℄ OF GIRDER

0.60 " Ø LOW RELAXATION STRAND LAYOUT

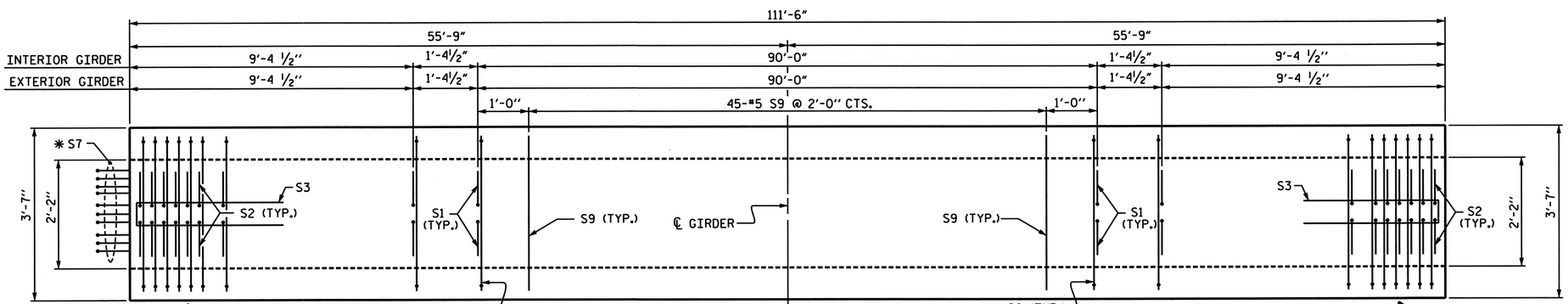

PLAN OF GIRDER

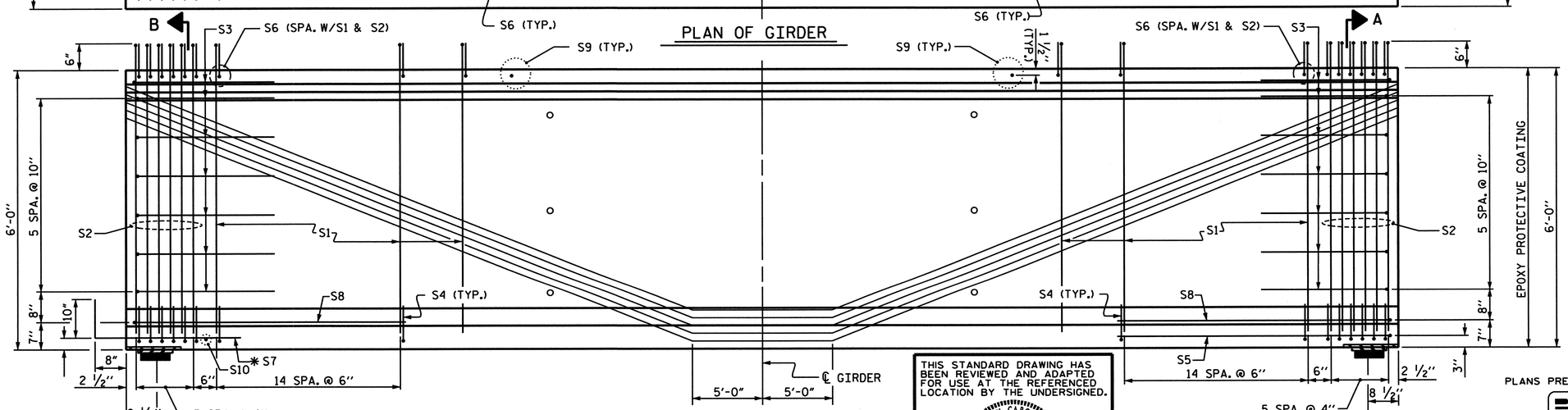

ELEVATION OF GIRDER

FOR LOCATION OF HOLES IN GIRDER WEB, SEE INTERMEDIATE STEEL DIAPHRAGM SHEET

THIS STANDARD DRAWING HAS BEEN REVIEWED AND ADAPTED FOR USE AT THE REFERENCED LOCATION BY THE UNDERSIGNED.

NORTH CAROLINA PROFESSIONAL SEAL 15832 ENGINEER JOEL A. LEE

1-17-07

0.60" Ø L. R. GRADE 270 STRANDS

AREA (SQUARE INCHES)	ULTIMATE STRENGTH (LBS. PER STRAND)	APPLIED PRESTRESS (LBS. PER STRAND)
0.217	58,600	43,950

REINFORCING STEEL FOR ONE GIRDER

	BAR	NUMBER	SIZE	TYPE	LENGTH	WEIGHT
INTERIOR GDR.	S1	152	#4	1	6'-10"	694
EXTERIOR GDR.	S1	152	#4	1	6'-10"	694
	S2	24	#5	1	6'-10"	171
	S3	14	#4	2	8'-5"	79
	S4	84	#4	3	3'-0"	168
	S5	1	#5	2	9'-10"	10
INTERIOR GDR.	S6	176	#5	1	3'-9"	688
EXTERIOR GDR.	S6	176	#5	1	3'-9"	688
	* S7	10	#5	STR	3'-8"	38
	S8	2	#5	2	9'-0"	19
	S9	45	#5	STR	3'-3"	153
	S10	1	#3	STR	1'-10"	1

* NOTE: S7 BARS SHALL BE BENT BEFORE SHIPMENT. HEAT BENDING SHALL NOT BE ALLOWED.

BAR TYPES

ALL BAR DIMENSIONS ARE OUT-TO-OUT

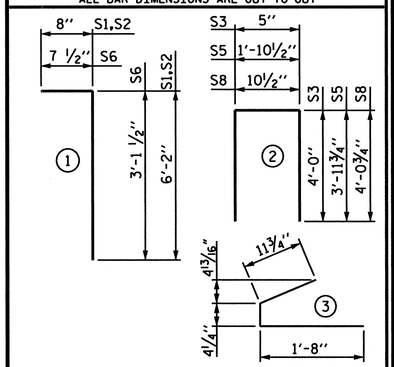

QUANTITIES FOR ONE GIRDER

	REINFORCING STEEL	8,000 PSI CONCRETE	0.60" Ø L.R. STRANDS
	LB.	C.Y.	No.
INTERIOR GIRDER	2021	23.9	40
EXTERIOR GIRDER	2021	23.9	40

GIRDERS REQUIRED

NUMBER	LENGTH	TOTAL LENGTH
4	111.500	446.000

PROJECT NO. B-682

BRUNSWICK COUNTY

STATION: 47+08.03 -L- POT

SHEET 11 OF 21

STATE OF NORTH CAROLINA
DEPARTMENT OF TRANSPORTATION
RALEIGH

STANDARD
72" PRESTRESSED CONCRETE
MODIFIED BULB TEE
CONTINUOUS FOR LIVE LOAD
SPAN K

PLANS PREPARED BY:

PARSONS TRANSPORTATION GROUP
Engineers and Planners
RALEIGH, NORTH CAROLINA

JOB NO. 645615

DWG. NO.

REVISIONS								
NO.	BY:	DATE:	NO.	BY:	DATE:	SHEET NO.
1			3			5-88
2			4			TOTAL SHEETS 207

STD. NO. PCG10

ASSEMBLED BY : D. H. Carter	DATE : JULY 2006		
CHECKED BY : J. A. Lee	DATE : JULY 2006		
DRAWN BY : EEM 2/6/97	REV. 8/16/99	RWW/LES	
CHECKED BY : VAP 2/6/97	REV. 10/17/00	RWW/LES	
	REV. 5/1/06	TLA/GM	

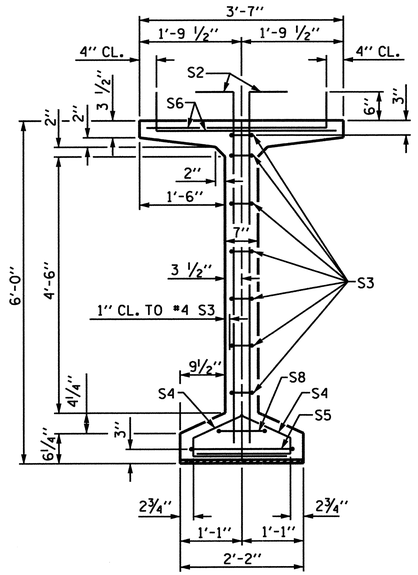

SECTION A-A

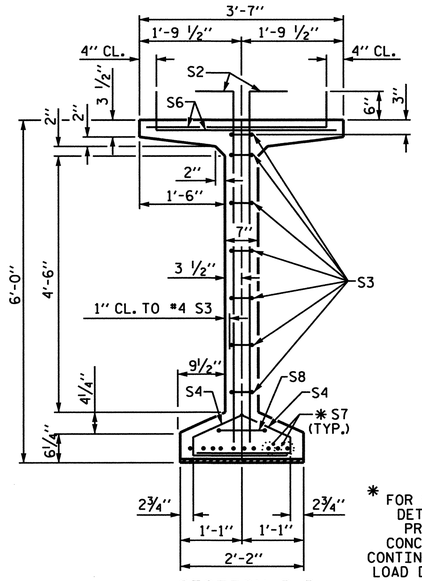

SECTION B-B

* FOR S7 BARS, SEE DETAIL "C" OF PRESTRESSED CONCRETE GIRDER CONTINUOUS FOR LIVE LOAD DETAILS SHEET

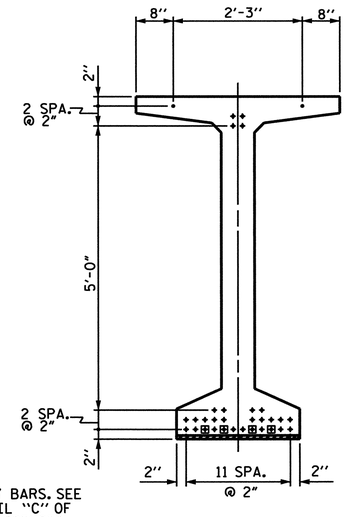

AT END OF GIRDER

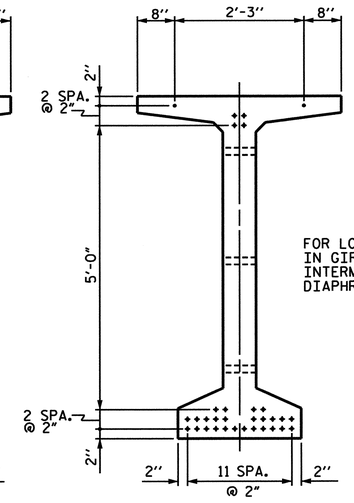

AT ℄ OF GIRDER

FOR LOCATION OF HOLES IN GIRDER WEB, SEE INTERMEDIATE STEEL DIAPHRAGM SHEET

0.60 " Ø LOW RELAXATION STRAND LAYOUT

DEBONDING LEGEND

- ● FULLY BONDED STRANDS
- ⊡ STRANDS DEBONDED FOR 4'-0" FROM END OF GIRDER

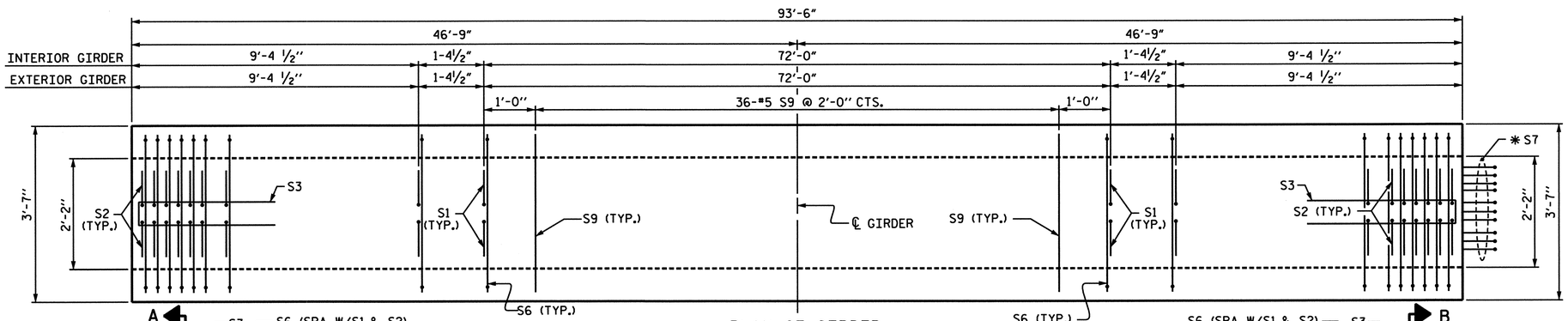

PLAN OF GIRDER

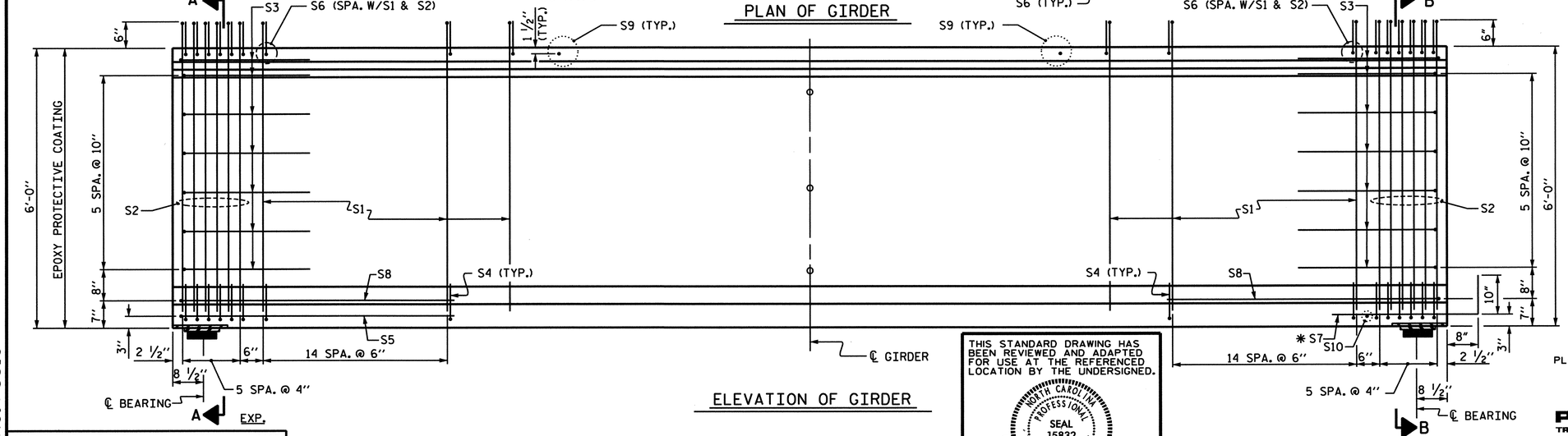

ELEVATION OF GIRDER

THIS STANDARD DRAWING HAS BEEN REVIEWED AND ADAPTED FOR USE AT THE REFERENCED LOCATION BY THE UNDERSIGNED.

NORTH CAROLINA PROFESSIONAL SEAL 15832 ENGINEER JOSEPH A. LEE

1-17-07

0.60" Ø L. R. GRADE 270 STRANDS

AREA (SQUARE INCHES)	ULTIMATE STRENGTH (LBS. PER STRAND)	APPLIED PRESTRESS (LBS. PER STRAND)
0.217	58,600	43,950

REINFORCING STEEL FOR ONE GIRDER

	BAR	NUMBER	SIZE	TYPE	LENGTH	WEIGHT
INTERIOR GDR.	S1	134	#4	1	6'-10"	612
EXTERIOR GDR.	S1	134	#4	1	6'-10"	612
	S2	24	#5	1	6'-10"	171
	S3	14	#4	2	8'-5"	79
	S4	84	#4	3	3'-0"	168
	S5	1	#5	2	9'-10"	10
INTERIOR GDR.	S6	158	#5	1	3'-9"	618
EXTERIOR GDR.	S6	158	#5	1	3'-9"	618
	* S7	10	#5	STR	3'-8"	38
	S8	2	#5	2	9'-0"	19
	S9	36	#5	STR	3'-3"	122
	S10	1	#3	STR	1'-10"	1

* NOTE: S7 BARS SHALL BE BENT BEFORE SHIPMENT. HEAT BENDING SHALL NOT BE ALLOWED.

BAR TYPES

ALL BAR DIMENSIONS ARE OUT-TO-OUT

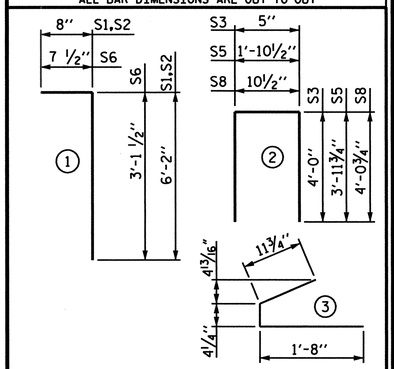

QUANTITIES FOR ONE GIRDER

	REINFORCING STEEL	8,000 PSI CONCRETE	0.60" Ø L.R. STRANDS
	LB.	C.Y.	No.
INTERIOR GIRDER	1838	20.0	32
EXTERIOR GIRDER	1838	20.0	32

GIRDERS REQUIRED

NUMBER	LENGTH	TOTAL LENGTH
4	93.500'	374.000'

PROJECT NO. B-682

BRUNSWICK COUNTY

STATION: 47+08.03 -L- POT

SHEET 12 OF 21

STATE OF NORTH CAROLINA
DEPARTMENT OF TRANSPORTATION
RALEIGH

STANDARD
72" PRESTRESSED CONCRETE
MODIFIED BULB TEE
CONTINUOUS FOR LIVE LOAD
SPAN O

PLANS PREPARED BY:

PARSONS TRANSPORTATION GROUP
Engineers and Planners
RALEIGH, NORTH CAROLINA

JOB NO. 645615

DWG. NO.

REVISIONS								
NO.	BY:	DATE:	NO.	BY:	DATE:			
1			3					
2			4					

SHEET NO. S-89

TOTAL SHEETS 207

ASSEMBLED BY : D. H. Carter		DATE : JULY 2005	
CHECKED BY : J. A. Lee		DATE : JULY 2005	
DRAWN BY : EEM 2/6/97	REV. 8/16/99	RWW/LES	
CHECKED BY : VAP 2/6/97	REV. 10/17/00	RWW/LES	
	REV. 5/1/06	TLA/GM	

STD. NO. PCG10

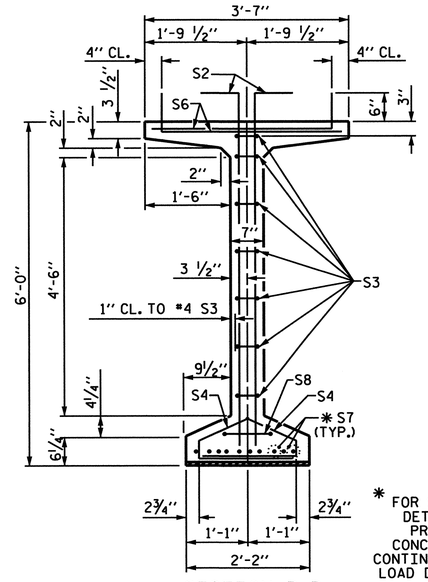

SECTION B-B

* FOR S7 BARS, SEE DETAIL "C" OF PRESTRESSED CONCRETE GIRDER CONTINUOUS FOR LIVE LOAD DETAILS SHEET

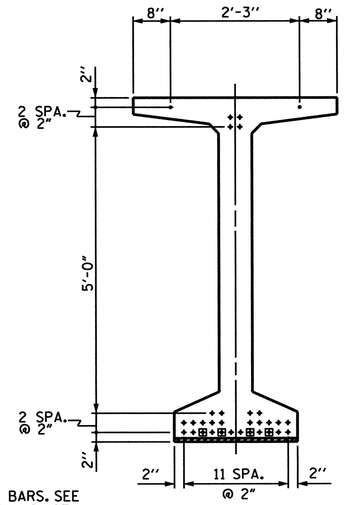

AT END OF GIRDER

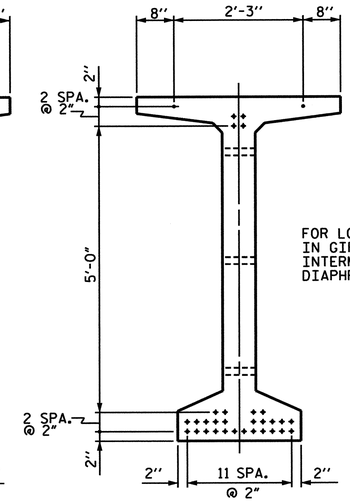

AT ℄ OF GIRDER

FOR LOCATION OF HOLES IN GIRDER WEB, SEE INTERMEDIATE STEEL DIAPHRAGM SHEET

0.60 " Ø LOW RELAXATION STRAND LAYOUT

DEBONDING LEGEND

- ● FULLY BONDED STRANDS
- ▣ STRANDS DEBONDED FOR 4'-0" FROM END OF GIRDER

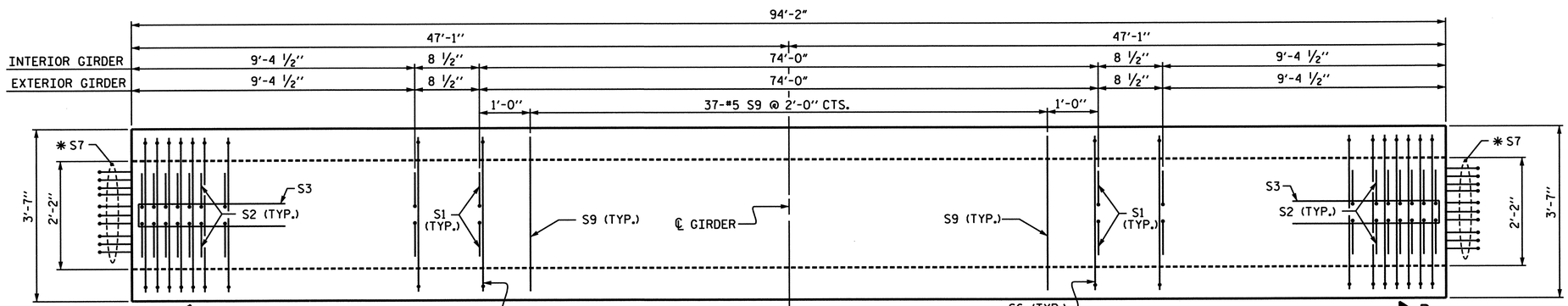

PLAN OF GIRDER

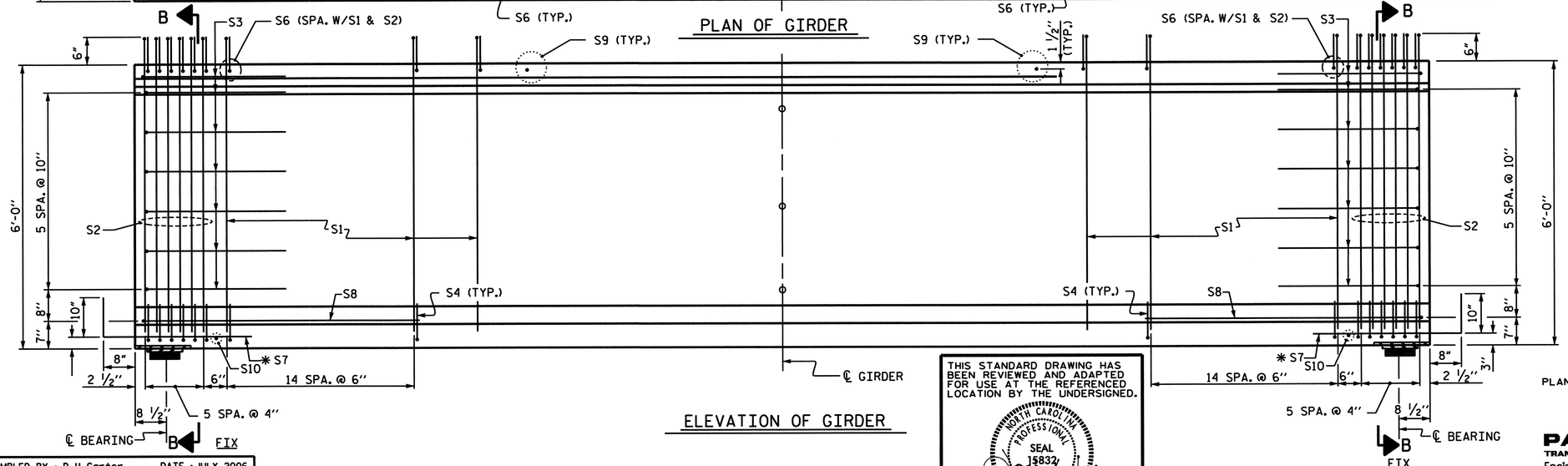

ELEVATION OF GIRDER

THIS STANDARD DRAWING HAS BEEN REVIEWED AND ADAPTED FOR USE AT THE REFERENCED LOCATION BY THE UNDERSIGNED.

NORTH CAROLINA PROFESSIONAL SEAL 15832 ENGINEER JOEL A. LEE

1-17-07

0.60" Ø L. R. GRADE 270 STRANDS

AREA (SQUARE INCHES)	ULTIMATE STRENGTH (LBS. PER STRAND)	APPLIED PRESTRESS (LBS. PER STRAND)
0.217	58,600	43,950

REINFORCING STEEL FOR ONE GIRDER

	BAR	NUMBER	SIZE	TYPE	LENGTH	WEIGHT
INTERIOR GDR.	S1	136	#4	1	6'-10"	621
EXTERIOR GDR.	S1	136	#4	1	6'-10"	621
	S2	24	#5	1	6'-10"	171
	S3	14	#4	2	8'-5"	79
	S4	84	#4	3	3'-0"	168
	S5	1	#5	2	9'-10"	10
INTERIOR GDR.	S6	160	#5	1	3'-9"	625
EXTERIOR GDR.	S6	160	#5	1	3'-9"	625
	* S7	20	#5	STR	3'-8"	76
	S8	2	#5	2	9'-0"	19
	S9	37	#5	STR	3'-3"	125
	S10	1	#3	STR	1'-10"	1

* NOTE: S7 BARS SHALL BE BENT BEFORE SHIPMENT. HEAT BENDING SHALL NOT BE ALLOWED.

BAR TYPES

ALL BAR DIMENSIONS ARE OUT-TO-OUT

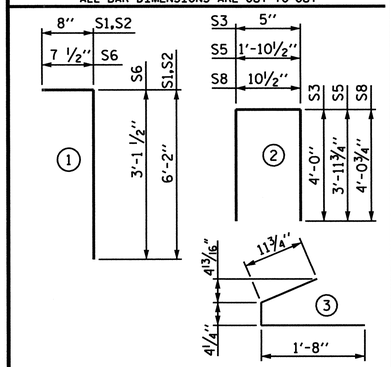

QUANTITIES FOR ONE GIRDER

	REINFORCING STEEL	8,000 PSI CONCRETE	0.60" Ø L.R. STRANDS
	LB.	C.Y.	No.
INTERIOR GIRDER	1895	20.18	32
EXTERIOR GIRDER	1895	20.18	32

GIRDERS REQUIRED

NUMBER	LENGTH	TOTAL LENGTH
4	94.167'	376.668'

PROJECT NO. B-682

BRUNSWICK COUNTY

STATION: 47+08.03 -L- POT

SHEET 13 OF 21

STATE OF NORTH CAROLINA
DEPARTMENT OF TRANSPORTATION
RALEIGH

STANDARD
72" PRESTRESSED CONCRETE
MODIFIED BULB TEE
CONTINUOUS FOR LIVE LOAD
SPAN P

PLANS PREPARED BY:

PARSONS TRANSPORTATION GROUP
Engineers and Planners
RALEIGH, NORTH CAROLINA

JOB NO. 645615
DWG. NO.

REVISIONS								SHEET NO.
NO.	BY:	DATE:	NO.	BY:	DATE:			5-90
1			3					TOTAL SHEETS
2			4					207

STD. NO. PCG10

ASSEMBLED BY : D. H. Carter	DATE : JULY 2006		
CHECKED BY : J. A. Lee	DATE : JULY 2006		
DRAWN BY : EEM 2/6/97	REV. 8/16/99	RWW/LES	
CHECKED BY : VAP 2/6/97	REV. 10/17/00	RWW/LES	
	REV. 5/1/06	TLA/GM	

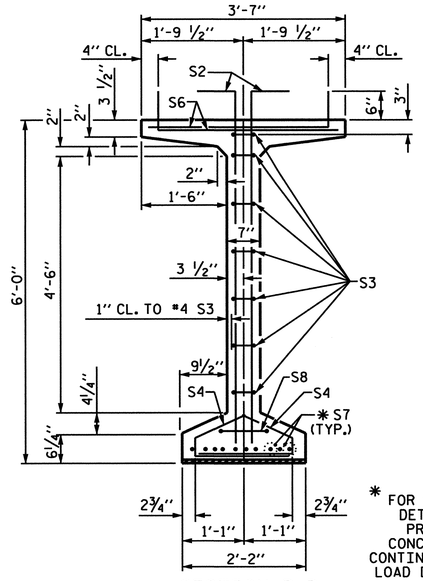

SECTION B-B

* FOR S7 BARS, SEE DETAIL "C" OF PRESTRESSED CONCRETE GIRDER CONTINUOUS FOR LIVE LOAD DETAILS SHEET

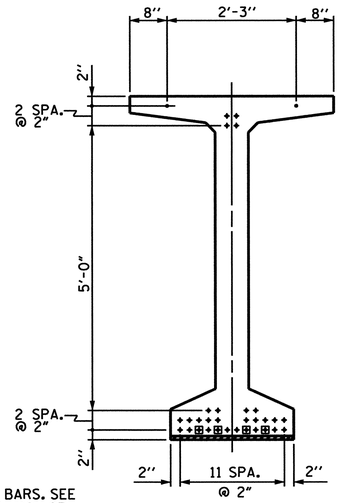

AT END OF GIRDER

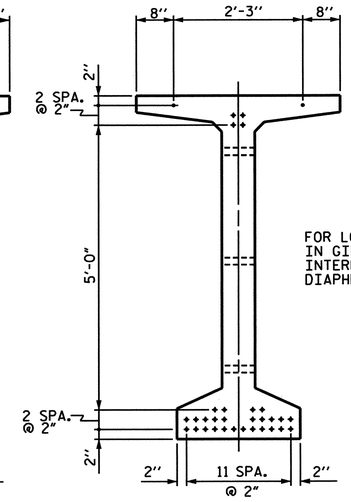

AT ℄ OF GIRDER

FOR LOCATION OF HOLES IN GIRDER WEB, SEE INTERMEDIATE STEEL DIAPHRAGM SHEET

0.60 " Ø LOW RELAXATION STRAND LAYOUT

DEBONDING LEGEND

- ● FULLY BONDED STRANDS
- ⊡ STRANDS DEBONDED FOR 4'-0" FROM END OF GIRDER

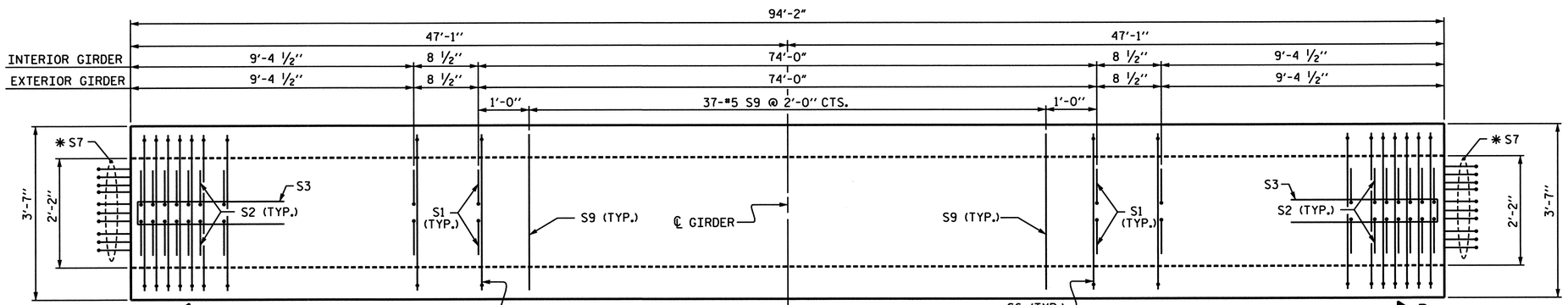

PLAN OF GIRDER

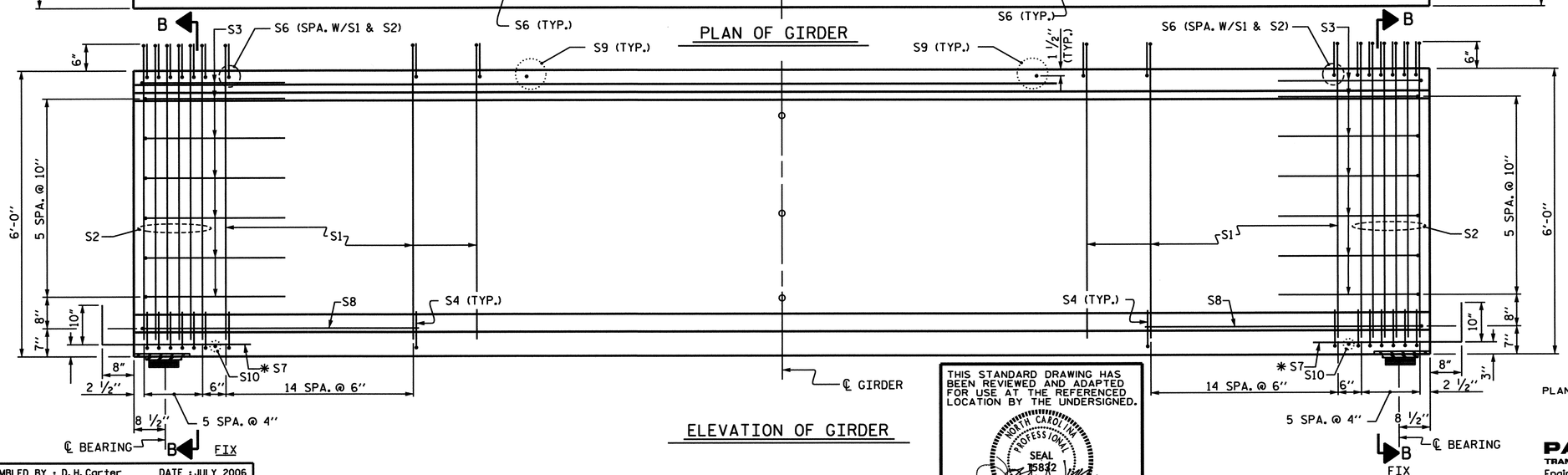

ELEVATION OF GIRDER

THIS STANDARD DRAWING HAS BEEN REVIEWED AND ADAPTED FOR USE AT THE REFERENCED LOCATION BY THE UNDERSIGNED.

NORTH CAROLINA PROFESSIONAL SEAL 15832 ENGINEER JOEL A. LEE

1-17-07

0.60" Ø L. R. GRADE 270 STRANDS

AREA (SQUARE INCHES)	ULTIMATE STRENGTH (LBS. PER STRAND)	APPLIED PRESTRESS (LBS. PER STRAND)
0.217	58,600	43,950

REINFORCING STEEL FOR ONE GIRDER

	BAR	NUMBER	SIZE	TYPE	LENGTH	WEIGHT
INTERIOR GDR.	S1	136	#4	1	6'-10"	621
EXTERIOR GDR.	S1	136	#4	1	6'-10"	621
	S2	24	#5	1	6'-10"	171
	S3	14	#4	2	8'-5"	79
	S4	84	#4	3	3'-0"	168
	S5	1	#5	2	9'-10"	10
INTERIOR GDR.	S6	160	#5	1	3'-9"	625
EXTERIOR GDR.	S6	160	#5	1	3'-9"	625
	* S7	20	#5	STR	3'-8"	76
	S8	2	#5	2	9'-0"	19
	S9	37	#5	STR	3'-3"	125
	S10	1	#3	STR	1'-10"	1

* NOTE: S7 BARS SHALL BE BENT BEFORE SHIPMENT. HEAT BENDING SHALL NOT BE ALLOWED.

BAR TYPES

ALL BAR DIMENSIONS ARE OUT-TO-OUT

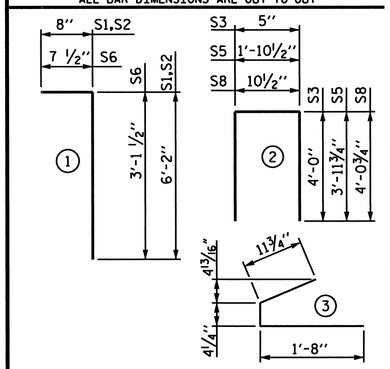

QUANTITIES FOR ONE GIRDER

	REINFORCING STEEL	8,000 PSI CONCRETE	0.60" Ø L.R. STRANDS
	LB.	C.Y.	No.
INTERIOR GIRDER	1895	20.18	32
EXTERIOR GIRDER	1895	20.18	32

GIRDERS REQUIRED

NUMBER	LENGTH	TOTAL LENGTH
4	94.167'	376.668'

PROJECT NO. B-682

BRUNSWICK COUNTY

STATION: 47+08.03 -L- POT

SHEET 14 OF 21

STATE OF NORTH CAROLINA
DEPARTMENT OF TRANSPORTATION
RALEIGH

STANDARD

72" PRESTRESSED CONCRETE MODIFIED BULB TEE CONTINUOUS FOR LIVE LOAD SPAN Q

PLANS PREPARED BY:

PARSONS TRANSPORTATION GROUP
Engineers and Planners
RALEIGH, NORTH CAROLINA

JOB NO. 645615

DWG. NO.

REVISIONS							
NO.	BY:	DATE:	NO.	BY:	DATE:	SHEET NO.	
1			3			5-91	
2			4			TOTAL SHEETS	
						207	

STD. NO. PCG10

ASSEMBLED BY : D. H. Carter		DATE : JULY 2006	
CHECKED BY : J. A. Lee		DATE : JULY 2006	
DRAWN BY : EEM 2/6/97	REV. 8/16/99	RWW/LES	
CHECKED BY : VAP 2/6/97	REV. 10/17/00	RWW/LES	
	REV. 5/1/06	TLA/GM	

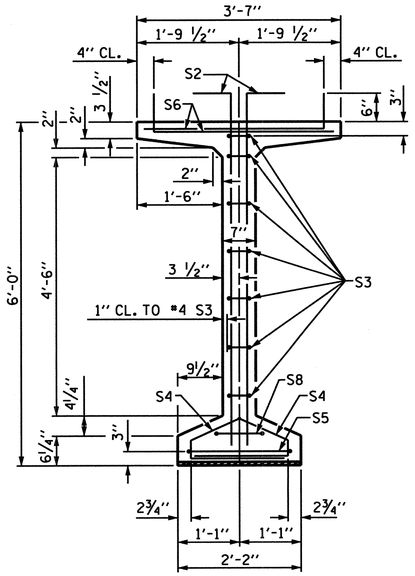

SECTION A-A

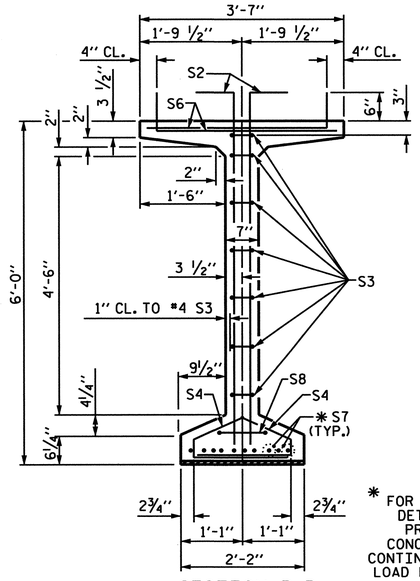

SECTION B-B

* FOR S7 BARS, SEE DETAIL "C" OF PRESTRESSED CONCRETE GIRDER CONTINUOUS FOR LIVE LOAD DETAILS SHEET

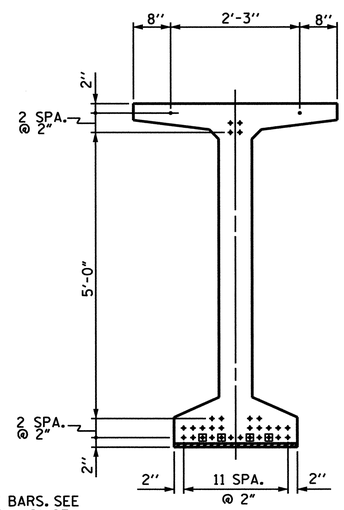

AT END OF GIRDER

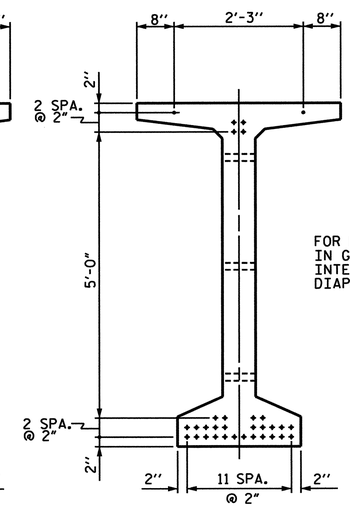

AT ℄ OF GIRDER

0.60 " Ø LOW RELAXATION STRAND LAYOUT

FOR LOCATION OF HOLES IN GIRDER WEB, SEE INTERMEDIATE STEEL DIAPHRAGM SHEET

DEBONDING LEGEND

- ● FULLY BONDED STRANDS
- ▣ STRANDS DEBONDED FOR 4'-0" FROM END OF GIRDER

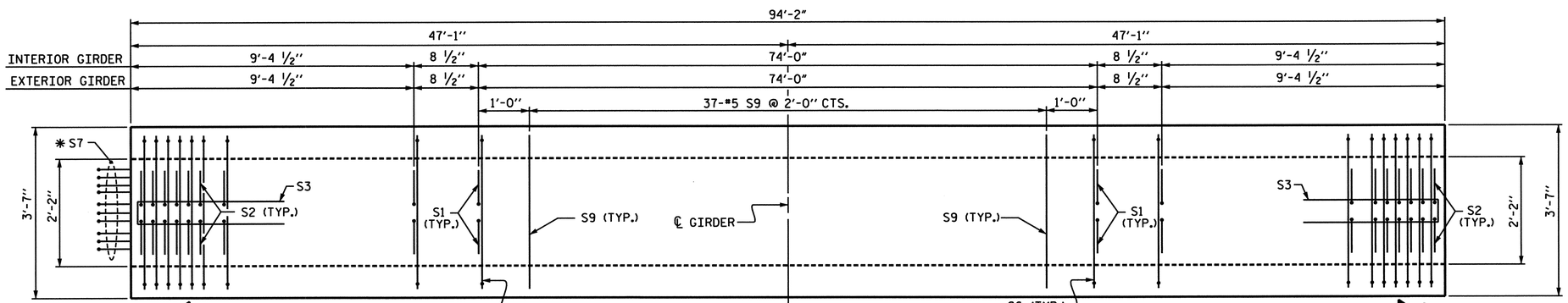

PLAN OF GIRDER

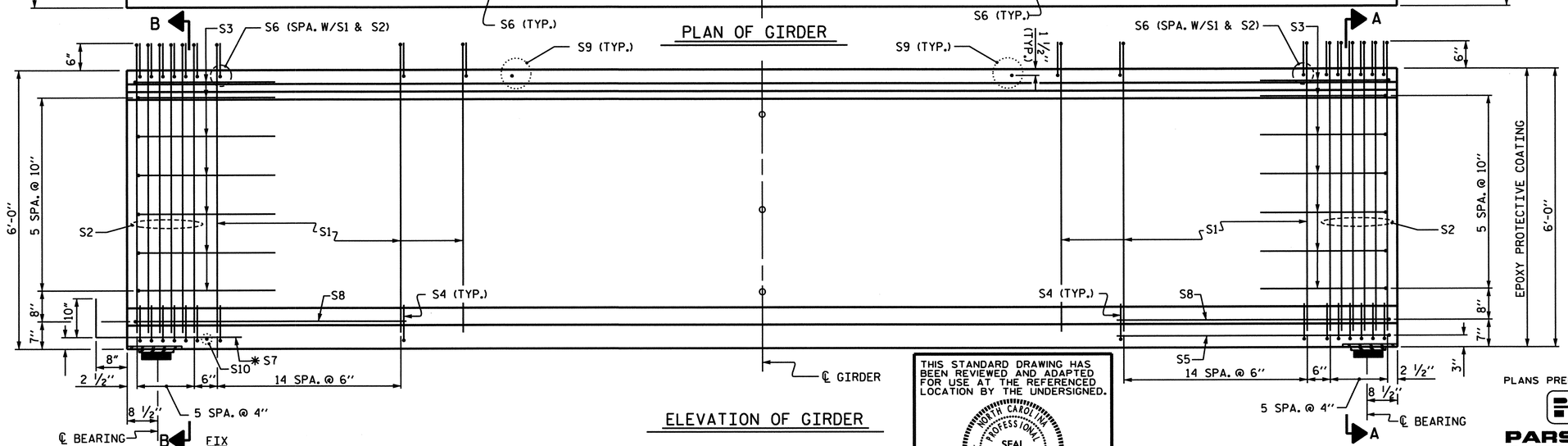

ELEVATION OF GIRDER

THIS STANDARD DRAWING HAS BEEN REVIEWED AND ADAPTED FOR USE AT THE REFERENCED LOCATION BY THE UNDERSIGNED.

NORTH CAROLINA PROFESSIONAL SEAL 19832 ENGINEER JOEL A. LEE

1.17.07

0.60" Ø L. R. GRADE 270 STRANDS

AREA (SQUARE INCHES)	ULTIMATE STRENGTH (LBS. PER STRAND)	APPLIED PRESTRESS (LBS. PER STRAND)
0.217	58,600	43,950

REINFORCING STEEL FOR ONE GIRDER

	BAR	NUMBER	SIZE	TYPE	LENGTH	WEIGHT
INTERIOR GDR.	S1	136	#4	1	6'-10"	621
EXTERIOR GDR.	S1	136	#4	1	6'-10"	621
	S2	24	#5	1	6'-10"	171
	S3	14	#4	2	8'-5"	79
	S4	84	#4	3	3'-0"	168
	S5	1	#5	2	9'-10"	10
INTERIOR GDR.	S6	160	#5	1	3'-9"	625
EXTERIOR GDR.	S6	160	#5	1	3'-9"	625
	* S7	10	#5	STR	3'-8"	38
	S8	2	#5	2	9'-0"	19
	S9	37	#5	STR	3'-3"	125
	S10	1	#3	STR	1'-10"	1

* NOTE: S7 BARS SHALL BE BENT BEFORE SHIPMENT. HEAT BENDING SHALL NOT BE ALLOWED.

BAR TYPES

ALL BAR DIMENSIONS ARE OUT-TO-OUT

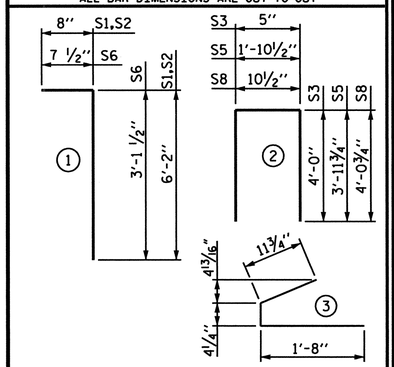

QUANTITIES FOR ONE GIRDER

	REINFORCING STEEL	8,000 PSI CONCRETE	0.60" Ø L.R. STRANDS
	LB.	C.Y.	No.
INTERIOR GIRDER	1857	20.18	32
EXTERIOR GIRDER	1857	20.18	32

GIRDERS REQUIRED

NUMBER	LENGTH	TOTAL LENGTH
4	94.167'	376.668'

PROJECT NO. B-682

BRUNSWICK COUNTY

STATION: 47+08.03 -L- POT

SHEET 15 OF 21

STATE OF NORTH CAROLINA
DEPARTMENT OF TRANSPORTATION
RALEIGH

STANDARD
72" PRESTRESSED CONCRETE MODIFIED BULB TEE CONTINUOUS FOR LIVE LOAD SPAN R

PLANS PREPARED BY:

PARSONS TRANSPORTATION GROUP
Engineers and Planners
RALEIGH, NORTH CAROLINA

JOB NO. 645615
DWG. NO.

REVISIONS							
NO.	BY:	DATE:	NO.	BY:	DATE:	SHEET NO. 5-92
1			3			TOTAL SHEETS 207
2			4			

STD. NO. PCG10

ASSEMBLED BY : D. H. Carter		DATE : JULY 2006	
CHECKED BY : J. A. Lee		DATE : JULY 2006	
DRAWN BY : EEM 2/6/97	REV. 8/16/99	RWW/LES	
CHECKED BY : VAP 2/6/97	REV. 10/17/00	RWW/LES	
	REV. 5/1/06	TLA/GM	

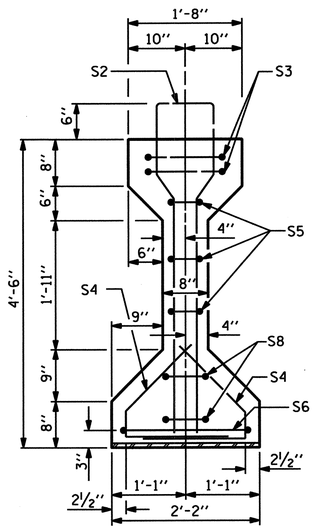

SECTION A-A

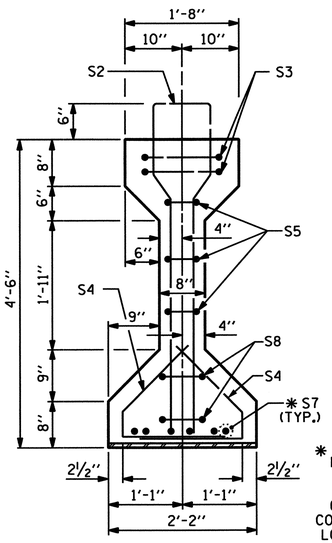

SECTION B-B

* FOR S7 BARS, SEE DETAIL "A" OF PRESTRESSED CONCRETE GIRDER CONTINUOUS FOR LIVE LOAD DETAILS SHEET

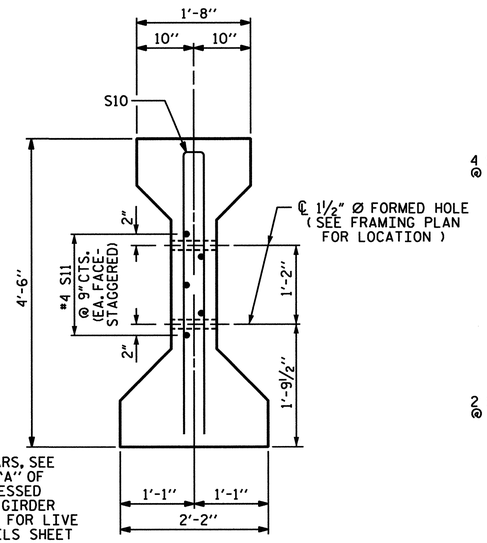

SECTION C-C

(S1 BARS NOT SHOWN)

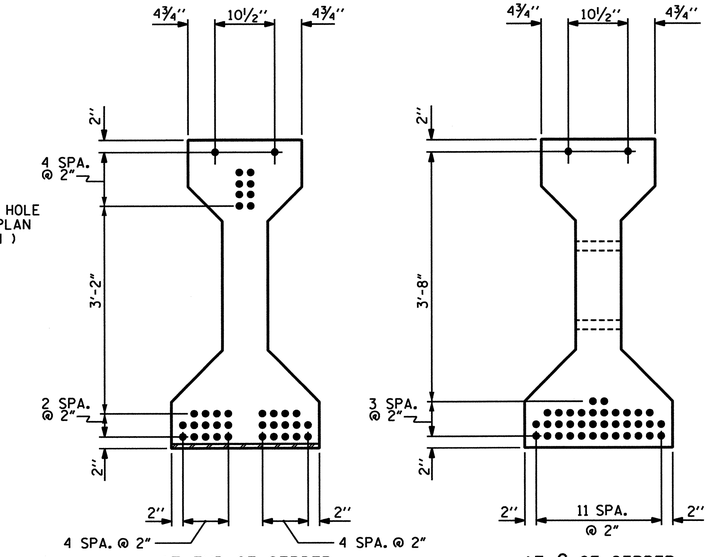

AT END OF GIRDER

AT ℄ OF GIRDER

0.60" Ø LOW RELAXATION STRAND LAYOUT

0.60" Ø L. R. GRADE 270 STRANDS		
AREA (SQUARE INCHES)	ULTIMATE STRENGTH (LBS. PER STRAND)	APPLIED PRESTRESS (LBS. PER STRAND)
0.217	58,600	43,950

GIRDER REINFORCING STEEL

	BAR	NUMBER	SIZE	TYPE	LENGTH	WEIGHT
EXTERIOR -S1	S1	56	#4	1	10'-8"	399
INTERIOR -S2	S1	55	#4	1	10'-8"	392
INTERIOR -S3	S1	55	#4	1	10'-8"	392
EXTERIOR -S4	S1	55	#4	1	10'-8"	392
	S2	12	#6	1	10'-8"	192
	S3	4	#4	2	9'-1"	24
	S4	64	#4	3	3'-5"	146
	S5	6	#4	2	8'-5"	34
	S6	1	#4	2	9'-11"	7
	* S7	6	#5	STR	3'-8"	23
	S8	4	#4	2	8'-7"	23
	S9	1	#3	STR	1'-10"	1
EXTERIOR GDR.	S10	2	#5	2	8'-8"	18
INTERIOR GDR.	S10	2	#5	2	8'-8"	18
EXTERIOR GDR.	S11	5	#4	STR	7'-0"	23
INTERIOR GDR.	S11	5	#4	STR	7'-0"	23

* NOTE: S7 BARS SHALL BE BENT BEFORE SHIPMENT. HEAT BENDING SHALL NOT BE ALLOWED.

BAR TYPES

ALL BAR DIMENSIONS ARE OUT-TO-OUT

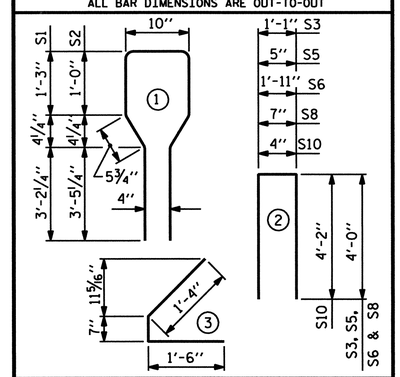

GDR	A	B	C	D
S1	85'-5¼"	42'-8⅝"	10⅛"	70'-0"
S2	84'-6"	42'-3"	1'-4½"	68'-0"
S3	83'-7¼"	41'-9⅝"	11⅛"	68'-0"
S4	82'-9"	41'-4½"	6"	68'-0"

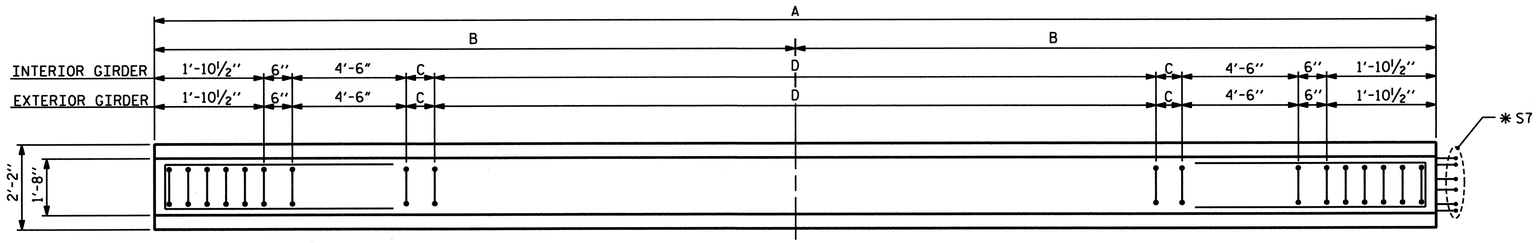

PLAN OF GIRDER

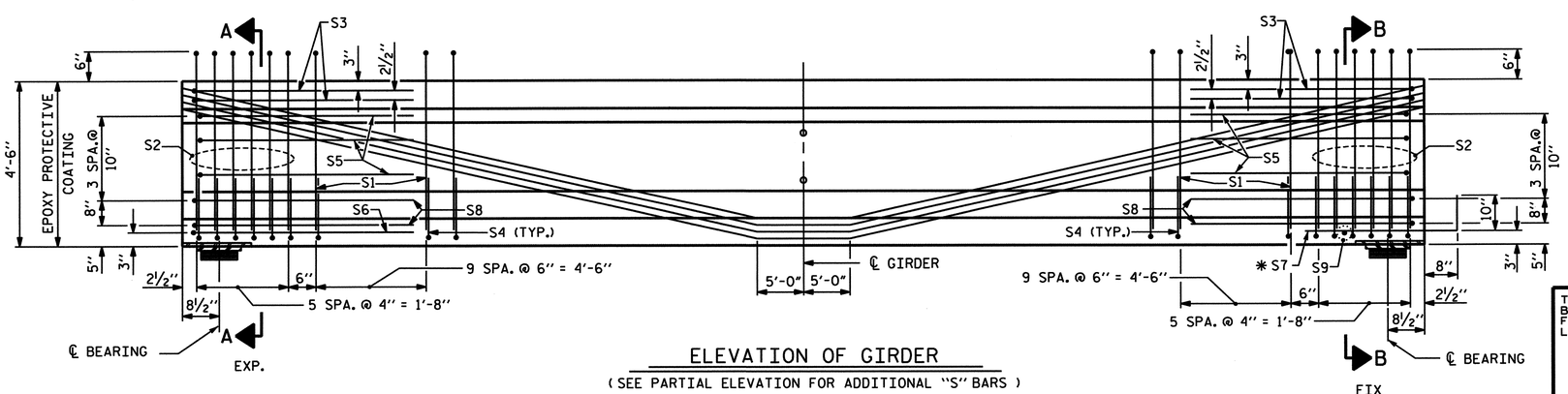

ELEVATION OF GIRDER

(SEE PARTIAL ELEVATION FOR ADDITIONAL "S" BARS)

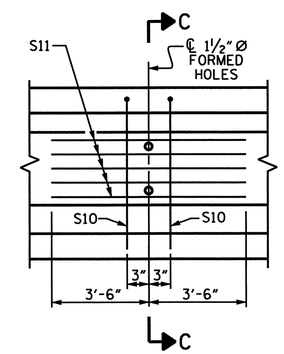

PARTIAL ELEVATION

SHOWING INTERMEDIATE DIAPHRAGM REINFORCING STEEL FOR ALL GIRDERS

GIRDER QUANTITIES

	REINFORCING STEEL LB.	8000 PSI CONCRETE C.Y.	0.60" Ø L.R. STRANDS No.
EXTERIOR -S1	890	17.34	38
INTERIOR -S2	883	17.15	38
INTERIOR -S3	883	16.97	38
EXTERIOR -S4	883	16.79	38

GIRDERS REQUIRED

NUMBER	LENGTH	TOTAL LENGTH
4	VARIES	336.292

PROJECT NO. B-682

BRUNSWICK COUNTY

STATION: 47+08.03 -L- POT

SHEET 16 OF 21

STATE OF NORTH CAROLINA
DEPARTMENT OF TRANSPORTATION
RALEIGH

STANDARD
AASHTO TYPE IV
PRESTRESSED CONCRETE GIRDER
CONTINUOUS FOR LIVE LOAD
SPAN S

THIS STANDARD DRAWING HAS BEEN REVIEWED AND ADAPTED FOR USE AT THE REFERENCED LOCATION BY THE UNDERSIGNED.

NORTH CAROLINA PROFESSIONAL SEAL 15832 ENGINEER JOEL A. LEE
1.17.07

PLANS PREPARED BY:

PARSONS TRANSPORTATION GROUP
Engineers and Planners
RALEIGH, NORTH CAROLINA
JOB NO. 645615
DWG. NO.

REVISIONS								SHEET NO.
NO.	BY:	DATE:	NO.	BY:	DATE:			5-93
1			3					TOTAL SHEETS
2			4					207

ASSEMBLED BY : D. H. Carter		DATE : JULY 2006	
CHECKED BY : J. A. Lee		DATE : JULY 2006	
DRAWN BY : ELR 8/91	REV. 7/17/98	RWW/LES	
CHECKED BY : GRP 8/91	REV. 10/17/00R	RWW/LES	
	REV. 5/1/06	TLA/GM	

STD. NO. PCG6

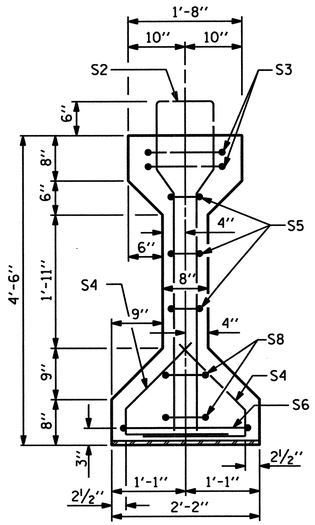

SECTION A-A

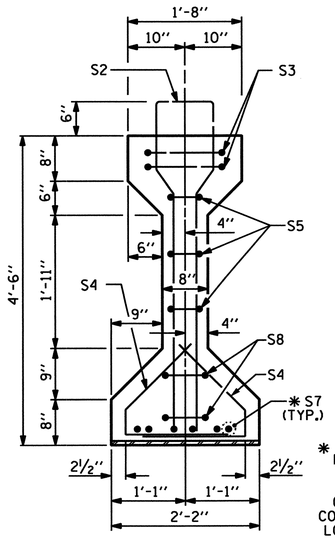

SECTION B-B

* FOR S7 BARS, SEE DETAIL "A" OF PRESTRESSED CONCRETE GIRDER CONTINUOUS FOR LIVE LOAD DETAILS SHEET

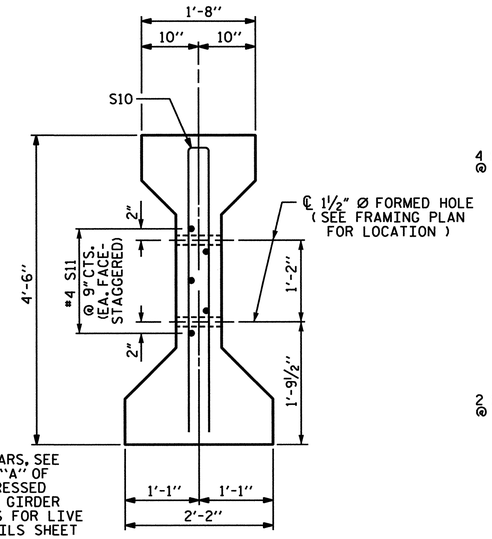

SECTION C-C

(S1 BARS NOT SHOWN)

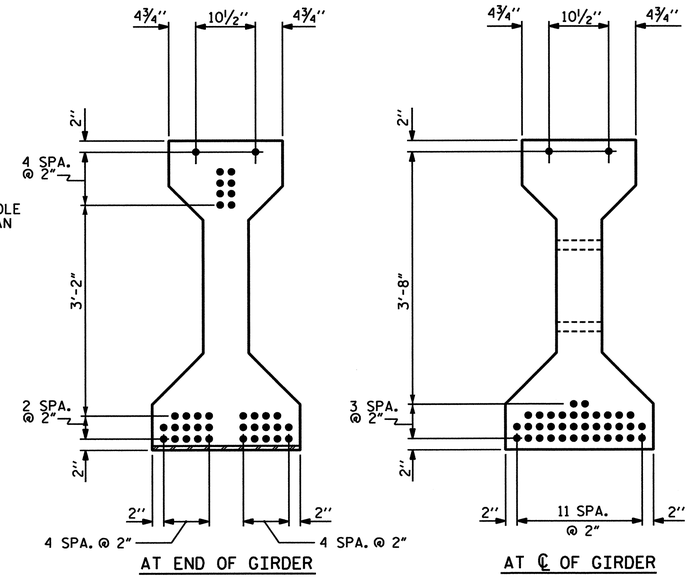

AT END OF GIRDER

AT ℄ OF GIRDER

0.60" Ø LOW RELAXATION STRAND LAYOUT

0.60" Ø L. R. GRADE 270 STRANDS		
AREA (SQUARE INCHES)	ULTIMATE STRENGTH (LBS. PER STRAND)	APPLIED PRESTRESS (LBS. PER STRAND)
0.217	58,600	43,950

GIRDER REINFORCING STEEL

	BAR	NUMBER	SIZE	TYPE	LENGTH	WEIGHT
EXTERIOR -T1	S1	56	#4	1	10'-8"	399
INTERIOR -T2	S1	55	#4	1	10'-8"	392
INTERIOR -T3	S1	55	#4	1	10'-8"	392
EXTERIOR -T4	S1	54	#4	1	10'-8"	385
	S2	12	#6	1	10'-8"	192
	S3	4	#4	2	9'-1"	24
	S4	64	#4	3	3'-5"	146
	S5	6	#4	2	8'-5"	34
	S6	1	#4	2	9'-11"	7
	* S7	6	#5	STR	3'-8"	23
	S8	4	#4	2	8'-7"	23
	S9	1	#3	STR	1'-10"	1
EXTERIOR GDR.	S10	2	#5	2	8'-8"	18
INTERIOR GDR.	S10	2	#5	2	8'-8"	18
EXTERIOR GDR.	S11	5	#4	STR	7'-0"	23
INTERIOR GDR.	S11	5	#4	STR	7'-0"	23

* NOTE: S7 BARS SHALL BE BENT BEFORE SHIPMENT. HEAT BENDING SHALL NOT BE ALLOWED.

BAR TYPES

ALL BAR DIMENSIONS ARE OUT-TO-OUT

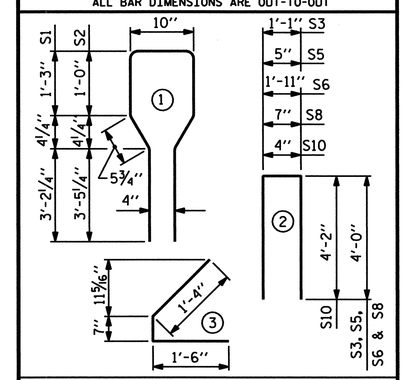

GDR	A	B	C	D
T1	86'-3 5/8"	43'-1 13/16"	1'-3 5/16"	70'-0"
T2	84'-8 1/8"	42'-4 1/16"	1'-5 5/16"	68'-0"
T3	83'-0 1/2"	41'-6 1/4"	7¾"	68'-0"
T4	81'-5"	40'-8 1/2"	10"	66'-0"

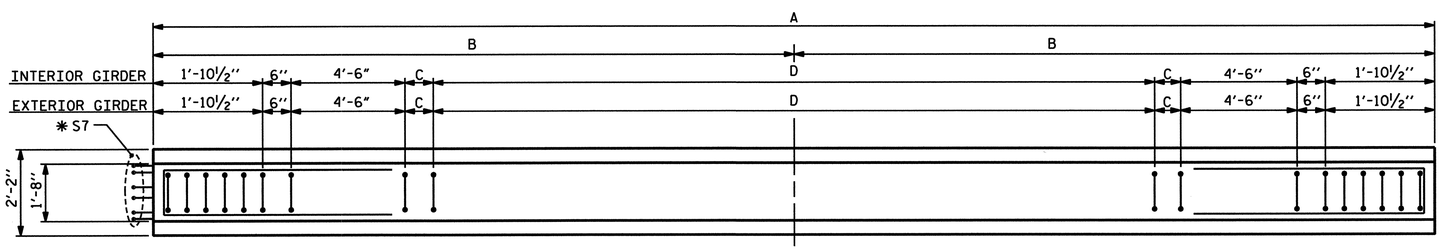

PLAN OF GIRDER

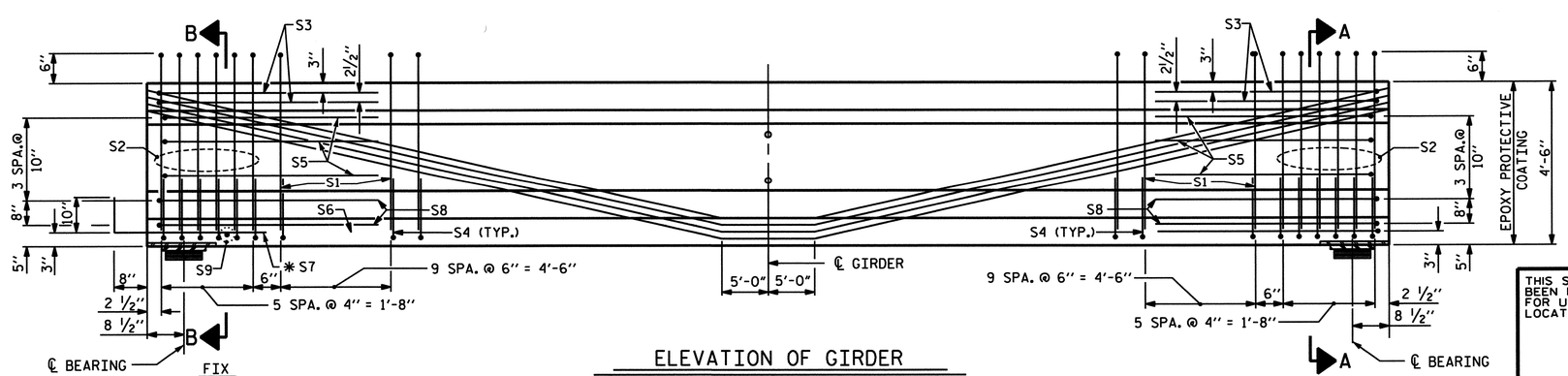

ELEVATION OF GIRDER

(SEE PARTIAL ELEVATION FOR ADDITIONAL "S" BARS)

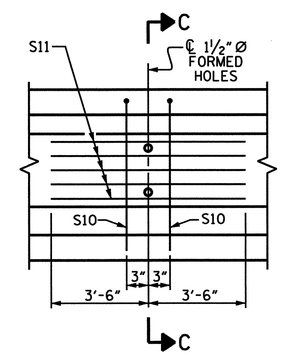

PARTIAL ELEVATION

SHOWING INTERMEDIATE DIAPHRAGM REINFORCING STEEL FOR ALL GIRDERS

GIRDER QUANTITIES

	REINFORCING STEEL LB.	8000 PSI CONCRETE C.Y.	0.60" Ø L.R. STRANDS No.
EXTERIOR -T1	890	17.51	38
INTERIOR -T2	883	17.18	38
INTERIOR -T3	883	16.85	38
EXTERIOR -T4	876	16.52	38

GIRDERS REQUIRED

NUMBER	LENGTH	TOTAL LENGTH
4	VARIES	335.437

PROJECT NO. B-682

BRUNSWICK COUNTY

STATION: 47+08.03 -L- POT

SHEET 17 OF 21

STATE OF NORTH CAROLINA
DEPARTMENT OF TRANSPORTATION
RALEIGH

STANDARD
AASHTO TYPE IV
PRESTRESSED CONCRETE GIRDER
CONTINUOUS FOR LIVE LOAD
SPAN T

THIS STANDARD DRAWING HAS BEEN REVIEWED AND ADAPTED FOR USE AT THE REFERENCED LOCATION BY THE UNDERSIGNED.

NORTH CAROLINA PROFESSIONAL SEAL 15832 ENGINEER JOEL A. LEE
1.17.07

PLANS PREPARED BY:

PARSONS TRANSPORTATION GROUP
Engineers and Planners
RALEIGH, NORTH CAROLINA

JOB NO. 645615
DWG. NO.

REVISIONS								
NO.	BY:	DATE:	NO.	BY:	DATE:			
1			3					
2			4					

SHEET NO. 5-94

TOTAL SHEETS 207

ASSEMBLED BY : D. H. Carter		DATE : JULY 2006	
CHECKED BY : J. A. Lee		DATE : JULY 2006	
DRAWN BY : ELR 8/91	REV. 7/17/98	RWW/LES	
CHECKED BY : GRP 8/91	REV. 10/17/00R	RWW/LES	
	REV. 5/1/06	TLA/GM	

STD. NO. PCG6

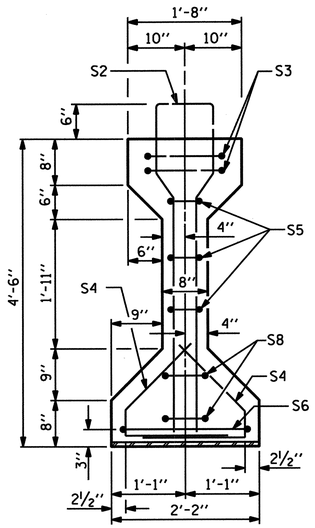

SECTION A-A

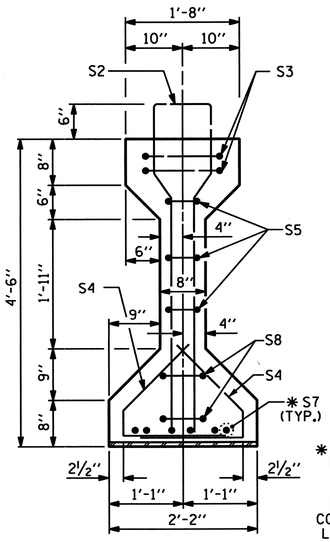

SECTION B-B

✱ FOR S7 BARS, SEE DETAIL "A" OF PRESTRESSED CONCRETE GIRDER CONTINUOUS FOR LIVE LOAD DETAILS SHEET

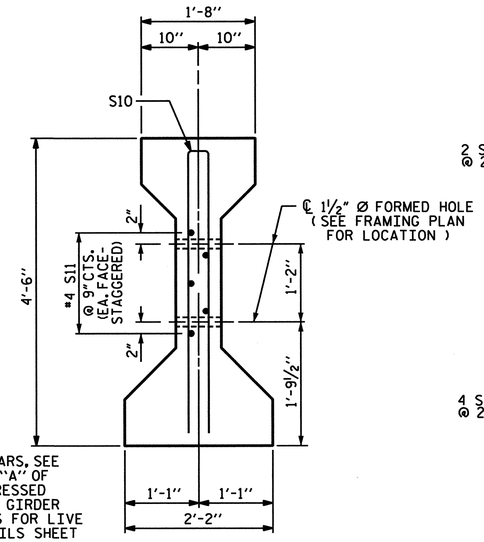

SECTION C-C

(S1 BARS NOT SHOWN)

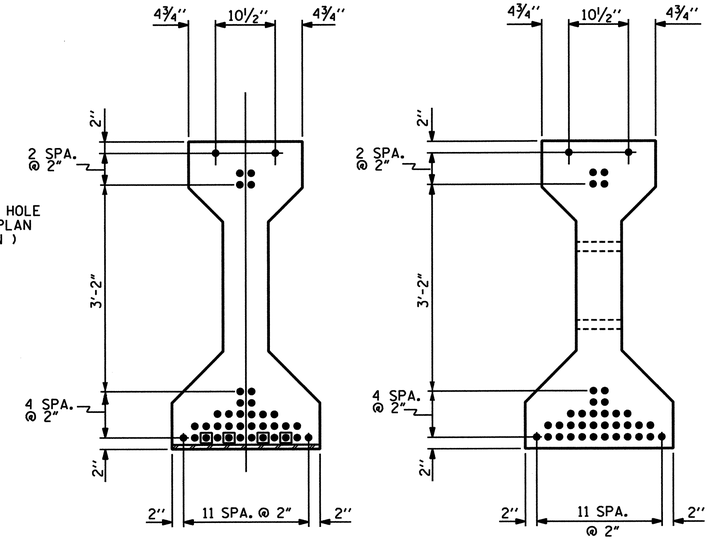

AT END OF GIRDER

AT ℄ OF GIRDER

0.60" Ø LOW RELAXATION STRAND LAYOUT

DEBONDING LEGEND

● FULLY BONDED STRANDS

▣ STRANDS DEBONDED FOR 4'-0" FROM END OF GIRDER

GDR	A	B	C	D
U1	81'-2¼"	40'-7⅛"	8⅝"	66'-0"
U2	79'-7⅞"	39'-9 15/16"	11 1/16"	64'-0"
U3	78'-1⅜"	39'-0 11/16"	1'-2 3/16"	62'-0"
U4	76'-7"	38'-3½"	1'-5"	60'-0"

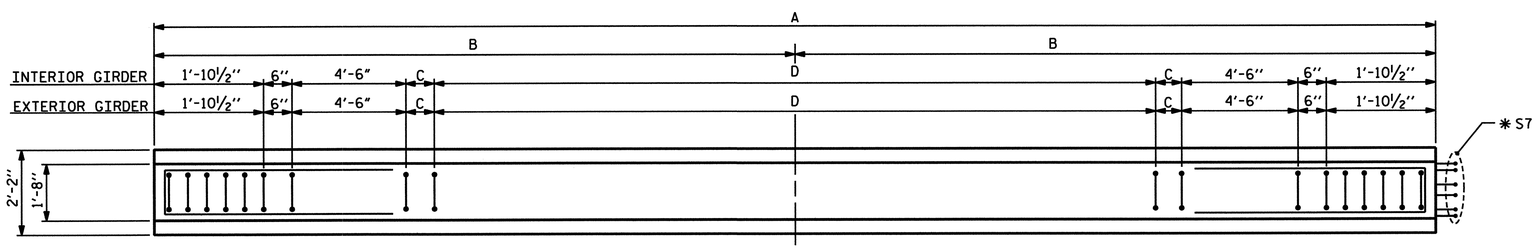

PLAN OF GIRDER

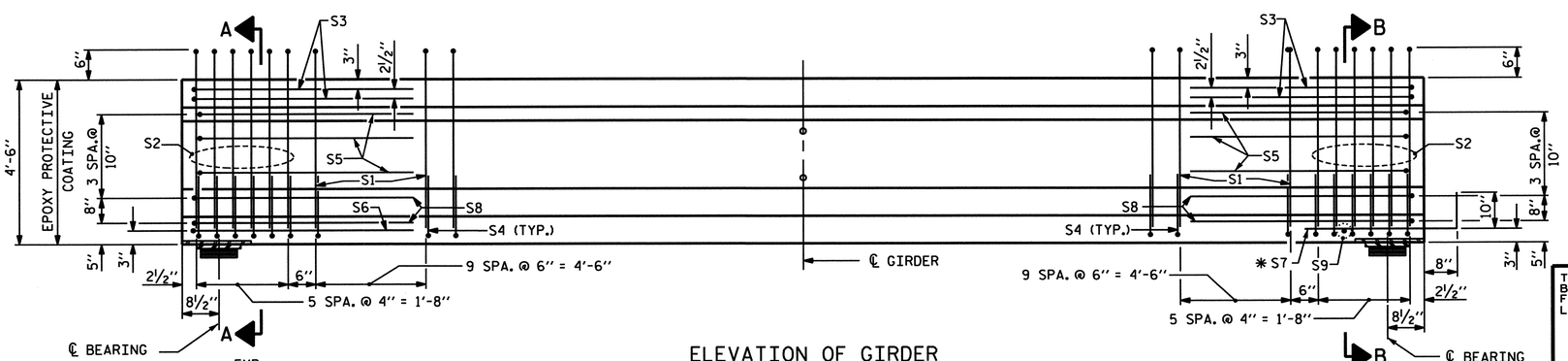

ELEVATION OF GIRDER

(SEE PARTIAL ELEVATION FOR ADDITIONAL "S" BARS)

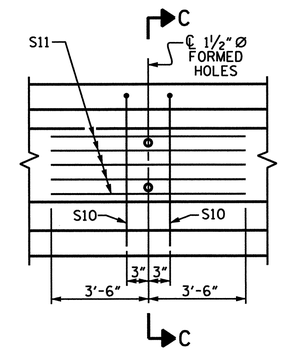

PARTIAL ELEVATION

SHOWING INTERMEDIATE DIAPHRAGM REINFORCING STEEL FOR ALL GIRDERS

0.60" Ø L. R. GRADE 270 STRANDS

AREA (SQUARE INCHES)	ULTIMATE STRENGTH (LBS. PER STRAND)	APPLIED PRESTRESS (LBS. PER STRAND)
0.217	58,600	43,950

GIRDER REINFORCING STEEL

	BAR	NUMBER	SIZE	TYPE	LENGTH	WEIGHT
EXTERIOR -U1	S1	54	#4	1	10'-8"	385
INTERIOR -U2	S1	53	#4	1	10'-8"	378
INTERIOR -U3	S1	52	#4	1	10'-8"	371
EXTERIOR -U4	S1	51	#4	1	10'-8"	363
	S2	12	#6	1	10'-8"	192
	S3	4	#4	2	9'-1"	24
	S4	64	#4	3	3'-5"	146
	S5	6	#4	2	8'-5"	34
	S6	1	#4	2	9'-11"	7
	✱ S7	6	#5	STR	3'-8"	23
	S8	4	#4	2	8'-7"	23
	S9	1	#3	STR	1'-10"	1
EXTERIOR GDR.	S10	2	#5	2	8'-8"	18
INTERIOR GDR.	S10	2	#5	2	8'-8"	18
EXTERIOR GDR.	S11	5	#4	STR	7'-0"	23
INTERIOR GDR.	S11	5	#4	STR	7'-0"	23

✱ NOTE: S7 BARS SHALL BE BENT BEFORE SHIPMENT. HEAT BENDING SHALL NOT BE ALLOWED.

BAR TYPES

ALL BAR DIMENSIONS ARE OUT-TO-OUT

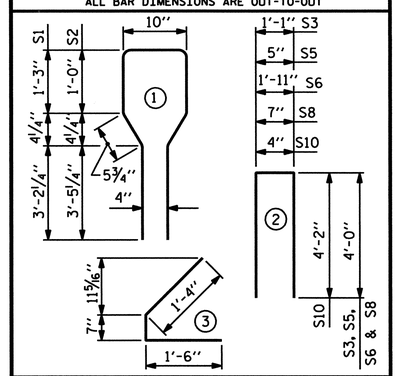

GIRDER QUANTITIES

	REINFORCING STEEL LB.	8000 PSI CONCRETE C.Y.	0.60" Ø L.R. STRANDS No.
EXTERIOR -U1	876	16.48	38
INTERIOR -U2	869	16.16	38
INTERIOR -U3	862	15.85	38
EXTERIOR -U4	854	15.54	38

GIRDERS REQUIRED

NUMBER	LENGTH	TOTAL LENGTH
4	VARIES	315.542

PROJECT NO. B-682

BRUNSWICK COUNTY

STATION: 47+08.03 -L- POT

SHEET 18 OF 21

STATE OF NORTH CAROLINA
DEPARTMENT OF TRANSPORTATION
RALEIGH

STANDARD
AASHTO TYPE IV
PRESTRESSED CONCRETE GIRDER
CONTINUOUS FOR LIVE LOAD
SPAN U

THIS STANDARD DRAWING HAS BEEN REVIEWED AND ADAPTED FOR USE AT THE REFERENCED LOCATION BY THE UNDERSIGNED.

NORTH CAROLINA PROFESSIONAL SEAL 15832 ENGINEER JOEL A. LEE
1-17-07

PLANS PREPARED BY:

PARSONS TRANSPORTATION GROUP
Engineers and Planners
RALEIGH, NORTH CAROLINA

JOB NO. 645615

DWG. NO.

REVISIONS							
NO.	BY:	DATE:	NO.	BY:	DATE:	SHEET NO.	
1			3			5-95	
2			4			TOTAL SHEETS	207

ASSEMBLED BY : D. H. Carter DATE : JULY 2006
CHECKED BY : J. A. Lee DATE : JULY 2006

DRAWN BY : ELR 8/91
CHECKED BY : GRP 8/91

REV. 7/17/98 RWW/LES
REV. 10/17/00R RWW/LES
REV. 5/1/06 TLA/GM

STD. NO. PCG6

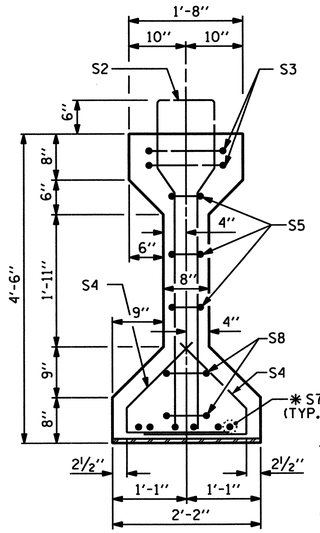

SECTION B-B

✱ FOR S7 BARS, SEE DETAIL "A" OF PRESTRESSED CONCRETE GIRDER CONTINUOUS FOR LIVE LOAD DETAILS SHEET

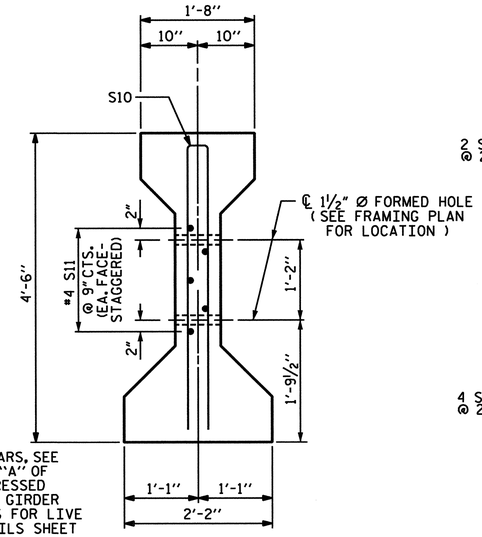

SECTION C-C

(S1 BARS NOT SHOWN)

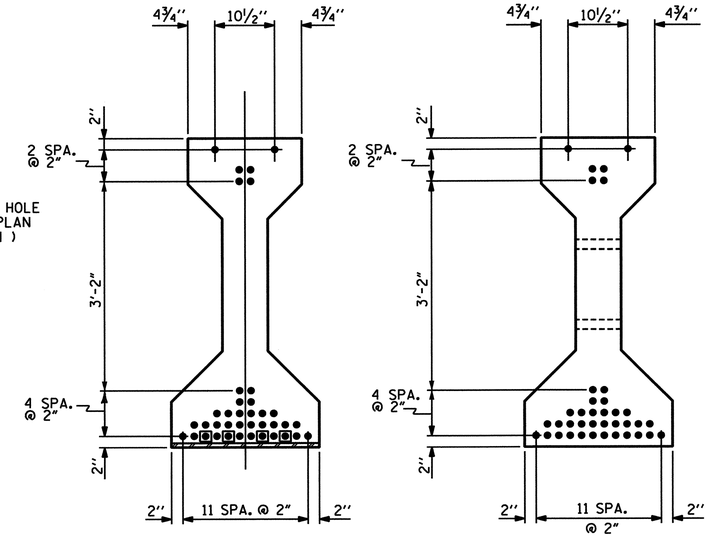

AT END OF GIRDER

AT ℄ OF GIRDER

0.60" Ø LOW RELAXATION STRAND LAYOUT

DEBONDING LEGEND

● FULLY BONDED STRANDS

⊡ STRANDS DEBONDED FOR 4'-0" FROM END OF GIRDER

GDR	A	B	C	D
V1	81'-2¼"	40'-7⅛"	8⅝"	66'-0"
V2	79'-7⅞"	39'-9 15/16"	11 1/16"	64'-0"
V3	78'-1⅜"	39'-0 11/16"	1'-2 5/16"	62'-0"
V4	76'-7"	38'-3½"	1'-5"	60'-0"

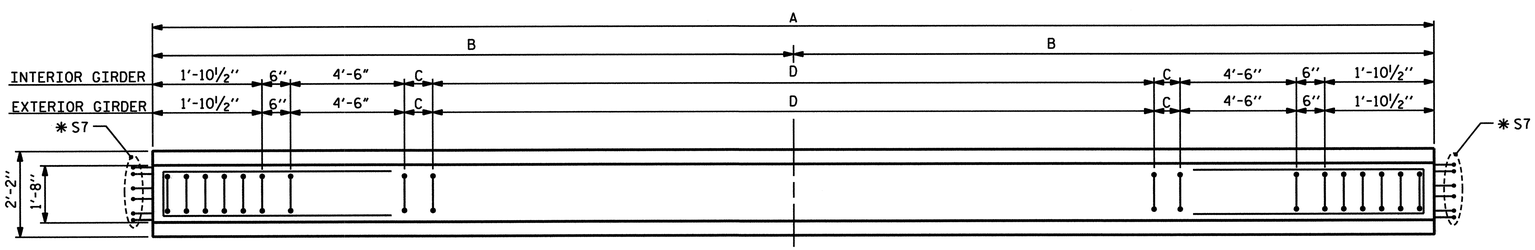

PLAN OF GIRDER

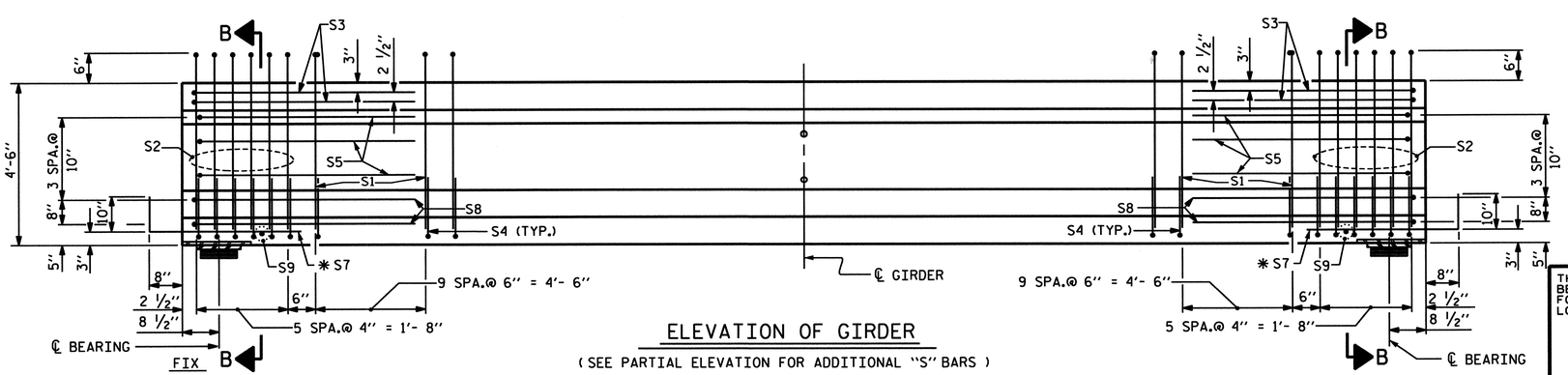

ELEVATION OF GIRDER

(SEE PARTIAL ELEVATION FOR ADDITIONAL "S" BARS)

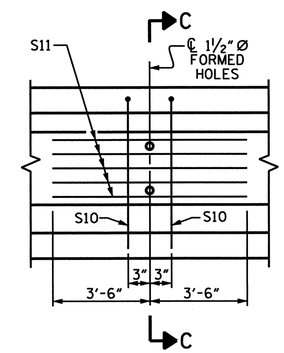

PARTIAL ELEVATION

SHOWING INTERMEDIATE DIAPHRAGM REINFORCING STEEL FOR ALL GIRDERS

0.60" Ø L. R. GRADE 270 STRANDS

AREA (SQUARE INCHES)	ULTIMATE STRENGTH (LBS. PER STRAND)	APPLIED PRESTRESS (LBS. PER STRAND)
0.217	58,600	43,950

GIRDER REINFORCING STEEL

	BAR	NUMBER	SIZE	TYPE	LENGTH	WEIGHT
EXTERIOR -V1	S1	54	#4	1	10'-8"	385
INTERIOR -V2	S1	53	#4	1	10'-8"	378
INTERIOR -V3	S1	52	#4	1	10'-8"	371
EXTERIOR -V4	S1	51	#4	1	10'-8"	363
	S2	12	#6	1	10'-8"	192
	S3	4	#4	2	9'-1"	24
	S4	64	#4	3	3'-5"	146
	S5	6	#4	2	8'-5"	34
	S6	1	#4	2	9'-11"	7
	✱ S7	12	#5	STR	3'-8"	46
	S8	4	#4	2	8'-7"	23
	S9	1	#3	STR	1'-10"	1
EXTERIOR GDR.	S10	2	#5	2	8'-8"	18
INTERIOR GDR.	S10	2	#5	2	8'-8"	18
EXTERIOR GDR.	S11	5	#4	STR	7'-0"	23
INTERIOR GDR.	S11	5	#4	STR	7'-0"	23

✱ NOTE: S7 BARS SHALL BE BENT BEFORE SHIPMENT. HEAT BENDING SHALL NOT BE ALLOWED.

BAR TYPES

ALL BAR DIMENSIONS ARE OUT-TO-OUT

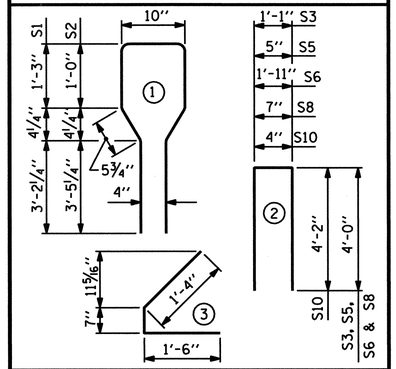

GIRDER QUANTITIES

	REINFORCING STEEL LB.	8000 PSI CONCRETE C.Y.	0.60" Ø L.R. STRANDS No.
EXTERIOR -V1	899	16.48	38
INTERIOR -V2	892	16.16	38
INTERIOR -V3	885	15.85	38
EXTERIOR -V4	877	15.54	38

GIRDERS REQUIRED

NUMBER	LENGTH	TOTAL LENGTH
4	VARIES	315.542

PROJECT NO. B-682

BRUNSWICK COUNTY

STATION: 47+08.03 -L- POT

SHEET 19 OF 21

STATE OF NORTH CAROLINA
DEPARTMENT OF TRANSPORTATION
RALEIGH

STANDARD
AASHTO TYPE IV
PRESTRESSED CONCRETE GIRDER
CONTINUOUS FOR LIVE LOAD
SPAN V

THIS STANDARD DRAWING HAS BEEN REVIEWED AND ADAPTED FOR USE AT THE REFERENCED LOCATION BY THE UNDERSIGNED.

NORTH CAROLINA PROFESSIONAL SEAL 15832 ENGINEER JOEL A. LEE

1.17.07

PLANS PREPARED BY:

PARSONS TRANSPORTATION GROUP
Engineers and Planners
RALEIGH, NORTH CAROLINA

JOB NO. 645615

DWG. NO.

REVISIONS							
NO.	BY:	DATE:	NO.	BY:	DATE:	SHEET NO.	5-96
1			3			TOTAL SHEETS	207
2			4				

ASSEMBLED BY : D. H. Carter DATE : JULY 2006
CHECKED BY : J. A. Lee DATE : JULY 2006

DRAWN BY : ELR 8/91
CHECKED BY : GRP 8/91

REV. 7/17/98 RWW/LES
REV. 10/17/00R RWW/LES
REV. 5/1/06 TLA/GM

STD. NO. PCG6

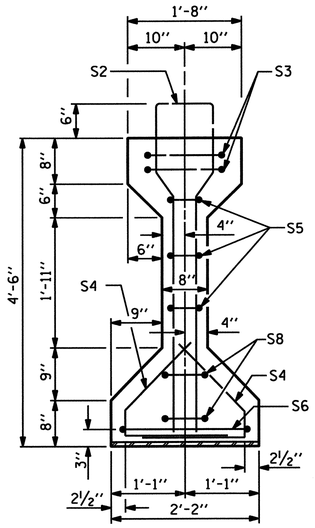

SECTION A-A

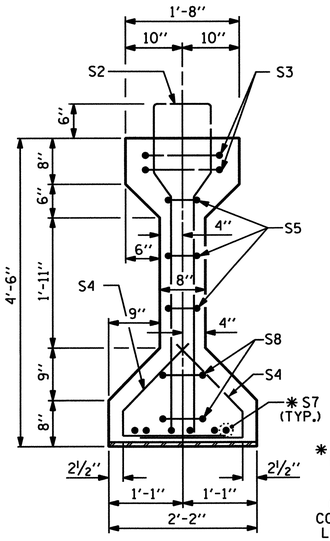

SECTION B-B

✱ FOR S7 BARS, SEE DETAIL "A" OF PRESTRESSED CONCRETE GIRDER CONTINUOUS FOR LIVE LOAD DETAILS SHEET

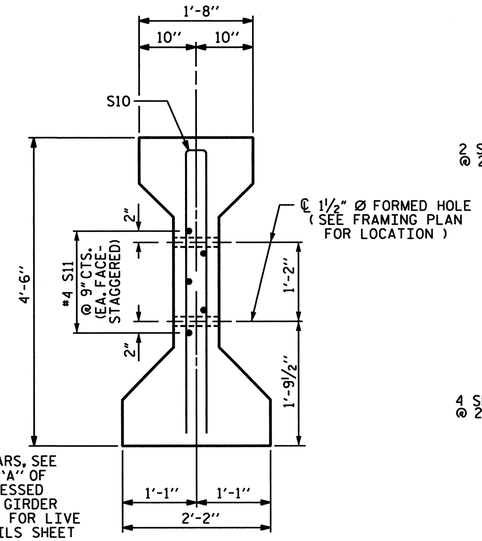

SECTION C-C

(S1 BARS NOT SHOWN)

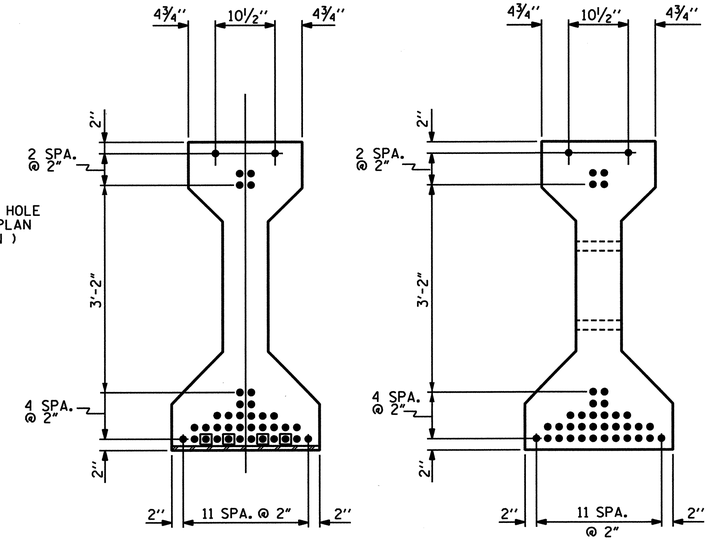

AT END OF GIRDER

AT ℄ OF GIRDER

0.60" Ø LOW RELAXATION STRAND LAYOUT

0.60" Ø L. R. GRADE 270 STRANDS

AREA (SQUARE INCHES)	ULTIMATE STRENGTH (LBS. PER STRAND)	APPLIED PRESTRESS (LBS. PER STRAND)
0.217	58,600	43,950

GIRDER REINFORCING STEEL

	BAR	NUMBER	SIZE	TYPE	LENGTH	WEIGHT
EXTERIOR -W1	S1	53	#4	1	10'-8"	378
INTERIOR -W2	S1	55	#4	1	10'-8"	392
INTERIOR -W3	S1	52	#4	1	10'-8"	371
EXTERIOR -W4	S1	51	#4	1	10'-8"	363
	S2	12	#6	1	10'-8"	192
	S3	4	#4	2	9'-1"	24
	S4	64	#4	3	3'-5"	146
	S5	6	#4	2	8'-5"	34
	S6	1	#4	2	9'-11"	7
	✱ S7	6	#5	STR	3'-8"	23
	S8	4	#4	2	8'-7"	23
	S9	1	#3	STR	1'-10"	1
EXTERIOR GDR.	S10	2	#5	2	8'-8"	18
INTERIOR GDR.	S10	2	#5	2	8'-8"	18
EXTERIOR GDR.	S11	5	#4	STR	7'-0"	23
INTERIOR GDR.	S11	5	#4	STR	7'-0"	23

✱ NOTE: S7 BARS SHALL BE BENT BEFORE SHIPMENT. HEAT BENDING SHALL NOT BE ALLOWED.

BAR TYPES

ALL BAR DIMENSIONS ARE OUT-TO-OUT

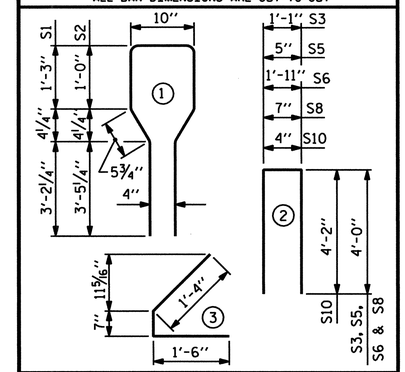

GIRDER QUANTITIES

	REINFORCING STEEL LB.	8000 PSI CONCRETE C.Y.	0.60" Ø L.R. STRANDS No.
EXTERIOR -W1	869	15.93	38
INTERIOR -W2	883	15.61	38
INTERIOR -W3	862	15.30	38
EXTERIOR -W4	854	15.00	38

GIRDERS REQUIRED

NUMBER	LENGTH	TOTAL LENGTH
4	VARIES	304.700'

DEBONDING LEGEND

● FULLY BONDED STRANDS

⊡ STRANDS DEBONDED FOR 4'-0" FROM END OF GIRDER

GDR	A	B	C	D
W1	79'-10¾"	39'-11⅜"	1'-0⅞"	64'-0"
W2	78'-4½"	39'-2¼"	1'-3¾"	60'-0"
W3	76'-9⅛"	38'-4 15/16"	6 1/16"	62'-0"
W4	75'-3½"	37'-7¾"	9¼"	60'-0"

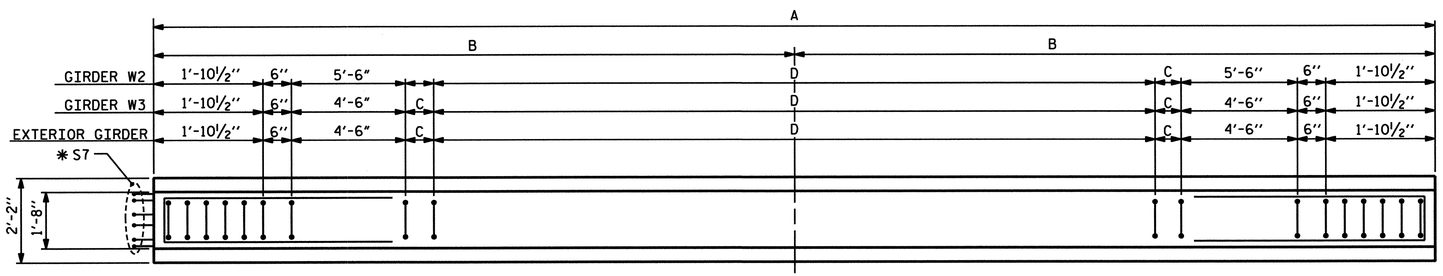

PLAN OF GIRDER

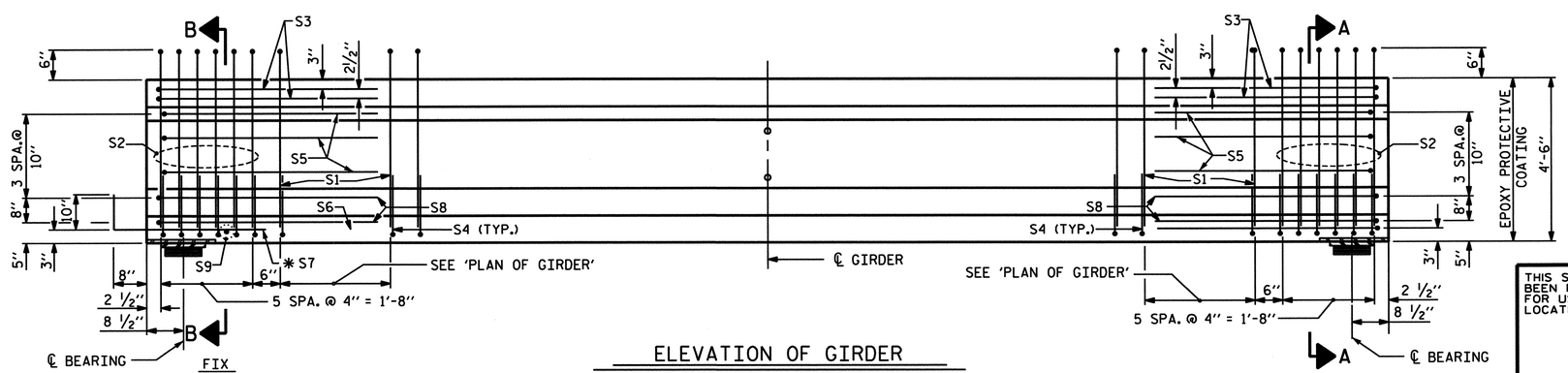

ELEVATION OF GIRDER

(SEE PARTIAL ELEVATION FOR ADDITIONAL "S" BARS)

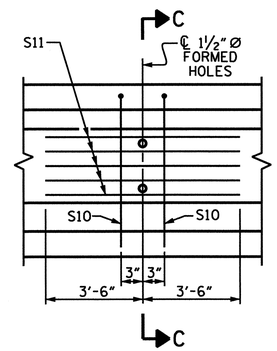

PARTIAL ELEVATION

SHOWING INTERMEDIATE DIAPHRAGM REINFORCING STEEL FOR ALL GIRDERS

PROJECT NO. B-682

BRUNSWICK COUNTY

STATION: 47+08.03 -L- POT

SHEET 20 OF 21

STATE OF NORTH CAROLINA
DEPARTMENT OF TRANSPORTATION
RALEIGH

STANDARD
AASHTO TYPE IV
PRESTRESSED CONCRETE GIRDER
CONTINUOUS FOR LIVE LOAD
SPAN W

THIS STANDARD DRAWING HAS BEEN REVIEWED AND ADAPTED FOR USE AT THE REFERENCED LOCATION BY THE UNDERSIGNED.

NORTH CAROLINA PROFESSIONAL SEAL 15802 ENGINEER MICHAEL A. LEE
1.17.07

PLANS PREPARED BY:

PARSONS TRANSPORTATION GROUP
Engineers and Planners
RALEIGH, NORTH CAROLINA

JOB NO. 645615

DWG. NO.

REVISIONS							SHEET NO.
NO.	BY:	DATE:	NO.	BY:	DATE:		5-97
1			3				TOTAL SHEETS
2			4				207

ASSEMBLED BY : D. H. Carter	DATE : JULY 2006		
CHECKED BY : J. A. Lee	DATE : JULY 2006		
DRAWN BY : ELR 8/91	REV. 7/17/98	RWW/LES	
CHECKED BY : GRP 8/91	REV. 10/17/00R	RWW/LES	
	REV. 5/1/06	TLA/GM	

STD. NO. PCG6

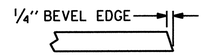

SECTION "G"

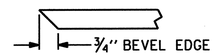

SECTION "F"

(SEE NOTES)

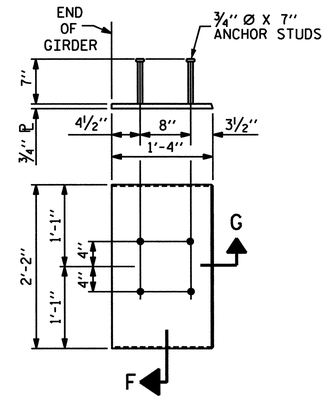

EMBEDDED PLATE "B-1" DETAILS FOR AASHTO TYPE IV GIRDER AND & 72" MODIFIED BULB TEES

(2 REQ'D PER GIRDER)

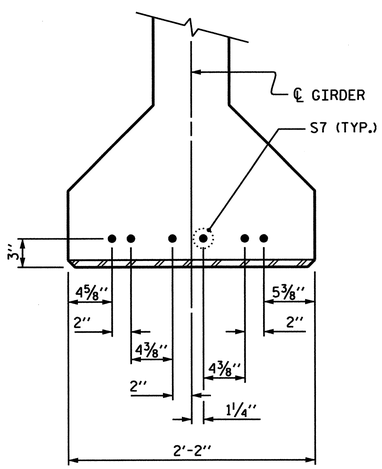

DETAIL "A"

(FOR AASHTO TYPE IV GIRDERS)

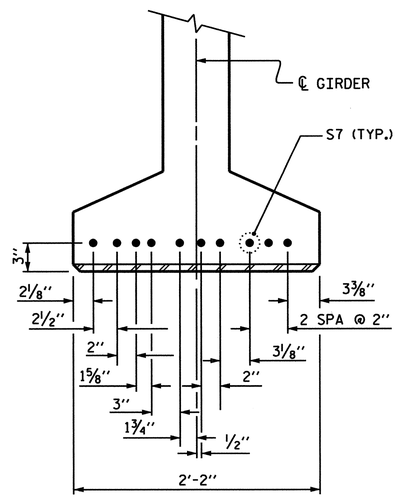

DETAIL "C"

(FOR 63" & 72" MODIFIED BULB TEES)

NOTES

ALL PRESTRESSING STRANDS SHALL BE 7-WIRE LOW-RELAXATION GRADE 270 STRANDS AND SHALL CONFORM TO AASHTO M203 EXCEPT FOR SAMPLING REQUIREMENTS WHICH SHALL BE IN ACCORDANCE WITH THE STANDARD SPECIFICATIONS.

ALL REINFORCING STEEL SHALL BE GRADE 60.

APPLY EPOXY PROTECTIVE COATING TO END OF GIRDER SURFACES INDICATED IN ELEVATION VIEW.

EMBEDDED PLATE "B-1" SHALL BE GALVANIZED IN ACCORDANCE WITH THE STANDARD SPECIFICATIONS. BEVEL EDGES OF PLATE "B-1" TO GIVE CLOSE FIT BUT NOT TIGHT FIT TO STEEL CASTING FORM.

ANCHOR STUDS SHALL CONFORM TO AASHTO M169 GRADES 1010 THROUGH 1020 OR APPROVED EQUAL, AND SHALL MEET THE TYPE "B" REQUIREMENTS OF SUBSECTION 7.3 OF THE ANSI/AASHTO/AWS D1.5 BRIDGE WELDING CODE.

AT ENDS OF GIRDERS TO BE EMBEDDED IN CONCRETE DIAPHRAGMS OR END WALLS, PRESTRESSING STRANDS MAY EXTEND A MAXIMUM OF 2" BEYOND THE GIRDER ENDS. OTHERWISE, PRESTRESSING STRANDS SHALL BE CUT FLUSH WITH THE GIRDER ENDS.

THE TRANSFER OF LOAD FROM THE ANCHORAGES TO THE GIRDER SHALL BE DONE WHEN CONCRETE HAS REACHED A COMPRESSIVE STRENGTH OF NOT LESS THAN 6400 PSI.

DEPENDING ON THE TYPE OF SYSTEM USED TO SUPPORT THE DECK SLAB FORMS, PRESET ANCHORS MAY BE NECESSARY IN THE PRESTRESSED CONCRETE GIRDER.

THE TOP SURFACE OF THE GIRDER, EXCLUDING THE OUTSIDE 4", SHALL BE RAKED TO A DEPTH OF 1/4".

WHEN DRAPED STRANDS ARE DETAILED, THE LONGITUDINAL LOCATION OF THE HOLD DOWN DEVICES SHALL BE WITHIN 6" OF THE LOCATION SHOWN AND THE CENTER OF GRAVITY OF THE GROUP OF DRAPED STRANDS SHALL BE LOCATED WITHIN 1/2" OF THE THEORETICAL LOCATION SHOWN.

A 2" x 2" CHAMFER IS ALLOWED AT THE INTERSECTION OF THE WEB AND THE BOTTOM FLANGE OF THE 63" AND 72" MODIFIED BULB TEES ONLY.

THE CONTRACTOR HAS THE OPTION TO PROVIDE, AT NO ADDITIONAL COST TO THE DEPARTMENT, 2 ADDITIONAL STRANDS AT THE TOP OF THE GIRDER TO FACILITATE TYING OF THE REINFORCING STEEL. THESE STRANDS SHALL BE PULLED TO A LOAD OF 4500 lbs.

FOR CRACK REPAIR OF PRESTRESSED CONCRETE GIRDERS, SEE SPECIAL PROVISIONS.

PRESTRESSED CONCRETE GIRDERS ARE DESIGNED FOR 0 PSI TENSION IN THE PRECOMPRESSED TENSILE ZONE UNDER ALL LOADING CONDITIONS.

PRESTRESSED CONCRETE GIRDERS SHALL CONTAIN CALCIUM NITRATE CORROSION INHIBITOR.

THE COST OF ALL CONCRETE, REINFORCING STEEL, PRESTRESSED STRANDS, INSERTS EMBEDDED IN THE CONCRETE, EMBEDDED PLATES, TEMPORARY BRACING AND INCINDENTIAL ITEMS SHALL BE INCLUDED IN THE CONTRACT UNIT PRICE FOR PRESTRESSED CONCRETE GIRDERS.

PRIOR TO CASTING THE GIRDERS, THE CONTRACTOR SHALL SUBMIT COMPLETE WORKING DRAWINGS WITH THE EXACT LOCATION, AND COMPLETE DESCRIPTION OF ALL INSERTS CAST IN THE GIRDERS, TO THE DEPARTMENT FOR APPROVAL. SUCH INSERTS INCLUDE BUT ARE NOT LIMITED TO, INSERTS FOR SUPPORTING FALSEWORK AND FORMWORK, INSERTS FOR ATTACHING DIAPHRAGMS, INSERTS FOR CONNECTING TEMPORARY BRACING, AND LIFTING INSERTS.

PROJECT NO. B-682

BRUNSWICK COUNTY

STATION: 47+08.03 -L- POT

SHEET 21 OF 21

STATE OF NORTH CAROLINA
DEPARTMENT OF TRANSPORTATION
RALEIGH

STANDARD

PRESTRESSED CONCRETE GIRDER CONTINUOUS FOR LIVE LOAD DETAILS

THIS STANDARD DRAWING HAS BEEN REVIEWED AND ADAPTED FOR USE AT THE REFERENCED LOCATION BY THE UNDERSIGNED.

NORTH CAROLINA PROFESSIONAL SEAL 15832 ENGINEER JOEL A. LEE
1-17-07

PLANS PREPARED BY:

PARSONS TRANSPORTATION GROUP
Engineers and Planners
RALEIGH, NORTH CAROLINA

JOB NO. 645615

DWG. NO.

REVISIONS							SHEET NO.
NO.	BY:	DATE:	NO.	BY:	DATE:		5-98
1			3				TOTAL SHEETS
2			4				207

ASSEMBLED BY : D. H. Carter		DATE : JULY 2006	
CHECKED BY : J. A. Lee		DATE : JULY 2006	
DRAWN BY : ELR 11/91	REV. 10/17/00 RWW/LES		
CHECKED BY : GRP 11/91	REV. 7/10/01RR LES/RDR		
	REV. 5/1/06 TLA/GM		

STD.No.PCG11

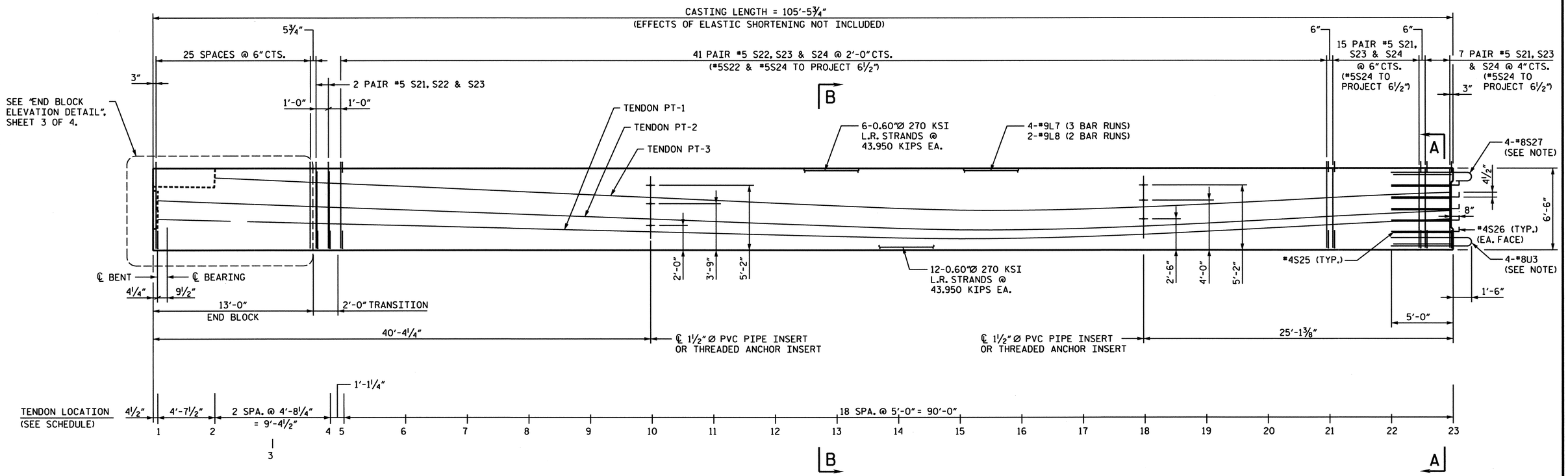

ELEVATION OF END SEGMENT OF CHANNEL UNIT

POST-TENSIONING TENDONS PT-1 THRU PT-3
ARE EACH COMPRISED OF 15-0.60"Ø 270 KSI L.R. STRANDS

TENDON LOCATION SCHEDULE

(DISTANCES SHOWN ARE MEASURED FROM BOTTOM OF GIRDER TO ℄ DUCT)

SECTION	TENDON T1	TENDON T2	TENDON T3
1	2'-6"	4'-0"	--------
2	2'-4 9/16"	3'-9 7/8"	5'-9"
3	2'-3 1/8"	3'-7 3/4"	5'-6 1/2"
4	2'-1 3/4"	3'-5 11/16"	5'-4 1/8"
5	2'-1 7/16"	3'-5 3/16"	5'-3 9/16"
6	1'-11 15/16"	3'-3"	5'-1"
7	1'-10 7/16"	3'-0 3/4"	4'-10 3/8"
8	1'-8 7/8"	2'-10 1/2"	4'-7 13/16"
9	1'-7 3/8"	2'-8 5/16"	4'-5 1/4"
10	1'-5 7/8"	2'-6 1/16"	4'-2 11/16"
11	1'-4 3/8"	2'-3 13/16"	4'-0 1/8"
12	1'-2 7/8"	2'-1 9/16"	3'-9 1/2"
13	1'-1 3/8"	1'-11 3/8"	3'-6 15/16"
14	11 7/8"	1'-9 1/8"	3'-4 3/8"
15	11 1/16"	1'-7 11/16"	3'-2 11/16"
16	11 1/2"	1'-7 3/4"	3'-2 1/2"
17	1'-1"	1'-9"	3'-3 5/8"
18	1'3 1/4"	1' 11 1/8"	3'-5 5/8"
19	1'-6 1/16"	2'-1 7/8"	3'-8 1/4"
20	1'-9 3/16"	2'-5 1/16"	3'-11 1/4"
21	2'-0 5/16"	2'-8 5/16"	4'-2 1/4"
22	2'-3 3/8"	2'-11 3/8"	4'-5"
23	2'-6"	3'-2"	4'-7 1/8"

NOTE:
USE THREADED INSERTS ON EXTERIOR GIRDERS INSTEAD OF PVC PIPE INSERTS. SEE 78"P/T CONCRETE GIRDER AND POST-TENSIONING DETAILS.

FOR REINFORCING AROUND THE PVC PIPE INSERTS AND THREADED INSERTS, SEE 78"P/T CONCRETE GIRDER AND POST-TENSIONING DETAILS.

OMIT 2-#8S27 & 2-#8U3 BARS ON EXTERIOR SIDE OF EXTERIOR GIRDERS.

#4S26 BARS SHALL BE BENT AFTER GIRDER FABRICATION AND BEFORE SHIPMENT. HEAT BENDING SHALL NOT BE ALLOWED.

FOR SECTIONS A-A AND B-B, SEE SHEET 2 OF 4.

PROJECT NO. B-0682
BRUNSWICK COUNTY
STATION: 47+08.03 -L- POT

SHEET 1 OF 4

NORTH CAROLINA PROFESSIONAL SEAL 024928 ENGINEER RODNEY E. MONEY 9/26/07

STATE OF NORTH CAROLINA
DEPARTMENT OF TRANSPORTATION
RALEIGH

78"P/T CONCRETE GIRDER END SEGMENT

SPANS L AND N

PREPARED IN THE OFFICE OF
TYLIN INTERNATIONAL
RALEIGH, NORTH CAROLINA
Copyright © 2006, TYLI
DWG NO.

REVISIONS						SHEET NO.
NO.	BY:	DATE:	NO.	BY:	DATE:	5-99
1			3			TOTAL SHEETS
2			4			207

DRAWN BY : S. A. MORGAN DATE : NOV. 06
CHECKED BY : R.E. MONEY DATE : NOV. 06

DATE: #DATE#
FILE: #FILENAME#

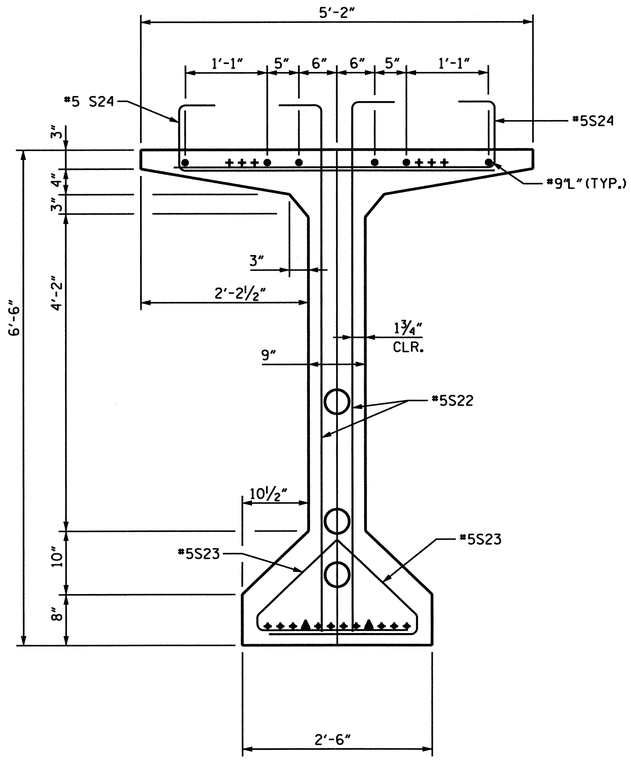

SECTION B-B

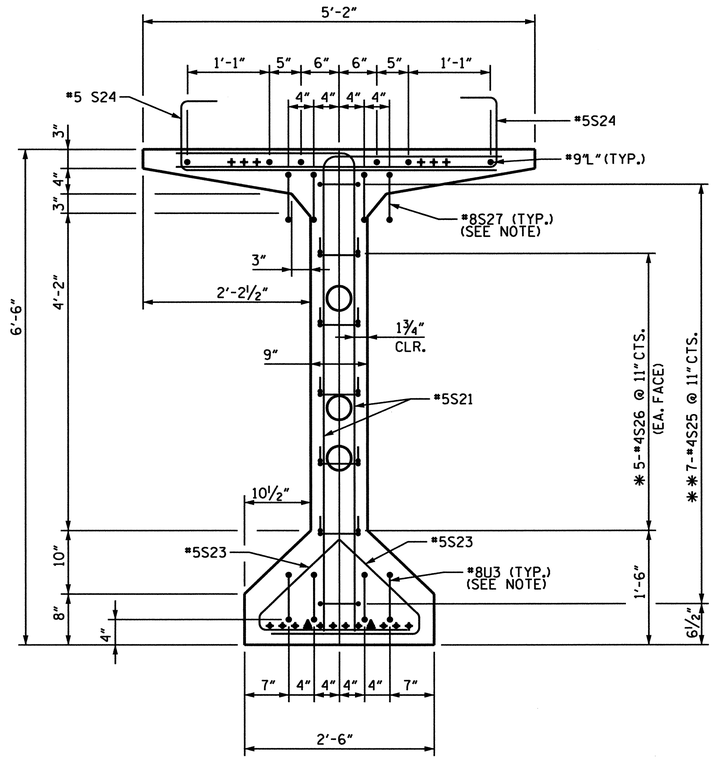

SECTION A-A

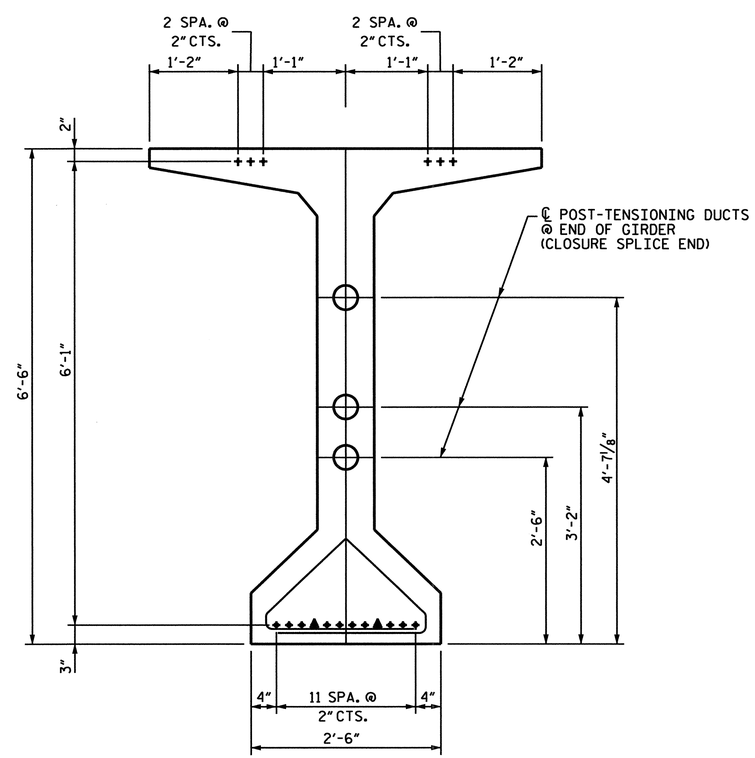

0.6" Ø LOW RELAXATION STRAND LAYOUT

18 STRAIGHT STRANDS

✦ FULLY BONDED STRANDS

▲ DEBOND TO 30'-0" FROM GIRDER END

NOTES:

OMIT 2-#8S27 & 2-#8U3 BARS ON EXTERIOR SIDE OF EXTERIOR GIRDERS.

* #4S26 BARS SHALL BE BENT AFTER GIRDER FABRICATION AND BEFORE SHIPMENT. HEAT BENDING SHALL NOT BE ALLOWED.

** #4S25 BARS MAY BE SHIFTED SLIGHTLY TO AVOID THE POST-TENSIONING DUCTS.

PROJECT NO. B-0682

BRUNSWICK COUNTY

STATION: 47+08.03 -L- POT

SHEET 2 OF 4

NORTH CAROLINA PROFESSIONAL SEAL 024928 ENGINEER RODNEY E. MONEY 2/26/07

STATE OF NORTH CAROLINA
DEPARTMENT OF TRANSPORTATION
RALEIGH

78" P/T CONCRETE GIRDER END SEGMENT DETAILS

SPANS L AND N

PREPARED IN THE OFFICE OF
TYLIN INTERNATIONAL
RALEIGH, NORTH CAROLINA
Copyright © 2006, TYLI

DWG NO.

REVISIONS						
NO.	BY:	DATE:	NO.	BY:	DATE:	
1			3			
2			4			

SHEET NO. 5-100

TOTAL SHEETS 207

DRAWN BY : S. A. MORGAN DATE : NOV. 06

CHECKED BY : R.E. MONEY DATE : NOV. 06

DATE: $DATE$
FILE: $FILENAME$

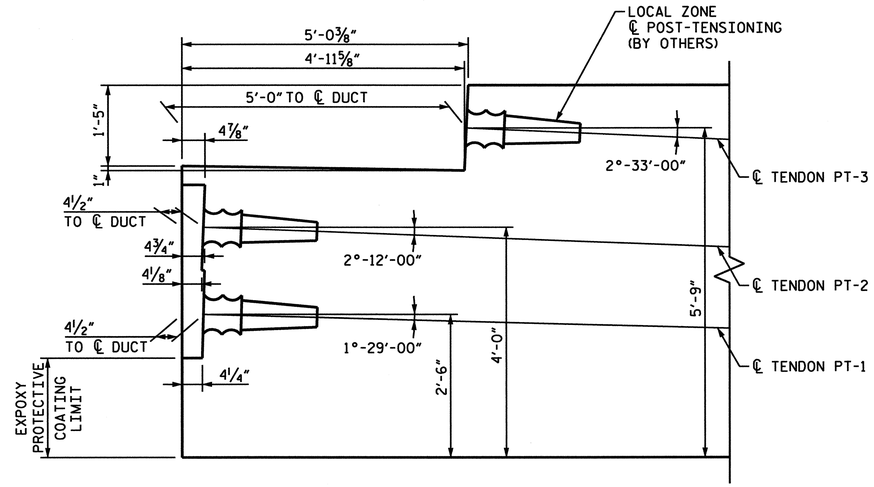

SECTION G-G

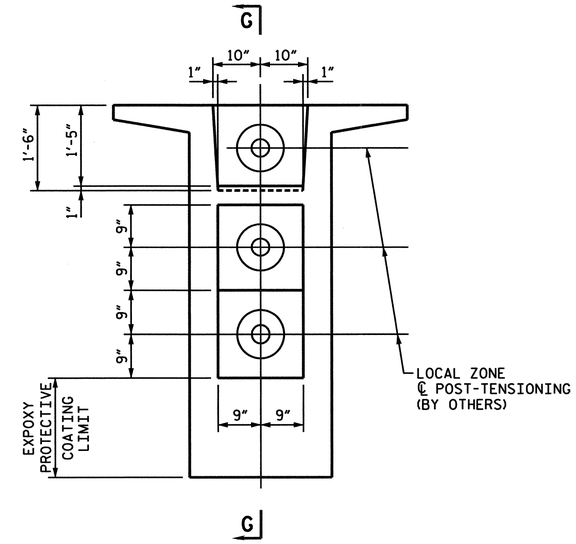

END VIEW

END BLOCK RECESS DETAIL

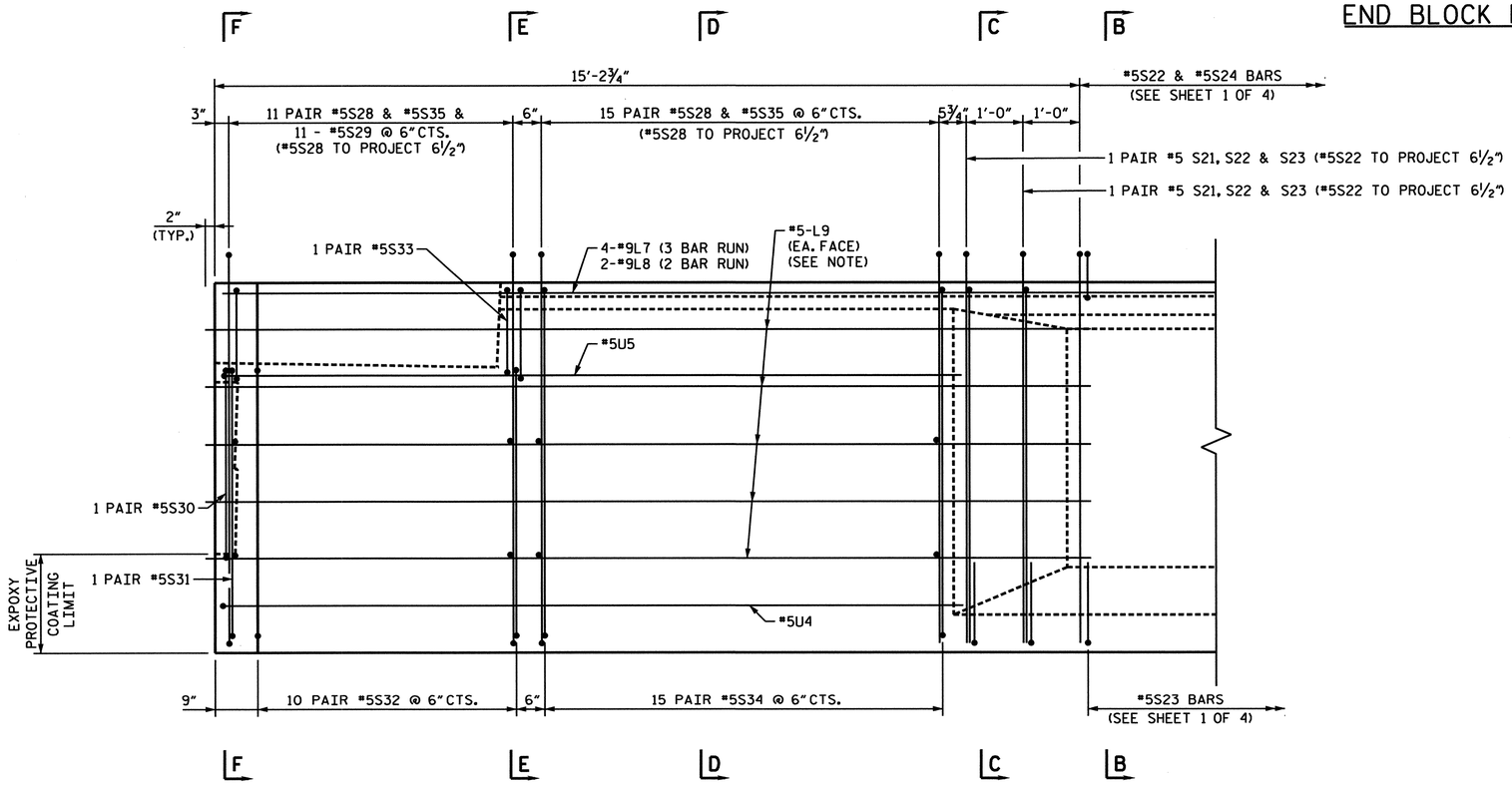

NOTE:

*5L9 BARS SHALL BE EXTEND 2" FROM END OF GIRDER AND SHALL BE FIELD BENT ALONG FACE OF TRANSITION.

END BLOCK ELEVATION DETAIL

FOR SECTION B-B, SEE SHEET 2 OF 4
FOR SECTION C-C THRU SECTION F-F, SEE SHEET 4 OF 4

PROJECT NO. B-0682
BRUNSWICK COUNTY
STATION: 47+08.03 -L- POT

SHEET 3 OF 4

STATE OF NORTH CAROLINA
DEPARTMENT OF TRANSPORTATION
RALEIGH

78" P/T CONCRETE GIRDER
END SEGMENT
DETAILS

SPANS L AND N

NORTH CAROLINA PROFESSIONAL SEAL 024928 ENGINEER RODNEY E. MONEY 12/26/07

PREPARED IN THE OFFICE OF
TYLIN INTERNATIONAL
RALEIGH, NORTH CAROLINA
Copyright © 2006, TYLI

DWG NO.

REVISIONS						
NO.	BY:	DATE:	NO.	BY:	DATE:	
1			3			
2			4			

SHEET NO. S-101
TOTAL SHEETS 207

DRAWN BY : S. A. MORGAN DATE : NOV. 06
CHECKED BY : R.E. MONEY DATE : NOV. 06

DATE: $DATE$
FILE: $FILENAME$

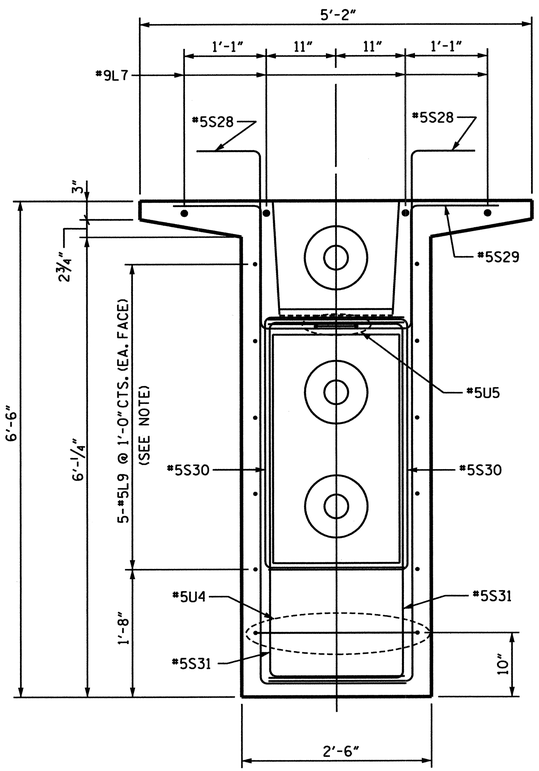

SECTION F-F

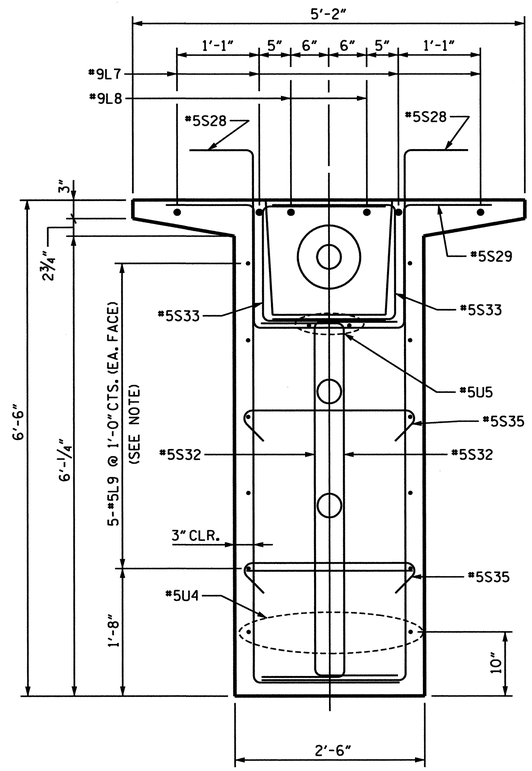

SECTION E-E

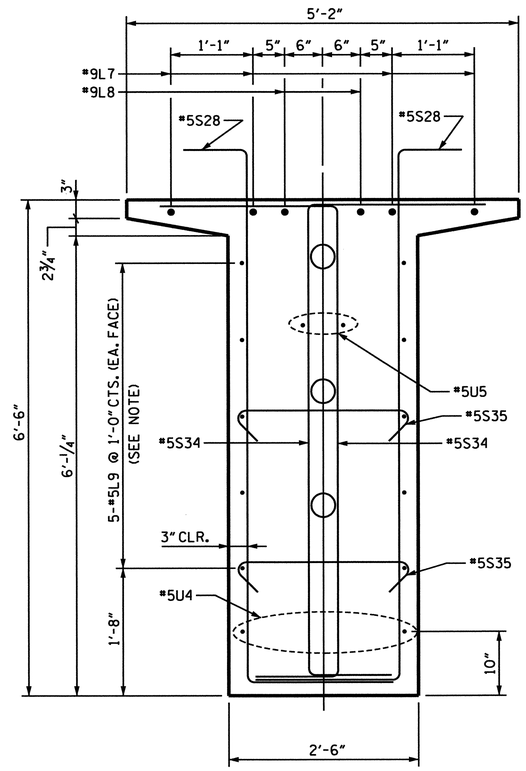

SECTION D-D

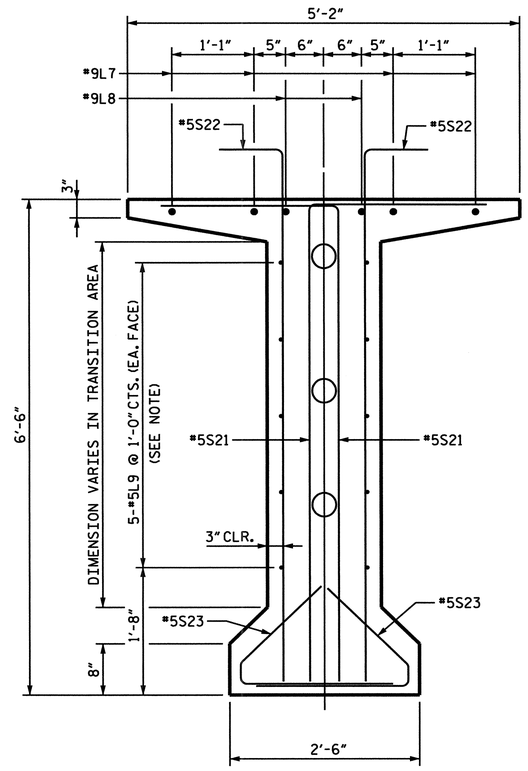

SECTION C-C

NOTE:
#5L9 BARS SHALL EXTEND 2" FROM END OF GIRDER AND SHALL BE FIELD BENT ALONG FACE OF TRANSITION

PROJECT NO. B-0682
BRUNSWICK COUNTY
STATION: 47+08.03 -L- POT

SHEET 4 OF 4

STATE OF NORTH CAROLINA
DEPARTMENT OF TRANSPORTATION
RALEIGH

78" P/T CONCRETE GIRDER END SEGMENT DETAILS

SPANS L AND N

NORTH CAROLINA PROFESSIONAL SEAL 024928 ENGINEER RODNEY E. MONEY 2/26/07

PREPARED IN THE OFFICE OF
TYLIN INTERNATIONAL
RALEIGH, NORTH CAROLINA
Copyright © 2006, TYLI

DWG NO.

REVISIONS					
NO.	BY:	DATE:	NO.	BY:	DATE:
1			3		
2			4		

SHEET NO. S-102
TOTAL SHEETS 207

DRAWN BY : S. A. MORGAN DATE : NOV. 06
CHECKED BY : R.E. MONEY DATE : NOV. 06

DATE: $DATE$
FILE: $FILENAME$

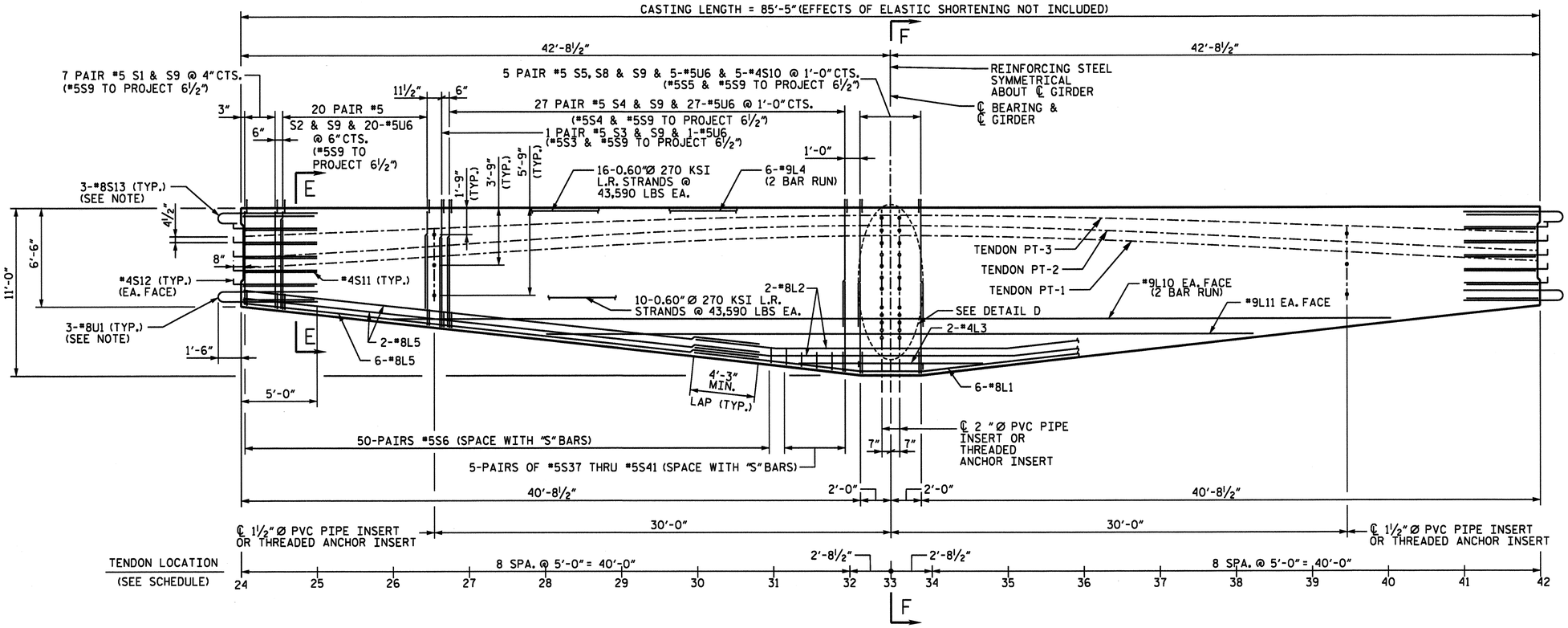

LONGITUDINAL SECTION OF HAUNCHED SEGMENT

(HAUNCHED PIER SEGMENT SHOWN AT BENT 12, SEGMENT AT BENT 13 IS SIMILAR BY ROTATION)
POST-TENSIONING TENDONS PT-1 THRU PT-3 ARE EACH COMPRISED OF
15-0.60"Ø 270 KSI L.R. STRANDS

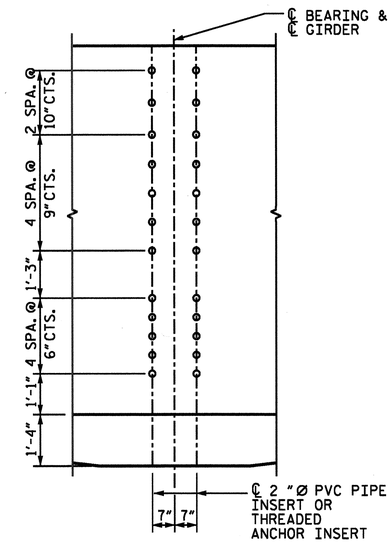

DETAIL D

TENDON LOCATION SCHEDULE

(DISTANCES SHOWN ARE MEASURED FROM TOP OF GIRDER TO ℄ DUCT)

SECTION	TENDON T1	TENDON T2	TENDON T3
24	3'-11"	3'-3"	1'-10 3/16"
25	3'-7 7/8"	2'-11 7/8"	1'-7 15/16"
26	3'-4 5/16"	2'-8 1/4"	1'-5 9/16"
27	3'-0 7/16"	2'-4 5/16"	1'-3 1/16"
28	2'-8 5/8"	2'-0 3/8"	1'-0 5/8"
29	2'-5 1/16"	1'-8 11/16"	10 7/16"
30	2'-1 15/16"	1'-5 9/16"	8 1/2"
31	1'-11 5/8"	1'-3 5/16"	7 1/16"
32	1'-10 1/4"	1'-2 1/8"	6 3/16"
33	1'-10"	1'-2"	6"
34	1'-10 1/8"	1'-2 1/4"	6 1/16"
35	1'-11 1/8"	1'-3 1/2"	6 11/16"
36	2'-1 1/16"	1'-5 7/16"	7 15/16"
37	2'-3 9/16"	1'-8"	9 5/8"
38	2'-6 9/16"	1'-10 15/16"	11 5/8"
39	2'-9 3/4"	2'-2"	1'-1 7/8"
40	3'-0 15/16"	2'-5 1/16"	1'-4 1/8"
41	3'-3 15/16"	2'-8"	1'-6 9/16"
42	3'-6 1/2"	2'-10 1/2"	1'-8 5/16"

NOTE:
USE THREADED INSERTS ON EXTERIOR GIRDERS INSTEAD OF PVC PIPE INSERTS. SEE 78"P/T CONCRETE GIRDER AND POST-TENSIONING DETAILS.

FOR REINFORCING AROUND THE PVC PIPE INSERTS AND THREADED INSERTS, SEE 78"P/T CONCRETE GIRDER AND POST-TENSIONING DETAILS.

OMIT 1-#8S13 & 1-#8U1 BARS ON EXTERIOR SIDE OF EXTERIOR GIRDERS.

#4S12 BARS SHALL BE BENT AFTER GIRDER FABRICATION AND BEFORE SHIPMENT. HEAT BENDING SHALL NOT BE ALLOWED.

FOR SECTIONS A-A AND B-B, SEE SHEET 2 OF 2.

PROJECT NO. B-0682
BRUNSWICK COUNTY
STATION: 47+08.03 -L- POT

SHEET 1 OF 2

STATE OF NORTH CAROLINA
DEPARTMENT OF TRANSPORTATION
RALEIGH

78"P/T CONCRETE GIRDER
HAUNCHED SEGMENT

SPANS L AND M
SPANS M AND N

NORTH CAROLINA PROFESSIONAL SEAL 024928 ENGINEER RODNEY E. MONEY 02/26/07

PREPARED IN THE OFFICE OF
TYLIN INTERNATIONAL
RALEIGH, NORTH CAROLINA
Copyright © 2006, TYLI

DWG NO.

REVISIONS						SHEET NO.
NO.	BY:	DATE:	NO.	BY:	DATE:	5-103
1			3			TOTAL SHEETS
2			4			207

DRAWN BY : S. A. MORGAN DATE : NOV. 06
CHECKED BY : R.E. MONEY DATE : NOV. 06

DATE: $DATE$
FILE: $FILENAME$

B0682_SD_GE0_02A.dgn 02/26/2007 01:41:58 PM

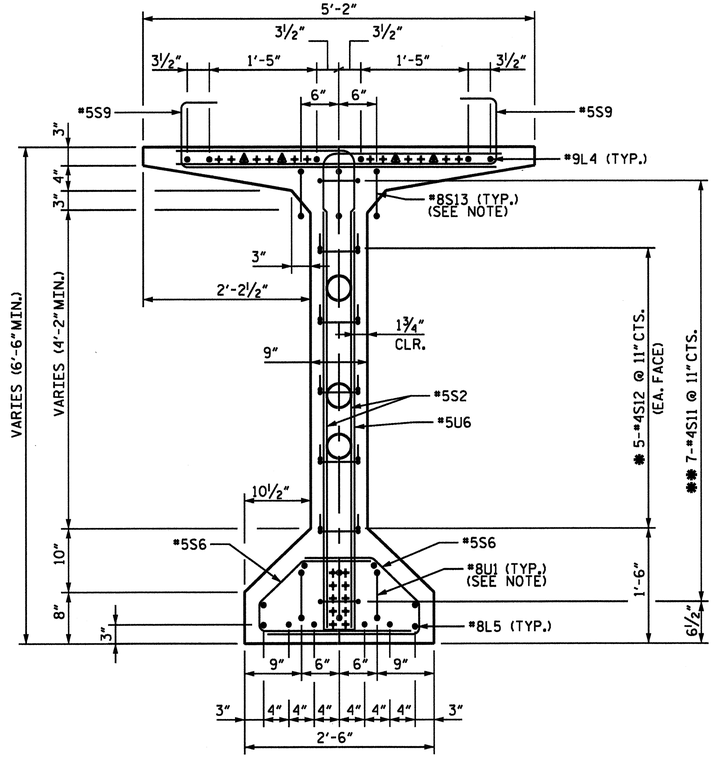

SECTION E-E

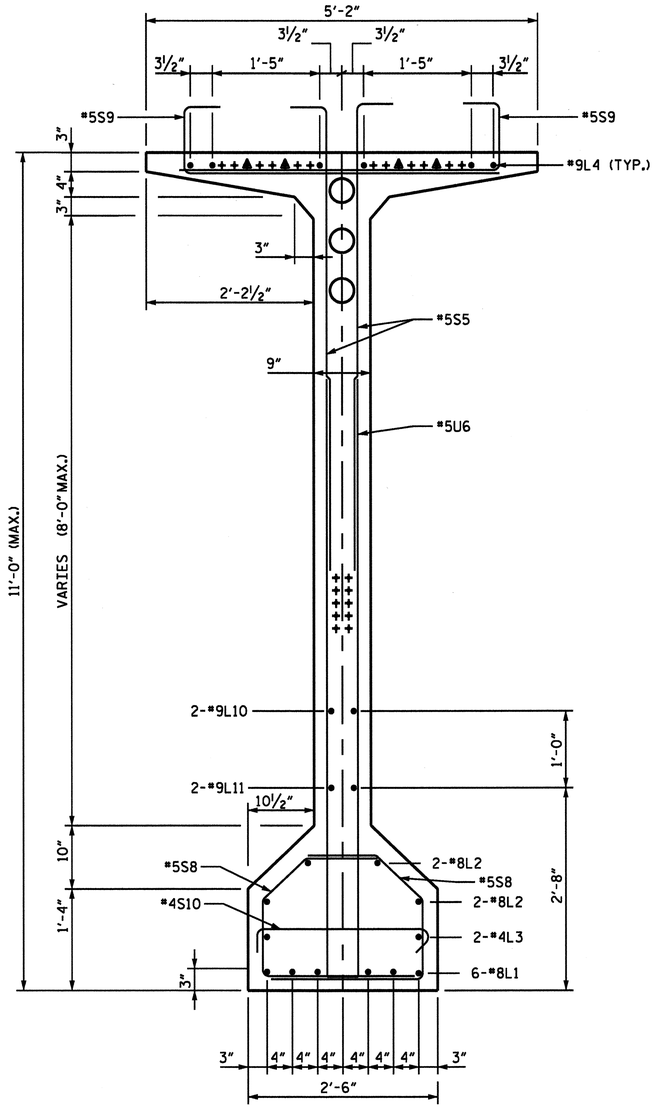

SECTION F-F

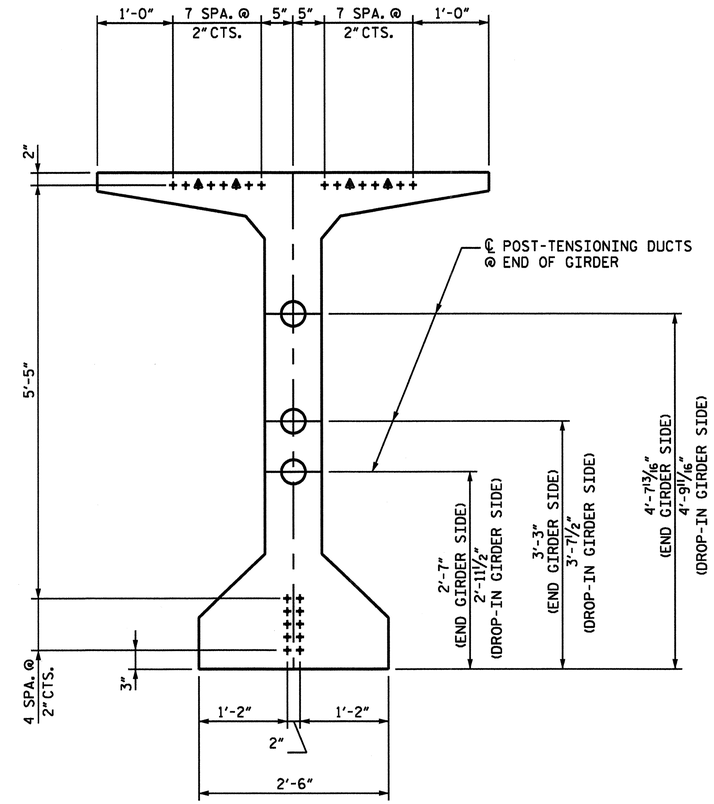

0.6" Ø LOW RELAXATION STRAND LAYOUT

26 STRAIGHT STRANDS

+ FULLY BONDED STRANDS

▲ DEBONDED TO 10'-0" FROM GIRDER END

PROJECT NO. B-0682

BRUNSWICK COUNTY

STATION: 47+08.03 -L- POT

SHEET 2 OF 2

NORTH CAROLINA PROFESSIONAL SEAL 024928 ENGINEER RODNEY E. MONEY 2/26/07

NOTES:

OMIT 1-*8S13 & 1-*8U1 BARS ON EXTERIOR SIDE OF EXTERIOR GIRDERS.

* *4S12 BARS SHALL BE BENT AFTER GIRDER FABRICATION AND BEFORE SHIPMENT. HEAT BENDING SHALL NOT BE ALLOWED.

** *4S11 BARS MAY BE SHIFTED SLIGHTLY TO AVOID THE POST-TENSIONING DUCTS.

STATE OF NORTH CAROLINA
DEPARTMENT OF TRANSPORTATION
RALEIGH

78" P/T CONCRETE GIRDER
HAUNCHED SEGMENT DETAILS

SPANS L AND M
SPANS M AND N

PREPARED IN THE OFFICE OF
TYLIN INTERNATIONAL
RALEIGH, NORTH CAROLINA
Copyright © 2006, TYLI

DWG NO.

REVISIONS						
NO.	BY:	DATE:	NO.	BY:	DATE:	
1			3			
2			4			

SHEET NO. S-104

TOTAL SHEETS 207

DATE: @DATE@
FILE: @FILENAME@

DRAWN BY : S. A. MORGAN DATE : NOV. 06
CHECKED BY : R.E. MONEY DATE : NOV. 06