CONTRACT: C201487 TIP PROJECTS: B-3450 / U-4012

STATE	STATE PROJECT REFERENCE NO.	SHEET NO.	TOTAL SHEETS
N.C.	B-3450 /U-4012		

STATE PROJ. NO.	F.A. PROJ. NO.	DESCRIPTION
33070.1.1	BRSTP-1116(4)	(B-3450) PE
33070.2.2	BRSTP-1116(4)	(B-3450) R/W, UTILITIES
33070.3.1	BRSTP-1116(6)	(B-3450) CONST.
35012.1.1	MA-NHF-15(8)	(U-4012) PE
35012.2.2	NHF-15(8)	(U-4012) R/W, UTIL.
35012.3.1	BRSTP-1116(6)	(U-4012) CONST.

STATE OF NORTH CAROLINA
DIVISION OF HIGHWAYS
DURHAM COUNTY

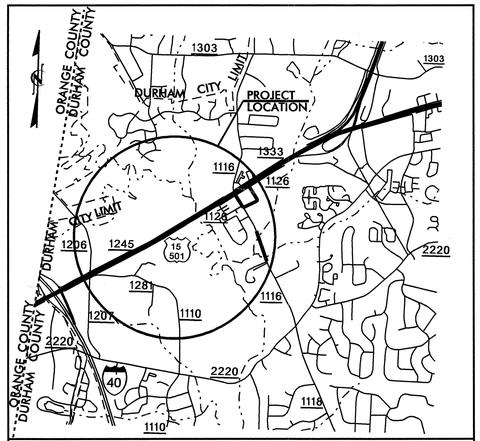

VICINITY MAP

NEAREST SHIPPING POINT AT DURHAM ON NCRR 9 MILES FROM PROJECT.

LOCATION: BRIDGE 217 OVER TRIBUTARY OF SANDY CREEK AND BRIDGE 122 OVER SANDY CREEK ON SR 1116 (GARRETT ROAD); DURHAM - SR 1126 (SERVICE ROAD) NEAR US 15-501 & SR 1116 (GARRETT ROAD) INTERSECTION; US 15-501 FROM NORTH OF MT. MORIAH ROAD SOUTH OF GARRETT ROAD

TYPE OF WORK: GRADING, DRAINAGE, PAVING, SIGNING, SIGNALS AND STRUCTURES

STRUCTURES

(NOTE : NO STRUCTURES ON U-4009)

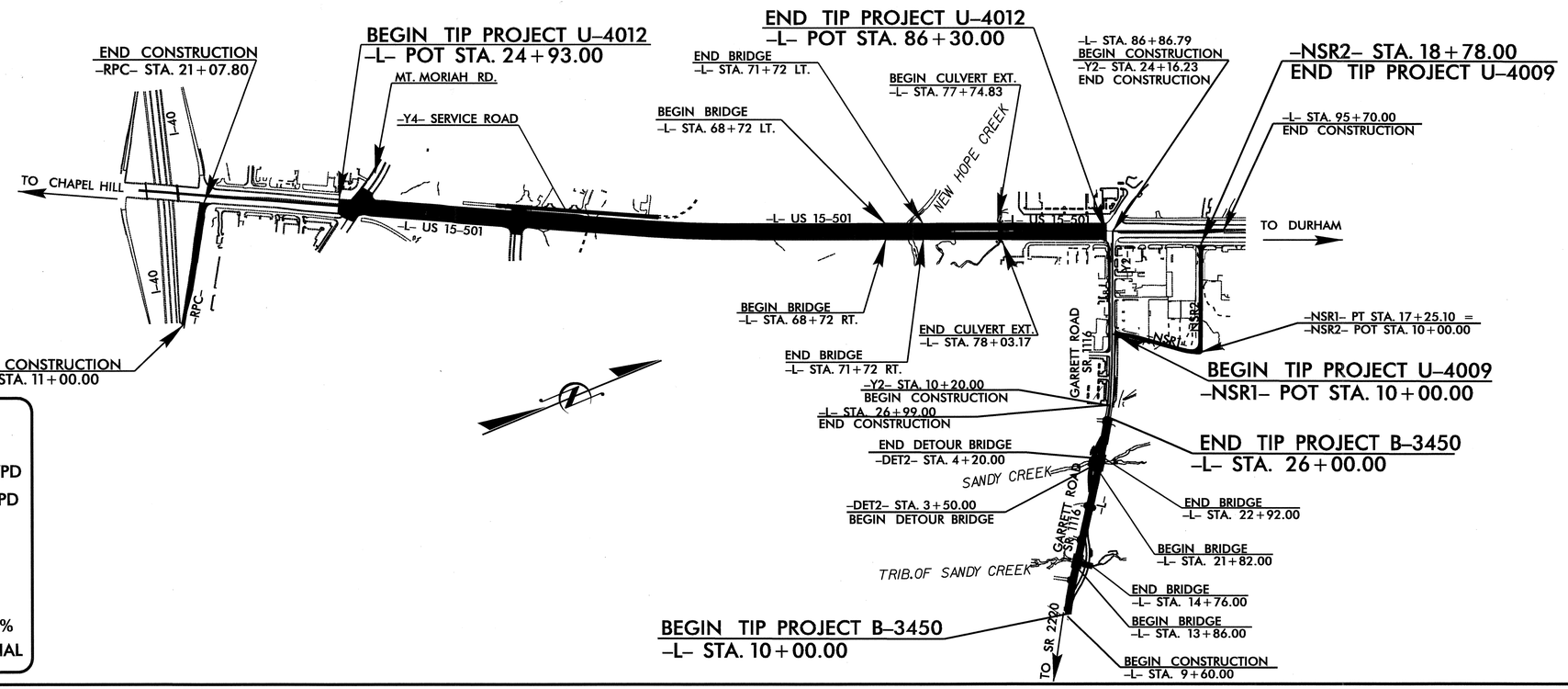

DESIGN DATA (B-3450)		DESIGN DATA (U-4012)	
ADT 2007 =	13,300 VPD	ADT 2002 =	50,524 VPD
ADT 2027 =	20,400 VPD	ADT 2025 =	99,100 VPD
DHV =	10%	DHV =	9%
D =	55%	D =	60%
T =	7% *	T =	7% *
V =	45 MPH	V =	60 MPH
* TTST 3% +	DUAL 4%	* TTST 3% +	DUAL 4%
		FUNC. CLASS =	ARTERIAL

STATE OF NORTH CAROLINA DEPARTMENT OF TRANSPORTATION

PROJECT LENGTH

LENGTH ROADWAY TIP PROJECTS U-4012 /U-4009 /B-3450 = 1.669 MI

LENGTH STRUCTURES TIP PROJECTS U-4012 /U-4009 /B-3450 = 0.100 MI

TOTAL LENGTH OF TIP PROJECTS U-4012 /U-4009 /B-3450 = 1.769 MI

Prepared in the Office of:

DIVISION OF HIGHWAYS

2006 STANDARD SPECIFICATIONS

LETTING DATE :

AUGUST 21, 2007

N. N. BULLOCK, PE
Q. H. NGUYEN, PE
PROJECT ENGINEERS

D. R. CALHOUN, PE
MARC G. CHEEK, PE
PROJECT DESIGN ENGINEERS

STRUCTURE DESIGN UNIT
1000 BIRCH RIDGE DR.
RALEIGH, N.C. 27610

DIVISION OF HIGHWAYS
STATE OF NORTH CAROLINA

P.E.
STATE DESIGN ENGINEER

DEPARTMENT OF TRANSPORTATION
FEDERAL HIGHWAY ADMINISTRATION

APPROVED
DIVISION ADMINISTRATOR DATE

19-JUN-2007 07:49
R:\Structures\Final Plans\b3450-u4012_1sh_01.dgn
gallen

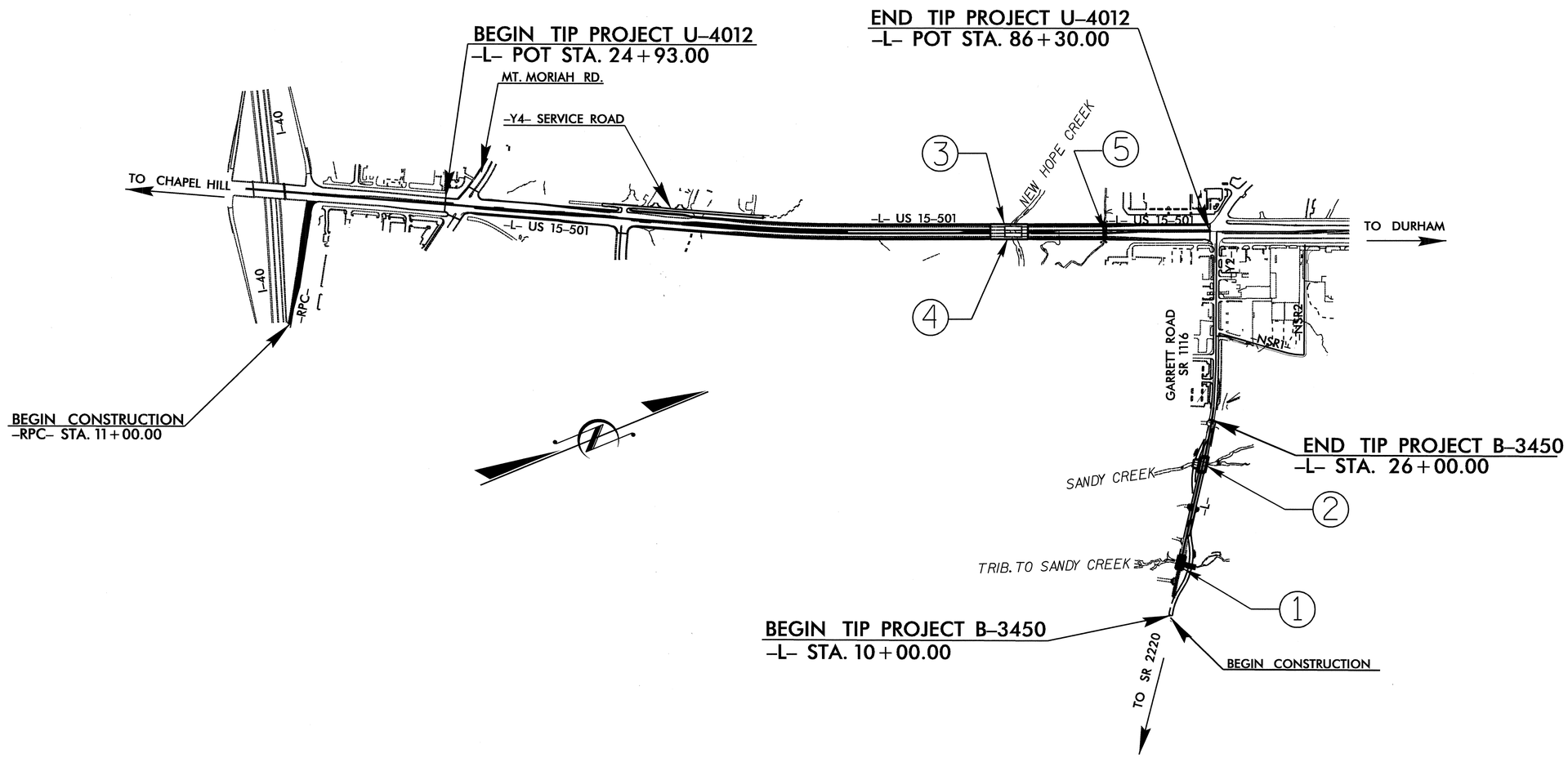

INDEX

STR. No.	STATION	DESCRIPTION	SHEETS
1	14+31.00 -L-	BRIDGE ON SR 1116 (GARRETT ROAD) OVER TRIBUTARY TO SANDY CREEK BETWEEN SR 2220 & US 15-501	S-1 THRU S-25
2	22+37.00 -L-	BRIDGE ON SR 1116 (GARRETT ROAD) OVER SANDY CREEK BETWEEN SR 2220 & US 15-501	S-26 THRU S-53
3	70+22.00 -L-	BRIDGE OVER NEW HOPE CREEK ON US 15-501 BETWEEN SR 1245 & SR 1126 (LEFT LANE)	S-54 THRU S-90
4	70+22.00 -L-	BRIDGE OVER NEW HOPE CREEK ON US 15-501 BETWEEN SR 1245 & SR 1126 (RIGHT LANE)	S-91 THRU S-128
5	77+89.00 -L-	LEFT & RIGHT EXTENSIONS OF TRIPLE 9 FT. X 10 FT. RCBC	C-1 THRU C-7

PROJECT NO. B-3450/U-4012

DURHAM COUNTY

STATION:

STATE OF NORTH CAROLINA
DEPARTMENT OF TRANSPORTATION
RALEIGH

STRUCTURE INDEX

REVISIONS						SHEET NO.
NO.	BY:	DATE:	NO.	BY:	DATE:	
1			3			TOTAL SHEETS
2			4			

DRAWN BY : E. G. ALLEN DATE : 4/5/07
CHECKED BY : MG CHEEK DATE :

27-APR-2007 10:47
R:\Structures\Final Plans\B3450_U-4012_IS.dgn
gallen

F.A. PROJECT NO. BRSTP-1116(6)

NOTES:

FOR NOTES, SEE SHEET 2 OF 3 AND SHEET 3 OF 3.

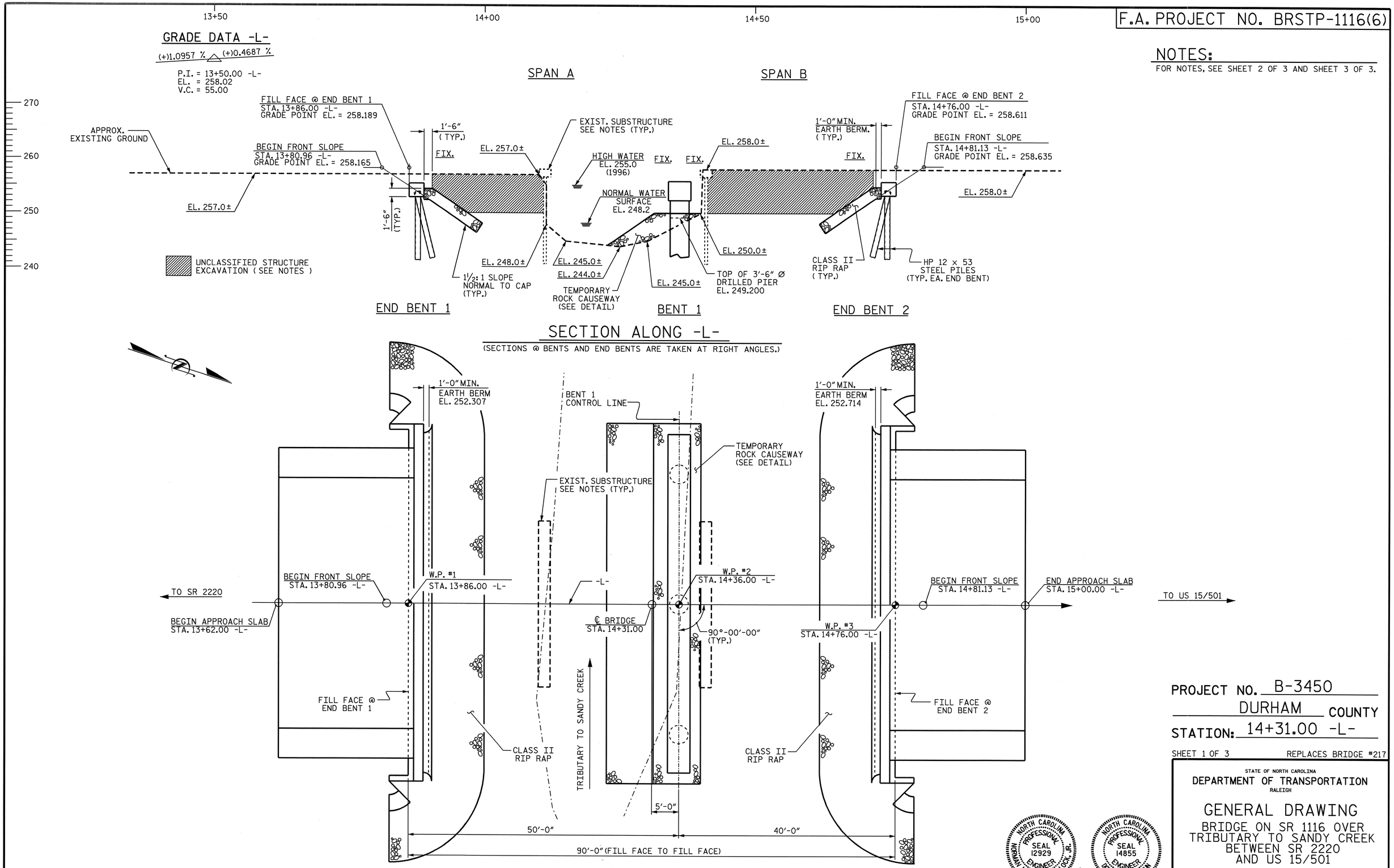

PROJECT NO. B-3450

DURHAM COUNTY

STATION: 14+31.00 -L-

SHEET 1 OF 3 REPLACES BRIDGE #217

STATE OF NORTH CAROLINA
DEPARTMENT OF TRANSPORTATION
RALEIGH

GENERAL DRAWING

BRIDGE ON SR 1116 OVER TRIBUTARY TO SANDY CREEK BETWEEN SR 2220 AND US 15/501

NORTH CAROLINA PROFESSIONAL SEAL 12929 ENGINEER NORMAN NEBLETT BULLOCK, JR.
6-19-07

NORTH CAROLINA PROFESSIONAL SEAL 14855 ENGINEER DOUGLAS R. CALHOUN
6-18-07

REVISIONS						SHEET NO.
NO.	BY:	DATE:	NO.	BY:	DATE:	S-1
1			3			TOTAL SHEETS
2			4			128

DRAWN BY : A. L. MEADOWS DATE : 6/28/02
CHECKED BY : K.M.M. & E.G.A. DATE : 5/04/06

08-JUN-2007 12:04
R:\Structures\Final Plans\STR. 1\B3450_sd_GD_01.dgn
gallen

STR. 1

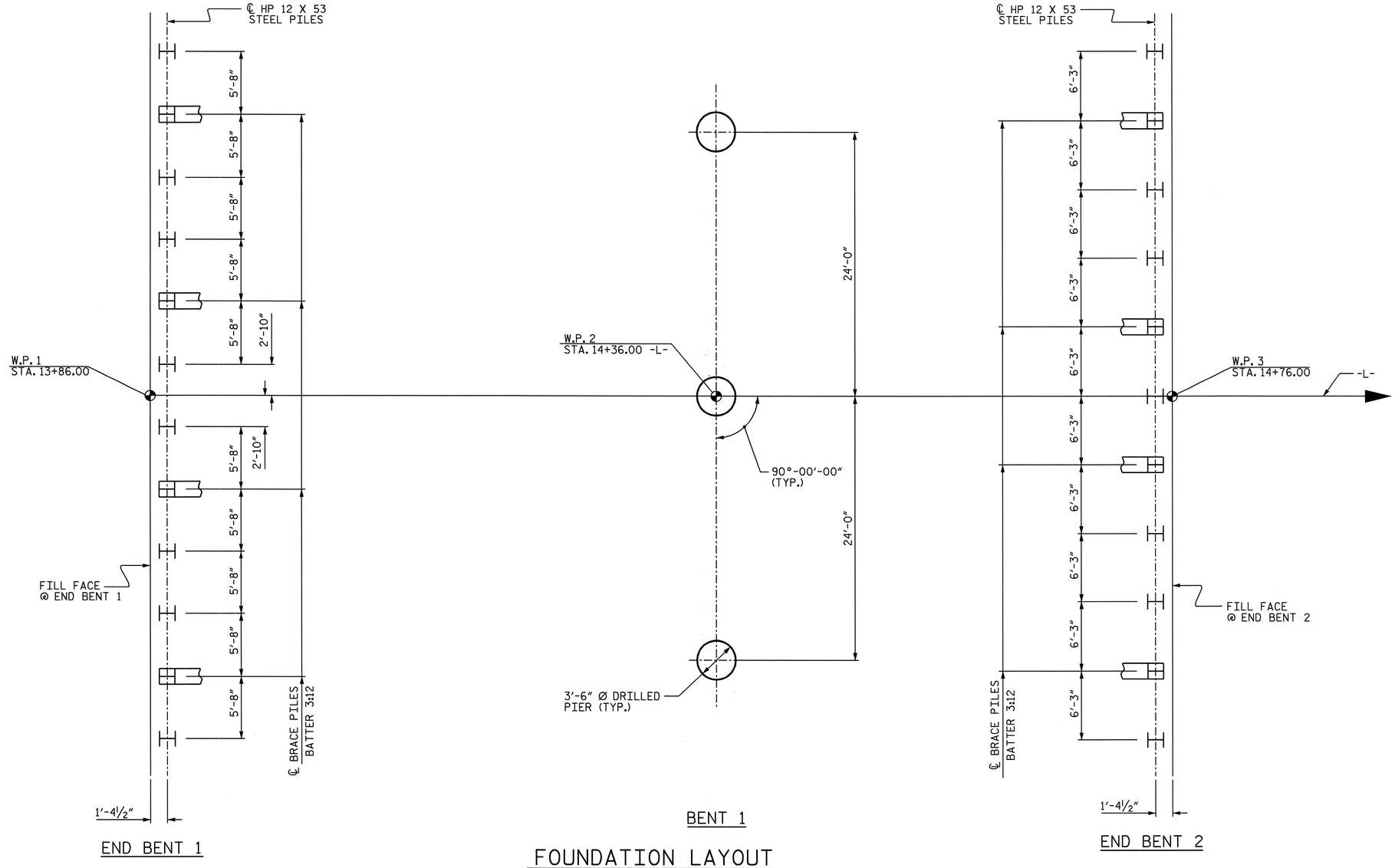

FOUNDATION LAYOUT

DIMENSIONS LOCATING END BENT PILES AND BENT DRILLED PIERS ARE SHOWN TO CENTERLINE OF PILES AND DRILLED PIERS.

PILES AT END BENTS 1 AND 2 ARE HP 12 x 53 STEEL PILES.

FOUNDATION NOTES:

DRILLED PIERS AT BENT 1 ARE DESIGNED FOR BOTH SKIN FRICTION AND END BEARING. CHECK FIELD CONDITIONS FOR THE REQUIRED END BEARING CAPACITY OF 40.0 TSF.

DRILLED PIERS AT BENT 1 MUST EXTEND TO AN ELEVATION NO HIGHER THAN 222.5 FT. AND SATISFY THE REQUIRED END BEARING CAPACITY.

DRILLED PIERS AT BENT 1 ARE DESIGNED FOR AN APPLIED LOAD OF 197.0 TONS EACH AT THE TOP OF THE COLUMN.

PERMANENT STEEL CASING IS REQUIRED FOR DRILLED PIERS AT BENT 1. DO NOT EXTEND THE CASING BELOW ELEVATION 230.0 FT. WITHOUT PRIOR APPROVAL FROM THE ENGINEER. SEE DRILLED PIERS SPECIAL PROVISION.

THE SCOUR CRITICAL ELEVATION FOR BENT 1 IS ELEVATION 235.0 FT. SCOUR CRITICAL ELEVATIONS ARE USED TO MONITOR POSSIBLE SCOUR PROBLEMS DURING THE LIFE OF THE STRUCTURE.

FOR DRILLED PIERS, SEE DRILLED PIERS SPECIAL PROVISION.

SPT TESTING IS NOT REQUIRED TO DETERMINE THE END BEARING CAPACITY OF THE DRILLED PIERS AT BENT 1.

DO NOT USE SLURRY CONSTRUCTION FOR DRILLED PIERS AT BENT 1.

SID INSPECTIONS MAY BE REQUIRED TO INSPECT THE BOTTOM CLEANLINESS OF THE DRILLED PIERS. THE ENGINEER WILL DETERMINE THE NEED FOR SID INSPECTIONS. SEE DRILLED PIERS SPECIAL PROVISION.

CSL TUBES ARE REQUIRED AND CSL TESTING MAY BE REQUIRED FOR THE DRILLED PIERS. THE ENGINEER WILL DETERMINE THE NEED FOR CSL TESTING. SEE CROSSHOLE SONIC LOGGING SPECIAL PROVISION.

DRIVE PILES AT END BENT 1 & 2 TO A REQUIRED BEARING CAPACITY OF 100 TONS PER PILE. THE REQUIRED BEARING CAPACITY IS EQUAL TO THE ALLOWABLE BEARING CAPACITY WITH A MINIMUM FACTOR OF SAFETY OF TWO.

THE ALLOWABLE BEARING CAPACITY FOR PILES AT END BENT 1 & 2 IS 50 TONS PER PILE

DRILLED PIER EXCAVATIONS AT BENT 1 WILL EXTEND INTO MATERIAL THAT DETERIORATES WHEN EXPOSED TO THE ELEMENTS. CHECK FIELD CONDITIONS FOR THE REQUIRED END BEARING CAPACITY AND PLACE CONCRETE IMMEDIATELY AFTER THE EXCAVATION IS COMPLETE.

NORTH CAROLINA PROFESSIONAL SEAL 14855 ENGINEER DOUGLAS R. CALLAHAN
6-18-07

PROJECT NO. B-3450
DURHAM COUNTY
STATION: 14+31.00 -L-

SHEET 2 OF 3

STATE OF NORTH CAROLINA
DEPARTMENT OF TRANSPORTATION
RALEIGH

GENERAL DRAWING
BRIDGE ON SR 1116 OVER TRIBUTARY TO SANDY CREEK BETWEEN SR 2220 AND US 15/501

REVISIONS						SHEET NO.
NO.	BY:	DATE:	NO.	BY:	DATE:	S-2
1			3			TOTAL SHEETS
2			4			128

DRAWN BY : A.L.MEADOWS DATE : 7/17/02
CHECKED BY : K.M.M. & E.G.A. DATE : 5/04/06

08-JUN-2007 15:34
R:\Structures\Final Plans\STR. 1\B3450_sd_GD_01.dgn
gallen

STR. 1

TOTAL BILL OF MATERIAL

	CONSTRUCTION, MAINTENANCE & REMOVAL OF TEMPORARY ACCESS	REMOVAL OF EXISTING STRUCTURE	3'-6" Ø DRILLED PIERS IN SOIL	3'-6" Ø DRILLED PIERS NOT IN SOIL	PERMANENT STEEL CASING FOR 3'-6" Ø DRILLED PIER	SID INSPECTION	CROSSHOLE SONIC LOGGING	UNCLASSIFIED STRUCTURE EXCAVATION	CONCRETE WEARING SURFACE	GROOVING BRIDGE FLOORS	CLASS AA CONCRETE	CLASS A CONCRETE	BRIDGE APPROACH SLABS	REINFORCING STEEL	EPOXY COATED REINFORCING STEEL	SPIRAL COLUMN REINFORCING STEEL	HP 12 X 53 STEEL PILES		THREE BAR METAL RAIL	RIP RAP CLASS II (2'-0" THICK)	FILTER FABRIC FOR DRAINAGE	ELASTOMERIC BEARINGS	EVAZOTE JOINT SEALS	3'-0" X 1'-9" PRESTRESSED CONCRETE CORED SLABS	
	LUMP SUM	LUMP SUM	LIN. FT.	LIN. FT.	LIN. FT.	EACH	EACH	CU. YDS.	SQ. FT.	SQ. FT.	CU. YDS.	CU. YDS.	LUMP SUM	LBS.	LBS.	LBS.	NO.	LIN. FT.	LIN. FT.	TONS	SQ. YDS.	LUMP SUM	LUMP SUM	NO.	LIN. FT.
SUPERSTRUCTURE									4016	5806	50.9		LUMP SUM		1383				160.50			LUMP SUM	LUMP SUM	40	1752.50
END BENT 1								411				21.8		3469			12	300		127	141				
BENT 1			54.60	25.50	54.60		1					40.1		10489		1998									
END BENT 2								721				21.8		3482			11	220		150	167				
TOTAL	LUMP SUM	LUMP SUM	54.60	25.50	54.60	1	1	1132	4016	5806	50.9	83.7	LUMP SUM	17440	1383	1998	23	520	160.50	277	308	LUMP SUM	LUMP SUM	40	1752.50

B.M. #2: RR SPIKE SET IN 14" TWIN GUM 142.45' RT. OF STA. 11+88.76 -L- EL. 250.12

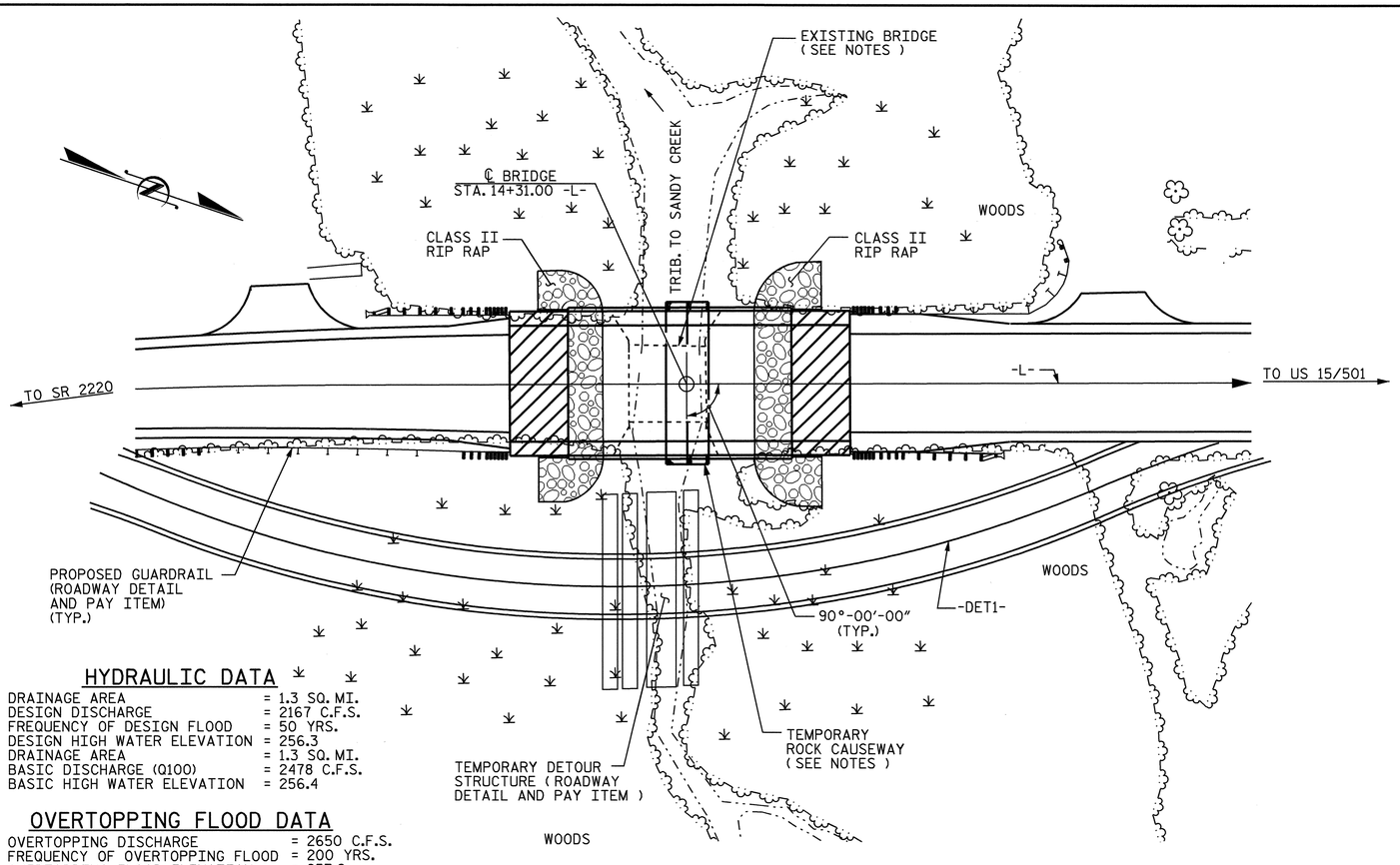

HYDRAULIC DATA

DRAINAGE AREA	= 1.3 SQ. MI.
DESIGN DISCHARGE	= 2167 C.F.S.
FREQUENCY OF DESIGN FLOOD	= 50 YRS.
DESIGN HIGH WATER ELEVATION	= 256.3
DRAINAGE AREA	= 1.3 SQ. MI.
BASIC DISCHARGE (Q100)	= 2478 C.F.S.
BASIC HIGH WATER ELEVATION	= 256.4

OVERTOPPING FLOOD DATA

OVERTOPPING DISCHARGE	= 2650 C.F.S.
FREQUENCY OF OVERTOPPING FLOOD	= 200 YRS.
OVERTOPPING FLOOD ELEVATION	= 257.2

LOCATION SKETCH

FOR UTILITY INFORMATION, SEE UTILITY PLANS AND SPECIAL PROVISIONS.

NOTES

ASSUMED LIVE LOAD = HS20 OR ALTERNATE LOADING, EXCEPT THAT CORED SLAB UNITS HAVE BEEN DESIGNED FOR HS25.

FOR OTHER DESIGN DATA AND GENERAL NOTES, SEE SHEET SN.

FOR EROSION CONTROL MEASURES SEE EROSION CONTROL PLANS.

THIS BRIDGE HAS BEEN DESIGNED BY THE STRENGTH DESIGN METHOD AS SPECIFIED IN AASHTO STANDARD SPECIFICATIONS.

A 15 FOOT DRY LAND PASSAGE FOR WILDLIFE SHALL BE PROVIDED ON EACH SIDE OF THE CREEK.

THE EXISTING STRUCTURE CONSISTING OF 1 SPAN AT 31'-0" WITH A CLEAR ROADWAY WIDTH OF 28'-11" SUPPORTED BY 12 PRECAST CONCRETE CHANNELS ON CONCRETE END BENT CAPS WITH STEEL H-PILES AND LOCATED AT THE PROPOSED LOCATION SHALL BE REMOVED. THE EXISTING BRIDGE IS PRESENTLY POSTED BELOW THE LEGAL LOAD LIMIT.

REMOVAL OF EXISTING BRIDGE SHALL BE PERFORMED SO AS NOT TO ALLOW DEBRIS TO FALL INTO THE WATER. THE CONTRACTOR SHALL REMOVE THE BRIDGE AND SUBMIT PLANS FOR DEMOLITION IN ACCORDANCE WITH ARTICLE 402-2 OF THE STANDARD SPECIFICATIONS.

THE MATERIAL SHOWN IN THE CROSS-HATCHED AREA ON SHEET S-1 SHALL BE EXCAVATED FOR A DISTANCE OF 43'-0" FT. EACH SIDE OF THE CENTERLINE ROADWAY AS DIRECTED BY THE ENGINEER. THIS WORK WILL BE MEASURED AND PAID FOR AT THE CONTRACT UNIT PRICE PER CUBIC YARD FOR UNCLASSIFIED STRUCTURE EXCAVATION.

THE SUBSTRUCTURE OF THE EXISTING BRIDGE INDICATED ON THE PLANS IS FROM THE BEST INFORMATION AVAILABLE. SINCE THIS INFORMATION IS SHOWN FOR THE CONVENIENCE OF THE CONTRACTOR, THE CONTRACTOR SHALL HAVE NO CLAIM WHATSOEVER AGAINST THE DEPARTMENT OF TRANSPORTATION FOR ANY DELAYS OR ADDITIONAL COST INCURRED BASED ON THE DIFFERENCES BETWEEN THE EXISTING BRIDGE SUBSTRUCTURE SHOWN ON THE PLANS AND THE ACTUAL CONDITIONS AT THE PROJECT SITE.

THIS STRUCTURE HAS BEEN DESIGNED IN ACCORDANCE WITH HEC 18, "EVALUATING SCOUR AT BRIDGES", MAY, 2001.

THIS BRIDGE HAS BEEN DESIGNED IN ACCORDANCE WITH THE REQUIREMENTS OF THE AASHTO STANDARD SPECIFICATIONS FOR SEISMIC DESIGN OF HIGHWAY BRIDGES FOR SEISMIC PERFORMANCE CATEGORY A.

THE CONTRACTOR SHALL PROVIDE INDEPENDENT ASSURANCE SAMPLES OF REINFORCING STEEL AS FOLLOWS: FOR PROJECTS REQUIRING UP TO 400 TONS OF REINFORCING STEEL, ONE 30 INCH SAMPLE OF EACH SIZE BAR USED, AND FOR PROJECTS REQUIRING OVER 400 TONS OF REINFORCING STEEL, TWO 30 INCH SAMPLES OF EACH SIZE BAR USED. THE BARS FROM WHICH THE SAMPLES ARE TAKEN MUST THEN BE SPLICED WITH REPLACEMENT BARS OF THE SIZE AND LENGTH OF THE SAMPLE, PLUS A MINIMUM LAP SPLICE OF THIRTY BAR DIAMETERS.

AT THE CONTRACTOR'S OPTION, AND UPON REMOVAL OF THE CAUSEWAY, THE CLASS II RIP RAP USED IN THE CAUSEWAY MAY BE PLACED AS RIP RAP SLOPE PROTECTION. SEE SPECIAL PROVISIONS FOR CONSTRUCTION, MAINTENANCE AND REMOVAL OF TEMPORARY ACCESS AT STATION 14+31.00 -L-.

FOR SUBMITTAL OF WORKING DRAWINGS, SEE SPECIAL PROVISIONS.

FOR FALSEWORK AND FORMWORK, SEE SPECIAL PROVISIONS.

FOR CRANE SAFETY, SEE SPECIAL PROVISIONS.

FOR CONCRETE WEARING SURFACE, SEE SPECIAL PROVISIONS.

FOR GROUT FOR STRUCTURES, SEE SPECIAL PROVISIONS.

PROJECT NO. B-3450
DURHAM COUNTY
STATION: 14+31.00 -L-

SHEET 3 OF 3

STATE OF NORTH CAROLINA
DEPARTMENT OF TRANSPORTATION
RALEIGH

GENERAL DRAWING
BRIDGE ON SR 1116 OVER TRIBUTARY TO SANDY CREEK BETWEEN SR 2220 AND US 15/501

NORTH CAROLINA PROFESSIONAL SEAL 14855 ENGINEER DOUGLAS R. CALLAHAN
6-18-07

REVISIONS						SHEET NO.
NO.	BY:	DATE:	NO.	BY:	DATE:	S-3
1			3			TOTAL SHEETS
2			4			128

DRAWN BY : A.L.MEADOWS DATE : 6/28/02
CHECKED BY : K.M.M. & E.G.A. DATE : 5/04/06

18-JUN-2007 11:45
R:\Structures\Final Plans\STR. 1\B3450_sd_GD_01.dgn
gallen

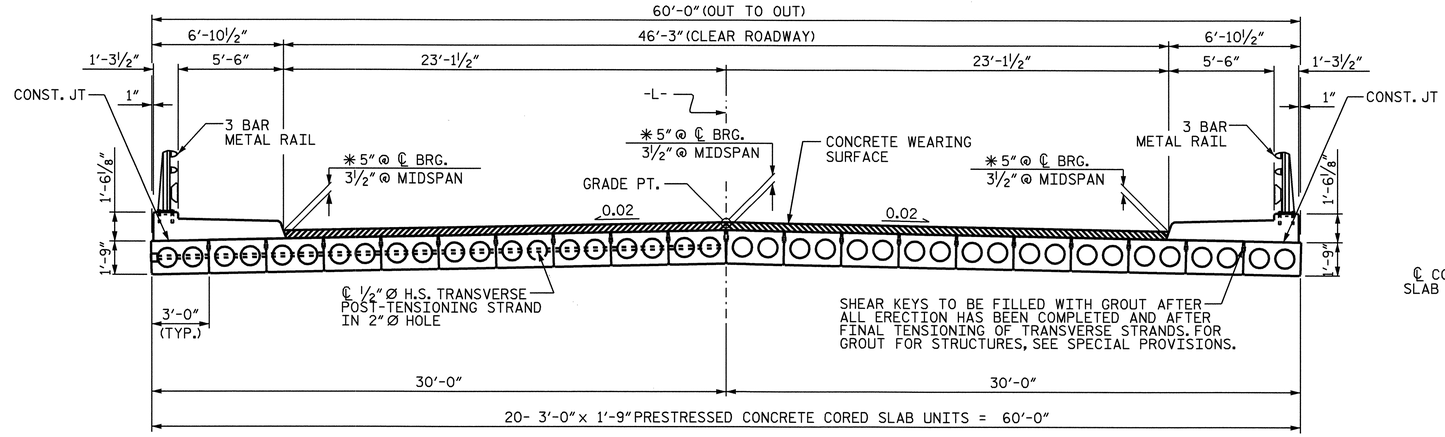

TYPICAL SECTION

✱ BASED ON PREDICTED FINAL CAMBER AND THEORETICAL GRADE LINE ELEVATIONS

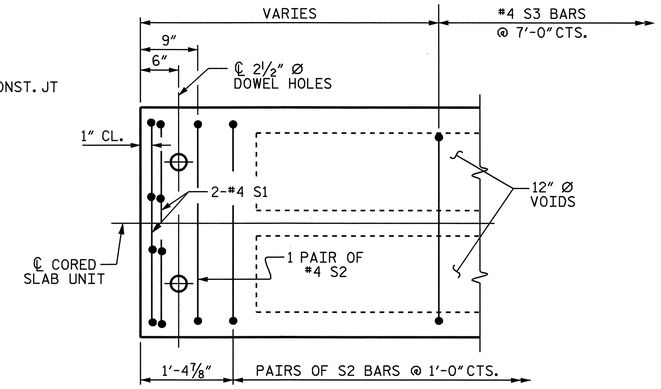

PART PLAN-EXTERIOR AND INTERIOR (SIDEWALK) SECTION

EXTERIOR AND INTERIOR SECTION (SIDEWALK) SHOWN - INTERIOR SECTION SIMILAR EXCEPT OMIT S3 BARS. SEE PLAN OF SPANS FOR END SPACING.

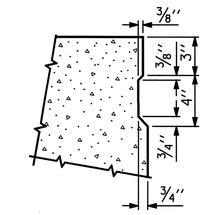

SHEAR KEY DETAIL

NOTE: OMIT SHEAR KEY ON OUTSIDE FACE OF EXTERIOR CORED SLABS.

NOTE: THE TOP SURFACE OF ALL THE CORED SLAB UNITS SHALL HAVE A ⅜" RAKED FINISH.

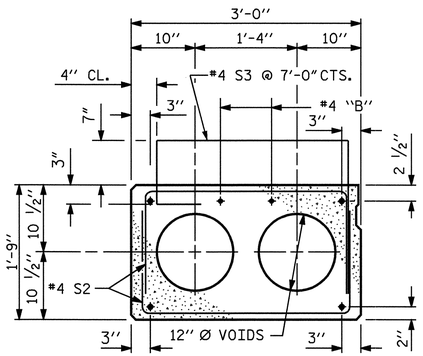

EXTERIOR SLAB -SIDEWALK SECTION-

(FOR PRESTRESSED STRAND LAYOUT, SEE INTERIOR SLAB SECTION.)

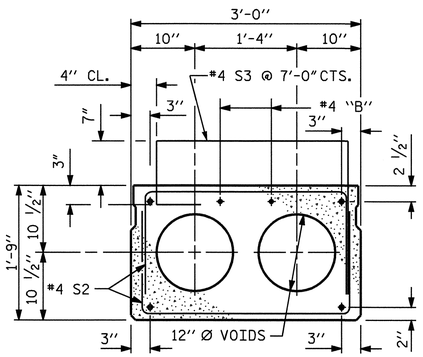

INTERIOR SLAB -SIDEWALK SECTION-

(FOR PRESTRESSED STRAND LAYOUT, SEE INTERIOR SLAB SECTION.)

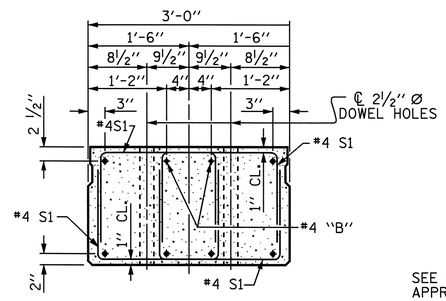

END ELEVATION

SHOWING PLACEMENT OF DOUBLE STIRRUPS AND LOCATION OF DOWEL HOLES. (STRAND LAYOUT NOT SHOWN.) INTERIOR SLAB SECTION SHOWN-EXTERIOR SLAB SECTION SIMILAR EXCEPT SHEAR KEY LOCATION.

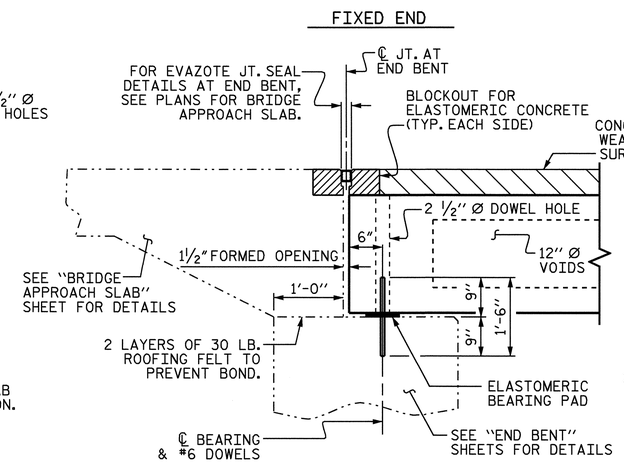

SECTION AT END BENT

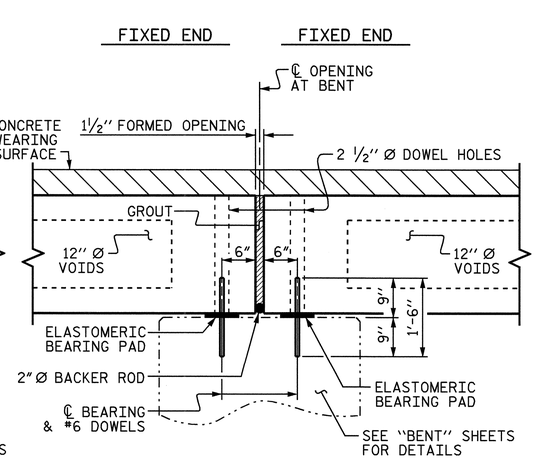

SECTION AT BENT

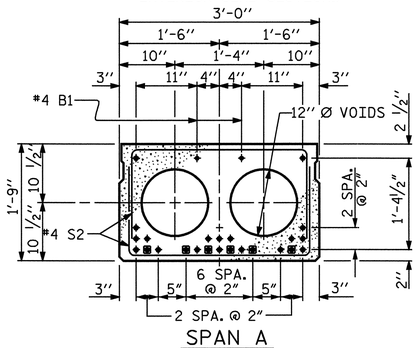

SPAN A

(24 STRANDS, 6 SHEATHED)

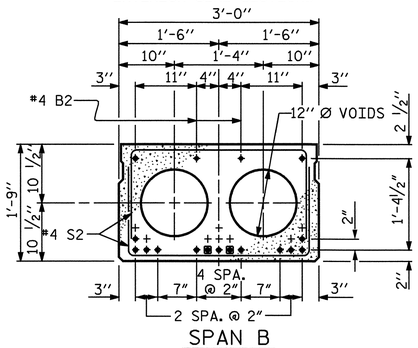

SPAN B

(15 STRANDS, 2 SHEATHED)

INTERIOR SLAB SECTION

½" Ø LOW RELAXATION STRAND LAYOUT

◉ BOND SHALL BE BROKEN ON THESE STRANDS FOR A DISTANCE OF 4'-9" (SPAN A) & 4'-0" (SPAN B) FROM THE END OF CORED SLAB UNIT, SEE STANDARD SPECIFICATIONS ARTICLE 1078-7.

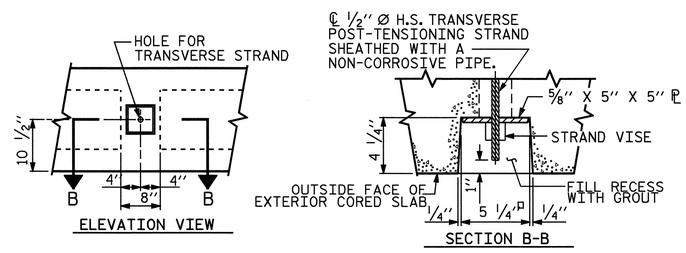

GROUTED RECESS AT END OF POST-TENSIONED STRAND-CORED SLABS

PROJECT NO. B-3450

DURHAM COUNTY

STATION: 14+31.00 -L-

STATE OF NORTH CAROLINA
DEPARTMENT OF TRANSPORTATION
RALEIGH

STANDARD

3'-0" X 1'-9" PRESTRESSED CONCRETE CORED SLAB UNIT

NORTH CAROLINA PROFESSIONAL SEAL 14855 ENGINEER DOUGLAS R. CALHOUN

6-18-07

ASSEMBLED BY : A.L.MEADOWS	DATE : 9/06/02		
CHECKED BY : T.A.HARRIS	DATE : 9/24/02		
DRAWN BY : WJH 4/89	REV. 10/17/00	RWW/LES	
CHECKED BY : FCJ 5/89	REV. 7/10/01RR	RWW/LES	
	REV. 5/1/06	TLA/GM	

REVISIONS						SHEET NO.
NO.	BY:	DATE:	NO.	BY:	DATE:	S-4
1			3			TOTAL SHEETS
2			4			128

STD. NO. PCS2

08-JUN-2007 12:44
R:\Structures\Final Plans\STR. 1\B3450_sd_TS_01.dgn
gallen

NOTE : THE CONTRACTOR'S ATTENTION IS CALLED TO THE FACT THAT THE SIDEWALK SHALL EXTEND 1/2" BEYOND THE CORED SLAB UNITS AT BENT 1 TO CREATE A 1/2" OPENING IN THE SIDEWALK FOR EXPANSION JOINT MATERIAL.

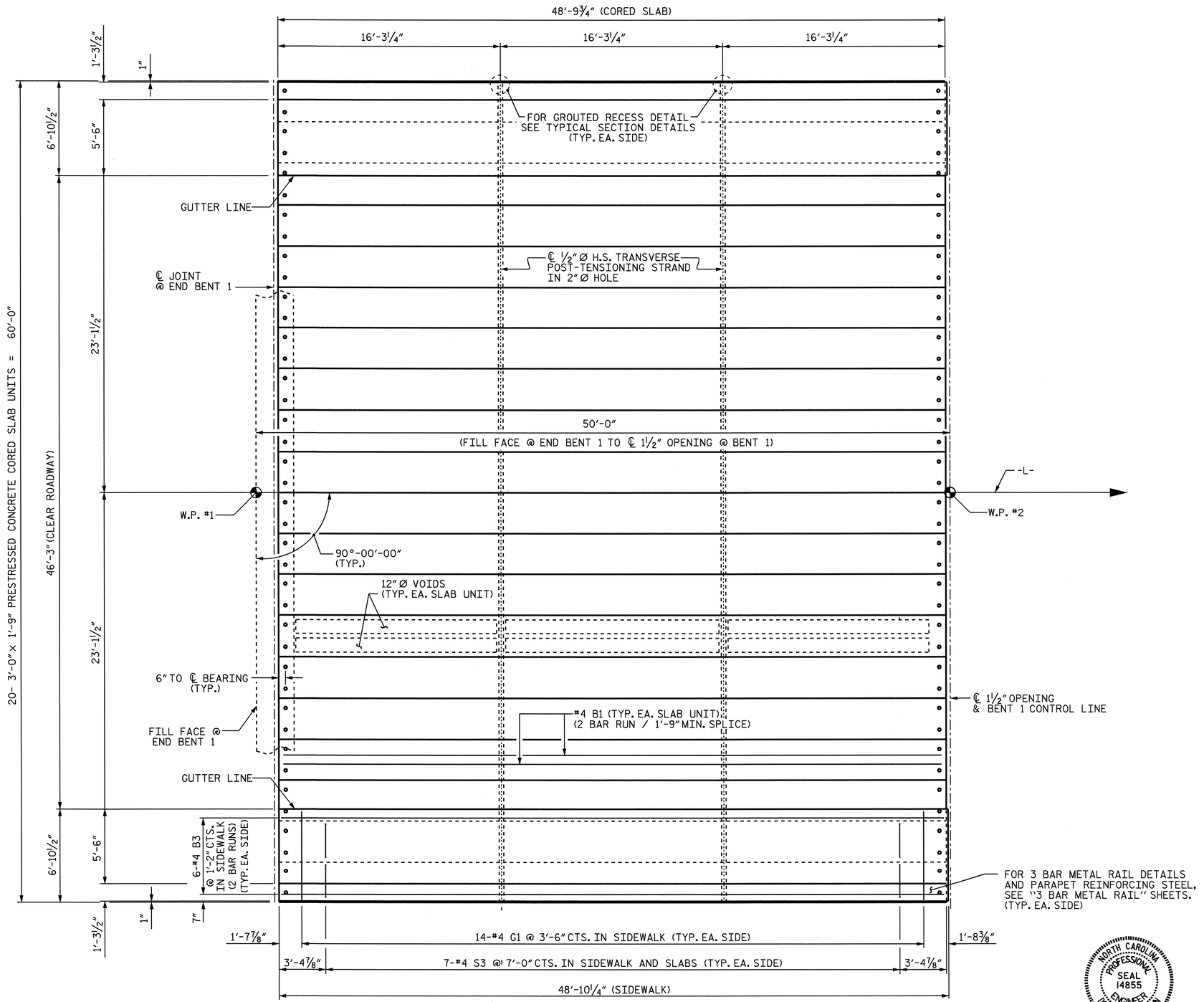

SPAN A

PROJECT NO. B-3450
DURHAM COUNTY
STATION: 14+31.00 -L-

STATE OF NORTH CAROLINA
DEPARTMENT OF TRANSPORTATION
RALEIGH

SUPERSTRUCTURE
PLAN OF SPAN A

NORTH CAROLINA PROFESSIONAL SEAL 14855 ENGINEER DOUGLAS R. CALHOUN
6-18-07

REVISIONS						SHEET NO.
NO.	BY:	DATE:	NO.	BY:	DATE:	S-5
1			3			TOTAL SHEETS
2			4			128

DRAWN BY : A.L.MEADOWS DATE : 9/6/02
CHECKED BY : T.A.HARRIS DATE : 9/25/02

18-JUN-2007 11:46
R:\Structures\Final Plans\STR. 1\B3450_sd_S1_01.dgn
gallen

STR. 1

NOTE : THE CONTRACTOR'S ATTENTION IS CALLED TO THE FACT THAT THE SIDEWALK SHALL EXTEND 1/2" BEYOND THE CORED SLAB UNITS AT BENT 1 TO CREATE A 1/2" OPENING IN THE SIDEWALK FOR EXPANSION JOINT MATERIAL.

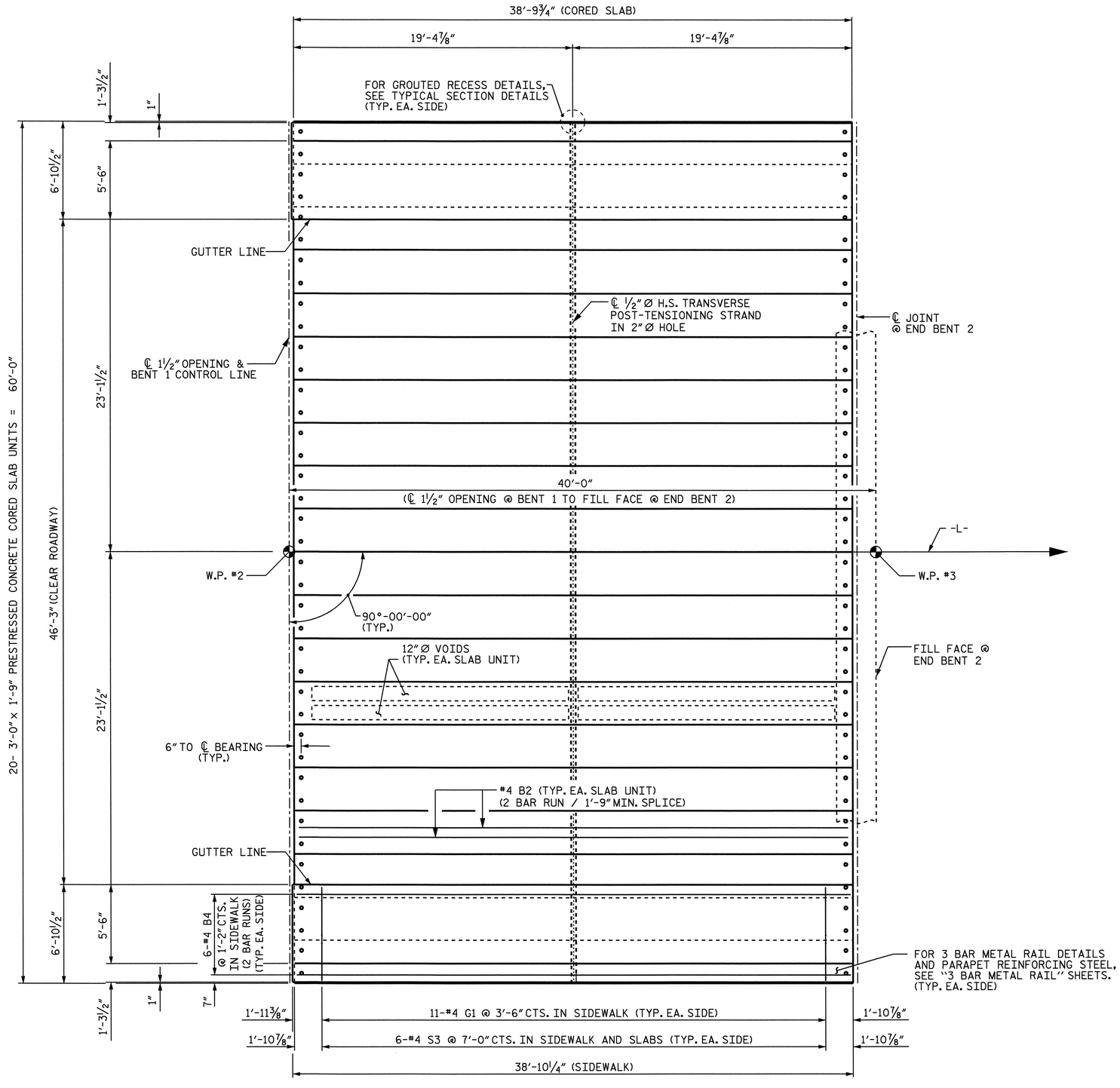

SPAN B

PROJECT NO. B-3450
DURHAM COUNTY
STATION: 14+31.00 -L-

STATE OF NORTH CAROLINA
DEPARTMENT OF TRANSPORTATION
RALEIGH

SUPERSTRUCTURE
PLAN OF SPAN B

NORTH CAROLINA PROFESSIONAL SEAL 14855 ENGINEER DOUGLAS R. CALHOUN
6-18-07

REVISIONS						SHEET NO.
NO.	BY:	DATE:	NO.	BY:	DATE:	S-6
1			3			TOTAL SHEETS
2			4			128

DRAWN BY : A.L.MEADOWS DATE : 9/6/02
CHECKED BY : T.A.HARRIS DATE : 9/25/02

08-JUN-2007 12:07
R:\Structures\Final Plans\STR. 1\B3450_sd_S1_01.dgn
gallen

STR. 1

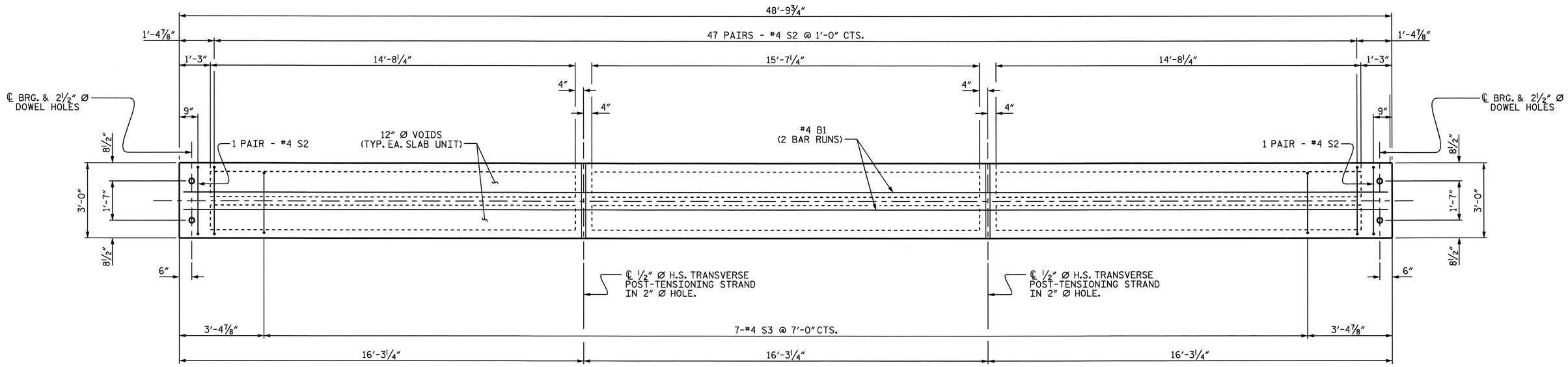

PLAN OF CORED SLAB UNIT - SPAN A

EXTERIOR AND INTERIOR (SIDEWALK) SECTION SHOWN, INTERIOR SECTION SIMILAR EXCEPT OMIT S3 BARS. FOR THE LOCATION OF ADDITIONAL REINFORCING STEEL AT END OF SLAB, SEE "PART-PLAN - EXTERIOR AND INTERIOR (SIDEWALK) SECTION", SHEET S-4.

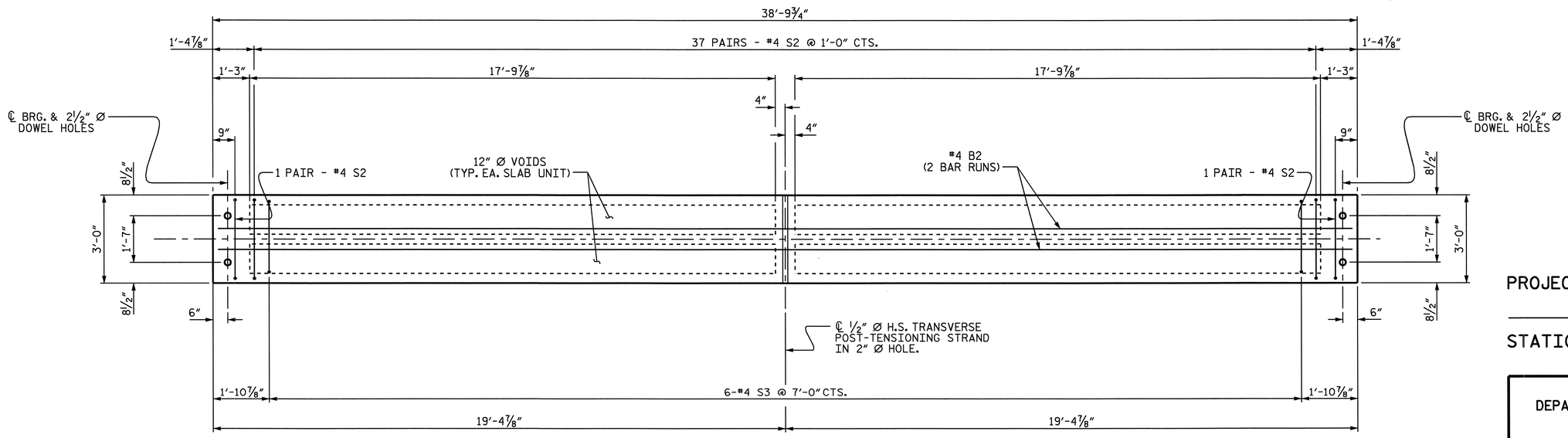

PLAN OF CORED SLAB UNIT - SPAN B

EXTERIOR AND INTERIOR (SIDEWALK) SECTION SHOWN, INTERIOR SECTION SIMILAR EXCEPT OMIT S3 BARS. FOR THE LOCATION OF ADDITIONAL REINFORCING STEEL AT END OF SLAB, SEE "PART-PLAN - EXTERIOR AND INTERIOR (SIDEWALK) SECTION", SHEET S-4.

PROJECT NO. B-3450
DURHAM COUNTY
STATION: 14+31.00 -L-

STATE OF NORTH CAROLINA
DEPARTMENT OF TRANSPORTATION
RALEIGH

SUPERSTRUCTURE

CORED SLAB DETAILS
SPAN A & B

NORTH CAROLINA PROFESSIONAL SEAL 14855 ENGINEER DOUGLAS R. CALHOUN
6-18-07

REVISIONS						SHEET NO.
NO.	BY:	DATE:	NO.	BY:	DATE:	S-7
1			3			TOTAL SHEETS
2			4			128

DRAWN BY : A.L.MEADOWS DATE : 9/6/02
CHECKED BY : T.A.HARRIS DATE : 9/25/02

08-JUN-2007 12:07
R:\Structures\Final Plans\STR. 1\B3450_sd_S1_01.dgn
gallen

STR. 1

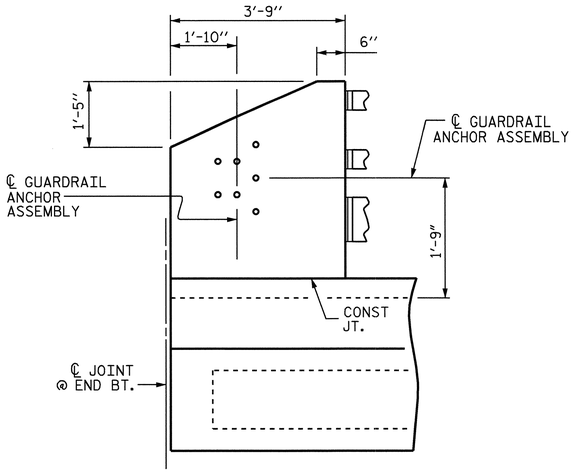

ELEVATION

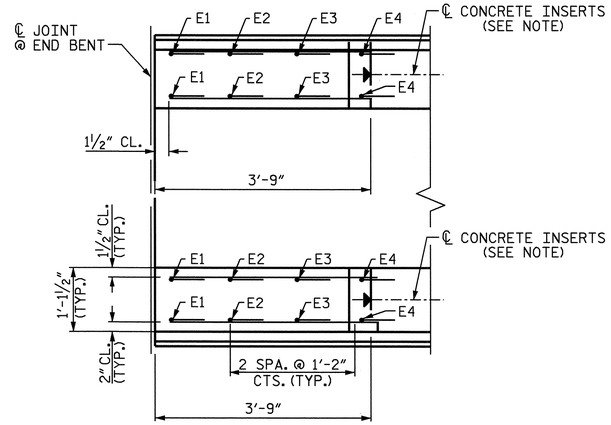

PLAN

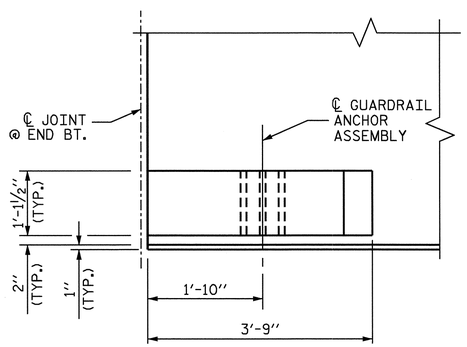

PLAN

GUARDRAIL ANCHOR DETAIL

FOR REINFORCEMENT OF END POST, SEE "END POST DETAILS"

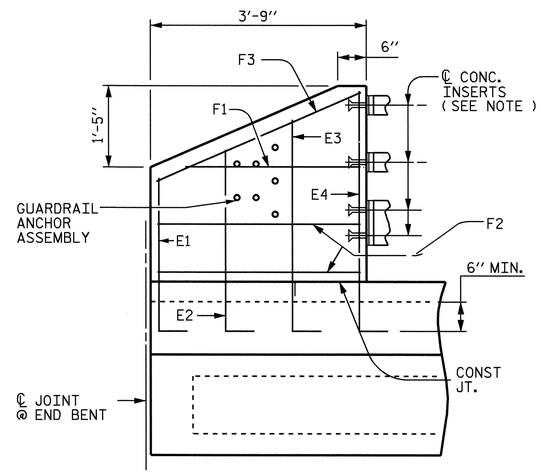

ELEVATION

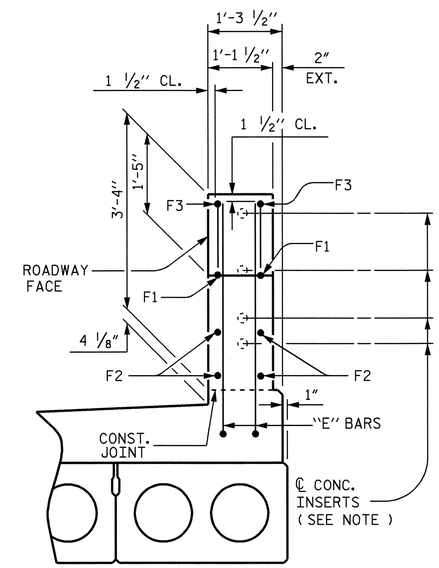

END VIEW

END POST DETAILS

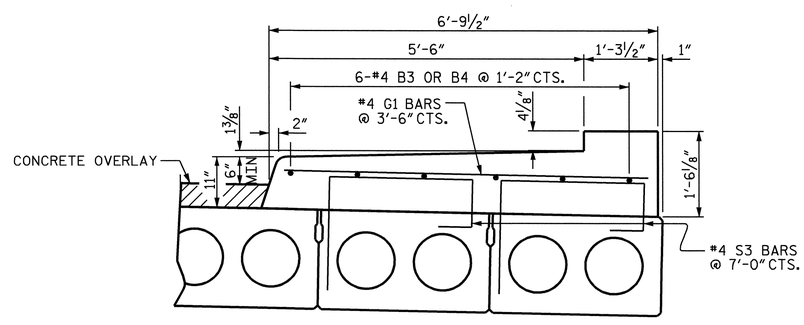

SECTION THRU SIDEWALK

BAR TYPE

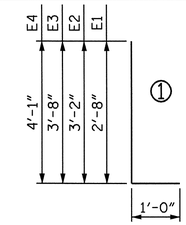

BAR DIMENSIONS ARE OUT TO OUT

SPLICE LENGTH CHART

BAR	SIZE	LENGTH
B3,B4	4	2'-0"

BILL OF MATERIAL FOR 4 END POSTS AND SIDEWALK

BAR	NO.	SIZE	TYPE	LENGTH	WEIGHT
B3	24	4	STR	25'-3"	405
B4	24	4	STR	20'-3"	325
E1	8	7	1	3'-8"	60
E2	8	7	1	4'-2"	68
E3	8	7	1	4'-8"	76
E4	8	7	1	5'-1"	83
F1	8	6	STR	2'-7"	31
F2	16	6	STR	3'-5"	82
F3	8	6	STR	3'-8"	44
G1	50	4	STR	6'-3"	209

EPOXY COATED REINFORCING STEEL 1383 LBS.

CLASS AA CONCRETE 50.9 CU.YDS.

NOTES :

FOR METAL RAILS AND GUARDRAIL ANCHOR ASSEMBLIES, SEE "GUARDRAIL ANCHORAGE DETAILS" SHEET 6 OF 6.

FOR DETAILS OF CONCRETE INSERTS, SEE "3 BAR METAL RAIL" SHEET 5 OF 6.

ALL REINFORCING STEEL IN SIDEWALK AND END POST SHALL BE EPOXY COATED.

GROOVED CONTRACTION JOINTS, ½" IN DEPTH, SHALL BE TOOLED IN ALL EXPOSED FACES OF THE SIDEWALK IN ACCORDANCE WITH ARTICLE 825-10 (B) OF THE STANDARD SPECIFICATIONS. THE CONTRACTION JOINTS SHALL BE LOCATED AT A SPACING OF 8 FT. TO 10 FT. BETWEEN EXPANSION JOINTS. NO CONTRACTION JOINTS WILL BE REQUIRED FOR SEGMENTS LESS THAN 10 FEET IN LENGTH.

THE COST OF THE SIDEWALKS AND END POSTS ARE INCLUDED IN THE PAY ITEMS FOR CLASS AA CONCRETE AND EPOXY COATED REINFORCING STEEL.

THE CONTRACTOR'S ATTENTION IS CALLED TO THE FACT THAT THE SIDEWALK SHALL EXTEND ½" BEYOND THE CORED SLAB UNITS AT BENT 1 TO CREATE A ½" OPENING IN THE SIDEWALK FOR EXPANSION JOINT MATERIAL.

NORTH CAROLINA PROFESSIONAL SEAL 14855 ENGINEER DOUGLAS R. CALHOUN
6-18-07

PROJECT NO. B-3450
DURHAM COUNTY
STATION: 14+31.00 -L-

SHEET 1 OF 6

STATE OF NORTH CAROLINA
DEPARTMENT OF TRANSPORTATION
RALEIGH

3 BAR METAL RAIL END POST & SIDEWALK DETAILS

REVISIONS						SHEET NO.
NO.	BY:	DATE:	NO.	BY:	DATE:	S-8
1			3			TOTAL SHEETS
2			4			128

DRAWN BY : A.L.MEADOWS DATE : 8/22/02
CHECKED BY : T.A.HARRIS DATE : 9/25/02

18-JUN-2007 14:09
R:\Structures\Final Plans\STR. 1\B3450_sd_3MR_01.dgn
gallen

STR. 1

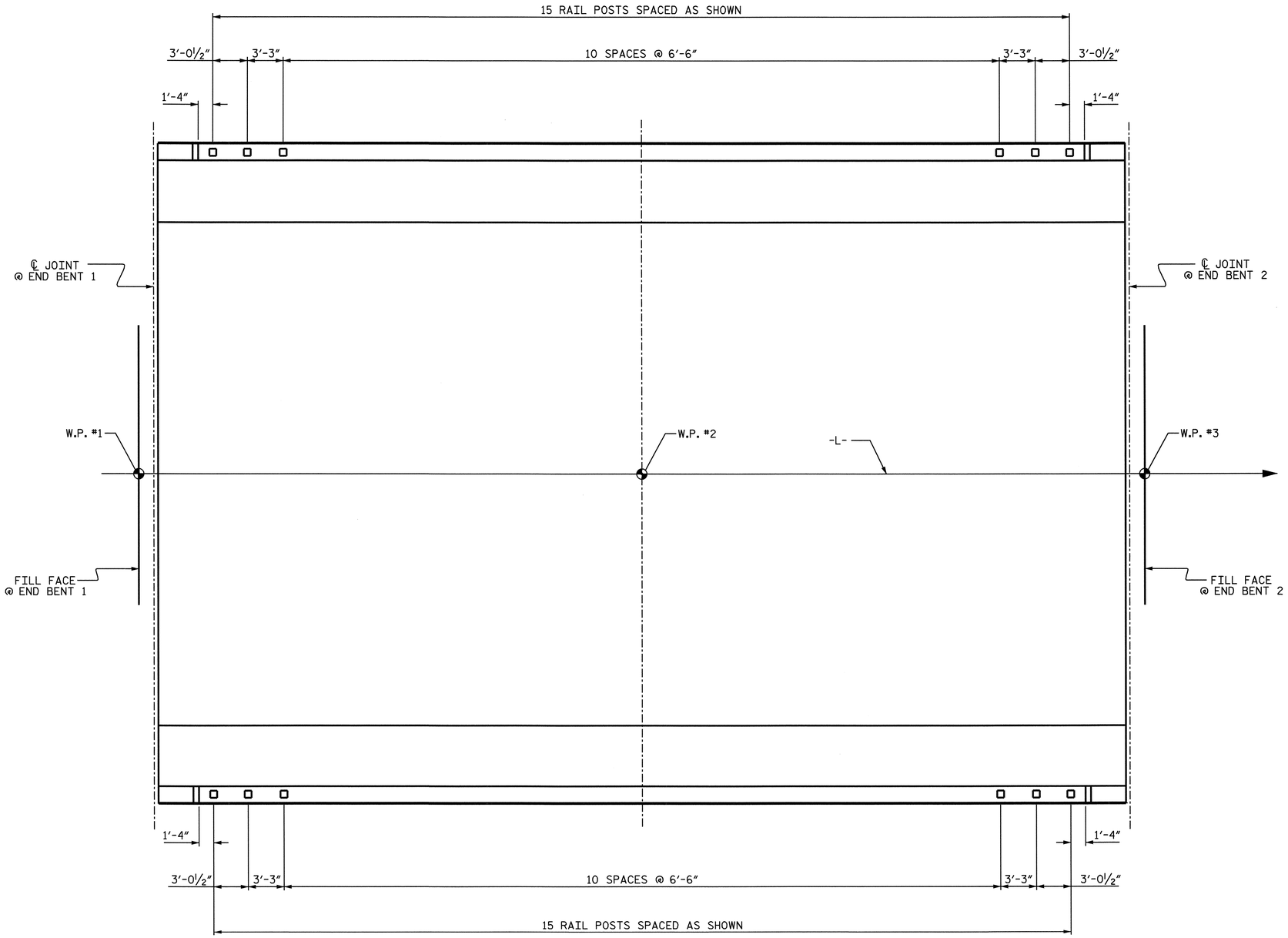

PLAN OF RAIL POST SPACINGS

PROJECT NO. B-3450
DURHAM COUNTY
STATION: 14+31.00 -L-

SHEET 2 OF 6

STATE OF NORTH CAROLINA
DEPARTMENT OF TRANSPORTATION
RALEIGH

RAIL POST SPACINGS
FOR THREE BAR METAL RAIL

NORTH CAROLINA PROFESSIONAL SEAL 14855 ENGINEER DOUGLAS R. CALHOON
6-18-07

REVISIONS						SHEET NO.
NO.	BY:	DATE:	NO.	BY:	DATE:	S-9
1			3			TOTAL SHEETS
2			4			128

DRAWN BY : A.L.MEADOWS DATE : 8/22/02
CHECKED BY : T.A.HARRIS DATE : 9/25/02

08-JUN-2007 12:08
R:\Structures\Final Plans\STR. 1\B3450_sd_3MR_01.dgn
gallen

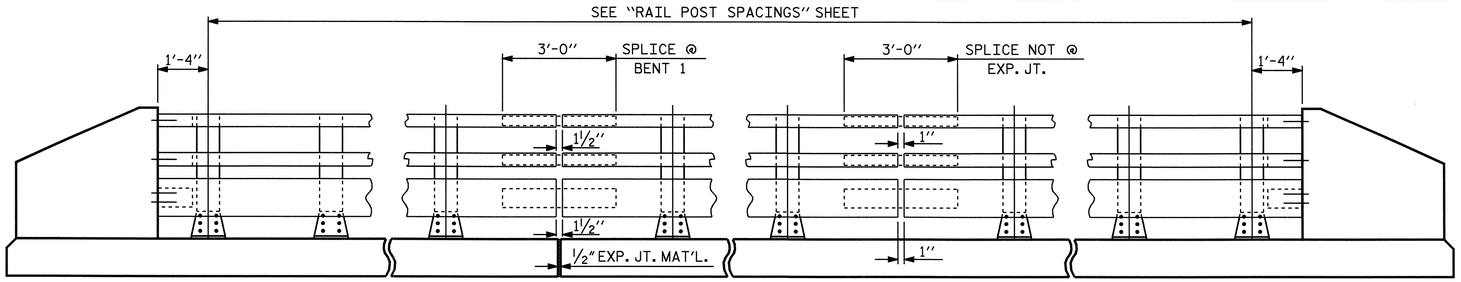

NOTE:
FOR ATTACHMENT OF METAL RAIL TO END POST, SEE "3 BAR METAL RAIL" SHEET 5 OF 6.

ELEVATION

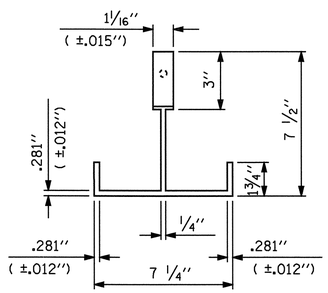

PLAN

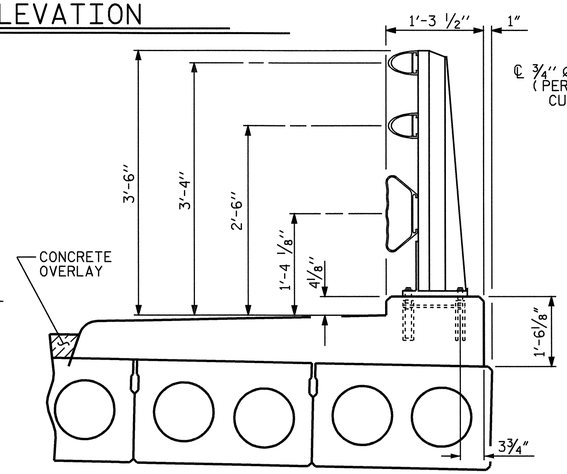

SECTION THRU RAIL

FOR ANCHOR ASSEMBLY, SEE "3 BAR METAL RAIL" STD.No.BMR6

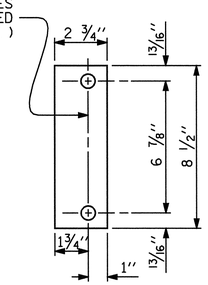

REAR PLATE

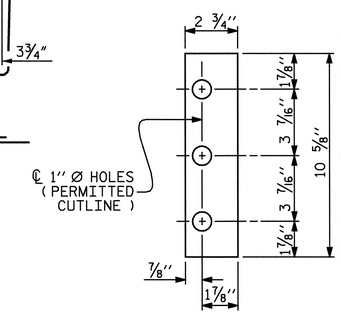

FRONT PLATE

SHIM DETAILS

NOTE :
SHIMS MAY BE CUT ALONG PERMITTED CUTLINE OR SLOTTED TO EDGE OF PLATE TO FACILITATE PLACEMENT.

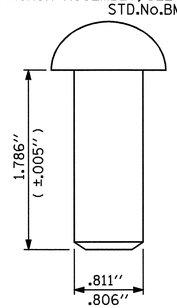

RIVET DETAIL

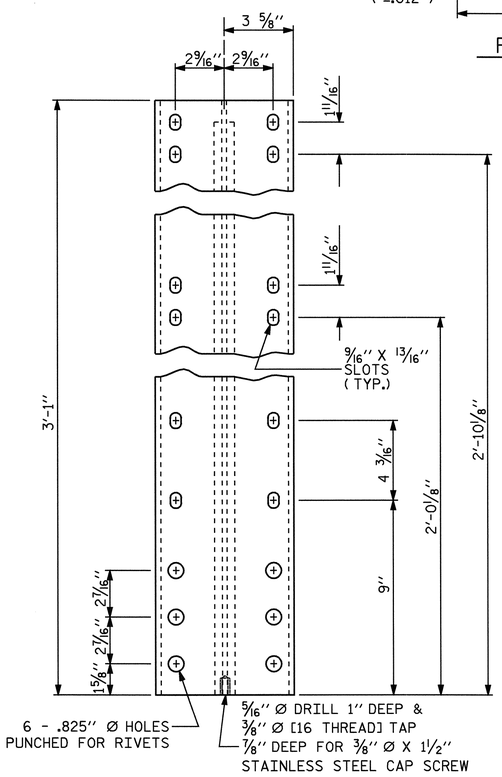

FRONT ELEVATION

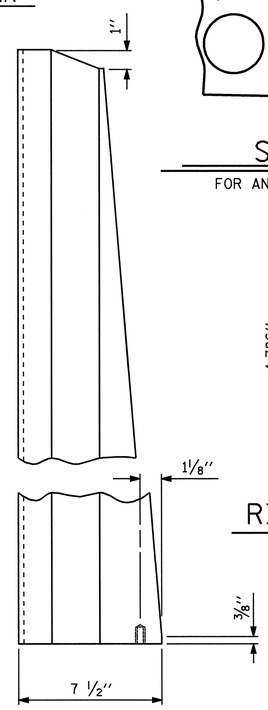

SIDE ELEVATION

DETAILS OF POST

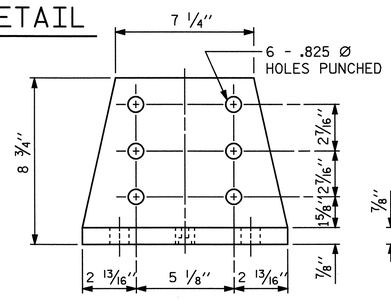

FRONT ELEVATION

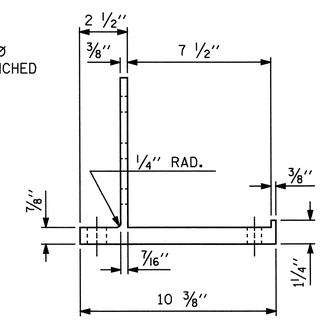

SIDE ELEVATION

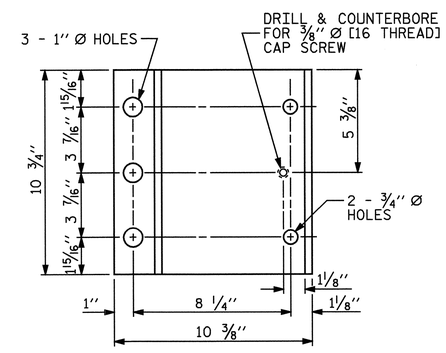

PLAN

POST BASE DETAILS

NOTES

AT THE CONTRACTOR'S OPTION, METAL RAIL MAY BE EITHER ALUMINUM OR GALVANIZED STEEL IN ACCORDANCE WITH THE REQUIREMENTS OF THE GENERAL NOTES AND THE FOLLOWING SPECIFICATIONS FOR THE ALTERNATE MATERIALS; HOWEVER, THE CONTRACTOR WILL BE REQUIRED TO USE THE SAME RAIL MATERIAL ON ALL STRUCTURES ON THE PROJECT FOR WHICH METAL RAIL IS DESIGNATED.

ALUMINUM RAILS

MATERIAL FOR POSTS, BASES AND RAILS, EXPANSION BARS AND CLAMP BARS SHALL BE ASTM B221 ALLOY 6061-T6.

MATERIAL FOR RIVETS SHALL BE ASTM B316 ALLOY 6061-T6. RIVETS SHALL BE STANDARD BUTTON HEAD AND CONE POINT COLD DRIVEN AS PER DRAWING.

THE BASE OF RAIL POSTS, OR ANY OTHER ALUMINUM SURFACE IN CONTACT WITH CONCRETE SHALL BE THOROUGHLY COATED WITH AN ALUMINUM IMPREGNATED CAULKING COMPOUND OF APPROVED QUALITY.

MATERIAL FOR SHIMS TO BE ASTM B209 ALLOY 6061-T6.

GALVANIZED STEEL RAILS

MATERIAL AND GALVANIZING ARE TO CONFORM TO THE FOLLOWING SPECIFICATIONS:

POST, POST BASES, RAILS, EXPANSION BARS AND CLAMP BARS : AASHTO M270 GRADE 36 STRUCTURAL STEEL - GALVANIZED TO AASHTO M111.

RIVETS: RIVETS SHALL MEET THE REQUIREMENTS OF ASTM A502 FOR GRADE 1 RIVETS.

THE CUT ENDS OF GALVANIZED STEEL RAILING, AFTER GRINDING SMOOTH SHALL BE GIVEN TWO COATS OF ZINC RICH PAINT MEETING THE REQUIREMENTS OF FEDERAL SPECIFICATION MIL-P-26915 USAF TYPE 1, OR OF FEDERAL SPECIFICATIONS TT-P-641.

SHIMS: SHIMS SHALL MEET THE REQUIREMENTS OF ASTM A570 FOR GRADE 33 OR A611 FOR GRADE C AND SHALL BE GALVANIZED IN ACCORDANCE WITH AASHTO M111.

RAIL CAPS: RAIL CAPS SHALL MEET THE REQUIREMENTS OF ASTM A570 FOR GRADE 33 OR A611 FOR GRADE C AND SHALL BE GALVANIZED IN ACCORDANCE WITH AASHTO M111.

GENERAL NOTES

RAILING SHALL BE CONTINUOUS FROM END POST TO END POST OF BRIDGE. EACH JOINT IN RAIL LENGTH SHALL BE SPLICED AS DETAILED. PANEL LENGTHS OF RAIL SHALL BE ATTACHED TO A MINIMUM OF THREE POSTS. PLACE ONE JOINT SPLICE JUST BEYOND THE 3RD RAIL POST FROM EACH END, TYPICALLY 14' FROM THE END. PLACE OTHER JOINTS AS NEEDED.

FOR END OF RAIL TO CLEAR FACE OF CONCRETE END POST DIMENSION, SEE STANDARD NO. BMR7.

CAP SCREWS SHALL BE ASTM F593 ALLOY 305 STAINLESS STEEL. WASHERS FOR RAIL ATTACHMENT SHALL MEET THE REQUIREMENTS OF ASTM F844 EXCEPT THEY SHALL BE MADE FROM ALLOY 304 STAINLESS STEEL.

CERTIFIED MILL REPORTS ARE REQUIRED FOR RAILS AND POSTS. SHOP INSPECTION IS NOT REQUIRED.

METAL RAIL POSTS SHALL BE SET NORMAL TO CURB GRADE.

METHOD OF MEASUREMENT FOR METAL RAILS: FOR LENGTH OF METAL RAILS TO BE PAID FOR, SEE THE STANDARD SPECIFICATIONS.

CURVED RAIL USAGE: WHERE RAILS ARE TO BE USED ON BRIDGES ON HORIZONTAL AND/OR VERTICAL CURVATURE THE CONTRACTOR MAY, AT HIS OPTION, HAVE THE REQUIRED CURVATURE IN THE RAIL FORMED IN THE SHOP OR IN THE FIELD. IN EITHER EVENT, THE RAIL SHALL CONFORM WITHOUT BUCKLING OR KINKING TO THE REQUIRED CURVATURE IN A UNIFORM MANNER ACCEPTABLE TO THE ENGINEER.

TO INSURE FUTURE IDENTIFICATION OF THE FABRICATOR, A PERMANENT IDENTIFYING MARK SHALL BE PLACED ON EACH POST. THE METHOD OF MARKING AND LOCATION SHALL BE SUCH THAT IT DOES NOT DETRACT FROM THE APPEARANCE OF THE POST, BUT REMAIN VISIBLE AFTER RAIL PLACEMENT.

SHIMS SHALL BE USED AS NECESSARY FOR POST ALIGNMENT.

ALLOY 6351-T5 MAY BE SUBSTITUTED FOR ALLOY 6061-T6 WHERE APPLICABLE.

MINOR VARIATIONS IN DETAILS OF METAL RAIL WILL BE CONSIDERED. DETAILS OF SUCH VARIATIONS, IF DESIRED, SHALL BE SUBMITTED FOR APPROVAL.

PAY LENGTH = 160.50 LIN.FT.

NORTH CAROLINA PROFESSIONAL SEAL 14855 ENGINEER DOUGLAS R. CALHOUN
6-8-07

PROJECT NO. B-3450
DURHAM COUNTY
STATION: 14+31.00 -L-

SHEET 3 OF 6

STATE OF NORTH CAROLINA
DEPARTMENT OF TRANSPORTATION
RALEIGH

STANDARD

3 BAR METAL RAIL

FEBRUARY 1988

REVISIONS								SHEET NO.
NO.	BY:	DATE:	NO.	BY:	DATE:			S-10
1			3					TOTAL SHEETS
2			4					128

ASSEMBLED BY : A.L.MEADOWS		DATE : 8/28/02	
CHECKED BY : T.A.HARRIS		DATE : 9/25/02	
DRAWN BY : JMB	1/88	REV. 10/17/00	RWW/LES
CHECKED BY : GGH	1/88	REV. 5/7/03	RWW/JTE
		REV. 5/1/06	TLA/GM

08-JUN-2007 12:08
R:\Structures\Final Plans\STR. 1\B3450_sd_3MR_01.dgn
gallen

STR. 1 STD. NO. BMR5

NOTES

STRUCTURAL CONCRETE ANCHOR ASSEMBLY

THE STRUCTURAL CONCRETE ANCHOR ASSEMBLY SHALL CONSIST OF THE FOLLOWING COMPONENTS:

A. FERRULES SHALL BE MADE FROM STEEL MEETING THE REQUIREMENTS OF AASHTO M169, GRADE 12L14 AND SHALL HAVE A MINIMUM LENGTH OF THREADS OF 2" FOR ¾" FERRULES AND 1¾" FOR ⅝" FERRULES.

B. 3 - ¾" Ø X 2½" BOLTS WITH WASHERS. BOLTS SHALL CONFORM TO THE REQUIREMENTS OF ASTM A307. BOLTS AND WASHERS SHALL BE GALVANIZED. AT THE CONTRACTOR'S OPTION, STAINLESS STEEL BOLTS AND WASHERS MAY BE USED AS AN ALTERNATE FOR THE ¾" Ø X 2½" GALVANIZED BOLTS AND WASHERS. THEY SHALL CONFORM TO OR EXCEED THE MECHANICAL REQUIREMENTS OF ASTM A307. THE USE OF THIS ALTERNATE SHALL BE APPROVED BY THE ENGINEER.

C. 2 - ⅝" Ø X 2¼" BOLTS WITH WASHERS. BOLTS SHALL CONFORM TO THE REQUIREMENTS OF ASTM A307. BOLTS AND WASHERS SHALL BE GALVANIZED. AT THE CONTRACTOR'S OPTION, STAINLESS STEEL BOLTS AND WASHERS MAY BE USED AS AN ALTERNATE FOR THE ⅝" Ø X 2¼" GALVANIZED BOLTS AND WASHERS. THEY SHALL CONFORM TO OR EXCEED THE MECHANICAL REQUIREMENTS OF ASTM A307. THE USE OF THIS ALTERNATE SHALL BE APPROVED BY THE ENGINEER.

D. WIRE STRUT SHOWN IN THE CONCRETE ANCHOR ASSEMBLY DETAIL IS THE MINIMUM ALLOWABLE SIZE AND SHALL HAVE A MINIMUM TENSILE STRENGTH OF 100,000 PSI. AS AN OPTION, A 7/16" Ø WIRE STRUT WITH A MINIMUM TENSILE STRENGTH OF 90,000 PSI IS ACCEPTABLE.

E. THE METAL RAIL ANCHOR ASSEMBLIES TO BE HOT DIPPED GALVANIZED TO CONFORM TO REQUIREMENTS OF AASHTO M111.

F. THE COST OF THE METAL RAIL ANCHOR ASSEMBLY WITH BOLTS AND WASHERS COMPLETE IN PLACE SHALL BE INCLUDED IN THE PRICE BID FOR LINEAR FEET OF METAL RAIL.

G. BOLTS TO BE TIGHTENED ONE-HALF TURN WITH A WRENCH FROM A FINGER-TIGHT POSITION.

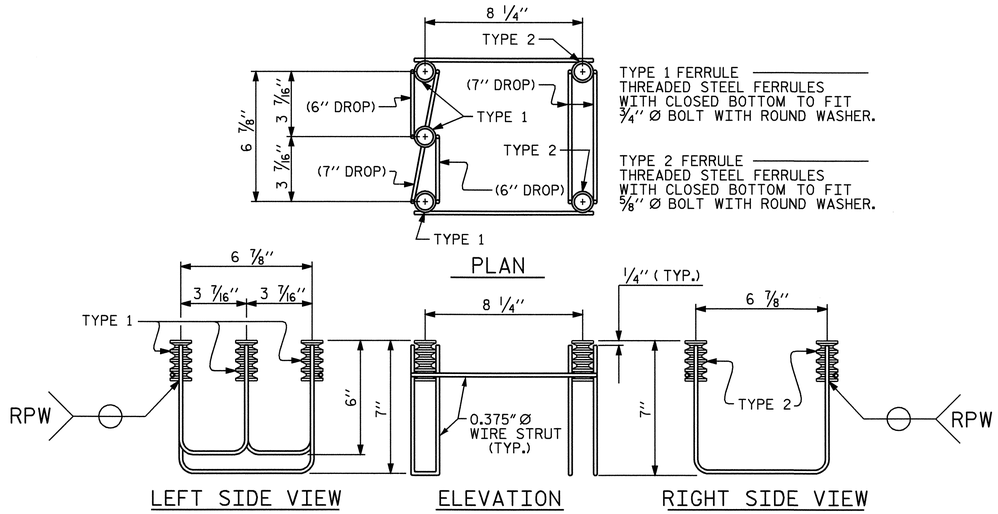

5-BOLT METAL RAIL ANCHOR ASSEMBLY

(30 ASSEMBLIES REQUIRED)

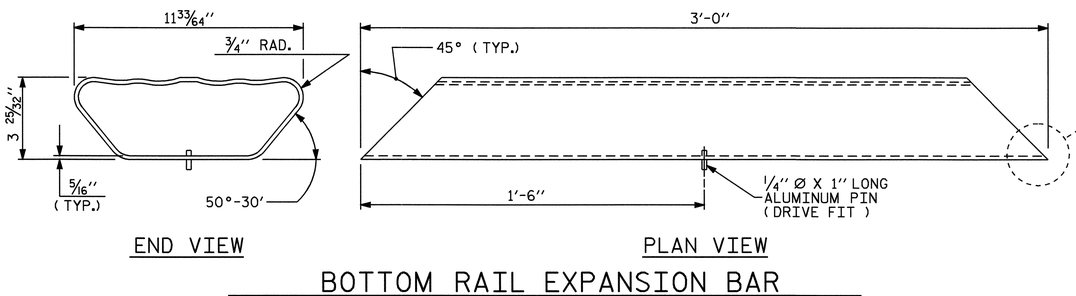

BOTTOM RAIL EXPANSION BAR

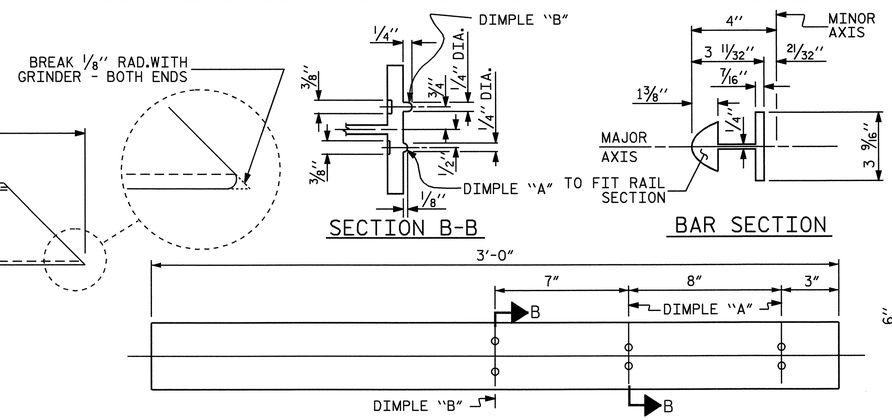

TOP & MIDDLE RAIL EXPANSION BAR

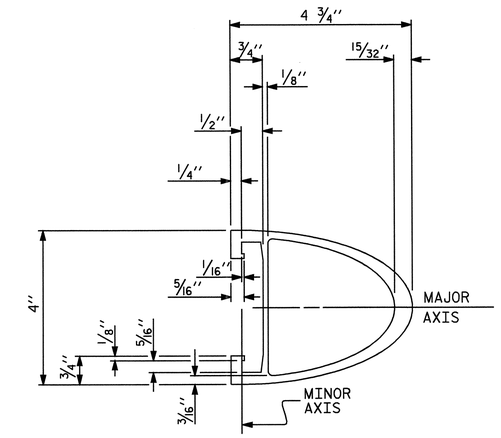

TOP & MIDDLE RAIL SECTION

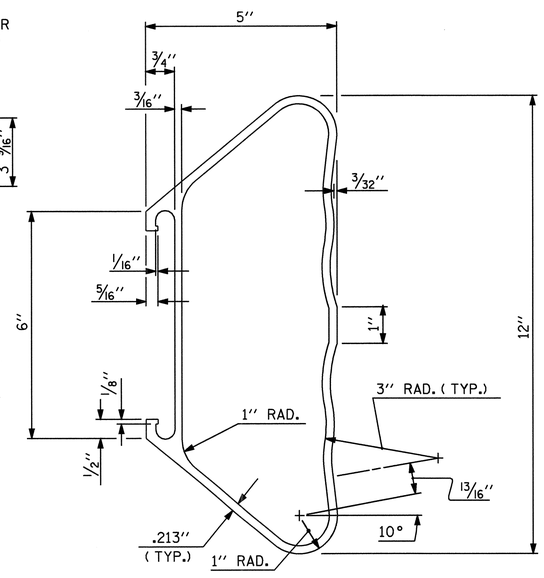

BOTTOM RAIL SECTION

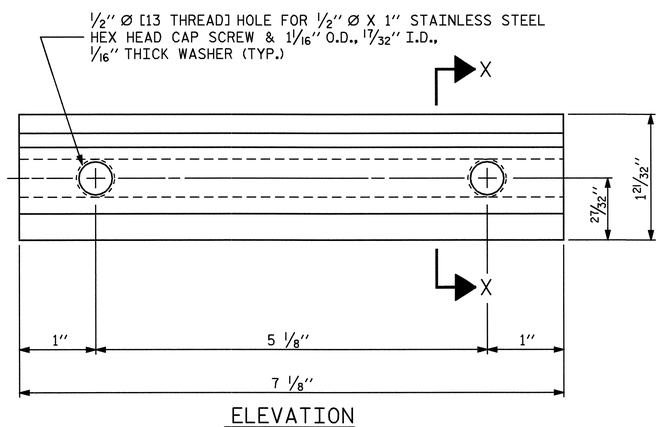

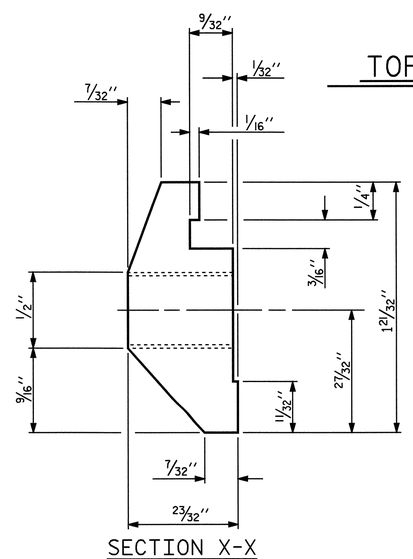

CLAMP BAR DETAIL

(6 REQUIRED PER POST)

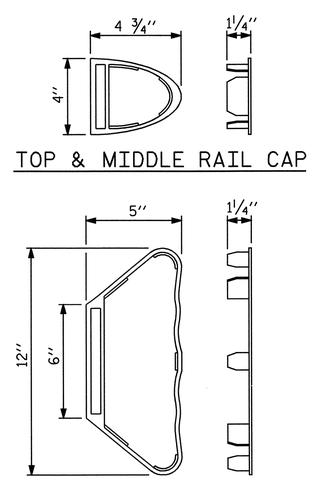

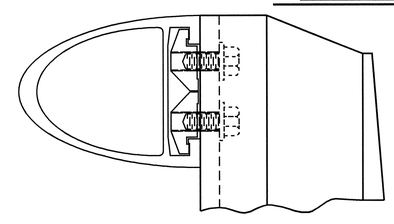

CLAMP ASSEMBLY

TOP RAIL SHOWN
(MIDDLE & BOTTOM RAIL ARE SIMILAR)

NORTH CAROLINA PROFESSIONAL SEAL 14855 ENGINEER DOUGLAS R. CALHOUN
6-13-07

PROJECT NO. B-3450
DURHAM COUNTY
STATION: 14+31.00 -L-

SHEET 4 OF 6

STATE OF NORTH CAROLINA
DEPARTMENT OF TRANSPORTATION
RALEIGH

STANDARD

3 BAR METAL RAIL

FEBRUARY 1988

REVISIONS						SHEET NO.
NO.	BY:	DATE:	NO.	BY:	DATE:	S-11
1			3			TOTAL SHEETS
2			4			128

ASSEMBLED BY : A.L.MEADOWS		DATE : 8/28/02	
CHECKED BY : T.A.HARRIS		DATE : 9/25/02	
DRAWN BY : JMB 1/88	REV. 10/17/00	LES/RDR	
CHECKED BY : GGH 1/88	REV. 7/10/01	RWW/LES	
	REV. 5/7/03	RWW/JTE	

08-JUN-2007 12:08
R:\Structures\Final Plans\STR. 1\B3450_sd_3MR_01.dgn
gallen

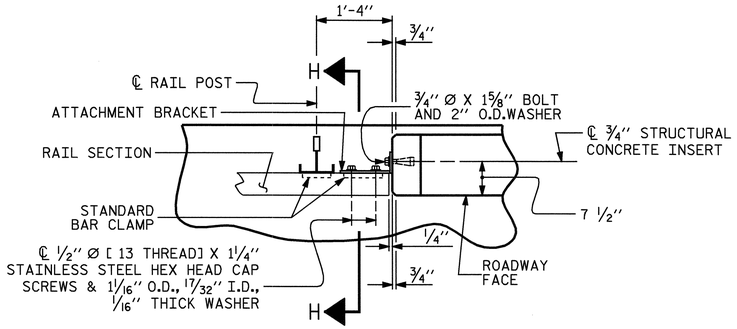

PLAN OF RAIL AND END POST

(STIFFENER ON 1/2" ℙ NOT SHOWN FOR CLARITY)

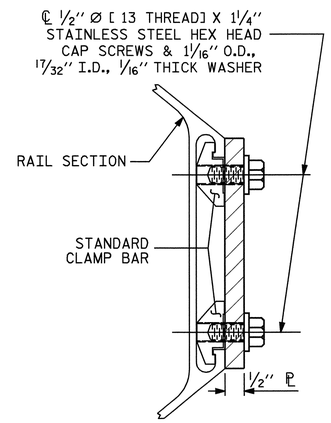

SECTION H-H

(FOR BOTTOM RAIL)

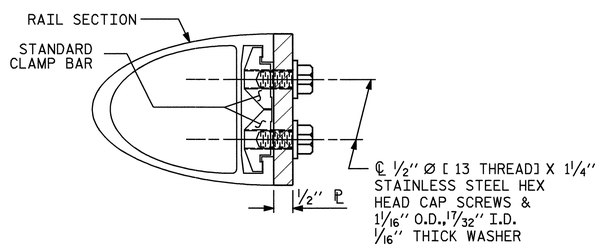

SECTION H-H

(FOR TOP & MIDDLE RAIL)

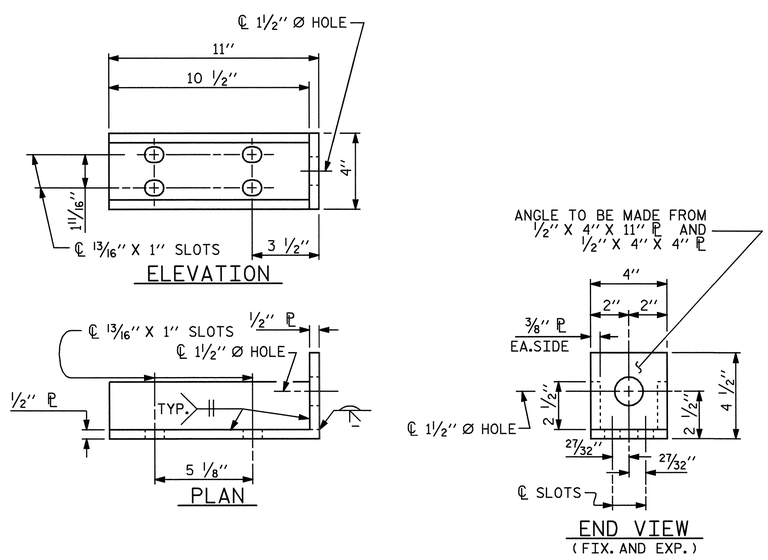

DETAILS FOR ATTACHMENT BRACKET

(TOP & MIDDLE RAIL ONLY)

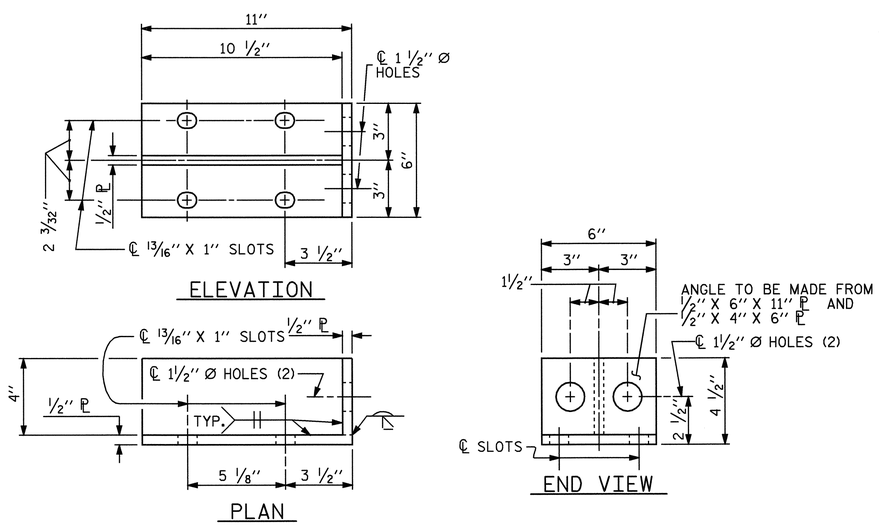

DETAILS FOR ATTACHMENT BRACKET

(BOTTOM RAIL ONLY)

NOTES

METAL RAIL TO END POST CONNECTION

THE METAL RAIL TO END POST CONNECTION SHALL CONSIST OF THE FOLLOWING COMPONENTS:

A. 1/2" PLATES SHALL CONFORM TO AASHTO M270 GRADE 36 AND SHALL BE GALVANIZED AFTER FABRICATION.

B. 3/4" STRUCTURAL CONCRETE INSERT SHALL HAVE A WORKING LOAD SHEAR CAPACITY OF 4800 LBS. THE FERRULES SHALL ENGAGE A 3/4" Ø X 1 5/8" BOLT WITH 2" O.D. WASHER IN PLACE. THE 3/4" Ø X 1 5/8" BOLT SHALL HAVE N. C. THREADS.

C. CAP SCREWS FOR RAIL ATTACHMENT TO ANGLE SHALL CONFORM TO THE REQUIREMENTS OF ASTM F593 ALLOY 305 STAINLESS STEEL. CAP SCREWS TO BE CENTERED IN SLOTS AT 60°F. WASHERS FOR RAIL ATTACHMENT SHALL MEET THE REQUIREMENTS OF ASTM F844 EXCEPT THEY SHALL BE MADE FROM ALLOY 304 STAINLESS STEEL.

D. STANDARD CLAMP BARS (SEE STD. BMR6).

THE COST OF THE STANDARD CLAMP BARS AND CAP SCREWS USED IN THE METAL RAIL TO END POST CONNECTION SHALL BE INCLUDED IN THE UNIT CONTRACT PRICE BID FOR LINEAR FEET OF 3 BAR METAL RAIL.

THE 3/4" STRUCTURAL CONCRETE INSERT WITH BOLT SHALL BE ASSEMBLED IN THE SHOP.

THE COST OF THE 3/4" STRUCTURAL CONCRETE INSERT ASSEMBLY, AND THE 1/2" PLATES COMPLETE IN PLACE SHALL BE INCLUDED IN THE VARIOUS PAY ITEMS.

THE CONTRACTOR, AT HIS OPTION, MAY USE AN ADHESIVE BONDING SYSTEM IN LIEU OF THE STRUCTURAL CONCRETE INSERT EMBEDDED IN THE END POST. IF THE ADHESIVE BONDING SYSTEM IS USED, THE 3/4" Ø X 1 5/8" BOLT WITH WASHER SHALL BE REPLACED WITH A 3/4" Ø X 6 1/2" BOLT AND 2" O.D.WASHER. ALL SPECIFICATIONS THAT APPLY TO THE 3/4" Ø X 1 5/8" BOLT SHALL APPLY TO THE 3/4" Ø X 6 1/2" BOLT. FIELD TESTING OF THE ADHESIVE BONDING SYSTEM IS NOT REQUIRED.

NOTES

STRUCTURAL CONCRETE INSERT

THE STRUCTURAL CONCRETE INSERT ASSEMBLY SHALL CONSIST OF THE FOLLOWING COMPONENTS:

A. FERRULES SHALL BE MADE FROM STEEL MEETING THE REQUIREMENTS OF AASHTO M169, GRADE 12L14 AND SHALL HAVE A MINIMUM LENGTH OF THREADS OF 1 1/2".

B. 1 - 3/4" Ø X 1 5/8" BOLT WITH WASHER. BOLT SHALL CONFORM TO THE REQUIREMENTS OF ASTM A307. BOLT AND WASHER SHALL BE GALVANIZED. AT THE CONTRACTORS OPTION, STAINLESS STEEL BOLT AND WASHER MAY BE USED AS AN ALTERNATE FOR THE 3/4" Ø X 1 5/8" GALVANIZED BOLT AND WASHER. THEY SHALL CONFORM TO OR EXCEED THE MECHANICAL REQUIREMENTS OF ASTM A307. THE USE OF THIS ALTERNATE SHALL BE APPROVED BY THE ENGINEER.

C. WIRE STRUT SHOWN IN THE CONCRETE INSERT ASSEMBLY DETAIL IS THE MINIMUM ALLOWABLE SIZE AND SHALL HAVE A MINIMUM TENSILE STRENGTH OF 100,000 PSI. AS AN OPTION, A 7/16" Ø WIRE STRUT WITH A MINIMUM TENSILE STRENGTH OF 90,000 PSI IS ACCEPTABLE.

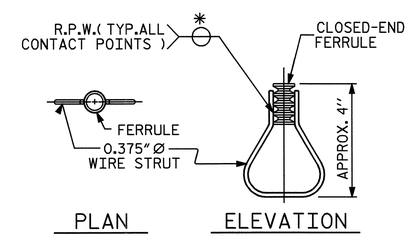

STRUCTURAL CONCRETE INSERT

* EACH WELDED ATTACHMENT OF WIRE TO FERRULE SHALL DEVELOP THE TENSILE STRENGTH OF THE WIRE.

PROJECT NO. B-3450

DURHAM COUNTY

STATION: 14+31.00 -L-

SHEET 5 OF 6

STATE OF NORTH CAROLINA
DEPARTMENT OF TRANSPORTATION
RALEIGH

STANDARD

3 BAR METAL RAIL

FEBRUARY 1988

NORTH CAROLINA PROFESSIONAL SEAL 14855 ENGINEER DOUGLAS R. CALHOUN

6-12-07

REVISIONS						SHEET NO.
NO.	BY:	DATE:	NO.	BY:	DATE:	S-12
1			3			TOTAL SHEETS
2			4			128

ASSEMBLED BY : A.L.MEADOWS DATE : 8/28/02
CHECKED BY : T.A.HARRIS DATE : 9/25/02

DRAWN BY : JMB 1/88
CHECKED BY : GGH 1/88

REV. 7/10/01 RWW/LES
REV. 5/7/03 RWW/JTE
REV. 5/1/06 TLA/GM

08-JUN-2007 12:08
R:\Structures\Final Plans\STR. 1\B3450_sd_3MR_01.dgn
gallen

STR. 1

STD. NO. BMR7

NOTES

THE GUARDRAIL ANCHOR ASSEMBLY SHALL CONSIST OF A 1/4'' HOLD DOWN PLATE AND 7 - 7/8'' Ø BOLTS WITH NUTS AND WASHERS.

THE HOLD-DOWN PLATE SHALL CONFORM TO AASHTO M270 GRADE 36. AFTER FABRICATION, THE HOLD-DOWN PLATE SHALL BE HOT-DIP GALVANIZED IN ACCORDANCE WITH AASHTO M111.

BOLTS SHALL CONFORM TO THE REQUIREMENTS OF ASTM A307 AND NUTS SHALL CONFORM TO THE REQUIREMENTS OF AASHTO M291. BOLTS, NUTS AND WASHERS SHALL BE GALVANIZED. AT THE CONTRACTOR'S OPTION, STAINLESS STEEL BOLTS, NUTS AND WASHERS MAY BE USED AS AN ALTERNATE FOR THE 7/8'' Ø GALVANIZED BOLTS, NUTS AND WASHERS. THEY SHALL CONFORM TO OR EXCEED THE MECHANICAL REQUIREMENTS OF ASTM A307. THE USE OF THIS ALTERNATE SHALL BE APPROVED BY THE ENGINEER.

AFTER INSTALLATION, THE EXPOSED THREAD OF THE BOLT SHALL BE BURRED WITH A SHARP POINTED TOOL.

THE COST OF THE GUARDRAIL ANCHOR ASSEMBLIES WITH BOLTS, NUTS AND WASHERS COMPLETE IN PLACE, SHALL BE INCLUDED IN THE VARIOUS PAY ITEMS.

THE VERTICAL REINFORCING BARS MAY BE SHIFTED SLIGHTLY IN THE END POST TO CLEAR ASSEMBLY BOLTS.

THE 1 1/4'' Ø HOLES SHALL BE FORMED OR DRILLED WITH A CORE BIT. IMPACT TOOLS WILL NOT BE PERMITTED. ANY CONCRETE DAMAGED BY THIS WORK SHALL BE REPAIRED TO THE SATISFACTION OF THE ENGINEER.

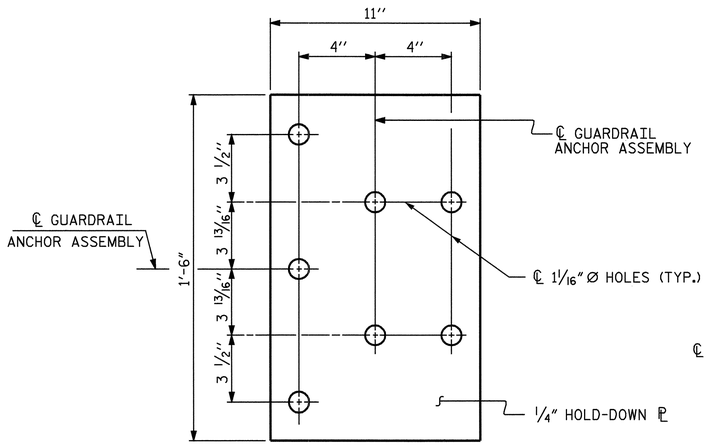

PLAN

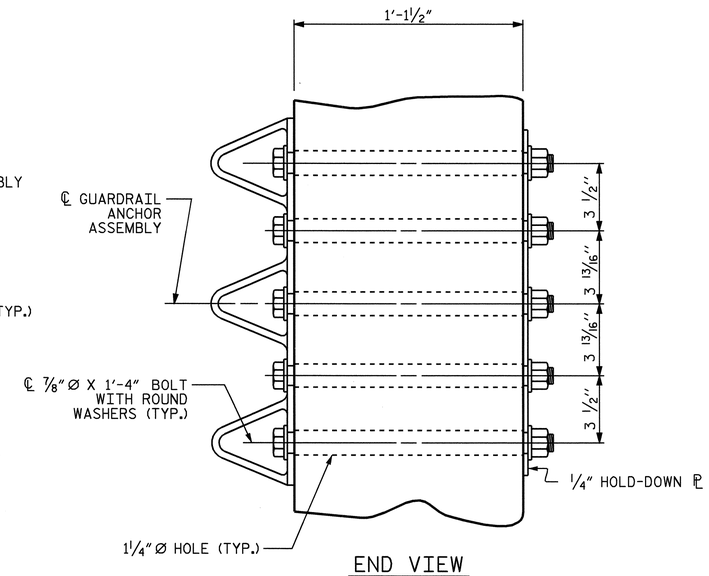

END VIEW

GUARDRAIL ANCHOR ASSEMBLY DETAILS

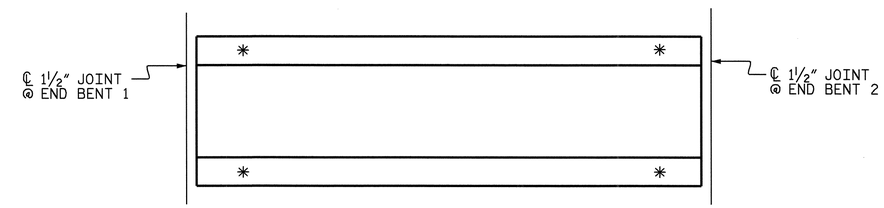

SKETCH SHOWING POINTS OF ATTACHMENT

* LOCATION OF GUARDRAIL ATTACHMENT

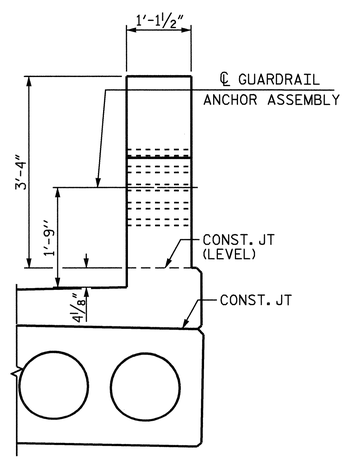

END VIEW
(THREE BAR METAL RAIL)

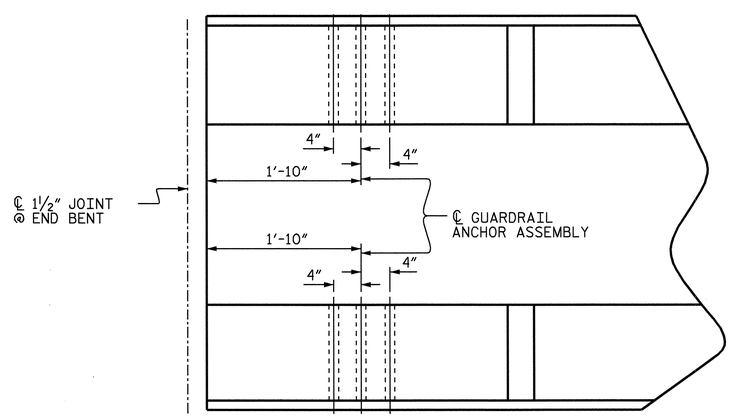

PLAN
(TYP. EA. END BENT)

LOCATION OF GUARDRAIL ANCHOR AT END POST

PROJECT NO. B-3450
DURHAM COUNTY
STATION: 14+31.00 -L-

SHEET 6 OF 6

STATE OF NORTH CAROLINA
DEPARTMENT OF TRANSPORTATION
RALEIGH

STANDARD
GUARDRAIL ANCHORAGE DETAILS FOR METAL RAILS

NORTH CAROLINA PROFESSIONAL SEAL 14855 ENGINEER DOUGLAS R. CALHOUN
6-18-07

REVISIONS						SHEET NO.
NO.	BY:	DATE:	NO.	BY:	DATE:	S-13
1			3			TOTAL SHEETS
2			4			128

ASSEMBLED BY : A.L.MEADOWS		DATE : 8/28/02	
CHECKED BY : T.A.HARRIS		DATE : 9/25/02	
DRAWN BY : EEM 6/94	REV. 10/17/00	RWW/LES	
CHECKED BY : RGW 6/94	REV. 5/7/03	RWW/JTE	
	REV. 5/1/06	TLA/GM	

18-JUN-2007 11:42
R:\Structures\Final Plans\STR. 1\B3450_sd_3MR_01.dgn
gallen

BILL OF MATERIAL FOR ONE CORED SLAB SECTION

			SPAN A									SPAN B								
			INTERIOR UNIT			INT. (SIDEWALK)			EXT. (SIDEWALK)			INTERIOR UNIT			INT. (SIDEWALK)			EXT. (SIDEWALK)		
BAR	SIZE	TYPE	NUMBER	LENGTH	WEIGHT	NUMBER	LENGTH	WEIGHT	NUMBER	LENGTH	WEIGHT	NUMBER	LENGTH	WEIGHT	NUMBER	LENGTH	WEIGHT	NUMBER	LENGTH	WEIGHT
B1	# 4	STR	4	25'-2"	67	4	25'-2"	67	4	25'-2"	67									
B2	# 4	STR										4	20'-2"	54	4	20'-2"	54	4	20'-2"	54
S1	# 4	1	8	4'-3"	23	8	4'-3"	23	8	4'-3"	23	8	4'-3"	23	8	4'-3"	23	8	4'-3"	23
S2	# 4	1	98	5'-4"	349	98	5'-4"	349	98	5'-4"	349	78	5'-4"	278	78	5'-4"	278	78	5'-4"	278
✳ S3	# 4	2				7	5'-11"	28	7	5'-11"	28				6	5'-11"	24	6	5'-11"	24
REINFORCING STEEL			439 LBS.			439 LBS.			439 LBS.			355 LBS.			355 LBS.			355 LBS.		
✳ EPOXY COATED REINF. STEEL			0			28 LBS.			28 LBS.			0			24 LBS.			24 LBS.		
5,000 P.S.I. CONCRETE			6.8 C. Y.			6.8 C. Y.			6.8 C. Y.			5.4 C. Y.			5.4 C. Y.			5.4 C. Y.		
1/2" Ø L.R. STRANDS			24			24			24			15			15			15		

GRADE 270 STRANDS	
	1/2" Ø L.R.
AREA (SQUARE INCHES)	0.153
ULTIMATE STRENGTH (LBS. PER STRAND)	41,300
APPLIED PRESTRESS (LBS. PER STRAND)	30,980

GROOVING BRIDGE FLOORS	
BRIDGE DECK	3741 SQ.FT.
APPROACH SLAB	2065 SQ.FT.
TOTAL	5806 SQ.FT.

NOTES

ALL PRESTRESSING STRANDS SHALL BE 7-WIRE LOW RELAXATION GRADE 270 STRANDS AND SHALL CONFORM TO AASHTO M203 EXCEPT FOR SAMPLING REQUIREMENTS WHICH SHALL BE IN ACCORDANCE WITH THE STANDARD SPECIFICATIONS.

ALL REINFORCING STEEL CAST WITH THE CORED SLAB SECTIONS SHALL BE GRADE 60 AND SHALL BE INCLUDED IN THE UNIT PRICE BID FOR PRESTRESSED CONCRETE CORED SLABS.

RECESSES FOR TRANSVERSE STRANDS SHALL BE GROUTED AFTER THE TENSIONING OF THE STRANDS.

THE 2 1/2" Ø DOWEL HOLES AT FIXED ENDS OF SLAB SECTIONS SHALL BE FILLED WITH GROUT.

THE 2" Ø BACKER ROD SHALL CONFORM TO THE REQUIREMENTS OF TYPE M BOND BREAKER. SEE SECTION 1028 OF THE STANDARD SPECIFICATIONS.

WHEN CORED SLABS ARE CAST, A POSITIVE HOLD-DOWN SYSTEM SHALL BE EMPLOYED TO PREVENT VOIDS FROM RISING OR MOVING SIDEWAYS. THIS SYSTEM SHALL BE DESIGNED TO BE LEFT IN PLACE UNTIL THE CONCRETE HAS REACHED RELEASE STRENGTH. AT LEAST THREE WEEKS PRIOR TO CASTING CORED SLABS, THE CONTRACTOR SHALL SUBMIT TO THE ENGINEER FOR REVIEW AND COMMENT, DETAILED DRAWINGS OF THE PROPOSED HOLD-DOWN SYSTEM. IN ADDITION TO STRUCTURAL DETAILS, LOCATION AND SPACING OF THE HOLD-DOWNS SHALL BE INDICATED.

WHEN A CONCRETE WEARING SURFACE IS DETAILED ON THE CORED SLAB BRIDGE TYPICAL SECTION, THE TOP SURFACE OF THE CORED SLAB UNITS SHALL HAVE A 3/8" RAKED FINISH.

THE TRANSFER OF LOAD FROM THE ANCHORAGES TO THE CORED SLAB UNIT SHALL BE DONE WHEN THE CONCRETE HAS REACHED A COMPRESSIVE STRENGTH OF NOT LESS THAN 4000 PSI.

PRESTRESSING STRANDS SHALL BE CUT FLUSH WITH THE CORED SLAB UNIT ENDS.

APPLY EPOXY PROTECTIVE COATING TO CORED SLAB UNIT ENDS.

PLACEMENT OF THE CONCRETE WEARING SURFACE SHALL OCCUR AFTER CASTING THE CONCRETE END POSTS AND SIDEWALKS. THE COST OF THE REINFORCING STEEL CAST WITH THE CONCRETE WEARING SURFACE SHALL BE INCLUDED IN THE UNIT BID PRICE FOR CONCRETE WEARING SURFACE. FOR CONCRETE WEARING SURFACE, SEE SPECIAL PROVISIONS.

FOR PRESTRESSED CONCRETE MEMBERS, SEE SPECIAL PROVISIONS.

CORED SLABS REQUIRED

SPAN A	NUMBER		TOTAL LENGTH
EXTERIOR C.S.	2	48'-9 3/4"	97'-7 1/2"
INTERIOR C.S.	18	48'-9 3/4"	878'-7 1/2"
TOTAL	20		976'-3"
SPAN B			
EXTERIOR C.S.	2	38'-9 3/4"	77'-7 1/2"
INTERIOR C.S.	18	38'-9 3/4"	698'-7 1/2"
TOTAL	20		776'-3"
TOTAL	40		1752'-6" LIN. FT.

BAR TYPES

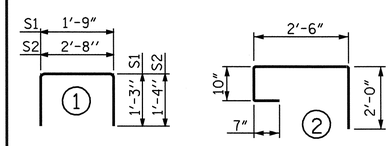

ALL BAR DIMENSIONS ARE OUT TO OUT

DEAD LOAD DEFLECTION AND CAMBER

	3'-0" x 2'-9"	
	0.6" Ø L.R. STRAND	
	SPAN A	SPAN B
CAMBER (BEAM ALONE IN PLACE) ↑	1 1/4"	1/2"
DEFLECTION DUE TO CONCRETE WEARING SURFACE ↓	3/16"	1/16"
FINAL CAMBER ↑	1 1/16"	7/16"

REINFORCING BAR SCHEDULE FOR CONCRETE WEARING SURFACE

BAR	NUMBER	SIZE	TYPE	LENGTH	WEIGHT
✳ A1	348	#3	STR	23'-9"	3108
✳ B1	368	#3	STR	22'-9"	3148
✳ B2	91	#4	STR	20'-0"	1216
✳ EPOXY COATED REINFORCING STEEL LBS. 7472					

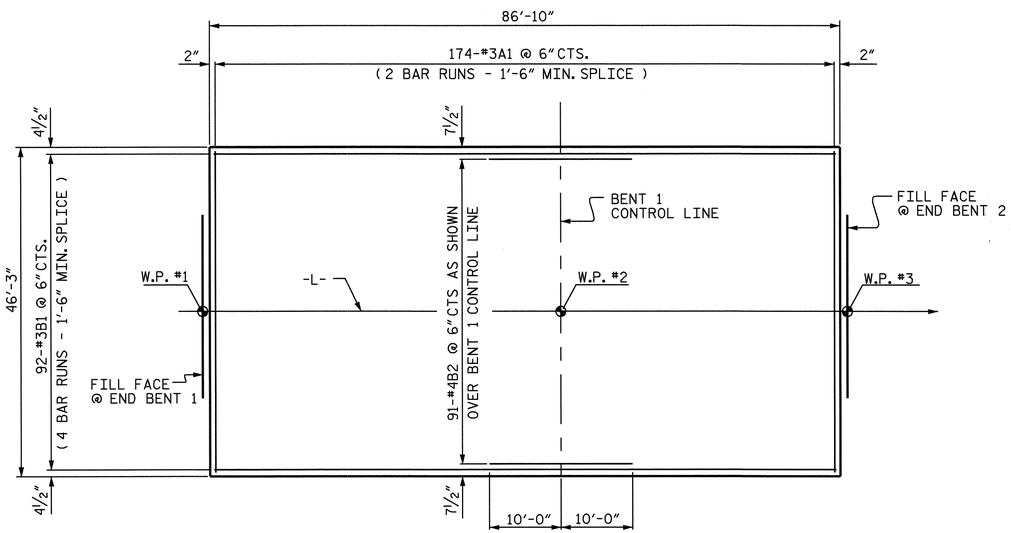

PLAN OF CONCRETE WEARING SURFACE

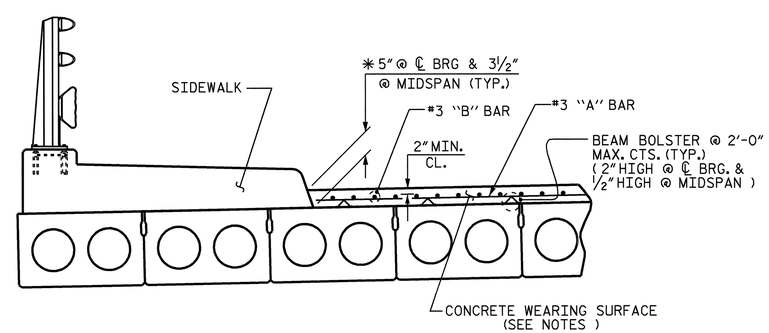

REINFORCING FOR CONCRETE WEARING SURFACE

✳ BASED ON PREDICTED FINAL CAMBER AND THEORETICAL GRADE LINE ELEVATIONS

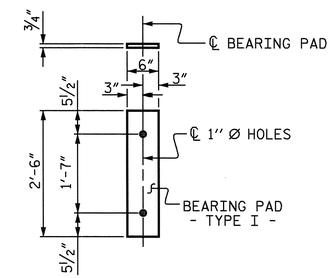

FIXED END
(TYPE I - 80 REQ'D)

ELASTOMERIC BEARING DETAILS

CONCRETE WEARING SURFACE		EPOXY COATED REINFORCING STEEL (FOR WEARING SURFACE)
SQ. FT.	APPROX. CU. YDS.	LBS.
4016	49.6	7553

PROJECT NO. B-3450
DURHAM COUNTY
STATION: 14+31.00 -L-

NORTH CAROLINA PROFESSIONAL SEAL 14855 ENGINEER DOUGLAS R. CALHOUN
6-18-07

STATE OF NORTH CAROLINA
DEPARTMENT OF TRANSPORTATION
RALEIGH

3'-0" X 1'-9"
PRESTRESSED
CONCRETE CORED
SLAB UNIT

ASSEMBLED BY : A.L.MEADOWS	DATE : 7/3/02
CHECKED BY : T.A.HARRIS	DATE : 9/25/02
DRAWN BY : WJH 4/89	REV. 7/10/01 RWW/LES
CHECKED BY : FCJ 5/89	REV. 5/7/03RR RWW/JTE
	REV. 5/1/06 TLA/GM

REVISIONS								SHEET NO.
NO.	BY:	DATE:	NO.	BY:	DATE:			S-14
1			3					TOTAL SHEETS
2			4					128

STR. 1 STD. NO. PCS3

18-JUN-2007 11:44
R:\Structures\Final Plans\STR. 1\B3450_sd_TS_01.dgn
galleh

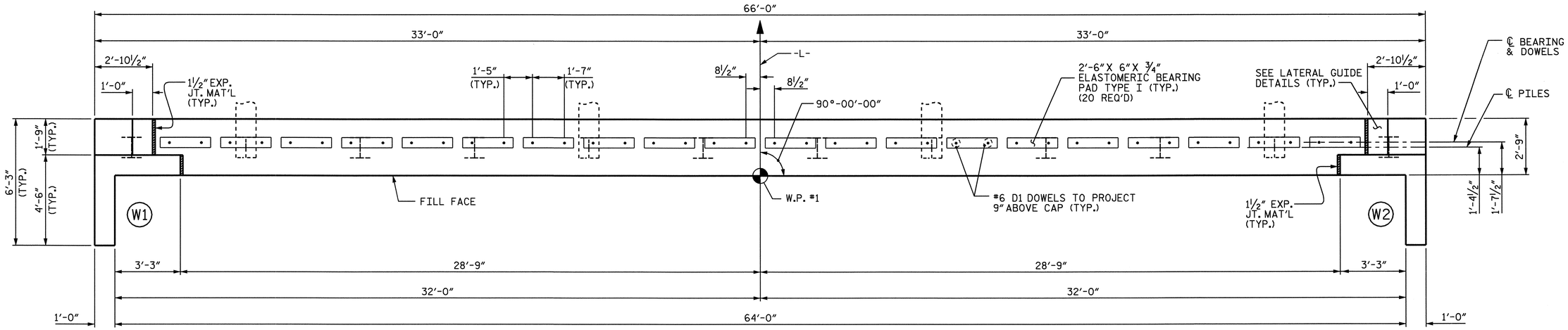

PLAN

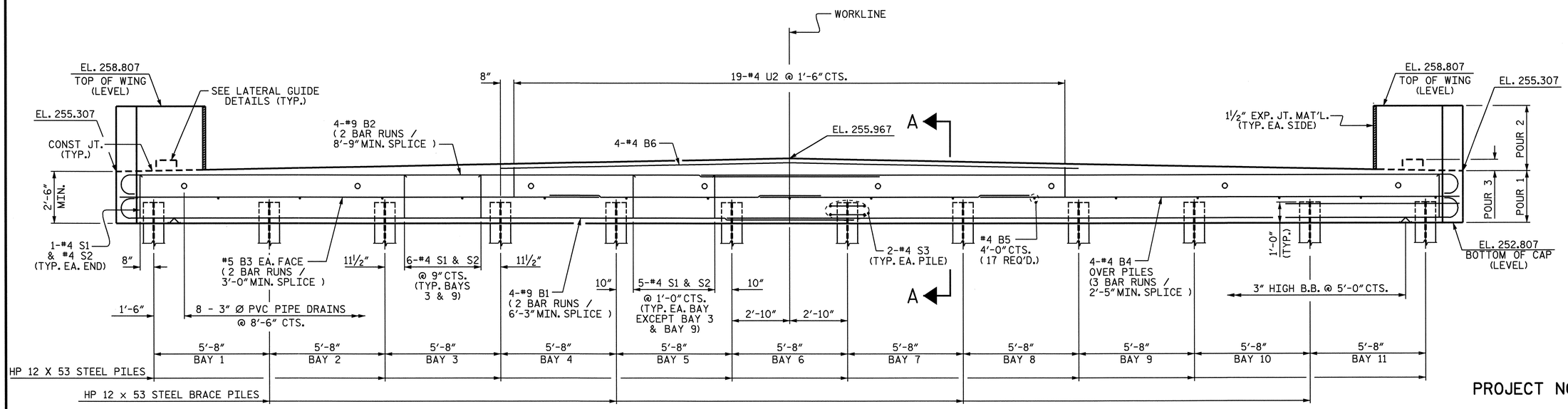

ELEVATION

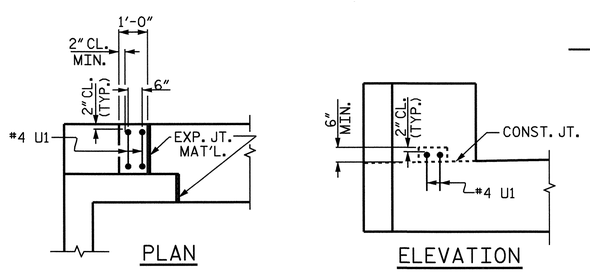

LATERAL GUIDE DETAILS

(TYP. EACH LATERAL GUIDE)

NOTES

STIRRUPS MAY BE SHIFTED AS NECESSARY TO CLEAR DOWELS.

PIPE DRAINS MAY BE SHIFTED AS NECESSARY TO CLEAR REINFORCING STEEL AND DOWELS.

THE LATERAL GUIDE AT EACH END OF THE CAP IS NOT TO BE POURED UNTIL AFTER CORED SLAB UNITS ARE IN PLACE.

FOR REINFORCING STEEL IN WINGS, SEE SHEET 2 OF 3.

NORTH CAROLINA PROFESSIONAL SEAL 14855 ENGINEER DOUGLAS R. CALLISON

6-18-07

PROJECT NO. B-3450

DURHAM COUNTY

STATION: 14+31.00 -L-

SHEET 1 OF 3

STATE OF NORTH CAROLINA
DEPARTMENT OF TRANSPORTATION
RALEIGH

SUBSTRUCTURE
END BENT 1

REVISIONS						SHEET NO.
NO.	BY:	DATE:	NO.	BY:	DATE:	S-15
1			3			TOTAL SHEETS
2			4			128

DRAWN BY : A.L.MEADOWS DATE : 9/04/02
CHECKED BY : T.A.HARRIS DATE : 9/27/02

08-JUN-2007 12:09
R:\Structures\Final Plans\STR. 1\B3450_sd_E*_01.dgn
gallen

STR. 1

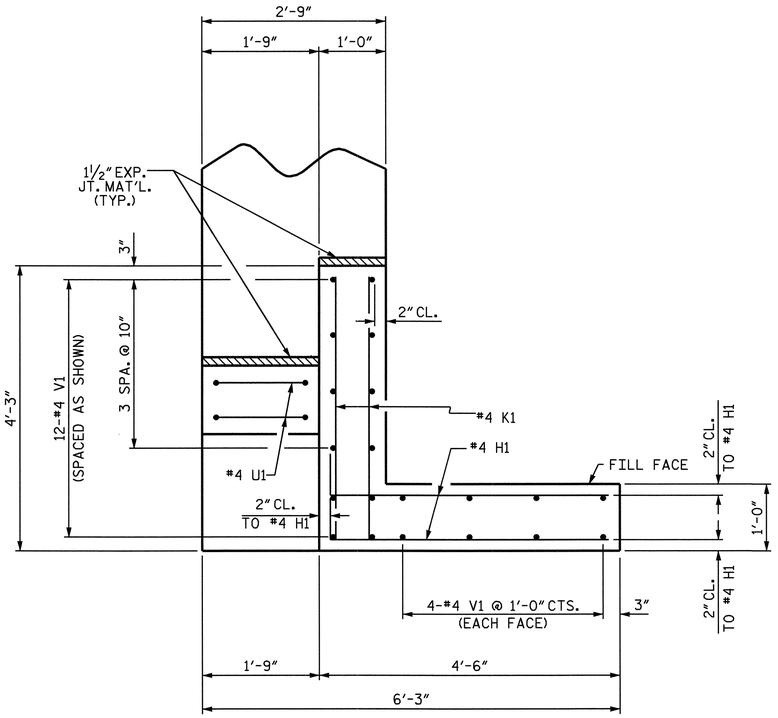

PLAN OF WING (W1)

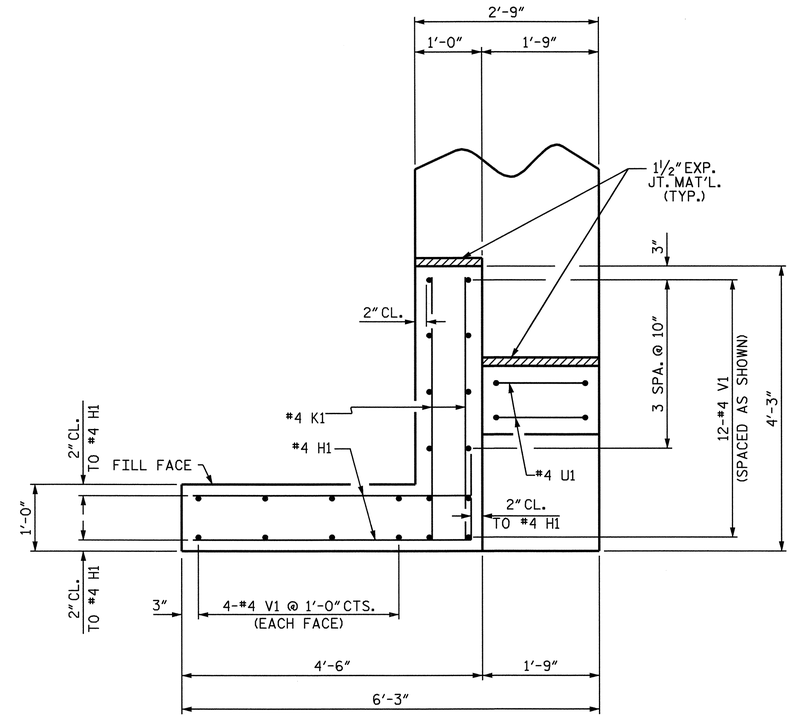

PLAN OF WING (W2)

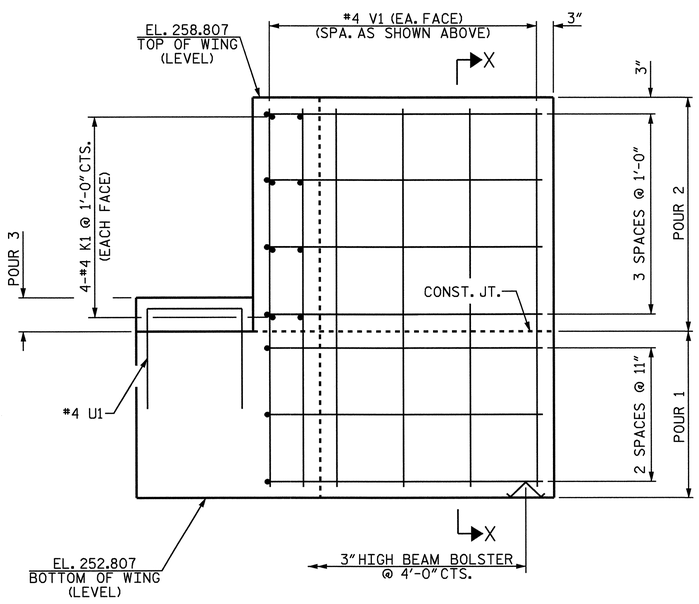

ELEVATION OF WING (W1)

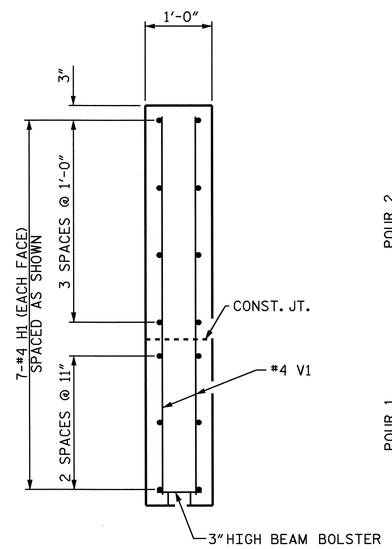

SECTION X-X

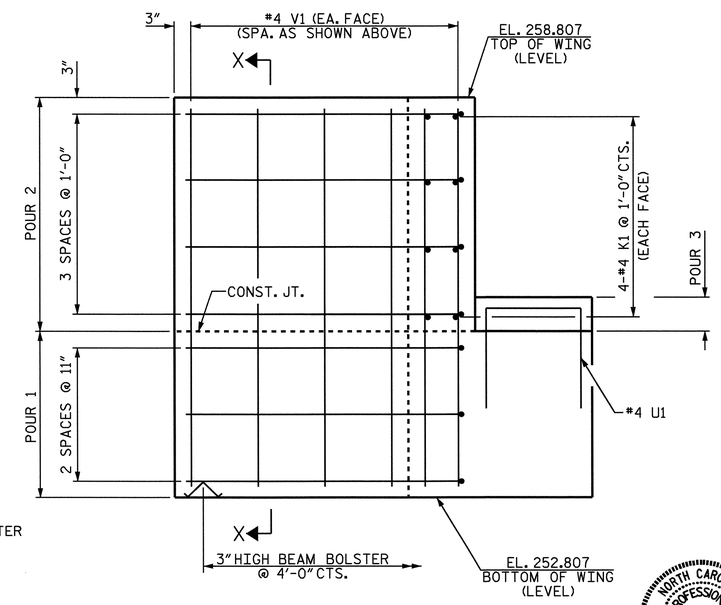

ELEVATION OF WING (W2)

NORTH CAROLINA PROFESSIONAL SEAL 14855 ENGINEER DOUGLAS R. CALDWELL

6-18-07

PROJECT NO. B-3450

DURHAM COUNTY

STATION: 14+31.00 -L-

SHEET 2 OF 3

STATE OF NORTH CAROLINA
DEPARTMENT OF TRANSPORTATION
RALEIGH

SUBSTRUCTURE
END BENT 1

REVISIONS						SHEET NO.
NO.	BY:	DATE:	NO.	BY:	DATE:	S-16
1			3			TOTAL SHEETS
2			4			128

DRAWN BY : A.L.MEADOWS DATE : 9/04/02
CHECKED BY : T.A.HARRIS DATE : 9/27/02

08-JUN-2007 12:09
R:\Structures\Final Plans\STR. 1\B3450_sd_E*_01.dgn
gallen

STR. 1

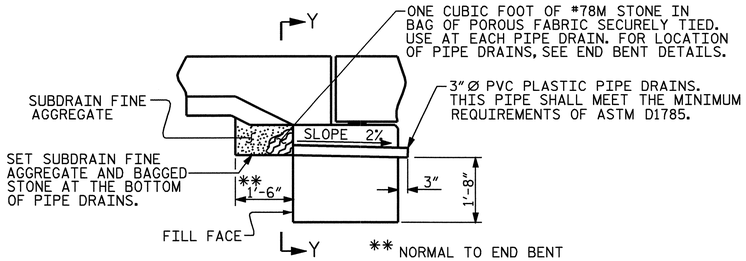

SUBDRAIN DETAIL AT END BENT

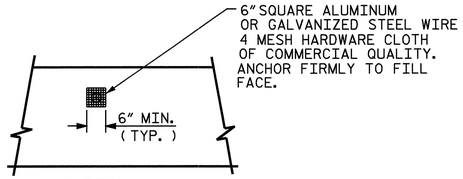

VIEW Y-Y

NOTE: NO SEPARATE PAYMENT WILL BE MADE FOR FURNISHING AND INSTALLING THE PVC PLASTIC PIPE DRAINS HARDWARE CLOTH, AND FASTENERS. THE ENTIRE COST OF THIS WORK SHALL BE INCLUDED IN THE UNIT CONTRACT PRICE BID FOR THE SEVERAL PAY ITEMS.

PIPE DRAIN DETAILS

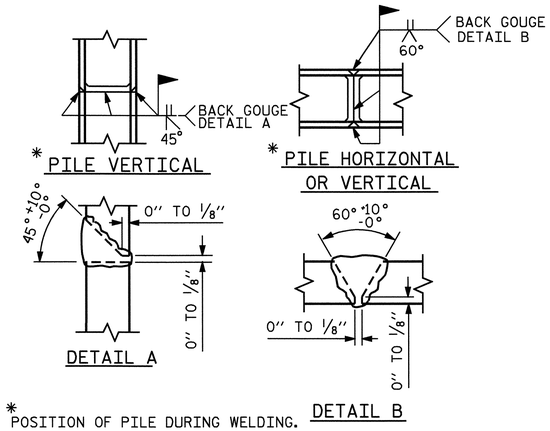

* POSITION OF PILE DURING WELDING.

PILE SPLICE DETAILS

BAR TYPES

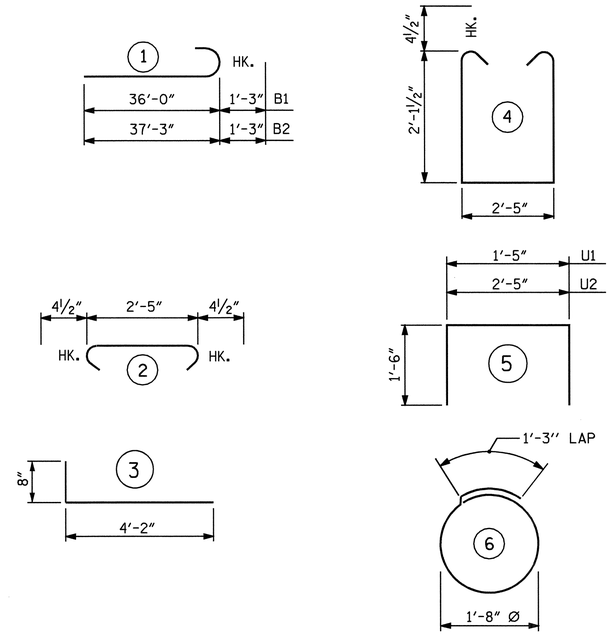

ALL BAR DIMENSIONS ARE OUT TO OUT.

BILL OF MATERIAL

END BENT 1

BAR	NO.	SIZE	TYPE	LENGTH	WEIGHT
B1	8	9	1	37-3	1013
B2	8	9	1	38-6	1047
B3	4	5	STR	34-4	143
B4	12	4	STR	23-6	188
B5	17	4	STR	2-5	27
B6	4	4	STR	28-4	76
D1	40	6	STR	1-6	90
H1	28	4	3	4-10	90
K1	16	4	STR	3-11	42
S1	59	4	4	7-5	292
S2	59	4	2	3-2	125
S3	24	4	6	6-6	104
U1	4	4	5	4-5	12
U2	19	4	5	5-5	69
V1	40	4	STR	5-8	151
REINFORCING STEEL					3469 LBS.

CLASS A CONCRETE

POUR 1	CAP & LOWER PART OF WINGS	19.7 C.Y.
POUR 2	UPPER PART OF WINGS	2.0 C.Y.
POUR 3	LATERAL GUIDE	0.1 C.Y.
	TOTAL	21.8 C.Y.

HP 12 x 53 STEEL PILES

NO. 12 LIN. FT. 300

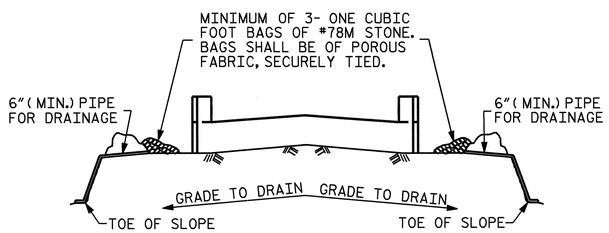

BAGGED STONE AND PIPE SHALL BE PLACED IMMEDIATELY AFTER COMPLETION OF END BENT EXCAVATION. PIPE MAY BE EITHER CONCRETE, CORRUGATED STEEL, CORRUGATED ALUMINUM ALLOY, OR CORRUGATED PLASTIC. PERFORATED PIPE WILL NOT BE ALLOWED.

BAGGED STONE SHALL REMAIN IN PLACE UNTIL THE ENGINEER DIRECTS THAT IT BE REMOVED. THE CONTRACTOR SHALL REMOVE AND DISPOSE OF SILT ACCUMULATIONS AT BAGGED STONE WHEN SO DIRECTED BY THE ENGINEER. BAGS SHALL BE REMOVED AND REPLACED WHENEVER THE ENGINEER DETERMINES THAT THEY HAVE DETERIORATED AND LOST THEIR EFFECTIVENESS.

NO SEPARATE PAYMENT WILL BE MADE FOR THIS WORK AND THE ENTIRE COST OF THIS WORK SHALL BE INCLUDED IN THE UNIT CONTRACT PRICE FOR THE SEVERAL PAY ITEMS.

TEMPORARY DRAINAGE AT END BENT

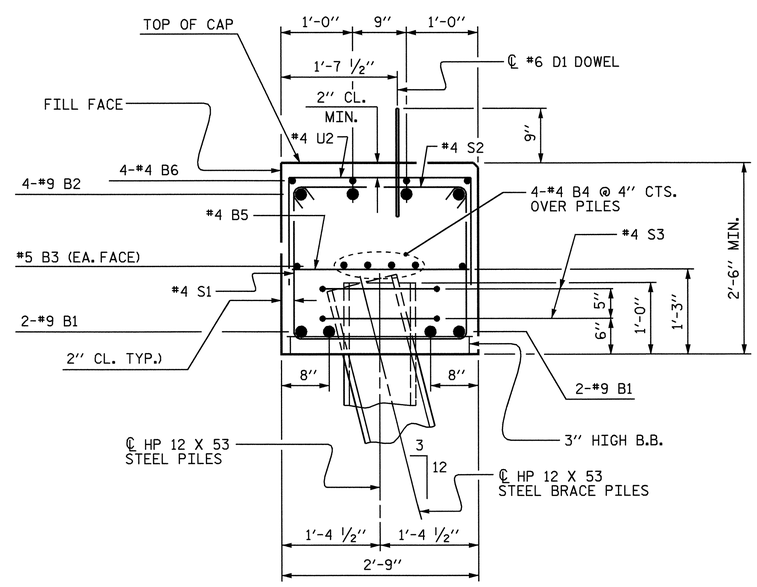

SECTION A-A

PROJECT NO. B-3450

DURHAM COUNTY

STATION: 14+31.00 -L-

SHEET 3 OF 3

STATE OF NORTH CAROLINA
DEPARTMENT OF TRANSPORTATION
RALEIGH

SUBSTRUCTURE END BENT 1

NORTH CAROLINA PROFESSIONAL SEAL 14855 ENGINEER DOUGLAS R. CALLIHAN

6-18-07

REVISIONS						SHEET NO.
NO.	BY:	DATE:	NO.	BY:	DATE:	S-17
1			3			TOTAL SHEETS
2			4			128

STR. 1

DRAWN BY : A.L.MEADOWS DATE : 7/10/02
CHECKED BY : T.A.HARRIS DATE : 9/27/02

08-JUN-2007 12:09
R:\Structures\Final Plans\STR. 1\B3450_sd_E*_01.dgn
gallen

NOTES

STIRRUPS IN CAP MAY BE SHIFTED AS NECESSARY TO CLEAR DOWELS.

HOOKS ON "V" BARS MAY BE TURNED AS NECESSARY FOR PLACING REINFORCING STEEL.

ALL STEEL IN THE DRILLED PIERS IS INCLUDED IN THE PAY ITEMS FOR "REINFORCING STEEL" AND "SPIRAL COLUMN REINFORCING STEEL."

LATERAL GUIDE AT END OF CAP IS NOT TO BE POURED UNTIL AFTER THE CORED SLAB UNITS ARE IN PLACE.

THE CONTRACTORS ATTENTION IS CALLED TO THE FACT THAT THE LONGITUDINAL REINFORCEMENT FOR THE DRILLED PIERS IS DETAILED WITH 3 FEET OF EXTRA LENGTH.

SPLICING OF THE LONGITUDINAL BARS IN THE DRILLED PIERS WILL NOT BE PERMITTED.

MECHANICAL COUPLERS SHALL BE USED TO JOIN THE LONGITUDINAL DRILLED PIER REINFORCING STEEL TO THE COLUMN REINFORCING STEEL. THE HEIGHT OF THE COUPLERS SHALL BE STAGGERED ON ALTERNATING BARS BY 1'-6" AND THE DRILLED PIER AND COLUMN STEEL SHALL BE CUT ACCORDINGLY.

NO SEPARATE PAYMENT WILL BE MADE FOR CSL TUBES. CSL TUBES WILL BE INCLUDED IN THE UNIT BID PRICE FOR DRILLED PIERS.

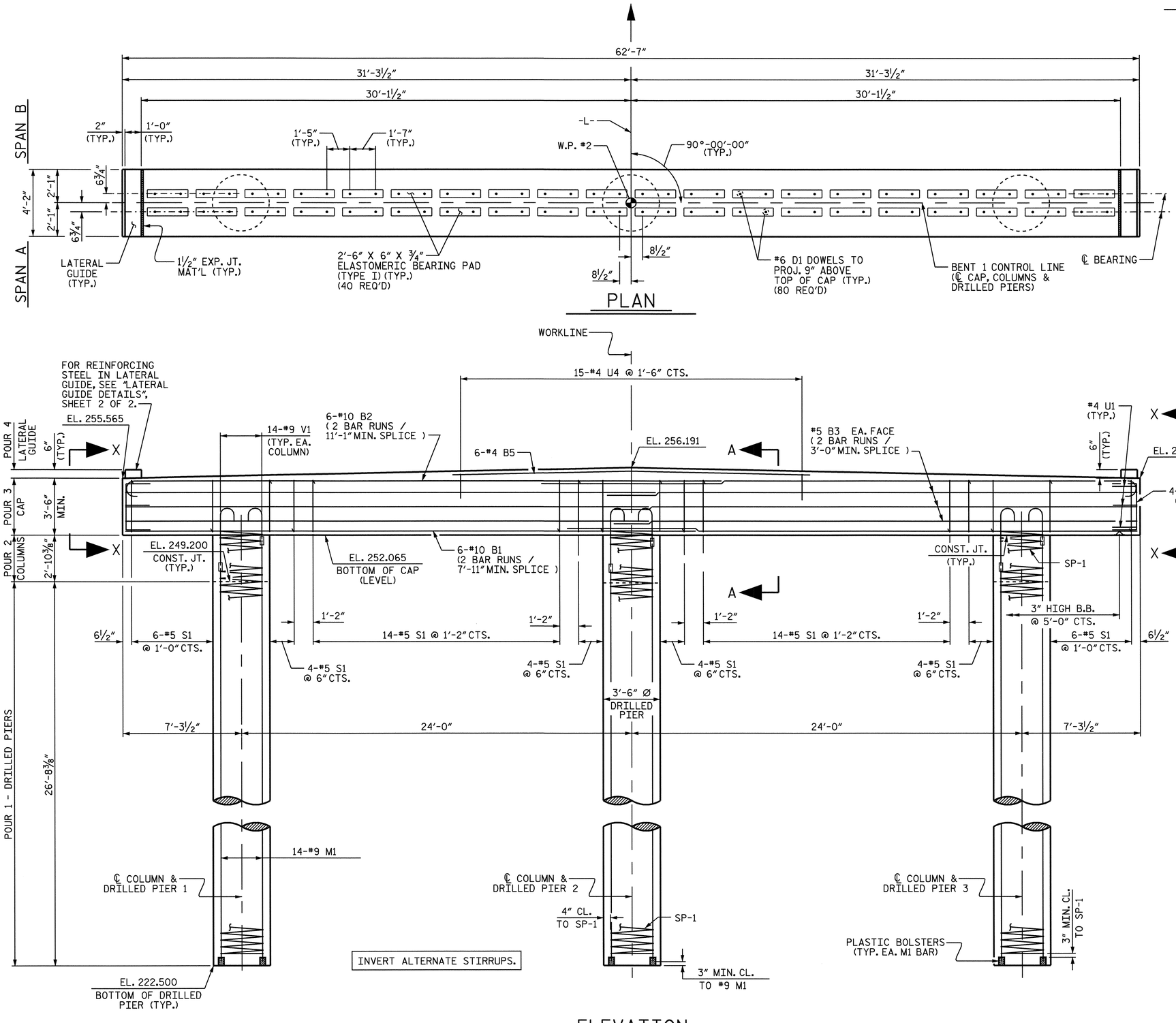

ELEVATION

REINFORCING STEEL AND DIMENSIONS ARE TYPICAL FOR ALL DRILLED PIERS AND COLUMNS

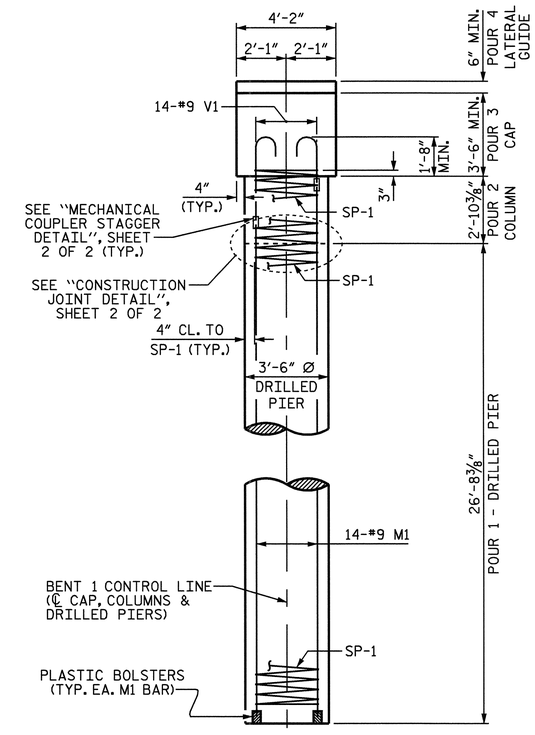

END ELEVATION

PROJECT NO. B-3450

DURHAM COUNTY

STATION: 14+31.00 -L-

SHEET 1 OF 2

STATE OF NORTH CAROLINA
DEPARTMENT OF TRANSPORTATION
RALEIGH

SUBSTRUCTURE
BENT 1

NORTH CAROLINA PROFESSIONAL SEAL 14855 ENGINEER DOUGLAS R. CALHOUN

6-8-07

REVISIONS						SHEET NO.
NO.	BY:	DATE:	NO.	BY:	DATE:	S-18
1			3			TOTAL SHEETS
2			4			128

DRAWN BY : T. A. HARRIS DATE : 3/28/03
CHECKED BY : A. L. MEADOWS DATE : 10/9/03

08-JUN-2007 12:11
R:\Structures\Final Plans\STR. 1\b3450_sd_b1_01.dgn
gallen

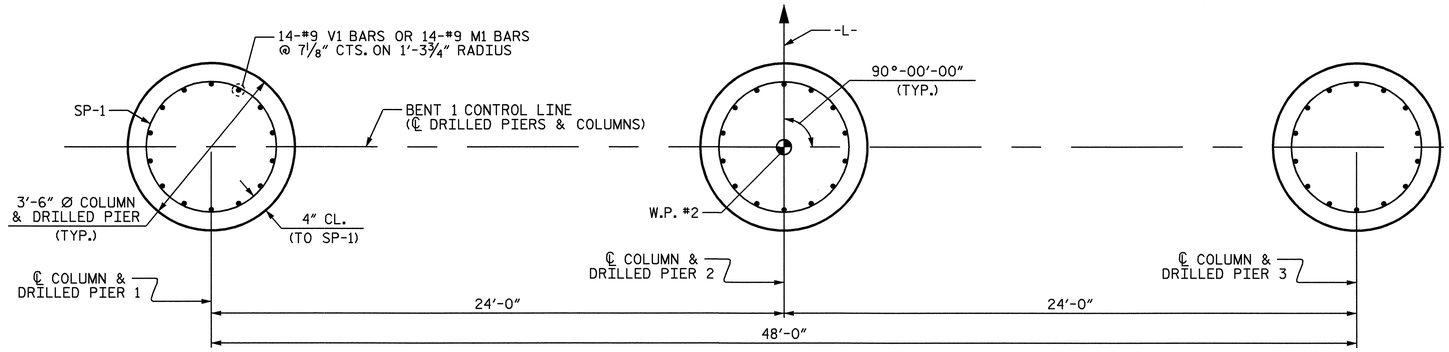

PLAN OF COLUMNS AND DRILLED PIERS

REINFORCING STEEL AND DIMENSIONS ARE TYPICAL FOR ALL COLUMNS AND DRILLED PIERS.

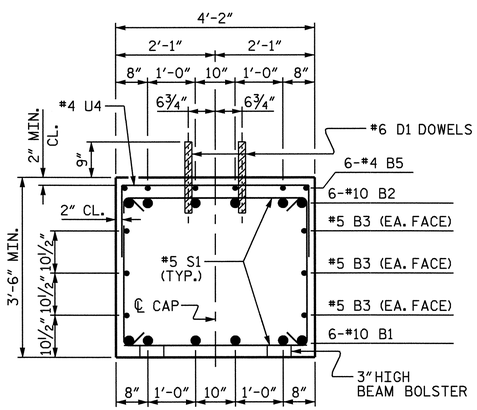

SECTION A-A

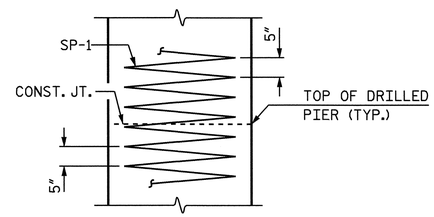

CONSTRUCTION JOINT DETAIL

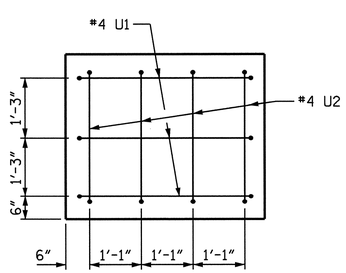

VIEW X-X

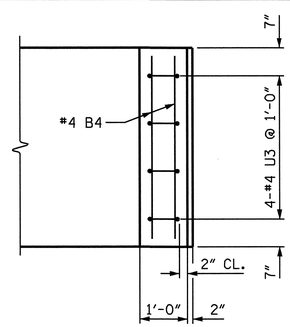

PLAN

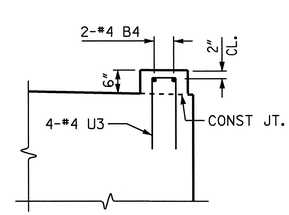

ELEVATION

LATERAL GUIDE DETAIL

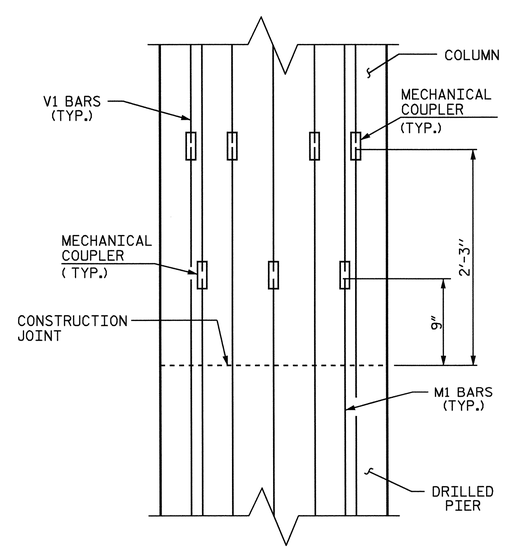

MECHANICAL COUPLER STAGGER DETAIL

BAR TYPES

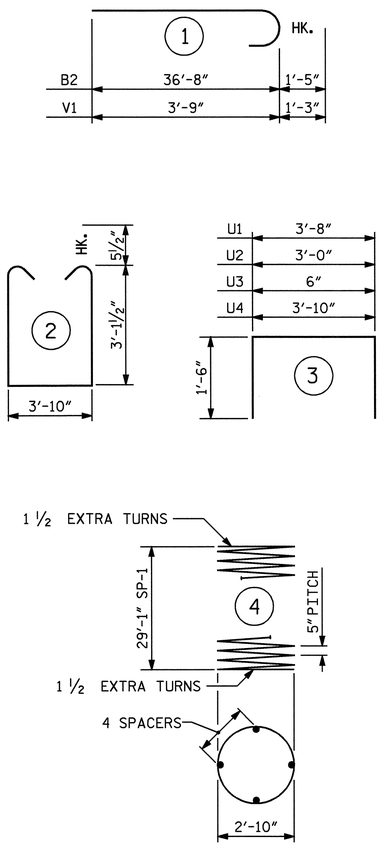

ALL BAR DIMENSIONS ARE OUT TO OUT.

BILL OF MATERIAL

BENT 1

BAR	NO	SIZE	TYPE	LENGTH	WEIGHT
B1	12	10	STR	35- 1	1812
B2	12	10	1	38- 1	1966
B3	12	5	STR	32- 8	409
B4	4	4	STR	3-10	10
B5	6	4	STR	22- 0	88
D1	80	6	STR	1- 6	180
M1	42	9	STR	31- 8	4522
S1	56	5	2	11- 0	642
U1	6	4	3	6- 8	27
U2	8	4	3	6- 0	32
U3	8	4	3	3- 6	19
U4	15	4	3	6-10	68
V1	42	9	1	5- 0	714
SP-1	3	✱✱	4	638- 7	1998
REINFORCING STEEL LBS.					10489
SPIRAL COLUMN REINFORCING STEEL LBS.					1998

CLASS A CONCRETE BREAKDOWN

POUR #2 (COLUMNS)	C.Y.	3.1
POUR #3 (CAP)	C.Y.	36.8
POUR #4 (LATERAL GUIDE)	C.Y.	0.2
TOTAL CLASS A CONCRETE	C.Y.	40.1

3'-6" Ø DRILLED PIERS

DRILLED PIER CONCRETE

POUR #1 (DRILLED PIERS)	C.Y.	28.5

3'-6" Ø DRILLED PIERS IN SOIL: 54.60 LIN. FT.

3'-6" Ø DRILLED PIERS NOT IN SOIL: 25.50 LIN. FT.

PERMANENT STEEL CASING FOR 3'-6" Ø DRILLED PIER: 54.60 LIN. FT.

CROSSHOLE SONIC LOGGING: EACH 1

▲ CSL TUBES: 350.40 LIN. FT.

✱✱ THE SP-1 SPIRAL REINFORCING STEEL SHALL BE W31 OR D-31 COLD DRAWN WIRE OR #5 PLAIN OR DEFORMED BAR.

▲ SEE NOTE ON SHEET 1 OF 2.

PROJECT NO. B-3450

DURHAM COUNTY

STATION: 14+31.00 -L-

SHEET 2 OF 2

STATE OF NORTH CAROLINA
DEPARTMENT OF TRANSPORTATION
RALEIGH

SUBSTRUCTURE
BENT 1

NORTH CAROLINA PROFESSIONAL SEAL 14855 ENGINEER DOUGLAS R. CALHOUN
6-18-07

REVISIONS						SHEET NO.
NO.	BY:	DATE:	NO.	BY:	DATE:	S-19
1			3			TOTAL SHEETS
2			4			128

DRAWN BY : T. A. HARRIS DATE : 5/15/03
CHECKED BY : A. L. MEADOWS DATE : 10/9/03

08-JUN-2007 12:11
R:\Structures\Final Plans\STR. 1\b3450_sd_b1_01.dgn
gallen

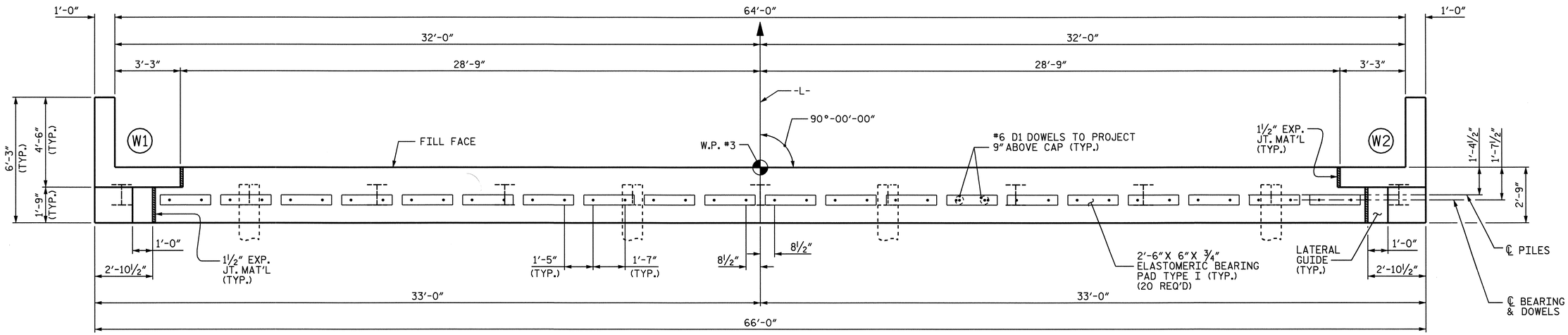

PLAN

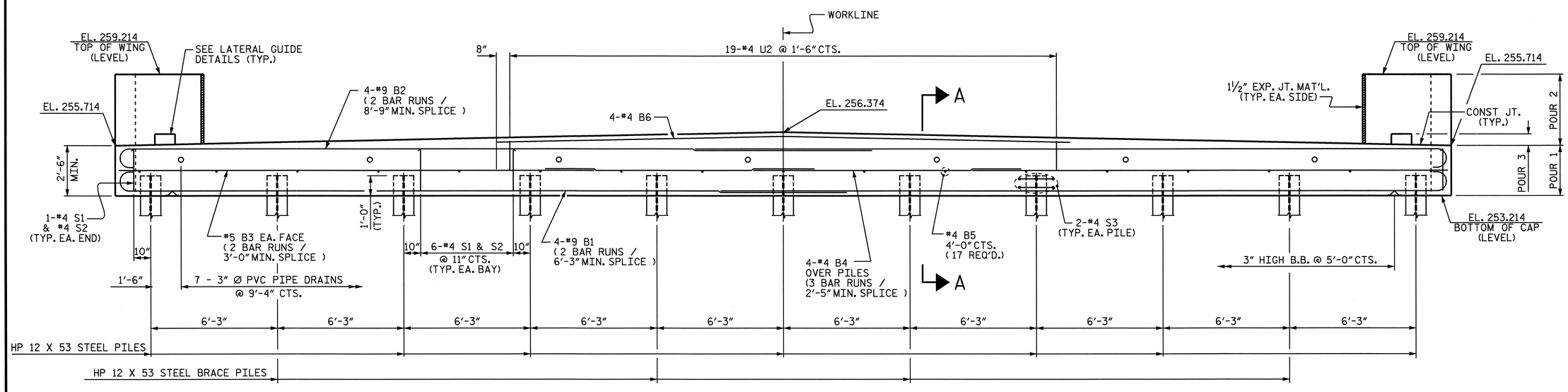

ELEVATION

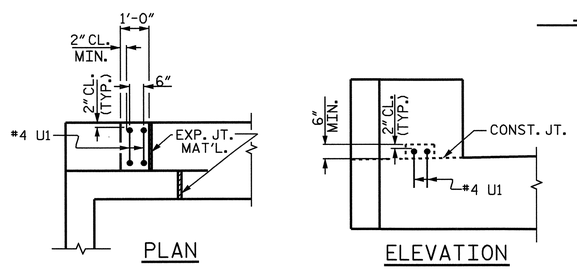

LATERAL GUIDE DETAILS

(TYP. EACH LATERAL GUIDE)

NOTES

STIRRUPS MAY BE SHIFTED AS NECESSARY TO CLEAR DOWELS.

PIPE DRAINS MAY BE SHIFTED AS NECESSARY TO CLEAR REINFORCING STEEL AND DOWELS.

THE LATERAL GUIDE AT EACH END OF THE CAP IS NOT TO BE POURED UNTIL AFTER CORED SLAB UNITS ARE IN PLACE.

FOR REINFORCING STEEL IN WINGS, SEE SHEET 2 OF 3.

NORTH CAROLINA PROFESSIONAL SEAL 14855 ENGINEER DOUGLAS R. CALHOUN

6-18-07

PROJECT NO. B-3450

DURHAM COUNTY

STATION: 14+31.00 -L-

SHEET 1 OF 3

STATE OF NORTH CAROLINA
DEPARTMENT OF TRANSPORTATION
RALEIGH

SUBSTRUCTURE
END BENT 2

REVISIONS						SHEET NO.
NO.	BY:	DATE:	NO.	BY:	DATE:	S-20
1			3			TOTAL SHEETS
2			4			128

DRAWN BY : A.L.MEADOWS DATE : 7/3/03
CHECKED BY : T.A.HARRIS DATE : 9/27/02

08-JUN-2007 12:10
R:\Structures\Final Plans\STR. 1\B3450_sd_E*_01.dgn
gallen

STR. 1

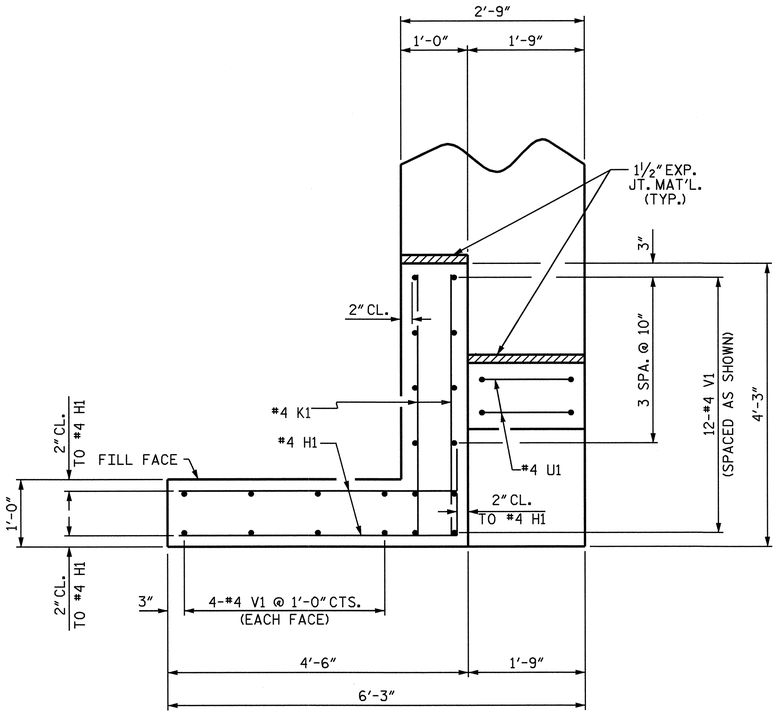

PLAN OF WING (W1)

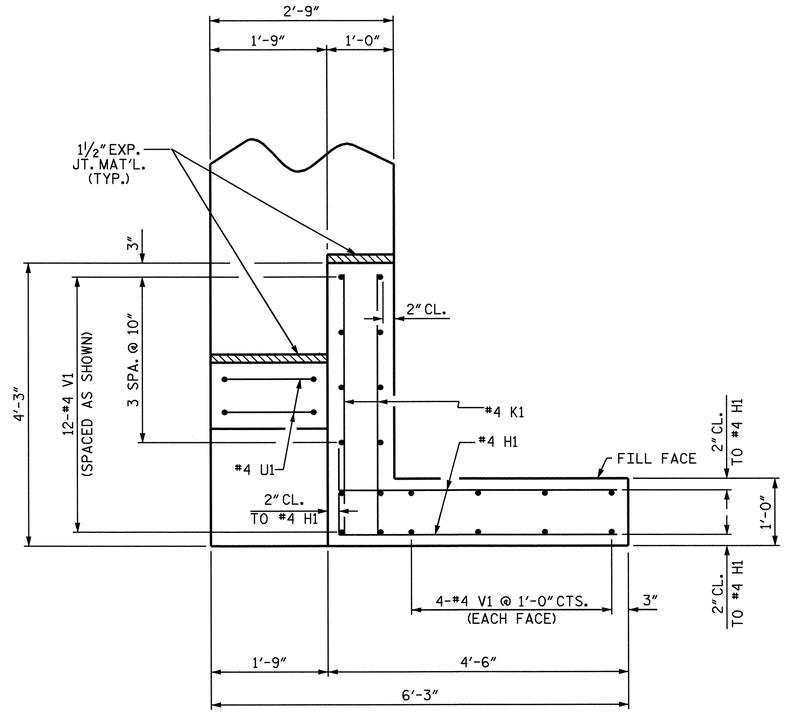

PLAN OF WING (W2)

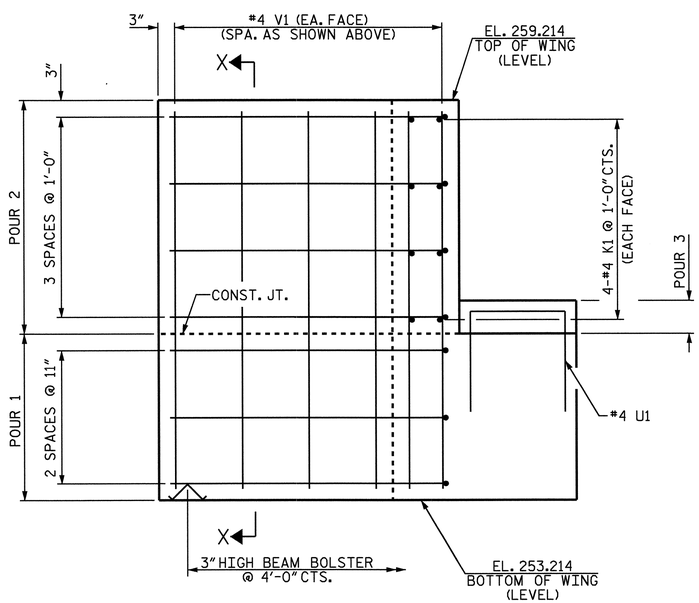

ELEVATION OF WING (W1)

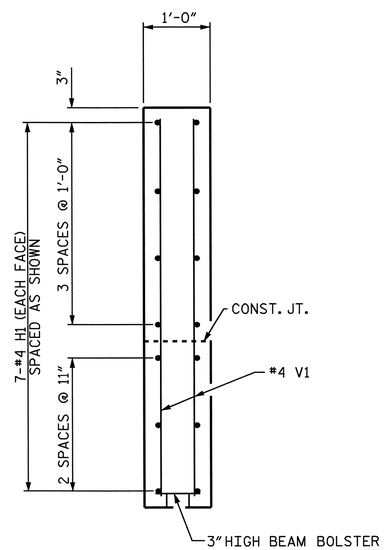

SECTION X-X

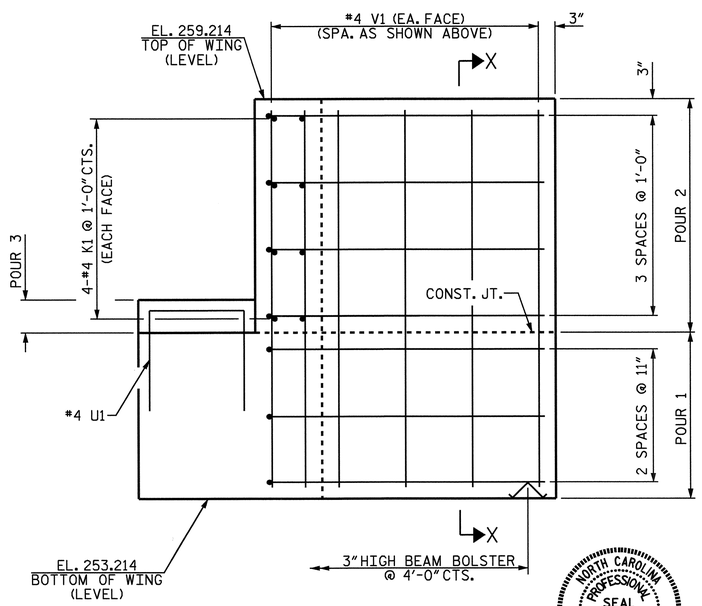

ELEVATION OF WING (W2)

NORTH CAROLINA PROFESSIONAL SEAL 14855 ENGINEER DOUGLAS R. CALLAHAN
6-18-07

PROJECT NO. B-3450
DURHAM COUNTY
STATION: 14+31.00 -L-

SHEET 2 OF 3

STATE OF NORTH CAROLINA
DEPARTMENT OF TRANSPORTATION
RALEIGH

SUBSTRUCTURE
END BENT 2

REVISIONS						SHEET NO.
NO.	BY:	DATE:	NO.	BY:	DATE:	S-21
1			3			TOTAL SHEETS
2			4			53

DRAWN BY : A.L.MEADOWS DATE : 9/04/02
CHECKED BY : T.A.HARRIS DATE : 9/27/02

08-JUN-2007 12:10
R:\Structures\Final Plans\STR. 1\B3450_sd_E*_01.dgn
gallen

STR. 1

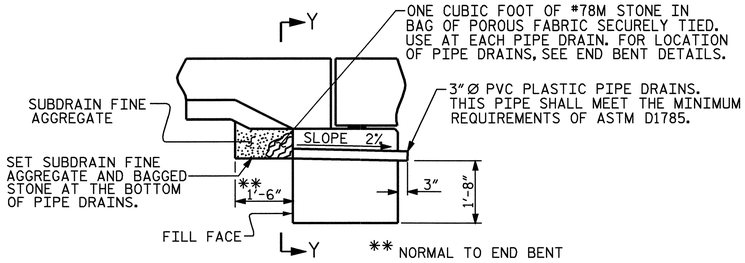

SUBDRAIN DETAIL AT END BENT

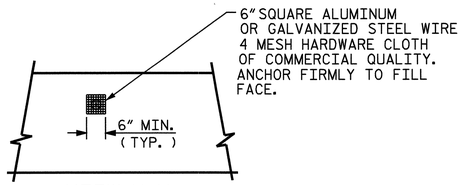

VIEW Y-Y

NOTE: NO SEPARATE PAYMENT WILL BE MADE FOR FURNISHING AND INSTALLING THE PVC PLASTIC PIPE DRAINS HARDWARE CLOTH, AND FASTENERS. THE ENTIRE COST OF THIS WORK SHALL BE INCLUDED IN THE UNIT CONTRACT PRICE BID FOR THE SEVERAL PAY ITEMS.

PIPE DRAIN DETAILS

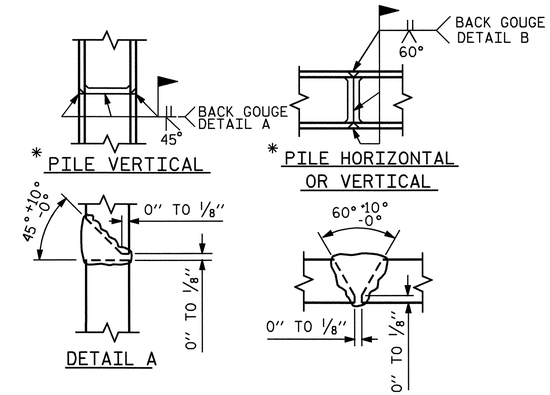

* POSITION OF PILE DURING WELDING.

PILE SPLICE DETAILS

BAR TYPES

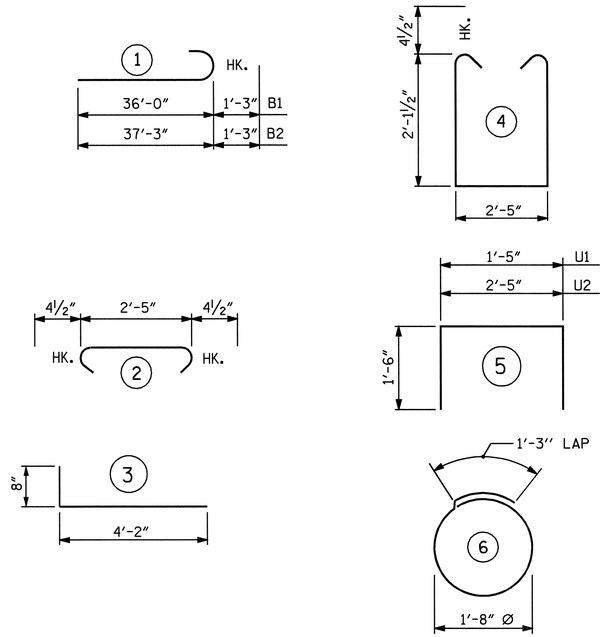

ALL BAR DIMENSIONS ARE OUT TO OUT.

BILL OF MATERIAL

END BENT 2

BAR	NO.	SIZE	TYPE	LENGTH	WEIGHT
B1	8	9	1	37-3	1013
B2	8	9	1	38-6	1047
B3	4	5	STR	34-4	143
B4	12	4	STR	23-6	188
B5	17	4	STR	2-5	27
B6	4	4	STR	28-4	76
D1	40	6	STR	1-6	90
H1	28	4	3	4-10	90
K1	16	4	STR	3-11	42
S1	62	4	4	7-5	307
S2	62	4	2	3-2	131
S3	22	4	6	6-6	96
U1	4	4	5	4-5	12
U2	19	4	5	5-5	69
V1	40	4	STR	5-8	151
REINFORCING STEEL					3482 LBS.

CLASS A CONCRETE

POUR 1 CAP & LOWER PART OF WINGS	19.7 C.Y.
POUR 2 UPPER PART OF WINGS	2.0 C.Y.
POUR 3 LATERAL GUIDE	0.1 C.Y.
TOTAL	21.8 C.Y.

HP 12 × 53 STEEL PILES

NO. 11 LIN. FT. 220

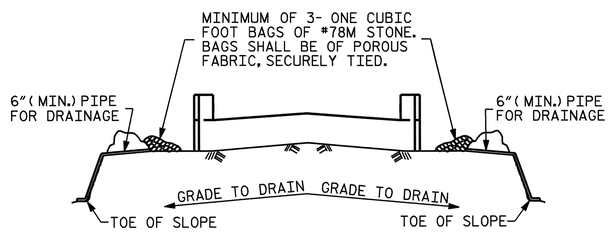

BAGGED STONE AND PIPE SHALL BE PLACED IMMEDIATELY AFTER COMPLETION OF END BENT EXCAVATION. PIPE MAY BE EITHER CONCRETE, CORRUGATED STEEL, CORRUGATED ALUMINUM ALLOY, OR CORRUGATED PLASTIC. PERFORATED PIPE WILL NOT BE ALLOWED.

BAGGED STONE SHALL REMAIN IN PLACE UNTIL THE ENGINEER DIRECTS THAT IT BE REMOVED. THE CONTRACTOR SHALL REMOVE AND DISPOSE OF SILT ACCUMULATIONS AT BAGGED STONE WHEN SO DIRECTED BY THE ENGINEER. BAGS SHALL BE REMOVED AND REPLACED WHENEVER THE ENGINEER DETERMINES THAT THEY HAVE DETERIORATED AND LOST THEIR EFFECTIVENESS.

NO SEPARATE PAYMENT WILL BE MADE FOR THIS WORK AND THE ENTIRE COST OF THIS WORK SHALL BE INCLUDED IN THE UNIT CONTRACT PRICE FOR THE SEVERAL PAY ITEMS.

TEMPORARY DRAINAGE AT END BENT

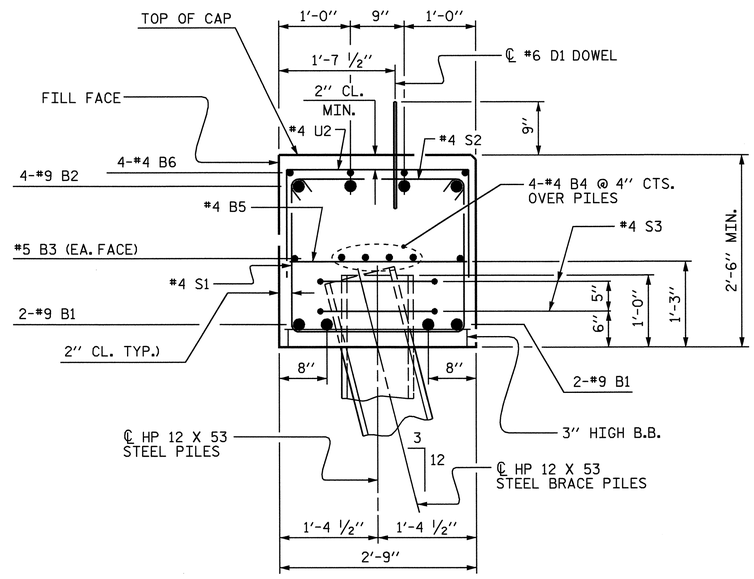

SECTION A-A

NORTH CAROLINA PROFESSIONAL SEAL 14855 ENGINEER DOUGLAS R. CALHOUN

6-18-07

PROJECT NO. B-3450

DURHAM COUNTY

STATION: 14+31.00 -L-

SHEET 3 OF 3

STATE OF NORTH CAROLINA
DEPARTMENT OF TRANSPORTATION
RALEIGH

SUBSTRUCTURE
END BENT 2

REVISIONS						SHEET NO.
NO.	BY:	DATE:	NO.	BY:	DATE:	S-22
1			3			TOTAL SHEETS
2			4			128

DRAWN BY : A.L.MEADOWS DATE : 7/10/02
CHECKED BY : T.A.HARRIS DATE : 9/27/02

08-JUN-2007 12:10
R:\Structures\Final Plans\STR. 1\B3450_sd_E*_01.dgn
gallen

NOTES :

FOR BERM WIDTH DIMENSIONS, SEE GENERAL DRAWING.

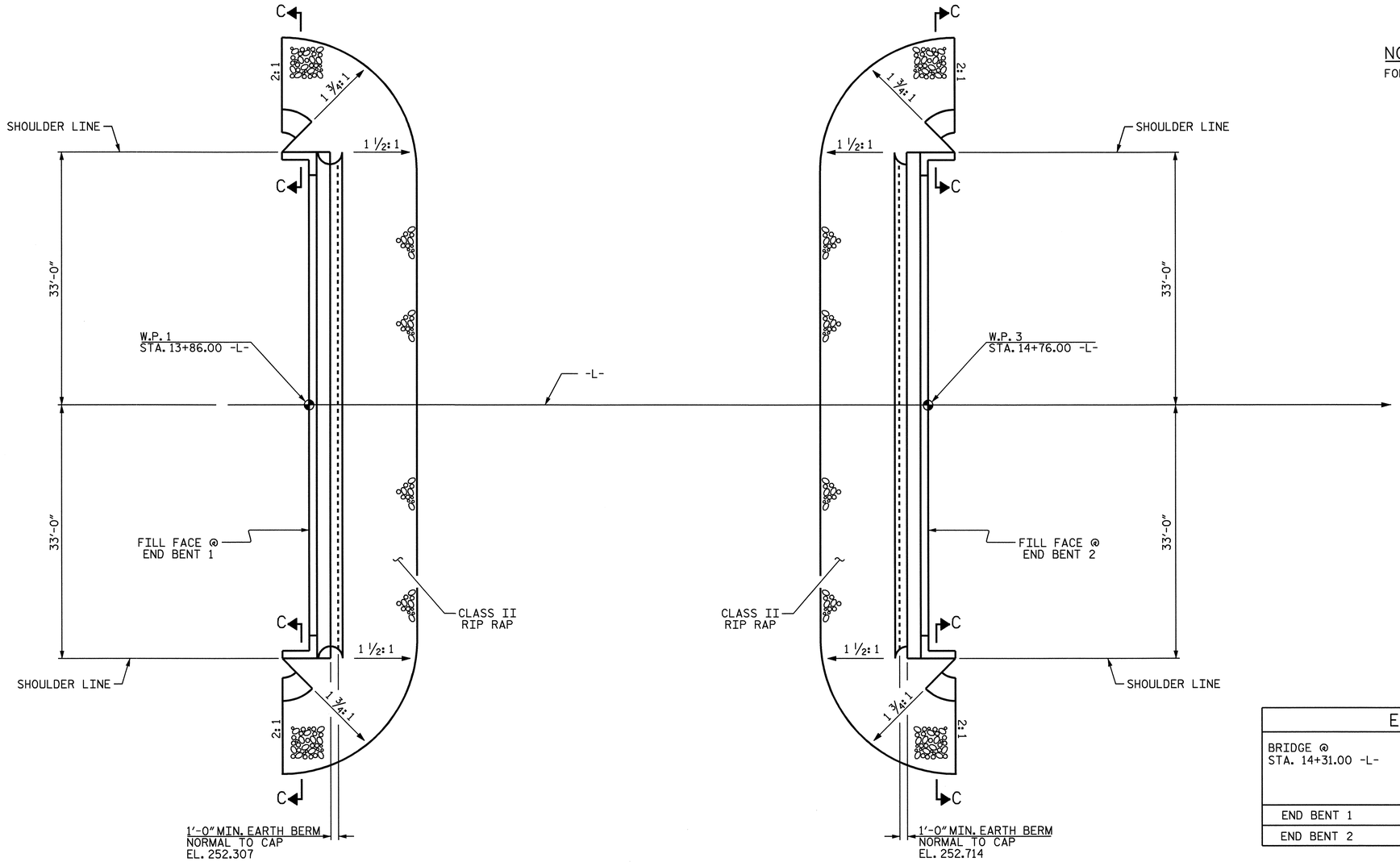

ESTIMATED QUANTITIES		
BRIDGE @ STA. 14+31.00 -L-	RIP RAP CLASS II (2'-0" THICK)	FILTER FABRIC FOR DRAINAGE
	TONS	SQUARE YARDS
END BENT 1	127	141
END BENT 2	150	167

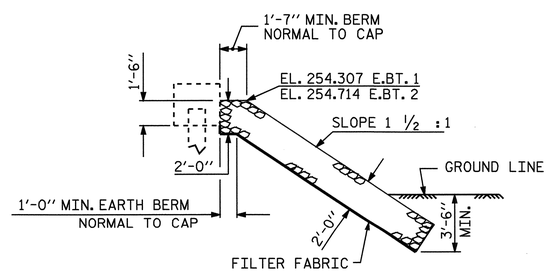

℄ SECTION

BERM RIP RAPPED

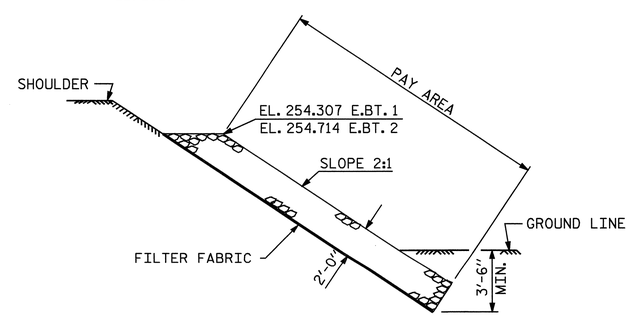

SECTION C-C

PROJECT NO. B-3450

DURHAM COUNTY

STATION: 14+31.00 -L-

STATE OF NORTH CAROLINA
DEPARTMENT OF TRANSPORTATION
RALEIGH

STANDARD

RIP RAP DETAILS

NORTH CAROLINA PROFESSIONAL SEAL 14855 ENGINEER DOUGLAS R. CALHOUN
6-12-07

ASSEMBLED BY : A.L.MEADOWS	DATE : 7/18/02		
CHECKED BY : T.A.HARRIS	DATE : 2/6/04		
DRAWN BY : FCJ 2/88	REV. 7/17/98	REK/RWW	
CHECKED BY : ARB 8/88	REV. 8/16/99	RWW/LES	
	REV. 10/17/00	RWW/LES	

REVISIONS						SHEET NO.
NO.	BY:	DATE:	NO.	BY:	DATE:	S-23
1			3			TOTAL SHEETS
2			4			128

08-JUN-2007 12:11
R:\Structures\Final Plans\STR. 1\B3450_sd_RR_01.dgn
gallen

STR. 1 SKEW 90° STD. NO. RR2

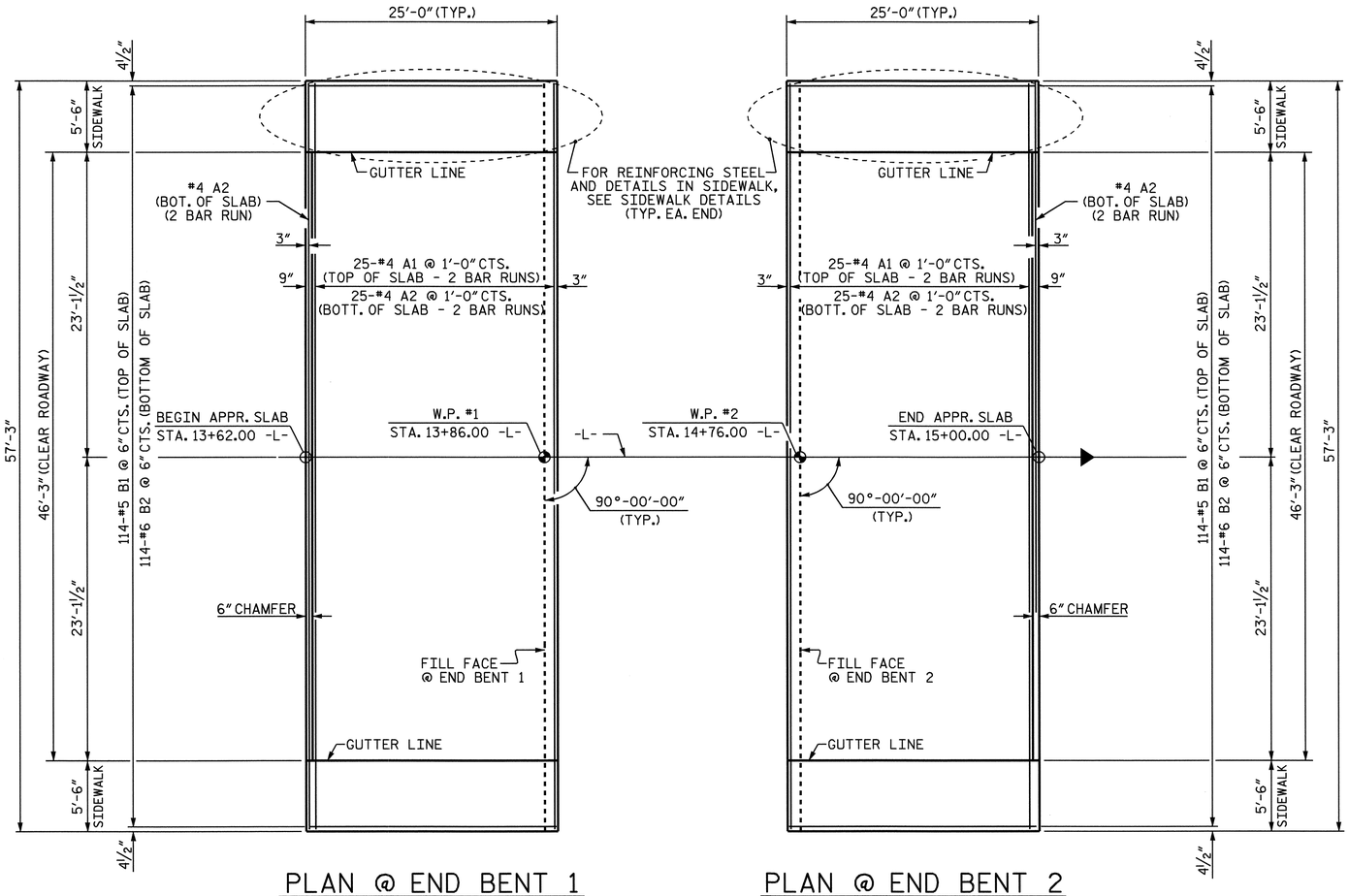

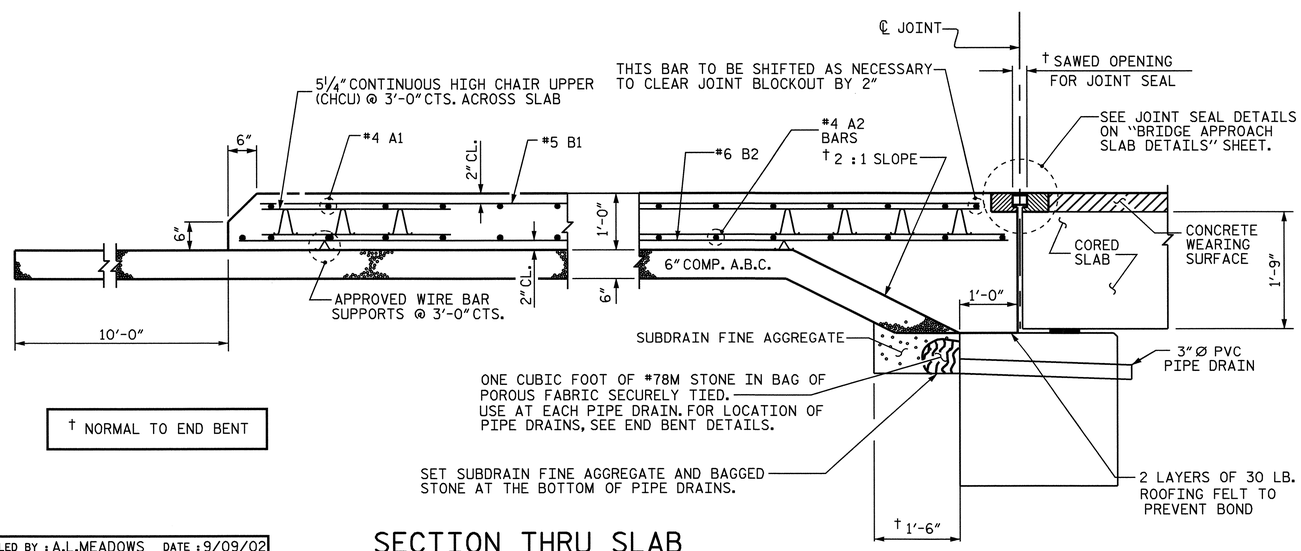

SECTION THRU SLAB

NOTES

SUBDRAIN FINE AGGREGATE IS TO BE CONTINUOUS ALONG FILL FACE OF BACKWALL AND END BENT FROM OUTSIDE EDGE TO OUTSIDE EDGE OF APPROACH SLAB.

AREA BETWEEN THE WINGWALL AND APPROACH SLAB SHALL BE GRADED TO DRAIN THE WATER AWAY FROM THE FILL FACE OF THE BRIDGE AND SHALL BE PAVED. SEE ROADWAY PLANS.

THE 6" COMP. A.B.C. SHALL EXTEND 10'-0" BEYOND THE END OF THE APPROACH SLAB AND 1'-0" OUTSIDE OF EACH EDGE OF SLAB.

THE CONTRACTOR MAY USE 4" TYPE HB ASPHALT CONCRETE BASE COURSE IN LIEU OF 6" COMP. A.B.C. IF THIS OPTION IS USED, THE BASE COURSE SHALL EXTEND 1'-0" BEYOND THE END OF THE APPROACH SLAB AND THE WIDTH SHALL BE THE SAME AS THAT OF THE APPROACH SLAB.

THE CONTRACTOR MAY USE 5" CLASS 'A' CONCRETE BASE IN LIEU OF 6" COMP. A.B.C. IF THIS OPTION IS USED, THE CONCRETE BASE SHALL EXTEND 1'-0" BEYOND THE END OF THE APPROACH SLAB AND THE WIDTH SHALL BE THE SAME AS THAT OF THE APPROACH SLAB. THE CONCRETE SHALL BE FINISHED TO A SMOOTH SURFACE AND A LAYER OF 30 LB ROOFING FELT SHALL BE PLACED BETWEEN THE CONCRETE BASE AND THE APPROACH SLAB TO PREVENT BOND. THE APPROACH SLAB SHALL NOT BE CAST UNTIL THE CONCRETE BASE HAS REACHED AN AGE OF THREE CURING DAYS.

DOWELS MAY BE PUSHED INTO GREEN CONCRETE AFTER SLAB HAS BEEN SCREEDED AND FLOAT FINISHED.

QUANTITIES FOR SIDEWALK ARE INCLUDED IN APPROACH SLAB.

FOR EVAZOTE JOINT SEALS, SEE SPECIAL PROVISIONS.

THE NOMINAL UNCOMPRESSED SEAL WIDTH OF THE EVAZOTE JOINT SEAL SHALL BE 3/16".

FOR ELASTOMERIC CONCRETE, SEE SPECIAL PROVISIONS.

THE JOINT SHALL BE SAWED AFTER THE CASTING OF THE SIDEWALKS & END POSTS.

APPROACH SLABS SHALL BE POURED AFTER THE CONCRETE OVERLAY IS POURED.

BILL OF MATERIAL
FOR ONE APPROACH SLAB (2 REQ'D)

BAR	NO.	SIZE	TYPE	LENGTH	WEIGHT
✱A1	50	#4	STR	29'-6"	985
A2	52	#4	STR	29'-4"	1019
✱B1	114	#5	STR	23'-10"	2834
B2	114	#6	STR	24'-8"	4224
✱B3	8	#4	STR	24'-8"	132
✱D1	32	#4	STR	0'-10"	18
✱G1	50	#4	STR	5'-0"	167
REINFORCING STEEL				LBS.	5243
✱EPOXY COATED REINFORCING STEEL				LBS.	4136
CLASS AA CONCRETE BREAKDOWN					
SLAB				C.Y.	55.5
SIDEWALK				C.Y.	6.2
TOTAL CLASS AA CONCRETE				C.Y.	61.7

SPLICE LENGTH

BAR SIZE	EPOXY COATED	UNCOATED
#4	2'-0"	1'-9"

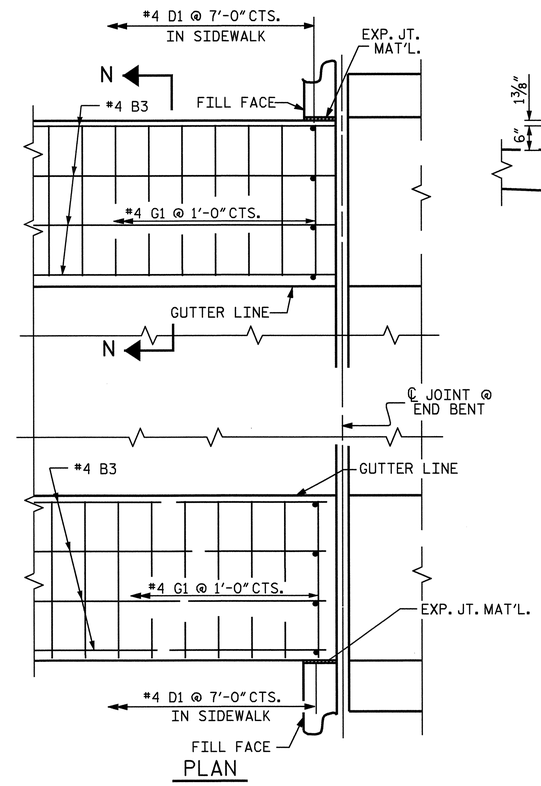

SIDEWALK DETAILS

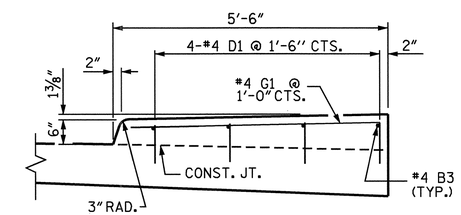

SECTION N-N

NORTH CAROLINA PROFESSIONAL SEAL 14855 ENGINEER DOUGLAS R. CALDWELL
6-18-07

PROJECT NO. B-3450
DURHAM COUNTY
STATION: 14+31.00 -L-

SHEET 1 OF 2

STATE OF NORTH CAROLINA
DEPARTMENT OF TRANSPORTATION
RALEIGH

STANDARD

BRIDGE APPROACH SLAB FOR PRESTRESSED CONCRETE CORED SLAB

REVISIONS						SHEET NO.
NO.	BY:	DATE:	NO.	BY:	DATE:	S-24
1			3			TOTAL SHEETS
2			4			128

ASSEMBLED BY : A.L.MEADOWS		DATE : 9/09/02	
CHECKED BY : T.A.HARRIS		DATE : 10/3/02	
DRAWN BY : FCJ 6/87	REV. 7/10/01	LES/RDR	
CHECKED BY : EGA 6/87	REV. 5/7/03	RWW/JTE	
	REV. 5/1/06	TLA/GM	

08-JUN-2007 12:12
R:\Structures\Final Plans\STR. 1\B3450_sd_AS_01.dgn
gallen

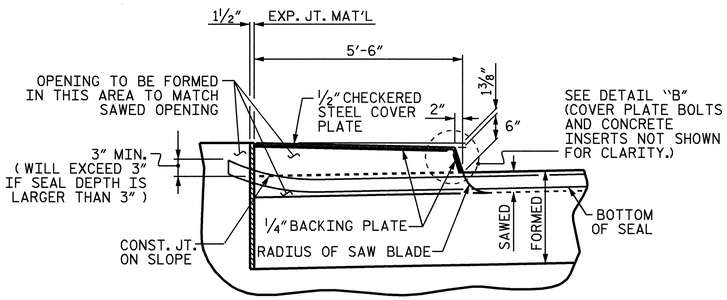

SECTION I-I

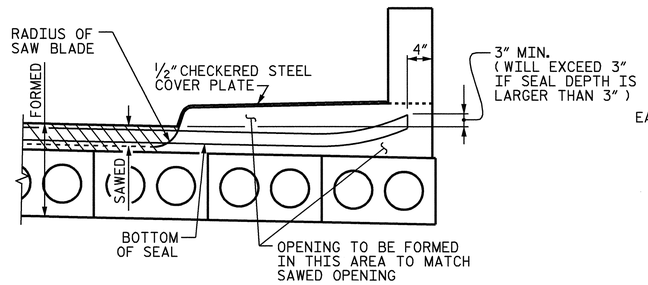

SECTION H-H

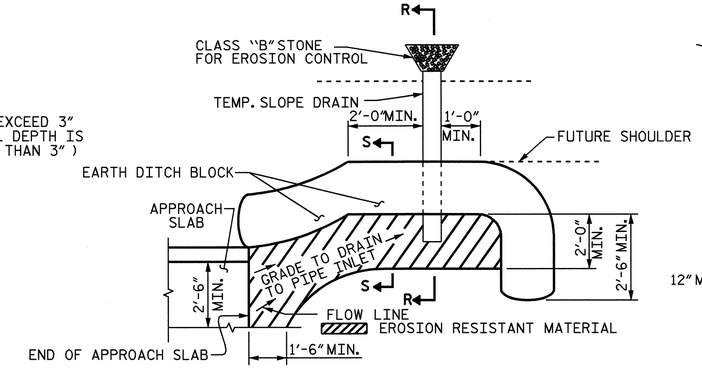

NOTE: IMMEDIATELY AFTER THE CONSTRUCTION OF THE APPROACH SLAB, THE CONTRACTOR SHALL PROVIDE TEMPORARY BERM AND SLOPE DRAIN. CONTRACTOR SHALL GRADE TO PIPE INLET AND PROVIDE EROSION RESISTANT MATERIAL AS SHOWN. THE EROSION RESISTANT MATERIAL SHALL BE EITHER 1) ASPHALT PLANT MIX, TYPE 1 OR TYPE 2, MIN. 2" DEPTH, 2) EROSION CONTROL MAT, OR 3) CONCRETE, AS DIRECTED BY THE ENGINEER. THE SLOPE DRAIN SHALL CONSIST OF A NON-PERFORATED TEMPORARY DRAINAGE PIPE, 12 INCHES IN DIAMETER.

PLAN VIEW

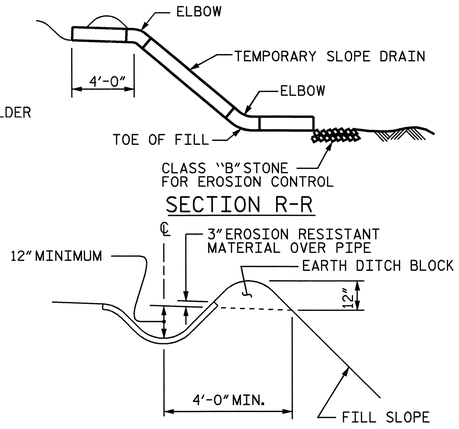

SECTION R-R

SECTION S-S

TEMPORARY BERM AND SLOPE DRAIN DETAILS

(TO BE USED WHEN SHOULDER BERM GUTTER IS REQUIRED)

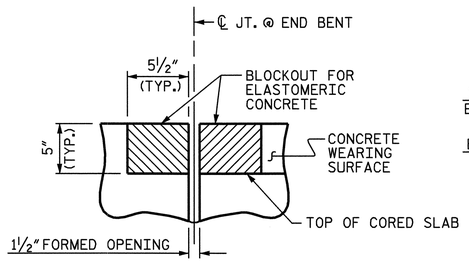

SECTION C-C
EVAZOTE JOINT SEAL
(PRE-SAWED ELASTOMERIC CONCRETE DIMENSIONS)

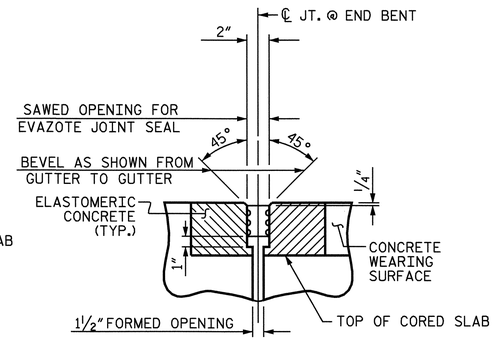

SECTION C-C
EVAZOTE JOINT SEAL

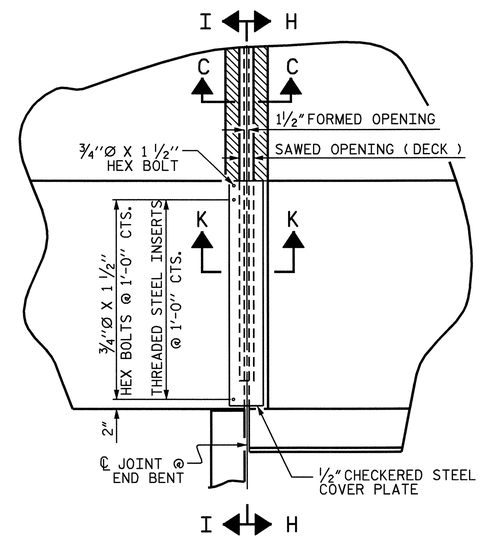

PLAN

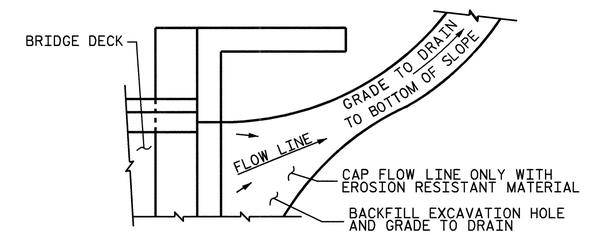

NOTE: IF THE APPROACH SLAB IS NOT CONSTRUCTED IMMEDIATELY AFTER THE BACKFILLING OF THE END BENT EXCAVATION, GRADE TO DRAIN TO THE BOTTOM OF THE SLOPE AND PROVIDE EROSION RESISTANT MATERIAL, SUCH AS FIBERGLASS ROVING OR AS DIRECTED BY THE ENGINEER TO PREVENT SOIL EROSION AND TO PROTECT THE AREA ADJACENT TO THE STRUCTURE. THE CONTRACTOR WILL BE REQUIRED TO REMOVE THESE MATERIALS PRIOR TO CONSTRUCTION OF THE APPROACH SLAB.

TEMPORARY DRAINAGE DETAIL

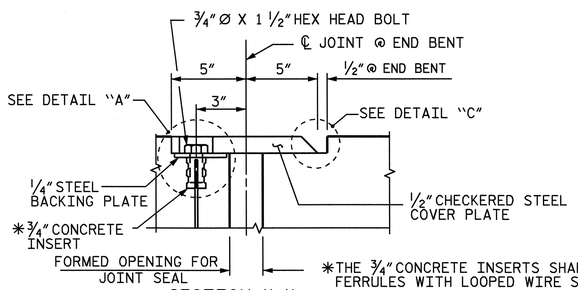

SECTION K-K

*THE ¾" CONCRETE INSERTS SHALL BE CLOSED-END FERRULES WITH LOOPED WIRE STRUTS ATTACHED TO THEM. THE INSERTS SHALL CONFORM TO AASHTO M169, GRADE 12L14 AND SHALL HAVE A TENSILE WORKING LOAD CAPACITY OF 3000 LBS.

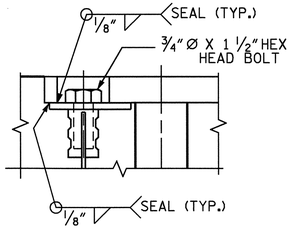

DETAIL "A"

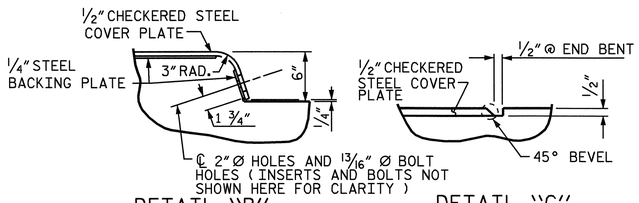

DETAIL "B" DETAIL "C"

ELASTOMERIC CONCRETE	
END BENT NO.	ELASTOMERIC CONCRETE *(CU. FT)
1	17.7
2	17.7
TOTAL	35.4

*BASED ON THE MINIMUM BLOCKOUT SHOWN

JOINT SEAL DETAILS @ END BENT

PROJECT NO. B-3450
DURHAM COUNTY
STATION: 14+31.00 -L-

SHEET 2 OF 2

STATE OF NORTH CAROLINA
DEPARTMENT OF TRANSPORTATION
RALEIGH

STANDARD

BRIDGE APPROACH SLAB DETAILS

NORTH CAROLINA PROFESSIONAL SEAL 14855 ENGINEER DOUGLAS R. CALHOUN
6-18-07

ASSEMBLED BY : A.L.MEADOWS	DATE : 9/09/02
CHECKED BY : T.A.HARRIS	DATE : 10/3/02

DRAWN BY : FCJ 11/88	REV. 10/17/00 RWW/LES
CHECKED BY : ARB 11/88	REV. 5/7/03 RWW/JTE
	REV. 5/1/06 TLA/GM

REVISIONS						SHEET NO.
NO.	BY:	DATE:	NO.	BY:	DATE:	S-25
1			3			TOTAL SHEETS
2			4			128

STD. NO. BAS10

08-JUN-2007 12:12
R:\Structures\Final Plans\STR. 1\B3450_sd_AS_01.dgn
gallen

F.A. PROJECT NO. BRSTP-1116(6)

GRADE DATA -L-

P.I. = 17+90.00 -L-
EL. = 260.080
V.C. = 600.00
0.4687% -0.4249%

NOTES :

FOR NOTES, SEE SHEETS 2 OF 3 & 3 OF 3.

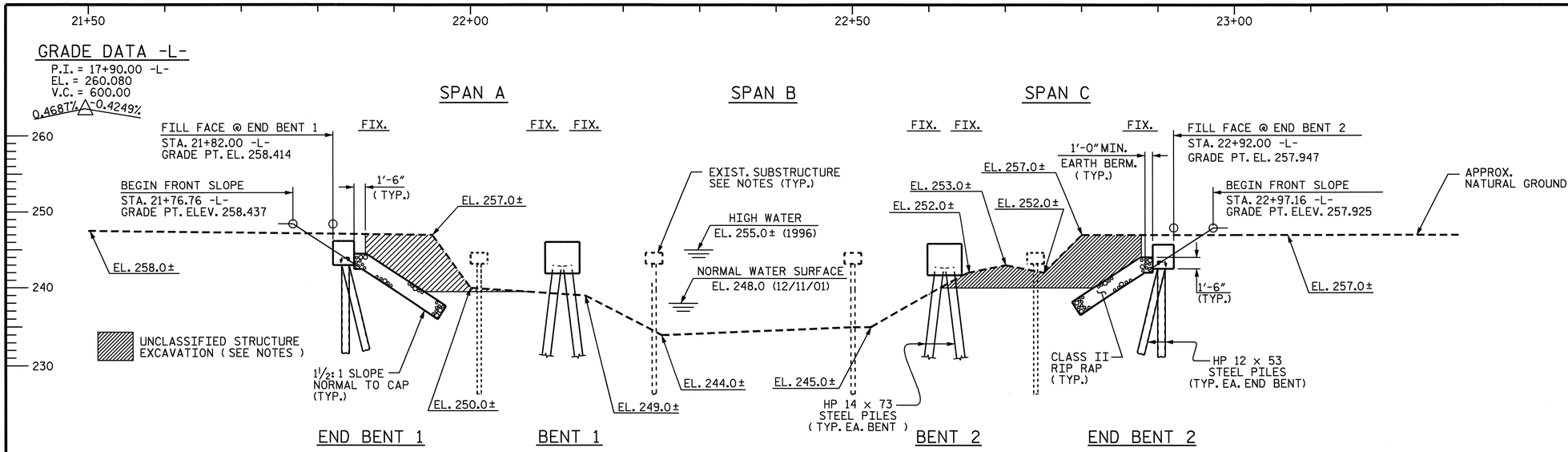

SECTION ALONG -L-

(SECTIONS @ BENTS AND END BENTS ARE TAKEN AT RIGHT ANGLES.)

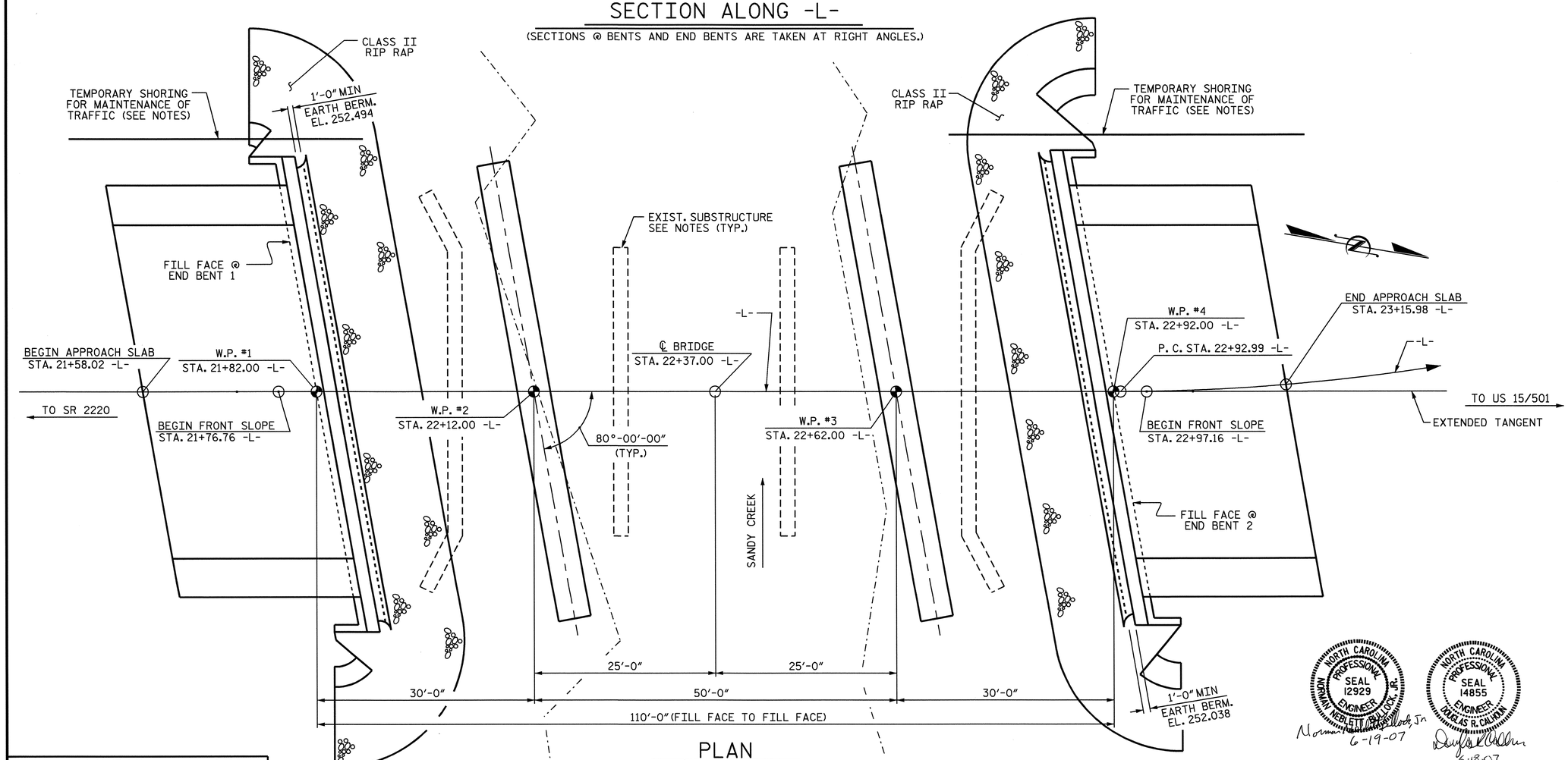

PLAN

PILES NOT SHOWN IN PLAN VIEW FOR CLARITY

PROJECT NO. B-3450
DURHAM COUNTY
STATION: 22+37.00 -L-

SHEET 1 OF 3 REPLACES BRIDGE NO. 122

STATE OF NORTH CAROLINA
DEPARTMENT OF TRANSPORTATION
RALEIGH

GENERAL DRAWING

BRIDGE ON SR 1116 OVER SANDY CREEK BETWEEN SR 2220 AND US 15/501

NORTH CAROLINA PROFESSIONAL SEAL 12929 ENGINEER NORMAN NEBLETT BULLOCK, JR.
Norman Neblett Bullock, Jr. 6-19-07

NORTH CAROLINA PROFESSIONAL SEAL 14855 ENGINEER DOUGLAS R. CALHOUN
Douglas R. Calhoun 6-18-07

REVISIONS						SHEET NO.
NO.	BY:	DATE:	NO.	BY:	DATE:	S-26
1			3			TOTAL SHEETS
2			4			128

DRAWN BY : A.L.M./T.A.H. DATE : 8/06/02
CHECKED BY : K.M.M. & E.G.A. DATE : 5/04/06

08-JUN-2007 12:13
R:\Structures\Final Plans\STR. 2\B3450_sd_GD_02.dgn
gallen

STR. 2

FOUNDATION NOTES:

DRIVE PILES AT END BENT 1 & 2 TO A REQUIRED BEARING CAPACITY OF 100 TONS PER PILE. THE REQUIRED BEARING CAPACITY IS EQUAL TO THE ALLOWABLE BEARING CAPACITY WITH A MINIMUM FACTOR OF SAFETY OF TWO.

THE ALLOWABLE BEARING CAPACITY FOR PILES AT END BENT 1 & 2 IS 50 TONS PER PILE.

DRIVE PILES AT BENT 1 & 2 TO A REQUIRED BEARING CAPACITY OF 115 TONS PER PILE. THE REQUIRED BEARING CAPACITY IS EQUAL TO THE ALLOWABLE BEARING CAPACITY WITH A MINIMUM FACTOR OF SAFETY OF TWO PLUS ANY ADDITIONAL CAPACITY TO ACCOUNT FOR DOWN DRAG OR NEGATIVE SKIN FRICTION AND SCOUR.

THE ALLOWABLE BEARING CAPACITY FOR PILES AT BENT 1 & 2 IS 50 TONS PER PILE.

THE SCOUR CRITICAL ELEVATION FOR BENT 1 & 2 IS ELEVATION 236.5 FT. SCOUR CRITICAL ELEVATIONS TO MONITOR POSSIBLE SCOUR PROBLEMS DURING THE LIFE OF THE STRUCTURE.

PROVIDE GALVANIZED STEEL PILES AT BENT 1 & 2 IN ACCORDANCE WITH SECTION 1076 AND 450-9 OF THE STANDARD SPECIFICATIONS.

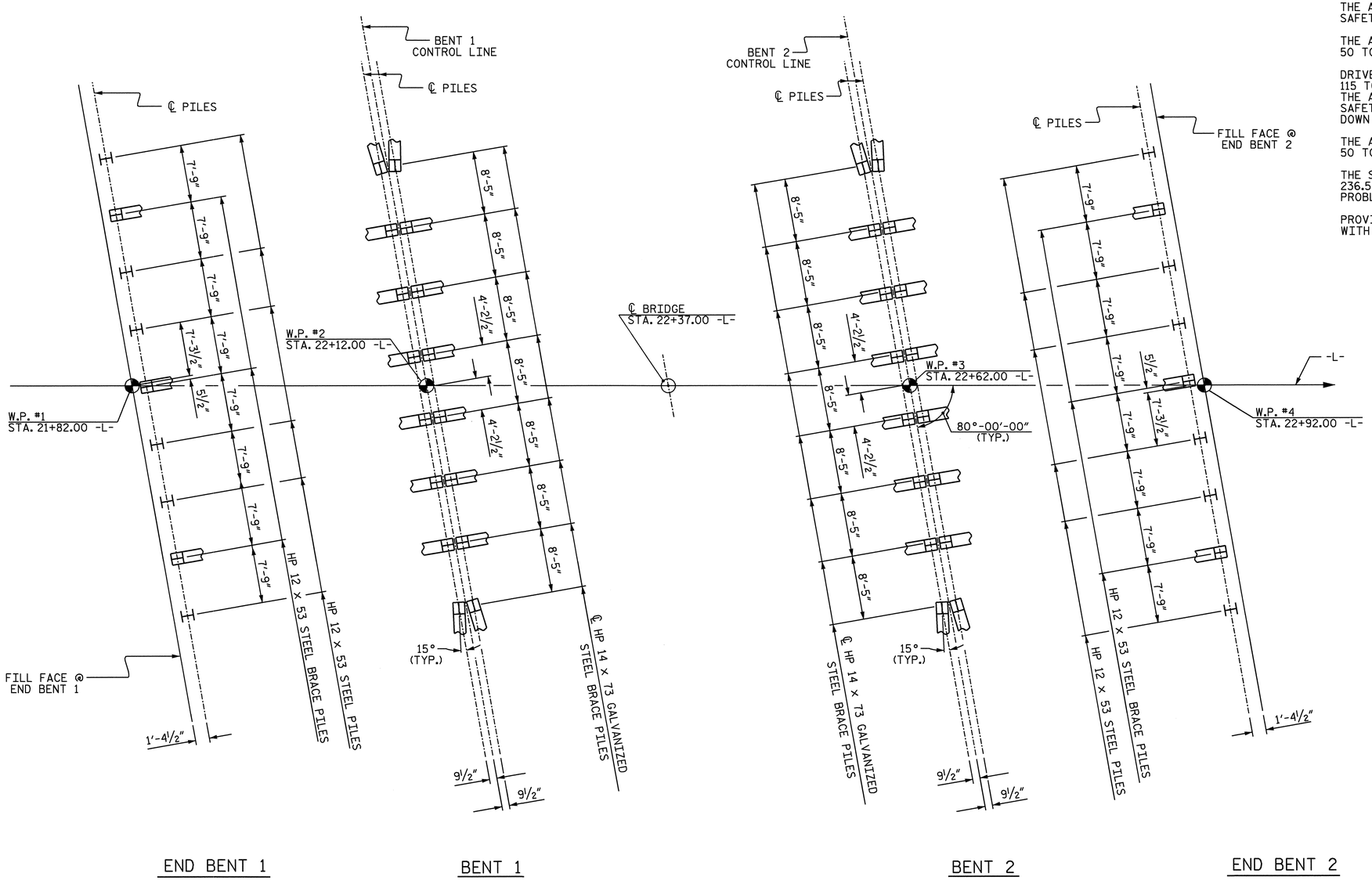

FOUNDATION LAYOUT

DIMENSIONS LOCATING PILES ARE SHOWN TO PILE CENTERLINE.

PILES AT END BENTS 1 AND 2 ARE HP 12x53 STEEL PILES.

ALL END BENT BRACE PILES ARE BATTERED 3:12.

PILES AT BENTS 1 AND 2 ARE HP 14x73 GALVANIZED STEEL PILES.

ALL BENT PILES ARE BATTERED 1½:12. PILES AT ENDS OF BENTS TO BE ROTATED AS SHOWN.

PROJECT NO. B-3450

DURHAM COUNTY

STATION: 22+37.00 -L-

SHEET 2 OF 3

STATE OF NORTH CAROLINA
DEPARTMENT OF TRANSPORTATION
RALEIGH

GENERAL DRAWING
BRIDGE ON SR 1116 OVER SANDY CREEK BETWEEN SR 2220 AND US 15/501

NORTH CAROLINA PROFESSIONAL SEAL 14855 ENGINEER DOUGLAS R. CALVIN
6-18-07

REVISIONS						SHEET NO.
NO.	BY:	DATE:	NO.	BY:	DATE:	S-27
1			3			TOTAL SHEETS
2			4			128

DRAWN BY : A.L.MEADOWS DATE : 8/19/02
CHECKED BY : T.A.H. & E.G.A. DATE : 5/4/06

08-JUN-2007 12:13
R:\Structures\Final Plans\STR. 2\B3450_sd_GD_02.dgn
gallen

TOTAL BILL OF MATERIAL

	CONSTRUCTION, MAINTENANCE & REMOVAL OF TEMPORARY STRUCTURE	REMOVAL OF EXISTING STRUCTURE	UNCLASSIFIED STRUCTURE EXCAVATION	CONCRETE WEARING SURFACE	GROOVING BRIDGE FLOORS	CLASS AA CONCRETE	CLASS A CONCRETE	BRIDGE APPROACH SLABS	REINFORCING STEEL	EPOXY COATED REINFORCING STEEL	HP 12 X 53 STEEL PILES		HP 14 X 73 GALVANIZED STEEL PILES		THREE BAR METAL RAIL	RIP RAP CLASS II (2'-0" THICK)	FILTER FABRIC FOR DRAINAGE	ELASTOMERIC BEARINGS	EVAZOTE JOINT SEALS	3'-0" X 1'-9" PRESTRESSED CONCRETE CORED SLABS	
	LUMP SUM	LUMP SUM	CU. YDS.	SQ. FT.	SQ. FT.	CU. YDS.	CU. YDS.	LUMP SUM	LBS.	LBS.	NO.	LIN. FT.	NO.	LIN. FT.	LIN. FT.	TONS	SQ. YDS.	LUMP SUM	LUMP SUM	NO.	LIN. FT.
SUPERSTRUCTURE				4941	6566	60.3		LUMP SUM		1568					199.90			LUMP SUM	LUMP SUM	60	2149.17
END BENT 1			219				22.6		3540		9	270				122	136				
BENT 1							41.3		5671				16	480							
BENT 2							41.3		5671				16	480							
END BENT 2			295				22.6		3540		9	270				90	100				
TOTAL	LUMP SUM	LUMP SUM	514	4941	6566	60.3	127.8	LUMP SUM	18422	1568	18	540	32	960	199.90	212	236	LUMP SUM	LUMP SUM	60	2149.17

B.M.-3, RR SPIKE SET IN 15" BEECH TREE 178' LT. OF -BL- STA. 15+67.90 EL. 250.58 NGVD 29

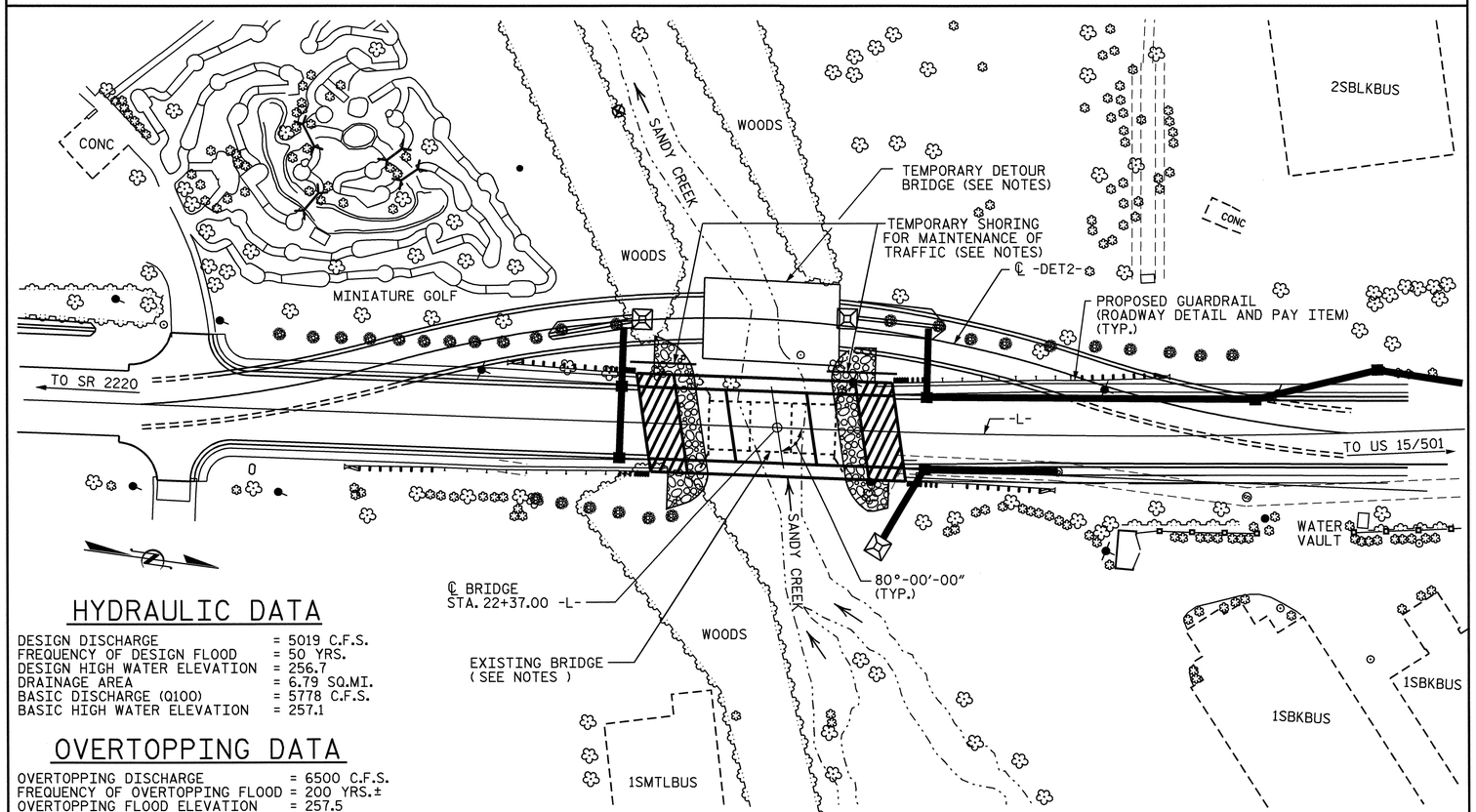

HYDRAULIC DATA

DESIGN DISCHARGE	= 5019 C.F.S.
FREQUENCY OF DESIGN FLOOD	= 50 YRS.
DESIGN HIGH WATER ELEVATION	= 256.7
DRAINAGE AREA	= 6.79 SQ.MI.
BASIC DISCHARGE (Q100)	= 5778 C.F.S.
BASIC HIGH WATER ELEVATION	= 257.1

OVERTOPPING DATA

OVERTOPPING DISCHARGE	= 6500 C.F.S.
FREQUENCY OF OVERTOPPING FLOOD	= 200 YRS.±
OVERTOPPING FLOOD ELEVATION	= 257.5

LOCATION SKETCH

FOR UTILITY INFORMATION, SEE UTILITY PLANS AND SPECIAL PROVISIONS.

NOTES

ASSUMED LIVE LOAD = HS20 OR ALTERNATE LOADING, EXCEPT THAT CORED SLAB UNITS HAVE BEEN DESIGNED FOR HS25.

THIS BRIDGE SHALL BE CONSTRUCTED USING TOP-DOWN CONSTRUCTION METHODS. THE USE OF A TEMPORARY CAUSEWAY OR WORK BRIDGE IS NOT PERMITTED.

FOR OTHER DESIGN DATA AND GENERAL NOTES, SEE SHEET SN.

THIS BRIDGE HAS BEEN DESIGNED BY THE STRENGTH DESIGN METHOD AS SPECIFIED IN AASHTO STANDARD SPECIFICATIONS.

A 15 FOOT DRY LAND PASSAGE FOR WILDLIFE SHALL BE PROVIDED ON EACH SIDE OF THE CREEK.

FOR EROSION CONTROL MEASURES, SEE EROSION CONTROL PLANS.

THE CONTRACTOR WILL BE REQUIRED TO CONSTRUCT, MAINTAIN AND AFTERWARDS REMOVE A TEMPORARY STRUCTURE AT STATION 22+37.00 -L- FOR USE DURING CONSTRUCTION OF THE PROPOSED STRUCTURE. THE BRIDGE RAILS ON THE TEMPORARY STRUCTURE SHALL BE DESIGNED FOR THE AASHTO LFRD TEST LEVEL 3 (TL3) CRASH TEST CRITERIA. SEE SPECIAL PROVISIONS FOR CONSTRUCTION, MAINTENANCE AND REMOVAL OF TEMPORARY STRUCTURE.

THE EXISTING STRUCTURE CONSISTING OF 3 SPANS (3 @ 25'-0") WITH A CLEAR ROADWAY WIDTH OF 29.1 FT. SUPPORTED BY PRESTRESSED CONCRETE CHANNELS, PRECAST CONCRETE CAPS ON STEEL H-PILES AND TIMBER ABUTMENTS AND LOCATED AT THE PROPOSED LOCATION SHALL BE REMOVED.

REMOVAL OF THE EXISTING BRIDGE SHALL BE PERFORMED SO AS NOT TO ALLOW DEBRIS TO FALL INTO THE WATER. THE CONTRACTOR SHALL REMOVE THE BRIDGE AND SUBMIT PLANS FOR DEMOLITION IN ACCORDANCE WITH ARTICLE 402-2 OF THE STANDARD SPECIFICATIONS.

THE MATERIAL SHOWN IN THE CROSS-HATCHED AREA SHALL BE EXCAVATED FOR A DISTANCE OF 43.0 FT. EACH SIDE OF THE CENTERLINE ROADWAY AS DIRECTED BY THE ENGINEER. THIS WORK WILL BE MEASURED AND PAID FOR AT THE CONTRACT UNIT BID PRICE PER CUBIC YARD FOR UNCLASSIFIED STRUCTURE EXCAVATION.

THE SUBSTRUCTURE OF THE EXISTING BRIDGE INDICATED ON THE PLANS IS FROM THE BEST INFORMATION AVAILABLE. SINCE THIS INFORMATION IS SHOWN FOR THE CONVENIENCE OF THE CONTRACTOR, THE CONTRACTOR SHALL HAVE NO CLAIM WHATSOEVER AGAINST THE DEPARTMENT OF TRANSPORTATION FOR ANY DELAYS OR ADDITIONAL COST INCURRED BASED ON DIFFERENCES BETWEEN THE EXISTING BRIDGE SUBSTRUCTURE SHOWN ON THE PLANS AND THE ACTUAL CONDITIONS AT THE PROJECT SITE.

THIS STRUCTURE HAS BEEN DESIGNED IN ACCORDANCE WITH HEC 18, "EVALUATING SCOUR AT BRIDGES", MAY, 2001.

THIS BRIDGE HAS BEEN DESIGNED IN ACCORDANCE WITH THE REQUIREMENTS OF THE AASHTO STANDARD SPECIFICATIONS FOR SEISMIC DESIGN OF HIGHWAY BRIDGES FOR SEISMIC PERFORMANCE CATEGORY A.

THE CONTRACTOR SHALL PROVIDE INDEPENDENT ASSURANCE SAMPLES OF REINFORCING STEEL AS FOLLOWS: FOR PROJECTS REQUIRING UP TO 400 TONS OF REINFORCING STEEL, ONE 30 INCH SAMPLE OF EACH SIZE BAR USED, AND FOR PROJECTS REQUIRING OVER 400 TONS OF REINFORCING STEEL, TWO 30 INCH SAMPLE OF EACH SIZE BAR USED. THE BARS FROM WHICH THE SAMPLES ARE TAKEN MUST THEN BE SPLICED WITH REPLACEMENT BARS OF THE SIZE AND LENGTH OF THE SAMPLE, PLUS A MINIMUM LAP SPLICE OF THIRTY BAR DIAMETERS.

FOR SUBMITTAL OF WORKING DRAWINGS, SEE SPECIAL PROVISIONS.

FOR FALSEWORK AND FORMWORK, SEE SPECIAL PROVISIONS.

FOR LIMITS OF TEMPORARY SHORING FOR MAINTENANCE OF TRAFFIC, SEE TRAFFIC CONTROL PLANS. FOR PAY ITEM FOR TEMPORARY SHORING FOR MAINTENANCE OF TRAFFIC, SEE ROADWAY PLANS.

FOR CRANE SAFETY, SEE SPECIAL PROVISONS.

FOR CONCRETE WEARING SURFACE, SEE SPECIAL PROVISIONS.

FOR GROUT FOR STRUCTURES, SEE SPECIAL PROVISIONS.

NORTH CAROLINA PROFESSIONAL SEAL 14855 ENGINEER DOUGLAS R. CALHOUN
6-12-07

PROJECT NO. B-3450
DURHAM COUNTY
STATION: 22+37.00 -L-

SHEET 3 OF 3

STATE OF NORTH CAROLINA
DEPARTMENT OF TRANSPORTATION
RALEIGH

GENERAL DRAWING
BRIDGE ON SR 1116 OVER SANDY CREEK BETWEEN SR 2220 AND US 15/501

REVISIONS						SHEET NO.
NO.	BY:	DATE:	NO.	BY:	DATE:	S-28
1			3			TOTAL SHEETS
2			4			128

DRAWN BY : A.L.M./T.A.H. DATE : 8/06/02
CHECKED BY : K.M.M. & E.G.A. DATE : 5/04/06

08-JUN-2007 12:13
R:\Structures\Final Plans\STR. 2\B3450_sd_GD_02.dgn
gallen

STR. 2

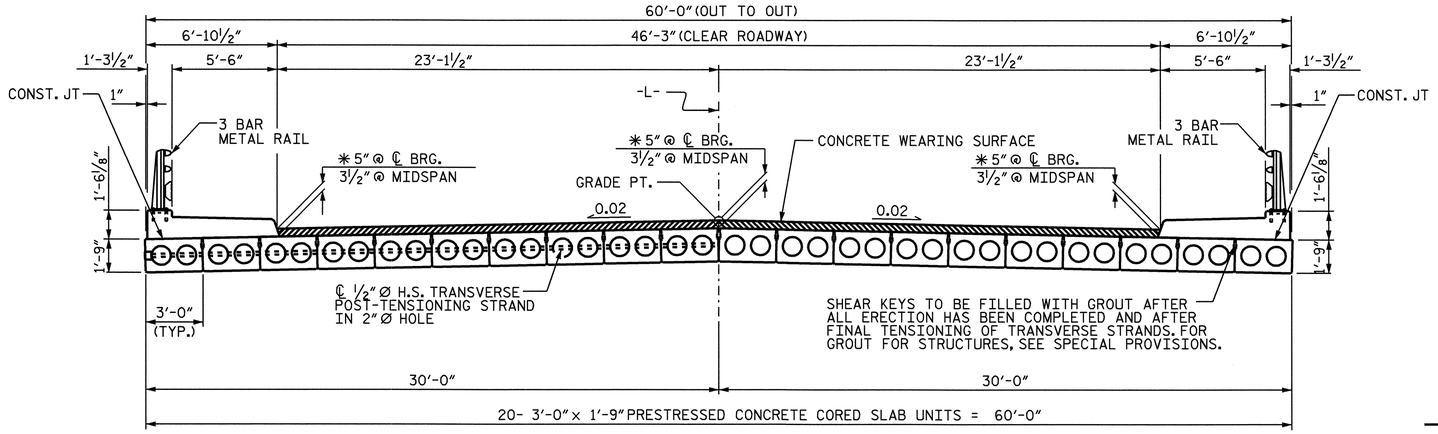

TYPICAL SECTION

✱ BASED ON PREDICTED FINAL CAMBER AND THEORETICAL GRADE LINE ELEVATIONS

NOTE: THE TOP SURFACE OF ALL THE CORED SLAB UNITS SHALL HAVE A ⅜" RAKED FINISH.

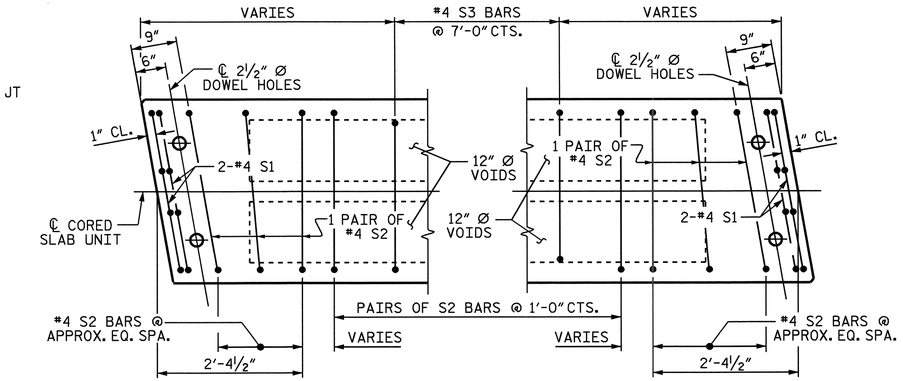

PART PLAN-EXTERIOR AND INTERIOR (SIDEWALK) SECTION

EXTERIOR AND INTERIOR SECTION (SIDEWALK) SHOWN - INTERIOR SECTION SIMILAR EXCEPT OMIT S3 BARS. SEE PLAN OF SPANS FOR END SPACING.

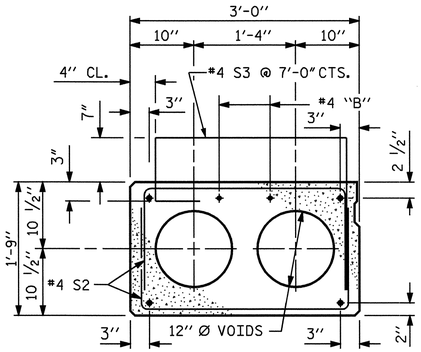

EXTERIOR SLAB -SIDEWALK SECTION-

(FOR PRESTRESSED STRAND LAYOUT, SEE INTERIOR SLAB SECTION.)

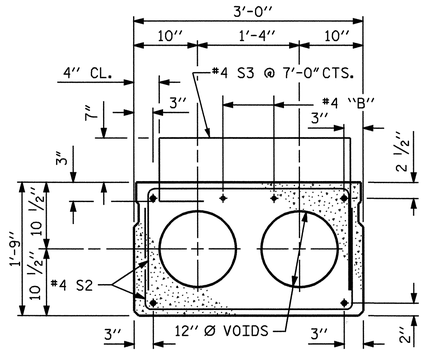

INTERIOR SLAB -SIDEWALK SECTION-

(FOR PRESTRESSED STRAND LAYOUT, SEE INTERIOR SLAB SECTION.)

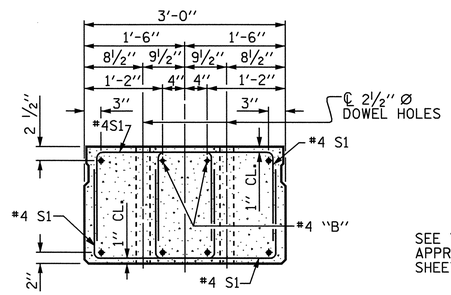

END ELEVATION

SHOWING PLACEMENT OF DOUBLE STIRRUPS AND LOCATION OF DOWEL HOLES. (STRAND LAYOUT NOT SHOWN.) INTERIOR SLAB SECTION SHOWN-EXTERIOR SLAB SECTION SIMILAR EXCEPT SHEAR KEY LOCATION.

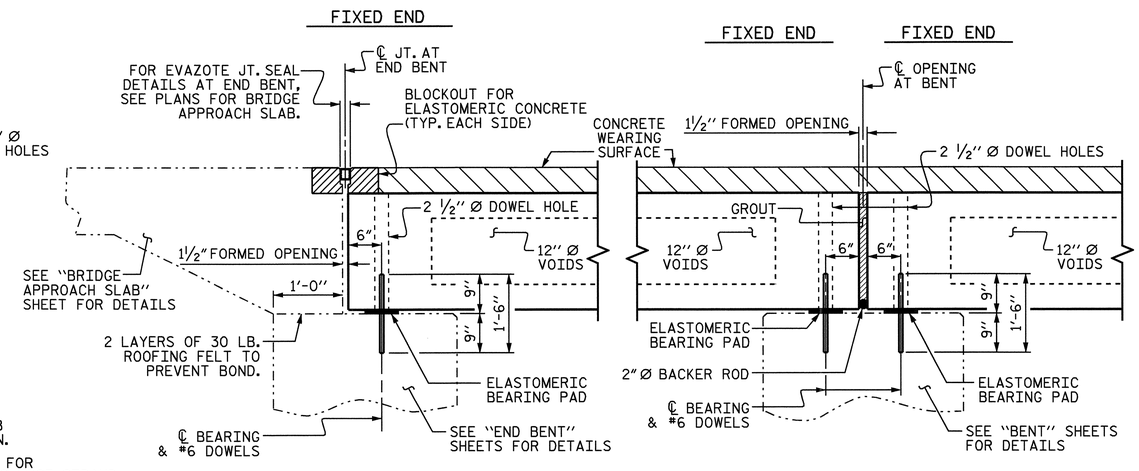

SECTION AT END BENT

SECTION AT BENT

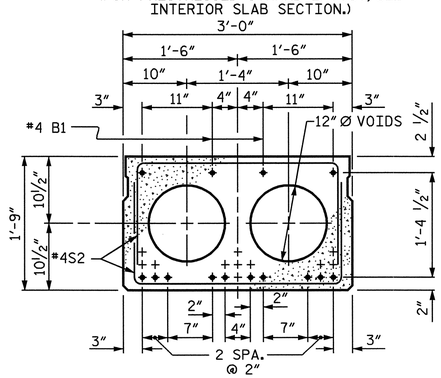

SPAN A AND C

(12 STRANDS)

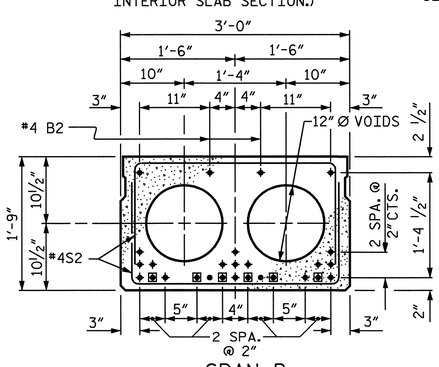

SPAN B

(25 STRANDS, 6 SHEATHED)

INTERIOR SLAB SECTION

½" Ø LOW RELAXATION STRAND LAYOUT

▣ BOND SHALL BE BROKEN ON THESE STRANDS FOR A DISTANCE OF 4'-6" FROM END OF CORED SLAB UNIT, SEE STANDARD SPECIFICATIONS ARTICLE 1078-7.

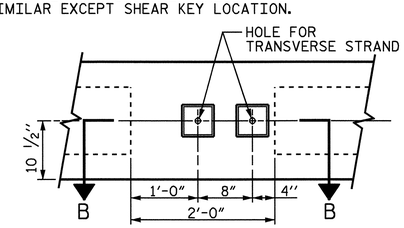

ELEVATION VIEW

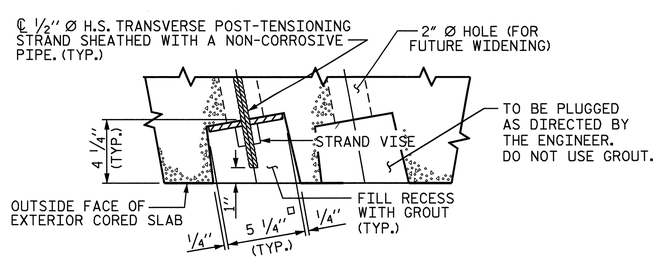

SECTION B-B

GROUTED RECESS AT END OF POST-TENSIONED STRAND CORED SLABS

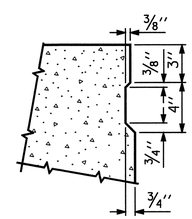

SHEAR KEY DETAIL

NOTE: OMIT SHEAR KEY ON OUTSIDE FACE OF EXTERIOR CORED SLABS.

PROJECT NO. B-3450

DURHAM COUNTY

STATION: 22+37.00 -L-

STATE OF NORTH CAROLINA
DEPARTMENT OF TRANSPORTATION
RALEIGH

STANDARD 3'-0" X 1'-9" PRESTRESSED CONCRETE CORED SLAB UNIT

OCTOBER 1981

NORTH CAROLINA PROFESSIONAL SEAL 14855 ENGINEER DOUGLAS R. CALHOUN
6-18-07

REVISIONS						SHEET NO.
NO.	BY:	DATE:	NO.	BY:	DATE:	S-29
1			3			TOTAL SHEETS
2			4			128

ASSEMBLED BY : A.L.MEADOWS		DATE : 7/23/02	
CHECKED BY : T.A.HARRIS		DATE : 9/13/02	
DRAWN BY : WJH 4/89	REV. 10/17/00	RWW/LES	
CHECKED BY : FCJ 5/89	REV. 7/10/01RR	RWW/LES	
	REV. 5/1/06	TLA/GM	

08-JUN-2007 12:14
R:\Structures\Final Plans\STR. 2\B3450_sd_TS_02.dgn

NOTE : THE CONTRACTOR'S ATTENTION IS CALLED TO THE FACT THAT THE SIDEWALK AND PARAPET SHALL EXTEND 1/2" BEYOND THE CORED SLAB UNITS AT BOTH BENTS TO CREATE A 1/2" OPENING IN THE SIDEWALK FOR EXPANSION JOINT MATERIAL.

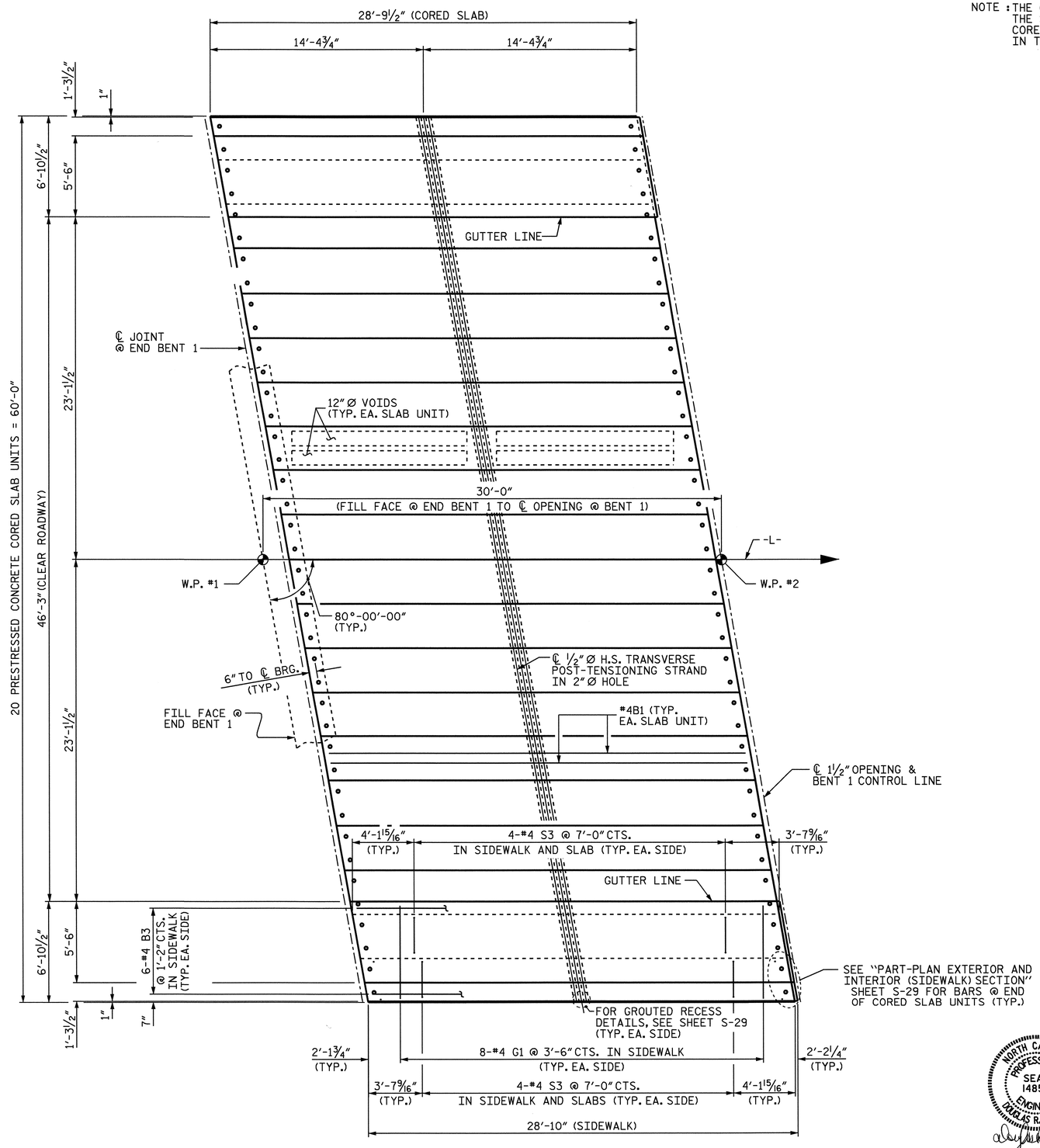

SPAN A

NORTH CAROLINA PROFESSIONAL SEAL 14855 ENGINEER DOUGLAS R. CALHOUN
6-18-07

PROJECT NO. B-3450
DURHAM COUNTY
STATION: 22+37.00 -L-

STATE OF NORTH CAROLINA
DEPARTMENT OF TRANSPORTATION
RALEIGH

SUPERSTRUCTURE
PLAN OF SPAN A

REVISIONS						SHEET NO.
NO.	BY:	DATE:	NO.	BY:	DATE:	S-30
1			3			TOTAL SHEETS
2			4			128

DRAWN BY : A.L.MEADOWS DATE : 7/19/02
CHECKED BY : T.A.HARRIS DATE : 9/13/02

08-JUN-2007 12:15
R:\Structures\Final Plans\STR. 2\B3450_sd_S*_02.dgn
gallen

STR. 2

NOTE : THE CONTRACTOR'S ATTENTION IS CALLED TO THE FACT THAT THE SIDEWALK AND PARAPET SHALL EXTEND ½" BEYOND THE CORED SLAB UNITS AT BOTH BENTS TO CREATE A ½" OPENING IN THE SIDEWALK FOR EXPANSION JOINT MATERIAL.

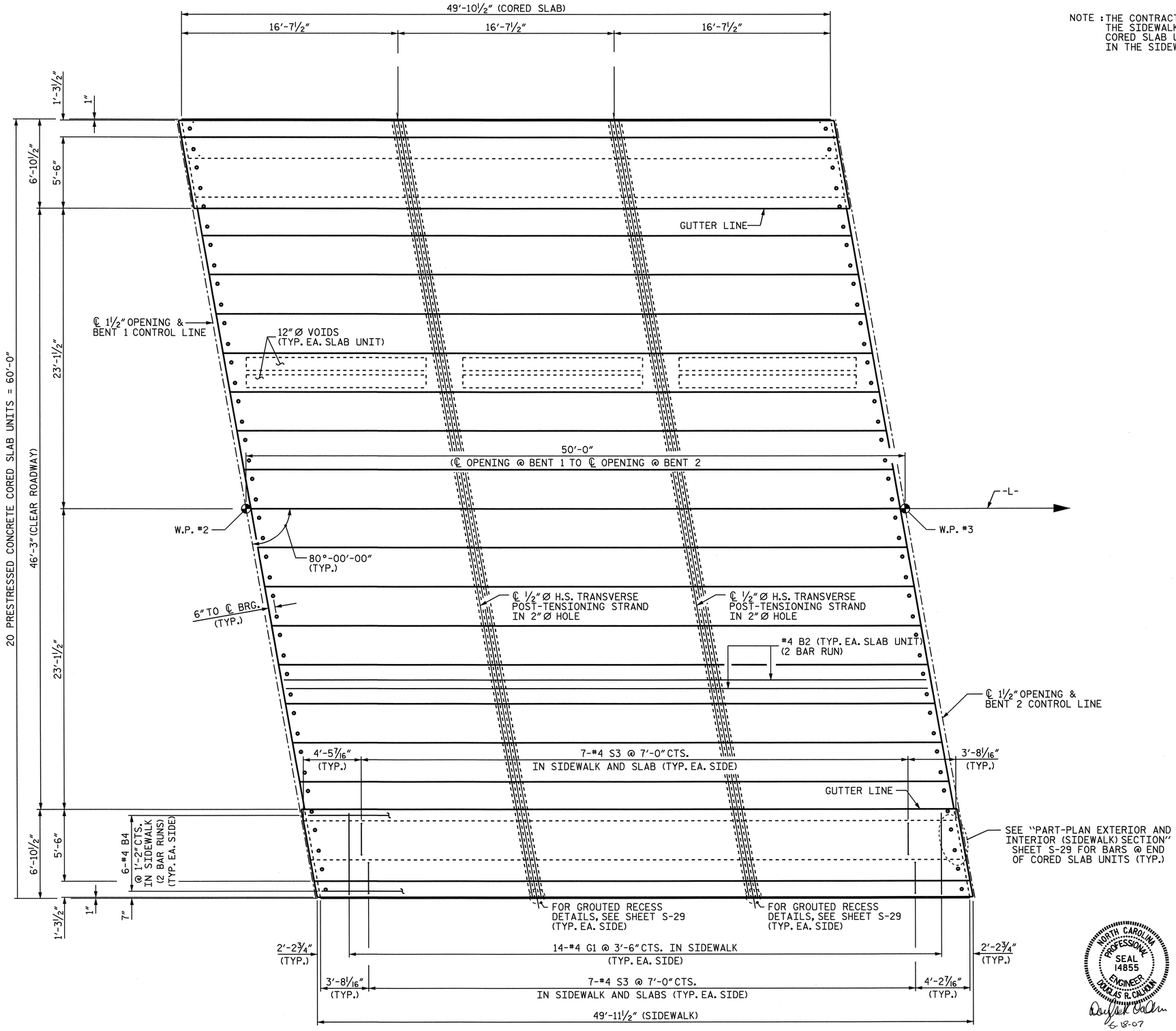

SPAN B

PROJECT NO. B-3450

DURHAM COUNTY

STATION: 22+37.00 -L-

STATE OF NORTH CAROLINA
DEPARTMENT OF TRANSPORTATION
RALEIGH

SUPERSTRUCTURE
PLAN OF SPAN B

NORTH CAROLINA PROFESSIONAL SEAL 14855 ENGINEER DOUGLAS R. CALHOUN
6-18-07

REVISIONS						SHEET NO.
NO.	BY:	DATE:	NO.	BY:	DATE:	S-31
1			3			TOTAL SHEETS
2			4			128

DRAWN BY : A.L.MEADOWS DATE : 7/22/02
CHECKED BY : T.A.HARRIS DATE : 9/13/02

08-JUN-2007 12:15
R:\Structures\Final Plans\STR. 2\B3450_sd_S*_02.dgn
gallen

STR. 2

NOTE : THE CONTRACTOR'S ATTENTION IS CALLED TO THE FACT THAT THE SIDEWALK AND PARAPET SHALL EXTEND 1/2" BEYOND THE CORED SLAB UNITS AT BOTH BENTS TO CREATE A 1/2" OPENING IN THE SIDEWALK FOR EXPANSION JOINT MATERIAL.

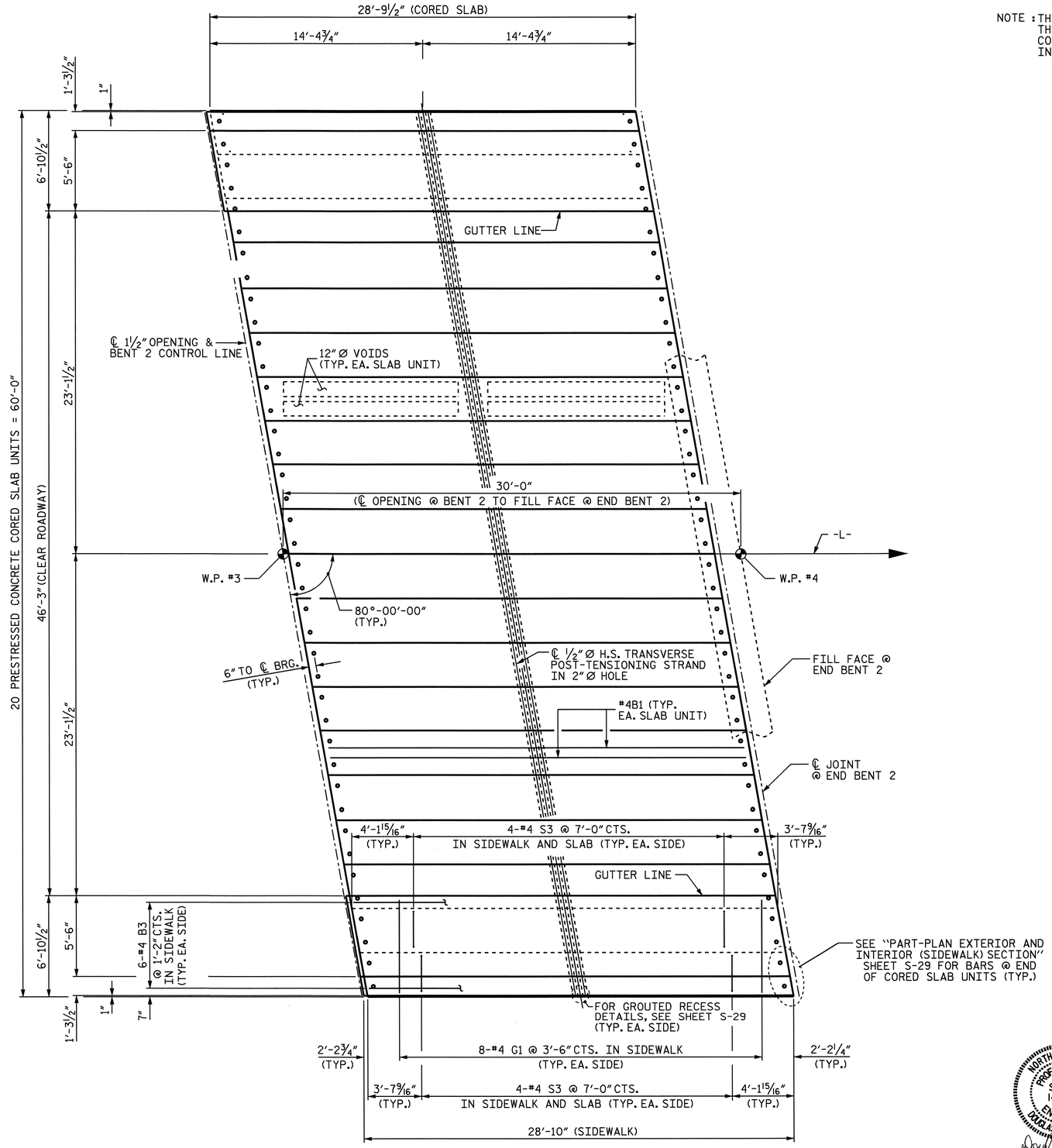

SPAN C

PROJECT NO. B-3450
DURHAM COUNTY
STATION: 22+37.00 -L-

STATE OF NORTH CAROLINA
DEPARTMENT OF TRANSPORTATION
RALEIGH

SUPERSTRUCTURE
PLAN OF SPAN C

NORTH CAROLINA PROFESSIONAL SEAL 14855 ENGINEER DOUGLAS R. CALHOUN
6-18-07

REVISIONS						SHEET NO.
NO.	BY:	DATE:	NO.	BY:	DATE:	S-32
1			3			TOTAL SHEETS
2			4			128

DRAWN BY : A.L.MEADOWS DATE : 7/19/02
CHECKED BY : T.A.HARRIS DATE : 9/13/02

08-JUN-2007 12:16
R:\Structures\Final Plans\STR. 2\B3450_sd_S*_02.dgn
gallen

STR. 2

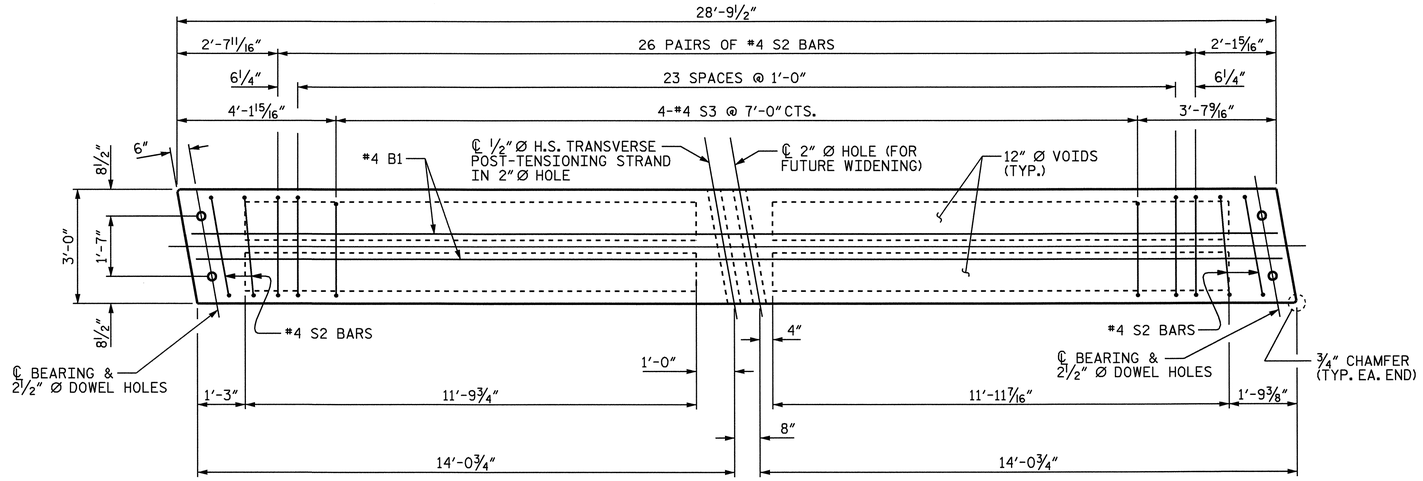

PLAN OF EXTERIOR AND INTERIOR (SIDEWALK) CORED SLAB UNIT - SPAN A AND C

EXTERIOR AND INTERIOR (SIDEWALK) SHOWN, INTERIOR SIMILAR EXCEPT OMIT #4 S3 BARS.
FOR REINFORCING STEEL AT ENDS OF CORED SLAB UNITS, SEE "PART-PLAN - EXTERIOR AND INTERIOR (SIDEWALK) SECTION" SHEET S-29.

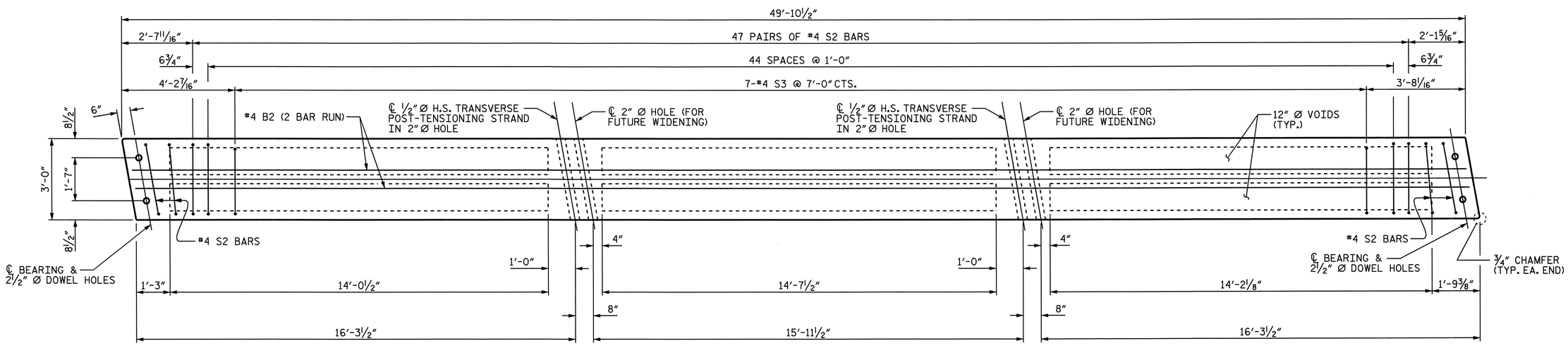

PLAN OF EXTERIOR AND INTERIOR (SIDEWALK) CORED SLAB UNIT - SPAN B

EXTERIOR AND INTERIOR (SIDEWALK) SHOWN, INTERIOR SIMILAR EXCEPT OMIT #4 S3 BARS.
FOR REINFORCING STEEL AT ENDS OF CORED SLAB UNITS, SEE "PART-PLAN - EXTERIOR AND INTERIOR (SIDEWALK) SECTION" SHEET S-29.

PROJECT NO. B-3450
DURHAM COUNTY
STATION: 22+37.00 -L-

NORTH CAROLINA PROFESSIONAL SEAL 14855 ENGINEER DOUGLAS R. CALHOUN
6-18-07

STATE OF NORTH CAROLINA
DEPARTMENT OF TRANSPORTATION
RALEIGH

SUPERSTRUCTURE

CORED SLAB DETAILS (ALL SPANS)

REVISIONS						SHEET NO.
NO.	BY:	DATE:	NO.	BY:	DATE:	S-33
1			3			TOTAL SHEETS
2			4			128

DRAWN BY : A.L.MEADOWS DATE : 7/22/02
CHECKED BY : T.A.HARRIS DATE : 9/13/02

08-JUN-2007 12:16
R:\Structures\Final Plans\STR. 2\B3450_sd_S*_02.dgn
gallen

STR. 2

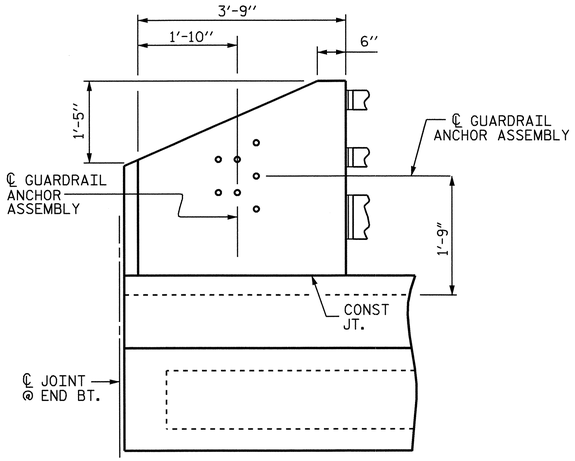

ELEVATION

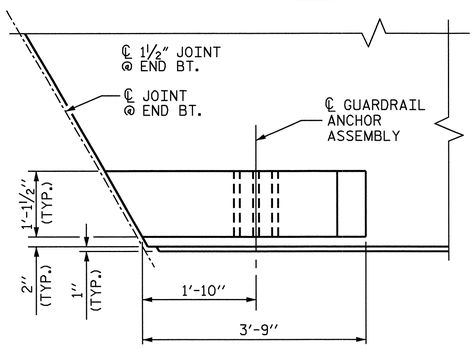

PLAN

GUARDRAIL ANCHOR DETAIL

FOR REINFORCEMENT OF END POST, SEE "END POST DETAILS"

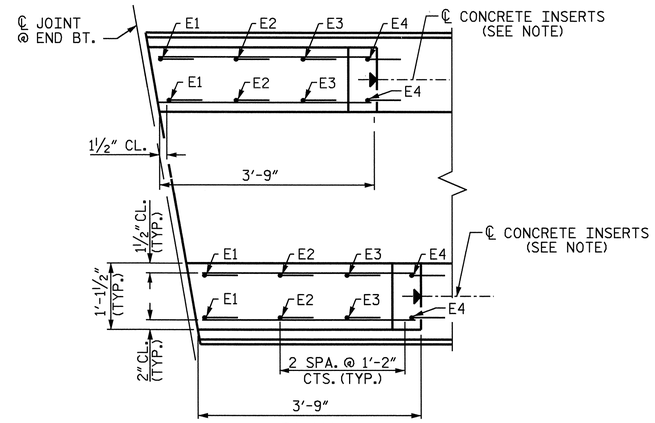

PLAN

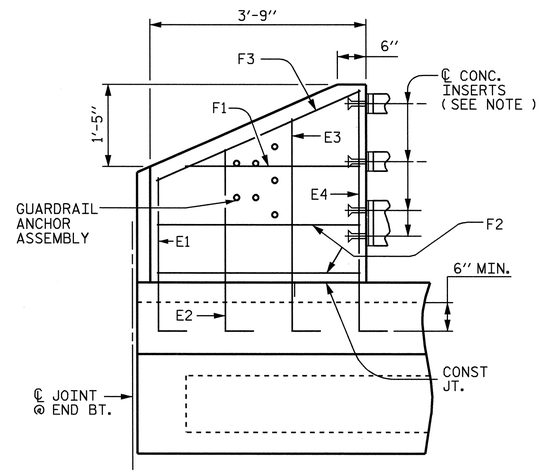

ELEVATION

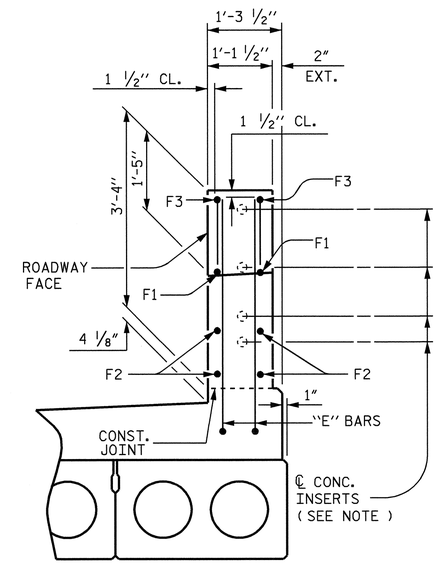

END VIEW

END POST DETAILS

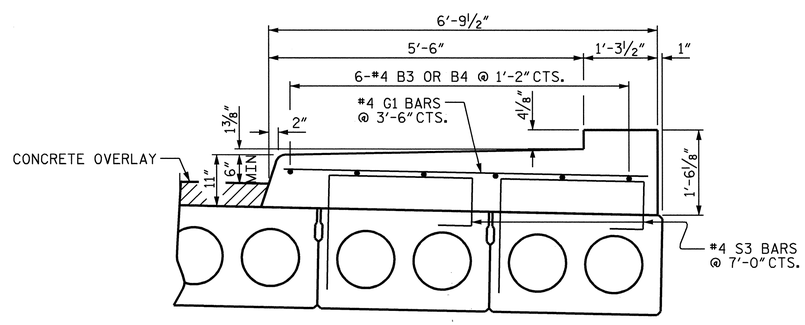

SECTION THRU SIDEWALK

BAR TYPE

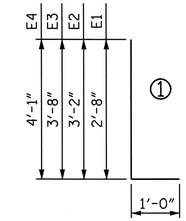

BAR DIMENSIONS ARE OUT TO OUT

SPLICE LENGTH CHART

BAR	SIZE	LENGTH
B4	4	2'-0"

BILL OF MATERIAL FOR 4 END POSTS AND SIDEWALK

BAR	NO.	SIZE	TYPE	LENGTH	WEIGHT
B3	24	4	STR	28'-5"	456
B4	24	4	STR	25'-10"	414
E1	8	7	1	3'-8"	60
E2	8	7	1	4'-2"	68
E3	8	7	1	4'-8"	76
E4	8	7	1	5'-1"	83
F1	8	6	STR	2'-9"	33
F2	16	6	STR	3'-5"	82
F3	8	6	STR	3'-9"	45
G1	60	4	STR	6'-3"	251
EPOXY COATED REINFORCING STEEL					1568
CLASS AA CONCRETE					60.3 CU.YDS.

NOTES :

FOR METAL RAILS AND GUARDRAIL ANCHOR ASSEMBLIES, SEE "GUARDRAIL ANCHORAGE DETAILS" SHEET 6 OF 6.

FOR DETAILS OF CONCRETE INSERTS, SEE "3 BAR METAL RAIL" SHEET 5 OF 6.

ALL REINFORCING STEEL IN SIDEWALK AND END POST SHALL BE EPOXY COATED.

GROOVED CONTRACTION JOINTS, ½" IN DEPTH, SHALL BE TOOLED IN ALL EXPOSED FACES OF THE SIDEWALK IN ACCORDANCE WITH ARTICLE 825-10 (B) OF THE STANDARD SPECIFICATIONS. THE CONTRACTION JOINTS SHALL BE LOCATED AT A SPACING OF 8 FT. TO 10 FT. BETWEEN EXPANSION JOINTS. NO CONTRACTION JOINTS WILL BE REQUIRED FOR SEGMENTS LESS THAN 10 FEET IN LENGTH.

THE COST OF THE SIDEWALKS AND END POSTS ARE INCLUDED IN THE PAY ITEMS FOR CLASS AA CONCRETE AND EPOXY COATED REINFORCING STEEL.

THE CONTRACTOR'S ATTENTION IS CALLED TO THE FACT THAT THE SIDEWALK AND PARAPET SHALL EXTEND ½" BEYOND THE CORED SLAB UNITS AT BOTH BENTS TO CREATE A ½" OPENING IN THE SIDEWALK FOR EXPANSION JOINT MATERIAL.

NORTH CAROLINA PROFESSIONAL SEAL 14855 ENGINEER DOUGLAS R. CALHOUN
6-18-07

PROJECT NO. B-3450
DURHAM COUNTY
STATION: 22+37.00 -L-

SHEET 1 OF 6

STATE OF NORTH CAROLINA
DEPARTMENT OF TRANSPORTATION
RALEIGH

3 BAR METAL RAIL END POST & SIDEWALK DETAILS

REVISIONS						SHEET NO.
NO.	BY:	DATE:	NO.	BY:	DATE:	S-34
1			3			TOTAL SHEETS
2			4			128

DRAWN BY : A.L.MEADOWS DATE : 8/26/02
CHECKED BY : T.A.HARRIS DATE : 9/14/02

18-JUN-2007 12:54
R:\Structures\Final Plans\STR. 2\B3450_sd_3MR_02.dgn
gallen

STR. 2

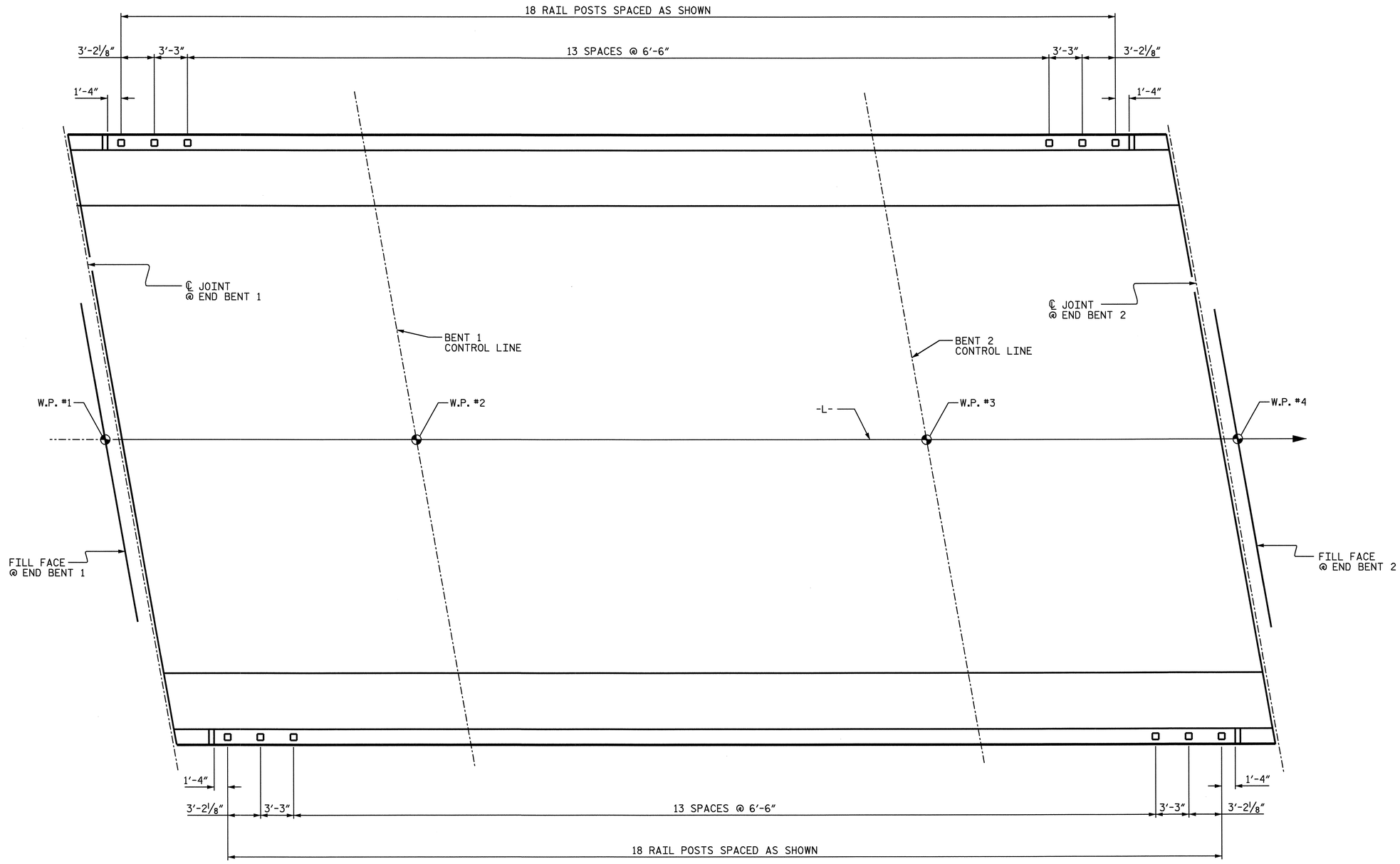

PLAN OF RAIL POST SPACINGS

NORTH CAROLINA PROFESSIONAL SEAL 14855 ENGINEER DOUGLAS R. CALHOUN
6-18-07

PROJECT NO. B-3450
DURHAM COUNTY
STATION: 22+37.00 -L-

SHEET 2 OF 6

STATE OF NORTH CAROLINA
DEPARTMENT OF TRANSPORTATION
RALEIGH

RAIL POST SPACINGS
FOR THREE BAR METAL RAIL

REVISIONS						SHEET NO.
NO.	BY:	DATE:	NO.	BY:	DATE:	S-35
1			3			TOTAL SHEETS
2			4			128

DRAWN BY : A.L.MEADOWS DATE : 3/18/03
CHECKED BY : T.A.HARRIS DATE : 3/19/03

08-JUN-2007 12:17
R:\Structures\Final Plans\STR. 2\B3450_sd_3MR_02.dgn
gallen

STR. 2

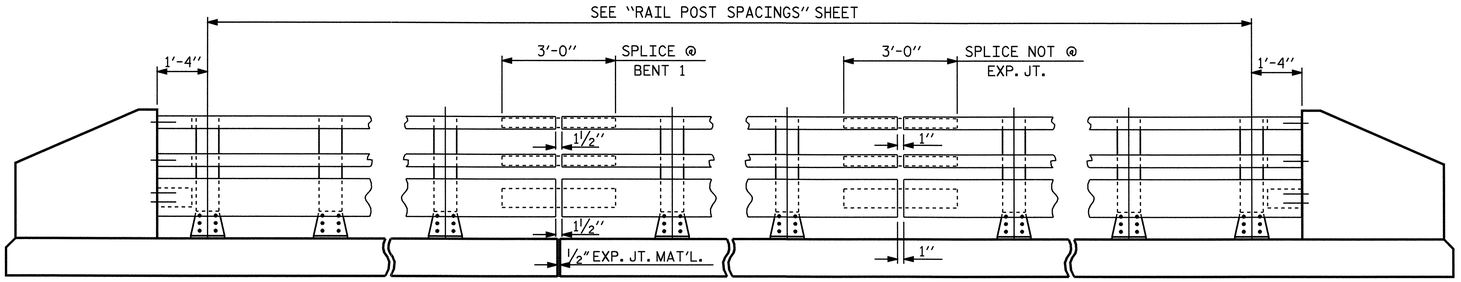

NOTE:
FOR ATTACHMENT OF METAL RAIL TO END POST, SEE "3 BAR METAL RAIL" SHEET 5 OF 6.

ELEVATION

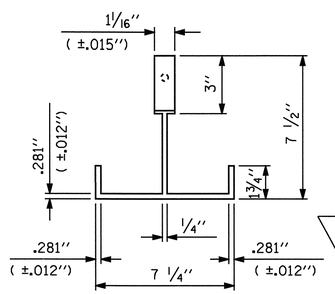

PLAN

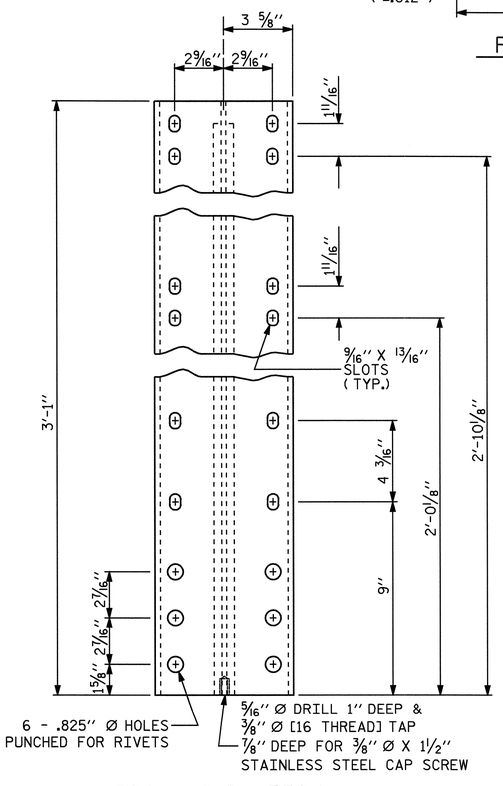

FRONT ELEVATION

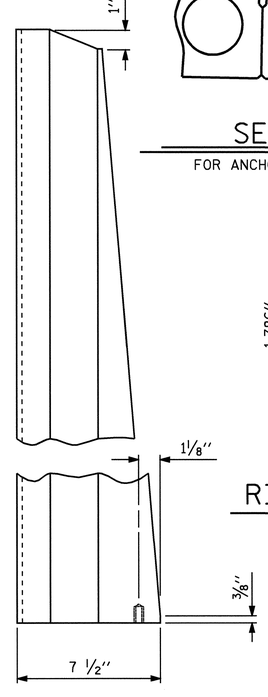

SIDE ELEVATION

DETAILS OF POST

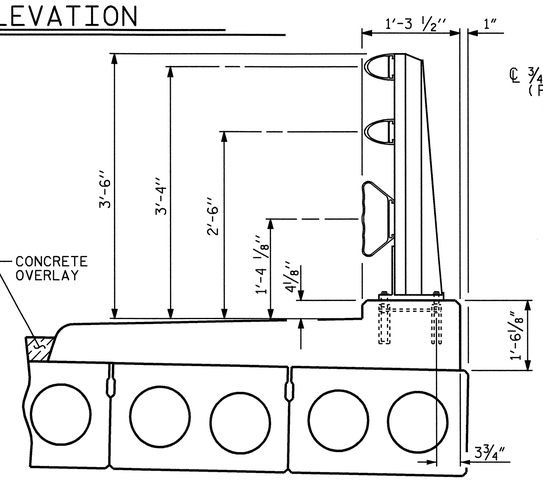

SECTION THRU RAIL

FOR ANCHOR ASSEMBLY, SEE "3 BAR METAL RAIL" STD.No.BMR6

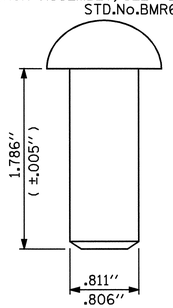

RIVET DETAIL

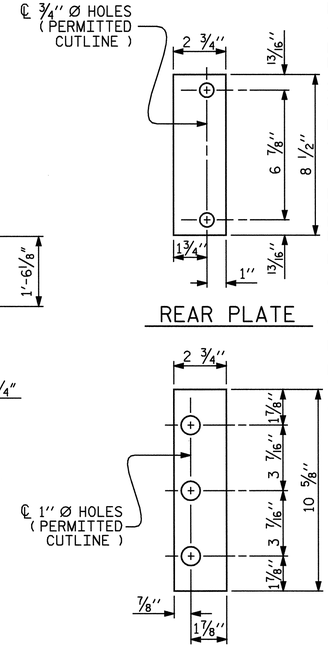

REAR PLATE

FRONT PLATE

SHIM DETAILS

NOTE:
SHIMS MAY BE CUT ALONG PERMITTED CUTLINE OR SLOTTED TO EDGE OF PLATE TO FACILITATE PLACEMENT.

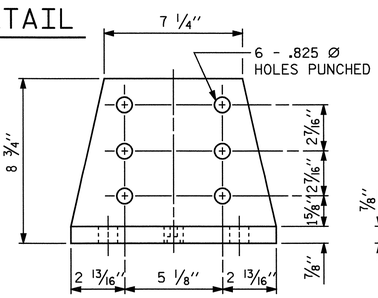

FRONT ELEVATION

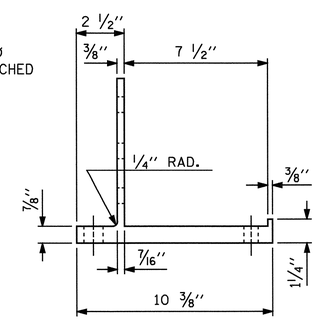

SIDE ELEVATION

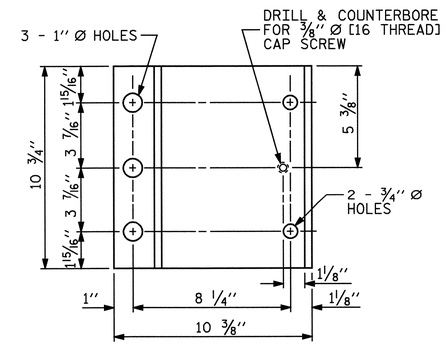

PLAN

POST BASE DETAILS

NOTES

AT THE CONTRACTOR'S OPTION, METAL RAIL MAY BE EITHER ALUMINUM OR GALVANIZED STEEL IN ACCORDANCE WITH THE REQUIREMENTS OF THE GENERAL NOTES AND THE FOLLOWING SPECIFICATIONS FOR THE ALTERNATE MATERIALS; HOWEVER, THE CONTRACTOR WILL BE REQUIRED TO USE THE SAME RAIL MATERIAL ON ALL STRUCTURES ON THE PROJECT FOR WHICH METAL RAIL IS DESIGNATED.

ALUMINUM RAILS

MATERIAL FOR POSTS, BASES AND RAILS, EXPANSION BARS AND CLAMP BARS SHALL BE ASTM B221 ALLOY 6061-T6.

MATERIAL FOR RIVETS SHALL BE ASTM B316 ALLOY 6061-T6. RIVETS SHALL BE STANDARD BUTTON HEAD AND CONE POINT COLD DRIVEN AS PER DRAWING.

THE BASE OF RAIL POSTS, OR ANY OTHER ALUMINUM SURFACE IN CONTACT WITH CONCRETE SHALL BE THOROUGHLY COATED WITH AN ALUMINUM IMPREGNATED CAULKING COMPOUND OF APPROVED QUALITY.

MATERIAL FOR SHIMS TO BE ASTM B209 ALLOY 6061-T6.

GALVANIZED STEEL RAILS

MATERIAL AND GALVANIZING ARE TO CONFORM TO THE FOLLOWING SPECIFICATIONS:

POST, POST BASES, RAILS, EXPANSION BARS AND CLAMP BARS : AASHTO M270 GRADE 36 STRUCTURAL STEEL - GALVANIZED TO AASHTO M111.

RIVETS: RIVETS SHALL MEET THE REQUIREMENTS OF ASTM A502 FOR GRADE 1 RIVETS.

THE CUT ENDS OF GALVANIZED STEEL RAILING, AFTER GRINDING SMOOTH SHALL BE GIVEN TWO COATS OF ZINC RICH PAINT MEETING THE REQUIREMENTS OF FEDERAL SPECIFICATION MIL-P-26915 USAF TYPE 1, OR OF FEDERAL SPECIFICATIONS TT-P-641.

SHIMS: SHIMS SHALL MEET THE REQUIREMENTS OF ASTM A570 FOR GRADE 33 OR A611 FOR GRADE C AND SHALL BE GALVANIZED IN ACCORDANCE WITH AASHTO M111.

RAIL CAPS: RAIL CAPS SHALL MEET THE REQUIREMENTS OF ASTM A570 FOR GRADE 33 OR A611 FOR GRADE C AND SHALL BE GALVANIZED IN ACCORDANCE WITH AASHTO M111.

GENERAL NOTES

RAILING SHALL BE CONTINUOUS FROM END POST TO END POST OF BRIDGE. EACH JOINT IN RAIL LENGTH SHALL BE SPLICED AS DETAILED. PANEL LENGTHS OF RAIL SHALL BE ATTACHED TO A MINIMUM OF THREE POSTS. PLACE ONE JOINT SPLICE JUST BEYOND THE 3RD RAIL POST FROM EACH END, TYPICALLY 14' FROM THE END. PLACE OTHER JOINTS AS NEEDED.

FOR END OF RAIL TO CLEAR FACE OF CONCRETE END POST DIMENSION, SEE STANDARD NO. BMR7.

CAP SCREWS SHALL BE ASTM F593 ALLOY 305 STAINLESS STEEL. WASHERS FOR RAIL ATTACHMENT SHALL MEET THE REQUIREMENTS OF ASTM F844 EXCEPT THEY SHALL BE MADE FROM ALLOY 304 STAINLESS STEEL.

CERTIFIED MILL REPORTS ARE REQUIRED FOR RAILS AND POSTS. SHOP INSPECTION IS NOT REQUIRED.

METAL RAIL POSTS SHALL BE SET NORMAL TO CURB GRADE.

METHOD OF MEASUREMENT FOR METAL RAILS: FOR LENGTH OF METAL RAILS TO BE PAID FOR, SEE THE STANDARD SPECIFICATIONS.

CURVED RAIL USAGE: WHERE RAILS ARE TO BE USED ON BRIDGES ON HORIZONTAL AND/OR VERTICAL CURVATURE THE CONTRACTOR MAY, AT HIS OPTION, HAVE THE REQUIRED CURVATURE IN THE RAIL FORMED IN THE SHOP OR IN THE FIELD. IN EITHER EVENT, THE RAIL SHALL CONFORM WITHOUT BUCKLING OR KINKING TO THE REQUIRED CURVATURE IN A UNIFORM MANNER ACCEPTABLE TO THE ENGINEER.

TO INSURE FUTURE IDENTIFICATION OF THE FABRICATOR, A PERMANENT IDENTIFYING MARK SHALL BE PLACED ON EACH POST. THE METHOD OF MARKING AND LOCATION SHALL BE SUCH THAT IT DOES NOT DETRACT FROM THE APPEARANCE OF THE POST, BUT REMAIN VISIBLE AFTER RAIL PLACEMENT.

SHIMS SHALL BE USED AS NECESSARY FOR POST ALIGNMENT.

ALLOY 6351-T5 MAY BE SUBSTITUTED FOR ALLOY 6061-T6 WHERE APPLICABLE.

MINOR VARIATIONS IN DETAILS OF METAL RAIL WILL BE CONSIDERED. DETAILS OF SUCH VARIATIONS, IF DESIRED, SHALL BE SUBMITTED FOR APPROVAL.

PAY LENGTH = 199.90 LIN.FT.

NORTH CAROLINA PROFESSIONAL SEAL 14855 ENGINEER DOUGLAS R. CALHOUN
6-8-07

PROJECT NO. B-3450
DURHAM COUNTY
STATION: 22+37.00 -L-

SHEET 3 OF 6

STATE OF NORTH CAROLINA
DEPARTMENT OF TRANSPORTATION
RALEIGH

STANDARD

3 BAR METAL RAIL

FEBRUARY 1988

REVISIONS								SHEET NO.
NO.	BY:	DATE:	NO.	BY:	DATE:			S-36
1			3					TOTAL SHEETS
2			4					128

ASSEMBLED BY : A.L.MEADOWS		DATE : 8/28/02	
CHECKED BY : T.A.HARRIS		DATE : 9/13/02	
DRAWN BY : JMB	1/88	REV. 10/17/00	RWW/LES
CHECKED BY : GGH	1/88	REV. 5/7/03	RWW/JTE
		REV. 5/1/06	TLA/GM

08-JUN-2007 12:17
R:\Structures\Final Plans\STR. 2\B3450_sd_3MR_02.dgn
gallen

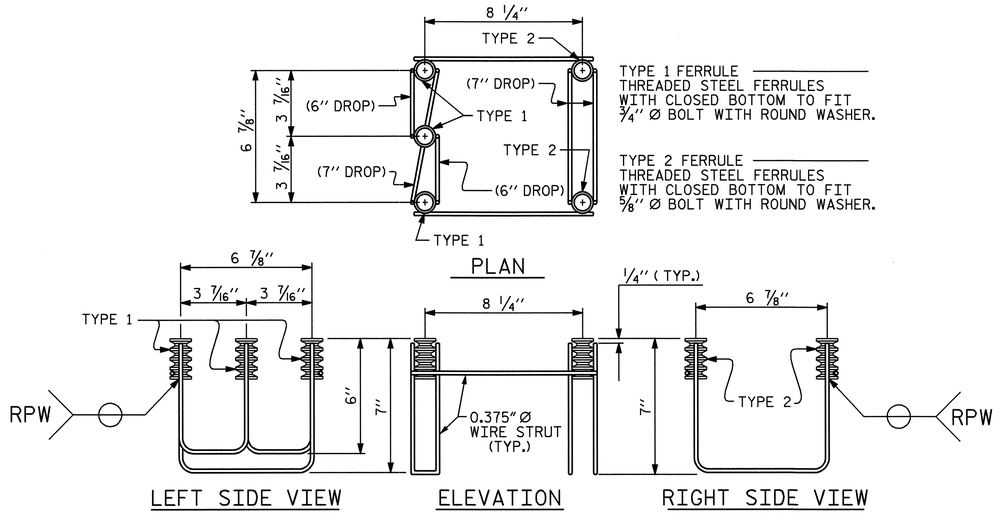

5-BOLT METAL RAIL ANCHOR ASSEMBLY

(36 ASSEMBLIES REQUIRED)

NOTES

STRUCTURAL CONCRETE ANCHOR ASSEMBLY

THE STRUCTURAL CONCRETE ANCHOR ASSEMBLY SHALL CONSIST OF THE FOLLOWING COMPONENTS:

A. FERRULES SHALL BE MADE FROM STEEL MEETING THE REQUIREMENTS OF AASHTO M169, GRADE 12L14 AND SHALL HAVE A MINIMUM LENGTH OF THREADS OF 2" FOR 3/4" FERRULES AND 1 3/4" FOR 5/8" FERRULES.

B. 3 - 3/4" Ø X 2 1/2" BOLTS WITH WASHERS. BOLTS SHALL CONFORM TO THE REQUIREMENTS OF ASTM A307. BOLTS AND WASHERS SHALL BE GALVANIZED. AT THE CONTRACTOR'S OPTION, STAINLESS STEEL BOLTS AND WASHERS MAY BE USED AS AN ALTERNATE FOR THE 3/4" Ø X 2 1/2" GALVANIZED BOLTS AND WASHERS. THEY SHALL CONFORM TO OR EXCEED THE MECHANICAL REQUIREMENTS OF ASTM A307. THE USE OF THIS ALTERNATE SHALL BE APPROVED BY THE ENGINEER.

C. 2 - 5/8" Ø X 2 1/4" BOLTS WITH WASHERS. BOLTS SHALL CONFORM TO THE REQUIREMENTS OF ASTM A307. BOLTS AND WASHERS SHALL BE GALVANIZED. AT THE CONTRACTOR'S OPTION, STAINLESS STEEL BOLTS AND WASHERS MAY BE USED AS AN ALTERNATE FOR THE 5/8" Ø X 2 1/4" GALVANIZED BOLTS AND WASHERS. THEY SHALL CONFORM TO OR EXCEED THE MECHANICAL REQUIREMENTS OF ASTM A307. THE USE OF THIS ALTERNATE SHALL BE APPROVED BY THE ENGINEER.

D. WIRE STRUT SHOWN IN THE CONCRETE ANCHOR ASSEMBLY DETAIL IS THE MINIMUM ALLOWABLE SIZE AND SHALL HAVE A MINIMUM TENSILE STRENGTH OF 100,000 PSI. AS AN OPTION, A 7/16" Ø WIRE STRUT WITH A MINIMUM TENSILE STRENGTH OF 90,000 PSI IS ACCEPTABLE.

E. THE METAL RAIL ANCHOR ASSEMBLIES TO BE HOT DIPPED GALVANIZED TO CONFORM TO REQUIREMENTS OF AASHTO M111.

F. THE COST OF THE METAL RAIL ANCHOR ASSEMBLY WITH BOLTS AND WASHERS COMPLETE IN PLACE SHALL BE INCLUDED IN THE PRICE BID FOR LINEAR FEET OF METAL RAIL.

G. BOLTS TO BE TIGHTENED ONE-HALF TURN WITH A WRENCH FROM A FINGER-TIGHT POSITION.

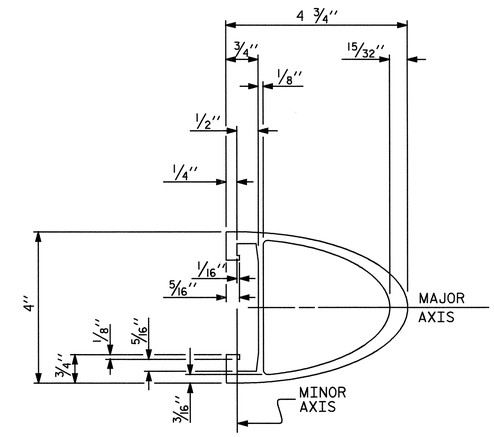

TOP & MIDDLE RAIL SECTION

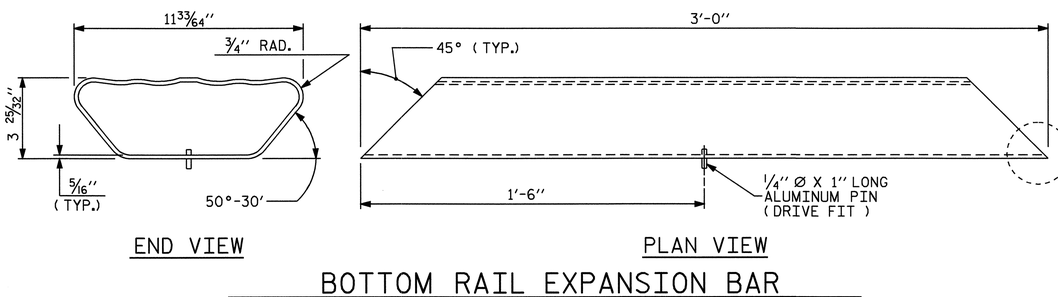

END VIEW

PLAN VIEW

BOTTOM RAIL EXPANSION BAR

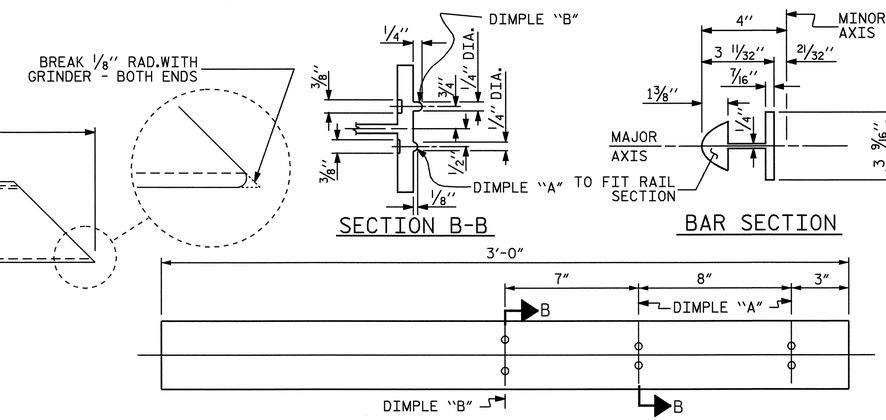

TOP & MIDDLE RAIL EXPANSION BAR

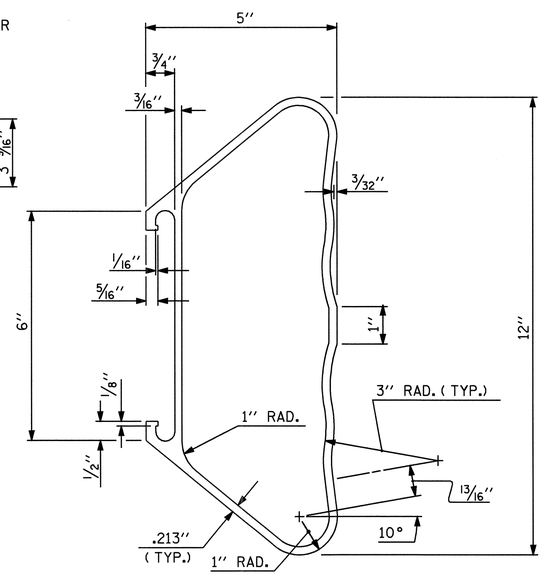

BOTTOM RAIL SECTION

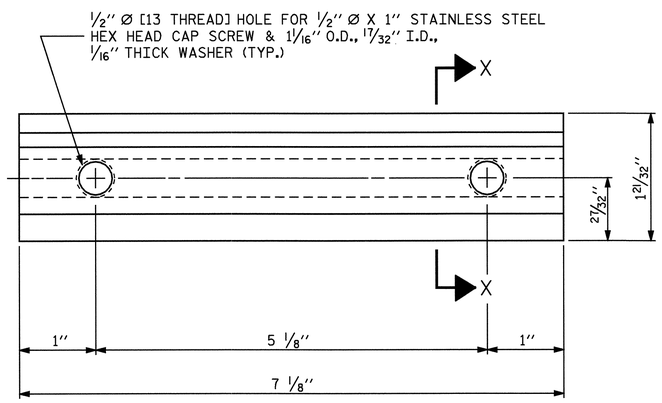

ELEVATION

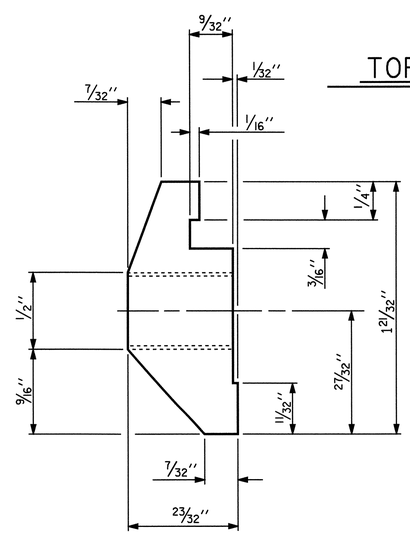

SECTION X-X

CLAMP BAR DETAIL

(6 REQUIRED PER POST)

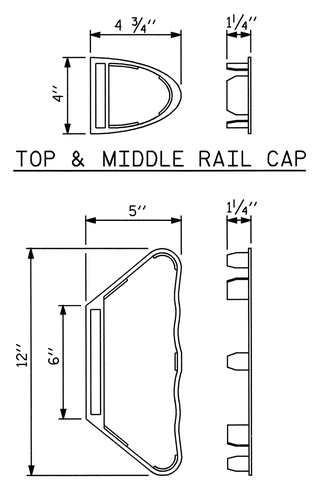

TOP & MIDDLE RAIL CAP

BOTTOM RAIL CAP

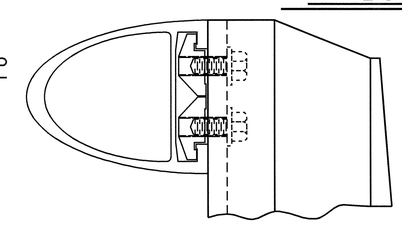

CLAMP ASSEMBLY

TOP RAIL SHOWN
(MIDDLE & BOTTOM RAIL ARE SIMILAR)

PROJECT NO. B-3450
DURHAM COUNTY
STATION: 22+37.00 -L-

SHEET 4 OF 6

STATE OF NORTH CAROLINA
DEPARTMENT OF TRANSPORTATION
RALEIGH

STANDARD

3 BAR METAL RAIL

FEBRUARY 1988

NORTH CAROLINA PROFESSIONAL SEAL 14855 ENGINEER DOUGLAS R. CALHOUN
06-18-07

REVISIONS						SHEET NO.
NO.	BY:	DATE:	NO.	BY:	DATE:	S-37
1			3			TOTAL SHEETS
2			4			128

ASSEMBLED BY : A.L.MEADOWS		DATE : 8/28/02	
CHECKED BY : T.A.HARRIS		DATE : 9/13/02	
DRAWN BY : JMB	1/88	REV. 7/10/01	RWW/LES
CHECKED BY : GGH	1/88	REV. 5/7/03	RWW/JTE
		REV. 5/1/06	TLA/GM

08-JUN-2007 12:17
R:\Structures\Final Plans\STR. 2\B3450_sd_3MR_02.dgn
gallen

STR. 2 STD. NO. BMR6

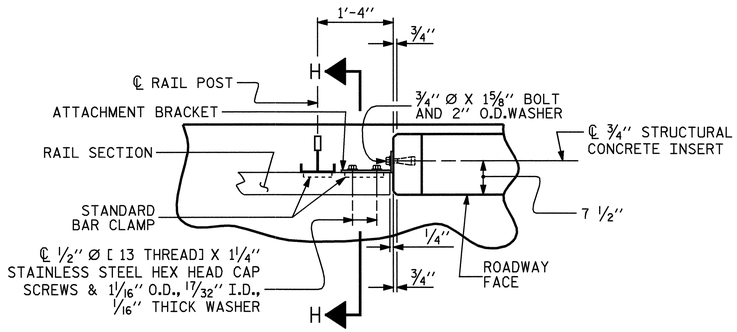

PLAN OF RAIL AND END POST

(STIFFENER ON 1/2" ℙ NOT SHOWN FOR CLARITY)

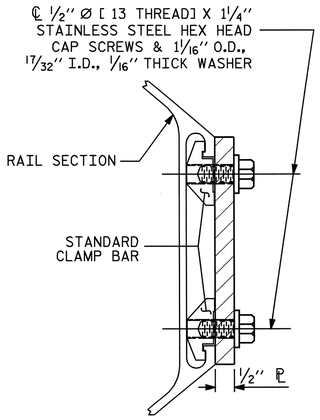

SECTION H-H

(FOR BOTTOM RAIL)

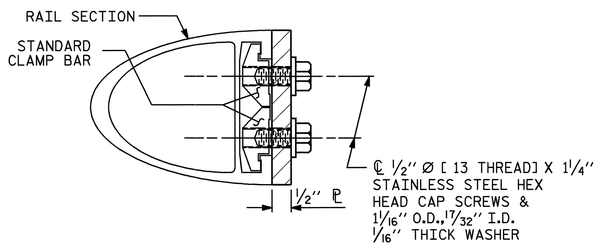

SECTION H-H

(FOR TOP & MIDDLE RAIL)

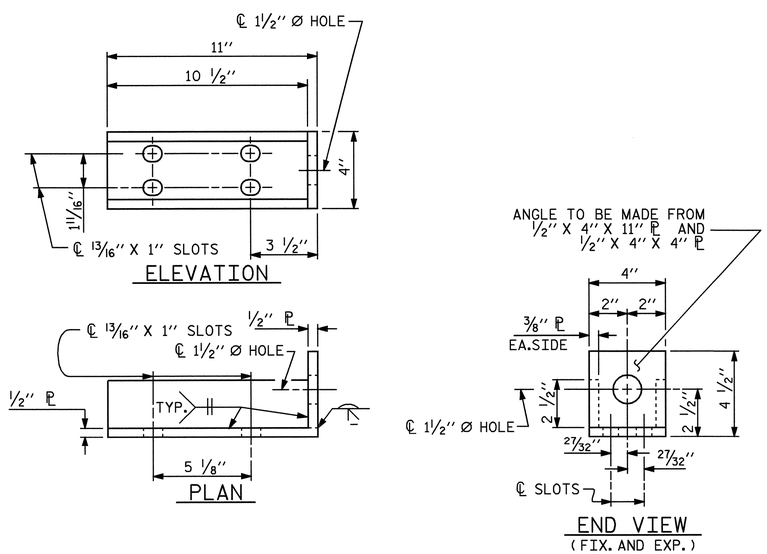

DETAILS FOR ATTACHMENT BRACKET

(TOP & MIDDLE RAIL ONLY)

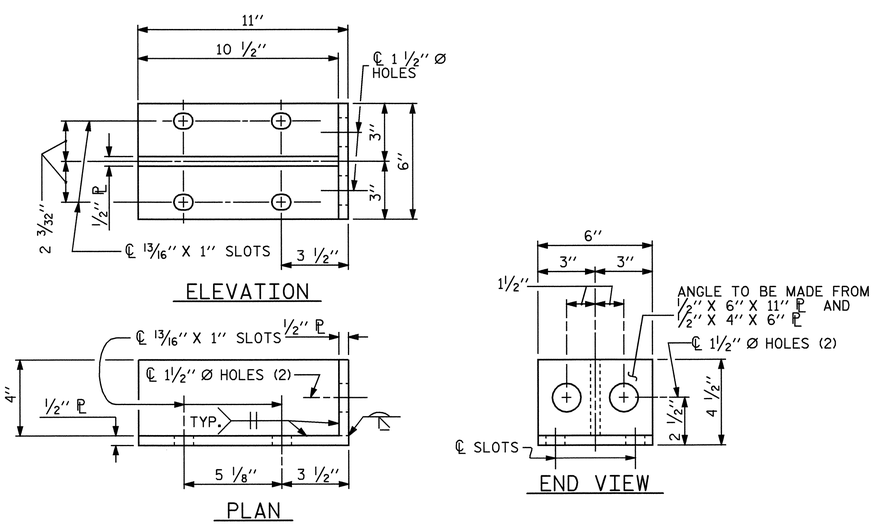

DETAILS FOR ATTACHMENT BRACKET

(BOTTOM RAIL ONLY)

NOTES

METAL RAIL TO END POST CONNECTION

THE METAL RAIL TO END POST CONNECTION SHALL CONSIST OF THE FOLLOWING COMPONENTS:

A. 1/2" PLATES SHALL CONFORM TO AASHTO M270 GRADE 36 AND SHALL BE GALVANIZED AFTER FABRICATION.

B. 3/4" STRUCTURAL CONCRETE INSERT SHALL HAVE A WORKING LOAD SHEAR CAPACITY OF 4800 LBS. THE FERRULES SHALL ENGAGE A 3/4" Ø X 1 5/8" BOLT WITH 2" O.D. WASHER IN PLACE. THE 3/4" Ø X 1 5/8" BOLT SHALL HAVE N. C. THREADS.

C. CAP SCREWS FOR RAIL ATTACHMENT TO ANGLE SHALL CONFORM TO THE REQUIREMENTS OF ASTM F593 ALLOY 305 STAINLESS STEEL. CAP SCREWS TO BE CENTERED IN SLOTS AT 60°F. WASHERS FOR RAIL ATTACHMENT SHALL MEET THE REQUIREMENTS OF ASTM F844 EXCEPT THEY SHALL BE MADE FROM ALLOY 304 STAINLESS STEEL.

D. STANDARD CLAMP BARS (SEE STD. BMR6).

THE COST OF THE STANDARD CLAMP BARS AND CAP SCREWS USED IN THE METAL RAIL TO END POST CONNECTION SHALL BE INCLUDED IN THE UNIT CONTRACT PRICE BID FOR LINEAR FEET OF 3 BAR METAL RAIL.

THE 3/4" STRUCTURAL CONCRETE INSERT WITH BOLT SHALL BE ASSEMBLED IN THE SHOP.

THE COST OF THE 3/4" STRUCTURAL CONCRETE INSERT ASSEMBLY, AND THE 1/2" PLATES COMPLETE IN PLACE SHALL BE INCLUDED IN THE VARIOUS PAY ITEMS.

THE CONTRACTOR, AT HIS OPTION, MAY USE AN ADHESIVE BONDING SYSTEM IN LIEU OF THE STRUCTURAL CONCRETE INSERT EMBEDDED IN THE END POST. IF THE ADHESIVE BONDING SYSTEM IS USED, THE 3/4" Ø X 1 5/8" BOLT WITH WASHER SHALL BE REPLACED WITH A 3/4" Ø X 6 1/2" BOLT AND 2" O.D.WASHER. ALL SPECIFICATIONS THAT APPLY TO THE 3/4" Ø X 1 5/8" BOLT SHALL APPLY TO THE 3/4" Ø X 6 1/2" BOLT. FIELD TESTING OF THE ADHESIVE BONDING SYSTEM IS NOT REQUIRED.

NOTES

STRUCTURAL CONCRETE INSERT

THE STRUCTURAL CONCRETE INSERT ASSEMBLY SHALL CONSIST OF THE FOLLOWING COMPONENTS:

A. FERRULES SHALL BE MADE FROM STEEL MEETING THE REQUIREMENTS OF AASHTO M169, GRADE 12L14 AND SHALL HAVE A MINIMUM LENGTH OF THREADS OF 1 1/2".

B. 1 - 3/4" Ø X 1 5/8" BOLT WITH WASHER. BOLT SHALL CONFORM TO THE REQUIREMENTS OF ASTM A307. BOLT AND WASHER SHALL BE GALVANIZED. AT THE CONTRACTORS OPTION, STAINLESS STEEL BOLT AND WASHER MAY BE USED AS AN ALTERNATE FOR THE 3/4" Ø X 1 5/8" GALVANIZED BOLT AND WASHER. THEY SHALL CONFORM TO OR EXCEED THE MECHANICAL REQUIREMENTS OF ASTM A307. THE USE OF THIS ALTERNATE SHALL BE APPROVED BY THE ENGINEER.

C. WIRE STRUT SHOWN IN THE CONCRETE INSERT ASSEMBLY DETAIL IS THE MINIMUM ALLOWABLE SIZE AND SHALL HAVE A MINIMUM TENSILE STRENGTH OF 100,000 PSI. AS AN OPTION, A 7/16" Ø WIRE STRUT WITH A MINIMUM TENSILE STRENGTH OF 90,000 PSI IS ACCEPTABLE.

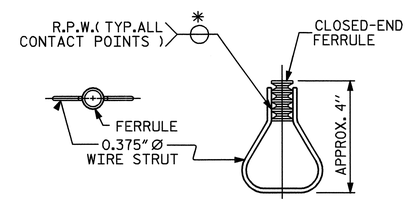

STRUCTURAL CONCRETE INSERT

* EACH WELDED ATTACHMENT OF WIRE TO FERRULE SHALL DEVELOP THE TENSILE STRENGTH OF THE WIRE.

PROJECT NO. B-3450

DURHAM COUNTY

STATION: 22+37.00 -L-

SHEET 5 OF 6

STATE OF NORTH CAROLINA
DEPARTMENT OF TRANSPORTATION
RALEIGH

STANDARD

3 BAR METAL RAIL

FEBRUARY 1988

NORTH CAROLINA PROFESSIONAL SEAL 14855 ENGINEER DOUGLAS R. CALHOUN

6-18-07

REVISIONS						SHEET NO.
NO.	BY:	DATE:	NO.	BY:	DATE:	S-38
1			3			TOTAL SHEETS
2			4			128

ASSEMBLED BY : A.L.MEADOWS		DATE : 8/28/02	
CHECKED BY : T.A.HARRIS		DATE : 9/13/02	
DRAWN BY : JMB	1/88	REV. 7/10/01	RWW/LES
CHECKED BY : GGH	1/88	REV. 5/7/03	RWW/JTE
		REV. 5/1/06	TLA/GM

08-JUN-2007 12:17
R:\Structures\Final Plans\STR. 2\B3450_sd_3MR_02.dgn
gallen

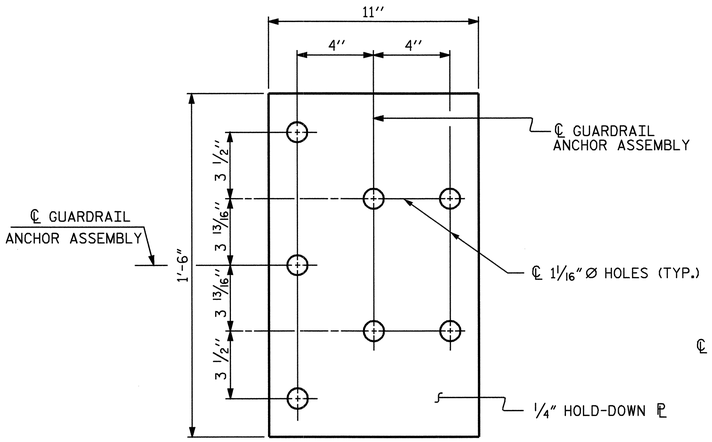

PLAN

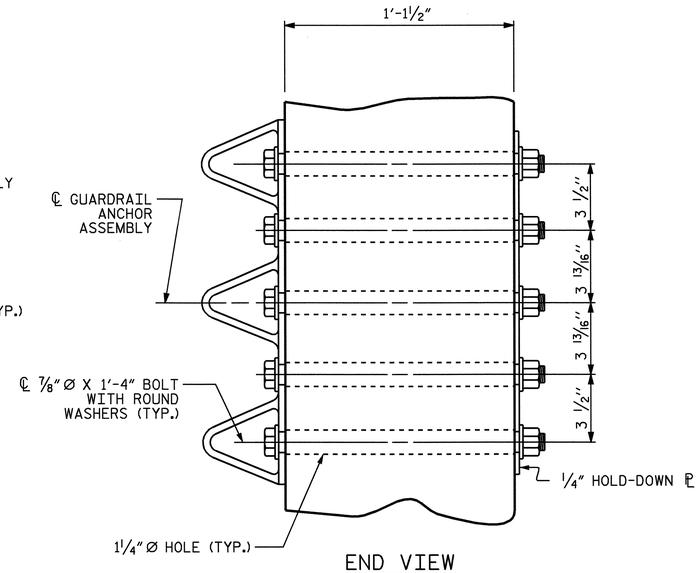

END VIEW

GUARDRAIL ANCHOR ASSEMBLY DETAILS

NOTES

THE GUARDRAIL ANCHOR ASSEMBLY SHALL CONSIST OF A 1/4'' HOLD DOWN PLATE AND 7 - 7/8'' Ø BOLTS WITH NUTS AND WASHERS.

THE HOLD-DOWN PLATE SHALL CONFORM TO AASHTO M270 GRADE 36. AFTER FABRICATION, THE HOLD-DOWN PLATE SHALL BE HOT-DIP GALVANIZED IN ACCORDANCE WITH AASHTO M111.

BOLTS SHALL CONFORM TO THE REQUIREMENTS OF ASTM A307 AND NUTS SHALL CONFORM TO THE REQUIREMENTS OF AASHTO M291. BOLTS, NUTS AND WASHERS SHALL BE GALVANIZED. AT THE CONTRACTOR'S OPTION, STAINLESS STEEL BOLTS, NUTS AND WASHERS MAY BE USED AS AN ALTERNATE FOR THE 7/8'' Ø GALVANIZED BOLTS, NUTS AND WASHERS. THEY SHALL CONFORM TO OR EXCEED THE MECHANICAL REQUIREMENTS OF ASTM A307. THE USE OF THIS ALTERNATE SHALL BE APPROVED BY THE ENGINEER.

AFTER INSTALLATION, THE EXPOSED THREAD OF THE BOLT SHALL BE BURRED WITH A SHARP POINTED TOOL.

THE COST OF THE GUARDRAIL ANCHOR ASSEMBLIES WITH BOLTS, NUTS AND WASHERS COMPLETE IN PLACE, SHALL BE INCLUDED IN THE VARIOUS PAY ITEMS.

THE VERTICAL REINFORCING BARS MAY BE SHIFTED SLIGHTLY IN THE END POST TO CLEAR ASSEMBLY BOLTS.

THE 1 1/4'' Ø HOLES SHALL BE FORMED OR DRILLED WITH A CORE BIT. IMPACT TOOLS WILL NOT BE PERMITTED. ANY CONCRETE DAMAGED BY THIS WORK SHALL BE REPAIRED TO THE SATISFACTION OF THE ENGINEER.

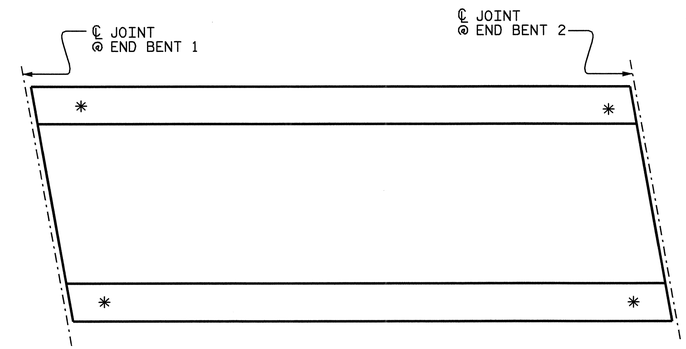

SKETCH SHOWING POINTS OF ATTACHMENT

*LOCATION OF GUARDRAIL ATTACHMENT

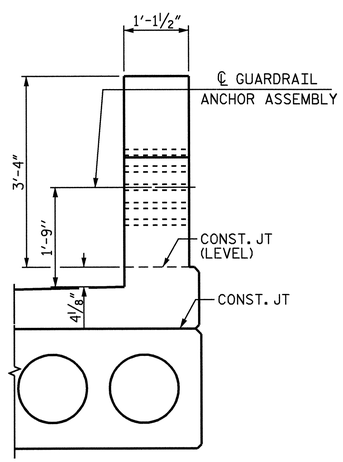

END VIEW

(THREE BAR METAL RAIL)

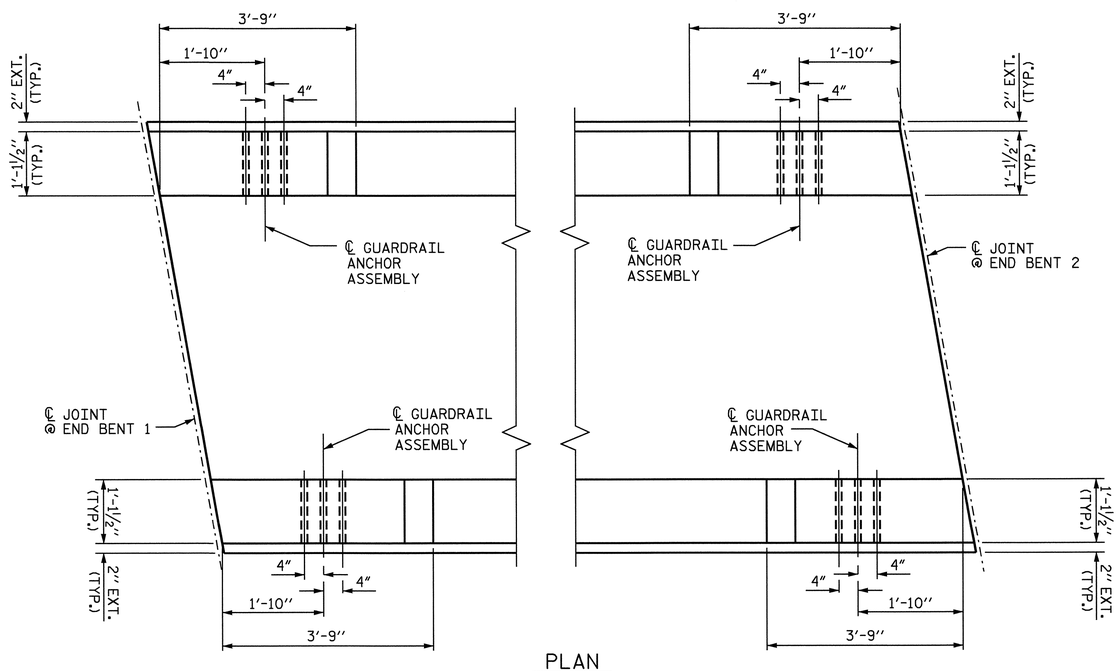

PLAN

SKETCH SHOWING LOCATION OF GUARDRAIL ATTACHMENTS

PROJECT NO. B-3450

DURHAM COUNTY

STATION: 22+37.00 -L-

SHEET 6 OF 6

STATE OF NORTH CAROLINA
DEPARTMENT OF TRANSPORTATION
RALEIGH

STANDARD

GUARDRAIL ANCHORAGE DETAILS FOR METAL RAILS

JUNE 1994

NORTH CAROLINA PROFESSIONAL SEAL 14855 ENGINEER DOUGLAS R. CALHOUN
6-18-07

REVISIONS						SHEET NO.
NO.	BY:	DATE:	NO.	BY:	DATE:	S-39
1			3			TOTAL SHEETS
2			4			128

ASSEMBLED BY : A.L.MEADOWS		DATE : 8/28/02	
CHECKED BY : T.A.HARRIS		DATE : 9/13/02	
DRAWN BY : EEM 6/94	REV. 10/17/00	RWW/LES	
CHECKED BY : RGW 6/94	REV. 5/7/03	RWW/JTE	
	REV. 5/1/06	TLA/GM	

08-JUN-2007 12:18
R:\Structures\Final Plans\STR. 2\B3450_sd_3MR_02.dgn
gallen

STD. NO. BMR8 STR. 2

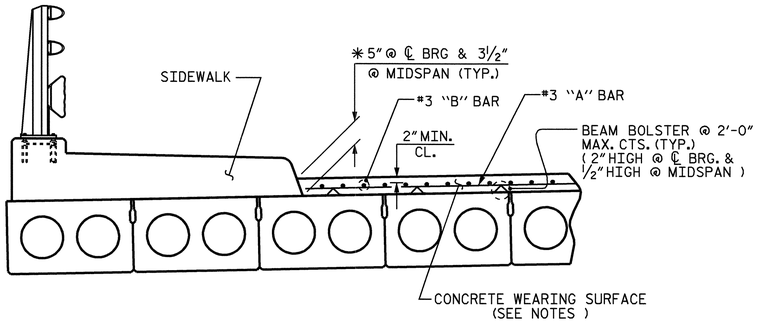

REINFORCING FOR CONCRETE WEARING SURFACE

*BASED ON PREDICTED FINAL CAMBER AND THEORETICAL GRADE LINE ELEVATIONS

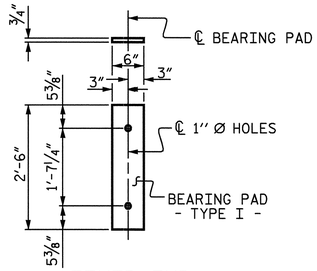

FIXED END
(TYPE I - 120 REQ'D)

ELASTOMERIC BEARING DETAILS

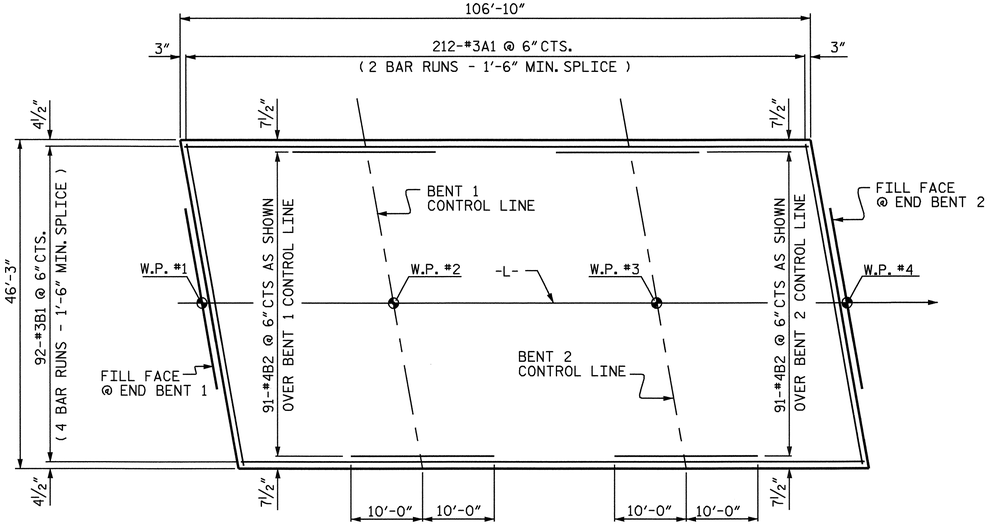

PLAN OF CONCRETE WEARING SURFACE

NOTES

ALL PRESTRESSING STRANDS SHALL BE 7-WIRE LOW RELAXATION GRADE 270 STRANDS AND SHALL CONFORM TO AASHTO M203 EXCEPT FOR SAMPLING REQUIREMENTS WHICH SHALL BE IN ACCORDANCE WITH THE STANDARD SPECIFICATIONS.

ALL REINFORCING STEEL CAST WITH THE CORED SLAB SECTIONS SHALL BE GRADE 60 AND SHALL BE INCLUDED IN THE UNIT PRICE BID FOR PRESTRESSED CONCRETE CORED SLABS.

RECESSES FOR TRANSVERSE STRANDS SHALL BE GROUTED AFTER THE TENSIONING OF THE STRANDS.

THE 2½"Ø DOWEL HOLES AT FIXED ENDS OF SLAB SECTIONS SHALL BE FILLED WITH GROUT.

THE 2"Ø BACKER ROD SHALL CONFORM TO THE REQUIREMENTS OF TYPE M BOND BREAKER. SEE SECTION 1028 OF THE STANDARD SPECIFICATIONS.

WHEN CORED SLABS ARE CAST, A POSITIVE HOLD-DOWN SYSTEM SHALL BE EMPLOYED TO PREVENT VOIDS FROM RISING OR MOVING SIDEWAYS. THIS SYSTEM SHALL BE DESIGNED TO BE LEFT IN PLACE UNTIL THE CONCRETE HAS REACHED RELEASE STRENGTH. AT LEAST THREE WEEKS PRIOR TO CASTING CORED SLABS, THE CONTRACTOR SHALL SUBMIT TO THE ENGINEER FOR REVIEW AND COMMENT, DETAILED DRAWINGS OF THE PROPOSED HOLD-DOWN SYSTEM. IN ADDITION TO STRUCTURAL DETAILS, LOCATION AND SPACING OF THE HOLD-DOWNS SHALL BE INDICATED.

WHEN A CONCRETE WEARING SURFACE IS DETAILED ON THE CORED SLAB BRIDGE TYPICAL SECTION, THE TOP SURFACE OF THE CORED SLAB UNITS SHALL HAVE A ⅜" RAKED FINISH.

THE TRANSFER OF LOAD FROM THE ANCHORAGES TO THE CORED SLAB UNIT SHALL BE DONE WHEN THE CONCRETE HAS REACHED A COMPRESSIVE STRENGTH OF NOT LESS THAN 4000 PSI.

PRESTRESSING STRANDS SHALL BE CUT FLUSH WITH THE CORED SLAB UNIT ENDS.

APPLY EPOXY PROTECTIVE COATING TO CORED SLAB UNIT ENDS.

PLACEMENT OF THE CONCRETE WEARING SURFACE SHALL OCCUR AFTER CASTING THE CONCRETE END POSTS AND SIDEWALKS. THE COST OF THE REINFORCING STEEL CAST WITH THE CONCRETE WEARING SURFACE SHALL BE INCLUDED IN THE UNIT BID PRICE FOR CONCRETE WEARING SURFACE. FOR CONCRETE WEARING SURFACE, SEE SPECIAL PROVISIONS.

FOR PRESTRESSED CONCRETE MEMBERS, SEE SPECIAL PROVISIONS.

BILL OF MATERIAL FOR ONE CORED SLAB SECTION

			SPAN A									SPAN B									SPAN C								
			INTERIOR UNIT			INT. (SIDEWALK)			EXT. (SIDEWALK)			INTERIOR UNIT			INT. (SIDEWALK)			EXT. (SIDEWALK)			INTERIOR UNIT			INT. (SIDEWALK)			EXT. (SIDEWALK)		
BAR	SIZE	TYPE	NUMBER	LENGTH	WEIGHT	NUMBER	LENGTH	WEIGHT	NUMBER	LENGTH	WEIGHT	NUMBER	LENGTH	WEIGHT	NUMBER	LENGTH	WEIGHT	NUMBER	LENGTH	WEIGHT	NUMBER	LENGTH	WEIGHT	NUMBER	LENGTH	WEIGHT	NUMBER	LENGTH	WEIGHT
B1	# 4	STR	2	28'-5"	38	2	28'-5"	38	2	28'-5"	38										2	28'-5"	38	2	28'-5"	38	2	28'-5"	38
B2	# 4	STR										4	25'-8"	69	4	25'-8"	69	4	25'-8"	69									
S1	# 4	1	8	4'-3"	23	8	4'-3"	23	8	4'-3"	23	8	4'-3"	23	8	4'-3"	23	8	4'-3"	23	8	4'-3"	23	8	4'-3"	23	8	4'-3"	23
S2	# 4	1	60	5'-4"	214	60	5'-4"	214	60	5'-4"	214	102	5'-4"	363	102	5'-4"	363	102	5'-4"	363	60	5'-4"	214	60	5'-4"	214	60	5'-4"	214
*S3	# 4	2				4	5'-11	16	4	5'-11	16				7	5'-11"	28	7	5'-11"	28				4	5'-11	16	4	5'-11	16
REINFORCING STEEL			275 LBS.			275 LBS.			275 LBS.			455 LBS.			455 LBS.			455 LBS.			275 LBS.			275 LBS.			275 LBS.		
*EPOXY COATED REINF. STEEL			0			16 LBS.			16 LBS.			0			28 LBS.			28 LBS.			0			16 LBS.			16 LBS.		
5,000 P.S.I. CONCRETE			4.2 C.Y.			4.2 C.Y.			4.2 C.Y.			7.2 C.Y.			7.2 C.Y.			7.2 C.Y.			4.2 C.Y.			4.2 C.Y.			4.2 C.Y.		
½" Ø L.R. STRANDS			12			12			12			25			25			25			12			12			12		

GROOVING BRIDGE FLOORS

BRIDGE DECK	4566 SQ.FT.
APPROACH SLAB	2000 SQ.FT.
TOTAL	6566 SQ.FT.

GRADE 270 STRANDS

	½"Ø L.R.
AREA (SQUARE INCHES)	0.153
ULTIMATE STRENGTH (LBS. PER STRAND)	41,300
APPLIED PRESTRESS (LBS. PER STRAND)	30,980

CORED SLABS REQUIRED

UNIT TYPE	NUMBER PER SPAN	LENGTH SPAN A	LENGTH SPAN B	LENGTH SPAN C	TOTAL LENGTH
INTERIOR	16	28'-9½"	49'-10½"	28'-9½"	1719'-4"
INT. (SIDEWALK)	2	28'-9½"	49'-10½"	28'-9½"	214'-11"
EXT. (SIDEWALK)	2	28'-9½"	49'-10½"	28'-9½"	214'-11"
TOTAL NUMBER	60			LIN. FT.	2149'-2"

BAR TYPES

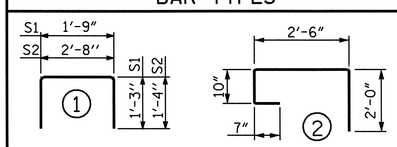

ALL BAR DIMENSIONS ARE OUT TO OUT

REINFORCING BAR SCHEDULE FOR CONCRETE WEARING SURFACE

BAR	NUMBER	SIZE	TYPE	LENGTH	WEIGHT
*A1	432	#3	STR	24'-1"	3912
*B1	368	#3	STR	28'-1"	3886
*B2	182	#4	STR	20'-0"	2432

*EPOXY COATED REINFORCING STEEL LBS. 10,230

DEAD LOAD DEFLECTION AND CAMBER

3'-0" x 1'-9" ½"Ø L.R. STRAND

	SPAN A	SPAN B	SPAN C
CAMBER (BEAM ALONE IN PLACE) ↑	¼"	1¼"	¼"
DEFLECTION DUE TO CONCRETE WEARING SURFACE ↓	1/16"	3/16"	1/16"
FINAL CAMBER ↑	3/16"	1 1/16"	3/16"

CONCRETE WEARING SURFACE		EPOXY COATED REINFORCING STEEL (FOR WEARING SURFACE)
SQ. FT.	APPROX. CU. YDS.	LBS.
4941	61.0	10,088

PROJECT NO. B-3450
DURHAM COUNTY
STATION: 22+37.00 -L-

STATE OF NORTH CAROLINA
DEPARTMENT OF TRANSPORTATION
RALEIGH

3'-0" X 1'-9" PRESTRESSED CONCRETE CORED SLAB UNIT

OCTOBER 1981

NORTH CAROLINA PROFESSIONAL SEAL 14855 ENGINEER DOUGLAS R. CALHOUN
6-18-07

REVISIONS						SHEET NO.
NO.	BY:	DATE:	NO.	BY:	DATE:	S-40
1			3			TOTAL SHEETS
2			4			128

STR. 2

ASSEMBLED BY : A.L.MEADOWS	DATE : 7/24/02
CHECKED BY : T.A.HARRIS	DATE : 9/13/02
DRAWN BY : WJH 4/89	REV. 10/17/00 RWW/LES
CHECKED BY : FCJ 5/89	REV. 7/10/01RR RWW/LES
	REV. 5/1/06 TLA/GM

08-JUN-2007 12:14
R:\Structures\Final Plans\STR. 2\B3450_sd_TS_02.dgn
gallen

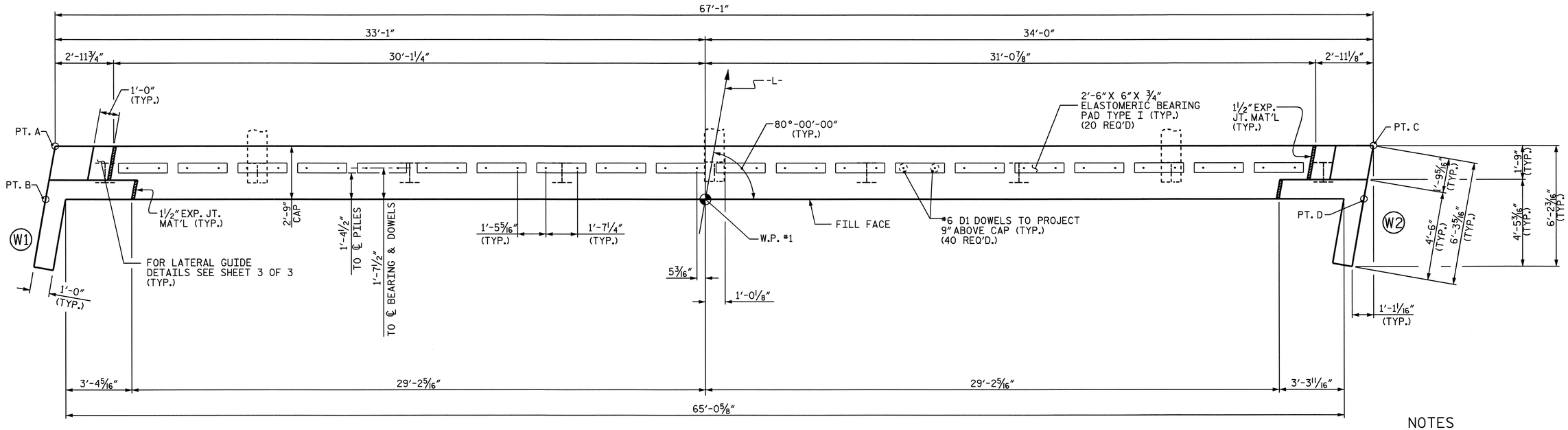

PLAN

NOTES

STIRRUPS MAY BE SHIFTED AS NECESSARY TO CLEAR DOWELS.

PIPE DRAINS MAY BE SHIFTED AS NECESSARY TO CLEAR REINFORCING STEEL AND DOWELS.

THE LATERAL GUIDE AT EACH END OF THE CAP IS NOT TO BE POURED UNTIL AFTER CORED SLAB UNITS ARE IN PLACE.

FOR REINFORCING STEEL IN WINGS, SEE SHEET 2 OF 3.

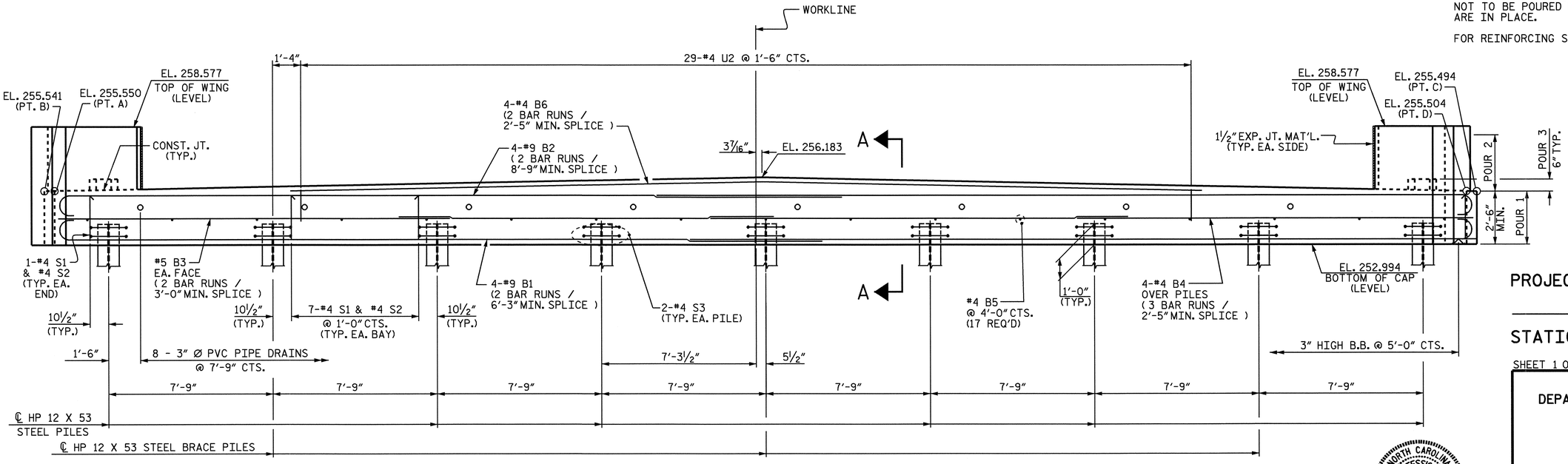

ELEVATION

PROJECT NO. B-3450

DURHAM COUNTY

STATION: 22+37.00 -L-

SHEET 1 OF 3

STATE OF NORTH CAROLINA
DEPARTMENT OF TRANSPORTATION
RALEIGH

SUBSTRUCTURE
END BENT 1

NORTH CAROLINA PROFESSIONAL SEAL 14855 ENGINEER DOUGLAS R. CALHOUN

5-8-07

REVISIONS						SHEET NO.
NO.	BY:	DATE:	NO.	BY:	DATE:	S-41
1			3			TOTAL SHEETS
2			4			128

DRAWN BY : A.L.MEADOWS DATE : 7/24/02
CHECKED BY : T.A.HARRIS DATE : 9/20/02

08-JUN-2007 12:18
R:\Structures\Final Plans\STR. 2\B3450_sd_E*_02.dgn
gallen

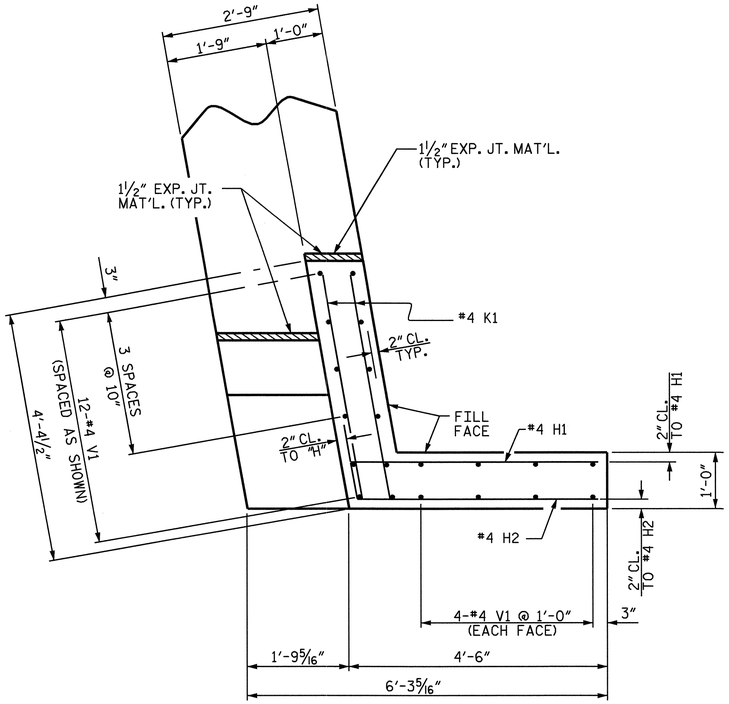

PLAN OF WING (W1)

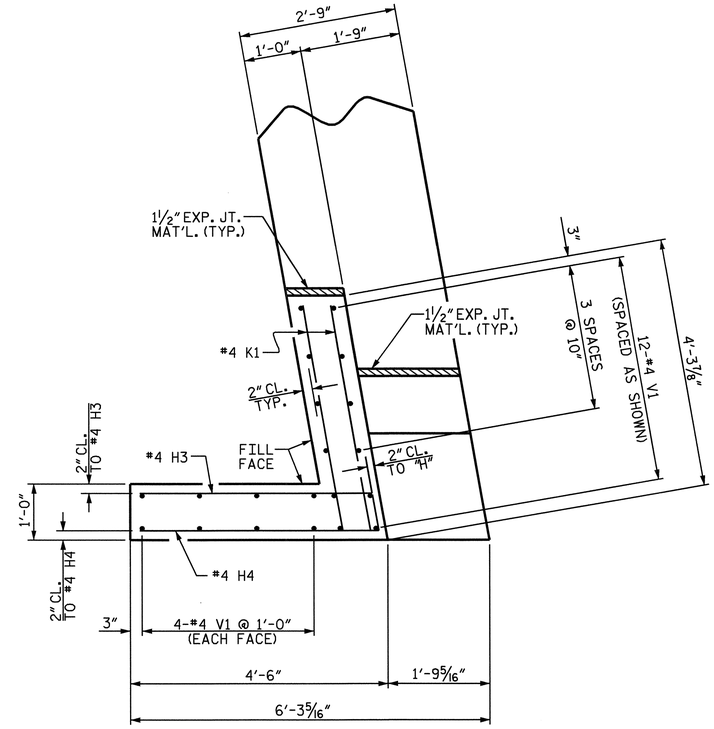

PLAN OF WING (W2)

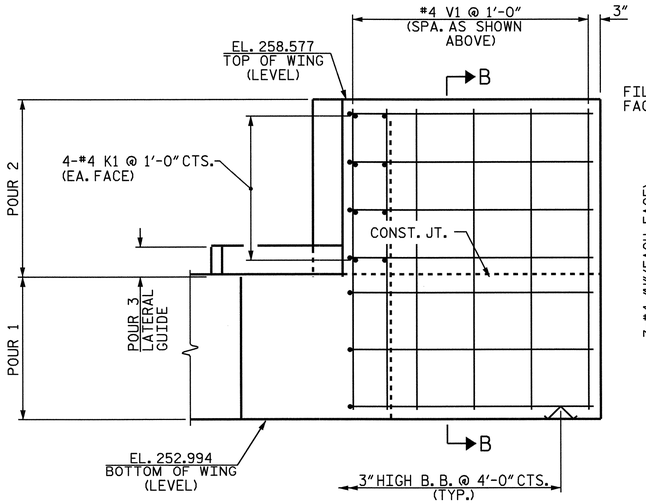

ELEVATION OF WING (W1)

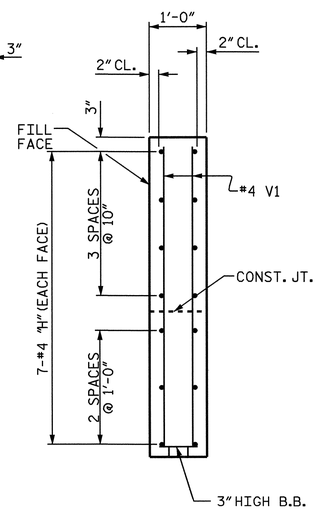

SECTION B-B

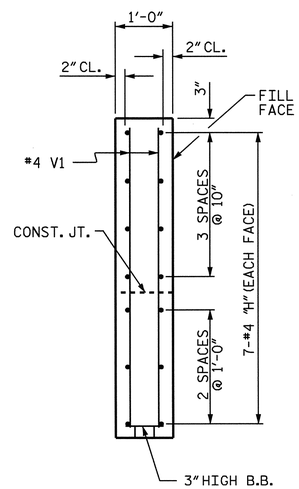

SECTION C-C

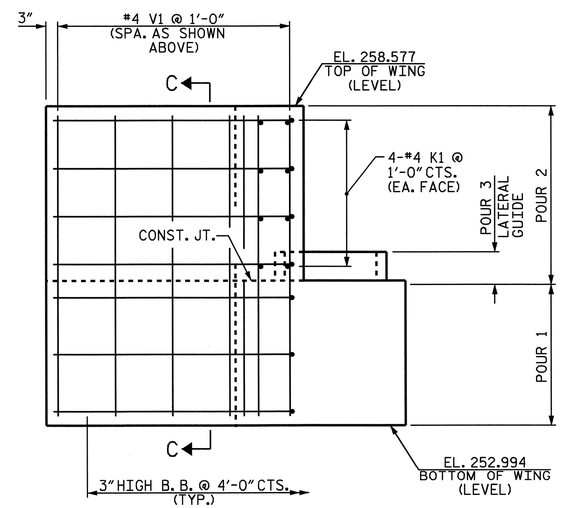

ELEVATION OF WING (W2)

NORTH CAROLINA PROFESSIONAL SEAL 14855 ENGINEER DOUGLAS R. CALLISON
6-18-07

PROJECT NO. B-3450
DURHAM COUNTY
STATION: 22+37.00 -L-

SHEET 2 OF 3

STATE OF NORTH CAROLINA
DEPARTMENT OF TRANSPORTATION
RALEIGH

SUBSTRUCTURE
END BENT 1

REVISIONS						SHEET NO.
NO.	BY:	DATE:	NO.	BY:	DATE:	S-42
1			3			TOTAL SHEETS
2			4			128

DRAWN BY : A.L.MEADOWS DATE : 7/25/02
CHECKED BY : T.A.HARRIS DATE : 9/20/02

08-JUN-2007 12:18
R:\Structures\Final Plans\STR. 2\B3450_sd_E*_02.dgn
gallen

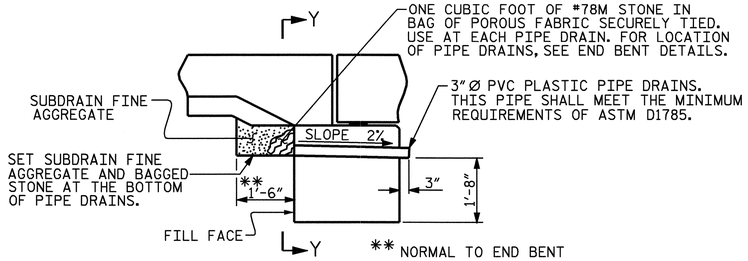

SUBDRAIN DETAIL AT END BENT

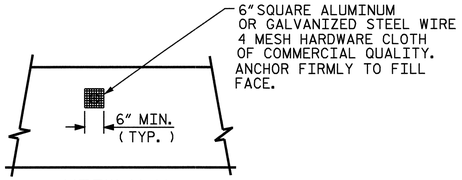

VIEW Y-Y

NOTE: NO SEPARATE PAYMENT WILL BE MADE FOR FURNISHING AND INSTALLING THE PVC PLASTIC PIPE DRAINS HARDWARE CLOTH, AND FASTENERS. THE ENTIRE COST OF THIS WORK SHALL BE INCLUDED IN THE UNIT CONTRACT PRICE BID FOR THE SEVERAL PAY ITEMS.

PIPE DRAIN DETAILS

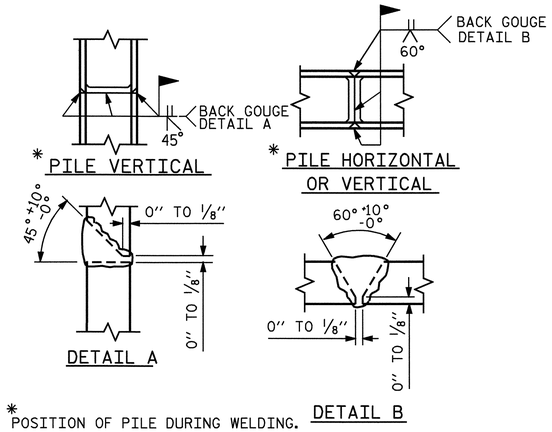

* POSITION OF PILE DURING WELDING.

PILE SPLICE DETAILS

BAR TYPES

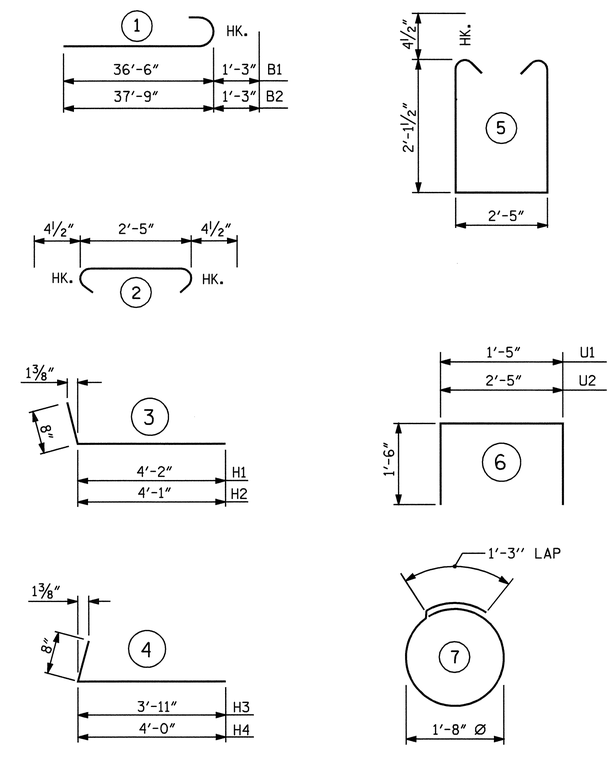

ALL BAR DIMENSIONS ARE OUT TO OUT.

BILL OF MATERIAL

END BENT 1

BAR	NO.	SIZE	TYPE	LENGTH	WEIGHT
B1	8	9	1	37-9	1027
B2	8	9	1	39-0	1061
B3	4	5	STR	34-10	145
B4	12	4	STR	23-11	192
B5	17	4	STR	2-5	27
B6	8	4	STR	22-9	122
D1	40	6	STR	1-6	90
H1	7	4	3	4-10	23
H2	7	4	3	4-9	22
H3	7	4	4	4-7	21
H4	7	4	4	4-8	22
K1	16	4	STR	4-0	43
S1	58	4	5	7-5	287
S2	58	4	2	3-2	123
S3	18	4	7	6-6	78
U1	4	4	6	4-5	12
U2	29	4	6	5-5	105
V1	40	4	STR	5-3	140

REINFORCING STEEL 3540 LBS.

CLASS A CONCRETE

POUR 1	CAP & LOWER PART OF WINGS	CU. YDS. 20.5
POUR 2	UPPER PART OF WINGS	CU. YDS. 2.0
POUR 3	LATERAL GUIDE	CU. YDS. 0.1
	TOTAL	CU. YDS. 22.6

HP 12 x 53 STEEL PILES

No. 9 LIN.FT. 270

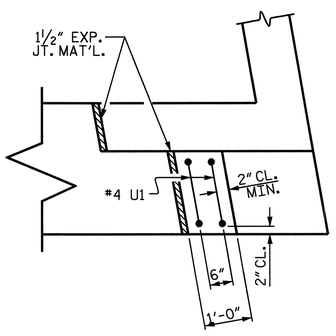

PLAN

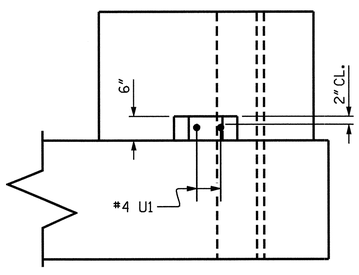

ELEVATION

LATERAL GUIDE DETAILS

(TYP. EACH LATERAL GUIDE)

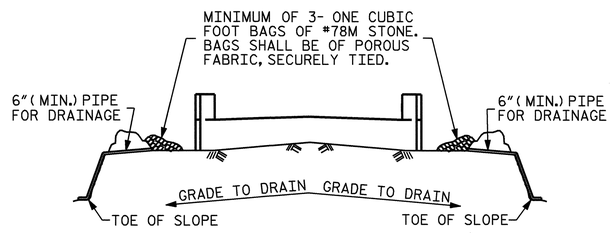

BAGGED STONE AND PIPE SHALL BE PLACED IMMEDIATELY AFTER COMPLETION OF END BENT EXCAVATION. PIPE MAY BE EITHER CONCRETE, CORRUGATED STEEL, CORRUGATED ALUMINUM ALLOY, OR CORRUGATED PLASTIC. PERFORATED PIPE WILL NOT BE ALLOWED.

BAGGED STONE SHALL REMAIN IN PLACE UNTIL THE ENGINEER DIRECTS THAT IT BE REMOVED. THE CONTRACTOR SHALL REMOVE AND DISPOSE OF SILT ACCUMULATIONS AT BAGGED STONE WHEN SO DIRECTED BY THE ENGINEER. BAGS SHALL BE REMOVED AND REPLACED WHENEVER THE ENGINEER DETERMINES THAT THEY HAVE DETERIORATED AND LOST THEIR EFFECTIVENESS.

NO SEPARATE PAYMENT WILL BE MADE FOR THIS WORK AND THE ENTIRE COST OF THIS WORK SHALL BE INCLUDED IN THE UNIT CONTRACT PRICE FOR THE SEVERAL PAY ITEMS.

TEMPORARY DRAINAGE AT END BENT

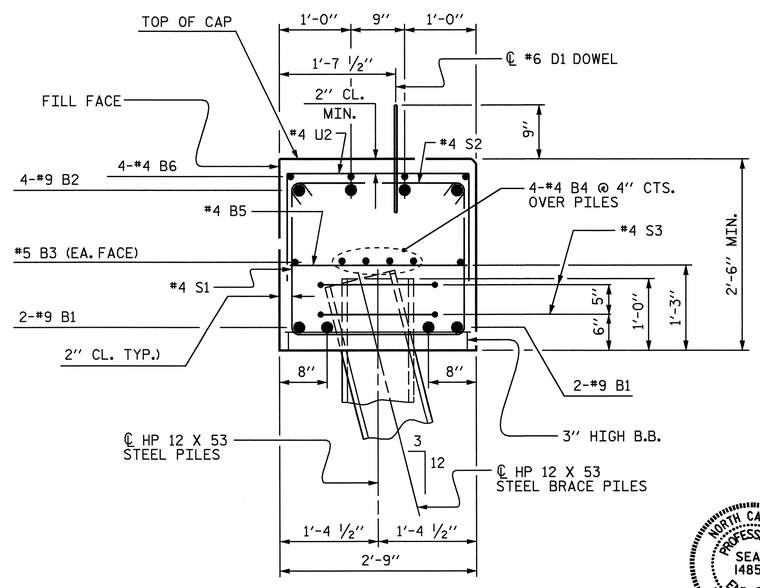

SECTION A-A

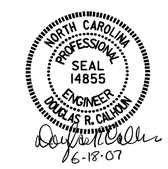

PROJECT NO. B-3450

DURHAM COUNTY

STATION: 22+37.00 -L-

SHEET 3 OF 3

STATE OF NORTH CAROLINA
DEPARTMENT OF TRANSPORTATION
RALEIGH

SUBSTRUCTURE
END BENT 1

REVISIONS						SHEET NO.
NO.	BY:	DATE:	NO.	BY:	DATE:	S-43
1			3			TOTAL SHEETS
2			4			128

DRAWN BY : A.L.MEADOWS DATE : 7/26/02
CHECKED BY : T.A.HARRIS DATE : 9/20/02

08-JUN-2007 12:18
R:\Structures\Final Plans\STR. 2\B3450_sd_E*_02.dgn
gallen

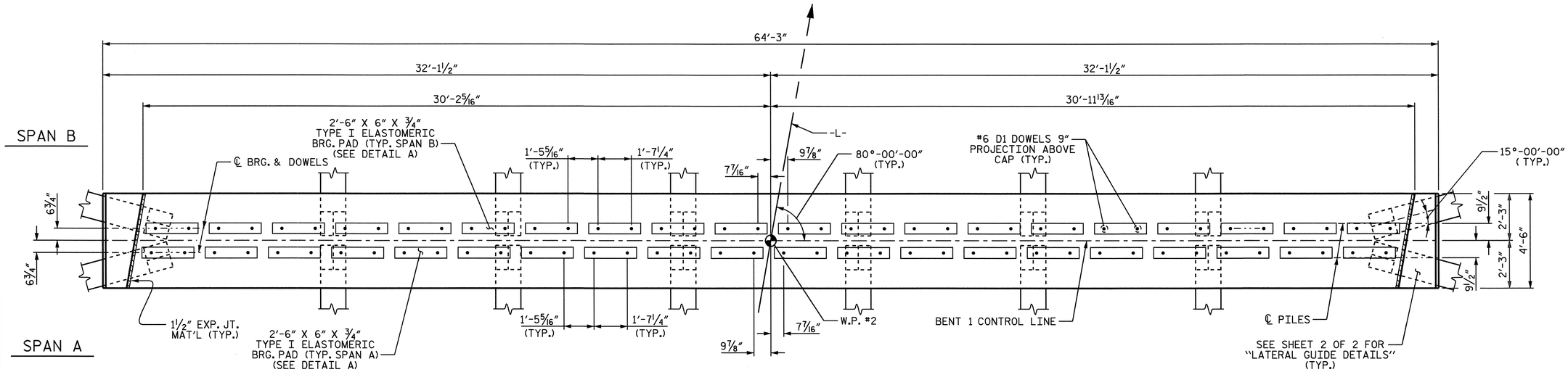

PLAN

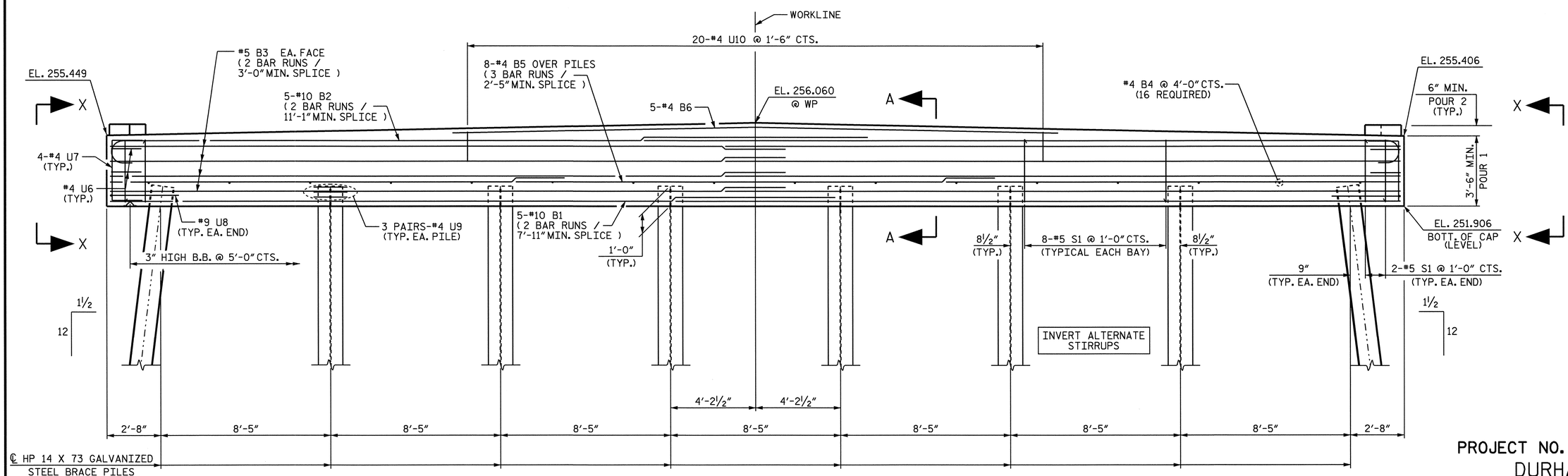

ELEVATION

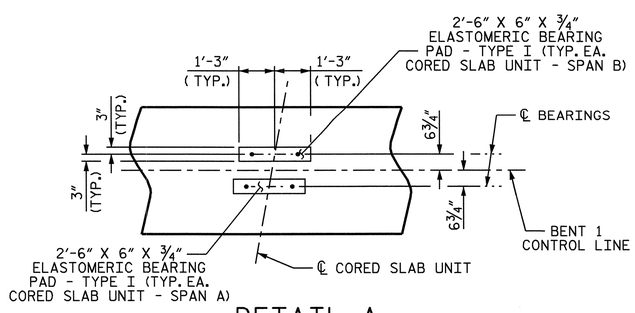

DETAIL A

PROJECT NO. B-3450

DURHAM COUNTY

STATION: 22+37.00 -L-

SHEET 1 OF 2

STATE OF NORTH CAROLINA
DEPARTMENT OF TRANSPORTATION
RALEIGH

SUBSTRUCTURE
BENT 1

NORTH CAROLINA PROFESSIONAL SEAL 14855 ENGINEER DOUGLAS R. CALHOUN
6-18-07

REVISIONS						SHEET NO.
NO.	BY:	DATE:	NO.	BY:	DATE:	S-44
1			3			TOTAL SHEETS
2			4			128

DRAWN BY : T. A. HARRIS DATE : 12/27/03
CHECKED BY : K. P. SEDAI DATE : 2/6/04

08-JUN-2007 12:19
R:\Structures\Final Plans\STR. 2\b3450_sd_b1_02.dgn
gallen

NOTES

STIRRUPS IN CAP MAY BE SHIFTED AS NECESSARY TO CLEAR #6 DOWELS AND REINFORCING STEEL.

LATERAL GUIDE AT END OF CAP IS NOT TO BE POURED UNTIL AFTER THE CORED SLAB UNITS ARE IN PLACE.

THE STEEL PILES SHALL BE GALVANIZED IN ACCORDANCE WITH SECTION 1076 AND SECTION 450-9 OF THE STANDARD SPECIFICATIONS.

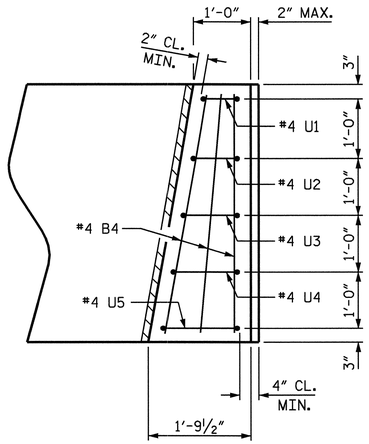

PLAN

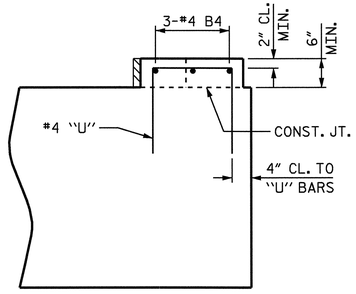

ELEVATION

LATERAL GUIDE DETAILS

RIGHT SIDE SHOWN, LEFT SIDE SIMILAR

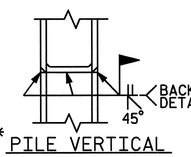

* PILE VERTICAL

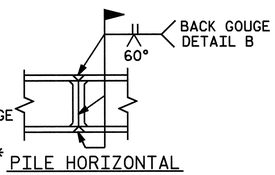

* PILE HORIZONTAL OR VERTICAL

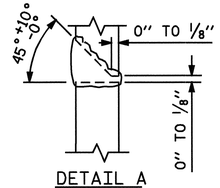

DETAIL A

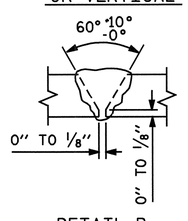

DETAIL B

* POSITION OF PILE DURING WELDING.

PILE SPLICE DETAILS

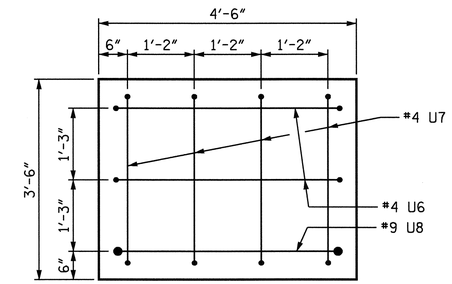

VIEW X-X

SHOWING REINFORCING STEEL AT THE END OF THE CAP

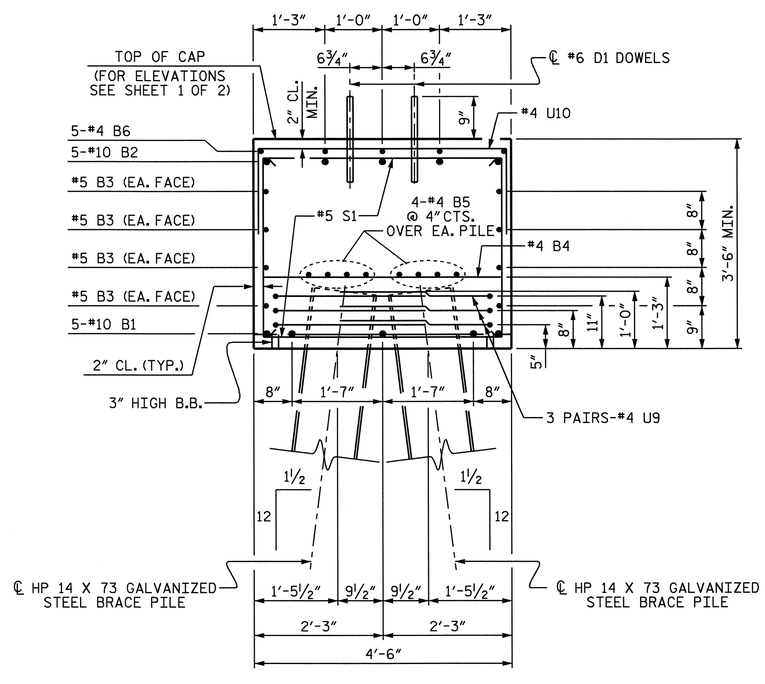

SECTION A-A

BAR TYPES

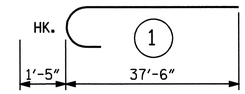

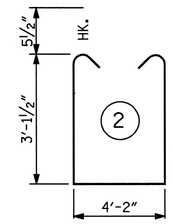

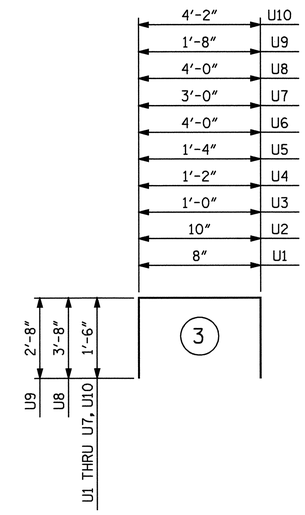

ALL BAR DIMENSIONS ARE OUT TO OUT.

BILL OF MATERIAL

BENT 1

BAR	NO	SIZE	TYPE	LENGTH	WEIGHT
B1	10	10	STR	35- 11	1545
B2	10	10	1	38- 11	1675
B3	16	5	STR	33- 6	559
B4	22	4	STR	4- 2	61
B5	24	4	STR	22- 11	367
B6	5	4	STR	30- 0	100
D1	80	6	STR	1- 6	180
S1	60	5	2	11- 4	709
U1	2	4	3	3- 8	5
U2	2	4	3	3-10	5
U3	2	4	3	4- 0	5
U4	2	4	3	4- 2	6
U5	2	4	3	4- 4	6
U6	4	4	3	7- 0	19
U7	8	4	3	6- 0	32
U8	2	9	3	11- 4	77
U9	48	4	3	7- 0	224
U10	20	4	3	7- 2	96
REINFORCING STEEL LBS.					5671

CLASS A CONCRETE BREAKDOWN		
POUR 1 (CAP)	C.Y.	41.1
POUR 2 (LATERAL GUIDE)	C.Y.	0.2
TOTAL CLASS A CONCRETE	C.Y.	41.3

HP 14 X 73 GALVANIZED STEEL PILES NO. 16	LIN. FT.	480

PROJECT NO. B-3450

DURHAM COUNTY

STATION: 22+37.00 -L-

SHEET 2 OF 2

STATE OF NORTH CAROLINA
DEPARTMENT OF TRANSPORTATION
RALEIGH

SUBSTRUCTURE
BENT 1

NORTH CAROLINA PROFESSIONAL SEAL 14855 ENGINEER DOUGLAS R. CALHOUN

6-8-07

REVISIONS						SHEET NO.
NO.	BY:	DATE:	NO.	BY:	DATE:	S-45
1			3			TOTAL SHEETS
2			4			128

DRAWN BY : T. A. HARRIS DATE : 12/27/03
CHECKED BY : K. P. SEDAI DATE : 12/27/03

08-JUN-2007 12:20
R:\Structures\Final Plans\STR. 2\b3450_sd_b1_02.dgn
gallen

STR. #2

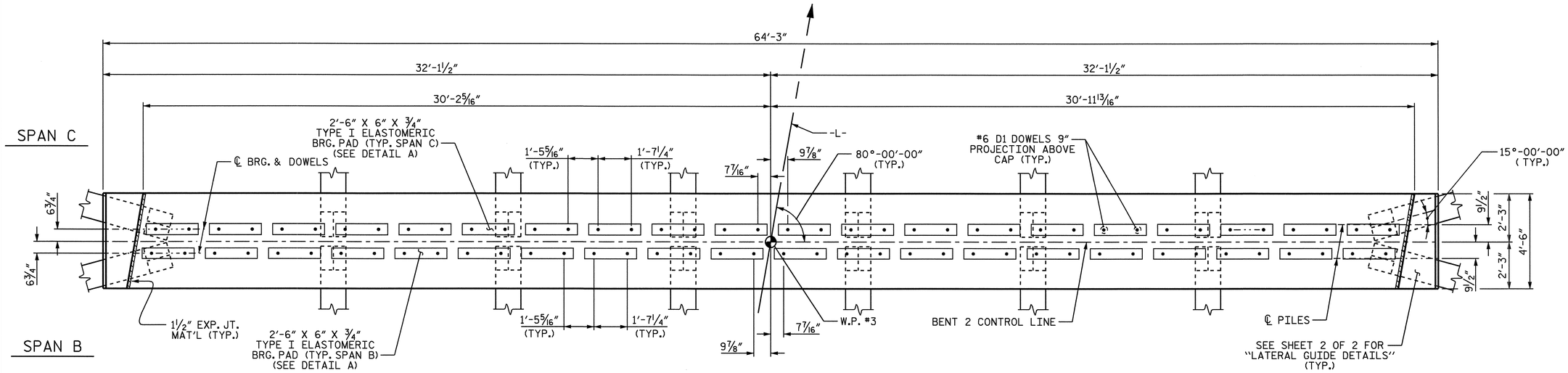

PLAN

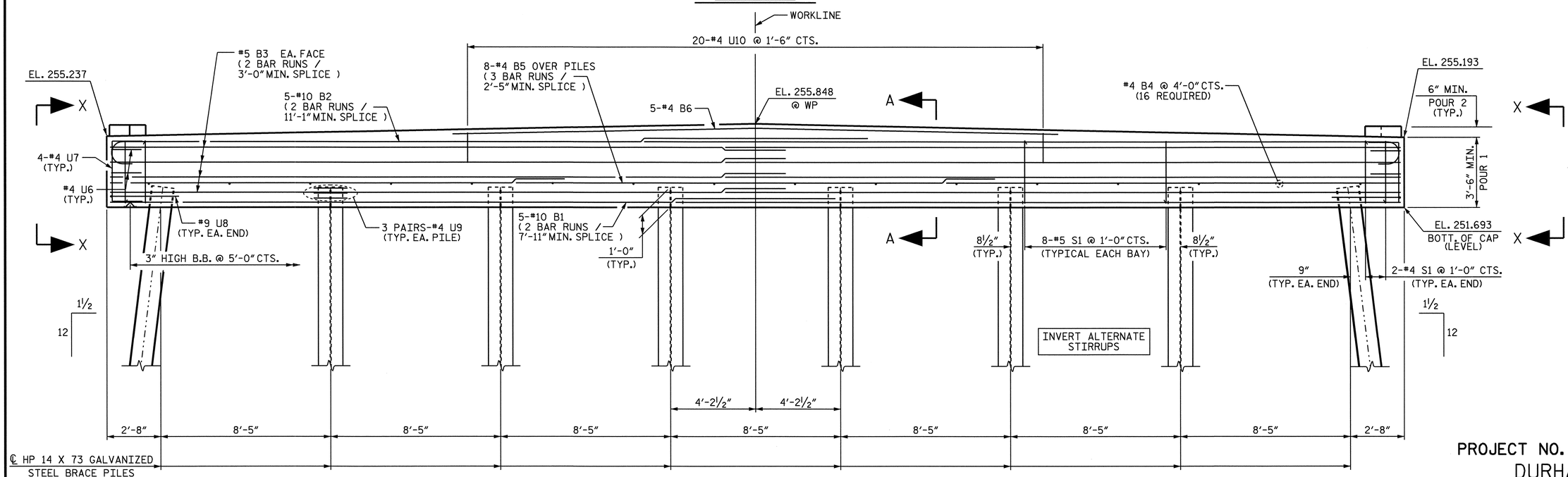

ELEVATION

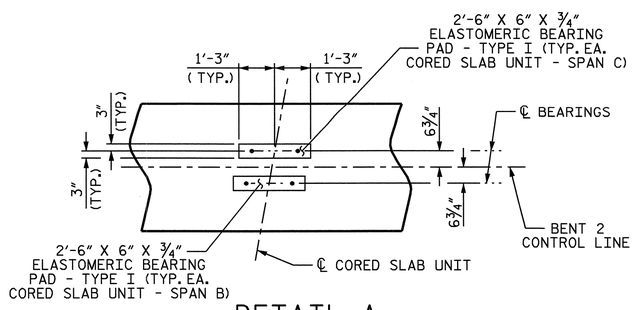

DETAIL A

PROJECT NO. B-3450

DURHAM COUNTY

STATION: 22+37.00 -L-

SHEET 1 OF 2

STATE OF NORTH CAROLINA
DEPARTMENT OF TRANSPORTATION
RALEIGH

SUBSTRUCTURE
BENT 2

NORTH CAROLINA PROFESSIONAL SEAL 14855 ENGINEER DOUGLAS R. CALHOUN
6-8-07

REVISIONS						SHEET NO.
NO.	BY:	DATE:	NO.	BY:	DATE:	S-46
1			3			TOTAL SHEETS
2			4			128

DRAWN BY : T. A. HARRIS DATE : 12/28/04
CHECKED BY : K. P. SEDAI DATE : 2/6/04

08-JUN-2007 12:20
R:\Structures\Final Plans\STR. 2\b3450_sd_b2_02.dgn
gallen

NOTES

STIRRUPS IN CAP MAY BE SHIFTED AS NECESSARY TO CLEAR #6 DOWELS AND REINFORCING STEEL.

LATERAL GUIDE AT END OF CAP IS NOT TO BE POURED UNTIL AFTER THE CORED SLAB UNITS ARE IN PLACE.

THE STEEL PILES SHALL BE GALVANIZED IN ACCORDANCE WITH SECTION 1076 AND SECTION 450-9 OF THE STANDARD SPECIFICATIONS.

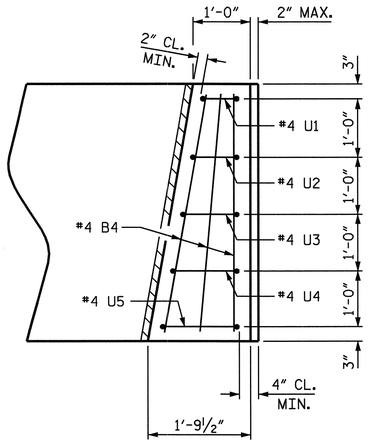

PLAN

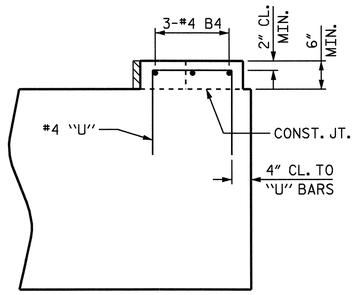

ELEVATION

LATERAL GUIDE DETAILS

RIGHT SIDE SHOWN, LEFT SIDE SIMILAR

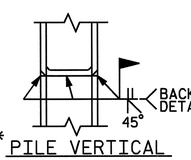

* PILE VERTICAL

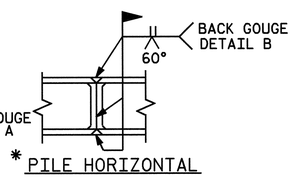

* PILE HORIZONTAL OR VERTICAL

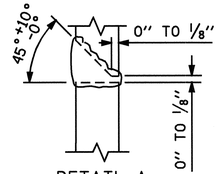

DETAIL A

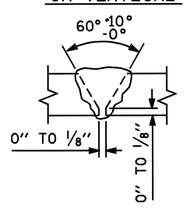

DETAIL B

* POSITION OF PILE DURING WELDING.

PILE SPLICE DETAILS

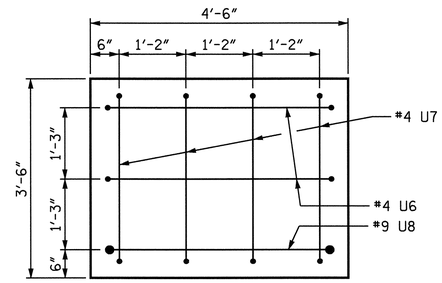

VIEW X-X

SHOWING REINFORCING STEEL AT THE END OF THE CAP

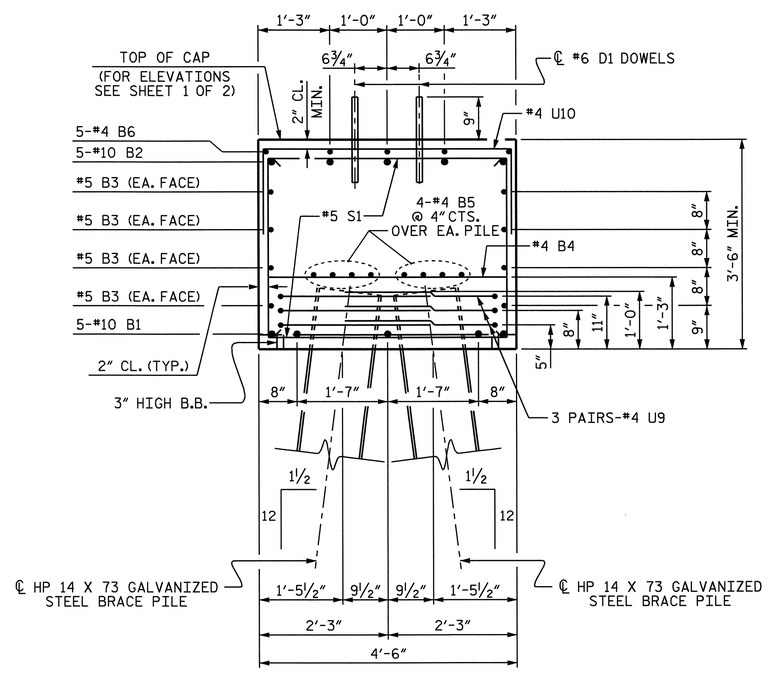

SECTION A-A

BAR TYPES

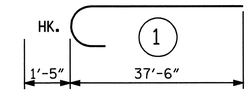

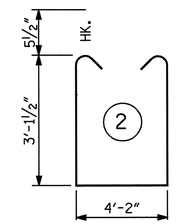

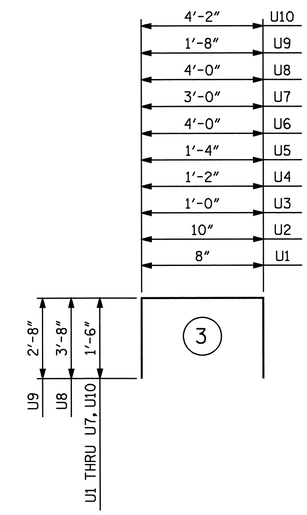

ALL BAR DIMENSIONS ARE OUT TO OUT.

BILL OF MATERIAL

BENT 2

BAR	NO	SIZE	TYPE	LENGTH	WEIGHT
B1	10	10	STR	35- 11	1545
B2	10	10	1	38- 11	1675
B3	16	5	STR	33- 6	559
B4	22	4	STR	4- 2	61
B5	24	4	STR	22- 11	367
B6	5	4	STR	30- 0	100
D1	80	6	STR	1- 6	180
S1	60	5	2	11- 4	709
U1	2	4	3	3- 8	5
U2	2	4	3	3-10	5
U3	2	4	3	4- 0	5
U4	2	4	3	4- 2	6
U5	2	4	3	4- 4	6
U6	4	4	3	7- 0	19
U7	8	4	3	6- 0	32
U8	2	9	3	11- 4	77
U9	48	4	3	7- 0	224
U10	20	4	3	7- 2	96
REINFORCING STEEL LBS.					5671

CLASS A CONCRETE BREAKDOWN		
POUR 1 (CAP)	C.Y.	41.1
POUR 2 (LATERAL GUIDE)	C.Y.	0.2
TOTAL CLASS A CONCRETE	C.Y.	41.3

HP 14 X 73 GALVANIZED STEEL PILES NO. 16	LIN. FT.	480

PROJECT NO. B-3450

DURHAM COUNTY

STATION: 22+37.00 -L-

SHEET 2 OF 2

STATE OF NORTH CAROLINA
DEPARTMENT OF TRANSPORTATION
RALEIGH

SUBSTRUCTURE
BENT 2

NORTH CAROLINA PROFESSIONAL SEAL 14855 ENGINEER DOUGLAS R. CALHOUN
6-18-07

REVISIONS						SHEET NO.
NO.	BY:	DATE:	NO.	BY:	DATE:	S-47
1			3			TOTAL SHEETS
2			4			128

DRAWN BY : T. A. HARRIS DATE : 12/28/04
CHECKED BY : K. P. SEDAI DATE : 12/27/03

08-JUN-2007 12:20
R:\Structures\Final Plans\STR. 2\b3450_sd_b2_02.dgn
gallen

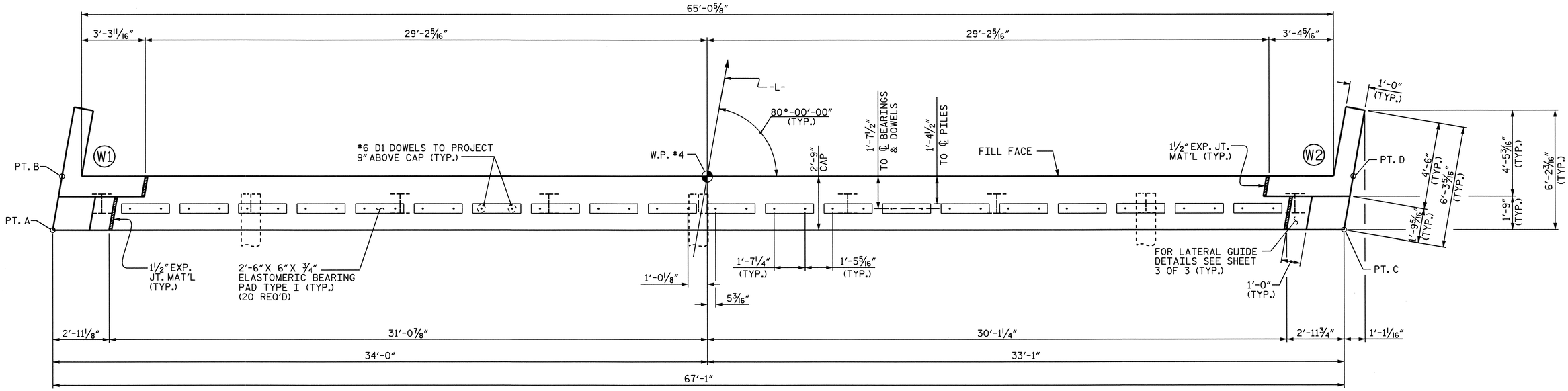

PLAN

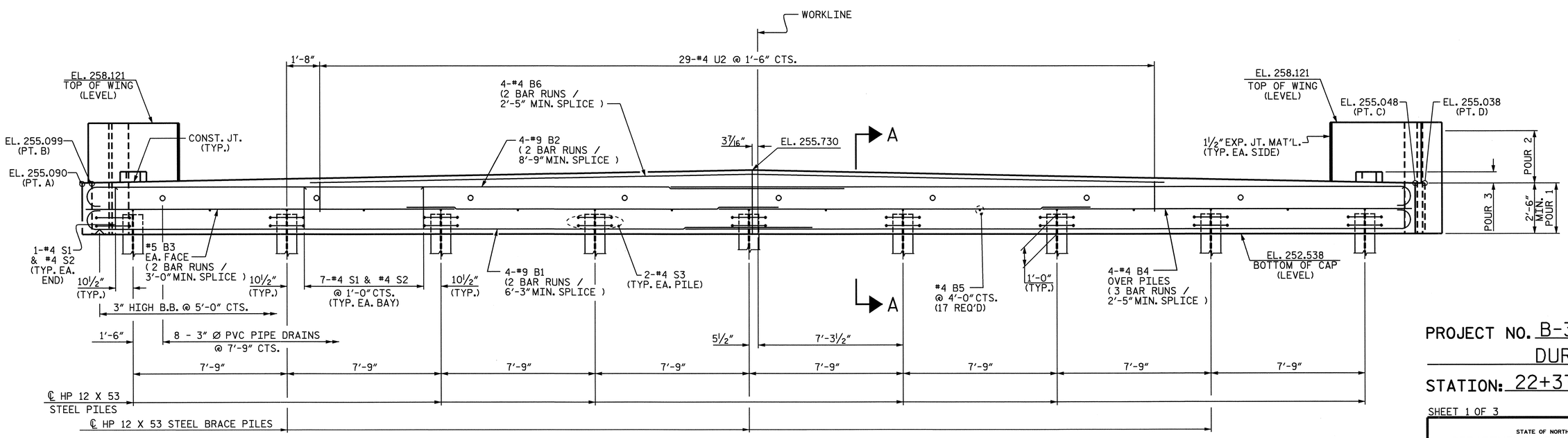

ELEVATION

NOTES

STIRRUPS MAY BE SHIFTED AS NECESSARY TO CLEAR DOWELS.

PIPE DRAINS MAY BE SHIFTED AS NECESSARY TO CLEAR REINFORCING STEEL AND DOWELS.

THE LATERAL GUIDE AT EACH END OF THE CAP IS NOT TO BE POURED UNTIL AFTER CORED SLAB UNITS ARE IN PLACE.

FOR REINFORCING STEEL IN WINGS, SEE SHEET 2 OF 3.

PROJECT NO. B-3450
DURHAM COUNTY
STATION: 22+37.00 -L-

SHEET 1 OF 3

STATE OF NORTH CAROLINA
DEPARTMENT OF TRANSPORTATION
RALEIGH

SUBSTRUCTURE
END BENT 2

NORTH CAROLINA PROFESSIONAL SEAL 14855 ENGINEER DOUGLAS R. CALHOUN
6-18-07

REVISIONS							SHEET NO.
NO.	BY:	DATE:	NO.	BY:	DATE:		S-48
1			3				TOTAL SHEETS
2			4				128

DRAWN BY : A.L.MEADOWS DATE : 7/26/02
CHECKED BY : T.A.HARRIS DATE : 9/23/02

08-JUN-2007 12:19
R:\Structures\Final Plans\STR. 2\B3450_sd_E*_02.dgn
gallen

STR. 2

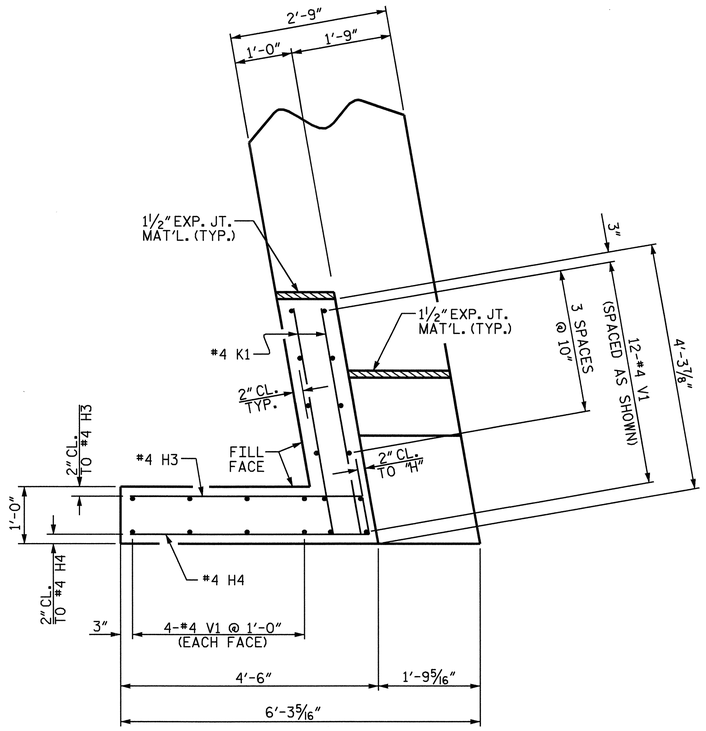

PLAN OF WING (W1)

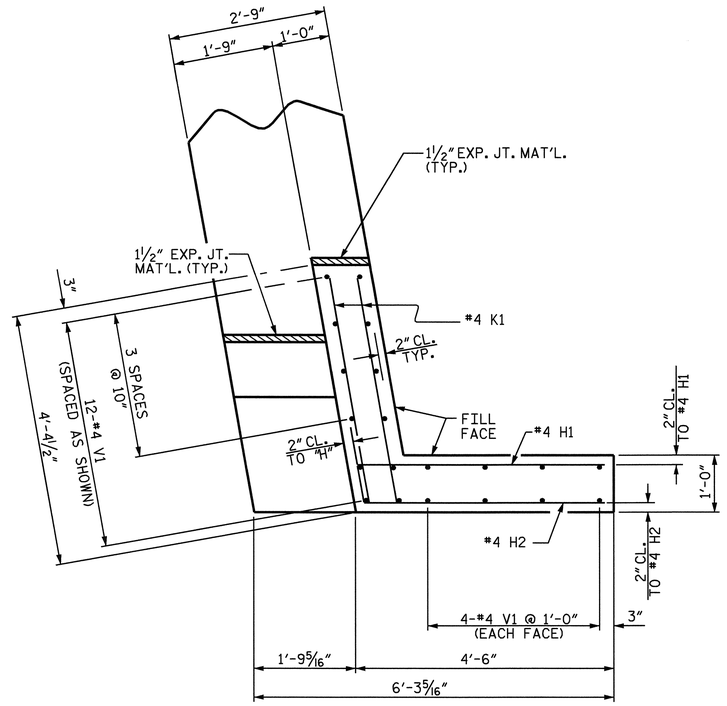

PLAN OF WING (W2)

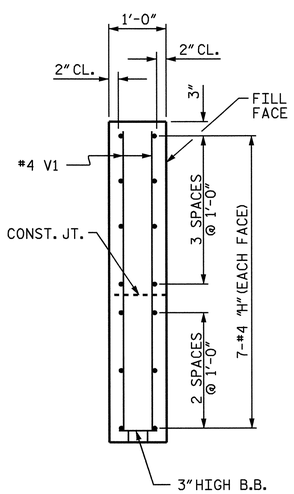

SECTION B-B

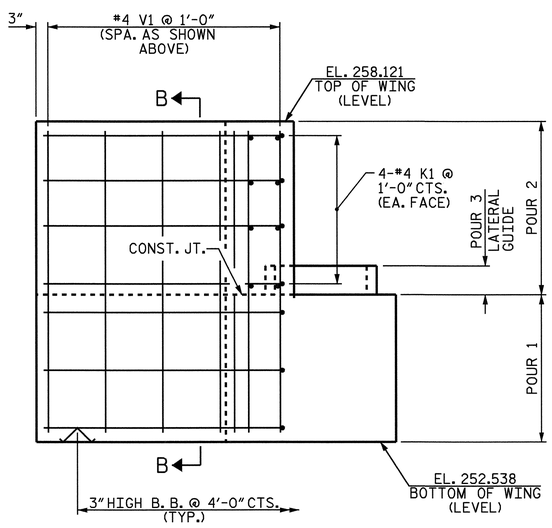

ELEVATION OF WING (W1)

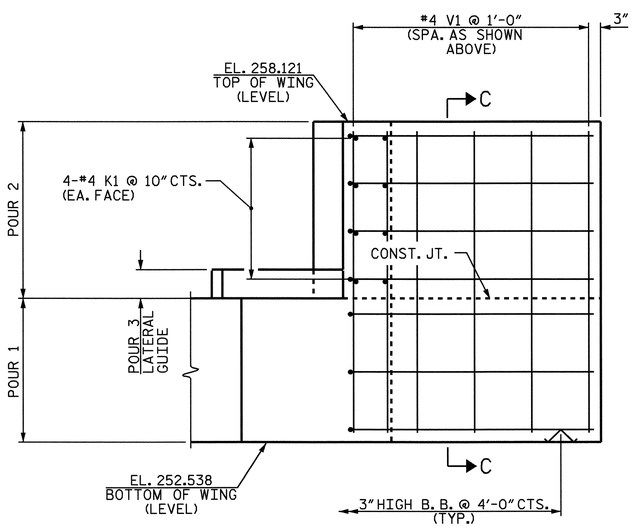

ELEVATION OF WING (W2)

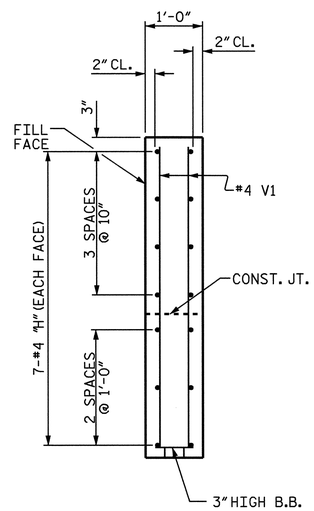

SECTION C-C

NORTH CAROLINA PROFESSIONAL SEAL 14855 ENGINEER DOUGLAS R. GALLIGAN

6-18-07

PROJECT NO. B-3450

DURHAM COUNTY

STATION: 22+37.00 -L-

SHEET 2 OF 3

STATE OF NORTH CAROLINA
DEPARTMENT OF TRANSPORTATION
RALEIGH

SUBSTRUCTURE
END BENT 2

REVISIONS						SHEET NO.
NO.	BY:	DATE:	NO.	BY:	DATE:	S-49
1			3			TOTAL SHEETS
2			4			53

DRAWN BY : A.L.MEADOWS DATE : 7/29/02
CHECKED BY : T.A.HARRIS DATE : 9/23/02

08-JUN-2007 12:19
R:\Structures\Final Plans\STR. 2\B3450_sd_E*_02.dgn
gallen

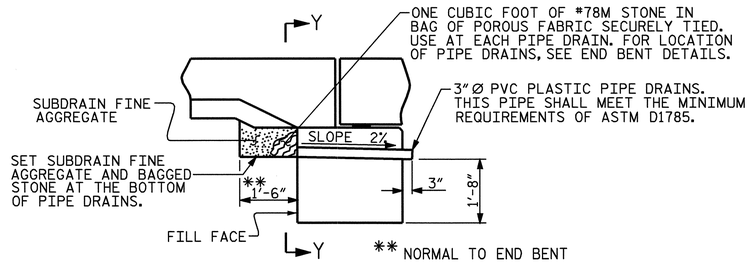

SUBDRAIN DETAIL AT END BENT

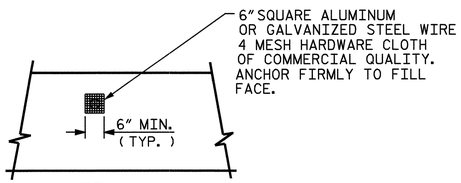

VIEW Y-Y

NOTE: NO SEPARATE PAYMENT WILL BE MADE FOR FURNISHING AND INSTALLING THE PVC PLASTIC PIPE DRAINS HARDWARE CLOTH, AND FASTENERS. THE ENTIRE COST OF THIS WORK SHALL BE INCLUDED IN THE UNIT CONTRACT PRICE BID FOR THE SEVERAL PAY ITEMS.

PIPE DRAIN DETAILS

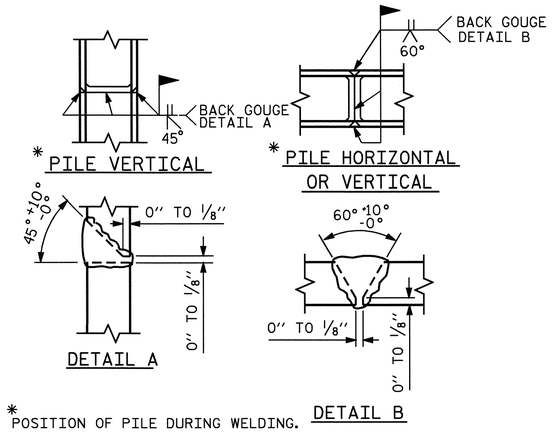

* POSITION OF PILE DURING WELDING.

PILE SPLICE DETAILS

BAR TYPES

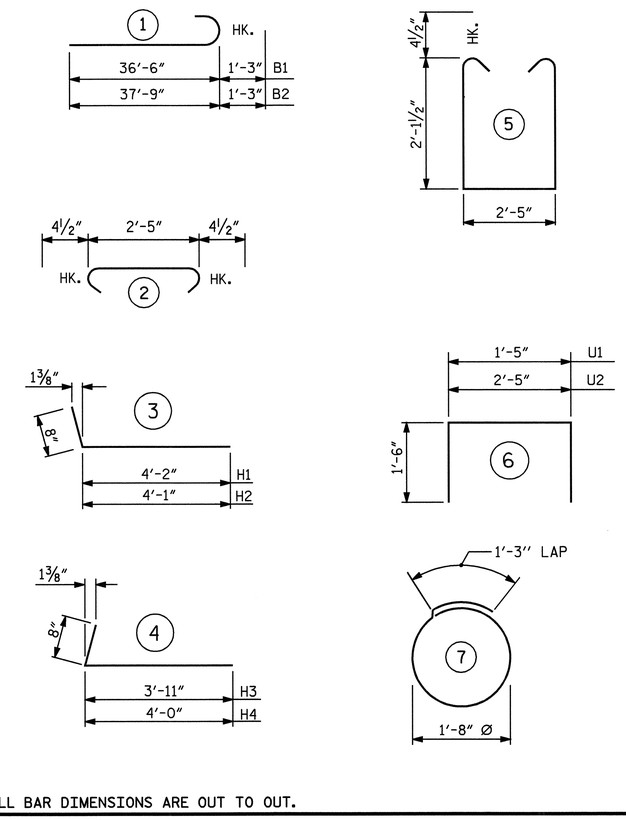

ALL BAR DIMENSIONS ARE OUT TO OUT.

BILL OF MATERIAL

END BENT 2

BAR	NO.	SIZE	TYPE	LENGTH	WEIGHT
B1	8	9	1	37-9	1027
B2	8	9	1	39-0	1061
B3	4	5	STR	34-10	145
B4	12	4	STR	23-11	192
B5	17	4	STR	2-5	27
B6	8	4	STR	22-9	122
D1	40	6	STR	1-6	90
H1	7	4	3	4-10	23
H2	7	4	3	4-9	22
H3	7	4	4	4-7	21
H4	7	4	4	4-8	22
K1	16	4	STR	4-0	43
S1	58	4	5	7-5	287
S2	58	4	2	3-2	123
S3	18	4	7	6-6	78
U1	4	4	6	4-5	12
U2	29	4	6	5-5	105
V1	40	4	STR	5-3	140

REINFORCING STEEL 3540 LBS.

CLASS A CONCRETE

POUR 1	CAP & LOWER PART OF WINGS	CU. YDS. 20.5
POUR 2	UPPER PART OF WINGS	CU. YDS. 2.0
POUR 3	LATERAL GUIDE	CU. YDS. 0.1
	TOTAL	CU. YDS. 22.6

HP 12 x 53 STEEL PILES

No. 9 LIN.FT. 270

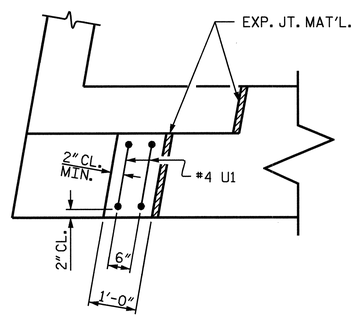

PLAN

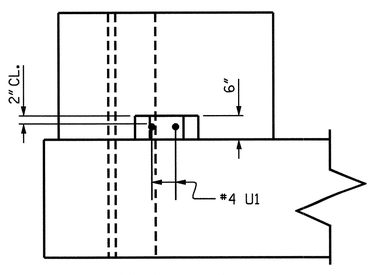

ELEVATION

LATERAL GUIDE DETAILS

(TYP. EACH LATERAL GUIDE)

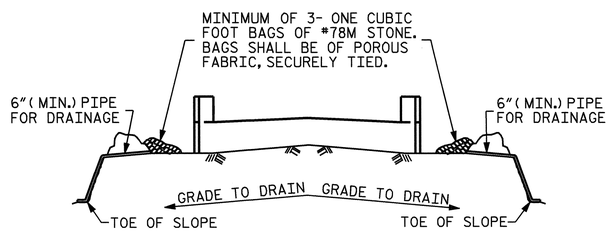

BAGGED STONE AND PIPE SHALL BE PLACED IMMEDIATELY AFTER COMPLETION OF END BENT EXCAVATION. PIPE MAY BE EITHER CONCRETE, CORRUGATED STEEL, CORRUGATED ALUMINUM ALLOY, OR CORRUGATED PLASTIC. PERFORATED PIPE WILL NOT BE ALLOWED.

BAGGED STONE SHALL REMAIN IN PLACE UNTIL THE ENGINEER DIRECTS THAT IT BE REMOVED. THE CONTRACTOR SHALL REMOVE AND DISPOSE OF SILT ACCUMULATIONS AT BAGGED STONE WHEN SO DIRECTED BY THE ENGINEER. BAGS SHALL BE REMOVED AND REPLACED WHENEVER THE ENGINEER DETERMINES THAT THEY HAVE DETERIORATED AND LOST THEIR EFFECTIVENESS.

NO SEPARATE PAYMENT WILL BE MADE FOR THIS WORK AND THE ENTIRE COST OF THIS WORK SHALL BE INCLUDED IN THE UNIT CONTRACT PRICE FOR THE SEVERAL PAY ITEMS.

TEMPORARY DRAINAGE AT END BENT

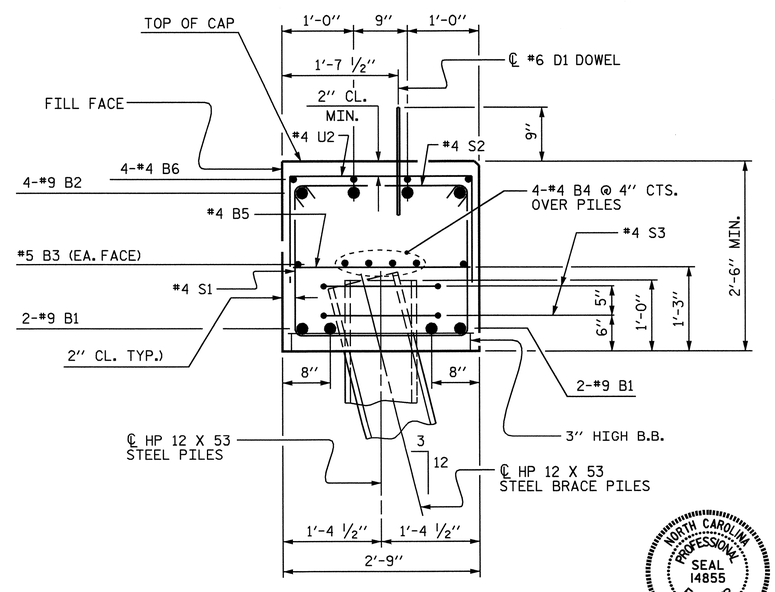

SECTION A-A

NORTH CAROLINA PROFESSIONAL SEAL 14855 ENGINEER DOUGLAS R. CALLIHAN

6-18-07

PROJECT NO. B-3450

DURHAM COUNTY

STATION: 22+37.00 -L-

SHEET 3 OF 3

STATE OF NORTH CAROLINA
DEPARTMENT OF TRANSPORTATION
RALEIGH

SUBSTRUCTURE
END BENT 2

REVISIONS						SHEET NO.
NO.	BY:	DATE:	NO.	BY:	DATE:	S-50
1			3			TOTAL SHEETS
2			4			128

DRAWN BY : A.L.MEADOWS DATE : 7/29/02
CHECKED BY : T.A.HARRIS DATE : 9/23/02

08-JUN-2007 12:19
R:\Structures\Final Plans\STR. 2\B3450_sd_E*_02.dgn
gallen

NOTES :

FOR BERM WIDTH DIMENSIONS, SEE GENERAL DRAWING.

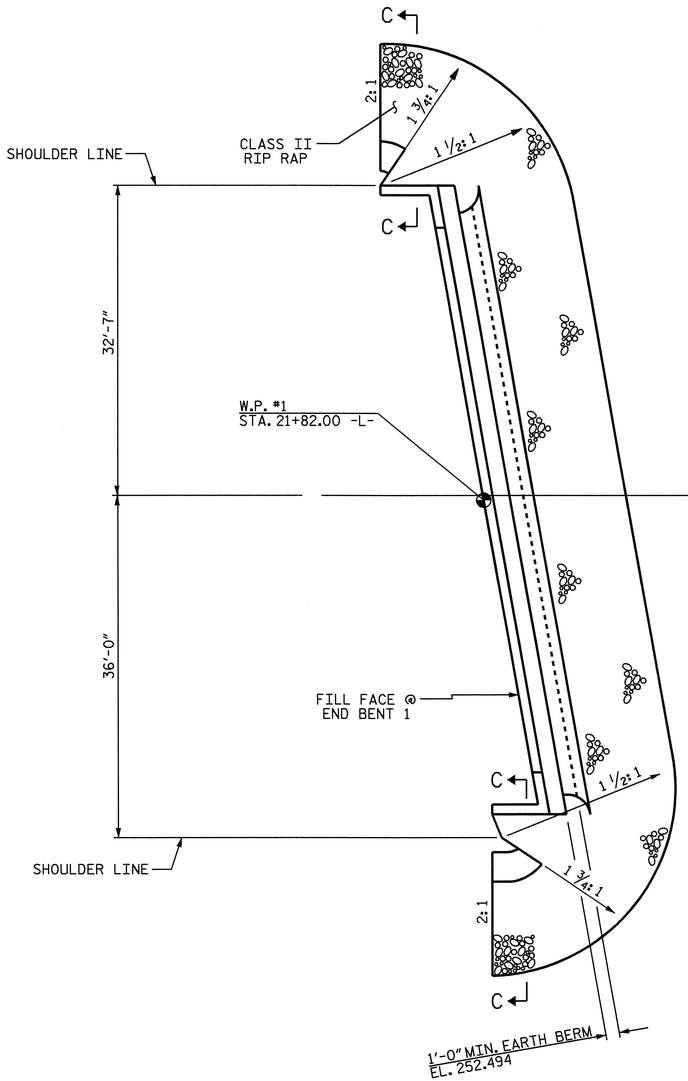

END BENT 1

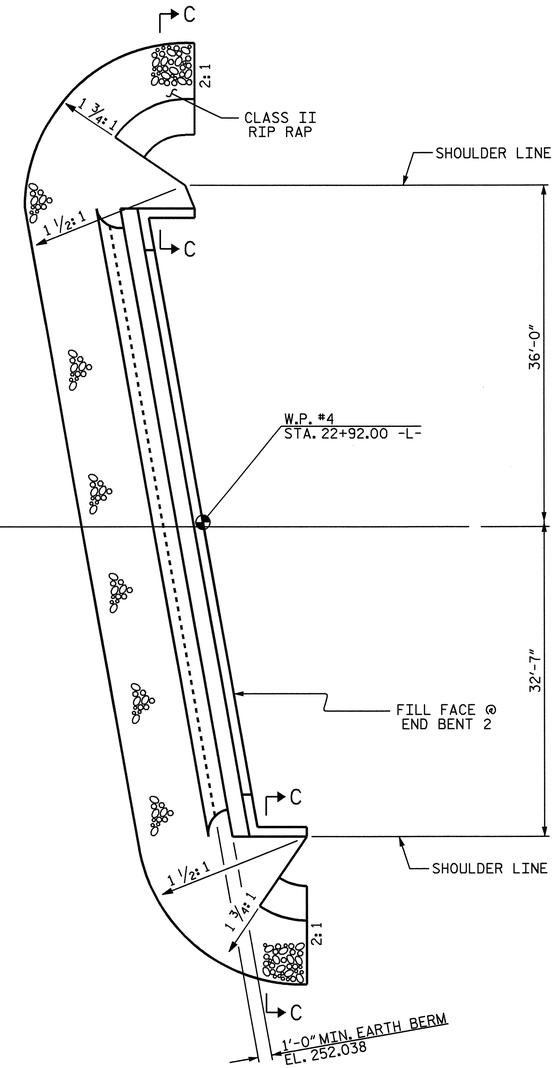

END BENT 2

-L-

ESTIMATED QUANTITIES		
BRIDGE @ STA. 22+37.00 -L-	RIP RAP CLASS II (2'-0" THICK)	FILTER FABRIC FOR DRAINAGE
	TONS	SQUARE YARDS
END BENT 1	122	136
END BENT 2	90	100

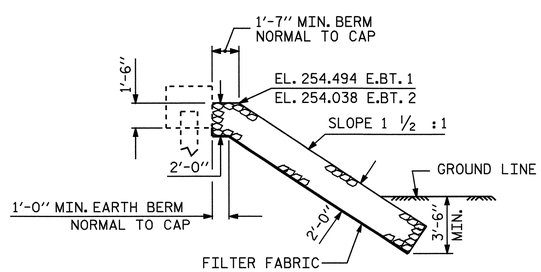

℄ SECTION

BERM RIP RAPPED

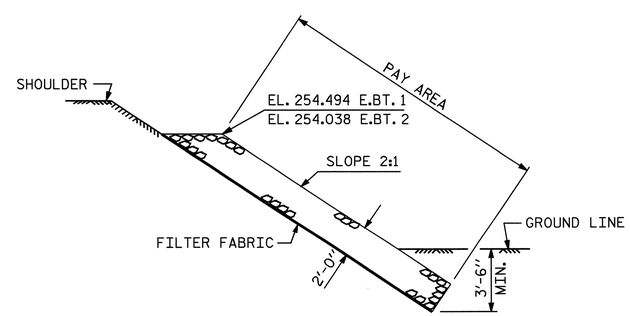

SECTION C-C

PROJECT NO. B-3450

DURHAM COUNTY

STATION: 22+37.00 -L-

STATE OF NORTH CAROLINA
DEPARTMENT OF TRANSPORTATION
RALEIGH

STANDARD

RIP RAP DETAILS

NORTH CAROLINA PROFESSIONAL SEAL 14855 ENGINEER DOUGLAS R. CALHOUN

6-18-07

REVISIONS								SHEET NO.
NO.	BY:	DATE:	NO.	BY:	DATE:			S-51
1			3					TOTAL SHEETS
2			4					128

ASSEMBLED BY : A.L.MEADOWS	DATE : 8/16/02	
CHECKED BY : T.A.HARRIS	DATE : 2/6/04	
DRAWN BY : REK 1/84	REV. 7/17/98	REK/RWW
CHECKED BY : RDU 1/84	REV. 8/16/99	RWW/LES
	REV. 10/17/00	RWW/LES

08-JUN-2007 12:21
R:\Structures\Final Plans\STR. 2\B3450_sd_RR_02.dgn
gallen

STR. 2

SKEW < 90°

STD. NO. RR1

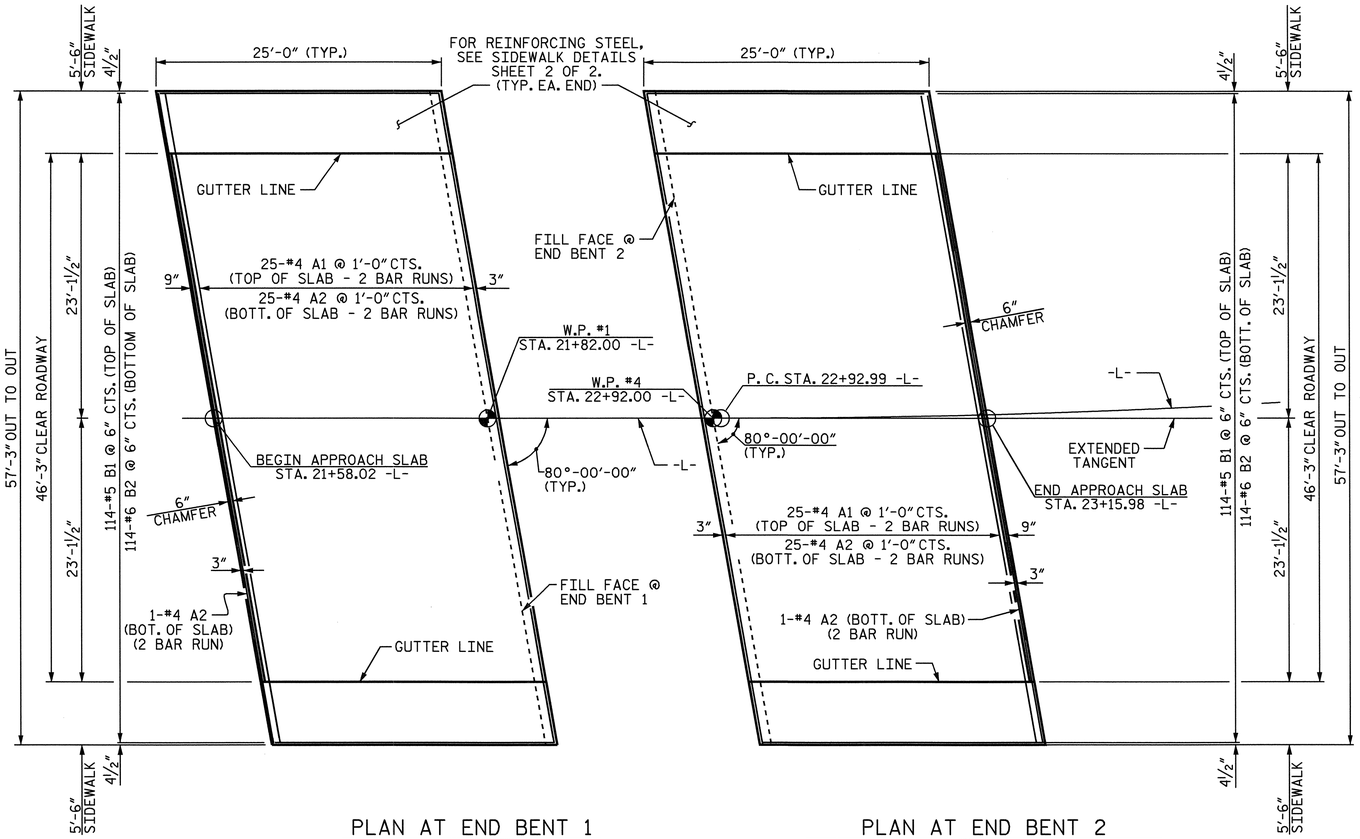

PLAN AT END BENT 1

PLAN AT END BENT 2

APPROACH SLAB AT END BENT 2 TO BE CONSTRUCTED ON EXTENDED TANGENT TO -L-

NOTES

SUBDRAIN FINE AGGREGATE IS TO BE CONTINUOUS ALONG FILL FACE OF BACKWALL AND END BENT FROM OUTSIDE EDGE TO OUTSIDE EDGE OF APPROACH SLAB.

AREA BETWEEN THE WINGWALL AND APPROACH SLAB SHALL BE GRADED TO DRAIN THE WATER AWAY FROM THE FILL FACE OF THE BRIDGE AND SHALL BE PAVED. SEE ROADWAY PLANS.

THE 6" COMP. A.B.C. SHALL EXTEND 10'-0" BEYOND THE END OF THE APPROACH SLAB AND 1'-0" OUTSIDE OF EACH EDGE OF SLAB.

THE CONTRACTOR MAY USE 4" TYPE HB ASPHALT CONCRETE BASE COURSE IN LIEU OF 6" COMP. A.B.C. IF THIS OPTION IS USED, THE BASE COURSE SHALL EXTEND 1'-0" BEYOND THE END OF THE APPROACH SLAB AND THE WIDTH SHALL BE THE SAME AS THAT OF THE APPROACH SLAB.

THE CONTRACTOR MAY USE 5" CLASS 'A' CONCRETE BASE IN LIEU OF 6" COMP. A.B.C. IF THIS OPTION IS USED, THE CONCRETE BASE SHALL EXTEND 1'-0" BEYOND THE END OF THE APPROACH SLAB AND THE WIDTH SHALL BE THE SAME AS THAT OF THE APPROACH SLAB. THE CONCRETE SHALL BE FINISHED TO A SMOOTH SURFACE AND A LAYER OF 30 LB ROOFING FELT SHALL BE PLACED BETWEEN THE CONCRETE BASE AND THE APPROACH SLAB TO PREVENT BOND. THE APPROACH SLAB SHALL NOT BE CAST UNTIL THE CONCRETE BASE HAS REACHED AN AGE OF THREE CURING DAYS.

DOWELS MAY BE PUSHED INTO GREEN CONCRETE AFTER SLAB HAS BEEN SCREEDED AND FLOAT FINISHED.

QUANTITIES FOR SIDEWALK ARE INCLUDED IN APPROACH SLAB.

FOR EVAZOTE JOINT SEALS, SEE SPECIAL PROVISIONS.

THE NOMINAL UNCOMPRESSED SEAL WIDTH OF THE EVAZOTE JOINT SEAL SHALL BE 3 7/16".

FOR ELASTOMERIC CONCRETE, SEE SPECIAL PROVISIONS.

THE JOINT SHALL BE SAWED AFTER THE CASTING OF THE SIDEWALKS & END POSTS.

APPROACH SLABS SHALL BE POURED AFTER THE CONCRETE OVERLAY IS POURED.

BILL OF MATERIAL
FOR ONE APPROACH SLAB (2 REQ'D.)

BAR	NO.	SIZE	TYPE	LENGTH	WEIGHT
✳ A1	50	#4	STR	29'-11"	999
A2	52	#4	STR	29'-10"	1036
✳ B1	114	#5	STR	23'-10"	2834
B2	114	#6	STR	24'-8"	4224
✳ B3	8	#4	STR	24'-8"	132
✳ D1	32	#4	STR	0'-10"	18
✳ G1	50	#4	STR	5'-0"	167

REINFORCING STEEL	LBS.	5260
✳ EPOXY COATED REINFORCING STEEL	LBS.	4150

CLASS AA CONCRETE BREAKDOWN

SLAB	C. Y.	56.4
SIDEWALK	C. Y.	6.2
TOTAL CLASS AA CONCRETE	C. Y.	62.6

SPLICE LENGTH

BAR SIZE	EPOXY COATED	UNCOATED
#4	2'-0"	1'-9"

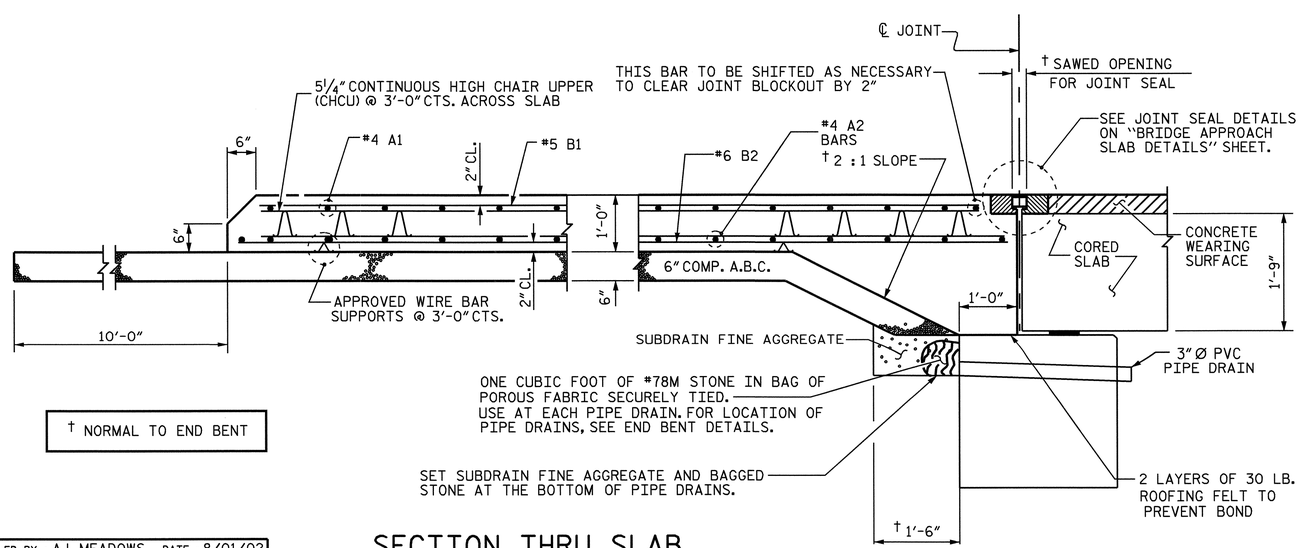

† NORMAL TO END BENT

SECTION THRU SLAB

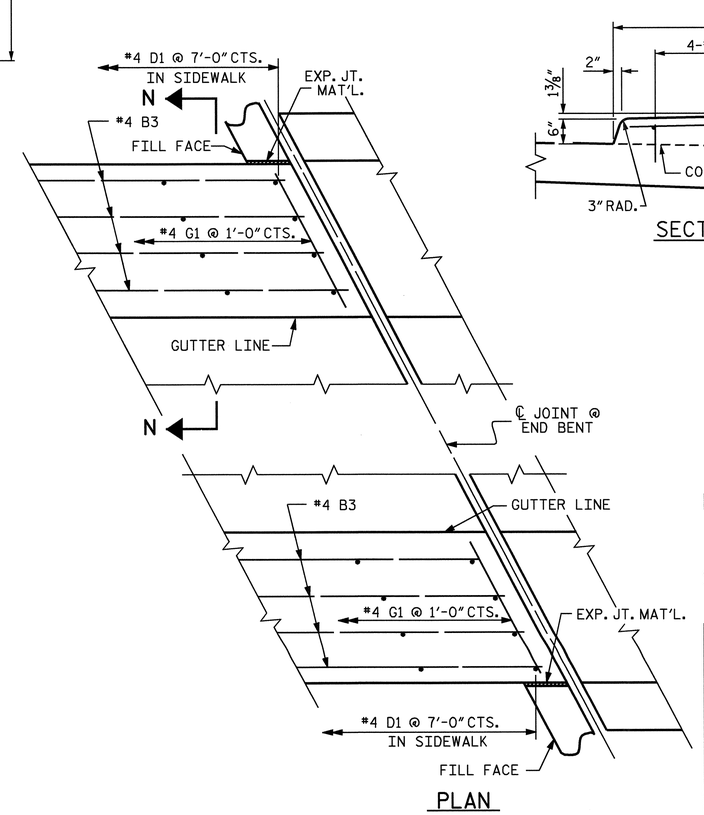

PLAN

SIDEWALK DETAILS

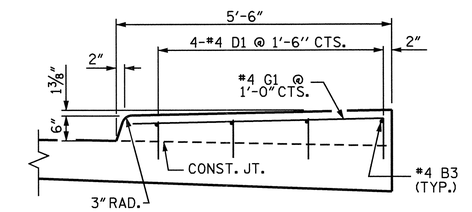

SECTION N-N

NORTH CAROLINA PROFESSIONAL SEAL 14855 ENGINEER DOUGLAS R. CALHOUN
6-12-07

PROJECT NO. B-3450
DURHAM COUNTY
STATION: 22+37.00 -L-

SHEET 1 OF 2

STATE OF NORTH CAROLINA
DEPARTMENT OF TRANSPORTATION
RALEIGH

STANDARD

BRIDGE APPROACH SLAB FOR PRESTRESSED CONCRETE CORED SLAB

REVISIONS						SHEET NO.
NO.	BY:	DATE:	NO.	BY:	DATE:	S-52
1			3			TOTAL SHEETS
2			4			128

ASSEMBLED BY : A.L.MEADOWS	DATE : 8/01/02		
CHECKED BY : T.A.HARRIS	DATE : 10/8/02		
DRAWN BY : FCJ 6/87	REV. 7/10/01	LES/RDR	
CHECKED BY : EGA 6/87	REV. 5/7/03	RWW/JTE	
	REV. 5/1/06	TLA/GM	

08-JUN-2007 12:21
R:\Structures\Final Plans\STR. 2\B3450_sd_AS_02.dgn
gallen

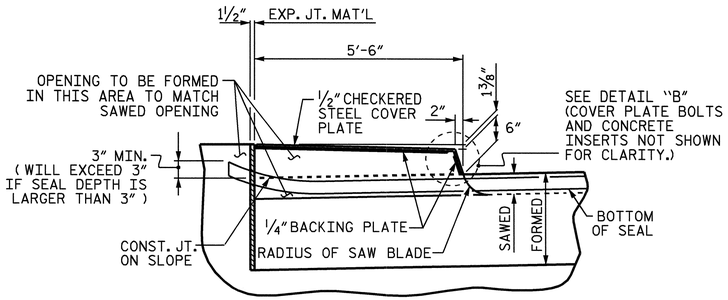

SECTION I-I

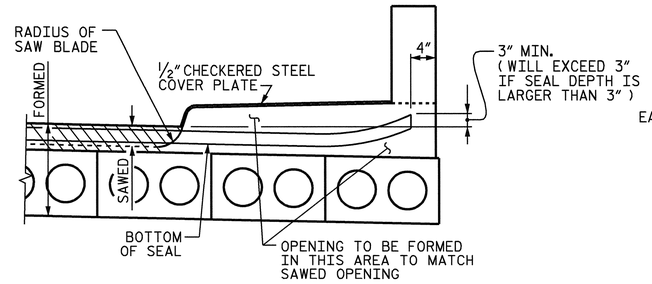

SECTION H-H

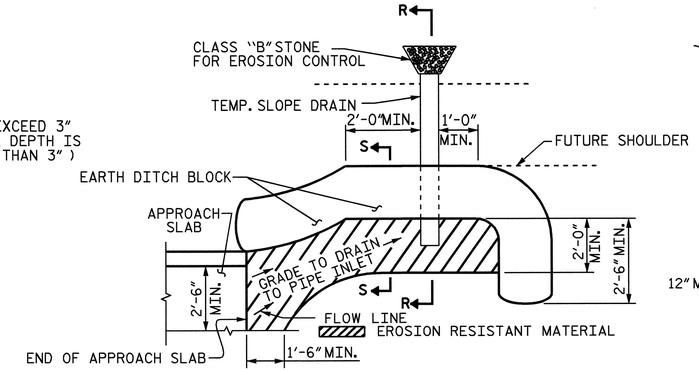

NOTE: IMMEDIATELY AFTER THE CONSTRUCTION OF THE APPROACH SLAB, THE CONTRACTOR SHALL PROVIDE TEMPORARY BERM AND SLOPE DRAIN. CONTRACTOR SHALL GRADE TO PIPE INLET AND PROVIDE EROSION RESISTANT MATERIAL AS SHOWN. THE EROSION RESISTANT MATERIAL SHALL BE EITHER 1) ASPHALT PLANT MIX, TYPE 1 OR TYPE 2, MIN. 2" DEPTH, 2) EROSION CONTROL MAT, OR 3) CONCRETE, AS DIRECTED BY THE ENGINEER. THE SLOPE DRAIN SHALL CONSIST OF A NON-PERFORATED TEMPORARY DRAINAGE PIPE, 12 INCHES IN DIAMETER.

PLAN VIEW

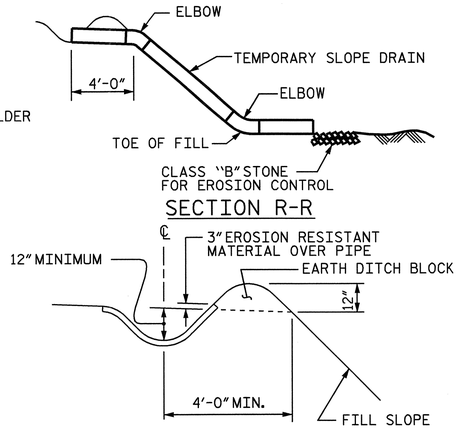

SECTION R-R

SECTION S-S

TEMPORARY BERM AND SLOPE DRAIN DETAILS

(TO BE USED WHEN SHOULDER BERM GUTTER IS REQUIRED)

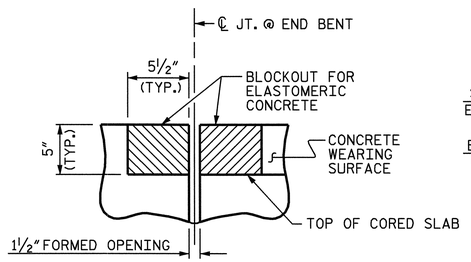

SECTION C-C
EVAZOTE JOINT SEAL
(PRE-SAWED ELASTOMERIC CONCRETE DIMENSIONS)

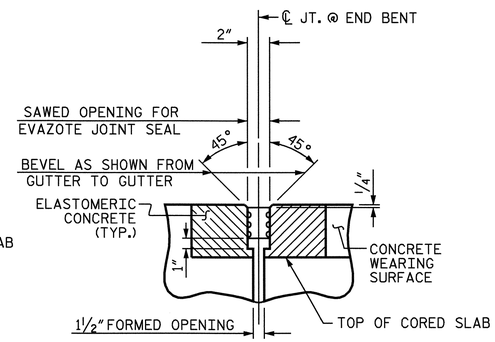

SECTION C-C
EVAZOTE JOINT SEAL

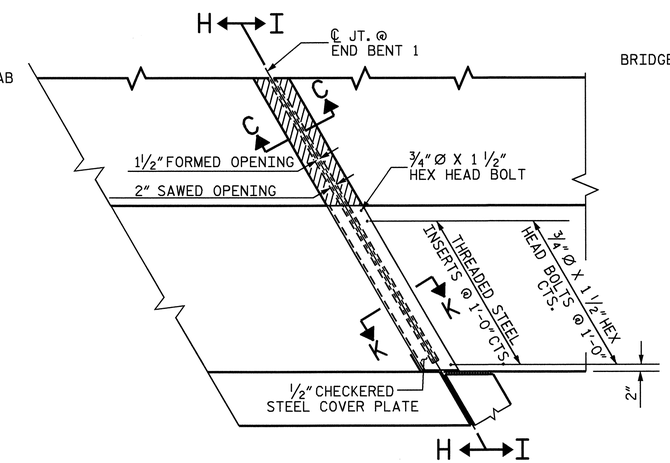

PLAN

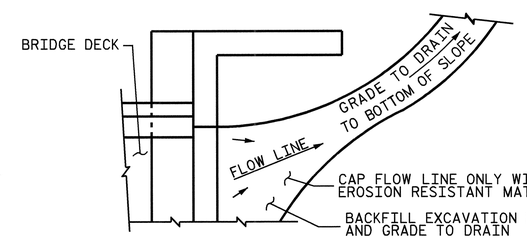

NOTE: IF THE APPROACH SLAB IS NOT CONSTRUCTED IMMEDIATELY AFTER THE BACKFILLING OF THE END BENT EXCAVATION, GRADE TO DRAIN TO THE BOTTOM OF THE SLOPE AND PROVIDE EROSION RESISTANT MATERIAL, SUCH AS FIBERGLASS ROVING OR AS DIRECTED BY THE ENGINEER TO PREVENT SOIL EROSION AND TO PROTECT THE AREA ADJACENT TO THE STRUCTURE. THE CONTRACTOR WILL BE REQUIRED TO REMOVE THESE MATERIALS PRIOR TO CONSTRUCTION OF THE APPROACH SLAB.

TEMPORARY DRAINAGE DETAIL

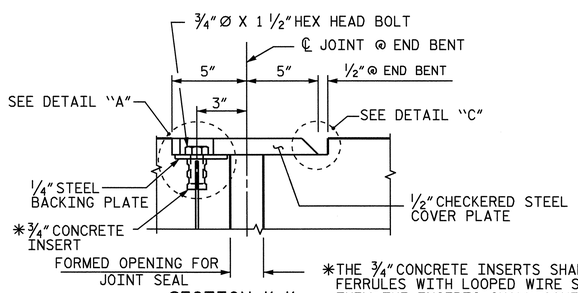

SECTION K-K

*THE ¾" CONCRETE INSERTS SHALL BE CLOSED-END FERRULES WITH LOOPED WIRE STRUTS ATTACHED TO THEM. THE INSERTS SHALL CONFORM TO AASHTO M169, GRADE 12L14 AND SHALL HAVE A TENSILE WORKING LOAD CAPACITY OF 3000 LBS.

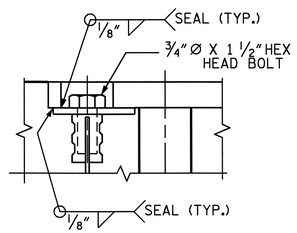

DETAIL "A"

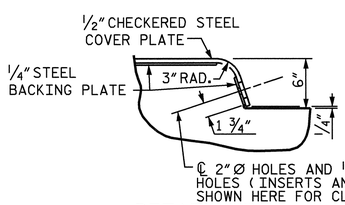

DETAIL "B"

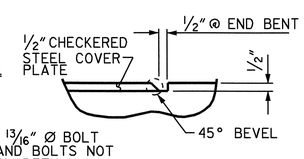

DETAIL "C"

ELASTOMERIC CONCRETE	
END BENT NO.	ELASTOMERIC CONCRETE *(CU. FT)
1	17.9
2	17.9
TOTAL	35.8

*BASED ON THE MINIMUM BLOCKOUT SHOWN

JOINT SEAL DETAILS @ END BENT

PROJECT NO. B-3450
DURHAM COUNTY
STATION: 22+37.00 -L-

SHEET 2 OF 2

STATE OF NORTH CAROLINA
DEPARTMENT OF TRANSPORTATION
RALEIGH

STANDARD

BRIDGE APPROACH SLAB DETAILS

NORTH CAROLINA PROFESSIONAL SEAL 14855 ENGINEER DOUGLAS R. CALHOUN
6-8-07

REVISIONS								SHEET NO.
NO.	BY:	DATE:	NO.	BY:	DATE:			S-53
1			3					TOTAL SHEETS
2			4					128

STD. NO. BAS10

ASSEMBLED BY : A.L.MEADOWS		DATE : 9/09/02	
CHECKED BY : T.A.HARRIS		DATE : 10/3/02	
DRAWN BY : FCJ 11/88	REV. 10/17/00	RWW/LES	
CHECKED BY : ARB 11/88	REV. 5/7/03	RWW/JTE	
	REV. 5/1/06	TLA/GM	

08-JUN-2007 12:21
R:\Structures\Final Plans\STR. 2\B3450_sd_AS_02.dgn
gallen

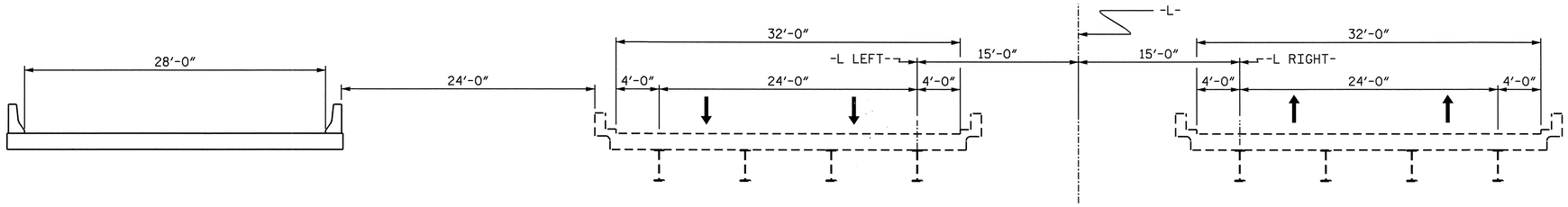

DETOUR BRIDGE

EXISTING LEFT LANE BRIDGE

EXISTING RIGHT LANE BRIDGE

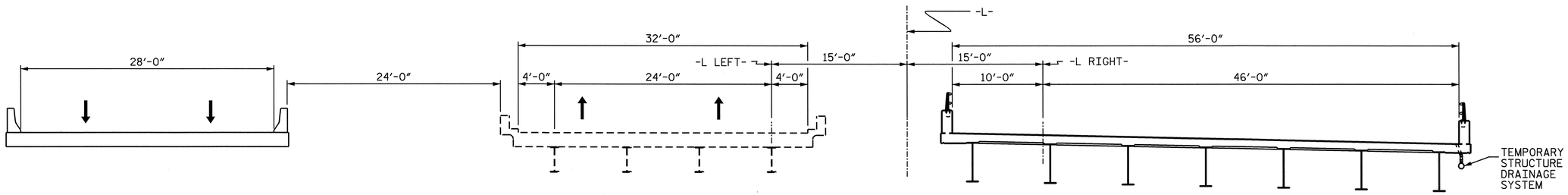

DETOUR BRIDGE

EXISTING LEFT LANE BRIDGE

PROPOSED RIGHT LANE BRIDGE

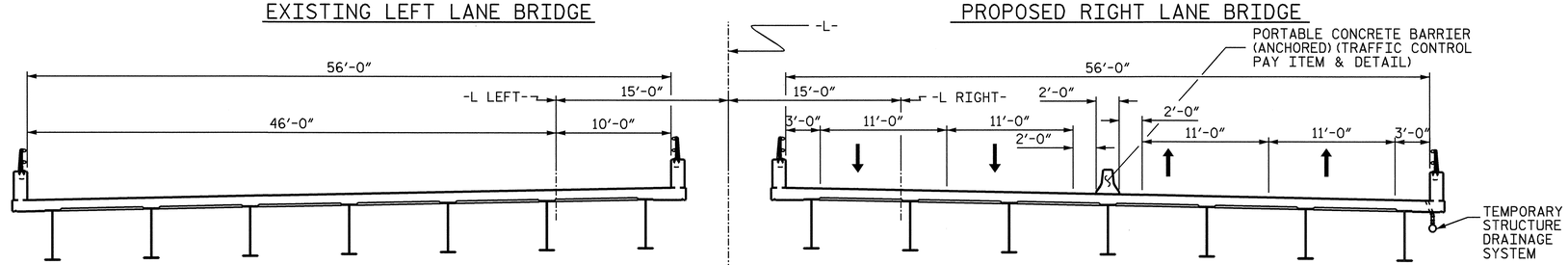

PROPOSED LEFT LANE BRIDGE

PROPOSED RIGHT LANE BRIDGE

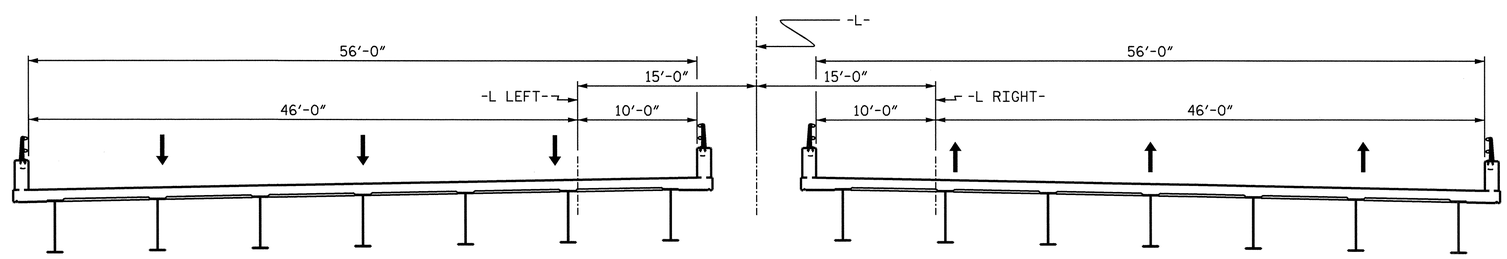

PROPOSED LEFT LANE BRIDGE

PROPOSED RIGHT LANE BRIDGE

PROJECT NO. U-4012

DURHAM COUNTY

STATION: 70+22.00 -L-

STATE OF NORTH CAROLINA
DEPARTMENT OF TRANSPORTATION
RALEIGH

CONSTRUCTION SEQUENCE

FOR BRIDGES ON US 15-501 OVER NEW HOPE CREEK BETWEEN SR 1245 AND SR 1126 RIGHT & LEFT LANE

NORTH CAROLINA PROFESSIONAL SEAL 20125 ENGINEER MARSHALL G. CHEEK, JR.

6-28-07

REVISIONS							
NO.	BY:	DATE:	NO.	BY:	DATE:		SHEET NO. S-54
1			3				TOTAL SHEETS 128
2			4				

DRAWN BY : CR YARBROUGH DATE : 02/05
CHECKED BY : MG CHEEK DATE : 02/05

27-JUN-2007 08:47
R:\Structures\u4012\Final Plans\Str #3\U-4012_sd_PC.dgn
vnguyen

F. A. PROJECT NO.: BRSTP-1116 (6)

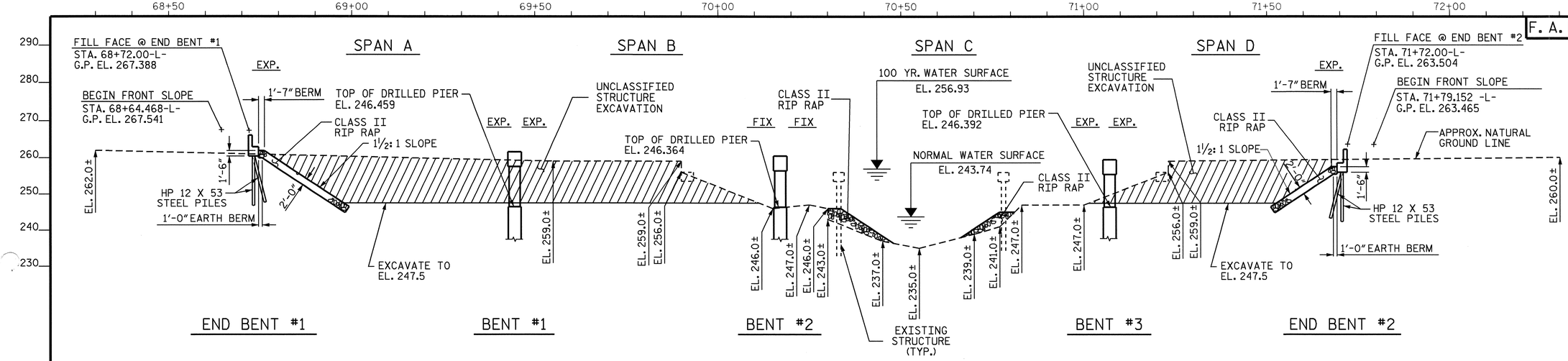

GRADE DATA -L LEFT-

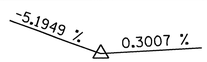

PI = 67+85.00 -L-
EL. = 261.570
VC = 1130'

SECTION ALONG -L LEFT-

SECTION THRU END BENTS & BENTS ARE TAKEN AT RIGHT ANGLES

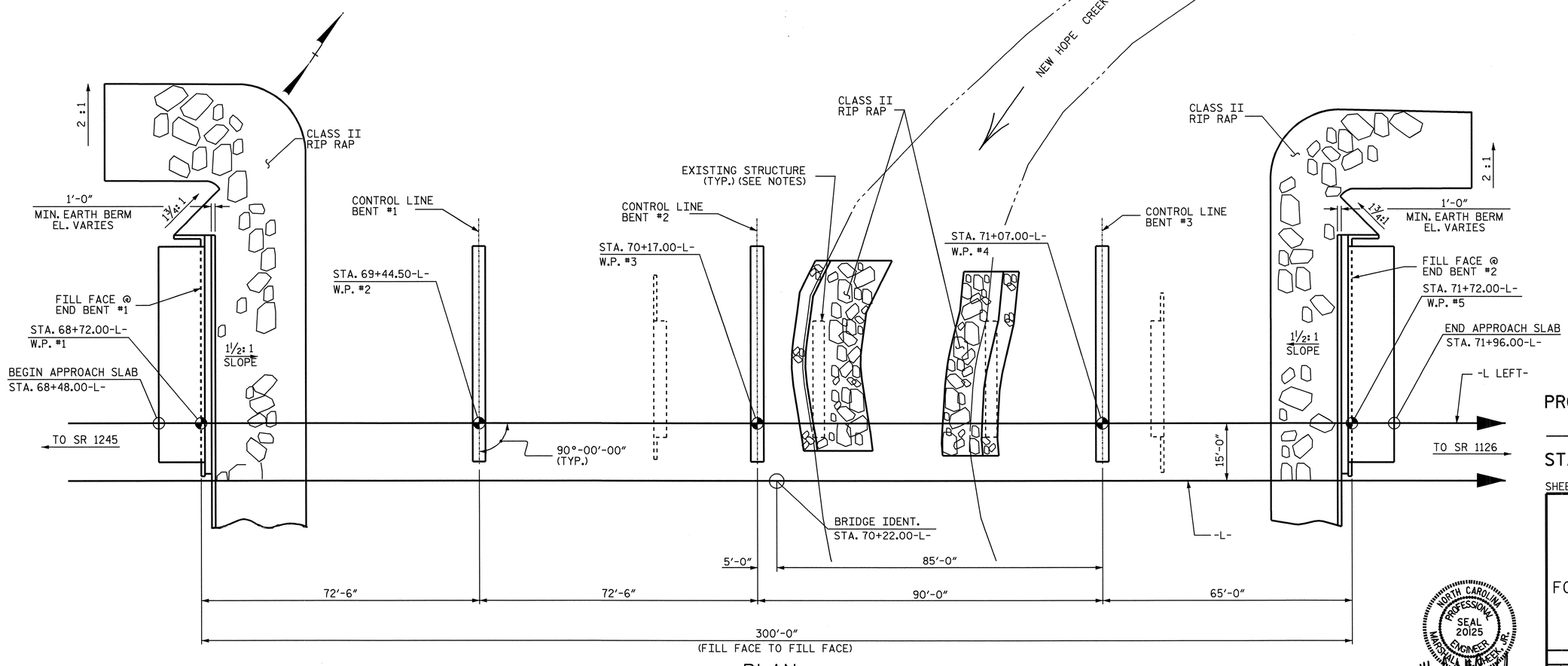

PLAN

COLUMNS AND PILES ARE NOT SHOWN IN PLAN VIEW

NORTH CAROLINA PROFESSIONAL SEAL 13014 ENGINEER QUANG H. NGUYEN

Quang H Nguyen 6-7-07

NORTH CAROLINA PROFESSIONAL SEAL 20125 ENGINEER MARSHALL G. CHEEK, JR.

6-7-07

PROJECT NO. U-4012

DURHAM COUNTY

STATION: 70+22.00-L-

SHEET 1 OF 3 REPLACES BRIDGE #17

STATE OF NORTH CAROLINA
DEPARTMENT OF TRANSPORTATION
RALEIGH

GENERAL DRAWING

FOR BRIDGE ON US 15-501 OVER NEW HOPE CREEK BETWEEN SR 1245 AND SR 1126 LEFT LANE

REVISIONS								SHEET NO.
NO.	BY:	DATE:	NO.	BY:	DATE:			S-55
1			3					TOTAL SHEETS
2			4					128

DRAWN BY : L.L.MURPHY/CRY DATE : 02/05
CHECKED BY : M.G. CHEEK DATE : 02/05

06-JUN-2007 15:38
R:\Structures\u4012\FinalPlans\Str #3\U4012_sd_GD_01.dgn
vnguyen

STR. #3

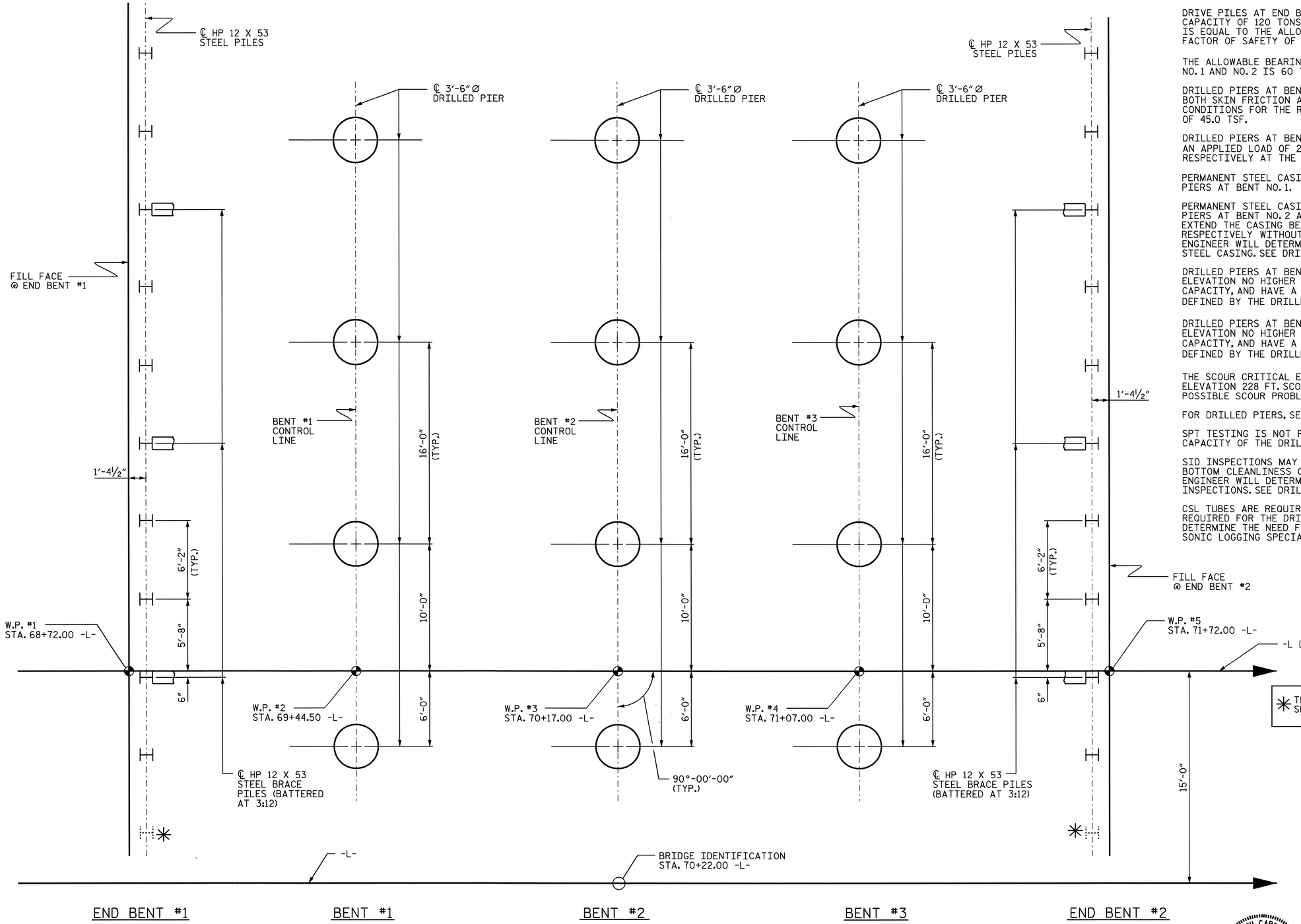

NOTES

DRIVE PILES AT END BENTS NO. 1 AND NO. 2 TO A REQUIRED BEARING CAPACITY OF 120 TONS PER PILE. THE REQUIRED BEARING CAPACITY IS EQUAL TO THE ALLOWABLE BEARING CAPACITY WITH A MINIMUM FACTOR OF SAFETY OF TWO.

THE ALLOWABLE BEARING CAPACITY FOR PILES AT END BENTS NO. 1 AND NO. 2 IS 60 TONS PER PILE.

DRILLED PIERS AT BENTS NO. 1, NO. 2, AND NO. 3 ARE DESIGNED FOR BOTH SKIN FRICTION AND END BEARING. CHECK FIELD CONDITIONS FOR THE REQUIRED END BEARING CAPACITY OF 45.0 TSF.

DRILLED PIERS AT BENTS NO. 1, NO. 2, AND NO. 3 ARE DESIGNED FOR AN APPLIED LOAD OF 243 TONS, 248 TONS, AND 246 TONS EACH, RESPECTIVELY AT THE TOP OF THE COLUMN.

PERMANENT STEEL CASING IS NOT REQUIRED FOR DRILLED PIERS AT BENT NO. 1.

PERMANENT STEEL CASING MAY BE REQUIRED FOR DRILLED PIERS AT BENT NO. 2 AND NO. 3. IF REQUIRED, DO NOT EXTEND THE CASING BELOW ELEVATION 230 FT. AND 229 FT. RESPECTIVELY WITHOUT PRIOR APPROVAL FROM THE ENGINEER. THE ENGINEER WILL DETERMINE THE NEED FOR PERMANENT STEEL CASING. SEE DRILLED PIERS SPECIAL PROVISION.

DRILLED PIERS AT BENT NO. 1, NO. 2 SHALL EXTEND TO AN ELEVATION NO HIGHER THAN 221 FT., SATISFY THE REQUIRED END BEARING CAPACITY, AND HAVE A MINIMUM PENETRATION OF ONE FT. INTO ROCK AS DEFINED BY THE DRILLED PIERS SPECIAL PROVISION.

DRILLED PIERS AT BENT NO. 3 SHALL EXTEND TO AN ELEVATION NO HIGHER THAN 216 FT., SATISFY THE REQUIRED END BEARING CAPACITY, AND HAVE A MINIMUM PENETRATION OF ONE FT. INTO ROCK AS DEFINED BY THE DRILLED PIERS SPECIAL PROVISION.

THE SCOUR CRITICAL ELEVATION FOR BENT NO. 1, NO.2, AND NO. 3 IS ELEVATION 228 FT. SCOUR CRITICAL ELEVATIONS ARE USED TO MONITOR POSSIBLE SCOUR PROBLEMS DURING THE LIFE OF THE STRUCTURE.

FOR DRILLED PIERS, SEE DRILLED PIERS SPECIAL PROVISION.

SPT TESTING IS NOT REQUIRED TO DETERMINE THE END BEARING CAPACITY OF THE DRILLED PIERS AT BENT NO. 1, NO. 2, AND NO. 3.

SID INSPECTIONS MAY BE REQUIRED TO INSPECT THE BOTTOM CLEANLINESS OF THE DRILLED PIERS. THE ENGINEER WILL DETERMINE THE NEED FOR SID INSPECTIONS. SEE DRILLED PIERS SPECIAL PROVISION.

CSL TUBES ARE REQUIRED AND CSL TESTING MAY BE REQUIRED FOR THE DRILLED PIERS. THE ENGINEER WILL DETERMINE THE NEED FOR CSL TESTING. SEE CROSSHOLE SONIC LOGGING SPECIAL PROVISION.

✳ THESE PILES FOR THE LEFT LANE STRUCTURE SHALL BE DRIVEN WITH THE RIGHT LANE PILES.

FOUNDATION LAYOUT

DIMENSIONS LOCATING PILES ARE TO THE PILE CENTERLINE AT BOTTOM OF CAP.

ALL END BENT BRACE PILES ARE BATTERED AT 3:12.

PROJECT NO. U-4012
DURHAM COUNTY
STATION: 70+22.00 -L-

SHEET 2 OF 3

STATE OF NORTH CAROLINA
DEPARTMENT OF TRANSPORTATION
RALEIGH

GENERAL DRAWING
FOR BRIDGE ON US 15-501 OVER NEW HOPE CREEK BETWEEN SR 1245 AND SR 1126
LEFT LANE

NORTH CAROLINA PROFESSIONAL SEAL 20125 ENGINEER MARSHALL STREET, JR.
6-7-07

REVISIONS						SHEET NO.
NO.	BY:	DATE:	NO.	BY:	DATE:	S-56
1			3			TOTAL SHEETS
2			4			128

STR. #3

DRAWN BY : CR YARBROUGH DATE : 01/05
CHECKED BY : MG CHEEK DATE : 01/05

06-JUN-2007 07:49
R:\Structures\u4012\Final Plans\U-4012_FL.dgn
vnguyen

TOTAL BILL OF MATERIAL

	CONSTRUCTION, MAINTENANCE AND REMOVAL OF TEMPORARY STRUCTURE	REMOVAL OF EXISTING STRUCTURE	3'-6"Ø DRILLED PIERS IN SOIL	3'-6"Ø DRILLED PIERS NOT IN SOIL	PERMANENT STEEL CASING FOR 3'-6"Ø DRILLED PIERS	SID INSPECTIONS	CROSSHOLE SONIC LOGGING	UNCLASSIFIED STRUCTURE EXCAVATION	REINFORCED CONCRETE DECK SLAB	GROOVING BRIDGE FLOORS	CLASS A CONCRETE	BRIDGE APPROACH SLABS	REINFORCING STEEL	SPIRAL COLUMN REINFORCING STEEL	STRUCTURAL STEEL	HP 12 X 53 STEEL PILES		TWO BAR METAL RAIL	1'-2" X 2'-6" CONCRETE PARAPET	RIP RAP CLASS II (2'-0" THICK)	FILTER FABRIC FOR DRAINAGE	ELASTOMERIC BEARINGS	EVAZOTE JOINT SEALS
	LUMP SUM	LUMP SUM	LIN. FT.	LIN. FT.	LIN. FT.	EACH	EACH	CU. YD.	SQ. FT	SQ. FT	CU. YD.	LUMP SUM	LBS.	LBS.	APPROX. LBS.	NO.	LIN. FT.	LIN. FT.	LIN. FT.	TONS	SQ. YDS.	LUMP SUM	LUMP SUM
SUPERSTRUCTURE									17451	18166		LUMP SUM			534,000			580.54	595.77			LUMP SUM	LUMP SUM
END BENT 1								5985			26.5		4411			11	220			625	695		
BENT 1			77.00	25.00							42.8		11653	3135									
BENT 2			78.00	24.00	65.46						41.8		11490	3047									
BENT 3			100.00	22.00	69.58						40.7		12143	3371									
END BENT 2								2390			26.5		4411			11	275			315	350		
TOTAL	LUMP SUM	LUMP SUM	255.00	71.00	135.04	1	1	8375	17451	18166	178.3	LUMP SUM	44108	9553	534,000	22	495	580.54	595.77	940	1045	LUMP SUM	LUMP SUM

HYDRAULIC DATA

DESIGN DISCHARGE = 8440 c.f.s.
FREQUENCY OF DESIGN FLOOD ____= 50 YR
DESIGN HIGH WATER ELEVATION __= 254.870'
DRAINAGE AREA_____ = 42.3 SQ. MILES
BASIC DISCHARGE (Q100) _____= 10068 c.f.s.
BASIC HIGH WATER ELEVATION ___= 256.930'

OVERTOPPING FLOOD DATA

OVERTOPPING DISCHARGE = N/A
FREQUENCY OF OVERTOPPING FLOOD = N/A
OVERTOPPING FLOOD ELEVATION = N/A

THE BRIDGE RAILS ON THE TEMPORARY STRUCTURE SHALL BE DESIGNED FOR THE AASHTO LRFD TEST LEVEL 3 (TL-3) CRASH TEST CRITERIA. FOR CONSTRUCTION, MAINTENANCE AND REMOVAL OF TEMPORARY STRUCTURE, SEE SPECIAL PROVISIONS.

B.M. #4 R. R. SPIKE IN BASE OF 18" RED OAK 114' RT. OF BL STA. 68+27.00 EL. = 249.280

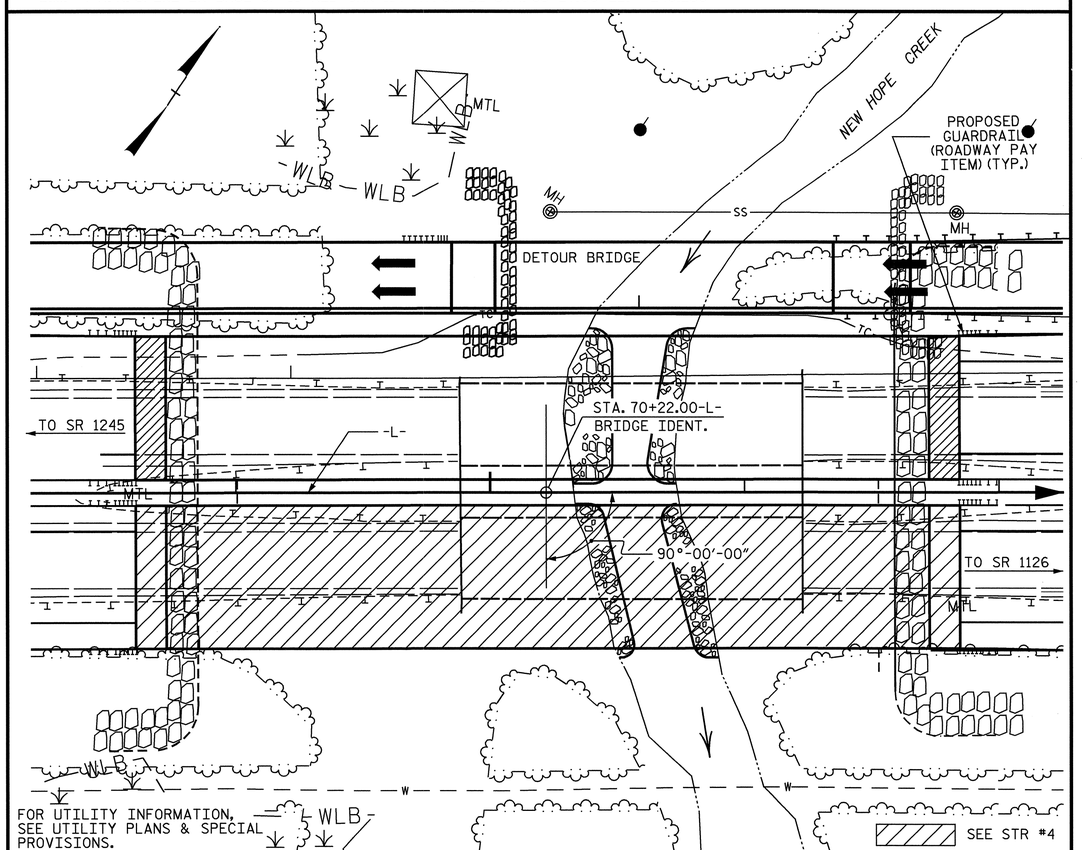

LOCATION SKETCH

DRAWN BY : L.L.MURPHY/CRY DATE : 02/05
CHECKED BY : M.G. CHEEK DATE : 02/05

08-JUN-2007 09:46
R:\Structures\u4012\Final Plans\Str #3\U4012_sd_GD_01.dgn
vnguyen

NOTES

ASSUMED LIVE LOAD = HS 20 OR ALTERNATE LOADING, EXCEPT THAT THE BEAMS HAVE BEEN DESIGNED FOR HS25.

FOR OTHER DESIGN DATA AND GENERAL NOTES, SEE SHEET SN.

FOR EROSION CONTROL MEASURES SEE EROSION CONTROL PLANS.

THIS BRIDGE HAS BEEN DESIGNED BY THE STRENGTH DESIGN METHOD AS SPECIFIED IN AASHTO STANDARD SPECIFICATIONS.

ALL STRUCTURAL STEEL SHALL BE AASHTO M270 GRADE 50W AND PAINTED IN ACCORDANCE WITH SYSTEM 4 OF ARTICLE 442-7 OF THE STANDARD SPECIFICATIONS UNLESS OTHERWISE NOTED ON THE PLANS.

REMOVABLE FORMS MAY BE USED IN LIEU OF METAL STAY-IN-PLACE FORMS IN ACCORDANCE WITH ARTICLE 420-3 OF THE STANDARD SPECIFICATIONS.

REMOVAL OF THE EXISTING BRIDGE SHALL BE PERFORMED SO AS NOT TO ALLOW DEBRIS TO FALL INTO THE WATER. THE CONTRACTOR SHALL REMOVE THE BRIDGE AND SUBMIT PLANS FOR DEMOLITION IN ACCORDANCE WITH ARTICLE 402-2 OF THE STANDARD SPECIFICATIONS.

THE CONTRACTOR WILL BE REQUIRED TO CONSTRUCT, MAINTAIN AND AFTERWARDS REMOVE A TEMPORARY STRUCTURE FOR USE DURING CONSTRUCTION OF THE PROPOSED STRUCTURE. SEE SPECIAL PROVISIONS FOR CONSTRUCTION, MAINTENANCE AND REMOVAL OF TEMPORARY STRUCTURE.

THE MATERIAL SHOWN IN THE CROSS-HATCHED AREA SHALL BE EXCAVATED FOR A DISTANCE OF 30 FT. EACH SIDE OF CENTERLINE ROADWAY AS DIRECTED BY THE ENGINEER. THIS WORK WILL BE MEASURED AND PAID FOR AT THE CONTRACT UNIT PRICE PER CUBIC YARD FOR UNCLASSIFIED STRUCTURE EXCAVATION.

THE CLASS AA CONCRETE IN THE BRIDGE DECK SHALL CONTAIN FLY ASH OR GROUND GRANULATED BLAST FURNACE SLAG AT THE SUBSTITUTION RATE SPECIFIED IN ARTICLE 1024-1 AND IN ACCORDANCE WITH ARTICLES 1024-5 AND 1024-6 OF THE STANDARD SPECIFICATIONS. NO PAYMENT WILL BE MADE FOR THIS SUBSTITUTION AS IT IS CONSIDERED INCIDENTAL TO THE COST OF THE REINFORCED CONCRETE DECK SLAB.

COFFER DAMS SHALL BE REQUIRED FOR REMOVAL OF THE EXISTING BRIDGE PIERS IN NEW HOPE CREEK. THE COST OF THE COFFER DAMS SHALL BE INCLUDED IN THE BID PRICE FOR "REMOVAL OF EXISTING STRUCTURE".

THE EXISTING 3 SPAN STRUCTURE (3 @ 45') CONSISTING OF A REINFORCED CONCRETE DECK WITH A 2½" ASPHALT WEARING SURFACE ON STEEL I-BEAMS WITH A CLEAR ROADWAY OF 27.9' ON A SUBSTRUCTURE CONSISTING OF REINFORCED CONCRETE CAPS ON CONCRETE ENCASED H-PILES AT THE END BENTS AND BENTS AND LOCATED AT THE SITE OF THE PROPOSED STRUCTURE SHALL BE REMOVED. THE EXISTING BRIDGE IS PRESENTLY NOT POSTED FOR LOAD LIMIT. SHOULD THE STRUCTURAL INTEGRITY OF THE BRIDGE DETERIORATE DURING CONSTRUCTION OF THE PROPOSED STRUCTURE, A LOAD LIMIT MAY BE POSTED AND MAY BE REDUCED AS FOUND NECESSARY DURING THE LIFE OF THE PROJECT.

AT THE CONTRACTOR'S OPTION, AND UPON REMOVAL OF THE DETOUR BRIDGE, THE CLASS II RIP RAP USED FOR THE DETOUR BRIDGE SLOPES MAY BE PLACED AS RIP RAP SLOPE PROTECTION OR CREEK BANK PROTECTION. SEE SPECIAL PROVISIONS FOR CONSTRUCTION, MAINTENANCE AND REMOVAL OF TEMPORARY STRUCTURE.

THIS STRUCTURE HAS BEEN DESIGNED IN ACCORDANCE WITH HEC 18, "EVALUATING SCOUR AT BRIDGES", NOVEMBER, 1995.

THIS BRIDGE HAS BEEN DESIGNED IN ACCORDANCE WITH THE REQUIREMENTS OF THE AASHTO STANDARD SPECIFICATIONS FOR SEISMIC DESIGN OF HIGHWAY BRIDGES FOR SEISMIC PERFORMANCE CATEGORY A.

THE CONTRACTOR SHALL PROVIDE INDEPENDENT ASSURANCE SAMPLES OF REINFORCING STEEL AS FOLLOWS: FOR PROJECTS REQUIRING UP TO 400 TONS OF REINFORCING STEEL, ONE 30 INCH SAMPLE OF EACH SIZE BAR USED, AND FOR PROJECTS REQUIRING OVER 400 TONS OF REINFORCING STEEL, TWO 30 INCH SAMPLES OF EACH SIZE BAR USED. THE BARS FROM WHICH THE SAMPLES ARE TAKEN MUST THEN BE SPLICED WITH REPLACEMENT BARS OF THE SIZE AND LENGTH OF THE SAMPLE, PLUS A MINIMUM LAP SPLICE OF THIRTY BAR DIAMETERS.

INASMUCH AS THE PAINT SYSTEM ON THE EXISTING STRUCTURAL STEEL CONTAINS LEAD, THE CONTRACTOR'S ATTENTION IS DIRECTED TO ARTICLE 107-1 OF THE STANDARD SPECIFICATIONS. ANY COSTS RESULTING FROM COMPLIANCE WITH APPLICABLE STATE OR FEDERAL REGULATIONS PERTAINING TO HANDLING OF MATERIALS CONTAINING LEAD BASED PAINT SHALL BE INCLUDED IN THE BID PRICE FOR "REMOVAL OF EXISTING STRUCTURE.

NEEDLE BEAMS WILL NOT BE ALLOWED UNLESS OTHERWISE CALLED FOR ON THE PLANS OR APPROVED BY THE ENGINEER.

FOR SUBMITTAL OF WORKING DRAWINGS, SEE SPECIAL PROVISIONS.

FOR CRANE SAFETY, SEE SPECIAL PROVISIONS.

CLASS II RIP RAP REQUIRED FOR THE DETOUR BRIDGE SLOPES SHALL BE PAID FOR UNDER THE PRICE BID FOR "CONSTRUCTION, MAINTENANCE, AND REMOVAL OF TEMPORARY STRUCTURE."

FOR GROUT FOR STRUCTURES, SEE SPECIAL PROVISIONS.

FOR FALSEWORK AND FORMWORK, SEE SPECIAL PROVISIONS.

THE SUBSTRUCTURE OF THE EXISTING BRIDGE INDICATED ON THE PLANS IS FROM THE BEST INFORMATION AVAILABLE. SINCE THIS INFORMATION IS SHOWN FOR THE CONVENIENCE OF THE CONTRACTOR, THE CONTRACTOR SHALL HAVE NO CLAIM WHATSOEVER AGAINST THE DEPARTMENT OF TRANSPORTATION FOR ANY DELAYS OR ADDITIONAL COST INCURED BASED ON DIFFERENCES BETWEEN THE EXISTING BRIDGE SUBSTRUCTURE SHOWN ON THE PLANS AND THE ACTUAL CONDITION AT THE PROJECT SITE.

FOLLOWING REMOVAL OF THE EXISTING BENTS, AND AT THE DIRECTION OF THE ENGINEER, THE DISTURBED AREAS OF THE BANKS SHALL BE GRADED TO A 2:1 SLOPE AND CLASS II RIP RAP SHALL BE PLACED ON THE DISTURBED AREAS.

PROJECT NO. U-4012
DURHAM COUNTY
STATION: 70+22.00-L-

SHEET 3 OF 3

STATE OF NORTH CAROLINA
DEPARTMENT OF TRANSPORTATION
RALEIGH

GENERAL DRAWING
FOR BRIDGE ON US 15-501 OVER NEW HOPE CREEK BETWEEN SR 1245 AND SR 1126 LEFT LANE

NORTH CAROLINA PROFESSIONAL SEAL 20125 ENGINEER MARSHALL G. CHEEK, JR.
6-8-07

REVISIONS						SHEET NO.
NO.	BY:	DATE:	NO.	BY:	DATE:	S-57
1			3			TOTAL SHEETS
2			4			128

STR. #3

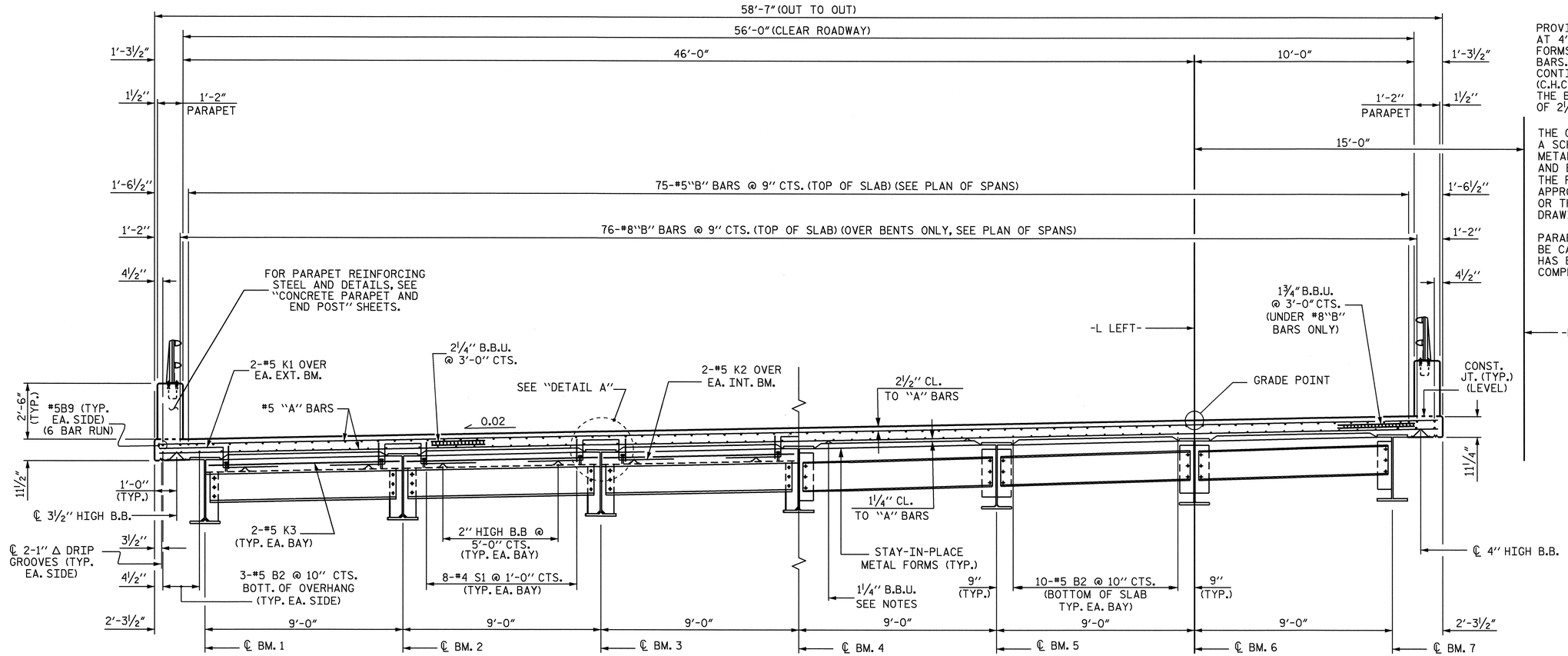

HALF TYPICAL SECTION

SHOWING END BENT DIAPHRAGMS

HALF TYPICAL SECTION

SHOWING INTERMEDIATE DIAPHRAGMS

NOTES

PROVIDE 1¼" HIGH BEAM BOLSTERS UPPER AT 4'-0" CTS. ATOP THE METAL STAY-IN-PLACE FORMS TO SUPPORT THE BOTTOM MAT OF 'A' BARS. WHEN USING REMOVABLE FORMS, PROVIDE CONTINUOUS HIGH CHAIRS FOR METAL DECK (C.H.C.M.) @ 4'-0" CTS. WITH A HEIGHT TO SUPPORT THE BOTTOM MAT OF 'A' BARS A CLEAR DISTANCE OF 2½" ABOVE THE TOP OF THE REMOVABLE FORM.

THE CONTRACTOR MAY, WHEN NECESSARY, PROPOSE A SCHEME FOR AVOIDING INTERFERENCE BETWEEN METAL STAY-IN-PLACE FORM SUPPORTS OR FORMS AND BEAM STIFFENERS OR CONNECTOR PLATES. THE PROPOSAL SHALL BE INDICATED, AS APPROPRIATE, ON EITHER STEEL WORKING DRAWINGS OR THE METAL STAY-IN-PLACE FORM WORKING DRAWINGS.

PARAPET IN A CONTINUOUS UNIT SHALL NOT BE CAST UNTIL ALL SLAB CONCRETE IN THE UNIT HAS BEEN CAST AND HAS REACHED A MINIMUM COMPRESSIVE STRENGTH OF 3,000 PSI.

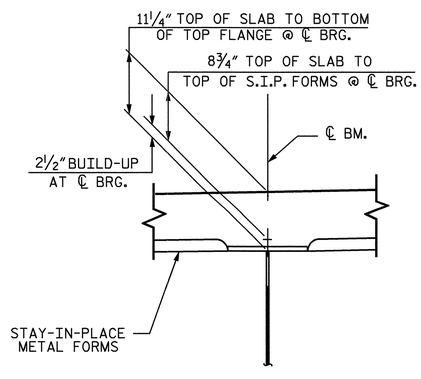

DETAIL A

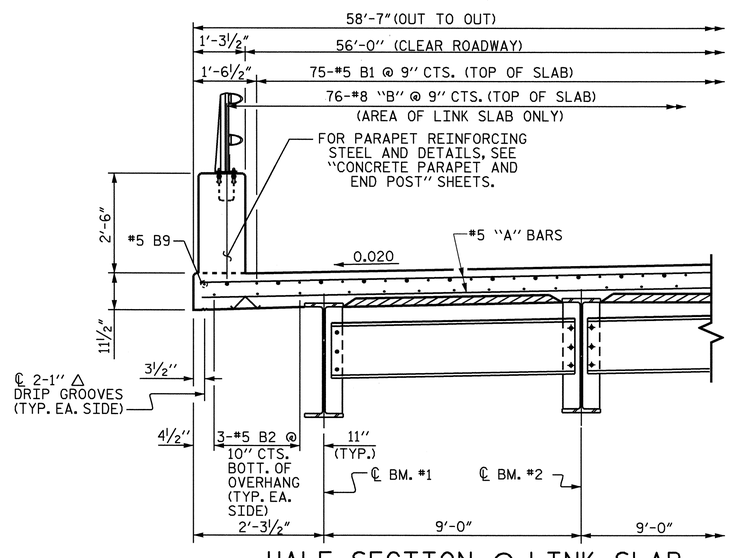

HALF SECTION @ LINK SLAB

(LINK SLAB ONLY REQUIRED AT BENTS)

PROJECT NO. U-4012
DURHAM COUNTY
STATION: 70+22.00 -L-

SHEET 1 OF 2

STATE OF NORTH CAROLINA
DEPARTMENT OF TRANSPORTATION
RALEIGH

SUPERSTRUCTURE
TYPICAL SECTION
LEFT LANE

NORTH CAROLINA PROFESSIONAL SEAL 20125 ENGINEER MARSHALL G. PECK, JR.
6-29-07

REVISIONS						SHEET NO.
NO.	BY:	DATE:	NO.	BY:	DATE:	S-58
1			3			TOTAL SHEETS
2			4			128

DRAWN BY : M. POOLE/L.L.M. DATE : 02/05
CHECKED BY : D. HODGE DATE : 02/05

27-JUN-2007 08:38
R:\Structures\u4012\Final Plans\Str #3\U4012_sd_TS_01.dgn
vnguyen

STR.#3 NCDDS

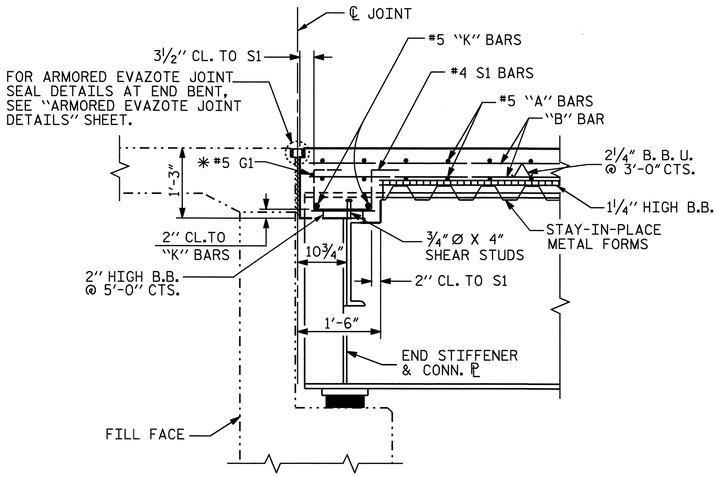

SECTION THRU END BENT

✱ #5 G1 MAY BE SHIFTED SLIGHTLY, AS NECESSARY, TO CLEAR DIAPHRAGM AND REINFORCING STEEL.

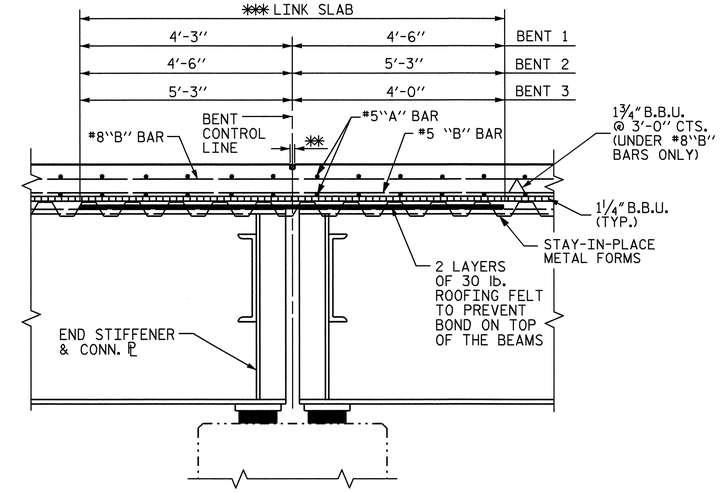

SECTION AT BENT

✱✱✱ NOTE: THE TOP OF THE BEAM IN THE REGION OF THE LINK SLAB SHALL BE SMOOTH AND FREE OF SHEAR STUDS. NO WELDING OF FORMS OR FALSEWORK TO THE TOP FLANGE WILL BE PERMITTED IN THIS REGION.

✱✱ THE CONTRACTOR SHALL SAW A 1½" DEEP CONTRACTION JOINT AT THE BENT CONTROL LINE, WITHIN 24 HOURS OF POURING THE DECK. THE JOINT SHALL BE FILLED WITH JOINT SEALER MATERIAL. THE JOINT FILLER MATERIAL SHALL CONFORM TO THE REQUIREMENTS OF TYPE B LOW MODULUS SILICONE SEALANT, SEE SECTION 1028 OF THE STANDARD SPECIFICATIONS.

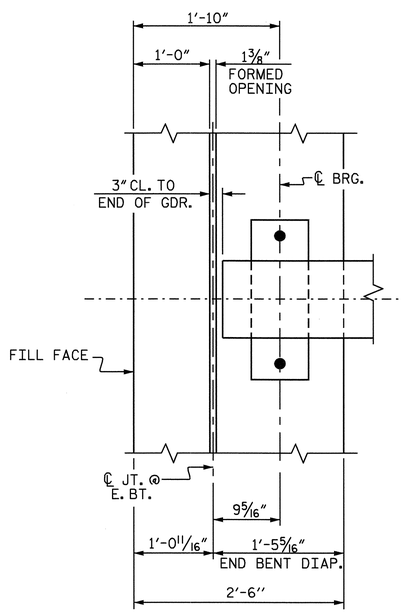

END BENT DIAPHRAGM

PLAN

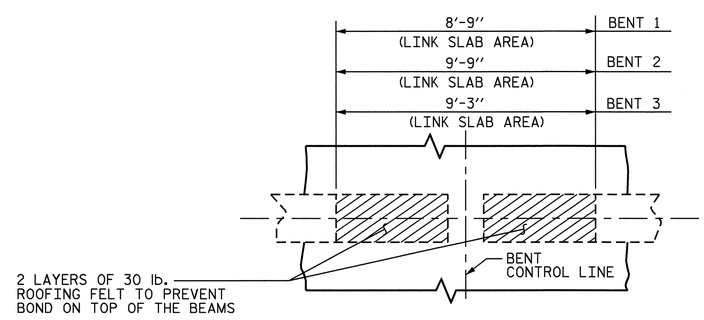

PLAN OF LINK SLAB

PROJECT NO. U-4012
DURHAM COUNTY
STATION: 70+22.00 -L-

SHEET 2 OF 2

STATE OF NORTH CAROLINA
DEPARTMENT OF TRANSPORTATION
RALEIGH

SUPERSTRUCTURE
TYPICAL SECTION
LEFT LANE

NORTH CAROLINA PROFESSIONAL SEAL 20125 ENGINEER MARSHALL G. CREEK, JR.
6-29-07

REVISIONS						SHEET NO.
NO.	BY:	DATE:	NO.	BY:	DATE:	S-59
1			3			TOTAL SHEETS
2			4			128

STR.#3

DRAWN BY : M. POOLE/L.L.M. DATE : 02/05
CHECKED BY : D. HODGE DATE : 02/05

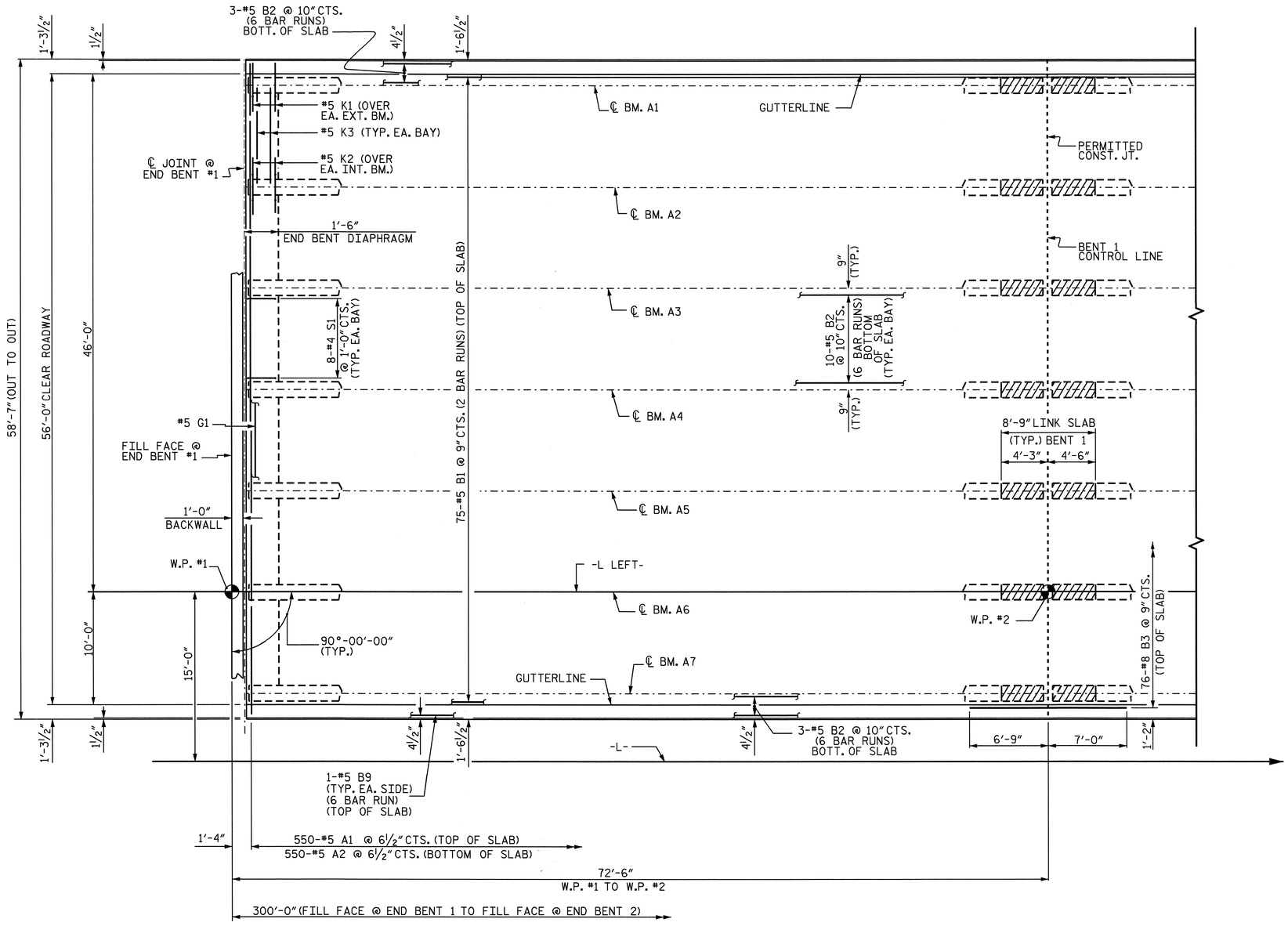

PLAN OF SPAN A

FOR REINFORCING STEEL IN PARAPET, SEE "PARAPET AND END POST DETAILS" SHEET.

PERMITTED TRANSVERSE CONSTRUCTION JOINT SHALL BE ALONG BENT 1 CONTROL LINE.

PROJECT NO. U-4012
DURHAM COUNTY
STATION: 70+22.00 -L-

SHEET 1 OF 4

STATE OF NORTH CAROLINA
DEPARTMENT OF TRANSPORTATION
RALEIGH

SUPERSTUCTURE
PLAN OF SPAN A
LEFT LANE

NORTH CAROLINA PROFESSIONAL SEAL 20125 ENGINEER MARSHALL L. GRICK, JR.
6-7-07

REVISIONS						SHEET NO.
NO.	BY:	DATE:	NO.	BY:	DATE:	S-60
1			3			TOTAL SHEETS
2			4			128

DRAWN BY : M. POOLE/L.L.M. DATE : 02/05
CHECKED BY : D. HODGE DATE : 02/05

06-JUN-2007 09:41
R:\Structures\u4012\Final Plans\Str #3\U4012_sd_S_01.dgn
vnguyen

STR.#3

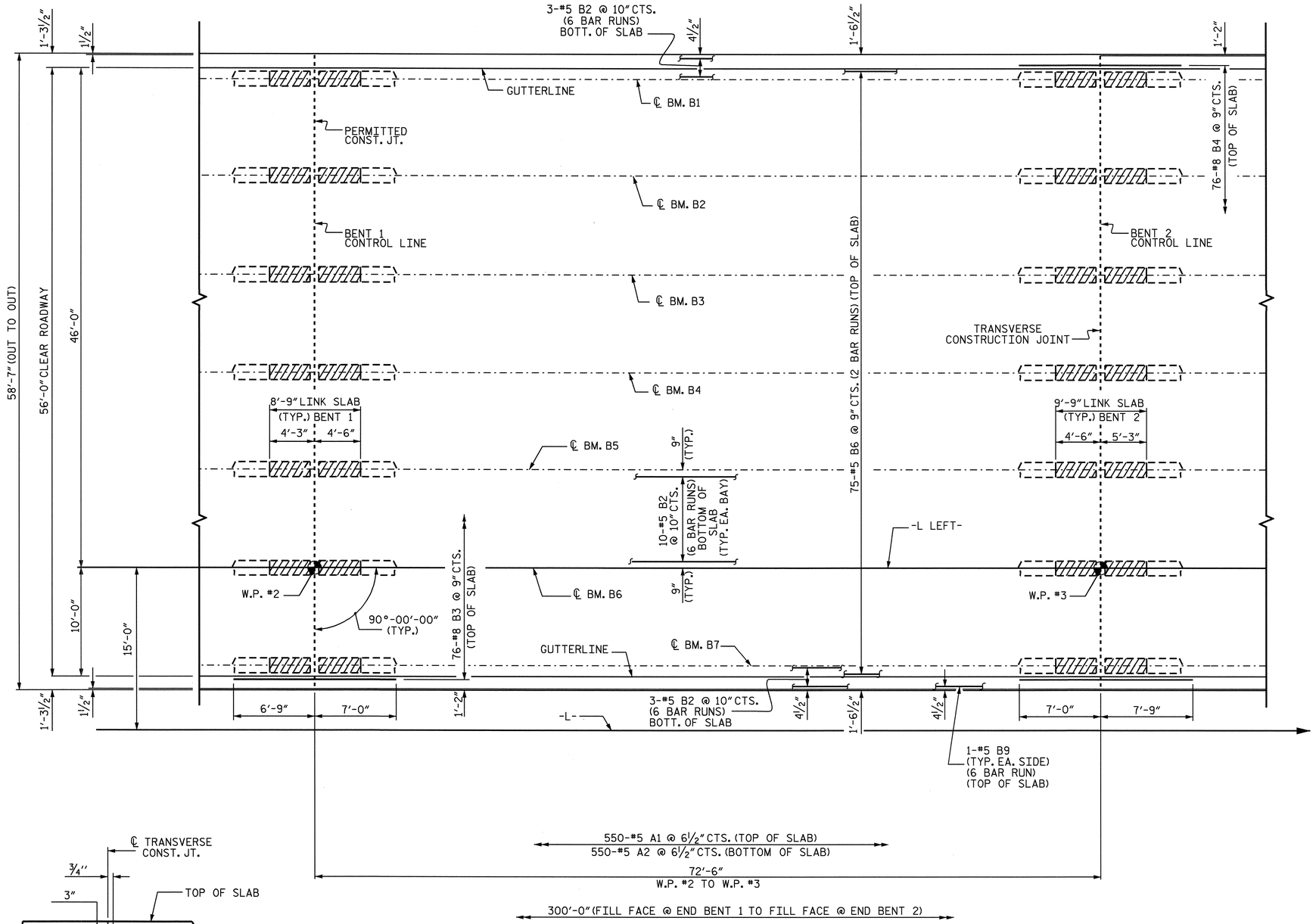

PLAN OF SPAN B

FOR REINFORCING STEEL IN PARAPET, SEE "PARAPET AND END POST DETAILS" SHEET.

TRANSVERSE CONSTRUCTION JOINT SHALL BE ALONG BENT 2 CONTROL LINE.

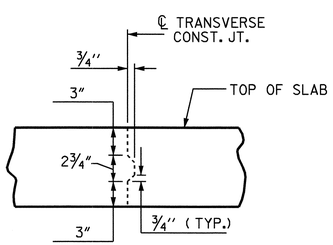

TRANSVERSE CONSTRUCTION JOINT DETAIL

NOTE: REINFORCING STEEL IN SLAB NOT SHOWN.
LONGITUDINAL REINFORCING STEEL SHALL BE
CONTINUOUS THRU JOINT

PROJECT NO. U-4012
DURHAM COUNTY
STATION: 70+22.00 -L-

SHEET 2 OF 4

STATE OF NORTH CAROLINA
DEPARTMENT OF TRANSPORTATION
RALEIGH

SUPERSTUCTURE
PLAN OF SPAN B
LEFT LANE

NORTH CAROLINA PROFESSIONAL SEAL 20125 ENGINEER MARSHALL LEE GREEL, JR.
6-7-07

REVISIONS						SHEET NO.
NO.	BY:	DATE:	NO.	BY:	DATE:	S-61
1			3			TOTAL SHEETS
2			4			128

DRAWN BY : M. POOLE/L.L.M. DATE : 02/05
CHECKED BY : D. HODGE DATE : 02/05

06-JUN-2007 09:41
R:\Structures\u4012\FinalPlans\Str #3\U4012_sd_S_01.dgn
vnguyen

STR.#3

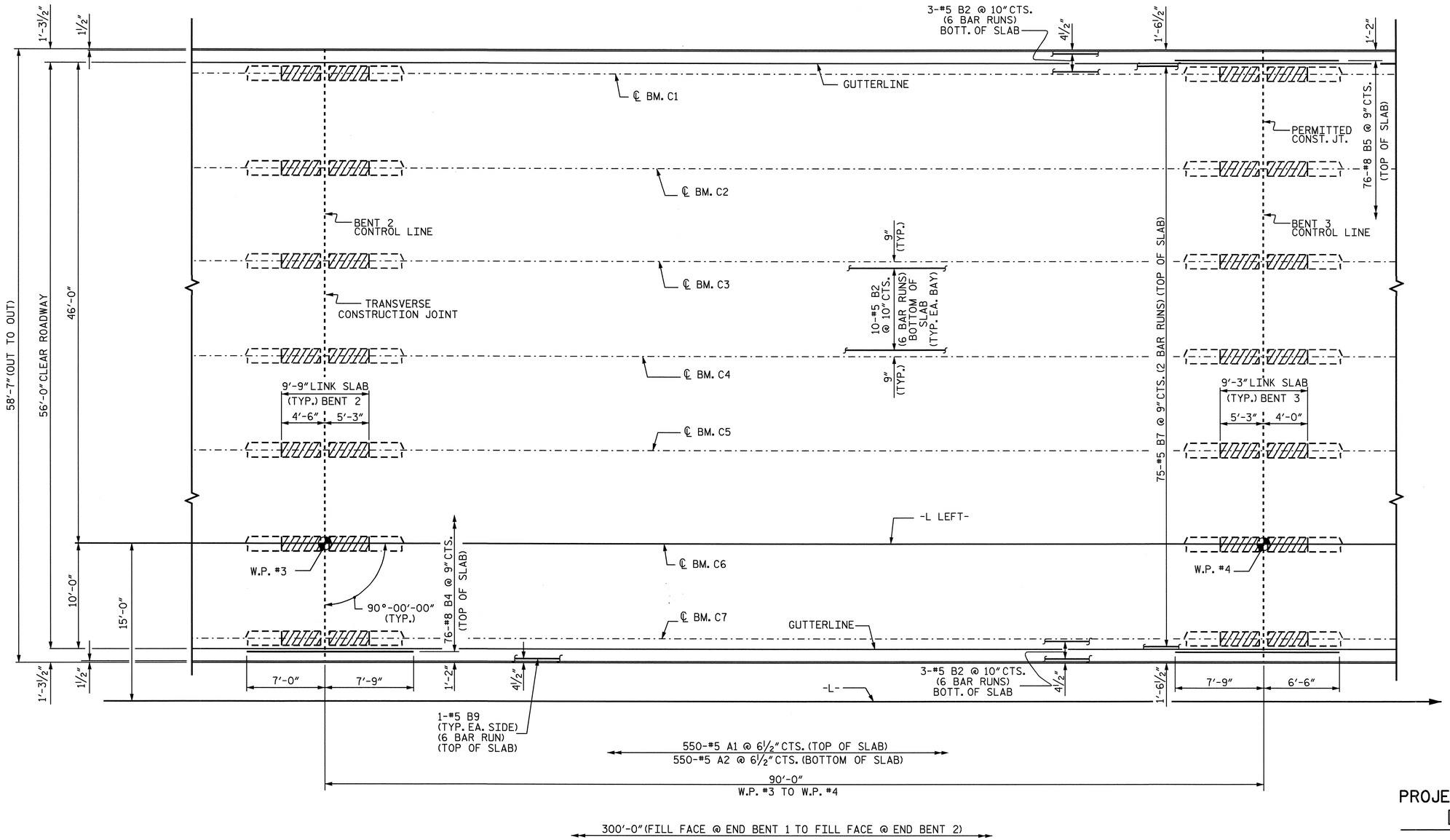

PROJECT NO. U-4012

DURHAM COUNTY

STATION: 70+22.00 -L-

SHEET 3 OF 4

PLAN OF SPAN C

FOR REINFORCING STEEL IN PARAPET, SEE "PARAPET AND END POST DETAILS" SHEET.

PERMITTED TRANSVERSE CONSTRUCTION JOINT SHALL BE ALONG BENT 3 CONTROL LINE.

STATE OF NORTH CAROLINA
DEPARTMENT OF TRANSPORTATION
RALEIGH

SUPERSTUCTURE
PLAN OF SPAN C
LEFT LANE

NORTH CAROLINA PROFESSIONAL SEAL 20125 ENGINEER MARSHALL G. KEMPEL, JR.
6-7-07

REVISIONS						SHEET NO.
NO.	BY:	DATE:	NO.	BY:	DATE:	S-62
1			3			TOTAL SHEETS
2			4			128

DRAWN BY : M. POOLE/L.L.M. DATE : 02/05
CHECKED BY : D. HODGE DATE : 02/05

06-JUN-2007 09:41
R:\Structures\u4012\Final Plans\Str #3\U4012_sd_S_01.dgn
vnguyen

STR.#3

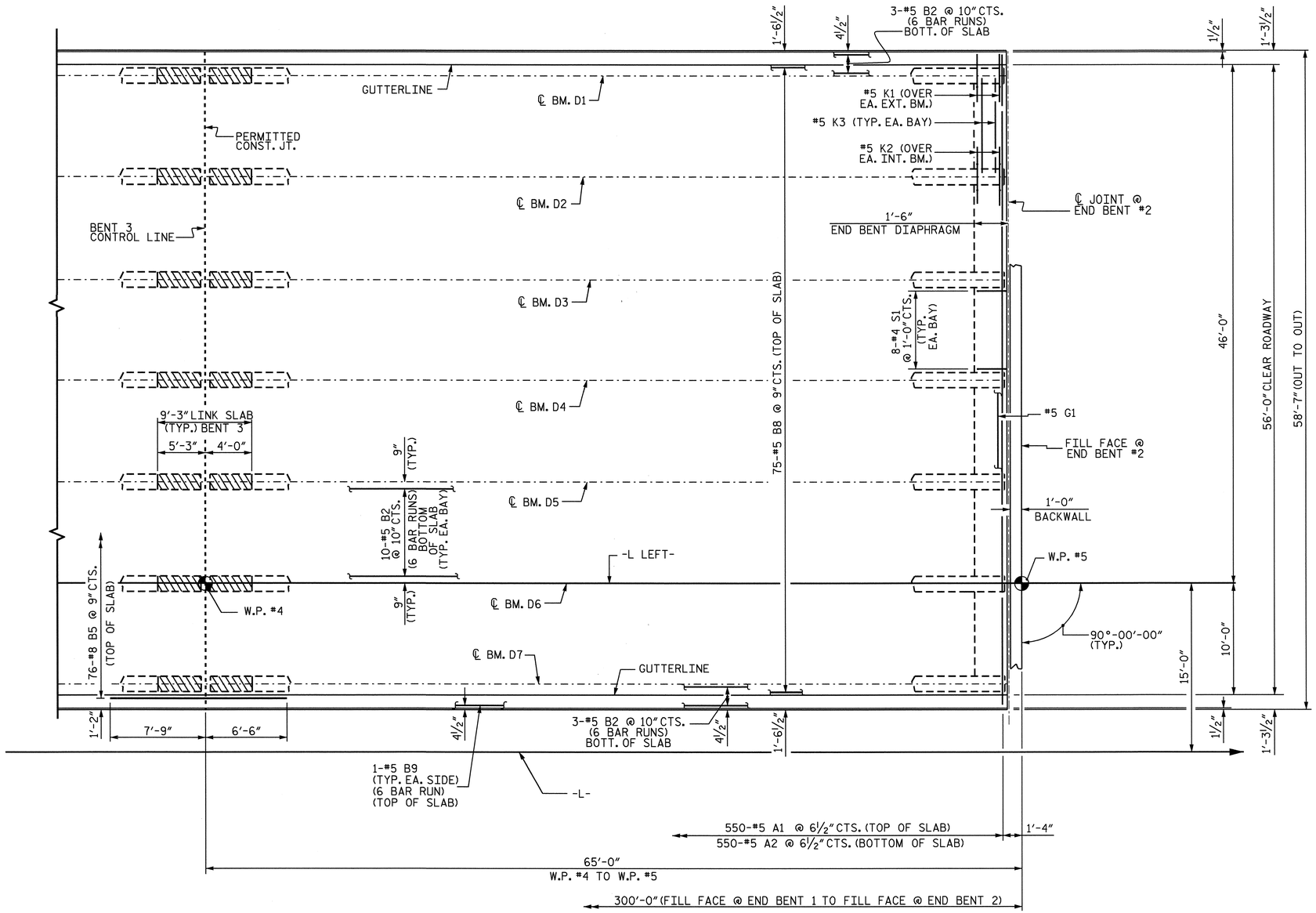

PLAN OF SPAN D

FOR REINFORCING STEEL IN PARAPET, SEE "PARAPET AND END POST DETAILS" SHEET.

PROJECT NO. U-4012
DURHAM COUNTY
STATION: 70+22.00 -L-

SHEET 4 OF 4

STATE OF NORTH CAROLINA
DEPARTMENT OF TRANSPORTATION
RALEIGH

SUPERSTUCTURE
PLAN OF SPAN D
LEFT LANE

NORTH CAROLINA PROFESSIONAL SEAL 20125 ENGINEER MARSHALL L. STEEL, JR.
6-7-07

REVISIONS						SHEET NO.
NO.	BY:	DATE:	NO.	BY:	DATE:	S-63
1			3			TOTAL SHEETS
2			4			128

DRAWN BY : M. POOLE/L.L.M. DATE : 02/05
CHECKED BY : D. HODGE DATE : 02/05

06-JUN-2007 09:41
R:\Structures\U4012\Final Plans\Str #3\U4012_sd_S_01.dgn
vnguyen

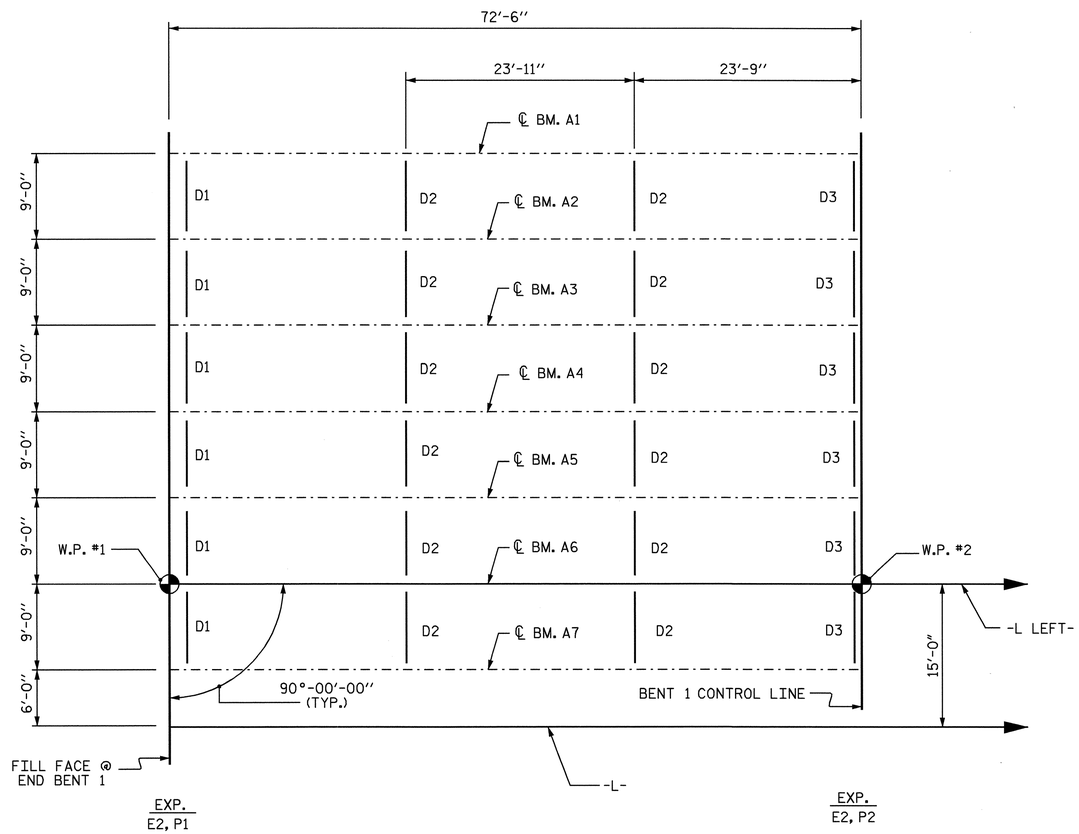

SPAN A

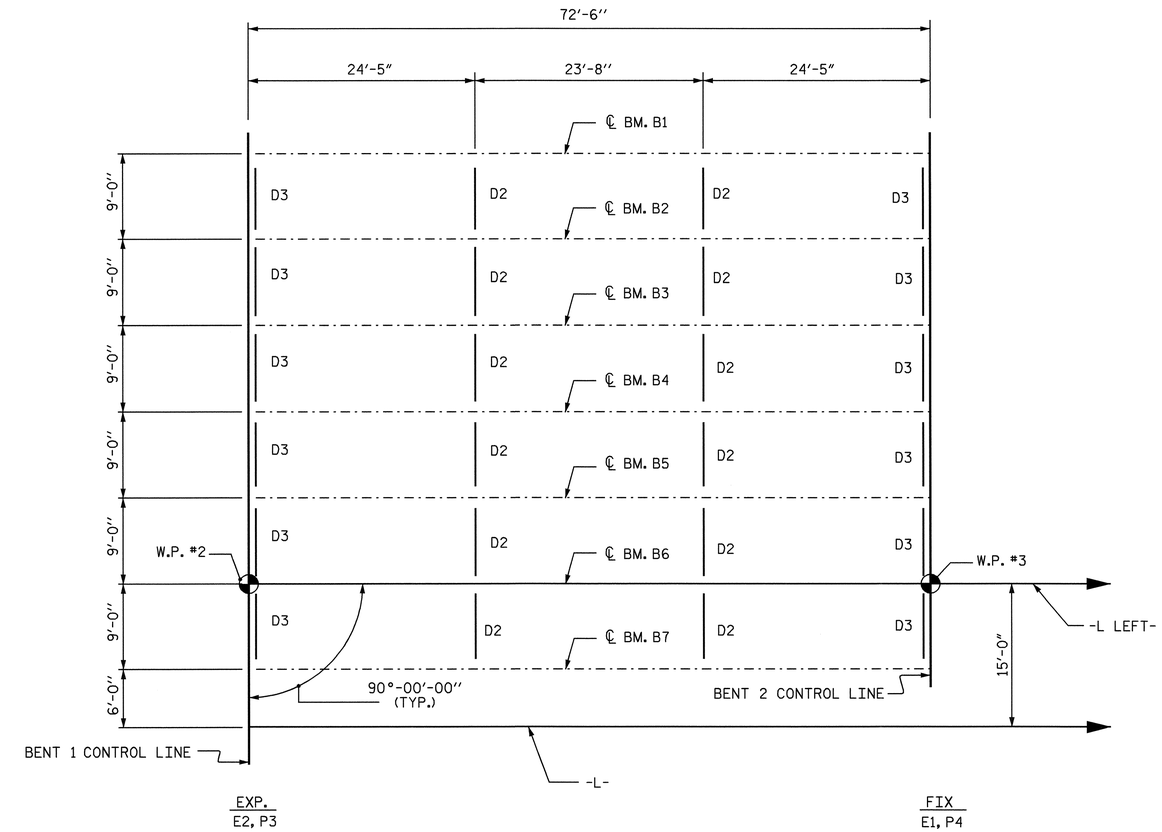

SPAN B

PROJECT NO. U-4012

DURHAM COUNTY

STATION: 70+22.00 -L-

SHEET 1 OF 2

STATE OF NORTH CAROLINA
DEPARTMENT OF TRANSPORTATION
RALEIGH

SUPERSTUCTURE
FRAMING PLAN
SPANS A & B
LEFT LANE

NORTH CAROLINA PROFESSIONAL SEAL 20125 ENGINEER MARSHALL G. LEWIS, JR.
6-7-07

REVISIONS						SHEET NO.
NO.	BY:	DATE:	NO.	BY:	DATE:	S-64
1			3			TOTAL SHEETS
2			4			128

DRAWN BY : M. POOLE DATE : 11/04
CHECKED BY : D. HODGE DATE : 02/05

06-JUN-2007 09:49
R:\Structures\U4012\Final Plans\Str #3\U4012_sd_FP_01.dgn
vnguyen

STR.#3

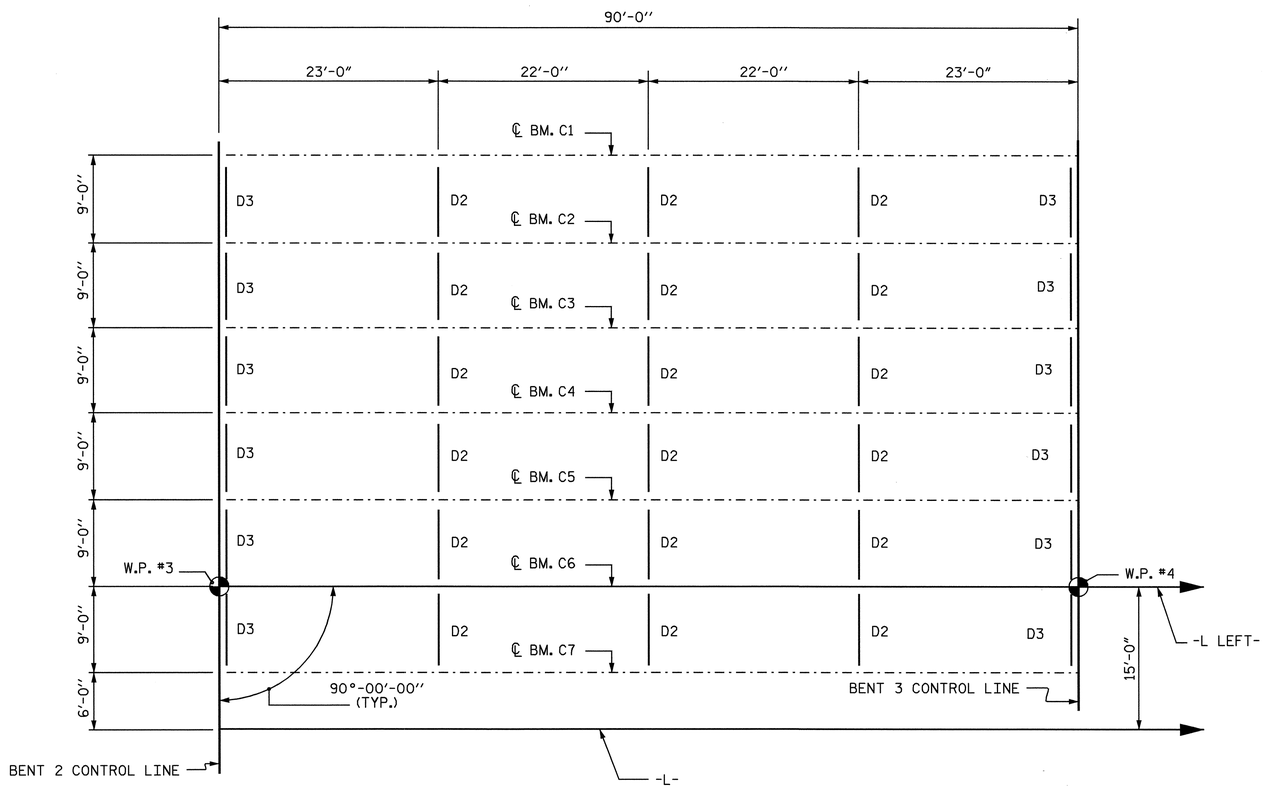

SPAN C

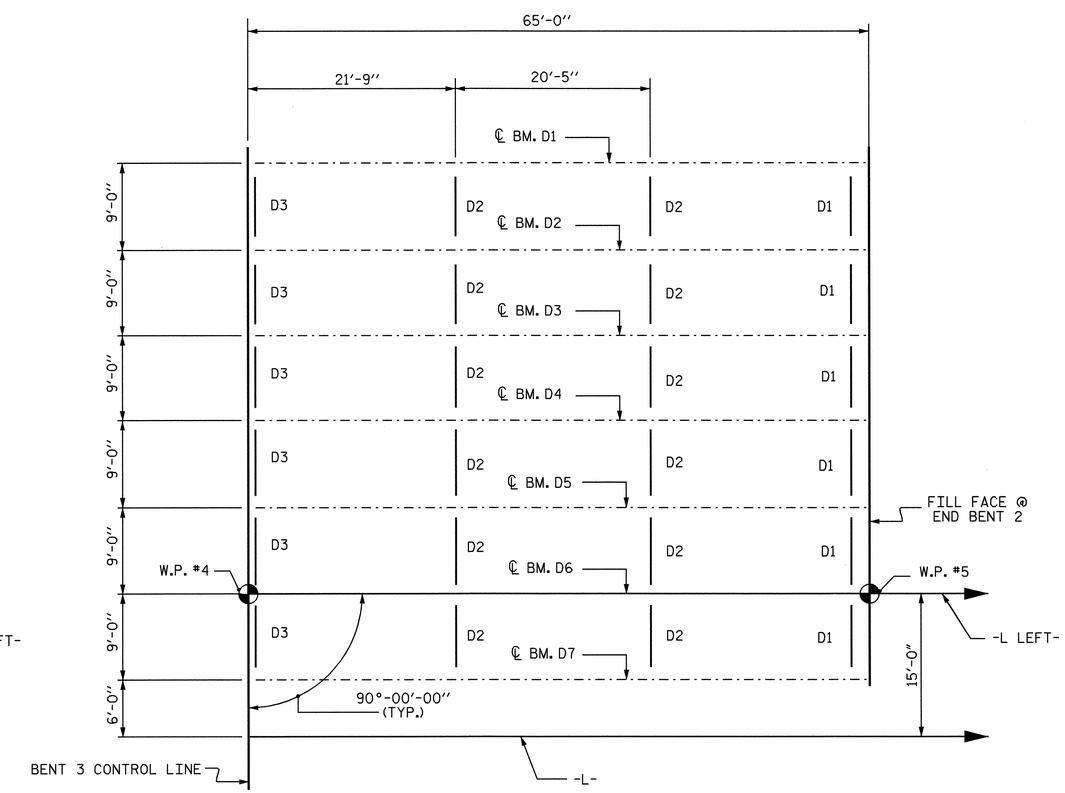

SPAN D

PROJECT NO. U-4012
DURHAM COUNTY
STATION: 70+22.00 -L-

SHEET 2 OF 2

STATE OF NORTH CAROLINA
DEPARTMENT OF TRANSPORTATION
RALEIGH

SUPERSTUCTURE
FRAMING PLAN
SPANS C & D
LEFT LANE

NORTH CAROLINA PROFESSIONAL SEAL 20125 ENGINEER MARSHALL L. GREEK, JR.
6-7-07

REVISIONS						SHEET NO.
NO.	BY:	DATE:	NO.	BY:	DATE:	S-65
1			3			TOTAL SHEETS
2			4			128

DRAWN BY : M. POOLE DATE : 11/04
CHECKED BY : D. HODGE DATE : 02/05

06-JUN-2007 09:49
R:\Structures\u4012\FinalPlans\Str #3\U4012_sd_FP_01.dgn
vnguyen

STR.#3

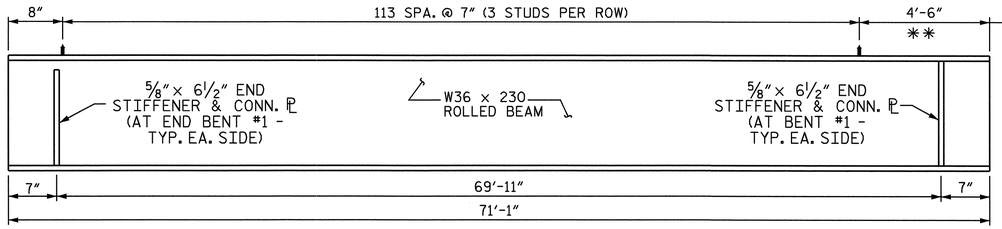

BEAM ELEVATION

(INTERMEDIATE DIAPHRAGMS NOT SHOWN)

SPAN A

2 LAYERS OF 30 LBS. ROOFING FELT ON TOP OF BEAM (TYP. FOR LENGTH OF LINK SLAB)

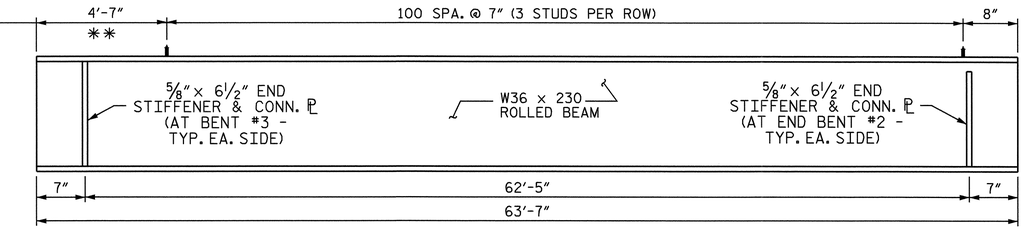

BEAM ELEVATION

(INTERMEDIATE DIAPHRAGMS NOT SHOWN)

SPAN D

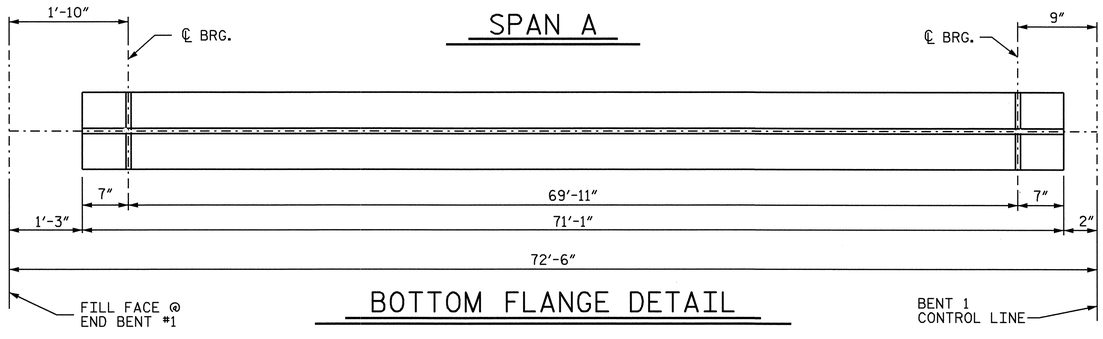

BOTTOM FLANGE DETAIL

SPAN A

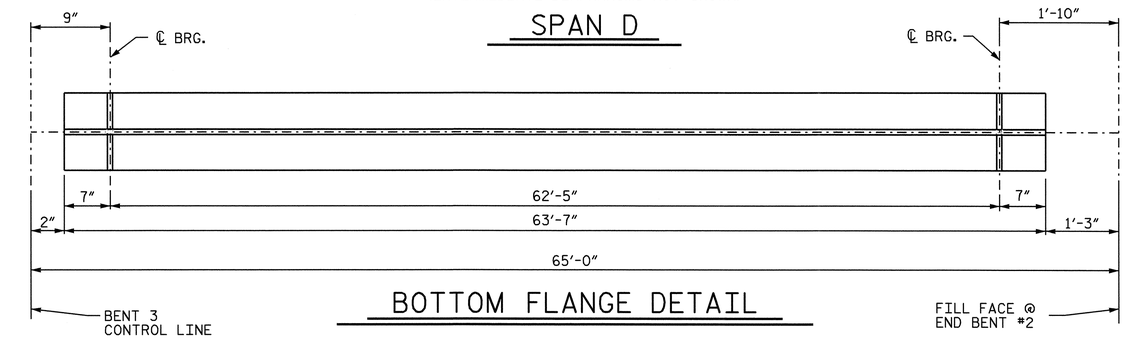

BOTTOM FLANGE DETAIL

SPAN D

2 LAYERS OF 30 LBS. ROOFING FELT ON TOP OF BEAM (TYP. FOR LENGTH OF LINK SLAB)

2 LAYERS OF 30 LBS. ROOFING FELT ON TOP OF BEAM (TYP. FOR LENGTH OF LINK SLAB)

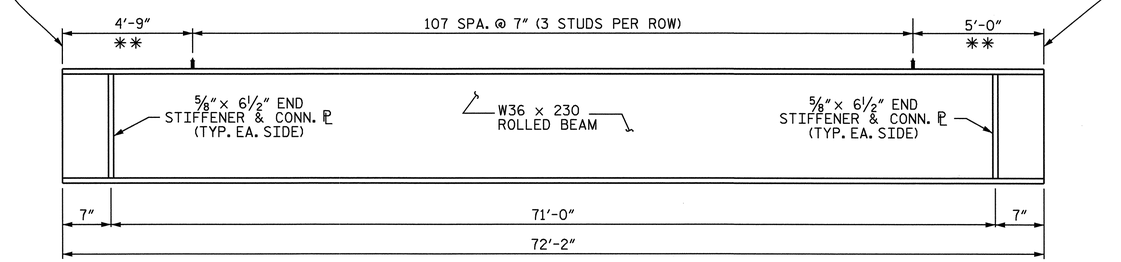

BEAM ELEVATION

(INTERMEDIATE DIAPHRAGMS NOT SHOWN)

SPAN B

2 LAYERS OF 30 LBS. ROOFING FELT ON TOP OF BEAM (TYP. FOR LENGTH OF LINK SLAB)

2 LAYERS OF 30 LBS. ROOFING FELT ON TOP OF BEAM (TYP. FOR LENGTH OF LINK SLAB)

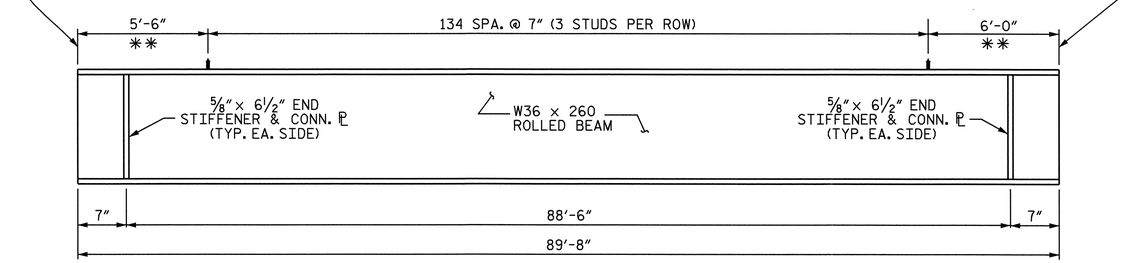

BEAM ELEVATION

(INTERMEDIATE DIAPHRAGMS NOT SHOWN)

SPAN C

** THE TOP OF THE BEAM IN THE REGION OF THE LINK SLAB SHALL BE SMOOTH AND FREE OF SHEAR STUDS. NO WELDING OF THE FORMS OR FALSEWORK TO THE TOP FLANGE WILL BE PERMITTED IN THIS REGION.

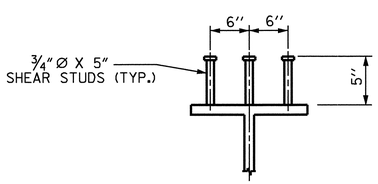

SHEAR STUD DETAILS

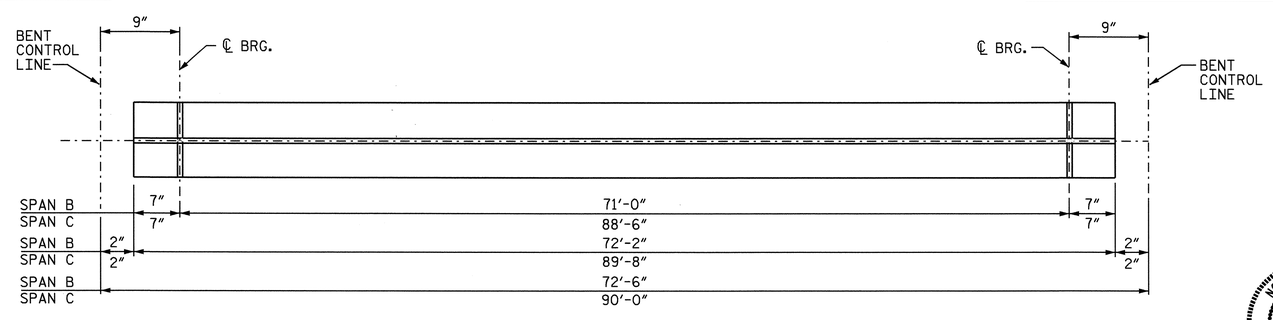

BOTTOM FLANGE DETAIL

SPAN B OR C

PROJECT NO. U-4012

DURHAM COUNTY

STATION: 70+22.00 -L-

SHEET 1 OF 2

STATE OF NORTH CAROLINA
DEPARTMENT OF TRANSPORTATION
RALEIGH

SUPERSTRUCTURE
STRUCTURAL STEEL
LEFT LANE

NORTH CAROLINA PROFESSIONAL SEAL 20125 ENGINEER MARSHALL C. WEEKS, JR.
6-29-07

REVISIONS						SHEET NO.
NO.	BY:	DATE:	NO.	BY:	DATE:	S-66
1			3			TOTAL SHEETS
2			4			128

DRAWN BY : M. POOLE/L.L.M. DATE : 02/05
CHECKED BY : D. HODGE DATE : 02/05

27-JUN-2007 10:20
R:\Structures\u4012\Final Plans\Str #3\U4012_sd_SS_01.dgn
vnguyen

STR.#3

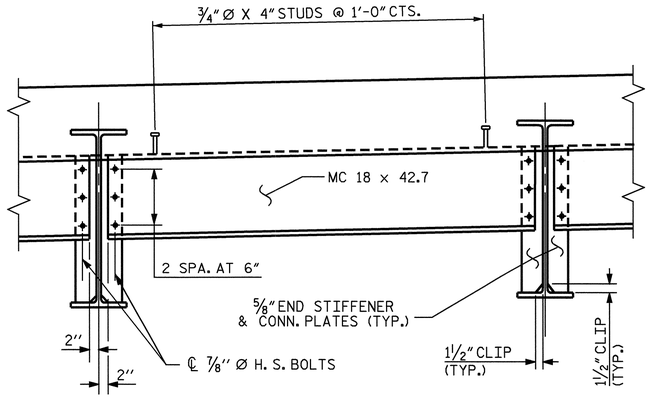

TYPICAL END BENT DIAPHRAGM - D1

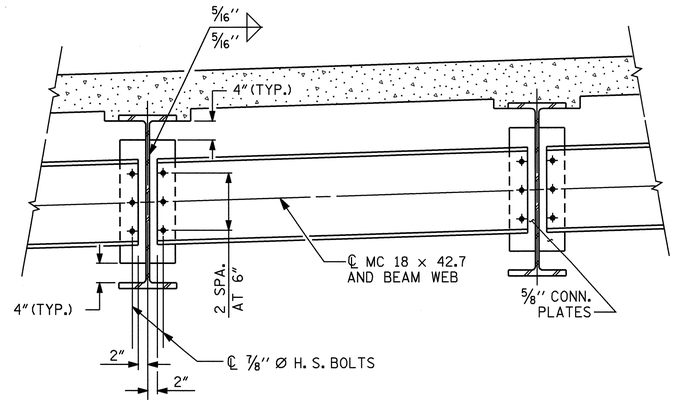

TYPICAL INTERMEDIATE DIAPHRAGM - D2

NOTES

ALL STRUCTURAL STEEL SHALL BE AASHTO M270 GRADE 50W AND PAINTED IN ACCORDANCE WITH SYSTEM 4 OF ARTICLE 442-7 OF THE STANDARD SPECIFICATIONS UNLESS OTHERWISE NOTED ON THE PLANS.

ALL DIMENSIONS SHOWN ARE HORIZONTAL OR VERTICAL, UNLESS OTHERWISE NOTED.

ALL FIELD CONNECTIONS TO BE 7/8" DIA. HIGH STRENGTH BOLTS UNLESS OTHERWISE NOTED.

ENDS OF BEAMS SHALL BE PLUMB.

TENSION ON THE AASHTO M164 BOLTS SHALL BE CALIBRATED USING DIRECT TENSION INDICATOR WASHERS IN ACCORDANCE WITH ARTICLE 440-8 OF THE STANDARD SPECIFICATIONS.

A CHARPY V-NOTCH TEST IS REQUIRED ON ALL BEAM SECTIONS IN ACCORDANCE WITH ARTICLE 1072-9 OF THE STANDARD SPECIFICATIONS.

END STIFFENERS ARE TO BE PLACED NORMAL TO THE WEB OF THE GIRDER AND SHALL BE PLUMB.

END STIFFENER MAY REQUIRE COPING IF WIDER THAN BOTTOM FLANGE TO AVOID INTERFERENCE WITH THE ANCHOR BOLTS.

END STIFFENERS ARE NOT REQUIRED ON THE OUTSIDE OF EXTERIOR BEAMS.

FOR HIGH STRENGTH BOLTS, SEE SPECIAL PROVISIONS.

FOR SHIPPING STEEL STRUCTURAL MEMBERS, SEE SPECIAL PROVISIONS.

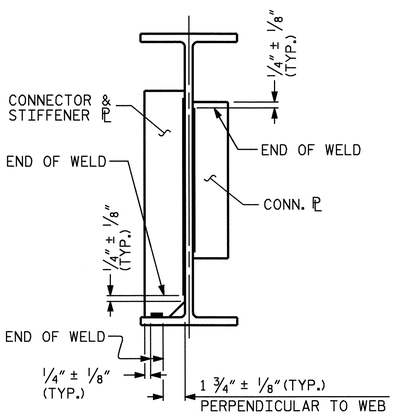

TYPICAL STIFFENER OR
CONNECTOR PLATE CONNECTIONS

WELD TERMINATION DETAILS

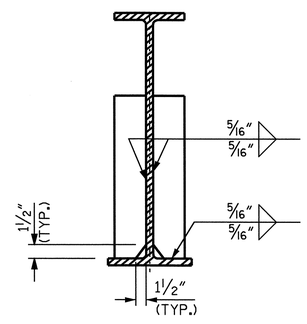

END STIFFENER

(AT END BENT)

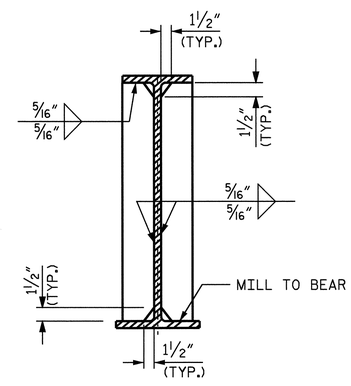

END STIFFENER

(AT BENT)

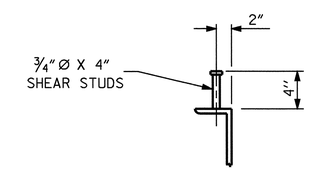

SHEAR STUD DETAILS

(ON DIAPHRAGMS)

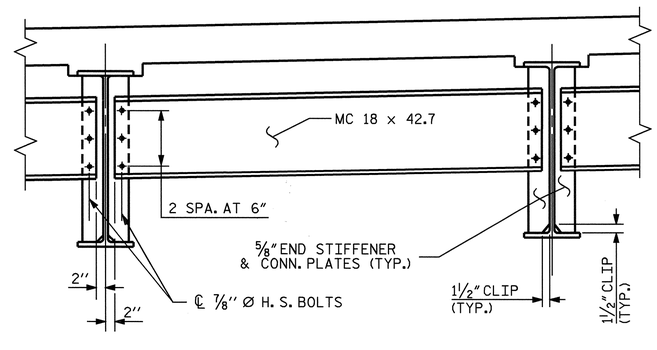

TYPICAL BENT DIAPHRAGM - D3

PROJECT NO. U-4012
DURHAM COUNTY
STATION: 70+22.00 -L-

SHEET 2 OF 2

STATE OF NORTH CAROLINA
DEPARTMENT OF TRANSPORTATION
RALEIGH

SUPERSTRUCTURE
STRUCTURAL STEEL DETAILS
LEFT LANE

NORTH CAROLINA PROFESSIONAL SEAL 20125 ENGINEER MARSHALL L. GLOVER, JR.
6-29-07

REVISIONS								SHEET NO.
NO.	BY:	DATE:		NO.	BY:	DATE:		S-67
1				3				TOTAL SHEETS
2				4				128

DRAWN BY : M. POOLE/L.L.M. DATE : 02/05
CHECKED BY : D. HODGE DATE : 02/05

27-JUN-2007 10:26
R:\Structures\u4012\FinalPlans\Str #3\U4012_sd_SS_01.dgn
vnguyen

STR. #3

DEAD LOAD DEFLECTION TABLE FOR BEAMS

	SPAN A										
	BEAM 1 & 7										
TENTH POINTS	0	.10	.20	.30	.40	.50	.60	.70	.80	.90	0
DEFLECTION DUE TO WEIGHT OF BEAM	0.000	0.009	0.016	0.022	0.026	0.027	0.026	0.022	0.016	0.009	0.000
DEFLECTION DUE TO WEIGHT OF SLAB ✳	0.000	0.029	0.055	0.076	0.089	0.093	0.089	0.076	0.055	0.029	0.000
DEFLECTION DUE TO WEIGHT OF PARAPET	0.000	0.006	0.011	0.016	0.018	0.019	0.018	0.016	0.011	0.006	0.000
TOTAL DEAD LOAD DEFLECTION	0.000	0.044	0.082	0.114	0.133	0.139	0.133	0.114	0.082	0.044	0.000
VERTICAL CURVE ORDINATE	0.000	-0.011	-0.019	-0.025	-0.029	-0.030	-0.029	-0.025	-0.019	-0.011	0.000
ORDINATE DUE TO SUPERELEVATION	—	—	—	—	—	—	—	—	—	—	—
REQUIRED CAMBER	0	3/8"	3/4"	1 1/16"	1 1/4"	1 5/16"	1 1/4"	1 1/16"	3/4"	3/8"	0

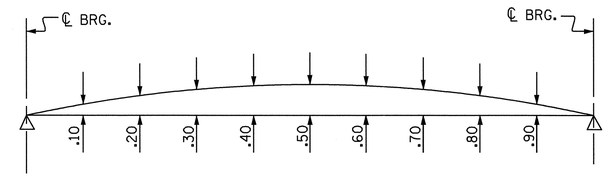

SCHEMATIC CAMBER ORDINATES

DEAD LOAD DEFLECTION TABLE FOR BEAMS

	SPAN A										
	BEAM 2, 3, 4, 5 & 6										
TENTH POINTS	0	.10	.20	.30	.40	.50	.60	.70	.80	.90	0
DEFLECTION DUE TO WEIGHT OF BEAM	0.000	0.009	0.016	0.022	0.026	0.027	0.026	0.022	0.016	0.009	0.000
DEFLECTION DUE TO WEIGHT OF SLAB ✳	0.000	0.038	0.072	0.098	0.115	0.121	0.115	0.098	0.072	0.038	0.000
DEFLECTION DUE TO WEIGHT OF PARAPET	0.000	0.006	0.011	0.015	0.017	0.018	0.017	0.015	0.011	0.006	0.000
TOTAL DEAD LOAD DEFLECTION	0.000	0.053	0.099	0.135	0.158	0.166	0.158	0.135	0.099	0.053	0.000
VERTICAL CURVE ORDINATE	0.000	-0.011	-0.019	-0.025	-0.029	-0.030	-0.029	-0.025	-0.019	-0.011	0.000
ORDINATE DUE TO SUPERELEVATION	—	—	—	—	—	—	—	—	—	—	—
REQUIRED CAMBER	0	1/2"	15/16"	1 5/16"	1 9/16"	1 5/8"	1 9/16"	1 5/16"	15/16"	1/2"	0

DEAD LOAD DEFLECTION TABLE FOR BEAMS

	SPAN B										
	BEAM 1 & 7										
TENTH POINTS	0	.10	.20	.30	.40	.50	.60	.70	.80	.90	0
DEFLECTION DUE TO WEIGHT OF BEAM	0.000	0.009	0.017	0.024	0.028	0.029	0.028	0.024	0.017	0.009	0.000
DEFLECTION DUE TO WEIGHT OF SLAB ✳	0.000	0.031	0.059	0.081	0.094	0.099	0.094	0.081	0.059	0.031	0.000
DEFLECTION DUE TO WEIGHT OF PARAPET	0.000	0.006	0.012	0.017	0.020	0.021	0.020	0.017	0.012	0.006	0.000
TOTAL DEAD LOAD DEFLECTION	0.000	0.046	0.088	0.122	0.142	0.149	0.142	0.122	0.088	0.046	0.000
VERTICAL CURVE ORDINATE	0.000	-0.011	-0.020	-0.026	-0.029	-0.031	-0.029	-0.026	-0.020	-0.011	0.000
ORDINATE DUE TO SUPERELEVATION	—	—	—	—	—	—	—	—	—	—	—
REQUIRED CAMBER	0	7/16"	13/16"	1 1/8"	1 3/8"	1 7/16"	1 3/8"	1 1/8"	13/16"	7/16"	0

DEAD LOAD DEFLECTION TABLE FOR BEAMS

	SPAN B										
	BEAM 2, 3, 4, 5 & 6										
TENTH POINTS	0	.10	.20	.30	.40	.50	.60	.70	.80	.90	0
DEFLECTION DUE TO WEIGHT OF BEAM	0.000	0.009	0.017	0.024	0.028	0.029	0.028	0.024	0.017	0.009	0.000
DEFLECTION DUE TO WEIGHT OF SLAB ✳	0.000	0.040	0.076	0.105	0.123	0.129	0.123	0.105	0.076	0.040	0.000
DEFLECTION DUE TO WEIGHT OF PARAPET	0.000	0.006	0.011	0.015	0.018	0.019	0.018	0.015	0.011	0.006	0.000
TOTAL DEAD LOAD DEFLECTION	0.000	0.055	0.104	0.144	0.169	0.177	0.169	0.144	0.104	0.055	0.000
VERTICAL CURVE ORDINATE	0.000	-0.011	-0.020	-0.026	-0.029	-0.031	-0.029	-0.026	-0.020	-0.011	0.000
ORDINATE DUE TO SUPERELEVATION	—	—	—	—	—	—	—	—	—	—	—
REQUIRED CAMBER	0	1/2"	1"	1 7/16"	1 11/16"	1 3/4"	1 11/16"	1 7/16"	1"	1/2"	0

✳ INCLUDES SLAB, BUILDUPS & STAY-IN-PLACE FORMS.
ALL VALUES ARE SHOWN IN FEET (DECIMAL FORM), EXCEPT " FINAL CAMBER ", WHICH IS GIVEN IN INCHES (FRACTION FORM).

PROJECT NO. U-4012
DURHAM COUNTY
STATION: 70+22.00 -L-

SHEET 1 OF 2

STATE OF NORTH CAROLINA
DEPARTMENT OF TRANSPORTATION
RALEIGH

SUPERSTRUCTURE
DEAD LOAD DEFLECTIONS
LEFT LANE

NORTH CAROLINA PROFESSIONAL SEAL 20125 ENGINEER MARSHALL L. HODGE, JR.
4-26-07

REVISIONS						SHEET NO.
NO.	BY:	DATE:	NO.	BY:	DATE:	S-68
1			3			TOTAL SHEETS
2			4			128

DRAWN BY : M. POOLE DATE : 12/04
CHECKED BY : D. HODGE DATE : 02/05

23-APR-2007 09:26
R:\Structures\U4012\FinalPlans\Str #3\U4012_sd_DL_01.dgn
vnguyen

STR.#3

DEAD LOAD DEFLECTION TABLE FOR BEAMS

	SPAN C										
	BEAM 1 & 7										
TENTH POINTS	0	.10	.20	.30	.40	.50	.60	.70	.80	.90	0
DEFLECTION DUE TO WEIGHT OF BEAM	0.000	0.022	0.041	0.056	0.065	0.069	0.065	0.056	0.041	0.022	0.000
DEFLECTION DUE TO WEIGHT OF SLAB ✳	0.000	0.065	0.123	0.169	0.198	0.207	0.198	0.169	0.123	0.065	0.000
DEFLECTION DUE TO WEIGHT OF PARAPET	0.000	0.014	0.027	0.036	0.043	0.045	0.043	0.036	0.027	0.014	0.000
TOTAL DEAD LOAD DEFLECTION	0.000	0.101	0.191	0.261	0.306	0.321	0.306	0.261	0.191	0.101	0.000
VERTICAL CURVE ORDINATE	0.000	-0.017	-0.031	-0.040	-0.046	-0.048	-0.046	-0.040	-0.031	-0.017	0.000
ORDINATE DUE TO SUPERELEVATION	—	—	—	—	—	—	—	—	—	—	—
REQUIRED CAMBER	0	1″	1 15/16″	2 5/8″	3 1/8″	3 1/4″	3 1/8″	2 5/8″	1 15/16″	1″	0

DEAD LOAD DEFLECTION TABLE FOR BEAMS

	SPAN C										
	BEAM 2, 3, 4, 5 & 6										
TENTH POINTS	0	.10	.20	.30	.40	.50	.60	.70	.80	.90	0
DEFLECTION DUE TO WEIGHT OF BEAM	0.000	0.022	0.041	0.056	0.065	0.069	0.065	0.056	0.041	0.022	0.000
DEFLECTION DUE TO WEIGHT OF SLAB ✳	0.000	0.084	0.160	0.219	0.256	0.269	0.256	0.219	0.160	0.084	0.000
DEFLECTION DUE TO WEIGHT OF PARAPET	0.000	0.013	0.025	0.034	0.040	0.042	0.040	0.034	0.025	0.013	0.000
TOTAL DEAD LOAD DEFLECTION	0.000	0.119	0.225	0.308	0.361	0.379	0.361	0.308	0.225	0.119	0.000
VERTICAL CURVE ORDINATE	0.000	-0.017	-0.031	-0.040	-0.046	-0.048	-0.046	-0.040	-0.031	-0.017	0.000
ORDINATE DUE TO SUPERELEVATION	—	—	—	—	—	—	—	—	—	—	—
REQUIRED CAMBER	0	1 1/4″	2 5/16″	3 3/16″	3 3/4″	4″	3 3/4″	3 3/16″	2 5/16″	1 1/4″	0

DEAD LOAD DEFLECTION TABLE FOR BEAMS

	SPAN D										
	BEAM 1 & 7										
TENTH POINTS	0	.10	.20	.30	.40	.50	.60	.70	.80	.90	0
DEFLECTION DUE TO WEIGHT OF BEAM	0.000	0.005	0.010	0.014	0.017	0.017	0.017	0.014	0.010	0.005	0.000
DEFLECTION DUE TO WEIGHT OF SLAB ✳	0.000	0.019	0.035	0.048	0.056	0.059	0.056	0.048	0.035	0.019	0.000
DEFLECTION DUE TO WEIGHT OF PARAPET	0.000	0.004	0.007	0.010	0.012	0.012	0.012	0.010	0.007	0.004	0.000
TOTAL DEAD LOAD DEFLECTION	0.000	0.028	0.052	0.072	0.085	0.088	0.085	0.072	0.052	0.028	0.000
VERTICAL CURVE ORDINATE	0.000	-0.009	-0.015	-0.020	-0.023	-0.024	-0.023	-0.020	-0.015	-0.009	0.000
ORDINATE DUE TO SUPERELEVATION	—	—	—	—	—	—	—	—	—	—	—
REQUIRED CAMBER	0	1/4″	7/16″	5/8″	3/4″	3/4″	3/4″	5/8″	7/16″	1/4″	0

DEAD LOAD DEFLECTION TABLE FOR BEAMS

	SPAN D										
	BEAM 2, 3, 4, 5 & 6										
TENTH POINTS	0	.10	.20	.30	.40	.50	.60	.70	.80	.90	0
DEFLECTION DUE TO WEIGHT OF BEAM	0.000	0.005	0.010	0.014	0.017	0.017	0.017	0.014	0.010	0.005	0.000
DEFLECTION DUE TO WEIGHT OF SLAB ✳	0.000	0.024	0.046	0.062	0.073	0.077	0.073	0.062	0.046	0.024	0.000
DEFLECTION DUE TO WEIGHT OF PARAPET	0.000	0.004	0.007	0.009	0.011	0.011	0.011	0.009	0.007	0.004	0.000
TOTAL DEAD LOAD DEFLECTION	0.000	0.033	0.063	0.085	0.101	0.105	0.101	0.085	0.063	0.033	0.000
VERTICAL CURVE ORDINATE	0.000	-0.009	-0.015	-0.020	-0.023	-0.024	-0.023	-0.020	-0.015	-0.009	0.000
ORDINATE DUE TO SUPERELEVATION	—	—	—	—	—	—	—	—	—	—	—
REQUIRED CAMBER	0	5/16″	9/16″	3/4″	15/16″	1″	15/16″	3/4″	9/16″	5/16″	0

✳ INCLUDES SLAB, BUILDUPS & STAY-IN-PLACE FORMS.
ALL VALUES ARE SHOWN IN FEET (DECIMAL FORM), EXCEPT " FINAL CAMBER ", WHICH IS GIVEN IN INCHES (FRACTION FORM).

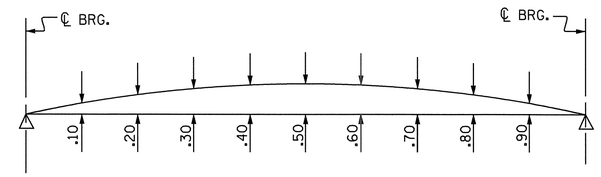

SCHEMATIC CAMBER ORDINATES

PROJECT NO. U-4012
DURHAM COUNTY
STATION: 70+22.00 -L-

SHEET 2 OF 2

STATE OF NORTH CAROLINA
DEPARTMENT OF TRANSPORTATION
RALEIGH

SUPERSTRUCTURE
DEAD LOAD DEFLECTIONS
LEFT LANE

NORTH CAROLINA PROFESSIONAL SEAL 20125 ENGINEER MARSHALL H. HODGE, JR.
6-26-07

REVISIONS						SHEET NO.
NO.	BY:	DATE:	NO.	BY:	DATE:	S-69
1			3			TOTAL SHEETS
2			4			128

DRAWN BY : M. POOLE DATE : 12/04
CHECKED BY : D. HODGE DATE : 02/05

26-JUN-2007 15:12
R:\Structures\U4012\Final Plans\Str #3\U4012_sd_DL_01.dgn
aflgueroa

STR.#3

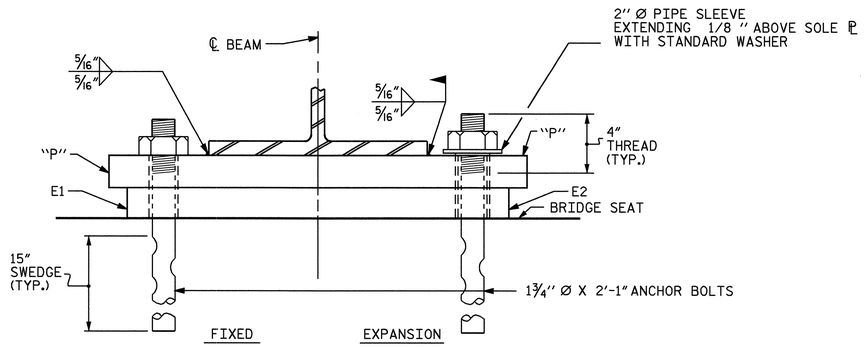

END VIEW

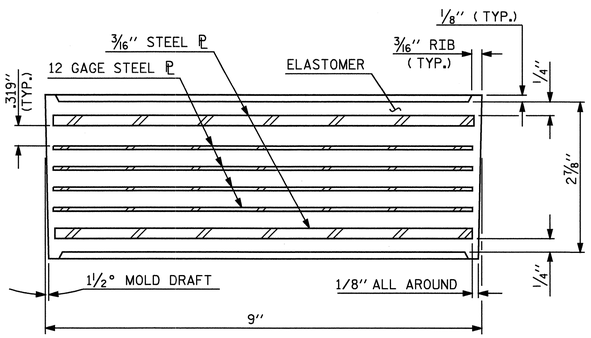

TYPICAL SECTION OF ELASTOMERIC BEARINGS

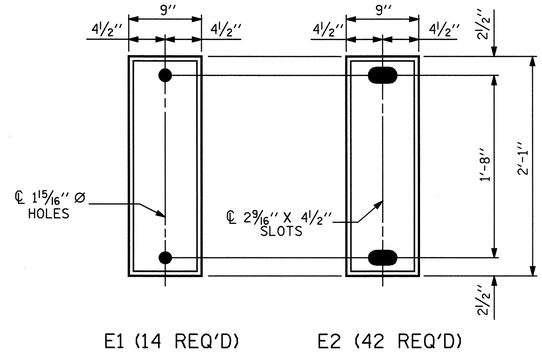

PLAN VIEW OF ELASTOMERIC BEARING

TYPE III

NOTES

AT ALL FIXED POINTS OF SUPPORT, NUTS FOR ANCHOR BOLTS ARE TO BE TIGHTENED FINGER TIGHT AND THEN BACKED OFF ½ TURN. THE THREAD OF THE NUT AND BOLT SHALL THEN BE BURRED WITH A SHARP POINTED TOOL.

THE 2'' Ø PIPE SLEEVE SHALL BE CUT FROM SCHEDULE 40 PVC PLASTIC PIPE. THE PVC PLASTIC PIPE SHALL MEET THE REQUIREMENTS OF ASTM D1785.

THE PAYMENT FOR THE PIPE SLEEVES SHALL BE INCLUDED IN THE SEVERAL PAY ITEMS.

FOR AASHTO M270 GRADE 50W STRUCTURAL STEEL, SOLE PLATE SHALL BE AASHTO M270 GRADE 50W AND SHALL NOT BE GALVANIZED. ANCHOR BOLTS, NUTS AND WASHERS SHALL BE GALVANIZED IN ACCORDANCE WITH THE STANDARD SPECIFICATIONS.

ANCHOR BOLTS SHALL MEET THE REQUIREMENTS OF ASTM A449. NUTS SHALL MEET THE REQUIREMENTS OF AASHTO M291-DH OR AASHTO M292-2H. WASHERS SHALL MEET THE REQUIREMENTS OF AASHTO M293. SHOP DRAWINGS ARE NOT REQUIRED FOR ANCHOR BOLTS, NUTS AND WASHERS. SHOP INSPECTION IS REQUIRED.

WHEN FIELD WELDING THE SOLE PLATE TO THE GIRDER FLANGE, USE TEMPERATURE INDICATING WAX PENS, OR OTHER SUITABLE MEANS, TO ENSURE THAT THE TEMPERATURE OF THE SOLE PLATE DOES NOT EXCEED 300°F. TEMPERATURES ABOVE THIS MAY DAMAGE THE ELASTOMER.

ALL SURFACES OF BEARING PLATES SHALL BE SMOOTH AND STRAIGHT.

-LOAD RATINGS-	
	MAX.D.L.+L.L.
TYPE III	144 K

INCREASING STATIONS →

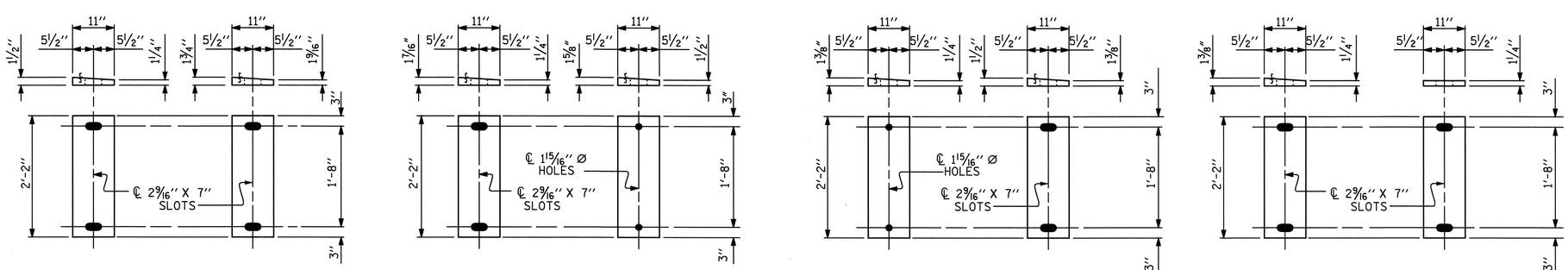

SOLE PLATE DETAILS (''P'')

PROJECT NO. U-4012
DURHAM COUNTY
STATION: 70+22.00 -L-

STATE OF NORTH CAROLINA
DEPARTMENT OF TRANSPORTATION
RALEIGH

STANDARD

ELASTOMERIC BEARING DETAILS

LEFT LANE

NORTH CAROLINA PROFESSIONAL SEAL 20125 ENGINEER MARSHALL L. ROBERTS JR.
6-7-07

ASSEMBLED BY :	M. POOLE	DATE : 12/04
CHECKED BY :	D. HODGE	DATE : 02/05

DRAWN BY : JMB 11/87	REV. 8/16/99 MAB/LES
CHECKED BY : ARB 11/87	REV. 10/17/00 RWW/LES
	REV. 5/1/06 TLA/GM

REVISIONS						SHEET NO.
NO.	BY:	DATE:	NO.	BY:	DATE:	S-70
1			3			TOTAL SHEETS
2			4			128

STR.#3

STD. NO. EB1

06-JUN-2007 10:03
R:\Structures\U4012\Final Plans\Str #3\U4012_sd_BG_01.dgn
vnguyen

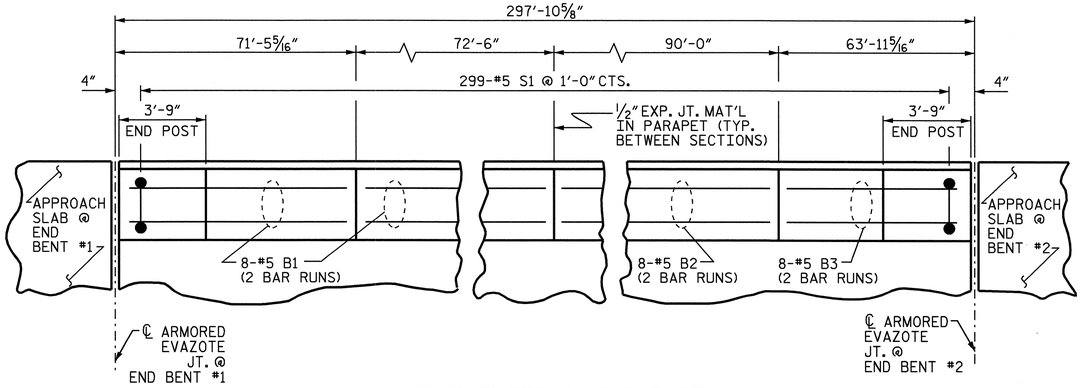

PLAN OF PARAPET & END POST

(TYP. EA. SIDE)

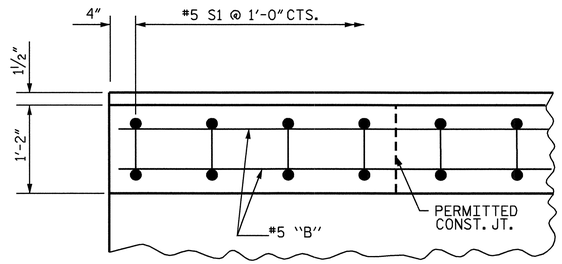

PLAN OF PARAPET

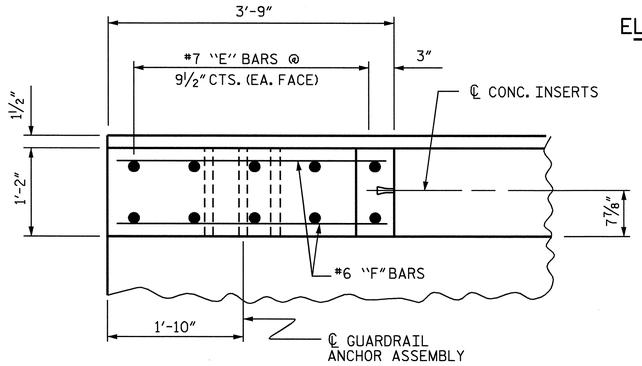

PLAN OF END POST

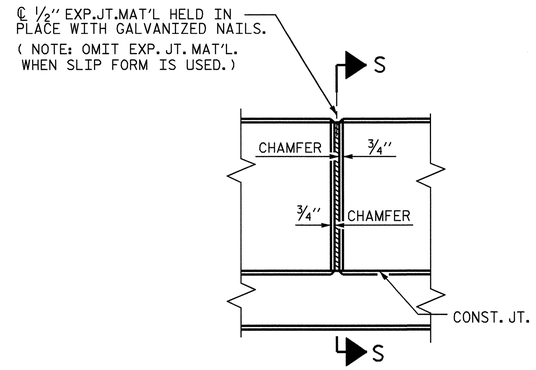

ELEVATION AT JOINTS IN PARAPET

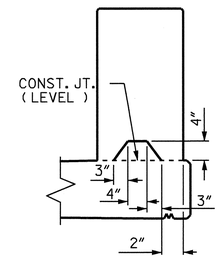

SECTION S-S

AT DAM IN OPEN JOINT
(THIS IS TO BE USED ONLY WHEN SLIP FORM IS USED)

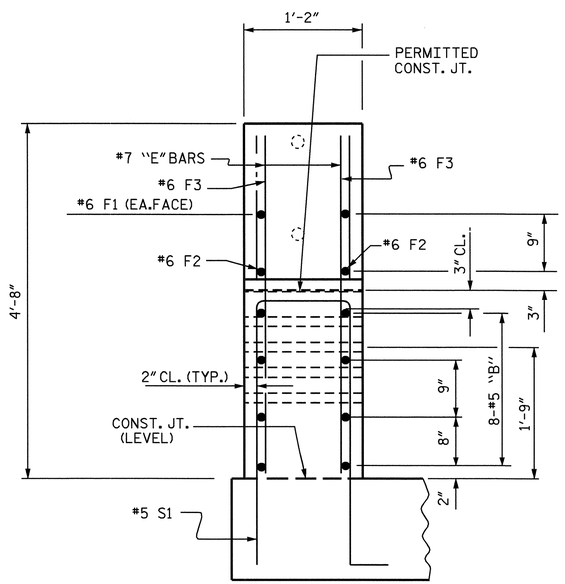

END VIEW

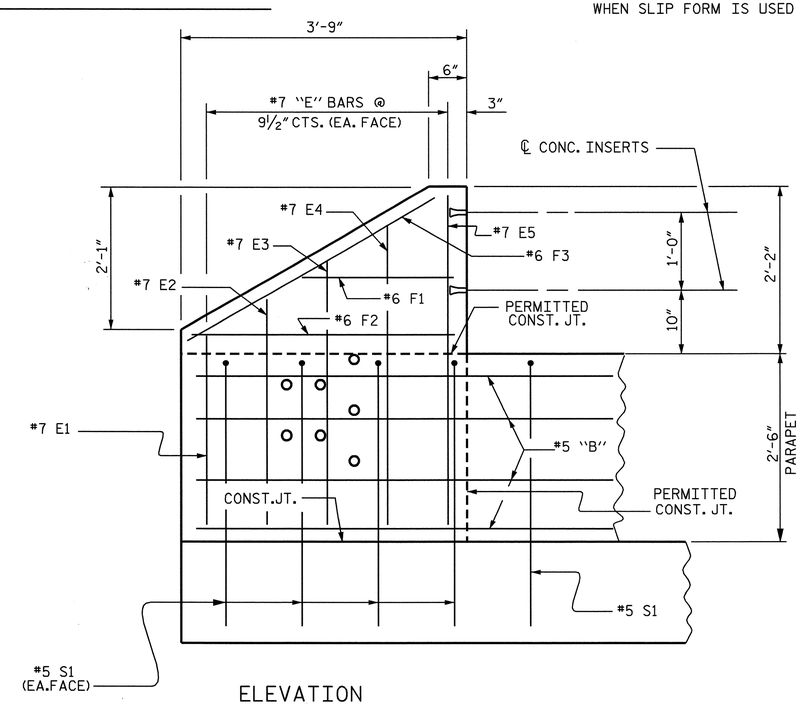

ELEVATION

PARAPET AND END POST FOR TWO BAR RAIL

BILL OF MATERAL

CONCRETE PARAPET & END POSTS

BAR	NO.	SIZE	TYPE	LENGTH	WEIGHT
✱ B1	64	5	STR	37'-9"	2520
✱ B2	32	5	STR	46'-7"	1555
✱ B3	32	5	STR	33'-6"	1118
✱ E1	8	7	STR	2'-6"	41
✱ E2	8	7	STR	3'-0"	49
✱ E3	8	7	STR	3'-6"	57
✱ E4	8	7	STR	4'-0"	65
✱ E5	8	7	STR	4'-6"	74
✱ F1	8	6	STR	1'-10"	22
✱ F2	8	6	STR	3'-0"	36
✱ F3	8	6	STR	3'-4"	40
✱ S1	598	5	1	7'-0"	4366

✱ EPOXY COATED REINFORCING STEEL 9943 LBS.

CLASS AA CONCRETE 65.2 C.Y.

1'-2" X 2'-6" CONCRETE PARAPET 595.77 LIN FEET

BAR TYPE

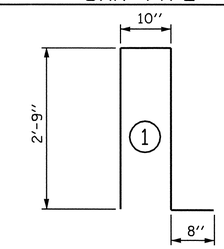

ALL BAR DIMENSIONS ARE OUT TO OUT

✱ THESE BARS ARE EPOXY COATED

NOTES:

FOR DETAILS OF CONCRETE INSERT AND GUARDRAIL ANCHOR ASSEMBLY, SEE "RAIL POST SPACINGS AND END OF RAIL DETAILS" SHEETS.

ALL REINFORCING STEEL IN CONCRETE PARAPET SHALL BE EPOXY COATED.

THE REINFORCING STEEL & CONCRETE IN THE END POSTS IS INCLUDED IN THE UNIT PRICE BID FOR THE CONCRETE PARAPET.

GROOVED CONTRACTION JOINTS, 1/2" IN DEPTH, SHALL BE TOOLED IN ALL EXPOSED FACES OF THE PARAPET IN ACCORDANCE WITH ARTICLE 825-10(B) OF THE STANDARD SPECIFICATIONS. THE CONTRACTION JOINTS SHALL BE LOCATED AT A SPACING OF 8 FT. TO 10 FT. BETWEEN EXPANSION JOINTS. NO CONTRACTION JOINTS WILL BE REQUIRED FOR SEGMENTS LESS THAN 10 FEET IN LENGTH.

PROJECT NO. U-4012

DURHAM COUNTY

STATION: 70+22.00 -L-

STATE OF NORTH CAROLINA
DEPARTMENT OF TRANSPORTATION
RALEIGH

1'-2" X 2'-6"
CONCRETE PARAPET
FOR
2 BAR METAL RAIL
LEFT LANE

NORTH CAROLINA PROFESSIONAL SEAL 20125 ENGINEER MARSHALL L. GOODE, JR.
6-7-07

REVISIONS						SHEET NO.
NO.	BY:	DATE:	NO.	BY:	DATE:	S-71
1			3			TOTAL SHEETS
2			4			128

DRAWN BY : M. POOLE DATE : 11/04
CHECKED BY : D. HODGE DATE : 02/05

06-JUN-2007 15:55
R:\Structures\u4012\Final Plans\Str #3\U4012_sd_2MR_01.dgn
vnguyen

STR.#3

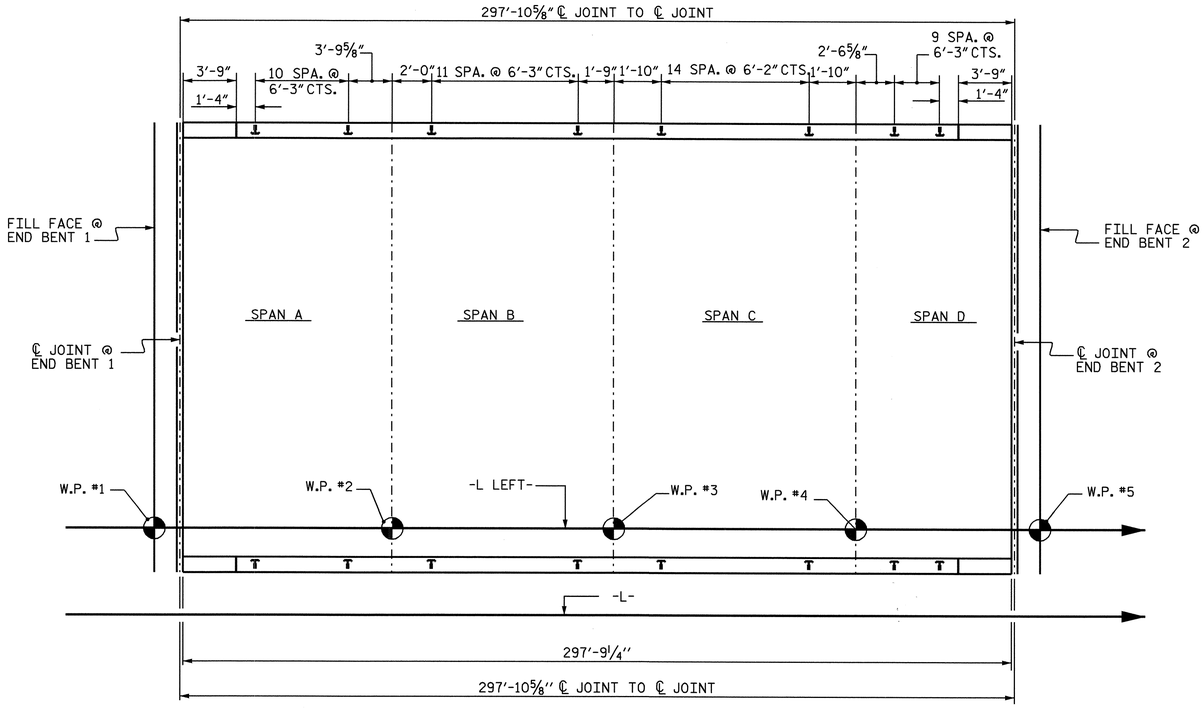

PLAN OF RAIL POST SPACINGS

RAIL POSTING DIMENSIONS TYPICAL EACH SIDE

NOTES

STRUCTURAL CONCRETE INSERT

THE STRUCTURAL CONCRETE INSERT ASSEMBLY SHALL CONSIST OF THE FOLLOWING COMPONENTS:

A. FERRULES SHALL BE MADE FROM STEEL MEETING THE REQUIREMENTS OF AASHTO M169, GRADE 12L14 AND SHALL HAVE A MINIMUM LENGTH OF THREADS OF 1½".

B. 1 - ¾" Ø X 1⅝" BOLT WITH WASHER. BOLT SHALL CONFORM TO THE REQUIREMENTS OF ASTM A307. BOLT AND WASHER SHALL BE GALVANIZED. (AT THE CONTRACTOR'S OPTION, STAINLESS STEEL BOLT AND WASHER MAY BE USED AS AN ALTERNATE FOR THE ¾" Ø X 1⅝" GALVANIZED BOLT AND WASHER. THEY SHALL CONFORM TO OR EXCEED THE MECHANICAL REQUIREMENTS OF ASTM A307. THE USE OF THIS ALTERNATE SHALL BE APPROVED BY THE ENGINEER.)

C. WIRE STRUT SHOWN IN THE CONCRETE INSERT ASSEMBLY DETAIL IS THE MINIMUM ALLOWABLE SIZE AND SHALL HAVE A MINIMUM TENSILE STRENGTH OF 100,000 PSI. AS AN OPTION, A 7/16" Ø WIRE STRUT WITH A MINIMUM TENSILE STRENGTH OF 90,000 PSI IS ACCEPTABLE.

NOTES

METAL RAIL TO END POST CONNECTION

THE METAL RAIL TO END POST CONNECTION SHALL CONSIST OF THE FOLLOWING COMPONENTS:

A. ½" PLATES SHALL CONFORM TO AASHTO M270 GRADE 36 AND SHALL BE GALVANIZED AFTER FABRICATION.

B. ¾" STRUCTURAL CONCRETE INSERT SHALL HAVE A WORKING LOAD SHEAR CAPACITY OF 4800 LBS. THE FERRULES SHALL ENGAGE A ¾"Ø X 1⅝" BOLT WITH 2" O.D. WASHER IN PLACE. THE ¾"Ø X 1⅝" BOLT SHALL HAVE N. C. THREADS.

C. CAP SCREWS FOR RAIL ATTACHMENT TO ANGLE SHALL CONFORM TO THE REQUIREMENTS OF ASTM F593 ALLOY 305 STAINLESS STEEL. CAP SCREWS TO BE CENTERED IN SLOTS AT 60°F.

D. STANDARD CLAMP BARS (SEE METAL RAIL SHEET).

E. ½" Ø PIPE SLEEVES (IF REQUIRED) TO BE GALVANIZED.

THE COST OF THE STANDARD CLAMP BARS AND CAP SCREWS USED IN THE METAL RAIL TO END POST CONNECTION SHALL BE INCLUDED IN THE UNIT CONTRACT PRICE BID FOR LINEAR FEET OF 1 OR 2 BAR METAL RAILS.

THE ¾" STRUCTURAL CONCRETE INSERT WITH BOLT SHALL BE ASSEMBLED IN THE SHOP.

THE COST OF THE ¾" STRUCTURAL CONCRETE INSERT ASSEMBLY, AND THE ½" PLATES COMPLETE IN PLACE SHALL BE INCLUDED IN THE VARIOUS PAY ITEMS.

THE CONTRACTOR, AT HIS OPTION, MAY USE AN ADHESIVE BONDING SYSTEM IN LIEU OF THE STRUCTURAL CONCRETE INSERT EMBEDDED IN THE END POST. IF THE ADHESIVE BONDING SYSTEM IS USED, THE ¾" Ø X 1⅝" BOLT WITH WASHER SHALL BE REPLACED WITH A ¾"Ø X 6½" BOLT AND 2" O.D. WASHER. ALL SPECIFICATIONS THAT APPLY TO THE ¾" Ø X 1⅝" BOLT SHALL APPLY TO THE ¾"Ø X 6 ½" BOLT. FIELD TESTING OF THE ADHESIVE BONDING SYSTEM IS NOT REQUIRED.

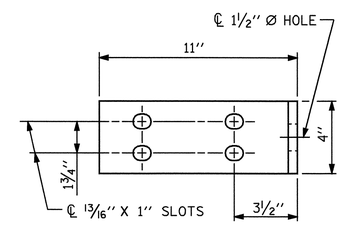

ELEVATION

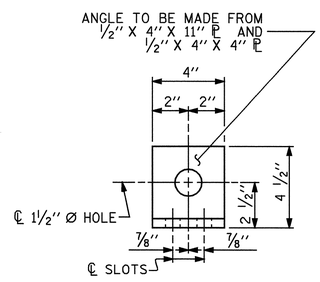

END VIEW

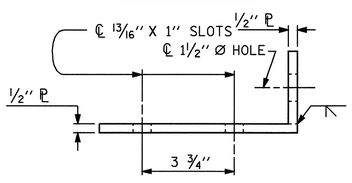

TOP VIEW

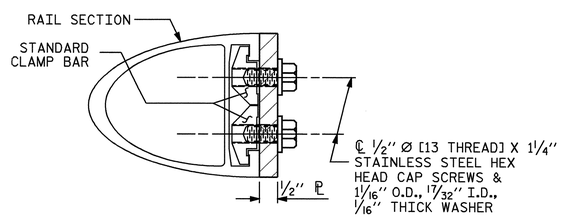

SECTION H-H

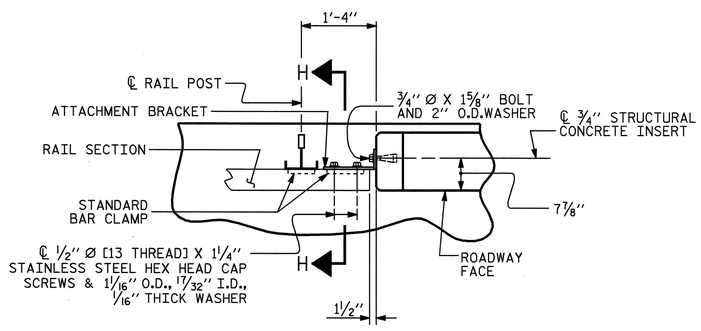

PLAN - RAIL AND END POST

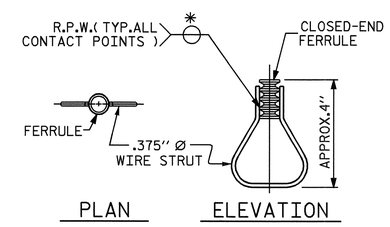

PLAN ELEVATION

STRUCTURAL CONCRETE INSERT

* EACH WELDED ATTACHMENT OF WIRE TO FERRULE SHALL DEVELOP THE TENSILE STRENGTH OF THE WIRE.

PROJECT NO. U-4012

DURHAM COUNTY

STATION: 70+22.00 -L-

STATE OF NORTH CAROLINA
DEPARTMENT OF TRANSPORTATION
RALEIGH

STANDARD

RAIL POST SPACINGS AND END OF RAIL DETAILS LEFT LANE

NORTH CAROLINA PROFESSIONAL SEAL 20125 ENGINEER MARSHALL IVEY HODGE, JR.
6-7-07

REVISIONS								SHEET NO.
NO.	BY:	DATE:	NO.	BY:	DATE:			S-72
1			3					TOTAL SHEETS
2			4					128

ASSEMBLED BY :	M. POOLE	DATE :	12/04
CHECKED BY :	D. HODGE	DATE :	02/05

DRAWN BY : FCJ 1/88	REV. 10/17/00	LES/RDR	
CHECKED BY : CRK 3/89	REV. 5/7/03	RWW/JTE	
	REV. 5/1/06	TLA/GM	

DETAILS FOR ATTACHING METAL RAIL TO END POST

06-JUN-2007 10:46
R:\Structures\U4012\Final Plans\Str #3\U4012_sd_2MR_01.dgn
vnguyen

STR.#3

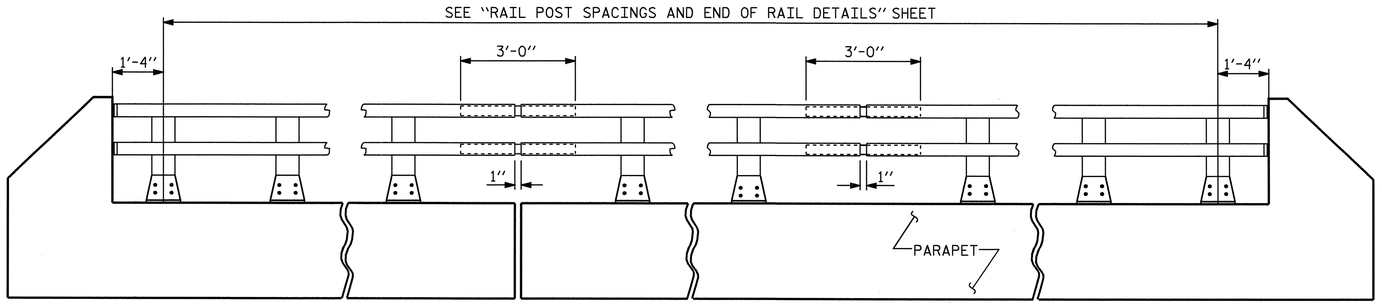

ELEVATION

NOTE : FOR ATTACHMENT OF METAL RAIL TO END POST, SEE SHEET S-75

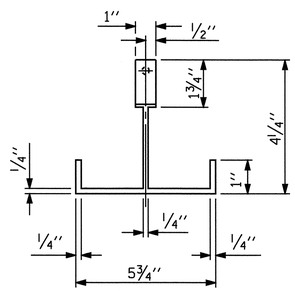

PLAN

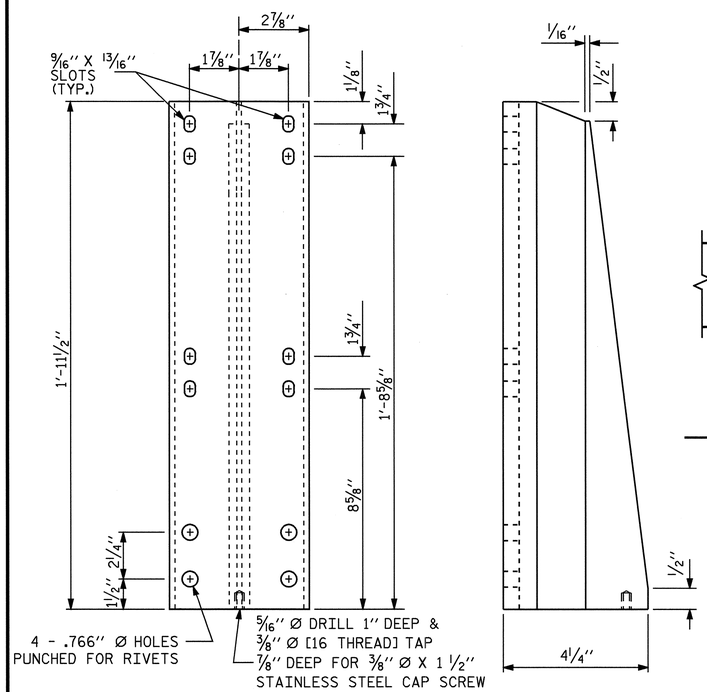

FRONT ELEVATION

SIDE ELEVATION

DETAILS OF POST

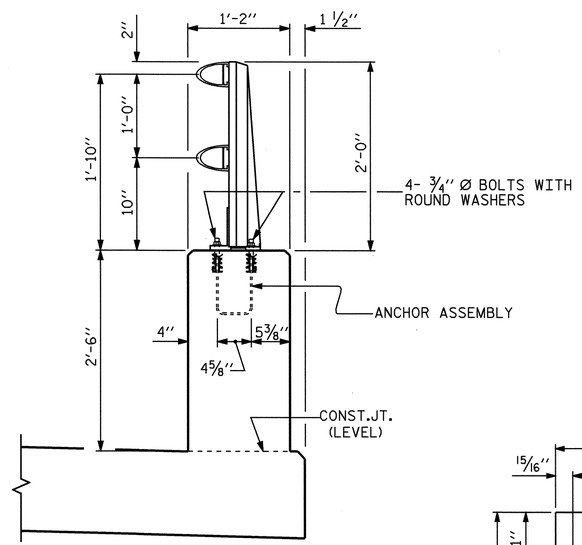

SECTION THRU PARAPET AND RAIL

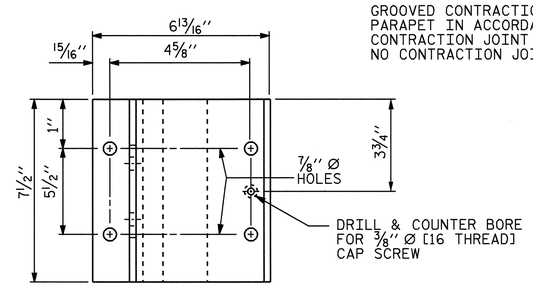

PLAN

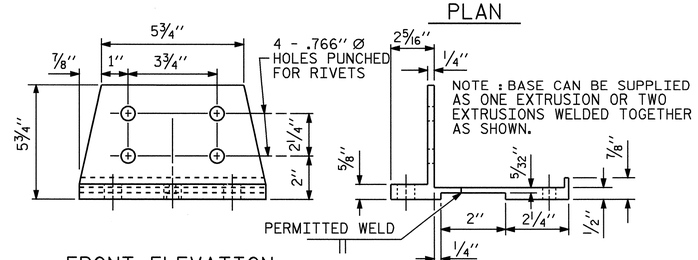

FRONT ELEVATION

SIDE ELEVATION

POST BASE DETAILS

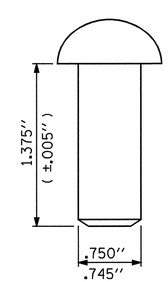

RIVET DETAIL

NOTES

AT THE CONTRACTOR'S OPTION, METAL RAIL MAY BE EITHER ALUMINUM OR GALVANIZED STEEL IN ACCORDANCE WITH THE REQUIREMENTS OF THE GENERAL NOTES AND THE FOLLOWING SPECIFICATIONS FOR THE ALTERNATE MATERIALS; HOWEVER, THE CONTRACTOR WILL BE REQUIRED TO USE THE SAME RAIL MATERIAL ON ALL STRUCTURES ON THE PROJECT FOR WHICH METAL RAIL IS DESIGNATED.

ALUMINUM RAILS

MATERIAL FOR POSTS, BASES AND RAILS, EXPANSION BARS AND CLAMP BARS SHALL BE ASTM B-221 ALLOY 6061-T6.

MATERIAL FOR RIVETS SHALL BE ASTM B316 ALLOY 6061-T6. RIVETS SHALL BE STANDARD BUTTON HEAD AND CONE POINT COLD DRIVEN AS PER DRAWING.

THE BASE OF RAIL POSTS, OR ANY OTHER ALUMINUM SURFACE IN CONTACT WITH CONCRETE SHALL BE THOROUGHLY COATED WITH AN ALUMINUM IMPREGNATED CAULKING COMPOUND OF APPROVED QUALITY.

MATERIAL FOR SHIMS TO BE ASTM B209 ALLOY 6061-T6.

GALVANIZED STEEL RAILS

MATERIAL AND GALVANIZING ARE TO CONFORM TO THE FOLLOWING SPECIFICATIONS:

POST, POST BASES, RAILS, EXPANSION BARS AND CLAMP BARS: AASHTO M270 GRADE 36 STRUCTURAL STEEL - GALVANIZED TO AASHTO M111.

RIVETS: RIVETS SHALL MEET THE REQUIREMENTS OF ASTM A502 FOR GRADE 1 RIVETS.

THE CUT ENDS OF GALVANIZED STEEL RAILING, AFTER GRINDING SMOOTH SHALL BE GIVEN TWO COATS OF ZINC RICH PAINT MEETING THE REQUIREMENTS OF FEDERAL SPECIFICATION MIL-P-26915 USAF TYPE 1, OR OF FEDERAL SPECIFICATIONS TT-P-641.

SHIMS: SHIMS SHALL MEET THE REQUIREMENTS OF ASTM A570 FOR GRADE 33 OR A611 FOR GRADE C AND SHALL BE GALVANIZED IN ACCORDANCE WITH AASHTO M111.

RAIL CAPS: RAIL CAPS SHALL MEET THE REQUIREMENTS OF ASTM A570 FOR GRADE 33 OR A611 FOR GRADE C AND SHALL BE GALVANIZED IN ACCORDANCE WITH AASHTO M111.

GENERAL NOTES

RAILING SHALL BE CONTINUOUS FROM END POST TO END POST OF BRIDGE. EACH JOINT IN RAIL LENGTH SHALL BE SPLICED AS DETAILED. PANEL LENGTHS OF RAIL SHALL BE ATTACHED TO A MINIMUM OF THREE POSTS.

FOR END OF RAIL TO CLEAR FACE OF CONCRETE END POST DIMENSION, SEE STANDARD NO. BMR2.

CAP SCREWS SHALL BE ASTM F593 ALLOY 305 STAINLESS STEEL. WASHERS SHALL MEET THE REQUIREMENTS OF ASTM F844 EXCEPT THEY SHALL BE MADE FROM ALLOY 304 STAINLESS STEEL.

CERTIFIED MILL REPORTS ARE REQUIRED FOR RAILS AND POSTS. SHOP INSPECTION IS NOT REQUIRED.

METAL RAIL POSTS SHALL BE SET NORMAL TO CURB GRADE.

METHOD OF MEASUREMENT FOR METAL RAILS: FOR LENGTH OF METAL RAILS TO BE PAID FOR, SEE THE STANDARD SPECIFICATIONS.

CURVED RAIL USAGE: WHERE RAILS ARE TO BE USED ON BRIDGES ON HORIZONTAL AND/OR VERTICAL CURVATURE THE CONTRACTOR MAY, AT HIS OPTION, HAVE THE REQUIRED CURVATURE IN THE RAIL FORMED IN THE SHOP OR IN THE FIELD. IN EITHER EVENT, THE RAIL SHALL CONFORM WITHOUT BUCKLING OR KINKING TO THE REQUIRED CURVATURE IN A UNIFORM MANNER ACCEPTABLE TO THE ENGINEER.

TO INSURE FUTURE IDENTIFICATION OF THE FABRICATOR, A PERMANENT IDENTIFYING MARK SHALL BE PLACED ON EACH POST. THE METHOD OF MARKING AND LOCATION SHALL BE SUCH THAT IT DOES NOT DETRACT FROM THE APPEARANCE OF THE POST, BUT REMAINS VISIBLE AFTER RAIL PLACEMENT.

SHIMS SHALL BE USED AS NECESSARY FOR POST ALIGNMENT.

ALLOY 6351-T5 MAY BE SUBSTITUTED FOR ALLOY 6061-T6 WHERE APPLICABLE.

MINOR VARIATIONS IN DETAILS OF METAL RAIL WILL BE CONSIDERED. DETAILS OF SUCH VARIATIONS, IF DESIRED, SHALL BE SUBMITTED FOR APPROVAL.

GROOVED CONTRACTION JOINTS, 1/2" IN DEPTH, SHALL BE TOOLED IN ALL EXPOSED FACES OF THE PARAPET IN ACCORDANCE WITH ARTICLE 825-10(B) OF THE STANDARD SPECIFICATIONS. THE CONTRACTION JOINT SHALL BE LOCATED AT A SPACING OF 8FT. TO 10FT. BETWEEN EXPANSION JOINTS. NO CONTRACTION JOINTS WILL BE REQUIRED FOR SEGMENTS LESS THAN 10 FEET IN LENGTH.

PAY LENGTH = 580.54 LIN. FT.

PROJECT NO. U-4012

DURHAM COUNTY

STATION: 70+22.00 -L-

SHEET 1 OF 2

STATE OF NORTH CAROLINA
DEPARTMENT OF TRANSPORTATION
RALEIGH

2 BAR METAL RAIL
LEFT LANE

NORTH CAROLINA PROFESSIONAL SEAL 20125 ENGINEER MARSHALL A. PECK, JR.
4-25-07

ASSEMBLED BY :	M. POOLE	DATE :	12/04
CHECKED BY :	D. HODGE	DATE :	02/05

DRAWN BY : EEM 6/94	REV. 10/17/00	LES/RDR
CHECKED BY : RGW 6/94	REV. 5/7/03R	RWW/JTE
	REV. 5/1/06	TLA/GM

REVISIONS								SHEET NO.
NO.	BY:	DATE:	NO.	BY:	DATE:			S-73
1			3					TOTAL SHEETS
2			4					128

STR.#3

25-APR-2007 09:17
R:\Structures\U4012\Final Plans\Str #3\U4012_sd_2MR_01.dgn
vnguyen

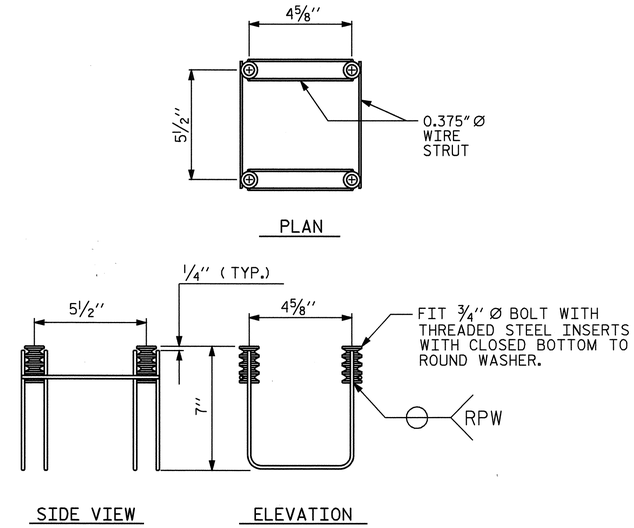

MINIMUM LENGTH OF THREADS IN INSERT (FERRULE): 1 3/4''

4-BOLT METAL RAIL ANCHOR ASSEMBLY

(96 ASSEMBLIES REQUIRED)

NOTES

STRUCTURAL CONCRETE ANCHOR ASSEMBLY

THE STRUCTURAL CONCRETE ANCHOR ASSEMBLY SHALL CONSIST OF THE FOLLOWING COMPONENTS :

A. FERRULES SHALL BE MADE FROM STEEL MEETING THE REQUIREMENTS OF AASHTO M169, GRADE 12L14 AND SHALL HAVE A MINIMUM LENGTH OF THREADS OF 2'' FOR 3/4'' FERRULES.

B. 4 - 3/4'' Ø X 2 1/2'' BOLTS WITH WASHERS. BOLTS SHALL CONFORM TO THE REQUIREMENTS OF ASTM A307. BOLTS AND WASHERS SHALL BE GALVANIZED. AT THE CONTRACTOR'S OPTION, STAINLESS STEEL BOLTS AND WASHERS MAY BE USED AS AN ALTERNATE FOR THE 3/4'' Ø X 2 1/2'' GALVANIZED BOLTS AND WASHERS. THEY SHALL CONFORM TO OR EXCEED THE MECHANICAL REQUIREMENTS OF ASTM A307. THE USE OF THIS ALTERNATE SHALL BE APPROVED BY THE ENGINEER.

C. WIRE STRUT SHOWN IN THE CONCRETE ANCHOR ASSEMBLY DETAIL IS THE MINIMUM ALLOWABLE SIZE AND SHALL HAVE A MINIMUM TENSILE STRENGTH OF 100,000 PSI. AS AN OPTION, A 7/16'' Ø WIRE STRUT WITH A MINIMUM TENSILE STRENGTH OF 90,000 PSI IS ACCEPTABLE.

D. THE METAL RAIL ANCHOR ASSEMBLIES TO BE HOT DIPPED GALVANIZED TO CONFORM TO REQUIREMENTS OF AASHTO M111.

E. THE COST OF THE METAL RAIL ANCHOR ASSEMBLY WITH BOLTS AND WASHERS COMPLETE IN PLACE SHALL BE INCLUDED IN THE PRICE BID FOR LINEAR FEET OF METAL RAIL.

F. BOLTS TO BE TIGHTENED ONE-HALF TURN WITH A WRENCH FROM A FINGER-TIGHT POSITION.

THE CONTRACTOR, AT HIS OPTION, MAY USE ADHESIVELY ANCHORED ANCHOR BOLTS IN LIEU OF THE METAL RAIL ANCHOR ASSEMBLY. THE YIELD LOAD OF THE 3/4'' Ø BOLT IS 10 KIPS. FIELD TESTING OF THE ADHESIVE BONDING SYSTEM IS REQUIRED.

WHEN ADHESIVELY ANCHORED ANCHOR BOLTS ARE USED, BOLTS SHALL MEET THE REQUIREMENTS OF ASTM F593 ALLOY 304 STAINLESS STEEL WITH MINIMUM 75,000 PSI ULTIMATE STRENGTH. NUTS SHALL MEET THE REQUIREMENTS OF ASTM F594 ALLOY 304 STAINLESS STEEL AND WASHERS SHALL MEET THE REQUIREMENTS OF ASTM F844 EXCEPT THEY SHALL BE MADE FROM ALLOY 304 STAINLESS STEEL.

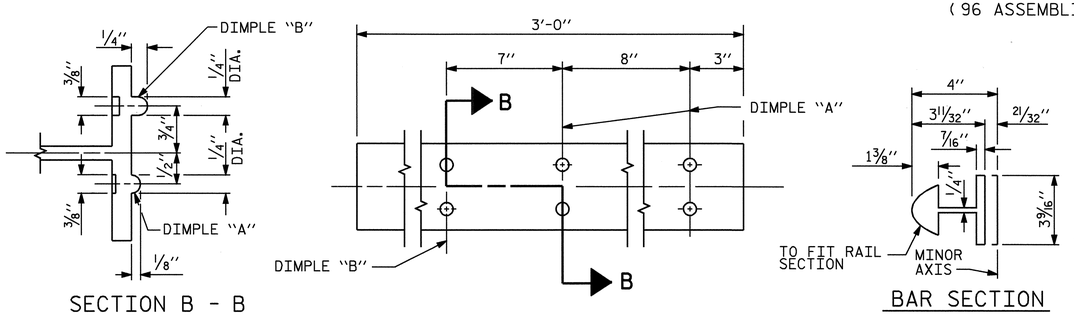

EXPANSION BAR DETAILS

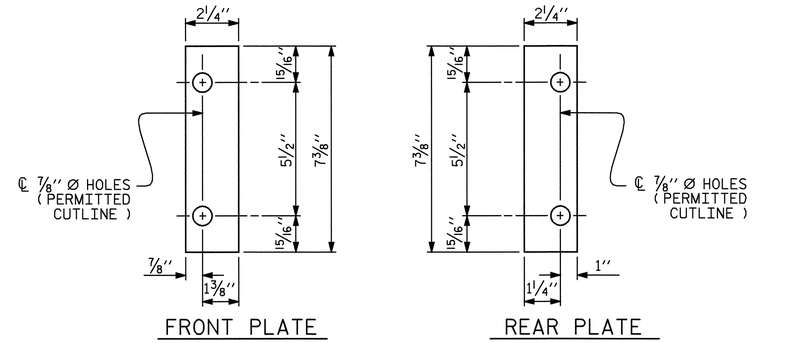

SHIM DETAILS

NOTE :
SHIMS MAY BE CUT ALONG PERMITTED CUTLINE OR SLOTTED TO EDGE OF PLATE TO FACILITATE PLACEMENT.

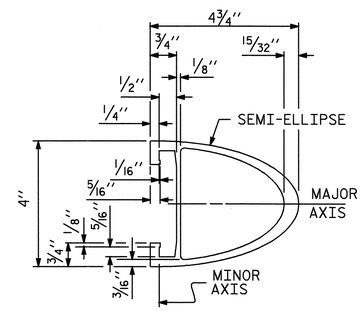

RAIL SECTION

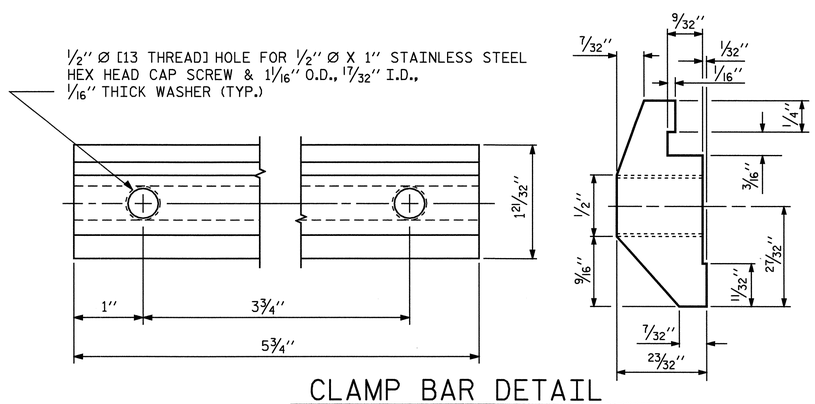

CLAMP BAR DETAIL

(4 REQUIRED PER POST)

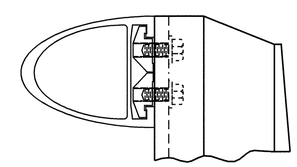

CLAMP ASSEMBLY

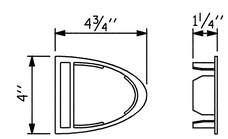

RAIL CAP

PROJECT NO. U-4012
DURHAM COUNTY
STATION: 70+22.00 -L-

SHEET 2 OF 2

STATE OF NORTH CAROLINA
DEPARTMENT OF TRANSPORTATION
RALEIGH

2 BAR METAL RAIL LEFT LANE

NORTH CAROLINA PROFESSIONAL SEAL 20125 ENGINEER MARSHALL B. HICKS, JR.
4-25-07

ASSEMBLED BY : M. POOLE		DATE :	12/04
CHECKED BY : D. HODGE		DATE :	02/05
DRAWN BY : EEM 6/94	REV. 2/6/97		EEM/RGW
CHECKED BY : RGW 6/94	REV. 8/16/99		MAB/LES
	REV. 5/7/03		RWW/JTE

REVISIONS								SHEET NO.
NO.	BY:	DATE:		NO.	BY:	DATE:		S-74
1				3				TOTAL SHEETS
2				4				128

STR.#3

23-APR-2007 09:45
R:\Structures\u4012\Final Plans\Str #3\U4012_sd_2MR_01.dgn
vnguyen

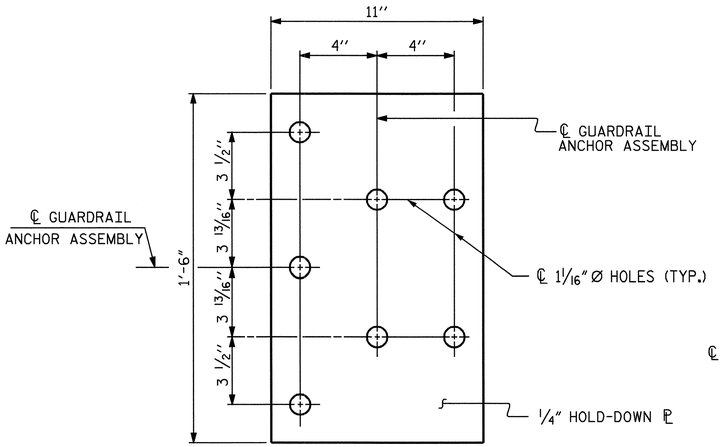

PLAN

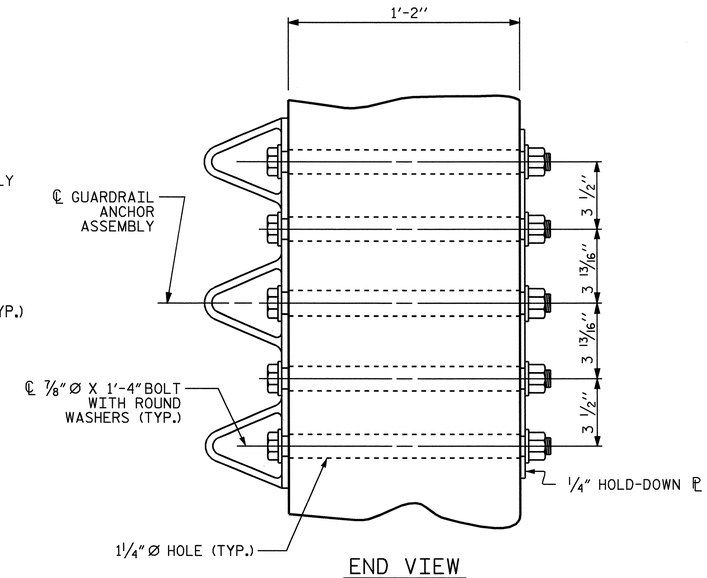

END VIEW

GUARDRAIL ANCHOR ASSEMBLY DETAILS

NOTES

THE GUARDRAIL ANCHOR ASSEMBLY SHALL CONSIST OF A 1/4'' HOLD DOWN PLATE AND 7 - 7/8'' Ø BOLTS WITH NUTS AND WASHERS.

THE HOLD-DOWN PLATE SHALL CONFORM TO AASHTO M270 GRADE 36. AFTER FABRICATION, THE HOLD-DOWN PLATE SHALL BE HOT-DIP GALVANIZED IN ACCORDANCE WITH AASHTO M111.

BOLTS SHALL CONFORM TO THE REQUIREMENTS OF ASTM A307 AND NUTS SHALL CONFORM TO THE REQUIREMENTS OF AASHTO M291. BOLTS, NUTS AND WASHERS SHALL BE GALVANIZED. AT THE CONTRACTOR'S OPTION, STAINLESS STEEL BOLTS, NUTS AND WASHERS MAY BE USED AS AN ALTERNATE FOR THE 7/8'' Ø GALVANIZED BOLTS, NUTS AND WASHERS. THEY SHALL CONFORM TO OR EXCEED THE MECHANICAL REQUIREMENTS OF ASTM A307. THE USE OF THIS ALTERNATE SHALL BE APPROVED BY THE ENGINEER.

AFTER INSTALLATION, THE EXPOSED THREAD OF THE BOLT SHALL BE BURRED WITH A SHARP POINTED TOOL.

THE COST OF THE GUARDRAIL ANCHOR ASSEMBLIES WITH BOLTS, NUTS AND WASHERS COMPLETE IN PLACE, SHALL BE INCLUDED IN THE VARIOUS PAY ITEMS.

THE VERTICAL REINFORCING BARS MAY BE SHIFTED SLIGHTLY IN THE END POST TO CLEAR ASSEMBLY BOLTS.

THE 1 1/4'' Ø HOLES SHALL BE FORMED OR DRILLED WITH A CORE BIT. IMPACT TOOLS WILL NOT BE PERMITTED. ANY CONCRETE DAMAGED BY THIS WORK SHALL BE REPAIRED TO THE SATISFACTION OF THE ENGINEER.

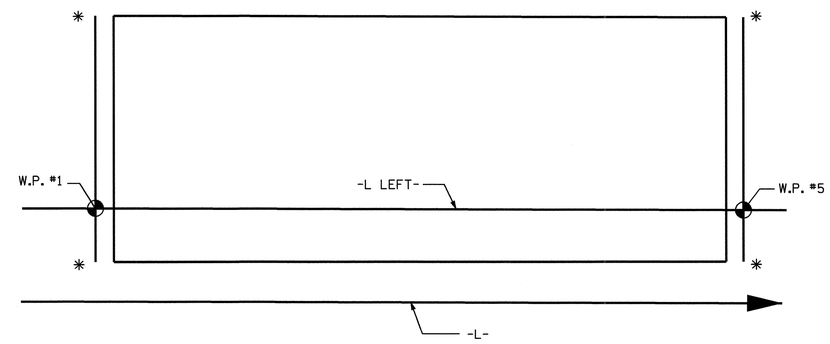

SKETCH SHOWING POINTS OF ATTACHMENT

*LOCATION OF GUARDRAIL ATTACHMENT

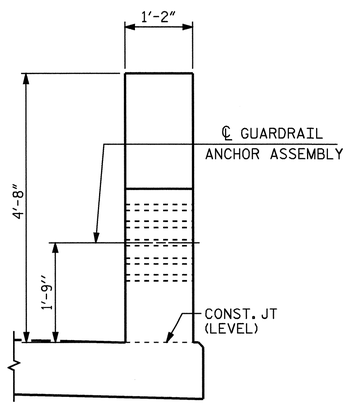

END VIEW
(TWO BAR METAL RAIL)

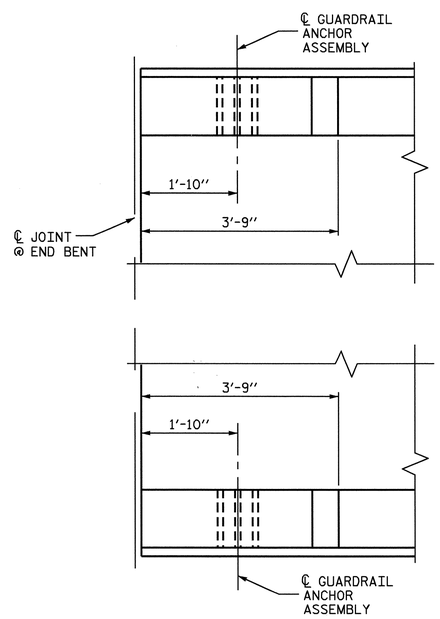

PLAN
(TYP. EA. END)

LOCATION OF GUARDRAIL ANCHOR AT END POST

PROJECT NO. U-4012
DURHAM COUNTY
STATION: 70+22.00 -L-

STATE OF NORTH CAROLINA
DEPARTMENT OF TRANSPORTATION
RALEIGH

STANDARD

GUARDRAIL ANCHORAGE DETAILS FOR METAL RAILS LEFT LANE

NORTH CAROLINA PROFESSIONAL SEAL 20125 ENGINEER MARSHALL L. GREEK, JR.
6-7-07

ASSEMBLED BY : M. POOLE	DATE : 12/04		
CHECKED BY : D. HODGE	DATE : 02/05		
DRAWN BY : EEM 6/94	REV. 10/17/00	RWW/LES	
CHECKED BY : RGW 6/94	REV. 5/7/03	RWW/JTE	
	REV. 5/1/06	TLA/GM	

REVISIONS						SHEET NO.
NO.	BY:	DATE:	NO.	BY:	DATE:	S-75
1			3			TOTAL SHEETS
2			4			128

STR. 3

06-JUN-2007 10:47
R:\Structures\U4012\FinalPlans\Str #3\U4012_sd_2MR_01.dgn
vnguyen

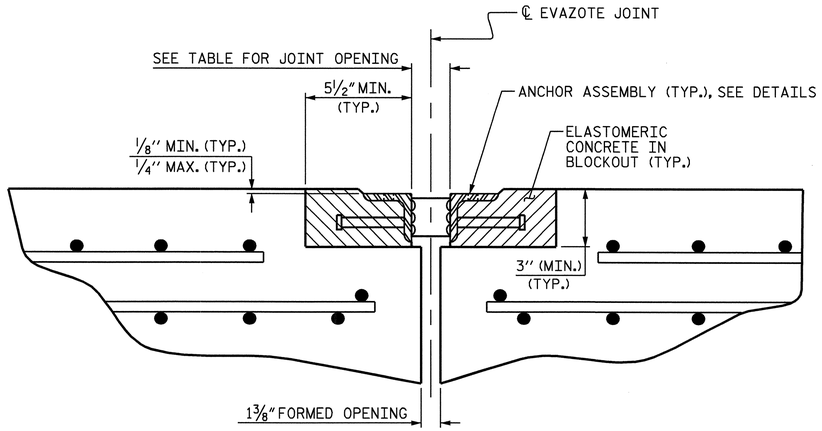

ARMORED JOINT DETAILS

SECTION NORMAL TO JOINT AT END BENT

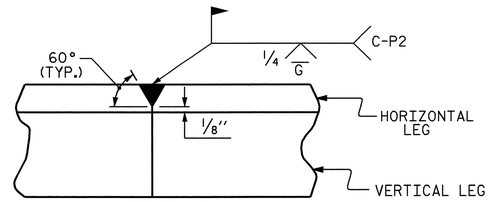

DETAIL- FIELD WELD SPLICE OF ANGLE

NOTES

ANGLES SHALL CONFORM TO AASHTO M270 GRADE 36 STEEL OR APPROVED EQUAL. ALL STUD ANCHORS SHALL CONFORM TO AASHTO M169 GRADES 1010 THRU 1020 OR APPROVED EQUAL.

STUD ANCHORS SHALL BE SHOP WELDED AND ALL HOLES SHALL BE SHOP DRILLED AS SHOWN ON THE PLANS. STUD ANCHORS SHALL BE ELECTRIC ARC END WELDED WITH COMPLETE FUSION.

UPON COMPLETION OF SHOP FABRICATION, THE ENTIRE ANCHOR ASSEMBLY SHALL BE METALLIZED. THE ½" Ø STUD ANCHORS AND ANCHOR TABS NEED NOT BE METALLIZED. SEE SPECIAL PROVISION FOR THERMAL SPRAYED COATINGS (METALLIZATION).

ANCHOR ASSEMBLY SHALL BE MADE CONTINUOUS THE LENGTH OF THE JOINT FROM GUTTER TO GUTTER. FOR FIELD SPLICES AT ALL CROWN BREAK POINTS, THE ENDS OF THE STEEL ANGLES SHALL BE CUT PARALLEL TO THE BRIDGE CENTERLINE. FINISHED FIELD WELDS SHALL BE GROUND SMOOTH AND COATED WITH A MINIMUM THICKNESS OF 4 DRY MILS OF ZINC-RICH PAINT IN ACCORDANCE WITH THE STANDARD SPECIFICATIONS.

ANCHOR ASSEMBLY SEGMENTS SHALL NOT BE LESS THAN 12 FEET NOR MORE THAN 20 FEET IN LENGTH. SHORTER SEGMENTS MAY BE USED AT THE EDGE OF ROADWAY OR AT POINTS OF STAGED CONSTRUCTION.

THE ANCHOR ASSEMBLY SHALL BE SECURED AND LEVELED AS SHOWN IN THE "ARMORED JOINT ANCHOR ASSEMBLY DETAILS". NO SUBMITTALS ARE REQUIRED FOR ⅜" Ø EXPANSION ANCHORS, NUTS OR WASHERS. THE CONTRACTOR MAY SUBMIT FOR APPROVAL AN ALTERNATE METHOD OF ALIGNING AND LEVELING THE ANGLES. THE ALTERNATE METHOD SHALL NOT INCLUDE ANY WELDING TO THE OUTSIDE FACE OF THE ANGLES.

AFTER THE ELASTOMERIC CONCRETE HAS BEEN CAST ON BOTH SIDES OF THE JOINT, REMOVE ANY EXCESS CONCRETE THAT COMES THROUGH THE WEEP HOLES AND THOROUGHLY CLEAN THE ANGLES. ANY DAMAGED STEEL SHALL BE COATED WITH A MINIMUM OF 4 MILS OF ZINC-RICH PAINT IN ACCORDANCE WITH THE STANDARD SPECIFICATIONS.

SEE SPECIAL PROVISIONS FOR EVAZOTE JOINT SEALS.

SEE SPECIAL PROVISIONS FOR ELASTOMERIC CONCRETE.

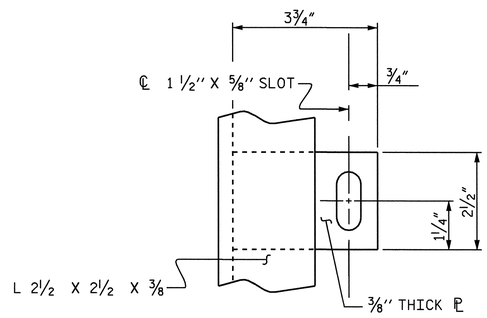

PLAN VIEW OF TAB

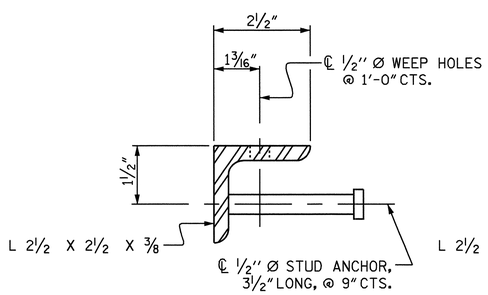

SECTION VIEW OF STUD

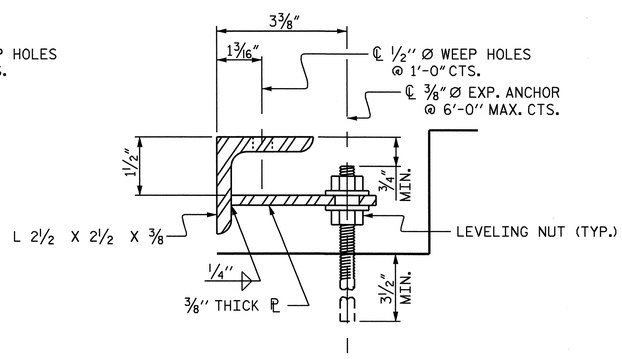

SECTION VIEW OF TAB

ARMORED JOINT ANCHOR ASSEMBLY DETAILS

MOVEMENT AND SETTING AT EVAZOTE JOINT

END BENT NO.	SKEW ANGLE	NOMINAL UNCOMPRESSED SEAL WIDTH	TOTAL MOVEMENT (ALONG ℄ RDWY)	PERPENDICULAR JOINT OPENING AT 45° F	PERPENDICULAR JOINT OPENING AT 60° F	PERPENDICULAR JOINT OPENING AT 90° F
1	90°	3⅛"	1½"	2⅝"	2⅜"	1 15/16"
2	90°	3⅛"	1½"	2⅝"	2⅜"	1 15/16"

TOTAL MOVEMENT IS CALCULATED ALONG THE CENTERLINE OF ROADWAY.
JOINT OPENINGS ARE MEASURED PERPENDICULAR TO THE JOINT.

BILL OF MATERIAL

END BENT NO.	ELASTOMERIC CONCRETE ✳ (CU. FT.)	TOTAL LENGTH OF ANGLE (FT)
1	12.8	112'-0"
2	12.8	112'-0"

✳ BASED ON THE MINIMUM BLOCKOUT SHOWN.

PROJECT NO. U-4012
DURHAM COUNTY
STATION: 70+22.00 -L-

STATE OF NORTH CAROLINA
DEPARTMENT OF TRANSPORTATION
RALEIGH

STANDARD
ARMORED EVAZOTE
JOINT DETAILS
LEFT LANE

NORTH CAROLINA PROFESSIONAL SEAL 20125 ENGINEER MARSHALL E. FRYE JR.
6-7-07

REVISIONS						SHEET NO.
NO.	BY:	DATE:	NO.	BY:	DATE:	S-76
1			3			TOTAL SHEETS
2			4			128

ASSEMBLED BY : CR YARBROUGH DATE : 02/05
CHECKED BY : D. HODGE DATE : 02/05
DRAWN BY : EEM 1/96
CHECKED BY : RGW 1/96
REV. 7/10/01 LES/RDR
REV. 5/7/03RR RWW/JTE
REV. 5/1/06 TLA/GM

06-JUN-2007 10:59
R:\Structures\U4012\Final Plans\Str #3\U-4012_sd_AEJ_01.dgn
vnguyen

STR.#3

SUPERSTRUCTURE REINFORCING STEEL LENGTHS ARE BASED ON THE FOLLOWING MINIMUM SPLICE LENGTHS

BAR SIZE	SUPERSTRUCTURE EXCEPT APPROACH SLABS, PARAPET, AND BARRIER RAIL		APPROACH SLABS		PARAPET AND BARRIER RAIL
	EPOXY COATED	UNCOATED	EPOXY COATED	UNCOATED	
#4	2'-0"	1'-9"	2'-0"	1'-9"	2'-9"
#5	2'-6"	2'-2"	2'-6"	2'-2"	3'-5"
#6	3'-0"	2'-7"	3'-10"	2'-7"	4'-4"
#7	5'-3"	3'-6"			
#8	6'-10"	4'-7"			

BILL OF MATERIAL

BAR	NO.	SIZE	TYPE	LENGTH	WEIGHT
✳ A1	550	#5	STR	58'-3"	33415
A2	550	#5	STR	58'-3"	33415
✳ B1	150	#5	STR	34'-9"	5437
B2	396	#5	STR	51'-5"	21237
✳ B3	76	#8	STR	13'-9"	2790
✳ B4	76	#8	STR	14'-9"	2993
✳ B5	76	#8	STR	14'-3"	2892
✳ B6	150	#5	STR	33'-0"	5163
✳ B7	150	#5	STR	40'-9"	6375
✳ B8	75	#5	STR	59'-9"	4674
✳ B9	12	#5	STR	51'-8"	647
✳ G1	2	#5	STR	58'-3"	122
✳ K1	8	#5	1	6'-3"	52
✳ K2	20	#5	2	8'-4"	174
✳ K3	24	#5	STR	7'-3"	182
✳ S1	96	#4	3	3'-8"	235

REINFORCING STEEL = 54652 LBS
✳ EPOXY COATED REINF. STEEL = 65151 LBS

✳ THESE BARS ARE EPOXY COATED

GROOVING BRIDGE FLOORS

APPROACH SLABS	2517	SQ.FT.
BRIDGE DECK	15649	SQ.FT.
TOTAL	18166	SQ.FT.

BAR TYPES

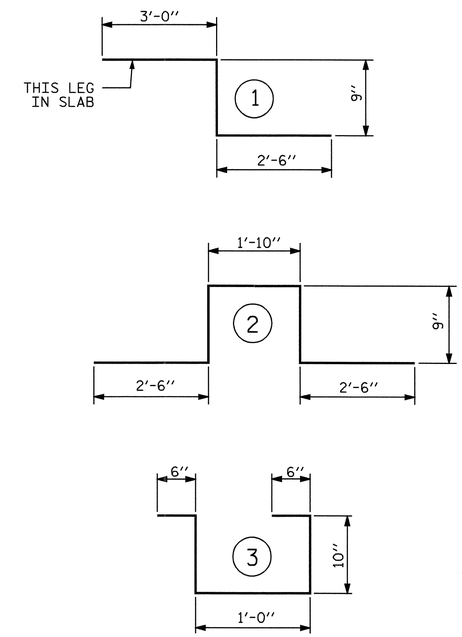

ALL BAR DIMENSIONS ARE OUT TO OUT

SUPERSTRUCTURE BILL OF MATERIAL

	CLASS AA CONCRETE	REINFORCING STEEL	✳ EPOXY COATED REINFORCING STEEL
	(CU.YDS.)	(LBS.)	(LBS.)
SPANS A-D		54652	65151
POUR 1	264		
POUR 2	283		
TOTALS✳✳	547	54652	65151

✳✳ QUANTITIES FOR PARAPET ARE NOT INCLUDED

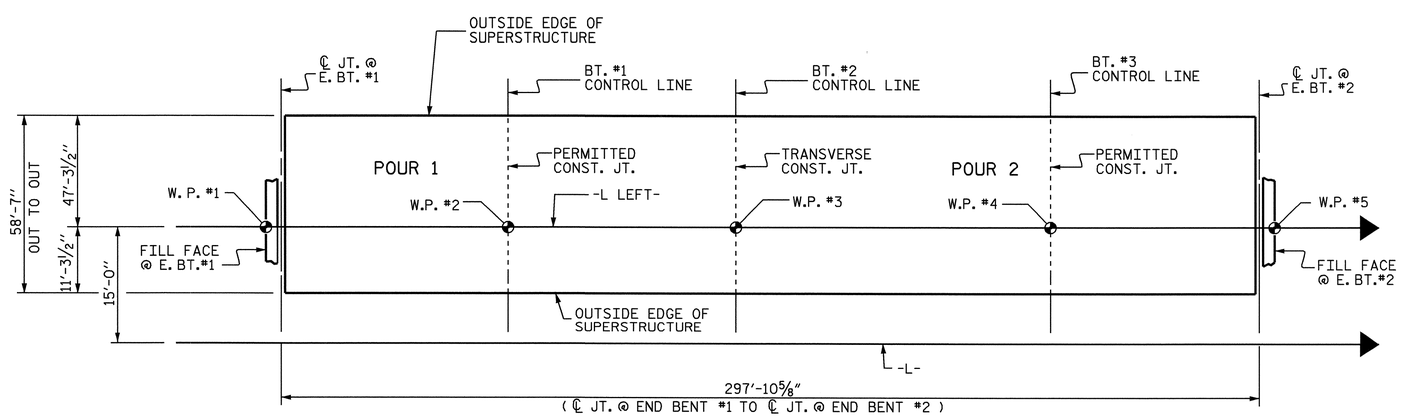

LAYOUT FOR COMPUTING AREA OF REINFORCED CONCRETE DECK SLAB
(SQ. FT. = 17,451)

PROJECT NO. U-4012
DURHAM COUNTY
STATION: 70+22.00 -L-

STATE OF NORTH CAROLINA
DEPARTMENT OF TRANSPORTATION
RALEIGH

SUPERSTRUCTURE BILL OF MATERIAL LEFT SIDE

NORTH CAROLINA PROFESSIONAL SEAL 20125 ENGINEER MARSHALL G. CREEK, JR.
6-7-07

ASSEMBLED BY : M. POOLE	DATE : 12/04		
CHECKED BY : D. HODGE	DATE : 2/05		
DRAWN BY : JMB 5/87	REV. 6/1/94	EEM/GRP	
CHECKED BY : SJD 9/87	REV. 8/16/99	RWW/LES	

REVISIONS						SHEET NO.
NO.	BY:	DATE:	NO.	BY:	DATE:	S-77
1			3			TOTAL SHEETS
2			4			128

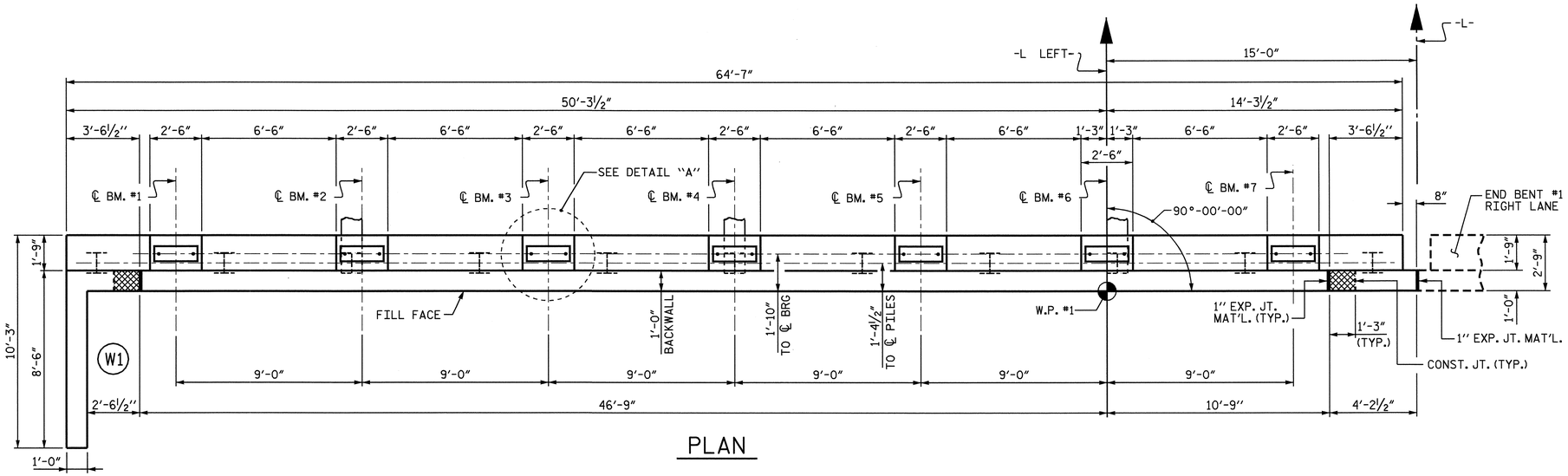

PLAN

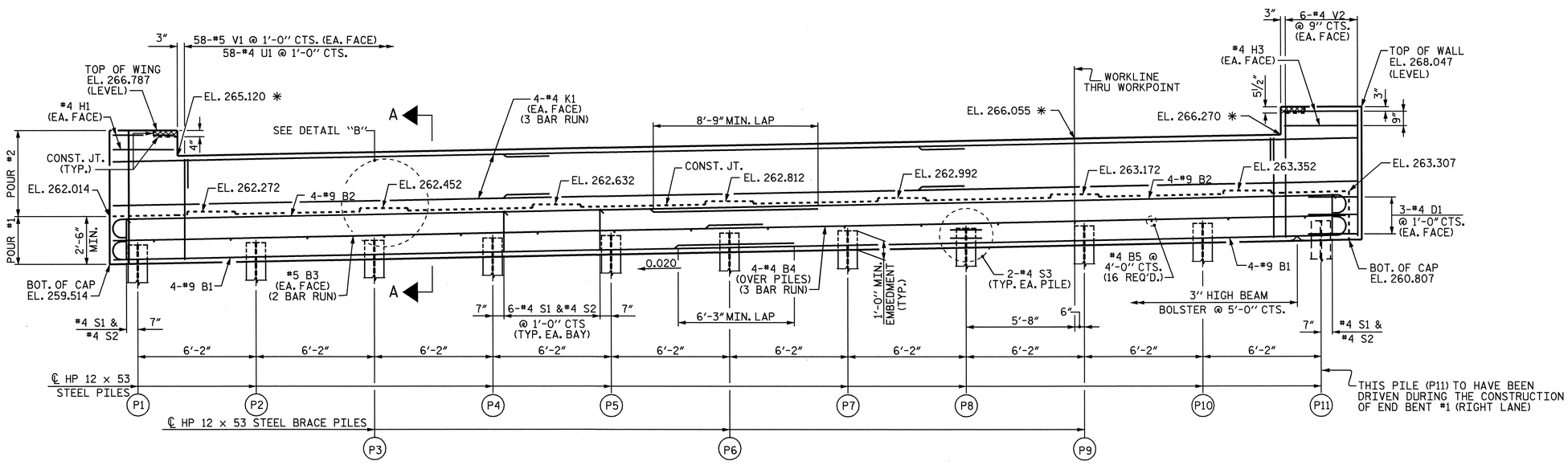

ELEVATION

* THESE ELEVATIONS ARE TAKEN AT FILL FACE.

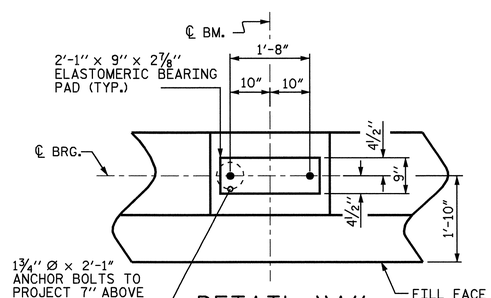

DETAIL "A"

(TYP. EA. BEAM)

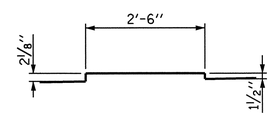

DETAIL "B"

(TYP. EA. SEAT)

NOTES

STIRRUPS IN CAP MAY BE SHIFTED AS NECESSARY TO CLEAR ANCHOR BOLTS.

BACKWALL SHALL BE PLACED BEFORE APPLYING THE EPOXY PROTECTIVE COATING.

THE TOP SURFACE AREAS OF THE END BENT CAPS SHALL BE CURED IN ACCORDANCE WITH THE STANDARD SPECIFICATIONS EXCEPT THE MEMBRANE CURING COMPOUND METHOD SHALL NOT BE USED.

THE TOP SURFACE OF THE CAP EXCEPT THE BRIDGE SEAT BUILDUPS SHALL BE SLOPED TRANSVERSELY FROM THE FILL FACE TO THE BACK FACE AT THE RATE OF 2%.

THE CONCRETE IN THE CROSS-HATCHED AREA OF THE WING SHALL BE POURED AFTER THE PARAPET AND END POST ARE CAST IF SLIP FORMING IS USED.

THE CONTRACTOR SHALL PROVIDE FOR INSTALLATION OF THE 4" DIAMETER DRAIN PIPE THROUGH THE WING WALL AS REQUIRED FOR REINFORCED BRIDGE APPROACH FILLS, SEE THE ROADWAY PLANS. REINFORCING STEEL IN THE WING WALL MAY BE SHIFTED AS NECESSARY TO CLEAR THE DRAIN PIPE.

PILE	TOP OF PILE ELEVATION
P1	260.553
P2	260.676
P3	260.800
P4	260.923
P5	261.046
P6	261.170
P7	261.293
P8	261.416
P9	261.540
P10	361.663
P11	261.786

SPLICE LENGTH CHART
#5 B3 SPLICE = 3'-0"
#4 B4 SPLICE = 2'-5"
#4 K1 SPLICE = 2'-5"

PROJECT NO. U-4012
DURHAM COUNTY
STATION: 70+22.00 -L-

SHEET 1 OF 2

STATE OF NORTH CAROLINA
DEPARTMENT OF TRANSPORTATION
RALEIGH

SUBSTRUCTURE
END BENT 1
LEFT LANE

NORTH CAROLINA PROFESSIONAL SEAL 20125 ENGINEER MARSHALL F. MACK, JR.
6-7-07

REVISIONS								SHEET NO.
NO.	BY:	DATE:	NO.	BY:	DATE:			S-78
1			3					TOTAL SHEETS
2			4					128

DRAWN BY : A.S. CALLAWAY DATE : 1/5/05
CHECKED BY : D. HODGE DATE : 1/05

06-JUN-2007 11:05
R:\Structures\u4012\FinalPlans\U4012_sd_E*_01.dgn
vnguyen

STR. #3

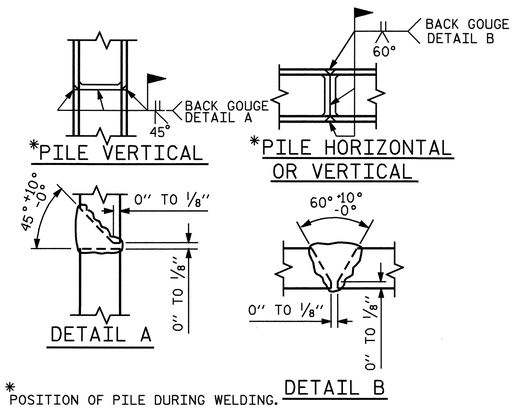

*POSITION OF PILE DURING WELDING.

PILE SPLICE DETAILS

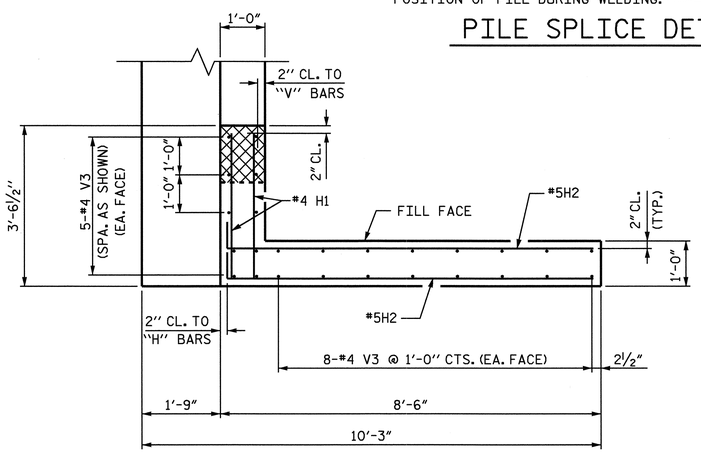

PLAN OF WING W1

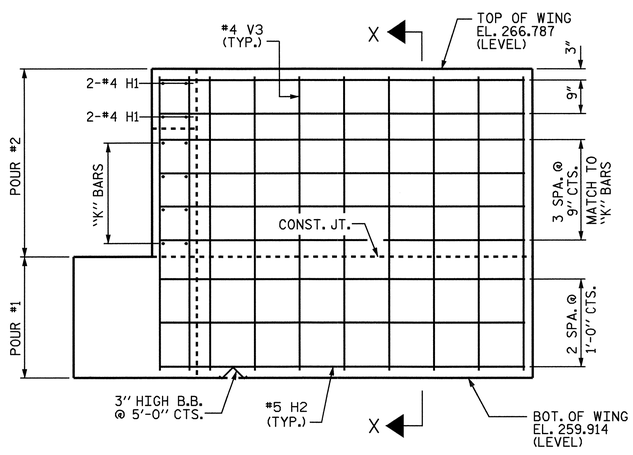

ELEVATION OF WING W1

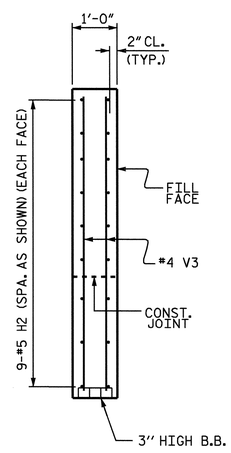

SECTION X-X

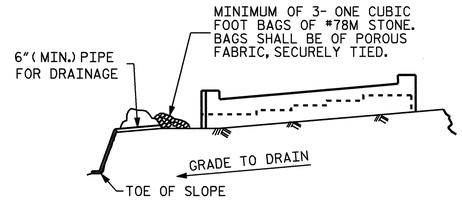

BAGGED STONE AND PIPE SHALL BE PLACED IMMEDIATELY AFTER COMPLETION OF END BENT EXCAVATION. PIPE MAY BE EITHER CONCRETE, CORRUGATED STEEL, CORRUGATED ALUMINUM ALLOY, OR CORRUGATED PLASTIC. PERFORATED PIPE WILL NOT BE ALLOWED.

BAGGED STONE SHALL REMAIN IN PLACE UNTIL THE ENGINEER DIRECTS THAT IT BE REMOVED. THE CONTRACTOR SHALL REMOVE AND DISPOSE OF SILT ACCUMULATIONS AT BAGGED STONE WHEN SO DIRECTED BY THE ENGINEER. BAGS SHALL BE REMOVED AND REPLACED WHENEVER THE ENGINEER DETERMINES THAT THEY HAVE DETERIORATED AND LOST THEIR EFFECTIVENESS.

NO SEPARATE PAYMENT WILL BE MADE FOR THIS WORK AND THE ENTIRE COST OF THIS WORK SHALL BE INCLUDED IN THE UNIT CONTRACT PRICE BID FOR THE SEVERAL PAY ITEMS.

TEMPORARY DRAINAGE AT END BENT

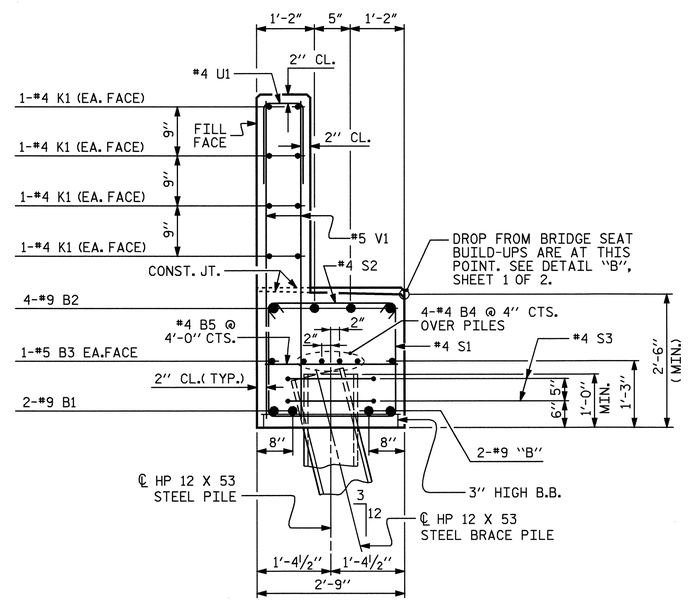

SECTION A-A

BAR TYPES

ALL BAR DIMENSIONS ARE OUT TO OUT.

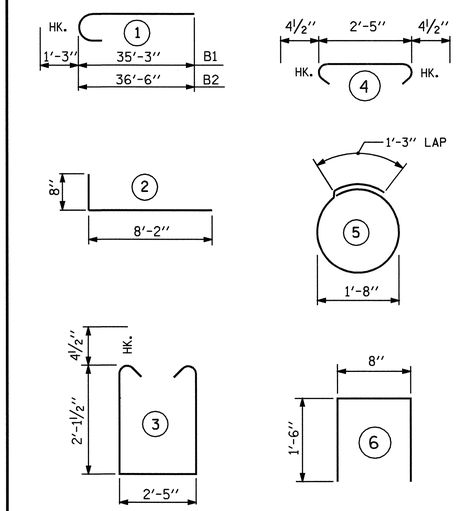

BILL OF MATERIAL

END BENT 1

BAR	NO.	SIZE	TYPE	LENGTH	WEIGHT
B1	8	#9	1	36'-6"	993
B2	8	#9	1	37'-9"	1027
B3	4	#5	STR	33'-8"	140
B4	12	#4	STR	23'-1"	185
B5	16	#4	STR	2'-5"	26
D1	6	#4	STR	2'-8"	11
H1	4	#4	STR	3'-2"	8
H2	18	#5	2	8'-10"	166
H3	4	#4	STR	3'-10"	10
K1	24	#4	STR	23'-3"	373
S1	62	#4	3	7'-5"	307
S2	62	#4	4	3'-2"	131
S3	22	#4	5	6'-6"	96
U1	58	#4	6	3'-8"	142
V1	116	#5	STR	5'-2"	625
V2	12	#4	STR	6'-9"	54
V3	26	#4	STR	6'-9"	117

REINFORCING STEEL 4411 LBS

CLASS A CONCRETE BREAKDOWN
POUR #1
(CAP & LOWER WINGS) 17.5 C.Y.
POUR #2
(BACKWALL & UPPER WINGS) 9.0 C.Y.
TOTAL 26.5 C.Y.

HP 12 x 53 STEEL PILES
NO. 11 220 L.F.

PROJECT NO. U-4012
DURHAM COUNTY
STATION: 70+22.00 -L-

SHEET 2 OF 2

STATE OF NORTH CAROLINA
DEPARTMENT OF TRANSPORTATION
RALEIGH

SUBSTRUCTURE
END BENT 1
LEFT LANE

NORTH CAROLINA PROFESSIONAL SEAL 20125 ENGINEER MARSHALL L. HODGE, JR.
4-24-07

REVISIONS						SHEET NO.
NO.	BY:	DATE:	NO.	BY:	DATE:	S-79
1			3			TOTAL SHEETS
2			4			128

STR. #3

DRAWN BY : A.S. CALLAWAY DATE : 1/5/05
CHECKED BY : D. HODGE DATE : 1/05

23-APR-2007 10:24
R:\Structures\U4012\Final Plans\U4012_sd_E*_01.dgn
vnguyen

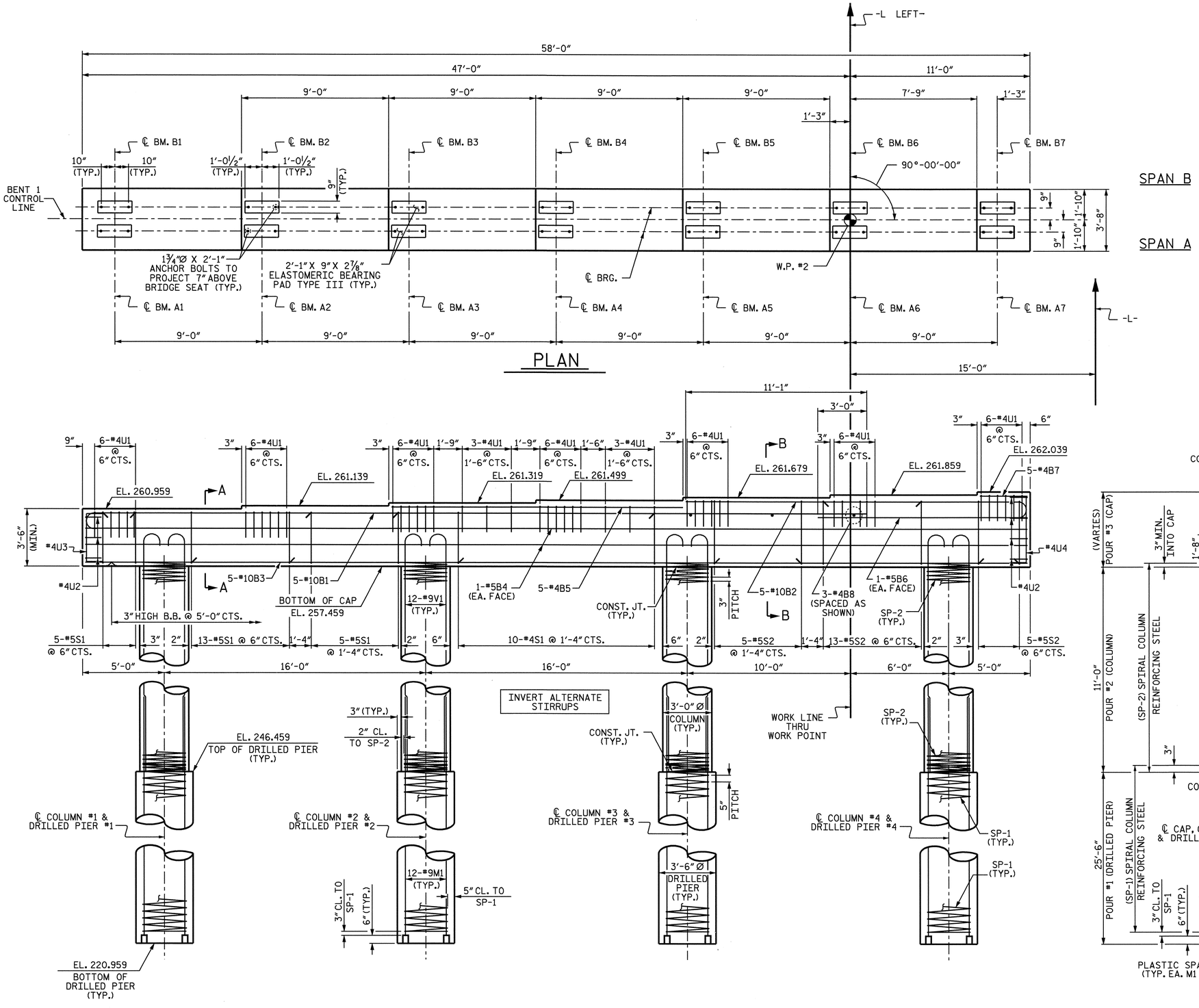

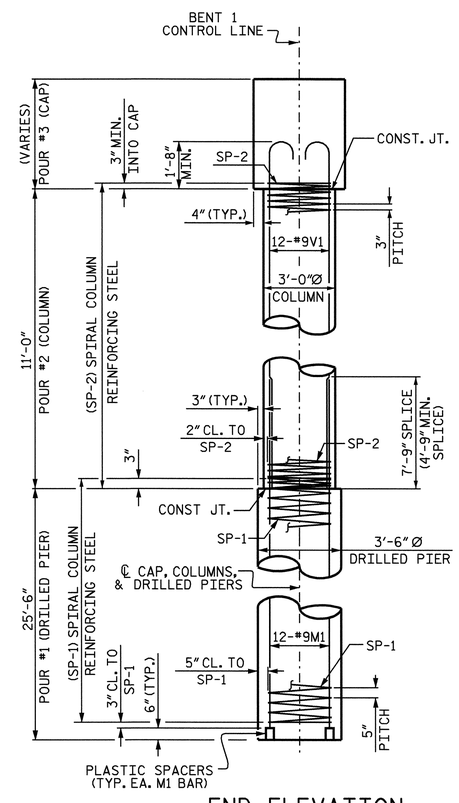

NOTES

STIRRUPS IN CAP MAY BE SHIFTED AS NECESSARY TO CLEAR ANCHOR BOLTS.

HOOKS ON "V" BARS MAY BE TURNED AS NECESSARY FOR PLACING REINFORCING STEEL.

ALL STEEL IN THE DRILLED PIERS IS INCLUDED IN THE PAY ITEMS FOR "REINFORCING STEEL" AND "SPIRAL COLUMN REINFORCING STEEL"

THE CONTRACTOR'S ATTENTION IS CALLED TO THE FACT THAT THE LONGITUDINAL REINFORCEMENT FOR THE DRILLED PIERS IS DETAILED WITH 3 FEET OF EXTRA LENGTH.

THE LOCATION OF THE CONSTRUCTION JOINT IN THE DRILLED PIERS IS BASED ON AN APPROXIMATE GROUND LINE ELEVATION. IF THE CONSTRUCTION JOINT IS ABOVE THE ACTUAL GROUND LINE ELEVATION, THE CONTRACTOR SHALL PLACE THE CONSTRUCTION JOINT 1 FT. BELOW THE GROUND LINE.

SPLICING OF LONGITUDINAL BARS IN THE DRILLED PIERS WILL NOT BE PERMITTED.

NORTH CAROLINA PROFESSIONAL SEAL 20125 ENGINEER MARSHALL G. CHEEK, JR.
6-7-07

PROJECT NO. U-4012
DURHAM COUNTY
STATION: 70+22.00 -L-

SHEET 1 OF 2

STATE OF NORTH CAROLINA
DEPARTMENT OF TRANSPORTATION
RALEIGH

SUBSTRUCTURE
BENT 1
LEFT LANE

REVISIONS								SHEET NO.
NO.	BY:	DATE:	NO.	BY:	DATE:			S-80
1			3					TOTAL SHEETS
2			4					128

DRAWN BY : S.H.SOCKWELL/L.L.M. DATE : 02-05
CHECKED BY : M.G. CHEEK DATE : 2-14-05

06-JUN-2007 11:07
R:\Structures\u4012\Final Plans\U-4012_sd_B*_01.dgn
vnguyen

STR #3

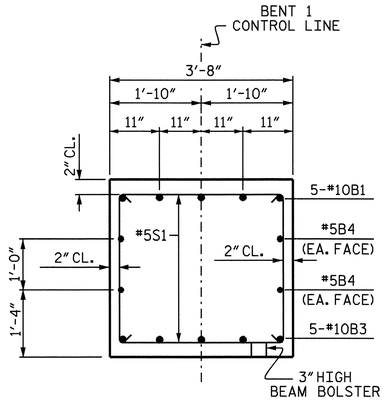

SECTION A-A

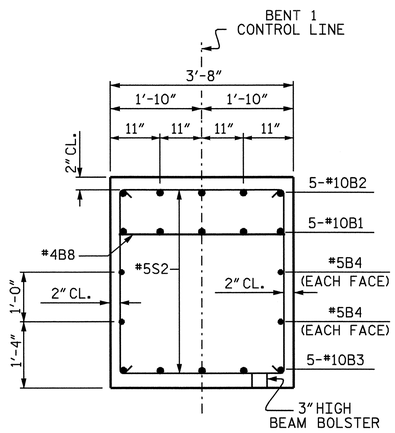

SECTION B-B

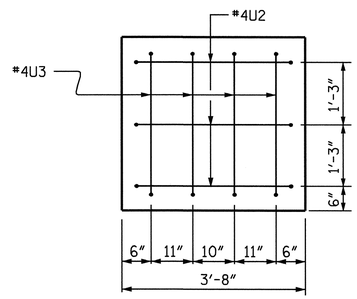

LEFT END VIEW

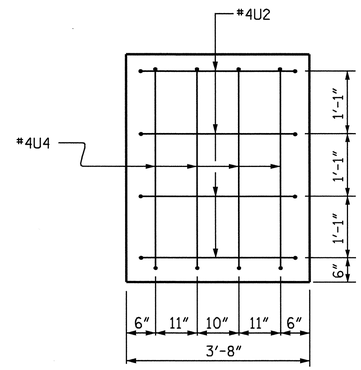

RIGHT END VIEW

BAR TYPES

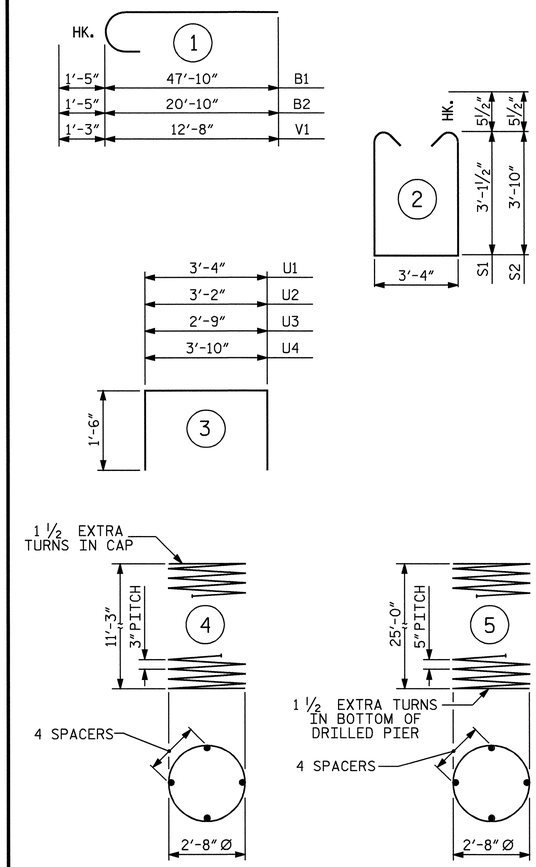

ALL BAR DIMENSIONS ARE OUT TO OUT.

BILL OF MATERIAL

BENT 1

BAR	NO.	SIZE	TYPE	LENGTH	WEIGHT
B1	5	#10	1	49'-3"	1060
B2	5	#10	1	22'-3"	479
B3	5	#10	STR	57'-8"	1241
B4	4	#5	STR	57'-8"	241
B5	5	#4	STR	17'-10"	60
B6	2	#5	STR	12'-9"	27
B7	5	#4	STR	2'-11"	10
B8	3	#4	STR	3'-4"	7
M1	48	#9	STR	32'-9"	5345
S1	33	#5	2	10'-6"	361
S2	23	#5	2	11'-11"	286
U1	48	#4	3	6'-4"	203
U2	7	#4	3	6'-2"	29
U3	4	#4	3	5'-9"	15
U4	4	#4	3	6'-10"	18
V1	48	#9	1	13'-11"	2271

REINFORCING STEEL = 11653 LBS

BAR	NO.	SIZE	TYPE	LENGTH	WEIGHT
SP-1	4	✱✱✱	5	505'-10"	2110
SP-2	4	✱✱	4	383'-8"	1025

SPIRAL COLUMN REINF. STEEL = 3135 LBS

CLASS A CONCRETE BREAKDOWN

POUR #2 (COLUMNS)	11.5 C.Y.
POUR #3 (CAP)	31.3 C.Y.
TOTAL	42.8 C.Y.

DRILLED PIER QUANTITIES

DRILLED PIER CONCRETE BREAKDOWN

POUR #1 (DRILLED PIERS)	36.3 C.Y.
3'-6" Ø DRILLED PIERS NOT IN SOIL	25.00 LIN. FT.
3'-6" Ø DRILLED PIERS IN SOIL	77.00 LIN. FT.
CROSSHOLE SONIC LOGGING	1 EA.
▲ CSL TUBES	448.00 LIN. FT.

✱✱ THE SP-2 SPIRAL REINFORCING STEEL SHALL BE W20 OR D-20 COLD DRAWN WIRE OR #4 PLAIN OR DEFORMED BAR.
✱✱✱ THE SP-1 SPIRAL REINFORCING STEEL SHALL BE W31 OR D-31 COLD DRAWN WIRE OR #5 PLAIN OR DEFORMED BAR.

▲ NO SEPARATE PAYMENT WILL BE MADE FOR CSL TUBES. CSL TUBES WILL BE INCLUDED IN THE UNIT BID PRICE FOR DRILLED PIERS.

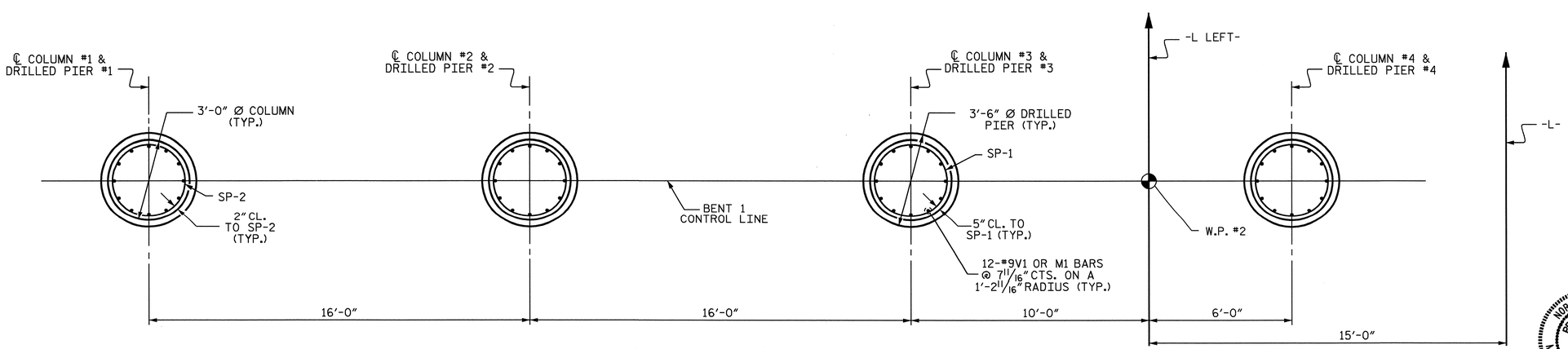

PLAN OF DRILLED PIERS & COLUMNS

(REINFORCING STEEL IS TYPICAL FOR EACH COLUMN & DRILLED PIER)

PROJECT NO. U-4012

DURHAM COUNTY

STATION: 70+22.00 -L-

SHEET 2 OF 2

STATE OF NORTH CAROLINA
DEPARTMENT OF TRANSPORTATION
RALEIGH

SUBSTRUCTURE
BENT 1
LEFT LANE

NORTH CAROLINA PROFESSIONAL SEAL 20125 ENGINEER MARSHALL G. CHEEK, JR.
6-7-07

REVISIONS								SHEET NO.
NO.	BY:	DATE:	NO.	BY:	DATE:			S-81
1			3					TOTAL SHEETS
2			4					128

DRAWN BY : S.H.SOCKWELL/L.L.M. DATE : 02-05
CHECKED BY : M.G. CHEEK DATE : 2-14-05

06-JUN-2007 11:08
R:\Structures\u4012\Final Plans\U-4012_sd_B*_01.dgn
vnguyen

STR #3

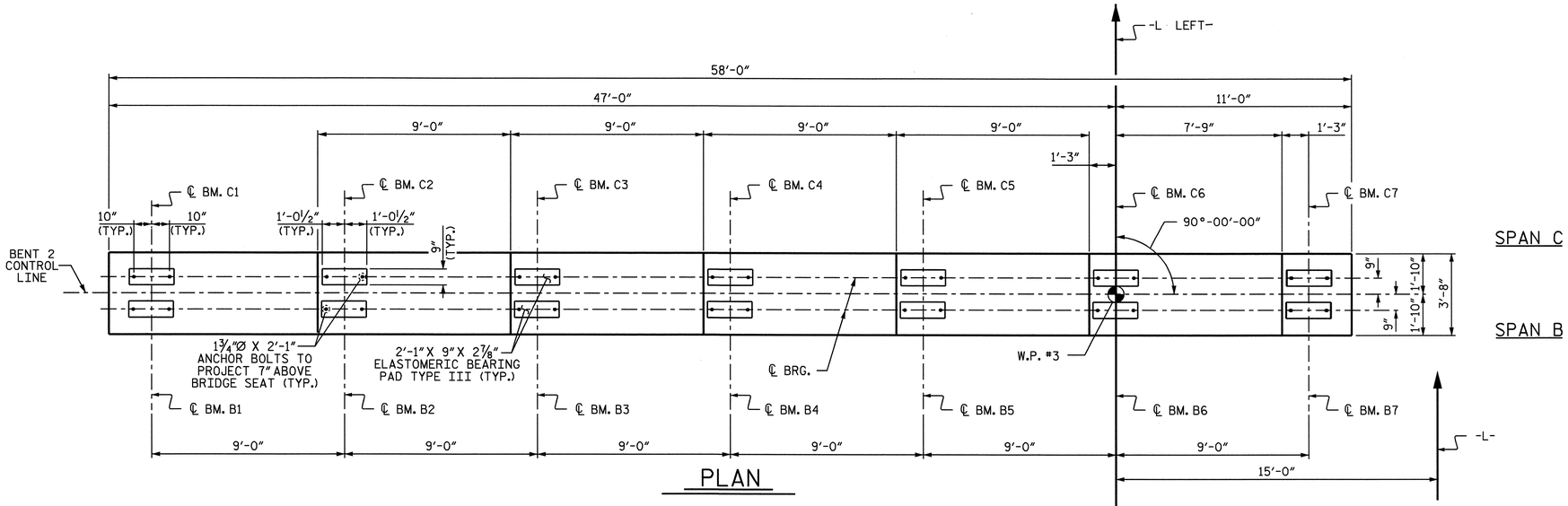

PLAN

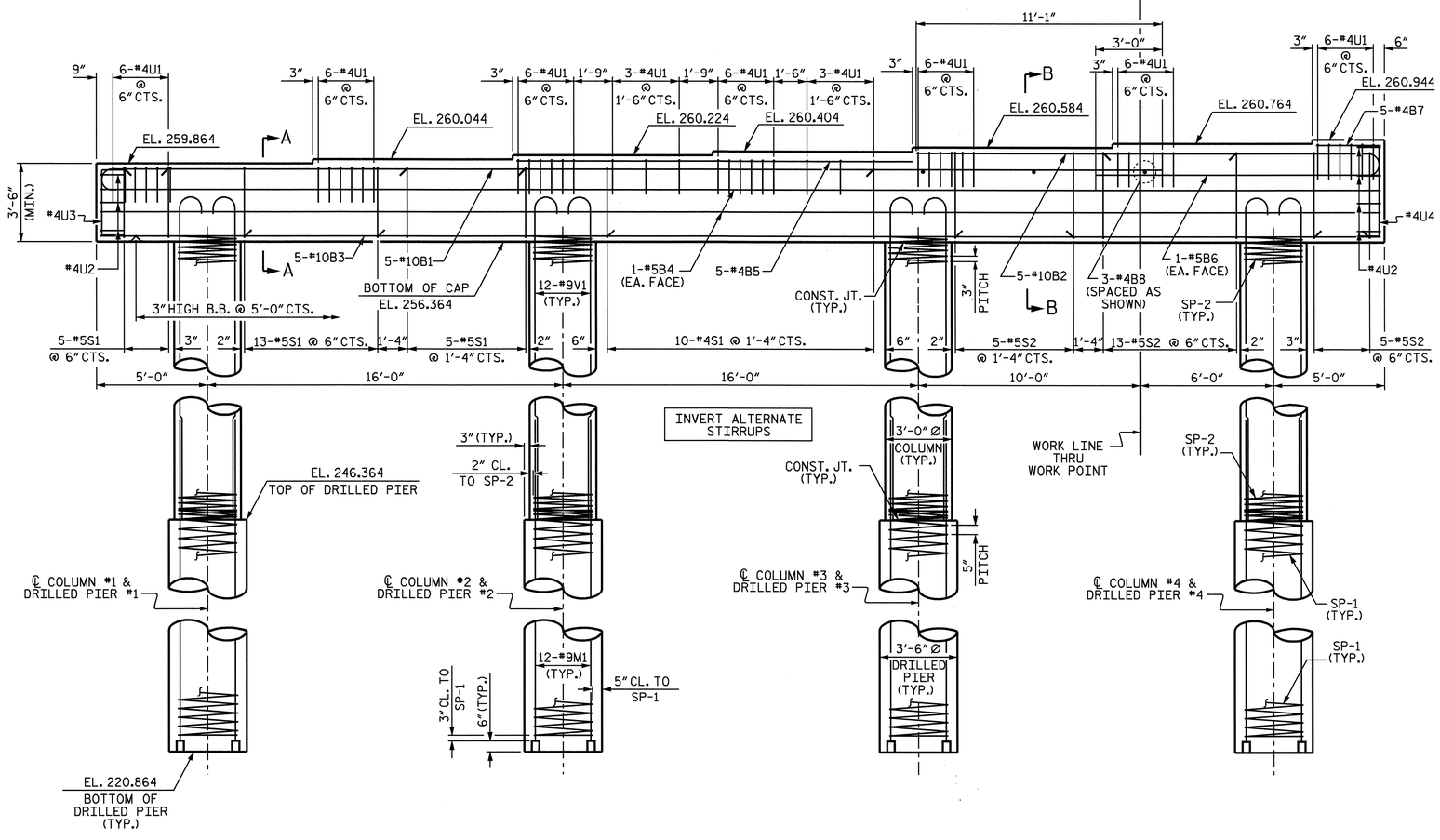

ELEVATION

DIMENSIONS AND REINFORCING STEEL ARE TYPICAL FOR EACH COLUMN & DRILLED PIER.

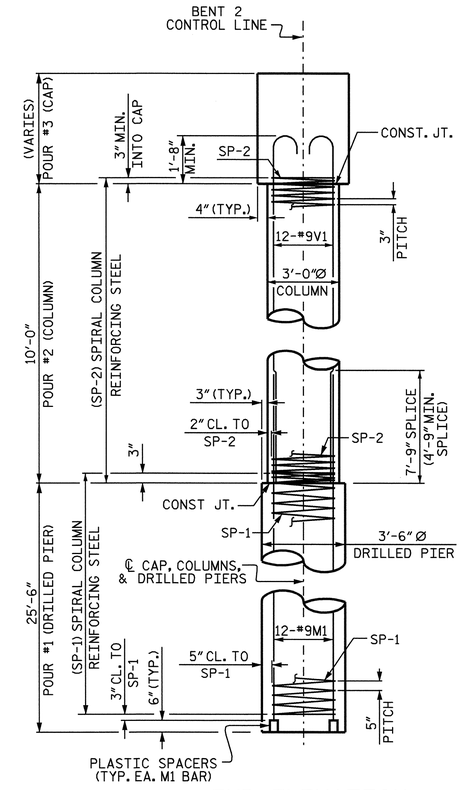

END ELEVATION

NOTES

STIRRUPS IN CAP MAY BE SHIFTED AS NECESSARY TO CLEAR ANCHOR BOLTS.

HOOKS ON "V" BARS MAY BE TURNED AS NECESSARY FOR PLACING REINFORCING STEEL.

ALL STEEL IN THE DRILLED PIERS IS INCLUDED IN THE PAY ITEMS FOR "REINFORCING STEEL" AND "SPIRAL COLUMN REINFORCING STEEL"

THE CONTRACTOR'S ATTENTION IS CALLED TO THE FACT THAT THE LONGITUDINAL REINFORCEMENT FOR THE DRILLED PIERS IS DETAILED WITH 3 FEET OF EXTRA LENGTH.

THE LOCATION OF THE CONSTRUCTION JOINT IN THE DRILLED PIERS IS BASED ON AN APPROXIMATE GROUND LINE ELEVATION. IF THE CONSTRUCTION JOINT IS ABOVE THE ACTUAL GROUND LINE ELEVATION, THE CONTRACTOR SHALL PLACE THE CONSTRUCTION JOINT 1 FT. BELOW THE GROUND LINE.

SPLICING OF LONGITUDINAL BARS IN THE DRILLED PIERS WILL NOT BE PERMITTED.

NORTH CAROLINA PROFESSIONAL SEAL 20125 ENGINEER MARSHALL L. CHEEK, JR.
6-7-07

PROJECT NO. U-4012
DURHAM COUNTY
STATION: 70+22.00 -L-

SHEET 1 OF 2

STATE OF NORTH CAROLINA
DEPARTMENT OF TRANSPORTATION
RALEIGH

SUBSTRUCTURE
BENT 2
LEFT LANE

REVISIONS						SHEET NO.
NO.	BY:	DATE:	NO.	BY:	DATE:	S-82
1			3			TOTAL SHEETS
2			4			75

DRAWN BY : S.H.SOCKWELL/L.L.M. DATE : 02-05
CHECKED BY : M.G. CHEEK DATE : 2-14-05

06-JUN-2007 11:11
R:\Structures\u4012\Final Plans\U-4012_sd_B*_01.dgn
vnguyen

STR #3

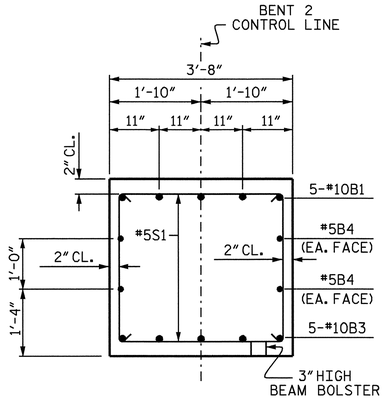

SECTION A-A

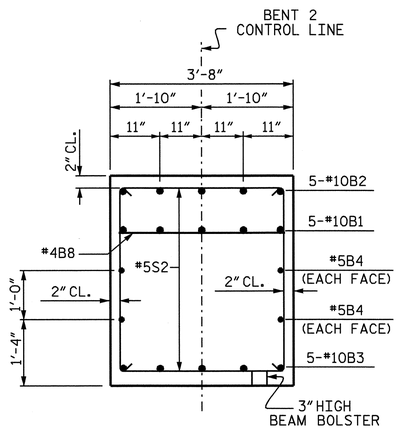

SECTION B-B

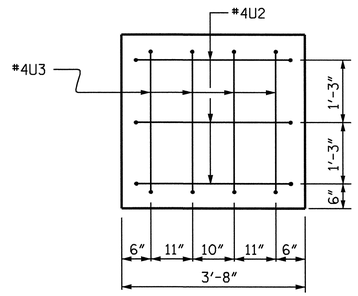

LEFT END VIEW

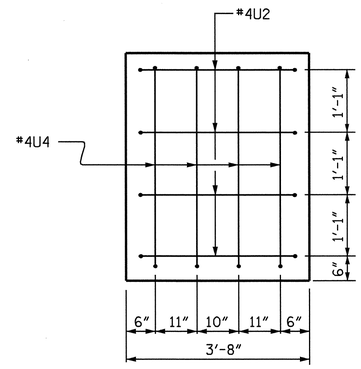

RIGHT END VIEW

BAR TYPES

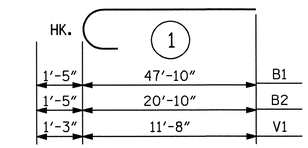

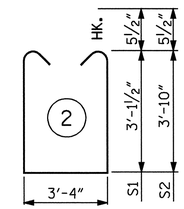

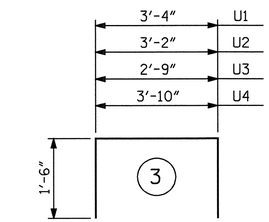

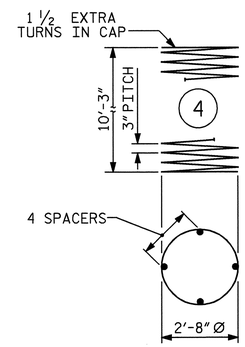

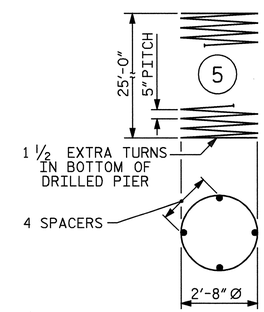

ALL BAR DIMENSIONS ARE OUT TO OUT.

BILL OF MATERIAL

BENT 2

BAR	NO.	SIZE	TYPE	LENGTH	WEIGHT
B1	5	#10	1	49'-3"	1060
B2	5	#10	1	22'-3"	479
B3	5	#10	STR	57'-8"	1241
B4	4	#5	STR	57'-8"	241
B5	5	#4	STR	17'-10"	60
B6	2	#5	STR	12'-9"	27
B7	5	#4	STR	2'-11"	10
B8	3	#4	STR	3'-4"	7
M1	48	#9	STR	32'-9"	5345
S1	33	#5	2	10'-6"	361
S2	23	#5	2	11'-11"	286
U1	48	#4	3	6'-4"	203
U2	7	#4	3	6'-2"	29
U3	4	#4	3	5'-9"	15
U4	4	#4	3	6'-10"	18
V1	48	#9	1	12'-11"	2108
REINFORCING STEEL				=	11490 LBS

BAR	NO.	SIZE	TYPE	LENGTH	WEIGHT
SP-1	4	✱✱✱	5	505'-10"	2110
SP-2	4	✱✱	4	350'-8"	937
SPIRAL COLUMN REINF. STEEL				=	3047 LBS

CLASS A CONCRETE BREAKDOWN

POUR #2 (COLUMNS)	10.5 C.Y.
POUR #3 (CAP)	31.3 C.Y.
TOTAL	41.8 C.Y.

DRILLED PIER QUANTITIES

DRILLED PIER CONCRETE BREAKDOWN

POUR #1 (DRILLED PIERS)	36.3 C.Y.
3'-6" Ø DRILLED PIERS NOT IN SOIL	24.00 LIN. FT.
3'-6" Ø DRILLED PIERS IN SOIL	78.00 LIN. FT.
3'-6" Ø PERMANENT STEEL CASING	65.46 LIN. FT.
SID INSPECTION	1 EA.
▲ CSL TUBES	448.00 LIN. FT.

✱✱ THE SP-2 SPIRAL REINFORCING STEEL SHALL BE W20 OR D-20 COLD DRAWN WIRE OR #4 PLAIN OR DEFORMED BAR.
✱✱✱ THE SP-1 SPIRAL REINFORCING STEEL SHALL BE W31 OR D-31 COLD DRAWN WIRE OR #5 PLAIN OR DEFORMED BAR.

▲ NO SEPARATE PAYMENT WILL BE MADE FOR CSL TUBES. CSL TUBES WILL BE INCLUDED IN THE UNIT BID PRICE FOR DRILLED PIERS.

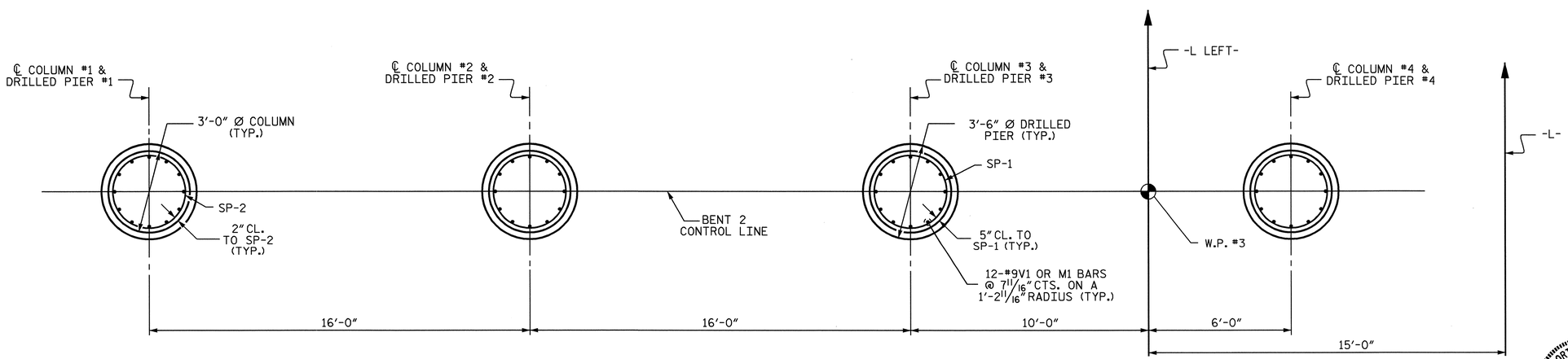

PLAN OF DRILLED PIERS & COLUMNS

(REINFORCING STEEL IS TYPICAL FOR EACH COLUMN & DRILLED PIER)

PROJECT NO. U-4012
DURHAM COUNTY
STATION: 70+22.00 -L-

SHEET 2 OF 2

STATE OF NORTH CAROLINA
DEPARTMENT OF TRANSPORTATION
RALEIGH

SUBSTRUCTURE
BENT 2
LEFT LANE

NORTH CAROLINA PROFESSIONAL SEAL 20125 ENGINEER MARSHALL B. BRICKER, JR.
6-7-07

REVISIONS						SHEET NO.
NO.	BY:	DATE:	NO.	BY:	DATE:	S-83
1			3			TOTAL SHEETS
2			4			128

DRAWN BY : S.H.SOCKWELL/L.L.M. DATE : 02-05
CHECKED BY : M.G. CHEEK DATE : 2-14-05

06-JUN-2007 11:11
R:\Structures\u4012\Final Plans\U-4012_sd_B*_01.dgn
vnguyen

STR #3

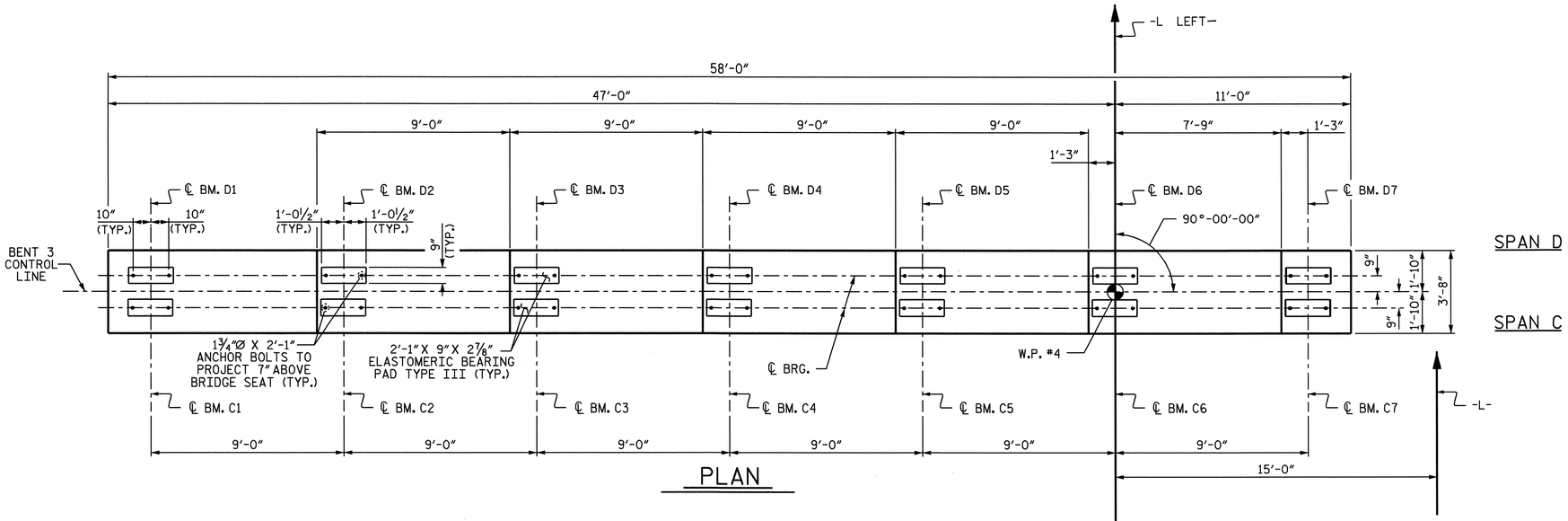

PLAN

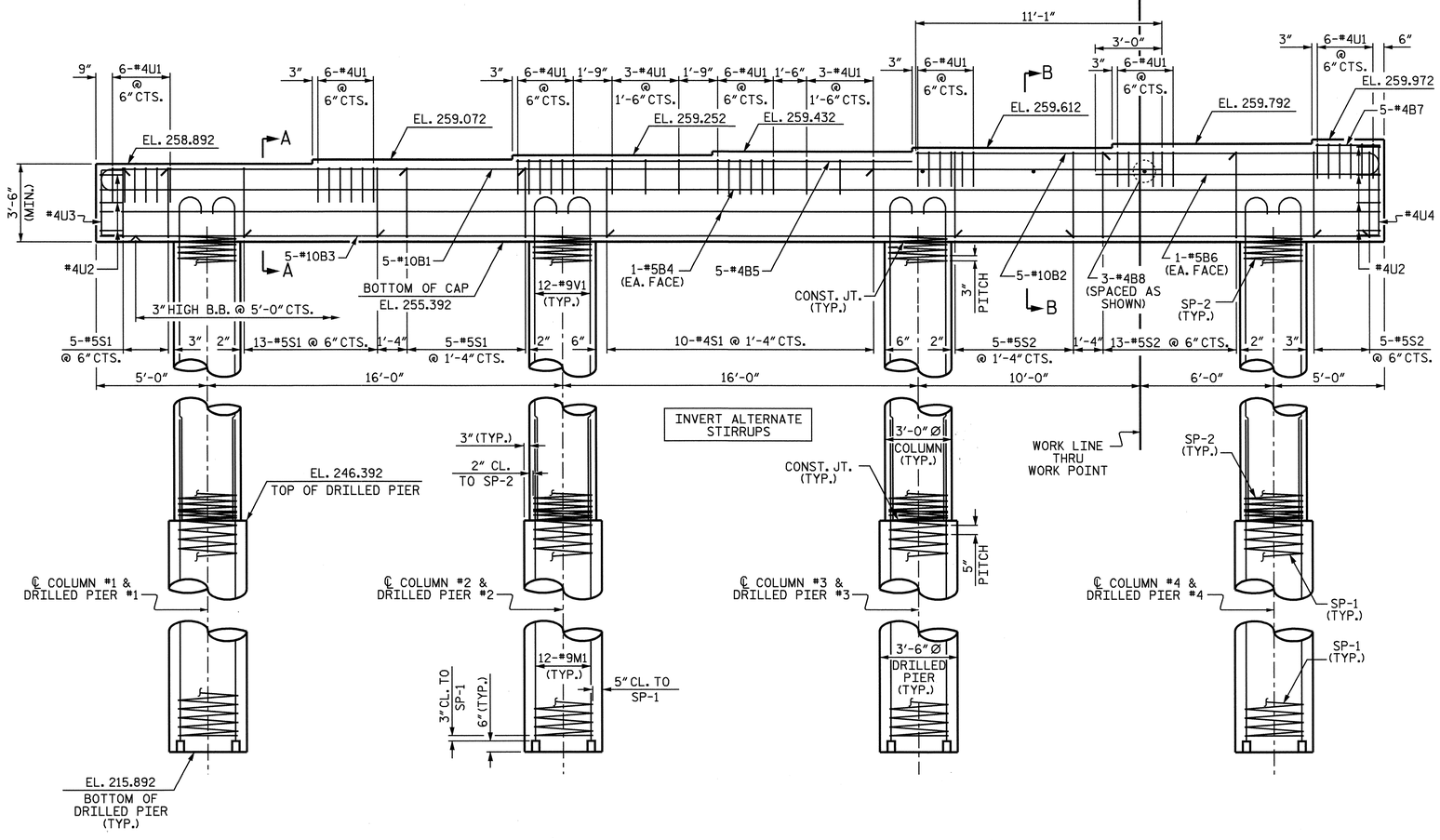

ELEVATION

DIMENSIONS AND REINFORCING STEEL ARE TYPICAL FOR EACH COLUMN & DRILLED PIER.

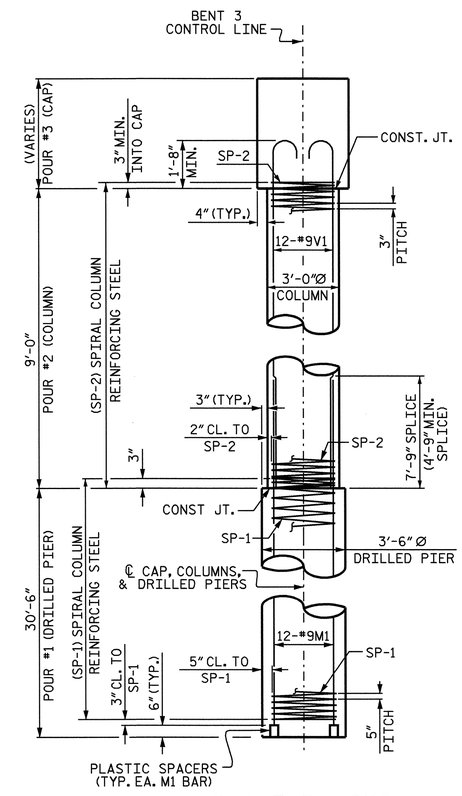

END ELEVATION

NOTES

STIRRUPS IN CAP MAY BE SHIFTED AS NECESSARY TO CLEAR ANCHOR BOLTS.

HOOKS ON "V" BARS MAY BE TURNED AS NECESSARY FOR PLACING REINFORCING STEEL.

ALL STEEL IN THE DRILLED PIERS IS INCLUDED IN THE PAY ITEMS FOR "REINFORCING STEEL" AND "SPIRAL COLUMN REINFORCING STEEL"

THE CONTRACTOR'S ATTENTION IS CALLED TO THE FACT THAT THE LONGITUDINAL REINFORCEMENT FOR THE DRILLED PIERS IS DETAILED WITH 3 FEET OF EXTRA LENGTH.

THE LOCATION OF THE CONSTRUCTION JOINT IN THE DRILLED PIERS IS BASED ON AN APPROXIMATE GROUND LINE ELEVATION. IF THE CONSTRUCTION JOINT IS ABOVE THE ACTUAL GROUND LINE ELEVATION, THE CONTRACTOR SHALL PLACE THE CONSTRUCTION JOINT 1 FT. BELOW THE GROUND LINE.

SPLICING OF LONGITUDINAL BARS IN THE DRILLED PIERS WILL NOT BE PERMITTED.

NORTH CAROLINA PROFESSIONAL SEAL 20125 ENGINEER MARSHALL G. CHEEK, JR.

6-7-07

PROJECT NO. U-4012

DURHAM COUNTY

STATION: 70+22.00 -L-

SHEET 1 OF 2

STATE OF NORTH CAROLINA
DEPARTMENT OF TRANSPORTATION
RALEIGH

SUBSTRUCTURE
BENT 3
LEFT LANE

REVISIONS						SHEET NO.
NO.	BY:	DATE:	NO.	BY:	DATE:	S-84
1			3			TOTAL SHEETS
2			4			128

DRAWN BY : S.H.SOCKWELL/L.L.M. DATE : 02-05
CHECKED BY : M.G. CHEEK DATE : 2-14-05

06-JUN-2007 11:12
R:\Structures\u4012\FinalPlans\U-4012_sd_B*_01.dgn
vnguyen

STR #3

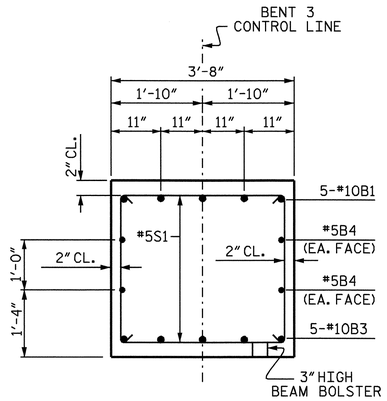

SECTION A-A

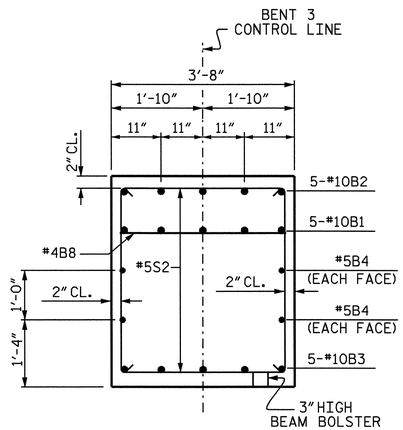

SECTION B-B

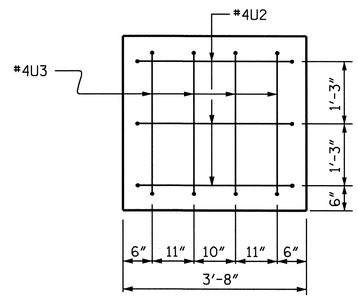

LEFT END VIEW

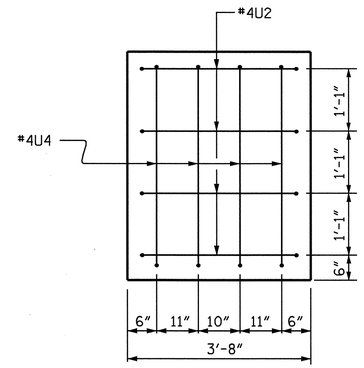

RIGHT END VIEW

BAR TYPES

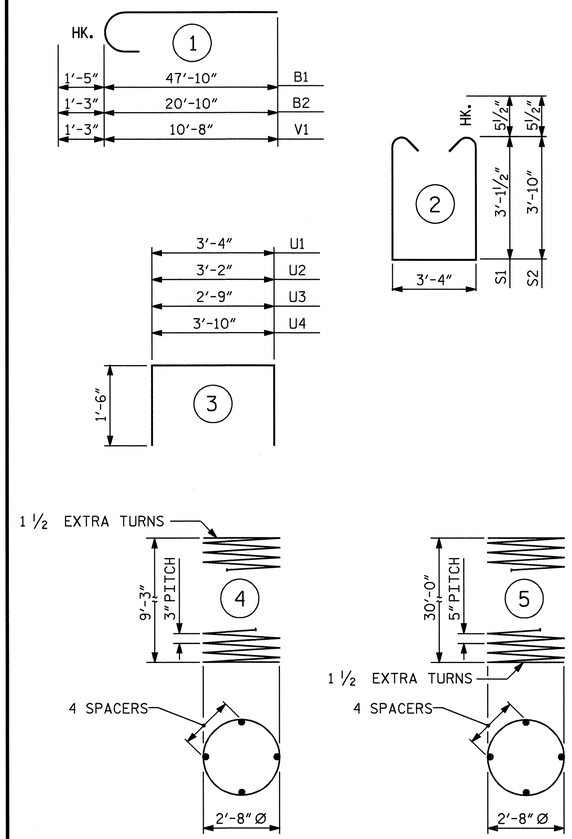

ALL BAR DIMENSIONS ARE OUT TO OUT.

BILL OF MATERIAL

BENT 3

BAR	NO.	SIZE	TYPE	LENGTH	WEIGHT
B1	5	#10	1	49'-3"	1060
B2	5	#10	1	22'-3"	479
B3	5	#10	STR	57'-8"	1241
B4	4	#5	STR	57'-8"	241
B5	5	#4	STR	17'-10"	60
B6	2	#5	STR	12'-9"	27
B7	5	#4	STR	2'-11"	10
B8	3	#4	STR	3'-4"	7
M1	48	#9	STR	37'-9"	6161
S1	33	#5	2	10'-6"	361
S2	23	#5	2	11'-11"	286
U1	48	#4	3	6'-4"	203
U2	7	#4	3	6'-2"	29
U3	4	#4	3	5'-9"	15
U4	4	#4	3	6'-10"	18
V1	48	#9	1	11'-11"	1945

REINFORCING STEEL = 12143 LBS

BAR	NO.	SIZE	TYPE	LENGTH	WEIGHT
SP-1	4	✱✱✱	5	604'-7"	2522
SP-2	4	✱✱	4	317'-8"	849

SPIRAL COLUMN REINF. STEEL = 3371 LBS

CLASS A CONCRETE BREAKDOWN

POUR #2 (COLUMNS)	9.4 C.Y.
POUR #3 (CAP)	31.3 C.Y.
TOTAL	40.7 C.Y.

DRILLED PIER QUANTITIES

DRILLED PIER CONCRETE BREAKDOWN

POUR #1 (DRILLED PIERS)	43.5 C.Y.
3'-6" Ø DRILLED PIERS NOT IN SOIL	22.00 LIN. FT.
3'-6" Ø DRILLED PIERS IN SOIL	100.00 LIN. FT.
3'-6" Ø PERMANENT STEEL CASING	69.58 LIN. FT.
▲CSL TUBES	528.00 LIN. FT.

✱✱ THE SP-2 SPIRAL REINFORCING STEEL SHALL BE W20 OR D-20 COLD DRAWN WIRE OR #4 PLAIN OR DEFORMED BAR.
✱✱✱ THE SP-1 SPIRAL REINFORCING STEEL SHALL BE W31 OR D-31 COLD DRAWN WIRE OR #5 PLAIN OR DEFORMED BAR.

▲ NO SEPARATE PAYMENT WILL BE MADE FOR CSL TUBES. CSL TUBES WILL BE INCLUDED IN THE UNIT BID PRICE FOR DRILLED PIERS.

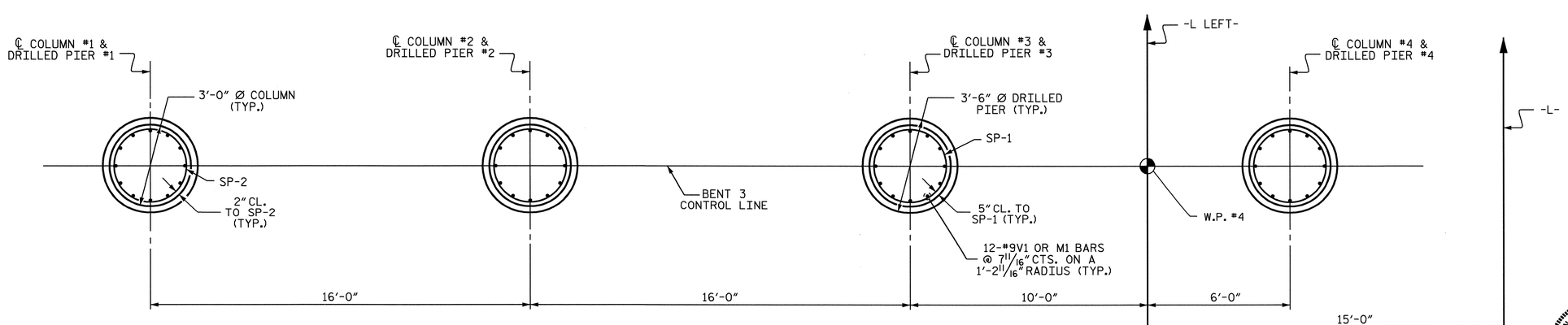

PLAN OF DRILLED PIERS & COLUMNS

(REINFORCING STEEL IS TYPICAL FOR EACH COLUMN & DRILLED PIER)

PROJECT NO. U-4012

DURHAM COUNTY

STATION: 70+22.00 -L-

SHEET 2 OF 2

STATE OF NORTH CAROLINA
DEPARTMENT OF TRANSPORTATION
RALEIGH

SUBSTRUCTURE
BENT 3
LEFT LANE

NORTH CAROLINA PROFESSIONAL SEAL 20125 ENGINEER M.G. CHEEK
6-7-07

REVISIONS						SHEET NO.
NO.	BY:	DATE:	NO.	BY:	DATE:	S-85
1			3			TOTAL SHEETS
2			4			128

DRAWN BY : S.H.SOCKWELL/L.L.M. DATE : 02-05
CHECKED BY : M.G. CHEEK DATE : 2-14-05

06-JUN-2007 11:12
R:\Structures\u4012\Final Plans\U-4012_sd_B*_01.dgn
vnguyen

STR #3

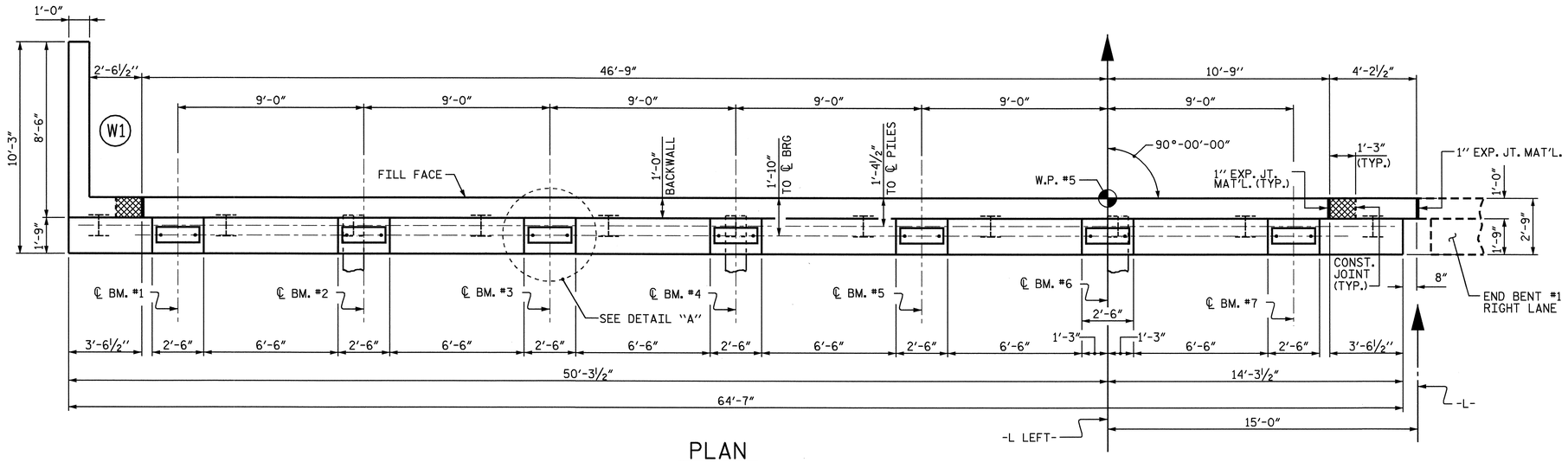

PLAN

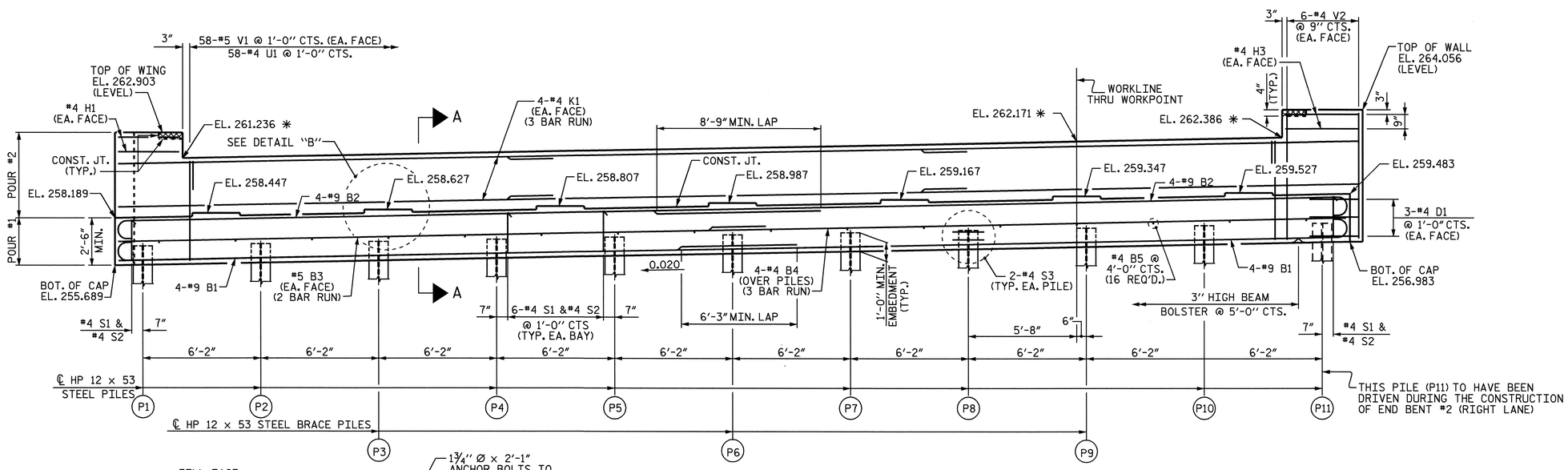

ELEVATION

✱ THESE ELEVATIONS ARE TAKEN AT FILL FACE.

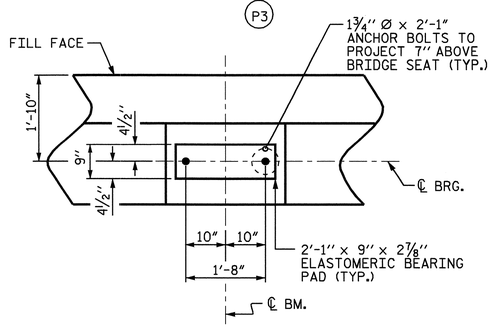

DETAIL "A"

(TYP. EA. BEAM)

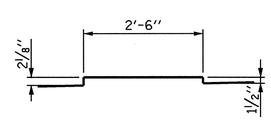

DETAIL "B"

(TYP. EA. SEAT)

NOTES

STIRRUPS IN CAP MAY BE SHIFTED AS NECESSARY TO CLEAR ANCHOR BOLTS.

BACKWALL SHALL BE PLACED BEFORE APPLYING THE EPOXY PROTECTIVE COATING.

THE TOP SURFACE AREAS OF THE END BENT CAPS SHALL BE CURED IN ACCORDANCE WITH THE STANDARD SPECIFICATIONS EXCEPT THE MEMBRANE CURING COMPOUND METHOD SHALL NOT BE USED.

THE TOP SURFACE OF THE CAP EXCEPT THE BRIDGE SEAT BUILDUPS SHALL BE SLOPED TRANSVERSELY FROM THE FILL FACE TO THE BACK FACE AT THE RATE OF 2%.

THE CONCRETE IN THE CROSS-HATCHED AREA OF THE WING SHALL BE POURED AFTER THE PARAPET AND END POST ARE CAST IF SLIP FORMING IS USED.

THE CONTRACTOR SHALL PROVIDE FOR INSTALLATION OF THE 4"DIAMETER DRAIN PIPE THROUGH THE WING WALL AS REQUIRED FOR REINFORCED BRIDGE APPROACH FILLS. SEE THE ROADWAY PLANS. REINFORCING STEEL IN THE WING WALL MAY BE SHIFTED AS NECESSARY TO CLEAR THE DRAIN PIPE.

PILE	TOP OF PILE ELEVATION
P1	256.728
P2	256.851
P3	256.975
P4	257.098
P5	257.221
P6	257.345
P7	257.468
P8	257.591
P9	257.715
P10	257.838
P11	257.961

SPLICE LENGTH CHART
#5 B3 SPLICE = 3'-0"
#4 B4 SPLICE = 2'-5"
#4 K1 SPLICE = 2'-5"

PROJECT NO. U-4012
DURHAM COUNTY
STATION: 70+22.00 -L-

SHEET 1 OF 2

STATE OF NORTH CAROLINA
DEPARTMENT OF TRANSPORTATION
RALEIGH

SUBSTRUCTURE

END BENT 2
LEFT LANE

NORTH CAROLINA PROFESSIONAL SEAL 20125 ENGINEER MARSHALL L. HAMBRICK, JR.
6-7-07

REVISIONS								SHEET NO.
NO.	BY:	DATE:	NO.	BY:	DATE:			S-86
1			3					TOTAL SHEETS
2			4					128

DRAWN BY : A.S. CALLAWAY DATE : 1/5/05
CHECKED BY : D. HODGE DATE : 1/05

06-JUN-2007 11:15
R:\Structures\u4012\Final Plans\U4012_sd_E*_01.dgn
vnguyen

STR. #3

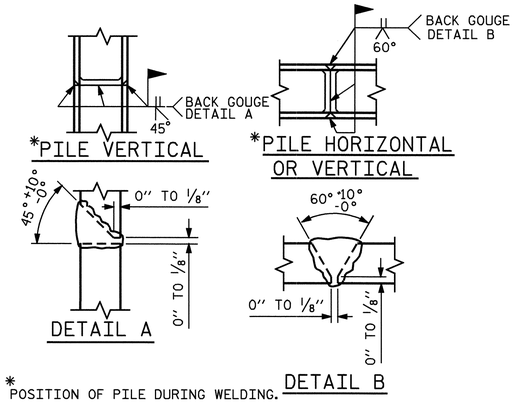

*POSITION OF PILE DURING WELDING.

PILE SPLICE DETAILS

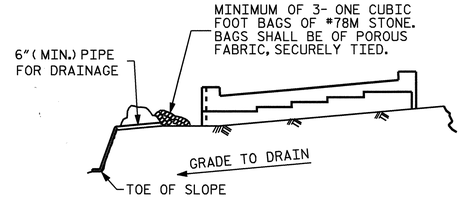

BAGGED STONE AND PIPE SHALL BE PLACED IMMEDIATELY AFTER COMPLETION OF END BENT EXCAVATION. PIPE MAY BE EITHER CONCRETE, CORRUGATED STEEL, CORRUGATED ALUMINUM ALLOY, OR CORRUGATED PLASTIC. PERFORATED PIPE WILL NOT BE ALLOWED.

BAGGED STONE SHALL REMAIN IN PLACE UNTIL THE ENGINEER DIRECTS THAT IT BE REMOVED. THE CONTRACTOR SHALL REMOVE AND DISPOSE OF SILT ACCUMULATIONS AT BAGGED STONE WHEN SO DIRECTED BY THE ENGINEER. BAGS SHALL BE REMOVED AND REPLACED WHENEVER THE ENGINEER DETERMINES THAT THEY HAVE DETERIORATED AND LOST THEIR EFFECTIVENESS.

NO SEPARATE PAYMENT WILL BE MADE FOR THIS WORK AND THE ENTIRE COST OF THIS WORK SHALL BE INCLUDED IN THE UNIT CONTRACT PRICE BID FOR THE SEVERAL PAY ITEMS.

TEMPORARY DRAINAGE AT END BENT

BAR TYPES

ALL BAR DIMENSIONS ARE OUT TO OUT.

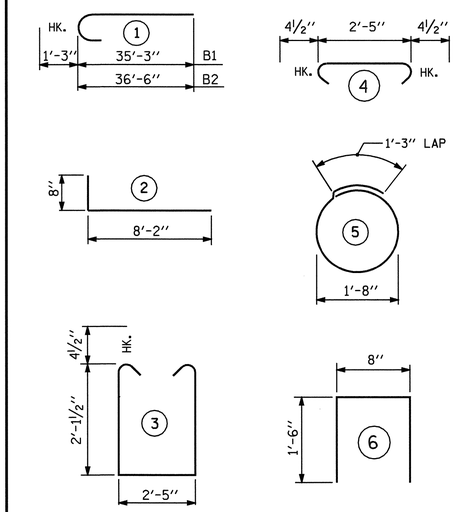

BILL OF MATERIAL

END BENT 2

BAR	NO.	SIZE	TYPE	LENGTH	WEIGHT
B1	8	#9	1	36'-6"	993
B2	8	#9	1	37'-9"	1027
B3	4	#5	STR	33'-8"	140
B4	12	#4	STR	23'-1"	185
B5	16	#4	STR	2'-5"	26
D1	6	#4	STR	2'-8"	11
H1	4	#4	STR	3'-2"	8
H2	18	#5	2	8'-10"	166
H3	4	#4	STR	3'-10"	10
K1	24	#4	STR	23'-3"	373
S1	62	#4	3	7'-5"	307
S2	62	#4	4	3'-2"	131
S3	22	#4	5	6'-6"	96
U1	58	#4	6	3'-8"	142
V1	116	#5	STR	5'-2"	625
V2	12	#4	STR	6'-9"	54
V3	26	#4	STR	6'-9"	117

REINFORCING STEEL 4411 LBS

CLASS A CONCRETE BREAKDOWN
POUR #1
(CAP & LOWER WINGS) 17.5 C.Y.
POUR #2
(BACKWALL & UPPER WINGS) 9.0 C.Y.
TOTAL 26.5 C.Y.

HP 12 x 53 STEEL PILES
NO. 11 275 L.F.

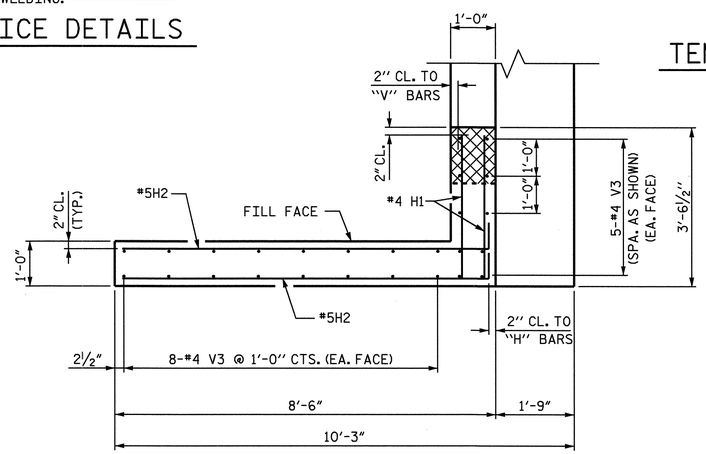

PLAN OF WING W1

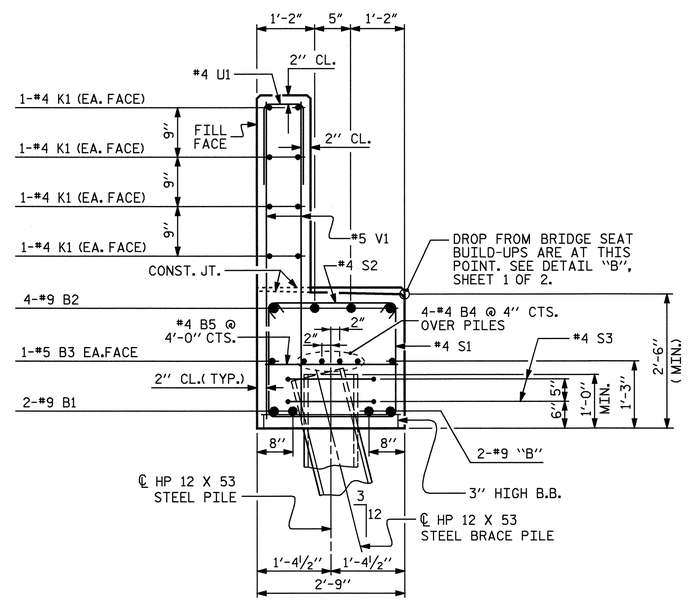

SECTION A-A

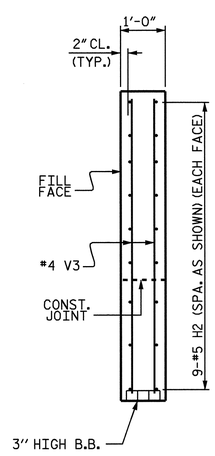

SECTION X-X

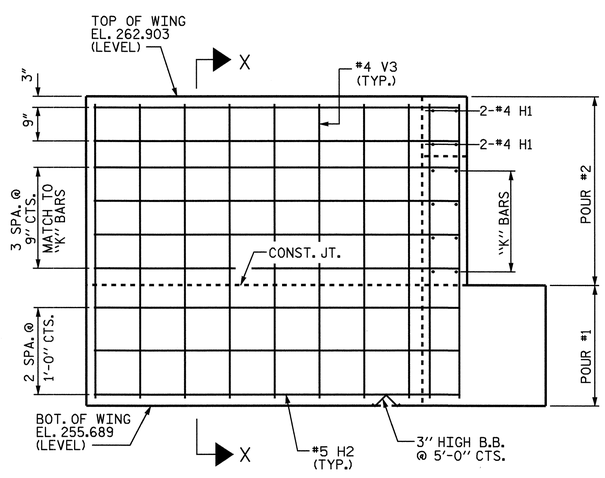

ELEVATION OF WING W1

PROJECT NO. U-4012
DURHAM COUNTY
STATION: 70+22.00 -L-

SHEET 2 OF 2

STATE OF NORTH CAROLINA
DEPARTMENT OF TRANSPORTATION
RALEIGH

SUBSTRUCTURE
END BENT 2
LEFT LANE

NORTH CAROLINA PROFESSIONAL SEAL 20125 ENGINEER MARSHALL C. WEEKS, JR.
4-24-07

REVISIONS						SHEET NO.
NO.	BY:	DATE:	NO.	BY:	DATE:	S-87
1			3			TOTAL SHEETS
2			4			128

STR. #3

DRAWN BY : A.S. CALLAWAY DATE : 1/5/05
CHECKED BY : D. HODGE DATE : 1/05

23-APR-2007 10:25
R:\Structures\U4012\Final Plans\U4012_sd_E*_01.dgn
vnguyen

NOTES :

FOR BERM WIDTH DIMENSIONS, SEE GENERAL DRAWING.

FOLLOWING REMOVAL OF THE EXISTING BENTS, AND AT THE DIRECTION OF THE ENGINEER, THE DISTURBED AREAS OF THE BANKS SHALL BE GRADED TO A 2:1 SLOPE AND CLASS II RIP RAP SHALL BE PLACED ON THE DISTURBED AREAS.

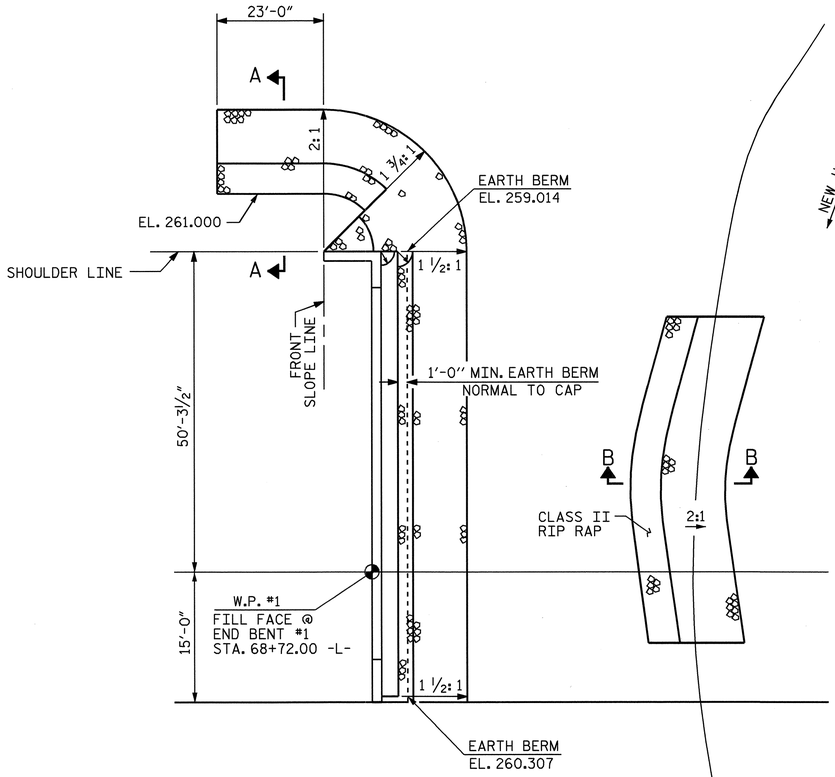

PLAN OF RIP RAP AT END BENT #1

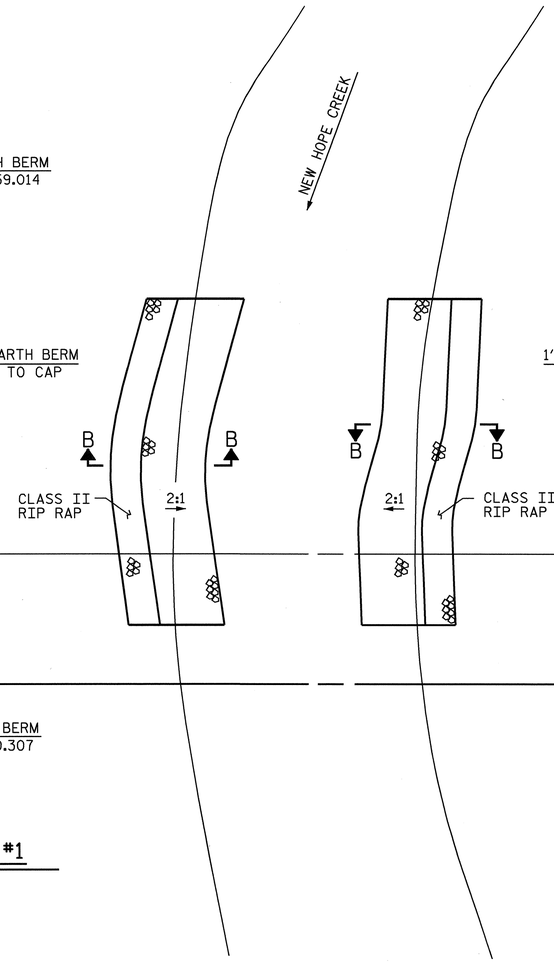

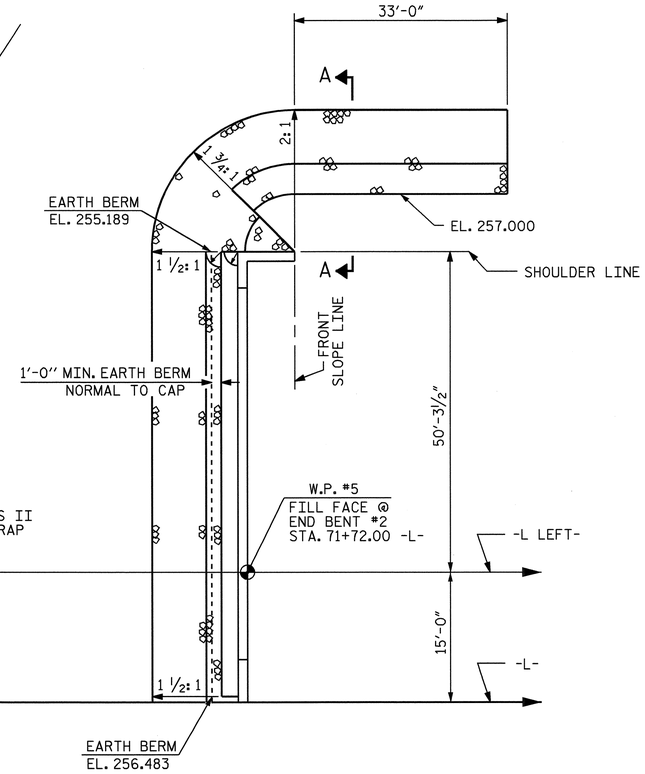

PLAN OF RIP RAP AT END BENT #2

ESTIMATED QUANTITIES		
BRIDGE @ STA. 70+22.00 -L- (LEFT LANE)	RIP RAP CLASS II	FILTER FABRIC FOR DRAINAGE
	TONS	SQUARE YARDS
END BENT 1	405	450
END BENT 2	315	350
* CREEK BANKS	220	245

* CREEK BANK QUANTITIES ARE INCLUDED WITH END BENT #1 QUANTITIES IN TOTAL BILL OF MATERIAL.

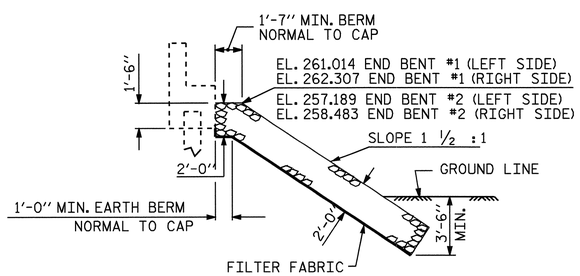

℄ SECTION
BERM RIP RAPPED

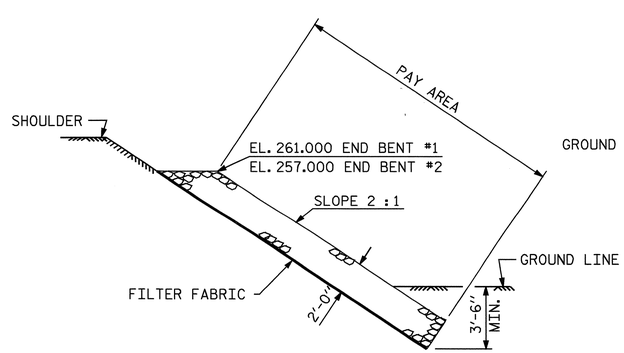

SECTION A-A

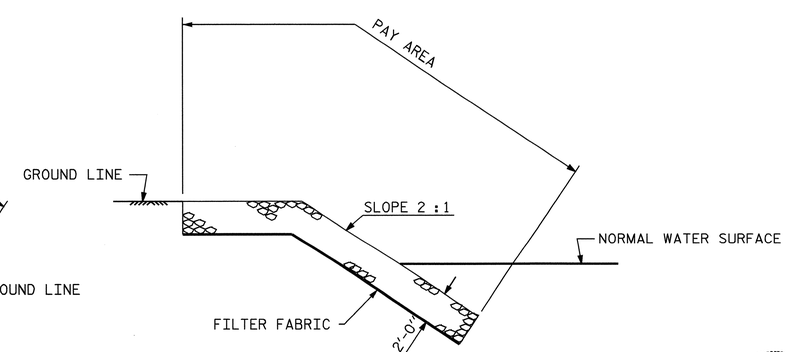

SECTION B-B

PROJECT NO. U-4012
DURHAM COUNTY
STATION: 70+22.00 -L-

STATE OF NORTH CAROLINA
DEPARTMENT OF TRANSPORTATION
RALEIGH

STANDARD
RIP RAP DETAILS
LEFT LANE

NORTH CAROLINA PROFESSIONAL SEAL 20125 ENGINEER
MARSHALL L. PAYNE, JR.
10-8-07

REVISIONS							
NO.	BY:	DATE:	NO.	BY:	DATE:	SHEET NO.	S-88
1			3			TOTAL SHEETS	128
2			4				

ASSEMBLED BY : D. HODGE	DATE : 1/05	
CHECKED BY : J. HARRIS	DATE : 2/05	
DRAWN BY : FCJ 2/88	REV. 7/17/98	REK/RWW
CHECKED BY : ARB 8/88	REV. 8/16/99	RWW/LES
	REV. 10/17/00	RWW/LES

08-JUN-2007 09:45
R:\Structures\u4012\Final Plans\U4012_sd_RR.dgn
vnguyen

STR. #3

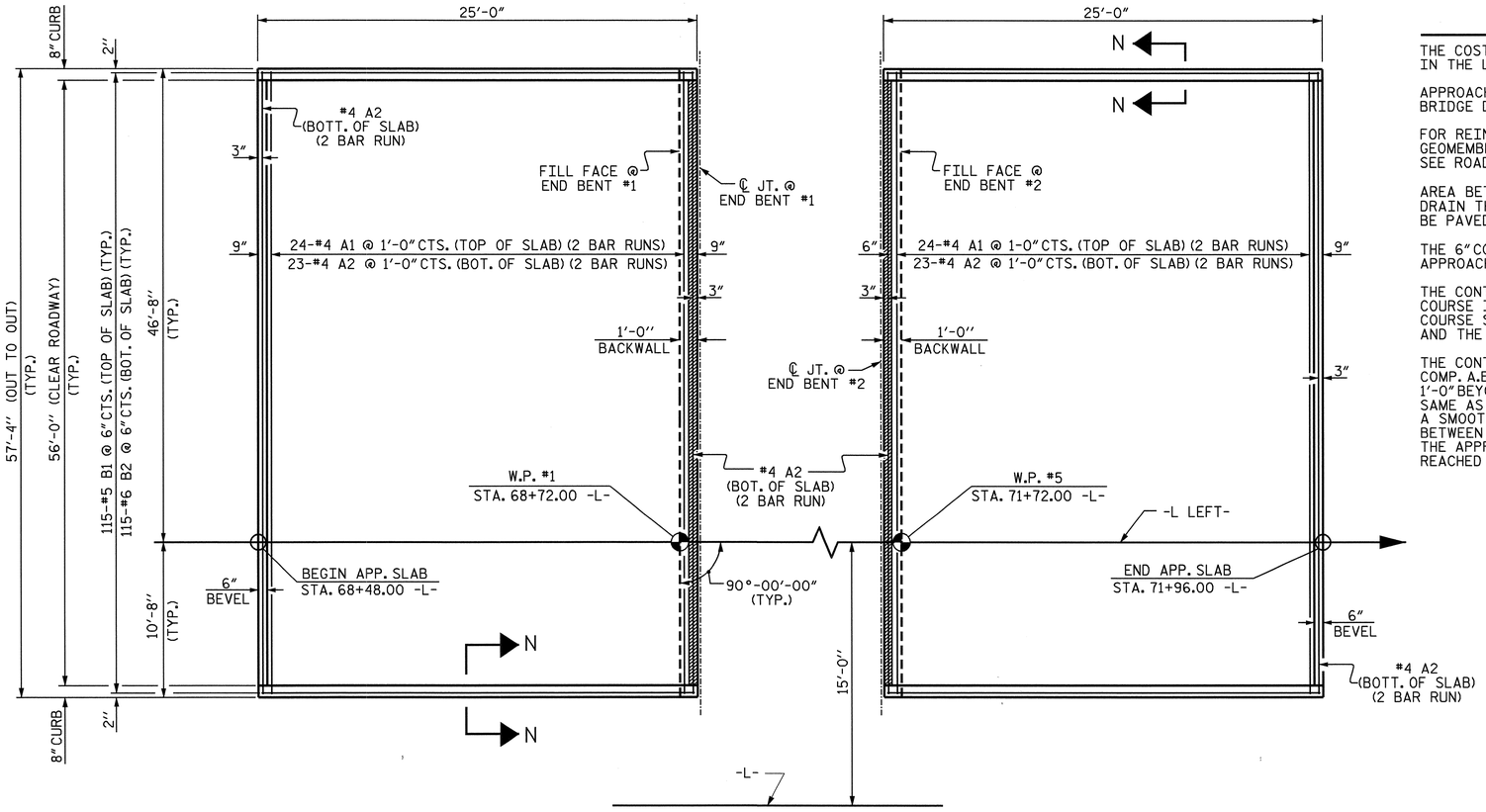

APPROACH SLAB @ END BENT NO. 1

APPROACH SLAB @ END BENT NO. 2

PLAN

NOTES

THE COST OF THE BARRIER RAIL ON THE APPROACH SLAB SHALL BE INCLUDED IN THE LUMP SUM CONTRACT PRICE BID FOR BRIDGE APPROACH SLABS.

APPROACH SLAB SHALL NOT BE CONSTRUCTED PRIOR TO COMPLETION OF THE BRIDGE DECK.

FOR REINFORCED BRIDGE APPROACH FILL INCLUDING FABRIC, IMPERMEABLE GEOMEMBRANE, 4" Ø DRAINAGE PIPE, #78M STONE, AND SELECT MATERIAL, SEE ROADWAY PLANS.

AREA BETWEEN THE WINGWALL AND APPROACH SLAB SHALL BE GRADED TO DRAIN THE WATER AWAY FROM THE FILL FACE OF THE BRIDGE AND SHALL BE PAVED. SEE ROADWAY PLANS.

THE 6" COMP. A.B.C. SHALL EXTEND 10'-0" BEYOND THE END OF THE APPROACH SLAB AND 1'-0" OUTSIDE OF EACH EDGE OF SLAB.

THE CONTRACTOR MAY USE 4" TYPE B-25.0B ASPHALT CONCRETE BASE COURSE IN LIEU OF 6" COMP. A.B.C. IF THIS OPTION IS USED, THE BASE COURSE SHALL EXTEND 1'-0" BEYOND THE END OF THE APPROACH SLAB AND THE WIDTH SHALL BE THE SAME AS THAT OF THE APPROACH SLAB.

THE CONTRACTOR MAY USE 5" CLASS "A" CONCRETE BASE IN LIEU OF 6" COMP. A.B.C. IF THIS OPTION IS USED, THE CONCRETE BASE SHALL EXTEND 1'-0" BEYOND THE END OF THE APPROACH SLAB AND THE WIDTH SHALL BE THE SAME AS THAT OF THE APPROACH SLAB. THE CONCRETE SHALL BE FINISHED TO A SMOOTH SURFACE AND A LAYER OF 30 LB ROOFING FELT SHALL BE PLACED BETWEEN THE CONCRETE BASE AND THE APPROACH SLAB TO PREVENT BOND. THE APPROACH SLAB SHALL NOT BE CAST UNTIL THE CONCRETE BASE HAS REACHED AN AGE OF THREE CURING DAYS.

BILL OF MATERIAL
FOR ONE APPROACH SLAB (2 REQ'D)

BAR	NO.	SIZE	TYPE	LENGTH	WEIGHT
✳ A1	48	#4	STR	29'-6"	946
A2	50	#4	STR	29'-5"	983
✳ B1	115	#5	STR	23'-9"	2849
B2	115	#6	STR	24'-8"	4261
REINFORCING STEEL				LBS.	5244
✳ EPOXY COATED REINFORCING STEEL				LBS.	3795
CLASS AA CONCRETE BREAKDOWN					
SLAB AND CURB				C. Y.	53.8
CLASS AA CONCRETE				C. Y.	53.8

✳ THESE BARS ARE EPOXY COATED

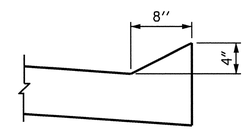

SECTION N-N

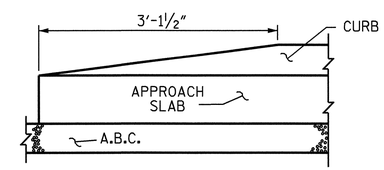

END OF CURB WITHOUT SHOULDER BERM GUTTER

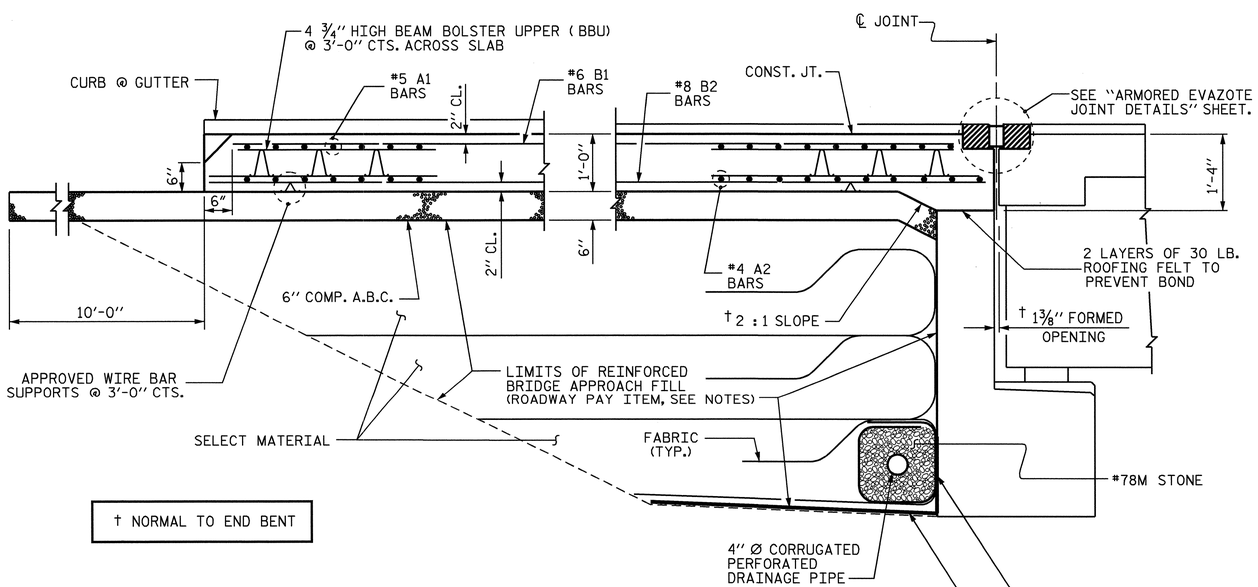

† NORMAL TO END BENT

SECTION THRU SLAB

PROJECT NO. U-4012

DURHAM COUNTY

STATION: 70+22.00 -L-

SHEET 1 OF 2

STATE OF NORTH CAROLINA
DEPARTMENT OF TRANSPORTATION
RALEIGH

BRIDGE APPROACH SLAB FOR FLEXIBLE PAVEMENT LEFT LANE

NORTH CAROLINA PROFESSIONAL SEAL 20125 ENGINEER MARSHALL L. SPEAR, JR.
6-7-07

REVISIONS								SHEET NO.
NO.	BY:	DATE:	NO.	BY:	DATE:			S-89
1			3					TOTAL SHEETS
2			4					128

STR. #3

ASSEMBLED BY : QT NGUYEN	DATE : 12-04		
CHECKED BY : L. MURPHY	DATE : 02/05		
DRAWN BY : LES 8/01	REV. 5/7/03R	RWW/JTE	
CHECKED BY : RDR 8/01	REV. 5/1/06	TLA/GM	

06-JUN-2007 11:17
R:\Structures\u4012\Final Plans\U4012_sd_AS.dgn
vnguyen

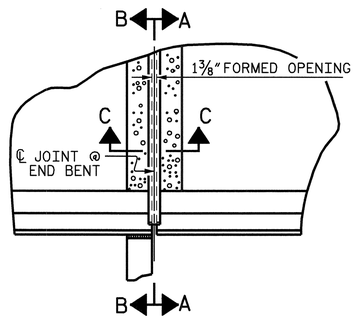

PLAN

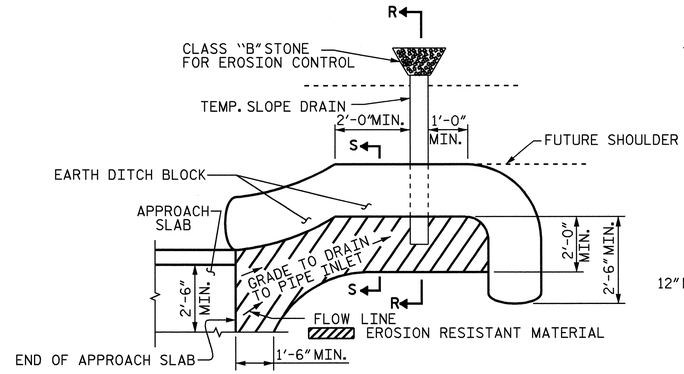

NOTE: IMMEDIATELY AFTER THE CONSTRUCTION OF THE APPROACH SLAB, THE CONTRACTOR SHALL PROVIDE TEMPORARY BERM AND SLOPE DRAIN. CONTRACTOR SHALL GRADE TO PIPE INLET AND PROVIDE EROSION RESISTANT MATERIAL AS SHOWN. THE EROSION RESISTANT MATERIAL SHALL BE EITHER 1) ASPHALT PLANT MIX, TYPE 1 OR TYPE 2, MIN. 2" DEPTH, 2) EROSION CONTROL MAT, OR 3) CONCRETE, AS DIRECTED BY THE ENGINEER. THE SLOPE DRAIN SHALL CONSIST OF A NON-PERFORATED TEMPORARY DRAINAGE PIPE, 12 INCHES IN DIAMETER.

PLAN VIEW

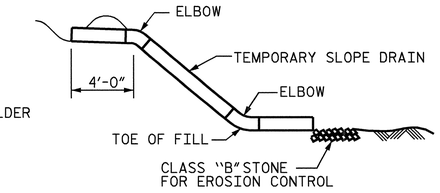

SECTION R-R

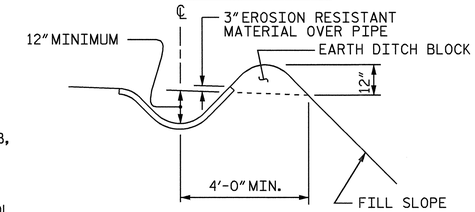

SECTION S-S

TEMPORARY BERM AND SLOPE DRAIN DETAILS

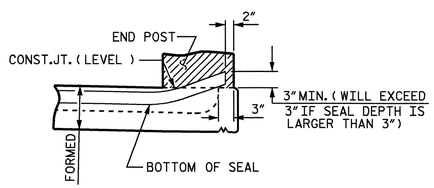

SECTION A-A

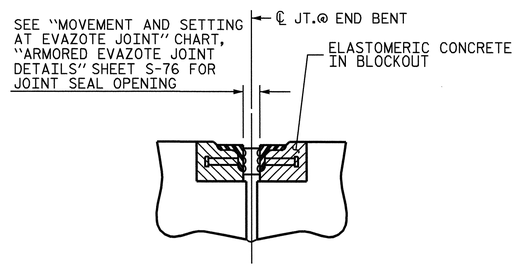

SECTION C-C
ARMORED EVAZOTE JOINT SEAL

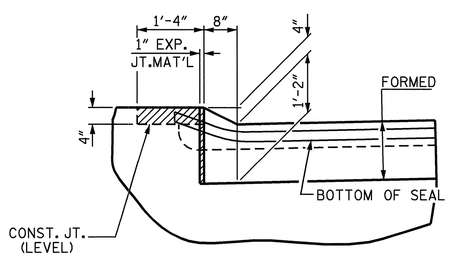

SECTION B-B

JOINT SEAL DETAILS @ END BENT

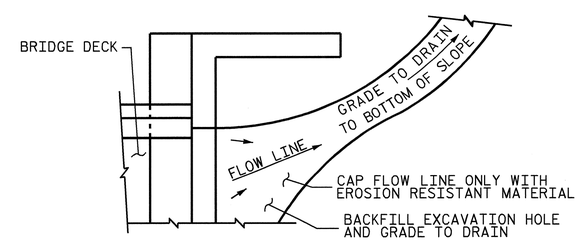

NOTE: IF THE APPROACH SLAB IS NOT CONSTRUCTED IMMEDIATELY AFTER THE BACKFILLING OF THE END BENT EXCAVATION, GRADE TO DRAIN TO THE BOTTOM OF THE SLOPE AND PROVIDE EROSION RESISTANT MATERIAL, SUCH AS FIBERGLASS ROVING OR AS DIRECTED BY THE ENGINEER TO PREVENT SOIL EROSION AND TO PROTECT THE AREA ADJACENT TO THE STRUCTURE. THE CONTRACTOR WILL BE REQUIRED TO REMOVE THESE MATERIALS PRIOR TO CONSTRUCTION OF THE APPROACH SLAB.

TEMPORARY DRAINAGE DETAIL

PROJECT NO. U-4012
DURHAM COUNTY
STATION: 70+22.00 -L-

SHEET 2 OF 2

STATE OF NORTH CAROLINA
DEPARTMENT OF TRANSPORTATION
RALEIGH

BRIDGE APPROACH SLAB DETAILS
LEFT LANE

NORTH CAROLINA PROFESSIONAL SEAL 20125 ENGINEER MASSAMILLO, ALLEN BLACK, JR.
6-7-07

REVISIONS						SHEET NO.
NO.	BY:	DATE:	NO.	BY:	DATE:	S-90
1			3			TOTAL SHEETS
2			4			128

STR. #3

ASSEMBLED BY : QT NGUYEN		DATE : 12-04	
CHECKED BY : L. MURPHY		DATE : 02/05	
DRAWN BY : FCJ 11/88	REV. 10/17/00	RWW/LES	
CHECKED BY : ARB 11/88	REV. 5/7/03	RWW/JTE	
	REV. 5/1/06	TLA/GM	

06-JUN-2007 11:17
R:\Structures\U4012\Final Plans\U4012_sd_AS.dgn
vnguyen

F. A. PROJECT NO.: BRSTP-1116 (6)

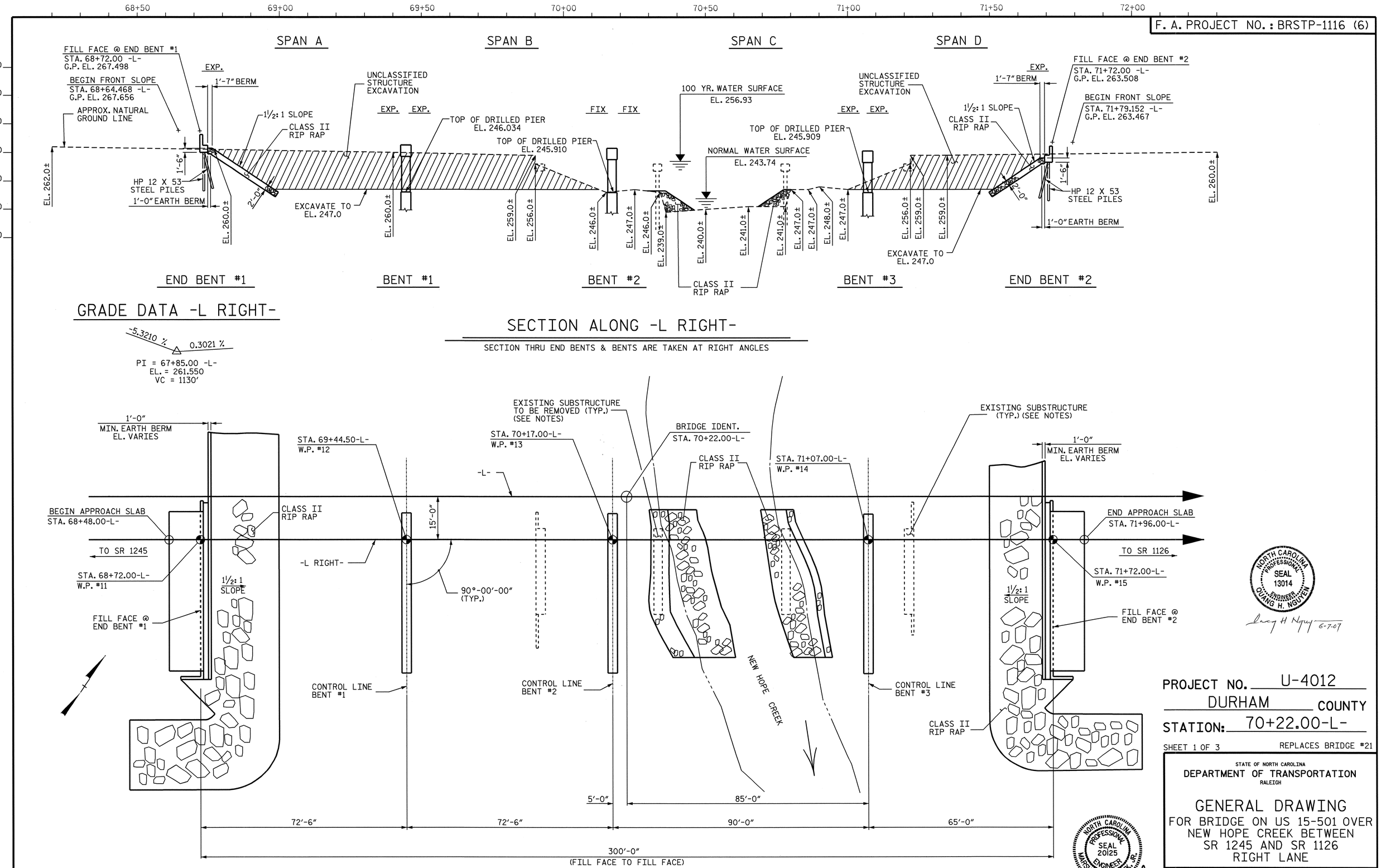

GRADE DATA -L RIGHT-

-5.3210 % 0.3021 %

PI = 67+85.00 -L-
EL. = 261.550
VC = 1130'

SECTION ALONG -L RIGHT-

SECTION THRU END BENTS & BENTS ARE TAKEN AT RIGHT ANGLES

PLAN

COLUMNS AND PILES ARE NOT SHOWN IN PLAN VIEW

NORTH CAROLINA PROFESSIONAL SEAL 13014 ENGINEER QUANG H. NGUYEN
Quang H Nguyen 6-7-07

NORTH CAROLINA PROFESSIONAL SEAL 20125 ENGINEER MARSHALL G. CHEEK, JR.
6-7-07

PROJECT NO. U-4012
DURHAM COUNTY
STATION: 70+22.00-L-

SHEET 1 OF 3 REPLACES BRIDGE #21

STATE OF NORTH CAROLINA
DEPARTMENT OF TRANSPORTATION
RALEIGH

GENERAL DRAWING

FOR BRIDGE ON US 15-501 OVER NEW HOPE CREEK BETWEEN SR 1245 AND SR 1126 RIGHT LANE

REVISIONS						SHEET NO.
NO.	BY:	DATE:	NO.	BY:	DATE:	S-91
1			3			TOTAL SHEETS
2			4			128

DRAWN BY : L.L.MURPHY/CRY DATE : 02/05
CHECKED BY : M.G. CHEEK DATE : 02/05

06-JUN-2007 15:39
R:\Structures\u4012\FinalPlans\Str #4\U4012_sd_GD_02.dgn
vnguyen

STR. #4

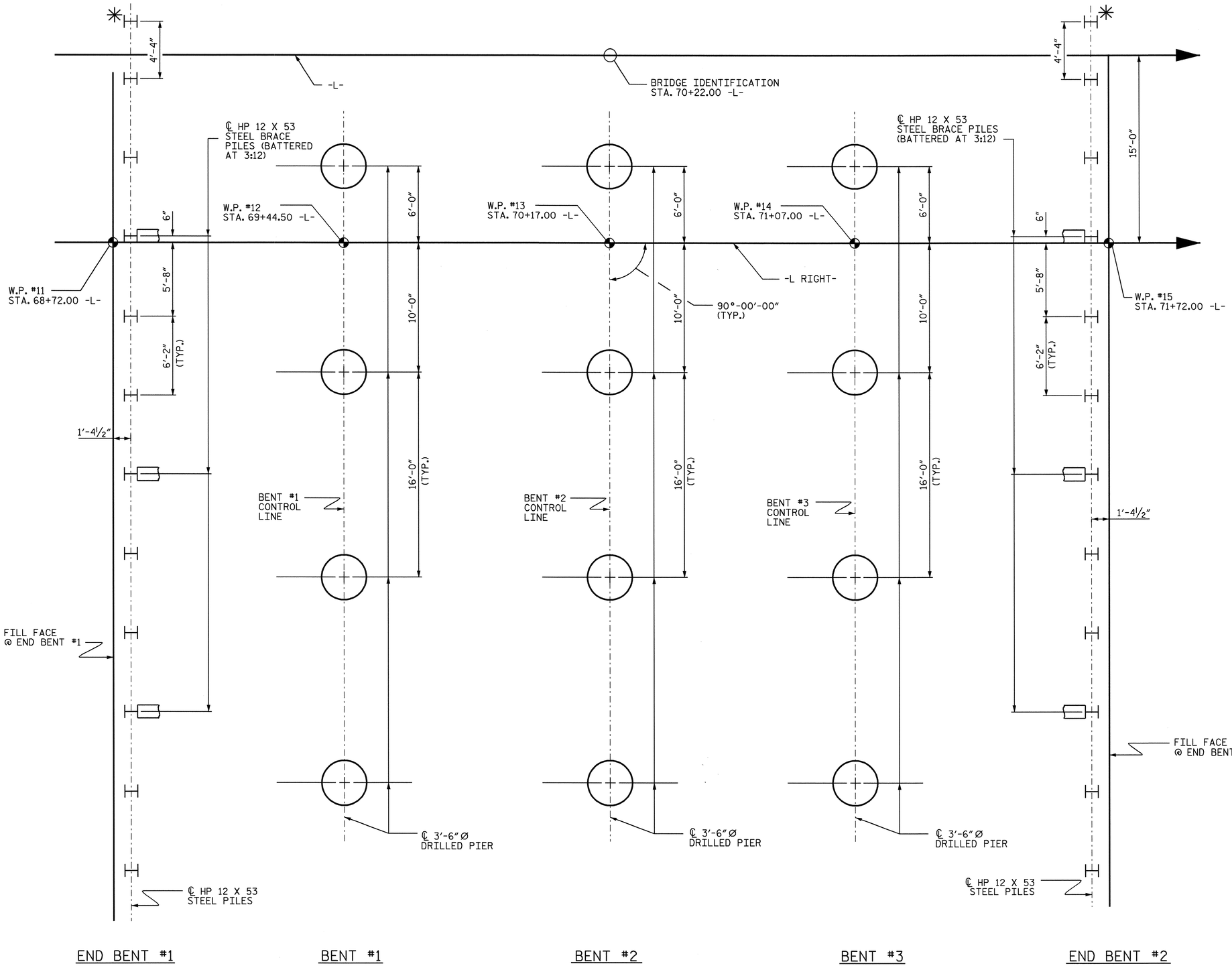

NOTES

DRIVE PILES AT END BENTS NO. 1 AND NO. 2 TO A REQUIRED BEARING CAPACITY OF 120 TONS PER PILE. THE REQUIRED BEARING CAPACITY IS EQUAL TO THE ALLOWABLE BEARING CAPACITY WITH A MINIMUM FACTOR OF SAFETY OF TWO.

THE ALLOWABLE BEARING CAPACITY FOR PILES AT END BENTS NO. 1 AND NO. 2 IS 60 TONS PER PILE.

DRILLED PIERS AT BENTS NO. 1, NO. 2, AND NO. 3 ARE DESIGNED FOR BOTH SKIN FRICTION AND END BEARING. CHECK FIELD CONDITIONS FOR THE REQUIRED END BEARING CAPACITY OF 45.0 TSF.

DRILLED PIERS AT BENTS NO. 1, NO. 2, AND NO. 3 ARE DESIGNED FOR AN APPLIED LOAD OF 243 TONS EACH AT THE TOP OF THE COLUMN.

PERMANENT STEEL CASING IS NOT REQUIRED FOR DRILLED PIERS AT BENT NO. 1.

PERMANENT STEEL CASING MAY BE REQUIRED FOR DRILLED PIERS AT BENT NO. 2 AND NO. 3. IF REQUIRED, DO NOT EXTEND THE CASING BELOW ELEVATION 230 FT. AND 229 FT. RESPECTIVELY WITHOUT PRIOR APPROVAL FROM THE ENGINEER. THE ENGINEER WILL DETERMINE THE NEED FOR PERMANENT STEEL CASING. SEE DRILLED PIERS SPECIAL PROVISION.

DRILLED PIERS AT BENT NO. 1, NO. 2, AND NO. 3 SHALL EXTEND TO AN ELEVATION NO HIGHER THAN 219 FT., SATISFY THE REQUIRED END BEARING CAPACITY, AND HAVE A MINIMUM PENETRATION OF ONE FT. INTO ROCK AS DEFINED BY THE DRILLED PIERS SPECIAL PROVISION.

THE SCOUR CRITICAL ELEVATION FOR BENT NO. 1, NO.2, AND NO. 3 IS ELEVATION 228 FT. SCOUR CRITICAL ELEVATIONS ARE USED TO MONITOR POSSIBLE SCOUR PROBLEMS DURING THE LIFE OF THE STRUCTURE.

FOR DRILLED PIERS, SEE DRILLED PIERS SPECIAL PROVISION.

SPT TESTING IS NOT REQUIRED TO DETERMINE THE END BEARING CAPACITY OF THE DRILLED PIERS AT BENT NO. 1, NO. 2, AND NO. 3.

SID INSPECTIONS MAY BE REQUIRED TO INSPECT THE BOTTOM CLEANLINESS OF THE DRILLED PIERS. THE ENGINEER WILL DETERMINE THE NEED FOR SID INSPECTIONS. SEE DRILLED PIERS SPECIAL PROVISION.

CSL TUBES ARE REQUIRED AND CSL TESTING MAY BE REQUIRED FOR THE DRILLED PIERS. THE ENGINEER WILL DETERMINE THE NEED FOR CSL TESTING. SEE CROSSHOLE SONIC LOGGING SPECIAL PROVISION.

✳ THESE PILES FOR THE LEFT LANE STRUCTURE SHALL BE DRIVEN WITH THE RIGHT LANE PILES.

FOUNDATION LAYOUT

DIMENSIONS LOCATING PILES ARE TO THE PILE CENTERLINE AT BOTTOM OF CAP.

ALL END BENT BRACE PILES ARE BATTERED AT 3:12.

PROJECT NO. U-4012
DURHAM COUNTY
STATION: 70+22.00 -L-

SHEET 2 OF 3

STATE OF NORTH CAROLINA
DEPARTMENT OF TRANSPORTATION
RALEIGH

GENERAL DRAWING
FOR BRIDGE ON US 15-501 OVER NEW HOPE CREEK BETWEEN SR 1245 AND SR 1126
RIGHT LANE

NORTH CAROLINA PROFESSIONAL SEAL 20125 ENGINEER MARSHALL L. STEEK, JR.
6-7-07

REVISIONS								SHEET NO.
NO.	BY:	DATE:	NO.	BY:	DATE:			S-92
1			3					TOTAL SHEETS
2			4					128

STR. #4

DRAWN BY : CR YARBROUGH DATE : 01/05
CHECKED BY : MG CHEEK DATE : 01/05

06-JUN-2007 07:49
R:\Structures\u4012\FinalPlans\U-4012_FL.dgn
vnguyen

TOTAL BILL OF MATERIAL

	REMOVAL OF EXISTING STRUCTURE	3'-6"Ø DRILLED PIERS IN SOIL	3'-6"Ø DRILLED PIERS NOT IN SOIL	PERMANENT STEEL CASING FOR 3'-6"Ø DRILLED PIERS	SID INSPECTIONS	UNCLASSIFIED STRUCTURE EXCAVATION	REINFORCED CONCRETE DECK SLAB	GROOVING BRIDGE FLOORS	CLASS A CONCRETE	BRIDGE APPROACH SLABS	REINFORCING STEEL	SPIRAL COLUMN REINFORCING STEEL	STRUCTURAL STEEL	HP 12 X 53 STEEL PILES		TWO BAR METAL RAIL	1'-2"X 2'-6" CONCRETE PARAPET	RIP RAP CLASS II (2'-0" THICK)	FILTER FABRIC FOR DRAINAGE	ELASTOMERIC BEARINGS	EVAZOTE JOINT SEALS	TEMPORARY STRUCTURE DRAINAGE SYSTEM
	LUMP SUM	LIN. FT.	LIN. FT.	LIN. FT.	EACH	CU. YD.	SQ. FT	SQ. FT	CU. YD.	LUMP SUM	LBS.	LBS.	APPROX. LBS.	NO.	LIN. FT.	LIN. FT.	LIN. FT.	TONS	SQ. YDS.	LUMP SUM	LUMP SUM	LUMP SUM
SUPERSTRUCTURE							17451	18166		LUMP SUM			534,000			580.54	595.77			LUMP SUM	LUMP SUM	LUMP SUM
END BENT 1						6545			26.5		4411			11	275			640	710			
BENT 1		75.00	34.00						43.3		12020	3325										
BENT 2		75.00	33.00	63.70					42.3		11817	3220										
BENT 3		72.00	36.00	67.65					41.2		11653	3132										
END BENT 2						2510			26.5		4414			11	330			335	375			
TOTAL	LUMP SUM	222.00	103.00	131.35	1	9055	17451	18166	179.8	LUMP SUM	44315	9677	534,000	22	605	580.54	595.77	975	1085	LUMP SUM	LUMP SUM	LUMP SUM

HYDRAULIC DATA

DESIGN DISCHARGE = 8440 c.f.s.
FREQUENCY OF DESIGN FLOOD ____= 50 YR
DESIGN HIGH WATER ELEVATION __= 254.870'
DRAINAGE AREA_____ = 42.3 SQ. MILES
BASIC DISCHARGE (Q100) _____= 10068 c.f.s.
BASIC HIGH WATER ELEVATION ___= 256.930'

OVERTOPPING FLOOD DATA

OVERTOPPING DISCHARGE = N/A
FREQUENCY OF OVERTOPPING FLOOD = N/A
OVERTOPPING FLOOD ELEVATION = N/A

THE BRIDGE RAILS ON THE TEMPORARY STRUCTURE SHALL BE DESIGNED FOR THE AASHTO LRFD TEST LEVEL 3 (TL-3) CRASH TEST CRITERIA. FOR CONSTRUCTION, MAINTENANCE AND REMOVAL OF TEMPORARY STRUCTURE, SEE SPECIAL PROVISIONS.

B.M. #4 R. R. SPIKE IN BASE OF 18" RED OAK 114' RT. OF BL STA. 68+27.00 EL. = 249.280

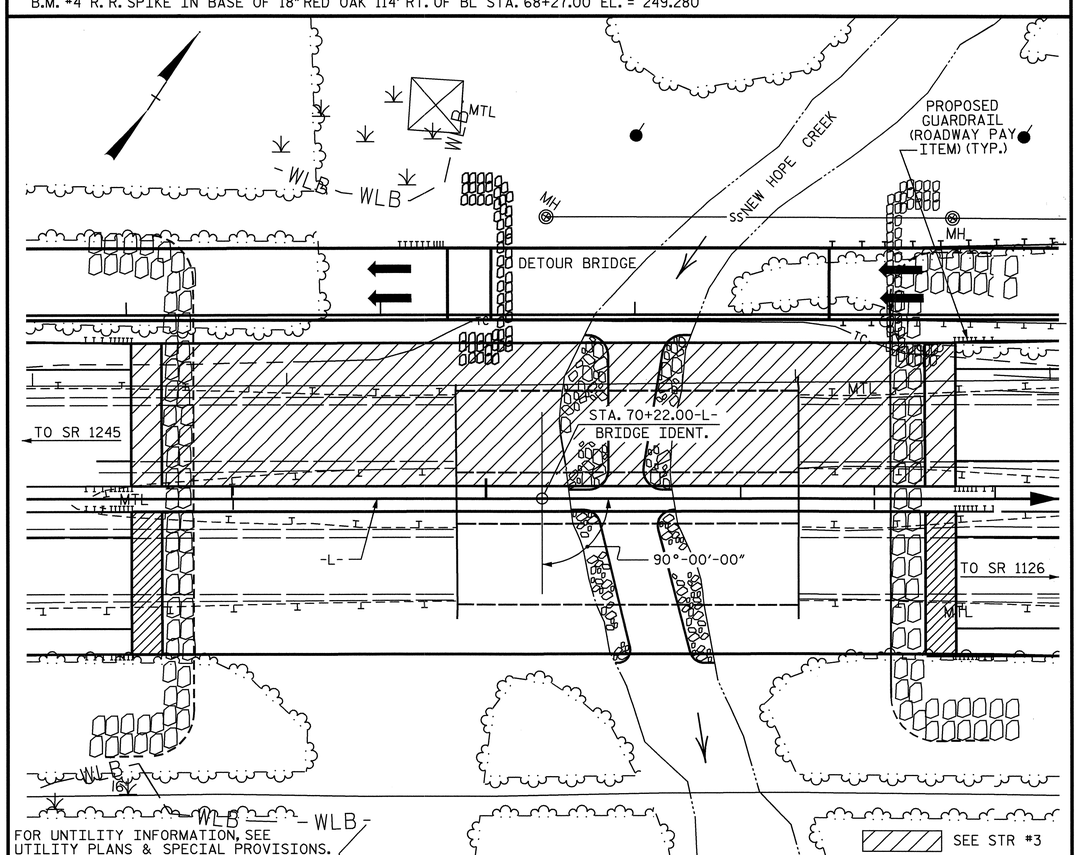

LOCATION SKETCH

DRAWN BY : L.L.MURPHY/CRY DATE : 02/05
CHECKED BY : M.G. CHEEK DATE : 02/05

08-JUN-2007 09:47
R:\Structures\u4012\FinalPlans\Str #4\U4012_sd_GD_02.dgn
vnguyen

NOTES

ASSUMED LIVE LOAD = HS 20 OR ALTERNATE LOADING, EXCEPT THAT THE BEAMS HAVE BE DESIGNED FOR HS25

FOR OTHER DESIGN DATA AND GENERAL NOTES, SEE SHEET SN.

FOR EROSION CONTROL MEASURES SEE EROSION CONTROL PLANS.

THIS BRIDGE HAS BEEN DESIGNED BY THE STRENGTH DESIGN METHOD AS SPECIFIED IN AASHTO STANDARD SPECIFICATIONS.

ALL STRUCTURAL STEEL SHALL BE AASHTO M270 GRADE 50W AND PAINTED IN ACCORDANCE WITH SYSTEM 4 OF ARTICLE 442-7 OF THE STANDARD SPECIFICATIONS UNLESS OTHERWISE NOTED ON THE PLANS.

REMOVABLE FORMS MAY BE USED IN LIEU OF METAL STAY-IN-PLACE FORMS IN ACCORDANCE WITH ARTICLE 420-3 OF THE STANDARD SPECIFICATIONS.

REMOVAL OF THE EXISTING BRIDGE SHALL BE PERFORMED SO AS NOT TO ALLOW DEBRIS TO FALL INTO THE WATER. THE CONTRACTOR SHALL REMOVE THE BRIDGE AND SUBMIT PLANS FOR DEMOLITION IN ACCORDANCE WITH ARTICLE 402-2 OF THE STANDARD SPECIFICATIONS.

THE MATERIAL SHOWN IN THE CROSS-HATCHED AREA SHALL BE EXCAVATED FOR A DISTANCE OF 30 FT. EACH SIDE OF CENTERLINE ROADWAY AS DIRECTED BY THE ENGINEER. THIS WORK WILL BE MEASURED AND PAID FOR AT THE CONTRACT UNIT PRICE PER CUBIC YARD FOR UNCLASSIFIED STRUCTURE EXCAVATION.

THE CLASS AA CONCRETE IN THE BRIDGE DECK SHALL CONTAIN FLY ASH OR GROUND GRANULATED BLAST FURNACE SLAG AT THE SUBSTITUTION RATE SPECIFIED IN ARTICLE 1024-1 AND IN ACCORDANCE WITH ARTICLES 1024-5 AND 1024-6 OF THE STANDARD SPECIFICATIONS. NO PAYMENT WILL BE MADE FOR THIS SUBSTITUTION AS IT IS CONSIDERED INCIDENTAL TO THE COST OF THE REINFORCED CONCRETE DECK SLAB.

THIS STRUCTURE HAS BEEN DESIGNED IN ACCORDANCE WITH HEC 18, "EVALUATING SCOUR AT BRIDGES", NOVEMBER, 1995.

THIS BRIDGE HAS BEEN DESIGNED IN ACCORDANCE WITH THE REQUIREMENTS OF THE AASHTO STANDARD SPECIFICATIONS FOR SEISMIC DESIGN OF HIGHWAY BRIDGES FOR SEISMIC PERFORMANCE CATEGORY A.

THE CONTRACTOR SHALL PROVIDE INDEPENDENT ASSURANCE SAMPLES OF REINFORCING STEEL AS FOLLOWS: FOR PROJECTS REQUIRING UP TO 400 TONS OF REINFORCING STEEL, ONE 30 INCH SAMPLE OF EACH SIZE BAR USED, AND FOR PROJECTS REQUIRING OVER 400 TONS OF REINFORCING STEEL, TWO 30 INCH SAMPLES OF EACH SIZE BAR USED. THE BARS FROM WHICH THE SAMPLES ARE TAKEN MUST THEN BE SPLICED WITH REPLACEMENT BARS OF THE SIZE AND LENGTH OF THE SAMPLE, PLUS A MINIMUM LAP SPLICE OF THIRTY BAR DIAMETERS.

INASMUCH AS THE PAINT SYSTEM ON THE EXISTING STRUCTURAL STEEL CONTAINS LEAD, THE CONTRACTOR'S ATTENTION IS DIRECTED TO ARTICLE 107-1 OF THE STANDARD SPECIFICATIONS. ANY COSTS RESULTING FROM COMPLIANCE WITH APPLICABLE STATE OR FEDERAL REGULATIONS PERTAINING TO HANDLING OF MATERIALS CONTAINING LEAD BASED PAINT SHALL BE INCLUDED IN THE BID PRICE FOR "REMOVAL OF EXISTING STRUCTURE.

NEEDLE BEAMS WILL NOT BE ALLOWED UNLESS OTHERWISE CALLED FOR ON THE PLANS OR APPROVED BY THE ENGINEER.

FOR SUBMITTAL OF WORKING DRAWINGS, SEE SPECIAL PROVISIONS.

FOR CRANE SAFETY, SEE SPECIAL PROVISIONS.

COFFER DAMS SHALL BE REQUIRED FOR REMOVAL OF THE EXISTING BRIDGE PIERS IN NEW HOPE CREEK. THE COST OF THE COFFER DAMS SHALL BE INCLUDED IN THE BID PRICE FOR "REMOVAL OF EXISTING STRUCTURE".

THE EXISTING 3 SPAN STRUCTURE (3 @ 45') CONSISTING OF A REINFORCED CONCRETE DECK WITH A 2½" ASPHALT WEARING SURFACE ON STEEL I-BEAMS WITH A CLEAR ROADWAY OF 27.9' ON A SUBSTRUCTURE CONSISTING OF REINFORCED CONCRETE CAPS ON CONCRETE ENCASED H-PILES AT THE END BENTS AND BENTS AND LOCATED AT THE SITE OF THE PROPOSED STRUCTURE SHALL BE REMOVED. THE EXISTING BRIDGE IS PRESENTLY NOT POSTED FOR LOAD LIMIT. SHOULD THE STRUCTURAL INTEGRITY OF THE BRIDGE DETERIORATE DURING CONSTRUCTION OF THE PROPOSED STRUCTURE, A LOAD LIMIT MAY BE POSTED AND MAY BE REDUCED AS FOUND NECESSARY DURING THE LIFE OF THE PROJECT.

FOR TEMPORARY STRUCTURE DRAINAGE SYSTEM, SEE SPECIAL PROVISIONS.

AT THE CONTRACTOR'S OPTION, AND UPON REMOVAL OF THE DETOUR BRIDGE, THE CLASS II RIP RAP USED FOR THE DETOUR BRIDGE SLOPES MAY BE PLACED AS RIP RAP SLOPE PROTECTION OR CREEK BANK PROTECTION. SEE SPECIAL PROVISIONS FOR CONSTRUCTION, MAINTENANCE AND REMOVAL OF TEMPORARY STRUCTURE.

CLASS II RIP RAP REQUIRED FOR THE DETOUR BRIDGE SLOPES SHALL BE PAID FOR UNDER THE PRICE BID FOR "CONSTRUCTION, MAINTENANCE, AND REMOVAL OF TEMPORARY STRUCTURE."

FOR GROUT FOR STRUCTURES, SEE SPECIAL PROVISIONS.

FOR FALSEWORK AND FORMWORK, SEE SPECIAL PROVISIONS.

THE SUBSTRUCTURE OF THE EXISTING BRIDGE INDICATED ON THE PLANS IS FROM THE BEST INFORMATION AVAILABLE. SINCE THIS INFORMATION IS SHOWN FOR THE CONVENIENCE OF THE CONTRACTOR, THE CONTRACTOR SHALL HAVE NO CLAIM WHATSOEVER AGAINST THE DEPARTMENT OF TRANSPORTATION FOR ANY DELAYS OR ADDITIONAL COST INCURED BASED ON DIFFERENCES BETWEEN THE EXISTING BRIDGE SUBSTRUCTURE SHOWN ON THE PLANS AND THE ACTUAL CONDITION AT THE PROJECT SITE.

FOLLOWING REMOVAL OF THE EXISTING BENTS, AND AT THE DIRECTION OF THE ENGINEER, THE DISTURBED AREAS OF THE BANKS SHALL BE GRADED TO A 2:1 SLOPE AND CLASS II RIP RAP SHALL BE PLACED ON THE DISTURBED AREAS.

PROJECT NO. U-4012
DURHAM COUNTY
STATION: 70+22.00-L-

SHEET 3 OF 3

STATE OF NORTH CAROLINA
DEPARTMENT OF TRANSPORTATION
RALEIGH

GENERAL DRAWING
FOR BRIDGE ON US 15-501 OVER NEW HOPE CREEK BETWEEN SR 1245 AND SR 1126 RIGHT LANE

NORTH CAROLINA PROFESSIONAL SEAL 20125 ENGINEER MARSHALL G. CHEEK, JR.
6-8-07

REVISIONS						SHEET NO.
NO.	BY:	DATE:	NO.	BY:	DATE:	S-93
1			3			TOTAL SHEETS
2			4			128

STR. #4

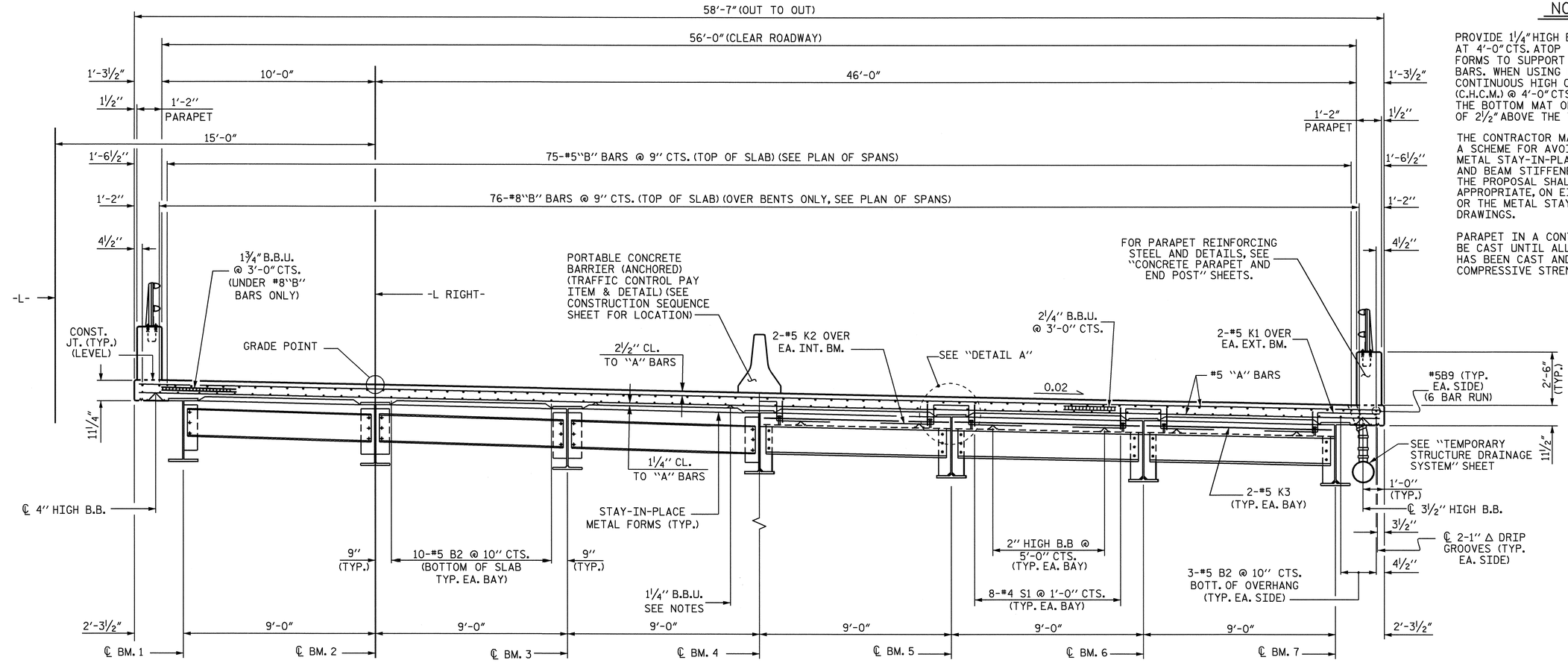

HALF TYPICAL SECTION

SHOWING INTERMEDIATE DIAPHRAGMS

HALF TYPICAL SECTION

SHOWING END BENT DIAPHRAGMS

NOTES

PROVIDE 1¼" HIGH BEAM BOLSTERS UPPER AT 4'-0" CTS. ATOP THE METAL STAY-IN-PLACE FORMS TO SUPPORT THE BOTTOM MAT OF 'A' BARS. WHEN USING REMOVABLE FORMS, PROVIDE CONTINUOUS HIGH CHAIRS FOR METAL DECK (C.H.C.M.) @ 4'-0" CTS. WITH A HEIGHT TO SUPPORT THE BOTTOM MAT OF 'A' BARS A CLEAR DISTANCE OF 2½" ABOVE THE TOP OF THE REMOVABLE FORM.

THE CONTRACTOR MAY, WHEN NECESSARY, PROPOSE A SCHEME FOR AVOIDING INTERFERENCE BETWEEN METAL STAY-IN-PLACE FORM SUPPORTS OR FORMS AND BEAM STIFFENERS OR CONNECTOR PLATES. THE PROPOSAL SHALL BE INDICATED, AS APPROPRIATE, ON EITHER STEEL WORKING DRAWINGS OR THE METAL STAY-IN-PLACE FORM WORKING DRAWINGS.

PARAPET IN A CONTINUOUS UNIT SHALL NOT BE CAST UNTIL ALL SLAB CONCRETE IN THE UNIT HAS BEEN CAST AND HAS REACHED A MINIMUM COMPRESSIVE STRENGTH OF 3,000 PSI.

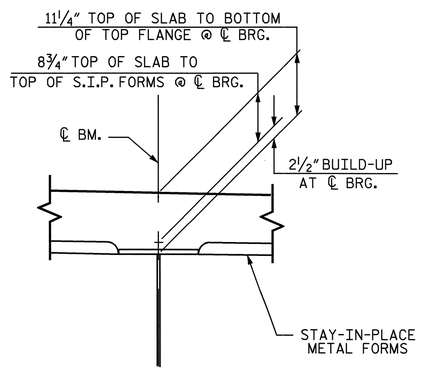

DETAIL A

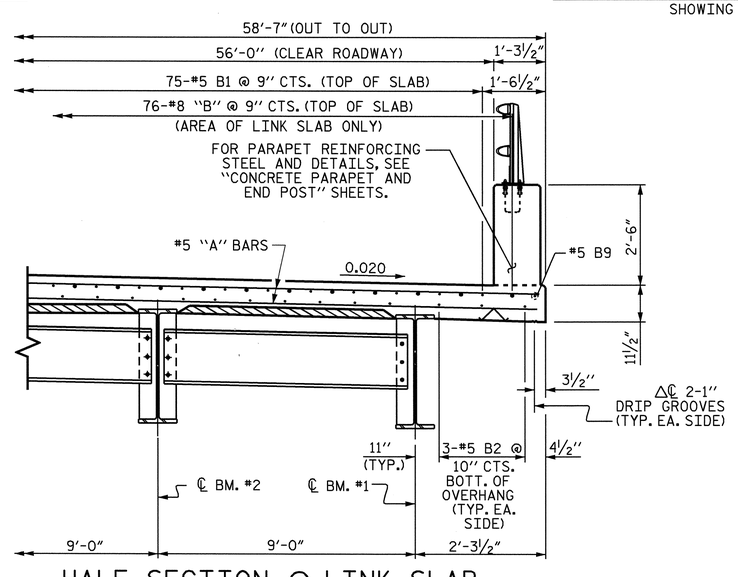

HALF SECTION @ LINK SLAB

(LINK SLAB ONLY REQUIRED AT BENTS)

PROJECT NO. U-4012
DURHAM COUNTY
STATION: 70+22.00 -L-

SHEET 1 OF 2

STATE OF NORTH CAROLINA
DEPARTMENT OF TRANSPORTATION
RALEIGH

SUPERSTRUCTURE
TYPICAL SECTION
RIGHT LANE

NORTH CAROLINA PROFESSIONAL SEAL 20125 ENGINEER MARSHALL G. CHEEK, JR.
6-28-07

REVISIONS						SHEET NO.
NO.	BY:	DATE:	NO.	BY:	DATE:	S-94
1			3			TOTAL SHEETS
2			4			128

DRAWN BY : M. POOLE/L.L.M. DATE : 02/05
CHECKED BY : D. HODGE DATE : 02/05

27-JUN-2007 08:58
R:\Structures\U4012\Final Plans\Str #4\B4012_sd_TS_02.dgn
vnguyen

STR. #4

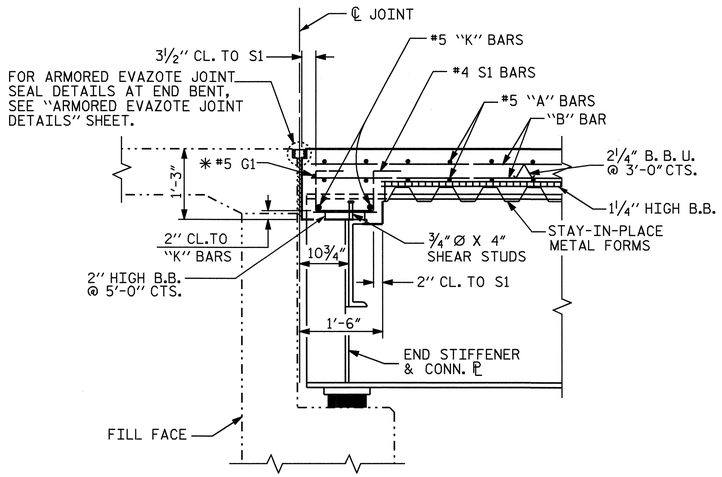

SECTION THRU END BENT

✱ #5 G1 MAY BE SHIFTED SLIGHTLY, AS NECESSARY, TO CLEAR DIAPHRAGM AND REINFORCING STEEL.

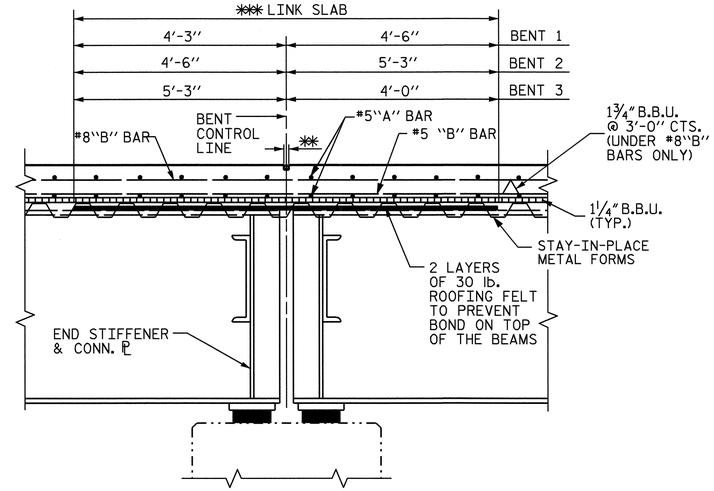

SECTION AT BENT

✱✱✱ NOTE: THE TOP OF THE BEAM IN THE REGION OF THE LINK SLAB SHALL BE SMOOTH AND FREE OF SHEAR STUDS. NO WELDING OF FORMS OR FALSEWORK TO THE TOP FLANGE WILL BE PERMITTED IN THIS REGION.

✱✱ THE CONTRACTOR SHALL SAW A 1½" DEEP CONTRACTION JOINT AT THE BENT CONTROL LINE, WITHIN 24 HOURS OF POURING THE DECK. THE JOINT SHALL BE FILLED WITH JOINT SEALER MATERIAL. THE JOINT FILLER MATERIAL SHALL CONFORM TO THE REQUIREMENTS OF TYPE B LOW MODULUS SILICONE SEALANT, SEE SECTION 1028 OF THE STANDARD SPECIFICATIONS.

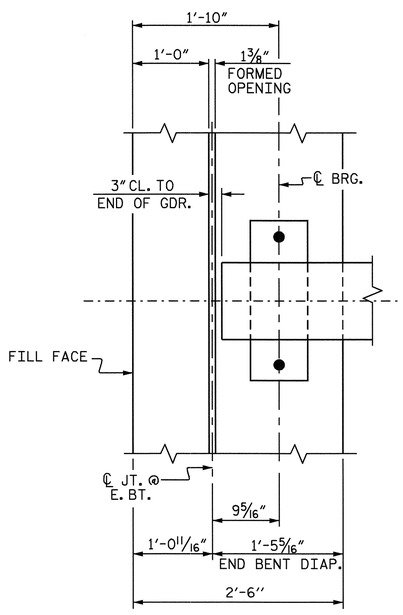

END BENT DIAPHRAGM

PLAN

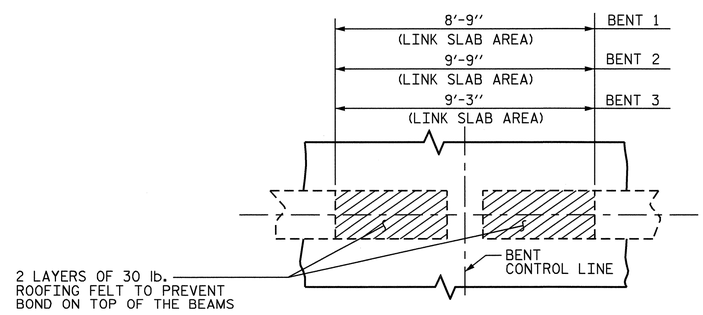

PLAN OF LINK SLAB

PROJECT NO. U-4012
DURHAM COUNTY
STATION: 70+22.00 -L-

SHEET 2 OF 2

STATE OF NORTH CAROLINA
DEPARTMENT OF TRANSPORTATION
RALEIGH

SUPERSTRUCTURE
TYPICAL SECTION
RIGHT LANE

NORTH CAROLINA PROFESSIONAL SEAL 20125 ENGINEER MARSHALL G. CLARK, JR.
6-24-05

REVISIONS								SHEET NO.
NO.	BY:	DATE:	NO.	BY:	DATE:			S-95
1			3					TOTAL SHEETS
2			4					128

DRAWN BY : M. POOLE/L.L.M. DATE : 02/05
CHECKED BY : D. HODGE DATE : 02/05

STR.#4

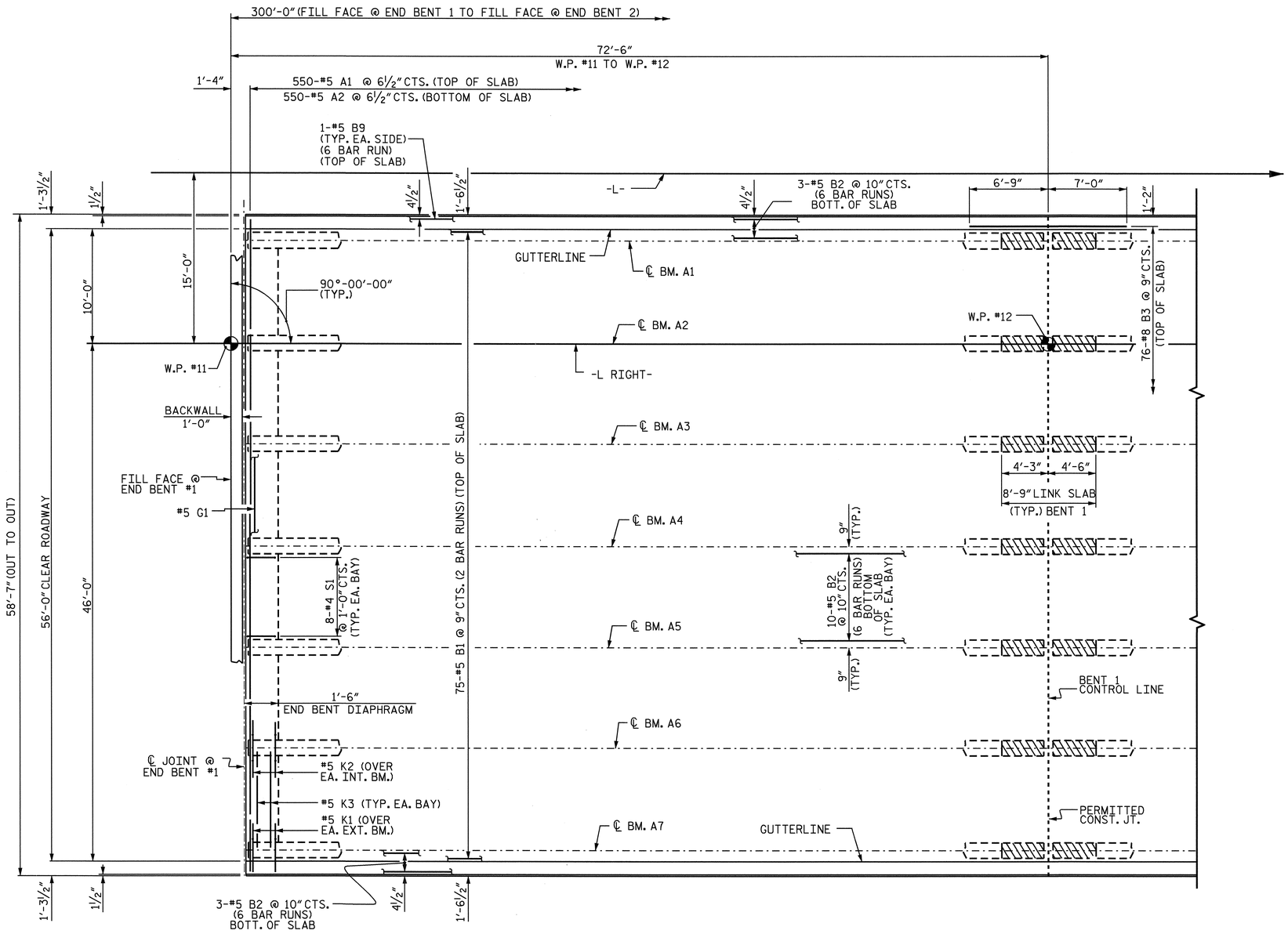

PLAN OF SPAN A

FOR REINFORCING STEEL IN PARAPET, SEE "PARAPET AND END POST DETAILS" SHEET.

PERMITTED TRANSVERSE CONSTRUCTION JOINT SHALL BE ALONG BENT 1 CONTROL LINE.

PROJECT NO. U-4012
DURHAM COUNTY
STATION: 70+22.00 -L-

SHEET 1 OF 4

STATE OF NORTH CAROLINA
DEPARTMENT OF TRANSPORTATION
RALEIGH

SUPERSTUCTURE
PLAN OF SPAN A
RIGHT LANE

NORTH CAROLINA PROFESSIONAL SEAL 20125 ENGINEER MARSHALL C. CHEEK, JR.
6-7-07

REVISIONS						SHEET NO.
NO.	BY:	DATE:	NO.	BY:	DATE:	S-96
1			3			TOTAL SHEETS
2			4			128

DRAWN BY : M. POOLE/L.L.M. DATE : 02/05
CHECKED BY : D. HODGE DATE : 02/05

06-JUN-2007 15:15
R:\Structures\u4012\Final Plans\Str #4\U4012_sd_S_02.dgn
vnguyen

STR. #4

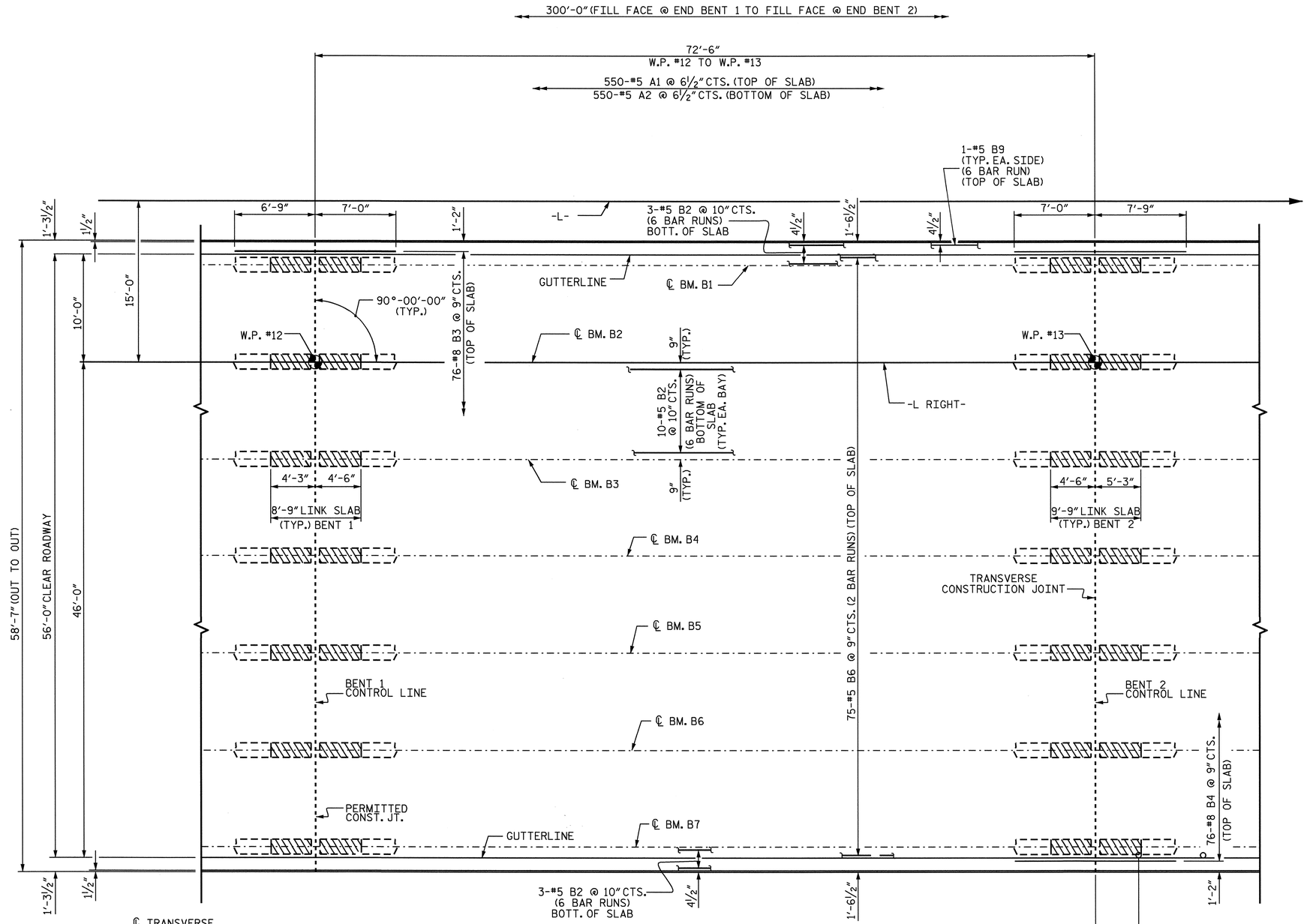

PLAN OF SPAN B

FOR REINFORCING STEEL IN PARAPET, SEE "PARAPET AND END POST DETAILS" SHEET.

TRANSVERSE CONSTRUCTION JOINT SHALL BE ALONG BENT 2 CONTROL LINE.

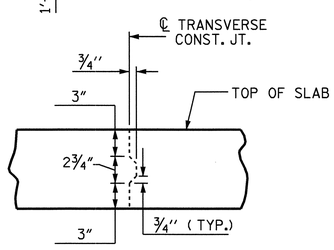

TRANSVERSE CONSTRUCTION JOINT DETAIL

NOTE: REINFORCING STEEL IN SLAB NOT SHOWN.
LONGITUDINAL REINFORCING STEEL SHALL BE
CONTINUOUS THRU JOINT

PROJECT NO. U-4012
DURHAM COUNTY
STATION: 70+22.00 -L-

SHEET 2 OF 4

STATE OF NORTH CAROLINA
DEPARTMENT OF TRANSPORTATION
RALEIGH

SUPERSTUCTURE
PLAN OF SPAN B
RIGHT LANE

REVISIONS						SHEET NO.
NO.	BY:	DATE:	NO.	BY:	DATE:	S-97
1			3			TOTAL SHEETS
2			4			128

NORTH CAROLINA PROFESSIONAL SEAL 20125 ENGINEER MARSHALL L. GOODEL, JR.
6-7-07

DRAWN BY : M. POOLE/L.L.M. DATE : 02/05
CHECKED BY : D. HODGE DATE : 02/05

06-JUN-2007 15:15
R:\Structures\U4012\Final Plans\Str #4\U4012_sd_S_02.dgn
vnguyen

STR. #4

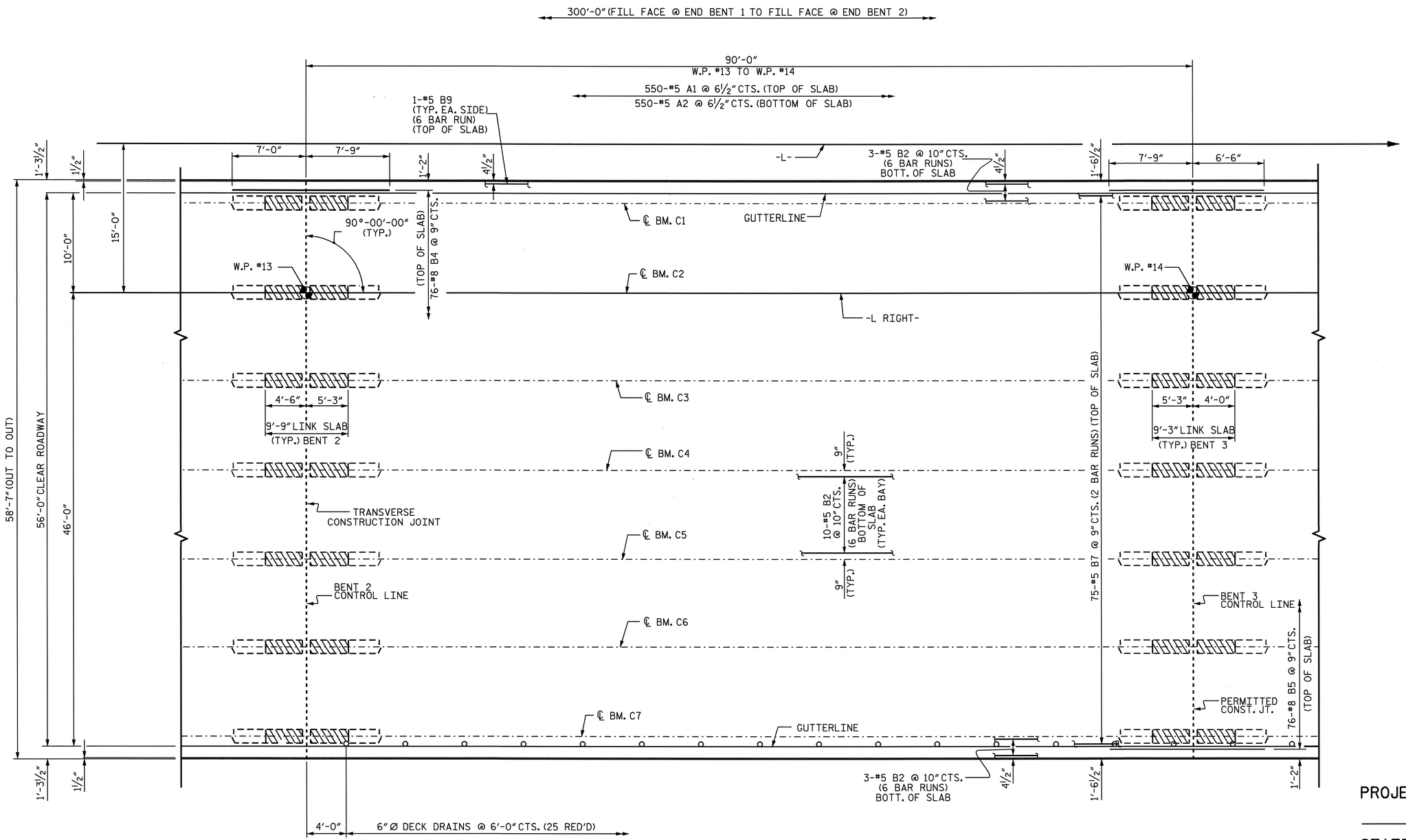

PLAN OF SPAN C

FOR REINFORCING STEEL IN PARAPET, SEE "PARAPET AND END POST DETAILS" SHEET.

PERMITTED TRANSVERSE CONSTRUCTION JOINT SHALL BE ALONG BENT 3 CONTROL LINE.

PROJECT NO. U-4012
DURHAM COUNTY
STATION: 70+22.00 -L-

SHEET 3 OF 4

STATE OF NORTH CAROLINA
DEPARTMENT OF TRANSPORTATION
RALEIGH

SUPERSTUCTURE
PLAN OF SPAN C
RIGHT LANE

NORTH CAROLINA PROFESSIONAL SEAL 20125 ENGINEER MARSHALL L. GREEK, JR.
6-7-07

REVISIONS						SHEET NO.
NO.	BY:	DATE:	NO.	BY:	DATE:	S-98
1			3			TOTAL SHEETS
2			4			128

DRAWN BY : M. POOLE/L.L.M. DATE : 02/05
CHECKED BY : D. HODGE DATE : 02/05

06-JUN-2007 15:15
R:\Structures\u4012\FinalPlans\Str #4\U4012_sd_S_02.dgn
vnguyen

STR. #4

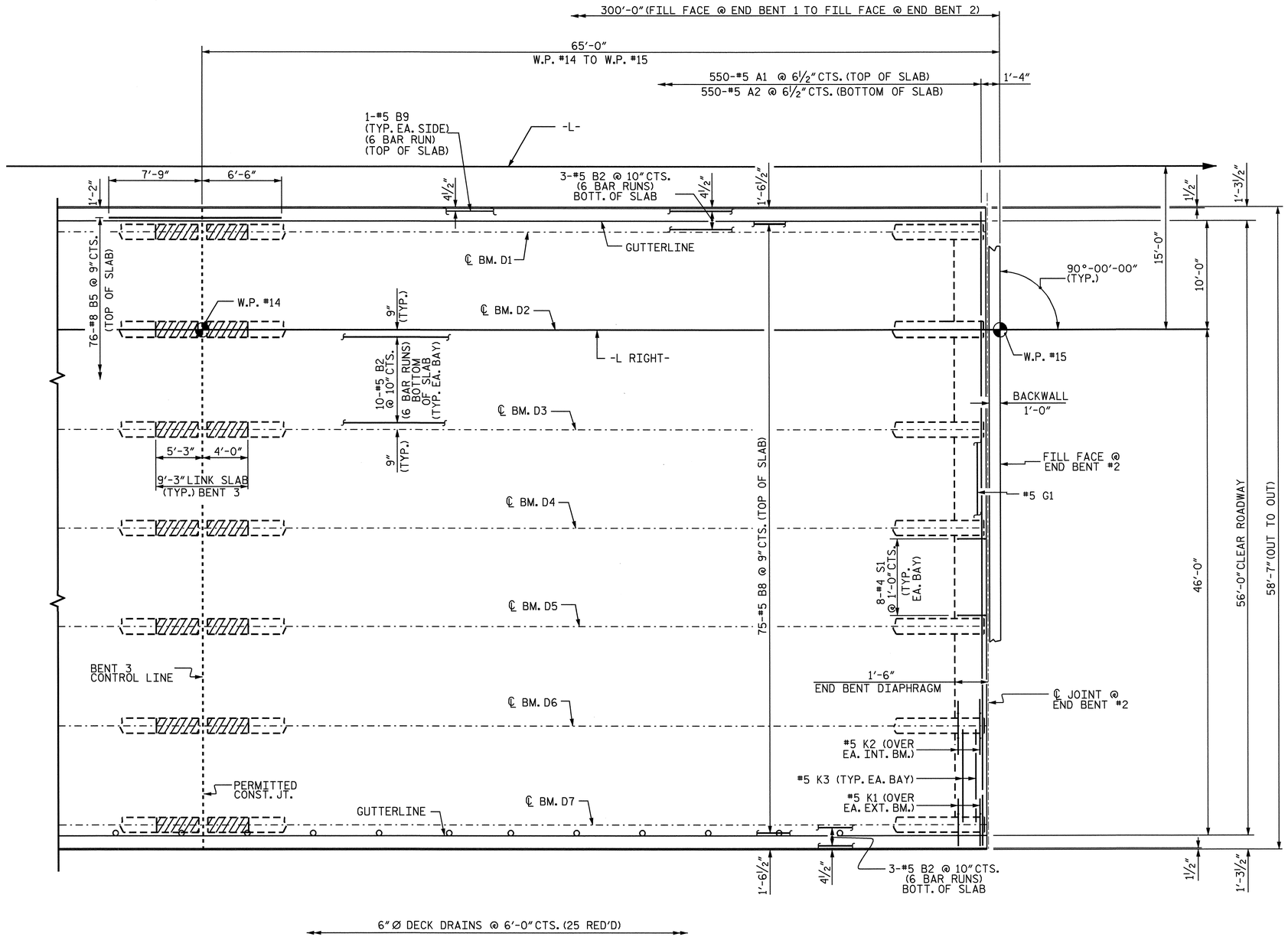

PLAN OF SPAN D

FOR REINFORCING STEEL IN PARAPET, SEE "PARAPET AND END POST DETAILS" SHEET.

PROJECT NO. U-4012
DURHAM COUNTY
STATION: 70+22.00 -L-

SHEET 4 OF 4

STATE OF NORTH CAROLINA
DEPARTMENT OF TRANSPORTATION
RALEIGH

SUPERSTUCTURE
PLAN OF SPAN D
RIGHT LANE

NORTH CAROLINA PROFESSIONAL SEAL 20125 ENGINEER MARSHALL G. CREEK, JR.
6-7-07

REVISIONS						SHEET NO.
NO.	BY:	DATE:	NO.	BY:	DATE:	S-99
1			3			TOTAL SHEETS
2			4			128

DRAWN BY : M. POOLE/L.L.M. DATE : 02/05
CHECKED BY : D. HODGE DATE : 02/05

06-JUN-2007 15:16
R:\Structures\u4012\Final Plans\Str #4\U4012_sd_S_02.dgn
vnguyen

STR. #4

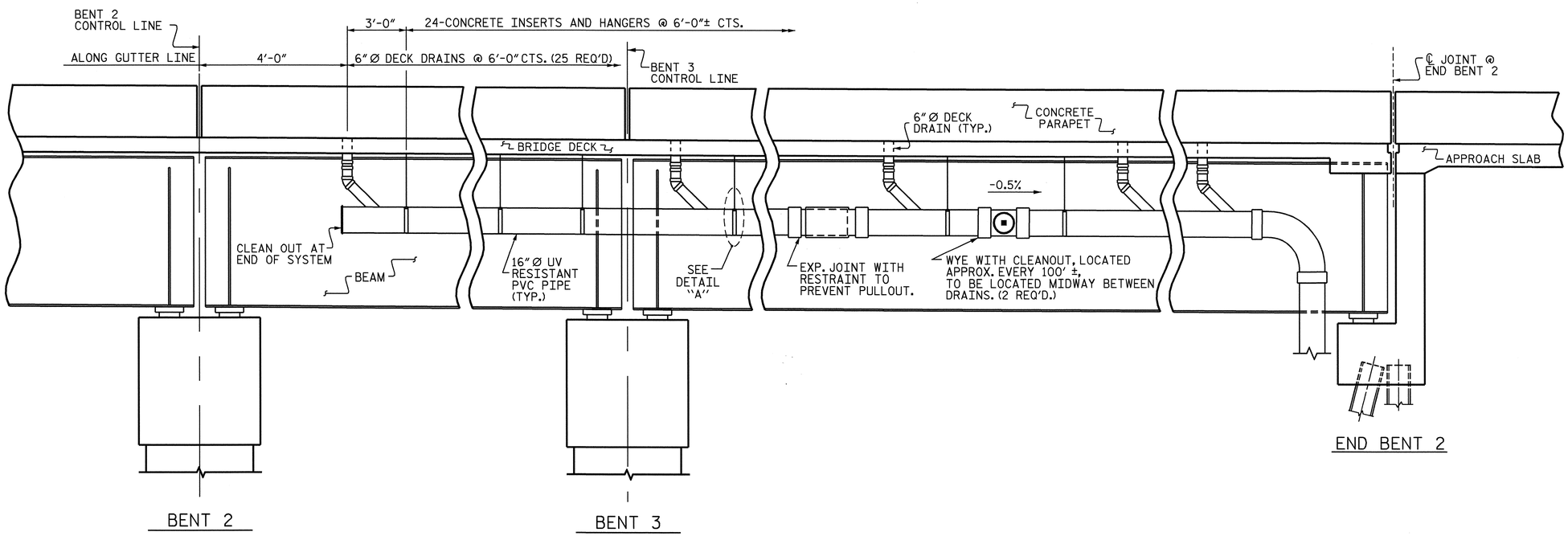

ELEVATION OF DRAINAGE SYSTEM

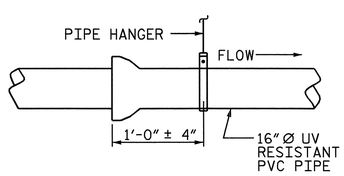

DETAIL "A"

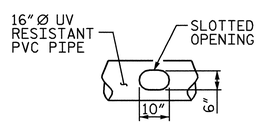

SLOT DETAIL

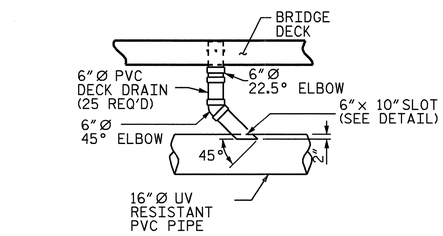

ELEVATION VIEW OF DECK DRAIN AND DRAIN LINE INTERSECTION

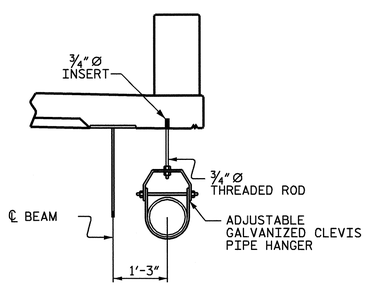

SECTION THRU DRAINAGE SYSTEM AT TYPICAL HANGER

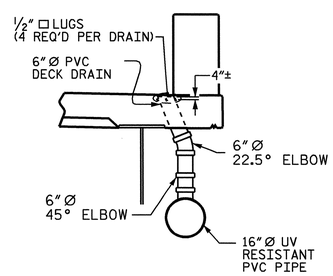

SECTION THRU DRAINAGE SYSTEM AT 16"Ø DECK DRAINS

TOP OF DECK DRAIN IS TO BE SET ½" BELOW SURFACE OF SLAB.

4 -½" □ LUGS ARE TO BE GLUED TO THE PVC PIPE AT EQUAL SPACES AROUND THE DECK DRAIN.

NOTES

SEE "PLAN OF SPANS" SHEETS, FOR LOCATION OF 6"Ø DECK DRAINS.

THE DRAINAGE SYSTEM DETAILS ARE SCHEMATIC DRAWINGS ONLY.

PROVIDE EXPANSION JOINTS IN THE DRAIN PIPE AT A MINIMUM SPACING OF 25'-0".

THE CONTRACTOR SHALL SUBMIT FOR ACCEPTANCE, PRIOR TO PURCHASE, A PLAN FOR THE PVC DRAINAGE SYSTEM, INCLUDING ATTACHMENTS TO THE BRIDGE SUPERSTRUCTURE.

THE CONTRACTOR SHALL BE RESPONSIBLE FOR DETERMINING THE HORIZONTAL AND VERTICAL ALIGNMENT OF THE PVC DRAINAGE SYSTEM USING NECESSARY FITTINGS, ELBOWS, TEES, AND WYES TO PROVIDE A CONTINUOUS DRAINAGE SYSTEM.

DRAINAGE SYSTEM WILL BE PAID FOR UNDER THE PAY ITEM "TEMPORARY STRUCTURE DRAINAGE SYSTEM".

FOR "TEMPORARY STRUCTURE DRAINAGE SYSTEM", SEE SPECIAL PROVISIONS.

THE CONTRACTOR SHALL DETERMINE THE QUANTITY OF FITTINGS, PIPE LENGTHS, GUIDES, AND ATTACHMENTS REQUIRED TO CARRY THE WATER FROM THE DECK DRAINS TO THE OUTLETS.

BOLTS, NUTS, AND WASHERS SHALL BE HIGH STRENGTH AND GALVANIZED IN ACCORDANCE WITH THE STANDARD SPECIFICATIONS.

CONCRETE INSERTS SHALL BE OF AN APPROVED GALVANIZED TYPE HAVING A MINIMUM WORKING LOAD TENSION CAPACITY OF 2500 LBS.

IN LIEU OF CASTING INSERTS INTO THE DECK, RODS MAY BE ADHESIVELY ANCHORED TO THE DECK.

PIPE AND FITTINGS SHALL BE PVC, SDR 35, ASTM D 3034.

FITTING JOINTS SHALL BE SOLVENT CEMENT TYPE.

PIPE JOINTS SHALL BE ELASTOMERIC TYPE.

THE TEMPORARY STRUCTURE DRAINAGE SYSTEM SHALL BE REMOVED WHEN THE DETOUR PHASING IS COMPLETED. THE 6"Ø DECK DRAINS SHALL BE FILLED AT THE DIRECTION OF THE ENGINEER.

THE 16"Ø PVC PIPE SHALL BE DISCHARGED ONTO THE RIP RAP SLOPE PROTECTION AWAY FROM THE CREEK, AT THE DIRECTION OF THE ENGINEER.

PROJECT NO. U-4012
DURHAM COUNTY
STATION: 70+22.00 -L-

STATE OF NORTH CAROLINA
DEPARTMENT OF TRANSPORTATION
RALEIGH

SUPERSTRUCTURE
TEMPORARY STRUCTURE DRAINAGE SYSTEM
RIGHT LANE

REVISIONS						SHEET NO.
NO.	BY:	DATE:	NO.	BY:	DATE:	S-100
1			3			TOTAL SHEETS
2			4			128

NORTH CAROLINA PROFESSIONAL SEAL 20125 MARCELLO G. CHEEK ENGINEER

DRAWN BY : D.A. HODGE DATE : 2/05
CHECKED BY : M.G. CHEEK DATE : 2/05

07-JUN-2007 14:42
R:\Structures\U4012\Final Plans\U4012_sd_UT.dgn
dahodge

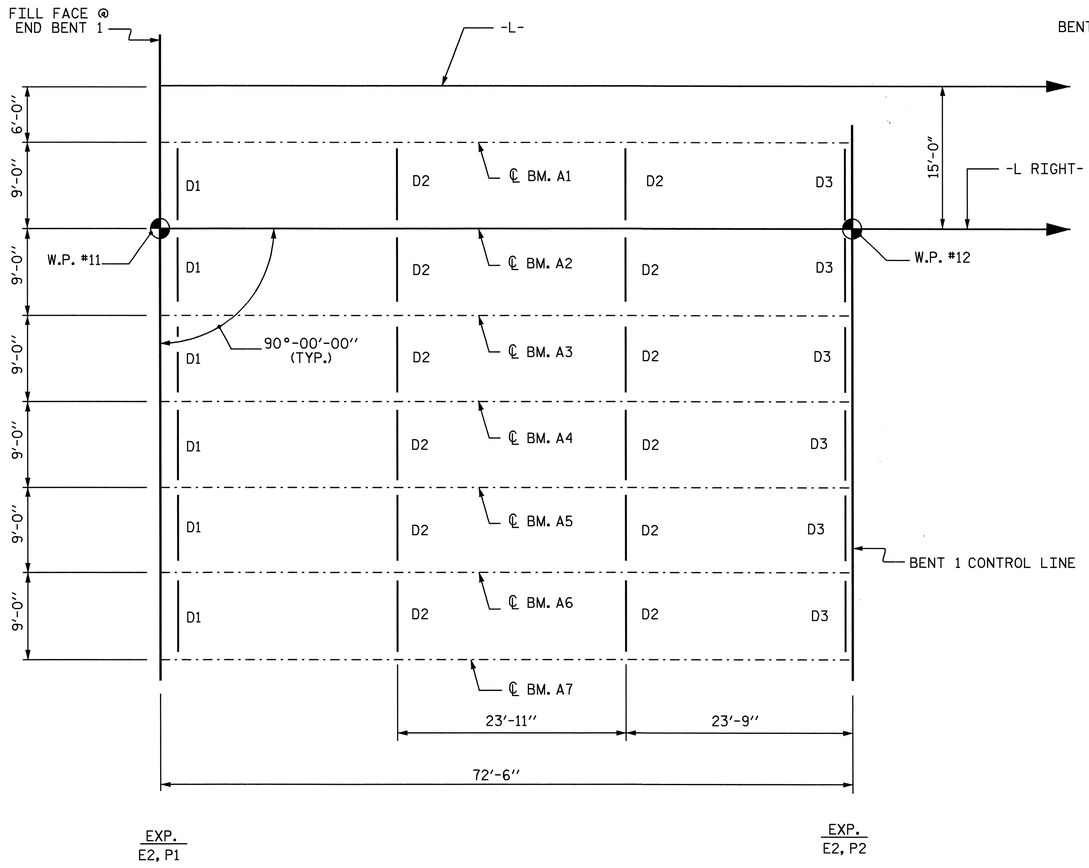

SPAN A

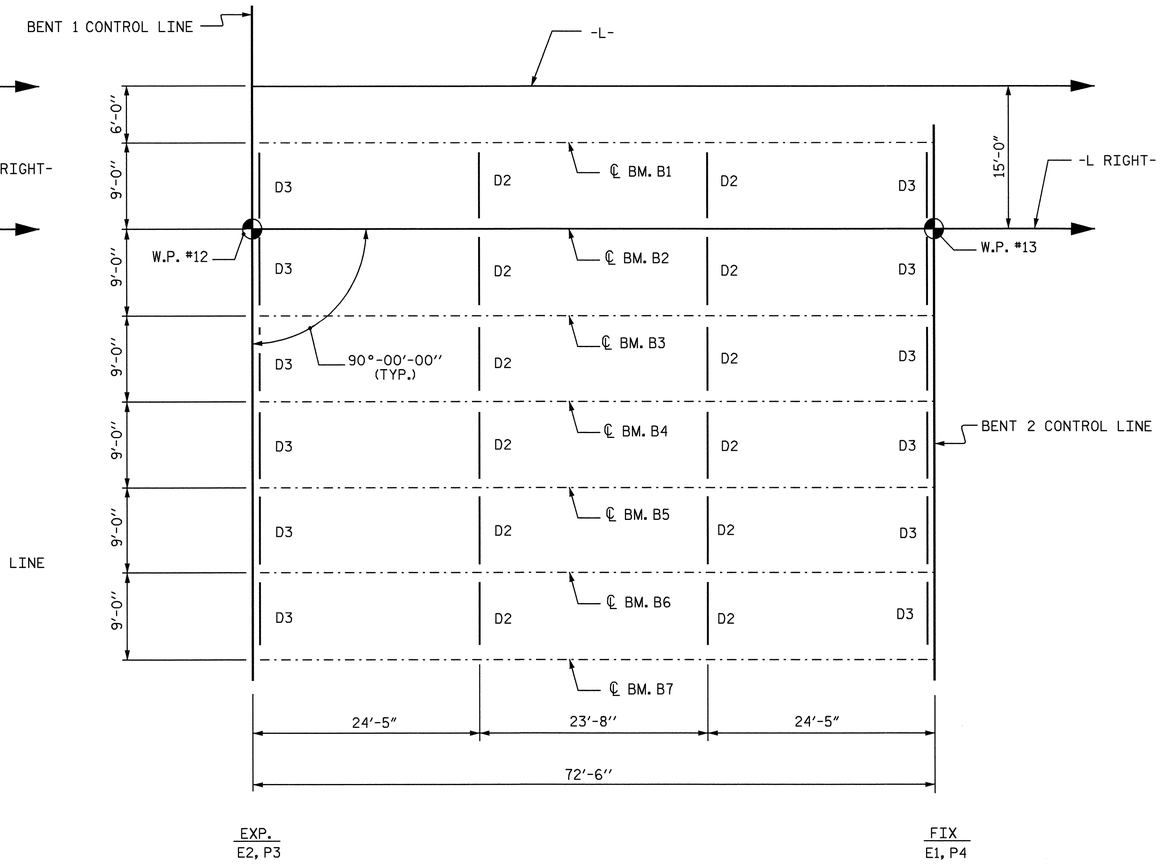

SPAN B

PROJECT NO. U-4012

DURHAM COUNTY

STATION: 70+22.00 -L-

SHEET 1 OF 2

STATE OF NORTH CAROLINA
DEPARTMENT OF TRANSPORTATION
RALEIGH

SUPERSTUCTURE
FRAMING PLAN
SPANS A & B
RIGHT LANE

NORTH CAROLINA PROFESSIONAL SEAL 20125 ENGINEER MARSHALL L. GREEK, JR.
6-1-07

REVISIONS								SHEET NO.
NO.	BY:	DATE:		NO.	BY:	DATE:		S-101
1				3				TOTAL SHEETS
2				4				128

STR. #4

DRAWN BY : M. POOLE DATE : 11/04
CHECKED BY : D. HODGE DATE : 02/05

06-JUN-2007 09:59
R:\Structures\u4012\FinalPlans\Str #4\U4012_sd_FP_02.dgn
vnguyen

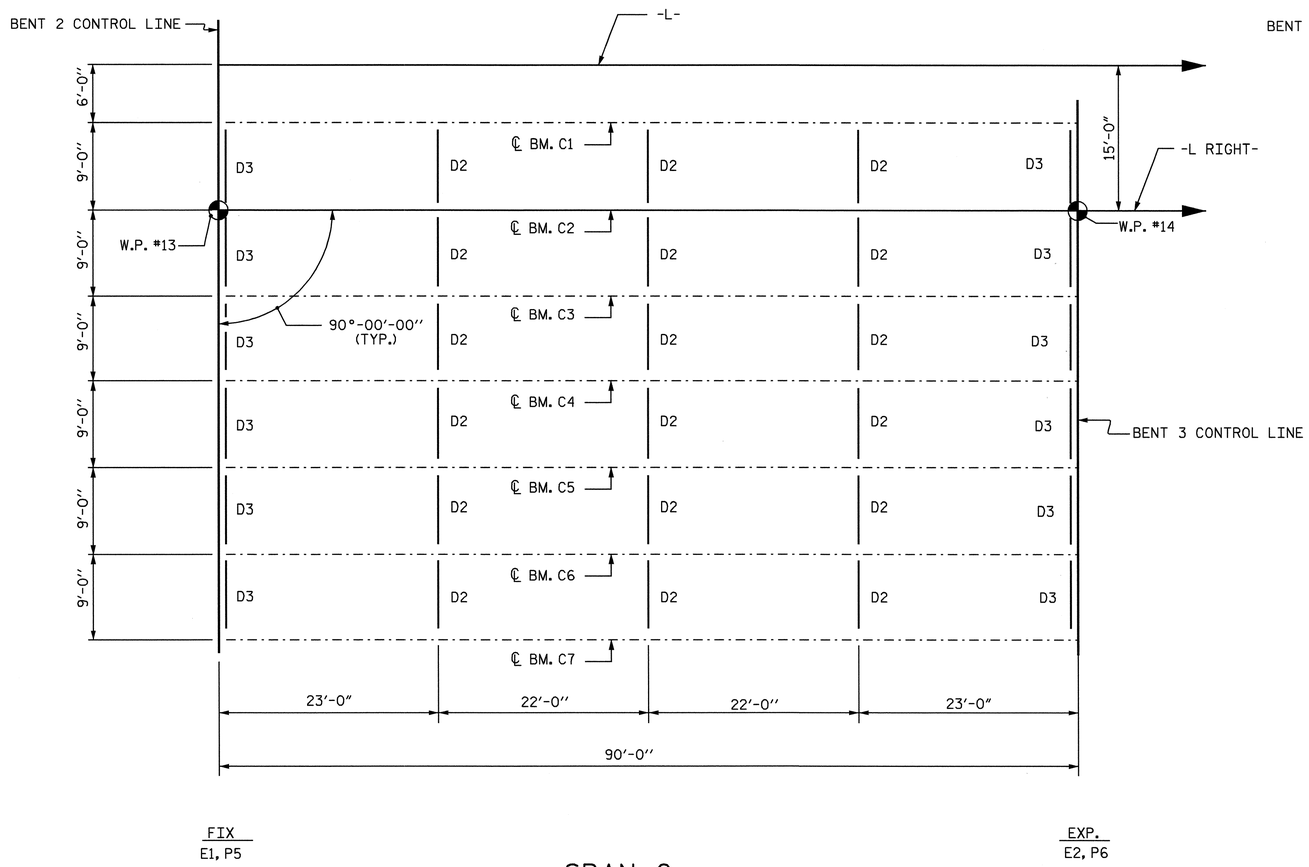

SPAN C

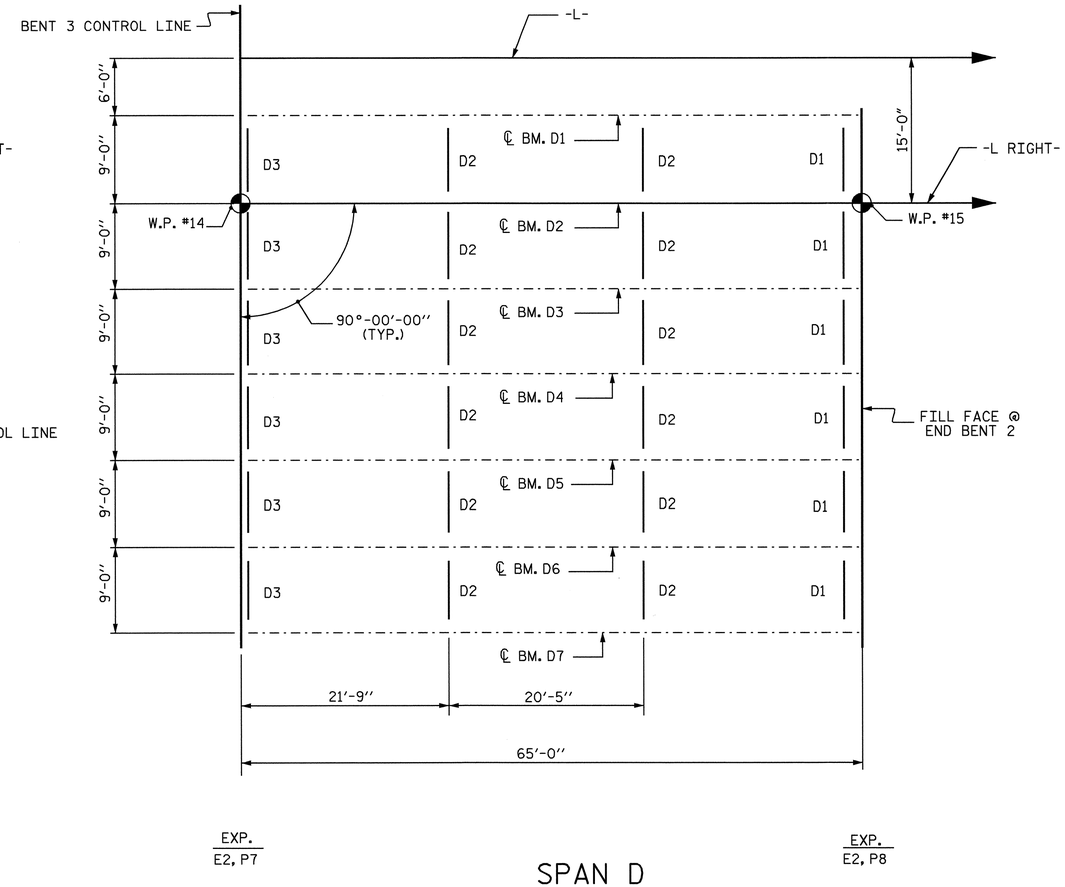

SPAN D

PROJECT NO. U-4012

DURHAM COUNTY

STATION: 70+22.00 -L-

SHEET 2 OF 2

STATE OF NORTH CAROLINA
DEPARTMENT OF TRANSPORTATION
RALEIGH

SUPERSTUCTURE
FRAMING PLAN
SPANS C & D
RIGHT LANE

NORTH CAROLINA PROFESSIONAL SEAL 20125 ENGINEER MARSHALL C. HEDGECOCK, JR.
6-7-07

REVISIONS						SHEET NO.
NO.	BY:	DATE:	NO.	BY:	DATE:	S-102
1			3			TOTAL SHEETS
2			4			128

STR. #4

DRAWN BY : M. POOLE DATE : 11/04
CHECKED BY : D. HODGE DATE : 02/05

06-JUN-2007 10:00
R:\Structures\u4012\FinalPlans\Str #4\U4012_sd_FP_02.dgn
vnguyen

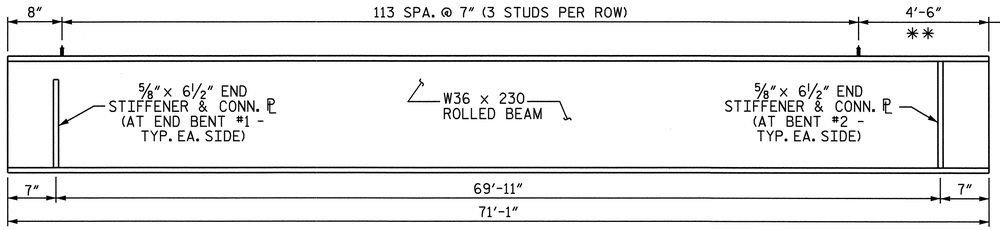

BEAM ELEVATION

(INTERMEDIATE DIAPHRAGMS NOT SHOWN)

SPAN A

2 LAYERS OF 30 LBS. ROOFING FELT ON TOP OF BEAM (TYP. FOR LENGTH OF LINK SLAB)

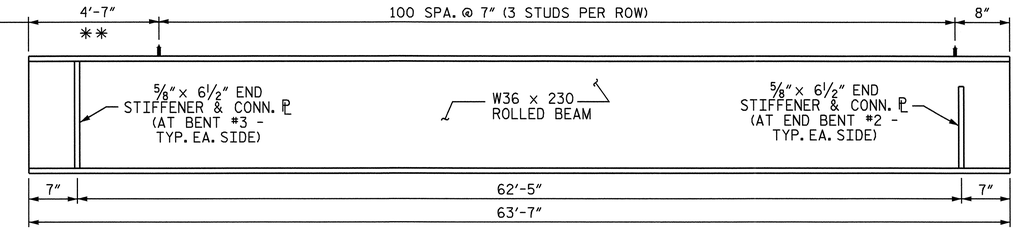

BEAM ELEVATION

(INTERMEDIATE DIAPHRAGMS NOT SHOWN)

SPAN D

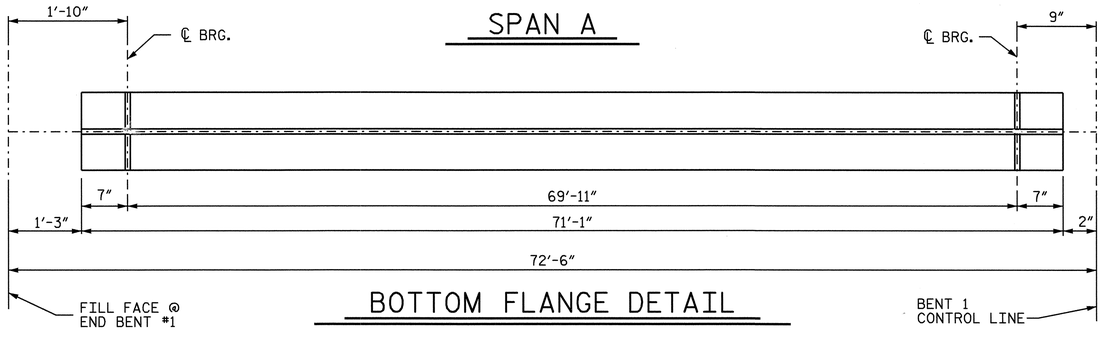

BOTTOM FLANGE DETAIL

SPAN A

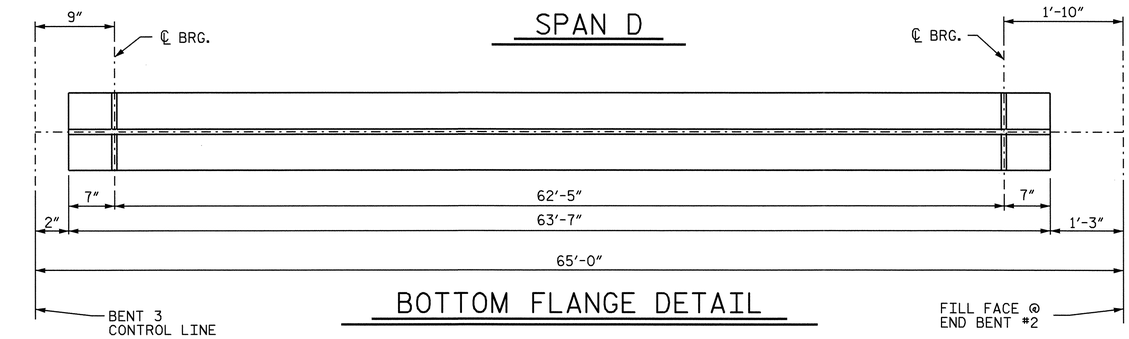

BOTTOM FLANGE DETAIL

SPAN D

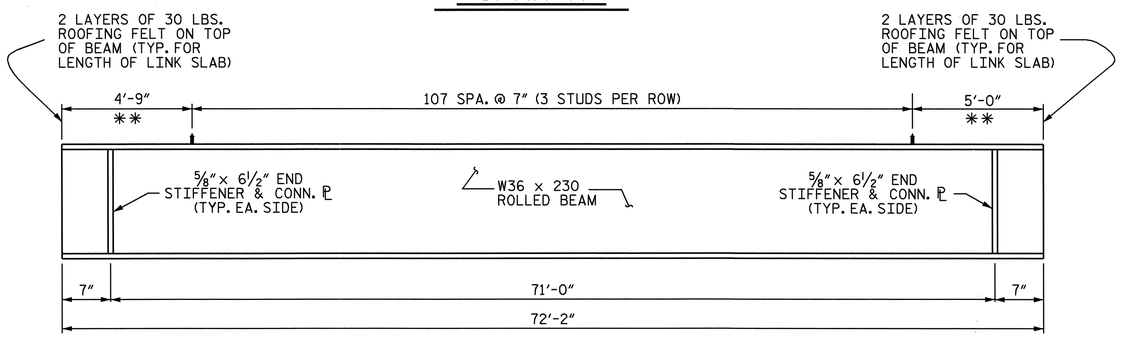

BEAM ELEVATION

(INTERMEDIATE DIAPHRAGMS NOT SHOWN)

SPAN B

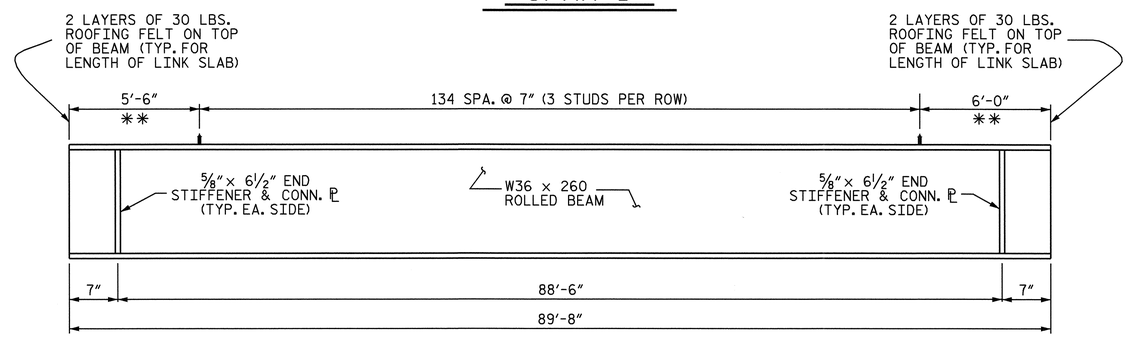

BEAM ELEVATION

(INTERMEDIATE DIAPHRAGMS NOT SHOWN)

SPAN C

** THE TOP OF THE BEAM IN THE REGION OF THE LINK SLAB SHALL BE SMOOTH AND FREE OF SHEAR STUDS. NO WELDING OF THE FORMS OR FALSEWORK TO THE TOP FLANGE WILL BE PERMITTED IN THIS REGION.

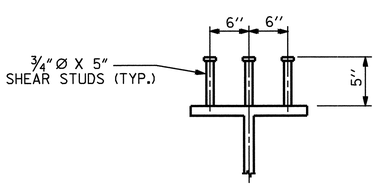

SHEAR STUD DETAILS

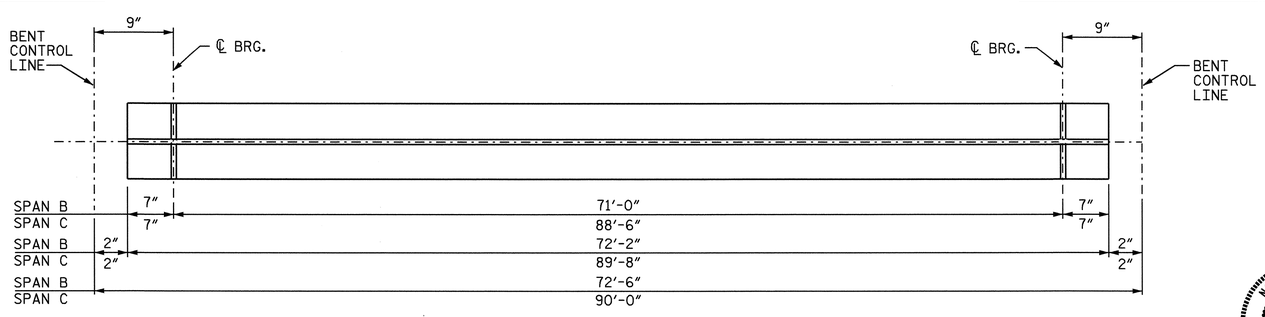

BOTTOM FLANGE DETAIL

SPAN B OR C

PROJECT NO. U-4012

DURHAM COUNTY

STATION: 70+22.00 -L-

SHEET 1 OF 2

STATE OF NORTH CAROLINA
DEPARTMENT OF TRANSPORTATION
RALEIGH

SUPERSTRUCTURE
STRUCTURAL STEEL
RIGHT LANE

NORTH CAROLINA PROFESSIONAL SEAL 20125 ENGINEER MARSHALL C. PECK, JR.
6-29-07

REVISIONS						SHEET NO.
NO.	BY:	DATE:	NO.	BY:	DATE:	S-103
1			3			TOTAL SHEETS
2			4			128

DRAWN BY : M. POOLE/L.L.M. DATE : 02/05
CHECKED BY : D. HODGE DATE : 02/05

27-JUN-2007 10:32
R:\Structures\u4012\FinalPlans\Str #4\U4012_sd_SS_02.dgn
vnguyen

STR. #4

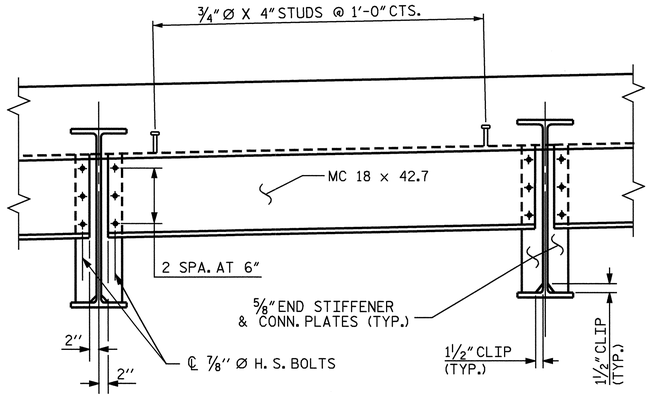

TYPICAL END BENT DIAPHRAGM - D1

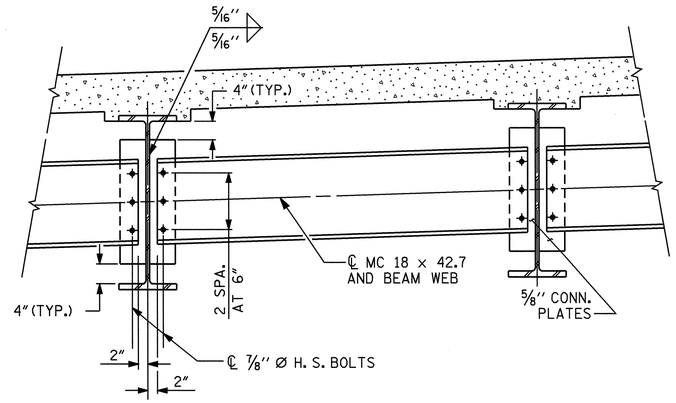

TYPICAL INTERMEDIATE DIAPHRAGM - D2

NOTES

ALL STRUCTURAL STEEL SHALL BE AASHTO M270 GRADE 50W AND PAINTED IN ACCORDANCE WITH SYSTEM 4 OF ARTICLE 442-7 OF THE STANDARD SPECIFICATIONS UNLESS OTHERWISE NOTED ON THE PLANS.

ALL DIMENSIONS SHOWN ARE HORIZONTAL OR VERTICAL, UNLESS OTHERWISE NOTED.

ALL FIELD CONNECTIONS TO BE 7/8" DIA. HIGH STRENGTH BOLTS UNLESS OTHERWISE NOTED.

ENDS OF BEAMS SHALL BE PLUMB.

TENSION ON THE AASHTO M164 BOLTS SHALL BE CALIBRATED USING DIRECT TENSION INDICATOR WASHERS IN ACCORDANCE WITH ARTICLE 440-8 OF THE STANDARD SPECIFICATIONS.

A CHARPY V-NOTCH TEST IS REQUIRED ON ALL BEAM SECTIONS IN ACCORDANCE WITH ARTICLE 1072-9 OF THE STANDARD SPECIFICATIONS.

END STIFFENERS ARE TO BE PLACED NORMAL TO THE WEB OF THE GIRDER AND SHALL BE PLUMB.

END STIFFENER MAY REQUIRE COPING IF WIDER THAN BOTTOM FLANGE TO AVOID INTERFERENCE WITH THE ANCHOR BOLTS.

END STIFFENERS ARE NOT REQUIRED ON THE OUTSIDE OF EXTERIOR BEAMS.

FOR HIGH STRENGTH BOLTS, SEE SPECIAL PROVISIONS.

FOR SHIPPING STEEL STRUCTURAL MEMBERS, SEE SPECIAL PROVISIONS.

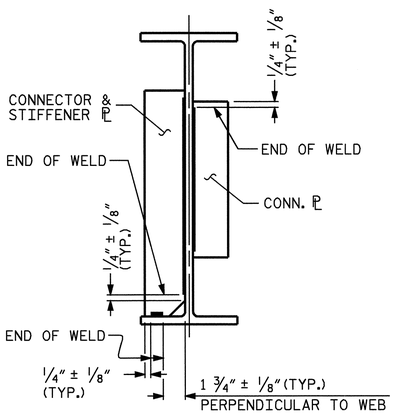

TYPICAL STIFFENER OR
CONNECTOR PLATE CONNECTIONS

WELD TERMINATION DETAILS

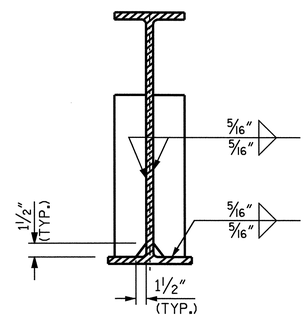

END STIFFENER

(AT END BENT)

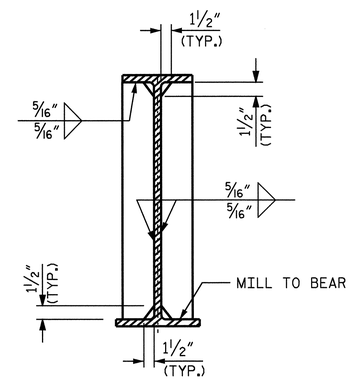

END STIFFENER

(AT BENT)

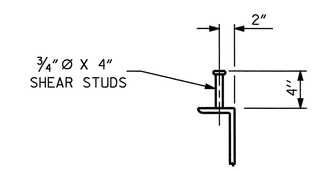

SHEAR STUD DETAILS

(ON DIAPHRAGMS)

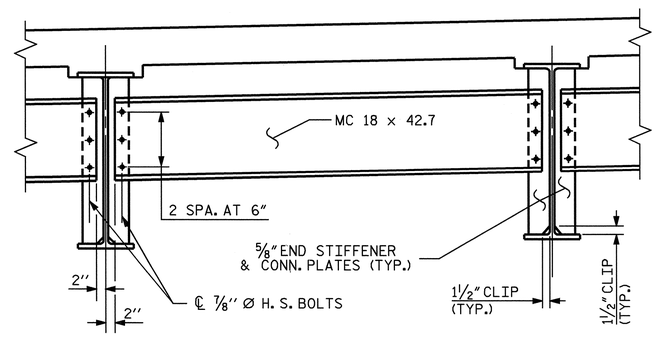

TYPICAL BENT DIAPHRAGM - D3

PROJECT NO. U-4012
DURHAM COUNTY
STATION: 70+22.00 -L-

SHEET 2 OF 2

STATE OF NORTH CAROLINA
DEPARTMENT OF TRANSPORTATION
RALEIGH

SUPERSTRUCTURE
STRUCTURAL STEEL DETAILS
RIGHT LANE

NORTH CAROLINA PROFESSIONAL SEAL 20125 ENGINEER MARSHALL L. HEDGECOCK, JR.
6-29-07

REVISIONS						SHEET NO.
NO.	BY:	DATE:	NO.	BY:	DATE:	S-104
1			3			TOTAL SHEETS
2			4			128

DRAWN BY : M. POOLE/L.L.M. DATE : 02/05
CHECKED BY : D. HODGE DATE : 02/05

27-JUN-2007 10:29
R:\Structures\U4012\Final Plans\Str #4\U4012_sd_SS_02.dgn
vnguyen

STR. #4

DEAD LOAD DEFLECTION TABLE FOR BEAMS

	SPAN A										
	BEAM 1 & 7										
TENTH POINTS	0	.10	.20	.30	.40	.50	.60	.70	.80	.90	0
DEFLECTION DUE TO WEIGHT OF BEAM	0.000	0.009	0.016	0.022	0.026	0.027	0.026	0.022	0.016	0.009	0.000
DEFLECTION DUE TO WEIGHT OF SLAB ✳	0.000	0.029	0.055	0.076	0.089	0.093	0.089	0.076	0.055	0.029	0.000
DEFLECTION DUE TO WEIGHT OF PARAPET	0.000	0.006	0.011	0.016	0.018	0.019	0.018	0.016	0.011	0.006	0.000
TOTAL DEAD LOAD DEFLECTION	0.000	0.044	0.082	0.114	0.133	0.139	0.133	0.114	0.082	0.044	0.000
VERTICAL CURVE ORDINATE	0.000	-0.011	-0.020	-0.026	-0.029	-0.030	-0.029	-0.026	-0.020	-0.011	0.000
ORDINATE DUE TO SUPERELEVATION	—	—	—	—	—	—	—	—	—	—	—
REQUIRED CAMBER	0	3/8"	3/4"	1 1/16"	1 1/4"	1 5/16"	1 1/4"	1 1/16"	3/4"	3/8"	0

DEAD LOAD DEFLECTION TABLE FOR BEAMS

	SPAN B										
	BEAM 2, 3, 5 & 6										
TENTH POINTS	0	.10	.20	.30	.40	.50	.60	.70	.80	.90	0
DEFLECTION DUE TO WEIGHT OF BEAM	0.000	0.009	0.017	0.024	0.028	0.029	0.028	0.024	0.017	0.009	0.000
DEFLECTION DUE TO WEIGHT OF SLAB ✳	0.000	0.040	0.076	0.105	0.122	0.129	0.122	0.105	0.076	0.040	0.000
DEFLECTION DUE TO WEIGHT OF PARAPET	0.000	0.009	0.016	0.022	0.026	0.027	0.026	0.022	0.016	0.009	0.000
TOTAL DEAD LOAD DEFLECTION	0.000	0.058	0.109	0.151	0.176	0.185	0.176	0.151	0.109	0.058	0.000
VERTICAL CURVE ORDINATE	0.000	-0.011	-0.020	-0.026	-0.030	-0.031	-0.030	-0.026	-0.020	-0.011	0.000
ORDINATE DUE TO SUPERELEVATION	—	—	—	—	—	—	—	—	—	—	—
REQUIRED CAMBER	0	9/16"	1 1/16"	1 1/2"	1 3/4"	1 7/8"	1 3/4"	1 1/2"	1 1/16"	9/16"	0

DEAD LOAD DEFLECTION TABLE FOR BEAMS

	SPAN A										
	BEAM 2, 3, 5 & 6										
TENTH POINTS	0	.10	.20	.30	.40	.50	.60	.70	.80	.90	0
DEFLECTION DUE TO WEIGHT OF BEAM	0.000	0.009	0.016	0.022	0.026	0.027	0.026	0.022	0.016	0.009	0.000
DEFLECTION DUE TO WEIGHT OF SLAB ✳	0.000	0.038	0.072	0.098	0.115	0.121	0.115	0.098	0.072	0.038	0.000
DEFLECTION DUE TO WEIGHT OF PARAPET	0.000	0.008	0.015	0.021	0.024	0.026	0.024	0.021	0.015	0.008	0.000
TOTAL DEAD LOAD DEFLECTION	0.000	0.055	0.103	0.141	0.165	0.174	0.165	0.141	0.103	0.055	0.000
VERTICAL CURVE ORDINATE	0.000	-0.011	-0.020	-0.026	-0.029	-0.030	-0.029	-0.026	-0.020	-0.011	0.000
ORDINATE DUE TO SUPERELEVATION	—	—	—	—	—	—	—	—	—	—	—
REQUIRED CAMBER	0	1/2"	1"	1 3/8"	1 5/8"	1 3/4"	1 5/8"	1 3/8"	1"	1/2"	0

DEAD LOAD DEFLECTION TABLE FOR BEAMS

	SPAN A										
	BEAM 4										
TENTH POINTS	0	.10	.20	.30	.40	.50	.60	.70	.80	.90	0
DEFLECTION DUE TO WEIGHT OF BEAM	0.000	0.009	0.016	0.022	0.026	0.027	0.026	0.022	0.016	0.009	0.000
DEFLECTION DUE TO WEIGHT OF SLAB ✳	0.000	0.038	0.072	0.098	0.115	0.121	0.115	0.098	0.072	0.038	0.000
DEFLECTION DUE TO WEIGHT OF PARAPET	0.000	0.005	0.010	0.014	0.016	0.017	0.016	0.014	0.010	0.005	0.000
TOTAL DEAD LOAD DEFLECTION	0.000	0.052	0.098	0.134	0.157	0.165	0.157	0.134	0.098	0.052	0.000
VERTICAL CURVE ORDINATE	0.000	-0.011	-0.020	-0.026	-0.029	-0.030	-0.029	-0.026	-0.020	-0.011	0.000
ORDINATE DUE TO SUPERELEVATION	—	—	—	—	—	—	—	—	—	—	—
REQUIRED CAMBER	0	1/2"	15/16"	15/16"	19/16"	15/8"	19/16"	15/16"	15/16"	1/2"	0

DEAD LOAD DEFLECTION TABLE FOR BEAMS

	SPAN B										
	BEAM 1 & 7										
TENTH POINTS	0	.10	.20	.30	.40	.50	.60	.70	.80	.90	0
DEFLECTION DUE TO WEIGHT OF BEAM	0.000	0.009	0.017	0.024	0.028	0.029	0.028	0.024	0.017	0.009	0.000
DEFLECTION DUE TO WEIGHT OF SLAB ✳	0.000	0.031	0.059	0.081	0.094	0.099	0.094	0.081	0.059	0.031	0.000
DEFLECTION DUE TO WEIGHT OF PARAPET	0.000	0.006	0.012	0.017	0.020	0.021	0.020	0.017	0.012	0.006	0.000
TOTAL DEAD LOAD DEFLECTION	0.000	0.046	0.088	0.122	0.142	0.149	0.142	0.122	0.088	0.046	0.000
VERTICAL CURVE ORDINATE	0.000	-0.011	-0.020	-0.026	-0.030	-0.031	-0.030	-0.026	-0.020	-0.011	0.000
ORDINATE DUE TO SUPERELEVATION	—	—	—	—	—	—	—	—	—	—	—
REQUIRED CAMBER	0	7/16"	13/16"	1 1/8"	1 3/8"	1 7/16"	1 3/8"	1 1/8"	13/16"	7/16"	0

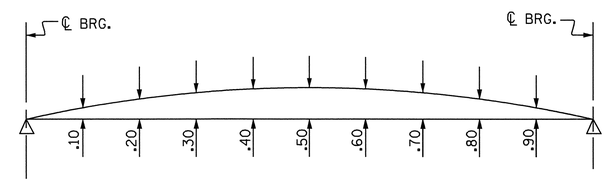

SCHEMATIC CAMBER ORDINATES

✳ INCLUDES SLAB, BUILDUPS & STAY-IN-PLACE FORMS.
ALL VALUES ARE SHOWN IN FEET (DECIMAL FORM), EXCEPT " FINAL CAMBER ", WHICH IS GIVEN IN INCHES (FRACTION FORM).

PROJECT NO. U-4012
DURHAM COUNTY
STATION: 70+22.00 -L-

SHEET 1 OF 3

STATE OF NORTH CAROLINA
DEPARTMENT OF TRANSPORTATION
RALEIGH

SUPERSTRUCTURE
DEAD LOAD
DEFLECTIONS
RIGHT LANE

NORTH CAROLINA PROFESSIONAL SEAL 20125 ENGINEER MARSHALL L. ELDER, JR.
6-29-07

REVISIONS							SHEET NO.
NO.	BY:	DATE:	NO.	BY:	DATE:		S-105
1			3				TOTAL SHEETS
2			4				128

DRAWN BY : M. POOLE DATE : 12/04
CHECKED BY : D. HODGE DATE : 02/05

29-JUN-2007 08:34
R:\Structures\U4012\Final Plans\Str #4\U4012_sd_DL_02.dgn
dahodge

STR. #4

DEAD LOAD DEFLECTION TABLE FOR BEAMS

	SPAN B										
	BEAM 4										
TENTH POINTS	0	.10	.20	.30	.40	.50	.60	.70	.80	.90	0
DEFLECTION DUE TO WEIGHT OF BEAM	0.000	0.009	0.017	0.024	0.028	0.029	0.028	0.024	0.017	0.009	0.000
DEFLECTION DUE TO WEIGHT OF SLAB *	0.000	0.040	0.076	0.105	0.122	0.129	0.122	0.105	0.076	0.040	0.000
DEFLECTION DUE TO WEIGHT OF PARAPET	0.000	0.006	0.011	0.015	0.017	0.018	0.017	0.015	0.011	0.006	0.000
TOTAL DEAD LOAD DEFLECTION	0.000	0.055	0.104	0.144	0.167	0.176	0.167	0.144	0.104	0.055	0.000
VERTICAL CURVE ORDINATE	0.000	-0.011	-0.020	-0.026	-0.030	-0.031	-0.030	-0.026	-0.020	-0.011	0.000
ORDINATE DUE TO SUPERELEVATION	—	—	—	—	—	—	—	—	—	—	—
REQUIRED CAMBER	0	1/2"	1"	1 7/16"	1 5/8"	1 3/4"	1 5/8"	1 7/16"	1"	1/2"	0

DEAD LOAD DEFLECTION TABLE FOR BEAMS

	SPAN C										
	BEAM 1										
TENTH POINTS	0	.10	.20	.30	.40	.50	.60	.70	.80	.90	0
DEFLECTION DUE TO WEIGHT OF BEAM	0.000	0.022	0.041	0.056	0.065	0.069	0.065	0.056	0.041	0.022	0.000
DEFLECTION DUE TO WEIGHT OF SLAB *	0.000	0.065	0.122	0.167	0.196	0.206	0.196	0.167	0.122	0.065	0.000
DEFLECTION DUE TO WEIGHT OF PARAPET	0.000	0.014	0.027	0.036	0.043	0.045	0.043	0.036	0.027	0.014	0.000
TOTAL DEAD LOAD DEFLECTION	0.000	0.101	0.190	0.259	0.304	0.320	0.304	0.259	0.190	0.101	0.000
VERTICAL CURVE ORDINATE	0.000	-0.018	-0.031	-0.041	-0.047	-0.049	-0.047	-0.041	-0.031	-0.018	0.000
ORDINATE DUE TO SUPERELEVATION	—	—	—	—	—	—	—	—	—	—	—
REQUIRED CAMBER	0	1"	1 15/16"	2 5/8"	3 1/16"	3 1/4"	3 1/16"	2 5/8"	1 15/16"	1"	0

DEAD LOAD DEFLECTION TABLE FOR BEAMS

	SPAN C										
	BEAM 2 & 6										
TENTH POINTS	0	.10	.20	.30	.40	.50	.60	.70	.80	.90	0
DEFLECTION DUE TO WEIGHT OF BEAM	0.000	0.022	0.041	0.056	0.065	0.069	0.065	0.056	0.041	0.022	0.000
DEFLECTION DUE TO WEIGHT OF SLAB *	0.000	0.084	0.160	0.219	0.256	0.269	0.256	0.219	0.160	0.084	0.000
DEFLECTION DUE TO WEIGHT OF PARAPET	0.000	0.013	0.025	0.034	0.040	0.042	0.040	0.034	0.025	0.013	0.000
TOTAL DEAD LOAD DEFLECTION	0.000	0.119	0.226	0.309	0.361	0.380	0.361	0.309	0.226	0.119	0.000
VERTICAL CURVE ORDINATE	0.000	-0.018	-0.031	-0.041	-0.047	-0.049	-0.047	-0.041	-0.031	-0.018	0.000
ORDINATE DUE TO SUPERELEVATION	—	—	—	—	—	—	—	—	—	—	—
REQUIRED CAMBER	0	1 3/16"	2 5/16"	3 3/16"	3 3/4"	4"	3 3/4"	3 3/16"	2 5/16"	1 3/16"	0

DEAD LOAD DEFLECTION TABLE FOR BEAMS

	SPAN C										
	BEAM 3 & 5										
TENTH POINTS	0	.10	.20	.30	.40	.50	.60	.70	.80	.90	0
DEFLECTION DUE TO WEIGHT OF BEAM	0.000	0.022	0.041	0.056	0.065	0.069	0.065	0.056	0.041	0.022	0.000
DEFLECTION DUE TO WEIGHT OF SLAB *	0.000	0.084	0.160	0.219	0.256	0.269	0.256	0.219	0.160	0.084	0.000
DEFLECTION DUE TO WEIGHT OF PARAPET	0.000	0.019	0.036	0.049	0.057	0.060	0.057	0.049	0.036	0.019	0.000
TOTAL DEAD LOAD DEFLECTION	0.000	0.125	0.237	0.324	0.378	0.398	0.378	0.324	0.237	0.125	0.000
VERTICAL CURVE ORDINATE	0.000	-0.018	-0.031	-0.041	-0.047	-0.049	-0.047	-0.041	-0.031	-0.018	0.000
ORDINATE DUE TO SUPERELEVATION	—	—	—	—	—	—	—	—	—	—	—
REQUIRED CAMBER	0	1 5/16"	2 1/2"	3 3/8"	4"	4 3/16"	4"	3 3/8"	2 1/2"	1 5/16"	0

* INCLUDES SLAB, BUILDUPS & STAY-IN-PLACE FORMS.
ALL VALUES ARE SHOWN IN FEET (DECIMAL FORM), EXCEPT " FINAL CAMBER ", WHICH IS GIVEN IN INCHES (FRACTION FORM).

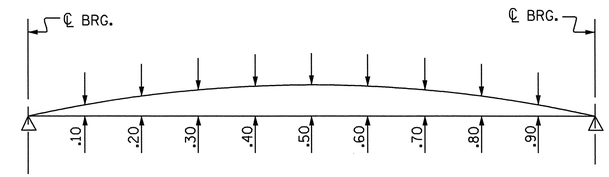

SCHEMATIC CAMBER ORDINATES

PROJECT NO. U-4012
DURHAM COUNTY
STATION: 70+22.00 -L-

SHEET 2 OF 3

STATE OF NORTH CAROLINA
DEPARTMENT OF TRANSPORTATION
RALEIGH

SUPERSTRUCTURE
DEAD LOAD
DEFLECTIONS
RIGHT LANE

NORTH CAROLINA PROFESSIONAL SEAL 20125 ENGINEER MARSHALL BLACK, JR.
6-29-07

REVISIONS								SHEET NO.
NO.	BY:	DATE:	NO.	BY:	DATE:			S-106
1			3					TOTAL SHEETS
2			4					128

DRAWN BY : M. POOLE DATE : 12/04
CHECKED BY : D. HODGE DATE : 02/05

29-JUN-2007 08:35
R:\Structures\u4012\Final Plans\Str #4\U4012_sd_DL_02.dgn
dahodge

STR. #4

DEAD LOAD DEFLECTION TABLE FOR BEAMS

	SPAN C										
	BEAM 4										
TENTH POINTS	0	.10	.20	.30	.40	.50	.60	.70	.80	.90	0
DEFLECTION DUE TO WEIGHT OF BEAM	0.000	0.022	0.041	0.056	0.065	0.069	0.065	0.056	0.041	0.022	0.000
DEFLECTION DUE TO WEIGHT OF SLAB ✳	0.000	0.084	0.160	0.219	0.256	0.269	0.256	0.219	0.160	0.084	0.000
DEFLECTION DUE TO WEIGHT OF PARAPET	0.000	0.012	0.024	0.032	0.038	0.040	0.038	0.032	0.024	0.012	0.000
TOTAL DEAD LOAD DEFLECTION	0.000	0.118	0.225	0.307	0.359	0.378	0.359	0.307	0.225	0.118	0.000
VERTICAL CURVE ORDINATE	0.000	-0.018	-0.031	-0.041	-0.047	-0.049	-0.047	-0.041	-0.031	-0.018	0.000
ORDINATE DUE TO SUPERELEVATION	—	—	—	—	—	—	—	—	—	—	—
REQUIRED CAMBER	0	1 3/16"	2 5/16"	3 3/16"	3 3/4"	3 15/16"	3 3/4"	3 3/16"	2 5/16"	1 3/16"	0

DEAD LOAD DEFLECTION TABLE FOR BEAMS

	SPAN C										
	BEAM 7										
TENTH POINTS	0	.10	.20	.30	.40	.50	.60	.70	.80	.90	0
DEFLECTION DUE TO WEIGHT OF BEAM	0.000	0.022	0.041	0.056	0.065	0.069	0.065	0.056	0.041	0.022	0.000
DEFLECTION DUE TO WEIGHT OF SLAB ✳	0.000	0.065	0.122	0.167	0.196	0.206	0.196	0.167	0.122	0.065	0.000
DEFLECTION DUE TO WEIGHT OF PARAPET	0.000	0.018	0.034	0.047	0.055	0.057	0.055	0.047	0.034	0.018	0.000
TOTAL DEAD LOAD DEFLECTION	0.000	0.105	0.197	0.270	0.316	0.332	0.316	0.270	0.197	0.105	0.000
VERTICAL CURVE ORDINATE	0.000	-0.018	-0.031	-0.041	-0.047	-0.049	-0.047	-0.041	-0.031	-0.018	0.000
ORDINATE DUE TO SUPERELEVATION	—	—	—	—	—	—	—	—	—	—	—
REQUIRED CAMBER	0	1 1/16"	2"	2 3/4"	3 1/4"	3 3/8"	3 1/4"	2 3/4"	2"	1 1/16"	0

DEAD LOAD DEFLECTION TABLE FOR BEAMS

	SPAN D										
	BEAM 1 & 7										
TENTH POINTS	0	.10	.20	.30	.40	.50	.60	.70	.80	.90	0
DEFLECTION DUE TO WEIGHT OF BEAM	0.000	0.005	0.010	0.014	0.016	0.017	0.016	0.014	0.010	0.005	0.000
DEFLECTION DUE TO WEIGHT OF SLAB ✳	0.000	0.018	0.035	0.048	0.056	0.059	0.056	0.048	0.035	0.018	0.000
DEFLECTION DUE TO WEIGHT OF PARAPET	0.000	0.005	0.009	0.013	0.015	0.016	0.015	0.013	0.009	0.005	0.000
TOTAL DEAD LOAD DEFLECTION	0.000	0.028	0.054	0.075	0.087	0.092	0.087	0.075	0.054	0.028	0.000
VERTICAL CURVE ORDINATE	0.000	-0.009	-0.016	-0.020	-0.023	-0.024	-0.023	-0.020	-0.016	-0.009	0.000
ORDINATE DUE TO SUPERELEVATION	—	—	—	—	—	—	—	—	—	—	—
REQUIRED CAMBER	0	1/4"	7/16"	11/16"	3/4"	13/16"	3/4"	11/16"	7/16"	1/4"	0

DEAD LOAD DEFLECTION TABLE FOR BEAMS

	SPAN D										
	BEAM 2, 3, 4, 5 & 6										
TENTH POINTS	0	.10	.20	.30	.40	.50	.60	.70	.80	.90	0
DEFLECTION DUE TO WEIGHT OF BEAM	0.000	0.005	0.010	0.014	0.016	0.017	0.016	0.014	0.010	0.005	0.000
DEFLECTION DUE TO WEIGHT OF SLAB ✳	0.000	0.024	0.046	0.062	0.073	0.077	0.073	0.062	0.046	0.024	0.000
DEFLECTION DUE TO WEIGHT OF PARAPET	0.000	0.005	0.010	0.013	0.016	0.016	0.016	0.013	0.010	0.005	0.000
TOTAL DEAD LOAD DEFLECTION	0.000	0.034	0.066	0.089	0.105	0.110	0.105	0.089	0.066	0.034	0.000
VERTICAL CURVE ORDINATE	0.000	-0.009	-0.016	-0.020	-0.023	-0.024	-0.023	-0.020	-0.016	-0.009	0.000
ORDINATE DUE TO SUPERELEVATION	—	—	—	—	—	—	—	—	—	—	—
REQUIRED CAMBER	0	5/16"	5/8"	13/16"	1"	1 1/16"	1"	13/16"	5/8"	5/16"	0

✳ INCLUDES SLAB, BUILDUPS & STAY-IN-PLACE FORMS.
ALL VALUES ARE SHOWN IN FEET (DECIMAL FORM), EXCEPT "FINAL CAMBER", WHICH IS GIVEN IN INCHES (FRACTION FORM).

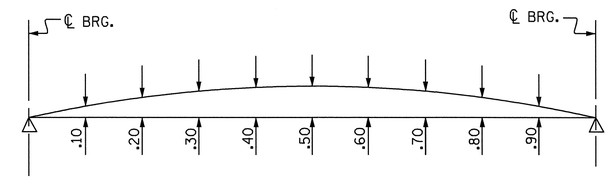

SCHEMATIC CAMBER ORDINATES

PROJECT NO. U-4012
DURHAM COUNTY
STATION: 70+22.00 -L-

SHEET 3 OF 3

STATE OF NORTH CAROLINA
DEPARTMENT OF TRANSPORTATION
RALEIGH

SUPERSTRUCTURE
DEAD LOAD
DEFLECTIONS
RIGHT LANE

NORTH CAROLINA PROFESSIONAL SEAL 20125 ENGINEER MARSHALL G. WEEK, JR.
6-29-07

REVISIONS								SHEET NO.
NO.	BY:	DATE:	NO.	BY:	DATE:			S-107
1			3					TOTAL SHEETS
2			4					128

DRAWN BY : M. POOLE DATE : 12/04
CHECKED BY : D. HODGE DATE : 02/05

29-JUN-2007 08:35
R:\Structures\u4012\FInal Plans\Str #4\U4012_sd_DL_02.dgn
dahodge

STR. #4

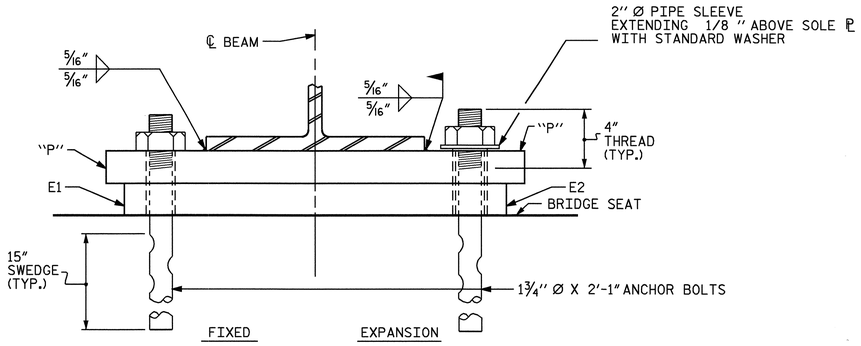

END VIEW

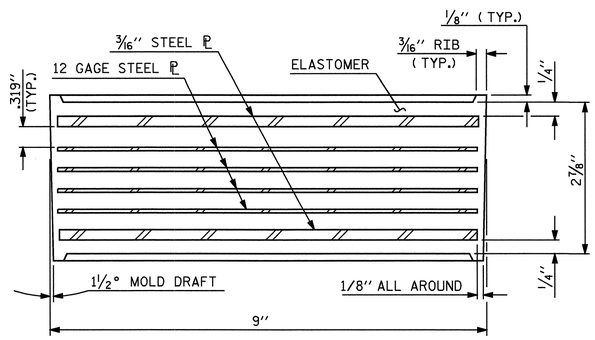

TYPICAL SECTION OF ELASTOMERIC BEARINGS

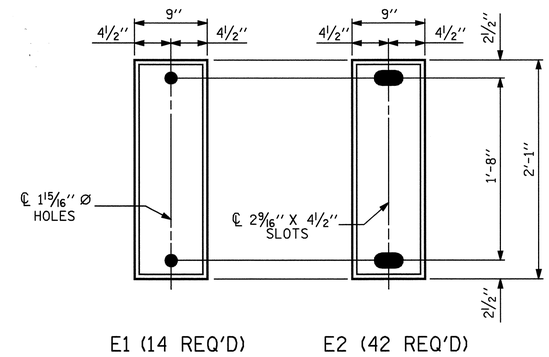

PLAN VIEW OF ELASTOMERIC BEARING

TYPE III

NOTES

AT ALL FIXED POINTS OF SUPPORT, NUTS FOR ANCHOR BOLTS ARE TO BE TIGHTENED FINGER TIGHT AND THEN BACKED OFF 1/2 TURN. THE THREAD OF THE NUT AND BOLT SHALL THEN BE BURRED WITH A SHARP POINTED TOOL.

THE 2'' Ø PIPE SLEEVE SHALL BE CUT FROM SCHEDULE 40 PVC PLASTIC PIPE. THE PVC PLASTIC PIPE SHALL MEET THE REQUIREMENTS OF ASTM D1785.

THE PAYMENT FOR THE PIPE SLEEVES SHALL BE INCLUDED IN THE SEVERAL PAY ITEMS.

FOR AASHTO M270 GRADE 50W STRUCTURAL STEEL, SOLE PLATE SHALL BE AASHTO M270 GRADE 50W AND SHALL NOT BE GALVANIZED. ANCHOR BOLTS, NUTS AND WASHERS SHALL BE GALVANIZED IN ACCORDANCE WITH THE STANDARD SPECIFICATIONS.

ANCHOR BOLTS SHALL MEET THE REQUIREMENTS OF ASTM A449. NUTS SHALL MEET THE REQUIREMENTS OF AASHTO M291-DH OR AASHTO M292-2H. WASHERS SHALL MEET THE REQUIREMENTS OF AASHTO M293. SHOP DRAWINGS ARE NOT REQUIRED FOR ANCHOR BOLTS, NUTS AND WASHERS. SHOP INSPECTION IS REQUIRED.

WHEN FIELD WELDING THE SOLE PLATE TO THE GIRDER FLANGE, USE TEMPERATURE INDICATING WAX PENS, OR OTHER SUITABLE MEANS, TO ENSURE THAT THE TEMPERATURE OF THE SOLE PLATE DOES NOT EXCEED 300°F. TEMPERATURES ABOVE THIS MAY DAMAGE THE ELASTOMER.

ALL SURFACES OF BEARING PLATES SHALL BE SMOOTH AND STRAIGHT.

—LOAD RATINGS—	
	MAX.D.L.+L.L.
TYPE III	144 K

INCREASING STATIONS →

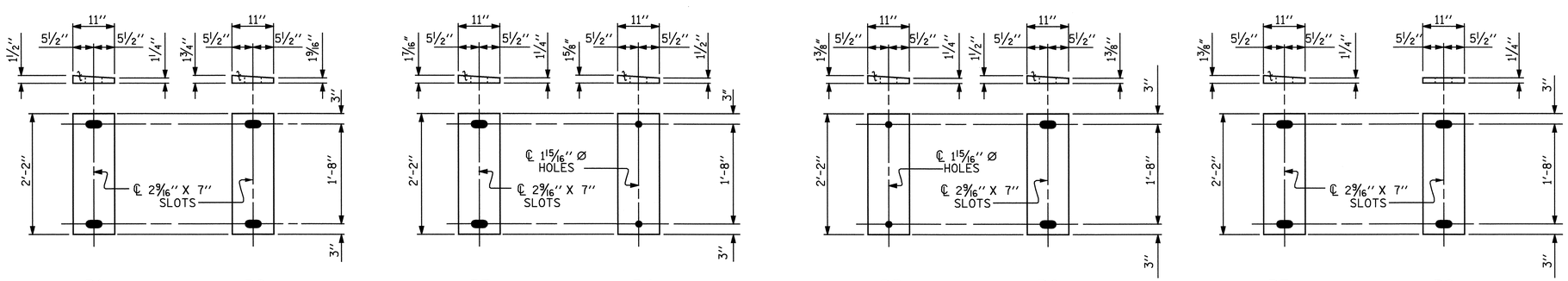

P1	P2	P3	P4	P5	P6	P7	P8
(EXPANSION)	(EXPANSION)	(EXPANSION)	(FIX)	(FIXED)	(EXPANSION)	(EXPANSION)	(EXPANSION)
(7 REQ'D.)	(7 REQ'D.)	(7 REQ'D.)	(7 REQ'D.)	(7 REQ'D.)	(7 REQ'D.)	(7 REQ'D.)	(7 REQ'D.)

SOLE PLATE DETAILS ("P")

PROJECT NO. U-4012
DURHAM COUNTY
STATION: 70+22.00 -L-

STATE OF NORTH CAROLINA
DEPARTMENT OF TRANSPORTATION
RALEIGH

STANDARD

ELASTOMERIC BEARING DETAILS

RIGHT LANE

NORTH CAROLINA PROFESSIONAL SEAL 20125 ENGINEER MARSHALL GIZEK, JR.
6-7-07

REVISIONS								SHEET NO.
NO.	BY:	DATE:	NO.	BY:	DATE:			S-108
1			3					TOTAL SHEETS
2			4					128

ASSEMBLED BY :	M. POOLE	DATE :	12/04
CHECKED BY :	D. HODGE	DATE :	02/05
DRAWN BY : JMB 11/87	REV. 8/16/99	MAB/LES	
CHECKED BY : ARB 11/87	REV. 10/17/00	RWW/LES	
	REV. 5/1/06	TLA/GM	

06-JUN-2007 15:08
R:\Structures\u4012\Final Plans\Str #4\U4012_sd_BG_02.dgn
vnguyen

STR. #4

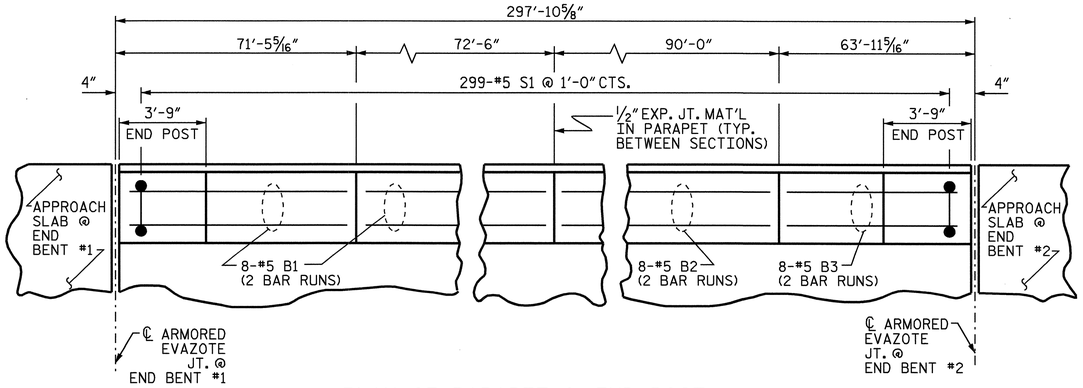

PLAN OF PARAPET & END POST

(TYP. EA. SIDE)

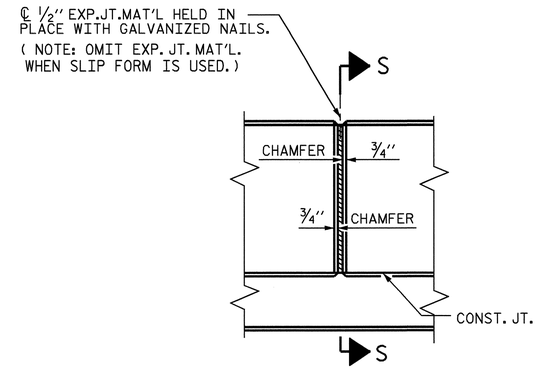

ELEVATION AT JOINTS IN PARAPET

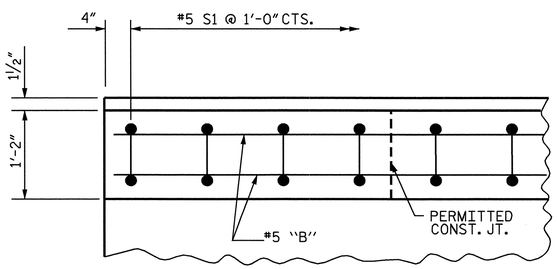

PLAN OF PARAPET

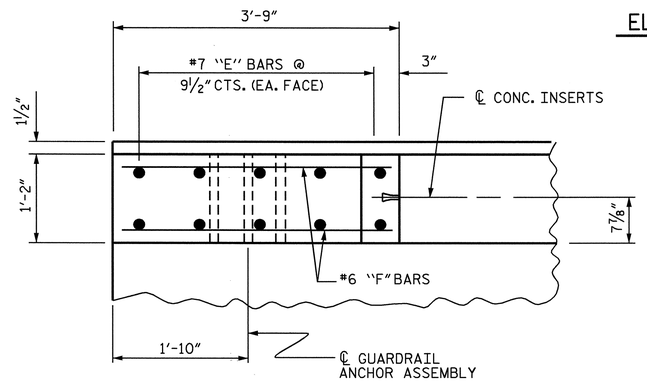

PLAN OF END POST

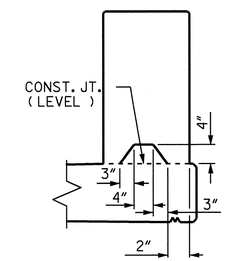

SECTION S-S

AT DAM IN OPEN JOINT
(THIS IS TO BE USED ONLY WHEN SLIP FORM IS USED)

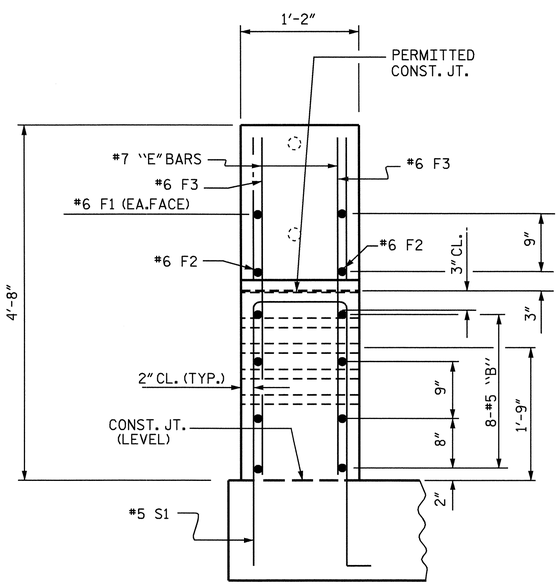

END VIEW

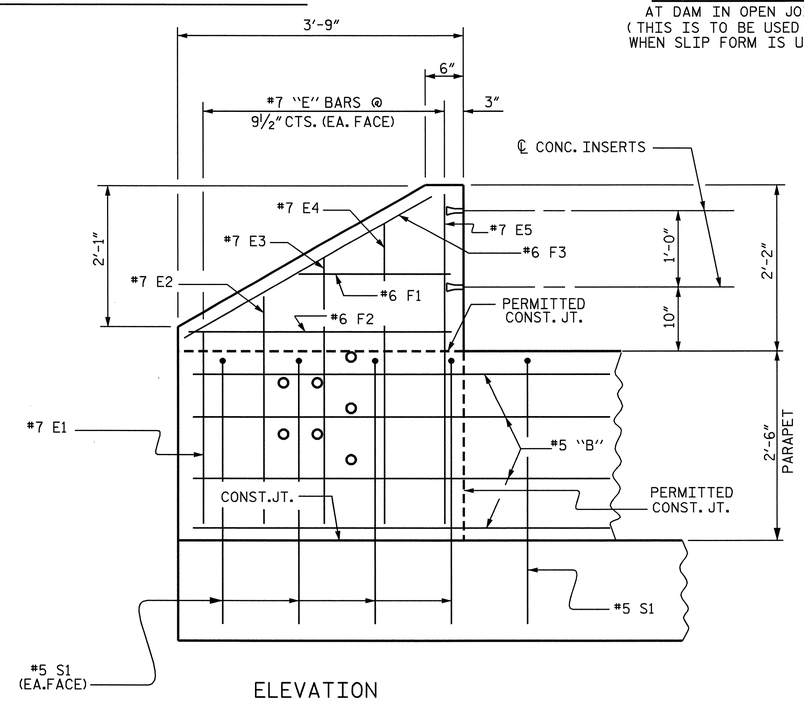

ELEVATION

PARAPET AND END POST FOR TWO BAR RAIL

BILL OF MATERAL

CONCRETE PARAPET & END POSTS

BAR	NO.	SIZE	TYPE	LENGTH	WEIGHT
* B1	64	5	STR	37'-9"	2520
* B2	32	5	STR	46'-7"	1555
* B3	32	5	STR	33'-6"	1118
* E1	8	7	STR	2'-6"	41
* E2	8	7	STR	3'-0"	49
* E3	8	7	STR	3'-6"	57
* E4	8	7	STR	4'-0"	65
* E5	8	7	STR	4'-6"	74
* F1	8	6	STR	1'-10"	22
* F2	8	6	STR	3'-0"	36
* F3	8	6	STR	3'-4"	40
* S1	598	5	1	7'-0"	4366

* EPOXY COATED REINFORCING STEEL	9943 LBS.
CLASS AA CONCRETE	65.2 C.Y.
1'-2" X 2'-6" CONCRETE PARAPET	595.77 LIN FEET

BAR TYPE

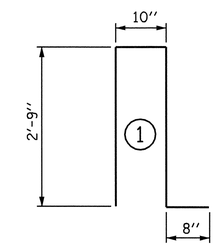

ALL BAR DIMENSIONS ARE OUT TO OUT

NOTES: * THESE BARS ARE EPOXY COATED

FOR DETAILS OF CONCRETE INSERT AND GUARDRAIL ANCHOR ASSEMBLY, SEE "RAIL POST SPACINGS AND END OF RAIL DETAILS" SHEETS.

ALL REINFORCING STEEL IN CONCRETE PARAPET SHALL BE EPOXY COATED.

THE REINFORCING STEEL & CONCRETE IN THE END POSTS IS INCLUDED IN THE UNIT PRICE BID FOR THE CONCRETE PARAPET.

GROOVED CONTRACTION JOINTS, 1/2" IN DEPTH, SHALL BE TOOLED IN ALL EXPOSED FACES OF THE PARAPET IN ACCORDANCE WITH ARTICLE 825-10(B) OF THE STANDARD SPECIFICATIONS. THE CONTRACTION JOINTS SHALL BE LOCATED AT A SPACING OF 8 FT. TO 10 FT. BETWEEN EXPANSION JOINTS. NO CONTRACTION JOINTS WILL BE REQUIRED FOR SEGMENTS LESS THAN 10 FEET IN LENGTH.

PROJECT NO. U-4012

DURHAM COUNTY

STATION: 70+22.00 -L-

STATE OF NORTH CAROLINA
DEPARTMENT OF TRANSPORTATION
RALEIGH

1'-2" X 2'-6"
CONCRETE PARAPET
FOR
2 BAR METAL RAIL
RIGHT LANE

NORTH CAROLINA PROFESSIONAL SEAL 20125 ENGINEER MARSHALL B. PECK, JR.
6-7-07

REVISIONS								SHEET NO.
NO.	BY:	DATE:	NO.	BY:	DATE:			S-109
1			3					TOTAL SHEETS
2			4					128

DRAWN BY : M. POOLE DATE : 11/04
CHECKED BY : D. HODGE DATE : 02/05

06-JUN-2007 15:56
R:\Structures\U4012\Final Plans\Str #4\U4012_sd_2MR_02.dgn
vnguyen

STR. #4

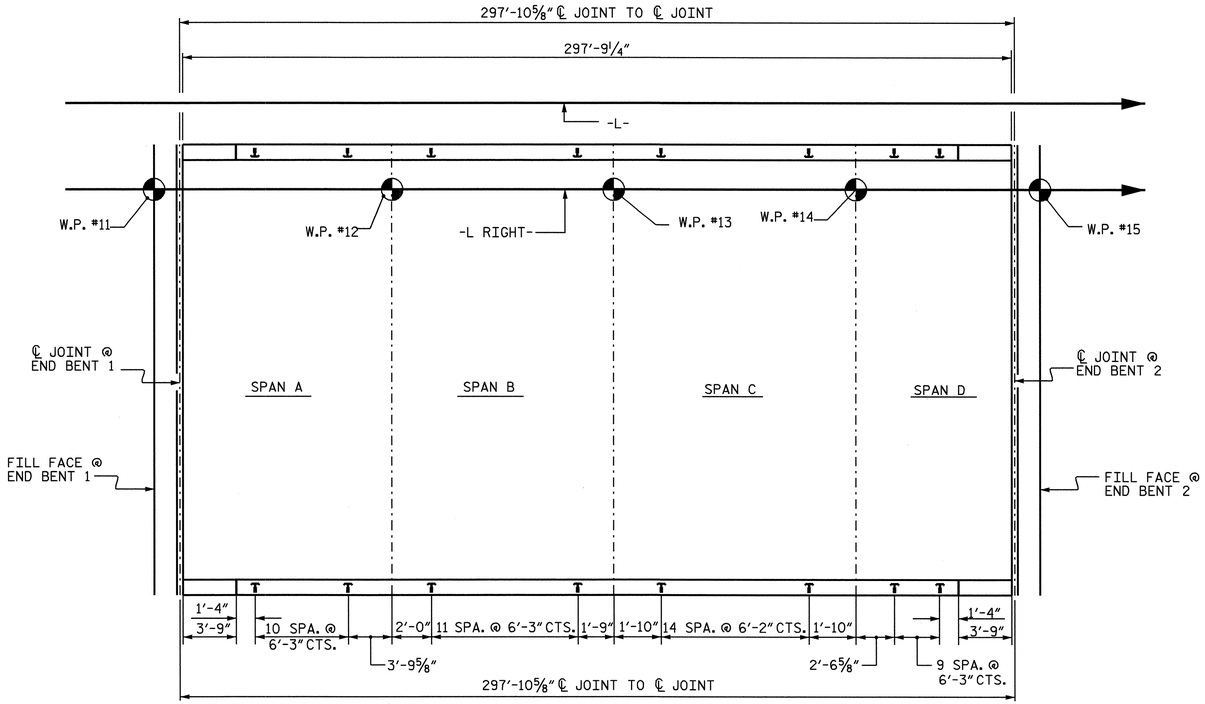

PLAN OF RAIL POST SPACINGS

RAIL POSTING DIMENSIONS TYPICAL EACH SIDE

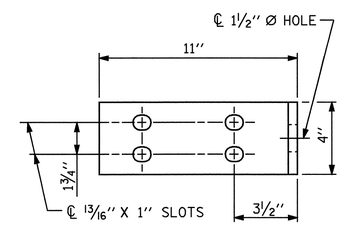

ELEVATION

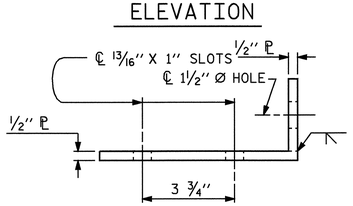

TOP VIEW

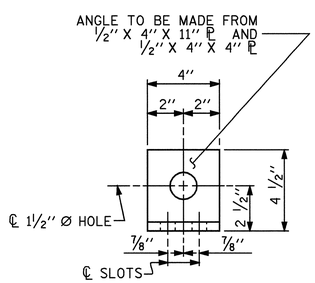

END VIEW

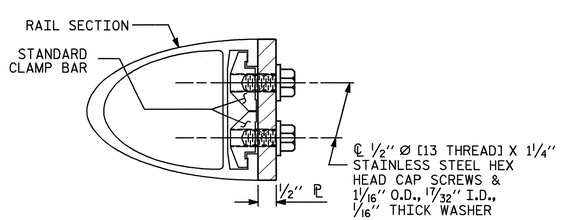

SECTION H-H

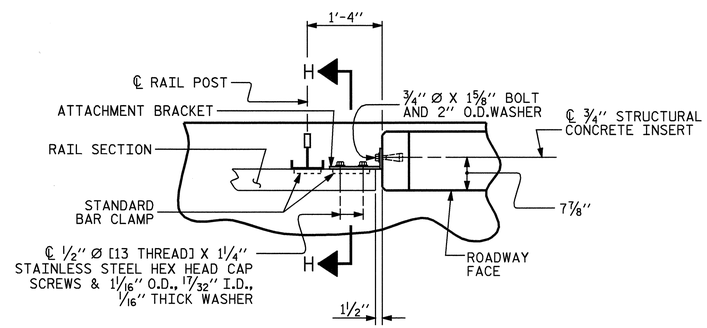

PLAN - RAIL AND END POST

DETAILS FOR ATTACHING METAL RAIL TO END POST

NOTES

STRUCTURAL CONCRETE INSERT

THE STRUCTURAL CONCRETE INSERT ASSEMBLY SHALL CONSIST OF THE FOLLOWING COMPONENTS:

A. FERRULES SHALL BE MADE FROM STEEL MEETING THE REQUIREMENTS OF AASHTO M169, GRADE 12L14 AND SHALL HAVE A MINIMUM LENGTH OF THREADS OF 1½".

B. 1 - ¾" Ø X 1⅝" BOLT WITH WASHER. BOLT SHALL CONFORM TO THE REQUIREMENTS OF ASTM A307. BOLT AND WASHER SHALL BE GALVANIZED. (AT THE CONTRACTOR'S OPTION, STAINLESS STEEL BOLT AND WASHER MAY BE USED AS AN ALTERNATE FOR THE ¾" Ø X 1⅝" GALVANIZED BOLT AND WASHER. THEY SHALL CONFORM TO OR EXCEED THE MECHANICAL REQUIREMENTS OF ASTM A307. THE USE OF THIS ALTERNATE SHALL BE APPROVED BY THE ENGINEER.)

C. WIRE STRUT SHOWN IN THE CONCRETE INSERT ASSEMBLY DETAIL IS THE MINIMUM ALLOWABLE SIZE AND SHALL HAVE A MINIMUM TENSILE STRENGTH OF 100,000 PSI. AS AN OPTION, A 7/16" Ø WIRE STRUT WITH A MINIMUM TENSILE STRENGTH OF 90,000 PSI IS ACCEPTABLE.

NOTES

METAL RAIL TO END POST CONNECTION

THE METAL RAIL TO END POST CONNECTION SHALL CONSIST OF THE FOLLOWING COMPONENTS:

A. ½" PLATES SHALL CONFORM TO AASHTO M270 GRADE 36 AND SHALL BE GALVANIZED AFTER FABRICATION.

B. ¾" STRUCTURAL CONCRETE INSERT SHALL HAVE A WORKING LOAD SHEAR CAPACITY OF 4800 LBS. THE FERRULES SHALL ENGAGE A ¾"Ø X 1⅝" BOLT WITH 2" O.D. WASHER IN PLACE. THE ¾"Ø X 1⅝" BOLT SHALL HAVE N. C. THREADS.

C. CAP SCREWS FOR RAIL ATTACHMENT TO ANGLE SHALL CONFORM TO THE REQUIREMENTS OF ASTM F593 ALLOY 305 STAINLESS STEEL. CAP SCREWS TO BE CENTERED IN SLOTS AT 60°F.

D. STANDARD CLAMP BARS (SEE METAL RAIL SHEET).

E. ½" Ø PIPE SLEEVES (IF REQUIRED) TO BE GALVANIZED.

THE COST OF THE STANDARD CLAMP BARS AND CAP SCREWS USED IN THE METAL RAIL TO END POST CONNECTION SHALL BE INCLUDED IN THE UNIT CONTRACT PRICE BID FOR LINEAR FEET OF 1 OR 2 BAR METAL RAILS.

THE ¾" STRUCTURAL CONCRETE INSERT WITH BOLT SHALL BE ASSEMBLED IN THE SHOP.

THE COST OF THE ¾" STRUCTURAL CONCRETE INSERT ASSEMBLY, AND THE ½" PLATES COMPLETE IN PLACE SHALL BE INCLUDED IN THE VARIOUS PAY ITEMS.

THE CONTRACTOR, AT HIS OPTION, MAY USE AN ADHESIVE BONDING SYSTEM IN LIEU OF THE STRUCTURAL CONCRETE INSERT EMBEDDED IN THE END POST. IF THE ADHESIVE BONDING SYSTEM IS USED, THE ¾" Ø X 1⅝" BOLT WITH WASHER SHALL BE REPLACED WITH A ¾"Ø X 6½" BOLT AND 2" O.D. WASHER. ALL SPECIFICATIONS THAT APPLY TO THE ¾" Ø X 1⅝" BOLT SHALL APPLY TO THE ¾"Ø X 6 ½" BOLT. FIELD TESTING OF THE ADHESIVE BONDING SYSTEM IS NOT REQUIRED.

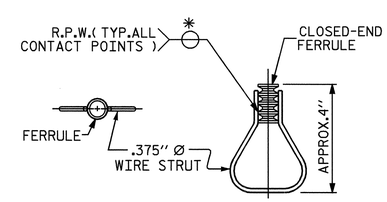

PLAN ELEVATION

STRUCTURAL CONCRETE INSERT

* EACH WELDED ATTACHMENT OF WIRE TO FERRULE SHALL DEVELOP THE TENSILE STRENGTH OF THE WIRE.

PROJECT NO. U-4012
DURHAM COUNTY
STATION: 70+22.00 -L-

STATE OF NORTH CAROLINA
DEPARTMENT OF TRANSPORTATION
RALEIGH

STANDARD

RAIL POST SPACINGS
AND
END OF RAIL DETAILS
RIGHT LANE

NORTH CAROLINA PROFESSIONAL SEAL 20125 ENGINEER MARSHALL A. CHECK, JR.
6-7-07

REVISIONS							SHEET NO.
NO.	BY:	DATE:	NO.	BY:	DATE:		S-110
1			3				TOTAL SHEETS
2			4				128

ASSEMBLED BY :	M. POOLE	DATE :	12/04
CHECKED BY :	D. HODGE	DATE :	02/05

DRAWN BY : FCJ	1/88	REV. 10/17/00	LES/RDR
CHECKED BY : CRK	3/89	REV. 5/7/03	RWW/JTE
		REV. 5/1/06	TLA/GM

06-JUN-2007 10:56
R:\Structures\U4012\Final Plans\Str #4\U4012_sd_2MR_02.dgn
vnguyen

STR. #4

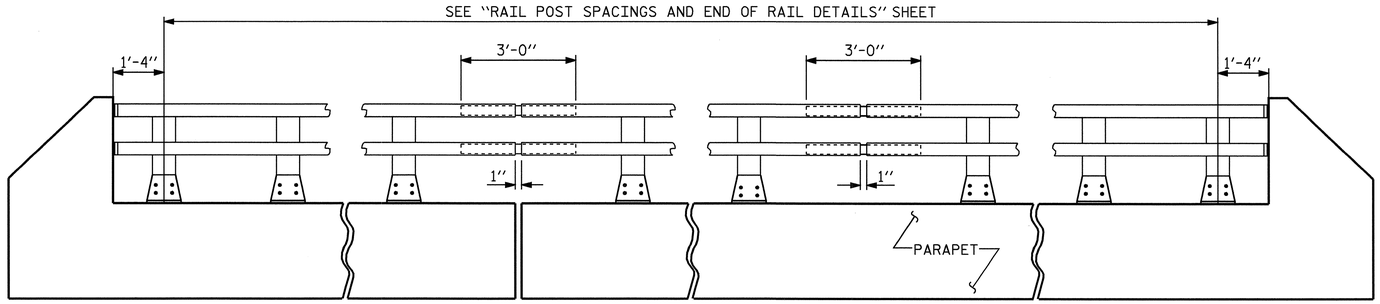

ELEVATION

NOTE : FOR ATTACHMENT OF METAL RAIL TO END POST, SEE SHEET S-113

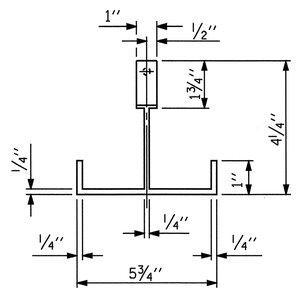

PLAN

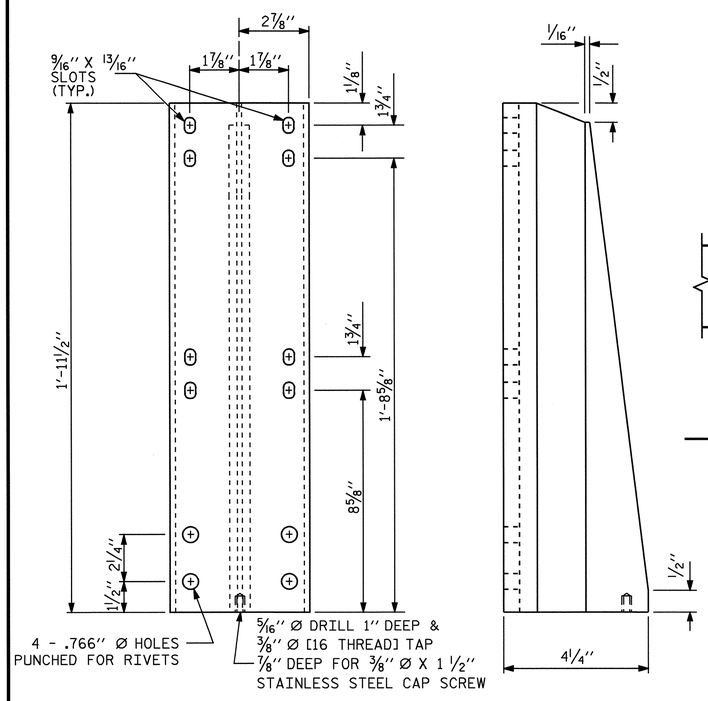

FRONT ELEVATION

SIDE ELEVATION

DETAILS OF POST

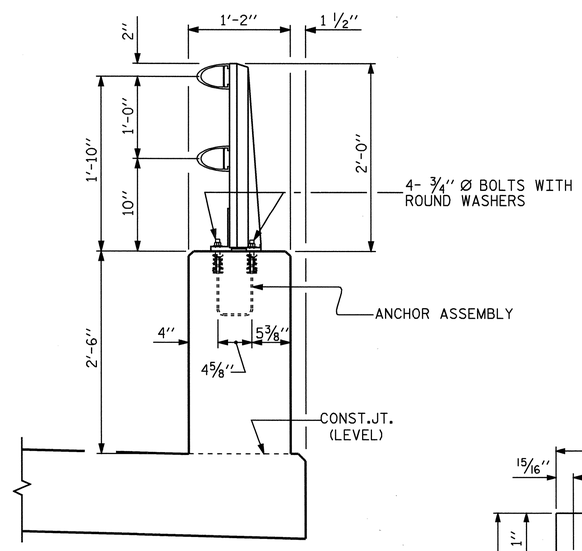

SECTION THRU PARAPET AND RAIL

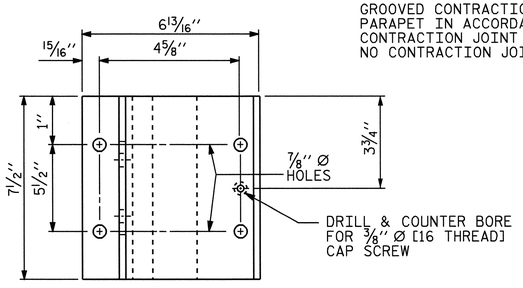

PLAN

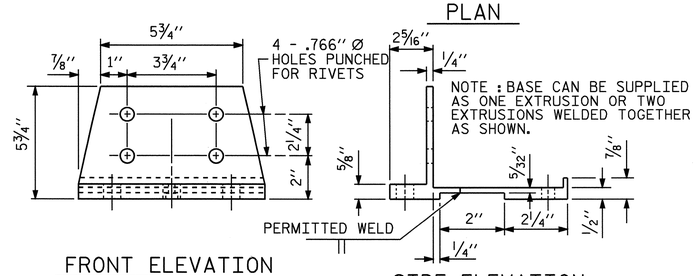

FRONT ELEVATION

SIDE ELEVATION

POST BASE DETAILS

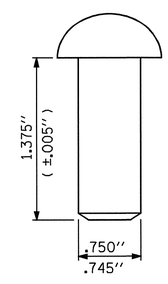

RIVET DETAIL

NOTES

AT THE CONTRACTOR'S OPTION, METAL RAIL MAY BE EITHER ALUMINUM OR GALVANIZED STEEL IN ACCORDANCE WITH THE REQUIREMENTS OF THE GENERAL NOTES AND THE FOLLOWING SPECIFICATIONS FOR THE ALTERNATE MATERIALS; HOWEVER, THE CONTRACTOR WILL BE REQUIRED TO USE THE SAME RAIL MATERIAL ON ALL STRUCTURES ON THE PROJECT FOR WHICH METAL RAIL IS DESIGNATED.

ALUMINUM RAILS

MATERIAL FOR POSTS, BASES AND RAILS, EXPANSION BARS AND CLAMP BARS SHALL BE ASTM B-221 ALLOY 6061-T6.

MATERIAL FOR RIVETS SHALL BE ASTM B316 ALLOY 6061-T6. RIVETS SHALL BE STANDARD BUTTON HEAD AND CONE POINT COLD DRIVEN AS PER DRAWING.

THE BASE OF RAIL POSTS, OR ANY OTHER ALUMINUM SURFACE IN CONTACT WITH CONCRETE SHALL BE THOROUGHLY COATED WITH AN ALUMINUM IMPREGNATED CAULKING COMPOUND OF APPROVED QUALITY.

MATERIAL FOR SHIMS TO BE ASTM B209 ALLOY 6061-T6.

GALVANIZED STEEL RAILS

MATERIAL AND GALVANIZING ARE TO CONFORM TO THE FOLLOWING SPECIFICATIONS:

POST, POST BASES, RAILS, EXPANSION BARS AND CLAMP BARS: AASHTO M270 GRADE 36 STRUCTURAL STEEL - GALVANIZED TO AASHTO M111.

RIVETS: RIVETS SHALL MEET THE REQUIREMENTS OF ASTM A502 FOR GRADE 1 RIVETS.

THE CUT ENDS OF GALVANIZED STEEL RAILING, AFTER GRINDING SMOOTH SHALL BE GIVEN TWO COATS OF ZINC RICH PAINT MEETING THE REQUIREMENTS OF FEDERAL SPECIFICATION MIL-P-26915 USAF TYPE 1, OR OF FEDERAL SPECIFICATIONS TT-P-641.

SHIMS: SHIMS SHALL MEET THE REQUIREMENTS OF ASTM A570 FOR GRADE 33 OR A611 FOR GRADE C AND SHALL BE GALVANIZED IN ACCORDANCE WITH AASHTO M111.

RAIL CAPS: RAIL CAPS SHALL MEET THE REQUIREMENTS OF ASTM A570 FOR GRADE 33 OR A611 FOR GRADE C AND SHALL BE GALVANIZED IN ACCORDANCE WITH AASHTO M111.

GENERAL NOTES

RAILING SHALL BE CONTINUOUS FROM END POST TO END POST OF BRIDGE. EACH JOINT IN RAIL LENGTH SHALL BE SPLICED AS DETAILED. PANEL LENGTHS OF RAIL SHALL BE ATTACHED TO A MINIMUM OF THREE POSTS.

FOR END OF RAIL TO CLEAR FACE OF CONCRETE END POST DIMENSION, SEE STANDARD NO. BMR2.

CAP SCREWS SHALL BE ASTM F593 ALLOY 305 STAINLESS STEEL. WASHERS SHALL MEET THE REQUIREMENTS OF ASTM F844 EXCEPT THEY SHALL BE MADE FROM ALLOY 304 STAINLESS STEEL.

CERTIFIED MILL REPORTS ARE REQUIRED FOR RAILS AND POSTS. SHOP INSPECTION IS NOT REQUIRED.

METAL RAIL POSTS SHALL BE SET NORMAL TO CURB GRADE.

METHOD OF MEASUREMENT FOR METAL RAILS: FOR LENGTH OF METAL RAILS TO BE PAID FOR, SEE THE STANDARD SPECIFICATIONS.

CURVED RAIL USAGE: WHERE RAILS ARE TO BE USED ON BRIDGES ON HORIZONTAL AND/OR VERTICAL CURVATURE THE CONTRACTOR MAY, AT HIS OPTION, HAVE THE REQUIRED CURVATURE IN THE RAIL FORMED IN THE SHOP OR IN THE FIELD. IN EITHER EVENT, THE RAIL SHALL CONFORM WITHOUT BUCKLING OR KINKING TO THE REQUIRED CURVATURE IN A UNIFORM MANNER ACCEPTABLE TO THE ENGINEER.

TO INSURE FUTURE IDENTIFICATION OF THE FABRICATOR, A PERMANENT IDENTIFYING MARK SHALL BE PLACED ON EACH POST. THE METHOD OF MARKING AND LOCATION SHALL BE SUCH THAT IT DOES NOT DETRACT FROM THE APPEARANCE OF THE POST, BUT REMAINS VISIBLE AFTER RAIL PLACEMENT.

SHIMS SHALL BE USED AS NECESSARY FOR POST ALIGNMENT.

ALLOY 6351-T5 MAY BE SUBSTITUTED FOR ALLOY 6061-T6 WHERE APPLICABLE.

MINOR VARIATIONS IN DETAILS OF METAL RAIL WILL BE CONSIDERED. DETAILS OF SUCH VARIATIONS, IF DESIRED, SHALL BE SUBMITTED FOR APPROVAL.

GROOVED CONTRACTION JOINTS, 1/2" IN DEPTH, SHALL BE TOOLED IN ALL EXPOSED FACES OF THE PARAPET IN ACCORDANCE WITH ARTICLE 825-10(B) OF THE STANDARD SPECIFICATIONS. THE CONTRACTION JOINT SHALL BE LOCATED AT A SPACING OF 8FT. TO 10FT. BETWEEN EXPANSION JOINTS. NO CONTRACTION JOINTS WILL BE REQUIRED FOR SEGMENTS LESS THAN 10 FEET IN LENGTH.

PAY LENGTH = 580.54 LIN. FT.

PROJECT NO. U-4012
DURHAM COUNTY
STATION: 70+22.00 -L-

SHEET 1 OF 2

STATE OF NORTH CAROLINA
DEPARTMENT OF TRANSPORTATION
RALEIGH

2 BAR METAL RAIL
RIGHT LANE

NORTH CAROLINA PROFESSIONAL SEAL 20125 ENGINEER MARSHALL G. PECK, JR.
6-8-07

ASSEMBLED BY :	M. POOLE	DATE :	12/04
CHECKED BY :	D. HODGE	DATE :	02/05

DRAWN BY : EEM 6/94	REV. 10/17/00	LES/RDR
CHECKED BY : RGW 6/94	REV. 5/7/03R	RWW/JTE
	REV. 5/1/06	TLA/GM

REVISIONS								SHEET NO.
NO.	BY:	DATE:	NO.	BY:	DATE:			S-111
1			3					TOTAL SHEETS
2			4					128

08-JUN-2007 09:06
R:\Structures\u4012\Final Plans\Str #4\U4012_sd_2MR_02.dgn
vnguyen

STR.#4

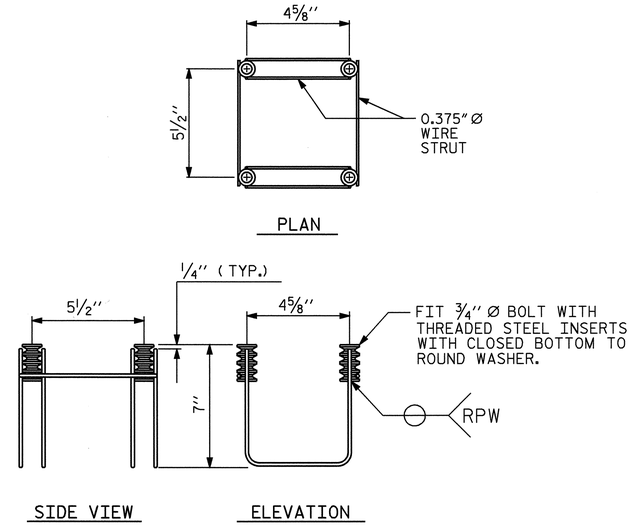

MINIMUM LENGTH OF THREADS IN INSERT (FERRULE): 1 3/4''

4-BOLT METAL RAIL ANCHOR ASSEMBLY

(96 ASSEMBLIES REQUIRED)

NOTES

STRUCTURAL CONCRETE ANCHOR ASSEMBLY

THE STRUCTURAL CONCRETE ANCHOR ASSEMBLY SHALL CONSIST OF THE FOLLOWING COMPONENTS :

A. FERRULES SHALL BE MADE FROM STEEL MEETING THE REQUIREMENTS OF AASHTO M169, GRADE 12L14 AND SHALL HAVE A MINIMUM LENGTH OF THREADS OF 2'' FOR 3/4'' FERRULES.

B. 4 - 3/4'' Ø X 2 1/2'' BOLTS WITH WASHERS. BOLTS SHALL CONFORM TO THE REQUIREMENTS OF ASTM A307. BOLTS AND WASHERS SHALL BE GALVANIZED. AT THE CONTRACTOR'S OPTION, STAINLESS STEEL BOLTS AND WASHERS MAY BE USED AS AN ALTERNATE FOR THE 3/4'' Ø X 2 1/2'' GALVANIZED BOLTS AND WASHERS. THEY SHALL CONFORM TO OR EXCEED THE MECHANICAL REQUIREMENTS OF ASTM A307. THE USE OF THIS ALTERNATE SHALL BE APPROVED BY THE ENGINEER.

C. WIRE STRUT SHOWN IN THE CONCRETE ANCHOR ASSEMBLY DETAIL IS THE MINIMUM ALLOWABLE SIZE AND SHALL HAVE A MINIMUM TENSILE STRENGTH OF 100,000 PSI. AS AN OPTION, A 7/16'' Ø WIRE STRUT WITH A MINIMUM TENSILE STRENGTH OF 90,000 PSI IS ACCEPTABLE.

D. THE METAL RAIL ANCHOR ASSEMBLIES TO BE HOT DIPPED GALVANIZED TO CONFORM TO REQUIREMENTS OF AASHTO M111.

E. THE COST OF THE METAL RAIL ANCHOR ASSEMBLY WITH BOLTS AND WASHERS COMPLETE IN PLACE SHALL BE INCLUDED IN THE PRICE BID FOR LINEAR FEET OF METAL RAIL.

F. BOLTS TO BE TIGHTENED ONE-HALF TURN WITH A WRENCH FROM A FINGER-TIGHT POSITION.

THE CONTRACTOR, AT HIS OPTION, MAY USE ADHESIVELY ANCHORED ANCHOR BOLTS IN LIEU OF THE METAL RAIL ANCHOR ASSEMBLY. THE YIELD LOAD OF THE 3/4'' Ø BOLT IS 10 KIPS. FIELD TESTING OF THE ADHESIVE BONDING SYSTEM IS REQUIRED.

WHEN ADHESIVELY ANCHORED ANCHOR BOLTS ARE USED, BOLTS SHALL MEET THE REQUIREMENTS OF ASTM F593 ALLOY 304 STAINLESS STEEL WITH MINIMUM 75,000 PSI ULTIMATE STRENGTH. NUTS SHALL MEET THE REQUIREMENTS OF ASTM F594 ALLOY 304 STAINLESS STEEL AND WASHERS SHALL MEET THE REQUIREMENTS OF ASTM F844 EXCEPT THEY SHALL BE MADE FROM ALLOY 304 STAINLESS STEEL.

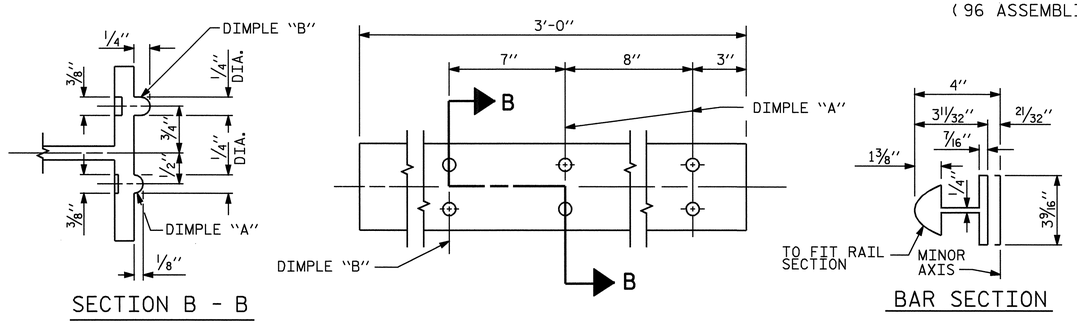

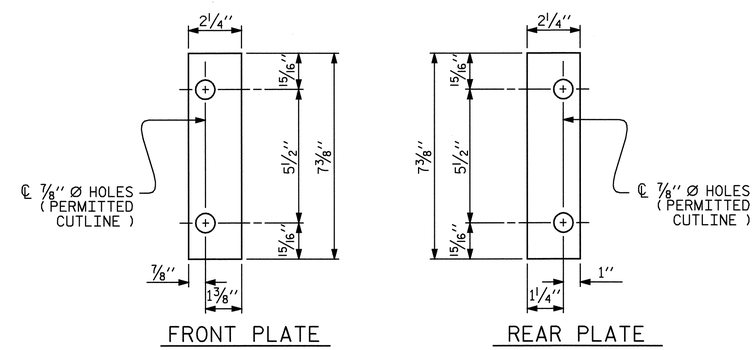

SHIM DETAILS

NOTE :
SHIMS MAY BE CUT ALONG PERMITTED CUTLINE OR SLOTTED TO EDGE OF PLATE TO FACILITATE PLACEMENT.

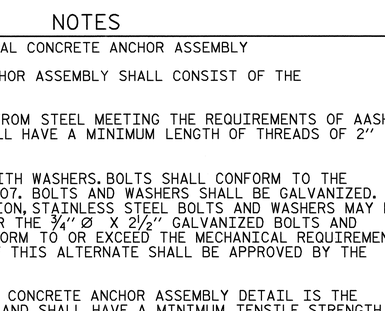

RAIL SECTION

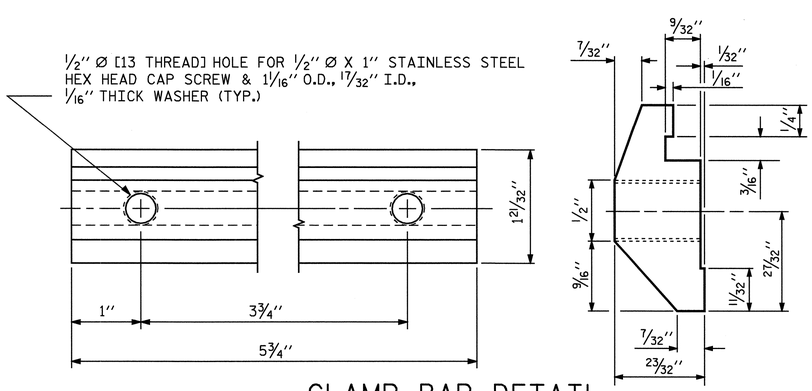

CLAMP BAR DETAIL

(4 REQUIRED PER POST)

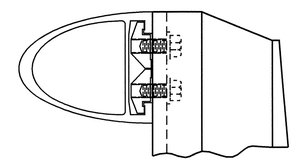

CLAMP ASSEMBLY

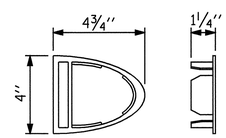

RAIL CAP

PROJECT NO. U-4012
DURHAM COUNTY
STATION: 70+22.00 -L-

SHEET 2 OF 2

STATE OF NORTH CAROLINA
DEPARTMENT OF TRANSPORTATION
RALEIGH

2 BAR METAL RAIL

RIGHT LANE

NORTH CAROLINA PROFESSIONAL SEAL 20125 ENGINEER MARSHALL G. CROSEK, JR.
4-25-07

ASSEMBLED BY : M. POOLE	DATE : 12/04		
CHECKED BY : D. HODGE	DATE : 02/05		
DRAWN BY : EEM 6/94	REV. 2/6/97	EEM/RGW	
CHECKED BY : RGW 6/94	REV. 8/16/99	MAB/LES	
	REV. 5/7/03	RWW/JTE	

REVISIONS								SHEET NO.
NO.	BY:	DATE:		NO.	BY:	DATE:		S-112
1				3				TOTAL SHEETS
2				4				128

STR. #4

23-APR-2007 15:27
R:\Structures\u4012\Final Plans\Str #4\U4012_sd_2MR_02.dgn
vnguyen

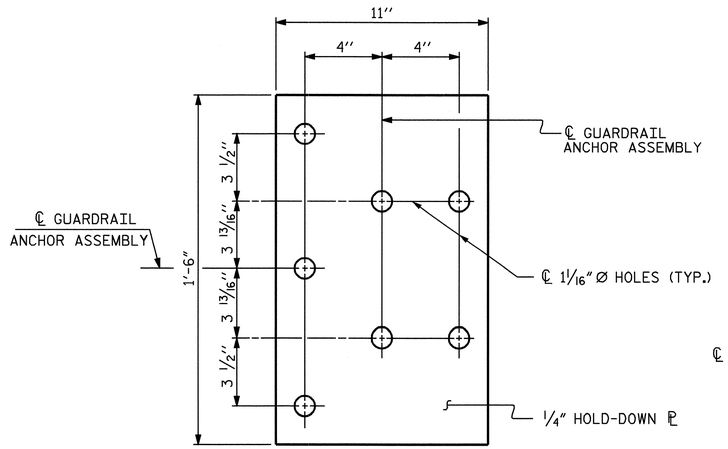

PLAN

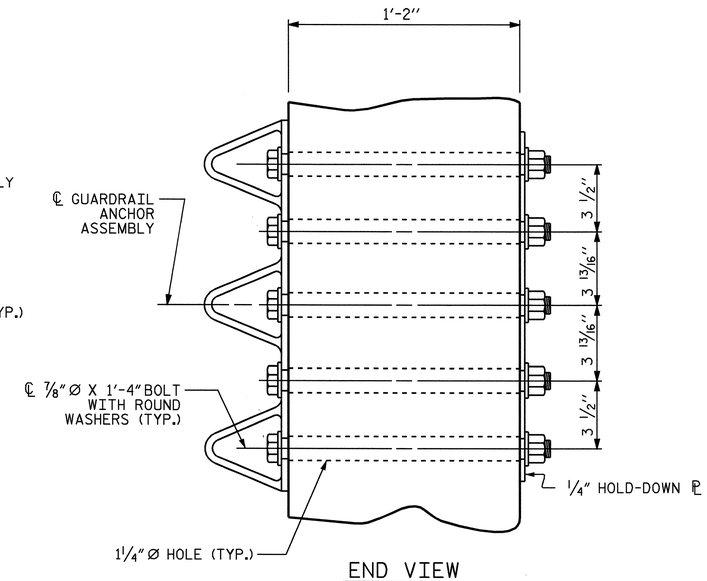

END VIEW

GUARDRAIL ANCHOR ASSEMBLY DETAILS

NOTES

THE GUARDRAIL ANCHOR ASSEMBLY SHALL CONSIST OF A 1/4'' HOLD DOWN PLATE AND 7 - 7/8'' Ø BOLTS WITH NUTS AND WASHERS.

THE HOLD-DOWN PLATE SHALL CONFORM TO AASHTO M270 GRADE 36. AFTER FABRICATION, THE HOLD-DOWN PLATE SHALL BE HOT-DIP GALVANIZED IN ACCORDANCE WITH AASHTO M111.

BOLTS SHALL CONFORM TO THE REQUIREMENTS OF ASTM A307 AND NUTS SHALL CONFORM TO THE REQUIREMENTS OF AASHTO M291. BOLTS, NUTS AND WASHERS SHALL BE GALVANIZED. AT THE CONTRACTOR'S OPTION, STAINLESS STEEL BOLTS, NUTS AND WASHERS MAY BE USED AS AN ALTERNATE FOR THE 7/8'' Ø GALVANIZED BOLTS, NUTS AND WASHERS. THEY SHALL CONFORM TO OR EXCEED THE MECHANICAL REQUIREMENTS OF ASTM A307. THE USE OF THIS ALTERNATE SHALL BE APPROVED BY THE ENGINEER.

AFTER INSTALLATION, THE EXPOSED THREAD OF THE BOLT SHALL BE BURRED WITH A SHARP POINTED TOOL.

THE COST OF THE GUARDRAIL ANCHOR ASSEMBLIES WITH BOLTS, NUTS AND WASHERS COMPLETE IN PLACE, SHALL BE INCLUDED IN THE VARIOUS PAY ITEMS.

THE VERTICAL REINFORCING BARS MAY BE SHIFTED SLIGHTLY IN THE END POST TO CLEAR ASSEMBLY BOLTS.

THE 1 1/4'' Ø HOLES SHALL BE FORMED OR DRILLED WITH A CORE BIT. IMPACT TOOLS WILL NOT BE PERMITTED. ANY CONCRETE DAMAGED BY THIS WORK SHALL BE REPAIRED TO THE SATISFACTION OF THE ENGINEER.

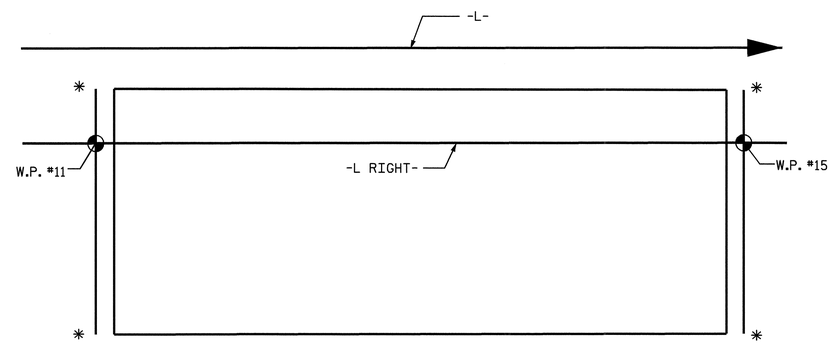

SKETCH SHOWING POINTS OF ATTACHMENT

* LOCATION OF GUARDRAIL ATTACHMENT

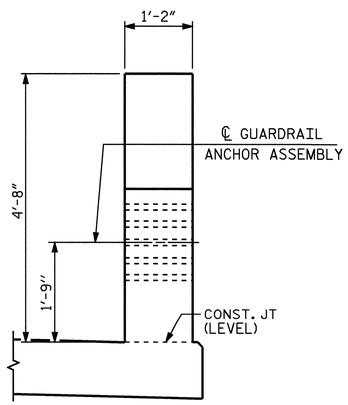

END VIEW
(TWO BAR METAL RAIL)

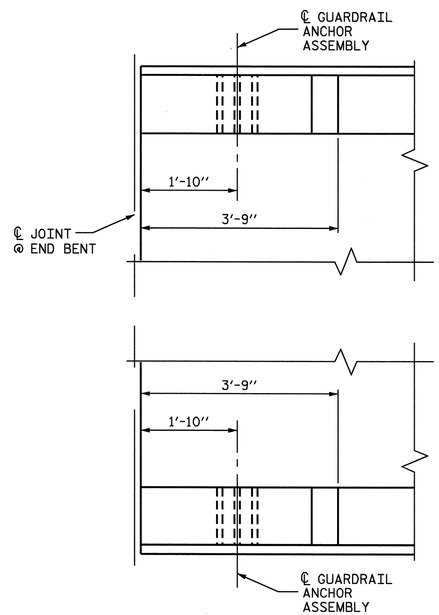

PLAN
(TYP. EA. END)

LOCATION OF GUARDRAIL ANCHOR AT END POST

PROJECT NO. U-4012
DURHAM COUNTY
STATION: 70+22.00 -L-

STATE OF NORTH CAROLINA
DEPARTMENT OF TRANSPORTATION
RALEIGH

STANDARD

GUARDRAIL ANCHORAGE DETAILS FOR METAL RAILS RIGHT LANE

NORTH CAROLINA PROFESSIONAL SEAL 20125 ENGINEER MARSHALL L. HODGE, JR.
6-7-07

ASSEMBLED BY : M. POOLE	DATE : 12/04		
CHECKED BY : D. HODGE	DATE : 02/05		
DRAWN BY : EEM 6/94	REV. 10/17/00	RWW/LES	
CHECKED BY : RGW 6/94	REV. 5/7/03	RWW/JTE	
	REV. 5/1/06	TLA/GM	

REVISIONS								SHEET NO.
NO.	BY:	DATE:	NO.	BY:	DATE:			S-113
1			3					TOTAL SHEETS
2			4					128

STR. 4

06-JUN-2007 10:57
R:\Structures\u4012\FinalPlans\Str #4\U4012_sd_2MR_02.dgn
vnguyen

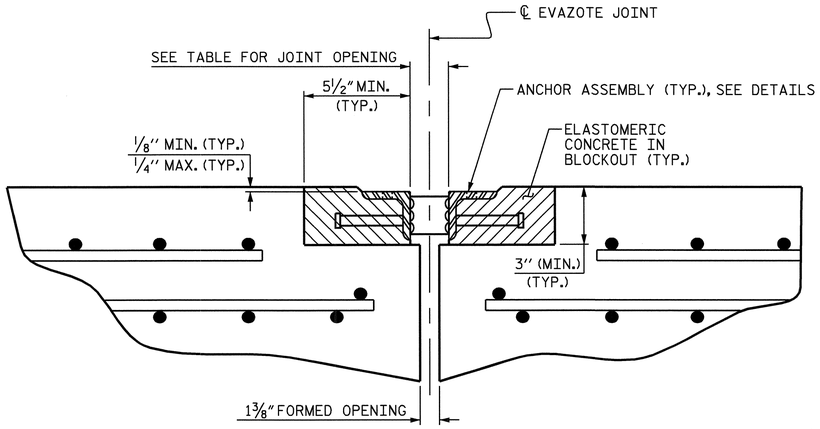

ARMORED JOINT DETAILS

SECTION NORMAL TO JOINT AT END BENT

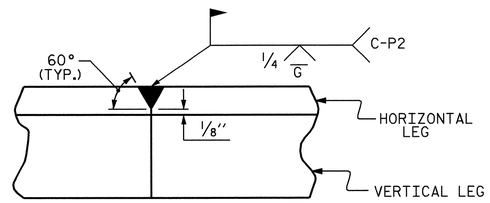

DETAIL- FIELD WELD SPLICE OF ANGLE

NOTES

ANGLES SHALL CONFORM TO AASHTO M270 GRADE 36 STEEL OR APPROVED EQUAL. ALL STUD ANCHORS SHALL CONFORM TO AASHTO M169 GRADES 1010 THRU 1020 OR APPROVED EQUAL.

STUD ANCHORS SHALL BE SHOP WELDED AND ALL HOLES SHALL BE SHOP DRILLED AS SHOWN ON THE PLANS. STUD ANCHORS SHALL BE ELECTRIC ARC END WELDED WITH COMPLETE FUSION.

UPON COMPLETION OF SHOP FABRICATION, THE ENTIRE ANCHOR ASSEMBLY SHALL BE METALLIZED. THE ½" Ø STUD ANCHORS AND ANCHOR TABS NEED NOT BE METALLIZED. SEE SPECIAL PROVISION FOR THERMAL SPRAYED COATINGS (METALLIZATION).

ANCHOR ASSEMBLY SHALL BE MADE CONTINUOUS THE LENGTH OF THE JOINT FROM GUTTER TO GUTTER. FOR FIELD SPLICES AT ALL CROWN BREAK POINTS, THE ENDS OF THE STEEL ANGLES SHALL BE CUT PARALLEL TO THE BRIDGE CENTERLINE. FINISHED FIELD WELDS SHALL BE GROUND SMOOTH AND COATED WITH A MINIMUM THICKNESS OF 4 DRY MILS OF ZINC-RICH PAINT IN ACCORDANCE WITH THE STANDARD SPECIFICATIONS.

ANCHOR ASSEMBLY SEGMENTS SHALL NOT BE LESS THAN 12 FEET NOR MORE THAN 20 FEET IN LENGTH. SHORTER SEGMENTS MAY BE USED AT THE EDGE OF ROADWAY OR AT POINTS OF STAGED CONSTRUCTION.

THE ANCHOR ASSEMBLY SHALL BE SECURED AND LEVELED AS SHOWN IN THE "ARMORED JOINT ANCHOR ASSEMBLY DETAILS". NO SUBMITTALS ARE REQUIRED FOR ⅜" Ø EXPANSION ANCHORS, NUTS OR WASHERS. THE CONTRACTOR MAY SUBMIT FOR APPROVAL AN ALTERNATE METHOD OF ALIGNING AND LEVELING THE ANGLES. THE ALTERNATE METHOD SHALL NOT INCLUDE ANY WELDING TO THE OUTSIDE FACE OF THE ANGLES.

AFTER THE ELASTOMERIC CONCRETE HAS BEEN CAST ON BOTH SIDES OF THE JOINT, REMOVE ANY EXCESS CONCRETE THAT COMES THROUGH THE WEEP HOLES AND THOROUGHLY CLEAN THE ANGLES. ANY DAMAGED STEEL SHALL BE COATED WITH A MINIMUM OF 4 MILS OF ZINC-RICH PAINT IN ACCORDANCE WITH THE STANDARD SPECIFICATIONS.

SEE SPECIAL PROVISIONS FOR EVAZOTE JOINT SEALS.

SEE SPECIAL PROVISIONS FOR ELASTOMERIC CONCRETE.

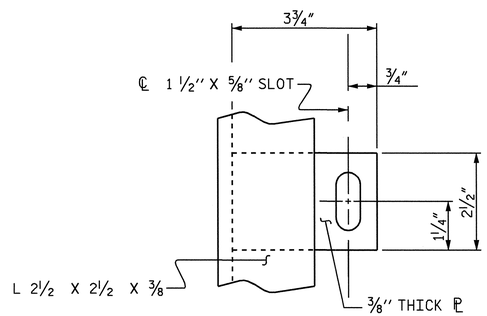

PLAN VIEW OF TAB

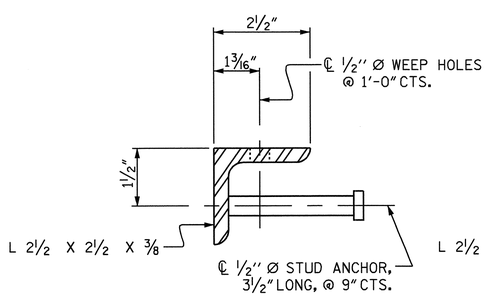

SECTION VIEW OF STUD

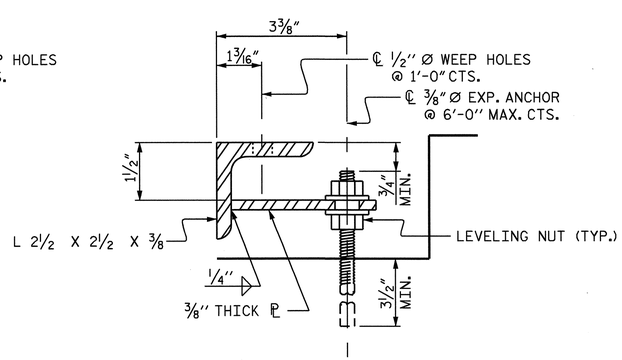

SECTION VIEW OF TAB

ARMORED JOINT ANCHOR ASSEMBLY DETAILS

MOVEMENT AND SETTING AT EVAZOTE JOINT

END BENT NO.	SKEW ANGLE	NOMINAL UNCOMPRESSED SEAL WIDTH	TOTAL MOVEMENT (ALONG ℄ RDWY)	PERPENDICULAR JOINT OPENING AT 45° F	PERPENDICULAR JOINT OPENING AT 60° F	PERPENDICULAR JOINT OPENING AT 90° F
1	90°	3⅛"	1½"	2⅝"	2⅜"	1 15/16"
2	90°	3⅛"	1½"	2⅝"	2⅜"	1 15/16"

TOTAL MOVEMENT IS CALCULATED ALONG THE CENTERLINE OF ROADWAY.
JOINT OPENINGS ARE MEASURED PERPENDICULAR TO THE JOINT.

BILL OF MATERIAL

END BENT NO.	ELASTOMERIC CONCRETE * (CU. FT.)	TOTAL LENGTH OF ANGLE (FT)
1	12.8	112'-0"
2	12.8	112'-0"

* BASED ON THE MINIMUM BLOCKOUT SHOWN.

PROJECT NO. U-4012
DURHAM COUNTY
STATION: 70+22.00 -L-

STATE OF NORTH CAROLINA
DEPARTMENT OF TRANSPORTATION
RALEIGH

STANDARD
ARMORED EVAZOTE
JOINT DETAILS
RIGHT LANE

NORTH CAROLINA PROFESSIONAL SEAL 20125 ENGINEER MARSHALL T. CHECK, JR.
6-7-07

REVISIONS						SHEET NO.
NO.	BY:	DATE:	NO.	BY:	DATE:	S-114
1			3			TOTAL SHEETS
2			4			128

ASSEMBLED BY : CR YARBROUGH		DATE :	02/05
CHECKED BY : D. HODGE		DATE :	02/05
DRAWN BY : EEM	1/96	REV. 7/10/01	LES/RDR
CHECKED BY : RGW	1/96	REV. 5/7/03	RRW/JTE
		REV. 5/1/06	TLA/GM

06-JUN-2007 10:58
R:\Structures\u4012\FinalPlans\Str #4\U-4012_sd_AEJ_02.dgn
vnguyen

STR. #4

SUPERSTRUCTURE REINFORCING STEEL LENGTHS ARE BASED ON THE FOLLOWING MINIMUM SPLICE LENGTHS

BAR SIZE	SUPERSTRUCTURE EXCEPT APPROACH SLABS, PARAPET, AND BARRIER RAIL		APPROACH SLABS		PARAPET AND BARRIER RAIL
	EPOXY COATED	UNCOATED	EPOXY COATED	UNCOATED	
#4	2'-0"	1'-9"	2'-0"	1'-9"	2'-9"
#5	2'-6"	2'-2"	2'-6"	2'-2"	3'-5"
#6	3'-0"	2'-7"	3'-10"	2'-7"	4'-4"
#7	5'-3"	3'-6"			
#8	6'-10"	4'-7"			

BILL OF MATERIAL

BAR	NO.	SIZE	TYPE	LENGTH	WEIGHT
✳ A1	550	#5	STR	58'-3"	33415
A2	550	#5	STR	58'-3"	33415
✳ B1	150	#5	STR	34'-9"	5437
B2	396	#5	STR	51'-5"	21237
✳ B3	76	#8	STR	13'-9"	2790
✳ B4	76	#8	STR	14'-9"	2993
✳ B5	76	#8	STR	14'-3"	2892
✳ B6	150	#5	STR	33'-0"	5163
✳ B7	150	#5	STR	40'-9"	6375
✳ B8	75	#5	STR	59'-9"	4674
✳ B9	12	#5	STR	51'-8"	647
✳ G1	2	#5	STR	58'-3"	122
✳ K1	8	#5	1	6'-3"	52
✳ K2	20	#5	2	8'-4"	174
✳ K3	24	#5	STR	7'-3"	182
✳ S1	96	#4	3	3'-8"	235

REINFORCING STEEL = 54652 LBS
✳ EPOXY COATED REINF. STEEL = 65151 LBS

✳ THESE BARS ARE EPOXY COATED

GROOVING BRIDGE FLOORS

APPROACH SLABS	2517	SQ.FT.
BRIDGE DECK	15649	SQ.FT.
TOTAL	18166	SQ.FT.

BAR TYPES

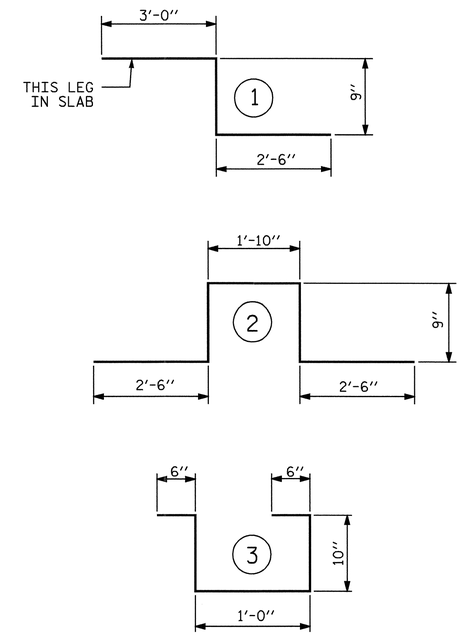

ALL BAR DIMENSIONS ARE OUT TO OUT

SUPERSTRUCTURE BILL OF MATERIAL

	CLASS AA CONCRETE	REINFORCING STEEL	✳ EPOXY COATED REINFORCING STEEL
	(CU.YDS.)	(LBS.)	(LBS.)
SPANS A-D		54652	65151
POUR 1	264		
POUR 2	283		
TOTALS✳✳	547	54652	65151

✳✳ QUANTITIES FOR PARAPET ARE NOT INCLUDED

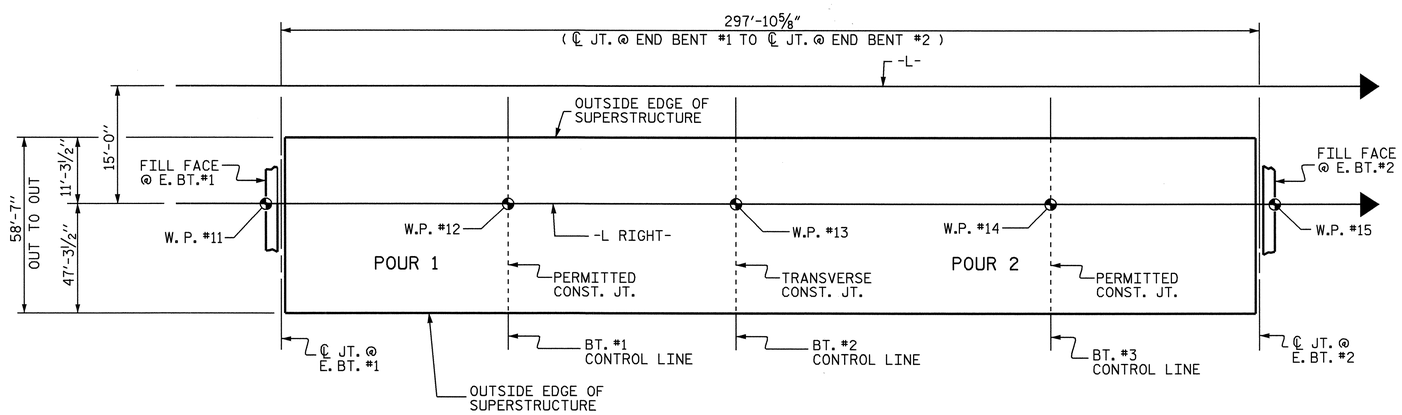

LAYOUT FOR COMPUTING AREA OF REINFORCED CONCRETE DECK SLAB
(SQ. FT. = 17,451)

PROJECT NO. U-4012
DURHAM COUNTY
STATION: 70+22.00 -L-

STATE OF NORTH CAROLINA
DEPARTMENT OF TRANSPORTATION
RALEIGH

SUPERSTRUCTURE BILL OF MATERIAL RIGHT SIDE

NORTH CAROLINA PROFESSIONAL SEAL 20125 ENGINEER MARSHALL L. GRIFFIN, JR.

ASSEMBLED BY : M. POOLE	DATE : 12/04		
CHECKED BY : D. HODGE	DATE : 2/05		
DRAWN BY : JMB 5/87	REV. 6/1/94	EEM/GRP	
CHECKED BY : SJD 9/87	REV. 8/16/99	RWW/LES	

REVISIONS							
NO.	BY:	DATE:	NO.	BY:	DATE:	SHEET NO.	S-115
1			3			TOTAL SHEETS	128
2			4				

STR. #4

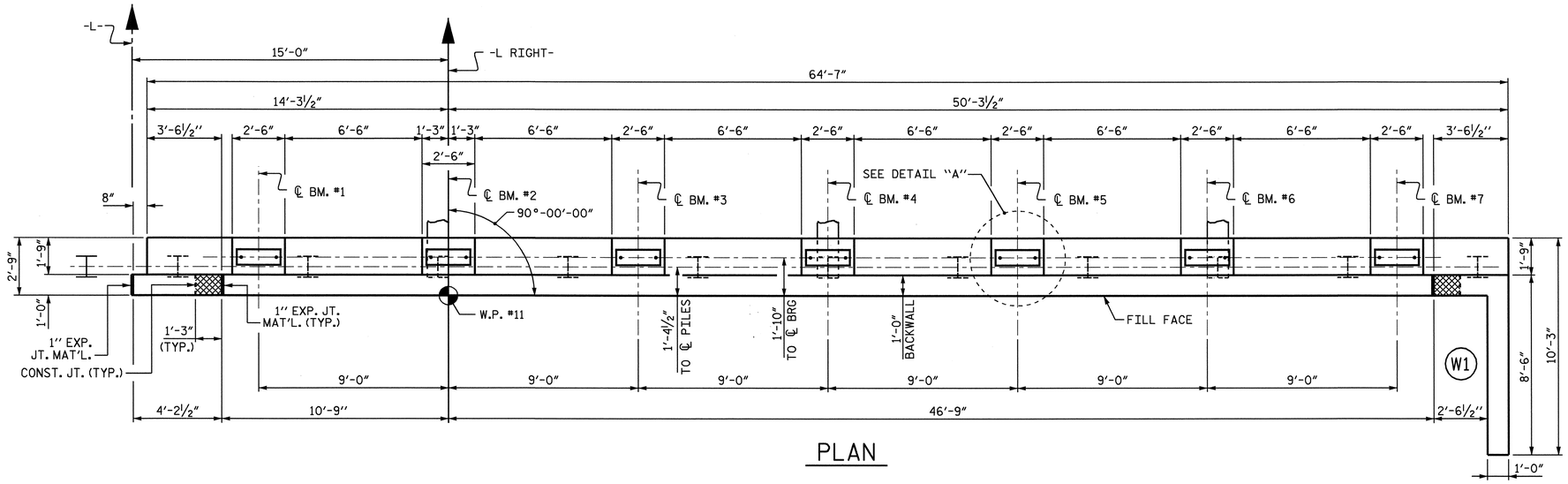

PLAN

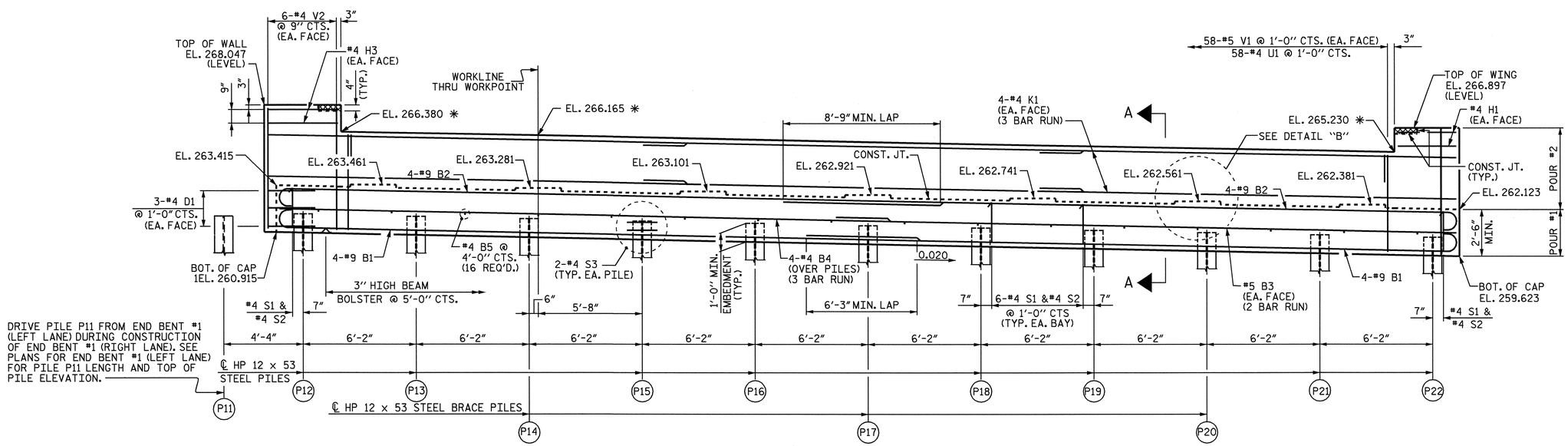

ELEVATION

✱ THESE ELEVATIONS ARE TAKEN AT FILL FACE.

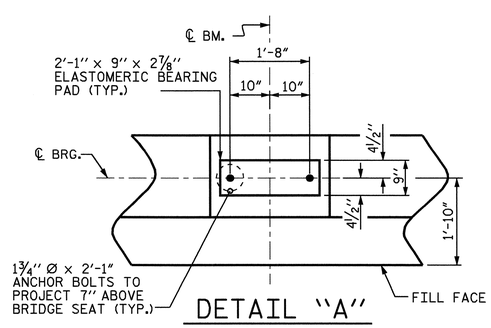

DETAIL "A"

(TYP. EA. BEAM)

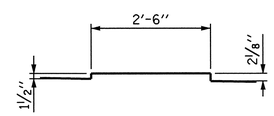

DETAIL "B"

(TYP. EA. SEAT)

NOTES

STIRRUPS IN CAP MAY BE SHIFTED AS NECESSARY TO CLEAR ANCHOR BOLTS.

BACKWALL SHALL BE PLACED BEFORE APPLYING THE EPOXY PROTECTIVE COATING.

THE TOP SURFACE AREAS OF THE END BENT CAPS SHALL BE CURED IN ACCORDANCE WITH THE STANDARD SPECIFICATIONS EXCEPT THE MEMBRANE CURING COMPOUND METHOD SHALL NOT BE USED.

THE TOP SURFACE OF THE CAP EXCEPT THE BRIDGE SEAT BUILDUPS SHALL BE SLOPED TRANSVERSELY FROM THE FILL FACE TO THE BACK FACE AT THE RATE OF 2%.

THE CONCRETE IN THE CROSS-HATCHED AREA OF THE WING SHALL BE POURED AFTER THE PARAPET AND END POST ARE CAST IF SLIP FORMING IS USED.

THE CONTRACTOR SHALL PROVIDE FOR INSTALLATION OF THE 4" DIAMETER DRAIN PIPE THROUGH THE WING WALL AS REQUIRED FOR REINFORCED BRIDGE APPROACH FILLS, SEE THE ROADWAY PLANS. REINFORCING STEEL IN THE WING WALL MAY BE SHIFTED AS NECESSARY TO CLEAR THE DRAIN PIPE.

PILE	TOP OF PILE ELEVATION
P12	261.896
P13	261.773
P14	261.649
P15	261.526
P16	261.403
P17	261.279
P18	261.156
P19	261.033
P20	260.909
P21	260.786
P22	260.663

SPLICE LENGTH CHART
#5 B3 SPLICE = 3'-0"
#4 B4 SPLICE = 2'-5"
#4 K1 SPLICE = 2'-5"

PROJECT NO. U-4012
DURHAM COUNTY
STATION: 70+22.00 -L-

SHEET 1 OF 2

STATE OF NORTH CAROLINA
DEPARTMENT OF TRANSPORTATION
RALEIGH

SUBSTRUCTURE
END BENT 1
RIGHT LANE

NORTH CAROLINA PROFESSIONAL SEAL 20125 ENGINEER MARSHALL L. HEDRICK, JR.
6-7-07

REVISIONS						SHEET NO.
NO.	BY:	DATE:	NO.	BY:	DATE:	S-116
1			3			TOTAL SHEETS
2			4			128

STR. #4

DRAWN BY : A.S. CALLAWAY DATE : 1/5/05
CHECKED BY : D. HODGE DATE : 1/05

06-JUN-2007 11:06
R:\Structures\u4012\Final Plans\U4012_sd_E*_01.dgn
vnguyen

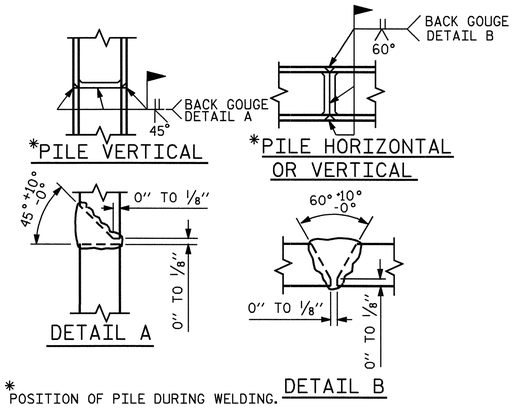

PILE SPLICE DETAILS

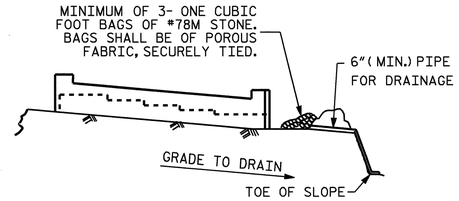

BAGGED STONE AND PIPE SHALL BE PLACED IMMEDIATELY AFTER COMPLETION OF END BENT EXCAVATION. PIPE MAY BE EITHER CONCRETE, CORRUGATED STEEL, CORRUGATED ALUMINUM ALLOY, OR CORRUGATED PLASTIC. PERFORATED PIPE WILL NOT BE ALLOWED.

BAGGED STONE SHALL REMAIN IN PLACE UNTIL THE ENGINEER DIRECTS THAT IT BE REMOVED. THE CONTRACTOR SHALL REMOVE AND DISPOSE OF SILT ACCUMULATIONS AT BAGGED STONE WHEN SO DIRECTED BY THE ENGINEER. BAGS SHALL BE REMOVED AND REPLACED WHENEVER THE ENGINEER DETERMINES THAT THEY HAVE DETERIORATED AND LOST THEIR EFFECTIVENESS.

NO SEPARATE PAYMENT WILL BE MADE FOR THIS WORK AND THE ENTIRE COST OF THIS WORK SHALL BE INCLUDED IN THE UNIT CONTRACT PRICE BID FOR THE SEVERAL PAY ITEMS.

TEMPORARY DRAINAGE AT END BENT

BAR TYPES

ALL BAR DIMENSIONS ARE OUT TO OUT.

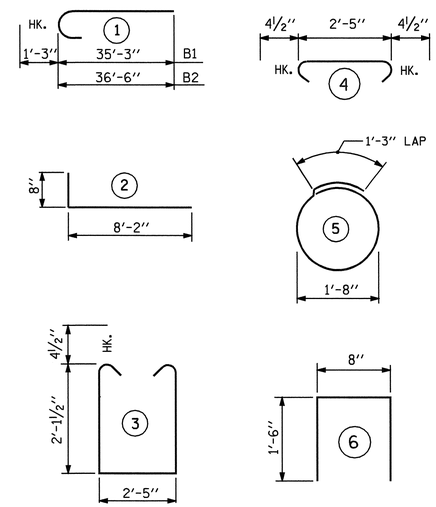

BILL OF MATERIAL

END BENT 1

BAR	NO.	SIZE	TYPE	LENGTH	WEIGHT
B1	8	#9	1	36'-6"	993
B2	8	#9	1	37'-9"	1027
B3	4	#5	STR	33'-8"	140
B4	12	#4	STR	23'-1"	185
B5	16	#4	STR	2'-5"	26
D1	6	#4	STR	2'-8"	11
H1	4	#4	STR	3'-2"	8
H2	18	#5	2	8'-10"	166
H3	4	#4	STR	3'-10"	10
K1	24	#4	STR	23'-3"	373
S1	62	#4	3	7'-5"	307
S2	62	#4	4	3'-2"	131
S3	22	#4	5	6'-6"	96
U1	58	#4	6	3'-8"	142
V1	116	#5	STR	5'-2"	625
V2	12	#4	STR	6'-9"	54
V3	26	#4	STR	6'-9"	117

REINFORCING STEEL 4411 LBS

CLASS A CONCRETE BREAKDOWN
POUR #1
(CAP & LOWER WINGS) 17.5 C.Y.
POUR #2
(BACKWALL & UPPER WINGS) 9.0 C.Y.
TOTAL 26.5 C.Y.

HP 12 x 53 STEEL PILES
NO. 11 275 L.F.

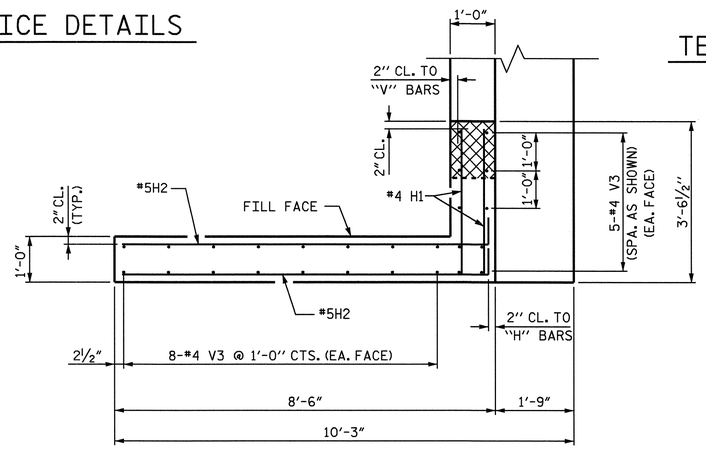

PLAN OF WING W1

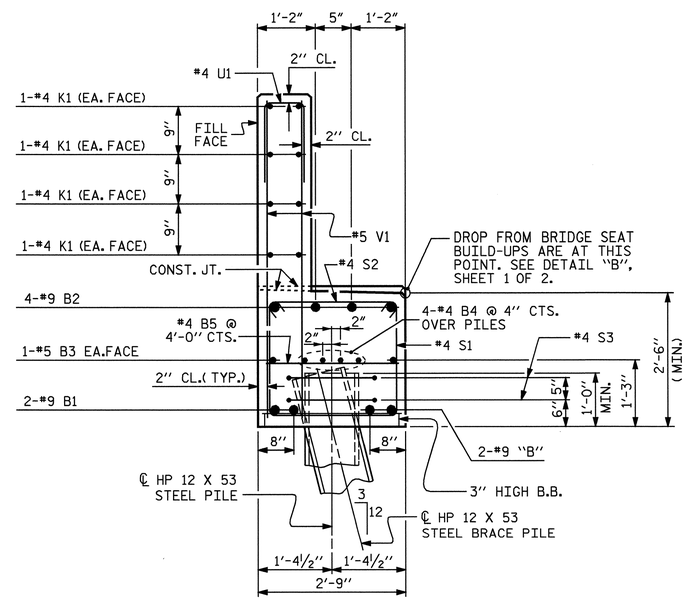

SECTION A-A

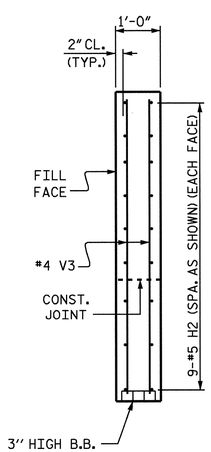

SECTION X-X

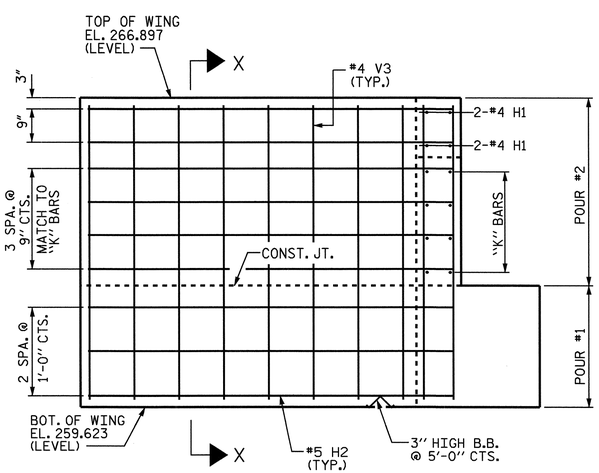

ELEVATION OF WING W1

PROJECT NO. U-4012
DURHAM COUNTY
STATION: 70+22.00 -L-

SHEET 2 OF 2

STATE OF NORTH CAROLINA
DEPARTMENT OF TRANSPORTATION
RALEIGH

SUBSTRUCTURE
END BENT 1
RIGHT LANE

NORTH CAROLINA PROFESSIONAL SEAL 20125 ENGINEER MARSHALL L. FOREST, JR.
6-7-07

REVISIONS						SHEET NO.
NO.	BY:	DATE:	NO.	BY:	DATE:	S-117
1			3			TOTAL SHEETS
2			4			128

STR. #4

DRAWN BY : A.S. CALLAWAY DATE : 1/5/05
CHECKED BY : D. HODGE DATE : 1/05

06-JUN-2007 15:57
R:\Structures\u4012\Final Plans\U4012_sd_E*_01.dgn
vnguyen

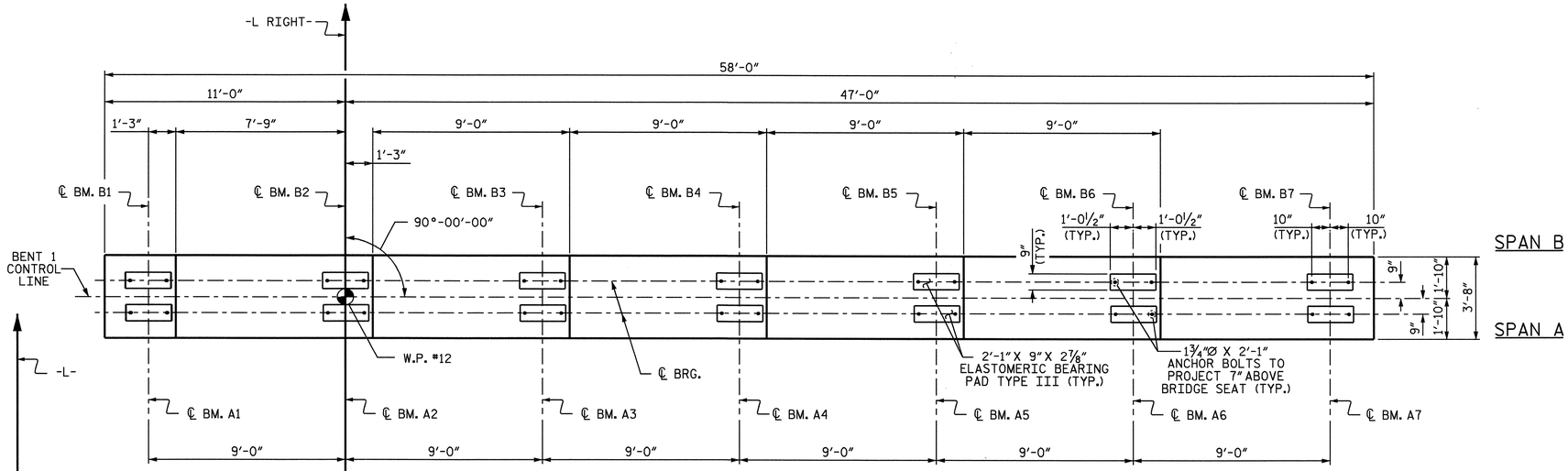

PLAN

NOTES

STIRRUPS IN CAP MAY BE SHIFTED AS NECESSARY TO CLEAR ANCHOR BOLTS.

HOOKS ON "V" BARS MAY BE TURNED AS NECESSARY FOR PLACING REINFORCING STEEL.

ALL STEEL IN THE DRILLED PIERS IS INCLUDED IN THE PAY ITEMS FOR "REINFORCING STEEL" AND "SPIRAL COLUMN REINFORCING STEEL" OR "EPOXY COATED SPIRAL COLUMN REINFORCING STEEL".

THE CONTRACTOR'S ATTENTION IS CALLED TO THE FACT THAT THE LONGITUDINAL REINFORCEMENT FOR THE DRILLED PIERS IS DETAILED WITH 3 FEET OF EXTRA LENGTH.

THE LOCATION OF THE CONSTRUCTION JOINT IN THE DRILLED PIERS IS BASED ON AN APPROXIMATE GROUND LINE ELEVATION. IF THE CONSTRUCTION JOINT IS ABOVE THE ACTUAL GROUND LINE ELEVATION, THE CONTRACTOR SHALL PLACE THE CONSTRUCTION JOINT 1 FT. BELOW THE GROUND LINE.

SPLICING OF LONGITUDINAL BARS IN THE DRILLED PIERS WILL NOT BE PERMITTED.

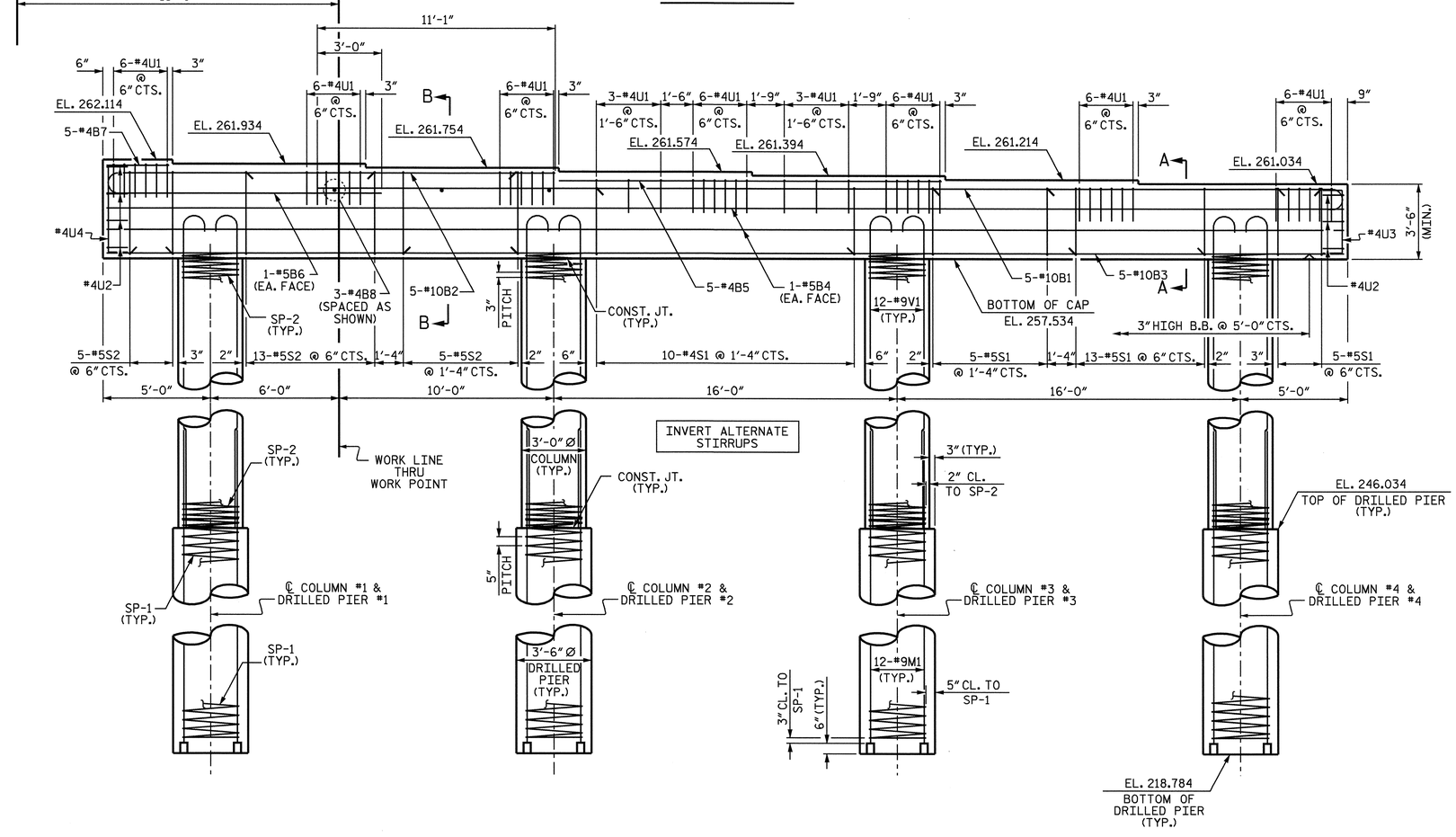

ELEVATION

DIMENSIONS AND REINFORCING STEEL ARE TYPICAL FOR EACH COLUMN & DRILLED PIER.

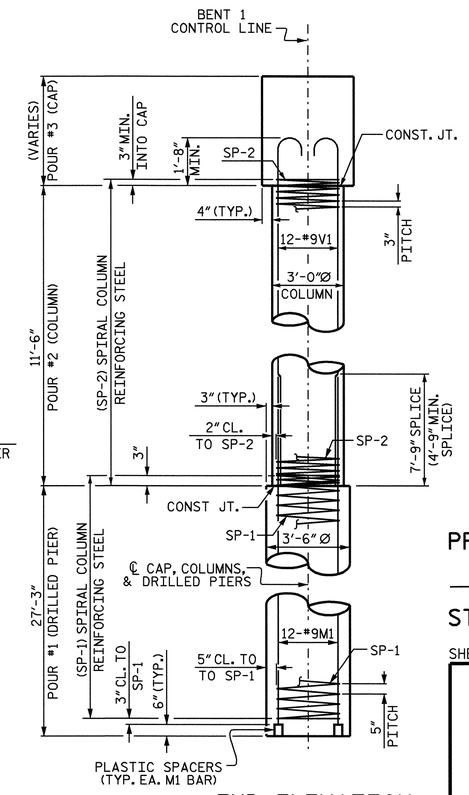

END ELEVATION

NORTH CAROLINA PROFESSIONAL SEAL 20125 ENGINEER MARSHALL G. CHEEK, JR.
6-7-07

PROJECT NO. U-4012
DURHAM COUNTY
STATION: 70+22.00 -L-

SHEET 1 OF 2

STATE OF NORTH CAROLINA
DEPARTMENT OF TRANSPORTATION
RALEIGH

SUBSTRUCTURE
BENT 1
RIGHT LANE

REVISIONS						SHEET NO.
NO.	BY:	DATE:	NO.	BY:	DATE:	S-118
1			3			TOTAL SHEETS
2			4			128

DRAWN BY : S.H.SOCKWELL/L.L.M. DATE : 02-05
CHECKED BY : M.G. CHEEK DATE : 2-14-05

06-JUN-2007 11:07
R:\Structures\u4012\Final Plans\U-4012_sd_B*_01.dgn
vnguyen

STR #4

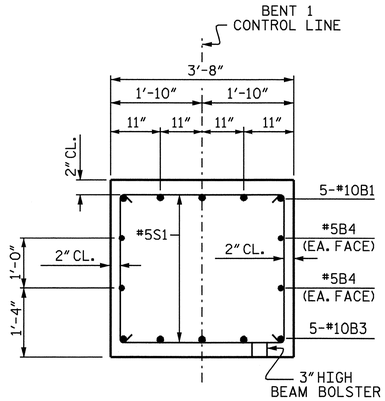

SECTION A-A

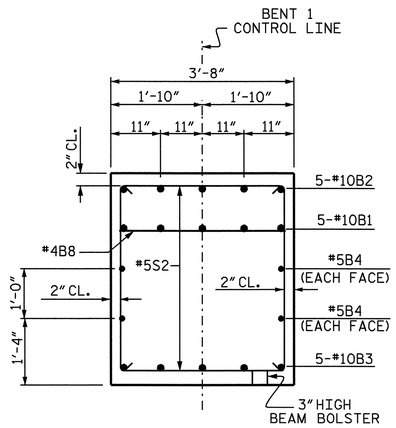

SECTION B-B

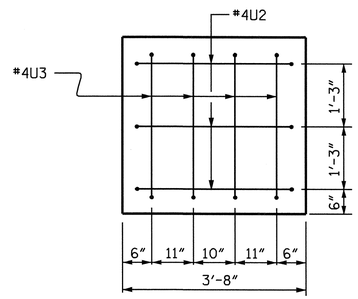

RIGHT END VIEW

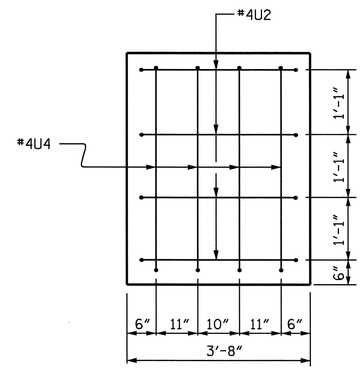

LEFT END VIEW

BAR TYPES

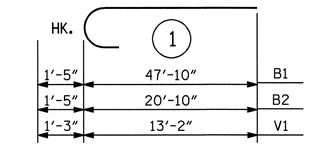

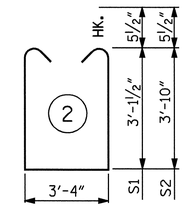

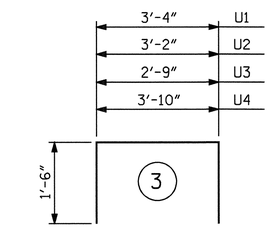

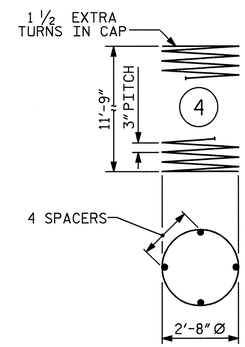

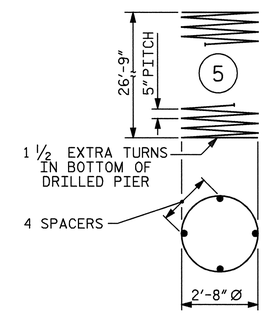

ALL BAR DIMENSIONS ARE OUT TO OUT.

BILL OF MATERIAL

BENT 1

BAR	NO.	SIZE	TYPE	LENGTH	WEIGHT
B1	5	#10	1	49'-3"	1060
B2	5	#10	1	22'-3"	479
B3	5	#10	STR	57'-8"	1241
B4	4	#5	STR	57'-8"	241
B5	5	#4	STR	17'-10"	60
B6	2	#5	STR	12'-9"	27
B7	5	#4	STR	2'-11"	10
B8	3	#4	STR	3'-4"	7
M1	48	#9	STR	34'-6"	5630
S1	33	#5	2	10'-6"	361
S2	23	#5	2	11'-11"	286
U1	48	#4	3	6'-4"	203
U2	7	#4	3	6'-2"	29
U3	4	#4	3	5'-9"	15
U4	4	#4	3	6'-10"	18
V1	48	#9	1	14'-5"	2353

REINFORCING STEEL = 12020 LBS

BAR	NO.	SIZE	TYPE	LENGTH	WEIGHT
SP-1	4	✱✱✱	5	540'-10"	2256
SP-2	4	✱✱	4	400'-2"	1069

SPIRAL COLUMN REINF. STEEL = 3325 LBS

CLASS A CONCRETE BREAKDOWN

POUR #2 (COLUMNS)	12.0 C.Y.
POUR #3 (CAP)	31.3 C.Y.
TOTAL	43.3 C.Y.

DRILLED PIER QUANTITIES

DRILLED PIER CONCRETE BREAKDOWN

POUR #1 (DRILLED PIERS)	38.8 C.Y.
3'-6" Ø DRILLED PIERS NOT IN SOIL	34.00 LIN. FT.
3'-6" Ø DRILLED PIERS IN SOIL	75.00 LIN. FT.
▲ CSL TUBES	476.00 LIN. FT.

✱✱ THE SP-2 SPIRAL REINFORCING STEEL SHALL BE W20 OR D-20 COLD DRAWN WIRE OR #4 PLAIN OR DEFORMED BAR.
✱✱✱ THE SP-1 SPIRAL REINFORCING STEEL SHALL BE W31 OR D-31 COLD DRAWN WIRE OR #5 PLAIN OR DEFORMED BAR.

▲ NO SEPARATE PAYMENT WILL BE MADE FOR CSL TUBES. CSL TUBES WILL BE INCLUDED IN THE UNIT BID PRICE FOR DRILLED PIERS.

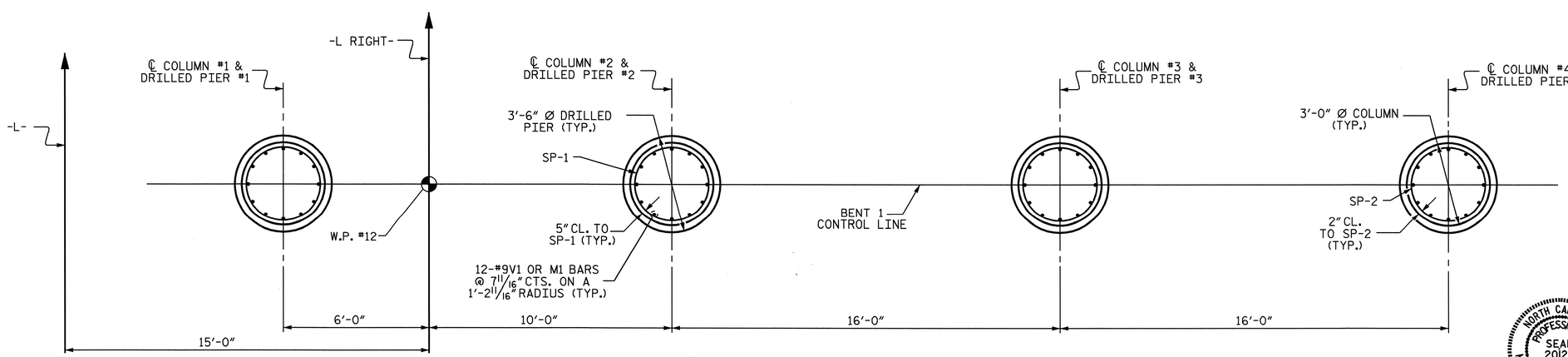

PLAN OF DRILLED PIERS & COLUMNS

(REINFORCING STEEL IS TYPICAL FOR EACH COLUMN & DRILLED PIER)

PROJECT NO. U-4012
DURHAM COUNTY
STATION: 70+22.00 -L-

SHEET 2 OF 2

STATE OF NORTH CAROLINA
DEPARTMENT OF TRANSPORTATION
RALEIGH

SUBSTRUCTURE
BENT 1
RIGHT LANE

NORTH CAROLINA PROFESSIONAL SEAL 20125 ENGINEER MARSHALL L. LOCHER, JR.
6-7-07

REVISIONS						SHEET NO.
NO.	BY:	DATE:	NO.	BY:	DATE:	S-119
1			3			TOTAL SHEETS
2			4			128

DRAWN BY : S.H.SOCKWELL/L.L.M. DATE : 02-05
CHECKED BY : M.G. CHEEK DATE : 2-14-05

06-JUN-2007 11:09
R:\Structures\u4012\Final Plans\U-4012_sd_B*_01.dgn
vnguyen

STR. #4

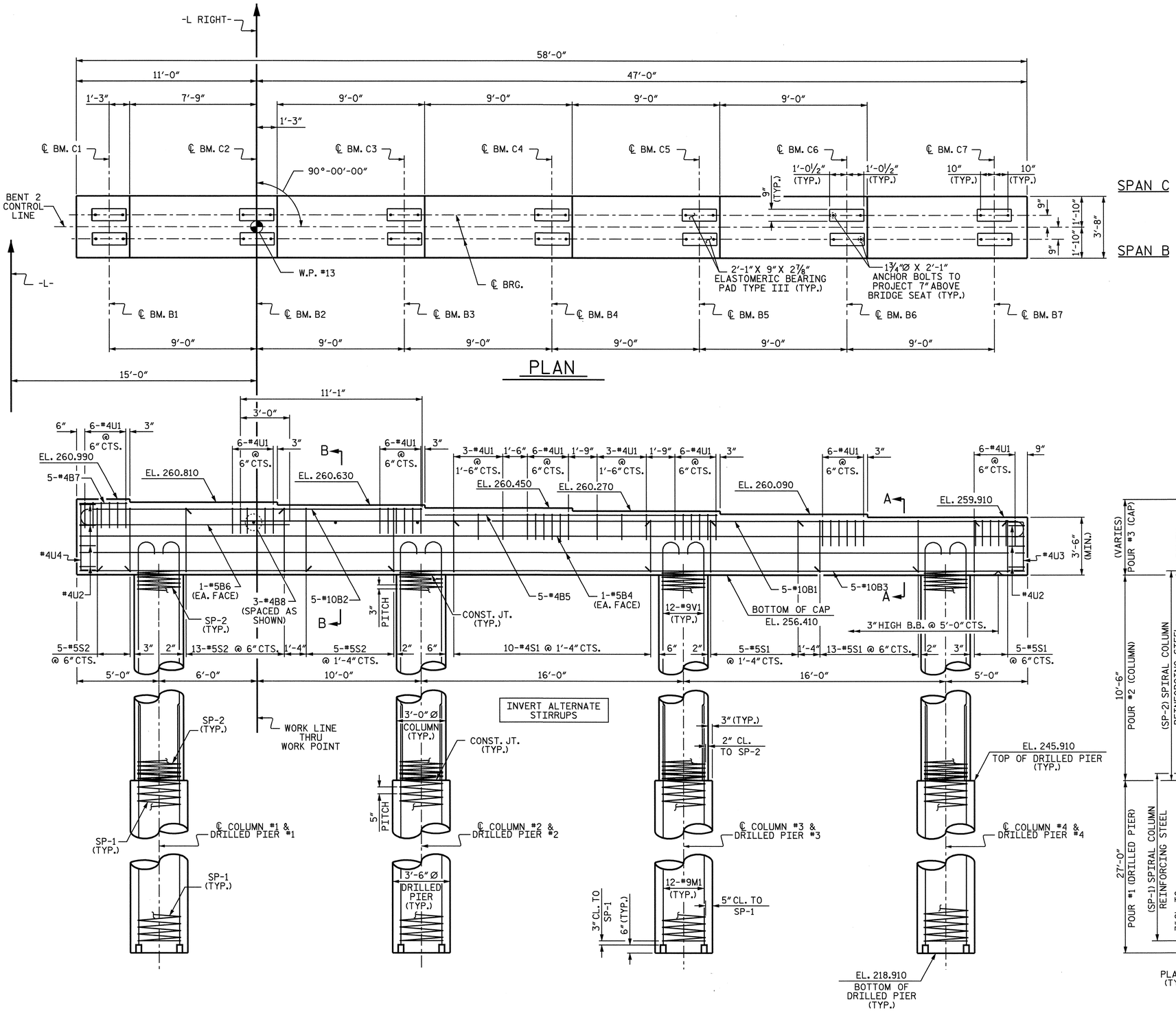

NOTES

STIRRUPS IN CAP MAY BE SHIFTED AS NECESSARY TO CLEAR ANCHOR BOLTS.

HOOKS ON "V" BARS MAY BE TURNED AS NECESSARY FOR PLACING REINFORCING STEEL.

ALL STEEL IN THE DRILLED PIERS IS INCLUDED IN THE PAY ITEMS FOR "REINFORCING STEEL" AND "SPIRAL COLUMN REINFORCING STEEL" OR "EPOXY COATED SPIRAL COLUMN REINFORCING STEEL".

THE CONTRACTOR'S ATTENTION IS CALLED TO THE FACT THAT THE LONGITUDINAL REINFORCEMENT FOR THE DRILLED PIERS IS DETAILED WITH 3 FEET OF EXTRA LENGTH.

THE LOCATION OF THE CONSTRUCTION JOINT IN THE DRILLED PIERS IS BASED ON AN APPROXIMATE GROUND LINE ELEVATION. IF THE CONSTRUCTION JOINT IS ABOVE THE ACTUAL GROUND LINE ELEVATION, THE CONTRACTOR SHALL PLACE THE CONSTRUCTION JOINT 1 FT. BELOW THE GROUND LINE.

SPLICING OF LONGITUDINAL BARS IN THE DRILLED PIERS WILL NOT BE PERMITTED.

NORTH CAROLINA PROFESSIONAL SEAL 20125 ENGINEER MARSHALL G. CHEEK, JR.
6-7-07

PROJECT NO. U-4012
DURHAM COUNTY
STATION: 70+22.00 -L-

SHEET 1 OF 2

STATE OF NORTH CAROLINA
DEPARTMENT OF TRANSPORTATION
RALEIGH

SUBSTRUCTURE
BENT 2
RIGHT LANE

REVISIONS						SHEET NO.
NO.	BY:	DATE:	NO.	BY:	DATE:	S-120
1			3			TOTAL SHEETS
2			4			128

DRAWN BY : S.H.SOCKWELL/L.L.M. DATE : 02-05
CHECKED BY : M.G. CHEEK DATE : 2-14-05

06-JUN-2007 11:12
R:\Structures\u4012\Final Plans\U-4012_sd_B*_01.dgn
vnguyen

STR #4

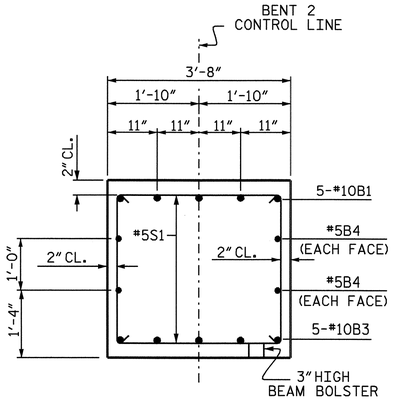

SECTION A-A

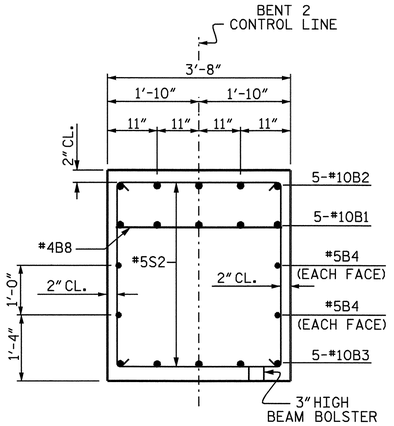

SECTION B-B

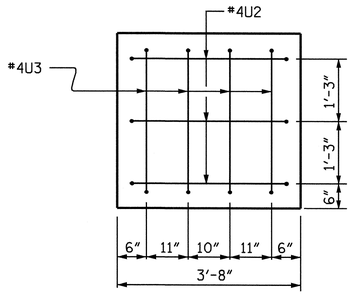

RIGHT END VIEW

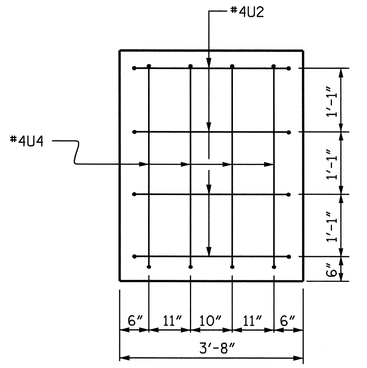

LEFT END VIEW

BAR TYPES

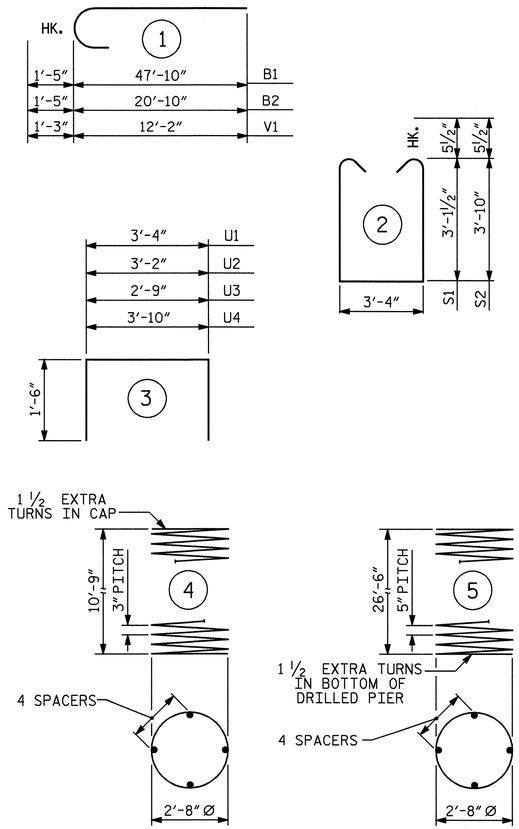

ALL BAR DIMENSIONS ARE OUT TO OUT.

BILL OF MATERIAL

BENT 2

BAR	NO.	SIZE	TYPE	LENGTH	WEIGHT
B1	5	#10	1	49'-3"	1060
B2	5	#10	1	22'-3"	479
B3	5	#10	STR	57'-8"	1241
B4	4	#5	STR	57'-8"	241
B5	5	#4	STR	17'-10"	60
B6	2	#5	STR	12'-9"	27
B7	5	#4	STR	2'-11"	10
B8	3	#4	STR	3'-4"	7
M1	48	#9	STR	34'-3"	5590
S1	33	#5	2	10'-6"	361
S2	23	#5	2	11'-11"	286
U1	48	#4	3	6'-4"	203
U2	7	#4	3	6'-2"	29
U3	4	#4	3	5'-9"	15
U4	4	#4	3	6'-10"	18
V1	48	#9	1	13'-5"	2190

REINFORCING STEEL = 11817 LBS

BAR	NO.	SIZE	TYPE	LENGTH	WEIGHT
SP-1	4	✱✱✱	5	536'-8"	2239
SP-2	4	✱✱	4	367'-2"	981

SPIRAL COLUMN REINF. STEEL = 3220 LBS

CLASS A CONCRETE BREAKDOWN

POUR #2 (COLUMNS)	11.0 C.Y.
POUR #3 (CAP)	31.3 C.Y.
TOTAL	42.3 C.Y.

DRILLED PIER QUANTITIES

DRILLED PIER CONCRETE BREAKDOWN

POUR #1 (DRILLED PIERS)	38.5 C.Y.
3'-6" Ø DRILLED PIERS NOT IN SOIL	33.00 LIN. FT.
3'-6" Ø DRILLED PIERS IN SOIL	75.00 LIN. FT.
3'-6" Ø PERMANENT STEEL CASING	63.70 LIN. FT.
SID INSPECTION	1 EA.
▲ CSL TUBES	472.00 LIN. FT.

✱✱ THE SP-2 SPIRAL REINFORCING STEEL SHALL BE W20 OR D-20 COLD DRAWN WIRE OR #4 PLAIN OR DEFORMED BAR.
✱✱✱ THE SP-1 SPIRAL REINFORCING STEEL SHALL BE W31 OR D-31 COLD DRAWN WIRE OR #5 PLAIN OR DEFORMED BAR.

▲ NO SEPARATE PAYMENT WILL BE MADE FOR CSL TUBES. CSL TUBES WILL BE INCLUDED IN THE UNIT BID PRICE FOR DRILLED PIERS.

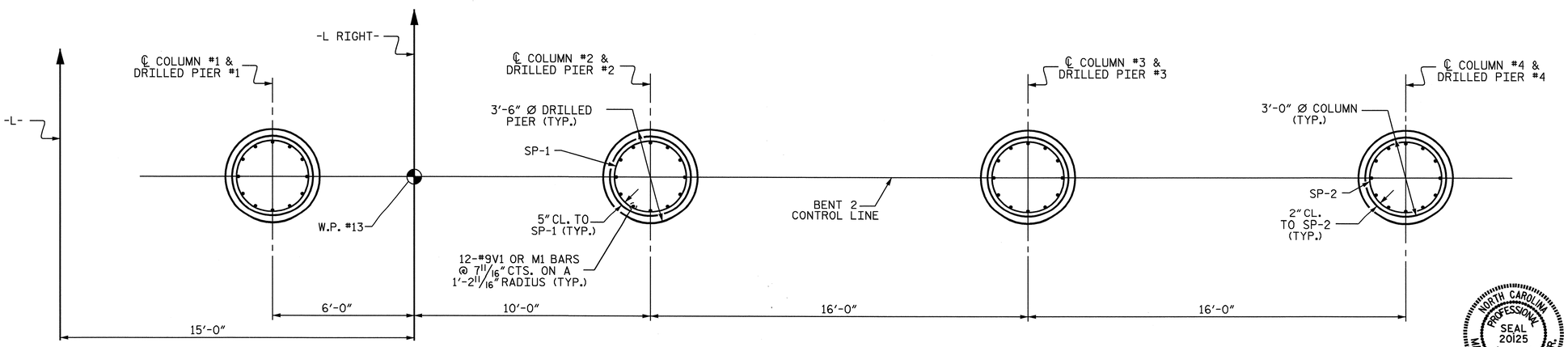

PLAN OF DRILLED PIERS & COLUMNS

(REINFORCING STEEL IS TYPICAL FOR EACH COLUMN & DRILLED PIER)

PROJECT NO. U-4012
DURHAM COUNTY
STATION: 70+22.00 -L-

SHEET 2 OF 2

STATE OF NORTH CAROLINA
DEPARTMENT OF TRANSPORTATION
RALEIGH

SUBSTRUCTURE
BENT 2
RIGHT LANE

NORTH CAROLINA PROFESSIONAL SEAL 20125 ENGINEER MARSHALL L. CHEEK, JR.
6-7-07

REVISIONS						SHEET NO.
NO.	BY:	DATE:	NO.	BY:	DATE:	S-121
1			3			TOTAL SHEETS
2			4			128

DRAWN BY : S.H.SOCKWELL/L.L.M. DATE : 02-05
CHECKED BY : M.G. CHEEK DATE : 2-14-05

06-JUN-2007 11:12
R:\Structures\u4012\Final Plans\U-4012_sd_B*_01.dgn
vnguyen

STR. #4

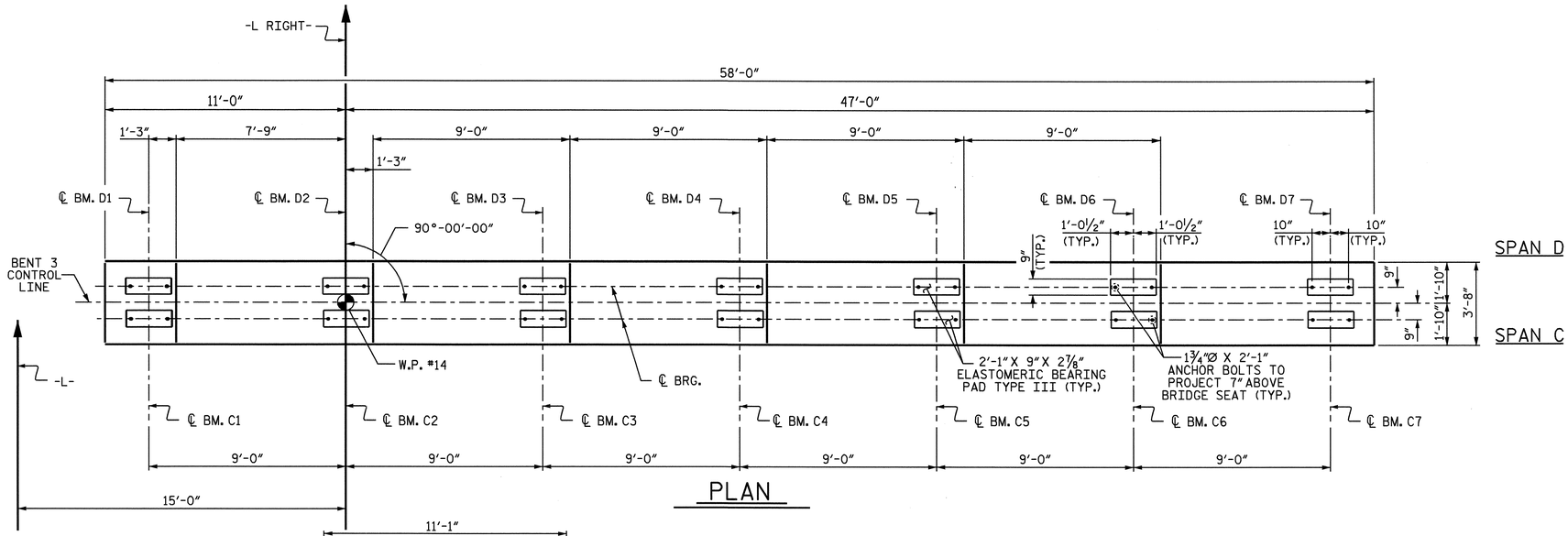

PLAN

NOTES

STIRRUPS IN CAP MAY BE SHIFTED AS NECESSARY TO CLEAR ANCHOR BOLTS.

HOOKS ON "V" BARS MAY BE TURNED AS NECESSARY FOR PLACING REINFORCING STEEL.

ALL STEEL IN THE DRILLED PIERS IS INCLUDED IN THE PAY ITEMS FOR "REINFORCING STEEL" AND "SPIRAL COLUMN REINFORCING STEEL" OR "EPOXY COATED SPIRAL COLUMN REINFORCING STEEL".

THE CONTRACTOR'S ATTENTION IS CALLED TO THE FACT THAT THE LONGITUDINAL REINFORCEMENT FOR THE DRILLED PIERS IS DETAILED WITH 3 FEET OF EXTRA LENGTH.

THE LOCATION OF THE CONSTRUCTION JOINT IN THE DRILLED PIERS IS BASED ON AN APPROXIMATE GROUND LINE ELEVATION. IF THE CONSTRUCTION JOINT IS ABOVE THE ACTUAL GROUND LINE ELEVATION, THE CONTRACTOR SHALL PLACE THE CONSTRUCTION JOINT 1 FT. BELOW THE GROUND LINE.

SPLICING OF LONGITUDINAL BARS IN THE DRILLED PIERS WILL NOT BE PERMITTED.

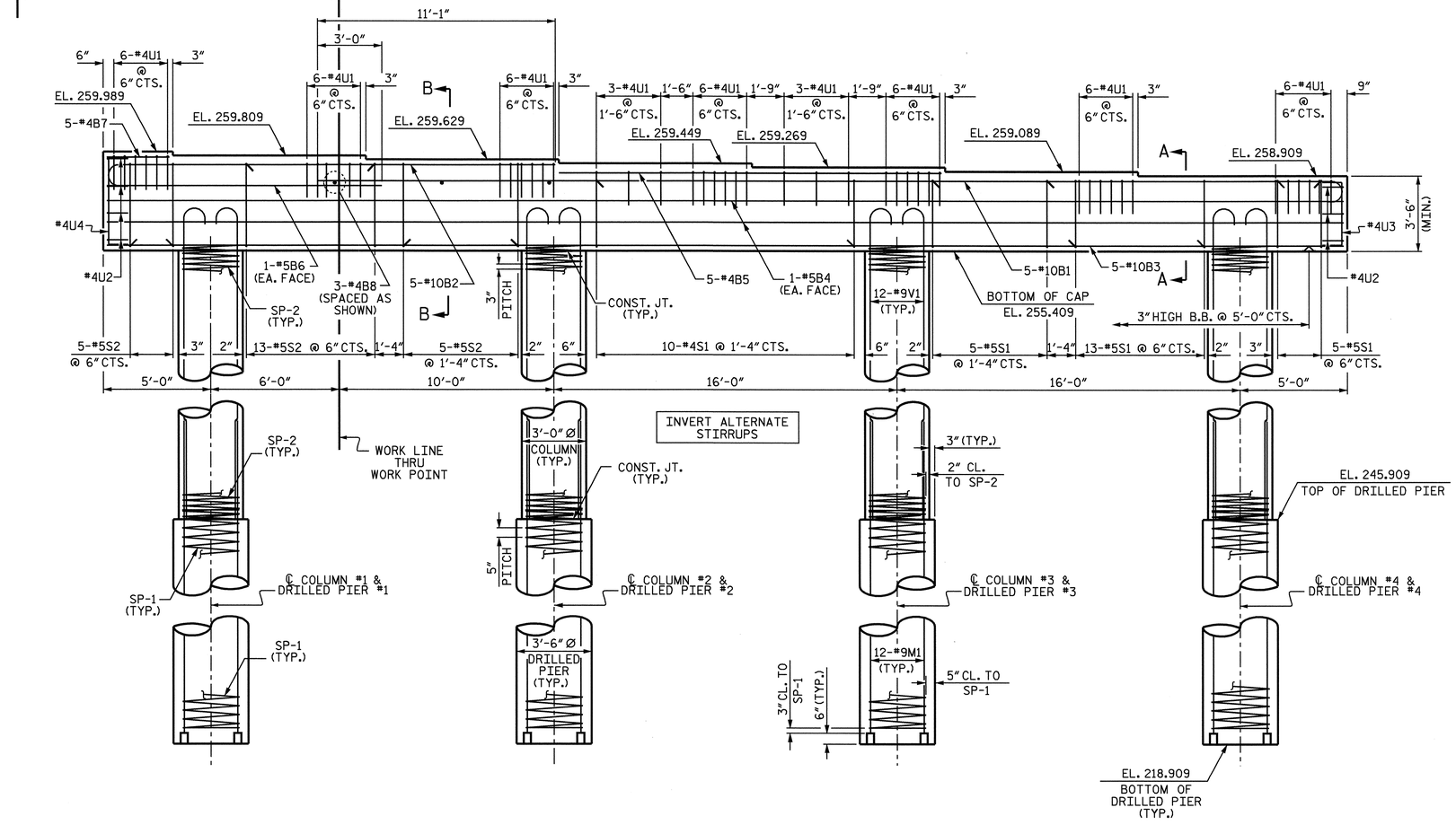

ELEVATION

DIMENSIONS AND REINFORCING STEEL ARE TYPICAL FOR EACH COLUMN & DRILLED PIER.

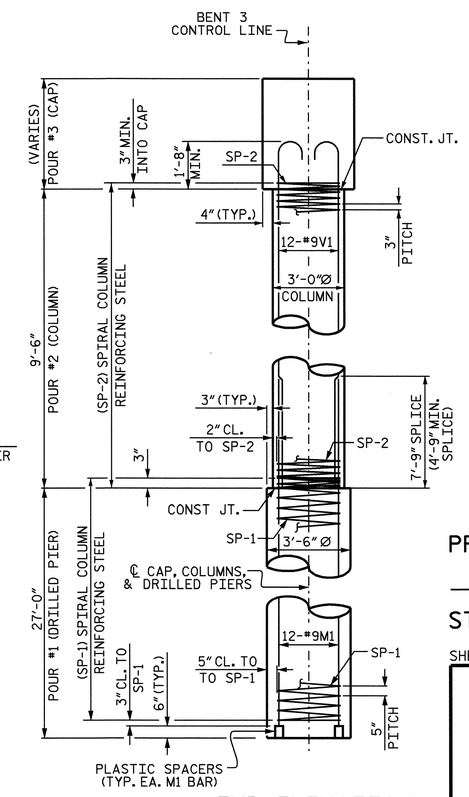

END ELEVATION

NORTH CAROLINA PROFESSIONAL SEAL 20125 ENGINEER MARSHALL G. CHEEK, JR.
6-7-07

PROJECT NO. U-4012
DURHAM COUNTY
STATION: 70+22.00 -L-

SHEET 1 OF 2

STATE OF NORTH CAROLINA
DEPARTMENT OF TRANSPORTATION
RALEIGH

SUBSTRUCTURE
BENT 3
RIGHT LANE

REVISIONS						SHEET NO.
NO.	BY:	DATE:	NO.	BY:	DATE:	S-122
1			3			TOTAL SHEETS
2			4			128

DRAWN BY : S.H.SOCKWELL/L.L.M. DATE : 02-05
CHECKED BY : M.G. CHEEK DATE : 2-14-05

06-JUN-2007 11:13
R:\Structures\u4012\Final Plans\U-4012_sd_B*_01.dgn
vnguyen

STR. #4

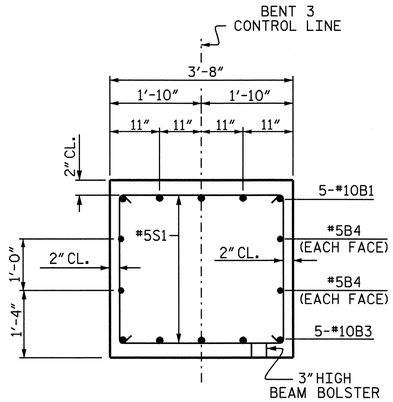

SECTION A-A

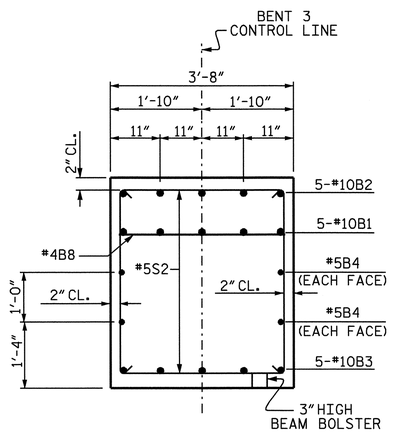

SECTION B-B

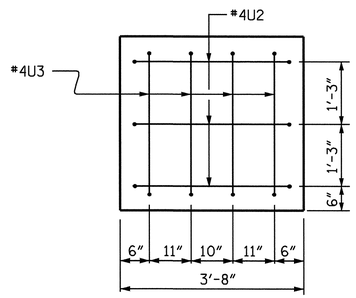

RIGHT END VIEW

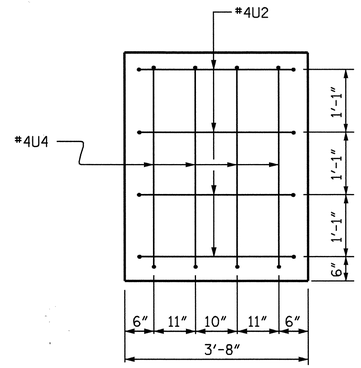

LEFT END VIEW

BAR TYPES

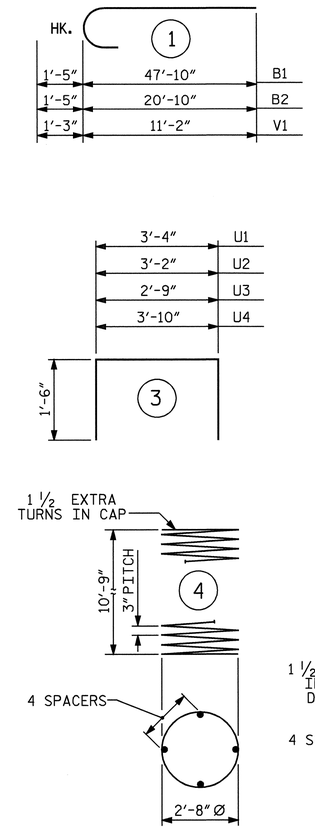

ALL BAR DIMENSIONS ARE OUT TO OUT.

BILL OF MATERIAL

BENT 3

BAR	NO.	SIZE	TYPE	LENGTH	WEIGHT
B1	5	#10	1	49'-3"	1060
B2	5	#10	1	22'-3"	479
B3	5	#10	STR	57'-8"	1241
B4	4	#5	STR	57'-8"	241
B5	5	#4	STR	17'-10"	60
B6	2	#5	STR	12'-9"	27
B7	5	#4	STR	2'-11"	10
B8	3	#4	STR	3'-4"	7
M1	48	#9	STR	34'-3"	5590
S1	33	#5	2	10'-6"	361
S2	23	#5	2	11'-11"	286
U1	48	#4	3	6'-4"	203
U2	7	#4	3	6'-2"	29
U3	4	#4	3	5'-9"	15
U4	4	#4	3	6'-10"	18
V1	48	#9	1	12'-5"	2026

REINFORCING STEEL = 11653 LBS

BAR	NO.	SIZE	TYPE	LENGTH	WEIGHT
SP-1	4	✱✱✱	5	536'-8"	2239
SP-2	4	✱✱	4	334'-2"	893

SPIRAL COLUMN REINF. STEEL = 3132 LBS

CLASS A CONCRETE BREAKDOWN

POUR #2 (COLUMNS)	9.9 C.Y.
POUR #3 (CAP)	31.3 C.Y.
TOTAL	41.2 C.Y.

DRILLED PIER QUANTITIES

DRILLED PIER CONCRETE BREAKDOWN

POUR #1 (DRILLED PIERS)	38.5 C.Y.
3'-6" Ø DRILLED PIERS NOT IN SOIL	36.00 LIN. FT.
3'-6" Ø DRILLED PIERS IN SOIL	72.00 LIN. FT.
3'-6" Ø PERMANENT STEEL CASING	67.65 LIN. FT.
▲ CSL TUBES	472.00 LIN. FT.

✱✱ THE SP-2 SPIRAL REINFORCING STEEL SHALL BE W20 OR D-20 COLD DRAWN WIRE OR #4 PLAIN OR DEFORMED BAR.
✱✱✱ THE SP-1 SPIRAL REINFORCING STEEL SHALL BE W31 OR D-31 COLD DRAWN WIRE OR #5 PLAIN OR DEFORMED BAR.

▲ NO SEPARATE PAYMENT WILL BE MADE FOR CSL TUBES. CSL TUBES WILL BE INCLUDED IN THE UNIT BID PRICE FOR DRILLED PIERS.

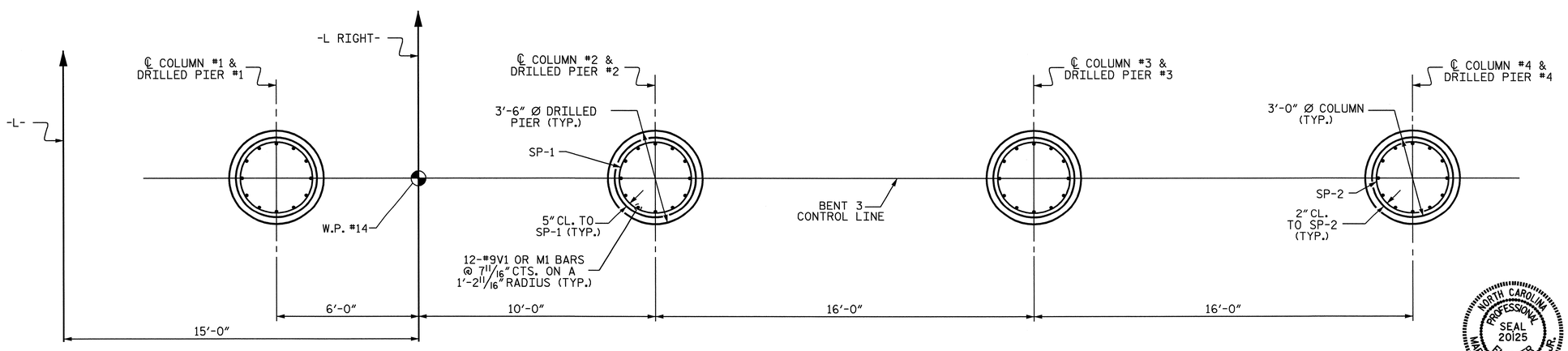

PLAN OF DRILLED PIERS & COLUMNS

(REINFORCING STEEL IS TYPICAL FOR EACH COLUMN & DRILLED PIER)

PROJECT NO. U-4012

DURHAM COUNTY

STATION: 70+22.00 -L-

SHEET 2 OF 2

STATE OF NORTH CAROLINA
DEPARTMENT OF TRANSPORTATION
RALEIGH

SUBSTRUCTURE
BENT 3
RIGHT LANE

NORTH CAROLINA PROFESSIONAL SEAL 20125 ENGINEER MARSHALL G. CHEEK, JR.
6-7-07

REVISIONS						SHEET NO.
NO.	BY:	DATE:	NO.	BY:	DATE:	S-123
1			3			TOTAL SHEETS
2			4			128

DRAWN BY : S.H.SOCKWELL/L.L.M. DATE : 02-05
CHECKED BY : M.G. CHEEK DATE : 2-14-05

06-JUN-2007 11:13
R:\Structures\u4012\Final Plans\U-4012_sd_B*_01.dgn
vnguyen

STR. #4

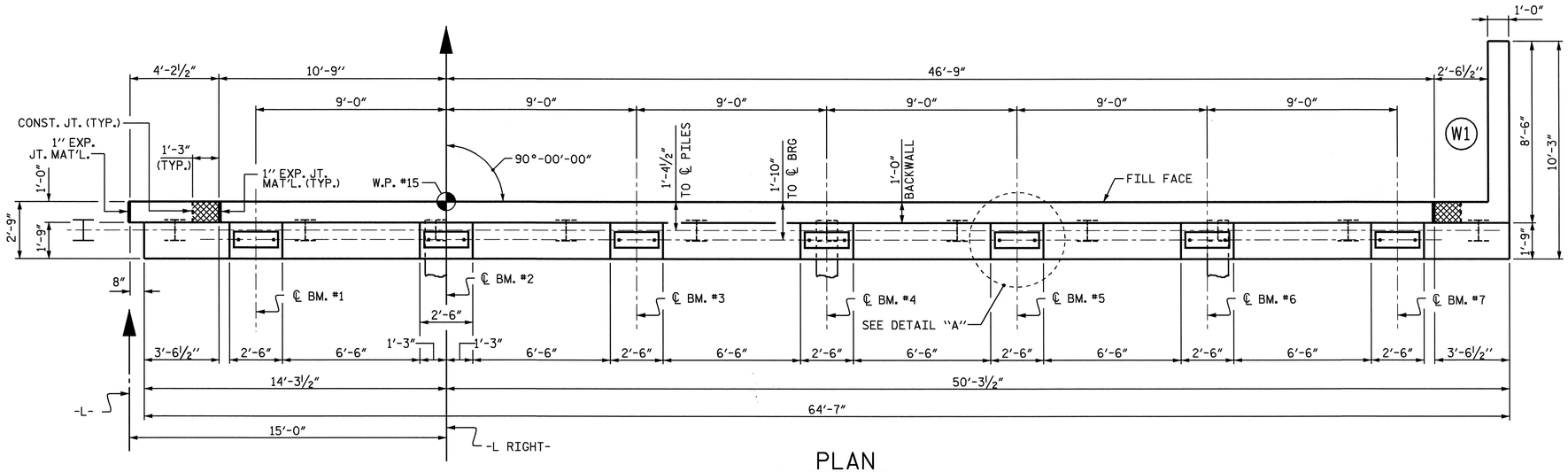

PLAN

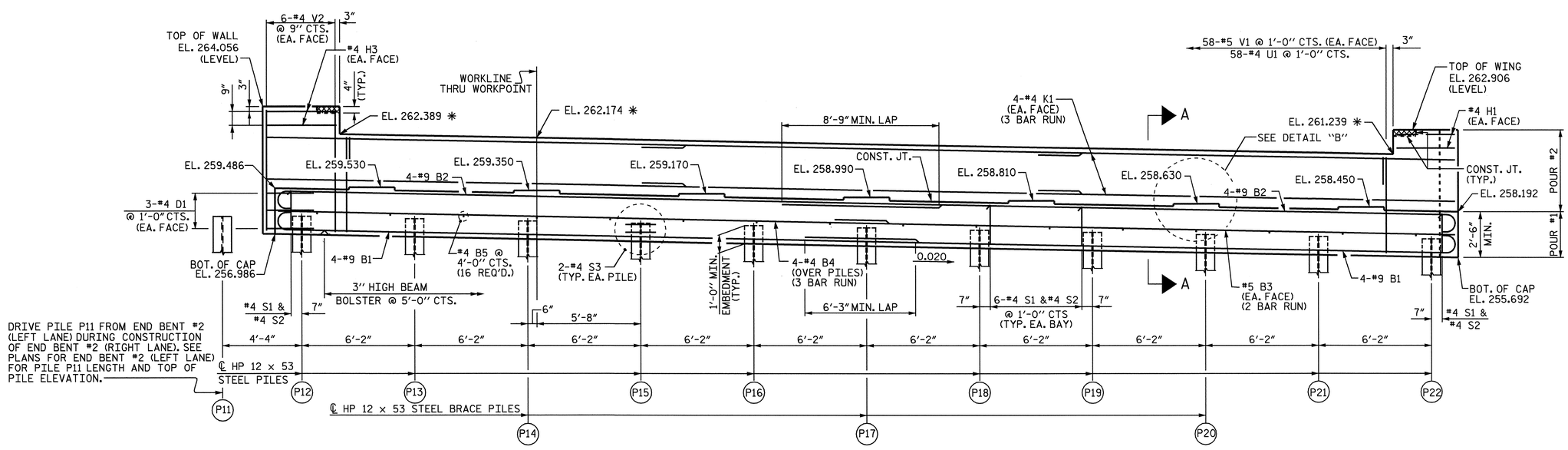

ELEVATION

✱ THESE ELEVATIONS ARE TAKEN AT FILL FACE.

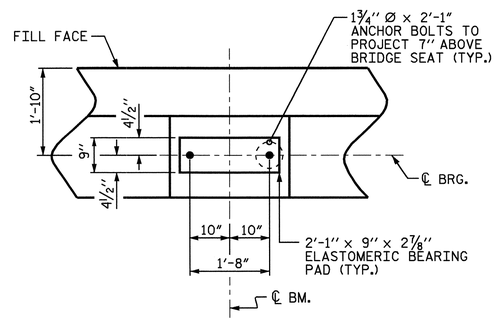

DETAIL "A"

(TYP. EA. BEAM)

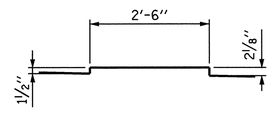

DETAIL "B"

(TYP. EA. SEAT)

NOTES

STIRRUPS IN CAP MAY BE SHIFTED AS NECESSARY TO CLEAR ANCHOR BOLTS.

BACKWALL SHALL BE PLACED BEFORE APPLYING THE EPOXY PROTECTIVE COATING.

THE TOP SURFACE AREAS OF THE END BENT CAPS SHALL BE CURED IN ACCORDANCE WITH THE STANDARD SPECIFICATIONS EXCEPT THE MEMBRANE CURING COMPOUND METHOD SHALL NOT BE USED.

THE TOP SURFACE OF THE CAP EXCEPT THE BRIDGE SEAT BUILDUPS SHALL BE SLOPED TRANSVERSELY FROM THE FILL FACE TO THE BACK FACE AT THE RATE OF 2%.

THE CONCRETE IN THE CROSS-HATCHED AREA OF THE WING SHALL BE POURED AFTER THE PARAPET AND END POST ARE CAST IF SLIP FORMING IS USED.

THE CONTRACTOR SHALL PROVIDE FOR INSTALLATION OF THE 4" DIAMETER DRAIN PIPE THROUGH THE WING WALL AS REQUIRED FOR REINFORCED BRIDGE APPROACH FILLS, SEE THE ROADWAY PLANS. REINFORCING STEEL IN THE WING WALL MAY BE SHIFTED AS NECESSARY TO CLEAR THE DRAIN PIPE.

PILE	TOP OF PILE ELEVATION
P12	257.964
P13	257.841
P14	257.718
P15	257.594
P16	257.471
P17	257.348
P18	257.224
P19	257.101
P20	256.978
P21	256.854
P22	256.731

SPLICE LENGTH CHART
#5 B3 SPLICE = 3'-0"
#4 B4 SPLICE = 2'-5"
#4 K1 SPLICE = 2'-5"

PROJECT NO. U-4012
DURHAM COUNTY
STATION: 70+22.00 -L-

SHEET 1 OF 2

STATE OF NORTH CAROLINA
DEPARTMENT OF TRANSPORTATION
RALEIGH

SUBSTRUCTURE
END BENT 2
RIGHT LANE

NORTH CAROLINA PROFESSIONAL SEAL 20125 ENGINEER MARSHALL C. PARKER, JR.
6-7-07

REVISIONS						SHEET NO.
NO.	BY:	DATE:	NO.	BY:	DATE:	S-124
1			3			TOTAL SHEETS
2			4			128

DRAWN BY : A.S. CALLAWAY DATE : 1/5/05
CHECKED BY : D. HODGE DATE : 1/05

06-JUN-2007 14:22
R:\Structures\u4012\FinalPlans\U4012_sd_E*_01.dgn
vnguyen

STR. #4

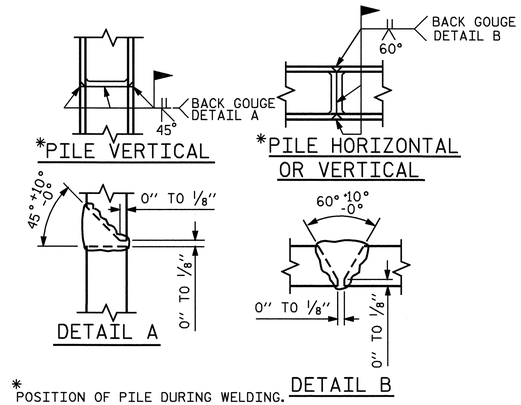

PILE SPLICE DETAILS

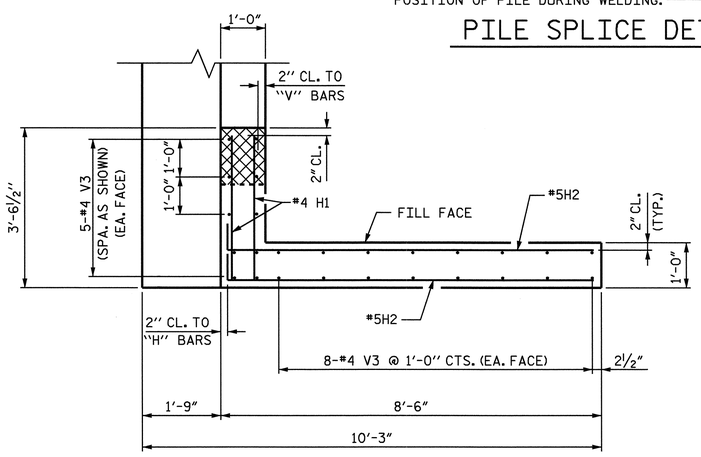

PLAN OF WING W1

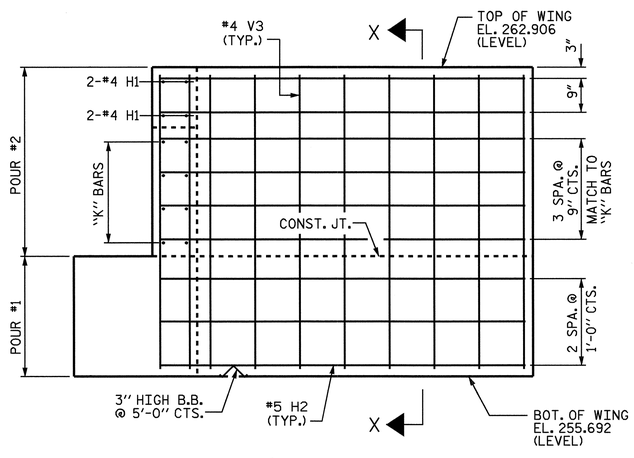

ELEVATION OF WING W1

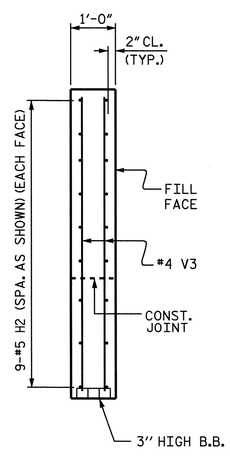

SECTION X-X

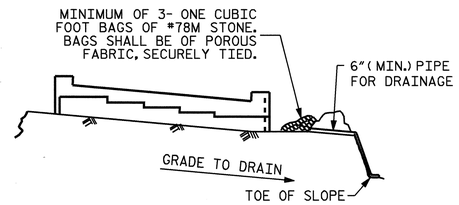

BAGGED STONE AND PIPE SHALL BE PLACED IMMEDIATELY AFTER COMPLETION OF END BENT EXCAVATION. PIPE MAY BE EITHER CONCRETE, CORRUGATED STEEL, CORRUGATED ALUMINUM ALLOY, OR CORRUGATED PLASTIC. PERFORATED PIPE WILL NOT BE ALLOWED.

BAGGED STONE SHALL REMAIN IN PLACE UNTIL THE ENGINEER DIRECTS THAT IT BE REMOVED. THE CONTRACTOR SHALL REMOVE AND DISPOSE OF SILT ACCUMULATIONS AT BAGGED STONE WHEN SO DIRECTED BY THE ENGINEER. BAGS SHALL BE REMOVED AND REPLACED WHENEVER THE ENGINEER DETERMINES THAT THEY HAVE DETERIORATED AND LOST THEIR EFFECTIVENESS.

NO SEPARATE PAYMENT WILL BE MADE FOR THIS WORK AND THE ENTIRE COST OF THIS WORK SHALL BE INCLUDED IN THE UNIT CONTRACT PRICE BID FOR THE SEVERAL PAY ITEMS.

TEMPORARY DRAINAGE AT END BENT

BAR TYPES

ALL BAR DIMENSIONS ARE OUT TO OUT.

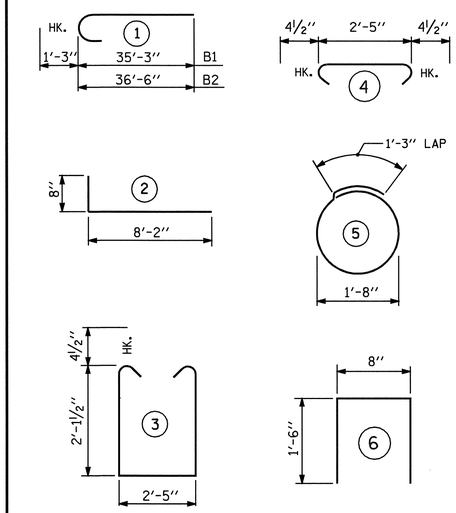

BILL OF MATERIAL

END BENT 2

BAR	NO.	SIZE	TYPE	LENGTH	WEIGHT
B1	8	#9	1	36'-6"	993
B2	8	#9	1	37'-9"	1027
B3	4	#5	STR	33'-8"	140
B4	12	#4	STR	23'-1"	185
B5	16	#4	STR	2'-5"	26
D1	6	#4	STR	2'-8"	11
H1	4	#4	STR	3'-2"	8
H2	18	#5	2	8'-10"	166
H3	4	#4	STR	3'-10"	10
K1	24	#4	STR	23'-3"	373
S1	62	#4	3	7'-5"	307
S2	62	#4	4	3'-2"	131
S3	22	#4	5	6'-6"	96
U1	58	#4	6	3'-8"	142
V1	116	#5	STR	5'-2"	625
V2	12	#4	STR	6'-9"	54
V3	26	#4	STR	6'-11"	120

REINFORCING STEEL 4414 LBS

CLASS A CONCRETE BREAKDOWN
POUR #1
(CAP & LOWER WINGS) 17.5 C.Y.
POUR #2
(BACKWALL & UPPER WINGS) 9.0 C.Y.
TOTAL 26.5 C.Y.

HP 12 x 53 STEEL PILES
NO. 11 330 L.F.

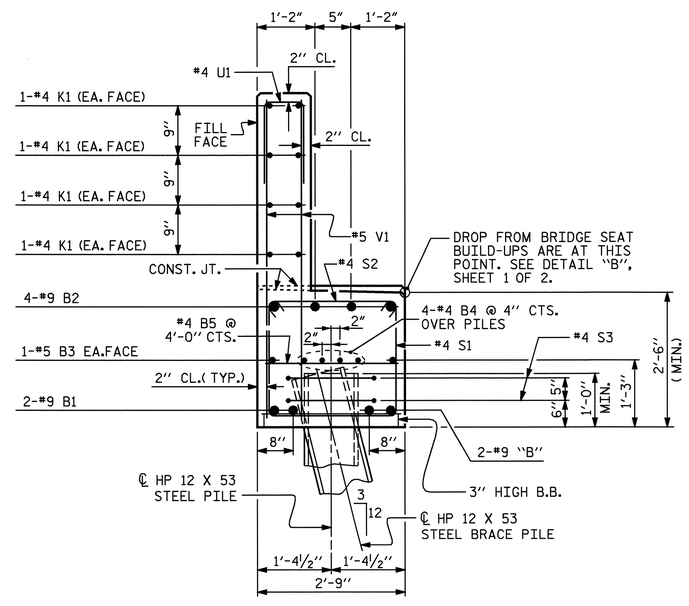

SECTION A-A

PROJECT NO. U-4012
DURHAM COUNTY
STATION: 70+22.00 -L-

SHEET 2 OF 2

STATE OF NORTH CAROLINA
DEPARTMENT OF TRANSPORTATION
RALEIGH

SUBSTRUCTURE
END BENT 2
RIGHT LANE

NORTH CAROLINA PROFESSIONAL SEAL 20125 ENGINEER MARSHALL B. WEBB, JR.
4-24-07

REVISIONS						SHEET NO.
NO.	BY:	DATE:	NO.	BY:	DATE:	S-125
1			3			TOTAL SHEETS
2			4			128

STR. #4

DRAWN BY : A.S. CALLAWAY DATE : 1/5/05
CHECKED BY : D. HODGE DATE : 1/05

23-APR-2007 15:46
R:\Structures\U4012\Final Plans\U4012_sd_E*_01.dgn
vnguyen

NOTES :

FOR BERM WIDTH DIMENSIONS, SEE GENERAL DRAWING.

FOLLOWING REMOVAL OF THE EXISTING BENTS, AND AT THE DIRECTION OF THE ENGINEER, THE DISTURBED AREAS OF THE BANKS SHALL BE GRADED TO A 2:1 SLOPE AND CLASS II RIP RAP SHALL BE PLACED ON THE DISTURBED AREAS.

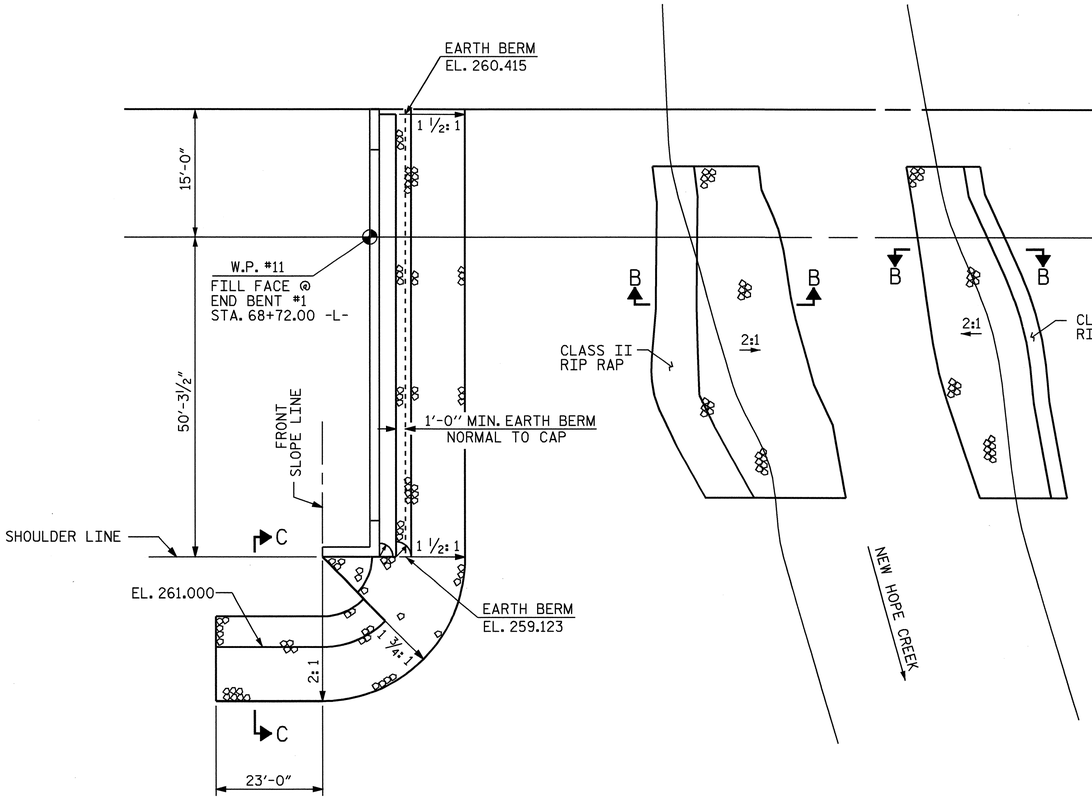

PLAN OF RIP RAP AT END BENT #1

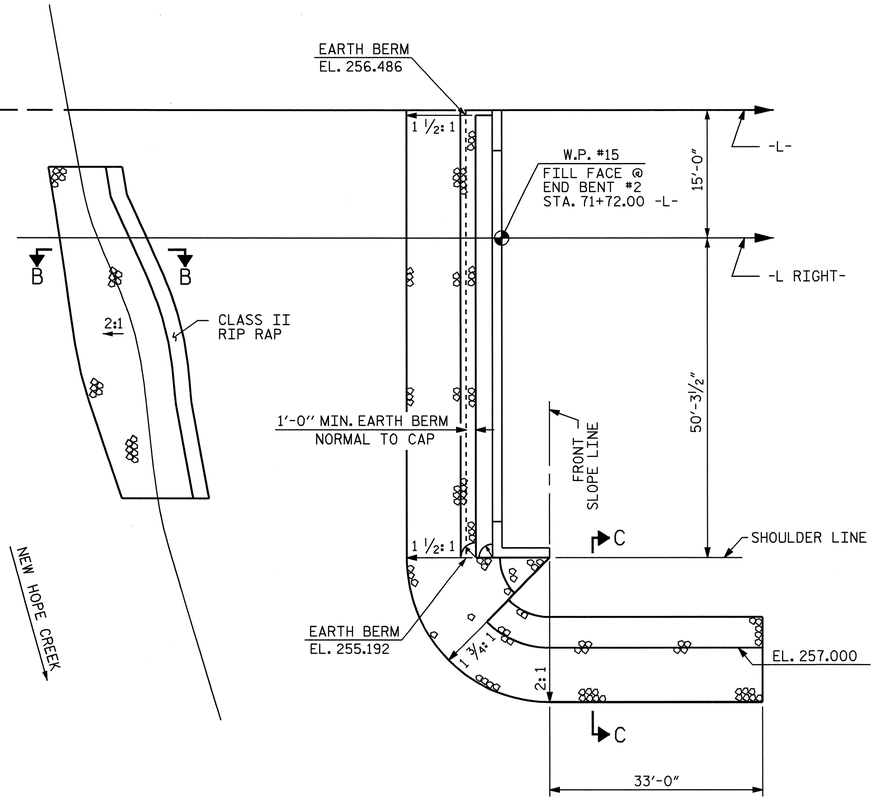

PLAN OF RIP RAP AT END BENT #2

ESTIMATED QUANTITIES		
BRIDGE @ STA. 70+22.00 -L- (RIGHT LANE)	RIP RAP CLASS II	FILTER FABRIC FOR DRAINAGE
	TONS	SQUARE YARDS
END BENT 1	420	465
END BENT 2	335	375
* CREEK BANKS	220	245

* CREEK BANK QUANTITIES ARE INCLUDED WITH END BENT #1 QUANTITIES IN TOTAL BILL OF MATERIAL.

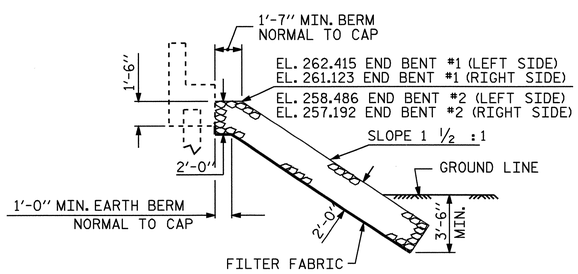

℄ SECTION
BERM RIP RAPPED

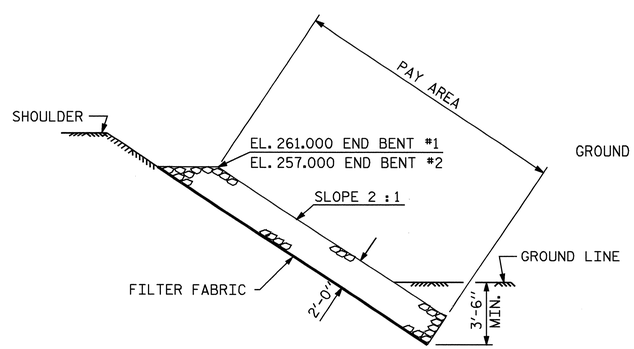

SECTION C-C

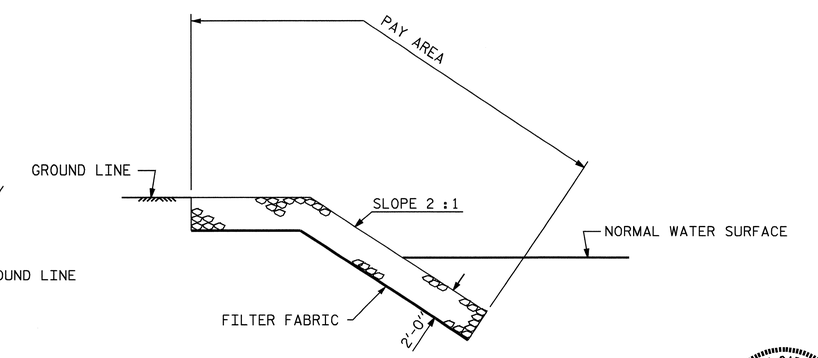

SECTION B-B

PROJECT NO. U-4012
DURHAM COUNTY
STATION: 70+22.00 -L-

STATE OF NORTH CAROLINA
DEPARTMENT OF TRANSPORTATION
RALEIGH

STANDARD
RIP RAP DETAILS
RIGHT LANE

NORTH CAROLINA PROFESSIONAL SEAL 20125 ENGINEER MARSHALL L. CRUMPLER, JR.
6-8-07

REVISIONS						
NO.	BY:	DATE:	NO.	BY:	DATE:	
1			3			
2			4			

SHEET NO. S-126
TOTAL SHEETS 128

STR. #4

ASSEMBLED BY : D. HODGE		DATE : 1/05	
CHECKED BY : J. HARRIS		DATE : 2/05	
DRAWN BY : FCJ 2/88	REV. 7/17/98	REK/RWW	
CHECKED BY : ARB 8/88	REV. 8/16/99	RWW/LES	
	REV. 10/17/00	RWW/LES	

08-JUN-2007 09:45
R:\Structures\u4012\Final Plans\U4012_sd_RR.dgn
vnguyen

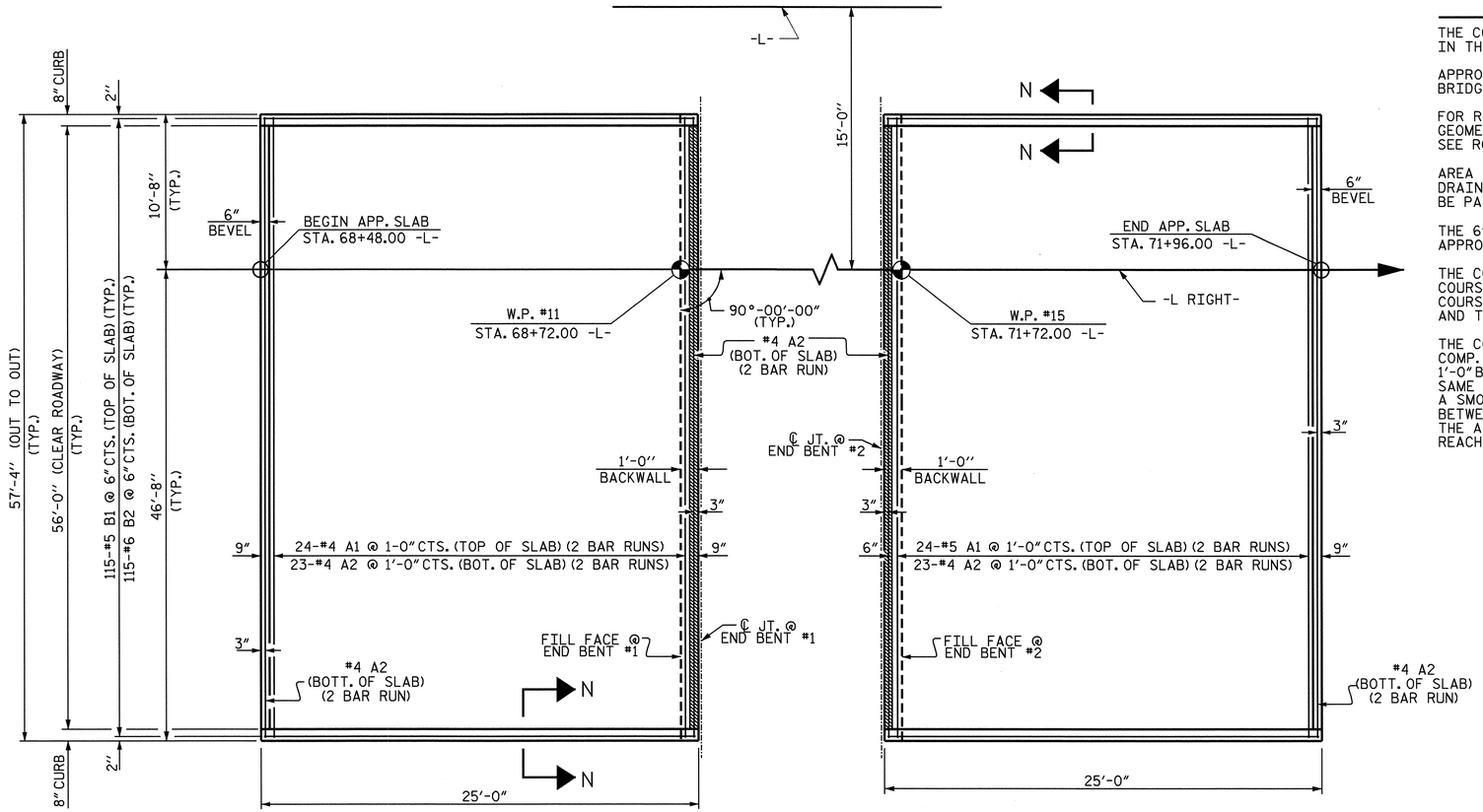

APPROACH SLAB @ END BENT NO. 1

APPROACH SLAB @ END BENT NO. 2

PLAN

NOTES

THE COST OF THE BARRIER RAIL ON THE APPROACH SLAB SHALL BE INCLUDED IN THE LUMP SUM CONTRACT PRICE BID FOR BRIDGE APPROACH SLABS.

APPROACH SLAB SHALL NOT BE CONSTRUCTED PRIOR TO COMPLETION OF THE BRIDGE DECK.

FOR REINFORCED BRIDGE APPROACH FILL INCLUDING FABRIC, IMPERMEABLE GEOMEMBRANE, 4" Ø DRAINAGE PIPE, #78M STONE, AND SELECT MATERIAL, SEE ROADWAY PLANS.

AREA BETWEEN THE WINGWALL AND APPROACH SLAB SHALL BE GRADED TO DRAIN THE WATER AWAY FROM THE FILL FACE OF THE BRIDGE AND SHALL BE PAVED. SEE ROADWAY PLANS.

THE 6" COMP. A.B.C. SHALL EXTEND 10'-0" BEYOND THE END OF THE APPROACH SLAB AND 1'-0" OUTSIDE OF EACH EDGE OF SLAB.

THE CONTRACTOR MAY USE 4" TYPE B-25.0B ASPHALT CONCRETE BASE COURSE IN LIEU OF 6" COMP. A.B.C. IF THIS OPTION IS USED, THE BASE COURSE SHALL EXTEND 1'-0" BEYOND THE END OF THE APPROACH SLAB AND THE WIDTH SHALL BE THE SAME AS THAT OF THE APPROACH SLAB.

THE CONTRACTOR MAY USE 5" CLASS "A" CONCRETE BASE IN LIEU OF 6" COMP. A.B.C. IF THIS OPTION IS USED, THE CONCRETE BASE SHALL EXTEND 1'-0" BEYOND THE END OF THE APPROACH SLAB AND THE WIDTH SHALL BE THE SAME AS THAT OF THE APPROACH SLAB. THE CONCRETE SHALL BE FINISHED TO A SMOOTH SURFACE AND A LAYER OF 30 LB ROOFING FELT SHALL BE PLACED BETWEEN THE CONCRETE BASE AND THE APPROACH SLAB TO PREVENT BOND. THE APPROACH SLAB SHALL NOT BE CAST UNTIL THE CONCRETE BASE HAS REACHED AN AGE OF THREE CURING DAYS.

BILL OF MATERIAL
FOR ONE APPROACH SLAB (2 REQ'D)

BAR	NO.	SIZE	TYPE	LENGTH	WEIGHT
✳ A1	48	#4	STR	29'-6"	946
A2	50	#4	STR	29'-5"	983
✳ B1	115	#5	STR	23'-9"	2849
B2	115	#6	STR	24'-8"	4261
REINFORCING STEEL				LBS.	5244
✳ EPOXY COATED REINFORCING STEEL				LBS.	3795
CLASS AA CONCRETE BREAKDOWN					
SLAB AND CURB				C. Y.	53.8
CLASS AA CONCRETE				C. Y.	53.8

✳ THESE BARS ARE EPOXY COATED

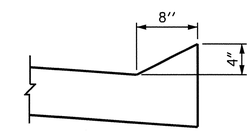

SECTION N-N

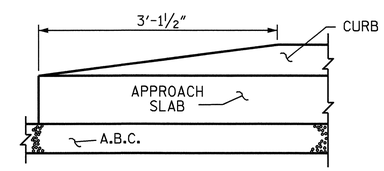

END OF CURB WITHOUT SHOULDER BERM GUTTER

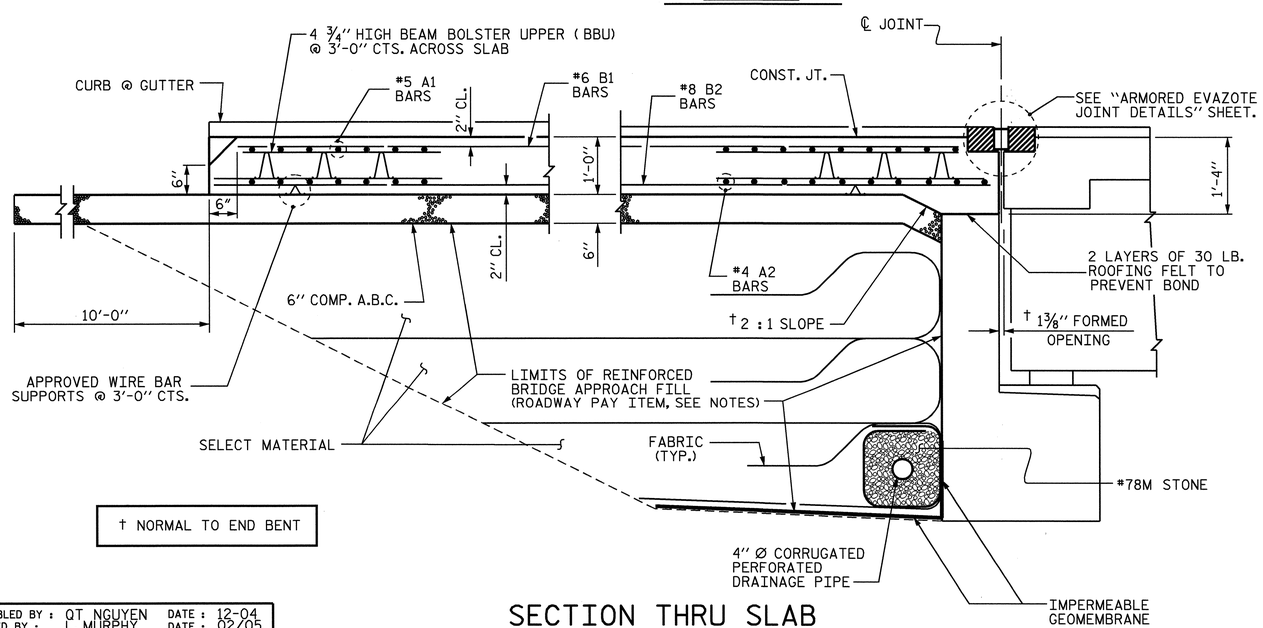

† NORMAL TO END BENT

SECTION THRU SLAB

PROJECT NO. U-4012
DURHAM COUNTY
STATION: 70+22.00 -L-

SHEET 1 OF 2

STATE OF NORTH CAROLINA
DEPARTMENT OF TRANSPORTATION
RALEIGH

BRIDGE APPROACH SLAB FOR FLEXIBLE PAVEMENT
RIGHT LANE

NORTH CAROLINA PROFESSIONAL SEAL 20125 ENGINEER MARSHALL G. CHEEK, JR.
6-7-07

REVISIONS						SHEET NO.
NO.	BY:	DATE:	NO.	BY:	DATE:	S-127
1			3			TOTAL SHEETS
2			4			128

STR. #4

ASSEMBLED BY : QT NGUYEN	DATE : 12-04		
CHECKED BY : L. MURPHY	DATE : 02/05		
DRAWN BY : LES 8/01	REV. 5/7/03R	RWW/JTE	
CHECKED BY : RDR 8/01	REV. 5/1/06	TLA/GM	

06-JUN-2007 15:10
R:\Structures\u4012\Final Plans\U4012_sd_AS.dgn
vnguyen

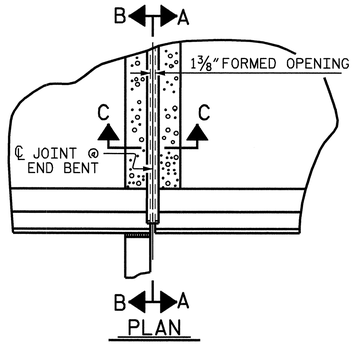

PLAN

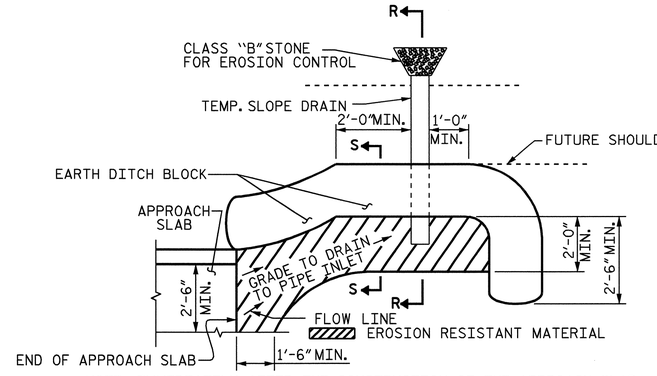

NOTE: IMMEDIATELY AFTER THE CONSTRUCTION OF THE APPROACH SLAB, THE CONTRACTOR SHALL PROVIDE TEMPORARY BERM AND SLOPE DRAIN. CONTRACTOR SHALL GRADE TO PIPE INLET AND PROVIDE EROSION RESISTANT MATERIAL AS SHOWN. THE EROSION RESISTANT MATERIAL SHALL BE EITHER 1) ASPHALT PLANT MIX, TYPE 1 OR TYPE 2, MIN. 2" DEPTH, 2) EROSION CONTROL MAT, OR 3) CONCRETE, AS DIRECTED BY THE ENGINEER. THE SLOPE DRAIN SHALL CONSIST OF A NON-PERFORATED TEMPORARY DRAINAGE PIPE, 12 INCHES IN DIAMETER.

PLAN VIEW

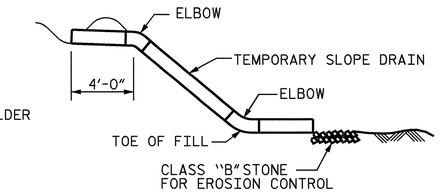

SECTION R-R

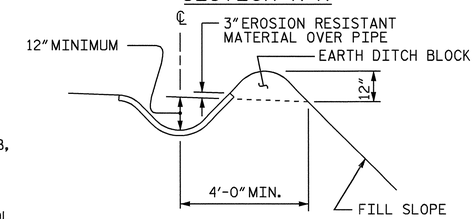

SECTION S-S

TEMPORARY BERM AND SLOPE DRAIN DETAILS

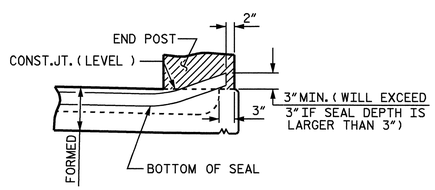

SECTION A-A

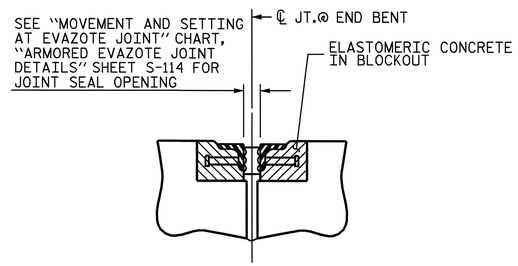

SECTION C-C
ARMORED EVAZOTE JOINT SEAL

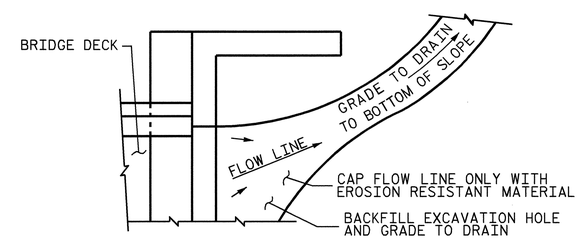

NOTE: IF THE APPROACH SLAB IS NOT CONSTRUCTED IMMEDIATELY AFTER THE BACKFILLING OF THE END BENT EXCAVATION, GRADE TO DRAIN TO THE BOTTOM OF THE SLOPE AND PROVIDE EROSION RESISTANT MATERIAL, SUCH AS FIBERGLASS ROVING OR AS DIRECTED BY THE ENGINEER TO PREVENT SOIL EROSION AND TO PROTECT THE AREA ADJACENT TO THE STRUCTURE. THE CONTRACTOR WILL BE REQUIRED TO REMOVE THESE MATERIALS PRIOR TO CONSTRUCTION OF THE APPROACH SLAB.

TEMPORARY DRAINAGE DETAIL

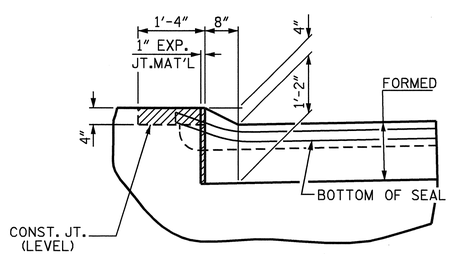

SECTION B-B

JOINT SEAL DETAILS @ END BENT

PROJECT NO. U-4012
DURHAM COUNTY
STATION: 70+22.00 -L-

SHEET 2 OF 2

STATE OF NORTH CAROLINA
DEPARTMENT OF TRANSPORTATION
RALEIGH

BRIDGE APPROACH SLAB DETAILS
RIGHT LANE

1988

REVISIONS						SHEET NO.
NO.	BY:	DATE:	NO.	BY:	DATE:	S-128
1			3			TOTAL SHEETS
2			4			128

NORTH CAROLINA PROFESSIONAL SEAL 20125 ENGINEER MARSHALL C. GRIFFIN, JR.
6-7-07

STR. #4

ASSEMBLED BY : QT NGUYEN		DATE : 12-04	
CHECKED BY : L. MURPHY		DATE : 02/05	
DRAWN BY : FCJ 11/88	REV. 10/17/00	RWW/LES	
CHECKED BY : ARB 11/88	REV. 5/7/03	RWW/JTE	
	REV. 5/1/06	TLA/GM	

06-JUN-2007 11:18
R:\Structures\U4012\Final Plans\U4012_sd_AS.dgn
vnguyen

B.M. #4 : R/R SPIKE IN BASE OF 18" RED OAK; 114' RT. OF STA. 68+27.00-L- EL.249.28

F.A. PROJECT NO. : BRSTP-1116 (6)

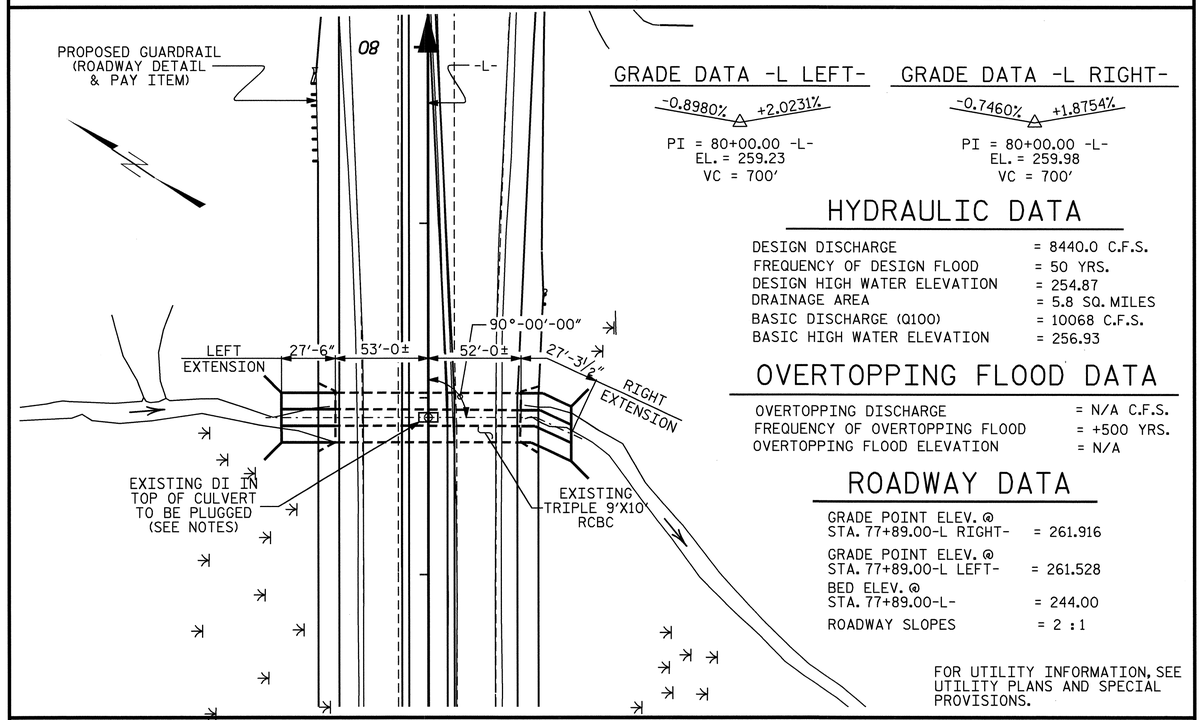

GRADE DATA -L LEFT-

-0.8980% +2.0231%

PI = 80+00.00 -L-
EL. = 259.23
VC = 700'

GRADE DATA -L RIGHT-

-0.7460% +1.8754%

PI = 80+00.00 -L-
EL. = 259.98
VC = 700'

HYDRAULIC DATA

DESIGN DISCHARGE	= 8440.0 C.F.S.
FREQUENCY OF DESIGN FLOOD	= 50 YRS.
DESIGN HIGH WATER ELEVATION	= 254.87
DRAINAGE AREA	= 5.8 SQ. MILES
BASIC DISCHARGE (Q100)	= 10068 C.F.S.
BASIC HIGH WATER ELEVATION	= 256.93

OVERTOPPING FLOOD DATA

OVERTOPPING DISCHARGE	= N/A C.F.S.
FREQUENCY OF OVERTOPPING FLOOD	= +500 YRS.
OVERTOPPING FLOOD ELEVATION	= N/A

ROADWAY DATA

GRADE POINT ELEV. @ STA. 77+89.00-L RIGHT-	= 261.916
GRADE POINT ELEV. @ STA. 77+89.00-L LEFT-	= 261.528
BED ELEV. @ STA. 77+89.00-L-	= 244.00
ROADWAY SLOPES	= 2 : 1

FOR UTILITY INFORMATION, SEE UTILITY PLANS AND SPECIAL PROVISIONS.

LOCATION SKETCH

TOTAL STRUCTURE QUANTITIES

CLASS A CONCRETE		
LEFT EXTENSION	94.7	C.Y.
RIGHT EXTENSION	97.3	C.Y.
TOTAL	192.0	C.Y.
REINFORCING STEEL		
LEFT EXTENSION	14681	LBS.
RIGHT EXTENSION	18946	LBS.
TOTAL	33627	LBS.
FOUNDATION CONDITIONING MATERIAL		
LEFT EXTENSION	58	TONS
RIGHT EXTENSION	58	TONS
TOTAL	116	TONS
CULVERT EXCAVATION	LUMP SUM	

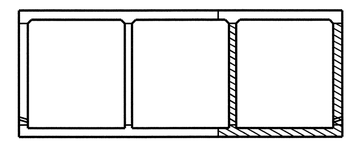

STAGING SEQUENCE

(LOOKING DOWNSTREAM)

PHASE I CONSTRUCTION

NOTES

ASSUMED LIVE LOAD ----------HS20-44 OR ALTERNATE LOADING.

DESIGN FILL----------LEFT EXTENSION = 6.8'
RIGHT EXTENSION = 7.9'

FOR OTHER DESIGN DATA AND NOTES SEE STANDARD NOTE SHEET.

3"Ø WEEP HOLES INDICATED TO BE IN ACCORDANCE WITH THE SPECIFICATIONS.

CONCRETE IN CULVERTS TO BE POURED IN THE FOLLOWING ORDER:

1. PHASE I WING FOOTINGS AND FLOOR SLAB INCLUDING 4" OF PHASE I VERTICAL WALLS.
2. THE REMAINING PORTIONS OF PHASE I WALL AND PHASE I WINGS FULL HEIGHT.
3. PHASE II WING FOOTINGS AND FLOOR SLAB INCLUDING 4" OF PHASE I I VERTICAL WALLS.
4. THE REMAINING PORTIONS OF PHASE II WALL AND PHASE II WINGS FULL HEIGHT.
5. ROOF SLAB IN IT'S ENTIRETY AND HEADWALLS.

THE RESIDENT ENGINEER SHALL CHECK THE LENGTH OF CULVERT BEFORE STAKING IT OUT TO MAKE CERTAIN THAT IT WILL PROPERLY TAKE CARE OF THE FILL.

DIMENSIONS FOR WING LAYOUT AS WELL AS ADDITIONAL REINFORCING STEEL EMBEDDED IN BARREL ARE SHOWN ON WING SHEET.

AT THE CONTRACTOR'S OPTION, HE MAY SPLICE THE VERTICAL REINFORCING STEEL IN THE INTERIOR FACE OF EXTERIOR WALL AND BOTH FACES OF INTERIOR WALLS ABOVE LOWER WALL CONSTRUCTION JOINT. THE SPLICE LENGTH SHALL BE AS PROVIDED IN THE SPLICE LENGTH CHART SHOWN ON THE PLANS. EXTRA WEIGHT OF STEEL DUE TO THE SPLICES SHALL BE PAID FOR BY THE CONTRACTOR.

AT THE CONTRACTOR'S OPTION HE MAY SUBMIT, TO THE ENGINEER FOR APPROVAL, DESIGN AND DETAIL DRAWINGS FOR A PRECAST REINFORCED CONCRETE BOX CULVERT IN LIEU OF THE CAST-IN-PLACE CULVERT SHOWN ON THE PLANS. THE DESIGN SHALL PROVIDE THE SAME SIZE AND NUMBER OF BARRELS INCLUDING SILLS OF THE SAME SIZE AND LOCATION AS USED ON THE CAST-IN-PLACE DESIGN. FOR OPTIONAL PRECAST REINFORCED CONCRETE BOX CULVERT, SEE SPECIAL PROVISIONS.

DOWELS SHALL BE USED TO CONNECT THE CULVERT EXTENSION TO THE EXISTING CULVERT AS SHOWN. FOR NOTE REGARDING SETTING OF DOWELS, SEE SHEET SN.

IF APPROVED BY THE ENGINEER, THE CONTRACTOR MAY USE THE EXISTING WINGS AS TEMPORARY SHORING FOR THE CONSTRUCTION OF THE CULVERT EXTENSIONS. IN THIS CASE, THE BOTTOM SLAB OF THE EXTENSION SHALL BE POURED AT LEAST 72 HOURS PRIOR TO CUTTING THE WINGS. THE WINGS MAY BE CUT EARLIER PROVIDED THE SLAB CONCRETE STRENGTH HAS REACHED A MINIMUM COMPRESSIVE STRENGTH OF 1500 PSI.

FOR CULVERT DIVERSION DETAILS AND PAY ITEM, SEE EROSION CONTROL PLANS.

THE CONTRACTOR SHALL PROVIDE INDEPENDENT ASSURANCE SAMPLES OF REINFORCING STEEL AS FOLLOWS: FOR PROJECTS REQUIRING UP TO 400 TONS OF REINFORCING STEEL, ONE 30 INCH SAMPLE OF EACH SIZE BAR USED, AND FOR PROJECTS REQUIRING OVER 400 TONS OF REINFORCING STEEL, TWO 30 INCH SAMPLES OF EACH SIZE BAR USED. THE BARS FROM WHICH THE SAMPLES ARE TAKEN MUST THEN BE SPLICED WITH REPLACMENT BARS OF THE SIZE AND LENGTH OF THE SAMPLE, PLUS A MINIMUM LAP SPLICE OF THIRTY BAR DIAMETERS.

FOR SUBMITTAL OF WORKING DRAWINGS, SEE SPECIAL PROVISIONS.

FOLLOWING REMOVAL OF THE DETOUR ALIGNMENT, THE EXISTING DROP INLET IN THE TOP OF THE EXISTING CULVERT SHALL BE PLUGGED AT THE DIRECTION OF THE ENGINEER.

FOR CRANE SAFETY, SEE SPECIAL PROVISIONS.

FOR FALSEWORK AND FORMWORK, SEE SPECIAL PROVISIONS.

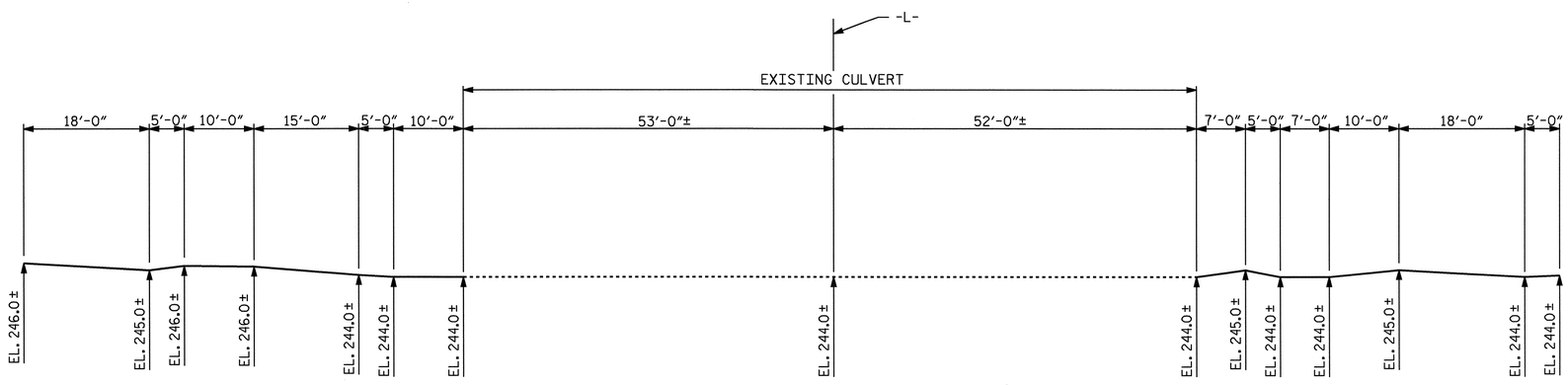

PROFILE ALONG ℄ CULVERT

PROJECT NO. U-4012
DURHAM COUNTY
STATION: 77+89.00-L-

SHEET 1 OF 7 CULVERT # C45

NORTH CAROLINA PROFESSIONAL SEAL 13014 ENGINEER CUONG H. NGUYEN
6-7-07

NORTH CAROLINA PROFESSIONAL SEAL 20125 ENGINEER MARSHALL GLENN CHILDERS, JR.
6-7-07

STATE OF NORTH CAROLINA
DEPARTMENT OF TRANSPORTATION
RALEIGH

TRIPLE 9 FT. X 10 FT. CONCRETE BOX CULVERT EXTENSIONS

REVISIONS						SHEET NO.
NO.	BY:	DATE:	NO.	BY:	DATE:	C-1
1			3			TOTAL SHEETS
2			4			7

ASSEMBLED BY : L.L. MURPHY DATE : 01-05
CHECKED BY : V.X. NGUYEN DATE : 02-05
DRAWN BY : J. E. MANGUM DATE : 10/25/89
CHECKED BY : A.R. BISSETTE DATE : AUG. 1989

SPECIAL
STANDARD

ADDED 8-22-89

STR #5 STD. NO. CB13A

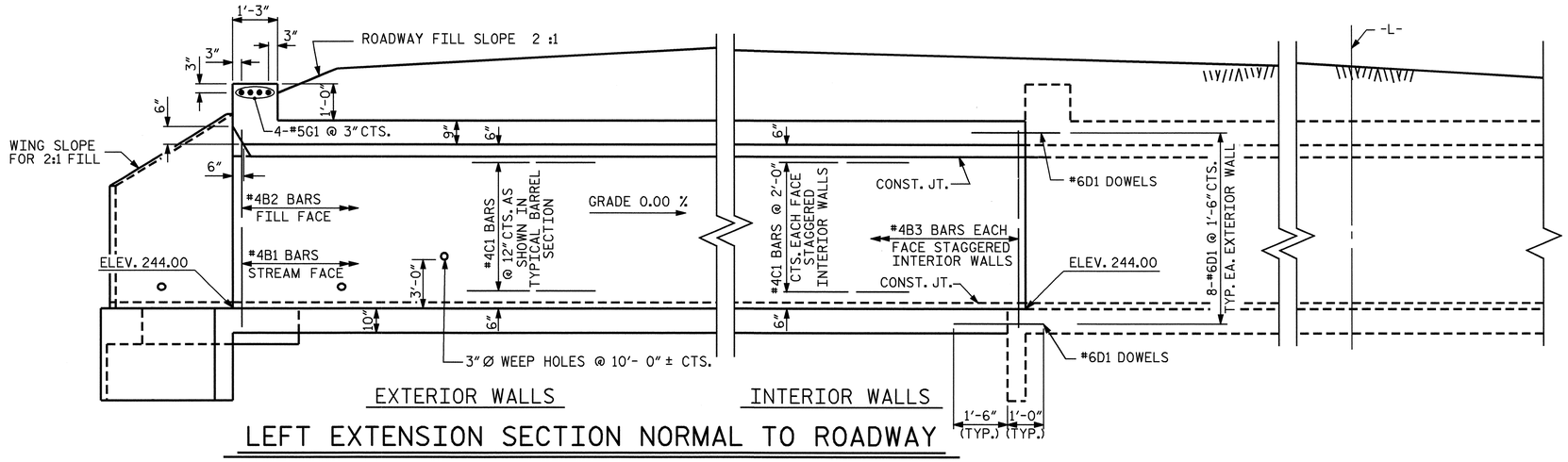

LEFT EXTENSION SECTION NORMAL TO ROADWAY

LEFT EXTENSION STRUCTURE QUANTITIES

CLASS A CONCRETE			
BARREL @	2.740 CY/FT	75.4	C.Y.
WINGS, ETC.		18.6	C.Y.
SILL		0.7	C.Y.
TOTAL		94.7	C.Y.
REINFORCING STEEL			
BARREL		13466	LBS.
WINGS, ETC.		1215	LBS.
TOTAL		14681	LBS.
FOUNDATION CONDITIONING MATERIAL		58	TONS
CULVERT EXCAVATION		LUMP	SUM

BAR SCHEDULE

LEFT EXTENSION

BAR	NO.	SIZE	TYPE	LENGTH	WEIGHT
A1	102	#6	6	5'-8"	868
A2	102	#6	6	5'-8"	868
A100	44	#5	STR	29'-3"	1342
A200	44	#5	STR	12'-11"	593
A250	44	#5	STR	18'-0"	826
A300	51	#6	STR	29'-3"	2241
A400	51	#6	STR	13'-6"	1034
A450	51	#6	STR	18'-0"	1379
B1	56	#4	STR	11'-1"	415
B2	102	#4	STR	9'-4"	636
B3	112	#4	STR	11'-1"	829
C1	116	#4	STR	27'-1"	2099
D1	54	#6	STR	2'-6"	203
D2	3	#6	STR	2'-5"	11
G1	4	#5	STR	29'-4"	122
REINFORCING STEEL					= 13466 LBS.

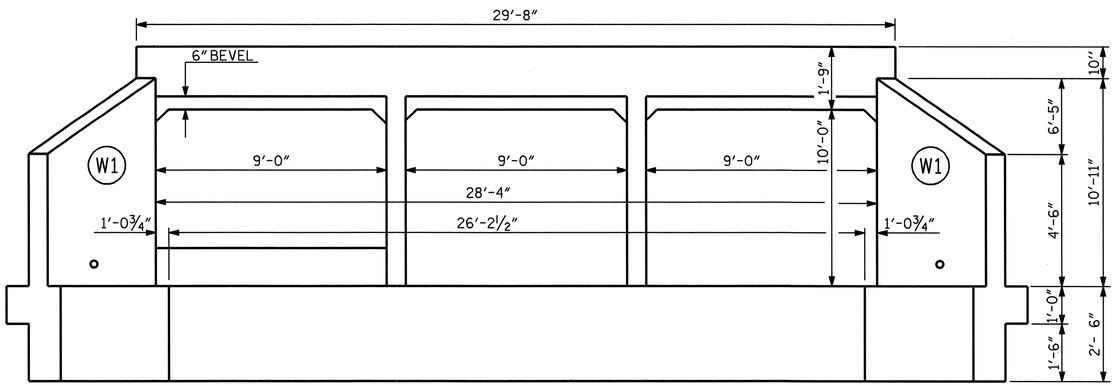

INLET END ELEVATION

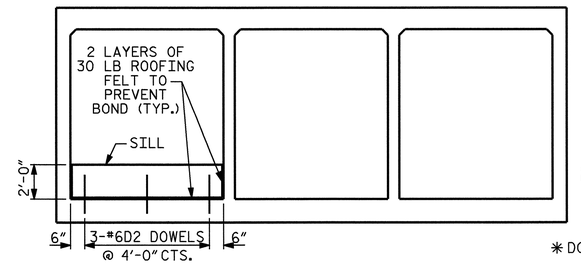

ELEVATION

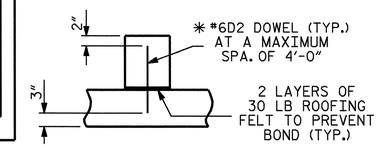

✱ DOWELS MAY BE PUSHED INTO GREEN CONCRETE AFTER SLAB HAS BEEN FLOAT FINISHED.

SECTION THROUGH SILL

CULVERT SILL DETAILS

LOOKING DOWNSTREAM

SPLICE LENGTHS CHART

BAR	SIZE	SPLICE LENGTH
A200	#5	1'-9"
A400	#6	2'-4"
B1	#4	1'-9"
B3	#4	1'-9"
C1	#4	1'-11"

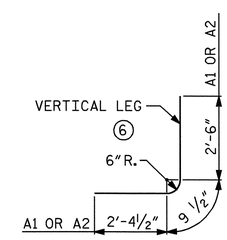

BAR TYPE

BAR DIMENSIONS ARE OUT TO OUT

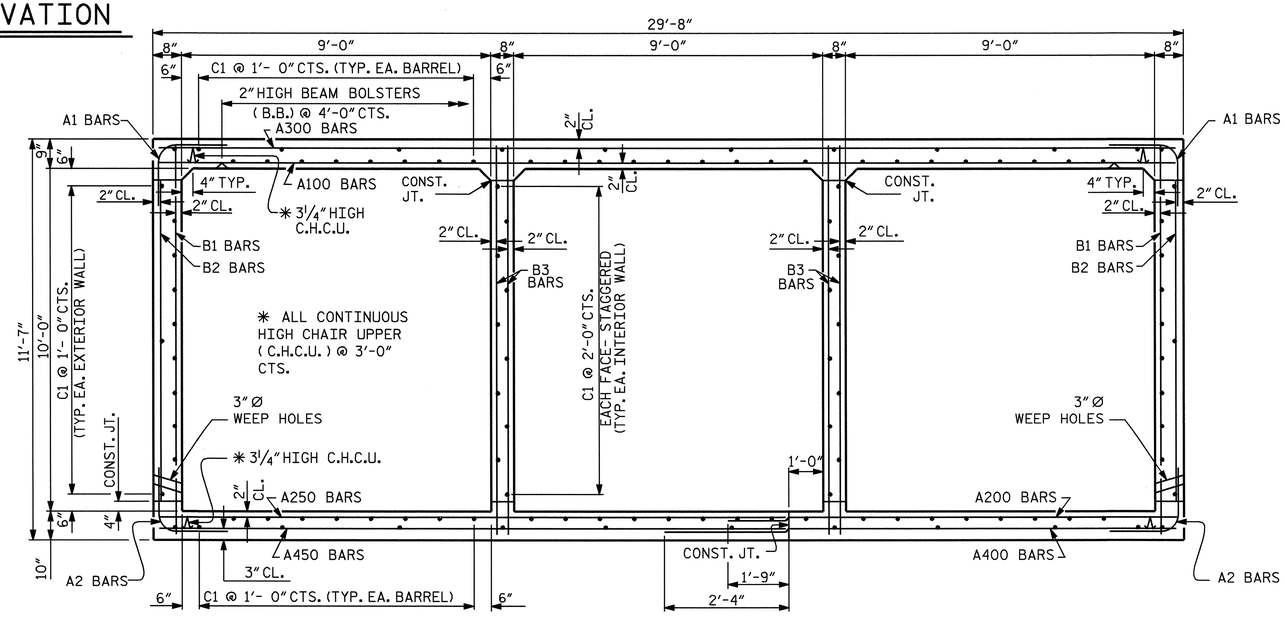

RIGHT ANGLE SECTION OF BARREL

LOOKING DOWNSTREAM

THERE ARE 116 "C" BARS IN SECTION OF BARREL.

PROJECT NO. U-4012

DURHAM COUNTY

STATION: 77+89.00-L-

SHEET 2 OF 7

STATE OF NORTH CAROLINA
DEPARTMENT OF TRANSPORTATION
RALEIGH

TRIPLE 9 FT. X 10 FT. CONCRETE BOX CULVERT LEFT EXTENSION

NORTH CAROLINA PROFESSIONAL SEAL 20125 ENGINEER MARSHALL C. CAMPBELL, JR.
6-7-07

REVISIONS						SHEET NO.
NO.	BY:	DATE:	NO.	BY:	DATE:	C-2
1			3			TOTAL SHEETS
2			4			7

ASSEMBLED BY : L.L. MURPHY	DATE : 01-05	SPECIAL	
CHECKED BY : V.X. NGUYEN	DATE : 02-05		
DRAWN BY : JOEL JOHNSON	DATE : MAR. 1971	STANDARD	
CHECKED BY : GARY BROOME	DATE : MAR. 1971		

REVISED 8-28-92 BY E.L.R. CHECKED BY G.R.P.
REDRAWN NOV. 1990 BY TSS. CHECKED BY ARB
REVISED 11-19-99 BY M.M. CHECKED BY R.W.W.

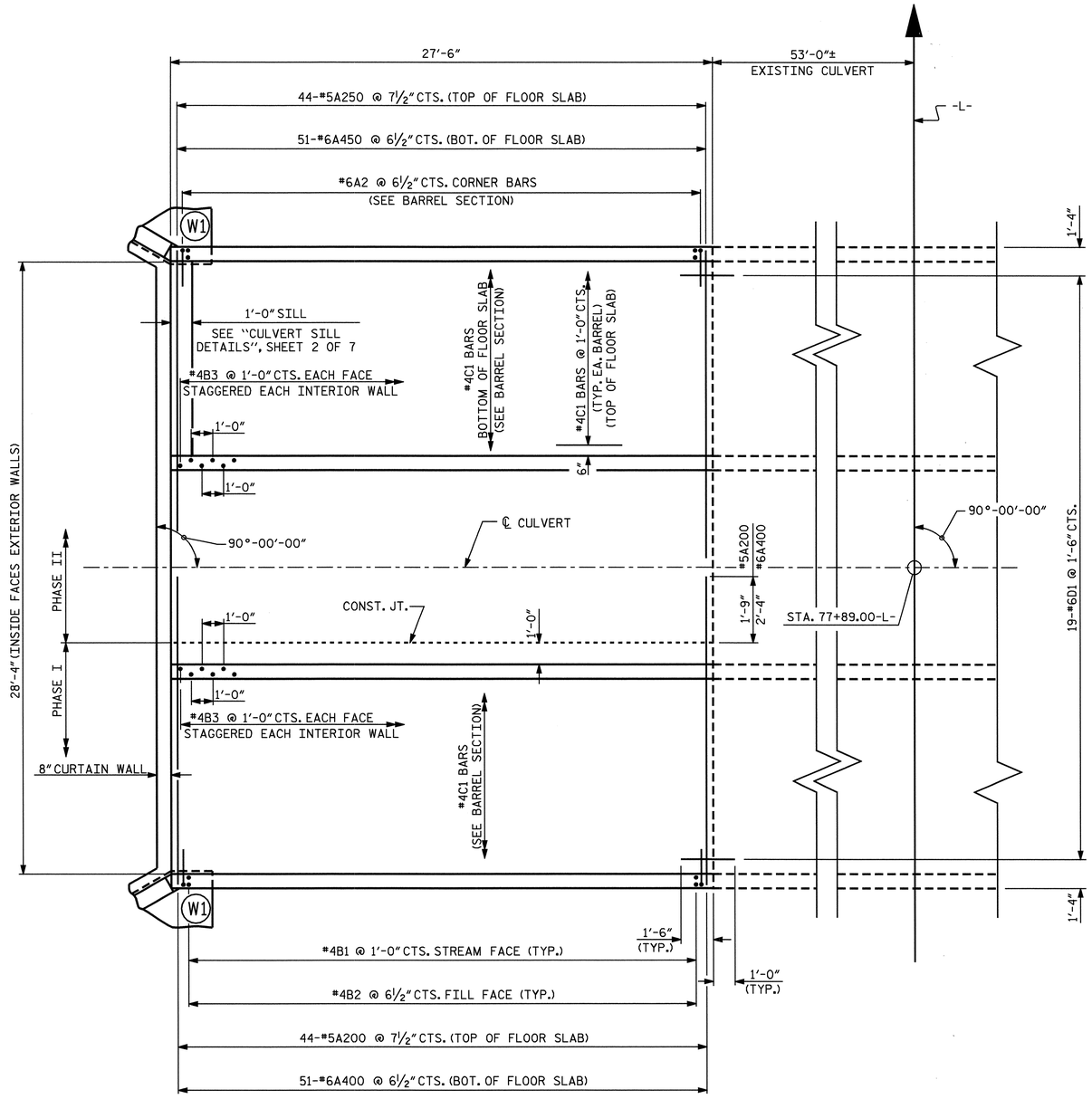

FLOOR SLAB LEFT EXTENSION

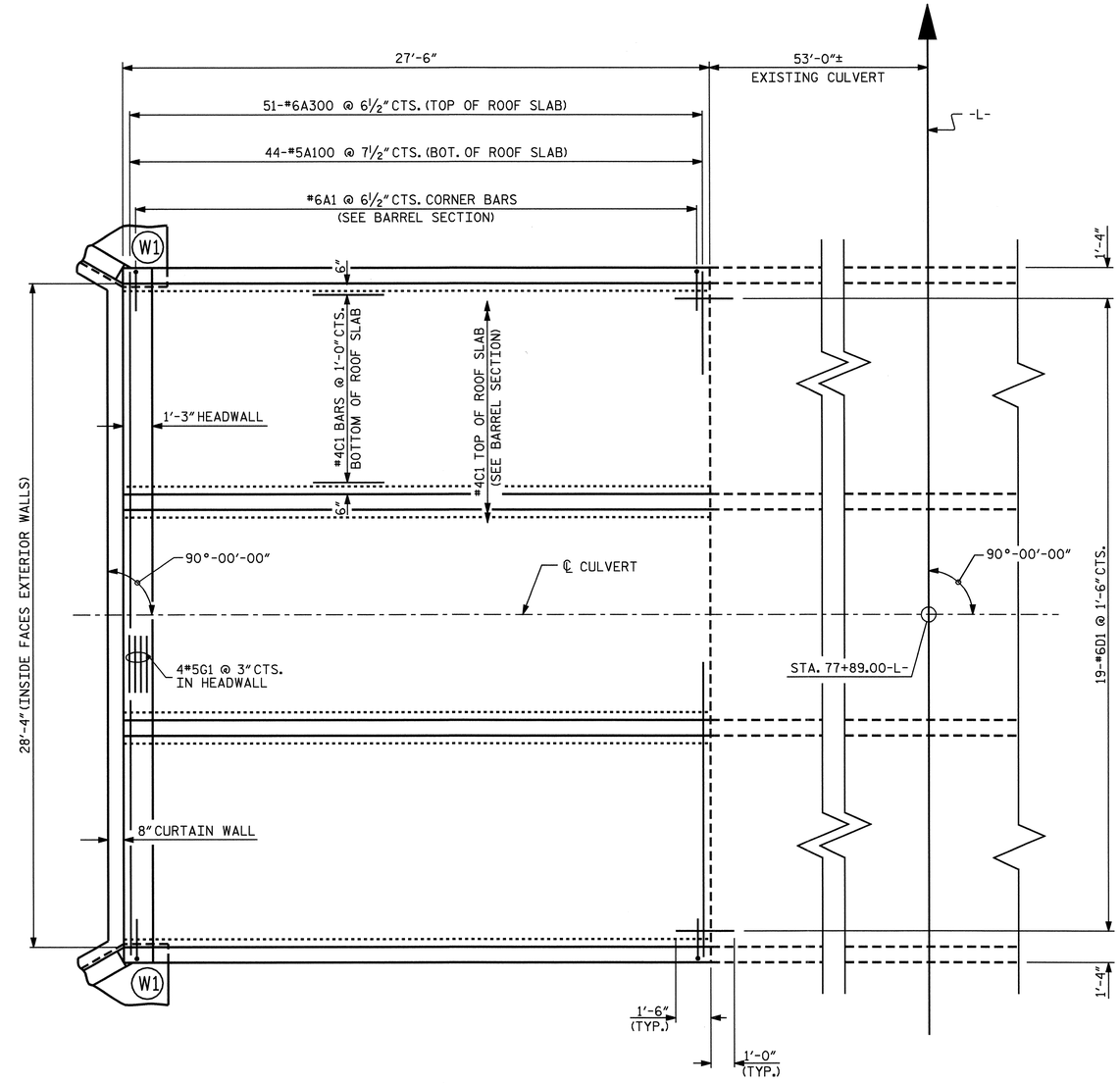

ROOF SLAB LEFT EXTENSION

PROJECT NO. U-4012

DURHAM COUNTY

STATION: 77+89.00-L-

SHEET 3 OF 7

STATE OF NORTH CAROLINA
DEPARTMENT OF TRANSPORTATION
RALEIGH

TRIPLE 9 FT. X 10 FT.
CONCRETE BOX CULVERT
LEFT EXTENSION

NORTH CAROLINA PROFESSIONAL SEAL 20125 ENGINEER MARSHAL A. PEEK, JR.
6-7-07

REVISIONS						SHEET NO.
NO.	BY:	DATE:	NO.	BY:	DATE:	C-3
1			3			TOTAL SHEETS
2			4			7

DRAWN BY : L.L. MURPHY DATE : 01-05
CHECKED BY : V.X. NGUYEN DATE : 02-05

05-JUN-2007 08:25
R:\Structures\U4012\FinalPlans\Str #5\U4012_sd_CU_03.dgn
dahodge

STR #5 NCDDS

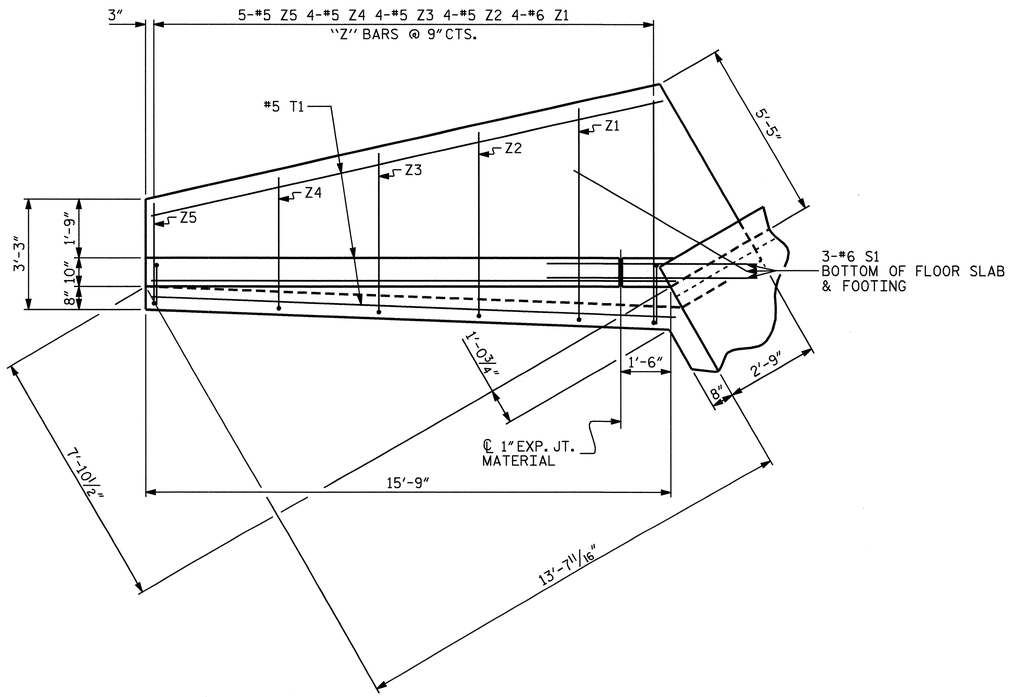

PLAN W1

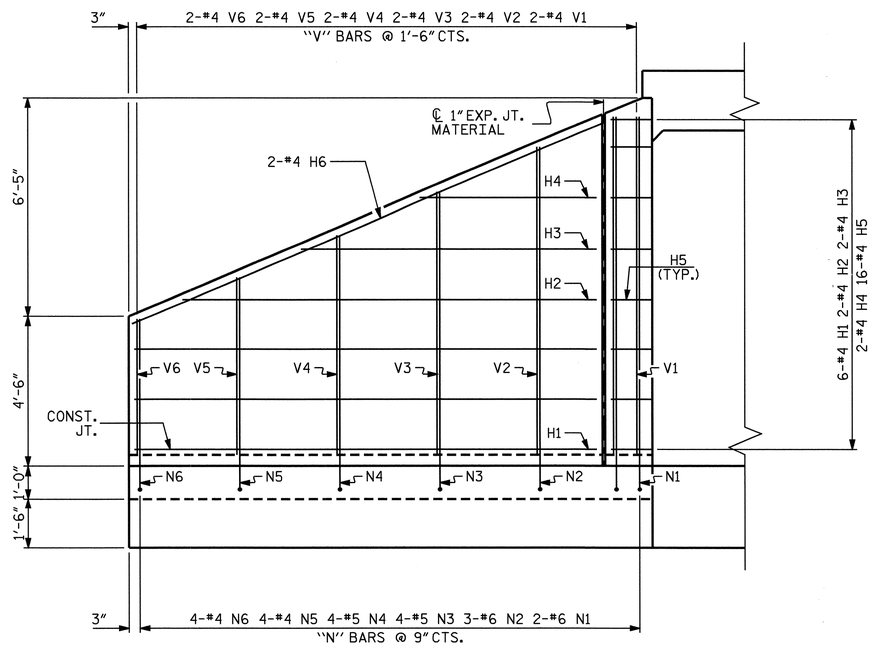

ELEVATION W1

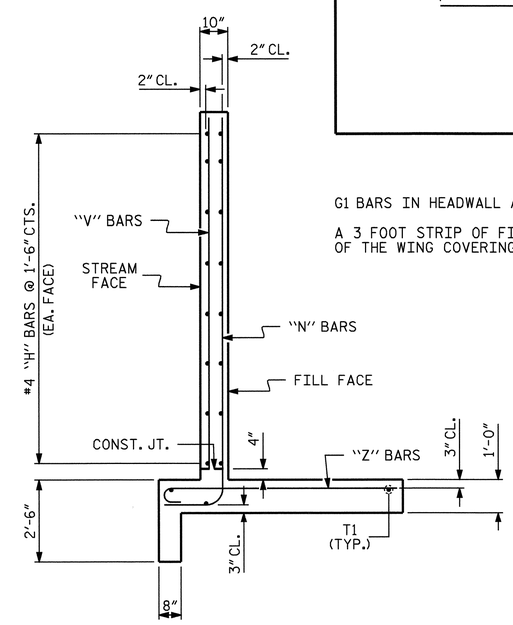

TYPICAL WING SECTION

BAR TYPES

ALL BAR DIMENSIONS ARE OUT TO OUT.

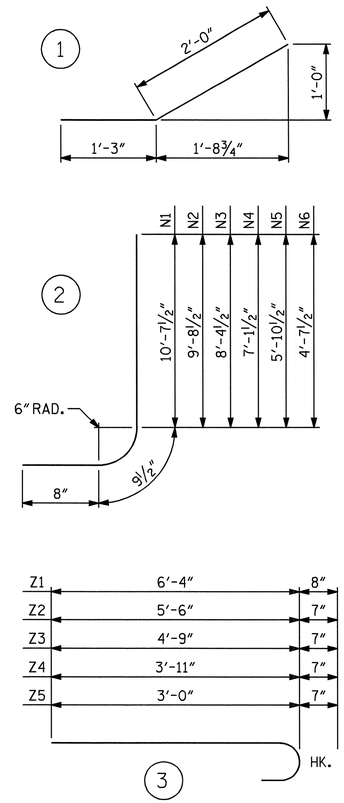

BILL OF MATERIAL

BAR	NO.	SIZE	TYPE	LENGTH	WEIGHT
H1	12	#4	STR	13'-10"	111
H2	4	#4	STR	12'-5"	33
H3	4	#4	STR	8'-10"	24
H4	4	#4	STR	5'-4"	14
H5	32	#4	1	3'-3"	69
H6	4	#4	STR	15'-5"	41
N1	4	#6	2	12'-1"	73
N2	6	#6	2	11'-2"	101
N3	8	#5	2	9'-10"	82
N4	8	#5	2	8'-7"	72
N5	8	#4	2	7'-4"	39
N6	8	#4	2	6'-1"	33
S1	6	#6	STR	6'-0"	54
T1	6	#5	STR	15'-9"	99
V1	4	#4	STR	10'-1"	27
V2	4	#4	STR	9'-2"	24
V3	4	#4	STR	7'-10"	21
V4	4	#4	STR	6'-7"	18
V5	4	#4	STR	5'-4"	14
V6	4	#4	STR	4'-1"	11
Z1	8	#6	3	7'-0"	84
Z2	8	#5	3	6'-1"	51
Z3	8	#5	3	5'-4"	45
Z4	8	#5	3	4'-6"	38
Z5	10	#5	3	3'-7"	37

REINFORCING STEEL
FOR 2 WINGS 1215 LBS

CLASS A CONCRETE
2 WINGS 15.6 CY
1 HEADWALL 1.4 CY
1 END CURTAIN WALL 1.6 CY

TOTAL 18.6 CY

NOTES

G1 BARS IN HEADWALL ARE INCLUDED WITH BARREL REINFORCING STEEL.

A 3 FOOT STRIP OF FILTER FABRIC SHALL BE ATTACHED TO THE FILL FACE OF THE WING COVERING THE ENTIRE LENGTH OF THE EXPANSION JOINT.

PROJECT NO. U-4012
DURHAM COUNTY
STATION: 77+89.00-L-

SHEET 4 OF 7

NORTH CAROLINA PROFESSIONAL SEAL 20125 ENGINEER MARSHALL G. PECK, JR.
6-7-07

STATE OF NORTH CAROLINA
DEPARTMENT OF TRANSPORTATION
RALEIGH

STANDARD WINGS
FOR REINFORCED
CONCRETE BOX CULVERT
H = 10'-0" SLOPE = 2:1
LEFT EXTENSION

REVISIONS						SHEET NO.
NO.	BY:	DATE:	NO.	BY:	DATE:	C-4
1			3			TOTAL SHEETS
2			4			7

ASSEMBLED BY : L.L. MURPHY DATE : 01-05	
CHECKED BY : V.X. NGUYEN DATE : 02-05	
DRAWN BY : CCJ 10/99	
CHECKED BY : RWW 03/00	

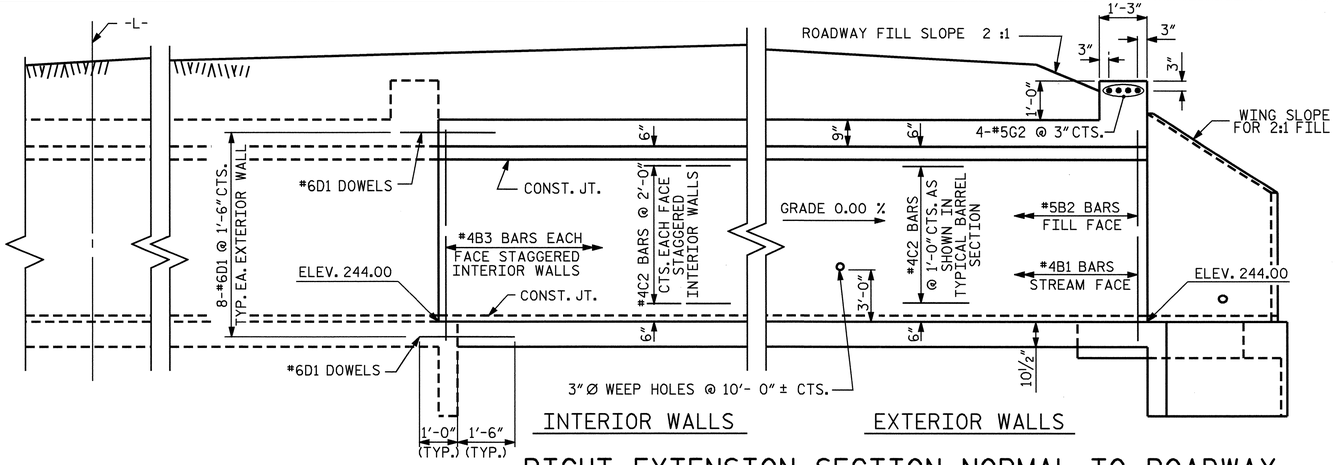

RIGHT EXTENSION SECTION NORMAL TO ROADWAY

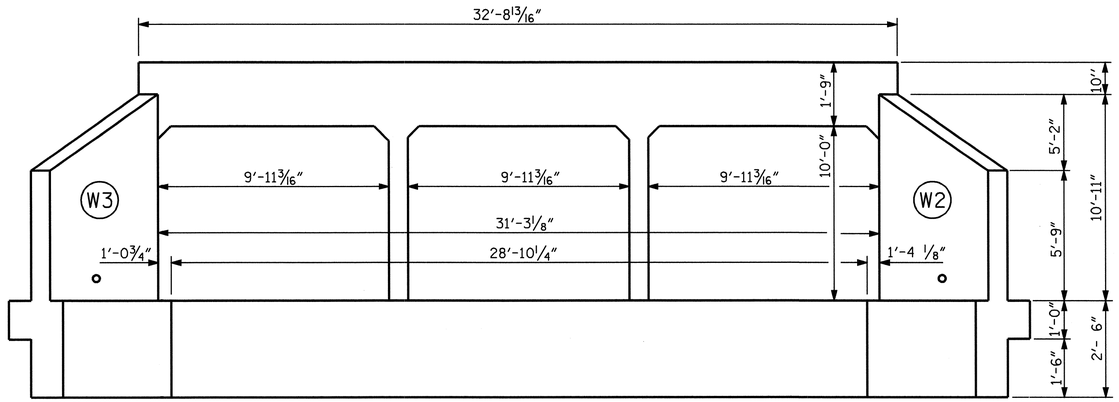

OUTLET END ELEVATION

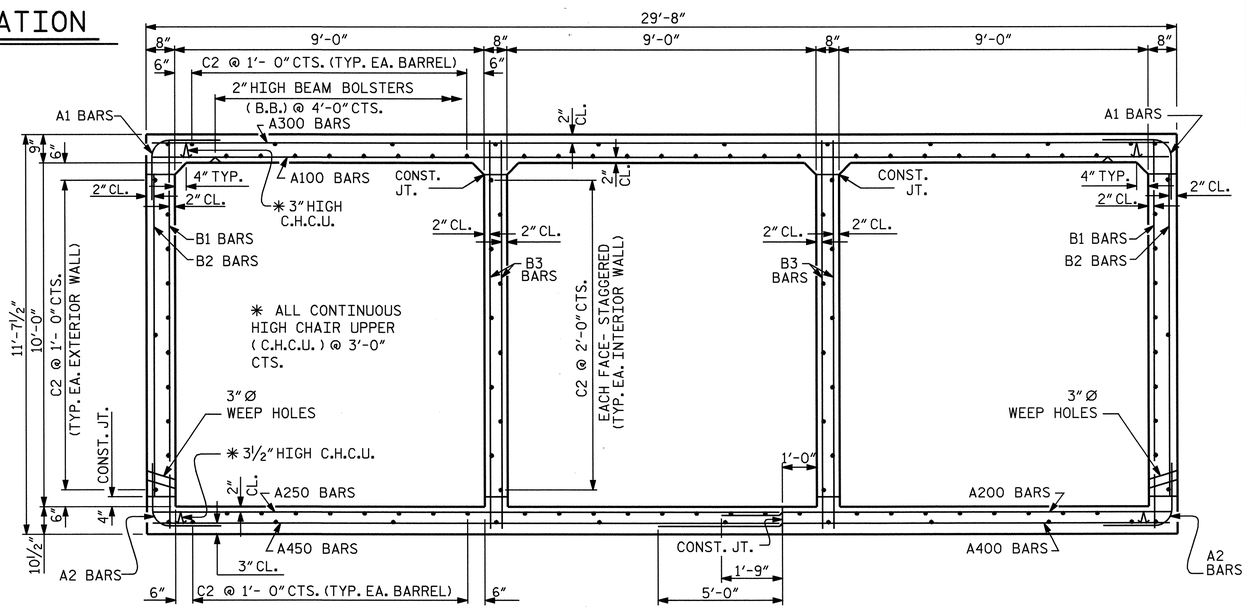

RIGHT ANGLE SECTION OF BARREL

LOOKING DOWNSTREAM

THERE ARE 116 "C" BARS IN SECTION OF BARREL.

RIGHT EXTENSION STRUCTURE QUANTITIES

CLASS A CONCRETE			
BARREL @ 2.785 CY/FT	76.0	C.Y.	
WINGS, ETC.	21.3	C.Y.	
TOTAL	97.3	C.Y.	
REINFORCING STEEL			
BARREL	18820	LBS.	
WINGS, ETC.	1392	LBS.	
TOTAL	20212	LBS.	
FOUNDATION CONDITIONING MATERIAL	58	TONS	
CULVERT EXCAVATION	LUMP SUM		

BAR SCHEDULE

RIGHT EXTENSION

BAR	NO.	SIZE	TYPE	LENGTH	WEIGHT
A1	83	#7	6	6'-10"	1159
A2	83	#7	6	6'-10"	1159
A100	23	#5	STR	29'-4"	704
A101	1	#5	STR	28'-3"	29
A102	1	#5	STR	26'-11"	28
A103	1	#5	STR	25'-7"	27
A104	1	#5	STR	24'-3"	25
A105	1	#5	STR	22'-11"	24
A106	1	#5	STR	21'-7"	23
A107	1	#5	STR	20'-3"	21
A108	1	#5	STR	18'-11"	20
A109	1	#5	STR	17'-7"	18
A110	1	#5	STR	16'-3"	17
A111	1	#5	STR	14'-10"	15
A112	1	#5	STR	13'-6"	14
A113	1	#5	STR	12'-2"	13
A114	1	#5	STR	10'-10"	11
A115	1	#5	STR	9'-6"	10
A116	1	#5	STR	8'-2"	9
A117	1	#5	STR	6'-10"	7
A118	1	#5	STR	5'-6"	6
A119	1	#5	STR	4'-2"	4
A120	1	#5	STR	2'-10"	3
A121	1	#5	STR	1'-6"	2

BAR	NO.	SIZE	TYPE	LENGTH	WEIGHT
A122	4	#5	STR	27'-0"	113
A123	6	#5	STR	23'-9"	149
A124	10	#5	STR	15'-9"	164
A200	35	#5	STR	12'-11"	472
A201	1	#5	STR	11'-8"	12
A202	1	#5	STR	10'-4"	11
A203	1	#5	STR	9'-0"	9
A204	1	#5	STR	7'-8"	8
A205	1	#5	STR	6'-4"	7
A206	1	#5	STR	5'-0"	5
A207	1	#5	STR	3'-8"	4
A208	1	#5	STR	2'-4"	2
A209	4	#5	STR	8'-9"	37
A210	4	#5	STR	6'-9"	28
A250	31	#5	STR	18'-0"	582
A251	1	#5	STR	16'-11"	18
A252	1	#5	STR	15'-7"	16
A253	1	#5	STR	14'-3"	15
A254	1	#5	STR	12'-11"	13
A255	1	#5	STR	11'-7"	12
A256	1	#5	STR	10'-3"	11
A257	1	#5	STR	8'-11"	9
A258	1	#5	STR	7'-7"	8
A259	1	#5	STR	6'-3"	7
A260	1	#5	STR	4'-11"	5
A261	1	#5	STR	3'-6"	4
A262	1	#5	STR	2'-2"	2
A263	2	#5	STR	16'-0"	33
A264	4	#5	STR	13'-0"	54
A265	6	#5	STR	9'-0"	56
A300	23	#8	STR	29'-4"	1801
A301	1	#8	STR	28'-3"	75
A302	1	#8	STR	26'-11"	72
A303	1	#8	STR	25'-7"	68
A304	1	#8	STR	24'-3"	65
A305	1	#8	STR	22'-11"	61
A306	1	#8	STR	21'-7"	58
A307	1	#8	STR	20'-3"	54
A308	1	#8	STR	18'-11"	51
A309	1	#8	STR	17'-7"	47
A310	1	#8	STR	16'-3"	43
A311	1	#8	STR	14'-10"	40
A312	1	#8	STR	13'-6"	36
A313	1	#8	STR	12'-2"	32
A314	1	#8	STR	10'-10"	29
A315	1	#8	STR	9'-6"	25
A316	1	#8	STR	8'-2"	22
A317	1	#8	STR	6'-10"	18

BAR	NO.	SIZE	TYPE	LENGTH	WEIGHT
A318	1	#8	STR	5'-6"	15
A319	1	#8	STR	4'-2"	11
A320	1	#8	STR	2'-10"	8
A321	1	#8	STR	1'-6"	4
A322	4	#8	STR	27'-0"	288
A323	6	#8	STR	23'-9"	380
A324	10	#8	STR	15'-9"	421
A400	33	#9	STR	16'-2"	1814
A401	1	#9	STR	14'-10"	50
A402	1	#9	STR	13'-6"	46
A403	1	#9	STR	12'-2"	41
A404	1	#9	STR	10'-10"	37
A405	1	#9	STR	9'-6"	32
A406	1	#9	STR	8'-2"	28
A407	1	#9	STR	6'-10"	23
A408	1	#9	STR	5'-6"	19
A409	1	#9	STR	4'-2"	14
A410	1	#9	STR	2'-10"	10
A411	1	#9	STR	1'-5"	5
A412	4	#9	STR	12'-0"	163
A413	4	#9	STR	10'-0"	136
A450	31	#9	STR	18'-0"	1897
A451	1	#9	STR	16'-11"	58
A452	1	#9	STR	15'-7"	53
A453	1	#9	STR	14'-3"	48
A454	1	#9	STR	12'-11"	44
A455	1	#9	STR	11'-7"	39
A456	1	#9	STR	10'-3"	35
A457	1	#9	STR	8'-11"	30
A458	1	#9	STR	7'-7"	26
A459	1	#9	STR	6'-3"	21
A460	1	#9	STR	4'-11"	17
A461	1	#9	STR	3'-6"	12
A462	1	#9	STR	2'-2"	7
A463	2	#9	STR	16'-0"	109
A464	4	#9	STR	13'-0"	177
A465	6	#9	STR	9'-0"	184
B1	62	#4	STR	11'-1"	459
B2	83	#5	STR	9'-4"	808
B3	112	#4	STR	11'-1"	829
C2	232	#4	STR	14'-8"	2273
D1	54	#6	STR	2'-6"	203
G2	4	#5	STR	32'-4"	135
REINFORCING STEEL				=	18820 LBS.

SPLICE LENGTHS CHART

BAR	SIZE	SPLICE LENGTH
A200	#5	1'-9"
A400	#8	4'-0"
B1	#4	1'-9"
B3	#4	1'-9"
C2	#4	1'-11"

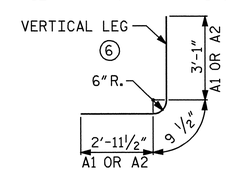

BAR TYPE

BAR DIMENSIONS ARE OUT TO OUT

PROJECT NO. U-4012

DURHAM COUNTY

STATION: 77+89.00-L-

SHEET 5 OF 7

STATE OF NORTH CAROLINA
DEPARTMENT OF TRANSPORTATION
RALEIGH

TRIPLE 9 FT. X 10 FT. CONCRETE BOX CULVERT RIGHT EXTENSION

REVISIONS						SHEET NO.
NO.	BY:	DATE:	NO.	BY:	DATE:	C-5
1			3			TOTAL SHEETS
2			4			7

NORTH CAROLINA PROFESSIONAL SEAL 20125 ENGINEER MARSHALL G. GREEK, JR.

ASSEMBLED BY : L.L. MURPHY	DATE : 01-05	SPECIAL	
CHECKED BY : V.X. NGUYEN	DATE : 02-05		
DRAWN BY : JOEL JOHNSON	DATE : MAR. 1971	STANDARD	
CHECKED BY : GARY BROOME	DATE : MAR. 1971		

REVISED 8-28-92 BY E.L.R. CHECKED BY G.R.P.
REDRAWN NOV. 1990 BY TSS. CHECKED BY ARB
REVISED 11-19-99 BY M.M. CHECKED BY R.W.W.

STD. NO. CB13

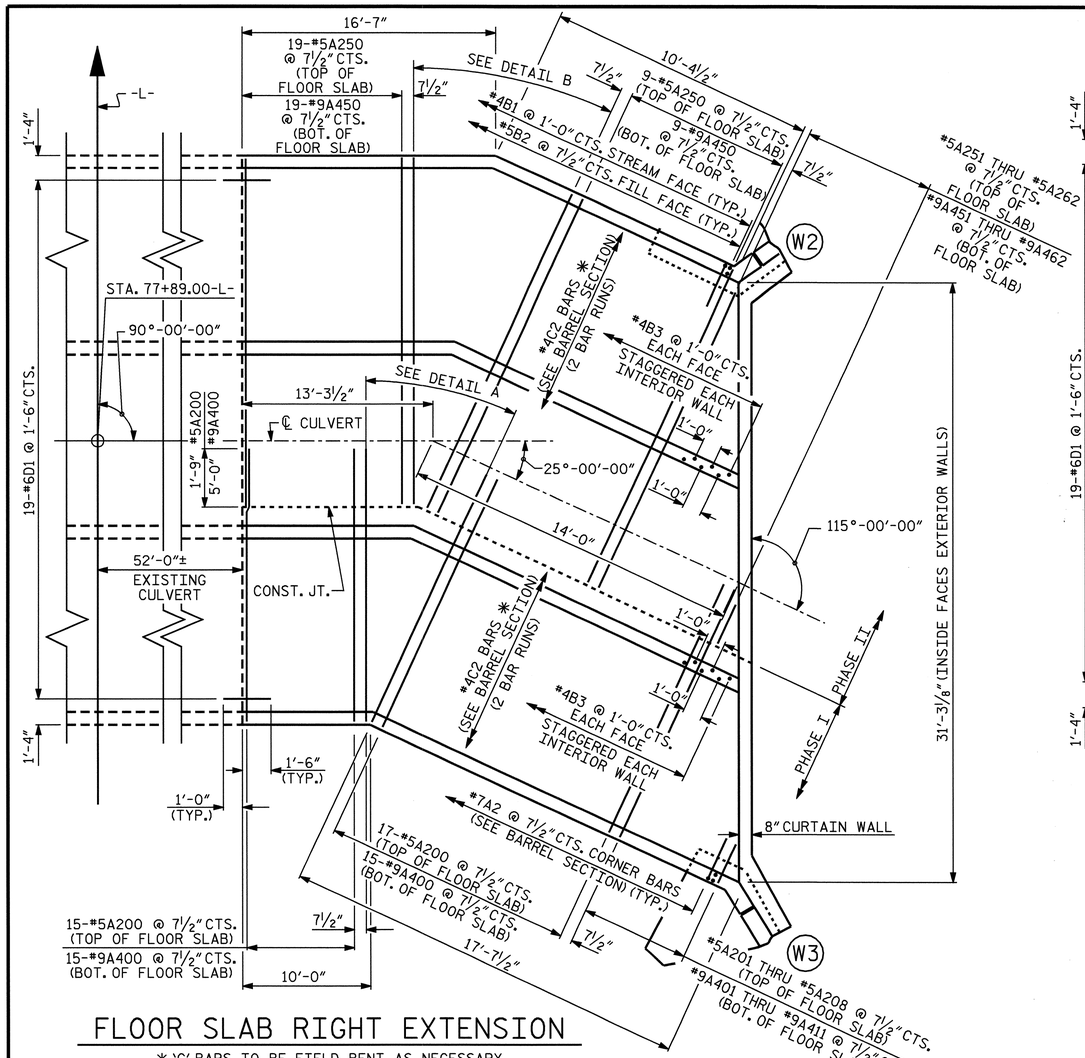

FLOOR SLAB RIGHT EXTENSION

* 'C' BARS TO BE FIELD BENT AS NECESSARY

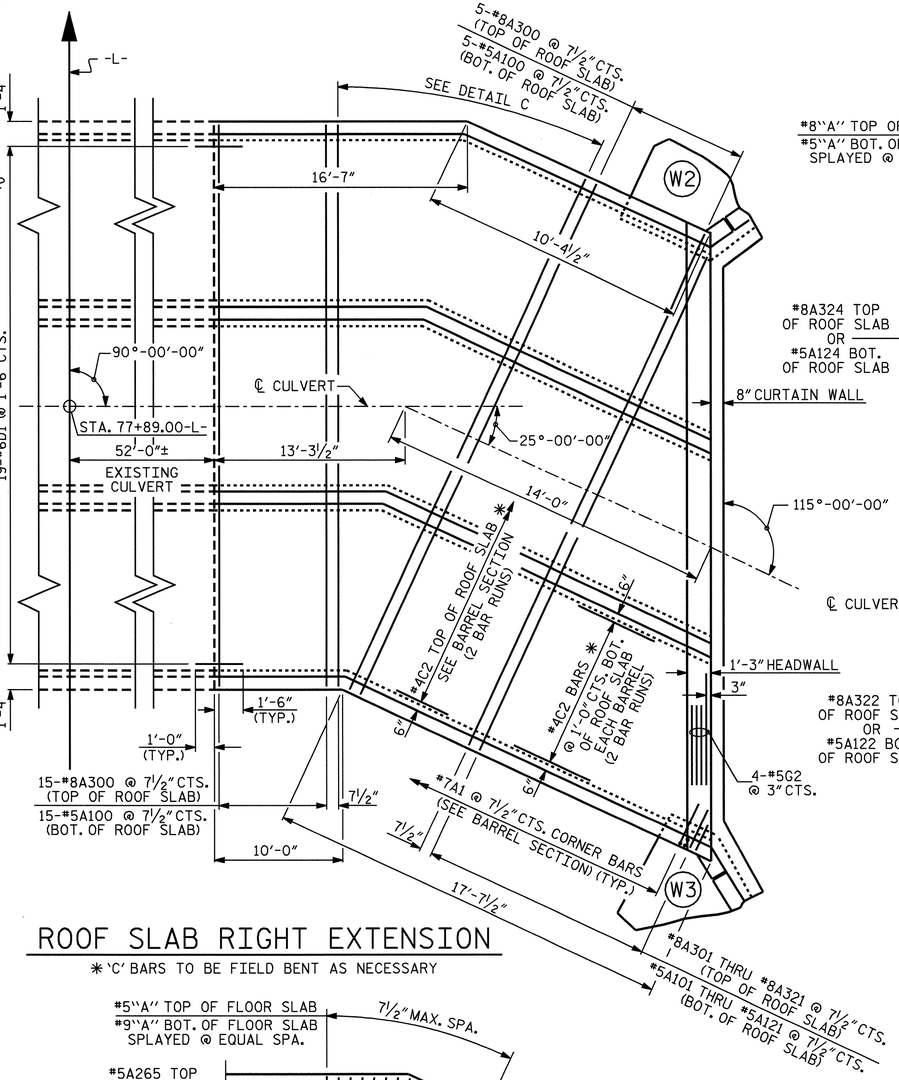

ROOF SLAB RIGHT EXTENSION

* 'C' BARS TO BE FIELD BENT AS NECESSARY

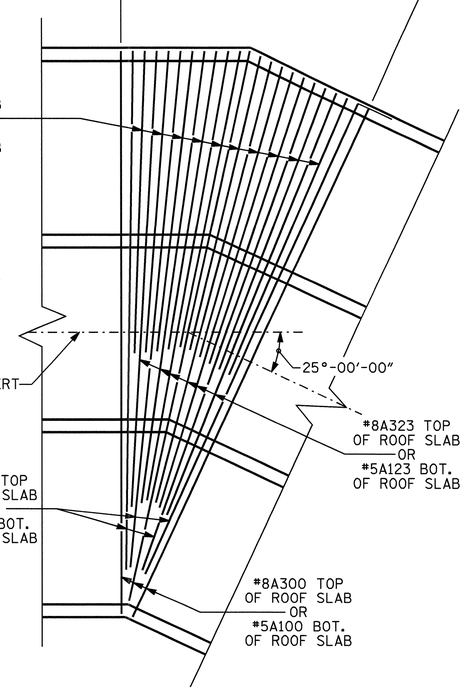

DETAIL C

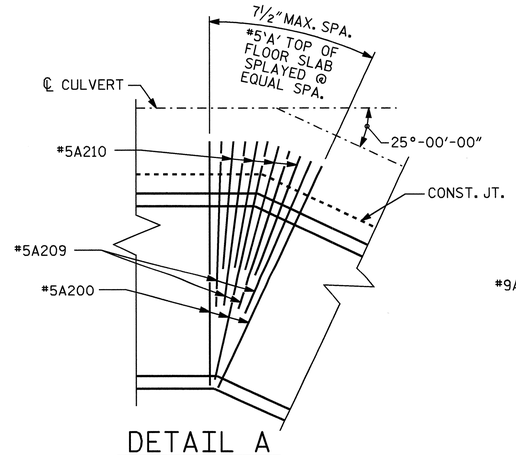

DETAIL A

PHASE I
TOP OF FLOOR SLAB

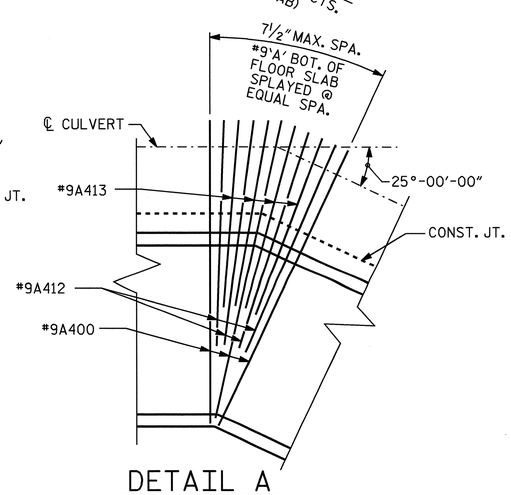

DETAIL A

PHASE I
BOT. OF FLOOR SLAB

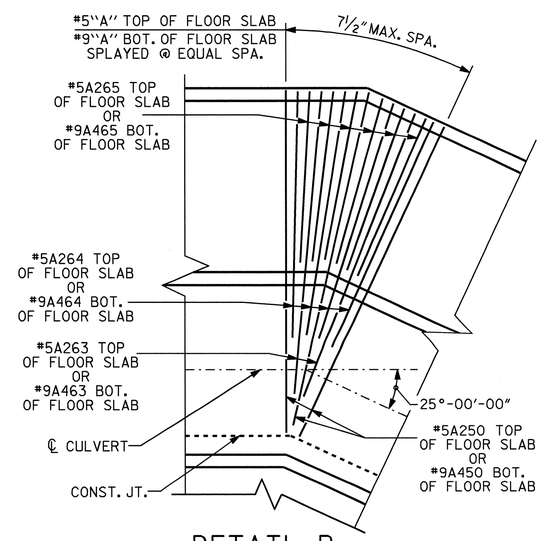

DETAIL B

PHASE II
TOP & BOT. OF FLOOR SLAB

PROJECT NO. U-4012
DURHAM COUNTY
STATION: 77+89.00-L-

SHEET 6 OF 7

STATE OF NORTH CAROLINA
DEPARTMENT OF TRANSPORTATION
RALEIGH

TRIPLE 9 FT. X 10 FT. CONCRETE BOX CULVERT RIGHT EXTENSION

NORTH CAROLINA PROFESSIONAL SEAL 20125 ENGINEER MARSHALL G. CREEK, JR. 6-7-07

REVISIONS						SHEET NO.
NO.	BY:	DATE:	NO.	BY:	DATE:	C-6
1			3			TOTAL SHEETS
2			4			7

DRAWN BY : L.L. MURPHY DATE : 01-05
CHECKED BY : V.X. NGUYEN DATE : 02-05

05-JUN-2007 08:25
R:\Structures\u4012\FinalPlans\Str #5\U4012_sd_CU_03.dgn
dahodge

STR #5

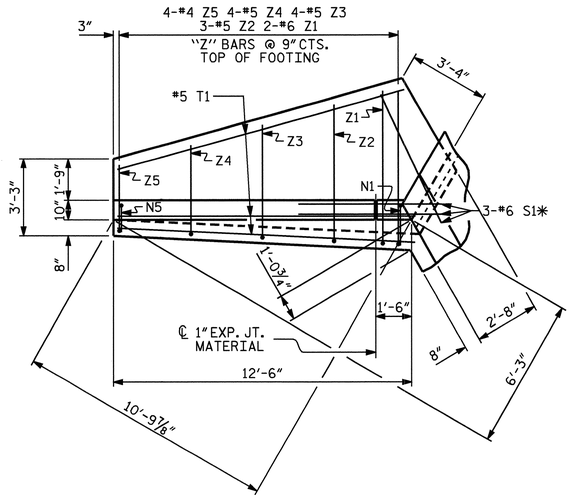

PLAN W3

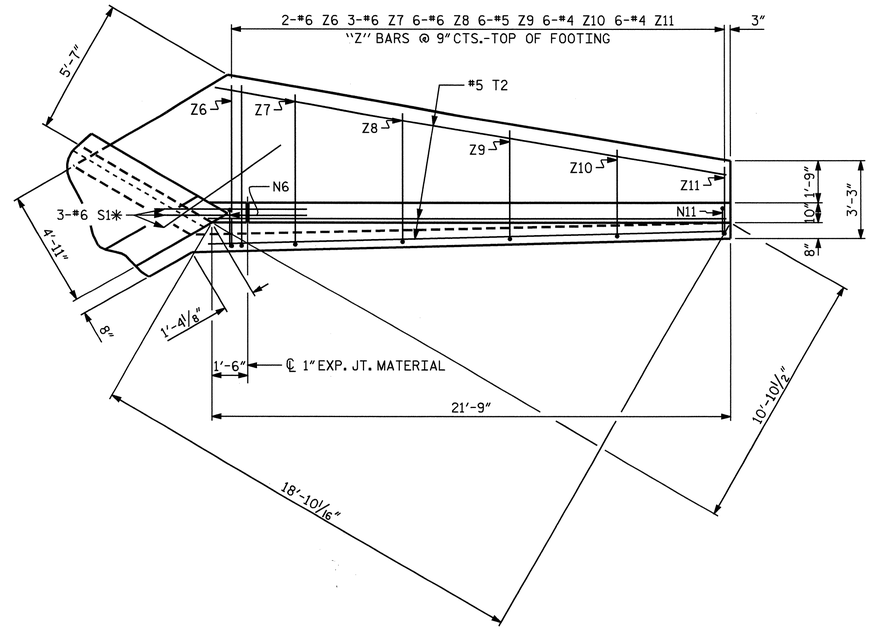

PLAN W2

✱ S1 BARS @ BOTTOM OF FLOOR SLAB AND FOOTING

NOTES

G2 BARS IN HEADWALL ARE INCLUDED WITH BARREL REINFORCING STEEL.

A 3 FOOT STRIP OF FILTER FABRIC SHALL BE ATTACHED TO THE FILL FACE OF THE WING COVERING THE ENTIRE LENGTH OF THE EXPANSION JOINT.

BAR TYPES

ALL BAR DIMENSIONS ARE OUT TO OUT.

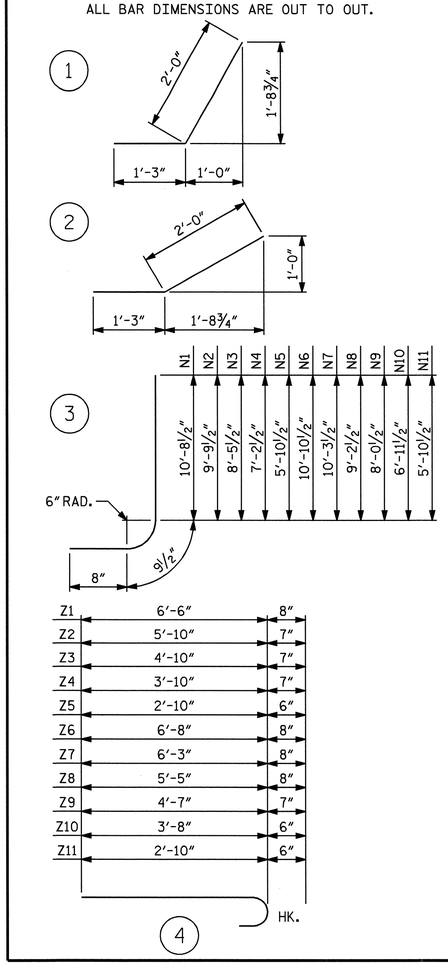

BILL OF MATERIAL

BAR	NO.	SIZE	TYPE	LENGTH	WEIGHT
H1	8	#4	STR	10'-7"	57
H2	2	#4	STR	8'-7"	11
H3	2	#4	STR	5'-2"	7
H4	16	#4	1	3'-3"	35
H5	2	#4	STR	11'-7"	15
H6	8	#4	STR	19'-10"	106
H7	2	#4	STR	16'-4"	22
H8	2	#4	STR	10'-3"	14
H9	2	#4	STR	4'-3"	6
H10	16	#4	2	3'-3"	35
H11	2	#4	STR	20'-5"	27
N1	2	#6	3	12'-2"	37
N2	3	#6	3	11'-3"	51
N3	4	#5	3	9'-11"	41
N4	4	#4	3	8'-8"	23
N5	4	#4	3	7'-4"	20
N6	2	#6	3	12'-4"	37
N7	3	#6	3	11'-9"	53
N8	6	#6	3	10'-8"	96
N9	6	#5	3	9'-6"	59
N10	6	#5	3	8'-5"	53
N11	6	#4	3	7'-4"	29
S1	6	#6	STR	6'-0"	54
T1	3	#5	STR	12'-6"	39
T2	3	#5	STR	21'-9"	68
V1	2	#4	STR	10'-1"	13
V2	2	#4	STR	9'-2"	12
V3	2	#4	STR	7'-11"	11
V4	2	#4	STR	6'-7"	9
V5	2	#4	STR	5'-4"	7
V6	2	#4	STR	10'-4"	14
V7	2	#4	STR	9'-9"	13
V8	3	#4	STR	8'-8"	17
V9	3	#4	STR	7'-6"	15
V10	3	#4	STR	6'-5"	13
V11	3	#4	STR	5'-3"	11
Z1	2	#6	4	7'-2"	22
Z2	3	#5	4	6'-5"	20
Z3	4	#5	4	5'-5"	23
Z4	4	#5	4	4'-5"	18
Z5	4	#4	4	3'-4"	9
Z6	2	#6	4	7'-4"	22
Z7	3	#6	4	6'-11"	31
Z8	6	#6	4	6'-1"	55
Z9	6	#5	4	5'-2"	32
Z10	6	#4	4	4'-2"	17
Z11	6	#4	4	3'-4"	13

REINFORCING STEEL
FOR 2 WINGS 1392 LBS

CLASS A CONCRETE
2 WINGS 18.0 CY
1 HEADWALL 1.5 CY
1 END CURTAIN WALL 1.8 CY

TOTAL 21.3 CY

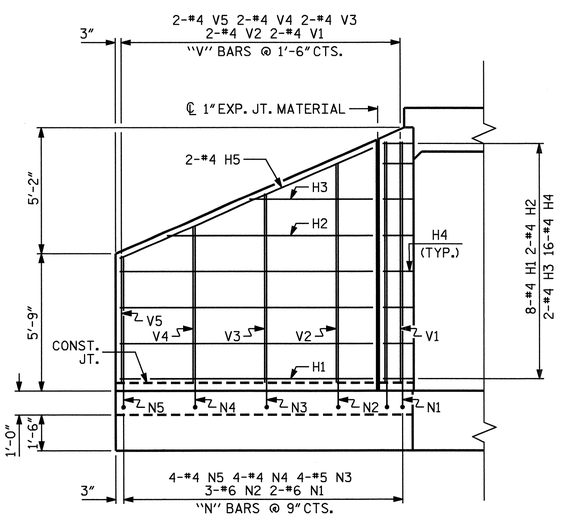

ELEVATION W3

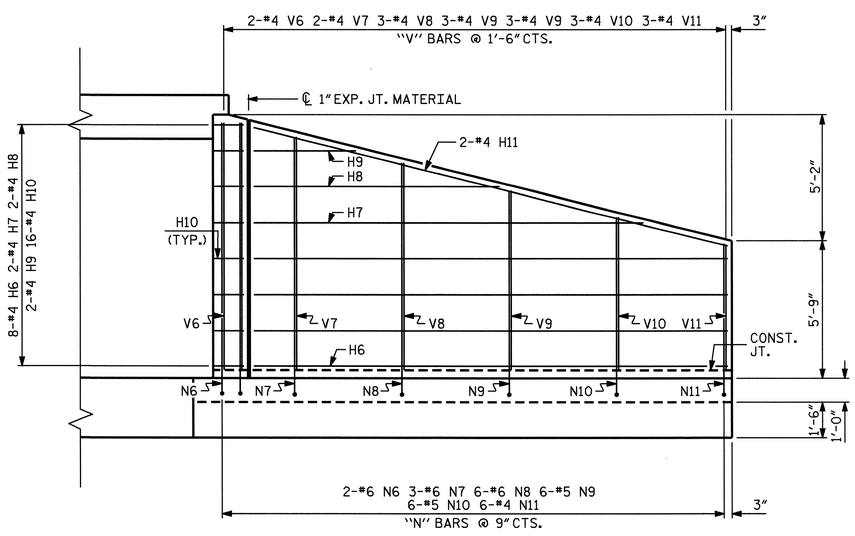

ELEVATION W2

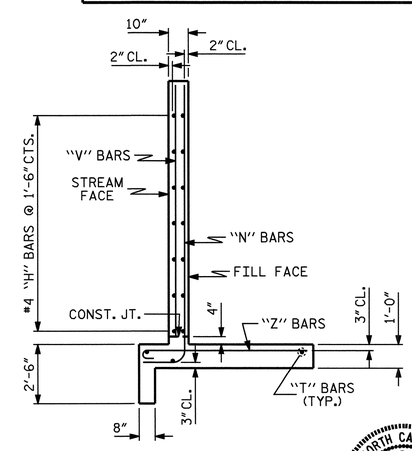

TYPICAL WING SECTION

PROJECT NO. U-4012

DURHAM COUNTY

STATION: 77+89.00-L-

SHEET 7 OF 7

STATE OF NORTH CAROLINA
DEPARTMENT OF TRANSPORTATION
RALEIGH

STANDARD WINGS FOR REINFORCED CONCRETE BOX CULVERT

H = 10'-0" SLOPE = 2:1
RIGHT EXTENSION

NORTH CAROLINA PROFESSIONAL SEAL 20125 ENGINEER MARSHALL N. STEEL, JR.
6-7-07

REVISIONS						SHEET NO.
NO.	BY:	DATE:	NO.	BY:	DATE:	C-7
1			3			TOTAL SHEETS
2			4			7

ASSEMBLED BY :	L.L. MURPHY	DATE : 01-05
CHECKED BY :	V.X. NGUYEN	DATE : 02-05
DRAWN BY :	CCJ	12/99
CHECKED BY :	RWW	03/00

STANDARD NOTES

DESIGN DATA:

SPECIFICATIONS	A.A.S.H.T.O. (CURRENT)
LIVE LOAD	SEE PLANS
IMPACT ALLOWANCE	SEE A.A.S.H.T.O.
STRESS IN EXTREME FIBER OF	
STRUCTURAL STEEL - AASHTO M270 GRADE 36	20,000 LBS. PER SQ. IN.
- AASHTO M270 GRADE 50W	27,000 LBS. PER SQ. IN.
- AASHTO M270 GRADE 50	27,000 LBS. PER SQ. IN.
REINFORCING STEEL IN TENSION	
GRADE 60	24,000 LBS. PER SQ. IN.
CONCRETE IN COMPRESSION	1,200 LBS. PER SQ. IN.
CONCRETE IN SHEAR	SEE A.A.S.H.T.O.
STRUCTURAL TIMBER - TREATED OR	
UNTREATED - EXTREME FIBER STRESS	1,800 LBS. PER SQ. IN.
COMPRESSION PERPENDICULAR TO GRAIN OF TIMBER	375 LBS. PER SQ. IN.
EQUIVALENT FLUID PRESSURE OF EARTH	30 LBS. PER CU. FT. (MINIMUM)

MATERIAL AND WORKMANSHIP:

EXCEPT AS MAY OTHERWISE BE SPECIFIED ON PLANS OR IN THE SPECIAL PROVISIONS, ALL MATERIAL AND WORKMANSHIP SHALL BE IN ACCORDANCE WITH THE 2002 STANDARD SPECIFICATIONS "FOR ROADS AND STRUCTURES" OF THE N. C. DEPARTMENT OF TRANSPORTATION.

STEEL SHEET PILING FOR PERMANENT OR TEMPORARY APPLICATIONS SHALL BE HOT ROLLED.

CONCRETE:

UNLESS OTHERWISE REQUIRED ON PLANS, CLASS A CONCRETE SHALL BE USED FOR ALL PORTIONS OF ALL STRUCTURES WITH THE EXCEPTION THAT: CLASS AA CONCRETE SHALL BE USED IN BRIDGE SUPERSTRUCTURES, ABUTMENT BACKWALLS, AND APPROACH SLABS; CLASS B CONCRETE SHALL BE USED FOR SLOPE PROTECTION AND RIP RAP; AND CLASS S SHALL BE USED FOR UNDERWATER FOOTING SEALS.

CONCRETE CHAMFERS:

UNLESS OTHERWISE NOTED ON THE PLANS, ALL EXPOSED CORNERS ON STRUCTURES SHALL BE CHAMFERED 3/4" WITH THE FOLLOWING EXCEPTIONS: TOP CORNERS OF CURBS MAY BE ROUNDED TO 1-1/2" RADIUS WHICH IS BUILT INTO CURB FORMS; CORNERS OF TRANSVERSE FLOOR EXPANSION JOINTS SHALL BE ROUNDED WITH A 1/4" FINISHING TOOL UNLESS OTHERWISE REQUIRED ON PLANS; AND CORNERS OF EXPANSION JOINTS IN THE ROADWAY FACES AND TOPS OF CURBS AND SIDEWALKS SHALL BE ROUNDED TO A 1/4" RADIUS WITH A FINISHING STONE OR TOOL UNLESS OTHERWISE REQUIRED ON PLANS.

DOWELS:

DOWELS WHEN INDICATED ON PLANS AS FOR CULVERT EXTENSIONS, SHALL BE EMBEDDED AT LEAST 12" INTO THE OLD CONCRETE AND GROUTED INTO PLACE WITH 1:2 CEMENT MORTAR.

ALLOWANCE FOR DEAD LOAD DEFLECTION, SETTLEMENT, ETC. IN CASTING SUPERSTRUCTURES:

BRIDGES SHALL BE BUILT ON THE GRADE OR VERTICAL CURVE SHOWN ON PLANS. SLABS, CURBS AND PARAPETS SHALL CONFORM TO THE GRADE OR CURVE.

ALL DIMENSIONS WHICH ARE GIVEN IN SECTION AND ARE AFFECTED BY DEAD LOAD DEFLECTIONS ARE DIMENSIONS AT CENTER LINE OF BEARING UNLESS OTHERWISE NOTED ON PLANS. IN SETTING FORMS FOR STEEL BEAM BRIDGES AND PRESTRESSED CONCRETE GIRDER BRIDGES, ADJUSTMENTS SHALL BE MADE DUE TO THE DEAD LOAD DEFLECTIONS FOR THE ELEVATIONS SHOWN. WHERE BLOCKS ARE SHOWN OVER BEAMS FOR BUILDING UP TO THE SLAB, THE VERTICAL DIMENSIONS OF THE BLOCKS SHALL BE ADJUSTED BETWEEN BEARINGS TO COMPENSATE FOR DEAD LOAD DEFLECTIONS, VERTICAL CURVE ORDINATE, AND ACTUAL BEAM CAMBER. WHERE BOTTOM OF SLAB IS IN LINE WITH BOTTOM OF TOP FLANGES, DEPTH OF SLAB BETWEEN BEARINGS SHALL BE ADJUSTED TO COMPENSATE FOR DEAD LOAD DEFLECTION, VERTICAL CURVE ORDINATE, AND ACTUAL BEAM CAMBER.

IN SETTING FALSEWORK AND FORMS FOR REINFORCED CONCRETE SPANS, AN ALLOWANCE SHALL BE MADE FOR DEAD LOAD DEFLECTIONS, SETTLEMENT OF FALSEWORK, AND PERMANENT CAMBER WHICH SHALL BE PROVIDED FOR IN ADDITION TO THE ELEVATIONS SHOWN. AFTER REMOVAL OF THE FALSEWORK, THE FINISHED STRUCTURES SHALL CONFORM TO THE PROFILE AND ELEVATIONS SHOWN ON THE PLANS AND CONSTRUCTION ELEVATIONS FURNISHED BY THE ENGINEER.

DETAILED DRAWINGS FOR FALSEWORK OR FORMS FOR BRIDGE SUPERSTRUCTURE AND ANY STRUCTURE OR PARTS OF A STRUCTURE AS NOTED ON THE PLANS SHALL BE SUBMITTED TO THE ENGINEER FOR APPROVAL BEFORE CONSTRUCTION OF THE FALSEWORK OR FORMS IS STARTED.

REINFORCING STEEL:

ALL REINFORCING STEEL SHALL BE DEFORMED WITH THE EXCEPTION OF #2 BARS WHICH MAY BE FABRICATED FROM COLD DRAWN STEEL WIRE. DIMENSIONS RELATIVE TO PLACEMENT OF REINFORCING ARE TO CENTERS OF BARS UNLESS OTHERWISE INDICATED IN THE PLANS. DIMENSIONS ON BAR DETAILS ARE TO CENTERS OF BARS OR ARE OUT TO OUT AS INDICATED ON PLANS.

WIRE BAR SUPPORTS SHALL BE PROVIDED FOR REINFORCING STEEL WHERE INDICATED ON THE PLANS. WHEN BAR SUPPORT PIECES ARE PLACED IN CONTINUOUS LINES, THEY SHALL BE SO PLACED THAT THE ENDS OF THE SUPPORTING WIRES SHALL BE LAPPED TO LOCK LEGS ON ADJOINING PIECES.

STRUCTURAL STEEL:

AT THE CONTRACTOR'S OPTION, HE MAY SUBSTITUTE 7/8" Ø SHEAR STUDS FOR THE 3/4" Ø STUDS SPECIFIED ON THE PLANS. THIS SUBSTITUTION SHALL BE MADE AT THE RATE OF 3 - 7/8" Ø STUDS FOR 4 - 3/4" Ø STUDS, AND STUD SPACING CHANGES SHALL BE MADE AS NECESSARY TO PROVIDE THE SAME EQUIVALENT NUMBER OF 7/8" Ø STUDS ALONG THE BEAM AS SHOWN FOR 3/4" Ø STUDS BASED ON THE RATIO OF 3 - 7/8" Ø STUDS FOR 4 - 3/4" Ø STUDS. STUDS OF THE LENGTH SPECIFIED ON THE PLANS MUST BE PROVIDED. THE MAXIMUM SPACING SHALL BE 2'-0".

EXCEPT AT THE INTERIOR SUPPORTS OF CONTINUOUS BEAMS WHERE THE COVER PLATE IS IN CONTACT WITH BEARING PLATE, THE CONTRACTOR MAY, AT HIS OPTION, SUBSTITUTE FOR THE COVER PLATES DESIGNATED ON THE PLANS COVER PLATES OF THE EQUIVALENT AREA PROVIDED THESE PLATES ARE AT LEAST 5/16" IN THICKNESS AND DO NOT EXCEED A WIDTH EQUAL TO THE FLANGE WIDTH LESS 2" OR A THICKNESS EQUAL TO 2 TIMES THE FLANGE THICKNESS. THE SIZE OF FILLET WELDS SHALL CONFORM TO THE REQUIREMENTS OF THE CURRENT ANSI/AASHTO/AWS "BRIDGE WELDING CODE". ELECTROSLAG WELDING WILL NOT BE PERMITTED.

PLACEMENT OF BEAM OR GIRDER MEMBERS ON TRUCKS FOR HAULING SHALL BE DONE IN COMPLIANCE WITH LIMITS SHOWN ON SKETCHES PROVIDED TO THE MATERIALS AND TEST UNIT APPROVED BY THE STRUCTURE DESIGN UNIT DATED MAY 8, 1991. THESE SKETCHES PRIMARILY LIMIT THE UNSUPPORTED CANTILEVER LENGTH OF MEMBERS. WHEN THE CONTRACTOR WISHES TO PLACE MEMBERS ON TRUCKS NOT IN ACCORDANCE WITH THESE LIMITS, TO SHIP BY RAIL, TO ATTACH SHIPPING RESTRAINTS TO THE MEMBERS OR TO INVERT MEMBERS, HE SHALL SUBMIT A SKETCH FOR APPROVAL PRIOR TO SHIPPING. SEE ALSO ARTICLE 1072-11.

WITH THE SOLE EXCEPTION OF EDGES AT SURFACES WHICH BEAR ON OTHER SURFACES, ALL SHARP EDGES AND ENDS OF SHAPES AND PLATES SHALL BE SLIGHTLY ROUNDED BY SUITABLE MEANS TO A RADIUS OF APPROXIMATELY 1/16 INCH OR EQUIVALENT FLAT SURFACE AT A SUITABLE ANGLE PRIOR TO PAINTING, GALVANIZING, OR METALLIZING.

HANDRAILS AND POSTS:

METAL STANDARDS AND FACES OF THE CONCRETE END POSTS FOR THE METAL RAIL SHALL BE SET NORMAL TO THE GRADE OF THE CURB, UNLESS OTHERWISE SHOWN ON PLANS. THE METAL RAIL AND TOPS OF CONCRETE POSTS USED WITH THE ALUMINUM RAIL SHALL BE BUILT PARALLEL TO THE GRADE OF THE CURB.

METAL HANDRAILS SHALL BE IN ACCORDANCE WITH THE PLANS. RAILS SHALL BE AS MANUFACTURED FOR BRIDGE RAILING. CASTINGS SHALL BE OF A UNIFORM APPEARANCE. FINS AND OTHER DEFORMATIONS RESULTING FROM CASTING OR OTHERWISE SHALL BE REMOVED IN A MANNER SO THAT A UNIFORM COLORING OF THE COMPLETED CASTING SHALL BE OBTAINED. CASTINGS WITH DISCOLORATIONS OR OF NON-UNIFORM COLORING WILL NOT BE ACCEPTED. CERTIFIED MILL REPORTS ARE REQUIRED FOR METAL RAILS AND POSTS.

SPECIAL NOTES:

GENERALLY, IN CASE OF DISCREPANCY, THIS STANDARD SHEET OF NOTES SHALL GOVERN OVER THE SPECIFICATIONS, BUT THE REMAINDER OF THE PLANS SHALL GOVERN OVER NOTES HEREON, AND SPECIAL PROVISIONS SHALL GOVERN OVER ALL. SEE SPECIFICATIONS ARTICLE 105-4.

ENGLISH

JANUARY, 1990

STD. NO. SN