STATE	STATE PROJECT REFERENCE NO.	SHEET NO.
N.C.	U-3823A	UC-1
STATE PROJ. NO.	F.A. PROJ. NO.	DESCRIPTION

STATE OF NORTH CAROLINA
DIVISION OF HIGHWAYS

UTILITY CONSTRUCTION PLANS
WILSON COUNTY

LOCATION: SR 1158 (AIRPORT BLVD.) FROM EAST OF NC 42 TO EAST OF CAROLINA AND NORTHWESTERN RAILROAD

TYPE OF WORK: UTILITIES RELOCATION

NOTE:
BIDDERS ARE STRONGLY ENCOURAGED TO REVIEW THE 2006 EDITION OF THE NCDOT STANDARD SPECIFICATIONS CONCERNING DESCRIPTIONS FOR MEASUREMENT AND PAYMENT OF UTILITY PAY ITEMS

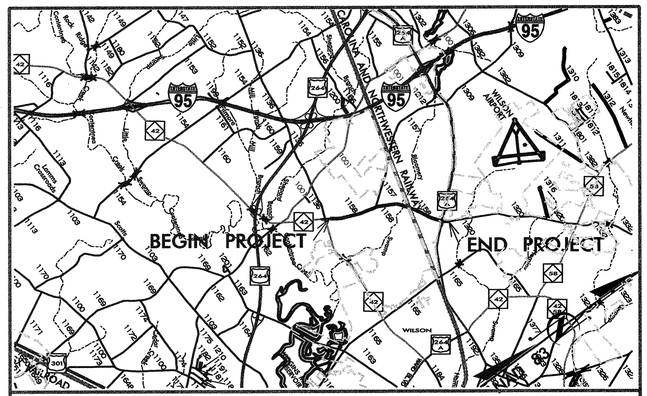

VICINITY MAP

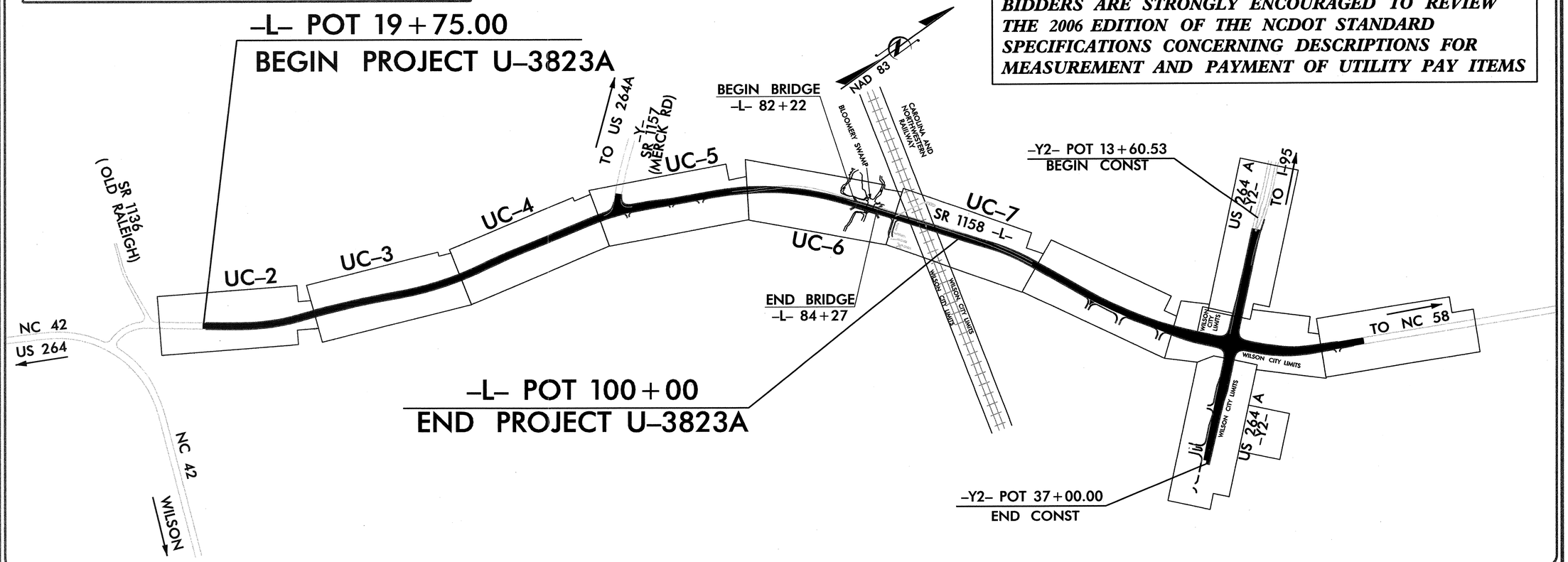

GRAPHIC SCALES

50 25 0 50 100
PLANS

50 25 0 50 100
PROFILE (HORIZONTAL)

5 0 5 10
PROFILE (VERTICAL)

INDEX OF SHEETS

SHEET No.	DESCRIPTION
UC-1	TITLE SHEET
UC-2 THRU UC-7	UTILITY CONSTRUCTION DRAWINGS
UC-8	PROFILE SHEET
UC-9 THRU UC-12	DETAIL SHEETS

UTILITY OWNERS ON PROJECT

CITY OF WILSON

Municipal Services Engineering Company, P.A.
P.O. BOX 97 GARNER, N.C. 27529 (919) 772-5393
P.O. BOX 349 BOONE, N.C. 28607 (828) 262-1767
P.O. BOX 276 MOREHEAD CITY, N.C. 28557 (252) 726-9481

JIMMY D. WOODIE
UTILITY ENGINEER
DATE

TIP PROJECT: U-3823A
CONTRACT: C201301

$$$$$$SYSTIME$$$$$$DGN$$$$$$USERNAME$$$$

...\U3823\U3823A\G04121A-uc1.dgn 03/07/2007 02:29:05 PM

PROJECT REFERENCE NO.	SHEET NO.
U-3823A	UC-2

UTILITY CONSTRUCTION DRAWINGS

Municipal Services Engineering Company, P.A.

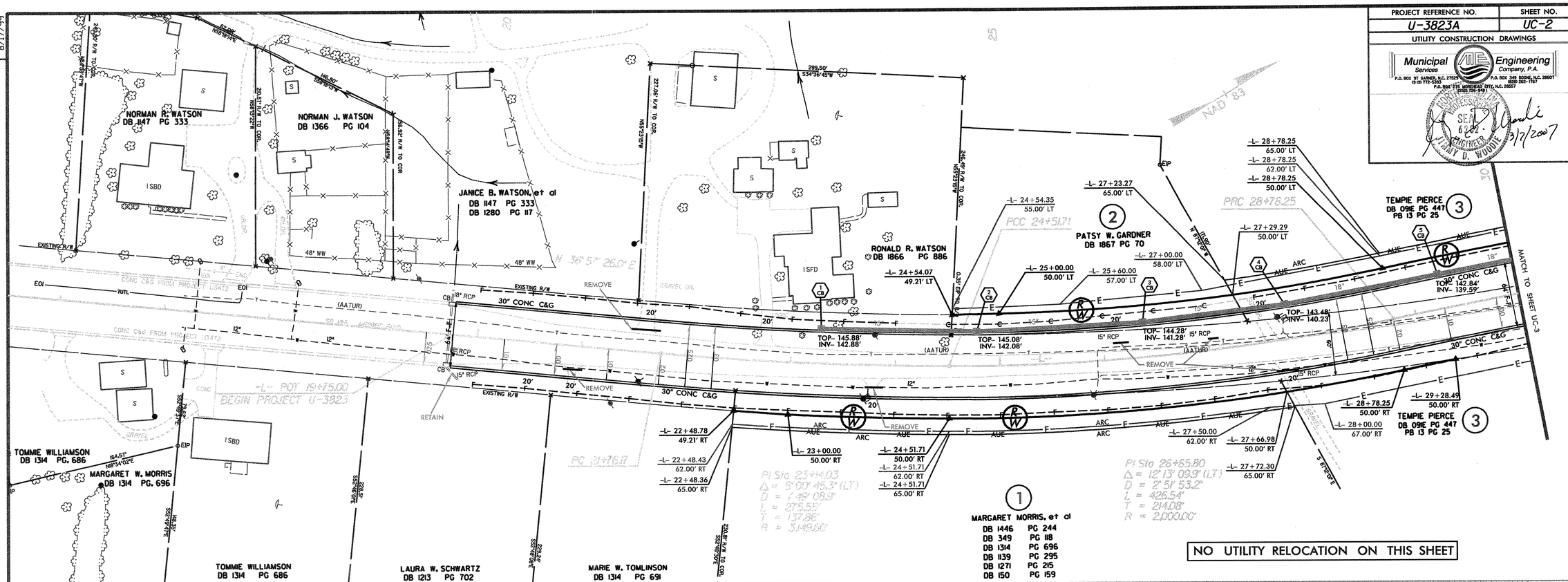

NO UTILITY RELOCATION ON THIS SHEET

REVISIONS

8/17/99

$$$$$$SYSTIME$$$$$$
$$$$$$USERNAME$$$$$$DGN$$$$$$

...\U3823\U3823A\G04121A-uc2.dgn 03/07/2007 10:39:26 AM

PROJECT REFERENCE NO.	SHEET NO.
U-3823A	UC-3

UTILITY CONSTRUCTION DRAWINGS

Municipal Services Engineering Company, P.A.

P.O. BOX 97 GARNER, N.C. 27529 (919) 772-5393

P.O. BOX 349 BOONE, N.C. 28607 (828) 262-1767

P.O. BOX 336 HENDERSONVILLE, N.C. 28793 (828) 697-9487

NORTH CAROLINA PROFESSIONAL SEAL 042 ENGINEER JAMMY D. WOODIE

3/7/2007

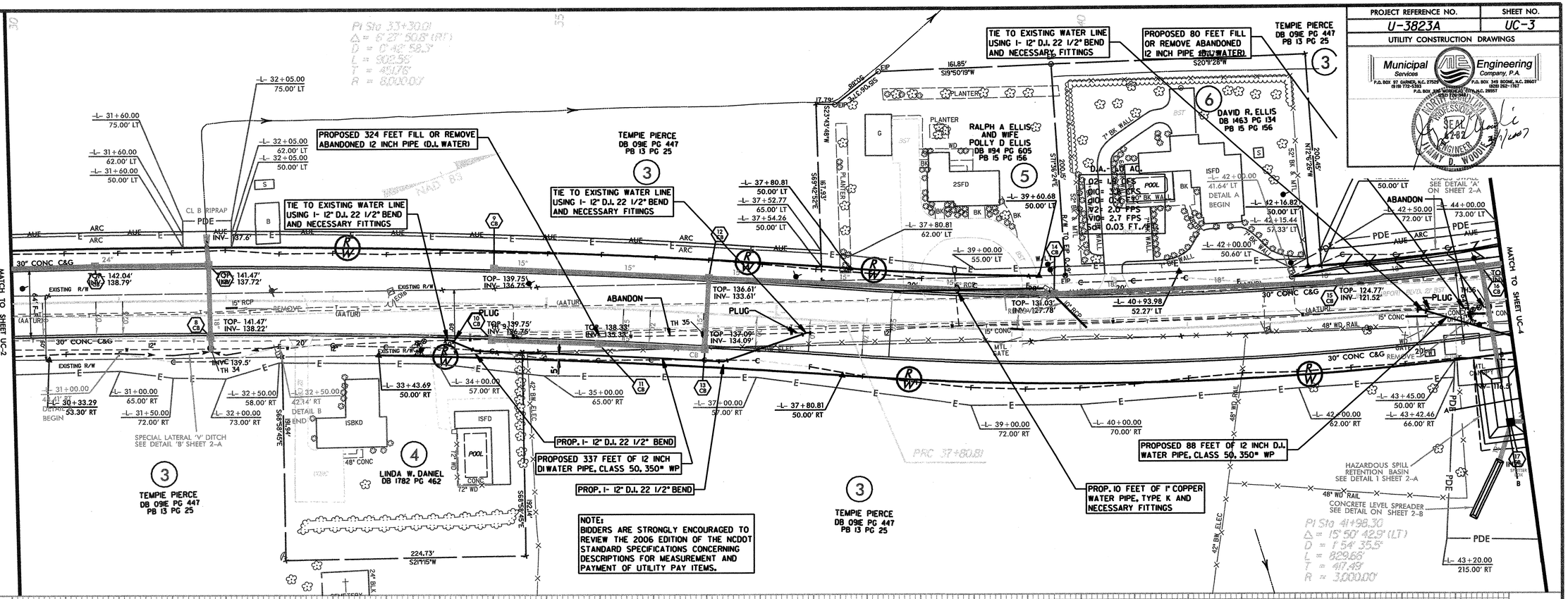

NOTE:
BIDDERS ARE STRONGLY ENCOURAGED TO REVIEW THE 2006 EDITION OF THE NCDOT STANDARD SPECIFICATIONS CONCERNING DESCRIPTIONS FOR MEASUREMENT AND PAYMENT OF UTILITY PAY ITEMS.

REVISIONS

8/17/99

$$$$$SYSTIME$$$$$
$$$$$DGN$$$$$
$$$$USERNAME$$$$

...\U3823\U3823A\G04121A-uc3.dgn 03/07/2007 10:42:49 AM

PROJECT REFERENCE NO.	SHEET NO.
U-3823A	UC-4

UTILITY CONSTRUCTION DRAWINGS

Municipal Services Engineering Company, P.A.

P.O. BOX 97 GARNER, N.C. 27529 (919) 772-5393
P.O. BOX 990 ONEONTA, N.C. 28607 (828) 262-1767
P.O. BOX 276 MOREHEAD CITY, N.C. 28557 (252) 726-9621

NORTH CAROLINA PROFESSIONAL SEAL 6282 ENGINEER JIMMY D. WOODIE 3/7/2007

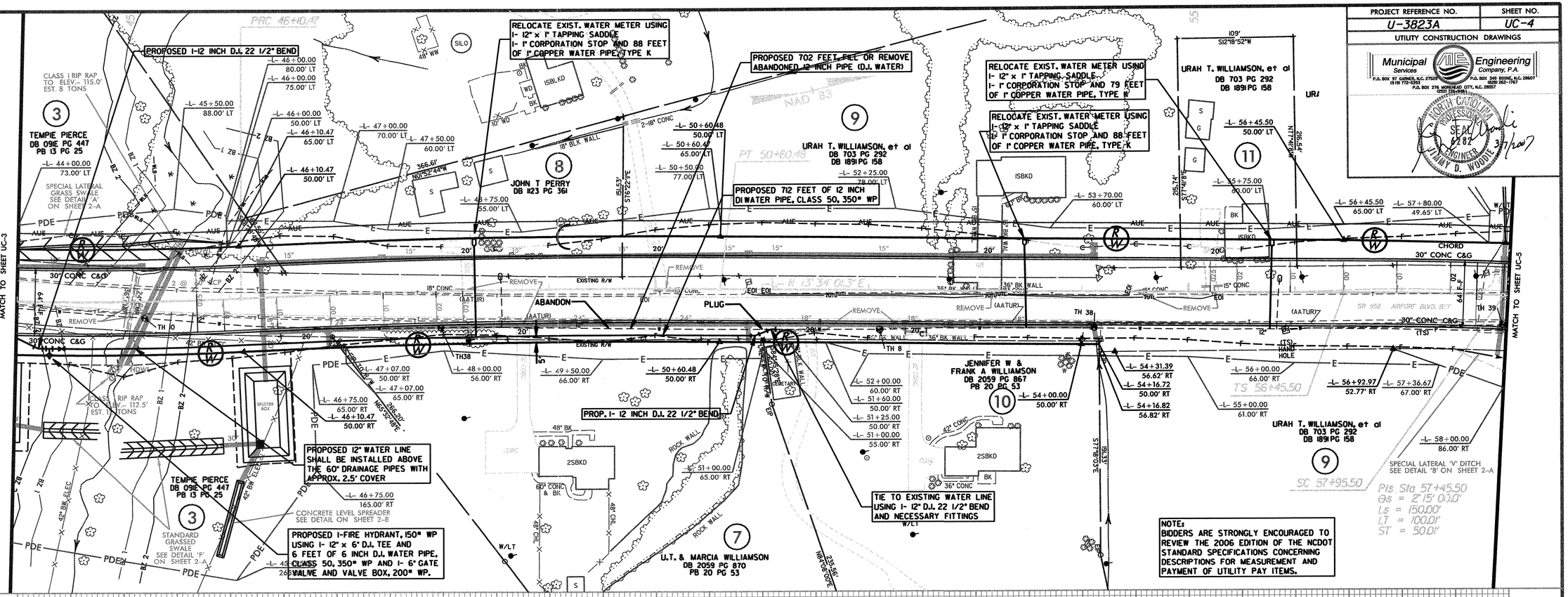

NOTE:
BIDDERS ARE STRONGLY ENCOURAGED TO REVIEW THE 2006 EDITION OF THE NCDOT STANDARD SPECIFICATIONS CONCERNING DESCRIPTIONS FOR MEASUREMENT AND PAYMENT OF UTILITY PAY ITEMS.

REVISIONS

8/17/99

$$$$$$SYSTIME$$$$$$DGN$$$$$$USERNAME$$$$$$

...\U3823\U3823A\G04121A-uc4.dgn 03/07/2007 10:56:06 AM

PROJECT REFERENCE NO.	SHEET NO.
U-3823A	UC-5

UTILITY CONSTRUCTION DRAWINGS

Municipal Services Engineering Company, P.A.

P.O. BOX 97 GARNER, N.C. 27529 (919) 772-5393
P.O. BOX 349 BOONE, N.C. 28607 (828) 262-1767
P.O. BOX 276 MOREHEAD CITY, N.C. 28557 (252) 726-9481

NORTH CAROLINA PROFESSIONAL SEAL 6282 ENGINEER JIMMY D. WOODIE 3/7/2007

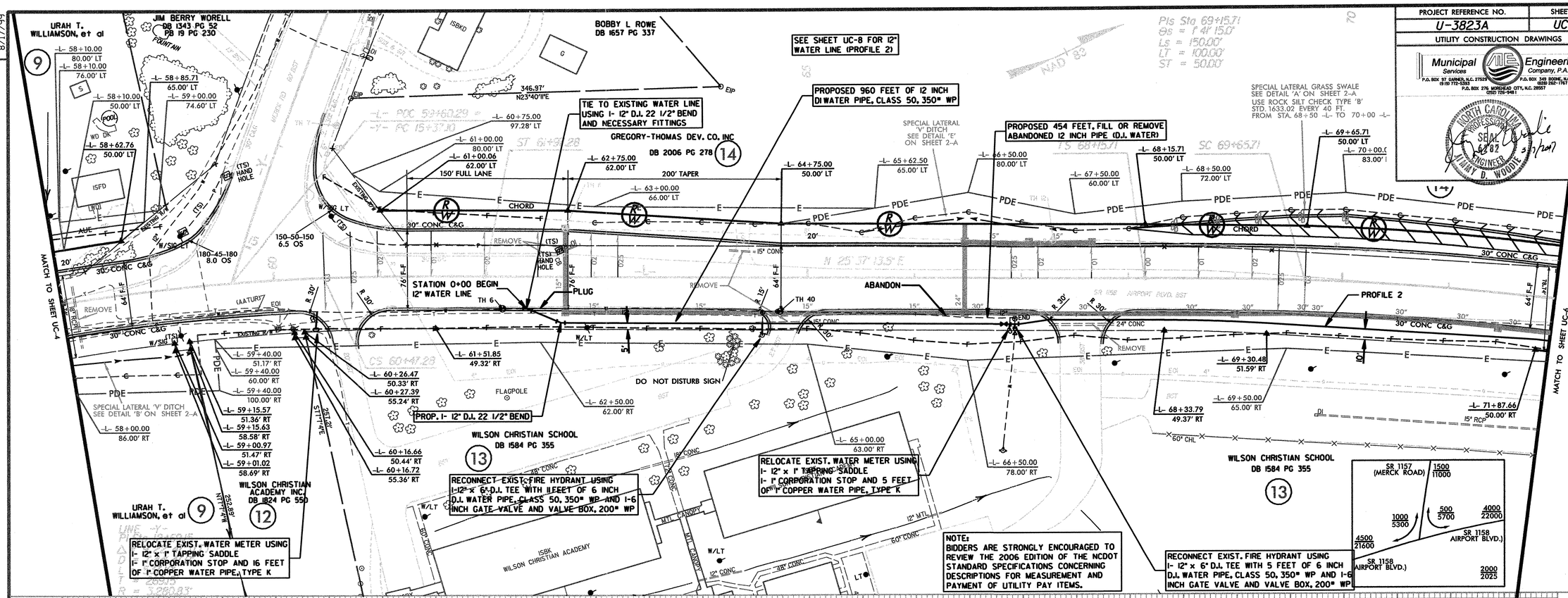

NOTE:
BIDDERS ARE STRONGLY ENCOURAGED TO REVIEW THE 2006 EDITION OF THE NCDOT STANDARD SPECIFICATIONS CONCERNING DESCRIPTIONS FOR MEASUREMENT AND PAYMENT OF UTILITY PAY ITEMS.

REVISIONS

8/17/99

$$$$$$SYSTIME$$$$$$DGN$$$$$$USERNAME$$$$$$

...\U3823\U3823A\G04121A-uc5.dgn 03/07/2007 12:25:34 PM

PROJECT REFERENCE NO.	SHEET NO.
U-3823A	UC-6

UTILITY CONSTRUCTION DRAWINGS

Municipal Services Engineering Company, P.A.
P.O. BOX 97 GARNER, N.C. 27529 (919) 772-5393
P.O. BOX 369 BOONE, N.C. 28607 (828) 262-1767
P.O. BOX 276 MOREHEAD CITY, N.C. 28557

NORTH CAROLINA PROFESSIONAL ENGINEER SEAL 16282 JOHN D. WOODS
3/7/2007

8/17/99

REVISIONS

GREGORY-THOMAS DEV. CO. INC
DB 2006 PG 278

SPECIAL LATERAL GRASS SWALE SEE DETAIL 'A' ON SHEET 2-A
USE ROCK SILT CHECK TYPE 'B' STD. 1633.02 EVERY 40 FT. FROM STA. 73+50 -L- TO 75+00 -L-

PROPOSED 104 FEET OF 24 INCH D.I. SEWER PIPE, CLASS 50, (TO BE INSTALLED ALONG THE SAME GRADE AND ALIGNMENT)

PROPOSED 1-8" D.I. PLUG

PROPOSED 959 FEET OF 12 INCH D.I. WATER PIPE, CLASS 50, 350# WP

WILSON CHRISTIAN SCHOOL
DB 1584 PG 355

PROPOSED 1- 12" x 8" D.I. TEE WITH 75 FEET OF 8 INCH D.I. WATER PIPE, CLASS 50, 350# WP AND 1-8 INCH GATE VALVE AND VALVE BOX, 200# WP

NOTE: BIDDERS ARE STRONGLY ENCOURAGED TO REVIEW THE 2006 EDITION OF THE NCDOT STANDARD SPECIFICATIONS CONCERNING DESCRIPTIONS FOR MEASUREMENT AND PAYMENT OF UTILITY PAY ITEMS.

GREGORY-THOMAS DEV. CO. INC

PROPOSED MANHOLE 'A' STA. 0+00 LINE 1
STA. 77+01 45 FEET RIGHT OF LINE -L-

PROPOSED 1-12 INCH GATE VALVE AND VALVE BOX, 200# WP
REMOVE PAVEMENT
REMOVE 2-UTILITY MANHOLE

PROFILE 2

PROPOSED 233 FEET OF 12 INCH D.I. SEWER PIPE, CLASS 50

PROP. 2- 12 INCH D.I. 45° BEND

PROPOSED 242 FEET OF 12 INCH D.I. SEWER PIPE, CLASS 50

CONCRETE LEVEL SPREADER SEE DETAIL ON SHEET 2-B

HAZARDOUS SPILL RETENTION BASIN SEE DETAIL '3' SHEET 2-A

NOTE: CONTRACTOR WILL BE RESPONSIBLE FOR ANY NECESSARY PUMPING AND HAULING OF SEWER. THIS SHALL BE CONSIDERED INCIDENTAL TO THE COST OF THE PROP. 24 INCH D.I. SEWER PIPE

PROPOSED MANHOLE 'B' STA. 2+33 LINE 1
STA. 79+38 45 FEET RIGHT OF LINE -L-

PROPOSED 390 FEET, FILL OR REMOVE ABANDONED 12" SEWER PIPE (PVC)

ABANDON

BEGIN 14" HDPE, DR 9
CS 80+33.53
ST 81+83.53

WILSON CHRISTIAN SCHOOL
DB 1584 PG 355

PROP. MANHOLE 'C' WITH VENT, STA. 4+75 LINE 1
STA. 81+83 45 FEET RIGHT OF LINE -L-

PROPOSED 280 FEET OF 12 INCH D.I. SEWER PIPE, CLASS 50

CLASS II RIP RAP TO ELEV. = 111.0'

PROPOSED 144 FEET OF 16 INCH PVC SEWER PIPE, SDR 35

PROPOSED 52 FEET OF 12 INCH D.I. WATER PIPE, CLASS 50, 350# WP

PROP. 145 FEET-24 INCH STEEL ENCASEMENT PIPE, 0.344" THICK, BY OPEN CUT

END 14" HDPE, DR 9

PROP. MANHOLE 'D' WITH VENT, STA. 7+55 LINE 1
STA. 84+59 45 FEET RIGHT OF LINE -L-

PROPOSED 1-12 INCH GATE VALVE AND VALVE BOX, 200# WP

PROP. 1- 12 INCH D.I. 45° BEND

REMOVE UTILITY MANHOLE

PROP. 395 FEET OF 14 INCH HDPE, WATER PIPE, DR 9

TIE TO EXISTING WATER PIPE USING 1- 12 INCH D.I. 45° BEND AND NECESSARY FITTINGS

HERITAGE PLACE OF WILSON, LLC
DB 1826 PG 743

MATCH TO SHEET UC-5

MATCH TO SHEET UC-7

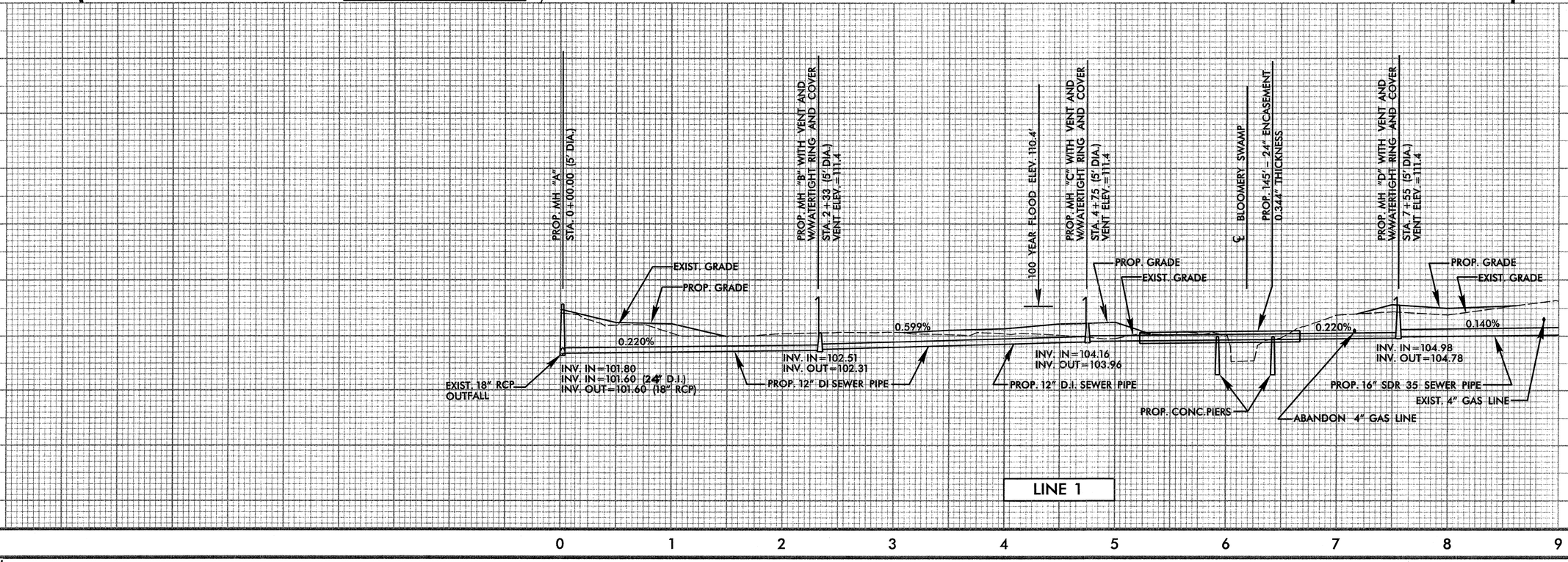

LINE 1

$$$$SYSTIME$$$$
$$$$USERNAME$$$$
$$$$DGN$$$$

...\U3823\U3823A\G04121A-uc6.dgn 03/15/2007 11:43:03 AM

PROJECT REFERENCE NO.	SHEET NO.
U-3823A	UC-7

UTILITY CONSTRUCTION DRAWINGS

Municipal Services Engineering Company, P.A.
P.O. BOX 97 GARNER, N.C. 27529 (919) 772-5393
P.O. BOX 345 BOONE, N.C. 28607 (828) 262-1767
P.O. BOX 696 MATTHEWS, N.C. 28107 (704) 814-1940

NORTH CAROLINA PROFESSIONAL SEAL 6282 ENGINEER JIMMY D. WOODY
3/7/2007

8/17/99

REVISIONS

MATCH TO SHEET UC-6

HERITAGE PLACE OF WILSON, LLC DB 2080 PG 806 (16)

REMOVE UTILITY MANHOLE

-L- 86+90.58 54.83' LT

-L- 87+61.19 54.82' LT

150' TAPER

-L- 87+53.02 65.00' LT

NORFOLK AND SOUTHERN RAILROAD

EXISTING RR R/W

-L- 88+72.3 75.10' LT

88+45.00 END ISLAND

4' CONC ISLAND

88+90.00 BEGIN ISLAND

89+90.00 END ISLAND

-L- 90+74.43 76.18' LT

PROPOSED 196 FEET, FILL OR REMOVE ABANDONED 12" SEWER PIPE (PVC)

-L- POT 85+06.44 = -Y3- POT 10+00.00

EXISTING MANHOLE 'G' STA. 11+01 LINE 1

STA. 87+99 28.5 FEET RIGHT OF LINE -L-

PREFORMED SCOUR HOLE SEE DETAIL ON SHEET 2-A

-L- 92+75.73 75.49' LT

150' TAPER

N 53°01'17" E

HERITAGE PLACE OF WILSON, LLC DB 2080 PG 806 (16)

-L- 94+00.00 70.90' LT

SPECIAL LATERAL BASE DITCH SEE DETAIL 'D' ON SHEET 2-A

-L- 97+50.00 80.00' LT

-L- 97+50.00 70.00' LT

-L- 97+50.00 49.70' LT

-L- 99+21.11 48.70' LT

30" CONC C&G

12" PVC

15" RCP

24" RCP

TH 41

TH 20

COLLAR METER

REMOVE EXISTING 8" W

-L- 88+44.56 50.00' RT

-L- 88+63.24 75.00' RT

-L- 89+84.22 67.00' RT

-L- 89+70.84 50.00' RT

-L- 89+95.00 50.00' RT

-L- 90+00.00 62.00' RT

-L- 91+55.00 50.00' RT

-L- 91+55.60 61.00' RT

-L- 91+61.00 160.00' RT

-L- 91+95.00 125.00' RT

-L- 91+95.00 185.00' RT

-L- 91+75.00 185.00' RT

-L- 93+00.00 50.00' RT

-L- 93+00.00 55.00' RT

-L- 93+00.00 125.00' RT

-L- 94+49.48 50.00' RT

-L- 95+99.48 50.00' RT

-L- 95+99.48 68.00' RT

-L- 97+38.35 50.00' RT

-L- 99+22.26 51.30' RT

-L- 98+63.40 68.00' RT

TS 94+49.48

SC 95+99.48

CS 98+63.40

PROPOSED 174 FEET OF 16 INCH PVC SEWER PIPE, SDR 35

PROPOSED 28 FEET OF 16 INCH SEWER PIPE, SDR 35

PROPOSED MANHOLE 'E' STA. 8+99 LINE 1 STA. 86+03 45 FEET RIGHT OF LINE -L-

PROPOSED MANHOLE 'F' STA. 10+73 LINE 1 STA. 87+77 45 FEET RIGHT OF LINE -L-

-Y3- PC 11+67.76

-Y3- PT 12+17.76

-Y3- POT 13+00.00

Sta. 11+60

Δ = 42° 49' 23.0" (LT)

D = 54° 14' 02.7"

L = 78.9'

T = 41.15'

R = 105.00'

S 79° 05' E

RELOCATE EXIST. FIRE HYDRANT USING 28 FEET OF 6 INCH D.I. WATER PIPE, CLASS 50, 350# WP

HAZARDOUS SPILL RETENTION BASIN SEE DETAIL '6' SHEET 2-A

CONCRETE LEVEL SPREADER SEE DETAIL ON SHEET 2-B

HERITAGE CROSSING, LLC DB 2075 PG 330 (17)

NOTE: BIDDERS ARE STRONGLY ENCOURAGED TO REVIEW THE 2006 EDITION OF THE NCDOT STANDARD SPECIFICATIONS CONCERNING DESCRIPTIONS FOR MEASUREMENT AND PAYMENT OF UTILITY PAY ITEMS.

Pis Sta 96+49.48
Θs = 2°15'00.0"
Ls = 150.00'
LT = 100.01'
ST = 50.01'

PI Sta 97+31.65
Δ = 7°55'04.0" (RT)
D = 3°00'00.0"
L = 263.93
T = 132.17'
R = 1909.86'

Pis Sta 99+13.41
Θs = 2°15'00.0"
Ls = 150.00'
LT = 100.01'
ST = 50.01'

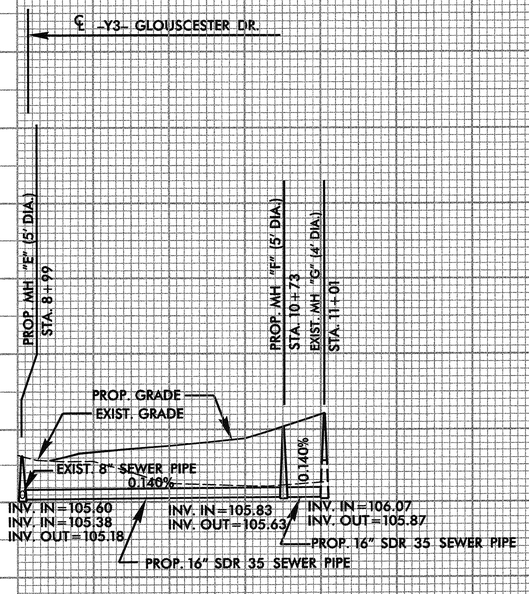

9 10 11

...\U3823\U3823A\G04121A-uc7.dgn 03/07/2007 01:26:39 PM

PROJECT REFERENCE NO.	SHEET NO.
U-3823A	UC-8

Municipal Services Engineering Company, P.A.

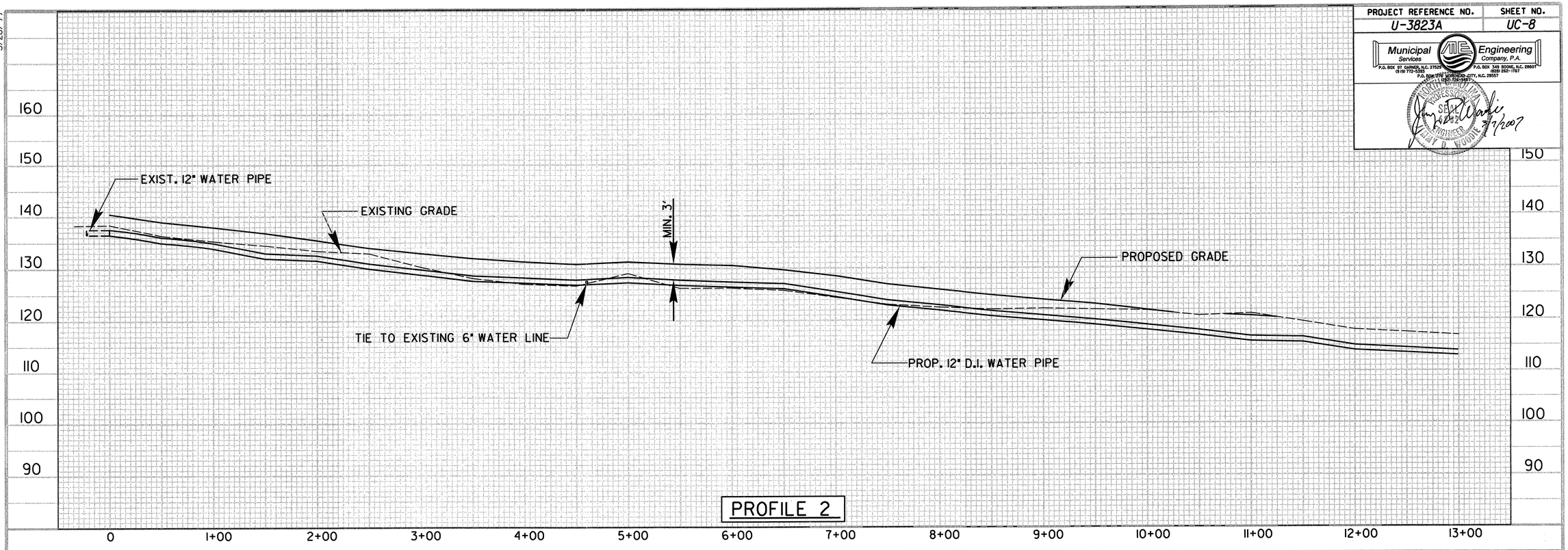

PROFILE 2

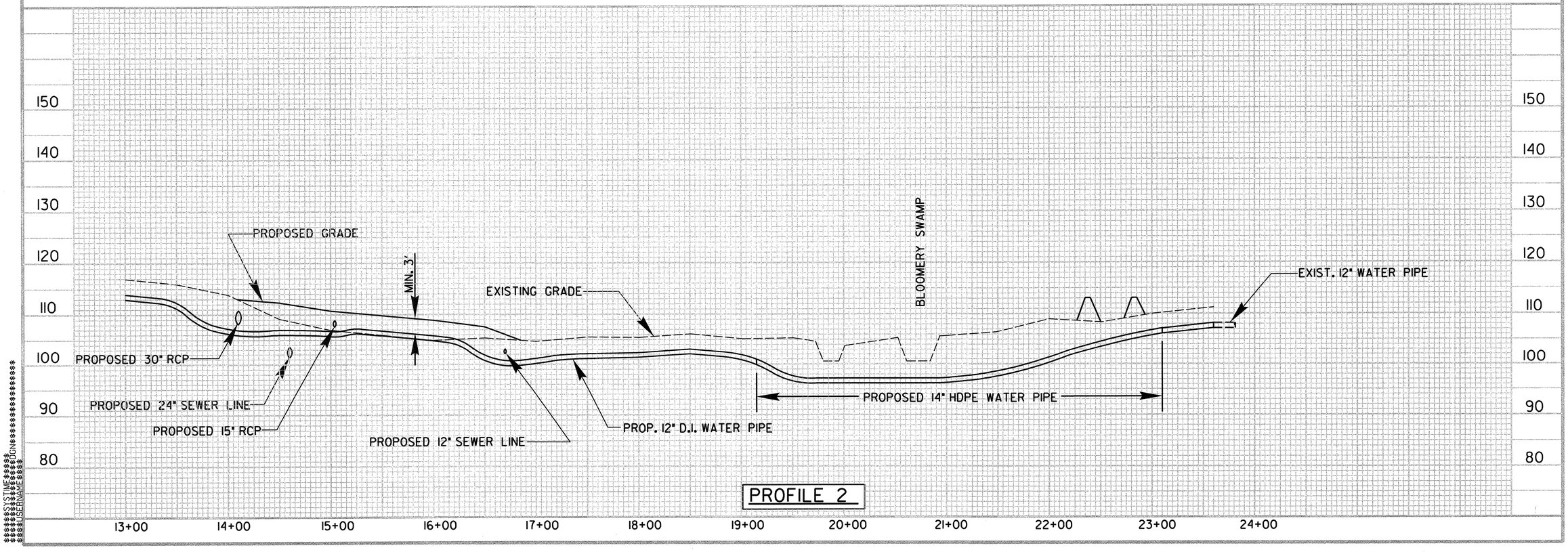

PROFILE 2

5/28/99

8/17/99

PROJECT REFERENCE NO.	SHEET NO.
U-3823A	UC-9

Municipal Services Engineering Company, P.A.
P.O. BOX 97 GARNER, N.C. 27529 (919) 772-5393
P.O. BOX 349 BOONE, N.C. 28607 (828) 262-1767
P.O. BOX 276, MONROE-ID CITY, N.C. 28557 (704) 726-7481

NORTH CAROLINA PROFESSIONAL SEAL 6282 ENGINEER TIMMY D. WOODY
3/7/2007

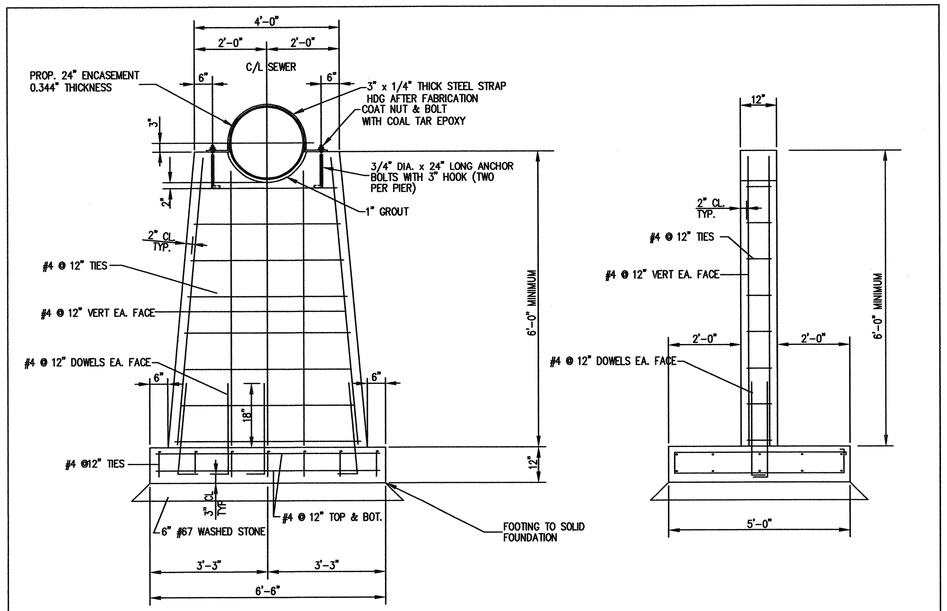

CONCRETE PIER DETAIL

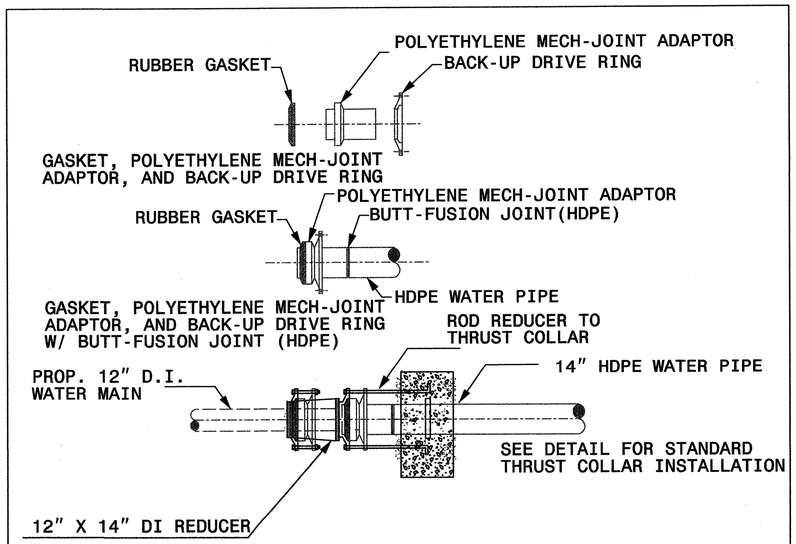

CONNECTOR ASSEMBLY DETAILS (PROP. WATER LINE)

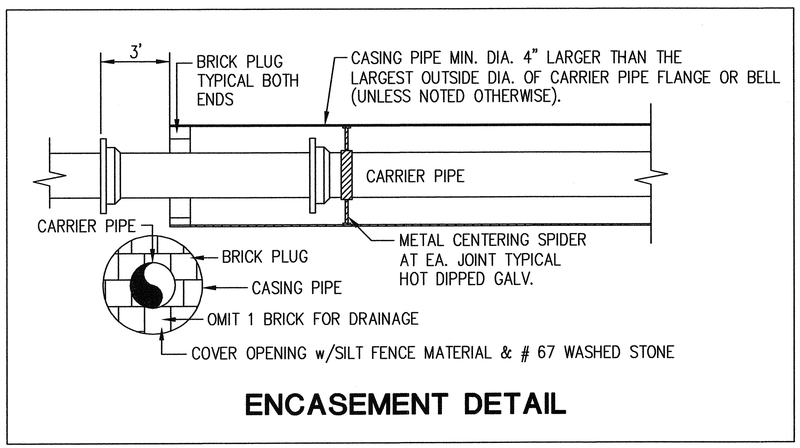

ENCASEMENT DETAIL

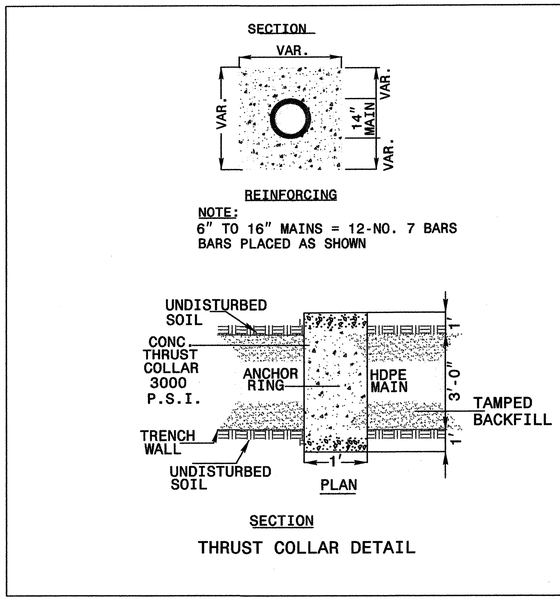

THRUST COLLAR DETAIL

...\U3823A\G04121A_uc9Detail.dgn 03/07/2007 03:28:21 PM

8/17/99

PROJECT REFERENCE NO.	SHEET NO.
U-3823A	UC-10

Municipal Services Engineering Company, P.A.
P.O. BOX 97 GARNER, N.C. 27529 (919) 772-5393
P.O. BOX 349 BOONE, N.C. 28607 (828) 262-1767
P.O. BOX 276 MOREHEAD CITY, N.C. 28557 (252) 726-3481

NORTH CAROLINA PROFESSIONAL SEAL 6282 ENGINEER TIMMY D. MOORE 3/7/2007

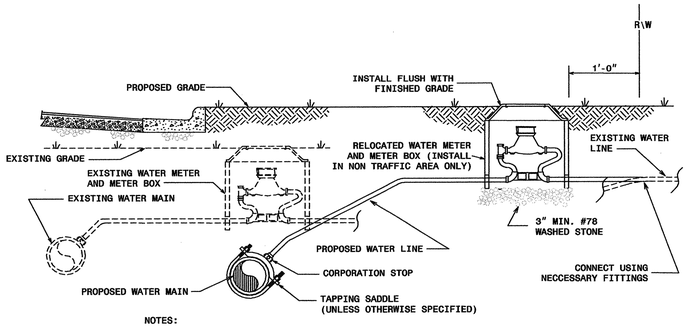

NOTES:

1. RELOCATION SHALL INCLUDE THE REMOVAL AND INSTALLATION AT THE APPROPRIATE LOCATION OF THE WATER METER, METER SETTER AND YOKE, METER VALVES, AND METER BOX WITH LID.
2. THE NEW WATER SERVICE LINE SHALL BE OF THE SAME TYPE AND GRADE AS THE EXISTING WATER SERVICE LINE UNLESS OTHERWISE SHOWN ON THE PLANS OR DIRECTED BY THE ENGINEER.
3. THE NEW WATER SERVICE LINE SHALL BE INSTALLED WITH A MINIMUN OF 36" COVER BELOW FINISHED GRADE.

WATER METER RELOCATION DETAIL

TYPE "2"
(BEDDING FOR D.I. PIPE)

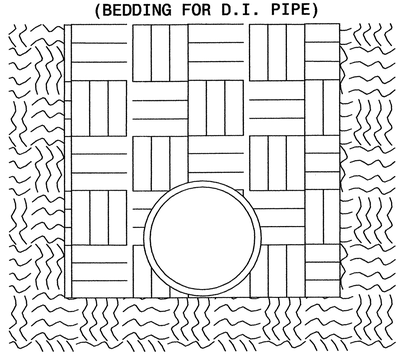

PIPE BEDDED IN FLAT-BOTTOM TRENCH. TRENCH BACKFILLED IN LOOSE 6" LAYERS COMPACTED TO TOP OF TRENCH USING LOCAL EXCAVATED MATERIAL, IF APPROVED BY THE ENGINEER, OR SELECT MATERIAL. ALL MATERIAL SHALL BE FREE OF ROCKS, FOREIGN MATERIAL, AND FROZEN EARTH. COMPACTION SHALL BE TO APPROX. 95% DENSITY IN ACCORDANCE WITH AASHTO T-99 AS MODIFIED BY THE DEPARTMENT OF TRANSPORTATION.

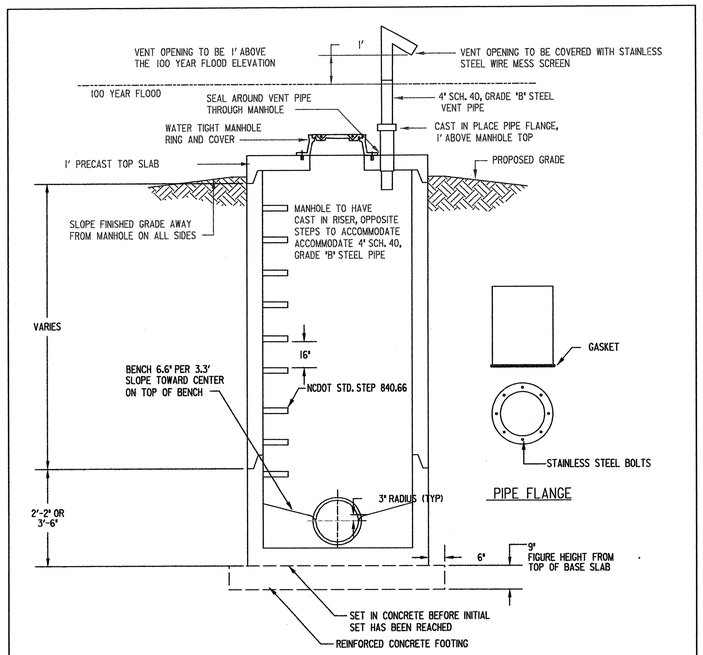

NOTES:

1. VENT MUST BE FACTORY WELDED, FABRICATED AND GALVANIZED.
2. MANHOLE NUMBER NEEDS TO COINCIDE WITH VENT NUMBER.
3. PRECAST MANHOLE COMPONENTS SHALL MEET REQUIREMENTS OF AASHTO M199.
4. RISERS AND GRADE RINGS SHALL BE ASSEMBLED IN SUCH A MANNER AS TO CAUSE THE STEPS TO HAVE A SPACING OF 16" FROM THE TOP TO THE BOTTOM OF THE MANHOLE.
5. WHERE MANHOLE IS TO BE EXPOSED TO ROADWAY TRAFFIC, THE TOP OF THE MANHOLE IS TO BE FLUSH WITH THE GROUND; AND AT OTHER LOCATIONS THE TOP SHOULD BE A MINIMUM OF 9" ABOVE THE GROUND.
6. REINFORCED CONCRETE FOOTING IS REQUIRED WHEN THE MANHOLE IS OVER 12' OR ON POOR SOIL BASE. THE FOOTING AND BASE SECTION MAY BE PRECAST.

5' PRECAST WATER TIGHT VENTED MANHOLE DETAIL

NOT TO SCALE

MAXIMUM TRENCH WIDTH
AT TOP OF PIPE

NOMINAL PIPE SIZE (INCHES)	TRENCH WIDTH (INCHES)	NOMINAL PIPE SIZE (INCHES)	TRENCH WIDTH (INCHES)
4	28	20	44
6	30	24	48
8	32	30	54
10	34	36	60
12	36	42	66
14	38	48	72
16	40	54	78
18	42		

CLASS "C"
(BEDDING FOR P.V.C. PIPE)

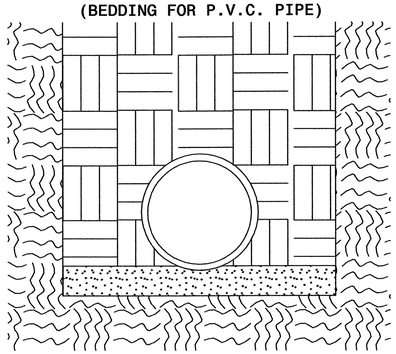

PIPE BEDDED IN LOOSE MATERIAL, LIGHTLY TAMPED WITH A MINIMUM OF 6" UNDER PIPE. TRENCH BACKFILLED IN LOOSE 6" LAYERS COMPACTED TO TOP OF TRENCH USING LOCAL EXCAVATED MATERIAL, IF APPROVED BY THE ENGINEER, OR SELECT MATERIAL. ALL MATERIAL SHALL BE FREE OF ROCKS, FOREIGN MATERIAL, AND FROZEN EARTH. COMPACTION SHALL BE TO APPROX.95% DENSITY IN ACCORDANCE WITH AASHTO T-99 AS MODIFIED BY THE DEPARTMENT OF TRANSPORTATION.

...\U3823A\G04121A_uc10Detail.dgn 03/07/2007 03:37:23 PM

8/17/99

PROJECT REFERENCE NO.	SHEET NO.
U-3823A	UC-11

Municipal Services Engineering Company, P.A.
P.O. BOX 97 GARNER, N.C. 27529 (919) 772-5393
P.O. BOX 349 BOONE, N.C. 28607 (828) 262-1767
P.O. BOX 276, MONROE-SO CITY, N.C. 28057 (257) 726-5481

NORTH CAROLINA PROFESSIONAL ENGINEER 21203 JOHN D. WOOLPERT

BASED ON TEST PRESSURE OF 200 P.S.I.

HORIZONTAL RESTRAINT
(ALL AREAS GIVEN ARE IN SQUARE FEET)

PIPE SIZE	DEGREE OF BEND	LBS. STATIC THRUST *	ALLOWABLE SOIL BEARING (PSF) 1000	2000	3000	4000	5000	6000	7000	8000
4"	11 1/4°	616	1	1	1	1	1	1	1	1
	22 1/2°	1,226	1	1	1	1	1	1	1	1
	45°	2,405	2	1	1	1	1	1	1	1
	90°	4,444	4	2	1	1	1	1	1	1
	TEE/PLUG	3,143	3	2	1	1	1	1	1	1
6"	11 1/4°	1,385	2	1	1	1	1	1	1	1
	22 1/2°	2,758	3	2	1	1	1	1	1	1
	45°	5,409	5	3	2	2	1	1	1	1
	90°	9,999	10	5	3	3	2	2	2	1
	TEE/PLUG	7,068	7	4	3	2	2	1	1	1
8"	11 1/4°	2,424	3	1	1	1	1	1	1	1
	22 1/2°	4,904	5	3	2	1	1	1	1	1
	45°	9,619	10	5	3	2	2	2	2	1
	90°	17,773	18	9	6	4	4	3	3	2
	TEE/PLUG	12,568	13	6	4	3	3	2	2	2
10"	11 1/4°	3,846	4	2	2	1	1	1	1	1
	22 1/2°	7,661	8	4	3	2	2	2	1	1
	45°	15,028	15	8	5	4	3	3	2	2
	90°	27,768	28	14	9	7	6	5	4	3
	TEE/PLUG	19,635	20	10	7	5	4	3	3	2
12"	11 1/4°	5,543	6	3	2	2	1	1	1	1
	22 1/2°	11,032	11	6	4	3	2	2	2	2
	45°	21,641	22	11	7	5	4	4	3	3
	90°	39,987	40	20	13	10	8	7	6	5
	TEE/PLUG	28,274	28	14	9	7	6	5	4	4
14"	11 1/4°	7,544	8	4	3	2	2	2	1	1
	22 1/2°	15,016	15	8	5	4	3	3	2	2
	45°	29,455	29	15	10	7	6	5	4	4
	90°	54,426	54	27	18	14	11	9	8	7
	TEE/PLUG	38,485	38	19	13	10	8	6	5	5
16"	11 1/4°	9,854	10	5	3	3	2	2	2	2
	22 1/2°	19,612	20	10	7	5	4	3	3	3
	45°	38,471	38	17	13	10	8	6	5	5
	90°	71,085	71	36	24	18	14	12	10	9
	TEE/PLUG	50,265	50	25	17	13	10	8	7	6

* INCLUDES 1.25 SAFETY FACTOR

VERTICAL RESTRAINT
(ALL VOLUMES GIVEN ARE IN CUBIC YARDS)**

PIPE SIZE	RESTRAINING RODS NO.REQ'D	RESTRAINING RODS DIA.	DEGREE OF BEND 11 1/4°	22 1/2°	45°
4"	2	1/2"	0.25	0.50	0.75
6"	2	1/2"	0.50	1.0	1.75
8"	2	5/8"	0.75	1.50	3.0
10"	2	3/4"	1.25	2.25	4.50
12"	2	7/8"	1.75	3.25	6.50
14"	4	5/8"	2.25	4.50	8.75
16"	4	3/4"	3.0	6.0	11.50

**INCLUDES 1.50 SAFETY FACTOR

GENERAL NOTES:
1. CONCRETE SHALL BE CLASS "B".
2. CONCRETE SHALL NOT CONTACT BOLTS ENDS OF MECHANICAL JOINT FITTINGS.
3. CONSULT WITH ENGINEER FOR CONCRETE REQUIREMENTS ON MAINS LARGER THAN 16 INCHES. (FOR VERTICAL & HORIZONTAL BENDS)
4. ALLOWABLE SOIL BEARING SHALL BE DETERMINED BY THE ENGINEER.

REVISIONS		
NO.	DATE	DESCRIPTION

SHEET 2 OF 2

THRUST RESTRAINT FOR WATER MAINS
STATE OF NORTH CAROLINA
DIVISION OF HIGHWAYS
RALEIGH, N.C.

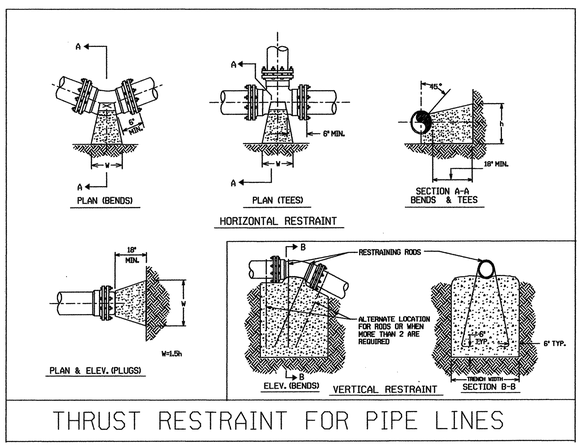

THRUST RESTRAINT FOR PIPE LINES

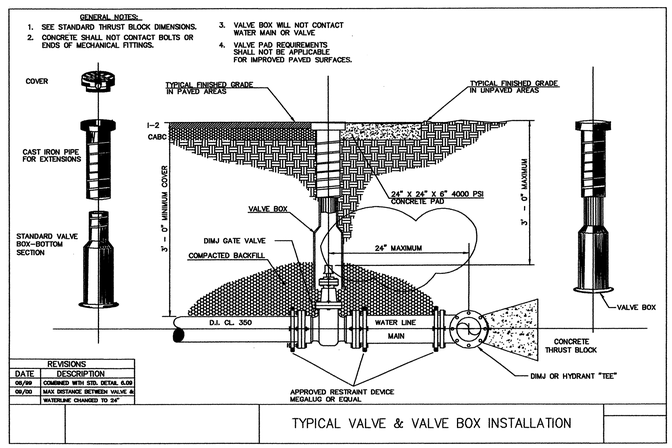

REVISIONS	
DATE	DESCRIPTION
05/00	COMBINED WITH STD. DETAIL 6.00
09/00	MAX DISTANCE BETWEEN VALVE & WATERLINE CHANGED TO 24"

TYPICAL VALVE & VALVE BOX INSTALLATION

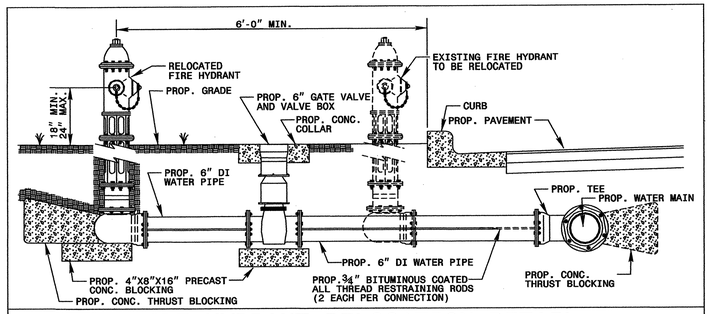

FIRE HYDRANT RELOCATION DETAIL

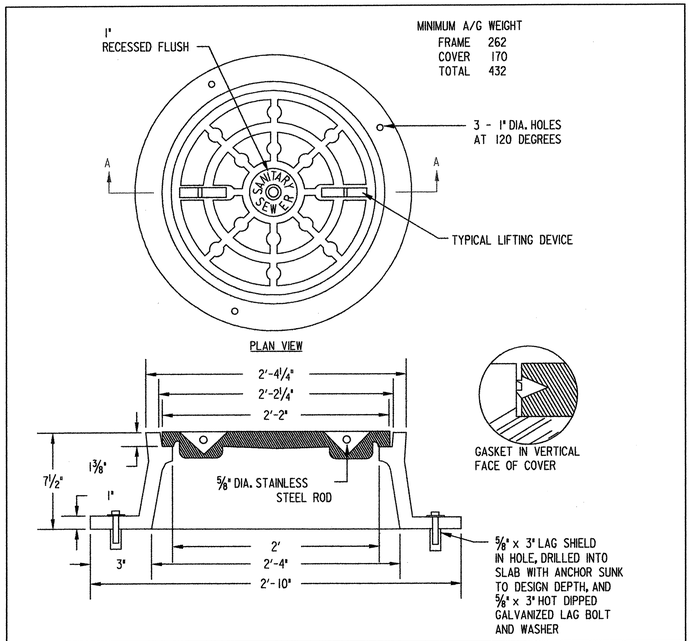

WATER TIGHT MANHOLE RING AND COVER
NOT TO SCALE

SYSTIMED DESIGNED

09/08/99

TIP PROJECT: U-3823A

CONTRACT: C201301

STATE	STATE PROJECT REFERENCE NO.	SHEET NO.
N.C.	U-3823A	UO-1
STATE PROJ. NO.	F. A. PROJ. NO.	DESCRIPTION

STATE OF NORTH CAROLINA
DIVISION OF HIGHWAYS

UTILITIES BY OTHERS
WILSON COUNTY

LOCATION: *SR 1158 (AIRPORT BLVD.) FROM EAST OF NC 42 TO EAST OF CAROLINA AND NORTHWESTERN RAILROAD*

TYPE OF WORK: *UTILITIES RELOCATION*

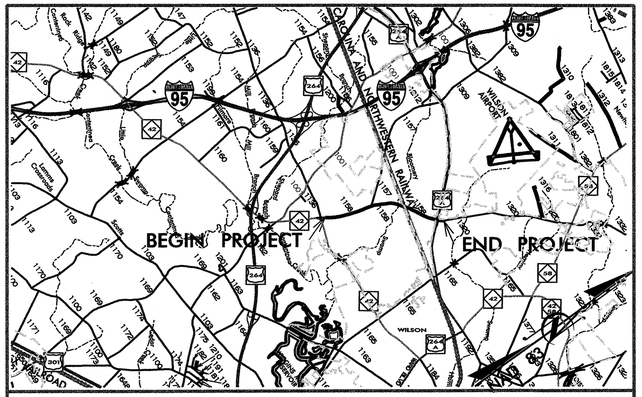

VICINITY MAP

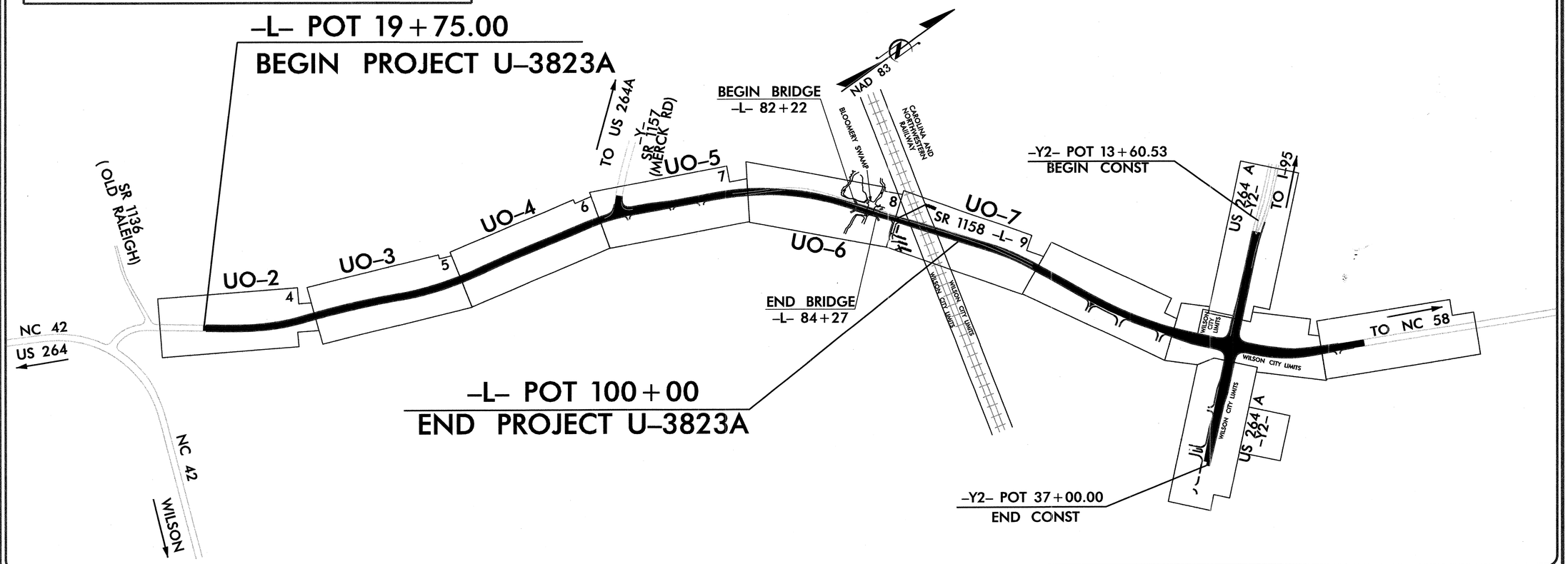

GRAPHIC SCALES

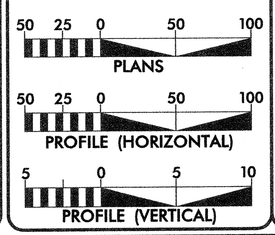

INDEX OF SHEETS

SHEET No.	DESCRIPTION
UO-1	TITLE SHEET
UO-2 THRU UO-7	UTILITIES BY OTHERS DRAWINGS

UTILITY OWNERS ON PROJECT

(1) THE CITY OF WILSON (NATURAL GAS)
(2) THE CITY OF WILSON (POWER)
(3) EMBARQ (TELEPHONE)
(4) TIME WARNER (CATV)

Municipal Services Engineering Company, P.A.
P.O. BOX 97 GARNER, N.C. 27529 (919) 772-5393
P.O. BOX 349 BOONE, N.C. 28607 (828) 262-1767
P.O. BOX 276 MOREHEAD CITY, N.C. 28557 (252) 726-9481

JIMMY D. WOODIE
UTILITY ENGINEER *DATE*

$$$$SYSTIME$$$$
$$$$USERNAME$$$$
$$$$DGN$$$$

..\U3823\U3823A\G04121A-ubo1.dgn 03/20/2007 01:10:34 PM

PROJECT REFERENCE NO.	SHEET NO.
U-3823-A	U0-2

Municipal Services Engineering Company, P.A.
P.O. BOX 97 GARNER, N.C. 27529 (919) 772-5393
P.O. BOX 349 BOONE, N.C. 28607 (828) 262-1767
P.O. BOX 276 MOREHEAD CITY, N.C. 28557 (252) 726-9401

NOTE:
ALL PROPOSED UTILITY WORK SHOWN ON THIS SHEET WILL BE DONE BY OTHERS

8/17/99

REVISIONS

NAD '83

NORMAN R. WATSON
DB 1147 PG 333

NORMAN J. WATSON
DB 1366 PG 104

JANICE B. WATSON, et al
DB 1147 PG 333
DB 1280 PG 117

RONALD R. WATSON
DB 1866 PG 886

PATSY W. GARDNER
DB 1867 PG 70

TEMPIE PIERCE
DB 0916 PG 447
PB 13 PG 25

TOMMIE WILLIAMSON
DB 1314 PG. 686

MARGARET W. MORRIS
DB 1314 PG. 696

TOMMIE WILLIAMSON
DB 1314 PG 686

LAURA W. SCHWARTZ
DB 1213 PG 702

MARIE W. TOMLINSON
DB 1314 PG 691

MARGARET MORRIS, et al
DB 1446 PG 244
DB 349 PG 118
DB 1314 PG 696
DB 1139 PG 295
DB 1271 PG 215
DB 150 PG 159

-L- POT 19+75.00
BEGIN PROJECT U-3823

PC 21+76.17

PCC 24+51.71

PRC 28+78.25

BY3-1A PINC 5+00.00
-L- POC 26+65.51 17.59' RT

PI Sta 23+44.03
Δ = 5° 00' 45.3" (LT)
D = 1° 49' 08.9"
L = 275.55'
T = 137.86'
R = 3,149.60'

PI Sta 26+65.80
Δ = 12° 13' 09.9" (LT)
D = 2° 51' 53.2"
L = 426.54'
T = 214.08'
R = 2,000.00'

UTILITIES BY OTHERS

...\U3823\U3823A\G04121A-ubo2.dgn 03/20/2007 02:24:09 PM

PROJECT REFERENCE NO.	SHEET NO.
U-3823-A	U0-3

Municipal Services / Engineering Company, P.A.
P.O. BOX 97 GARNER, N.C. 27529 (919) 772-5393
P.O. BOX 249 ROXBORO, N.C. 27573 (336) 599-1766
P.O. BOX 276 MOREHEAD CITY, N.C. 28557 (252) 726-9481

NOTE:
ALL PROPOSED UTILITY WORK SHOWN ON THIS SHEET WILL BE DONE BY OTHERS

8/17/99

REVISIONS

MATCH TO SHEET U0-2

MATCH TO SHEET U0-4

PROP. O/H POW TEL & CATV LINES

PROP O/H POW TEL & CATV LINES

PI Sta 33+30.01
Δ = 6° 27' 50.8" (RT)
D = 0° 42' 58.3"
L = 902.56'
T = 451.76'
R = 8,000.00'

PI Sta 41+98.30
Δ = 15° 50' 42.9" (LT)
D = 1° 54' 35.5"
L = 329.66'
T = 417.49'
R = 3,000.00'

NAD 83

TEMPIE PIERCE
DB 09IE PG 447
PB 13 PG 25

RALPH A ELLIS AND WIFE POLLY D ELLIS
DB 1194 PG 605
PB 15 PG 156

DAVID R. ELLIS
DB 1463 PG 134
PB 15 PG 156

LINDA W. DANIEL
DB 1782 PG 462

-BL- GPS JKA-27 PINC 13+12.88
-L- POC 34+78.50 35.83' RT

PRC 37+80.81

SR 1158 AIRPORT BLVD. 2' BST

HAZARDOUS SPILL RETENTION BASIN SEE DETAIL 1 SHEET 2-A

CONCRETE LEVEL SPREADER SEE DETAIL ON SHEET 2-8

SPECIAL LATERAL 'V' DITCH SEE DETAIL 'B' SHEET 2-A

ABANDON

REMOVE

EXISTING R/W

30" CONC C&G

48" WD RAIL

42" BK ELEC

PDE

...\U3823\U3823A\G04121A-ubo3.dgn 03/20/2007 01:09:07 PM

$$$$$USERNAME$$$$$DGN$$$$$SYSTIME$$$$$

PROJECT REFERENCE NO.	SHEET NO.
U-3823-A	UO-4

Municipal Services Engineering Company, P.A.

NOTE:
ALL PROPOSED UTILITY WORK SHOWN ON THIS SHEET WILL BE DONE BY OTHERS

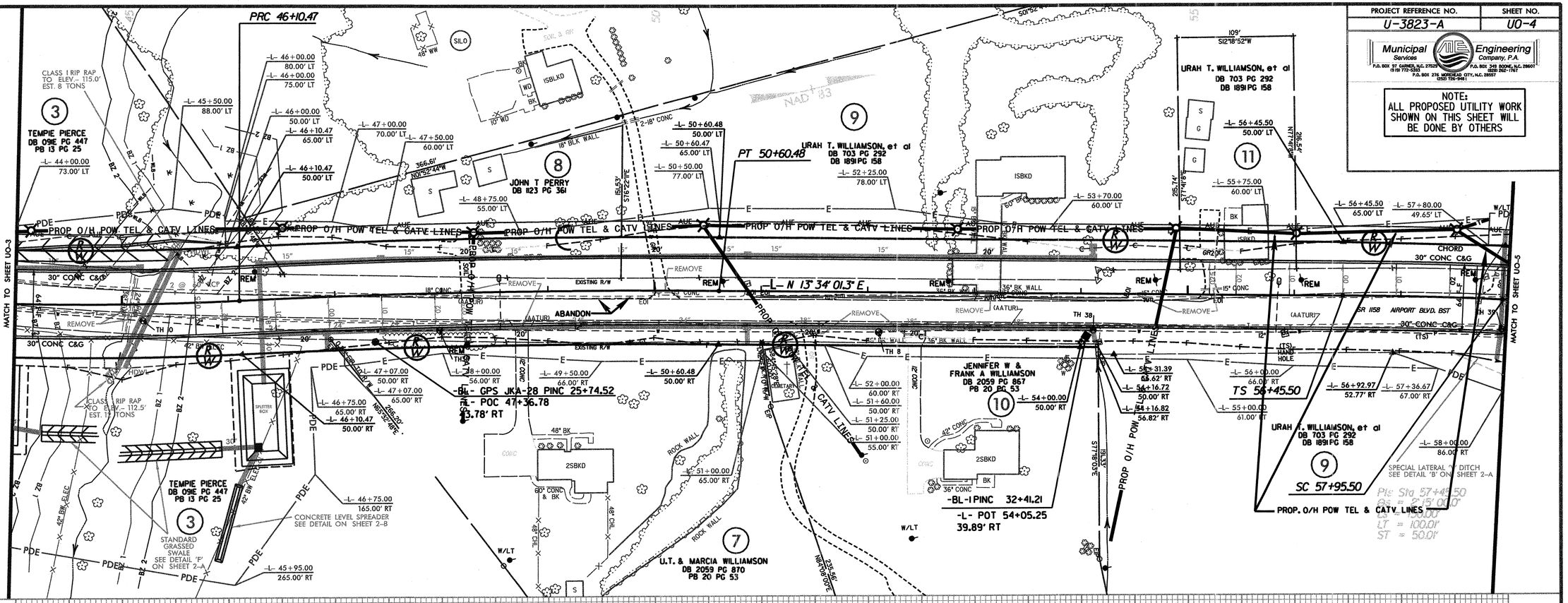

REVISIONS

8/17/99

...\U3823\U3823A\G04121A-ubo4.dgn 03/20/2007 03:01:21 PM

PROJECT REFERENCE NO.	SHEET NO.
U-3823-A	UO-5

Municipal Services — Engineering Company, P.A.
P.O. BOX 97 GARNER, N.C. 27529 (919) 772-5393
P.O. BOX 349 BOONE, N.C. 28607 (828) 262-1767
P.O. BOX 276 MOREHEAD CITY, N.C. 28557 (252) 726-9481

NOTE:
ALL PROPOSED UTILITY WORK SHOWN ON THIS SHEET WILL BE DONE BY OTHERS

...\U3823\U3823A\G04121A-ubo5.dgn 03/20/2007 03:17:13 PM

8/17/99

REVISIONS

PROJECT REFERENCE NO.	SHEET NO.
U-3823-A	U0-6

Municipal Services Engineering Company, P.A.
P.O. BOX 97 GARNER, N.C. 27529 (919) 772-5393
P.O. BOX 249 BOONE, N.C. 28607 (828) 262-1767
P.O. BOX 276 MOREHEAD CITY, N.C. 28557 (252) 726-5481

NOTE:
ALL PROPOSED UTILITY WORK SHOWN ON THIS SHEET WILL BE DONE BY OTHERS

GREGORY-THOMAS DEV. CO. INC
DB 2006 PG 278

GREGORY-THOMAS DEV. CO. INC

SPECIAL LATERAL GRASS SWALE
SEE DETAIL 'A' ON SHEET 2-A
USE ROCK SILT CHECK TYPE 'B'
STD. 1633.02 EVERY 40 FT.
FROM STA. 73+50 -L- TO 75+00 -L-

-BL-5 PINC 56+64.15
-L- POC 78+42.72
24.80' LT

-BL-6 PINC 61+40.78
-L- POT 83+17.23
8.02' LT

-BL-4 PINC 51+68.08
-L- POC 73+48.50
36.50' RT

WILSON CHRISTIAN SCHOOL
DB 1584 PG 355

HERITAGE PLACE OF WILSON. LLC
DB 1826 PG 743

MATCH TO SHEET UO-5

MATCH TO SHEET UO-7

PROP. O/H POW TEL & CATV LINES

PROP. BURIED POWER
PROP. BURIED TELEPHONE

ST 81+83.53

CS 80+33.53

CONCRETE LEVEL SPREADER
SEE DETAIL ON SHEET 2-B

HAZARDOUS SPILL
RETENTION BASIN
SEE DETAIL '3' SHEET 2-A

HAZARDOUS SPILL
RETENTION BASIN
SEE DETAIL '4' SHEET 2-A

HAZARDOUS SPILL
RETENTION BASIN
SEE DETAIL '5' SHEET 2-A

REMOVE PAVEMENT

ABANDON

CLASS II RIP RAP
TO ELEV.= 111.0'

PROPERTY LINE IS THE CL OF STREAM

N 53°01'11.0"E

PI Sta 75+07.58
Δ = 24°01'33.5" (RT)
D = 2°15'00.0"
L = 1,067.82
T = 541.81'
R = 2,546.48'

Pis Sta 80+83.53
es = 0.41'5.0"
Ls = 150.00'
LT = 100.00'
ST = 50.00'

...\U3823\U3823A\G04121A-ubo6.dgn 03/20/2007 01:37:53 PM

PROJECT REFERENCE NO.	SHEET NO.
U-3823-A	U0-7

Municipal Services Engineering Company, P.A.
P.O. BOX 97 GARNER, N.C. 27529 (919) 772-5393
P.O. BOX 349 BOONE, N.C. 28607 (828) 262-1767
P.O. BOX 276 MOREHEAD CITY, N.C. 28557 (252) 726-9481

NOTE:
ALL PROPOSED UTILITY WORK SHOWN ON THIS SHEET WILL BE DONE BY OTHERS

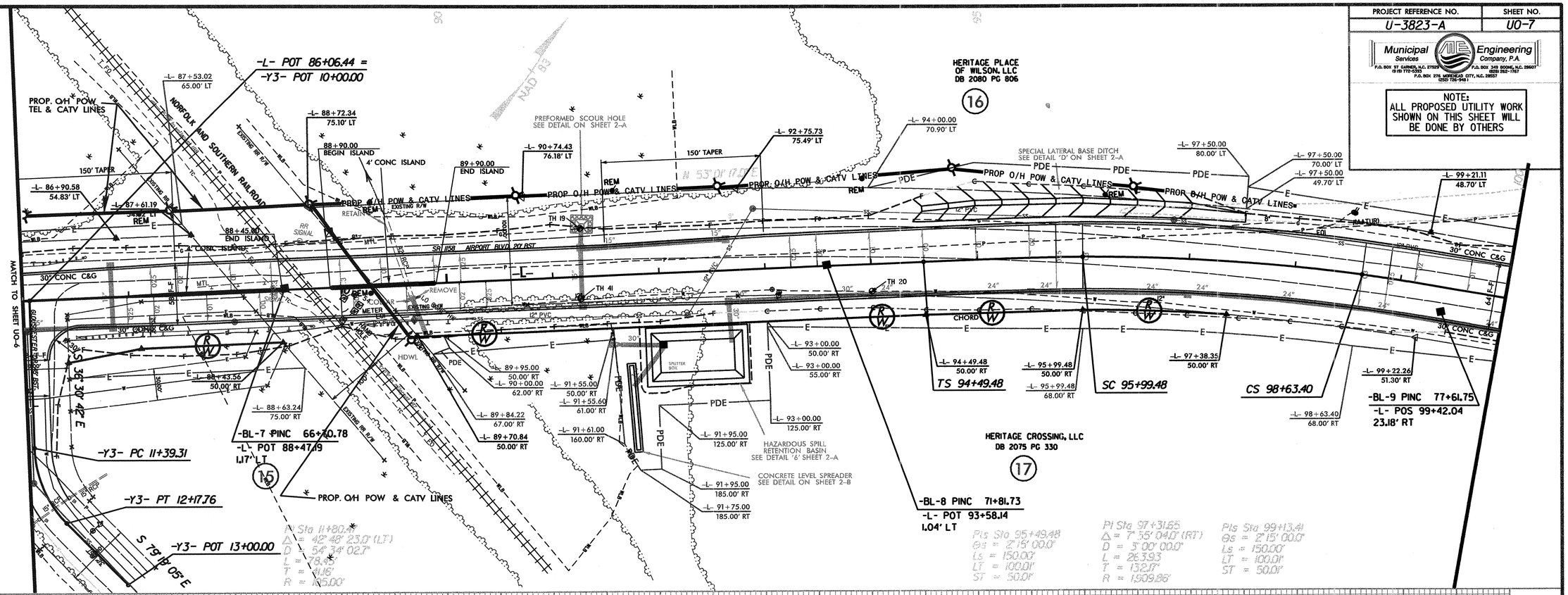

REVISIONS

8/17/99

...\U3823\U3823A\G04121A-ubo7.dgn 03/20/2007 03:54:23 PM