STATE	T.I.P. #	SHEET #	of
NC	K-4903	1	

WBS #	F.A. Project #	Description
39914.1.1	IMS-95-3(88)142	P.E.
		R/W
39914.3.1		CONST.

STATE OF NORTH CAROLINA
DIVISION OF HIGHWAYS

NASH COUNTY

Location: Rest Area I–95 North and South Bound Lanes, 3 miles north of Rocky Mount

Type of Work: Rest Area Renovation; New Building, Renovation of Old Service Building, Site, and Utility Work

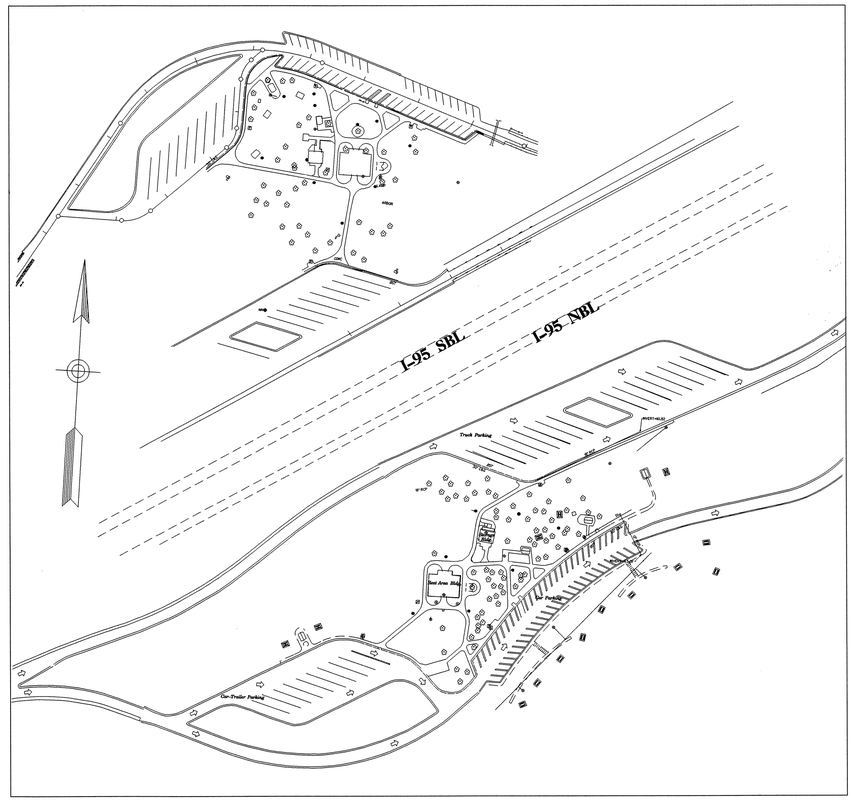

2006 STANDARD SPECIFICATIONS

LETTING DATE

JUNE 19, 2007

Site /Landscape Design	Site /Utility Design	Architectural /Engineering
LANDSCAPE DESIGN & DEVELOPMENT	***REST AREA SECTION***	***FACILITIES DESIGN***
Roadside Environmental Unit 1 South Wilmington Street 1557 Mail Service Center Raleigh, North Carolina 27601 Office (919) 733–2920 Fax (919) 733–9810	Roadside Environmental Unit 1 South Wilmington Street 1557 Mail Service Center Raleigh, North Carolina 27601 Office (919) 733–2920 Fax (919) 733–9810	General Services Division, NCDOT 1 South Wilmington Street 1525 Mail Service Center Raleigh, North Carolina 27601 Office (919) 715–0400 Fax (919) 715–0399

Contract : C201795 K - 4903

I-95 NBL/SBL, Nash County Rest Area

North Carolina Department of Transportation

Division of Highways

1 South Wilmington Street Raleigh, North Carolina

Plan :

Nash County, I - 95
North and South Bound Lanes
Rest Area Renovation

Plans Drawn By:
CSM - DK - NR

Scale
Not to Scale

Date
12 / 21 / 06

Sheet Description
Nash NBL/SBL RA
Title Sheet

Sheet #
1

Index of Sheets

1	Title Sheet NBL/SBL Combined
2	Index of Sheets, List of Standard Drawings
3	Summary of Quantities
T1–T2	Design Data & Abbreviation
A1–A6	Architectural Drawings
S1–S3	Structural Drawings
P1–P2	Plumbing Plan & Details
M1–M2	Mechanical Plan & Details
E1–E2	Electrical Plan & Details
VA1–VA4	Vending Building Architectural Plans
VP1	Plumbing Plan
VM1	HVAC Plan
VE1	Electrical Plan
L–NBL–1	Existing Site Plan
L–NBL–2	Proposed Site Plan
L–NBL–3	Construction Limits and Staging Plan
L–NBL–4	Demolition Plan
L–NBL–5	Grading Plan
L–NBL–6	Layout and Dimension Plan
L–NBL–7	Site Detail Sheet
L–NBL–8	Seat Wall Detail Sheet
L–NBL–9	Stair A Detail Sheet
L–NBL–10	Stair B Detail Sheet
L–NBL–11	Stair C Detail Sheet
L–NBL–12	Typical Stair Detail Sheet
L–NBL–13	Picnic Shelter Detail Sheet
L–NBL–14	Picnic Table Detail Sheet
L–NBL–15	Plant Bed Plan
SU–NBL–1	Existing Site Utility Plan
SU–NBL–2	Proposed Site Utility Plan
EC–NBL–1	Erosion and Sediment Control Title Sheet
EC–NBL–2	Erosion and Sediment Control Plan Sheet
EC–NBL–3	Erosion and Sediment Control Plan Sheet
L–SBL–1	Existing Site Plan
L–SBL–2	Proposed Site Plan
L–SBL–3	Demolition and Phasing Plan
L–SBL–4	Grading Plan
L–SBL–5	Layout and Dimension Plan
L–SBL–6	Site Detail Sheet
L–SBL–7	Pergola Picnic Shelter Detail Sheet
L–SBL–8	Picnic Table Detail Sheet
L–SBL–9	Plant Bed Plan
SU–SBL–1	Existing Site Utility Plan
SU–SBL–2	Proposed Site Utility Plan

Roadway Standard Drawings

THE FOLLOWING ROADWAY STANDARDS APPEAR IN "ROADWAY STANDARD DRAWINGS" – HIGHWAY DESIGN BRANCH – N.C. DEPARTMENT OF TRANSPORTATION – RALEIGH, N.C., DATED JULY 2006 ARE APPLICABLE TO THIS PROJECT AND BY REFERENCE HEREBY ARE CONSIDERED A PART OF THESE PLANS:

STD. NO.	TITLE
840.00	– CONC. BASE PAD FOR DRAINAGE STRUCTURE
840.14	– CONC. DROP INLET
840.16	– DROP INLET FRAME AND GRATE
846.01	– CONC. CURB, GUTTER, AND CURB & GUTTER
848.05	– WHEELCHAIR RAMP

SHEET # 2 OF
WBS # 39914.3.1
FED. PROJ. # IMS-95-3(88)142
T.I.P. # K–4903

North Carolina Department of Transportation
Roadside Environmental Unit
Landscape Design & Development Section

PROJECT TITLE :
Rest Area Renovation
I – 95 (NBL & SBL Pair)
Nash County

Plans Drawn By: CSM/DK/NR
Scale: Not to Scale
Date: 12 / 5 / 06
Sheet Description: Summary of Quantities and List of Standard Drawings
Sheet # 2

STATE OF NORTH CAROLINA
SUMMARY OF QUANTITIES

PROJECT REFERENCE No.	SHEET No.
K-4903	3

STATE OF NORTH CAROLINA
DIVISION OF HIGHWAYS
ROADWAY SUMMARY OF QUANTITIES FOR CONTRACT - C201795

ItemNumber	Sec #	Quantity	Unit	Description
0000100000-N	800	Lump Sum		MOBILIZATION
0000970000-E	SP	1.5	ACR	GENERIC MISCELLANEOUS ITEM SEEDING & MULCHING OF REST AREA LAWN
0000970000-E	SP	2.5	ACR	GENERIC MISCELLANEOUS ITEM SITE DEMOLITION
1077000000-E	SP	6	TON	#57 STONE
2286000000-N	840	1	EA	MASONRY DRAINAGE STRUCTURES
2364000000-N	840	1	EA	FRAME WITH TWO GRATES, STD 840.16
2549000000-E	846	767	LF	2'-6" CONCRETE CURB & GUTTER
2605000000-N	848	6	EA	CONCRETE WHEELCHAIR RAMPS
2738000000-E	SP	2,732	SY	GENERIC PAVING ITEM 4" CONCRETE PAVEMENT
3575000000-E	SP	1,450	LF	GENERIC FENCING ITEM CHAIN LINK FENCE, 72" FABRIC
3578000000-N	SP	2	EA	GENERIC FENCING ITEM DOUBLE GATE, 72" HIGH, 8' WIDE, 16' OPENING
3651000000-E	SP	24	TON	BOULDERS
3656000000-E	876	75	SY	FILTER FABRIC FOR DRAINAGE
5882000000-N	SP	1	EA	GENERIC UTILITY ITEM 1/2" GATE VALVE & BOX
5882000000-N	SP	2	EA	GENERIC UTILITY ITEM 3" GATE VALVE & BOX
5882000000-N	SP	1	EA	GENERIC UTILITY ITEM 3/4" GATE VALVE & BOX
5882000000-N	SP	2	EA	GENERIC UTILITY ITEM 4" GATE VALVE & BOX
5882000000-N	SP	5	EA	GENERIC UTILITY ITEM 4" SANITARY SEWER CLEAN-OUT
6000000000-E	1605	525	LF	TEMPORARY SILT FENCE
6006000000-E	1610	40	TON	STONE FOR EROSION CONTROL, CLASS A
6009000000-E	1610	50	TON	STONE FOR EROSION CONTROL, CLASS B
6012000000-E	1610	20	TON	SEDIMENT CONTROL STONE
6015000000-E	1615	0.5	ACR	TEMPORARY MULCHING
6042000000-E	1632	20	LF	1/4" HARDWARE CLOTH
6084000000-E	1660	0.5	ACR	SEEDING & MULCHING
6108000000-E	1665	0.25	TON	FERTILIZER TOPDRESSING
6650000000-E	1670	341	CY	MULCH FOR PLANTING
6665000000-E	1670	2,385	SY	POSTEMERGENT HERBICIDAL TREAT-MENT FOR PLANT BEDS
6670000000-E	1670	2,385	SY	PREEMERGENT HERBICIDAL TREAT-MENT FOR PLANT BEDS
6890000000-E	SP	4.8	CY	CONCRETE STEPS
6900000000-E	SP	2,144	CY	TOPSOIL
6970000000-N	SP	15	EA	GENERIC REST AREA ITEM 4" STORM DRAIN CLEANOUT
6970000000-N	SP	42	EA	GENERIC REST AREA ITEM BLUESTONE PAVER
6970000000-N	SP	3	EA	GENERIC REST AREA ITEM CONNECTION TO SEWER MANHOLE/ SEWER LINE
6970000000-N	SP	2	EA	GENERIC REST AREA ITEM FLAGPOLE
6970000000-N	SP	4	EA	GENERIC REST AREA ITEM FLAGPOLE LIGHT
6970000000-N	SP	1	EA	GENERIC REST AREA ITEM PERGOLA PICNIC SHELTER, SINGLE HC PICNIC TABLE
6970000000-N	SP	1	EA	GENERIC REST AREA ITEM PICNIC SHELTER WITH HC PICNIC TABLE
6970000000-N	SP	5	EA	GENERIC REST AREA ITEM RELOCATE PAYPHONE & PEDESTAL
6970000000-N	SP	5	EA	GENERIC REST AREA ITEM RELOCATE POST TOP LIGHT & POLE
6970000000-N	SP	2	EA	GENERIC REST AREA ITEM RELOCATION OF VENDING BUILDING
6970000000-N	SP	1	EA	GENERIC REST AREA ITEM TEMPORARY RELOCATION OF VENDING BUILDING (ON SITE)
6970000000-N	SP	10	EA	GENERIC REST AREA ITEM WASTE CONTAINER
6975000000-N	SP	Lump Sum		GENERIC REST AREA ITEM ELECTRICAL CONSTRUCTION FOR THE NBL/SBL VENDING BUILDING
6975000000-N	SP	Lump Sum		GENERIC REST AREA ITEM ELECTRICAL INSTALLATION FOR THE NBL/SBL REST AREA SERVICE BUILDING
6975000000-N	SP	Lump Sum		GENERIC REST AREA ITEM GENERAL CONSTRUCTION OF NBL/ SBL REST AREA BUILDING
6975000000-N	SP	Lump Sum		GENERIC REST AREA ITEM GENERAL CONSTRUCTION OF NBL/ SBL VENDING BUILDING
6975000000-N	SP	Lump Sum		GENERIC REST AREA ITEM HEAT & AC CONSTRUCTION FOR THE NBL/SBL VENDING BUILDING
6975000000-N	SP	Lump Sum		GENERIC REST AREA ITEM HEAT & AC INSTALLATION FOR THE NBL/SBL REST AREA SERVICE BLDG
6975000000-N	SP	Lump Sum		GENERIC REST AREA ITEM LANDSCAPE GRADING
6975000000-N	SP	Lump Sum		GENERIC REST AREA ITEM PLUMBING CONSTRUCTION FOR THE NBL/SBL VENDING BUILDING
6975000000-N	SP	Lump Sum		GENERIC REST AREA ITEM PLUMBING INSTALLATION FOR THE NBL/SBL REST AREA SERVICE BUIL DING
6980000000-E	SP	15	LF	GENERIC REST AREA ITEM 1/2" PVC WATER PIPE, SCH-80
6980000000-E	SP	1,743	LF	GENERIC REST AREA ITEM 2" SLEEVE FOR U/G ELECTRICAL /PHONE SERVICE (SCH 40 PVC)
6980000000-E	SP	295	LF	GENERIC REST AREA ITEM 3" PVC WATER PIPE, SCH-80
6980000000-E	SP	175	LF	GENERIC REST AREA ITEM 3/4" PVC WATER PIPE, SCH-80
6980000000-E	SP	415	LF	GENERIC REST AREA ITEM 4" PVC WATER PIPE, SCH-80
6980000000-E	SP	452	LF	GENERIC REST AREA ITEM 4" PVC/ABS -DWV DRAIN PIPE, SCH 40
6980000000-E	SP	395	LF	GENERIC REST AREA ITEM 6" PVC GRAVITY SEWER LINE, SDR-35
6980000000-E	SP	350	LF	GENERIC REST AREA ITEM 6" PVC/ABS-DWV DRAIN PIPE, SCH 40
6980000000-E	SP	1,168	LF	GENERIC REST AREA ITEM BRICK BANDING/BRICK EDGING
6980000000-E	SP	76	LF	GENERIC REST AREA ITEM BRICK CHEEKWALLS
6980000000-E	SP	120	LF	GENERIC REST AREA ITEM BRICK SEATWALL
6980000000-E	SP	76	LF	GENERIC REST AREA ITEM HANDRAILS
6980000000-E	SP	200	LF	GENERIC REST AREA ITEM LANDSCAPE METAL EDGING
6980000000-E	SP	40	LF	GENERIC REST AREA ITEM PVC WATER PIPE REPAIR, SCH 80
6980000000-E	SP	2,284	LF	GENERIC REST AREA ITEM TREE PROTECTION FENCE

BUILDING CODE SUMMARY: New Rest Area Bldg.

Name of Project: I-95 REST AREA & VENDING
Address: NASH COUNTY, NC
Proposed Use: BUSINESS (Rest Area)
Owner or Authorized Agent: GENERAL SERVICES, NCDOT
Telephone # (919) 715-0400
Owned By: State of North Carolina
Code Enforcement Jurisdiction: State

LEAD DESIGN PROFESSIONAL: FACILITIES DESIGN, NCDOT
Telephone # (919) 715-0400
Architectural: Victor M. Buzard, Jr. RA. Licence # 4241
Plumbing/Mechanical/Electrical: LEWIS WAYNE HOLLEY, PE Licence # 14904
Structural: W. E. Ratterree, PE Licence # 16394

YEAR EDITION OR CODE: 2002, New Construction

BUILDING DATA:

Construction Type: V-B — Mixed Construction: No
Sprinklers: No — NFPA 13
Standpipes: No
Fire District: No
Building Height: 11'-4" — Number of Stories: 1
Mezzanine: No
High Rise: No
Gross Building Area: New Rest Area Bldg. 2,975 sf

ALLOWABLE AREA:

Primary Occupancy: Business (Rest Area Bldg)
Secondary Occupancy: N/A
Special Occupancy: N/A
Mixed Occupancy: No Separation: -

Story No.	Description and Use	Bldg Area per Story (Actual)	Table 503 Area	Area for Open Space Increase	Allowable Area	Max Bldg Area
1	Business(B)	2,975	9,000	N/A	-	-

ALLOWABLE HEIGHT:

	Allowable Table 503	Increase for Sprinklers	Shown on Plans	Code Reference
Type of Construction	Type V-B	-	V-B	-
Bldg Height in Feet	40'	N/A	11'-4"	-
Bldg Height in Stories	2-Story	N/A	1-Story	-

FIRE PROTECTION REQUIREMENTS:

Life Safety Plan Sheet #, N/A

Bldg Element	Fire Separation Distance (Feet)	Rating Req'd	Rating Provided w/ Reduction	Detail # and Sheet #	Design # for Rated Assembly	Design # for Rated Penetration	Design # for Rated Joints
Structural Frame including columns, girders, trusses	-	0	0	-	-	-	-
Exterior Bearing Walls							
North	30	0	0	-	-	-	-
East	30	0	0	-	-	-	-
West	30	0	0	-	-	-	-
South	30	0	0	-	-	-	-
Interior Bearing Walls		0	0	-	-	-	-
Ext. Nonbearing walls & partitions							
North	30	0	0	-	-	-	-
East	30	0	0	-	-	-	-
West	30	0	0	-	-	-	-
South	30	0	0	-	-	-	-
Interior Nonbearing		0	0	-	-	-	-
Floor construction including supporting beams & joists	-	0	0	-	-	-	-
Roof construction incl. support'g beams & truss @ Jan. Clos. only	-	0	0	-	-	-	-
Shafts - Exit	-	N/A	-	-	-	-	-
Shafts - Other	-	N/A	-	-	-	-	-
Corridor Separation	-	N/A	-	-	-	-	-
Occupancy Separation	-	N/A	-	-	-	-	-
Party/Fire Wall Separation	-	N/A	-	-	-	-	-
Smoke Barrier Separation	-	N/A	-	-	-	-	-
Tenant Separation	-	N/A	-	-	-	-	-

LIFE SAFETY SYSTEM REQUIREMENTS:

Emergency Lighting: Yes
Exit Signs: No
Fire Alarm: No
Smoke Detection System: No
Panic Hardware: No

EXIT REQUIREMENTS:
NUMBER & ARRANGEMENT OF EXITS

Floor, Room or Space Designation	Minimum[2] Number of Exits: Required	Shown on Plans (Actual)	Travel Distance: Allowable Travel Distance (Table 1004.2.4)	Actual Travel Distance Shown on Plans	Arrangement Means of Egress[3] (Section 1004.1): Required Distance Between Exit Doors	Actual Distance Shown on Plans
Business 28-occupants	1	2	200'	41'	N/A	30'

EXIT WIDTH

Use Group or Space	(a) Area[1] sq. ft.	(b) Area[1] per Occupant (Table 1003.2.2.2)	(c) Egress Width per Occupant (Table 1003.2.3): Stair	Level	Required Width (Table 1003.2.3) (a/b) x c: Stair	Level	Exit Width (in)[2,3,4,5,6] Actual Width Shown on Plans: Stair	Level
REST AREA								
Business	2,682	100	N/A	.2	N/A	5.4"	N/A	66"
Storage/Mech	293	300	N/A	.2	N/A	.19"	N/A	33"

STRUCTURAL DESIGN

DESIGN LOADS:
Importance Factors: Wind(Iw) 1.0; Snow(Is) 1.0; Seismic (IE) 1.0
Live Loads: Roof 20 psf; Mezzanine NA psf; Floor 100 psf
Snow Load: 10 psf
Wind Load: Basic Wind Speed 100 mph (ASCE-7-98)
Exposure Category B
Wind Base Shears (for MWFRS) Vx= 4380# Vy=5805#
SEISMIC DESIGN CATEGORY "B"
Seismic Use Group I
Spectral Response Acceleration Sms 0.37 %g Sm1 0.22 %g
Site Classification D
Basic structural system (check one)
X Bearing Wall ___ Dual w/Special Moment Frame
___ Building Frame ___ Dual w/Intermediate R/C or Special Steel
___ Moment Frame ___ Inverted Pendulum
Seismic base shear Vx= 3910# Vy = 3910#
Analysis Procedure X Simplified ___ Equivalent Lateral Force ___ Modal
Architectural, Mechanical, Components anchored? YES
LATERAL DESIGN CONTROL: Earthquake ___ Wind X
SOIL BEARING CAPACITIES:
Field Test (provide copy of test report) 2000 psf
Presumptive Bearing capacity ___ psf
Pile size, Type and Capacity ___

PLUMBING FIXTURE REQUIREMENTS

Rest Area Total Occupants is 29 Persons x 75% = 22 Persons by Code, [Fixtures #'s provided]

Bldg or Occupancy	Total Occupants: Male	Female	Waterclosets: Male	Female	Urinals	Lavatories: Male	Female	Showers/Tubs	Drinking Fountains: Regular	Accessible
Rest Area	9	13	1 [8]	2 [16]	0[8]	1[8]	1[8]	N/A	1	1

ACCESSIBLE PARKING

Lot or Parking Area	Total # of Parking Spaces: Required	Provided	# of Accessible Spaces Provided: Regular w/ 5' Access Aisle	Van Spaces w/ 8' Access Aisle	Total # Accessible Provided
Cars		51	2	1	3
Trucks/Trailers		27			
Total		78			

SPECIAL APPROVALS

Special Approval: N/A

ENERGY SUMMARY
THERMAL ENVELOPE COMPLIANCE REPORT

Method of Compliance: Whole Building Method
Building Location: Rocky Mount, NC
Climate Zone: 7a
Heating Degree Days (Base 65 Degrees F): 3321
Cooling Degree Days (Base 65 Degree F): 1447
Building Type: Office

Component Name / Description	Gross Area	Cavity R-Value	Cont. R-Value	Proposed U-Factor	Budget U-Factor (a)
ROOF 1: ALL-WOOD JOIST/RAFTER/TRUSS	2,975	0.0	30.0	0.032	0.069
SKYLIGHT 1: WOOD FRAME, DOUBLE PANE, CLEAR, SHGC 0.01	64	---	---	0.800	0.069
EXTERIOR WALL 1: WOOD FRAME, ANY SPACING	1691	0.0	19.0	0.046	0.133
WINDOW 1: WOOD FRAME, DOUBLE PANE WITH LOW-E CLEAR, SHGC 0.70, PF 1.00	361	---	---	0.590	0.106
FLOOR 1: UNHEATED SLAB-ON-GRADE, HORIZONTAL- 2 FT.	228	---	7.5	---	---

Envelope Passes: Design 24% Better Than Code

I-95 REST AREA REPLACEMENT

NEW REST AREA BLDG. & VENDING BLDG. REMODELING

NASH COUNTY, NORTH CAROLINA

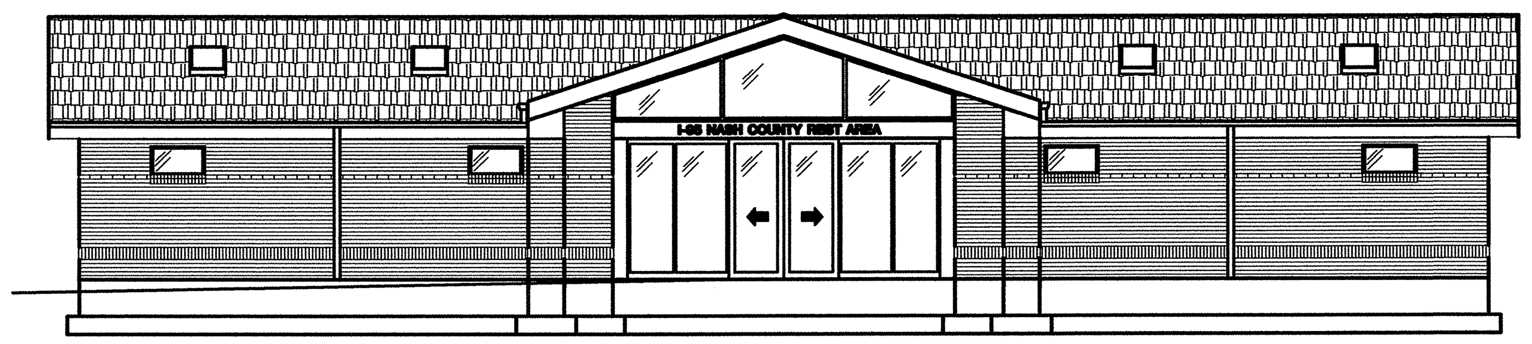

INDEX OF DRAWINGS

T1 DESIGN DATA & ABBREVIATION
T2 DESIGN DATA FOR EXISTING BUILDINGS

A1 FLOOR PLAN
A2 ELEVATIONS (INT. & EXT.)
A3 ELEVATIONS/ WALL SECTION
A4 BUILDING SECTIONS
A5 SCHEDULES/ DETAILS
A6 REFLECTED CEILING PLAN & DETAILS

S1 FOUNDATION PLAN & DETAILS
S2 ROOF FRAMING PLAN & DETAILS
S3 DETAILS

P1 PLUMBING PLAN
P2 PLUMBING WASTE RISER DIAGRAM & DETAILS

M1 MECHANICAL PLAN & NOTES
M2 MECHANICAL DETAILS & NOTES

E1 ELECTRICAL PLANS & DETAILS
E2 ELECTRICAL PANELS & RISER

VA1 FLOOR PLAN/ SCHEDULES
VA2 ELEVATIONS
VA3 CEILING PLAN
VA4 DEMOLITION PLAN
VP1 VENDING BLDG. PLUMBING
VM1 VENDING BLDG. MECHANICAL
VE1 VENDING BLDG. ELECTRICAL

L1 NBL SITE PLAN & SIDEWALK LAYOUT
L2 SBL SITE PLAN & SIDEWALK LAYOUT

NORTH CAROLINA PROFESSIONAL SEAL 14904 ENGINEER LEWIS WAYNE HOLLEY
December 18, 2006

NORTH CAROLINA PROFESSIONAL SEAL 16394 ENGINEER WILLIAM E. RATTERREE
12.18.06

SYMBOLS

SILT FENCE
ELEVATION MARK
DRAINAGE / SLOPE ARROW
EXISTING CONTOURS
EXISTING ELEVATION
NEW CONTOURS
NEW ELEVATION
EXISTING TREE
FIRE EXTINGUISHER
RIGID INSULATION
BATT INSULATION / BLOWN
DRYWALL OR PLASTER
GRAVEL
UNDISTURBED EARTH
COMPACTED FILL
REVISION NUMBER
E2 / RA3 — ELEVATION NUMBER / DRAWING SHEET NUMBER
E1 / RA3 — DRAWING NUMBER / DRAWING SHEET REFERENCE NUMBER
E2 / RA1 — BUILDING OR WALL SECTION NO. / DRAWING SHEET NUMBER
CMU
CONCRETE
STEEL
ROUGH CARPENTRY
FINISH CARPENTRY

ABBREVIATIONS & SYMBOLS

<	ANGLE
AL.	ALUMINUM
AB.	ANCHOR BOLT
APPROX.	APPROXIMATE
ARCH.	ARCHITECTURAL
@	AT
AVG.	AVERAGE
BB	BACK TO BACK
BSMT.	BASEMENT
BRG.	BEARING
BM.	BENCH MARK
BLKG.	BLOCKING
BD.	BOARD
BLDG.	BUILDING
CH	CEILING HEIGHT
CL	CENTER LINE
CC	CENTER TO CENTER
C.I.	CAST IRON
COL.	COLUMN
CONC.	CONCRETE
CMU	CONCRETE MASONRY UNIT
CONT.	CONTINUOUS
CJ	CEILING JOIST
C/J	CONSTRUCTION JOINT
CRS	COURSES
DET.	DETAIL
DIA.	DIAMETER
DBL.	DOUBLE
DS	DOWN SPOUT
EA.	EACH
EW	EYE WASH
ELEC.	ELECTRICAL
ELEV.	ELEVATION
EXIST.	EXISTING
EWC	ELECTRIC WATER COOLER
E/J	EXPANSION JOINT
EBC	EXTENDED BOTTOM CHORD
EXT.	EXTERIOR
FFE	FINISH FLOOR ELEVATION
FIN.FL.	FINISH FLOOR
F.E.	FIRE EXTINGUISHER
F.D.	FLOOR DRAIN
FTG.	FOOTING
FRGWB	FIRE RATED GYPSUM WALLBOARD
GALV.	GALVANIZED
GA.	GAUGE
GL.	GLASS
GP.	GLAZED PAVER TILE
GWB	GYPSUM SHEATHING
GYP.	GYPSUM
HM	HOLLOW METAL
HOR.	HORIZONTAL
H.B.	HOSE BIBB
INSUL.	INSULATION
INT.	INTERIOR
JST.	JOIST
LAV.	LAVATORY
M.H.	MAN HOLE
M.O.	MASONRY OPENING
MAT.	MATERIAL
MAX.	MAXIMUM
MIN.	MINIMUM
MTD.	MOUNTED
MLDG.	MOULDING
N.T.S.	NOT TO SCALE
NO.	NUMBER
O.C.	ON CENTER
OPNG.	OPENING
PNL.	PANEL
PLAS.LAM.	PLASTIC LAMINATE
PL	PLATE
PLMB.	PLUMBING
PLYWD.	PLYWOOD
LB.(#)	POUND
PREFAB.	PREFABRICATED
P.S.I.	POUNDS PER SQUARE INCH
REQ'D	REQUIRED
R.	RISER
SAN.	SANITARY
SEC.	SECTION
SHT.	SHEET
SHTHG.	SHEATHING
SIM.	SIMILAR
SPEC.	SPECIFICATIONS
SQ.	SQUARE
SS	SERVICE SINK
STD.	STANDARD
STL.	STEEL
STG.	STORAGE
S.A.C.	SUSPENDED ACOUSTICAL CEILING
T&G	TONGUE AND GROOVE
T.O.F.	TOP OF FOOTING
T.O.J.	TOP OF JOIST
T.O.S.	TOP OF STEEL
T.O.W.	TOP OF WALL
T.	TREAD
TYP.	TYPICAL
UNFIN.	UNFINISHED
U.O.N.	UNLESS OTHERWISE NOTED
VERT.	VERTICAL
W.W.M.	WELDED WIRE MESH
W/	WITH
WD.	WOOD
102	ROOM/SPACE NUMBER
(B)	WINDOW TYPE
(2)	DOOR TYPE
	CENTER LINE
	HIDDEN LINE
	BREAK LINE
	CONSTRUCTION FENCE

PROJECT:
I-95 REST AREA
NASH COUNTY — NORTH CAROLINA

ARCHITECT/ENGINEERS:
FACILITIES DESIGN
GENERAL SERVICES DIVISION, NCDOT
1 SOUTH WILMINGTON STREET
RALEIGH, NORTH CAROLINA 27601
(919) 715-0400 — FAX (919) 715-0399

DRAWING TITLE:
BUILDING CODE SUMMARY
DRAWN BY: RA — CHECKED BY: V. BUZARD — ISSUE DATE: 12/05/06

SEAL: VICTOR M. BUZARD JR. REGISTERED ARCHITECT 4241 NORTH CAROLINA RALEIGH, N.C. 12.15.06

T.I.P. PROJ. NO.	FED. PROJ. NO.	STATE PROJ. NO.
K-4903	IMS-95-3(88)142	39914.3.1

NO.	REVISIONS/SUBMISSIONS	DATE

SHEET NO. **T1** OF 2

S:\FD\REST AREA, WELCOME CENTERS\I-95 Nash Co\Nash Co. I-95 Rest Area\ARCH\T1-Nash.dwg, 12/18/2006 8:03:42 AM, \\dot-trbpp01\FD209072

BUILDING CODE SUMMARY-EXISTING VENDING

Name of Project: I-95 REST AREA & VENDING
Address: NASH COUNTY, NC
Proposed Use: STORAGE (Vending Bldg.)
Owner or Authorized Agent: GENERAL SERVICES, NCDOT
Telephone # (919) 715-0400
Owned By: State of North Carolina
Code Enforcement Jurisdiction: State

LEAD DESIGN PROFESSIONAL: FACILITIES DESIGN, NCDOT
Telephone # (919) 715-0400
Architectural: Victor M. Buzard, Jr. RA. Licence # 4241
Plumbing/Mechanical/Electricall: LEWIS WAYNE HOLLEY, PE
Licence # 14904
Structural: W. E. Ratterree, PE Licence # 16394

YEAR EDITION OR CODE: 2002, Renovation

BUILDING DATA:
Construction Type: V-B Mixed Construction: No
Sprinklers: No NFPA 13
Standpipes: No
Fire District: No
Building Height: 15'-8" Number of Stories: 1
Mezzanine: No
High Rise: No
Gross Building Area: Exist'g Vending Bldg. 1,882 sf

ALLOWABLE AREA:
Primary Occupancy: Storage (S-2)
Secondary Occupancy: N/A
Special Occupancy: N/A
Mixed Occupancy: No Separation: -

Story No.	Description and Use	Bldg Area per Story (Actual)	Table 503 Area	Area for Open Space Increase	Allowable Area	Max Bldg Area
1	Storage	1,882	13,500	N/A	-	-

ALLOWABLE HEIGHT:

	Allowable Table 503	Increase for Sprinklers	Shown on Plans	Code Reference
Type of Construction	Type V-B	-	V-B	-
Bldg Height in Feet	40'	N/A	15'-8"	-
Bldg Height in Stories	2-Story	N/A	1-Story	-

FIRE PROTECTION REQUIREMENTS:
Life Safety Plan Sheet #, N/A

Bldg Element	Fire Separation Distance (Feet)	Rating Req'd	Rating Provided w/ Reduction	Detail # and Sheet #	Design # for Rated Assembly	Design # for Rated Penetra-tion	Design # for Rated Joints
Structural Frame including columns, girders, trusses	-	0	0	-	-	-	-
Exterior Bearing Walls							
North	30	0	0	-	-	-	-
East	30	0	0	-	-	-	-
West	30	0	0	-	-	-	-
South	30	0	0	-	-	-	-
Interior Bearing Walls		0	0	-	-	-	-
Ext. Nonbearing Walls & partitions							
North	30	0	0	-	-	-	-
East	30	0	0	-	-	-	-
West	30	0	0	-	-	-	-
South	30	0	0	-	-	-	-
Interior Nonbearing		0	0	-	-	-	-
Floor construction including supporting beams & joists	-	0	0	-	-	-	-
Roof construction including supporting beams & joists	-	0	0	-	-	-	-
Shafts - Exit	-	N/A	-	-	-	-	-
Shafts - Other	-	N/A	-	-	-	-	-
Corridor Separation	-	N/A	-	-	-	-	-
Occupancy Separation	-	N/A	-	-	-	-	-
Party/Fire Wall Separation	-	N/A	-	-	-	-	-
Smoke Barrier Separation	-	N/A	-	-	-	-	-
Tenant Separation	-	N/A	-	-	-	-	-

LIFE SAFETY SYSTEM REQUIREMENTS:
Emergency Lighting: Yes
Exit Signs: No
Fire Alarm: No
Smoke Detection System: No
Panic Hardware: No

EXIT REQUIREMENTS:
NUMBER & ARRANGEMENT OF EXITS

Floor, Room or Space Designation	Minimum[2] Number of Exits: Required	Minimum[2] Number of Exits: Shown on Plans (Actual)	Travel Distance: Allowable Travel Distance (Table 1004.2.4)	Travel Distance: Actual Travel Distance Shown on Plans	Arrangement Means of Egress[3] (Section 1004.1): Required Distance Between Exit Doors	Arrangement Means of Egress[3] (Section 1004.1): Actual Distance Shown on Plans
Storage 6-occupants	1	2	200'	33'	N/A	34'

EXIT WIDTH

Use Group or Space	(a) Area[1] sq. ft.	(b) Area[1] per Occupant (Table 1003.2.2.2)	(c) Egress Width per Occupant (Table 1003.2.3): Stair	(c) Egress Width per Occupant (Table 1003.2.3): Level	Required Width (Table 1003.2.3) (a/b) x c: Stair	Required Width (Table 1003.2.3) (a/b) x c: Level	Exit Width (in)[2,3,4,5,6] Actual Width Shown on Plans: Stair	Exit Width (in)[2,3,4,5,6] Actual Width Shown on Plans: Level
VENDING	1,882	300	N/A	.2	N/A	1.25"	N/A	132"

STRUCTURAL DESIGN; EXISTING (OLD BLDG. CODE)

PLUMBING FIXTURE REQUIREMENTS
Adjacent Rest Area provides fixtures for the 6 occupants that may occupy the bldg. temporarily.

Bldg or Occupancy	Total Occupants: Male	Total Occupants: Female	Waterclosets: Male	Waterclosets: Female	Urinals	Lavatories: Male	Lavatories: Female	Showers/ Tubs	Drinking Fountains: Regular	Drinking Fountains: Accessible

ACCESSIBLE PARKING: See Sheet T1.

SPECIAL APPROVALS
Special Approval: N/A

ENERGY SUMMARY: EXISTING BLDG.

PROJECT:
I-95 REST AREA
NASH COUNTY NORTH CAROLINA

ARCHITECT/ENGINEERS:
FACILITIES DESIGN
GENERAL SERVICES DIVISION, NCDOT
1 SOUTH WILMINGTON STREET
RALEIGH, NORTH CAROLINA 27601
(919) 715-0400 FAX (919) 715-0399

DRAWING TITLE:
BUILDING CODE SUMMARY
DRAWN BY: RA CHECKED BY: V. BUZARD ISSUE DATE: 12/05/06

SEAL: VICTOR M. BUZARD, JR. REGISTERED ARCHITECT 4241 12.15.06 NORTH CAROLINA RALEIGH, N.C.

T.I.P. PROJ. NO. K-4903 | FED. PROJ. NO. IMS-95-3(88)142 | STATE PROJ. NO. 39914.3.1

NO.	REVISIONS/SUBMISSIONS	DATE

SHEET NO. T2 OF 2

S:\FD\REST AREA, WELCOME CENTERS\I-95 Nash Co\Nash Co. I-95 Rest Area\ARCH\T2-Nash.dwg, 12/18/2006 8:04:25 AM,
\\dot-bbpp01\FD209072

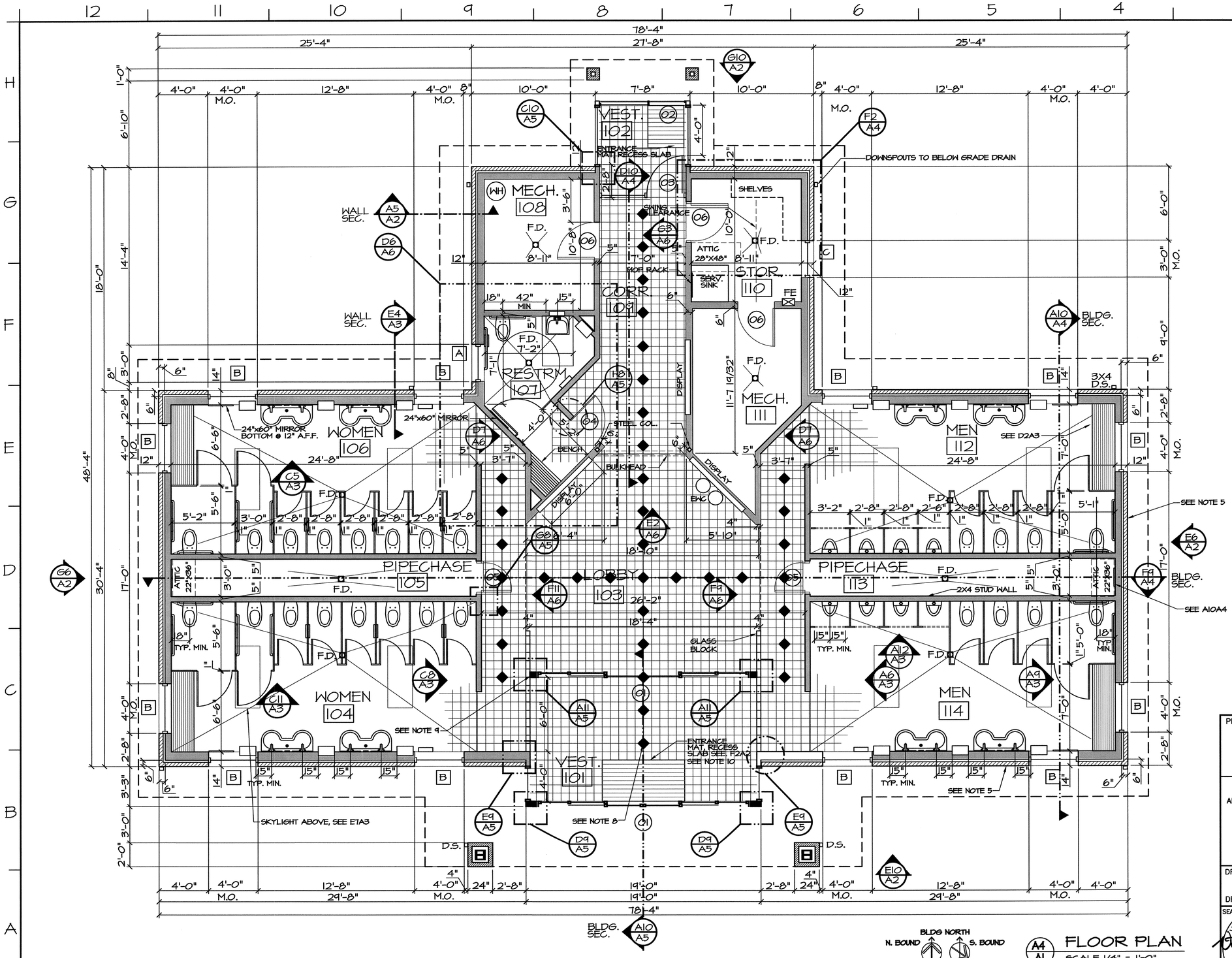

A4/A1 FLOOR PLAN
SCALE 1/4" = 1'-0"

GENERAL NOTES:

1. USE THIN-SET TILE INSTALLATION AT CONCRETE FLOORS & TILE BACKER PANELS AT WOOD STUD WALLS.
2. INTERIOR ELEVATIONS FOR WOMEN 104 & MEN 114 SIMILAR TO ADJACENT ROOMS 106 & 112 RESPECTIVELY.
3. PROVIDE 5/8" DRYWALL @ ALL CEILING/ROOF JOIST.
4. ALL FINISHED FLOOR ELEVATIONS ARE 100'-0" AND ALL FLOOR DRAINS SHALL BE SET AT 99'-10 1/2"(99'-11" @ 107).
5. ALL EXTERIOR WOOD STUDS SHALL BE 2x6's @ 16" O.C. / EXCEPT LAVATORY WALLS ARE 2X8'S @ 16" O.C. PROVIDE TOILET ACCESSORY BLOCK-OUTS PER ELEVATIONS.
6. DIMENSIONS ARE NOMINAL AND ARE TO ALLOW FOR FINISHES.
7. PROVIDE TOILET PARTITION DOOR (32" MIN. CLR.) W/ PILASTERS OF RESTROOM 107. PROVIDE SOLID WOOD BLOCKING FOR ALL TOILET PARTITIONS & ACCESSORIES.
8. CENTER FLOOR ACCENT GLAZED PAVERS OFF ENTRY & PIPE CHASE DOORS.
9. PAINT SUPPORT COLUMNS AGAINST GLASS BLOCK GRAY.
10. PROVIDE ENTRANCE MAT. & ALUM. RECESS FRAME. (SEE F2A2).

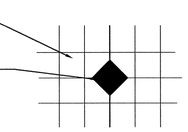

C3/A1 DETAIL- TILE PATTERN
SCALE 1/2" = 1'-0"

PROJECT:
I-95 REST AREA
NASH COUNTY — NORTH CAROLINA

ARCHITECT/ENGINEERS:
FACILITIES DESIGN
GENERAL SERVICES DIVISION, NCDOT
1 SOUTH WILMINGTON STREET
RALEIGH, NORTH CAROLINA 27601
(919) 715-0400 FAX (919) 715-0399

DRAWING TITLE: FLOOR PLAN

DRAWN BY: CHECKED BY: V. BUZARD ISSUE DATE: 12/05/06

SEAL: VICTOR M. BUZARD JR. REGISTERED ARCHITECT 4241 12-15-06 NORTH CAROLINA RALEIGH, N.C.

T.I.P. PROJ. NO.	FED. PROJ. NO.	STATE PROJ. NO.
K-4903	IMS-95-3(88)142	39914.3.1

NO.	REVISIONS/SUBMISSIONS	DATE

SHEET NO. A1 OF 6

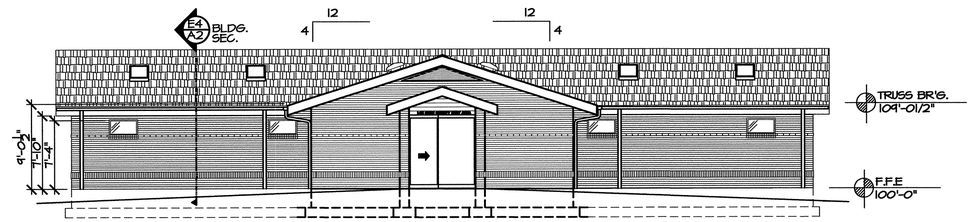

610 A2 NORTH ELEVATION
SCALE 1/8" = 1'-0"

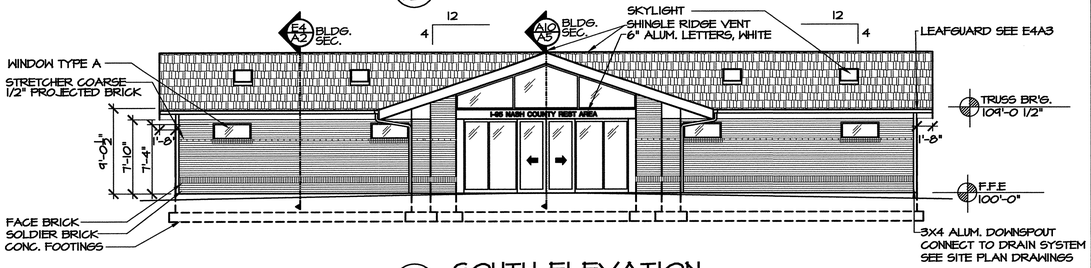

E10 A2 SOUTH ELEVATION
SCALE 1/8" = 1'-0"

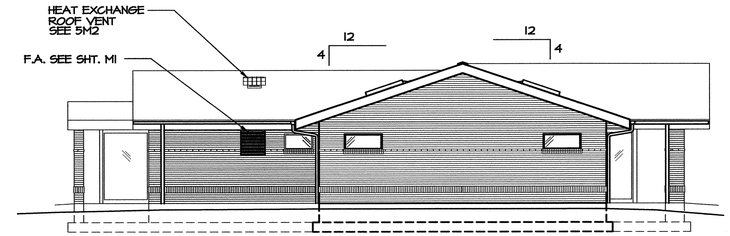

66 A2 WEST ELEVATION
SCALE 1/8" = 1'-0"

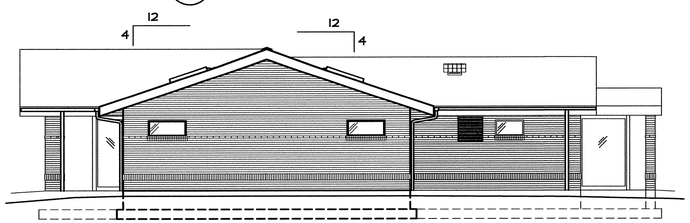

E6 A2 EAST ELEVATION
SCALE 1/8" = 1'-0"

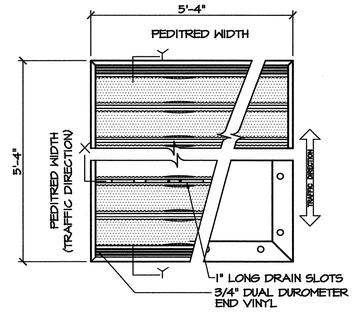

PEDITRED WITH BLOCK OUT FRAME

F2 A2 PLAN DETAIL
SCALE 1/2" = 1'-0"

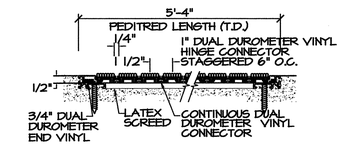

SECTION Y-Y

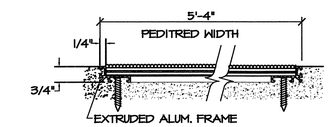

PEDITRED WITH
BLOCK OUT FRAME

SECTION X-X

D2 A2 PEDITRED DETAIL
SCALE 1/2" = 1'-0"

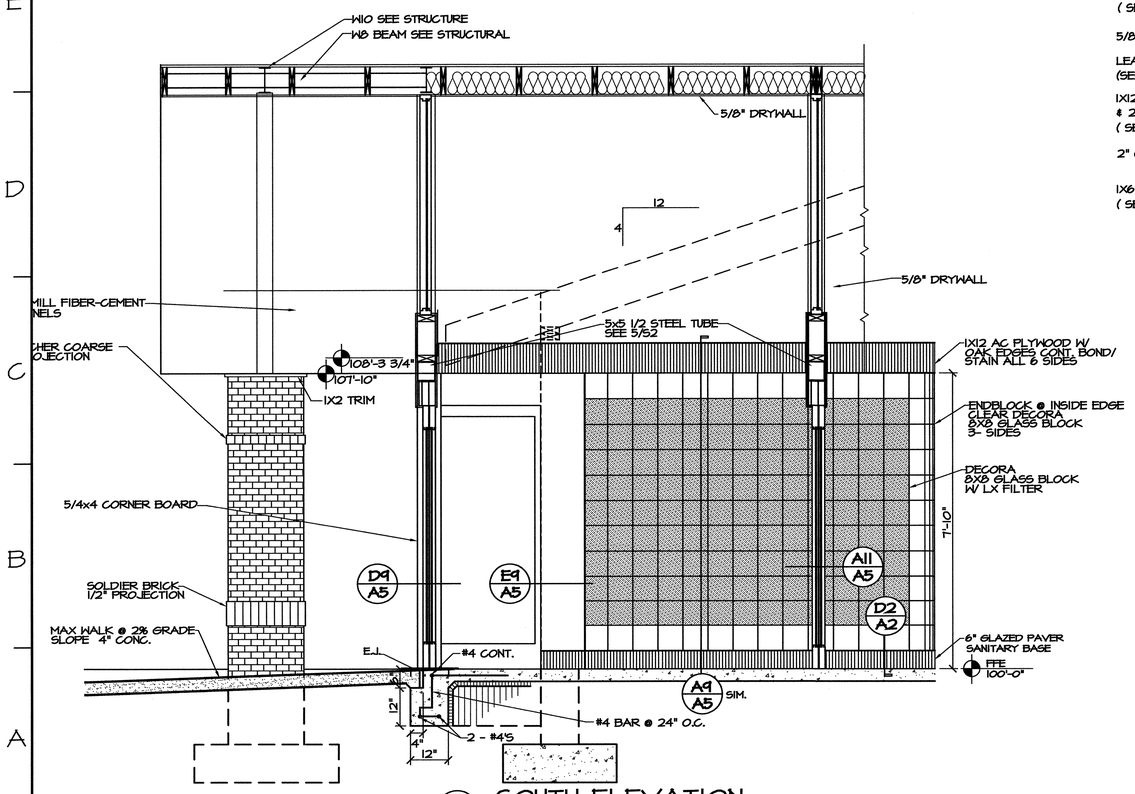

A10 A2 SOUTH ELEVATION
SCALE 1/8" = 1'-0"

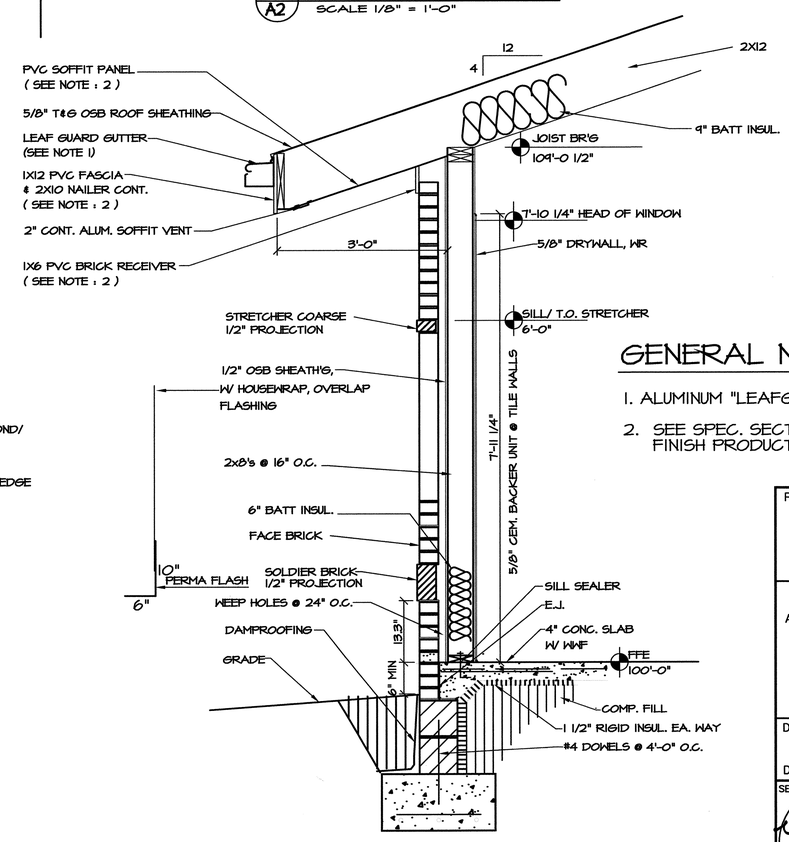

A5 A2 WALL SECTION
SCALE 3/4" = 1'-0"

GENERAL NOTES:

1. ALUMINUM "LEAFGUARD" GUTTER, W/ ANCHOR AT 24" O.C.
2. SEE SPEC. SECTION 07625 FOR EQUAL OR COMPETITIVE FINISH PRODUCT MANUFACTURING.

PROJECT:
I-95 REST AREA
NASH COUNTY — NORTH CAROLINA

ARCHITECT/ENGINEERS:
FACILITIES DESIGN
GENERAL SERVICES DIVISION, NCDOT
1 SOUTH WILMINGTON STREET
RALEIGH, NORTH CAROLINA 27601
(919) 715-0400 FAX (919) 715-0399

DRAWING TITLE:
ELEVATIONS (INT. & EXT.)

DRAWN BY: CHECKED BY: V. BUZARD ISSUE DATE: 12/05/06

SEAL: VICTOR M. BUZARD, JR. REGISTERED ARCHITECT 4241 NORTH CAROLINA RALEIGH, N.C. 12-16-06

T.I.P. PROJ. NO.	FED. PROJ. NO.	STATE PROJ. NO.
K-4903	IMS-95-3(88)142	39914.3.1

NO.	REVISIONS/SUBMISSIONS	DATE

SHEET NO. A2 OF 6

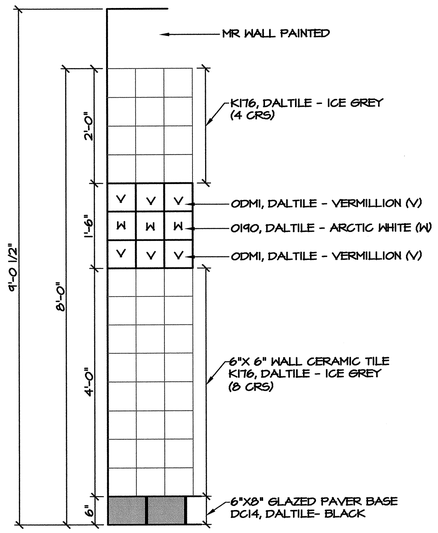

E12/A3 DETAIL- TILE PATTERN
SCALE 3/4" = 1'-0"

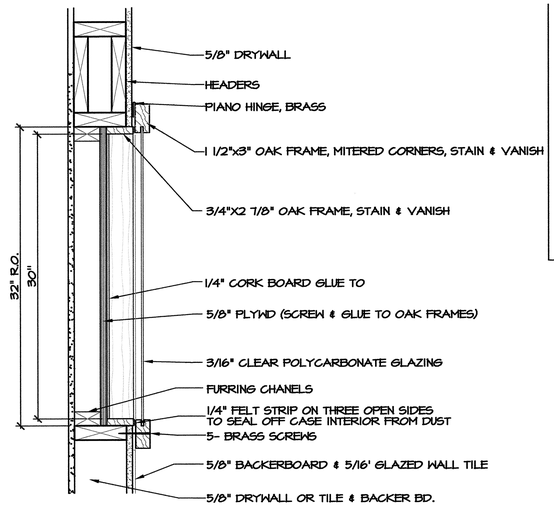

E9/A3 DETAIL- DISPLAY CASE
SCALE 1-1/2" = 1'-0"

GENERAL NOTES:

1. PROVIDE 5/8" DRYWALL @ ALL CEILING/ROOF JOIST.
2. ALL EXTERIOR WOOD STUDS SHALL BE 2x6's @ 16" O.C. EXCEPT @ LAVATORIES SHALL BE 2X8'S.
3. SECURE 3 x 3 x 1/4"Δ PERIMETER FRAME (FOR CHANGING TABLE), WELD MITERED CORNERS; ANCHOR TO WALLS & SOLID PLASTIC COUNTER & TOILET PARTITION W/ S.S. SCREWS AND BOLTS.
4. ALUMINUM "RAINGUARD" GUTTER, W/ ANCHOR AT 24" O.C.
5. DO NOT OVERLAP FIXTURE ELECTRONIC CONTROLS WITH GRAB BARS.

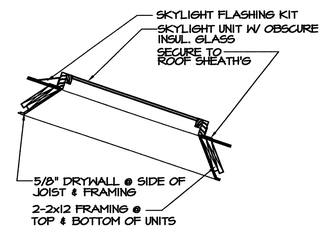

E1/A3 DETAIL- SKYLIGHT
SCALE 1/2" = 1'-0"

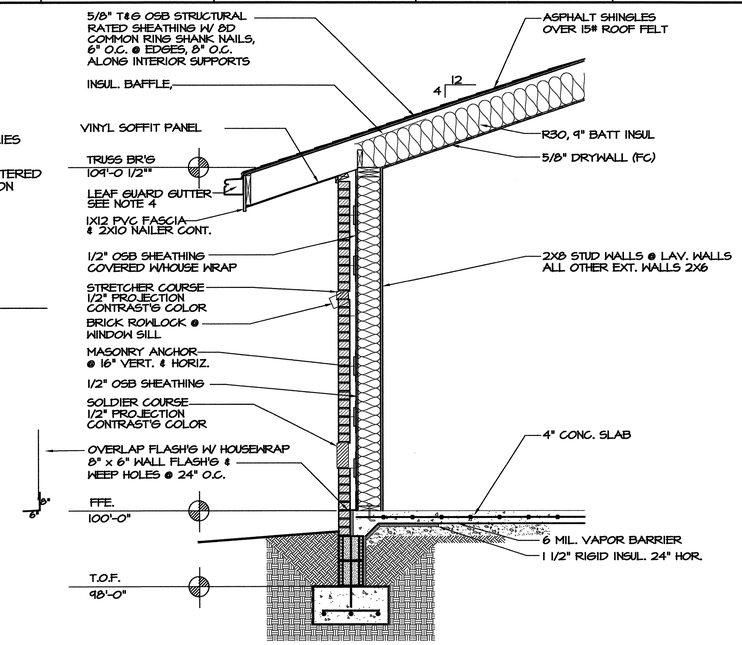

E4/A3 WALL SECTION
SCALE 1/2" = 1'-0"

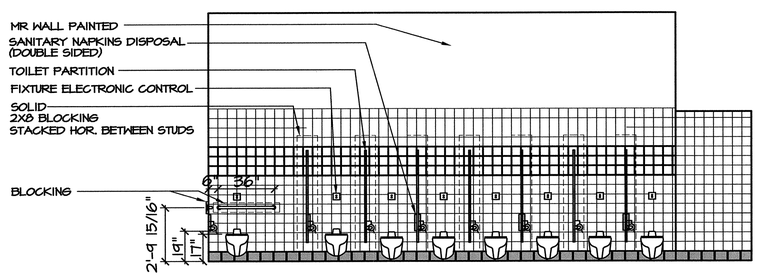

C11/A3 ELEVATION-WOMEN
SCALE 1/4" = 1'-0"

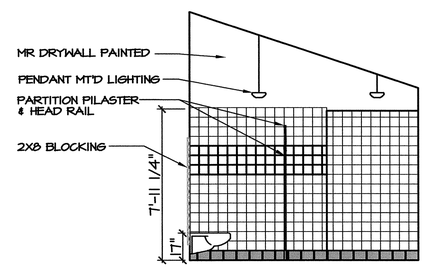

C8/A3 ELEVATION-WOMEN
SCALE 1/4" = 1'-0"

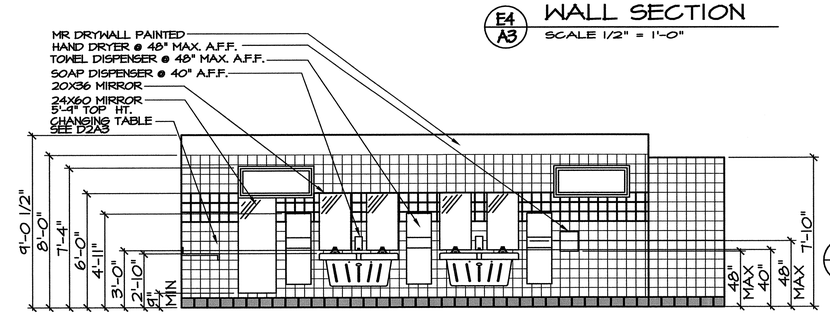

C5/A3 ELEVATION-WOMEN
SCALE 1/4" = 1'-0"

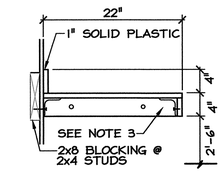

D2/A3 DETAIL- COUNTER
SCALE 1" = 1'-0"

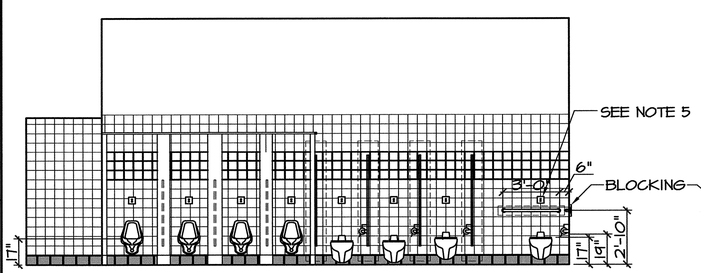

A12/A3 ELEVATION-MEN
SCALE 1/4" = 1'-0"

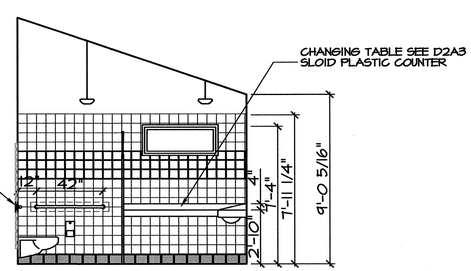

A9/A3 ELEVATION-MEN
SCALE 1/4" = 1'-0"

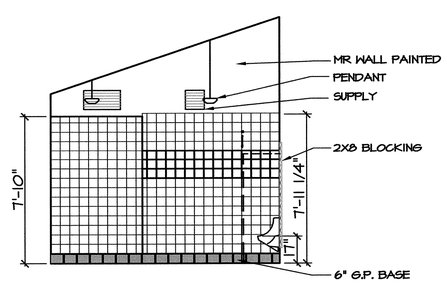

A6/A3 ELEVATION-MEN
SCALE 1/4" = 1'-0"

PROJECT:
I-95 REST AREA
NASH COUNTY — NORTH CAROLINA

ARCHITECT/ENGINEERS:
FACILITIES DESIGN
GENERAL SERVICES DIVISION, NCDOT
1 SOUTH WILMINGTON STREET
RALEIGH, NORTH CAROLINA 27601
(919) 715-0400 FAX (919) 715-0399

DRAWING TITLE:
ELEVATIOS/ WALL SECTION

DRAWN BY: CHECKED BY: V. BUZARD ISSUE DATE: 12/05/06

SEAL: VICTOR M. BUZARD JR. REGISTERED ARCHITECT 4241 12-15-06 NORTH CAROLINA RALEIGH, N.C.

T.I.P. PROJ. NO.	FED. PROJ. NO.	STATE PROJ. NO.
K-4903	IMS-95-3(88)142	39914.3.1

NO.	REVISIONS/SUBMISSIONS	DATE

SHEET NO. A3 OF 6

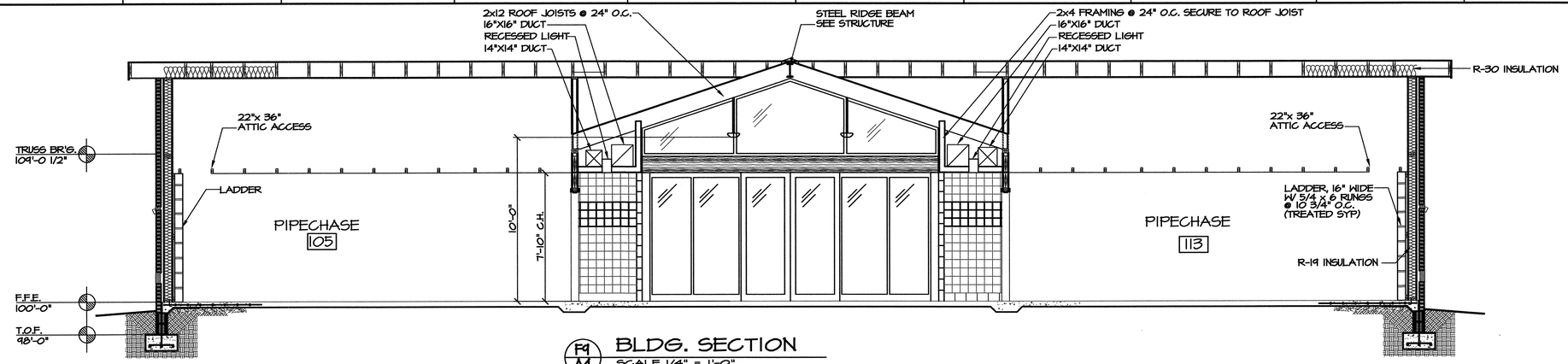

F9/A4 BLDG. SECTION
SCALE 1/4" = 1'-0"

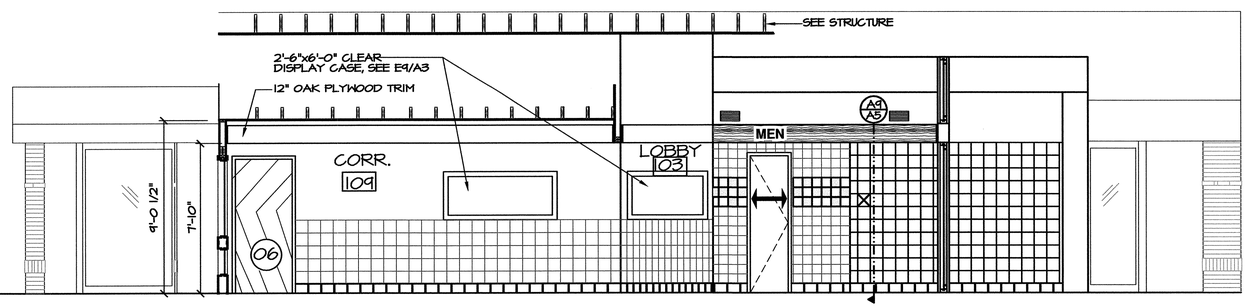

D10/A4 BLDG. SECTION
SCALE 1/4" = 1'-0"

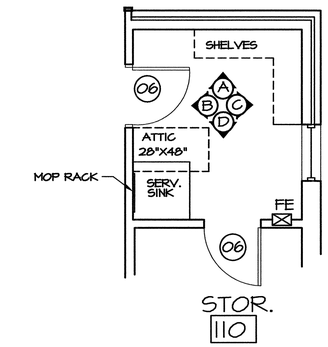

F2/A4 ELEVATION-STORAGE 110
SCALE 1/4" = 1'-0"

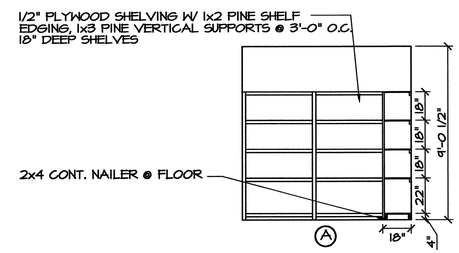

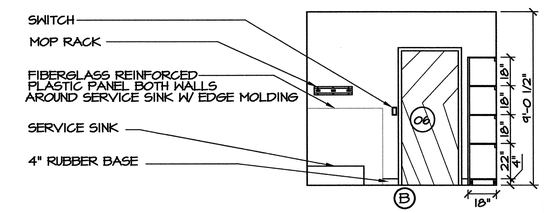

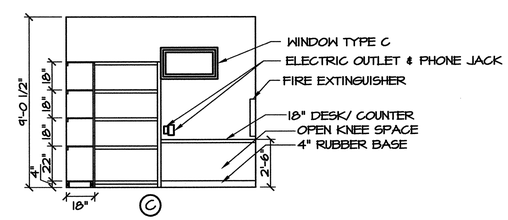

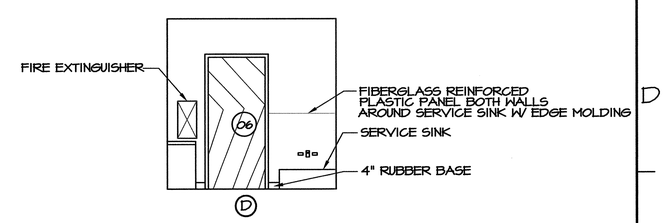

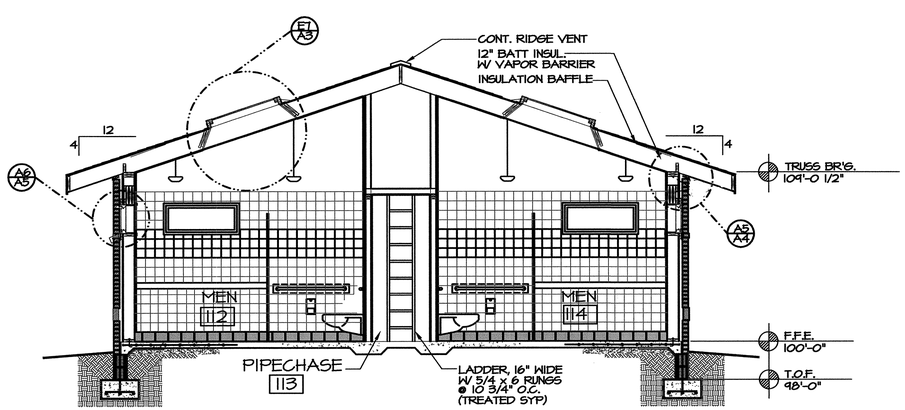

A10/A4 BLDG. SECTION
SCALE 1/4" = 1'-0"

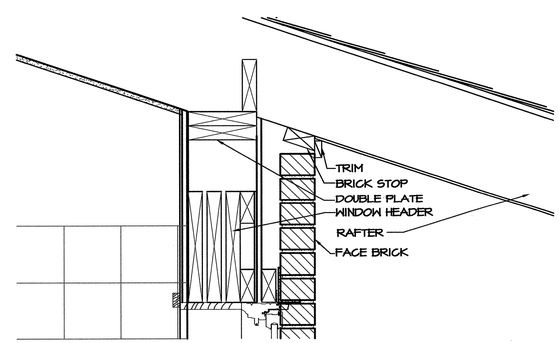

A5/A4 ENLARGED PLAN
SCALE 1-1/2" = 1'-0"

PROJECT:
I-95 REST AREA
NASH COUNTY — NORTH CAROLINA

ARCHITECT/ENGINEERS:
FACILITIES DESIGN
GENERAL SERVICES DIVISION, NCDOT
1 SOUTH WILMINGTON STREET
RALEIGH, NORTH CAROLINA 27601
(919) 715-0400 FAX (919) 715-0399

DRAWING TITLE: BLDG. SECTIONS

DRAWN BY: CHECKED BY: V. BUZARD ISSUE DATE: 12/05/06

SEAL: VICTOR M. BUZARD JR. REGISTERED ARCHITECT 4241 12-15-06 NORTH CAROLINA RALEIGH, N.C.

T.I.P. PROJ. NO.	FED. PROJ. NO.	STATE PROJ. NO.
K-4903	IMS-95-3(88)142	39914.3.1

NO.	REVISIONS/SUBMISSIONS	DATE

SHEET NO. A4 OF 6

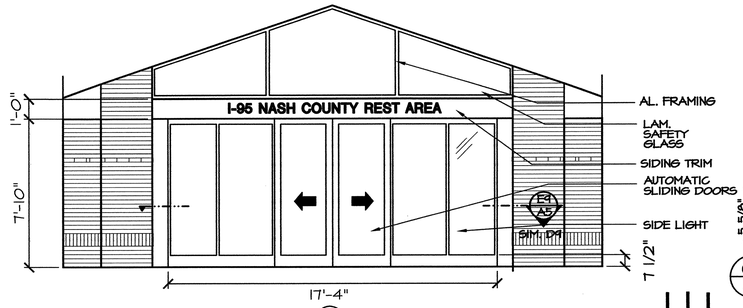

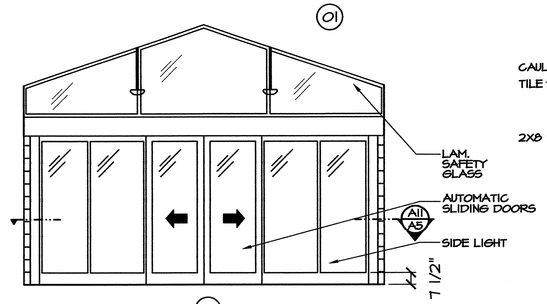

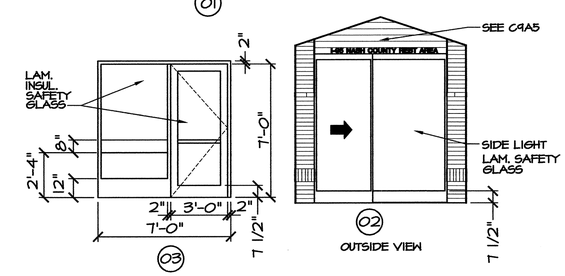

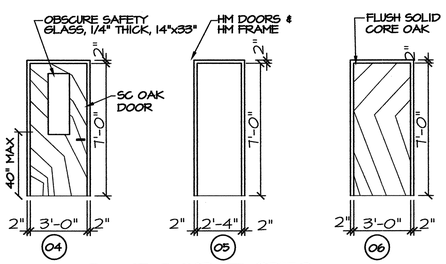

B12 A5 DOOR TYPES
SCALE 1/4" = 1'-0"

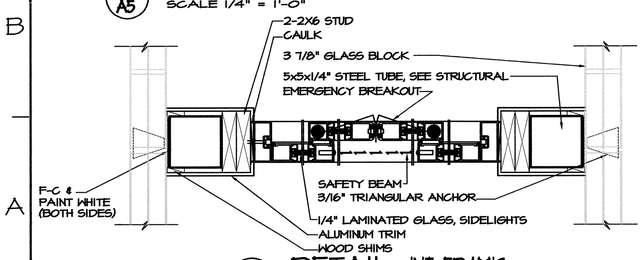

A11 A5 DETAIL- INT. FRAM'G
SCALE 1 1/2" = 1'-0"

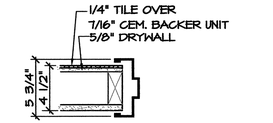

H8 A5 DETAIL- INT. H.M.
SCALE 1 1/2" = 1'-0"

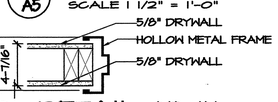

G8 A5 DETAIL- INT. H.M.
SCALE 1 1/2" = 1'-0"

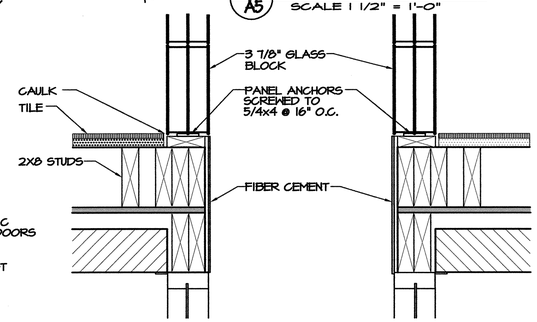

E9 A5 DETAIL- WEST/ EAST JAMB
SCALE 1 1/2" = 1'-0"

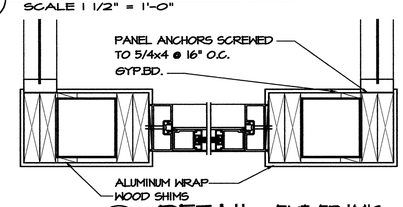

D4 A5 DETAIL- EXT. FRAM'G
SCALE 1 1/2" = 1'-0"

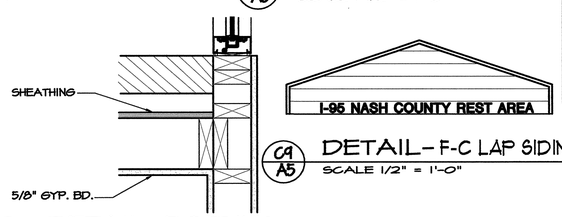

C9 A5 DETAIL- F-C LAP SIDING
SCALE 1/2" = 1'-0"

C10 A5 DETAIL- EXT. FRAM'G
SCALE 1 1/2" = 1'-0"

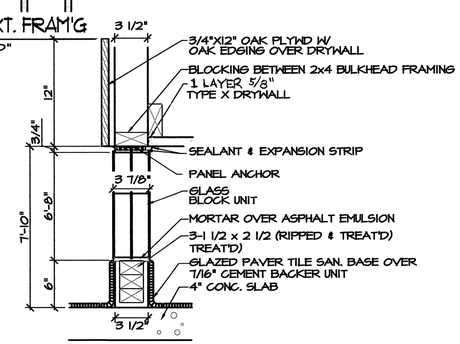

A9 A5 DETAIL- SILL/ HEAD (GLASS BLOCK)
SCALE = NTS

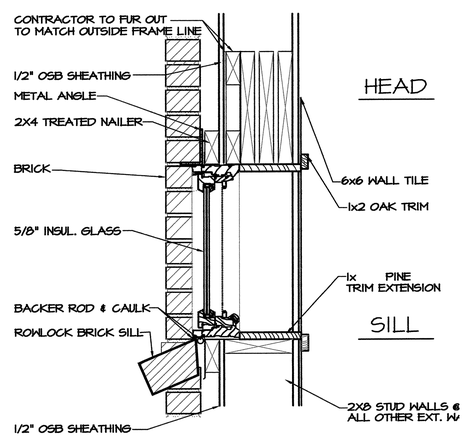

A6 A5 DETAIL- WINDOW
SCALE 1 1/2" = 1'-0"

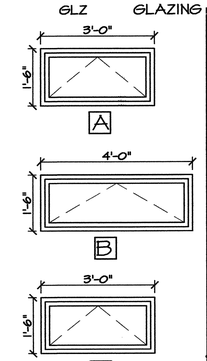

A4 A5 WINDOW TYPES
SCALE 1/4" = 1'-0"

FINISH - COLOR SCHEDULE

ROOM	NO.	FLOOR		BASE		NORTH WALL		EAST WALL		SOUTH WALL		WEST WALL		CEILING			REMARKS
		MAT.	COLOR	MAT.	COLOR	MAT.	COLOR	MAT.	COLOR	MAT.	COLOR	MAT.	COLOR	MAT.	COLOR	HEIGHT	
VESTIBULE	101	G.P.	VS02	G.P.	DC14	-	-	GLZ GB DW	30GY 88/014	-	-	GLZ GB DW	30GY 88/014	DW	30GY 88/014	VARIES	
VESTIBULE	102	G.P.	VS02	G.P.	DC14	-	-	GLZ DW	30GY 88/014	-	-	GLZ DW	30GY 88/014	DW	30GY 88/014	VARIES	
LOBBY	103	G.P.	VS02	G.P.	DC14	-	-	GT GB DW	DC05 30GY 88/014	-	-	GT GB DW	DC05 30GY 88/014	DW	30GY 88/014	VARIES	
WOMEN'S RESTRM	104	G.P.	VS02	G.P.	DC14	GT/DW	KI76 30GY 88/014	GT/DW	KI76 30GY 88/014	GT/DW	KI76 30GY 88/014	GT/DW	KI76 30GY 88/014	DW	30GY 88/014	VARIES	WALL TILE W/ ACCENT BAND, SEE E12A3
PIPECHASE	105	CONC.	-	-	-	OSB	30GY 88/014	OSB	30GY 88/014	OSB	30GY 88/014	OSB	30GY 88/014	DW	30GY 88/014	7'-10"	
WOMEN'S RESTRM	106	G.P.	VS02	G.P.	DC14	GT/DW	KI76 30GY 88/014	GT/DW	KI76 30GY 88/014	GT/DW	KI76 30GY 88/014	GT/DW	KI76 30GY 88/014	DW	30GY 88/014	VARIES	WALL TILE W/ ACCENT BAND, SEE E12A3
RESTROOM	107	G.P.	VS02	G.P.	DC14	GT/DW	KI76 30GY 88/014	GT/DW	KI76 30GY 88/014	GT/DW	KI76 30GY 88/014	GT/DW	KI76 30GY 88/014	DW	30GY 88/014	9'-0 1/2"	WALL TILE W/ ACCENT BAND, SEE E12A3
MECHANICAL	108	CONC.	-	RUBBER	P100	DW	30GY 88/014	DW	30GY 88/014	DW	30GY 88/014	DW	30GY 88/014	DW	30GY 88/014	9'-0 1/2"	
CORRIDOR	109	G.P.	VS02	G.P.	DC14	-	-	GT/DW	DC05 30GY 88/014	-	-	GT/DW	DC05 30GY 88/014	DW	30GY 88/014	9'-0 1/2"	
STORAGE	110	VCT	52513	RUBBER	P100	DW	30GY 88/014	DW	30GY 88/014	DW	30GY 88/014	DW	30GY 88/014	DW	30GY 88/014	9'-0 1/2"	PAINT WOOD SHELVING
MECHANICAL	111	VCT	52513	RUBBER	P100	DW	30GY 88/014	DW	30GY 88/014	DW	30GY 88/014	DW	30GY 88/014	DW	30GY 88/014	9'-0 1/2"	
MEN'S RESTRM	112	G.P.	VS02	G.P.	DC14	GT/DW	KI76 30GY 88/014	GT/DW	KI76 30GY 88/014	GT/DW	KI76 30GY 88/014	GT/DW	KI76 30GY 88/014	DW	30GY 88/014	VARIES	WALL TILE W/ ACCENT BAND, SEE E12A3
PIPECHASE	113	CONC.	-	-	-	OSB	30GY 88/014	OSB	30GY 88/014	OSB	30GY 88/014	OSB	30GY 88/014	DW	30GY 88/014	7'-10"	PAINT WALLS
MEN'S RESTRM	114	G.P.	VS02	G.P.	DC14	GT/DW	KI76 30GY 88/014	GT/DW	KI76 30GY 88/014	GT/DW	KI76 30GY 88/014	GT/DW	KI76 30GY 88/014	DW	30GY 88/014	VARIES	WALL TILE W/ ACCENT BAND, SEE E12A3

DOOR - HARDWARE SCHEDULE

DOOR				FRAME		HARDWARE							REMARKS
MARK	SIZE	MAT.	COLOR	MAT.	COLOR	LOCKSET	HINGES	CLOSER	STOP	PLATE KICK	WEATHS'P/ THRESHOLD	PUSH/ PULL	
1	6'-0"X7'-0"	AL	BRONZE	AL	BRONZE	KEY LOCK/EGRESS					ALUM.(1/2" MAX)		AUTO. SLIDING DOOR W/SIDELIGHTS W/EMERGENCY EGRESS FUNCTION
2	3'-0"x7'-0"	AL	BRONZE	AL	BRONZE	KEY LOCK/EGRESS					ALUM.(1/2" MAX)		AUTO. SLIDING DOOR W/SIDELIGHTS
3	3'-0"x7'-0"	AL	BRONZE	AL	BRONZE		A5112	C02022	L02162		316A5/114/664		INSULATED DOOR, 1/4" LAM. GLASS
4	3'-0"x7'-0"x1 3/4"	SC	STAIN	H.M.	90RB 08/113	F04	A5112	C02022	L02162	-	3/8" MARBLE	-	OBSCURE SAFETY GLASS, 1/4" THICK, 14"x33"
5	2'-4"x7'-0"x1 3/4"	H.M.	90RR 11/257	H.M.	90RB 08/113	F17	A5112	C02511		-	3/8" MARBLE	-	DEAD BOLT LOCKSET
6	3'-0"x7'-0"x1 3/4"	SC	STAIN	ST'L	90RB 08/113	F01	A5112	C02022	L02162	-	3/8" MARBLE	-	

WINDOW SCHEDULE:

MARK:	OPENING SIZE:	FRAME: MAT.	FRAME: COLOR	REMARKS:
A	3'-0"x1'-6"	M. CLAD	BROWN	5/8" INSUL. GL. OBSCURE
B	4'-0"x 1'-6"	M. CLAD	BROWN	5/8" INSUL. GL. OBSCURE
C	3'-0"x 1'-6"	M. CLAD	BROWN	5/8" INSUL. GL. CLEAR

ABBREVIATIONS:

AL.	ALUMINUM
CONC.	CONCRETE, EXPOSED SLAB
DW	DRYWALL PAINTED (GLIDDEN, OR EQUAL TO DEVOS, MOORE, P&L, OR SW, SEE SPEC)
GT	GLAZED TILE / WALL (DAL TILE OR EQUAL TO AMER. OLEAN OR FLORIDA TILE, SEE SPEC.)
H.M.	HOLLOW METAL DOORS & FRAMES
SC	SOLID CORE WOOD, OAK (1C1 GLIDDEN "CHERRY" OR EQUAL, P&L OR SW)
G.P.	GLAZED PAVERS / FLOOR & BASE (DAL-TILE OR EQUAL, SEE SPEC.)
F-C	FIBER-CEMENT / SIDING PANELS & TRIM CEDAR MILL EXTERIOR SIDING & TRIM
GLZ	GLAZING

PROJECT:
I-95 REST AREA
CUMBERLAND COUNTY — NORTH CAROLINA

ARCHITECT/ENGINEERS:
FACILITIES DESIGN
GENERAL SERVICES DIVISION, NCDOT
1 SOUTH WILMINGTON STREET
RALEIGH, NORTH CAROLINA 27601
(919) 715-0400 FAX (919) 715-0399

DRAWING TITLE: SCHEDULES/ DETAILS

DRAWN BY: CHECKED BY: V. BUZARD ISSUE DATE: 01 FEBRUARY 06

SEAL: VICTOR M. BUZARD JR. REGISTERED ARCHITECT 4241 NORTH CAROLINA RALEIGH, N.C.

T.I.P. PROJ. NO.	FED. PROJ. NO.	STATE PROJ. NO.
K-4904	IMS-95-3(88)???	40223.1.1

NO.	REVISIONS/SUBMISSIONS	DATE

SHEET NO. A5 OF 6

S:\FD\REST AREA, WELCOME CENTERS\I-95 Cumberland Co.\Cumberland Co. I-95 Rest Area\ARCH\A5updated.dwg, 10/27/2006 7:54:56 AM,
\\dot-trbpp01\FD20\0072

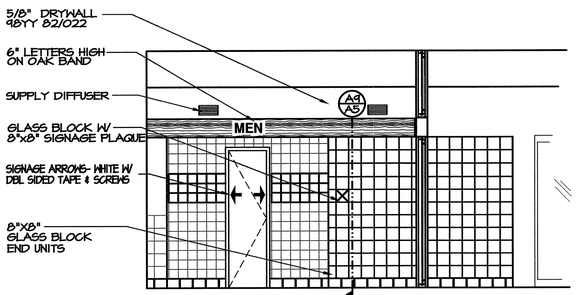

F11/A6 EAST ELEV.- LOBBY
SCALE 1/4" = 1'-0"

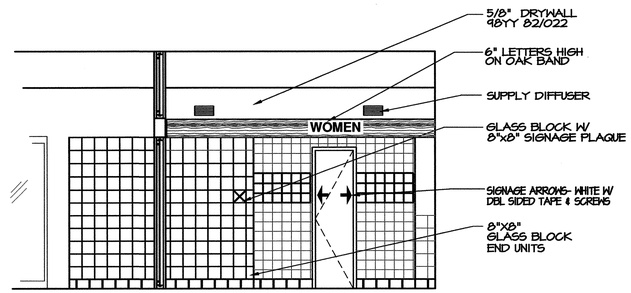

F9/A6 WEST ELEV.- LOBBY
SCALE 1/4" = 1'-0"

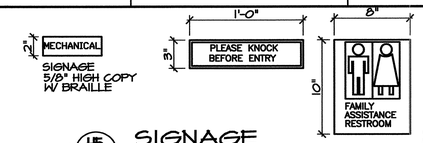

H5/A6 SIGNAGE
SCALE 1 1/2" = 1'-0"

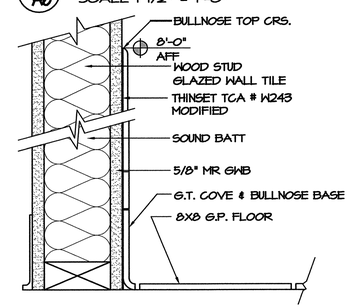

F5/A6 SECTION.-TILE
SCALE 3" = 1'-0"

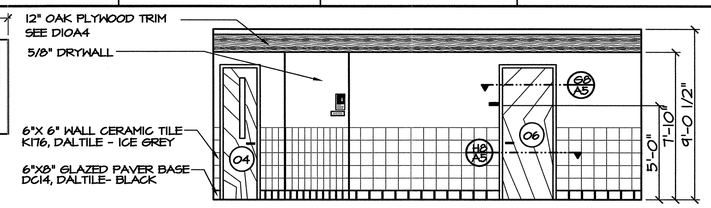

G3/A6 WEST ELEV.- CORR 109
SCALE 1/4" = 1'-0"

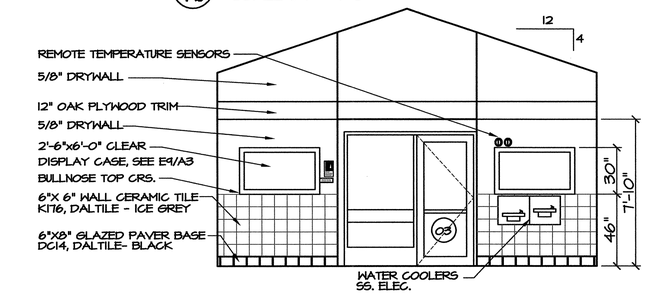

E2/A6 NORTH ELEV.- LOBBY
SCALE 1/4" = 1'-0"

GENERAL NOTES:

1. PROVIDE FRAMING FOR FIRE EXTINGUISHER CABINET PER MANUFACTURES RECOMMENDATIONS.

LEGEND:

- FLUORESCENT FIXTURE (TYPE A)
- SUSPENDED FLUORESCENT FIXTURE (TYPE B)
- SURFACE MOUNTED FLUORESCENT FIXTURE (TYPE D)
- RECESSED FLUORESCENT FIXTURE (TYPE C)
- SIMI-RECESSED FLUORESCENT FIXTURE (TYPE G)
- SIMI-RECESSED EMERGENCY FLUORESCENT EXTERIOR FIXTURE (TY
- SMOKE DETECTOR (120V)
- EF EXHAUST FAN
- SUPPLY REGISTER OR SECTION
- RETURN REGISTER OR SECTION

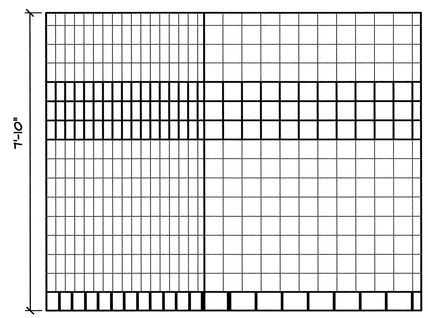

D1/A6 ELEVATION.
SCALE 1/4" = 1'-0"

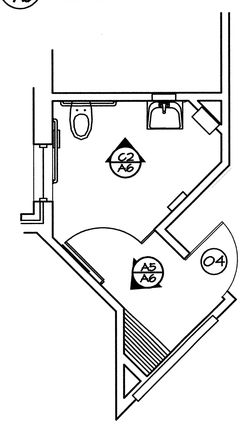

D6/A6 ENLARGED PLAN- UNISEX
SCALE 1/4" = 1'-0"

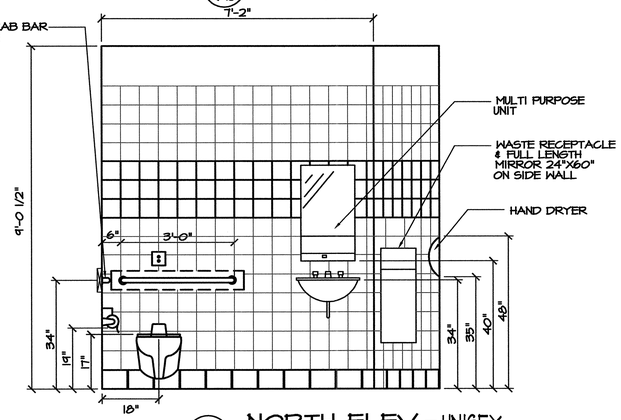

C2/A6 NORTH ELEV.- UNISEX
SCALE 1/2" = 1'-0"

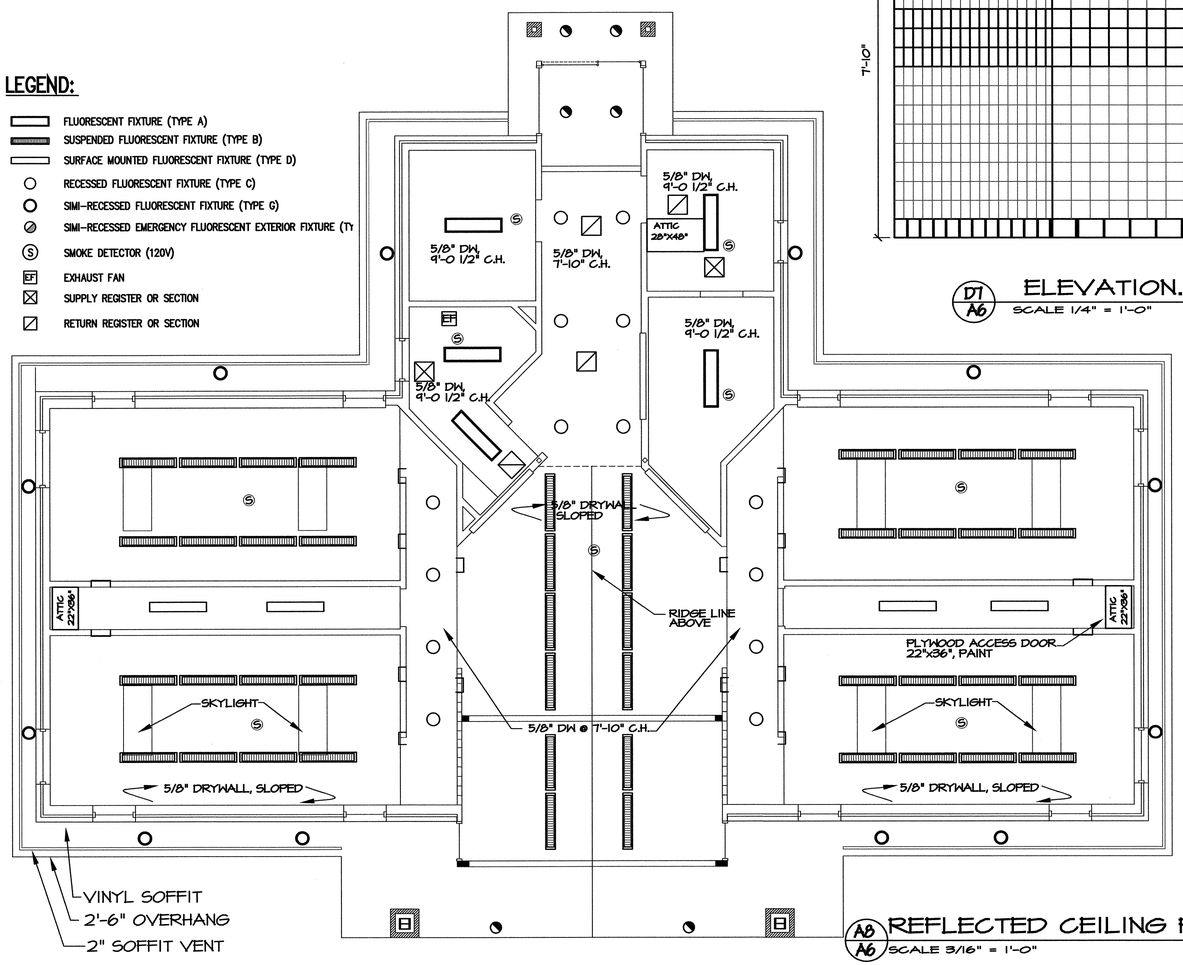

A8/A6 REFLECTED CEILING PLAN
SCALE 3/16" = 1'-0"

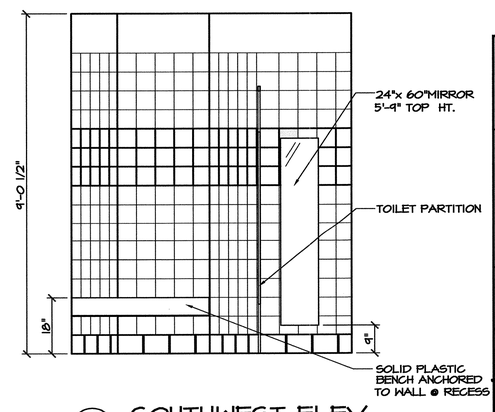

A5/A6 SOUTHWEST ELEV.
SCALE 1/2" = 1'-0"

PROJECT:
I-95 REST AREA
NASH COUNTY — NORTH CAROLINA

ARCHITECT/ENGINEERS:
FACILITIES DESIGN
GENERAL SERVICES DIVISION, NCDOT
1 SOUTH WILMINGTON STREET
RALEIGH, NORTH CAROLINA 27601
(919) 715-0400 FAX (919) 715-0399

DRAWING TITLE:
REFLECTED CEILING PLAN & DETAILS

DRAWN BY: CHECKED BY: V. BUZARD ISSUE DATE: 12/05/06

SEAL: VICTOR M. BUZARD JR. REGISTERED ARCHITECT 4241 12-15-06 NORTH CAROLINA RALEIGH, N.C.

T.I.P. PROJ. NO.	FED. PROJ. NO.	STATE PROJ. NO.
K-4903	IMS-95-3(88)142	39914.3.1

NO.	REVISIONS/SUBMISSIONS	DATE

SHEET NO. A6 OF 6

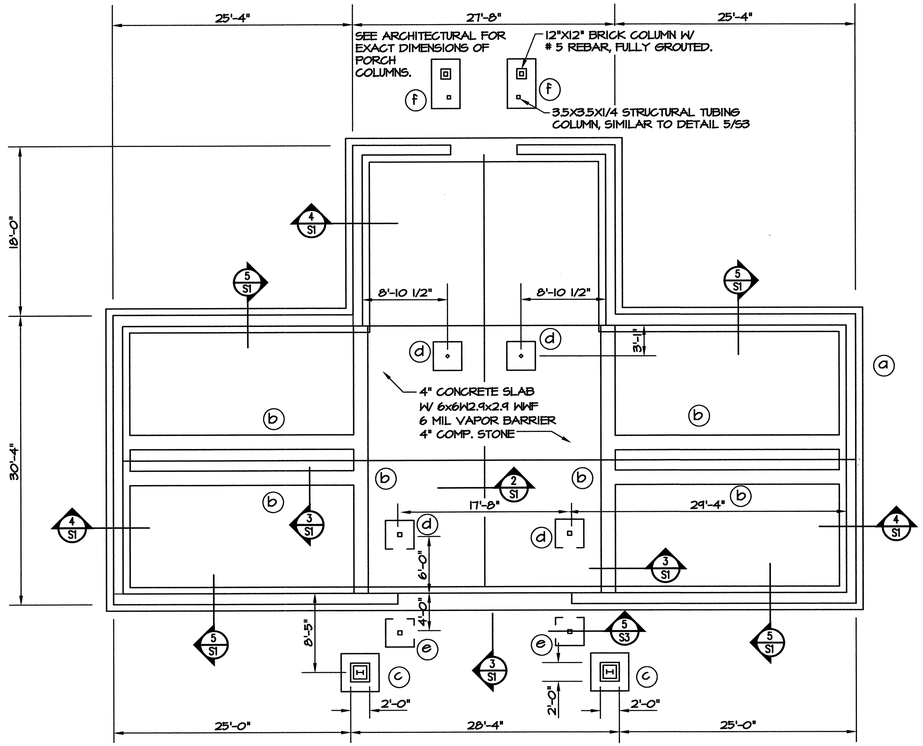

NOTE: SEE ARCHITECTURAL FOR FLOOR DRAIN LACATIONS AND SLOPE OF RESTROOM FLOORS.

NORTH

1/S1 FOUNDATION PLAN

SCALE: 1/8" = 1'-0"

FOOTING SCHEDULE

MARK	SIZE	REINFORCING
a	2'-6" x 12" CONT.	3 -#5'S CONT. W/ #4 TIES 24" O.C.
b	18" x 12" CONT. LUG FOOTING	6 -#4'S CONT. W/ #4 TIES 12" O.C.
c	4'-0" x 4'-0" x 1'-0"	4 -#5'S EACH WAY TOP & BOTTOM
d	3'-0" x 3'-0" x 1'-0" LUG FOOTING	3 -#4'S EACH WAY
e	3'-0" x 3'-0" x 1'-0" FOOTING	3 -#4'S EACH WAY TOP & BOTTOM
f	3'-0" x 5'-0" x 1'-0" FOOTING	6 -#4'S SHORT WAY 3 -#4'S LONG WAY

NOTE: ALL FOOTINGS ARE (a) U.O.N.

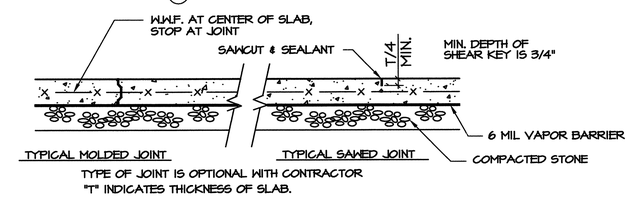

TYPE OF JOINT IS OPTIONAL WITH CONTRACTOR
"T" INDICATES THICKNESS OF SLAB.

2/S1 TYP. CONTROL JOINT

SCALE: 3/4" = 1'-0"

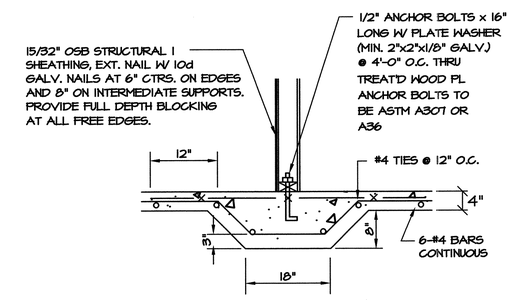

3/S1 DETAIL- INTERIOR FOOTING

SCALE: 3/4" = 1'- 0"

NOTES:

1. DESIGN SOIL BEARING CAPACITY = 2000 PSF (PRESUMPTIVE)
2. DESIGN FLOOR SLAB LIVE LOAD = 100 PSF
3. DESIGN ROOF LIVE LOAD = 20 PSF
4. DESIGN GROUND SNOW LOAD, Pg = 15 PSF
5. DESIGN WIND VELOCITY = 100 MPH, WIND EXPOSURE CAT. B.
6. SEISMIC DATA
   SEISMIC DESIGN CATEGORY B
   Seismic Use Group ___I___
   Spectral Response Acceleration Sms 0.272 %g Sm1 0.168 %g
   Site Classification ___D___
   Basic structural system (check one)
   _X_ Bearing Wall ___ Dual w/Special Moment Frame
   ___ Building Frame ___ Dual w/Intermediate R/C or Special Steel
   ___ Moment Frame ___ Inverted Pendulum
   Seismic base shear Vx= 7,705# Vy = 7,705#
   Analysis Procedure _X_ Simplified ___ Equivalent Lateral Force ___ Modal
   Architectural, Mechanical, Components anchored? YES
7. COMPRESSIVE STRENGTH OF CONCRETE f'c IN FLOOR SLAB SHALL BE MIN. OF 3000 PSI AT 28 DAYS.
8. CONTRACTOR SHALL VERIFY THAT ALL UNDERSLAB PIPING IS IN PLACE PRIOR TO POURING SLAB.
9. DO NOT SCALE FROM DRAWINGS. USE GIVEN DIMENSIONS FOR EXACT LOCATIONS. (SEE ARCHITECTURAL DIMENSIONS U.O.N)
10. FOOTINGS SHALL BE CENTERED ON CORRESPONDING MASONRY WALLS.
11. COMPRESSIVE STRENGTH OF CONCRETE f'c IN FOOTINGS SHALL BE MIN. OF 3000 PSI AT 28 DAYS.
12. FINISH FLOOR REFERENCE (ELEVATION) OF SLAB SHALL BE 100.0' U.O.N.
13. ALL REINFORCING STEEL SHALL BE GRADE 60.
14. TOP OF FOOTING SHALL BE 2'-0 BELOW F.F.E. U.O.N.

NOTE: ALL HARDWARE AND/OR FASTENERS THAT COME IN CONTACT WITH ANY TREATED LUMBER WILL BE HOT DIPPED GALVANIZED OR STAINLESS STEEL.

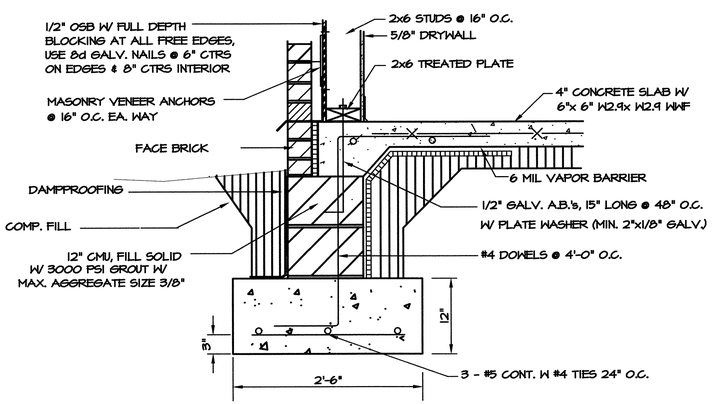

4/S1 TYP. WALL DETAIL

SCALE: 1" = 1'-0"

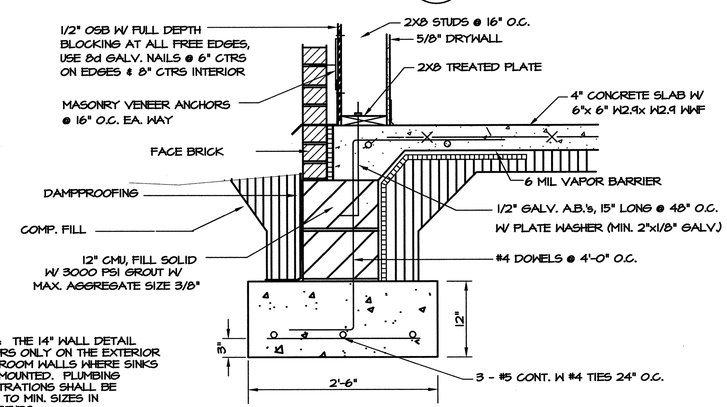

NOTE: THE 14" WALL DETAIL OCCURS ONLY ON THE EXTERIOR RESTROOM WALLS WHERE SINKS ARE MOUNTED. PLUMBING PENETRATIONS SHALL BE KEPT TO MIN. SIZES IN 2X8 STUDS.

5/S1 14" WALL DETAIL

SCALE: 1" = 1'-0"

PROJECT:

I-95 REST AREA

NASH COUNTY — NORTH CAROLINA

ARCHITECT/ENGINEERS:

FACILITIES DESIGN

GENERAL SERVICES DIVISION, NCDOT
1 SOUTH WILMINGTON STREET
RALEIGH, NORTH CAROLINA 27601
(919) 715-0400 FAX (919) 715-0399

DRAWING TITLE:

DRAWN BY: W.E.R. CHECKED BY: W.E. Ratterree ISSUE DATE: 05 December 06

SEAL: NORTH CAROLINA PROFESSIONAL SEAL 16394 ENGINEER WILLIAM E. RATTERREE 12-5-06

T.I.P. PROJ. NO.	FED. PROJ. NO.	STATE PROJ. NO.
K-4903	IMS-95-3(88)142	39914.3.1

NO.	REVISIONS/SUBMISSIONS	DATE

SHEET NO. **S1** OF 3

NOTE: ALL GABLE ENDS OF THE BUILDING SHALL BE BALLOON FRAMED CONSTRUCTION AT 16" CTRS. 2X6 OVERHANG SHALL BE ATTACHED TO BALLOON FRAMING SIMILAR TO DETAIL 2/S3.

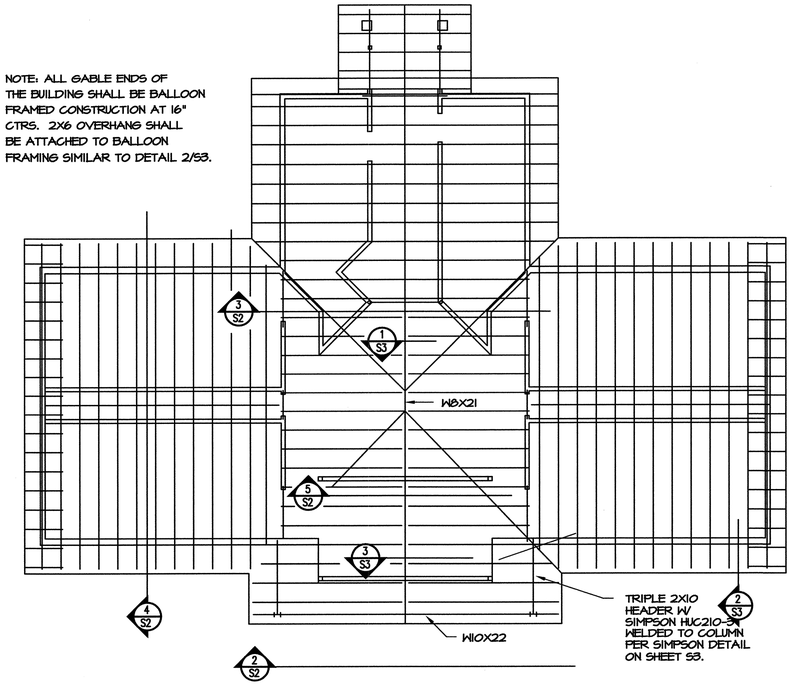

NORTH

1/S2 ROOF FRAMING PLAN

SCALE: 1/8" = 1'-0"

NOTE: SPLICES OF TOP AND BOTTOM PLATES SHALL BE SPACED A MAX. OF 3' APART. ALL FRAMING MEMBERS SHALL BE FASTENED PER THE REQUIRED FASTENING SCHEDULE, TABLE 2306.1 OF THE NCSBC IN ADDITION TO THE FASTENERS SHOWN ON THESE DETAILS OR CALLED OUT IN THE SPECS.

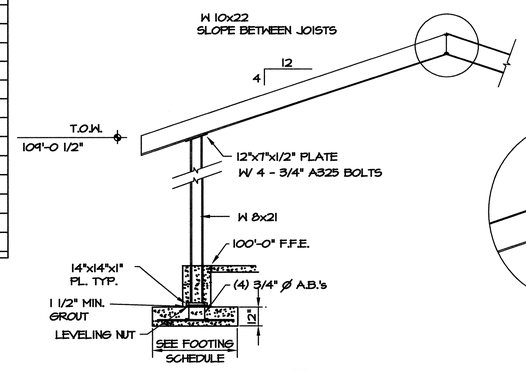

2/S2 DETAIL- COLUMN & BEAM

SCALE: 1/4" = 1'- 0"

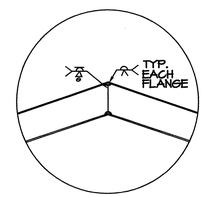

NOTE: ALL OSB SHEATHING PANELS SHALL BE IN STALLED HORIZONTALLY ONLY. VERTICAL INSTALLATION IS NOT ALLOWED. NO PIECING OF OSB PANELS SHALL BE ALLOWED. DOUBLE TOP AND BOTTOM PLATES SHALL BE FASTENED AS SHOWN BELOW. USE SIMILAR FASTENING PATTERNS FOR DOUBLE VERTICAL OR TRIPLE MEMBERS. BLOCKING SHALL BE INSTALLED AT ALL FREE EDGES OF PANELS. ROOF AND WALL SHEATHING SHALL NOT BE COVERED UNTIL A FRAMING INSPECTION HAS BEEN PERFORMED BY THIS OFFICE.

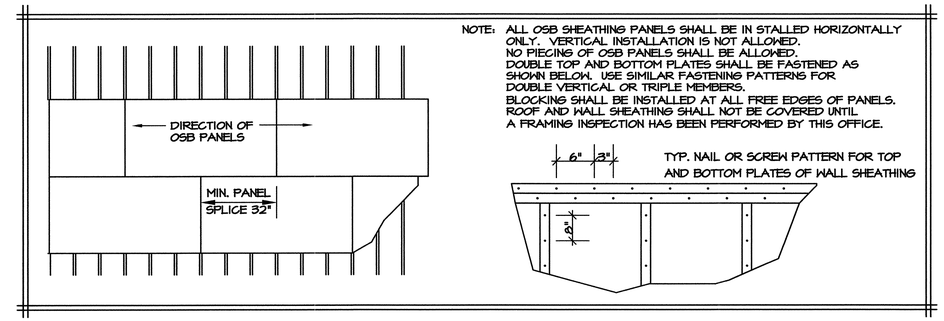

WALL & ROOF DIAPHRAGM SHEATHING

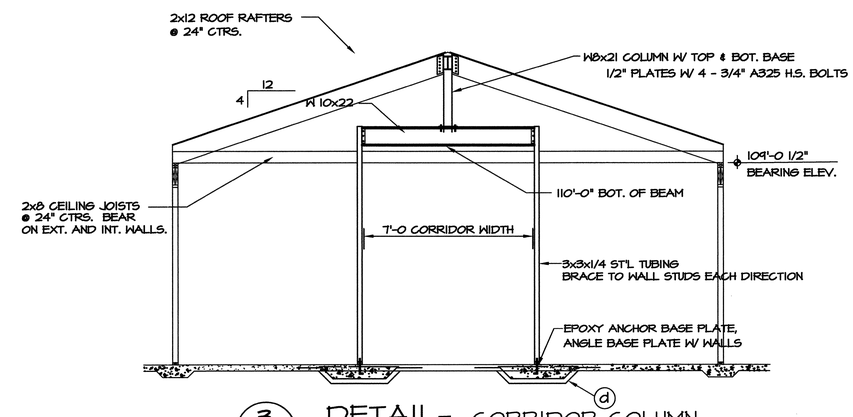

3/S2 DETAIL- CORRIDOR COLUMN

SCALE: 1/4" = 1'- 0"

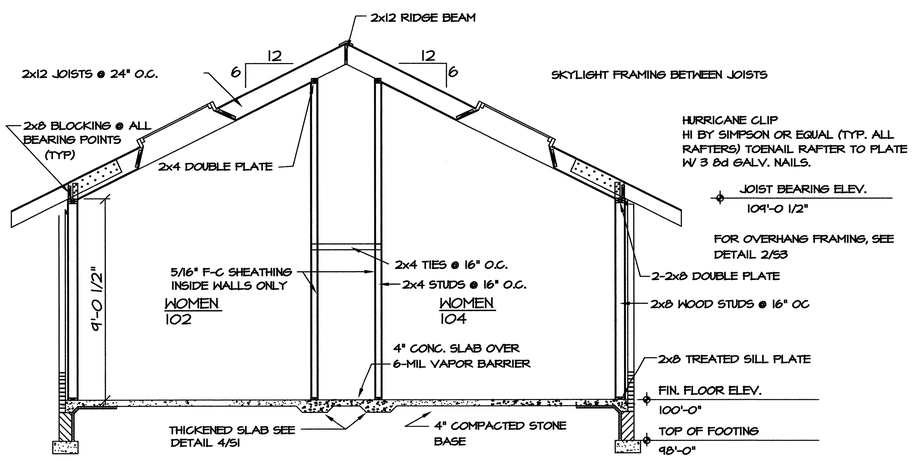

5/S2 BLDG. SECTION

SCALE 1/4" = 1'-0"

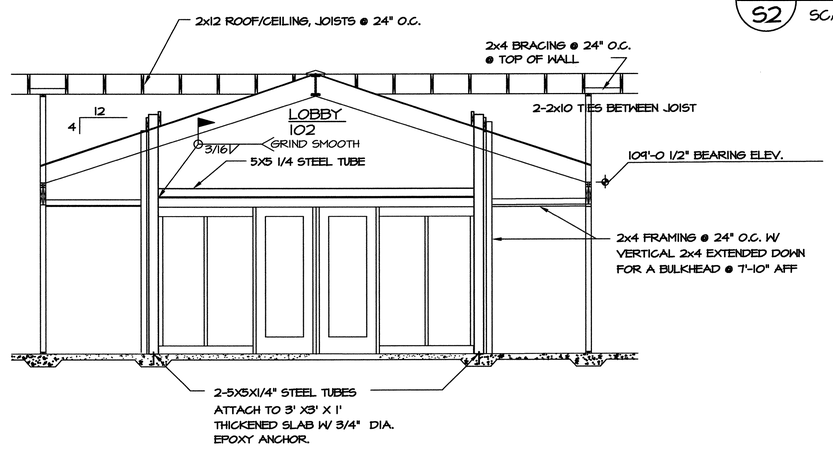

5/S2 TYP. AIRLOCK SECTION

SCALE 1/4" = 1'-0"

PROJECT:

I-95 REST AREA

NASH COUNTY — NORTH CAROLINA

ARCHITECT/ENGINEERS:

FACILITIES DESIGN

GENERAL SERVICES DIVISION, NCDOT
1 SOUTH WILMINGTON STREET
RALEIGH, NORTH CAROLINA 27601
(919) 715-0400 FAX (919) 715-0399

DRAWING TITLE:

DRAWN BY: W.E.R. CHECKED BY: W.E. Ratterree ISSUE DATE: 05 December 06

SEAL: NORTH CAROLINA PROFESSIONAL ENGINEER SEAL 16394 WILLIAM E. RATTERREE

T.I.P. PROJ. NO.	FED. PROJ. NO.	STATE PROJ. NO.
K-4903	IMS-95-3(88)142	39914.3.1

NO.	REVISIONS/SUBMISSIONS	DATE

SHEET NO. S2 OF 3

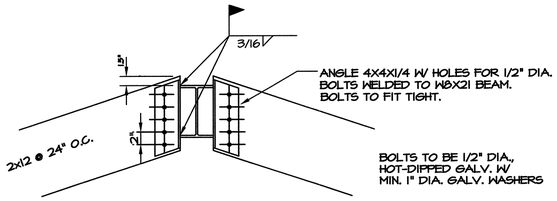

1 / S3 WELDED RIDGE CONN.
SCALE: 1" = 1'- 0"

NOTE: SPLICES OF TOP AND BOTTOM PLATES SHALL BE SPACED A MAX. OF 3' APART. ALL FRAMING MEMBERS SHALL BE FASTENED PER THE REQUIRED FASTENING SCHEDULE, TABLE 2306.1 OF THE NCSBC IN ADDITION TO THE FASTENERS SHOWN ON THESE DETAILS OR CALLED OUT IN THE SPECS.

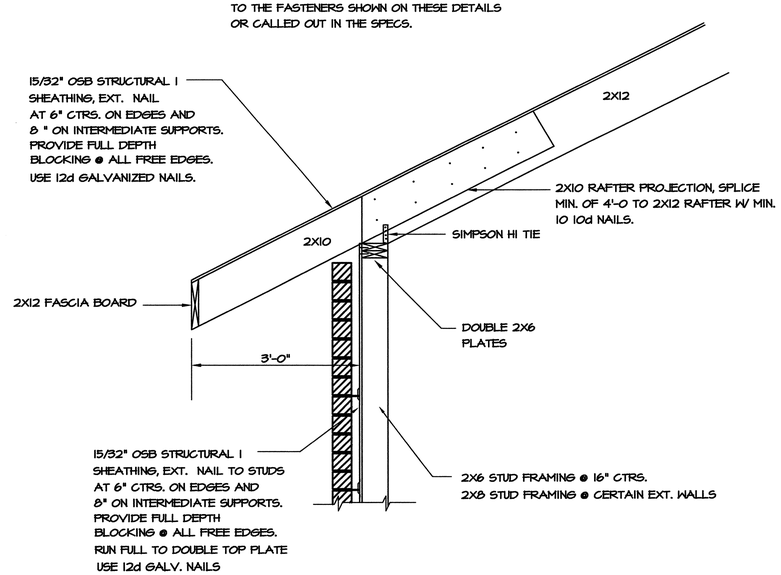

2 / S3 DETAIL: TYP. EAVE SECT.
SCALE 3/4" = 1'-0"

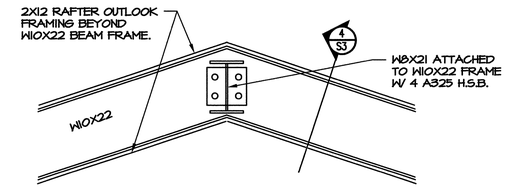

3 / S3 DETAIL: TYP. EAVE SECT.
SCALE 1" = 1'-0"

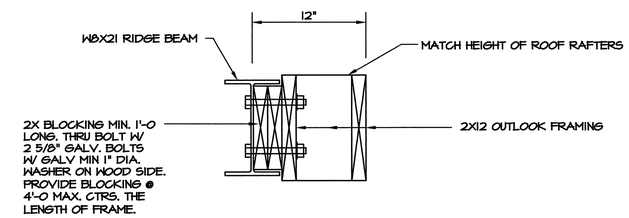

4 / S3 DETAIL: TYP. EAVE SECT.
SCALE 3/4" = 1'-0"

ROOF FRAMING NOTES:

1. ROOF TRUSS FABRICATOR SHALL FURNISH SHOP DRAWINGS, ENGINEERING DESIGN COMPUTATIONS, ALL CONNECTIONS AND DETAILS, ALL BRIDGING AND BRACING FOR TRUSSES AS SHOWN IN PROFILE, ALL BEARING THE SEAL OF A REGISTERED ENGINEER SHOWING REGISTRATION IN THE STATE OF NORTH CAROLINA. THE PLACEMENT OF THE ENGINEER'S SEAL WITH THE ENGINEER'S SIGNATURE AND DATE SEALED AND SIGNED CERTIFIES THAT THE WORK HAS BEEN DESIGNED AND CHECKED BY THE ENGINEER AND THAT THE DESIGN AND WORK MEETS THE SPECIFIED REQUIREMENTS AND THE NORTH CAROLINA STATE BUILDING CODE. TRUSS LATERAL X-BRACING, TOP & BOTTOM CHORD LATERAL BRACING SHALL BE AS DEFINED IN HIB-91 FOR PITCHED ROOFS. BRACING SHALL BE SYP #2 (MIN. 2x4's) AND NAILED AT EACH CONNECTION W/ A MINIMUM OF 2-16d GALVANIZED NAILS.
2. DESIGN LOADS
   ROOF TRUSSES:
   DEAD LOAD = 10 PSF
   LIVE LOAD = 20 PSF
   SNOW LOAD = 15 PSF
   COLLATERAL DEAD LOAD 4 PSF (DUCTWORK, & ELEC.)
   USE DEAD LOAD AND COLLATERAL DL TO CALCULATE NET UPLIFT
3. PROVIDE THE REQUIRED CAMBER IN EACH ROOF TRUSS SO THAT THE D.L. AND L.L. DEFLECTION SHALL BE THE SAME IN ALL PLANES. CAMBER FOR LONG TERM DEAD LOAD DEFLECTION.
4. ALL WOOD MEMBERS USED SHALL BEAR THE IDENTIFICATION GRADE AS CALLED FOR IN THE FABRICATOR'S ENGINEERED AND SEALED DESIGN COMPUTATIONS.
5. LUMBER SHALL NOT BE LESS THAN GRADE NO. 2 SOUTHERN YELLOW PINE OR AS ALLOWED BY FABRICATOR'S ENGINEERED AND SEALED DESIGN COMPUTATIONS.
6. LUMBER SHALL BE GRADED AND MARKED BY SOUTHERN PINE INSPECTION BUREAU.
7. THE ERECTOR SHALL BE RESPONSIBLE FOR PROVIDING ADEQUATE BRACING TO RESIST ALL FORCES ENCOUNTERED DURING ERECTION.
8. THE ERECTOR SHALL INSTALL ALL BRIDGING AND BRACING AS CALLED FOR BY THE SEALED SHOP DRAWINGS AND COMPUTATIONS.
9. ANCHORS FOR ROOF TRUSSES SHALL BE AS MANUFACTURED BY SIMPSON STRONG TIE CO., OR APPROVED EQUAL. (HARLON METAL PRODUCTS INC., OR HUGHES, OR KANT-SAG)

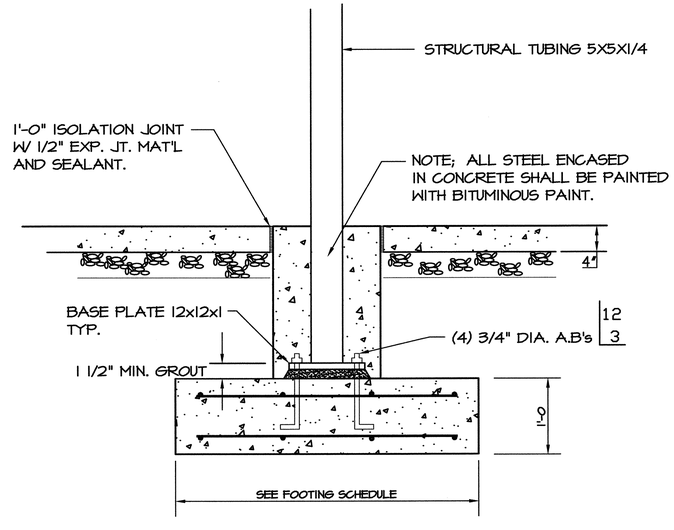

5 / S3 DETAIL: EXT. AIRLOCK COLUMN
SCALE 1" = 1'-0"

NOTE: ALL HARDWARE AND/OR FASTENERS THAT COME IN CONTACT WITH ANY TREATED LUMBER WILL BE HOT DIPPED GALVANIZED OR STAINLESS STEEL.

HEADER SCHEDULE
WOOD FRAMING

	OPENING SIZE	HEADER SIZE	JACK STUDS
	TO 10'-0"	2 2x12's W/ 1 1/2" PLYW'D P	1
	TO 10'-0"	3 2x12's W/ 2 1/2" PLYW'D P'S	2
	TO 10'-0"	4 2x10's W/ 2 5/8" PLYW'D P'S	2

MASONRY WALL LINTEL SCHEDULE

OPENINGS	LINTEL		BEARING
0'-0" TO 1'-4"	1 P-3/8 x 3 1/2	(GALV'D.) *	8"
1'-4" TO 4'-0"	1 L-3 1/2 x 3 1/2 x 5/16	(GALV'D.) *	8"
4'-0" TO 6'-8"	1 L-4 x 3 1/2 x 5/16	(GALV'D.) *	8"
6'-8" TO 8'-0"	1 L-5 x 3 1/2 x 5/16	(GALV'D.) *	8"

PROJECT:
I-95 REST AREA
NASH COUNTY NORTH CAROLINA

ARCHITECT/ENGINEERS:
FACILITIES DESIGN
GENERAL SERVICES DIVISION, NCDOT
1 SOUTH WILMINGTON STREET
RALEIGH, NORTH CAROLINA 27601
(919) 715-0400 FAX (919) 715-0399

DRAWING TITLE: DETAILS

DRAWN BY: W.E.R. CHECKED BY: W.E. Ratterree ISSUE DATE: 05 December 06

SEAL: NORTH CAROLINA PROFESSIONAL SEAL 16394 ENGINEER WILLIAM E. RATTERREE 12-5-06

T.I.P. PROJ. NO.	FED. PROJ. NO.	STATE PROJ. NO.
K-4903	IMS-95-3(88)142	39914.3.1

NO.	REVISIONS/SUBMISSIONS	DATE

SHEET NO. S3 OF 3

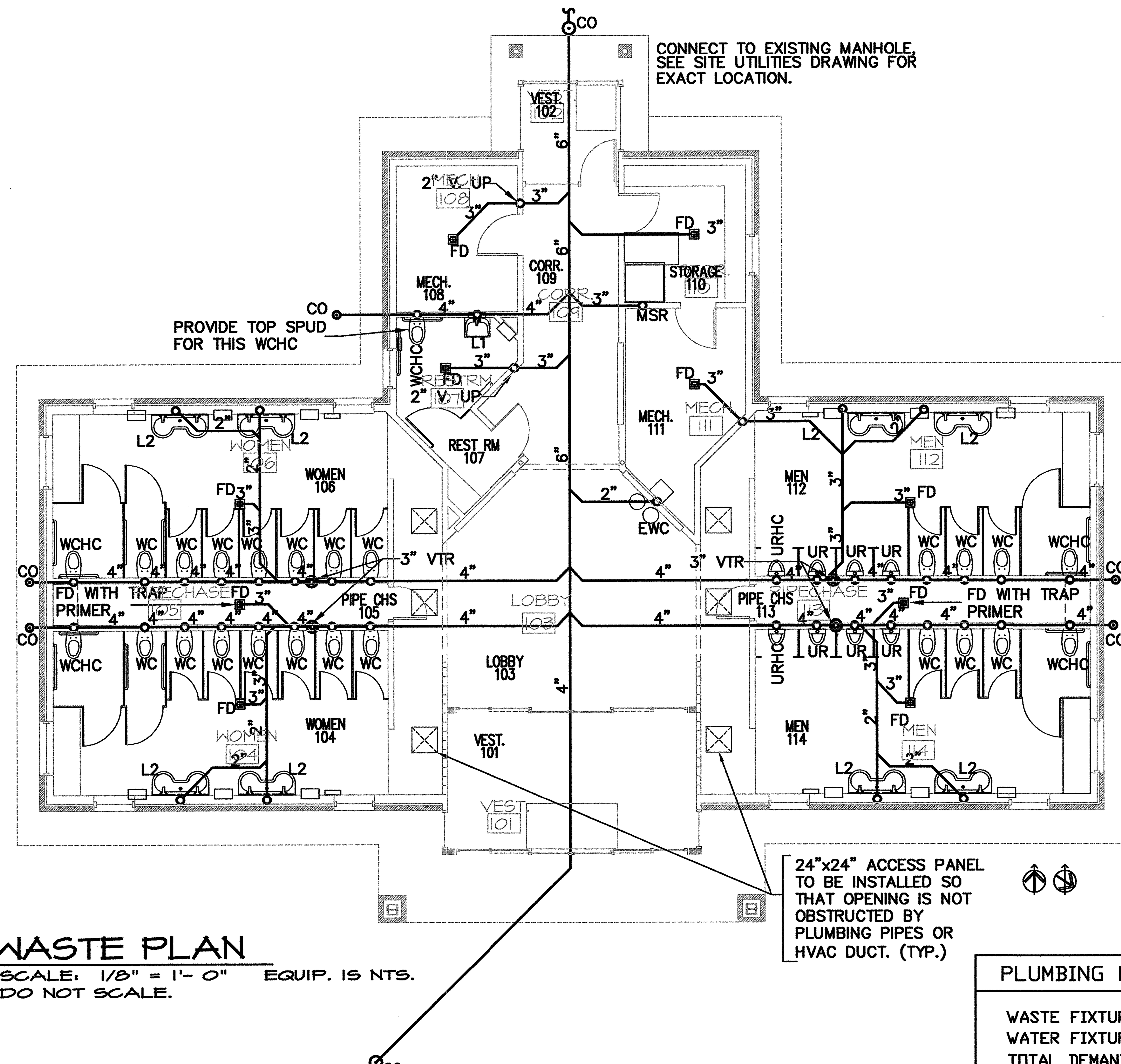

E12/E1 WASTE PLAN
SCALE: 1/8" = 1'- 0" EQUIP. IS NTS.
DO NOT SCALE.

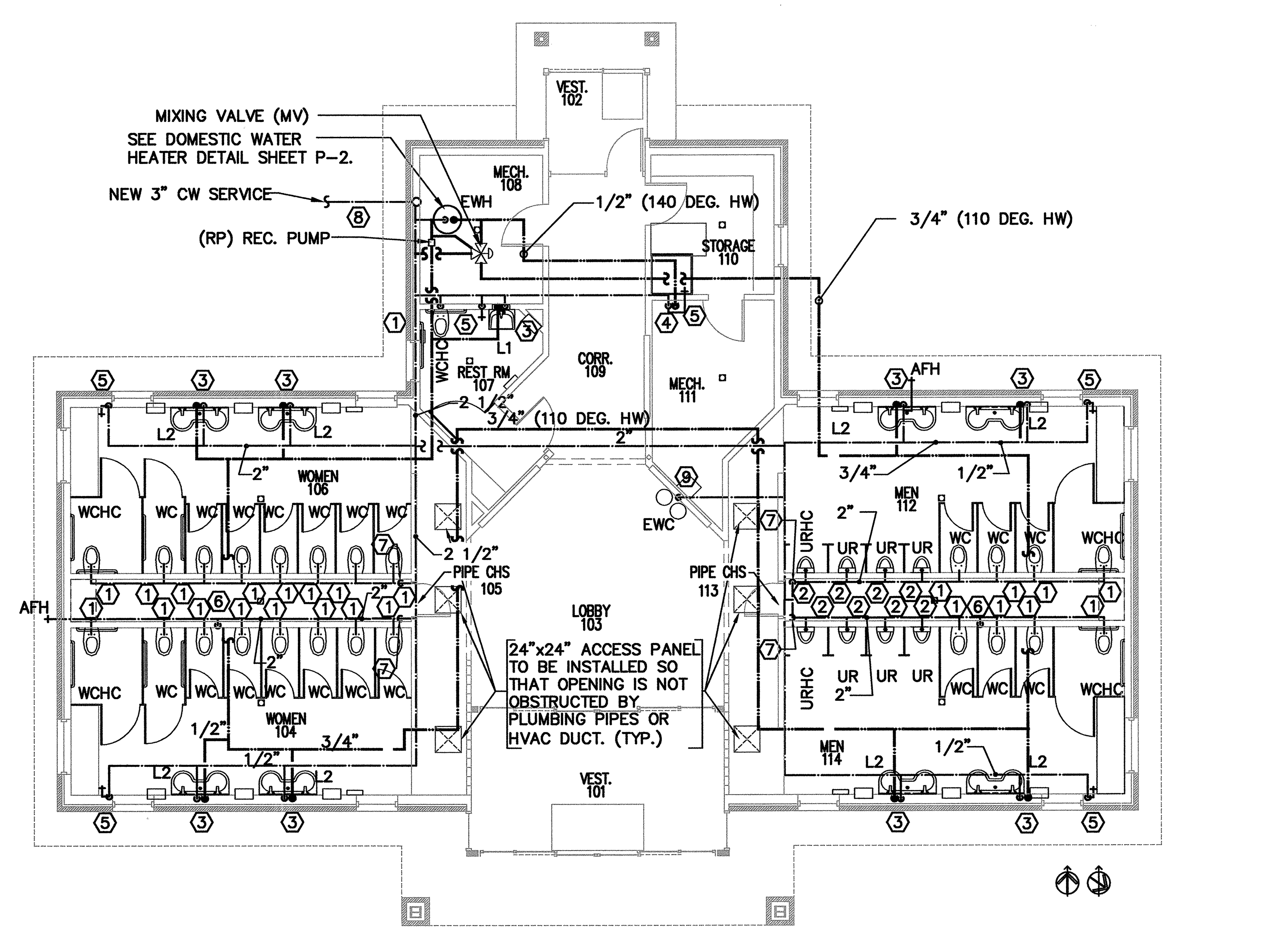

E6/E1 WATER PLAN
SCALE: 1/8" = 1'- 0" EQUIP IS NTS.
DO NOT SCALE.

PLUMBING LOAD SUMMARY
WASTE FIXTURE UNITS = 206
WATER FIXTURE UNITS = 348
TOTAL DEMAND G.P.M. = 117

GENERAL NOTES - PLUMBING

1. ALL WORK SHALL BE IN ACCORDANCE WITH THE LATEST EDITION OF THE STATE CODE, ALL LOCAL AND OTHER APPLICABLE CODES.
2. ALL WORK SHALL BE PERFORMED BY EXPERIENCED AND SKILLED CRAFTSMEN. THE PC SHALL COORDINATE ALL OF HIS WORK WITH THE GENERAL CONTRACTOR (GC) AND OTHER TRADES. OFFSET VENT PIPING AROUND BEAMS AND JOISTS AS NECESSARY.
3. THE PLUMBING PLANS AND SPECIFICATIONS SHALL BE THOROUGHLY REVIEWED AND ALL WORK PREPLANNED PRIOR TO PURCHASING, ORDERING, FABRICATING AND INSTALLATION. ALL DISCREPANCIES, INTERFERENCE'S, OR CONFLICTS WITH EXISTING FIELD CONDITIONS OR OTHER TRADES SHOULD BE BROUGHT TO THE IMMEDIATE ATTENTION OF THE ENGINEER. RESOLVE CONFLICTS PRIOR TO INCURRING MATERIAL OR LABOR EXPENSES.
4. THESE PLANS ARE DIAGRAMMATIC AND MAY NOT SHOW MINOR DETAILS AND LOCATIONS. LOCATE FIXTURES AND EQUIPMENT GENERALLY AS SHOWN ON PLANS; HOWEVER, COORDINATE LOCATIONS WITH ACTUAL FIELD CONDITIONS TO PRESERVE ALL CODE-REQUIRED AND MANUFACTURER'S REQUIRED CLEARANCES. PC TO REMOVE AND DISPOSE OFF ALL EXISTING FIXTURES AND PLUMBING WORK.
5. THE GC SHALL PROVIDE ALL WALL, FLOOR AND ROOF OPENINGS OF THE SIZE AND LOCATION REQUIRED BY THE PC AND SHALL BE RESPONSIBLE FOR PAINTING AND FLOOR FINISHES. THE PC SHALL INSTALL FIRE-RATED SLEEVES WHEREVER PENETRATIONS OF RATED WALLS OR CEILINGS OCCUR AND ALL OPENINGS MADE FIRE AND VERMIN PROOF WITH UL LISTED ASSEMBLY.
6. ALL NEW UNDERGROUND WATER PIPING SHALL BE INSTALLED BELOW FREEZE LEVEL, ADEQUATELY SUPPORTED AND PROTECTED AND PROPERLY PITCHED. SEE SITE PLANS FOR EXTENT OF WORK.
7. ALL WATER PIPING INSIDE OF BUILDING SHALL BE TYPE 'L' COPPER.
8. ALL WATER PIPING SHALL BE HYDROSTATICALLY TESTED FOR 2 - HOURS AT 150 PSIG BEFORE COVERING AND ALL LEAKS CORRECTED. THE ENTIRE WATER DISTRIBUTION SYSTEM SHALL BE DISINFECTED PRIOR TO PLACING IN SERVICE. PROVIDE TEST REPORTS AT FINAL INSPECTION. TESTS SHALL MEET SPECIFICATION REQUIREMENTS.
9. INSULATE ALL NEW HOT & COLD WATER COPPER PIPING WITH FIBERGLASS (JACKETED) PER SPECIFICATIONS.
10. PROVIDE WATER HAMMER ARRESTORS AT THE END OF EACH COLD AND HOT WATER BRANCH RISER. SIZE ARRESTOR APPROPRIATELY.
11. ALL WASTE AND VENT PIPING SHALL BE TESTED IN ACCORDANCE WITH NC STATE PLUMBING CODE AND SPECIFICATIONS BEFORE COVERING AND ALL LEAKS CORRECTED.
12. WATER HEATERS SHALL HAVE AN EFFICIENCY RATING EQUAL TO OR EXCEEDING ASHRAE 90-75 REVISED AND SO LABELED. SET WATER TEMPERATURE AS REQUIRED.
13 DRAIN, WASTE, AND VENT PIPING SHALL BE SCHEDULE 40 PVC-DWV INSTALLED IN ACCORDANCE WITH STATE AND LOCAL CODES.
14 VENT LINES SHALL SLOPE UP TO ALL STACKS AND TERMINATE 12" ABOVE ROOF LINE.
15 INSULATE ALL PIPING UNDER ALL LAVATORIES IN ACCORDANCE WITH ADA GUIDLINES.
16 PROVIDE HOT AND COLD WATER ISOLATION VALVES AT ALL BRANCHES OF MAIN PIPING LOOP.
17 ALL FLOOR DRAINS SHALL BE EQUIPPED WITH TRAP PRIMER OR PROVIDE HOSE BIBB FOR MANUAL PRIMING WHERE EASILY ACCESSIBLE.
18 COORDINATE W/ MC. FOR SPACE AT ALL LOCATIONS, DUCTWORK SHALL HAVE PRECEDENCE OVER WATER PIPING IN THOSE AREAS.
19. PC IS RESPONSIBLE FOR THE FINAL ELECTRICAL CONNECTIONS, WIRING, AND CONDUIT TO ALL EQUIPMENT INSTALLED AS PART OF HIS CONTRACT. UON THE PC SHALL WIRE FROM HIS EQUIPMENT TO DISCONNECT SWITCHES, JUNCTION BOXES, OUTLETS, OR PANELBOARD CIRCUIT BREAKERS PROVIDED BY ELECTRICAL CONTRACTOR. THIS INCLUDES ALL INTERCONNECTING WIRING AND ELECTRICAL BOXES/CONDUIT BETWEEN PLUMBING FLUSH VALVES, TRANSFORMER(S), AND ELECTRICAL OUTLET PROVIDED IN PIPE CHASES.
20. COMPLY WITH THE MANUFACTURER'S TECHNICAL INSTRUCTIONS WHEN INSTALLING PLUMBING FIXTURES, MATERIALS, AND DEVICES.
21. ALL HANDICAP FIXTURES AND INSTALLATION OF HANDICAP FIXTURES SHALL CONFORM TO ADA REQUIREMENTS.
22. AT EXTERIOR WALL, INSTALL WATER PIPING ON HEATED SIDE OF WALL INSULATION.
23. PROVIDE CONCRETE RING FOR ALL EXTERIOR CLEAN-OUTS.
24. UTILITY CONTACT: ROCKY MOUNT, DIRECTOR OF WATER RESOURCES, PAUL BLOUNT, 252-972-1291

FIXTURE SCHEDULE - PLUMBING

SYMBOL — DESCRIPTION

WC / WCHC WATER CLOSET (HANDICAPPED) (See note 1 below)
AMERICAN STANDARD 'AFWALL EL 1.6' # 2258.125, SIPHON JET, ELONGATED BOWL, VITROUS CHINA, AND 1 1/2" BACK SPUD. PROVIDE OPEN FRONT SEAT, AND CONCEALED WALL MOUNTED SENSOR W/ MANUAL OVERRIDE, USE HYDROTECH H-8000C-C FLUSH VALVE AND TRANSFORMER(S).

UR / URHC URINAL (HANDICAPPED) (See note 1 below)
AMERICAN STANDARD 'ALLBROOK 1.0' # 6541.132 SIPHON JET, VITREOUS CHINA, 3/4" TOP SPUD, AND WALL SENSOR W/ MANUAL OVERRIDE HYDROTECH H-8000C-D FLUSH VALVE AND TRANSFORMER(S)

L1 LAVATORY (HANDICAPPED WALL HUNG)(See note 1 below)
AMERICAN STANDARD 'LUCERNE' # 0355.012 WHITE, 4" CENTERSET HOLES, WITH CONCEALED ARM CARRIER. FURNISH WITH AUTOMATIC SENSOR FAUCET (HYDROTECH H-1000C & TRANSFORMER(S)), 4" CENTERSET HOLES AND DRAIN ASSEMBLY (7723.018).

WALL OR CHASE LAVATORIES IN ALL BATHROOMS SHALL BE EQUIPPED W/ WIRING ENCASED IN METAL FLEX CONDUIT TO AVOID VANDALISM.

L2 2- STATION LAVATORY (HANDICAPPED) (See note 1 below)
BRADLEY MODEL #MG-2/IR-NSD TMA, TERREON ACRYLIC MODIFIED POLYESTER RESIN DOUBLE MODULE SINK SYSTEM (EMPIRE GRAY), 54" x 22" WALL HUNG LAVATORY WITH INFRARED FAUCET CONTROLS. ADA COMPLIANT WITH WALL HANGER SUPPORT FRAME. FURNISH WITH TRANSFORMER(S) AND AUTOMATIC FAUCET ASSEMBLY FOR 90°F TEMPERED WATER. NO SOAP DISPENSER IS REQUIRED.

MSR MOP SINK (See note 1 below)
ACORN NO. TDF36-SSC, 36"X36"X12" TERRAZZO SERVICE BASIN WITH 6" DROP FRONT AND STAINLESS STEEL CAPS ON CURBS.
FAUCET: ACORN MODEL KFC CHROME PLATED SERVICE FAUCET WITH VACUUM BREAKER, INTEGRAL STOPS, ADJUSTABLE WALL BRACE, PAIL HOOK AND 3/4" HOSE THREAD ON SPOUT.
HOSE & HOSE BRACKET: ACORN MODEL KH36 LONG FLEXIBLE 5/8" RUBBER HOSE, CLOTH REINFORCED.

EWC ELECTRIC WATER COOLER (See note 5 below)
HAWS # H1011.8, DUAL SST DRINKING FOUNTAIN W/ #4 FINISH, WALL HUNG, WITH REMOTE CHILLER, 120V/1PH/60HZ, 564W, FLA=4.7, USE HAWS HCR8 CHILLER..

RP CIRCULATING PUMP (See note 7 below)
BELL & GOSSET, SERIES 100 IN-LINE HOT WATER PUMP, 1/12 HP, 115 VAC, FLA=1.75 1 Ph., 3/4" CONN., WITH A MINIMUM OF 13 GPM AND 8' TDH. PUMP TO BE ALL BRONZE CONSTRUCTION, COORDINATE WITH ELEC. CONTRACTOR FOR POWER FEED. PROVIDE DISCONNECT SWITCH.

MTR WATER METER (OR EQUAL)
NEPTUNE, 3", MODEL T-10 (OR EQUAL). METER INDICATION SHALL BE WITH BOTTOM OF GAUGE TOWARD FLOOR.

TPV TRAP PRIMER VALVE (See note 6 below)
PPP INC. MODEL# PR-500, 1/2" INLET, 1/2" OUTLET

WS WATER CLOSET SUPPORTS (See note 8 below)
SMITH MODEL# 0209Y, HORIZONTAL NO HUB.

US URINAL SUPPORTS (See note 8 below)
SMITH MODEL# 0637

BFP BACK FLOW PREVENTER (See note 4 below)
WATTS SERIES 909 TYPE. PIPE DRAIN TO FLOOR DRAIN.

HB HOSE BIBB (See note 4 below)
NIBCO, 3/4" STANDARD BRONZE HOSE BIBB W/ VACUUM BREAKER. INCLUDE KEYED OPERATION.

EWH ELECTRIC WATER HEATER (See note 2 below)
STATE WATER # PX-52-20RT-2, 50 GALLONS, 4500W, 3/4" INLET AND OUTLET, ELECTRIC, 240V, 1 PHASE, MODEL# ETC-2X EXPANSION TANK.

FD FLOOR DRAIN (See note 3 below)
ZURN ZN-415-P. PROVIDE WITH DEEP SEAL P-TRAP, AND TYPE 'B' STRAINER.

FD-1 FLOOR DRAIN (See note 3 below)
ZURN ZN-415-P. PROVIDE WITH DEEP SEAL P-TRAP, AND TYPE 'I' STRAINER.

AFH ANTI-FREEZE HOSEBIBB (See note 3 below)
ZURN Z-1315-5, 3/4" NON FREEZE WALL HYDRANT WITH VACUUM BREAKER. INCLUDE KEYED OPERATION.

MV MIXING VALVE (See note 9 below)
LEONARD THERMOSTATIC MIXING VALVE

NOTES:
1. Or equal by Kohler,Eljer,Zurn,Sloan or Hydrotech Flush Valve: Zurn or Sloan.
2. Or equal by Bock or Vanguard
3. Or equal by Wade or JR Smith
4. Or equal by Ames or Viking
5. Or equal by Oasis, Sunroc, or Halsey Taylor
6. Or equal by Sioux Chief or Zurn.
7. Or equal by Ingersoll Rand or Weinman.
8. Or equal by Zurn or American Standard.
9. Or equal by Spirax or Holby.

WASTE AND VENT LEGEND:

Symbol	Description
—·—·—	COLD WATER PIPE
—··—··—	HOT WATER PIPE
·····—·····	NEW HOT RETURN
(ball valve symbol)	BALL VALVE
—+—	HOSE BIBB
—•	WATER HYDRANT
– – – – –	NEW VENT
———	NEW WASTE
O C.O.	CLEAN OUT-PROVIDE CONCRETE RING FOR EXTERIOR CLEANOUTS
—▌W.C.O.	WALL CLEAN OUT
▣	FLOOR DRAIN
◎ VTR	VENT THROUGH ROOF
÷ TPC	TRAP PRIMER CONNECTION
⊗	CONNECT TO EXISTING
⟨1⟩	KEY NOTE NUMBER

PLUMBING KEY NOTES - WATER

1. 1" CW TO FLUSH VALVE.
2. 3/4" CW TO FLUSH VALVE.
3. 1/2" H & CW TO SINK L1 & L2.
4. 3/4" H & CW TO MOP SINK (HW 140 DEG.)
5. 1/2" CW TO HOSE BIB.
6. 1/2" CW TO TRAP PRIMER VALVE.
7. VALVE IN VERTICAL DROP.
8. 3/4" CW DN. TO EWH, 3/4" HW LOOP.
9. 1/2" CW DN. TO ELECTRICAL WATER COOLER.

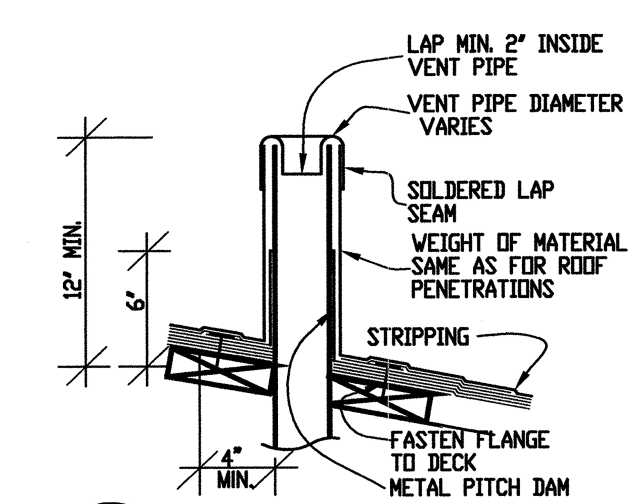

C4/P1 VTR DETAIL
NTS

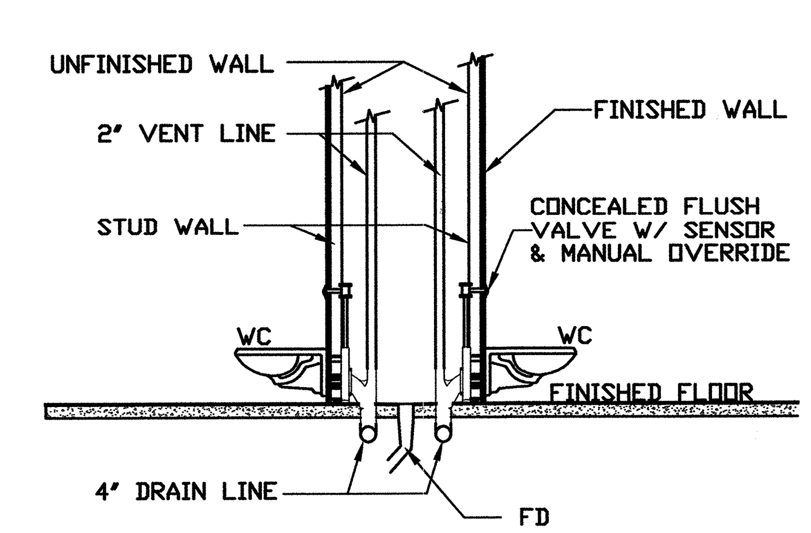

A4/P1 WATER CLOSET DEATIL
NTS

FINAL DRAWINGS - FOR CONSTRUCTION

PROJECT:
I-95 REST AREA
NASH COUNTY — NORTH CAROLINA

ARCHITECT/ENGINEERS:
FACILITIES DESIGN
GENERAL SERVICES DIVISION, NCDOT
1 SOUTH WILMINGTON STREET
RALEIGH, NORTH CAROLINA 27601
(919) 715-0400 FAX (919) 715-0399

DRAWING TITLE: PLUMBING PLAN

DRAWN BY: CLS/VT CHECKED BY: LWH ISSUE DATE: 12/05/06

SEAL: NORTH CAROLINA PROFESSIONAL ENGINEER SEAL 14904 LEWIS WAYNE HOLLEY — December 18, 2006
P M E

T.I.P. PROJ. NO.	FED. PROJ. NO.	STATE PROJ. NO.
K-4903	IMS-95-3(88)142	39914.3.1

NO.	REVISIONS/SUBMISSIONS	DATE
0	ORIGINAL	12/18/06

SHEET NO. **P1** OF 2

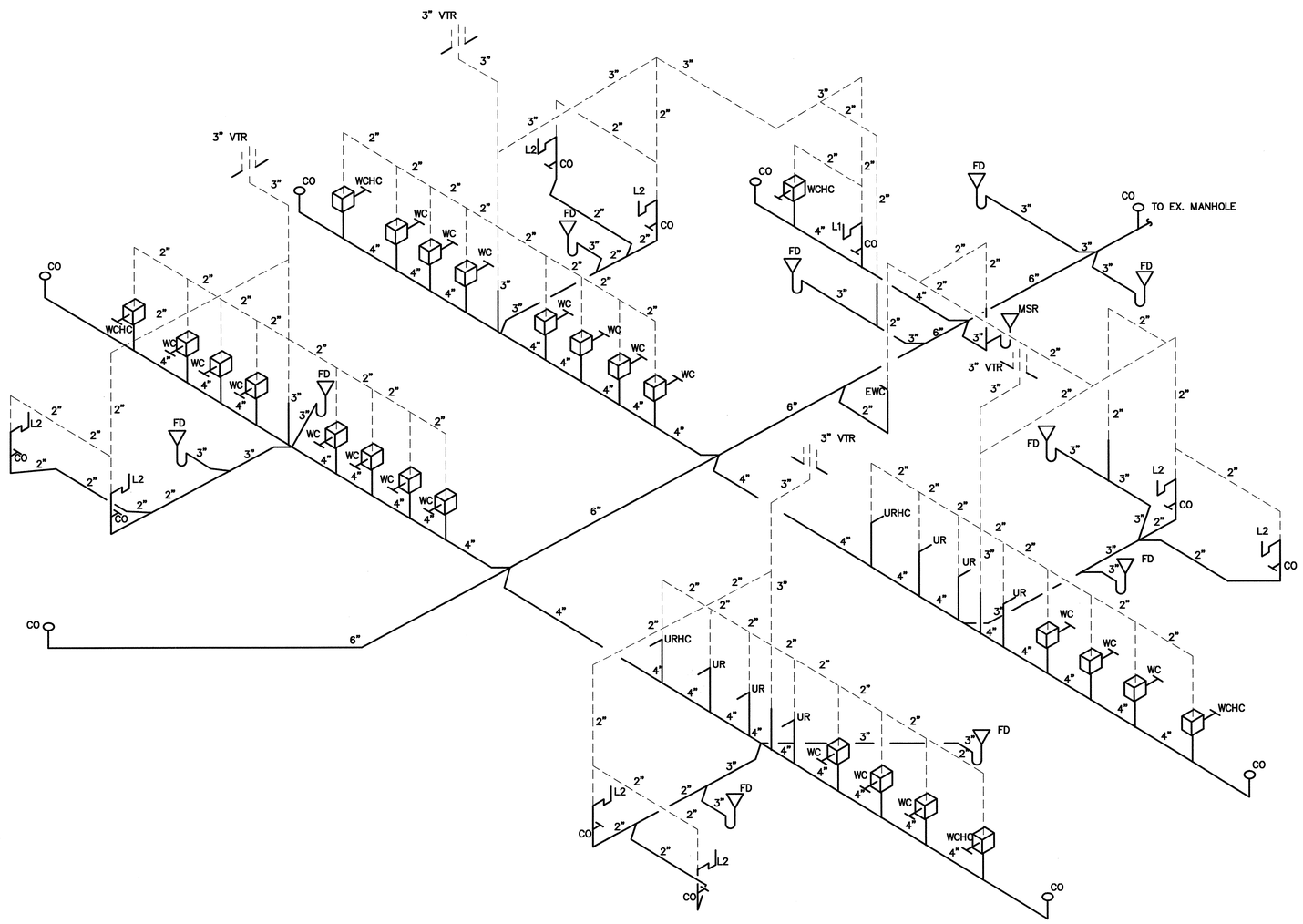

1 P-2 **WASTE & VENT RISER**
NOT TO SCALE

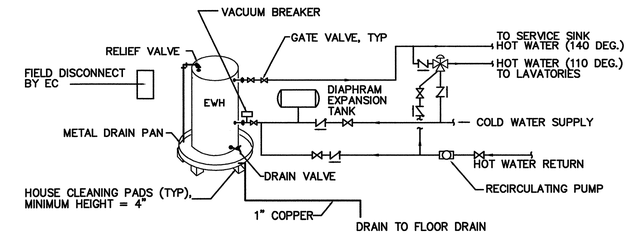

NOTES:
1. COORDINATE WITH EC FOR EXACT POWER REQUIREMENTS. EC TO FURNISH ALL WIRE EXCEPT FROM DISCONNECT TERMINALS TO HEATER (BY PC).

3 P-2 **DOMESTIC WATER HEATER PIPING SCHEMATIC**
NOT TO SCALE

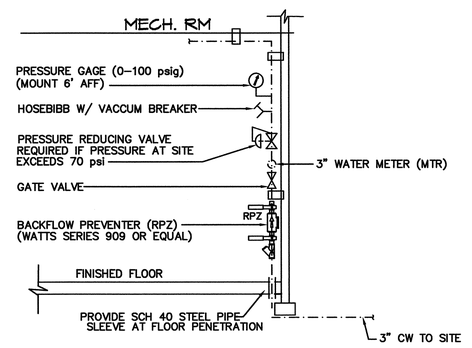

2 P-2 **WATER RISER DETAIL**
NOT TO SCALE

PROJECT:
I-95 REST AREA
NASH COUNTY — NORTH CAROLINA

ARCHITECT/ENGINEERS:
FACILITIES DESIGN
GENERAL SERVICES DIVISION, NCDOT
1 SOUTH WILMINGTON STREET
RALEIGH, NORTH CAROLINA 27601
(919) 715-0400 FAX (919) 715-0399

DRAWING TITLE: PLUMBING WASTE RISER DIAGRAM & DETAILS

DRAWN BY: CLS/VT CHECKED BY: LWH ISSUE DATE: 12/05/06

SEAL: NORTH CAROLINA PROFESSIONAL SEAL 14904 ENGINEER LEWIS WAYNE HOLLIS — PME

T.I.P. PROJ. NO.	FED. PROJ. NO.	STATE PROJ. NO.
K-4903	IMS-95-3(88)142	39914.3.1

NO.	REVISIONS/SUBMISSIONS	DATE
0	ORIGINAL	12/18/06

SHEET NO. **P2** OF 2

FINAL DRAWINGS - FOR CONSTRUCTION

HVAC SCHEDULE

EQUIP. NUMBER	INDOOR UNIT											OUTDOOR UNIT				
	MODEL NO.	FAN			COOLING CAPACITY		COIL HEATING CAPACITY	ELECTRICAL HEATING		VOLTAGE	MCA	FUSE/ CB MAX	MODEL NO.	POWER	MCA	FUSE/ CB MAX	NOTES
		CFM	HP	POWER	MIN TOTAL	MIN SENS.		MODEL #	CAPACITY								
AHU-1/CU-1	CARRIER FC4DNF048010	1600@1/2"WC	3/4	208/230-1	46.5 MBH	35.09 MBH	30/48 MBH @ 17/47F	KFCEH0901N10	34 MBH (10 KW)	208/230-1	58.5	60 (TD)	CARRIER 25HBR348A003	208/230-1	27.6	40 A (TD)	1,2,3,4,5,6
AHU-2/CU-2	CARRIER FC4DNF048010	1600@1/2"WC	3/4	208/230-1	46.5 MBH	35.09 MBH	30/48 MBH @ 17/47F	KFCEH0901N10	34 MBH (10 KW)	208/230-1	58.5	60 (TD)	CARRIER 25HBR348A003	208/230-1	27.6	40 A (TD)	1,2,3,4,5,6

NOTES:

1. PROVIDE WITH DISCONNECT SWITCH, ELECTRONIC PROGRAMMABLE THERMOSTAT WITH LOCKING COVER, TIME DELAY RELAY, FILTER RACK WITH FILTERS, AND HEAD PRESSURE CONTROLLER AND SINGLE POINT POWER CONNECTIONS.
2. PROVIDE MINIMUM OUTDOOR AIR FLOW SETTINGS AS PER PLAN.
3. AHU's ARE BASED ON 1/2" EXT. WATER COLUMN STATIC.
4. OR EQUAL BY TRANE OR YORK
5. PROVIDE SHUTDOWN RELAY SWITCH WITH A MAXIMUM OF 60 SECOND DELAY ON HEATING CYCLE, TO BE WIRED TO THE DUCT SMOKE DETECTORS AS PROVIDED BY THE ELECTRICAL CONTRACTOR.
6. SPECIFIED COOLING CAPACITIES ARE BASED ON STANDARD CONDITIONS: EAT= DB/WB = 80/67 F; AMBIENT = 95 F. COIL HEATING CAPACITIES ARE BASED ON 65 F EDB. ELECTRIC HEATER RATINGS ARE AT 240V.

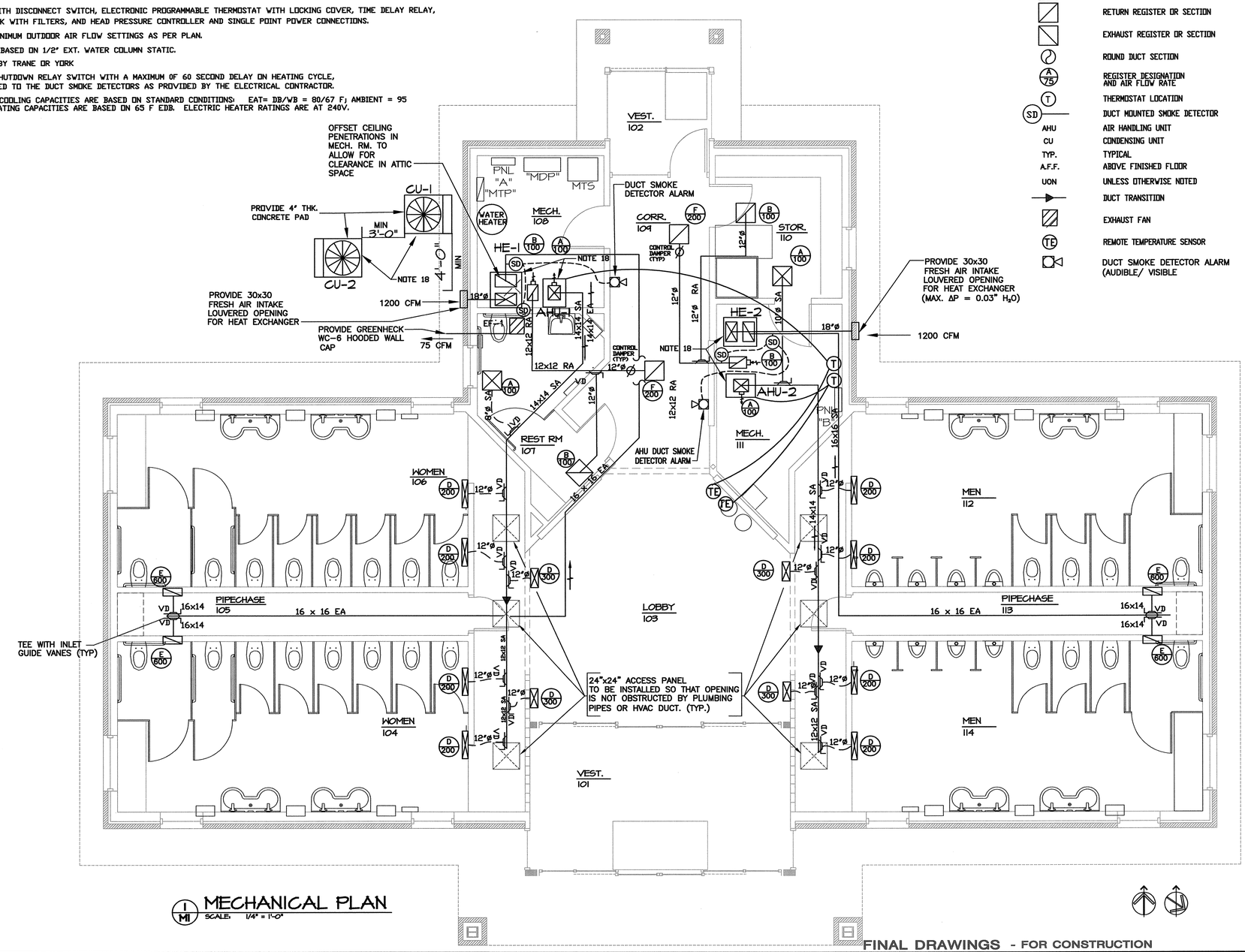

1 M1 MECHANICAL PLAN
SCALE: 1/4" = 1'-0"

SYMBOL LEGEND - MECHANICAL

SYMBOL	DESCRIPTION
	RIGID DUCTWORK (SUPPLY /RETURN/EXHAUST)
	FLEX DUCT
	SPIN-IN FITTING
VD	VOLUME CONTROL DAMPER, LOCKABLE
	DIRECTION OF AIR FLOW
	SUPPLY REGISTER OR SECTION
	RETURN REGISTER OR SECTION
	EXHAUST REGISTER OR SECTION
	ROUND DUCT SECTION
A 75	REGISTER DESIGNATION AND AIR FLOW RATE
T	THERMOSTAT LOCATION
SD	DUCT MOUNTED SMOKE DETECTOR
AHU	AIR HANDLING UNIT
CU	CONDENSING UNIT
TYP.	TYPICAL
A.F.F.	ABOVE FINISHED FLOOR
UON	UNLESS OTHERWISE NOTED
	DUCT TRANSITION
	EXHAUST FAN
TE	REMOTE TEMPERATURE SENSOR
	DUCT SMOKE DETECTOR ALARM (AUDIBLE/ VISIBLE

REGISTER SCHEDULE

MARK	MANUFACTURER MODEL NO.	FACE SIZE	NECK SIZE	MATERIAL	SERVICE	NOTES
A	CARNES-RNCAH	12x6	8"ø OR 10"ø or 10"x10"	ALUM	SUPPLY	1,2,3
B	CARNES-RALAH	18x12	12" ø OR 12" X 12"	ALUM	RETURN	1,2,3
C	CARNES-SSEA	12"ø	6" or 8"ø	ALUM	SUPPLY	1,2,3
D	CARNES-RNCAH	12" X 12"	12"ø	ALUM	SUPPLY	1,2,3
E	CARNES-RALAH	24x18	14"ø	ALUM	RETURN	1,2,3
F	CARNES-RALAH	12x12	12"ø	ALUM	RETURN	1,2,3
G	LOREN COOK CO. "GR"	24x28	12 X 12	ALUM	EXHAUST CAP	4

1. PROVIDE WITH O.B.D.; COLOR TO BE OFF-WHITE; COORDINATE BORDER TYPE WITH CEILING TYPE. SEE ARCHITECTURAL PLANS.
2. PROVIDE WITH SQUARE TO ROUND TRANSITION (WHERE INDICATED) AND O.B.D.; COLOR TO BE OFF-WHITE.
3. PROVIDE WITH OPPOSED BLADE DAMPER.
4. PROVIDE WITH BIRD SCREEN. MATCH COLOR TO TRIM (SEE ARCHITECTURAL); BRONZE PREFERRED

GENERAL NOTES - MECHANICAL

1. ALL WORK SHALL BE IN ACCORDANCE WITH THE LATEST EDITION OF THE STATE CODE AND ALL LOCAL AND OTHER APPLICABLE CODES.
2. ANY INSPECTION SHALL BE COORDINATED WITH THE DESIGNER BY THE MECHANICAL CONTRACTOR (MC) WITH A 48 HRS NOTICED.
3. ALL WORK SHALL BE PERFORMED BY EXPERIENCED AND SKILLED CRAFTSMEN. THE MC SHALL COORDINATE ALL OF HIS WORK WITH THE GENERAL CONTRACTOR (GC) AND OTHER TRADES.
4. THE LOCATION OF ALL DUCT, PIPING AND EQUIPMENT SHALL BE ADJUSTED TO ACCOMMODATE ANTICIPATED OR ENCOUNTERED INTERFERENCES. EQUIPMENT SHALL BE INSTALLED IN THE GENERAL LOCATION SHOWN IN ROOMS AND ALONG DESIGNATED WALLS.
5. THESE PLANS ARE DIAGRAMMATIC AND MAY NOT SHOW MINOR DETAILS AND LOCATIONS. FOR DIMENSIONS REFER TO THE ARCHITECTURAL PLANS.
6. THE MC SHALL BE RESPONSIBLE FOR ALL ELECTRICAL STARTERS INTERLOCKS, CONTROL WIRING CONDUIT AND POWER WIRING FROM DISCONNECTS TO HIS EQUIPMENT, USING A LICENSED ELECTRICIAN
7. THE MC SHALL USE FIRE DAMPERS FOR PROTECTION OF THE OPENING IN ACCORDANCE WITH STATE AND LOCAL CODES IN ALL LOCATIONS WHERE PENETRATIONS OF RATED WALLS AND CEILING OCCUR. SEE ARCHITECTURAL PLANS FOR RATED WALL AND CEILING LOCATIONS.
8. INSTALL FLEXIBLE CONNECTORS ON SUPPLY AND RETURN DUCTWORK AT ALL UNITS. ALL MECHANICAL EQUIPMENT SHALL OPERATE FREE OF OBJECTIONAL NOISE AND VIBRATION.
9. INSTALL TURNING VANES IN SUPPLY, RETURN, AND EXHAUST DUCTS AT ALL ELBOWS AND SPLITTER DAMPERS. PROVIDE BALANCING DAMPERS IN DUCTS AS SHOWN OR REQ'D FOR SYSTEM BALANCING.
10. DUCT DIMENSIONS ARE SHOWN INSIDE CLEAR.
11. ALL THERMOSTATS, WIRING AND CONDUIT ARE TO BE FURNISHED BY THE MC. MOUNT ALL THERMOSTATS 48" ABOVE THE FINISHED FLOOR.
12. THE MC SHALL KEEP THE PREMISES CLEAR OF DEBRIS FROM HIS WORK DURING CONSTRUCTION AND LEAVE THE AREA AND BUILDING CLEAN AT THE COMPLETION OF HIS WORK. HE SHALL ALSO LEAVE CLEAN ALL EXPOSED EQUIPMENT IN HIS CONTRACT.
13. COORDINATE DIFFUSER AND CEILING EXHAUST GRILLE LOCATIONS WITH LIGHTS AND GRID. COORDINATE MOUNTING FRAME WITH CEILING TYPE.
14. THE M.C. SHALL COORDINATE WITH AND PROVIDE EQUIPMENT SPEC. SHEETS TO THE GENERAL AND ELECTRICAL CONTRACTORS FOR APPROVAL PRIOR TO CONSTRUCTION.
15. THE M.C. IS RESPONSIBLE FOR PATCHING, SEALING, SLEEVING AND FIRE CAULKING ALL PENETRATIONS WHERE HIS EQUIPMENT IS INSTALLED TO MEET CODE. SEAL REQUIRED PENETRATIONS WITH 3M FIRE/SMOKE STOP MATERIAL OR EQUAL PRODUCT. SEE ARCH. PLANS FOR WALL/CEILING RATINGS.
16. MAXIMUM LENGTH OF FLEXIBLE DUCT SHALL BE 6'-0". PROVIDE SHEET METAL ELBOWS AT ALL 90 DEGREE BENDS.
17. MECHANICAL CONTRACTOR SHALL DRILL ALL OPENINGS REQUIRED FOR DUCT/PIPING. COORDINATE ALL LOCATIONS WITH GENERAL CONTRACTOR. MECHANICAL CONTRACTOR TO PROVIDE DIMENSIONAL LAYOUT WITHIN SEVEN DAYS OF START OF PROJECT. PROVIDE DUCT COLLARS AT ALL PENETRATIONS.
18. HVAC EQUIPMENT IS NOT TO SCALE (NTS). HE-1/2 AND AHU-1/2 ARE SHOWN LARGER THAN ACTUAL. LOCATION AND GENERAL ARRANGEMENT OF CONDENSORS SHALL BE AS SHOWN.

PROJECT:

I-95 REST AREA

NASH COUNTY — NORTH CAROLINA

ARCHITECT/ENGINEERS:

FACILITIES DESIGN

GENERAL SERVICES DIVISION, NCDOT
1 SOUTH WILMINGTON STREET
RALEIGH, NORTH CAROLINA 27601
(919) 715-0400 FAX (919) 715-0399

DRAWING TITLE:

MECHANICAL PLAN & NOTES

DRAWN BY: CLS/VT CHECKED BY: LWH ISSUE DATE: 12/05/06

SEAL: NORTH CAROLINA PROFESSIONAL SEAL 19304 ENGINEER LEWIS WAYNE MOLLOY December 18, 2006

T.I.P. PROJ. NO.	FED. PROJ. NO.	STATE PROJ. NO.
K-4903	IMS-95-3(88)142	39914.3.1

NO.	REVISIONS/SUBMISSIONS	DATE
0	ORIGINAL	12/18/06

SHEET NO. **M1** OF **2**

P M E

FINAL DRAWINGS - FOR CONSTRUCTION

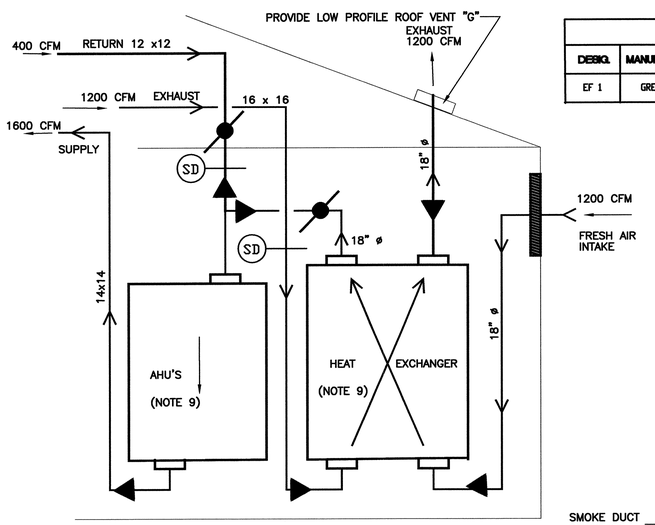

2 / M2 HVAC DIAGRAM

SCALE: NTS

EXHAUST FAN SCHEDULE												
DESIG.	MANUFACTURER	MODEL NO.	TYPE	CFM	TSP IN H_2O	SONES	RPM	HP	VOLTAGE	SERVES	CONTROL	REMARKS
EF 1	GREENHECK	SP-B80-QD	CEILING MOUNTED	78	0.125	1.9	900	54 WATTS	120/1	UNISEX BATHROOM	1B	3,4,5

REMARKS:

1. CONTROLS SHALL BE AS FOLLOWS:
   A. FAN TO BE SWITCHED WITH LIGHTS.
   B. FAN TO BE CONTROLLED BY WALL MOUNTED SWITCH.
   C. FAN TO OPERATE CONTINUOUSLY.
2. PROVIDE N.E.C. RATED U.L. APPROVED STARTER/DISCONNECT.
3. PROVIDE WITH BIRD SCREEN (1/4" MIN. MESH) AND GRAVITY BACKDRAFT DAMPER.
4. EXHAUST FANS ARE BASED ON 1/8" EXTERNAL WATER COLUMN STATIC (TSP).
5. OR EQUAL BY POWERLINE OR CARNES FANS.

ENERGY RECOVERY UNIT SCHEDULE

									THERMAL PERFORMANCE									
		FANS / MOTORS							ENERGY RECOVERY (THERMAL) CAPACITY						INLET / OUTLET CONDITIONS				
EQUIP. NUMBER	MODEL NO.	FLOW	STATIC PRESSURE (EXTERNAL)	FAN MOTOR (QTY-HP)	FLA (PER MOTOR)	VOLTS/ PHASE/ HZ	MCA	FUSE/CB MAX	COOLING CAPACITY (MBH / TON)			HEATING CAPACITY (MBH)			OUTSIDE AIR TEMP(F) & HUMIDITY (DB) / (WB OR RH)		ROOM AIR TEMP (F) & HUMIDITY (DB) / (WB OR RH)		NOTES:
									SENSIBLE	LATENT	TOTAL	SENSIBLE	LATENT	TOTAL	SUMMER	WINTER	SUMMER	WINTER	
HE-1/2	RENEWAIRE HE2XINV DIRECT DRIVE MOTOR G4 CORE	1200 CFM	0.75 in H_2O	4-3/4 HP	4.3 A	208-230V 1 PH 60 HZ	18.3 A	20 A	15.9 1.3	9.9 0.8	25.8 2.2	50.9	18.4	69.4	92F / 75F	14F / 50%	75F / 50%	68F / 50%	ALL

NOTES:

1. FLOW & LOADS BASED ON ARI-1060 PERFORMANCE & CERTIFIED CORE.
2. SHUT DOWN ALL FANS ON DUCT SMOKE DETECTOR ALARM CONDITION.
3. VENTILATION TYPE: FIXED STATIC PLATE, HEAT & HUMIDITY TRANSFER.
4. RENEWAIRE CONTACT: DAVE BALDUS 800-627-4499
5. INCLUDE INTEGRAL DISPOSABLE FILTERS (OUTSIDE AND ROOM AIR) WITH MERV8 OR BETTER RATING.
6. INCLUDE SINGLE POINT ELECTRICAL POWER CONNECTION.
7. HOUSING SHALL BE GALVANIZED, 20 GAUGE (OR THICKER) STEEL WITH LAPPED CORNERS.
8. OR EQUAL BY LOSSNAY (MITSUBISHI) OR ECO AIR.
9. SERVICE ACCESS DOORS SHALL BE GASKETED & PROVIDE ACCESS FOR MAINTENANCE OF ALL COMPONENTS.
10. INCLUDE INSULATION ON ALL CASE WALLS & DOORS.
11. INCLUDE THERMALLY PROTECTED MOTORS WITH STARTERS.
12. UL LISTED (INCLUDING 1812 & 723)
13. PROVIDE WITH FUSED DISCONNECT SWITCH.

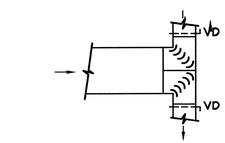

LOW PRESSURE TEE

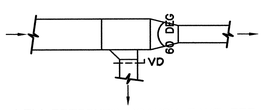

LOW PRESSURE BRANCH TAKE-OFF

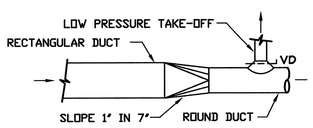

RECTANGULAR TO ROUND TRANSITION

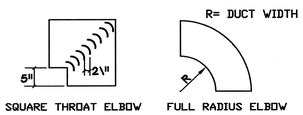

SQUARE THROAT ELBOW FULL RADIUS ELBOW

LOW PRESSURE DUCT ELBOWS

1 / M2 DUCT CONSTRUCTION DETAILS

SCALE: NTS

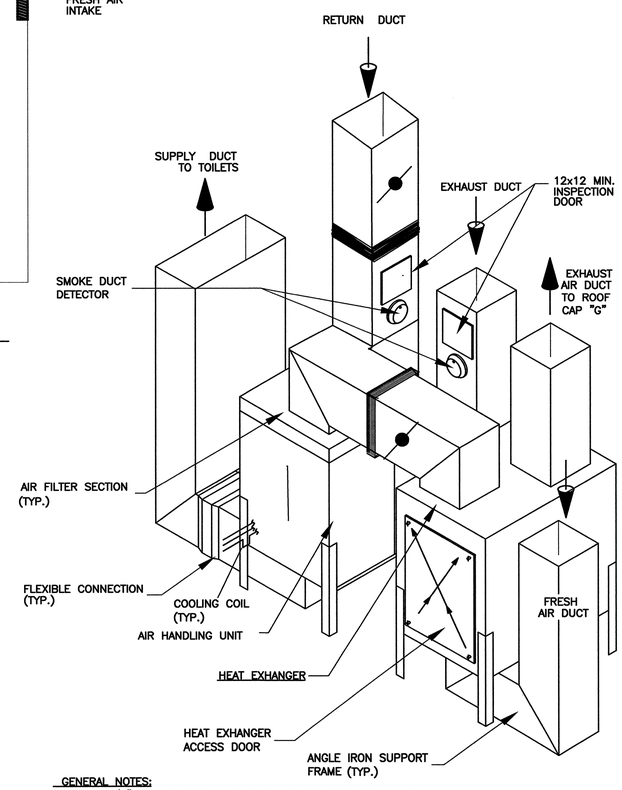

GENERAL NOTES:

1. PROVIDE 3/4" CONDENSATE P-TRAP ON CONDENSATE DRAIN LINE AND PIPE TO FLOOR DRAIN. USE COPPER PIPING AT FLOOR LEVEL.
2. PROVIDE EMERGENCY SHUT-OFF KEY SWITCH PER ADA & MOUNT 48"AFF.
3. ROUTE REFRIGERANT LINES TO CONDENSER ABOVE CEILING AND TURN DOWN IN EXTERIOR WALL.
4. PROVIDE SERVICE CLEARANCES AROUND UNIT AS PER MANU-FACTURERS RECOMMENDATIONS.
5. SUPPORT AIR HANDLING UNITS ON 3x3x1/4" ANGLE IRON FRAME. PRIME AND PAINT BLACK ALL CARBON STEEL TO PREVENT RUSTING. SUPPORTING AHU OR HEAT RECOVERY UNIT WITH DUCT IS UNACCEPTABLE. NO UL LABELS MAY BE OBSCURED BY OR COVERED WITH SUPPORT FRAME.
6. PROVIDE PARTICULATE FILTER WITH CHANGEOUT ACCESS IN THE RETURN PLENUM JUST PRIOR ENTERING EACH AHU.
7. MC TO PROVIDE SMOKE DUCT DETECTORS LOCATED ON EXHAUST AND RETURN DUCTS. EACH AIR HANDLER SHALL SHUT DOWN UPON DETECTION OF SMOKE. PROVIDE A MINIMUM 12x12 ACCESS OPENING EASILY ACCESSIBLE FOR INSPECTION AT EACH DETECTOR. VISIBLE / AUDIBLE ALARM SHALL ACTIVATE IN LOBBY AREA ON ALARM. SHUT DOWN ENERGY RECOVERY UNITS ON SMOKE DETECTION.
8. THIS DETAIL IS SCHEMATIC AND ACTUAL CONFIGURATION SHALL VARY IN FIELD AS NECESSARY TO INSTALL EQUIPMENT AND DUCT.
9. SEE VENDOR INFORMATION FOR ACTUAL SIZE & LOCATION OF CONNECTIONS AND THE ACTUAL SIZE OF ALL EQUIPMENT.

3 / M2 HVAC EQUIP. DETAIL

SCALE: NTS

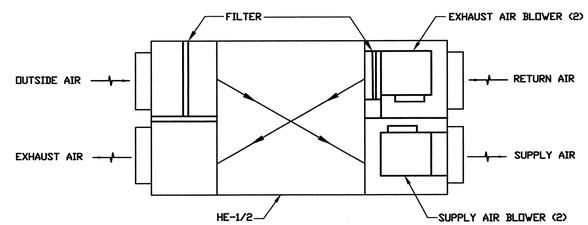

4 / M2 ENERGY RECOVERY UNIT

SCALE: NTS

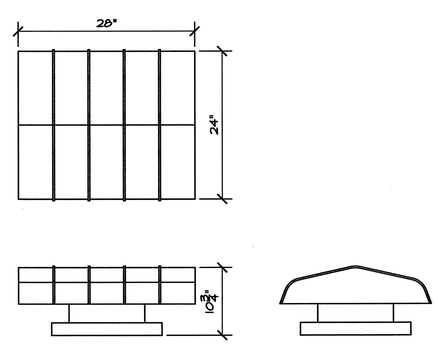

5 / M2 ROOF TOP VENT CAP "G"

SCALE: 1" = 1'-0"

MECHANICAL SYSTEMS, SERVICE SYSTEMS AND EQUIPMENT METHOD OF COMPLIANCE:

PRESCRIPTIVE ☒ ENERGY COST BUDGET ☐

THERMAL ZONE 7A

EXTERIOR DESIGN CONDITIONS
- WINTER DRY BULB 16° F
- SUMMER DRY BULB 92° F (75° F WB)

INTERIOR DESIGN CONDITIONS
- WINTER DRY BULB 68 °F
- SUMMER DRY BULB 75 °F
- RELATIVE HUMIDITY 50%

BUILDING HEATING LOAD (50%) 80 MBH

BUILDING COOLING LOAD (50%) 6 TONS

MECHANICAL SPACE CONDITIONING SYSTEM
- SPLIT SYSTEM

AHU-1/CU-1 AND AHU-2/CU-2 (2 COMPLETE SYSTEMS)

DESCRIPTION OF UNIT	SPLIT HEAT PUMP W/ ENERGY RECOVERY
HEATING EFFICIENCY	COP = 3.4@47°F, 8.4 HSPF (6.8 CODE MIN.)
COOLING EFFICIENCY	SEER = 13.0 (10.0 CODE MIN.)
HEAT OUTPUT OF EACH AHU/CU	47 MBH + 10 KW ELEC
COOLING OUTPUT OF EACH AHU/CU	4 TON

LIST EQUIPMENT EFFICIENCIES
- COP AND SEER ARE LISTED ABOVE

EQUIPMENT SCHEDULES WITH MOTORS (MECHANICAL SYSTEMS)
- MOTORS USED IN THIS PROJECT ARE INCLUDED IN THE EFFICIENCY RATING OF THE UNITS
- MOTOR HORSEPOWERS ARE ON EQUIPMENT SCHEDULE

PROJECT:

I-95 REST AREA

NASH COUNTY NORTH CAROLINA

ARCHITECT/ENGINEERS:

FACILITIES DESIGN

GENERAL SERVICES DIVISION, NCDOT
1 SOUTH WILMINGTON STREET
RALEIGH, NORTH CAROLINA 27601
(919) 715-0400 FAX (919) 715-0399

DRAWING TITLE:

MECHANICAL DETAILS & NOTES

DRAWN BY: CLS/VT CHECKED BY: LWH ISSUE DATE: 12/05/06

SEAL: NORTH CAROLINA PROFESSIONAL ENGINEER SEAL 14904 LEWIS WAYNE HOLLEY December 18, 2006

T.I.P. PROJ. NO.	FED. PROJ. NO.	STATE PROJ. NO.
K-4903	IMS-95-3(88)142	39914.3.1

NO.	REVISIONS/SUBMISSIONS	DATE
0	ORIGINAL	12/18/06

SHEET NO. **M2** OF **2**

FINAL DRAWINGS - FOR CONSTRUCTION

GENERAL NOTES

1. ALL ELECTRICAL WORK SHALL BE IN ACCORDANCE WITH THE NATIONAL ELECTRICAL CODE AND ALL LOCAL CODES HAVING JURISDICTION. (LATEST EDITIONS)
2. ALL WORK SHALL BE PERFORMED BY EXPERIENCED AND SKILLED CRAFTSMEN. THE EC SHALL COORDINATE ALL OF HIS WORK WITH THE GENERAL CONTRACTOR (GC) AND OTHER TRADES. EC SHALL COORDINATE WITH MC FOR SPACE; DUCT SHALL HAVE PRECEDENCE OVER CONDUIT AND DISCONNECT LOCATIONS EXCEPT AT PANEL BOARDS AND MAIN PANELS.
3. ALL WIRES TO BE 2 #12, 1 #12 GND IN 1/2" CONDUIT FOR 20A, 1-P BREAKERS. WIRING FOR OTHERS DEVICES/BREAKERS SHALL MEET NEC REQUIREMENTS. ALL WIRING SHALL BE NEW.
4. ALL EMPTY CONDUIT RUNS IN EXCESS OF 10 FEET SHALL BE PROVIDED WITH A PULL WIRE OR FISH TAPE/CORD.
5. CONTRACTOR SHALL VERIFY THAT ALL DOOR SWINGS ARE CORRECT BEFORE INSTALLING LIGHT SWITCH OUTLETS.
6. ALL BRANCH CIRCUIT CONDUCTORS FROM THE PANEL TO THE FIRST DEVICE/FIXTURE SHALL BE INCREASED TO THE NEXT LARGER SIZE WHERE THE LENGTH OF THE HOME RUN EXCEEDS 50 FEET ON 120 AND 208 OR GREATER VOLT CIRCUIT. MINIMUM SIZE INCREASE SHALL BE TO #10 AWG.
7. THE REQUIRED NUMBER OF WIRES MAY NOT BE INDICATED FOR ALL CIRCUITS; ONLY THOSE WHERE CLARIFICATION IS NECESSARY. THE ELECTRICAL CONTRACTOR SHALL PROVIDE ALL WIRES NECESSARY FOR THE PROPER FUNCTION OF THE SYSTEM WHETHER INDICATED ON DRAWINGS OR NOT.
8. THE BUILDING SOFFIT LIGHT FIXTURES SHALL BE OPERATED THRU A PHOTOCELL TO BE LOCATED IN THE SOFFIT OF BACK SIDE OF BUILDING. A CONTACTOR SHALL BE UTILIZED SO THAT ALL LIGHTS WILL BE ENERGIZED AT THE SAME TIME. PHOTOCELL MUST BE MOUNTED AND ADJUSTED SO THAT ARTIFICIAL LIGHT DOES NOT AFFECT ITS FUNCTION.
9. ELECTRICAL CONTRACTOR TO INSTALL TELEPHONE CONDUIT/WIRE FOR THE PROVISION OF TWO (2) OPERATING LINES (PLUS 8 SPARE SETS OF WIRES). PROVIDE ONE JACK IN STORAGE ROOM (WALL MOUNTED, 48" AFF) WITH ALL WIRING AND HARDWARE NECESSARY FOR A FUNCTIONAL PHONE JACK, AND ONE (1) PHONE JACK FOR FUTURE DATA CONNECTION SPARE. EC IS RESPONSIBLE FOR ALL PHONE/COMMUNICATION CONDUIT/WIRING INSIDE NEW REST ROOM BUILDING, BETWEEN BUILDINGS AND TO CONNECTION/TERMINATION LOCATION IN EXISTING REST ROOM BLDG. (FUTURE VENDING BLDG.). EC SHALL COORDINATE WITH PHONE COMPANY AS NECESSARY TO MAKE FINAL CONNECTIONS TO EXISTING PHONE SYSTEM.
10. ELECTRICAL REQUIREMENTS INDICATED ON DRAWINGS MAY DIFFER FROM ACTUAL EQUIPMENT FURNISHED. IF FURNISHED EQUIPMENT DIFFERS FROM RATINGS ON DRAWINGS CONTRACTOR SHALL NOTIFY ARCHITECT/ENGINEER AND INSTALL CIRCUIT BREAKERS AND FUSES BASED ON ACTUAL NAMEPLATE & MANUFACTURER'S INSTRUCTIONS. NEC REQUIREMENTS MUST BE MET OR EXCEEDED (ESPECIALLY WHERE THERE IS NO NAMEPLATE DATA).
11. IT SHALL BE THE RESPONSIBILITY OF THE ELECTRICAL CONTRACTOR TO COORDINATE EXACT REQUIREMENTS FOR INCOMING SERVICE WITH THE LOCAL UTILITIES FOR POWER AND TELEPHONE.
12. ELECTRICAL CONTRACTOR SHALL PROVIDE ALL DISCONNECTS FOR MECHANICAL EQUIPMENT. DISCONNECTS SHALL BE PER MANUFACTURERS RECOMMENDATIONS AND FUSED PER NAME PLATE. PROVIDE NEMA 3R ENCLOSURES ON EXTERIOR AND WHERE OTHERWISE NOTED.
13. ELECTRICAL CONTRACTOR SHALL PROVIDE ALL DISCONNECTS FOR PLUMBING EQUIPMENT. DISCONNECTS SHALL BE PER MANUFACTURES RECOMMENDATIONS & FUSED PER NAMEPLATE.
14. ALL EMERGENCY, EXIT, AND NIGHT LIGHT FIXTURES SHALL BE UNSWITCHED. CONNECT TO LOCAL LIGHTING CIRCUIT.
15. PROVIDE ONE ATTIC LIGHT W/ CHAIN SWITCH & LOCATED NEAR EACH ATTIC ACCESS DOOR OPENING. SWITCH SHALL BE ACCESSIBLE WITHOUT ATTIC ENTRY. DO NOT OBSTRUCT DOOR OPENING OR ACCESS REQUIRED FOR PERSONNEL ENTRY.
16. THE BUILDING SOFFIT LIGHT FIXTURES SHALL BE OPERATED THRU A PHOTOCELL TO BE LOCATED IN THE SOFFIT OF BACK SIDE OF BUILDING. A CONTACTOR SHALL BE UTILIZED SO THAT ALL LIGHTS WILL BE ENERGIZED AT THE SAME TIME. PHOTOCELL MUST BE MOUNTED AND ADJUSTED SO THAT ARTIFICIAL LIGHT DOES NOT AFFECT ITS FUNCTION. THE BUILDING SOFFIT LIGHT FIXTURES SHALL BE LOCATED IN CENTER OF SOFFIT.
17. SITE LIGHTING AND THEIR ASSOCIATED CONTROLS ARE EXISTING.
18. MATERIALS AND EQUIPMENT SHALL BE NEW AND LISTED BY A TESTING AGENCY APPROVED BY THE AUTHORITY HAVING JURISDICTION, WHERE SUCH LISTING EXISTS.
19. CONDUITS AND WIRE ARE SIZED PER THE THWN/THHN INSULATION TABLES IN THE NEC. RESIZE AS NECESSARY WHERE THICKER CONDUCTOR INSULATION IS USED.
20. EQUIPMENT FUSES SHALL BE U/L LISTED, CURRENT LIMITING, 200K AMP INTERRUPT RATING. SERVICE ENTRANCE & FEEDER CIRCUIT FUSES (600A OR LESS) SHALL BE CLASS RK1, U/L LISTED, CURRENT LIMITING, 200K AMP INTERRUPT RATING. TIME-DELAY, DUAL-ELEMENT TYPE, CLASS RK-5, UON.
21. INSTALL A NEC SIZED GROUND WIRE IN ALL RACEWAYS.
22. INDICATE CIRCUITS IN PANELS, SERVING EMERGENCY AND EXIT LIGHTS.
23. REVIEW ARCHITECTURAL DRAWINGS FOR TOILET MIRROR LOCATIONS. ADJUST LOCATIONS OF TOILET RECEPTACLES ABOVE CABINETS AS NECESSARY SO THAT THEY WILL NOT BE INSTALLED BEHIND MIRRORS.
24. ITEMS USED AS SERVICE ENTRANCE EQUIPMENT SHALL BE LISTED AND LABELED FOR THAT PURPOSE.
25. PROVIDE ADEQUATE SPACE IN ALL PANELS FOR CHECK METERING.
26. IN FLUORESCENT LIGHT FIXTURES CONTAINING TWO OR MORE LAMPS, DO NOT PROVIDE SINGLE-LAMP BALLASTS UNLESS IT IS SPECIFICALLY NOTED IN THESE DRAWINGS. EITHER PROVIDE THREE-OR-FOUR-LAMP BALLASTS, OR TANDEM-WIRED LIGHT FIXTURES WITH A MINIMUM OF TWO LAMPS PER BALLAST.
27. EC SHALL REVIEW THE ELECTRICAL REQUIREMENTS FOR ALL EQUIPMENT PROVIDED BY OTHERS WITH RESPECT TO MINIMUM CIRCUIT AMPACITY, MAXIMUM OVER CURRENT PROTECTION, VOLTAGE, & PHASE PRIOR TO INSTALLING HIS WORK. ANY DISCREPANCIES WITH THE ELECTRICAL DESIGN SHALL BE COORDINATED WITH THE ENGINEER.
28. FOR ALL LAY-IN FLUORESCENT FIXTURES, INSTALL 12 GAUGE HANGER WIRES AT DIAGONAL CORNERS TO PREVENT FIXTURES FROM FALLING IF GRID FAILS. SECURE FIXTURE TO GRID WITH SCREWS OR EARTHQUAKE CLIPS.
29. ALL DISCONNECT SWITCHES SHALL BE HEAVY DUTY TYPE. PROVIDE NEMA 3R WHERE LOCATED OUTSIDE & WHERE OTHERWISE NOTED. SIZE PER NAMEPLATE AMPERAGE.
30. PROVIDE A MINIMUM OF 10% EXTRA FUSES FOR EACH SIZE & CLASS.
31. PROVIDE MAGNETIC TRACER RIBBON FOR ALL UNDER GROUND UTILITIES BURIED 12" BELOW FINISH GRADE.
32. ALL DATA/COMM CABLE SHALL BE PLENUM RATED.

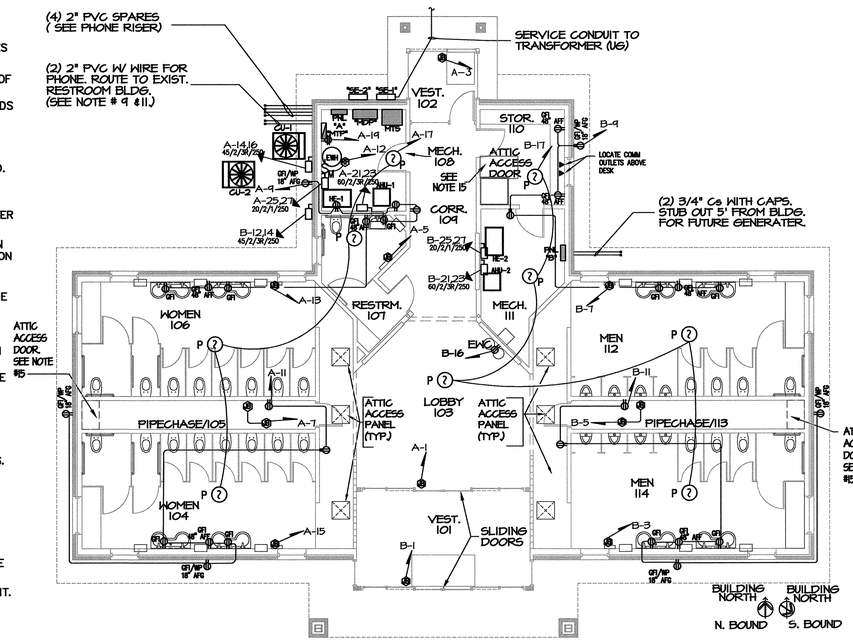

POWER PLAN - NEW BLDG.

SCALE: 1/8" = 1'- 0" EQUIP. IS NTS.
DO NOT SCALE.

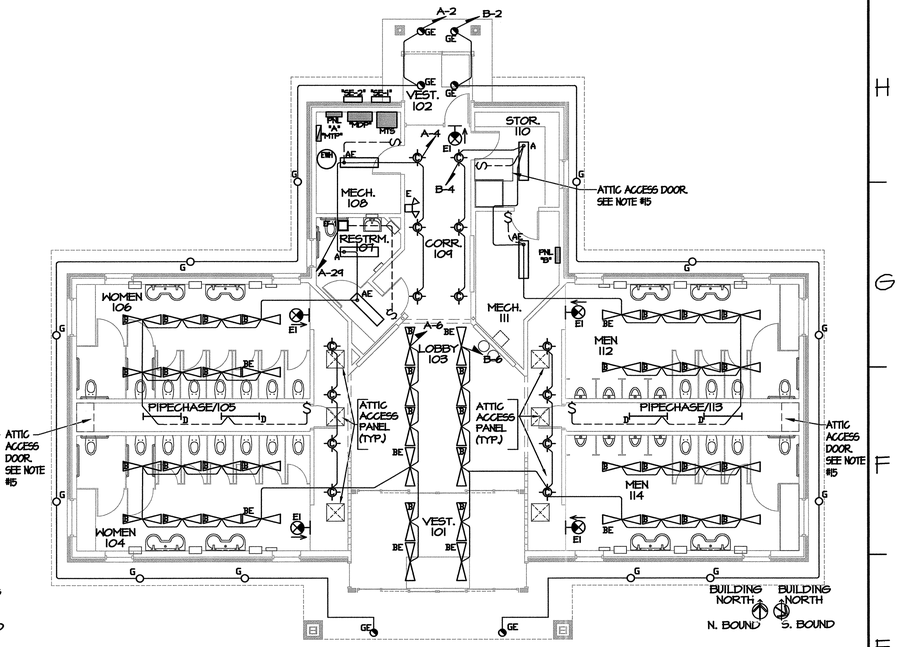

LIGHTING PLAN - NEW BLDG.

SCALE: 1/8" = 1'- 0" EQUIP IS NTS.
DO NOT SCALE.

ELECTRICAL NOTES

1. SWITCH WITH PHOTO CELL.
2. 600A ENCLOSED CIRCUIT BREAKER.
3. 600A ENCLOSED CIRCUIT BREAKER.

ELECTRICAL SYMBOL LEGEND

- EMERGENCY LIGHTING, WALL MTD. – BATTERY POWERED, UON. CONNECT TO LOCAL LIGHTING CIRCUIT AHEAD OF SWITCHING.
- COMMUNICATIONS OUTLET. 16" AFF TO BOTTOM, UON (RJ45)
- 30/3/1/240 — DISCONNECT SWITCH – HEAVY DUTY, FUSIBLE (INCLUDE FUSES), UON. CURRENT RATING/POLES/NEMA RATING/VOLTAGE
- MDP — MAIN DISTRIBUTION PANEL
- MTS — MANUAL TRANSFER SWITCH
- MTP — MAIN TELEPHONE PANEL 4'x8'x3/4" PLYWOOD BACKBOARD (FIRE PROOF)
- PNL — PANEL BOARD (PANEL)
- SE — SERVICE INTRANCE
- (18) — JUNCTION BOX SIZE PER NEC
- DUPLEX RECEPTACLE, NEMA 5-20R. 16" AFF TO BOTTOM, UON.
- QUAD (DOUBLE DUPLEX) RECEPTACLE, NEMA 5-20R. 16" TO BOTTOM, UON.
- GFI — DUPLEX RECEPTACLE, NEMA 5-20R, GROUND FAULT CIRCUIT INTERRUPTER.
- WP — DUPLEX RECEPTACLE, NEMA 5-20R, GROUND FAULT CIRCUIT INTERRUPTER (GFCI) WITH WEATHERPROOF COVER
- EWC — DUPLEX RECEPTACLE, NEMA 5-20R, FOR ELECTRIC WATER COOLER. COORDINATE RECEPTACLE LOCATION WITH EWC SO THAT RECEPTACLE IS MOUNTED INSIDE EWC IF CORD AND PLUG PERMIT.
- A — FLUORESCENT FIXTURE (TYPE A)
- B — SUSPENDED FLUORESCENT FIXTURE (TYPE B)
- D — SURFACE MOUNTED FLUORESCENT FIXTURE (TYPE D)
- RECESSED FLUORESCENT FIXTURE (TYPE C)
- SEMI-RECESSED FLUORESCENT FIXTURE (TYPE G)
- SEMI-RECESSED FLUORESCENT EXTERIOR FIXTURE (TYPE GE)
- SINGLE-POLE WALL SWITCH. 48" TO TOP, UON.
- 3 — THREE WAY WALL SWITCH. 48" TO TOP, UON.
- M — SINGLE-POLE MOTOR RATED SWITCH. A "2" SUBSCRIPT INDICATES A 2-POLE SWITCH.
- HOMERUN – 120V, 1-POLE, 2-#12, 1-#12G, 1/2"C, UON (MINIMUM REQUIREMENTS MUST MEET NEC.)
- HOMERUN – 240V, CIRCUIT WIRES AS INDICATED (MINIMUM REQUIREMENTS MUST MEET NEC.)
- UNSWITCHED CIRCUIT
- P (?) — SMOKE DETECTOR (120V)
- MTP — MAIN TELEPHONE PANEL
- AFF — ABOVE FINISHED FLOOR
- AFG — ABOVE FINISHED GRADE
- HD — ELECT. HAND DRYER (BY GC, POWER BY EC)
- UON — UNLESS OTHERWISE NOTED
- EWC — ELECT. WATER COOLER
- UG — UNDERGROUND
- EXIST — EXISTING
- HOA — HAND-OFF-AUTOMATIC SWITCH
- SWITCHED CIRCUIT

FIXTURE SCHEDULE

MARK	DESCRIPTION	MFG. & CATALOG #	EQUALS	VOLTAGE	LAMP	REMARKS	WATTS
A	1X4 FLUORESCENT	LITHONIA AW232AR120	METALUX DAYBRITE	120 V	(2) 32WT8	SURFACE MOUNT, WRAPAROUND, EB	62
AE	1X4 FLUORESCENT	LITHONIA AW232AR120	METALUX DAYBRITE		(2) 32WT8	SURFACE MOUNT, WRAPAROUND, BATTERY BACK-UP	62
B	8'x3' FLUORESCENT	PEERLESS 4ENM4 332 120 LP841 (ENVISION)	LITHONIA COLUMBIA		(3) 32WT8	INDIRECT WHITE GLOSS AL. SUSPENDED FIXTURE	95
BE	8'x3' FLUORESCENT	PEERLESS 4ENM4 332 120 LP841 (ENVISION)	LITHONIA COLUMBIA		(3) 32WT8	INDIRECT WHITE GLOSS AL. SUSPENDED FIXTURE, BATTERY BACK UP	95
C	RECESSED FLUORESCENT	LITHONIA LGF 226 DTT 7RW T73	LITHONIA COLUMBIA		(2) 26W DTT	7"APERTURE, SPECULAR CLEAR REFLECTOR	54
D	4' FLUOR. STRIP 2 TUBES	METALUX SS-232	LITHONIA COLUMBIA		2F32T8	WITH WIRE GUARD	62
F	OPEN CYLINDER WALL MT'D FLUORESCENT	LITHONIA CF102/26DTT6ARLS 120GEB10WM	LUMARK GE		226WDTT	MOUNT TO HORIZONTAL BAND ABOVE DISPLAY	54
G	SEMI-RECESSED ROUND, FLUORESCENT	LUMINAIRE ARV13HO	LITHONIA KENALL		2-PLC26	2 LAMPS/WET LOCATION OPAL LENS/GRAY VANDAL RESISTANT	52

NOTES:
1. FIXTURES & BALLAST MUST BE REMOVABLE FROM INACCESSIBLE CEILING.

GE	EMERGENCY/EXTERIOR LIGHT SIMI RECESSED, ROUND, FLUORESCENT	LUMINAIRE ARV13HO -EMB	LITHONIA KENALL	120 V	2-PLC26	90 MINUTE BACK-UP 2 LAMPS/WET LOCATION OPAL LENS/GRAY, VANDAL RES.	52
E	EMERGENCY LIGHT .	SURELITE CC-6	LITHONIA LIGHT ALARMS			90 MINUTE BACK-UP	11
E1	EXIT SIGN .	SURELITE LPX	LITHONIA LIGHT ALARMS			90 MINUTE BACK-UP	
P (?)	SMOKE DETECTOR .	KIDDE MODEL 1235E	EST ADEM CO		- -	CEILING MNT. NFPA 72 IONIZATION TYPE, LOCAL ALARMS, FDR	<5

FINAL DRAWINGS - FOR CONSTRUCTION

PROJECT:
I-95 REST AREA
NASH COUNTY NORTH CAROLINA

ARCHITECT/ENGINEERS:
FACILITIES DESIGN
GENERAL SERVICES DIVISION, NCDOT
1 SOUTH WILMINGTON STREET
RALEIGH, NORTH CAROLINA 27601
(919) 715-0400 FAX (919) 715-0399

DRAWING TITLE:
ELECTRICAL PLANS & DETAILS

DRAWN BY: CLS/VT CHECKED BY: LWH ISSUE DATE: 12/05/06

SEAL: NORTH CAROLINA PROFESSIONAL SEAL 14904 ENGINEER LEWIS WAYNE HOLLEY

T.I.P. PROJ. NO.	FED. PROJ. NO.	STATE PROJ. NO.
K-4903	IMS-95-3(88)142	39914.3.1

NO.	REVISIONS/SUBMISSIONS	DATE
0	ORIGINAL	12/18/06

SHEET NO. E1 OF 2

NEW PANEL "MDP"

LOAD SERVED	VA PER PHASE A	VA PER PHASE B	CKT. BRKR.	CKT. NO.	NEUTRAL A B	CKT. NO.	CKT. BRKR.	VA PER PHASE A	VA PER PHASE B	LOAD SERVED
PNL "A"	24,919		225	1		2	225	21,155		PNL "B"
(SEE RISER)		21,577	225	3		4	225		21,667	(SEE RISER)
3" SPACE	.		.	5		6	400	37,786		PNL "C"
.		.	.	7		8	400		34,198	(SEE RISER)
3" SPACE	.		.	9		10	.	.		3" SPACE
.		.	.	11		12	.		.	.

C/B TEMP. 75° C. RATING 120/240 V 1 PH 3 W
MOUNTING SURFACE GROUND BUS [X] YES [·] NO
MAIN CIRCUIT BREAKER [·] YES [X] NO RATING 800
SERVICE ENTR. RATED [·] YES [X] NO BUS 800 LUG 800
MINIMUM AIC (K AMPS) 65 SN 800

① DEMAND FACTORS PER NEC 220, PART B. ② LARGEST OF: NEC TABLE 220-3(a) OR CONNECTED LOAD. ③ NEC TABLE 220-20. ④ NEC 220-15. ⑤ NEC 220-12, 200 VA/LINEAR FT. * NON-COINCIDENT LOADS, LARGEST OF THE TWO LOADS.

LOAD TYPE		EXIST.	KVA NEW	TOTAL	NEC DEM. FACTOR①	KVA DEMAND
GENERAL LIGHTING ②		0.1	6.7	6.8	125%	8.5
GENERAL USE RECEPTACLES		0.2	8.3	8.5	≤10KVA@100%	8.5
					>10KVA@50%	.
MOTORS AND EQUIPMENT	LARGEST	.	9.0	9.0	125%	11.2
	ALL OTHERS	0.6	76.6	77.3	100%	77.3
WATER HEATERS		.	9.0	9.0	100%	9.0
KITCHEN EQUIPMENT ③		.	.	.	100%	.
FIX. ELEC. SPACE HEAT. ④		.	32.5	32.5	100%	32.5
SHOW WINDOW LIGHTS ⑤		.	5.6	5.6	125%	7.0
SIGN/ SPARE		.	.	.	125%	.
EXTERIOR LIGHTS		11.6	1.1	12.7	125%	15.9
PANEL/FEEDER (TOTAL KVA)						170
(TOTAL KVA) X 1000 / VOLTS = TOTAL AMPS						708

NEW PANEL "A"

LOAD SERVED	VA PER PHASE A	VA PER PHASE B	CKT. BRKR.	CKT. NO.	NEUTRAL A B	CKT. NO.	CKT. BRKR.	VA PER PHASE A	VA PER PHASE B	LOAD SERVED
AUTO. SLIDING DOOR-GFI (FRONT INNER)	600		20	1		2	20	542		SOFFIT LIGHTS
AUTO. SLIDING DOOR-GFI (REAR)		600	20	3		4	20		1232	LTS
HAND DRYER	1500		20	5		6	20	1546		LTS
FLUSH VALVE CONTROLS		600	20	7		8	30		2250	WATER HEATER
RECEPTS.	1,620		25	9		10	30	2250		2#10, #10 G., 1/2" C.
RECEPTS.		1,260	20	11		12	15		300	WATER HEATER RECIRC. PUMP (RP)
HAND DRYER	1500		20	13		14	45	3174		HVAC, CU-1
HAND DRYER		1500	20	15		16	45		3174	. 2P
SMOKE DETECTORS (BREAKER LOCK)	100		20	17		18	.	.		.
RECEPTS.-MTP (PHONE)		360	20	19		20	.		.	.
HVAC, AHU-1	6728		60	21		22	20	2001		SPARE
. 2P		6728	60	23		24	20		331	SPARE
HVAC, HE-1	2105		60	25		26	20	1200		SPARE
. 2P		2105	60	27		28	20		1200	SPARE
EXHAUST FAN, EF-1	54		20	29		30	.			.
.		.	.	31		32	.			.
.			.	33		34	.			.
.			.	35		36	.			.
.			.	37		38	.			.
.			.	39		40	.			.
.			.	41		42	.			.
	14,206	13,152		TOTAL VA PER PHASE				10,713	8,485	

C/B TEMP. 75° C. RATING 120/240 V 1 PH 3 W
MOUNTING SURFACE GROUND BUS [X] YES [·] NO
MAIN CIRCUIT BREAKER [·] YES [X] NO RATING 225
SERVICE ENTR. RATED [·] YES [X] NO BUS 225 LUG 225
MINIMUM AIC (K AMPS) 22 SN 225

① DEMAND FACTORS PER NEC 220, PART B. ② LARGEST OF: NEC TABLE 220-3(a) OR CONNECTED LOAD. ③ NEC TABLE 220-20. ④ NEC 220-15. ⑤ NEC 220-12, 200 VA/LINEAR FT. * NON-COINCIDENT LOADS, LARGEST OF THE TWO LOADS.

LOAD TYPE		EXIST.	KVA NEW	TOTAL	NEC DEM. FACTOR①	KVA DEMAND
GENERAL LIGHTING ②		.	2.7	2.7	125%	3.4
GENERAL USE RECEPTACLES		.	3.2	3.2	≤10KVA@100%	3.2
					>10KVA@50%	.
MOTORS AND EQUIPMENT	LARGEST	.	6.3	6.3	125%	7.9
	ALL OTHERS	.	19.2	19.2	100%	19.2
WATER HEATERS		.	4.5	4.5	100%	4.5
KITCHEN EQUIPMENT ③		.	.	.	100%	.
FIX. ELEC. SPACE HEAT. ④		.	10.0	10.0	100%	10.0
SHOW WINDOW LIGHTS ⑤		.	.	.	125%	.
SIGN		.	.	.	125%	.
EXTERIOR LIGHTS		.	0.5	0.5	125%	0.7
PANEL/FEEDER (TOTAL KVA)						49.0
(TOTAL KVA) X 1000 / VOLTS = TOTAL AMPS						204

NEW PANEL "B"

LOAD SERVED	VA PER PHASE A	VA PER PHASE B	CKT. BRKR.	CKT. NO.	NEUTRAL A B	CKT. NO.	CKT. BRKR.	VA PER PHASE A	VA PER PHASE B	LOAD SERVED
AUTO. SLIDING DOOR-GFI (FRONT OUTER)	600		20	1		2	20	542		SOFFIT LIGHTS
HAND DRYER		1500	20	3		4	20		1170	LTS
FLUSH VALVE CONTROLS	700		20	5		6	20	1546		LTS
HAND DRYER		1500	20	7		8	20		500	TELEPHONE EQUIPMENT
RECEPTS.	1260		20	9		10	20	0		SPARE
RECEPTS.		1260	20	11		12	45		3124	HVAC, CU-2
NOTE ① GENERATOR BATTERY CHARGER (FUTURE)	1200		20	13		14	45	3124		. 2P
NOTE ① GENERATOR COOLING JACKET HEATER (FUTURE)		1600	20	15		16	20		600	EWC
SMOKE DETECTORS (BREAKER LOCK)	100		20	17		18	.	.		.
.		.	.	19		20	.		.	.
HVAC, AHU-2	6728		60	21		22	20	2001		SPARE
. 2P		6728	60	23		24	20		331	SPARE
HVAC, HE-2	2105		20	25		26	20	1200		SPARE
. 2P		2105	20	27		28	20		1200	SPARE
.	.		.	29		30	.	.		.
.		.	.	31		32	.	.		.
.	.		.	33		34	.	.		.
.		.	.	35		36	.	.		.
.	.		.	37		38	.	.		.
.			.	39		40	.	.		.
.			.	41		42	.	.		.
	12,692	14,692		TOTAL VA PER PHASE				8,463	6,975	

C/B TEMP. 75° C. RATING 120/240 V 1 PH 3 W
MOUNTING SURFACE GROUND BUS [X] YES [·] NO
MAIN CIRCUIT BREAKER [·] YES [X] NO RATING 225
SERVICE ENTR. RATED [·] YES [X] NO BUS 225 LUG 225
MINIMUM AIC (K AMPS) 22 SN 225

① DEMAND FACTORS PER NEC 220, PART B. ② LARGEST OF: NEC TABLE 220-3(a) OR CONNECTED LOAD. ③ NEC TABLE 220-20. ④ NEC 220-15. ⑤ NEC 220-12, 200 VA/LINEAR FT. * NON-COINCIDENT LOADS, LARGEST OF THE TWO LOADS.

LOAD TYPE		EXIST.	KVA NEW	TOTAL	NEC DEM. FACTOR①	KVA DEMAND
GENERAL LIGHTING ②		.	2.7	2.7	125%	3.4
GENERAL USE RECEPTACLES		.	2.5	2.5	≤10KVA@100%	2.5
					>10KVA@50%	.
MOTORS AND EQUIPMENT	LARGEST	.	6.3	6.3	125%	7.9
	ALL OTHERS	.	20.7	20.7	100%	20.7
WATER HEATERS		.	.	.	100%	.
KITCHEN EQUIPMENT ③		.	.	.	100%	.
FIX. ELEC. SPACE HEAT. ④		.	10.0	10.0	100%	10.0
SHOW WINDOW LIGHTS ⑤		.	.	.	125%	.
SIGN		.	.	.	125%	.
EXTERIOR LIGHTS		.	0.5	0.5	125%	0.7
PANEL/FEEDER (TOTAL KVA)						45.2
(TOTAL KVA) X 1000 / VOLTS = TOTAL AMPS						188

NOTE: ① PROVIDE BREAKERS FOR FUTURE GENERATOR BATTERY CHARGER AND JACKET HEATER BRANCH CIRCUIT. NO BRANCH WIRING REQUIRED.

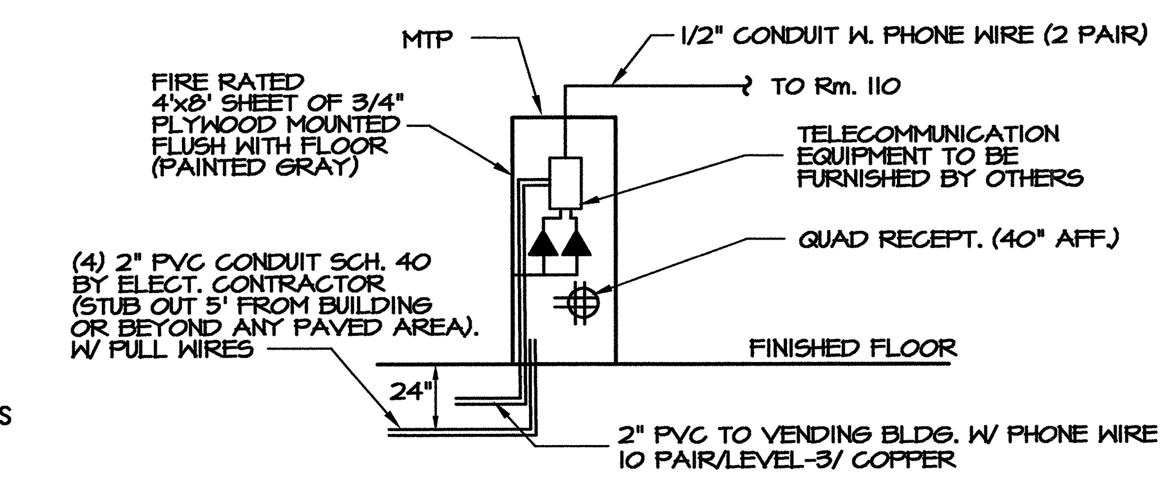

2 / E2 TELEPHONE RISER
NTS

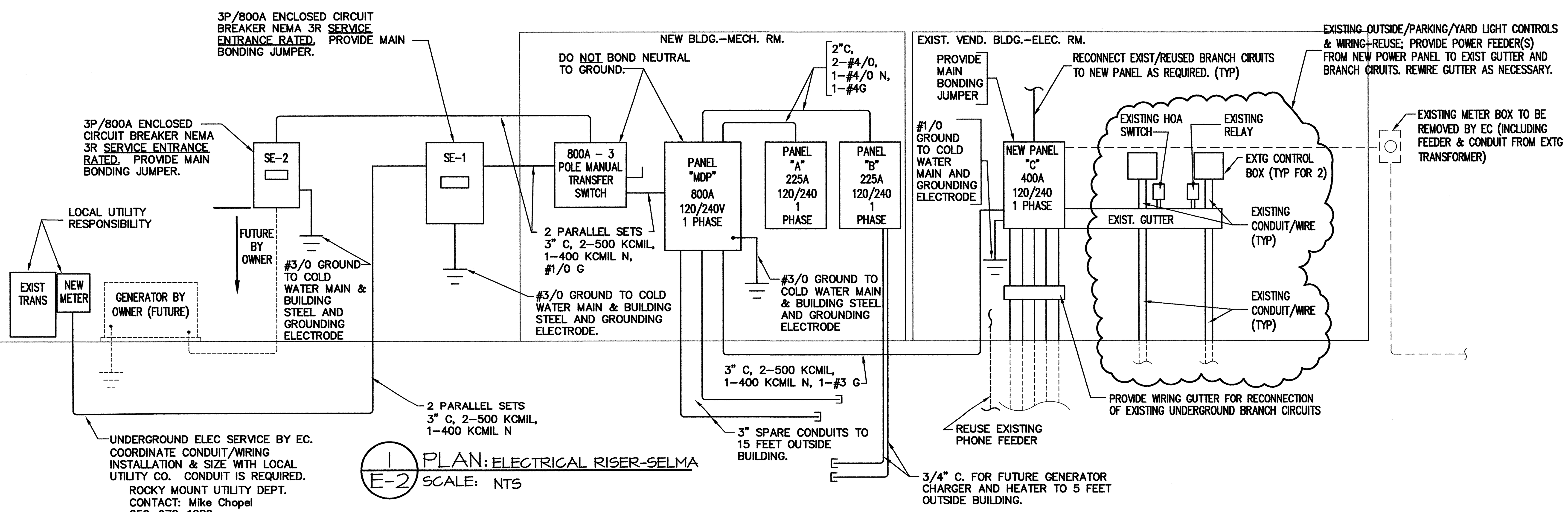

1 / E-2 PLAN: ELECTRICAL RISER-SELMA
SCALE: NTS

NOTES:

① ALL UNDER GROUND CONDUITS INSTALLED BY THE EC SHALL BE ENCASED IN MINIMUM 3" CONCRETE. PROVIDE MAGNETIC TRACER RIBBON 12" BELOW GRADE.

② FUTURE GENERATOR DESIGN AND INSTALLATION TO BE PER NEC AND SHALL BE COORDINATED WITH ELECTRICAL DESIGN / SCOPE PROVIDED.

③ ALL GROUNDING AND BONDING SHALL BE PER NEC 250.

FINAL DRAWINGS - FOR CONSTRUCTION

PROJECT:
I-95 REST AREA
NASH COUNTY — NORTH CAROLINA

ARCHITECT/ENGINEERS:
FACILITIES DESIGN
GENERAL SERVICES DIVISION, NCDOT
1 SOUTH WILMINGTON STREET
RALEIGH, NORTH CAROLINA 27601
(919) 715-0400 FAX (919) 715-0399

DRAWING TITLE:
ELECTRICAL PANELS & RISERS

DRAWN BY: CLS/VT CHECKED BY: LWH ISSUE DATE: 12/05/06

SEAL: NORTH CAROLINA PROFESSIONAL ENGINEER SEAL 14904 LEWIS WAYNE HOLLEY — December 18, 2006

T.I.P. PROJ. NO.	FED. PROJ. NO.	STATE PROJ. NO.
K-4903	IMS-95-3(88)142	39914.3.1

NO.	REVISIONS/SUBMISSIONS	DATE
0	ORIGINAL	12/18/06

SHEET NO. **E2** OF 2

FINISH – COLOR SCHEDULE

ROOM	NO.	FLOOR		BASE		NORTH WALL		EAST WALL		SOUTH WALL		WEST WALL		CEILING			REMARKS
		MAT.	COLOR	MAT.	COLOR	MAT.	COLOR	MAT.	COLOR	MAT.	COLOR	MAT.	COLOR	MAT.	COLOR	HEIGHT	
EXIST'G VISTIBULE	V101	EXIST'G QT		EXIST'G QT										–	–	VARIES	GLASS ENTRY WAY
EXIST'G VISTIBULE	V102	EXIST'G QT		EXIST'G QT				–	–			–	–	–	–	8'–1"	GLASS ENTRY WAY
VENDING	V103	CONC.		1X3 TRIM		FC	30GY 88/014	F–C	30GY 88/014	FC	30GY 88/014	FC	30GY 88/014	PLY	–	VARIES	MATCH EXIST'G PLYWOOD CLG'S SEE NOTE 8
STORAGE	V104	VCT	52518	RUB.	84	DW	30GY 88/014	DW	30GY 88/014	DW	30GY 88/014	DW	30GY 88/014	DW*	30GY 88/014	9'–4"	SEE NOTE 2/ * SEE NOTE 5
RESTROOM STOR.	V105	EXIST'G 6X6 TILE	52518	RUB.	84	DW	30GY 88/014	DW	30GY 88/014	DW	30GY 88/014	DW	30GY 88/014	DW*	30GY 88/014	9'–4"	" " " "
MECH.	V106	NEW CONC.	–	RUB.	–	DW	30GY 88/014	DW	30GY 88/014	DW	30GY 88/014	DW	30GY 88/014	DW*	30GY 88/014	9'–4"	" " " "
ELEC.	V107	EXIST'G CONC.	–	RUB.	–	–	–	–	–	DW	30GY 88/014	–	–	–	–	9'–4"	PAINT ALL EXIST'G DRYWALLS
VENDING STORAGE	V108	EXIST'G 6X6 TILE	52518	RUB.	84	DW	30GY 88/014	DW	30GY 88/014	DW	30GY 88/014	DW	30GY 88/014	DW*	30GY 88/014	9'–4"	SEE NOTE 2/ * SEE NOTE 5

DOOR – HARDWARE SCHEDULE

DOOR				FRAME		HARDWARE							REMARKS
MARK	SIZE	MAT.	COLOR	MAT.	COLOR	LOCKSET	HINGES	CLOSER	STOP	PLATE KICK	WEATHS'P/ THRESHOLD		
1	3'–0"x7'–0"x1 3/4"	H.M.	10BB 13/250	H.M.	10BB 13/250	F04	A5112	CO2511	LO2162	–			ONE WAY REFLECTIVE GLASS
2	3'–0"x7'–0"x1 3/4"	H.M.	10BB 13/250	H.M.	10BB 13/250	F04	A5112	CO2511	LO2162	–			

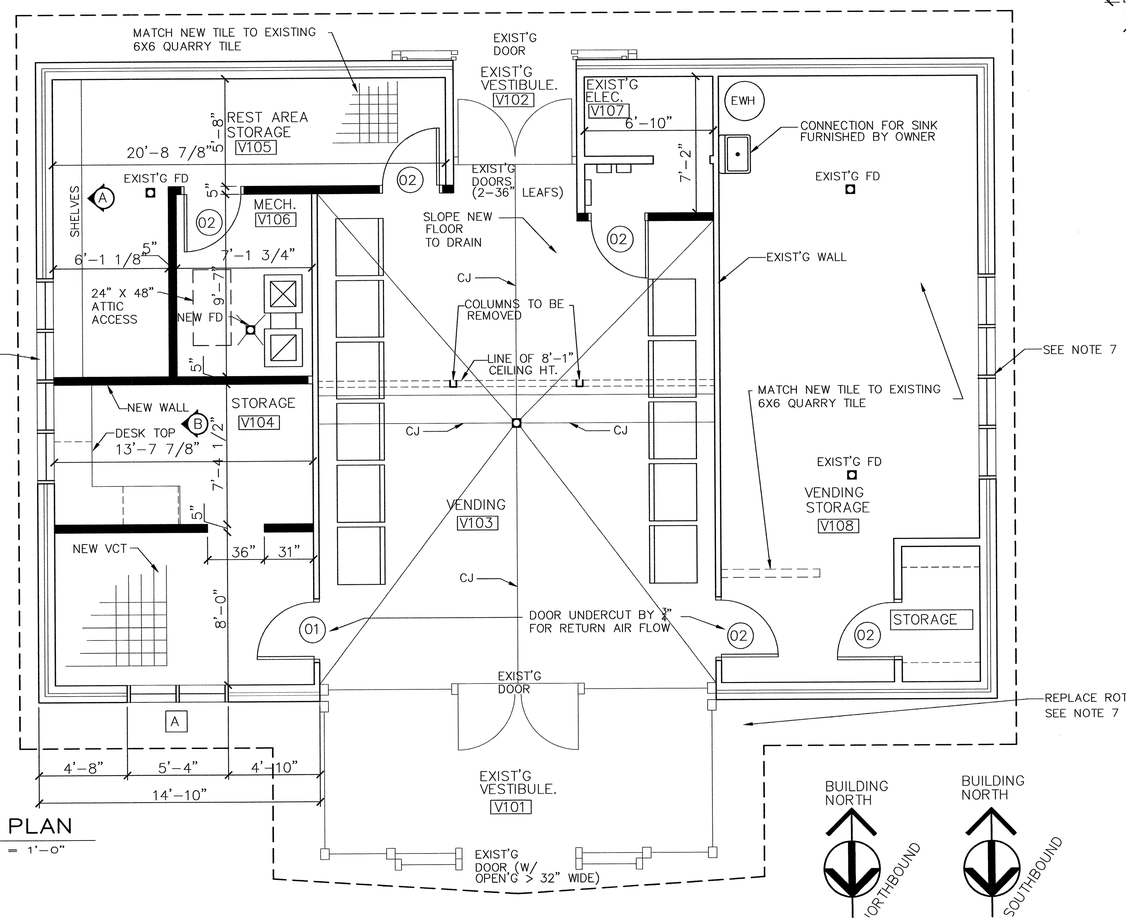

A12 / VA1 FLOOR PLAN
SCALE 1/4" = 1'–0"

GENERAL NOTES:

1. REMOVE BRICK & STUD WALL & INSTALL NEW WINDOW, WINDOW SILL. (SEE DEMO PLAN VA4).
2. FUR–OUT EXISTING STUD/ TILE WALLS W/ 1X3 FURRING STRIPS @ 16" O.C. INSTALL NEW 5/8" DW, PAINT. PROVIDE 1X3 BASE @ ROOMS V105, V108. PROVIDE RUBBER BASE @ ROOM 104.
3. NEW STUD WALL W/ F–C PANELING ON BOTH SIDES W/ INSUL., PAINT. (SEE NOTE 2 FOR FINISHING).
4. NEW WOOD SHELVING SEE VA1.
5. ALL CEILINGS SHALL BE OVERLAID W/ 1–LAYER OF 5/8" DRYWALL.
6. FLOOR AT RM. V104 – REMOVE TILE, POUR CONC.TOPPING FLUSH W/ OLD CERAMIC TILE. PROVIDE NEW VCT.
7. REPAIR & PAINT ALL EXISTING FASCIA, SOFFIT & REPAINT WINDOWS.
8. FUR–OUT EXISTING STUD/ TILE WALLS W/ 1X3 FURRING STRIPS @ 16" O.C. INSTALL NEW F–C PANELING SIERRA–8, PAINT. PROVIDE 1X3 BASE & 1X3 CEILING TRIM @ ROOM V103 CEILING SHALL BE REPLACED W/ 1– LAYER OF 1/2" PLYWOOD.

WALL LEGEND:

EXIST'G WALLS TO REMAIN

NEW 2X4 FRAMED WALL W/ 5/8" GYP.

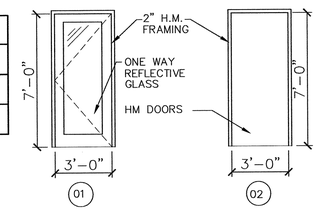

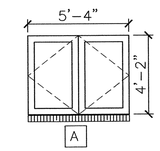

WINDOW
(PELLA METAL CLAD AWNING WINDOWS, BROWN FIN.)
INSULATED GLASS SOLAR COOL GLARE

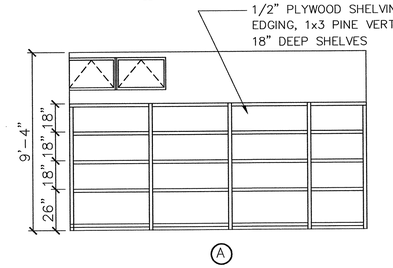

D5 / VA1 ELEVATION– STORAGE V105
SCALE 1/4" = 1'–0"

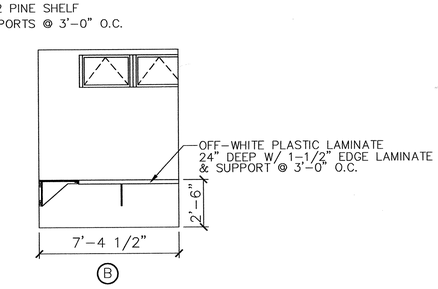

D3 / VA1 ELEVATION– STORAGE V104
SCALE 1/4" = 1'–0"

PROJECT:
I–95 REST AREA
NASH COUNTY NORTH CAROLINA

ARCHITECT/ENGINEERS:
FACILITIES DESIGN
GENERAL SERVICES DIVISION, NCDOT
1 SOUTH WILMINGTON STREET
RALEIGH, NORTH CAROLINA 27601
(919) 715–0400 FAX (919) 715–0399

DRAWING TITLE:
FLOOR PLAN/ SCHEDULES

DRAWN BY: CHECKED BY: V. BUZARD ISSUE DATE: 12/05/06

SEAL: VICTOR M. BUZARD, JR. REGISTERED ARCHITECT 4241 4.30.07 NORTH CAROLINA RALEIGH, N.C.

T.I.P. PROJ. NO.	FED. PROJ. NO.	STATE PROJ. NO.
K–4903	IMS–95–3(88)142	39914.3.1

NO.	REVISIONS/SUBMISSIONS	DATE

SHEET NO. VA1 OF 4

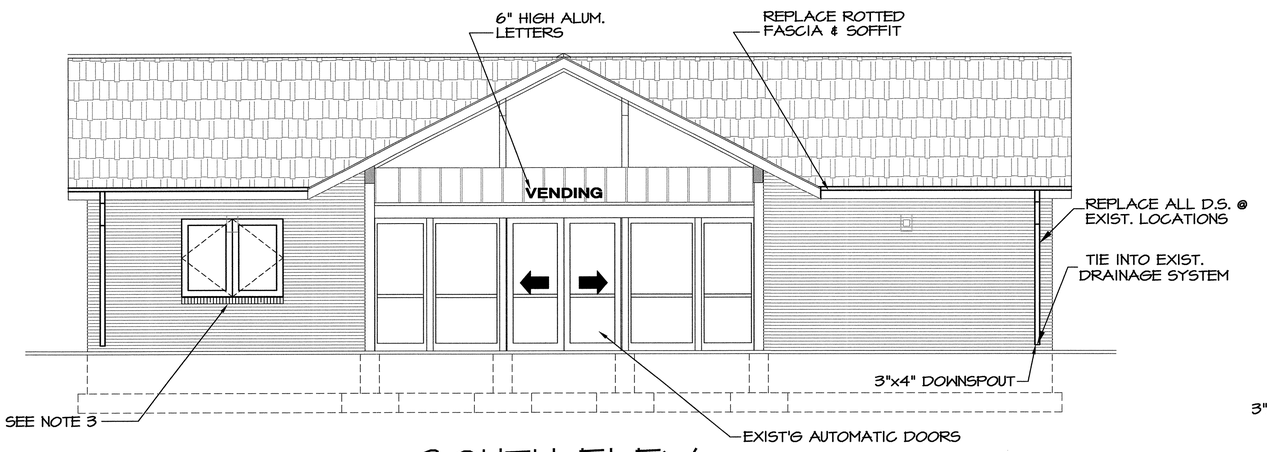

C5 / A2 SOUTH ELEV.
SCALE 1/4" = 1'-0"

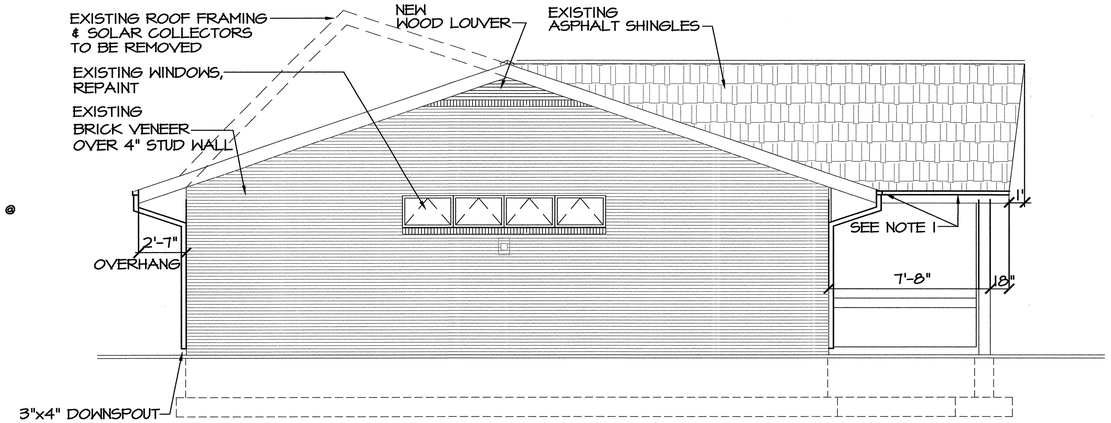

C10 / A2 WEST ELEV.
SCALE 1/4" = 1'-0"

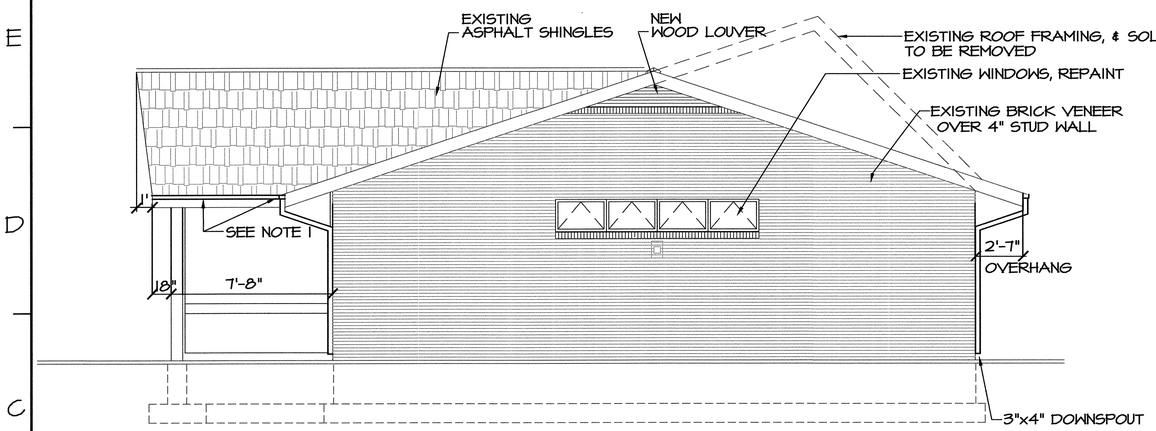

F5 / A2 EAST ELEV.
SCALE 1/4" = 1'-0"

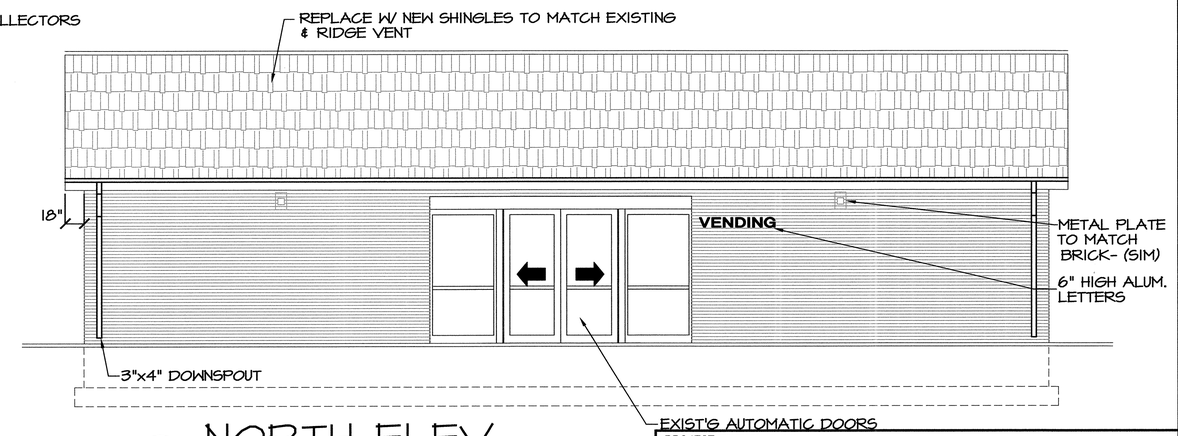

F10 / A2 NORTH ELEV.
SCALE 1/4" = 1'-0"

GENERAL NOTES:

1. REPLACE EXISTING GUTTERS W/ NEW LEAFGUARD GUTTERS.
2. EXISTING SHINGLES TO REMAIN
3. NEW WINDOW W/ LINTEL (∠ 3 1/2 X 3 1/2 X 3/8"), TOOTH-IN BRICK JAMBS & NEW BRICK ROLOCK SILL.

PROJECT:
I-95 REST AREA
NASH COUNTY — NORTH CAROLINA

ARCHITECT/ENGINEERS:
FACILITIES DESIGN
GENERAL SERVICES DIVISION, NCDOT
1 SOUTH WILMINGTON STREET
RALEIGH, NORTH CAROLINA 27601
(919) 715-0400 FAX (919) 715-0399

DRAWING TITLE: ELEVATIONS

DRAWN BY: VT CHECKED BY: V. BUZARD ISSUE DATE: 12/05/06

SEAL: VICTOR M. BUZARD JR. REGISTERED ARCHITECT 4240 12-18-06 NORTH CAROLINA RALEIGH, N.C.

T.I.P. PROJ. NO.	FED. PROJ. NO.	STATE PROJ. NO.
K-4903	IMS-95-3(88)142	39914.3.1

NO.	REVISIONS/SUBMISSIONS	DATE

SHEET NO. VA2 OF 4

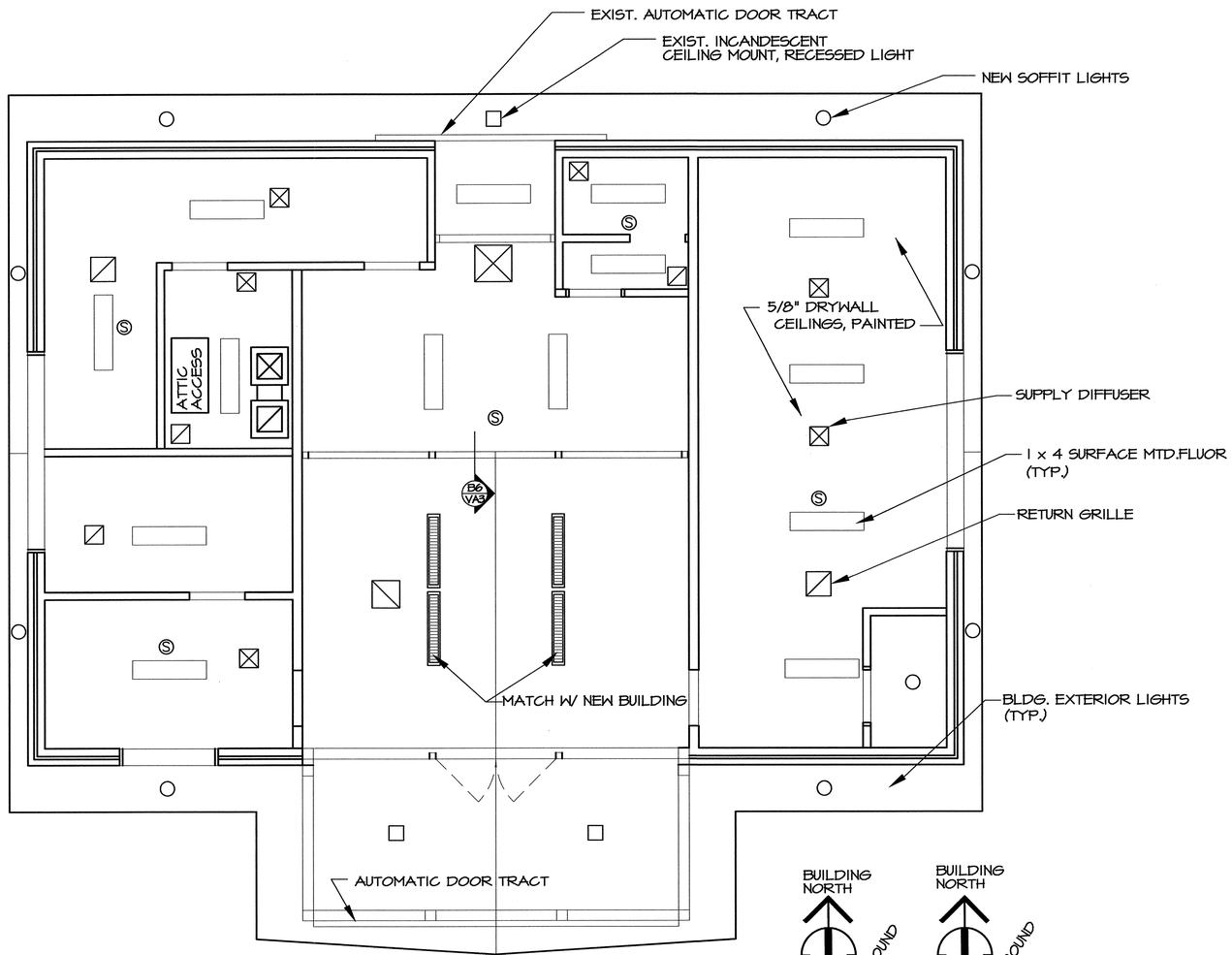

A10 A3 REFLECTED CEILING PLAN

SCALE 1/4" = 1'-0"

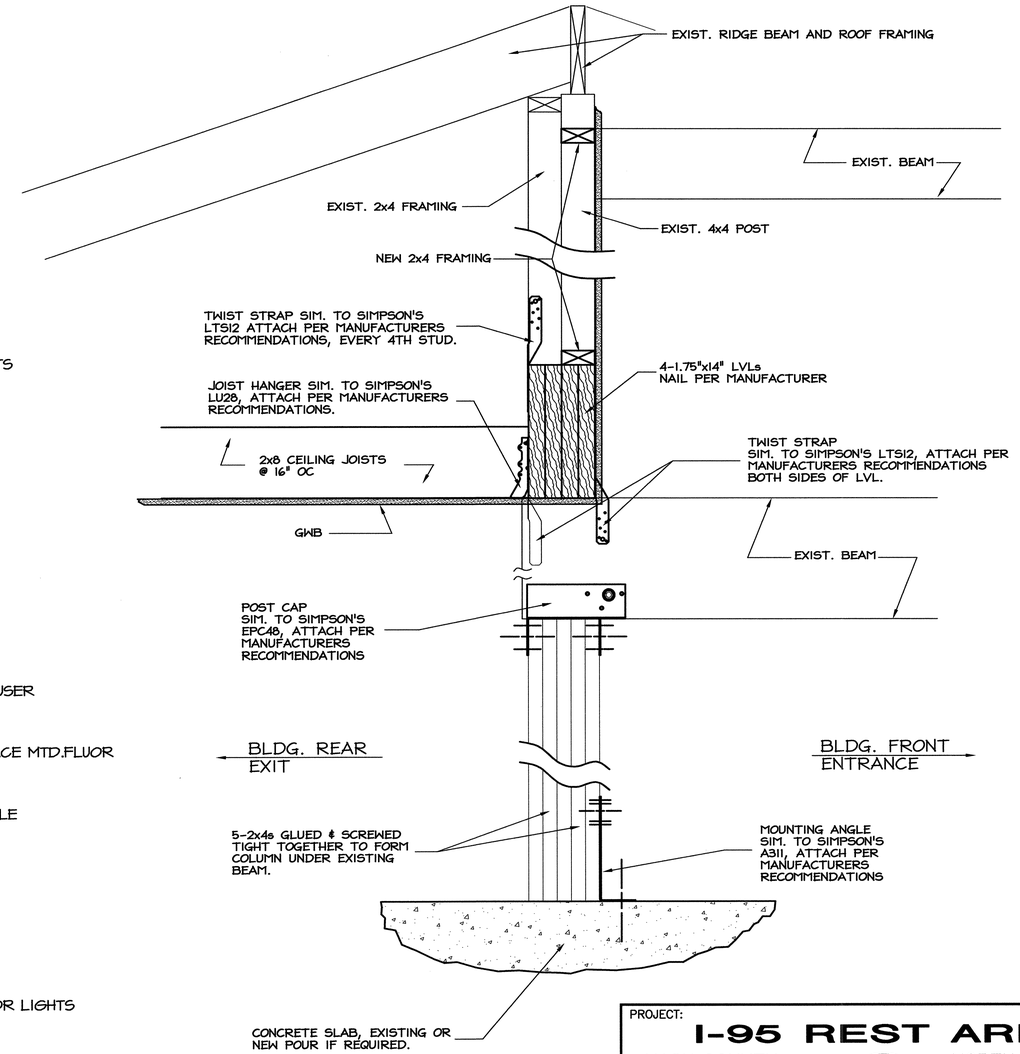

B6 VA3 STRUCTURAL SECT.

SCALE: 1 1/2" = 1'- 0"

PROJECT:

I-95 REST AREA

NASH COUNTY — NORTH CAROLINA

ARCHITECT/ENGINEERS:

FACILITIES DESIGN

GENERAL SERVICES DIVISION, NCDOT
1 SOUTH WILMINGTON STREET
RALEIGH, NORTH CAROLINA 27601
(919) 715-0400 FAX (919) 715-0399

DRAWING TITLE: CEILING PLAN

DRAWN BY: VT CHECKED BY: V. BUZARD ISSUE DATE: 12/05/06

SEAL: VICTOR M. BUZARD JR. REGISTERED ARCHITECT 4241 12-15-06 NORTH CAROLINA RALEIGH, N.C.

T.I.P. PROJ. NO.	FED. PROJ. NO.	STATE PROJ. NO.
K-4903	IMS-95-3(88)142	39914.3.1

NO.	REVISIONS/SUBMISSIONS	DATE

SHEET NO. VA3 OF 4

GENERAL NOTES:

1. REMOVE EXISTING STUD WALLS.
2. REMOVE EXISTING MASONRY & TILE WALLS.
3. REMOVE EXISTING SOFFIT.
4. REMOVE ALL TOILET PARTITIONS, ALL FIXTURES & CAPS.
5. REMOVE TILE & CONC. SLAB AT OLD WOMEN'S RESTROOM & LOBBY.
6. EXISTING FLOOR DRAIN TO REMAIN. TIE NEW DRAINS INTO EXISTING LINES (TRAP PRIMERS).
7. □ EXISTING FD; CAP & SEAL TO MATCH ARCH. FINISHES.

---------- WALL TO BE REMOVE

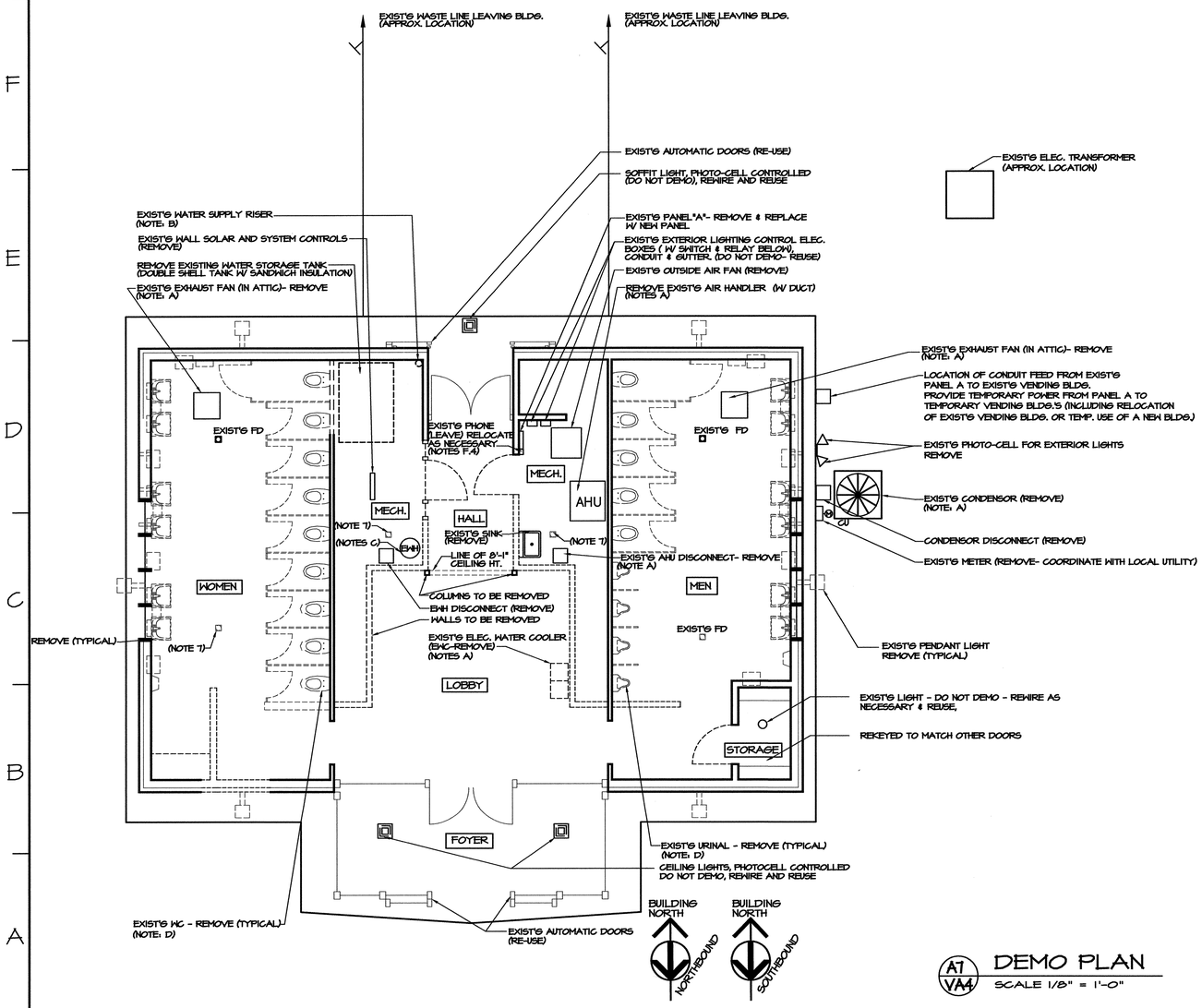

A7 / VA4 DEMO PLAN
SCALE 1/8" = 1'-0"

GENERAL NOTES

1. THE PME DEMOLITION SCOPE DOES NOT REQUIRE REMOVAL OF ANY PIPE OR CONDUIT LOCATED INSIDE BUILDING AND BELOW FINISHED FLOOR ELEVATION UNLESS SPECIFICALLY NOTED OR REQUIRED TO COMPLETE OTHER WORK. UNLESS OTHERWISE NOTED, ALL DEMO'D CONDUIT AND PIPE ENTERING/EXITING FLOOR SHALL BE CUT OFF AT OR JUST BELOW FLOOR LEVEL AND PERMANENTLY SEALED IN A MANNER THAT DOES NOT INTERFERE WITH OR ADVERSELY AFFECT THE CONSTRUCTION AND FINISHES REQUIRED IN RENOVATED BLDG AND IN A MANNER THAT MEETS APPLICABLE CODE REQUIREMENTS.

2. THE FLOOR DRAINS AND UNDERGROUND WASTE LINES SHALL REMAIN FULLY FUNCTIONAL FOLLOWING DEMOLITION AND RENOVATION.

3. PIPE AND CONDUIT MAY BE ABANDONED IN WALLS PROVIDED PIPE IS DRAINED, WIRE IS REMOVED FROM CONDUIT, AND BOTH ARE SEALED. BOTH SHALL BE CLEARLY LABELED AS ABANDONED AT EXPOSED LOCATIONS AND AT EACH END.

4. ALL PENETRATIONS, DAMAGE, AND OPENINGS IN WALLS, CEILINGS, ROOFS, FLOORS, OR DOORS WHICH RESULTS FROM DEMOLITION SHALL BE REPAIRED, SEALED AND FINISHED IN A MANNER WHICH IS CONSISTENT WITH THE CONSTRUCTION AND FINISHES REQUIRED FOR BUILDING RENOVATION. ALL FIRE BARRIER RATINGS SHALL BE MAINTAINED.

5. REMOVAL OF ANY DEVICE OR EQUIPMENT INCLUDES THE REMOVAL OF ALL RELATED ELECTRICAL, PLUMBING, AND MECHANICAL SYSTEM COMPONENTS. THIS INCLUDES, BUT IS NOT LIMITED TO, MOUNTING BOLTS, CLAMPS, SUPPORTS, FASTENERS, WIRING (UP TO CIRCUIT BREAKER), CONDUIT (UP TO FEEDER PANEL), SWITCHES, DISCONNECTS, CONTROLS, DUCT, DAMPERS, REGISTERS, GRILLS, DIFFUSERS, PIPE, VALVES, INSULATION, ETC. ASSOCIATED WITH THAT DEVICE UNLESS SPECIFICALLY NOTED OTHERWISE. PROVIDE ALL PLUMBING VALVES TO OWNER REP.(G. HARRELL OR HIS DESIGNEE).

6. GENERAL CONTRACTOR (GC) HAS OVERALL RESPONSIBILITY FOR COORDINATING DEMOLITION AND COMPLETING ALL DEMOLITION. TRADE RESPONSIBILITY FOR SPECIFIC DEMOLITION SCOPE/TASKS SHALL BE THE SAME CONTRACTOR/TRADE WHO WOULD BE RESPONSIBLE FOR INSTALLING/RENOVATING SIMILAR ITEMS AS PER THIS PROJECTS DESIGN PLANS AND SPECIFICATIONS.

7. CONTRACTOR IS RESPONSIBLE FOR COORDINATION WITH LOCAL UTILITIES.

A. EQUIPMENT DEMOLITION

REMOVE AIR HANDLER (AHU), CONDENSOR, EXHAUST FAN, HEATER(S) (INCLUDING ANY BASEBOARD OR DUCT HEATERS), AND ELECTRIC WATER COOLER (EWC). THE SOUTHBOUND CONDENSOR SHALL BE PROVIDED TO OWNER (G HARRELL OR HIS DESIGNEE)

B. COLD WATER (CW) SUPPLY & DISTRIBUTION

EXISTING WATER SUPPLY RISER ENTERS BLDG AT THIS LOCATION. REMOVE ALL EXISTING CW PIPING AND COMPONENTS BEYOND APPROXIMATE 6" ABOVE MECHANICAL ROOM FLOOR. SEE PLUMBING RISER (SUPPLY WATER & BACKFLOW PREVENTER DETAIL) ON DRAWING VP-1. CW PIPING REMOVAL INCLUDES ALL PIPING TO ELEC. WATER HEATER (EWH), URINALS, WATER CLOSETS, BATHROOM SINKS, ELECTRIC WATER COOLER (EWC), HOSEBIBBS, ETC. IN EXISTING BUILDING.

C. ELECTRIC WATER HEATER (EWH), HOT WATER (HW) PIPE, AND TEMPERED WATER (TW) PIPE

BOTH EWH'S (NORTH & SOUTH BOUND) WILL BE REMOVED, INCLUDING ALL PIPE, SOUTHBOUND EWH SHALL BE PROVIDED TO OWNER'S REP. (G.HARRELL OR DESIGNEE). NORTHBOUND EWH SHALL BE DISCARDED.

REMOVE PIPING AND DEVICES FOR HW SUPPLY AND TEMPERED WATER BETWEEN EWH AND ALL OTHER PLUMBING FIXTURES IN BUILDING. THIS INCLUDES REMOVAL OF ALL PIPING TO AND FROM SOLAR COLLECTION/ PANEL SYSTEM.

D. PLUMBING FIXTURES

REMOVE ALL SINKS, URINALS, WATER CLOSETS, HOSE BIBBS, ETC. IN MEN'S AND WOMEN'S BATHROOMS INCLUDING ALL PLUMBING PIPE, VALVES, FIXTURES, AND THEIR SUPPORTS / CARRIERS. SEE SEPARATE NOTES FOR PIPING FOR CW, HW, WASTE, AND VENTS.

E. WASTE & VENT PIPING

E.1 REMOVE ALL EXPOSED WASTE & VENT LINES IN ROOMS AND IN ATTIC. ALL EXISTING VTR'S TO BE REMOVED.

E.2 PERMANENTLY PLUG EXISTING WASTE LINES FROM WATER COOLERS (EWC), BATHROOM SINKS, WATER CLOSETS, AND URINALS CONSISTENT WITH REQUIREMENTS FOR FINAL WALL AND FLOOR FINISHES WHEN BUILDING IS RENOVATED. WASTE LINES SHALL BE PLUGGED BELOW FLOOR LEVEL WHERE THEY ENTER FLOOR INSIDE A ROOM (INCLUDING PIPE CHASE ROOMS). OTHERWISE, THEY SHALL BE PLUGGED IN WALLS.

F. ELECTRICAL – LIGHTING & MISCELLANEOUS

F.1 DO NOT REMOVE EXTERIOR AREA LIGHTING SUPPLIED FROM EXTG PANEL "A". IT REMAINS ON PANEL "A" (SEE DRAWING VE-2).

F.2 UNLESS NOTED OTHERWISE, REMOVE ALL INTERIOR LIGHTING, EXTERIOR PENDANT LIGHTING, EXIT SIGNS, EMERGENCY LIGHTING, AND OTHER MISCELLANEOUS LIGHTING & DEVICES INSTALLED INSIDE THIS BUILDING OR MOUNTED ON THE EXTERIOR OF THIS BUILDING.

F.3 UNLESS OTHERWISE NOTED, REMOVE ALL MISCELLANEOUS ELECTRICAL DEVICES INCLUDING ELECTRIC HAND DRYERS, ELECTRICAL OUTLETS, AUTOMATIC FLUSH DEVICES, AND SINK FAUCET CONTROLS

F.4 DO NOT REMOVE EXISTING PHONE SERVICE, WIRING, DEVICES, OR JACKS FROM THIS BUILDING.

G. SOLAR COLLECTION SYSTEM FOR WATER HEATING

REMOVE ALL SOLAR PANELS FROM ROOF INCLUDING ALL PIPING & VALVES. REMOVE ALL PUMPS, HEAT EXCHANGERS, TANKS, CONTROLS, EQUIPMENT, THERMOSTATS, INSULATION, PENETRATIONS, TANKS, ETC, FROM BLDG.

PROJECT:
I-95 REST AREA
NASH COUNTY — NORTH CAROLINA

ARCHITECT/ENGINEERS:
FACILITIES DESIGN
GENERAL SERVICES DIVISION, NCDOT
1 SOUTH WILMINGTON STREET
RALEIGH, NORTH CAROLINA 27601
(919) 715-0400 FAX (919) 715-0399

DRAWING TITLE: DEMO PLAN

DRAWN BY: RA/DB CHECKED BY: LWH ISSUE DATE: 12/05/06

SEAL: NORTH CAROLINA PROFESSIONAL SEAL 14904 ENGINEER LEWIS WAYNE HOLLEY — 12/05/06

T.I.P. PROJ. NO.	FED. PROJ. NO.	STATE PROJ. NO.
K-4903	IMS-95-3(88)142	39914.3.1

NO.	REVISIONS/SUBMISSIONS	DATE
0	ORIGINAL	12/18/06

SHEET NO. VA4 OF 4

PME

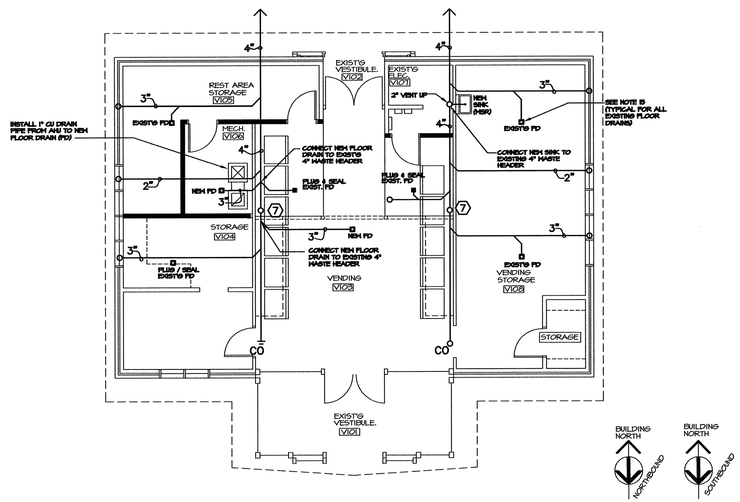

1 P-1 PLUMBING PLAN-WASTE

SCALE: 1/8" = 1'-0"

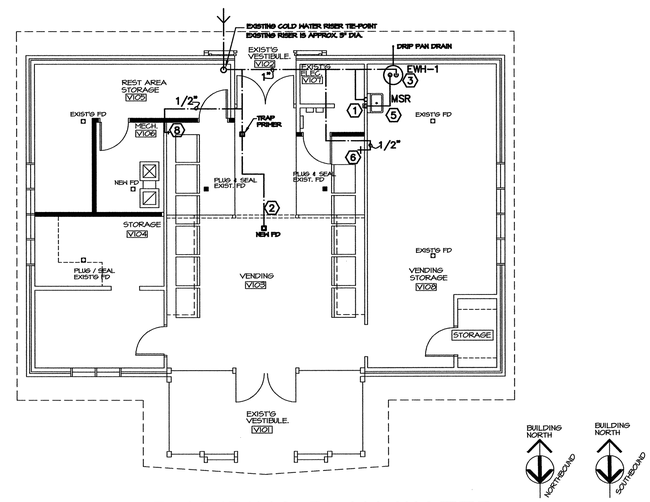

2 P-1 PLUMBING PLAN-WATER

SCALE: 1/8" = 1'-0"

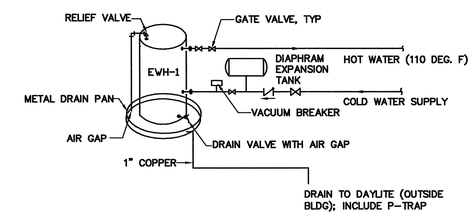

DOMESTIC WATER HEATER PIPING SCHEMATIC

NOT TO SCALE

PLUMBING LOAD SUMMARY
WASTE FIXTURE UNITS = 10
WATER FIXTURE UNITS = 10
TOTAL DEMAND G.P.M. = 15

PLUMBING KEY NOTES – WATER

1. 1/2" H&CW DN. TO SINKS (HW 110 DEG. F)
2. 1/2" CW DN. TO TRAP PRIMER VALVE
3. 3/4" CW DN. & 3/4" UP FOR EWH
5. CONNECT WASTE LINE FOR SINK TO EXISTING WATER CLOSET WASTE CONNECTION ON FLOOR (REF DWG VA-4)
6. 1/2" CONN WITH VALVE AND REMOVABLE CAP FOR FUTURE TIE-IN TO COFFEE MACHINE. LOCATE 3' ABOVE FLOOR.
7. 3" VENT TO NEW ROOF MOUNTED "VTR". SEE DRAWING P1 FOR VTR DETAILS.
8. 1/2" CW DOWN TO HB

PLUMBING NOTES:

1. PREPLAN ALL WORK PRIOR TO ORDERING, PURCHASING, OR FABRICATING ANY PART OF THE WORK DESCRIBED BY THIS DRAWING.
2. IMMEDIATELY NOTIFY THE ENGINEER OF ANY CONFLICTS WITH EXISTING FIELD CONDITIONS OR THE WORK OF OTHER TRADES.
3. RESOLVE ALL CONFLICTS PRIOR TO INCURRING ANY MATERIAL OR LABOR EXPENSES.
4. COMPLY WITH THE MANUFACTURER'S TECHNICAL INSTRUCTIONS WHEN INSTALLING PLUMBING FIXTURES, MATERIALS, AND DEVICES.
5. LOCATE FIXTURES AND EQUIPMENT GENERALLY AS SHOWN ON THE PLANS; HOWEVER, COORDINATE LOCATIONS WITH ACTUAL FIELD CONDITIONS TO PRESERVE ALL CODE-REQUIRED AND MANUFACTURER - REQUESTED SERVICE CLEARANCES.
6. COORDINATE ROUTING OF ALL PIPING WITH BUILDING STRUCTURE AND WITH THE WORK OF OTHER TRADES. OFFSET VENT PIPING AROUND BEAMS AND JOISTS AS NECESSARY.
7. ALL HANDICAP FIXTURES AND INSTALLATION OF HANDICAP FIXTURES SHALL CONFORM TO ADA REQUIREMENTS.
8. AT EXTERIOR WALL, INSTALL WATER PIPING ON HEATED SIDE OF WALL INSULATION.
9. PROVIDE WATER HAMMER ARRESTORS AT THE END OF EACH COLD AND HOT WATER BRANCH RISER. SIZE ARRESTOR APPROPRIATELY.
10. THE PLUMBING CONTRACTOR SHALL BE RESPONSIBLE FOR THE FINAL ELECTRICAL CONNECTIONS TO ALL EQUIPMENT INSTALLED AS PART OF HIS CONTRACT. UNLESS OTHERWISE NOTED, THIS CONTRACTOR SHALL WIRE FROM HIS EQUIPMENT TO DISCONNECT SWITCHES, JUNCTION BOXES, OR PANELBOARD CIRCUIT BREAKERS AS PROVIDED BY THE ELECTRICAL CONTRACTOR.
11. DO NOT INSTALL ANY WATER PIPING IN THE MECHANICAL ROOM ABOVE ELECTRICAL PANELS, DISCONNECTS, OR MDPE.
12. LOCATE CW & HW LINES IN ATTIC & WALLS EXCEPT FOR RISER IN IN THE MECH ROOM, PIPING ADJACENT TO WATER HEATER, AND AND PIPING ADJACENT TO PLUMBING FIXTURES.
13. ALL GENERAL NOTES ON DRAWING P1 APPLY TO THIS DRAWING UNLESS OTHERWISE NOTED OR SUPERCEDED BY SPECIFIC DESIGN DETAILS ON THIS DRAWING.
14. LOCATION OF EXISTING PLUMBING IS APPROXIMATE.
15. NEW TRAP PRIMERS SHALL BE PROVIDED FOR ALL EXISTING FLOOR DRAINS WHICH HAD TRAP DRAINS AT THE START OF DEMOLITION.

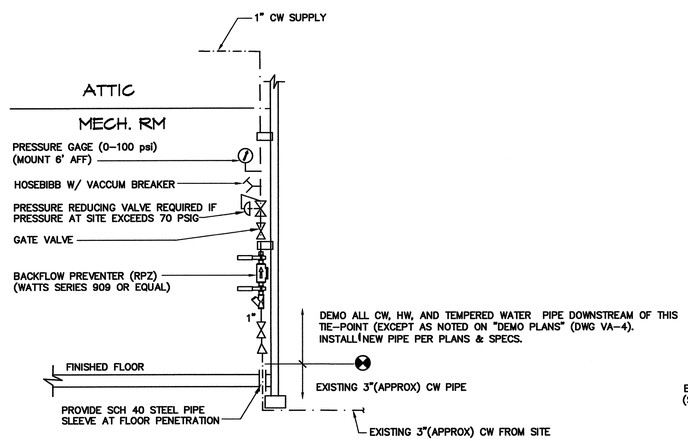

WATER RISER DETAIL

NOT TO SCALE

PLUMBING FIXTURE SCHEDULE:

BFP BACK FLOW PREVENTER (See note 4 below)
WATTS SERIES 909 TYPE. PIPE DRAIN TO FLOOR DRAIN.

HB HOSE BIBB (See note 4 below)
NIBCO, 3/4" STANDARD BRONZE HOSE BIBB W/ VACUUM BREAKER.

EWH ELECTRIC WATER HEATER (See note 2 below)
STATE WATER # P6-20-10MS-E, 4500W, 20 GALLONS, 3/4" INLET AND OUTLET, ELECTRIC, 240V, 1 PHASE, MODEL# ETC-2X EXPANSION TANK.

MSR MOP SINK (See note 1 below)
CRANE PLUMBING #MSB-2424, 24"x24"x10" FLOOR TYPE WITH #830-AA FAUCET/VACUUM BREAKER, #832-AA HOSE AND HOSE BRACKET, #1453-BB STRAINER, #889-CC MOP HANGER, # E-77-AA BUMPER GUARD, AND STAINLESS STEEL WALL SPLASH GUARD.

FD FLOOR DRAIN (See note 3 below)
ZURN ZN-415-P. PROVIDE WITH DEEP SEAL P-TRAP, AND TYPE 'B' STRAINER. INCLUDE TRAP PRIMER CONNECTION.

NOTES:
1. Or equal by Kohler or Eljer
Flush Valve: Delaney or Sloan.
2. Or equal by Bock or Vanguard
3. Or equal by Wade or JR Smith
4. Or equal by Ames or Viking
5. Or equal by Oasis or Halsey Taylor
6. Or equal by Sioux Chief or Zurn.
7. Or equal by Ingersoll Rand or Weinman.
8. Or equal by Zurn or American Standard.
9. Or equal by Sarco or Holby.

SEE DRAWING VA-4 FOR PLUMBING DEMOLITION.

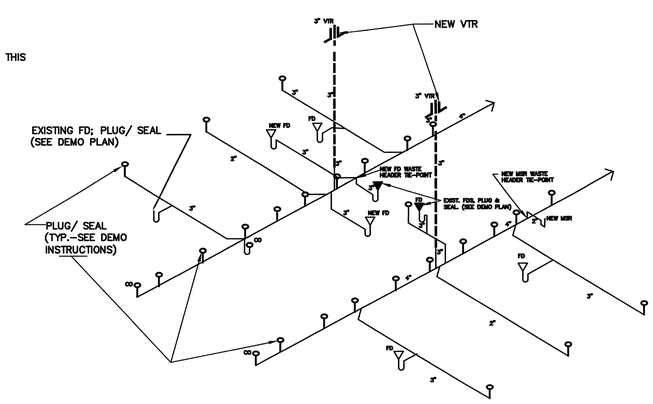

WASTE RISER

NTS

WASTE AND VENT LEGEND:

—·—·—	COLD WATER PIPE
—··—··—	HOT WATER PIPE
	BALL VALVE
	HOSE BIBB
	WATER HYDRANT
— — —	NEW VENT
———	NEW WASTE
C.O.	CLEAN OUT-PROVIDE CONCRETE RING FOR EXTERIOR CLEANOUTS
W.C.O.	WALL CLEAN OUT
	FLOOR DRAIN
VTR	VENT THROUGH ROOF
TPC	TRAP PRIMER CONNECTION
	CONNECT TO EXISTING
1	KEY NOTE NUMBER

PROJECT:

I-95 REST AREA

NASH COUNTY NORTH CAROLINA

ARCHITECT/ENGINEERS:

FACILITIES DESIGN

GENERAL SERVICES DIVISION, NCDOT
1 SOUTH WILMINGTON STREET
RALEIGH, NORTH CAROLINA 27601
(919) 715-0400 FAX (919) 715-0399

DRAWING TITLE:

PLUMBING PLAN

DRAWN BY: CLS/VT CHECKED BY: LWH ISSUE DATE: 12/05/06

SEAL: NORTH CAROLINA PROFESSIONAL SEAL 14906 ENGINEER LEWIS WAYNE HOLE December 18, 2006

T.I.P. PROJ. NO.	FED. PROJ. NO.	STATE PROJ. NO.
K-4903	IMS-95-3(88)142	39914.3.1

NO.	REVISIONS/SUBMISSIONS	DATE
0	ORIGINAL	12/18/06

SHEET NO. VP1 OF 1

P M E

FINAL DRAWINGS - FOR CONSTRUCTION

SPLIT SYSTEM HEAT PUMP SCHEDULE

DESIGNATION	MANUFACTURER	INDOOR UNIT	OUTDOOR UNIT	FAN DATA			COOLING CAPACITY					HEATING CAPACITY		AUX. ELECTRICAL HEAT CAPACITY		ELECTRICAL DATA				
																MCA		MOCP		VOLTAGE
				CFM	E.S.P.	HP	TOTAL MBH	SENS. MBH	EAT (°F) DB/WB	AMBIENT (°F)	SEER	MBH	COP	TOTAL KW	NO. OF STAGES	AHU	CU	AHU	CU	
AHU-1/CU-1	LENNOX	CB29M-65	HP29-060	2000	0.4	3/4	59.1	44.3	80/67	95	10.5 NOTE 6	56.0	2.75	12.5	3	28/35	37.4	30/50	60	240/1ø

REMARKS:

1. PROVIDE PROGRAMMABLE THERMOSTAT.
2. PROVIDE SINGLE POINT ELECTRICAL CONNECTION.
3. PROVIDE SIDE RETURN UNIT STAND FOR BOTTOM RETURN. (SUPPORTING AIR HANDLING UNIT WITH DUCT IS NOT ACCEPTABLE.)
4. PROVIDE VERTICAL AIR HANDLER UNIT WITH BOTTOM RETURN AND FILTER RACK.
5. PROVIDE CONCRETE EQUIPMENT PAD FOR OUTSIDE CONDINSING UNIT (SIZE PER EQUIPMENT MANUF. RECOMENDATIONS).
6. CONTRACTOR SHALL PROVIDE EQUIVALENT UNIT WITH 13.0 SEER MINIMUM. IT SHALL MEET OR EXCEED ALL FAN, COOLING, AND HEATING PERFORMANCE CAPABILITIES OF SPECIFIED UNIT/ SYSTEM.

OUTSIDE AIR CALCULATION
DUCTED OUTSIDE AIR NOT REQUIRED.
BUILDING MEETS REQUIREMENT FOR NATURAL VENTILATION.

AIR DISTRIBUTION SCHEDULE

DESIGNATION	MANUFACTURER	MODEL NO.	TYPE	PANEL SIZE	NECK SIZE	MAX CFM	MAX NC	REMARKS
A	PRICE	SCD	CEILING SUPPLY	12 x 12	6"ø	100	30	GYP. CEILING
B	PRICE	SCD	CEILING SUPPLY	12 x 12	8"ø	200	30	GYP. CEILING
C	PRICE	PDDR	RETURN GRILLE	12 x 12	6"ø	100	30	GYP. CEILING
D	PRICE	PDDR	RETURN GRILLE	16 x 16	8"ø	200	30	GYP. CEILING
E	PRICE	PDDR	RETURN GRILLE	16 x 16	10"ø	300	30	GYP. CEILING
F	PRICE	SCD	CEILING SUPPLY	24 x 24	10"ø	400	30	GYP. CEILING
G	PRICE	520	SUPPLY GRILLE	12 x 12	–	500	30	SIDEWALL
H	PRICE	535	RETURN GRILLE	18 x 30	–	1400	30	SIDEWALL
I	PRICE	PDDR	RETURN GRILLE	20 x 20	12" ø	400	30	GYP. CEILING

SEE DRAWING VA-4 FOR DEMOLITION.

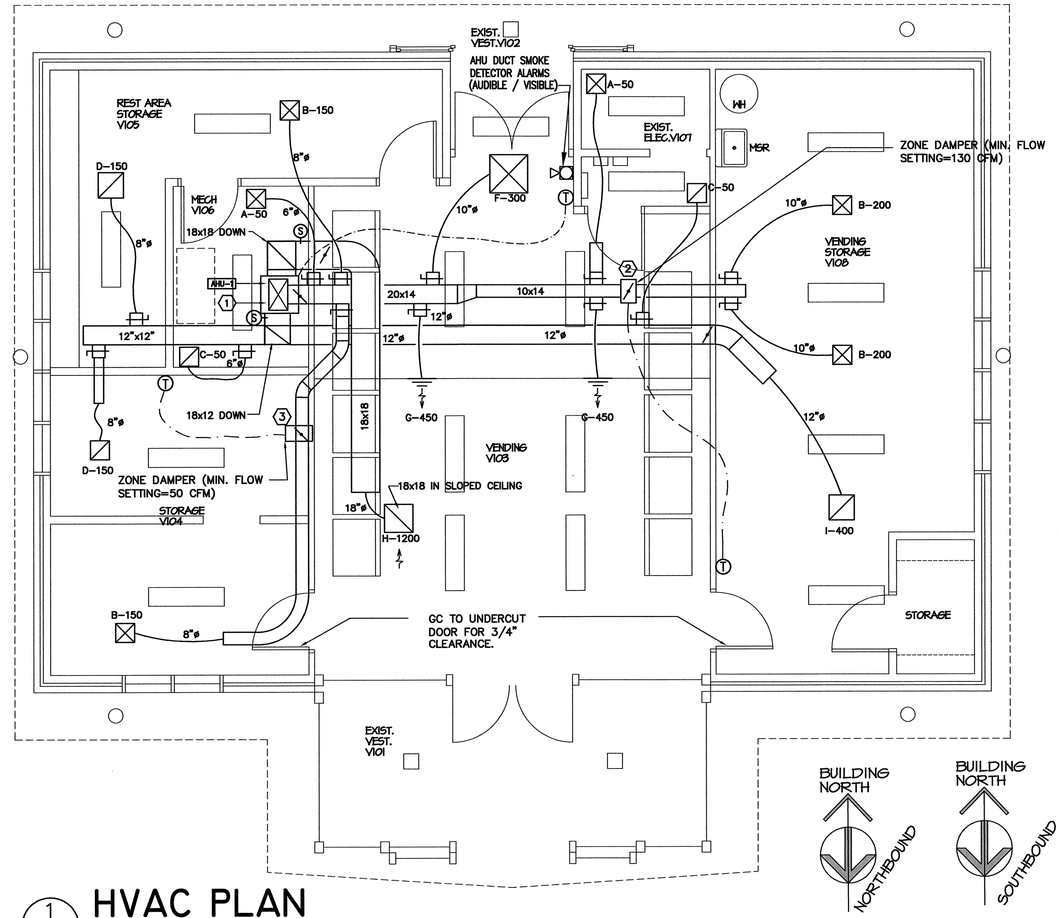

1 VM1 **HVAC PLAN**

SCALE: 1/4" = 1'-0"

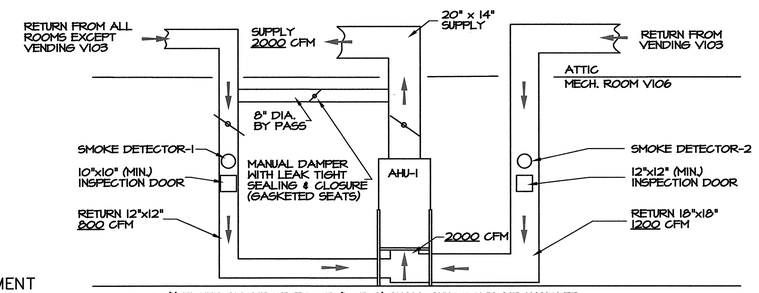

NOTE: (1) EITHER SMOKE DETECTOR (1 OR 2) SHALL SHUT DOWN AIR HANDLER ON ALARM CONDITION DETECTION. PROVIDE VISIBLE / AUDIBLE DUCT SMOKE DETECTOR ALARM (INCLUDING "TROUBLE ALARM"). IN VENDING AREA VESTIBULE.

3 VM1 **AHU-1 FLOW SCHEMATIC**

SCALE: NTS

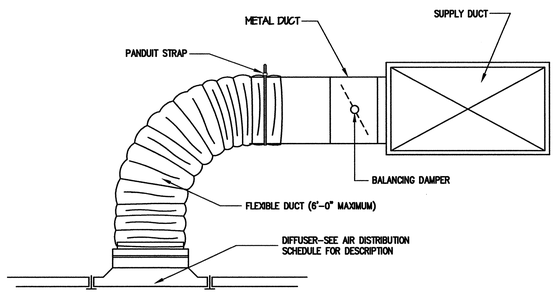

2 VM1 **DIFFUSER DETAIL**

SCALE: NTS

MECHANICAL SYSTEMS, SERVICE SYSTEMS AND EQUIPMENT METHOD OF COMPLIANCE:

PRESCRIPTIVE ☒	ENERGY COST BUDGET ☐
THERMAL ZONE	7A
EXTERIOR DESIGN CONDITIONS	
WINTER DRY BULB	16° F
SUMMER DRY BULB	92° F (75 F WB)
INTERIOR DESIGN CONDITIONS	
WINTER DRY BULB	68 F
SUMMER DRY BULB	75F
RELATIVE HUMIDITY	50%
BUILDING HEATING LOAD	32.3 MBH
BUILDING COOLING LOAD	4.35 TONS
MECHANICAL SPACE CONDITIONING SYSTEM	
SPLIT SYSTEM	
AHU-1/CU-1	
DESCRIPTION OF UNIT	SPLIT SYSTEM HEAT PUMP
HEATING EFFICIENCY	COP = 2.75 (6.8 MIN. HSPF)
COOLING EFFICIENCY	SEER = 10.5 (10.0 MIN. PER CODE)
HEAT OUTPUT OF UNIT	56 MBH
COOLING OUTPUT OF UNIT	59.1 MBH
LIST EQUIPMENT EFFICIENCIES	
EFFICIENCIES ARE LISTED ON EQUIPMENT SCHEDULES	
EQUIPMENT SCHEDULES WITH MOTORS (MECHANICAL SYSTEMS)	
MOTORS USED IN THIS PROJECT ARE INCLUDED IN THE EFFICIENCY RATING OF THE UNITS	

KEYED NOTES

1. ROUTE CONDENSATE TO FLOOR DRAIN IN MECH. RM. USE COPPER PIPE (1" MIN.)
2. ZONE DAMPER SHALL MODULATE TO CONTROL TEMP. IN ROOM V108. INCLUDE MINIMUM FLOW STOP.
3. ZONE DAMPER SHALL MODULATE TO CONTROL TEMP. IN ROOM V104. INCLUDE MINIMUM FLOW STOP.

GENERAL NOTES

1. PROVIDE LOCKING COVER FOR THERMOSTAT.
2. GENERAL NOTES AND DUCT CONSTRUCTION DETAILS ON DRAWINGS M1 AND M2 APPLY TO THIS DRAWING ALSO.
3. ROUTE SUPPLY, EXHAUST, AND RETURN DUCTS IN ATTIC.

LEGEND - DUCTWORK/ACCESSORIES	
☒	SUPPLY DIFFUSER
⧄	RETURN GRILLE
⊥	LOCKING MANUAL BALANCING DAMPER
Ⓣ	THERMOSTAT
	VOLUME DAMPER (SPIN IN) (LOCKING)
	VOLUME DAMPER (LOCKING)
Ⓢ	DUCT SMOKE DETECTOR

FINAL DRAWINGS - FOR CONSTRUCTION

PROJECT:

I-95 REST AREA

NASH COUNTY — NORTH CAROLINA

ARCHITECT/ENGINEERS:

FACILITIES DESIGN

GENERAL SERVICES DIVISION, NCDOT
1 SOUTH WILMINGTON STREET
RALEIGH, NORTH CAROLINA 27601
(919) 715-0400 FAX (919) 715-0399

DRAWING TITLE: HVAC PLAN

DRAWN BY: CLS/VT CHECKED BY: LWH ISSUE DATE: 12/05/06

SEAL: NORTH CAROLINA PROFESSIONAL ENGINEER SEAL 14904 LEWIS WAYNE HOLLEY — December 18, 2006

T.I.P. PROJ. NO.	FED. PROJ. NO.	STATE PROJ. NO.
K-4903	IMS-95-3(88)142	39914.3.1

NO.	REVISIONS/SUBMISSIONS	DATE
0	ORIGINAL	12/18/06

SHEET NO. VM1 OF 1

P M E

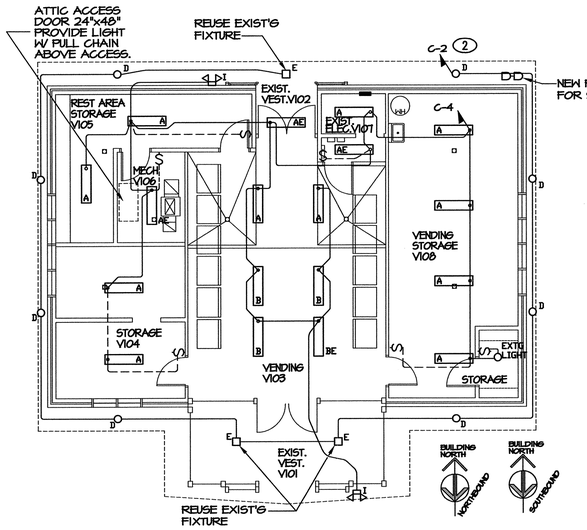

3 E-1 LIGHTING PLAN-RENOVATION TO EXIST. BLDG.
SCALE: 1/8" = 1'-0"

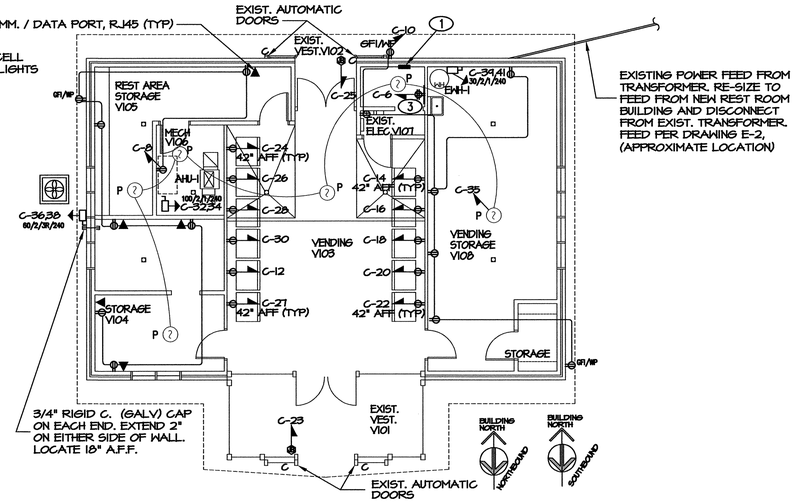

4 E-1 POWER PLAN-RENOVATION TO EXIST. BLDG.
SCALE:1/8" = 1'-0"

LOAD SERVED	VA PER PHASE A	VA PER PHASE B	CKT. BRKR.	CKT. NO.	NEUTRAL A B	CKT. NO.	CKT. BRKR.	VA PER PHASE A	VA PER PHASE B	LOAD SERVED
SPARE	1300		20	1		2	20	716		LIGHTS, SOFFIT, EXTR. WALL, FRONT VEST.
EXISTING EXTERIOR LIGHTS		1100	30	3		4	20		1348	NEW LIGHTS & EXTG STG RM LIGHT
2P, YARD (NOTE 1)	1100		30	5		6	20	500		NEW TELEPHONE EQUIPMENT
EXISTING EXTERIOR LIGHTS		1100	30	7		8	20		1440	NEW RECEPT
2P, YARD (NOTE 1)	1100		30	9		10	20	1260		NEW RECEPT
EXISTING EXTERIOR LIGHTS		1100	30	11		12	20		500	NEW VENDING, GFI
2P, YARD (NOTE 1)	1100		30	13		14	20	500		NEW VENDING, GFI
EXISTING EXTERIOR LIGHTS		1100	20	15		16	20		500	NEW VENDING, GFI
2P,YARD (NOTE 1)	1100		20	17		18	20	500		NEW VENDING, GFI
EXTR. LTG. CONTROLLS (PHOTO CELL)		100	20	19		20	20		500	NEW VENDING, GFI
EXISTING TELEPHONE BOOTH (3)	2000		20	21		22	20	500		NEW VENDING, GFI
EXST. AUTO. DOOR, GFI, FRONT		322	20	23		24	20		500	NEW VENDING, GFI
EXST. AUTO. DOOR, GFI, REAR	322		20	25		26	20	500		NEW VENDING, GFI
NEW VENDING, GFI		500	20	27		28	20		500	NEW VENDING, GFI
SPARE	1300		20	29		30	20	500		NEW VENDING, GFI
EXIST. UTILITY BLDG.		4800	50	31		32	100		10450	NEW AHU-1 (HEAT PUMP)
2P	4800		50	33		34	100	10450		2P, 2#6, #8 G., 3/4" C.
NEW SMOKE DETECTORS (BREAKER LOCK)		100	20	35		36	60		4488	NEW CU-1
BLANK	0		.	37		38	60	4488		2P, 2#8, #10 G., 3/4" C.
NEW EWH-1		2250	30	39		40	30		1500	SPARE
2#10, #10 G., 1/2" C.	2250		30	41		42	30	1500		SPARE
	16,372	12,472		TOTAL VA PER PHASE				21,414	21,726	

C/B TEMP. 75° C. RATING 120/240 V 1 PH 3 W
MOUNTING SURFACE GROUND BUS [X] YES [ ] NO
MAIN CIRCUIT BREAKER [X] YES [ ] NO RATING 400
SERVICE ENTR. RATED [X] YES [ ] NO BUS 400
MINIMUM AIC (K AMPS) 22 LUG 400
SN 400

① DEMAND FACTORS PER NEC 220, PART B.
② LARGEST OF: NEC TABLE 220-3(a) OR CONNECTED LOAD.
③ NEC TABLE 220-20.
④ NEC 220-15.
⑤ NEC 220-12, 200 VA/LINEAR FT.
* NON-COINCIDENT LOADS, LARGEST OF THE TWO LOADS.

NEW PANEL "C"

LOAD TYPE		EXIST.	KVA NEW	TOTAL	NEC DEM. FACTOR ①	KVA DEMAND
GENERAL LIGHTING ③		0.1	1.2	1.3	125%	1.7
GENERAL USE RECEPTACLES		0.2	2.5	4.2	<10KVA@100%	2.7
					>10KVA@50%	0
MOTORS AND EQUIPMENT	LARGEST	.	9.0	9.0	125%	11.2
	ALL OTHERS	0.6	24.1	24.7	100%	24.7
WATER HEATERS		.	4.5	4.5	100%	4.5
KITCHEN EQUIPMENT ③		.	.	.	100%	.
FIX. ELEC. SPACE HEAT. ④		.	12.5	12.5	100%	12.5
SHOW WINDOW LIGHTS ③		.	.	.	125%	.
SIGN/ SPARE			5.6	5.6	125%	7.0
EXISTING EXTERIOR LIGHTS		11.6	.	11.6	125%	14.5
PANEL/FEEDER (TOTAL KVA)						78.9
(TOTAL KVA) X 1000 / VOLTS = TOTAL AMPS						329

NOTES: (1) PHOTO-CELL CONTROLLED LIGHTS (PHOTO-CELL CONTROLS ARE EXISTING.)

ELECTRICAL NOTES

1. NEW PANEL "C".
2. SWITCH WITH PHOTO CELL.
3. SEE RISER, SHEET E-2, FOR DETAILS ON REMOVAL OF EXISTING ELECTRICAL DEVICES AND ADDITION OF NEW GUTTER TO SERVE EXISTING BRANCH CIRCUITS.

SEE DRAWING VA-4 FOR DEMOLITION.

GENERAL NOTES:

1. ORIGINAL DESIGN INFORMATION FROM SHEET LE-1, "FLOOR PLAN & DETAILS" BY TALBOT & ASSOCIATES, Ltd., SOLAR SERVICE BUILDING, ROADSIDE REST AREA, DATED: MAY 25, 1979.
2. SEE SYMBOLS AND LEGENDS ON SHEET E-1.
3. THE GENERAL NOTES ON SHEET E-1 APPLY TO THIS DRAWING.

FIXTURE SCHEDULE

MARK	DESCRIPTION	MFG. & CATALOG #	EQUALS	VOLTAGE	LAMP	REMARKS	WATTS
A	1 x 4 SURFACE MTD.FLUOR 2 TUBES	LITHONIA AW232AR120	LITHONIA COLUMBIA	120 V	2F32T8	WRAPAROUND ELECTRONIC BALLAST	62
AE	1 x 4 SURFACE MTD.FLUOR 2 TUBES	LITHONIA AW232AR120	LITHONIA COLUMBIA	120 V	2F32T8	90 MIN. BATTERY BACK UP	62
B	8' x 3" FLUORESCENT	PEERLESS 4ENM4 332 120 LP841 (ENVISION)	LITHONIA COLUMBIA	120 V	(3) 32WT8	INDIRECT WHITE GLOSS AL. SUSPENDED FIXTURE	95
BE	8' x 3" FLUORESCENT	PEERLESS 4ENM4 332 120 LP841 (ENVISION)	LITHONIA COLUMBIA	120 V	(3) 32WT8	INDIRECT WHITE GLOSS AL. SUSPENDED FIXTURE 90 MIN. BATTERY BACK UP	95
C	AUTOMATIC DOOR OPERATOR	NABCO MODEL 1175	N/A EXISTING	115 V	-	FOR REFERENCE ONLY EXISTING-REUSE 60 Hz 120 A @ 115 V	322
D	BLDG. EXTERIOR LIGHTS, FLUORESCENT SOFFIT	KENALL, MILLENIUM, MR13FD-PP-DB-26Q-2-120	COLUMBIA LITHONIA	115 V	2-26 W	2 LAMPS, DARK BRONZE, ELECTRONIC BALLAST, 13" ROUND PEARLESCENT POLYCARBINATE LENS	52
E	CEILING MOUNT, RECESSED LIGHT INCANDESCENT (EXISTING)		N/A EXISTING	115 V		FOR REFERENCE ONLY EXISTING-REUSE, INCANDESCENT	-
	EGRESS LIGHT	SURELITE (COOPER) AELI-BZ-SD-TDM	LITHONIA LIGHT ALARMS	120 V	XENON THREE-6V, 6W EACH	WET LOCATION, NI CAD BATTERY, 90 MIN. BATTERY BACK-UP	18W

NOTES:
1. FIXTURES & BALLAST MUST BE REMOVABLE FROM INACCESSIBLE CEILING.

PROJECT:
I-95 REST AREA
NASH COUNTY NORTH CAROLINA

ARCHITECT/ENGINEERS:
FACILITIES DESIGN
GENERAL SERVICES DIVISION, NCDOT
1 SOUTH WILMINGTON STREET
RALEIGH, NORTH CAROLINA 27601
(919) 715-0400 FAX (919) 715-0399

DRAWING TITLE:
ELECTRICAL PLAN

DRAWN BY: CLS/VT CHECKED BY: LWH ISSUE DATE: 12/05/06

SEAL: NORTH CAROLINA PROFESSIONAL ENGINEER SEAL 14904 LEWIS WAYNE HOLLEY December 8, 2006

T.I.P. PROJ. NO.	FED. PROJ. NO.	STATE PROJ. NO.
K-4903	IMS-95-3(88)142	39914.3.1

NO.	REVISIONS/SUBMISSIONS	DATE
0	ORIGINAL	12/18/06

SHEET NO. VE-1 OF

PME

FINAL DRAWINGS - FOR CONSTRUCTION

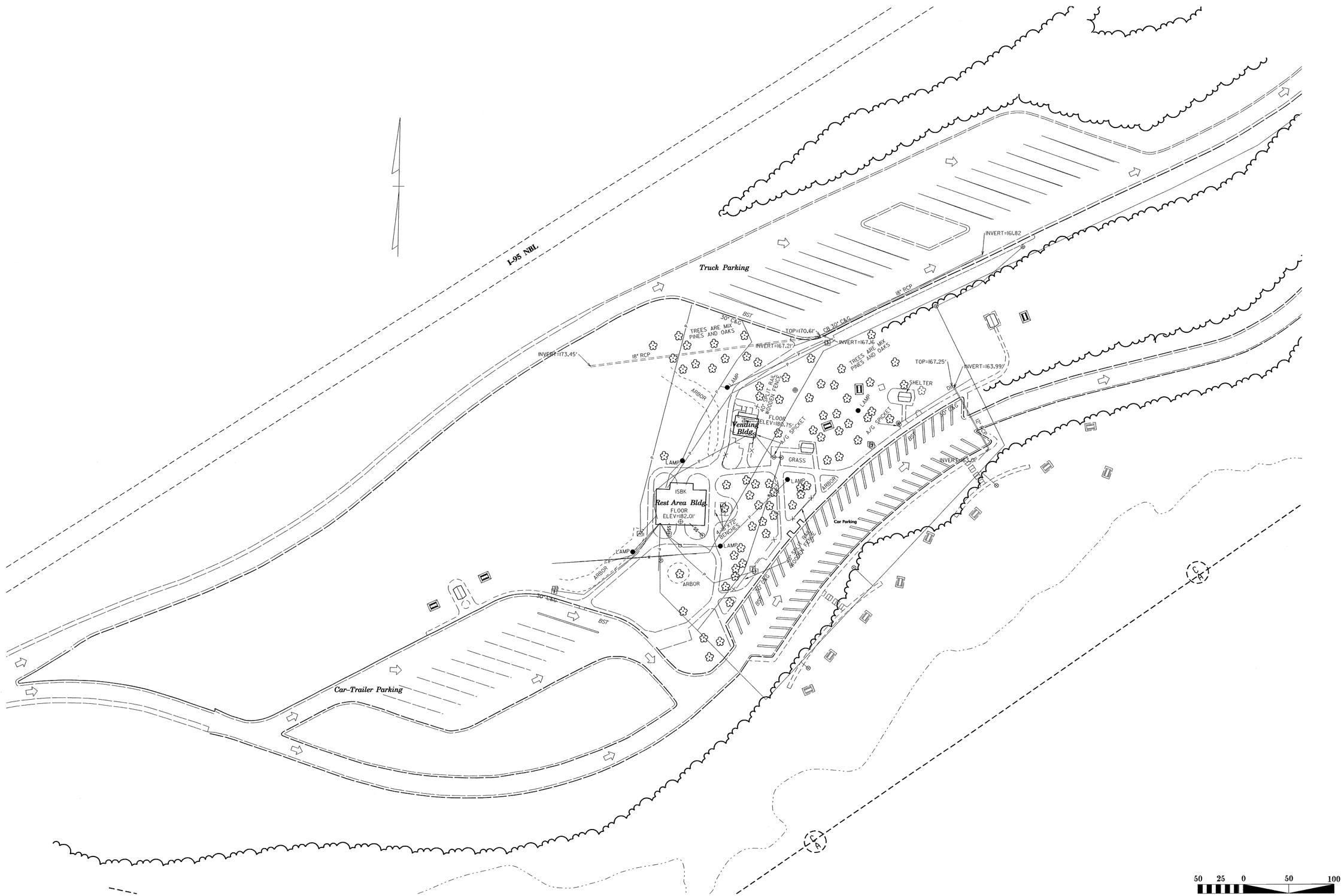

SHEET # of

WBS # 39914.3.1

FED. PROJ. # IMS-95-3(88)142

T.I.P. # K-4903

North Carolina Department of Transportation

Roadside Environmental Unit

Landscape Design & Development Section

STATE OF NORTH CAROLINA DEPARTMENT OF TRANSPORTATION

PROJECT TITLE :

Rest Area Renovation
I - 95 (NBL & SBL Pair)
Nash County

Plans Drawn By: CSM/NR

Scale: 1" - 50'

Date: 12 / 5 / 06

Sheet Description: Existing Site Plan NBL

Sheet # L-NBL-1

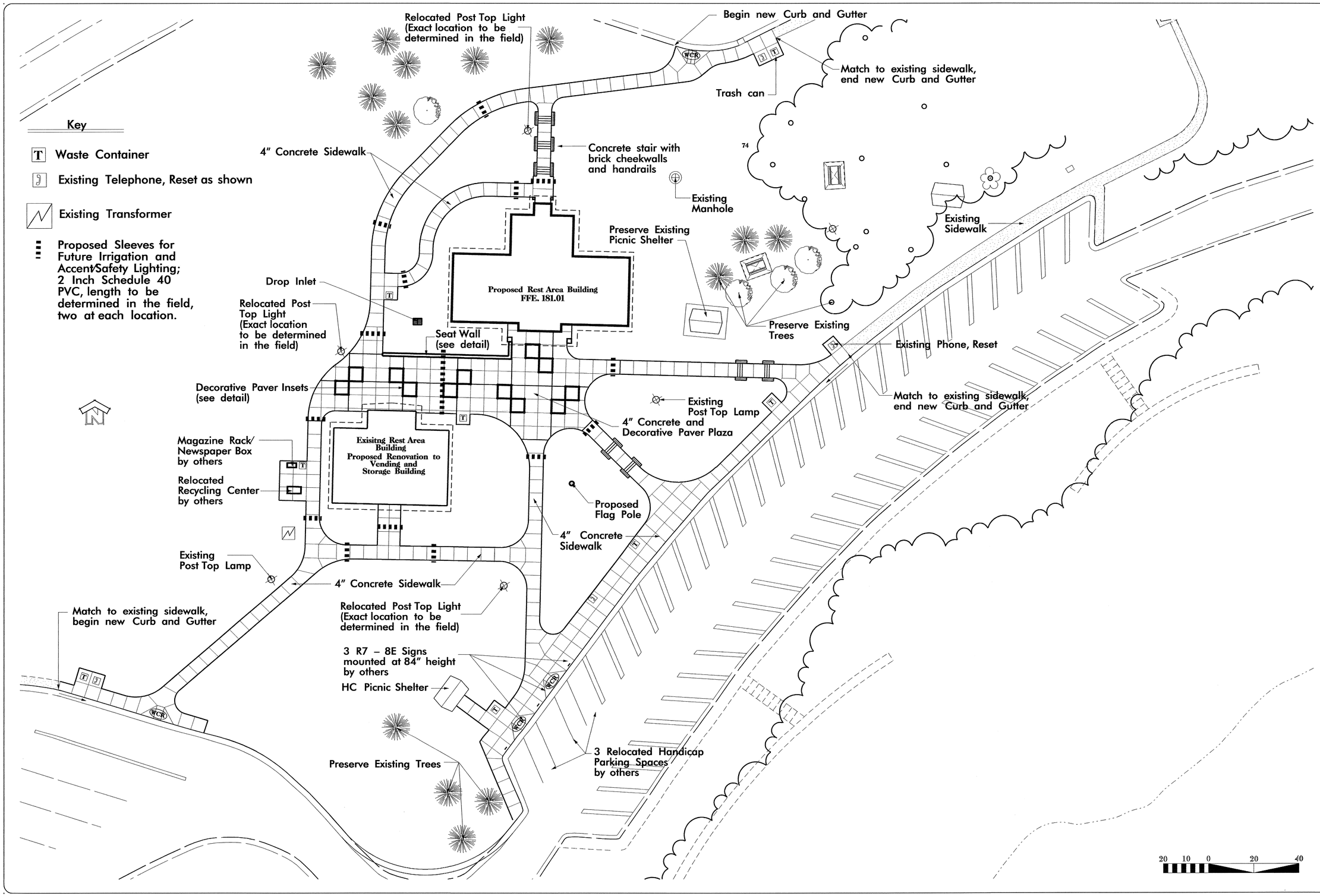

SHEET # 9T
WBS # 39914.3.1
FED. PROJ. # IMS-95-3(88)142
T.I.P. # K-4903

North Carolina Department of Transportation
Roadside Environmental Unit
Landscape Design & Development Section

PROJECT TITLE:
Rest Area Renovation
I - 95 (NBL & SBL Pair)
Nash County

Plans Drawn By: CSM/NR
Scale: 1" = 20'
Date: 12 / 21 / 06
Sheet Description: Proposed Site Plan
Sheet # L-NBL-2

Notes:

- Unless the facility is closed to the public, handicapped access must be maintained at all times.
- Days of facility closure shall be kept to a minimum as determined by the engineer. See notes under Construction Phasing.
- Place relocated vending building on existing concrete pad adding additional temporary concrete sidewalk where needed for accessibility as directed by engineer in the field.
- Temporary construction fence will be placed as indicated prior to beginning work on each phase. Gate location will be determined in the field. Recycle fence and gate by relocating for subsequent phases.
- Exact location of staging area to be determined by the Engineer in the field. The Contractor will repair all areas disturbed during construction.

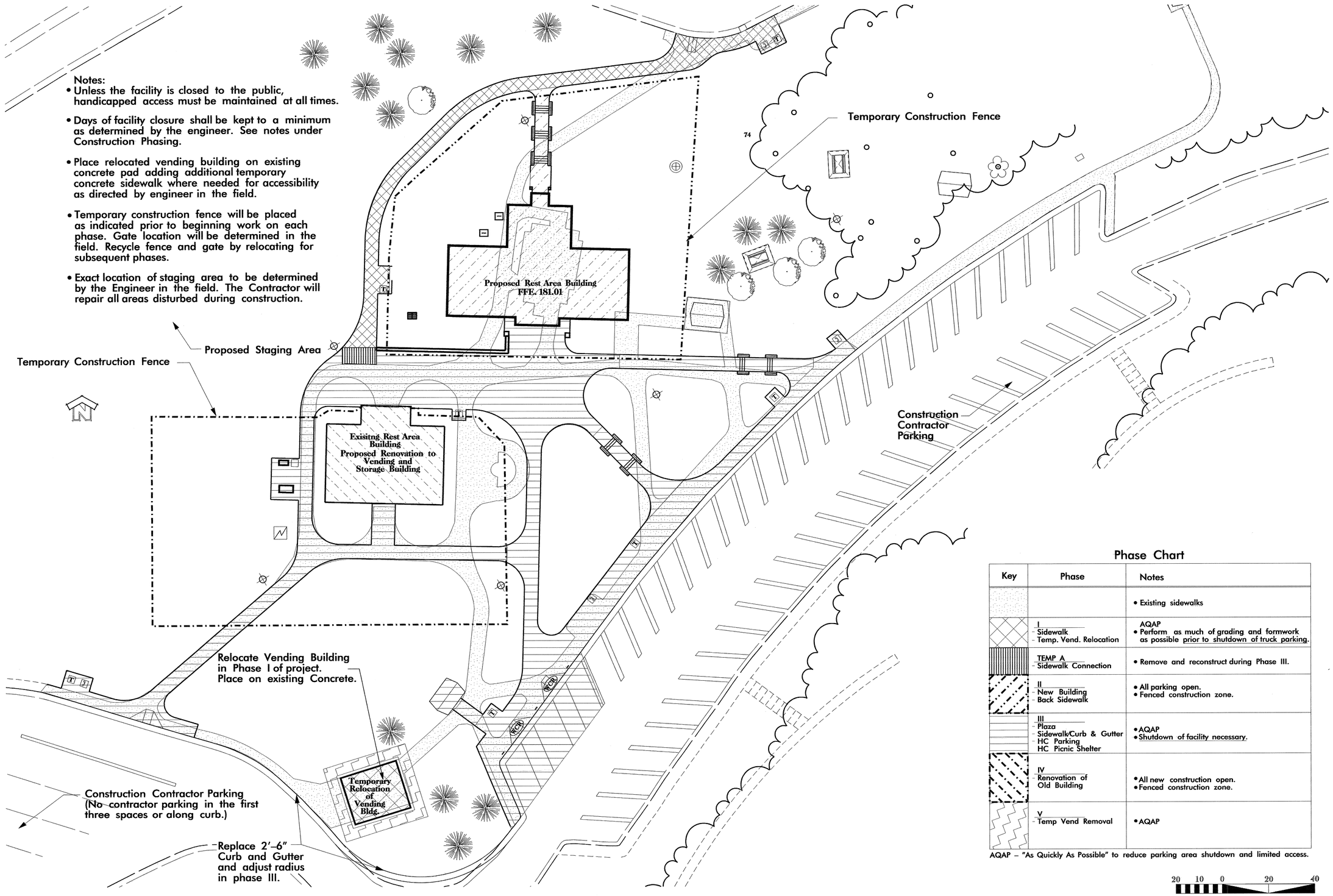

Phase Chart

Key	Phase	Notes
		• Existing sidewalks
	I - Sidewalk - Temp. Vend. Relocation	AQAP • Perform as much of grading and formwork as possible prior to shutdown of truck parking.
	TEMP A - Sidewalk Connection	• Remove and reconstruct during Phase III.
	II - New Building - Back Sidewalk	• All parking open. • Fenced construction zone.
	III - Plaza - Sidewalk/Curb & Gutter - HC Parking HC Picnic Shelter	•AQAP •Shutdown of facility necessary.
	IV - Renovation of Old Building	•All new construction open. •Fenced construction zone.
	V - Temp Vend Removal	•AQAP

AQAP – "As Quickly As Possible" to reduce parking area shutdown and limited access.

SHEET #
WBS # 39914.3.1
FED. PROJ. # IMS-95-3(88)142
T.I.P. # K-4903

North Carolina Department of Transportation
Roadside Environmental Unit
Landscape Design & Development Section

PROJECT TITLE:
Rest Area Renovation
I - 95 (NBL & SBL Pair)
Nash County

Plans Drawn By: CSM/NR
Scale: 1" = 20'
Date: 12 / 21 / 06
Sheet Description: Construction Limits and Staging
Sheet #: L-NBL-3

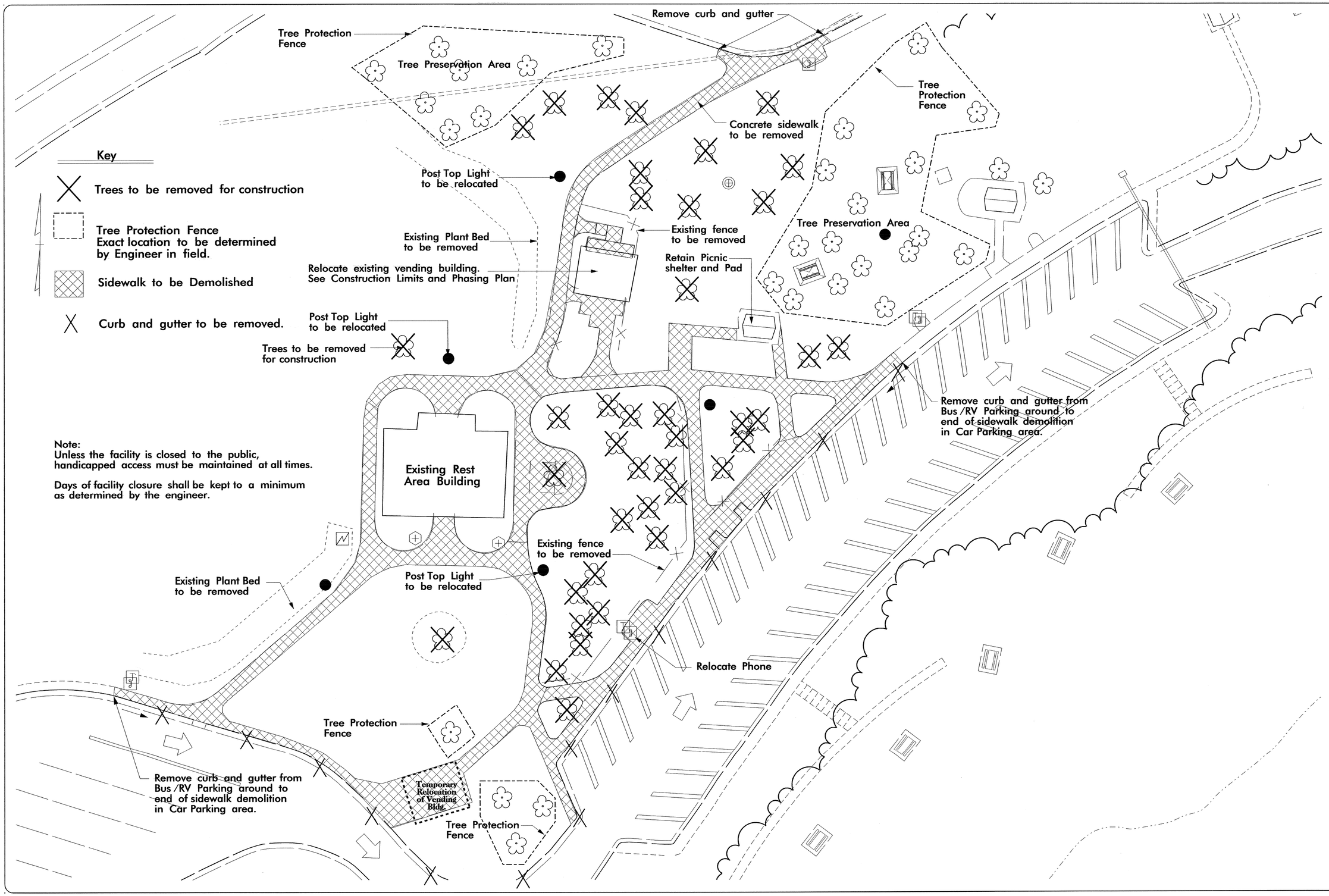

SHEET # PT

WBS # 39914.3.1

FED. PROJ. # IM8-95-3(88)142

T.I.P. # K-4903

North Carolina Department of Transportation

Roadside Environmental Unit

Landscape Design & Development Section

PROJECT TITLE :

Rest Area Renovation
I - 95 (NBL & SBL Pair)
Nash County

Plans Drawn By: CSM/NR

Scale 1" = 20'

Date 12 / 21 / 06

Sheet Description: Demolition Plan

Sheet # L-NBL-4

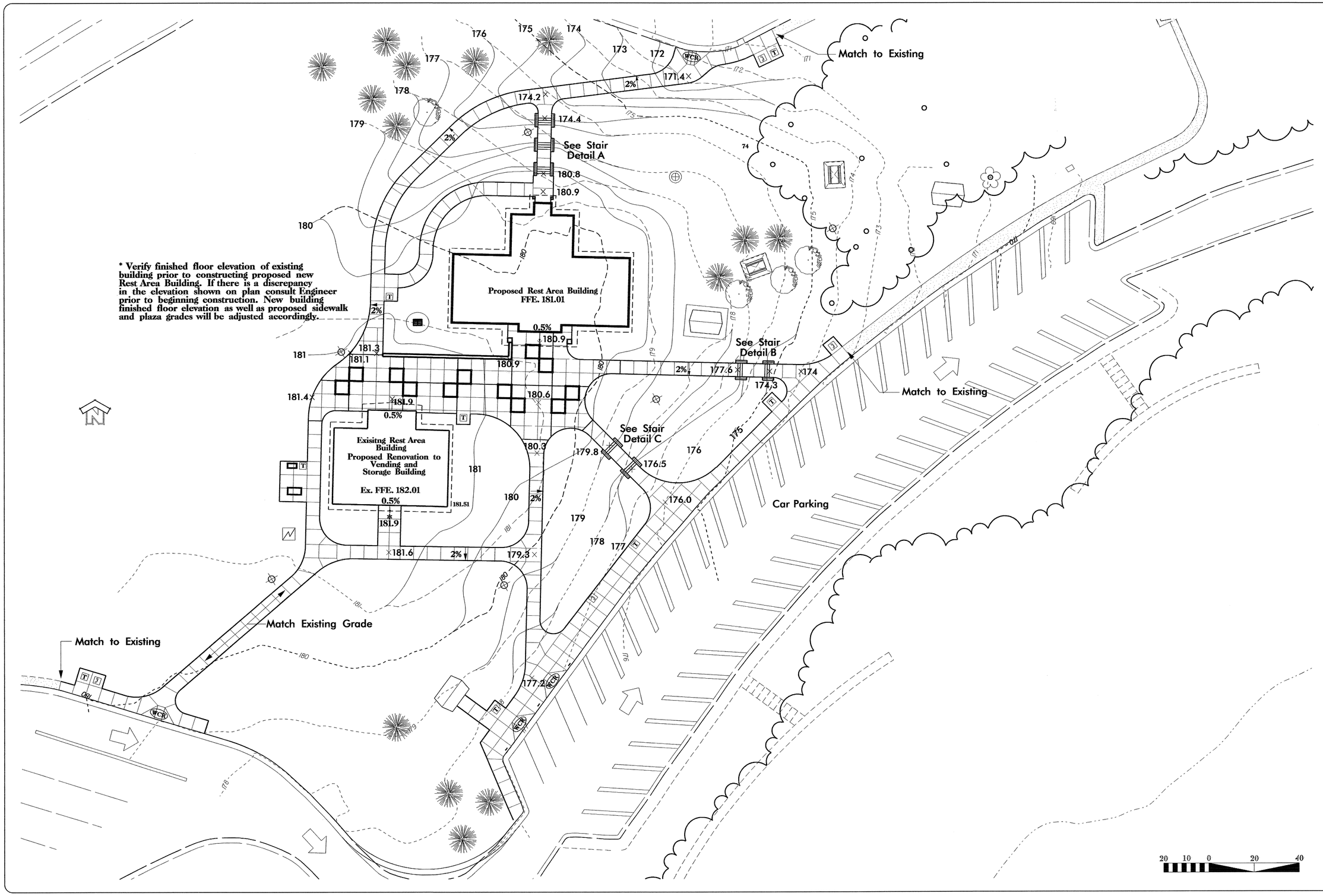

SHEET # 1 OF

WBS # 39914.3.1

FED. PROJ. # IMS-95-3(88)142

T.I.P. # K-4903

North Carolina Department of Transportation

Roadside Environmental Unit

Landscape Design & Development Section

PROJECT TITLE :

Rest Area Renovation
I - 95 (NBL & SBL Pair)
Nash County

Plans Drawn By: CSM/NR

Scale 1" = 40'

Date 12 / 21 / 06

Sheet Description: Grading Plan

Sheet # L-NBL-5

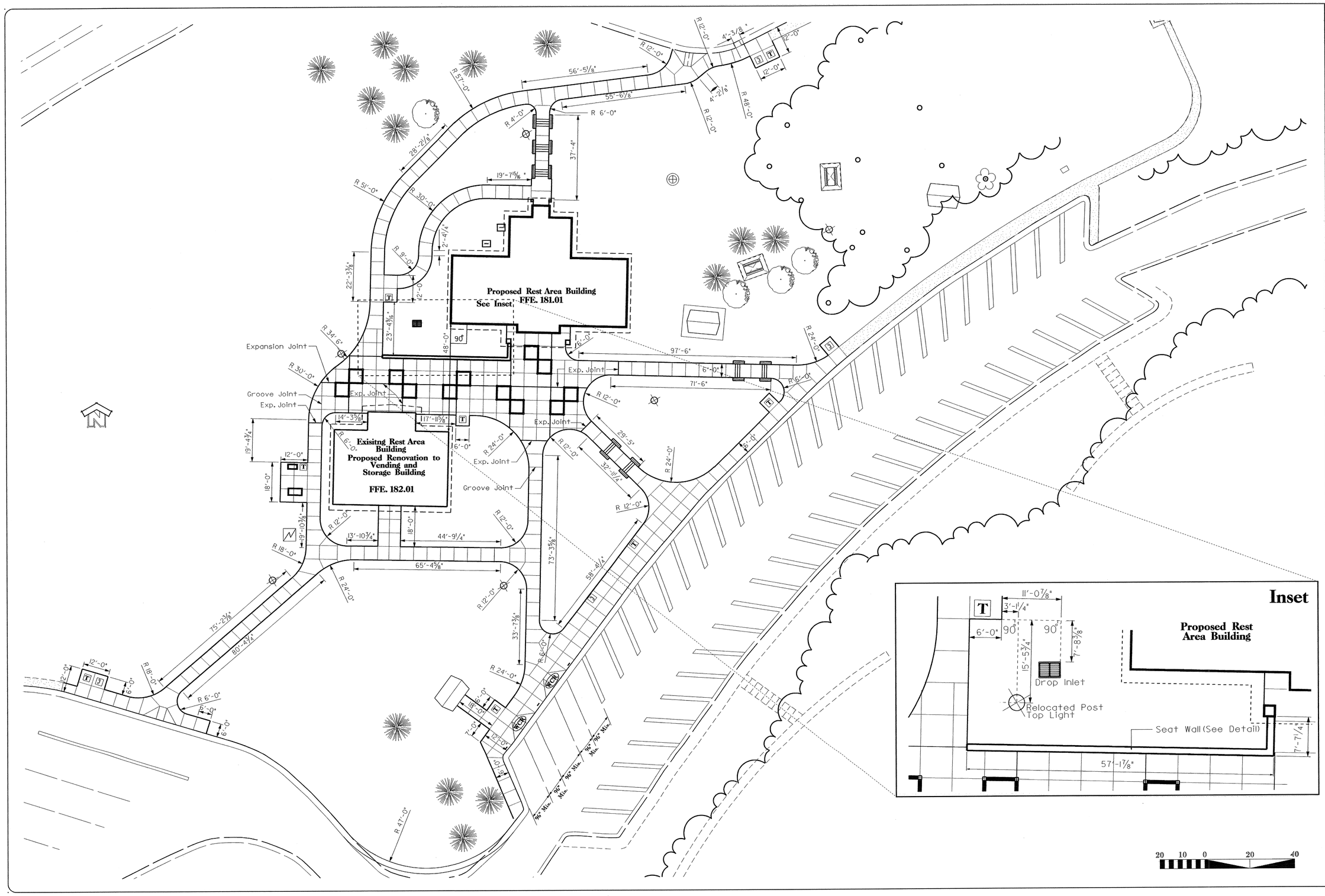

SHEET # 01
WBS # 39914.3.1
FED. PROJ. # IMS-95-3(88)142
T.I.P. # K-4903

North Carolina Department of Transportation
Roadside Environmental Unit
Landscape Design & Development Section

PROJECT TITLE:
Rest Area Renovation
I - 95 (NBL & SBL Pair)
Nash County

Plans Drawn By:	CSM/NR
Scale	1" = 20'
Date	12/21/06
Sheet Description	Layout, Dimension and Scoring Plan
Sheet #	L-NBL-6

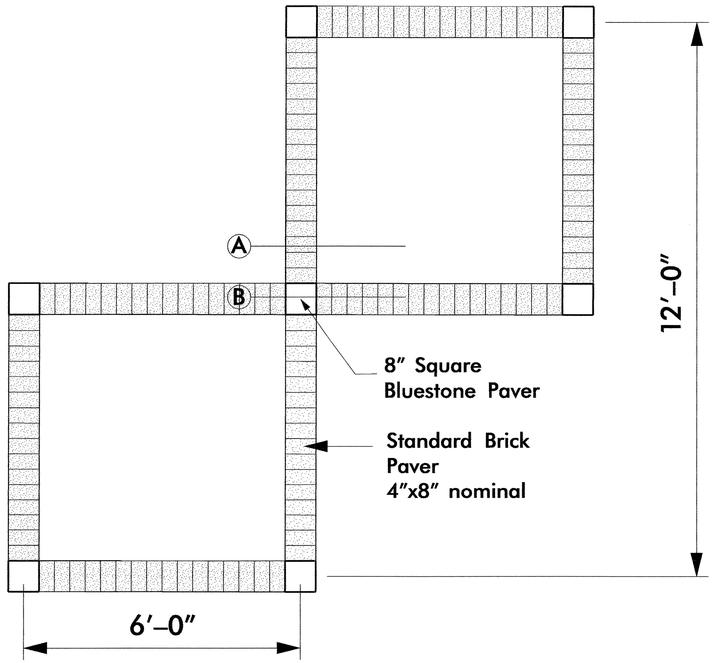

Decorative Paver Inset

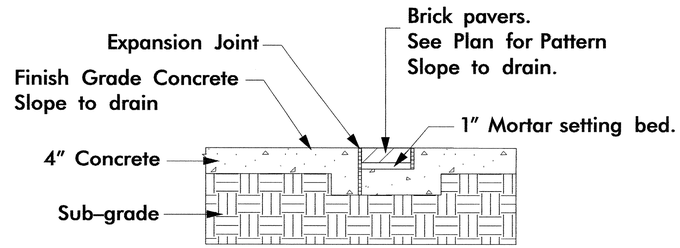

Section A

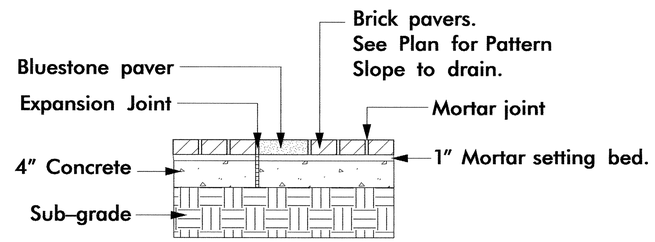

Section B

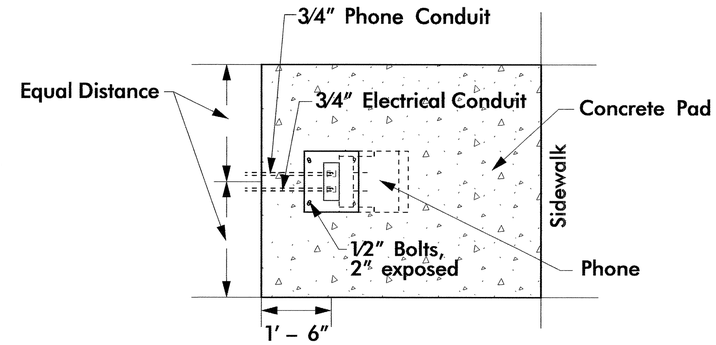

Note: see Plans for exact locations and concrete pad dimensions.

Phone Relocation – Plan (Typical Installation)

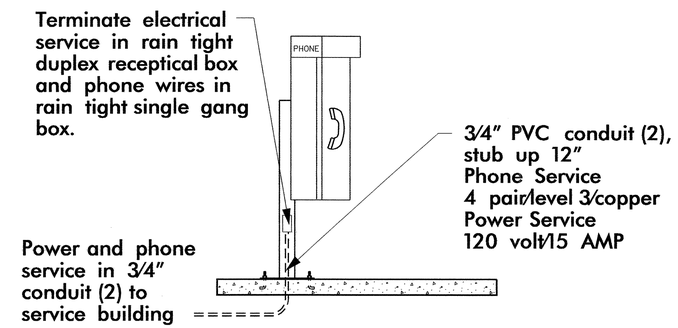

All telephones will meet state and federal handicap accesibility requirements.

Phone Relocation – Elevation / Section

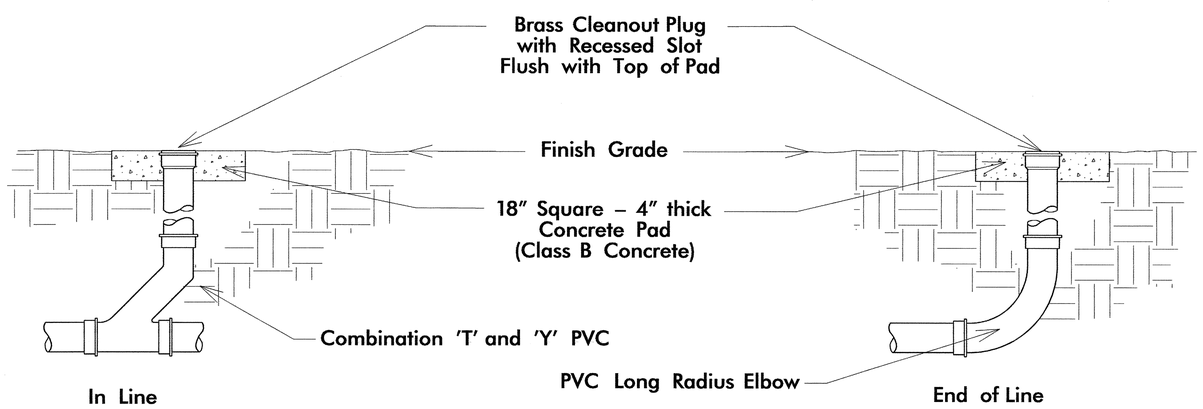

PVC Cleanout Detail

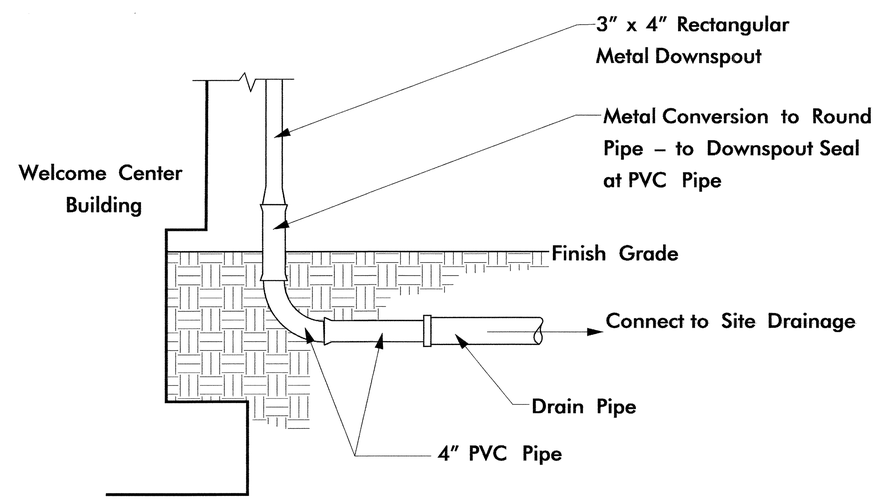

Downspout Detail

SHEET #
WBS # 39914.3.1
FED. PROJ. # IMS-95-3(88)142
T.I.P. # K-4903

North Carolina Department of Transportation
Roadside Environmental Unit
Landscape Design & Development Section

PROJECT TITLE:
Rest Area Renovation
I – 95 (NBL & SBL Pair)
Nash County

Plans Drawn By: CSM/NR
Scale: No Scale
Date: 12 / 5 / 06
Sheet Description: Site Details
Sheet # L–NBL–7

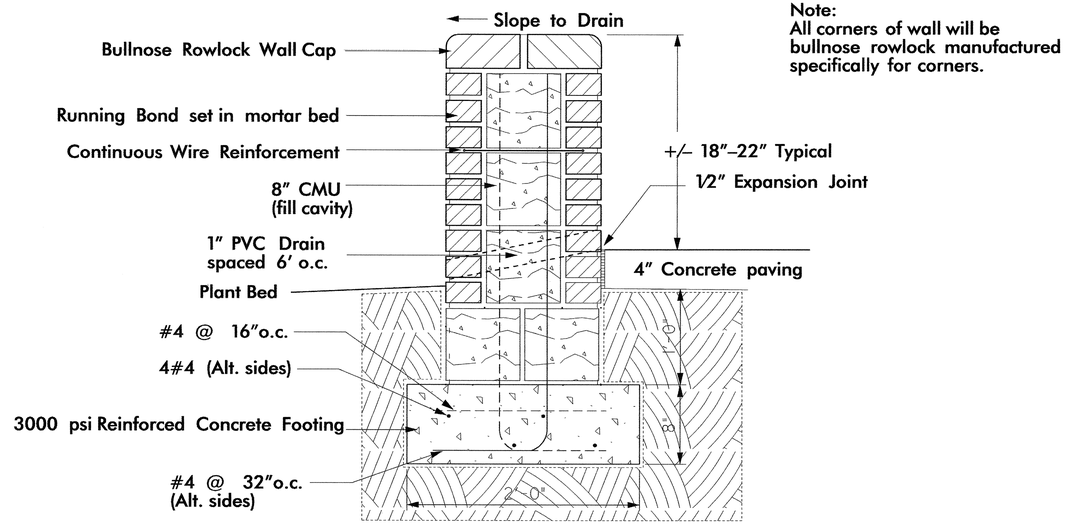

Note:
All corners of wall will be bullnose rowlock manufactured specifically for corners.

Seatwall Section (Typical)

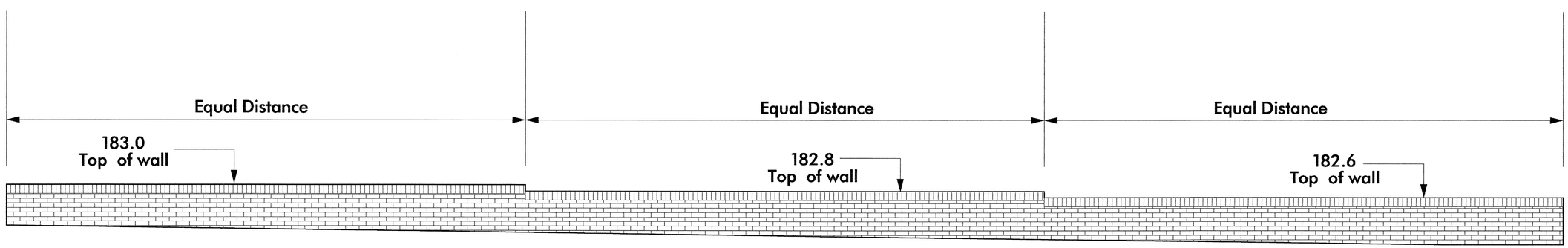

Seatwall – South Elevation

SHEET # of
WBS # 39914.3.1
FED. PROJ. # IMS-95-3(88)142
T.I.P. # K–4903

North Carolina Department of Transportation
Roadside Environmental Unit
Landscape Design & Development Section

PROJECT TITLE :
Rest Area Renovation
I – 95 (NBL & SBL Pair)
Nash County

Plans Drawn By: CSM/NR
Scale: No Scale
Date: 12 / 5 / 06
Sheet Description: Seatwall Details
Sheet # L–NBL–8

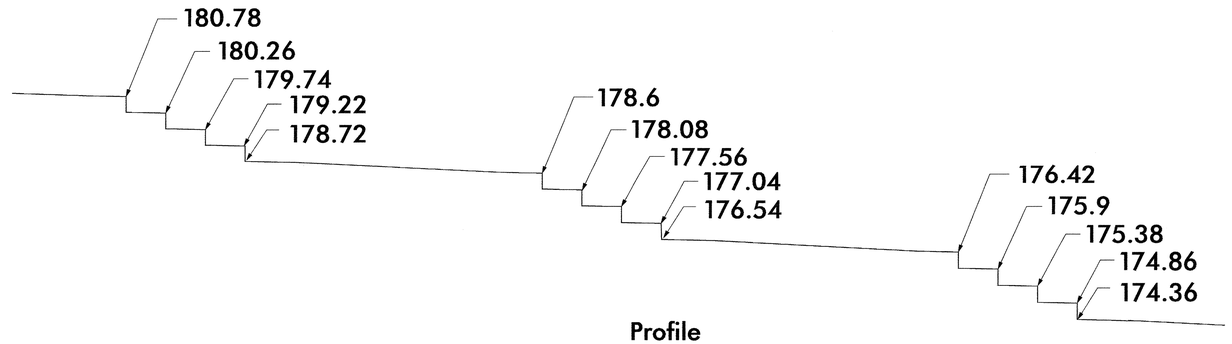

Profile

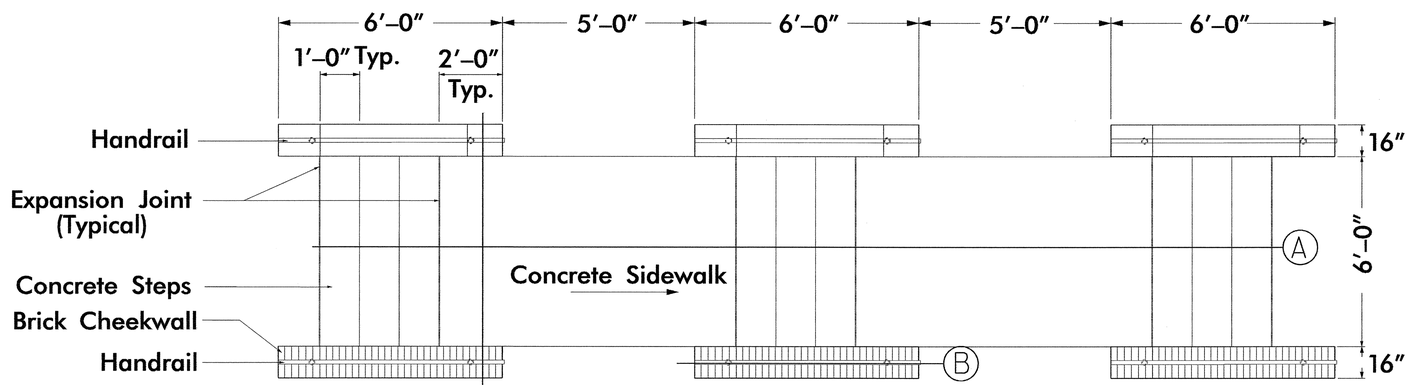

(B) See profile on sheet L–NBL–12.

(C) See section on sheet L–NBL–12.

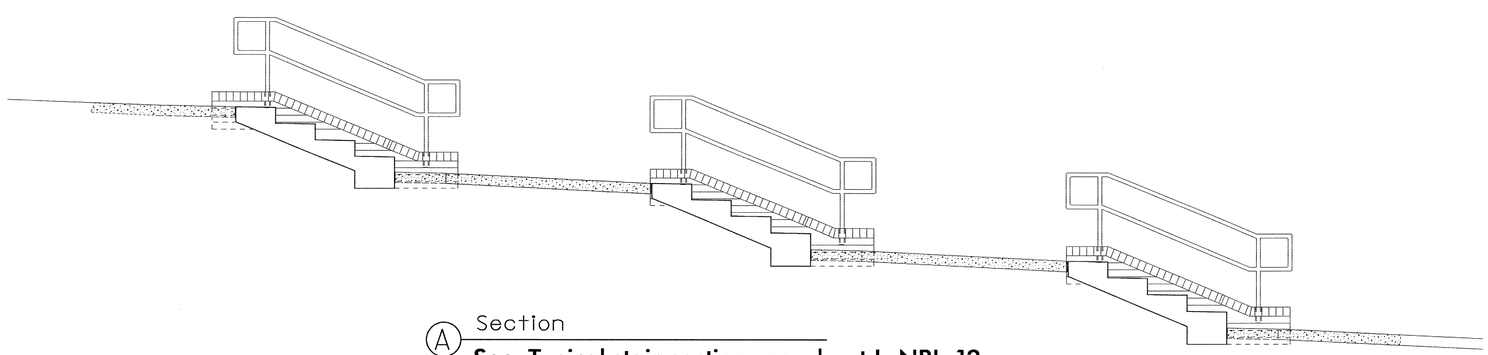

(A) Section

See Typical stair section on sheet L–NBL–12.

SHEET # OF

WBS # 39914.3.1

FED. PROJ. # IMS-95-3(88)142

T.I.P. # K–4903

North Carolina Department of Transportation

Roadside Environmental Unit

Landscape Design & Development Section

PROJECT TITLE :

Rest Area Renovation
I - 95 (NBL & SBL Pair)
Nash County

Plans Drawn By: CSM/NR

Scale: No Scale

Date: 12 / 5 / 06

Sheet Description: Stair Detail A

Sheet # L–NBL–9

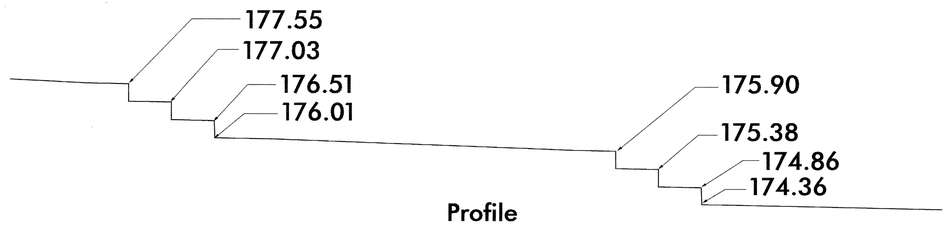

Profile

(B) See profile on sheet L–NBL–12.

(C) See section on sheet L–NBL–12.

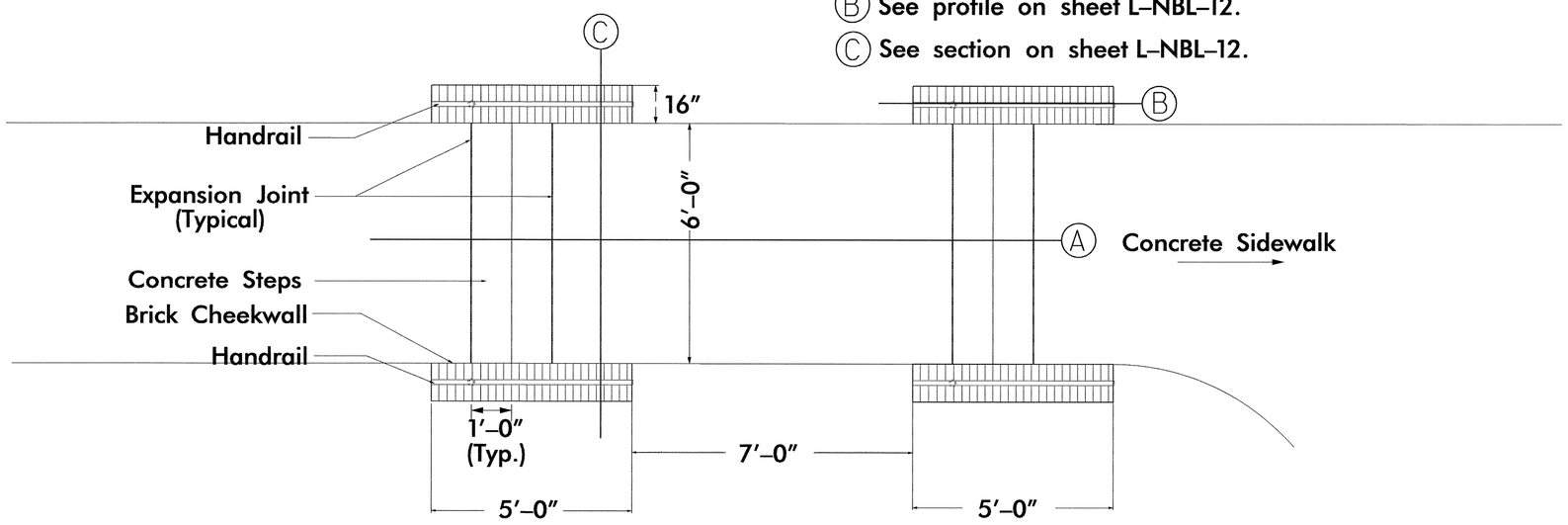

Plan

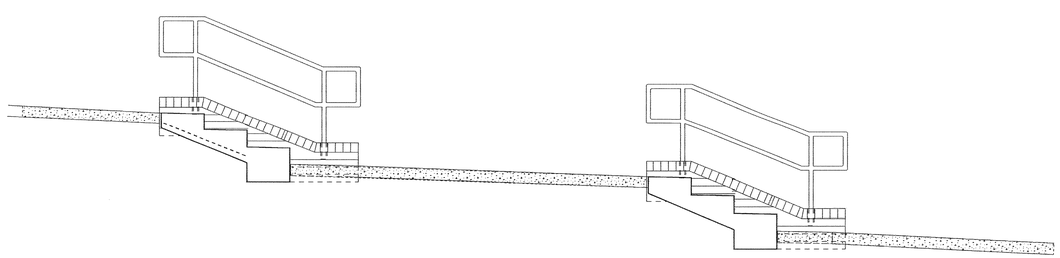

(A) Section

SHEET # of

WBS # 39914.3.1

FED. PROJ. # IMS-95-3(88)142

T.I.P. # K–4903

North Carolina Department of Transportation

Roadside Environmental Unit

Landscape Design & Development Section

STATE OF NORTH CAROLINA DEPARTMENT OF TRANSPORTATION

PROJECT TITLE :

Rest Area Renovation
I – 95 (NBL & SBL Pair)
Nash County

Plans Drawn By: CSM/NR

Scale: No Scale

Date: 12 / 5 / 06

Sheet Description: Stair Detail B

Sheet # L–NBL–10

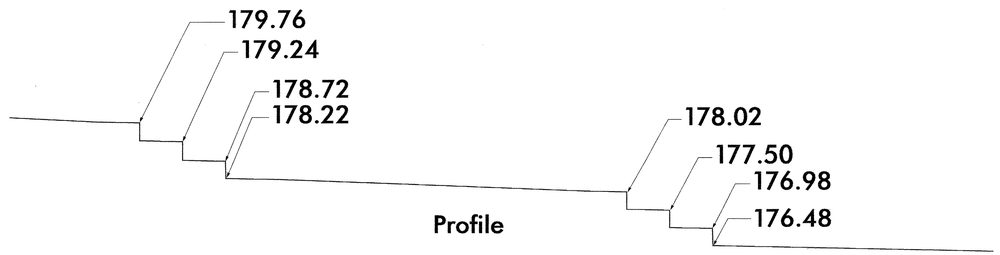

Profile

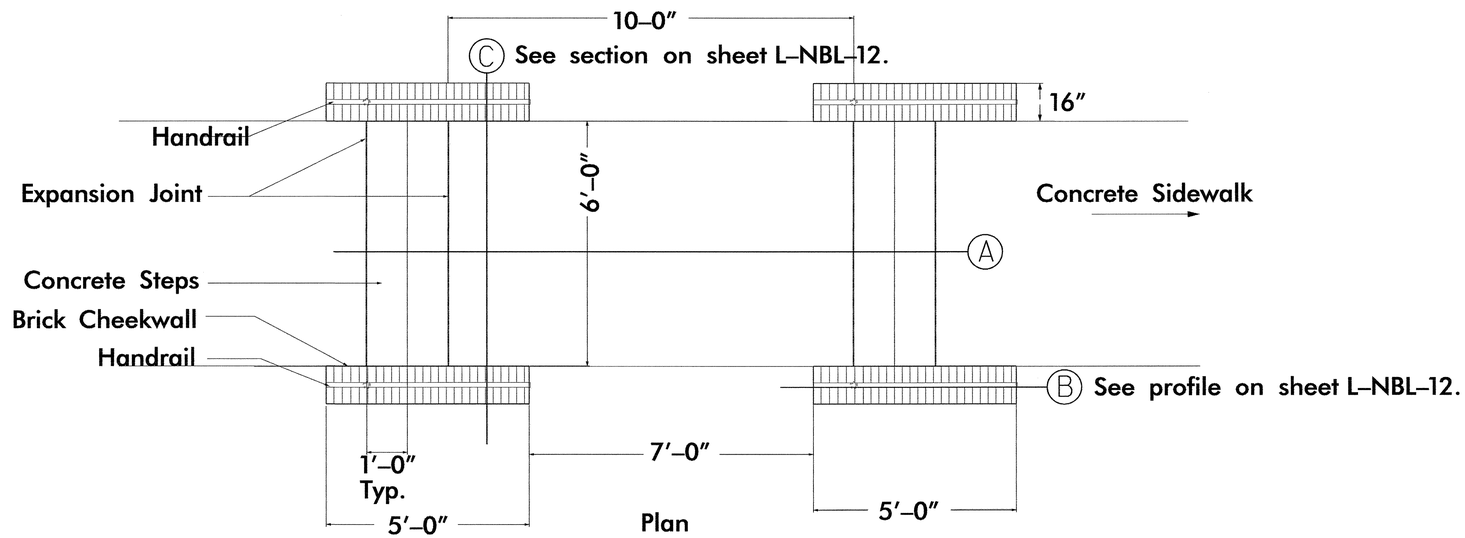

Plan

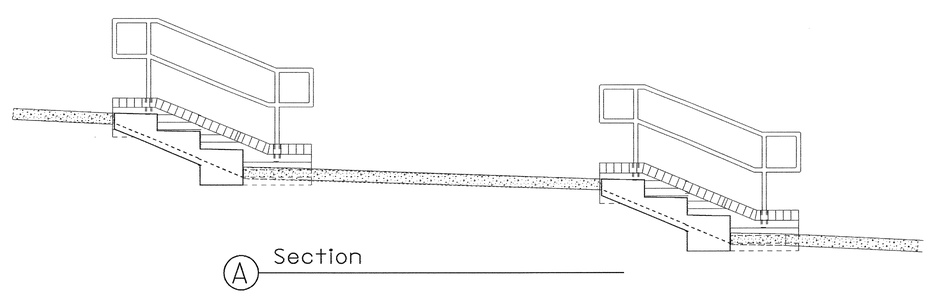

A Section

SHEET #

WBS # 39914.3.1

FED. PROJ. # IMS-95-3(88)142

T.I.P. # K–4903

North Carolina Department of Transportation

Roadside Environmental Unit

Landscape Design & Development Section

PROJECT TITLE :

Rest Area Renovation
I - 95 (NBL & SBL Pair)
Nash County

Plans Drawn By: CSM/NR

Scale: No Scale

Date: 12 / 5 / 06

Sheet Description: Stair Detail C

Sheet # L–NBL–11

Note: Conform Reinforced Concrete Step construction to all applicable requirements of Section 825, Incidental Concrete Construction. Class B concrete shall be used in construction of steps..

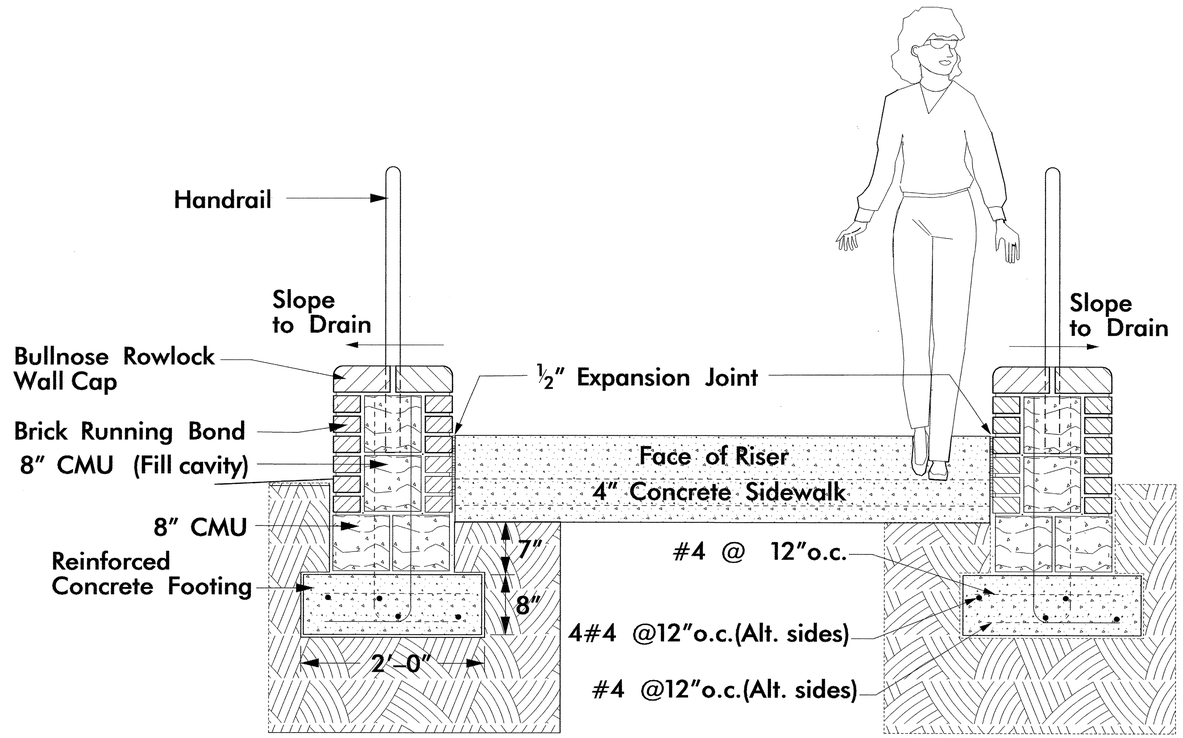

C Step/Cheekwall Section (Typ.)

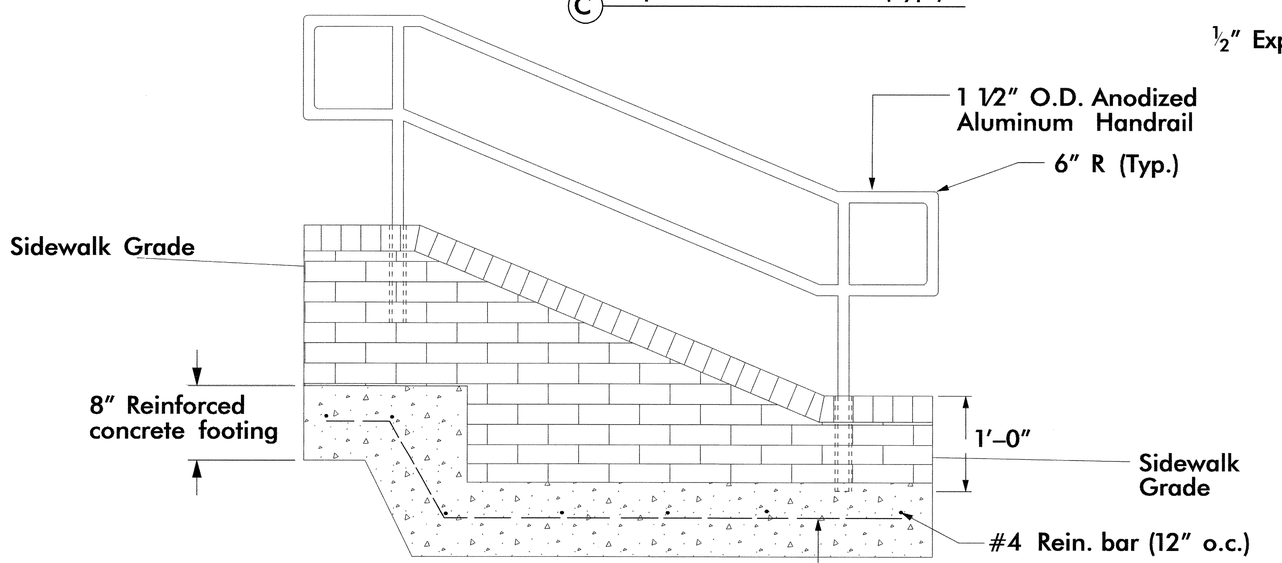

B Cheekwall Profile (Typ.)

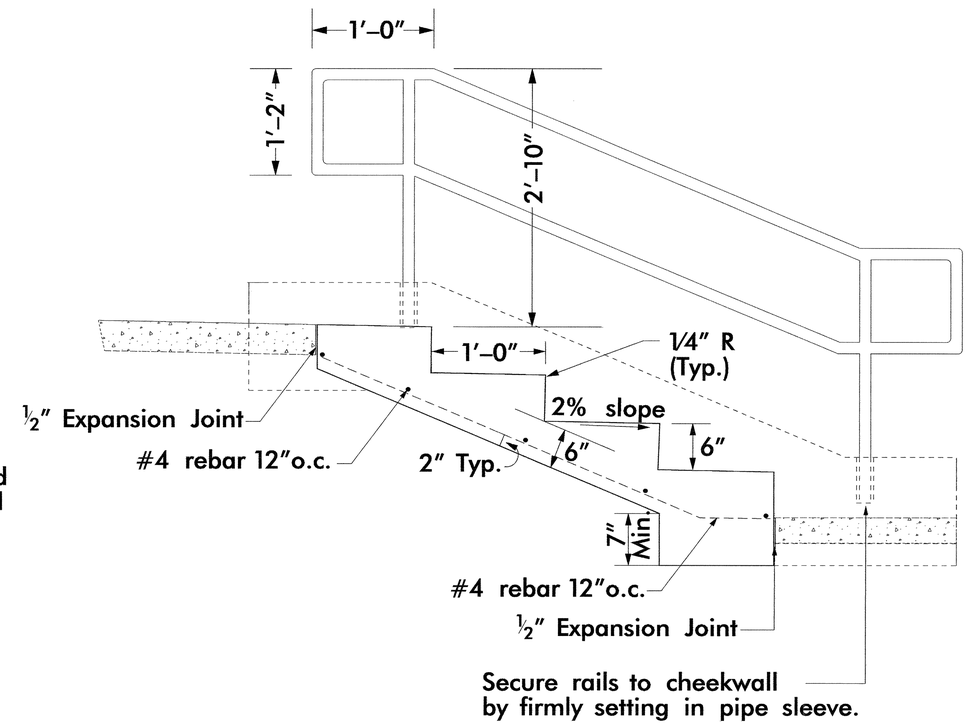

Stair Section (Typ.)

SHEET # 07
WBS # 39914.3.1
FED. PROJ. # IMS-95-3(88)142
T.I.P. # K-4903

North Carolina Department of Transportation
Roadside Environmental Unit
Landscape Design & Development Section

PROJECT TITLE :
Rest Area Renovation
I - 95 (NBL & SBL Pair)
Nash County

Plans Drawn By: CSM/NR
Scale: No Scale
Date: 12/5/06
Sheet Description: Typical Stair Details
Sheet #: L-NBL-12

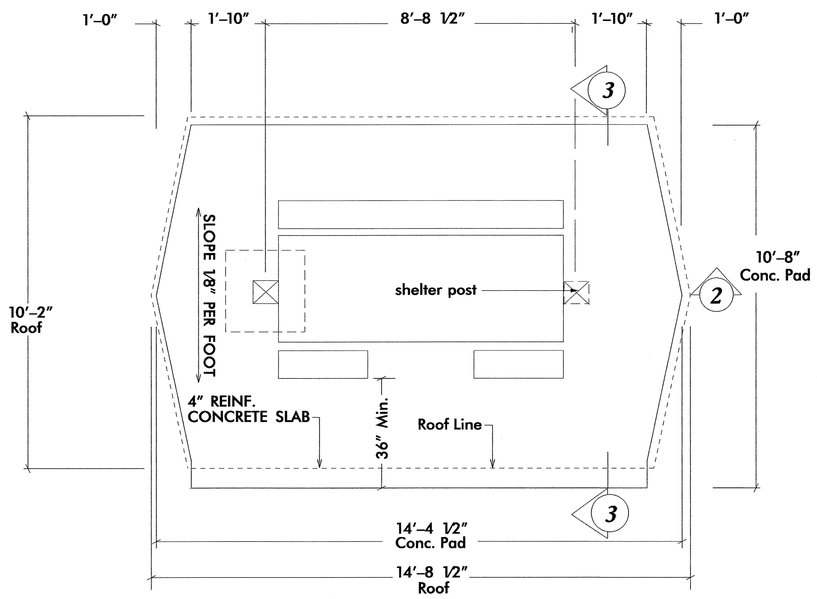

1 CONC. PAD & ROOF PLAN
No Scale

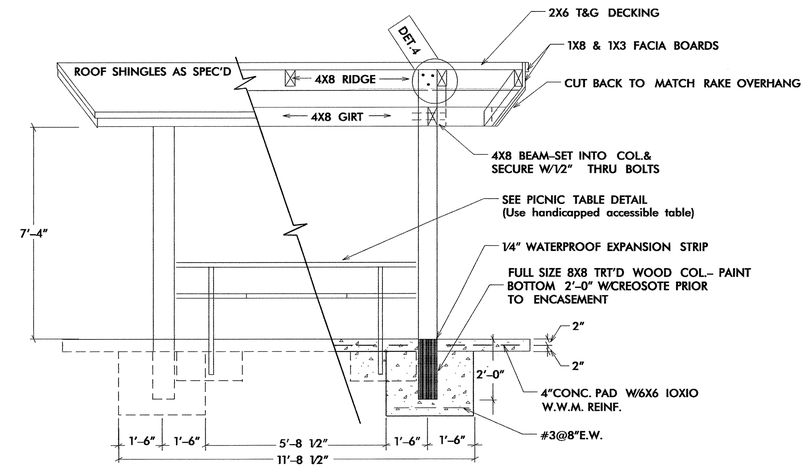

2 SECTION
1/2"=1'-0"

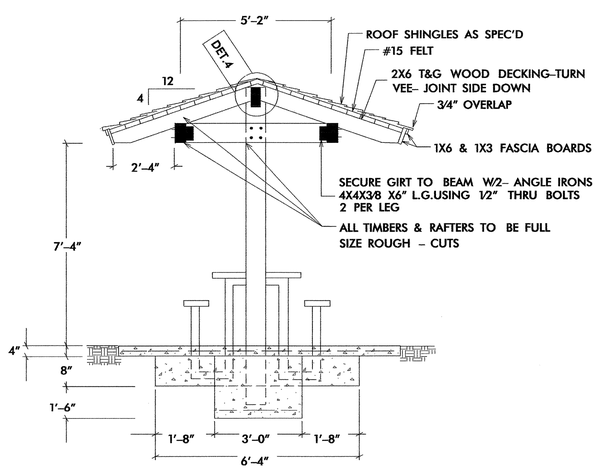

3 SECTION
1/2"=1'-0"

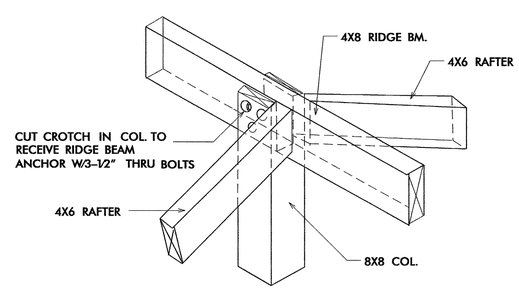

4 JOINT DETAIL
1/2"=1'-0"

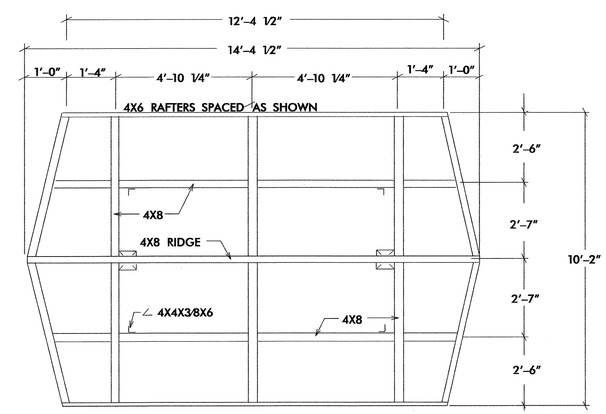

5 FRAMING PLAN
1/2"=1'-0"

SHEET #
WBS # 39914.3.1
FED. PROJ. # IMS-95-3(88)142
T.I.P. # K-4903

North Carolina Department of Transportation
Roadside Environmental Unit
Landscape Design & Development Section

STATE OF NORTH CAROLINA DEPARTMENT OF TRANSPORTATION

PROJECT TITLE :
Rest Area Renovation
I - 95 (NBL & SBL Pair)
Nash County

Plans Drawn By: CSM/NR
Scale: See Drawing
Date: 12 / 5 / 06
Sheet Description: Picnic Shelter Detail
Sheet #: L-NBL-13

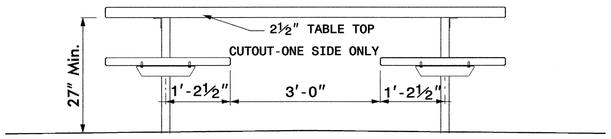

HANDICAP ACCESSIBLE PICNIC TABLE

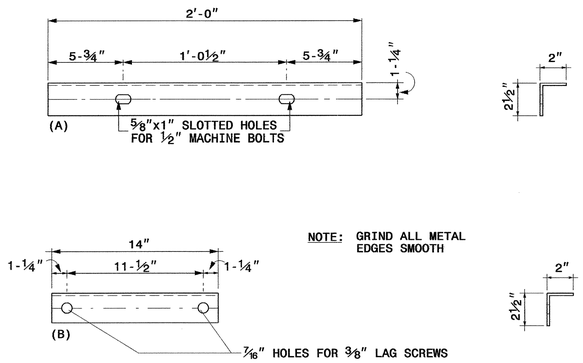

2" X 212" X 316" STEEL ∠ DETAILS

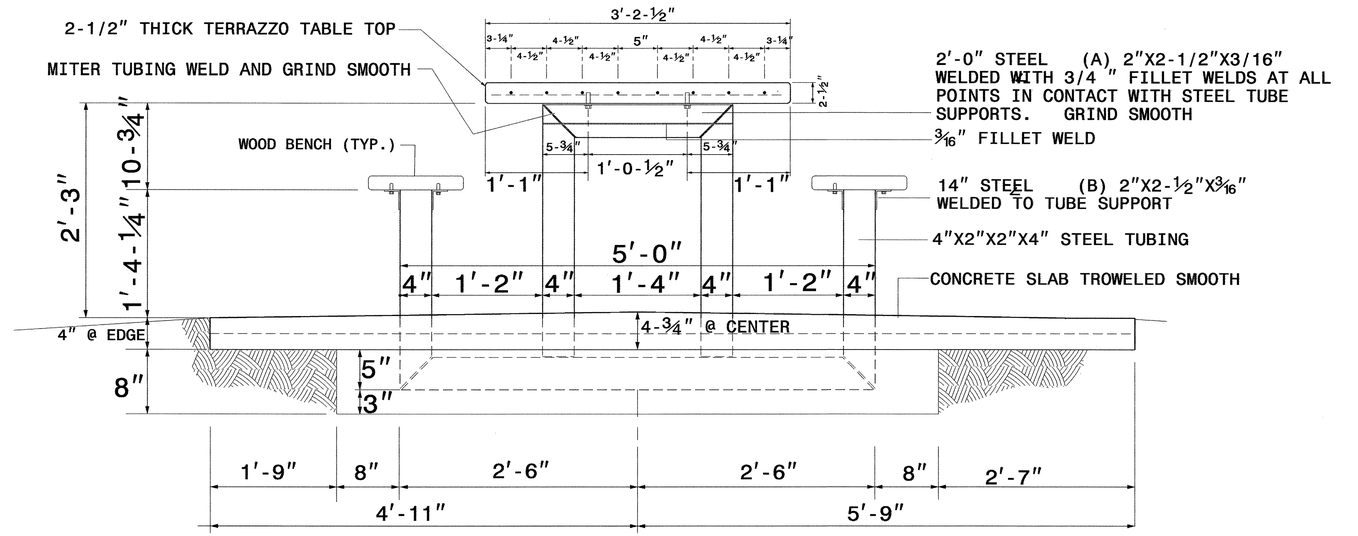

SECTION A-A VERT. CROSS SECTION THROUGH CONC. PAD, TABLE, & BENCHES

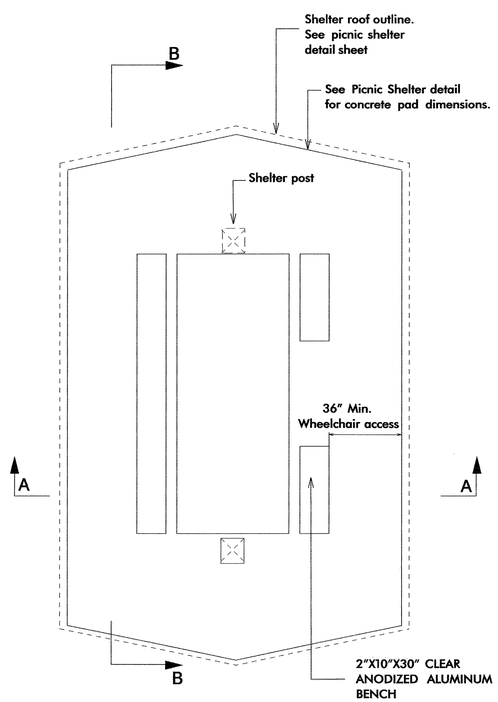

PLAN OF HANDICAP ACCESSIBLE TABLE, BENCHES, & CONCRETE PAD

SLOPES SAME AS LONGITUDINAL SECTION

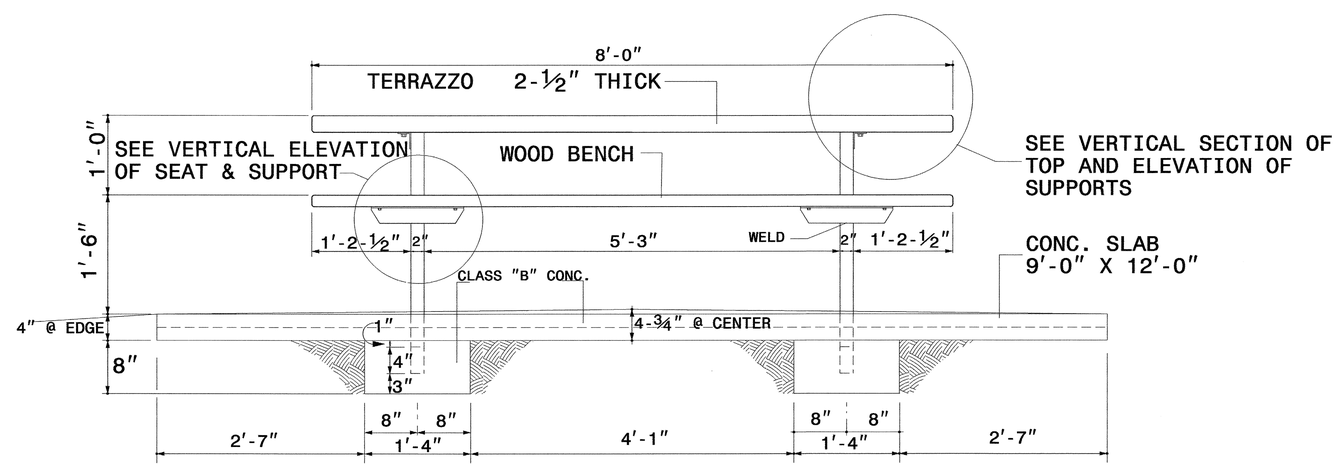

SECTION B-B VERT. LONGITUDINAL SECT. THROUGH CONC. PAD LOOKING TOWARD BENCH &TABLE

SHEET #

WBS # 39914.3.1

FED. PROJ. # IMS-95-3(88)142

T.I.P. # K-4903

North Carolina Department of Transportation

Roadside Environmental Unit

Landscape Design & Development Section

PROJECT TITLE :

Rest Area Renovation

I - 95 (NBL & SBL Pair)

Nash County

Plans Drawn By: CSM/NR

Scale: See Drawing

Date: 12 / 5 / 06

Sheet Description: Picnic Table Detail

Sheet # L-NBL-14

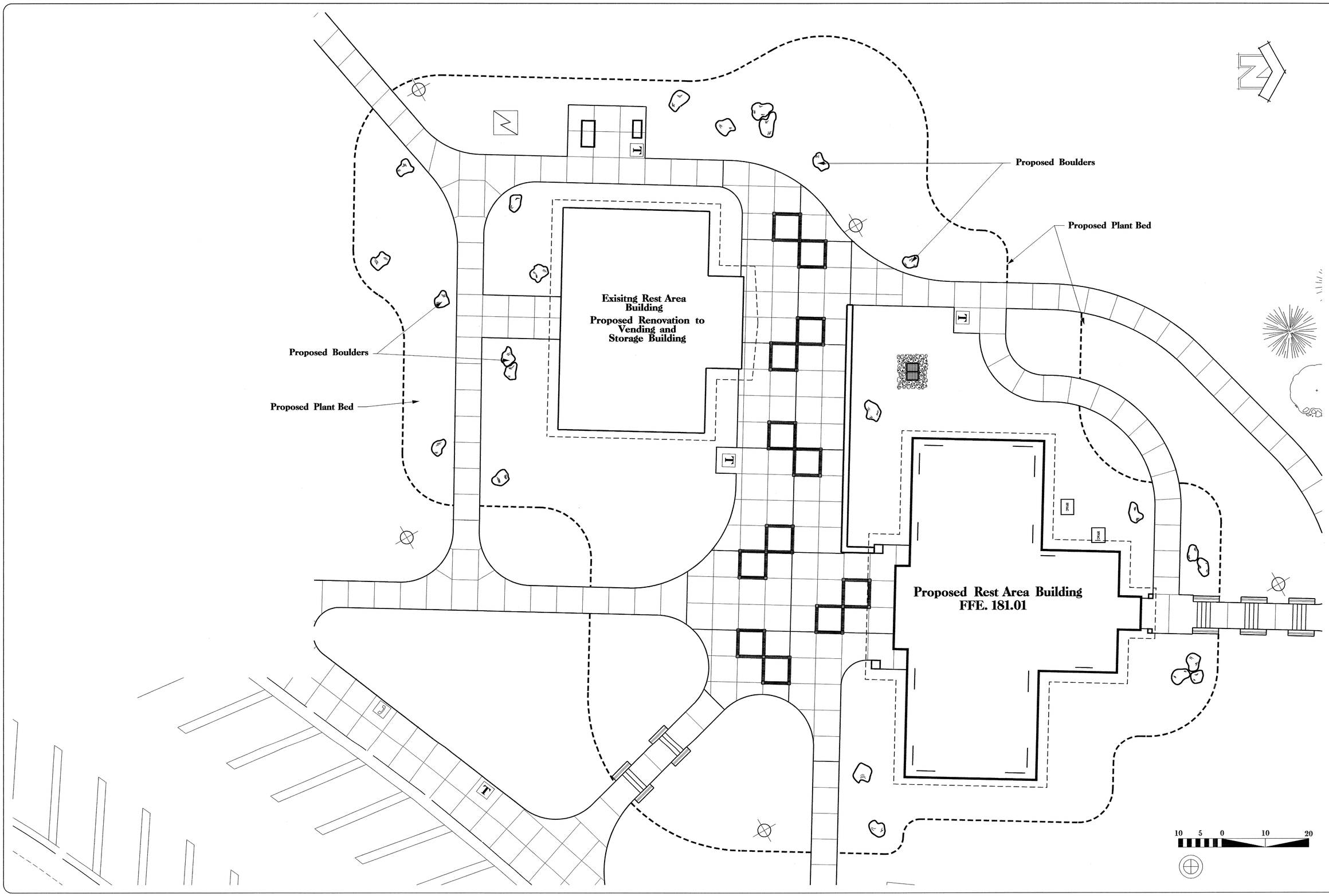

SHEET # 01

WBS # 39914.3.1

FED. PROJ. # IMS-95-3(88)142

T.I.P. # K-4903

North Carolina Department of Transportation

Roadside Environmental Unit

Landscape Design & Development Section

PROJECT TITLE :

Rest Area Renovation
I - 95 (NBL & SBL Pair)
Nash County

Plans Drawn By: CSM/NR

Scale 1" = 10'

Date 12 / 5 / 06

Sheet Description: Plant Bed Plan

Sheet # L-NBL-15

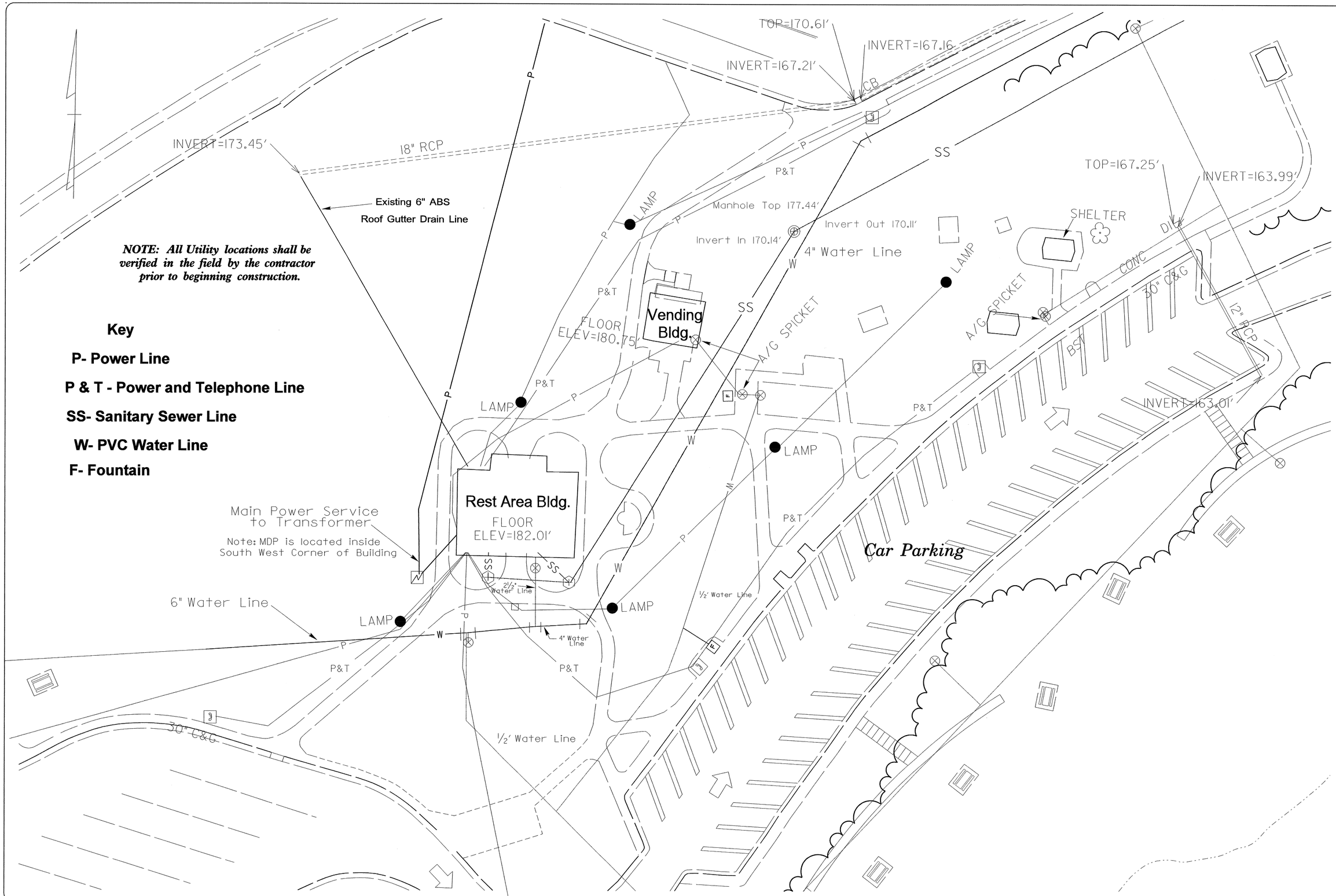

NOTE: All Utility locations shall be verified in the field by the contractor prior to beginning construction.

Key

P- Power Line

P & T - Power and Telephone Line

SS- Sanitary Sewer Line

W- PVC Water Line

F- Fountain

SHEET #	
WBS #	39914.3.1
FED. PROJ. #	IM8-95-3(88)142
T.I.P. #	K-4903

North Carolina Department of Transportation

Roadside Environmental Unit

Landscape Design & Development Section

PROJECT TITLE :

Rest Area Renovation
I - 95 (NBL & SBL Pair)
Nash County

Plans Drawn By:	JPP
Scale	1" = 20'
Date	12 / 05 / 06
Sheet Description	Existing Site Utility Plan- NBL
Sheet #	SU-NBL-1

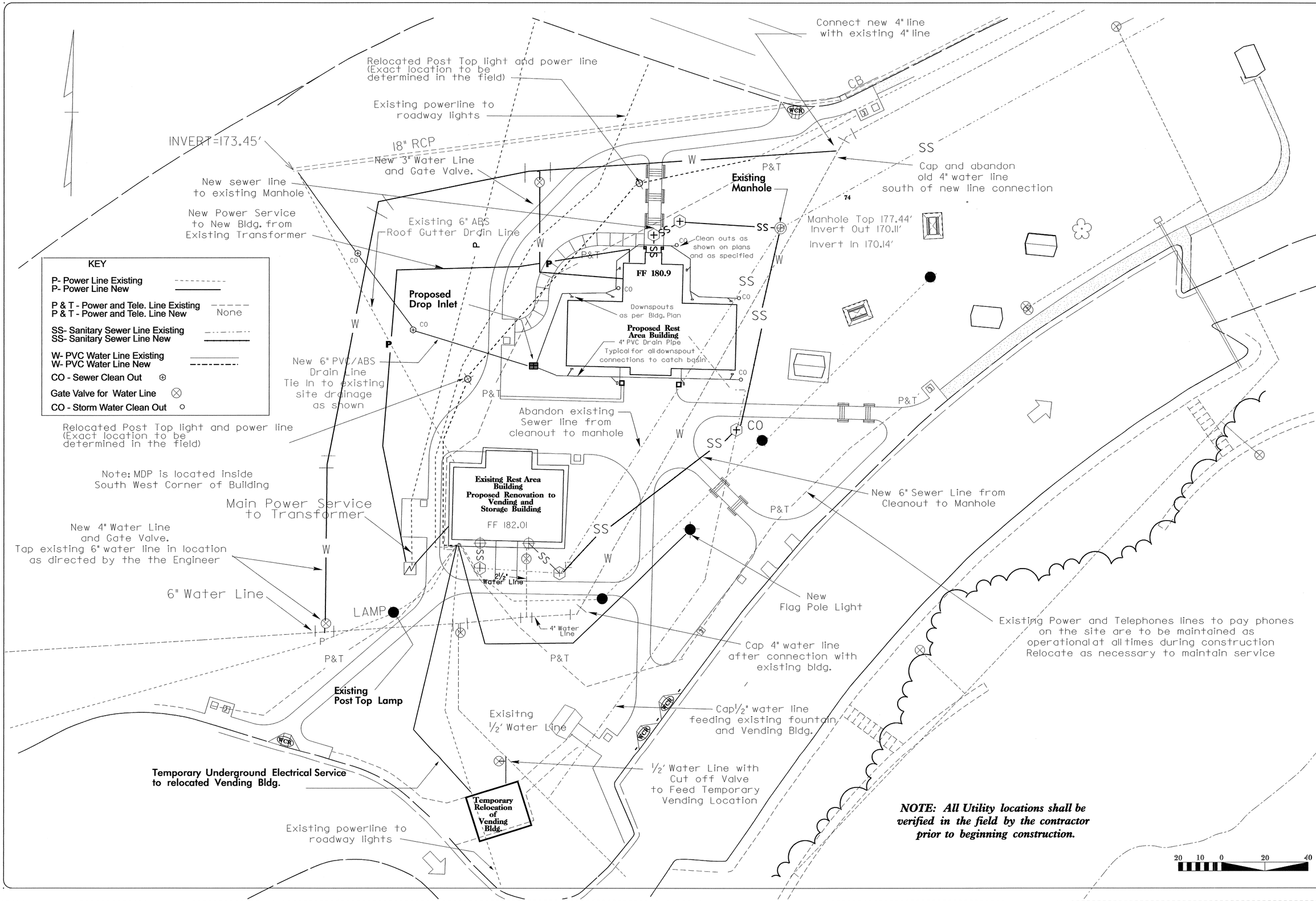

NOTE: All Utility locations shall be verified in the field by the contractor prior to beginning construction.

SHEET # ___ OF ___

WBS # 39914.3.1

FED. PROJ. # IMS-95-3(88)142

T.I.P. # K-4903

North Carolina Department of Transportation

Roadside Environmental Unit

Landscape Design & Development Section

PROJECT TITLE :

Rest Area Renovation

I - 95 (NBL & SBL Pair)

Nash County

Plans Drawn By:	JPP
Scale	See Drawing
Date	12 / 5 / 06
Sheet Description	Proposed Site Utility Plan
Sheet #	SU-NBL-2

TIP PROJECT: K-4903

STATE	STATE PROJECT REFERENCE NO.	SHEET NO.	TOTAL SHEETS
N.C.	K-4903	EC-NBL-1	

STATE PROJ. NO.	F.A. PROJ. NO.	DESCRIPTION

STATE OF NORTH CAROLINA
DIVISION OF HIGHWAYS

PLAN FOR PROPOSED
HIGHWAY EROSION CONTROL

NASH COUNTY

Location: Rest Area I-95 North and South Bound Lanes, 3 miles north of Rocky Mount

Type of Work: Rest Area Renovation; New Building, Renovation of Old Service Building, Site, and Utility Work

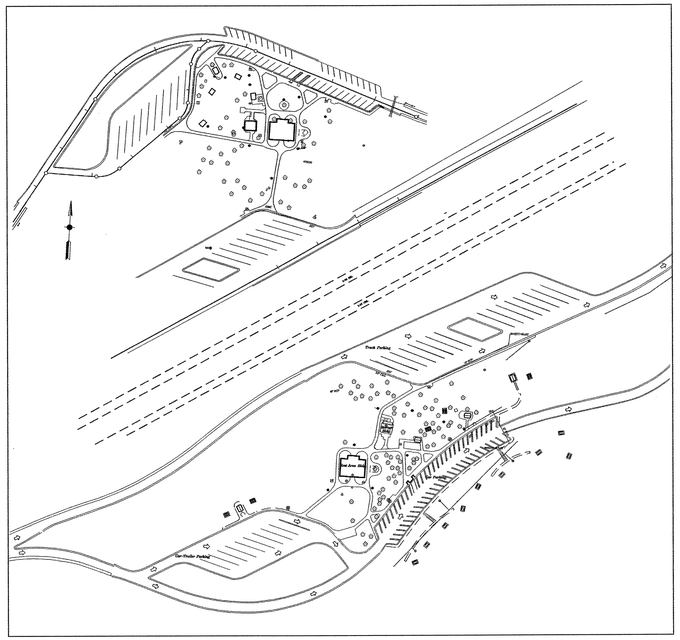

EROSION AND SEDIMENT CONTROL MEASURES

Std. #	Description	Symbol
	Streambank Reforestation	
1630.03	Temporary Silt Ditch	TSD
1630.05	Temporary Diversion	TD
1605.01	Temporary Silt Fence	
1606.01	Special Sediment Control Fence	
1622.01	Temporary Berms and Slope Drains	
1630.01	Riser Basin	
1630.02	Silt Basin Type B	
1633.01	Temporary Rock Silt Check Type-A	
	Temporary Rock Silt Check Type-B	
1634.01	Temporary Rock Sediment Dam Type-A	
1634.02	Temporary Rock Sediment Dam Type-B	
1635.01	Rock Pipe Inlet Sediment Trap Type-A	
1635.02	Rock Pipe Inlet Sediment Trap Type-B	
1630.04	Stilling Basin	
	Rock Inlet Sediment Trap:	
1632.01	Type A	A
1632.02	Type B	B
1632.03	Type C	C
	Skimmer Basin	
	Tiered Skimmer Basin	

THIS PROJECT CONTAINS EROSION CONTROL PLANS FOR CLEARING AND GRUBBING PHASE OF CONSTRUCTION.

THIS PROJECT HAS BEEN DESIGNED TO SENSITIVE WATERSHED STANDARDS.

GRAPHIC SCALE

0
PLANS

0
PROFILE (HORIZONTAL)

0
PROFILE (VERTICAL)

ROADSIDE ENVIRONMENTAL UNIT
DIVISION OF HIGHWAYS
STATE OF NORTH CAROLINA

Prepared In the Office of:

ROADSIDE ENVIRONMENTAL UNIT
1 South Wilmington St.
Raleigh, NC 27611

2006 STANDARD SPECIFICATIONS

Roadway Standard Drawings

The following roadway english standards as appear in "Roadway Standard Drawings"– Roadway Design Unit – N. C. Department of Transportation – Raleigh, N. C., dated July 18, 2006 and the latest revison thereto are applicable to this project and by reference hereby are considered a part of these plans.

1605.01 Temporary Silt Fence
1632.03 Rock Inlet Sediment Trap Type C
1633.01 Temporary Rock Silt Check Type A

14-DEC-2006 09:45
r:\projects\tip\k4903\k4903_i-95 rest area\NBL\Nash Title.dgn
PLAN VIEW-2D

NOTE:
PLACE TEMPORARY ROCK SEDIMENT DAMS TYPE – B AND TEMPORARY ROCK SILT CHECKS TYPE – A AT DRAINAGE OUTLETS.

CLEARING AND GRUBBING
EROSION CONTROL FOR K–4903

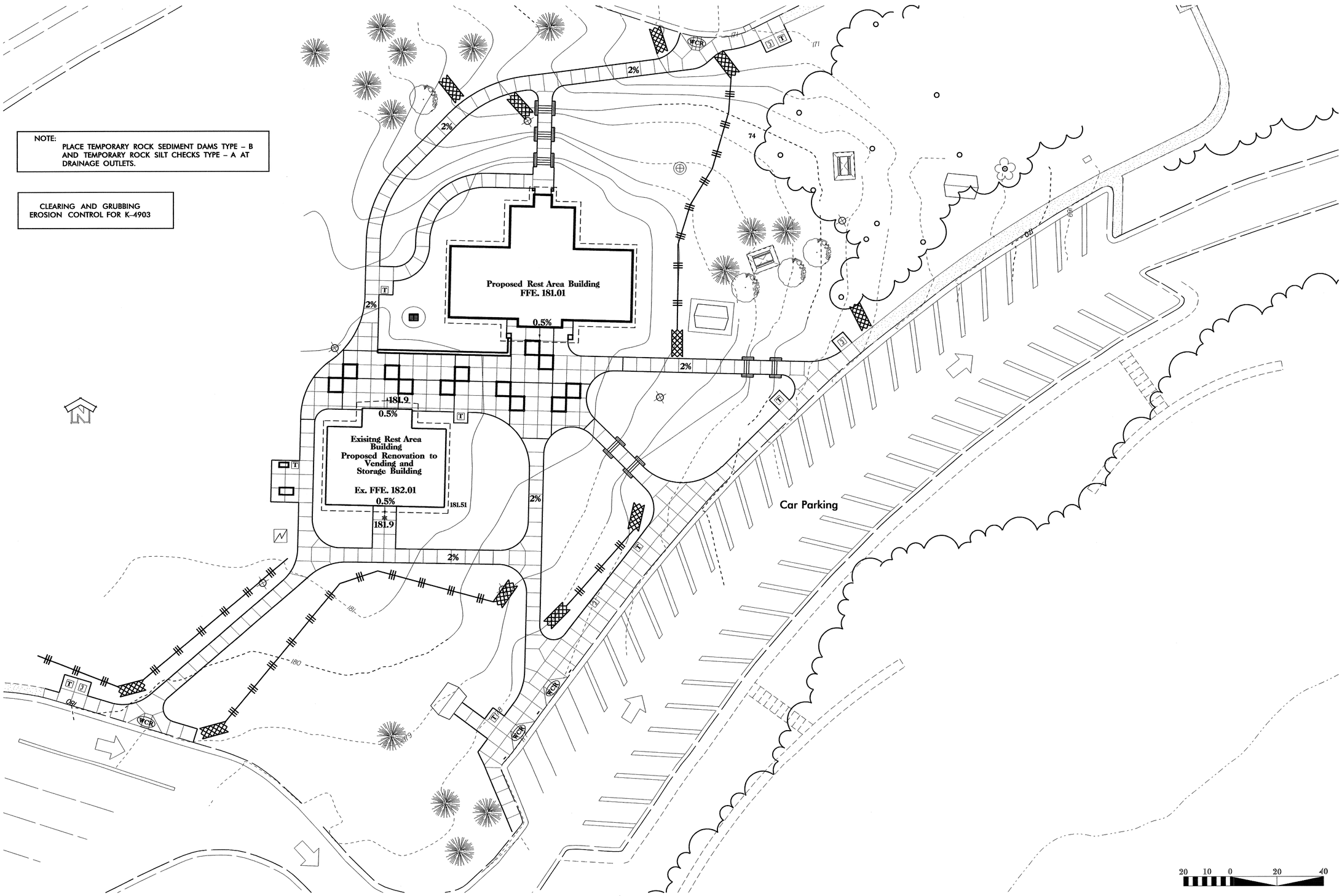

SHEET # 01
WBS # 39914.3.1
FED. PROJ. # IMS-95-3(88)142
T.I.P. # K–4903

North Carolina Department of Transportation
Roadside Environmental Unit
Landscape Design & Development Section

PROJECT TITLE :
Rest Area Renovation
I – 95 (NBL & SBL Pair)
Nash County

Plans Drawn By: CSM/NR
Scale
Date 12 / 05 / 06
Sheet Description: CG Erosion and Sedimentation Control Plan
Sheet # EC–NBL–2

SHEET #

WBS # 39914.3.1

FED. PROJ. # IMS-95-3(88)142

T.I.P. # K-4903

North Carolina Department of Transportation

Roadside Environmental Unit

Landscape Design & Development Section

PROJECT TITLE:

Rest Area Renovation
I - 95 (NBL & SBL Pair)
Nash County

Plans Drawn By: CSM/NR

Scale

Date 12 / 05 / 06

Sheet Description: Final Erosion and Sedimentation Control Plan

Sheet # EC-NBL-3

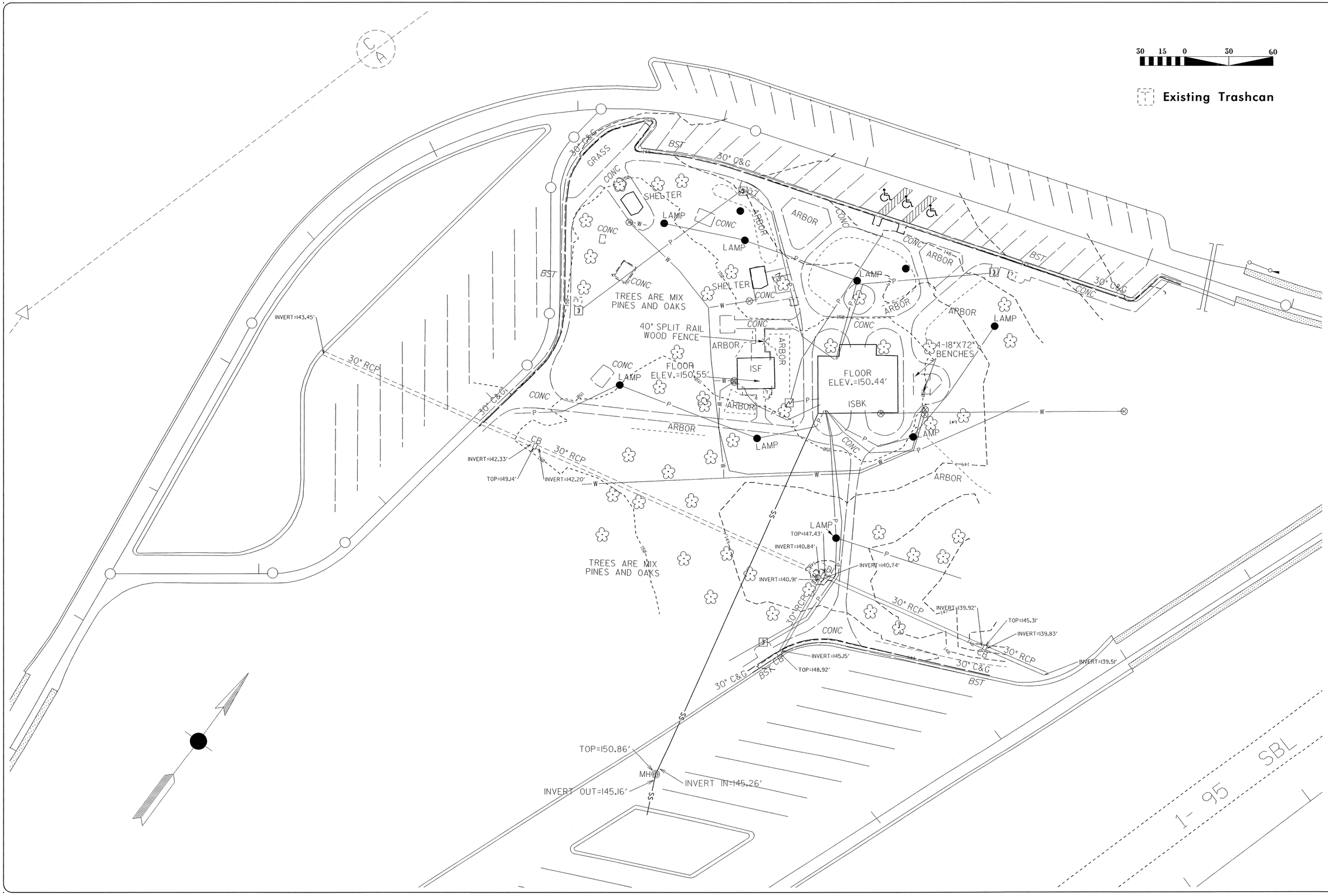

SHEET #

WBS # 39914.3.1

FED. PROJ. # IMS-95-3(88)142

T.I.P. # K-4903

North Carolina Department of Transportation

Roadside Environmental Unit

Landscape Design & Development Section

PROJECT TITLE :

Rest Area Renovation
I - 95 (NBL & SBL Pair)
Nash County

Plans Drawn By: DK

Scale: See graphic

Date: 12 / 5 / 06

Sheet Description: Existing Site Plan

Sheet # L-SBL-1

Key

- Proposed Waste Container
- Existing Waste Container
- Existing Phone
- Existing Transformer

Proposed Sleeves for Future Irrigation and Accent/Safety Lighting; 2 Inch Schedule 40 PVC, length to be determined in the field, two at each location.

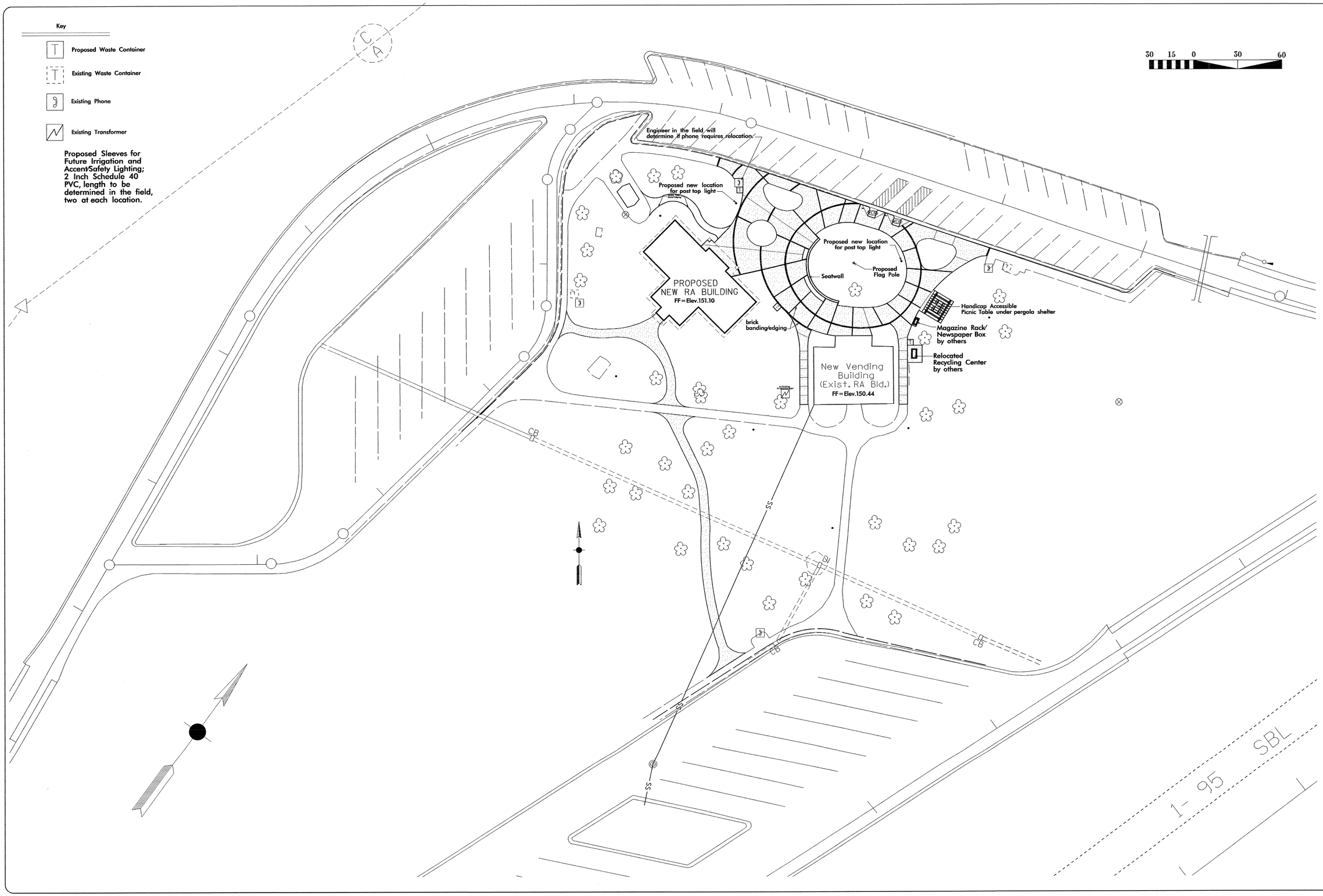

SHEET # 9

WBS # 39914.3.1

FED. PROJ. # IMS-95-3(88)142

T.I.P. # K-4903

North Carolina Department of Transportation

Roadside Environmental Unit

Landscape Design & Development Section

PROJECT TITLE:

Rest Area Renovation
I - 95 (NBL & SBL Pair)
Nash County

Plans Drawn By:	DK
Scale	See graphic
Date	12 / 05 / 06
Sheet Description	Proposed Site Plan
Sheet #	L-SBL-2

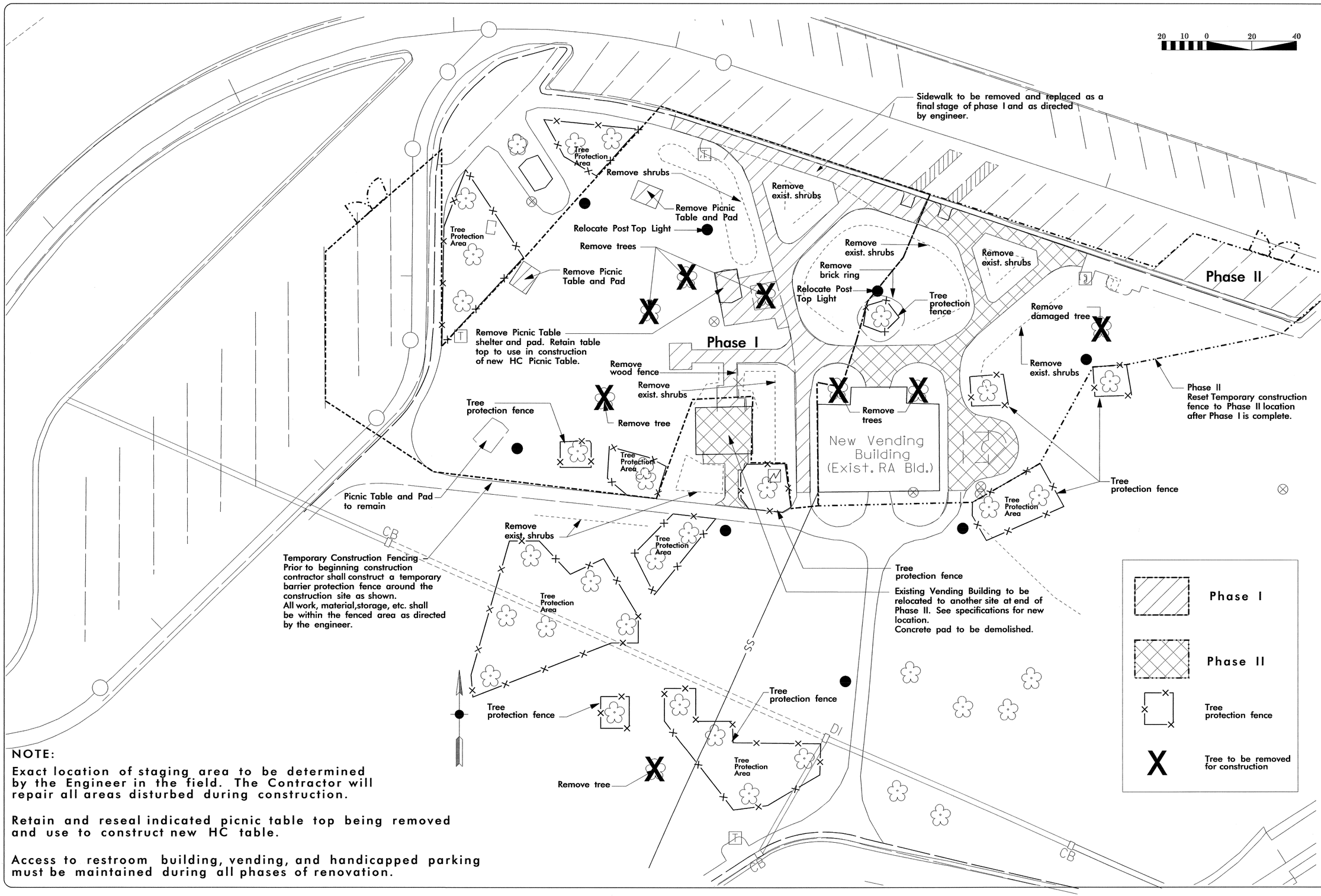

NOTE:

Exact location of staging area to be determined by the Engineer in the field. The Contractor will repair all areas disturbed during construction.

Retain and reseal indicated picnic table top being removed and use to construct new HC table.

Access to restroom building, vending, and handicapped parking must be maintained during all phases of renovation.

SHEET # 21
WBS # 39914.3.1
FED. PROJ. # IMS-95-3(88)142
T.I.P. # K-4903

North Carolina Department of Transportation
Roadside Environmental Unit
Landscape Design & Development Section

STATE OF NORTH CAROLINA DEPARTMENT OF TRANSPORTATION

PROJECT TITLE :
Rest Area Renovation
I - 95 (NBL & SBL Pair)
Nash County

Plans Drawn By: DK
Scale: See graphic
Date: 12 / 05 / 06
Sheet Description: Demolition and Phasing Plan
Sheet #: L-SBL-3

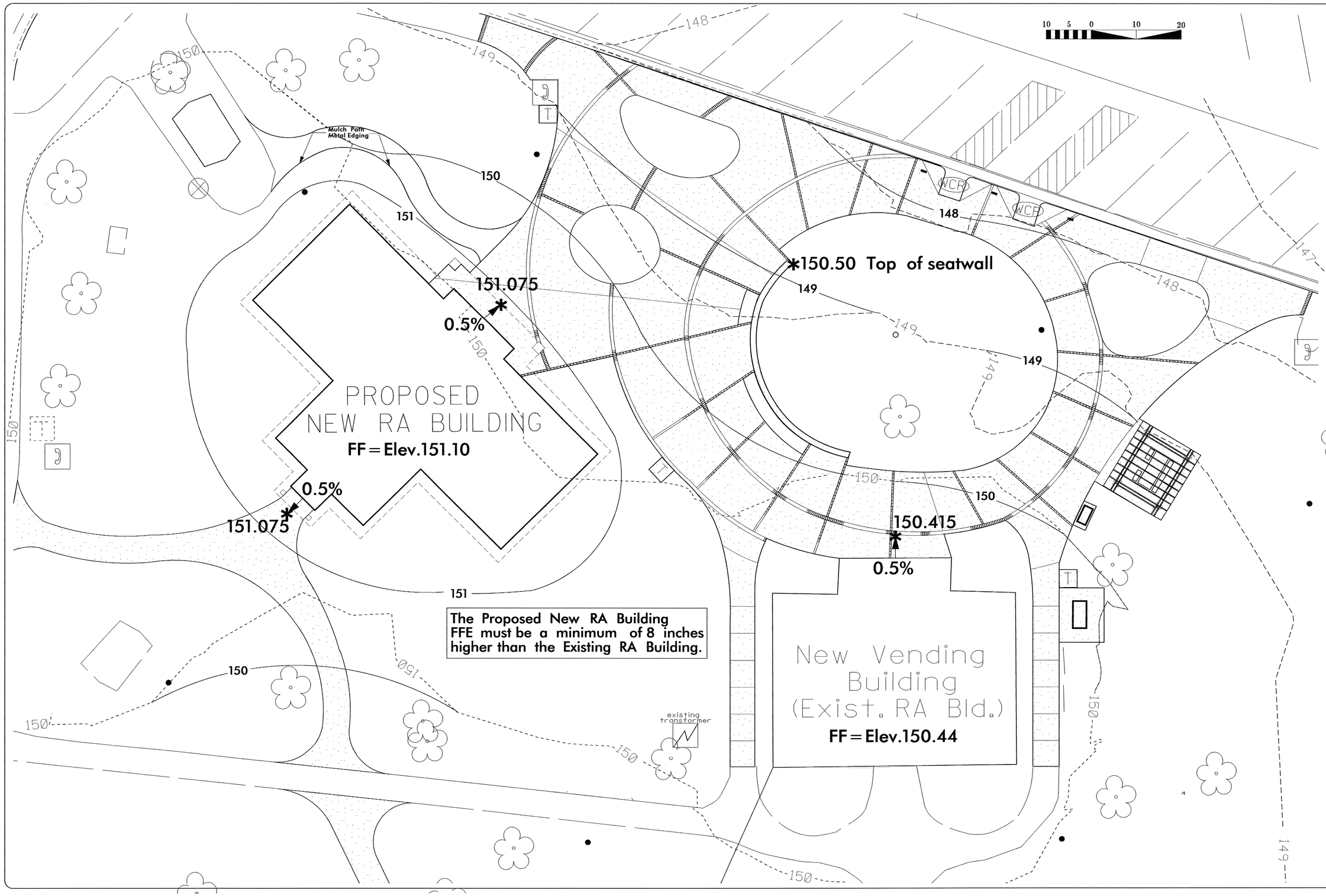

SHEET # PT

WBS # 39914.3.1

FED. PROJ. # IMS-95-3(88)142

T.I.P. # K-4903

North Carolina Department of Transportation

Roadside Environmental Unit

Landscape Design & Development Section

PROJECT TITLE :

Rest Area Renovation
I - 95 (NBL & SBL Pair)
Nash County

Plans Drawn By: DK

Scale: See graphic

Date: / /

Sheet Description: Layout and Dimension

Sheet # L-SBL-4

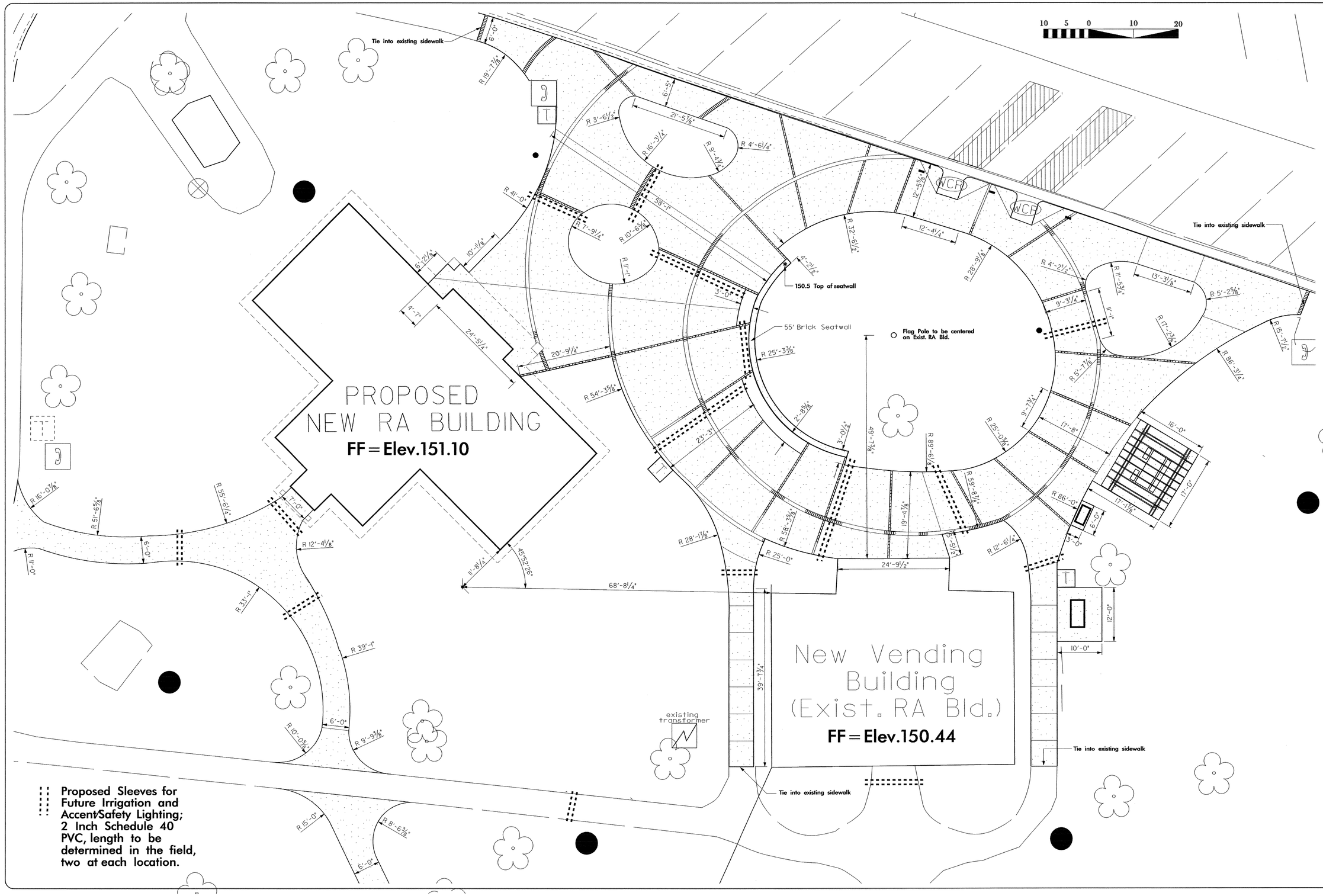

SHEET #

WBS # 39914.3.1

FED. PROJ. # IMS-95-3(88)142

T.I.P. # K-4903

North Carolina Department of Transportation

Roadside Environmental Unit

Landscape Design & Development Section

PROJECT TITLE :

Rest Area Renovation
I - 95 (NBL & SBL Pair)
Nash County

Plans Drawn By: DK

Scale: See graphic

Date: 12/05/06

Sheet Description: Layout and Dimension

Sheet # L-SBL-5

Downspout Detail

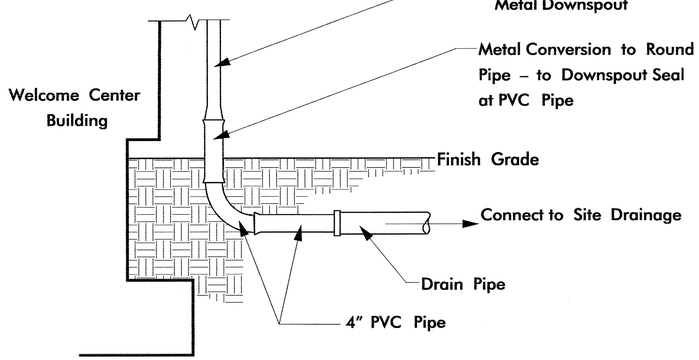

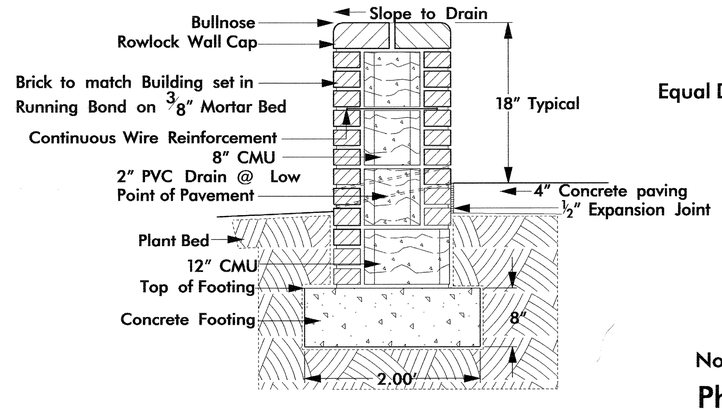

TYPICAL X–SECTION THROUGH SEATWALL

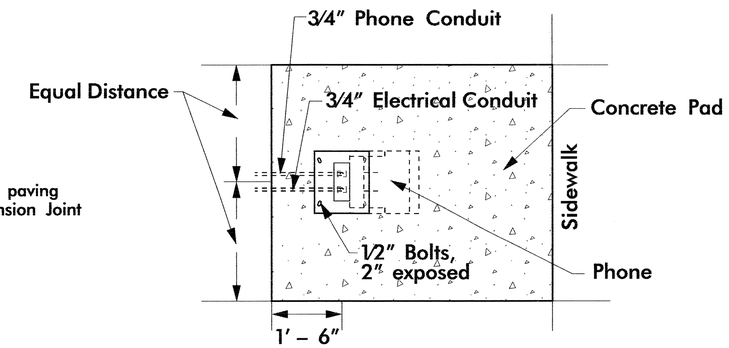

Note: see Plans for exact locations and concrete pad dimensions.

Phone Relocation – Plan (Typical Installation)

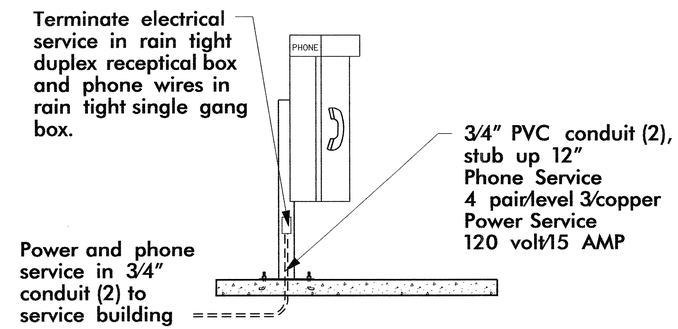

All telephones will meet state and federal handicap accesibility requirements.

Phone Relocation – Elevation / Section

PVC Cleanout Detail

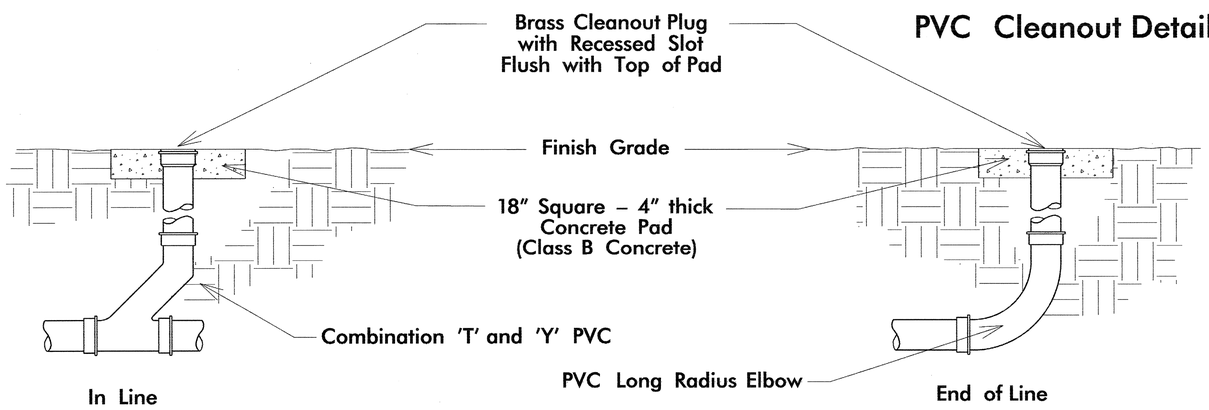

METAL EDGING

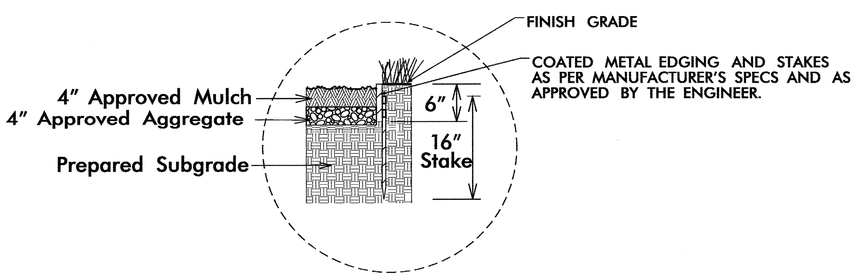

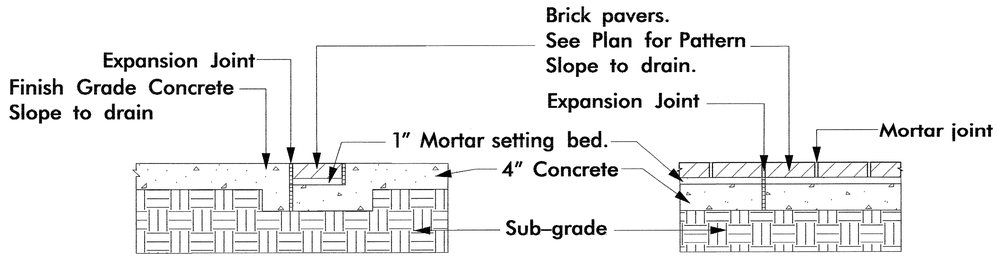

Section A

Section B

Brick Banding /Edging Detail

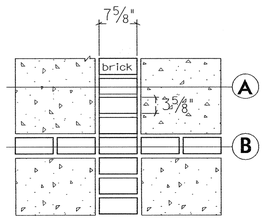

Plan

No Scale

SHEET #

WBS # 39914.3.1

FED. PROJ. # IMS-95-3(88)142

T.I.P. # K–4903

North Carolina Department of Transportation

Roadside Environmental Unit

Landscape Design & Development Section

PROJECT TITLE: Rest Area Renovation I – 95 (NBL & SBL Pair) Nash County

Plans Drawn By: DK

Scale: See graphic

Date: 12/05/06

Sheet Description: Site Details

Sheet # L–SBL–6

All lumber shall be treated with water borne pentachlorophenol or CCA (Chromated Copper Arsenate) in accordance with standards of the American Wood Preserver's Association. Minimum retention shall be 0.25 pcf for material 2 inches and smaller and 0.40 pcf for materials greater than 2 inches.

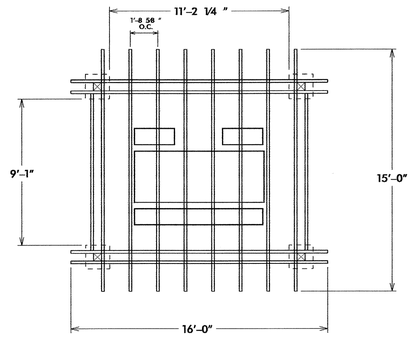

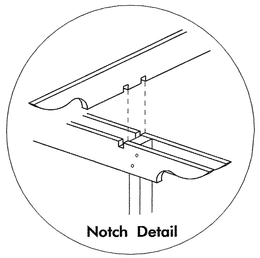

Conceptual Sketch

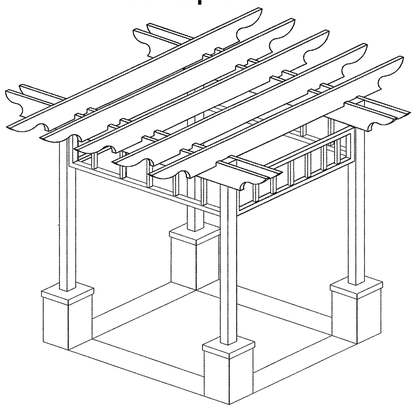

Sections

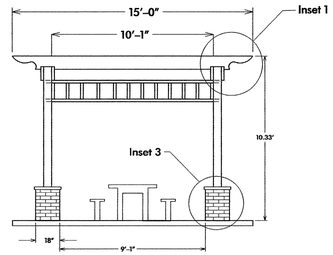

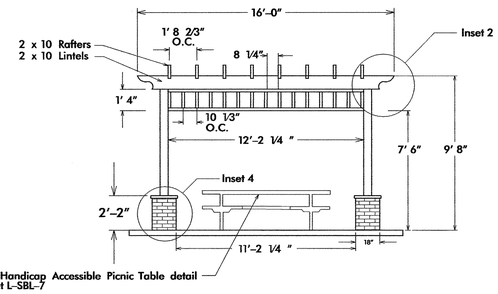

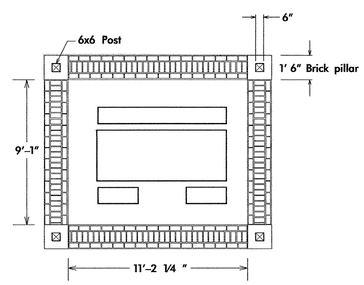

Concrete Pad with Brick Banding Plan

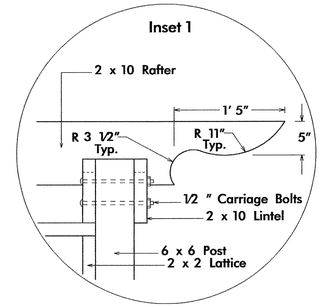

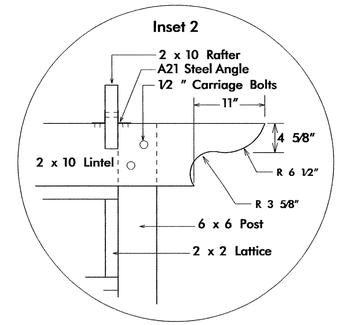

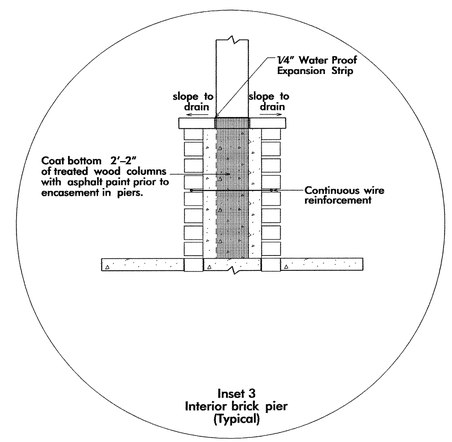

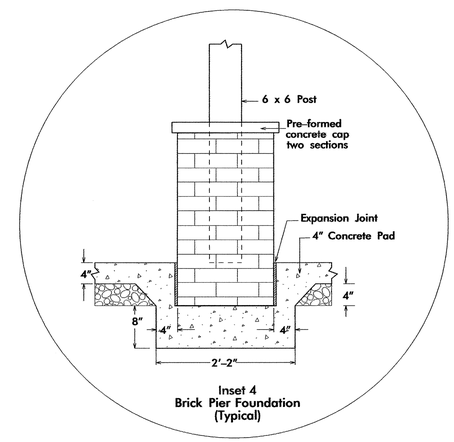

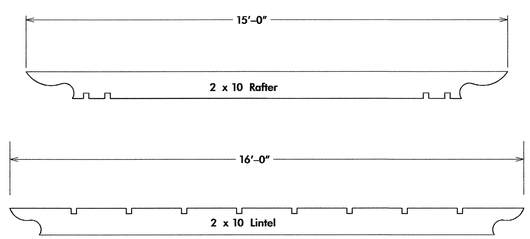

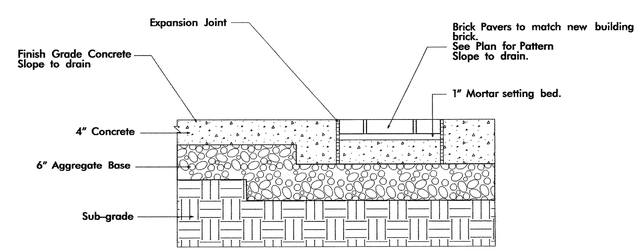

Concrete pad with Brick Banding Section

No Scale

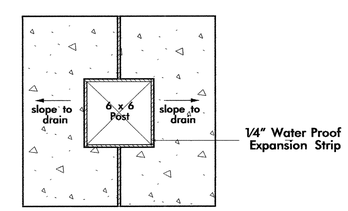

Pre-formed concrete cap (two sections). Typical

No Scale

No Scale

SHEET #
WBS # 39914.3.1
FED. PROJ. # IMS-95-3(88)142
T.I.P. # K-4903

North Carolina Department of Transportation
Roadside Environmental Unit
Landscape Design & Development Section

PROJECT TITLE :
Rest Area Renovation
I - 95 (NBL & SBL Pair)
Nash County

Plans Drawn By: DK
Scale: See graphic
Date: 12 / 05 / 06
Sheet Description: Pergola Picnic Shelter
Sheet #: L-SBL-7

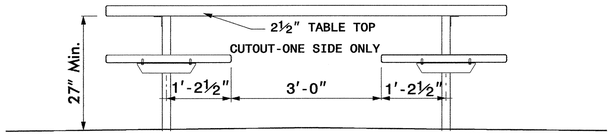

HANDICAP ACCESSIBLE PICNIC TABLE

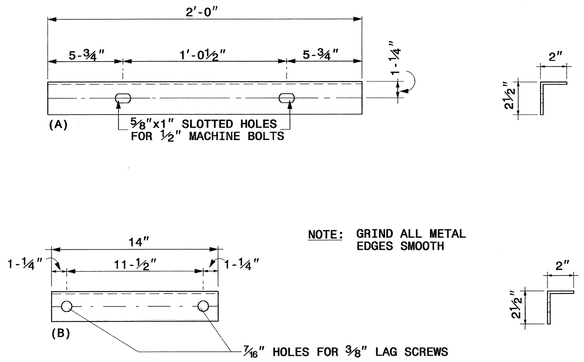

2" X 212" X 316" STEEL ∠ DETAILS

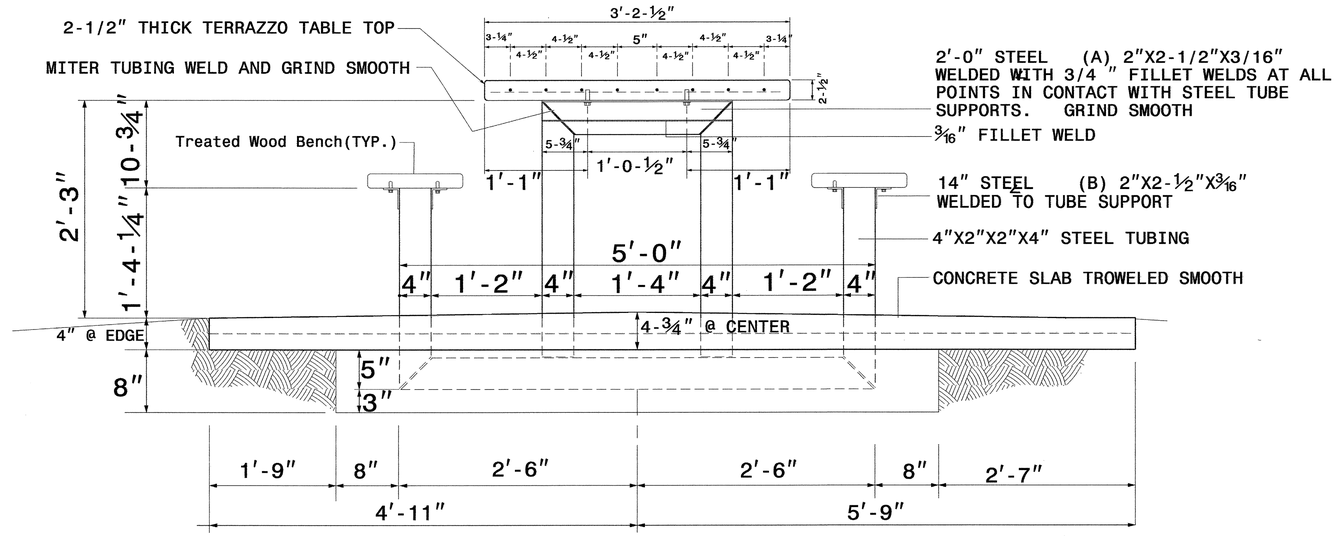

SECTION A-A VERT. CROSS SECTION THROUGH CONC. PAD, TABLE, & BENCHES

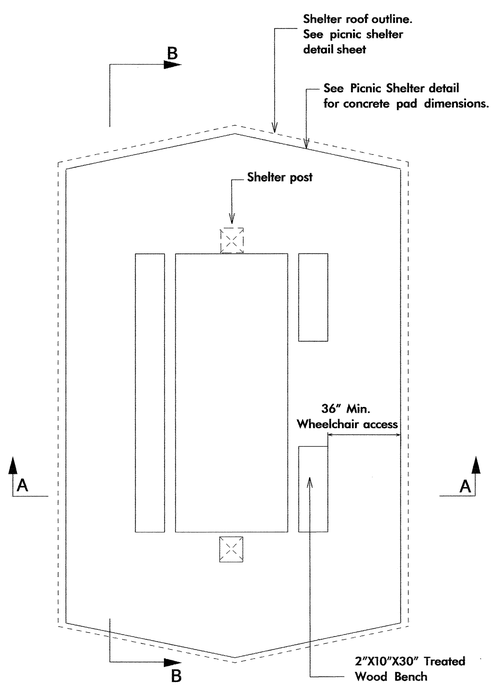

PLAN OF HANDICAP ACCESSIBLE TABLE, BENCHES, & CONCRETE PAD

SLOPES SAME AS LONGITUDINAL SECTION

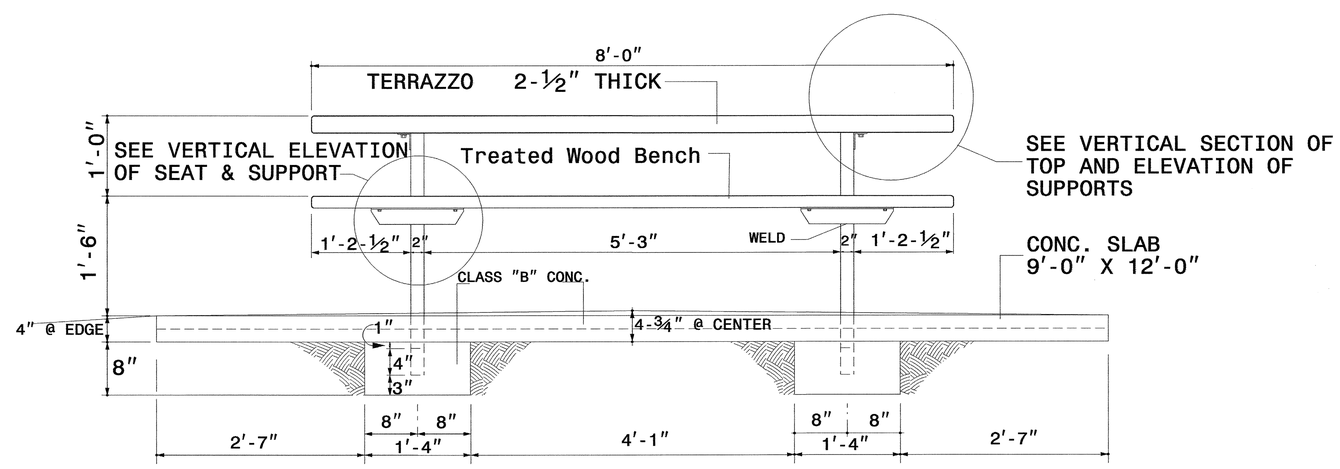

SECTION B-B VERT. LONGITUDINAL SECT. THROUGH CONC. PAD LOOKING TOWARD BENCH &TABLE

SHEET #
WBS # 39914.3.1
FED. PROJ. # IMS-95-3(88)142
T.I.P. # K-4903

North Carolina Department of Transportation
Roadside Environmental Unit
Landscape Design & Development Section

PROJECT TITLE :
Rest Area Renovation
I - 95 (NBL & SBL Pair)
Nash County

Plans Drawn By: CSM/NR
Scale: Not to Scale
Date: 12 / 5 / 06
Sheet Description: Picnic Table Detail
Sheet # L-SBL-8

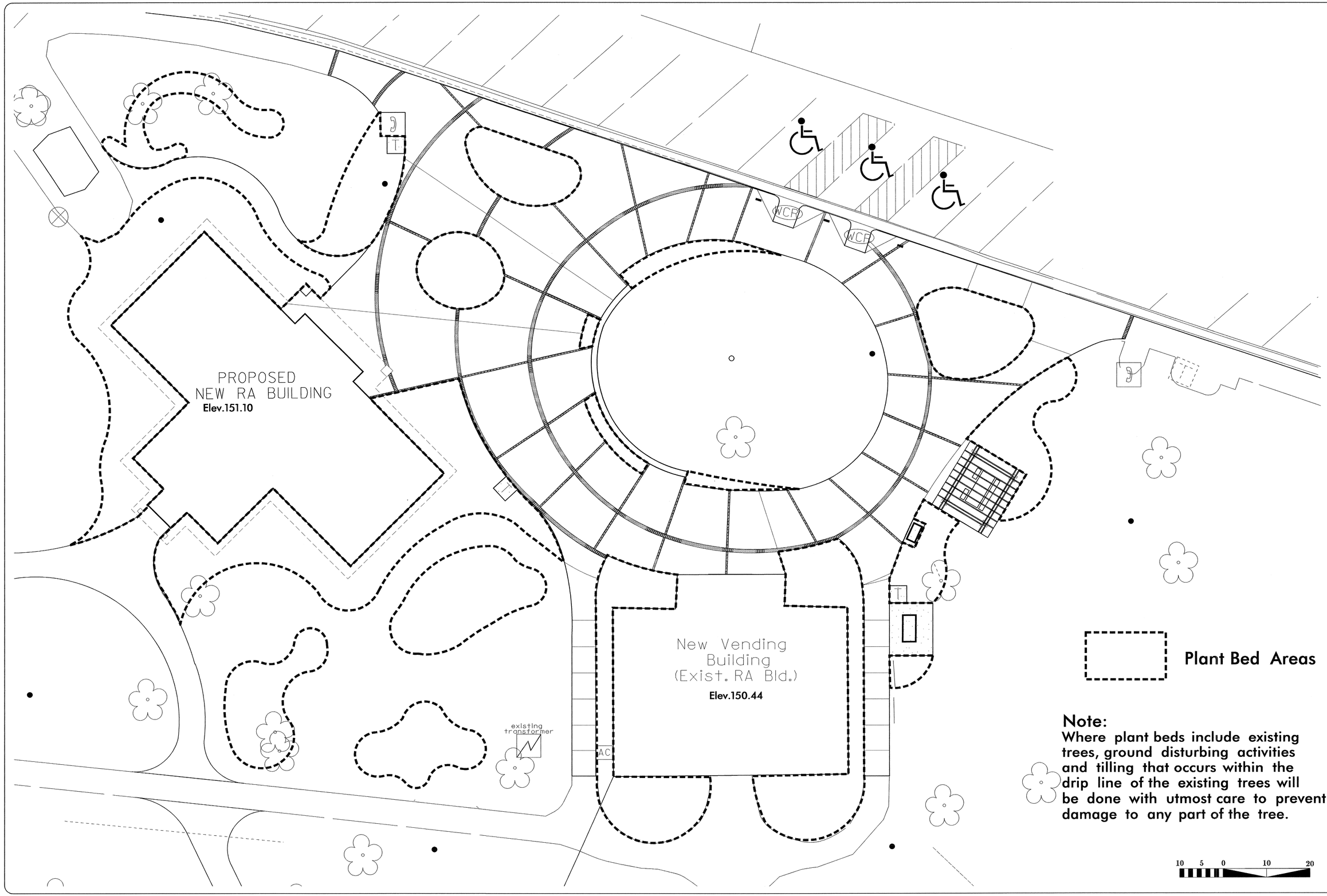

Note:
Where plant beds include existing trees, ground disturbing activities and tilling that occurs within the drip line of the existing trees will be done with utmost care to prevent damage to any part of the tree.

SHEET # 01

WBS # 39914.3.1

FED. PROJ. # IMS-95-3(88)142

T.I.P. # K-4903

North Carolina Department of Transportation

Roadside Environmental Unit

Landscape Design & Development Section

STATE OF NORTH CAROLINA • NORTH CAROLINA DEPARTMENT OF TRANSPORTATION

PROJECT TITLE :

Rest Area Renovation
I - 95 (NBL & SBL Pair)
Nash County

Plans Drawn By: DK

Scale: See graphic

Date: 12/05/06

Sheet Description: Plant Bed Plan

Sheet # L-SBL-9

Note: All utility locations shall be verified in the field by the contractor prior to beginning construction.

30 15 0 30 60

Telephone and Power Service to Existing Telephone

BST

30" C&G

CONC

SHELTER

LAMP

P&T

Telephone and Power Service to Existing Telephone

Main Power Line

T

¾" WATER LINE

INVERT=143.45'

30" RCP

FLOOR ELEV.=150.55'

ISF

FLOOR ELEV.=150.44'

ISBK

2½" WATER LINE

CB

INVERT=142.33'

TOP=149.14'

INVERT=142.20'

TOP=147.43'

INVERT=140.84'

INVERT=140.74'

INVERT=140.91'

INVERT=139.92'

TOP=145.31'

INVERT=139.83'

INVERT=145.15'

TOP=148.92'

INVERT=139.51'

BST CB

TOP=150.86'

MH

INVERT IN=145.26'

INVERT OUT=145.16'

SS

W

P

Key:
P - Power Line
P & T - Power and Telephone Line
SS - Sanitary Sewer Line
W - PVC Water Line

1-95

SBL

Existing Site Utility Plan
SBL

SBL

SHEET # 97

WBS # 39914.3.1

FED. PROJ. # IMS-95-3(88)142

T.I.P. # K-4903

North Carolina Department of Transportation

Roadside Environmental Unit

Landscape Design & Development Section

STATE OF NORTH CAROLINA DEPARTMENT OF TRANSPORTATION

PROJECT TITLE:

Rest Area Renovation
I - 95 (NBL & SBL Pair)
Nash County

Plans Drawn By:	JPP
Scale	See graphic
Date	12/05/06
Sheet Description	Existing SBL Utility Plan
Sheet #	SU-SBL-1

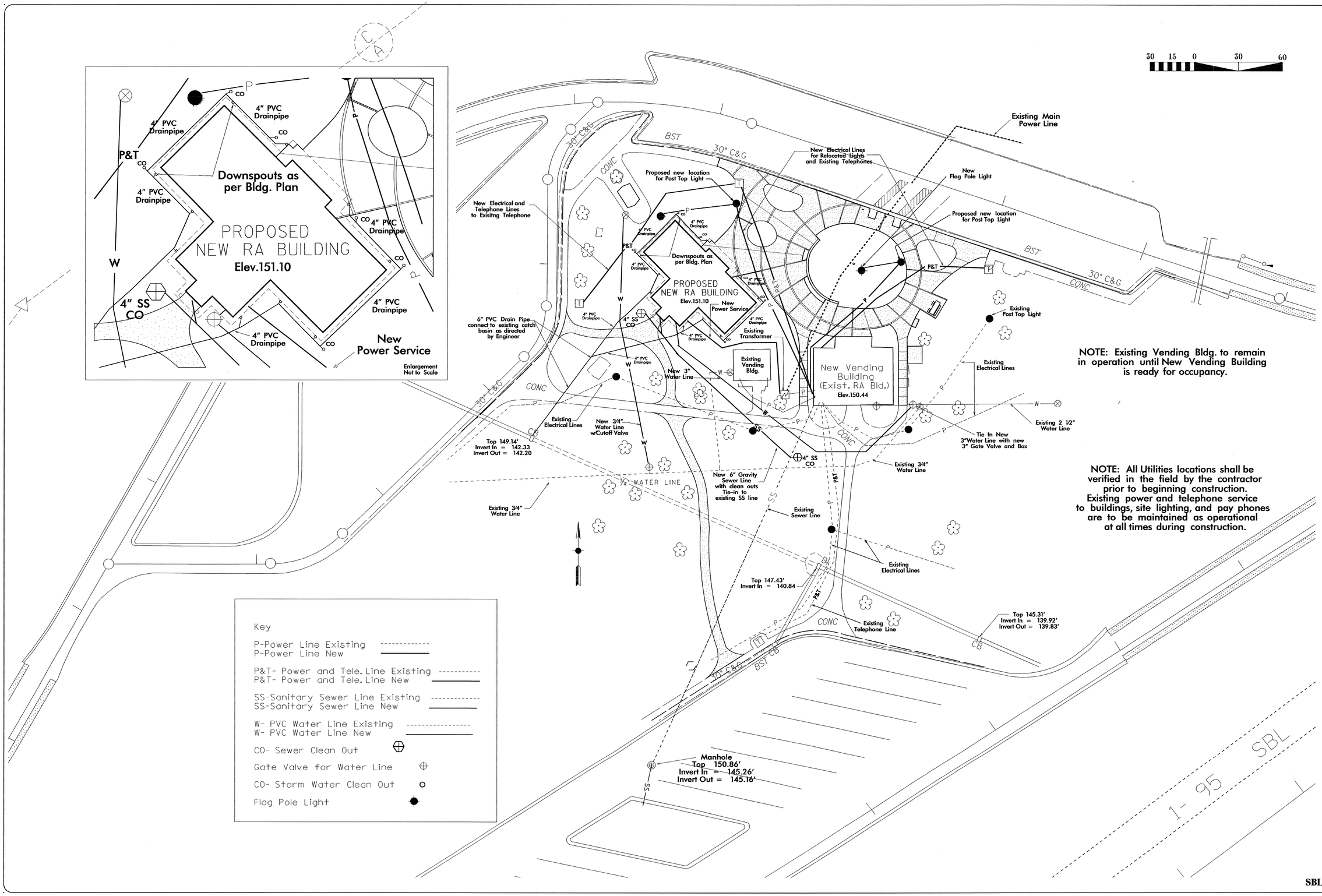

NOTE: Existing Vending Bldg. to remain in operation until New Vending Building is ready for occupancy.

NOTE: All Utilities locations shall be verified in the field by the contractor prior to beginning construction. Existing power and telephone service to buildings, site lighting, and pay phones are to be maintained as operational at all times during construction.

SBL

SHEET # 91
WBS # 39914.3.1
FED. PROJ. # IMS-95-3(88)142
T.I.P. # K-4903

North Carolina Department of Transportation
Roadside Environmental Unit
Landscape Design & Development Section

STATE OF NORTH CAROLINA * NORTH CAROLINA DEPARTMENT OF TRANSPORTATION

PROJECT TITLE:
Rest Area Renovation
I - 95 (NBL & SBL Pair)
Nash County

Plans Drawn By: JPP
Scale: See graphic
Date: 12/05/06
Sheet Description: Proposed Site Utility Plan SBL
Sheet #: SU-SBL-2