09/08/99

TIP PROJECT: R-2245

CONTRACT: C201550

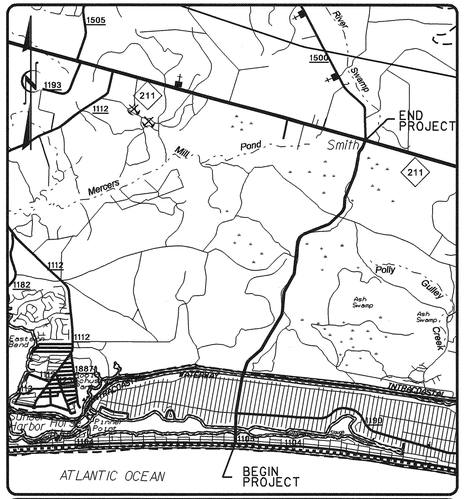

VICINITY MAP

STATE OF NORTH CAROLINA
DIVISION OF HIGHWAYS

BRUNSWICK COUNTY

STATE	STATE PROJECT REFERENCE NO.	SHEET NO.	TOTAL SHEETS
N.C.	R-2245		

STATE PROJ. NO.	F. A. PROJ. NO.	DESCRIPTION
34407.1.1	STP-1105(6)	P.E.
34407.3.1	STP-1105(7)	R /W & UTIL.
34407.2.3	STP-1105(17)	CONST.

LOCATION: *NEW ROUTE FROM SR 1104 (BEACH DRIVE) TO NC 211 (SECOND BRIDGE TO OAK ISLAND)*

TYPE OF WORK: *GRADING, PAVING, DRAINAGE, CULVERT, STRUCTURES, SIGNING AND SIGNALS*

STRUCTURES

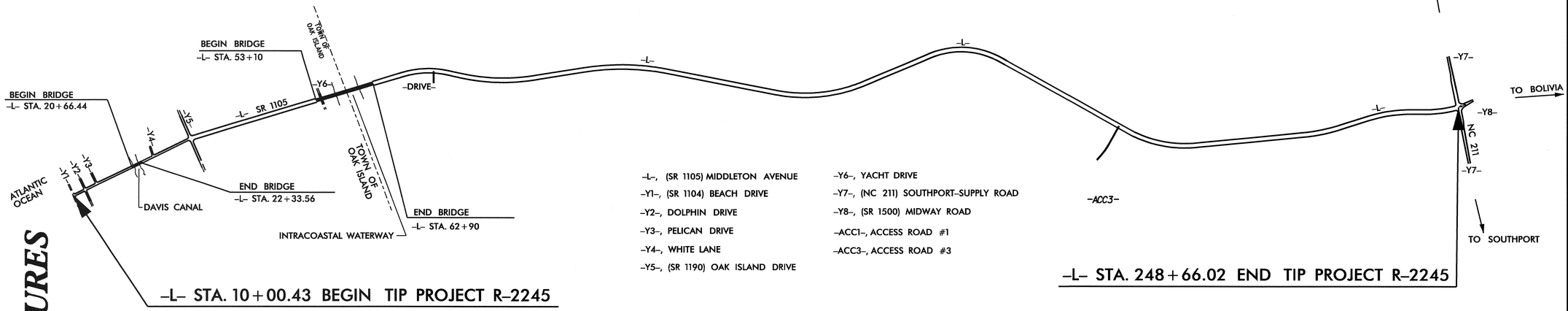

-L-, (SR 1105) MIDDLETON AVENUE
-Y1-, (SR 1104) BEACH DRIVE
-Y2-, DOLPHIN DRIVE
-Y3-, PELICAN DRIVE
-Y4-, WHITE LANE
-Y5-, (SR 1190) OAK ISLAND DRIVE
-Y6-, YACHT DRIVE
-Y7-, (NC 211) SOUTHPORT-SUPPLY ROAD
-Y8-, (SR 1500) MIDWAY ROAD
-ACC1-, ACCESS ROAD #1
-ACC3-, ACCESS ROAD #3

-L- STA. 10+00.43 BEGIN TIP PROJECT R-2245

-L- STA. 248+66.02 END TIP PROJECT R-2245

STATE OF NORTH CAROLINA DEPARTMENT OF TRANSPORTATION

DESIGN DATA

ADT 2007 = 14500
ADT 2030 = 31000
DHV = 8 %
D = 55 %
T = 3 % *
V = 40-60 MPH
* TTST 1% + DUAL 2%
FUNC CLASS = RURAL COLLECTOR

PROJECT LENGTH

LENGTH ROADWAY TIP PROJECT R-2245 = 4.302 MI
LENGTH STRUCTURES TIP PROJECT R-2245 = 0.218 MI
TOTAL LENGTH OF TIP PROJECT R-2245 = 4.520 MI

Prepared In the Office of:
DIVISION OF HIGHWAYS
1000 Birch Ridge Dr., Raleigh NC, 27610

2006 STANDARD SPECIFICATIONS

LETTING DATE:
MAY 15, 2007

OMAR R. AZIZI, P.E.
PROJECT ENGINEER

E. E. MURRAY, P.E.
PROJECT DESIGN ENGINEER

STRUCTURE DESIGN UNIT
1000 BIRCH RIDGE DR.
RALEIGH, N.C. 27610

NORTH CAROLINA PROFESSIONAL SEAL 14552 ENGINEER GREGORY R. PERFETTI
2.20.07

DIVISION OF HIGHWAYS
STATE OF NORTH CAROLINA

P.E.
STATE DESIGN ENGINEER

DEPARTMENT OF TRANSPORTATION
FEDERAL HIGHWAY ADMINISTRATION

APPROVED
DIVISION ADMINISTRATOR *DATE*

14-FEB-2007 16:58
$$$$$$$$$$$$$$$$DGN$$$$$$$$$$$$$$$$
emurray

STATE OF NORTH CAROLINA
DIVISION OF HIGHWAYS

BRUNSWICK COUNTY

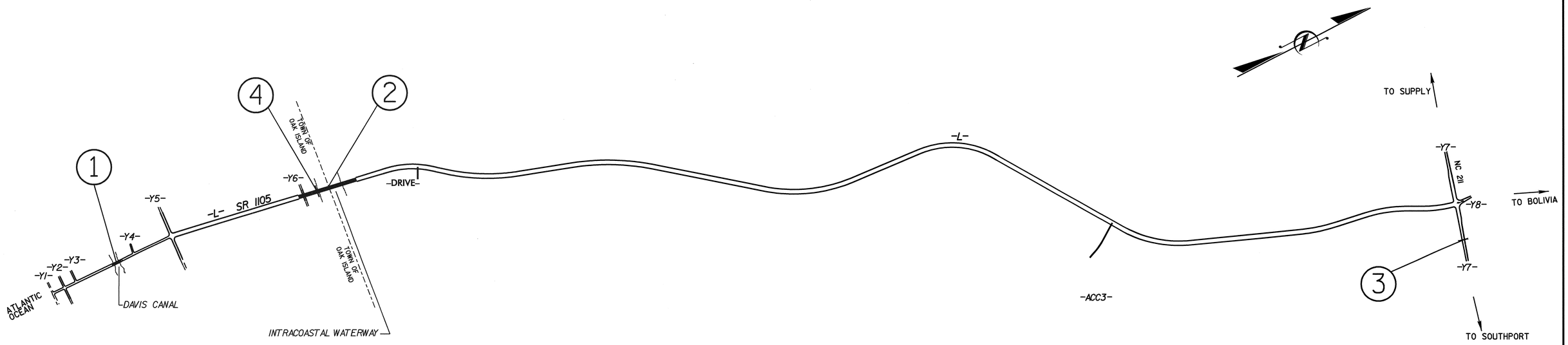

INDEX

STRUCTURE NO.	STATION	DESCRIPTION	SHEET NUMBERS
1	21+50.00 -L-	BRIDGE ON SR 1105 OVER BIG DAVIS CANAL	S-1 THRU S-25
2	58+00.00 -L-	BRIDGE ON SR 1105 OVER INTRACOASTAL WATERWAY	S-26 THRU S-98
3	23+98.00 -Y7-	SINGLE 10' X 8' RCBC	C-1 THRU C-4
4	56+40.47 -L-	STEEL SHEET PILE BULKHEAD	W-1 THRU W-2

PROJECT NO. R-2245
BRUNSWICK COUNTY

STATE OF NORTH CAROLINA
DEPARTMENT OF TRANSPORTATION
RALEIGH

INDEX

REVISIONS						
NO.	BY:	DATE:	NO.	BY:	DATE:	
1			3			
2			4			

DRAWN BY : PEGGY ADKINS DATE : 9-06
CHECKED BY : T.L. AVERETTE DATE : 10-06

14-FEB-2007 16:39
K:\Structures\R2245\final plans\INDEX.DGN
emurray

F.A. No. STP-1105(17)

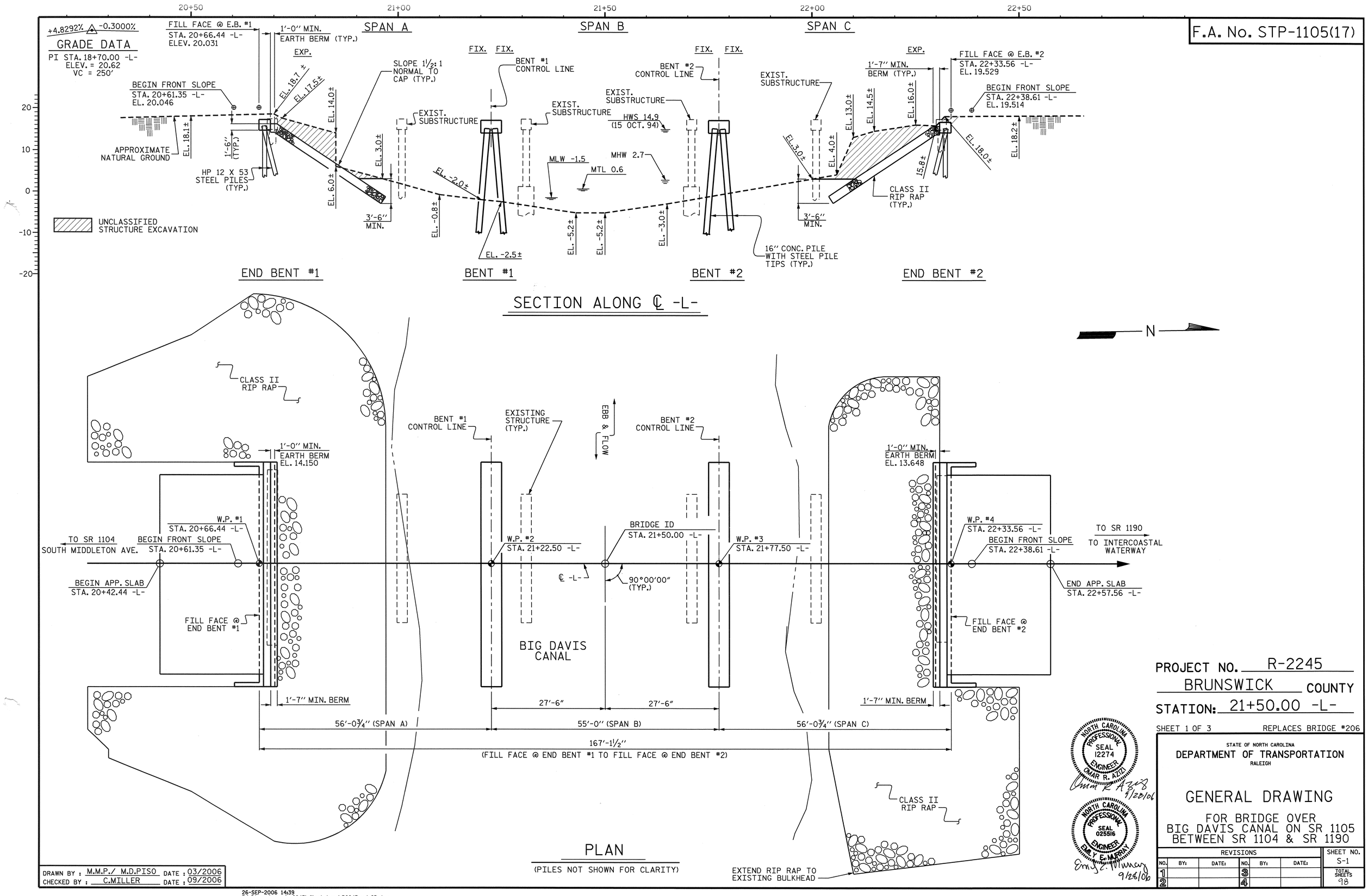

PROJECT NO. R-2245

BRUNSWICK COUNTY

STATION: 21+50.00 -L-

SHEET 1 OF 3 REPLACES BRIDGE #206

STATE OF NORTH CAROLINA
DEPARTMENT OF TRANSPORTATION
RALEIGH

GENERAL DRAWING

FOR BRIDGE OVER
BIG DAVIS CANAL ON SR 1105
BETWEEN SR 1104 & SR 1190

NORTH CAROLINA PROFESSIONAL SEAL 12274 ENGINEER OMAR R. AZIZI
Omar R. Aziz 9/28/06

NORTH CAROLINA PROFESSIONAL SEAL 025516 ENGINEER EMILY E. MURRAY
Emily E. Murray 9/28/06

REVISIONS						SHEET NO.
NO.	BY:	DATE:	NO.	BY:	DATE:	S-1
1			3			TOTAL SHEETS
2			4			98

DRAWN BY : M.M.P./ M.D.PISO DATE : 03/2006
CHECKED BY : C.MILLER DATE : 09/2006

26-SEP-2006 14:39
R:\Structures\r2245\finalplans\R2245_sd_GD.dgn
padkins

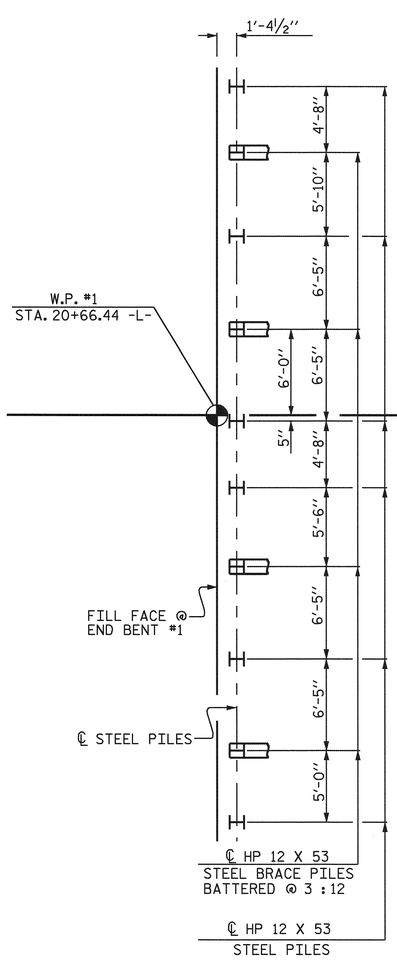

END BENT #1

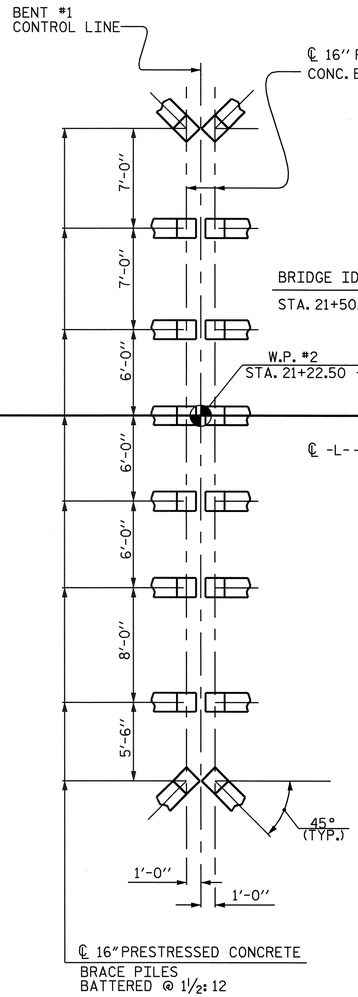

BENT #1

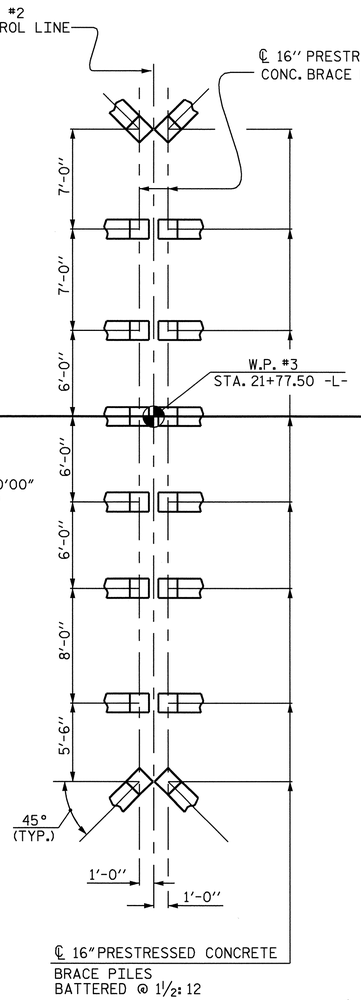

BENT #2

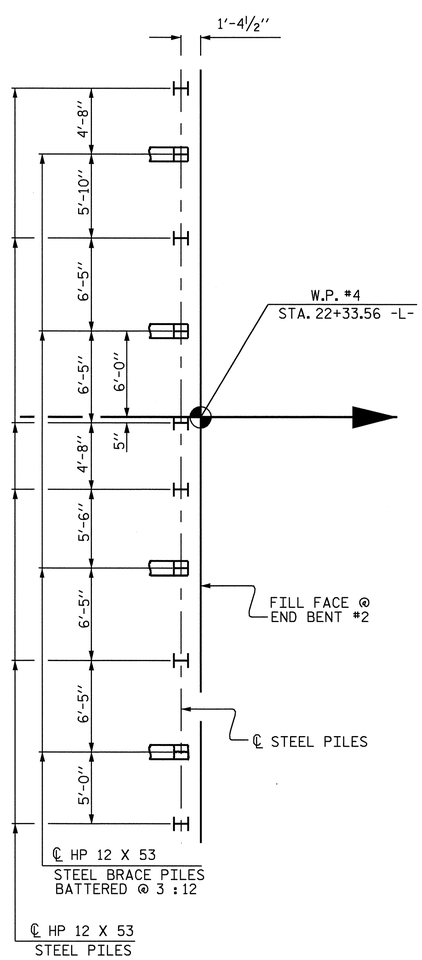

END BENT #2

BRIDGE ID
STA. 21+50.00 -L-

W.P. #2
STA. 21+22.50 -L-

W.P. #3
STA. 21+77.50 -L-

℄ -L-

90°00'00"
(TYP.)

FOUNDATION LAYOUT

PROJECT NO. R-2245

BRUNSWICK COUNTY

STATION: 21+50.00 -L-

SHEET 2 OF 3

STATE OF NORTH CAROLINA
DEPARTMENT OF TRANSPORTATION
RALEIGH

GENERAL DRAWING

FOR BRIDGE OVER
BIG DAVIS CANAL ON SR 1105
BETWEEN SR 1104 & SR 1190

REVISIONS						SHEET NO.
NO.	BY:	DATE:	NO.	BY:	DATE:	S-2
1			3			TOTAL SHEETS
2			4			98

NORTH CAROLINA PROFESSIONAL SEAL 025516 ENGINEER EMILY E. MURRAY
11/2/06

DRAWN BY : M.D.PISO DATE : 05/2006
CHECKED BY : C.MILLER DATE : 09/2006

31-OCT-2006 10:18
G:\Structures\r2245\final plans\R2245_sd_GD.dgn
taverette

B.M. #200 : BOLT IN LEFT FRONT LEG OF WATER TOWER, -L- STA. 15+14.91, 62.10' RT, EL.=7.95', NGVD 1929
B.M. #201 : RRS SET IN 10" OAK, -L- STA. 24+99.53, 125.17' LEFT, EL. 18.90, NGVD 1929

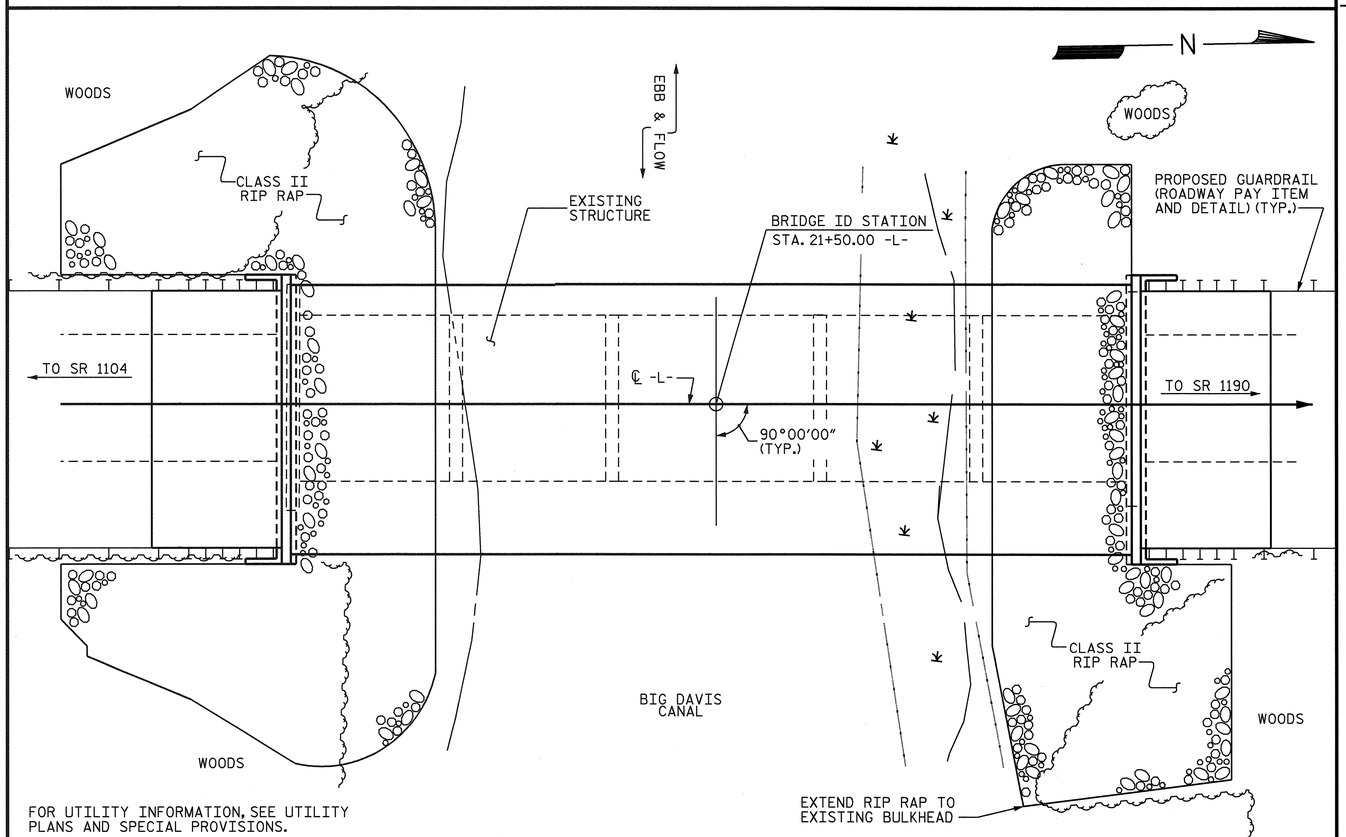

FOR UTILITY INFORMATION, SEE UTILITY PLANS AND SPECIAL PROVISIONS.

LOCATION SKETCH

HYDRAULIC DATA

DESIGN DISCHARGE	=	N/A
FREQUENCY OF DESIGN FLOOD	=	10 YRS.
DESIGN HIGH WATER ELEVATION	=	6.9 FT.
DRAINAGE AREA	=	N/A
BASIC DISCHARGE (Q100)	=	N/A
BASIC HIGH WATER EL	=	12.3 FT.

OVERTOPPING DATA

OVERTOPPING DISCHARGE	=	N/A
FREQUENCY OF OVERTOPPING FLOOD	=	10 YR. +
OVERTOPPING FLOOD EL.	=	7.3 FT.

NOTES

ASSUMED LIVE LOAD = HS20 OR ALTERNATE LOADING, EXCEPT THAT CORED SLAB UNITS, PRIOR TO PLACEMENT OF SIDEWALK AND WEARING SURFACE, HAVE BEEN DESIGNED FOR HS25 FOR THE PURPOSE OF TOP-DOWN CONSTRUCTION. THIS BRIDGE SHALL BE CONSTRUCTED USING TOP-DOWN CONSTRUCTION METHODS. THE USE OF A TEMPORARY CAUSEWAY OR WORK BRIDGE IS NOT PERMITTED.

FOR OTHER DESIGN DATA AND GENERAL NOTES, SEE SHEET SN.

FOR EROSION CONTROL MEASURES SEE EROSION CONTROL PLANS.

THIS BRIDGE HAS BEEN DESIGNED BY THE STRENGTH DESIGN METHOD AS SPECIFIED IN AASHTO STANDARD SPECIFICATIONS.

EXISTING STRUCTURE CONSISTING OF 5 SPANS: 1 @ 30'-4", 1 @ 30'-0", 1 @ 39'-11", 1 @ 30'-0", 1 @ 31'-4". WITH A CLEAR ROADWAY WIDTH OF 23'-8" WITH A TIMBER FLOOR ON STEEL I-BEAMS AND TIMBER CAPS ON TIMBER PILES LOCATED AT THE SITE OF THE PROPOSED STRUCTURE SHALL BE REMOVED. THE EXISTING BRIDGE IS PRESENTLY POSTED BELOW THE LEGAL LIMIT. SHOULD THE STRUCTURAL INTEGRITY OF BRIDGE FURTHER DETERIORATE, THIS LOAD LIMITATION MAY BE REDUCED AS FOUND NECESSARY DURING THE LIFE OF THE PROJECT.

REMOVAL OF THE EXISTING BRIDGE SHALL BE PERFORMED SO AS NOT TO ALLOW DEBRIS TO FALL INTO THE WATER. THE CONTRACTOR SHALL REMOVE THE BRIDGE AND SUBMIT PLANS FOR DEMOLITION IN ACCORDANCE WITH ARTICLE 402-2 OF THE STANDARD SPECIFICATIONS.

THE MATERIAL SHOWN IN THE CROSS-HATCHED AREA SHALL BE EXCAVATED FOR A DISTANCE OF 28 FT. LEFT OF CENTERLINE ROADWAY AND 35 FT. RIGHT OF CENTERLINE ROADWAY AS DIRECTED BY THE ENGINEER. THE ESTIMATED QUANTITY IS LESS THAN 500 CUBIC YARDS. THIS WORK WILL BE PAID FOR AT THE CONTRACT LUMP SUM PRICE FOR UNCLASSIFIED STRUCTURE EXCAVATION.

THE SUBSTRUCTURE OF THE EXISTING BRIDGE INDICATED ON THE PLANS IS FROM THE BEST INFORMATION AVAILABLE. SINCE THIS INFORMATION IS SHOWN FOR THE CONVENIENCE OF THE CONTRACTOR, THE CONTRACTOR SHALL HAVE NO CLAIM WHATSOEVER AGAINST THE DEPARTMENT OF TRANSPORTATION FOR ANY DELAYS OR ADDITIONAL COST INCURRED BASED ON DIFFERENCES BETWEEN THE EXISTING BRIDGE SUBSTRUCTURE SHOWN ON THE PLANS AND THE ACTUAL CONDITIONS AT THE PROJECT SITE.

THIS STRUCTURE HAS BEEN DESIGNED IN ACCORDANCE WITH HEC 18, "EVALUATING SCOUR AT BRIDGES." NOVEMBER 1995.

THIS BRIDGE HAS BEEN DESIGNED IN ACCORDANCE WITH THE REQUIREMENTS OF THE AASHTO STANDARD SPECIFICATIONS FOR SESMIC DESIGN OF HIGHWAY BRIDGES FOR SESMIC PERFORMANCE CATEGORY A.

THIS STRUCTURE CONTAINS THE NECESSARY CORROSION PROTECTION REQUIRED FOR A CORROSIVE SITE.

FOR GROUT FOR STRUCTURES, SEE SPECIAL PROVISIONS.

INASMUCH AS THE PAINT SYSTEM ON THE EXISTING STRUCTURAL STEEL CONTAINS LEAD, THE CONTRACTOR'S ATTENTION IS DIRECTED TO ARTICLE 107-1 OF THE STANDARD SPECIFICATIONS. ANY COSTS RESULTING FROM COMPLIANCE WITH APPLICABLE STATE OR FEDERAL REGULATIONS PERTAINING TO HANDLING OF MATERIALS CONTAINING LEAD BASED PAINT SHALL BE INCLUDED IN THE BID PRICE FOR "REMOVAL OF EXISTING STRUCTURE."

THE CONTRACTOR SHALL PROVIDE INDEPENDENT ASSURANCE SAMPLES OF REINFORCING STEEL AS FOLLOWS: FOR PROJECTS REQUIRING UP TO 400 TONS OF REINFORCING STEEL, ONE 30 INCH SAMPLE OF EACH SIZE BAR USED, AND FOR PROJECTS REQUIRING OVER 400 TONS OF REINFORCING STEEL, TWO 30 INCH SAMPLES OF EACH SIZE BAR USED. THE BARS FROM WHICH THE SAMPLES ARE TAKEN MUST THEN BE SPLICED WITH REPLACEMENT BARS OF THE SIZE AND LENGTH OF THE SAMPLE, PLUS A MINIMUM LAP SPLICE OF THIRTY BAR DIAMETERS.

FOR SUBMITTAL OF WORKING DRAWINGS, SEE SPECIAL PROVISIONS.

FOR FALSEWORK AND FORMWORK, SEE SPECIAL PROVISIONS.

THE SCOUR CRITICAL ELEVATION FOR BENT NO. 1 AND BENT NO. 2 IS ELEVATION -20 FT. SCOUR CRITICAL ELEVATIONS ARE USED TO MONITOR POSSIBLE SCOUR PROBLEMS DURING LIFE OF THE STRUCTURE.

DRIVE PILES AT END BENT NO. 1 AND END BENT NO. 2 TO A REQUIRED BEARING CAPACITY OF 100 TONS PER PILE. THE REQUIRED BEARING CAPACITY IS EQUAL TO THE ALLOWABLE BEARING CAPACITY WITH A MINIMUM FACTOR OF SAFTEY OF TWO.

THE ALLOWABLE BEARING CAPACITY FOR PILES AT END BENT NO. 1, END BENT NO. 2, BENT NO. 1 AND BENT NO. 2 IS 50 TONS PER PILE.

DRIVE PILES AT BENT NO. 1 AND BENT NO. 2 TO A REQUIRED BEARING CAPACITY OF 110 TONS PER PILE. THE REQUIRED BEARING CAPACITY IS EQUAL TO THE ALLOWABLE BEARING CAPACITY WITH A MINIMUM FACTOR OF SAFETY OF TWO PLUS ANY ADDITIONAL CAPACITY TO ACCOUNT FOR DOWN DRAG OR NEGATIVE SKIN FRICTION AND SCOUR.

STEEL PILE TIPS ARE REQUIRED FOR THE PRESTRESSED CONCRETE PILES AT BENT NO. 1 AND BENT NO. 2. SEE SECTION 450 OF THE STANDARD SPECIFICATIONS.

FOR CRANE SAFETY, SEE SPECIAL PROVISIONS.

FOR CONCRETE WEARING SURFACE, SEE SPECIAL PROVISIONS.

CLASS AA CONCRETE SHALL BE USED IN ALL CAST-IN-PLACE BENT CAPS AND SHALL CONTAIN CALCIUM NITRITE CORROSION INHIBITOR.

ALL BAR SUPPORTS USED IN THE END POSTS, PARAPETS, SIDEWALK, AND BENT CAPS AND ALL INCIDENTAL REINFORCING STEEL SHALL BE EPOXY COATED IN ACCORDANCE WITH THE STANDARD SPECIFICATIONS.

PRESTRESSED CONCRETE CORED SLAB UNITS AND PILES SHALL CONTAIN CALCIUM NITRITE CORROSION INHIBITOR.

THE CONCRETE IN THE PILES OF THE BENTS SHALL CONTAIN SILICA FUME. SILICA FUME SHALL BE SUBSTITUTED FOR 5% OF THE PORTLAND CEMENT BY WEIGHT. IF THE OPTION OF ARTICLE 1024-1 OF THE STANDARD SPECIFICATIONS TO PARTIALLY SUBSTITUTE CLASS F FLY ASH FOR PORTLAND CEMENT IS EXERCISED, THEN THE RATE OF FLY ASH SUBSTITUTION SHALL BE REDUCED TO 1.0 lb OF FLY ASH PER 1.0 lb. OF CEMENT. NO PAYMENT WILL BE MADE FOR THIS SUBSTITUTION AS IT IS CONSIDERED INCIDENTAL TO THE VARIOUS PAY ITEMS.

NORTH CAROLINA PROFESSIONAL SEAL 025516 ENGINEER EMILY E. MURRAY

Emily E. Murray 9/27/01

TOTAL BILL OF MATERIAL

	REMOVAL OF EXISTING STRUCTURE	UNCLASSIFIED STRUCTURE EXCAVATION	CONCRETE WEARING SURFACE	GROOVING BRIDGE FLOORS	CLASS AA CONCRETE	BRIDGE APPROACH SLABS	EPOXY COATED REINFORCING STEEL	16" PRESTRESSED CONCRETE PILES		HP 12 x 53 STEEL PILES		2 BAR METAL RAIL	1'-2" X 2'-6" CONCRETE PARAPET	1'-2" X 3'-1½" CONCRETE PARAPET	RIP RAP CLASS II (2'-0" THICK)	FILTER FABRIC FOR DRAINAGE	ELASTOMERIC BEARINGS	EVAZOTE JOINT SEALS	3'-0" X 1'-9" PRESTRESSED CONCRETE CORED SLABS	
	LUMP SUM	LUMP SUM	SQ. FEET	SQ. FEET	CU. YDS.	LUMP SUM	LBS.	NO.	LIN. FT.	NO.	LIN. FT.	LIN. FT.	LIN. FT.	LIN. FT.	TONS	SQ. YDS.	LUMP SUM	LUMP SUM	NO.	LIN. FT.
SUPERSTRUCTURE			6595	7926	46.5	LUMP SUM	1362					314.75	164.88	164.88			LUMP SUM	LUMP SUM	48	2634.00
END BENT NO. 1					19.4		2962			10	400				630	700				
BENT NO. 1					30.4		4365	16	640											
BENT NO. 2					30.4		4365	16	640											
END BENT NO. 2					19.4		2962			10	400				419	465				
TOTAL	LUMP SUM	LUMP SUM	6595	7926	146.1	LUMP SUM	16016	32	1280	20	800	314.75	164.88	164.88	1049	1165	LUMP SUM	LUMP SUM	48	2634.00

DRAWN BY : M.M.P./M.D.PISO DATE : 03/2006
CHECKED BY : C.MILLER DATE : 09/2006

22-FEB-2007 17:06
G:\TIPProjects-R\R2245\Structures\r2245\final plans\R2245_sd_GD.dgn
taverette

PROJECT NO. R-2245
BRUNSWICK COUNTY
STATION: 21+50.00 -L-

SHEET 3 OF 3

STATE OF NORTH CAROLINA
DEPARTMENT OF TRANSPORTATION
RALEIGH

GENERAL DRAWING

FOR BRIDGE OVER
BIG DAVIS CANAL ON SR 1105
BETWEEN SR 1104 & SR 1190

REVISIONS						SHEET NO.
NO.	BY:	DATE:	NO.	BY:	DATE:	S-3
1			3			TOTAL SHEETS
2			4			98

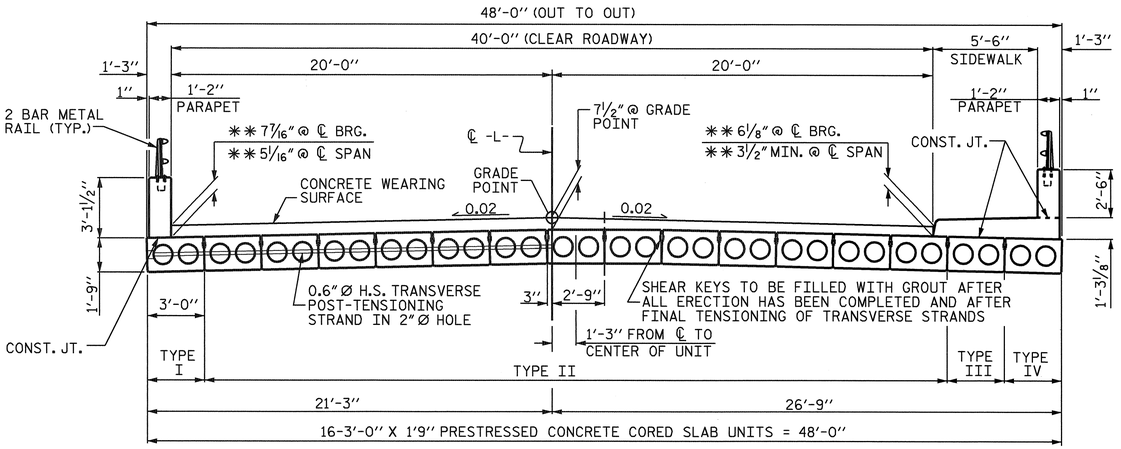

TYPICAL SECTION

** BASED ON PREDICTED FINAL CAMBER AND THEORETICAL GRADE LINE ELEVATIONS

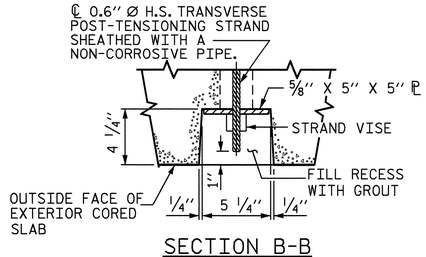

SECTION B-B

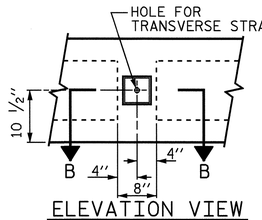

ELEVATION VIEW

GROUTED RECESS AT END OF POST-TENSIONED STRAND CORED SLABS

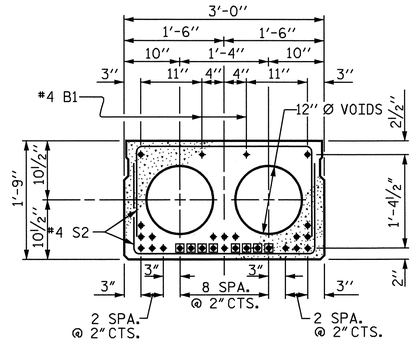

□ BOND SHALL BE BROKEN AT THESE STRANDS AT A DISTANCE OF 5'-8" FROM END OF THE CORED SLAB UNIT.

26 - 1/2" Ø LOW RELAXATION STRAND LAYOUT DETAIL

INTERIOR SLAB SECTION SHOWN - EXTERIOR SLAB SECTION SIMILAR EXCEPT SHEAR KEY LOCATION.

EXPANSION END

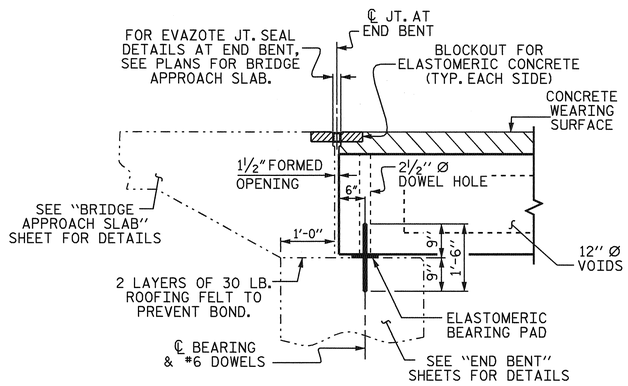

SECTION AT END BENT #1 & END BENT #2

FIXED END FIXED END

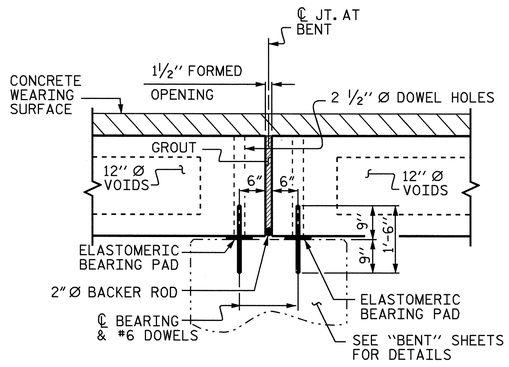

SECTION AT BENTS

SHEAR KEY DETAIL

NOTE: OMIT SHEAR KEY ON OUTSIDE FACE OF EXTERIOR CORED SLABS.

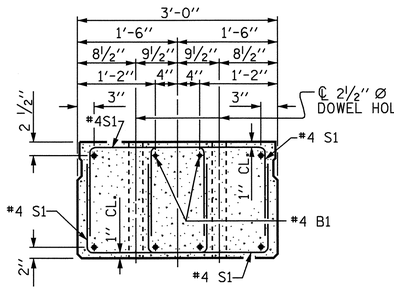

END ELEVATION

SHOWING PLACEMENT OF DOUBLE STIRRUPS AND LOCATION OF DOWEL HOLES. (STRAND LAYOUT NOT SHOWN.) INTERIOR SLAB SECTION SHOWN - EXTERIOR SLAB SECTION SIMILAR EXCEPT SHEAR KEY LOCATION.

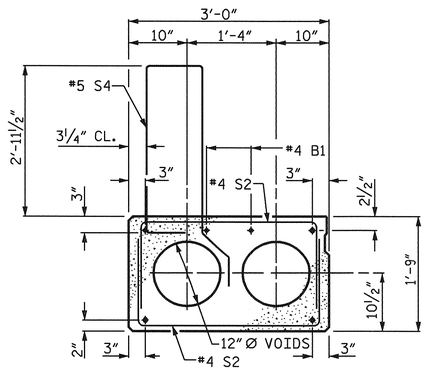

TYPE I - EXTERIOR SLAB SECTION (LEFT)

(FOR PRESTRESSED STRAND LAYOUT, SEE STRAND LAYOUT DETAIL)

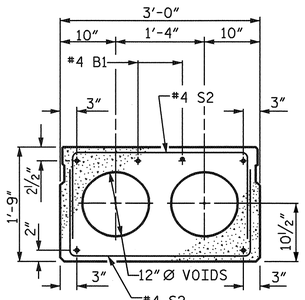

TYPE II - INTERIOR SLAB SECTION

(FOR PRESTRESSED STRAND LAYOUT, SEE STRAND LAYOUT DETAIL)

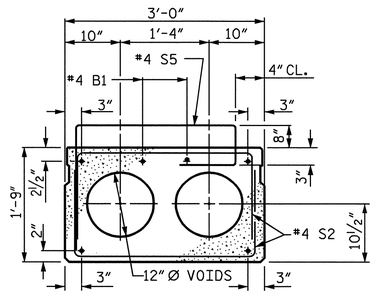

TYPE III - INTERIOR SLAB SIDEWALK SECTION

(FOR PRESTRESSED STRAND LAYOUT, SEE STRAND LAYOUT DETAIL)

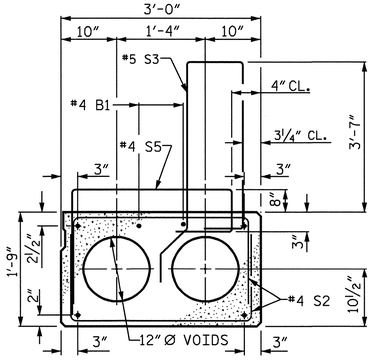

TYPE IV - EXTERIOR SLAB SIDEWALK SECTION (RIGHT)

(FOR PRESTRESSED STRAND LAYOUT, SEE STRAND LAYOUT DETAIL)

PROJECT NO. R-2245

BRUNSWICK COUNTY

STATION: 21+50.00 -L-

SHEET 1 OF 11

STATE OF NORTH CAROLINA
DEPARTMENT OF TRANSPORTATION
RALEIGH

STANDARD 3'-0" X 1'-9" PRESTRESSED CONCRETE CORED SLAB UNIT

OCTOBER 1981

REVISIONS						SHEET NO.
NO.	BY:	DATE:	NO.	BY:	DATE:	S-4
1			3			TOTAL SHEETS
2			4			98

NORTH CAROLINA PROFESSIONAL SEAL 025516 ENGINEER EMILY E. MURRAY
9/28/06

ASSEMBLED BY :	M.D. PISO	DATE : 2/28/05	
CHECKED BY :	C.MILLER	DATE : 01/2006	
DRAWN BY : WJH	4/89	REV. 8/16/99	RWW/LES
CHECKED BY : FCJ	5/89	REV. 10/17/00	RWW/LES
		REV. 7/10/01R	RWW/LES

26-SEP-2006 14:40
R:\Structures\r2245\final plans\R2245_sd_TS.dgn
padkins

STR. #1

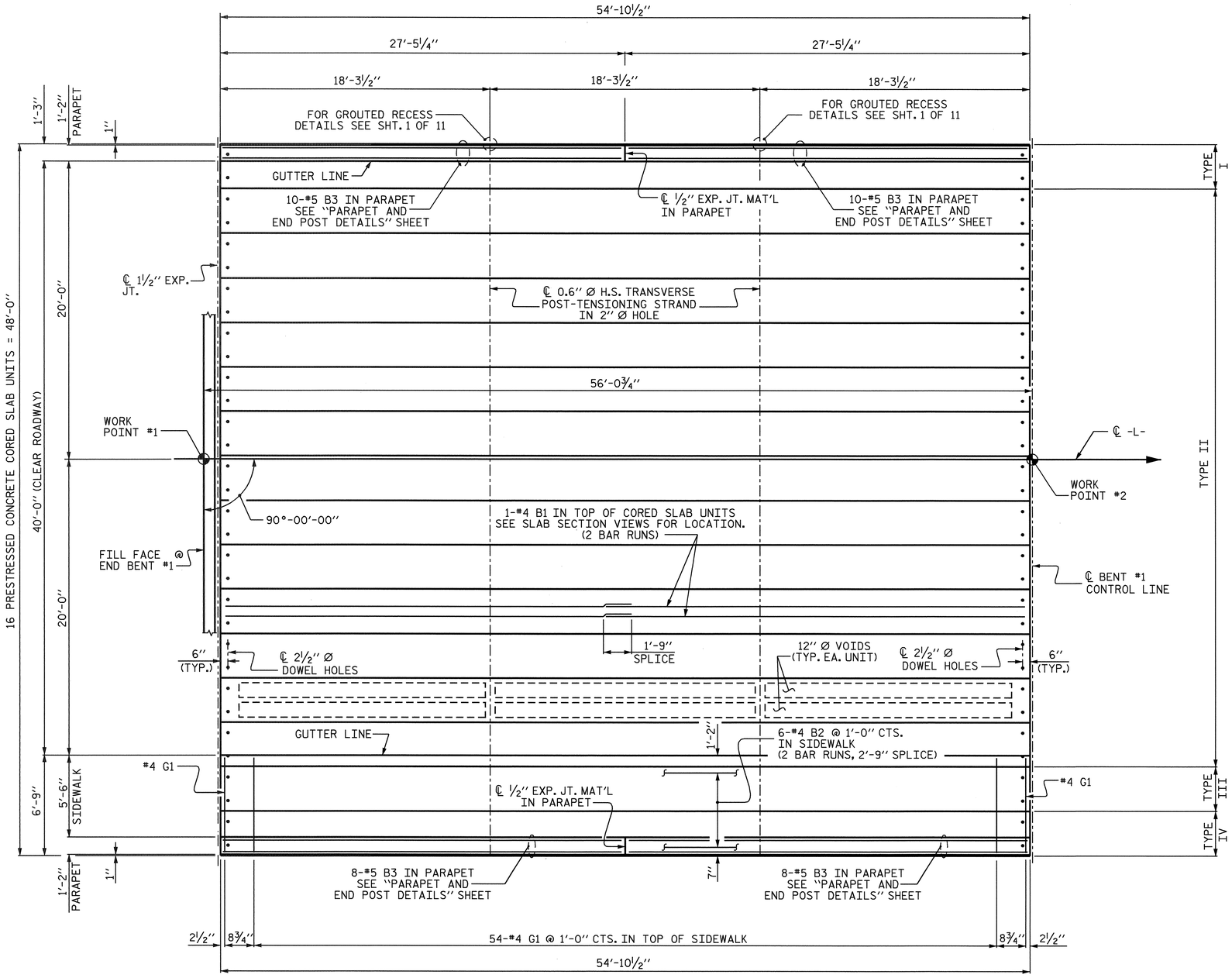

SPAN A

SHOWING REINFORCING STEEL IN PARAPETS AND SIDEWALK
SEE SHEET 5 OF 11 FOR REINFORCING STEEL DETAILS IN CORED SLAB UNITS

NORTH CAROLINA PROFESSIONAL SEAL 025516 ENGINEER EMILY E. MURRAY
1/28/06

PROJECT NO. R-2245
BRUNSWICK COUNTY
STATION: 21+50.00 -L-

SHEET 2 OF 11

STATE OF NORTH CAROLINA
DEPARTMENT OF TRANSPORTATION
RALEIGH

3'-0" X 1'-9" PRESTRESSED CONCRETE CORED SLAB UNIT SPAN A

REVISIONS						SHEET NO.
NO.	BY:	DATE:	NO.	BY:	DATE:	S-5
1			3			TOTAL SHEETS
2			4			98

DRAWN BY : M.D.PISO DATE : 04/2005
CHECKED BY : C.MILLER DATE : 01/2006

26-SEP-2006 14:41
R:\Structures\r2245\final plans\R2245_sd_S1.dgn
padkins

STR. #1

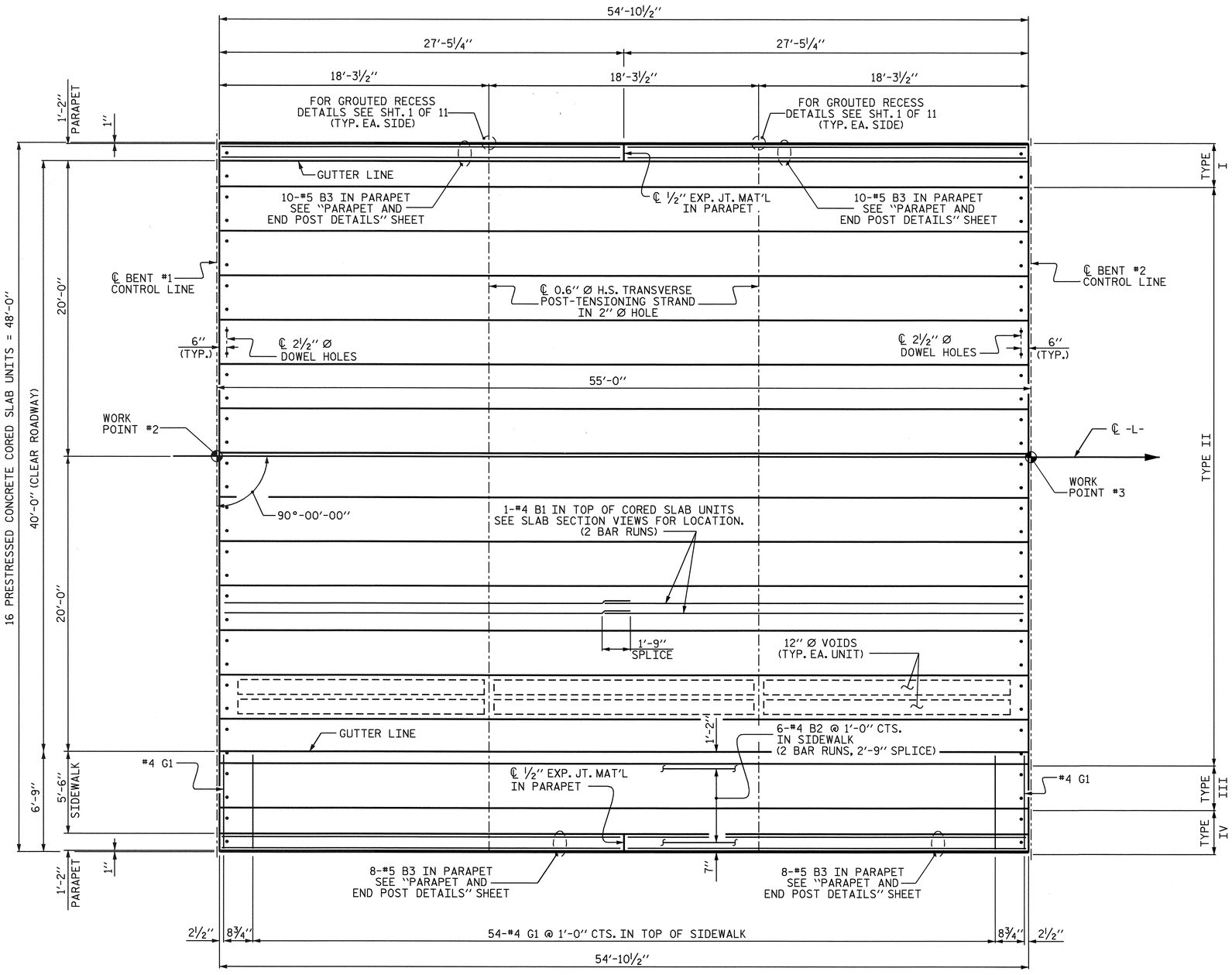

SPAN B

SHOWING REINFORCING STEEL IN PARAPETS AND SIDEWALK
SEE SHEET 5 OF 11 FOR REINFORCING STEEL DETAILS IN CORED SLAB UNITS

DRAWN BY : M.D.PISO DATE : 04/2005
CHECKED BY : C.MILLER DATE : 01/2006

31-OCT-2006 10:23
G:\Structures\r2245\final plans\R2245_sd_S1.dgn
taverette

NORTH CAROLINA PROFESSIONAL SEAL 025516 ENGINEER EMILY E. MURRAY
11/2/06

PROJECT NO. R-2245
BRUNSWICK COUNTY
STATION: 21+50.00 -L-

SHEET 3 OF 11

STATE OF NORTH CAROLINA
DEPARTMENT OF TRANSPORTATION
RALEIGH

3'-0'' X 1'-9'' PRESTRESSED CONCRETE CORED SLAB UNIT SPAN B

REVISIONS						SHEET NO.
NO.	BY:	DATE:	NO.	BY:	DATE:	S-6
1			3			TOTAL SHEETS
2			4			98

STR. #1

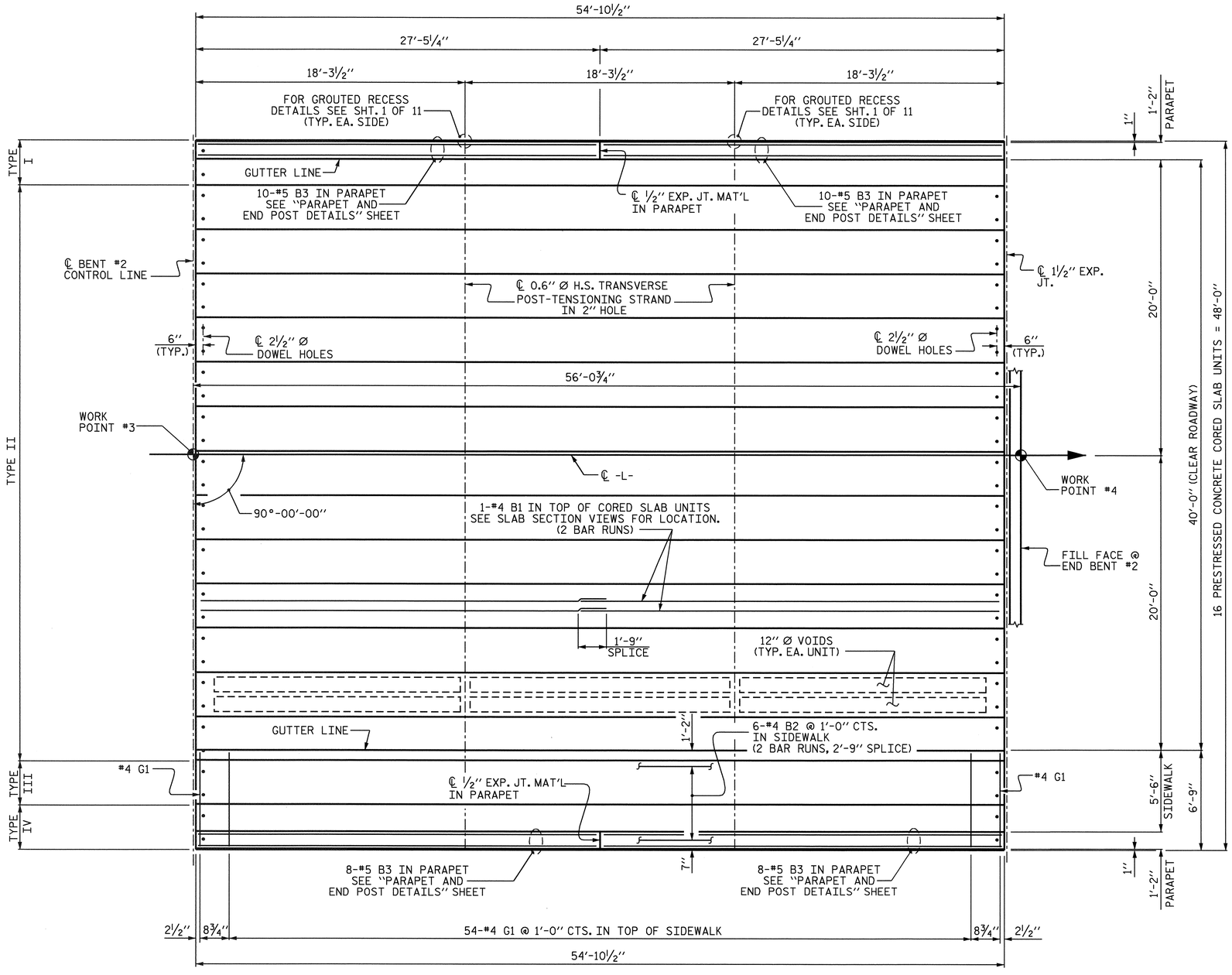

SPAN C

SHOWING REINFORCING STEEL IN PARAPETS AND SIDEWALK
SEE SHEET 5 OF 11 FOR REINFORCING STEEL DETAILS IN CORED SLAB UNITS

DRAWN BY : M.D.PISO DATE : 04/2005
CHECKED BY : C.MILLER DATE : 01/2006

26-SEP-2006 14:42
R:\Structures\r2245\final plans\R2245_sd_S1.dgn
padkins

NORTH CAROLINA PROFESSIONAL SEAL 025516 ENGINEER EMILY E. MURRAY
Emily E. Murray 01/28/06

PROJECT NO. R-2245
BRUNSWICK COUNTY
STATION: 21+50.00 -L-

SHEET 4 OF 11

STATE OF NORTH CAROLINA
DEPARTMENT OF TRANSPORTATION
RALEIGH

3'-0'' X 1'-9'' PRESTRESSED CONCRETE CORED SLAB UNIT SPAN C

REVISIONS						SHEET NO.
NO.	BY:	DATE:	NO.	BY:	DATE:	S-7
1			3			TOTAL SHEETS
2			4			98

STR. #1

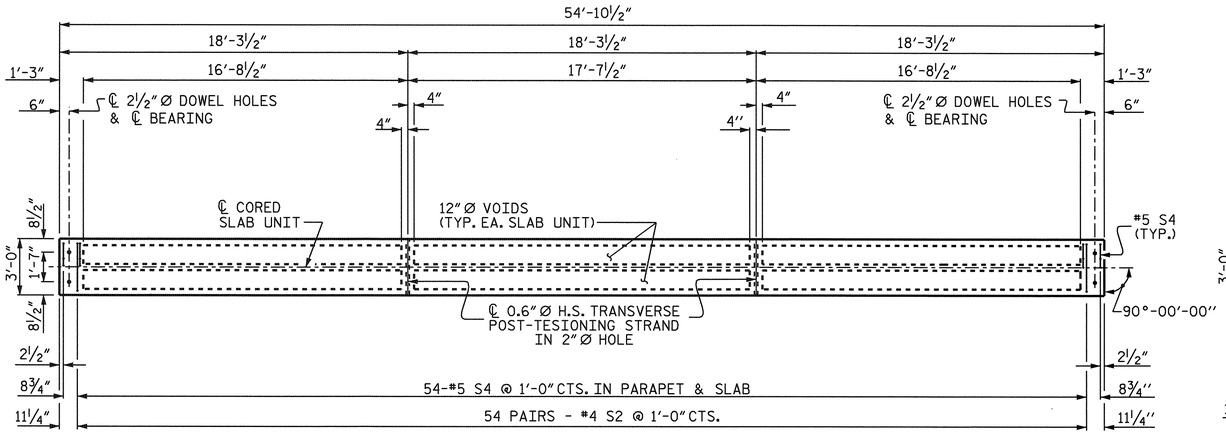

PLAN OF TYPE I CORED SLAB UNIT

FOR LOCATION OF S1 BARS AT ENDS OF SLAB, SEE "PART PLAN-EXTERIOR SECTIONS"

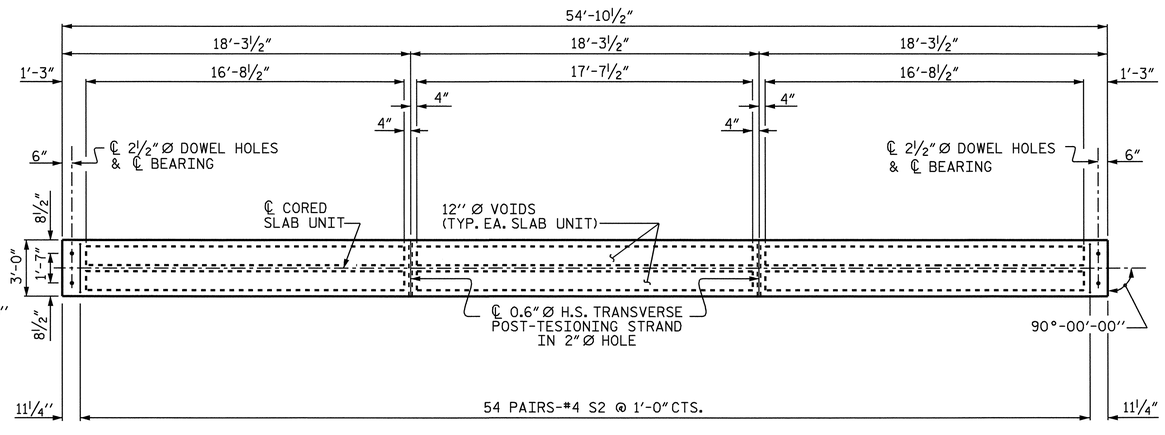

PLAN OF TYPE II CORED SLAB UNIT

FOR LOCATION OF S1 BARS AT ENDS OF SLAB, SEE "PART PLAN-EXTERIOR SECTIONS"

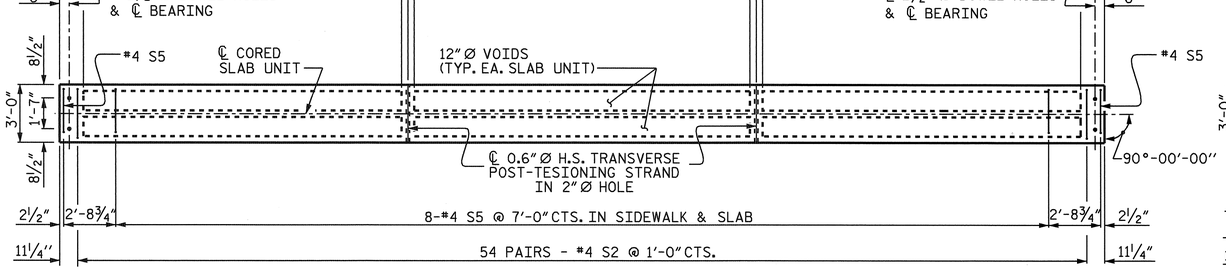

PLAN OF TYPE III CORED SLAB UNIT

FOR LOCATION OF S1 BARS AT ENDS OF SLAB, SEE "PART PLAN-EXTERIOR SECTIONS"

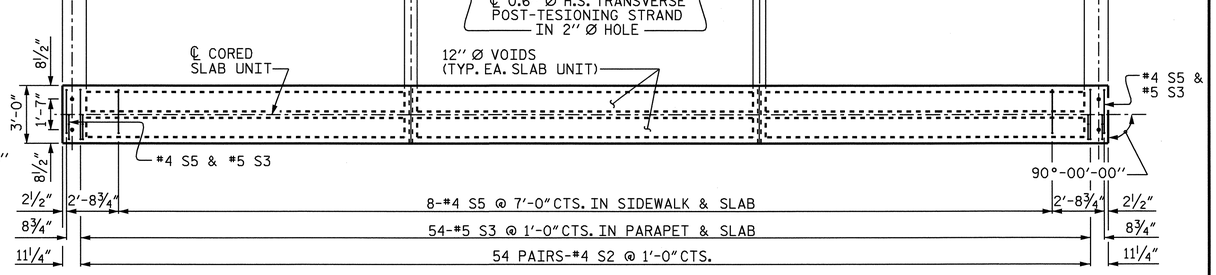

PLAN OF TYPE IV CORED SLAB UNIT

FOR LOCATION OF S1 BARS AT ENDS OF SLAB, SEE "PART PLAN-EXTERIOR SECTIONS"

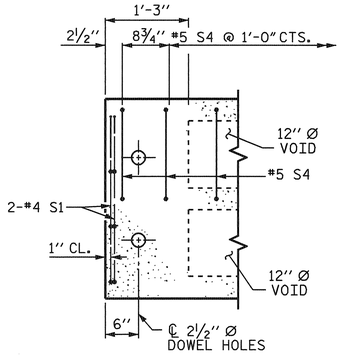

TYPE I EXTERIOR SECTION

TYPE II SIMILAR EXCEPT OMIT S4 BARS

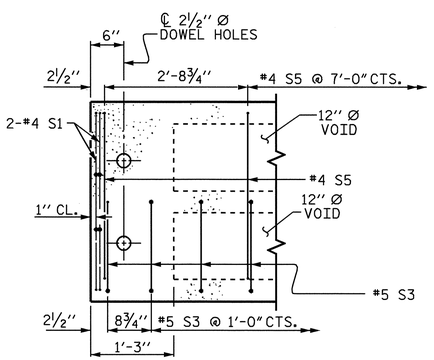

TYPE IV EXTERIOR SECTION

TYPE III SIMILAR EXCEPT OMIT S3 BARS

PART PLAN - EXTERIOR SECTIONS

#4 S2 BARS NOT SHOWN

DRAWN BY : M.D.PISO DATE : 04/2005
CHECKED BY : C.MILLER DATE : 01/2006

26-SEP-2006 14:42
R:\Structures\r2245\finalplans\R2245_sd_S1.dgn
padkins

PROJECT NO. R-2245
BRUNSWICK COUNTY
STATION: 21+50.00 -L-

SHEET 5 OF 11

STATE OF NORTH CAROLINA
DEPARTMENT OF TRANSPORTATION
RALEIGH

3'-0" X 1'-9" PRESTRESSED CONCRETE CORED SLAB UNITS DETAILS

REVISIONS						SHEET NO.
NO.	BY:	DATE:	NO.	BY:	DATE:	S-8
1			3			TOTAL SHEETS
2			4			98

NORTH CAROLINA PROFESSIONAL SEAL 025516 ENGINEER EMILY E. MARRAY
9/28/06

STR. #1

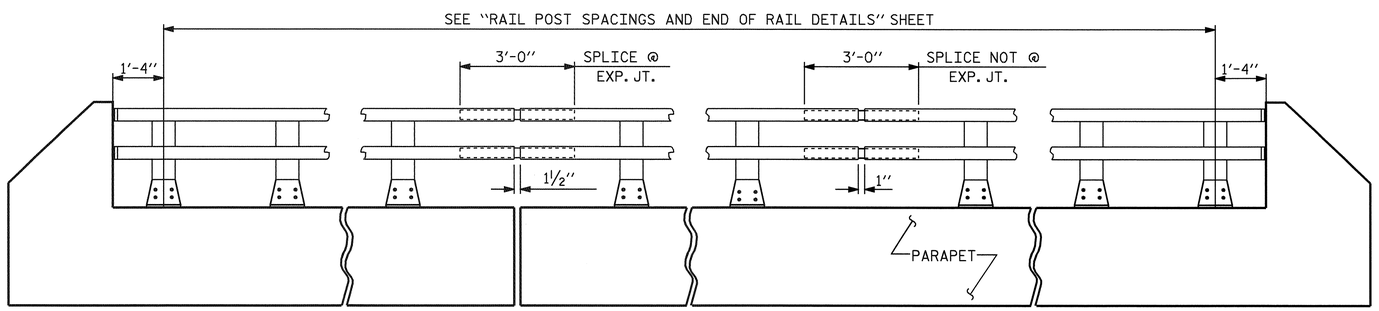

ELEVATION

NOTE : FOR ATTACHMENT OF METAL RAIL TO END POST, SEE STANDARD NO. BMR2.

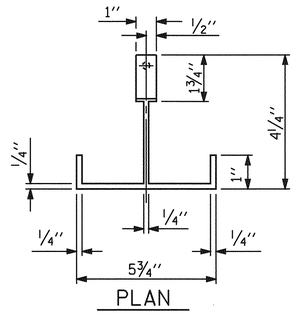

PLAN

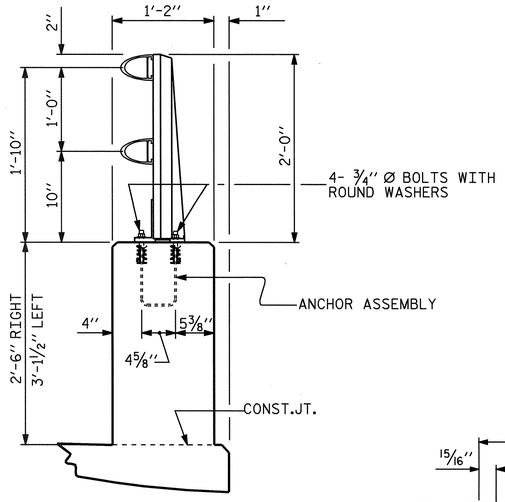

SECTION THRU PARAPET AND RAIL

FRONT ELEVATION SIDE ELEVATION

DETAILS OF POST

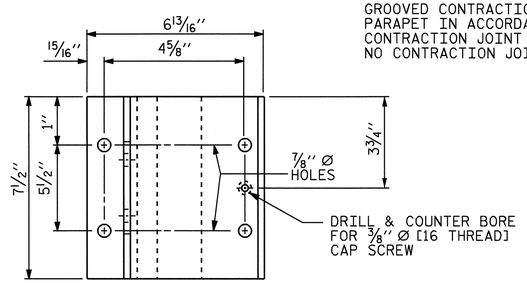

PLAN

FRONT ELEVATION SIDE ELEVATION

POST BASE DETAILS

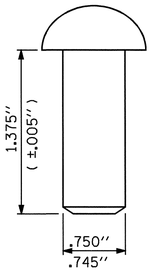

RIVET DETAIL

NOTES

AT THE CONTRACTOR'S OPTION, METAL RAIL MAY BE EITHER ALUMINUM OR GALVANIZED STEEL IN ACCORDANCE WITH THE REQUIREMENTS OF THE GENERAL NOTES AND THE FOLLOWING SPECIFICATIONS FOR THE ALTERNATE MATERIALS; HOWEVER, THE CONTRACTOR WILL BE REQUIRED TO USE THE SAME RAIL MATERIAL ON ALL STRUCTURES ON THE PROJECT FOR WHICH METAL RAIL IS DESIGNATED.

ALUMINUM RAILS

MATERIAL FOR POSTS, BASES AND RAILS, EXPANSION BARS AND CLAMP BARS SHALL BE ASTM B-221 ALLOY 6061-T6.

MATERIAL FOR RIVETS SHALL BE ASTM B316 ALLOY 6061-T6. RIVETS SHALL BE STANDARD BUTTON HEAD AND CONE POINT COLD DRIVEN AS PER DRAWING.

THE BASE OF RAIL POSTS, OR ANY OTHER ALUMINUM SURFACE IN CONTACT WITH CONCRETE SHALL BE THOROUGHLY COATED WITH AN ALUMINUM IMPREGNATED CAULKING COMPOUND OF APPROVED QUALITY.

MATERIAL FOR SHIMS TO BE ASTM B209 ALLOY 6061-T6.

GALVANIZED STEEL RAILS

MATERIAL AND GALVANIZING ARE TO CONFORM TO THE FOLLOWING SPECIFICATIONS:

POST, POST BASES, RAILS, EXPANSION BARS AND CLAMP BARS: AASHTO M270 GRADE 36 STRUCTURAL STEEL - GALVANIZED TO AASHTO M111.

RIVETS: RIVETS SHALL MEET THE REQUIREMENTS OF ASTM A502 FOR GRADE 1 RIVETS.

THE CUT ENDS OF GALVANIZED STEEL RAILING, AFTER GRINDING SMOOTH SHALL BE GIVEN TWO COATS OF ZINC RICH PAINT MEETING THE REQUIREMENTS OF FEDERAL SPECIFICATION MIL-P-26915 USAF TYPE 1, OR OF FEDERAL SPECIFICATIONS TT-P-641.

SHIMS: SHIMS SHALL MEET THE REQUIREMENTS OF ASTM A570 FOR GRADE 33 OR A611 FOR GRADE C AND SHALL BE GALVANIZED IN ACCORDANCE WITH AASHTO M111.

RAIL CAPS: RAIL CAPS SHALL MEET THE REQUIREMENTS OF ASTM A570 FOR GRADE 33 OR A611 FOR GRADE C AND SHALL BE GALVANIZED IN ACCORDANCE WITH AASHTO M111.

GENERAL NOTES

RAILING SHALL BE CONTINUOUS FROM END POST TO END POST OF BRIDGE. EACH JOINT IN RAIL LENGTH SHALL BE SPLICED AS DETAILED. PANEL LENGTHS OF RAIL SHALL BE ATTACHED TO A MINIMUM OF THREE POSTS.

FOR END OF RAIL TO CLEAR FACE OF CONCRETE END POST DIMENSION, SEE STANDARD NO. BMR2.

CAP SCREWS SHALL BE ASTM F593 ALLOY 305 STAINLESS STEEL. WASHERS SHALL MEET THE REQUIREMENTS OF ASTM F844 EXCEPT THEY SHALL BE MADE FROM ALLOY 304 STAINLESS STEEL.

CERTIFIED MILL REPORTS ARE REQUIRED FOR RAILS AND POSTS. SHOP INSPECTION IS NOT REQUIRED.

METAL RAIL POSTS SHALL BE SET NORMAL TO CURB GRADE.

METHOD OF MEASUREMENT FOR METAL RAILS: FOR LENGTH OF METAL RAILS TO BE PAID FOR, SEE THE STANDARD SPECIFICATIONS.

CURVED RAIL USAGE: WHERE RAILS ARE TO BE USED ON BRIDGES ON HORIZONTAL AND/OR VERTICAL CURVATURE THE CONTRACTOR MAY, AT HIS OPTION, HAVE THE REQUIRED CURVATURE IN THE RAIL FORMED IN THE SHOP OR IN THE FIELD. IN EITHER EVENT, THE RAIL SHALL CONFORM WITHOUT BUCKLING OR KINKING TO THE REQUIRED CURVATURE IN A UNIFORM MANNER ACCEPTABLE TO THE ENGINEER.

TO INSURE FUTURE IDENTIFICATION OF THE FABRICATOR, A PERMANENT IDENTIFYING MARK SHALL BE PLACED ON EACH POST. THE METHOD OF MARKING AND LOCATION SHALL BE SUCH THAT IT DOES NOT DETRACT FROM THE APPEARANCE OF THE POST, BUT REMAINS VISIBLE AFTER RAIL PLACEMENT.

SHIMS SHALL BE USED AS NECESSARY FOR POST ALIGNMENT.

ALLOY 6351-T5 MAY BE SUBSTITUTED FOR ALLOY 6061-T6 WHERE APPLICABLE.

MINOR VARIATIONS IN DETAILS OF METAL RAIL WILL BE CONSIDERED. DETAILS OF SUCH VARIATIONS, IF DESIRED, SHALL BE SUBMITTED FOR APPROVAL.

GROOVED CONTRACTION JOINTS, ½" IN DEPTH, SHALL BE TOOLED IN ALL EXPOSED FACES OF THE PARAPET IN ACCORDANCE WITH ARTICLE 825-10(B) OF THE STANDARD SPECIFICATIONS. THE CONTRACTION JOINT SHALL BE LOCATED AT A SPACING OF 8FT. TO 10FT. BETWEEN EXPANSION JOINTS. NO CONTRACTION JOINTS WILL BE REQUIRED FOR SEGMENTS LESS THAN 10 FEET IN LENGTH.

PAY LENGTH = 314.75 LIN. FT.

PROJECT NO. R-2245

BRUNSWICK COUNTY

STATION: 21+50.00 -L-

SHEET 6 OF 11

STATE OF NORTH CAROLINA
DEPARTMENT OF TRANSPORTATION
RALEIGH

STANDARD

2 BAR METAL RAIL DETAILS

REVISIONS						SHEET NO.
NO.	BY:	DATE:	NO.	BY:	DATE:	S-9
1			3			TOTAL SHEETS
2			4			98

STD. NO. BMR3

ASSEMBLED BY :	M.D.PISO	DATE :	09/2006
CHECKED BY :	C.MILLER	DATE :	09/2006
DRAWN BY : EEM	6/94	REV. 10/17/00	LES/RDR
CHECKED BY : RGW	6/94	REV. 5/7/03R	RWW/JTE
		REV. 5/1/06	TLA/GM

NORTH CAROLINA PROFESSIONAL SEAL 025516 ENGINEER EMILY E. MURRAY

9/28/06

26-SEP-2006 14:43
R:\Structures\r2245\final plans\R2245_sd_MR.dgn
padkins

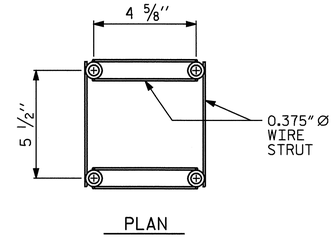

MINIMUM LENGTH OF THREADS IN INSERT (FERRULE): 1¾"

4-BOLT METAL RAIL ANCHOR ASSEMBLY

(54 ASSEMBLIES REQUIRED)

NOTES

STRUCTURAL CONCRETE ANCHOR ASSEMBLY

THE STRUCTURAL CONCRETE ANCHOR ASSEMBLY SHALL CONSIST OF THE FOLLOWING COMPONENTS :

A. FERRULES SHALL BE MADE FROM STEEL MEETING THE REQUIREMENTS OF AASHTO M169, GRADE 12L14 AND SHALL HAVE A MINIMUM LENGTH OF THREADS OF 2" FOR ¾" FERRULES.

B. 4 - ¾" Ø X 2½" BOLTS WITH WASHERS. BOLTS SHALL CONFORM TO THE REQUIREMENTS OF ASTM A307. BOLTS AND WASHERS SHALL BE GALVANIZED. AT THE CONTRACTOR'S OPTION, STAINLESS STEEL BOLTS AND WASHERS MAY BE USED AS AN ALTERNATE FOR THE ¾" Ø X 2½" GALVANIZED BOLTS AND WASHERS. THEY SHALL CONFORM TO OR EXCEED THE MECHANICAL REQUIREMENTS OF ASTM A307. THE USE OF THIS ALTERNATE SHALL BE APPROVED BY THE ENGINEER.

C. WIRE STRUT SHOWN IN THE CONCRETE ANCHOR ASSEMBLY DETAIL IS THE MINIMUM ALLOWABLE SIZE AND SHALL HAVE A MINIMUM TENSILE STRENGTH OF 100,000 PSI. AS AN OPTION, A 7/16" Ø WIRE STRUT WITH A MINIMUM TENSILE STRENGTH OF 90,000 PSI IS ACCEPTABLE.

D. THE METAL RAIL ANCHOR ASSEMBLIES TO BE HOT DIPPED GALVANIZED TO CONFORM TO REQUIREMENTS OF AASHTO M111.

E. THE COST OF THE METAL RAIL ANCHOR ASSEMBLY WITH BOLTS AND WASHERS COMPLETE IN PLACE SHALL BE INCLUDED IN THE PRICE BID FOR LINEAR FEET OF METAL RAIL.

F. BOLTS TO BE TIGHTENED ONE-HALF TURN WITH A WRENCH FROM A FINGER-TIGHT POSITION.

THE CONTRACTOR, AT HIS OPTION, MAY USE ADHESIVELY ANCHORED ANCHOR BOLTS IN LIEU OF THE METAL RAIL ANCHOR ASSEMBLY. THE YIELD LOAD OF THE ¾" Ø BOLT IS 10 KIPS. FIELD TESTING OF THE ADHESIVE BONDING SYSTEM IS REQUIRED.

WHEN ADHESIVELY ANCHORED ANCHOR BOLTS ARE USED, BOLTS SHALL MEET THE REQUIREMENTS OF ASTM F593 ALLOY 304 STAINLESS STEEL WITH MINIMUM 75,000 PSI ULTIMATE STRENGTH. NUTS SHALL MEET THE REQUIREMENTS OF ASTM F594 ALLOY 304 STAINLESS STEEL AND WASHERS SHALL MEET THE REQUIREMENTS OF ASTM F844 EXCEPT THEY SHALL BE MADE FROM ALLOY 304 STAINLESS STEEL.

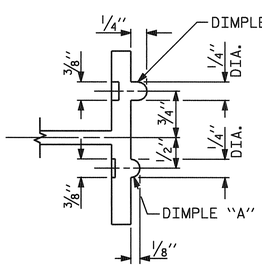

SECTION B - B

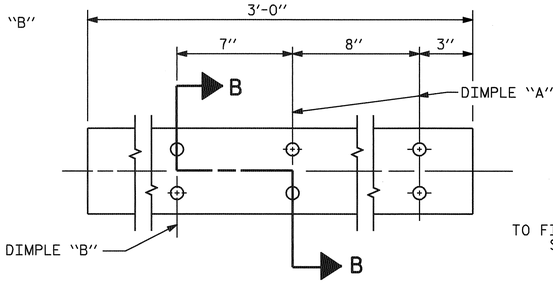

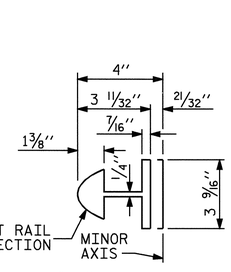

BAR SECTION

EXPANSION BAR DETAILS

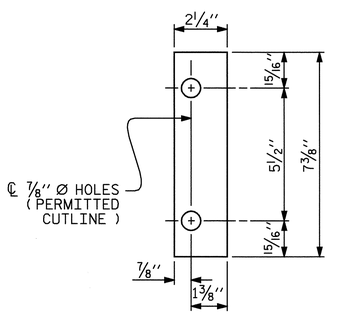

FRONT PLATE

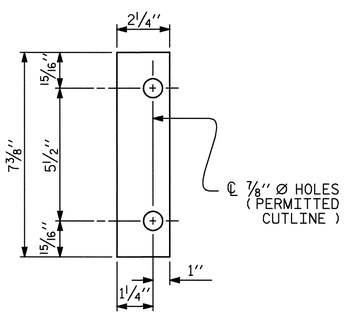

REAR PLATE

SHIM DETAILS

NOTE :
SHIMS MAY BE CUT ALONG PERMITTED CUTLINE OR SLOTTED TO EDGE OF PLATE TO FACILITATE PLACEMENT.

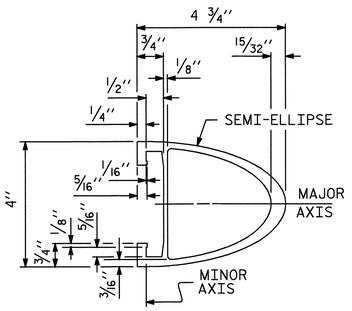

RAIL SECTION

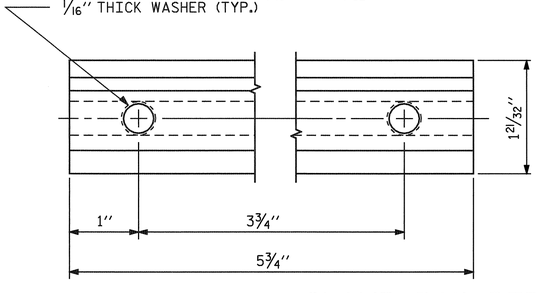

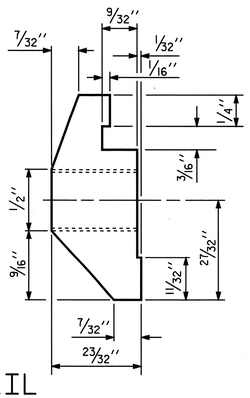

CLAMP BAR DETAIL

(4 REQUIRED PER POST)

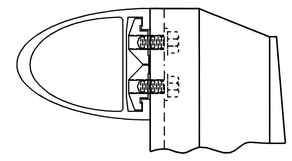

CLAMP ASSEMBLY

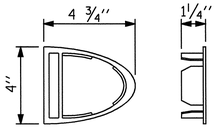

RAIL CAP

PROJECT NO. R-2245
BRUNSWICK COUNTY
STATION: 21+50.00 -L-

SHEET 7 OF 11

STATE OF NORTH CAROLINA
DEPARTMENT OF TRANSPORTATION
RALEIGH

STANDARD

2 BAR METAL RAIL

REVISIONS					
NO.	BY:	DATE:	NO.	BY:	DATE:
1			3		
2			4		

SHEET NO. S-10
TOTAL SHEETS 98

STD. NO. BMR4

ASSEMBLED BY :	M.D.PISO	DATE :	09/2006
CHECKED BY :	C.MILLER	DATE :	09/2006
DRAWN BY : EEM 6/94		REV. 2/6/97	EEM/RGW
CHECKED BY : RGW 6/94		REV. 8/16/99	MAB/LES
		REV. 5/7/03	RWW/JTE

NORTH CAROLINA PROFESSIONAL SEAL 025516 ENGINEER EMILY E. MURRAY
9/28/06

26-SEP-2006 14:43
R:\Structures\r2245\finalplans\R2245_sd_MR.dgn
padkins

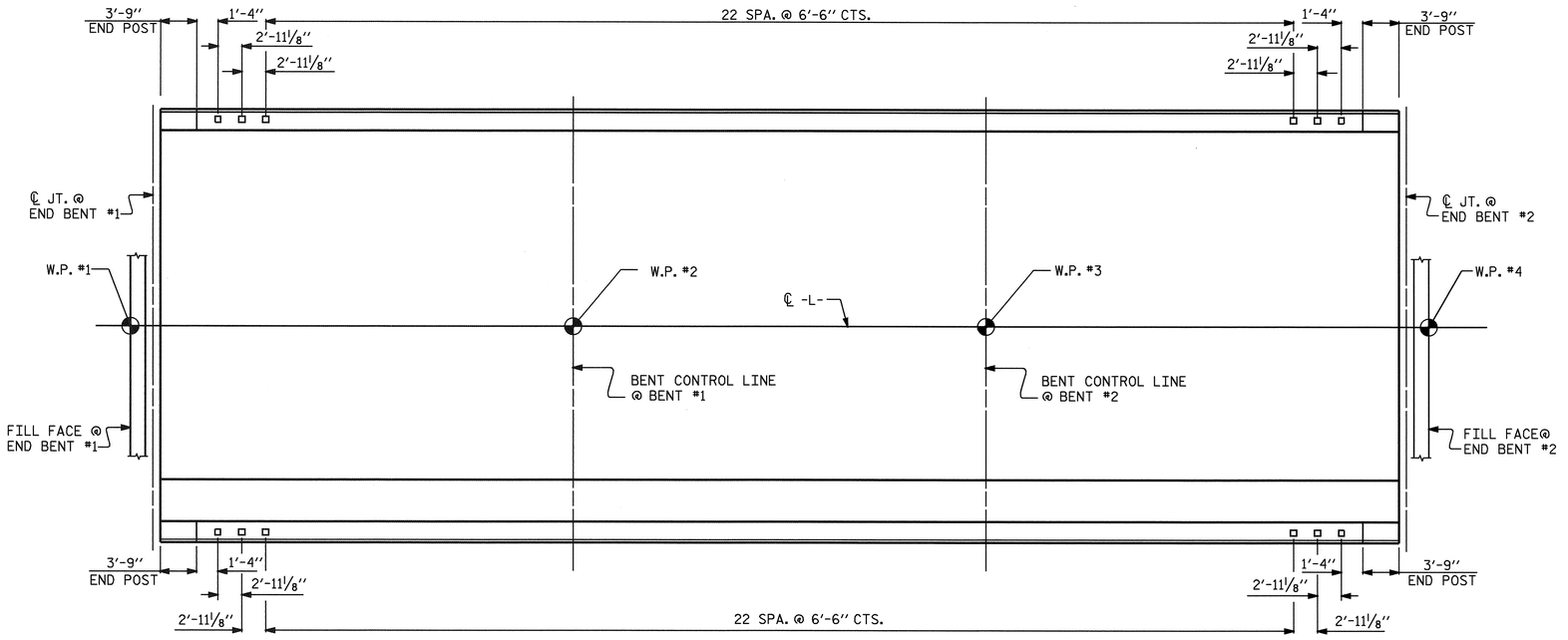

PLAN OF RAIL POST SPACINGS

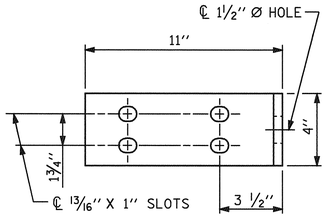

ELEVATION

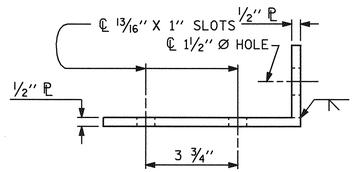

TOP VIEW

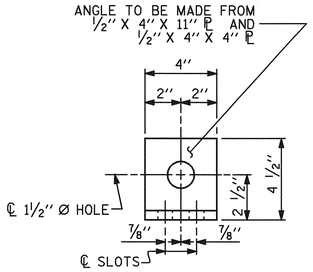

END VIEW

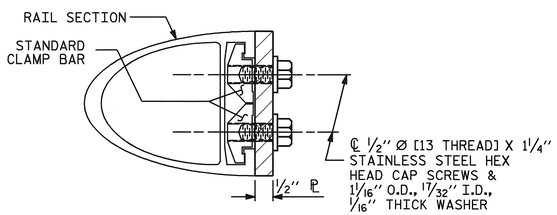

SECTION H-H

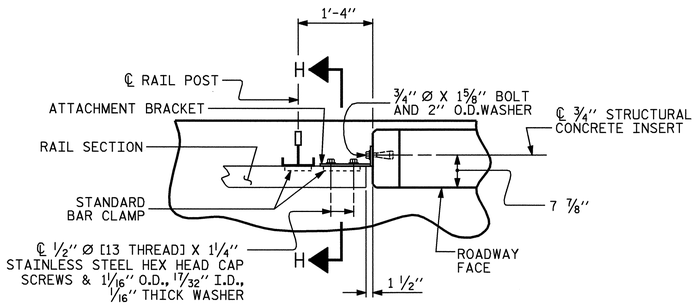

PLAN - RAIL AND END POST

DETAILS FOR ATTACHING METAL RAIL TO END POST

NOTES

STRUCTURAL CONCRETE INSERT

THE STRUCTURAL CONCRETE INSERT ASSEMBLY SHALL CONSIST OF THE FOLLOWING COMPONENTS:

A. FERRULES SHALL BE MADE FROM STEEL MEETING THE REQUIREMENTS OF AASHTO M169, GRADE 12L14 AND SHALL HAVE A MINIMUM LENGTH OF THREADS OF 1½".

B. 1 - ¾" Ø X 1⅝" BOLT WITH WASHER. BOLT SHALL CONFORM TO THE REQUIREMENTS OF ASTM A307. BOLT AND WASHER SHALL BE GALVANIZED. (AT THE CONTRACTOR'S OPTION, STAINLESS STEEL BOLT AND WASHER MAY BE USED AS AN ALTERNATE FOR THE ¾" Ø X 1⅝" GALVANIZED BOLT AND WASHER. THEY SHALL CONFORM TO OR EXCEED THE MECHANICAL REQUIREMENTS OF ASTM A307. THE USE OF THIS ALTERNATE SHALL BE APPROVED BY THE ENGINEER.)

C. WIRE STRUT SHOWN IN THE CONCRETE INSERT ASSEMBLY DETAIL IS THE MINIMUM ALLOWABLE SIZE AND SHALL HAVE A MINIMUM TENSILE STRENGTH OF 100,000 PSI. AS AN OPTION, A 7/16" Ø WIRE STRUT WITH A MINIMUM TENSILE STRENGTH OF 90,000 PSI IS ACCEPTABLE.

NOTES

METAL RAIL TO END POST CONNECTION

THE METAL RAIL TO END POST CONNECTION SHALL CONSIST OF THE FOLLOWING COMPONENTS:

A. ½" PLATES SHALL CONFORM TO AASHTO M270 GRADE 36 AND SHALL BE GALVANIZED AFTER FABRICATION.

B. ¾" STRUCTURAL CONCRETE INSERT SHALL HAVE A WORKING LOAD SHEAR CAPACITY OF 4800 LBS. THE FERRULES SHALL ENGAGE A ¾"Ø X 1⅝" BOLT WITH 2" O.D. WASHER IN PLACE. THE ¾"Ø X 1⅝" BOLT SHALL HAVE N. C. THREADS.

C. CAP SCREWS FOR RAIL ATTACHMENT TO ANGLE SHALL CONFORM TO THE REQUIREMENTS OF ASTM F593 ALLOY 305 STAINLESS STEEL. CAP SCREWS TO BE CENTERED IN SLOTS AT 60°F.

D. STANDARD CLAMP BARS (SEE METAL RAIL SHEET).

E. ½" Ø PIPE SLEEVES (IF REQUIRED) TO BE GALVANIZED.

THE COST OF THE STANDARD CLAMP BARS AND CAP SCREWS USED IN THE METAL RAIL TO END POST CONNECTION SHALL BE INCLUDED IN THE UNIT CONTRACT PRICE BID FOR LINEAR FEET OF 1 OR 2 BAR METAL RAILS.

THE ¾" STRUCTURAL CONCRETE INSERT WITH BOLT SHALL BE ASSEMBLED IN THE SHOP.

THE COST OF THE ¾" STRUCTURAL CONCRETE INSERT ASSEMBLY, AND THE ½" PLATES COMPLETE IN PLACE SHALL BE INCLUDED IN THE VARIOUS PAY ITEMS.

THE CONTRACTOR, AT HIS OPTION, MAY USE AN ADHESIVE BONDING SYSTEM IN LIEU OF THE STRUCTURAL CONCRETE INSERT EMBEDDED IN THE END POST. IF THE ADHESIVE BONDING SYSTEM IS USED, THE ¾" Ø X 1⅝" BOLT WITH WASHER SHALL BE REPLACED WITH A ¾"Ø X 6½" BOLT AND 2" O.D. WASHER. ALL SPECIFICATIONS THAT APPLY TO THE ¾" Ø X 1⅝" BOLT SHALL APPLY TO THE ¾"Ø X 6 ½" BOLT. FIELD TESTING OF THE ADHESIVE BONDING SYSTEM IS NOT REQUIRED.

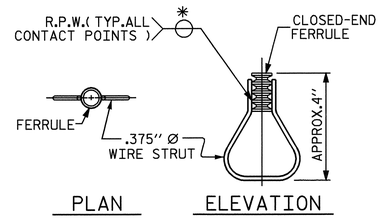

PLAN ELEVATION

STRUCTURAL CONCRETE INSERT

* EACH WELDED ATTACHMENT OF WIRE TO FERRULE SHALL DEVELOP THE TENSILE STRENGTH OF THE WIRE.

PROJECT NO. R-2245

BRUNSWICK COUNTY

STATION: 21+50.00 -L-

SHEET 8 OF 11

ASSEMBLED BY : M.D.PISO	DATE : 09/2006
CHECKED BY : C.MILLER	DATE : 09/2006
DRAWN BY : FCJ 1/88	REV. 10/17/00 LES/RDR
CHECKED BY : CRK 3/89	REV. 5/7/03 RWW/JTE
	REV. 5/1/06 TLA/GM

NORTH CAROLINA PROFESSIONAL SEAL 025516 ENGINEER EMILY E. MURRAY 9/28/06

STATE OF NORTH CAROLINA
DEPARTMENT OF TRANSPORTATION
RALEIGH

STANDARD

RAIL POST SPACINGS AND END OF RAIL DETAILS

FOR ONE OR TWO BAR METAL RAILS

REVISIONS						SHEET NO.
NO.	BY:	DATE:	NO.	BY:	DATE:	S-11
1			3			TOTAL SHEETS
2			4			98

STD. NO. BMR2

26-SEP-2006 14:43
R:\Structures\r2245\final plans\R2245_sd_MR.dgn
padkins

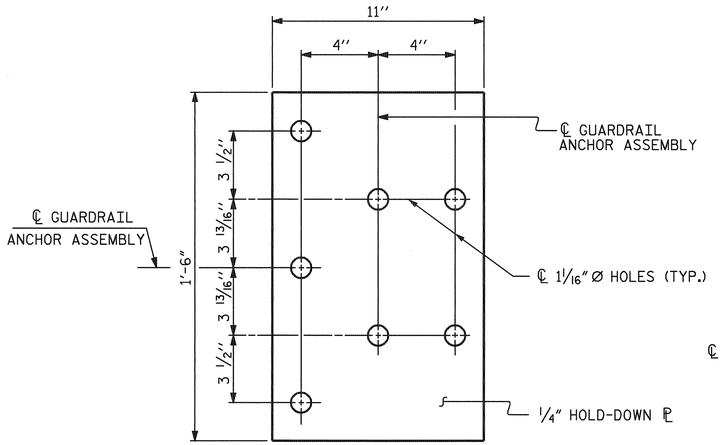

PLAN

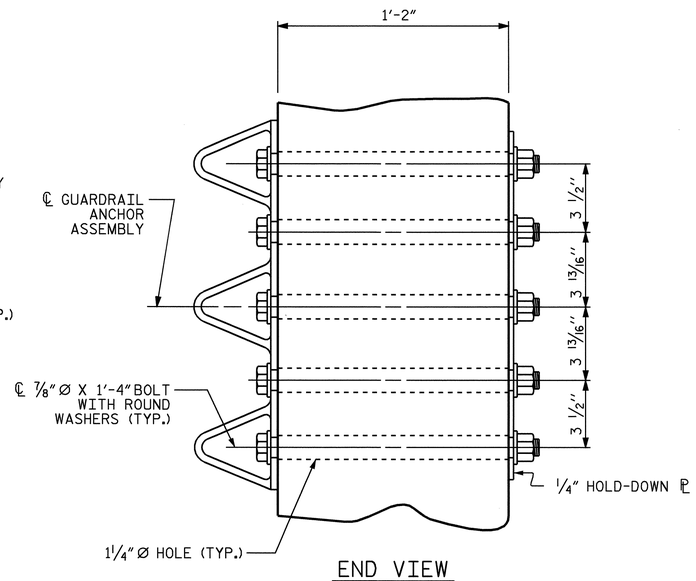

END VIEW

GUARDRAIL ANCHOR ASSEMBLY DETAILS

NOTES

THE GUARDRAIL ANCHOR ASSEMBLY SHALL CONSIST OF A 1/4'' HOLD DOWN PLATE AND 7 - 7/8'' Ø BOLTS WITH NUTS AND WASHERS.

THE HOLD-DOWN PLATE SHALL CONFORM TO AASHTO M270 GRADE 36. AFTER FABRICATION, THE HOLD-DOWN PLATE SHALL BE HOT-DIP GALVANIZED IN ACCORDANCE WITH AASHTO M111.

BOLTS SHALL CONFORM TO THE REQUIREMENTS OF ASTM A307 AND NUTS SHALL CONFORM TO THE REQUIREMENTS OF AASHTO M291. BOLTS, NUTS AND WASHERS SHALL BE GALVANIZED. AT THE CONTRACTOR'S OPTION, STAINLESS STEEL BOLTS, NUTS AND WASHERS MAY BE USED AS AN ALTERNATE FOR THE 7/8'' Ø GALVANIZED BOLTS, NUTS AND WASHERS. THEY SHALL CONFORM TO OR EXCEED THE MECHANICAL REQUIREMENTS OF ASTM A307. THE USE OF THIS ALTERNATE SHALL BE APPROVED BY THE ENGINEER.

AFTER INSTALLATION, THE EXPOSED THREAD OF THE BOLT SHALL BE BURRED WITH A SHARP POINTED TOOL.

THE COST OF THE GUARDRAIL ANCHOR ASSEMBLIES WITH BOLTS, NUTS AND WASHERS COMPLETE IN PLACE, SHALL BE INCLUDED IN THE VARIOUS PAY ITEMS.

THE VERTICAL REINFORCING BARS MAY BE SHIFTED SLIGHTLY IN THE END POST TO CLEAR ASSEMBLY BOLTS.

THE 1 1/4'' Ø HOLES SHALL BE FORMED OR DRILLED WITH A CORE BIT. IMPACT TOOLS WILL NOT BE PERMITTED. ANY CONCRETE DAMAGED BY THIS WORK SHALL BE REPAIRED TO THE SATISFACTION OF THE ENGINEER.

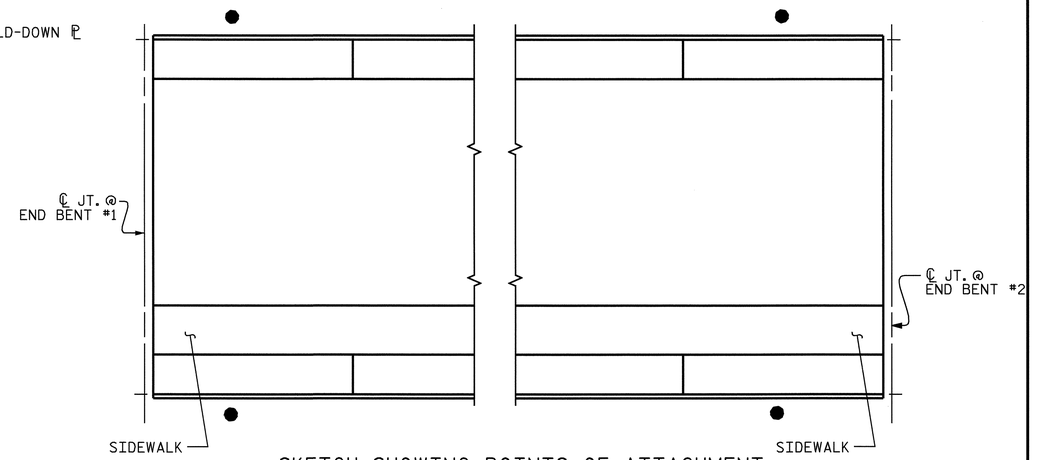

SKETCH SHOWING POINTS OF ATTACHMENT

● LOCATION OF GUARDRAIL ATTACHMENT

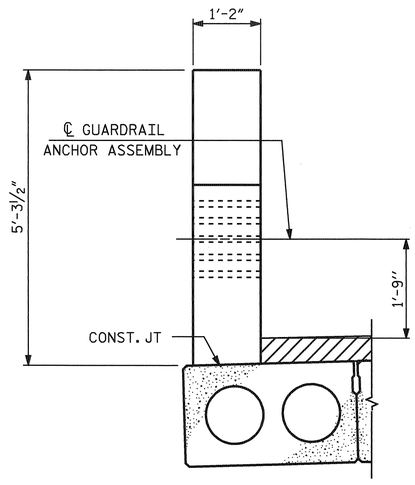

END VIEW LEFT SIDE
(TWO BAR METAL RAIL)

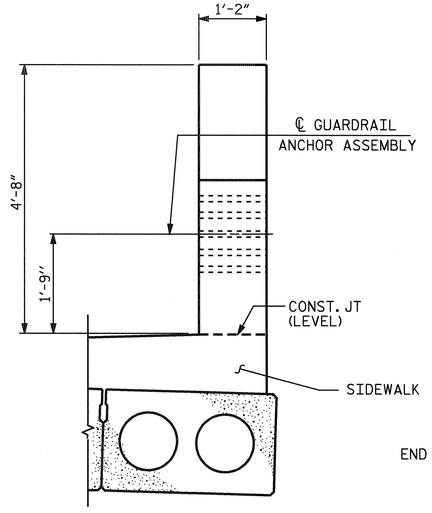

END VIEW RIGHT SIDE
(TWO BAR METAL RAIL WITH SIDEWALK)

LOCATION OF GUARDRAIL ANCHOR AT END POST

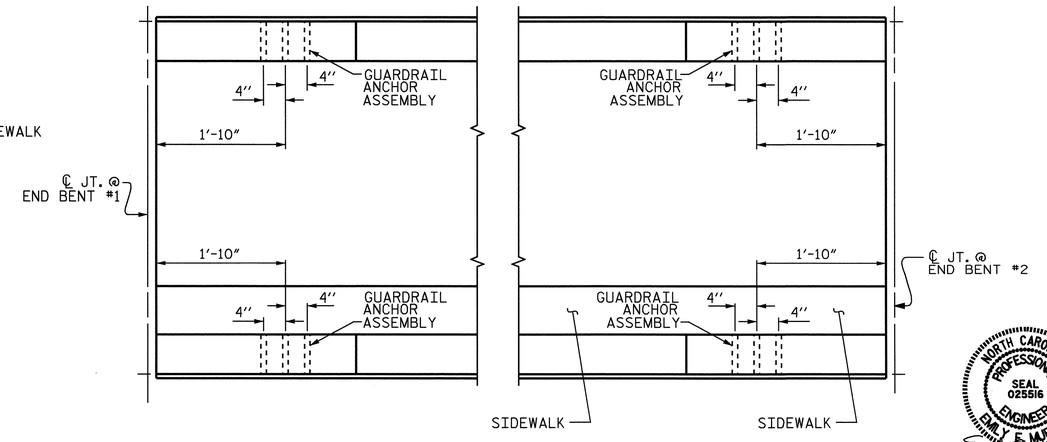

PLAN

PROJECT NO. R-2245
BRUNSWICK COUNTY
STATION: 21+50.00 -L-

SHEET 9 OF 11

STATE OF NORTH CAROLINA
DEPARTMENT OF TRANSPORTATION
RALEIGH

STANDARD
GUARDRAIL ANCHORAGE DETAILS FOR METAL RAILS

REVISIONS						SHEET NO.
NO.	BY:	DATE:	NO.	BY:	DATE:	S-12
1			3			TOTAL SHEETS
2			4			98

NORTH CAROLINA PROFESSIONAL SEAL 025516 ENGINEER EMILY E. MURRAY
11/2/06

ASSEMBLED BY : PEGGY ADKINS DATE : 9-06			
CHECKED BY : T. AVERETTE DATE : 9-06			
DRAWN BY : EEM 6/94	REV. 10/17/00	RWW/LES	
CHECKED BY : RGW 6/94	REV. 5/7/03	RWW/JTE	
	REV. 5/1/06	TLA/GM	

31-OCT-2006 10:27
G:\Structures\r2245\final plans\R2245_sd_GR.dgn
taveratte

STR. #1

STD. NO. BMR8

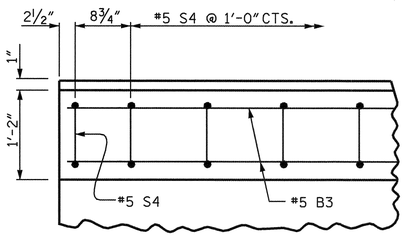

PLAN OF PARAPET

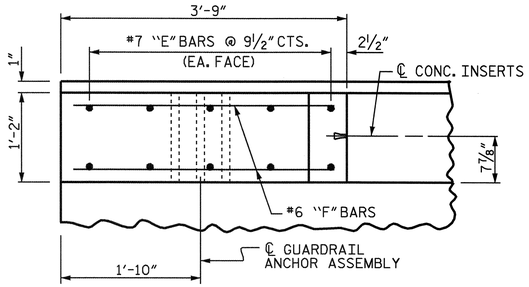

PLAN OF END POST

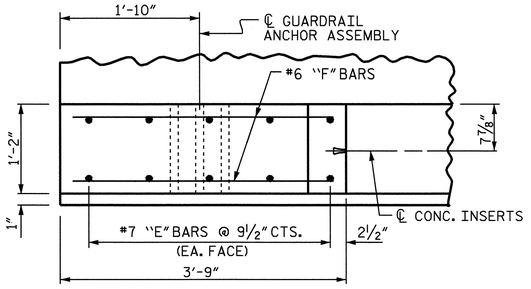

PLAN OF END POST

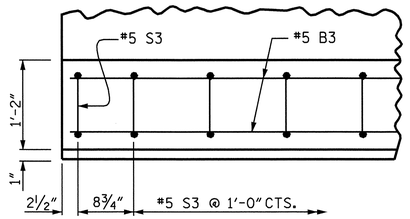

PLAN OF PARAPET

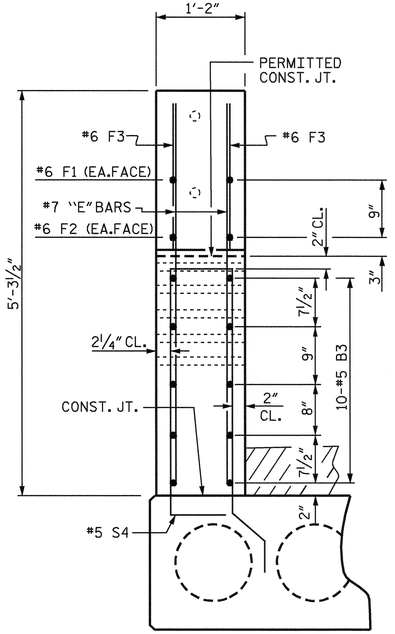

END VIEW

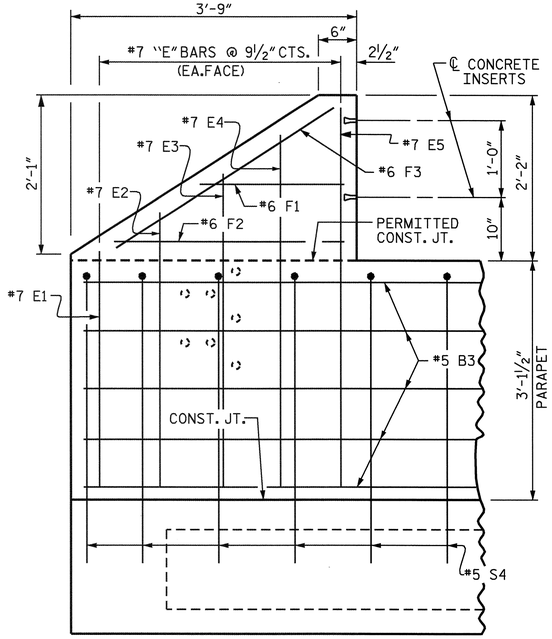

ELEVATION

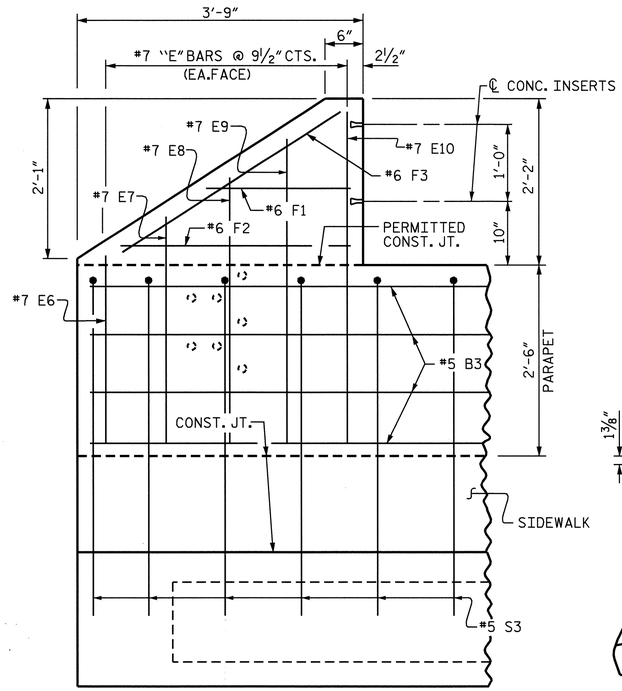

ELEVATION

REINFORCING STEEL IN SIDEWALK NOT SHOWN FOR CLARITY

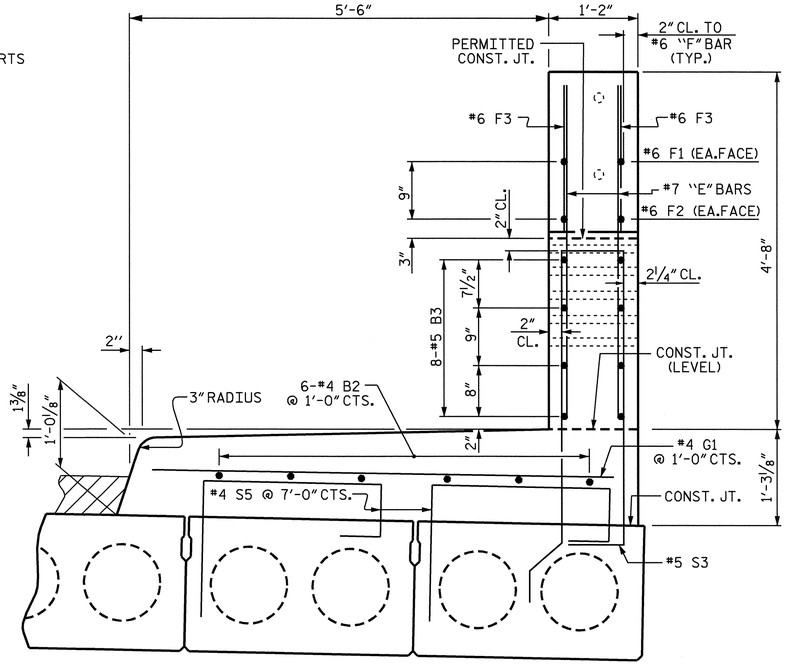

END VIEW

SEE "PLAN OF SPAN" SHEETS FOR LOCATION OF STEEL IN SIDEWALK

PARAPET AND END POST FOR TWO BAR RAIL

(LEFT SIDE)

PARAPET AND END POST FOR TWO BAR RAIL

(RIGHT SIDE)

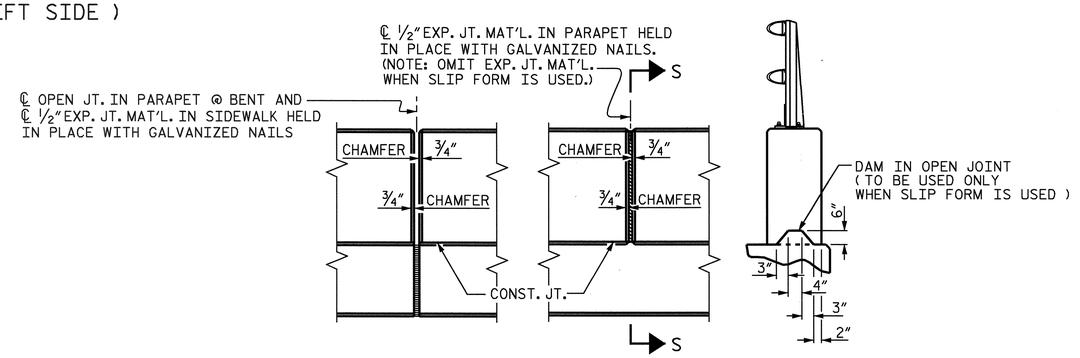

ELEVATION AT EXPANSION JOINTS

SECTION S-S

PARAPET DETAILS

PROJECT NO. R-2245

BRUNSWICK COUNTY

STATION: 21+50.00 -L-

SHEET 10 OF 11

STATE OF NORTH CAROLINA
DEPARTMENT OF TRANSPORTATION
RALEIGH

SUPERSTRUCTURE

CONCRETE PARAPET & END POST DETAILS

REVISIONS						SHEET NO.
NO.	BY:	DATE:	NO.	BY:	DATE:	S-13
1			3			TOTAL SHEETS
2			4			98

NORTH CAROLINA PROFESSIONAL SEAL 025516 ENGINEER EMILY E. MURRAY

2/14/07

DRAWN BY : T.L. AVERETTE DATE : 09-06
CHECKED BY : PEGGY ADKINS DATE : 09-06

14-FEB-2007 16:41
K:\Structures\r2245\final plans\R2245_sd_CP.dgn
emurray

BAR TYPES

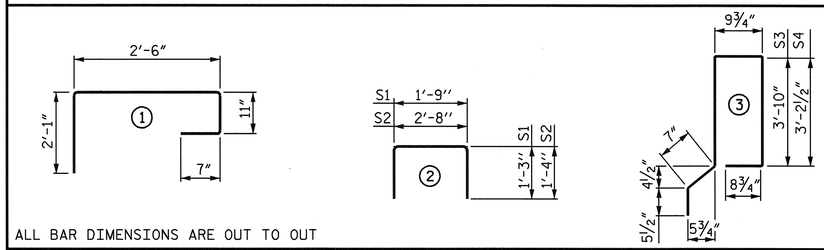

ALL BAR DIMENSIONS ARE OUT TO OUT

BILL OF MATERIAL FOR ONE CORED SLAB UNIT

				TYPE I UNIT		TYPE II UNIT		TYPE III UNIT		TYPE IV UNIT	
BAR	NUMBER	SIZE	TYPE	LENGTH	WEIGHT	LENGTH	WEIGHT	LENGTH	WEIGHT	LENGTH	WEIGHT
B1	4	#4	STR	28'-2"	75	28'-2"	75	28'-2"	75	28'-2"	75
S1	8	#4	2	4'-3"	23	4'-3"	23	4'-3"	23	4'-3"	23
S2	108	#4	2	5'-4"	385	5'-4"	385	5'-4"	385	5'-4"	385
✳ S3	56	#5	3	——	——	——	——	——	——	10'-3"	599
✳ S4	56	#5	3	9'-0"	526	——	——	——	——	——	——
✳ S5	10	#4	1	——	——	——	——	6'-1"	41	6'-1"	41
REINFORCING STEEL					483 LBS.		483 LBS.		483 LBS.		483 LBS.
✳ EPOXY COATED REINFORCING STEEL					526 LBS.		——		41 LBS.		640 LBS.
5,000 P.S.I. CONCRETE					7.7 CU. YDS.		7.7 CU. YDS.		7.7 CU. YDS.		7.7 CU. YDS.
½" Ø L.R. STRANDS		No.			26		26		26		26

GROOVING BRIDGE FLOORS

APPROACH SLABS	1838 SQ.FT.
BRIDGE DECK	6088 SQ.FT.
TOTAL	7926 SQ.FT.

CORED SLABS REQUIRED

		NUMBER	LENGTH	TOTAL LENGTH
SPAN A	TYPE I	1	54'-10½"	54'-10½"
	TYPE II	13	54'-10½"	713'-4½"
	TYPE III	1	54'-10½"	54'-10½"
	TYPE IV	1	54'-10½"	54'-10½"
SPAN B	TYPE I	1	54'-10½"	54'-10½"
	TYPE II	13	54'-10½"	713'-4½"
	TYPE III	1	54'-10½"	54'-10½"
	TYPE IV	1	54'-10½"	54'-10½"
SPAN C	TYPE I	1	54'-10½"	54'-10½"
	TYPE II	13	54'-10½"	713'-4½"
	TYPE III	1	54'-10½"	54'-10½"
	TYPE IV	1	54'-10½"	54'-10½"
TOTAL	——	48	——	2634'-0"

BILL OF MATERIAL FOR CONCRETE PARAPET AND END POSTS

BAR	NO.	SIZE	TYPE	LENGTH	WEIGHT
✳ B3	108	5	STR	27'-1"	3051
✳ E1	4	7	STR	3'-1"	25
✳ E2	4	7	STR	3'-7"	29
✳ E3	4	7	STR	4'-1"	33
✳ E4	4	7	STR	4'-7"	37
✳ E5	4	7	STR	4'-11"	40
✳ E6	4	7	STR	2'-5"	20
✳ E7	4	7	STR	2'-11"	24
✳ E8	4	7	STR	3'-5"	28
✳ E9	4	7	STR	3'-11"	32
✳ E10	4	7	STR	4'-4"	35
✳ F1	8	6	STR	1'-10"	22
✳ F2	8	6	STR	3'-0"	36
✳ F3	8	6	STR	3'-4"	40

✳ EPOXY COATED REINFORCING STEEL	3452 LBS.
CLASS AA CONCRETE	40.9 CU. YDS.
1'-2" × 3'-1½" CONCRETE PARAPET	164.88 LIN. FT.
1'-2" × 2'-6" CONCRETE PARAPET	164.88 LIN. FT.

GRADE 270 STRANDS

	½" Ø L.R.
AREA (SQUARE INCHES)	0.153
ULTIMATE STRENGTH (LBS. PER STRAND)	41,300
APPLIED PRESTRESS (LBS. PER STRAND)	30,980

SPLICE LENGTH CHART

BAR SIZE	EPOXY COATED
#3 "R"	1'-3"
#4 "R"	1'-8"

BILL OF MATERIAL FOR CONCRETE WEARING SURFACE

BAR	NO.	SIZE	TYPE	LENGTH	WEIGHT
✳ R1	656	#3	STR	20'-6"	5056
✳ R2	480	#3	STR	28'-4"	5114
✳ R3	158	#4	STR	20'-0"	2111
✳ EPOXY COATED REINFORCING STEEL				LBS.	12281
CONCRETE WEARING SURFACE				SQ. FT.	6595
				APPROX. CU. YDS.	115

BILL OF MATERIAL FOR SIDEWALK

BAR	NO.	SIZE	TYPE	LENGTH	WEIGHT
✳ B2	36	4	STR	28'-8"	689
✳ G1	168	4	STR	6'-0"	673
✳ EPOXY COATED REINFORCING STEEL					1362 LBS.
CLASS AA CONCRETE					46.5 CU. YDS.

DEAD LOAD DEFLECTION AND CAMBER

	SPANS A, B & C
	½" Ø L.R. STRAND
CAMBER (SLAB ALONE IN PLACE)	↑ 3"
DEFLECTION DUE TO SUPERIMPOSED DEAD LOAD ✳✳	↓ ⅝"
FINAL CAMBER	↑ 2⅜"

✳✳ INCLUDES FUTURE WEARING SURFACE

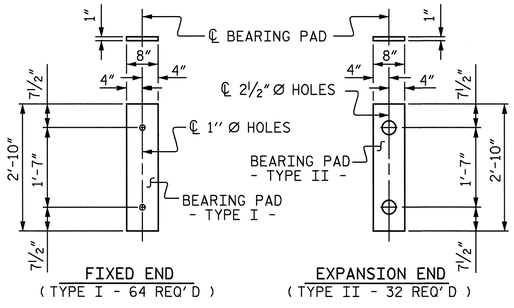

ELASTOMERIC BEARING DETAILS

NOTES

ALL PRESTRESSING STRANDS SHALL BE 7-WIRE LOW RELAXATION GRADE 270 STRANDS AND SHALL CONFORM TO AASHTO M203 EXCEPT FOR SAMPLING REQUIREMENTS WHICH SHALL BE IN ACCORDANCE WITH THE STANDARD SPECIFICATIONS.

ALL REINFORCING STEEL CAST WITH THE CORED SLAB SECTIONS SHALL BE GRADE 60 AND SHALL BE INCLUDED IN THE UNIT PRICE BID FOR PRESTRESSED CONCRETE CORED SLABS.

RECESSES FOR TRANSVERSE STRANDS SHALL BE GROUTED AFTER THE TENSIONING OF THE STRANDS.

THE 2½" Ø DOWEL HOLES AT FIXED ENDS OF SLAB SECTIONS SHALL BE FILLED WITH GROUT. THE 2½" Ø DOWEL HOLES AT EXPANSION ENDS OF SLAB SECTIONS SHALL BE FILLED WITH JOINT SEALER MATERIAL TO 1½" ABOVE THE TOP OF DOWELS AND THEN FILLED WITH GROUT.

THE JOINT SEALER MATERIAL SHALL CONFORM TO THE REQUIREMENTS OF TYPE SL LOW MODULUS SILICONE SEALANT. THE 2" Ø BACKER ROD SHALL CONFORM TO THE REQUIREMENTS OF TYPE M BOND BREAKER. SEE SECTION 1028 OF THE STANDARD SPECIFICATIONS.

WHEN CORED SLABS ARE CAST, A POSITIVE HOLD-DOWN SYSTEM SHALL BE EMPLOYED TO PREVENT VOIDS FROM RISING OR MOVING SIDEWAYS. THIS SYSTEM SHALL BE DESIGNED TO BE LEFT IN PLACE UNTIL THE CONCRETE HAS REACHED RELEASE STRENGTH. AT LEAST THREE WEEKS PRIOR TO CASTING CORED SLABS, THE CONTRACTOR SHALL SUBMIT TO THE ENGINEER FOR REVIEW AND COMMENT, DETAILED DRAWINGS OF THE PROPOSED HOLD-DOWN SYSTEM. IN ADDITION TO STRUCTURAL DETAILS, LOCATION AND SPACING OF THE HOLD-DOWNS SHALL BE INDICATED.

THE TOP SURFACE OF THE CORED SLAB UNITS SHALL HAVE A ⅜" RAKED FINISH.

THE TRANSFER OF LOAD FROM THE ANCHORAGES TO THE CORED SLAB UNIT SHALL BE DONE WHEN THE CONCRETE HAS REACHED A COMPRESSIVE STRENGTH OF NOT LESS THAN 4000 PSI.

ALL REINFORCING STEEL IN PARAPETS, END POSTS, SIDEWALK AND CONCRETE WEARING SURFACE SHALL BE EPOXY COATED.

PRESTRESSING STRANDS SHALL BE CUT FLUSH WITH THE CORED SLAB UNIT ENDS.

APPLY EPOXY PROTECTIVE COATING TO CORED SLAB UNIT ENDS.

FOR EVAZOTE JOINT SEALS, SEE SPECIAL PROVISIONS.

PLACEMENT OF THE CONCRETE WEARING SURFACE SHALL OCCUR AFTER CASTING THE CONCRETE PARAPET AND SIDEWALK. THE COST OF THE REINFORCING STEEL CAST WITH THE CONCRETE WEARING SURFACE SHALL BE INCLUDED IN THE UNIT PRICE BID FOR CONCRETE WEARING SURFACE. FOR CONCRETE WEARING SURFACE, SEE SPECIAL PROVISIONS.

GROOVED CONTRACTION JOINTS ½" IN DEPTH, SHALL BE TOOLED IN ALL EXPOSED FACES OF THE PARAPET AND SIDEWALK IN ACCORDANCE WITH ARTICLE 825-10(B) OF THE STANDARD SPECIFICATIONS. THE CONTRACTION JOINTS SHALL BE LOCATED AT A SPACING OF 8 FEET TO 10 FEET BETWEEN EXPANSION JOINTS. NO CONTRACTION JOINTS WILL BE REQUIRED FOR SEGMENTS LESS THAN 10 FEET IN LENGTH.

PRESTRESSED CONCRETE CORED SLAB UNITS SHALL CONTAIN CALCIUM NITRITE CORROSION INHIBITOR.

FOR GROUT FOR STRUCTURES, SEE SPECIAL PROVISIONS.

THE COST OF THE SIDEWALK IS INCLUDED IN THE PAY ITEMS FOR CLASS AA CONCRETE AND EPOXY COATED REINFORCING STEEL.

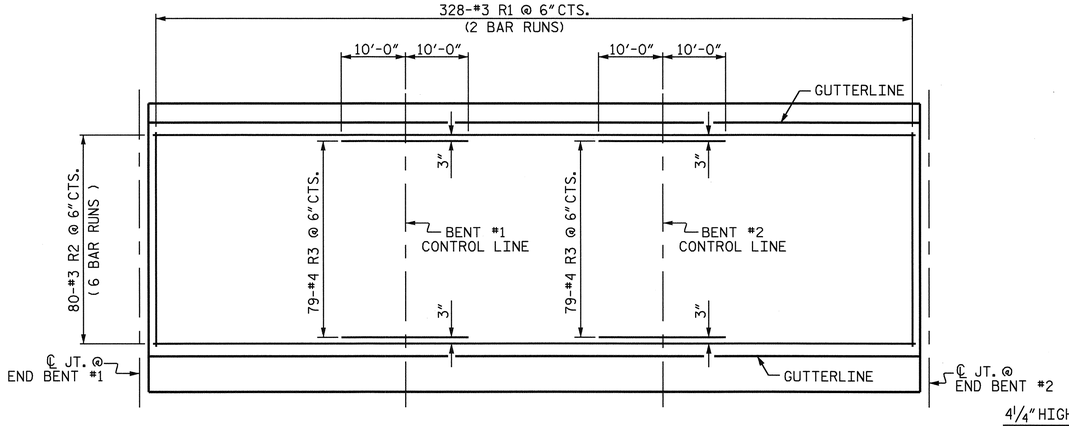

PLAN SHOWING CONCRETE WEARING SURFACE REINFORCING STEEL

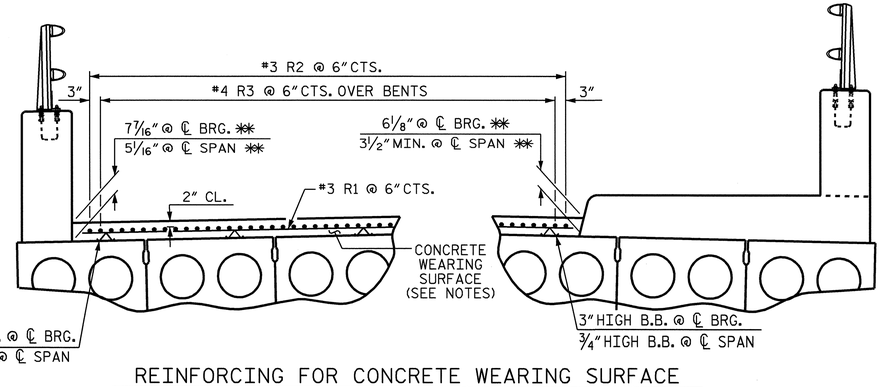

REINFORCING FOR CONCRETE WEARING SURFACE

✳✳ BASED ON PREDICTED FINAL CAMBER AND THEORETICAL GRADE LINE ELEVATIONS

NORTH CAROLINA PROFESSIONAL SEAL 025516 ENGINEER EMILY E. MURRAY

2/27/07

PROJECT NO. R-2245

BRUNSWICK COUNTY

STATION: 21+50.00 -L-

SHEET 11 OF 11

STATE OF NORTH CAROLINA
DEPARTMENT OF TRANSPORTATION
RALEIGH

SUPERSTRUCTURE

BILL OF MATERIAL

REVISIONS						SHEET NO.
NO.	BY:	DATE:	NO.	BY:	DATE:	S-14
1			3			TOTAL SHEETS
2			4			98

DRAWN BY : T.L. AVERETTE DATE : 09-06
CHECKED BY : PEGGY ADKINS DATE : 09-06

26-FEB-2007 11:07

STR #1

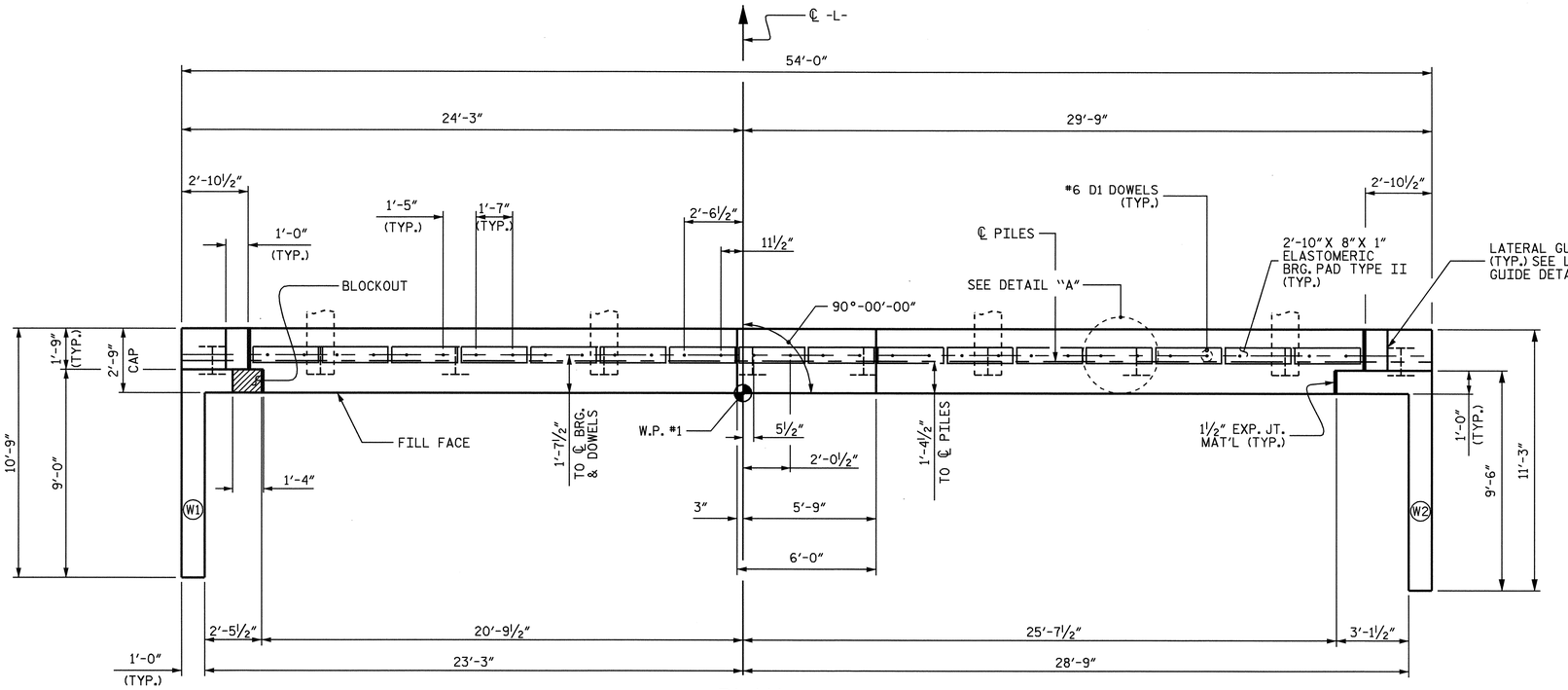

PLAN

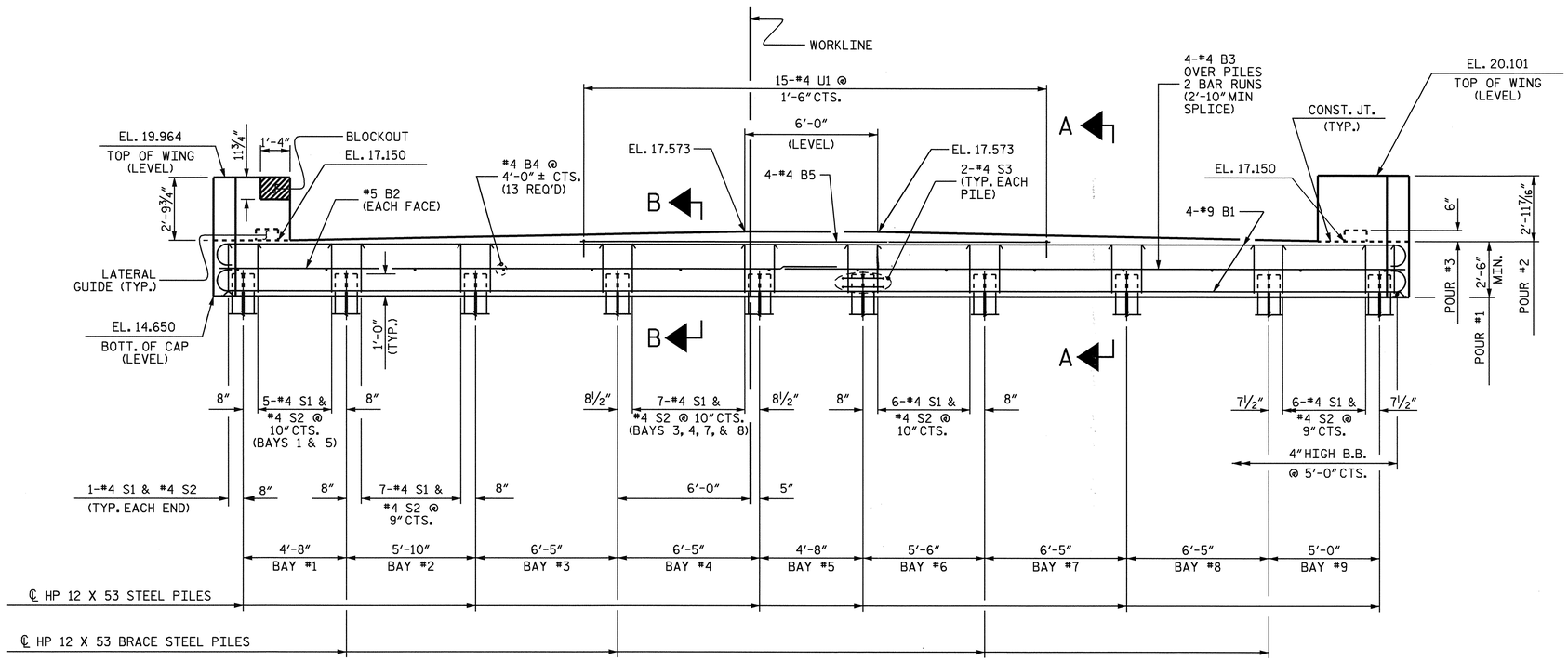

ELEVATION

NOTES

STIRRUPS IN CAP MAY BE SHIFTED AS NECESSARY TO CLEAR ANCHOR BOLTS.

THE CONTRACTOR SHALL PROVIDE FOR INSTALLATION OF THE 4" DIAMETER DRAIN PIPE THROUGH THE WING WALL AS REQUIRED FOR REINFORCED BRIDGE APPROACH FILLS, SEE THE ROADWAY PLANS. REINFORCING STEEL IN THE WING WALL MAY BE SHIFTED AS NECESSARY TO CLEAR THE DRAIN PIPE.

THE LATERAL GUIDE @ EACH END OF THE CAP IS NOT TO BE POURED UNTIL AFTER THE CORED SLAB UNITS ARE IN PLACE.

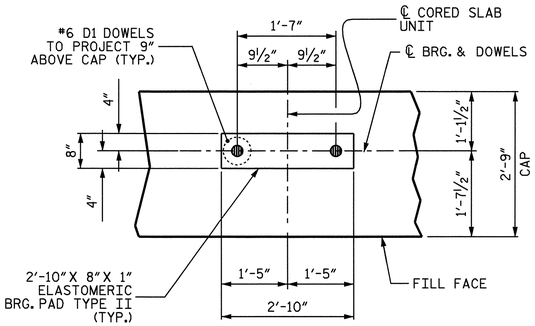

DETAIL A
(TYP. EA. UNIT)

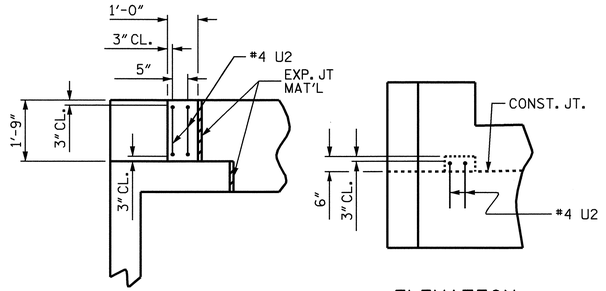

LATERAL GUIDE DETAILS

PROJECT NO. R-2245

BRUNSWICK COUNTY

STATION: 21+50.00 -L-

SHEET 1 OF 3

STATE OF NORTH CAROLINA
DEPARTMENT OF TRANSPORTATION
RALEIGH

SUBSTRUCTURE

END BENT #1

REVISIONS						SHEET NO.
NO.	BY:	DATE:	NO.	BY:	DATE:	S-15
1			3			TOTAL SHEETS
2			4			98

NORTH CAROLINA PROFESSIONAL SEAL 025516 ENGINEER EMILY E. MURRAY
9/28/06

DRAWN BY : ZION J. RORIE DATE : 5/25/05
CHECKED BY : M. D. PISO DATE : 3/21/06

22-SEP-2006 10:28
R:\Structures\r2245\zrorie\R2245A_sd_E*.dgn
padkins

STR. #1

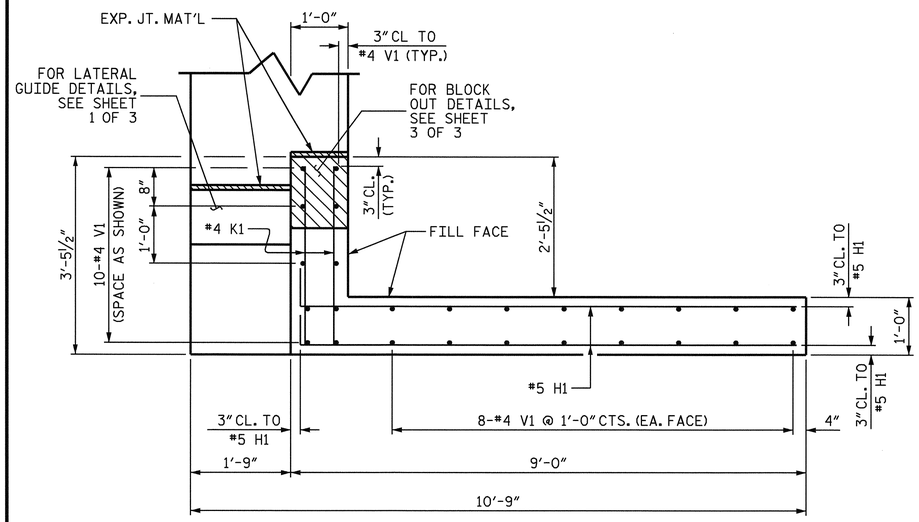

PLAN OF LEFT WING (W1)

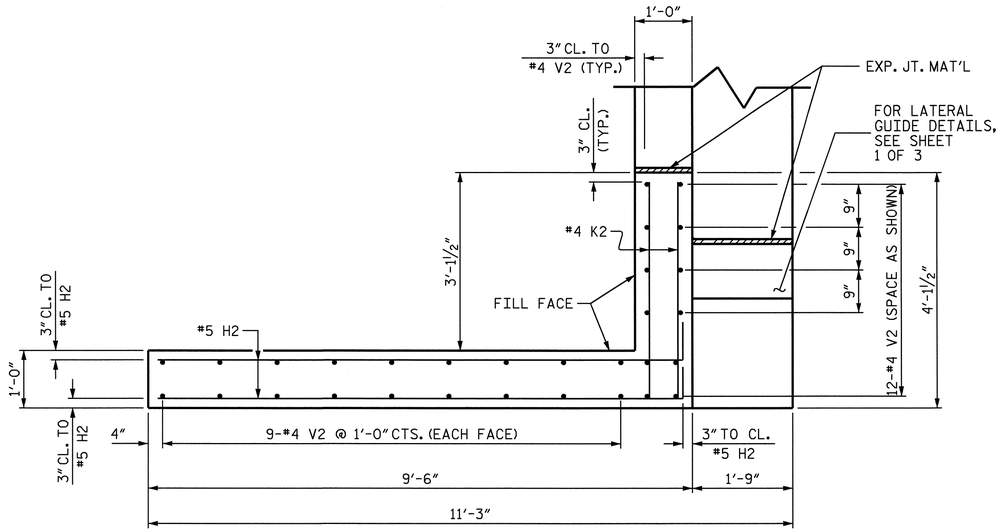

PLAN OF RIGHT WING (W2)

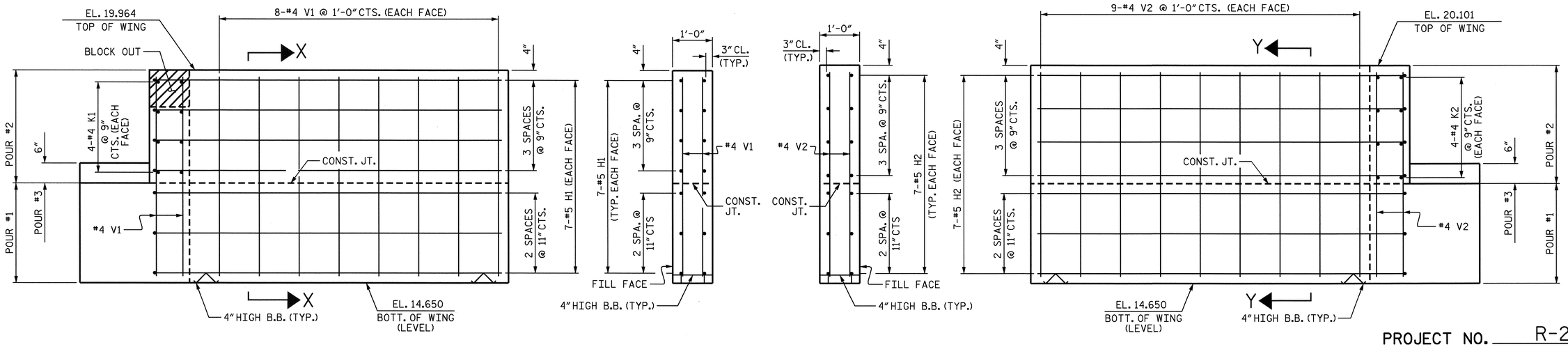

SECTION X-X

SECTION Y-Y

ELEVATION OF LEFT WING (W1)

ELEVATION OF RIGHT WING (W2)

PROJECT NO. R-2245

BRUNSWICK COUNTY

STATION: 21+50.00 -L-

SHEET 2 OF 3

STATE OF NORTH CAROLINA
DEPARTMENT OF TRANSPORTATION
RALEIGH

SUBSTRUCTURE

END BENT #1

NORTH CAROLINA PROFESSIONAL SEAL 025516 ENGINEER EMILY E. MURRAY
9/28/06

REVISIONS						SHEET NO.
NO.	BY:	DATE:	NO.	BY:	DATE:	S-16
1			3			TOTAL SHEETS
2			4			98

DRAWN BY : ZION J. RORIE DATE : 5/25/05
CHECKED BY : M. D. PISO DATE : 3/21/06

22-SEP-2006 10:28
R:\Structures\r2245\zrorie\R2245A_sd_E*.dgn
padkins

STR. #1

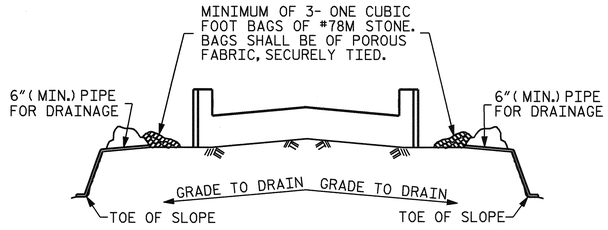

BAGGED STONE AND PIPE SHALL BE PLACED IMMEDIATELY AFTER COMPLETION OF END BENT EXCAVATION. PIPE MAY BE EITHER CONCRETE, CORRUGATED STEEL, CORRUGATED ALUMINUM ALLOY, OR CORRUGATED PLASTIC. PERFORATED PIPE WILL NOT BE ALLOWED.

BAGGED STONE SHALL REMAIN IN PLACE UNTIL THE ENGINEER DIRECTS THAT IT BE REMOVED. THE CONTRACTOR SHALL REMOVE AND DISPOSE OF SILT ACCUMULATIONS AT BAGGED STONE WHEN SO DIRECTED BY THE ENGINEER. BAGS SHALL BE REMOVED AND REPLACED WHENEVER THE ENGINEER DETERMINES THAT THEY HAVE DETERIORATED AND LOST THEIR EFFECTIVENESS.

NO SEPARATE PAYMENT WILL BE MADE FOR THIS WORK AND THE ENTIRE COST OF THIS WORK SHALL BE INCLUDED IN THE UNIT CONTRACT PRICE BID FOR THE SEVERAL PAY ITEMS.

TEMPORARY DRAINAGE AT END BENT

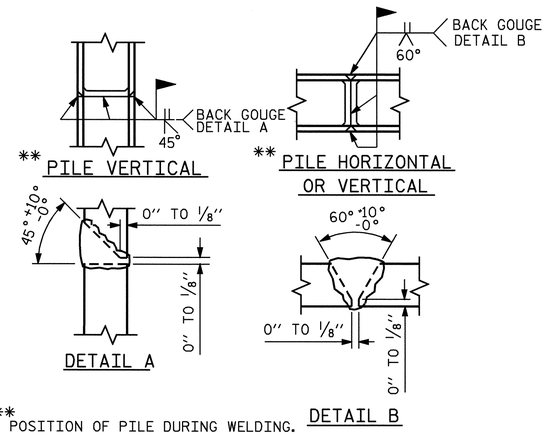

** POSITION OF PILE DURING WELDING.

PILE SPLICE DETAILS

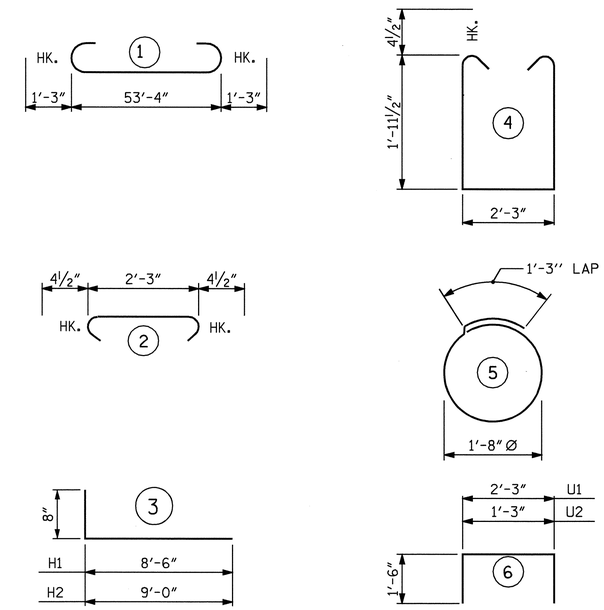

ALL BAR DIMENSIONS ARE OUT TO OUT.

BAR TYPES

BILL OF MATERIAL

END BENT #1

BAR	NO.	SIZE	TYPE	LENGTH	WEIGHT
✱B1	8	#9	1	55'-10"	1519
✱B2	2	#5	STR.	53'-6"	112
✱B3	8	#4	STR.	28'-2"	151
✱B4	13	#4	STR.	2'-3"	20
✱B5	4	#4	STR.	21'-3"	57
✱K1	8	#4	STR.	2-11"	16
✱K2	8	#4	STR.	3'-7"	19
✱H1	14	#5	3	9'-2"	134
✱H2	14	#5	3	9'-8"	141
✱S1	59	#4	4	6'-11"	273
✱S2	59	#4	2	3'-0"	118
✱S3	20	#4	5	6'-6"	87
✱U1	15	#4	6	5'-3"	53
✱U2	4	#4	6	4'-3"	11
✱V1	26	#4	STR.	4'-9"	82
✱V2	30	#4	STR.	4'-10"	97
✱D1	32	#6	STR.	1'-6"	72

✱EPOXY REINFORCING STEEL = 2962 LBS.
CLASS "AA" CONCRETE BREAKDOWN
POUR #1 CAP & LOWER WINGS
CU. YDS. 16.7
POUR #2 UPPER WINGS
CU. YDS. 2.6
POUR #3 LATERAL GUIDE
CU. YDS. 0.1
TOTAL CLASS "AA" CONCRETE
CU. YDS. 19.4
HP 12 X 53 STEEL PILES
NO. 10 LIN. FT. 400

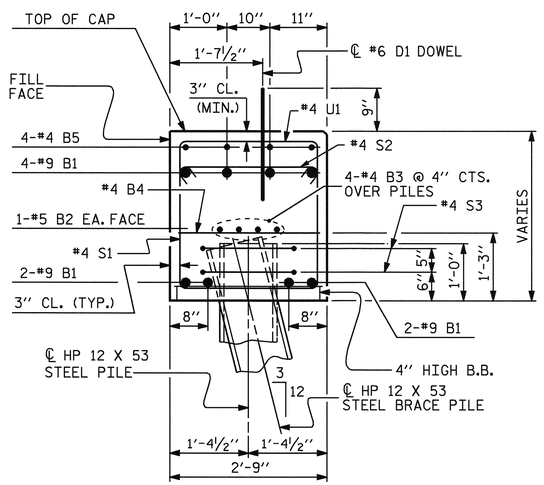

SECTION B-B

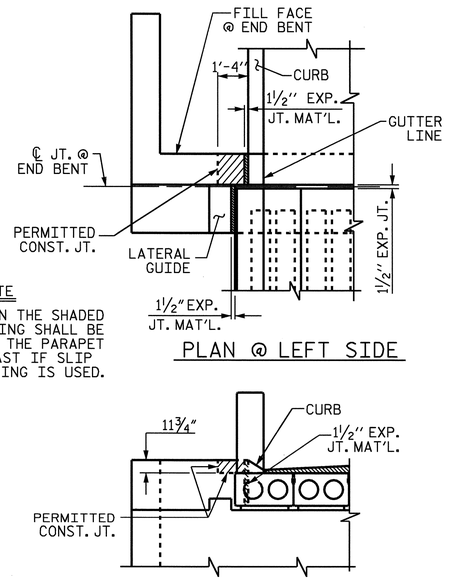

NOTE

THE CONCRETE IN THE SHADED AREA OF THE WING SHALL BE POURED AFTER THE PARAPET AND END POST ARE CAST IF SLIP FORMING IS USED.

PLAN @ LEFT SIDE

ELEVATION @ LEFT SIDE

BLOCKOUT IN WING WALL FOR CORED SLAB

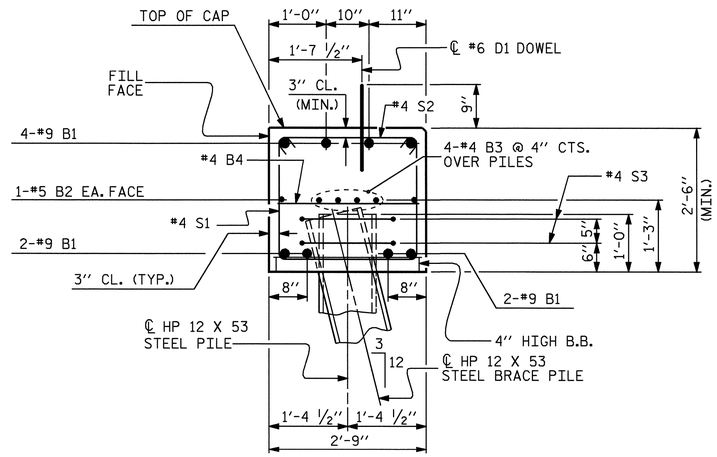

SECTION A-A

PROJECT NO. R-2245

BRUNSWICK COUNTY

STATION: 21+50.00 -L-

SHEET 3 OF 3

STATE OF NORTH CAROLINA
DEPARTMENT OF TRANSPORTATION
RALEIGH

SUBSTRUCTURE

END BENT #1

REVISIONS						SHEET NO.
NO.	BY:	DATE:	NO.	BY:	DATE:	S-17
1			3			TOTAL SHEETS
2			4			98

NORTH CAROLINA PROFESSIONAL SEAL 025516 ENGINEER EMILY E. MURRAY

11/2/06

DRAWN BY : ZION J. RORIE DATE : 5/25/05
CHECKED BY : M. D. PISO DATE : 3/21/06

STR. #1

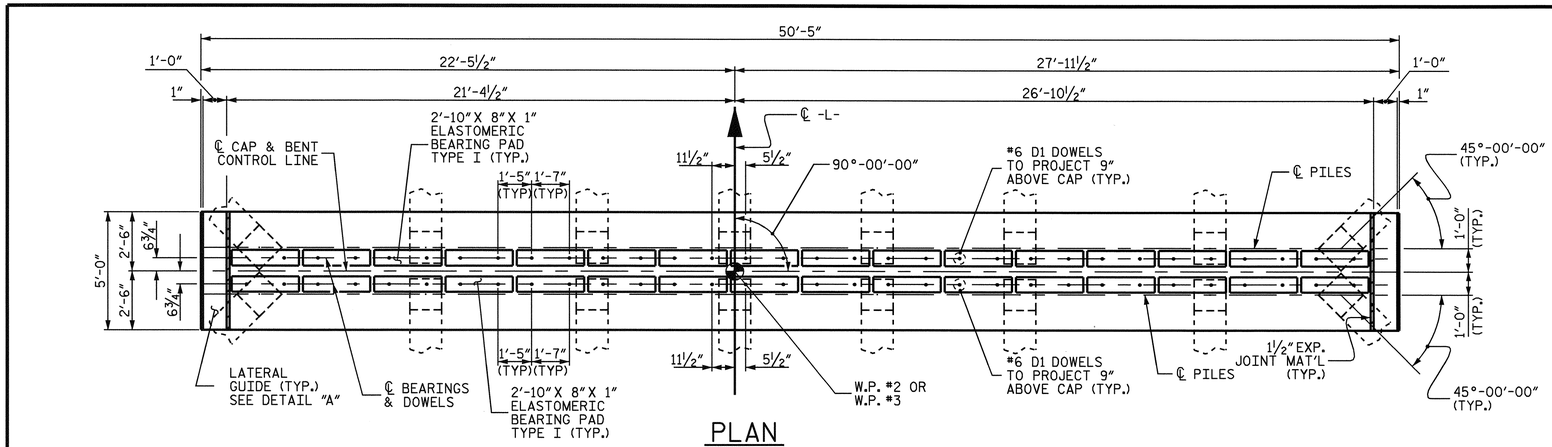

PLAN

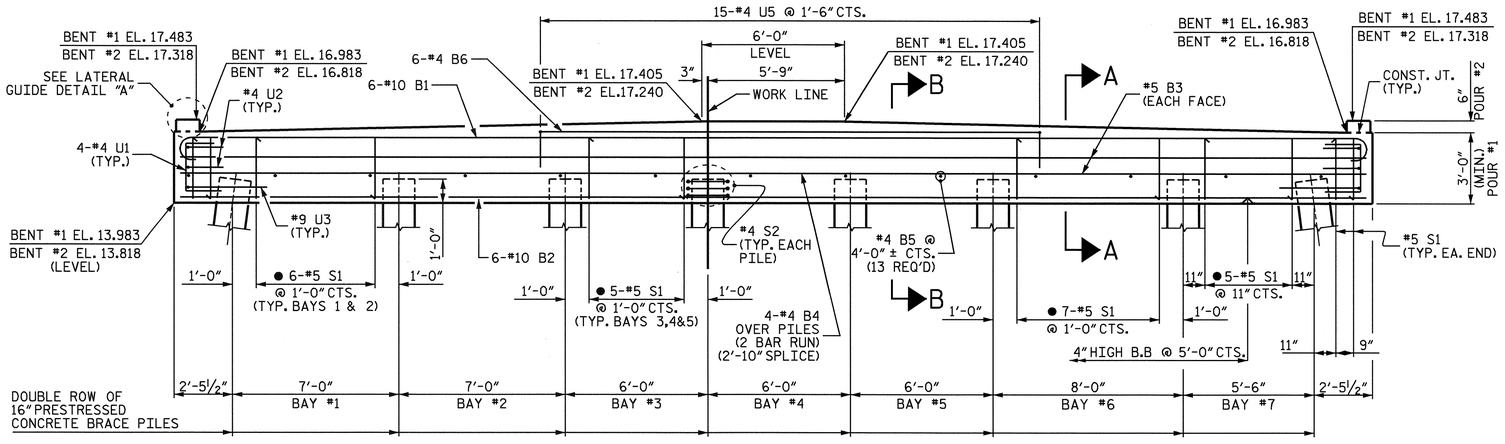

ELEVATION

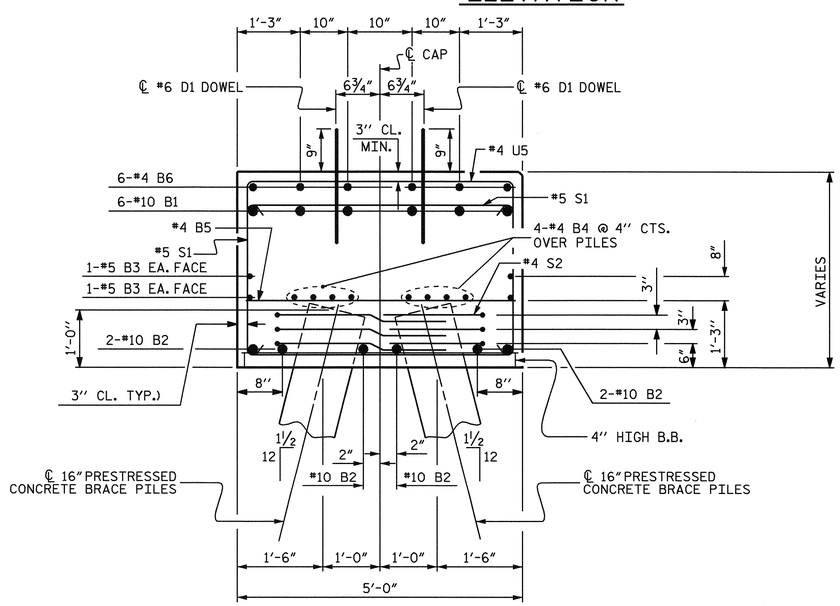

SECTION B-B

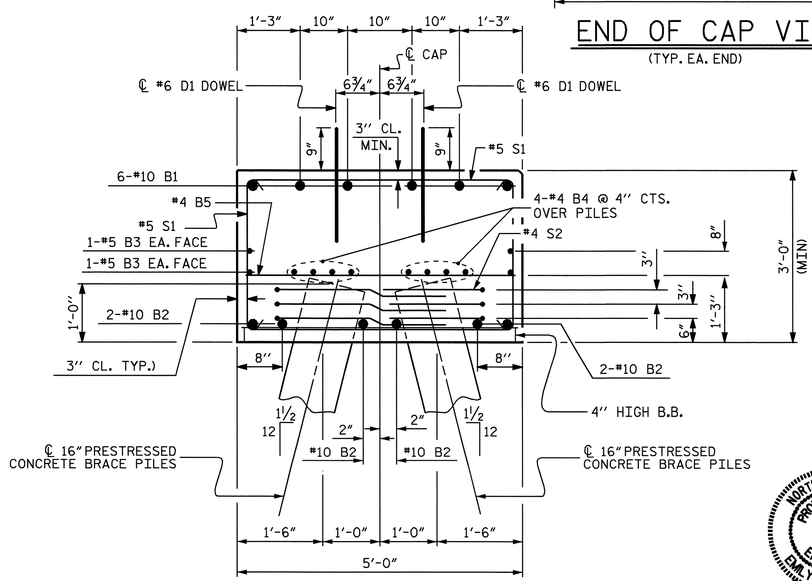

SECTION A-A

NOTES:

STIRRUPS IN CAP MAY BE SHIFTED AS NECESSARY TO CLEAR DOWELS.

ALL REINFORCING STEEL IS EPOXY COATED.

THE LATERAL GUIDE AT EACH END OF CAP IS NOT TO BE POURED UNTIL AFTER THE CORED SLAB UNITS ARE IN PLACE.

● INVERT ALTERNATE STIRRUPS

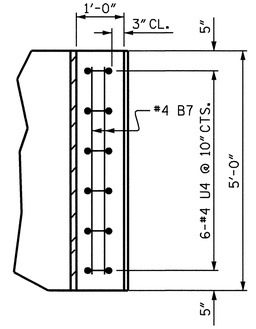

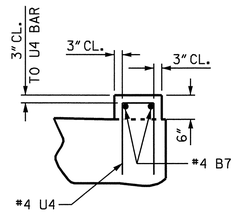

DETAIL "A"

(TYP. EA. LATERAL GUIDE)

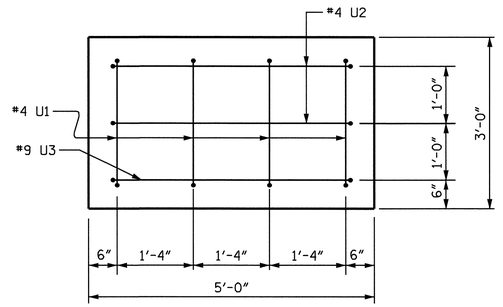

END OF CAP VIEW

(TYP. EA. END)

BILL OF MATERIAL

FOR ONE BENT

BAR	NO.	SIZE	TYPE	LENGTH	WEIGHT
✳B1	6	#10	1	52'-7"	1358
✳B2	6	#10	STR	49'-11"	1289
✳B3	4	#5	STR	49'-11"	208
✳B4	16	#4	STR	26'-5"	282
✳B5	13	#4	STR	4'-6"	39
✳B6	6	#4	STR	21'-0"	84
✳B7	4	#4	STR	4'-6"	12
✳D1	64	#6	STR	1'-6"	144
✳S1	43	#5	2	10'-4"	463
✳S2	48	#4	3	8'-0"	257
✳U1	8	#4	3	5'-0"	27
✳U2	4	#4	3	7'-4"	20
✳U3	2	#9	3	11'-8"	79
✳U4	12	#4	3	3'-6"	28
✳U5	15	#4	3	7'-6"	75

✳EPOXY COATED		
REINFORCING STEEL	LBS.	4365
CLASS "AA" CONCRETE BREAKDOWN		
POUR #1 (CAP)	C.Y.	30.2
POUR #2 (LATERAL GUIDE)	C.Y.	0.2
TOTAL CLASS "AA" CONCRETE	C.Y.	30.4
16" PRESTRESSED CONCRETE PILES		
NO. 16	LIN. FT.	640
STEEL PILE TIPS	EACH	16

BAR TYPES

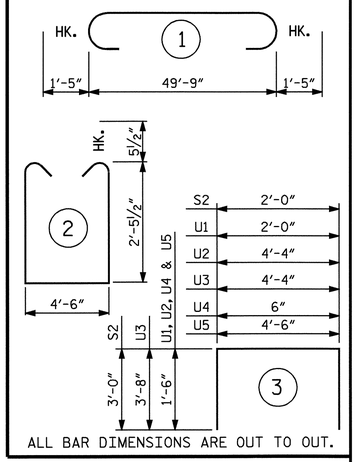

ALL BAR DIMENSIONS ARE OUT TO OUT.

PROJECT NO. R-2245

BRUNSWICK COUNTY

STATION: 21+50.00 -L-

SHEET 1 OF 2

STATE OF NORTH CAROLINA
DEPARTMENT OF TRANSPORTATION
RALEIGH

SUBSTRUCTURE

BENTS #1 & #2

NORTH CAROLINA PROFESSIONAL SEAL 025516 ENGINEER EMILY F. MURRAY

9/28/06

REVISIONS						SHEET NO.
NO.	BY:	DATE:	NO.	BY:	DATE:	S-18
1			3			TOTAL SHEETS
2			4			98

DRAWN BY : ZION J. RORIE DATE : 10/10/05
CHECKED BY : C. MILLER DATE : 2/06

STR. #1

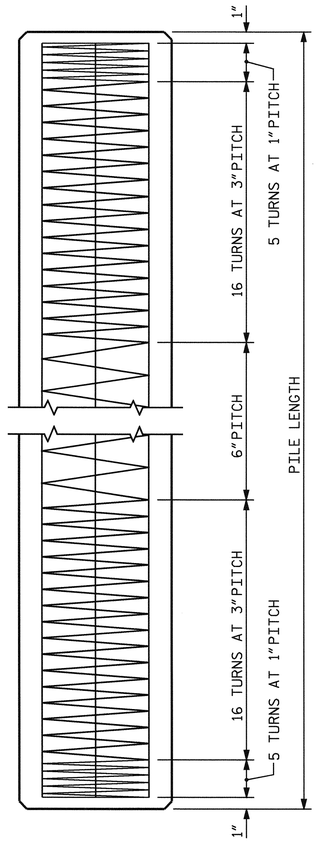

ELEVATION

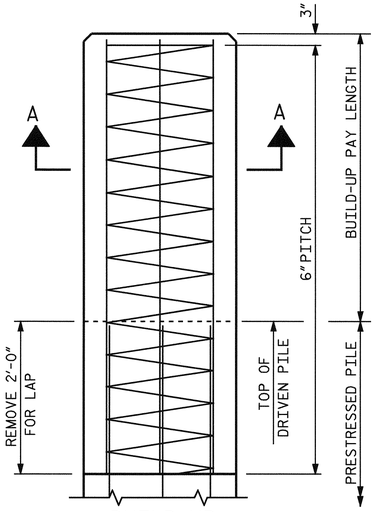

BUILD-UP
WITHOUT DRIVING

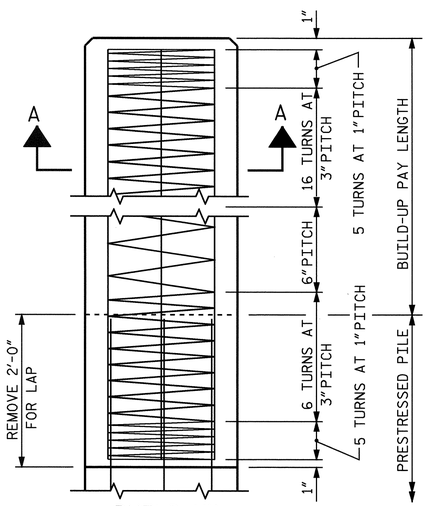

BUILD-UP
WITH DRIVING

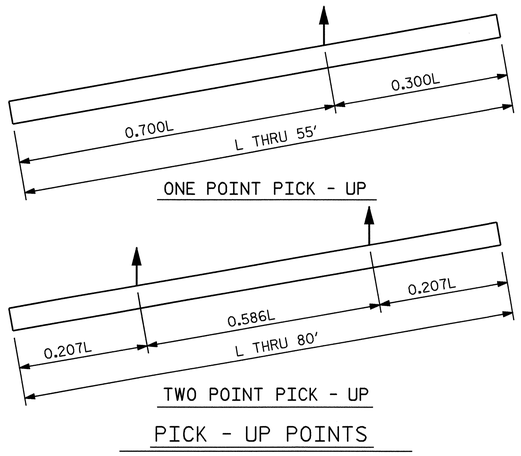

ONE POINT PICK - UP

TWO POINT PICK - UP

PICK - UP POINTS

NOTES

CONCRETE DESIGN DATA : f'c = 5,000 PSI ; fc = 2,000 PSI

IMPACT IN HANDLING = 50%

THE TRANSFER OF LOAD FROM THE ANCHORAGES TO THE PILE SHALL BE DONE WHEN THE CONCRETE HAS REACHED A COMPRESSIVE STRENGTH OF NOT LESS THAN 3,500 PSI.

IN DRIVING PILES, A METHOD APPROVED BY THE ENGINEER SHALL BE USED, WHEREBY THE HEAD OF THE PILE IS NOT DAMAGED.

PROPOSED DEVICES FOR LIFTING PILES, RECESS DETAILS, AND PATCHING MATERIAL SHALL BE DETAILED IN SHOP DRAWINGS. AFTER ATTACHMENTS HAVE BEEN REMOVED, OPENINGS SHALL BE REPAIRED SUCH THAT THE APPEARANCE OF THE PILE IS UNIFORM.

WHERE CAST - IN - PLACE LIFTING DEVICES ARE NOT USED, PICK-UP POINTS TO BE INDICATED WITH A BLACK MARK 2" WIDE.

ALL PRESTRESSING STRANDS SHALL BE 7-WIRE LOW-RELAXATION GRADE 270 STRANDS AND SHALL CONFORM TO AASHTO M203 EXCEPT FOR SAMPLING REQUIREMENTS WHICH SHALL BE IN ACCORDANCE WITH STANDARD SPECIFICATIONS.

THE CONTRACTOR SHALL USE THE FOLLOWING STRAND TYPE:

SIZE	GRADE	NUMBER OF STRANDS	AREA SQ. IN.	ULTIMATE STRENGTH LBS.	APPLIED PRESTRESS FORCE LBS.
1/2"	270 L.R.	8	0.153	41,300 PER STRAND	30,980 PER STRAND

THE SLIP-FORM METHOD OF CASTING PILES WILL NOT BE PERMITTED.

IF STRAND STRESS IS RELIEVED BY BURNING, THE STRANDS SHALL BE BURNED IN OPPOSITE PAIRS AS INDICATED IN THE TYPICAL PATTERN SHOWN. FOR ANY NUMBER OF STRANDS BURN IN OPPOSITE PAIRS AND SYMMETRICAL ABOUT BOTH VERTICAL AND HORIZONTAL AXES. STRANDS 1-1 SHALL BE BURNED BEFORE 2-2, ETC. NOT MORE THAN 4 STRANDS, SAY 3-3 AND 4-4, MAY BE BURNED AT ANY ONE SECTION BEFORE THESE SAME PAIRS OF STRANDS ARE BURNED AT BOTH ENDS OF THE BED AND BETWEEN EACH PAIR OF PILES IN THE BED.

BUILD-UPS SHALL BE 'CLASS A' CONCRETE WITH 20% ADDITIONAL CEMENT. NO DRIVING OF THE BUILT-UP PILE WILL BE PERMITTED UNTIL THE CONCRETE HAS REACHED A COMPRESSIVE STRENGTH OF 3,000 PSI AND UNTIL A PERIOD OF SEVEN DAYS HAS ELAPSED SINCE CASTING OF THE BUILD-UP.

THE WATER/CEMENT RATIO FOR CONCRETE PILES SHALL NOT EXCEED 0.40.

THE CONCRETE IN THE PILES OF BENTS SHALL CONTAIN SILICA FUME. SILICA FUME SHALL BE SUBSTITUTED FOR 5% OF THE PORTLAND CEMENT BY WEIGHT. IF THE ARTICLE 1024-1 OF THE STANDARD SPECIFICATIONS TO PARTIALLY SUBSTITUTE CLASS F FLY ASH FOR PORTLAND CEMENT IS EXERCISED, THEN THE RATE OF FLY ASH SUBSTITUTE SHALL BE REDUCED TO 1.0 LB OF FLY ASH PER 1.0 LB. OF CONCRETE. NO PAYMENT WILL BE MADE FOR THIS SUBSTITUTION AS IT IS CONSIDERED INCIDENTAL TO THE VARIOUS PAY ITEMS.

PRESTRESSED CONCRETE PILES SHALL CONTAIN CALCIUM NITRITE CORROSION INHIBITOR.

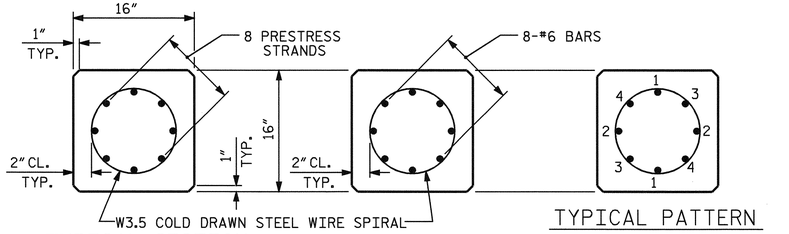

TYPICAL SECTION

SECTION "A-A"

TYPICAL PATTERN FOR BURNING STRANDS

1/2" Ø GRADE 270 L.R. PRESTRESS STRANDS

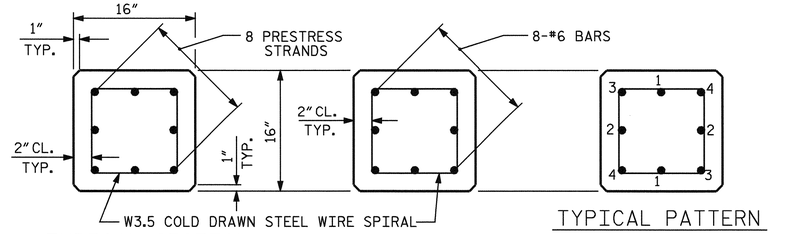

TYPICAL SECTION

SECTION "A-A"

TYPICAL PATTERN FOR BURNING STRANDS

1/2" Ø GRADE 270 L.R. PRESTRESS STRANDS

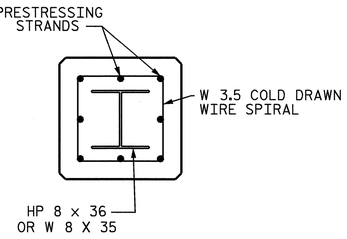

SECTION B-B

FOR 16" SQUARE PRESTRESSED CONCRETE PILE

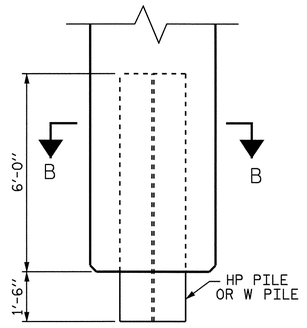

ELEVATION

PILE TIP DETAILS

QUANTITIES FOR ONE 16" PRESTRESSED PILE

LENGTH	CONCRETE CU. YDS.	PILE WT. TONS	ONE POINT PICK-UP 0.300L	ONE POINT PICK-UP 0.700L	TWO POINT PICK-UP 0.207L	TWO POINT PICK-UP 0.586L
25'-0"	1.63	3.31	7'-6"	17'-6"	5'-2"	14'-8"
30'-0"	1.96	3.97	9'-0"	21'-0"	6'-2 1/2"	17'-7"
35'-0"	2.29	4.63	10'-6"	24'-6"	7'-3"	20'-6"
40'-0"	2.61	5.29	12'-0"	28'-0"	8'-3 1/2"	23'-5"
45'-0"	2.94	5.95	13'-6"	31'-6"	9'-4"	26'-4"
50'-0"	3.27	6.61	15'-0"	35'-0"	10'-4"	29'-4"
55'-0"	3.59	7.28	16'-6"	38'-6"	11'-4 1/2"	32'-3"
60'-0"	3.92	7.94			12'-5"	35'-2"
65'-0"	4.25	8.60			13'-5 1/2"	38'-1"
70'-0"	4.57	9.26			14'-6"	41'-0"
75'-0"	4.90	9.92			15'-6 1/2"	43'-11"
80'-0"	5.23	10.58			16'-7"	46'-10"

PROJECT NO. R2245

BRUNSWICK COUNTY

STATION: 21+50.00 -L-

SHEET 2 OF 2

STATE OF NORTH CAROLINA
DEPARTMENT OF TRANSPORTATION
RALEIGH

16" PRESTRESSED CONCRETE PILE

NORTH CAROLINA PROFESSIONAL SEAL 025516 ENGINEER EMILY E. MURRAY

11/2/06

REVISIONS						SHEET NO.
NO.	BY:	DATE:	NO.	BY:	DATE:	S-19
1			3			TOTAL SHEETS
2			4			98

ASSEMBLED BY : ZION RORIE	DATE : 10/10/05
CHECKED BY : C. MILLER	DATE : 2/06
DRAWN BY : RH 9/98	ADDED 12/2/98
CHECKED BY : LES 10/98	REV. 8/16/99RR RWW/LES

31-OCT-2006 10:57
G:\Structures\r2245\finalplans\R2245_sd_B1.dgn
taverette

STR. #1

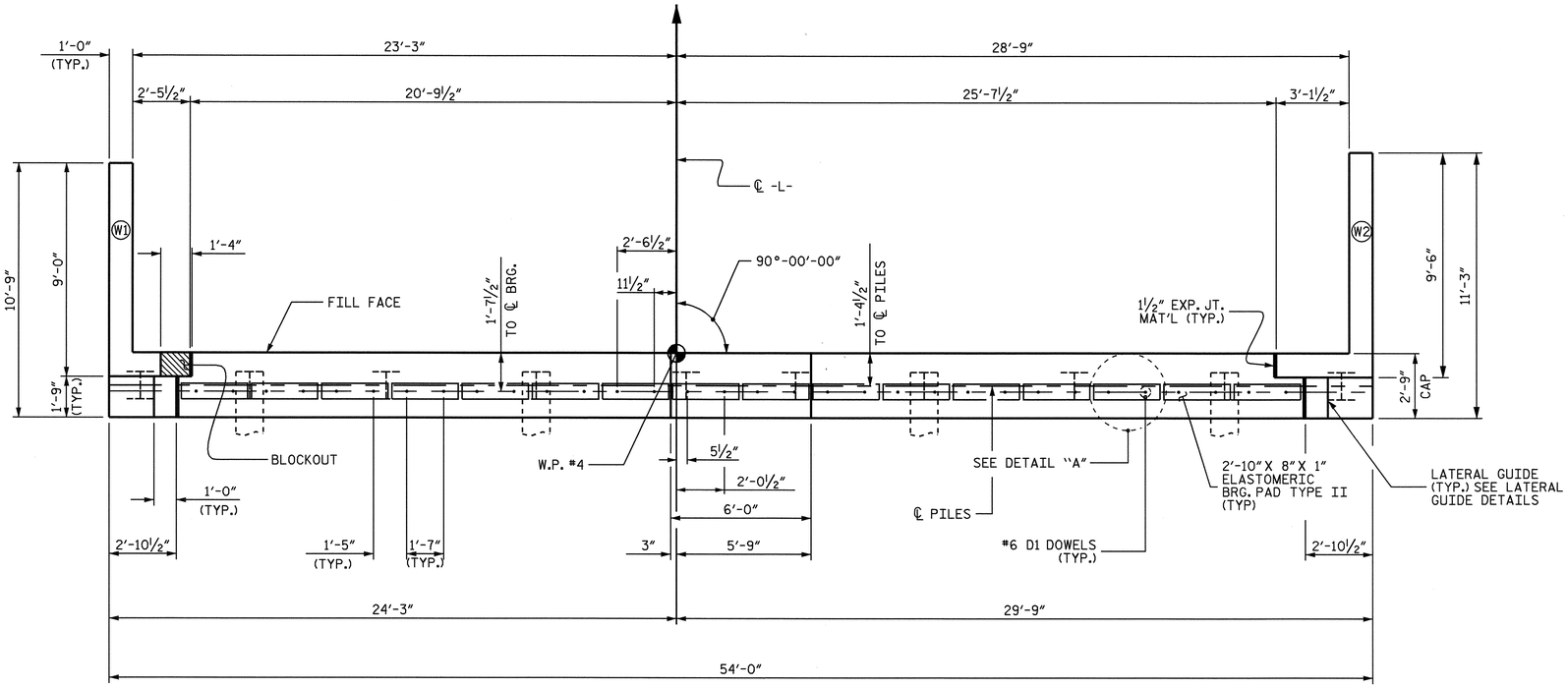

PLAN

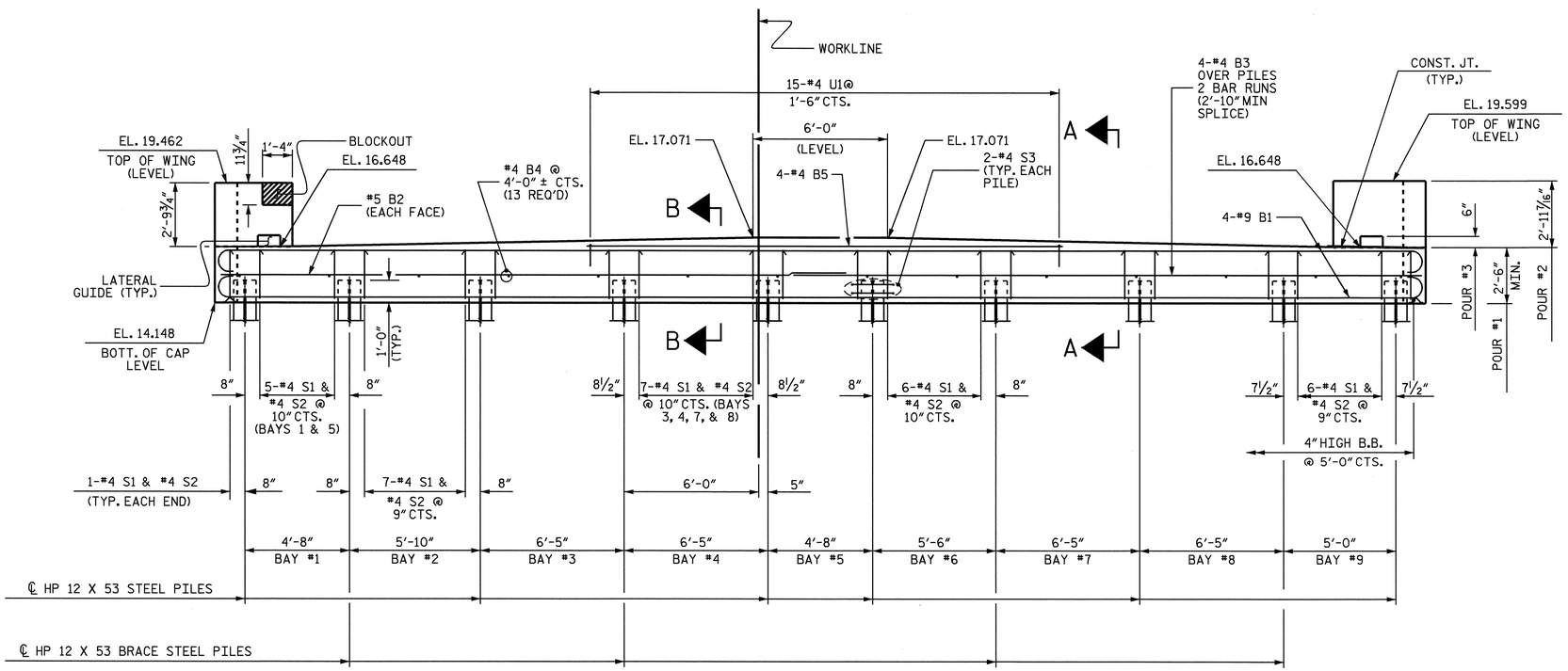

ELEVATION

NOTES

STIRRUPS IN CAP MAY BE SHIFTED AS NECESSARY TO CLEAR ANCHOR BOLTS.

THE CONTRACTOR SHALL PROVIDE FOR INSTALLATION OF THE 4" DIAMETER DRAIN PIPE THROUGH THE WING WALL AS REQUIRED FOR REINFORCED BRIDGE APPROACH FILLS, SEE THE ROADWAY PLANS. REINFORCING STEEL IN THE WING WALL MAY BE SHIFTED AS NECESSARY TO CLEAR THE DRAIN PIPE.

THE LATERAL GUIDE @ EACH END OF THE CAP IS NOT TO BE POURED UNTIL AFTER THE CORED SLAB UNITS ARE IN PLACE.

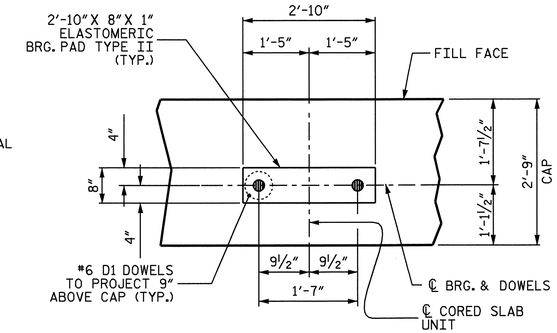

DETAIL A

(TYP. EA. UNIT)

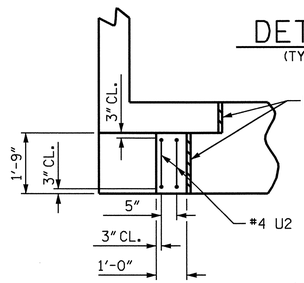

PLAN

ELEVATION

LATERAL GUIDE DETAILS

PROJECT NO. R-2245

BRUNSWICK COUNTY

STATION: 21+50.00 -L-

SHEET 1 OF 3

STATE OF NORTH CAROLINA
DEPARTMENT OF TRANSPORTATION
RALEIGH

SUBSTRUCTURE

END BENT #2

REVISIONS						SHEET NO.
NO.	BY:	DATE:	NO.	BY:	DATE:	S-20
1			3			TOTAL SHEETS
2			4			98

NORTH CAROLINA PROFESSIONAL SEAL 025516 ENGINEER EMILY E. MURRAY

9/28/06

DRAWN BY : ZION J. RORIE DATE : 5/25/05
CHECKED BY : M. D. PISO DATE : 3/21/06

26-SEP-2006 14:47
R:\Structures\r2245\finalplans\R2245_sd_E1.dgn
padkins

STR. #1

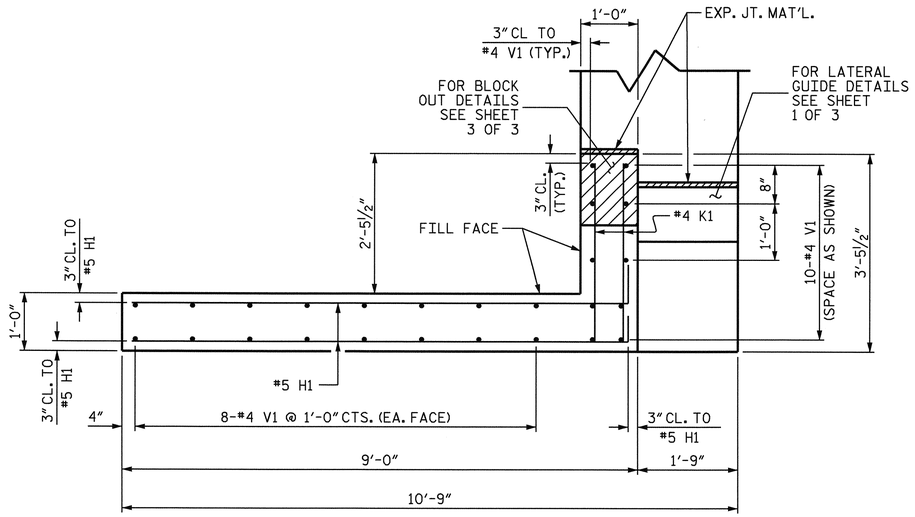

PLAN OF LEFT WING (W1)

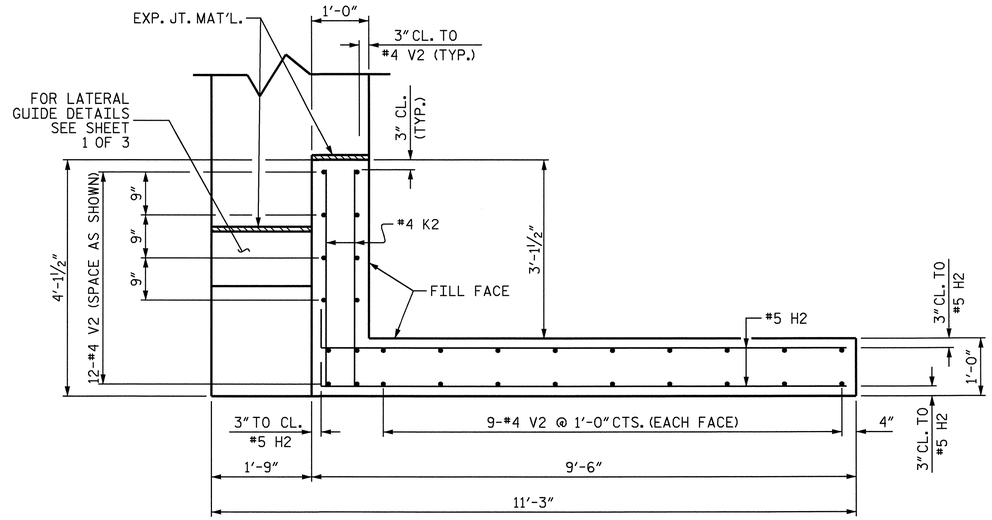

PLAN OF RIGHT WING (W2)

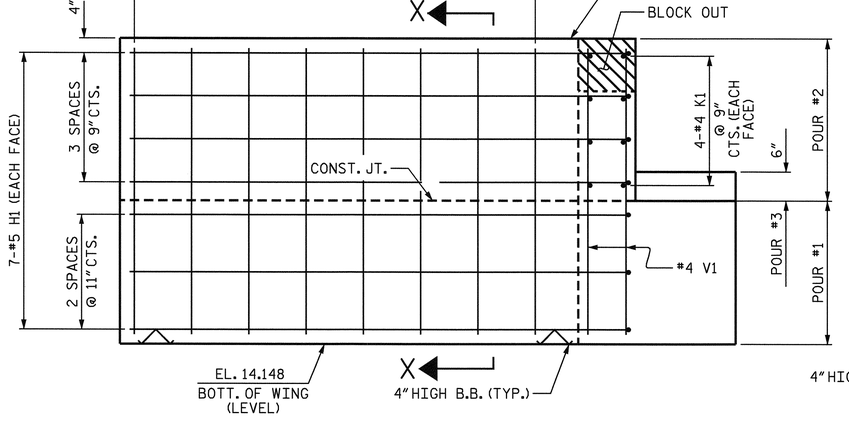

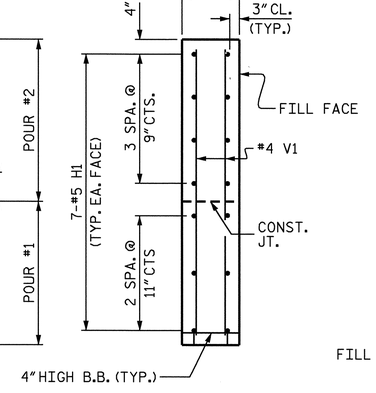

SECTION X-X

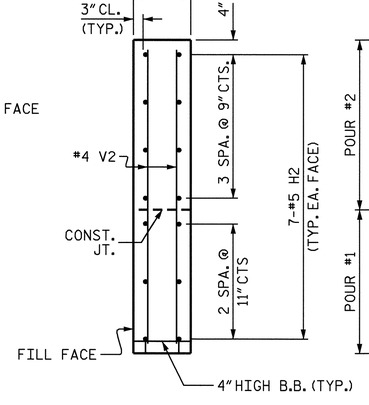

SECTION Y-Y

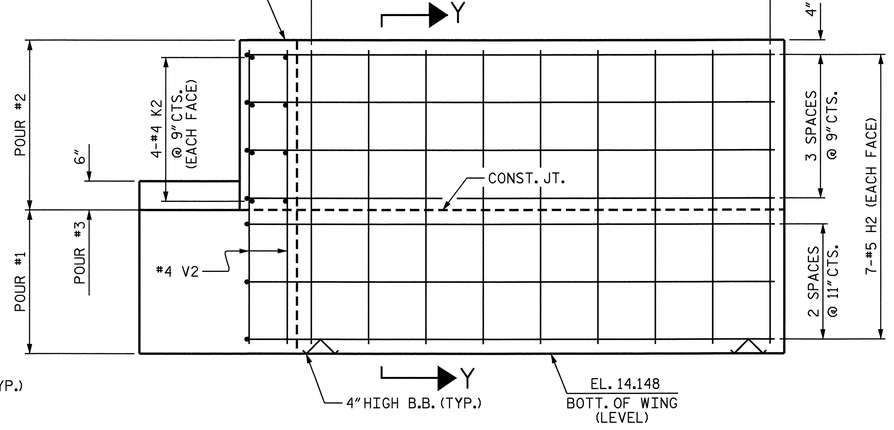

ELEVATION OF LEFT WING (W1)

ELEVATION OF RIGHT WING (W2)

PROJECT NO. R-2245

BRUNSWICK COUNTY

STATION: 21+50.00 -L-

SHEET 2 OF 3

STATE OF NORTH CAROLINA
DEPARTMENT OF TRANSPORTATION
RALEIGH

SUBSTRUCTURE

END BENT #2

NORTH CAROLINA PROFESSIONAL SEAL 025516 ENGINEER EMILY E. MURRAY

Emily E. Murray 9/28/06

REVISIONS						SHEET NO.
NO.	BY:	DATE:	NO.	BY:	DATE:	S-21
1			3			TOTAL SHEETS
2			4			98

DRAWN BY : ZION J. RORIE DATE : 5/25/05
CHECKED BY : M. D. PISO DATE : 3/21/06

26-SEP-2006 14:47
R:\Structures\r2245\finalplans\R2245_sd_E1.dgn
padkins

STR. #1

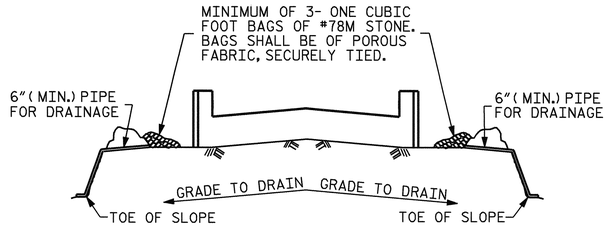

BAGGED STONE AND PIPE SHALL BE PLACED IMMEDIATELY AFTER COMPLETION OF END BENT EXCAVATION. PIPE MAY BE EITHER CONCRETE, CORRUGATED STEEL, CORRUGATED ALUMINUM ALLOY, OR CORRUGATED PLASTIC. PERFORATED PIPE WILL NOT BE ALLOWED.

BAGGED STONE SHALL REMAIN IN PLACE UNTIL THE ENGINEER DIRECTS THAT IT BE REMOVED. THE CONTRACTOR SHALL REMOVE AND DISPOSE OF SILT ACCUMULATIONS AT BAGGED STONE WHEN SO DIRECTED BY THE ENGINEER. BAGS SHALL BE REMOVED AND REPLACED WHENEVER THE ENGINEER DETERMINES THAT THEY HAVE DETERIORATED AND LOST THEIR EFFECTIVENESS.

NO SEPARATE PAYMENT WILL BE MADE FOR THIS WORK AND THE ENTIRE COST OF THIS WORK SHALL BE INCLUDED IN THE UNIT CONTRACT PRICE BID FOR THE SEVERAL PAY ITEMS.

TEMPORARY DRAINAGE AT END BENT

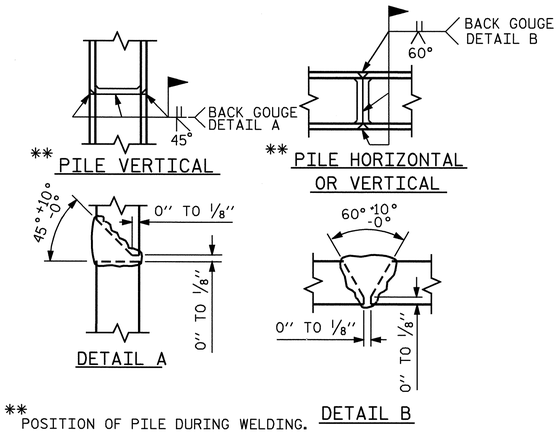

** POSITION OF PILE DURING WELDING.

PILE SPLICE DETAILS

BAR TYPES

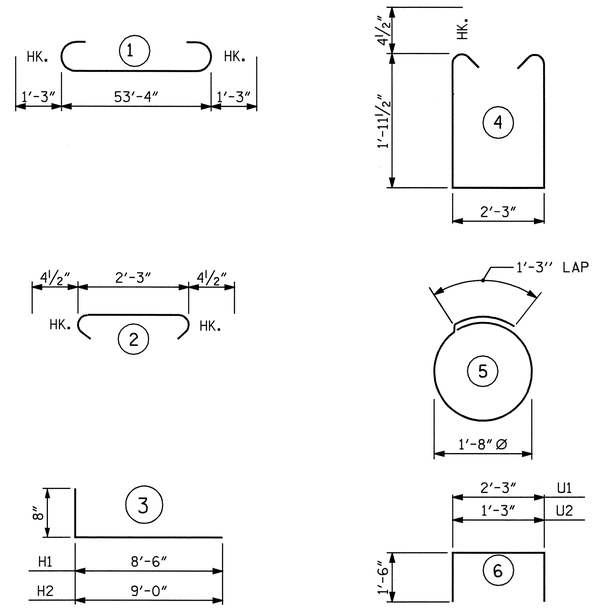

ALL BAR DIMENSIONS ARE OUT TO OUT.

BILL OF MATERIAL

END BENT #2

BAR	NO.	SIZE	TYPE	LENGTH	WEIGHT
✱B1	8	#9	1	55'-10"	1519
✱B2	2	#5	STR.	53'-6"	112
✱B3	8	#4	STR.	28'-2"	151
✱B4	13	#4	STR.	2'-3"	20
✱B5	4	#4	STR.	21'-3"	57
✱K1	8	#4	STR.	2-11"	16
✱K2	8	#4	STR.	3'-7"	19
✱H1	14	#5	3	9'-2"	134
✱H2	14	#5	3	9'-8"	141
✱S1	59	#4	4	6'-11"	273
✱S2	59	#4	2	3'-0"	118
✱S3	20	#4	5	6'-6"	87
✱U1	15	#4	6	5'-3"	53
✱U2	4	#4	6	4'-3"	11
✱V1	26	#4	STR.	4'-9"	82
✱V2	30	#4	STR.	4'-10"	97
✱D1	32	#6	STR.	1'-6"	72

✱EPOXY REINFORCING STEEL = 2962 LBS.

CLASS "AA" CONCRETE BREAKDOWN

POUR #1 CAP & LOWER WINGS
CU. YDS. 16.7

POUR #2 UPPER WINGS
CU. YDS. 2.6

POUR #3 LATERAL GUIDE
CU. YDS. 0.1

TOTAL CLASS "AA" CONCRETE
CU. YDS. 19.4

HP 12 X 53 STEEL PILES
NO. 10 LIN. FT. 400

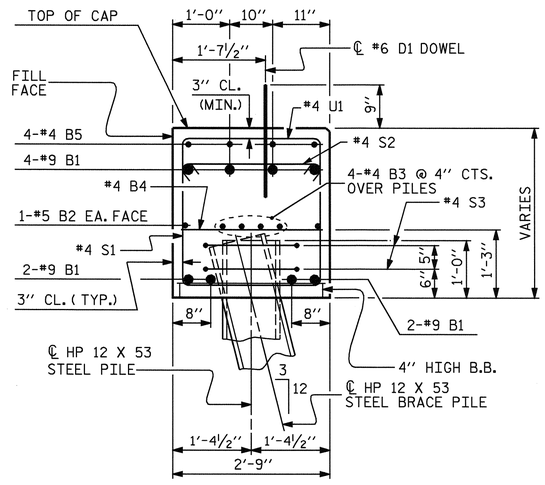

SECTION B-B

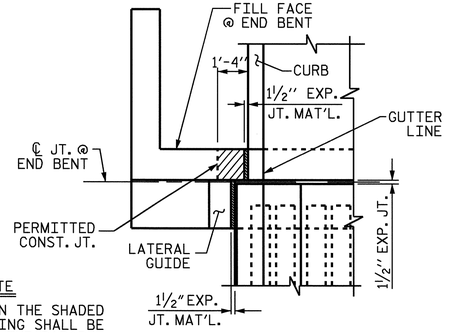

NOTE

THE CONCRETE IN THE SHADED AREA OF THE WING SHALL BE POURED AFTER THE PARAPET AND END POST ARE CAST IF SLIP FORMING IS USED.

PLAN @ LEFT SIDE

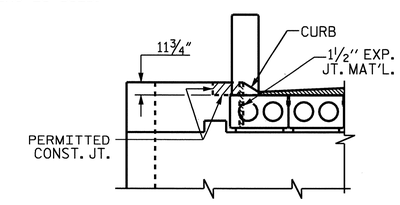

ELEVATION @ LEFT SIDE

BLOCKOUT IN WING WALL FOR CORED SLAB

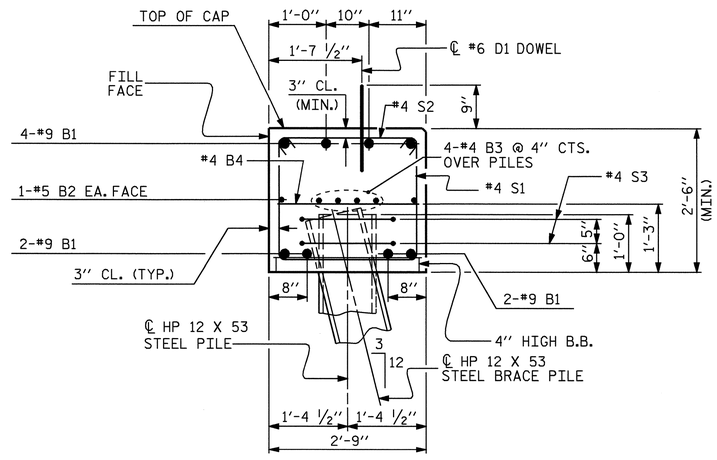

SECTION A-A

PROJECT NO. R-2245

BRUNSWICK COUNTY

STATION: 21+50.00 -L-

SHEET 3 OF 3

STATE OF NORTH CAROLINA
DEPARTMENT OF TRANSPORTATION
RALEIGH

SUBSTRUCTURE

END BENT #2

REVISIONS						SHEET NO.
NO.	BY:	DATE:	NO.	BY:	DATE:	S-22
1			3			TOTAL SHEETS
2			4			98

DRAWN BY : ZION J. RORIE DATE : 5/25/05
CHECKED BY : M. D. PISO DATE : 3/21/06

NORTH CAROLINA PROFESSIONAL SEAL 025516 ENGINEER EMILY E. MURRAY

11/2/06

STR. #1

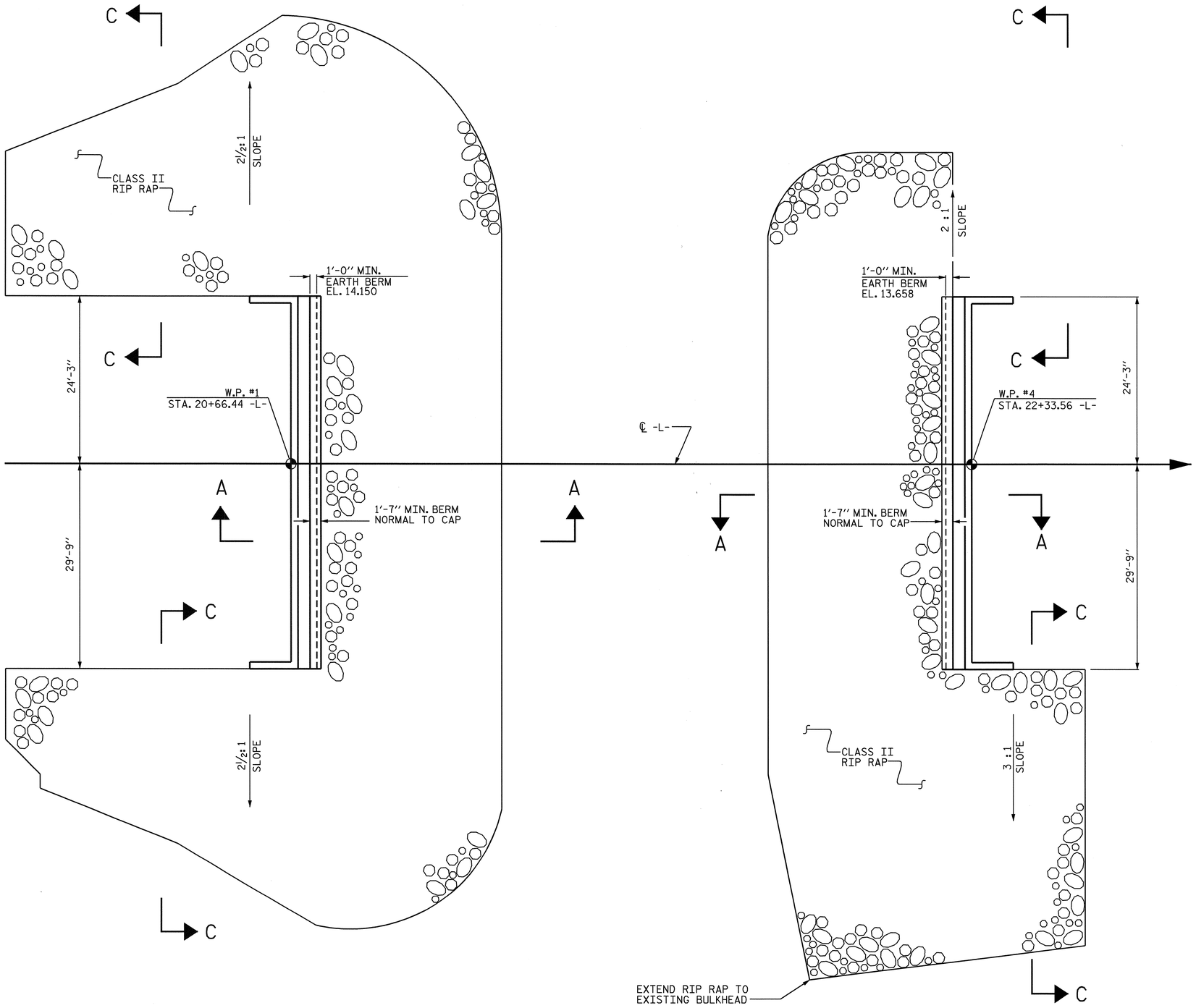

END BENT #1

END BENT #2

PLAN

ESTIMATED QUANTITIES		
BRIDGE @ STA. 21+50.00 -L-	PLAIN RIP RAP CLASS II	FILTER FABRIC FOR DRAINAGE
	TONS	SQUARE YARDS
END BENT 1	630	700
END BENT 2	419	465

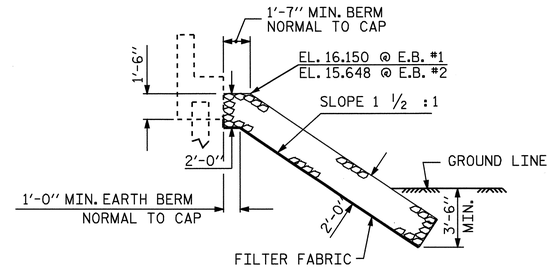

℄ SECTION
BERM RIP RAPPED

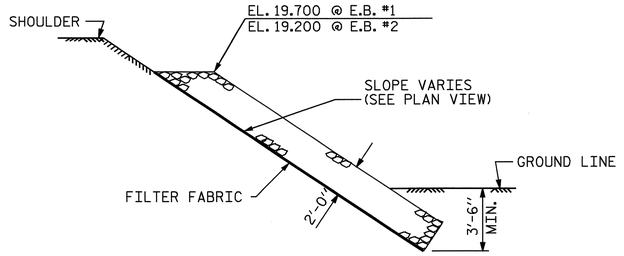

SECTION C-C

PROJECT NO. R-2245
BRUNSWICK COUNTY
STATION: 21+50.00 -L-

STATE OF NORTH CAROLINA
DEPARTMENT OF TRANSPORTATION
RALEIGH

RIP RAP DETAILS

REVISIONS						SHEET NO.
NO.	BY:	DATE:	NO.	BY:	DATE:	S-23
1			3			TOTAL SHEETS
2			4			98

NORTH CAROLINA PROFESSIONAL SEAL 025516 ENGINEER EMILY E MURRAY
9/28/06

SKEW 90°

STD. NO. RR2

ASSEMBLED BY : M.D.PISO	DATE : 09/2006		
CHECKED BY : T.AVERETTE	DATE : 09/2006		
DRAWN BY : FCJ 2/88	REV. 8/16/99	RWW/LES	
CHECKED BY : ARB 8/88	REV. 10/17/00	RWW/LES	
	REV. 5/1/06	TLA/GM	

26-SEP-2006 10:21
R:\Structures\r2245\final plans\R2245_sd_RR.DGN
padkins

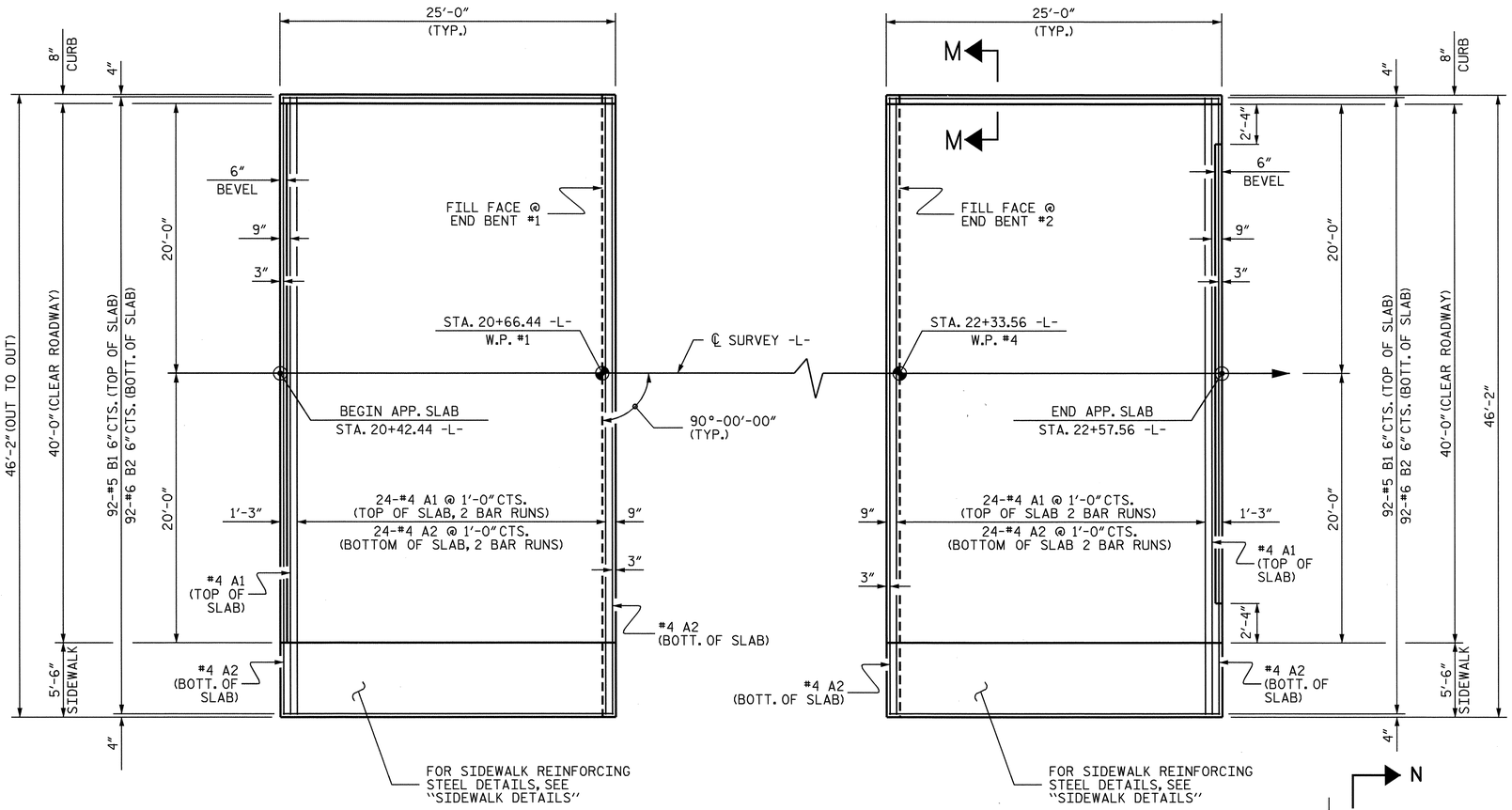

PLAN @ END BENT #1

PLAN @ END BENT #2

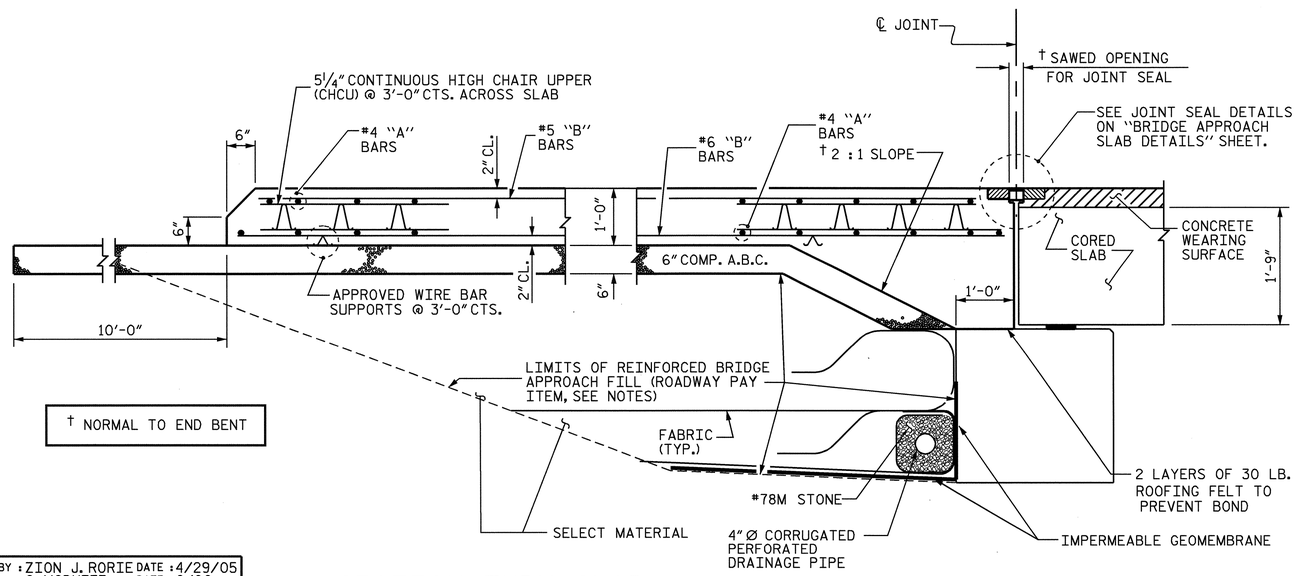

† NORMAL TO END BENT

SECTION THRU SLAB

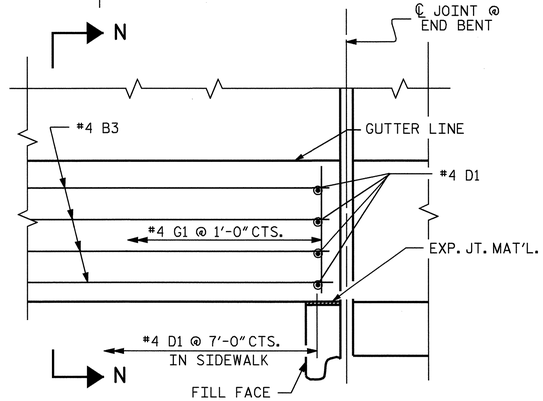

PLAN

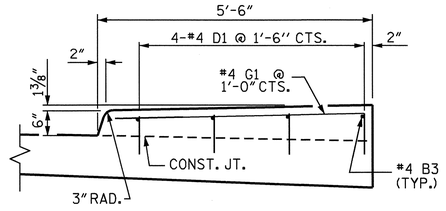

SECTION N-N

SIDEWALK DETAILS

NOTES

APPROACH SLABS SHALL BE POURED AFTER CONCRETE OVERLAY IS POURED.

FOR REINFORCED BRIDGE APPROACH FILL INCLUDING FABRIC, IMPERMEABLE GEOMEMBRANE, 4" Ø DRAINAGE PIPE, #78M STONE, AND SELECT MATERIAL, SEE ROADWAY PLANS.

AREA BETWEEN THE WINGWALL AND APPROACH SLAB SHALL BE GRADED TO DRAIN THE WATER AWAY FROM THE FILL FACE OF THE BRIDGE AND SHALL BE PAVED. SEE ROADWAY PLANS.

THE 6" COMP. A.B.C. SHALL EXTEND 10'-0" BEYOND THE END OF THE APPROACH SLAB AND 1'-0" OUTSIDE OF EACH EDGE OF SLAB.

THE CONTRACTOR MAY USE 4" TYPE B-25.0B ASPHALT CONCRETE BASE COURSE IN LIEU OF 6" COMP. A.B.C. IF THIS OPTION IS USED, THE BASE COURSE SHALL EXTEND 1'-0" BEYOND THE END OF THE APPROACH SLAB AND THE WIDTH SHALL BE THE SAME AS THAT OF THE APPROACH SLAB.

THE CONTRACTOR MAY USE 5" CLASS "A" CONCRETE BASE IN LIEU OF 6" COMP. A.B.C. IF THIS OPTION IS USED, THE CONCRETE BASE SHALL EXTEND 1'-0" BEYOND THE END OF THE APPROACH SLAB AND THE WIDTH SHALL BE THE SAME AS THAT OF THE APPROACH SLAB. THE CONCRETE SHALL BE FINISHED TO A SMOOTH SURFACE AND A LAYER OF 30 LB ROOFING FELT SHALL BE PLACED BETWEEN THE CONCRETE BASE AND THE APPROACH SLAB TO PREVENT BOND. THE APPROACH SLAB SHALL NOT BE CAST UNTIL THE CONCRETE BASE HAS REACHED AN AGE OF THREE CURING DAYS.

D1 DOWELS MAY BE PUSHED INTO GREEN CONCRETE AFTER THE SLAB HAS BEEN SCREEDED AND FLOAT FINISHED.

WITH EVAZOTE JOINT SEAL

FOR EVAZOTE JOINT SEALS, SEE SPECIAL PROVISIONS.

THE NOMINAL UNCOMPRESSED SEAL WIDTH OF THE EVAZOTE JOINT SEAL SHALL BE 3 7/16".

FOR ELASTOMERIC CONCRETE, SEE SPECIAL PROVISIONS.

THE JOINT SHALL BE SAWED AFTER THE CASTING OF THE SIDEWALK, PARAPETS & ENDPOSTS.

BILL OF MATERIAL

FOR ONE APPROACH SLAB (2 REQ'D)

BAR	NO.	SIZE	TYPE	LENGTH	WEIGHT
* A1	50	#4	STR	23'-11"	799
A2	52	#4	STR	23'-10"	828
* B1	92	#5	STR	23'-8"	2271
B2	92	#6	STR	24'-8"	3409
* B3	4	#4	STR	24'-8"	66
* D1	16	#4	STR	1'-0"	11
* G1	25	#4	STR	5'-0"	84

REINFORCING STEEL		LBS.	4237
* EPOXY COATED REINFORCING STEEL		LBS.	3231
POUR 1	SLAB & CURB	C. Y.	47.9
POUR 2	SIDEWALK	C. Y.	3.1
CLASS AA CONCRETE		C. Y.	51.0

SPLICE CHART

BAR	LENGTH
#4 A1	2'-0"
#4 A2	1'-9"

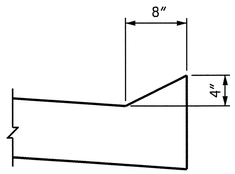

SECTION M-M

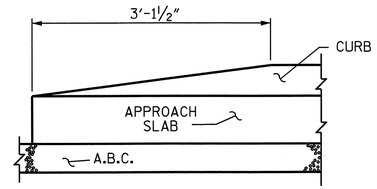

END OF CURB WITHOUT SHOULDER BERM GUTTER

CURB DETAILS

PROJECT NO. R-2245

BRUNSWICK COUNTY

STATION: 21+50.00 -L-

SHEET 1 OF 2

STATE OF NORTH CAROLINA
DEPARTMENT OF TRANSPORTATION
RALEIGH

BRIDGE APPROACH SLAB FOR PRESTRESSED CONCRETE CORED SLAB

REVISIONS						SHEET NO.
NO.	BY:	DATE:	NO.	BY:	DATE:	S-24
1			3			TOTAL SHEETS
2			4			98

NORTH CAROLINA PROFESSIONAL SEAL 025516 ENGINEER EMILY E. MURRAY
9/28/06

ASSEMBLED BY : ZION J. RORIE	DATE : 4/29/05		
CHECKED BY : C. MCDUFEE	DATE : 6/06		
DRAWN BY : FCJ 6/87	REV. 7/10/01	LES/RDR	
CHECKED BY : EGA 6/87	REV. 5/7/03R	RWW/JTE	
	REV. 5/1/06	TLA/GM	

22-SEP-2006 10:21
R:\Structures\r2245\zrorie\R2245A_sd_AS.dgn
padkins

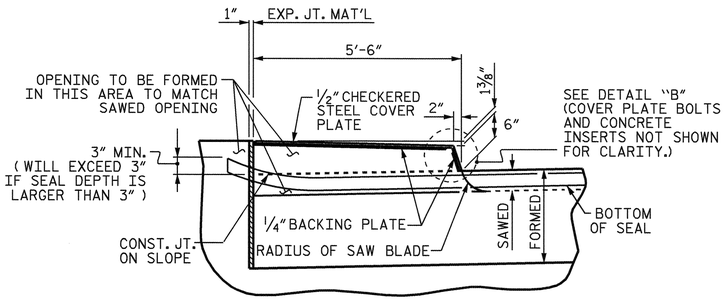

SECTION I-I

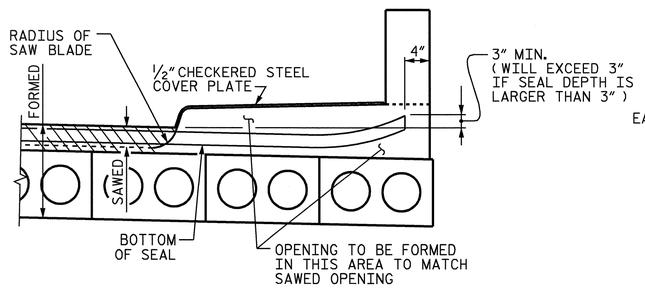

SECTION H-H

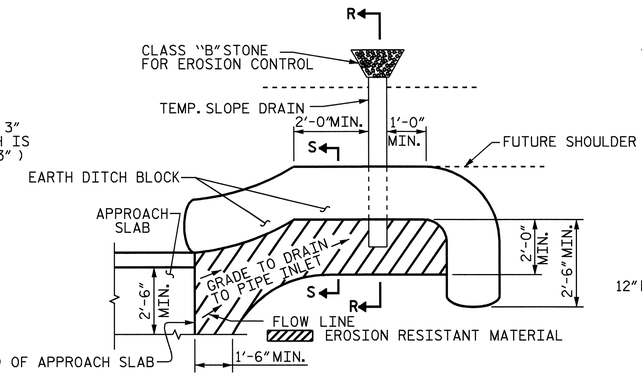

NOTE: IMMEDIATELY AFTER THE CONSTRUCTION OF THE APPROACH SLAB, THE CONTRACTOR SHALL PROVIDE TEMPORARY BERM AND SLOPE DRAIN. CONTRACTOR SHALL GRADE TO PIPE INLET AND PROVIDE EROSION RESISTANT MATERIAL AS SHOWN. THE EROSION RESISTANT MATERIAL SHALL BE EITHER 1) ASPHALT PLANT MIX, TYPE 1 OR TYPE 2, MIN. 2" DEPTH, 2) EROSION CONTROL MAT, OR 3) CONCRETE, AS DIRECTED BY THE ENGINEER. THE SLOPE DRAIN SHALL CONSIST OF A NON-PERFORATED TEMPORARY DRAINAGE PIPE, 12 INCHES IN DIAMETER.

PLAN VIEW

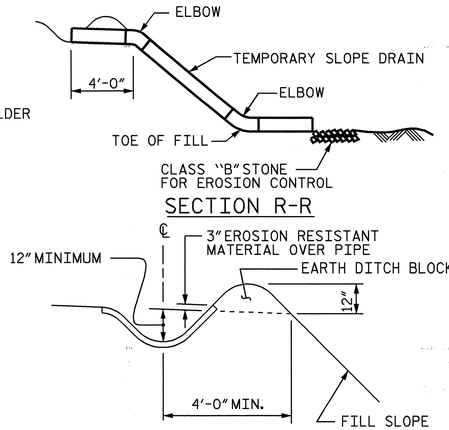

SECTION S-S

TEMPORARY BERM AND SLOPE DRAIN DETAILS

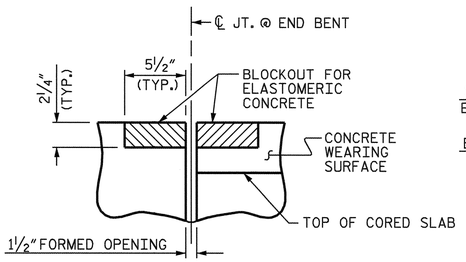

SECTION C-C
EVAZOTE JOINT SEAL
(PRE-SAWED ELASTOMERIC CONCRETE DIMENSIONS)

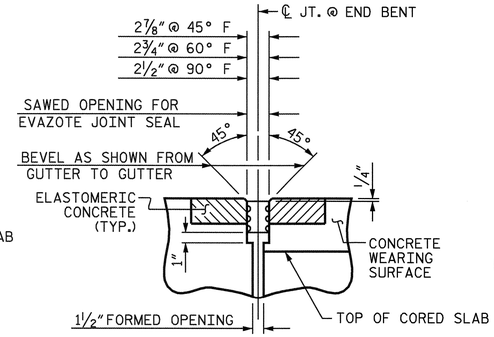

SECTION C-C
EVAZOTE JOINT SEAL

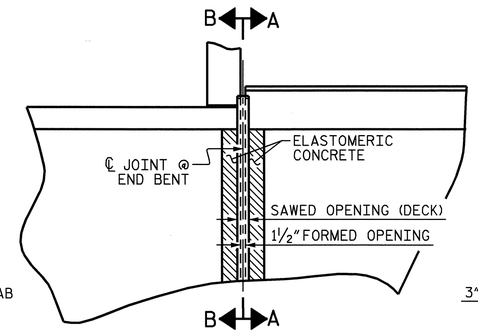

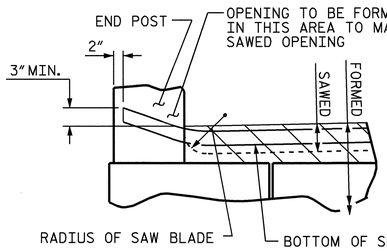

SECTION A-A

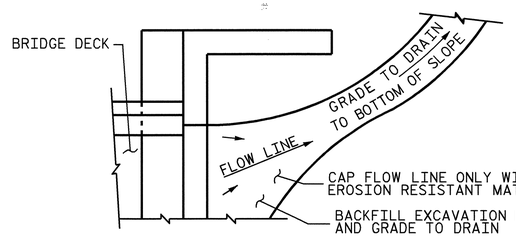

NOTE: IF THE APPROACH SLAB IS NOT CONSTRUCTED IMMEDIATELY AFTER THE BACKFILLING OF THE END BENT EXCAVATION, GRADE TO DRAIN TO THE BOTTOM OF THE SLOPE AND PROVIDE EROSION RESISTANT MATERIAL, SUCH AS FIBERGLASS ROVING OR AS DIRECTED BY THE ENGINEER TO PREVENT SOIL EROSION AND TO PROTECT THE AREA ADJACENT TO THE STRUCTURE. THE CONTRACTOR WILL BE REQUIRED TO REMOVE THESE MATERIALS PRIOR TO CONSTRUCTION OF THE APPROACH SLAB.

TEMPORARY DRAINAGE DETAIL

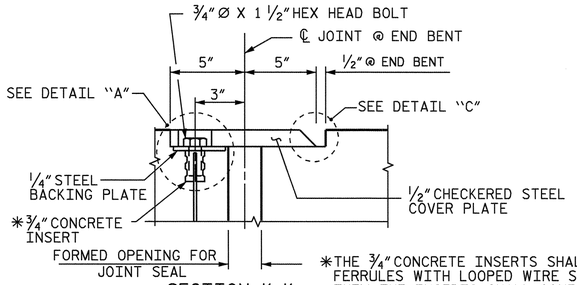

SECTION K-K

*THE 3/4" CONCRETE INSERTS SHALL BE CLOSED-END FERRULES WITH LOOPED WIRE STRUTS ATTACHED TO THEM. THE INSERTS SHALL CONFORM TO AASHTO M169, GRADE 12L14 AND SHALL HAVE A TENSILE WORKING LOAD CAPACITY OF 3000 LBS.

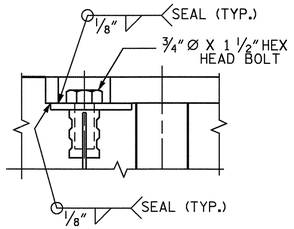

DETAIL "A"

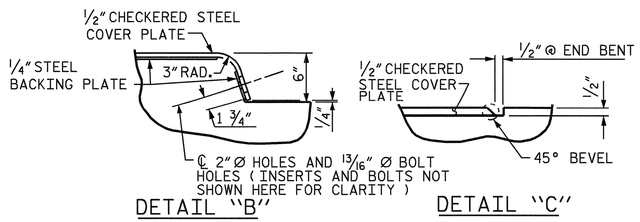

DETAIL "B"

DETAIL "C"

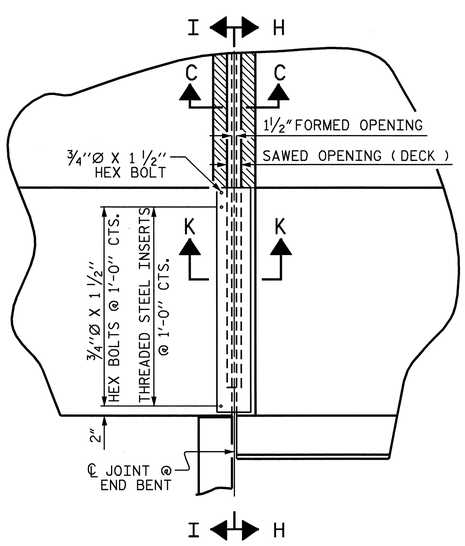

PLAN

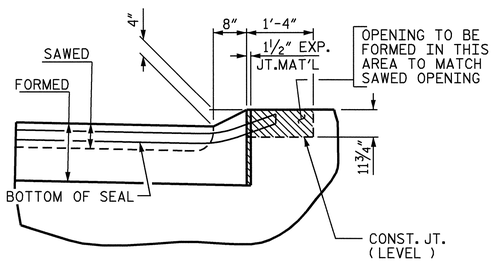

SECTION B-B

ELASTOMERIC CONCRETE	
END BENT NO.	ELASTOMERIC CONCRETE *(CU. FT)
1	6.9
2	6.9
TOTAL	13.8

*BASED ON THE MINIMUM BLOCKOUT SHOWN

JOINT SEAL DETAILS @ END BENT

PROJECT NO. R-2245
BRUNSWICK COUNTY
STATION: 21+50.00 -L-

SHEET 2 OF 2

STATE OF NORTH CAROLINA
DEPARTMENT OF TRANSPORTATION
RALEIGH

STANDARD

BRIDGE APPROACH SLAB DETAILS

REVISIONS						SHEET NO.
NO.	BY:	DATE:	NO.	BY:	DATE:	S-25
1			3			TOTAL SHEETS
2			4			98

STD. NO. BAS10

NORTH CAROLINA PROFESSIONAL SEAL 025516 ENGINEER EMILY E. MURRAY
2/27/07

ASSEMBLED BY : ZION J. RORIE	DATE : 4/29/05			
CHECKED BY : C. MCDUFEE	DATE : 6/06			
DRAWN BY : FCJ	11/88	REV. 10/17/00	RWW/LES	
CHECKED BY : ARB	11/88	REV. 5/7/03	RWW/JTE	
		REV. 5/1/06	TLA/GM	

27-FEB-2007 16:34
G:\TIPProjects-R\R2245\Structures\r2245\finalplans\R2245_sd_AS.dgn
taverette

F.A. PROJECT NO: STP-1105 (17)

52+50 53+00 53+50 54+00 54+50 55+00 55+50 56+00 56+50 57+00 57+50 58+00 58+50 59+00

70 60 50 40 30 20 10 0 -10 -20

FILL FACE @ END BENT #1
STA. 53+10.00 -L-
GRADE POINT EL.63.320

SPAN A

1'-0" BERM (MIN.)

1'-6"

EXP.

4" CONCRETE SLOPE PROTECTION

2:1 SLOPE

FILL

37'-2" MIN. VERTICAL CLEARANCE

HP 12 X 53 STEEL PILES

EL. 22±

EL. 22±

APPROX. EXISTING GROUND LINE

FIX. EXP.

EL. 20.597 TOP OF FOOTING

HP 12 X 53 STEEL PILES

SPAN B

EL. 23±

EL. 24±

EL. 23±

EL. 16±

* PROPOSED BULKHEAD

FIX.

EL. 9.700 TOP OF FOOTING

6'-0" Ø DRILLED PIERS

EL. 0±

EL. 0±

EL. -5±

EL. -15±

EL. -15±

EL. -10±

5.2000% -5.2000%

PI= 58+00.00 -L-
EL.= 88.80
VC= 800'

GRADE DATA -L-

SPAN C

NOTE: 65'-0" MIN. VERTICAL CLEARANCE @ MHW ELEV.

Q100 EL. 11.6

Q50 EL. 10.1

MHW EL. 2.7

MLW EL. -1.5

END BENT #1

BENT #1

BENT #2

MATCH LINE

* SEE BULKHEAD SHEETS FOR DETAILS.

SECTION ALONG -L-

4" CONCRETE SLOPE PROTECTION

-Y6-

1'-0" BERM (MIN.)
EL.52.243 (LEVEL)

SW 1st ST

STA. 53+98.14 -L-
STA. 11+90.80 -Y6-

BENT #1 CONTROL LINE

TEMPORARY WORK BRIDGE

159'-9"

MIN. HORIZONTAL CLEARANCE

BENT #2 CONTROL LINE

INTRACOASTAL WATERWAY

EBB

BRIDGE I.D.
STA. 58+00.00 -L-

* PROPOSED BULKHEAD

BEGIN APPROACH SLAB
STA. 52+86.00 -L-

TO SR 1104

W.P.#1
FILL FACE @ END BENT #1
STA. 53+10.00 -L-

24'-0"

YACHT DR.

SE 1st ST

90°-00'-00" (TYP.)

W.P.#2
BENT#1
STA. 54+35.00 -L-

MIN. HORIZONTAL CLEARANCE= 20'-8"

INTRACOASTAL WATERWAY EASEMENT

TEMPORARY BENT FOR CONSTRUCTION

W.P.#3
BENT#2
STA. 56+60.00 -L-

140'-0"

-L-

(℄ CHANNEL)

FLOOD

125'-0"(SPAN A)

225'-0"(SPAN B)

280'-0"(SPAN C)

980'-0"(TOTAL LENGTH OF BRIDGE FILL FACE TO FILL FACE)

PLAN

(PILES AND DRILLED PIERS NOT SHOWN FOR CLARITY)

PROJECT NO. R-2245

BRUNSWICK COUNTY

STATION: 58+00.00 -L-

SHEET 1 OF 6 BRIDGE NO. 229

STATE OF NORTH CAROLINA
DEPARTMENT OF TRANSPORTATION
RALEIGH

GENERAL DRAWING FOR BRIDGE ON SR 1105 NORTH MIDDLETON AVE. OVER THE INTRACOASTAL WATERWAY BETWEEN SR 1104 AND NC211

NORTH CAROLINA PROFESSIONAL SEAL 23926 ENGINEER BRIAN C. HANKS

1/16/07

REVISIONS						SHEET NO.
NO.	BY:	DATE:	NO.	BY:	DATE:	S-26
1			3			TOTAL SHEETS
2			4			98

DRAWN BY : R.D. MARTIN DATE : 4/8/05
CHECKED BY : B.C. HANKS DATE : 9/6/06

18-JAN-2007 09:49
S:\PG3\R-2245 Oak Island\Final Plans\R2245_sd_GD.dgn
bhanks

F.A. PROJ. NO: STP-1105 (17)

57+50 58+00 58+50 59+00 59+50 60+00 60+50 61+00 61+50 62+00 62+50 63+00 63+50

70 60 50 40 30 20 10 0 -10 -20

5.2000% -5.2000%

PI= 58+00.00 -L-
EL.= 88.80
VC= 800'

GRADE DATA -L-

SPAN C

NOTE: 65'-0" MIN. VERTICAL CLEARANCE @ MHW ELEV.

Q100 EL. 11.6
Q50 EL. 10.1
MHW EL. 2.7
MLW EL. -1.5

FIX.
EL. 9.700 TOP OF FOOTING

EL. -5±
EL. -15±
EL. -15±
EL. -10±
EL. -3±
EL. 0±
6'-0" Ø DRILLED PIERS

BENT #3

SPAN D

EXP. FIX.
EL. 31.597 TOP OF FOOTING

EL. 26±
EL. 32±
EL. 1±
EL. 6±
HP 12 X 53 STEEL PILES

BENT #4

SPAN E

FILL FACE @ END BENT #2
STA. 62+90.00 -L-
GRADE POINT EL.63.320

BEGIN FRONT SLOPE
STA. 63+09.02 -L-
GRADE POINT EL.62.331

1'-0" (MIN.) EARTH BERM
EXP.
1'-6"
FILL
CLASS II RIP RAP (2'-0" THICK)
2:1 SLOPE

EL. 31±
EL. 38±
EL. 38±
EL. 36±
EL. 43±
HP 12 X 53 STEEL PILES
APPROX. EXISTING GROUND LINE

END BENT #2

SECTION ALONG -L-

MATCH LINE

INTRACOASTAL WATERWAY
(℄ CHANNEL)
EBB
FLOOD

TEMPORARY WORK BRIDGE

BRIDGE I.D.
STA. 58+00.00 -L-

BENT #3 CONTROL LINE

W.P.#4
BENT#3
STA. 59+40.00 -L-

TEMPORARY BENT FOR CONSTRUCTION

94'-11"
MIN. HORIZONTAL CLEARANCE

140'-0"

BENT #4 CONTROL LINE

W.P.#5
BENT#4
STA. 61+65.00 -L-

90°-00'-00" (TYP.)

CLASS II RIP RAP (2'-0" THICK)

1'-7" BERM
EL. 52.243
(LEVEL)

BEGIN FRONT SLOPE
STA. 63+09.02 -L-

END APPROACH SLAB
STA. 63+14.00 -L-

TO NC 211

W.P.#6
FILL FACE @ END BENT #2
STA. 62+90.00 -L-

-L-

280'-0" (SPAN C)
225'-0" (SPAN D)
125'-0" (SPAN E)

980'-0" (TOTAL LENGTH OF BRIDGE FILL FACE TO FILL FACE)

PLAN

(PILES AND DRILLED PIERS NOT SHOWN FOR CLARITY)

NORTH CAROLINA PROFESSIONAL SEAL 23926 ENGINEER BRIAN C. HANKS
1/16/07

PROJECT NO. R-2245
BRUNSWICK COUNTY
STATION: 58+00.00 -L-

SHEET 2 OF 6

STATE OF NORTH CAROLINA
DEPARTMENT OF TRANSPORTATION
RALEIGH

GENERAL DRAWING
FOR BRIDGE ON SR 1105
NORTH MIDDLETON AVE. OVER
THE INTRACOASTAL WATERWAY
BETWEEN SR 1104 AND NC211

REVISIONS						SHEET NO.
NO.	BY:	DATE:	NO.	BY:	DATE:	S-27
1			3			TOTAL SHEETS
2			4			98

DRAWN BY : R.D. MARTIN DATE : 4/8/05
CHECKED BY : B.C. HANKS DATE : 9/6/06

18-JAN-2007 09:49
S:\PGS\R-2245 Oak Island\Final Plans\R2245_sd_GD.dgn
bhanks

FOR FOUNDATION NOTES, SEE SHEET 5 OF 6.

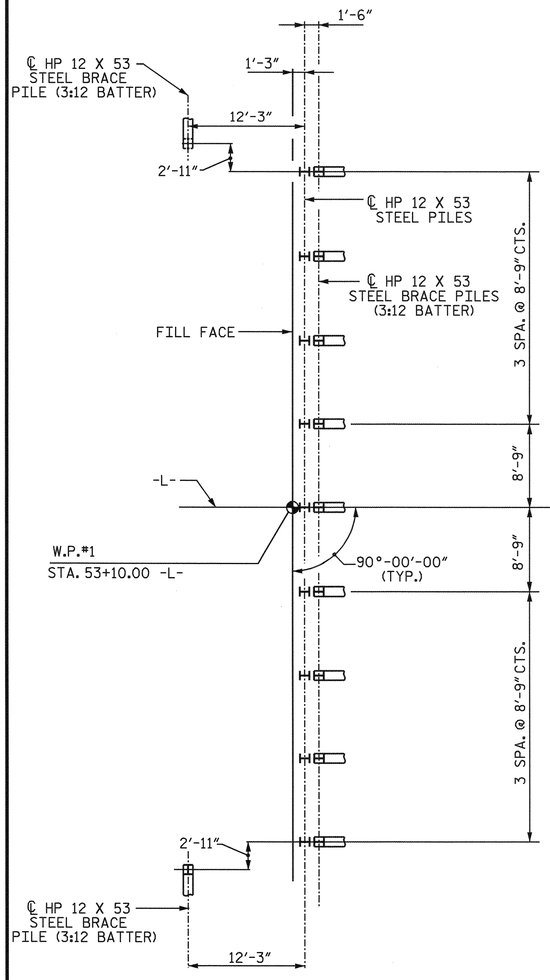

END BENT 1

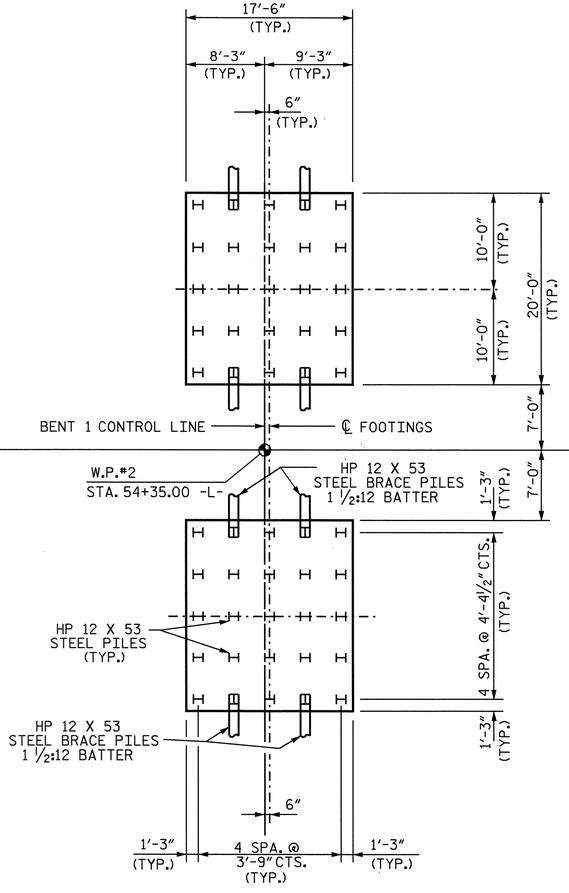

BENT 1

THE CONTRACTOR'S ATTENTION IS CALLED TO THE FACT THAT THE CENTERLINE OF CAP, COLUMNS, & FOOTINGS IS OFFSET FROM THE CONTROL LINE OF BENT 1.

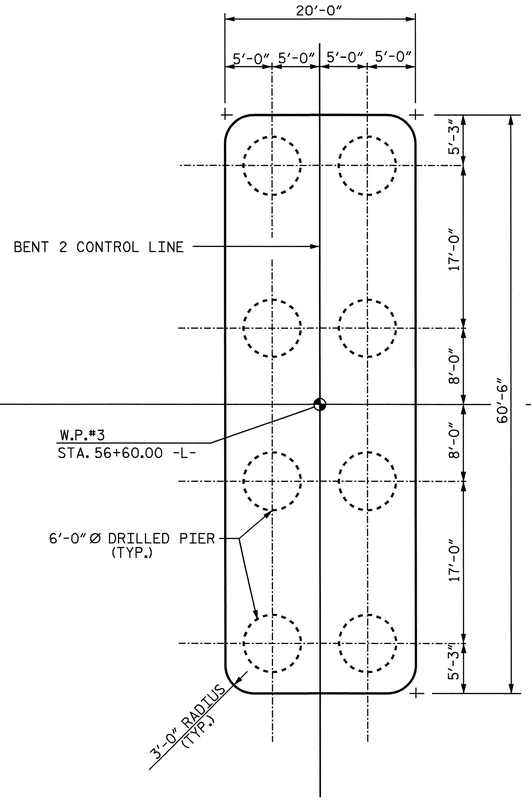

BENT 2

FOUNDATION LAYOUT

DIMENSIONS LOCATING PILES ARE TO CENTERLINE OF PILES
DIMENSIONS LOCATING FOOTINGS ARE TO CENTERLINE OF FOOTINGS.
DIMENSIONS LOCATING DRILLED PIERS ARE TO CENTERLINE OF DRILLED PIERS.

NORTH CAROLINA PROFESSIONAL SEAL 23926 ENGINEER BRIAN C. HANKS
1/16/07

PROJECT NO. R-2245
BRUNSWICK COUNTY
STATION: 58+00.00 -L-
SHEET 3 OF 6

STATE OF NORTH CAROLINA
DEPARTMENT OF TRANSPORTATION
RALEIGH

GENERAL DRAWING
FOR BRIDGE ON SR 1105
NORTH MIDDLETON AVE. OVER
THE INTRACOASTAL WATERWAY
BETWEEN SR 1104 AND NC211

REVISIONS						SHEET NO.
NO.	BY:	DATE:	NO.	BY:	DATE:	S-28
1			3			TOTAL SHEETS
2			4			98

DRAWN BY : H. A. LUCAS DATE : 8/9/06
CHECKED BY : B. C. HANKS DATE : 8/22/06

11-OCT-2006 11:45
S:\PGS\R-2245 Oak Island\Final Plans\R2245_sd_FL.dgn
rmartin

FOR FOUNDATION NOTES, SEE SHEET 5 OF 6.

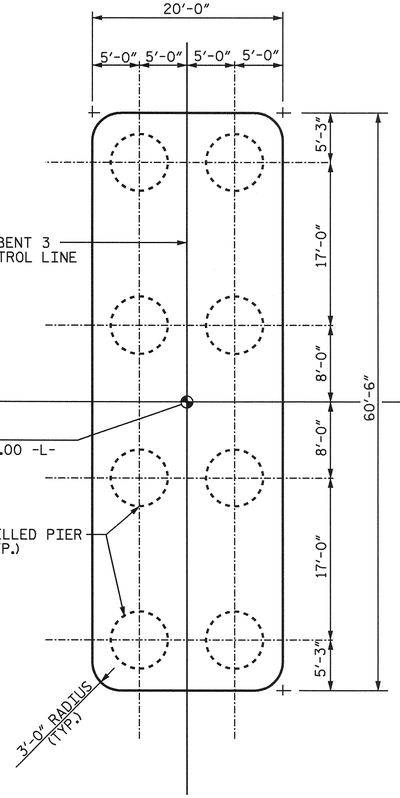

BENT 3

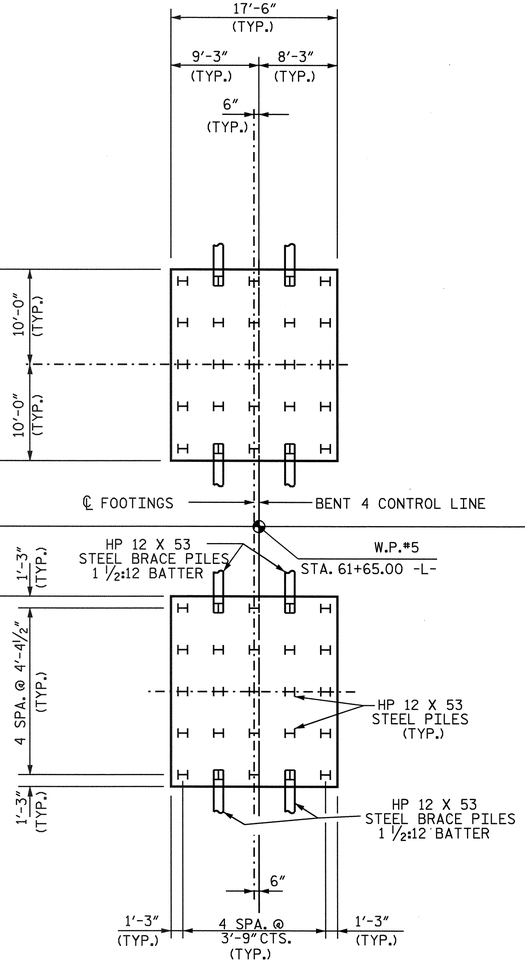

BENT 4

THE CONTRACTOR'S ATTENTION IS CALLED TO THE FACT THAT THE CENTERLINE OF CAP, COLUMNS, & FOOTINGS IS OFFSET FROM THE CONTROL LINE OF BENT 4.

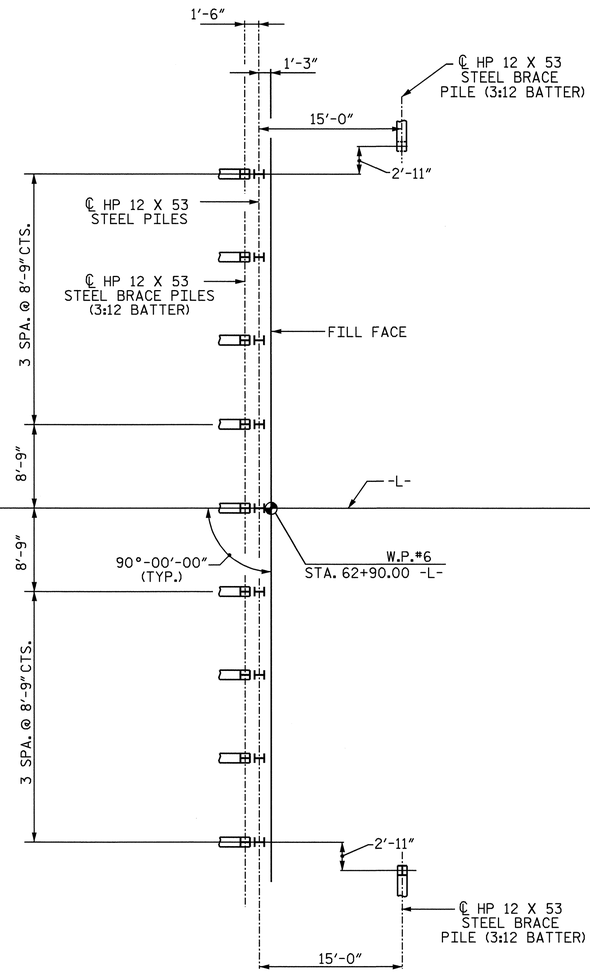

END BENT 2

FOUNDATION LAYOUT

DIMENSIONS LOCATING PILES ARE TO CENTERLINE OF PILES
DIMENSIONS LOCATING FOOTINGS ARE TO CENTERLINE OF FOOTINGS.
DIMENSIONS LOCATING DRILLED PIERS ARE TO CENTERLINE OF DRILLED PIERS.

PROJECT NO. R-2245

BRUNSWICK COUNTY

STATION: 58+00.00 -L-

SHEET 4 OF 6

STATE OF NORTH CAROLINA
DEPARTMENT OF TRANSPORTATION
RALEIGH

GENERAL DRAWING
FOR BRIDGE ON SR 1105
NORTH MIDDLETON AVE. OVER
THE INTRACOASTAL WATERWAY
BETWEEN SR 1104 AND NC211

NORTH CAROLINA PROFESSIONAL SEAL 23926 ENGINEER BRIAN C. HANKS
1/16/07

REVISIONS						SHEET NO.
NO.	BY:	DATE:	NO.	BY:	DATE:	S-29
1			3			TOTAL SHEETS
2			4			98

DRAWN BY : H. A. LUCAS DATE : 8/9/06
CHECKED BY : B. C. HANKS DATE : 8/22/06

11-OCT-2006 11:45
S:\PGS\R-2245 Oak Island\Final Plans\R2245_sd_FL.dgn
rmartin

GENERAL NOTES

ASSUMED LIVE LOAD= HS 20 OR ALTERNATE LOADING.

THIS BRIDGE HAS BEEN DESIGNED IN ACCORDANCE WITH THE REQUIREMENTS OF AASHTO STANDARD SPECIFICATIONS FOR SEISMIC DESIGN OF HIGHWAY BRIDGES FOR SEISMIC PERFORMANCE CATEGORY A.

DESIGN WIND VELOCITY= 120 mph

THIS BRIDGE HAS BEEN DESIGNED BY THE STRENGTH DESIGN METHOD AS SPECIFIED IN AASHTO STANDARD SPECIFICATIONS.

THIS BRIDGE HAS BEEN DESIGNED IN ACCORDANCE WITH HEC 18, "EVALUATING SCOUR AT BRIDGES", MAY 2001.

THIS BRIDGE HAS BEEN DESIGNED IN ACCORDANCE WITH AASHTO'S "GUIDE SPECIFICATION AND COMMENTARY FOR VESSEL COLLISION DESIGN OF HIGHWAY BRIDGES" USING CRITICAL IMPORTANCE CLASSIFICATION, METHOD II CRITERIA.

FOR SUBMITTAL OF WORKING DRAWINGS, SEE SPECIAL PROVISIONS.

FOR CRANE SAFETY, SEE SPECIAL PROVISIONS.

FOR OTHER DESIGN DATA AND GENERAL NOTES, SEE SHEET SN.

FOR EROSION CONTROL MEASURES, SEE EROSION CONTROL PLANS.

FOR SECURING OF VESSELS, SEE SPECIAL PROVISIONS.

FOR BRIDGE DECK RIDEABILITY AND GROOVING, SEE SPECIAL PROVISIONS.

FOR FALSEWORK AND FORMWORK, SEE SPECIAL PROVISIONS.

FOR MASS CONCRETE AT BENT NO.2 AND BENT NO.3, SEE SPECIAL PROVISIONS.

FOR CONSTRUCTION, MAINTENANCE AND REMOVAL OF TEMPORARY ACCESS, SEE SPECIAL PROVISIONS.

FOR CRACK REPAIR OF PRESTRESSED CONCRETE GIRDERS, SEE SPECIAL PROVISIONS.

FOR GROUT FOR STRUCTURES, SEE SPECIAL PROVISIONS.

FOR MAINTENANCE AND PROTECTION OF TRAFFIC BENEATH PROPOSED STRUCTURE, SEE SPECIAL PROVISIONS.

FOR MAINTANENCE OF WATER TRAFFIC, SEE SPECIAL PROVISIONS.

FOR WORK IN, OVER, OR ADJACENT TO NAVIGABLE WATERS, SEE SPECIAL PROVISIONS.

FOR VERTICAL CLEARANCE GAGES, SEE SPECIAL PROVISIONS.

FOR EPOXY RESIN INJECTION, SEE SPECIAL PROVISIONS.

FOR GIRDER BRACING REQUIREMENTS FOR DECK SLAB PLACEMENT, SEE SPECIAL PROVISIONS.

FOR HIGH STRENGTH BOLTS, SEE SPECIAL PROVISIONS.

NEEDLE BEAMS WILL NOT BE ALLOWED UNLESS OTHERWISE CALLED FOR ON THE PLANS OR APPROVED BY THE ENGINEER.

THE EXISTING PAVEMENT WITHIN THE AREA OF THE END BENT #1 PILES SHALL BE REMOVED AND THE ROADBED SCARIFIED TO A MINIMUM DEPTH OF 2'-0".

THE CONTRACTOR SHALL PROVIDE INDEPENDENT ASSURANCE SAMPLES OF REINFORCING STEEL AS FOLLOWS: FOR PROJECTS REQUIRING UP TO 400 TONS OF REINFORCING STEEL, ONE 30 INCH SAMPLE OF EACH SIZE BAR USED, AND FOR PROJECTS REQUIRING OVER 400 TONS OF REINFORCING STEEL, TWO 30 INCH SAMPLES OF EACH SIZE BAR USED. THE BARS FROM WHICH THE SAMPLES ARE TAKEN MUST THEN BE SPLICED WITH REPLACEMENT BARS OF THE SIZE AND LENGTH OF THE SAMPLE PLUS A MINIMUM LAP SPLICE OF THIRTY BAR DIAMETERS.

THE COST OF THE MATERIALS, LABOR AND ANY INCIDENTAL ITEMS RELATED TO THE CONSTRUCTION, MAINTENANCE AND REMOVAL OF TEMPORARY SUPPORTS AND STRONG-BACKS SHALL BE INCLUDED IN THE PAY ITEM "CONSTRUCTION, MAINTENANCE AND REMOVAL OF TEMPORARY ACCESS".

THE DECK CONCRETE FOR SPAN A AND SPAN E SHALL BE CLASS AA (NORMAL WEIGHT) CONCRETE.

FOR SPAN A AND SPAN E ONLY, PRESTRESSED CONCRETE DECK PANELS MAY BE USED IN LIEU OF REMOVABLE FORMS IN ACCORDANCE WITH ARTICLE 420-3 OF THE STANDARD SPECIFICATIONS.

IF PRECAST PANELS ARE USED IN SPAN A AND SPAN E, THEY SHALL BE DESIGNED FOR AN ALLOWABLE TENSILE STRESS OF 0 psi IN THE PRECOMPRESSED TENSILE ZONE UNDER ALL LOADING CONDITIONS.

THE DECK CONCRETE FOR SPANS B THRU D SHALL BE SAND LIGHTWEIGHT CONCRETE. FOR SAND LIGHTWEIGHT CONCRETE, SEE SPECIAL PROVISIONS.

CLASS AA (NORMAL WEIGHT) CONCRETE SHALL BE USED IN THE BENT DIAPHRAGMS AT BENT 2 AND BENT 3. THE COST OF THIS CONCRETE SHALL BE INCLUDED IN THE PAY ITEM "REINFORCED CONCRETE DECK SLAB" (SAND LIGHTWEIGHT CONCRETE).

CLASS PRESTRESS +6000 (NORMAL WEIGHT) CONCRETE SHALL BE USED IN ALL CLOSURE SPLICE DIAPHRAGMS. THE MINIMUM COMPRESSIVE STRENGTH OF THE CLASS PRESTRESS +6000 CONCRETE SHALL BE 6500 psi. THE COST OF THIS CONCRETE SHALL BE INCLUDED IN THE PAY ITEM "REINFORCED CONCRETE DECK SLAB" (SAND LIGHTWEIGHT CONCRETE).

PREVIOUSLY CAST CONCRETE IN A CONTINUOUS UNIT SHALL HAVE ATTAINED A MINIMUM COMPRESSIVE STRENGTH OF 3,000 PSI BEFORE ADDITIONAL CONCRETE IS CAST IN THE UNIT.

GROOVED CONTRACTION JOINTS ½" IN DEPTH, SHALL BE TOOLED IN ALL EXPOSED FACES OF THE MEDIAN ISLAND AND PARAPET IN ACCORDANCE WITH ARTICLE 825-10(B) OF THE STANDARD SPECIFICATIONS. THE CONTRACTION JOINTS SHALL BE LOCATED AT A SPACING OF 8 FEET TO 10 FEET BETWEEN EXPANSION JOINTS. NO CONTRACTION JOINTS WILL BE REQUIRED FOR SEGMENTS LESS THAN 10 FEET IN LENGTH.

STRUCTURAL STEEL DIAPHRAGM ERECTION SHALL BE COMPLETED BEFORE FALSEWORK OR FORMS ARE PLACED ON THE GIRDERS.

THE EXACT LOCATION, AND COMPLETE DESCRIPTION OF ALL INSERTS SHALL BE SHOWN ON WORKING DRAWINGS AND SUBMITTED TO THE DEPARTMENT FOR APPROVAL PRIOR TO CASTING OF THE CONCRETE MEMBER.

THE INSTALLATION, STRESSING AND GROUTING OF POST-TENSIONING TENDONS SHALL BE SUPERVISED, PERFORMED AND INSPECTED BY PERSONNEL WITH QUALIFICATIONS AND EXPERIENCE AS DESCRIBED IN APPENDIX B OF THE "POST-TENSIONING TENDON INSTALLATION AND GROUTING MANUAL" PUBLISHED BY THE FEDERAL HIGHWAY ADMINSTRATION. DOCUMENTATION OF THE QUALIFICATIONS AND EXPERIENCE SHALL BE SUBMITTED TO THE ENGINEER FOR APPROVAL.

CORROSION PROTECTION NOTES

FOR CORROSION PROTECTION OF BRIDGE, SEE SPECIAL PROVISIONS.

THIS STRUCTURE CONTAINS THE NECESSARY CORROSION PROTECTION REQUIRED FOR A CORROSIVE SITE.

THE DRILLED PIERS SHALL CONTAIN SILICA FUME FROM TOP OF DRILLED PIER TO EL. -12.0. SILICA FUME SHALL BE SUBSTITUTED FOR 5% OF THE PORTLAND CEMENT BY WEIGHT. SEE CORROSION PROTECTION OF BRIDGE SPECIAL PROVISION.

PRESTRESSED CONCRETE GIRDERS ARE DESIGNED FOR 0 PSI TENSION IN THE PRECOMPRESSED TENSILE ZONE UNDER ALL LOADING CONDITIONS.

ALL BAR SUPPORTS IN THE PARAPET, DECK, BENT DIAPHRAGMS, BENT CAPS, COLUMNS, DRILLED PIERS AND FOOTINGS AND ALL INCIDENTAL REINFORCING STEEL SHALL BE EPOXY COATED IN ACCORDANCE WITH THE STANDARD SPECIFICATIONS.

ALL INSERTS AND MISCELLANEOUS REINFORCING STEEL EMBEDDED IN CAST-IN-PLACE CONCRETE SHALL BE CORROSION PROTECTED. INSERTS MAY BE HOT DIP GALVANIZED OR EPOXY COATED. REINFORCING STEEL SHALL BE EPOXY COATED. ELECTROPLATING WILL NOT BE ALLOWED.

FOUNDATION NOTES

DRILLED PIERS AT BENT NO.2 AND BENT NO.3 ARE DESIGNED FOR BOTH SKIN FRICTION AND END BEARING. CHECK FIELD CONDITIONS FOR THE REQUIRED END BEARING CAPACITY OF 15 TSF.

DRILLED PIERS AT BENT NO.2 AND BENT NO.3 ARE DESIGNED FOR AN APPLIED LOAD OF 560 TONS EACH AT THE TOP OF THE COLUMN.

PERMANENT STEEL CASING IS REQUIRED FOR DRILLED PIERS AT BENT NO.2 AND BENT NO.3 DO NOT EXTEND THE CASING BELOW ELEVATION -17 WITHOUT PRIOR APPROVAL FROM THE ENGINEER. SEE DRILLED PIERS SPECIAL PROVISION.

DRILLED PIERS AT BENT NO.2 AND BENT NO.3 SHALL EXTEND TO AN ELEVATION NO HIGHER THAN -75 AND SATISFY THE REQUIRED END BEARING CAPACITY.

THE SCOUR CRITICAL ELEVATION FOR BENT NO.2 AND BENT NO.3 IS ELEVATION -25. SCOUR CRITICAL ELEVATIONS ARE TO BE USED TO MONITOR POSSIBLE SCOUR PROBLEMS DURING THE LIFE OF THE STRUCTURE.

FOR DRILLED PIERS, SEE DRILLED PIERS SPECIAL PROVISION.

SPT TESTING IS REQUIRED TO DETERMINE THE END BEARING CAPACITY OF THE DRILLED PIER AT BENT NO.2 AND BENT NO.3. SEE DRILLED PIERS SPECIAL PROVISION.

POLYMER SLURRY IS REQUIRED FOR DRILLED PIERS AT BENT NO.2 AND BENT NO.3. SEE DRILLED PIERS SPECIAL PROVISION.

SID INSPECTIONS ARE REQUIRED TO INSPECT THE BOTTOM CLEANLINESS OF THE DRILLED PIERS AT BENT NO.2 AND BENT NO.3. SEE DRILLED PIERS SPECIAL PROVISION.

CSL TUBES ARE REQUIRED AND CSL TESTING MAY BE REQUIRED FOR THE DRILLED PIERS. THE ENGINEER WILL DETERMINE THE NEED FOR CSL TESTING. SEE CROSSHOLE SONIC LOGGING SPECIAL PROVISION.

DRIVE PILES AT BENT NO.1 AND BENT NO.4 TO A REQUIRED BEARING CAPACITY OF 140 TONS PER PILE. THE REQUIRED BEARING CAPACITY IS EQUAL TO THE ALLOWABLE BEARING CAPACITY WITH A MINIMUM FACTOR OF SAFETY OF TWO.

THE ALLOWABLE BEARING CAPACITY FOR PILES AT BENT NO.1 AND BENT NO.4 IS 70 TONS PER PILE.

DRIVE PILES AT END BENT NO.1 AND END BENT NO.2 TO A REQUIRED BEARING CAPACITY OF 120 TONS PER PILE. THE REQUIRED BEARING CAPACITY IS EQUAL TO THE ALLOWABLE BEARING CAPACITY WITH A MINIMUM FACTOR OF SAFETY OF TWO.

THE ALLOWABLE BEARING CAPACITY FOR PILES AT END BENT NO.1 AND END BENT NO.2 IS 60 TONS PER PILE.

PROJECT NO. R-2245

BRUNSWICK COUNTY

STATION: 58+00.00 -L-

SHEET 5 OF 6

STATE OF NORTH CAROLINA
DEPARTMENT OF TRANSPORTATION
RALEIGH

GENERAL DRAWING (NOTES) FOR BRIDGE ON SR 1105 NORTH MIDDLETON AVE. OVER THE INTRACOASTAL WATERWAY BETWEEN SR 1104 AND NC211

NORTH CAROLINA PROFESSIONAL SEAL 23926 ENGINEER BRIAN C. HANKS

2/23/07

REVISIONS						SHEET NO.
NO.	BY:	DATE:	NO.	BY:	DATE:	S-30
1			3			TOTAL SHEETS
2			4			98

DRAWN BY : R.D. MARTIN DATE : 4/11/05
CHECKED BY : B. C. HANKS DATE : 9/12/06

23-FEB-2007 08:44
S:\PGS\R-2245 Oak Island\Final Plans\R2245_sd_GD.dgn
bhanks

BENCH MARK ARE #202 RRS SET IN 12" OAK, 212.74' LT OF -L- STA. 54+37.89, EL.= 22.35' & #204 RRS SET IN 12" OAK, 595.94' RT OF -L- STA. 61+60.20, EL.= 29.92'

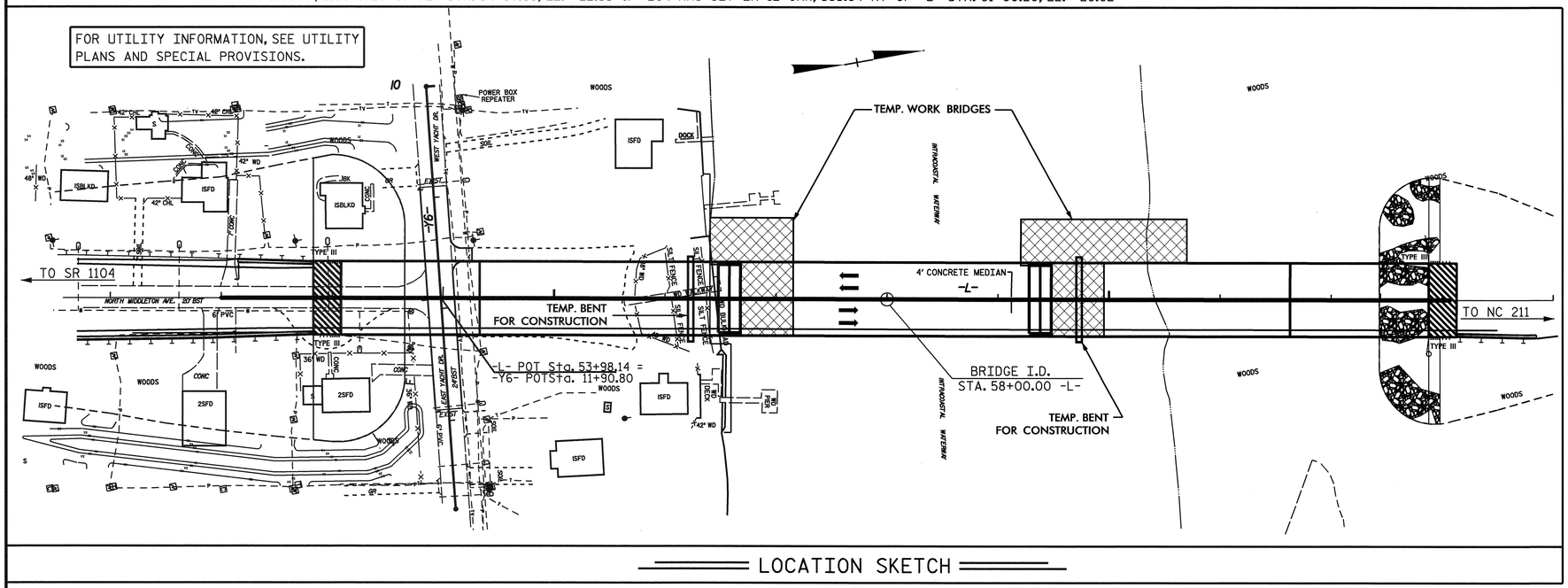

LOCATION SKETCH

HYDRAULIC DATA

DESIGN DISCHARGE ——— 24,900 C.F.S.
FREQUENCY OF DESIGN FLOOD — 50 YRS.
DESIGN HIGHWATER ELEVATION — 10.1
DRAINAGE AREA ——— INDETERMINATE
BASIC DISCHARGE (Q100) ——— 30,600 C.F.S.
BASIC HIGHWATER ELEVATION — 11.6

OVERTOPPING FLOOD DATA

OVERTOPPING DISCHARGE ——— N/A
FREQUENCY OF OVERTOPPING FLOOD — N/A
OVERTOPPING FLOOD ELEVATION — N/A

TOTAL BILL OF MATERIAL

	CONSTRUCTION MAINTENANCE & REMOVAL OF TEMPORARY ACCESS	FOUNDATION EXCAVATION	6'-0" Ø DRILLED PIERS	PERMANENT STEEL CASING FOR 6'-0" Ø DRILLED PIER	SID INSPECTION	SPT TESTING	CROSSHOLE SONIC LOGGING	REINFORCED CONCRETE DECK SLAB	REINFORCED CONCRETE DECK SLAB (SAND LIGHTWEIGHT CONCRETE)	GROOVING BRIDGE FLOORS	CLASS AA CONCRETE	BRIDGE APPROACH SLABS	EPOXY COATED REINFORCING STEEL	EPOXY COATED SPIRAL COLUMN REINFORCING STEEL	STRUCTURAL STEEL	HP 12 X 53 STEEL PILES	
	LUMP SUM	LUMP SUM	LIN.FT.	LIN.FT.	EA.	EA.	EA.	SQ.FT.	SQ.FT.	SQ.FT.	CU.YDS.	LUMP SUM	LBS.	LBS.	APPROX. LBS.	NO.	LIN.FT.
SUPERSTRUCTURE								16,845	49,701	56,746		LUMP SUM			53,300		
END BENT NO.1											88.5		9,633			20	1,800.0
BENT NO.1		LUMP SUM									291.3		46,802			50	2,500.0
BENT NO.2			632.00	168.26	8	8	2				475.0		211,017	24,835			
BENT NO.3			632.00	168.26	8	8	2				475.0		211,017	24,835			
BENT NO.4		LUMP SUM									264.8		43,414			50	3,000.0
END BENT NO.2											92.5		10,014			20	1,300.0
TOTAL	LUMP SUM	LUMP SUM	1,264.00	336.52	16	16	4	16,845	49,701	56,746	1,687.1	LUMP SUM	531,897	49,670	53,300	140	8,600.0

TOTAL BILL OF MATERIAL (CONT'D.)

	TWO BAR METAL RAIL	1'-2" X 2'-6" CONCRETE PARAPET	4" SLOPE PROTECTION	RIP RAP CLASS II (2'-0" THICK)	FILTER FABRIC FOR DRAINAGE	ELASTOMERIC BEARINGS	EVAZOTE JOINT SEALS	POST TENSIONING TENDONS	SOLAR ARRAY SUPPORT PLATFORM	78" POST TENSIONED PRESTRESSED CONCRETE GIRDERS		78" PRESTRESSED CONCRETE GIRDERS	
	LIN.FT.	LIN.FT.	SQ.YDS.	TONS	SQ.YDS.	LUMP SUM	LUMP SUM	LUMP SUM	LUMP SUM	NO.	LIN.FT.	NO.	LIN.FT.
SUPERSTRUCTURE	1,939.66	1,954.66				LUMP SUM	LUMP SUM	LUMP SUM	LUMP SUM	40	5,768.00	16	1,972.00
END BENT NO.1			1,660										
BENT NO.1													
BENT NO.2													
BENT NO.3													
BENT NO.4													
END BENT NO.2				500	550								
TOTAL	1,939.66	1,954.66	1,660	500	550	LUMP SUM	LUMP SUM	LUMP SUM	LUMP SUM	40	5,768.00	16	1,972.00

DRAWN BY : R.D. MARTIN DATE : 4/11/05
CHECKED BY : B. C. HANKS DATE : 9/29/06

17-JAN-2007 10:04
S:\PGS\R-2245 Oak Island\Final Plans\R2245_sd_GD_BOM.dgn
bhanks

PROJECT NO. R-2245
BRUNSWICK COUNTY
STATION: 58+00.00 -L-
SHEET 6 OF 6

STATE OF NORTH CAROLINA
DEPARTMENT OF TRANSPORTATION
RALEIGH

GENERAL DRAWING FOR BRIDGE ON SR 1105 NORTH MIDDLETON AVE. OVER THE INTRACOASTAL WATERWAY BETWEEN SR 1104 AND NC211

NORTH CAROLINA PROFESSIONAL SEAL 23926 ENGINEER BRIAN C. HANKS
1/16/07

REVISIONS						SHEET NO.
NO.	BY:	DATE:	NO.	BY:	DATE:	S-31
1			3			TOTAL SHEETS
2			4			98

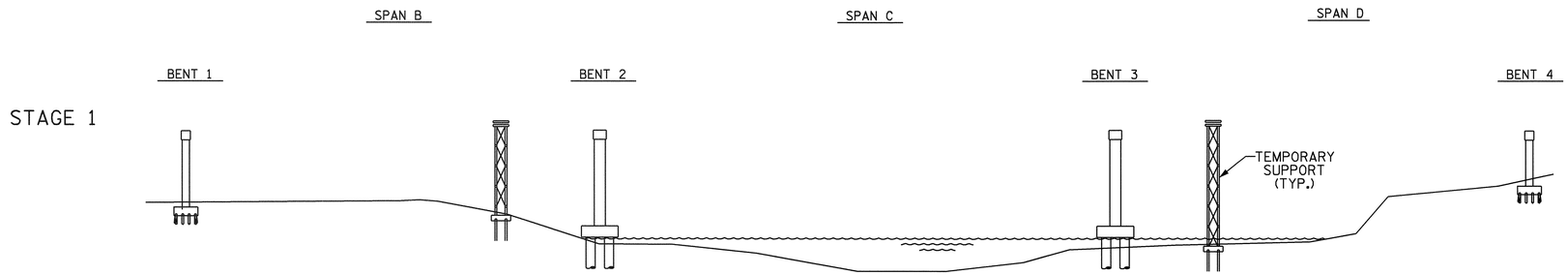

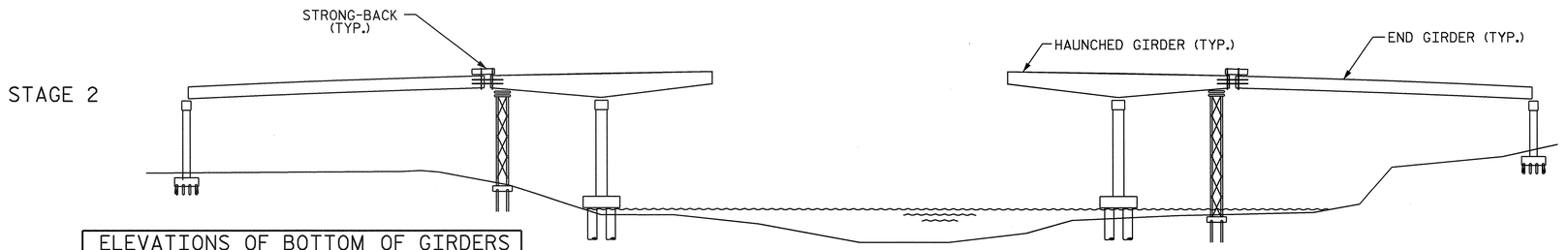

ELEVATIONS OF BOTTOM OF GIRDERS AT TEMPORARY SUPPORTS		
GIRDER NO.	END GIRDER SPAN B OR D	HAUNCHED GIRDER SPAN B OR D
1	67.710	67.762
2	67.880	67.932
3	68.050	68.102
4	68.220	68.272
5	68.220	68.272
6	68.050	68.102
7	67.880	67.932
8	67.710	67.762

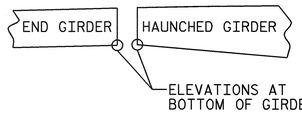

BOTTOM OF GIRDER DIAGRAM
(SHOWING ELEVATION LOCATIONS)

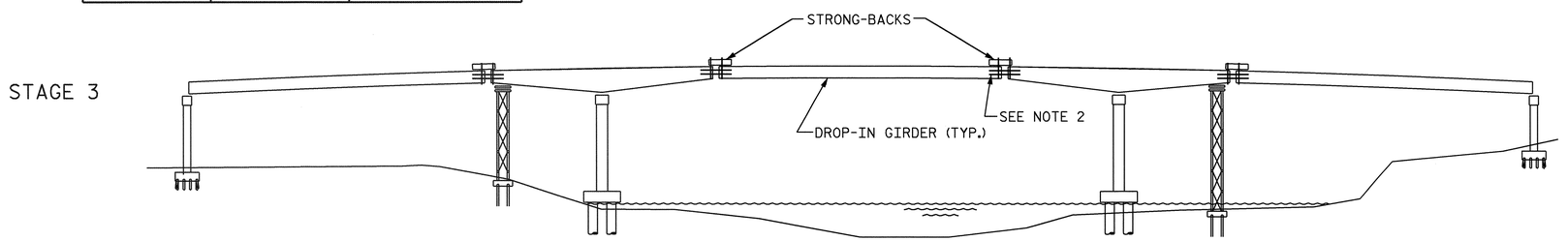

STAGE 1

1. CONSTRUCT BENTS 1 THRU 4 AND ERECT TEMPORARY SUPPORTS IN SPANS B AND D.

GIRDERS IN SPANS A AND E SHALL NOT BE PLACED IN FINAL POSITION UNTIL FIRST STAGE POST-TENSIONING IS PERFORMED AND FIRST STAGE POST-TENSIONING DUCT AND ANCHORAGE ARE GROUTED IN SPANS B, C AND D.

STAGE 2

1. ERECT HAUNCHED GIRDERS AND SECURE TO TEMPORARY SUPPORTS. SECURE HAUNCHED GIRDERS TO TEMPORARY SUPPORTS AND BENTS 2 AND 3 TO TRANSMIT WIND FORCES ASSUMING THE BEARING PROVIDES NO TRANSVERSE SUPPORT.
2. ATTACH STRONG-BACKS TO THE PORTION OF THE END GIRDERS WHICH WILL BE SUPPORTED BY THE HAUNCHED GIRDERS. ERECT END GIRDERS AND SECURE TO HAUNCHED GIRDERS. SECURE END GIRDERS TO HAUNCHED GIRDERS AND BENTS 1 AND 4 TO TRANSMIT TRANSVERSE WIND FORCES ASSUMING THE BEARING PROVIDES NO TRANSVERSE SUPPORT.
3. THE HAUNCHED GIRDERS SHALL BE SECURED TO PREVENT UPLIFT DURING THE PLACEMENT OF THE DROP-IN GIRDERS DURING STAGE 3.

   AS A MINIMUM, GIRDER CONNECTIONS TO TEMPORARY SUPPORT SHALL BE CAPABLE OF TRANSMITTING THE DEAD LOAD REACTIONS SHOWN IN STAGE 3.
4. STAGE 2 DEAD LOAD REACTIONS ON TEMPORARY SUPPORTS, PER GIRDER (EXCLUDING CONSTRUCTION LOADS, WIND LOADS, ERECTION LOADS, IMPACT LOADS AND ANY OTHER MISCELLANEOUS LOAD):

   HAUNCHED GIRDER 0 Kips (UPWARD)

   DEAD LOAD REACTIONS ON STRONG-BACKS, PER GIRDER (EXCLUDING CONSTRUCTION LOADS, WIND LOADS, ERECTION LOADS, IMPACT LOADS AND ANY OTHER MISCELLANEOUS LOADS)

   END GIRDER 108 Kips (DOWNWARD)

   DEAD LOAD REACTIONS SHOWN SHALL BE ADJUSTED FOR ANY CONSTRUCTION LOADS, WIND LOADS, ERECTION LOADS, IMPACT LOADS AND ANY OTHER MISCELLANEOUS LOADS PROPOSED BY THE CONTRACTOR, INCLUDING THE WEIGHT OF THE STRONG-BACKS.

STAGE 3

1. CAST DIAPHRAGMS AT BENTS 2 AND 3 AND PLACE INTERMEDIATE DIAPHRAGMS.
2. ATTACH STRONG-BACKS TO EACH END OF THE DROP-IN-GIRDERS. ERECT DROP-IN-GIRDERS AND CONNECT STRONG-BACKS TO HAUNCHED GIRDERS. AS A MINIMUM, CONNECTIONS BETWEEN DROP-IN GIRDERS AND HAUNCHED GIRDERS SHALL BE CAPABLE OF RESISTING RELATIVE TWIST BETWEEN GIRDER SEGMENTS.
3. STAGE 3 DEAD LOAD REACTIONS ON TEMPORARY SUPPORTS, PER GIRDER (EXCLUDING CONSTRUCTION LOADS, WIND LOADS, ERECTION LOADS, IMPACT LOADS AND ANY OTHER MISCELLANEOUS LOADS):

   HAUNCHED GIRDER 105 Kips (UPWARD)

   DEAD LOAD REACTIONS ON STRONG-BACKS, PER GIRDER (EXCLUDING CONSTRUCTION LOADS, WIND LOADS, ERECTION LOADS, IMPACT LOADS AND ANY OTHER MISCELLANEOUS LOADS)

   END GIRDER 108 Kips (DOWNWARD)
   DROP-IN GIRDER 105 Kips (DOWNWARD)

   DEAD LOAD REACTIONS SHOWN SHALL BE ADJUSTED FOR ANY CONSTRUCTION LOADS, WIND LOADS, ERECTION LOADS, IMPACT LOADS AND ANY OTHER MISCELLANEOUS LOADS PROPOSED BY THE CONTRACTOR, INCLUDING THE WEIGHT OF THE STRONG-BACKS.
4. PLACE REMAINING INTERMEDIATE DIAPHRAGMS.

NOTES

1. THIS BRIDGE IS DESIGNED FOR THE ERECTION SEQUENCE SHOWN. THE CONTRACTOR HAS THE OPTION TO DEVIATE FROM THE PROPOSED ERECTION SEQUENCE. IF THE CONTRACTOR CHOOSES TO DEVIATE FROM THE PROPOSED ERECTION SEQUENCE, HE WILL BE RESPONSIBLE FOR ANALYZING THE EFFECTS OF THE PROPOSED CHANGES TO THE PERMANENT STRUCTURE DURING THE CONSTRUCTION PHASE AND IN THE FINAL CONDITION. CALCULATIONS SHOWING REVISED EFFECTS MUST BE SUBMITTED FOR APPROVAL. ANY APPROVED CHANGES WILL BE REFLECTED IN REVISED CONTRACT PLANS FURNISHED BY THE CONTRACTOR. ALL ENGINEERING WORK FOR THE REVISION MUST BE PERFORMED BY A PROFESSIONAL ENGINEER REGISTERED IN NORTH CAROLINA. ANY WORK REQUIRED BY THE CONTRACTOR TO COMPLETE THE DEVIATION FROM THE PROPOSED ERECTION SEQUENCE SHALL BE PERFORMED AT NO ADDITIONAL COST TO THE DEPARTMENT.
2. THE CONTRACTOR IS RESPONSIBLE FOR DESIGNING THE TEMPORARY SUPPORTS, STRONG-BACKS AND A CONNECTION THAT WILL PREVENT RELATIVE ROTATION BETWEEN THE DROP-IN GIRDERS AND HAUNCHED GIRDERS. THE DESIGNS SHALL FOLLOW THE AASHTO GUIDE DESIGN SPECIFICATIONS FOR BRIDGE TEMPORARY WORKS, 1995 AND SHALL BE COMPLETED BY A PROFESSIONAL ENGINEER REGISTERED IN NORTH CAROLINA. THE CONTRACTOR SHALL SUBMIT SIGNED AND SEALED WORKING DRAWINGS AND CALCULATIONS FOR APPROVAL BY THE ENGINEER.
3. THE CONTRACTOR SHALL ENSURE THAT BEARINGS ARE PROPERLY SEATED AND FUNCTIONING AFTER POST-TENSIONING IS COMPLETED.
4. BEAMS SHALL NOT BE MORE THAN 1/4" OUT OF VERTICAL OR TRANSVERSE ALIGNMENT AT SPLICE LOCATIONS.
5. FOR DETAILS OF POST-TENSIONING OPERATIONS, SEE SHEET TITLED "POST-TENSION GIRDER NOTES".
6. THE COST OF THE MATERIALS, LABOR AND ANY INCIDENTAL ITEMS RELATED TO THE CONSTRUCTION, MAINTENANCE AND REMOVAL OF TEMPORARY SUPPORTS AND STRONG-BACKS SHALL BE INCLUDED IN THE PAY ITEM "CONSTRUCTION, MAINTENANCE AND REMOVAL OF TEMPORARY ACCESS".

NORTH CAROLINA PROFESSIONAL SEAL 23926 ENGINEER BRIAN C. HANKS
1/18/07

DRAWN BY : R. D. MARTIN DATE : 4/26/06
CHECKED BY : P. S. ERVIN DATE : 9/26/06

22-NOV-2006 11:05
S:\PGS\R-2245 Oak Island\Final Plans\R2245_sd_GD_ConstSequence.dgn
bhanks

PROJECT NO. R-2245
BRUNSWICK COUNTY
STATION: 58+00.00 -L-

STATE OF NORTH CAROLINA
DEPARTMENT OF TRANSPORTATION
RALEIGH

ERECTION SEQUENCE FOR SPANS B, C AND D

REVISIONS						SHEET NO.
NO.	BY:	DATE:	NO.	BY:	DATE:	S-32
1			3			TOTAL SHEETS
2			4			98

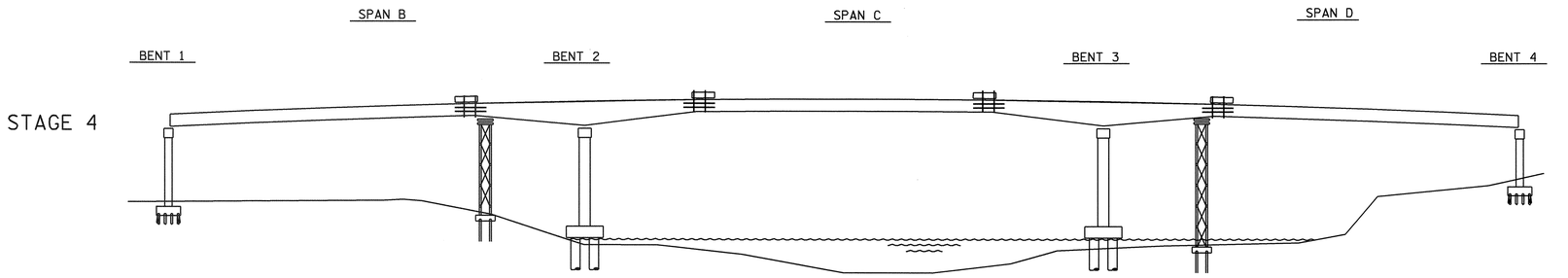

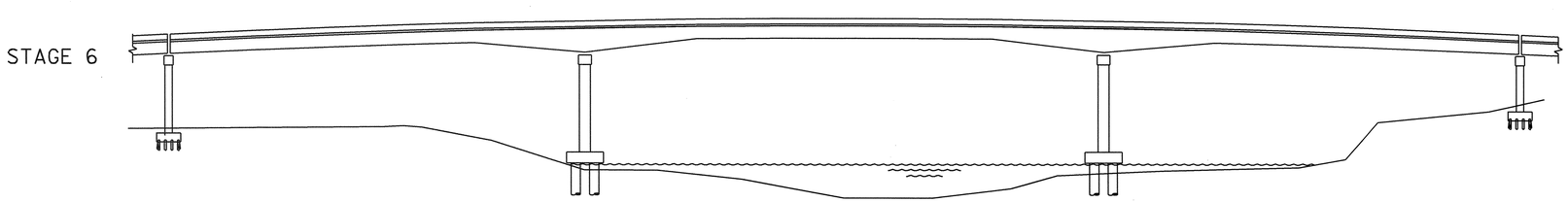

NOTE:

SEE SHEET 1 OF 2 FOR NOTES AND ADDITIONAL POST-TENSIONING NOTES.

STAGE 4

STRUCTURAL STEEL DIAPHRAGM ERECTION SHALL BE COMPLETED BEFORE FALSEWORK OR FORMS ARE PLACED ON THE GIRDERS.

1. CAST CLOSURE SPLICE DIAPHRAGMS.

STAGE 5

DO NOT BEGIN THIS STAGE UNTIL CONCRETE STRENGTH FOR CLOSURE SPLICE REACHES 6500 psi.

1. LOOSEN BOLTS CONNECTING INTERMEDIATE DIAPHRAGMS TO GIRDERS.
2. FIRST STAGE POST-TENSIONING: AFTER CLOSURE SPLICE DIAPHRAGMS IN SPANS B THRU D HAVE ATTAINED REQUIRED STRENGTH OF 6500 psi, STRESS FIRST STAGE TENDONS (TENDONS 2 AND 3).
3. RELEASE GIRDERS FROM TEMPORARY SUPPORTS.
4. GROUT FIRST STAGE TENDONS.

   ENCASE POST-TENSIONING ANCHORAGES FOR TENDONS 2 AND 3 WITH EPOXY GROUT POUR-BACK OR APPROVED EQUIVALENT.
5. RETIGHTEN BOLTS CONNECTING INTERMEDIATE DIAPHRAGMS TO GIRDERS.
6. REMOVE STRONG-BACKS.

   AFTER THE REMOVAL OF THE STRONG-BACKS, SPAN A AND SPAN E GIRDERS MAY BE PLACED IN THEIR FINAL POSITION.
7. ERECT DECK FORMS IN SPANS B THRU D. CAST DECK POURS #1 THRU #8 (SEE SUPERSTRUCTURE BILL OF MATERIAL PLANSHEET FOR POURING SEQUENCE)

STAGE 6

1. SECOND STAGE POST-TENSIONING: AFTER THE DECK CONCRETE IN SPANS B-D HAS ATTAINED REQUIRED STRENGTH, STRESS SECOND STAGE TENDON (TENDON 1).
2. GROUT SECOND STAGE TENDON.

   ENCASE POST-TENSIONING ANCHORAGES FOR TENDON 1 WITH EPOXY GROUT POUR-BACK OR APPROVED EQUIVALENT.
3. CAST DECK POUR #9 (SEE SUPERSTRUCTURE BILL OF MATERIAL PLANSHEET FOR POURING SEQUENCE). REMOVE TEMPORARY SUPPORTS FOR SPANS B AND D.
4. CAST REMAINING CONCRETE (PARAPET, MEDIAN ISLAND, ETC.).

PROJECT NO. R-2245

BRUNSWICK COUNTY

STATION: 58+00.00 -L-

SHEET 2 OF 2

STATE OF NORTH CAROLINA
DEPARTMENT OF TRANSPORTATION
RALEIGH

ERECTION SEQUENCE FOR SPANS B, C AND D

NORTH CAROLINA PROFESSIONAL SEAL 23926 ENGINEER BRIAN C. HAWKS
11/18/07

REVISIONS						SHEET NO.
NO.	BY:	DATE:	NO.	BY:	DATE:	S-33
1			3			TOTAL SHEETS
2			4			98

DRAWN BY : R. D. MARTIN DATE : 4/26/06
CHECKED BY : P. S. ERVIN DATE : 9/26/06

17-JAN-2007 10:28
S:\PG3\R-2245 Oak Island\Final Plans\R2245_sd_GD_ConstSequence.dgn
bhanks

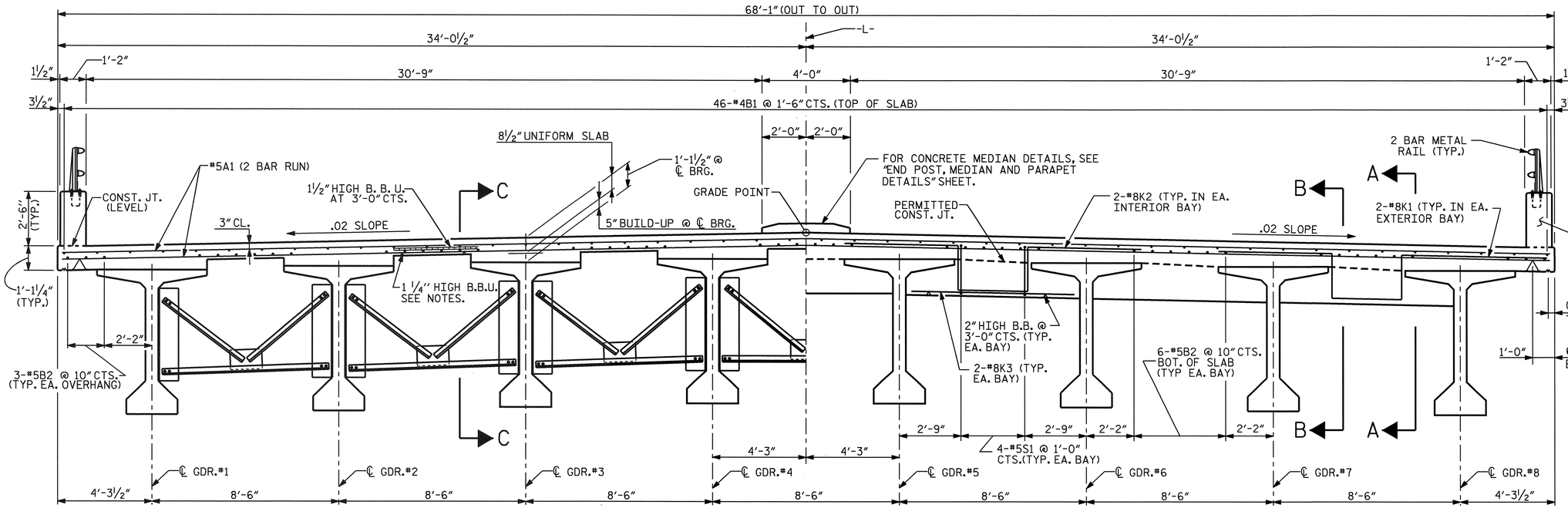

HALF-SECTION @ INTERMEDIATE DIAPHRAGM
(SPANS A AND E)

HALF- SECTION @ BENTS #1 AND #4 AND END BENTS

NOTES

PROVIDE 1¼" HIGH BEAM BOLSTERS AT 4'-0" CTS. ATOP THE REMOVABLE FORMS TO SUPPORT THE BOTTOM MAT OF "A" BARS.

LONGITUDINAL STEEL MAY BE SHIFTED SLIGHTLY, AS NECESSARY, TO AVOID INTERFERENCE WITH STIRRUPS IN PRESTRESSED CONCRETE GIRDERS.

STRUCTURAL STEEL ERECTION IN A CONTINUOUS UNIT SHALL BE COMPLETE BEFORE FALSEWORK OR FORMS ARE PLACED ON THE UNIT.

NO CHAMFER IS REQUIRED ON CORNERS OF GIRDER BUILDUPS.

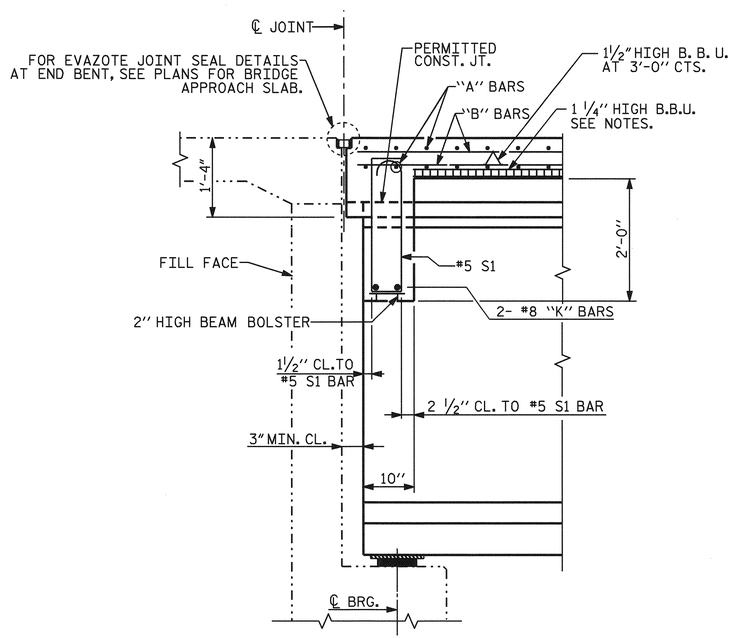

SECTION A-A
(AT END BENTS)

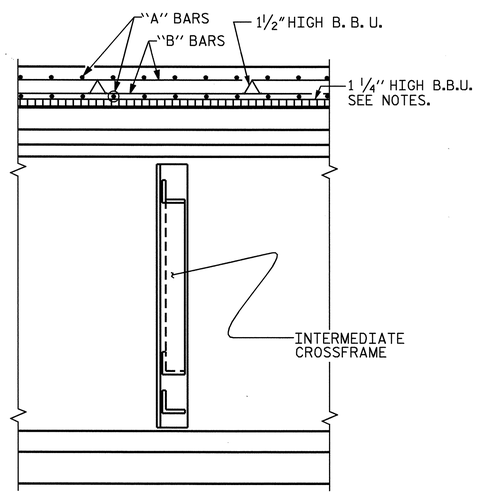

SECTION C-C

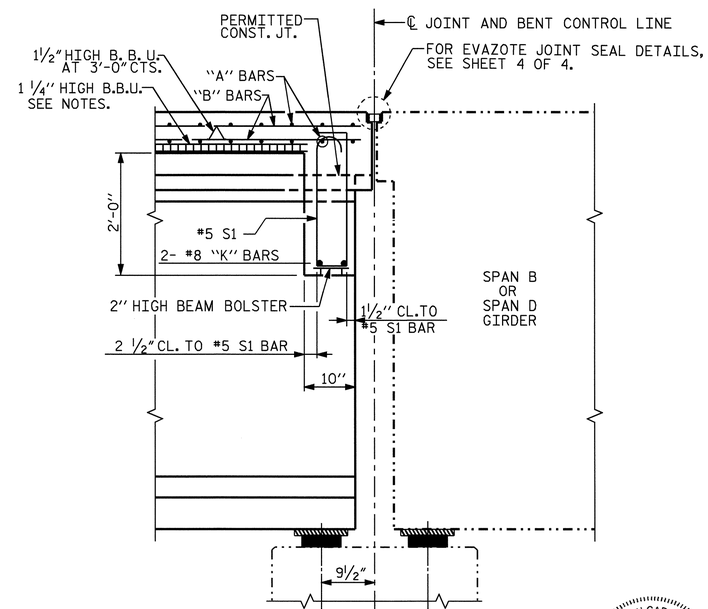

SECTION B-B
(AT BENT #1 AND #4)
(SPAN A OR SPAN E)

NORTH CAROLINA PROFESSIONAL SEAL 23926 ENGINEER BRIAN C. HANKS
1/18/07

PROJECT NO. R-2245

BRUNSWICK COUNTY

STATION: 58+00.00 -L-

SHEET 1 OF 4

STATE OF NORTH CAROLINA
DEPARTMENT OF TRANSPORTATION
RALEIGH

SUPERSTRUCTURE

TYPICAL SECTION AND DETAILS FOR SPANS A AND E

REVISIONS						SHEET NO.
NO.	BY:	DATE:	NO.	BY:	DATE:	S-34
1			3			TOTAL SHEETS
2			4			98

DRAWN BY : R. D. MARTIN DATE : 6/06
CHECKED BY : B. C. HANKS DATE : 9/6/06

11-OCT-2006 12:03
S:\PG3\R-2245 Oak Island\Final Plans\R2245_sd_TS_spans A and E.dgn
rmartin

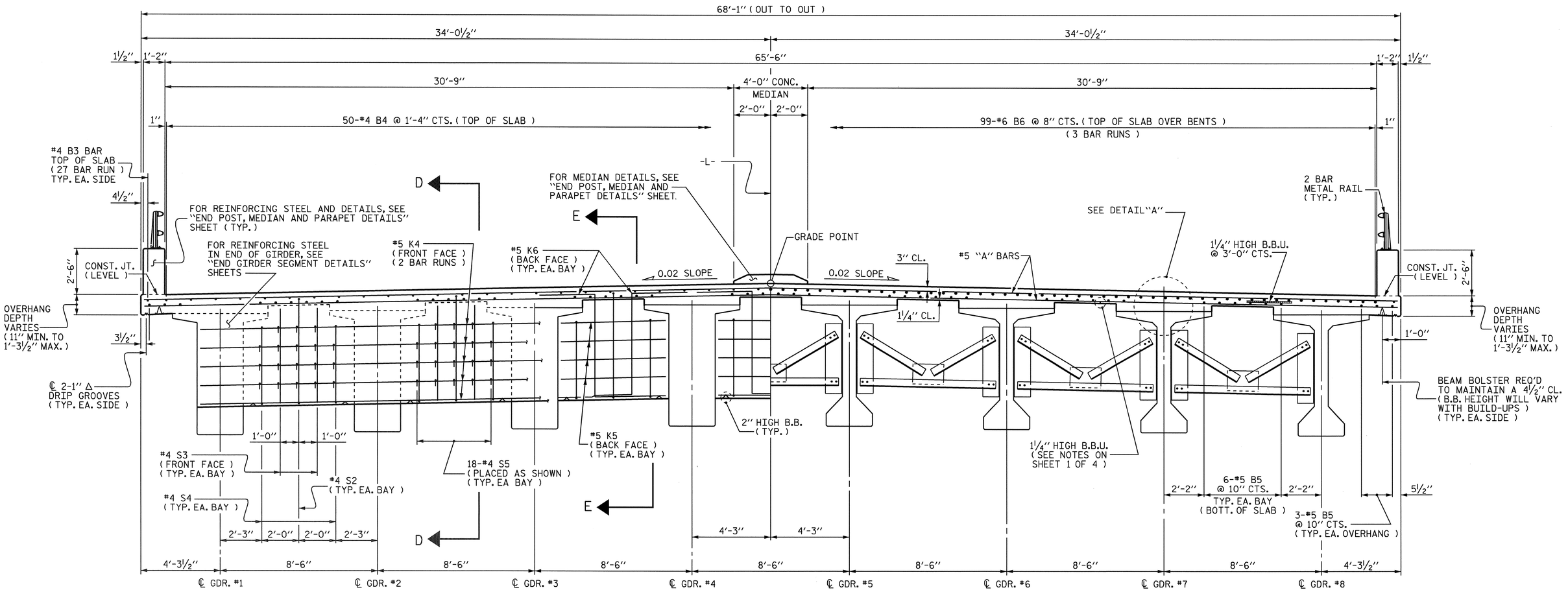

HALF-SECTION @ END DIAPHRAGM
(AT BENTS No. 1 & No. 4)

HALF-SECTION @ INTERMEDIATE DIAPHRAGM
(AT MODIFIED BULB TEE)

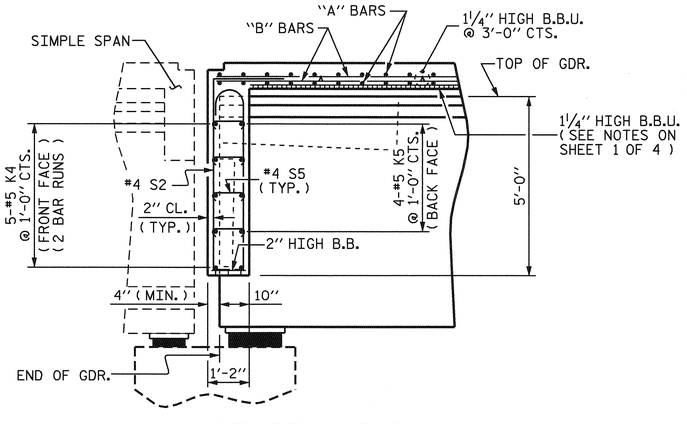

SECTION D-D
SHOWING PARTIAL REINFORCING STEEL FOR ADDITIONAL TYPICAL REINFORCING STEEL, SEE SECTION E-E

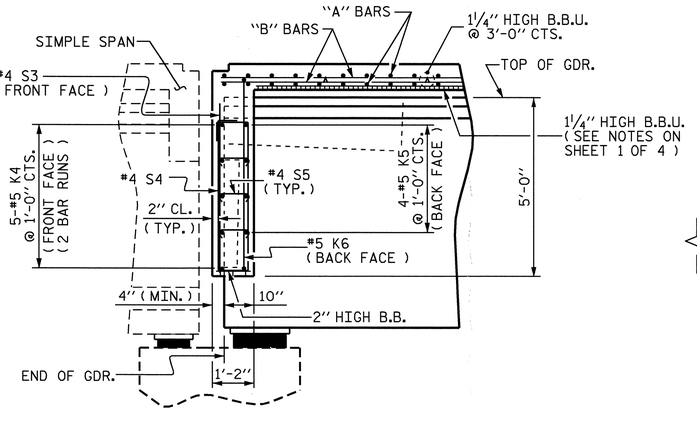

SECTION E-E
SHOWING PARTIAL REINFORCING STEEL FOR ADDITIONAL TYPICAL REINFORCING STEEL, SEE SECTION D-D

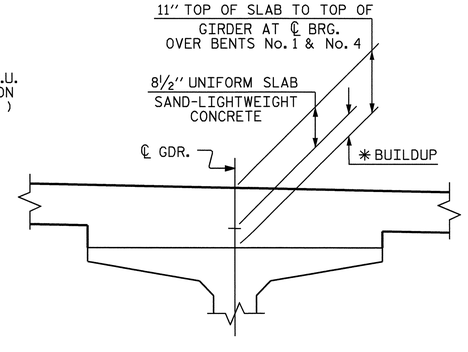

DETAIL "A"
*BUILDUP VARIES ALONG GIRDER (SEE "DEAD LOAD DEFLECTIONS" PLANSHEET)

NORTH CAROLINA PROFESSIONAL SEAL 23926 ENGINEER BRIAN C. HANKS
1/16/07

PROJECT NO. R-2245
BRUNSWICK COUNTY
STATION: 58+00.00 -L-
SHEET 2 OF 4

STATE OF NORTH CAROLINA
DEPARTMENT OF TRANSPORTATION
RALEIGH

SUPERSTRUCTURE

TYPICAL SECTION & DETAILS FOR SPANS B THRU D

REVISIONS						SHEET NO.
NO.	BY:	DATE:	NO.	BY:	DATE:	S-35
1			3			TOTAL SHEETS
2			4			98

DRAWN BY : MIKE BRITT DATE : 5-26-06
CHECKED BY : B.C. HANKS DATE : 9-7-06

11-OCT-2006 12:03
S:\PDG3\R-2245 Oak Island\Final Plans\R2245_sd_TS_spans B and D.dgn
rmartin

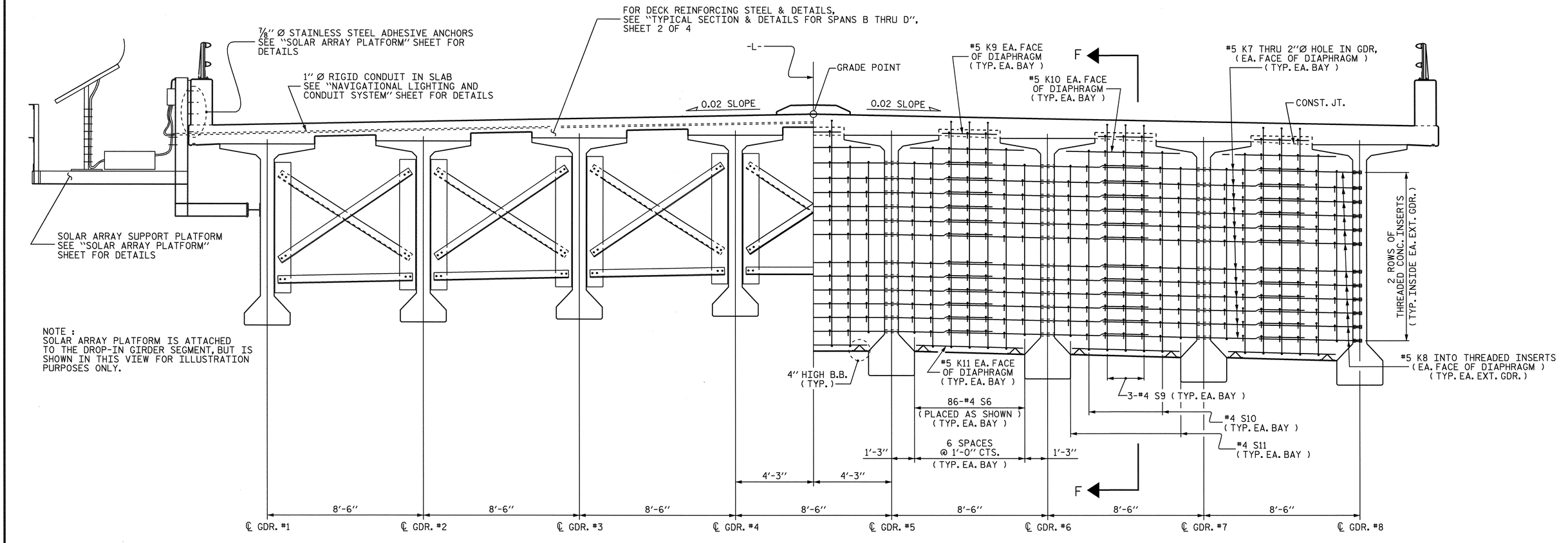

HALF-SECTION @ INTERMEDIATE DIAPHRAGM
(AT HAUNCHED GIRDER)

HALF-SECTION @ BENT DIAPHRAGM
(AT BENTS No. 2 & No. 3)

NOTE :
FOR SECTIONS F-F, G-G & H-H, SEE "TYPICAL SECTION FOR SPANS B THRU D", SHEET 4 OF 4

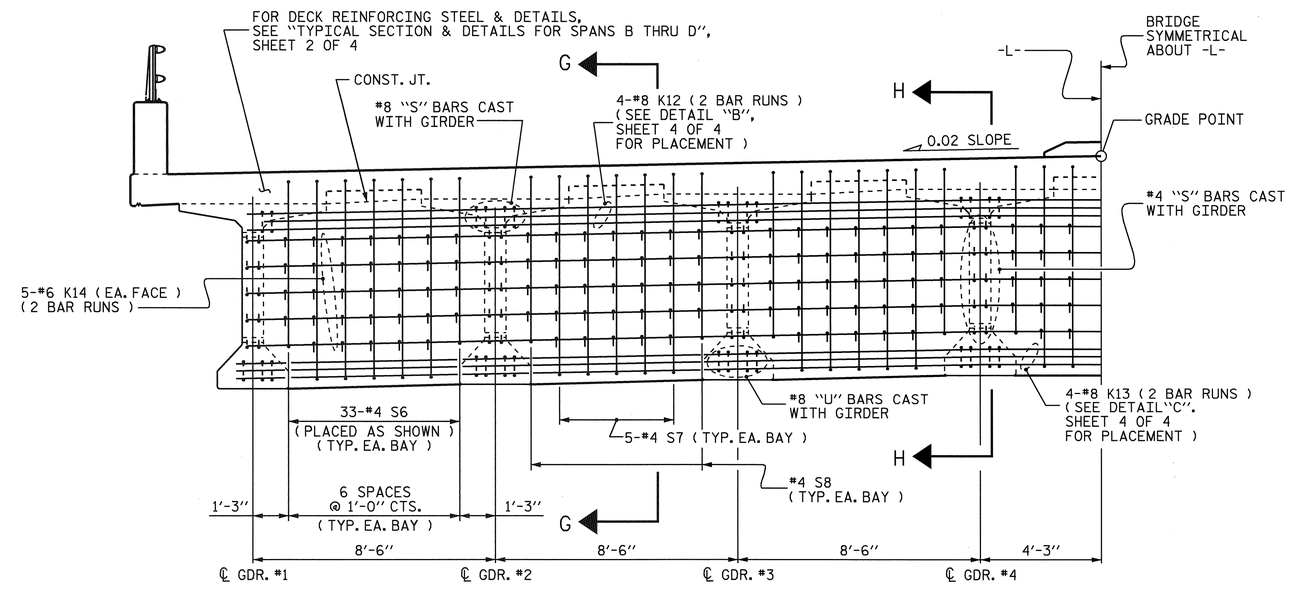

HALF-SECTION @ CLOSURE SPLICE DIAPHRAGM

PROJECT NO. R-2245
BRUNSWICK COUNTY
STATION: 58+00.00 -L-

SHEET 3 OF 4

STATE OF NORTH CAROLINA
DEPARTMENT OF TRANSPORTATION
RALEIGH

SUPERSTRUCTURE

TYPICAL SECTION FOR SPANS B THRU D

NORTH CAROLINA PROFESSIONAL SEAL 23926 ENGINEER BRIAN C. HANKS
1/18/07

REVISIONS						SHEET NO.
NO.	BY:	DATE:	NO.	BY:	DATE:	S-36
1			3			TOTAL SHEETS
2			4			98

DRAWN BY : MIKE BRITT DATE : 5-28-06
CHECKED BY : B.C. HANKS DATE : 9-7-06

11-OCT-2006 12:03
S:\PG3\R-2245 Oak Island\Final Plans\R2245_sd_TS_spans B and D.dgn
rmartin

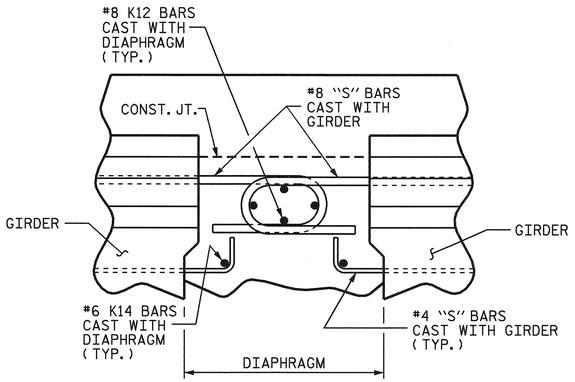

DETAIL "B"

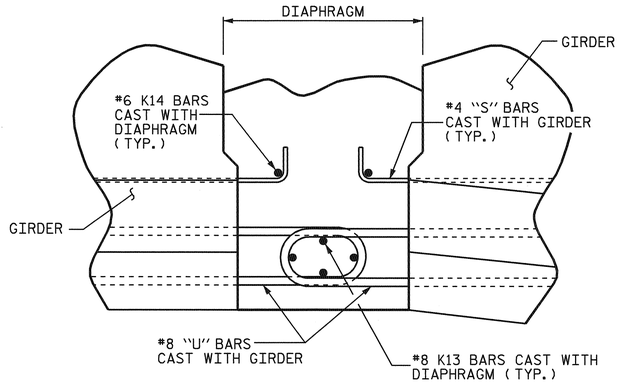

DETAIL "C"

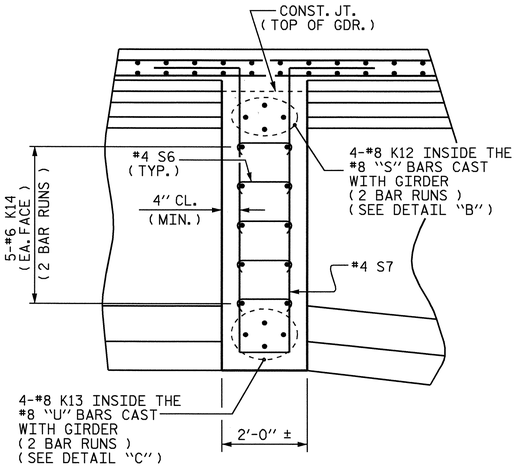

SECTION G-G

SHOWING CLOSURE SPLICE DIAPHRAGM IN BAY BETWEEN GDR.'s

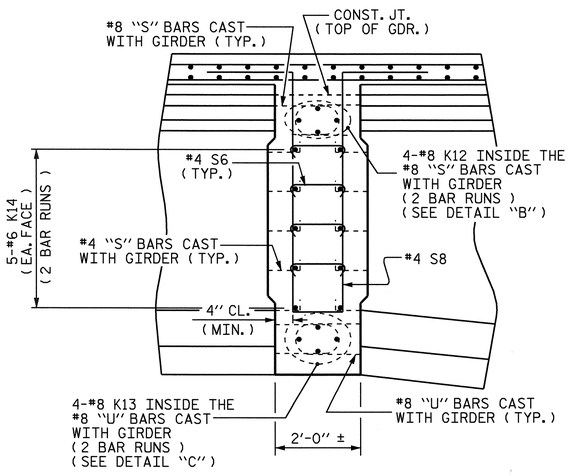

SECTION H-H

SHOWING CLOSURE SPLICE DIAPHRAGM BETWEEN ENDS OF GDR.'s

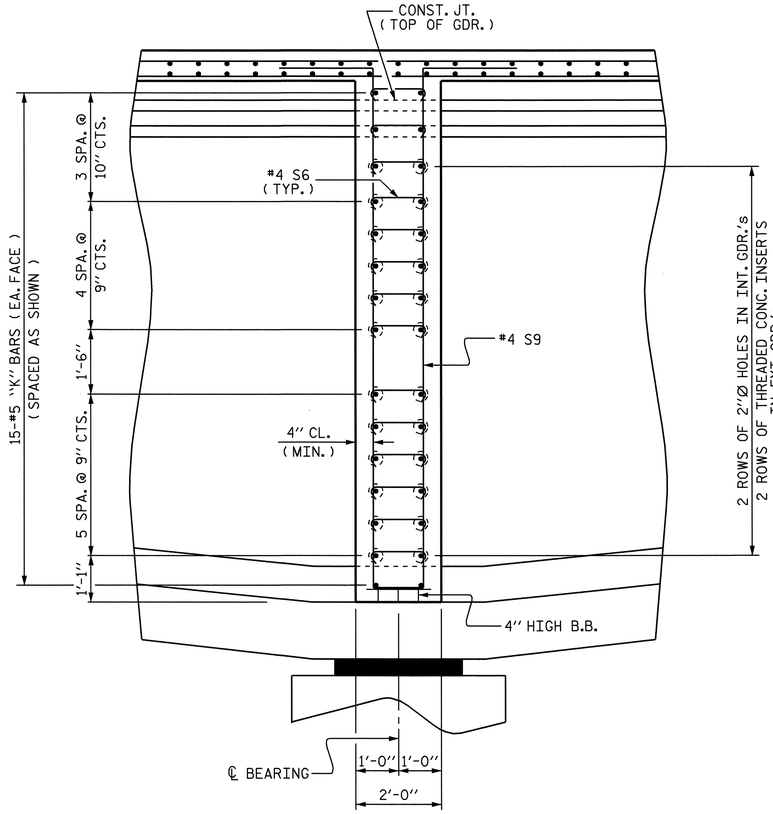

SECTION F-F

ELASTOMERIC CONCRETE	
BENT No.	ELASTOMERIC CONCRETE * (CU. FT.)
1	11.3
4	11.3
TOTAL	22.6

* BASED ON THE MINIMUM BLOCKOUT SHOWN.

FOR EVAZOTE JOINT SEALS, SEE SPECIAL PROVISIONS.

THE NOMINAL UNCOMPRESSED SEAL WIDTH OF THE EVAZOTE JOINT SEAL SHALL BE 3 7/16".

FOR ELASTOMERIC CONCRETE, SEE SPECIAL PROVISIONS.

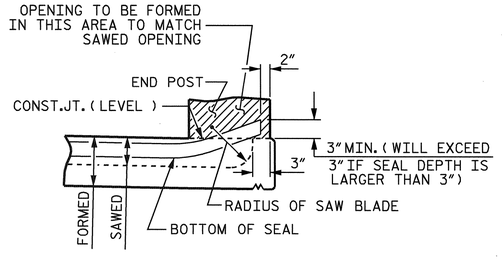

SECTION THRU PARAPET

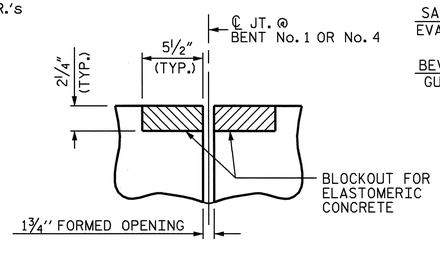

SECTION THRU JT.

EVAZOTE JOINT SEAL
(PRE-SAWED ELASTOMERIC CONCRETE DIMENSIONS)

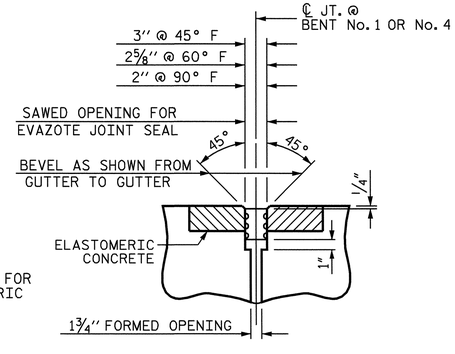

SECTION THRU JT.

EVAZOTE JOINT SEAL
(EXPANSION)

SECTION THRU JOINT @ BENTS No. 1 & No. 4

PROJECT NO. R-2245

BRUNSWICK COUNTY

STATION: 58+00.00 -L-

SHEET 4 OF 4

STATE OF NORTH CAROLINA
DEPARTMENT OF TRANSPORTATION
RALEIGH

SUPERSTRUCTURE

TYPICAL SECTION DETAILS FOR SPANS B THRU D

REVISIONS						SHEET NO.
NO.	BY:	DATE:	NO.	BY:	DATE:	S-37
1			3			TOTAL SHEETS
2			4			98

DRAWN BY : MIKE BRITT DATE : 5-30-06
CHECKED BY : B.C. HANKS DATE : 9-7-06

11-OCT-2006 12:04
S:\PGS\R-2245 Oak Island\Final Plans\R2245_sd_TS_spans B and D.dgn
rmartin

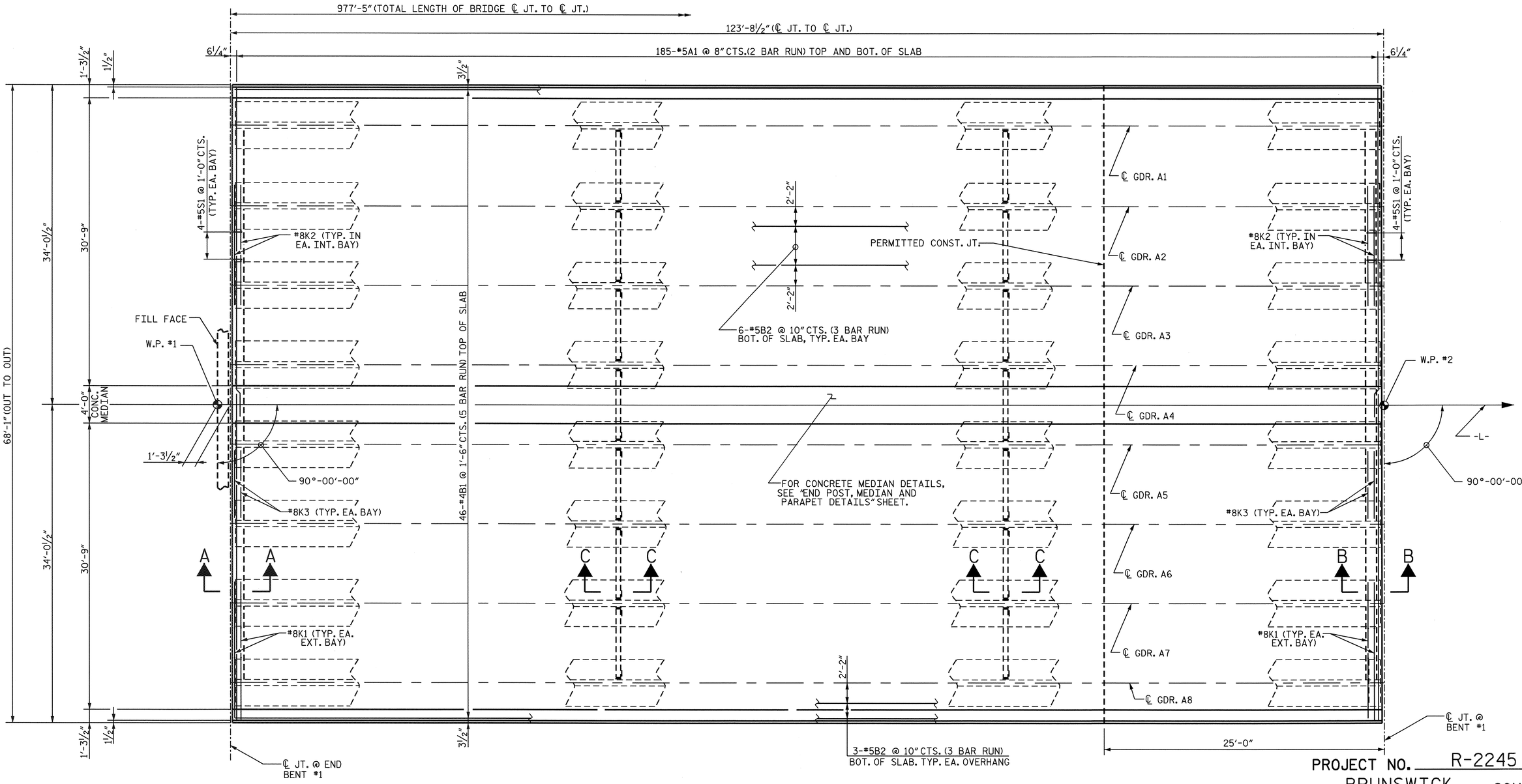

PLAN OF SPAN A

FOR SECTION VIEWS, SEE "TYPICAL SECTION AND DETAILS FOR SPANS A AND E"

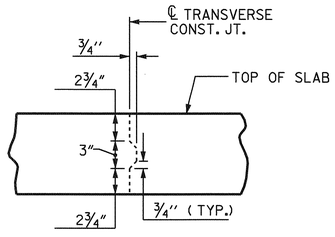

TRANSVERSE CONSTRUCTION JOINT DETAIL

NOTE: REINFORCING STEEL IN SLAB NOT SHOWN. LONGITUDINAL REINFORCING STEEL SHALL BE CONTINUOUS THRU JOINT

PROJECT NO. R-2245

BRUNSWICK COUNTY

STATION: 58+00.00 -L-

SHEET 1 OF 5

STATE OF NORTH CAROLINA
DEPARTMENT OF TRANSPORTATION
RALEIGH

SUPERSTRUCTURE

PLAN OF SPAN A

NORTH CAROLINA PROFESSIONAL SEAL 23926 ENGINEER BRIAN C. HANKS
1/16/07

REVISIONS						SHEET NO.
NO.	BY:	DATE:	NO.	BY:	DATE:	S-38
1			3			TOTAL SHEETS
2			4			98

DRAWN BY : R. D. MARTIN DATE : 6/06
CHECKED BY : B. C. HANKS DATE : 9/6/06

11-OCT-2006 11:58
S:\PGS\R-2245 Oak Island\Final Plans\R2245_sd_PS_spans A and E.dgn
rmartin

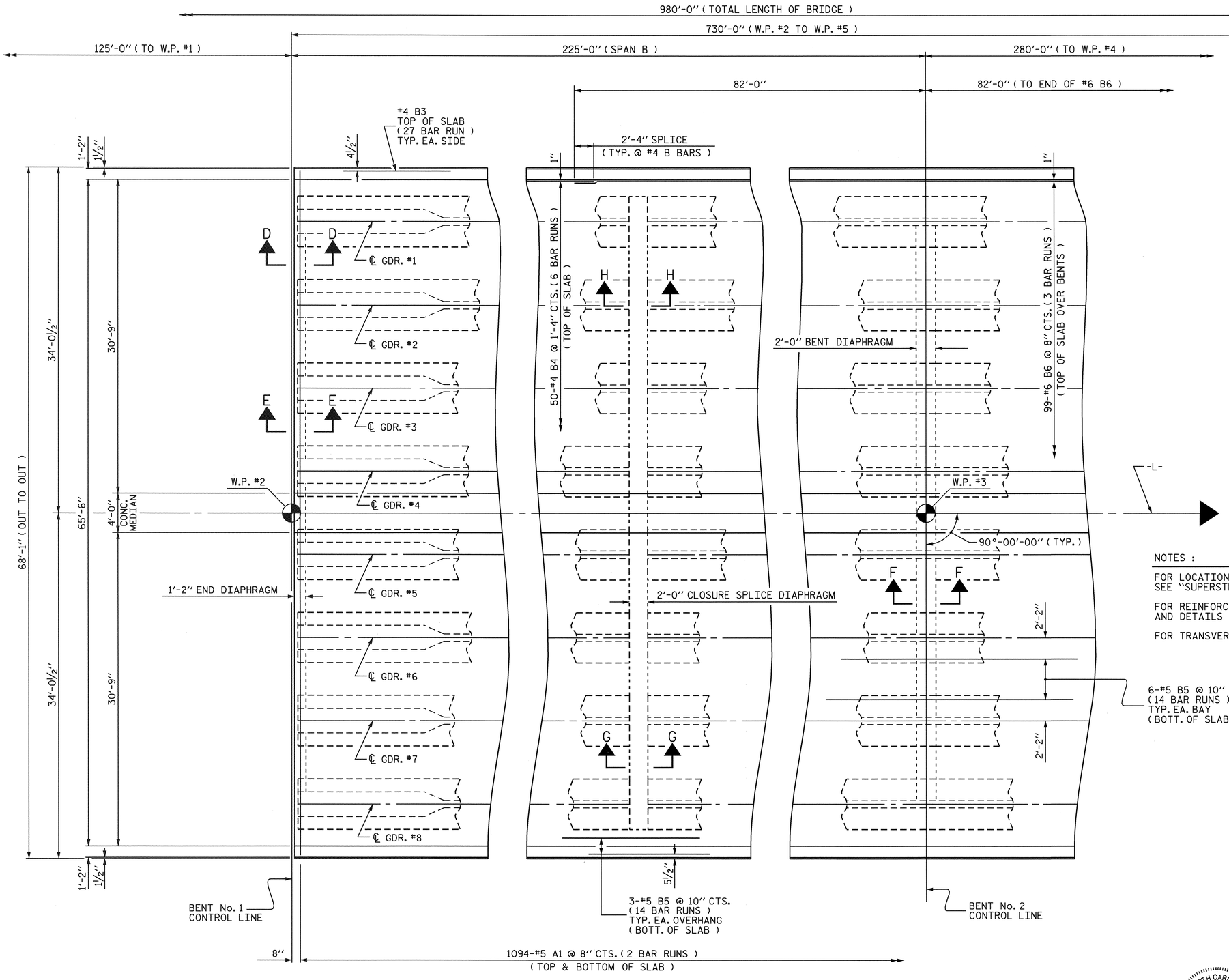

PLAN OF SPAN B

FOR SECTION VIEWS, SEE "TYPICAL SECTION AND DETAILS FOR SPANS B THRU D" SHEETS 2 OF 4 & 4 OF 4

NOTES :

FOR LOCATION OF TRANSVERSE CONSTRUCTION JOINTS, SEE "SUPERSTRUCTURE - BILL OF MATERIAL" SHEET.

FOR REINFORCING IN DIAPHRAGMS, SEE "TYPICAL SECTION AND DETAILS FOR SPANS B THRU D" SHEETS.

FOR TRANSVERSE CONSTRUCTION JOINT DETAIL, SEE SHEET 1 OF 5.

PROJECT NO. R-2245

BRUNSWICK COUNTY

STATION: 58+00.00 -L-

SHEET 2 OF 5

STATE OF NORTH CAROLINA
DEPARTMENT OF TRANSPORTATION
RALEIGH

SUPERSTRUCTURE

PLAN OF SPAN B

NORTH CAROLINA PROFESSIONAL SEAL 23926 ENGINEER BRIAN C. HANKS

1/18/07

REVISIONS						SHEET NO.
NO.	BY:	DATE:	NO.	BY:	DATE:	S-39
1			3			TOTAL SHEETS
2			4			98

DRAWN BY : MIKE BRITT DATE : 6-28-06
CHECKED BY : B.C. HANKS DATE : 9-7-06

11-OCT-2006 11:59
S:\PGS\R-2245 Oak Island\Final Plans\R2245_sd_PS_spans B thru D.dgn
rmartin

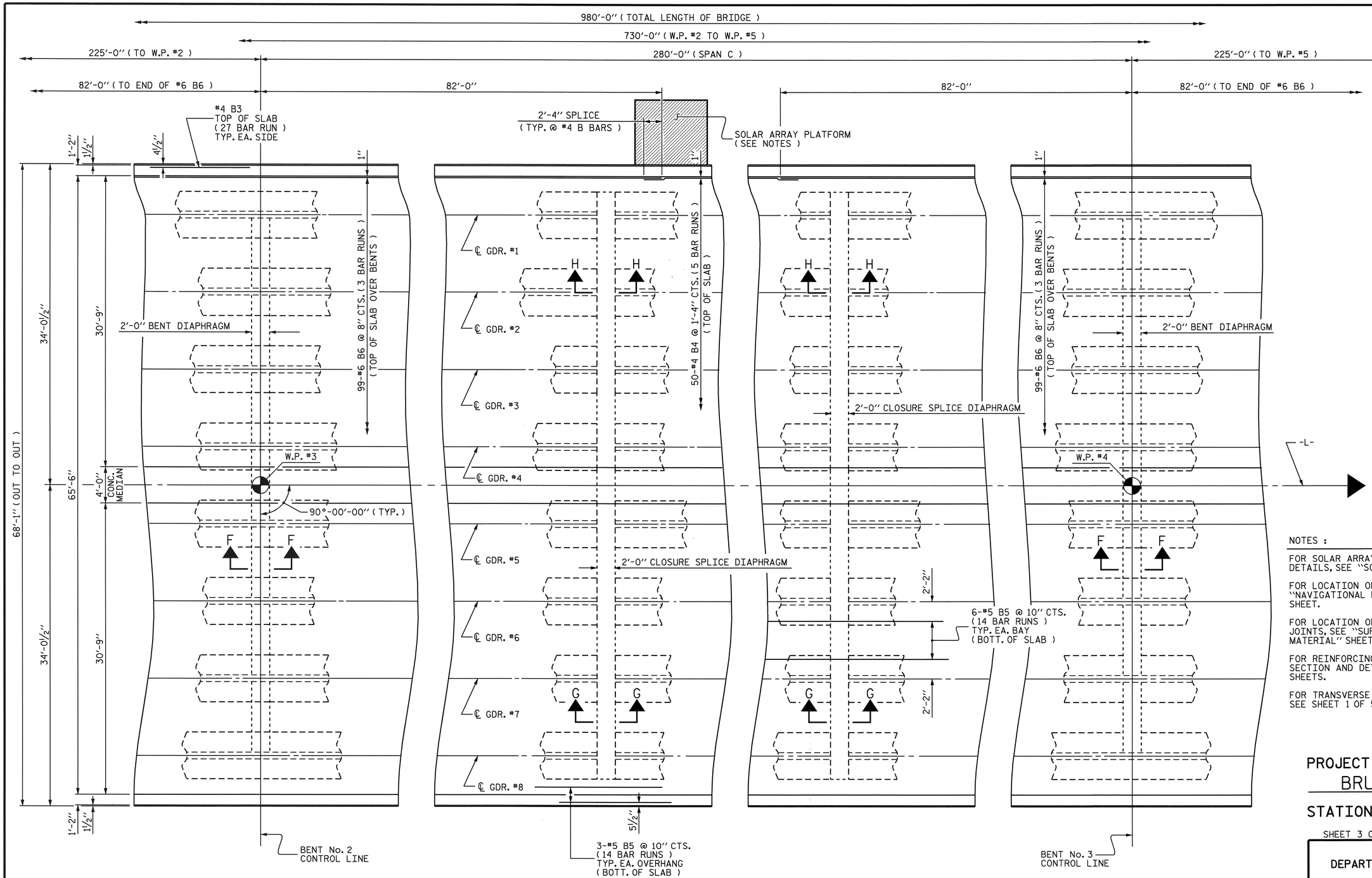

PLAN OF SPAN C

FOR SECTION VIEWS, SEE "TYPICAL SECTION AND DETAILS FOR SPANS B THRU D" SHEETS 2 OF 4 & 4 OF 4

NOTES :

FOR SOLAR ARRAY PLATFORM LOCATION AND DETAILS, SEE "SOLAR ARRAY PLATFORM" SHEET.

FOR LOCATION OF 1"Ø RIGID CONDUIT, SEE "NAVIGATIONAL LIGHTING AND CONDUIT SYSTEM" SHEET.

FOR LOCATION OF TRANSVERSE CONSTRUCTION JOINTS, SEE "SUPERSTRUCTURE - BILL OF MATERIAL" SHEET.

FOR REINFORCING IN DIAPHRAGMS, SEE "TYPICAL SECTION AND DETAILS FOR SPANS B THRU D" SHEETS.

FOR TRANSVERSE CONSTRUCTION JOINT DETAIL, SEE SHEET 1 OF 5.

PROJECT NO. R-2245

BRUNSWICK COUNTY

STATION: 58+00.00 -L-

SHEET 3 OF 5

STATE OF NORTH CAROLINA
DEPARTMENT OF TRANSPORTATION
RALEIGH

SUPERSTRUCTURE

PLAN OF SPAN C

REVISIONS						SHEET NO.
NO.	BY:	DATE:	NO.	BY:	DATE:	S-40
1			3			TOTAL SHEETS
2			4			98

NORTH CAROLINA PROFESSIONAL SEAL 23926 ENGINEER BRIAN C. HANKS

1/16/07

DRAWN BY : MIKE BRITT DATE : 6-29-06
CHECKED BY : B.C. HANKS DATE : 9-7-06

11-OCT-2006 12:00
S:\PG3\R-2245 Oak Island\Final Plans\R2245_sd_PS_spans B thru D.dgn
rmartin

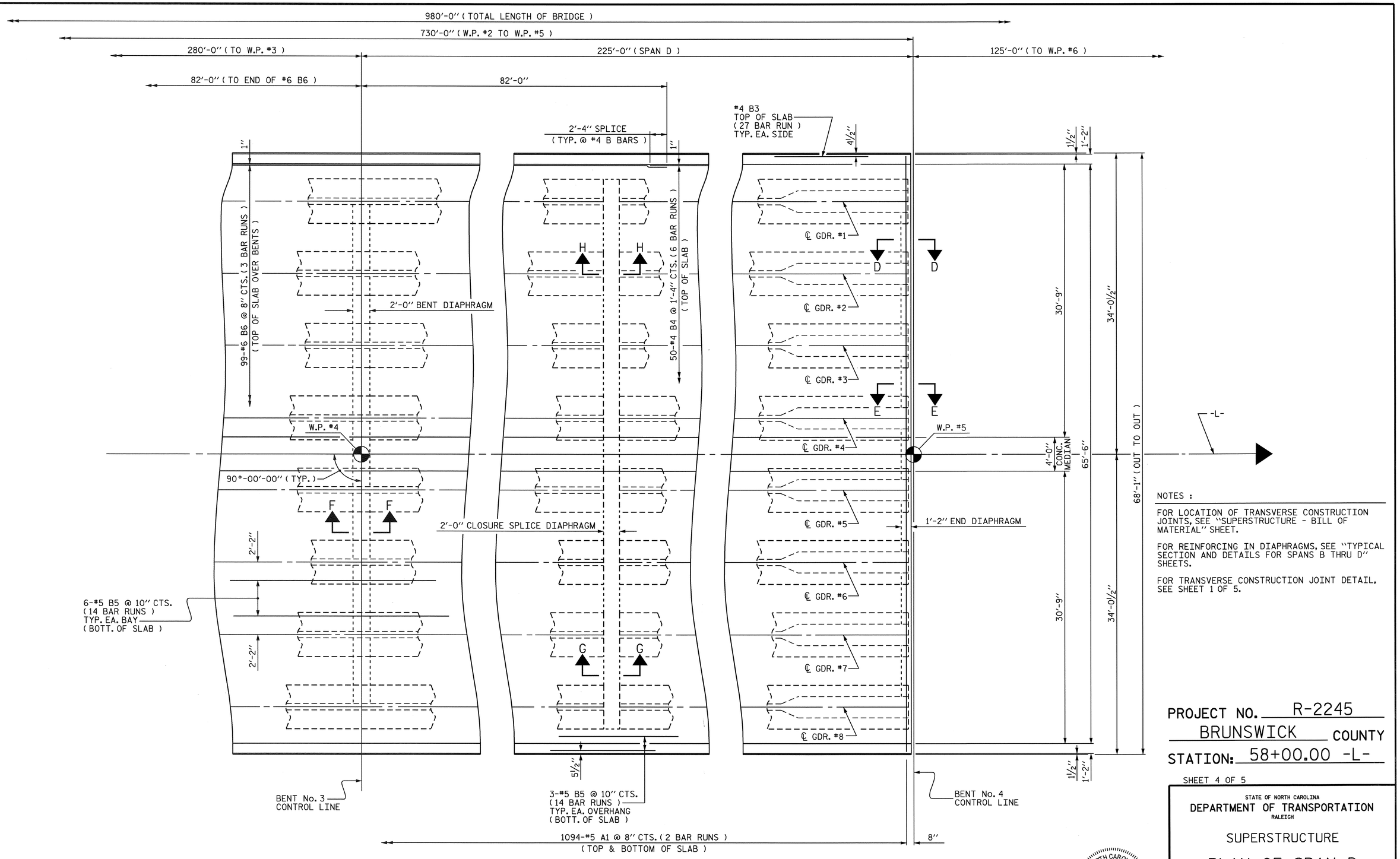

PLAN OF SPAN D

FOR SECTION VIEWS, SEE "TYPICAL SECTION AND DETAILS FOR SPANS B THRU D" SHEETS 2 OF 4 & 4 OF 4

NOTES :

FOR LOCATION OF TRANSVERSE CONSTRUCTION JOINTS, SEE "SUPERSTRUCTURE - BILL OF MATERIAL" SHEET.

FOR REINFORCING IN DIAPHRAGMS, SEE "TYPICAL SECTION AND DETAILS FOR SPANS B THRU D" SHEETS.

FOR TRANSVERSE CONSTRUCTION JOINT DETAIL, SEE SHEET 1 OF 5.

PROJECT NO. R-2245

BRUNSWICK COUNTY

STATION: 58+00.00 -L-

SHEET 4 OF 5

STATE OF NORTH CAROLINA
DEPARTMENT OF TRANSPORTATION
RALEIGH

SUPERSTRUCTURE

PLAN OF SPAN D

REVISIONS						SHEET NO.
NO.	BY:	DATE:	NO.	BY:	DATE:	S-41
1			3			TOTAL SHEETS
2			4			98

NORTH CAROLINA PROFESSIONAL SEAL 23926 ENGINEER BRIAN C. HANKS
1/16/07

DRAWN BY : MIKE BRITT DATE : 6-28-06
CHECKED BY : B.C. HANKS DATE : 9-7-06

11-OCT-2006 12:00
S:\PG3\R-2245 Oak Island\Final Plans\R2245_sd_PS_spans B thru D.dgn
rmartin

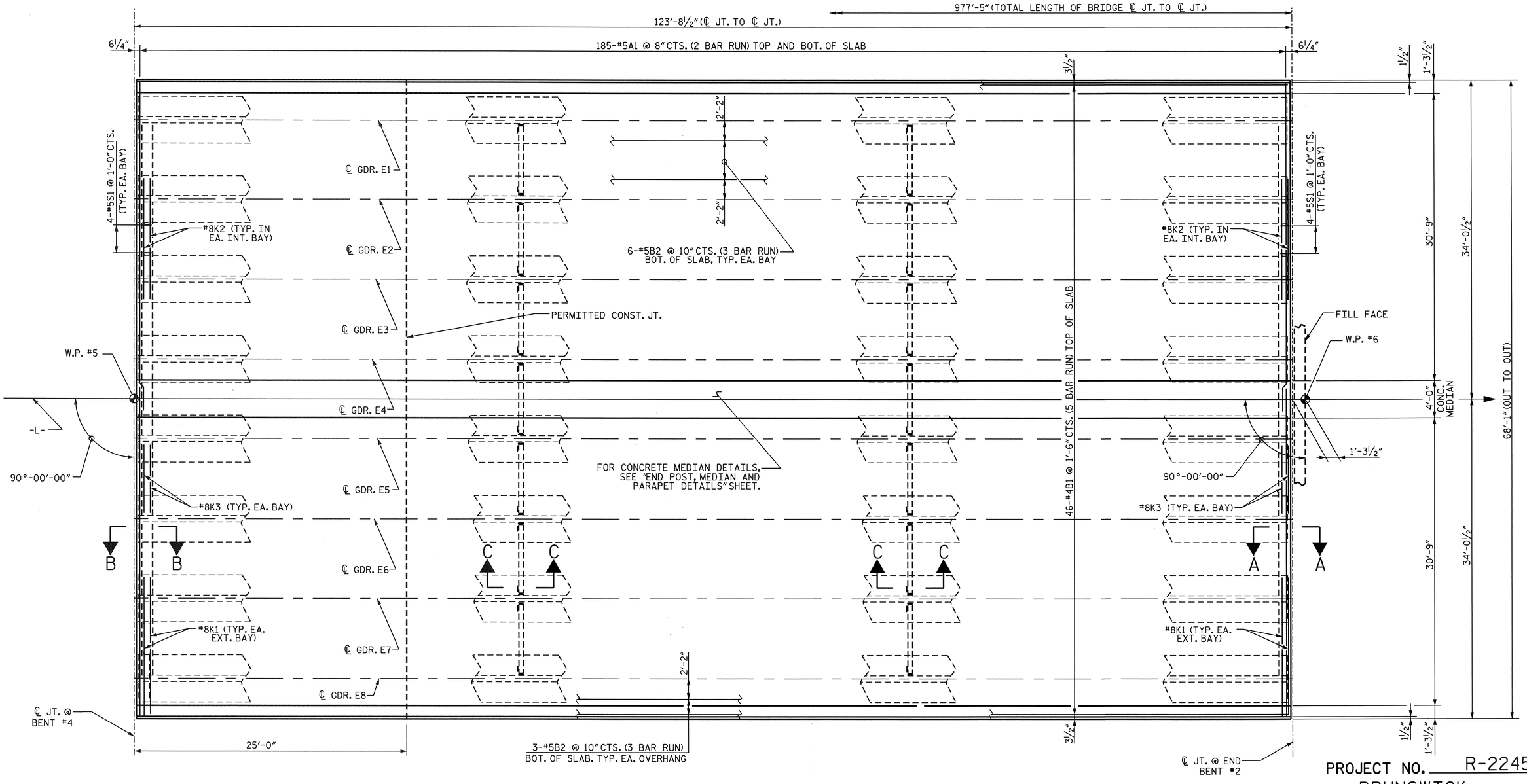

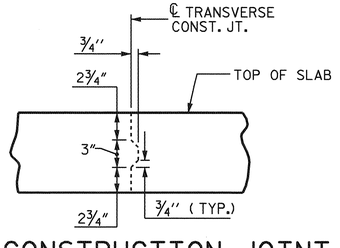

TRANSVERSE CONSTRUCTION JOINT DETAIL

NOTE: REINFORCING STEEL IN SLAB NOT SHOWN. LONGITUDINAL REINFORCING STEEL SHALL BE CONTINUOUS THRU JOINT

PLAN OF SPAN E

FOR SECTION VIEWS, SEE "TYPICAL SECTION AND DETAILS FOR SPANS A AND E"

PROJECT NO. R-2245

BRUNSWICK COUNTY

STATION: 58+00.00 -L-

SHEET 5 OF 5

STATE OF NORTH CAROLINA
DEPARTMENT OF TRANSPORTATION
RALEIGH

SUPERSTRUCTURE

PLAN OF SPAN E

NORTH CAROLINA PROFESSIONAL SEAL 23926 ENGINEER BRIAN C. HANKS

1/18/07

REVISIONS						SHEET NO.
NO.	BY:	DATE:	NO.	BY:	DATE:	S-42
1			3			TOTAL SHEETS
2			4			98

DRAWN BY : R. D. MARTIN DATE : 6/06
CHECKED BY : B. C. HANKS DATE : 9/6/06

11-OCT-2006 11:59
S:\PGS\R-2245 Oak Island\Final Plans\R2245_sd_PS_spans A and E.dgn
rmartin

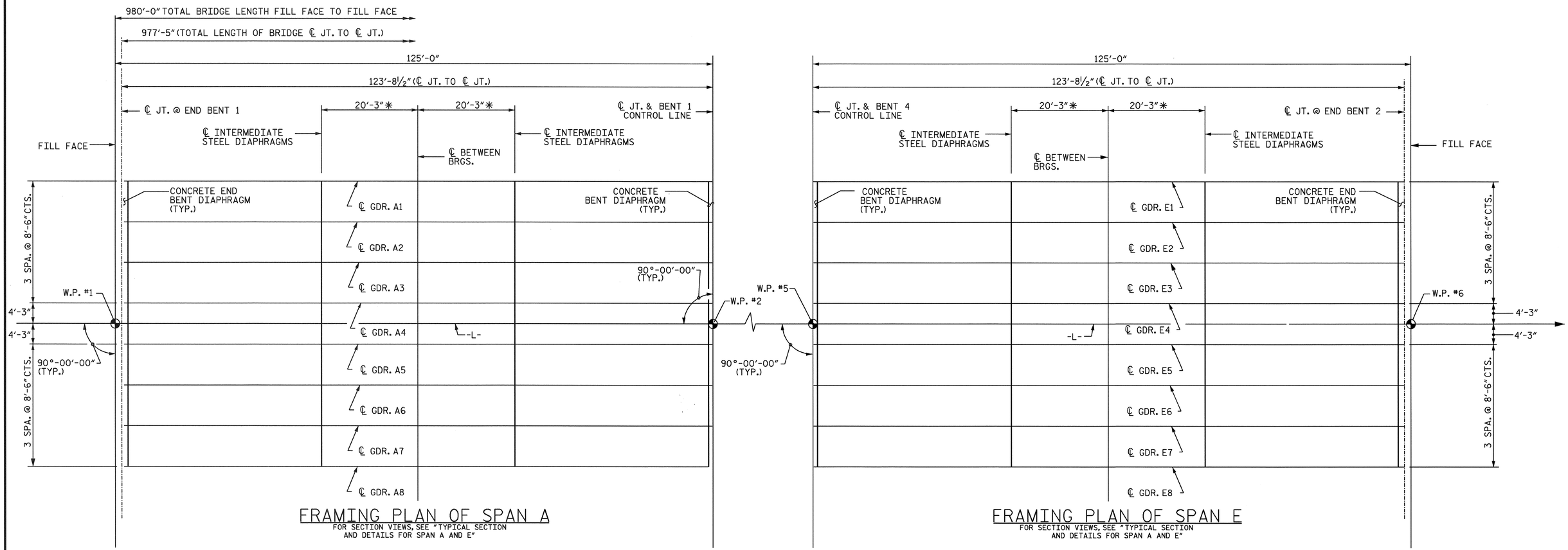

FRAMING PLAN OF SPAN A

FOR SECTION VIEWS, SEE "TYPICAL SECTION AND DETAILS FOR SPAN A AND E"

FRAMING PLAN OF SPAN E

FOR SECTION VIEWS, SEE "TYPICAL SECTION AND DETAILS FOR SPAN A AND E"

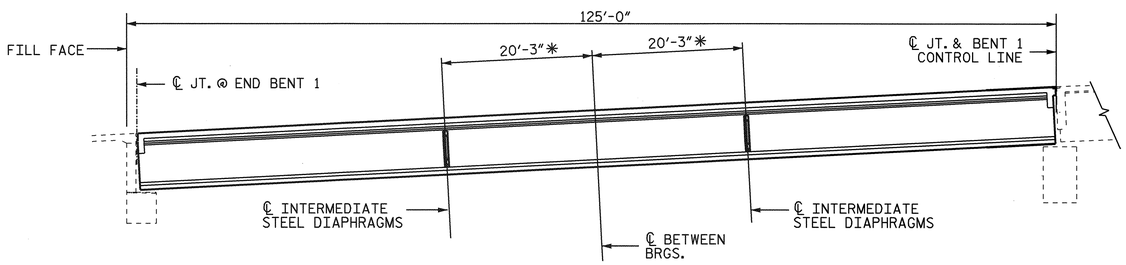

SPAN A

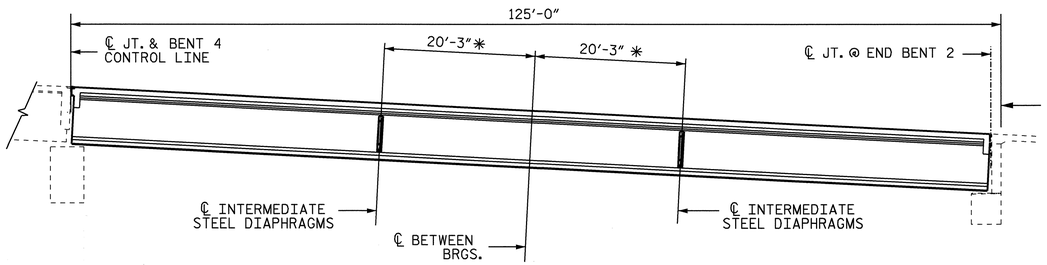

SPAN E

PROJECT NO. R-2245

BRUNSWICK **COUNTY**

STATION: 58+00.00 -L-

SHEET 1 OF 4

NOTE

ALL DIMENSIONS GIVEN ON THE FRAMING PLAN ARE HORIZONTAL UNLESS OTHERWISE NOTED.

* DIMENSION MEASURED ALONG GIRDER

NORTH CAROLINA PROFESSIONAL SEAL 23926 ENGINEER BRIAN C. HANKS
1/18/07

STATE OF NORTH CAROLINA
DEPARTMENT OF TRANSPORTATION
RALEIGH

FRAMING PLAN

REVISIONS						SHEET NO.
NO.	BY:	DATE:	NO.	BY:	DATE:	S-43
1			3			TOTAL SHEETS
2			4			98

DRAWN BY : H. A. LUCAS DATE : 9/18/06
CHECKED BY : W. D. CRUTCHER DATE : 9/26/06

02-NOV-2006 08:56
S:\P03\R-2245 Oak Island\Final Plans\R2245_sd_FP.dgn
bhanks

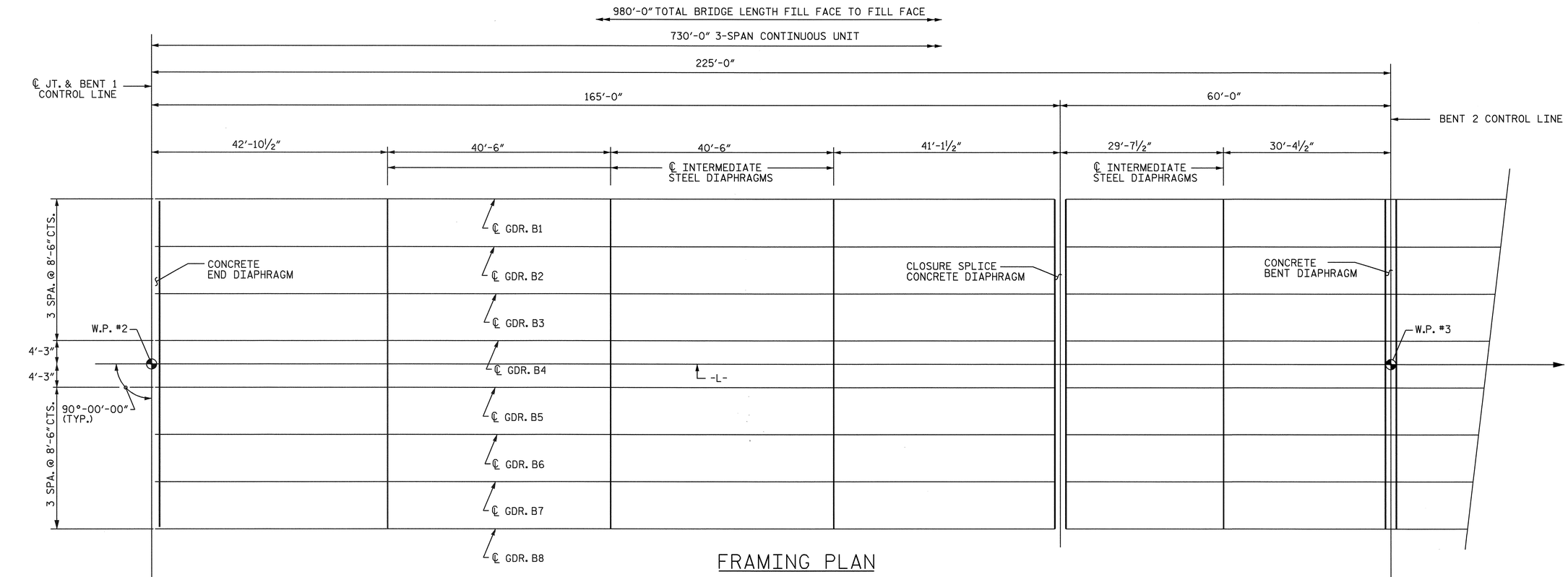

FRAMING PLAN

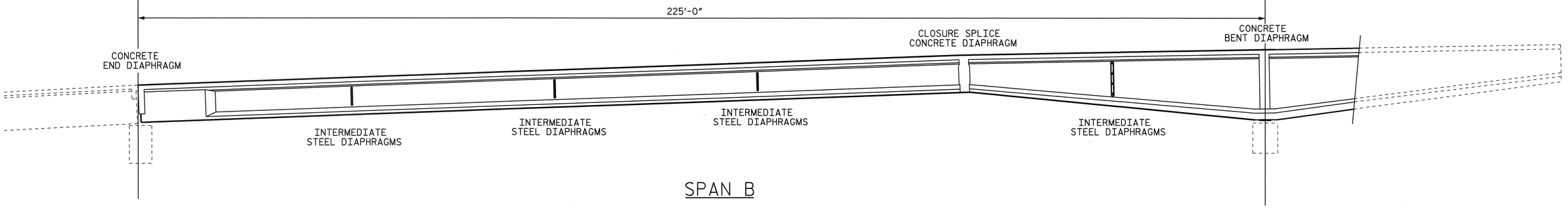

SPAN B

NOTE

ALL DIMENSIONS GIVEN ON THE FRAMING PLAN ARE HORIZONTAL.

NORTH CAROLINA PROFESSIONAL SEAL 23926 ENGINEER BRIAN C. HANKS
1/18/07

PROJECT NO. R-2245
BRUNSWICK **COUNTY**
STATION: 58+00.00 -L-

SHEET 2 OF 4

STATE OF NORTH CAROLINA
DEPARTMENT OF TRANSPORTATION
RALEIGH

FRAMING PLAN

REVISIONS						SHEET NO.
NO.	BY:	DATE:	NO.	BY:	DATE:	S-44
1			3			TOTAL SHEETS
2			4			98

DRAWN BY : H. A. LUCAS DATE : 9/18/06
CHECKED BY : W. D. CRUTCHER DATE : 9/26/06

17-JAN-2007 09:58
S:\PGS\R-2245 Oak Island\Final Plans\R2245_sd_FP.dgn
bhanks

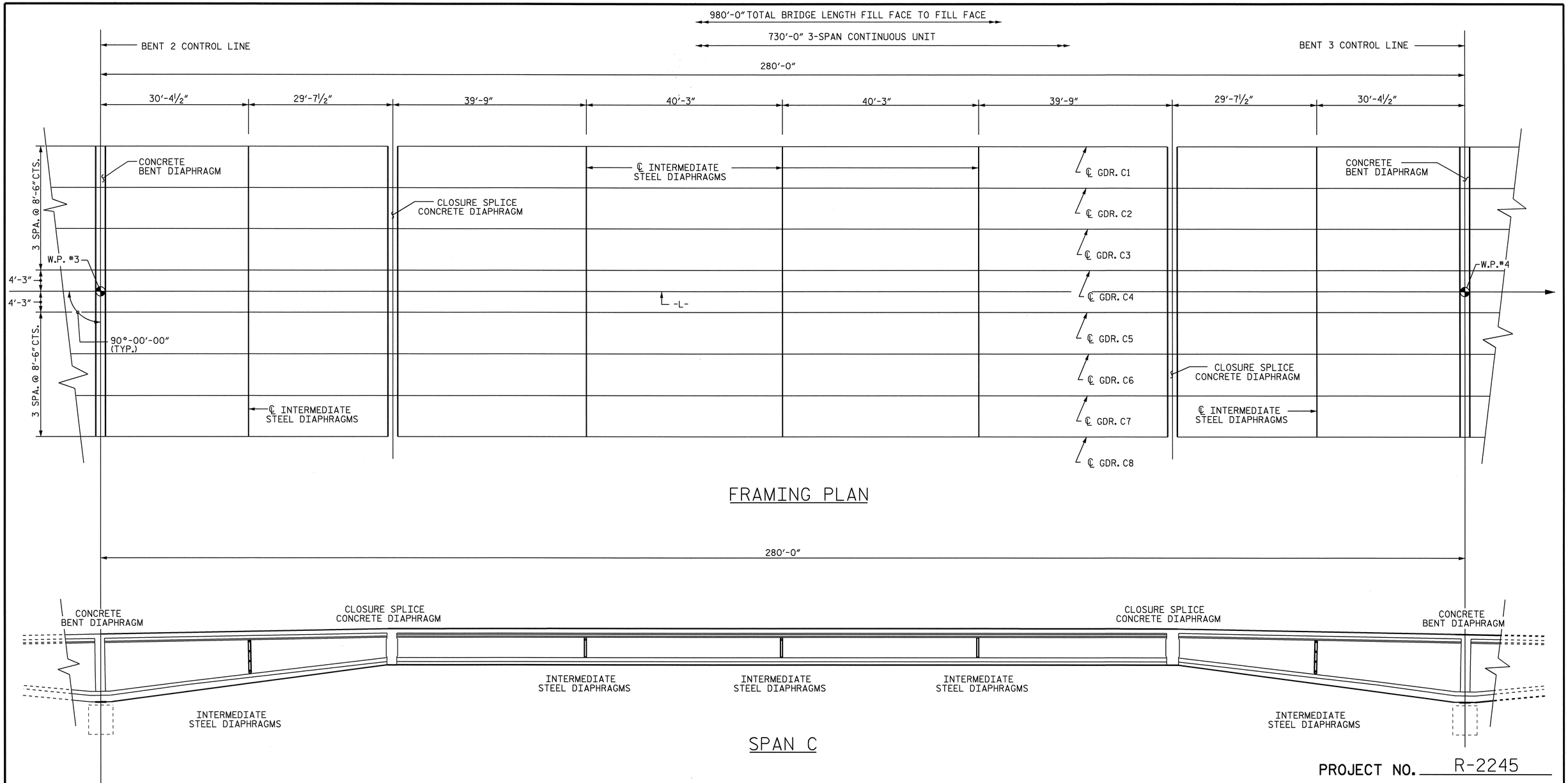

FRAMING PLAN

SPAN C

PROJECT NO. R-2245

BRUNSWICK **COUNTY**

STATION: 58+00.00 -L-

SHEET 3 OF 4

NOTE

ALL DIMENSIONS GIVEN ON THE FRAMING PLAN ARE HORIZONTAL.

NORTH CAROLINA PROFESSIONAL SEAL 23926 ENGINEER BRIAN C. HAWKS

1/18/07

STATE OF NORTH CAROLINA
DEPARTMENT OF TRANSPORTATION
RALEIGH

FRAMING PLAN

REVISIONS						SHEET NO.
NO.	BY:	DATE:	NO.	BY:	DATE:	S-45
1			3			TOTAL SHEETS
2			4			98

DRAWN BY : H. A. LUCAS DATE : 9/18/06
CHECKED BY : W. D. CRUTCHER DATE : 9/26/06

17-JAN-2007 09:58
S:\PGS\R-2245 Oak Island\Final Plans\R2245_sd_FP.dgn
bhanks

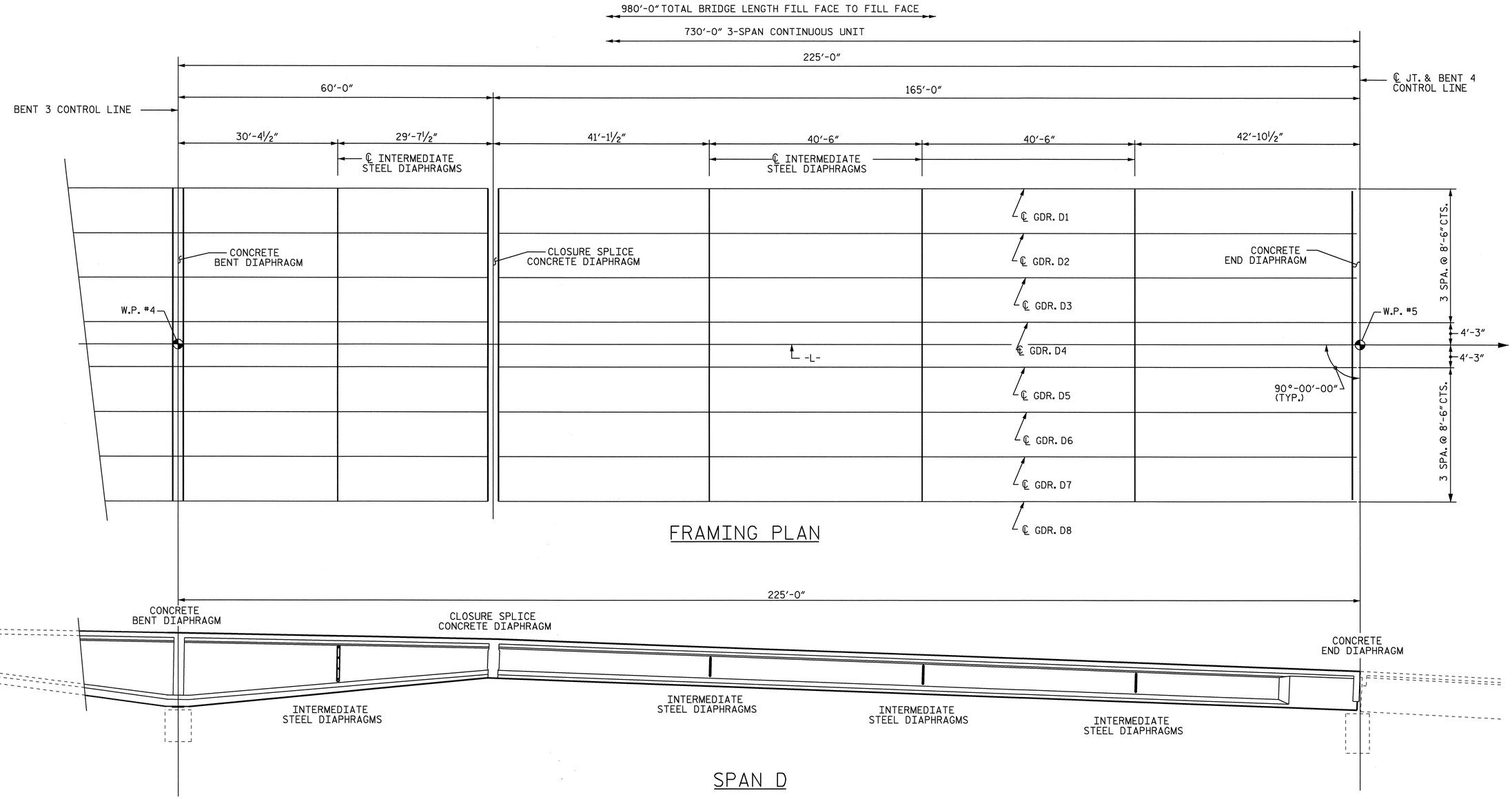

FRAMING PLAN

SPAN D

NOTE

ALL DIMENSIONS GIVEN ON THE FRAMING PLAN ARE HORIZONTAL.

PROJECT NO. R-2245

BRUNSWICK COUNTY

STATION: 58+00.00 -L-

SHEET 4 OF 4

STATE OF NORTH CAROLINA
DEPARTMENT OF TRANSPORTATION
RALEIGH

FRAMING PLAN

NORTH CAROLINA PROFESSIONAL SEAL 23926 ENGINEER BRIAN C. HANKS
1/18/07

REVISIONS						SHEET NO.
NO.	BY:	DATE:	NO.	BY:	DATE:	S-46
1			3			TOTAL SHEETS
2			4			98

DRAWN BY : H. A. LUCAS DATE : 9/18/06
CHECKED BY : W. D. CRUTCHER DATE : 9/26/06

17-JAN-2007 09:58
S:\PGS\R-2245 Oak Island\Final Plans\R2245_sd_FP.dgn
bhanks

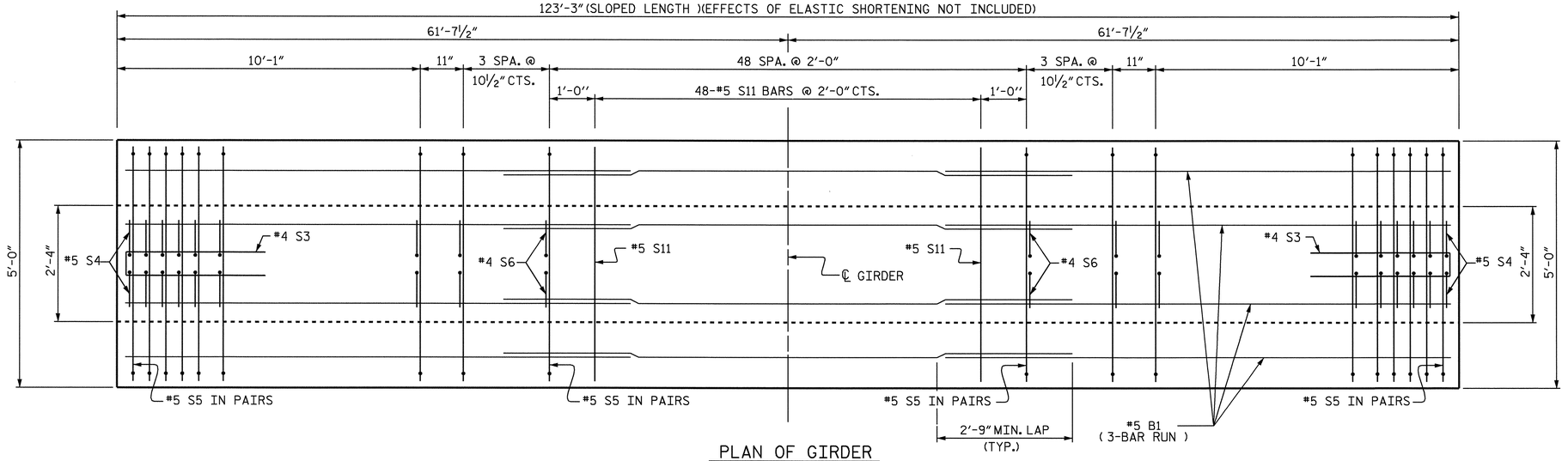

PLAN OF GIRDER

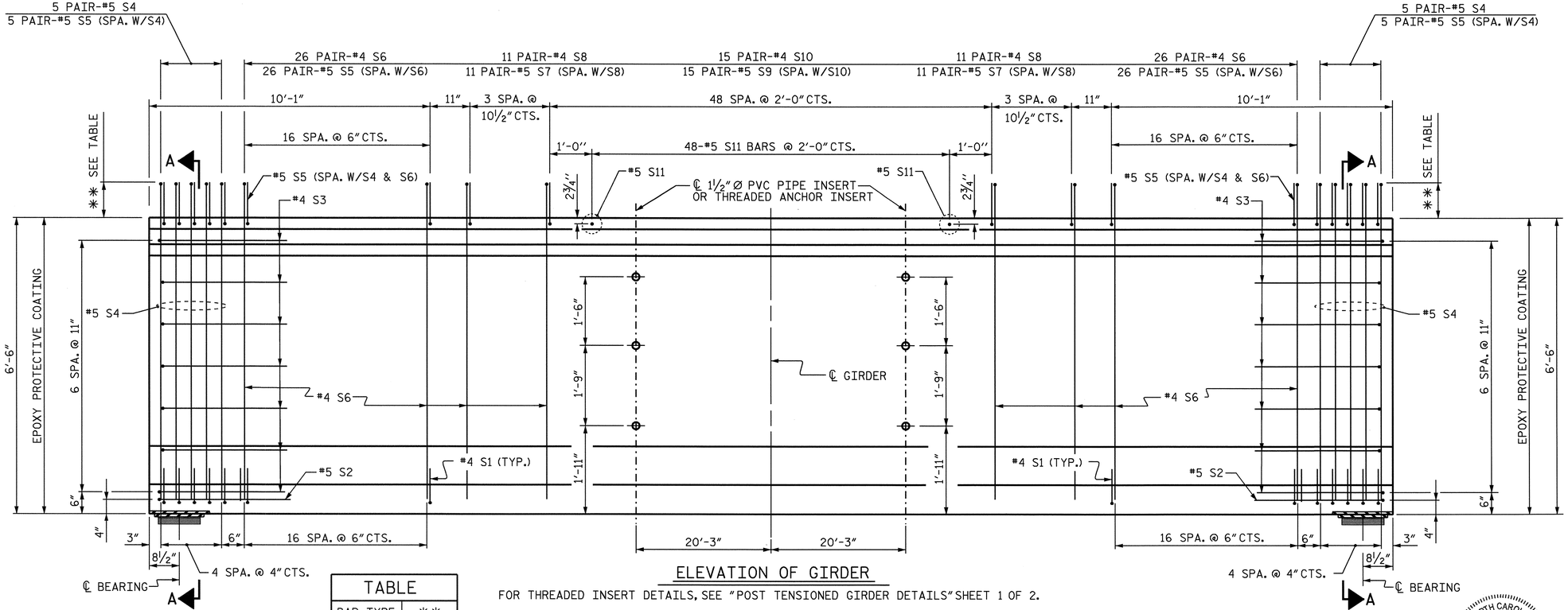

ELEVATION OF GIRDER

TABLE	
BAR TYPE	**
S4 & S5	8"
S6 & S5	8"
S8 & S7	7"
S10 & S9	6"

FOR THREADED INSERT DETAILS, SEE "POST TENSIONED GIRDER DETAILS" SHEET 1 OF 2.

FOR REINFORCING STEEL AROUND 1½" Ø PVC PIPE INSERT, SEE "POST TENSIONED GIRDER DETAILS" SHEET 1 OF 2.

USE THREADED INSERTS ON EXTERIOR GIRDERS AND PVC PIPE INSERTS ON INTERIOR GIRDERS.

0.6" Ø L. R. GRADE 270 STRANDS		
AREA (SQUARE INCHES)	ULTIMATE STRENGTH (LBS. PER STRAND)	APPLIED PRESTRESS (LBS. PER STRAND)
0.217	58,600	43,950

REINFORCING STEEL FOR ONE GIRDER

BAR	NUMBER	SIZE	TYPE	LENGTH	WEIGHT
B1	12	#5	STR	42'-10"	536
S1	88	#4	1	3'-8"	216
S2	2	#5	2	10'-7"	22
S3	14	#4	2	9'-1"	85
S4	20	#5	3	7'-5"	155
S5	124	#5	4	4'-10"	625
S6	104	#4	3	7'-3"	504
S7	44	#5	4	4'-9"	218
S8	44	#4	3	7'-2"	211
S9	30	#5	4	4'-8"	146
S10	30	#4	3	7'-1"	142
S11	48	#5	STR	4'-6'	225

BAR TYPES

ALL BAR DIMENSIONS ARE OUT-TO-OUT

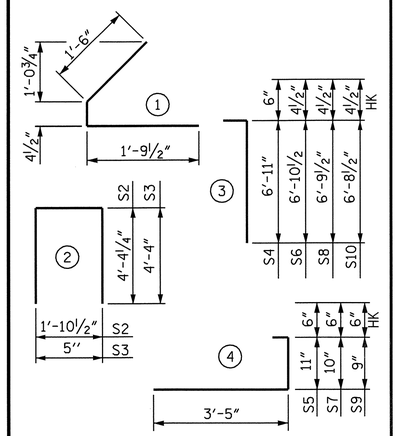

QUANTITIES FOR ONE GIRDER

	REINFORCING STEEL	7500 PSI CONCRETE	0.6" Ø L.R. STRANDS
	LB.	C.Y.	No.
	3085	34.9	48

GIRDERS REQUIRED

NUMBER	LENGTH	TOTAL LENGTH
16	123'-3"	1972.00'

PROJECT NO. R-2245

BRUNSWICK COUNTY

STATION: 58+00.00 -L-

SHEET 1 OF 2

STATE OF NORTH CAROLINA
DEPARTMENT OF TRANSPORTATION
RALEIGH

SUPERSTRUCTURE

78" PRESTRESSED CONCRETE BULB TEE

SPAN A & SPAN E

NORTH CAROLINA PROFESSIONAL SEAL 23926 ENGINEER BRIAN C. HANKS
1/18/07

REVISIONS					
NO.	BY:	DATE:	NO.	BY:	DATE:
1			3		
2			4		

SHEET NO. S-47

TOTAL SHEETS 98

DRAWN BY : R. D. MARTIN DATE : 6/06
CHECKED BY : B. C. HANKS DATE : 9/20/06

03-NOV-2006 07:44
S:\PDS\R-2245 Oak Island\Final Plans\R2245_sd_G*_spans A and E.dgn
bhanks

TABLE	
BAR TYPE	**
S4 & S5	8"
S6 & S5	8"
S8 & S7	7"
S10 & S9	6"

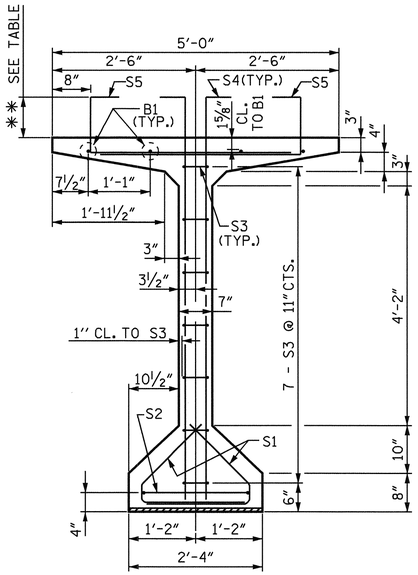

SECTION A-A

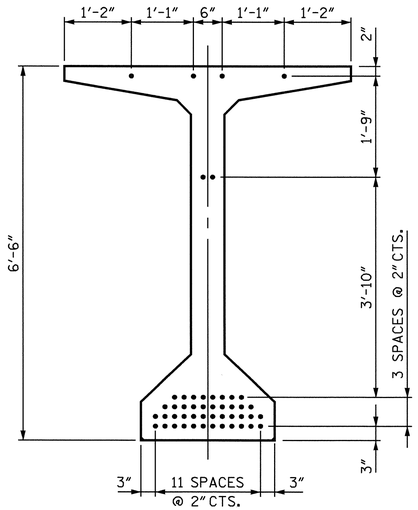

0.6" Ø LOW RELAXATION STRAND LAYOUT

48 STRANDS
(ALL STRAIGHT)

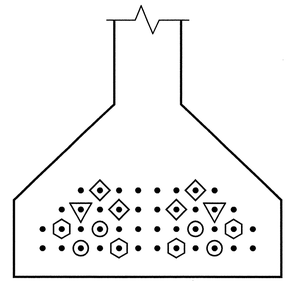

DEBONDING LENGTHS
8'-8"
10'-8"
12'-8"
14'-8"
• FULLY BONDED STRANDS

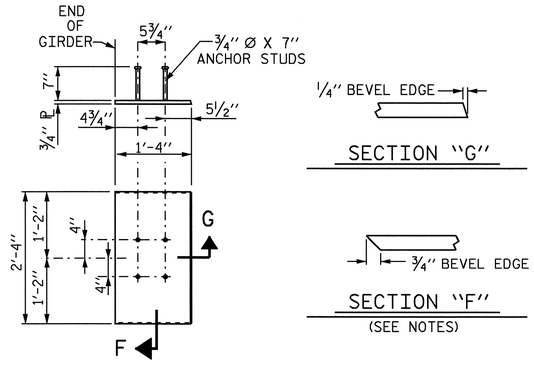

EMBEDDED PLATE "B-1" DETAILS

(2 REQ'D PER GIRDER)

NOTES

ALL PRESTRESSING STRANDS SHALL BE 7-WIRE LOW-RELAXATION GRADE 270 STRANDS AND SHALL CONFORM TO AASHTO M203 EXCEPT FOR SAMPLING REQUIREMENTS WHICH SHALL BE IN ACCORDANCE WITH THE STANDARD SPECIFICATIONS.

ALL REINFORCING STEEL SHALL BE GRADE 60.

APPLY EPOXY PROTECTIVE COATING TO END OF GIRDER SURFACES INDICATED IN ELEVATION VIEW.

EMBEDDED PLATE "B-1" SHALL BE GALVANIZED IN ACCORDANCE WITH THE STANDARD SPECIFICATIONS. BEVEL EDGES OF PLATE "B-1" TO GIVE CLOSE FIT BUT NOT TIGHT FIT TO STEEL CASTING FORM.

ANCHOR STUDS SHALL CONFORM TO AASHTO M169 GRADES 1010 THROUGH 1020 OR APPROVED EQUAL, AND SHALL MEET THE TYPE "B" REQUIREMENTS OF SUBSECTION 7.3 OF THE ANSI/AASHTO/AWS D1.5 BRIDGE WELDING CODE.

AT ENDS OF GIRDERS TO BE EMBEDDED IN CONCRETE DIAPHRAGMS OR END WALLS, PRESTRESSING STRANDS MAY EXTEND A MAXIMUM OF 2" BEYOND THE GIRDER ENDS. OTHERWISE, PRESTRESSING STRANDS SHALL BE CUT FLUSH WITH THE GIRDER ENDS.

THE TRANSFER OF LOAD FROM THE ANCHORAGES TO THE GIRDER SHALL BE DONE WHEN CONCRETE HAS REACHED A COMPRESSIVE STRENGTH OF NOT LESS THAN 6000 PSI.

DEPENDING ON THE TYPE OF SYSTEM USED TO SUPPORT THE DECK SLAB FORMS, PRESET ANCHORS MAY BE NECESSARY IN THE PRESTRESSED CONCRETE GIRDER.

THE TOP SURFACE OF THE GIRDER, EXCLUDING THE OUTSIDE 4", SHALL BE RAKED TO A DEPTH OF ¼".

PRESTRESSED CONCRETE GIRDERS ARE DESIGNED FOR 0 PSI TENSION IN THE PRECOMPRESSED TENSILE ZONE UNDER ALL LOADING CONDITIONS,

FOR CRACK REPAIR OF PRESTRESSED GIRDERS, SEE SPECIAL PROVISIONS.

PRESTRESSED CONCRETE GIRDERS SHALL CONTAIN CALCIUM NITRITE CORROSION INHIBITOR.

THE COST OF ALL CONCRETE, REINFORCING STEEL, PRESTRESSED STRANDS, INSERTS EMBEDDED IN THE CONCRETE, EMBEDDED PLATES, TEMPORARY BRACING AND INCIDENTAL ITEMS SHALL BE INCLUDED IN THE CONTRACT UNIT PRICE FOR "78" PRESTRESSED CONCRETE GIRDERS".

FOR 78" PRESTRESSED CONCRETE GIRDERS, SEE SPECIAL PROVISIONS.

THE CONTRACTOR IS RESPONSIBLE FOR THE INTEGRITY AND STABILITY OF THE GIRDERS. IN HANDLING THE 78" PRESTRESSED CONCRETE GIRDERS, THEY SHALL BE MAINTAINED IN AN UPRIGHT POSITION AT ALL TIMES AND THE PROPOSED METHOD FOR ERECTING, STORING AND TRANSPORTING THE GIRDERS SHALL BE SUBMITTED TO THE ENGINEER FOR APPROVAL. THE SUBMITTAL SHALL INCLUDED DESIGN CALCULATIONS FOR LOCATIONS OF PICK-UP POINTS AND SUPPORT POINTS AS NEEDED TO MAINTAIN THE GIRDERS STABLITY DURING ERECTION, STORAGE AND TRANSPORTATION.

PRIOR TO CASTING THE GIRDERS, THE CONTRACTOR SHALL SUBMIT COMPLETE WORKING DRAWINGS WITH THE EXACT LOCATION, AND A COMPLETE DESCRIPTION OF ALL INSERTS CAST IN THE GIRDERS, TO THE DEPARTMENT FOR APPROVAL. SUCH INSERTS INCLUDE, BUT ARE NOT LIMITED TO, INSERTS FOR SUPPORTING FALSEWORK AND FORMWORK, INSERTS FOR ATTACHING DIAPHRAGMS, INSERTS FOR CONNECTING TEMPORARY BRACING, AND LIFTING INSERTS.

PROJECT NO. R-2245

BRUNSWICK COUNTY

STATION: 58+00.00 -L-

SHEET 2 OF 2

STATE OF NORTH CAROLINA
DEPARTMENT OF TRANSPORTATION
RALEIGH

SUPERSTRUCTURE

78" PRESTRESSED CONCRETE BULB TEE

SPAN A & SPAN E

NORTH CAROLINA PROFESSIONAL SEAL 23926 ENGINEER BRIAN C. HANKS
1/18/07

REVISIONS						SHEET NO.
NO.	BY:	DATE:	NO.	BY:	DATE:	S-48
1			3			TOTAL SHEETS
2			4			98

DRAWN BY : R. D. MARTIN DATE : 6/06
CHECKED BY : B. C. HANKS DATE : 9/20/06

17-JAN-2007 10:00
S:\PG3\R-2245 Oak Island\Final Plans\R2245_sd_G*_spans A and E.dgn
bhanks

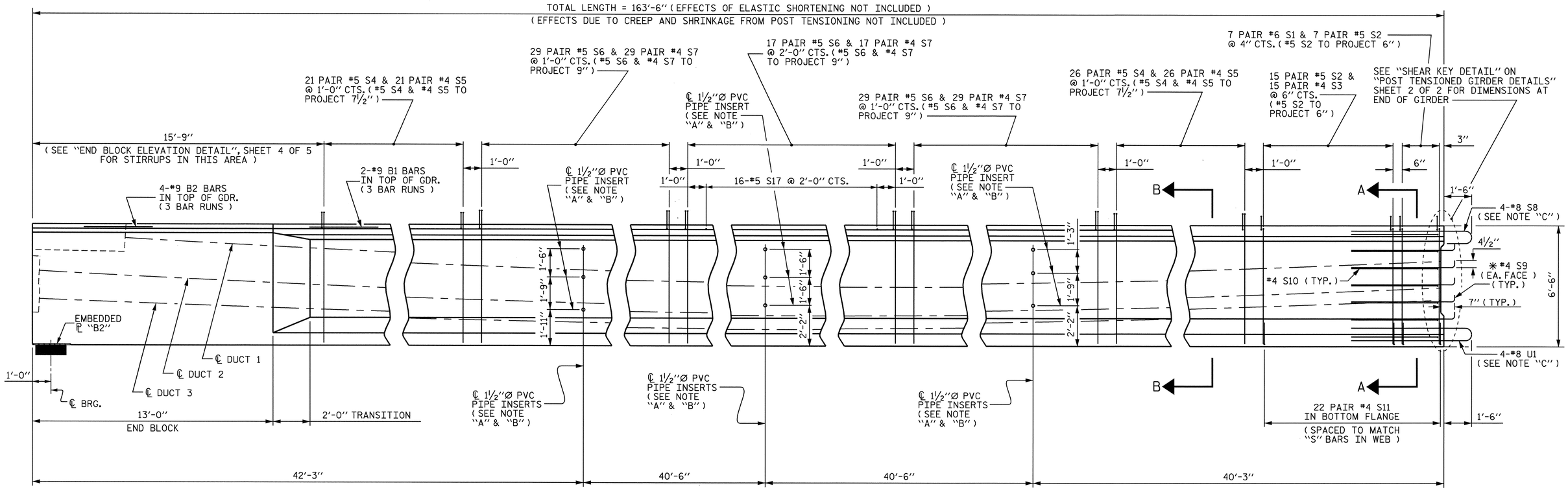

ELEVATION OF END GIRDER SEGMENT

SHOWING REINFORCING STEEL & DIAPHRAGM HOLE PLACEMENT

FOR REINFORCING STEEL DETAILS, SEE "BILL OF MATERIAL FOR POST TENSIONED GIRDERS" SHEET

NOTE "A"
USE THREADED INSERTS ON EXTERIOR GIRDERS INSTEAD OF PVC PIPE INSERTS (SEE "POST TENSIONED GIRDER DETAILS", SHEET 1 OF 2)

NOTE "B"
FOR REINFORCING AROUND THE PVC PIPE INSERTS, SEE "POST TENSIONED GIRDER DETAILS", SHEET 1 OF 2

NOTE "C"
OMIT 2-#8 S8 & 2-#8 U1 BARS ON EXTERIOR SIDE OF EXTERIOR GIRDERS

* NOTE :
#4 S9 BARS SHALL BE BENT AFTER GIRDER FABRICATION AND BEFORE SHIPMENT. HEAT BENDING SHALL NOT BE ALLOWED.

NOTE :
FOR SECTIONS A-A & B-B SEE "END GIRDER SEGMENT DETAILS", SHEET 2 OF 5

NORTH CAROLINA PROFESSIONAL SEAL 23926 ENGINEER BRIAN C. HANKS
1/12/07

PROJECT NO. R-2245
BRUNSWICK COUNTY
STATION: 58+00.00 -L-

SHEET 1 OF 5

STATE OF NORTH CAROLINA
DEPARTMENT OF TRANSPORTATION
RALEIGH

SUPERSTRUCTURE

END GIRDER SEGMENT DETAILS

MODIFIED 78" BULB TEE

REVISIONS						SHEET NO.
NO.	BY:	DATE:	NO.	BY:	DATE:	S-49
1			3			TOTAL SHEETS
2			4			98

DRAWN BY : MIKE BRITT DATE : 8-8-06
CHECKED BY : B. C. HANKS DATE : 9-8-06

02-NOV-2006 09:01
S:\PG3\R-2245 Oak Island\Final Plans\R2245_sd_G*_EndGdr_.dgn
bhanks

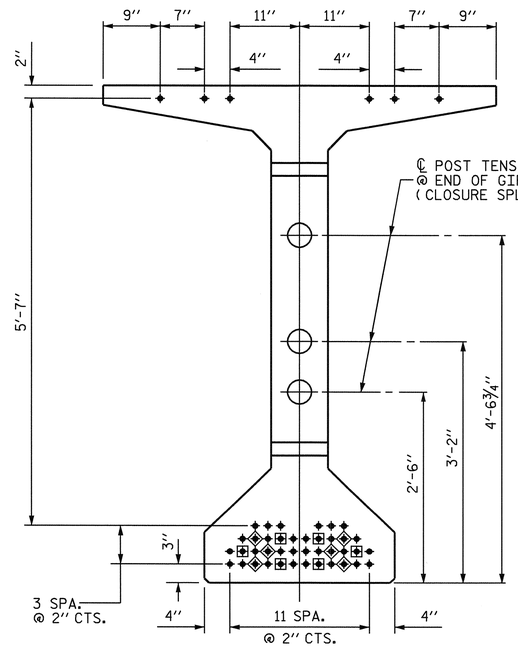

0.6'' Ø LOW RELAXATION STRAND LAYOUT

46 STRANDS, ALL STRAIGHT
(12 DEBONDED AS SHOWN)

- • FULLY BONDED STRANDS
- ⊡ STRANDS DEBONDED FOR 25'-0'' FROM END OF GIRDER
- ◈ STRANDS DEBONDED FOR 35'-0'' FROM END OF GIRDER

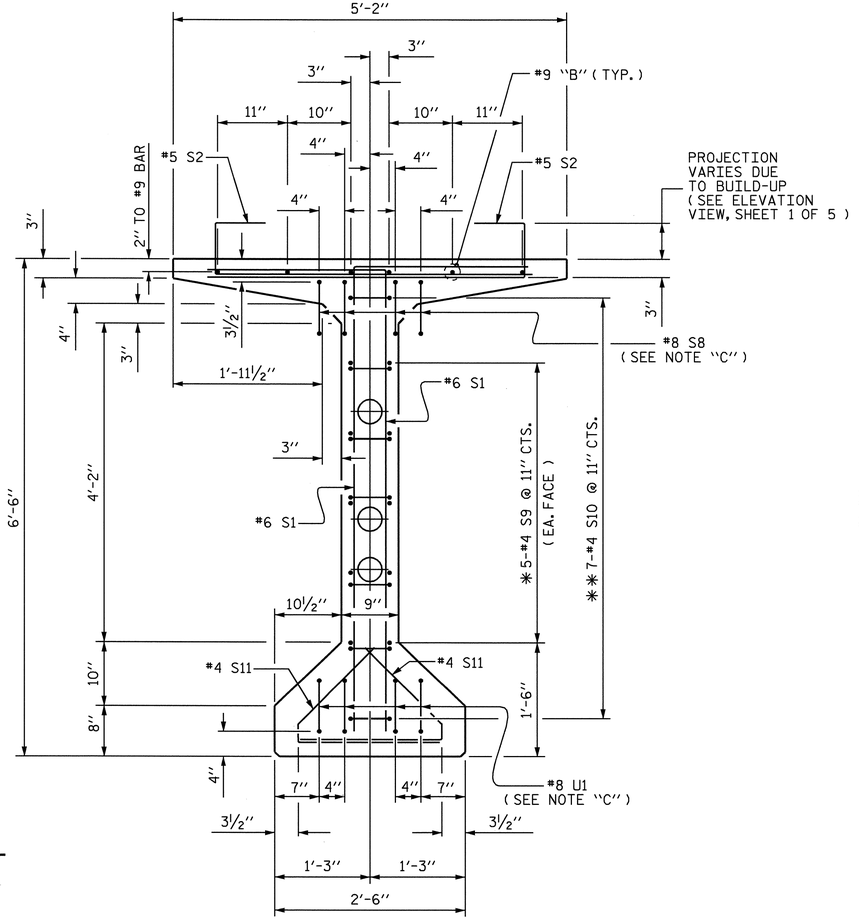

SECTION A-A

SEE STRAND LAYOUT DETAIL FOR STRAND LOCATIONS

NOTE "C"
OMIT 2-#8 S8 & 2-#8 U1
BARS ON EXTERIOR SIDE
OF EXTERIOR GIRDERS

* NOTE :
#4 S9 BARS SHALL BE BENT AFTER GIRDER FABRICATION AND BEFORE SHIPMENT. HEAT BENDING SHALL NOT BE ALLOWED.

** NOTE :
#4 S10 MAY BE SHIFTED SLIGHTLY IN ORDER TO AVOID THE POST TENSIONING DUCTS.

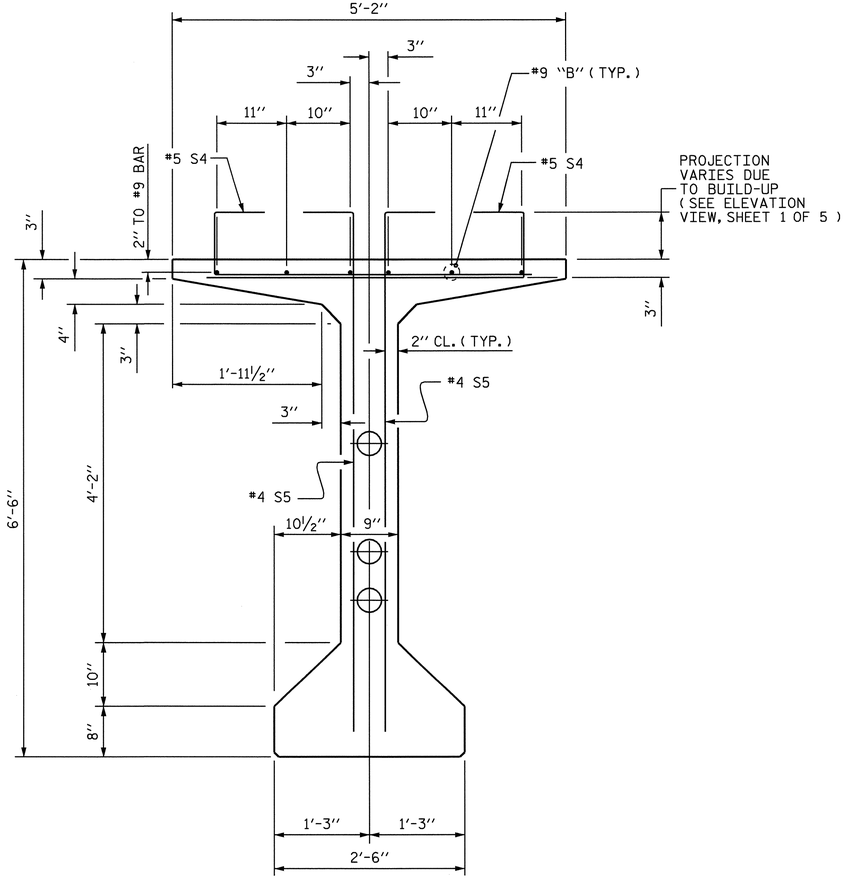

SECTION B-B

SEE STRAND LAYOUT DETAIL FOR STRAND LOCATIONS

PROJECT NO. R-2245
BRUNSWICK COUNTY
STATION: 58+00.00 -L-

SHEET 2 OF 5

STATE OF NORTH CAROLINA
DEPARTMENT OF TRANSPORTATION
RALEIGH

SUPERSTRUCTURE

END GIRDER SEGMENT DETAILS

MODIFIED 78" BULB TEE

REVISIONS						SHEET NO.
NO.	BY:	DATE:	NO.	BY:	DATE:	S-50
1			3			TOTAL SHEETS
2			4			98

NORTH CAROLINA PROFESSIONAL SEAL 23926 ENGINEER BRIAN C. HANKS
1/18/07

DRAWN BY : MIKE BRITT DATE : 8-16-06
CHECKED BY : B.C. HANKS DATE : 9-8-06

02-NOV-2006 09:01
S:\P03\R-2245 Oak Island\Final Plans\R2245_sd_G*_EndGdr_.dgn
bhanks

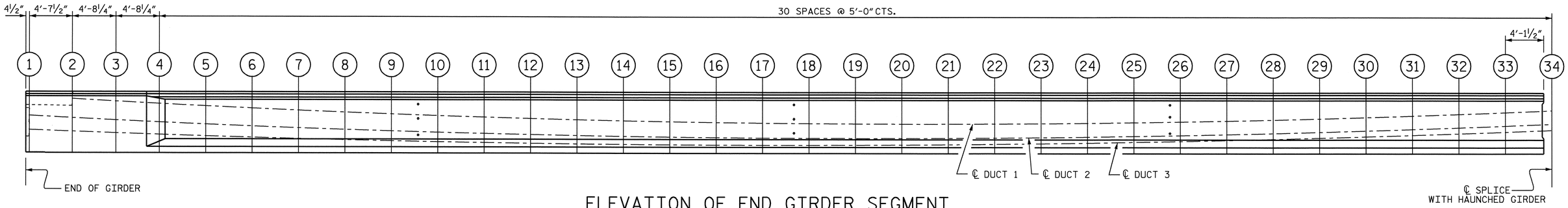

ELEVATION OF END GIRDER SEGMENT

SHOWING POST TENSIONING DUCT PROFILE

END GIRDER SEGMENT POST TENSIONING DUCT PROFILE TABLE

POINT	1	2	3	4	5	6	7	8	9	10	11	12	13	14	15	16	17	18	19	20	21	22	23	24	25	26	27	28	29	30	31	32	33	34
℄ DUCT 1	N/A	5′-9″	5′-5 7/8″	5′-2 15/16″	5′-0″	4′-9 3/16″	4′-6 5/8″	4′-4 1/4″	4′-2″	4′-0″	3′-10 1/8″	3′-8 1/2″	3′-7″	3′-5 3/4″	3′-4 11/16″	3′-3 3/4″	3′-3 1/16″	3′-2 1/2″	3′-2 3/16″	3′-2″	3′-2 1/16″	3′-2 1/4″	3′-2 11/16″	3′-3 1/4″	3′-4″	3′-5″	3′-6 1/8″	3′-7 1/2″	3′-9″	3′-10 11/16″	4′-0 5/8″	4′-2 11/16″	4′-4 15/16″	4′-7 7/16″
℄ DUCT 2	4′-0″	3′-8 15/16″	3′-6 3/16″	3′-3 5/8″	3′-1 1/16″	2′-10 11/16″	2′-8 7/16″	2′-6 7/16″	2′-4 9/16″	2′-2 13/16″	2′-1 5/16″	2′-0″	1′-10 13/16″	1′-9 13/16″	1′-9″	1′-8 5/16″	1′-7 7/8″	1′-7 9/16″	1′-7 7/16″	1′-7 1/2″	1′-7 11/16″	1′-8 1/8″	1′-8 11/16″	1′-9 7/16″	1′-10 3/8″	1′-11 7/16″	2′-0 3/4″	2′-2 3/16″	2′-3 13/16″	2′-5 5/8″	2′-7 9/16″	2′-9 11/16″	3′-0 1/16″	3′-2 9/16″
℄ DUCT 3	2′-6″	2′-3 11/16″	2′-1 11/16″	1′-11 13/16″	1′-9 15/16″	1′-8 3/16″	1′-6 9/16″	1′-5 1/8″	1′-3 13/16″	1′-2 11/16″	1′-1 11/16″	1′-0 13/16″	1′-0 1/8″	11 1/2″	11 1/8″	10 13/16″	10 11/16″	10 11/16″	10 13/16″	11 1/8″	11 3/16″	1′-0 3/16″	1′-0 7/8″	1′-1 3/4″	1′-2 13/16″	1′-3 15/16″	1′-5 1/4″	1′-6 3/4″	1′-8 5/16″	1′-10 1/16″	2′-0″	2′-2″	2′-4 3/16″	2′-6 1/2″

NOTE :
DIMENSIONS ARE MEASURED FROM THE BOTTOM OF GIRDER.

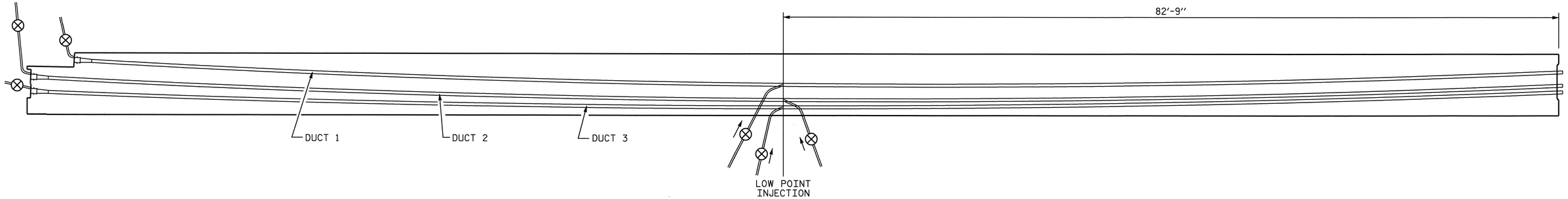

PROPOSED GROUT VENT LOCATION SKETCH

-- INDICATES GROUT VENT

PROJECT NO. R-2245

BRUNSWICK COUNTY

STATION: 58+00.00 -L-

SHEET 3 OF 5

STATE OF NORTH CAROLINA
DEPARTMENT OF TRANSPORTATION
RALEIGH

SUPERSTRUCTURE

END GIRDER SEGMENT DETAILS

MODIFIED 78″ BULB TEE

REVISIONS						SHEET NO.
NO.	BY:	DATE:	NO.	BY:	DATE:	S-51
1			3			TOTAL SHEETS
2			4			98

NORTH CAROLINA PROFESSIONAL SEAL 23926 ENGINEER BRIAN C. HANKS
1/18/07

DRAWN BY : MIKE BRITT DATE : 8-9-06
CHECKED BY : B.C. HANKS DATE : 9-8-06

02-NOV-2006 09:02
S:\PG3\R-2245 Oak Island\Final Plans\R2245_sd_G*_EndGdr_.dgn
bhanks

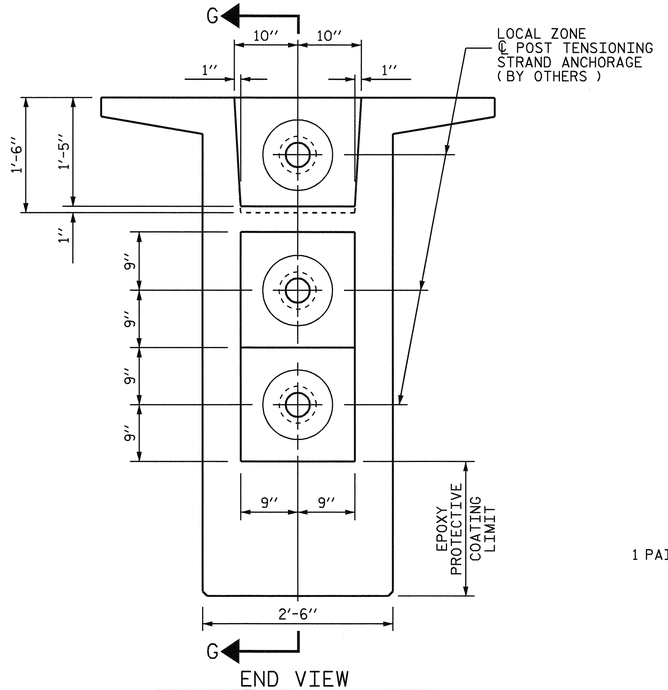

END VIEW

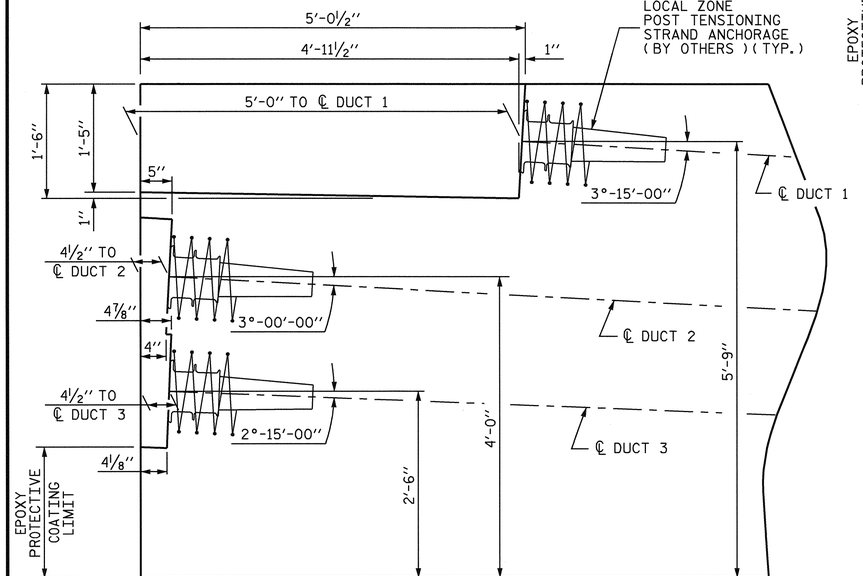

SECTION G-G

END BLOCK RECESS DETAILS

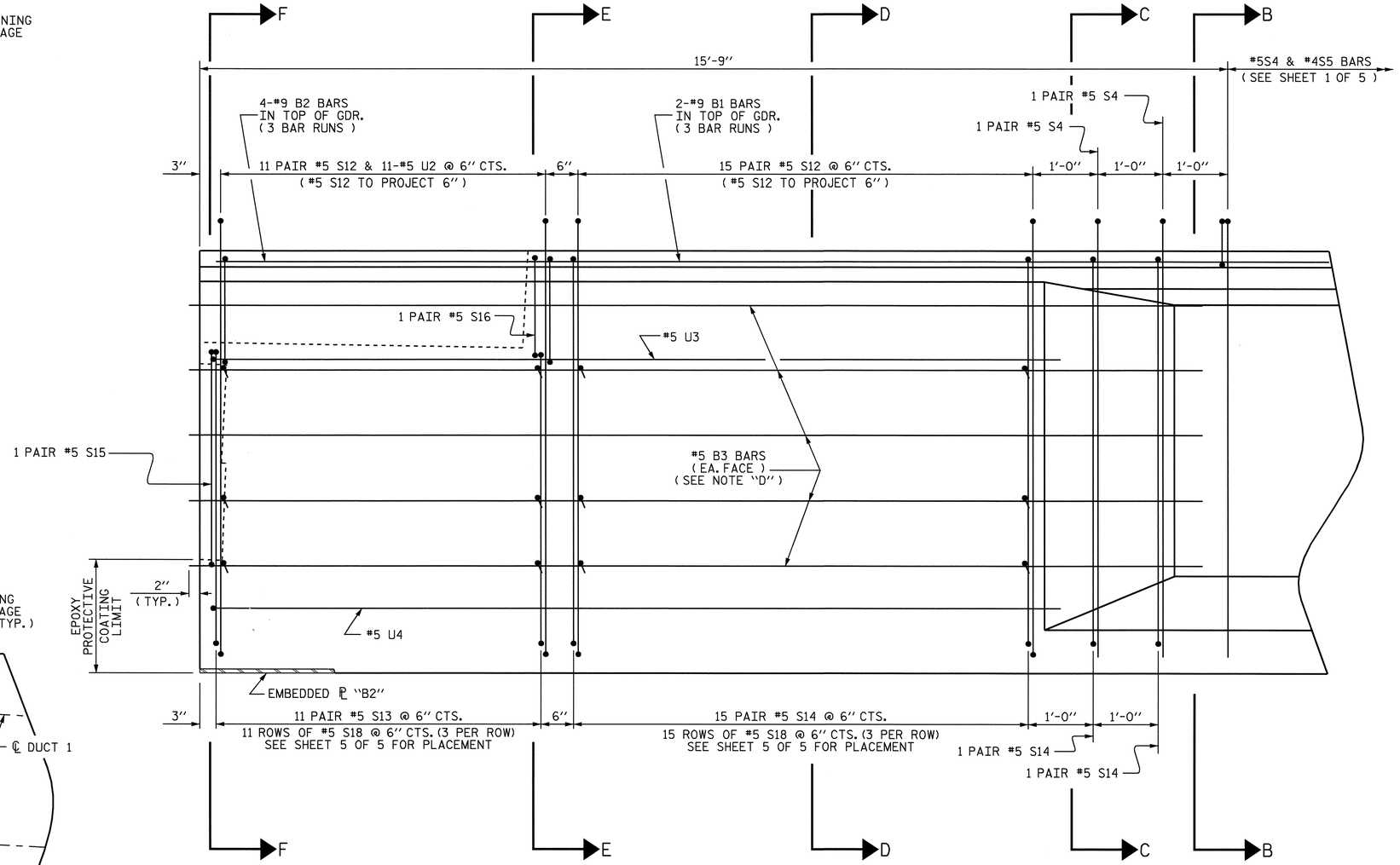

END BLOCK ELEVATION DETAIL

FOR SECTION B-B, SEE SHEET 2 OF 5
FOR SECTIONS C-C THRU F-F, SEE SHEET 5 OF 5

NOTE ''D''
#5 B3 BARS SHALL EXTEND 2'' FROM END OF GIRDER AND SHALL BE FIELD BENT ALONG FACE OF TRANSITION

PROJECT NO. R-2245
BRUNSWICK COUNTY
STATION: 58+00.00 -L-

SHEET 4 OF 5

STATE OF NORTH CAROLINA
DEPARTMENT OF TRANSPORTATION
RALEIGH

SUPERSTRUCTURE

END GIRDER SEGMENT DETAILS

MODIFIED 78'' BULB TEE

REVISIONS						SHEET NO.
NO.	BY:	DATE:	NO.	BY:	DATE:	S-52
1			3			TOTAL SHEETS
2			4			98

NORTH CAROLINA PROFESSIONAL SEAL 23926 ENGINEER BRIAN C. HANKS
1/18/07

DRAWN BY : MIKE BRITT DATE : 8-16-06
CHECKED BY : B.C. HANKS DATE : 9-8-06

15-NOV-2006 11:51
S:\PG3\R-2245 Oak Island\Final Plans\R2245_sd_G*_EndGdr_dgn
bhanks

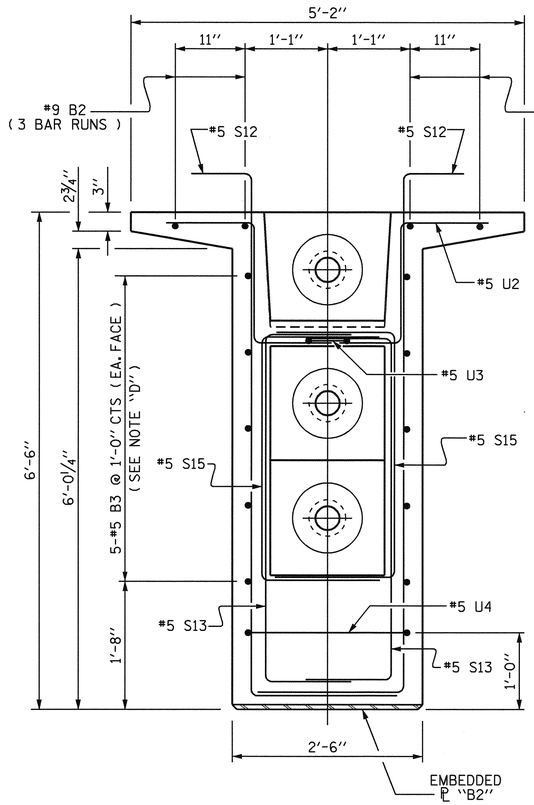

SECTION F-F

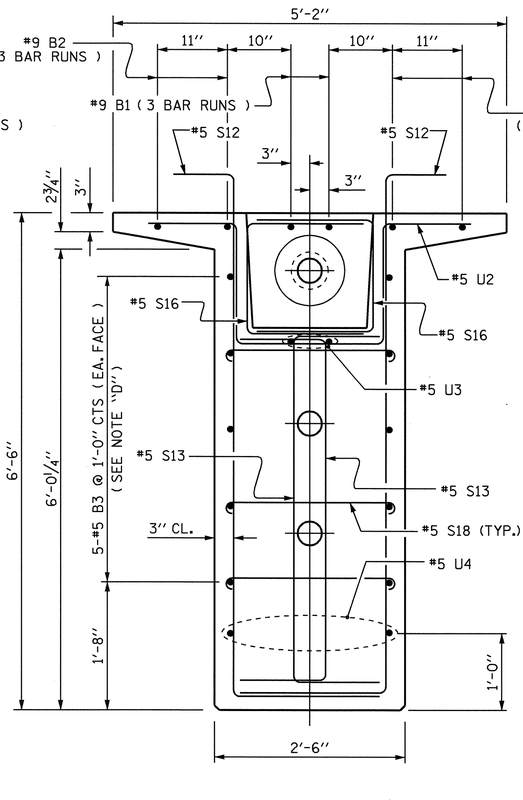

SECTION E-E

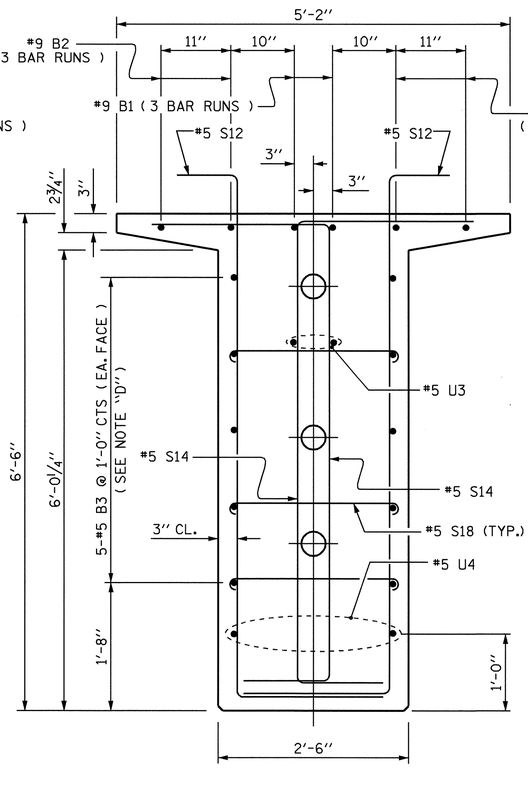

SECTION D-D

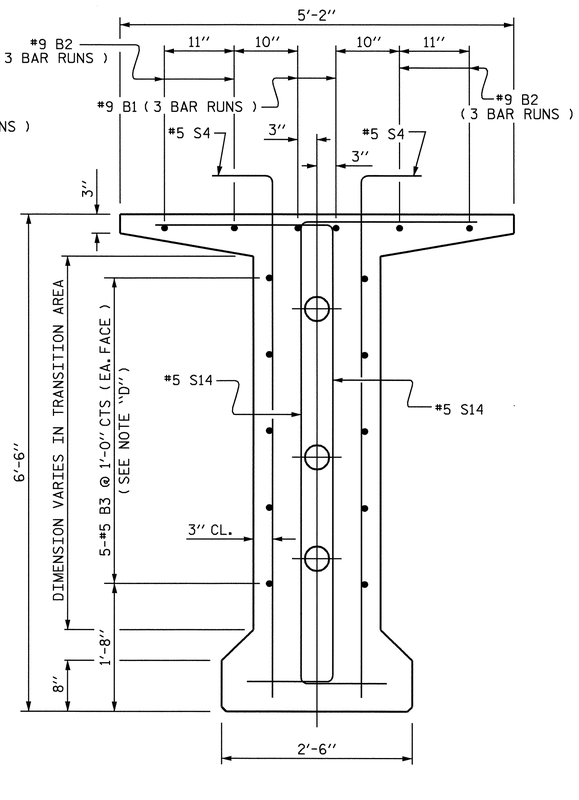

SECTION C-C

NOTE "D"
#5 B3 BARS SHALL EXTEND 2" FROM END OF GIRDER AND SHALL BE FIELD BENT ALONG FACE OF TRANSITION

PROJECT NO. R-2245

BRUNSWICK COUNTY

STATION: 58+00.00 -L-

SHEET 5 OF 5

STATE OF NORTH CAROLINA
DEPARTMENT OF TRANSPORTATION
RALEIGH

SUPERSTRUCTURE

END GIRDER SEGMENT DETAILS

MODIFIED 78" BULB TEE

NORTH CAROLINA PROFESSIONAL SEAL 23926 ENGINEER BRIAN C. HANKS
1/18/07

REVISIONS						SHEET NO.
NO.	BY:	DATE:	NO.	BY:	DATE:	S-53
1			3			TOTAL SHEETS
2			4			98

DRAWN BY : MIKE BRITT DATE : 8-17-06
CHECKED BY : B.C. HANKS DATE : 9-11-06

15-NOV-2006 11:51
S:\PG3\R-2245 Oak Island\Final Plans\R2245_sd_G*_EndGdr_.dgn
bhanks

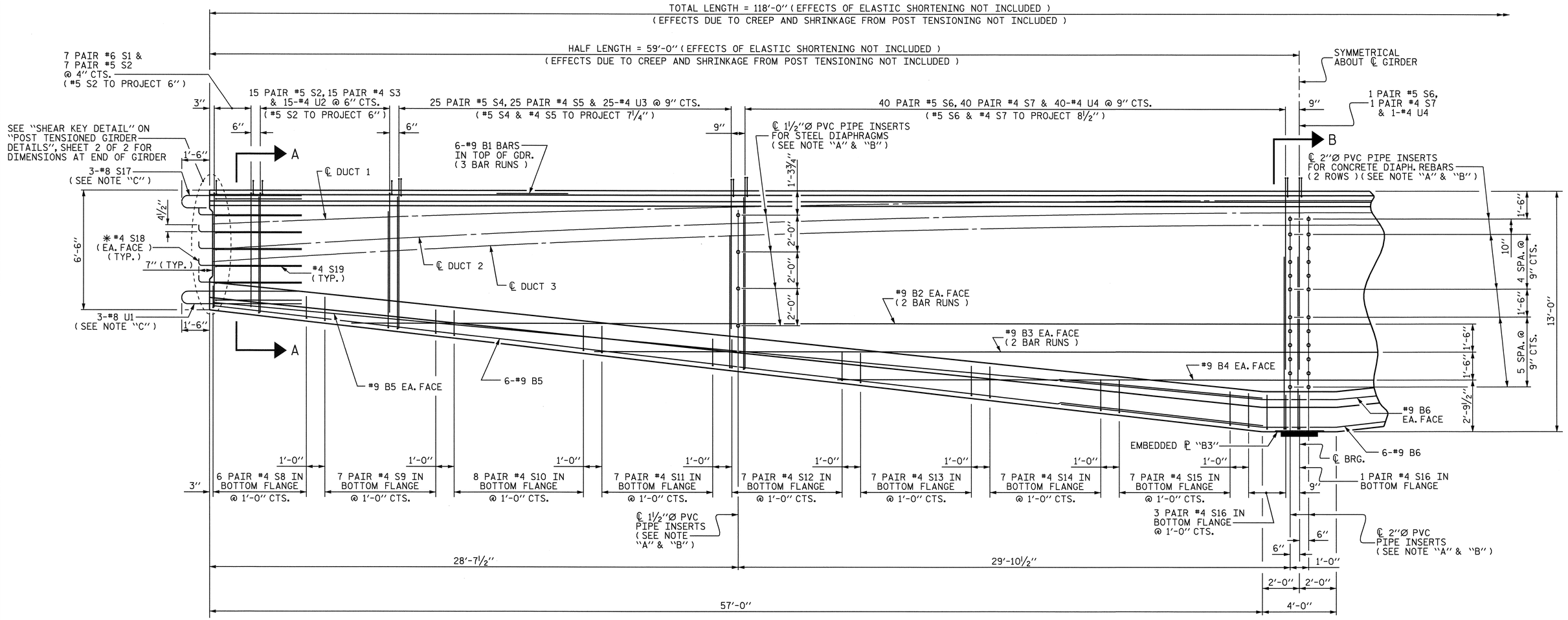

HALF ELEVATION OF HAUNCHED GIRDER SEGMENT

SHOWING REINFORCING STEEL & DIAPHRAGM HOLE PLACEMENT

FOR REINFORCING STEEL DETAILS, SEE "BILL OF MATERIAL FOR POST TENSIONED GIRDERS" SHEET

NOTE :
FOR SECTIONS A-A & B-B SEE "HAUNCHED GIRDER SEGMENT DETAILS", SHEET 2 OF 3

NOTE "A"
USE THREADED INSERTS ON EXTERIOR GIRDERS INSTEAD OF PVC PIPE INSERTS (SEE "POST TENSIONED GIRDER DETAILS", SHEET 1 OF 2)

NOTE "B"
FOR REINFORCING AROUND THE PVC PIPE INSERTS, SEE "POST TENSIONED GIRDER DETAILS", SHEET 1 OF 2

NOTE "C"
OMIT 1-#8 S17 & 1-#8 U1 BAR ON EXTERIOR SIDE OF EXTERIOR GIRDERS

* NOTE :
#4 S18 BARS SHALL BE BENT AFTER GIRDER FABRICATION AND BEFORE SHIPMENT. HEAT BENDING SHALL NOT BE ALLOWED.

NORTH CAROLINA PROFESSIONAL SEAL 23926 ENGINEER BRIAN C. HANKS
1/18/07

PROJECT NO. R-2245
BRUNSWICK COUNTY
STATION: 58+00.00 -L-

SHEET 1 OF 3

STATE OF NORTH CAROLINA
DEPARTMENT OF TRANSPORTATION
RALEIGH

SUPERSTRUCTURE

HAUNCHED GIRDER SEGMENT DETAILS

MODIFIED 78" BULB TEE

REVISIONS						SHEET NO.
NO.	BY:	DATE:	NO.	BY:	DATE:	S-54
1			3			TOTAL SHEETS
2			4			98

DRAWN BY : MIKE BRITT DATE : 7-27-06
CHECKED BY : B.C. HANKS DATE : 9-11-06

02-NOV-2006 09:04
S:\P03\R-2245 Oak Island\Final Plans\R2245_sd_G*_HaunchedGdr.dgn
bhanks

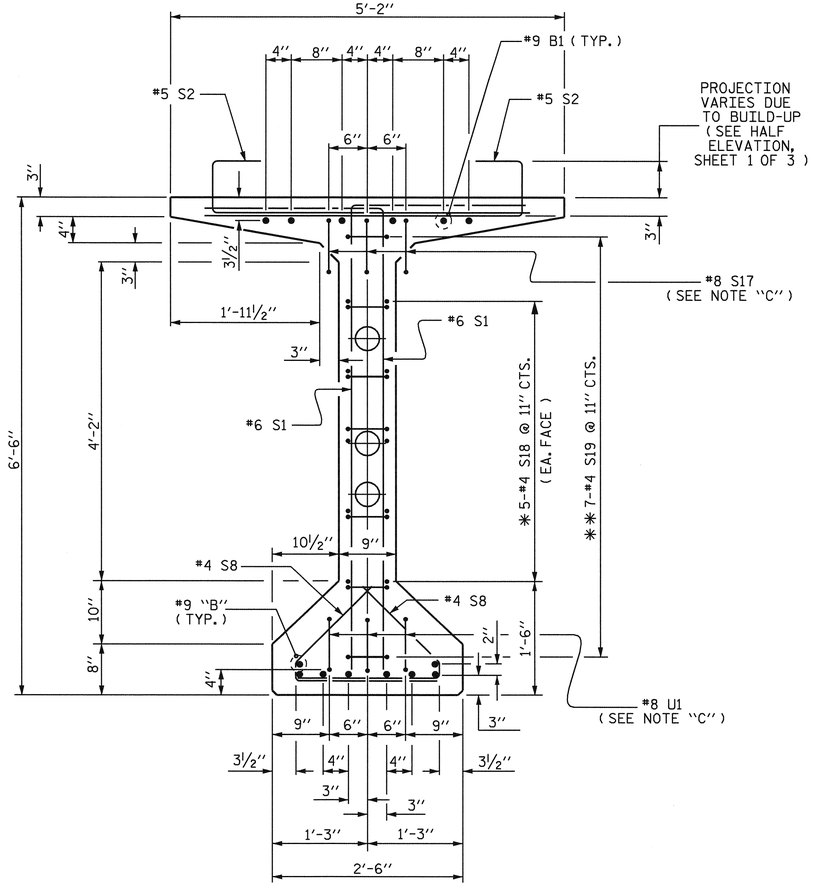

SECTION A-A

SEE STRAND LAYOUT DETAIL FOR STRAND LOCATIONS

NOTE "C"
OMIT 1-#8 S17 & 1-#8 U1
BARS ON EXTERIOR SIDE
OF EXTERIOR GIRDERS

* NOTE :
#4 S18 BARS SHALL BE BENT AFTER GIRDER FABRICATION AND BEFORE SHIPMENT. HEAT BENDING SHALL NOT BE ALLOWED.

** NOTE :
#4 S19 MAY BE SHIFTED SLIGHTLY IN ORDER TO AVOID THE POST TENSIONING DUCTS.

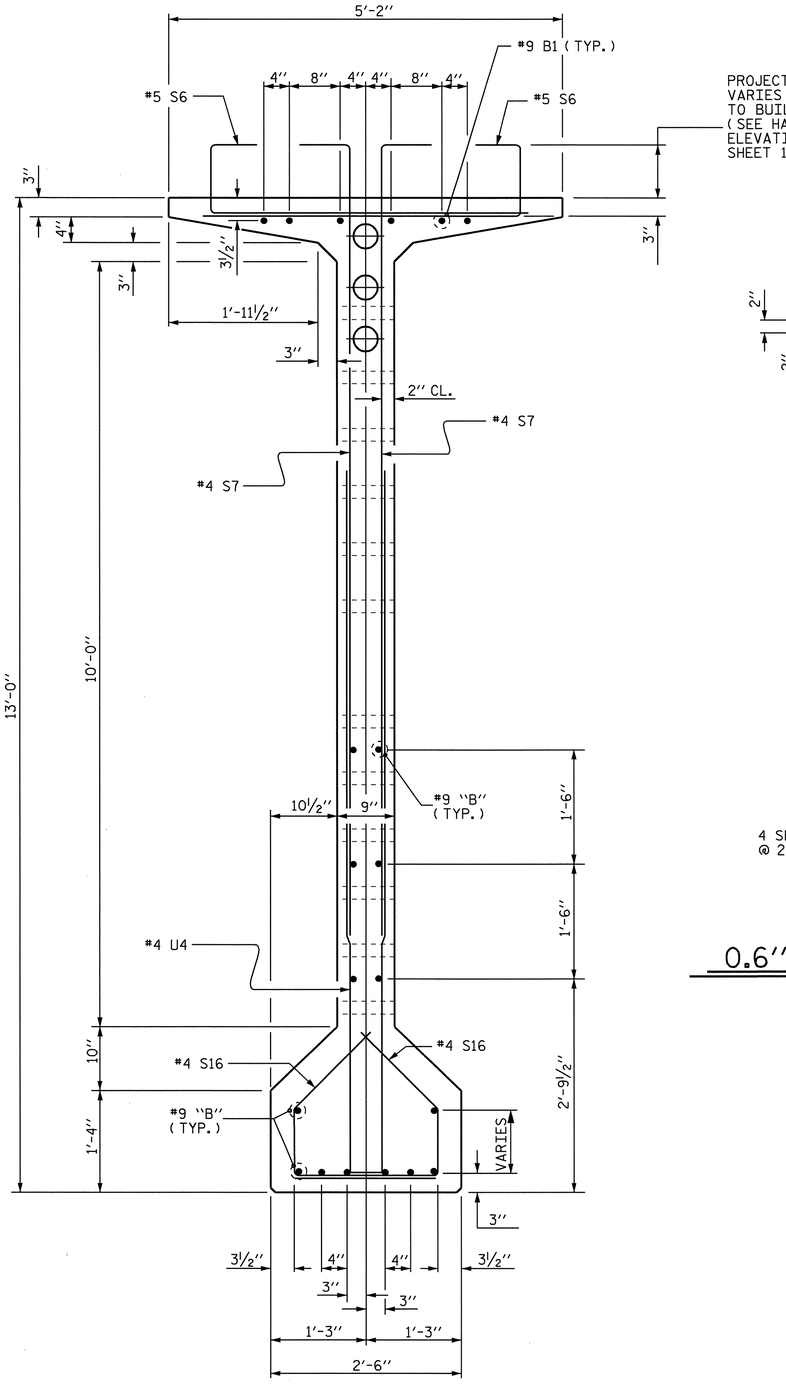

SECTION B-B

SEE STRAND LAYOUT DETAIL FOR STRAND LOCATIONS

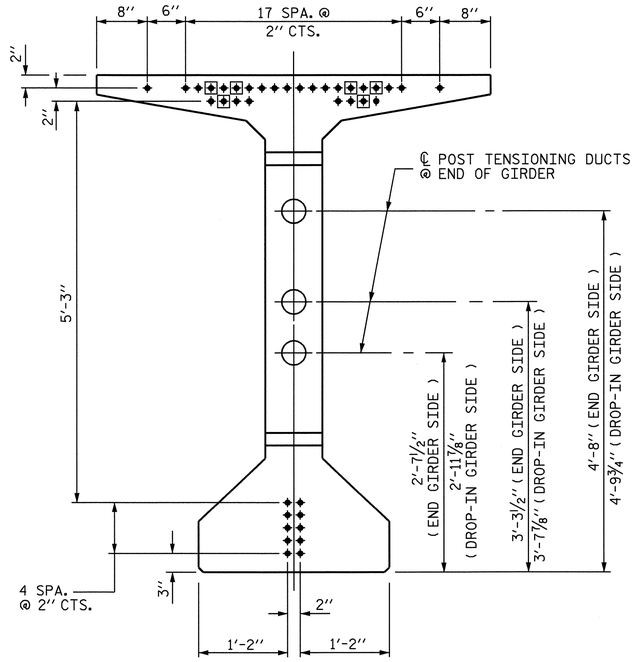

0.6"Ø LOW RELAXATION STRAND LAYOUT

38 STRANDS, ALL STRAIGHT
(6 DEBONDED AS SHOWN)

● FULLY BONDED STRANDS

⊡ STRANDS DEBONDED FOR 15'-0" FROM END OF GIRDER

PROJECT NO. R-2245
BRUNSWICK COUNTY
STATION: 58+00.00 -L-

SHEET 2 OF 3

STATE OF NORTH CAROLINA
DEPARTMENT OF TRANSPORTATION
RALEIGH

SUPERSTRUCTURE

HAUNCHED GIRDER SEGMENT DETAILS

MODIFIED 78" BULB TEE

REVISIONS						SHEET NO.
NO.	BY:	DATE:	NO.	BY:	DATE:	S-55
1			3			TOTAL SHEETS
2			4			98

NORTH CAROLINA PROFESSIONAL SEAL 23926 ENGINEER BRIAN C. HANKS
1/18/07

DRAWN BY : MIKE BRITT DATE : 8-1-06
CHECKED BY : B.C. HANKS DATE : 9-11-06

03-NOV-2006 12:57
S:\PGS\R-2245 Oak Island\Final Plans\R2245_sd_G*_HaunchedGdr.dgn
bhanks

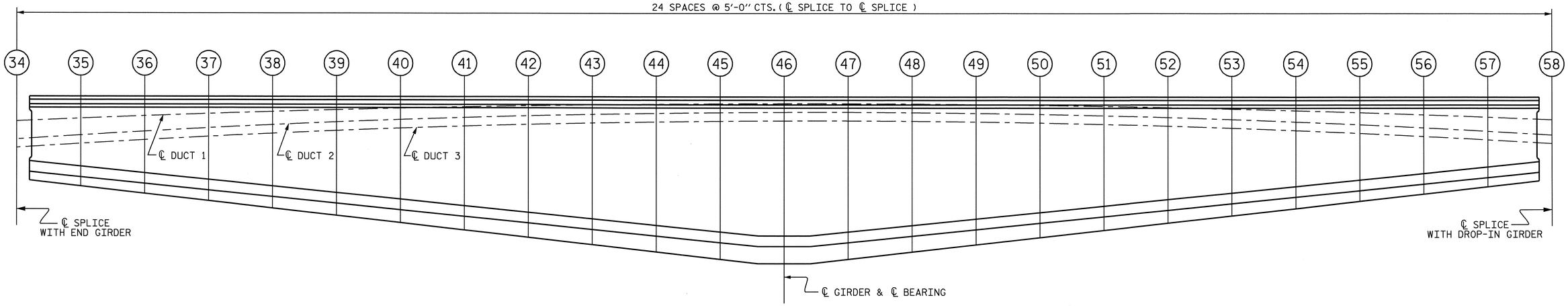

ELEVATION OF HAUNCHED GIRDER SEGMENT

SHOWING POST TENSIONING DUCT PROFILE

HAUNCHED GIRDER SEGMENT POST TENSIONING DUCT PROFILE TABLE

POINT	34	35	36	37	38	39	40	41	42	43	44	45	46	47	48	49	50	51	52	53	54	55	56	57	58
℄ DUCT 1	1'-10 9/16"	1'-8"	1'-5 5/8"	1'-3 1/2"	1'-1 9/16"	11 7/8"	10 3/8"	9 1/8"	8 1/16"	7 3/16"	6 9/16"	6 3/16"	6"	6 1/16"	6 5/16"	6 3/4"	7 7/16"	8 3/8"	9 1/2"	10 13/16"	1'-0 3/8"	1'-2 1/8"	1'-4 1/8"	1'-6 3/8"	1'-8 13/16"
℄ DUCT 2	3'-3 7/16"	2'-11 9/16"	2'-8"	2'-4 3/4"	2'-1 13/16"	1'-11 3/16"	1'-8 15/16"	1'-6 15/16"	1'-5 5/16"	1'-4"	1'-3"	1'-2 3/8"	1'-2"	1'-2"	1'-2 1/4"	1'-2 7/8"	1'-3 13/16"	1'-5 1/8"	1'-6 11/16"	1'-8 5/8"	1'-10 13/16"	2'-1 3/8"	2'-4 1/4"	2'-7 7/16"	2'-11"
℄ DUCT 3	3'-11 1/2"	3'-7 9/16"	3'-4"	3'-0 3/4"	2'-9 13/16"	2'-7 3/16"	2'-4 15/16"	2'-2 15/16"	2'-1 5/16"	2'-0"	1'-11"	1'-10 3/8"	1'-10"	1'-10"	1'-10 1/4"	1'-10 7/8"	1'-11 13/16"	2'-1 1/8"	2'-2 11/16"	2'-4 5/8"	2'-6 13/16"	2'-9 3/8"	3'-0 1/4"	3'-3 1/2"	3'-7"

NOTE :
DIMENSIONS ARE MEASURED FROM THE TOP OF GIRDER.

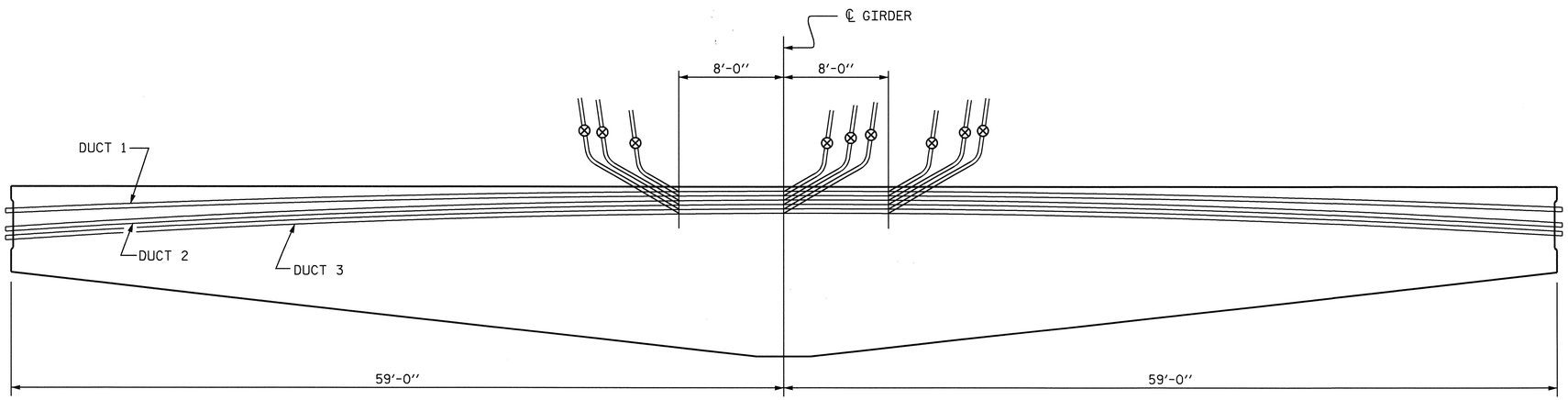

PROPOSED GROUT VENT LOCATION SKETCH

⊗ -- INDICATES GROUT VENT

NORTH CAROLINA PROFESSIONAL SEAL 23926 ENGINEER BRIAN C. HANKS
1/16/07

PROJECT NO. R-2245
BRUNSWICK COUNTY
STATION: 58+00.00 -L-

SHEET 3 OF 3

STATE OF NORTH CAROLINA
DEPARTMENT OF TRANSPORTATION
RALEIGH

SUPERSTRUCTURE

HAUNCHED GIRDER SEGMENT DETAILS

MODIFIED 78" BULB TEE

REVISIONS						SHEET NO.
NO.	BY:	DATE:	NO.	BY:	DATE:	S-56
1			3			TOTAL SHEETS
2			4			98

DRAWN BY : MIKE BRITT DATE : 8-1-06
CHECKED BY : B.C. HANKS DATE : 9-11-06

02-NOV-2006 09:05
S:\PG3\R-2245 Oak Island\Final Plans\R2245_sd_G*_HaunchedGdr.dgn
bhanks

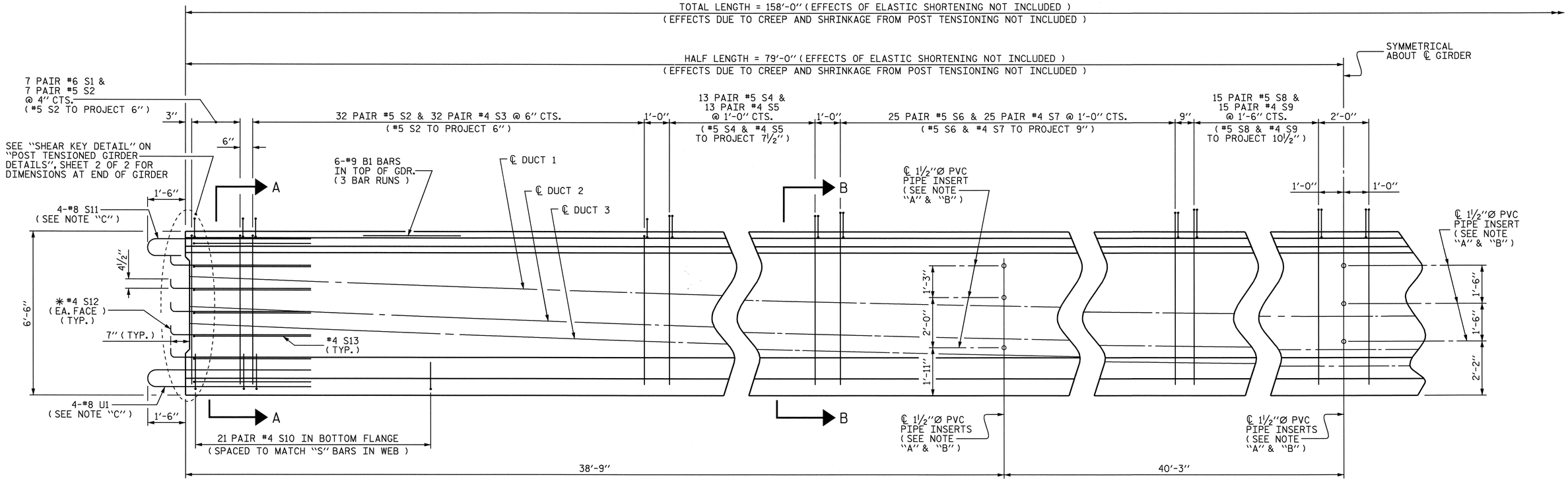

HALF ELEVATION OF DROP-IN GIRDER SEGMENT

SHOWING REINFORCING STEEL & DIAPHRAGM HOLE PLACEMENT

FOR REINFORCING STEEL DETAILS, SEE "BILL OF MATERIAL FOR POST TENSIONED GIRDERS" SHEET

NOTE :
FOR SECTIONS A-A & B-B SEE "DROP-IN GIRDER SEGMENT DETAILS", SHEET 2 OF 3.

NOTE "A"
USE THREADED INSERTS ON EXTERIOR GIRDERS INSTEAD OF PVC PIPE INSERTS (SEE "POST TENSIONED GIRDER DETAILS", SHEET 1 OF 2)

NOTE "B"
FOR REINFORCING AROUND THE PVC PIPE INSERTS, SEE "POST TENSIONED GIRDER DETAILS", SHEET 1 OF 2

NOTE "C"
OMIT 2-#8 S11 & 2-#8 U1 BARS ON EXTERIOR SIDE OF EXTERIOR GIRDERS

* NOTE :
#4 S12 BARS SHALL BE BENT AFTER GIRDER FABRICATION AND BEFORE SHIPMENT. HEAT BENDING SHALL NOT BE ALLOWED.

NORTH CAROLINA PROFESSIONAL SEAL 23926 ENGINEER BRIAN C. HANKS
1/18/07

PROJECT NO. R-2245
BRUNSWICK COUNTY
STATION: 58+00.00 -L-

SHEET 1 OF 3

STATE OF NORTH CAROLINA
DEPARTMENT OF TRANSPORTATION
RALEIGH

SUPERSTRUCTURE

DROP-IN GIRDER SEGMENT DETAILS

MODIFIED 78" BULB TEE

REVISIONS						SHEET NO.
NO.	BY:	DATE:	NO.	BY:	DATE:	S-57
1			3			TOTAL SHEETS
2			4			98

DRAWN BY : MIKE BRITT DATE : 7-19-06
CHECKED BY : B.C. HANKS DATE : 9-11-06

02-NOV-2006 09:06
S:\PGS\R-2245 Oak Island\Final Plans\R2245_sd_G*_DropInGdr.dgn
bhanks

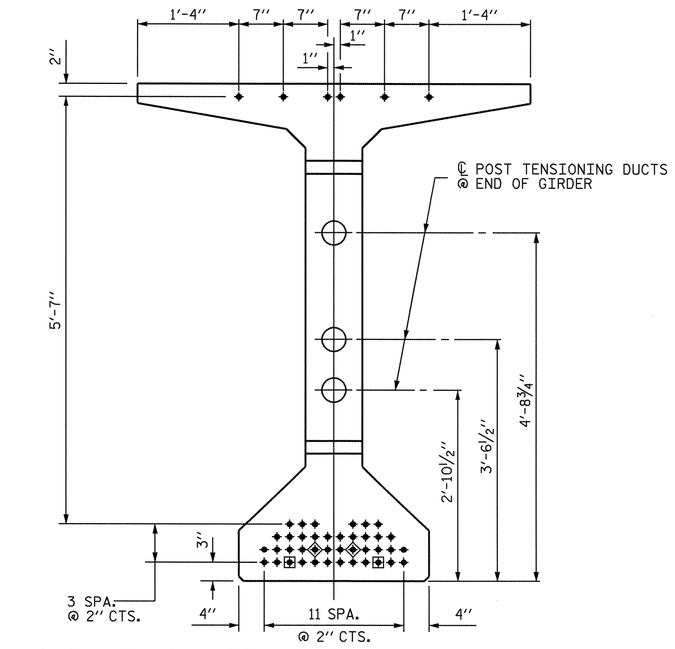

0.6'' Ø LOW RELAXATION STRAND LAYOUT

46 STRANDS, ALL STRAIGHT
(4 DEBONDED AS SHOWN)

- ● FULLY BONDED STRANDS
- ▣ STRANDS DEBONDED FOR 25'-0'' FROM END OF GIRDER
- ◈ STRANDS DEBONDED FOR 35'-0'' FROM END OF GIRDER

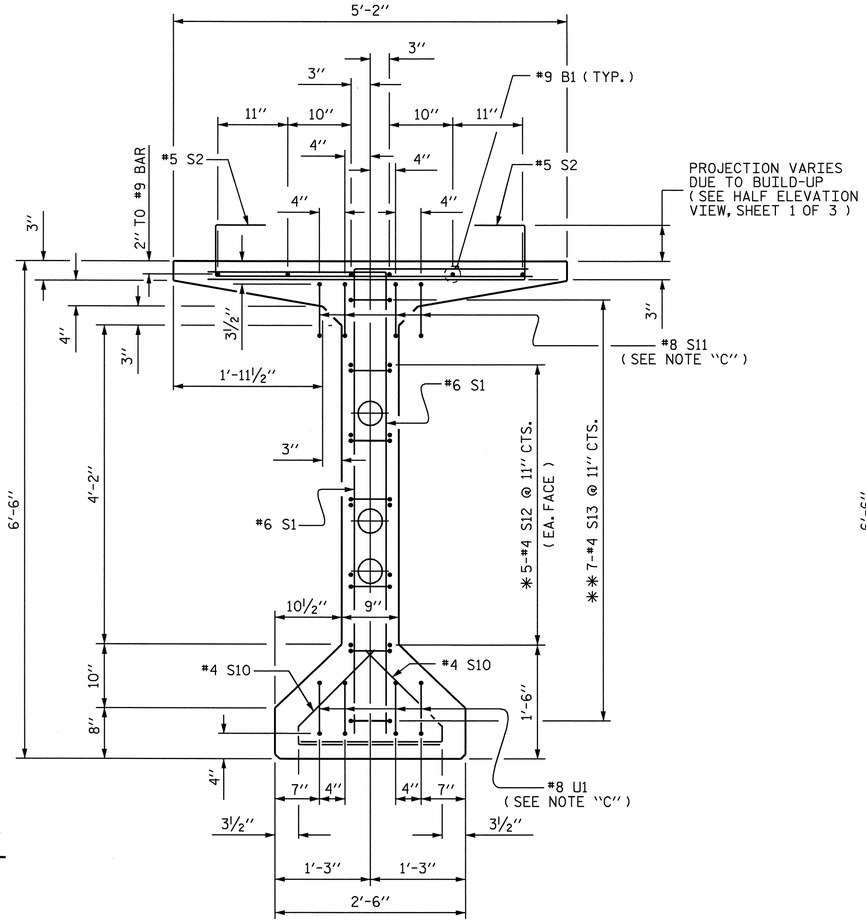

SECTION A-A

SEE STRAND LAYOUT DETAIL FOR STRAND LOCATIONS

NOTE ''C''
OMIT 2-#8 S11 & 2-#8 U1 BARS ON EXTERIOR SIDE OF EXTERIOR GIRDERS

∗ NOTE :
#4 S12 BARS SHALL BE BENT AFTER GIRDER FABRICATION AND BEFORE SHIPMENT. HEAT BENDING SHALL NOT BE ALLOWED.

∗∗ NOTE :
#4 S13 MAY BE SHIFTED SLIGHTLY IN ORDER TO AVOID THE POST TENSIONING DUCTS.

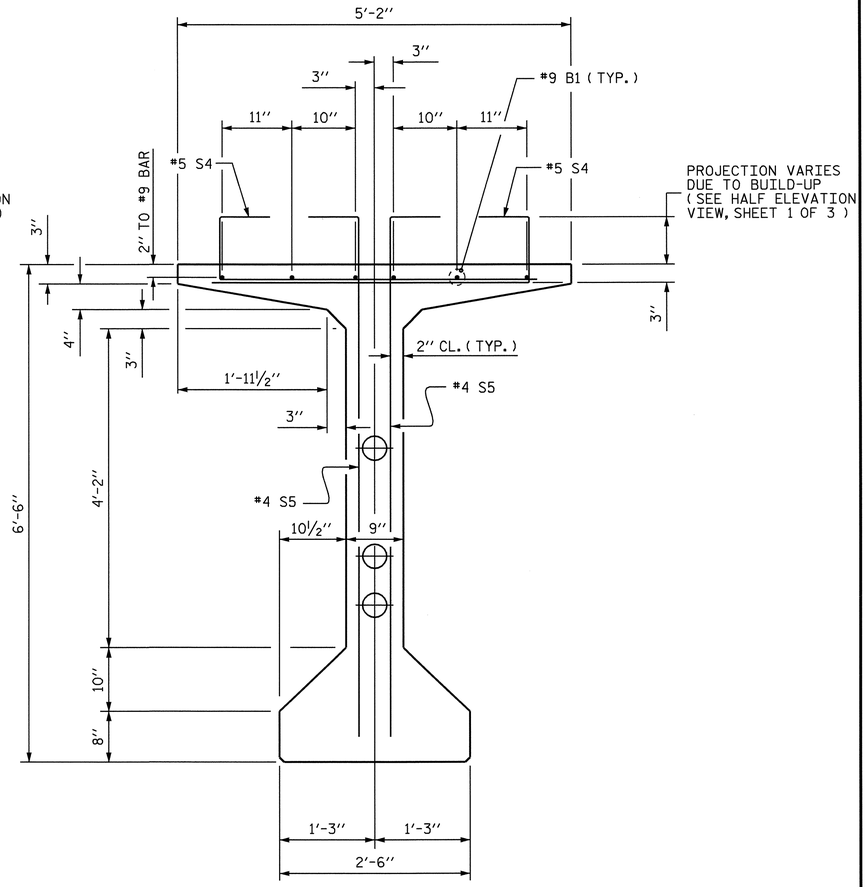

SECTION B-B

SEE STRAND LAYOUT DETAIL FOR STRAND LOCATIONS

PROJECT NO. R-2245
BRUNSWICK COUNTY
STATION: 58+00.00 -L-

SHEET 2 OF 3

STATE OF NORTH CAROLINA
DEPARTMENT OF TRANSPORTATION
RALEIGH

SUPERSTRUCTURE

DROP-IN GIRDER SEGMENT DETAILS

MODIFIED 78" BULB TEE

NORTH CAROLINA PROFESSIONAL SEAL 23926 ENGINEER BRIAN C. HANKS
1/16/07

REVISIONS						SHEET NO.
NO.	BY:	DATE:	NO.	BY:	DATE:	S-58
1			3			TOTAL SHEETS
2			4			98

DRAWN BY : MIKE BRITT DATE : 8-16-06
CHECKED BY : B.C. HANKS DATE : 9-11-06

02-NOV-2006 09:06
S:\PC3\R-2245 Oak Island\Final Plans\R2245_sd_G*_DropInGdr.dgn
bhanks

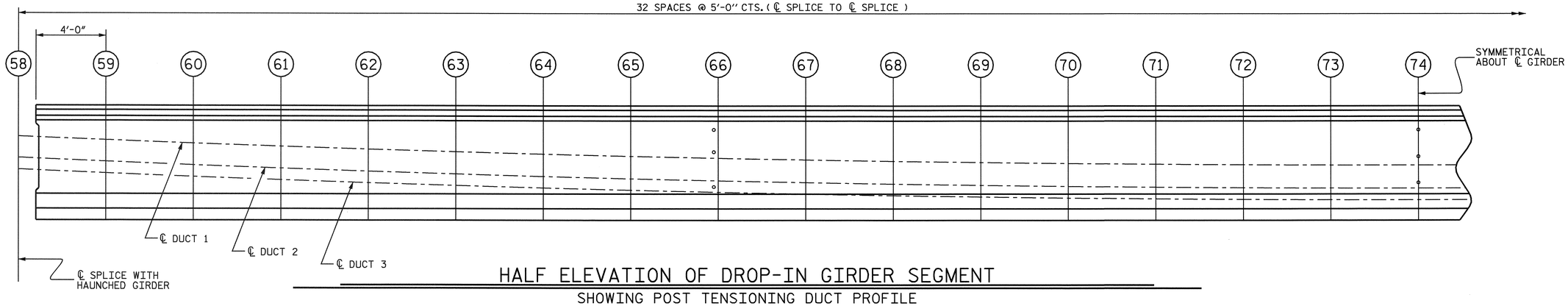

HALF ELEVATION OF DROP-IN GIRDER SEGMENT

SHOWING POST TENSIONING DUCT PROFILE

DROP-IN GIRDER SEGMENT POST TENSIONING DUCT PROFILE TABLE																	
POINT	58	59	60	61	62	63	64	65	66	67	68	69	70	71	72	73	74
℄ DUCT 1	4'-9 3/16"	4'-6 7/8"	4'-4 11/16"	4'-2 11/16"	4'-0 13/16"	3'-11 1/16"	3'-9 1/2"	3'-8 1/16"	3'-6 13/16"	3'-5 11/16"	3'-4 11/16"	3'-3 7/8"	3'-3 3/16"	3'-2 11/16"	3'-2 5/16"	3'-2 1/16"	3'-2"
℄ DUCT 2	3'-7"	3'-4 7/16"	3'-2 1/16"	2'-11 7/8"	2'-9 13/16"	2'-7 15/16"	2'-6 3/16"	2'-4 5/8"	2'-3 1/4"	2'-2"	2'-0 15/16"	2'-0 1/16"	1'-11 5/16"	1'-10 3/4"	1'-10 5/16"	1'-10 1/16"	1'-10"
℄ DUCT 3	2'-11"	2'-8 7/16"	2'-6 1/16"	2'-3 7/8"	2'-1 13/16"	1'-11 15/16"	1'-10 3/16"	1'-8 5/8"	1'-7 1/4"	1'-6"	1'-4 15/16"	1'-4 1/16"	1'-3 5/16"	1'-2 3/4"	1'-2 5/16"	1'-2 1/16"	1'-2"

NOTE: DIMENSIONS ARE MEASURED FROM THE BOTTOM OF GIRDER & ARE SYMMETRICAL ABOUT THE CENTERLINE OF GIRDER.

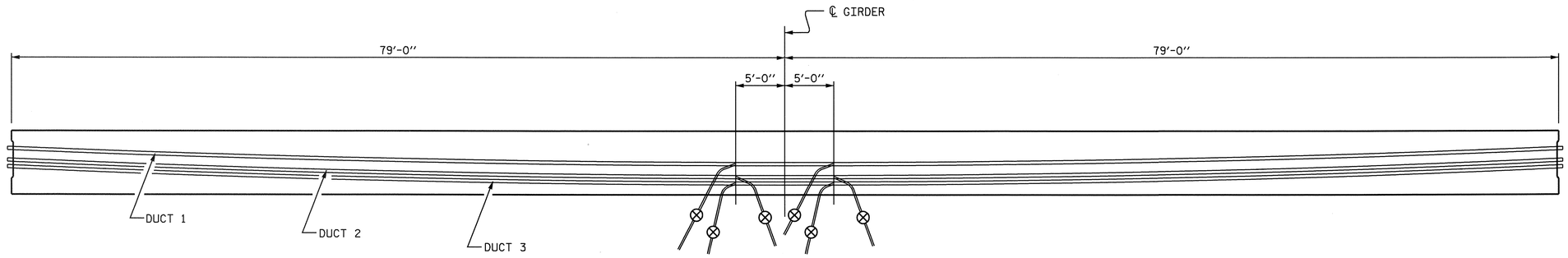

PROPOSED GROUT VENT LOCATION SKETCH

-- INDICATES GROUT VENT

PROJECT NO. R-2245

BRUNSWICK COUNTY

STATION: 58+00.00 -L-

SHEET 3 OF 3

STATE OF NORTH CAROLINA
DEPARTMENT OF TRANSPORTATION
RALEIGH

SUPERSTRUCTURE

DROP-IN GIRDER SEGMENT DETAILS

MODIFIED 78" BULB TEE

REVISIONS						SHEET NO.
NO.	BY:	DATE:	NO.	BY:	DATE:	S-59
1			3			TOTAL SHEETS
2			4			98

NORTH CAROLINA PROFESSIONAL SEAL 23926 ENGINEER BRIAN C. HANKS
1/16/07

DRAWN BY : MIKE BRITT DATE : 7-19-06
CHECKED BY : B.C. HANKS DATE : 9-11-06

02-NOV-2006 09:06
S:\PG3\R-2245 Oak Island\Final Plans\R2245_sd_G*_DropInGdr.dgn
bhanks

END GIRDER BILL OF MATERIAL

0.6″ Ø L. R. GRADE 270 STRANDS

AREA (SQUARE INCHES)	ULTIMATE STRENGTH (LBS. PER STRAND)	APPLIED PRESTRESS (LBS. PER STRAND)
0.217	58,600	43,950

REINFORCING STEEL FOR ONE END GIRDER

BAR	NUMBER	SIZE	TYPE	LENGTH	WEIGHT
B1	6	#9	STR	56′-8″	1156
B2	12	#9	STR	58′-7″	2390
B3	10	#5	STR	15′-7″	163
S1	14	#6	1	8′-5″	177
S2	44	#5	2	5′-7″	256
S3	30	#4	1	8′-5″	169
S4	98	#5	2	5′-9″	588
S5	94	#4	1	7′-6″	471
S6	150	#5	2	5′-10″	913
S7	150	#4	1	7′-7″	760
S8	4	#8	5	8′-2″	87
✳ S9	10	#4	STR	6′-0″	40
S10	7	#4	4	9′-11″	46
S11	44	#4	3	3′-7″	105
S12	52	#5	7	9′-5″	511
S13	22	#5	4	6′-9″	155
S14	34	#5	4	9′-5″	334
S15	2	#5	4	6′-2″	13
S16	2	#5	4	4′-5″	9
S17	16	#5	STR	4′-2″	70
S18	78	#5	9	3′-0″	244
U1	4	#8	6	13′-4″	142
U2	11	#5	8	7′-3″	83
U3	1	#5	4	26′-7″	28
U4	1	#5	4	28′-1″	29

✳ NOTE: S9 BARS SHALL BE BENT AFTER GIRDER FABRICATION AND BEFORE SHIPMENT. HEAT BENDING SHALL NOT BE ALLOWED.

BAR TYPES

ALL BAR DIMENSIONS ARE OUT-TO-OUT

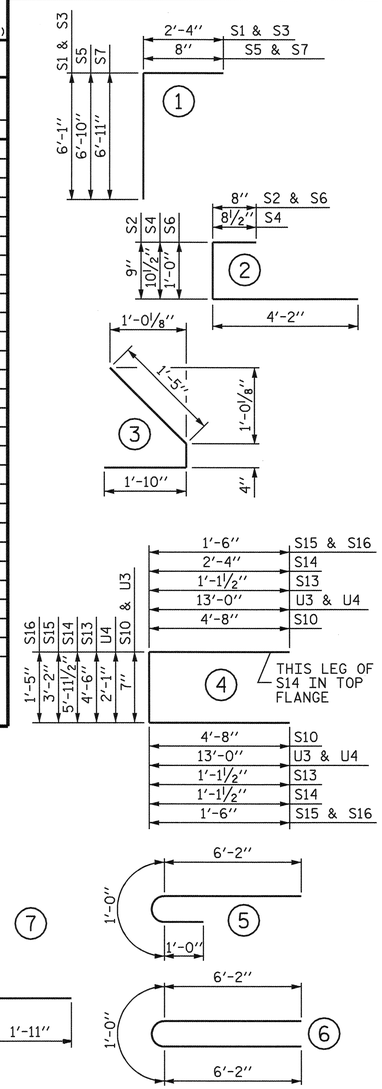

HAUNCHED GIRDER BILL OF MATERIAL

0.6″ Ø L. R. GRADE 270 STRANDS

AREA (SQUARE INCHES)	ULTIMATE STRENGTH (LBS. PER STRAND)	APPLIED PRESTRESS (LBS. PER STRAND)
0.217	58,600	43,950

REINFORCING STEEL FOR ONE HAUNCHED GIRDER

BAR	NUMBER	SIZE	TYPE	LENGTH	WEIGHT
B1	18	#9	STR	45′-1″	2759
B2	4	#9	STR	59′-9″	813
B3	4	#9	STR	46′-7″	634
B4	2	#9	STR	48′-6″	330
B5	16	#9	STR	54′-0″	2938
B6	8	#9	7	26′-0″	707
S1	28	#6	1	8′-5″	354
S2	88	#5	2	5′-7″	512
S3	60	#4	1	8′-5″	337
S4	100	#5	2	5′-9″	600
S5	100	#4	1	8′-10″	590
S6	162	#5	2	5′-10″	986
S7	162	#4	1	11′-0″	1190
S8	24	#4	3	3′-5″	55
S9	28	#4	3	3′-6″	65
S10	32	#4	3	3′-7″	77
S11	28	#4	3	3′-8″	69
S12	28	#4	3	3′-9″	70
S13	28	#4	3	3′-10″	72
S14	28	#4	3	3′-11″	73
S15	28	#4	3	4′-0″	75
S16	14	#4	3	4′-1″	38
S17	6	#8	5	8′-2″	131
✳ S18	20	#4	STR	6′-0″	80
S19	14	#4	4	9′-11″	92
U1	6	#8	6	13′-4″	214
U2	30	#4	4	13′-1″	262
U3	50	#4	4	14′-11″	498
U4	81	#4	4	19′-1″	1033

✳ NOTE: S18 BARS SHALL BE BENT AFTER GIRDER FABRICATION AND BEFORE SHIPMENT. HEAT BENDING SHALL NOT BE ALLOWED.

BAR TYPES

ALL BAR DIMENSIONS ARE OUT-TO-OUT

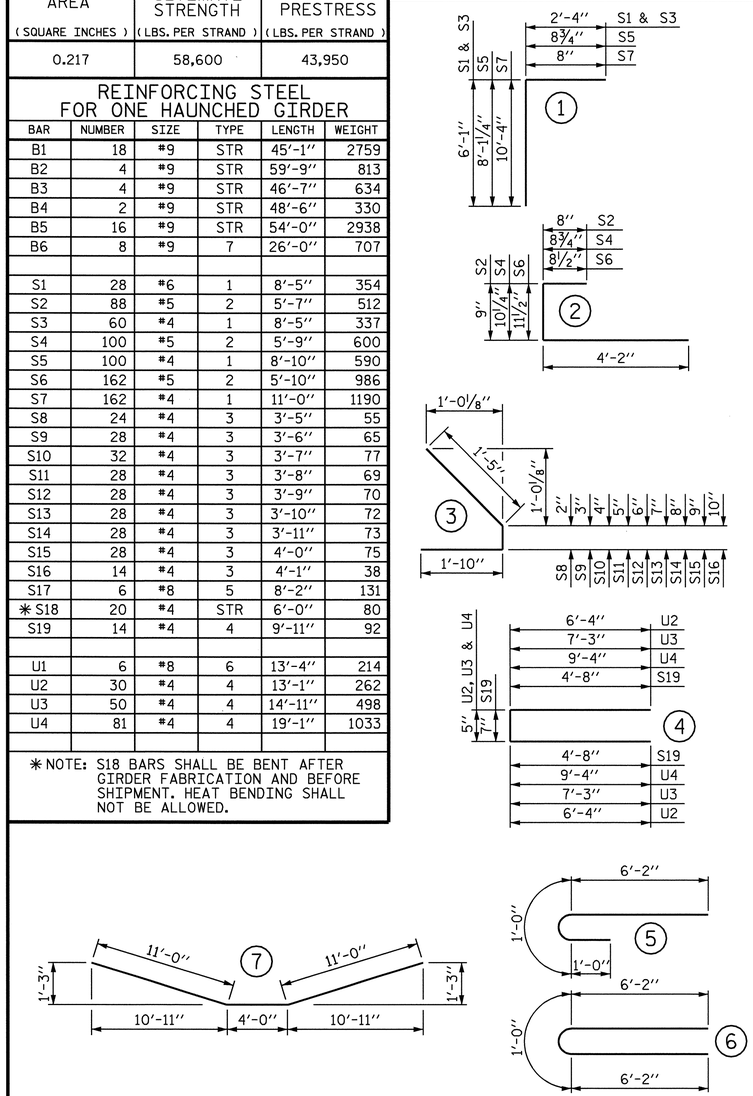

DROP-IN GIRDER BILL OF MATERIAL

0.6″ Ø L. R. GRADE 270 STRANDS

AREA (SQUARE INCHES)	ULTIMATE STRENGTH (LBS. PER STRAND)	APPLIED PRESTRESS (LBS. PER STRAND)
0.217	58,600	43,950

REINFORCING STEEL FOR ONE DROP-IN GIRDER

BAR	NUMBER	SIZE	TYPE	LENGTH	WEIGHT
B1	18	#9	STR	58′-5″	3575
S1	28	#6	1	8′-5″	354
S2	156	#5	2	5′-7″	908
S3	128	#4	1	8′-5″	720
S4	52	#5	2	5′-9″	312
S5	52	#4	1	7′-6″	261
S6	100	#5	2	5′-10″	608
S7	100	#4	1	7′-7″	507
S8	60	#5	2	6′-0″	375
S9	60	#4	1	7′-9″	311
S10	84	#4	3	3′-7″	201
S11	8	#8	5	8′-2″	174
✳ S12	20	#4	STR	6′-0″	80
S13	14	#4	4	9′-11″	92
U1	8	#8	6	13′-4″	285

✳ NOTE: S12 BARS SHALL BE BENT AFTER GIRDER FABRICATION AND BEFORE SHIPMENT. HEAT BENDING SHALL NOT BE ALLOWED.

BAR TYPES

ALL BAR DIMENSIONS ARE OUT-TO-OUT

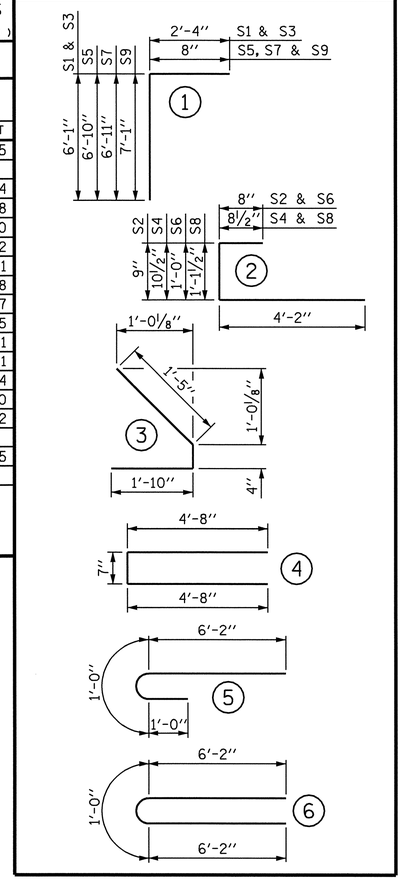

NORTH CAROLINA PROFESSIONAL SEAL 23926 ENGINEER BRIAN C. HANKS
1/16/07

PROJECT NO. R-2245

BRUNSWICK COUNTY

STATION: 58+00.00 -L-

QUANTITIES FOR ONE END GIRDER

REINFORCING STEEL	9,000 PSI CONCRETE	0.6″ Ø L.R. STRANDS
LBS.	C.Y.	No.
8,939	57.4	46

QUANTITIES FOR ONE HAUNCHED GIRDER

REINFORCING STEEL	9,000 PSI CONCRETE	0.6″ Ø L.R. STRANDS
LBS.	C.Y.	No.
15,654	51.9	38

QUANTITIES FOR ONE DROP-IN GIRDER

REINFORCING STEEL	9,000 PSI CONCRETE	0.6″ Ø L.R. STRANDS
LBS.	C.Y.	No.
8,763	51.2	46

END GIRDERS REQUIRED

GIRDERS REQ'D	LENGTH	TOTAL LENGTH
16	163′-6″	2,616.00′

HAUNCHED GIRDERS REQUIRED

GIRDERS REQ'D	LENGTH	TOTAL LENGTH
16	118′-0″	1,888.00′

DROP-IN GIRDERS REQUIRED

GIRDERS REQ'D	LENGTH	TOTAL LENGTH
8	158′-0″	1,264.00′

STATE OF NORTH CAROLINA
DEPARTMENT OF TRANSPORTATION
RALEIGH

SUPERSTRUCTURE

BILL OF MATERIAL FOR POST TENSIONED GIRDERS

REVISIONS						SHEET NO.
NO.	BY:	DATE:	NO.	BY:	DATE:	S-60
1			3			TOTAL SHEETS
2			4			98

DRAWN BY : MIKE BRITT DATE : 8-30-06
CHECKED BY : B.C. HANKS DATE : 9-11-06

15-NOV-2006 11:58
S:\PG3\R-2245 Oak Island\Final Plans\R2245_sd_G*_BOM.dgn
bhanks

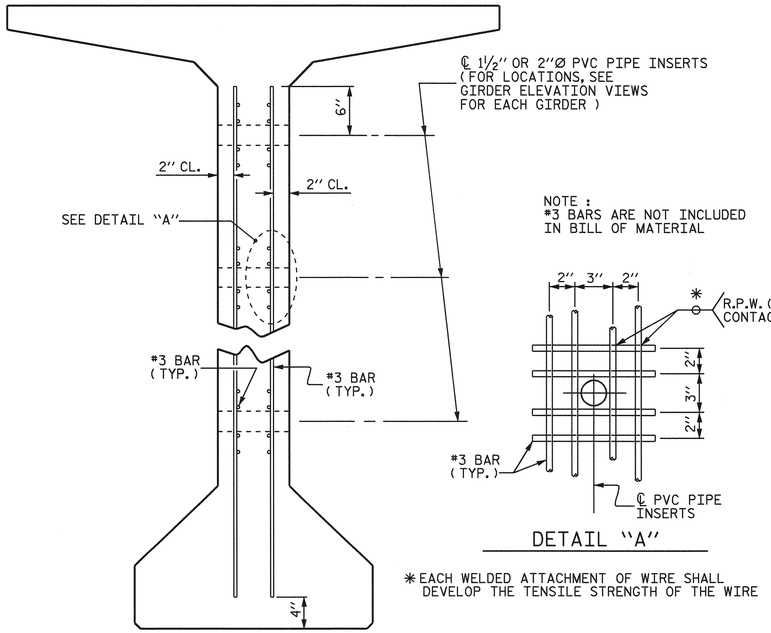

INTERIOR GIRDER ONLY

NOTE :
#3 BARS ARE NOT INCLUDED
IN BILL OF MATERIAL

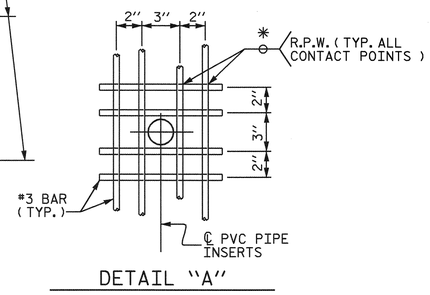

DETAIL "A"

✱EACH WELDED ATTACHMENT OF WIRE SHALL DEVELOP THE TENSILE STRENGTH OF THE WIRE

PVC PIPE INSERT DETAILS

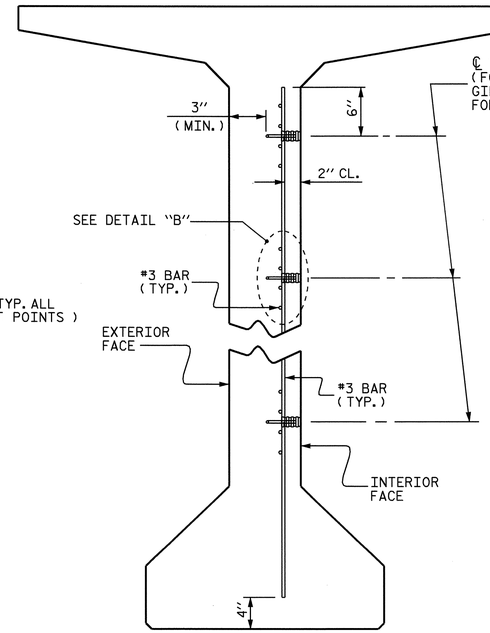

EXTERIOR GIRDER ONLY

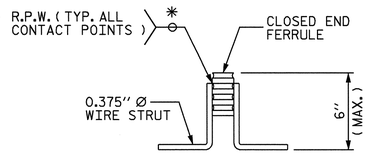

INSERT ELEVATION

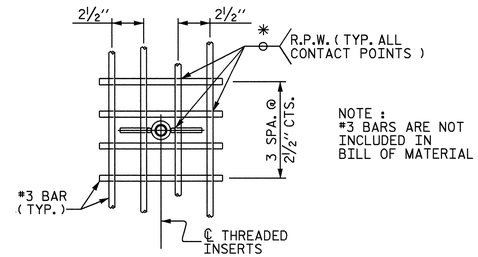

NOTE :
#3 BARS ARE NOT
INCLUDED IN
BILL OF MATERIAL

DETAIL "B"

✱EACH WELDED ATTACHMENT OF WIRE TO FERRULE SHALL DEVELOP THE TENSILE STRENGTH OF THE WIRE

THREADED INSERT DETAILS

NOTES

FOR STRUCTURAL CONCRETE INSERT FOR STEEL DIAPHRAGMS AND SOLAR ARRAY PLATFORM

THE STRUCTURAL CONCRETE INSERT ASSEMBLY FOR STEEL DIAPHRAGMS AND SOLAR ARRAY PLATFORM SHALL CONSIST OF THE FOLLOWING :

A. FERRULES SHALL BE MADE FROM STEEL MEETING THE REQUIREMENTS OF AASHTO M169, GRADE 12L14 AND SHALL HAVE A MINIMUM LENGTH OF THREADS OF 1½".

B. 1-⅞"Ø x 1⅝" BOLT WITH WASHER. BOLT SHALL CONFORM TO THE REQUIREMENTS OF ASTM A307. BOLT AND WASHER SHALL BE METALLIZED.

C. WIRE STRUT SHOWN IN THE CONCRETE INSERT ASSEMBLY DETAIL IS THE MINIMUM ALLOWABLE SIZE AND SHALL HAVE A MINIMUM TENSILE STRENGTH OF 100,000 PSI. AS AN OPTION, A 7/16"Ø WIRE STRUT WITH A MINIMUM TENSILE STRENGTH OF 90,000 PSI IS ACCEPTABLE.

D. IT IS THE CONTRACTOR'S RESPONSIBLITY TO ENSURE HIGH STRENGTH BOLTS AND FERRULES HAVE MATCHING THREAD TYPES AND PROVIDE A PROPER FIT UP.

NOTES

FOR STRUCTURAL CONCRETE INSERT FOR CONCRETE DIAPHRAGM REBARS

THE STRUCTURAL CONCRETE INSERT ASSEMBLY FOR CONCRETE DIAPHRAGM REBARS SHALL CONSIST OF THE FOLLOWING :

A. FERRULES SHALL BE MADE FROM STEEL MEETING THE REQUIREMENTS OF AASHTO M169, GRADE 12L14 AND SHALL HAVE A MINIMUM LENGTH OF THREADS OF 1½".

B. WIRE STRUT SHOWN IN THE CONCRETE INSERT ASSEMBLY DETAIL IS THE MINIMUM ALLOWABLE SIZE AND SHALL HAVE A MINIMUM TENSILE STRENGTH OF 100,000 PSI. AS AN OPTION, A 7/16"Ø WIRE STRUT WITH A MINIMUM TENSILE STRENGTH OF 90,000 PSI IS ACCEPTABLE.

C. ALL MECHANICAL SPLICERS SHALL BE POSITIVE LOCKING TAPER TYPE WITH A MINIMUM TENSILE STRENGTH OF 125 PERCENT OF SPECIFIED YIELD OF REINFORCEMENT STEEL CONFORMING TO ASTM A-615M GRADE 50.

D. REBAR ENDS SHALL BE MACHINED USING THE MANUFACTURERS BAR THREADER TO ENSURE PROPER THREADING. THE BARS SHALL BE TIGHTENED TO THE MANUFACTURERS RECOMMENDED WRENCH SETTING.

E. DETAILS SHOWING MECHANICAL SPLICERS AND THEIR LOCATIONS SHALL BE SHOWN ON THE SHOP DRAWINGS AND SHALL BE APPROVED BY THE ENGINEER PRIOR TO CASTING THE GIRDER.

THE COST OF THE THREADED INSERTS AND PVC PIPE INSERTS SHALL BE INCLUDED IN THE VARIOUS PAY ITEMS.

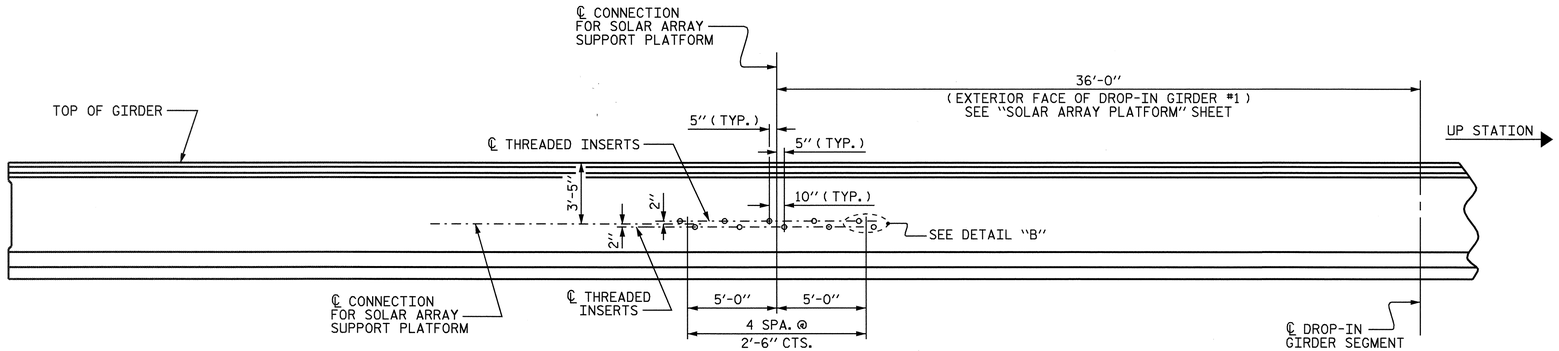

LOCATION OF THREADED INSERTS FOR SOLAR ARRAY PLATFORM

NOTE : THREADED INSERTS FOR SOLAR ARRAY PLATFORM ARE TO BE PLACED ON EXTERIOR SIDE OF DROP-IN GIRDER #1. FABRICATOR SHALL VERIFY LOCATIONS BEFORE CASTING OF THE GIRDER.

PROJECT NO. R-2245

BRUNSWICK COUNTY

STATION: 58+00.00 -L-

SHEET 1 OF 2

STATE OF NORTH CAROLINA
DEPARTMENT OF TRANSPORTATION
RALEIGH

SUPERSTRUCTURE

POST TENSIONED GIRDER DETAILS

MODIFIED 78" BULB TEE

REVISIONS						SHEET NO.
NO.	BY:	DATE:	NO.	BY:	DATE:	S-61
1			3			TOTAL SHEETS
2			4			98

NORTH CAROLINA PROFESSIONAL SEAL 23926 ENGINEER BRIAN C. HANKS
1/18/07

DRAWN BY : MIKE BRITT DATE : 9-15-06
CHECKED BY : B.C. HANKS DATE : 9-21-06

17-JAN-2007 12:24
S:\PGS\R-2245 Oak Island\Final Plans\R2245_sd_G*_Details.dgn
bhanks

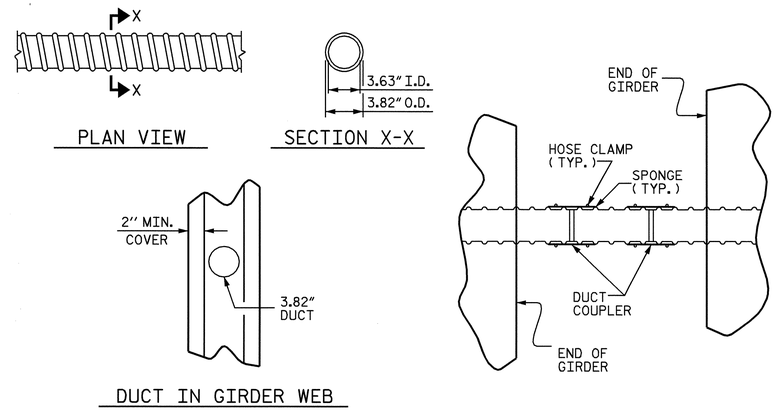

POST-TENSIONING CLOSURE SPLICE DUCT DETAILS

(TO BE INCLUDED IN THE UNIT PRICE BID FOR "POST-TENSIONING TENDONS")

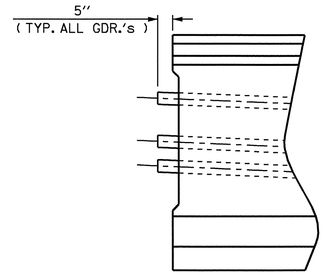

DUCT PROJECTION DETAIL

TYPICAL AT EACH SPLICE LOCATION

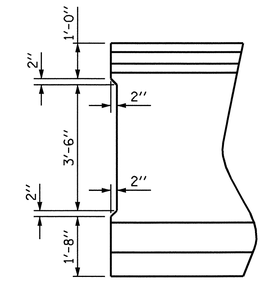

SHEAR KEY DETAIL

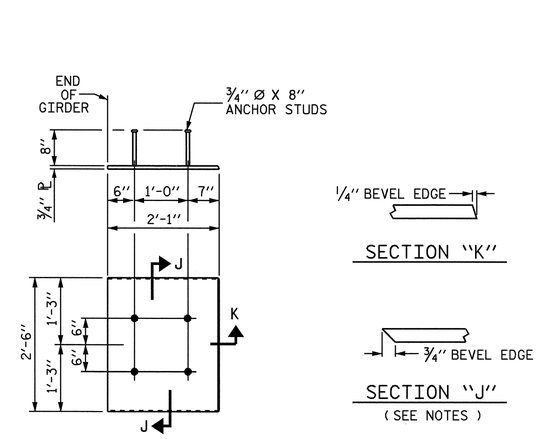

EMBEDDED PLATE "B-2" DETAILS

(1 REQ'D PER END GIRDER SEGMENT)

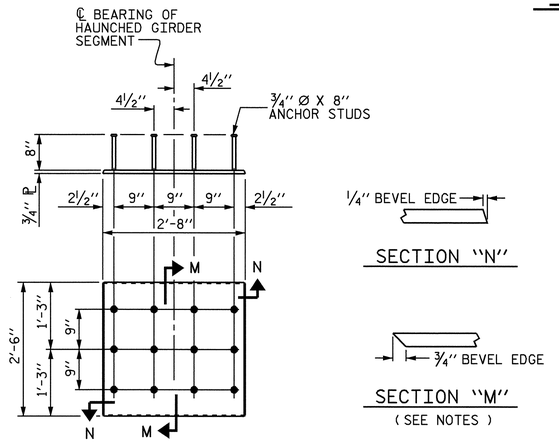

EMBEDDED PLATE "B-3" DETAILS

(1 REQ'D PER HAUNCHED GIRDER SEGMENT)

EMBEDDED PLATE NOTES

EMBEDDED PLATE "B-2" AND "B-3" SHALL BE GALVANIZED IN ACCORDANCE WITH THE STANDARD SPECIFICATIONS. BEVEL EDGES OF PLATE "B-2" AND "B-3" TO GIVE CLOSE FIT BUT NOT TIGHT FIT TO STEEL CASTING FORM.

ANCHOR STUDS SHALL CONFORM TO AASHTO M169 GRADES 1010 THROUGH 1020 OR APPROVED EQUAL, AND SHALL MEET THE TYPE "B" REQUIREMENTS OF SUBSECTION 7.3 OF THE ANSI/AASHTO/AWS D1.5 BRIDGE WELDING CODE.

EMBEDDED PLATES TO BE INCLUDED IN THE UNIT PRICE BID FOR "78" POST-TENSIONED CONCRETE GIRDERS"

NORTH CAROLINA PROFESSIONAL SEAL 23926 ENGINEER BRIAN C. HANKS

1/18/07

PROJECT NO. R-2245

BRUNSWICK COUNTY

STATION: 58+00.00 -L-

SHEET 2 OF 2

STATE OF NORTH CAROLINA
DEPARTMENT OF TRANSPORTATION
RALEIGH

SUPERSTRUCTURE

POST TENSIONED GIRDER DETAILS

MODIFIED 78" BULB TEE

REVISIONS						SHEET NO.
NO.	BY:	DATE:	NO.	BY:	DATE:	S-62
1			3			TOTAL SHEETS
2			4			98

DRAWN BY : MIKE BRITT DATE : 9-19-06
CHECKED BY : B.C. HANKS DATE : 9-21-06

02-NOV-2006 09:09
S:\PG3\R-2245 Oak Island\Final Plans\R2245_sd_G*_Details.dgn
bhanks

MATERIAL PROPERTIES

CONCRETE :

FOR CORROSION PROTECTION OF BRIDGE, SEE SPECIAL PROVISIONS.

THE TRANSFER OF LOAD FROM THE ANCHORAGES TO THE GIRDER SHALL BE DONE WHEN CONCRETE HAS REACH A COMPRESSIVE STRENGTH OF NOT LESS THAN 5500 psi.

THE CONCRETE IN THE GIRDER CLOSURE SPLICE DIAPHRAGMS SHALL BE CLASS PRESTRESS +6000 (NORMAL WEIGHT) WITH A MINIMUM CONCRETE COMPRESSIVE STRENGTH AT 28 DAYS OF 6500 psi.

THE CONCRETE IN THE DIAPHRAGMS OVER BENT 2 AND BENT 3 SHALL BE CLASS AA CONCRETE (NORMAL WEIGHT).

DECK SLAB CONCRETE SHALL ATTAIN A MINIMUM CONCRETE COMPRESSIVE STRENGTH OF 3000 psi PRIOR TO STRESSING OF STAGE 2 POST-TENSIONING TENDONS.

CONCRETE IN PRESTRESSED CONCRETE GIRDERS SHALL BE AT LEAST 60 DAYS OLD PRIOR TO STRESSING OF POST TENSIONING TENDONS.

ALL CONCRETE BEING STRESSED SHALL BE AT LEAST 10 DAYS OLD PRIOR TO STRESSING OF POST-TENSIONING TENDONS.

APPLY EPOXY PROTECTIVE COATING TO END OF GIRDER SURFACES INDICATED ON SHEET 4 OF 5 OF THE "END GIRDER SEGMENT DETAILS" PLANSHEET.

DEPENDING ON THE TYPE OF SYSTEM USED TO SUPPORT THE DECK SLAB FORMS, PRESET ANCHORS MAY BE NECESSARY IN THE PRESTRESSED CONCRETE GIRDER.

THE TOP SURFACE OF THE GIRDER, EXCLUDING THE OUTSIDE 4", SHALL BE RAKED TO A DEPTH OF 1/4".

FOR CRACK REPAIR OF PRESTRESSED CONCRETE GIRDERS, SEE SPECIAL PROVISIONS.

PRESTRESSED CONCRETE GIRDERS ARE DESIGNED FOR 0 PSI TENSION IN THE PRECOMPRESSED TENSILE ZONE UNDER ALL LOADING CONDITIONS.

PRESTRESSED CONCRETE GIRDERS SHALL CONTAIN NITRITE CORROSION INHIBITOR.

THE CONTRACTOR IS RESPONSIBLE FOR THE INTEGRITY AND STABILITY OF THE GIRDERS. IN HANDLING THE 78" POST-TENSIONED PRESTRESSED GIRDERS, THEY SHALL BE MAINTAINED IN AN UPRIGHT POSITION AT ALL TIMES AND THE PROPOSED METHOD FOR ERECTING, STORING AND TRANSPORTING THE GIRDERS SHALL BE SUBMITTED TO THE ENGINEER FOR APPROVAL. THE SUBMITTAL SHALL INCLUDED DESIGN CALCULATIONS FOR LOCATIONS OF PICK-UP POINTS AND SUPPORT POINTS AS NEEDED TO MAINTAIN THE GIRDERS STABLITY DURING ERECTION, STORAGE AND TRANSPORTATION.

PRESTRESSING STEEL :

ALL PRESTRESSING STRANDS SHALL BE 7-WIRE LOW-RELAXATION GRADE 270 STRANDS AND SHALL CONFORM TO AASHTO M203 EXCEPT FOR SAMPLING REQUIREMENTS WHICH SHALL BE IN ACCORDANCE WITH THE STANDARD SPECIFICATIONS.

AT ENDS OF GIRDERS TO BE EMBEDDED IN CONCRETE DIAPHRAGMS OR END WALLS, PRESTRESSING STRANDS MAY EXTEND A MAXIMUM OF 2" BEYOND THE GIRDER ENDS. OTHERWISE, PRESTRESSING STRANDS SHALL BE CUT FLUSH WITH THE GIRDER ENDS.

REINFORCING STEEL :

ALL REINFORCING STEEL SHALL BE GRADE 60.

DESIGN ASSUMPTIONS

CONSTRUCTION SEQUENCE

SEE "ERECTION SEQUENCE FOR SPANS B, C, AND D" PLAN SHEETS FOR NOTES AND DETAILS.

THE DESIGN SHOWN IN THESE PLANS IS BASED ON A CONSTRUCTION SEQUENCE FOR WHICH THE GIRDERS WERE ASSUMED TO BE FROM 60 TO 365 DAYS OLD WHEN ERECTED.

COEFFICIENTS FOR PRESTRESSING STEEL AND PRESTRESS LOSSES :

MODULUS OF ELASTICITY = 28,500,000 psi
ANCHOR SET = 0.375 INCHES **
FRICTION COEFFICIENT (GALVANIZED DUCT) = 0.25
WOBBLE COEFFICIENT = 0.0002
CONSPLICE® BY LEAP SOFTWARE, INC. AND ACI-209R-92 CODES WERE USED IN PERFORMING THE TIME-DEPENDENT ANALYSIS ON THE POST-TENSIONED PRESTRESSED CONCRETE MEMBERS

** - ACTUAL ANCHOR SET LOSSES SHALL BE DETERMINED DURING CONSTRUCTION. THE CONTRACTOR MAY REQUIRE ADJUSTMENT OF JACKING FORCES TO COMPENSATE FOR DIFFERENT AMOUNTS OF SET.

POST-TENSIONING TENDONS :

THREE POST-TENSIONING TENDONS CONSISTING OF 15 - 0.6 INCH DIAMETER LOW-RELAXATION PRESTRESSING STRANDS ARE USED.

TENDONS ARE STRESSED IN TWO STAGES :
FIRST STAGE POST-TENSIONING TENDONS (TENDONS 2 AND 3) ARE STRESSED AFTER GIRDERS ARE SPLICED BUT BEFORE COMPOSITE DECK SLAB IS PLACED.
SECOND STAGE POST-TENSIONING TENDON (TENDON 1) IS STRESSED AFTER THE COMPOSITE DECK SLAB IS PLACED.

ALL POST-TENSIONING TENDONS ARE STRESSED FROM BOTH ENDS.

POST-TENSIONING STRESS LIMITS AND DESIGN JACKING STRESSES :

MAXIMUM JACKING STRESS = 0.81 Fpu (218.7 ksi)
DESIGN JACKING STRESS = 0.78 Fpu (210.6 ksi) FOR TENDONS 1, 2, AND 3

MAXIMUM STRESSES AFTER ANCHORING TENDONS :
AT END OF SEATING ZONE = 0.75 Fpu (202.5 ksi)
AT ANCHOR = 0.70 Fpu (189.0 ksi)

DRAWN BY : R.D. MARTIN DATE : 4/11/05
CHECKED BY : B. C. HANKS DATE : 9/18/06

08-FEB-2007 14:02
S:\PG3\R-2245 Oak Island\Final Plans\R2245_sd_GD.dgn
bhanks

WORKING DRAWINGS

1. THE CONTRACTOR SHALL SUBMIT WORKING DRAWINGS SHOWING COMPLETE DETAILS OF THE POST-TENSIONING SYSTEM TO THE ENGINEER FOR APPROVAL.

2. THE CONTRACTOR SHALL SUBMIT WORKING DRAWINGS SHOWING COMPLETE DETAILS OF THE DUCT AND DUCT SPLICE FOR APPROVAL BY THE ENGINEER. THESE WORKING DRAWINGS SHALL SHOW COMPLETE DIMENSIONS OF THE DUCT AND DUCT SPLICE, A THOROUGH SEQUENCE OF INSTALLATION OF THE DUCT SPLICE, DETAILS FOR SUPPORT OF THE DUCT, DETAILS OF GROUT VENTS AND THEIR CONNECTION TO THE DUCT, LOCATION OF GROUT VENTS AND OTHER RELATED DETAILS. THE DUCT SHALL NOT BE SHIPPED TO THE PRECASTER UNTIL THIS SUBMITTAL IS APPROVED BY THE ENGINEER.

3. THE CONTRACTOR SHALL SUBMIT INTEGRATED WORKING DRAWINGS IN AREAS OF POST-TENSIONING ANCHORAGES DUE TO CONGESTION WITH REINFORCING STEEL. THESE WORKING DRAWINGS WILL SHOW COMPLETE DETAILS OF THE ANCHORAGE SYSTEM, INCLUDING ANCHORAGE PROTECTION DETAILS, AND RECESSES REQUIRED TO ACCOMMODATE STRESSING EQUIPMENT. LOCAL ANCHORAGE ZONE REINFORCEMENT SHALL BE DESIGNED BY THE POST-TENSIONING SUPPLIER AND SHOWN ON THE WORKING DRAWINGS. THE CONTRACTOR SHALL BE RESPONSIBLE FOR RESOLVING CONFLICTS OF LOCAL ANCHORAGE ZONE REINFORCEMENT AND ANCHORAGE WITH OTHER REINFORCEMENT. ANY SHIFTING OF REINFORCING STEEL TO ACCOMODATE PLACEMENT OF LOCAL ANCHORAGE ZONE REINFORCEMENT SHALL BE APPROVED BY THE ENGINEER.

4. PRIOR TO CASTING THE GIRDERS, THE CONTRACTOR SHALL SUBMIT COMPLETE WORKING DRAWINGS WITH THE EXACT LOCATION AND A COMPLETE DESCRIPTION OF ALL INSERTS CAST IN THE GIRDERS TO THE DEPARTMENT FOR APPROVAL. SUCH INSERTS INCLUDE, BUT ARE NOT LIMITED TO, INSERTS FOR SUPPORTING FALSEWORK AND FORMWORK, INSERTS FOR ATTACHING DIAPHRAGMS, INSERTS FOR CONNECTING STRONGBACKS, INSERTS FOR CONNECTING TEMPORARY TOWERS, INSERTS FOR CONNECTING TEMPORARY BRACING, AND LIFTING INSERTS.

5. THE CONTRACTOR SHALL SUBMIT WORKING DRAWINGS AND CALCULATIONS SHOWING COMPLETE DETAILS OF TENDON STRESSING FOR APPROVAL BY THE ENGINEER. THESE DETAILS SHALL INDICATE JACKING FORCES, THE SEQUENCE OF STRESSING, CALCULATED TENDON ELONGATIONS, GAUGE PRESSURES, JACK CALIBRATIONS, FRICTION COEFFICIENT, WOBBLE COEFFICIENT AND ANCHOR SET LOSS.

6. THE CONTRACTOR SHALL SUBMIT COMPLETE DETAILS OF TENDON GROUTING MATERIALS AND PROCEDURES FOR APPROVAL BY THE ENGINEER.

DUCTS

1. DUCTS FOR POST-TENSION TENDONS SHALL BE GALVANIZED CORRUGATED METAL SHEATHING WITH AN INSIDE CLEAR DIAMETER OF 3.63" AND AN OUTSIDE DIAMETER OF 3.82". THE CONTRACTOR HAS THE OPTION OF USING AN ALTERNATE DUCT SIZE AS LONG AS THE ALTERNATE DUCT DOES NOT DECREASE THE 2" OF COVER REQUIRED FOR THE STIRRUPS.

2. DUCTS SHALL BE SECURELY TIED TO STIRRUPS AT A MAXIMUM INTERVAL OF 1'-6" CTS. TO PREVENT DISPLACEMENT OF DUCTS DURING CONCRETE PLACEMENT.

3. DURING STORAGE AND AFTER INSTALLATION, DUCTS AND GROUT VENTS SHALL BE SEALED AT ALL TIMES TO PREVENT ENTRANCE OF WATER AND DEBRIS. DUCTS SHALL BE PROTECTED AND HANDLED WITH CARE TO PREVENT DAMAGE OR UNINTENDED BENDING, CRIMPING OR FLATTENING DURING STORAGE, INSTALLATION, AND PLACEMENT OF GIRDER CONCRETE.

4. THE GIRDER SIDE FORMS SHALL NOT BE SET IN PLACE UNTIL THE ENGINEER HAS VISUALLY INSPECTED AND APPROVED THE DUCT PROFILE, ANCHORAGE DETAILS, REINFORCING CAGE AND OTHER GIRDER FABRICATION DETAILS. THE DUCTS SHALL ALSO BE PRESSURE TESTED FOR POSSIBLE LEAKS BEFORE SIDE FORMS ARE PLACED.

5. THE CONTRACTOR SHALL BE RESPONSIBLE FOR THE DETAILED DESIGN OF THE DUCT AND THE DUCT SPLICE. A SUGGESTED CONCEPTUAL DESIGN OF THE DUCT SPLICE IS GIVEN ON THE SHEET TITLED "POST-TENSIONED GIRDER DETAILS" SHEET 2 OF 2.

6. DUCTS SHALL HAVE GROUT VENTS AT EACH INTERIOR SUPPORT (HIGH POINT) AND AT EACH LOW POINT ALONG THE TENDON PROFILE, AND AT OTHER LOCATIONS. SEE PROPOSED GROUT VENT LOCATION SKETCHES ON THE "MODIFIED 78" BULB TEE" PLAN SHEETS.

7. DUCT SPLICES SHALL BE WATERTIGHT AND PROVIDE A SMOOTH INTERIOR ALIGNMENT WITH NO LIPS OR KINKS. THEY SHALL BE INSTALLED TO THE SAME PLACEMENT TOLERANCE AS CONTINUOUS RUNS OF THE DUCT. STIRRUP SPACING AT DUCT SPLICES MAY BE ADJUSTED UP TO 4 INCHES PROVIDED THE TOTAL NUMBER OF STIRRUPS WITHIN 3 FEET ON EITHER SIDE OF THE SPLICE IS THE SAME AS REQUIRED BY THE PLANS.

8. FOLLOWING COMPLETION OF CONCRETE PLACEMENT IN GIRDERS AND BEFORE TRANSPORTING GIRDERS TO THE JOB SITE, DUCTS SHALL BE TESTED FOR OBSTRUCTIONS BY RUNNING A ROUND TORPEDO THROUGH THE DUCT. SEE NOTE 12.

9. DUCT SPLICES IN CLOSURE SPLICE DIAPHRAGMS SHALL BE PRESSURE TESTED FOR ANY LEAKS THAT MAY ALLOW GROUT TO ENTER DUCT BEFORE CONCRETE PLACEMENT.

10. FOLLOWING COMPLETION OF CONCRETE PLACEMENT FOR EACH CLOSURE SPLICE DIAPHRAGM, THE DUCTS SHALL BE TESTED FOR OBSTRUCTIONS BY RUNNING A ROUND TORPEDO THROUGH THE DUCT. SEE NOTE 12. THIS STEP SHALL BE PERFORMED BEFORE CONCRETE HAS TAKEN ITS INITIAL SET.

11. FOLLOWING COMPLETION OF GROUTING DUCTS 2 AND 3, DUCT 1 SHALL BE TESTED FOR OBSTRUCTIONS BY RUNNING A ROUND TORPEDO THROUGH THE DUCT. SEE NOTE 12.

12. TO DEMONSTRATE THAT THE DUCTS ARE NOT BLOCKED, THE CONTRACTOR SHALL PASS A TORPEDO THROUGH THE DUCTS. THE TORPEDO SHALL HAVE DIMENSIONS NOT LESS THAN 1/4" SMALLER THAN THE INSIDE DIAMETER OF THE DUCT.

13. RECESSES FOR POST-TENSIONING ANCHORAGE IN THE TOP OF GIRDERS SHALL BE PROVIDED WITH SUITABLE DRAIN PIPES TO PREVENT STANDING WATER. DRAIN PIPES SHALL BE MAINTAINED FREE OF OBSTRUCTIONS AT ALL TIMES UNTIL EPOXY GROUT POUR-BACKS ARE INSTALLED AFTER POST-TENSIONING TENDONS HAVE BEEN STRESSED AND GROUTED.

14. DUCT PLACEMENT TOLERANCE SHALL BE 1/4" ± IN THE HORIZONTAL DIRECTION AND 1/2" ± IN THE VERTICAL DIRECTION.

NORTH CAROLINA PROFESSIONAL SEAL 23926 ENGINEER BRIAN C. HANKS
1/18/07

GENERAL NOTES

FOR POST-TENSIONING TENDONS, SEE SPECIAL PROVISIONS.

IN ADDITION TO THE "POST-TENSIONING TENDONS" SPECIAL PROVISION, THE CONTRACTOR SHALL ADHERE TO THE GUIDELINES FOR TENDON INSTALLATION AND GROUTING AS DESCRIBED IN THE FEDERAL HIGHWAY ADMINISTRATION'S PUBLICATION "POST-TENSIONING TENDON INSTALLATION AND GROUTING MANUAL".

FOR 78" POST-TENSIONED PRESTRESSED CONCRETE GIRDERS, SEE SPECIAL PROVISIONS.

PROJECT NO. R-2245
BRUNSWICK COUNTY
STATION: 58+00.00 -L-

SHEET 1 OF 2

STATE OF NORTH CAROLINA
DEPARTMENT OF TRANSPORTATION
RALEIGH

POST-TENSION GIRDER NOTES

REVISIONS						SHEET NO.
NO.	BY:	DATE:	NO.	BY:	DATE:	S-63
1			3			TOTAL SHEETS
2			4			98

POST-TENSIONING OPERATIONS

1. THE POST-TENSIONING OPERATION SHALL BE PERFORMED ACCORDING TO THE REQUIREMENTS OF THE POST-TENSIONING TENDONS SPECIAL PROVISION AND TO THE "POST-TENSIONING TENDON INSTALLATION AND GROUTING MANUAL" PUBLISHED BY THE FEDERAL HIGHWAY ADMINISTRATION.

2. THE PERSON IN RESPONSIBLE CHARGE OF THE POST-TENSIONING OPERATION SHALL MEET THE QUALIFICATIONS DESCRIBED IN THE "POST-TENSIONING TENDON INSTALLATION AND GROUTING MANUAL" PUBLISHED BY THE FEDERAL HIGHWAY ADMINISTRATION. DOCUMENTATION OF THIS EXPERIENCE SHALL BE SUBMITTED TO THE ENGINEER FOR APPROVAL.

3. A MEETING BETWEEN THE CONTRACTOR, POST-TENSIONING SUPPLIER, NCDOT REPRESENTATIVES AND THE ENGINEER OF RECORD SHALL BE SCHEDULED AT LEAST (30) DAYS PRIOR TO POST-TENSIONING OPERATIONS TO REVIEW THE MEANS AND METHODS OF POST-TENSIONING, DUCT SPLICING AND TESTING TENDON GROUTING AND ALL ASSOCIATED FIELD ACTIVITIES. COMPLETE DETAILS OF THE POST-TENSIONING SYSTEM, TENDON STRESSING DETAILS, STRESSING SEQUENCES, CALCULATED EXTENSIONS OF EACH JACK, FRICTION COEFFICIENT, AND ANCHOR SET LOSSES SHALL BE REVIEWED. TEMPORARY SUPPORT PLATFORM REQUIREMENTS AND DETAILS SHALL BE REVIEWED AT THIS TIME.

4. THE CONTRACTOR SHALL NOT STRESS ANY POST-TENSIONING TENDONS UNTIL THE ENGINEER IS SATISFIED THAT THE REQUIREMENTS STATED IN THE SPECIAL PROVISIONS AND THE GUIDELINES OF THE "POST-TENSION TENDON INSTALLATION AND GROUTING MANUAL" HAVE BEEN MET.

5. STRESSING OF POST-TENSIONING TENDONS FOR SPAN B-D SHALL BE ACCOMPLISHED FOR EACH TENDON USING AN ALTERNATING SYMMETRICAL PATTERN ACROSS THE ROADWAY, BEGINNING AT THE CENTER GIRDER AND WORKING OUTWARD ALTERNATING SIDES.

6. FOR FIRST STAGE POST-TENSIONING, TENDON 3 SHALL BE STRESSED IN ALL GIRDERS ACROSS THE WIDTH OF THE BRIDGE AT BOTH ENDS PRIOR TO STRESSING TENDON 2 IN EACH GIRDER. FOR SECOND STAGE POST-TENSIONING, TENDON 1 SHALL BE STRESSED IN ALL GIRDERS ACROSS THE WIDTH OF THE BRIDGE AT BOTH ENDS.

7. ALL TENDONS SHALL BE STRESSED FROM BOTH ENDS.

8. IT IS THE CONTRACTOR'S RESPONSIBLITY TO MAINTAIN THE INTEGRITY OF THE POST-TENSIONING STRANDS. STRANDS SHALL BE PROTECTED AND HANDLED WITH CARE TO PREVENT DAMAGE OR RUST DURING STORAGE, INSTALLATION, AND PLACEMENT OF GROUT.

TENDON GROUTING

1. GROUTING OF POST-TENSIONING TENDONS SHALL BE PERFORMED ACCORDING TO THE REQUIREMENTS OF THE POST-TENSIONING TENDONS SPECIAL PROVISION AND TO THE "POST-TENSIONING TENDON INSTALLATION AND GROUTING MANUAL" PUBLISHED BY THE FEDERAL HIGHWAY ADMINISTRATION.

2. THE PERSON IN RESPONSIBLE CHARGE OF THE GROUTING OPERATION SHALL MEET THE QUALIFICATIONS DESCRIBED IN THE "POST-TENSIONING TENDON INSTALLATION AND GROUTING MANUAL" PUBLISHED BY THE FEDERAL HIGHWAY ADMINISTRATION. DOCUMENTATION OF EXPERIENCE SHALL BE SUBMITTED TO THE ENGINEER FOR APPROVAL.

3. A MEETING BETWEEN THE CONTRACTOR, POST-TENSION SUPPLIER, NCDOT REPRESENTATIVES AND THE ENGINEER OF RECORD SHALL BE SCHEDULED AT LEAST THIRTY (30) DAYS PRIOR TO THE FIRST GROUTING OPERATIONS. AT THE MEETING, THE GROUTING OPERATION, REQUIRED TESTING, CORRECTIVE PROCEDURES AND ANY OTHER RELEVANT ISSUES SHALL BE DISCUSSED.

4. AFTER TENDONS HAVE BEEN STRESSED, DUCTS SHALL BE GROUTED. GROUTING OF POST-TENSIONING TENDONS SHALL BE COMPLETED AS SOON AS POSSIBLE AFTER TENSIONING, SEE POST-TENSIONING TENDON SPECIAL PROVISION.

5. TO THE MAXIMUM EXTENT POSSIBLE, GROUT SHALL BE PUMPED FROM THE LOW POINTS IN THE TENDON PROFILE AND VENTED AT THE HIGH POINTS IN THE TENDON PROFILE.

6. AFTER TENDONS ARE GROUTED, ANCHORAGES AND DUCTS SHALL BE INSPECTED TO DETERMINE IF THEY HAVE BEEN COMPLETELY FILLED WITH GROUT.

APPROXIMATE GROUT QUANTITIES:

DUCT 1:	35.9 FT3
DUCT 2:	35.9 FT3
DUCT 3:	35.4 FT3

QUANTITIES SHOWN ARE BASED ON DUCTS WITH LENGTHS OF 728'-3¾", 728'-3¼", AND 719'-0⅜", RESPECTIVELY, HAVING AN INSIDE DIAMETER OF 3.63" AND EACH TENDON CONTAINING 15-0.6"Ø STRANDS.

THE QUANTITIES SHOWN ARE INTENDED TO ASSIST THE CONTRACTOR AND ENGINEER IN DETERMINING THE AMOUNT OF GROUT NEEDED TO COMPLETELY FILL THE POST-TENSIONING DUCT.

PAYMENT

THE COST OF MATERIALS AND INSTALLATION OF POST-TENSIONING TENDONS, WEDGES, ANCHOR DEVICES GROUTING OF TENDONS, EPOXY GROUT POUR-BACKS, AND INCIDENTAL ITEMS RELATED TO POST-TENSIONING SHALL BE INCLUDED IN THE LUMP SUM PRICE BID FOR "POST-TENSIONING TENDONS".

THE COST OF ALL CONCRETE, REINFORCING STEEL, PRESTRESSING STRANDS, POST-TENSION MATERIALS EMBEDDED IN THE CONCRETE, INSERTS EMBEDDED IN THE CONCRETE, BEARING PLATE ASSEMBLIES, ANCHOR DEVICES, TEMPORARY BRACING AND INCIDENTAL ITEMS SHALL BE INCLUDED IN THE CONTRACT UNIT PRICE FOR "78" POST-TENSIONED CONCRETE GIRDERS".

EPOXY GROUT POUR-BACK FOR POST-TENSIONING ANCHORAGES

AFTER TENDONS HAVE BEEN STRESSED, GROUTED AND INSPECTED, POST-TENSIONING ANCHORAGES SHALL BE ENCAPSULATED IN AN EPOXY GROUT POUR-BACK USING THE FOLLOWING PROCEDURE:

1. CONCRETE SURFACES OF RECESSES AT POST-TENSIONING ANCHORAGES SHALL BE CLEANED AND ROUGHENED PRIOR TO CASTING POUR-BACKS.

2. ENCAPSULATE ANCHORAGE AND PERMANENT GROUT CAP WITH A POUR-BACK OF AN APPROVED, HIGH-STRENGTH, HIGH-BOND, LOW-SHRINKAGE, SAND-FILLED EPOXY GROUT. SEE POST-TENSIONING TENDON SPECIAL PROVISION. FILL ANCHORAGE RECESS TO MATCH ADJACENT SURFACES OF CONCRETE GIRDER, PROVIDING A MINIMUM COVER OF 1.5 INCHES OVER ANCHORAGE AND PERMANENT GROUT CAPS.

3. FILL DRAIN PIPES FOR ANCHORAGE RECESSES IN TOP OF GIRDERS USING EPOXY GROUT.

4. COMPLETELY ENCASE TENDON 2 AND TENDON 3 BY PLACING END DIAPHRAGM CONCRETE AND ENCASE TENDON 1 ANCHORAGE BY PLACING DECK SLAB CONCRETE. THE DECK SLAB CONSTRUCTION JOINT SHALL BE SEALED WITH METHYL-METHACRYLATE OR APPROVED EQUAL.

5. THE PAYMENT OF EPOXY GROUT POUR-BACK SHALL BE INCLUDED IN THE LUMP SUM PRICE BID FOR "POST-TENSIONING TENDONS".

NORTH CAROLINA PROFESSIONAL SEAL 23926 ENGINEER BRIAN C. HANKS
1/16/07

PROJECT NO. R-2245

BRUNSWICK COUNTY

STATION: 58+00.00 -L-

SHEET 2 OF 2

STATE OF NORTH CAROLINA
DEPARTMENT OF TRANSPORTATION
RALEIGH

POST-TENSION GIRDER NOTES

REVISIONS						SHEET NO.
NO.	BY:	DATE:	NO.	BY:	DATE:	S-64
1			3			TOTAL SHEETS
2			4			98

DRAWN BY : R.D. MARTIN DATE : 4/11/05
CHECKED BY : B. C. HANKS DATE : 9/18/06

18-JAN-2007 08:22
S:\PG3\R-2245 Oak Island\Final Plans\R2245_sd_GD.dgn
bhanks

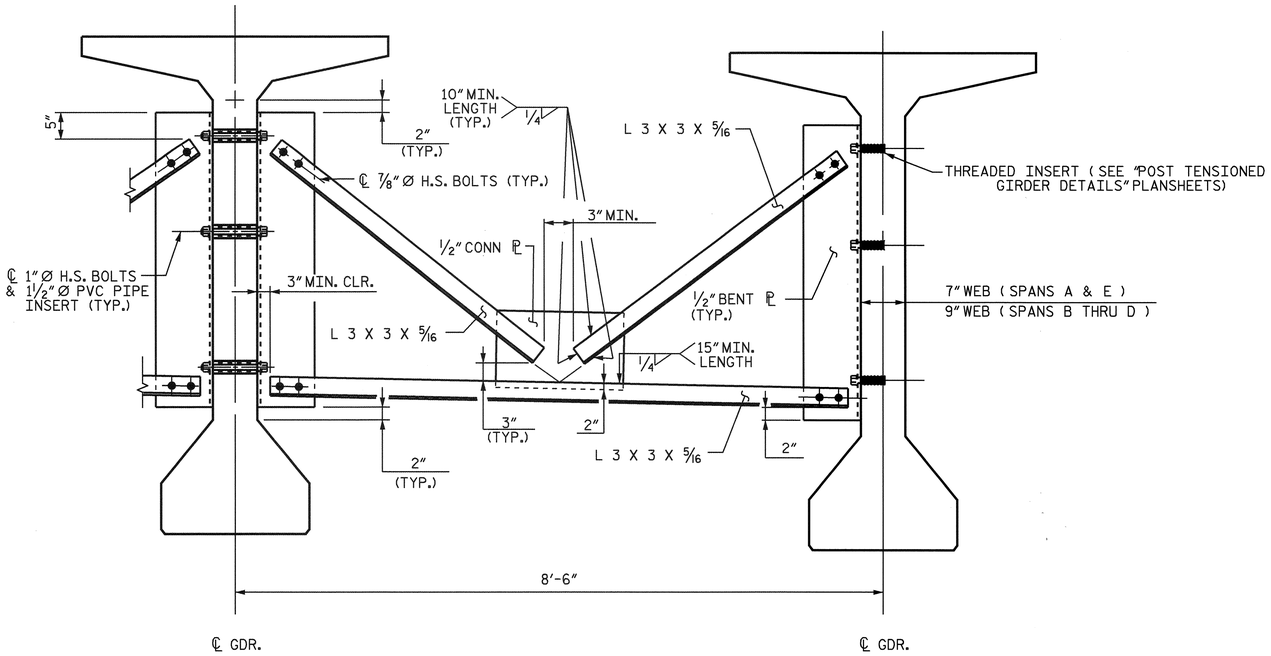

INTERIOR GIRDER

EXTERIOR GIRDER

PART SECTION AT INTERMEDIATE DIAPHRAGM

FOR 78" BULB TEE (SPANS A & E) AND MODIFIED 78" BULB TEE
END GIRDER & DROP-IN GIRDER SEGMENTS

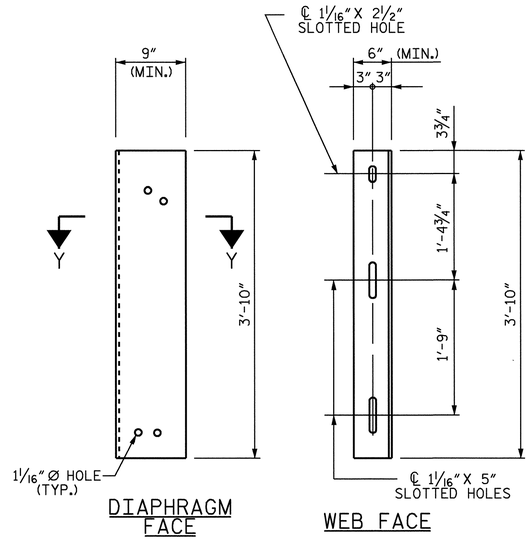

DIAPHRAGM FACE

WEB FACE

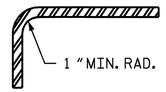

SECTION Y-Y

CONNECTOR PLATE DETAILS

STRUCTURAL STEEL NOTES

ALL INTERMEDIATE DIAPHRAGM STEEL, CONNECTOR PLATES AND PLATE WASHERS SHALL BE AASHTO M270 GRADE 50 OR APPROVED EQUAL.

TENSION ON THE AASHTO M164 BOLTS THROUGH THE ANGLE MEMBER SHALL BE CALIBRATED USING DIRECT TENSION INDICATOR WASHERS IN ACCORDANCE WITH ARTICLE 440-8 OF THE STANDARD SPECIFICATIONS.

TENSION ON THE AASHTO M164 BOLTS THROUGH THE GIRDER WEB SHALL BE SNUG TIGHTENED FOLLOWED BY AN ADDITIONAL 1/4 TURN.

THE ANGLES, BOLTS, WASHERS, PLATE WASHERS, CONNECTION PLATES AND DIRECT TENSION INDICATORS SHALL BE METALLIZED IN ACCORDANCE WITH THE STANDARD SPECIFICATIONS. FOR THERMAL SPRAYED COATINGS (METALLIZATION) SEE SPECIAL PROVISIONS.

APPLY AN 8 mil THICK 1350 ALUMINUM (W-Al-1350) THERMAL SPRAYED COATING WITH A 0.5 mil THICK SEAL COAT TO THE ANGLES, BOLTS, WASHERS, PLATE WASHERS, CONNECTOR PLATES AND DIRECT TENSION INDICATORS IN ACCORDANCE WITH THE THERMAL SPRAYED COATINGS SPECIAL PROVISION AND SECTION 442 OF THE STANDARD SPECIFICATIONS. FOR THERMAL SPRAYED COATINGS, SEE SPECIAL PROVISIONS.

APPLY 1 COAT EACH OF 1080-12 BROWN AND 1080-12 GRAY PAINT ON THE EDGES AND THE WEB FACE OF THE CONNECTOR PLATE WHICH COMES IN CONTACT WITH THE CONCRETE GIRDER IN ACCORDANCE WITH SECTION 442 OF THE STANDARD SPECIFICATIONS.

USE A PLATE WASHER WITH STANDARD HOLES UNDER EACH BOLT HEAD AND NUT. THE PLATE WASHERS SHALL HAVE SUFFICIENT SIZE TO COVER THE HOLES AFTER INSTALLATION. DIRECT TENSION INDICATORS ARE TO BE USED IN CONJUNCTION WITH THE PLATE WASHERS.

PROVIDE SUFFICIENT LENGTH OF ALL BOLTS TO ACCOMODATE WASHERS, DIRECT TENSION INDICATORS, THE THICKNESS OF CONNECTING MEMBER PLUS AT LEAST 1/4" PROJECTION BEYOND THE NUT.

INTERMEDIATE DIAPHRAGM ASSEMBLY SHALL COMPLY WITH SECTION 1072 OF THE STANDARD SPECIFICATIONS.

CONTRACTOR SHALL SUBMIT TWO SETS OF WORKING DRAWINGS FOR THE INTERMEDIATE DIAPHRAGM ASSEMBLY FOR REVIEW, COMMENTS AND ACCEPTANCE. AFTER REVIEW, COMMENTS, AND ACCEPTANCE, SUBMIT SEVEN SETS FOR DISTRIBUTION.

IN THE EXTERIOR BAYS, TEMPORARY STRUTS SHALL BE PLACED BETWEEN PRESTRESSED GIRDERS ADJACENT TO THE STEEL DIAPHRAGMS. STRUTS SHALL REMAIN IN PLACE 3 DAYS AFTER CONCRETE IS PLACED. ALL AASHTO M164 H.S. BOLTS SHALL BE FULLY TIGHTENED AFTER THE STRUTS HAVE BEEN REMOVED.

ALL DIMENSIONS SHOWN ARE HORIZONTAL OR VERTICAL UNLESS OTHERWISE NOTED.

AT THE CONTRACTOR'S OPTION, STAINLESS STEEL BOLTS AND WASHERS MAY BE USED AS AN ALTERNATE FOR THE ALUMINUM COATED AND SEALED BOLTS AND WASHERS. THEY SHALL CONFORM TO OR EXCEED THE MECHANICAL REQUIREMENTS OF ASTM A307. THE USE OF THIS ALTERNATE SHALL BE APPROVED BY THE ENGINEER.

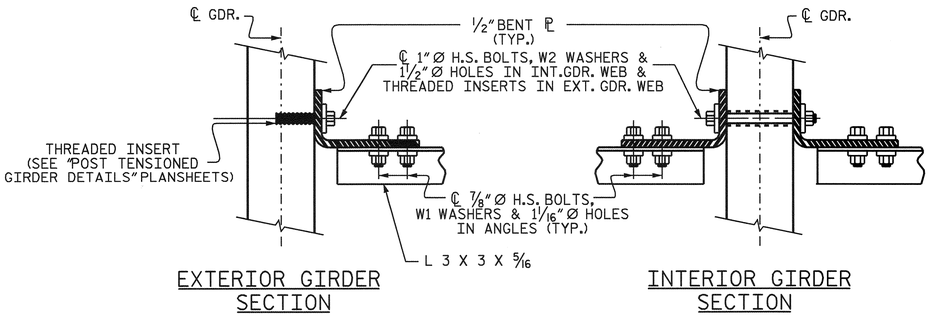

EXTERIOR GIRDER SECTION

INTERIOR GIRDER SECTION

CONNECTION DETAILS

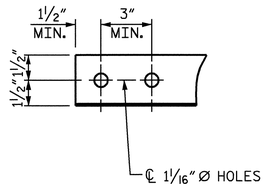

ANGLE END

(L 3 X 3 X 5/16)

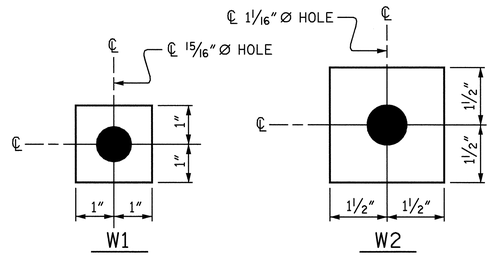

ℙ 7/16" X 2" X 2"

USE WITH 7/8" Ø HVY. HEX NUTS & DIRECT TENSION INDICATOR WASHERS AT DIAPHRAGM ANGLE TO CONNECTOR PLATE CONNECTIONS

ℙ 7/16" X 3" X 3"

USE WITH 1" Ø HVY. HEX NUTS & DIRECT TENSION INDICATOR WASHERS AT CONNECTOR PLATE TO GIRDER CONNECTIONS

WASHER DETAILS

PROJECT NO. R-2245

BRUNSWICK COUNTY

STATION: 58+00.00 -L-

SHEET 1 OF 2

STATE OF NORTH CAROLINA
DEPARTMENT OF TRANSPORTATION
RALEIGH

SUPERSTRUCTURE

INTERMEDIATE STEEL DIAPHRAGMS

REVISIONS						SHEET NO.
NO.	BY:	DATE:	NO.	BY:	DATE:	S-65
1			3			TOTAL SHEETS
2			4			98

NORTH CAROLINA PROFESSIONAL SEAL 23926 ENGINEER BRIAN C. HANKS
1/18/07

DRAWN BY : H. A. LUCAS DATE : 8/1/06
CHECKED BY : B. C. HANKS DATE : 9/12/06

08-FEB-2007 14:05
S:\PGS\R-2245 Oak Island\Final Plans\R2245_sd_SS_Diaph Dtls.dgn
bhanks

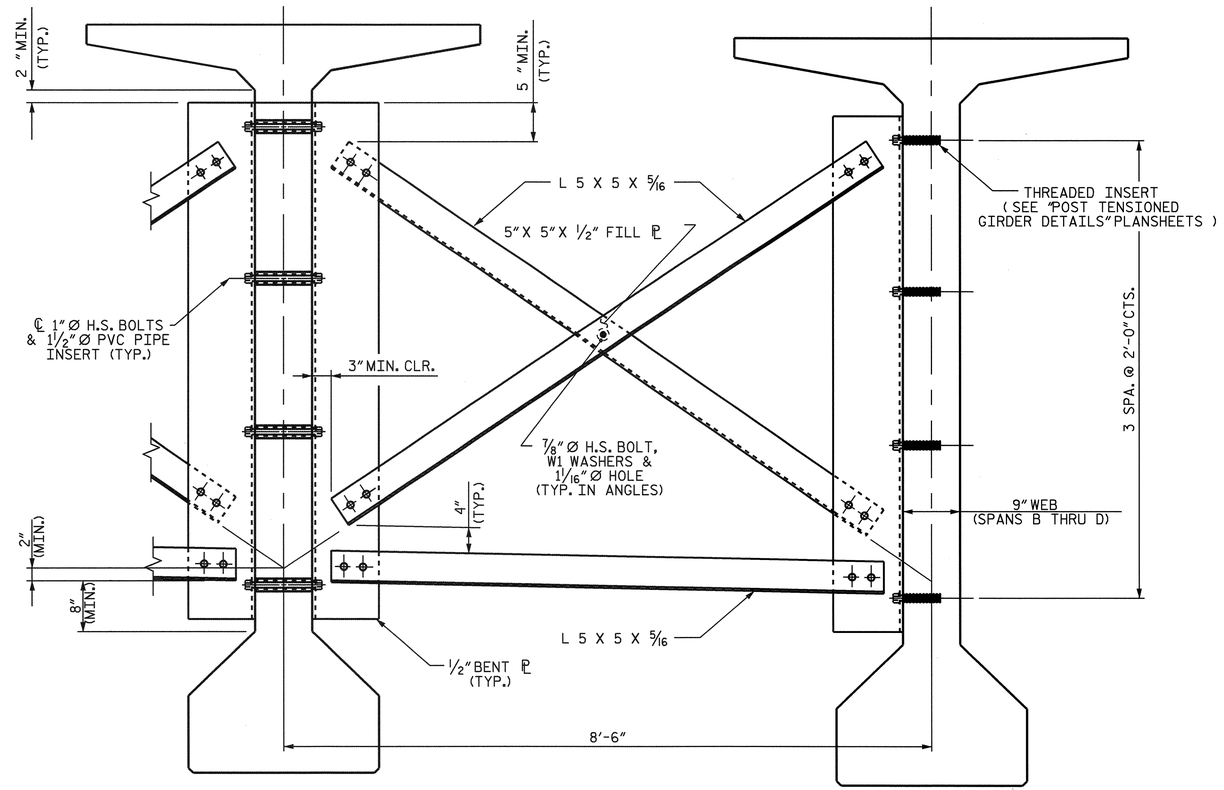

INTERIOR GIRDER

EXTERIOR GIRDER

PART SECTION AT INTERMEDIATE DIAPHRAGM

FOR MODIFIED 78" BULB TEE HAUNCHED GIRDER SEGMENTS

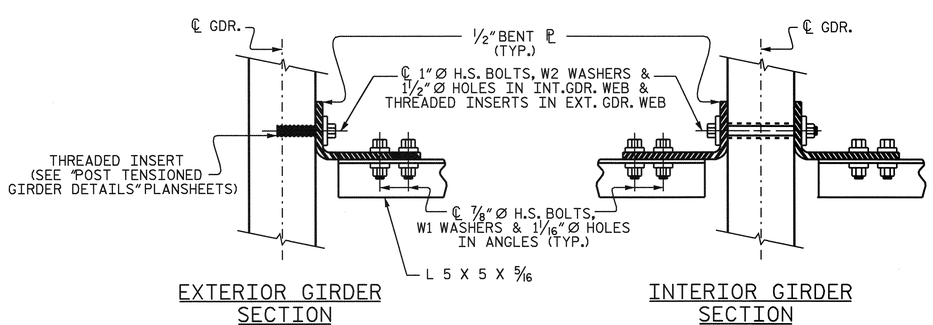

EXTERIOR GIRDER SECTION

INTERIOR GIRDER SECTION

CONNECTION DETAILS

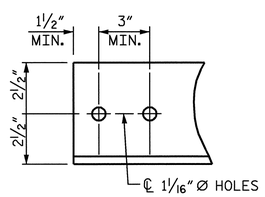

ANGLE END

(L 5 X 5 X 5/16)

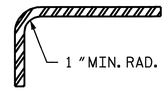

SECTION Y-Y

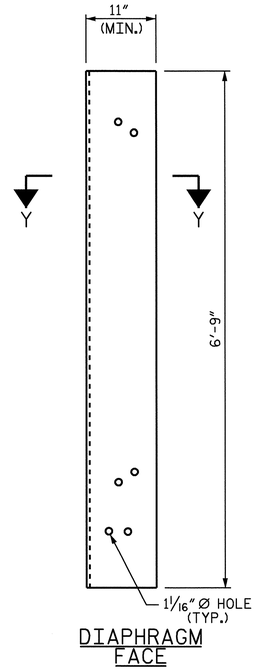

DIAPHRAGM FACE

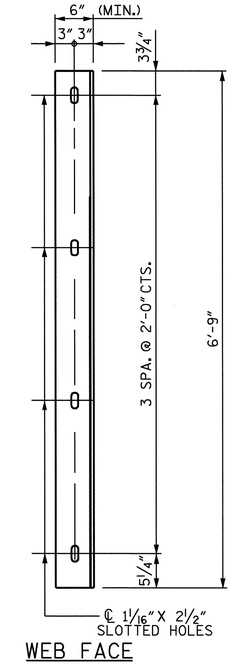

WEB FACE

CONNECTION PLATE DETAILS

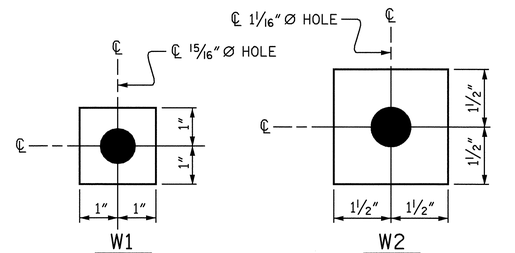

USE WITH 7/8"Ø HVY. HEX NUTS & DIRECT TENSION INDICATOR WASHERS AT DIAPHRAGM ANGLE TO CONNECTOR PLATE CONNECTIONS

USE WITH 1"Ø HVY. HEX NUTS & DIRECT TENSION INDICATOR WASHERS AT CONNECTOR PLATE TO GIRDER CONNECTIONS

WASHER DETAIL

PROJECT NO. R-2245

BRUNSWICK COUNTY

STATION: 58+00.00 -L-

SHEET 2 OF 2

STATE OF NORTH CAROLINA
DEPARTMENT OF TRANSPORTATION
RALEIGH

SUPERSTRUCTURE

INTERMEDIATE STEEL DIAPHRAGMS

NORTH CAROLINA PROFESSIONAL SEAL 23926 ENGINEER BRIAN C. HANKS
1/16/07

REVISIONS						SHEET NO.
NO.	BY:	DATE:	NO.	BY:	DATE:	S-66
1			3			TOTAL SHEETS
2			4			98

DRAWN BY : H. A. LUCAS DATE : 8/1/06
CHECKED BY : B. C. HANKS DATE : 9/12/06

08-FEB-2007 14:05
S:\PG3\R-2245 Oak Island\Final Plans\R2245_sd_SS_Diaph Dtls.dgn
bhanks

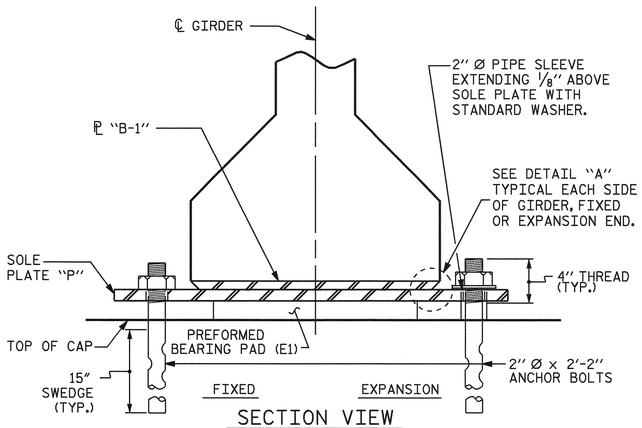

SECTION VIEW

(SPANS A AND E GIRDERS)

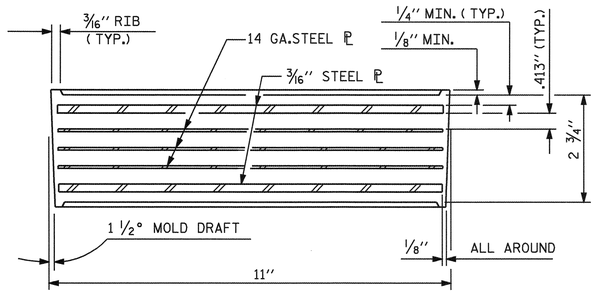

TYPICAL SECTION OF ELASTOMERIC BEARINGS

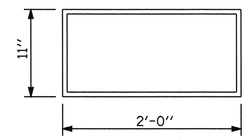

E1 (32 REQ'D)

PLAN VIEW OF ELASTOMERIC BEARING

TYPE VII

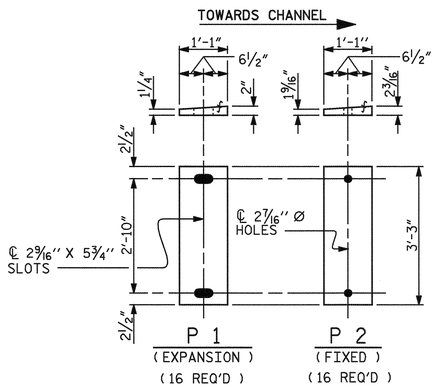

SOLE PLATE DETAILS ("P")

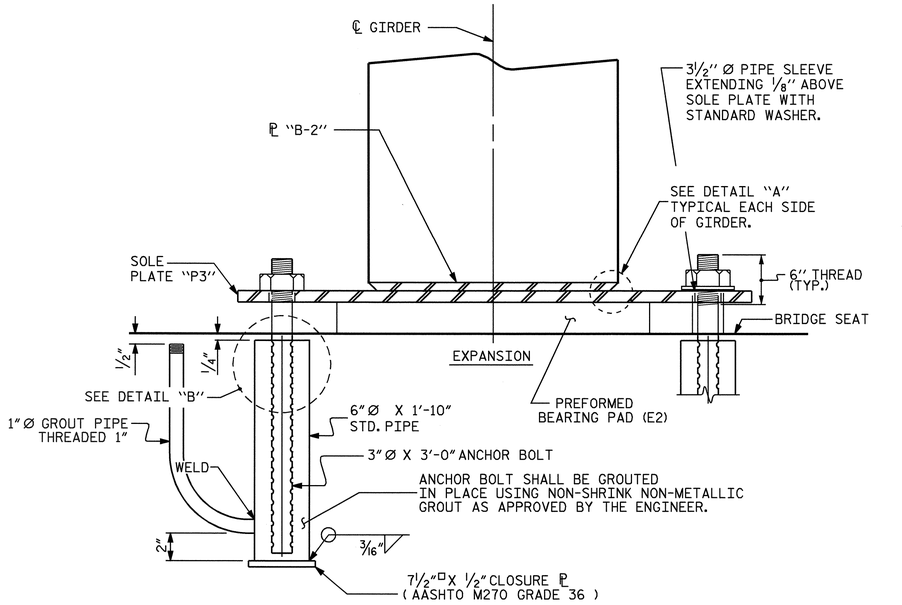

SECTION VIEW

(OVER BENTS 1 AND 4
SPANS B AND D GIRDERS)

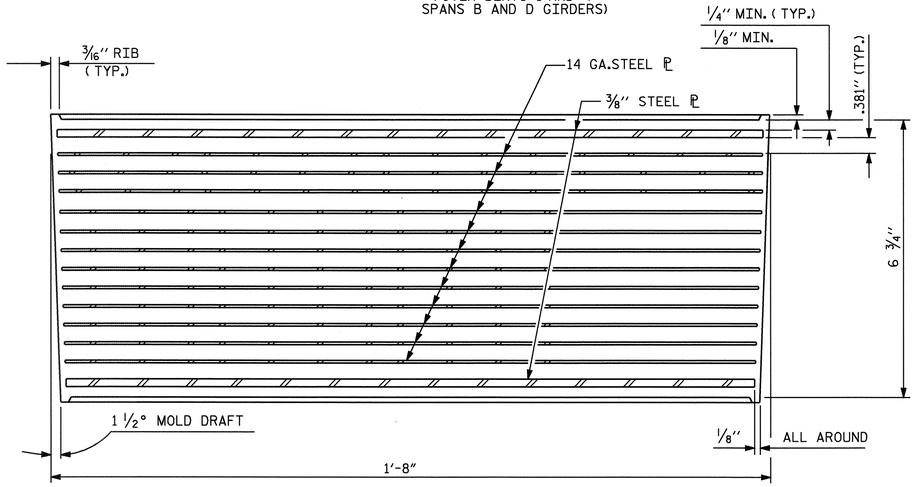

TYPICAL SECTION OF ELASTOMERIC BEARINGS

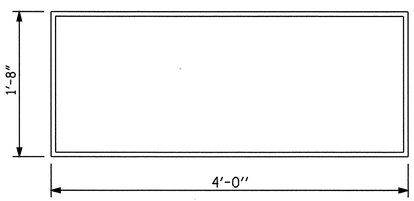

E2 (16 REQ'D)

PLAN VIEW OF ELASTOMERIC BEARING

TYPE VIII

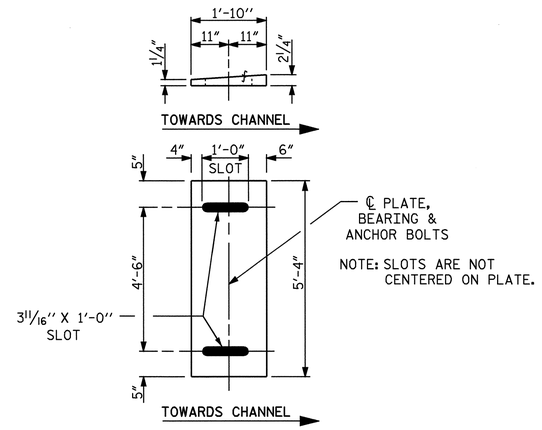

P 3

(EXPANSION)

(16 REQ'D)

SOLE PLATE DETAILS ("P 3")

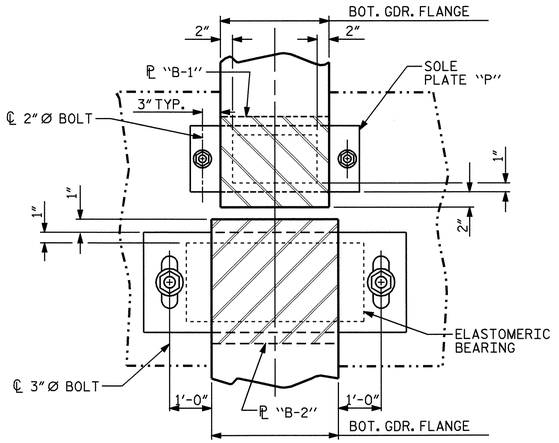

TYPICAL PLAN

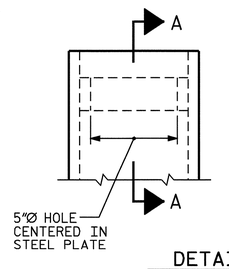

DETAIL "B"

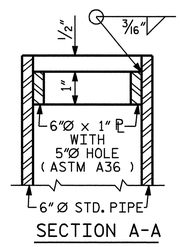

SECTION A-A

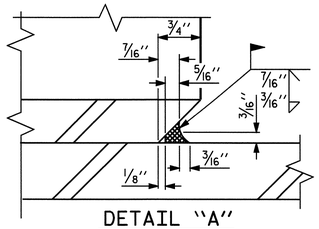

DETAIL "A"

NORTH CAROLINA PROFESSIONAL SEAL 23926 ENGINEER BRIAN C. HAWKS

1/16/07

PROJECT NO. R-2245

BRUNSWICK COUNTY

STATION: 58+00.00 -L-

SHEET 1 OF 2

STATE OF NORTH CAROLINA
DEPARTMENT OF TRANSPORTATION
RALEIGH

ELASTOMERIC BEARING DETAILS

REVISIONS						SHEET NO.
NO.	BY:	DATE:	NO.	BY:	DATE:	S-67
1			3			TOTAL SHEETS
2			4			98

ASSEMBLED BY : R. D. MARTIN	DATE : 9/06
CHECKED BY : W. D. CRUTCHER	DATE : 9/06

11-OCT-2006 11:38
S:\PG3\R-2245 Oak Island\Final Plans\R2245_sd_BG.dgn
rmartin

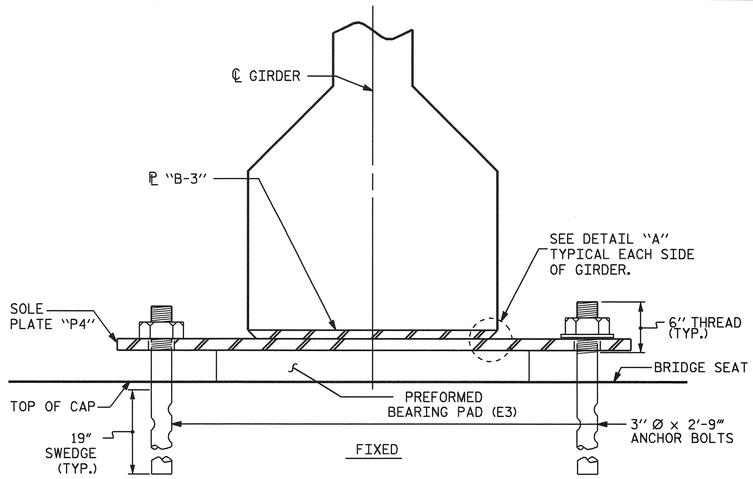

SECTION VIEW
(OVER BENTS #2 AND #3)

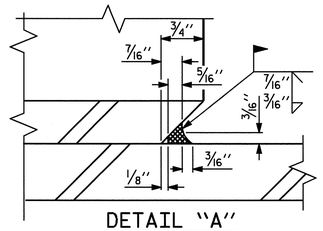

DETAIL "A"

NOTES

AT ALL FIXED POINTS OF SUPPORT, NUTS FOR ANCHOR BOLTS ARE TO BE TIGHTENED FINGER TIGHT AND THEN BACKED OFF 1/2 TURN. THE THREAD OF THE NUT AND BOLT SHALL THEN BE BURRED WITH A SHARP POINTED TOOL.

THE 2" Ø AND 3 1/2" Ø PIPE SLEEVE SHALL BE CUT FROM SCHEDULE 40 PVC PLASTIC PIPE. THE PVC PLASTIC PIPE SHALL MEET THE REQUIREMENTS OF ASTM D1785.

STEEL SOLE PLATES, ANCHOR BOLTS, NUTS, AND WASHERS SHALL BE GALVANIZED IN ACCORDANCE WITH THE STANDARD SPECIFICATIONS.

PRIOR TO WELDING, GRIND THE GALVANIZED SURFACE OF THE PORTION OF THE EMBEDDED PLATE AND SOLE PLATE THAT ARE TO BE WELDED. AFTER WELDING, DAMAGED GALVANIZED SURFACES SHALL BE REPAIRED IN ACCORDANCE WITH THE STANDARD SPECIFICATIONS.

WHEN WELDING THE SOLE PLATE TO THE EMBEDDED PLATE IN THE GIRDER, USE TEMPERATURE INDICATING WAX PENS, OR OTHER SUITABLE MEANS, TO ENSURE THAT THE TEMPERATURE OF THE SOLE PLATE DOES NOT EXCEED 300°F. TEMPERATURES ABOVE THIS MAY DAMAGE THE ELASTOMER.

SOLE PLATE "P", BOLTS, NUTS, WASHERS, AND PIPE SLEEVE SHALL BE INCLUDED IN THE LUMP SUM PRICE BID FOR ELASTOMERIC BEARINGS.

ANCHOR BOLTS SHALL MEET THE REQUIREMENTS OF ASTM A449. NUTS SHALL MEET THE REQUIREMENTS OF AASHTO M291-DH OR AASHTO M292-2H. WASHERS SHALL MEET THE REQUIREMENTS OF AASHTO M293. NO SHOP DRAWINGS ARE REQUIRED FOR ANCHOR BOLTS, NUTS AND WASHERS. SHOP INSPECTION IS REQUIRED.

ALL SURFACES OF BEARING PLATES SHALL BE SMOOTH AND STRAIGHT.

BEFORE POURING THE FINAL 7'-0" OF SPAN B AND SPAN D, THE GIRDERS SHALL BE JACKED AND THE ANCHOR BOLTS, SOLE PLATE, AND ELASTOMERIC BEARING SHALL BE CENTERED AS NEARLY AS PRACTICAL ABOUT THE EMBEDDED PLATE "B-2". THIS OPERATION SHALL BE PERFORMED AT APPROXIMATELY 60°F.

AFTER BEARING ASSEMBLY IS IN PLACE AND ANCHOR BOLTS HAVE FINALLY BEEN POSITIONED, THEY SHALL BE GROUTED IN PLACE AS SHOWN.

THE CONTRACTOR MAY PROPOSE ALTERNATE METHODS FOR ADJUSTING THE BEARING ASSEMBLY PROVIDED DETAILS ARE SUBMITTED TO THE ENGINEER FOR REVIEW AND APPROVAL.

THE CLOSURE PLATE, GROUT PIPE AND STANDARD PIPE FOR THIS ASSEMBLY SHALL BE GALVANIZED IN ACCORDANCE WITH STANDARD SPECIFICATIONS.

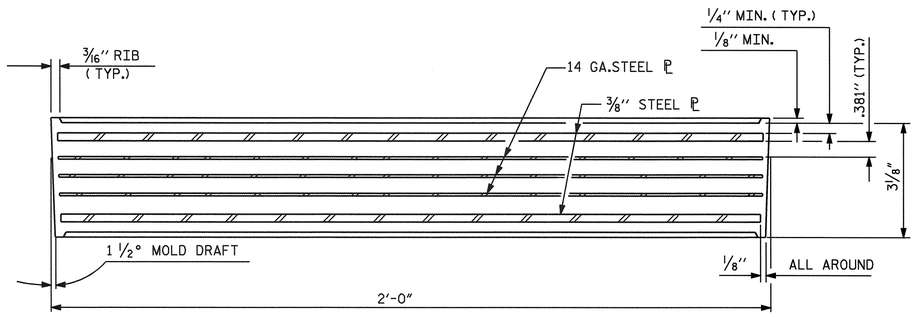

TYPICAL SECTION OF ELASTOMERIC BEARINGS

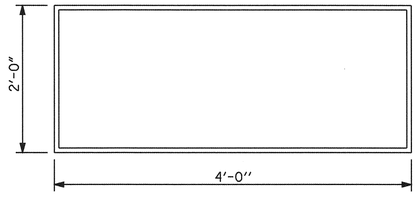

E3 (16 REQ'D)
PLAN VIEW OF ELASTOMERIC BEARING

TYPE IX

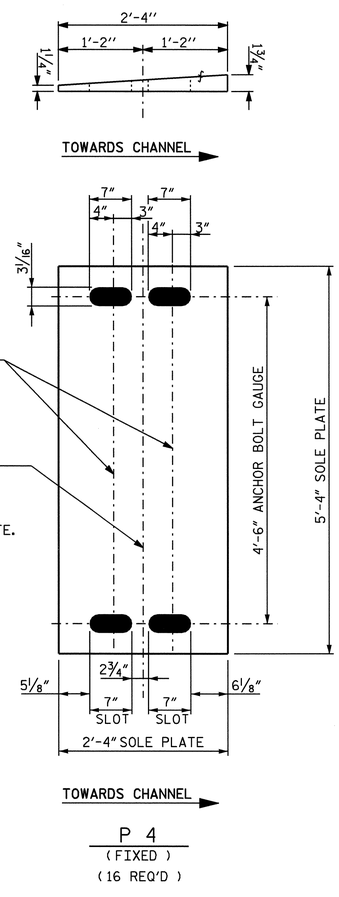

P 4
(FIXED)
(16 REQ'D)

SOLE PLATE DETAILS ("P 4")

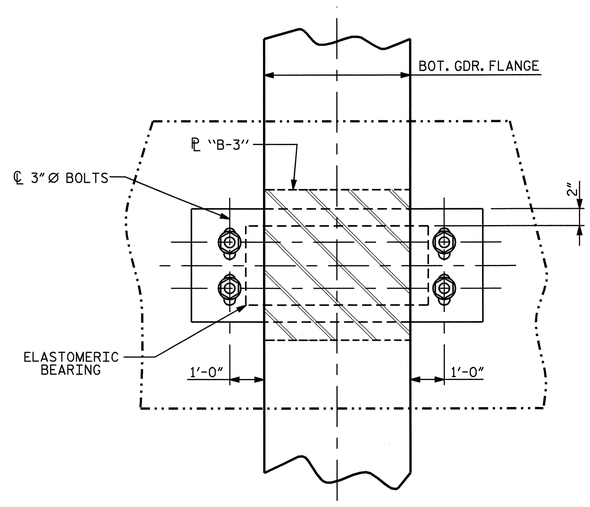

TYPICAL PLAN
(SHOWING BENTS #2 AND #3)

— LOAD RATINGS —	
	MAX.D.L.+ L.L.
TYPE VII	264 K
TYPE VIII	312 K
TYPE IX	1119 K

PROJECT NO. R-2245
BRUNSWICK COUNTY
STATION: 58+00.00 -L-

SHEET 2 OF 2

STATE OF NORTH CAROLINA
DEPARTMENT OF TRANSPORTATION
RALEIGH

ELASTOMERIC BEARING DETAILS

NORTH CAROLINA PROFESSIONAL SEAL 23926 ENGINEER BRIAN C. HANKS
1/18/07

REVISIONS						SHEET NO.
NO.	BY:	DATE:	NO.	BY:	DATE:	S-68
1			3			TOTAL SHEETS
2			4			98

ASSEMBLED BY : R. D. MARTIN	DATE : 9/06
CHECKED BY : W. D. CRUTCHER	DATE : 9/06

11-OCT-2006 11:38
S:\PG3\R-2245 Oak Island\Final Plans\R2245_sd_BG.dgn
rmartin

DEAD LOAD DEFLECTION TABLE FOR END GIRDER SEGMENTS

TWENTIETH POINTS		℄ BEARING	.05	.10	.15	.20	.25	.30	.35	.40	.45	.50	.55	.60	.65	.70	.75	.80	.85	.90	.95	℄ SPLICE
A	GIRDER AND STAGE #1 PT DEFLECTION ↑	0.000	0.036	0.068	0.099	0.125	0.151	0.167	0.188	0.198	0.208	0.214	0.214	0.219	0.214	0.208	0.203	0.188	0.167	0.146	0.120	0.094
B	DECK POUR DEFLECTION ↓	0.000	-0.021	-0.042	-0.063	-0.078	-0.094	-0.104	-0.115	-0.120	-0.125	-0.130	-0.130	-0.125	-0.120	-0.109	-0.104	-0.094	-0.083	-0.073	-0.063	-0.052
C	STAGE #2 PT DEFLECTION ↑	0.000	0.000	0.000	0.000	0.000	0.000	0.000	0.000	0.000	0.000	0.000	0.000	0.000	0.000	0.000	0.000	0.000	0.000	0.000	0.000	0.000
D	RAIL DEFLECTION ↑	0.000	0.000	0.000	0.000	0.000	0.000	0.000	0.000	0.000	0.000	0.000	0.000	0.000	0.000	0.000	0.000	0.000	0.000	0.000	0.000	0.000
E	FINAL DEFLECTION	0.000	0.016	0.026	0.036	0.047	0.057	0.063	0.073	0.078	0.083	0.083	0.083	0.094	0.094	0.099	0.099	0.094	0.083	0.073	0.057	0.042
F	VERTICAL CURVE ORDINATE ↑	0.000	0.082	0.156	0.221	0.278	0.325	0.364	0.395	0.416	0.429	0.434	0.429	0.416	0.395	0.364	0.325	0.278	0.212	0.156	0.082	0.000
BU	BUILD-UP REQUIRED	2 1/2"	3 5/16"	4 1/16"	4 11/16"	5 1/4"	5 11/16"	6 1/8"	6 3/8"	6 9/16"	6 5/8"	6 11/16"	6 5/8"	6 3/8"	6 1/8"	5 11/16"	5 3/16"	4 11/16"	4 1/8"	3 1/2"	2 13/16"	2"

ALL VALUES ARE SHOWN IN FEET (DECIMAL FORM), EXCEPT "BUILD-UP REQUIRED", WHICH IS GIVEN IN INCHES (FRACTION FORM).

DEAD LOAD DEFLECTION TABLE FOR HAUNCHED GIRDER SEGMENTS

TWENTIETH POINTS		℄ SPLICE	.05	.10	.15	.20	.25	.30	.35	.40	.45	℄ BEARING	.55	.60	.65	.70	.75	.80	.85	.90	.95	℄ SPLICE
A	GIRDER AND STAGE #1 PT DEFLECTION ↑	0.094	0.073	0.063	0.047	0.036	0.026	0.016	0.010	0.005	0.000	0.000	0.010	0.016	0.026	0.031	0.036	0.042	0.047	0.052	0.052	0.057
B	DECK POUR DEFLECTION ↓	-0.052	-0.042	-0.036	-0.031	-0.021	-0.016	-0.016	-0.010	-0.005	0.000	0.000	-0.005	-0.010	-0.016	-0.021	-0.026	-0.026	-0.031	-0.036	-0.036	-0.042
C	STAGE #2 PT DEFLECTION ↑	0.000	0.000	0.000	0.000	0.000	0.000	0.000	0.000	0.000	0.000	0.000	0.005	0.005	0.010	0.010	0.016	0.021	0.021	0.026	0.026	0.026
D	RAIL DEFLECTION ↑	0.000	0.000	0.000	0.000	0.000	0.000	0.000	0.000	0.000	0.000	0.000	0.005	0.005	0.010	0.016	0.016	0.021	0.021	0.026	0.026	0.026
E	FINAL DEFLECTION	0.042	0.031	0.026	0.016	0.016	0.010	0.000	0.000	0.000	0.000	0.000	0.015	0.015	0.031	0.037	0.042	0.057	0.057	0.068	0.068	0.068
F	VERTICAL CURVE ORDINATE ↑	0.000	0.045	0.084	0.119	0.150	0.178	0.197	0.213	0.225	0.232	0.234	0.232	0.225	0.213	0.197	0.178	0.150	0.119	0.084	0.045	0.000
BU	BUILD-UP REQUIRED	2"	2 11/16"	3 3/16"	3 3/4"	4 1/8"	4 1/2"	4 7/8"	5 1/16"	5 3/16"	5 1/4"	5 5/16"	5 1/8"	5"	4 11/16"	4 7/16"	4 1/8"	3 5/8"	3 1/4"	2 11/16"	2 1/4"	1 11/16"

ALL VALUES ARE SHOWN IN FEET (DECIMAL FORM), EXCEPT "BUILD-UP REQUIRED", WHICH IS GIVEN IN INCHES (FRACTION FORM).

DEAD LOAD DEFLECTION TABLE FOR DROP-IN GIRDER SEGMENTS

TWENTIETH POINTS		℄ SPLICE	.05	.10	.15	.20	.25	.30	.35	.40	.45	.50
A	GIRDER AND STAGE #1 PT DEFLECTION ↑	0.057	0.057	0.063	0.063	0.057	0.057	0.052	0.047	0.042	0.036	0.026
B	DECK POUR DEFLECTION ↓	-0.042	-0.047	-0.047	-0.052	-0.057	-0.057	-0.057	-0.063	-0.063	-0.063	-0.063
C	STAGE #2 PT DEFLECTION ↑	0.026	0.031	0.031	0.036	0.036	0.042	0.042	0.042	0.042	0.042	0.042
D	RAIL DEFLECTION ↑	0.026	0.031	0.031	0.031	0.031	0.031	0.026	0.026	0.021	0.021	0.021
E	FINAL DEFLECTION	0.068	0.073	0.078	0.078	0.067	0.073	0.062	0.052	0.042	0.036	0.026
F	VERTICAL CURVE ORDINATE ↑	0.000	0.079	0.150	0.212	0.266	0.312	0.349	0.379	0.399	0.412	0.416
BU	BUILD-UP REQUIRED	1 11/16"	2 9/16"	3 3/8"	4 1/8"	4 7/8"	5 3/8"	5 15/16"	6 7/16"	6 13/16"	7"	7 3/16"

ALL VALUES ARE SHOWN IN FEET (DECIMAL FORM), EXCEPT "BUILD-UP REQUIRED", WHICH IS GIVEN IN INCHES (FRACTION FORM).

NOTE :
DATA FOR END GIRDER SEGMENTS, HAUNCHED GIRDER SEGMENTS AND DROP-IN GIRDER SEGMENT IS SYMMETRICAL ABOUT ℄ DROP-IN GIRDER SEGMENT.

NOTES

ITEMS A, B, C AND D ARE INTENDED TO ASSIST THE CONTRACTOR AND ENGINEER IN DETECTING ANY UNINTENDED DEFLECTIONS THAT MAY OCCUR DURING CONSTRUCTION.

THE GIRDER BUILD-UPS ARE USED FOR ESTIMATING QUANTITIES AND PLATFORM SETTING. THEY ARE NOT INTENDED TO BE USED AS A GRADE SETTING TOOL.

PRIOR TO CASTING THE DECK, THE CONTRACTOR SHALL SUBMIT TO THE ENGINEER FOR APPROVAL, THE CALCULATIONS USED FOR DETERMINING THE BUILD-UP.

THE CONTRACTOR SHALL CAST THE DECK OF SPANS B-D WITHIN 30 DAYS OF DETERMINING THE REQUIRED BUILD-UPS. THE WORK TO BE DONE WITHIN THE 30 DAYS DOES NOT INCLUDE STAGE 2 POST TENSIONING OR CASTING THE FINAL 7'-0" OF DECK AT EACH END OF SPANS B-D.

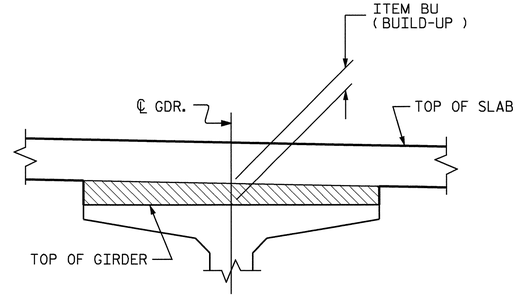

DETAIL SHOWING BUILD-UP OVER GIRDER

DEAD LOAD DEFLECTION TABLE FOR GIRDERS IN SPANS A & E

0.6" Ø LOW RELAXATION	GIRDERS #1 THRU #8					
TENTH POINTS	BRG.	.1	.2	.3	.4	.5
CAMBER (GIRDER ALONE IN PLACE)	0.000	0.117	0.222	0.304	0.356	0.373
✳ DEFLECTION DUE TO SUPERIMPOSED D.L.	0.000	-0.041	-0.078	-0.106	-0.125	-0.131
FINAL CAMBER	0"	15/16"	1 3/4"	2 3/8"	2 3/4"	2 15/16"

NOTE :
DATA IS SYMMETRICAL ABOUT ℄ GIRDER.

✳ INCLUDES FUTURE WEARING SURFACE

ALL VALUES ARE SHOWN IN FEET (DECIMAL FORM), EXCEPT " FINAL CAMBER ", WHICH IS GIVEN IN INCHES (FRACTIONAL FORM).

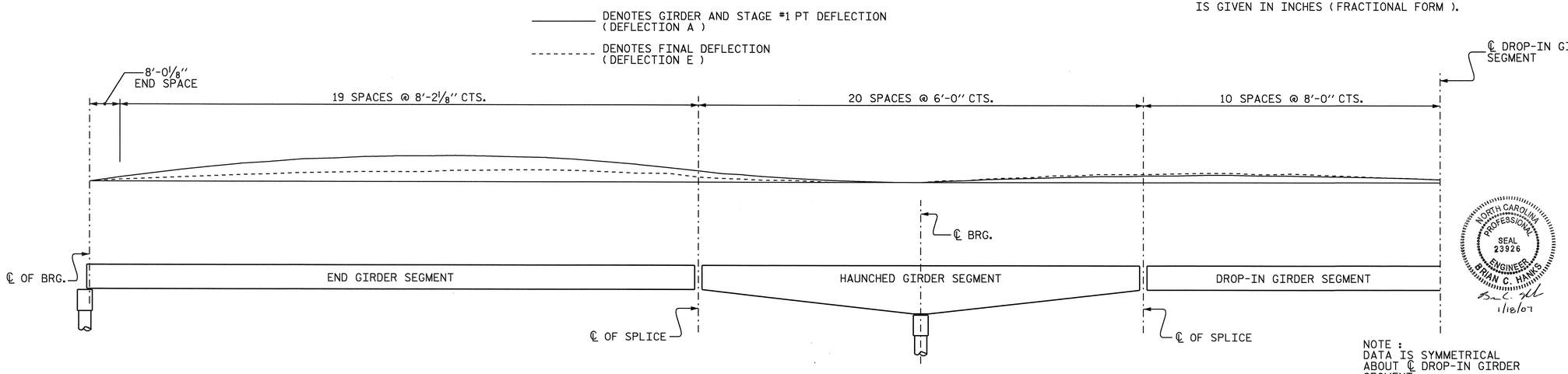

CAMBER DIAGRAM

NOTE :
DATA IS SYMMETRICAL ABOUT ℄ DROP-IN GIRDER SEGMENT

NORTH CAROLINA PROFESSIONAL SEAL 23926 ENGINEER BRIAN C. HANKS
1/18/07

PROJECT NO. R-2245
BRUNSWICK COUNTY
STATION: 58+00.00 -L-

STATE OF NORTH CAROLINA
DEPARTMENT OF TRANSPORTATION
RALEIGH

SUPERSTRUCTURE

DEAD LOAD DEFLECTIONS

REVISIONS						SHEET NO.
NO.	BY:	DATE:	NO.	BY:	DATE:	S-69
1			3			TOTAL SHEETS
2			4			98

DRAWN BY : MIKE BRITT DATE : 9-7-06
CHECKED BY : PAUL ERVIN DATE : 9-28-06

02-NOV-2006 13:00
S:\PGS\R-2245 Oak Island\Final Plans\R2245_sd_G*_Deflections.dgn
bhanks

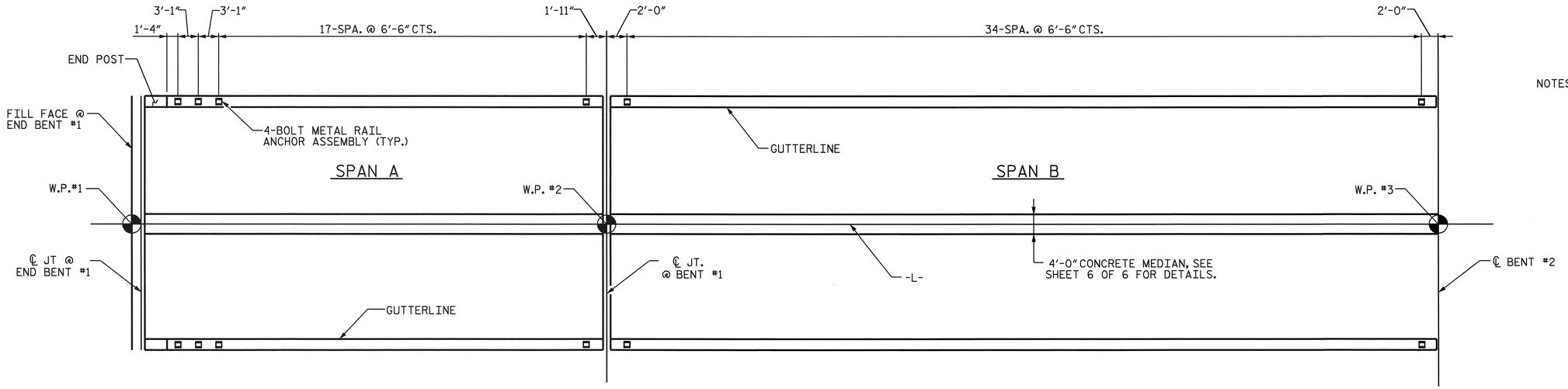

NOTES: ALL DIMENSIONS ARE MEASURED ALONG OUTSIDE EDGE OF SUPERSTRUCTURE.

DIMENSIONS ARE TYPICAL FOR BOTH SIDES OF BRIDGE.

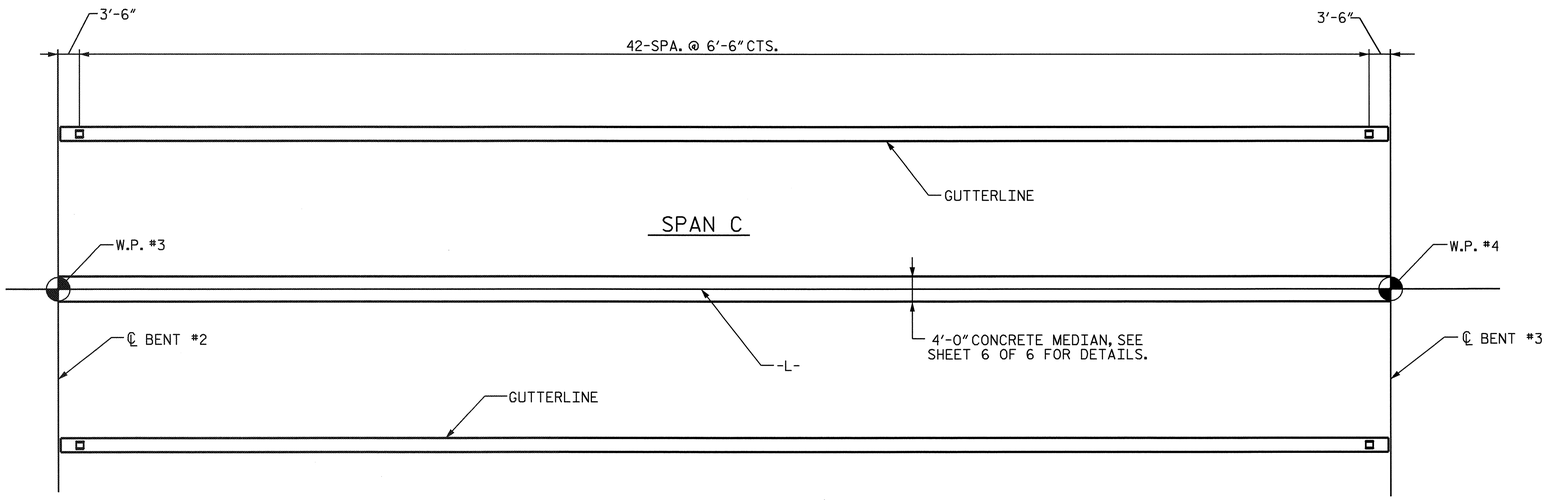

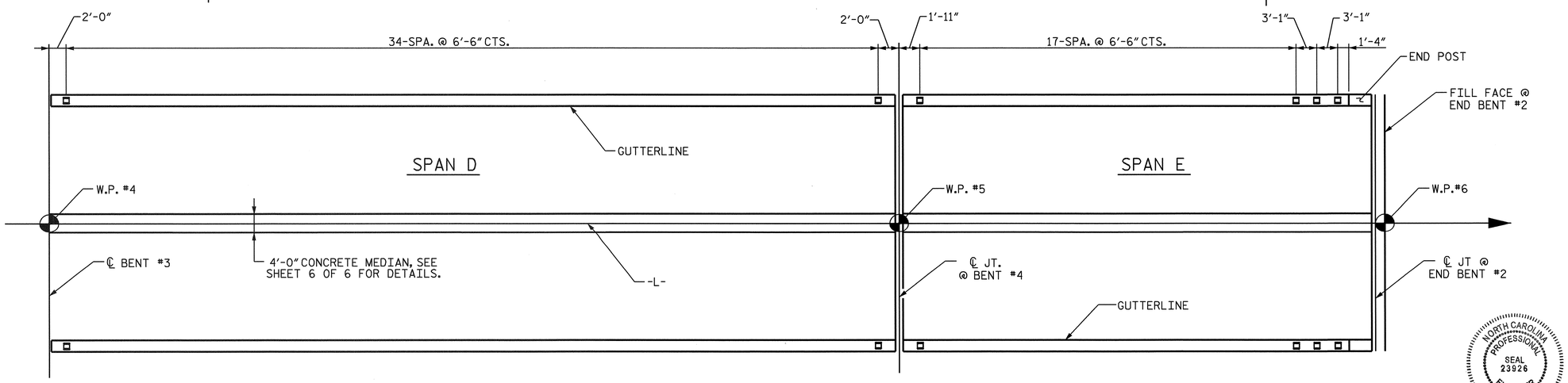

PLAN OF RAIL POST SPACINGS

ALL DIMENSIONS ARE MEASURED ALONG OUTSIDE EDGE OF SUPERSTRUCTURE (TYPICAL EACH SIDE)

NORTH CAROLINA PROFESSIONAL SEAL 23926 ENGINEER BRIAN C. HANKS
1/16/07

PROJECT NO. R-2245

BRUNSWICK COUNTY

STATION: 58+00.00B -L-

SHEET 1 OF 6

STATE OF NORTH CAROLINA
DEPARTMENT OF TRANSPORTATION
RALEIGH

RAIL POST SPACING FOR 2 BAR METAL RAIL

REVISIONS						SHEET NO.
NO.	BY:	DATE:	NO.	BY:	DATE:	S-70
1			3			TOTAL SHEETS
2			4			98

DRAWN BY : R. D. MARTIN DATE : 6/06
CHECKED BY : W. D. CRUTCHER DATE : 9/06

11-OCT-2006 11:33
S:\PG3\R-2245 Oak Island\Final Plans\R2245_sd_2MR.dgn
rmartin

FOR PLAN OF POST SPACINGS, SEE SHEET 1 OF 6.

PLAN OF RAIL POST SPACINGS

NOTES

STRUCTURAL CONCRETE INSERT

THE STRUCTURAL CONCRETE INSERT ASSEMBLY SHALL CONSIST OF THE FOLLOWING COMPONENTS:

A. FERRULES SHALL BE MADE FROM STEEL MEETING THE REQUIREMENTS OF AASHTO M169, GRADE 12L14 AND SHALL HAVE A MINIMUM LENGTH OF THREADS OF 1½".

B. 1 - ¾" Ø X 1⅝" BOLT WITH WASHER. BOLT SHALL CONFORM TO THE REQUIREMENTS OF ASTM A307. BOLT AND WASHER SHALL BE GALVANIZED. (AT THE CONTRACTOR'S OPTION, STAINLESS STEEL BOLT AND WASHER MAY BE USED AS AN ALTERNATE FOR THE ¾" Ø X 1⅝" GALVANIZED BOLT AND WASHER. THEY SHALL CONFORM TO OR EXCEED THE MECHANICAL REQUIREMENTS OF ASTM A307. THE USE OF THIS ALTERNATE SHALL BE APPROVED BY THE ENGINEER.)

C. WIRE STRUT SHOWN IN THE CONCRETE INSERT ASSEMBLY DETAIL IS THE MINIMUM ALLOWABLE SIZE AND SHALL HAVE A MINIMUM TENSILE STRENGTH OF 100,000 PSI. AS AN OPTION, A 7/16" Ø WIRE STRUT WITH A MINIMUM TENSILE STRENGTH OF 90,000 PSI IS ACCEPTABLE.

NOTES

METAL RAIL TO END POST CONNECTION

THE METAL RAIL TO END POST CONNECTION SHALL CONSIST OF THE FOLLOWING COMPONENTS:

A. ½" PLATES SHALL CONFORM TO AASHTO M270 GRADE 36 AND SHALL BE GALVANIZED AFTER FABRICATION.

B. ¾" STRUCTURAL CONCRETE INSERT SHALL HAVE A WORKING LOAD SHEAR CAPACITY OF 4800 LBS. THE FERRULES SHALL ENGAGE A ¾"Ø X 1⅝" BOLT WITH 2" O.D. WASHER IN PLACE. THE ¾"Ø X 1⅝" BOLT SHALL HAVE N. C. THREADS.

C. CAP SCREWS FOR RAIL ATTACHMENT TO ANGLE SHALL CONFORM TO THE REQUIREMENTS OF ASTM F593 ALLOY 305 STAINLESS STEEL. CAP SCREWS TO BE CENTERED IN SLOTS AT 60°F.

D. STANDARD CLAMP BARS (SEE METAL RAIL SHEET).

E. ½" Ø PIPE SLEEVES (IF REQUIRED) TO BE GALVANIZED.

THE COST OF THE STANDARD CLAMP BARS AND CAP SCREWS USED IN THE METAL RAIL TO END POST CONNECTION SHALL BE INCLUDED IN THE UNIT CONTRACT PRICE BID FOR LINEAR FEET OF 1 OR 2 BAR METAL RAILS.

THE ¾" STRUCTURAL CONCRETE INSERT WITH BOLT SHALL BE ASSEMBLED IN THE SHOP.

THE COST OF THE ¾" STRUCTURAL CONCRETE INSERT ASSEMBLY, AND THE ½" PLATES COMPLETE IN PLACE SHALL BE INCLUDED IN THE VARIOUS PAY ITEMS.

THE CONTRACTOR, AT HIS OPTION, MAY USE AN ADHESIVE BONDING SYSTEM IN LIEU OF THE STRUCTURAL CONCRETE INSERT EMBEDDED IN THE END POST. IF THE ADHESIVE BONDING SYSTEM IS USED, THE ¾" Ø X 1⅝" BOLT WITH WASHER SHALL BE REPLACED WITH A ¾"Ø X 6½" BOLT AND 2" O.D. WASHER. ALL SPECIFICATIONS THAT APPLY TO THE ¾" Ø X 1⅝" BOLT SHALL APPLY TO THE ¾"Ø X 6 ½" BOLT. FIELD TESTING OF THE ADHESIVE BONDING SYSTEM IS NOT REQUIRED.

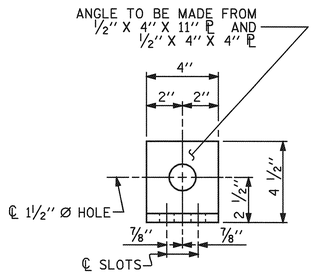

END VIEW (FIX AND EXP.)

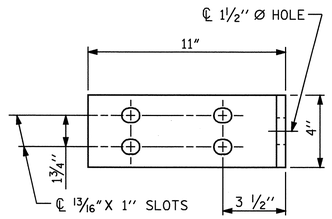

ELEVATION

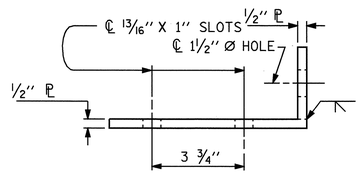

TOP VIEW

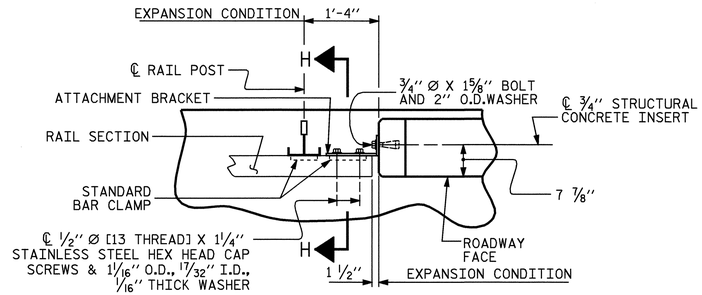

PLAN - RAIL AND END POST

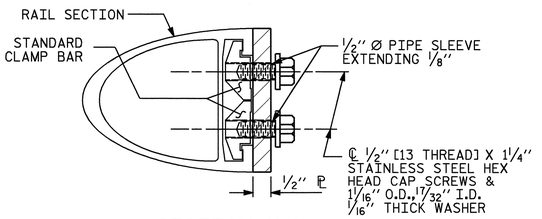

SECTION H-H

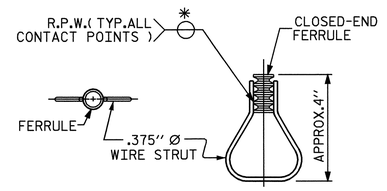

PLAN ELEVATION

STRUCTURAL CONCRETE INSERT

*EACH WELDED ATTACHMENT OF WIRE TO FERRULE SHALL DEVELOP THE TENSILE STRENGTH OF THE WIRE.

EXPANSION

DETAILS FOR ATTACHING METAL RAIL TO END POST

PROJECT NO. R-2245

BRUNSWICK COUNTY

STATION: 58+00.00 -L-

SHEET 2 OF 6

STATE OF NORTH CAROLINA
DEPARTMENT OF TRANSPORTATION
RALEIGH
STANDARD

RAIL POST SPACINGS
AND
END OF RAIL DETAILS
FOR ONE OR TWO BAR METAL RAILS

DECEMBER 1988

REVISIONS						SHEET NO.
NO.	BY:	DATE:	NO.	BY:	DATE:	S-71
1			3			TOTAL SHEETS
2			4			98

NORTH CAROLINA PROFESSIONAL SEAL 23926 ENGINEER BRIAN C. HANKS
1/16/07

ASSEMBLED BY : R. D. MARTIN	DATE : 6/06	REV. 8/16/99	RWW/LES
CHECKED BY : W. D. CRUTCHER	DATE : 9/06	REV. 10/17/00	LES/RDR
DRAWN BY : FCJ 1/88		REV. 5/7/03	RWW/JTE
CHECKED BY : CRK 3/89			

11-OCT-2006 11:34
S:\PG3\R-2245 Oak Island\Final Plans\R2245_sd_2MR.dgn
rmartin

STD. NO. BMR2

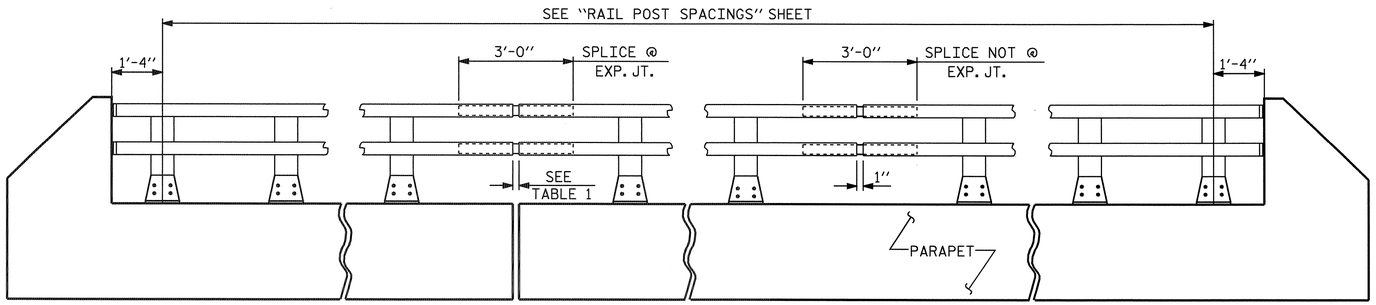

ELEVATION

NOTE : FOR ATTACHMENT OF METAL RAIL TO END POST, SEE STANDARD NO. BMR2.

TABLE 1	
℄ EXP. JT. @	RAIL OPENING
BENT No. 1	1¾"
BENT No. 2	1"
BENT No. 3	1"
BENT No. 4	1¾"

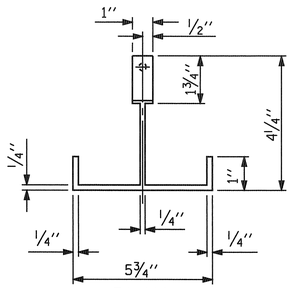

PLAN

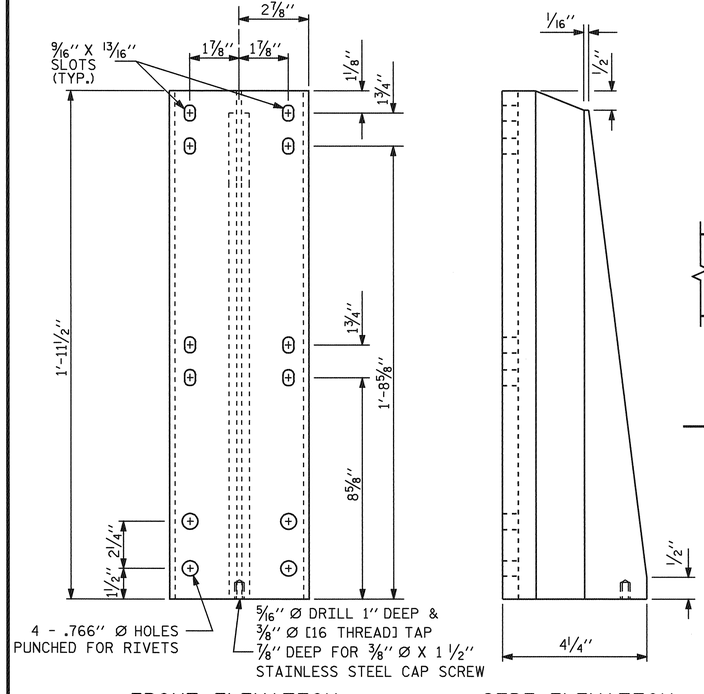

FRONT ELEVATION — SIDE ELEVATION

DETAILS OF POST

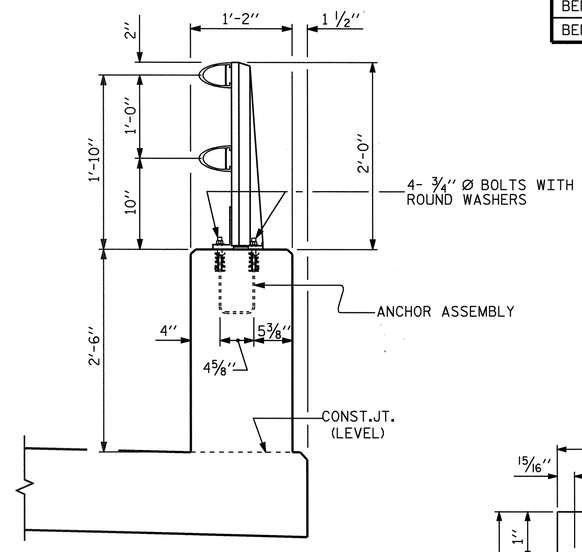

SECTION THRU PARAPET AND RAIL

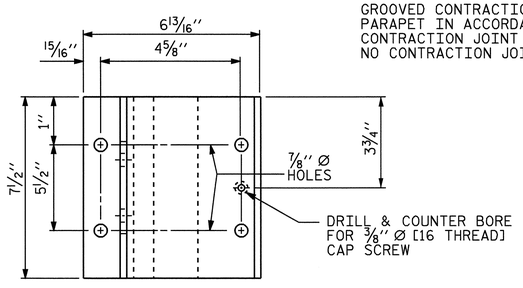

PLAN

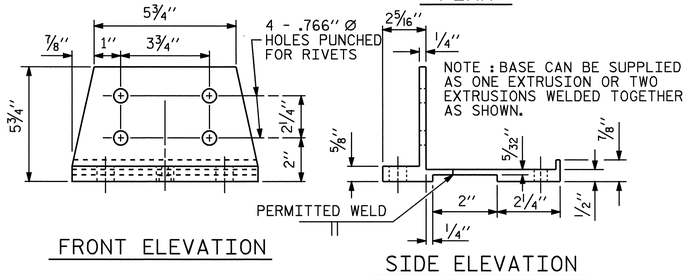

FRONT ELEVATION — SIDE ELEVATION

POST BASE DETAILS

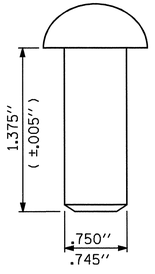

RIVET DETAIL

NOTES

AT THE CONTRACTOR'S OPTION, METAL RAIL MAY BE EITHER ALUMINUM OR GALVANIZED STEEL IN ACCORDANCE WITH THE REQUIREMENTS OF THE GENERAL NOTES AND THE FOLLOWING SPECIFICATIONS FOR THE ALTERNATE MATERIALS; HOWEVER, THE CONTRACTOR WILL BE REQUIRED TO USE THE SAME RAIL MATERIAL ON ALL STRUCTURES ON THE PROJECT FOR WHICH METAL RAIL IS DESIGNATED.

ALUMINUM RAILS

MATERIAL FOR POSTS, BASES AND RAILS, EXPANSION BARS AND CLAMP BARS SHALL BE ASTM B-221 ALLOY 6061-T6.

MATERIAL FOR RIVETS SHALL BE ASTM B316 ALLOY 6061-T6. RIVETS SHALL BE STANDARD BUTTON HEAD AND CONE POINT COLD DRIVEN AS PER DRAWING.

THE BASE OF RAIL POSTS, OR ANY OTHER ALUMINUM SURFACE IN CONTACT WITH CONCRETE SHALL BE THOROUGHLY COATED WITH AN ALUMINUM IMPREGNATED CAULKING COMPOUND OF APPROVED QUALITY.

MATERIAL FOR SHIMS TO BE ASTM B209 ALLOY 6061-T6.

GALVANIZED STEEL RAILS

MATERIAL AND GALVANIZING ARE TO CONFORM TO THE FOLLOWING SPECIFICATIONS:

POST, POST BASES, RAILS, EXPANSION BARS AND CLAMP BARS: AASHTO M270 GRADE 36 STRUCTURAL STEEL - GALVANIZED TO AASHTO M111.

RIVETS: RIVETS SHALL MEET THE REQUIREMENTS OF ASTM A502 FOR GRADE 1 RIVETS.

THE CUT ENDS OF GALVANIZED STEEL RAILING, AFTER GRINDING SMOOTH SHALL BE GIVEN TWO COATS OF ZINC RICH PAINT MEETING THE REQUIREMENTS OF FEDERAL SPECIFICATION MIL-P-26915 USAF TYPE 1, OR OF FEDERAL SPECIFICATIONS TT-P-641.

SHIMS: SHIMS SHALL MEET THE REQUIREMENTS OF ASTM A570 FOR GRADE 33 OR A611 FOR GRADE C AND SHALL BE GALVANIZED IN ACCORDANCE WITH AASHTO M111.

RAIL CAPS: RAIL CAPS SHALL MEET THE REQUIREMENTS OF ASTM A570 FOR GRADE 33 OR A611 FOR GRADE C AND SHALL BE GALVANIZED IN ACCORDANCE WITH AASHTO M111.

GENERAL NOTES

RAILING SHALL BE CONTINUOUS FROM END POST TO END POST OF BRIDGE. EACH JOINT IN RAIL LENGTH SHALL BE SPLICED AS DETAILED. PANEL LENGTHS OF RAIL SHALL BE ATTACHED TO A MINIMUM OF THREE POSTS.

FOR END OF RAIL TO CLEAR FACE OF CONCRETE END POST DIMENSION, SEE STANDARD NO. BMR2.

CAP SCREWS SHALL BE ASTM F593 ALLOY 305 STAINLESS STEEL. WASHERS SHALL MEET THE REQUIREMENTS OF ASTM F844 EXCEPT THEY SHALL BE MADE FROM ALLOY 304 STAINLESS STEEL.

CERTIFIED MILL REPORTS ARE REQUIRED FOR RAILS AND POSTS. SHOP INSPECTION IS NOT REQUIRED.

METAL RAIL POSTS SHALL BE SET NORMAL TO CURB GRADE.

METHOD OF MEASUREMENT FOR METAL RAILS: FOR LENGTH OF METAL RAILS TO BE PAID FOR, SEE THE STANDARD SPECIFICATIONS.

CURVED RAIL USAGE: WHERE RAILS ARE TO BE USED ON BRIDGES ON HORIZONTAL AND/OR VERTICAL CURVATURE THE CONTRACTOR MAY, AT HIS OPTION, HAVE THE REQUIRED CURVATURE IN THE RAIL FORMED IN THE SHOP OR IN THE FIELD. IN EITHER EVENT, THE RAIL SHALL CONFORM WITHOUT BUCKLING OR KINKING TO THE REQUIRED CURVATURE IN A UNIFORM MANNER ACCEPTABLE TO THE ENGINEER.

TO INSURE FUTURE IDENTIFICATION OF THE FABRICATOR, A PERMANENT IDENTIFYING MARK SHALL BE PLACED ON EACH POST. THE METHOD OF MARKING AND LOCATION SHALL BE SUCH THAT IT DOES NOT DETRACT FROM THE APPEARANCE OF THE POST, BUT REMAINS VISIBLE AFTER RAIL PLACEMENT.

SHIMS SHALL BE USED AS NECESSARY FOR POST ALIGNMENT.

ALLOY 6351-T5 MAY BE SUBSTITUTED FOR ALLOY 6061-T6 WHERE APPLICABLE.

MINOR VARIATIONS IN DETAILS OF METAL RAIL WILL BE CONSIDERED. DETAILS OF SUCH VARIATIONS, IF DESIRED, SHALL BE SUBMITTED FOR APPROVAL.

GROOVED CONTRACTION JOINTS, ½" IN DEPTH, SHALL BE TOOLED IN ALL EXPOSED FACES OF THE PARAPET IN ACCORDANCE WITH ARTICLE 825-10(B) OF THE STANDARD SPECIFICATIONS. THE CONTRACTION JOINT SHALL BE LOCATED AT A SPACING OF 8FT. TO 10FT. BETWEEN EXPANSION JOINTS. NO CONTRACTION JOINTS WILL BE REQUIRED FOR SEGMENTS LESS THAN 10 FEET IN LENGTH.

PAY LENGTH = 1939.66 LIN. FT.

PROJECT NO. R-2245

BRUNSWICK COUNTY

STATION: 58+00.00 -L-

SHEET 3 OF 6

STATE OF NORTH CAROLINA
DEPARTMENT OF TRANSPORTATION
RALEIGH

STANDARD

2 BAR METAL RAIL

JUNE 1994

REVISIONS						SHEET NO.
NO.	BY:	DATE:	NO.	BY:	DATE:	S-72
1			3			TOTAL SHEETS
2			4			98

STD. NO. BMR3

NORTH CAROLINA PROFESSIONAL SEAL 23926 ENGINEER BRIAN C. HANKS
1/18/07

ASSEMBLED BY : R. D. MARTIN	DATE : 6/06	
CHECKED BY : W. D. CRUTCHER	DATE : 9/06	
DRAWN BY : EEM 6/94	REV. 8/16/99	RWW/LES
CHECKED BY : RGW 6/94	REV. 10/17/00	LES/RDR
	REV. 5/7/03R	RWW/JTE

11-OCT-2006 11:34
S:\PGS\R-2245 Oak Island\Final Plans\R2245_sd_2MR.dgn
rmartin

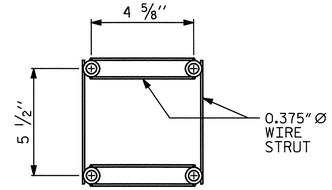

PLAN

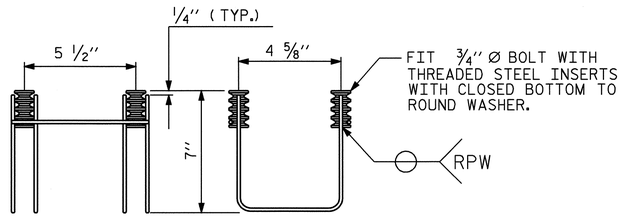

SIDE VIEW ELEVATION

MINIMUM LENGTH OF THREADS IN INSERT (FERRULE): 1 3/4''

4-BOLT METAL RAIL ANCHOR ASSEMBLY

(306 ASSEMBLIES REQUIRED)

NOTES

STRUCTURAL CONCRETE ANCHOR ASSEMBLY

THE STRUCTURAL CONCRETE ANCHOR ASSEMBLY SHALL CONSIST OF THE FOLLOWING COMPONENTS :

A. FERRULES SHALL BE MADE FROM STEEL MEETING THE REQUIREMENTS OF AASHTO M169, GRADE 12L14 AND SHALL HAVE A MINIMUM LENGTH OF THREADS OF 2'' FOR 3/4'' FERRULES.

B. 4 - 3/4'' Ø X 2 1/2'' BOLTS WITH WASHERS. BOLTS SHALL CONFORM TO THE REQUIREMENTS OF ASTM A307. BOLTS AND WASHERS SHALL BE GALVANIZED. AT THE CONTRACTOR'S OPTION, STAINLESS STEEL BOLTS AND WASHERS MAY BE USED AS AN ALTERNATE FOR THE 3/4'' Ø X 2 1/2'' GALVANIZED BOLTS AND WASHERS. THEY SHALL CONFORM TO OR EXCEED THE MECHANICAL REQUIREMENTS OF ASTM A307. THE USE OF THIS ALTERNATE SHALL BE APPROVED BY THE ENGINEER.

C. WIRE STRUT SHOWN IN THE CONCRETE ANCHOR ASSEMBLY DETAIL IS THE MINIMUM ALLOWABLE SIZE AND SHALL HAVE A MINIMUM TENSILE STRENGTH OF 100,000 PSI. AS AN OPTION, A 7/16'' Ø WIRE STRUT WITH A MINIMUM TENSILE STRENGTH OF 90,000 PSI IS ACCEPTABLE.

D. THE METAL RAIL ANCHOR ASSEMBLIES TO BE HOT DIPPED GALVANIZED TO CONFORM TO REQUIREMENTS OF AASHTO M111.

E. THE COST OF THE METAL RAIL ANCHOR ASSEMBLY WITH BOLTS AND WASHERS COMPLETE IN PLACE SHALL BE INCLUDED IN THE PRICE BID FOR LINEAR FEET OF METAL RAIL.

F. BOLTS TO BE TIGHTENED ONE-HALF TURN WITH A WRENCH FROM A FINGER-TIGHT POSITION.

THE CONTRACTOR, AT HIS OPTION, MAY USE ADHESIVELY ANCHORED ANCHOR BOLTS IN LIEU OF THE METAL RAIL ANCHOR ASSEMBLY. THE YIELD LOAD OF THE 3/4'' Ø BOLT IS 10 KIPS. FIELD TESTING OF THE ADHESIVE BONDING SYSTEM IS REQUIRED.

WHEN ADHESIVELY ANCHORED ANCHOR BOLTS ARE USED, BOLTS SHALL MEET THE REQUIREMENTS OF ASTM F593 ALLOY 304 STAINLESS STEEL WITH MINIMUM 75,000 PSI ULTIMATE STRENGTH. NUTS SHALL MEET THE REQUIREMENTS OF ASTM F594 ALLOY 304 STAINLESS STEEL AND WASHERS SHALL MEET THE REQUIREMENTS OF ASTM F844 EXCEPT THEY SHALL BE MADE FROM ALLOY 304 STAINLESS STEEL.

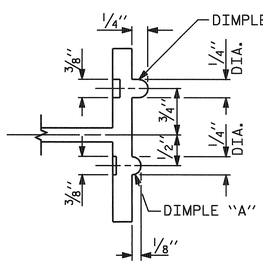

SECTION B - B

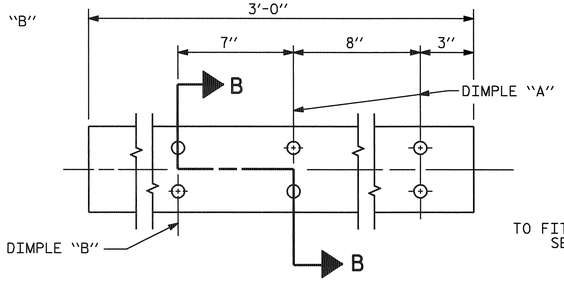

EXPANSION BAR DETAILS

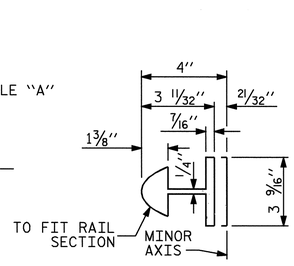

BAR SECTION

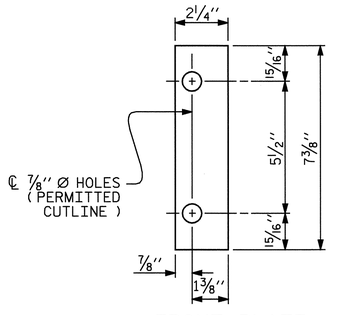

FRONT PLATE

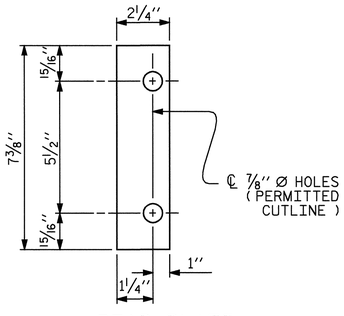

REAR PLATE

SHIM DETAILS

NOTE :
SHIMS MAY BE CUT ALONG PERMITTED CUTLINE OR SLOTTED TO EDGE OF PLATE TO FACILITATE PLACEMENT.

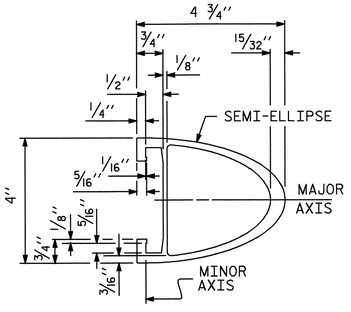

RAIL SECTION

1/2'' Ø [13 THREAD] HOLE FOR 1/2'' Ø X 1'' STAINLESS STEEL HEX HEAD CAP SCREW & 1 1/16'' O.D., 17/32'' I.D., 1/16'' THICK WASHER (TYP.)

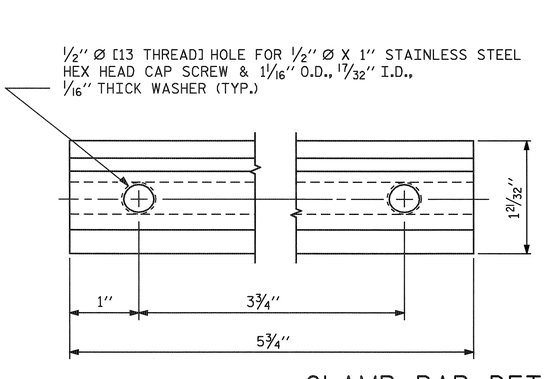

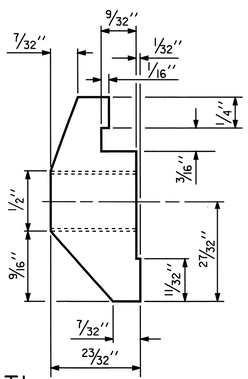

CLAMP BAR DETAIL

(4 REQUIRED PER POST)

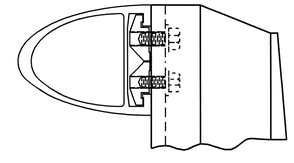

CLAMP ASSEMBLY

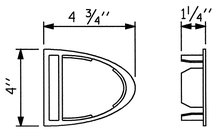

RAIL CAP

PROJECT NO. R-2245
BRUNSWICK COUNTY
STATION: 58+00.00 -L-

SHEET 4 OF 6

STATE OF NORTH CAROLINA
DEPARTMENT OF TRANSPORTATION
RALEIGH

STANDARD

2 BAR METAL RAIL

JUNE 1994

REVISIONS						SHEET NO.
NO.	BY:	DATE:	NO.	BY:	DATE:	S-73
1			3			TOTAL SHEETS
2			4			98

ASSEMBLED BY : R. D. MARTIN	DATE : 6/06		
CHECKED BY : W. D. CRUTCHER	DATE : 9/06		
DRAWN BY : EEM 6/94	REV. 2/6/97	EEM/RGW	
CHECKED BY : RGW 6/94	REV. 8/16/99	MAB/LES	
	REV. 5/7/03	RWW/JTE	

NORTH CAROLINA PROFESSIONAL SEAL 23926 ENGINEER BRIAN C. HANKS
1/16/07

11-OCT-2006 11:34
S:\PG3\R-2245 Oak Island\Final Plans\R2245_sd_2MR.dgn
rmartin

STD. NO. BMR4

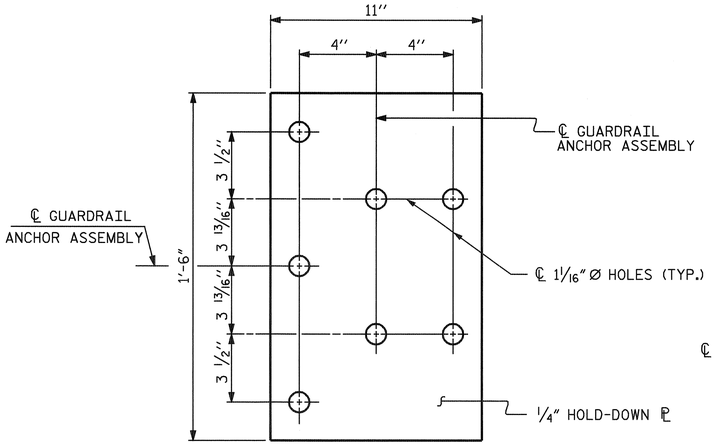

PLAN

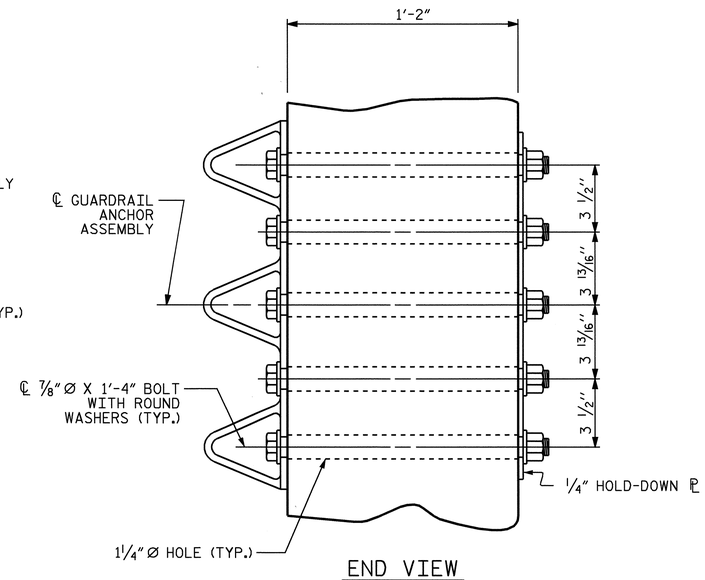

END VIEW

GUARDRAIL ANCHOR ASSEMBLY DETAILS

NOTES

THE GUARDRAIL ANCHOR ASSEMBLY SHALL CONSIST OF A 1/4'' HOLD DOWN PLATE AND 7 - 7/8'' Ø BOLTS WITH NUTS AND WASHERS.

THE HOLD-DOWN PLATE SHALL CONFORM TO AASHTO M270 GRADE 36. AFTER FABRICATION, THE HOLD-DOWN PLATE SHALL BE HOT-DIP GALVANIZED IN ACCORDANCE WITH AASHTO M111.

BOLTS SHALL CONFORM TO THE REQUIREMENTS OF ASTM A307 AND NUTS SHALL CONFORM TO THE REQUIREMENTS OF AASHTO M291. BOLTS, NUTS AND WASHERS SHALL BE GALVANIZED. AT THE CONTRACTOR'S OPTION, STAINLESS STEEL BOLTS, NUTS AND WASHERS MAY BE USED AS AN ALTERNATE FOR THE 7/8'' Ø GALVANIZED BOLTS, NUTS AND WASHERS. THEY SHALL CONFORM TO OR EXCEED THE MECHANICAL REQUIREMENTS OF ASTM A307. THE USE OF THIS ALTERNATE SHALL BE APPROVED BY THE ENGINEER.

AFTER INSTALLATION, THE EXPOSED THREAD OF THE BOLT SHALL BE BURRED WITH A SHARP POINTED TOOL.

THE COST OF THE GUARDRAIL ANCHOR ASSEMBLIES WITH BOLTS, NUTS AND WASHERS COMPLETE IN PLACE, SHALL BE INCLUDED IN THE VARIOUS PAY ITEMS.

THE VERTICAL REINFORCING BARS MAY BE SHIFTED SLIGHTLY IN THE END POST TO CLEAR ASSEMBLY BOLTS.

THE 1 1/4'' Ø HOLES SHALL BE FORMED OR DRILLED WITH A CORE BIT. IMPACT TOOLS WILL NOT BE PERMITTED. ANY CONCRETE DAMAGED BY THIS WORK SHALL BE REPAIRED TO THE SATISFACTION OF THE ENGINEER.

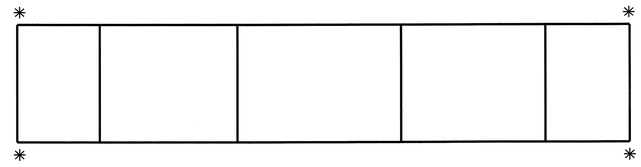

SKETCH SHOWING POINTS OF ATTACHMENT

*LOCATION OF GUARDRAIL ATTACHMENT

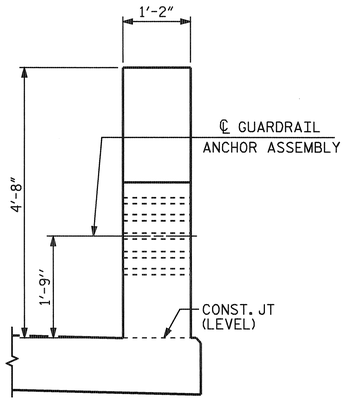

END VIEW
(TWO BAR METAL RAIL)

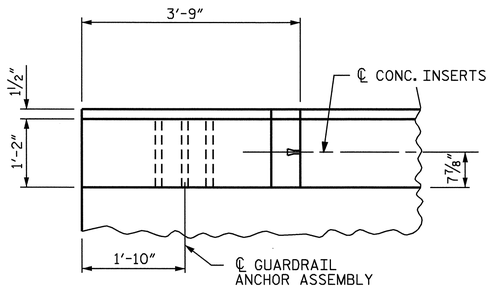

PLAN

LOCATION OF GUARDRAIL ANCHOR AT END POST

PROJECT NO. R-2245

BRUNSWICK COUNTY

STATION: 58+00.00 -L-

SHEET 5 OF 6

STATE OF NORTH CAROLINA
DEPARTMENT OF TRANSPORTATION
RALEIGH

STANDARD
GUARDRAIL ANCHORAGE DETAILS FOR METAL RAILS

JUNE 1994

REVISIONS						SHEET NO.
NO.	BY:	DATE:	NO.	BY:	DATE:	S-74
1			3			TOTAL SHEETS
2			4			98

NORTH CAROLINA PROFESSIONAL SEAL 23926 ENGINEER BRIAN C. HANKS
1/16/07

ASSEMBLED BY : R. D. MARTIN	DATE : 6/06		
CHECKED BY : W. D. CRUTCHER	DATE : 9/06		
DRAWN BY : EEM 6/94	REV. 8/16/99	RWW/LES	
CHECKED BY : RGW 6/94	REV. 10/17/00	RWW/LES	
	REV. 5/7/03	RWW/JTE	

11-OCT-2006 11:35
S:\PG3\R-2245 Oak Island\Final Plans\R2245_sd_2MR.dgn
rmartin

STD. NO. BMR8

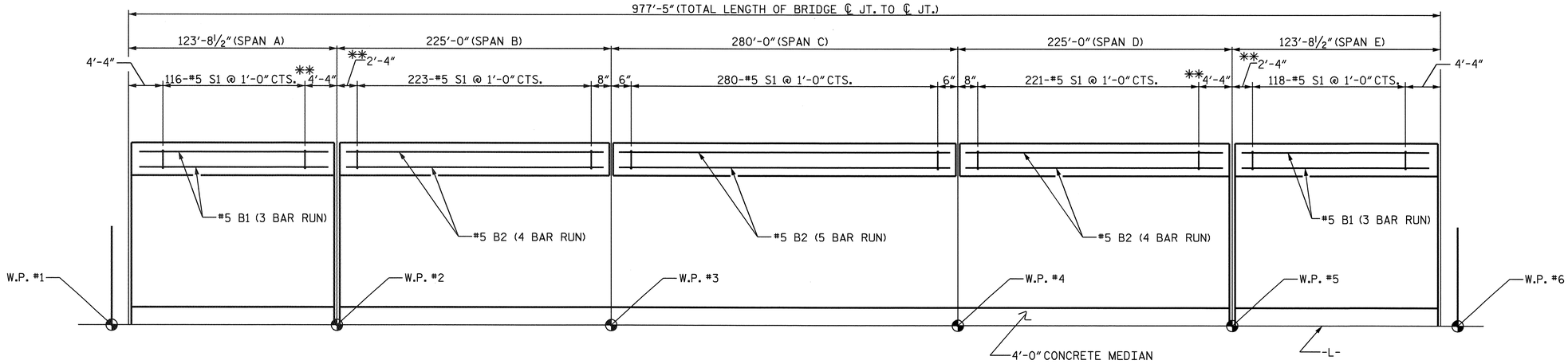

PLAN OF PARAPET

(LEFT SIDE SHOWN, RIGHT SIDE SIMILAR)
**DIMENSIONS REVERSED ON RIGHT SIDE.

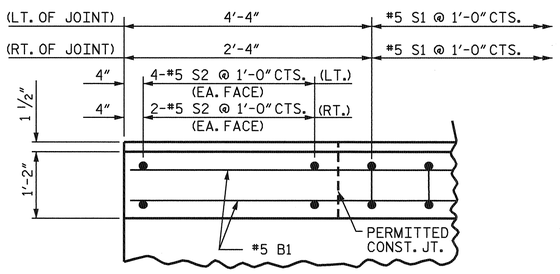

PLAN OF PARAPET

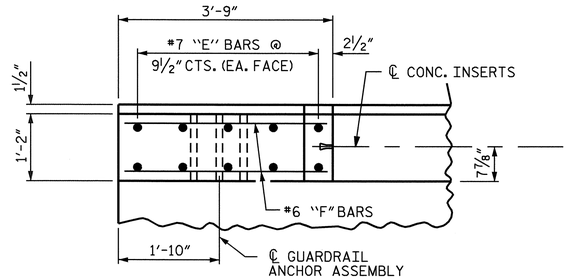

PLAN OF END POST

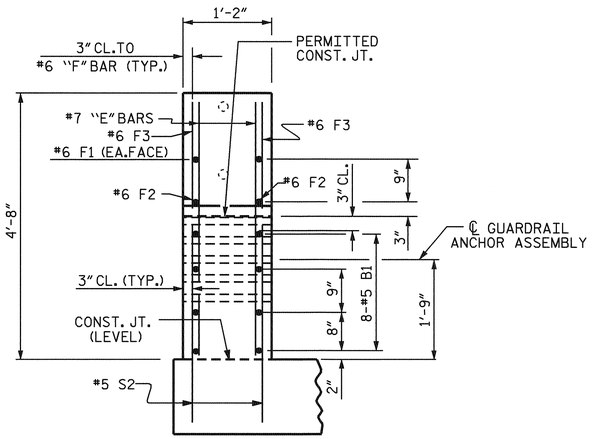

END VIEW

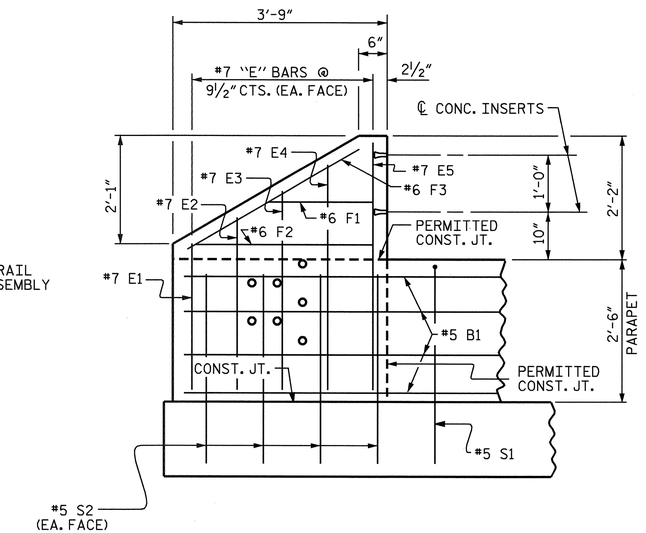

ELEVATION

PARAPET AND END POST FOR TWO BAR RAIL

NOTES

FOR DETAIL OF CONCRETE INSERT AND GUARDRAIL ANCHOR ASSEMBLY, SEE "RAIL POST SPACINGS AND END OF RAIL DETAIL" SHEETS.

THE #5 S2 BARS SHALL BE INSTALLED USING AN ADHESIVE ANCHORING SYSTEM AFTER SAWING THE JOINT. THE YIELD LOAD FOR THE #5S2 BARS IS 18.6 kips. FIELD TESTING OF THE ADHESIVE BONDING SYSTEM IS REQUIRED.

ADHESIVE ANCHOR SYSTEM SHALL HAVE A MINIMUM PULLOUT STRENGTH OF 50% OF THE YIELD LOAD AND A MINIMUM OF 20% OF THE FIRST 50 ANCHORS SHALL BE TESTED. IF ANY ANCHOR FAILS THE CONTRACTOR SHALL AT HIS EXPENSE TEST ALL ANCHORS UNLESS DIRECTED OTHERWISE BY THE ENGINEER.

PARAPETS AND MEDIAN IN A CONTINUOUS UNIT SHALL NOT BE CAST UNTIL ALL SLAB CONCRETE IN THE UNIT HAS BEEN CAST AND REACHED A MINIMUM COMPRESSIVE STRENGTH OF 3000 psi.

ALL REINFORCING STEEL IN PARAPETS AND END POSTS SHALL BE EPOXY COATED.

GROOVED CONTRACTION JOINTS, ½" IN DEPTH, SHALL BE TOOLED IN ALL EXPOSED FACES OF THE PARAPET AND MEDIAN IN ACCORDANCE WITH ARTICLE 825-10(B) OF THE STANDARD SPECIFICATIONS. THE CONTRACTION JOINTS SHALL BE LOCATED AT A SPACING OF 8 FEET TO 10 FEET BETWEEN EXPANSION JOINTS. NO CONTRACTION JOINTS WILL BE REQUIRED FOR SEGMENTS LESS THAN 10 FEET IN LENGTH.

COST FOR CONCRETE MEDIAN ON THE BRIDGE DECK SHALL BE INCLUDED IN PAYMENT FOR THE 1'-2" X 2'-6" CONCRETE PARAPET.

THE JOINT IN THE DECK SHALL BE SAWED PRIOR TO THE CASTING OF THE PARAPET AND MEDIAN.

THE SURFACE OF THE DECK UNDER THE MEDIAN SHALL BE ROUGHENED OR GROOVED BEFORE THE MEDIAN IS PLACED.

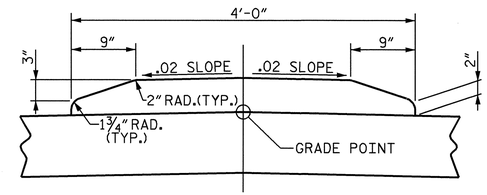

CONCRETE MEDIAN SECTION

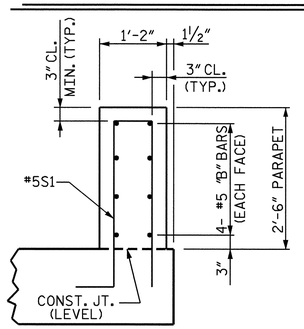

SECTION THRU PARAPET

BILL OF MATERIAL

FOR PARAPET AND FOUR END POSTS

BAR	NUMBER	SIZE	TYPE	LENGTH	WEIGHT
✳B1	96	#5	STR	43'-6"	4356
✳B2	208	#5	STR	58'-8"	12727
✳E1	8	#7	STR	2'-6"	41
✳E2	8	#7	STR	3'-0"	49
✳E3	8	#7	STR	3'-6"	57
✳E4	8	#7	STR	4'-0"	65
✳E5	8	#7	STR	4'-4"	71
✳F1	8	#6	STR	1'-10"	22
✳F2	8	#6	STR	3'-1"	37
✳F3	8	#6	STR	3'-5"	41
✳S1	1916	#5	1	6'-8"	13323
✳S2	80	#5	STR	2'-9"	229

✳EPOXY COATED REINFORCING STEEL (LBS.) 31018

CLASS AA CONCRETE (C.Y.) 211.9

1'-2" X 2'-6" CONCRETE PARAPET (L.F.) 1954.66

BAR TYPES

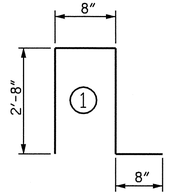

ALL BAR DIMENSIONS ARE OUT TO OUT.

BILL OF MATERIAL

4'-0" CONCRETE MEDIAN

CLASS AA CONCRETE		
SPAN A	(C.Y.)	6.9
SPAN B THRU D	(C.Y.)	40.7
SPAN E	(C.Y.)	6.9
TOTAL	(C.Y.)	54.5

PROJECT NO. R-2245

BRUNSWICK COUNTY

STATION: 58+00.00 -L-

SHEET 6 OF 6

STATE OF NORTH CAROLINA
DEPARTMENT OF TRANSPORTATION
RALEIGH

END POST, MEDIAN AND PARAPET DETAILS

NORTH CAROLINA PROFESSIONAL SEAL 23926 ENGINEER BRIAN C. HANKS
1/18/07

REVISIONS						SHEET NO.
NO.	BY:	DATE:	NO.	BY:	DATE:	S-75
1			3			TOTAL SHEETS
2			4			98

DRAWN BY : R. D. MARTIN DATE : 6/06
CHECKED BY : W. D. CRUTCHER DATE : 9/06

17-JAN-2007 10:01
S:\PCS\R-2245 Oak Island\Final Plans\R2245_sd_2MR.dgn
bhanks

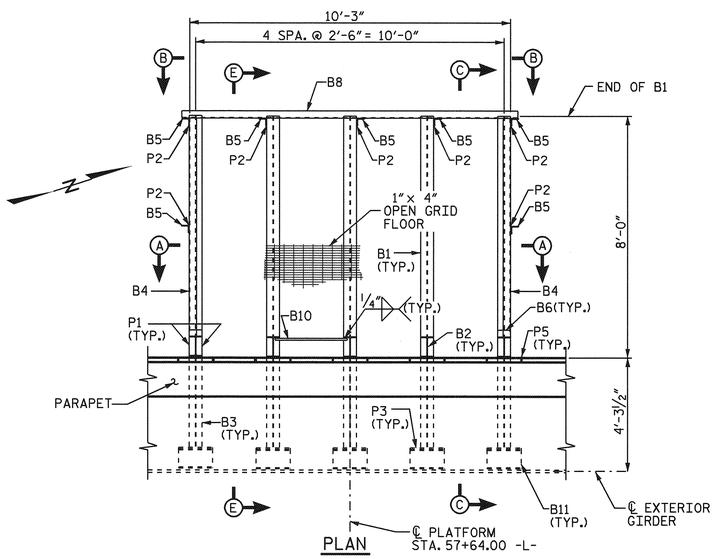

PLAN

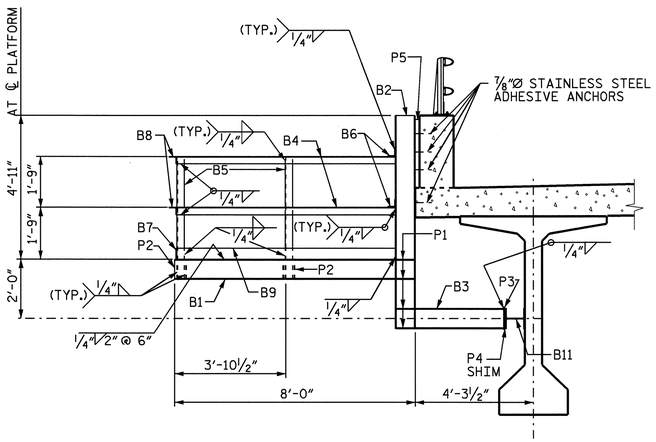

SECTION E-E

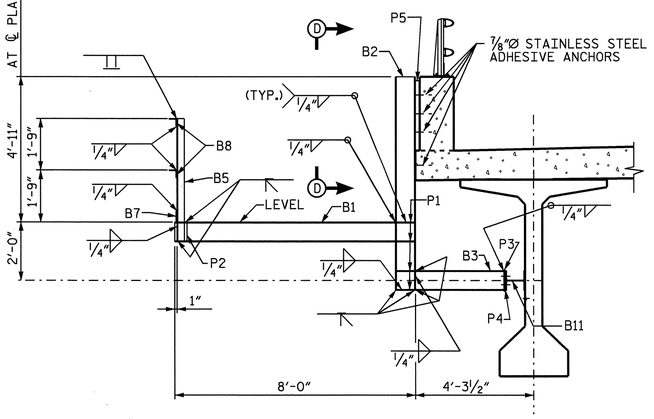

SECTION C-C

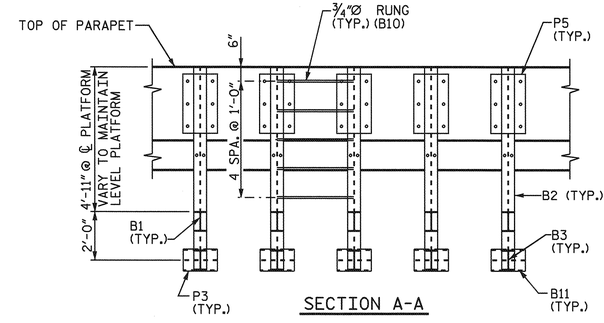

SECTION A-A

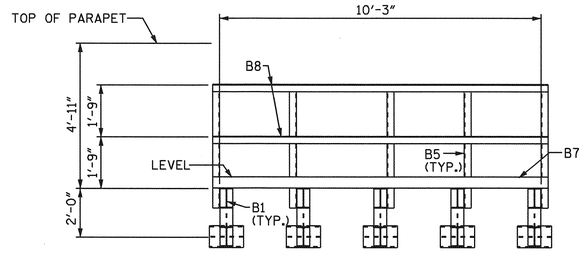

SECTION B-B

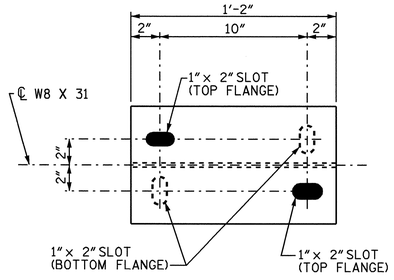

ELEVATION

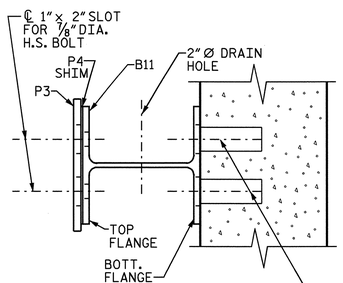

END VIEW

B11 DETAIL

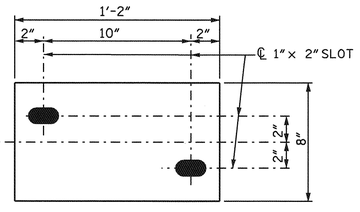

PLATE P4 SHIM DETAIL

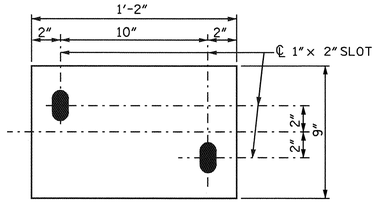

PLATE P3 DETAIL

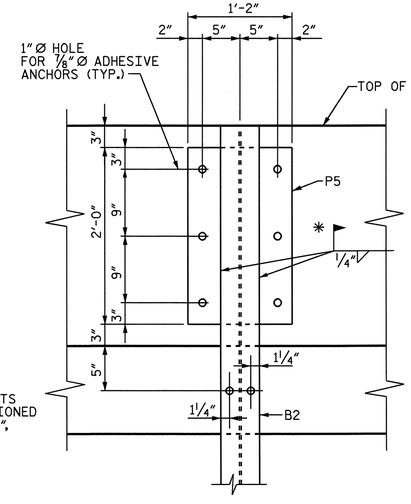

SECTION D-D

NOTES:

ALL STRUCTURAL STEEL SHALL BE AASHTO M270 GRADE 50.

ALL FABRICATION SHALL CONFORM TO THE APPLICABLE SECTION OF THE NORTH CAROLINA DEPARTMENT OF TRANSPORTATION STANDARD SPECIFICATIONS FOR ROADS AND STRUCTURES.

BAND ALL EDGES OF OPEN GRID FLOOR.

OPEN GRID FLOOR SHALL BE ATTACHED TO EACH HORIZONTAL FLOOR MEMBER USING AN APPROVED FASTENER.

ALL FIELD CONNECTIONS TO BE 7/8" Ø HIGH STRENGTH BOLTS UNLESS OTHERWISE NOTED.

7/8" Ø ADHESIVE ANCHORS SHALL BE STAINLESS STEEL.

ADHESIVE ANCHOR SYSTEM SHALL HAVE A MINIMUM PULLOUT STRENGTH OF 50% OF THE YIELD LOAD. A MINIMUM OF EIGHT (8) ANCHORS SHALL BE TESTED. IF ANY ANCHOR FAILS THE CONTRACTOR SHALL AT HIS EXPENSE TEST ALL ANCHORS UNLESS DIRECTED OTHERWISE BY THE ENGINEER.

FOR SOLAR ARRAY SUPPORT PLATFORM, SEE SPECIAL PROVISIONS.

FOR DETAILS OF NAVIGATIONAL LIGHTING, SEE NAVIGATIONAL LIGHTING AND CONDUIT SYSTEM PLAN SHEET.

* CONTRACTOR HAS THE OPTION TO SHOP WELD

BILL OF MATERIAL

ITEM	NUMBER	DESCRIPTION
B1	5	W8 x 18
B2	5	W8 x 18
B3	5	W8 x 18
B4	4	L3 x 3 x 1/4
B5	7	L3 x 3 x 1/4
B6	4	L3 x 3 x 1/4
B7	1	PL 1/4 x 5
B8	2	L3 x 3 x 1/4
B9	2	PL 1/4 x 5
B10	5	3/4"Ø RUNG
B11	5	W8 x 31
P1	40	PL 5/16 x 2 1/2 x 7 1/2
P2	7	PL 1/4 x 5 x 8
P3	5	PL 1/2 x 9 x 14
P4	AS REQ'D	PL 3/16 x 8 x 14
P5	5	PL 1 1/4 x 14 x 24

1"x4" OPEN GRID FLOOR W/ 3/16"x3/4" BRG. BARS

7/8" Ø STAINLESS STEEL ADHESIVE ANCHORS (40 REQ'D.)

7/8" Ø H.S. BOLT W/ WASHER (20 REQ'D.)

PROJECT NO. R-2245

BRUNSWICK COUNTY

STATION: 58+00.00 -L-

STATE OF NORTH CAROLINA
DEPARTMENT OF TRANSPORTATION
RALEIGH

SOLAR ARRAY PLATFORM

REVISIONS						SHEET NO.
NO.	BY:	DATE:	NO.	BY:	DATE:	S-76
1			3			TOTAL SHEETS
2			4			98

NORTH CAROLINA PROFESSIONAL SEAL 23926 ENGINEER BRIAN C. HANKS
1/16/07

DRAWN BY : R. D. MARTIN DATE : 6-06
CHECKED BY : F. BECKWITH, JR. DATE : 9-06

06-NOV-2006 08:40
S:\PGS\R-2245 Oak Island\Final Plans\R2245_sd_UT_solar array plat..dgn
bhanks

SUPERSTRUCTURE BILL OF MATERIAL

SPAN A

BAR	NUMBER	SIZE	TYPE	LENGTH	WEIGHT
A1	740	#5	STR	35'-3"	27207
B1	230	#4	STR	26'-7"	4084
B2	144	#5	STR	43'-1"	6471
K1	8	#8	2	19'-4"	413
K2	20	#8	2	17'-11"	957
K3	28	#8	STR	7'-3"	542
S1	56	#5	3	6'-1"	355

EPOXY COATED REINFORCING STEEL (LBS.)40029

TOTAL CLASS AA CONCRETE (C.Y.) 297.9

SPANS B, C & D

BAR	NUMBER	SIZE	TYPE	LENGTH	WEIGHT
A1	4376	#5	STR	35'-3"	160887
B3	54	#4	STR	29'-3"	1055
B4	850	#4	STR	26'-1"	14810
B5	672	#5	STR	54'-10"	38432
B6	594	#6	STR	57'-0"	50855
K4	20	#5	STR	32'-6"	678
K5	56	#5	STR	5'-8"	331
K6	28	#5	1	14'-9"	431
K7	288	#5	STR	11'-5"	3429
K8	96	#5	STR	5'-6"	551
K9	28	#5	STR	3'-0"	88
K10	28	#5	STR	6'-2"	180
K11	28	#5	STR	6'-0"	175
K12	32	#8	STR	33'-5"	2855
K13	32	#8	STR	33'-10"	2891
K14	80	#6	STR	31'-6"	3785
S2	14	#4	3	14'-5"	135
S3	28	#4	STR	5'-1"	95
S4	28	#4	4	11'-4"	212
S5	252	#4	5	1'-7"	267
S6	2128	#4	5	2'-1"	2961
S7	140	#4	2	18'-8"	1746
S8	56	#4	2	16'-4"	611
S9	42	#4	2	29'-4"	823
S10	28	#4	4	26'-2"	489
S11	28	#4	4	23'-0"	430

EPOXY COATED REINFORCING STEEL (LBS.)289202

SAND-LIGHTWEIGHT CONCRETE

POUR #1 (C.Y.)	214.3	POUR #6 (C.Y.)	214.3
POUR #2 (C.Y.)	214.3	POUR #7 (C.Y.)	216.7
POUR #3 (C.Y.)	216.7	POUR #8 (C.Y.)	216.7
POUR #4 (C.Y.)	216.7	POUR #9 (C.Y.)	59.4
POUR #5 (C.Y.)	214.3		

SAND-LIGHTWEIGHT CONCRETE TOTAL (C.Y.) 1783.4

PRESTRESS +6000 CONCRETE (CLOSURE SPLICE DIAPHRAGMS) (C.Y.) 117.2

CLASS AA CONCRETE (BENT DIAPHRAGMS) (C.Y.) 92.2

SPAN E

BAR	NUMBER	SIZE	TYPE	LENGTH	WEIGHT
A1	740	#5	STR	35'-3"	27207
B1	230	#4	STR	26'-7"	4084
B2	144	#5	STR	43'-1"	6471
K1	8	#8	2	19'-4"	413
K2	20	#8	2	17'-11"	957
K3	28	#8	STR	7'-3"	542
S1	56	#5	3	6'-1"	355

EPOXY COATED REINFORCING STEEL (LBS.)40029

TOTAL CLASS AA CONCRETE (C.Y.) 297.9

SUPERSTRUCTURE REINFORCING STEEL LENGTHS ARE BASED ON THE FOLLOWING MINIMUM SPLICE LENGTHS

BAR SIZE	SUPERSTRUCTURE EXCEPT APPROACH SLABS, PARAPET, AND BARRIER RAIL		APPROACH SLABS		PARAPET AND BARRIER RAIL
	EPOXY COATED	UNCOATED	EPOXY COATED	UNCOATED	
#4	2'-4"	2'-1"	2'-0"	1'-9"	2'-9"
#5	2'-11"	2'-7"	2'-6"	2'-2"	3'-5"
#6	3'-6"	3'-1"	3'-10"	2'-7"	4'-4"
#7	5'-5"	3'-8"			
#8	7'-2"	4'-9"			

GROOVING BRIDGE FLOORS

APPROACH SLABS	2673	SQ.FT.
BRIDGE DECK	54073	SQ.FT.
TOTAL	56746	SQ.FT.

POUR NUMBER & DIRECTION

NOTE:
FOR TRANSVERSE CONST. JOINT DETAIL SEE "PLAN OF SPAN A" PLANSHEET.

BAR TYPES

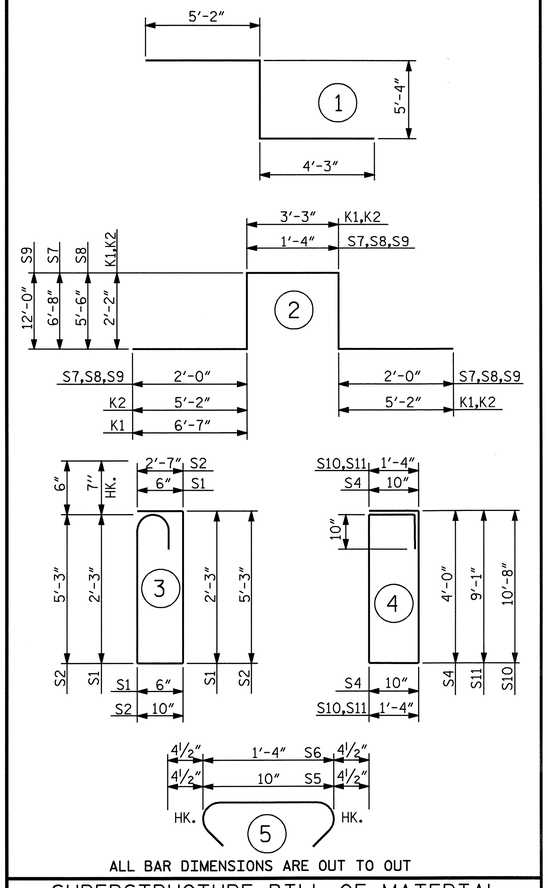

ALL BAR DIMENSIONS ARE OUT TO OUT

SUPERSTRUCTURE BILL OF MATERIAL

	PRESTRESS +6000 CONCRETE (CU. YDS.)	SAND-LIGHTWEIGHT CONCRETE (CU. YDS.)	CLASS AA CONCRETE (CU. YDS.)	EPOXY COATED REINFORCING STEEL (LBS.)
SPAN "A"	———	———	297.9	40029
SPAN "B" THRU SPAN "D"	117.2	1783.4	92.2	289202
SPAN "E"	———	———	297.9	40029
TOTALS**	117.2	1783.4	688.0	369260

**QUANTITIES FOR PARAPET AND MEDIAN ARE NOT INCLUDED

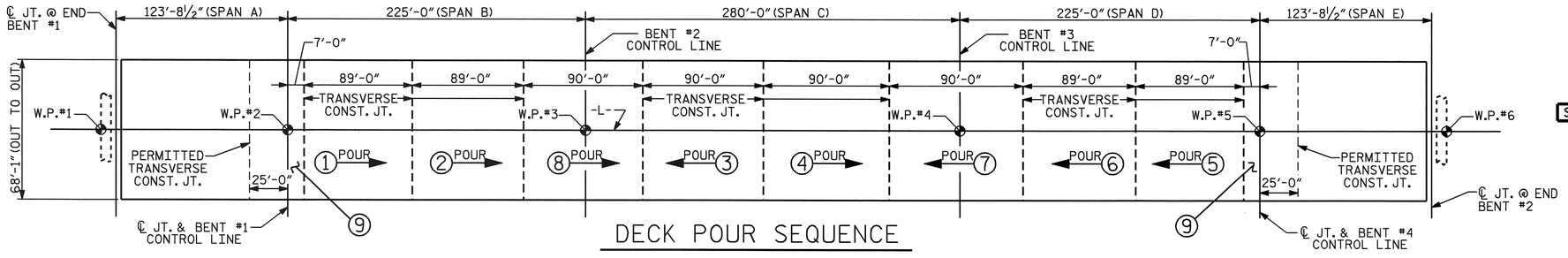

DECK POUR SEQUENCE

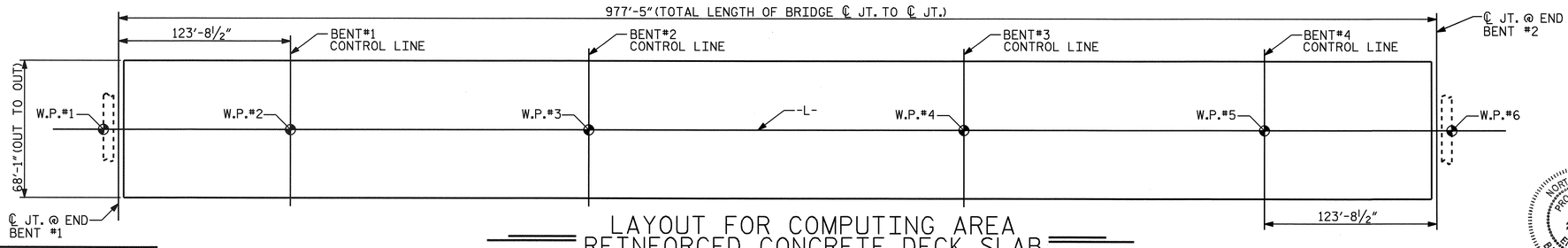

LAYOUT FOR COMPUTING AREA REINFORCED CONCRETE DECK SLAB

16,845 SQ. FEET - REINFORCED CONCRETE DECK SLAB

49,701 SQ. FEET - REINFORCED CONCRETE DECK SLAB (SAND-LIGHTWEIGHT CONCRETE)

PROJECT NO. R-2245

BRUNSWICK COUNTY

STATION: 58+00.00 -L-

STATE OF NORTH CAROLINA
DEPARTMENT OF TRANSPORTATION
RALEIGH

STANDARD

SUPERSTRUCTURE BILL OF MATERIAL

NORTH CAROLINA PROFESSIONAL SEAL 23926 ENGINEER BRIAN C. HANKS
1/18/07

REVISIONS						SHEET NO.
NO.	BY:	DATE:	NO.	BY:	DATE:	S-77
1			3			TOTAL SHEETS
2			4			98

ASSEMBLED BY : R. D. MARTIN DATE : 9/1/06
CHECKED BY : B. C. HANKS DATE : 9/20/06

DRAWN BY : JMB 5/87
CHECKED BY : SJD 9/87

REV. 6/1/94 EEM/GRP
REV. 8/16/99 RWW/LES
REV. 5/1/06 TLA/GM

03-NOV-2006 07:28
S:\PGJ\R-2245 Oak Island\Final Plans\R2245_sd_Superstr_BOM.dgn
bhanks

STD. NO. BOM2

NOTES

STIRRUPS IN CAP MAY BE SHIFTED AS NECESSARY TO CLEAR ANCHOR BOLTS.

FOR SECTION A-A, SEE SHEET 3 OF 3.

FOR PILE SPLICE DETAILS, SEE SHEET 3 OF 3.

FOR TEMPORARY DRAINAGE AT END BENTS, SEE SHEET 3 OF 3.

BACKWALL SHALL BE PLACED BEFORE APPLYING THE EPOXY PROTECTIVE COATING.

THE TOP SURFACE AREAS OF THE END BENT CAP SHALL BE CURED IN ACCORDANCE WITH THE STANDARD SPECIFICATIONS EXCEPT THE MEMBRANE CURING COMPOUND METHOD SHALL NOT BE USED.

THE TOP SURFACE OF THE CAP EXCEPT THE BRIDGE SEAT BUILDUPS SHALL BE SLOPED TRANSVERSELY FROM THE FILL FACE TO THE BACK FACE AT THE RATE OF 2%.

THE CONTRACTOR SHALL PROVIDE FOR INSTALLATION OF THE 4"DIAMETER DRAIN PIPE THROUGH THE WING WALL AS REQUIRED FOR REINFORCED BRIDGE APPROACH FILLS, SEE THE ROADWAY PLANS. REINFORCING STEEL IN THE WING WALL MAY BE SHIFTED AS NECESSARY TO CLEAR THE DRAIN PIPE.

THE CONCRETE IN THE SHADED AREA OF THE WING SHALL BE POURED AFTER THE CONCRETE PARAPET IS CAST IF SLIP FORMING IS USED.

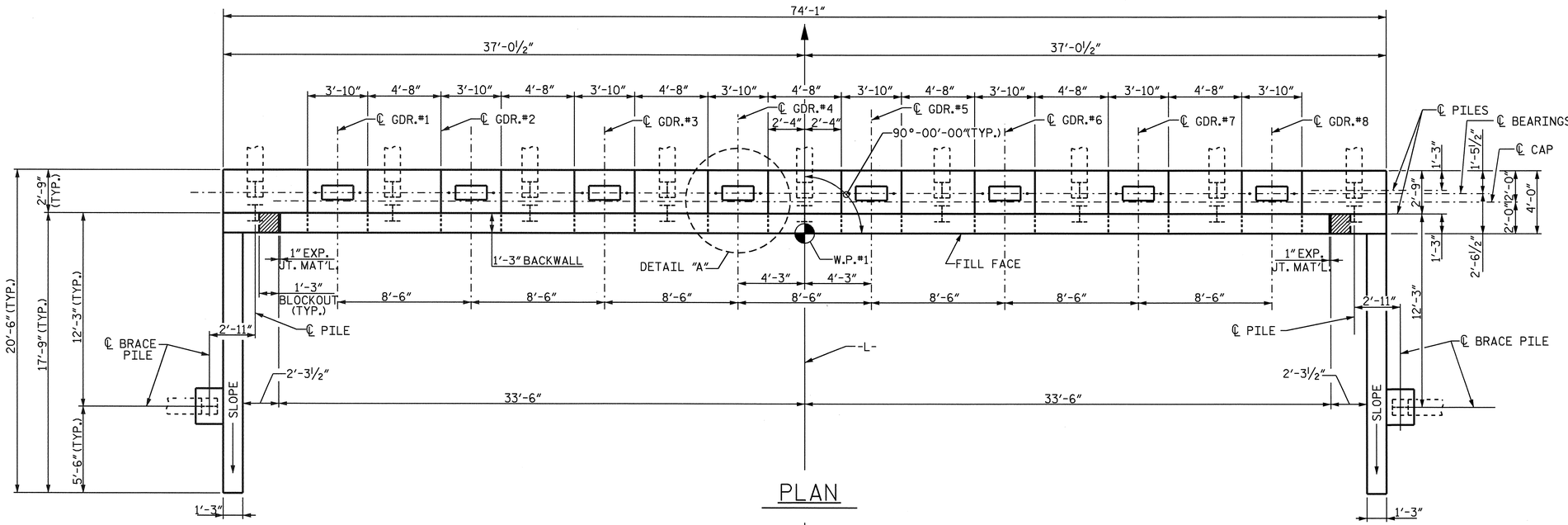

PLAN

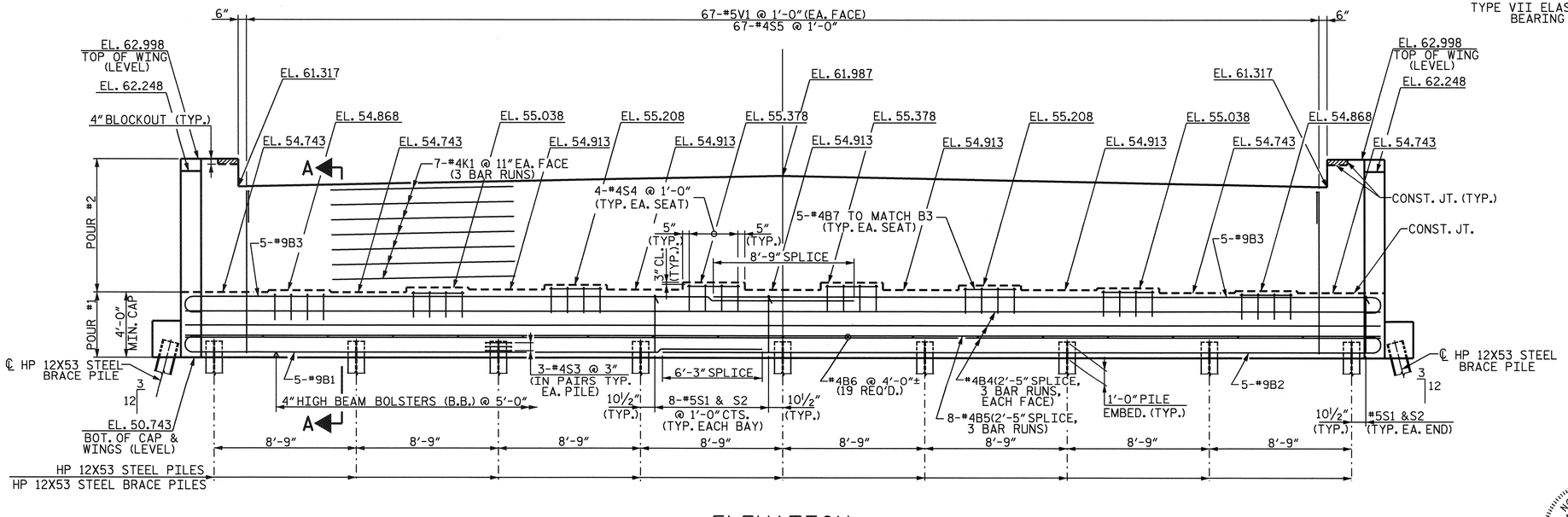

ELEVATION

DETAIL "A"
(TYPICAL EACH BRIDGE SEAT)

PROJECT NO. R-2245

BRUNSWICK COUNTY

STATION: 58+00.00 -L-

SHEET 1 OF 3

STATE OF NORTH CAROLINA
DEPARTMENT OF TRANSPORTATION
RALEIGH

SUBSTRUCTURE
END BENT #1

REVISIONS						SHEET NO.
NO.	BY:	DATE:	NO.	BY:	DATE:	S-78
1			3			TOTAL SHEETS
2			4			98

NORTH CAROLINA PROFESSIONAL SEAL 23926 ENGINEER BRIAN C. HANKS
1/16/07

DRAWN BY : R. D. MARTIN DATE : 10/05
CHECKED BY : W. D. CRUTCHER DATE : 9/06

11-OCT-2006 11:43
S:\PGS\R-2245 Oak Island\Final Plans\R2245_sd_E*.dgn
rmartin

NC005

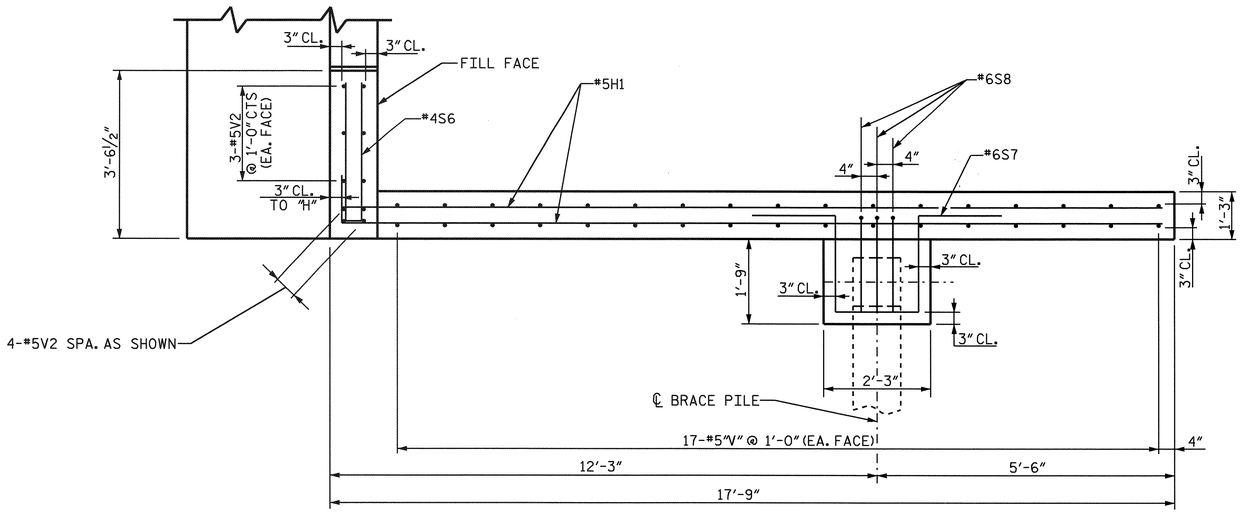

PLAN OF WING
(TYPICAL FOR BOTH WINGS)

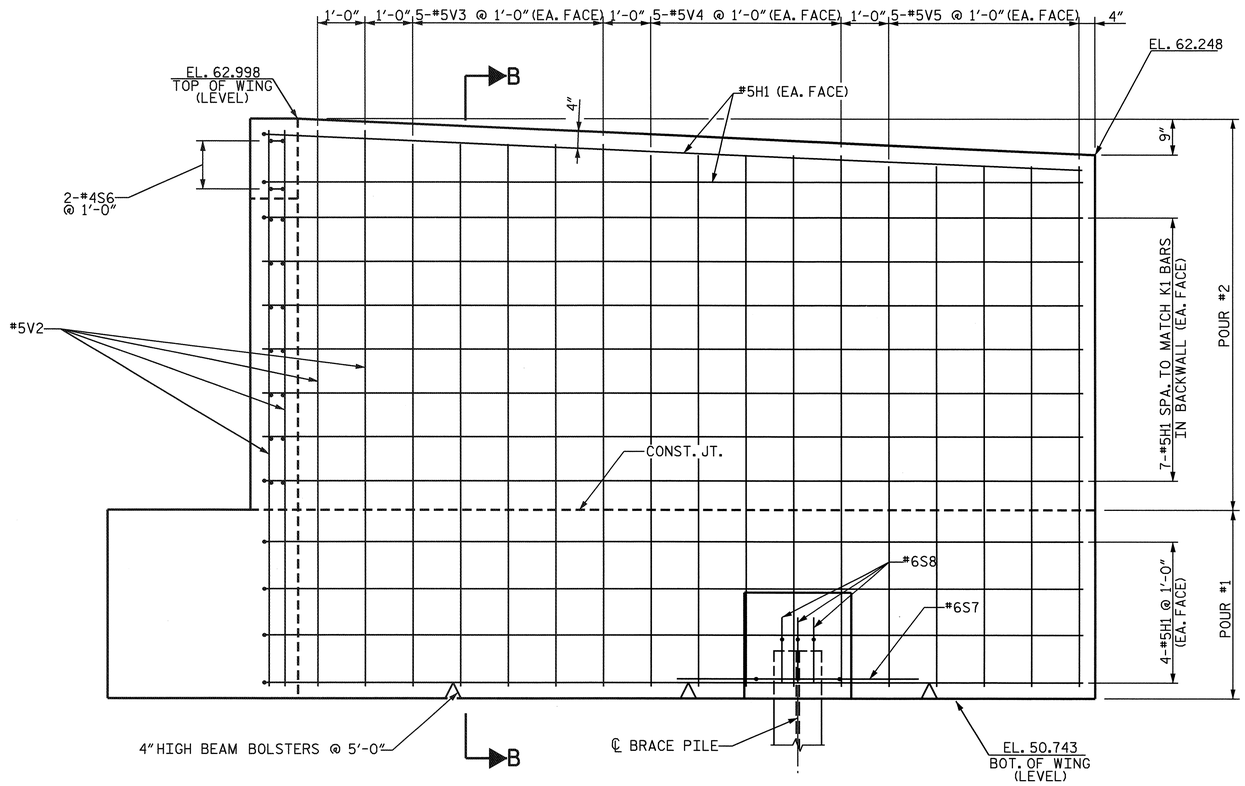

ELEVATION OF WING
(TYPICAL FOR BOTH WINGS)

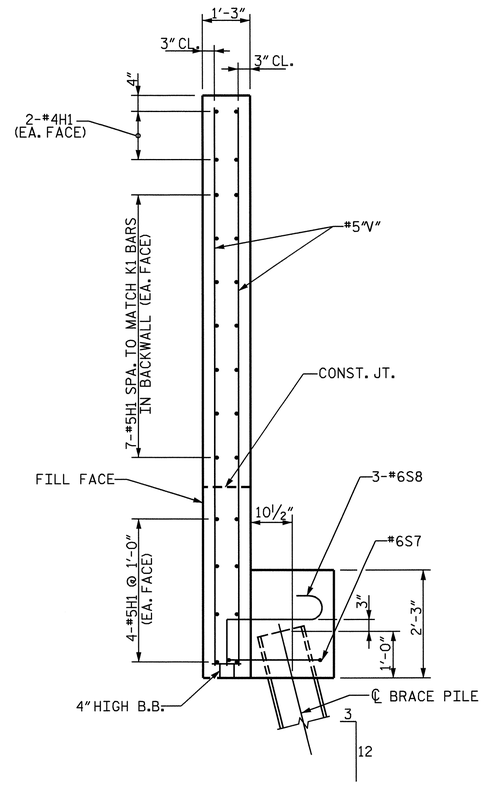

SECTION B-B

PROJECT NO. R-2245

BRUNSWICK COUNTY

STATION: 58+00.00 -L-

SHEET 2 OF 3

STATE OF NORTH CAROLINA
DEPARTMENT OF TRANSPORTATION
RALEIGH

SUBSTRUCTURE
END BENT #1

REVISIONS						SHEET NO.
NO.	BY:	DATE:	NO.	BY:	DATE:	S-79
1			3			TOTAL SHEETS
2			4			98

NORTH CAROLINA PROFESSIONAL SEAL 23926 ENGINEER BRIAN C. HANKS
1/16/07

DRAWN BY : R. D. MARTIN DATE : 10/05
CHECKED BY : W. D. CRUTCHER DATE : 9/06

11-OCT-2006 11:43
S:\PG3\R-2245 Oak Island\Final Plans\R2245_sd_E*.dgn
rmartin

NC0005

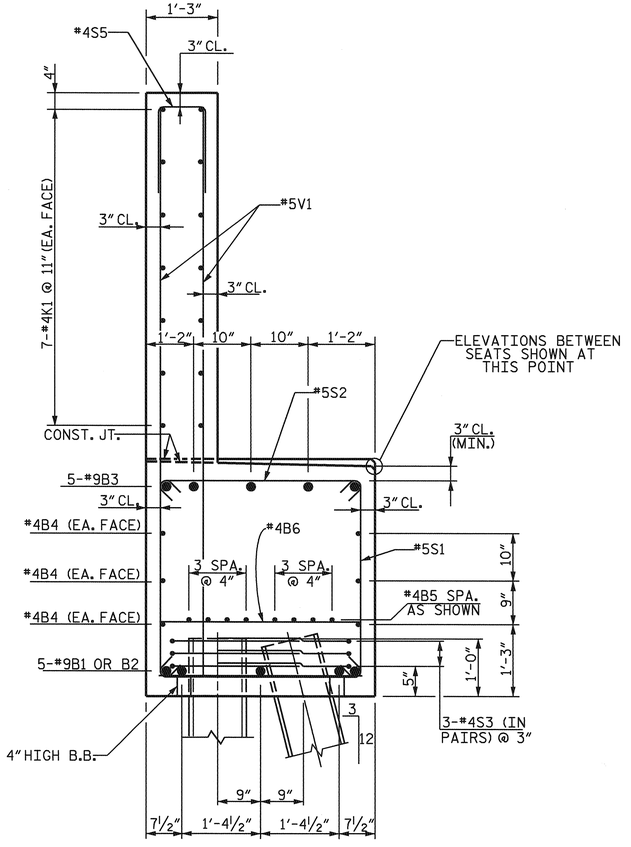

SECTION A-A

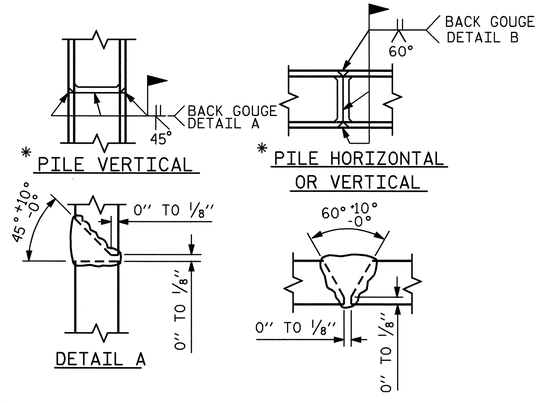

* POSITION OF PILE DURING WELDING.

PILE SPLICE DETAILS

BAR TYPES

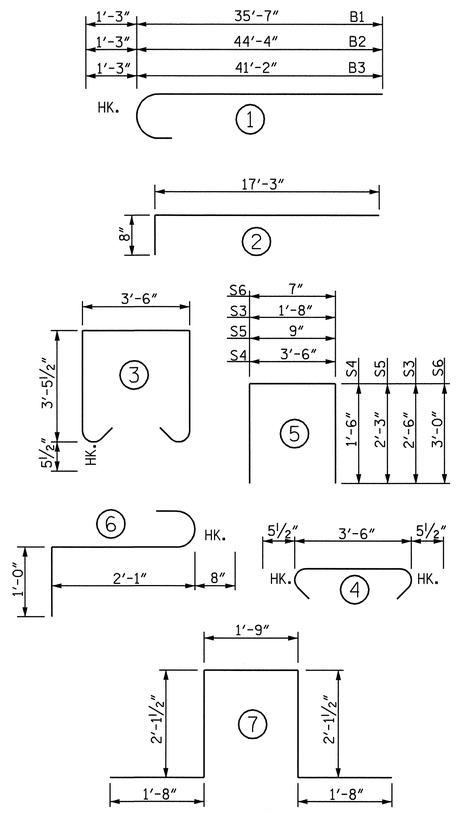

ALL BAR DIMENSIONS ARE OUT-TO-OUT

BILL OF MATERIAL

END BENT #1

BAR	NUMBER	SIZE	TYPE	LENGTH	WEIGHT
B1	5	#9	1	36'-10"	626
B2	5	#9	1	45'-7"	775
B3	10	#9	1	42'-5"	1442
B4	18	#4	STR	26'-2"	315
B5	24	#4	STR	26'-2"	420
B6	19	#4	STR	3'-6"	44
B7	40	#4	STR	3'-4"	89
H1	52	#5	2	17'-11"	972
K1	42	#4	STR	26'-2"	734
S1	66	#5	3	11'-4"	780
S2	66	#5	4	4'-5"	304
S3	54	#4	5	6'-8"	240
S4	32	#4	5	6'-6"	139
S5	67	#4	5	5'-3"	235
S6	4	#4	5	6'-7"	18
S7	2	#6	7	9'-4"	28
S8	6	#6	6	3'-9"	34
V1	134	#5	STR	10'-0"	1398
V2	28	#5	STR	11'-8"	341
V3	20	#5	STR	11'-5"	238
V4	20	#5	STR	11'-2"	233
V5	20	#5	STR	10'-11"	228

EPOXY COATED REINFORCING STEEL (LBS.) 9633

CLASS AA CONCRETE BREAKDOWN

POUR #1 CAP & LOWER WINGS (C.Y.) 53.3

POUR #2 UPPER WINGS & BACKWALL (C.Y.) 35.2

TOTAL CLASS AA CONCRETE (C.Y.) 88.5

HP 12X53 STEEL PILES

NO. 20 LIN. FT. 1800.0

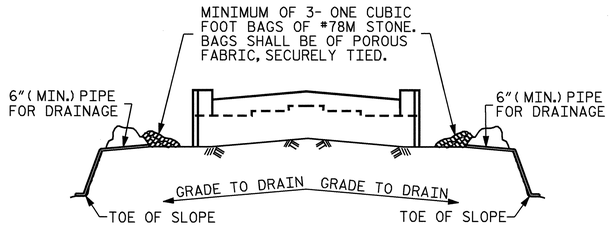

BAGGED STONE AND PIPE SHALL BE PLACED IMMEDIATELY AFTER COMPLETION OF END BENT EXCAVATION. PIPE MAY BE EITHER CONCRETE, CORRUGATED STEEL, CORRUGATED ALUMINUM ALLOY, OR CORRUGATED PLASTIC. PERFORATED PIPE WILL NOT BE ALLOWED.

BAGGED STONE SHALL REMAIN IN PLACE UNTIL THE ENGINEER DIRECTS THAT IT BE REMOVED. THE CONTRACTOR SHALL REMOVE AND DISPOSE OF SILT ACCUMULATIONS AT BAGGED STONE WHEN SO DIRECTED BY THE ENGINEER. BAGS SHALL BE REMOVED AND REPLACED WHENEVER THE ENGINEER DETERMINES THAT THEY HAVE DETERIORATED AND LOST THEIR EFFECTIVENESS.

NO SEPARATE PAYMENT WILL BE MADE FOR THIS WORK AND THE ENTIRE COST OF THIS WORK SHALL BE INCLUDED IN THE UNIT CONTRACT PRICE BID FOR THE SEVERAL PAY ITEMS.

TEMPORARY DRAINAGE AT END BENT

PROJECT NO. R-2245

BRUNSWICK COUNTY

STATION: 58+00.00 -L-

SHEET 3 OF 3

STATE OF NORTH CAROLINA
DEPARTMENT OF TRANSPORTATION
RALEIGH

SUBSTRUCTURE
END BENT #1

REVISIONS						SHEET NO.
NO.	BY:	DATE:	NO.	BY:	DATE:	S-80
1			3			TOTAL SHEETS
2			4			98

NORTH CAROLINA PROFESSIONAL SEAL 23926 ENGINEER BRIAN C. HANKS
1/16/07

DRAWN BY : R. D. MARTIN DATE : 10/05
CHECKED BY : W. D. CRUTCHER DATE : 9/06

11-OCT-2006 11:43
S:\PGS\R-2245 Oak Island\Final Plans\R2245_sd_E*.dgn
rmartin

NC8005

NOTES

THE CONTRACTOR'S ATTENTION IS CALLED TO THE FACT THAT THE CENTERLINE JOINT IN THE DECK SLAB (CONTROL LINE) IS OFFSET FROM THE CENTERLINE BENT.

STIRRUPS IN CAP MAY BE SHIFTED AS NECESSARY TO CLEAR ANCHOR BOLTS.

THE TOP SURFACE AREAS OF THE CAP SHALL BE CURED IN ACCORDANCE WITH THE STANDARD SPECIFICATIONS EXCEPT THE MEMBRANE CURING COMPOUND METHOD SHALL NOT BE USED.

INVERT ALTERNATE STIRRUP PAIRS.

FOR PILE SPLICE DETAILS SEE END BENT #1, SHEET 3 OF 3.

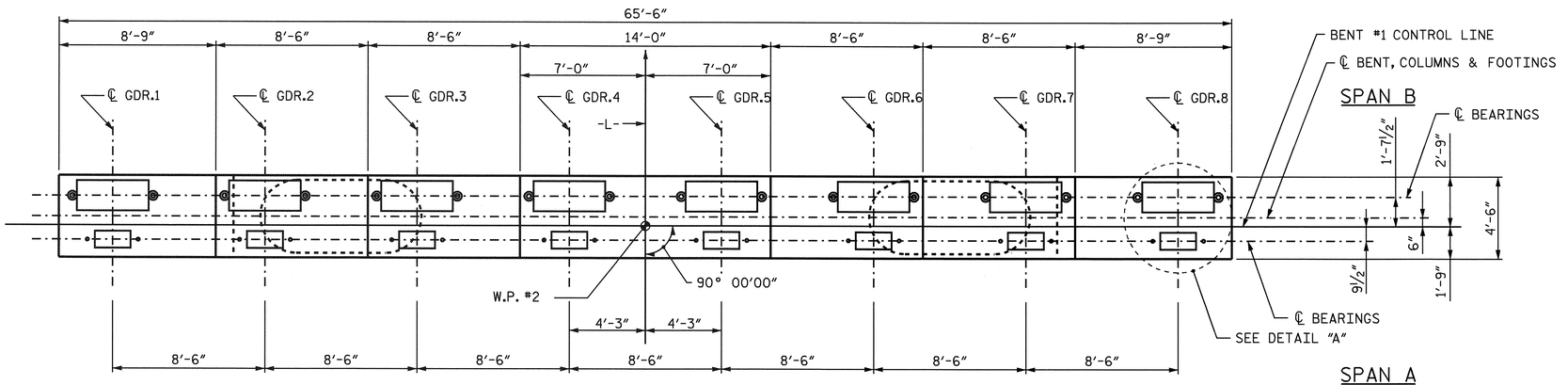

PLAN

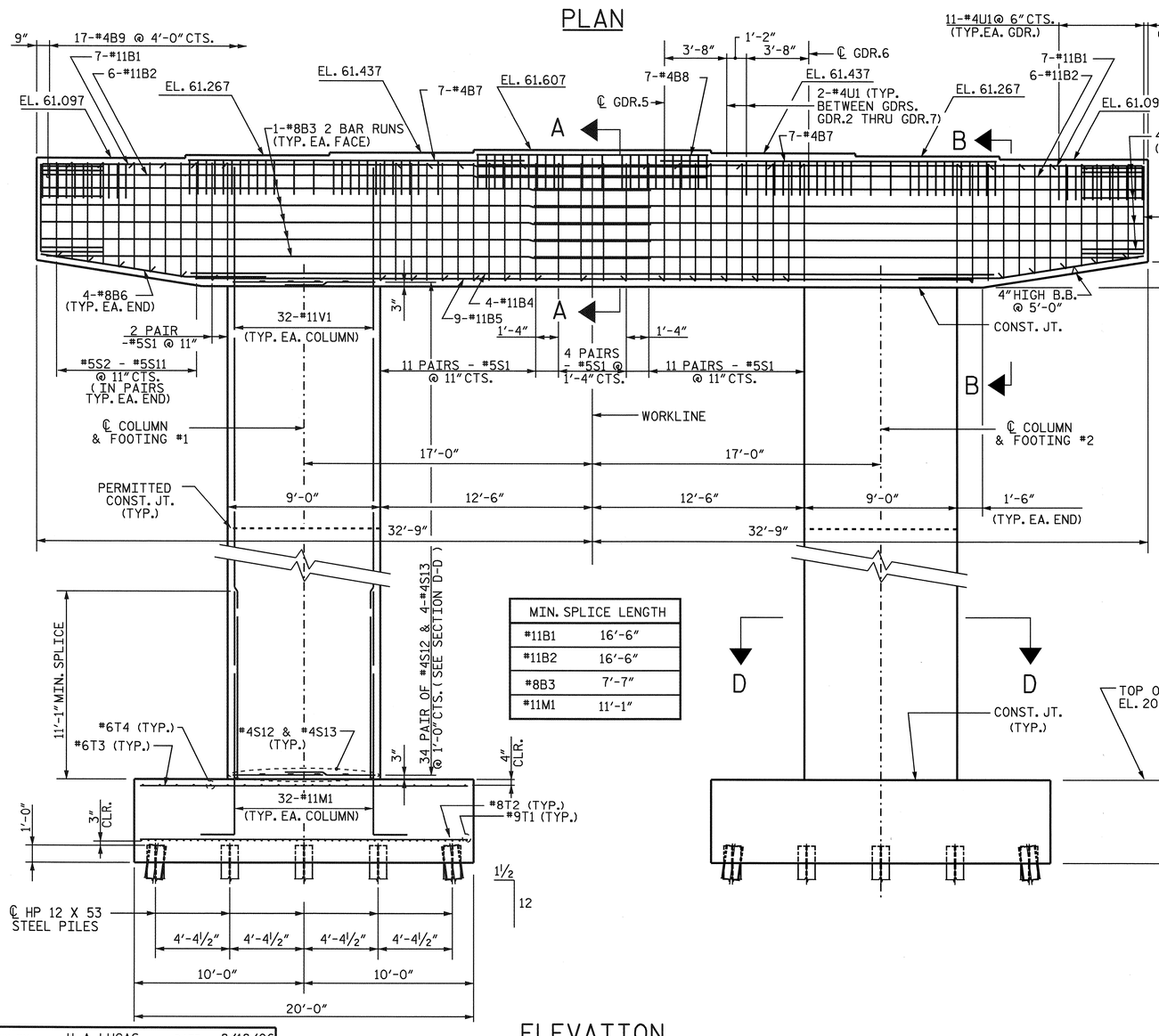

MIN. SPLICE LENGTH	
#11B1	16'-6"
#11B2	16'-6"
#8B3	7'-7"
#11M1	11'-1"

SPAN A

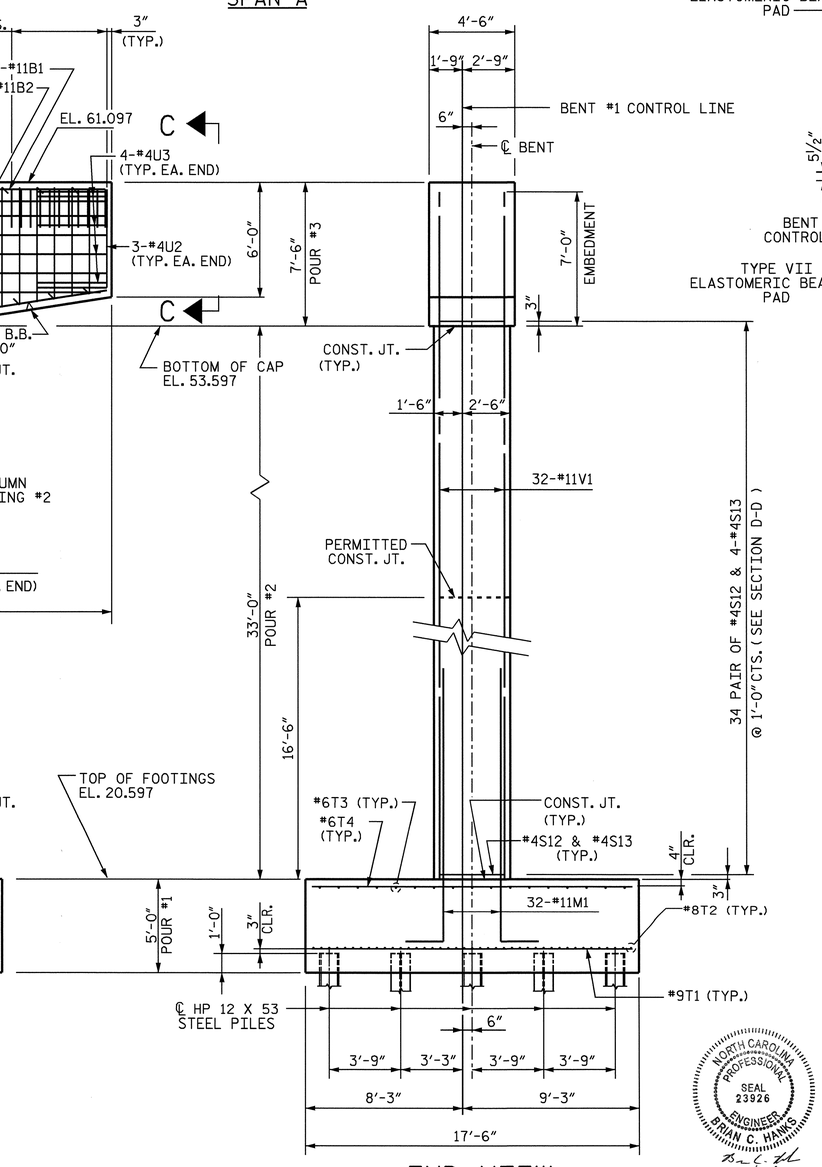

END VIEW

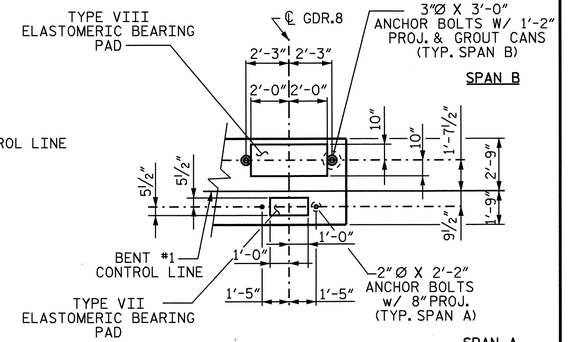

DETAIL "A"

BEARING DIMENSIONS & ANCHOR BOLT GAGES ARE TYPICAL EACH GIRDER CENTERLINE.

ELEVATION

(INFORMATION SHOWN IS TYPICAL FOR EACH COLUMN AND FOOTING.)

DRAWN BY : H. A. LUCAS DATE : 8/18/06
CHECKED BY : W. D. CRUTCHER DATE : 9/1/06

11-OCT-2006 12:00
S:\PGS\R-2245 Oak Island\Final Plans\R2245_sd_B*.dgn
hlucas

PROJECT NO. R-2245
BRUNSWICK COUNTY
STATION: 58+00.00 -L-

SHEET 1 OF 2

STATE OF NORTH CAROLINA
DEPARTMENT OF TRANSPORTATION
RALEIGH

SUBSTRUCTURE

BENT #1

NORTH CAROLINA PROFESSIONAL SEAL 23926 ENGINEER BRIAN C. HANKS
1/16/07

REVISIONS						SHEET NO.
NO.	BY:	DATE:	NO.	BY:	DATE:	S-81
1			3			TOTAL SHEETS
2			4			98

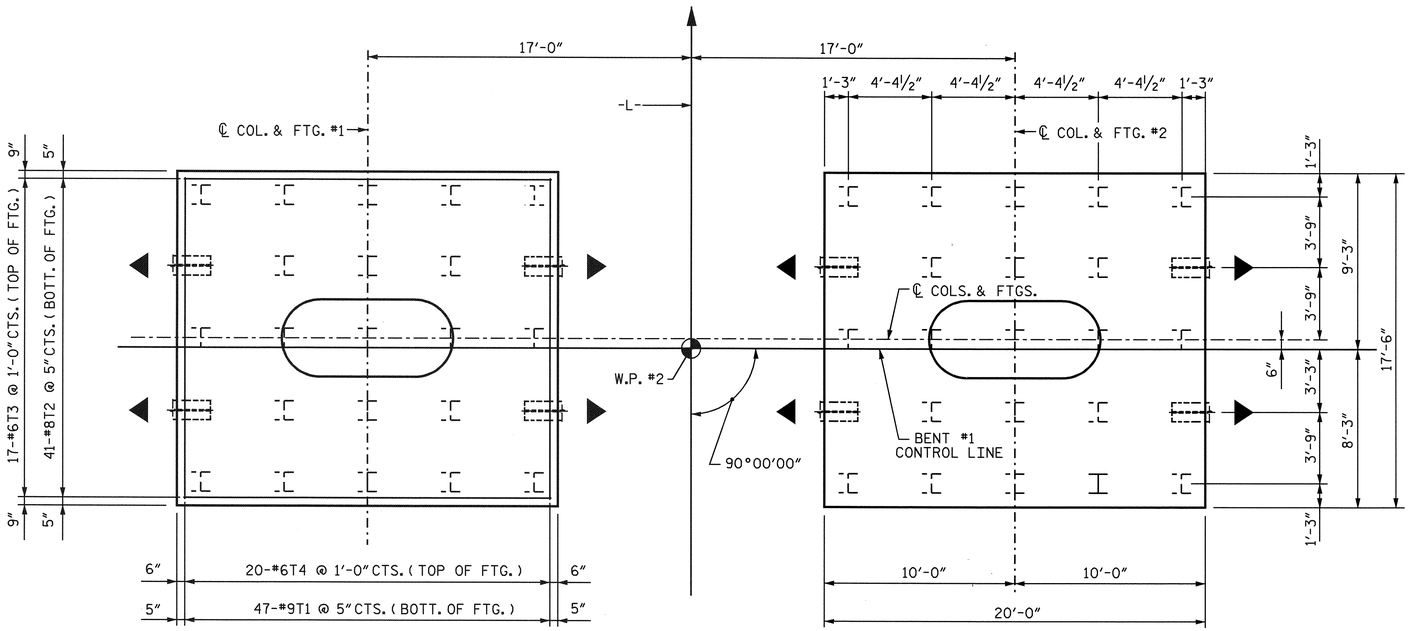

FOOTING PLAN

FOOTINGS ARE TYPICAL.

◀ INDICATES DIRECTION OF 1 1/2:12 PILE BATTER.

THE CONTRACTOR'S ATTENTION IS CALLED TO THE FACT THAT THE CENTERLINE JOINT IN THE THE DECK SLAB (CONTROL LINE) IS OFFSET FROM THE CENTERLINE BENT.

BAR TYPES

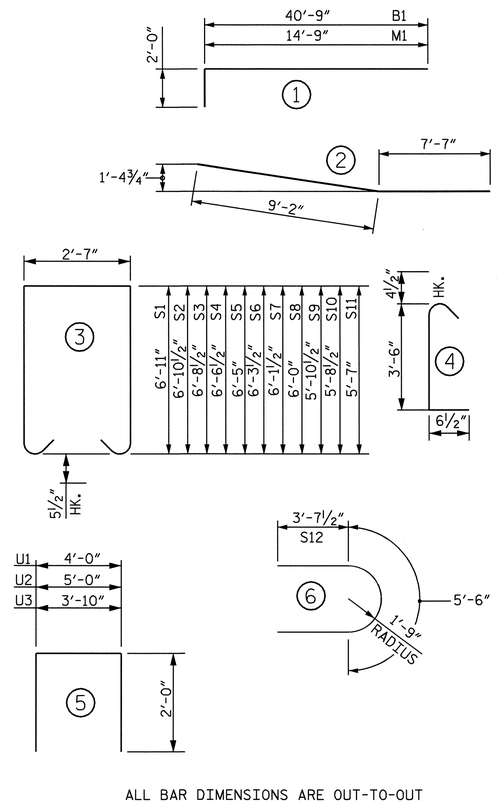

ALL BAR DIMENSIONS ARE OUT-TO-OUT

BILL OF MATERIAL

BENT #1

BAR	NUMBER	SIZE	TYPE	LENGTH	WEIGHT
B1	14	#11	1	42'-9"	3180
B2	12	#11	STR	40'-9"	2598
B3	20	#8	STR	36'-4"	1940
B4	4	#11	STR	47'-8"	1013
B5	9	#11	STR	46'-0"	2200
B6	8	#8	2	16'-9"	358
B7	14	#4	STR	19'-10"	185
B8	7	#4	STR	13'-6"	63
B9	17	#4	STR	4'-0"	45
M1	64	#11	1	16'-9"	5696
S1	60	#5	3	17'-4"	1085
S2	4	#5	3	17'-3"	72
S3	4	#5	3	16'-11"	71
S4	4	#5	3	16'-7"	69
S5	4	#5	3	16'-4"	68
S6	4	#5	3	16'-1"	67
S7	4	#5	3	15'-9"	66
S8	4	#5	3	15'-6"	65
S9	4	#5	3	15'-3"	64
S10	4	#5	3	14'-11"	62
S11	4	#5	3	14'-8"	61
S12	136	#4	6	12'-9"	1158
S13	272	#4	4	4'-5"	802
T1	94	#9	STR	16'-10"	5380
T2	82	#8	STR	19'-4"	4233
T3	34	#6	STR	19'-4"	987
T4	40	#6	STR	16'-10"	1011
U1	98	#4	5	8'-0"	524
U2	6	#4	5	9'-0"	36
U3	8	#4	5	7'-10"	42
V1	64	#11	STR	40'-0"	13601

EPOXY COATED REINFORCING STEEL (LBS.) 46802

CLASS AA CONCRETE BREAKDOWN

POUR #1	FOOTINGS	(C.Y.) 129.6
POUR #2	COLUMNS	(C.Y.) 79.6
POUR #3	CAP	(C.Y.) 82.1
TOTAL CLASS AA CONCRETE		(C.Y.) 291.3

HP 12X53 STEEL PILES

NO. 50	LIN. FT.	2500.0

FOUNDATION EXCAVATION — LUMP SUM

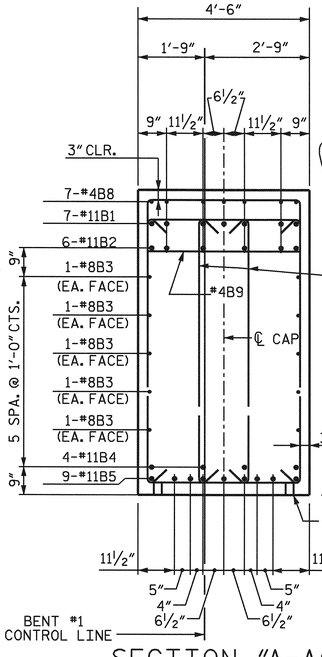

SECTION "A-A"

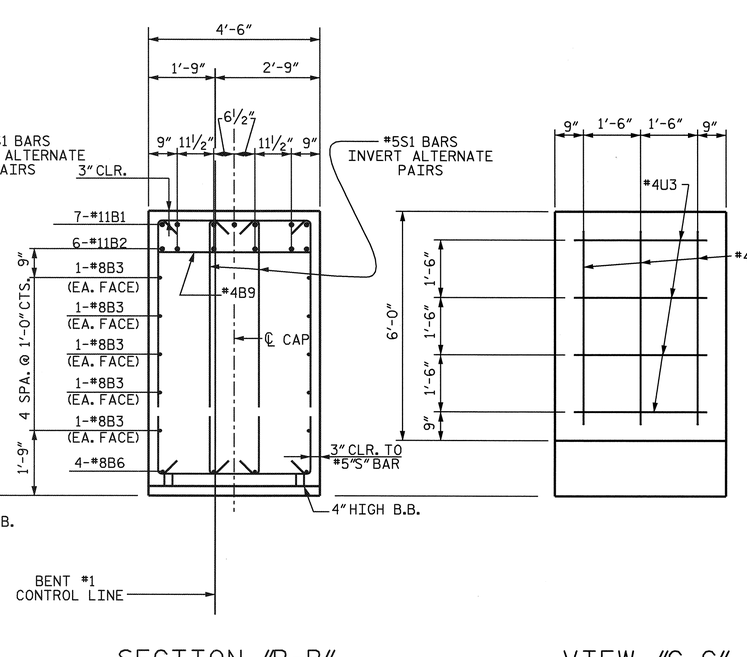

SECTION "B-B"

VIEW "C-C"

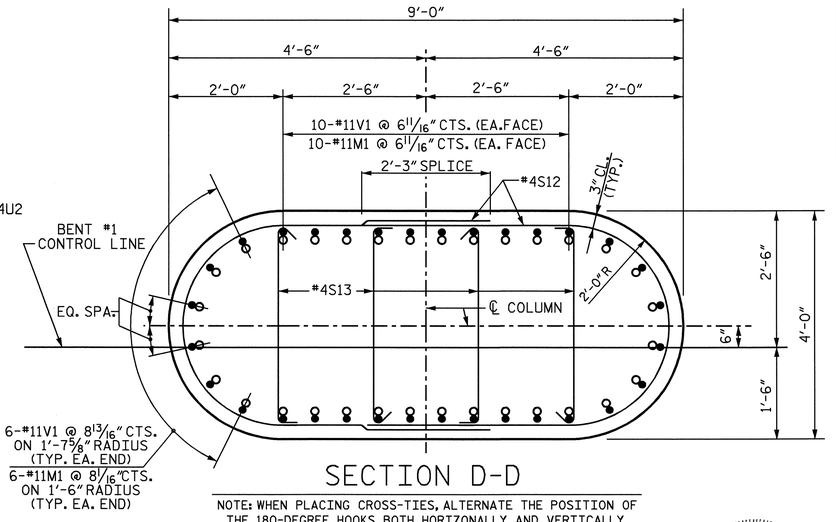

SECTION D-D

NOTE: WHEN PLACING CROSS-TIES, ALTERNATE THE POSITION OF THE 180-DEGREE HOOKS BOTH HORIZONALLY AND VERTICALLY.

○ #11M1
● #11V1

NORTH CAROLINA PROFESSIONAL SEAL 23926 ENGINEER BRIAN C. HAWKS
1/16/07

PROJECT NO. R-2245

BRUNSWICK COUNTY

STATION: 58+00.00 -L-

SHEET 2 OF 2

STATE OF NORTH CAROLINA
DEPARTMENT OF TRANSPORTATION
RALEIGH

SUBSTRUCTURE

BENT #1

REVISIONS						SHEET NO.
NO.	BY:	DATE:	NO.	BY:	DATE:	S-82
1			3			TOTAL SHEETS
2			4			98

DRAWN BY : H. A. LUCAS DATE : 8/18/06
CHECKED BY : W. D. CRUTCHER DATE : 9/1/06

11-OCT-2006 12:00
S:\PGS\R-2245 Oak Island\Final Plans\R2245_sd_B*.dgn
hlucas

NOTES

STIRRUPS IN CAP MAY BE SHIFTED AS NECESSARY TO CLEAR ANCHOR BOLTS.

ALTERNATELY INVERT STIRRUP PAIRS AS SHOWN.

FOR DRILLED PIER NOTES SEE GENERAL DRAWING SHEET 5 OF 6.

ALL STEEL IN THE DRILLED PIERS IS INCLUDED IN THE PAY ITEMS FOR "EPOXY COATED REINFORCING STEEL" AND "EPOXY COATED SPIRAL COLUMN REINFORCING STEEL".

THE CONTRACTOR'S ATTENTION IS CALLED TO THE FACT THAT THE LONGITUDINAL REINFORCEMENT FOR THE DRILLED PIERS IS DETAILED WITH 3 FEET OF EXTRA LENGTH.

* THE FOOTING HAS A DROP OF 2½" FROM THE CENTER OF THE FOOTING TO THE EDGE OF THE FOOTING TO ACCOMODATE DRAINAGE

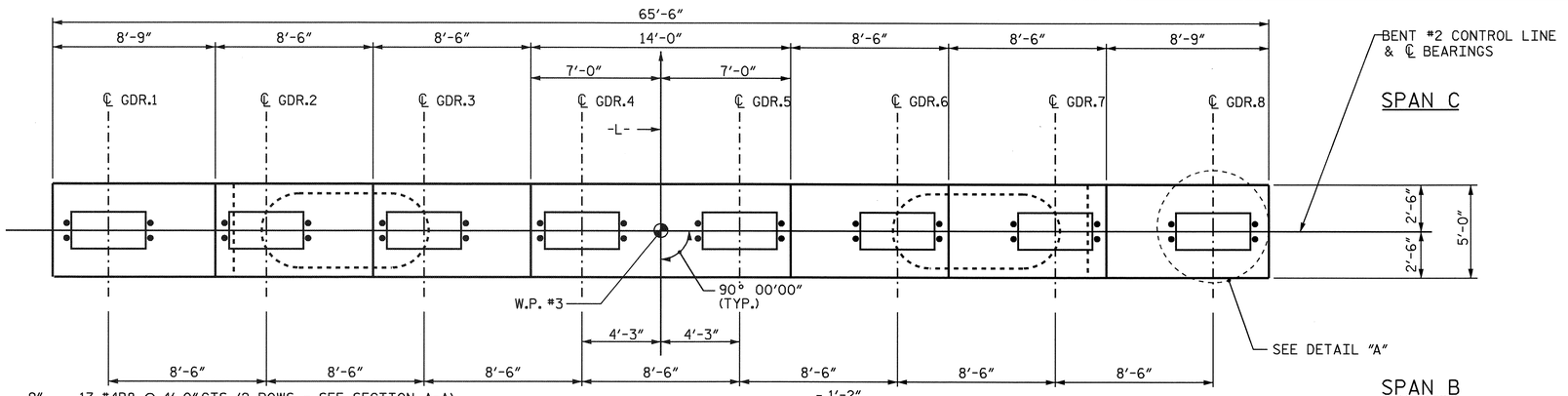

PLAN

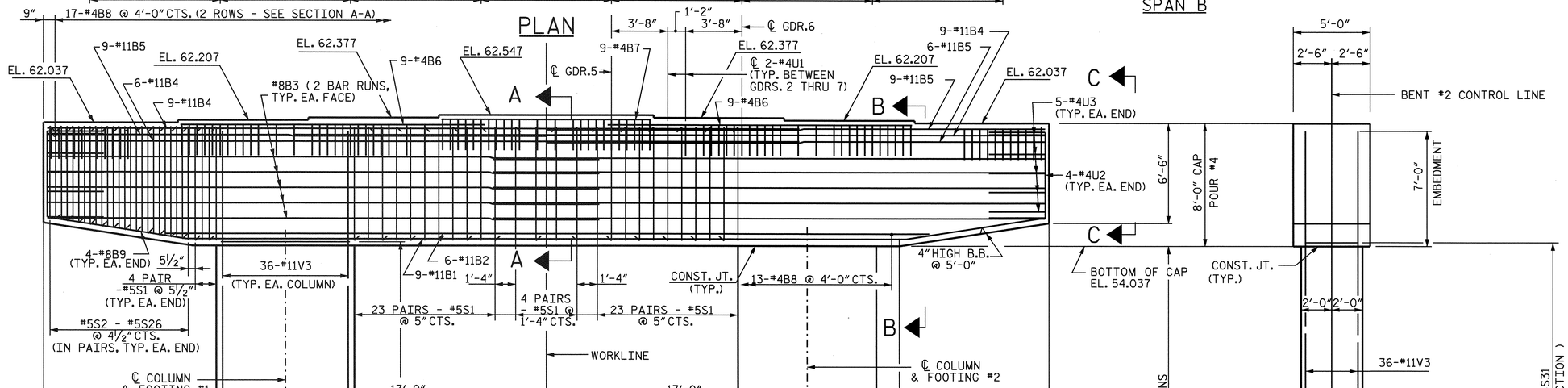

ELEVATION

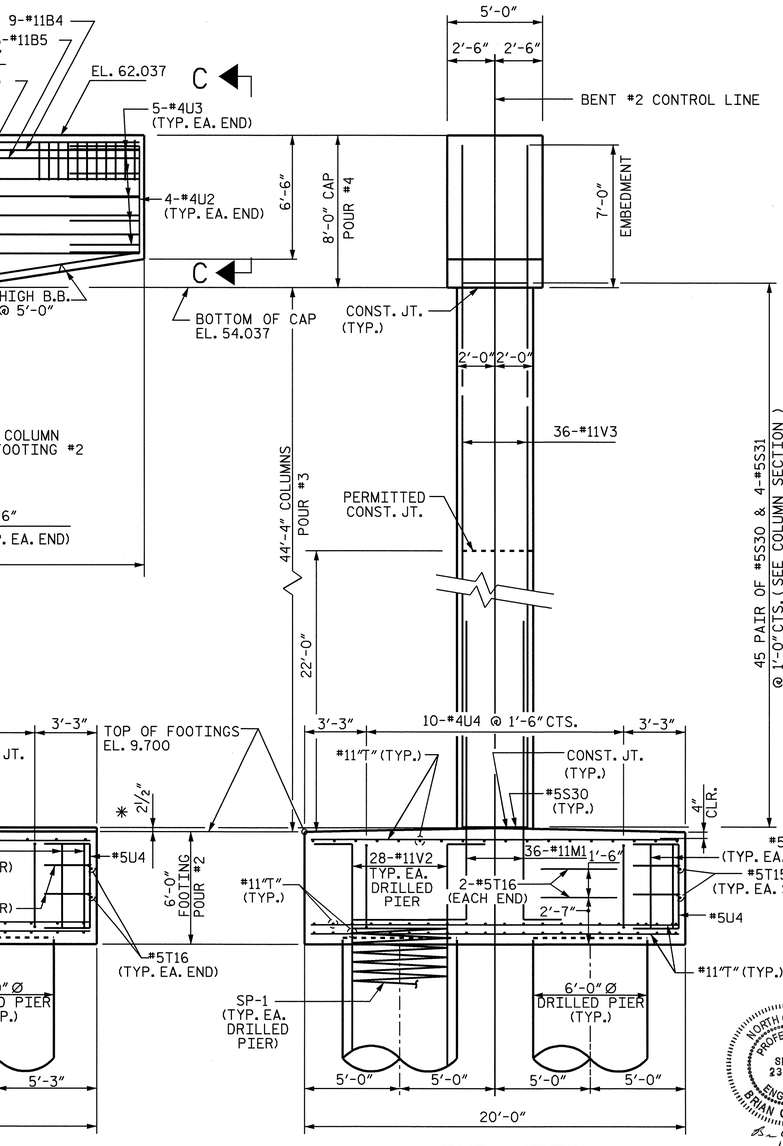

END VIEW

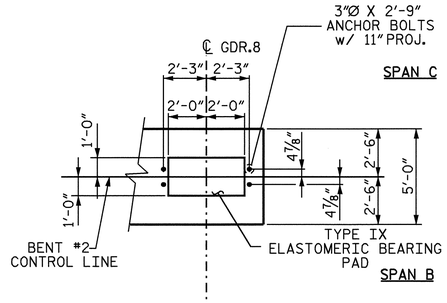

DETAIL "A"

BEARING DIMENSIONS & ANCHOR BOLT GAGES ARE TYPICAL EACH GIRDER CENTERLINE.

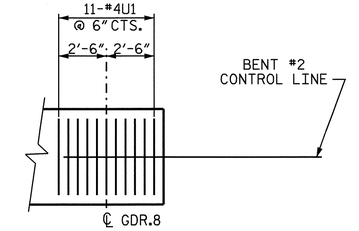

#4U1 BAR DETAILS

℄ GDR. 8 #4U1 BAR LOCATIONS SHOWN - TYP. ALL GDRS.

PROJECT NO. R-2245

BRUNSWICK COUNTY

STATION: 58+00.00 -L-

SHEET 1 OF 3

STATE OF NORTH CAROLINA
DEPARTMENT OF TRANSPORTATION
RALEIGH

SUBSTRUCTURE

BENT #2

REVISIONS						SHEET NO.
NO.	BY:	DATE:	NO.	BY:	DATE:	S-83
1			3			TOTAL SHEETS
2			4			98

NORTH CAROLINA PROFESSIONAL SEAL 23926 ENGINEER BRIAN C. HANKS
1/16/07

DRAWN BY : H. A. LUCAS DATE : 9/8/06
CHECKED BY : W. D. CRUTCHER DATE : 9/18/06

19-OCT-2006 15:00
S:\PG3\R-2245 Oak Island\Final Plans\R2245_sd_B*.dgn
hlucas

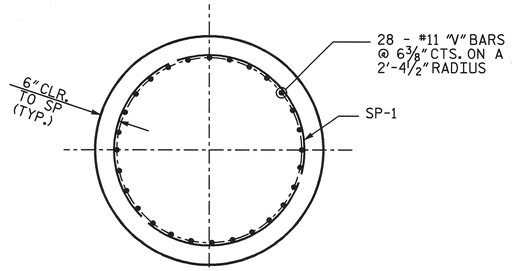

SECTION

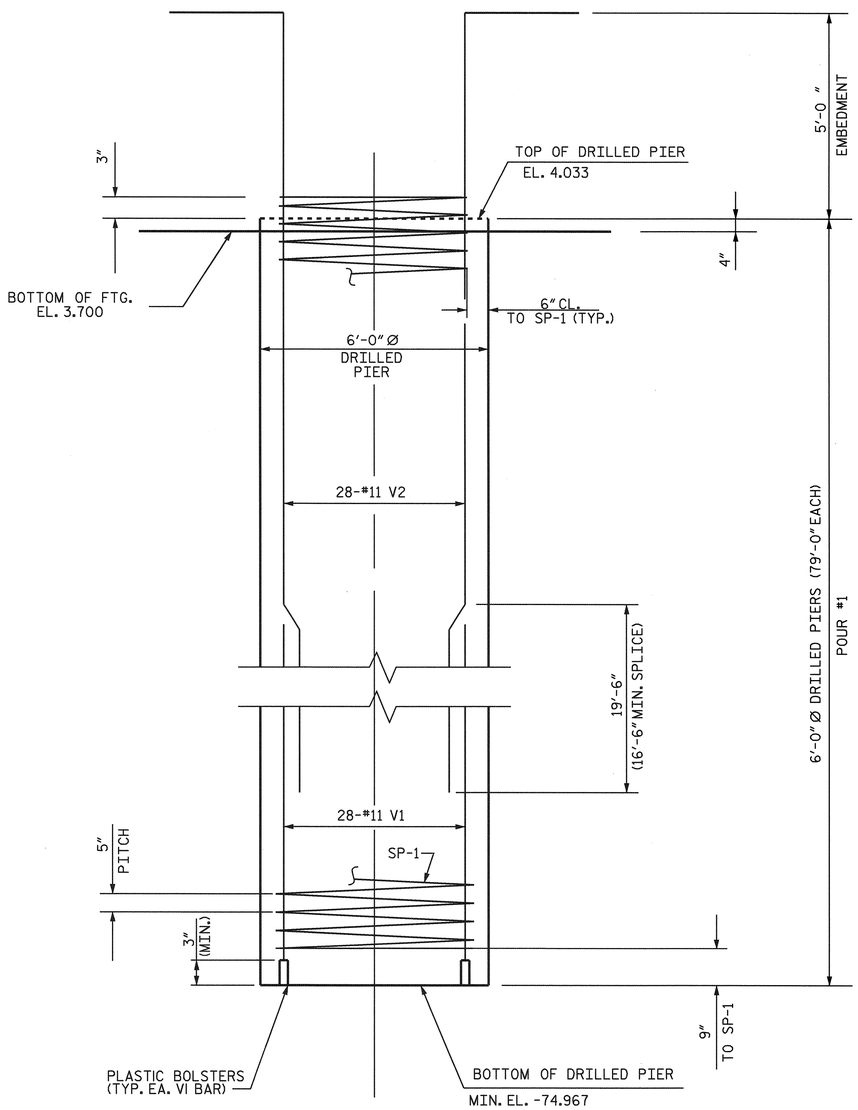

DRILLED PIER ELEVATION

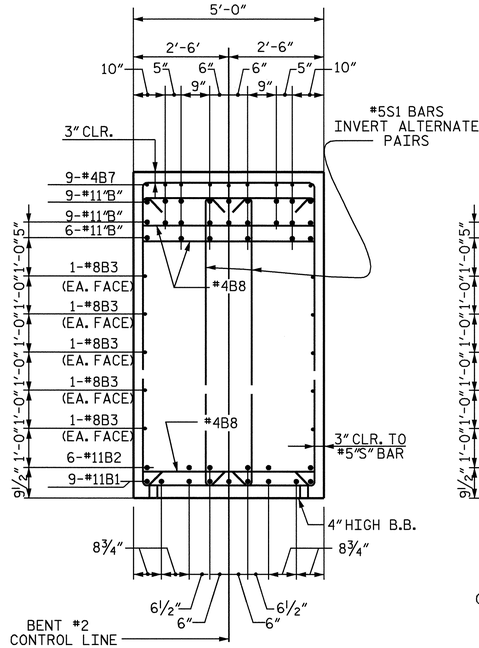

SECTION "A-A"

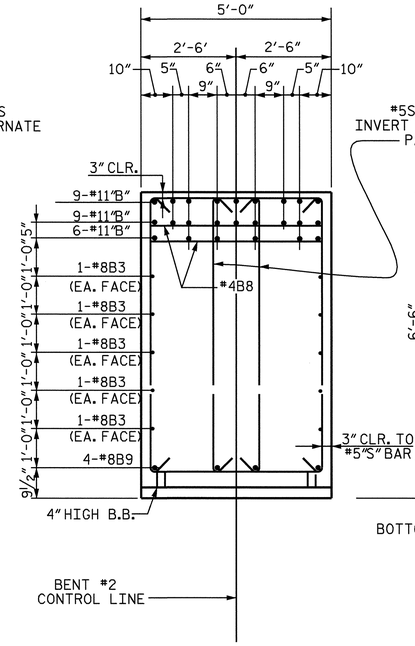

SECTION "B-B"

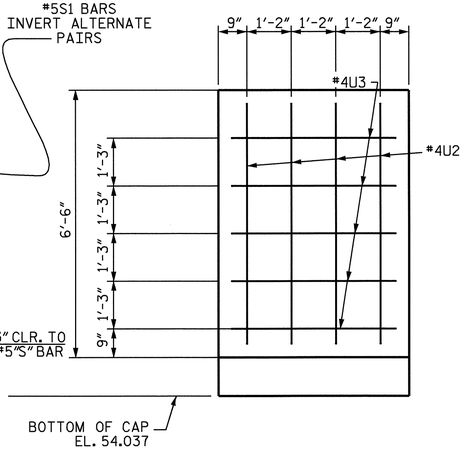

VIEW "C-C"

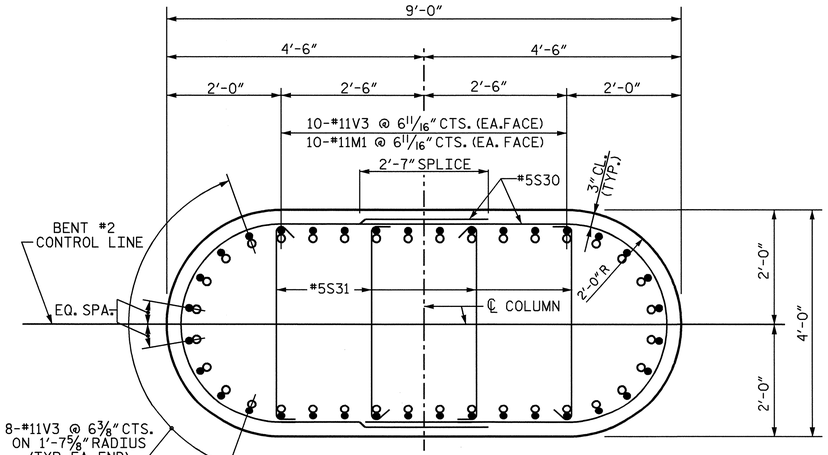

COLUMN SECTION

NOTE: WHEN PLACING CROSS-TIES, ALTERNATE THE POSITION OF THE 180-DEGREE HOOKS BOTH HORIZONALLY AND VERTICALLY.

○ #11M1
● #11V3

DRAWN BY : H. A. LUCAS DATE : 9/8/06
CHECKED BY : W. D. CRUTCHER DATE : 9/18/06

19-OCT-2006 15:00
S:\PG3\R-2245 Oak Island\Final Plans\R2245_sd_B*.dgn
hlucas

NORTH CAROLINA PROFESSIONAL SEAL 23926 ENGINEER BRIAN C. HANKS
1/16/07

PROJECT NO. R-2245
BRUNSWICK COUNTY
STATION: 58+00.00 -L-

SHEET 2 OF 3

STATE OF NORTH CAROLINA
DEPARTMENT OF TRANSPORTATION
RALEIGH

SUBSTRUCTURE

BENT #2

REVISIONS						SHEET NO.
NO.	BY:	DATE:	NO.	BY:	DATE:	S-84
1			3			TOTAL SHEETS
2			4			98

BAR TYPES

ALL BAR DIMENSIONS ARE OUT-TO-OUT

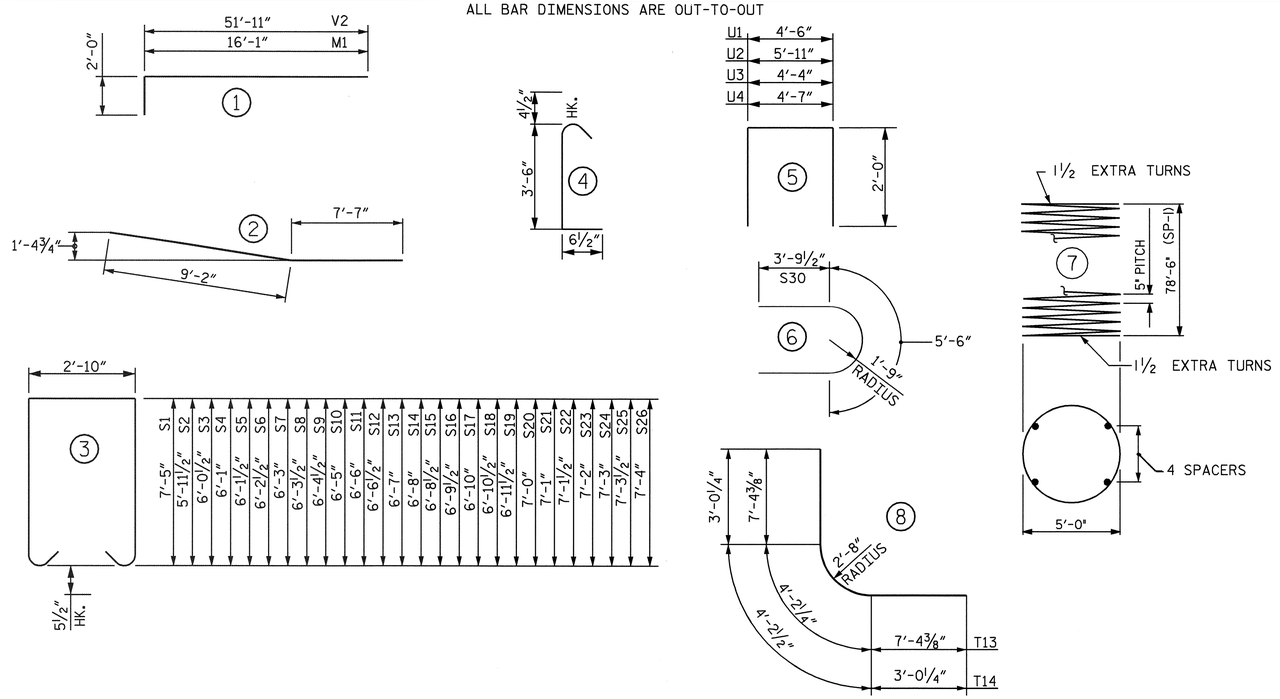

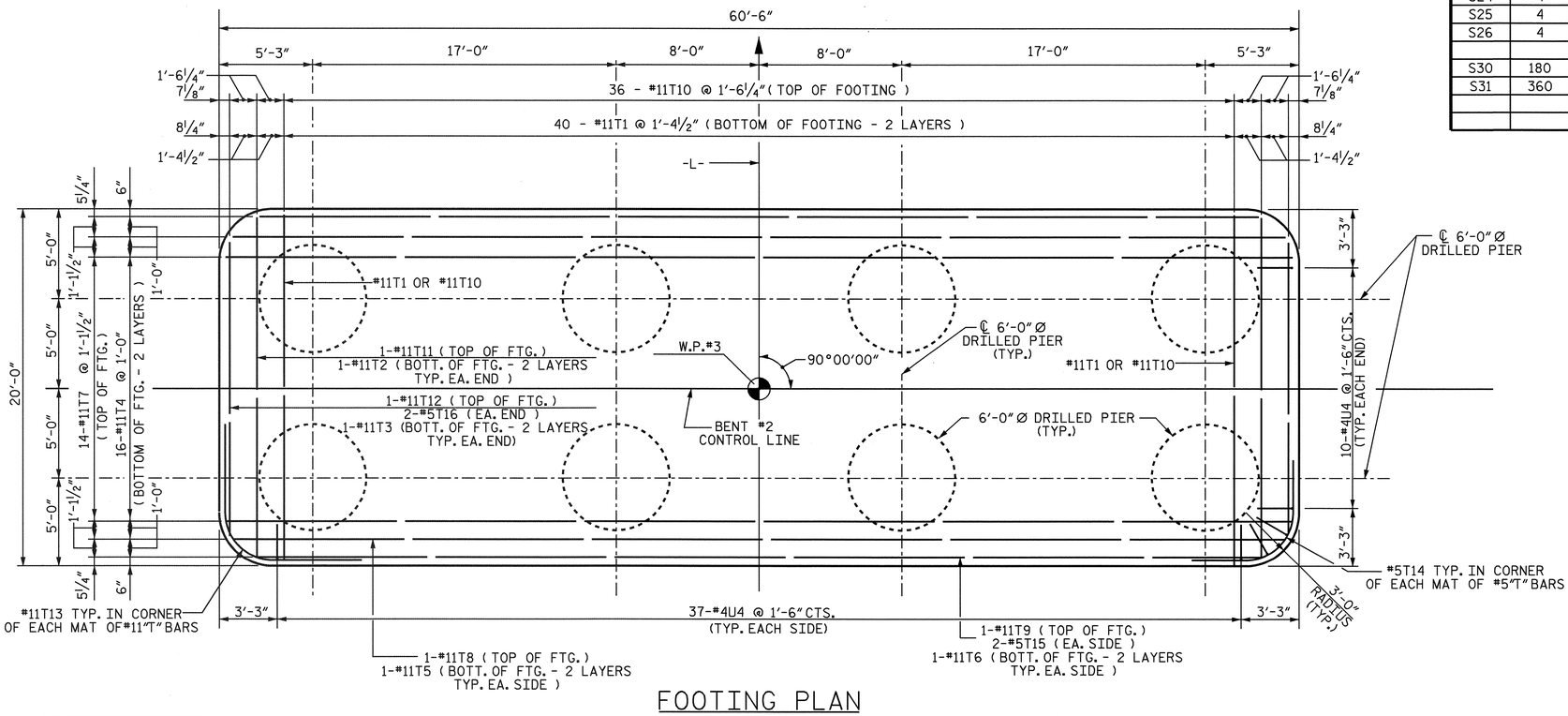

FOOTING PLAN

BILL OF MATERIAL

BENT #2

BAR	NUMBER	SIZE	TYPE	LENGTH	WEIGHT
B1	9	#11	STR	46'-0"	2200
B2	6	#11	STR	49'-10"	1589
B3	20	#8	STR	36'-4"	1940
B4	24	#11	STR	49'-0"	6248
B5	24	#11	STR	32'-6"	4144
B6	18	#4	STR	19'-10"	238
B7	9	#4	STR	13'-6"	81
B8	47	#4	STR	4'-0"	126
B9	8	#8	2	16'-9"	358
M1	72	#11	1	18'-1"	6918
S1	116	#5	3	18'-7"	2248
S2	4	#5	3	15'-8"	65
S3	4	#5	3	15'-10"	66
S4	4	#5	3	15'-11"	66
S5	4	#5	3	16'-0"	67
S6	4	#5	3	16'-2"	67
S7	4	#5	3	16'-3"	68
S8	4	#5	3	16'-4"	68
S9	4	#5	3	16'-6"	69
S10	4	#5	3	16'-7"	69
S11	4	#5	3	16'-9"	70
S12	4	#5	3	16'-10"	70
S13	4	#5	3	16'-11"	71
S14	4	#5	3	17'-1"	71
S15	4	#5	3	17'-2"	72
S16	4	#5	3	17'-4"	72
S17	4	#5	3	17'-5"	73
S18	4	#5	3	17'-6"	73
S19	4	#5	3	17'-8"	74
S20	4	#5	3	17'-9"	74
S21	4	#5	3	17'-11"	75
S22	4	#5	3	18'-0"	75
S23	4	#5	3	18'-1"	75
S24	4	#5	3	18'-3"	76
S25	4	#5	3	18'-4"	76
S26	4	#5	3	18'-5"	77
S30	180	#5	6	13'-1"	2456
S31	360	#5	4	4'-5"	1658

BAR	NUMBER	SIZE	TYPE	LENGTH	WEIGHT
T1	80	#11	STR	19'-4"	8217
T2	4	#11	STR	19'-0"	404
T3	4	#11	STR	16'-6"	351
T4	32	#11	STR	59'-10"	10173
T5	4	#11	STR	58'-11"	1252
T6	4	#11	STR	55'-4"	1176
T7	14	#11	STR	59'-10"	4451
T8	2	#11	STR	58'-11"	626
T9	2	#11	STR	55'-4"	588
T10	36	#11	STR	19'-4"	3698
T11	2	#11	STR	19'-0"	202
T12	2	#11	STR	16'-6"	175
T13	12	#11	8	18'-11"	1206
T14	8	#5	8	10'-3"	86
T15	4	#5	STR	54'-0"	225
T16	4	#5	STR	13'-7"	57
U1	98	#4	5	8'-6"	556
U2	8	#4	5	9'-11"	53
U3	10	#4	5	8'-4"	57
U4	102	#4	5	8'-7"	585
V1	224	#11	STR	51'-4"	61092
V2	224	#11	1	53'-11"	64167
V3	72	#11	STR	51'-4"	19637

EPOXY COATED REINFORCING STEEL (LBS.) 211017

SP-1	8	*	7	2976'-4"	24835

EPOXY COATED SPIRAL COLUMN REINFORCING STEEL (LBS.) 24835

CLASS AA CONCRETE BREAKDOWN

POUR #2	FOOTING	(C.Y.) 270.8
POUR #3	COLUMNS	(C.Y.) 106.9
POUR #4	CAP	(C.Y.) 97.3
TOTAL CLASS AA CONCRETE		(C.Y.) 475.0

6'-0" Ø DRILLED PIERS	(LIN FT.)	632.00
DRILLED PIER CONCRETE	(C.Y.)	661.8
PERMANENT STEEL CASING FOR 6'-0" Ø DRILLED PIER	(LIN FT.)	168.26
CROSSHOLE SONIC LOGGING	EA.	2
CSL TUBES	LIN. FT.	3912
SPT TESTING	EA.	8
SID INSPECTION	EA.	8

* THE SP-1 SPIRAL REINFORCING STEEL SHALL BE W31 OR D-31 COLD DRAWN WIRE OR #5 PLAIN OR DEFORMED BAR.

PROJECT NO. R-2245

BRUNSWICK COUNTY

STATION: 58+00.00 -L-

SHEET 3 OF 3

STATE OF NORTH CAROLINA
DEPARTMENT OF TRANSPORTATION
RALEIGH

SUBSTRUCTURE

BENT #2

NORTH CAROLINA PROFESSIONAL SEAL 23926 ENGINEER BRIAN C. HANKS
1/18/07

REVISIONS					
NO.	BY:	DATE:	NO.	BY:	DATE:
1			3		
2			4		

SHEET NO. S-85

TOTAL SHEETS 98

DRAWN BY : H. A. LUCAS DATE : 9/8/06
CHECKED BY : W. D. CRUTCHER DATE : 9/18/06

17-JAN-2007 10:08
S:\PG3\R-2245 Oak Island\Final Plans\R2245_sd_B*.dgn
bhanks

NOTES

STIRRUPS IN CAP MAY BE SHIFTED AS NECESSARY TO CLEAR ANCHOR BOLTS.

ALTERNATELY INVERT STIRRUP PAIRS AS SHOWN.

FOR DRILLED PIER NOTES SEE GENERAL DRAWING SHEET 5 OF 6.

ALL STEEL IN THE DRILLED PIERS IS INCLUDED IN THE PAY ITEMS FOR "EPOXY COATED REINFORCING STEEL" AND "EPOXY COATED SPIRAL COLUMN REINFORCING STEEL".

THE CONTRACTOR'S ATTENTION IS CALLED TO THE FACT THAT THE LONGITUDINAL REINFORCEMENT FOR THE DRILLED PIERS IS DETAILED WITH 3 FEET OF EXTRA LENGTH.

* THE FOOTING HAS A DROP OF 2½" FROM THE CENTER OF THE FOOTING TO THE EDGE OF THE FOOTING TO ACCOMODATE DRAINAGE

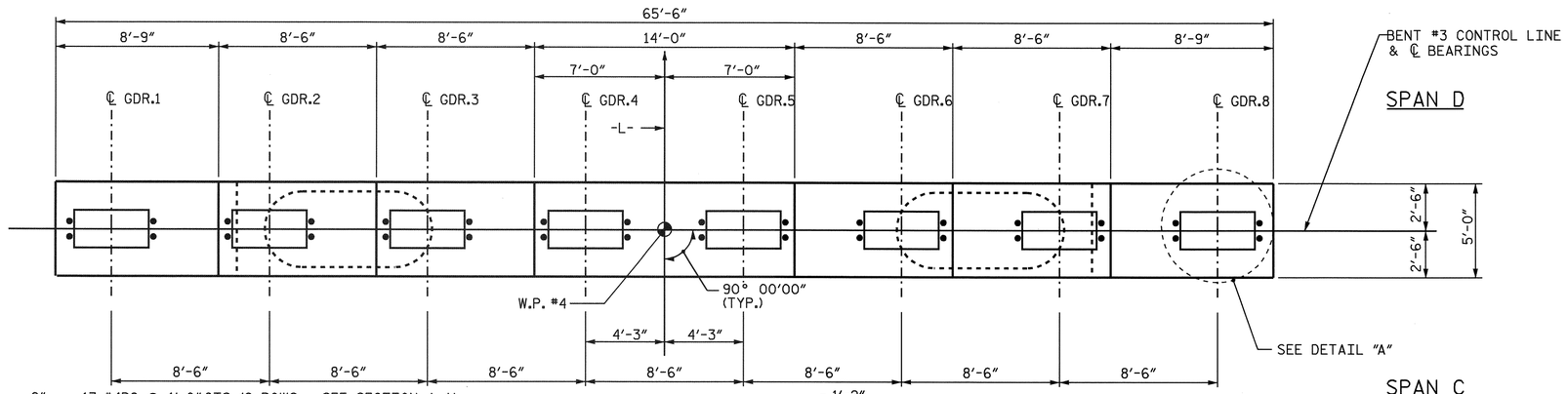

PLAN

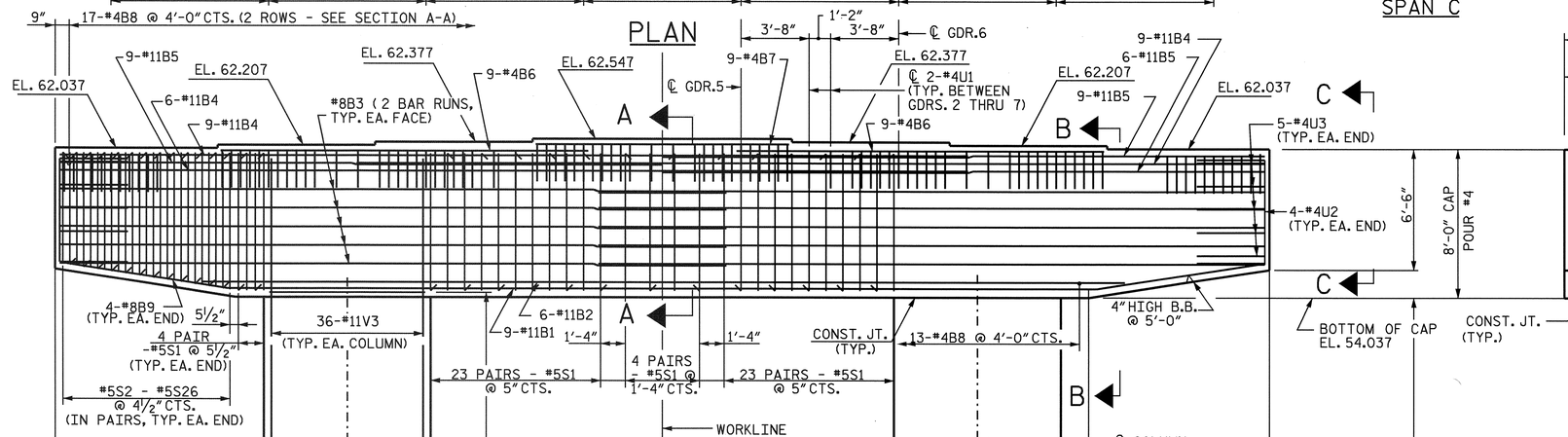

MIN. SPLICE LENGTH	
#11 "B"	16'-6"
#8B3	7'-7"
#11"M" OR #11"V"	11'-1"

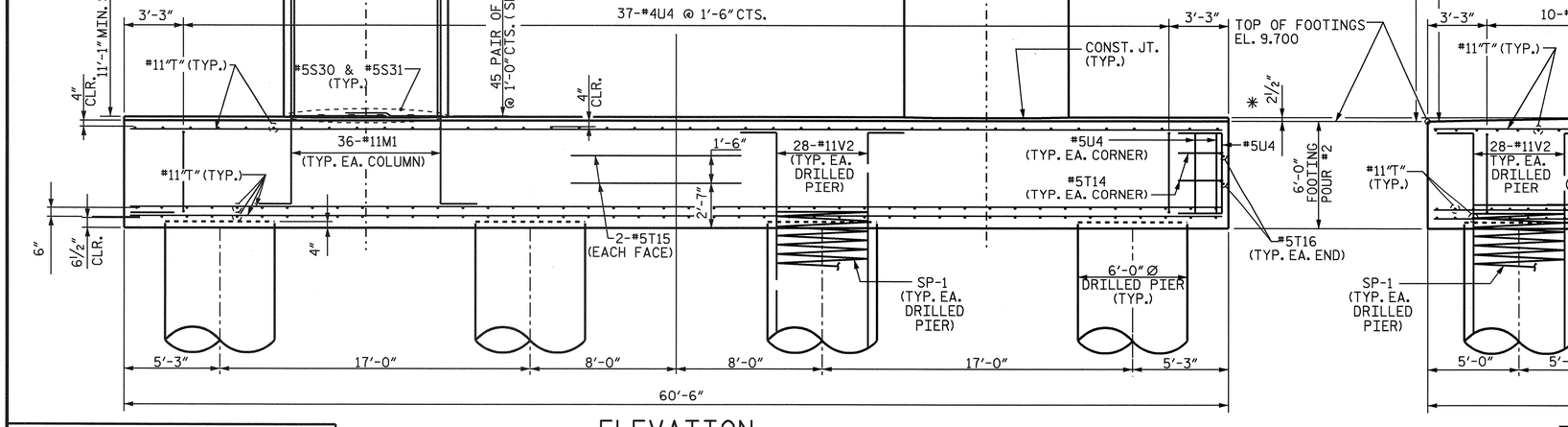

ELEVATION

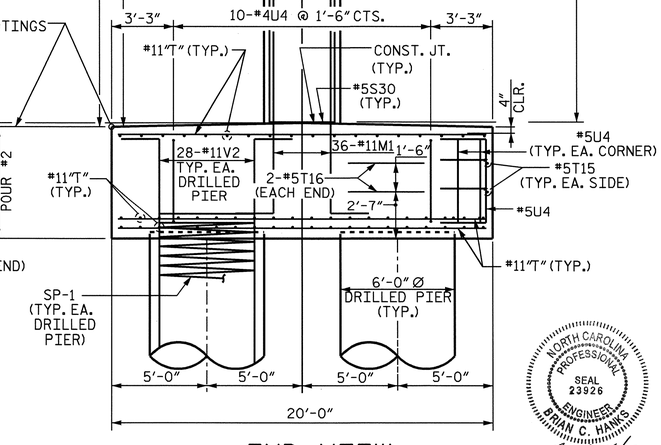

END VIEW

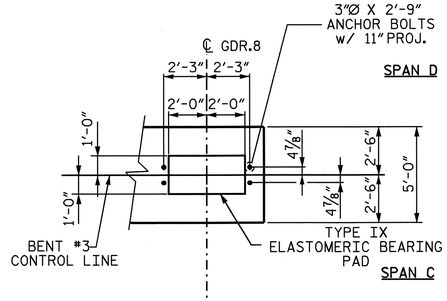

DETAIL "A"

BEARING DIMENSIONS & ANCHOR BOLT GAGES ARE TYPICAL EACH GIRDER CENTERLINE.

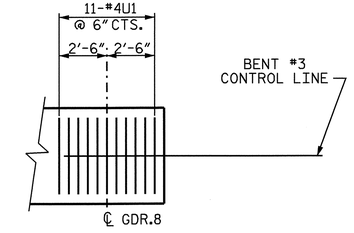

#4U1 BAR DETAILS

℄ GDR. 8 #4U1 BAR LOCATIONS SHOWN - TYP. ALL GDRS.

PROJECT NO. R-2245

BRUNSWICK COUNTY

STATION: 58+00.00 -L-

SHEET 1 OF 3

STATE OF NORTH CAROLINA
DEPARTMENT OF TRANSPORTATION
RALEIGH

SUBSTRUCTURE

BENT #3

REVISIONS						SHEET NO.
NO.	BY:	DATE:	NO.	BY:	DATE:	S-86
1			3			TOTAL SHEETS
2			4			98

DRAWN BY : H. A. LUCAS DATE : 9/8/06
CHECKED BY : W. D. CRUTCHER DATE : 9/18/06

NORTH CAROLINA PROFESSIONAL SEAL 23926 ENGINEER BRIAN C. HANKS 11/16/07

19-OCT-2006 15:07
S:\PG3\R-2245 Oak Island\Final Plans\R2245_sd_B*.dgn
hlucas

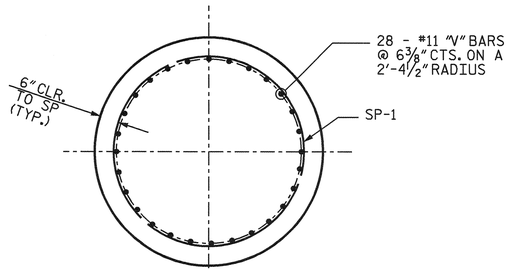

SECTION

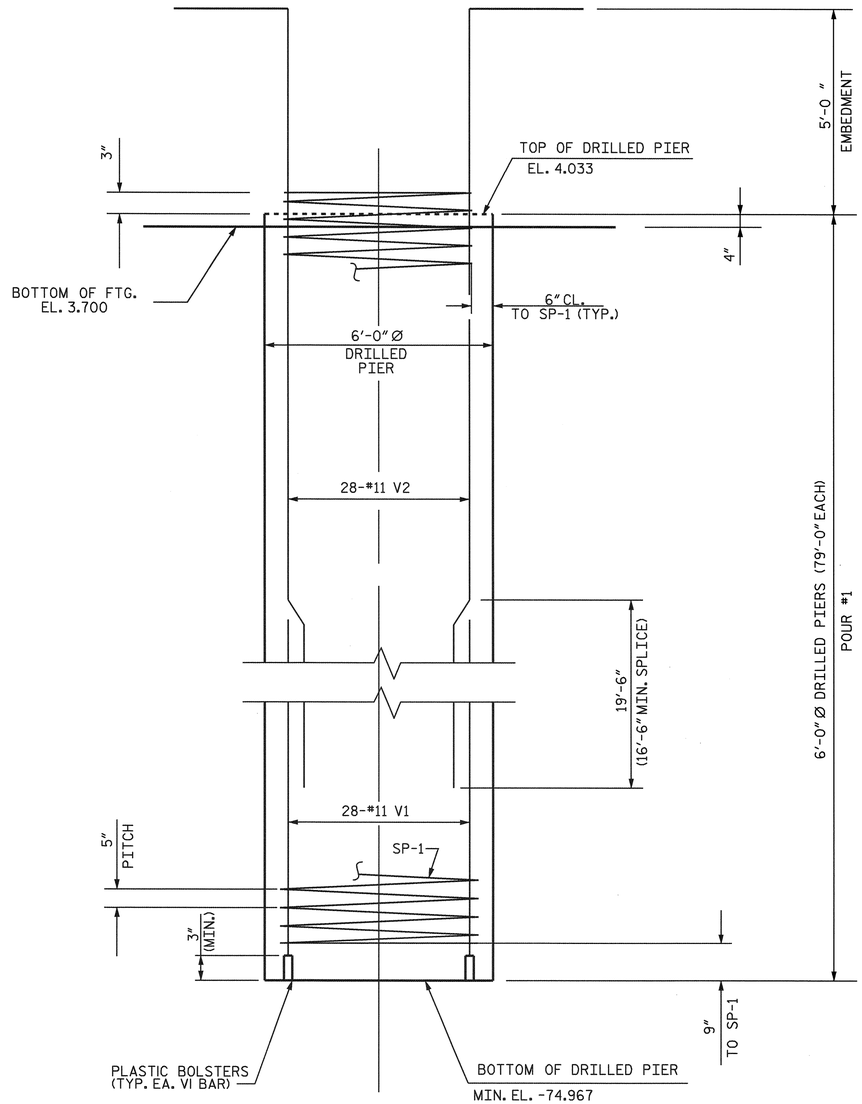

DRILLED PIER ELEVATION

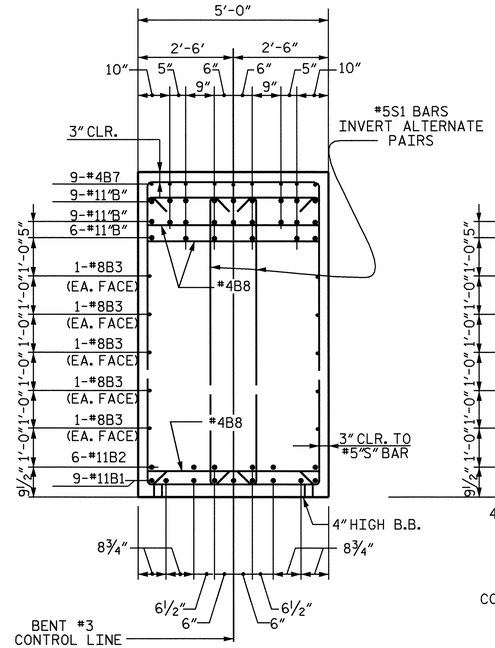

SECTION "A-A"

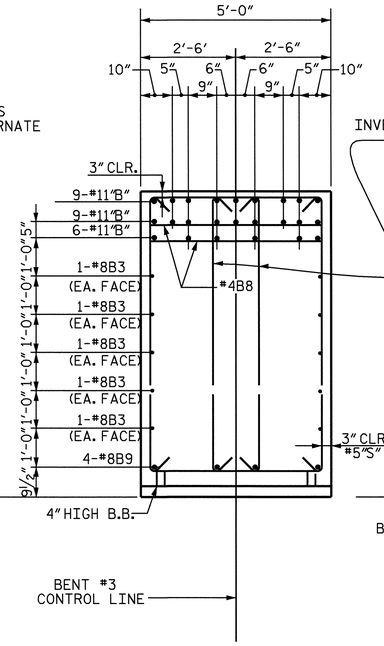

SECTION "B-B"

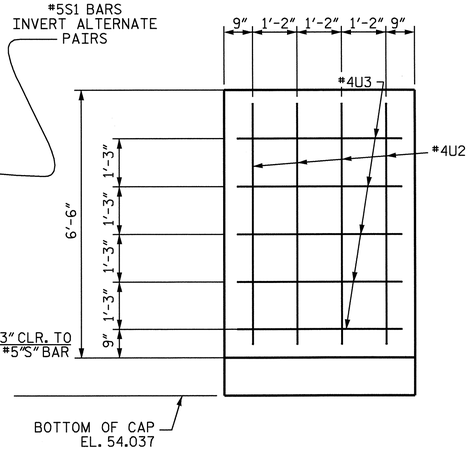

VIEW "C-C"

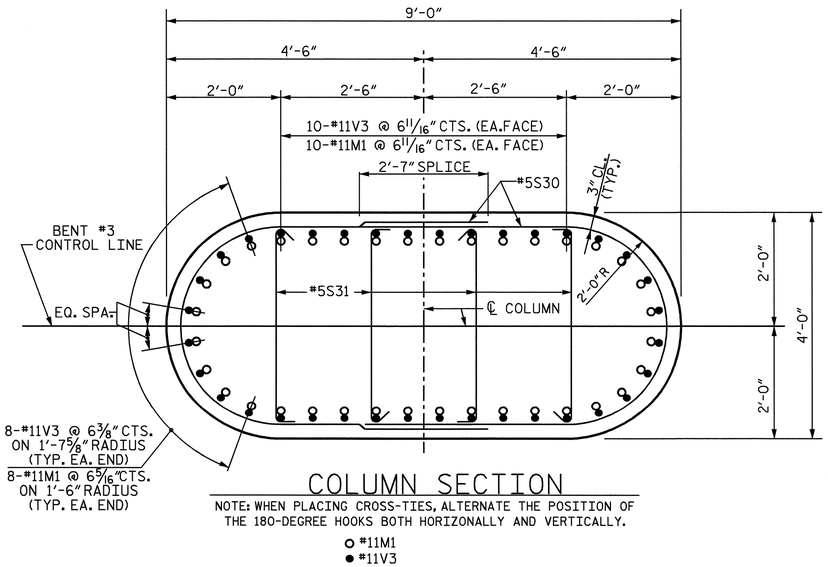

COLUMN SECTION

NOTE: WHEN PLACING CROSS-TIES, ALTERNATE THE POSITION OF THE 180-DEGREE HOOKS BOTH HORIZONALLY AND VERTICALLY.

○ #11M1
● #11V3

NORTH CAROLINA PROFESSIONAL SEAL 23926 ENGINEER BRIAN C. HANKS
1/18/07

PROJECT NO. R-2245
BRUNSWICK COUNTY
STATION: 58+00.00 -L-

SHEET 2 OF 3

STATE OF NORTH CAROLINA
DEPARTMENT OF TRANSPORTATION
RALEIGH

SUBSTRUCTURE

BENT #3

REVISIONS						SHEET NO.
NO.	BY:	DATE:	NO.	BY:	DATE:	S-87
1			3			TOTAL SHEETS
2			4			98

DRAWN BY : H. A. LUCAS DATE : 9/8/06
CHECKED BY : W. D. CRUTCHER DATE : 9/18/06

19-OCT-2006 15:01
S:\PGS\R-2245 Oak Island\Final Plans\R2245_sd_B*.dgn
hlucas

BAR TYPES

ALL BAR DIMENSIONS ARE OUT-TO-OUT

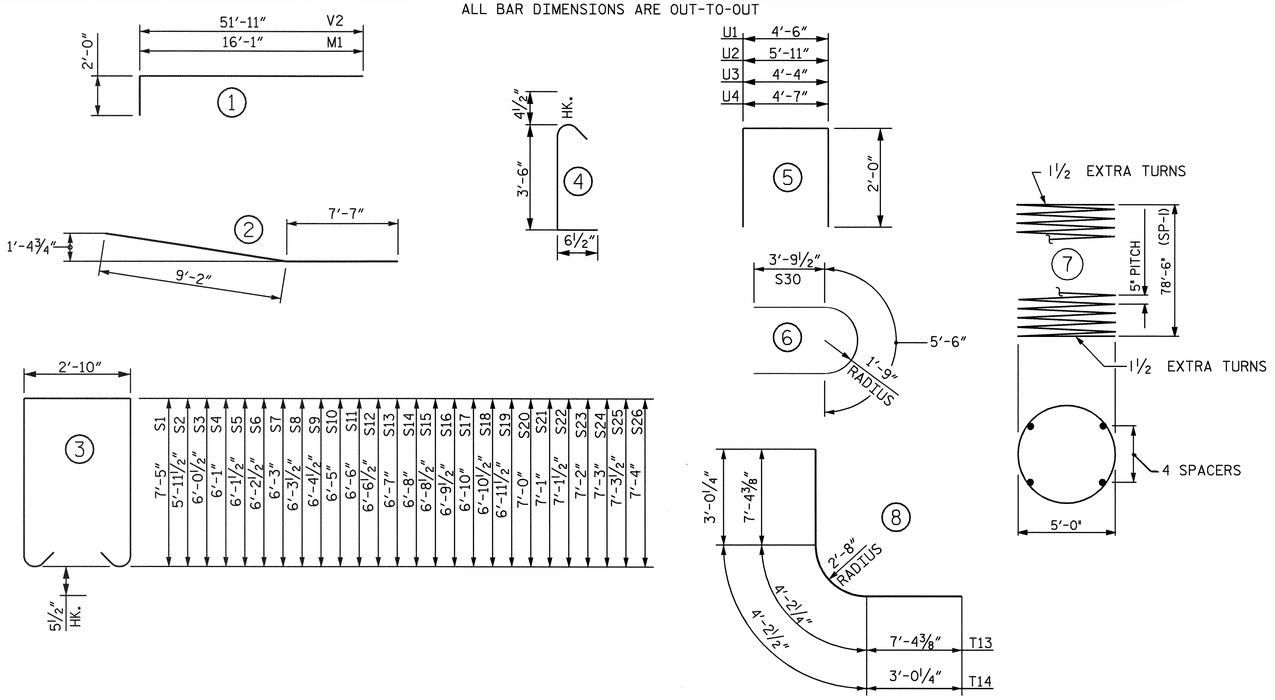

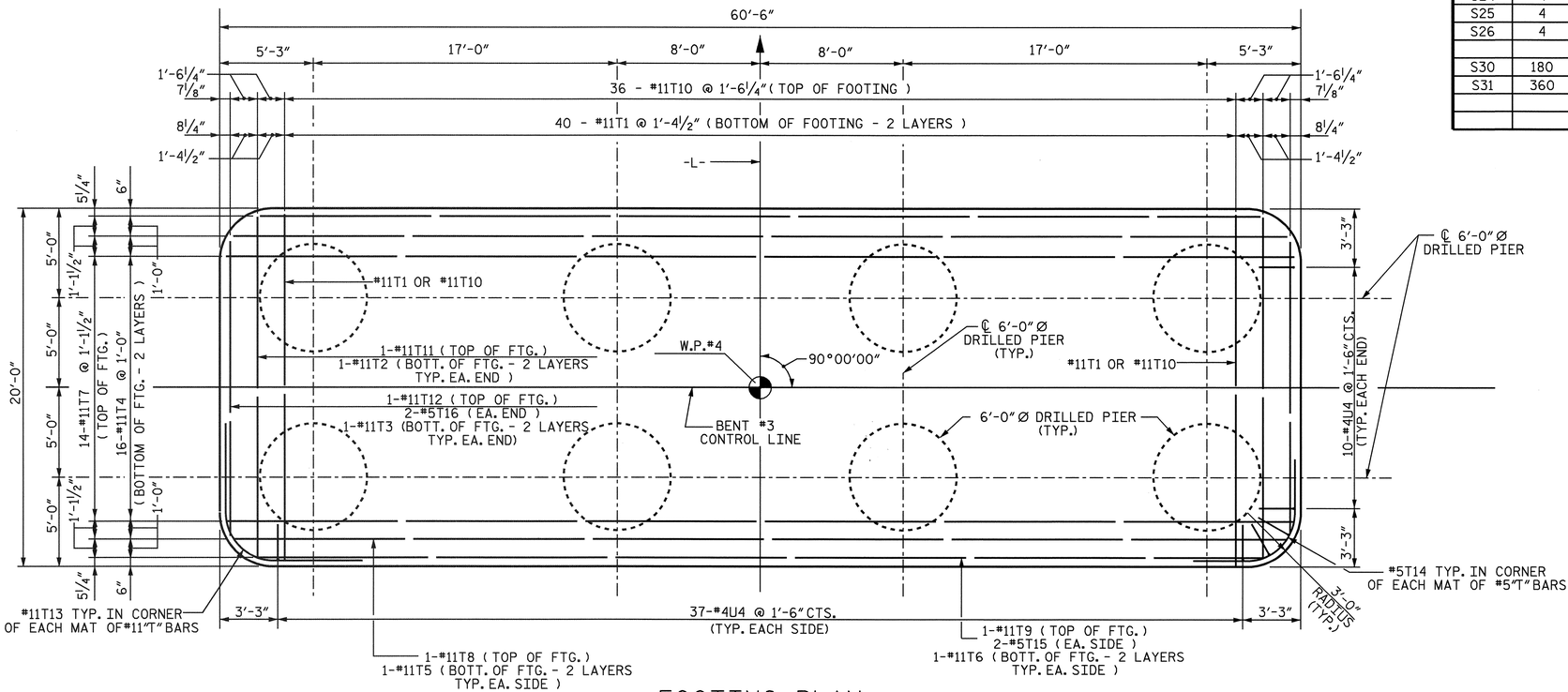

FOOTING PLAN

BILL OF MATERIAL

BENT #3

BAR	NUMBER	SIZE	TYPE	LENGTH	WEIGHT
B1	9	#11	STR	46'-0"	2200
B2	6	#11	STR	49'-10"	1589
B3	20	#8	STR	36'-4"	1940
B4	24	#11	STR	49'-0"	6248
B5	24	#11	STR	32'-6"	4144
B6	18	#4	STR	19'-10"	238
B7	9	#4	STR	13'-6"	81
B8	47	#4	STR	4'-0"	126
B9	8	#8	2	16'-9"	358
M1	72	#11	1	18'-1"	6918
S1	116	#5	3	18'-7"	2248
S2	4	#5	3	15'-8"	65
S3	4	#5	3	15'-10"	66
S4	4	#5	3	15'-11"	66
S5	4	#5	3	16'-0"	67
S6	4	#5	3	16'-2"	67
S7	4	#5	3	16'-3"	68
S8	4	#5	3	16'-4"	68
S9	4	#5	3	16'-6"	69
S10	4	#5	3	16'-7"	69
S11	4	#5	3	16'-9"	70
S12	4	#5	3	16'-10"	70
S13	4	#5	3	16'-11"	71
S14	4	#5	3	17'-1"	71
S15	4	#5	3	17'-2"	72
S16	4	#5	3	17'-4"	72
S17	4	#5	3	17'-5"	73
S18	4	#5	3	17'-6"	73
S19	4	#5	3	17'-8"	74
S20	4	#5	3	17'-9"	74
S21	4	#5	3	17'-11"	75
S22	4	#5	3	18'-0"	75
S23	4	#5	3	18'-1"	75
S24	4	#5	3	18'-3"	76
S25	4	#5	3	18'-4"	76
S26	4	#5	3	18'-5"	77
S30	180	#5	6	13'-1"	2456
S31	360	#5	4	4'-5"	1658

BAR	NUMBER	SIZE	TYPE	LENGTH	WEIGHT
T1	80	#11	STR	19'-4"	8217
T2	4	#11	STR	19'-0"	404
T3	4	#11	STR	16'-6"	351
T4	32	#11	STR	59'-10"	10173
T5	4	#11	STR	58'-11"	1252
T6	4	#11	STR	55'-4"	1176
T7	14	#11	STR	59'-10"	4451
T8	2	#11	STR	58'-11"	626
T9	2	#11	STR	55'-4"	588
T10	36	#11	STR	19'-4"	3698
T11	2	#11	STR	19'-0"	202
T12	2	#11	STR	16'-6"	175
T13	12	#11	8	18'-11"	1206
T14	8	#5	8	10'-3"	86
T15	4	#5	STR	54'-0"	225
T16	4	#5	STR	13'-7"	57
U1	98	#4	5	8'-6"	556
U2	8	#4	5	9'-11"	53
U3	10	#4	5	8'-4"	57
U4	102	#4	5	8'-7"	585
V1	224	#11	STR	51'-4"	61092
V2	224	#11	1	53'-11"	64167
V3	72	#11	STR	51'-4"	19637

EPOXY COATED REINFORCING STEEL (LBS.) 211017

SP-1	8	*	7	2976'-4"	24835

EPOXY COATED SPIRAL COLUMN REINFORCING STEEL (LBS.) 24835

CLASS AA CONCRETE BREAKDOWN

POUR #2	FOOTING	(C.Y.) 270.8
POUR #3	COLUMNS	(C.Y.) 106.9
POUR #4	CAP	(C.Y.) 97.3
TOTAL CLASS AA CONCRETE		(C.Y.) 475.0

6'-0" Ø DRILLED PIERS	(LIN FT.)	632.00
DRILLED PIER CONCRETE	(C.Y.)	661.8
PERMANENT STEEL CASING FOR 6'-0" Ø DRILLED PIER	(LIN FT.)	168.26
CROSSHOLE SONIC LOGGING	EA.	2
CSL TUBES	LIN. FT.	3912
SPT TESTING	EA.	8
SID INSPECTION	EA.	8

* THE SP-1 SPIRAL REINFORCING STEEL SHALL BE W31 OR D-31 COLD DRAWN WIRE OR #5 PLAIN OR DEFORMED BAR.

PROJECT NO. R-2245

BRUNSWICK COUNTY

STATION: 58+00.00 -L-

SHEET 3 OF 3

STATE OF NORTH CAROLINA
DEPARTMENT OF TRANSPORTATION
RALEIGH

SUBSTRUCTURE

BENT #3

NORTH CAROLINA PROFESSIONAL SEAL 23926 ENGINEER BRIAN C. HANKS
1/16/07

REVISIONS						SHEET NO.
NO.	BY:	DATE:	NO.	BY:	DATE:	S-88
1			3			TOTAL SHEETS
2			4			98

DRAWN BY : H. A. LUCAS DATE : 9/8/06
CHECKED BY : W. D. CRUTCHER DATE : 9/18/06

17-JAN-2007 10:09
S:\PGS\R-2245 Oak Island\Final Plans\R2245_sd_B*.dgn
bhanks

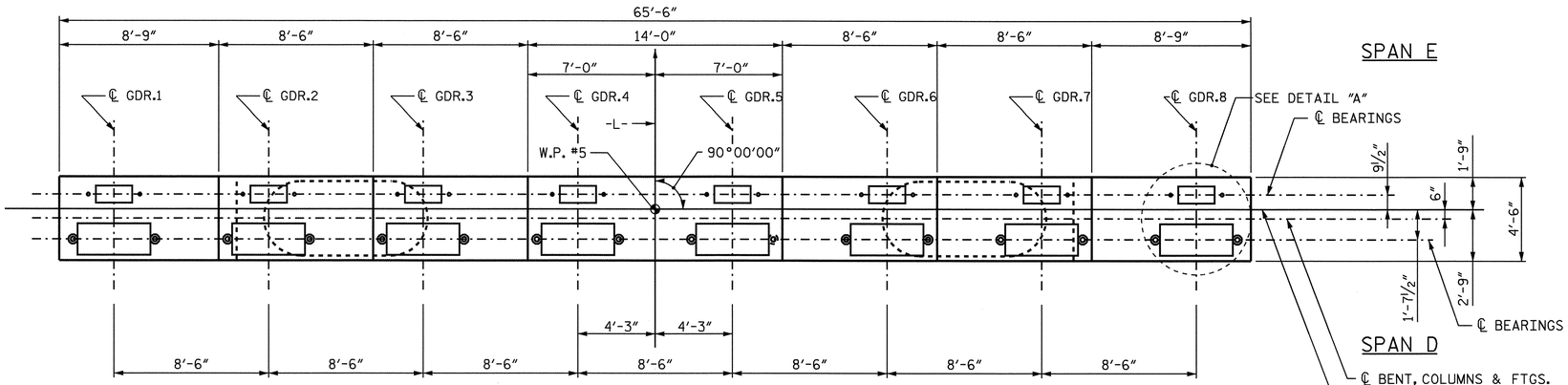

SPAN E

SPAN D

NOTES

THE CONTRACTOR'S ATTENTION IS CALLED TO THE FACT THAT THE CENTERLINE JOINT IN THE DECK SLAB (CONTROL LINE) IS OFFSET FROM THE CENTERLINE BENT.

STIRRUPS IN CAP MAY BE SHIFTED AS NECESSARY TO CLEAR ANCHOR BOLTS.

THE TOP SURFACE AREAS OF THE CAP SHALL BE CURED IN ACCORDANCE WITH THE STANDARD SPECIFICATIONS EXCEPT THE MEMBRANE CURING COMPOUND METHOD SHALL NOT BE USED.

INVERT ALTERNATE STIRRUP PAIRS.

FOR PILE SPLICE DETAILS SEE END BENT #1, SHEET 3 OF 3.

PLAN

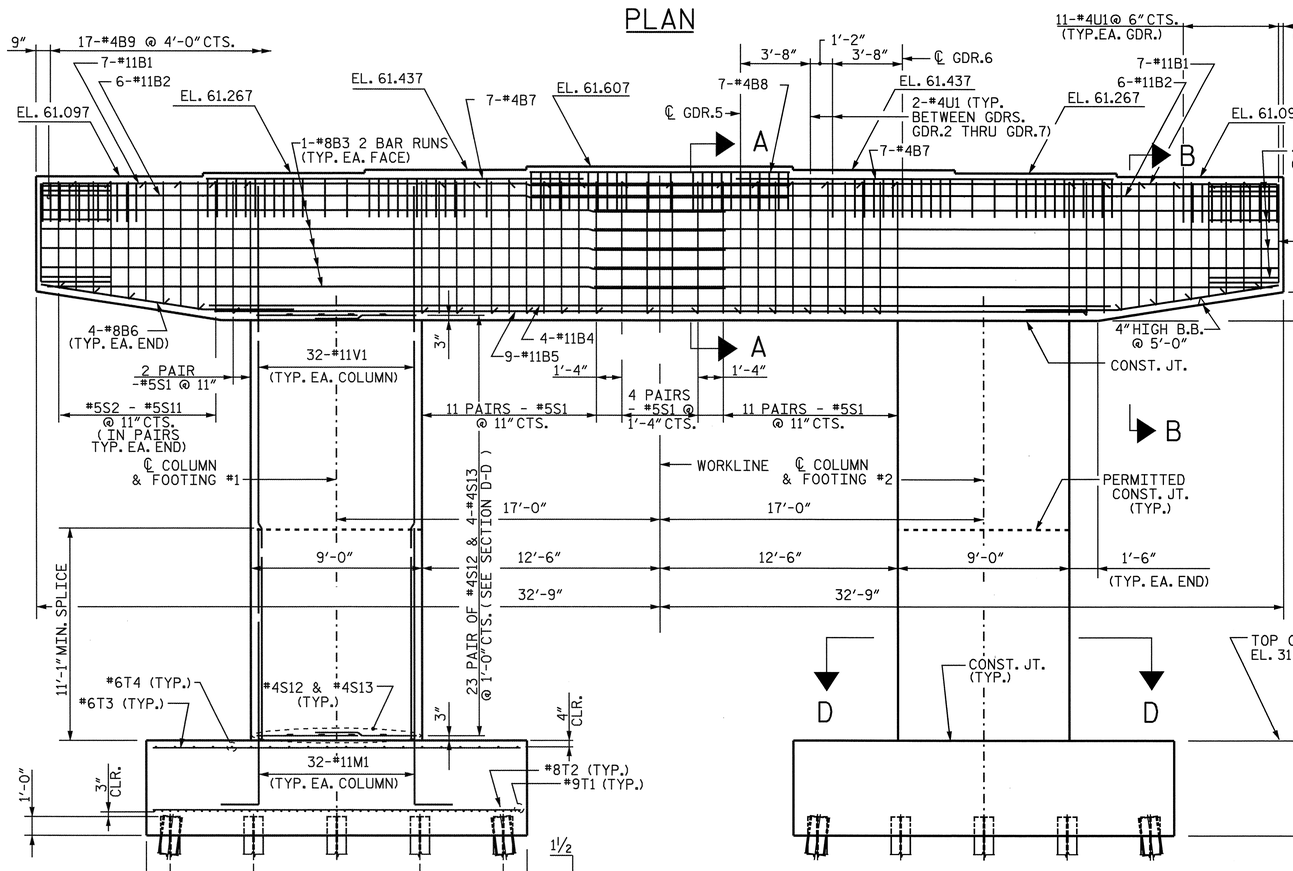

ELEVATION

(INFORMATION SHOWN IS TYPICAL FOR EACH COLUMN AND FOOTING.)

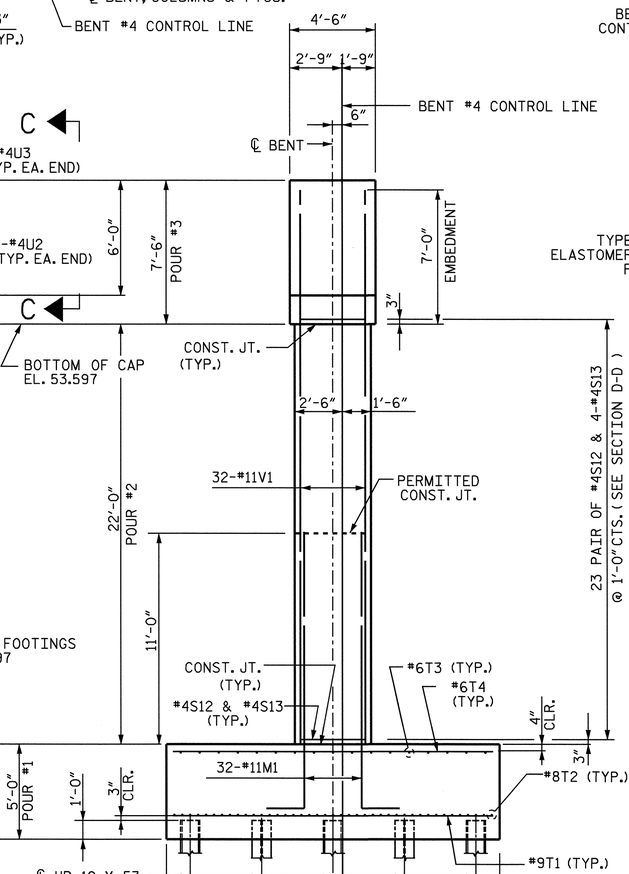

END VIEW

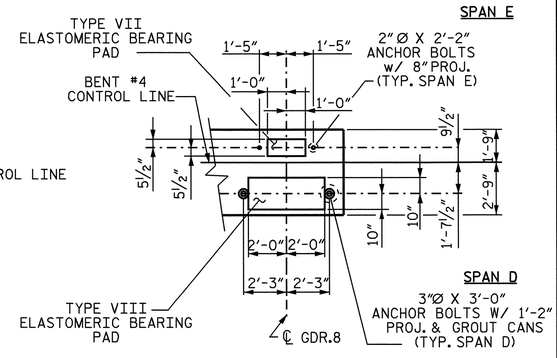

DETAIL "A"

BEARING DIMENSIONS & ANCHOR BOLT GAGES ARE TYPICAL EACH GIRDER CENTERLINE.

MIN. SPLICE LENGTH	
#11B1	16'-6"
#11B2	16'-6"
#8B3	7'-7"
#11M1	11'-1"

PROJECT NO. R-2245

BRUNSWICK COUNTY

STATION: 58+00.00 -L-

SHEET 1 OF 2

STATE OF NORTH CAROLINA
DEPARTMENT OF TRANSPORTATION
RALEIGH

SUBSTRUCTURE

BENT #4

NORTH CAROLINA PROFESSIONAL SEAL 23926 ENGINEER BRIAN C. HANKS
1/16/07

REVISIONS						SHEET NO.
NO.	BY:	DATE:	NO.	BY:	DATE:	S-89
1			3			TOTAL SHEETS
2			4			98

DRAWN BY : H. A. LUCAS DATE : 8/18/06
CHECKED BY : W. D. CRUTCHER DATE : 9/1/06

11-OCT-2006 11:59
S:\PGS\R-2245 Oak Island\Final Plans\R2245_sd_B*.dgn
hlucas

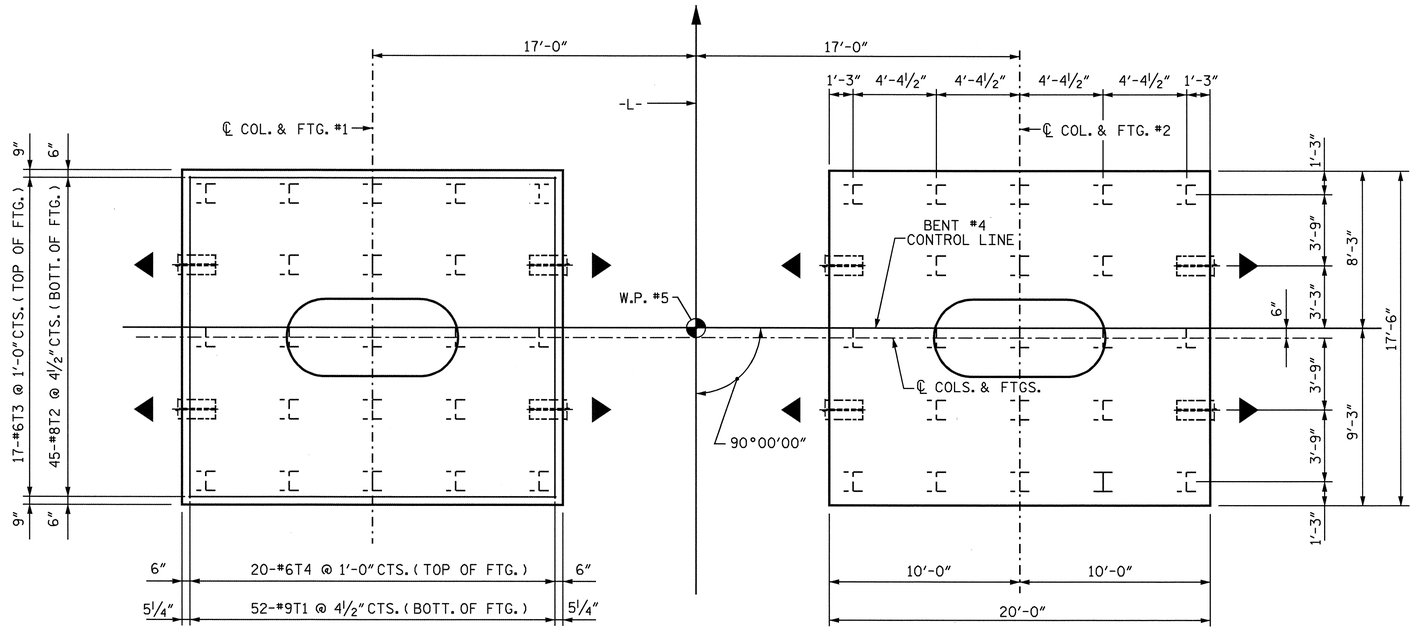

FOOTING PLAN

FOOTINGS ARE TYPICAL.

◀ INDICATES DIRECTION OF 1 1/2:12 PILE BATTER.

THE CONTRACTOR'S ATTENTION IS CALLED TO THE FACT THAT THE CENTERLINE JOINT IN THE THE DECK SLAB (CONTROL LINE) IS OFFSET FROM THE CENTERLINE BENT.

BAR TYPES

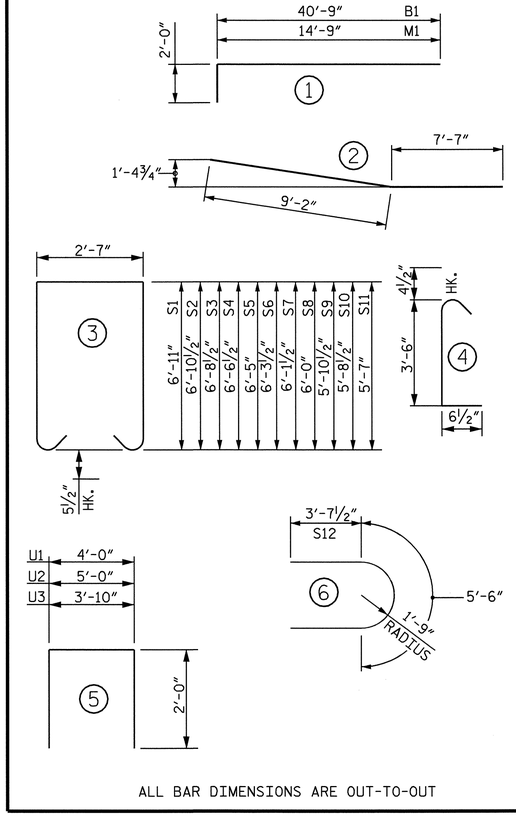

ALL BAR DIMENSIONS ARE OUT-TO-OUT

BILL OF MATERIAL

BENT #4

BAR	NUMBER	SIZE	TYPE	LENGTH	WEIGHT
B1	14	#11	1	42'-9"	3180
B2	12	#11	STR	40'-9"	2598
B3	20	#8	STR	36'-4"	1940
B4	4	#11	STR	47'-8"	1013
B5	9	#11	STR	46'-0"	2200
B6	8	#8	2	16'-9"	358
B7	14	#4	STR	19'-10"	185
B8	7	#4	STR	13'-6"	63
B9	17	#4	STR	4'-0"	45
M1	64	#11	1	16'-9"	5696
S1	60	#5	3	17'-4"	1085
S2	4	#5	3	17'-3"	72
S3	4	#5	3	16'-11"	71
S4	4	#5	3	16'-7"	69
S5	4	#5	3	16'-4"	68
S6	4	#5	3	16'-1"	67
S7	4	#5	3	15'-9"	66
S8	4	#5	3	15'-6"	65
S9	4	#5	3	15'-3"	64
S10	4	#5	3	14'-11"	62
S11	4	#5	3	14'-8"	61
S12	92	#4	6	12'-9"	784
S13	184	#4	4	4'-5"	543
T1	104	#9	STR	16'-10"	5952
T2	90	#8	STR	19'-4"	4646
T3	34	#6	STR	19'-4"	987
T4	40	#6	STR	16'-10"	1011
U1	98	#4	5	8'-0"	524
U2	6	#4	5	9'-0"	36
U3	8	#4	5	7'-10"	42
V1	64	#11	STR	29'-0"	9861

EPOXY COATED REINFORCING STEEL (LBS.) 43414

CLASS AA CONCRETE BREAKDOWN		
POUR #1	FOOTINGS	(C.Y.) 129.6
POUR #2	COLUMNS	(C.Y.) 53.1
POUR #3	CAP	(C.Y.) 82.1
TOTAL CLASS AA CONCRETE		(C.Y.) 264.8

HP 12X53 STEEL PILES		
NO. 50	LIN. FT.	3000.0

FOUNDATION EXCAVATION LUMP SUM

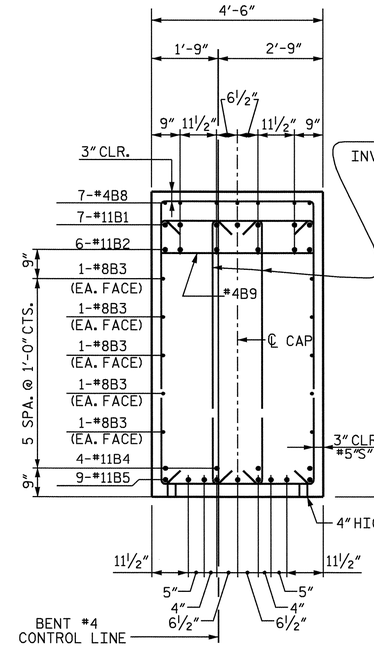

SECTION "A-A"

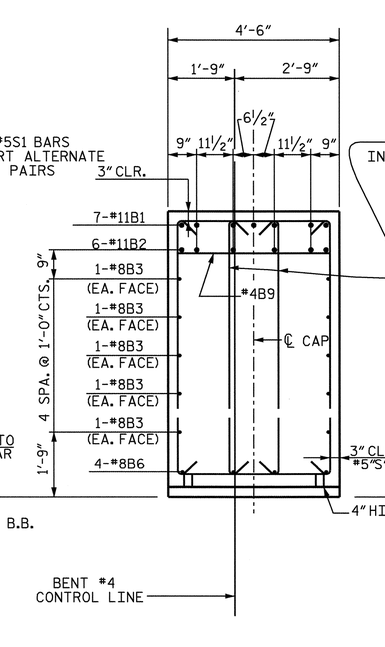

SECTION "B-B"

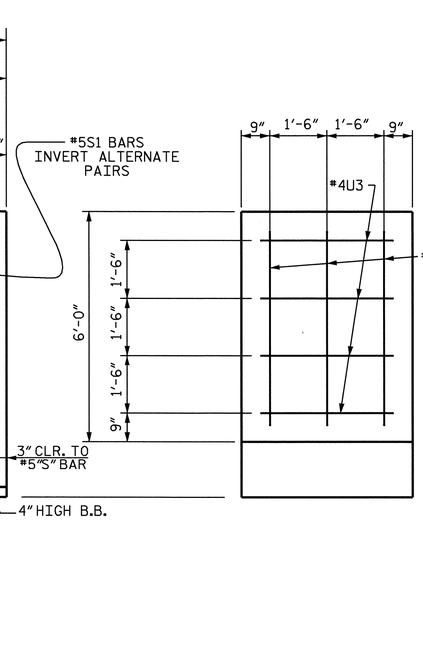

VIEW "C-C"

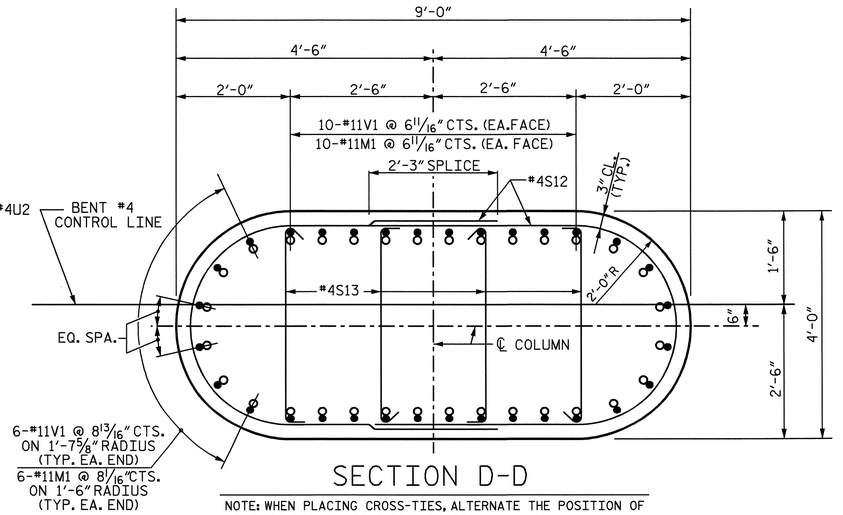

SECTION D-D

NOTE: WHEN PLACING CROSS-TIES, ALTERNATE THE POSITION OF THE 180-DEGREE HOOKS BOTH HORIZONALLY AND VERTICALLY.

○ #11M1
● #11V1

PROJECT NO. R-2245

BRUNSWICK COUNTY

STATION: 58+00.00 -L-

SHEET 2 OF 2

STATE OF NORTH CAROLINA
DEPARTMENT OF TRANSPORTATION
RALEIGH

SUBSTRUCTURE

BENT #4

REVISIONS						SHEET NO.
NO.	BY:	DATE:	NO.	BY:	DATE:	S-90
1			3			TOTAL SHEETS
2			4			98

DRAWN BY : H. A. LUCAS DATE : 8/18/06
CHECKED BY : W. D. CRUTCHER DATE : 9/1/06

11-OCT-2006 11:58
S:\PG3\R-2245 Oak Island\Final Plans\R2245_sd_B*.dgn
hlucas

NOTES

STIRRUPS IN CAP MAY BE SHIFTED AS NECESSARY TO CLEAR ANCHOR BOLTS.

FOR SECTION A-A, SEE SHEET 3 OF 3.

FOR PILE SPLICE DETAILS, SEE SHEET 3 OF 3.

FOR TEMPORARY DRAINAGE AT END BENTS, SEE SHEET 3 OF 3.

BACKWALL SHALL BE PLACED BEFORE APPLYING THE EPOXY PROTECTIVE COATING.

THE TOP SURFACE AREAS OF THE END BENT CAP SHALL BE CURED IN ACCORDANCE WITH THE STANDARD SPECIFICATIONS EXCEPT THE MEMBRANE CURING COMPOUND METHOD SHALL NOT BE USED.

THE TOP SURFACE OF THE CAP EXCEPT THE BRIDGE SEAT BUILDUPS SHALL BE SLOPED TRANSVERSELY FROM THE FILL FACE TO THE BACK FACE AT THE RATE OF 2%.

THE CONTRACTOR SHALL PROVIDE FOR INSTALLATION OF THE 4" DIAMETER DRAIN PIPE THROUGH THE WING WALL AS REQUIRED FOR REINFORCED BRIDGE APPROACH FILLS, SEE THE ROADWAY PLANS. REINFORCING STEEL IN THE WING WALL MAY BE SHIFTED AS NECESSARY TO CLEAR THE DRAIN PIPE.

THE CONCRETE IN THE SHADED AREA OF THE WING SHALL BE POURED AFTER THE CONCRETE PARAPET IS CAST IF SLIP FORMING IS USED.

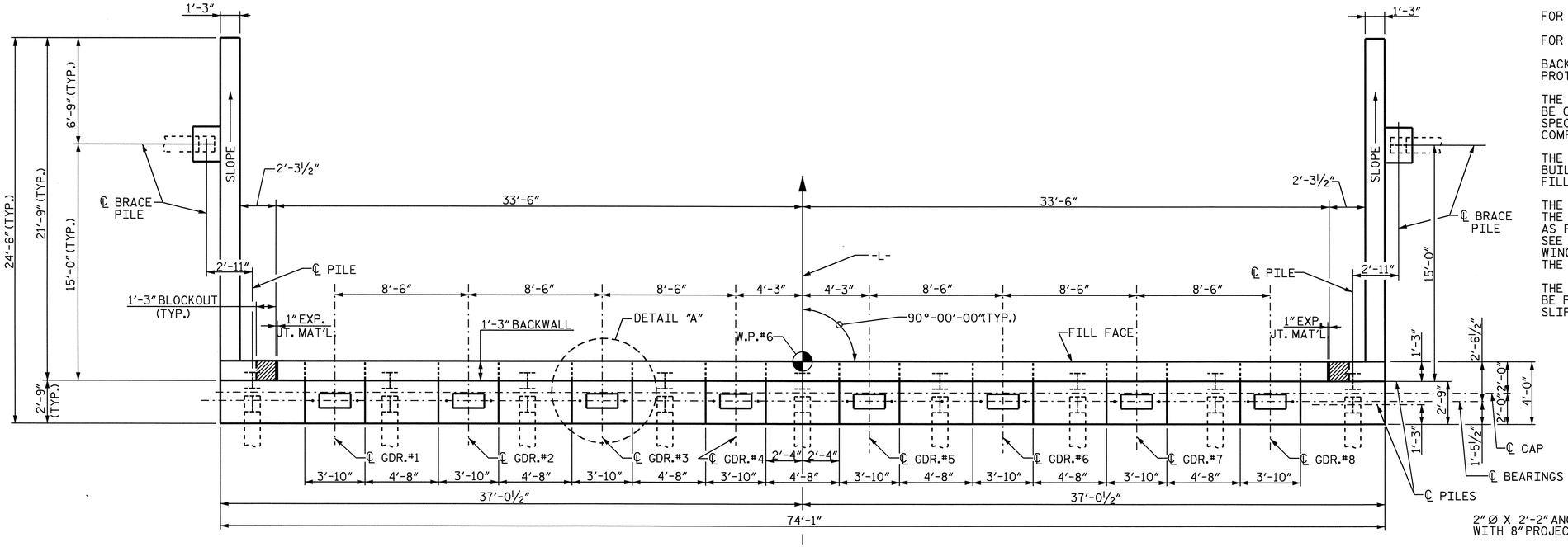

PLAN

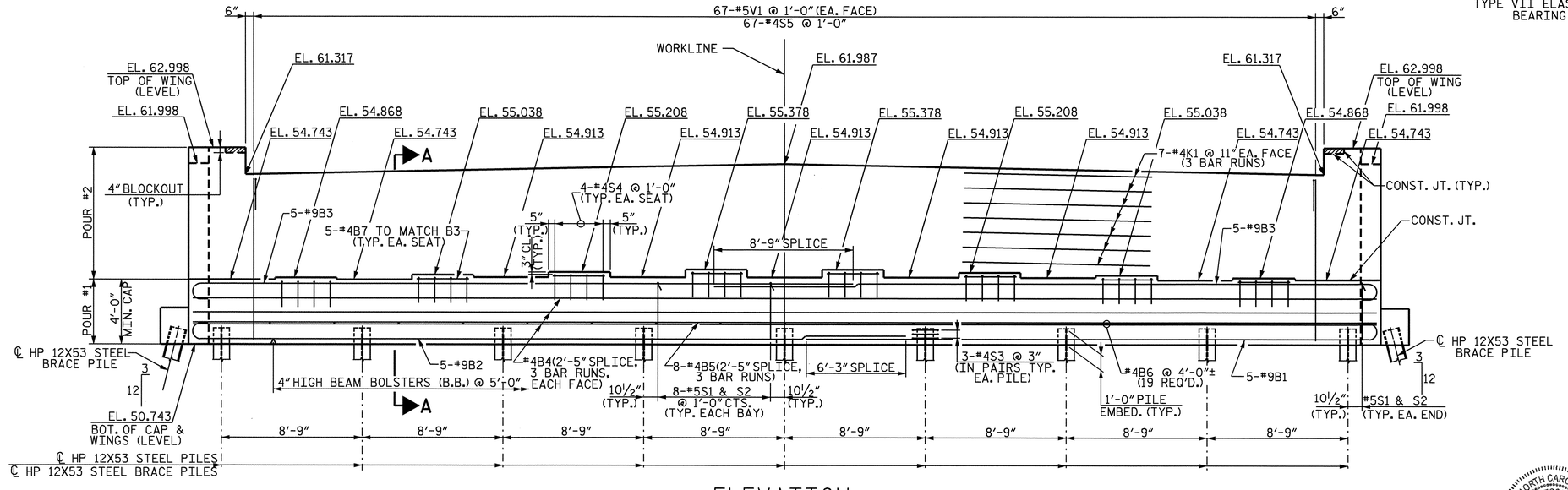

ELEVATION

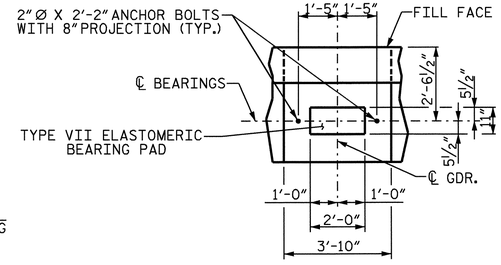

DETAIL "A"
(TYPICAL EACH BRIDGE SEAT)

PROJECT NO. R-2245

BRUNSWICK COUNTY

STATION: 58+00.00 -L-

SHEET 1 OF 3

STATE OF NORTH CAROLINA
DEPARTMENT OF TRANSPORTATION
RALEIGH

SUBSTRUCTURE

END BENT #2

NORTH CAROLINA PROFESSIONAL SEAL 23926 ENGINEER BRIAN C. HAWKS
1/18/07

REVISIONS						SHEET NO.
NO.	BY:	DATE:	NO.	BY:	DATE:	S-91
1			3			TOTAL SHEETS
2			4			98

DRAWN BY : R. D. MARTIN DATE : 10/05
CHECKED BY : W. D. CRUTCHER DATE : 9/06

11-OCT-2006 11:44
S:\PGS\R-2245 Oak Island\Final Plans\R2245_sd_E*.dgn
rmartin

NC0005

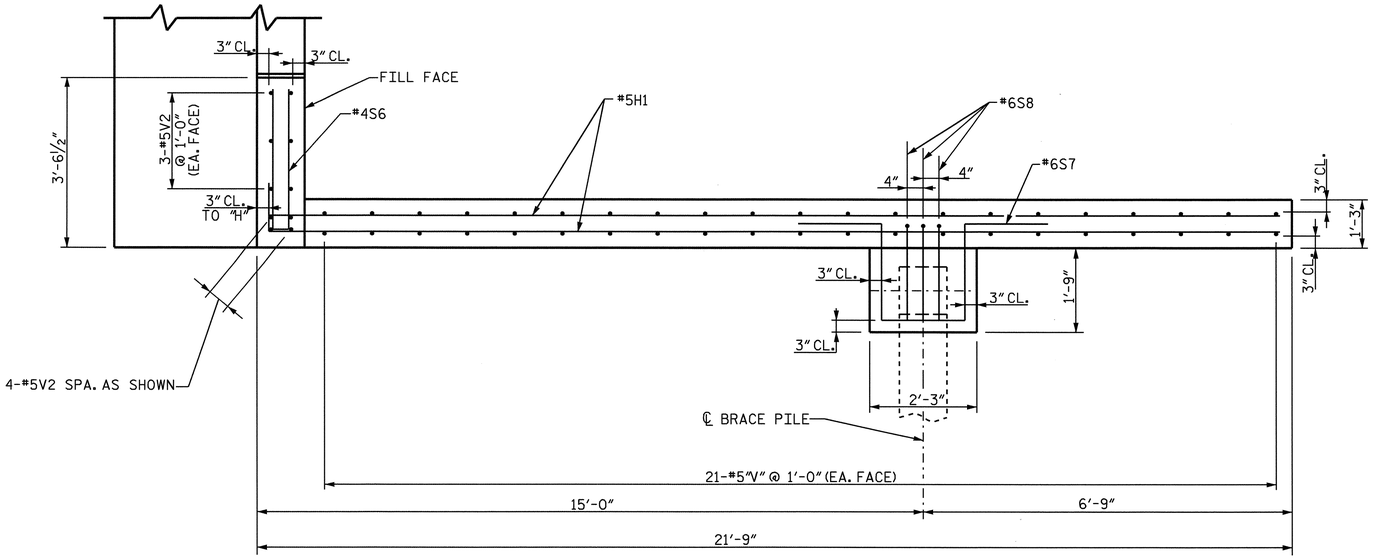

PLAN OF WING

(TYPICAL FOR BOTH WINGS)

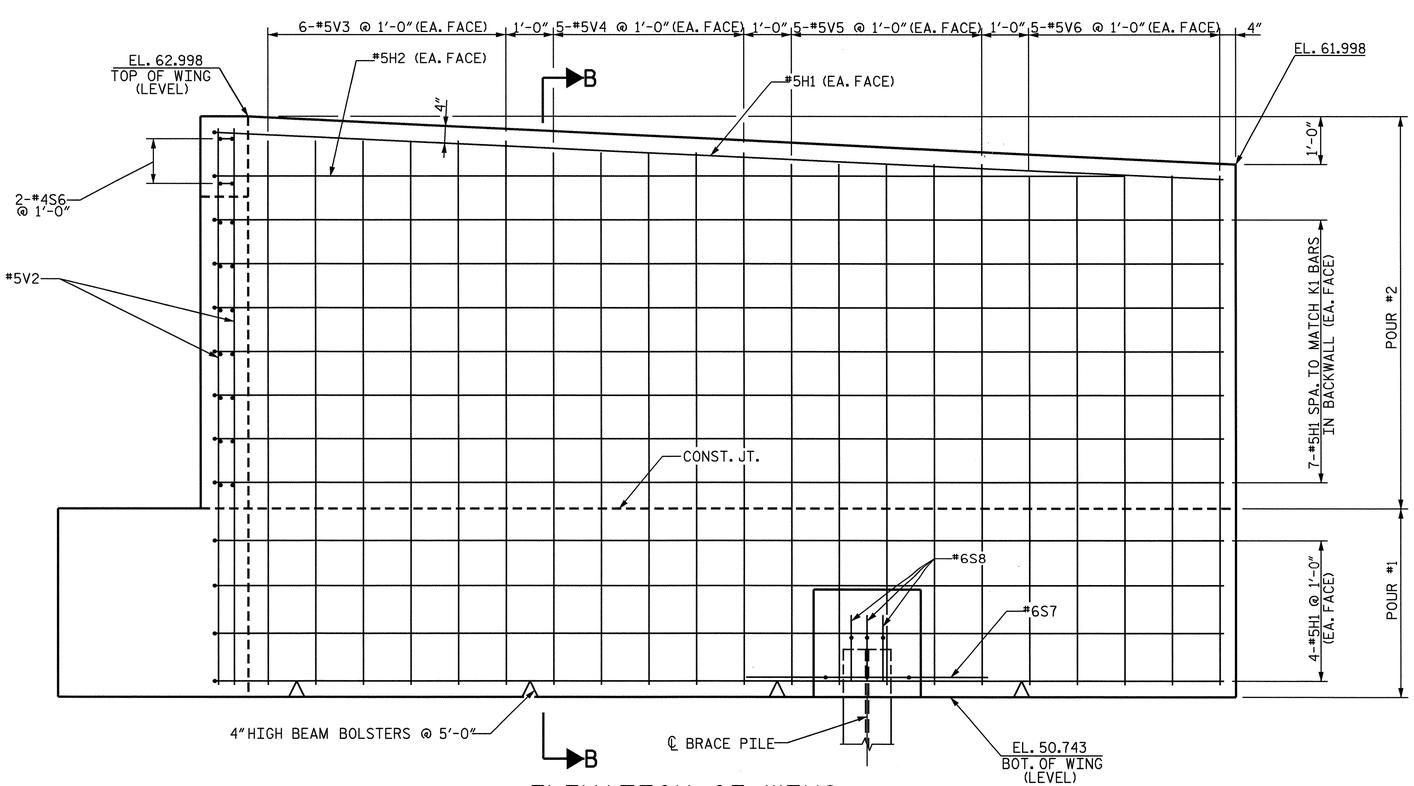

ELEVATION OF WING

(TYPICAL FOR BOTH WINGS)

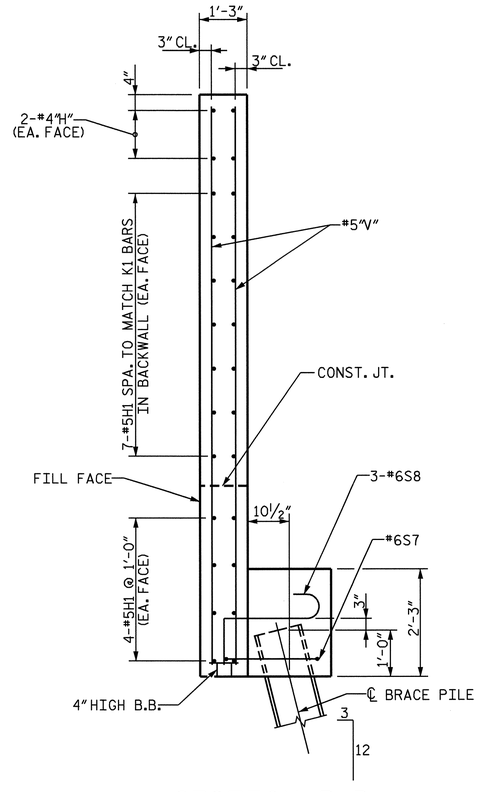

SECTION B-B

PROJECT NO. R-2245

BRUNSWICK COUNTY

STATION: 58+00.00 -L-

SHEET 2 OF 3

STATE OF NORTH CAROLINA
DEPARTMENT OF TRANSPORTATION
RALEIGH

SUBSTRUCTURE
END BENT #2

NORTH CAROLINA PROFESSIONAL SEAL 23926 ENGINEER BRIAN C. HANKS
1/18/07

REVISIONS						SHEET NO.
NO.	BY:	DATE:	NO.	BY:	DATE:	S-92
1			3			TOTAL SHEETS
2			4			98

DRAWN BY : R. D. MARTIN DATE : 10/05
CHECKED BY : W. D. CRUTCHER DATE : 9/06

11-OCT-2006 11:44
S:\PG3\R-2245 Oak Island\Final Plans\R2245_sd_E*.dgn
rmartin

NC0005

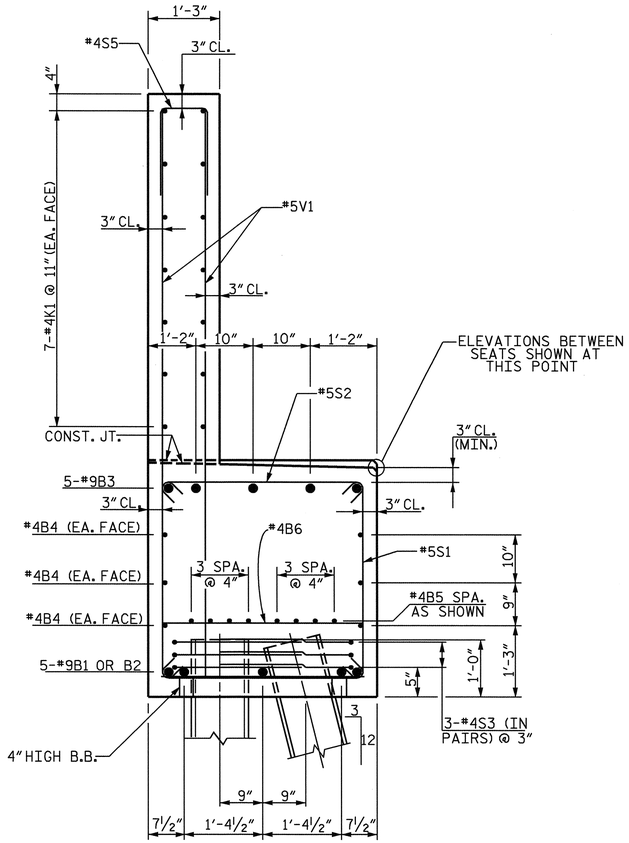

SECTION A-A

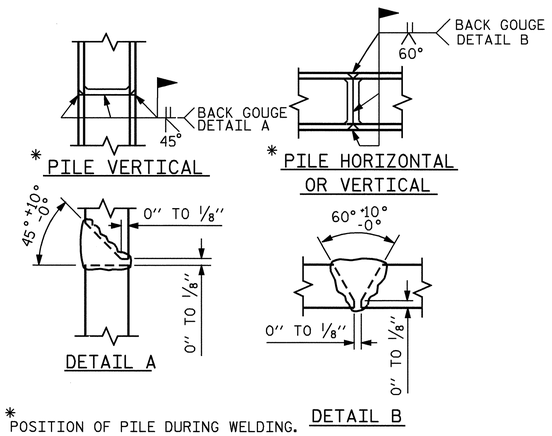

* POSITION OF PILE DURING WELDING.

PILE SPLICE DETAILS

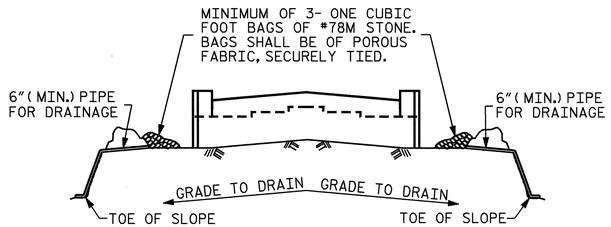

BAGGED STONE AND PIPE SHALL BE PLACED IMMEDIATELY AFTER COMPLETION OF END BENT EXCAVATION. PIPE MAY BE EITHER CONCRETE, CORRUGATED STEEL, CORRUGATED ALUMINUM ALLOY, OR CORRUGATED PLASTIC. PERFORATED PIPE WILL NOT BE ALLOWED.

BAGGED STONE SHALL REMAIN IN PLACE UNTIL THE ENGINEER DIRECTS THAT IT BE REMOVED. THE CONTRACTOR SHALL REMOVE AND DISPOSE OF SILT ACCUMULATIONS AT BAGGED STONE WHEN SO DIRECTED BY THE ENGINEER. BAGS SHALL BE REMOVED AND REPLACED WHENEVER THE ENGINEER DETERMINES THAT THEY HAVE DETERIORATED AND LOST THEIR EFFECTIVENESS.

NO SEPARATE PAYMENT WILL BE MADE FOR THIS WORK AND THE ENTIRE COST OF THIS WORK SHALL BE INCLUDED IN THE UNIT CONTRACT PRICE BID FOR THE SEVERAL PAY ITEMS.

TEMPORARY DRAINAGE AT END BENT

BAR TYPES

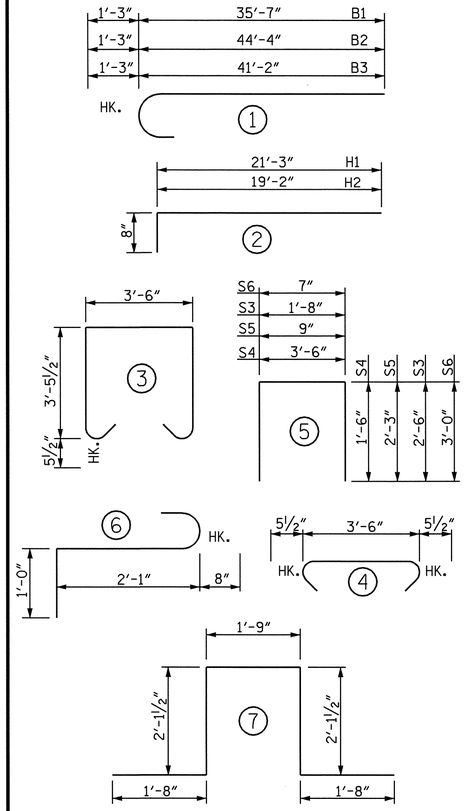

ALL BAR DIMENSIONS ARE OUT-TO-OUT

BILL OF MATERIAL

END BENT #2

BAR	NUMBER	SIZE	TYPE	LENGTH	WEIGHT
B1	5	#9	1	36'-10"	626
B2	5	#9	1	45'-7"	775
B3	10	#9	1	42'-5"	1442
B4	18	#4	STR	26'-2"	315
B5	24	#4	STR	26'-2"	420
B6	19	#4	STR	3'-6"	44
B7	40	#4	STR	3'-4"	89
H1	48	#5	2	21'-11"	1097
H2	4	#5	2	19'-10"	83
K1	42	#4	STR	26'-2"	734
S1	66	#5	3	11'-4"	780
S2	66	#5	4	4'-5"	304
S3	54	#4	5	6'-8"	240
S4	32	#4	5	6'-6"	139
S5	67	#4	5	5'-3"	235
S6	4	#4	5	6'-7"	18
S7	2	#6	7	9'-4"	28
S8	6	#6	6	3'-9"	34
V1	134	#5	STR	10'-0"	1398
V2	20	#5	STR	11'-8"	243
V3	24	#5	STR	11'-5"	286
V4	20	#5	STR	11'-2"	233
V5	20	#5	STR	10'-11"	228
V6	20	#5	STR	10'-8"	223

EPOXY COATED REINFORCING STEEL (LBS.) 10014

CLASS AA CONCRETE BREAKDOWN

POUR #1 CAP & LOWER WINGS (C.Y.) 54.7

POUR #2 UPPER WINGS & BACKWALL (C.Y.) 37.8

TOTAL CLASS AA CONCRETE (C.Y.) 92.5

HP 12X53 STEEL PILES

NO. 20 LIN. FT. 1300.0

PROJECT NO. R-2245

BRUNSWICK COUNTY

STATION: 58+00.00 -L-

SHEET 3 OF 3

STATE OF NORTH CAROLINA
DEPARTMENT OF TRANSPORTATION
RALEIGH

SUBSTRUCTURE
END BENT #2

REVISIONS						SHEET NO.
NO.	BY:	DATE:	NO.	BY:	DATE:	S-93
1			3			TOTAL SHEETS
2			4			98

NORTH CAROLINA PROFESSIONAL SEAL 23926 ENGINEER BRIAN C. HANKS
1/16/07

DRAWN BY : R. D. MARTIN DATE : 10/05
CHECKED BY : W. D. CRUTCHER DATE : 9/06

11-OCT-2006 11:44
S:\PG3\R-2245 Oak Island\Final Plans\R2245_sd_E*.dgn
rmartin

NC8DS

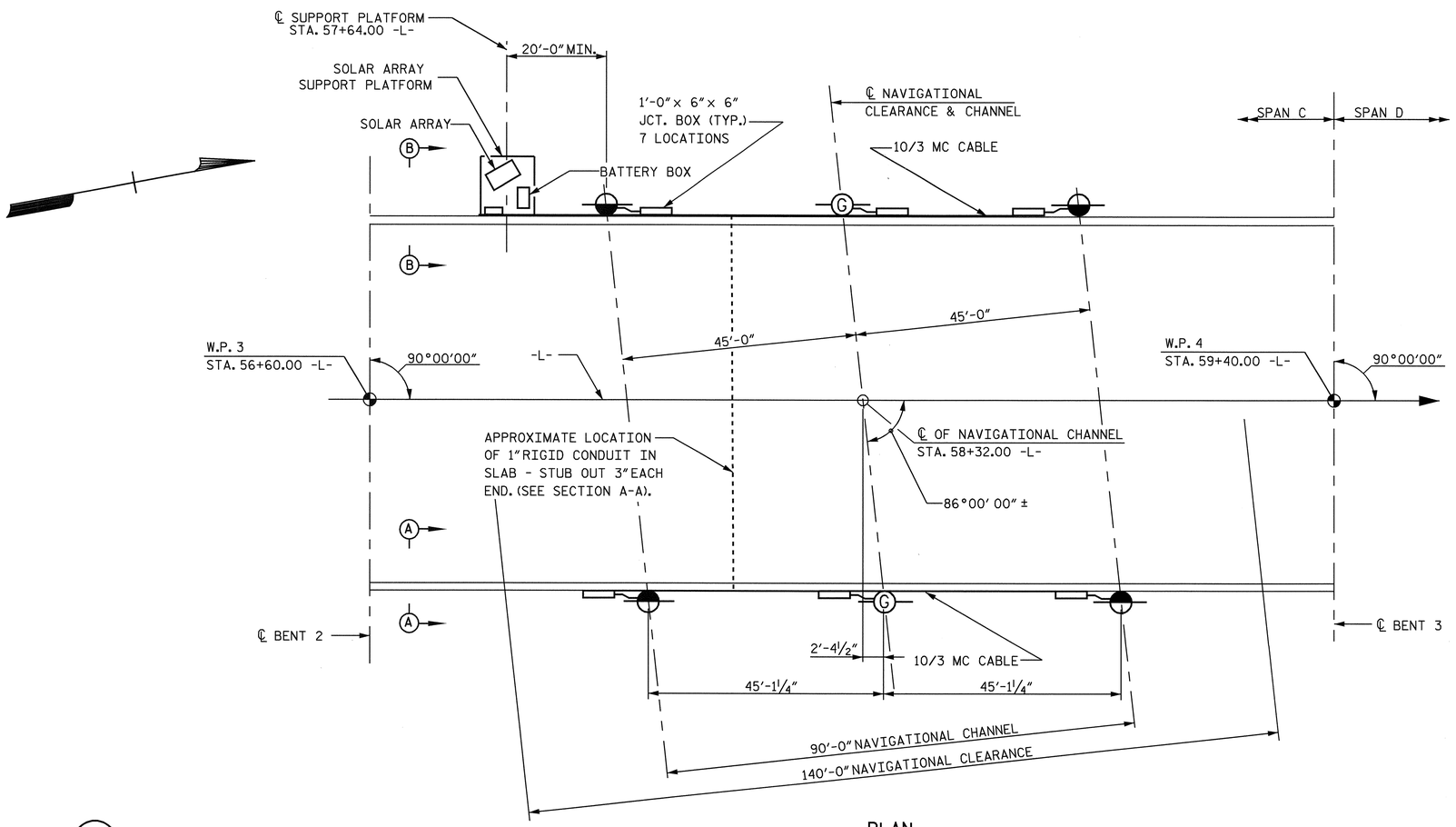

PLAN

G — 360° GREEN NAVIGATIONAL LIGHT - CHANNEL CENTERLINE

180° RED NAVIGATIONAL LIGHT - CHANNEL MARGIN

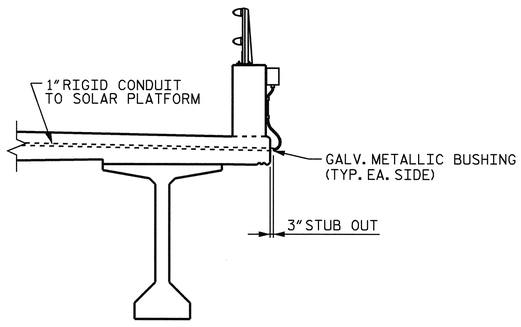

SECTION A-A

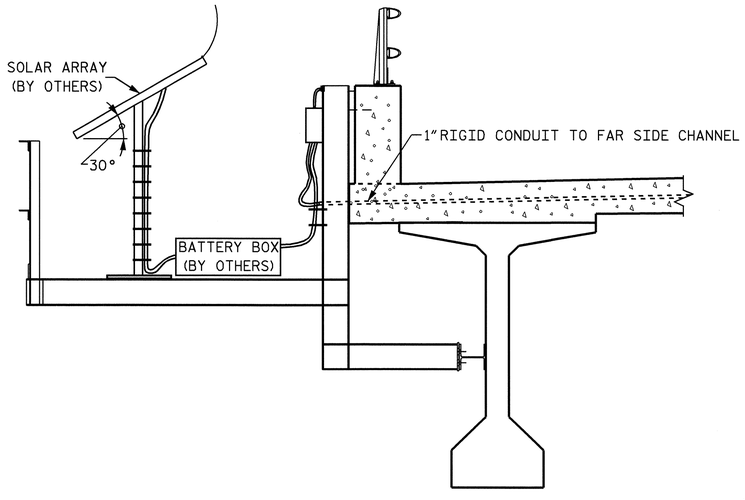

SECTION B-B

NOTES:

FOR NAVIGATIONAL LIGHTING SYSTEM, SEE SPECIAL PROVISIONS.

REFERENCE "SOLAR ARRAY SUPPORT PLATFORM" DRAWING FOR ADDITIONAL DETAILS.

1" RIGID CONDUIT TO BE PLACED DURING SPAN "C" CONSTRUCTION.

PROJECT NO. R-2245

BRUNSWICK COUNTY

STATION: 58+00.00 -L-

STATE OF NORTH CAROLINA
DEPARTMENT OF TRANSPORTATION
RALEIGH

NAVIGATIONAL LIGHTING AND CONDUIT SYSTEM

NORTH CAROLINA PROFESSIONAL SEAL 23926 ENGINEER BRIAN C. HANKS
1/18/07

REVISIONS						SHEET NO.
NO.	BY:	DATE:	NO.	BY:	DATE:	S-94
1			3			TOTAL SHEETS
2			4			98

DRAWN BY : R. D. MARTIN DATE : 6-06
CHECKED BY : F. BECKWITH, JR. DATE : 9-06

03-NOV-2006 07:40
S:\PG3\R-2245 Oak Island\Final Plans\R2245_sd_UT_solar array plat..dgn
bhanks

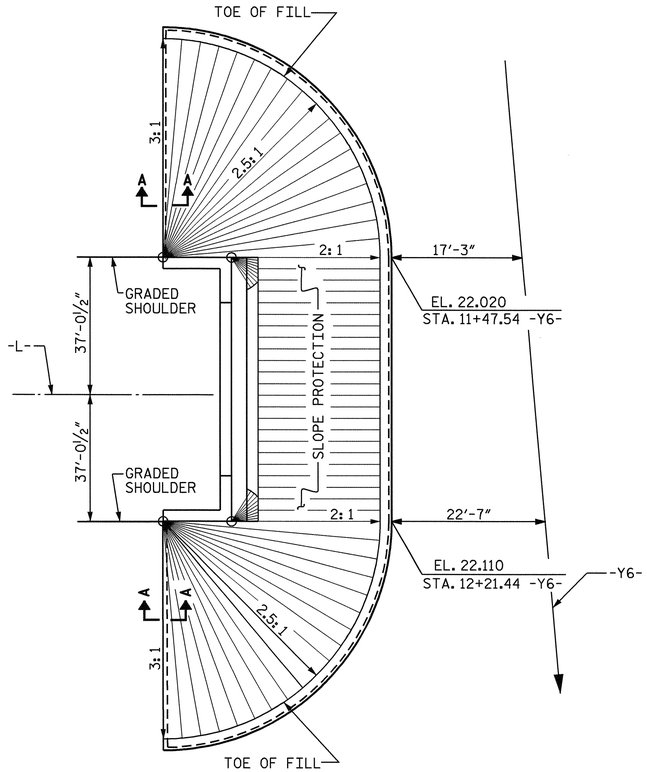

PLAN @ END BENT #1

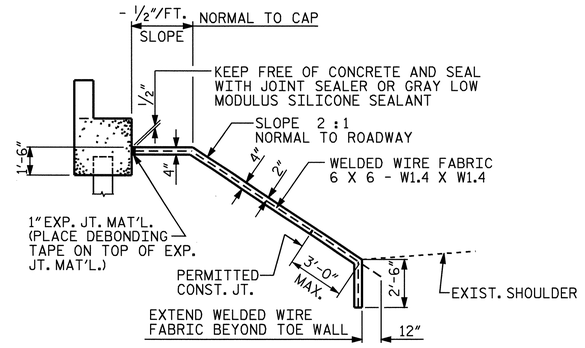

SECTION ALONG ℄ ROADWAY WHEN FILL CATCHES IN DITCH

GENERAL NOTES

SLOPE PROTECTION SHALL BE PLACED UNDER THE ENDS OF THE BRIDGE AS SHOWN IN THE DETAILS. STRAIGHT EDGING WILL NOT BE REQUIRED UNLESS, IN THE OPINION OF THE ENGINEER, VISUAL INSPECTION INDICATES A NEED FOR IT. METHOD OF MEASUREMENT AND BASIS OF PAYMENT SHALL BE AS PRESCRIBED IN SECTION 462 OF THE STANDARD SPECIFICATIONS. FOR BERM WIDTH, SEE GENERAL DRAWING.

SLOPE PROTECTION SHALL CONSIST OF 4" POURED-IN-PLACE CONCRETE PAVING AS SHOWN IN THE DETAILS ON THIS SHEET. CONCRETE SHALL BE CLASS "B". THE CONCRETE SURFACE SHALL BE FLOATED WITH A WOODEN FLOAT AND FINISHED. WELDED WIRE FABRIC REINFORCING SHALL BE 6 X 6 - W1.4 X W1.4, 60" WIDE. SLOPE PROTECTION SHALL BE POURED IN 5' STRIPS AS SHOWN IN THE "POURING DETAIL" WITH 2'-0" LONG #4 BARS PLACED ALONG THE SLOPE BETWEEN STRIPS AT 1'-6" MAXIMUM SPACING. SLOPE PROTECTION MAY BE POURED IN ALTERNATE 4' AND 5' STRIPS AS SHOWN IN THE "OPTIONAL POURING DETAIL" WITH ADJACENT RUNS OF WELDED WIRE FABRIC LAPPING AT LEAST 6". THE COST OF THE WELDED WIRE FABRIC AND #4 BARS, IF USED, SHALL BE INCLUDED IN THE CONTRACT UNIT PRICE BID PER SQUARE YARD FOR SLOPE PROTECTION.

BRIDGE @ STA. 58+00.00 -L-	4" SLOPE PROTECTION	* WELDED WIRE FABRIC 60 INCHES WIDE
	SQUARE YARDS	APPROX. L.F.
END BENT #1	1660	3240

* QUANTITY SHOWN IS BASED ON 5' POURS.

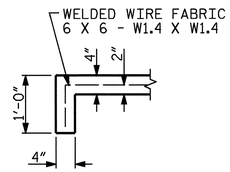

SECTION A-A

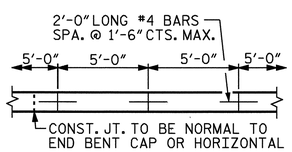

STRIP WIDTHS MAY VARY IN CURVED PORTION.

POURING DETAIL

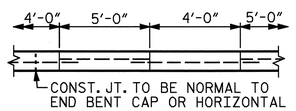

POUR A 4'-0" STRIP FIRST. STRIP WIDTHS MAY VARY IN CURVED PORTION.

OPTIONAL POURING DETAIL

PROJECT NO. R-2245

BRUNSWICK COUNTY

STATION: 58+00.00 -L-

STATE OF NORTH CAROLINA
DEPARTMENT OF TRANSPORTATION
RALEIGH

STANDARD

SLOPE PROTECTION DETAILS

AUG. 1992

REVISIONS						SHEET NO.
NO.	BY:	DATE:	NO.	BY:	DATE:	S-95
1			3			TOTAL SHEETS
2			4			98

STD. NO. SP1

NORTH CAROLINA PROFESSIONAL SEAL 23926 ENGINEER BRIAN C. HANKS
1/18/07

ASSEMBLED BY : R. D. MARTIN	DATE : 6/06		
CHECKED BY : W. D. CRUTCHER	DATE : 9/06		
DRAWN BY : ELR 5/92	REV. 10/17/00	LES/RDR	
CHECKED BY : GRP 6/92	REV. 7/10/01	LES/RDR	
	REV. 5/7/03	RWW/JTE	

11-OCT-2006 12:01
S:\PG3\R-2245 Oak Island\Final Plans\R2245_sd_RR.dgn
rmartin

NOTES :

FOR BERM WIDTH DIMENSIONS, SEE GENERAL DRAWING.

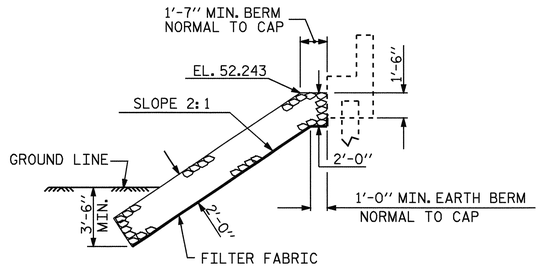

℄ SECTION

BERM RIP RAPPED

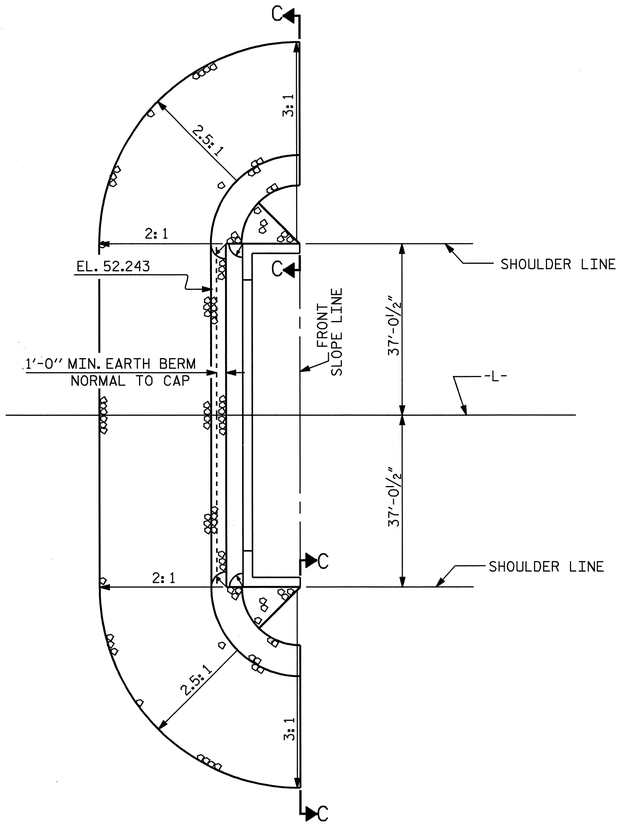

BERM RIP RAPPED

@ END BENT #2

ESTIMATED QUANTITIES		
BRIDGE @ STA. 58+00.00 -L-	RIP RAP CLASS II (2'-0" THICK)	FILTER FABRIC FOR DRAINAGE
	TONS	SQUARE YARDS
END BENT #2	500	550

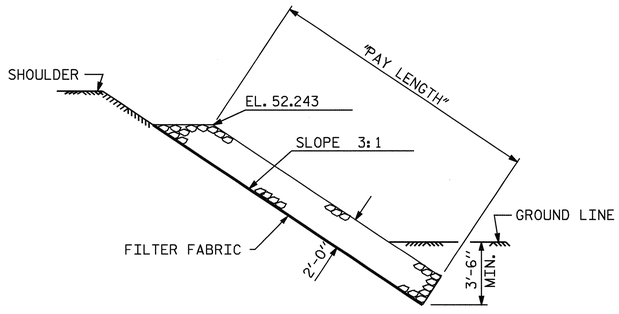

SECTION C-C

PROJECT NO. R-2245

BRUNSWICK COUNTY

STATION: 58+00.00 -L-

STATE OF NORTH CAROLINA
DEPARTMENT OF TRANSPORTATION
RALEIGH

STANDARD

RIP RAP DETAILS

NORTH CAROLINA PROFESSIONAL SEAL 23926 ENGINEER BRIAN C. HANKS
1/18/07

REVISIONS						SHEET NO.
NO.	BY:	DATE:	NO.	BY:	DATE:	S-96
1			3			TOTAL SHEETS
2			4			98

ASSEMBLED BY : R. D. MARTIN	DATE : 6/06
CHECKED BY : W. D. CRUTCHER	DATE : 9/06
DRAWN BY : FCJ 2/88	REV. 7/17/98 REK/RWW
CHECKED BY : ARB 8/88	REV. 8/16/99 RWW/LES
	REV. 10/17/00 RWW/LES

26-OCT-2006 08:31
S:\PDG\R-2245 Oak Island\Final Plans\R2245_sd_RR.dgn
bhanks

SKEW 90°

NC DOT STD. NO. RR2

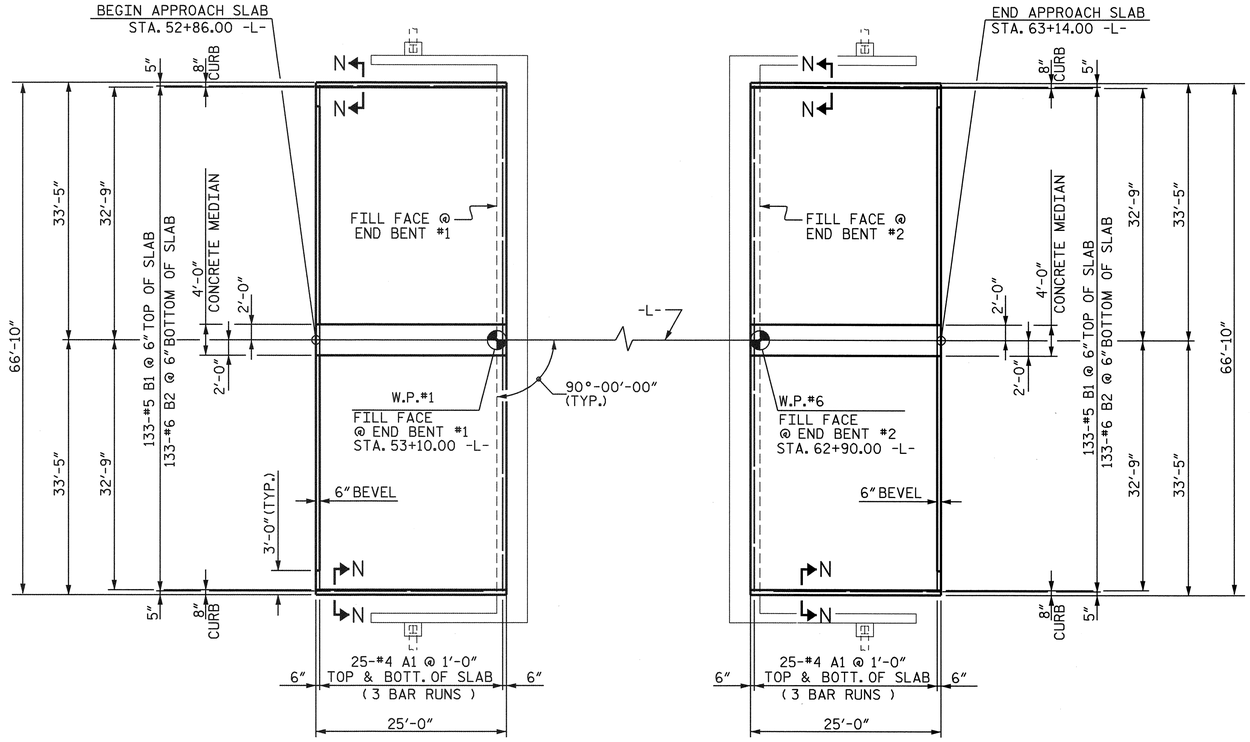

PLAN @ END BENT #1

PLAN @ END BENT #2

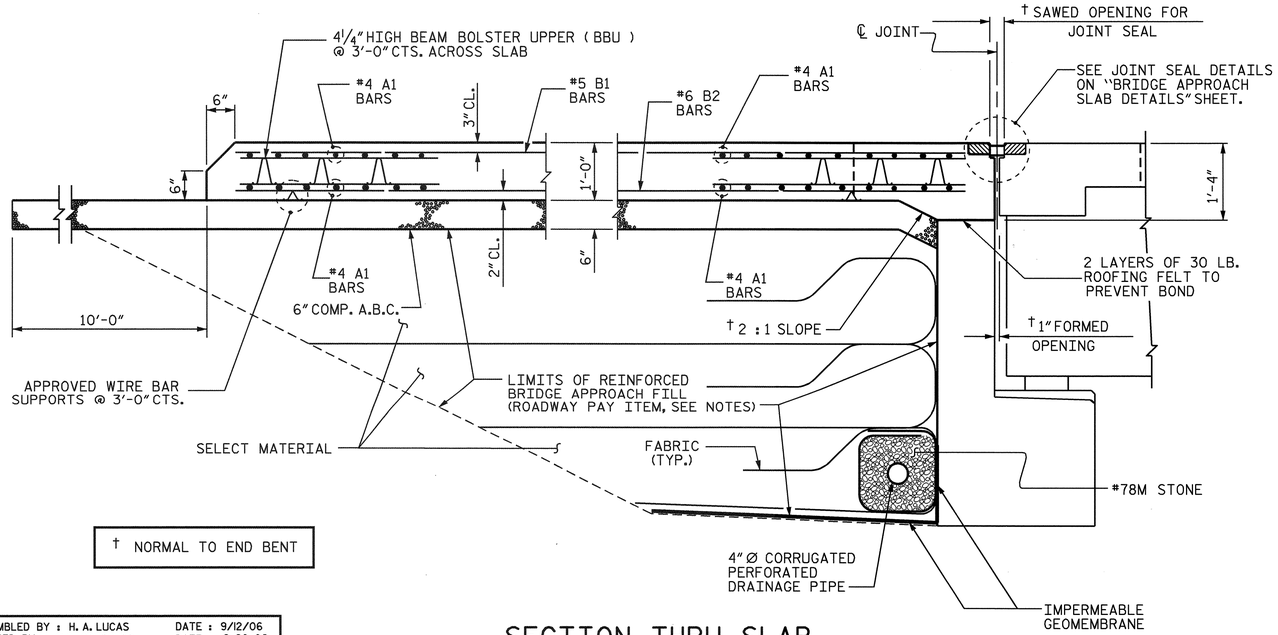

† NORMAL TO END BENT

SECTION THRU SLAB

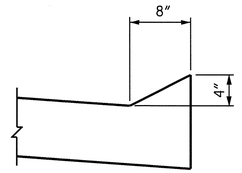

SECTION N-N

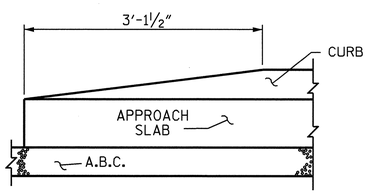

END OF CURB WITHOUT SHOULDER BERM GUTTER

CURB DETAILS

NOTES

APPROACH SLAB SHALL NOT BE CONSTRUCTED PRIOR TO COMPLETION OF THE BRIDGE DECK.

FOR REINFORCED BRIDGE APPROACH FILL INCLUDING FABRIC, IMPERMEABLE GEOMEMBRANE, 4" Ø DRAINAGE PIPE, #78M STONE, AND SELECT MATERIAL, SEE ROADWAY PLANS.

AREA BETWEEN THE WINGWALL AND APPROACH SLAB SHALL BE GRADED TO DRAIN THE WATER AWAY FROM THE FILL FACE OF THE BRIDGE AND SHALL BE PAVED. SEE ROADWAY PLANS.

THE 6" COMP. A.B.C. SHALL EXTEND 10'-0" BEYOND THE END OF THE APPROACH SLAB AND 1'-0" OUTSIDE OF EACH EDGE OF SLAB.

THE CONTRACTOR MAY USE 4" TYPE B-25.0B ASPHALT CONCRETE BASE COURSE IN LIEU OF 6" COMP. A.B.C. IF THIS OPTION IS USED, THE BASE COURSE SHALL EXTEND 1'-0" BEYOND THE END OF THE APPROACH SLAB AND THE WIDTH SHALL BE THE SAME AS THAT OF THE APPROACH SLAB.

THE CONTRACTOR MAY USE 5" CLASS "A" CONCRETE BASE IN LIEU OF 6" COMP. A.B.C. IF THIS OPTION IS USED, THE CONCRETE BASE SHALL EXTEND 1'-0" BEYOND THE END OF THE APPROACH SLAB AND THE WIDTH SHALL BE THE SAME AS THAT OF THE APPROACH SLAB. THE CONCRETE SHALL BE FINISHED TO A SMOOTH SURFACE AND A LAYER OF 30 LB ROOFING FELT SHALL BE PLACED BETWEEN THE CONCRETE BASE AND THE APPROACH SLAB TO PREVENT BOND. THE APPROACH SLAB SHALL NOT BE CAST UNTIL THE CONCRETE BASE HAS REACHED AN AGE OF THREE CURING DAYS.

THE JOINT SHALL BE SAWED PRIOR TO THE CASTING OF THE PARAPET, END POST, AND MEDIAN.

WITH EVAZOTE JOINT SEAL

FOR EVAZOTE JOINT SEALS, SEE SPECIAL PROVISIONS.

THE NOMINAL UNCOMPRESSED SEAL WIDTH OF THE EVAZOTE JOINT SEAL SHALL BE 2½".

FOR ELASTOMERIC CONCRETE, SEE SPECIAL PROVISIONS.

BILL OF MATERIAL

APPROACH SLAB AT EB #1

BAR	NO.	SIZE	TYPE	LENGTH	WEIGHT
✱A1	150	#4	STR	23'-6"	2355
✱B1	133	#5	STR	24'-0"	3329
✱B2	133	#6	STR	24'-6"	4894
✱EPOXY COATED REINFORCING STEEL				LBS.	10578
CLASS AA CONCRETE (SLAB & CURB)				C. Y.	63.1
(MEDIAN)				C. Y.	1.4
TOTAL				C. Y.	64.5

APPROACH SLAB AT EB #2

BAR	NO.	SIZE	TYPE	LENGTH	WEIGHT
✱A1	150	#4	STR	23'-6"	2355
✱B1	133	#5	STR	24'-0"	3329
✱B2	133	#6	STR	24'-6"	4894
✱EPOXY COATED REINFORCING STEEL				LBS.	10578
CLASS AA CONCRETE (SLAB & CURB)				C. Y.	63.1
(MEDIAN)				C. Y.	1.4
TOTAL				C. Y.	64.5

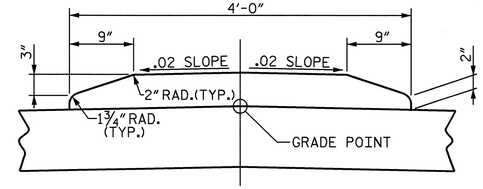

CONCRETE MEDIAN SECTION

GROOVED CONTRACTION JOINTS, ½" IN DEPTH, SHALL BE TOOLED IN ALL EXPOSED FACES OF THE MEDIAN IN ACCORDANCE WITH ARTICLE 825-10(B) OF THE STANDARD SPECIFICATIONS. THE CONTRACTION JOINTS SHALL BE LOCATED AT A SPACING OF 8 FEET TO 10 FEET BETWEEN EXPANSION JOINTS. NO CONTRACTION JOINTS WILL BE REQUIRED FOR SEGMENTS LESS THAN 10 FEET IN LENGTH.

COST FOR CONCRETE MEDIAN ON THE APPROACH SLAB SHALL BE INCLUDED IN PAYMENT FOR THE APPROACH SLAB.

THE SURFACE OF THE APPROACH SLAB UNDER THE MEDIAN SHALL BE ROUGHENED OR GROOVED BEFORE THE MEDIAN IS PLACED.

PROJECT NO. R-2245

BRUNSWICK COUNTY

STATION: 58+00.00 -L-

SHEET 1 OF 2

STATE OF NORTH CAROLINA
DEPARTMENT OF TRANSPORTATION
RALEIGH

STANDARD

BRIDGE APPROACH SLAB FOR FLEXIBLE PAVEMENT

REVISIONS						SHEET NO.
NO.	BY:	DATE:	NO.	BY:	DATE:	S-97
1			3			TOTAL SHEETS
2			4			98

NORTH CAROLINA PROFESSIONAL SEAL 23926 ENGINEER BRIAN C. HANKS

1/18/07

STD. NO. BAS4

ASSEMBLED BY : H. A. LUCAS	DATE : 9/12/06	
CHECKED BY : W.D. CRUTCHER	DATE : 9-20-06	
DRAWN BY : EEM 3/95	REV. 7/10/01	LES/RDR
CHECKED BY : VAP 3/95	REV. 5/1/03R	RWW/JTE
	REV. 5/1/06	TLA/GM

17-JAN-2007 10:14
S:\PGS\R-2245 Oak Island\Final Plans\R2245_sd_AS.dgn
bhanks

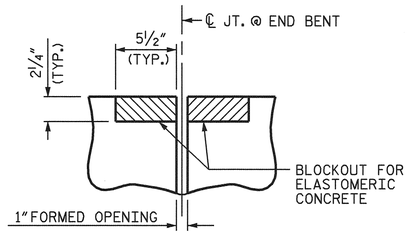

SECTION C-C

EVAZOTE JOINT SEAL
(PRE-SAWED ELASTOMERIC
CONCRETE DIMENSIONS)

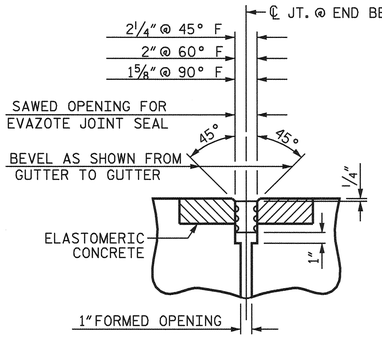

SECTION C-C

EVAZOTE JOINT SEAL
(EXPANSION)

ELASTOMERIC CONCRETE	
END BENT NO.	ELASTOMERIC CONCRETE * (CU. FT.)
1	11.3
2	11.3
TOTAL	22.6

* BASED ON THE MINIMUM BLOCKOUT SHOWN.

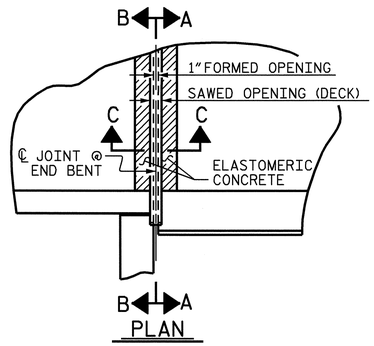

PLAN

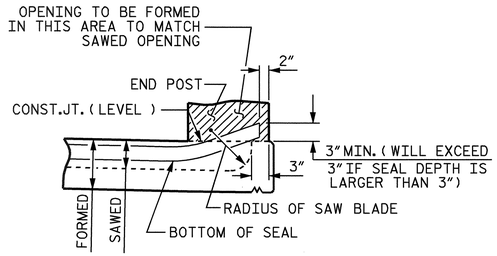

SECTION A-A

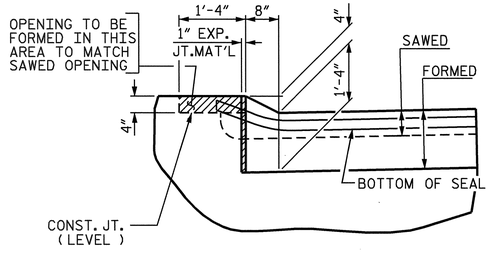

SECTION B-B

JOINT SEAL DETAILS @ END BENT

(FOR METAL RAILS WITH CURB)

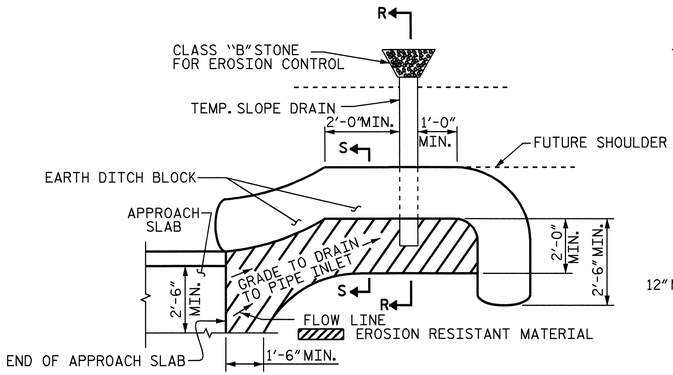

NOTE: IMMEDIATELY AFTER THE CONSTRUCTION OF THE APPROACH SLAB, THE CONTRACTOR SHALL PROVIDE TEMPORARY BERM AND SLOPE DRAIN. CONTRACTOR SHALL GRADE TO PIPE INLET AND PROVIDE EROSION RESISTANT MATERIAL AS SHOWN. THE EROSION RESISTANT MATERIAL SHALL BE EITHER 1) ASPHALT PLANT MIX, TYPE 1 OR TYPE 2, MIN. 2" DEPTH, 2) EROSION CONTROL MAT, OR 3) CONCRETE, AS DIRECTED BY THE ENGINEER. THE SLOPE DRAIN SHALL CONSIST OF A NON-PERFORATED TEMPORARY DRAINAGE PIPE, 12 INCHES IN DIAMETER.

PLAN VIEW

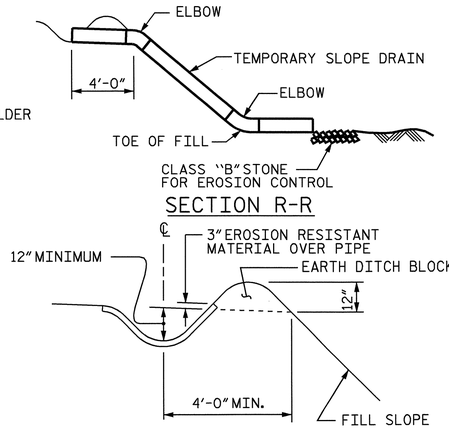

SECTION R-R

SECTION S-S

TEMPORARY BERM AND SLOPE DRAIN DETAILS

(TO BE USED WHEN SHOULDER BERM GUTTER IS REQUIRED)

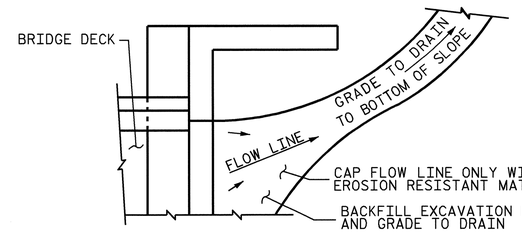

NOTE: IF THE APPROACH SLAB IS NOT CONSTRUCTED IMMEDIATELY AFTER THE BACKFILLING OF THE END BENT EXCAVATION, GRADE TO DRAIN TO THE BOTTOM OF THE SLOPE AND PROVIDE EROSION RESISTANT MATERIAL, SUCH AS FIBERGLASS ROVING OR AS DIRECTED BY THE ENGINEER TO PREVENT SOIL EROSION AND TO PROTECT THE AREA ADJACENT TO THE STRUCTURE. THE CONTRACTOR WILL BE REQUIRED TO REMOVE THESE MATERIALS PRIOR TO CONSTRUCTION OF THE APPROACH SLAB.

TEMPORARY DRAINAGE DETAIL

PROJECT NO. R-2245

BRUNSWICK COUNTY

STATION: 58+00.00 -L-

SHEET 2 OF 2

STATE OF NORTH CAROLINA
DEPARTMENT OF TRANSPORTATION
RALEIGH

STANDARD

BRIDGE APPROACH SLAB DETAILS

1988

REVISIONS						SHEET NO.
NO.	BY:	DATE:	NO.	BY:	DATE:	S-98
1			3			TOTAL SHEETS
2			4			98

STD. NO. BAS10

NORTH CAROLINA PROFESSIONAL SEAL 23926 ENGINEER BRIAN C. HAWKS
1/18/07

ASSEMBLED BY : H. A. LUCAS		DATE :	9/12/06
CHECKED BY : W. D. CRUTCHER		DATE :	9/20/06
DRAWN BY : FCJ 11/88	REV. 10/17/00		RWW/LES
CHECKED BY : ARB 11/88	REV. 5/7/03		RWW/JTE
	REV. 5/1/06		TLA/GM

11-OCT-2006 11:37
S:\PG3\R-2245 Oak Island\Final Plans\R2245_sd_AS.dgn
rmartin

11-JAN-2007 16:34
R:\Structures\r2245\final plans\CULVERT\R2245_sd_CU.dgn
TAVERETTE

BM #213: RR SPIKE SET IN 12" PINE 93.09' RT. OF -Y7- STA. 15+24.28, ELEV. = 44.33', NGVD 29.

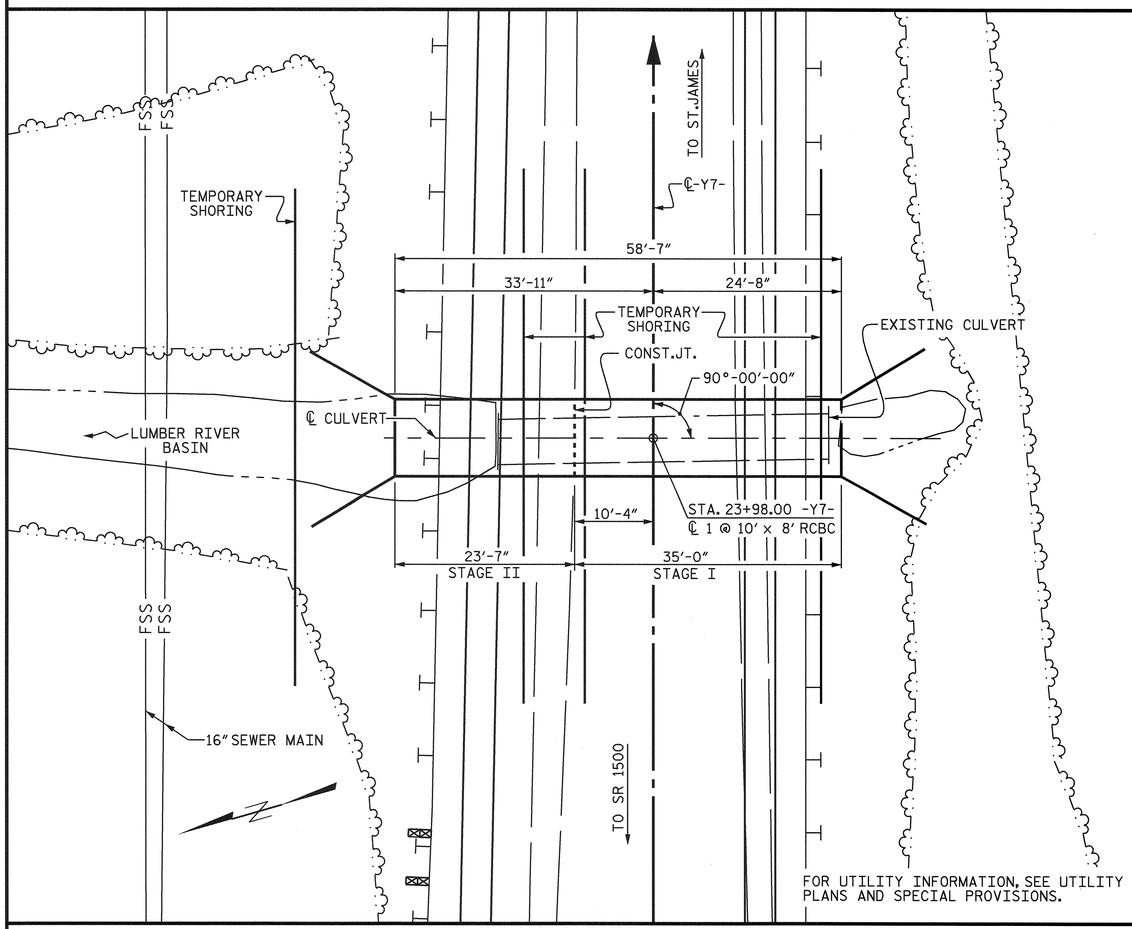

FOR UTILITY INFORMATION, SEE UTILITY PLANS AND SPECIAL PROVISIONS.

LOCATION SKETCH

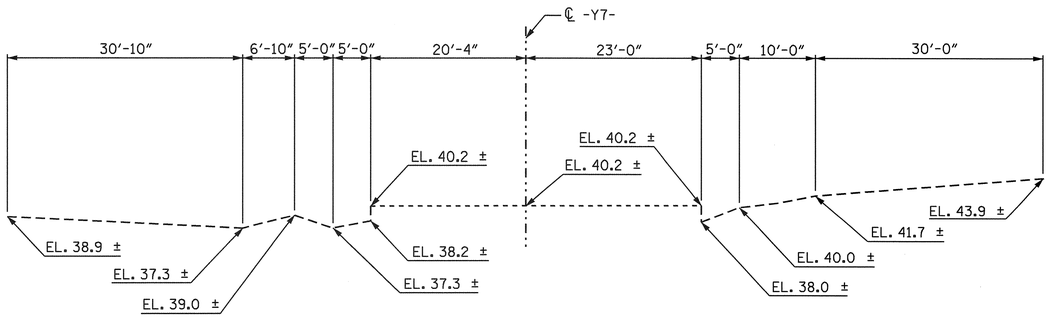

PROFILE ALONG ℄ CULVERT

GRADE DATA

GRADE POINT ELEVATION @ STA. 23+98.00 -Y7-	= 47.773
BED ELEVATION @ STA. 23+98.00 -Y7-	= 36.700
ROADWAY SLOPES	= 2:1

HYDRAULIC DATA

DESIGN DISCHARGE	= 600 C.F.S.
FREQUENCY OF DESIGN FLOOD	= 50 YEARS
DESIGN HIGH WATER ELEVATION	= 45.9'
DRAINAGE AREA	= 1.3 SQ. MILES
BASIC DISCHARGE (Q100)	= 750 C.F.S
BASIC HIGH WATER ELEVATION	= 47.2'

OVERTOPPING FLOOD DATA

OVERTOPPING DISCHARGE	= 815 ± C.F.S.
FREQUENCY OF OVERTOPPING FLOOD	= 100 + YEARS
OVERTOPPING FLOOD ELEVATION	= 47.78'

STRUCTURE QUANTITIES (STAGE I)

CLASS A CONCRETE

BARREL @ 1.151 CY/FT 40.3 C.Y.

WINGS ETC. 11.7 C.Y.

TOTAL 52.0 C.Y.

EPOXY COATED REINFORCING STEEL

BARREL 6066 LBS.

WINGS ETC. 721 LBS.

TOTAL 6787 LBS.

FOUNDATION COND. MAT'L. ---------- 28 TONS

STRUCTURE QUANTITIES (STAGE II)

CLASS A CONCRETE

BARREL @ 1.151 CY/FT 27.1 C.Y.

WINGS ETC. 11.7 C.Y.

TOTAL 38.8 C.Y.

EPOXY COATED REINFORCING STEEL

BARREL 4021 LBS.

WINGS ETC. 721 LBS.

TOTAL 4742 LBS.

FOUNDATION COND. MAT'L. ---------- 19 TONS

TOTAL STRUCTURE QUANTITIES

CLASS A CONCRETE

STAGE I 52.0 C.Y.

STAGE II 38.8 C.Y.

TOTAL 90.8 C.Y.

EPOXY COATED REINFORCING STEEL

STAGE I 6787 LBS.

STAGE II 4742 LBS.

TOTAL 11529 LBS.

CULVERT EXCAVATION ---------- LUMP SUM

FOUNDATION COND. MAT'L.

STAGE I 28 TONS

STAGE II 19 TONS

TOTAL 47 TONS

NOTES

ASSUMED LIVE LOAD ----------HS20-44 OR ALTERNATE LOADING.

DESIGN FILL---------- 3.07'

FOR OTHER DESIGN DATA AND NOTES SEE STANDARD NOTE SHEET.

3"Ø WEEP HOLES INDICATED TO BE IN ACCORDANCE WITH THE SPECIFICATIONS.

CONCRETE IN CULVERT TO BE POURED IN THE FOLLOWING ORDER:

1. STAGE ONE WING FOOTINGS AND FLOOR SLAB INCLUDING 4" OF ALL VERTICAL WALLS.
2. THE REMAINING PORTIONS OF THE STAGE ONE WALLS AND WINGS FULL HEIGHT FOLLOWED BY ROOF SLAB AND HEADWALL.
3. STAGE TWO WING FOOTINGS AND FLOOR SLAB INCLUDING 4" OF ALL VERTICAL WALLS.
4. THE REMAINING PORTIONS OF THE STAGE TWO WALLS AND WINGS FULL HEIGHT FOLLOWED BY ROOF SLAB AND HEADWALL.

ALL BAR SUPPORTS USED IN THE CULVERT AND ALL INCIDENTAL REINFORCING STEEL SHALL BE EPOXY COATED IN ACCORDANCE WITH THE STANDARD SPECIFICATIONS.

THE RESIDENT ENGINEER SHALL CHECK THE LENGTH OF CULVERT BEFORE STAKING IT OUT TO MAKE CERTAIN THAT IT WILL PROPERLY TAKE CARE OF THE FILL.

DIMENSIONS FOR WING LAYOUT AS WELL AS ADDITIONAL REINFORCING STEEL EMBEDDED IN BARREL ARE SHOWN ON WING SHEET.

FOR CULVERT DIVERSION DETAILS AND PAY ITEM, SEE EROSION CONTROL PLANS.

A 3 FOOT STRIP OF FILTER FABRIC SHALL BE ATTACHED TO THE FILL FACE OF THE WING COVERING THE ENTIRE LENGTH OF THE EXPANSION JOINT.

FOR MAINTENANCE OF TRAFFIC, SEE TRAFFIC CONTROL PLANS.

FOR FALSEWORK AND FORMWORK, SEE SPECIAL PROVISIONS.

FOR SUBMITTAL OF WORKING DRAWINGS, SEE SPECIAL PROVISIONS.

AFTER SERVING AS A TEMPORARY STRUCTURE, THE EXISTING 1 @ 6 FT. × 4 FT. REINFORCED CONCRETE BOX CULVERT LOCATED AT THE PROPOSED SITE SHALL BE REMOVED. PAYMENT FOR THE REMOVAL OF EXISTING STRUCTURE SHALL BE CONSIDERED INCIDENTAL TO CULVERT EXCAVATION.

FOR CRANE SAFETY, SEE SPECIAL PROVISIONS.

NO PRECAST REINFORCED BOX CULVERT OPTION WILL BE ALLOWED.

AT THE CONTRACTORS OPTION, HE MAY SPLICE THE VERTICAL REINFORCING STEEL IN THE INTERIOR FACE OF EXTERIOR WALL ABOVE LOWER WALL CONSTRUCTION JOINT. THE SPLICE LENGTH SHALL BE AS PROVIDED IN THE SPLICE LENGTH CHART SHOWN ON THE PLANS. EXTRA WEIGHT OF STEEL DUE TO THE SPLICES SHALL BE PAID FOR BY THE CONTRACTOR.

TRAFFIC ON NC 211 SHALL BE MAINTAINED. IN ORDER TO MAINTAIN TRAFFIC THE CULVERT SHALL BE CONSTRUCTED IN SECTIONS AS DIRECTED BY THE ENGINEER.

FOR LIMITS OF TEMPORARY SHORING, BARRIER SUPPORTED, SEE TRAFFIC CONTROL PLANS. FOR PAY ITEM FOR TEMPORARY SHORING, BARRIER SUPPORTED, SEE ROADWAY PLANS.

THE CONTRACTOR SHALL PROVIDE INDEPENDENT ASSURANCE SAMPLES OF REINFORCING STEEL AS FOLLOWS: FOR PROJECTS REQUIRING UP TO 400 TONS OF REINFORCING STEEL, ONE 30 INCH SAMPLE OF EACH SIZE BAR USED, AND FOR PROJECTS REQUIRING OVER 400 TONS OF REINFORCING STEEL, TWO 30 INCH SAMPLES OF EACH SIZE BAR USED. THE BARS FROM WHICH THE SAMPLES ARE TAKEN MUST THEN BE SPLICED WITH REPLACEMENT BARS OF THE SIZE AND LENGTH OF THE SAMPLE, PLUS A MINIMUM LAP SPLICE OF THIRTY BAR DIAMETERS.

PROJECT NO. R-2245

BRUNSWICK COUNTY

STATION: 23+98.00 -Y7-

SHEET 1 OF 4

NORTH CAROLINA PROFESSIONAL SEAL 12274 ENGINEER OMAR R. AZIZ
1/11/07

NORTH CAROLINA PROFESSIONAL SEAL 025516 ENGINEER EMILY E. MURRAY
1/11/07

STATE OF NORTH CAROLINA
DEPARTMENT OF TRANSPORTATION
RALEIGH

SINGLE 10 FT. X 8 FT. CONCRETE BOX CULVERT 90° SKEW

REVISIONS						SHEET NO.
NO.	BY:	DATE:	NO.	BY:	DATE:	C-1
1			3			TOTAL SHEETS
2			4			4

ASSEMBLED BY : C.R. MCDUFFEE	DATE : 5/15/06	SPECIAL
CHECKED BY : T.L. AVERETTE	DATE : 5/15/06	
DRAWN BY : R.W. WRIGHT	DATE : AUG. 1989	STANDARD
CHECKED BY : A.R. BISSETTE	DATE : AUG. 1989	

SID NO. CB11A

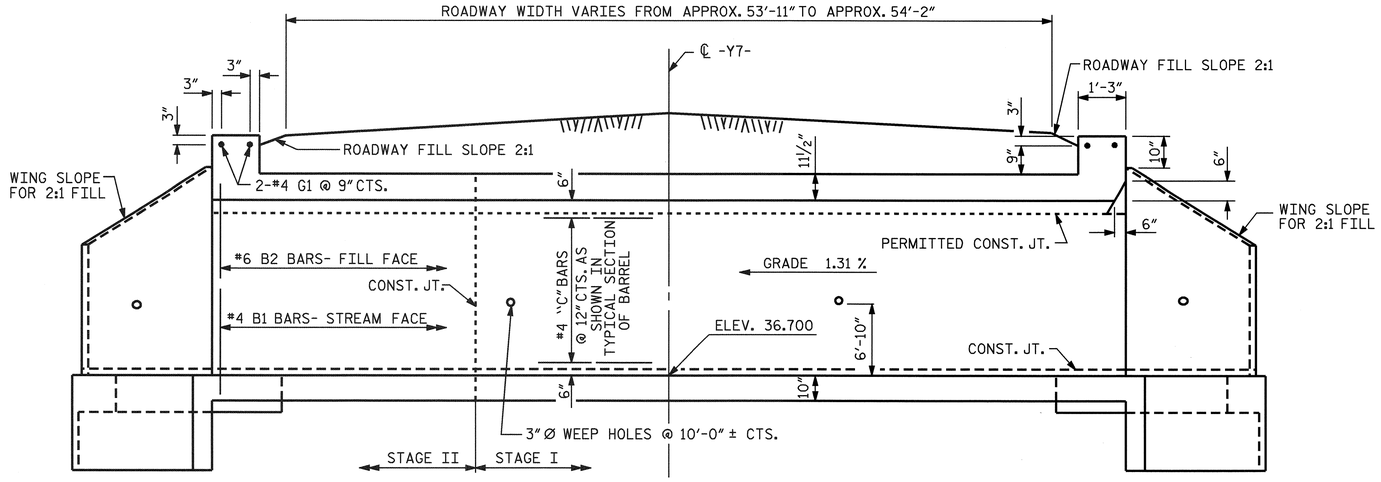

CULVERT SECTION NORMAL TO ROADWAY

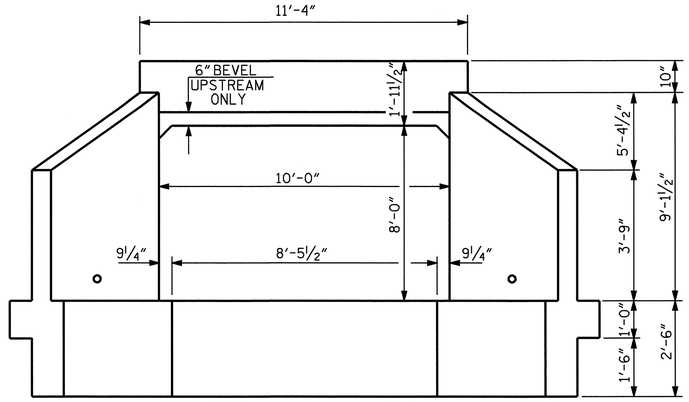

END ELEVATION

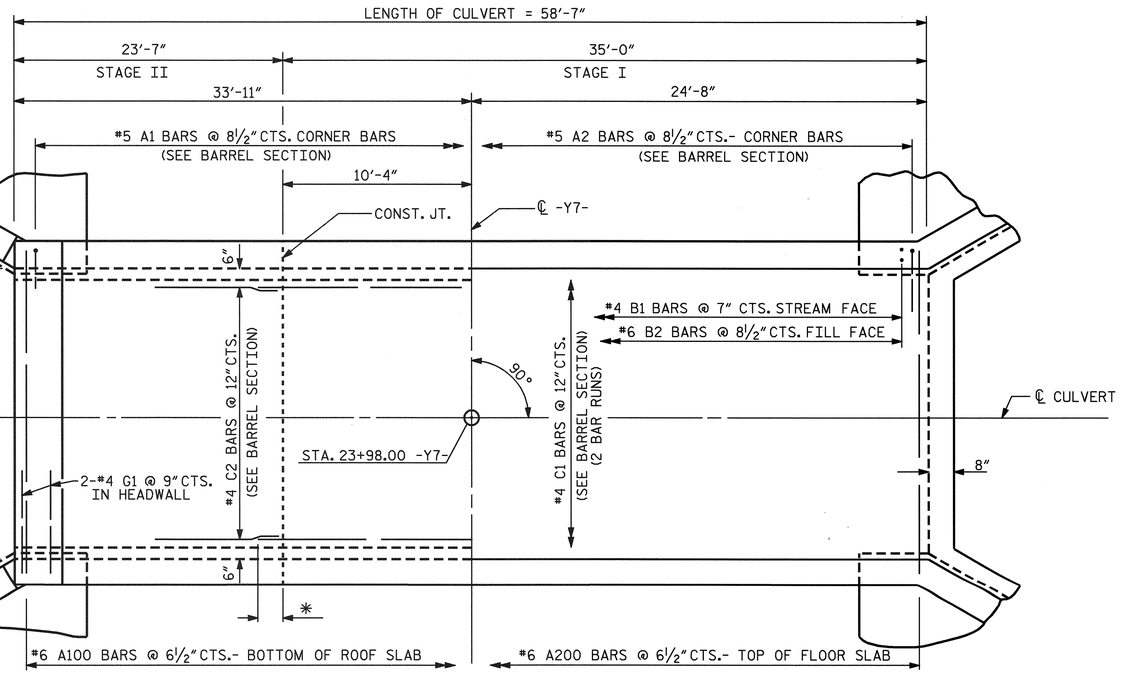

PART PLAN ROOF SLAB

PART PLAN FLOOR SLAB

* C1 BARS TO PROJECT 2'-6" INTO STAGE II TO ALLOW FOR A 2'-4" MINIMUM SPLICE (TYP. EA. C1 BAR)

ASSEMBLED BY : C.R. MCDUFFEE DATE : 5/15/06 CHECKED BY : T.L. AVERETTE DATE : 5/15/06	SPECIAL
DRAWN BY : R. WRIGHT DATE : AUG. 1989 CHECKED BY : A.R. BISSETTE DATE : AUG. 1989	STANDARD

PROJECT NO. R-2245
BRUNSWICK COUNTY
STATION: 23+98.00 -Y7-

SHEET 2 OF 4

STATE OF NORTH CAROLINA
DEPARTMENT OF TRANSPORTATION
RALEIGH

SINGLE 10 FT. X 8 FT. CONCRETE BOX CULVERT 90° SKEW

REVISIONS						SHEET NO.
NO.	BY:	DATE:	NO.	BY:	DATE:	C-2
1			3			TOTAL SHEETS
2			4			4

NORTH CAROLINA PROFESSIONAL SEAL 025516 ENGINEER EMILY E. MURRAY
9/28/06

STD. NO. CB11

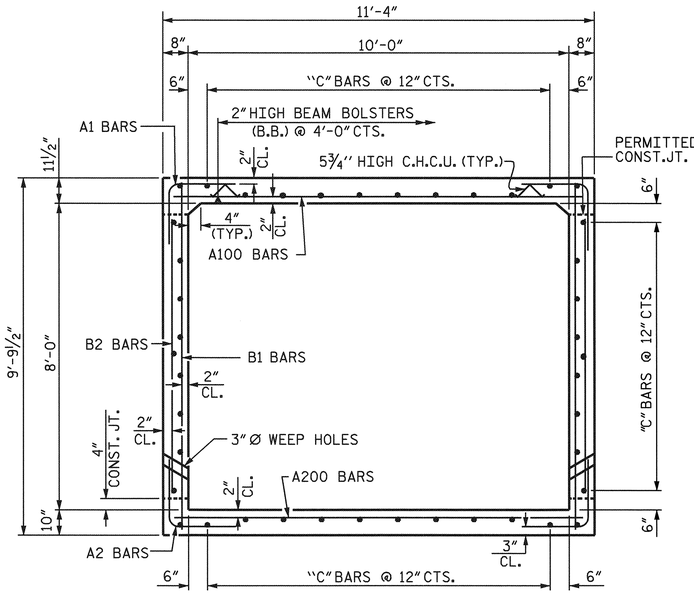

RIGHT ANGLE SECTION OF BARREL

THERE ARE 42 "C" BARS IN SECTION OF BARREL

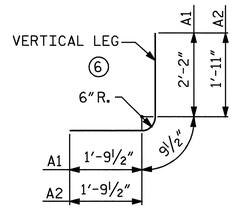

BAR TYPE

DIMENSIONS ARE OUT TO OUT

REINFORCING STEEL SCHEDULE FOR CULVERT BARREL											
STAGE I						STAGE II					
BAR	NO.	SIZE	TYPE	LENGTH	WEIGHT	BAR	NO.	SIZE	TYPE	LENGTH	WEIGHT
✳ A1	100	#5	6	4′-9″	495	✳ A1	68	#5	6	4′-9″	337
✳ A2	100	#5	6	4′-6″	469	✳ A2	68	#5	6	4′-6″	319
✳ A100	65	#6	STR	10′-11″	1066	✳ A100	44	#6	STR	10′-11″	721
✳ A200	65	#6	STR	10′-11″	1066	✳ A200	44	#6	STR	10′-11″	721
✳ B1	120	#4	STR	9′-3″	741	✳ B1	82	#4	STR	9′-3″	507
✳ B2	100	#6	STR	7′-4″	1101	✳ B2	68	#6	STR	7′-4″	749
✳ C1	84	#4	STR	19′-10″	1113	✳ C2	42	#4	STR	23′-3″	652
✳ G1	2	#4	STR	11′-0″	15	✳ G1	2	#4	STR	11′-0″	15
✳ EPOXY COATED REINFORCING STEEL FOR BARREL (STAGE I) 6066 LBS.						✳ EPOXY COATED REINFORCING STEEL FOR BARREL (STAGE II) 4021 LBS.					

SPLICE CHART		
BAR	SIZE	SPLICE LENGTH
✳ B1	#4	2′-0″
✳ "C"	#4	2′-4″

PROJECT NO. R-2245

BRUNSWICK COUNTY

STATION: 23+98.00 -Y7-

SHEET 3 OF 4

STATE OF NORTH CAROLINA
DEPARTMENT OF TRANSPORTATION
RALEIGH

SINGLE 10 FT. X 8 FT. CONCRETE BOX CULVERT 90° SKEW

NORTH CAROLINA PROFESSIONAL SEAL 025516 ENGINEER DARY E. MURRAY

9/28/06

REVISIONS						SHEET NO.
NO.	BY:	DATE:	NO.	BY:	DATE:	C-3
1			3			TOTAL SHEETS
2			4			4

ASSEMBLED BY : C.R.MCDUFFEE DATE : 5/15/06
CHECKED BY : T.L.AVERETTE DATE : 5/15/06

DRAWN BY : CCJ 10/99
CHECKED BY : RWW 03/00

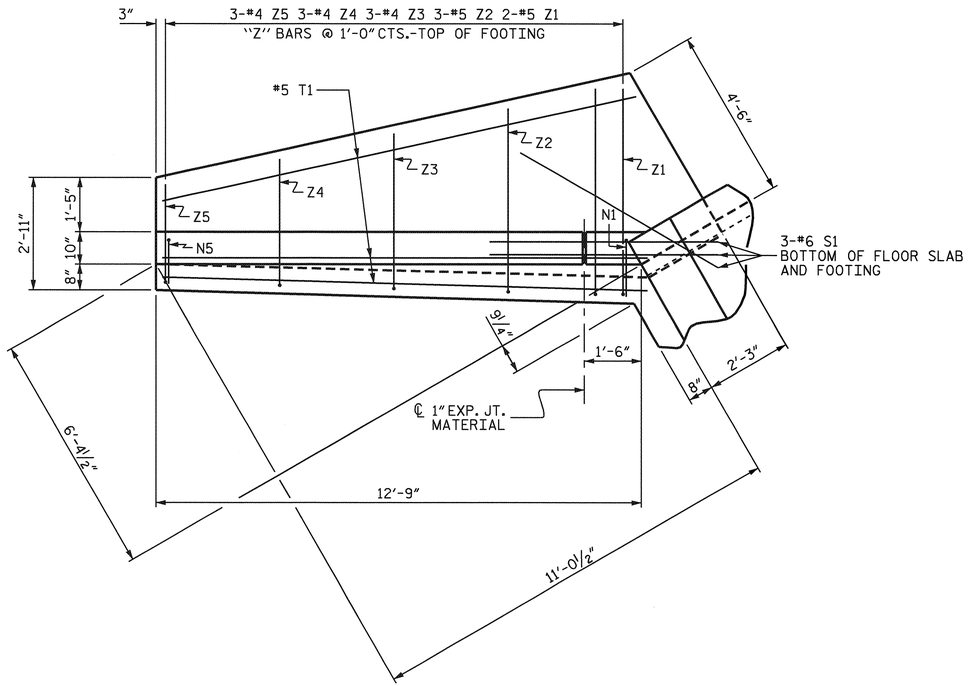

PLAN

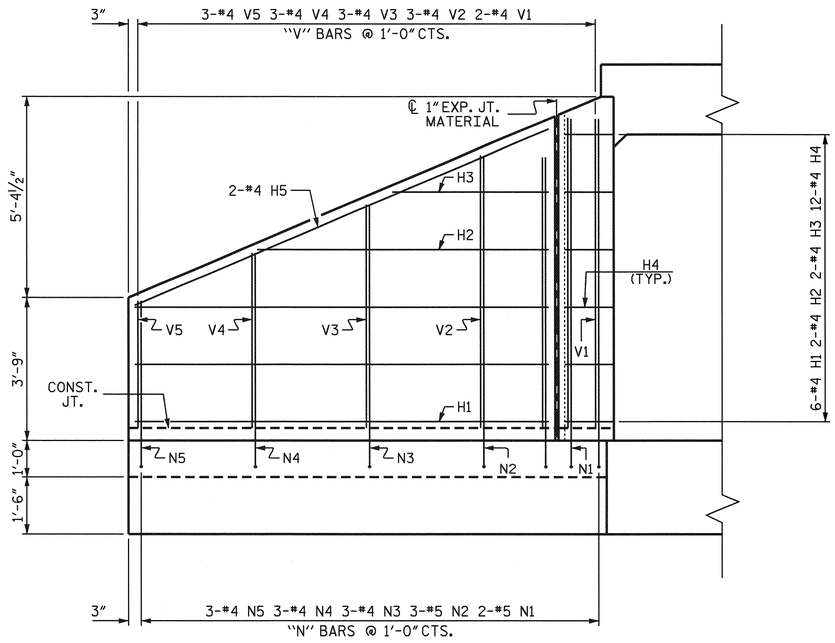

ELEVATION

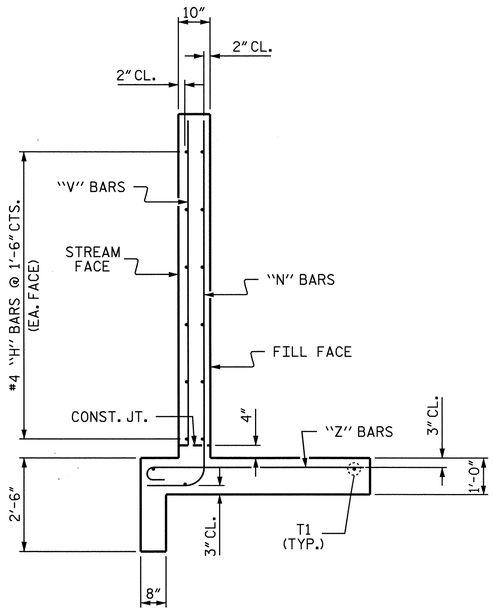

WING SECTION

BAR TYPES

ALL BAR DIMENSIONS ARE OUT TO OUT.

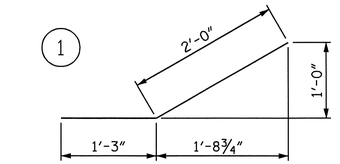

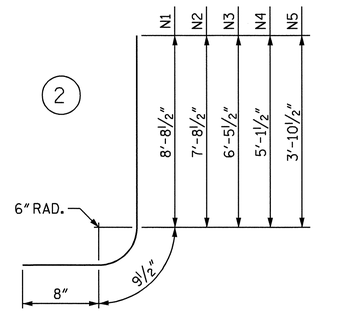

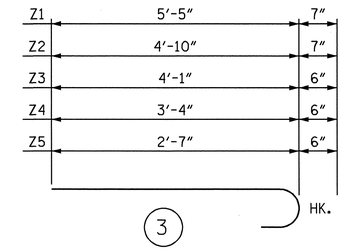

BILL OF MATERIAL FOR TWO WINGS

BAR	NO.	SIZE	TYPE	LENGTH	WEIGHT
✳H1	12	#4	STR	10'-10"	87
✳H2	4	#4	STR	7'-8"	20
✳H3	4	#4	STR	4'-1"	11
✳H4	24	#4	1	3'-3"	52
✳H5	4	#4	STR	11'-9"	31
✳N1	4	#5	2	10'-2"	42
✳N2	6	#5	2	9'-2"	57
✳N3	6	#4	2	7'-11"	32
✳N4	6	#4	2	6'-7"	26
✳N5	6	#4	2	5'-4"	21
✳S1	6	#6	STR	6'-0"	54
✳T1	6	#5	STR	12'-9"	80
✳V1	4	#4	STR	8'-1"	22
✳V2	6	#4	STR	7'-1"	28
✳V3	6	#4	STR	5'-10"	23
✳V4	6	#4	STR	4'-7"	18
✳V5	6	#4	STR	3'-4"	13
✳Z1	4	#5	3	6'-0"	25
✳Z2	6	#5	3	5'-5"	34
✳Z3	6	#4	3	4'-7"	18
✳Z4	6	#4	3	3'-10"	15
✳Z5	6	#4	3	3'-1"	12

✳EPOXY COATED REINFORCING STEEL FOR 2 WINGS 721 LBS

CLASS A CONCRETE
2 WINGS 10.7 CY
1 HEADWALL 0.5 CY
1 END CURTAIN WALL 0.5 CY
TOTAL 11.7 CY

ASSEMBLED BY : C.R.MCDUFFEE DATE : 5/15/06
CHECKED BY : T.L.AVERETTE DATE : 5/15/06

DRAWN BY : CCJ 10/99
CHECKED BY : RWW 03/00

NORTH CAROLINA PROFESSIONAL SEAL 025516 ENGINEER EMILY E. MURRAY
Emily E. Murray 9/28/06

PROJECT NO. R-2245
BRUNSWICK COUNTY
STATION: 23+98.00 -Y7-

SHEET 4 OF 4

STATE OF NORTH CAROLINA
DEPARTMENT OF TRANSPORTATION
RALEIGH

WINGS FOR CONCRETE BOX CULVERT

H = 8'-0" SLOPE = 2:1
90° SKEW

REVISIONS						SHEET NO.
NO.	BY:	DATE:	NO.	BY:	DATE:	C-4
1			3			TOTAL SHEETS
2			4			4

STD. NO. CW9008

BENCH MARK IS #202 RRS SET IN 12" OAK, 212.74' LT OF 54+37.88, EL.= 22.35' & #204 RRS IN 12" OAK, 595.94' RT OF -L- STA. 61+60.20, EL.= 29.92'

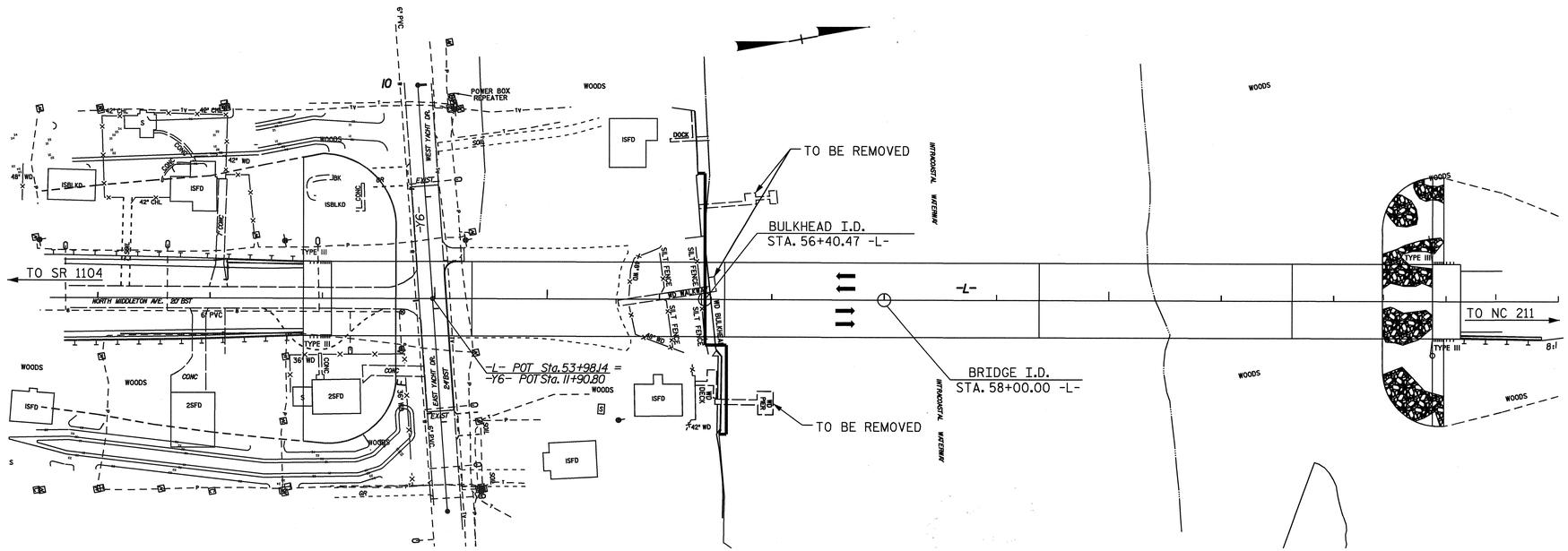

LOCATION SKETCH

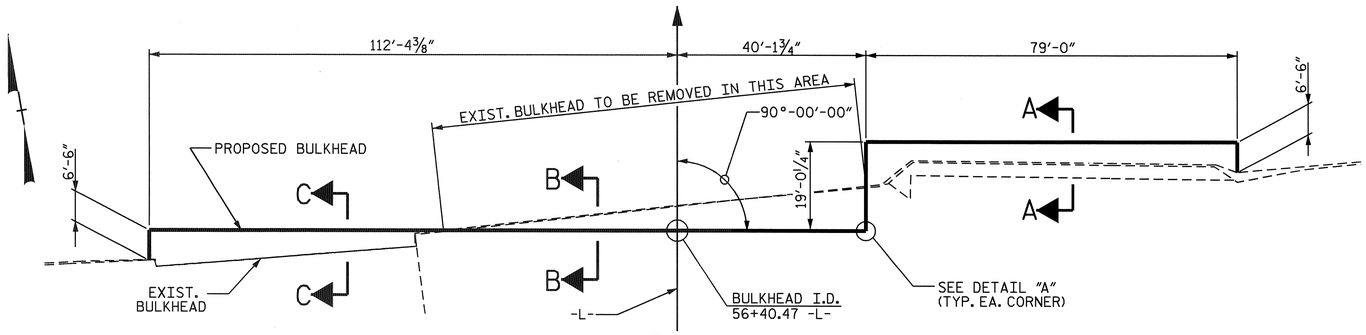

PLAN

FOR SECTIONS, SEE SHEET 2 OF 2.

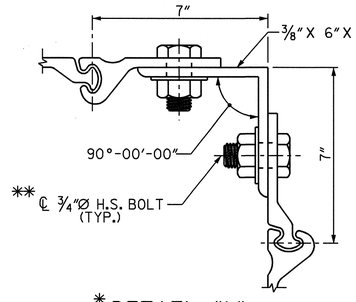

* DETAIL "A"

(TYPICAL EACH CORNER)

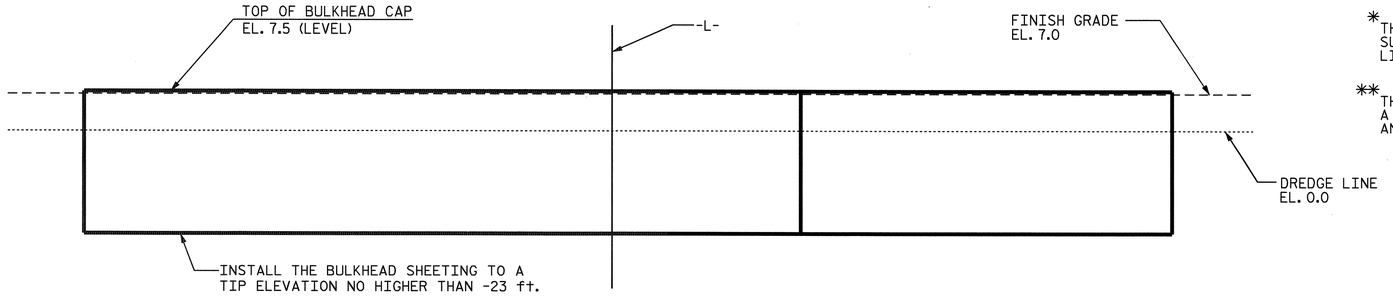

ELEVATION

* THE CONTRACTOR HAS THE OPTION TO SUBMIT AN APPROVED ALTERNATE IN LIEU OF THE DETAIL SHOWN.

** THE ¾"Ø BOLTS ARE ASTM A325 WITH A SPACING OF 6". THE LAST 2FT. AT TOP AND BOTTOM SHALL BE SPACED AT 3".

F.A. PROJ. NO.: STP-1105 (17)

NOTES

FOR STEEL SHEET PILE BULKHEAD, SEE SPECIAL PROVISIONS.

FOR REMOVAL OF EXISTING STRUCTURES, SEE SPECIAL PROVISIONS.

FOR CRANE SAFETY, SEE SPECIAL PROVISIONS.

FOR FALSEWORK AND FORMWORK, SEE SPECIAL PROVISIONS.

FOR SUBMITTAL OF WORKING DRAWINGS, SEE SPECIAL PROVISIONS.

THE BULKHEAD SHALL BE CONSTRUCTED IN ACCORDANCE WITH SECTION 452 OF THE STANDARD SPECIFICATIONS.

THE BULKHEAD WILL BE MEASURED AND PAID AS THE ACTUAL NUMBER OF SQUARE FEET OF EXPOSED FACE AREA INCORPORATED INTO THE COMPLETED BULKHEAD. THE BULKHEAD HEIGHT IS MEASURED AS THE DIFFERENCE BETWEEN THE TOP AND BOTTOM OF THE BULKHEAD. THE TOP OF THE BULKHEAD IS DEFINED AS THE TOP OF THE CONCRETE CAP. THE BOTTOM OF THE BULKHEAD IS DEFINED AS THE DREDGE LINE AT ELEVATION 0.0

CONSTRUCT TOP OF BULKHEAD CAP ELEVATION NO HIGHER THAN EL. 7.5.

CLASS AA CONCRETE SHALL BE USED IN THE CAST-IN-PLACE CAP AND SHALL CONTAIN CALCIUM NITRITE CORROSION INHIBITOR.

VERTICAL GROOVED CONTRACTION JOINTS, ½" IN DEPTH, SHALL BE TOOLED IN ALL EXPOSED FACES OF THE CONCRETE CAP AND SPACED A MAXIMUM OF 10 FEET.

INSTALL THE BULKHEAD SHEETING TO A TIP ELEVATION NO HIGHER THAN -23 ft.

STEEL SHEET PILING SHALL CONFORM TO THE REQUIREMENTS OF ASTM A690 AND SHALL BE GALVANIZED IN ACCORDANCE WITH THE STANDARD SPECIFICATIONS.

STEEL SHEET PILING SHALL BE HOT ROLLED.

MISCELLANEOUS MATERIALS USED TO CONSTRUCT THE CORNERS OF THE BULKHEAD SHALL CONFORM TO THE REQUIREMENTS OF ASTM A690 AND SHALL BE GALVANIZED IN ACCORDANCE WITH THE STANDARD SPECIFICATIONS.

FILL BEHIND THE PROPOSED BULKHEAD SHALL BE CLASS III BACKFILL.

THE FINISH GRADE OF THE BACK FILL SHALL BE GRADED TO PROVIDE ADEQUATE DRAINAGE AS DIRECTED BY THE ENGINEER.

THE SUBSTRUCTURE OF THE EXISTING BULKHEADS ON THE PLANS IS FROM THE BEST INFORMATION AVAILABLE. SINCE THIS INFORMATION IS SHOWN FOR THE CONVENIENCE OF THE CONTRACTOR, THE CONTRACTOR SHALL HAVE NO CLAIM WHATSOEVER AGAINST THE DEPARTMENT OF TRANSPORTATION FOR ANY DELAYS OR ADDITIONAL COST INCURRED BASED ON DIFFERENCES BETWEEN THE EXISTING BULKHEADS SHOWN ON THE PLANS AND THE ACTUAL CONDITIONS AT THE PROJECT SITE.

THE SCOUR CRITICAL ELEVATION FOR THE ABUTMENT WALL IS -5 ft. THE SCOUR CRITICAL ELEVATION IS USED BY MAINTENANCE FORCES TO MONITOR POSSIBLE SCOUR PROBLEMS DURING THE LIFE OF THE STRUCTURE.

TOTAL BILL OF MATERIAL

STEEL SHEET PILE BULKHEAD	1976 SQ. FT.
REMOVAL OF EXISTING STRUCTURES	LUMP SUM

PROJECT NO. R-2245

BRUNSWICK COUNTY

STATION: 56+40.47 -L-

SHEET 1 OF 2

STATE OF NORTH CAROLINA
DEPARTMENT OF TRANSPORTATION
RALEIGH

STEEL SHEET PILE BULKHEAD

NORTH CAROLINA PROFESSIONAL SEAL 12980 ENGINEER PAUL STEPHEN ERVIN

1-20-07

REVISIONS						SHEET NO.
NO.	BY:	DATE:	NO.	BY:	DATE:	W-1
1			3			TOTAL SHEETS
2			4			2

DRAWN BY : R.D. MARTIN DATE : 4/11/05
CHECKED BY : P.S. ERVIN DATE : 10/9/06

26-OCT-2006 10:15
S:\PG3\R-2245 Oak Island\Final Plans\R2245_sd_Bulkhead.dgn
bhanks

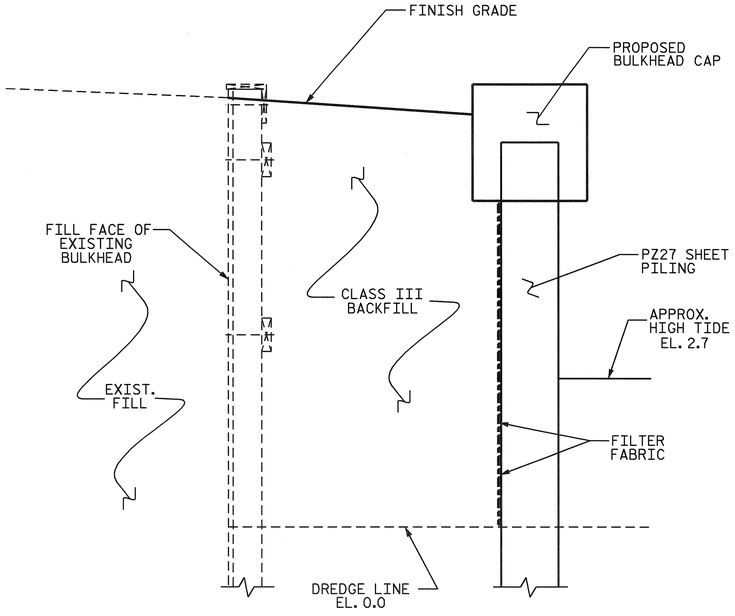

SECTION C-C

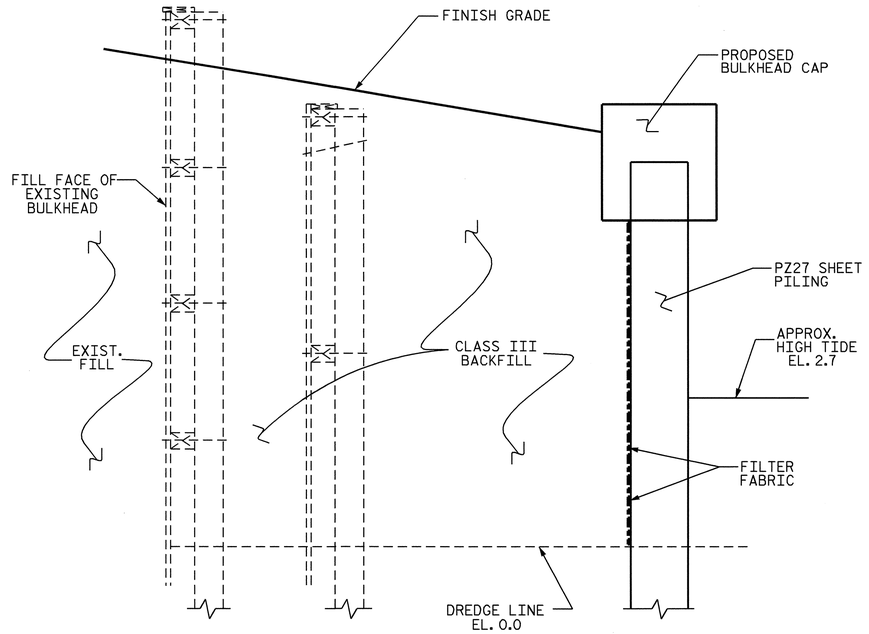

SECTION A-A

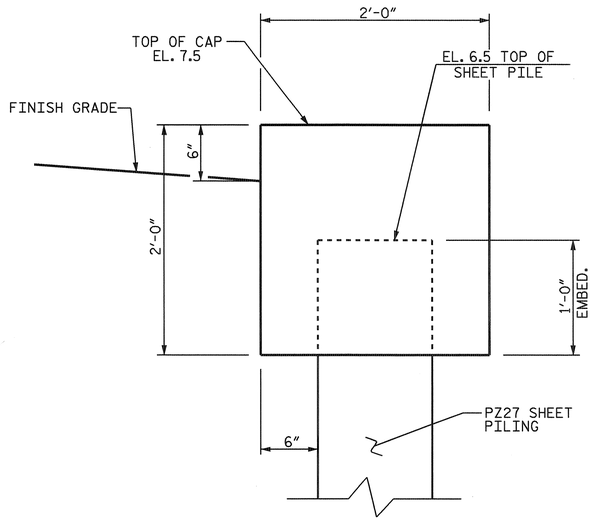

BULKHEAD CAP DETAIL

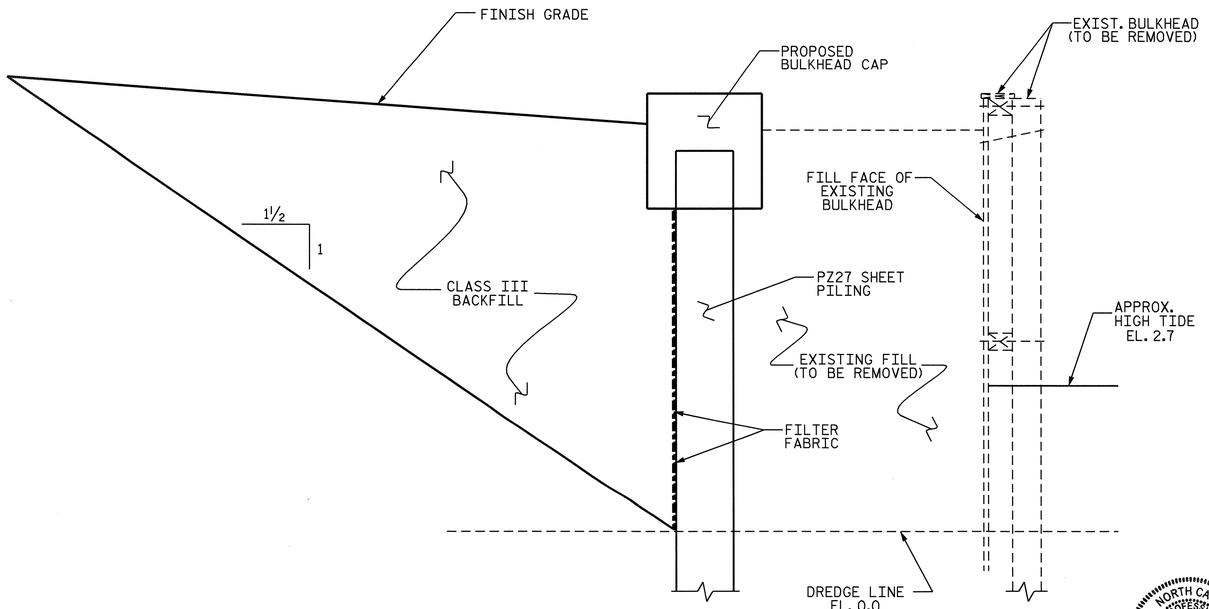

SECTION B-B

PROJECT NO. R-2245

BRUNSWICK COUNTY

STATION: 56+40.47 -L-

SHEET 2 OF 2

STATE OF NORTH CAROLINA
DEPARTMENT OF TRANSPORTATION
RALEIGH

STEEL SHEET PILE BULKHEAD

REVISIONS						SHEET NO.
NO.	BY:	DATE:	NO.	BY:	DATE:	W-2
1			3			TOTAL SHEETS
2			4			2

NORTH CAROLINA PROFESSIONAL SEAL 12960 ENGINEER PAUL STEPHEN ERVIN

1-20-07

DRAWN BY : R.D. MARTIN DATE : 4/11/05
CHECKED BY : P.S. ERVIN DATE : 10/9/06

26-OCT-2006 09:52
S:\PG3\R-2245 Oak Island\Final Plans\R2245_sd_Bulkhead.dgn
bhanks

STANDARD NOTES

DESIGN DATA:

SPECIFICATIONS	A.A.S.H.T.O. (CURRENT)
LIVE LOAD	SEE PLANS
IMPACT ALLOWANCE	SEE A.A.S.H.T.O.
STRESS IN EXTREME FIBER OF	
STRUCTURAL STEEL - AASHTO M270 GRADE 36	20,000 LBS. PER SQ. IN.
- AASHTO M270 GRADE 50W	27,000 LBS. PER SQ. IN.
- AASHTO M270 GRADE 50	27,000 LBS. PER SQ. IN.
REINFORCING STEEL IN TENSION	
GRADE 60	24,000 LBS. PER SQ. IN.
CONCRETE IN COMPRESSION	1,200 LBS. PER SQ. IN.
CONCRETE IN SHEAR	SEE A.A.S.H.T.O.
STRUCTURAL TIMBER - TREATED OR	
UNTREATED - EXTREME FIBER STRESS	1,800 LBS. PER SQ. IN.
COMPRESSION PERPENDICULAR TO GRAIN OF TIMBER	375 LBS. PER SQ. IN.
EQUIVALENT FLUID PRESSURE OF EARTH	30 LBS. PER CU. FT. (MINIMUM)

MATERIAL AND WORKMANSHIP:

EXCEPT AS MAY OTHERWISE BE SPECIFIED ON PLANS OR IN THE SPECIAL PROVISIONS, ALL MATERIAL AND WORKMANSHIP SHALL BE IN ACCORDANCE WITH THE 2002 STANDARD SPECIFICATIONS "FOR ROADS AND STRUCTURES" OF THE N. C. DEPARTMENT OF TRANSPORTATION.

STEEL SHEET PILING FOR PERMANENT OR TEMPORARY APPLICATIONS SHALL BE HOT ROLLED.

CONCRETE:

UNLESS OTHERWISE REQUIRED ON PLANS, CLASS A CONCRETE SHALL BE USED FOR ALL PORTIONS OF ALL STRUCTURES WITH THE EXCEPTION THAT: CLASS AA CONCRETE SHALL BE USED IN BRIDGE SUPERSTRUCTURES, ABUTMENT BACKWALLS, AND APPROACH SLABS; CLASS B CONCRETE SHALL BE USED FOR SLOPE PROTECTION AND RIP RAP; AND CLASS S SHALL BE USED FOR UNDERWATER FOOTING SEALS.

CONCRETE CHAMFERS:

UNLESS OTHERWISE NOTED ON THE PLANS, ALL EXPOSED CORNERS ON STRUCTURES SHALL BE CHAMFERED 3/4" WITH THE FOLLOWING EXCEPTIONS: TOP CORNERS OF CURBS MAY BE ROUNDED TO 1-1/2" RADIUS WHICH IS BUILT INTO CURB FORMS; CORNERS OF TRANSVERSE FLOOR EXPANSION JOINTS SHALL BE ROUNDED WITH A 1/4" FINISHING TOOL UNLESS OTHERWISE REQUIRED ON PLANS; AND CORNERS OF EXPANSION JOINTS IN THE ROADWAY FACES AND TOPS OF CURBS AND SIDEWALKS SHALL BE ROUNDED TO A 1/4" RADIUS WITH A FINISHING STONE OR TOOL UNLESS OTHERWISE REQUIRED ON PLANS.

DOWELS:

DOWELS WHEN INDICATED ON PLANS AS FOR CULVERT EXTENSIONS, SHALL BE EMBEDDED AT LEAST 12" INTO THE OLD CONCRETE AND GROUTED INTO PLACE WITH 1:2 CEMENT MORTAR.

ALLOWANCE FOR DEAD LOAD DEFLECTION, SETTLEMENT, ETC. IN CASTING SUPERSTRUCTURES:

BRIDGES SHALL BE BUILT ON THE GRADE OR VERTICAL CURVE SHOWN ON PLANS. SLABS, CURBS AND PARAPETS SHALL CONFORM TO THE GRADE OR CURVE.

ALL DIMENSIONS WHICH ARE GIVEN IN SECTION AND ARE AFFECTED BY DEAD LOAD DEFLECTIONS ARE DIMENSIONS AT CENTER LINE OF BEARING UNLESS OTHERWISE NOTED ON PLANS. IN SETTING FORMS FOR STEEL BEAM BRIDGES AND PRESTRESSED CONCRETE GIRDER BRIDGES, ADJUSTMENTS SHALL BE MADE DUE TO THE DEAD LOAD DEFLECTIONS FOR THE ELEVATIONS SHOWN. WHERE BLOCKS ARE SHOWN OVER BEAMS FOR BUILDING UP TO THE SLAB, THE VERTICAL DIMENSIONS OF THE BLOCKS SHALL BE ADJUSTED BETWEEN BEARINGS TO COMPENSATE FOR DEAD LOAD DEFLECTIONS, VERTICAL CURVE ORDINATE, AND ACTUAL BEAM CAMBER. WHERE BOTTOM OF SLAB IS IN LINE WITH BOTTOM OF TOP FLANGES, DEPTH OF SLAB BETWEEN BEARINGS SHALL BE ADJUSTED TO COMPENSATE FOR DEAD LOAD DEFLECTION, VERTICAL CURVE ORDINATE, AND ACTUAL BEAM CAMBER.

IN SETTING FALSEWORK AND FORMS FOR REINFORCED CONCRETE SPANS, AN ALLOWANCE SHALL BE MADE FOR DEAD LOAD DEFLECTIONS, SETTLEMENT OF FALSEWORK, AND PERMANENT CAMBER WHICH SHALL BE PROVIDED FOR IN ADDITION TO THE ELEVATIONS SHOWN. AFTER REMOVAL OF THE FALSEWORK, THE FINISHED STRUCTURES SHALL CONFORM TO THE PROFILE AND ELEVATIONS SHOWN ON THE PLANS AND CONSTRUCTION ELEVATIONS FURNISHED BY THE ENGINEER.

DETAILED DRAWINGS FOR FALSEWORK OR FORMS FOR BRIDGE SUPERSTRUCTURE AND ANY STRUCTURE OR PARTS OF A STRUCTURE AS NOTED ON THE PLANS SHALL BE SUBMITTED TO THE ENGINEER FOR APPROVAL BEFORE CONSTRUCTION OF THE FALSEWORK OR FORMS IS STARTED.

REINFORCING STEEL:

ALL REINFORCING STEEL SHALL BE DEFORMED WITH THE EXCEPTION OF #2 BARS WHICH MAY BE FABRICATED FROM COLD DRAWN STEEL WIRE. DIMENSIONS RELATIVE TO PLACEMENT OF REINFORCING ARE TO CENTERS OF BARS UNLESS OTHERWISE INDICATED IN THE PLANS. DIMENSIONS ON BAR DETAILS ARE TO CENTERS OF BARS OR ARE OUT TO OUT AS INDICATED ON PLANS.

WIRE BAR SUPPORTS SHALL BE PROVIDED FOR REINFORCING STEEL WHERE INDICATED ON THE PLANS. WHEN BAR SUPPORT PIECES ARE PLACED IN CONTINUOUS LINES, THEY SHALL BE SO PLACED THAT THE ENDS OF THE SUPPORTING WIRES SHALL BE LAPPED TO LOCK LEGS ON ADJOINING PIECES.

STRUCTURAL STEEL:

AT THE CONTRACTOR'S OPTION, HE MAY SUBSTITUTE 7/8" Ø SHEAR STUDS FOR THE 3/4" Ø STUDS SPECIFIED ON THE PLANS. THIS SUBSTITUTION SHALL BE MADE AT THE RATE OF 3 - 7/8" Ø STUDS FOR 4 - 3/4" Ø STUDS, AND STUD SPACING CHANGES SHALL BE MADE AS NECESSARY TO PROVIDE THE SAME EQUIVALENT NUMBER OF 7/8" Ø STUDS ALONG THE BEAM AS SHOWN FOR 3/4" Ø STUDS BASED ON THE RATIO OF 3 - 7/8" Ø STUDS FOR 4 - 3/4" Ø STUDS. STUDS OF THE LENGTH SPECIFIED ON THE PLANS MUST BE PROVIDED. THE MAXIMUM SPACING SHALL BE 2'-0".

EXCEPT AT THE INTERIOR SUPPORTS OF CONTINUOUS BEAMS WHERE THE COVER PLATE IS IN CONTACT WITH BEARING PLATE, THE CONTRACTOR MAY, AT HIS OPTION, SUBSTITUTE FOR THE COVER PLATES DESIGNATED ON THE PLANS COVER PLATES OF THE EQUIVALENT AREA PROVIDED THESE PLATES ARE AT LEAST 5/16" IN THICKNESS AND DO NOT EXCEED A WIDTH EQUAL TO THE FLANGE WIDTH LESS 2" OR A THICKNESS EQUAL TO 2 TIMES THE FLANGE THICKNESS. THE SIZE OF FILLET WELDS SHALL CONFORM TO THE REQUIREMENTS OF THE CURRENT ANSI/AASHTO/AWS "BRIDGE WELDING CODE". ELECTROSLAG WELDING WILL NOT BE PERMITTED.

PLACEMENT OF BEAM OR GIRDER MEMBERS ON TRUCKS FOR HAULING SHALL BE DONE IN COMPLIANCE WITH LIMITS SHOWN ON SKETCHES PROVIDED TO THE MATERIALS AND TEST UNIT APPROVED BY THE STRUCTURE DESIGN UNIT DATED MAY 8, 1991. THESE SKETCHES PRIMARILY LIMIT THE UNSUPPORTED CANTILEVER LENGTH OF MEMBERS. WHEN THE CONTRACTOR WISHES TO PLACE MEMBERS ON TRUCKS NOT IN ACCORDANCE WITH THESE LIMITS, TO SHIP BY RAIL, TO ATTACH SHIPPING RESTRAINTS TO THE MEMBERS OR TO INVERT MEMBERS, HE SHALL SUBMIT A SKETCH FOR APPROVAL PRIOR TO SHIPPING. SEE ALSO ARTICLE 1072-11.

WITH THE SOLE EXCEPTION OF EDGES AT SURFACES WHICH BEAR ON OTHER SURFACES, ALL SHARP EDGES AND ENDS OF SHAPES AND PLATES SHALL BE SLIGHTLY ROUNDED BY SUITABLE MEANS TO A RADIUS OF APPROXIMATELY 1/16 INCH OR EQUIVALENT FLAT SURFACE AT A SUITABLE ANGLE PRIOR TO PAINTING, GALVANIZING, OR METALLIZING.

HANDRAILS AND POSTS:

METAL STANDARDS AND FACES OF THE CONCRETE END POSTS FOR THE METAL RAIL SHALL BE SET NORMAL TO THE GRADE OF THE CURB, UNLESS OTHERWISE SHOWN ON PLANS. THE METAL RAIL AND TOPS OF CONCRETE POSTS USED WITH THE ALUMINUM RAIL SHALL BE BUILT PARALLEL TO THE GRADE OF THE CURB.

METAL HANDRAILS SHALL BE IN ACCORDANCE WITH THE PLANS. RAILS SHALL BE AS MANUFACTURED FOR BRIDGE RAILING. CASTINGS SHALL BE OF A UNIFORM APPEARANCE. FINS AND OTHER DEFORMATIONS RESULTING FROM CASTING OR OTHERWISE SHALL BE REMOVED IN A MANNER SO THAT A UNIFORM COLORING OF THE COMPLETED CASTING SHALL BE OBTAINED. CASTINGS WITH DISCOLORATIONS OR OF NON-UNIFORM COLORING WILL NOT BE ACCEPTED. CERTIFIED MILL REPORTS ARE REQUIRED FOR METAL RAILS AND POSTS.

SPECIAL NOTES:

GENERALLY, IN CASE OF DISCREPANCY, THIS STANDARD SHEET OF NOTES SHALL GOVERN OVER THE SPECIFICATIONS, BUT THE REMAINDER OF THE PLANS SHALL GOVERN OVER NOTES HEREON, AND SPECIAL PROVISIONS SHALL GOVERN OVER ALL. SEE SPECIFICATIONS ARTICLE 105-4.

ENGLISH

JANUARY, 1990