WBS: 37857 & 37645

CONTRACT: C201781

See Sheet 1-A For Index of Sheets
See Sheet 1-B For Conventional Symbols

STATE	STATE PROJECT REFERENCE NO.	SHEET NO.	TOTAL SHEETS
N.C.	37857 & 37645	1	

STATE PROJ. NO.	F. A. PROJ. NO.	DESCRIPTION
37857		PE, R/W, UTIL
37645		PE, R/W, UTIL

STATE OF NORTH CAROLINA
DIVISION OF HIGHWAYS

McDOWELL COUNTY

LOCATION: 37857 – NC 226 FROM EAST OF US 221 TO CSX RAILROAD
37645 – NC 226 FROM CSX RAILROAD TO EAST OF SR 1794

TYPE OF WORK: GRADING, PAVING, DRAINAGE, CULVERT, & RETAINING WALL

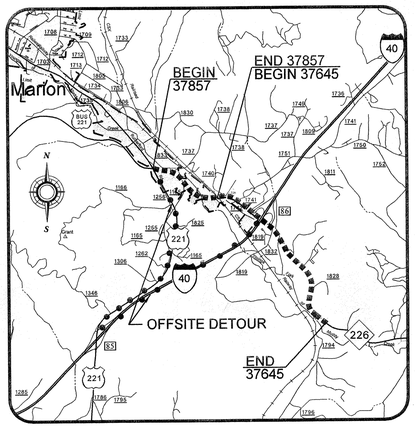

VICINITY MAP

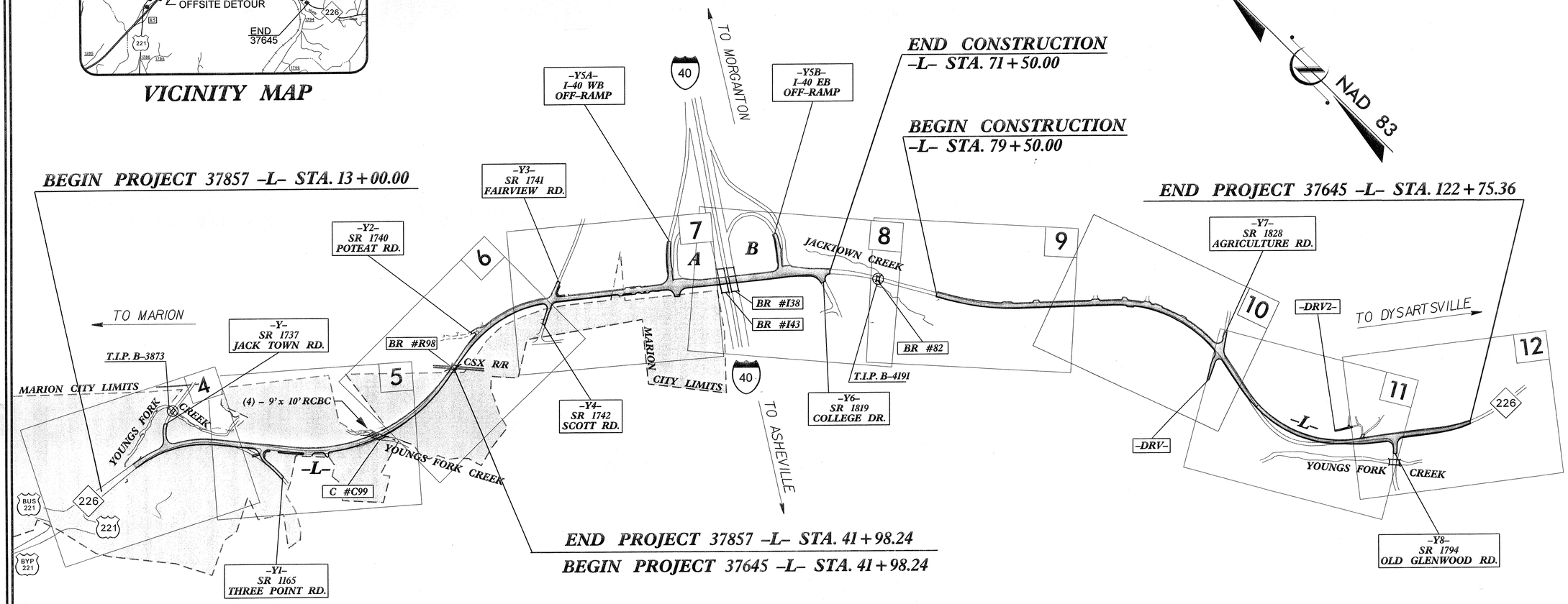

DESIGN EXCEPTION FOR VERTICAL ALIGNMENT AND HORIZONTAL CLEARANCE.

GRAPHIC SCALES

50 0 50 100
PLANS

50 0 50 100
PROFILE (HORIZONTAL)

5 0 5 10
PROFILE (VERTICAL)

DESIGN DATA

ADT 2005 = 8,500 – 14,000
V = 50 MPH
TTST 9% DUAL 5%

PROJECT LENGTH

LENGTH ROADWAY PROJECT 37857	0.538 MILES
LENGTH STRUCTURE PROJECT 37857	0.011 MILES
TOTAL LENGTH PROJECT 37857	0.549 MILES
LENGTH ROADWAY PROJECT 37645	1.378 MILES
LENGTH STRUCTURE PROJECT 37645	0.000 MILES
TOTAL LENGTH PROJECT 37645	1.378 MILES
TOTAL LENGTHS PROJECTS 37645 & 37857 ...	1.927 MILES

PLANS PREPARED BY :
RUMMEL, KLEPPER & KAHL, LLP
consulting engineers
900 RIDGEFIELD DRIVE SUITE 350
RALEIGH, NORTH CAROLINA 27609
FOR
DIVISION OF HIGHWAYS

2006 STANDARD SPECIFICATIONS
RIGHT OF WAY DATE: JULY 25, 2005
LETTING DATE: APRIL 17, 2007

B. Keith Skinner, P.E.
PROJECT ENGINEER

Stephen E. Roberts, P.E.
PROJECT DESIGN ENGINEER

NCDOT CONTACT: Greg Shuler
Division Project Manager – Division 13

HYDRAULICS ENGINEER
NORTH CAROLINA PROFESSIONAL SEAL 18181 ENGINEER LINA H. SWEET
SIGNATURE: 11/8/06 P.E.

ROADWAY DESIGN ENGINEER
NORTH CAROLINA PROFESSIONAL SEAL 23982 ENGINEER STEPHEN E. ROBERTS
SIGNATURE: 11-8-06 Stephen E. Roberts P.E.

DIVISION OF HIGHWAYS
STATE OF NORTH CAROLINA

P.E.
DIVISION ENGINEER

PROJECT REFERENCE NO.	SHEET NO.
37645 & 37857	1A
R/W SHEET NO.	

ROADWAY DESIGN ENGINEER

NORTH CAROLINA PROFESSIONAL SEAL 23982 ENGINEER STEPHEN E. ROBERTS

Stephen Roberts 12-8-06

REVISIONS

INDEX OF SHEETS

SHEET NUMBER	SHEET
1	TITLE SHEET
1-A	INDEX OF SHEETS, GENERAL NOTES, AND LIST OF STANDARD DRAWINGS
1-B	CONVENTIONAL SYMBOLS
2 THRU 2-C	PAVEMENT SCHEDULE, TYPICAL SECTIONS, AND WEDGING DETAILS
2-D	DETAIL SHOWING CURB AND GUTTER ELEVATIONS
2-E	RETAINING WALL ENVELOPE
2-F	GRAVITY RETAINING WALL DETAIL
2-G	ROCK PLATING DETAIL
2-H	DETAIL TO CONVERT EXISTING DI TO JB WITH MH
2-I	DETAIL FOR STANDARD TEMPORARY SHORING FOR MAINTENANCE OF TRAFFIC
3 (2 SHEETS)	SUMMARY OF QUANTITIES
3-A THRU 3-C	SUMMARY OF DRAINAGE QUANTITIES
3-D	SUMMARY OF GUARDRAIL
3-E THRU 3-F	SUMMARIES FOR EARTHWORK, ASPHALT PAVEMENT REMOVAL, & ASPHALT PAVEMENT BREAKUP
3-G	RIGHT OF WAY AREA DATA
4 THRU 12	PLAN SHEETS
13 THRU 19	PROFILE SHEETS
TCP-1 THRU TCP-22	TRAFFIC CONTROL PLANS
NCMA-1 THRU NCMA-2	TRAFFIC CONTROL MOVING AHEAD SIGNING DETAILS
PM-1 THRU PM-6	PAVEMENT MARKING PLANS
EC-1 THRU EC-19	EROSION CONTROL PLANS
UC-1 THRU UC-23	UTILITY CONSTRUCTION PLANS
X-0 THRU X-148	CROSS-SECTIONS, CROSS-SECTION SUMMARIES
S-1 THRU S-6	STRUCTURE PLANS

2006 ROADWAY STANDARD DRAWINGS EFF. 07-18-06

The following Roadway Standards as appear in "Roadway Standard Drawings" Highway Design Branch -N. C. Department of Transportation - Raleigh, N. C., Dated July 18, 2006 are applicable to this project and by reference hereby are considered a part of these plans:

STD.NO.	TITLE
DIVISION 2 - EARTHWORK	
200.02	Method of Clearing - Method II
225.02	Guide for Grading Subgrade - Secondary and Local
225.04	Method of Obtaining Superelevation - Two Lane Pavement
225.06	Method of Grading Sight Distance at Intersections
240.01	Guide for Berm Ditch Construction
DIVISION 3 - PIPE CULVERTS	
300.01	Method of Pipe Installation - Method 'A'
310.03	Cross Pipe End Section - Precast Concrete Section for 18" to 30" Pipe
310.05	Cross Pipe End Section - Prefabricated Steel Section for 18" to 30" Pipe
310.10	Driveway Pipe Construction
DIVISION 5 - SUBGRADE, BASES AND SHOULDERS	
560.01	Method of Shoulder Construction - High Side of Superelevated Curve - Method I
DIVISION 6 - ASPHALT BASES AND PAVEMENTS	
654.01	Pavement Repairs
DIVISION 8 - INCIDENTALS	
806.01	Concrete Right-of-Way Marker
806.02	Granite Right-of-Way Marker
815.03	Pipe Underdrain and Blind Drain
816.04	Markers for Drainage Structure and Concrete Pad
838.01	Concrete Endwall for Single and Double Pipe Culverts - 15" thru 48" Pipe 90 Skew
838.11	Brick Endwall for Single and Double Pipe Culverts - 15" thru 48" Pipe 90 Skew
838.80	Precast Endwalls - 12" thru 72" Pipe 90 Skew
840.00	Concrete Base Pad for Drainage Structures
840.01	Brick Catch Basin - 12" thru 54" Pipe
840.02	Concrete Catch Basin - 12" thru 54" Pipe
840.03	Frame, Grates and Hood - for Use on Standard Catch Basin
840.14	Concrete Drop Inlet - 12" thru 30" Pipe
840.15	Brick Drop Inlet - 12" thru 30" Pipe
840.16	Drop Inlet Frame and Grates - for use with Std. Dwg 840.14 and 840.15
840.18	Concrete Grated Drop Inlet Type 'B' - 12" thru 36" Pipe
840.24	Frames and Narrow Slot Sag Grates
840.25	Anchorage for Frames - Brick or Concrete
840.27	Brick Grated Drop Inlet Type 'B' - 12" thru 36" Pipe
840.31	Concrete Junction Box - 12" thru 66" Pipe
840.32	Brick Junction Box - 12" thru 66" Pipe
840.34	Traffic Bearing Junction Box - for Use with Pipes 42" and Under
840.45	Precast Drainage Structure
840.46	Traffic Bearing Precast Drainage Structure
840.51	Brick Manhole - 12" thru 36" Pipe
840.53	Precast Manhole with Masonry Base - 12" thru 42" Pipe
840.54	Manhole Frame and Cover
840.66	Drainage Structure Steps
840.72	Pipe Collar
846.01	Concrete Curb, Gutter and Curb & Gutter
848.01	Concrete Sidewalk
848.02	Driveway Turnout - Radius Type
848.04	Street Turnout
848.05	Wheelchair Ramp - Curb Cut
850.01	Concrete Paved Ditches
850.10	Guide for Berm Drainage Outlet - 15" and 18" Pipe
852.01	Concrete Islands
857.01	Precast Reinforced Concrete Barrier - 41" Single Faced
862.01	Guardrail Placement
862.02	Guardrail Installation
862.03	Structure Anchor Units
862.04	Anchoring End of Guardrail - B-77 and B-83 Anchor Units
876.01	Rip Rap in Channels
876.02	Guide for Rip Rap at Pipe Outlets
876.03	Drainage Ditches with Class 'A' Rip Rap
876.04	Drainage Ditches with Class 'B' Rip Rap

GENERAL NOTES:

2006 SPECIFICATIONS
EFFECTIVE: 07-18-06
REVISED:

GRADING AND SURFACING OR RESURFACING AND WIDENING:
THE GRADE LINES SHOWN DENOTE THE FINISHED ELEVATION OF THE PROPOSED SURFACING AT GRADE POINTS SHOWN ON THE TYPICAL SECTIONS. WHERE NO GRADE LINES ARE SHOWN, THE PROFILES SHOWN DENOTE THE TOP ELEVATION OF THE EXISTING PAVEMENT ALONG THE CENTER LINE OF SURVEY ON WHICH THE PROPOSED RESURFACING WILL BE PLACED. GRADE LINES MAY BE ADJUSTED BY THE ENGINEER IN ORDER TO SECURE A PROPER TIE-IN.

CLEARING:
CLEARING ON THIS PROJECT SHALL BE PERFORMED TO THE LIMITS ESTABLISHED BY METHOD II.

SUPERELEVATION:
ALL CURVES ON THIS PROJECT SHALL BE SUPERELEVATED IN ACCORDANCE WITH STD. NO. 225.04 USING THE RATE OF SUPERELEVATION AND RUNOFF SHOWN ON THE PLANS. SUPERELEVATION IS TO BE REVOLVED ABOUT THE GRADE POINTS SHOWN ON THE TYPICAL SECTIONS.

SHOULDER CONSTRUCTION:
ASPHALT, EARTH, AND CONCRETE SHOULDER CONSTRUCTION ON THE HIGH SIDE OF SUPERELEVATED CURVES SHALL BE IN ACCORDANCE WITH STD. NO. 560.01.

SIDE ROADS:
THE CONTRACTOR WILL BE REQUIRED TO DO ALL NECESSARY WORK TO PROVIDE SUITABLE CONNECTIONS WITH ALL ROADS, STREETS, AND DRIVES ENTERING THIS PROJECT. THIS WORK WILL BE PAID FOR AT THE CONTRACT UNIT PRICE FOR THE PARTICULAR ITEMS INVOLVED.

BERM DITCHES:
BERM DITCHES SHALL BE CONSTRUCTED IN ACCORDANCE WITH STD. NO. 240.01 AT LOCATIONS SHOWN ON THE PLANS OR AS DIRECTED BY THE ENGINEER.

UNDERDRAINS:
UNDERDRAINS SHALL BE CONSTRUCTED IN ACCORDANCE WITH STD. NO. 815.03 AT LOCATIONS DIRECTED BY THE ENGINEER.

DRIVEWAYS:
DRIVEWAYS SHALL BE CONSTRUCTED IN ACCORDANCE WITH STD. 848.02 USING 3' RADII OR RADII AS SHOWN ON THE PLANS. LOCATIONS OF DRIVES WILL BE AS SHOWN ON THE PLANS OR AS DIRECTED BY THE ENGINEER.

STREET TURNOUT:
STREET RETURNS SHALL BE CONSTRUCTED IN ACCORDANCE WITH STD. NO. 848.04 USING THE RADII NOTED ON PLANS.

GUARDRAIL:
THE GUARDRAIL LOCATIONS SHOWN ON THE PLANS MAY BE ADJUSTED DURING CONSTRUCTION AS DIRECTED BY THE ENGINEER. THE CONTRACTOR SHOULD CONSULT WITH THE ENGINEER PRIOR TO ORDERING GUARDRAIL MATERIAL.

TEMPORARY SHORING:
SHORING REQUIRED FOR THE MAINTENANCE OF TRAFFIC NOT SHOWN ON THE PLANS WILL BE PAID FOR AT THE CONTRACT PRICE FOR "TEMPORARY SHORING" OR "TEMPORARY SHORING-BARRIER SUPPORTED" DEPENDING UPON THE LOCATION OF THE SHORING.

SUBSURFACE PLANS:
NO SUBSURFACE PLANS ARE AVAILABLE ON THIS PROJECT. THE CONTRACTOR SHOULD MAKE HIS OWN INVESTIGATION AS TO THE SUBSURFACE CONDITIONS.

UTILITIES:
UTILITY OWNERS ON THIS PROJECT ARE DUKE POWER, BELLSOUTH, VERIZON, CHARTER COMMUNICATIONS, MEDICAOM, AND CITY OF MARION. ANY RELOCATION OF EXISTING UTILITIES WILL BE ACCOMPLISHED BY OTHERS, EXCEPT AS SHOWN ON THE PLANS.

RIGHT-OF-WAY MARKERS:
ALL RIGHT-OF-WAY MARKERS ON THIS PROJECT SHALL BE PLACED BY CONTRACT.

WHEELCHAIR RAMP CURB CUTS:
CURB CUTS FOR FUTURE WHEELCHAIR RAMPS ARE SHOWN ON THE PLANS AT APPROXIMATE LOCATIONS. THE CONSTRUCTION OF ALL CURB CUTS SHALL BE IN ACCORDANCE WITH STD. NO 848.05.

PROJECT REFERENCE NO.	SHEET NO.
37645 & 37857	1-B

Note: Not to Scale

S.U.E. = Subsurface Utility Engineering

STATE OF NORTH CAROLINA
DIVISION OF HIGHWAYS

CONVENTIONAL PLAN SHEET SYMBOLS

BOUNDARIES AND PROPERTY:

- State Line
- County Line
- Township Line
- City Line
- Reservation Line
- Property Line
- Existing Iron Pin — EIP
- Property Corner
- Property Monument — ECM
- Parcel/Sequence Number — 123
- Existing Fence Line
- Proposed Woven Wire Fence
- Proposed Chain Link Fence
- Proposed Barbed Wire Fence
- Existing Wetland Boundary — WLB
- Proposed Wetland Boundary — WLB
- Existing High Quality Wetland Boundary — HQ WLB
- Existing Endangered Animal Boundary — EAB
- Existing Endangered Plant Boundary — EPB

BUILDINGS AND OTHER CULTURE:

- Gas Pump Vent or U/G Tank Cap
- Sign — S
- Well — W
- Small Mine
- Foundation
- Area Outline
- Cemetery
- Building
- School
- Church
- Dam

HYDROLOGY:

- Stream or Body of Water
- Hydro, Pool or Reservoir
- River Basin Buffer — RBB
- Flow Arrow
- Disappearing Stream
- Spring
- Swamp Marsh
- Proposed Lateral, Tail, Head Ditch
- False Sump

RAILROADS:

- Standard Guage — CSX TRANSPORTATION
- RR Signal Milepost — MILEPOST 35
- Switch — SWITCH
- RR Abandoned
- RR Dismantled

RIGHT OF WAY:

- Baseline Control Point
- Existing Right of Way Marker
- Existing Right of Way Line
- Proposed Right of Way Line — RW
- Proposed Right of Way Line with Iron Pin and Cap Marker — RW
- Proposed Right of Way Line with Concrete or Granite Marker — RW
- Existing Control of Access — CA
- Proposed Control of Access — CA
- Existing Easement Line — E
- Proposed Temporary Construction Easement — E
- Proposed Temporary Drainage Easement — TDE
- Proposed Permanent Drainage Easement — PDE
- Proposed Permanent Utility Easement — PUE

ROADS AND RELATED FEATURES:

- Existing Edge of Pavement
- Existing Curb
- Proposed Slope Stakes Cut — C
- Proposed Slope Stakes Fill — F
- Proposed Wheel Chair Ramp — WCR
- Curb Cut for Future Wheel Chair Ramp — CCFR
- Existing Metal Guardrail
- Proposed Guardrail
- Existing Cable Guiderail
- Proposed Cable Guiderail
- Equaility Symbol
- Pavement Removal

VEGETATION:

- Single Tree
- Single Shrub
- Hedge
- Woods Line
- Orchard
- Vineyard — Vineyard

EXISTING STRUCTURES:

MAJOR:

- Bridge, Tunnel or Box Culvert — CONC
- Bridge Wing Wall, Head Wall and End Wall — CONC WW

MINOR:

- Head and End Wall — CONC HW
- Pipe Culvert
- Footbridge
- Drainage Box: Catch Basin, DI or JB — CB
- Paved Ditch Gutter
- Storm Sewer Manhole — S
- Storm Sewer — S

UTILITIES:

POWER:

- Existing Power Pole
- Proposed Power Pole
- Existing Joint Use Pole
- Proposed Joint Use Pole
- Power Manhole — P
- Power Line Tower
- Power Transformer
- U/G Power Cable Hand Hole — HH
- H-Frame Pole
- Recorded U/G Power Line — P
- Designated U/G Power Line (S.U.E.*) — P

TELEPHONE:

- Existing Telephone Pole
- Proposed Telephone Pole
- Telephone Manhole — T
- Telephone Booth
- Telephone Pedestal — T
- Telephone Cell Tower
- U/G Telephone Cable Hand Hole — HH
- Recorded U/G Telephone Cable — T
- Designated U/G Telephone Cable (S.U.E.*) — T
- Recorded U/G Telephone Conduit — TC
- Designated U/G Telephone Conduit (S.U.E.*) — TC
- Recorded U/G Fiber Optics Cable — T FO
- Designated U/G Fiber Optics Cable (S.U.E.*) — T FO

WATER:

- Water Manhole — W
- Water Meter
- Water Valve
- Water Hydrant
- Recorded U/G Water Line — W
- Designated U/G Water Line (S.U.E.*) — W
- Above Ground Water Line — A/G Water

TV:

- TV Satellite Dish
- TV Pedestal — C
- TV Tower
- U/G TV Cable Hand Hole — HH
- Recorded U/G TV Cable — TV
- Designated U/G TV Cable (S.U.E.*) — TV
- Recorded U/G Fiber Optic Cable — TV FO
- Designated U/G Fiber Optic Cable (S.U.E.*) — TV FO

GAS:

- Gas Valve
- Gas Meter
- Recorded U/G Gas Line — G
- Designated U/G Gas Line (S.U.E.*) — G
- Above Ground Gas Line — A/G Gas

SANITARY SEWER:

- Sanitary Sewer Manhole
- Sanitary Sewer Cleanout
- U/G Sanitary Sewer Line — SS
- Above Ground Sanitary Sewer — A/G Sanitary Sewer
- Recorded SS Forced Main Line — FSS
- Designated SS Forced Main Line (S.U.E.*) — FSS

MISCELLANEOUS:

- Utility Pole
- Utility Pole with Base
- Utility Located Object
- Utility Traffic Signal Box — S
- Utility Unknown U/G Line — ?UTL
- U/G Tank; Water, Gas, Oil
- A/G Tank; Water, Gas, Oil
- U/G Test Hole (S.U.E.*)
- Abandoned According to Utility Records — AATUR
- End of Information — E.O.I.

PROJECT REFERENCE NO.	SHEET NO.
37645 & 37857	2
R/W SHEET NO.	
ROADWAY DESIGN ENGINEER	

NORTH CAROLINA PROFESSIONAL SEAL 23982 ENGINEER STEPHEN E. ROBERTS
11-8-06

REVISIONS

PAVEMENT SCHEDULE

C1	PROP. APPROX. 1 1/2" ASPHALT CONCRETE SURFACE COURSE, TYPE S9.5C, AT AN AVERAGE RATE OF 168 LBS. PER SQ. YD.
C2	PROP. VAR. DEPTH ASPHALT CONCRETE SURFACE COURSE, TYPE S9.5C, AT AN AVERAGE RATE OF 112 LBS. PER SQ. YD. PER 1" DEPTH, TO BE PLACED IN LAYERS NOT TO EXCEED 2" IN DEPTH.
D1	PROP. APPROX. 5 1/2" ASPHALT CONCRETE INTERMEDIATE COURSE, TYPE I19.0C, AT AN AVERAGE RATE OF 313.5 LBS. PER SQ. YD. IN EACH OF TWO LAYERS.
D2	PROP. VAR. DEPTH ASPHALT CONCRETE INTERMEDIATE COURSE, TYPE I19.0C, AT AN AVERAGE RATE OF 114 LBS. PER SQ. YD. PER 1" DEPTH TO BE PLACED IN LAYERS NOT GREATER THAN 4" IN DEPTH OR LESS THAN 2 1/2" IN DEPTH.
E1	PROP. APPROX. 5 1/2" ASPHALT CONCRETE BASE COURSE, TYPE B25.0C, AT AN AVERAGE RATE OF 627 LBS. PER SQ. YD.
E2	PROP. VAR. DEPTH ASPHALT CONCRETE BASE COURSE, TYPE B25.0C, AT AN AVERAGE RATE OF 114 LBS. PER SQ. YD. PER 1" DEPTH, TO BE PLACED IN LAYERS NOT GREATER THAN 5 1/2" IN DEPTH OR LESS THAN 3" IN DEPTH.
J1	PROP. 8" AGGREGATE BASE COURSE
Q	PROP. MILLING OF EXISTING ASPHALT PAVEMENT 1 1/2" DEEP AND REPLACE WITH 1 1/2" S9.5C
R1	2'-6" CONCRETE CURB AND GUTTER
T	EARTH MATERIAL
U	EXISTING PAVEMENT
W	WEDGING

NOTE: All Pavement Edge Slopes Are To Be 1:1 Unless Otherwise Shown.

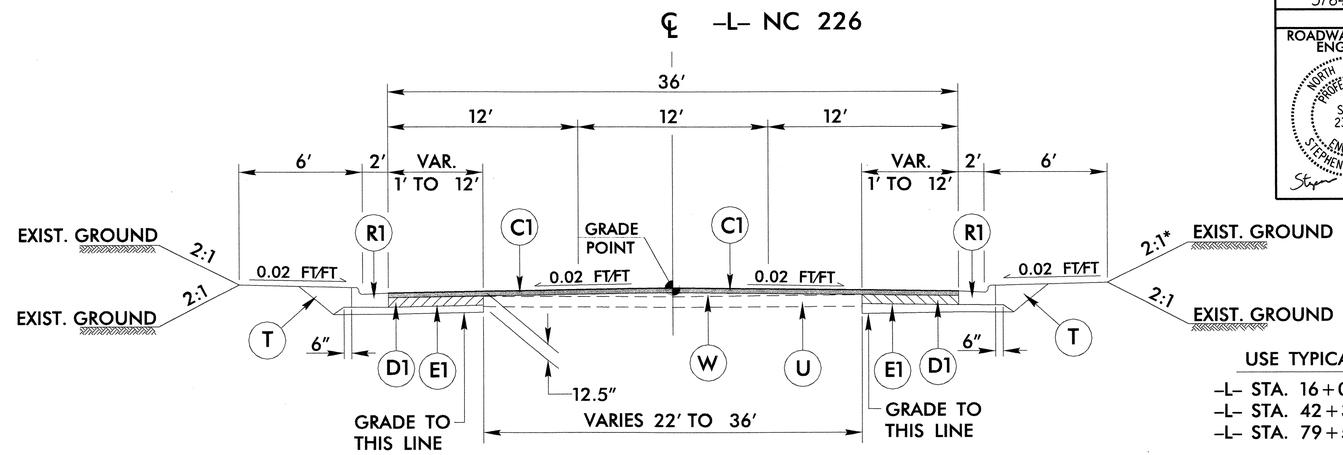

TYPICAL SECTION NO. 1

USE TYPICAL SECTION No. 1
-L- STA. 16+00.00 TO 41+72.14
-L- STA. 42+31.34 TO 57+50.00
-L- STA. 79+50.00 TO 101+50.00

* USE 1.5:1 SLOPE
-L- STA. 19+00.00 TO 20+00.00 RT.

NOTE: SEE PLANS FOR LOCATIONS OF TAPERS, AUXILIARY LANES, AND CHANNELIZATION.

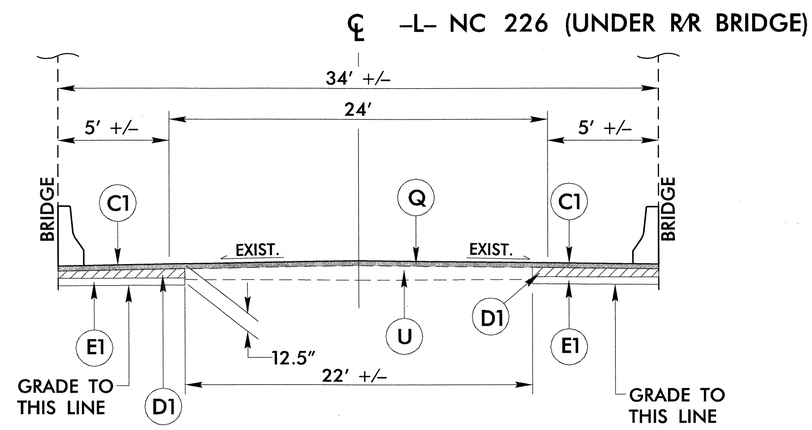

TYPICAL SECTION NO. 2

USE TYPICAL SECTION No. 2
-L- STA. 41+72.14 TO 42+31.34

NOTE: SEE PLANS FOR CURB AND GUTTER TRANSITION TO CONCRETE BARRIER.

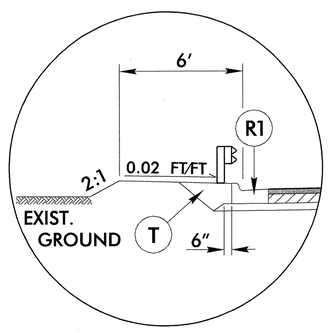

INSET A

SEE PLANS FOR GUARDRAIL LOCATIONS

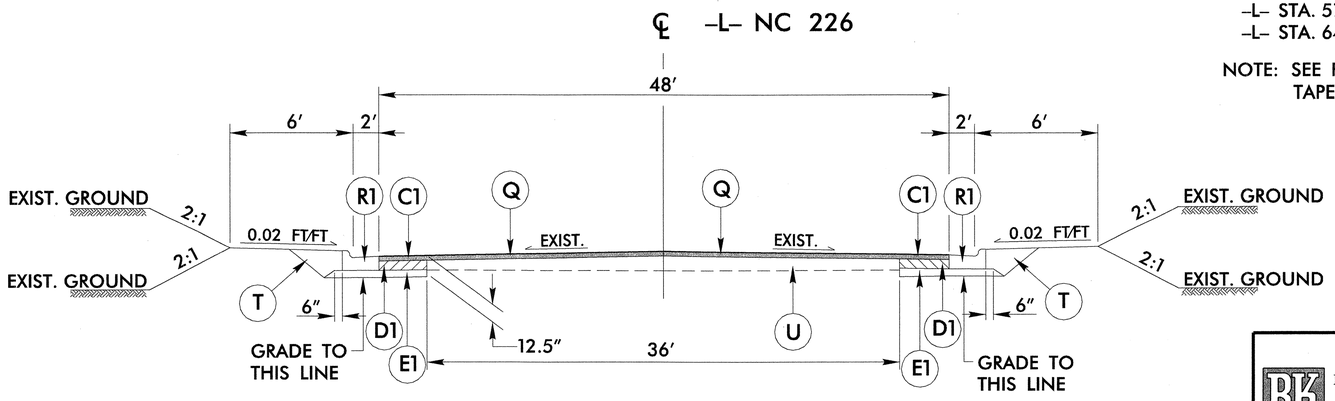

TYPICAL SECTION NO. 3

USE TYPICAL SECTION No. 3
-L- STA. 57+50.00 TO 63+36.50
-L- STA. 64+60.10 TO 71+50.00

NOTE: SEE PLANS FOR LOCATIONS OF TAPERS AND AUXILIARY LANES.

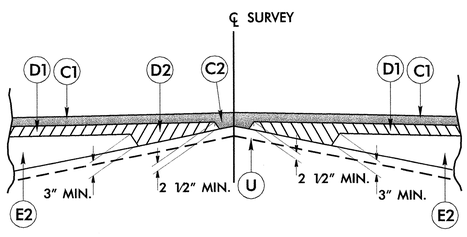

Detail Showing Method of Wedging

PLANS PREPARED BY :
RUMMEL • KLEPPER & KAHL, LLP
consulting engineers
900 RIDGEFIELD DRIVE SUITE 350
RALEIGH, NORTH CAROLINA 27609-3960
(919) 878-9560
FOR
DIVISION OF HIGHWAYS

11/7/2006

PROJECT REFERENCE NO.	SHEET NO.
37645 & 37857	2-A
R/W SHEET NO.	
ROADWAY DESIGN ENGINEER	

NORTH CAROLINA PROFESSIONAL SEAL 23982 ENGINEER STEPHEN E. ROBERTS

11-7-06

PAVEMENT SCHEDULE

C1	PROP. APPROX. 1 1/2" ASPHALT CONCRETE SURFACE COURSE, TYPE S9.5C, AT AN AVERAGE RATE OF 168 LBS. PER SQ. YD.
C2	PROP. VAR. DEPTH ASPHALT CONCRETE SURFACE COURSE, TYPE S9.5C, AT AN AVERAGE RATE OF 112 LBS. PER SQ. YD. PER 1" DEPTH, TO BE PLACED IN LAYERS NOT TO EXCEED 2" IN DEPTH.
D1	PROP. APPROX. 5 1/2" ASPHALT CONCRETE INTERMEDIATE COURSE, TYPE I19.0C, AT AN AVERAGE RATE OF 313.5 LBS. PER SQ. YD. IN EACH OF TWO LAYERS.
D2	PROP. VAR. DEPTH ASPHALT CONCRETE INTERMEDIATE COURSE, TYPE I19.0C, AT AN AVERAGE RATE OF 114 LBS. PER SQ. YD. PER 1" DEPTH TO BE PLACED IN LAYERS NOT GREATER THAN 4" IN DEPTH OR LESS THAN 2 1/2" IN DEPTH.
E1	PROP. APPROX. 5 1/2" ASPHALT CONCRETE BASE COURSE, TYPE B25.0C, AT AN AVERAGE RATE OF 627 LBS. PER SQ. YD.
E2	PROP. VAR. DEPTH ASPHALT CONCRETE BASE COURSE, TYPE B25.0C, AT AN AVERAGE RATE OF 114 LBS. PER SQ. YD. PER 1" DEPTH, TO BE PLACED IN LAYERS NOT GREATER THAN 5 1/2" IN DEPTH OR LESS THAN 3" IN DEPTH.
J1	PROP. 8" AGGREGATE BASE COURSE
Q	PROP. MILLING OF EXISTING ASPHALT PAVEMENT 1 1/2" DEEP AND REPLACE WITH 1 1/2" S9.5C
R1	2'-6" CONCRETE CURB AND GUTTER
T	EARTH MATERIAL
U	EXISTING PAVEMENT
W	WEDGING

NOTE: All Pavement Edge Slopes Are To Be 1:1 Unless Otherwise Shown.

REVISIONS

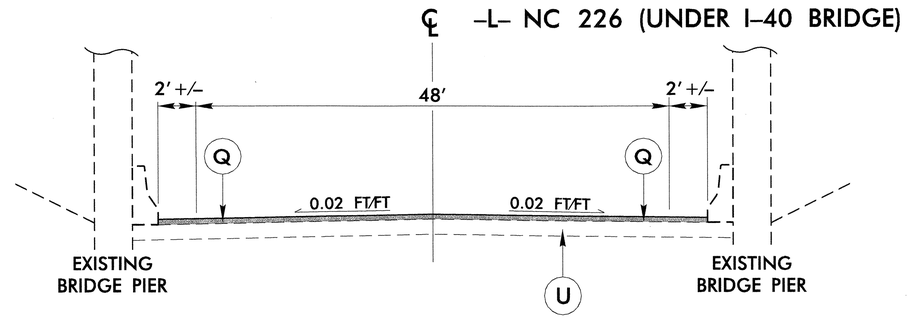

USE TYPICAL SECTION No. 4
-L- STA. 63+36.50 TO 64+60.10

TYPICAL SECTION NO. 4

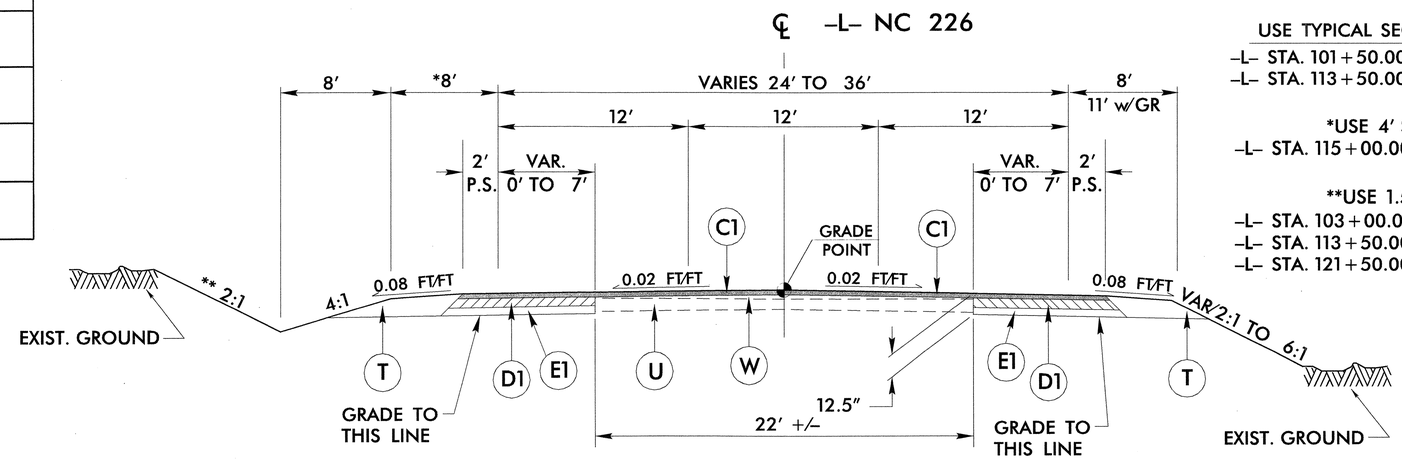

USE TYPICAL SECTION No. 5
-L- STA. 101+50.00 TO 106+30.00
-L- STA. 113+50.00 TO 122+75.36

*USE 4' SHOULDER
-L- STA. 115+00.00 TO 122+75.36 LT.

**USE 1.5:1 SLOPE
-L- STA. 103+00.00 TO 106+30.00 LT.
-L- STA. 113+50.00 TO 118+50.00 LT.
-L- STA. 121+50.00 TO 122+75.36 LT.

NOTE: SEE PLANS FOR LOCATIONS OF TAPERS.

TYPICAL SECTION NO. 5

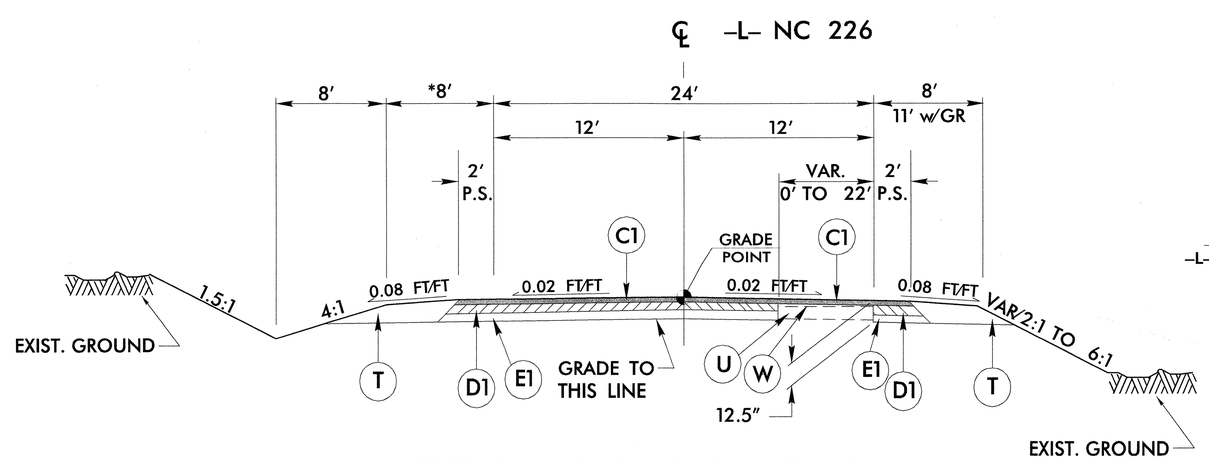

USE TYPICAL SECTION No. 6
-L- STA. 106+30.00 TO 113+50.00

TYPICAL SECTION NO. 6

PLANS PREPARED BY :
RUMMEL • KLEPPER & KAHL, LLP
consulting engineers
900 RIDGEFIELD DRIVE SUITE 350
RALEIGH, NORTH CAROLINA 27609-3960
(919) 878-9560
FOR
DIVISION OF HIGHWAYS

PROJECT REFERENCE NO.	SHEET NO.
37645 & 37857	2-B
R/W SHEET NO.	
ROADWAY DESIGN ENGINEER	

NORTH CAROLINA PROFESSIONAL SEAL 23982 ENGINEER STEPHEN E. ROBERTS
11-8-04

PAVEMENT SCHEDULE

C1	PROP. APPROX. 1 1/2" ASPHALT CONCRETE SURFACE COURSE, TYPE S9.5C, AT AN AVERAGE RATE OF 168 LBS. PER SQ. YD.
C2	PROP. VAR. DEPTH ASPHALT CONCRETE SURFACE COURSE, TYPE S9.5C, AT AN AVERAGE RATE OF 112 LBS. PER SQ. YD. PER 1" DEPTH, TO BE PLACED IN LAYERS NOT TO EXCEED 2" IN DEPTH.
D1	PROP. APPROX. 5 1/2" ASPHALT CONCRETE INTERMEDIATE COURSE, TYPE I19.0C, AT AN AVERAGE RATE OF 313.5 LBS. PER SQ. YD. IN EACH OF TWO LAYERS.
D2	PROP. VAR. DEPTH ASPHALT CONCRETE INTERMEDIATE COURSE, TYPE I19.0C, AT AN AVERAGE RATE OF 114 LBS. PER SQ. YD. PER 1" DEPTH TO BE PLACED IN LAYERS NOT GREATER THAN 4" IN DEPTH OR LESS THAN 2 1/2" IN DEPTH.
E1	PROP. APPROX. 5 1/2" ASPHALT CONCRETE BASE COURSE, TYPE B25.0C, AT AN AVERAGE RATE OF 627 LBS. PER SQ. YD.
E2	PROP. VAR. DEPTH ASPHALT CONCRETE BASE COURSE, TYPE B25.0C, AT AN AVERAGE RATE OF 114 LBS. PER SQ. YD. PER 1" DEPTH, TO BE PLACED IN LAYERS NOT GREATER THAN 5 1/2" IN DEPTH OR LESS THAN 3" IN DEPTH.
J1	PROP. 8" AGGREGATE BASE COURSE
Q	PROP. MILLING OF EXISTING ASPHALT PAVEMENT 1 1/2" DEEP AND REPLACE WITH 1 1/2" S9.5C
R1	2'-6" CONCRETE CURB AND GUTTER
T	EARTH MATERIAL
U	EXISTING PAVEMENT
W	WEDGING

NOTE: All Pavement Edge Slopes Are To Be 1:1 Unless Otherwise Shown.

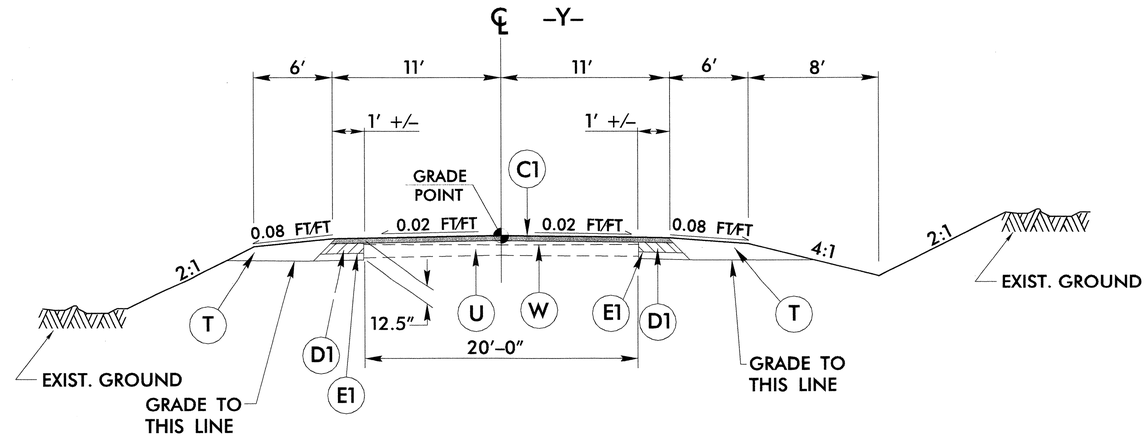

TYPICAL SECTION NO. 7

USE TYPICAL SECTION No. 7
-Y- STA. 10+12.77 TO 11+75.00

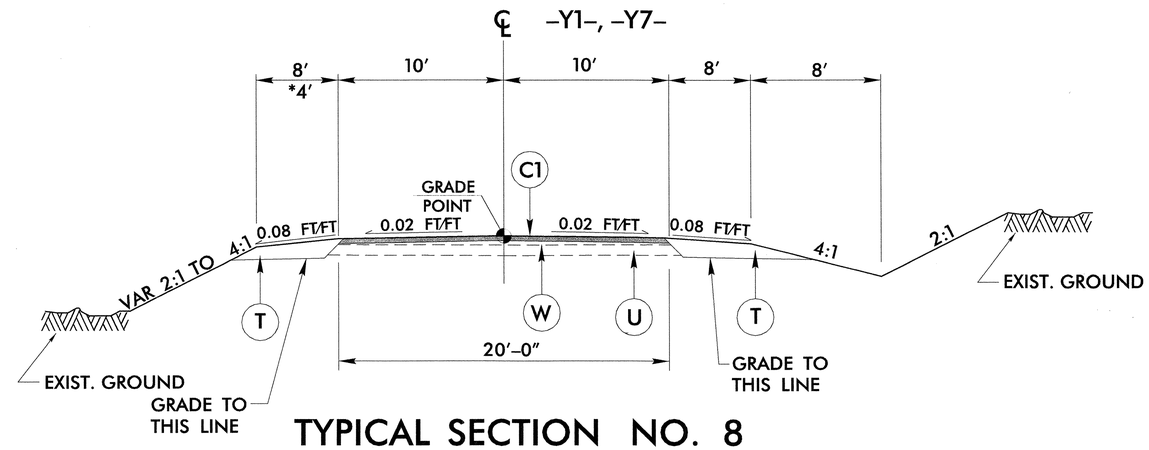

TYPICAL SECTION NO. 8

USE TYPICAL SECTION No. 8
-Y1- STA. 10+29.89 TO 13+02.90
-Y7- STA. 10+24.63 TO 11+70.00
* USE 4' SHOULDER
-Y1- STA. 10+29.89 TO 12+50.00 LT.

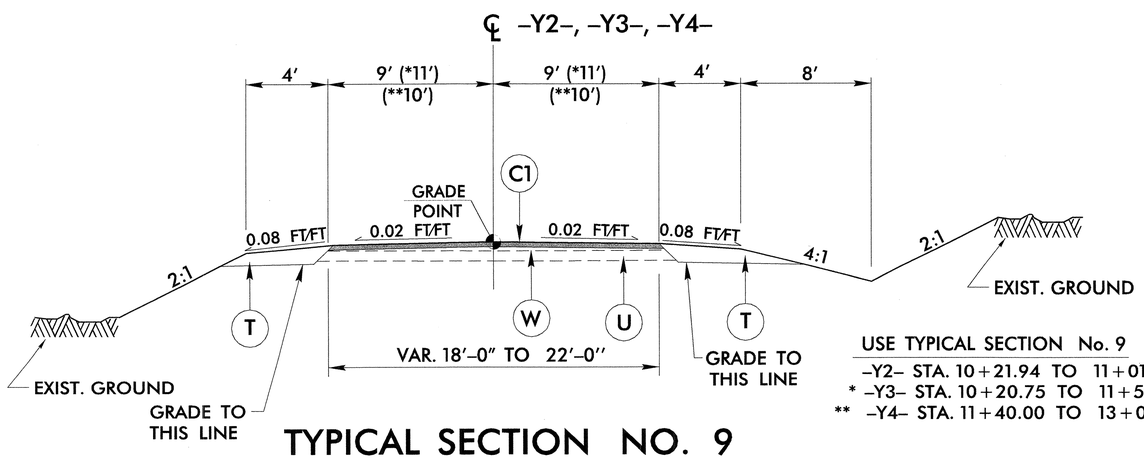

USE TYPICAL SECTION No. 9
-Y2- STA. 10+21.94 TO 11+01.00
* -Y3- STA. 10+20.75 TO 11+50.00
** -Y4- STA. 11+40.00 TO 13+05.15

TYPICAL SECTION NO. 9

USE TYPICAL SECTION No. 10
-Y5A- STA. 10+22.75 TO 13+25.00
-Y5B- STA. 10+23.68 TO 13+00.00

NOTE: WIDENING OF Y5A AND Y5B PREVIOUSLY COMPLETED BY OTHERS. RESURFACE ONLY.

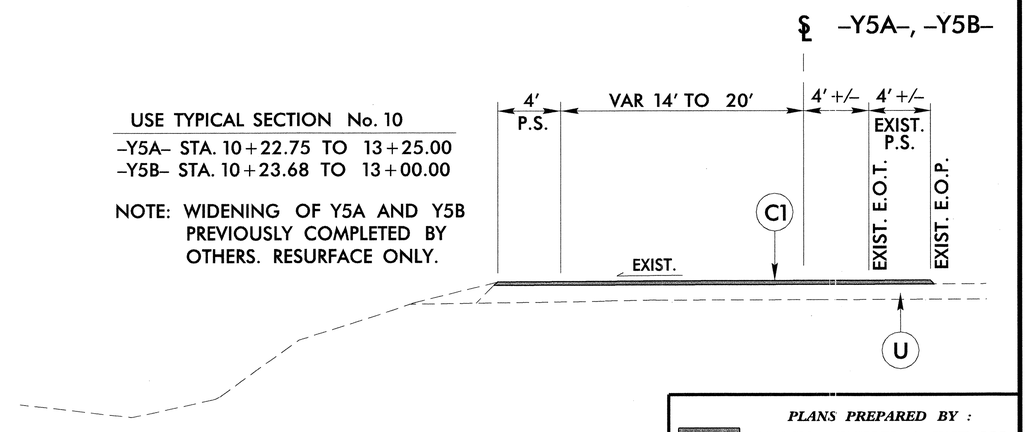

TYPICAL SECTION NO. 10

PLANS PREPARED BY :
RUMMEL • KLEPPER & KAHL, LLP
consulting engineers
900 RIDGEFIELD DRIVE SUITE 350
RALEIGH, NORTH CAROLINA 27609-3960
(919) 878-9560
FOR
DIVISION OF HIGHWAYS

REVISIONS

11/7/2006

PROJECT REFERENCE NO.	SHEET NO.
37645 & 37857	2-C
R/W SHEET NO.	
ROADWAY DESIGN ENGINEER	

NORTH CAROLINA PROFESSIONAL SEAL 23982 ENGINEER STEPHEN E. ROBERTS

11-Y-06

PAVEMENT SCHEDULE

C1	PROP. APPROX. 1 1/2" ASPHALT CONCRETE SURFACE COURSE, TYPE S9.5C, AT AN AVERAGE RATE OF 168 LBS. PER SQ. YD.
C2	PROP. VAR. DEPTH ASPHALT CONCRETE SURFACE COURSE, TYPE S9.5C, AT AN AVERAGE RATE OF 112 LBS. PER SQ. YD. PER 1" DEPTH, TO BE PLACED IN LAYERS NOT TO EXCEED 2" IN DEPTH.
D1	PROP. APPROX. 5 1/2" ASPHALT CONCRETE INTERMEDIATE COURSE, TYPE I19.0C, AT AN AVERAGE RATE OF 313.5 LBS. PER SQ. YD. IN EACH OF TWO LAYERS.
D2	PROP. VAR. DEPTH ASPHALT CONCRETE INTERMEDIATE COURSE, TYPE I19.0C, AT AN AVERAGE RATE OF 114 LBS. PER SQ. YD. PER 1" DEPTH TO BE PLACED IN LAYERS NOT GREATER THAN 4" IN DEPTH OR LESS THAN 2 1/2" IN DEPTH.
E1	PROP. APPROX. 5 1/2" ASPHALT CONCRETE BASE COURSE, TYPE B25.0C, AT AN AVERAGE RATE OF 627 LBS. PER SQ. YD.
E2	PROP. VAR. DEPTH ASPHALT CONCRETE BASE COURSE, TYPE B25.0C, AT AN AVERAGE RATE OF 114 LBS. PER SQ. YD. PER 1" DEPTH, TO BE PLACED IN LAYERS NOT GREATER THAN 5 1/2" IN DEPTH OR LESS THAN 3" IN DEPTH.
J1	PROP. 8" AGGREGATE BASE COURSE
Q	PROP. MILLING OF EXISTING ASPHALT PAVEMENT 1 1/2" DEEP AND REPLACE WITH 1 1/2" S9.5C
R1	2'-6" CONCRETE CURB AND GUTTER
T	EARTH MATERIAL
U	EXISTING PAVEMENT
W	WEDGING

NOTE: All Pavement Edge Slopes Are To Be 1:1 Unless Otherwise Shown.

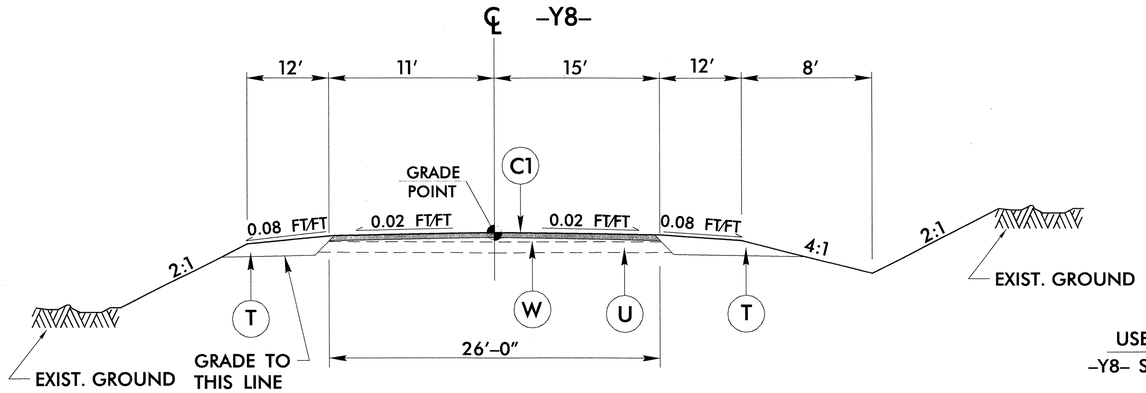

USE TYPICAL SECTION No. 11
-Y8- STA. 12+85.00 TO 13+94.24

TYPICAL SECTION NO. 11

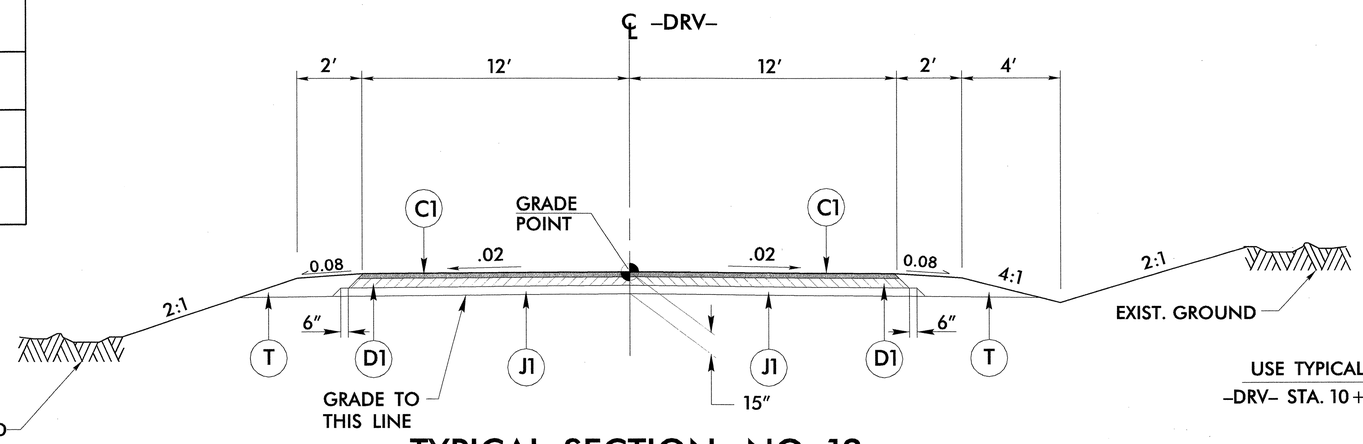

USE TYPICAL SECTION No. 12
-DRV- STA. 10+00.00 TO 12+03.00

TYPICAL SECTION NO. 12

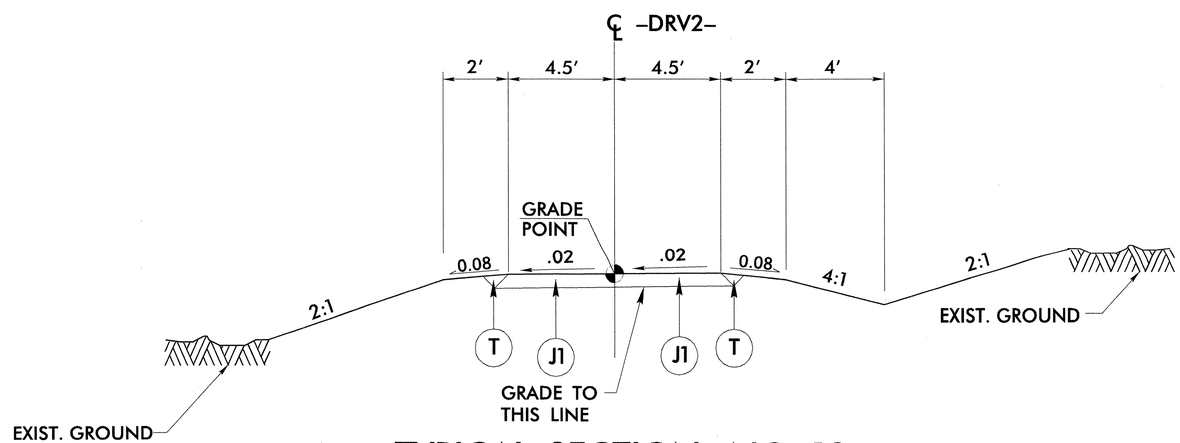

USE TYPICAL SECTION No. 13
-DRV2- STA. 11+70.00 TO 13+00.00

TYPICAL SECTION NO. 13

REVISIONS

11/7/2006
R:\Roadway\Proj\mul1806_25_roadway_typ.dgn

PLANS PREPARED BY :
RUMMEL • KLEPPER & KAHL, LLP
consulting engineers
900 RIDGEFIELD DRIVE SUITE 350
RALEIGH, NORTH CAROLINA 27609-3960
(919) 878-9560
FOR
DIVISION OF HIGHWAYS

COMPUTED BY: BDP DATE: 04-13-2006
CHECKED BY: SER DATE: 04-17-2006

PROJECT REFERENCE NO.	SHEET NO.
37645 & 37857	2-D
R/W SHEET NO.	
ROADWAY DESIGN ENGINEER	

NORTH CAROLINA PROFESSIONAL SEAL 23982 ENGINEER STEPHEN E. ROBERTS
1-8-06

DETAIL SHOWING CURB & GUTTER ELEVATIONS

IN VICINITY OF I-40 INTERCHANGE

37645

-L- (NC 226)				
TOP OF CURB (T.O.C.) ELEVATION (ft.) LEFT	OFFSET TO BACK OF CURB (B.O.C.) (ft.) LEFT	STATION	OFFSET TO BACK OF CURB (B.O.C.) (ft.) RIGHT	TOP OF CURB (T.O.C.) ELEVATION (ft.) RIGHT
1,306.00	21.50	58+00.00	n/a	n/a
1,303.19	22.50	58+50.00	22.50	1,303.79
1,300.69	23.50	59+00.00	23.50	1,300.96
n/a	n/a	59+50.00	24.50	1,297.54
n/a	n/a	60+00.00	n/a	n/a
n/a	n/a	60+50.00	n/a	n/a
1,286.75	42.50	61+00.00	26.50	1,287.54
1,283.85	33.57	61+50.00	26.50	1,284.56
1,281.23	26.50	62+00.00	26.50	1,281.51
1,278.57	26.50	62+50.00	26.50	1,278.42
1,275.64	26.50	63+00.00	28.08	1,275.72
n/a	n/a	63+50.00	n/a	n/a
n/a	n/a	64+00.00	n/a	n/a
n/a	n/a	64+50.00	n/a	n/a
1,267.67	26.50	65+00.00	26.50	1,267.59
1,265.78	26.50	65+50.00	26.50	1,266.27
1,264.67	26.50	66+00.00	26.50	1,264.89
1,263.20	26.50	66+50.00	26.50	1,263.06
1,262.06	26.50	67+00.00	26.50	1,261.76
1,259.62	40.57	67+50.00	26.50	1,259.63
n/a	n/a	68+00.00	25.98	1,257.64
n/a	n/a	68+50.00	25.00	1,255.78
1,255.68	42.55	69+00.00	24.00	1,253.80
1,254.05	32.56	69+50.00	23.00	1,252.08
1,252.80	24.30	70+00.00	30.55	1,249.79
1,251.70	22.66	70+50.00	47.97	1,248.93
1,250.39	21.96	71+00.00	n/a	n/a
1,248.50	21.27	71+50.00	n/a	n/a

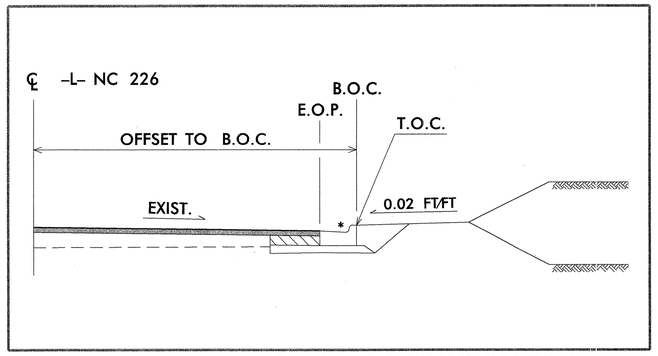

* NOTE: SEE X-SECTIONS FOR GUTTER FLOW-LINE ELEVATIONS.

PLANS PREPARED BY :
RUMMEL • KLEPPER & KAHL, LLP
consulting engineers
900 RIDGEFIELD DRIVE SUITE 350
RALEIGH, NORTH CAROLINA 27609-3960
(919) 878-9560
FOR
DIVISION OF HIGHWAYS

11/7/2006

PROJECT REFERENCE NO.	SHEET NO.
37645 & 37857	2-E
R/W SHEET NO.	

ROADWAY DESIGN ENGINEER

NORTH CAROLINA PROFESSIONAL SEAL 23982 ENGINEER STEPHEN E. ROBERTS

11-8-06

RETAINING WALL DETAIL

(SEE SHEET 2-F FOR RETAINING WALL DETAILS)

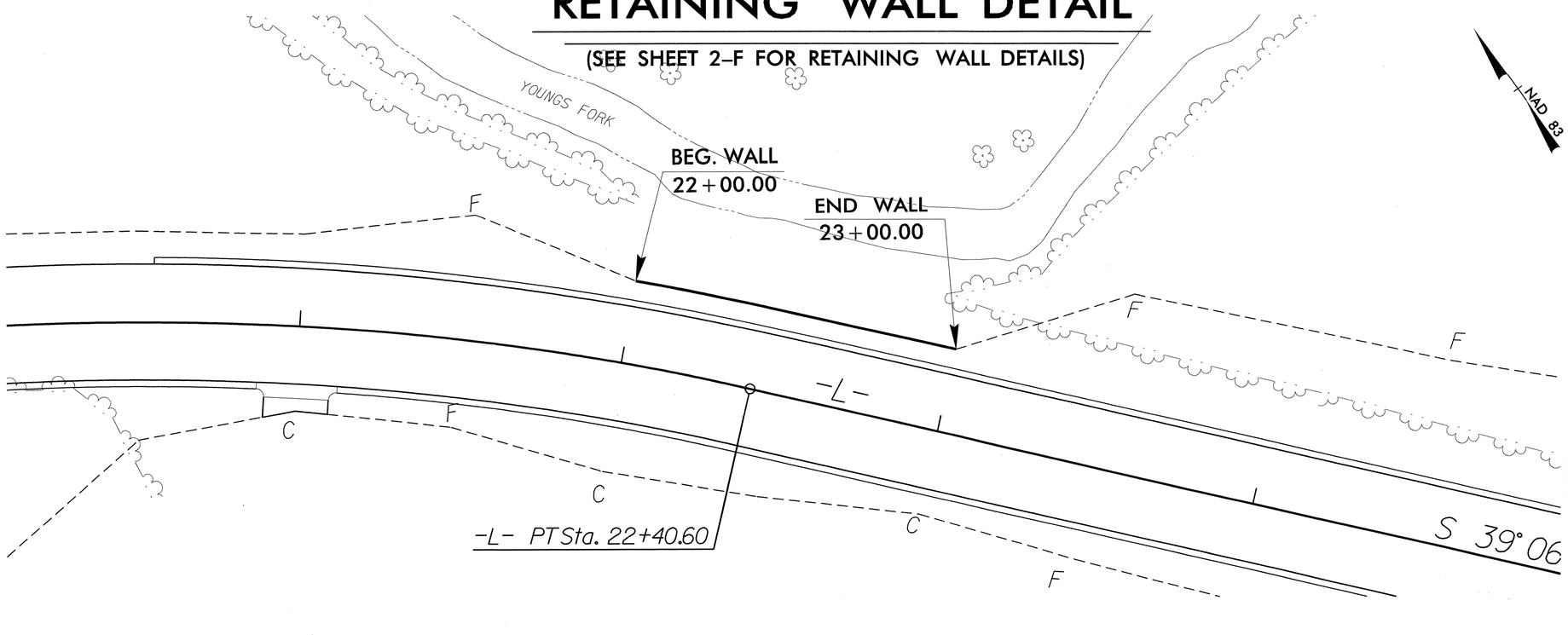

SEE SHTS.4 AND 5 FOR -L- PLAN
SEE SHT.13 FOR -L- PROFILE

PLANS PREPARED BY :
RUMMEL • KLEPPER & KAHL, LLP
consulting engineers
900 RIDGEFIELD DRIVE SUITE 350
RALEIGH, NORTH CAROLINA 27609-3960
(919) 878-9560
FOR
DIVISION OF HIGHWAYS

WALL ENVELOPE

PI#	-L- STA.	-L- OFFSET	ELEVATION
1	22+00	- 26.00'	1262.52'
2	22+50	- 26.00'	1263.94'
3	23+00	- 26.00'	1265.65'

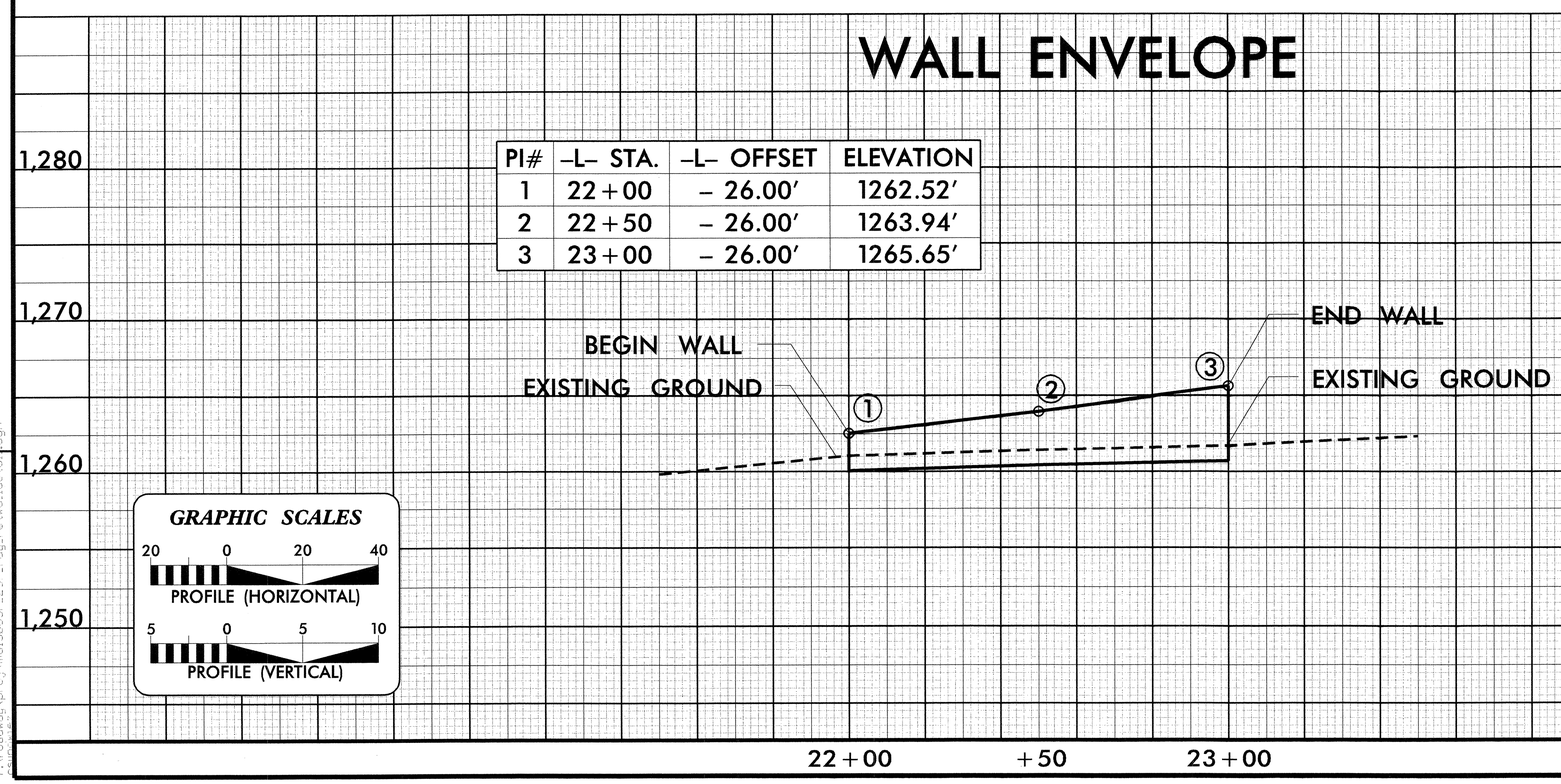

REVISIONS

8/17/05

11/9/2006
r:\roadway\proj\mo13063r_sf_rtg_retwalldetail.dgn

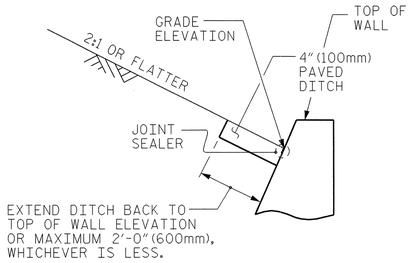

SLOPE CONDITION

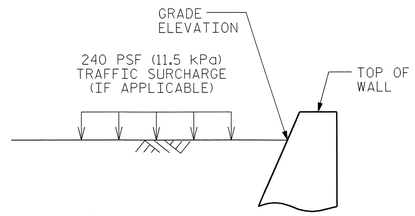

NO SLOPE CONDITION

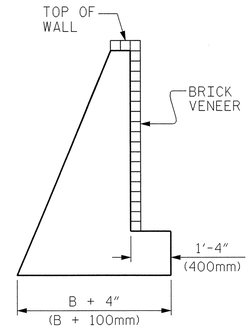

BRICK VENEER DETAIL

(WHEN APPLICABLE)

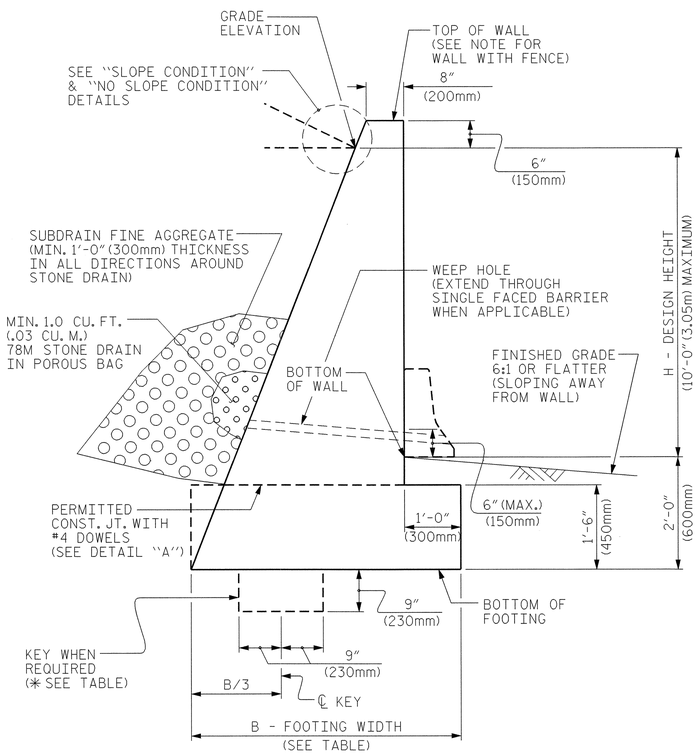

TYPICAL SECTION

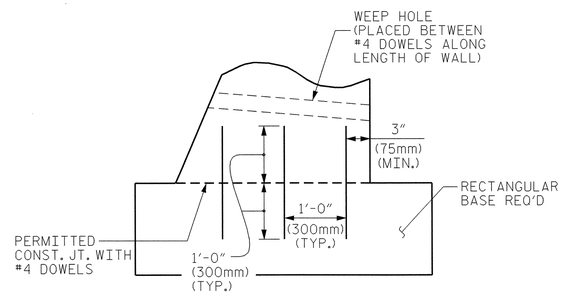

DETAIL "A"

H + 2 (ft)	< 6	6 - 9	> 9 - 12
H + 0.6 (m)	< 1.83	1.83 - 2.74	> 2.74 - 3.65
NO SLOPE CONDITION WITHOUT TRAFFIC SURCHARGE	.60	.60	.60
NO SLOPE CONDITION WITH TRAFFIC SURCHARGE	.80	.75 *	.70 *
SLOPE CONDITION	.66	.70 *	.75 *

B/(H + 2) RATIO

* KEY IS REQUIRED FOR SLOPE CONDITION OR NO SLOPE CONDITION WITH TRAFFIC SURCHARGE WHEN H + 2ft (H + 0.6m) IS 6'-0"(1.83m) OR GREATER.

NOTES

FOR GRAVITY RETAINING WALLS, SEE SECTION 453 OF THE STANDARD SPECIFICATIONS.

THE STANDARD GRAVITY RETAINING WALL IS BASED ON THE FOLLOWING IN-SITU ASSUMED SOIL PARAMETERS:
TOTAL UNIT WEIGHT = 120 PCF (18.8 kN/m3)
COHESION = 0 PSF (0 kPa)
FRICTION ANGLE = 35 DEGREES
(GROUNDWATER WITHIN 5'-0"(1.5m) OF BOTTOM OF FOOTING)
FRICTION ANGLE = 30 DEGREES
(GROUNDWATER MORE THAN 5'-0"(1.5m) BELOW BOTTOM OF FOOTING)

DO NOT USE A STANDARD GRAVITY RETAINING WALL IF THE ASSUMED SOIL PARAMETERS ARE NOT APPLICABLE OR GROUNDWATER IS ABOVE THE BOTTOM OF FOOTING.

DO NOT USE A STANDARD GRAVITY RETAINING WALL WHEN VERY LOOSE OR SOFT SOIL OR MUCK IS PRESENT BELOW THE WALL.

DO NOT PLACE CONCRETE UNTIL OBTAINING APPROVAL OF THE EXCAVATION DEPTH AND CHECKING FOUNDATION MATERIAL FOR IN-SITU ASSUMED SOIL PARAMETERS.

USE CLASS "A" CONCRETE AND PROVIDE CLASS I SURFACE FINISH FOR ALL EXPOSED SURFACES.

PROVIDE 3"(75mm) DIAMETER WEEP HOLES ON 10'-0"(3m) CENTERS ALONG WALL. SLOPE WEEP HOLES ON A 1"(25mm) PER FOOT (300mm) SLOPE THROUGH THE WALL SO THAT WATER DRAINS OUT OF THE FRONT OF THE WALL.

CONSTRUCT A HORIZONTAL DRAIN IN SUBDRAIN FINE AGGREGATE AT LEAST 1'-0"(300mm) TALL AND 1'-0"(300mm) WIDE TO CONNECT ALL STONE DRAINS.

PROVIDE GROOVED CONTRACTION JOINTS EVERY 10'-0"(3m) AND EXPANSION JOINTS EVERY 30'-0"(9m) ALONG THE WALL.

FOR WALL WITH BRICK VENEER, SUBMIT BRICK SAMPLES TO THE ENGINEER FOR APPROVAL BEFORE BEGINNING CONSTRUCTION. ANCHOR BRICK VENEER TO CONCRETE RETAINING WALL WITH BRICK TO CONCRETE TYPE ANCHORS ACCORDING TO MANUFACTURER'S SPECIFICATIONS WITH A MINIMUM VERTICAL SPACING OF 1'-4"(400mm) AND A MINIMUM HORIZONTAL SPACING OF 2'-8"(800mm) WITH EACH ROW STAGGERED 1'-4"(400mm) FROM THE ROW OF ANCHORS ABOVE AND BELOW.

DO NOT BACKFILL BEHIND WALL UNTIL CONCRETE DEVELOPS A MINIMUM COMPRESSIVE STRENGTH OF 3000 PSI (20.7 MPa). COMPACT BACKFILL IN ACCORDANCE WITH SUBARTICLE 235-4(C) OF THE STANDARD SPECIFICATIONS. PLACE BACKFILL WITHIN 3'-0"(1m) OF THE BACK OF THE WALL WITH HAND OPERATED EQUIPMENT. DO NOT OPERATE HEAVY EARTH MOVING EQUIPMENT WITHIN 10'-0"(3m) OF THE BACK OF WALL.

WHEN A CONSTRUCTION JOINT IS LOCATED AT THE BASE OF THE WALL, IN SECTION, PROVIDE A MINIMUM OF 3-#4 DOWELS AT AN EQUAL SPACING. SPACE ALL DOWELS AT 1'-6"(460mm) CENTERS ALONG THE LENGTH OF THE WALL.

SEE PREVIOUS SHEET(S) FOR PLAN AND PROFILE VIEW (WALL ENVELOPE) AND PROPOSED ELEVATIONS FOR GRAVITY RETAINING WALL(S).

FOR WALL WITH FENCE, USE SLEEVES IN ACCORDANCE WITH SECTION 866 OF THE STANDARD SPECIFICATIONS FOR FENCE POSTS, OR SUBMIT FENCE POST ANCHOR PLATE DETAILS.

PROJECT NO. 37645 & 37857
McDowell COUNTY
STATION:
SHEET OF

STATE OF NORTH CAROLINA
DEPARTMENT OF TRANSPORTATION
RALEIGH

STANDARD
GRAVITY RETAINING WALL

REVISIONS						SHEET NO.
NO.	BY:	DATE:	NO.	BY:		2-F
1			3			TOTAL SHEETS
2			4			

STD. NO. GRW1

ASSEMBLED BY :	DATE :
CHECKED BY :	DATE :
DRAWN BY : KMM 12/05	ADDED 5/1/06
CHECKED BY : GM 5/06	

08-FEB-2007 14:19
$$$$$$$$$$$$$$$$$$$$$$$$DGN$$$$$$$$$$$$$$$$$$$$$$$$
rnbritt AT PS228331

PS228331 2/8/2007 .dgn rnbritt PS-Oce34dtbond

PROJECT REFERENCE NO.	SHEET NO.
37646 & 37857	2-G
R/W SHEET NO.	

NORTH CAROLINA PROFESSIONAL SEAL 029869 ENGINEER SHANE C. CLARK

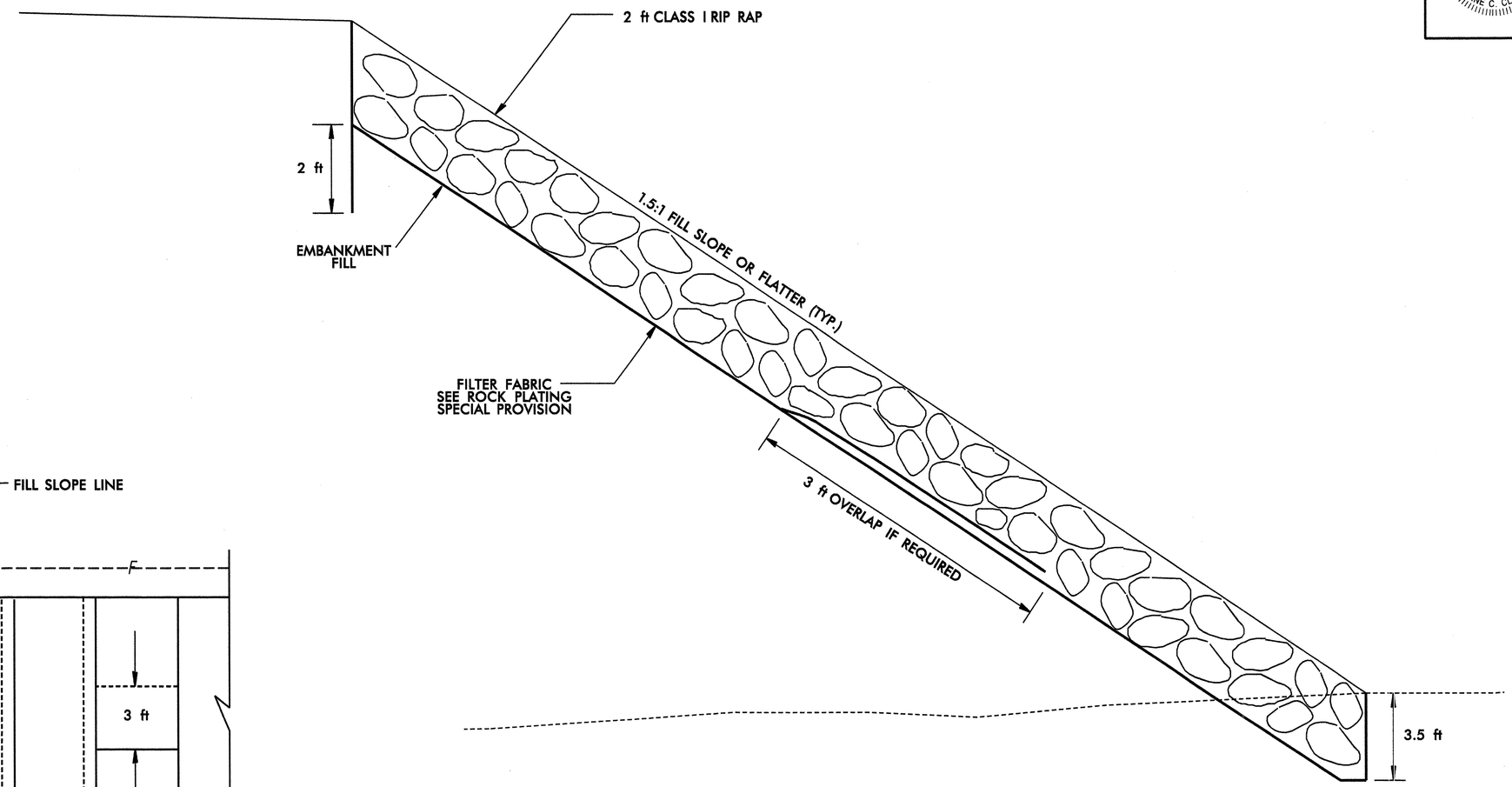

ROCK PLATING DETAIL

N.T.S.

-L- STA. 32+60.00 TO STA. 33+35.00

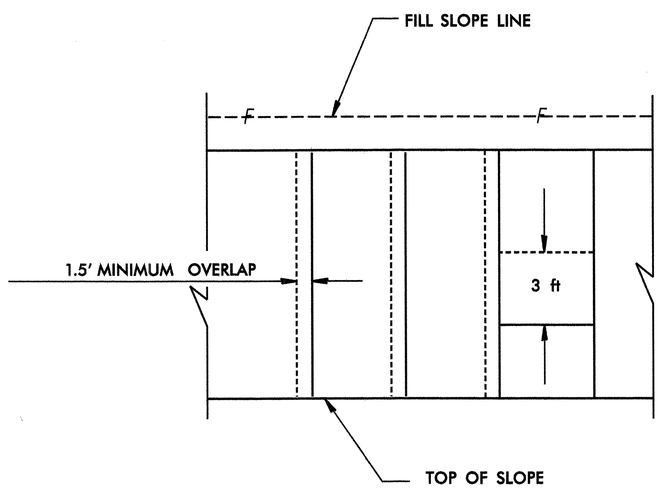

FABRIC OVERLAP DETAIL

N.T.S.

REVISIONS

ASSEMBLED BY :	DATE :
CHECKED BY :	DATE :
DRAWN BY :	REV.
CHECKED BY :	

STATE OF NORTH CAROLINA
DEPARTMENT OF TRANSPORTATION
RALEIGH

STANDARD

ROCK PLATING DETAIL

REVISIONS						SHEET NO.
NO.	BY:	DATE:	NO.	BY:	DATE:	
1			3			TOTAL SHEETS
2			4			

PROJECT REFERENCE NO.	SHEET NO.
37645 & 37857	2-H

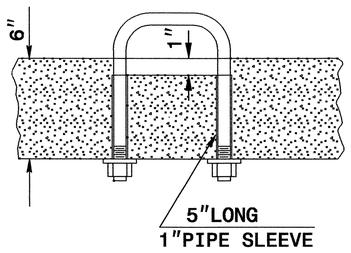

PARTIAL SECTION

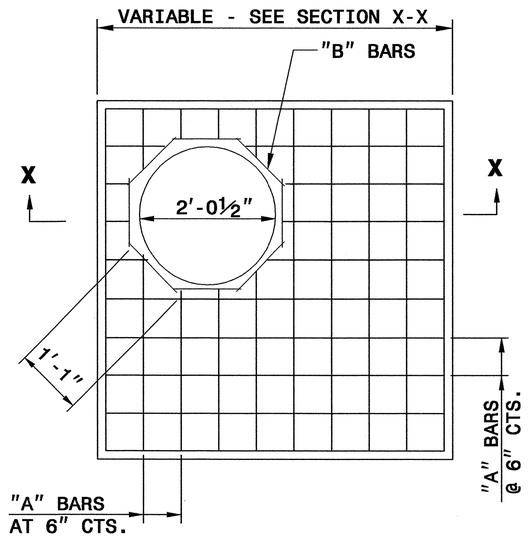

PLAN

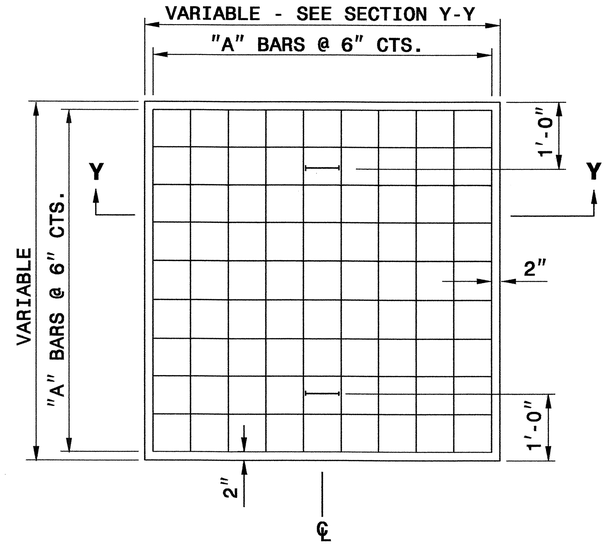

PLAN

GENERAL NOTES:

CONSTRUCT IN ACCORDANCE WITH SECTION 859 OF THE STANDARD SPECIFICATIONS.

FIELD VERIFY THE DIMENSIONS FOR THE EXISTING BOXES

DETAIL INTENDED FOR NON-TRAFFIC BEARING DRAINAGE STRUCTURES.

BILL OF MATERIALS

REINFORCING STEEL				
CODE	SIZE	QTY.	LENGTH	REINF. STEEL LBS.
A	#4	20	4'-6"	60.12
B	#4	8	1'-1"	5.79
TOTAL				65.91 *

MASONRY	CU YDS
TOP SLAB CONCRETE CLASS "B"	.433 *
BRICK MASONRY PER FT HT (MIN)	.4111

* NOTE:
QUANTITIES BASED ON 3'-6" X 3'-6" DRAINAGE STRUCTURE. ADJUST QUANTITIES FOR LARGER STRUCTURES AND MANHOLE CONSTRUCTION.

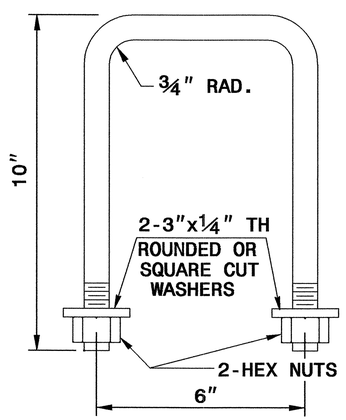

DETAIL OF HANDLE

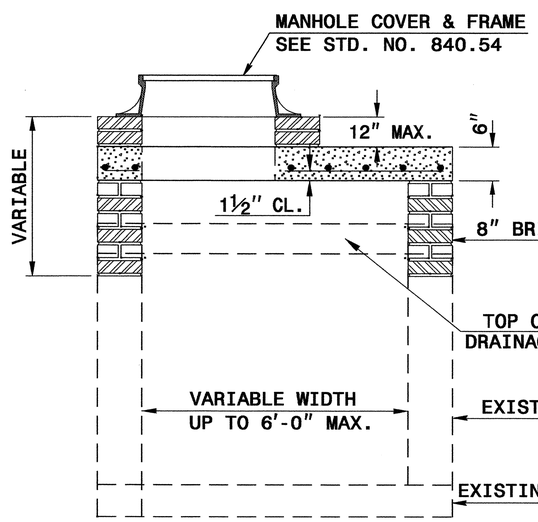

SECTION X-X

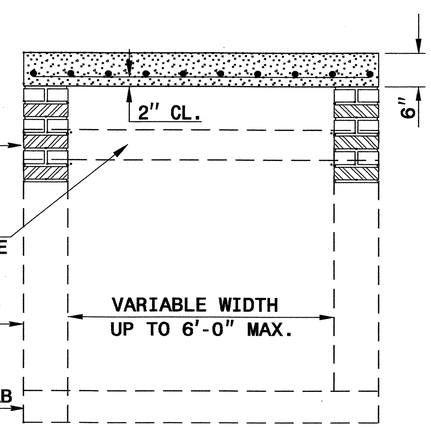

SECTION Y-Y

DESIGN SERVICES UNIT
STANDARDS AND SPECIAL DESIGN
Office 919-250-4128 FAX 919-250-4119

DETAIL TO CONVERT EXISTING DROP INLET OR CATCH BASIN TO JUNCTION BOX (MANHOLE OPTIONAL)

ORIGINAL BY: T.S.S. DATE: NOV.1997
MODIFIED BY: E.E.W DATE: 8-28-02
CHECKED BY: DATE:
FILE SPEC.: /usr/details/stand/boxtoibe.dgn

12-JAN-2005 13:41
v:\local_data\engineerd\usr\details\stand\cbtojbE.dgn
eriscoed AT PSUZ22293

PROJECT REFERENCE NO.	SHEET NO.
37645 & 37857	2-I

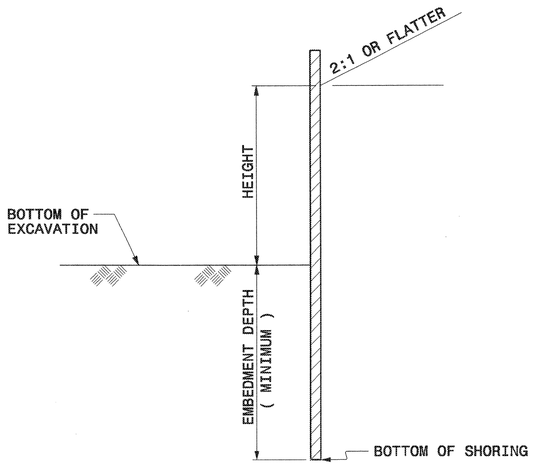

TEMPORARY SHORING

(SLOPING OR LEVEL WITH TRAFFIC SURCHARGE, NO BARRIER IMPACT)

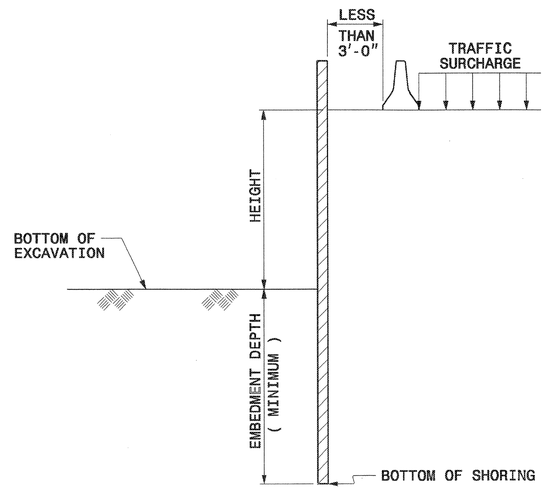

TEMPORARY SHORING - BARRIER SUPPORTED

(LEVEL WITH TRAFFIC SURCHARGE, WITH BARRIER IMPACT)

NOTES

FOR TEMPORARY SHORING FOR MAINTENANCE OF TRAFFIC, SEE SPECIAL PROVISIONS.

SELECT THE APPROPRIATE STANDARD SHORING DESIGN FOR TEMPORARY SHORING FOR MAINTENANCE OF TRAFFIC IN LIEU OF SUBMITTING CONTRACTOR SHORING DESIGN. USE STANDARD SHORING DESIGN ONLY WHEN ALL OF THE FOLLOWING CRITERIA ARE MET:

- MAXIMUM HEIGHT OF SHORING EXCAVATION IS 11 FEET
- GROUNDWATER TABLE IS NOT ABOVE BOTTOM OF THE EXCAVATION
- BACKFILL SLOPE IS 2:1 OR FLATTER
- TRAFFIC SURCHARGE EQUAL TO 240 PSF
- SOLDIER PILE SPACING OF 6 FEET
- TIMBER LAGGING SHALL HAVE A MINIMUM THICKNESS OF 3 INCHES

SUBMIT "STANDARD SHORING SELECTION" FORM TO ENGINEER PRIOR TO CONSTRUCTION OF SHORING.

DO NOT USE THE STANDARD SHORING DESIGNS WHEN VERY SOFT SOIL OR MUCK IS PRESENT WITHIN THE SHORING EMBEDMENT ZONE.

CONTRACTOR MUST VERIFY LOCATION OF GROUNDWATER TABLE PRIOR TO CONSTRUCTION OF SHORING.

THE CONTRACTOR HAS THE OPTION OF USING SOLDIER PILES SET IN DRILLED HOLES WITH A SHORTENED LENGTH EQUAL TO 75% OF THE EMBEDMENT DEPTHS SHOWN IN THE TABLE. FOR DRILLING REQUIREMENTS, SEE TEMPORARY SHORING FOR MAINTENANCE OF TRAFFIC SPECIAL PROVISION.

IF DESIGN EMBEDMENT DEPTH IS NOT ACHIEVED, THEN NOTIFY THE ENGINEER IMMEDIATELY.

GROUNDWATER TABLE CONDITIONS

1) WHEN WATER TABLE IS ABOVE THE BOTTOM OF EXCAVATION, SUBMIT CONTRACTOR SHORING DESIGN TO THE ENGINEER FOR APPROVAL.

2) WHEN WATER TABLE IS BELOW THE BOTTOM OF EXCAVATION AND ABOVE THE BOTTOM OF SHORING, USE "WATER TABLE" CASE.

3) WHEN WATER TABLE IS BELOW BOTTOM OF SHORING, USE "NO WATER TABLE" CASE.

		TEMPORARY SHORING					TEMPORARY SHORING - BARRIER SUPPORTED				
		CANTILEVER SHEETING		DRIVEN SOLDIER PILE			CANTILEVER SHEETING		DRIVEN SOLDIER PILE		
CASE	HEIGHT (FT)	MINIMUM EMBEDMENT DEPTH (FT)	MINIMUM SECTION MODULUS (IN^3 / FT OF WALL)	MINIMUM EMBEDMENT DEPTH (FT)			MINIMUM EMBEDMENT DEPTH (FT)	MINIMUM SECTION MODULUS (IN^3 / FT OF WALL)	MINIMUM EMBEDMENT DEPTH (FT)		
				HP 10x42	HP 12x53	HP 14x73			HP 10x42	HP 12x53	HP 14x73
"NO WATER TABLE"	< 6	7.5	3.0	8.0	8.0	8.0	11.0	10.0	9.5	9.5	9.5
	7	8.5	4.5	9.5	9.5	9.5	12.0	12.0	10.5	10.5	10.5
	8	10.0	6.5	10.5	10.5	10.5	12.5	14.0	11.5	11.5	11.5
	9	11.0	9.5	--	12.0	12.0	13.5	16.5	--	12.5	12.5
	10	12.5	13.0	--	--	13.5	14.0	19.5	--	13.5	13.5
	11	13.5	17.0	--	--	14.5	15.0	22.5	--	--	14.5
"WATER TABLE"	< 6	11.5	4.5	11.5	11.5	11.5	16.0	12.0	13.0	13.0	13.0
	7	13.0	7.0	13.0	13.0	13.0	17.0	14.5	14.5	14.5	14.5
	8	15.0	10.0	--	15.0	15.0	18.0	17.0	--	15.5	15.5
	9	17.0	14.0	--	17.0	17.0	19.0	20.0	--	17.0	17.0
	10	18.5	19.5	--	--	18.5	20.0	23.5	--	--	18.5
	11	20.5	26.0	--	--	--	21.0	28.0	--	--	20.0

DESIGN SERVICES UNIT
STANDARDS AND SPECIAL DESIGN
Office 919-250-4128 FAX 919-250-4119

STANDARD TEMPORARY SHORING FOR MAINTENANCE OF TRAFFIC

ORIGINAL BY: SOILS & FOUNDATIONS DATE: 10-2001
MODIFIED BY: DATE:
CHECKED BY: DATE:
FILE SPEC.: ericward:/usr/details/stand/shoring detail.dgn

$$$$$$SYSTIME$$$$$$
$$$$$$DGN$$$$$$
$$$$$$USERNAME$$$$$$

STATE OF NORTH CAROLINA
SUMMARY OF QUANTITIES

PROJECT REFERENCE No.	SHEET No.
37645 & 37857	3 (1 of 2)

STATE OF NORTH CAROLINA
DIVISION OF HIGHWAYS
ROADWAY SUMMARY OF QUANTITIES FOR CONTRACT - C201781

ItemNumber	Sec #	Quantity	Unit	Description
0000100000-N	800	Lump Sum		MOBILIZATION
0001000000-E	200	Lump Sum		CLEARING & GRUBBING .. ACRE(S)
0008000000-E	200	1	ACR	SUPPLEMENTARY CLEARING & GRUB-BING
0022000000-E	225	58,800	CY	UNCLASSIFIED EXCAVATION
0036000000-E	225	2,500	CY	UNDERCUT EXCAVATION
0134000000-E	240	1,355	CY	DRAINAGE DITCH EXCAVATION
0141000000-E	240	1,000	LF	BERM DITCH CONSTRUCTION
0156000000-E	250	4,030	SY	REMOVAL OF EXISTING ASPHALT PAVEMENT
0177000000-E	250	410	SY	BREAKING OF EXISTING ASPHALT PAVEMENT
0199000000-E	SP	1,320	SF	TEMPORARY SHORING
0241000000-E	SP	175	SY	GENERIC GRADING ITEM ROCK PLATING
0318000000-E	300	1,370	TON	FOUNDATION CONDITIONING MATE-RIAL, MINOR STRS
0343000000-E	310	60	LF	15" SIDE DRAIN PIPE
0344000000-E	310	172	LF	18" SIDE DRAIN PIPE
0384000000-E	310	137	LF	30" RC PIPE CULVERTS, CLASS III
0390000000-E	310	68	LF	36" RC PIPE CULVERTS, CLASS III
0453000000-E	310	2	EA	**" PIPE END SECTION (18")
0708000000-E	310	356	LF	15" BIT COAT CS PIPE CULVERTS, TYPE B 0.064" THICK
0714000000-E	310	108	LF	18" BIT COAT CS PIPE CULVERTS, TYPE B 0.064" THICK
0720000000-E	310	56	LF	24" BIT COAT CS PIPE CULVERTS, TYPE B 0.064" THICK
0738000000-E	310	16	LF	42" BIT COAT CS PIPE CULVERTS, TYPE B 0.109" THICK
0744000000-E	310	20	LF	48" BIT COAT CS PIPE CULVERTS, TYPE B 0.109" THICK
0806000000-E	310	16	EA	15" BIT COAT CS PIPE ELBOWS, TYPE B 0.064" THICK
0807000000-E	310	4	EA	18" BIT COAT CS PIPE ELBOWS, T YPE B 0.064" THICK
0808000000-E	310	6	EA	24" BIT COAT CS PIPE ELBOWS, T YPE B 0.064" THICK
0995000000-E	340	1,166	LF	PIPE REMOVAL
1011000000-N	500	Lump Sum		FINE GRADING
1121000000-E	520	450	TON	AGGREGATE BASE COURSE
1220000000-E	545	500	TON	INCIDENTAL STONE BASE
1231000000-E	560	1,420	CY	SHOULDER BORROW
1297000000-E	607	340	SY	MILLING ASPHALT PAVEMENT, **" DEPTH (1-1/2")
1491000000-E	610	7,220	TON	ASPHALT CONC BASE COURSE, TYPE B25.0C
1503000000-E	610	8,870	TON	ASPHALT CONC INTERMEDIATE COURSE, TYPE I19.0C
1523000000-E	610	4,320	TON	ASPHALT CONC SURFACE COURSE, TYPE S9.5C
1560000000-E	620	740	TON	ASPHALT BINDER FOR PLANT MIX, GRADE PG 64-22
1565000000-E	620	270	TON	ASPHALT BINDER FOR PLANT MIX, GRADE PG 70-22
1693000000-E	654	205	TON	ASPHALT PLANT MIX, PAVEMENT REPAIR
2000000000-N	806	95	EA	RIGHT OF WAY MARKERS
2022000000-E	815	56	CY	SUBDRAIN EXCAVATION
2033000000-E	815	42	CY	SUBDRAIN FINE AGGREGATE
2044000000-E	815	250	LF	6" PERFORATED SUBDRAIN PIPE
2055000000-E	815	9	EA	6" SUBDRAIN PIPE WYES, TEES, & ELBOWS
2066000000-N	815	1	EA	CONCRETE PAD FOR SUBDRAIN PIPE OUTLET
2077000000-E	815	6	LF	6" OUTLET PIPE (SUBDRAINS)
2209000000-E	838	8.7	CY	ENDWALLS
2253000000-E	840	4.13	CY	PIPE COLLARS
2275000000-E	SP	20	CY	FLOWABLE FILL

ItemNumber	Sec #	Quantity	Unit	Description
2286000000-N	840	57	EA	MASONRY DRAINAGE STRUCTURES
2308000000-E	840	52	LF	MASONRY DRAINAGE STRUCTURES
2364000000-N	840	4	EA	FRAME WITH TWO GRATES, STD 840.16
2366000000-N	840	3	EA	FRAME WITH TWO GRATES, STD 840.24
2374000000-N	840	4	EA	FRAME WITH GRATE & HOOD, STD 840.03, TYPE ** (E)
2374000000-N	840	18	EA	FRAME WITH GRATE & HOOD, STD 840.03, TYPE ** (F)
2374000000-N	840	18	EA	FRAME WITH GRATE & HOOD, STD 840.03, TYPE ** (G)
2396000000-N	840	7	EA	FRAME WITH COVER, STD 840.54
2549000000-E	846	14,410	LF	2'-6" CONCRETE CURB & GUTTER
2591000000-E	848	15	SY	4" CONCRETE SIDEWALK
2612000000-E	848	440	SY	6" CONCRETE DRIVEWAY
2619000000-E	850	33	SY	4" CONCRETE PAVED DITCH
2655000000-E	852	20	SY	5" MONOLITHIC CONCRETE ISLANDS (KEYED IN)
2724000000-E	857	77	LF	PRECAST REINFORCED CONCRETE BARRIER, SINGLE FACED
2830000000-N	858	3	EA	ADJUSTMENT OF MANHOLES
2845000000-N	858	7	EA	ADJUSTMENT OF METER BOXES OR VALVE BOXES
2938000000-N	SP	3	EA	CONVERT EXISTING DROP INLET TO JUNCTION BOX WITH MANHOLE COVER
3030000000-E	862	4,600	LF	STEEL BM GUARDRAIL
3045000000-E	862	212.5	LF	STEEL BM GUARDRAIL, SHOP CURVED
3150000000-N	862	10	EA	ADDITIONAL GUARDRAIL POSTS
3180000000-N	862	4	EA	GUARDRAIL ANCHOR UNITS, TYPE ********** (B-77)
3195000000-N	862	3	EA	GUARDRAIL ANCHOR UNITS, TYPE AT-1
3210000000-N	862	4	EA	GUARDRAIL ANCHOR UNITS, TYPE CAT-1
3270000000-N	SP	13	EA	GUARDRAIL ANCHOR UNITS, TYPE 350
3345000000-E	864	238	LF	REMOVE & RESET EXISTING GUARD-RAIL
3360000000-E	863	4,545	LF	REMOVE EXISTING GUARDRAIL
3628000000-E	876	30	TON	RIP RAP, CLASS I
3635000000-E	876	30	TON	RIP RAP, CLASS II
3649000000-E	876	680	TON	RIP RAP, CLASS B
3656000000-E	876	3,000	SY	FILTER FABRIC FOR DRAINAGE
4400000000-E	1110	572	SF	WORK ZONE SIGNS (STATIONARY)
4405000000-E	1110	224	SF	WORK ZONE SIGNS (PORTABLE)
4410000000-E	1110	25	SF	WORK ZONE SIGNS (BARRICADE MOUNTED)
4420000000-N	1120	4	EA	CHANGEABLE MESSAGE SIGN
4430000000-N	1130	150	EA	DRUMS
4435000000-N	1135	150	EA	CONES
4445000000-E	1145	144	LF	BARRICADES (TYPE III)
4450000000-N	1150	1,920	HR	FLAGGER
4465000000-N	1160	2	EA	TEMPORARY CRASH CUSHIONS
4480000000-N	1165	2	EA	TMIA
4485000000-E	1170	170	LF	PORTABLE CONCRETE BARRIER
4510000000-N	SP	160	HR	POLICE
4650000000-N	1251	312	EA	TEMPORARY RAISED PAVEMENT MARKERS
4685000000-E	1205	4,250	LF	THERMOPLASTIC PAVEMENT MARKING LINES (4", 90 MILS)
4686000000-E	1205	39,554	LF	THERMOPLASTIC PAVEMENT MARKING LINES (4", 120 MILS)
4695000000-E	1205	300	LF	THERMOPLASTIC PAVEMENT MARKING LINES (8", 90 MILS)
4710000000-E	1205	200	LF	THERMOPLASTIC PAVEMENT MARKING LINES (24", 120 MILS)

ItemNumber	Sec #	Quantity	Unit	Description
4721000000-E	1205	8	EA	THERMOPLASTIC PAVEMENT MARKING CHARACTER (120 MILS)
4725000000-E	1205	73	EA	THERMOPLASTIC PAVEMENT MARKING SYMBOL (90 MILS)
4810000000-E	1205	91,988	LF	PAINT PAVEMENT MARKING LINES (4")
4820000000-E	1205	600	LF	PAINT PAVEMENT MARKING LINES (8")
4835000000-E	1205	400	LF	PAINT PAVEMENT MARKING LINES (24")
4840000000-N	1205	8	EA	PAINT PAVEMENT MARKING CHARAC-TER
4845000000-N	1205	138	EA	PAINT PAVEMENT MARKING SYMBOL
4850000000-E	1205	3,230	LF	REMOVAL OF PAVEMENT MARKING LINES (4")
4875000000-N	1205	6	EA	REMOVAL OF PAVEMENT MARKING SYMBOLS & CHARACTERS
4905000000-N	1253	366	EA	SNOWPLOWABLE PAVEMENT MARKERS
4945000000-N	1267	30	EA	FLEXIBLE DELINEATORS (CRYSTAL & RED)
4950000000-N	1267	30	EA	FLEXIBLE DELINEATORS (YELLOW & RED)
5319000000-E	1505	2	CY	CLASS B CONCRETE FOR ENCASING UTILITY LINES
5326000000-E	1510	6	LF	10" WATER LINE
5326200000-E	1510	3,600	LF	12" WATER LINE
5558000000-E	1515	3	EA	12" VALVE
5648000000-N	1515	4	EA	RELOCATE WATER METER
5649000000-N	1515	1	EA	RECONNECT WATER METER
5666000000-E	1515	1	EA	FIRE HYDRANT
5672000000-N	1515	6	EA	RELOCATE FIRE HYDRANT
5691300000-E	1520	422	LF	8" SANITARY GRAVITY SEWER
5691500000-E	1520	106	LF	12" SANITARY GRAVITY SEWER
5692000000-E	1520	787	LF	30" SANITARY GRAVITY SEWER
5709300000-E	1520	2,868	LF	6" FORCE MAIN SEWER

STATE OF NORTH CAROLINA
SUMMARY OF QUANTITIES

PROJECT REFERENCE No.	SHEET No.
37645 & 37857	3 (2 OF 2)

ItemNumber	Sec #	Quantity	Unit	Description
5768000000-N	1520	6	EA	SANITARY SEWER CLEAN-OUT
5776000000-E	1525	12	EA	5' DIA UTILITY MANHOLE
5782000000-E	1525	19	LF	UTILITY MANHOLE WALL, 5' DIA
5798000000-E	1530	1,871	LF	ABANDON **" UTILITY PIPE (15")
5800000000-E	1530	2,913	LF	ABANDON 6" UTILITY PIPE
5802000000-E	1530	1,871	LF	ABANDON 10" UTILITY PIPE
5804000000-E	1530	3,346	LF	ABANDON 12" UTILITY PIPE
5814000000-E	1530	796	LF	ABANDON 30" UTILITY PIPE
5816000000-N	1530	15	EA	ABANDON UTILITY MANHOLE
5828000000-N	1530	1	EA	REMOVE UTILITY MANHOLE
5836000000-E	1540	57	LF	24" ENCASEMENT PIPE
5836200000-E	1540	57	LF	30" ENCASEMENT PIPE
5872200000-E	1550	57	LF	TRENCHLESS INSTALLATION OF 24" IN SOIL
5872300000-E	1550	57	LF	TRENCHLESS INSTALLATION OF 30" IN SOIL
6000000000-E	1605	8,050	LF	TEMPORARY SILT FENCE
6006000000-E	1610	400	TON	STONE FOR EROSION CONTROL, CLASS A
6009000000-E	1610	3,520	TON	STONE FOR EROSION CONTROL, CLASS B
6012000000-E	1610	2,135	TON	SEDIMENT CONTROL STONE
6015000000-E	1615	14	ACR	TEMPORARY MULCHING
6018000000-E	1620	550	LB	SEED FOR TEMPORARY SEEDING
6021000000-E	1620	2	TON	FERTILIZER FOR TEMPORARY SEEDING
6024000000-E	1622	650	LF	TEMPORARY SLOPE DRAINS
6027000000-N	1622	15	EA	INLET PROTECTION AT TEMPORARY SLOPE DRAINS
6029000000-E	SP	200	LF	SAFETY FENCE
6030000000-E	1630	16,190	CY	SILT EXCAVATION
6036000000-E	1631	7,090	SY	MATTING FOR EROSION CONTROL

ItemNumber	Sec #	Quantity	Unit	Description
6038000000-E	SP	355	SY	PERMANENT SOIL REINFORCEMENT MAT
6042000000-E	1632	2,525	LF	1/4" HARDWARE CLOTH
6045000000-E	SP	160	LF	**" TEMPORARY PIPE (24")
6070000000-N	SP	8	EA	SPECIAL STILLING BASINS
6084000000-E	1660	13	ACR	SEEDING & MULCHING
6087000000-E	1660	8.5	ACR	MOWING
6090000000-E	1661	200	LB	SEED FOR REPAIR SEEDING
6093000000-E	1661	0.5	TON	FERTILIZER FOR REPAIR SEEDING
6096000000-E	1662	325	LB	SEED FOR SUPPLEMENTAL SEEDING
6108000000-E	1665	9.75	TON	FERTILIZER TOPDRESSING
6111000000-E	SP	67	LF	IMPERVIOUS DIKE
6114000000-N	SP	8.5	HR	SPECIALIZED HAND MOWING
6117000000-N	SP	32	EA	RESPONSE FOR EROSION CONTROL
8126000000-N	414	Lump Sum		CULVERT EXCAVATION, STA ****** (34+27.24 -L-)
8133000000-E	414	126	TON	FOUNDATION CONDITIONING MATERIAL, BOX CULVERT
8196000000-E	420	229.5	CY	CLASS A CONCRETE (CULVERT)
8245000000-E	425	37,103	LB	REINFORCING STEEL (CULVERT)
8436000000-E	453	370	SF	GRAVITY RETAINING WALLS
******* BEGIN SCHEDULE AA ******* ******* (3 ALTERNATES) *******				
0366000000-E AA1	310	2,324	LF	15" RC PIPE CULVERTS, CLASS III
0372000000-E AA1	310	800	LF	18" RC PIPE CULVERTS, CLASS III
0378000000-E AA1	310	860	LF	24" RC PIPE CULVERTS, CLASS III
*** OR ***				
0366000000-E AA2	310	2,112	LF	15" RC PIPE CULVERTS, CLASS III

ItemNumber	Sec #	Quantity	Unit	Description
0372000000-E AA2	310	640	LF	18" RC PIPE CULVERTS, CLASS III
0378000000-E AA2	310	600	LF	24" RC PIPE CULVERTS, CLASS III
0536000000-E AA2	SP	212	LF	***" HDPE PIPE CULVERTS (15")
0536000000-E AA2	SP	160	LF	***" HDPE PIPE CULVERTS (18")
0536000000-E AA2	SP	260	LF	***" HDPE PIPE CULVERTS (24")
*** OR ***				
0366000000-E AA3	310	2,112	LF	15" RC PIPE CULVERTS, CLASS III
0372000000-E AA3	310	640	LF	18" RC PIPE CULVERTS, CLASS III
0378000000-E AA3	310	600	LF	24" RC PIPE CULVERTS, CLASS III
0540000000-E AA3	SP	212	LF	***" ALUMINIZED CORRUGATED STEEL PIPE CULVERTS, ****" THICK (15", 0.064")
0540000000-E AA3	SP	160	LF	***" ALUMINIZED CORRUGATED STEEL PIPE CULVERTS, ****" THICK (18", 0.064")
0540000000-E AA3	SP	260	LF	***" ALUMINIZED CORRUGATED STEEL PIPE CULVERTS, ****" THICK (24", 0.064")
******* END SCHEDULE AA *******				

COMPUTED BY: AMP	DATE: Sept. 2006	PROJECT NO.	SHEET NO.
CHECKED BY: THS	DATE: Sept. 2006	37857	3-A

STATE OF NORTH CAROLINA
DIVISION OF HIGHWAYS

LIST OF PIPES, ENDWALLS, ETC. (FOR PIPES 48" & UNDER)

ABBREVIATIONS

- C.B. CATCH BASIN
- N.D.I. NARROW DROP INLET
- D.I. DROP INLET
- M.D.I. MEDIAN DROP INLET
- M.D.I.(N.S.) MEDIAN DROP INLET (NARROW SLOT)
- J.B. JUNCTION BOX
- M.H. MANHOLE
- T.B.D.I. TRAFFIC BEARING DROP INLET
- T.B.J.B. TRAFFIC BEARING JUNCTION BOX

STATION (SIZE / THICKNESS OR GAUGE)	LOCATION (LT, RT, OR CL)	STRUCTURE NO. FROM	STRUCTURE NO. TO	TOP ELEVATION	INVERT ELEVATION	INVERT ELEVATION	SLOPE CRITICAL	CLASS III R.C. PIPE (UNLESS NOTED OTHERWISE) 12"	15"	18"	24"	30"	36"	42"	48"	BITUMINOUS COATED C.S. PIPE TYPE B (UNLESS NOTED OTHERWISE) 12" 0.064	15" 0.064	18" 0.064	24" 0.064	24"	30" 0.079	30"	36" 0.079	36"	42" 0.109	42"	48" 0.109	48"
-L- 17+55	RT	1		1257.1																								
-L- 17+55	RT	1	3		1254.1	1252.5			188																			
-L- 17+28	RT	2		1254.2																								
-L- 17+28	RT	2	1		1254.2	1254.1			32																			
-L- 19+46	RT	3		1255.5																								
-L- 19+46	RT	3	4		1252.3	1251.3				236																		
-L- 21+50	RT																											
-L- 21+88	RT	4		1259.2																								
-L- 21+88	RT	4	5		1251.3	1251.1					36																	
-L- 21+88	LT	5		1262.1																								
-L- 21+88	LT	5	5A		1251.1	1251.0																						
-L- 21+88	RT	6	4		1255.6	1253.0																						
-L- 23+50	RT	7	6		1264.0	1255.6																						
-L- 24+06	LT	8		1268.7																								
-L- 24+06	LT	8	9		1265.7	1254.2											40											
-L- 28+06	RT	10		1268.3																								
-L- 28+46	RT	10	11B		1258.3	1249.3					68																	
-L- 28+46	LT	11		1267.3																								
-L- 28+46	LT	11	11A		1264.3	1249.3											36											
-L- 34+35	LT																											
-L- 31+00	LT	12		1258.2																								
-L- 31+00	LT	12	13		1255.2	1250.0											28											
-L- 34+57	LT	14		1253.6																								
-L- 34+57	LT	14	15A		1250.6	1249.2			228																			
-L- 34+44	LT	14A	14B									69																
-L- 35+13	LT	14A																										
-L- 36+95	LT	15A		1252.9																								
-L- 36+95	LT	15A	15						4																			
-L- 36+99	LT	15		1252.9																								
-L- 36+99	LT	15	16		1249.2	1248.9					36																	
-L- 36+99	RT	16		1255.0																								
-L- 36+99	RT	16	17		1248.9	1245.3													24									
-L- 38+30	RT	18																										
-L- 39+90	RT																											
-L- 39+00	LT	19		1253.9																								
-L- 39+00	LT	19	15		1250.2	1249.2					196																	
-L- 41+10	LT	20		1256.2																								
-L- 41+10	LT	20	19		1252.7	1250.7				208																		
-L- 41+10	LT	20A																										
-L- 41+10	LT	20A	20						12																			
-L- 41+10	RT	21		1256.1																								
-L- 41+10	RT	21	20		1253.1	1252.7			24																			
-L- 42+35	RT	22	21		1256.3	1253.1			124																			
PROJECT MA13063R TOTALS								0	612	444	336	69	0	0	0	0	104	0	24	0	0	0	0	0	0	0	0	0

STATION	LOCATION	FROM	TO	CLASS III R.C. PIPE OR C.S. PIPE, TYPE IR ALUMINIZED OR HDPE PIPE, TYPE S OR D 12"	15"	18"	24"	30"	36"	42"	48"	15" SIDE DRAIN PIPE	18" SIDE DRAIN PIPE	24" SIDE DRAIN PIPE	ENDWALLS STD. 838.01 OR STD. 838.11 (UNLESS NOTED OTHERWISE) CU. YARDS R.C.P.	C.S.P.	QUANITIES FOR DRAINAGE STRUCTURES PER EACH (0 THRU 5.0')	*TOTAL L.F. FOR PAY QUANTITY SHALL BE COL. 'A' + (1.3 X COL.'B') LIN. *FT. A 5.0' THRU 10.0'	B 10.0' AND ABOVE	C.B. STD. 840.01 OR STD. 840.02	FRAME, GRATES, AND HOOD STANDARD 840.03 TYPE OF GRATE E	F	G	D.I. STD. 840.14 OR STD. 840.15	D.I. FRAME AND GRATE STD. 840.16	M.D.I. TYPE "B" STD. 840.18 OR 840.27	M.D.I. TYPE "D" STD. 840.19 OR 840.28	M.D.I. (N.S.) FRAME SINGLE GRATE STD. 840.24	M.D.I. (N.S.) FRAME WITH TWO GRATES STD. 840.24	M.D.I. (N.S.) FRAME WITH TWO FLAT GRATES STD. 840.29	J.B. STD. 840.31 OR 840.32	T.B.J.B. STD. 840.34	M.H. FRAME AND COVER STD. 840.54	M.H. STD. 840.51 OR 840.53	18" CROSS-PIPE END SECTION STD. 310.03 OR 310.05	4" CONCRETE PAVED DITCH (SY)	CONVERT DI TO J.B. W/ M.H. (SEE DETAIL 2-H)
-L- 17+55	RT	1															1			1		1															
-L- 17+55	RT	1	3																																		
-L- 17+28	RT	2																																			
-L- 17+28	RT	2	1																																		
-L- 19+46	RT	3															1			1	1																
-L- 19+46	RT	3	4																																		
-L- 21+50	RT																																				
-L- 21+88	RT	4															1	2.9		1			1														
-L- 21+88	RT	4	5																																		
-L- 21+88	LT	5															1	5.0	1.0														1	1			
-L- 21+88	LT	5	5A				12																														
-L- 21+88	RT	6	4			16																															
-L- 23+50	RT	7	6		160																																
-L- 24+06	LT	8															1			1		1															
-L- 24+06	LT	8	9																																		
-L- 28+06	RT	10															1	5.0														1	1				
-L- 28+46	RT	10	11B				32																														
-L- 28+46	LT	11															1			1			1														
-L- 28+46	LT	11	11A																																		
-L- 34+35	LT																																				
-L- 31+00	LT	12															1			1			1														
-L- 31+00	LT	12	13																																		
-L- 34+57	LT	14															1			1			1														
-L- 34+57	LT	14	15A																																		
-L- 34+44	LT	14A	14B																																		
-L- 35+13	LT	14A															1															1	1				
-L- 36+95	LT	15A															1			1	1																
-L- 36+95	LT	15A	15																																		
-L- 36+99	LT	15															1			1	1																
-L- 36+99	LT	15	16																																		
-L- 36+99	RT	16															1	1.1		1			1														
-L- 36+99	RT	16	17																																		
-L- 38+30	RT	18											104																								
-L- 39+90	RT																																				
-L- 39+00	LT	19															1			1		1															
-L- 39+00	LT	19	15																																		
-L- 41+10	LT	20															1			1		1															
-L- 41+10	LT	20	19																																		
-L- 41+10	LT	20A															1							1	1												
-L- 41+10	LT	20A	20																																		
-L- 41+10	RT	21															1			1			1														
-L- 41+10	RT	21	20																																		
-L- 42+35	RT	22	21																																		
PROJECT MA13063R TOTALS				0	160	16	44	0	0	0	0	0	104	0	0	0	17	14.0	1.0	13	3	4	6	1	1	0	0	0	0	0	0	2	3	1	0	0	0

STATION	LOCATION	FROM	TO	CORR. STEEL ELBOWS NO. & SIZE	CONC. COLLARS CL. "B" C.Y. STD. 840.72	CONC. & BRICK PIPE PLUG, C.Y. STD. 840.71	FLOWABLE FILL (CY)	PIPE REMOVAL (FEET)	REMARKS
-L- 17+55	RT	1							
-L- 17+55	RT	1	3						
-L- 17+28	RT	2							
-L- 17+28	RT	2	1					20	REM. EX. 15" CMP
-L- 19+46	RT	3						25	REM. EX. 15" RCP
-L- 19+46	RT	3	4						
-L- 21+50	RT							22	REM. EX. 18" RCP
-L- 21+88	RT	4							
-L- 21+88	RT	4	5						
-L- 21+88	LT	5						46	REM. EX. 18" CMP
-L- 21+88	LT	5	5A						
-L- 21+88	RT	6	4						
-L- 23+50	RT	7	6						
-L- 24+06	LT	8							
-L- 24+06	LT	8	9	2@15					
-L- 28+06	RT	10							
-L- 28+46	RT	10	11B					83	REM. EX. 24" CMP
-L- 28+46	LT	11							
-L- 28+46	LT	11	11A	2@15					
-L- 34+35	LT							14	REM. EX. 18" CSP
-L- 31+00	LT	12							
-L- 31+00	LT	12	13	2@15					
-L- 34+57	LT	14							
-L- 34+57	LT	14	15A						
-L- 34+44	LT	14A	14B						ELEVATION TBD DURING CONSTRUCTION FOR DRAINAGE STRUCTURES 14A AND 14B.
-L- 35+13	LT	14A							REM. EX. JB
-L- 36+95	LT	15A							
-L- 36+95	LT	15A	15						
-L- 36+99	LT	15							
-L- 36+99	LT	15	16						
-L- 36+99	RT	16							
-L- 36+99	RT	16	17	2@24					
-L- 38+30	RT	18						36	REM. EX. 18" CSP
-L- 39+90	RT							38	REM. EX. 18" CSP
-L- 39+00	LT	19							
-L- 39+00	LT	19	15						
-L- 41+10	LT	20						37	MUST BE PRECAST / REM. EX. 15" CMP
-L- 41+10	LT	20	19						
-L- 41+10	LT	20A							
-L- 41+10	LT	20A	20						
-L- 41+10	RT	21							MUST BE PRECAST
-L- 41+10	RT	21	20					40	REM. EX. 15" CMP
-L- 42+35	RT	22	21						
				6@15					
PROJECT MA13063R TOTALS				2@24	0.00	0.00	0.000	361	

COMPUTED BY: AMP DATE: Sept. 2006

CHECKED BY: THS DATE: Sept. 2006

PROJECT NO.	SHEET NO.
37645	3-B

STATE OF NORTH CAROLINA
DIVISION OF HIGHWAYS

LIST OF PIPES, ENDWALLS, ETC. (FOR PIPES 48" & UNDER)

ABBREVIATIONS

- C.B. CATCH BASIN
- N.D.I. NARROW DROP INLET
- D.I. DROP INLET
- M.D.I. MEDIAN DROP INLET
- M.D.I.(N.S.) MEDIAN DROP INLET (NARROW SLOT)
- J.B. JUNCTION BOX
- M.H. MANHOLE
- T.B.D.I. TRAFFIC BEARING DROP INLET
- T.B.J.B. TRAFFIC BEARING JUNCTION BOX

STATION	LOCATION (LT, RT, OR CL)	STRUCTURE NO. FROM	STRUCTURE NO. TO	TOP ELEVATION	INVERT ELEVATION	INVERT ELEVATION	SLOPE CRITICAL	CLASS III R.C. PIPE (UNLESS NOTED OTHERWISE) 12"	15"	18"	24"	30"	36"	42"	48"	BITUMINOUS COATED C.S. PIPE TYPE B (UNLESS NOTED OTHERWISE) 12" 0.064	15" 0.064	18" 0.064	24" 0.064	30" 0.079	36" 0.079	42" 0.109	48" 0.109	CLASS III R.C. PIPE OR C.S. PIPE, TYPE IR ALUMINIZED OR HDPE PIPE, TYPE S OR D 12"	15"	18"	24"	30"	36"	42"	48"	15" SIDE DRAIN PIPE	18" SIDE DRAIN PIPE	24" SIDE DRAIN PIPE	ENDWALLS STD. 838.01 OR STD. 838.11 (UNLESS NOTED OTHERWISE) CU. YARDS R.C.P.	C.S.P.	QUANTITIES FOR DRAINAGE STRUCTURES PER EACH (0 THRU 5.0')	*TOTAL L.F. FOR PAY QUANTITY SHALL BE COL. 'A' + (1.3 X COL.'B') LIN. *FT. A 5.0' THRU 10.0'	B 10.0' AND ABOVE	C.B. STD. 840.01 OR STD. 840.02	FRAME, GRATES, AND HOOD STANDARD 840.03 TYPE OF GRATE E	F	G	D.I. STD. 840.14 OR STD. 840.15	D.I. FRAME AND GRATE STD. 840.16	M.D.I. TYPE "B" STD. 840.18 OR 840.27	M.D.I. TYPE "D" STD. 840.19 OR 840.28	M.D.I. (N.S.) FRAME SINGLE GRATE STD. 840.24	M.D.I. (N.S.) FRAME WITH TWO GRATES STD. 840.24	M.D.I. (N.S.) FRAME WITH TWO FLAT GRATES STD. 840.29	J.B. STD. 840.31 OR 840.32	T.B.J.B. STD. 840.34	M.H. FRAME AND COVER STD. 840.54	M.H. STD. 840.51 OR 840.53		18" CROSS-PIPE END SECTION STD. 310.03 OR 310.05	4" CONCRETE PAVED DITCH (SY)	CONVERT DI TO J.B. W/ M.H. (SEE DETAIL 2-H)	CORR. STEEL ELBOWS NO. & SIZE	CONC. COLLARS CL. "B" C.Y. STD. 840.72	CONC. & BRICK PIPE PLUG, C.Y. STD. 840.71	FLOWABLE FILL (CY)	PIPE REMOVAL (FEET)	REMARKS
-L- 42+35	RT	22		1260.5																																	1														1		1											MUST BE PRECAST
-L- 42+70	RT	23		1261.9																																	1			1			1																					MUST BE PRECAST
-L- 42+70	RT	23	22		1258.9	1256.3			36																																																							
-L- 43+50	RT	24		1266.2																																	1			1			1																					MUST BE PRECAST
-L- 43+50	RT	24	23		1261.7	1258.9			76																																																							
-L- 43+50	RT	25		1264.9																																	1							1	1																			
-L- 43+50	RT	25	24		1261.7	1261.7			16																																																							
-L- 45+50	LT	26		1278.1																																	1							1	1																		22	REM. EX. 18" RCP
-L- 45+50	LT	26	27		1275.1	1274.9					36																																																					
-L- 45+85	LT	27		1278.9																																	1							1	1																			
-L- 45+85	LT	27	28		1274.9	1272.9						52																																																		
-L- 45+74	RT	28		1278.5																																	1	0.6		1			1																				45	REM. EX. 30" CMP
-L- 45+74	RT	28	29		1272.9	1272.6						16																																																	
-L- 45+72	RT	29		1279.1																																	1	1.5													1		1										6	REM. 6' OF EX. 30" CMP
-L- 46+35	LT	30																														16																															19	REM. EX. 15" CMP
-L- 49+82	LT	30A		1299.1																																	1							1	1																			
-L- 49+82	LT	30A	31		1295.2	1293.2					48																	24																																			75	REM. 75' OF EX. 24" CMP
-L- 49+53	RT	31		1299.0																																	1	5.0	4.5												1		1											
-Y4- 11+50	LT	32																															32																														41	REM. EX. 15" CMP
-Y3- 11+59.6	RT	33	34		1308.4	1304.7			92																																																						91	REM. EX. 12" CMP
-Y3- 10+70	LT	34		1307.7																																	1			1	1																							
-Y3- 10+70	LT	34	37		1304.7	1303.5				60																																																				1.950		
-L- 51+72	RT	35		1310.7																																	1	1.3		1		1																						
-L- 51+72	RT	35	34		1307.7	1304.7			40																																																							
-L- 52+35	LT	36		1312.3																																	1			1		1																						
-L- 52+35	LT	36	35		1309.3	1307.7			64																																																							
-L- 51+38	RT	38		1308.8																																	1			1			1																				5.330		
-L- 51+38	RT	38	39		1305.6	1296.8				44																		64																																				57	REM. EX. 15" CMP @ -Y- 12+50 RT
-L- 55+35	LT																																																														21	REM. EX. 15" CMP
-L- 56+36	LT	40		1312.2																																	1			1			1																					
-L- 56+36	LT	40	41		1309.2	1297.2			260																																																							
-L- 59+01	LT	41		1300.0																																	1			1			1																					
-L- 59+01	LT	41	42		1297.0	1296.8																						36																																				31	REM. EX. 18" CMP
-L- 58+98	RT	41A		1300.5																																	1			1		1																				5.432		
-L- 58+99	RT	41B		1299.9																																	1							1	1																			
-L- 58+99	RT	41B	41A		1299.9	1297.2				8																																																							
-L- 60+63	RT	45	46		1285.4	1284.5				32																																																		0.447				
-L- 62+50	LT	47		1277.6																																	1									1			1																
-L- 63+08	LT	48		1275.9																																																						1						
-L- 63+07	LT	49		1274.6																																	1			1			1																					
-L- 62+98	RT	50		1275.2																																	1			1		1																						
-L- 65+25	RT	51		1267.5																																	1									1			1																
-L- 65+25	RT	51	52		1264.8	1260.5																					52																																					
-L- 65+75	RT	52		1264.9																																	1			1		1																					7	REM. 7' OF EX. 18" CMP
-L- 65+89	LT	53		1265.0																																																						1						
-L- 67+04	LT	55		1261.2																																	1			1			1																					
-L- 67+04	LT	55	54		1258.2	1257.9			16																																																							
-L- 68+00	RT	56		1257.3																																	1									1			1																
-L- 68+00	RT	56	57		1254.8	1254.2			8																																																							
-L- 68+00	RT	57		1257.0																																	1			1		1																						
-L- 68+00	RT	57	59		1254.0	1250.7			184																																																							
SHEET TOTALS								0	792	144	84	68	0	0	0	0	0	0	0 0	0 0	0 0	0 0	0 0	0	52	100	24	0	0	0	0	16	32	0	0	0	26	8	5	15	1	6	8	3	3	3	0	0	3	0	2	0	2	0	0	0	0	2		0.447	0	12.712	415	

COMPUTED BY: AMP DATE: Sept. 2006

CHECKED BY: THS DATE: Sept. 2006

PROJECT NO. 37645 SHEET NO. 3-C

STATE OF NORTH CAROLINA
DIVISION OF HIGHWAYS

LIST OF PIPES, ENDWALLS, ETC. (FOR PIPES 48" & UNDER)

ABBREVIATIONS

- C.B. CATCH BASIN
- N.D.I. NARROW DROP INLET
- D.I. DROP INLET
- M.D.I. MEDIAN DROP INLET
- M.D.I.(N.S.) MEDIAN DROP INLET (NARROW SLOT)
- J.B. JUNCTION BOX
- M.H. MANHOLE
- T.B.D.I. TRAFFIC BEARING DROP INLET
- T.B.J.B. TRAFFIC BEARING JUNCTION BOX

STATION (SIZE / THICKNESS OR GAUGE)	LOCATION (LT, RT, OR CL)	STRUCTURE NO. FROM	STRUCTURE NO. TO	TOP ELEVATION	INVERT ELEVATION	INVERT ELEVATION	SLOPE CRITICAL	CLASS III R.C. PIPE (UNLESS NOTED OTHERWISE) 12"	15"	18"	24"	30"	36"	42"	48"	BITUMINOUS COATED C.S. PIPE TYPE B (UNLESS NOTED OTHERWISE) 12" 0.064	15" 0.064	18" 0.064	24" 0.064	30" 0.079	36" 0.079	42" 0.109	48" 0.109	CLASS III R.C. PIPE OR C.S. PIPE, TYPE IR ALUMINIZED OR D OR HDPE PIPE, TYPE S 12"	15"	18"	24"	30"	36"	42"	48"
-L- 69+86	RT	59		1253.7																											
-L- 69+86	RT	59	60		1250.7	1247.6											28														
-L- 70+50	RT																														
-L- 81+70	LT																														
-L- 84+27	LT	62		1257.1																											
-L- 84+27	LT	62	64		1252.7	1252.5					64																				
-L- 84+10	LT	63	62		1253.5	1252.7					20																				
-L- 84+71	RT	64		1256.2																											
-L- 84+71	RT	64	65		1252.5	1234.3																					192				
-L- 85+91	LT	66		1255.5																											
-L- 85+91	LT	66	67		1252.5	1252.0			28																						
-L- 86+73	RT	68		1248.9																											
-L- 86+73	RT	68	69		1235.0	1234.3																	12								
-L- 86+46	LT	70			1247.9	1247.3																	8								
-L- 88+60	LT	71		1253.7																											
-L- 88+60	LT	71	72		1250.7	1241.2			192																						
-L- 90+51	LT	72		1251.4																											
-L- 90+90	LT	73		1251.9	1246.1																										
-L- 93+24	LT	75		1251.3																											
-L- 93+24	LT	75	76		1248.6	1247.6			40																						
-L- 94+67	LT	77	78		1246.2	1239.8											60														
-L- 91+00	RT	79		1251.1																											
-L- 91+00	RT	79	80		1248.1	1247.5			100																						
-L- 92+01	RT	80		1250.5																											
-L- 92+01	RT	80	80A		1247.5	1247.4			8																						
-L- 92+08	RT	80A		1250.4																											
-L- 92+08	RT	80A	82		1247.4	1245.5			112																						
-L- 93+21	RT	82		1248.5																											
-L- 93+21	RT	82	83		1245.5	1242.3			228																						
-L- 95+45													68																		
-L- 95+52	RT	83		1245.3																											
-L- 95+52	RT	83	84		1233.0	1230.8													32												
-L- 97+94	LT	85																													
-L- 97+43	RT	87		1244.2																											
-L- 97+43	RT	87	88		1240.9	1235.0												28													
-L- 101+21	RT	89		1241.9																											
-L- 101+21	RT	89	90		1238.9	1232.8											36														
-Y7- 11+03	LT	91			1236.1	1235.6																				16					
-Y7- 11+03	LT	92			1233.7	1233.5				4																					
-L- 101+70	LT	93																													
-L- 111+50	LT	95C			1252.4	1232.7											40														
-L- 102+14	RT	94			1222.8	1222.5																16									
-L- 103+00	LT	94A			1264.7	1240.6											48														
-L- 112+50	LT	95B			1249.1	1229.0											40														
-L- 109+74	LT	95	96		1237.5	1236.5				48																28					
-L- 113+95	LT	97	98		1224.9	1215.0												80													
-L- 120+79	LT	99	100		1211.3	1206.2					96																				
-L- 114+80	LT	97A																													
SHEET TOTALS									708	52	180	0	68				252	108	32			16	20		0	44	192				
PROJECT 37645 TOTALS									1500	196	264	68	68				252	108	32			16	20		52	144	216				
PROJECT 37857 TOTALS									612	444	336	69	0				104	0	24			0	0		160	16	44				
GRAND TOTAL 37645 & 37857									2112	640	600	137	68				356	108	56			16	20		212	160	260				

STATION	15" SIDE DRAIN PIPE	18" SIDE DRAIN PIPE	24" SIDE DRAIN PIPE	ENDWALLS STD. 838.01 OR STD. 838.11 (UNLESS NOTED OTHERWISE) CU. YARDS R.C.P.	C.S.P.	QUANTITIES FOR DRAINAGE STRUCTURES PER EACH (0 THRU 5.0')	"TOTAL L.F. FOR PAY QUANTITY SHALL BE COL. 'A' + (1.3 X COL.'B') LIN. FT. A 5.0' THRU 10.0'	B 10.0' AND ABOVE	C.B. STD. 840.01 OR STD. 840.02	FRAME, GRATES, AND HOOD STANDARD 840.03 TYPE OF GRATE E	F	G	D.I. STD. 840.14 OR STD. 840.15	D.I. FRAME AND GRATE STD. 840.16		M.D.I. TYPE "B" STD. 840.18 OR 840.27	M.D.I. TYPE "D" STD. 840.19 OR 840.28					M.D.I. (N.S.) FRAME SINGLE GRATE STD. 840.24	M.D.I. (N.S.) FRAME WITH TWO GRATES STD. 840.24	M.D.I. (N.S.) FRAME WITH TWO FLAT GRATES STD. 840.29		J.B. STD. 840.31 OR 840.32	T.B.J.B. STD. 840.34	M.H. FRAME AND COVER STD. 840.54	M.H. STD. 840.51 OR 840.53						18" CROSS-PIPE END SECTION STD. 310.03 OR 310.05	4" CONCRETE PAVED DITCH (ST)	CONVERT DI TO J.B. W/ M.H. (SEE DETAIL 2-H)					CORR. STEEL ELBOWS NO. & SIZE	CONC. COLLARS CL. "B" C.Y. STD. 840.72	CONC. & BRICK PIPE PLUG, C.Y. STD. 840.71	FLOWABLE FILL (CY)	PIPE REMOVAL (FEET)	REMARKS
-L- 69+86																																															
-L- 69+86																																															
-L- 70+50																																													25	REM. EX. 18" CPP
-L- 81+70																																													32	REM. EX. 15" RCP
-L- 84+27						1			1			1																																		
-L- 84+27																																													68	REM. EX. 36" CMP
-L- 84+10																																														
-L- 84+71						1																				1		1																		
-L- 84+71																																														
-L- 85+91						1			1			1																																		
-L- 85+91																																														
-L- 86+73						1	5.0	3.9																		1		1																		
-L- 86+73																																														
-L- 86+46					4.900																																						1.013				
-L- 88+60						1			1			1																																		
-L- 88+60																																														
-L- 90+51						1	5.0	0.1	1			1																																		
-L- 90+90																																					1										
-L- 93+24						1			1		1																																			
-L- 93+24																																														
-L- 94+67																																										2@15				60	REM. EX. 15" CMP
-L- 91+00						1			1		1																																			
-L- 91+00																																														
-L- 92+01						1			1		1																																			
-L- 92+01																																														
-L- 92+08						1			1		1																																			
-L- 92+08																																														
-L- 93+21						1			1		1																																			
-L- 93+21																																														
-L- 95+45																																													80	REM. EX. 24" CMP
-L- 95+52						1	5.0	2.3	1		1																																			
-L- 95+52																																										2@24					
-L- 97+94	44																																													
-L- 97+43						1			1		1																																			
-L- 97+43																																										2@18			2.356	33	REM. 33' OF EX. 18" CMP
-L- 101+21						1			1		1																																			
-L- 101+21																																										2@15					
-Y7- 11+03																																											0.447				
-Y7- 11+03																																											0.447				
-L- 101+70					3.800																																						0.886				
-L- 111+50																																				11						2@15					BERM DRAIN. OUTLET (850.10)
-L- 102+14																																											0.886				
-L- 103+00																																				11						2@15					BERM DRAIN. OUTLET (850.10)
-L- 112+50																																				11						2@15					BERM DRAIN. OUTLET (850.10)
-L- 109+74																																			1												
-L- 113+95																																			1							2@18			4.654	30	REM. EX. 15" CMP
-L- 120+79																																										2@24				62	REM. EX. 24" CMP
-L- 114+80		36																																													
																																									SUBTOTAL	8@15					
																																									SUBTOTAL	4@18					
																																									SUBTOTAL	4@24					
																																										*8@15					
SHEET TOTALS	44	36			8.70	14	15	6	12	0	8	4	0	0		0							0			2	0	2	0						2	33	1					*4@18	3.678		7.010	390	
PROJECT 37645 TOTALS	60	68			8.70	40	23	11	27	1	14	12	3	3		3							3			4	0	4	0						2	33	3					*4@24	4.125		20	805	
PROJECT 37857 TOTALS	0	104			0.000	17	14.0	1.0	13	3	4	6	1	1		0							0			0	2	3	1						0	0	0					2@24	0.0000		0.000	361	
GRAND TOTAL 37645 & 37857	60	172			8.70	57	37	12	40	4	18	18	4	4	0	3	0	0	0	0	0	0	3	0	0	4	2	7	1						2	33	3					6@24	4.125		20	1166	

*Grand Totals

COMPUTED BY: BDP	DATE: 03-24-2005
CHECKED BY: CBH	DATE: 09-13-2006

STATE OF NORTH CAROLINA
DIVISION OF HIGHWAYS

PROJECT REFERENCE NO.	SHEET NO.
37645 & 37857	3-D

GUARDRAIL SUMMARY

"N" = DISTANCE FROM EDGE OF LANE TO FACE OF GUARDRAIL.
TOTAL SHOULDER WIDTH = DISTANCE FROM EDGE OF TRAVEL LANE TO SHOULDER BREAK POINT.
FLARE LENGTH = DISTANCE FROM LAST SECTION OF PARALLEL GUARDRAIL TO END OF GUARDRAIL.

W = TOTAL WIDTH OF FLARE FROM BEGINNING OF TAPER TO END OF GUARDRAIL.
G = GATING IMPACT ATTENUATOR TYPE 350
NG = NON-GATING IMPACT ATTENUATOR TYPE 350

37857

SURVEY LINE	BEG. STA.	END STA.	LOCATION	LENGTH			WARRANT POINT		"N" DIST. FROM E.O.L.	TOTAL SHOUL. WIDTH	FLARE LENGTH		W		ANCHORS								IMPACT ATTENUATOR TYPE 350			SINGLE FACED BARRIER	REMOVE EXISTING GUARDRAIL	REMOVE AND STOCKPILE EXISTING GUARDRAIL	REMARKS
				STRAIGHT	SHOP CURVED	DOUBLE FACED	APPROACH END	TRAILING END			APPROACH END	TRAILING END	APPROACH END	TRAILING END	III MOD	III	GRAU 350	M-350	XIII	CAT-1	XI MOD	B-77	AT-1	EA	G	NG				
-L-	21+46.25	34+65.00	LT	1287.75′	37.50′	—	34+30	21+50	2′	—	—	—	—	—						1			1					1,350′		EXIST. GRUARDRAIL -L- 21+30 TO 34+70 LT.
-L-	31+37.50	36+56.25	RT	521.25′	—	—	34+30	36+50	2′	—	50′	—	1′	—			1			1								740′		EXIST. GUARDRAIL -L- 30+90 TO 38+10 RT.
-L-	40+90.00	41+70.00	LT	68.75′	—	—	—	41+55	4′	—	—	50′	—	1′			1					1								
-L-	41+11.00	41+90.00	RT	68.75′	—	—	41+71	—	4′	—	50′	—	1′	—			1					1								
			SUBTOTAL:	1,946.50′	37.50′												3			2		2	1					2,060′		
LESS ANCHOR DEDUCTIONS																														
			3 GRAU350's @ 50′	-150′																										
			2 CAT-1's @ 6.25′	-12.5′																										
			1 AT -1's @ 6.25′		-6.25′																									
			2 B-77's @ 18.75′	-37.5′																										
			ANCHOR TOTAL DEDUCTION:	-200′	-6.25′																									
			GRAND TOTALS:	1,746.50′	31.25′												3			2		2	1					2,060′		
			SAY:	1,775.00′	50′	(5 ADDITIONAL GUARDRAIL POSTS)											3			2		2	1					2,060′		

37645

SURVEY LINE	BEG. STA.	END STA.	LOCATION	LENGTH			WARRANT POINT		"N" DIST. FROM E.O.L.	TOTAL SHOUL. WIDTH	FLARE LENGTH		W		ANCHORS								IMPACT ATTENUATOR TYPE 350			SINGLE FACED BARRIER	REMOVE EXISTING GUARDRAIL	REMOVE AND STOCKPILE EXISTING GUARDRAIL	REMARKS
				STRAIGHT	SHOP CURVED	DOUBLE FACED	APPROACH END	TRAILING END			APPROACH END	TRAILING END	APPROACH END	TRAILING END	III MOD	III	GRAU 350	M-350	XIII	CAT-1	XI MOD	B-77	AT-1	EA	G	NG				
-L-	42+07.00	44+38.25	LT	231.25′	—	—	42+20.00	—	4′	—	50′	—	1′	—			1					1					37′			
-L-	42+25.00	42+93.75	RT	68.75′	—	—	—	42+50.00	4′	—	—	50′	—	1′			1					1					40′			
-L-	61+51.50	63+39.00	RT	187.50′	—	—	63+39.00	—	2′	—	50′	—	1′	—			1													
-L-	62+46.50	63+34.00	LT	87.50′	—	—	63+34.00	—	2′	—	50′	—	1′	—			1													
-L-	64+64.00	65+51.50	RT	87.50′	—	—	—	64+64.00	2′	—	—	50′	—	1′			1													
-L-	64+57.00	66+44.50	LT	187.50′	—	—	64+57.00	—	2′	—	50′	—	1′	—			1													
-L-	68+68.00	72+05.00	LT	312.50′	50.00′	—	72+00.00	—	2′	—	—	—	—	—														347′		EXIST. GUADRAIL -L- 68+68 TO 72+05 LT.
-L-	82+30.00	93+36.25	RT	1,106.25′	—	—	* 83+30.00	* 93+30.00	2′	—	50′	—	1′	—			1			1								302′		EXIST. GUADRAIL -L- 84+49 TO 87+50 RT.
-L-	94+35.00	101+45.50	RT	650.00′	68.75′	—	95+50.00	101+00.00	2′	—	50′	—	1′	—			1						1					533′		EXIST. GUADRAIL -L- 94+40 TO 100+97 RT.
-L-	101+84.00	106+50.00	RT	450.00′	56.25′	—	102+00.00	105+50.00	2′	—	—	50′	—	1′			1						1					1,303′		EXIST. GUADRAIL -L- 101+44 TO 113+86 RT.
-L-	111+50.00	114+56.25	RT	306.25′	—	—	112+50.00	114+50.00	2′	—	50′	—	1′	—			1			1										
																														* PER DIVISION RECOMMENDATIONS
			SUBTOTAL:	3,675.00′	175.00′												10			2		2	2				77′	2,485′		
LESS ANCHOR DEDUCTIONS																														
			10 GRAU350's @ 50′	-500′																										
			2 CAT-1's @ 6.25′	-12.5′																										
			2 B-77's @ 18.75′	-37.5′																										
			2 AT-1's @ 6.25′		-12.5′																									
			4 EXISTING TYPE XI MOD's @ 25′	-100′																										
			ANCHOR TOTAL DEDUCTION:	-650.00′	-12.5′																									
			REMOVE AND RESET DEDUCTION:	238.00′																										
			GRAND TOTALS:	2,787.00′	162.50′												10			2		2	2				77′	2,485′		
			SAY:	2,825.00′	162.50′	(5 ADDITIONAL GUARDRAIL POSTS)											10			2		2	2				77′	2,485′		
			PROJECT 37857 GRAND TOTALS:	1,775.00′	50′	(5 ADDITIONAL GUARDRAIL POSTS)											3			2		2	1				0′	2,060′		
			PROJECT 37645 GRAND TOTALS:	2,825.00′	162.50′	(5 ADDITIONAL GUARDRAIL POSTS)											10			2		2	2				77′	2,485′		
			GRAND TOTAL PROJECTS 37645 & 37857:	4,600.00′	212.50′	(10 ADDITIONAL GUARDRAIL POSTS)											13			4		4	3				77′	4,545′		

37645

GUARDRAIL REMOVE & RESET SUMMARY

SURVEY LINE	BEG. STA.	END STA.	LOCATION	LENGTH
-L-	62+50	63+34	LT	84′
-L-	61+80	63+38	RT	158′
-L-	64+64	65+49	RT	85′
-L-	64+57	66+18	LT	161′
			SUBTOTAL:	488′
LESS ANCHOR DEDUCTIONS				
			4 MELT's @ 37.5′	150′
			4 TYPE XI MOD's @ 25′	100′
			ANCHOR TOTAL DEDUCTION:	250′
			GRAND TOTALS:	238′

11/7/2006
r:\roadway\proj\mau3063_25r_rdy_sums.dgn

COMPUTED BY:	BDP	DATE:	12-17-2004
CHECKED BY:	SER	DATE:	12-20-2004
REVISED BY:	BDP	DATE:	09-21-2006

PROJECT REFERENCE NO.	SHEET NO.
37645 & 37857	3-E

DIVISION OF HIGHWAYS
STATE OF NORTH CAROLINA

SUMMARY OF EARTHWORK

IN CUBIC YARDS

37857

LOCATION	UNCLASSIFIED EXCAVATION	UNDERCUT	EMBT+%	BORROW	WASTE
SUMMARY #1					
-L- LT Sta. 16+00.00 TO 41+98.24	441		11,516	11,075	0
-L- RT Sta. 16+00.00 TO 41+98.24	5,402		1,043	0	4,359
-Y- Sta. 10+12.77 TO 11+75.00	39		13	0	26
-Y1- Sta. 10+29.89 TO 13+02.90	103		69	0	34
SUBTOTAL	5,985		12,641	11,075	4,419
SEE EARTHWORK SUMMARY FOR PROJECT 37645 FOR GRAND TOTALS					
EST. UNDERCUT (CONTINGENCY)		850 CY			
EST. DRAINAGE DITCH EXCAVATION		342 CY			
EST. SHOULDER BORROW		340 CY			

PHASE II						
SLOPE DRAINS		37645				
STATION	STATION	LOCATION		DIST. (earth berm)	SLOPE LENGTH (FT)	# INLET PROTECTION @ 200' SPACING
42+50	44+50	LT		200	35	1
47+50	48+50	LT		100	50	1
(Y5A)	(Y5A)					
12+00	13+00			100	40	1
97+50	105+00	RT		750		
			99+50		45	1
			101+50		30	1
			103+50		55	1
			105+00		65	1
113+00	114+50	RT		150	40	1
121+00	122+50	LT		150	30	1
				TOTAL FT.	390	9

PHASE II						
SLOPE DRAINS		37857				
STATION	STATION	LOCATION		DIST.	SLOPE LENGTH (FT)	# INLET PROTECTION @ 200' SPACING
23+50	34+50	LT		1100		
			25+50		55	1
			27+50		55	1
			29+50		40	1
			31+00		35	1
			33+00		30	1
			34+50		45	1
				TOTAL FT.	260	6

PAVEMENT REMOVAL

LINE	STATION	STATION	LOC LT/RT/CL	FT^2
-L-	16+00	16+51	LT	24.70
-L-	20+54	23+74	LT	1694.72
-L-	23+67	26+15	RT	4500.60
-L-	25+90	26+20	RT	596.20
-L-	26+89	27+60	RT	160.20
-L-	28+11	28+70	RT	391.40
-L-	29+46	30+34	RT	813.39
-L-	30+59	37+20	RT	5996.92
		PROJECT TOTAL (SF):		14178.13
		PROJECT TOTAL (SY):		1575.35
			SAY (SY):	1600

COMPUTED BY: BDP	DATE: 12-17-2004
CHECKED BY: SER	DATE: 12-20-2004
REVISED BY: BDP	DATE: 04-07-2006

PROJECT REFERENCE NO.	SHEET NO.
37645 & 37857	3-F

DIVISION OF HIGHWAYS
STATE OF NORTH CAROLINA

SUMMARY OF EARTHWORK

IN CUBIC YARDS

37645

LOCATION	UNCLASSIFIED EXCAVATION	UNDERCUT	EMBT+15%	BORROW	WASTE
SUMMARY #1					
-L- LT Sta. 41+98.24 TO 71+50.00 (BEGIN B-4191)	1915		583	0	1,332
-L- RT Sta. 41+98.24 TO 71+50.00 (BEGIN B-4191)	678		831	153	0
-Y2- Sta. 10+21.94 TO 11+01.00	42		14	0	28
-Y3- Sta. 10+20.75 TO 11+50.00	41		23	0	18
-Y4- Sta. 11+40.00 TO 13+05.15	55		129	74	0
SUBTOTAL	2,731		1,580	227	1,378
SUMMARY #2					
-L- LT Sta. 79+50.00 (END B-4191) TO 109+50.00	32,179		914	0	31,265
-L- RT Sta. 79+50.00 (END B-4191) TO 109+50.00	4,669		9,072	4,403	0
-Y7- Sta. 10+24.63 TO 11+70.00	14		177	163	0
-DRV- Sta. 10+50.00 TO 12+03.00	32		1,351	1,319	0
SUBTOTAL	36,894		11,515	5,886	31,265
SUMMARY #3					
-L- LT Sta. 109+50.00 TO 122+75.36	13,069		367	0	12,702
-L- RT Sta. 109+50.00 TO 122+75.36	1,9999		5,028	3,029	0
-Y8- Sta. 12+85.00 TO 13+94.33	46		0	0	46
-DRV2- Sta. 11+70.00 TO 13+00.00	52		140	88	0
SUBTOTAL	15,166		5,535	3,117	12,748
37645 SUBTOTAL	54,791		18,630	9,230	45,391
37857 SUBTOTAL	5,985		12,641	11,075	4,419
COMBINED SUBTOTAL	60,776		31,271	20,305	49,810
EST. 5% LOSS DUE TO CLEARING AND GRUBBING	-3,039				-3,039
WASTE TO REPLACE BORROW				-20,305	-20,305
COMBINED GRAND TOTAL	57,737		31,271	0	26,466
COMBINED SAY	58,800				
EST. UNDERCUT (CONTINGENCY)		1,650 CY			
EST. DRAINAGE DITCH EXCAVATION		1,013 CY			
EST. SHOULDER BORROW		1,080 CY			

PAVEMENT REMOVAL

LINE	STATION	STATION	LOC LT/RT/CL	FT^2
-L-	57+79	59+45	LT	1047.50
-L-	58+12	59+49	RT	518.48
-L-	59+62	59+87	RT	34.81
-L-	60+74	63+34	LT	1011.51
-L-	66+41	67+82	LT	1425.81
-L-	68+63	70+62	LT	841.79
-L-	106+15	112+05	RT	12298.77
-L-	113+32	114+95	LT	276.41
-Y4-	12+20	12+83	LT	189.33
-Y5A-	10+32	13+25	LT	1127.57
-Y5B-	10+45	13+00	LT	2030.31
			PROJECT TOTAL (SF):	20802.29
			PROJECT TOTAL (SY):	2311.37
			SAY (SY):	2430

PROJECT 37857 GRAND TOTAL	1,600
PROJECT 37645 GRAND TOTAL	2,430
GRAND TOTAL PROJECTS 37645 & 37857	4,030

PAVEMENT BREAK-UP

LINE	STATION	STATION	LOC LT/RT/CL	FT^2
-L-	105+22	107+31	RT	1869.63
-L-	110+94	112+85	RT	1606.61
			PROJECT TOTAL (SF):	3476.24
			PROJECT TOTAL (SY):	386.25
			SAY (SY):	410

PROJECT 37857 GRAND TOTAL	0
PROJECT 37645 GRAND TOTAL	410
GRAND TOTAL PROJECTS 37645 & 37857	410

COMPUTED BY: MAL	DATE: 05-05-2005
CHECKED BY: SER	DATE: 05-06-2005
REVISED BY: BDP / MAL	DATE: 01-20-2006

PROJECT REFERENCE NO.	SHEET NO.
37645 & 37857	3-G

DIVISION OF HIGHWAYS
STATE OF NORTH CAROLINA

RIGHT OF WAY AREA DATA

37857

PARCEL NO.	PROPERTY OWNERS NAMES	TOTAL ACREAGE	AREA TAKEN	AREA REMAINING LT.	AREA REMAINING RT.	CONST. EASE.	PERM. DRAIN. EASE.	TEMP. DRAIN. EASE.
1	RICKY H. BOYD	36124 SF	261SF		35863 SF	2117 SF		86 SF
2	RANDY L. GRANT & TERRY L. GRANT	1.03 AC				1145 SF		
3	LEROY R. STEVENSON	40768 SF	3138 SF	37630 SF		1978 SF	312 SF	
4	CHAPEL HILL BAPTIST CHURCH	7.05 AC				3739 SF		
5	MARY P. DILLINGHAM & JOHN E. DILLINGHAM	35667 SF	6047 SF		29620 SF	10218 SF	1529 SF	
7	SCOTTY WILLIS	1.42 AC	0.15 AC		1.27 AC	1312 SF	0.14 AC	
8	PANSY E. POTEAT	4.51 AC	0.47 AC	4.04 AC		0.84 AC	4002 SF	
9	JJM PROPERTIES, LLC	29686 SF	5144 SF		24542 SF	1237 SF		
10	JOEL A. POTEAT & PAMELA POTEAT	31659 SF	437 SF		31222 SF	1146 SF	435 SF	
11	PANSY E. POTEAT	34.33 AC	66 SF		34.33 AC	672 SF		
12	AVERY D. WALL	7.49 AC	2549 SF	7.43 AC		360 SF	0.13 AC	0.15 AC
13	RANDALL N. CONDREY	2.45 AC				0.11 AC		2266 SF
14	REBECCA BROOKS WILSON	1.88 AC	283 SF		1.88 AC		0.28 AC	3102 SF
15	M & T PARTNERSHIP	4.10 AC	0.25 AC	3.85 AC		0.12 AC	461 SF	
16	PHYLLIS K. BELL	5.93 AC	2098 SF		5.8819 AC	1818 SF	1604 SF	
8Z	PANSY E. POTEAT	4.04 AC	0.67 AC	3.37 AC				
16Z	PHYLLIS K. BELL	5.8819 AC	1711 SF		5.8426 AC			

37645

PARCEL NO.	PROPERTY OWNERS NAMES	TOTAL ACREAGE	AREA TAKEN	AREA REMAINING LT.	AREA REMAINING RT.	TEMP. CONST. EASE.	PERM. DRAIN. EASE.	TEMP. DRAIN. EASE.
17	OLEN D. POTEAT & SHELBY J. POTEAT	8.72 AC	1978 SF	8.67 AC		0.13 AC		
18	BILLY ALLEN POTEAT ET AL	3.86 AC	0.18 AC		3.68 AC	0.16 AC	0.10 AC	
19	SHELL /SMITH	16527 SF					200 SF	
20	ERVIN R. ALLISON, JR. & RUBY S. ALLISON	17759 SF	776 SF	16983 SF			1378 SF	
21	BOBBY G. MORROW	5.34 AC	1687 SF	5.30 AC		2462 SF	583 SF	
22	ADOLPH JUSTICE & VICTORIA JUSTICE	2.20 AC	3286 SF	2.12 AC		0.12 AC	1612 SF	
23	MARY J. McCOYLE	1.18 AC	1716 SF	1.14 AC		817 SF	1441 SF	
24	GREGORY F. DANIELS & DAPHNE G. DANIELS	33729 SF	2583 SF		31145 SF	2705 SF		
25	WILLIAM J. YOUNG, JR. & BARBARA YOUNG	9217 SF	2543 SF	6675 SF		424 SF		
26	ROBERT C. HUNTER	1.04 AC	1884 SF		1.00 AC	3227 SF		
27	W. J. YOUNG	21196 SF	711 SF	20485 SF		417 SF		
28	W. J. YOUNG	33445 SF	940 SF	32506 SF		720 SF		
29	DEBRA MURRAY & PATRICIA LUNSFORD	1.12 AC				3130 SF		
32	DERMOX, INC. OF WEST VIRGINIA	1.22 AC				717 SF		
33	COLONIAL MARION, LLC	1.56 AC				1539 SF		
34	LOVE'S TRAVEL STOPS & COUNTRY STORES, INC.	6.69 AC				3094 SF		
35	TRUSTEES OF McDOWELL TECHNICAL INSTITUTE	12.35 AC	815 SF		12.33 AC			
36	TRUSTEES OF McDOWELL TECHNICAL COLLEGE	16.37 AC	764 SF		16.34 AC	0.10 AC		
37	McDOWELL COUNTY	193.06 AC	0.51 AC	UNKNOWN	UNKNOWN	1.14 AC	3536 SF	1145 SF
38	ITL CORP.	10.97 AC	83 SF		10.97 AC	0.12 AC	0.17 AC	
39	CITY OF MARION	24.60 AC	0.14 AC		24.46 AC	0.38 AC	2389 SF	
40	NCDOT & PUBLIC WORKS	30.95 AC	0.14 AC	30.81 AC		0.20 AC	2645 SF	
40A	NORTH CAROLINA PRISON DEPT.	14.77 AC	0.13 AC	14.64 AC		2894 SF	0.18 AC	
41	THE McDOWELL AGRICULTURAL CENTER, INC.	15.47 AC	0.54 AC	14.93 AC		1.00 AC	1100 SF	
43	THOMAS R. HALL, JR.	35.20 AC				0.28 AC	750 SF	
44	THOMAS R. HALL, JR. & DEANNA HALL	7.23 AC				3650 SF	490 SF	
45	GENEVA B. HALL	2.30 AC	2604 SF	2.24 AC		0.44 AC	684 SF	
18Z	BILLY ALLEN POTEAT ET AL	3.68 AC	0.16 AC		3.52 AC	0.16 AC	0.10 AC	
33Z	COLONIAL MARION, LLC	1.56 AC	294 SF		1.55 AC	1539 SF		

REVISIONS

11/7/2006
11:17:06AM By: ser01 m:\l3061r_55r_rdy_sums.dgn

PROJECT REFERENCE NO.	SHEET NO.
37645 & 37857	4
R/W SHEET NO.	
ROADWAY DESIGN ENGINEER	HYDRAULICS ENGINEER
NORTH CAROLINA PROFESSIONAL SEAL 23982 ENGINEER STEPHEN E. ROBERTS 11-8-06	NORTH CAROLINA PROFESSIONAL SEAL 18181 ENGINEER MA. H. SWEET 11/8/06

REVISIONS

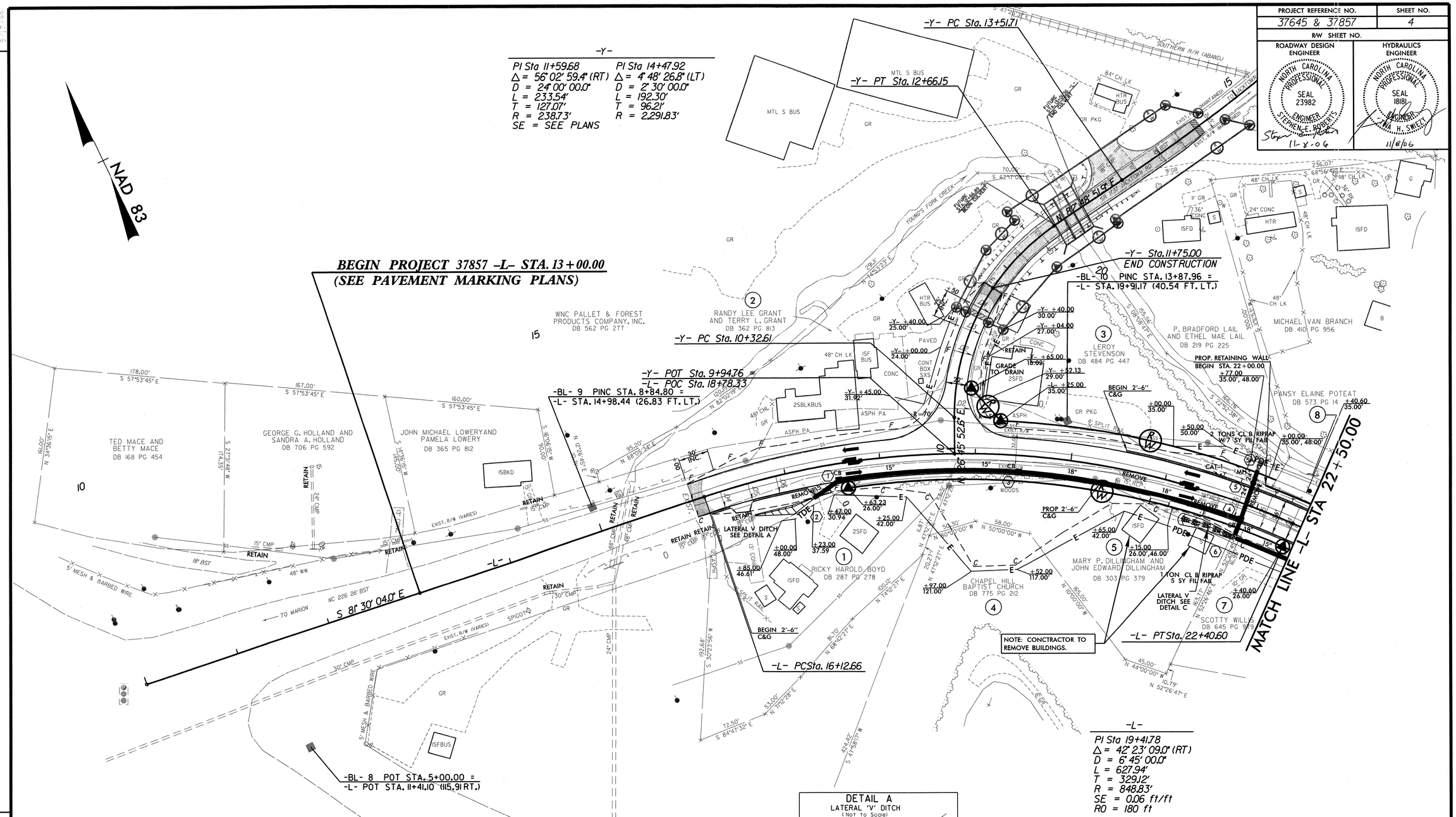

T.I.P. PROJ. B-387.3 (NOT IN CONTRACT)

SEE SHT. 13 FOR -L- PROFILE
SEE SHT. 18 FOR -Y- PROFILE
SEE SHTS. 2-E & 2-F FOR RET. WALL DETAILS

NOTE: ALL DRIVEWAY OPENINGS ARE 20' WIDE UNLESS OTHERWISE SHOWN.

DATUM DESCRIPTION

THE LOCALIZED COORDINATE SYSTEM DEVELOPED FOR THIS PROJECT IS BASED ON THE STATE PLANE COORDINATES ESTABLISHED BY NCDOT FOR MONUMENT "B419 1GPS-2" WITH NAD 83 STATE PLANE GRID COORDINATES OF NORTHING: 707418.2407(ft) EASTING: 1120471.9192(ft) THE AVERAGE COMBINED GRID FACTOR USED ON THIS PROJECT (GROUND TO GRID) IS: 0.99984226 THE N.C. LAMBERT GRID BEARING AND LOCALIZED HORIZONTAL GROUND DISTANCE FROM "B419 1GPS-2" TO -L- STATION (16+00.00) IS S 61°43'13.4" E 4,897.99 (ft) ALL LINEAR DIMENSIONS ARE LOCALIZED HORIZONTAL DISTANCES VERTICAL DATUM USED IS NAVD 88

PLANS PREPARED BY :
RUMMEL KLEPPER & KAHL, LLP
consulting engineers
900 RIDGEFIELD DRIVE SUITE 350
RALEIGH, NORTH CAROLINA 27609-3960
(919) 878-9560
FOR
STATE OF NORTH CAROLINA
DIVISION OF HIGHWAYS

11/8/2006
r:\Roadway\Proj\M4130652R_25R_RDY_PSH04.dgn

PROJECT REFERENCE NO.	SHEET NO.
37645 & 37857	5
R/W SHEET NO.	

ROADWAY DESIGN ENGINEER
NORTH CAROLINA PROFESSIONAL SEAL 23982 ENGINEER STEPHEN E. ROBERTS
11-8-06

HYDRAULICS ENGINEER
NORTH CAROLINA PROFESSIONAL SEAL 18181 ENGINEER TINA H. SNIEZK
11/8/06

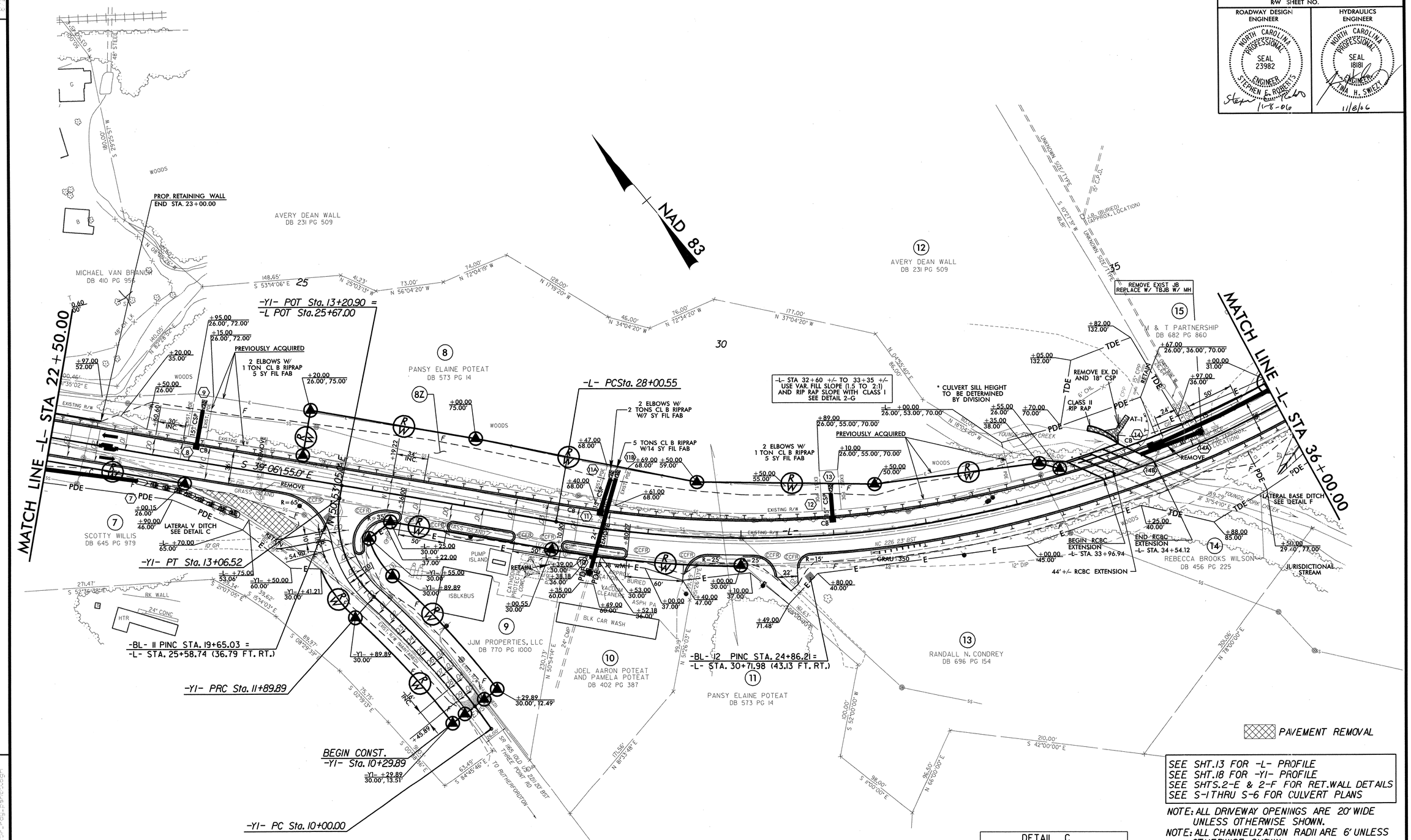

SEE SHT.13 FOR -L- PROFILE
SEE SHT.18 FOR -Y1- PROFILE
SEE SHTS.2-E & 2-F FOR RET.WALL DETAILS
SEE S-1 THRU S-6 FOR CULVERT PLANS

NOTE: ALL DRIVEWAY OPENINGS ARE 20' WIDE UNLESS OTHERWISE SHOWN.
NOTE: ALL CHANNELIZATION RADII ARE 6' UNLESS OTHERWISE SHOWN.

-Y1-

PI Sta 12+53.78	PI Sta 10+95.37
Δ = 58° 06' 38.8" (RT)	Δ = 13° 17' 31.6" (LT)
D = 49° 49' 20.7"	D = 7° 00' 00.0"
L = 116.64'	L = 189.89'
T = 63.89'	T = 95.37'
R = 115.00'	R = 818.51'
SE = SEE PLANS	SE = SEE PLANS

-L-

PI Sta 35+03.06
Δ = 60° 25' 59.0" (LT)
D = 4° 45' 00.0"
L = 1,272.27'
T = 702.51'
R = 1,206.23'
SE = 0.05 ft/ft
RO = 170 ft

DETAIL F
LATERAL BASE DITCH
(Not to Scale)

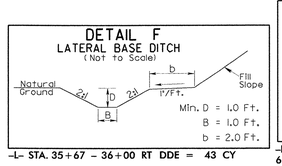

-L- STA. 35+67 – 36+00 RT DDE = 43 CY

DETAIL C
LATERAL 'V' DITCH
(Not to Scale)

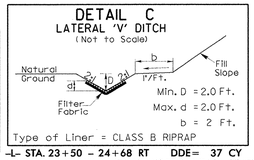

Type of Liner = CLASS B RIPRAP

-L- STA. 23+50 – 24+68 RT DDE= 37 CY
67.5 TONS CLASS B RIPRAP W/155.9 SQ.YD. FILTER FABRIC

PLANS PREPARED BY :
RUMMEL KLEPPER & KAHL, LLP
consulting engineers
900 RIDGEFIELD DRIVE SUITE 350
RALEIGH, NORTH CAROLINA 27609-3960
(919) 878-9560
FOR
STATE OF NORTH CAROLINA
DIVISION OF HIGHWAYS

REVISIONS

11/7/2006

PROJECT REFERENCE NO.	SHEET NO.
37645 & 37857	6
R/W SHEET NO.	
ROADWAY DESIGN ENGINEER	HYDRAULICS ENGINEER

NORTH CAROLINA PROFESSIONAL SEAL 23982 ENGINEER STEPHEN E. ROBERTS 11/8/06

NORTH CAROLINA PROFESSIONAL SEAL 18181 ENGINEER LINA H. SWEIDAN 11/8/06

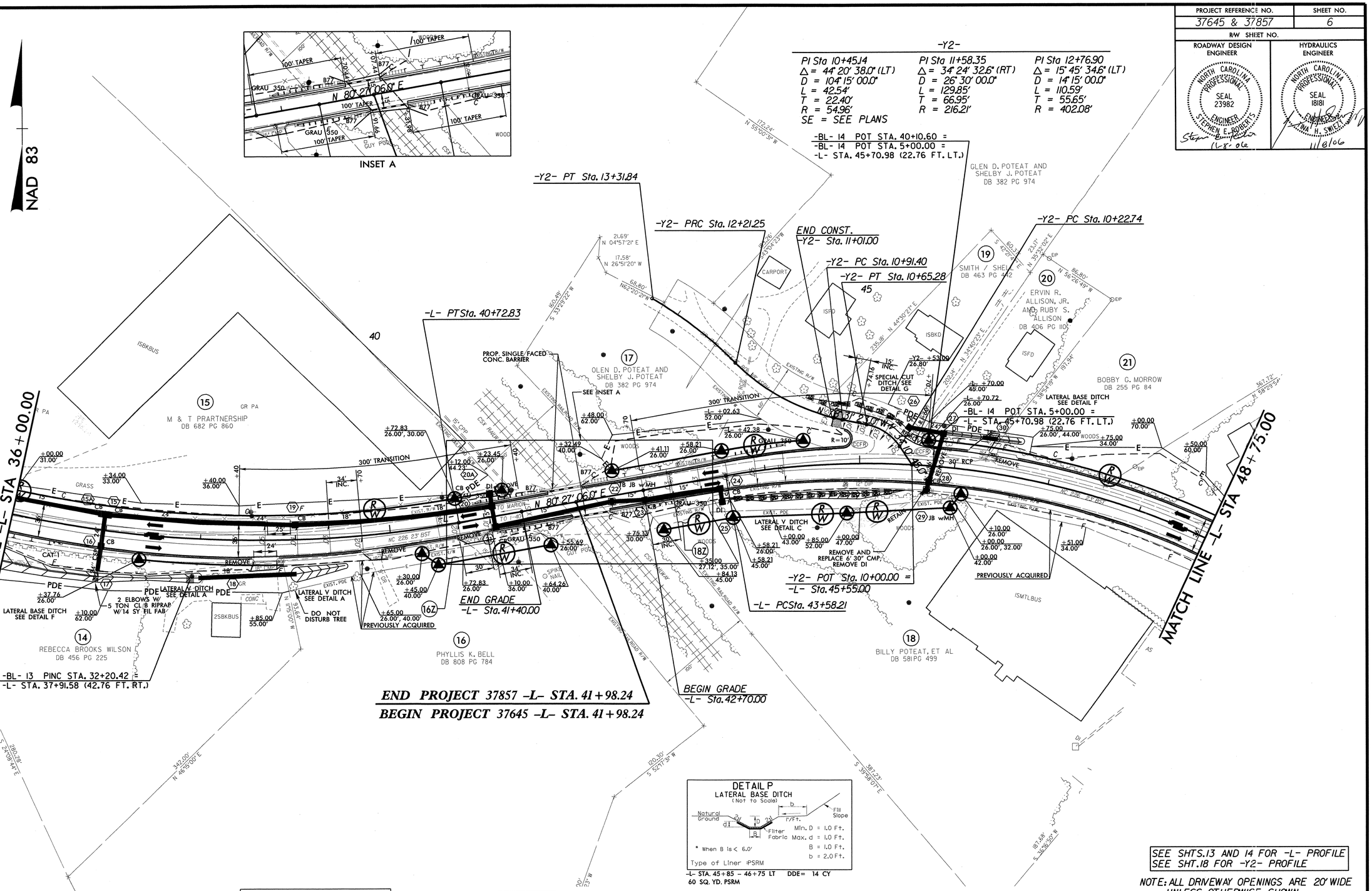

SEE SHTS.13 AND 14 FOR -L- PROFILE
SEE SHT.18 FOR -Y2- PROFILE

NOTE: ALL DRIVEWAY OPENINGS ARE 20' WIDE UNLESS OTHERWISE SHOWN.

PLANS PREPARED BY :
RUMMEL KLEPPER & KAHL, LLP
consulting engineers
900 RIDGEFIELD DRIVE SUITE 350
RALEIGH, NORTH CAROLINA 27609-3960
(919) 878-9560
FOR
STATE OF NORTH CAROLINA
DIVISION OF HIGHWAYS

REVISIONS

8/17/99

11/8/2006
f:\roadway\proj\m4103631_25fr_rdy_psh06.dgn

PROJECT REFERENCE NO.	SHEET NO.
37645 & 37857	7
R/W SHEET NO.	
ROADWAY DESIGN ENGINEER	HYDRAULICS ENGINEER
NORTH CAROLINA PROFESSIONAL SEAL 23982 ENGINEER STEPHEN E. ROBERTS 7-18-06	NORTH CAROLINA PROFESSIONAL SEAL 18181 ENGINEER TINA H. SWITZ 11/8/06

REVISIONS

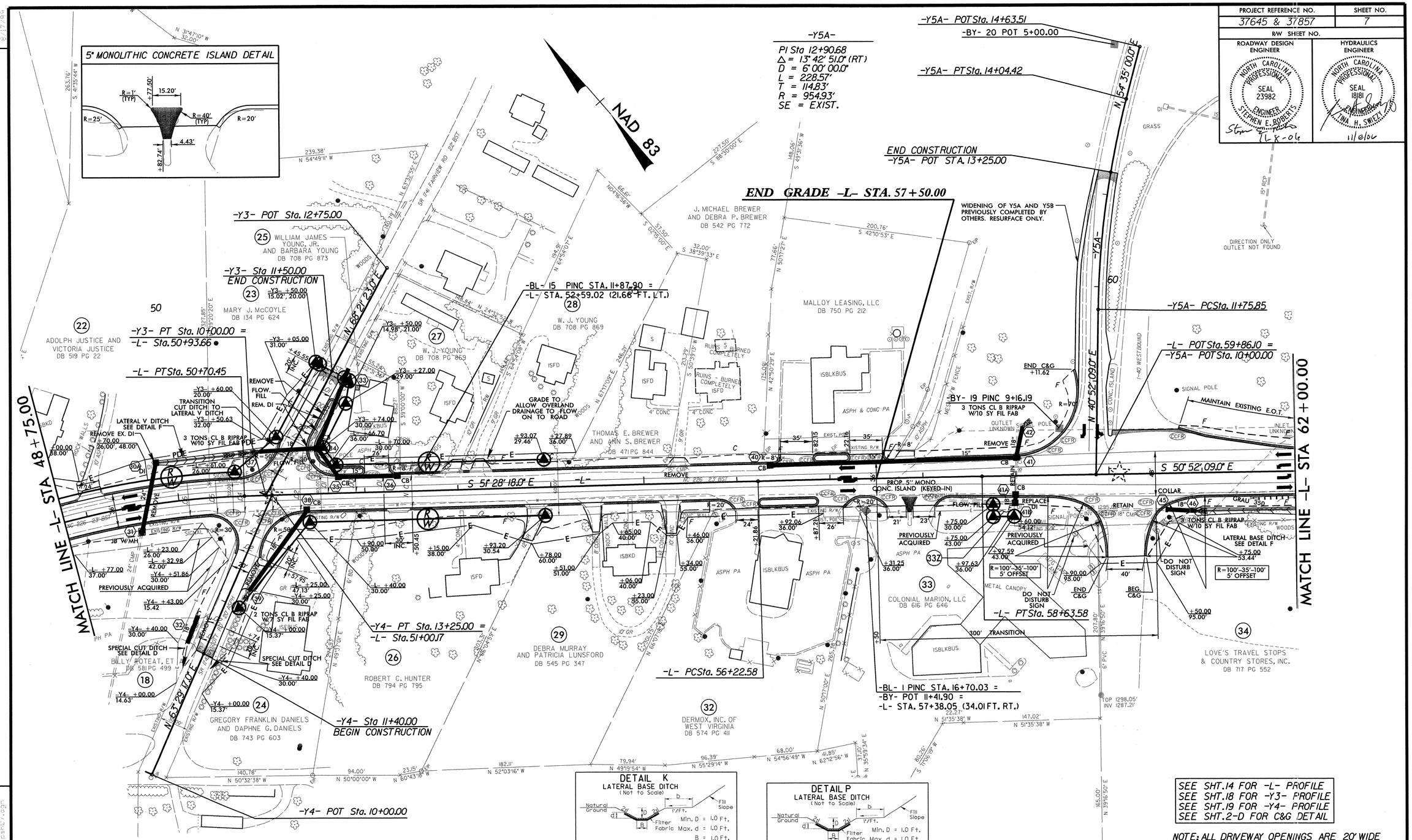

SEE SHT.14 FOR -L- PROFILE
SEE SHT.18 FOR -Y3- PROFILE
SEE SHT.19 FOR -Y4- PROFILE
SEE SHT.2-D FOR C&G DETAIL

NOTE: ALL DRIVEWAY OPENINGS ARE 20' WIDE UNLESS OTHERWISE SHOWN.
NOTE: ALL CHANNELIZATION RADII ARE 5' UNLESS OTHERWISE SHOWN.

PLANS PREPARED BY :
RUMMEL KLEPPER & KAHL, LLP
consulting engineers
900 RIDGEFIELD DRIVE SUITE 350
RALEIGH, NORTH CAROLINA 27609-3960
(919) 878-9560
FOR
STATE OF NORTH CAROLINA
DIVISION OF HIGHWAYS

11/8/2006
r:\roadway\proj\m13063-26r_rdy_psh07.dgn

PROJECT REFERENCE NO.	SHEET NO.
37645 & 37857	8
R/W SHEET NO.	
ROADWAY DESIGN ENGINEER	HYDRAULICS ENGINEER

NORTH CAROLINA PROFESSIONAL SEAL 23982 ENGINEER STEPHEN E. ROBERTS 11-8-06

NORTH CAROLINA PROFESSIONAL SEAL 18181 ENGINEER LINA H. SWEZY 11/8/06

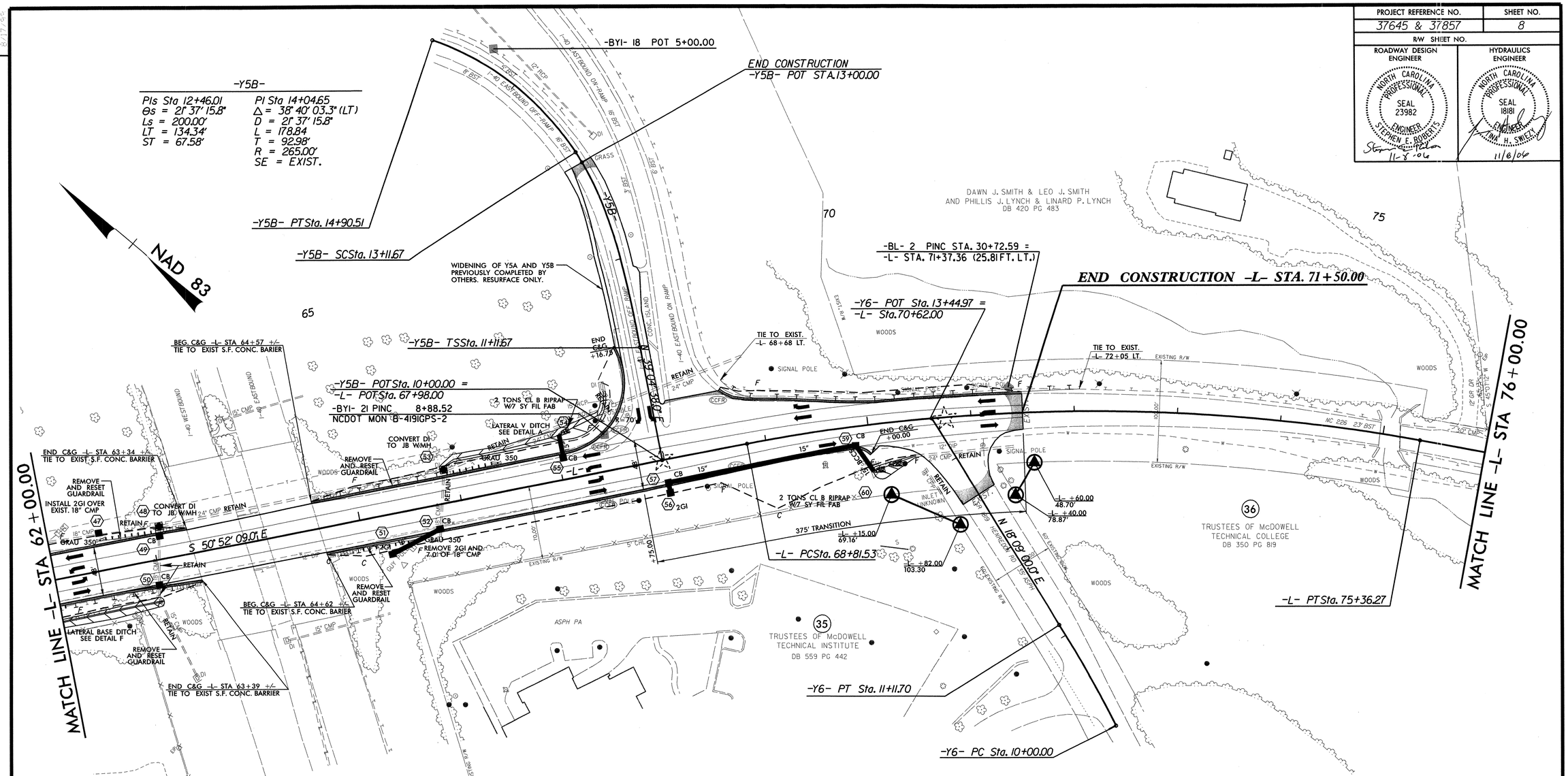

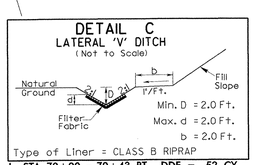

-L- STA. 70+00 - 70+43 RT DDE = 52 CY
24.6 TONS CLASS B RIPRAP W/66.4 SQ.YD. FIL. FAB.

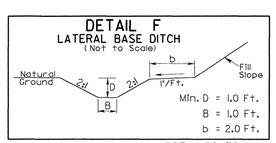

-L- STA. 62+00 - 62+95 RT DDE = 56 CY

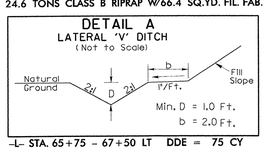

-L- STA. 65+75 - 67+50 LT DDE = 75 CY

-L-	-Y6-
PI Sta 72+12.71	PI Sta 10+55.88
Δ = 21° 16' 45.0" (RT)	Δ = 4° 59' 59.2" (LT)
D = 3° 15' 00.0"	D = 4° 28' 34.4"
L = 654.74'	L = 111.70'
T = 331.19'	T = 55.88'
R = 1,762.95'	R = 1,280.00'
SE = 0.05 ft/ft	
RO = 140 ft	

SEE SHTS. 14 AND 15 FOR -L- PROFILE
SEE SHT. 2-D FOR C&G DETAIL

NOTE: ALL DRIVEWAY OPENINGS ARE 20' WIDE UNLESS OTHERWISE SHOWN.

DESIGN EXCEPTION FOR HORIZONTAL CLEARANCE UNDER I-40

PLANS PREPARED BY :
RUMMEL KLEPPER & KAHL, LLP
consulting engineers
900 RIDGEFIELD DRIVE SUITE 350
RALEIGH, NORTH CAROLINA 27609-3960
(919) 878-9560
FOR
STATE OF NORTH CAROLINA
DIVISION OF HIGHWAYS

REVISIONS

8/17/06

11/8/2006
r:\roadway\proj\mail3063r_25r_rdy_psh06.dgn

PROJECT REFERENCE NO.	SHEET NO.
37645 & 37857	9
R/W SHEET NO.	
ROADWAY DESIGN ENGINEER	HYDRAULICS ENGINEER
NORTH CAROLINA PROFESSIONAL SEAL 23982 ENGINEER STEPHEN E. ROBERTS 11-8-06	NORTH CAROLINA PROFESSIONAL SEAL 18181 ENGINEER LINA H. SWEET 11/8/06

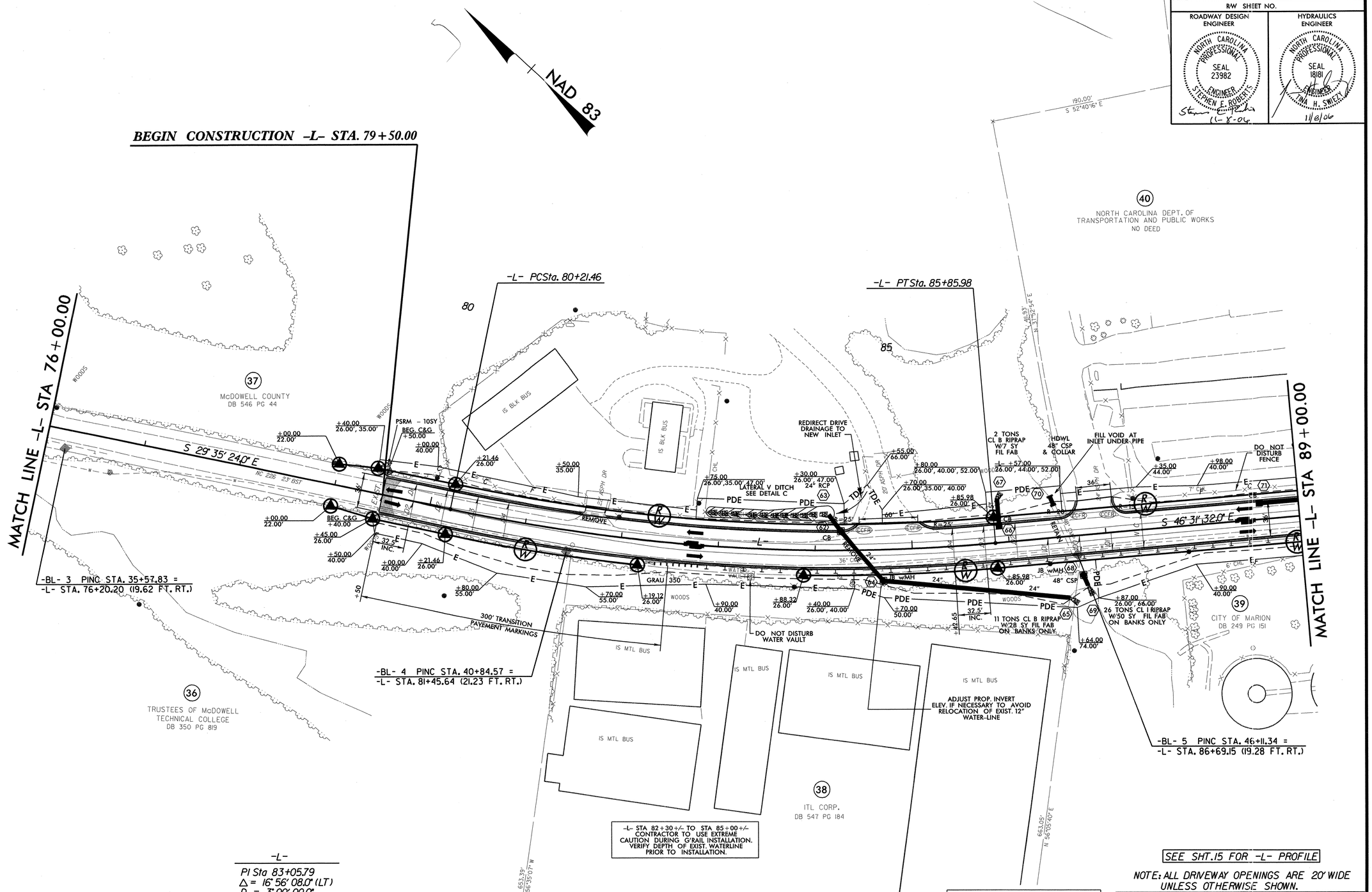

-L-

PI Sta 83+05.79
Δ = 16° 56' 08.0" (LT)
D = 3° 00' 00.0"
L = 564.52'
T = 284.33'
R = 1,909.86'
SE = 0.04 ft/ft
RO = 130 ft

DETAIL C
LATERAL 'V' DITCH
(Not to Scale)

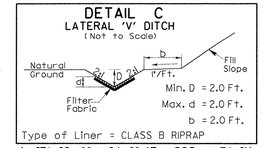

Type of Liner = CLASS B RIPRAP

-L- STA. 83+00 - 84+10 LT DDE = 74 CY
62.9 TONS CLASS B RIPRAP W/169.7 SQ.YD. FIL. FAB.

SEE SHT.15 FOR -L- PROFILE

NOTE: ALL DRIVEWAY OPENINGS ARE 20' WIDE UNLESS OTHERWISE SHOWN.

PLANS PREPARED BY :
RUMMEL KLEPPER & KAHL, LLP
consulting engineers
900 RIDGEFIELD DRIVE SUITE 350
RALEIGH, NORTH CAROLINA 27609-3960
(919) 878-9560
FOR
STATE OF NORTH CAROLINA
DIVISION OF HIGHWAYS

REVISIONS

5/17/99

11/8/2006
r:\roadway\proj\m813063r_25r_rdy_psh01.dgn

PROJECT REFERENCE NO.	SHEET NO.
37645 & 37857	10
R/W SHEET NO.	

ROADWAY DESIGN ENGINEER: NORTH CAROLINA PROFESSIONAL SEAL 23982 ENGINEER STEPHEN E. ROBERTS — 11-8-06

HYDRAULICS ENGINEER: NORTH CAROLINA PROFESSIONAL SEAL 18181 ENGINEER JOHN H. SWEZY — 11/8/06

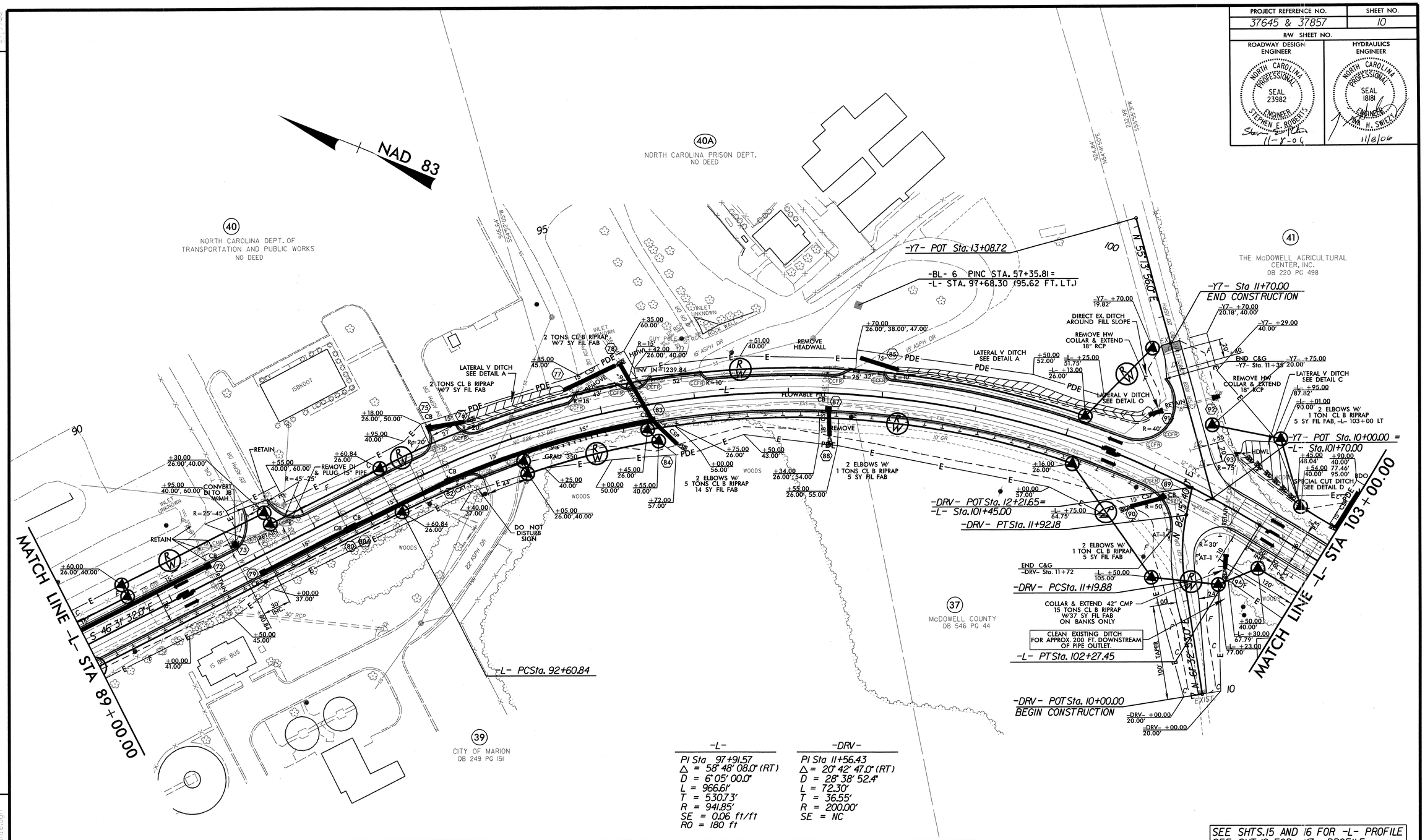

-L-	-DRV-
PI Sta 97+91.57	PI Sta 11+56.43
Δ = 58° 48' 08.0" (RT)	Δ = 20° 42' 47.0" (RT)
D = 6° 05' 00.0"	D = 28° 38' 52.4"
L = 966.61'	L = 72.30'
T = 530.73'	T = 36.55'
R = 941.85'	R = 200.00'
SE = 0.06 ft/ft	SE = NC
RO = 180 ft	

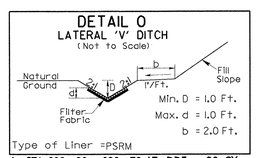

-L- STA. 100+00 – 100+78 LT DDE= 28 CY
40 SQ. YD. PSRM

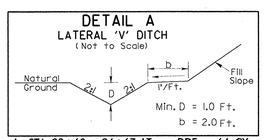

-L- STA. 93+60 – 94+67 LT DDE= 64 CY
-L- STA. 98+10 – 100+00 LT DDE= 75 CY

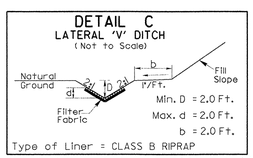

-L- STA. 101+70 – 102+50 LT DDE= 319 CY
45.8 TONS CLASS B RIPRAP W/123.4 SQ.YD. FIL. FAB.

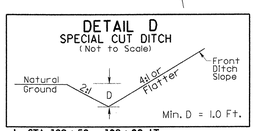

-L- STA. 102+50 – 103+00 LT

SEE SHTS.15 AND 16 FOR -L- PROFILE
SEE SHT.19 FOR -Y7- PROFILE
SEE SHT.19 FOR -DRV- PROFILE

NOTE: ALL DRIVEWAY OPENINGS ARE 20' WIDE UNLESS OTHERWISE SHOWN.

PLANS PREPARED BY :
RUMMEL KLEPPER & KAHL, LLP
consulting engineers
900 RIDGEFIELD DRIVE SUITE 350
RALEIGH, NORTH CAROLINA 27609-3960
(919) 878-9560
FOR
STATE OF NORTH CAROLINA
DIVISION OF HIGHWAYS

REVISIONS

11/7/2006

PROJECT REFERENCE NO.	SHEET NO.
37645 & 37857	11
R/W SHEET NO.	
ROADWAY DESIGN ENGINEER	HYDRAULICS ENGINEER
NORTH CAROLINA PROFESSIONAL SEAL 23982 ENGINEER STEPHEN E. ROBERTS 11-8-06	NORTH CAROLINA PROFESSIONAL SEAL 18181 ENGINEER JINA H. SMILZIS 11/8/06

REVISIONS

-L-
PI Sta 110+11.63
Δ = 64° 15' 52.0" (LT)
D = 6° 50' 00.0"
L = 940.46'
T = 526.63'
R = 838.47'
SE = 0.06 ft/ft
RO = 180 ft

-DRV2-
PI Sta 11+12.21
Δ = 100° 34' 26.3" (LT)
D = 260° 26' 07.3"
L = 38.62'
T = 26.49'
R = 22.00'
SE = RC

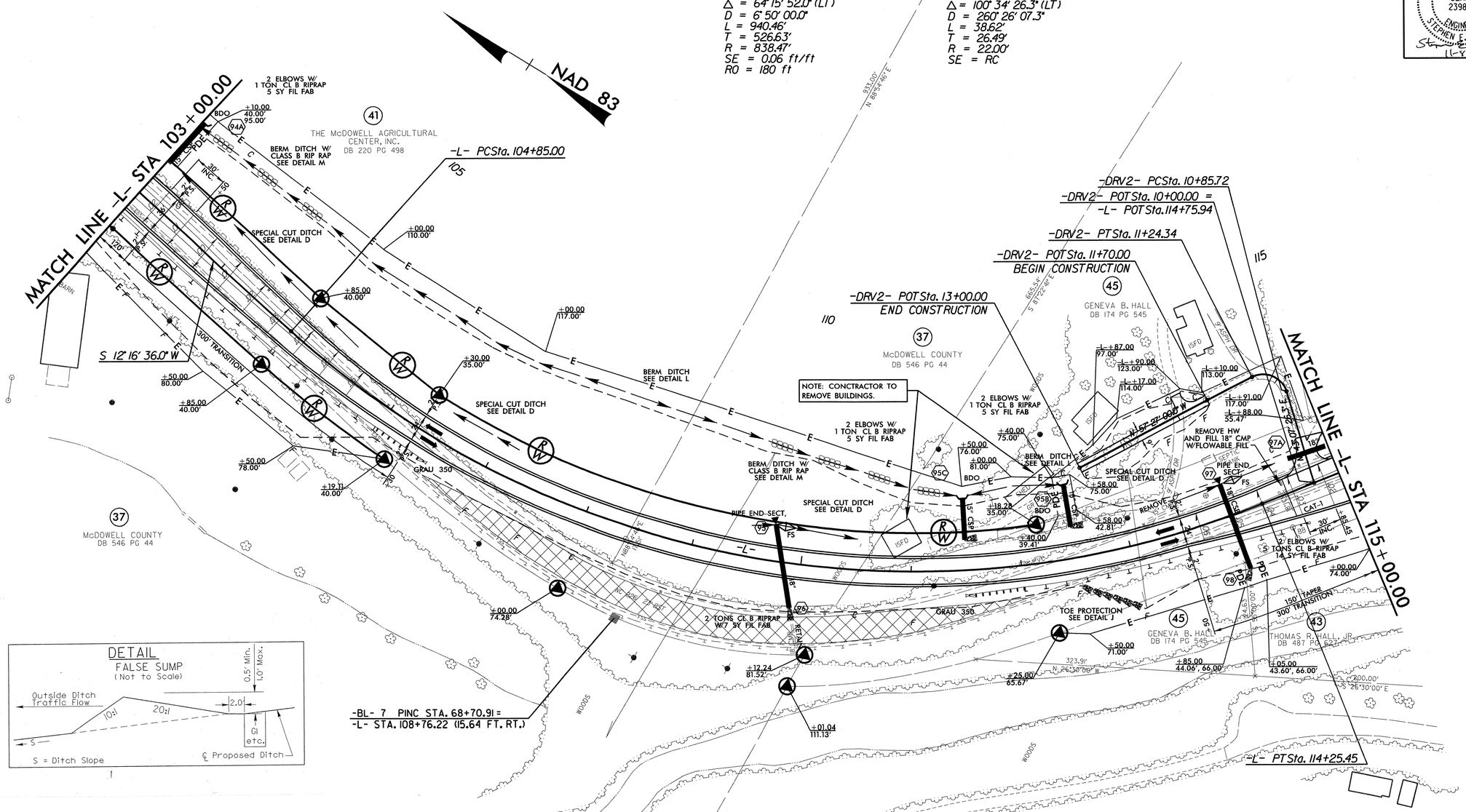

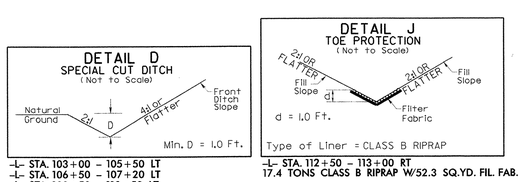

-L- STA. 112+50 - 113+00 RT
17.4 TONS CLASS B RIPRAP W/52.3 SQ.YD. FIL. FAB.

-L- STA. 103+00 - 105+50 LT
-L- STA. 106+50 - 107+20 LT
-L- STA. 109+50 - 110+50 LT
-L- STA. 113+50 - 114+50 LT

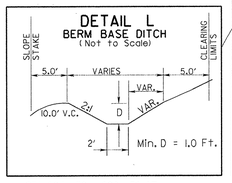

-L- STA. 104+50 - 109+50 LT.

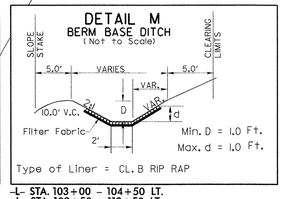

-L- STA. 103+00 - 104+50 LT.
-L- STA. 109+50 - 112+50 LT.

PAVEMENT REMOVAL

SEE SHT.16 FOR -L- PROFILE
SEE SHT.19 FOR -DRV2- PROFILE

NOTE: ALL DRIVEWAY OPENINGS ARE 20' WIDE UNLESS OTHERWISE SHOWN.

PLANS PREPARED BY :
RUMMEL KLEPPER & KAHL, LLP
consulting engineers
900 RIDGEFIELD DRIVE SUITE 350
RALEIGH, NORTH CAROLINA 27609-3960
(919) 878-9560
FOR
STATE OF NORTH CAROLINA
DIVISION OF HIGHWAYS

PROJECT REFERENCE NO.	SHEET NO.
37645 & 37857	12
R/W SHEET NO.	
ROADWAY DESIGN ENGINEER	HYDRAULICS ENGINEER
NORTH CAROLINA PROFESSIONAL SEAL 23982 ENGINEER STEPHEN E. ROBERTS 11-8-06	NORTH CAROLINA PROFESSIONAL SEAL 18181 ENGINEER LINA H. SWEIZY 11/8/06

REVISIONS

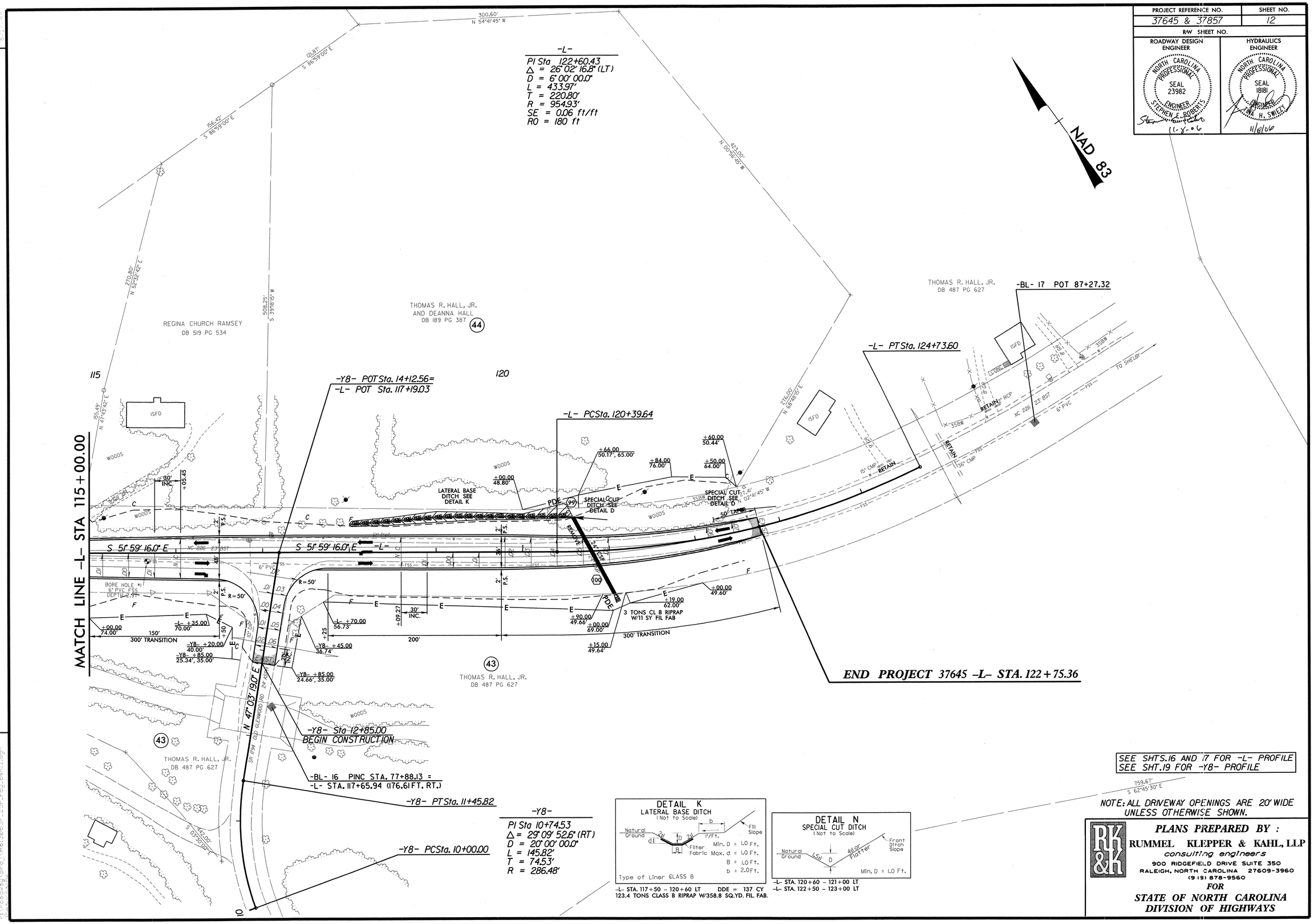

-Y8-
PI Sta 10+74.53
Δ = 29° 09' 52.6" (RT)
D = 20° 00' 00.0"
L = 145.82'
T = 74.53'
R = 286.48'

DETAIL K
LATERAL BASE DITCH
(Not to Scale)
Natural Ground
Fill Slope
Filter Fabric
Min. D = 1.0 Ft.
Max. d = 1.0 Ft.
B = 1.0 Ft.
b = 2.0 Ft.
Type of Liner GLASS B

-L- STA. 117+50 - 120+60 LT DDE = 137 CY
123.4 TONS CLASS B RIPRAP W/358.8 SQ.YD. FIL. FAB.

DETAIL N
SPECIAL CUT DITCH
(Not to Scale)
Natural Ground
Front Ditch Slope
Min. D = 1.0 Ft.

-L- STA. 120+60 - 121+00 LT
-L- STA. 122+50 - 123+00 LT

SEE SHTS.16 AND 17 FOR -L- PROFILE
SEE SHT.19 FOR -Y8- PROFILE

NOTE: ALL DRIVEWAY OPENINGS ARE 20' WIDE UNLESS OTHERWISE SHOWN.

PLANS PREPARED BY :
RUMMEL KLEPPER & KAHL, LLP
consulting engineers
900 RIDGEFIELD DRIVE SUITE 350
RALEIGH, NORTH CAROLINA 27609-3960
(919) 878-9560
FOR
STATE OF NORTH CAROLINA
DIVISION OF HIGHWAYS

PROJECT REFERENCE NO.	SHEET NO.
37645 & 37857	13

ROADWAY DESIGN ENGINEER: NORTH CAROLINA PROFESSIONAL SEAL 23982 ENGINEER STEPHEN E. ROBERTS 11-9-06

HYDRAULICS ENGINEER: NORTH CAROLINA PROFESSIONAL SEAL 18181 ENGINEER TINA H. SMITH 11/8/06

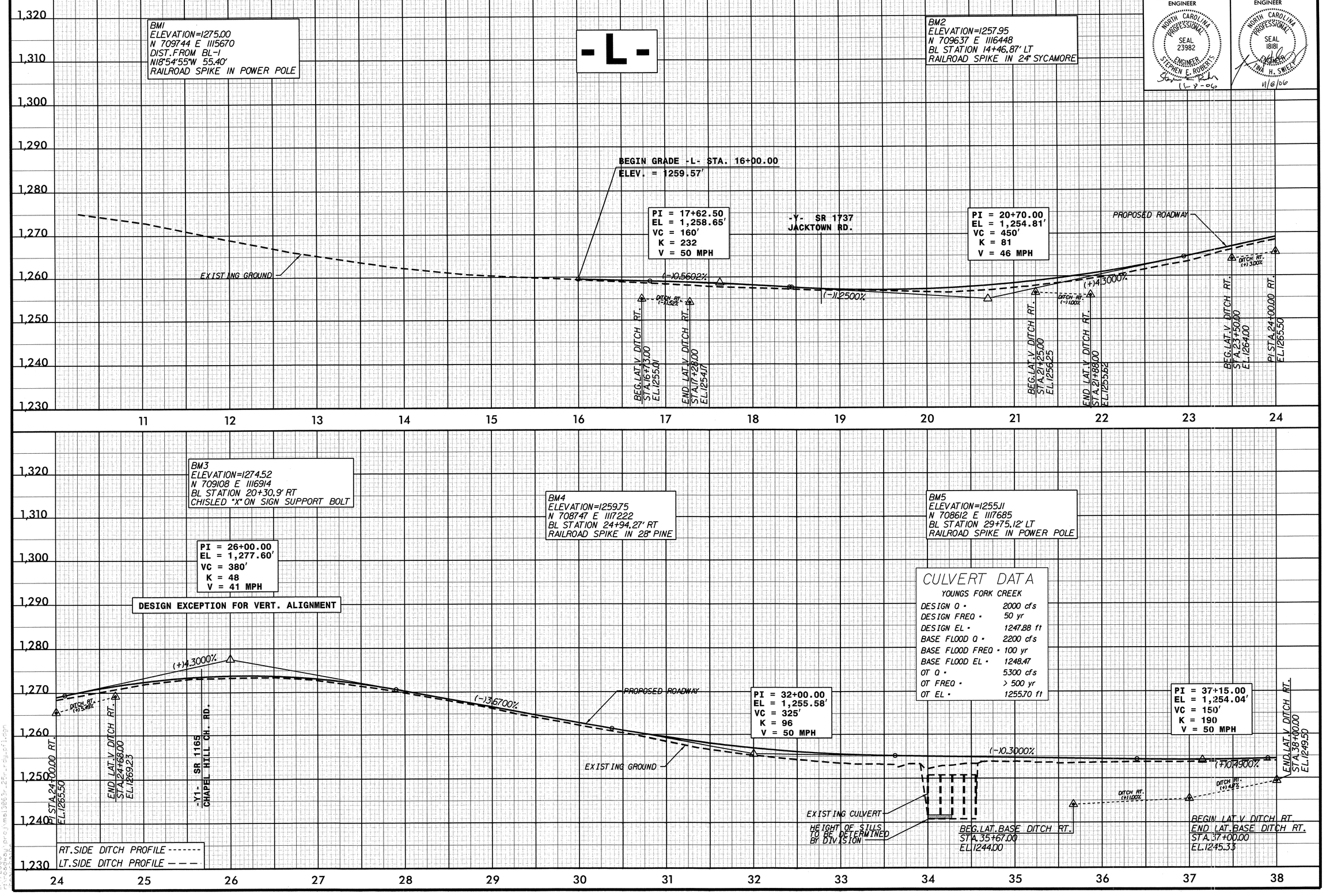

PROJECT REFERENCE NO.	SHEET NO.
37645 & 37857	14

ROADWAY DESIGN ENGINEER
NORTH CAROLINA PROFESSIONAL SEAL 23982 ENGINEER STEPHEN E. ROBERTS
11-8-06

HYDRAULICS ENGINEER
NORTH CAROLINA PROFESSIONAL SEAL 18181 ENGINEER TINA H. SWEET
11/8/06

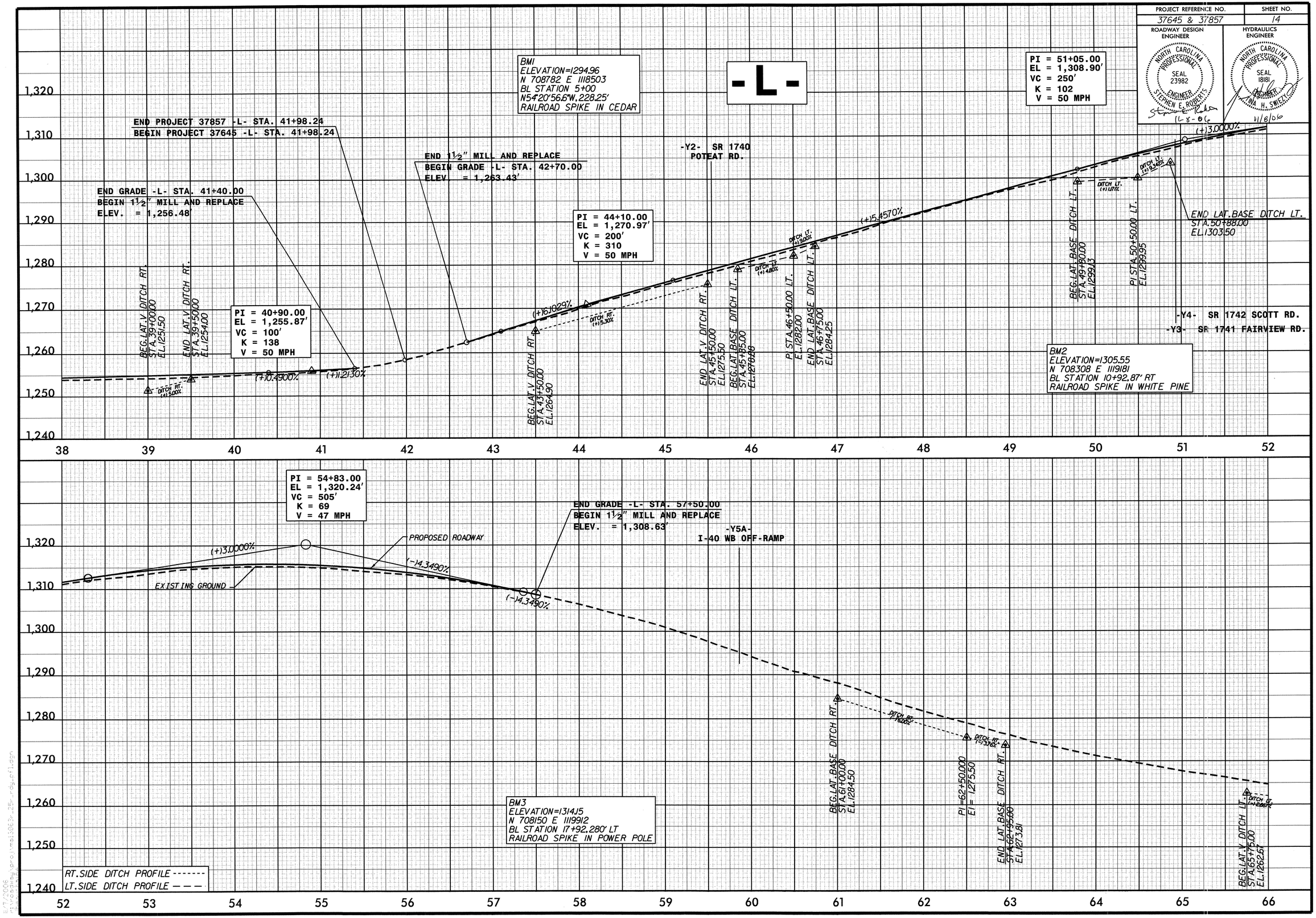

PROJECT REFERENCE NO.	SHEET NO.
37645 & 37857	15

ROADWAY DESIGN ENGINEER: NORTH CAROLINA PROFESSIONAL SEAL 23982 ENGINEER STEPHEN E. ROBERTS 11-8-06

HYDRAULICS ENGINEER: NORTH CAROLINA PROFESSIONAL SEAL 18181 ENGINEER TINA H. SWEEZY 11/8/06

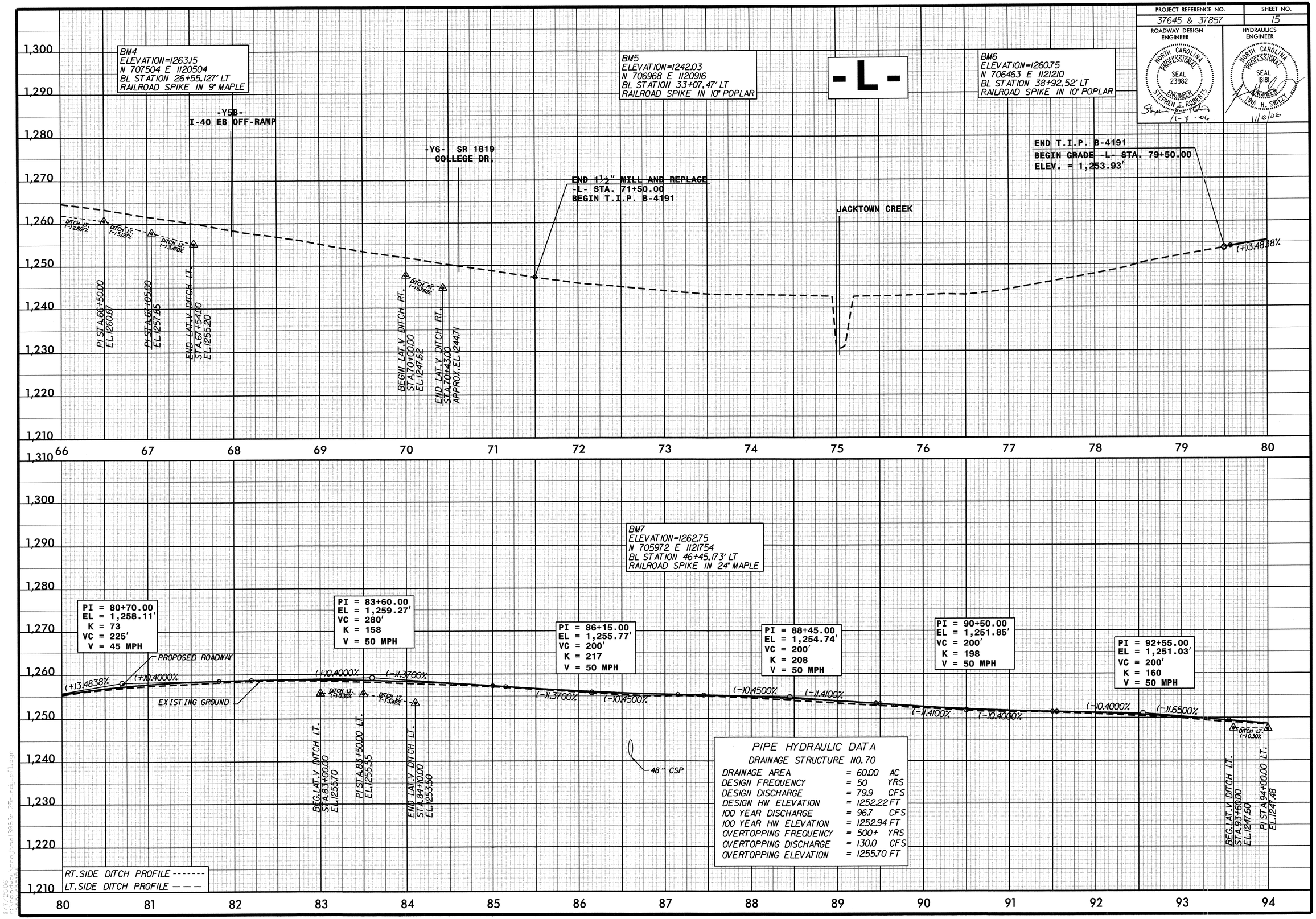

PIPE HYDRAULIC DATA

DRAINAGE STRUCTURE NO. 70

DRAINAGE AREA	= 60.00	AC
DESIGN FREQUENCY	= 50	YRS
DESIGN DISCHARGE	= 79.9	CFS
DESIGN HW ELEVATION	= 1252.22	FT
100 YEAR DISCHARGE	= 96.7	CFS
100 YEAR HW ELEVATION	= 1252.94	FT
OVERTOPPING FREQUENCY	= 500+	YRS
OVERTOPPING DISCHARGE	= 130.0	CFS
OVERTOPPING ELEVATION	= 1255.70	FT

11/7/2006
r:\roadway\proj\mb19863r_25_rdy_prfl.dgn

PROJECT REFERENCE NO.	SHEET NO.
37645 & 37857	16

ROADWAY DESIGN ENGINEER: NORTH CAROLINA PROFESSIONAL SEAL 23982 ENGINEER STEPHEN E. ROBERTS 11-14-06

HYDRAULICS ENGINEER: NORTH CAROLINA PROFESSIONAL SEAL 18181 ENGINEER TINA H. SWIFT 11/8/06

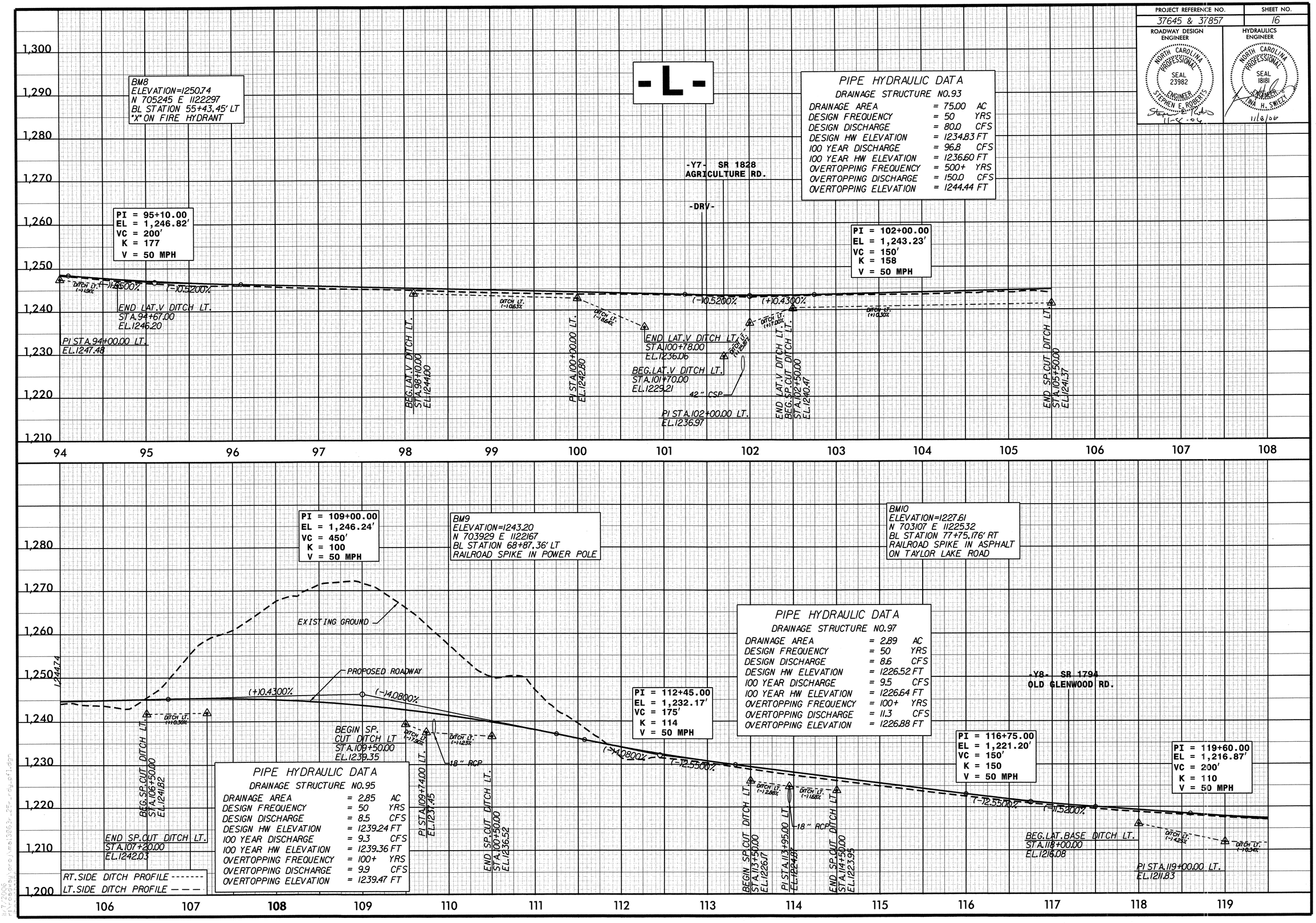

PIPE HYDRAULIC DATA
DRAINAGE STRUCTURE NO.93

DRAINAGE AREA	= 75.00	AC
DESIGN FREQUENCY	= 50	YRS
DESIGN DISCHARGE	= 80.0	CFS
DESIGN HW ELEVATION	= 1234.83	FT
100 YEAR DISCHARGE	= 96.8	CFS
100 YEAR HW ELEVATION	= 1236.60	FT
OVERTOPPING FREQUENCY	= 500+	YRS
OVERTOPPING DISCHARGE	= 150.0	CFS
OVERTOPPING ELEVATION	= 1244.44	FT

PIPE HYDRAULIC DATA
DRAINAGE STRUCTURE NO.95

DRAINAGE AREA	= 2.85	AC
DESIGN FREQUENCY	= 50	YRS
DESIGN DISCHARGE	= 8.5	CFS
DESIGN HW ELEVATION	= 1239.24	FT
100 YEAR DISCHARGE	= 9.3	CFS
100 YEAR HW ELEVATION	= 1239.36	FT
OVERTOPPING FREQUENCY	= 100+	YRS
OVERTOPPING DISCHARGE	= 9.9	CFS
OVERTOPPING ELEVATION	= 1239.47	FT

PIPE HYDRAULIC DATA
DRAINAGE STRUCTURE NO.97

DRAINAGE AREA	= 2.89	AC
DESIGN FREQUENCY	= 50	YRS
DESIGN DISCHARGE	= 8.6	CFS
DESIGN HW ELEVATION	= 1226.52	FT
100 YEAR DISCHARGE	= 9.5	CFS
100 YEAR HW ELEVATION	= 1226.64	FT
OVERTOPPING FREQUENCY	= 100+	YRS
OVERTOPPING DISCHARGE	= 11.3	CFS
OVERTOPPING ELEVATION	= 1226.88	FT

11/7/2006
r:\roadway\proj\m6130626_25_rdy_pf1.dgn

PROJECT REFERENCE NO.	SHEET NO.
37645 & 37857	17

ROADWAY DESIGN ENGINEER
NORTH CAROLINA PROFESSIONAL SEAL 23982 ENGINEER STEPHEN E. ROBERTS
11-8-06

HYDRAULICS ENGINEER
NORTH CAROLINA PROFESSIONAL SEAL 18181 ENGINEER TINA H. SWEITZER
11/8/06

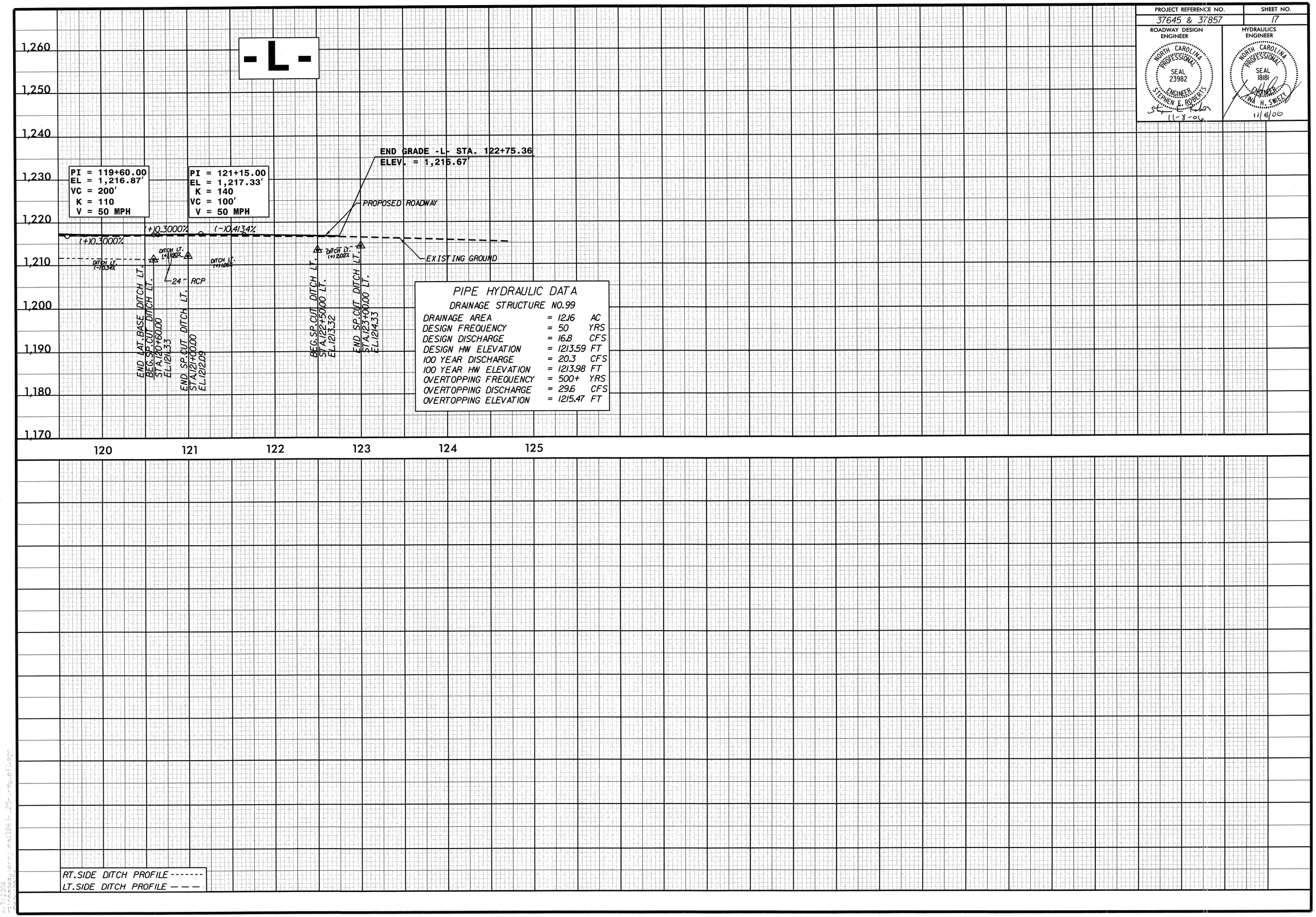

11/7/2006
11:08:49 AM
C:\pwworkdir\pro\jmai906_25_rdy_pf1.dgn

PROJECT REFERENCE NO.	SHEET NO.
37645 & 37857	18

ROADWAY DESIGN ENGINEER
NORTH CAROLINA PROFESSIONAL SEAL 23982 ENGINEER STEPHEN E. ROBERTS
11-7-06

HYDRAULICS ENGINEER
NORTH CAROLINA PROFESSIONAL SEAL 18181 ENGINEER LINA H. SWEEK
11/8/06

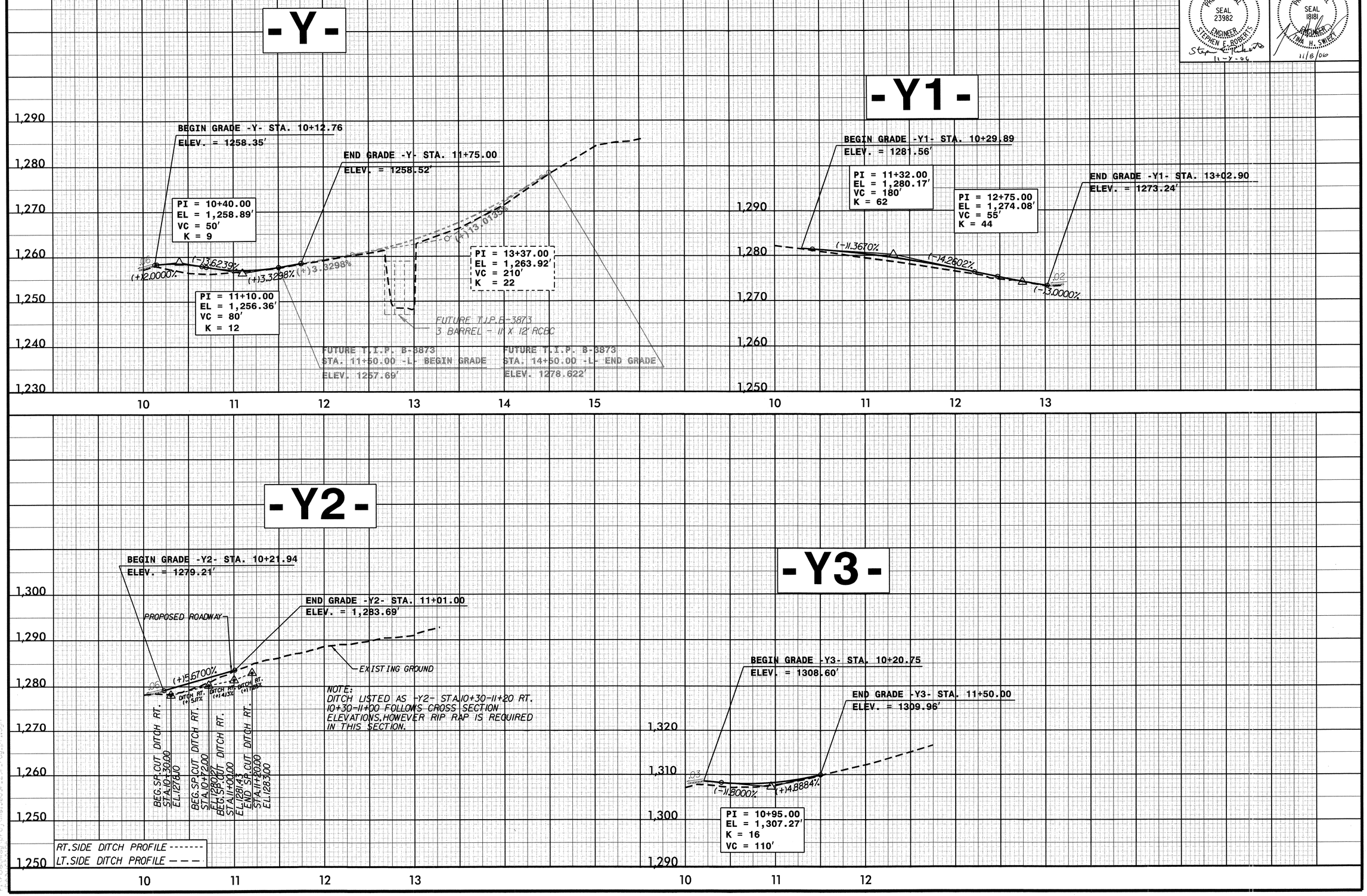

PROJECT REFERENCE NO.	SHEET NO.
37645 & 37857	19

ROADWAY DESIGN ENGINEER
NORTH CAROLINA PROFESSIONAL SEAL 23982 ENGINEER STEPHEN E. ROBERTS
11-8-06
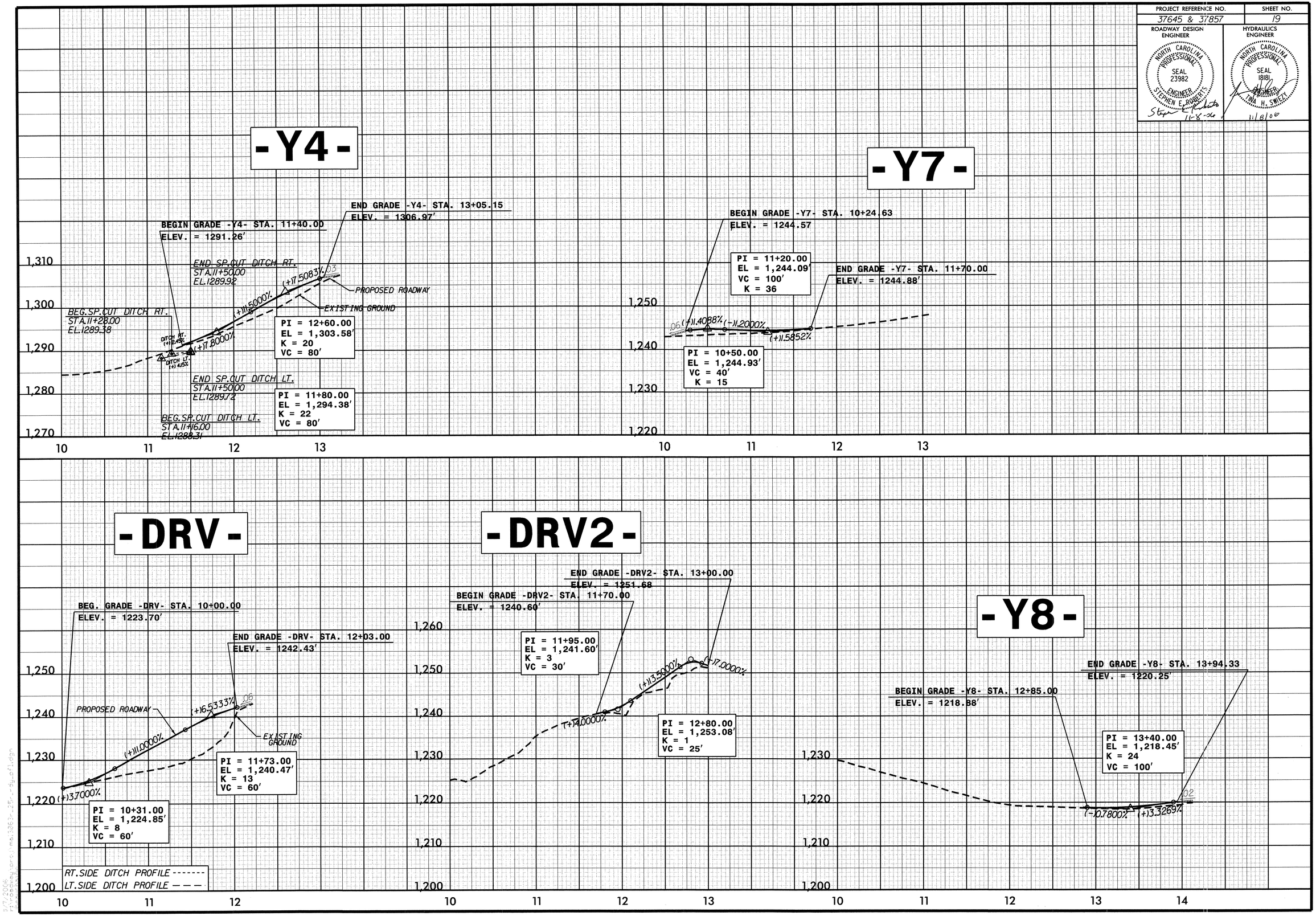
HYDRAULICS ENGINEER
NORTH CAROLINA PROFESSIONAL SEAL 18181 ENGINEER TINA H. SWEEZY
11/8/06