7/01/99

TIP PROJECT: R-2606A

CONTRACT: C201225

STATE	STATE PROJECT REFERENCE NO.	SHEET NO.	TOTAL SHEETS
N.C.	R-2606A	1	

W.B.S. NO.	F.A. PROJ. NO.	DESCRIPTION
34480.1.1	STP-NHF-311(3)	PE
34480.2.2	NHF-311(17)	R / W, UTIL.
34480.3.2	NHF-311(18)	CONSTRUCTION

STATE OF NORTH CAROLINA
DIVISION OF HIGHWAYS

PLAN AND PROFILE OF PROPOSED STATE HIGHWAY

RANDOLPH COUNTY

LOCATION: US 311 FROM SOUTH OF SR 1920 TO NORTH OF SR 1929

TYPE OF WORK: GRADING, DRAINAGE, PAVING, WIDENING, STRUCTURES, CULVERTS, SIGNALS, AND SIGNING

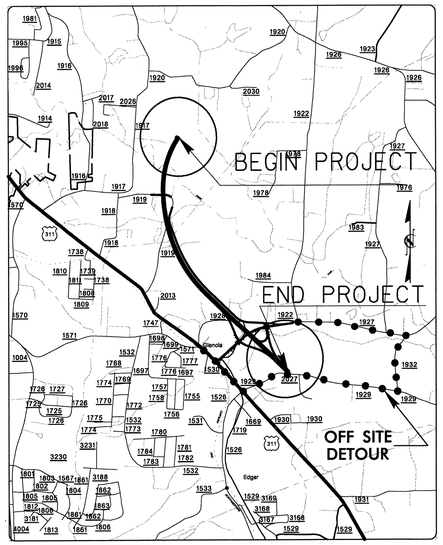

VICINITY MAP

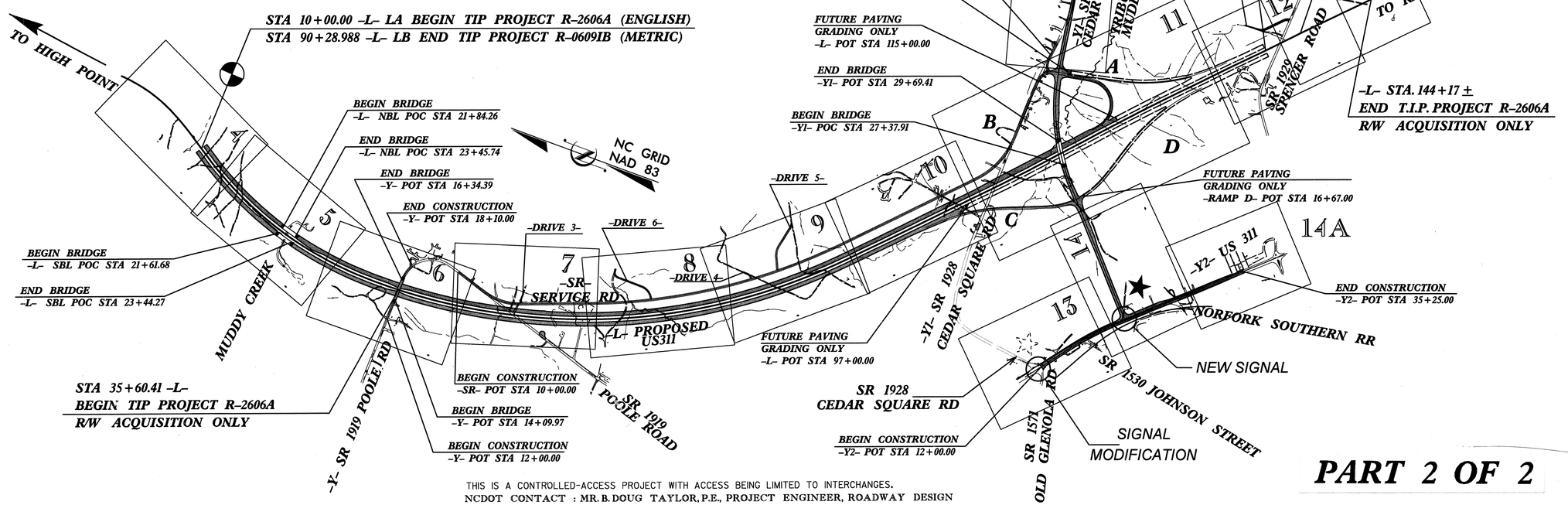

THIS IS A CONTROLLED-ACCESS PROJECT WITH ACCESS BEING LIMITED TO INTERCHANGES.
NCDOT CONTACT : MR. B. DOUG TAYLOR, P.E., PROJECT ENGINEER, ROADWAY DESIGN

PART 2 OF 2

GRAPHIC SCALES

50 25 0 50 100 — PLANS

50 25 0 50 100 — PROFILE (HORIZONTAL)

10 5 0 10 20 — PROFILE (VERTICAL)

DESIGN DATA

ADT 2006 = xxxxxx
ADT 2026 = xxxxxx
DHV = 10%
D = 60%
T = 20%
(TTST 6% & DUAL 14%)
V = 70 mph

PROJECT LENGTH

LENGTH ROADWAY TIP PROJECT R-2606A	= 2.280 MILES	(3.669 km)
LENGTH STRUCTURES TIP PROJECT R-2606A	= 0.031 MILES*	(0.050 km)
TOTAL LENGTH TIP PROJECT R-2606A	= 2.311 MILES	(3.719 km)

*LENGTH BASED ON NBL BRIDGE

2002 STANDARD SPECIFICATIONS

R/W DATE : August 4, 2003

LETTING DATE : APRIL 17, 2007

TOM SHEARIN, P.E.
EARTH TECH PROJECT MANAGER

Prepared In the Office of:

EarthTech
A Tyco International Ltd. Company

FOR NORTH CAROLINA DEPARTMENT OF TRANSPORTATION
701 Corporate Center Drive
Suite 475
Raleigh, N.C. 27607
(919)-854-6200
FAX (919)-854-6259

HYDRAULICS ENGINEER
NORTH CAROLINA PROFESSIONAL SEAL 25458 ENGINEER JOHN DAVID REHDER NICHOLS
SIGNATURE: John D.R. Nichols 6/22/2007

ROADWAY DESIGN ENGINEER
NORTH CAROLINA PROFESSIONAL SEAL 5965 ENGINEER GEORGE T. SHEARIN
SIGNATURE: G T Shearin 6/20/07

DIVISION OF HIGHWAYS
STATE OF NORTH CAROLINA

STATE OF NORTH CAROLINA DEPARTMENT OF TRANSPORTATION

Art McMillian

ART McMILLIAN, P.E.
STATE HIGHWAY DESIGN ENGINEER

USER: rdrdx rdrw
DATE: 6/27/2006 11:35:38 AM
DGN: K:\R2606\R2606A\Roadway\Proj\r2606a_rdy_bhdgn

PROJECT REFERENCE NO.	SHEET NO.
R-2606A	1-A

CENTERLINE COORDINATE LIST

Point #	Chain	Station	Northing(Y)	Easting(X)
1	-L-	10+00.00	782770.4420	1729627.3072
2	-L-	11+00.00	782686.7212	1729572.6189
3	-L-	12+00.00	782602.2895	1729519.0377
4	-L-	13+00.00	782516.5909	1729467.5093
5	-L-	14+00.00	782429.5662	1729418.2536
6	-L-	15+00.00	782341.2755	1729371.3049
7	-L-	16+00.00	782251.7801	1729326.6957
8	-L-	17+00.00	782161.1418	1729284.4567
9	-L-	18+00.00	782069.4235	1729244.6173
10	-L-	19+00.00	781976.6887	1729207.2050
11	-L-	20+00.00	781883.0016	1729172.2459
12	-L-	21+00.00	781788.4270	1729139.7639
13	-L-	22+00.00	781693.0305	1729109.7818
14	-L-	23+00.00	781596.8781	1729082.3202
15	-L-	24+00.00	781500.0364	1729057.3981
16	-L-	25+00.00	781402.5725	1729035.0328
17	-L-	26+00.00	781304.5538	1729015.2398
18	-L-	27+00.00	781206.0483	1728998.0328
19	-L-	28+00.00	781107.1241	1728983.4237
20	-L-	29+00.00	781007.8497	1728971.4227
21	-L-	30+00.00	780908.2940	1728962.0379
22	-L-	31+00.00	780808.5257	1728955.2760
23	-L-	32+00.00	780708.6141	1728951.1417
24	-L-	33+00.00	780608.6293	1728949.5079
25	-L-	34+00.00	780508.6304	1728949.5925
26	-L-	35+00.00	780408.6455	1728951.2644
27	-L-	36+00.00	780308.6996	1728954.5231
28	-L-	37+00.00	780208.8181	1728959.3677
29	-L-	38+00.00	780109.0260	1728965.7971
30	-L-	39+00.00	780009.3486	1728973.8096
31	-L-	40+00.00	779909.8109	1728983.4032
32	-L-	41+00.00	779810.4380	1728994.5754
33	-L-	42+00.00	779711.2550	1729007.3236
34	-L-	43+00.00	779612.2868	1729021.6444
35	-L-	44+00.00	779513.5584	1729037.5343
36	-L-	45+00.00	779415.0946	1729054.9892
37	-L-	46+00.00	779316.9203	1729074.0048
38	-L-	47+00.00	779219.0601	1729094.5762
39	-L-	48+00.00	779121.5388	1729116.6984
40	-L-	49+00.00	779024.3810	1729140.3656
41	-L-	50+00.00	778927.6110	1729165.5719
42	-L-	51+00.00	778831.2533	1729192.3111
43	-L-	52+00.00	778735.3321	1729220.5763
44	-L-	53+00.00	778639.8717	1729250.3605
45	-L-	54+00.00	778544.8960	1729281.6560
46	-L-	55+00.00	778450.4291	1729314.4552
47	-L-	56+00.00	778356.4946	1729348.7496
48	-L-	57+00.00	778263.1163	1729384.5306
49	-L-	58+00.00	778170.3177	1729421.7893
50	-L-	59+00.00	778078.1222	1729460.5162
51	-L-	60+00.00	777986.5529	1729500.7016
52	-L-	61+00.00	777895.6331	1729542.3353
53	-L-	62+00.00	777805.3855	1729585.4069
54	-L-	63+00.00	777715.8329	1729629.9055
55	-L-	64+00.00	777626.9979	1729675.8200
56	-L-	65+00.00	777538.9029	1729723.1386
57	-L-	66+00.00	777451.5700	1729771.8496
58	-L-	67+00.00	777365.0213	1729821.9406
59	-L-	68+00.00	777279.2786	1729873.3991
60	-L-	69+00.00	777194.3634	1729926.2120
61	-L-	70+00.00	777110.2972	1729980.3660
62	-L-	71+00.00	777027.1011	1730035.8476
63	-L-	72+00.00	776944.7961	1730092.6427
64	-L-	73+00.00	776863.4030	1730150.7370
65	-L-	74+00.00	776782.9422	1730210.1158
66	-L-	75+00.00	776703.4340	1730270.7643
67	-L-	76+00.00	776624.8985	1730332.6672
68	-L-	77+00.00	776547.3554	1730395.8088
69	-L-	78+00.00	776470.8243	1730460.1732
70	-L-	79+00.00	776395.3245	1730525.7443
71	-L-	80+00.00	776320.8749	1730592.5054
72	-L-	81+00.00	776247.4943	1730660.4398
73	-L-	82+00.00	776175.2013	1730729.5304
74	-L-	83+00.00	776104.0114	1730799.7571
75	-L-	84+00.00	776033.7400	1730870.9038
76	-L-	85+00.00	775963.8638	1730942.4392
77	-L-	86+00.00	775894.0192	1731014.0055
78	-L-	87+00.00	775824.1746	1731085.5718
79	-L-	88+00.00	775754.3300	1731157.1381
80	-L-	89+00.00	775684.4855	1731228.7044
81	-L-	90+00.00	775614.6409	1731300.2707
82	-L-	91+00.00	775544.7963	1731371.8370
83	-L-	92+00.00	775474.9517	1731443.4033
84	-L-	93+00.00	775405.1071	1731514.9695
85	-L-	94+00.00	775335.2626	1731586.5358
86	-L-	95+00.00	775265.4180	1731658.1021
87	-L-	96+00.00	775195.5734	1731729.6684
88	-L-	97+00.00	775125.7288	1731801.2347
89	-L-	98+00.00	775055.8842	1731872.8010
90	-L-	99+00.00	774986.0397	1731944.3673
91	-L-	100+00.00	774916.1951	1732015.9336
92	-L-	101+00.00	774846.3532	1732087.5026
93	-L-	102+00.00	774776.7747	1732159.3273
94	-L-	103+00.00	774707.6328	1732231.5725
95	-L-	104+00.00	774638.9299	1732304.2353
96	-L-	105+00.00	774570.6687	1732377.3132
97	-L-	106+00.00	774502.8057	1732450.7612
98	-L-	107+00.00	774435.0091	1732524.2705
99	-L-	108+00.00	774367.2124	1732597.7797
100	-L-	109+00.00	774299.4158	1732671.2890
101	-L-	110+00.00	774231.6191	1732744.7983
102	-L-	111+00.00	774163.8225	1732818.3076
103	-L-	112+00.00	774096.0258	1732891.8168
104	-L-	113+00.00	774028.2292	1732965.3261
105	-L-	114+00.00	773960.4325	1733038.8354
106	-L-	115+00.00	773892.5926	1733112.3047
107	-L-	116+00.00	773824.3780	1733185.4261
108	-L-	117+00.00	773755.7215	1733258.1327
109	-L-	118+00.00	773686.6256	1733330.4219
110	-L-	119+00.00	773617.0928	1733402.2910
111	-L-	120+00.00	773547.1358	1733473.7472
112	-L-	121+00.00	773477.0452	1733545.0726
113	-L-	122+00.00	773406.9547	1733616.3980
114	-L-	123+00.00	773336.8642	1733687.7235
115	-L-	124+00.00	773266.7736	1733759.0489
116	-L-	125+00.00	773196.6831	1733830.3743
117	-L-	126+00.00	773126.5925	1733901.6997
118	-L-	127+00.00	773056.5020	1733973.0252
119	-L-	128+00.00	772986.4115	1734044.3506
120	-L-	129+00.00	772916.3209	1734115.6760
121	-L-	130+00.00	772846.2304	1734187.0014
122	-L-	131+00.00	772776.1399	1734258.3269
123	-L-	132+00.00	772706.0493	1734329.6523

Disclaimer: This coordinate list is provided for the convenience of interested contractors and is intended for use during the project bidding process only. Coordinates are localized to this particular project and any conversion to state grid coordinates or other formats will be the responsibility of the recipient. While every effort has been made to provide up-to-date, accurate information, NCDOT makes no express guarantee as to the validity or potential for revision of this information prior to project letting.

USER: kaithompson
DGN FILE: R-2606A.dgn
DATE: 6/29/2016 10:29:29 AM
DGN: R:\R2606\Roadway\rte\r2606a_rdy_rtehdgn

PROJECT REFERENCE NO.	SHEET NO.
R-2606A	1-B
Location and Surveys	

SURVEY CONTROL SHEET R-2606A

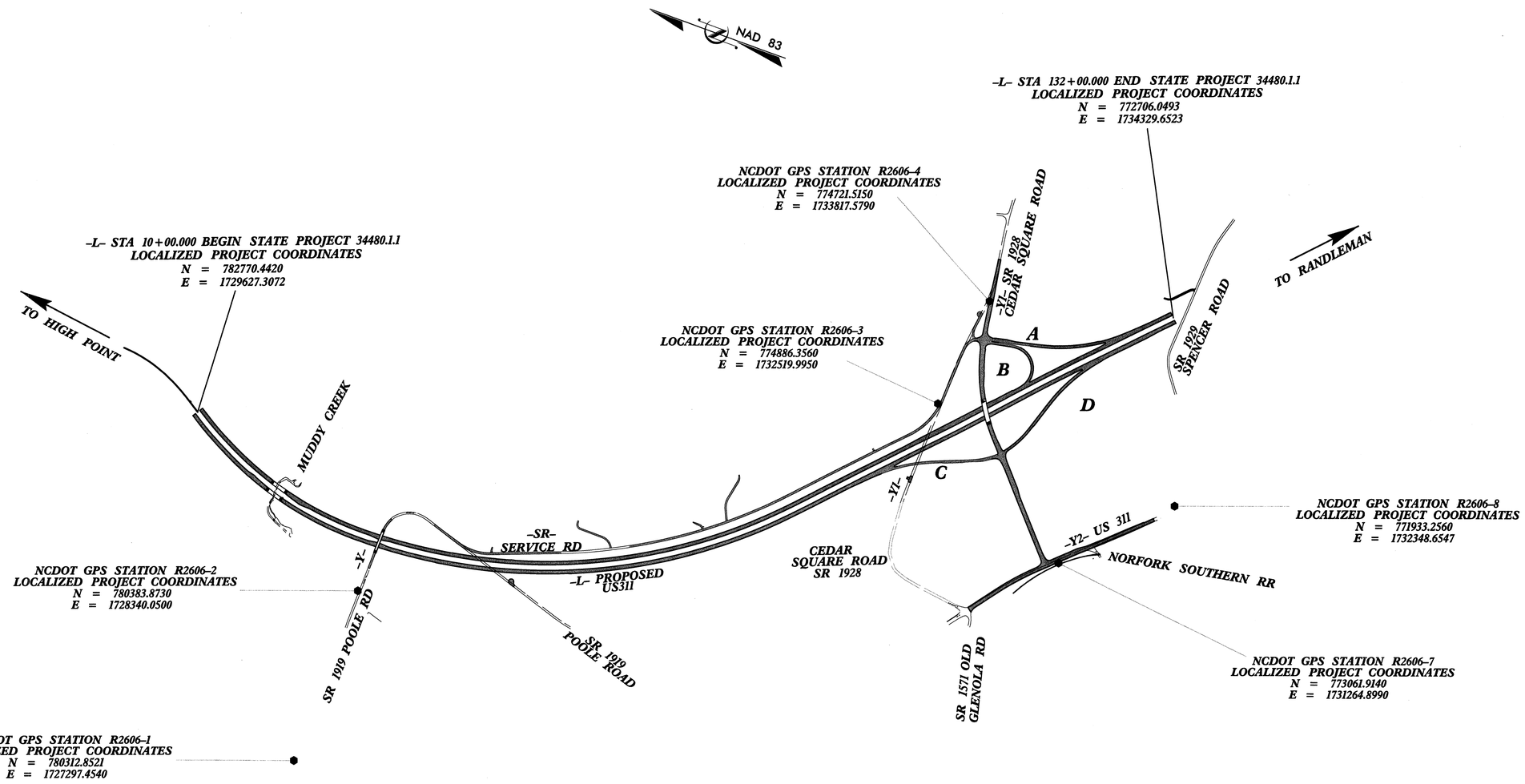

DATUM DESCRIPTION

THE LOCALIZED COORDINATE SYSTEM DEVELOPED FOR THIS PROJECT IS BASED ON THE STATE PLANE COORDINATES ESTABLISHED BY NCGS FOR MONUMENT "HOLLAND"
WITH NAD 83 STATE PLANE GRID COORDINATES OF
NORTHING: 797565.2421(ft) EASTING: 1722871.6461(ft)
THE AVERAGE COMBINED GRID FACTOR USED ON THIS PROJECT (GROUND TO GRID) IS: 0.999908360
THE N.C. LAMBERT GRID BEARING AND LOCALIZED HORIZONTAL GROUND DISTANCE FROM "HOLLAND" TO -L- STATION 10+00.00 IS
S 24°32'33.3" E 16,264.227'
ALL LINEAR DIMENSIONS ARE LOCALIZED HORIZONTAL DISTANCES
VERTICAL DATUM USED IS NGVD 29

NOTES:

THE CONTROL DATA FOR THIS PROJECT CAN BE FOUND ELECTRONICALLY BY SELECTING PROJECT CONTROL DATA AT:

HTTP:\WWW.DOH.DOT.STATE.NC.US/PRECONSTRUCT/HIGHWAY/LOCATION/PROJECT

SITE CALIBRATION INFORMATION HAS NOT BEEN PROVIDED FOR THIS PROJECT. IF FURTHER INFORMATION IS NEEDED, PLEASE CONTACT THE LOCATION AND SURVEYS UNIT.

● INDICATES GEODETIC CONTROL MONUMENTS USED OR SET FOR HORIZONTAL PROJECT CONTROL BY THE NCDOT LOCATION AND SURVEYS UNIT.

PROJECT CONTROL ESTABLISHED USING GLOBAL POSITIONING SYSTEM.

NETWORK ESTABLISHED FROM EXISTING NCGS NAD83 MONUMENTATION.

NOTE: DRAWING NOT TO SCALE

NOTES

1. THE CONTROL DATA FOR THIS PROJECT CAN BE FOUND ELECTRONICALLY BY SELECTING "PROJECT CONTROL DATA" AT:
HTTP://WWW.DOH.DOT.STATE.NC.US/PRECONSTRUCT/HIGHWAY/LOCATION/PROJECT/

THE FILES TO BE FOUND ARE AS FOLLOWS:
r2606a_ls_control_050308.txt

USER: kaylaurenmc
DATE: 6/22/2006 6:35:20 AM
DGN: k:\4153BV\2606A\Roadway\rtn\r2606a_rtn_ls1.dgn

PROJECT REFERENCE NO.	SHEET NO.
R-2606A	1-C
Location and Surveys	

SURVEY CONTROL SHEET R-2606A

BL

POINT	DESC.	NORTH	EAST	ELEVATION	L STATION	OFFSET
87	BL-87	782503.7120	1729742.2340	764.27	11+64.22	241.51 LT
500	BL-500	782381.6580	1729385.9730	774.45	14+57.45	5.69 RT
501	BL-501	782055.1230	1729223.1720	754.22	18+21.39	14.32 RT
502	BL-502	781778.3300	1729115.6230	724.84	21+17.04	19.82 RT
503	BL-503	781567.6020	1729047.1350	708.47	23+37.21	26.47 RT
504	BL-504	781258.9530	1728969.7260	727.87	26+52.73	36.66 RT
505	BL-505	780942.0650	1728916.7950	753.86	29+70.37	47.94 RT
506	BL-506	780378.7790	1728891.3560	760.89	35+28.11	60.69 RT
507	BL-507	779968.7980	1728914.4020	763.17	39+34.82	62.84 RT
508	BL-508	779658.6840	1728955.0810	748.64	42+44.60	59.04 RT
509	BL-509	779252.8180	1729025.8690	711.20	46+52.80	60.10 RT
510	BL-510	779055.8690	1729076.9420	728.67	48+54.36	53.97 RT
511	BL-511	778716.1800	1729173.5530	751.01	52+04.64	50.56 RT
512	BL-512	778492.9150	1729238.4120	759.96	54+35.06	57.72 RT
513	BL-513	778294.7620	1729348.0860	760.52	56+57.38	22.51 RT
514	BL-514	777982.1200	1729468.9570	736.57	59+91.10	30.79 RT
515	BL-515	777671.6730	1729627.0470	731.11	63+37.96	22.63 RT
516	BL-516	777379.4650	1729799.3180	765.15	66+76.12	12.20 RT
517	BL-517	777067.6700	1730004.7590	768.03	70+49.00	3.16 RT
518	BL-518	776702.8120	1730297.0930	785.52	75+16.68	20.40 LT
519	BL-519	776341.9130	1730622.2570	758.43	80+04.51	36.16 LT
520	BL-520	776116.6480	1730853.4190	751.85	83+29.21	46.80 LT
521	BL-521	775823.1920	1731161.8040	767.95	87+55.24	52.54 LT
522	BL-522	775549.8740	1731433.7520	776.06	91+40.76	46.88 LT
523	BL-523	775290.8850	1731801.7550	793.44	95+85.02	118.56 LT
524	BL-524	775118.2750	1731921.5690	794.51	97+91.32	78.71 LT
525	BL-525	774855.7000	1732098.2630	783.71	101+01.18	14.20 LT
526	BL-526	774554.3620	1732463.6370	761.82	105+74.51	46.63 LT
527	BL-527	774340.0900	1732688.6780	758.37	108+85.21	41.69 LT
528	BL-528	774027.8150	1732979.3860	761.75	113+10.62	9.23 LT
529	BL-529	773705.0000	1733279.4300	765.99	117+50.44	22.03 RT
530	BL-530	773178.2800	1733994.3940	790.20	126+29.89	101.84 LT
531	BL-531	772602.4720	1734412.4570	785.63	133+31.66	15.84 RT

BY101

POINT	DESC.	NORTH	EAST	ELEVATION	Y STATION	OFFSET
548	BY101-548	780393.4280	1727915.1790	767.73	OUTSIDE PROJECT LIMITS	
2	R2606-2 (GPS)	780383.8730	1728340.0500	761.55	OUTSIDE PROJECT LIMITS	
506	BL-506	780378.7790	1728891.3560	760.89	14+60.14	28.62 LT

POINT	DESC.	NORTH	EAST	ELEVATION	L STATION	OFFSET
549	BY101-549	780272.7610	1729312.0450	757.17	36+53.41	355.56 LT
550	BY101-550	779942.1060	1729385.3970	748.69	40+10.28	403.17 LT
510	BL-510	779055.8690	1729076.9420	728.67	48+54.36	53.97 RT
551	BY101-551	778047.7780	1728793.2090	765.20	56+85.91	629.14 RT

BY102

POINT	DESC.	NORTH	EAST	ELEVATION	Y1 STATION	OFFSET
552	BY102-552	774869.8640	1734844.8880	747.33	OUTSIDE PROJECT LIMITS	
4	R2606-4 (GPS)	774721.5150	1733817.5790	762.86	41+22.08	7.29 LT

POINT	DESC.	NORTH	EAST	ELEVATION	L STATION	OFFSET
3	R2606-3 (GPS)	774886.3560	1732519.9950	781.86	103+87.53	328.05 LT
525	BL-525	774855.7000	1732098.2630	783.71	101+01.18	14.20 LT
553	BY102-553	774933.1200	1731393.4460	788.29	95+42.69	422.66 RT

BY103

POINT	DESC.	NORTH	EAST	ELEVATION	Y1 STATION	OFFSET
4	R2606-4 (GPS)	774721.5150	1733817.5790	762.86	41+22.08	7.29 LT
565	BY103-565	774648.9469	1733442.3199	756.29	37+40.19	11.72 RT
566	BY103-566	774540.6388	1733109.8649	756.49	33+87.02	40.77 RT
527	BL-527	774340.0900	1732688.6780	758.37	29+09.50	47.82 RT
567	BY103-567	774095.4737	1732403.8000	773.59	25+23.83	76.10 RT
568	BY103-568	773918.4922	1732078.8168	779.83	21+62.72	8.41 LT
569	BY103-569	773618.3046	1731756.1835	794.21	17+22.12	0.06 RT
570	BY103-570	773422.9430	1731536.8715	802.94	14+28.41	0.65 LT
7	R2606-7 (GPS)	773061.9140	1731264.8990	794.34	OUTSIDE PROJECT LIMITS	

BY104

POINT	DESC.	NORTH	EAST	ELEVATION	Y2 STATION	OFFSET
554	BY104-554	773988.8020	1730263.4540	792.18	OUTSIDE PROJECT LIMITS	
555	BY104-555	773594.4680	1730797.4400	795.26	15+76.71	41.34 LT
7	R2606-7 (GPS)	773061.9140	1731264.8990	794.34	22+80.79	15.89 RT
556	BY104-556	772435.3690	1731821.0690	800.61	31+18.49	27.76 RT

****
BM1 ELEVATION = 778.00
N 782392 E 1729327
L STATION 14+76 62 RIGHT
RAILROAD SPIKE IN BASE OF 18"
WALNUT TREE
****
****
BM2 ELEVATION = 704.57
N 781659 E 1728985
L STATION 22+66 110 RIGHT
RAILROAD SPIKE IN BASE OF 15"
ELM TREE
****
****
BM3 ELEVATION = 757.60
N 780305 E 1729292
L STATION 36+18 337 LEFT
RAILROAD SPIKE IN BASE OF 24"
OAK TREE
****
****
BM4 ELEVATION = 764.33
N 778389 E 1729193
L STATION 55+17 136 RIGHT
UPPERMOST POINT ON ANGLE-IRON
PROJECTION ON THE NORTHEAST LEG OF A
HIGH-TENSION POWERLINE TOWER
****
****
BM5 ELEVATION = 746.09
N 777805 E 1729760
L STATION 62+78 157 LEFT
RAILROAD SPIKE IN BASE OF 8" OAK
TREE
****
****
BM6 ELEVATION = 758.67
N 776892 E 1729958
L STATION 71+66 140 RIGHT
RAILROAD SPIKE IN BASE OF 10"
POPLAR TREE
****
****
BM7 ELEVATION = 751.03
N 776260 E 1730923
L STATION 82+76 198 LEFT
RAILROAD SPIKE IN BASE OF 15"
OAK TREE
****
****
BM8 ELEVATION = 777.42
N 775315 E 1731539
L STATION 93+80 48 RIGHT
RAILROAD SPIKE IN BASE OF 20"
OAK TREE
****
****
BM9 ELEVATION = 775.08
N 774640 E 1731958
L STATION 101+50 238 RIGHT
RAILROAD SPIKE IN BASE OF 24"
SWEET GUM TREE
****
****
BM10 ELEVATION = 753.54
N 774373 E 1732930
L STATION 110+40 229 LEFT
RAILROAD SPIKE IN BASE OF 15"
WILLOW OAK TREE
****
****
BM11 ELEVATION = 796.63
N 773113 E 1733812
L STATION 125+46 73 RIGHT
RAILROAD SPIKE IN BASE OF 10"
OAK TREE
****

NOTES

1. THE CONTROL DATA FOR THIS PROJECT CAN BE FOUND ELECTRONICALLY BY SELECTING "PROJECT CONTROL DATA" AT:
HTTP://WWW.DOH.DOT.STATE.NC.US/PRECONSTRUCT/HIGHWAY/LOCATION/PROJECT/

THE FILES TO BE FOUND ARE AS FOLLOWS:
r2606a_ls_control_050308.txt

DATUM DESCRIPTION

THE LOCALIZED COORDINATE SYSTEM DEVELOPED FOR THIS PROJECT IS BASED ON THE STATE PLANE COORDINATES ESTABLISHED BY NCGS FOR MONUMENT "HOLLAND"
WITH NAD 83 STATE PLANE GRID COORDINATES OF
NORTHING: 797565.2421(ft) EASTING: 1722871.6461(ft)
THE AVERAGE COMBINED GRID FACTOR USED ON THIS PROJECT (GROUND TO GRID) IS: 0.999908360
THE N.C. LAMBERT GRID BEARING AND LOCALIZED HORIZONTAL GROUND DISTANCE FROM "HOLLAND" TO -L- STATION 10+00.00 IS
S 24°32'33.3" E 16,264.227'
ALL LINEAR DIMENSIONS ARE LOCALIZED HORIZONTAL DISTANCES
VERTICAL DATUM USED IS NGVD 29

USER: swhaynes
DATE: 6/20/2012 5:52:15 PM
FILE: K:\ROADWAY\R2606A\Roadway\r2606a_c01_sht1.dgn

PROJECT REFERENCE NO.	SHEET NO.
R-2606A	2

ROADWAY DESIGN ENGINEER

NORTH CAROLINA PROFESSIONAL SEAL 019882 ENGINEER GEORGE T. SHEARIN

6/26/06

PAVEMENT DESIGN ENGINEER

NORTH CAROLINA PROFESSIONAL SEAL 22896 ENGINEER CLARK S. MORRISON

6-29-06

Prepared in the Office of:

EarthTech
A Tyco International Ltd. Company
701 Corporate Center Drive, Suite 475
Raleigh, NC 27607
(919) 854-6200 - (919) 854-6259(FAX)

PAVEMENT SCHEDULE

C1	PROP. APPROX. 1½" ASPHALT CONCRETE SURFACE COURSE, TYPE S9.5B, AT AN AVERAGE RATE OF 168 LBS. PER SQ. YD.	E3	PROP. VAR. DEPTH ASPHALT CONCRETE BASE COURSE, TYPE B25.0B, AT AN AVERAGE RATE OF 114 LBS. PER SQ. YD. PER 1" DEPTH. TO BE PLACED IN LAYERS NOT LESS THAN 3" IN DEPTH OR GREATER THAN 5½" IN DEPTH
C2	PROP. APPROX. 2" ASPHALT CONCRETE SURFACE COURSE, TYPE S9.5B, AT AN AVERAGE RATE OF 224 LBS. PER SQ. YD.	E4	PROP. APPROX. 3" ASPHALT CONCRETE BASE COURSE, TYPE B25.0C, AT AN AVERAGE RATE OF 342 LBS. PER SQ. YD.
C3	PROP. APPROX. 3" ASPHALT CONCRETE SURFACE COURSE, TYPE S9.5B, AT AN AVERAGE RATE OF 168 LBS. PER SQ. YD. IN EACH OF TWO LAYERS	E5	PROP. APPROX. 6" ASPHALT CONCRETE BASE COURSE, TYPE B25.0C, AT AN AVERAGE RATE OF 342 LBS. PER SQ. YD. IN EACH OF TWO LAYERS
C4	PROP. VAR. DEPTH ASPHALT CONCRETE SURFACE COURSE, TYPE S9.5B, AT AN AVERAGE RATE OF 112 LBS. PER SQ. YD. PER 1" DEPTH. TO BE PLACED IN LAYERS NOT LESS THAN 1½" IN DEPTH OR GREATER THAN 2" IN DEPTH	J1	PROP. 8" AGGREGATE BASE COURSE
C5	PROP. APPROX. 3" ASPHALT CONCRETE SURFACE COURSE, TYPE S9.5C, AT AN AVERAGE RATE OF 168 LBS. PER SQ. YD. IN EACH OF TWO LAYERS	K	SUBGRADE TO BE TREATED WITH LIME TO A DEPTH OF 8", AT A RATE OF 20 LBS PER SQ. YD. AS DIRECTED BY THE ENGINEER OR SUBGRADE TO BE TREATED WITH CEMENT TO A DEPTH OF 7", AT A RATE OF 55 LBS. PER SQ. YD. AS DIERCTED BY THE ENGINEER OR SUBGRADE TO BE TREATED WITH AGGREGATE AT A RATE OF 250 LBS. PER SQ. YD. AND CEMENT AT A RATE OF 55 LBS. PER SQ. YD. TO A DEPTH OF 7" AS DIRECTED BY THE ENGINEER
D1	PROP. APPROX. 2½" ASPHALT CONCRETE INTERMEDIATE COURSE, TYPE I19.0B, AT AN AVERAGE RATE OF 285 LBS. PER SQ. YD.		
D2	PROP. APPROX. 3" ASPHALT CONCRETE INTERMEDIATE COURSE, TYPE I19.0B, AT AN AVERAGE RATE OF 342 LBS. PER SQ. YD.		
D3	PROP. APPROX. 4" ASPHALT CONCRETE INTERMEDIATE COURSE, TYPE I19.0B, AT AN AVERAGE RATE OF 456 LBS. PER SQ. YD.	R1	2'-6" CONCRETE CURB AND GUTTER
D4	PROP. VAR. DEPTH ASPHALT CONCRETE INTERMEDIATE COURSE, TYPE I19.0B, AT AN AVERAGE RATE OF 114 LBS. PER SQ. YD. PER 1" DEPTH, TO BE PLACED IN LAYERS NOT LESS THAN 2½" IN DEPTH OR GREATER THAN 4" IN DEPTH	R2	5" MONOLITHIC CONCRETE ISLAND KEYED IN (SEE PLANS FOR LOCATION)
D5	PROP. APPROX. 3½" ASPHALT CONCRETE INTERMEDIATE COURSE, TYPE I19.0C, AT AN AVERAGE RATE OF 399 LBS. PER SQ. YD.	T	EARTH MATERIAL
D6	PROP. APPROX. 4" ASPHALT CONCRETE INTERMEDIATE COURSE, TYPE I19.0C, AT AN AVERAGE RATE OF 456 LBS. PER SQ. YD.	U	EXISTING PAVEMENT
E1	PROP. APPROX. 3" ASPHALT CONCRETE BASE COURSE, TYPE B25.0B, AT AN AVERAGE RATE OF 342 LBS. PER SQ. YD.	W	VARIABLE DEPTH ASPHALT PAVEMENT (SEE STANDARD WEDGING DETAIL SHEET No. 2-B)
E2	PROP. APPROX. 7" ASPHALT CONCRETE BASE COURSE, TYPE B25.0B, AT AN AVERAGE RATE OF 399 LBS. PER SQ. YD. IN EACH OF TWO LAYERS		

NOTE: PAVEMENT EDGE SLOPES ARE 1:1 UNLESS SHOWN OTHERWISE.

USER: kevinvanmetre
DATE: 6/26/2006 4:59:59 PM
DGN: K:\HS\3912606\Roadway\Proj\r2606a_rdy.dgn

PROJECT REFERENCE NO.	SHEET NO.
R-2606A	2-A

ROADWAY DESIGN ENGINEER

NORTH CAROLINA PROFESSIONAL SEAL 5865 ENGINEER GEORGE T. SHEARIN

6/26/2006

PAVEMENT DESIGN ENGINEER

NORTH CAROLINA PROFESSIONAL SEAL 22896 ENGINEER CLARK S. MORRISON

6-29-06

Prepared in the Office of: EarthTech

A Tyco International Ltd. Company
701 Corporate Center Drive, Suite 475
Raleigh, NC 27607
(919) 854-6200 (919) 854-6259(FAX)

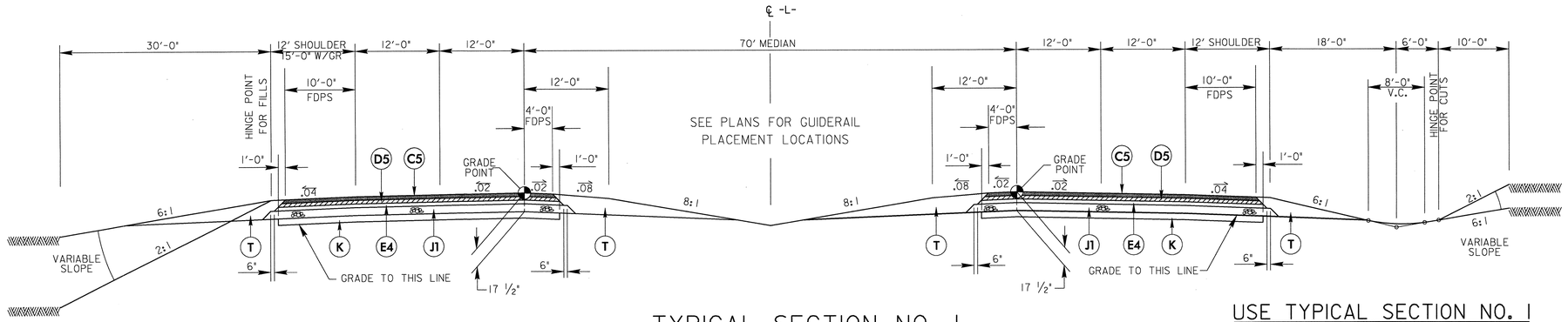

TYPICAL SECTION NO. 1

USE TYPICAL SECTION NO. 1

-L- NB STA. 10+00.00 TO STA. 21+84.26 (BEGIN BRIDGE)
-L- NB STA. 23+45.74 (END BRIDGE) TO -L- STA. 115+00.00
-L- SB STA. 10+00.00 TO STA. 21+85.73 (BEGIN BRIDGE)
-L- SB STA. 23+44.27 (END BRIDGE) TO STA. 97+00.00

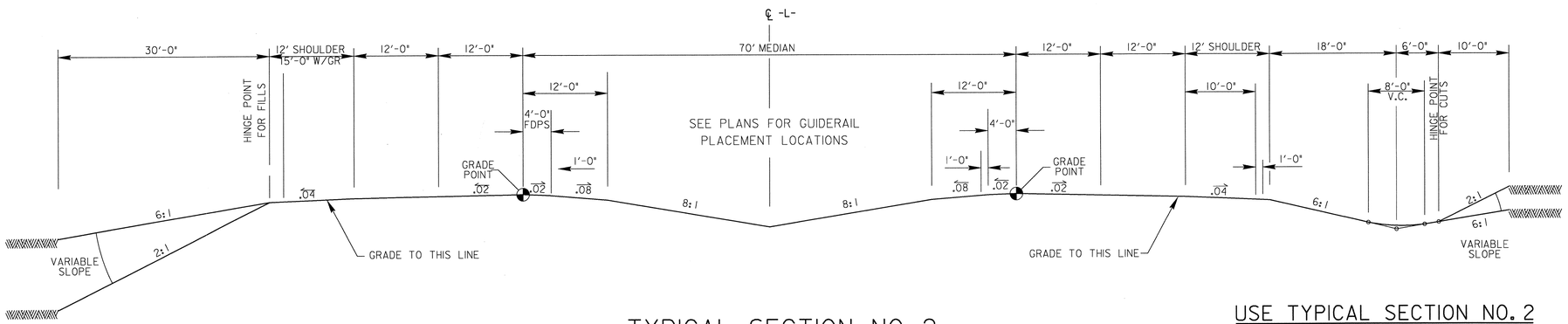

TYPICAL SECTION NO. 2

USE TYPICAL SECTION NO. 2

-L- NB STA. 115+00.00 TO STA. 132+00.00
-L- SB STA. 97+00.00 TO STA. 132+00.00

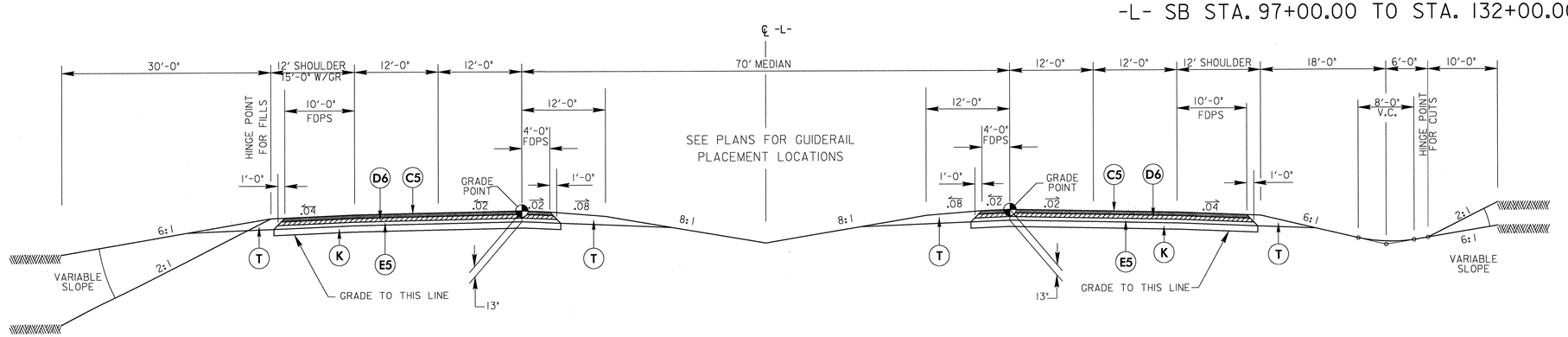

TYPICAL SECTION NO. 3
(ALTERNATE PAVEMENT DESIGN)

USE TYPICAL SECTION NO. 3

-L- NB STA. 10+00.00 TO STA. 21+84.26 (BEGIN BRIDGE)
-L- NB STA. 23+45.74 (END BRIDGE) TO -L- STA. 115+00.00
-L- SB STA. 10+00.00 TO STA. 21+85.73 (BEGIN BRIDGE)
-L- SB STA. 23+44.27 (END BRIDGE) TO STA. 97+00.00

PAVEMENT SCHEDULE	
C1	1½" S9.5B
C2	2" S9.5B
C3	3" S9.5B
C4	VAR. DEPTH S9.5B
C5	3" S9.5C
D1	2½" I19.0B
D2	3" I19.0B
D3	4" I19.0B
D4	VAR. DEPTH I19.0B
D5	3½" I19.0C
D6	4" I19.0C
E1	3" B25.0B
E2	7" B25.0B
E3	VAR. DEPTH B25.0B
E4	3" B25.0C
E5	6" B25.0C
J1	8" ABC
K	SOIL CEMENT BASE OR LIME TREATED SOIL
R1	2'-6" CURB AND GUTTER
R2	5" MONOLITHIC CONCRETE ISLAND KEYED IN
T	EARTH MATERIAL
U	EXISTING PAVEMENT
W	WEDGING

USER: keithcummins
DATE: 6/26/2006 4:59:53 PM
DGN: K:\HS\R-2606A\Roadway\Proj\r2606a_rdy_typ.dgn

PROJECT REFERENCE NO.	SHEET NO.
R-2606A	2-B

ROADWAY DESIGN ENGINEER

NORTH CAROLINA PROFESSIONAL SEAL 5968 ENGINEER GEORGE T. SHEARIN

6/26/06

PAVEMENT DESIGN ENGINEER

NORTH CAROLINA PROFESSIONAL SEAL 22896 ENGINEER CLARK S. MORRISON

6-29-06

Prepared in the Office of:
EarthTech
A Tyco International Ltd. Company
701 Corporate Center Drive, Suite 475
Raleigh, NC 27607
(919) 854-6200 - (919) 854-6259(FAX)

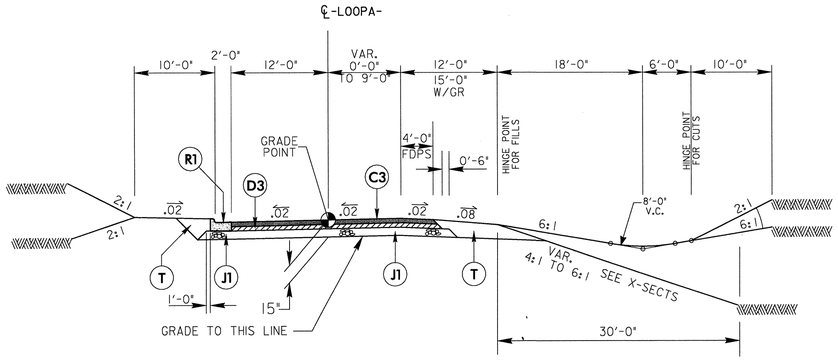

TYPICAL SECTION NO. 4

USE TYPICAL SECTION NO. 4
-LOOPA- STA 0+00.00 TO STA 10+16.77

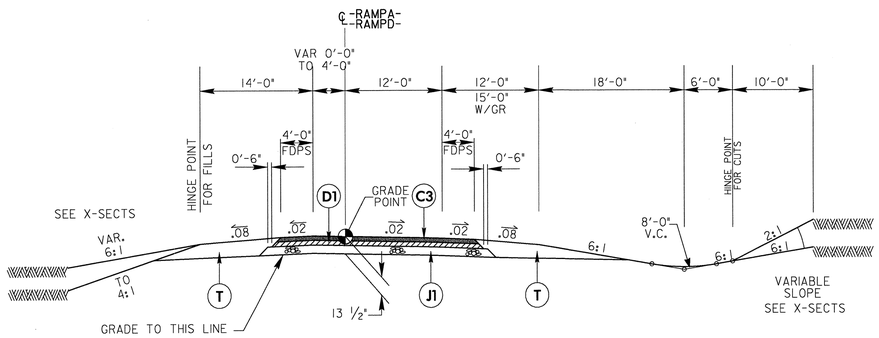

TYPICAL SECTION NO. 5

USE TYPICAL SECTION NO. 5
-RAMPA- STA 16+56.38 TO STA 17+50.98
-RAMPD- STA 16+67.00 TO STA 17+27.91

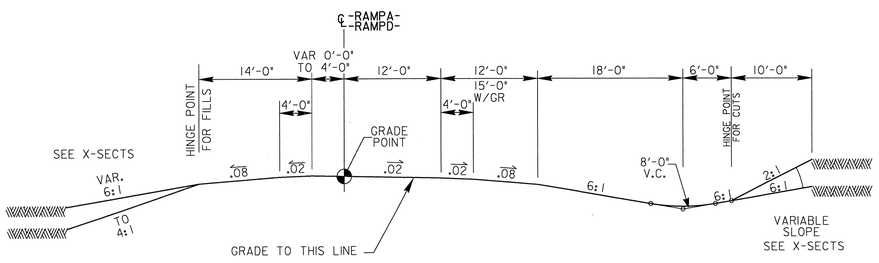

TYPICAL SECTION NO. 6

USE TYPICAL SECTION NO. 6
-RAMPA- STA 0+00.00 TO STA 16+56.38
-RAMPD- STA 0+00.00 TO STA 16+67.00

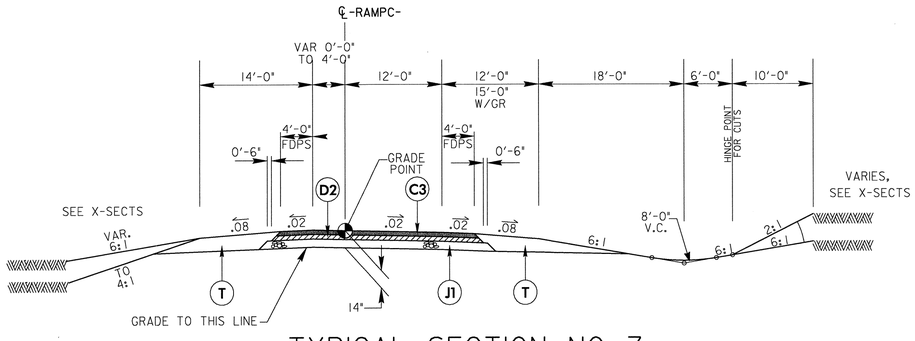

TYPICAL SECTION NO. 7

USE TYPICAL SECTION NO. 7
-RAMPC- STA 0+00.00 TO STA 15+89.32

PAVEMENT SCHEDULE	
C1	1½" S9.5B
C2	2" S9.5B
C3	3" S9.5B
C4	VAR. DEPTH S9.5B
C5	3" S9.5C
D1	2½" I19.0B
D2	3" I19.0B
D3	4" I19.0B
D4	VAR. DEPTH I19.0B
D5	3½" I19.0C
D6	4" I19.0C
E1	3" B25.0B
E2	7" B25.0B
E3	VAR. DEPTH B25.0B
E4	3" B25.0C
E5	6" B25.0C
J1	8" ABC
K	SOIL CEMENT BASE OR LIME TREATED SOIL
R1	2'-6" CURB AND GUTTER
R2	5" MONOLITHIC CONCRETE ISLAND KEYED IN
T	EARTH MATERIAL
U	EXISTING PAVEMENT
W	WEDGING

USER: kevinvanmetre
DATE: 6/26/2006 4:59:48 PM
DGN: k:\4155\r2606a\Roadway\Proj\r2606a_rdy_typ.dgn

PROJECT REFERENCE NO.	SHEET NO.
R-2606A	2-C

ROADWAY DESIGN ENGINEER — NORTH CAROLINA PROFESSIONAL SEAL 3965 ENGINEER GEORGE T. SHEARIN — 6/26/06

PAVEMENT DESIGN ENGINEER — NORTH CAROLINA PROFESSIONAL SEAL 22896 ENGINEER CLARK S. MORRISON — 6-29-06

Prepared in the Office of: EarthTech
A Tyco International Ltd. Company
701 Corporate Center Drive, Suite 475
Raleigh, NC 27607
(919) 854-6200 - (919) 854-6259(FAX)

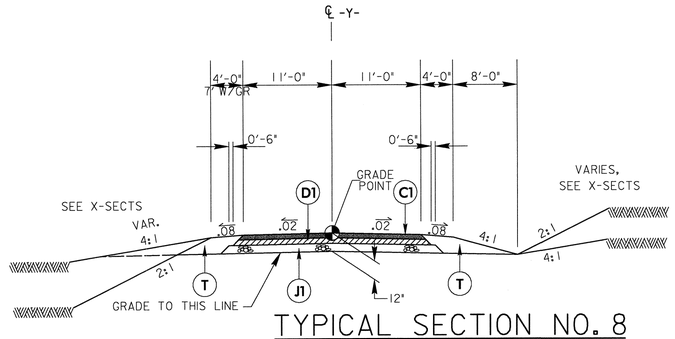

TYPICAL SECTION NO. 8

USE TYPICAL SECTION NO. 8

-Y- STA. 12+00.00 TO STA. 14+09.97 (BEGIN BRIDGE)
-Y- STA. 16+34.39 (END BRIDGE) TO STA. 18+10.00

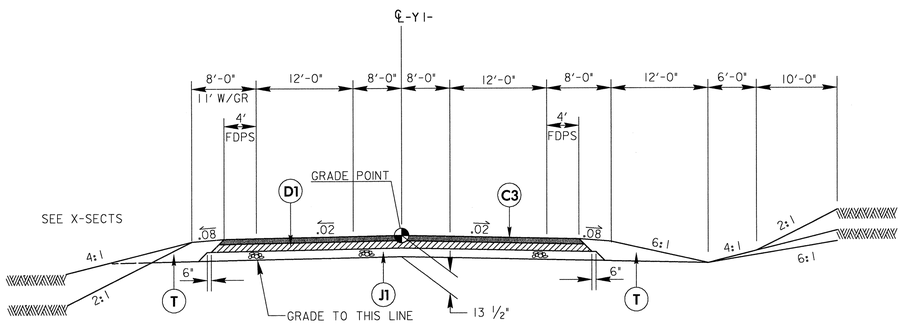

TYPICAL SECTION NO. 9

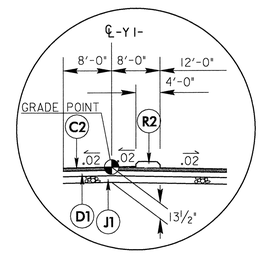

DETAIL A

USE DETAIL A: -Y1- 10+86.00 TO -Y1- 23+27.95
-Y1- 37+10.00 TO -Y1- 44+44.00

USE TYPICAL SECTION NO. 9

-Y1- STA. 10+00.00 TO STA. 27+37.91 (BEGIN BRIDGE)
-Y1- STA. 29+69.41 (END BRIDGE) TO STA. 46+00.00
SEE PLANS FOR LOCATIONS OF AUXILIARY LANES AND TAPERS

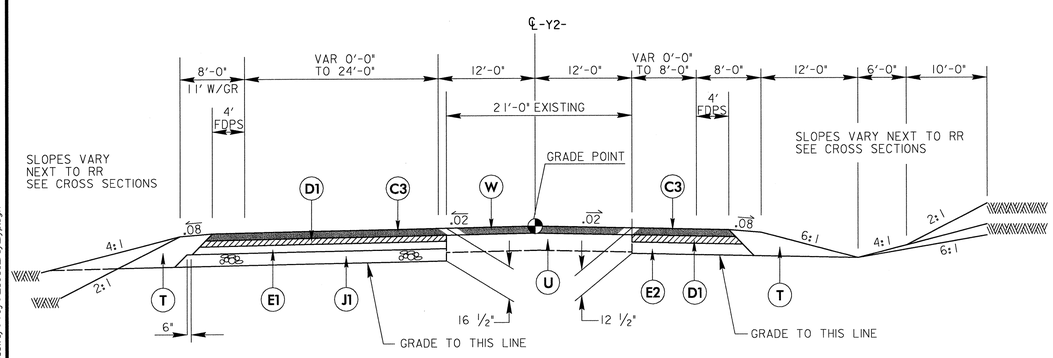

TYPICAL SECTION NO. 10

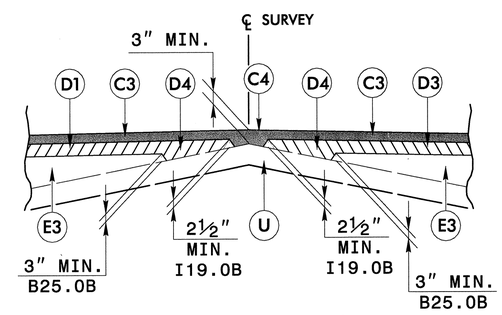

Detail Showing Method of Wedging
Use in conjunction with Typical Section No. 7

USE TYPICAL SECTION NO. 10

-Y2- STA 12+00.00 TO STA 35+25.00
SEE PLANS FOR LOCATION OF AUXILIARY LANES AND TAPERS

PAVEMENT SCHEDULE	
C1	1½" S9.5B
C2	2" S9.5B
C3	3" S9.5B
C4	VAR. DEPTH S9.5B
C5	3" S9.5C
D1	2½" I19.0B
D2	3" I19.0B
D3	4" I19.0B
D4	VAR. DEPTH I19.0B
D5	3½" I19.0C
D6	4" I19.0C
E1	3" B25.0B
E2	7" B25.0B
E3	VAR. DEPTH B25.0B
E4	3" B25.0C
E5	6" B25.0C
J1	8" ABC
K	SOIL CEMENT BASE OR LIME TREATED SOIL
R1	2'-6" CURB AND GUTTER
R2	5" MONOLITHIC CONCRETE ISLAND KEYED IN
T	EARTH MATERIAL
U	EXISTING PAVEMENT
W	WEDGING

USER: kevinvanmetre
DATE: 6/26/2006 4:59:37 PM
DGN: k:\41558\r2606a\Roadway\Proj\r2606a_rdy_typ.dgn

PROJECT REFERENCE NO.	SHEET NO.
R-2606A	2-D

ROADWAY DESIGN ENGINEER

NORTH CAROLINA PROFESSIONAL ENGINEER 5965 GEORGE T. SHEARIN

7/5/06

PAVEMENT DESIGN ENGINEER

NORTH CAROLINA PROFESSIONAL SEAL 22896 ENGINEER CLARK S. MORRISON

7/7/06

Prepared in the Office of:
EarthTech
A Tyco International Ltd. Company
701 Corporate Center Drive, Suite 475
Raleigh, NC 27607
(919) 854-6200 - (919) 854-6259(FAX)

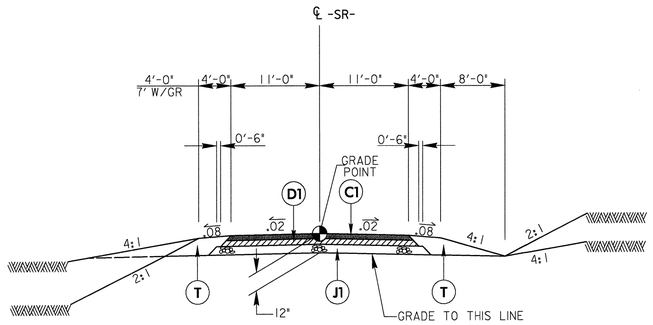

TYPICAL SECTION NO. 11

USE TYPICAL SECTION NO. 11

-SR- STA 10+00.00 TO STA 81+60.00
SEE PLANS FOR LOCATIONS OF TAPERS

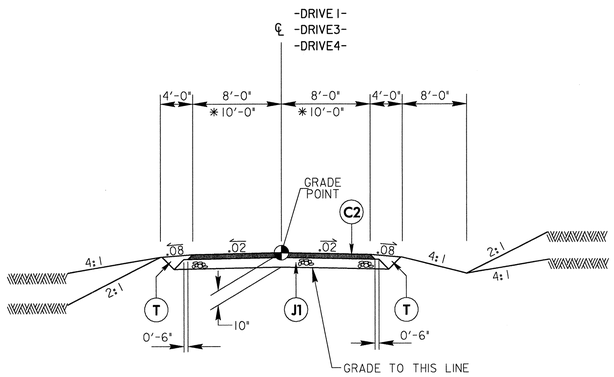

TYPICAL SECTION NO. 12

USE TYPICAL SECTION NO. 12

* -DRIVE1- STA 10+11.06 TO STA 13+01.35
-DRIVE3- STA 10+13.60 TO STA 11+00.00
-DRIVE4- STA 10+11.00 TO STA 11+50.00

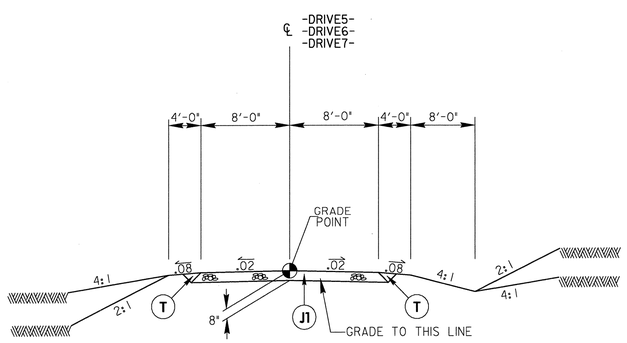

TYPICAL SECTION NO. 13

USE TYPICAL SECTION NO. 13

-DRIVE5- STA 11+11.36 TO STA 15+25.60
-DRIVE6- STA 10+11.00 TO STA 15+45.00
-DRIVE7- STA 11+00.00 TO STA 14+73.94

SEE PLANS FOR LOCATIONS OF TAPERS

PAVEMENT SCHEDULE	
C1	1½" S9.5B
C2	2" S9.5B
C3	3" S9.5B
C4	VAR. DEPTH S9.5B
C5	3" S9.5C
D1	2½" I19.0B
D2	3" I19.0B
D3	4" I19.0B
D4	VAR. DEPTH I19.0B
D5	3½" I19.0C
D6	4" I19.0C
E1	3" B25.0B
E2	7" B25.0B
E3	VAR. DEPTH B25.0B
E4	3" B25.0C
E5	6" B25.0C
J1	8" ABC
K	SOIL CEMENT BASE OR LIME TREATED SOIL
R1	2'-6" CURB AND GUTTER
R2	5" MONOLITHIC CONCRETE ISLAND KEYED IN
T	EARTH MATERIAL
U	EXISTING PAVEMENT
W	WEDGING

USER: kevinvanmetre
DATE: 7/5/2006 9:56:26 AM
DGN: k:\41558\r2606a\VT_FILES\Roadway\Proj\r2606a_rdy_typ.dgn

PROJECT REFERENCE NO.	SHEET NO.
R-2606A	2-E

ROADWAY DESIGN ENGINEER

NORTH CAROLINA PROFESSIONAL SEAL 9969 ENGINEER GEORGE T. SHEARIN

6/26/06

PAVEMENT DESIGN ENGINEER

NORTH CAROLINA PROFESSIONAL SEAL 22896 ENGINEER CLARK S. MORRISON

7/7/06

Prepared in the Office of:

EarthTech
A Tyco International Ltd. Company
701 Corporate Center Drive, Suite 475
Raleigh, NC 27607
(919) 854-6200 – (919) 854-6259(FAX)

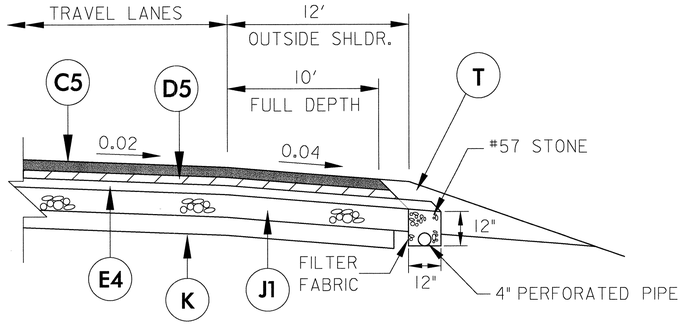

DETAIL NO. 1

(NOT TO SCALE)

PAVEMENT SCHEDULE	
C5	3" S9.5C
D5	3½" I19.0C
D6	4" I19.0C
E4	3" B25.0C
E5	6" B25.0C
J1	8" ABC
K	SOIL CEMENT BASE OR LIME TREATED SOIL

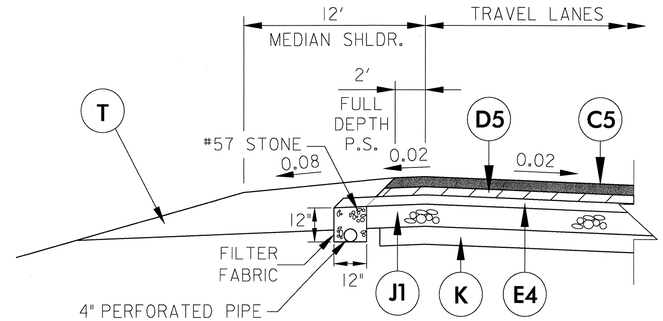

DETAIL NO. 2

(NOT TO SCALE)

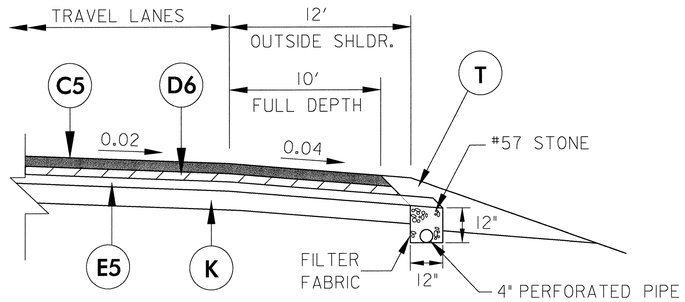

DETAIL NO. 1A (ALTERNATE DESIGN)

(NOT TO SCALE)

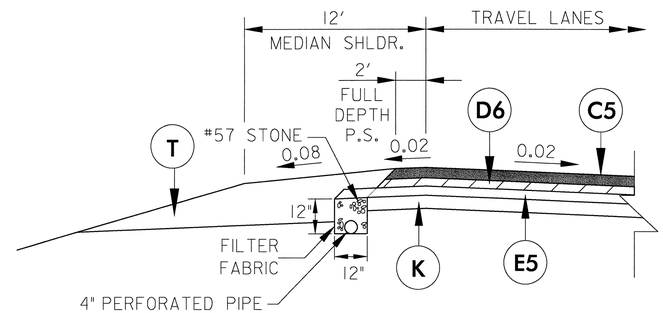

DETAIL NO. 2A (ALTERNATE DESIGN)

(NOT TO SCALE)

DETAIL NO.	LINE	STATION – STATION	SIDE	SHOULDER DRAIN	4" PERFORATED PIPE	OUTLET 4" PIPE (PVC)	OUTLET LOCATION	OUTLET STRUCTURE STRUCTURE NO.	OUTLET STRUCTURE PAD
1	-L-	13+00 - 16+00	LEFT (NB)	300'	300'	18'	16+00	1	---
		16+00 - 18+50	Outside Shld.	250'	250'	18'	18+50	---	1
		18+50 - 20+60		210'	210'	42'	20+60	---	1
1	-L-	24+51 - 27+25	LEFT (NB)	274'	274'	4'	24+51	10C	---
		27+25 - 30+00	Outside Shld.	275'	275'	18'	27+25	---	1
		30+00 - 33+00		300'	300'	18'	30+00	11	---
1	-L-	63+00 - 66+00	LEFT (NB)	300'	300'	68'	63+00	64	---
		66+00 - 69+00	Outside Shld.	300'	300'	18'	66+00	67	---
		69+00 - 72+35		335'	335'	18'	69+00	68	---
		72+35 - 75+70		335'	335'	18'	72+35	---	1
1	-L-	76+00 - 79+00	LEFT (NB)	300'	300'	56'	79+00	72	---
		79+00 - 81+50	Outside Shld.	250'	250'	52'	81+50	73	---
		81+50 - 85+51		401'	401'	28'	85+50	77	---
		85+51 - 87+50		199'	199'	18'	87+50	80	---
		87+50 - 90+50		300'	300'	18'	90+50	---	1
		90+50 - 93+00		250'	250'	18'	93+00	82	---
		93+00 - 95+70		270'	270'				
1	-L-	102+00 - 105+00	LEFT (NB)	300'	300'	18'	105+00	108B	---
		105+00 - 107+50	Outside Shld.	250'	250'	48'	107+50	110	---
		107+50 - 110+60		310'	310'	52'	110+60	---	1
1	-L-	114+50 - 115+00	LEFT (NB)	50'	50'	12'	114+50	---	1
			SUB-TOTAL	5,759'	5,759'	560'			7

DETAIL NO.	LINE	STATION – STATION	SIDE	SHOULDER DRAIN	4" PERFORATED PIPE	OUTLET 4" PIPE (PVC)	OUTLET LOCATION	OUTLET STRUCTURE STRUCTURE NO.	OUTLET STRUCTURE PAD
1	-L-	85+80 - 88+40	RIGHT (SB)	260'	260'	48'	85+80		
		88+40 - 91+50	Outside Shld.	310'	310'	28'	88+40		
2	-L-	13+00 - 16+00	RIGHT (SB)	300'	300'	28'	16+00	2	---
		16+00 - 18+50	Median Shld.	250'	250'	112'	18+50	---	1
		18+50 - 21+40		290'	290'	28'	21+40	5	---
2	-L-	24+51 - 27+25	RIGHT (SB)	274'	274'	28'	24+51	8	---
		27+25 - 30+00	Median Shld.	275'	275'	88'	27+25	---	1
		30+00 - 33+00		300'	300'	28'	30+00	12	---
2	-L-	63+00 - 66+00	RIGHT (SB)	300'	300'	28'	63+00	65	---
		66+00 - 69+00	Median Shld.	300'	300'	84'	66+00	---	1
		69+00 - 72+35		335'	335'	28'	69+00	69	---
		72+35 - 75+50		265'	265'	76'	72+35	---	1
2	-L-	76+00 - 78+50	RIGHT (SB)	250'	250'	80'	78+50	---	1
		78+50 - 81+50	Median Shld.	300'	300'	28'	81+50	74	---
			SUB-TOTAL	4,009'	4,009'	712'			7
				9,768'					
			TOTAL		9,768'	1,272'			14
			SAY	9,770'	9,770'	1,275'			

USER: kevinsumner
DATE: 6/26/2006 5:00:10 PM
DGN: K:\4155R\2606a\Roadway\Proj\r2606a_rdy_typ.dgn

DRAINAGE DETAILS

PROJECT REFERENCE NO.	SHEET NO.
R-2606A	2-F
R/W SHEET NO.	
ROADWAY DESIGN ENGINEER	HYDRAULICS ENGINEER

Prepared in the Office of: EarthTech (A Tyco International Ltd. Company) 701 Corporate Center Drive, Suite 475 Raleigh, NC 27607 (919) 854-6200 - (919) 854-6259(FAX)

NOT TO SCALE

DETAIL A
FALSE SUMP
(NOT TO SCALE)

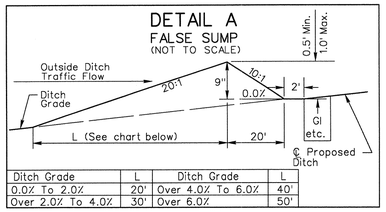

Ditch Grade	L	Ditch Grade	L
0.0% To 2.0%	20'	Over 4.0% To 6.0%	40'
Over 2.0% To 4.0%	30'	Over 6.0%	50'

-L- 16+14 L
-L- 21+19 L
-L- 25+16 R
-L- 29+86 R
-L- 29+86 R (BERM)
-Y- 14+00 L
-Y- 14+00 R
-Y- 16+56 R
-L- 54+36 R
-L- 79+14 L
-SR- 55+43.61 R
-L- 105+14 L

DETAIL B
FALSE SUMP
(NOT TO SCALE)

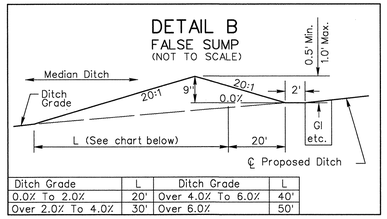

Ditch Grade	L	Ditch Grade	L
0.0% To 2.0%	20'	Over 4.0% To 6.0%	40'
Over 2.0% To 4.0%	30'	Over 6.0%	50'

-L- 16+24 M
-L- 21+64 M
-L- 23+57 M
-L- 29+76 M
-L- 43+26 M
-L- 47+76 M
-L- 54+26 M
-SR- 34+29.93 R
-L- 56+76 M
-L- 62+76 L
-L- 62+76 M
-L- 68+76 M
-L- 81+74 M
-DRIVE5- 10+45 R
-DRIVE5- 10+45 L
-L- 87+26 M
-L- 92+76 M
-L- 118+06 M
-L- 123+76 M

DETAIL C
FALSE SUMP
(NOT TO SCALE)

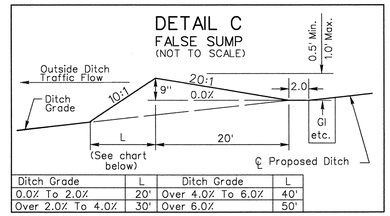

Ditch Grade	L	Ditch Grade	L
0.0% To 2.0%	20'	Over 4.0% To 6.0%	40'
Over 2.0% To 4.0%	30'	Over 6.0%	50'

-L- 16+24 R
-L- 21+64 R
-L- 25+76 L
-L- 29+76 L
-L- 31+26 L
-L- 37+36 L
-L- 40+56 L
-L- 43+26 L
-L- 47+76 L
-SR-31+37.78 L
-L- 65+76 L
-L- 68+76 L
-L- 85+27 L
-L- 87+26 L
-L- 92+76 L

PREFORMED SCOUR HOLE
(NOT TO SCALE)

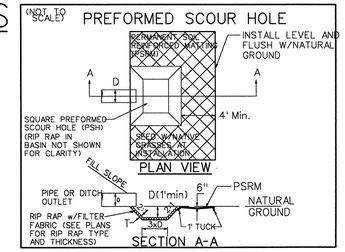

-L- 31+05 L
-L- 46+80 R
-L- 59+48 L
-L- 112+05 L
-SR- 48+00 L
-SR- 24+90 L
-DRIVE5- 15+60 R
-DRIVE6- 13+63 L
-RAMPC- 9+67 R
-RAMPD- 14+00 R

DETAIL E
BERM 'V' DITCH
(NOT TO SCALE)

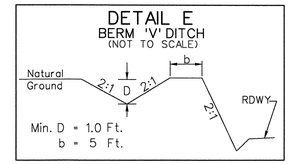

-L- 30+00 - 35+12 R
(DDE = 847 CY)

DETAIL F
TOE PROTECTION
(NOT TO SCALE)

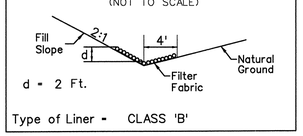

-L- 46+40 - 46+80 R
-L- 47+16 - 47+50 R
-L- 70+50 - 72+00 R
-SR- 49+90 - 51+00 L
-RAMPC- 10+25 - 15+00 R
-RAMPD- 14+28 - 14+80 L

DETAIL H
LATERAL 4' BASE DITCH w/CLASS I LINER
(NOT TO SCALE)

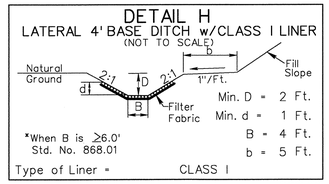

-L- 47+89 - 52+50 R
DDE = 458 CY

DETAIL I
TOE PROTECTION
(NOT TO SCALE)

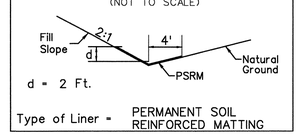

-SR- 14+45 - 15+75 L
-L- 58+10 - 59+48 R
-L- 60+00 - 61+50 L

DETAIL J
PERMANENT DITCH CHECK DAM
(NOT TO SCALE)

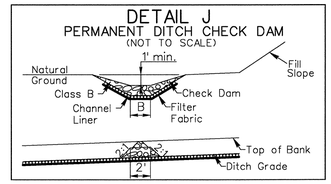

-L- 47+95 R
-L- 48+09 R
-L- 48+23 R
-L- 48+37 R

DETAIL K
SPECIAL DITCH w/STONE LINER
(NOT TO SCALE)

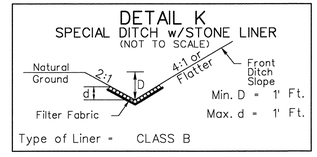

-SR- 10+00 - 11+85.62 R

DETAIL L
SPECIAL CUT BASE DITCH
(NOT TO SCALE)

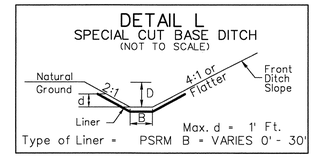

-SR- 11+85.62 - 13+30 R

DETAIL GG
SPECIAL DITCH w/GRASS LINER
(NOT TO SCALE)

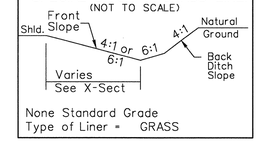

-L- 10+00 - 11+00 R
-L- 37+00 - 37+60 R
-L- 54+00 - 56+00 L
-L- 56+00 - 57+00 L
-L- 76+00 - 78+00 L
-L- 90+00 - 98+50 L
-L- 101+50 - 102+80 R
-L- 102+80 - 104+00 R
-L- 131+00 - 132+29 R
-RAMP C- 0+25 - 6+64 R
-RAMP C- 6+64 - 10+15 L
-Y1- 10+68 - 11+50 R
-Y1- 11+00 - 13+00 L
-Y1- 12+00 - 13+00 R
-Y2- 18+00 - 19+37 L
-Y2- 22+56 - 23+34 L

DETAIL M
LATERAL V DITCH
(NOT TO SCALE)

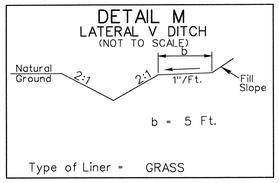

-L- 72+00 - 73+50 R (DDE = 31 CY)
-RAMPA- 3+30 - 7+90 R (DDE = 236 CY)
-DRIVE 6- 12+50 - 13+20 R (DDE = 22 CY)
-DRIVE 6- 12+50 - 13+60 L (DDE = 62 CY)

DETAIL N
RIP RAP AT EMBANKMENT
(NOT TO SCALE)

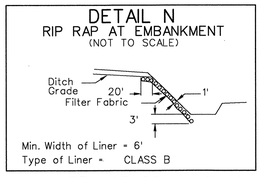

-SR- 45+60 - 46+30 L

DETAIL O
SPECIAL CUT BASE DITCH
(NOT TO SCALE)

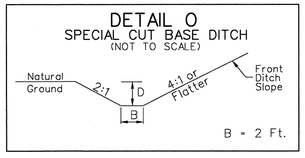

-L- 78+50 - 82+00 R

DETAIL P
RIP RAP APRON
(NOT TO SCALE)

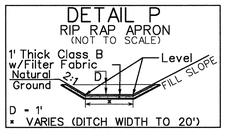

-L- 82+00 - 82+65 R

DETAIL Q
RIP RAP APRON
(NOT TO SCALE)

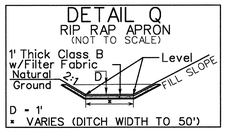

-SR- 50+95 - 52+00 L

DETAIL R
SPECIAL CUT BASE DITCH
(NOT TO SCALE)

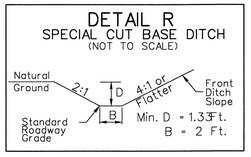

-SR- 76+50 - 77+80 L
-SR- 56+57.61 - 63+50 L
-SR- 69+50 - 76+50 L

DETAIL S
LATERAL 4' BASE DITCH w/CLASS B LINER
(NOT TO SCALE)

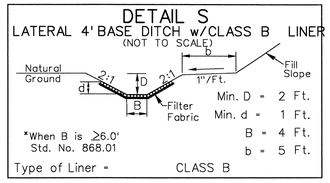

-L- 90+80 - 92+50 R (DDE = 408 CY)
-SR- 52+00 - 56+57.61 L (DDE = 1578 CY)

DETAIL HH
SPECIAL DITCH w/GRASS LINER
(NOT TO SCALE)

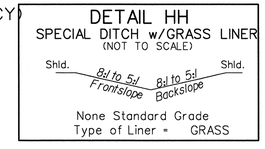

-L- 90+00 - 98+50 MED.

DETAIL T
LATERAL 2' BASE DITCH w/CLASS B LINER
(NOT TO SCALE)

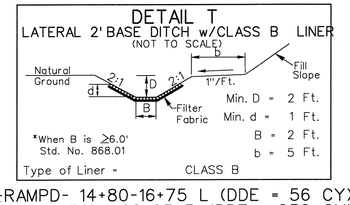

-RAMPD- 14+80-16+75 L (DDE = 56 CY)
-Y1- 19+50 - 22+93 R (DDE = 232 CY)

DETAIL U
LATERAL 2' BASE DITCH
(NOT TO SCALE)

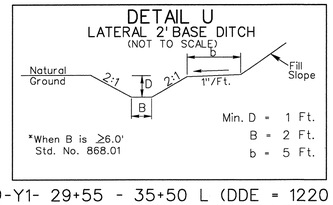

-Y1- 29+55 - 35+50 L (DDE = 1220 CY)
-DRIVE 6- 13+25 - 15+35 R (DDE = 110 CY)

DETAIL V
MAT LINER
(NOT TO SCALE)

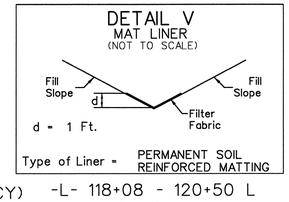

-L- 118+08 - 120+50 L
-L- 59+48 L

DETAIL W
TOE PROTECTION
(NOT TO SCALE)

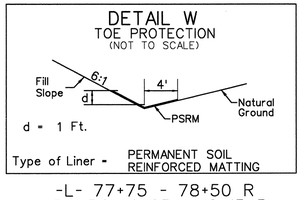

-L- 77+75 - 78+50 R
-RAMPC- 9+65 - 10+15 R
-RAMPD- 11+80 - 14+28 L
-SR- 77+80 - 80+20 L
-Y1- 18+75 - 22+80 L
-Y1- 38+00 - 39+10 L

DETAIL X
4' BASE TAIL DITCH
(NOT TO SCALE)

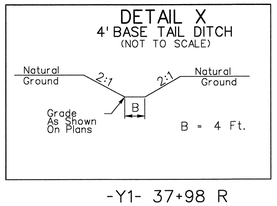

-Y1- 37+98 R
(DDE = 165 CY)

DETAIL Y
DITCH CLEAN OUT
(NOT TO SCALE)

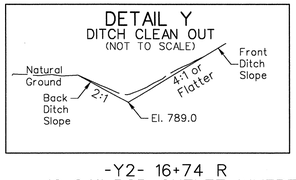

-Y2- 16+74 R
(2-24" RCP OUTLET INVERT TO RAILROAD R/W)

DETAIL II
SPECIAL DITCH w/GRASS LINER
(NOT TO SCALE)

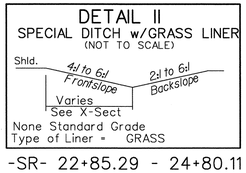

-SR- 22+85.29 - 24+80.11 R
-SR- 23+62 - 23+90 L
-SR- 45+25.13 - 46+22.51 R
-SR- 55+57.61 - 60+57.61 R
-Y- 12+50 - 13+50 L & R
-Y- 13+50 - 13+90 R
-Y- 16+70 - 18+00 R
-Y1- 19+09 - 19+50 R
-Y2- 15+05 - 16+35 R
-Y2- 15+50 - 16+74 L
-Y2- 16+35 - 16+74 R
-Y2- 16+74 - 17+15 L
-Y2- 19+37 - 21+50 L
-Y2- 29+15 - 30+83 R
-Y2- 30+83 - 31+50 R
-Y2- 32+50 - 34+00 L
-DRIVE 6- 12+00 - 12+50 L & R

DETAIL EE
"V" TAIL DITCH w/PSRM
(NOT TO SSCALE)

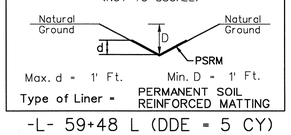

-L- 59+48 L (DDE = 5 CY)

DETAIL Z
EARTH BERM
(Not to Scale)

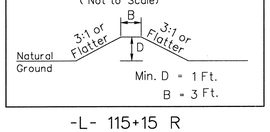

-L- 115+15 R
-Y1- 25+90 R
-Y1- 27+31 R

DETAIL AA
LATERAL V DITCH
(NOT TO SCALE)

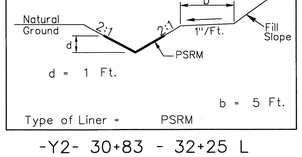

-Y2- 30+83 - 32+25 L
(DDE = 35 CY)

DETAIL BB
SPECIAL DITCH w/GRASS LINER
(NOT TO SCALE)

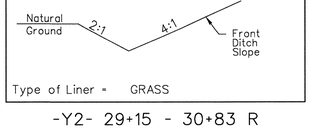

-Y2- 29+15 - 30+83 R
-Y2- 30+83 - 31+50 R
-Y2- 32+50 - 34+00 L

DETAIL CC
LATERAL 5' BASE DITCH w/CLASS I LINER
(NOT TO SSCALE)

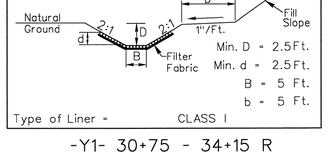

-Y1- 30+75 - 34+15 R
(DDE = 658 CY)

DETAIL DD
4' BASE TAIL DITCH w/CLASS I LINER
(NOT TO SSCALE)

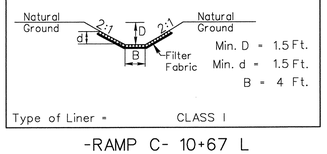

-RAMP C- 10+67 L
(DDE = 434 CY)

DETAIL FF
STREAM BANK OUTLET PROTECTION
(NOT TO SCALE)

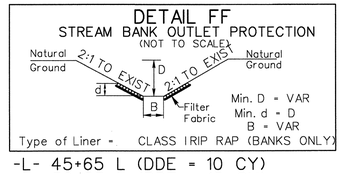

-L- 45+65 L (DDE = 10 CY)
-L- 59+85 L (DDE = 10 CY)
-L- 81+65 L (DDE = 5 CY)
-RAMPA- 14+20 R (DDE = 10 CY)

USER: tethomsette
DGN: R-2606A_2B_Roadway\Hydr\R2606a_rdy_psh_02f.dgn
DATE: 5/25/2006

PROJECT REFERENCE NO.	SHEET NO.
R-2606A	2-G
R/W SHEET NO.	
ROADWAY DESIGN ENGINEER	HYDRAULICS ENGINEER

NORTH CAROLINA PROFESSIONAL SEAL 29551 ENGINEER GEORGE T. SHEARIN
6/26/08

Prepared in the Office of: EarthTech
A Tyco International Ltd. Company
701 Corporate Center Drive, Suite 475
Raleigh, NC 27607
(919) 854-6200 - (919) 854-6259(FAX)

GRAPHIC SCALE
50 25 0 50 100
PLANS

INTERSECTION DETAIL SHEET

-Y1- RAMP A -LOOP A- SR

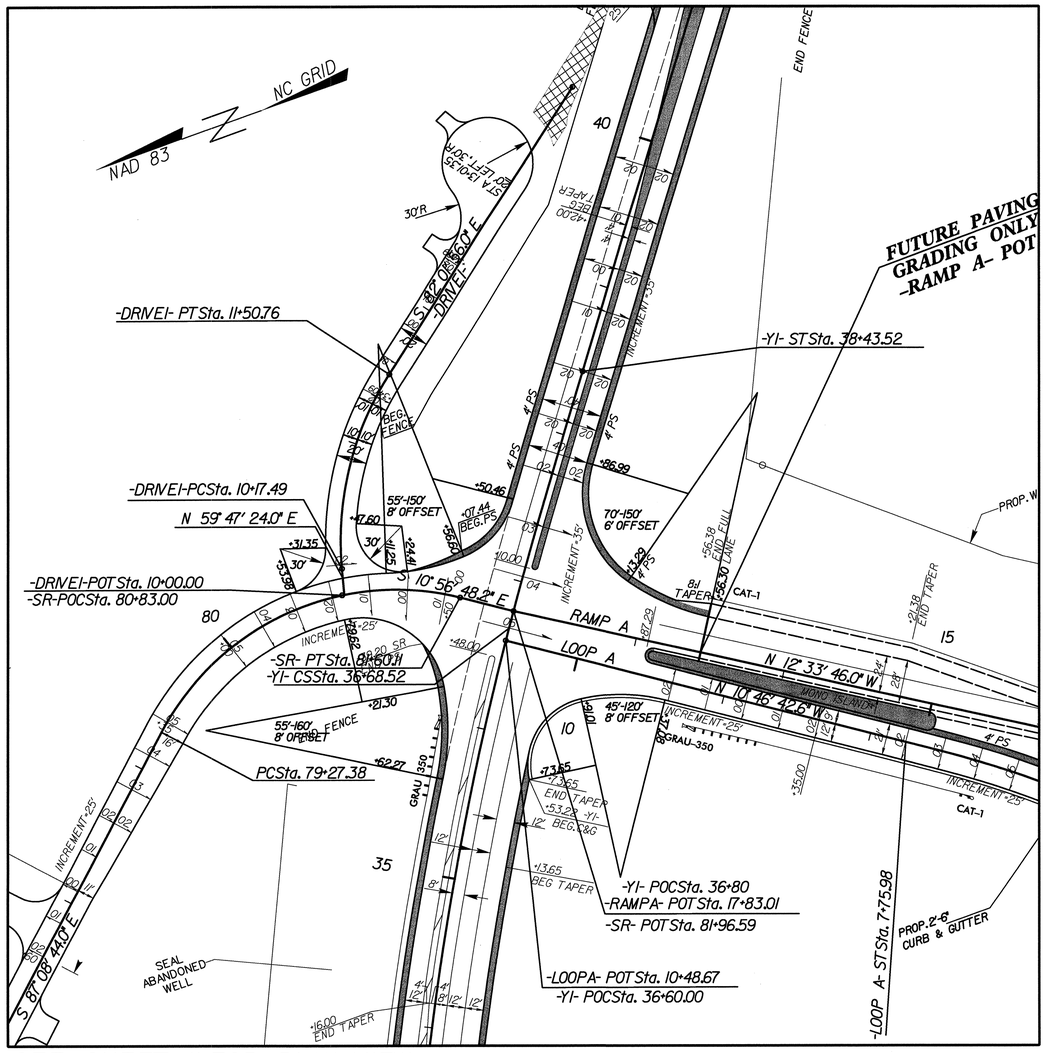

SEE SHEET 11 FOR PLAN VIEW

-Y1- RAMP C - RAMP D

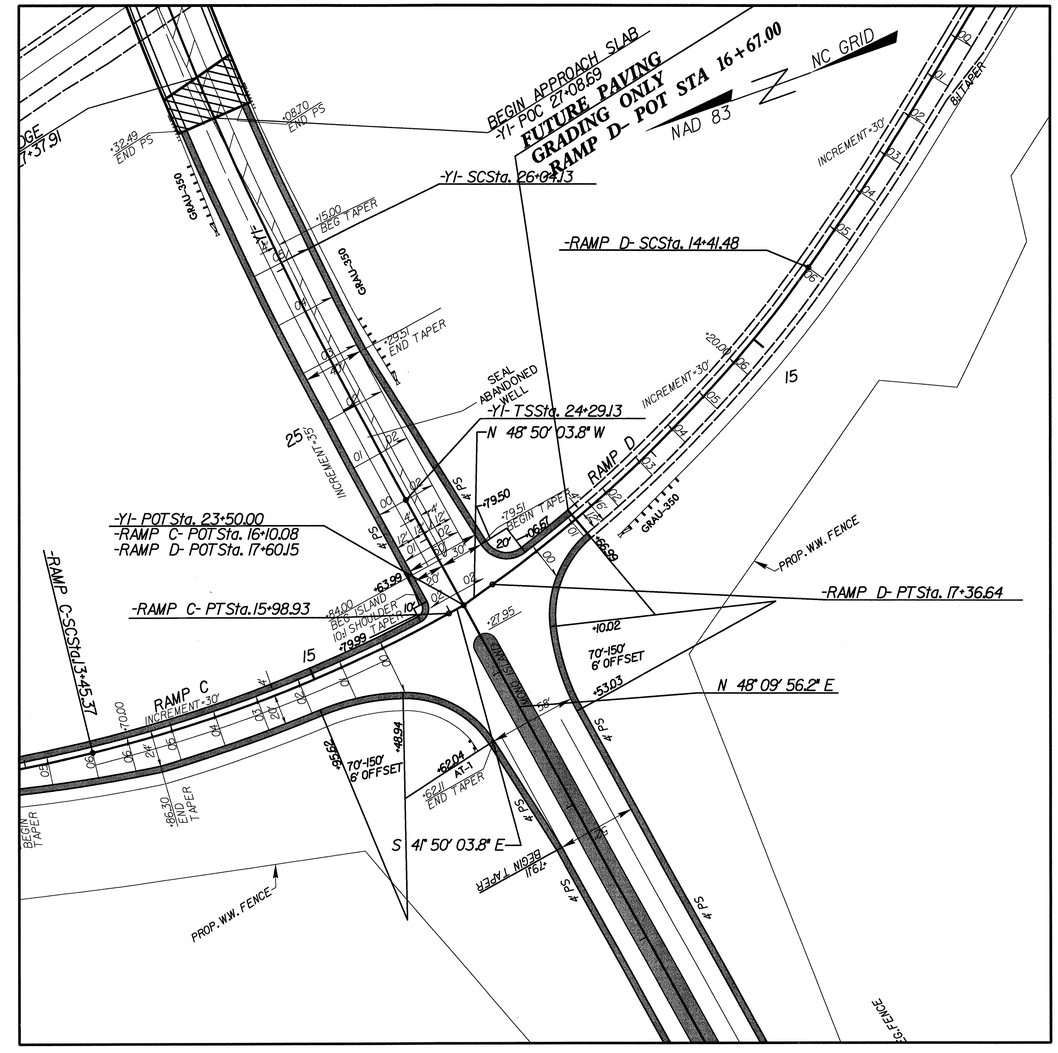

SEE SHEET 11 FOR PLAN VIEW

USER: kevinjoyner
DGN: R:\R2606A\R2606A\Roadway\Proj\r2606a_rdy_psh_020841.dgn
DATE: 6/26/2008

PROJECT REFERENCE NO.	SHEET NO.
R-2606A	2-H
R/W SHEET NO.	
ROADWAY DESIGN ENGINEER	HYDRAULICS ENGINEER

NORTH CAROLINA PROFESSIONAL SEAL 5965 ENGINEER GEORGE T. SHEARN
6/26/06

Prepared in the Office of:
EarthTech
A Tyco International Ltd. Company
701 Corporate Center Drive, Suite 475
Raleigh, NC 27607
(919) 854-6200 - (919) 854-6259(FAX)

GRAPHIC SCALE
50 25 0 50 100
PLANS

INTERSECTION DETAIL SHEET

-Y1- -Y2- US 311

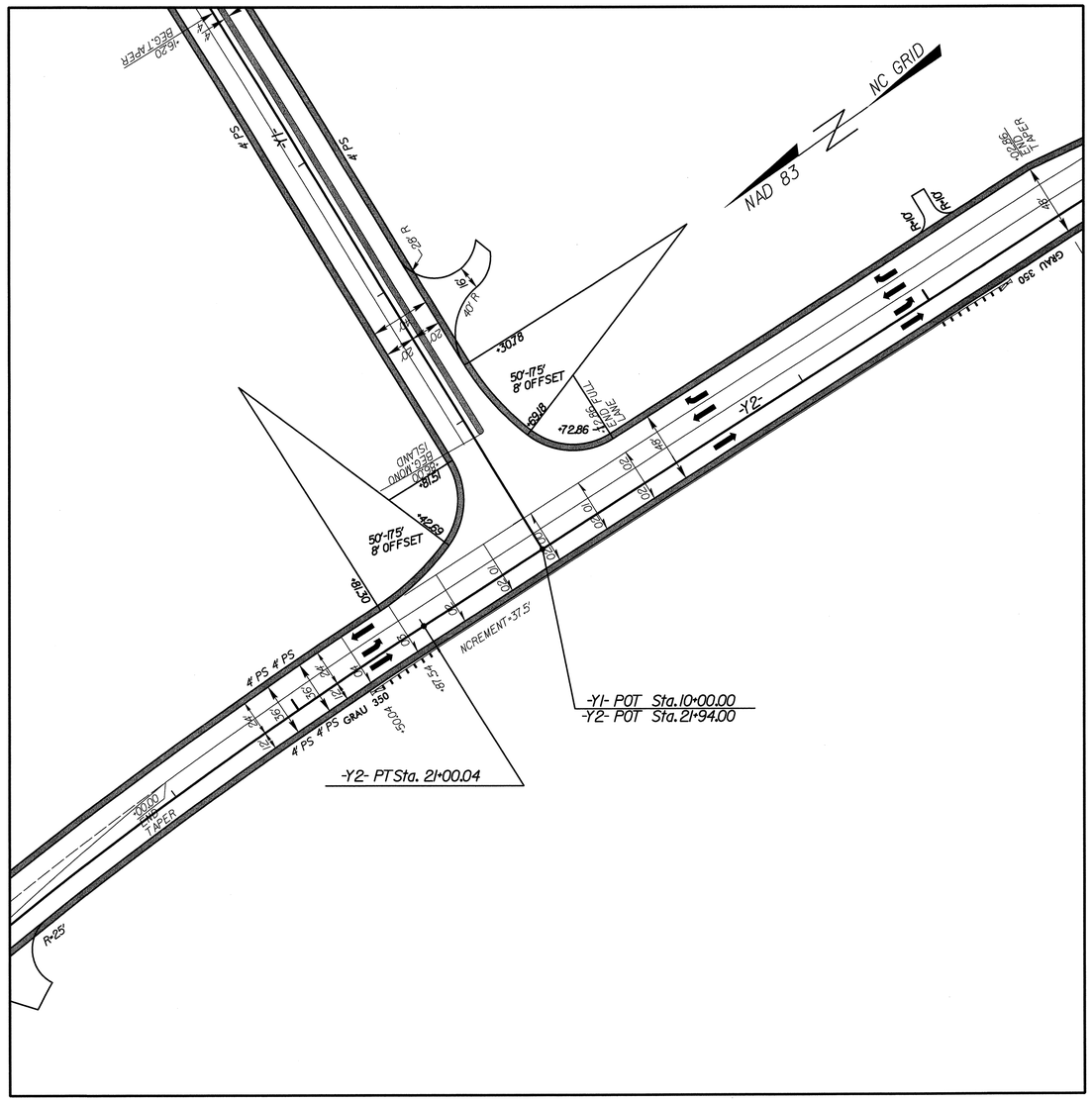

SEE SHEET 14 FOR PLAN VIEW

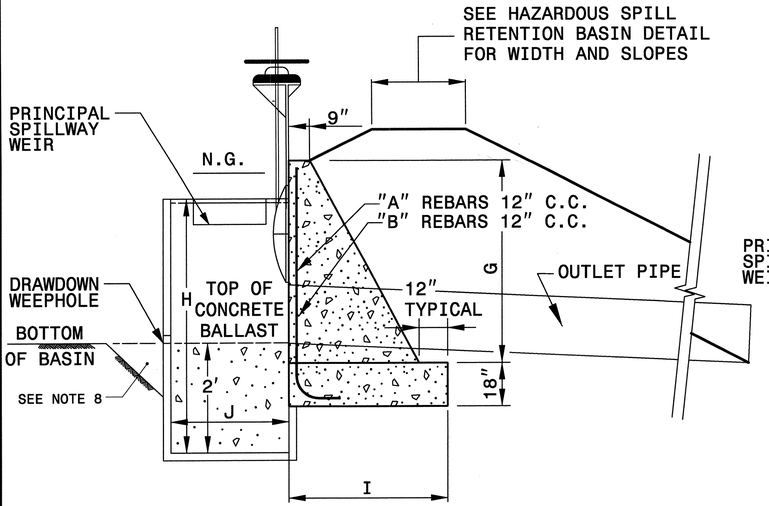

SECTION VIEW

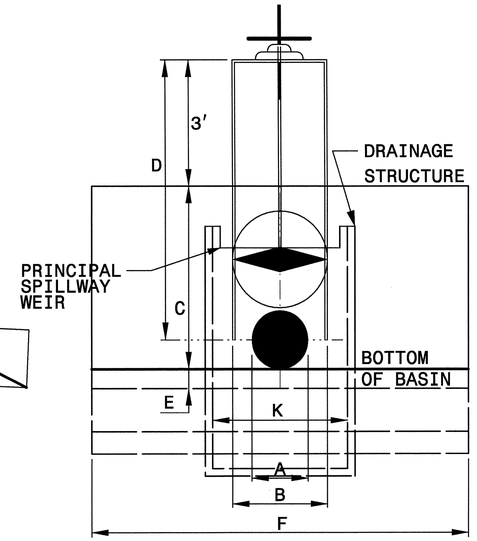

ELEVATION VIEW

BASIN #		1	2
SLUICE GATE DIMENSIONS			
PIPE DIAMETER	A	30"	30"
GATE DIAMETER	B	36"	36"
HEADWALL HT.	C	8'-0"	7'-0"
FRAME HEIGHT	D	9'-9"	8'-9"
INVERT HEIGHT	E	7"	7"
HEADWALL WIDTH	F	9'-4"	9'-4"
HEADWALL DIMENSIONS			
PIPE DIAMETER	A	30"	30"
HEADWALL HT.	G	8'-7"	7'-7"
HEADWALL DEP.	I	5'-0"	4'-0"

DRAINAGE STRUC. DIMENSIONS			
DRAWDOWN DIA.		1 1/8"	1 3/4"
DRAWDOWN INV.		724.00	716.00
STRUCTURE INV.		722.00	714.00
STRUCTURE DEP.	H	9'-0"	7'-0"
STRUCTURE DIM.	J	5'-0"	5'-0"
STRUCTURE DIM.	K	5'-0"	5'-0"
PRINCIPAL SPILLWAY ELEV.		729.00	720.00
PRINCIPAL WEIR SPILLWAY WIDTH		9'	9'

PROJECT REFERENCE NO.	SHEET NO.
R-2606A	2-1
R/W SHEET NO.	
ROADWAY DESIGN ENGINEER	HYDRAULICS ENGINEER

NORTH CAROLINA PROFESSIONAL SEAL 025498 ENGINEER DAVID REHDER NICHOLS 2006

Prepared in the Office of: EarthTech
A Tyco International Ltd. Company
701 Corporate Center Drive, Suite 475
Raleigh, NC 27607
(919) 854-6200 - (919) 854-6259(FAX)

GRAPHIC SCALE
50 25 0 50 100
PLANS

GENERAL NOTES:
1- REINFORCING STEEL SHALL BE CONSIDERED INCIDENTAL TO THE HEADWALL AND HEADWALL SHALL BE PAID FOR ON YD^3 BASIS.
2- CONCRETE SHALL BE CLASS "B" THROUGHOUT STRUCTURE.
3- DELETE REINFORCING STEEL WHEN BRICK ALTERNATE IS USED.
4- SEE PLAN SHEET FOR LOCATION OF OUTLET PIPE WITH SLUICE GATE.
5- INCORPORATE DRAINAGE STRUCTURE WALL INTO HEADWALL.
6- PAYMENT FOR DRAINAGE STRUCTURE IS TO BE PAID FOR AS "MASONRY DRAINAGE STRUCTURE FOR SLUICE GATE".
7- FOR BALLAST, FILL STRUCTURE WITH CONCRETE TO PIPE INVERT. HOWEVER, DO NOT OBSTRUCT SLUICE GATE FROM FULLY CLOSING OVER PIPE. CONRETE BALLAST SHALL BE INCIDENTAL TO MASONRY DRAINAGE STRUCTURE FOR SLUICE GATE.
8- TO AVOID CLOGGING OF THE DRAWDOWN WEEPHOLE, EXCAVATE 1' BELOW BASIN BOTTOM ELEVATION IN THE IMMEDIATE VICINITY OF THE SPILLWAY.
9- SEE STANDARD 838.02 FOR ADDITIONAL INFORMATION, INCLUDING REBAR SPECIFICATIONS.

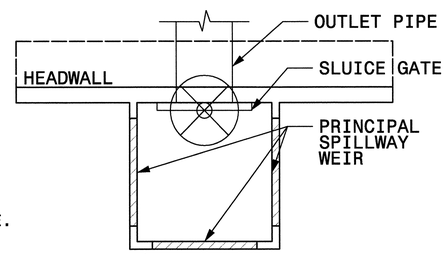

PLAN VIEW

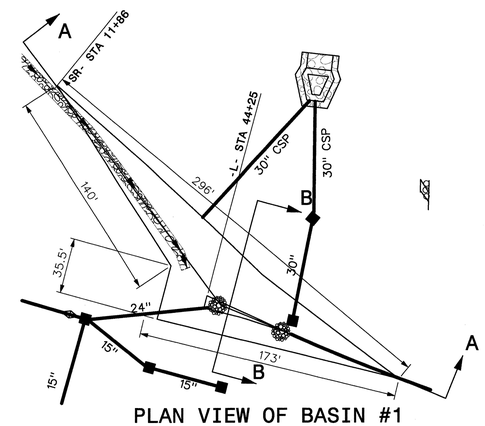

PLAN VIEW OF BASIN #1

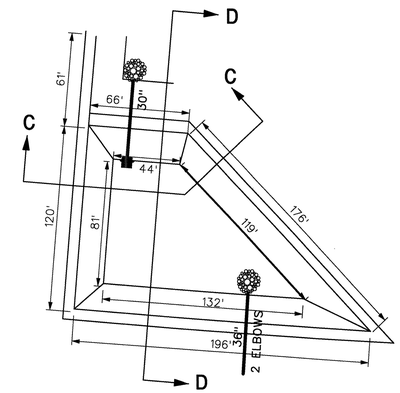

PLAN VIEW OF BASIN #2

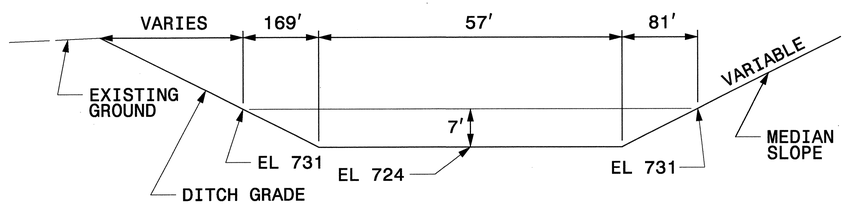

SECTION A-A

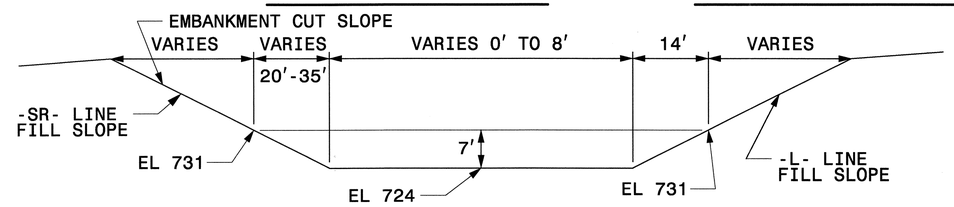

SECTION B-B

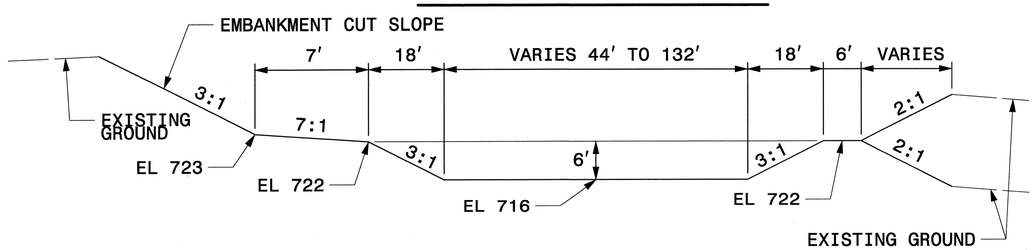

SECTION C-C

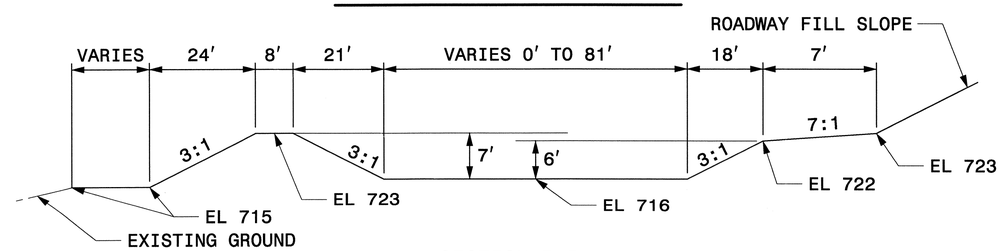

SECTION D-D

HAZARDOUS SPILL/DRY DETENTION BASIN							
BASIN #	PIPE SIZE	TOP ELEV.	BOTTOM ELEV.	D		CAPACITY	STATION
1	30"	731.00	724.00	7'		50264+ CF	-L- 44+50 LT
2	30"	722.00	716.00	6'		57934+ CF	-L- 57+00 LT

Hazardous Spill Retention Basins are provided at new and/or improved roadway sections to aid in containment and clean up of accidental spills by truck traffic. Basins are provided in particular locations including areas in proximity to sensitive waters and water supplies.

DESIGN SERVICES UNIT
STANDARDS AND SPECIAL DESIGN
Office 919-250-4128 FAX 919-250-4119

HAZARDOUS SPILL/
DRY DETENTION BASIN

ORIGINAL BY: JDRN DATE: 2/21/01
MODIFIED BY: DATE:
CHECKED BY: DATE:
FILE SPEC.:

USER: tnelmsmith
DGN: R-2606A_Roadway\Proj\r2606a_rdy_psh_02.dgn
DATE: 6/25/2008

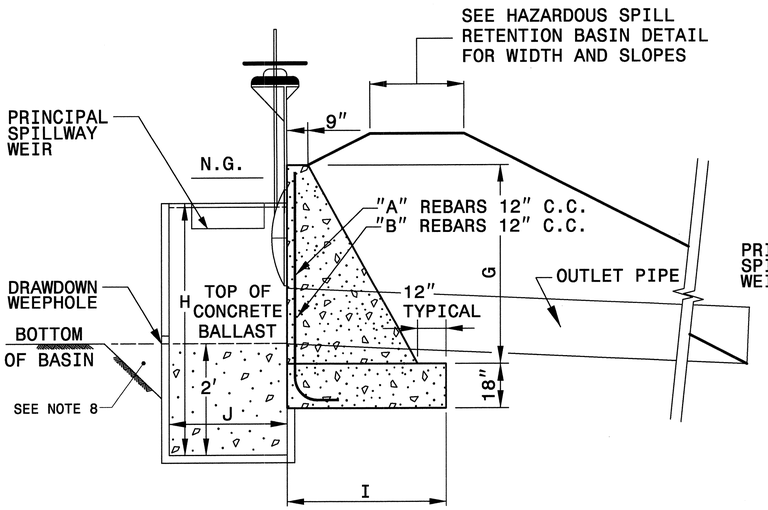

SECTION VIEW

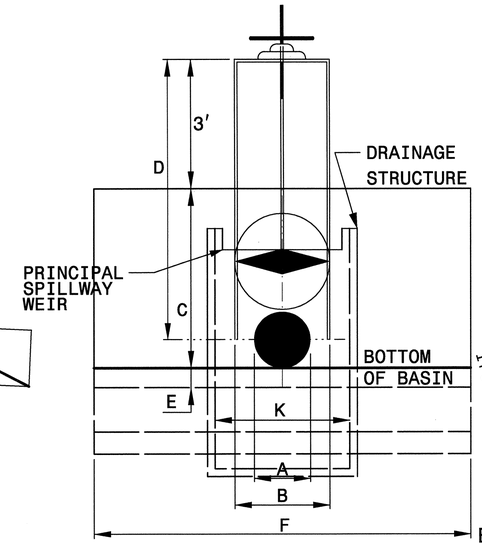

ELEVATION VIEW

BASIN #		3	4
SLUICE GATE DIMENSIONS			
PIPE DIAMETER	A	30"	30"
GATE DIAMETER	B	36"	36"
HEADWALL HT.	C	7'-0"	7'-0"
FRAME HEIGHT	D	8'-9"	8'-9"
INVERT HEIGHT	E	7"	7"
HEADWALL WIDTH	F	9'-4"	9'-4"
HEADWALL DIMENSIONS			
PIPE DIAMETER	A	30"	30"
HEADWALL HT.	G	7'-7"	7'-7"
HEADWALL DEP.	I	4'-0"	4'-0"

DRAINAGE STRUC. DIMENSIONS			
DRAWDOWN DIA.		2"	1 7/16"
DRAWDOWN INV.		750.00	756.50
STRUCTURE INV.		748.00	754.50
STRUCTURE DEP.	H	6'-6"	6'-6"
STRUCTURE DIM.	J	3'-0"	3'-0"
STRUCTURE DIM.	K	3'-0"	3'-0"
PRINCIPAL SPILLWAY ELEV.		753.50	760.00
PRINCIPAL WEIR SPILLWAY WIDTH		7'	5'

PROJECT REFERENCE NO.	SHEET NO.
R-2606A	2-J
R/W SHEET NO.	

ROADWAY DESIGN ENGINEER

HYDRAULICS ENGINEER

NORTH CAROLINA PROFESSIONAL SEAL 025498 ENGINEER JOHN DAVID REHDER NICHOLS 9/21/2006

Prepared in the Office of: EarthTech, A Tyco International Ltd. Company, 701 Corporate Center Drive, Suite 475, Raleigh, NC 27607, (919) 854-6200 - (919) 854-6259(FAX)

GRAPHIC SCALE

50 25 0 50 100

PLANS

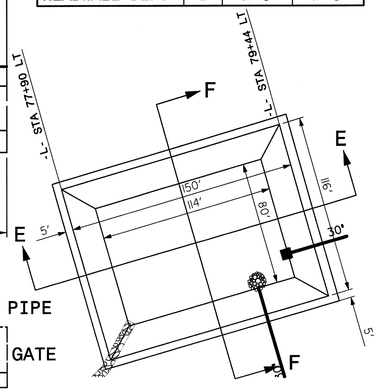

PLAN VIEW OF BASIN #3

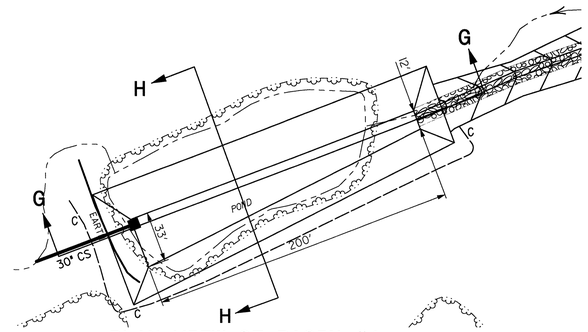

PLAN VIEW OF BASIN #4

GENERAL NOTES:

1- REINFORCING STEEL SHALL BE CONSIDERED INCIDENTAL TO THE HEADWALL AND HEADWALL SHALL BE PAID FOR ON YD^3 BASIS.
2- CONCRETE SHALL BE CLASS "B" THROUGHOUT STRUCTURE.
3- DELETE REINFORCING STEEL WHEN BRICK ALTERNATE IS USED.
4- SEE PLAN SHEET FOR LOCATION OF OUTLET PIPE WITH SLUICE GATE.
5- INCORPORATE DRAINAGE STRUCTURE WALL INTO HEADWALL.
6- PAYMENT FOR DRAINAGE STRUCTURE IS TO BE PAID FOR AS "MASONRY DRAINAGE STRUCTURE FOR SLUICE GATE".
7- FOR BALLAST, FILL STRUCTURE WITH CONCRETE TO PIPE INVERT. HOWEVER, DO NOT OBSTRUCT SLUICE GATE FROM FULLY CLOSING OVER PIPE. CONRETE BALLAST SHALL BE INCIDENTAL TO MASONRY DRAINAGE STRUCTURE FOR SLUICE GATE.
8- TO AVOID CLOGGING OF THE DRAWDOWN WEEPHOLE, EXCAVATE 1' BELOW BASIN BOTTOM ELEVATION IN THE IMMEDIATE VICINITY OF THE SPILLWAY.
9- SEE STANDARD 838.02 FOR ADDITIONAL INFORMATION, INCLUDING REBAR SPECIFICATIONS.
10. BASIN TO BE DEWATERED USING A FAIRCLOTH SKIMMER.

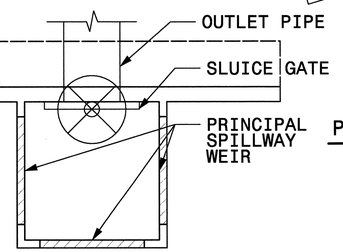

PLAN VIEW

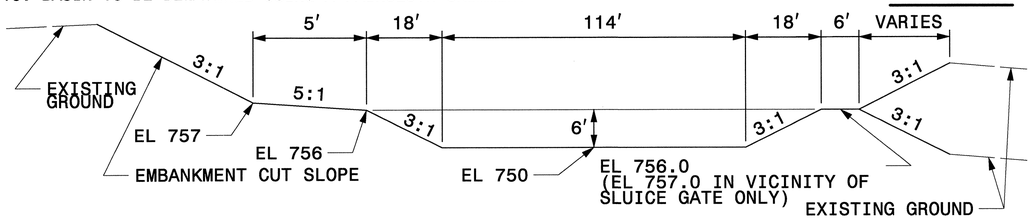

SECTION E-E

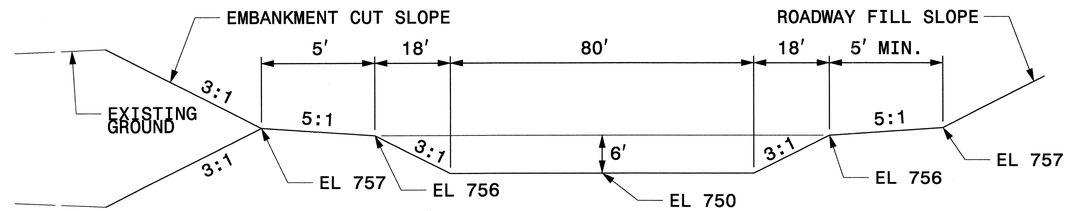

SECTION F-F

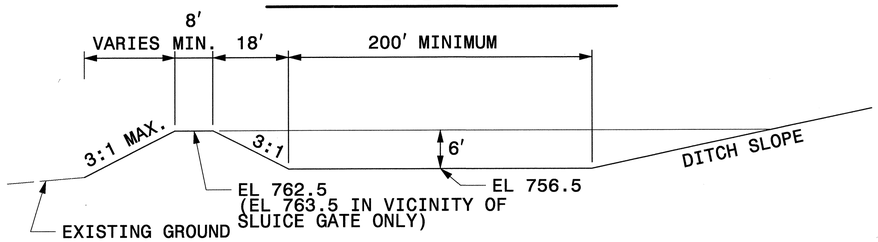

SECTION G-G

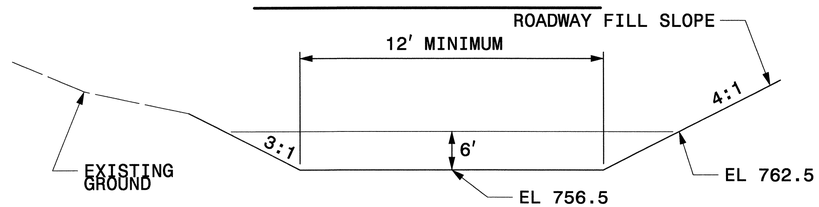

SECTION H-H

HAZARDOUS SPILL/DRY DETENTION BASIN							
BASIN #	PIPE SIZE	TOP ELEV.	BOTTOM ELEV.	D		CAPACITY	STATION
3	30"	756.00	750.00	6'		70968+ CF	-L- 79+00 LT
4	30"	762.5	756.5	6'		33500+ CF	-L- 89+00 RT

Hazardous Spill Retention Basins are provided at new and/or improved roadway sections to aid in containment and clean up of accidental spills by truck traffic. Basins are provided in particular locations including areas in proximity to sensitive waters and water supplies.

DESIGN SERVICES UNIT
STANDARDS AND SPECIAL DESIGN
Office 919-250-4128 FAX 919-250-4119

HAZARDOUS SPILL/
DRY DETENTION BASIN

ORIGINAL BY: JDRN DATE: 2/21/01
MODIFIED BY: DATE:
CHECKED BY: DATE:
FILE SPEC.:

USER: rmeramy
DGN: R:\R2606A\2606A\Roadway\Proj\2606a_rdy_psh_02.dgn
DATE: 9/27/2006

PROJECT REFERENCE NO.	SHEET NO.
R-2606A	2-K
R/W SHEET NO.	
ROADWAY DESIGN ENGINEER	HYDRAULICS ENGINEER

NORTH CAROLINA PROFESSIONAL SEAL 025498 ENGINEER DAVID REHDER NICHOLS 10/20/2006

Prepared in the Office of: EarthTech
A Tyco International Ltd. Company
701 Corporate Center Drive, Suite 475
Raleigh, NC 27607
(919) 854-6200 - (919) 854-6259(FAX)

GRAPHIC SCALE
50 25 0 50 100
PLANS

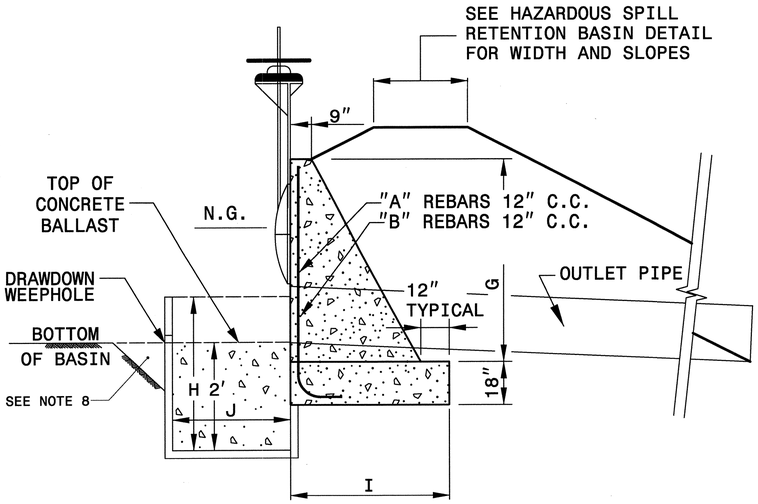

SECTION VIEW

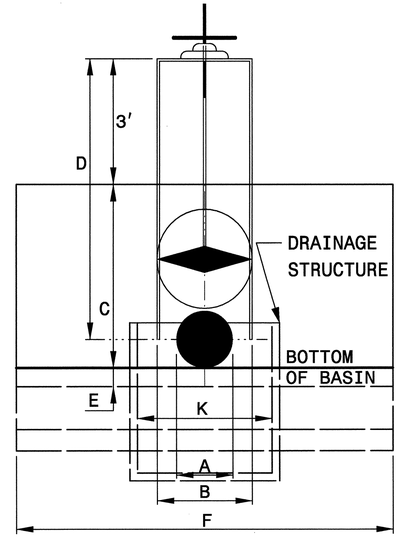

ELEVATION VIEW

BASIN #		5	
SLUICE GATE DIMENSIONS			
PIPE DIAMETER	A	24"	
GATE DIAMETER	B	30"	
HEADWALL HT.	C	6'-0"	
FRAME HEIGHT	D	8'-0"	
INVERT HEIGHT	E	7"	
HEADWALL WIDTH	F	8'-2"	
HEADWALL DIMENSIONS			
PIPE DIAMETER	A	24"	
HEADWALL HT.	G	6'-7"	
HEADWALL DEP.	I	4'-0"	
DRAINAGE STRUC. DIMENSIONS			
DRAWDOWN DIA.		1 ½"	
DRAWDOWN INV.		758.00	
STRUCTURE INV.		756.00	
STRUCTURE DEP.	H	2'-6"	
STRUCTURE DIM.	J	2'-0"	
STRUCTURE DIM.	K	3'-0"	

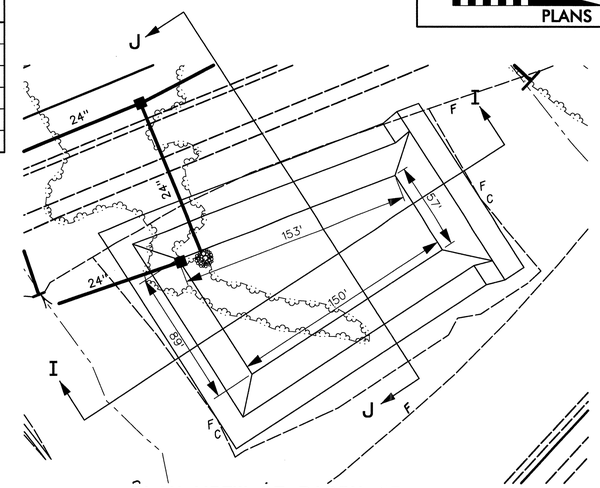

PLAN VIEW OF BASIN #5

GENERAL NOTES:
1- REINFORCING STEEL SHALL BE CONSIDERED INCIDENTAL TO THE HEADWALL AND HEADWALL SHALL BE PAID FOR ON YD^3 BASIS.
2- CONCRETE SHALL BE CLASS "B" THROUGHOUT STRUCTURE.
3- DELETE REINFORCING STEEL WHEN BRICK ALTERNATE IS USED.
4- SEE PLAN SHEET FOR LOCATION OF OUTLET PIPE WITH SLUICE GATE.
5- INCORPORATE DRAINAGE STRUCTURE WALL INTO HEADWALL.
6- PAYMENT FOR DRAINAGE STRUCTURE IS TO BE PAID FOR AS "MASONRY DRAINAGE STRUCTURE FOR SLUICE GATE".
7- FOR BALLAST, FILL STRUCTURE WITH CONCRETE TO PIPE INVERT. HOWEVER, DO NOT OBSTRUCT SLUICE GATE FROM FULLY CLOSING OVER PIPE. CONRETE BALLAST SHALL BE INCIDENTAL TO MASONRY DRAINAGE STRUCTURE FOR SLUICE GATE.
8- TO AVOID CLOGGING OF THE DRAWDOWN WEEPHOLE, EXCAVATE 1' BELOW BASIN BOTTOM ELEVATION IN THE IMMEDIATE VICINITY OF THE SPILLWAY.
9- SEE STANDARD 838.02 FOR ADDITIONAL INFORMATION, INCLUDING REBAR SPECIFICATIONS.

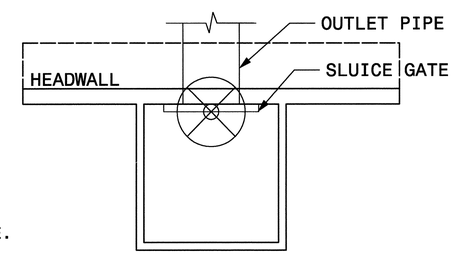

PLAN VIEW

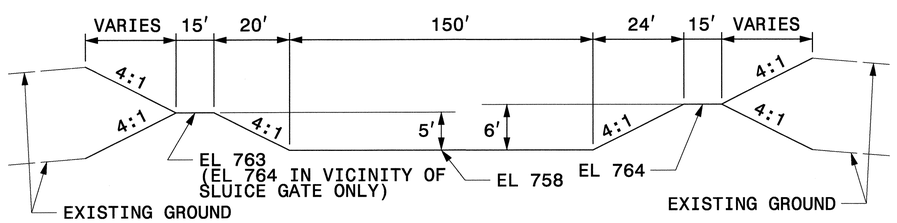

SECTION I-I

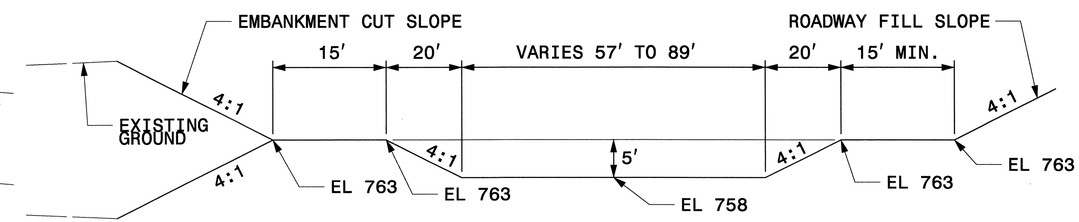

SECTION J-J

HAZARDOUS SPILL/DRY DETENTION BASIN							
BASIN #	PIPE SIZE	TOP ELEV.	BOTTOM ELEV.	D		CAPACITY	STATION
5	24"	763.0	758.0	5.0'		79730 CF	-L- 112+00 RT

Hazardous Spill Retention Basins are provided at new and/or improved roadway sections to aid in containment and clean up of accidental spills by truck traffic. Basins are provided in particular locations including areas in proximity to sensitive waters and water supplies.

DESIGN SERVICES UNIT
STANDARDS AND SPECIAL DESIGN
Office 919-250-4128 FAX 919-250-4119

HAZARDOUS SPILL/
DRY DETENTION BASIN

ORIGINAL BY: JDRN DATE: 2/21/01
MODIFIED BY: DATE:
CHECKED BY: DATE:
FILE SPEC.:

USER: tw/luyamatra
DGN: 6:\WESBrd\2606a\Roadway\Pro\r2606a_rdy_psh_02K.dgn
DATE: 6/28/2006

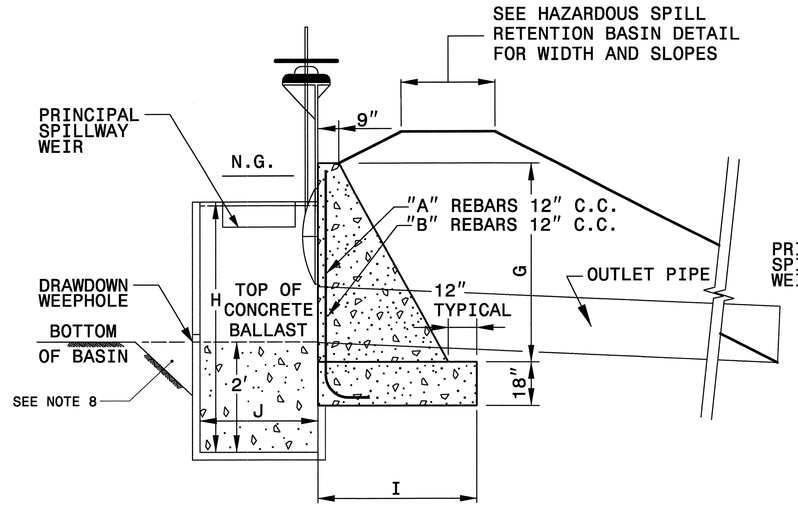

SECTION VIEW

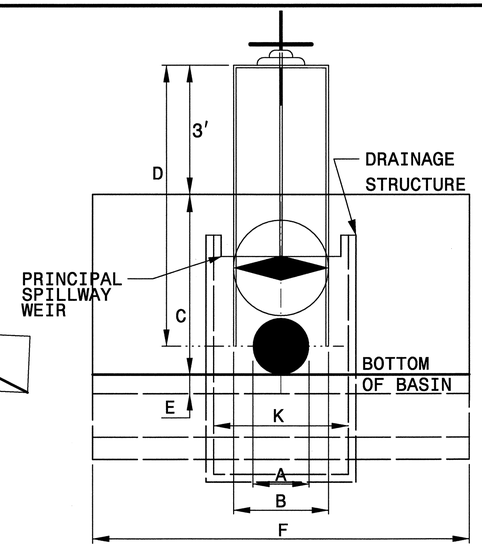

ELEVATION VIEW

BASIN #		6	7
SLUICE GATE DIMENSIONS			
PIPE DIAMETER	A	30"	24"
GATE DIAMETER	B	36"	30"
HEADWALL HT.	C	8'-0"	5'-5"
FRAME HEIGHT	D	9'-9"	7'-6"
INVERT HEIGHT	E	7"	7"
HEADWALL WIDTH	F	9'-4"	8'-2"
HEADWALL DIMENSIONS			
PIPE DIAMETER	A	30"	24"
HEADWALL HT.	G	7'-7"	6'-1"
HEADWALL DEP.	I	5'-0"	4'-0"

DRAINAGE STRUC. DIMENSIONS			
DRAWDOWN DIA.		3"	2"
DRAWDOWN INV.		714.00	713.00
STRUCTURE INV.		712.00	711.00
STRUCTURE DEP.	H	9'-0"	7'-6"
STRUCTURE DIM.	J	5'-0"	5'-0"
STRUCTURE DIM.	K	5'-0"	5'-0"
PRINCIPAL SPILLWAY ELEV.		720.00	717.50
PRINCIPAL WEIR SPILLWAY WIDTH		10'	9'

PROJECT REFERENCE NO.	SHEET NO.
R-2606A	2-L
R/W SHEET NO.	

ROADWAY DESIGN ENGINEER

HYDRAULICS ENGINEER

NORTH CAROLINA PROFESSIONAL SEAL 6582 ENGINEER RICHARD N. SCARCE 6/27/06

Prepared in the Office of: EarthTech
A Tyco International Company
701 Corporate Center Drive, Suite 475
Raleigh, NC 27607
(919) 854-6200 - (919) 854-6259(FAX)

GRAPHIC SCALE
50 25 0 50 100
PLANS

GENERAL NOTES:

1- REINFORCING STEEL SHALL BE CONSIDERED INCIDENTAL TO THE HEADWALL AND HEADWALL SHALL BE PAID FOR ON YD^3 BASIS.
2- CONCRETE SHALL BE CLASS "B" THROUGHOUT STRUCTURE.
3- DELETE REINFORCING STEEL WHEN BRICK ALTERNATE IS USED.
4- SEE PLAN SHEET FOR LOCATION OF OUTLET PIPE WITH SLUICE GATE.
5- INCORPORATE DRAINAGE STRUCTURE WALL INTO HEADWALL.
6- PAYMENT FOR DRAINAGE STRUCTURE IS TO BE PAID FOR AS "MASONRY DRAINAGE STRUCTURE FOR SLUICE GATE".
7- FOR BALLAST, FILL STRUCTURE WITH CONCRETE TO PIPE INVERT. HOWEVER, DO NOT OBSTRUCT SLUICE GATE FROM FULLY CLOSING OVER PIPE. CONRETE BALLAST SHALL BE INCIDENTAL TO MASONRY DRAINAGE STRUCTURE FOR SLUICE GATE.
8- TO AVOID CLOGGING OF THE DRAWDOWN WEEPHOLE, EXCAVATE 1' BELOW BASIN BOTTOM ELEVATION IN THE IMMEDIATE VICINITY OF THE SPILLWAY.
9- SEE STANDARD 838.02 FOR ADDITIONAL INFORMATION, INCLUDING REBAR SPECIFICATIONS.

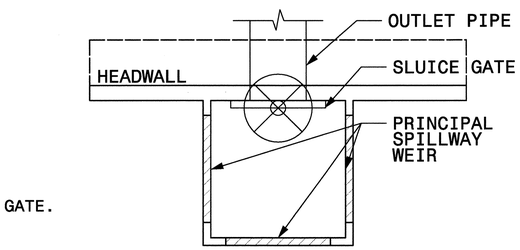

PLAN VIEW

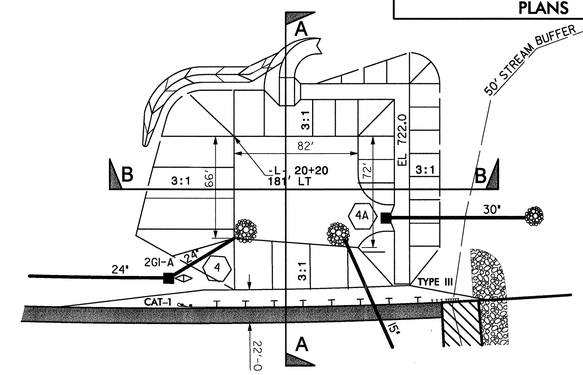

PLAN VIEW OF BASIN #6

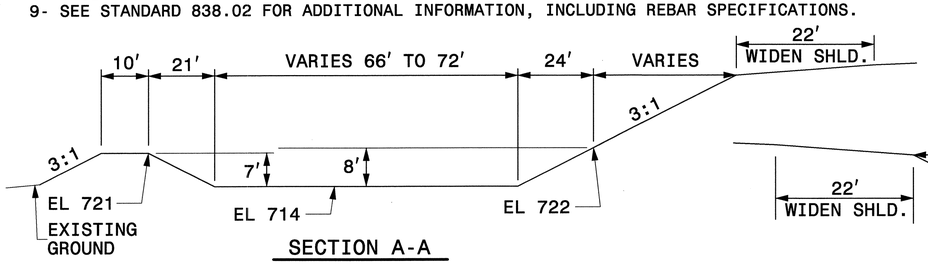

SECTION A-A

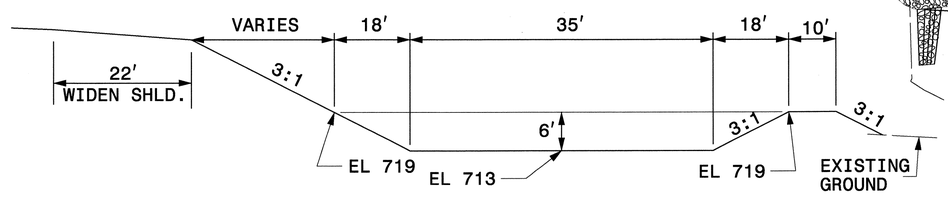

SECTION C-C

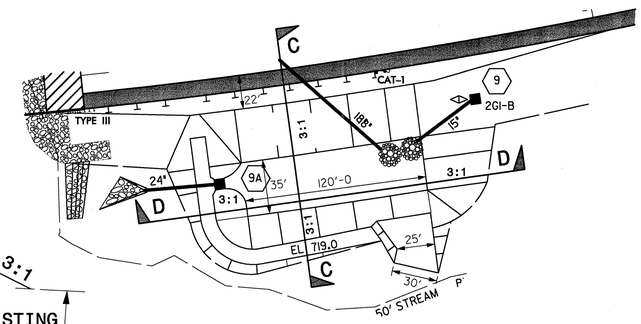

PLAN VIEW OF BASIN #7

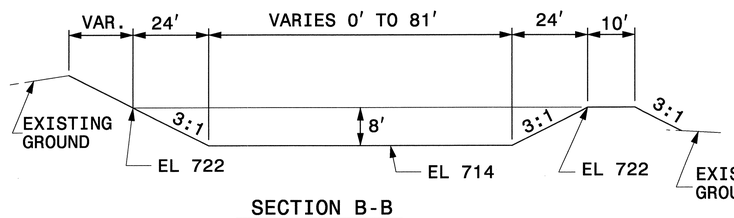

SECTION B-B

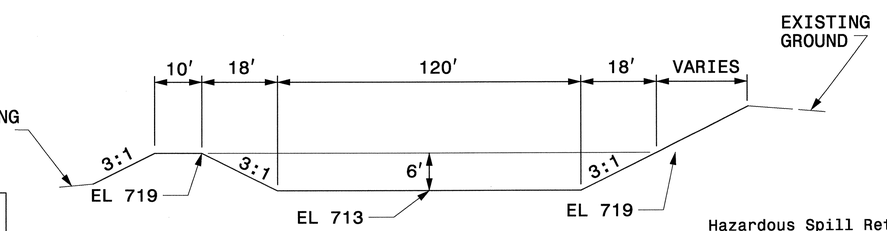

SECTION D-D

HAZARDOUS SPILL/DRY DETENTION BASIN							
BASIN #	PIPE SIZE	SPILLOVER ELEV.	BOTTOM ELEV.	D		CAPACITY	STATION
6	30"	721.00	714.00	8'		66069+ CF	-L- 20+50 LT
7	24"	718.50	713.00	6'		36950+ CF	-L-25+00 RT

Hazardous Spill Retention Basins are provided at new and/or improved roadway sections to aid in containment and clean up of accidental spills by truck traffic. Basins are provided in particular locations including areas in proximity to sensitive waters and water supplies.

DESIGN SERVICES UNIT
STANDARDS AND SPECIAL DESIGN
Office 919-250-4128 FAX 919-250-4119

HAZARDOUS SPILL/
DRY DETENTION BASIN

ORIGINAL BY: RWS DATE: 10/27/04
MODIFIED BY: DATE:
CHECKED BY: DATE:
FILE SPEC.:

USER: rdaniels
CADD: R-2606A
DATE: 6/27/2006

PROJECT REFERENCE NO.	SHEET NO.
R-2606A	2-M
R/W SHEET NO.	
ROADWAY DESIGN ENGINEER	HYDRAULICS ENGINEER

NORTH CAROLINA PROFESSIONAL SEAL 025498 ENGINEER JOHN DAVID REHDER NICHOLS 02/21/2006

Prepared in the Office of: EarthTech
A Tyco International Ltd. Company
701 Corporate Center Drive, Suite 475
Raleigh, NC 27607
(919) 854-6200 - (919) 854-6259(FAX)

GRAPHIC SCALE
50 25 0 50 100
PLANS

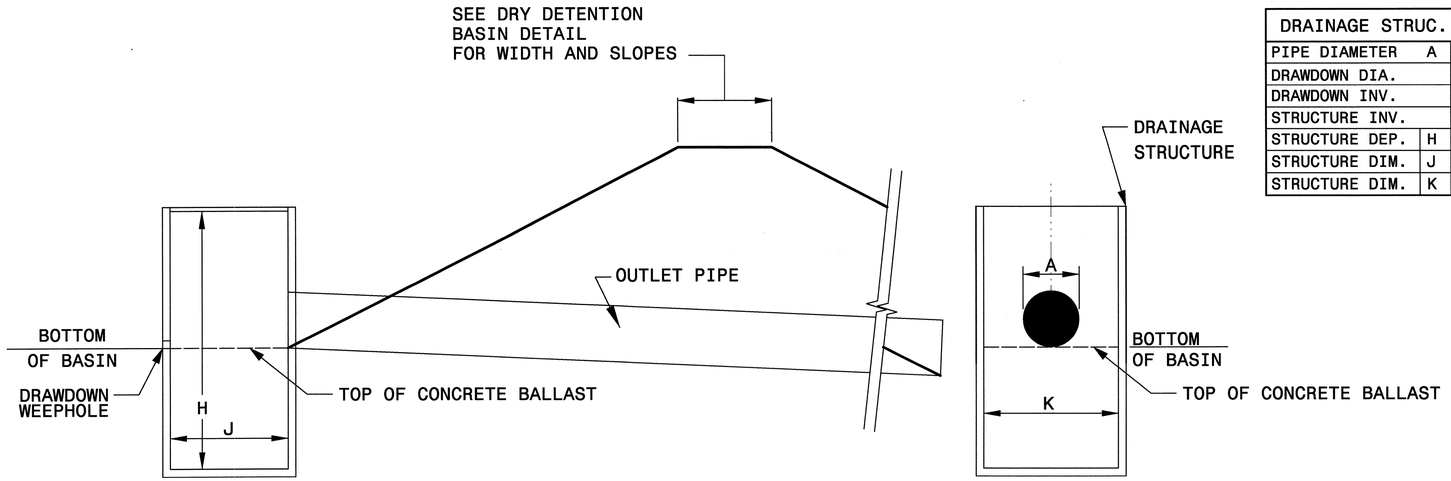

SECTION VIEW

ELEVATION VIEW

DRAINAGE STRUC. DIMENSIONS			
PIPE DIAMETER	A	24"	
DRAWDOWN DIA.		7/8"	
DRAWDOWN INV.		713.00	
STRUCTURE INV.		710.00	
STRUCTURE DEP.	H	7'-0"	
STRUCTURE DIM.	J	2'-0"	
STRUCTURE DIM.	K	3'-0"	

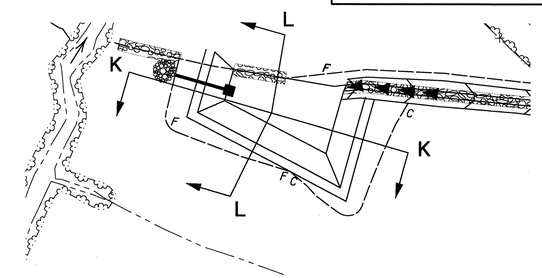

PLAN VIEW OF BASIN #8

GENERAL NOTES:

1- SEE PLAN SHEET FOR LOCATION OF OUTLET PIPE WITH DRAINAGE STRUCTURE.
2- PAYMENT FOR DRAINAGE STRUCTURES IS INCLUDED UNDER DRAINAGE STRUCTURES.
3- FOR BALLAST, FILL STRUCTURE WITH CONCRETE TO PIPE INVERT.
4- TO AVOID CLOGGING OF THE DRAWDOWN WEEPHOLE, EXCAVATE 1' BELOW BASIN BOTTOM ELEVATION IN THE IMMEDIATE VICINITY OF THE SPILLWAY.

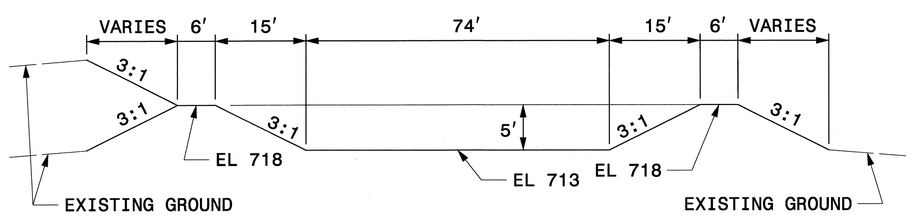

SECTION K-K

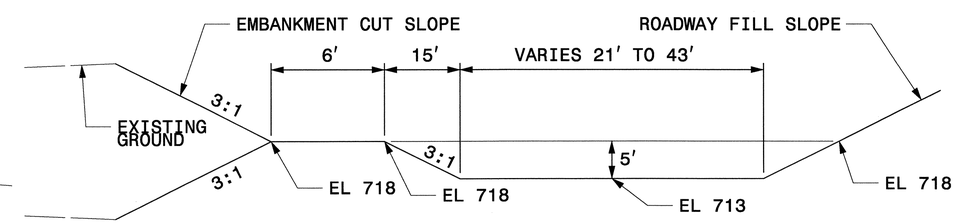

SECTION L-L

DRY DETENTION BASIN						
PIPE SIZE	TOP ELEV.	BOTTOM ELEV.	D		CAPACITY	STATION
24"	718.0	713.0	5.0'		14818 CF	-L- 47+00 RT

Hazardous Spill Retention Basins are provided at new and/or improved roadway sections to aid in containment and clean up of accidental spills by truck traffic. Basins are provided in particular locations including areas in proximity to sensitive waters and water supplies.

DESIGN SERVICES UNIT
STANDARDS AND SPECIAL DESIGN
Office 919-250-4128 FAX 919-250-4119

DRY DETENTION BASIN

ORIGINAL BY: JDRN DATE: 2/21/01
MODIFIED BY: DATE:
CHECKED BY: DATE:
FILE SPEC.:

USER: lwilliamsmitre
DGN: R:\R2606A\R2606a\Roadway\Proj\V-2606a_rdy_pph_02nu.dgn
DATE: 5/26/2006

PROJECT REFERENCE NO.	SHEET NO.
R-2606A	2-N
R/W SHEET NO.	
ROADWAY DESIGN ENGINEER	HYDRAULICS ENGINEER

NORTH CAROLINA PROFESSIONAL SEAL 025498 ENGINEER JOHN DAVID REMDER NICHOLS 2006

Prepared in the Office of:
EarthTech
A Tyco International Ltd. Company
701 Corporate Center Drive, Suite 475
Raleigh, NC 27607
(919) 854-6200 - (919) 854-6259(FAX)

GRAPHIC SCALE
50 25 0 50 100
PLANS

RIP RAP BASIN	LOCATION	L (feet)	POOL LENGTH (feet)	APRON LENGTH (feet)	BASE WIDTH (feet)	APRON WIDTH (feet)	RIP RAP THICKNESS T (inches)	RIP RAP CLASS	DEPTH hs (feet)
#1	-SR- 13+11 LT	24	16	8	11	13	23	II	1.66

PROFILE

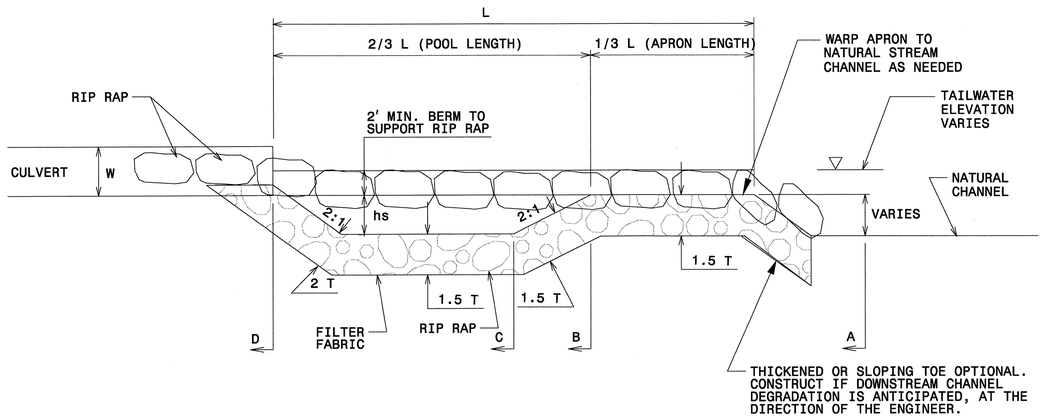

PLAN

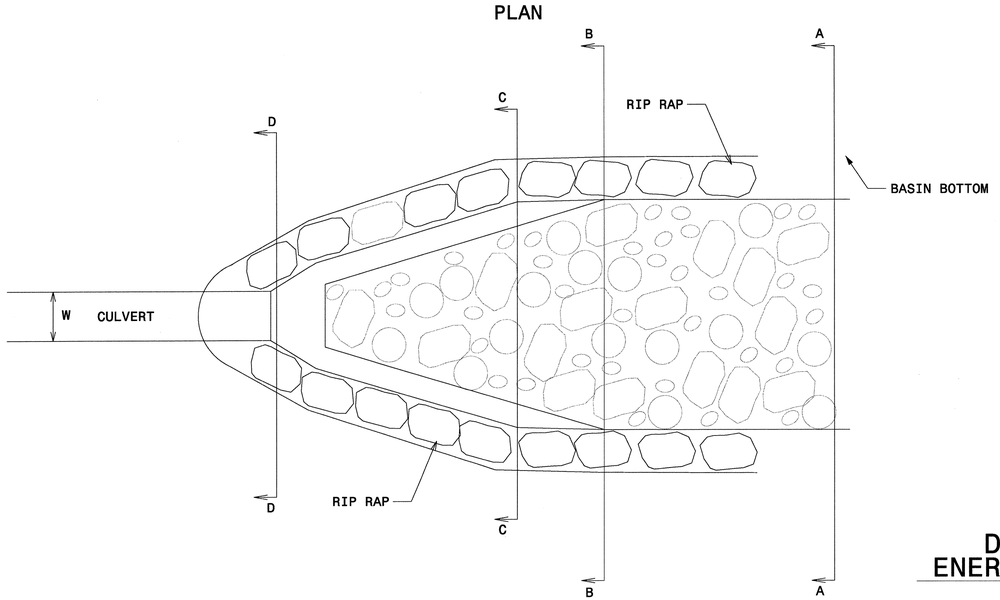

SECTION A-A

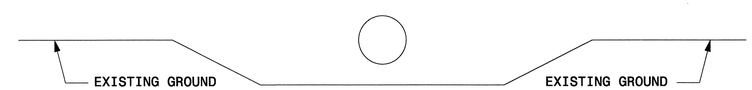

SECTION B-B

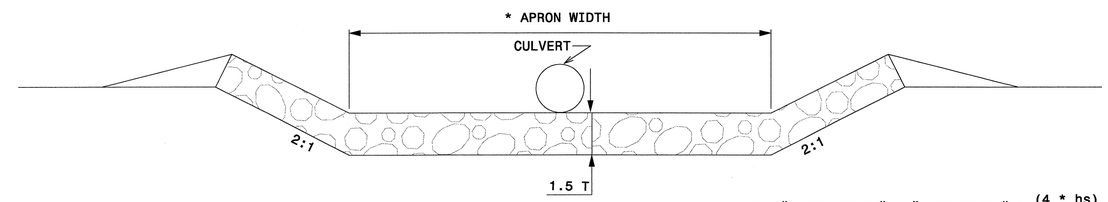

* WHERE "APRON WIDTH" = "BASE WIDTH" + $\frac{(4 * hs)}{3}$

SECTION C-C

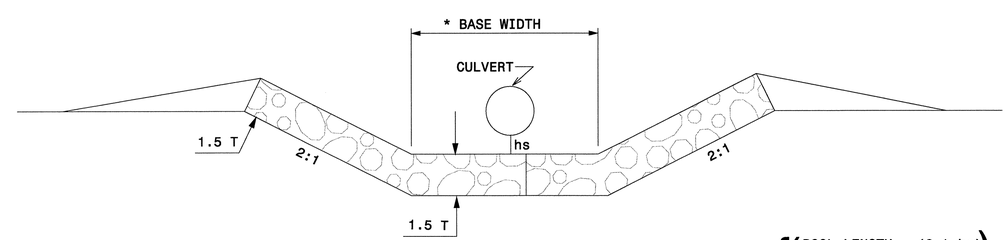

* WHERE "BASE WIDTH" = $2\left\{\left(\frac{\text{POOL LENGTH} - (2 * hs)}{3}\right) + \frac{W}{2}\right\}$

MINIMUM "BASE WIDTH" = 10'

SECTION D-D

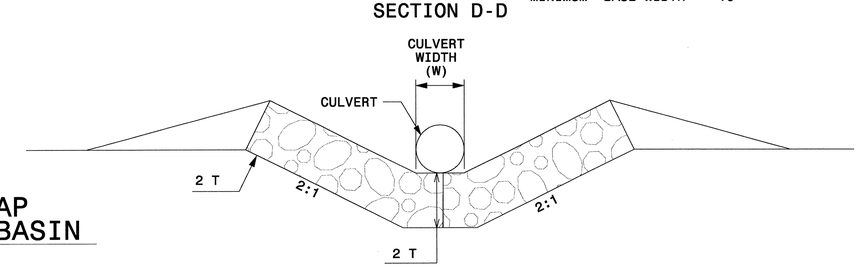

DETAIL OF RIP RAP ENERGY DISSIPATOR BASIN

(NOT TO SCALE)

-SR-, STA.13+11 LEFT

USER: kel/nwpmetre
DGN: E:\R2606A\R2606a\roadway\Pro1\r2606a_rdy_psh_02bu.dgn
DATE: 6/28/2006

REVISIONS

PROJECT REFERENCE NO.	SHEET NO.
R-2606A	2-0
R/W SHEET NO.	
ROADWAY DESIGN ENGINEER	HYDRAULICS ENGINEER

NORTH CAROLINA PROFESSIONAL SEAL 3505 ENGINEER GEORGE T. SHEARIN
6/26/06

Prepared in the Office of:

EarthTech
A Tyco International Ltd. Company
701 Corporate Center Drive, Suite 475
Raleigh, NC 27607
(919) 854-6200 - (919) 854-6259(FAX)

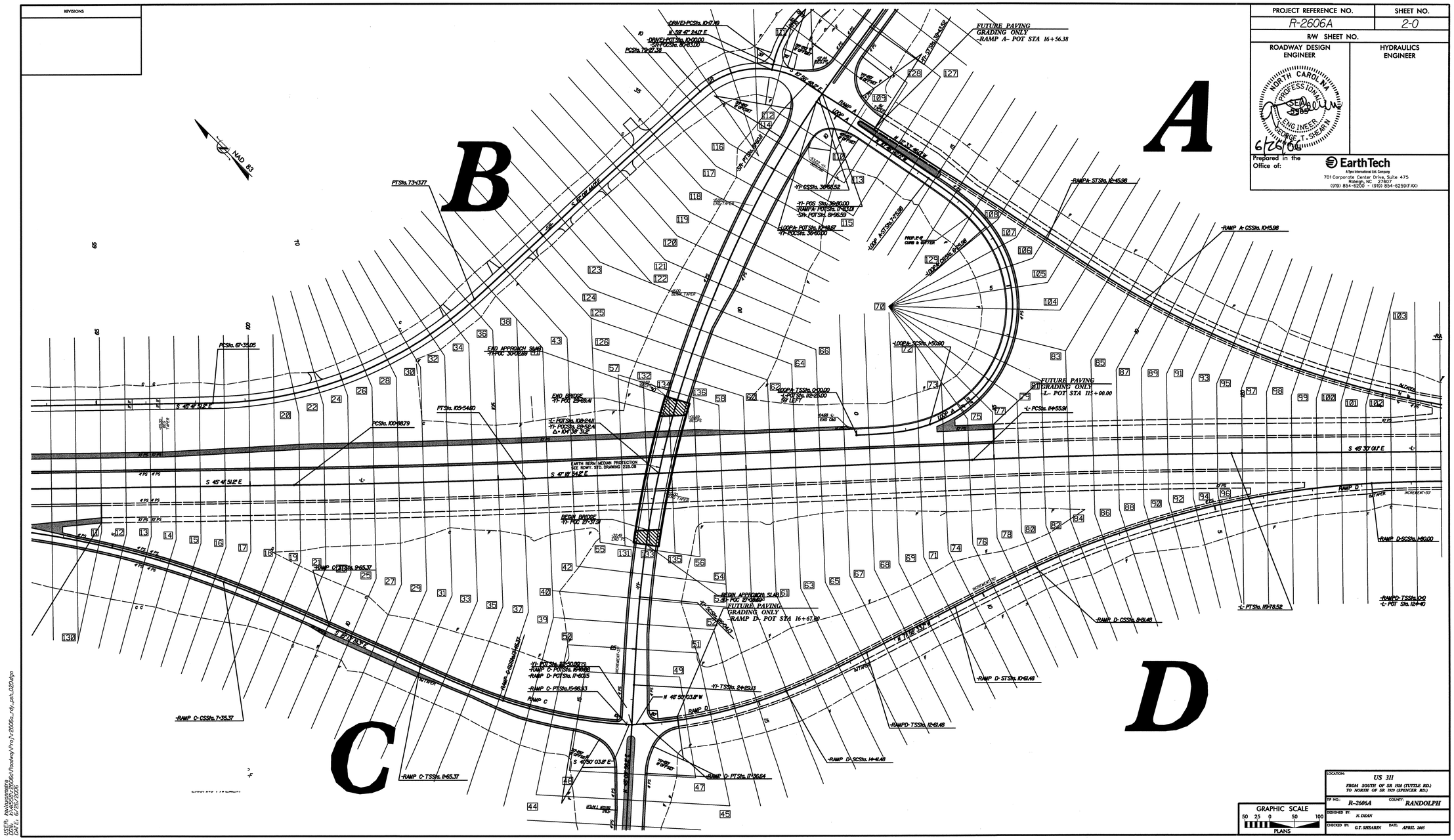

LOCATION:	US 311 FROM SOUTH OF SR 1109 (TUTTLE RD.) TO NORTH OF SR 1109 (SPENCER RD.)
TIP NO.: R-2606A	COUNTY: RANDOLPH
DESIGNED BY:	N. DEAN
CHECKED BY: G.T. SHEARIN	DATE: APRIL 2005

GRAPHIC SCALE
50 25 0 50 100
PLANS

USER: tbellsmarrera
DGN: R:\R2606A\R2606A\Roadway\Pro1\r2606a_rdy_psh_020.dgn
DATE: 6/26/2006

PROJECT REFERENCE NO.	SHEET NO.
R-2606A	2-P
R/W SHEET NO.	

ROADWAY DESIGN ENGINEER

HYDRAULICS ENGINEER

NORTH CAROLINA PROFESSIONAL SEAL ENGINEER GEORGE T. SHEARIN 6/26/06

Prepared in the Office of: EarthTech
A Tyco International Ltd. Company
701 Corporate Center Drive, Suite 475
Raleigh, NC 27607
(919) 854-6200 - (919) 854-6259(FAX)

GRAPHIC SCALE
50 25 0 50 100
PLANS

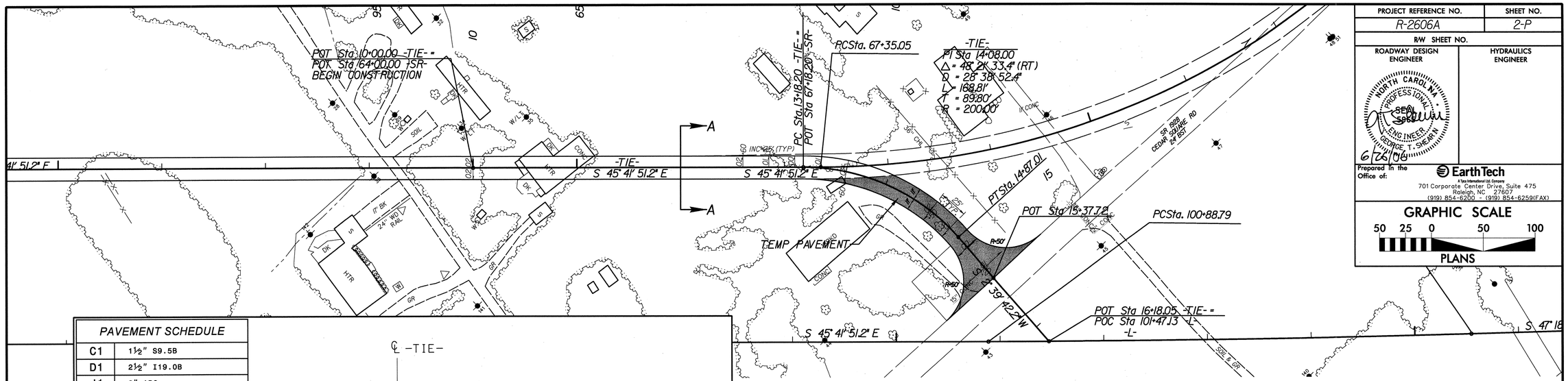

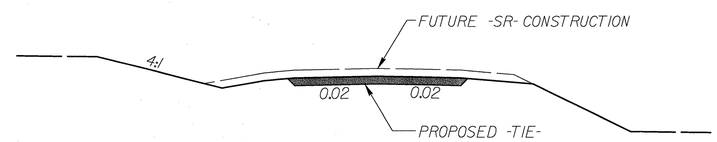

SECTION A-A

PAVEMENT SCHEDULE	
C1	1½" S9.5B
D1	2½" I19.0B
J1	8" ABC
T	EARTH MATERIAL

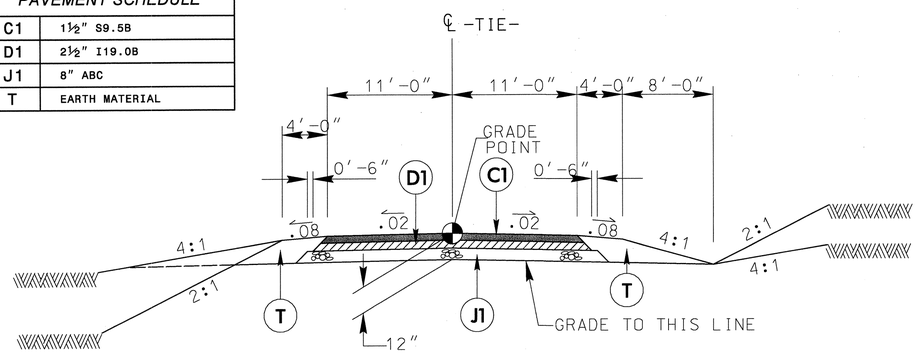

TYPICAL SECTION NOTE: -TIE- PAVEMENT SCHEDULE SAME AS -SR-

TEMPORARY TIE-IN FOR TRAFFIC CONTROL TO BE CONSTRUCTED IN PHASE I. SEE TCP PLANS.

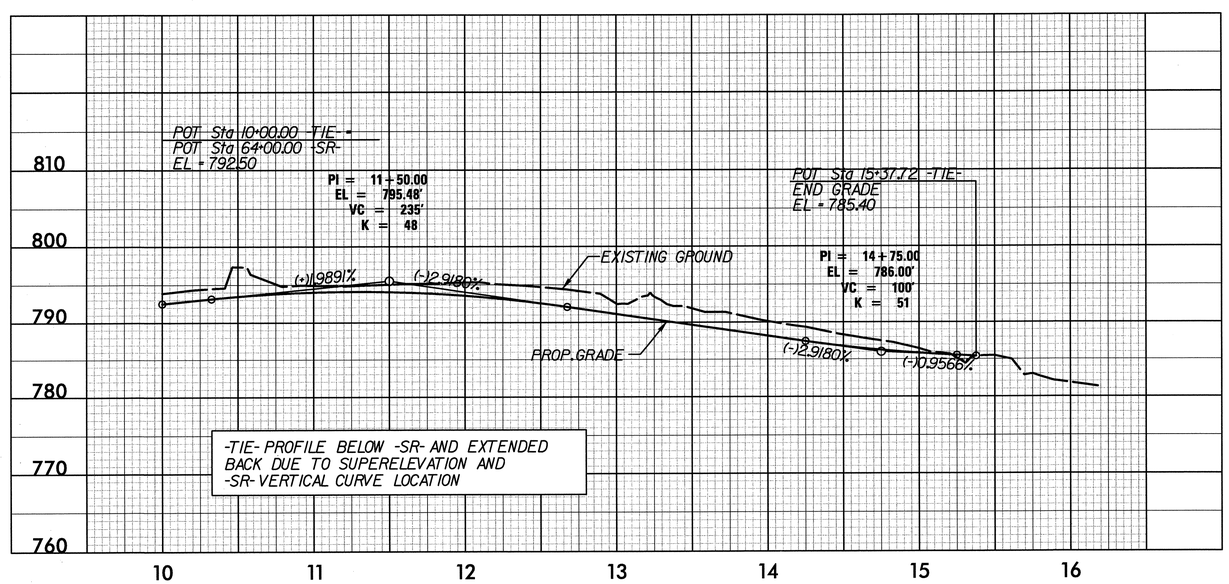

USER: keylongmarta
DGN: R:\R2606a\Roadway\Proj\r2606a_rdy_psh_02P.dgn
DATE: 6/26/2006

PROJECT REFERENCE NO.	SHEET NO.
R-2606 A	2-Q

STATE OF
NORTH CAROLINA
DEPT. OF TRANSPORTATION
DIVISION OF HIGHWAYS
RALEIGH, N.C.

ENGLISH DETAIL DRAWING FOR
GUIDE FOR GRADING SUBGRADE
INTERSTATE AND FREEWAY
(ROUND BOTTOM DITCH & MEDIAN DITCH)

SHEET 1 OF 1
225D01

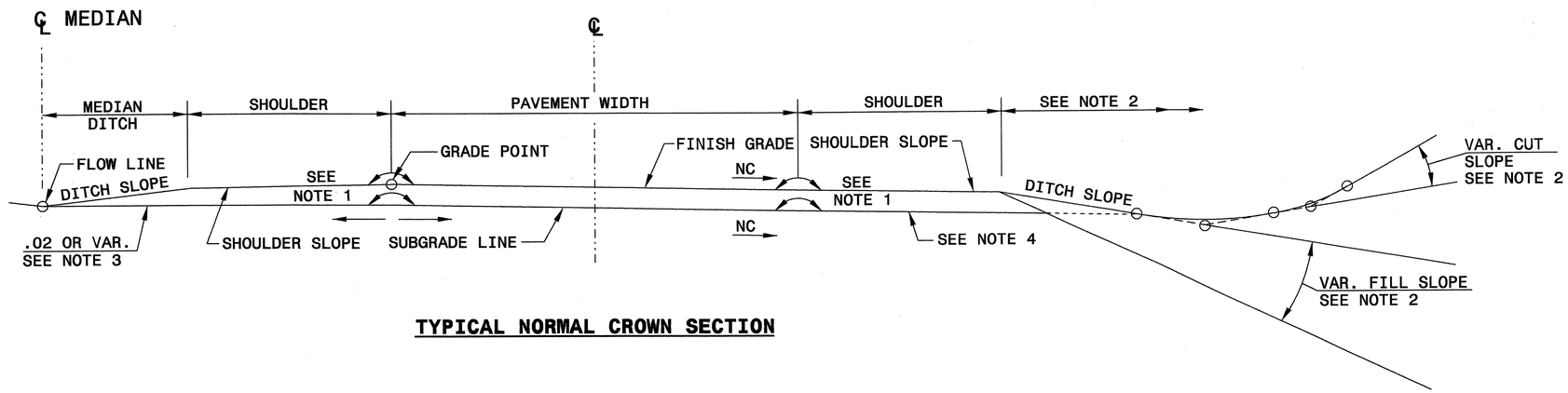

TYPICAL NORMAL CROWN SECTION

1. SEE TYPICAL SECTION FOR LATERAL LOCATION OF ROLLOVER.
2. SEE PLANS FOR METHOD OF CONSTRUCTING CUT AND FILL SLOPES.
3. SUBGRADE LINE WILL NOT UNDERCUT DITCH GRADE AT ANY POINT.
4. OUTSIDE SHOULDER SUBGRADES ARE THE SAME RATE OF SLOPE AS THE ADJACENT TRAVEL LANE SUBGRADES **UNLESS** CONSTRUCTED ON THE HIGH SIDE OF SUPERELEVATION OR CONSIST OF 10′ AND WIDER FULL DEPTH PAVEMENT (SEE STDS. 560.01 AND 560.02).

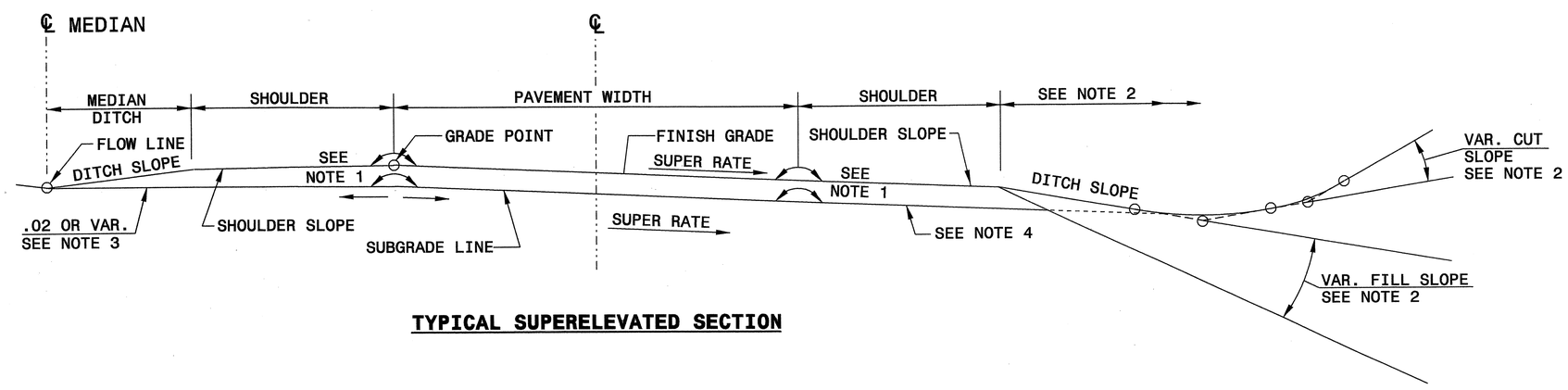

TYPICAL SUPERELEVATED SECTION

STATE OF
NORTH CAROLINA
DEPT. OF TRANSPORTATION
DIVISION OF HIGHWAYS
RALEIGH, N.C.

ENGLISH DETAIL DRAWING FOR
GUIDE FOR GRADING SUBGRADE
INTERSTATE AND FREEWAY
(ROUND BOTTOM DITCH & MEDIAN DITCH)

SHEET 1 OF 1
225D01

NORTH CAROLINA PROFESSIONAL SEAL 022966 ENGINEER
7/14/06

DESIGN SERVICES UNIT
STANDARDS AND SPECIAL DESIGN
Office 919-250-4128 FAX 919-250-4119

SEE PLATE FOR TITLE

ORIGINAL BY: 2002 STANDARDS DATE: 01-15-02
MODIFIED BY: E.E. WARD DATE: 04-07-03
CHECKED BY: DATE: 4-03
FILE SPEC.: stds/02stdstodetails/english/225d01.dgn

10-APR-2003 09:19
User:ericward
Pw:eric
eric.ward AT DS188660

PROJECT REFERENCE NO.	SHEET NO.
R-2606A	2-R

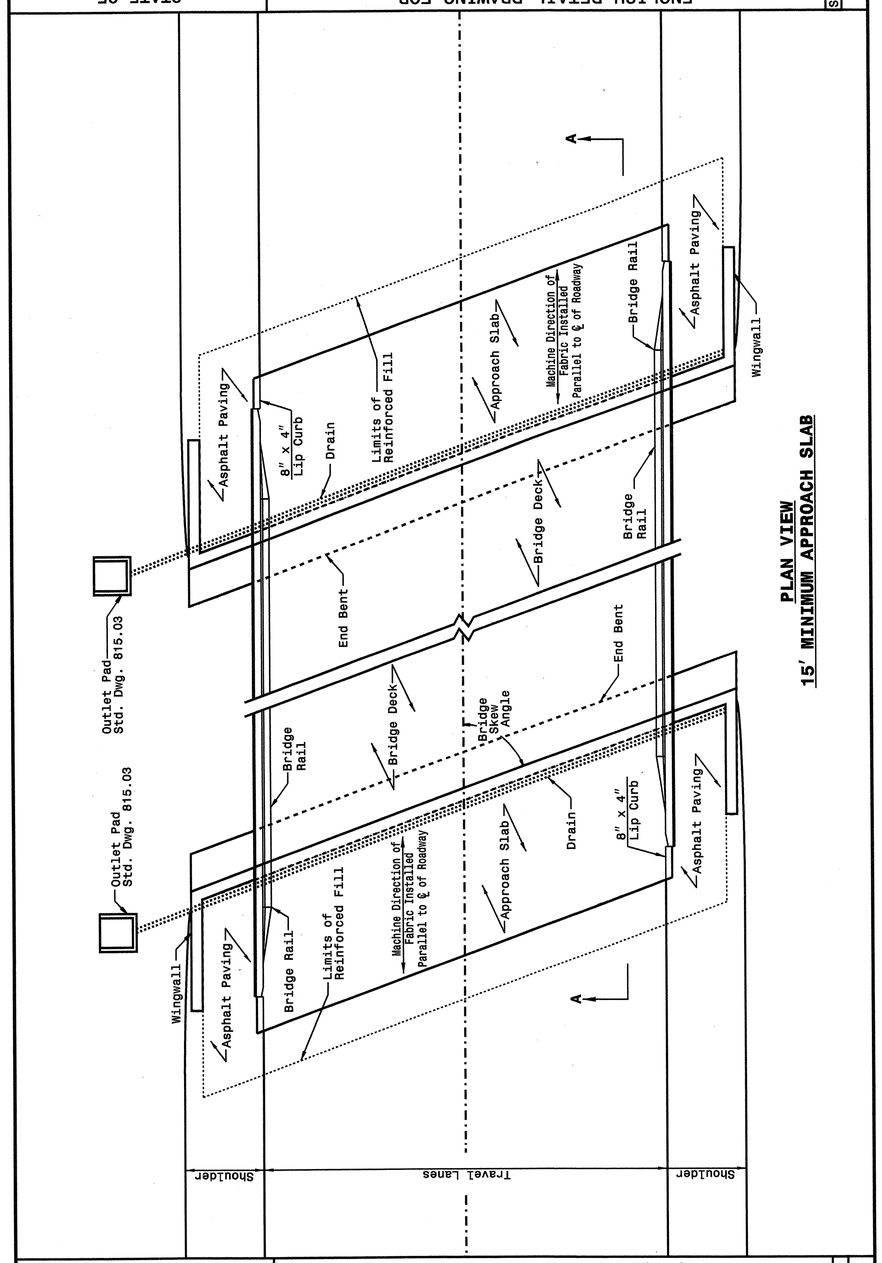

STATE OF NORTH CAROLINA DEPT. OF TRANSPORTATION DIVISION OF HIGHWAYS RALEIGH, N.C.

ENGLISH DETAIL DRAWING FOR
REINFORCED BRIDGE APPROACH FILLS
15' MINIMUM APPROACH SLAB

SHEET 1 OF 7 422D10

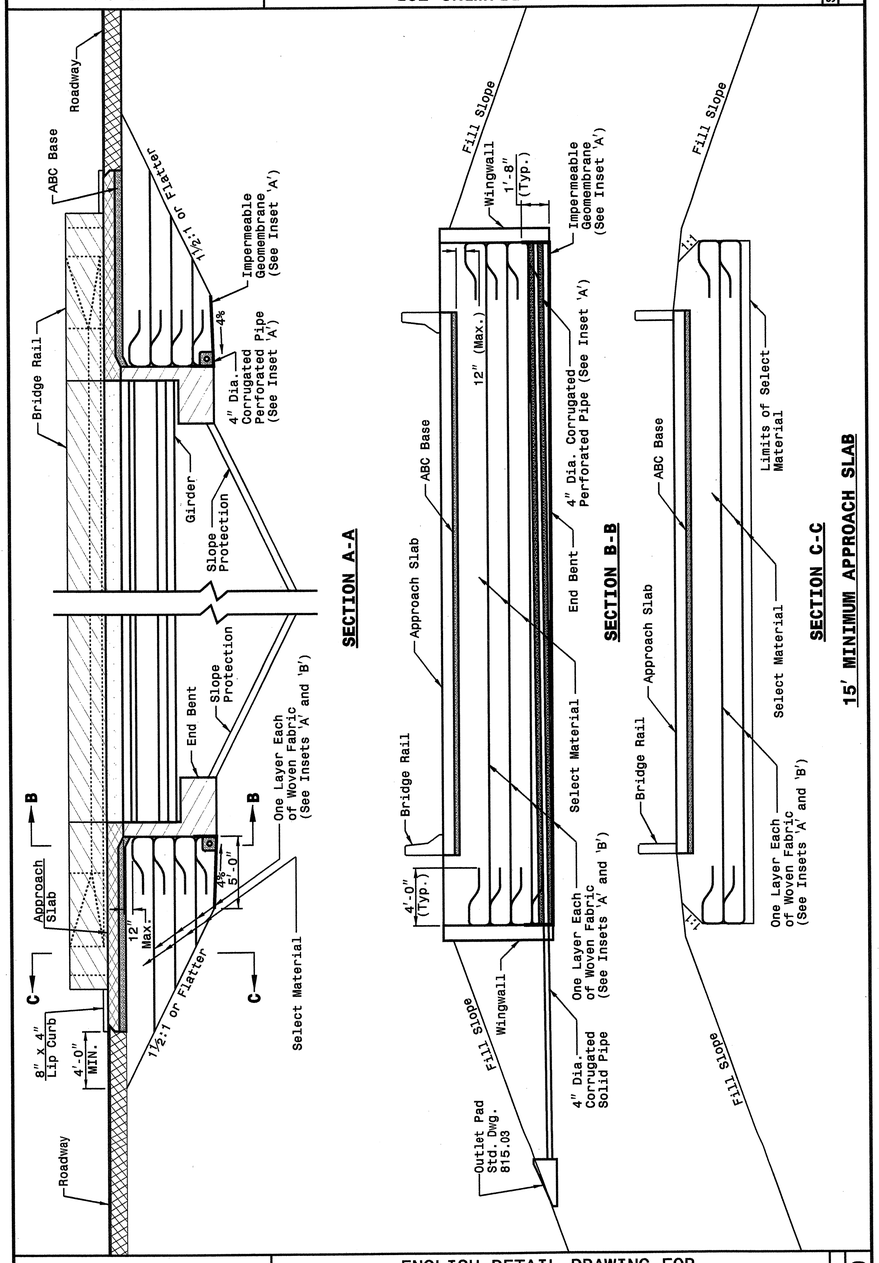

STATE OF NORTH CAROLINA DEPT. OF TRANSPORTATION DIVISION OF HIGHWAYS RALEIGH, N.C.

ENGLISH DETAIL DRAWING FOR
REINFORCED BRIDGE APPROACH FILLS
PRESTRESSED AND PLATE GIRDER BRIDGES
15' MINIMUM APPROACH SLAB

SHEET 2 OF 7 422D10

NORTH CAROLINA PROFESSIONAL SEAL 022966 ENGINEER JOEL L. HOUSTON
7/14/06

PROJECT SERVICES UNIT
STANDARDS AND SPECIAL DESIGN
Office 919-250-4128 FAX 919-250-4119

SEE PLATE FOR TITLE

ORIGINAL BY: 2002 STANDARDS DATE: 01-15-02
MODIFIED BY: E.E. WARD DATE: 09-28-05
CHECKED BY: [signature] DATE: 9/29/05
FILE SPEC.: stds/02stdstodetails/english/422d10.dgn

28-SEP-2005 15:30
S:\Contracts\Contracts\Special Details\ericward\stds\02' Stds to Special Details\english\422d10\0422d10.dgn
ericward AT PS222293

28-SEP-2005 15:31
S:\Contracts\Contracts\Special Details\ericward\stds\02' Stds to Special Details\english\42210\0422d10.dgn
.ericward AT PS222293

STATE OF NORTH CAROLINA
DEPT. OF TRANSPORTATION
DIVISION OF HIGHWAYS
RALEIGH, N.C.

ENGLISH DETAIL DRAWING FOR
REINFORCED BRIDGE APPROACH FILLS
CORED SLAB BRIDGES
15' MINIMUM APPROACH SLAB

SHEET 3 OF 7
422D10

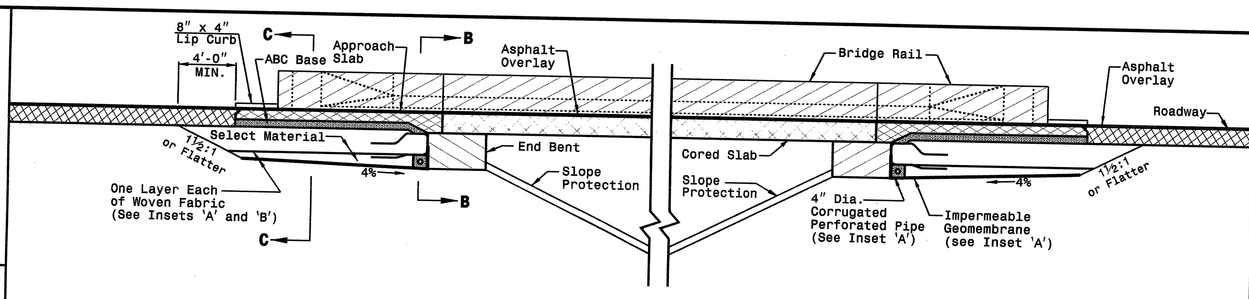

SECTION A-A

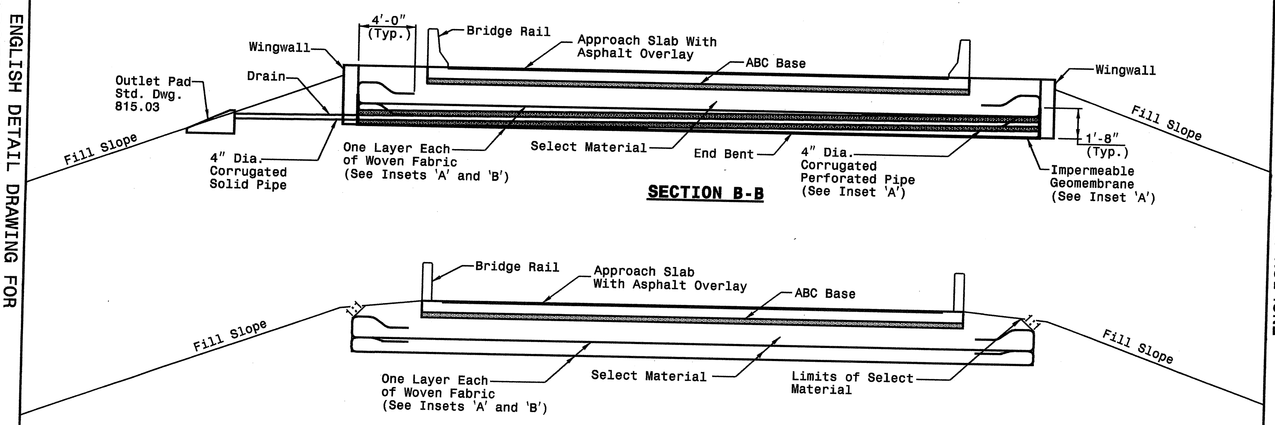

SECTION B-B

SECTION C-C

15' MINIMUM APPROACH SLAB

STATE OF NORTH CAROLINA
DEPT. OF TRANSPORTATION
DIVISION OF HIGHWAYS
RALEIGH, N.C.

ENGLISH DETAIL DRAWING FOR
REINFORCED BRIDGE APPROACH FILLS
CORED SLAB BRIDGES
15' MINIMUM APPROACH SLAB

SHEET 3 OF 7
422D10

STATE OF NORTH CAROLINA
DEPT. OF TRANSPORTATION
DIVISION OF HIGHWAYS
RALEIGH, N.C.

ENGLISH DETAIL DRAWING FOR
REINFORCED BRIDGE APPROACH FILLS
25' MINIMUM APPROACH SLAB

SHEET 4 OF 7
422D10

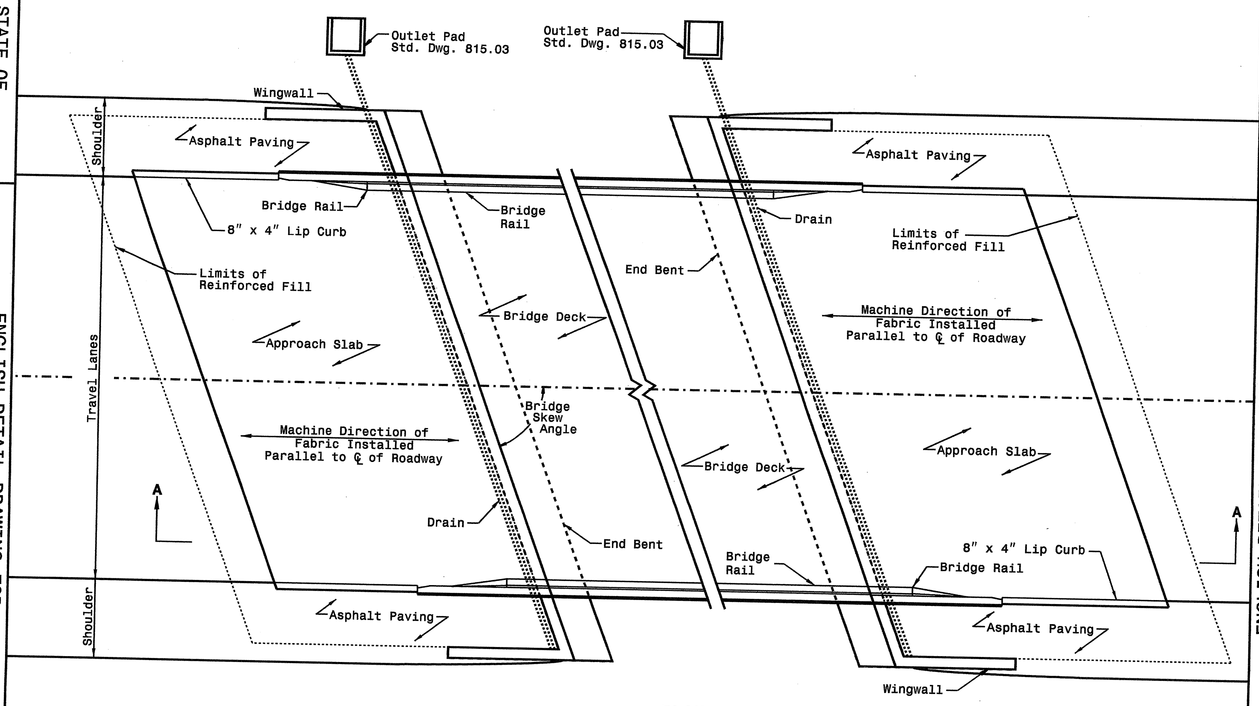

PLAN VIEW
25' MINIMUM APPROACH SLAB

STATE OF NORTH CAROLINA
DEPT. OF TRANSPORTATION
DIVISION OF HIGHWAYS
RALEIGH, N.C.

ENGLISH DETAIL DRAWING FOR
REINFORCED BRIDGE APPROACH FILLS
25' MINIMUM APPROACH SLAB

SHEET 4 OF 7
422D10

PROJECT SERVICES UNIT
STANDARDS AND SPECIAL DESIGN
Office 919-250-4128 FAX 919-250-4119

SEE PLATE FOR TITLE

ORIGINAL BY: 2002 STANDARDS DATE: 01-15-02
MODIFIED BY: E.E. WARD DATE: 09-28-05
CHECKED BY: [signature] DATE: 9/24/05
FILE SPEC.: stds/02stdstodetails/english/422d10.dgn

NORTH CAROLINA PROFESSIONAL ENGINEER SEAL 022966 JOEL E. HAMILTON
7/14/06

PROJECT REFERENCE NO. R-2606A
SHEET NO. 2-S

20-SEP-2005 08:49
S:\Contracts\Contracts\Special Details\ericward\stds\02' Stds to Special Details\english\42210\0422d10.dgn
ericward AT FS22293

STATE OF NORTH CAROLINA
DEPT. OF TRANSPORTATION
DIVISION OF HIGHWAYS
RALEIGH, N.C.

ENGLISH DETAIL DRAWING FOR
REINFORCED BRIDGE APPROACH FILLS
PRESTRESSED AND PLATE GIRDER BRIDGES
25' MINIMUM APPROACH SLAB

SHEET 5 OF 7
422D10

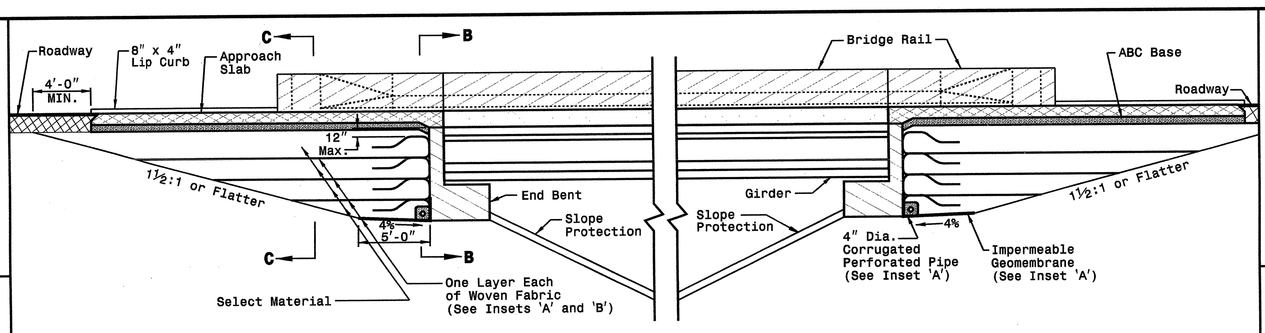

SECTION A-A

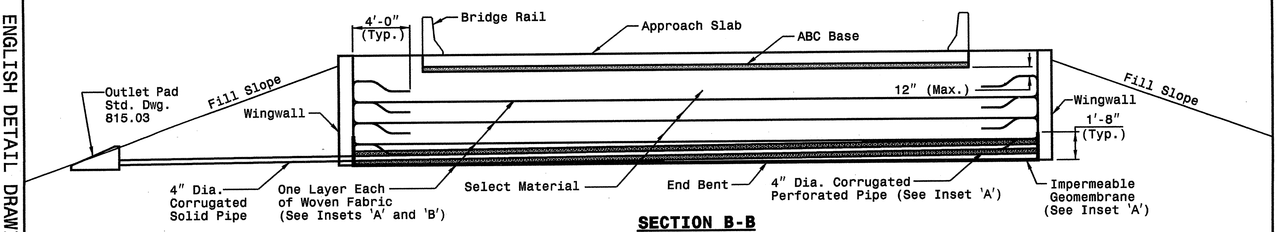

SECTION B-B

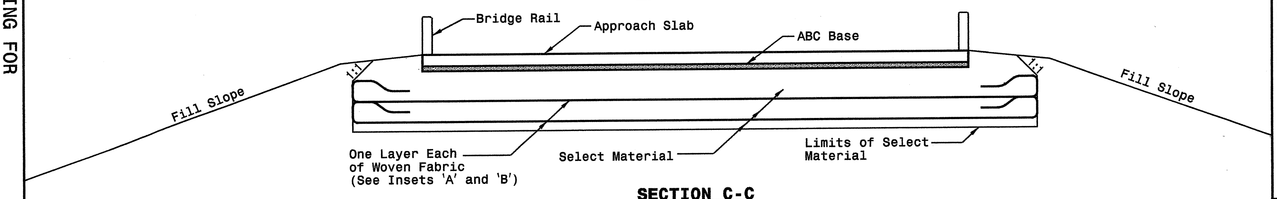

SECTION C-C

25' MINIMUM APPROACH SLAB

STATE OF NORTH CAROLINA
DEPT. OF TRANSPORTATION
DIVISION OF HIGHWAYS
RALEIGH, N.C.

ENGLISH DETAIL DRAWING FOR
REINFORCED BRIDGE APPROACH FILLS
PRESTRESSED AND PLATE GIRDER BRIDGES
25' MINIMUM APPROACH SLAB

SHEET 5 OF 7
422D10

STATE OF NORTH CAROLINA
DEPT. OF TRANSPORTATION
DIVISION OF HIGHWAYS
RALEIGH, N.C.

ENGLISH DETAIL DRAWING FOR
REINFORCED BRIDGE APPROACH FILLS
CORED SLAB BRIDGES
25' MINIMUM APPROACH SLAB

SHEET 6 OF 7
422D10

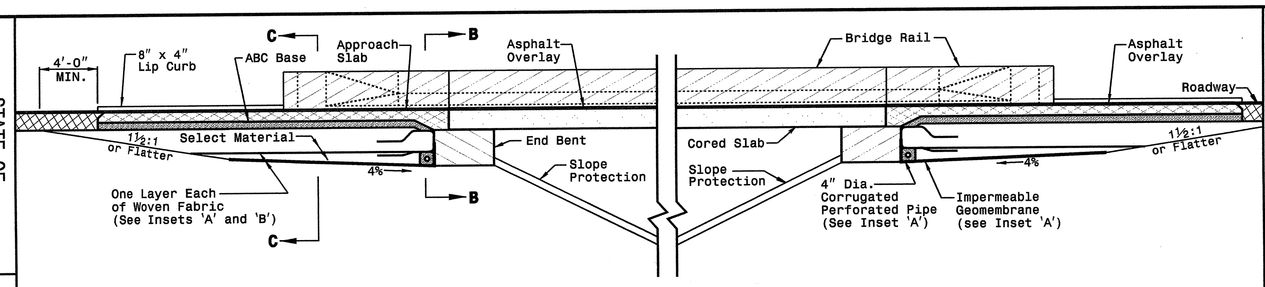

SECTION A-A

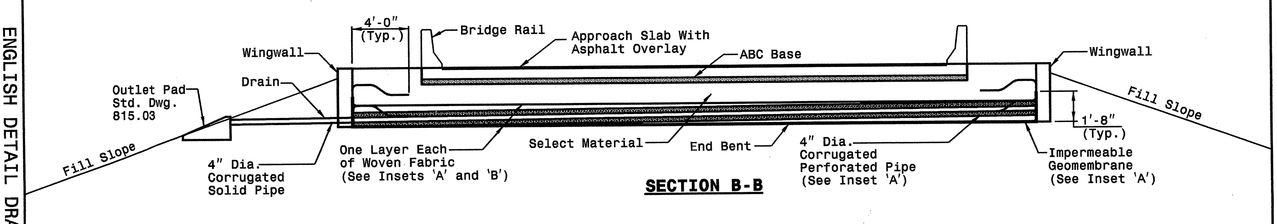

SECTION B-B

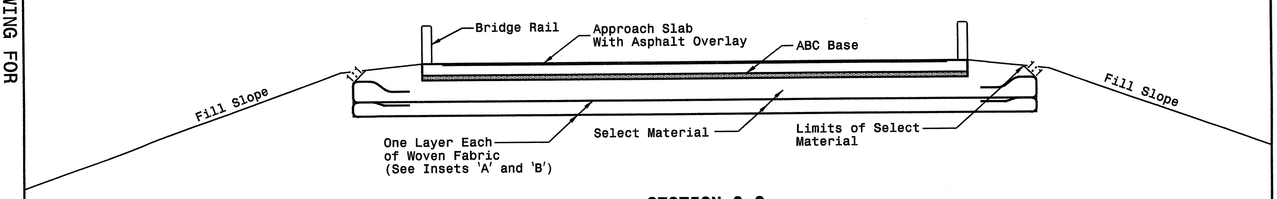

SECTION C-C

25' MINIMUM APPROACH SLAB

STATE OF NORTH CAROLINA
DEPT. OF TRANSPORTATION
DIVISION OF HIGHWAYS
RALEIGH, N.C.

ENGLISH DETAIL DRAWING FOR
REINFORCED BRIDGE APPROACH FILLS
CORED SLAB BRIDGES
25' MINIMUM APPROACH SLAB

SHEET 6 OF 7
422D10

PROJECT SERVICES UNIT
STANDARDS AND SPECIAL DESIGN
Office 919-250-4128 FAX 919-250-4119

SEE PLATE FOR TITLE

ORIGINAL BY: 2002 STANDARDS DATE: 01-15-02
MODIFIED BY: E.E. WARD DATE: 09-12-05
CHECKED BY: DATE: 9/26/05
FILE SPEC.: $jobs102$stroderails$english$422d10.dgn

NORTH CAROLINA PROFESSIONAL ENGINEER SEAL 02966

PROJECT REFERENCE NO. R-2606A
SHEET NO. 2-T

20-SEP-2005 08:49
S:\Contracts\Contracts\Special Details\ericward\stds\02' Stds to Special Details\english\42210\0422d10.dgn
.ericward AT PS222243

STATE OF
NORTH CAROLINA
DEPT. OF TRANSPORTATION
DIVISION OF HIGHWAYS
RALEIGH, N.C.

ENGLISH DETAIL DRAWING FOR
REINFORCED BRIDGE APPROACH FILLS
INSETS AND CHARTS

SHEET 7 OF 7
422D10

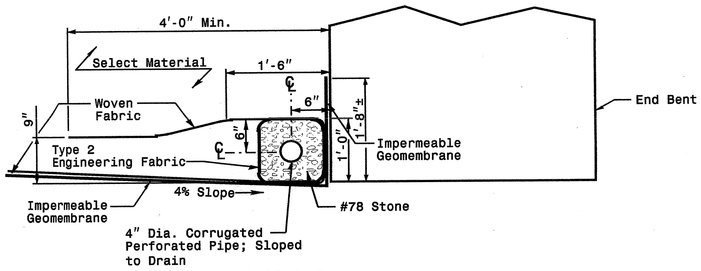

Cored Slab Bridge
Showing First Lift and Drains

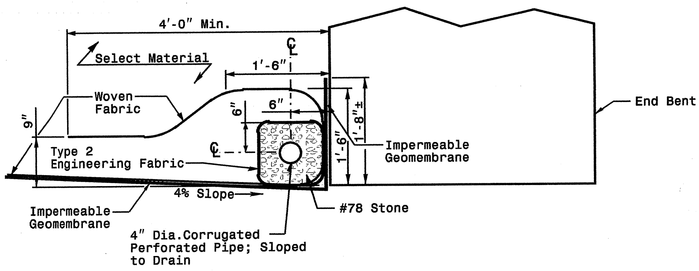

Girder Bridge
Showing First Lift and Drains

Inset 'A'

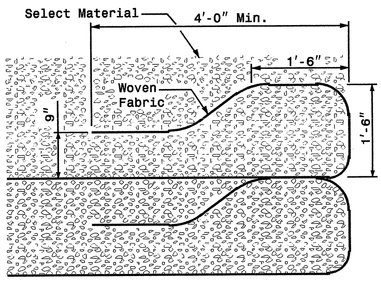

Typical Fabric Lift and Wrap
Showing Second and Above Lifts

Inset 'B'

Height of Backwall	Number of Fabric Layers
4'-6" - 5'-9"	3
5'-10" - 7'-2"	4
7'-3" - 8'-8"	5
8'-9" - 10'-1"	6
10'-2" - 11'-8"	7

Note: Cored Slab Structures Require 2 Fabric Layers.

Length of Bridge End Bent Inside Wingwalls
If Bridge Skew is Less Than or Equal to 90°: $\frac{\text{(Roadway Width + 7'-0")}}{\text{Sin (Bridge Skew Angle)}}$ = Dis. Between Wingwalls
If Bridge Skew is Greater Than 90°: $\frac{\text{(Roadway Width + 7'-0")}}{\text{Cos (Bridge Skew Angle - 90°)}}$ = Dis. Between Wingwalls

STATE OF
NORTH CAROLINA
DEPT. OF TRANSPORTATION
DIVISION OF HIGHWAYS
RALEIGH, N.C.

ENGLISH DETAIL DRAWING FOR
REINFORCED BRIDGE APPROACH FILLS
INSETS AND CHARTS

SHEET 7 OF 7
422D10

PROJECT SERVICES UNIT
STANDARDS AND SPECIAL DESIGN
Office 919-250-4128 FAX 919-250-4119

SEE PLATE FOR TITLE

ORIGINAL BY: 2002 STANDARDS DATE: 01-15-02
MODIFIED BY: E.E. WARD DATE: 09-12-05
CHECKED BY: DATE: 9/20/05
FILE SPEC.: S:\Stds\Contracts\eng\list\422d10.dgn

NORTH CAROLINA PROFESSIONAL SEAL 022866 ENGINEER
NOT REGISTERED FOR HIGHWAY DESIGN
9/14/06

PROJECT REFERENCE NO. R-2606A
SHEET NO. 2-U

28-OCT-2004 13:40
W:\Special Details\ericward\stds\02' Stds to Special Details\english\66501\0665d01.dgn
ericward AT DS212260

STATE OF NORTH CAROLINA
DEPT. OF TRANSPORTATION
DIVISION OF HIGHWAYS
RALEIGH, N.C.

ENGLISH DETAIL DRAWING FOR
ASPHALT SHOULDERS
MILLED RUMBLE STRIPS

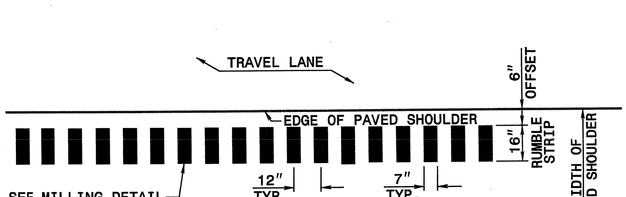

* FOR WIDTHS SEE TYPICAL SECTIONS AND PLAN SHEETS

PLAN VIEW
PAVED SHOULDER

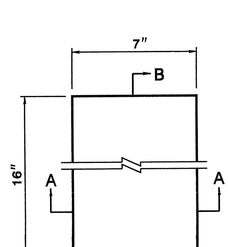

PLAN VIEW
MILLING DETAIL

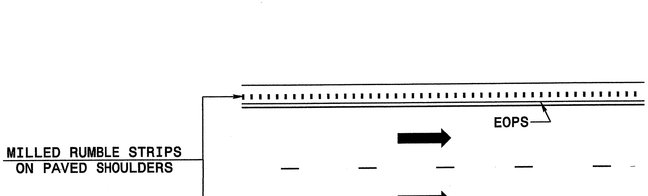

LANE TREATMENT

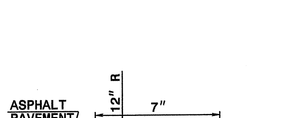

SECTION A-A

SECTION B-B

SHEET 1 OF 2
665D01

STATE OF NORTH CAROLINA
DEPT. OF TRANSPORTATION
DIVISION OF HIGHWAYS
RALEIGH, N.C.

ENGLISH DETAIL DRAWING FOR
ASPHALT SHOULDERS
MILLED RUMBLE STRIPS

SHEET 1 OF 2
665D01

STATE OF NORTH CAROLINA
DEPT. OF TRANSPORTATION
DIVISION OF HIGHWAYS
RALEIGH, N.C.

ENGLISH DETAIL DRAWING FOR
ASPHALT SHOULDERS
MILLED RUMBLE STRIPS

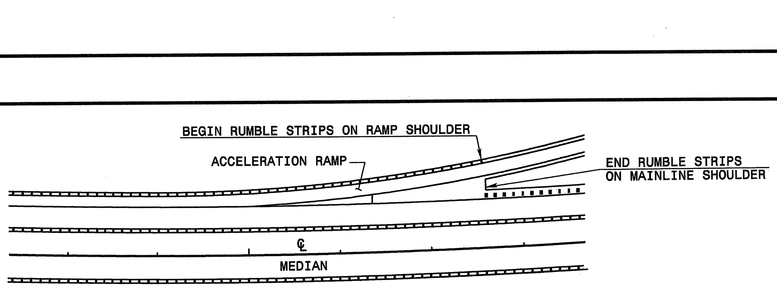

TREATMENT AT RAMP TERMINALS

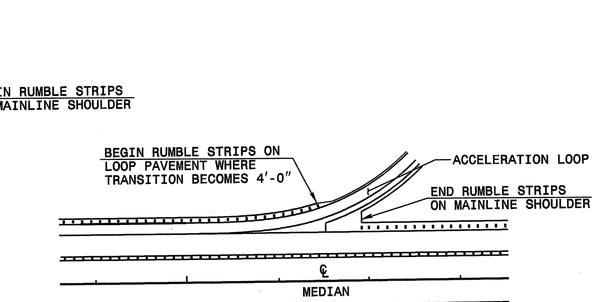

TREATMENT AT LOOP TERMINALS

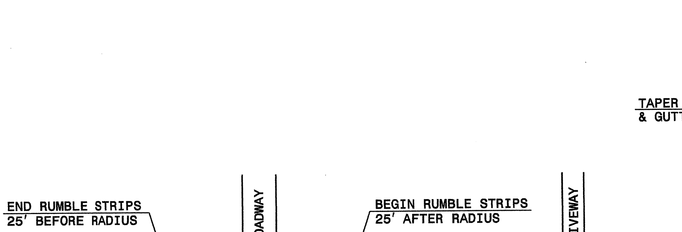

TREATMENT AT INTERSECTIONS
(ROADWAY OR DRIVEWAY)

* TERMINATE AT DRIVEWAYS AS DIRECTED BY THE ENGINEER.

SHEET 2 OF 2
665D01

STATE OF NORTH CAROLINA
DEPT. OF TRANSPORTATION
DIVISION OF HIGHWAYS
RALEIGH, N.C.

ENGLISH DETAIL DRAWING FOR
ASPHALT SHOULDERS
MILLED RUMBLE STRIPS

SHEET 2 OF 2
665D01

PROJECT SERVICES UNIT
STANDARDS AND SPECIAL DESIGN
Office 919-250-4128 FAX 919-250-4119

SEE PLATE FOR TITLE

ORIGINAL BY: 2002 STANDARDS DATE: 01-15-02
MODIFIED BY: E.E. WARD DATE: 09-16-04
CHECKED BY: [signature] DATE: 11/2/04
FILE SPEC.: stds/02stdstodetails/english/665d01.dgn

NORTH CAROLINA PROFESSIONAL SEAL 022966 ENGINEER JOEL R. HUNTER
7/14/06

PROJECT REFERENCE NO. R-2606A
SHEET NO. 2-V

19-OCT-2004 11:38
W:\Special Details\ericward\stds\02' Stds to Special Details\english\86202\0862d02.dgn
.ericward AT DS212260

STATE OF NORTH CAROLINA
DEPT. OF TRANSPORTATION
DIVISION OF HIGHWAYS
RALEIGH, N.C.

ENGLISH DETAIL DRAWING FOR
GUARDRAIL INSTALLATION

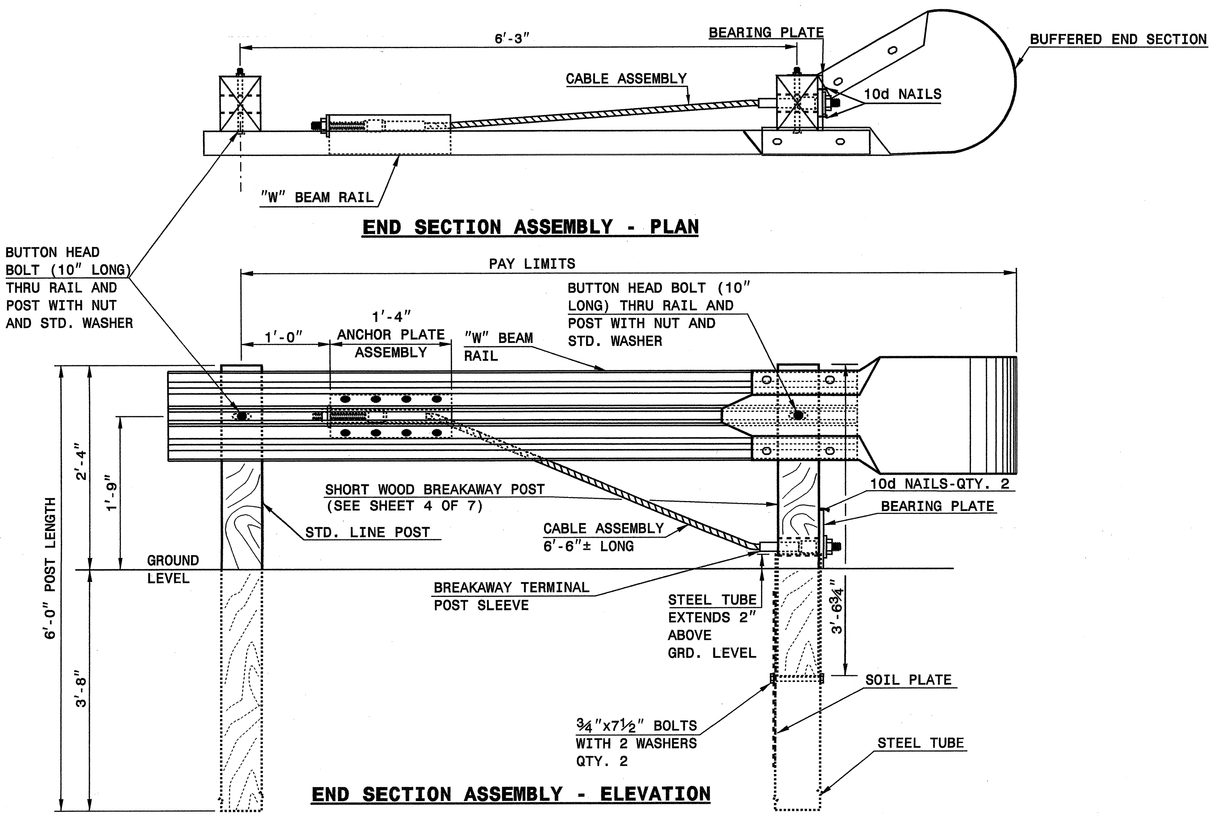

END SECTION ASSEMBLY - PLAN

END SECTION ASSEMBLY - ELEVATION

C.A.T.-1 SYSTEM

SHEET 1 OF 7
862D02

STATE OF NORTH CAROLINA
DEPT. OF TRANSPORTATION
DIVISION OF HIGHWAYS
RALEIGH, N.C.

ENGLISH DETAIL DRAWING FOR
GUARDRAIL INSTALLATION

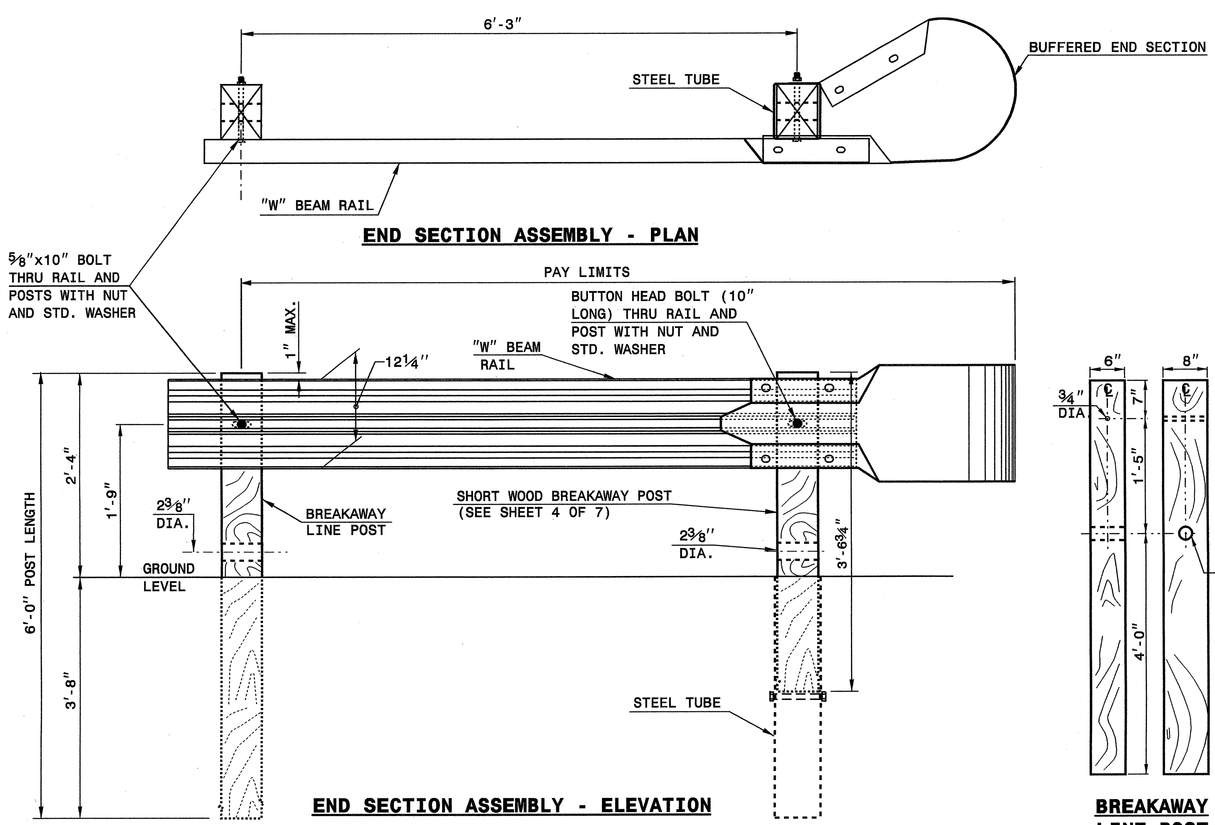

END SECTION ASSEMBLY - PLAN

END SECTION ASSEMBLY - ELEVATION

A.T.-1 SYSTEM

BREAKAWAY LINE POST

SHEET 2 OF 7
862D02

STATE OF NORTH CAROLINA
DEPT. OF TRANSPORTATION
DIVISION OF HIGHWAYS
RALEIGH, N.C.

ENGLISH DETAIL DRAWING FOR
GUARDRAIL INSTALLATION

PROJECT SERVICES UNIT
STANDARDS AND SPECIAL DESIGN
Office 919-250-4128 FAX 919-250-4119

SEE PLATE FOR TITLE

ORIGINAL BY: 2002 STD. 862.02 DATE:
MODIFIED BY: E.E. WARD DATE: 02-09-03
CHECKED BY: [signature] DATE: 10/21/04
FILE SPEC.: [usr/stds/02todetail/english/86202/862d02.dgn]

NORTH CAROLINA PROFESSIONAL SEAL 02266 ENGINEER JOEL R. HOWARD
7/14/06

PROJECT REFERENCE NO. R-2606A
SHEET NO. 2-W

PROJECT REFERENCE NO.	SHEET NO.
R-2606A	2-X

STATE OF NORTH CAROLINA DEPT. OF TRANSPORTATION DIVISION OF HIGHWAYS RALEIGH, N.C.

ENGLISH DETAIL DRAWING FOR
GUARDRAIL INSTALLATION

SHEET 3 OF 7
862D02

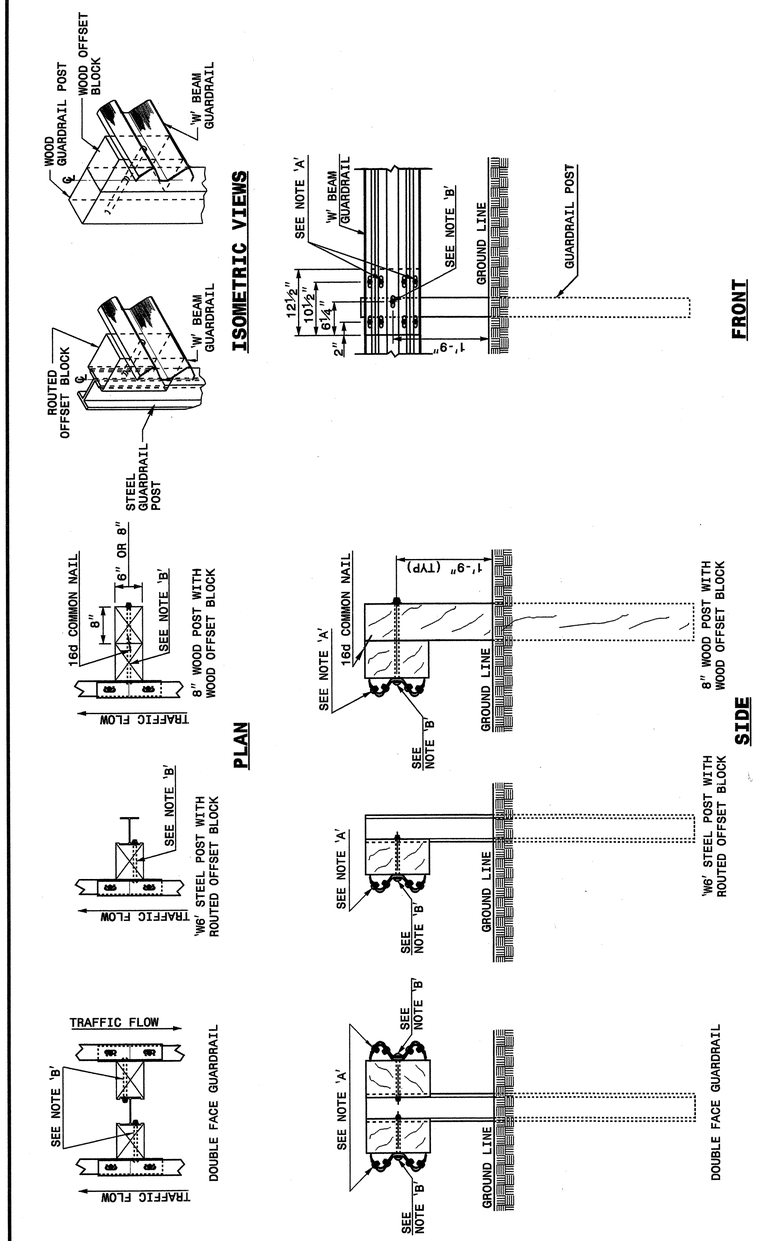

NOTES:
A - 5/8" DIA. BUTTON HEAD SPLICE BOLT 1¼" LONG (8 REQ. PER SPLICE JOINT).
B - 5/8" DIA. BUTTON HEAD BOLT 7½"/9" LONG WITH NUT FOR BOLTING 6"/8" ROUTED OFFSET BLOCK TO STEEL POSTS OR 5/8" DIA. BUTTON HEAD BOLT 18" LONG WITH STD. WASHER UNDER NUT FOR BOLTING TO WOOD POSTS (1 REQ. PER LOCATION)
C - FIELD PUNCHING OF HOLES INTO GUARDRAIL SHALL BE AS DIRECTED BY THE ENGINEER.

TYPICAL GUARDRAIL AND GUARDRAIL POST ALTERNATIVES

STATE OF NORTH CAROLINA DEPT. OF TRANSPORTATION DIVISION OF HIGHWAYS RALEIGH, N.C.

ENGLISH DETAIL DRAWING FOR
GUARDRAIL INSTALLATION

SHEET 3 OF 7
862D02

STATE OF NORTH CAROLINA DEPT. OF TRANSPORTATION DIVISION OF HIGHWAYS RALEIGH, N.C.

ENGLISH DETAIL DRAWING FOR
GUARDRAIL INSTALLATION

SHEET 4 OF 7
862D02

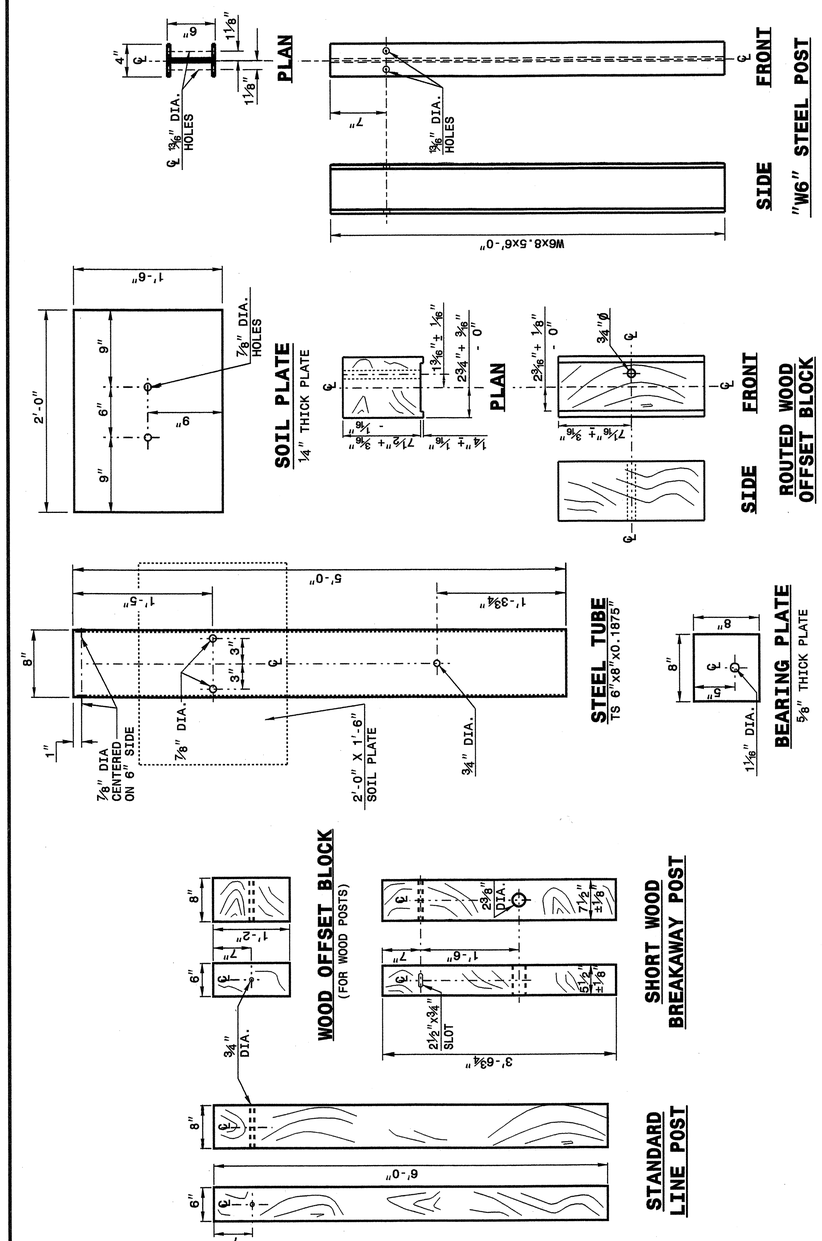

STATE OF NORTH CAROLINA DEPT. OF TRANSPORTATION DIVISION OF HIGHWAYS RALEIGH, N.C.

ENGLISH DETAIL DRAWING FOR
GUARDRAIL INSTALLATION

SHEET 4 OF 7
862D02

PROJECT SERVICES UNIT
STANDARDS AND SPECIAL DESIGN
Office 919-250-4128 FAX 919-250-4119

SEE PLATE FOR TITLE

ORIGINAL BY: 2002 STD.862.02 DATE:
MODIFIED BY: E.E. WARD DATE: 02-09-03
CHECKED BY: DATE: 10/21/04
FILE SPEC.: /usr/stds/02todetail/english/86202/862d02.dgn

19-OCT-2004 11:39
W:\Special Details\ericward\stds\02' Stds to Special Details\english\86202\0862d02.dgn
ericward AT US212260

PROJECT REFERENCE NO.	SHEET NO.
R-2606A	2-4

STATE OF NORTH CAROLINA DEPT. OF TRANSPORTATION DIVISION OF HIGHWAYS RALEIGH, N.C.

ENGLISH DETAIL DRAWING FOR
GUARDRAIL INSTALLATION

SHEET 5 OF 7
862D02

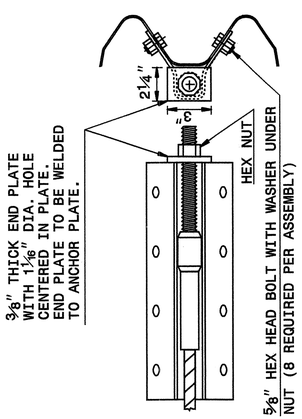

ANCHOR PLATE ASSEMBLY

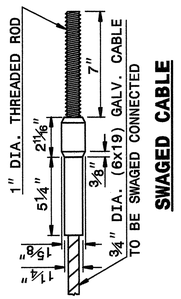

SWAGED CABLE

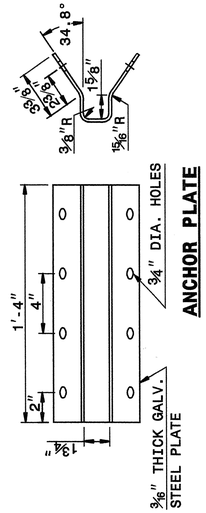

ANCHOR PLATE

CABLE ASSEMBLY

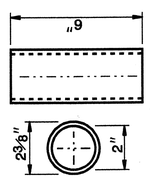

BREAKAWAY TERMINAL POST SLEEVE

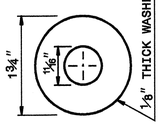

DETAIL OF STANDARD WASHER

STANDARD WASHER: TYPICAL USE UNDER NUT WITH WOOD POST

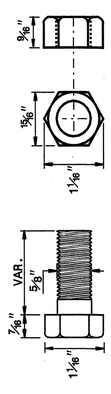

DETAIL OF STANDARD HEX BOLT AND NUT

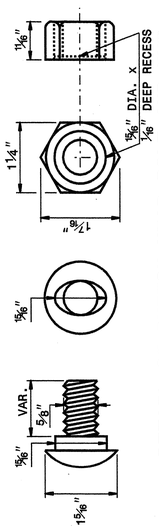

DETAIL OF BUTTON HEAD BOLT AND NUT

SYSTEM PARTS

STATE OF NORTH CAROLINA DEPT. OF TRANSPORTATION DIVISION OF HIGHWAYS RALEIGH, N.C.

ENGLISH DETAIL DRAWING FOR
GUARDRAIL INSTALLATION

SHEET 5 OF 7
862D02

STATE OF NORTH CAROLINA DEPT. OF TRANSPORTATION DIVISION OF HIGHWAYS RALEIGH, N.C.

ENGLISH DETAIL DRAWING FOR
GUARDRAIL INSTALLATION

SHEET 6 OF 7
862D02

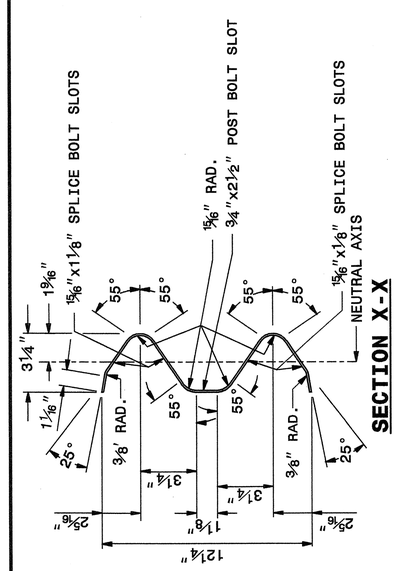

SECTION X-X

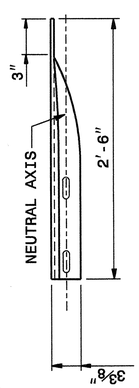

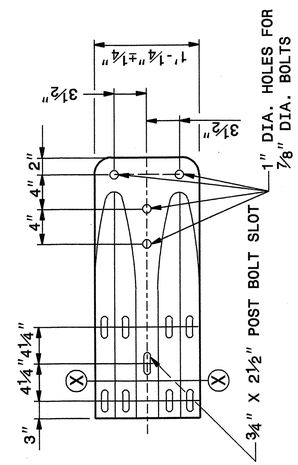

TYPICAL END SHOE

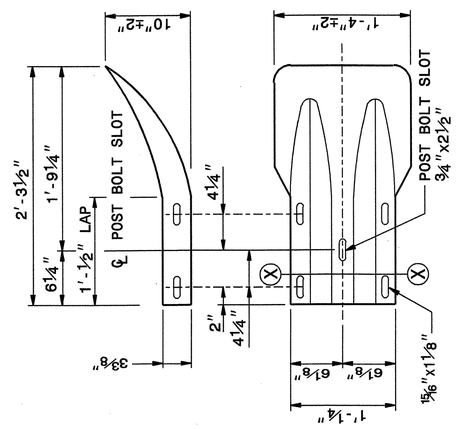

TERMINAL END SECTION

SYSTEM PARTS - GENERAL USE

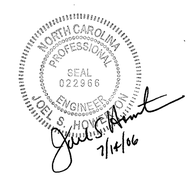

STATE OF NORTH CAROLINA DEPT. OF TRANSPORTATION DIVISION OF HIGHWAYS RALEIGH, N.C.

ENGLISH DETAIL DRAWING FOR
GUARDRAIL INSTALLATION

SHEET 6 OF 7
862D02

PROJECT SERVICES UNIT
STANDARDS AND SPECIAL DESIGN
Office 919-250-4128 FAX 919-250-4119

SEE PLATE FOR TITLE

ORIGINAL BY: 2002 STD.862.02 DATE:
MODIFIED BY: E.E. WARD DATE: 02-09-03
CHECKED BY: Joel S. Hocutt DATE: 10/21/04
FILE SPEC.: /usr/stds/02todetail/english/86202/862d02.dgn

19-OCT-2004 11:39
W:\Special Details\ericward\stds\02' Stds to Special Details\english\86202\0862d02.dgn
ericward AT DS212260

PROJECT REFERENCE NO.	SHEET NO.
R2606A	2-Z

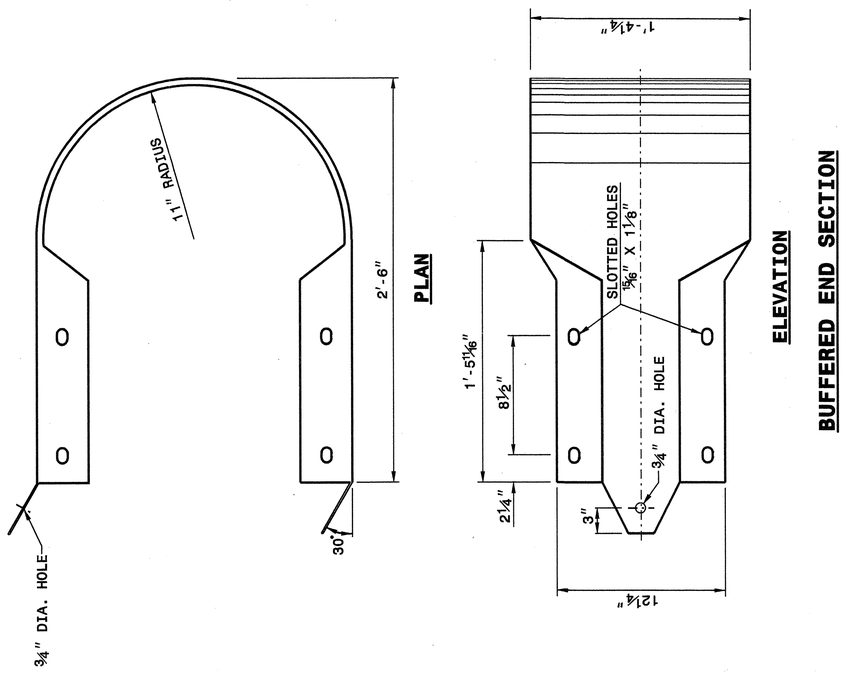

BUFFERED END SECTION

STATE OF NORTH CAROLINA
DEPT. OF TRANSPORTATION
DIVISION OF HIGHWAYS
RALEIGH, N.C.

ENGLISH DETAIL DRAWING FOR
GUARDRAIL INSTALLATION

SHEET 7 OF 7
862D02

STATE OF NORTH CAROLINA
DEPT. OF TRANSPORTATION
DIVISION OF HIGHWAYS
RALEIGH, N.C.

ENGLISH DETAIL DRAWING FOR
GUARDRAIL INSTALLATION

SHEET 7 OF 7
862D02

NORTH CAROLINA PROFESSIONAL SEAL 022966 ENGINEER JOEL S. HUNT
7/14/06

PROJECT SERVICES UNIT
STANDARDS AND SPECIAL DESIGN
Office 919-250-4128 FAX 919-250-4119

SEE PLATE FOR TITLE

ORIGINAL BY: 2002 STD.862.02 DATE:
MODIFIED BY: E.E. WARD DATE: 02-09-03
CHECKED BY: DATE: 10/21/04
FILE SPEC.: /usr/stds/02todetail/english/862D2/862d02.dgn

09-OCT-2004 11:39
W:\Special Details\ericward\stds\02 Stds to Special Details\english\86202\0862d02.dgn
ericward AT DS212260

21-SEP-2005 09:34
S:\Contracts\Contracts\Special Details\ericward\stds\02' Stds to Special Details\english\862D03\0862d03.dgn
ericward AT PS222293

STATE OF NORTH CAROLINA
DEPT. OF TRANSPORTATION
DIVISION OF HIGHWAYS
RALEIGH, N.C.

ENGLISH DETAIL DRAWING FOR
STRUCTURE ANCHOR UNITS
GUARDRAIL ANCHOR UNIT, TYPE III FOR ATTACHMENT TO RAIL ON BRIDGE (15' MINIMUM LENGTH APPROACH SLAB)

SHEET 1 OF 6
862D03

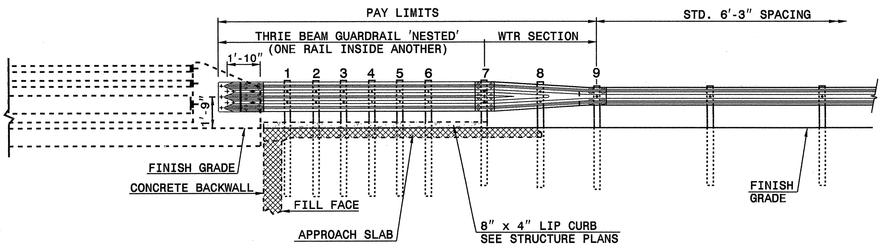

ELEVATION

NOTE:
**POST NOT REQUIRED FOR SKEW ANGLES GREATER THAN 150° OR LESS THAN 30° UNLESS OTHERWISE DIRECTED BY THE ENGINEER.
*THE DISTANCE FROM END OF BRIDGE RAIL TO CENTER LINE OF THE FIRST POST SHOULD BE 11½" IF CONCRETE BACKWALL IS NOT PRESENT.
-SHOULDER BERM GUTTER MUST BE INSTALLED TO THE LIMITS 8" x 4" LIP CURB IS SHOWN IF ANCHOR UNIT IS NOT ADJACENT TO AN APPROACH SLAB.
-MEASURE GUARDRAIL HEIGHT FROM THE TOP OF ADJACENT SURFACE (SHOULDER, BERM, OR GUTTER).
-LAP JOINTS IN THE DIRECTION OF TRAFFIC FLOW.
-SEE SHEET 5 FOR POST SECTIONS 1 THRU 9.

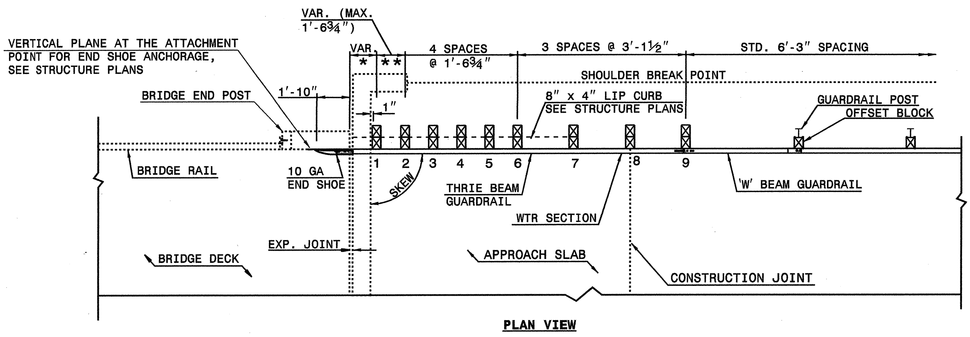

PLAN VIEW

GUARDRAIL ANCHOR UNIT, TYPE III FOR ATTACHMENT TO RAIL ON BRIDGE (15' MINIMUM LENGTH APPROACH SLAB)

STATE OF NORTH CAROLINA
DEPT. OF TRANSPORTATION
DIVISION OF HIGHWAYS
RALEIGH, N.C.

ENGLISH DETAIL DRAWING FOR
STRUCTURE ANCHOR UNITS
GUARDRAIL ANCHOR UNIT, TYPE III FOR ATTACHMENT TO RAIL ON BRIDGE (15' MINIMUM LENGTH APPROACH SLAB)

SHEET 1 OF 6
862D03

STATE OF NORTH CAROLINA
DEPT. OF TRANSPORTATION
DIVISION OF HIGHWAYS
RALEIGH, N.C.

ENGLISH DETAIL DRAWING FOR
STRUCTURE ANCHOR UNITS
GUARDRAIL ANCHOR UNIT, TYPE III FOR ATTACHMENT TO RAIL ON BRIDGE (25' MINIMUM LENGTH APPROACH SLAB)

SHEET 2 OF 6
862D03

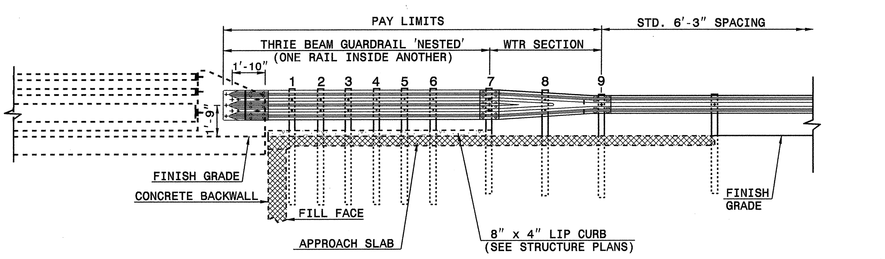

ELEVATION

NOTE:
**POST NOT REQUIRED FOR SKEW ANGLES GREATER THAN 150° OR LESS THAN 30° UNLESS OTHERWISE DIRECTED BY THE ENGINEER.
*THE DISTANCE FROM END OF BRIDGE RAIL TO CENTER LINE OF THE FIRST POST SHOULD BE 11½" IF CONCRETE BACKWALL IS NOT PRESENT.
-SHOULDER BERM GUTTER MUST BE INSTALLED TO THE LIMITS 8" x 4" LIP CURB IS SHOWN IF ANCHOR UNIT IS NOT ADJACENT TO AN APPROACH SLAB.
-MEASURE GUARDRAIL HEIGHT FROM THE TOP OF ADJACENT SURFACE (SHOULDER, BERM, OR GUTTER).
-LAP JOINTS IN THE DIRECTION OF TRAFFIC FLOW.
-SEE SHEET 5 FOR POST SECTIONS 1 THRU 9.

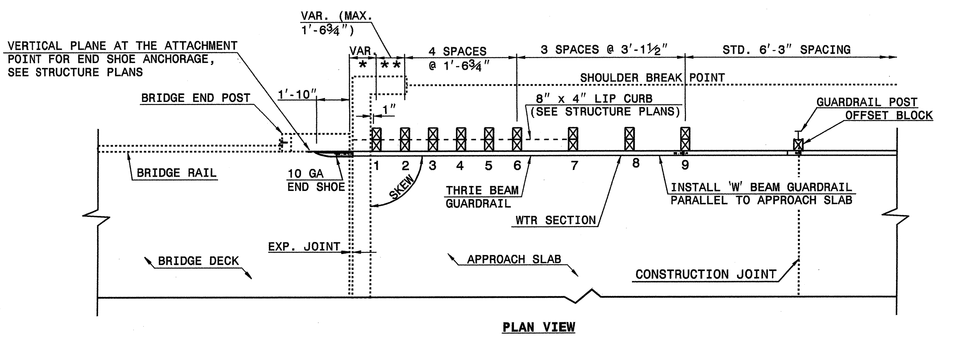

PLAN VIEW

GUARDRAIL ANCHOR UNIT, TYPE III FOR ATTACHMENT TO RAIL ON BRIDGE (25' MINIMUM LENGTH APPROACH SLAB)

ENGLISH DETAIL DRAWING FOR
STRUCTURE ANCHOR UNITS
GUARDRAIL ANCHOR UNIT, TYPE III FOR ATTACHMENT TO RAIL ON BRIDGE (25' MINIMUM LENGTH APPROACH SLAB)

SHEET 2 OF 6
862D03

PROJECT SERVICES UNIT
STANDARDS AND SPECIAL DESIGN
Office 919-250-4128 FAX 919-250-4119

SEE PLATE FOR TITLE

ORIGINAL BY: 2002 STANDARDS DATE: 01-15-02
MODIFIED BY: E.E. WARD DATE: 09-14-05
CHECKED BY: DATE: 9/8/06
FILE SPEC.: S:\Stds\02stdstodetails\english\862d03.dgn

NORTH CAROLINA PROFESSIONAL SEAL 022966 ENGINEER
JOSEPH E. HOOPER
9/14/06

PROJECT REFERENCE NO. R-2606A
SHEET NO. R-AA

21-SEP-2005 09:34
S:\Contracts\Contracts\Special Details\ericward\stds\02' Stds to Special Details\english\862D3\0862d03.dgn
ericward AT PS222243

STATE OF NORTH CAROLINA
DEPT. OF TRANSPORTATION
DIVISION OF HIGHWAYS
RALEIGH, N.C.

ENGLISH DETAIL DRAWING FOR
STRUCTURE ANCHOR UNITS
GUARDRAIL ANCHOR UNIT, TYPE III FOR ATTACHMENT TO
RAIL ON APPROACH SLAB (15' MINIMUM LENGTH APPROACH SLAB)

SHEET 3 OF 6
862D03

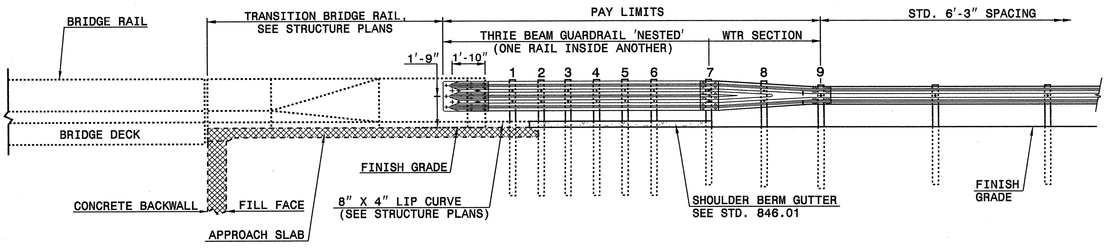

ELEVATION

NOTE:
- SHOULDER BERM GUTTER MUST BE INSTALLED TO THE LIMITS 8" x 4" LIP CURB IS SHOWN IF ANCHOR UNIT IS NOT ADJACENT TO AN APPROACH SLAB.
- MEASURE GUARDRAIL HEIGHT FROM THE TOP OF ADJACENT SURFACE (SHOULDER, BERM, OR GUTTER).
- LAP JOINTS IN THE DIRECTION OF TRAFFIC FLOW.
- SEE SHEET 5 FOR POST SECTIONS 1 THRU 9.

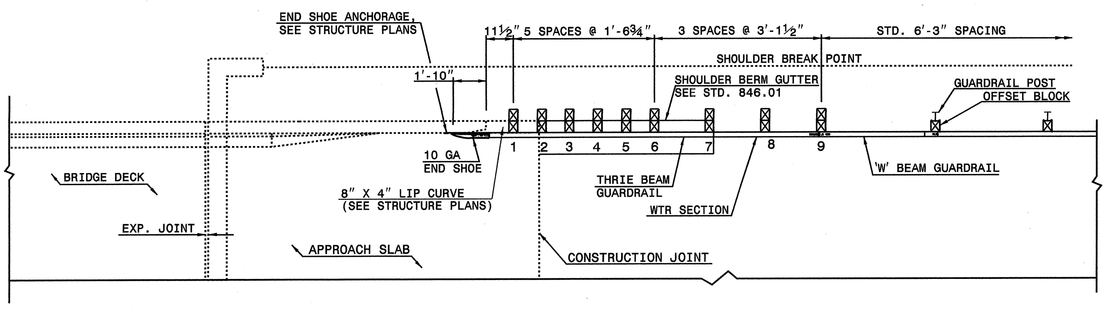

PLAN VIEW

GUARDRAIL ANCHOR UNIT, TYPE III FOR ATTACHMENT TO RAIL ON APPROACH SLAB (15' MINIMUM LENGTH APPROACH SLAB)

STATE OF NORTH CAROLINA
DEPT. OF TRANSPORTATION
DIVISION OF HIGHWAYS
RALEIGH, N.C.

ENGLISH DETAIL DRAWING FOR
STRUCTURE ANCHOR UNITS
GUARDRAIL ANCHOR UNIT, TYPE III FOR ATTACHMENT TO
RAIL ON APPROACH SLAB (15' MINIMUM LENGTH APPROACH SLAB)

SHEET 3 OF 6
862D03

STATE OF NORTH CAROLINA
DEPT. OF TRANSPORTATION
DIVISION OF HIGHWAYS
RALEIGH, N.C.

ENGLISH DETAIL DRAWING FOR
STRUCTURE ANCHOR UNITS
GUARDRAIL ANCHOR UNIT, TYPE III FOR ATTACHMENT TO
RAIL ON APPROACH SLAB (25' MINIMUM LENGTH APPROACH SLAB)

SHEET 4 OF 6
862D03

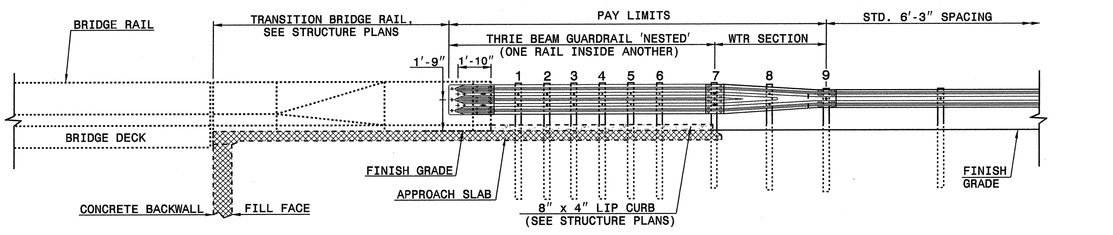

ELEVATION

NOTE:
- SHOULDER BERM GUTTER MUST BE INSTALLED TO THE LIMITS 8" x 4" LIP CURB IS SHOWN IF ANCHOR UNIT IS NOT ADJACENT TO AN APPROACH SLAB.
- MEASURE GUARDRAIL HEIGHT FROM THE TOP OF ADJACENT SURFACE (SHOULDER, BERM, OR GUTTER).
- LAP JOINTS IN THE DIRECTION OF TRAFFIC FLOW.
- SEE SHEET 5 FOR POST SECTIONS 1 THRU 9.

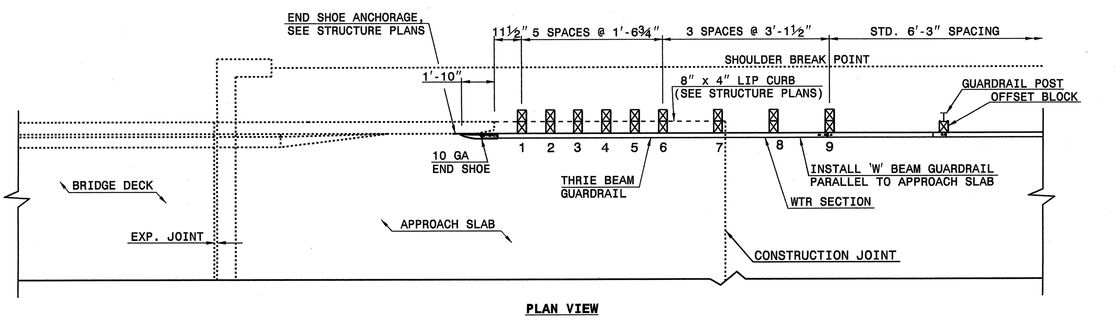

PLAN VIEW

GUARDRAIL ANCHOR UNIT, TYPE III FOR ATTACHMENT TO RAIL ON APPROACH SLAB (25' MINIMUM LENGTH APPROACH SLAB)

STATE OF NORTH CAROLINA
DEPT. OF TRANSPORTATION
DIVISION OF HIGHWAYS
RALEIGH, N.C.

ENGLISH DETAIL DRAWING FOR
STRUCTURE ANCHOR UNITS
GUARDRAIL ANCHOR UNIT, TYPE III FOR ATTACHMENT TO
RAIL ON APPROACH SLAB (25' MINIMUM LENGTH APPROACH SLAB)

SHEET 4 OF 6
862D03

PROJECT SERVICES UNIT
STANDARDS AND SPECIAL DESIGN
Office 919-250-4128 FAX 919-250-4119

SEE PLATE FOR TITLE

ORIGINAL BY: 2002 STANDARDS DATE: 01-15-02
MODIFIED BY: E.E. WARD DATE: 09-14-05
CHECKED BY: DATE: 9/21/05
FILE SPEC.: stds/02stdstoodetails/english/862d03.dgn

NORTH CAROLINA PROFESSIONAL SEAL 02256 ENGINEER

PROJECT REFERENCE NO. R-2601A
SHEET NO. 7-A8

15-SEP-2005 11:46
S:\Contracts\Contracts\Special Details\ericward\stds\02' Stds to Special Details\english\86203\0862d03.dgn
.ericward AT PS222243

STATE OF NORTH CAROLINA
DEPT. OF TRANSPORTATION
DIVISION OF HIGHWAYS
RALEIGH, N.C.

ENGLISH DETAIL DRAWING FOR
STRUCTURE ANCHOR UNITS
GUARDRAIL ANCHOR UNIT, TYPE III

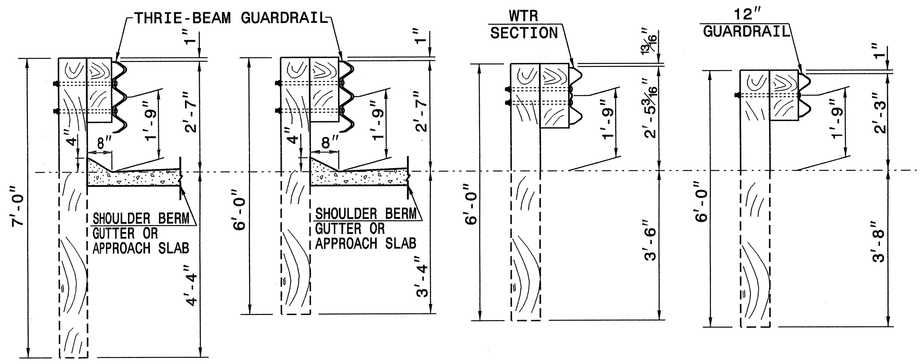

SECTION OF THRIE BEAM POSTS 1 THRU 6

SECTION OF THRIE BEAM POST 7

SECTION OF WTR BEAM POST 8

SECTION OF 'W' BEAM POST 9

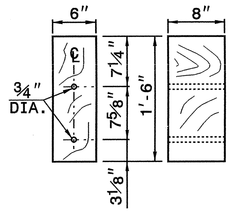

THRIE BEAM OFFSET BLOCK

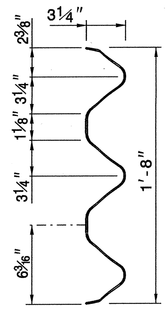

THRIE-BEAM SECTION

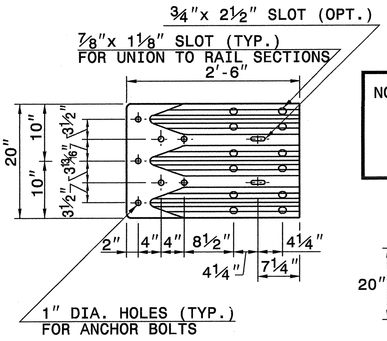

END SHOE

NOTE: THE MID POST AND OFFSET BLOCK OF THE WTR SECTION WILL REQUIRE SPECIAL BOLT HOLE DRILLING IN THE THRIE BEAM OFFSET BLOCK AND LINE POST.

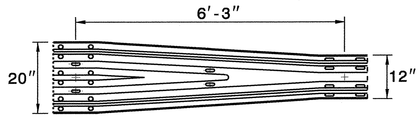

WTR SECTION
ELEVATION VIEW

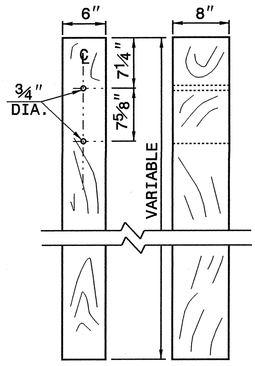

THRIE BEAM LINE POST

SHEET 5 OF 6
862D03

STATE OF NORTH CAROLINA
DEPT. OF TRANSPORTATION
DIVISION OF HIGHWAYS
RALEIGH, N.C.

ENGLISH DETAIL DRAWING FOR
STRUCTURE ANCHOR UNITS
GUARDRAIL ANCHOR UNIT, TYPE III

SHEET 5 OF 6
862D03

STATE OF NORTH CAROLINA
DEPT. OF TRANSPORTATION
DIVISION OF HIGHWAYS
RALEIGH, N.C.

ENGLISH DETAIL DRAWING FOR
STRUCTURE ANCHOR UNITS
ANCHORAGE FOR GUARDRAIL POST ON BOX CULVERT

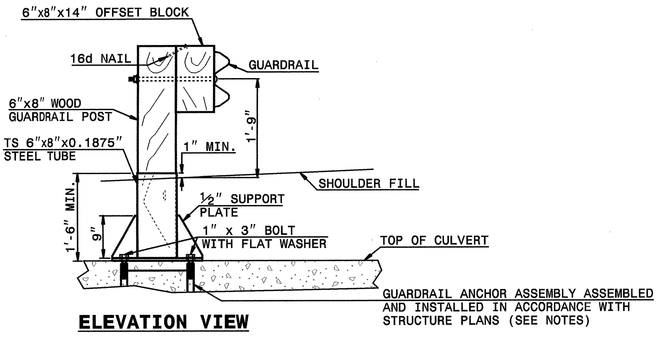

ELEVATION VIEW

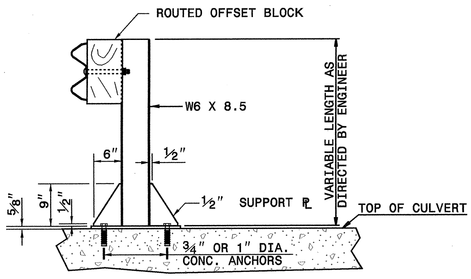

ELEVATION VIEW

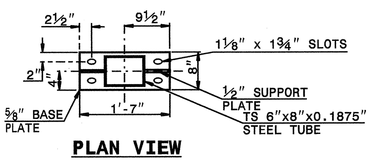

PLAN VIEW

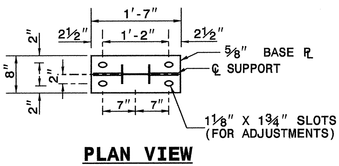

PLAN VIEW

NOTES FOR:
GUARDRAIL POST ANCHORED TO STRUCTURE:
-USE FULL LENGTH 1/4" BUTT WELDS AT ALL LOCATIONS OF CONTACT BETWEEN THE BASE PLATE, SUPPORT PLATES AND STEEL POST OR STEEL TUBE.
-USE POST AND POST BASE PLATES CONFORMING TO THE REQUIREMENTS OF A.S.T.M. A-36 AND GALVANIZED AFTER FABRICATION TO CONFORM TO A.S.T.M. A-123.
-USE WOOD POSTS WHICH FIT SNUGLY IN THE STEEL TUBE WITH A MAXIMUM OF 1/8" CLEARANCE BETWEEN TUBE WALL AND POST.

NEW STRUCTURES:
-ATTACH POST TO INSERT ASSEMBLY UNITS (USING ANCHOR BOLTS SUPPLIED WITH INSERTS) WHICH HAVE BEEN CAST INTO THE STRUCTURE DURING CONSTRUCTION.

EXISTING STRUCTURES:
-USE CONCRETE ANCHORS CONSISTING OF A STUD BOLT WITH NUT AND WASHER. USE STUDS THREADED ON ONE END AND HAVING AN EXPANDED WEDGE ASSEMBLY POSITIONED AROUND A TAPERED AREA AT THE OTHER END. USE ANCHORS WHICH PROVIDE A MINIMUM SAFE HOLDING POWER OF 2875 LBS. FOR A 3/4" OR 1" DIAMETER BOLT. CALCULATE HOLDING POWER BASED ON 1/4 THE ACTUAL HOLDING POWER OF THE ANCHOR IN 3500 PSI CONCRETE AS DETERMINED BY AN APPROVED COMMERCIAL TESTING LABORATORY.

-USE ANCHORS GALVANIZED IN ACCORDANCE WITH A.S.T.M. A-153. SIZE HOLES FOR THE CONCRETE ANCHORS IN ACCORDANCE WITH THE ANCHOR MANUFACTURER'S RECOMMENDATIONS. DRILL HOLES WITH A CARBIDE OR DIAMOND TIPPED MASONRY BIT POWERED BY A ROTARY OR ROTARY IMPACT DRILL. NO OTHER IMPACT TOOLS WILL BE PERMITTED. DRILL HOLES VERTICALLY. FURNISH DOCUMENTATION OF HOLE SIZE RECOMMENDED FOR THE SPECIFIED ANCHOR TO THE ENGINEER BEFORE DRILLING HOLES. THOROUGHLY CLEAN HOLES FOR ANCHORS OF ALL CONCRETE CHIPS, DUST, GREASE, OIL, ETC. BEFORE ANCHORS ARE INSTALLED. REPAIR ALL DAMAGE CAUSED BY THIS WORK TO THE SATISFACTION OF THE ENGINEER.

ANCHORAGE FOR GUARDRAIL POST ON BOX CULVERT

SHEET 6 OF 6
862D03

STATE OF NORTH CAROLINA
DEPT. OF TRANSPORTATION
DIVISION OF HIGHWAYS
RALEIGH, N.C.

ENGLISH DETAIL DRAWING FOR
STRUCTURE ANCHOR UNITS
ANCHORAGE FOR GUARDRAIL POST ON BOX CULVERT

SHEET 6 OF 6
862D03

PROJECT SERVICES UNIT
STANDARDS AND SPECIAL DESIGN
Office 919-250-4128 FAX 919-250-4119

SEE PLATE FOR TITLE

ORIGINAL BY: 2002 STANDARDS DATE: 01-15-02
MODIFIED BY: E.E. WARD DATE: 09-14-05
CHECKED BY: DATE: 9/15/05
FILE SPEC.: $$$$/02stdstoodetails/english/862d03.dgn

NORTH CAROLINA PROFESSIONAL SEAL 022916 ENGINEER

PROJECT REFERENCE NO.: R-1060A
SHEET NO.: 1-AC

STATE OF NORTH CAROLINA
DEPT. OF TRANSPORTATION
DIVISION OF HIGHWAYS
RALEIGH, N.C.

ENGLISH DETAIL DRAWING FOR
CABLE GUIDERAIL
MEDIAN HAZARD GUIDERAIL LAYOUT

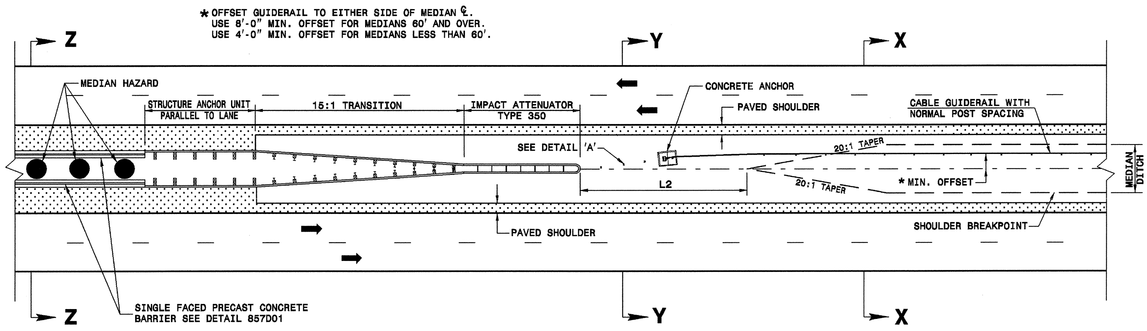

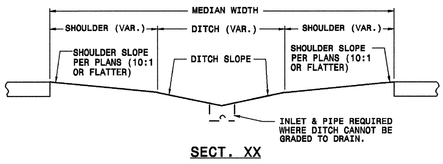

SECT. XX

LIMITS OF -L2-	
MEDIAN WIDTH	-L2- DIMENSION
30'	80.0'
36'	60.0'
40' & ABOVE	40.0'

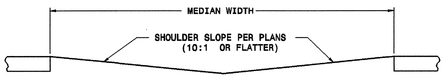

SECT. YY

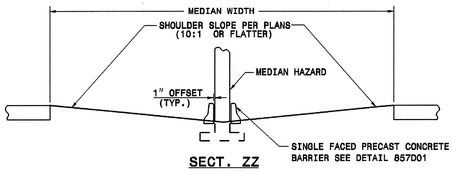

SECT. ZZ

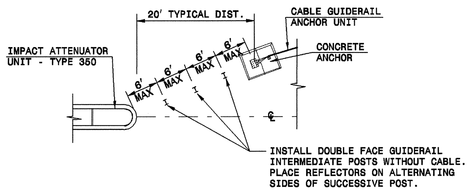

NOTE: POSTS WILL ONLY BE PLACED IN ONE OF THE TWO OPENINGS AT EACH MEDIAN HAZARD UNLESS OTHERWISE DIRECTED BY THE ENGINEER.

DETAIL 'A'

DETAIL OF TREATMENT AT MEDIAN HAZARDS

SHEET 1 OF 11
865D01

STATE OF NORTH CAROLINA
DEPT. OF TRANSPORTATION
DIVISION OF HIGHWAYS
RALEIGH, N.C.

ENGLISH DETAIL DRAWING FOR
CABLE GUIDERAIL
DUAL LANE BRIDGES GUIDERAIL LAYOUT

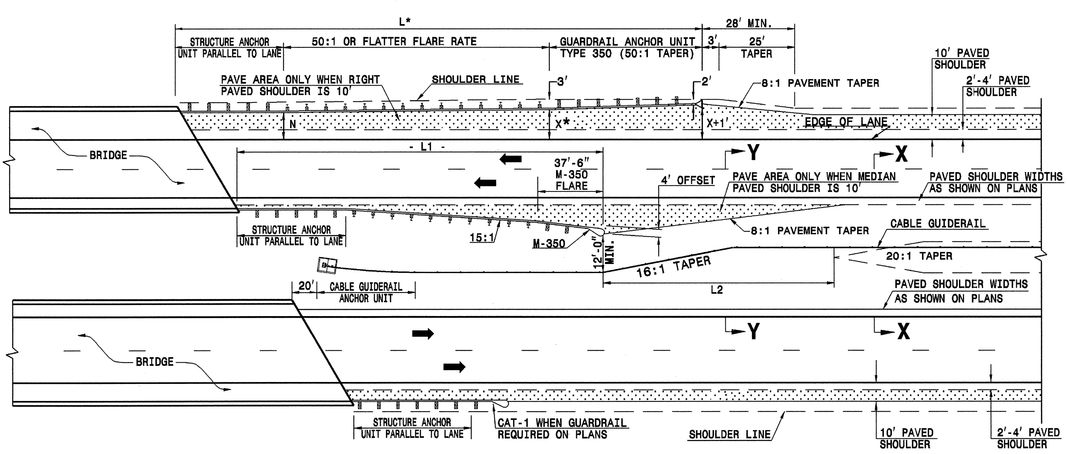

DIMENSIONS FOR LENGTH OF GUARDRAIL APPROACHING DUAL LANE BRIDGES							
MEDIAN WIDTH	-L-*			-L1-			-L2- DIM.
	70 MPH	60 MPH	50 MPH	70 MPH	60 MPH	50 MPH	
46' & ABOVE	300.0'	250.0'	150.0'	212.5'	187.5'	137.5'	40.0'

NOTES: * BASED ON "X" OF 12'
USE FLARE RATE AS THE CONTROL IF THE "X" DISTANCE IS NOT OBTAINED. ("X" IS BASED ON SHOULDER WIDTHS IN THE HIGHWAY DESIGN BRANCH MANUAL, PART 1, 1-4B, F1A).
"N"= DISTANCE FROM EDGE OF LANE TO FACE OF GUARDRAIL WHERE GUARDRAIL IS PARALLEL TO LANE.
THE DESIGN LAYOUT FOR LENGTHS SHOWN ON THIS STANDARD ARE MINIMUM DESIGN LENGTHS.
SEE STANDARD 862.01 SHEET 1 FOR SECTIONS XX, YY
SEE STD. 862.03 FOR STRUCTURE ANCHOR UNITS

DETAIL OF CABLE GUIDERAIL AT DUAL LANE BRIDGES

SHEET 2 OF 11
865D01

PROJECT SERVICES UNIT
STANDARDS AND SPECIAL DESIGN
Office 919-250-4128 FAX 919-250-4119

SEE PLATE FOR TITLE

ORIGINAL BY: 2002 STANDARDS DATE: 1-15-02
MODIFIED BY: E.E. WARD DATE: 11-30-04
CHECKED BY: DATE:
FILE SPEC.: /usr/std/02stds to details/english/86501/0865D01.dgn

NORTH CAROLINA PROFESSIONAL SEAL 02246 ENGINEER
7/14/06

PROJECT REFERENCE NO.: R-2606A
SHEET NO.: 2-AD

STATE OF NORTH CAROLINA
DEPT. OF TRANSPORTATION
DIVISION OF HIGHWAYS
RALEIGH, N.C.

ENGLISH DETAIL DRAWING FOR
CABLE GUIDERAIL
DESIGN AND PLACEMENT

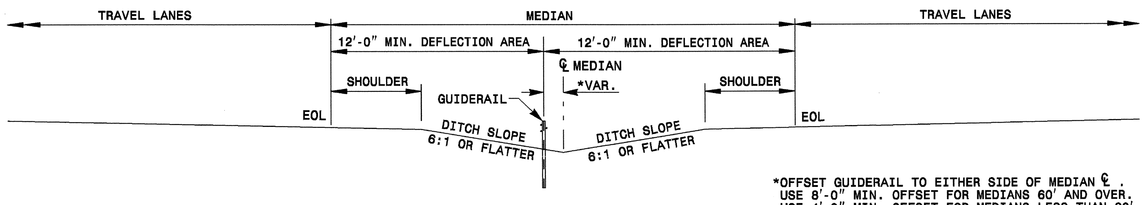

*OFFSET GUIDERAIL TO EITHER SIDE OF MEDIAN ℄ .
USE 8'-0" MIN. OFFSET FOR MEDIANS 60' AND OVER.
USE 4'-0" MIN. OFFSET FOR MEDIANS LESS THAN 60'.

TYPICAL SECTION
(DEFLECTION AREA ON MEDIAN SLOPES)
DOUBLE FACE GUIDERAIL APPLICATION

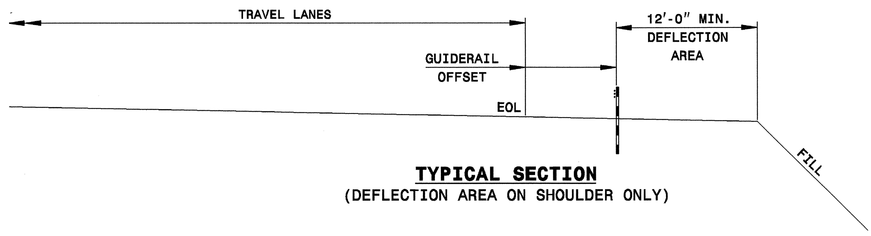

TYPICAL SECTION
(DEFLECTION AREA ON SHOULDER ONLY)

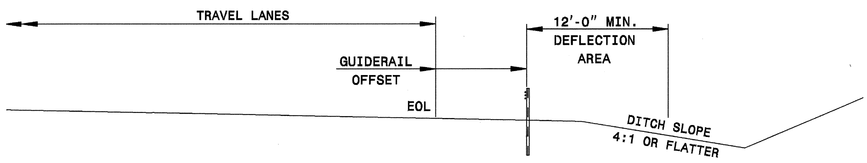

TYPICAL SECTION
(DEFLECTION AREA ON SHOULDER AND DITCH SLOPE)
SINGLE FACE GUIDERAIL APPLICATION

SHEET 3 OF 11
865D01

STATE OF NORTH CAROLINA
DEPT. OF TRANSPORTATION
DIVISION OF HIGHWAYS
RALEIGH, N.C.

ENGLISH DETAIL DRAWING FOR
CABLE GUIDERAIL
DESIGN AND PLACEMENT

SHEET 3 OF 11
865D01

STATE OF NORTH CAROLINA
DEPT. OF TRANSPORTATION
DIVISION OF HIGHWAYS
RALEIGH, N.C.

ENGLISH DETAIL DRAWING FOR
CABLE GUIDERAIL
GUIDERAIL LAYOUT

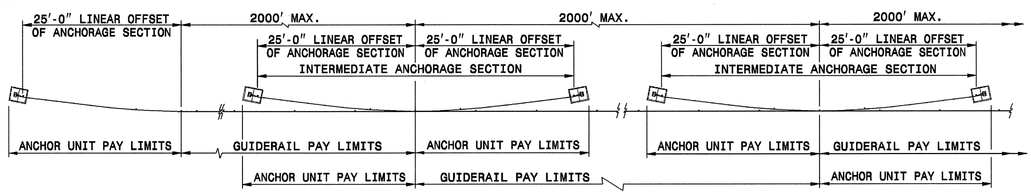

PLAN
TYPICAL LAYOUT

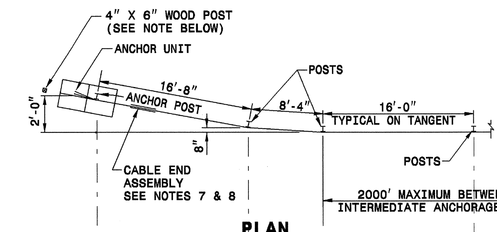

PLAN
TYPICAL APPROACH & TERMINAL SECTIONS

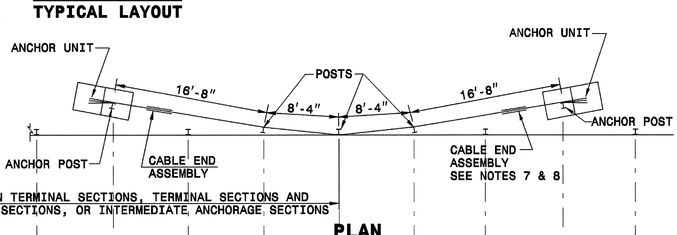

PLAN
TYPICAL INTERMEDIATE ANCHORAGE SECTION

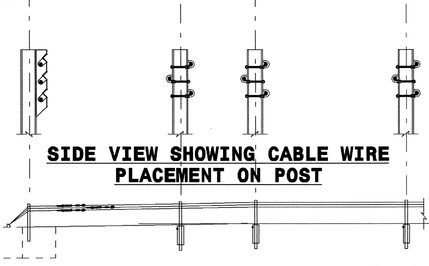

SIDE VIEW SHOWING CABLE WIRE PLACEMENT ON POST

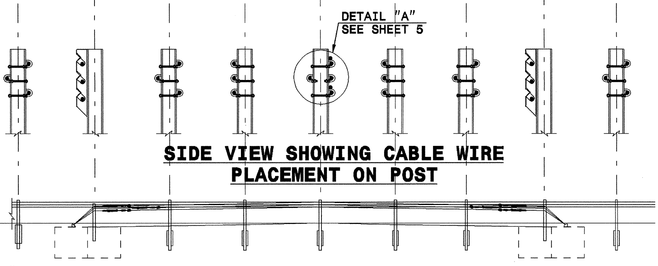

SIDE VIEW SHOWING CABLE WIRE PLACEMENT ON POST

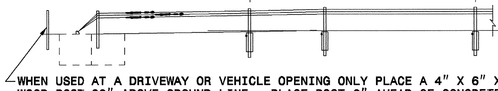

WHEN USED AT A DRIVEWAY OR VEHICLE OPENING ONLY PLACE A 4" X 6" X 5'-4" WOOD POST 30" ABOVE GROUND LINE. PLACE POST 6" AHEAD OF CONCRETE ANCHOR.
*PROVIDE OPENINGS ONLY FOR AREAS AS DESIGNATED ON ROADWAY PLAN SHEETS.

ELEVATION
TYPICAL APPROACH & TERMINAL SECTIONS

ELEVATION
TYPICAL INTERMEDIATE ANCHORAGE SECTION

SHEET 4 OF 11
865D01

STATE OF NORTH CAROLINA
DEPT. OF TRANSPORTATION
DIVISION OF HIGHWAYS
RALEIGH, N.C.

ENGLISH DETAIL DRAWING FOR
CABLE GUIDERAIL
GUIDERAIL LAYOUT

SHEET 4 OF 11
865D01

PROJECT SERVICES UNIT
STANDARDS AND SPECIAL DESIGN
Office 919-250-4128 FAX 919-250-4119

SEE PLATE FOR TITLE

ORIGINAL BY: 2002 STANDARDS DATE: 1-15-02
MODIFIED BY: E.E. WARD DATE: 4-07-04
CHECKED BY: DATE:
FILE SPEC.: /user/std/02stds to details/english/86501/0865d01.dgn

PROJECT REFERENCE NO. R-2606 A
SHEET NO. 2-A2

STATE OF NORTH CAROLINA
DEPT. OF TRANSPORTATION
DIVISION OF HIGHWAYS
RALEIGH, N.C.

ENGLISH DETAIL DRAWING FOR
CABLE GUIDERAIL
DOUBLE FACE GUIDERAIL - POST DETAILS

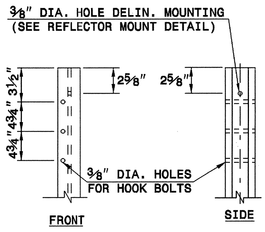

DOUBLE FACE GUIDERAIL POST
HOLE PLACEMENT DETAIL
INTERMEDIATE POST

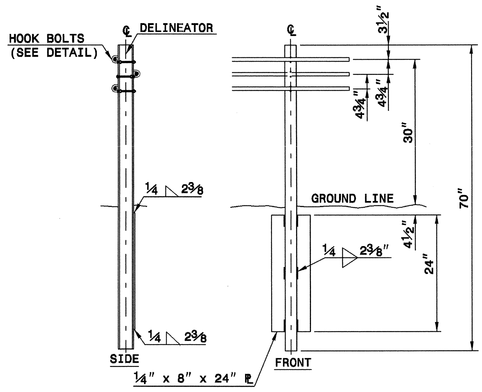

DOUBLE FACE GUIDERAIL
INTERMEDIATE POST

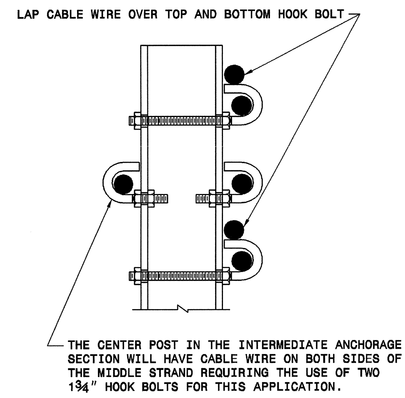

DETAIL "A" CENTER POST
INTERMEDIATE ANCHORAGE SECTION

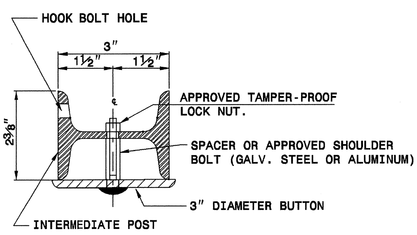

REFLECTOR MOUNT DETAIL
PLAN VIEW

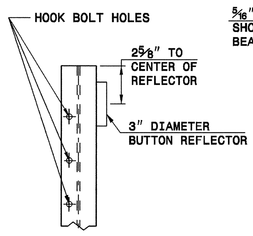

REFLECTOR MOUNT DETAIL
ELEVATION VIEW

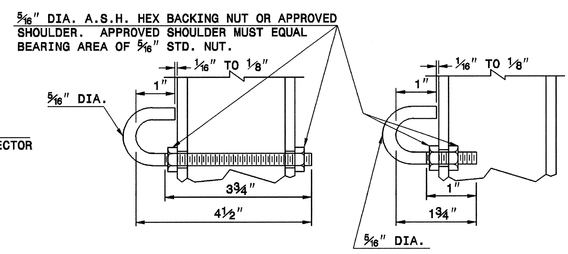

HOOK BOLT (ALTERNATES)

SHEET 5 OF 11
865D01

STATE OF NORTH CAROLINA
DEPT. OF TRANSPORTATION
DIVISION OF HIGHWAYS
RALEIGH, N.C.

ENGLISH DETAIL DRAWING FOR
CABLE GUIDERAIL
SINGLE FACE GUIDERAIL - POST DETAILS

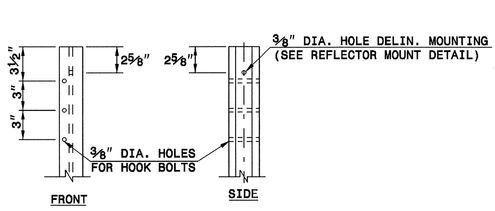

SINGLE FACE GUIDERAIL POST
HOLE PLACEMENT DETAIL

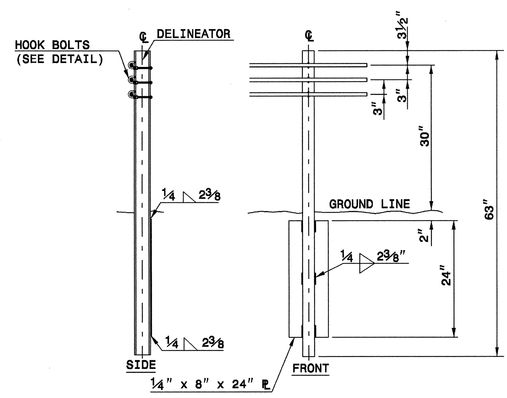

SINGLE FACE GUIDERAIL
INTERMEDIATE POST

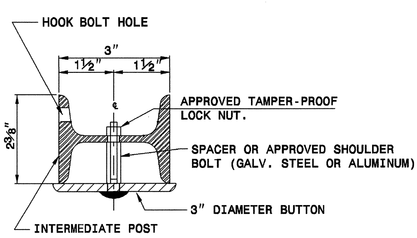

REFLECTOR MOUNT DETAIL
PLAN VIEW

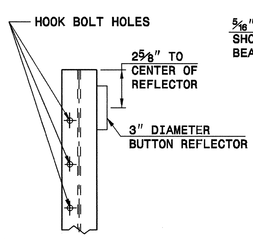

REFLECTOR MOUNT DETAIL
ELEVATION VIEW

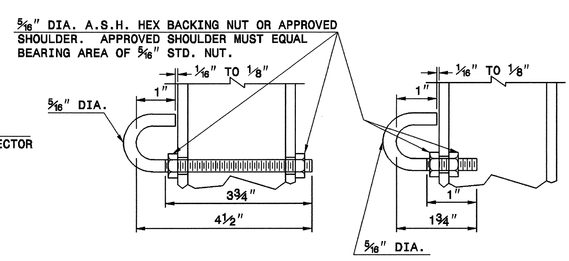

HOOK BOLT (ALTERNATES)

SHEET 6 OF 11
865D01

PROJECT SERVICES UNIT
STANDARDS AND SPECIAL DESIGN
Office 919-250-4128 FAX 919-250-4119

SEE PLATE FOR TITLE

ORIGINAL BY: 2002 STANDARDS DATE: 1-15-02
MODIFIED BY: E.E. WARD DATE: 4-07-04
CHECKED BY: DATE:
FILE SPEC.: /usr/std/02s16 to details/english/86501/0865d01.dgn

PROJECT REFERENCE NO. R-2406 A
SHEET NO. 2-AF

25-OCT-2004 14:13
W:\Special Details\ericward\stds\02' Stds to Special Details\english\86501\0865d01.dgn
ericward AT DS212260

STATE OF NORTH CAROLINA
DEPT. OF TRANSPORTATION
DIVISION OF HIGHWAYS
RALEIGH, N.C.

ENGLISH DETAIL DRAWING FOR
CABLE GUIDERAIL
ANCHOR POST DETAILS

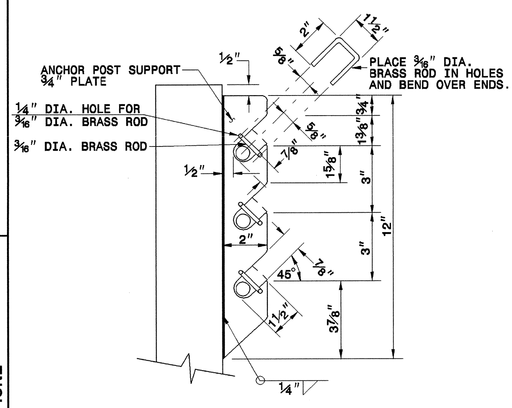

SIDE VIEW OF POST TOP

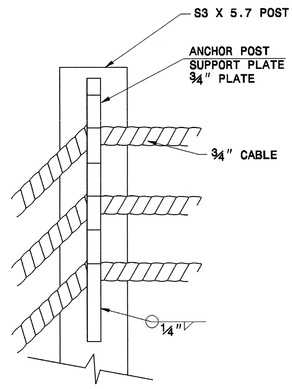

FRONT VIEW OF POST TOP
(ROAD SIDE)

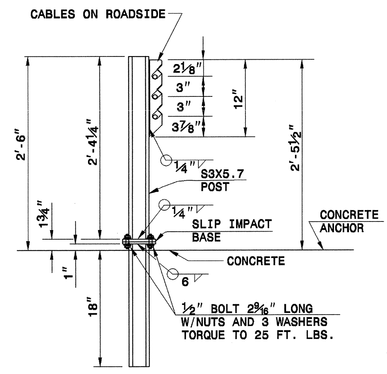

ANCHOR POST DETAIL

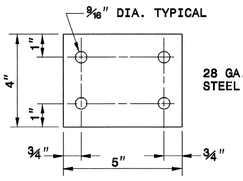

KEEPER PLATE

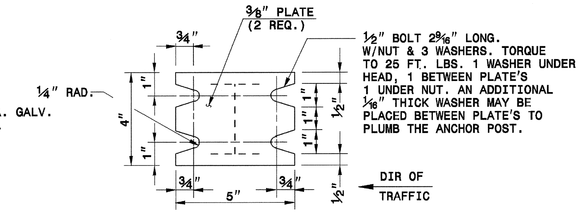

SLIP IMPACT BASE
(KEEPER PLATE NOT SHOWN)

SHEET 7 OF 11
865D01

STATE OF NORTH CAROLINA
DEPT. OF TRANSPORTATION
DIVISION OF HIGHWAYS
RALEIGH, N.C.

ENGLISH DETAIL DRAWING FOR
CABLE GUIDERAIL
ANCHOR POST DETAILS

SHEET 7 OF 11
865D01

STATE OF NORTH CAROLINA
DEPT. OF TRANSPORTATION
DIVISION OF HIGHWAYS
RALEIGH, N.C.

ENGLISH DETAIL DRAWING FOR
CABLE GUIDERAIL
ANCHOR DETAILS

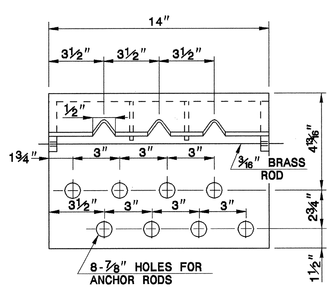

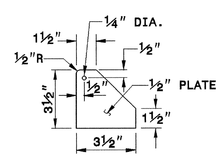

EXTERNAL STIFFENER PLATE

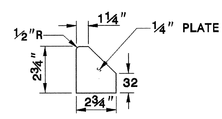

INTERNAL STIFFENER PLATE

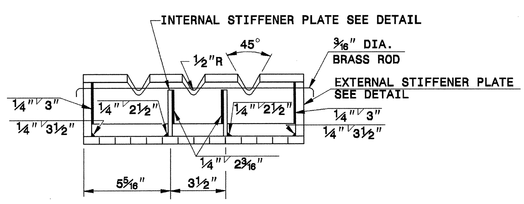

ANCHOR ANGLE DETAILS

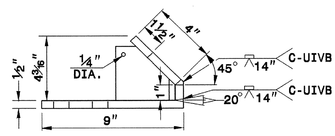

NOTE: SUBMIT ALTERNATE METHODS OF FABRICATING ANCHOR ANGLES FOR APPROVAL.

BREAKAWAY ANCHOR ANGLE

SHEET 8 OF 11
865D01

STATE OF NORTH CAROLINA
DEPT. OF TRANSPORTATION
DIVISION OF HIGHWAYS
RALEIGH, N.C.

ENGLISH DETAIL DRAWING FOR
CABLE GUIDERAIL
ANCHOR DETAILS

SHEET 8 OF 11
865D01

PROJECT SERVICES UNIT
STANDARDS AND SPECIAL DESIGN
Office 919-250-4128 FAX 919-250-4119

SEE PLATE FOR TITLE

ORIGINAL BY: 2002 STANDARDS DATE: 1-15-02
MODIFIED BY: E.E. WARD DATE: 4-07-04
CHECKED BY: DATE:
FILE SPEC.: /usr/std/02stds to details/english/86501/0865d01.dgn

PROJECT REFERENCE NO.
R-2206A
SHEET NO.
2-A6

STATE OF NORTH CAROLINA
DEPT. OF TRANSPORTATION
DIVISION OF HIGHWAYS
RALEIGH, N.C.

ENGLISH DETAIL DRAWING FOR
CABLE GUIDERAIL
ANCHOR DETAILS

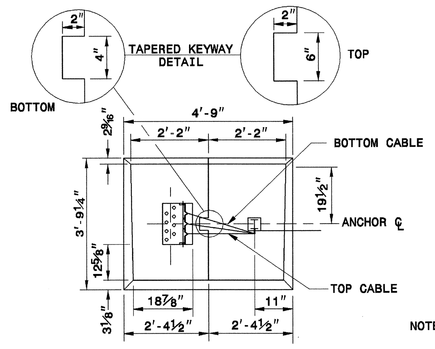

ANCHOR UNIT DETAIL
TOP VIEW LEFT HAND
(REINFORCEMENT NOT SHOWN)
TWO PIECE

NOTE: USE ONE OR TWO PIECE ANCHOR. DIMENSIONS OF TWO PIECE ANCHOR ARE SHOWN ON DRAWING. DIMENSIONS OF ONE PIECE ANCHOR ARE 5'-0" LONG BY 3'-0" WIDE BY 3'-4" HIGH.

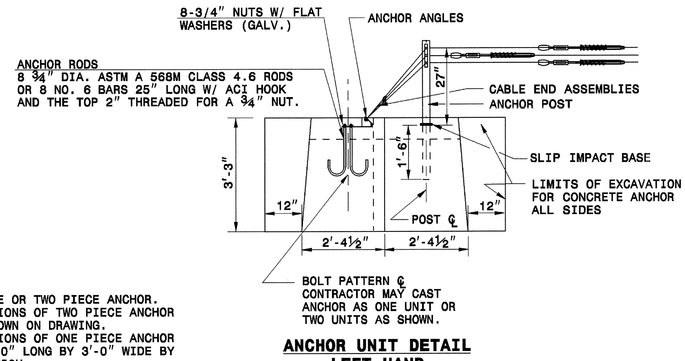

ANCHOR UNIT DETAIL
LEFT HAND
(REINFORCEMENT NOT SHOWN)

NOTE: SET THE CONCRETE ANCHOR INTO THE EXCAVATION AS DETAILED. THE BOTTOM OF THE ANCHOR MUST HAVE A FULL AND EVEN BEARING ON THE SURFACE UNDER IT SO THAT IF THE CONTRACTOR ELECTS TO PLACE THE ANCHOR IN TWO SECTIONS, THERE WILL BE LITTLE OR NO DIFFERENTIAL SETTLEMENT. IF THE CONTRACTOR ELECTS TO PLACE THE ANCHOR IN TWO SECTIONS, PLACE THE TOPS OF BOTH SECTIONS ON THE SAME PLANE. AFTER THE ANCHOR IS IN PLACE, BACKFILL THE EXCAVATION.

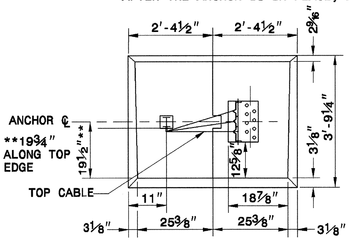

ANCHOR UNIT DETAIL
TOP VIEW RIGHT HAND
(REINFORCEMENT NOT SHOWN)
TWO PIECE

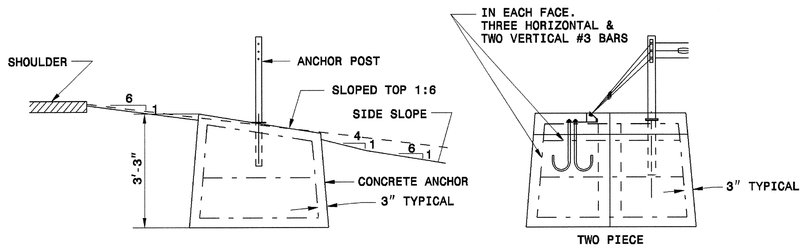

ANCHOR UNIT & RE-BAR INSTALLATION DETAIL

SHEET 9 OF 11
865D01

STATE OF NORTH CAROLINA
DEPT. OF TRANSPORTATION
DIVISION OF HIGHWAYS
RALEIGH, N.C.

ENGLISH DETAIL DRAWING FOR
CABLE GUIDERAIL
ANCHOR DETAILS

SHEET 9 OF 11
865D01

STATE OF NORTH CAROLINA
DEPT. OF TRANSPORTATION
DIVISION OF HIGHWAYS
RALEIGH, N.C.

ENGLISH DETAIL DRAWING FOR
CABLE GUIDERAIL
ANCHOR DETAILS

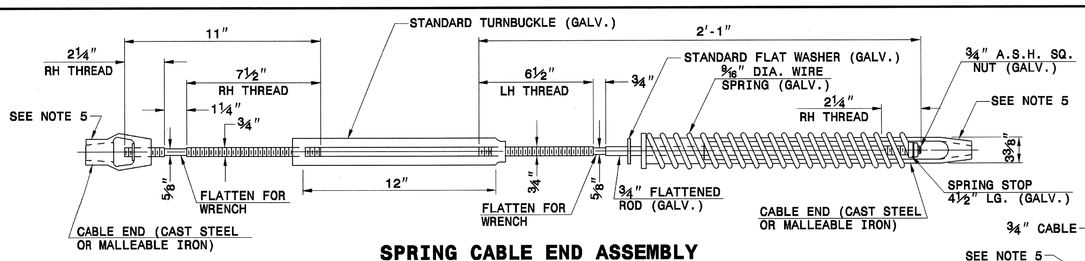

SPRING CABLE END ASSEMBLY
(COMPENSATING DEVICE)

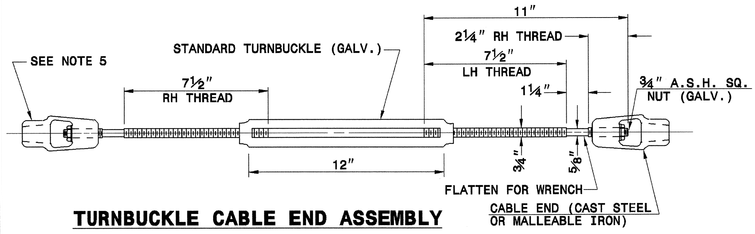

TURNBUCKLE CABLE END ASSEMBLY

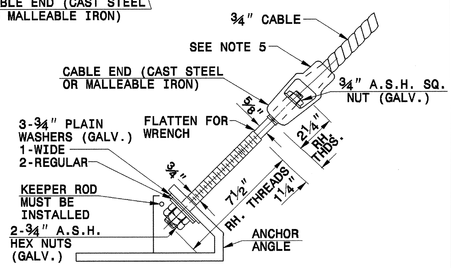

CABLE END ASSEMBLY TO
ANCHOR ANGLE DETAIL

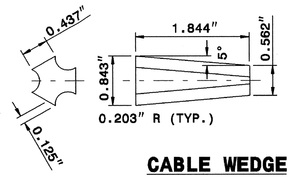

CABLE WEDGE
TYPICAL WEDGE FOR ALL SPLICES AND CABLE FITTINGS

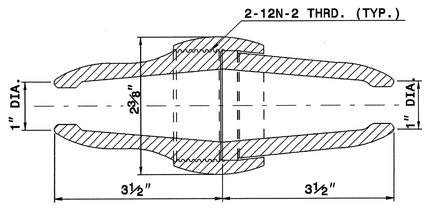

CABLE SPLICE
NOTE: USE WITH WEDGE

WASHER

WASHER	WASHER SERIES	A INSIDE DIA.	B OUTSIDE DIA.	C THICKNESS
¾"	REGULAR	⅞"	2"	5/32"
	WIDE	⅞"	2 9/16"	3/16"
½"	NARROW	17/32"	1"	3/32"

SHEET10 OF 11
865D01

STATE OF NORTH CAROLINA
DEPT. OF TRANSPORTATION
DIVISION OF HIGHWAYS
RALEIGH, N.C.

ENGLISH DETAIL DRAWING FOR
CABLE GUIDERAIL
ANCHOR DETAILS

SHEET10 OF 11
865D01

PROJECT SERVICES UNIT
STANDARDS AND SPECIAL DESIGN
Office 919-250-4128 FAX 919-250-4119

SEE PLATE FOR TITLE

ORIGINAL BY: 2002 STANDARDS DATE: 1-15-02
MODIFIED BY: E.E. WARD DATE: 4-07-04
CHECKED BY: DATE:
FILE SPEC.: user$std\02std$ to details\english\86501\0865d01.dgn

NORTH CAROLINA PROFESSIONAL SEAL 022868 ENGINEER
JOHN L. POPE
4/6/06

PROJECT REFERENCE NO. R-2606A
SHEET NO. 2-AH

STATE OF
NORTH CAROLINA
DEPT. OF TRANSPORTATION
DIVISION OF HIGHWAYS
RALEIGH, N.C.

ENGLISH DETAIL DRAWING FOR
CABLE GUIDERAIL
NOTES

SHEET11 OF 11
865D01

GENERAL NOTES:

1. PROVIDE ALL S3x5.7 ROLLED STEEL SECTIONS IN ACCORDANCE WITH ASTM A-6. USE POSTS, PLATES AND ANCHOR ANGLES CONFORMING TO THE REQUIREMENTS OF SECTION 862 OF THE STANDARD SPECIFICATIONS. WHERE THE RAIL IS PARALLEL TO THE EDGE OF THE TRAVEL LANE, REFLECTORIZE EVERY 6th POST (96') (SEE STANDARD 1261.02 FOR DELINEATORS). FOR DOUBLE FACE GUIDERAIL, PLACE DELINEATOR VISIBLE ON EVERY 6th POST TO TRAFFIC IN EITHER DIRECTION. DO NOT REFLECTORIZE POSTS IN THE TYPICAL INTERMEDIATE ANCHORAGE SECTION, TYPICAL APPROACH OR TERMINAL SECTIONS.

2. PROVIDE ROUND ¾" DIAMETER ZINC COATED CABLE WIRE CONSTRUCTED OF THREE STRANDS (7 WIRES PER STRAND) HAVING A MINIMUM TENSILE STRENGTH OF 25000 LBS. IN ACCORDANCE WITH AASHTO M-30 TYPE I CABLE, CLASS 'A' COATING.

3. PROVIDE MATERIALS INDICATED AS 'CAST STEEL' WHICH CONFORM TO AASHTO M103.

4. PROVIDE INSTALLED HOOK BOLTS WHICH DEVELOP AN ULTIMATE PULL OPEN STRENGTH OF 500 LBS TO 1000 LBS. APPLIED IN A DIRECTION NORMAL TO THE LONGITUDINAL AXIS OF THE POST.

5. DESIGN ALL FITTINGS, INCLUDING SPLICES, TO USE THE CABLE WEDGE AND DEVELOP THE FULL STRENGTH OF THE ¾" CABLE. HOT DIP GALVANIZE ALL FITTINGS, EXCEPT THE CABLE WEDGE, ACCORDANCE WITH AASHTO M-30.

6. CRIMP ONE WIRE OF THE WIRE ROPE OVER THE BASE OF THE WEDGE TO HOLD IT FIRMLY IN PLACE AT ALL LOCATIONS WHERE THE CABLE IS CONNECTED TO A CABLE SPLICE CONNECTION.

7. DESIGNS FOR A COMBINATION OR SINGLE UNIT COMPENSATING DEVICE AND TURNBUCKLE ASSEMBLY MAY BE SUMBITTED FOR APPROVAL. COMPENSATING DEVICES MUST HAVE A SPRING RATE OF 450 LBS. PLUS OR MINUS 50 LBS. PER INCH WITH A MINIMUM TOTAL 'THROW' OF 6".

8. APPLY THE FOLLOWING CRITERIA FOR ARRANGEMENT OF SPRING CABLE END ASSEMBLIES (COMPENSATING DEVICES) AND TURNBUCKLE CABLE END ASSEMBLIES:

   LENGTH OF CABLE RUNS:

   TO 1000' - USE COMPENSATING DEVICE ON ONE END AND TURNBUCKLE ON THE OTHER END OF EACH INDIVIDUAL CABLE.

   1000' TO 2000' - USE COMPENSATING DEVICE ON EACH END OF EACH CABLE.

   OVER 2000' - START NEW STRETCH BY INTERLACING AT LAST PARALLEL POST (TYPICAL LAYOUT).

   PRIOR TO FINAL ACCEPTANCE BY THE STATE, USE THE FOLLOWING VALUES TO TIGHTEN THE TURNBUCKLES BASED ON THE TEMPERATURE AT THE TIME OF ADJUSTMENT.

TABLE "A"

PAVEMENT ℄ CURVATURE	POST SPACING
8° OR LESS	16'
MORE THAN 8° TO 13° (440 FT. RAD.)	12'

TEMPERATURE (FAHRENHEIT)	SPRING COMPRESSION FROM UNLOADED POSITION IN EACH SPRING
110° - 120°	1"
100° - 109°	1¼"
90° - 99°	1½"
80° - 89°	1¾"
70° - 79°	2"
60° - 69°	2¼"
50° - 59°	2½"
40° - 49°	2¾"
30° - 39°	3"
20° - 29°	3¼"
10° - 19°	3½"
0° - 9°	3¾"
-10° - -1°	4"
-20° - -11°	4¼"

STATE OF
NORTH CAROLINA
DEPT. OF TRANSPORTATION
DIVISION OF HIGHWAYS
RALEIGH, N.C.

ENGLISH DETAIL DRAWING FOR
CABLE GUIDERAIL
NOTES

SHEET11 OF 11
865D01

PROJECT SERVICES UNIT
STANDARDS AND SPECIAL DESIGN
Office 919-250-4128 FAX 919-250-4119

SEE PLATE FOR TITLE

ORIGINAL BY: 2002 STANDARDS DATE: 1-15-02
MODIFIED BY: E.E. WARD DATE: 4-07-04
CHECKED BY: DATE:
FILE SPEC.: /usr/std/02stds to details/english/86501/0865D01.dgn

NORTH CAROLINA PROFESSIONAL SEAL 02206 ENGINEER
DIVISION ENGINEER
11-4-04

PROJECT REFERENCE NO. R-2604A
SHEET NO. E-A1

PROJECT REFERENCE NO.	SHEET NO.
R-2606A	2-AJ

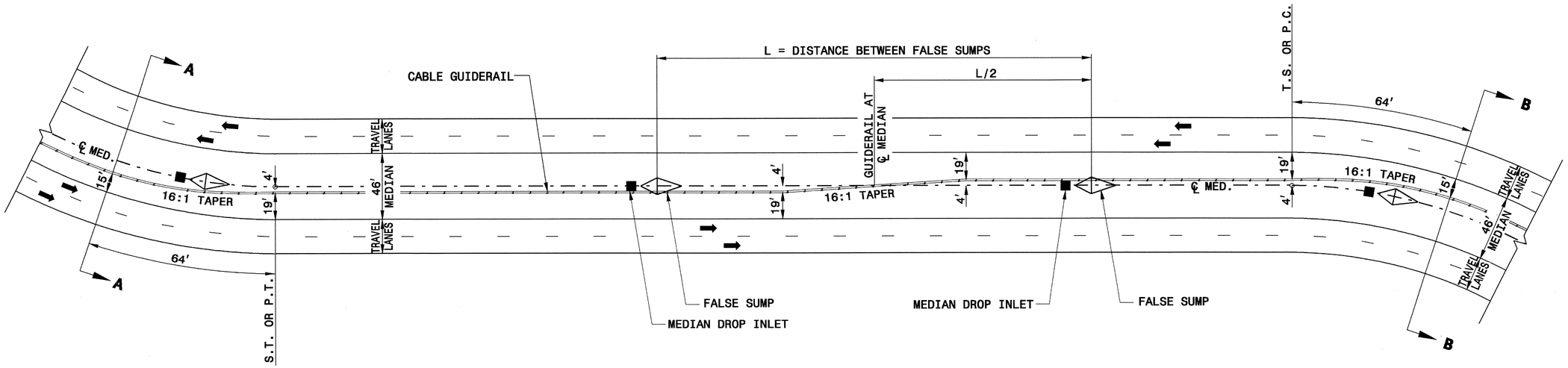

PLAN VIEW

46′ MEDIAN GUIDERAIL TRANSITIONS WITH SUPERELEVATION AND/OR FALSE SUMPS

GENERAL NOTES:
1. REFER TO DETAIL 865D01 IN LIEU OF 2002 STANDARD 865.01 FOR INSTALLATION OF CABLE GUIDERAIL.
2. FALSE SUMP DETAIL IS APPLICABLE TO ALL MEDIAN WIDTHS.
3. DO NOT TRANSITION GUIDERAIL FOR SUPERELEVATION WHEN THE RATE IS 2 PERCENT OR LESS.
4. DO NOT INSTALL GUIDERAIL ON SLOPES STEEPER THAN 6:1.

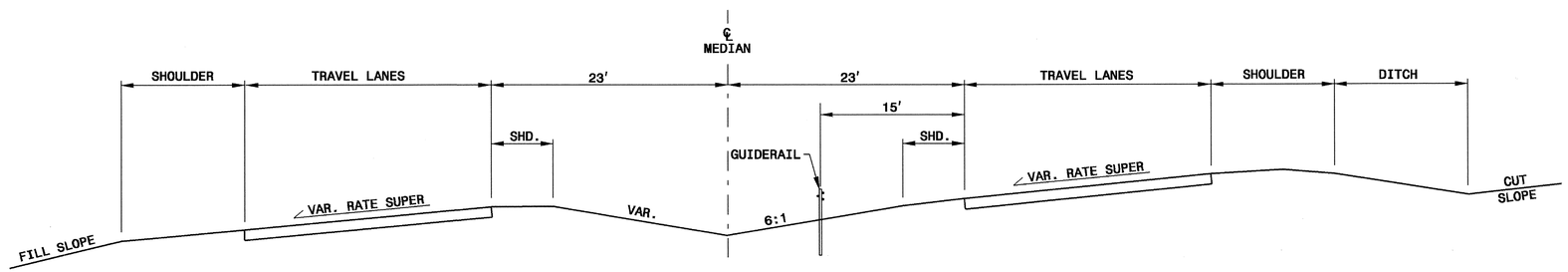

SECTION A-A

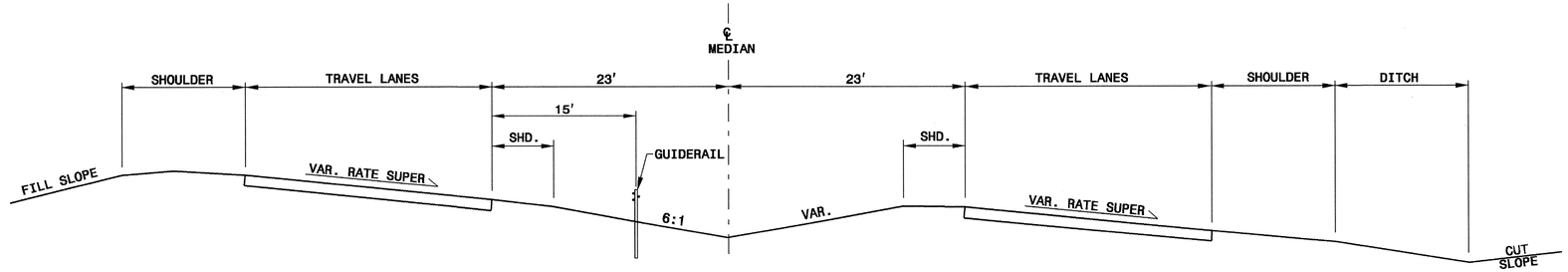

SECTION B-B

NORTH CAROLINA PROFESSIONAL SEAL 022966 ENGINEER JOEL R. HOCUTT
7/14/06

PROJECT SERVICES UNIT
STANDARDS AND SPECIAL DESIGN
Office 919-250-4128 FAX 919-250-4119

DETAIL OF 46′ MEDIAN GUIDERAIL TRANSITIONS WITH SUPERELEVATION AND/OR FALSE SUMPS

ORIGINAL BY: E.E. WARD DATE: 2-12-04
MODIFIED BY: DATE:
CHECKED BY: DATE:
FILE SPEC.: /usr/std/02stdstddetails/english/865D01/guiderailtransition.dgn

25-OCT-2004 14:01
W:\Special Details\ericword\stds\02'Stds to Special Details\english\865D01\guiderailtransition.dgn
ericword AT DS212260

PROJECT REFERENCE NO.	SHEET NO.
R-2606A	2-AK

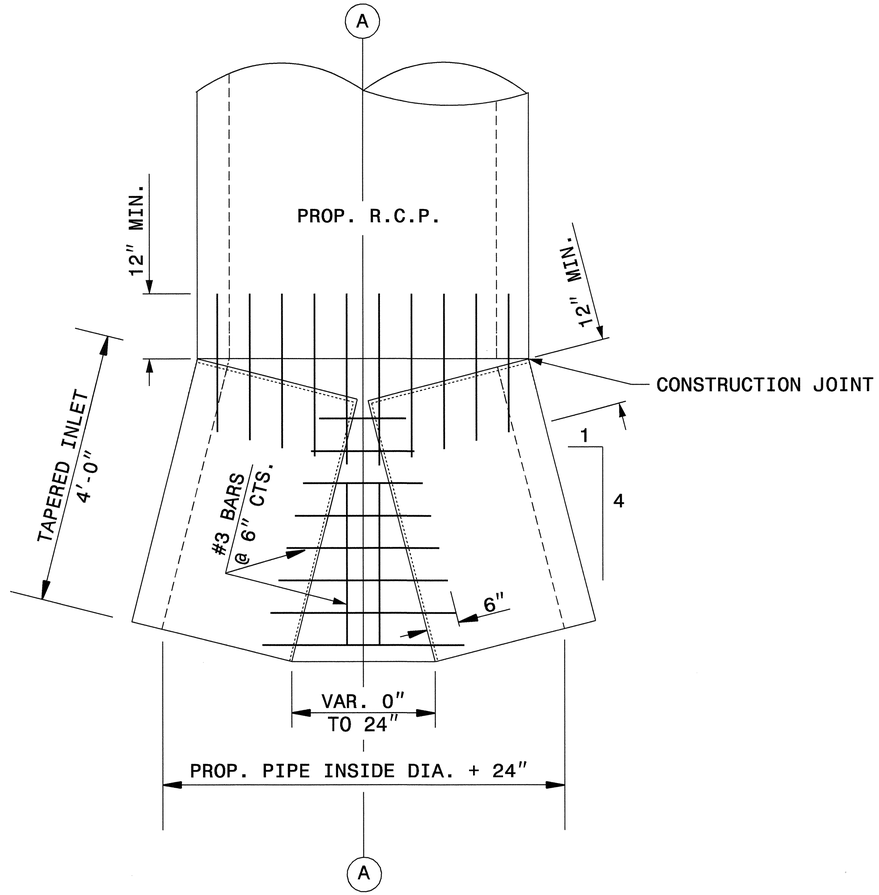

PLAN

SHOWING PLACEMENT OF REINFORCING STEEL

GENERAL NOTES:

* CONSTRUCT SPECIAL REINFORCED CONCRETE TAPERED INLET IN ACCORDANCE WITH DETAIL AND SECTION 310 OF THE STANDARD ROADWAY SPECIFICATIONS.
* CONSTRUCT THE TAPERED INLET FROM CLASS III REINFORCED CONCRETE PIPE.
* EMBED ALL REINFORCING STEEL UNLESS SHOWN OTHERWISE.
* CONSTRUCT THE TAPERED INLET AS DIRECTED BY THE ENGINEER.

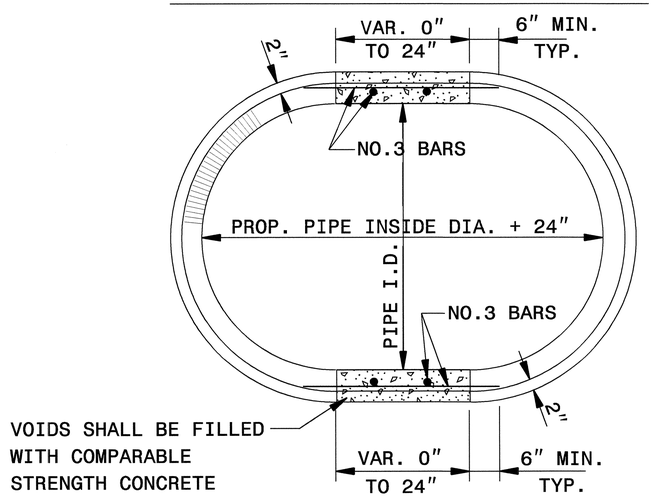

END VIEW

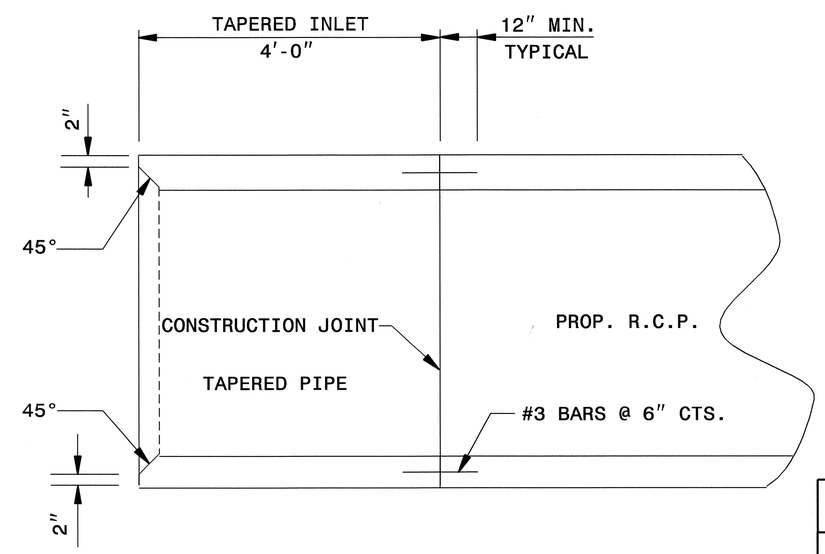

SECTION A-A

NORTH CAROLINA PROFESSIONAL SEAL 022966 ENGINEER JOEL HUNT
7/19/06

DESIGN SERVICES UNIT
STANDARDS AND SPECIAL DESIGN
Office 919-250-4128 FAX 919-250-4119

DETAIL OF REINFORCED TAPERD INLET 24" THRU 72" DIAMETER

ORIGINAL BY: ERIC E. WARD DATE: 11-26-97
MODIFIED BY: DATE:
CHECKED BY: DATE: 6/7/06
FILE SPEC.: d6172:/usr/details/metric/stand/tapin1.dgn

07-JUN-2006 11:42
s:\contracts\contracts\special details\ericward\usr\details\stand\metric\tapin1.dgn
jhowerton AT PSC12260

PROJECT REFERENCE NO.	SHEET NO.
R-2606A	2-AL

STATE OF
NORTH CAROLINA
DEPT. OF TRANSPORTATION
DIVISION OF HIGHWAYS
RALEIGH, N.C.

ENGLISH DETAIL DRAWING FOR

CONCRETE ENDWALL FOR TAPERED INLET

SHEET 1 OF 2

ENDTAP

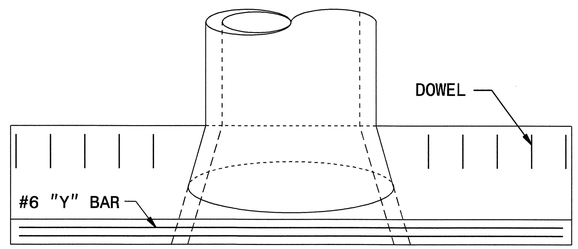

PLAN

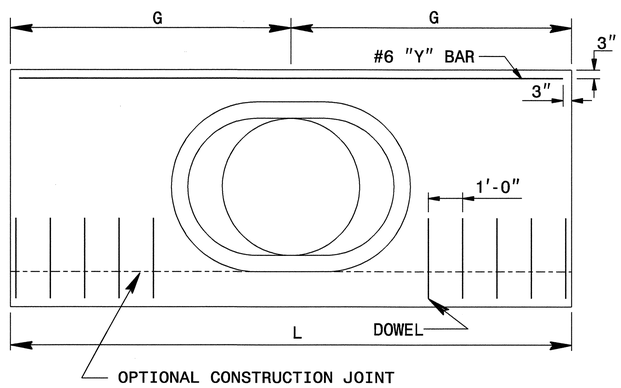

ELEVATION

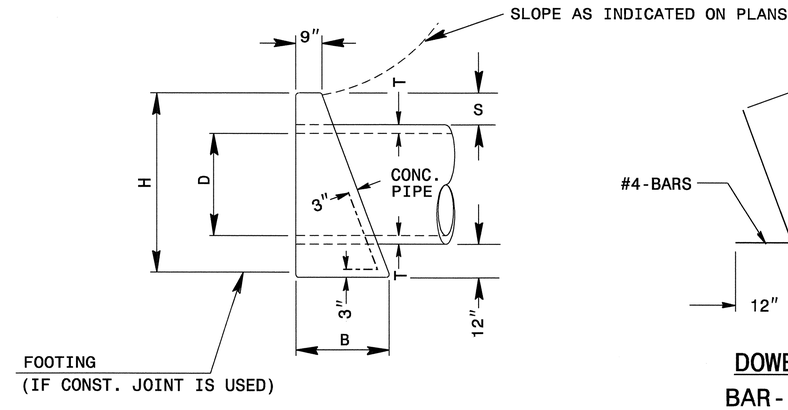

END ELEVATION

DOWEL
BAR-"X"

GENERAL NOTES:

ALL EXTERIOR CORNERS SHALL BE CHAMFERED 1" OR HAVE A RADIUS OF 1".

THE CONTRACTOR WILL BE REQUIRED TO PLACE 2 #6 "Y" BARS IN THE TOP OF ALL ENDWALL FOR PIPE CULVERTS 42" AND OVER WITH A MINIMUM OF 3" COVER AND A LENGTH OF 6" LESS THAN ENDWALL LENGTH.

FORMS ARE TO BE USED FOR THE CONSTRUCTION OF THE BOTTOM SLAB.

WALL THICKNESS (T) SHOWN IS NOT TO BE INTERPRETED TO MEAN THE THICKNESS ACCEPTABLE, BUT IS USED IN COMPUTING ENDWALL QUANTITIES.

WHEN THE CONTRACTOR ELECTS TO USE A CONSTRUCTION JOINT AT THE BOTTOM OF THE PIPE, BAR X DOWELS SHALL BE PLACED IN THE BASE AS SHOWN ON PLANS. SPACING OF BARS IS TO BE APPROXIMATELY 12" CENTERS UNLESS OTHERWISE DIRECTED BY THE ENGINEER.

WHEN THE CONTRACTOR ELECTS TO USE A CONSTRUCTION JOINT AT THE BOTTOM OF THE PIPE AND POUR THE BASE SEPARATELY, THE POUR SHALL BE LEFT ROUGH.

CLASS "B" CONCRETE SHALL BE USED.

DIMENSIONS AND CONCRETE QUANTITIES

CONCRETE PIPE	COMMON DIMENSIONS						
D	H	B	L	G	T	S	CU. YDS.
24"x48"	4'-6"	2'-2"	9'-8"	4'-10"	3"	11½"	2.3
30"x54"	5'-1"	2'-6"	11'-4"	5'-8"	3½"	11½"	3.5
36"x60"	5'-8"	2'-10"	13'-0"	6'-6"	4"	11½"	4.9
42"x66"	6'-4"	3'-2"	14'-8"	7'-4"	5¼"	11½"	6.7
48"x72"	6'-11"	3'-6"	16'-4"	8'-2"	5¾"	11½"	9.2

DOWELS IN ENDWALL
WITH REINFORCED CONCRETE PIPE

LOC.	PIPE DIA.	SINGLE PIPE									
		24"x48"		30"x54"		36"x60"		42"x66"		48"x72"	
	BARS	"X"	Y*	"X"	Y*	"X"	Y*	"X"	Y*	"X"	Y*
G	QTY.	3		4		4		5	2	5	2
G	QTY.	3		4		4		5		5	
TOT. LBS.		14		19		19		64		69	

STATE OF
NORTH CAROLINA
DEPT. OF TRANSPORTATION
DIVISION OF HIGHWAYS
RALEIGH, N.C.

ENGLISH DETAIL DRAWING FOR

CONCRETE ENDWALL FOR TAPERED INLET

SHEET 1 OF 2

ENDTAP

NORTH CAROLINA PROFESSIONAL SEAL 022868 ENGINEER
JOEL R. HOCKSTRA
7/14/06

DESIGN SERVICES UNIT
STANDARDS AND SPECIAL DESIGN
Office 919-250-4128 FAX 919-250-4119

SEE PLATE FOR TITLE

ORIGINAL BY: T.SPELL DATE: 10-5-98
MODIFIED BY: E.E. WARD DATE: 10-11-04
CHECKED BY: DATE: 6/7/06
FILE SPEC.: usr/details/stand/endwalltaper.dgn

07-JUN-2006 11:40
s:\contracts\contracts\special details\ericward\usr\details\stand\endwalltaper.dgn
jhowerton HT FS:12260

PROJECT REFERENCE NO.	SHEET NO.
R-2606A	2-AM

STATE OF
NORTH CAROLINA
DEPT. OF TRANSPORTATION
DIVISION OF HIGHWAYS
RALEIGH, N.C.

ENGLISH DETAIL DRAWING FOR
MODIFIED CONCRETE FLUME
WITH CONCRETE OR RIP-RAP DITCH

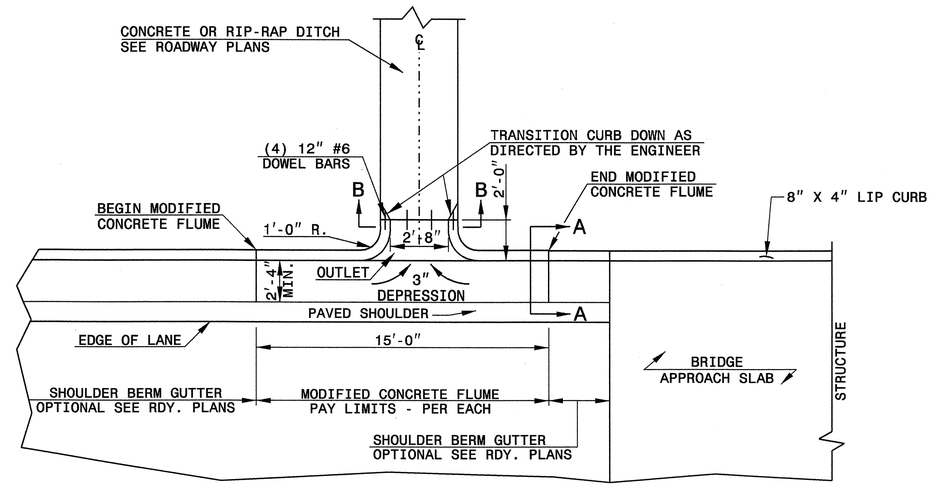

PLAN VIEW

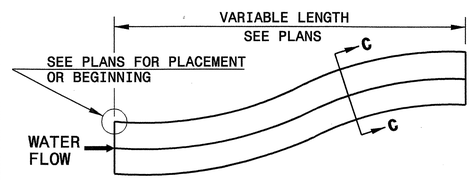

DOWNGRADE OR SAG

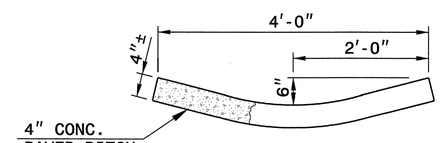

SECTION C-C

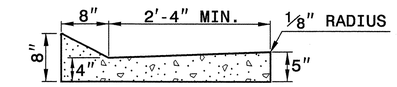

SECTION A-A

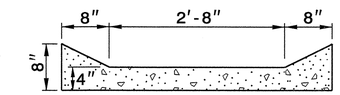

SECTION B-B

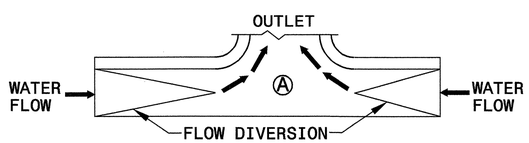

SAG

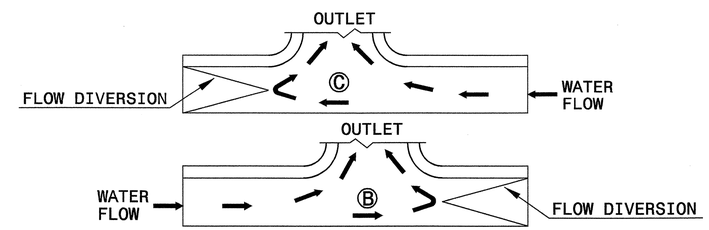

DOWN GRADE

FLOW DIVERSION EXAMPLES

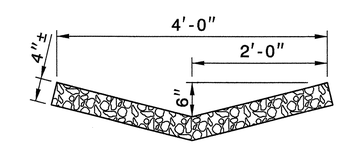

RIP-RAP LINED DITCH

NOTES:

- CONSTRUCT MODIFIED CONCRETE FLUME AND SHOULDER BERM GUTTER IN ACCORDANCE WITH THIS DETAIL.
- CONSTRUCT CONCRETE DITCH IN ACCORDANCE WITH STD. DWG. NO. 850.01.
- CONSTRUCT RIP RAP LINED DITCH IN ACCORDANCE WITH THIS DETAIL, IF CALLED FOR IN PLANS.
- CONCRETE OR RIP RAP LINED DITCH SHALL BE THE TYPE AND LENGTH SPECIFIED BY THE ROADWAY PLANS. THE DITCH SHALL TERMINATE AS SHOWN ON THE PLANS. IF NO TERMINATION IS INDICATED PLACE RIP-RAP AT THE END OF THE DITCH AS INDICATED BY STD. DWG. 876.02 FOR AN 18" PIPE. TRANSITIONS FROM THE DITCH TO TERMINATION SHALL BE AS DIRECTED BY THE ENGINEER.
- MODIFICATIONS SHALL BE AS DICTATED BY SITE CONDITIONS AND DIRECTED BY THE ENGINEER.

SHEET 1 OF 1
MODFLMDTCH

STATE OF
NORTH CAROLINA
DEPT. OF TRANSPORTATION
DIVISION OF HIGHWAYS
RALEIGH, N.C.

ENGLISH DETAIL DRAWING FOR
MODIFIED CONCRETE FLUME
WITH CONCRETE OR RIP-RAP DITCH

SHEET 1 OF 1
MODFLMDTCH

NORTH CAROLINA PROFESSIONAL SEAL 022966 ENGINEER
7/14/06

PROJECT SERVICES UNIT
STANDARDS AND SPECIAL DESIGN
Office 919-250-4128 FAX 919-250-4119

SEE PLATE FOR TITLE

ORIGINAL BY: E.E. Ward DATE: Apr. 2002
MODIFIED BY: E.E. Ward DATE: July 2004
CHECKED BY: DATE: 3/1/06
FILE SPEC.: W:details\stand\modifiedflume.dgn

01-MAR-2006 08:47
S:\Contracts\Contracts\Special Details\ericward\usr\details\stand\modifiedflume.dgn
ericward AT PS222293

PROJECT REFERENCE NO.	SHEET NO.
R-2606A	2-AN

5/14/99

STATE OF NORTH CAROLINA DEPT. OF TRANSPORTATION DIVISION OF HIGHWAYS RALEIGH, N.C. 1-02

ENGLISH STANDARD DRAWING FOR
CONCRETE OPEN THROAT CATCH BASIN
54"RC PIPE

SHEET 1 OF 2 **840D04**

NOTES:
USE CLASS "B" CONCRETE THROUGHOUT.
PROVIDE ALL CATCH BASINS OVER 3'-6" IN DEPTH WITH STEPS 12" ON CENTER. USE STEPS WHICH COMPLY WITH STD. DRAWING 840.66.
OPTIONAL CONSTRUCTION - MONOLITHIC POUR, 2" KEYWAY, OR #4 BAR DOWELS AT 12" CENTERS AS DIRECTED BY THE ENGINEER.
USE FORMS FOR THE CONSTRUCTION OF THE BOTTOM SLAB.
IF REINFORCED CONCRETE PIPE IS SET IN BOTTOM SLAB OF BOX, ADD TO SLAB AS SHOWN ON STD. NO. 840.00.
FOR 8'-0" IN HEIGHT OR LESS USE 6" WALLS AND BOTTOM SLAB. OVER 8'-0" TO 16'-0" IN HEIGHT USE 8" WALLS AND BOTTOM SLAB. ADJUST QUANTITIES ACCORDINGLY.
INSTALL 2" WEEPHOLES AS DIRECTED BY THE ENGINEER.
INSTALL STONE DRAINS, AT A MINIMUM OF 1 CUBIC FOOT OF NO. 78M STONE IN A POROUS FABRIC BAG OR WRAP, AT EACH WEEP HOLE OR AS DIRECTED BY THE ENGINEER.
CHAMFER ALL EXPOSED CORNERS 1".
DRAWING NOT TO SCALE.
* INCREASE THE SIZE OF THE 6" OPENING TO 8" MAX., AS DIRECTED BY THE ENGINEER BY ADDING 2" TO THE WALL HIEGHT ABOVE THE TOP ELEVATION. ADJUST QUANTITIES ACCORDINGLY.

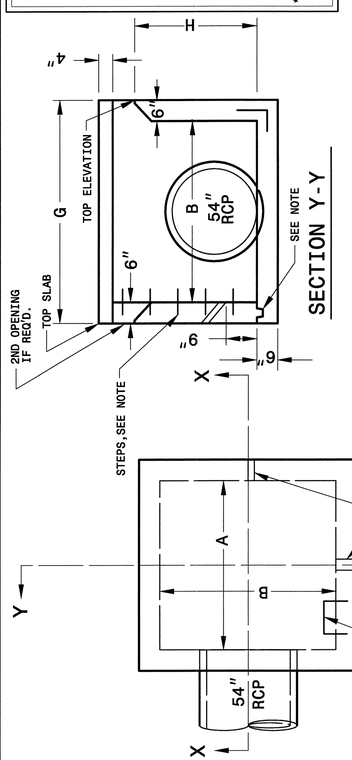

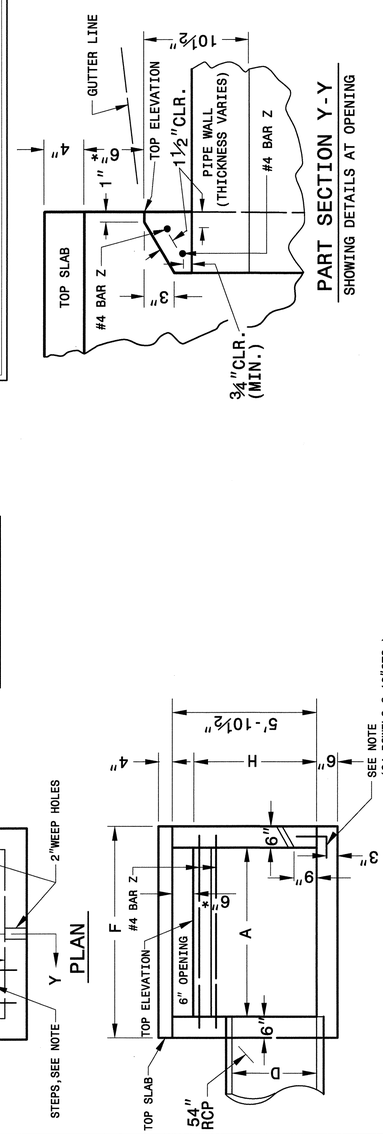

MIN. DIMENSIONS AND QUANTITIES FOR CONCRETE CATCH BASIN																			
DIM'S OF BOX & PIPE				REINFORCING						TOP & BOT. SLAB DIMENSIONS		CU. YDS. CONC. IN BOX		TOTAL QUANTITIES BOX & SLABS		DEDUCTION (YD^3) ONE PIPE		DED. ONE 6" THROAT OPENING
PIPE	SPAN	WIDTH	HEIGHT	#4 "X" BARS		#3 "Y" BARS		#3 "Z" BARS										YD^3
D	A	B	H	NO.	LENGTH	NO.	LENGTH	NO.	LENGTH	F	G	TOP SLAB	BOT. SLAB	WALL/FT.	LBS. REINF.	YD^3	54"RC	
54"	5'-6"	6'-9"	5'-4½"	11	7'-5"	13	6'-2"	2	6'-2"	6'-6"	7'-9"	0.612	0.934	0.491	90	4.426	0.401	0.062
												28 #4 DOWELS (OPTION)			30			

STATE OF NORTH CAROLINA DEPT. OF TRANSPORTATION DIVISION OF HIGHWAYS RALEIGH, N.C. 1-02

ENGLISH STANDARD DRAWING FOR
CONCRETE OPEN THROAT CATCH BASIN
54"RC PIPE

SHEET 1 OF 2 **840D04**

STATE OF NORTH CAROLINA DEPT. OF TRANSPORTATION DIVISION OF HIGHWAYS RALEIGH, N.C. 1-02

ENGLISH STANDARD DRAWING FOR
CONCRETE OPEN THROAT CATCH BASIN
54"RC PIPE

SHEET 2 OF 2 **840D04**

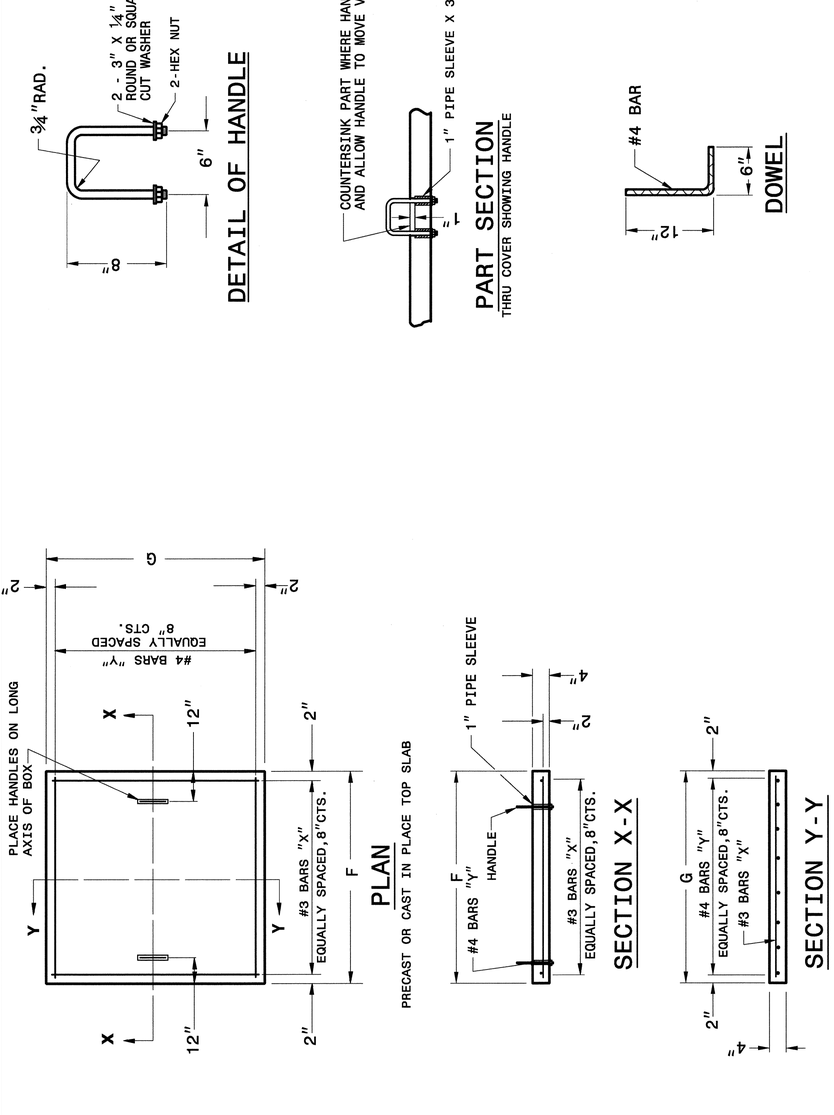

STATE OF NORTH CAROLINA DEPARTMENT OF TRANSPORTATION DIVISION OF HIGHWAYS RALEIGH, N.C. 1-02

ENGLISH STANDARD DRAWING FOR
CONCRETE OPEN THROAT CATCH BASIN
54"RC PIPE

SHEET 2 OF 2 **840D04**

NORTH CAROLINA PROFESSIONAL SEAL 022966 ENGINEER
7/14/06

PROJECT SERVICES UNIT
STANDARDS AND SPECIAL DESIGN
Office 919-250-4128 FAX 919-250-4119

SEE PLATE FOR TITLE

ORIGINAL BY: _____ DATE: _____
MODIFIED BY: rnbritt DATE: 06-23-06
CHECKED BY: _____ DATE: _____
FILE SPEC.: details/nbritt/english/rural/r2606a 54 otcb.dgn

10:57:10 AM
K:\4156\r2606a\Roadway\Proj\r2606a 54 otcb.dgn
renaremy

RD212417

COMPUTED BY:	RR	DATE:	6/14/2006
CHECKED BY:	KJV	DATE:	6/26/2006

PROJECT NO.	SHEET NO.
R2606A	3A

STATE OF NORTH CAROLINA
DIVISION OF HIGHWAYS

LIST OF PIPES, ENDWALLS, ETC. (FOR PIPES 48" & UNDER)

STATION	LOCATION (LT, RT, OR CL)	STRUCTURE NO. FROM	STRUCTURE NO. TO	TOP ELEVATION	INVERT ELEVATION	INVERT ELEVATION	SLOPE CRITICAL	CLASS III R.C. PIPE (UNLESS NOTED OTHERWISE) 12"	15"	18"	24"	30"	36"	36" CLASS IV	42"	42" CLASS IV	48"	48" CLASS IV	REMARKS
-L- 16+00	LT	1		731.96															EXTRA DEPTH
		1	4		727.38	719.34													
-L- 16+00	CL	2		732.99															
		2	1		730.49	728.13			88										
-L- 16+00	RT	3		735.13															
		3	2		732.63	730.69			88										
-L- 19+75	LT	4		724.09															
		4	OUT		719.14	714.00													
-L- 21+23	LT	4A		721.00															HAZARDOUS SPILL BASIN
		4A	OUT		714.00	700.00													
-L- 21+40	CL	5		722.11															
		5	OUT		719.30	714.00			120										
-L- 21+40	RT	6		724.13															
		6	5		721.46	719.44			92										
-L- 26+20	RT	9		721.84															
		9	OUT		719.09	713.00													
-L- 24+50	RT	9A		718.50															HAZARDOUS SPILL BASIN
		9A	OUT		713.00	711.00													
-L- 26+00	LT	10		719.22															
		10	10B		717.55	717.30													
-L- 26+00	LT	10B		722.17															EXTRA DEPTH
		10B	7		717.10	716.40			148										
-L- 24+51	LT	7		721.67															EXTRA DEPTH
		7	8		716.20	715.55			72										
-L- 24+51	CL	8		719.91															
		8	OUT		715.30	713.00				160									
-L- 30+00	RT	14																	BERM DITCH OUTLET
		14	13		752.6	724.74													
-L- 30+00	RT	13		727.29															
		13	12		724.54	722.32				88									
-L- 30+00	CL	12		725.15															
		12	11		721.82	719.54					88								
-L- 30+00	LT	11		724.12															
		11	OUT		719.04	717.68													
-Y- 13+50	CL	16			756.50	756.12					72								
-Y- 16+70	RT	18		754.37															
		18	17		751.87	751.77			20										
-Y- 16+70	RT	17		757.96															EXTRA NON-STD.DEPTH
		17	OUT		751.57	746.30			68										
-L- 37+60	RT	22		736.40															
		22	21						68										
-L- 37+60		21		737.54															
		21	20		734.38	734.19			40										
-L- 37+60		20		737.60															
		20	19		734.00	733.69			60										
-L- 37+60		19		736.86															
		19	23		733.44	731.90													
-L- 40+80		24		739.06															
		24	23		736.56	732.35			88										
SHEET TOTALS								0	952	248	160	0	0	0	0	0	0	0	

STATION	FROM	TO	BITUMINOUS COATED C.S. PIPE TYPE B (UNLESS NOTED OTHERWISE) 12" .064	15" .064	18" .064	24" .064	24" UNCOATED	30" .079	30" UNCOATED	36" .079	36"	42" .109	42"	48" .109	48"	CLASS III R.C. PIPE OR C.S.PIPE OR TYPE IR ALUMINIZED OR HDPE, TYPE S OR D 12"	15"	18"	24"	30"	36"	42"	48"	15" SIDE DRAIN PIPE	18" SIDE DRAIN PIPE	24" SIDE DRAIN PIPE	ENDWALLS STD. 838.01 OR STD. 838.11 (UNLESS NOTED OTHERWISE) STD. 838.80 CU. YARDS R.C.P.	C.S.P.
-L- 16+00	1	4																	368									
-L- 19+75	4	OUT																	52									
-L- 21+23	4A																											2.00
	4A	OUT							88																			
-L- 26+20	9	OUT															48											
-L- 24+50	9A																											1.4
	9A	OUT					48																					
-L- 26+00	10	10B															24											
-L- 30+00	14	13			68																							
-L- 30+00	11	OUT																		272								
-L- 37+60	19	23																312										
SHEET TOTALS			0	0	68	0	48	0	88	0	0	0	0	0	0	0	72	312	420	272	0	0	0	0	0	0	0	3.4

STATION	STRUCTURE NO.	QUANITIES FOR DRAINAGE STRUCTURES PER EACH (0' THRU 5.0')	*TOTAL L.F. FOR PAY QUANTITY SHALL BE COL. 'A' + (1.3 X COL.'B') LIN. FT. A 5.0' THRU 10.0'	B 10.0' AND ABOVE	C.B. STD. 840.01 OR STD. 840.02	FRAME, GRATES, AND HOOD STANDARD 840.03 TYPE OF GRATE E	F	G	D.I. STD. 840.14 OR STD. 840.15	D.I. FRAME AND GRATE STD. 840.16	G.D.I. TYPE "A" STD. 840.17 OR 840.26	G.D.I. TYPE "B" STD. 840.18 OR 840.27	G.D.I. TYPE "D" STD. 840.19 OR 840.28	G.D.I. FRAME WITH GRATE STD. 840.20	G.D.I. FRAME WITH TWO GRATES STD. 840.22	G.D.I. (N.S.) FRAME WITH GRATE STD. 840.24	G.D.I. (N.S.) FRAME WITH TWO GRATES STD. 840.24	J.B. STD. 840.31 OR 840.32		MANHOLE STD. 840.51	M.H. STD. 840.51 OR 840.53	M.H. FRAME AND COVER STD. 840.54	60"X36" RC TAPERED INLET (DETAIL SHEETS 2-AK)	BERM DRAINAGE OUTLET STD. 850.10	18" CONCRETE PIPE END SECTION STD. 310	24" CONCRETE PIPE END SECTION STD. 310	30" CONCRETE PIPE END SECTION STD. 310.03	36" CONCRETE PIPE END SECTION SPECIAL	30" SLUICE GATE	36" SLUICE GATE	SLUICE GATE INLET						CORR. STEEL ELBOWS NO. & SIZE	CONC. COLLARS CL. "B" C.Y. STD. 840.72	CONC. & BRICK PIPE PLUG, C.Y. STD. 840.71	PIPE REMOVAL LIN. FT.
-L- 16+00	1	1	0.58								1				1																										
-L- 16+00	2	1										1			1																										
-L- 16+00	3	1										1			1																										
-L- 19+75	4	1									1				1																										
-L- 21+23	4A	1										1			1																1	1									
-L- 21+40	5	1										1			1																										
-L- 21+40	6	1									1				1																										
-L- 26+20	9	1										1			1																										
-L- 24+50	9A	1										1			1															1		1										
-L- 26+00	10	1											1		1																										
-L- 26+00	10B	1	0.07									1		1																											
-L- 24+51	7	1	0.47									1		1																											
-L- 24+51	8	1										1			1																										
-L- 30+00	14 - 13																							1														1 -18"			
-L- 30+00	12	1										1			1																										
-L- 30+00	11	1	0.08									1			1																										
-Y- 16+70	18	1										1			1																										
-Y- 16+70	17	1	1.39									1			1																										
-L- 37+60	22	1											1		1																										
-L- 37+60	21	1									1				1																										
-L- 37+60	20	1										1			1																										
-L- 37+60	19	1									1				1																										
-L- 40+80	24	1										1			1																										
SHEET TOTALS		22	2.59	0	0	0	0	0	0	0	5	15	2	2	20	0	0	0	0	0	0	0	0	1	0	0	0	0	1	1	2				0	0	1	0	0	0

ABBREVIATIONS

C.B.	CATCH BASIN
N.D.I.	NARROW DROP INLET
D.I.	DROP INLET
G.D.I.	GRATED DROP INLET
G.D.I.(N.S.)	GRATED DROP INLET (NARROW SLOT)
J.B.	JUNCTION BOX
M.H.	MANHOLE
T.B.D.I.	TRAFFIC BEARING DROP INLET
T.B.J.B.	TRAFFIC BEARING JUNCTION BOX

RD212417

COMPUTED BY:	RR	DATE:	6/14/2006
CHECKED BY:	KJV	DATE:	6/26/2006

PROJECT NO.	SHEET NO.
R2606A	3B

STATE OF NORTH CAROLINA
DIVISION OF HIGHWAYS

LIST OF PIPES, ENDWALLS, ETC. (FOR PIPES 48" & UNDER)

STATION	LOCATION (LT, RT, OR CL)	STRUCTURE NO. FROM	STRUCTURE NO. TO	TOP ELEVATION	INVERT ELEVATION	INVERT ELEVATION	SLOPE CRITICAL	CLASS III R.C. PIPE (UNLESS NOTED OTHERWISE) 12"	15"	18"	24"	30"	36"	36" CLASS IV	42"	42" CLASS IV	48"	48" CLASS IV
-L- 40+80	LT	23		738.69														
		23	25		731.60	730.20												
-L- 43+50	LT	25		741.98														
		25	OUT		727.80	724.00												
-L- 43+50	CL	26		742.35														
		26	25		739.85	730.55			88									
-L- 44+00	LT	27		745.23														
		27	25		742.56	738.00												
-SR- 14+00	RT	30		731.00														
		30	28		724.00							68						
-SR- 13+70	LT	28		733.84														
		28	OUT		722.00	709.00												
-SR- 13+15	CL	28B			731.00	709.00												
-L- 44+50	LT	29		745.70														
		29	27		743.03	742.76			48									
-L- 48+00	CL	49		746.62														
		49	48		744.12	743.70			68									
-L- 48+00	LT	48		749.01														
		48	47		743.50	736.79												
-L- 48+00	LT	47		739.09														
		47	OUT		736.59	724.00												
-L- 47+15	RT	40		717.00														
		40	OUT		713.00	712.72												
-L- 50+80	RT	50	OUT		739.60	734.80												
-L- 69+00	CL	69		766.46														
		69	68		764.79	763.59			88									
-L- 69+00	LT	68		766.09														
		68	67		763.34	756.80												
-L- 66+00	LT	67		764.20														
		67	66		758.60	753.54												
-SR- 34+54	RT	66		756.09														
		66	64		748.39	742.91												
-L- 63+00	LT	64		746.99														
		64	59		741.91	738.29												
-L- 57+00	LT	59		743.37														
		59	OUT		737.79	716.00												
-L- 54+50	RT	58		754.22														
		58	57		751.72	750.46			88									
-L- 54+50	CL	57		752.76														
		57	60		750.26	748.32			248									
-L- 57+00	CL	60		755.12														
		60	59		748.12	739.54			128									
-SR- 31+62	LT	63		748.68														
		63	64		746.18	743.16			52									
-L- 63+00	CL	65		760.79														
		65	64		755.96	743.16			136									
-L- 59+48	CL	61	OUT		739.40	718.10							352					
SHEET TOTALS								0	944	0	0	68	352	0	0	0	0	0

STATION	FROM	TO	BITUMINOUS COATED C.S. PIPE TYPE B (UNLESS NOTED OTHERWISE) 12" .064	15" .064	18" .064	24" .064	24" UNCOATED	30" .079	30" UNCOATED	36" .079	36"	42" .109	42"	48" .109	48"
-L- 40+80	23														
	23	25													
-L- 43+50	25														
	25	OUT													
-L- 43+50	26														
	26	25													
-L- 44+00	27														
	27	25													
-SR- 14+00	30														
	30	28													
-SR- 13+70	28														
	28	OUT						76							
-SR- 13+15	28B							104							
-L- 44+50	29														
	29	27													
-L- 48+00	49														
	49	48													
-L- 48+00	48														
	48	47		24											
-L- 48+00	47														
	47	OUT													
-L- 47+15	40														
	40	OUT					36								
-L- 50+80	50	OUT													
-L- 69+00	69														
	69	68													
-L- 69+00	68														
	68	67													
-L- 66+00	67														
	67	66													
-SR- 34+54	66														
	66	64													
-L- 63+00	64														
	64	59													
-L- 57+00	59														
	59	OUT								132					
-L- 54+50	58														
	58	57													
-L- 54+50	57														
	57	60													
-L- 57+00	60														
	60	59													
-SR- 31+62	63														
	63	64													
-L- 63+00	65														
	65	64													
-L- 59+48	61	OUT													
SHEET TOTALS			0	24	0	0	36	180	0	132	0	0	0	0	0

STATION	FROM	TO	CLASS III R.C. PIPE OR C.S.PIPE OR TYPE IR ALUMINIZED OR HDPE, TYPE S OR D 12"	15"	18"	24"	30"	36"	42"	48"	15" SIDE DRAIN PIPE	18" SIDE DRAIN PIPE	24" SIDE DRAIN PIPE	ENDWALLS STD. 838.01 OR STD. 838.11 (UNLESS NOTED OTHERWISE) STD. 838.80 CU. YARDS R.C.P.	C.S.P.
-L- 40+80	23														
	23	25				264									
-L- 43+50	25														
	25	OUT				80									
-L- 43+50	26														
	26	25													
-L- 44+00	27														
	27	25		52											
-SR- 14+00	30														2.00
	30	28													
-SR- 13+70	28														
	28	OUT													
-SR- 13+15	28B														
-L- 44+50	29														
	29	27													
-L- 48+00	49														
	49	48													
-L- 48+00	48														
	48	47													
-L- 48+00	47														
	47	OUT		308											
-L- 47+15	40														
	40	OUT													
-L- 50+80	50	OUT										92			
-L- 69+00	69														
	69	68													
-L- 69+00	68														
	68	67			292										
-L- 66+00	67														
	67	66			52										
-SR- 34+54	66				292										
	66	64													
-L- 63+00	64														
	64	59					584								
-L- 57+00	59														
	59	OUT													
-L- 54+50	58														
	58	57													
-L- 54+50	57														
	57	60													
-L- 57+00	60														
	60	59													
-SR- 31+62	63														
	63	64													
-L- 63+00	65														
	65	64													
-L- 59+48	61	OUT												2.8	
SHEET TOTALS			0	360	636	344	584	0	0	0	0	92	0	2.8	2

STATION	FROM	TO	QUANITIES FOR DRAINAGE STRUCTURES PER EACH (0' THRU 5.0')	*TOTAL L.F. FOR PAY QUANTITY SHALL BE COL. 'A' + (1.3 X COL.'B') LIN. FT. A 5.0' THRU 10.0'	B 10.0' AND ABOVE	C.B. STD. 840.01 OR STD. 840.02	FRAME, GRATES, AND HOOD STANDARD 840.03 TYPE OF GRATE E	F	G	D.I. STD. 840.14 OR STD. 840.15	D.I. FRAME AND GRATE STD. 840.16	G.D.I. TYPE "A" STD. 840.17 OR 840.26	G.D.I. TYPE "B" STD. 840.18 OR 840.27	G.D.I. TYPE "D" STD. 840.19 OR 840.28	G.D.I. FRAME WITH GRATE STD. 840.20	G.D.I. FRAME WITH TWO GRATES STD. 840.22	G.D.I. (N.S.) FRAME WITH GRATE STD. 840.24	G.D.I. (N.S.) FRAME WITH TWO GRATES STD. 840.24
-L- 40+80	23		1	2.09								1				1		
	23	25																
-L- 43+50	25		1	5.00	4.18							1				1		
	25	OUT																
-L- 43+50	26		1										1			1		
	26	25																
-L- 44+00	27		1										1		1			
	27	25																
-SR- 14+00	30		1										1			1		
	30	28																
-SR- 13+70	28		1	5.00	1.84								1			1		
	28	OUT																
-SR- 13+15	28B																	
-L- 44+50	29		1										1		1			
	29	27																
-L- 48+00	49		1										1			1		
	49	48																
-L- 48+00	48		1	0.51									1		1			
	48	47																
-L- 48+00	47		1										1			1		
	47	OUT																
-L- 47+15	40		1	2.00									1			1		
	40	OUT																
-L- 50+80	50	OUT																
-L- 69+00	69		1											1		1		
	69	68																
-L- 69+00	68		1										1			1		
	68	67																
-L- 66+00	67		1	0.60									1			1		
	67	66																
-SR- 34+54	66		1	2.70									1			1		
	66	64																
-L- 63+00	64		1	0.08								1				1		
	64	59																
-L- 57+00	59		1	0.58								1				1		
	59	OUT																
-L- 54+50	58		1										1			1		
	58	57																
-L- 54+50	57		1										1			1		
	57	60																
-L- 57+00	60		1	2.00									1			1		
	60	59																
-SR- 31+62	63		1										1			1		
	63	64																
-L- 63+00	65		1										1			1		
	65	64																
-L- 59+48	61	OUT																
SHEET TOTALS			22	20.56	6.02	0	0	0	0	0	0	4	17	1	3	19	0	0

STATION	FROM	TO	J.B. STD. 840.31 OR 840.32		MANHOLE STD. 840.51	M.H. STD. 840.51 OR 840.53	M.H. FRAME AND COVER STD. 840.54	60"X36" RC TAPERED INLET (DETAIL SHEETS 2-AK)	BERM DRAINAGE OUTLET STD. 850.10	18" CONCRETE PIPE END SECTION STD. 310	24" CONCRETE PIPE END SECTION STD. 310	30" CONCRETE PIPE END SECTION STD. 310.03	36" CONCRETE PIPE END SECTION SPECIAL	30" SLUCE GATE	36" SLUCE GATE	SLUCE GATE INLET						CORR. STEEL ELBOWS NO. & SIZE	CONC. COLLARS CL. "B" C.Y. STD. 840.72	CONC. & BRICK PIPE PLUG, C.Y. STD. 840.71	PIPE REMOVAL LIN. FT.	REMARKS
-L- 40+80	23																									EXTRA NON-STD. DEPTH
	23	25																								
-L- 43+50	25																									EXTRA NON-STD. DEPTH
	25	OUT																								
-L- 43+50	26																									
	26	25																								
-L- 44+00	27																									
	27	25																								
-SR- 14+00	30														1	1										HAZARDOUS SPILL BASIN
	30	28																								
-SR- 13+70	28																					1 -30"				EXTRA NON-STD. DEPTH
	28	OUT																								
-SR- 13+15	28B																									
-L- 44+50	29																									
	29	27																								
-L- 48+00	49																									
	49	48																								
-L- 48+00	48																									EXTRA NON-STD. DEPTH
	48	47																								
-L- 48+00	47																									
	47	OUT																								
-L- 47+15	40																									DRY DETENTION BASIN(SEE DETAIL SH 2-M)
	40	OUT																								
-L- 50+80	50	OUT								1																WITH END SECTION
-L- 69+00	69																									
	69	68																								
-L- 69+00	68																									
	68	67																								
-L- 66+00	67																									EXTRA NON-STD. DEPTH
	67	66																								
-SR- 34+54	66																									EXTRA NON-STD. DEPTH
	66	64																								
-L- 63+00	64																									
	64	59																								
-L- 57+00	59																					2 -36"				EXTRA DEPTH
	59	OUT																								
-L- 54+50	58																									
	58	57																								
-L- 54+50	57																									
	57	60																								
-L- 57+00	60																									EXTRA NON-STD. DEPTH
	60	59																								
-SR- 31+62	63																									
	63	64																								
-L- 63+00	65																									
	65	64																								
-L- 59+48	61	OUT						1																		
SHEET TOTALS			0	0	0	0	0	1	0	1	0	0	0	0	1	1				0	0	3	0	0	0	

ABBREVIATIONS

C.B.	CATCH BASIN
N.D.I.	NARROW DROP INLET
D.I.	DROP INLET
G.D.I.	GRATED DROP INLET
G.D.I.(N.S.)	GRATED DROP INLET (NARROW SLOT)
J.B.	JUNCTION BOX
M.H.	MANHOLE
T.B.D.I.	TRAFFIC BEARING DROP INLET
T.B.J.B.	TRAFFIC BEARING JUNCTION BOX

RD212417

COMPUTED BY:	RR	DATE:	6/14/2006
CHECKED BY:	KJV	DATE:	6/26/2006

PROJECT NO.	SHEET NO.
R2606A	3C

STATE OF NORTH CAROLINA
DIVISION OF HIGHWAYS

LIST OF PIPES, ENDWALLS, ETC. (FOR PIPES 48" & UNDER)

STATION	LOCATION (LT, RT, OR CL)	STRUCTURE NO. FROM	STRUCTURE NO. TO	TOP ELEVATION	INVERT ELEVATION	INVERT ELEVATION	SLOPE CRITICAL	CLASS III R.C. PIPE (UNLESS NOTED OTHERWISE) 12"	15"	18"	24"	30"	36"	36"	42"	42"	48"	48"
SIZE																		
THICKNESS OR GAUGE													CLASS IV			CLASS IV		CLASS IV
-SR- 24+90	LT	59B		721.00														
		59B	OUT		716.00	715.00												
-DR6- 13+42	CL	62	OUT		726.40	721.60					160							
-L- 93+00	CL	83		769.18														
		83	82		767.51	766.72			96									
-L- 93+00	LT	82		769.22														
		82	80		766.47	763.52												
-L- 87+50	LT	80		765.87														
		80	77		765.12	756.94												
-L- 85+51	LT	77		761.02														
		77	73		756.44	752.89												
-L- 81+50	LT	73		757.47														
		73	72		752.39	751.20												
-L- 79+00	LT	72		760.77														
		72	OUT		751.00	750.00							96					
-SR- 47+45	LT	71		754.50														
		71	OUT		750.00	747.00												
-SR- 55+58	RT	79		769.06														
		79	80		764.23	763.37												
-L- 87+50	CL	80		765.88														
		80	81		764.21	763.37			88									
-L- 85+51	LT	78		764.94														
		78	77		762.44	757.19			104									
-SR- 62+98	LT	79A																
-DR5- 14+61	RT	70																
-DR5- 10+20	CL	70A																
-DR5- 10+20	CL	70B																
-DR5- 15+60	CL	70C																
-L- 81+50	CL	74		767.57														
		74	73		765.07	753.64			120									
-L- 82+74	CL	75	OUT		752.90	743.00									380			
-L- 84+40	CL	76	OUT		750.20	742.80										536		
-L- 88+80	RT	81C		761.00														
		81C	OUT		756.50	756.00												
-SR- 69+48	LT	131																
-SR- 72+51	LT	132																
-SR- 73+83	LT	133																
-SR- 77+79	LT	134																
-L- 102+80	RT	108		767.68														
		108	107		765.93	765.40			96									
-L- 102+80	CL	107		768.89														
		107	108C		765.20	764.10												
-L- 105+00	RT	108C		770.25														
		108C	113A		764.10	761.30												
-L- 110+40	RT	114			757.00	748.50												
-L- 110+60	LT	113A		767.92														
		113A	113B		761.00	761.10												
-L- 105+00	LT	108B		767.78														
		108B	108C		765.20	764.10			108									
SHEET TOTALS								0	612	0	160	96	0	380	536	0	260	0

STATION	BITUMINOUS COATED C.S. PIPE TYPE B (UNLESS NOTED OTHERWISE) 12"	15"	18"	24"	24"	30"	30"	36"	36"	42"	42"	48"	48"
SIZE													
THICKNESS OR GAUGE	.064	.064	.064	.064	UNCOATED	.079	UNCOATED	.079	.109		.109		
-SR- 24+90													
							52						
-DR6- 13+42													
-L- 93+00													
-L- 93+00													
-L- 87+50													
-L- 85+51													
-L- 81+50													
-L- 79+00													
-SR- 47+45													
							52						
-SR- 55+58													
-L- 87+50													
-L- 85+51													
-SR- 62+98													
-DR5- 14+61													
-DR5- 10+20													
-DR5- 10+20													
-DR5- 15+60													
-L- 81+50													
-L- 82+74													
-L- 84+40													
-L- 88+80													
							68						
-SR- 69+48													
-SR- 72+51													
-SR- 73+83													
-SR- 77+79													
-L- 102+80													
-L- 102+80													
-L- 105+00													
-L- 110+40													
-L- 110+60													
-L- 105+00													
SHEET TOTALS	0	0	0	0	0	0	172	0	0	0	0	0	0

STATION	CLASS III R.C. PIPE OR C.S.PIPE OR TYPE IR ALUMINIZED OR HDPE, TYPE S OR D 12"	15"	18"	24"	30"	36"	42"	48"	15" SIDE DRAIN PIPE	18" SIDE DRAIN PIPE	24" SIDE DRAIN PIPE	ENDWALLS STD. 838.01 OR STD. 838.11 (UNLESS NOTED OTHERWISE) R.C.P.	C.S.P.	STD. 838.80 CU. YARDS
-SR- 24+90													2.00	
-DR6- 13+42														
-L- 93+00														
-L- 93+00														
			548											
-L- 87+50														
			196											
-L- 85+51														
				396										
-L- 81+50														
					244									
-L- 79+00														
-SR- 47+45													2.00	
-SR- 55+58														
		24												
-L- 87+50														
-L- 85+51														
-SR- 62+98											24			
-DR5- 14+61									24					
-DR5- 10+20									28					
-DR5- 10+20									28					
-DR5- 15+60										44				
-L- 81+50														
-L- 82+74												2.8		
-L- 84+40												3.8		
-L- 88+80													2.00	
-SR- 69+48										24				
-SR- 72+51											24			
-SR- 73+83											24			
-SR- 77+79											32			
-L- 102+80														
-L- 102+80														
			220											
-L- 105+00														
				560										
-L- 110+40												4.9		
-L- 110+60														
				88										
-L- 105+00														
SHEET TOTALS	0	24	964	1044	244	0	0	0	80	68	104	11.5	6	

STATION	QUANTITIES FOR DRAINAGE STRUCTURES PER EACH (0' THRU 5.0')	LIN. FT. A 5.0' THRU 10.0'	LIN. FT. B 10.0' AND ABOVE	*TOTAL L.F. FOR PAY QUANTITY SHALL BE COL. "A" + (1.3 X COL."B")	C.B. STD. 840.01 OR STD. 840.02	FRAME, GRATES, AND HOOD STANDARD 840.03 TYPE OF GRATE E	F	G	D.I. STD. 840.14 OR STD. 840.15	D.I. FRAME AND GRATE STD. 840.16	G.D.I. TYPE "A" STD. 840.17 OR 840.26	G.D.I. TYPE "B" STD. 840.18 OR 840.27	G.D.I. TYPE "D" STD. 840.19 OR 840.28	G.D.I. FRAME WITH GRATE STD. 840.20	G.D.I. FRAME WITH TWO GRATES STD. 840.22	G.D.I. (N.S.) FRAME WITH GRATE STD. 840.24	G.D.I. (N.S.) FRAME WITH TWO GRATES STD. 840.24	J.B. STD. 840.31 OR 840.32	MANHOLE STD. 840.51	M.H. STD. 840.51 OR 840.53	M.H. FRAME AND COVER STD. 840.54	60"X36" RC TAPERED INLET (DETAIL SHEETS 2-A/K)	BERM DRAINAGE OUTLET STD. 850.10	18" CONCRETE PIPE END SECTION STD. 310	24" CONCRETE PIPE END SECTION STD. 310	30" CONCRETE PIPE END SECTION STD. 310.03	36" CONCRETE PIPE END SECTION SPECIAL	30" SLUCE GATE	36" SLUCE GATE	SLUCE GATE INLET	CORR. STEEL ELBOWS NO. & SIZE	CONC. COLLARS CL. "B" C.Y. STD. 840.72	CONC. & BRICK PIPE PLUG. C.Y. STD. 840.71	PIPE REMOVAL LIN. FT.	REMARKS
-SR- 24+90	1											1			1												1	1								HAZARDOUS SPILL BASIN
-DR6- 13+42																																					2-24" RCP
-L- 93+00	1												1		1																						
-L- 93+00	1											1			1																						
-L- 87+50	1											1			1																						
-L- 85+51	1										1				1																						
-L- 81+50	1												1		1																						
-L- 79+00	1	4.77									1				1																						EXTRA NON-STD. DEPTH
-SR- 47+45	1											1			1												1	1									HAZARDOUS SPILL BASIN
-SR- 55+58	1											1			1																						
-L- 87+50	1												1		1																						
-L- 85+51	1											1			1																						
-SR- 62+98																																					
-DR5- 14+61																																					
-DR5- 10+20																																					
-DR5- 10+20																																					
-DR5- 15+60																																					
-L- 81+50	1											1			1																						
-L- 82+74																					1																
-L- 84+40																																					
-L- 88+80	1											1			1												1	1									HAZARDOUS SPILL /DRY DETENTION BASIN
-SR- 69+48																																					
-SR- 72+51																																					
-SR- 73+83																																					
-SR- 77+79																																					
-L- 102+80	1												1		1																						2GI - MINIMUM DEPTH
-L- 102+80	1											1			1																						
-L- 105+00	1	1.15									1				1																						EXTRA NON-STD. DEPTH
-L- 110+40																																					
-L- 110+60	1	1.92									1				1																						EXTRA NON-STD. DEPTH
-L- 105+00	1											1			1																						
SHEET TOTALS	18	7.92	0	0	0	0	0	0	0	0	5	10	3	0	18	0	0	0	0	0	0	1	0	0	0	0	0	3	3	0				0	0	0	0	0

ABBREVIATIONS

C.B.	CATCH BASIN
N.D.I.	NARROW DROP INLET
D.I.	DROP INLET
G.D.I.	GRATED DROP INLET
G.D.I.(N.S.)	GRATED DROP INLET (NARROW SLOT)
J.B.	JUNCTION BOX
M.H.	MANHOLE
T.B.D.I.	TRAFFIC BEARING DROP INLET
T.B.J.B.	TRAFFIC BEARING JUNCTION BOX

RD212417

COMPUTED BY: RR DATE: 6/14/2006

CHECKED BY: KJV DATE: 6/26/2006

PROJECT NO.	SHEET NO.
R2606A	3D

STATE OF NORTH CAROLINA
DIVISION OF HIGHWAYS

LIST OF PIPES, ENDWALLS, ETC. (FOR PIPES 48" & UNDER)

STATION	LOCATION (LT, RT, OR CL)'	STRUCTURE NO. FROM	STRUCTURE NO. TO	TOP ELEVATION	INVERT ELEVATION	INVERT ELEVATION	SLOPE CRITICAL	CLASS III R.C. PIPE (UNLESS NOTED OTHERWISE) SIZE 12"	15"	18"	24"	30"	36"	36"	42"	42"	48"	48"
THICKNESS OR GAUGE													CLASS IV			CLASS IV		CLASS IV
-L- 110+60	LT	112		767.92														
		112	113A		763.09	761.30												
-L- 111+34	RT	113C																
		113C	OUT															
-L- 124+00	CL	120		784.76														
		120	118		782.26	773.09												
-L- 118+30	CL	118		775.39														
		118	117		722.89	765.13												
-L- 113+70	CL	117		767.43														
		117	113B		764.68	762.00												
-L- 111+50	LT	113B		768.10														
		113B	OUT		760.10	758.00					104							
-DR1- 11+66	LT	105		761.20														
		105	OUT		758.40	757.80				20								
-DR1- 10+94	LT	103	104		761.60	753.32							132					
-DR1- 13+11	LT	106A																
-DR7- 14+64	CL	141																
-Y1- 12+00	CL	207			792.50	791.50					92							
-Y1- 17+77	RT	213																
-Y1- 37+98	LT	104		757.70														
		104	OUT		753.12	746.78							176					
-Y1- 38+56	RT	106																
		106	OUT		765.65	753.50												
-Y1- 25+32	RT	121		796.59														
		121	OUT		793.92	771.90												
-Y1- 27+00	RT	122		797.43														
		122	OUT		793.13	765.00												
-Y1- 29+54	LT	110		756.00														
		110	109		752.17										208			
-Y1- 30+10	RT	123A		791.15														
		123A	123B		788.48	786.74			60									
-Y1- 30+73	RT	123B		789.21														
		123B	OUT		786.54	753.40												
-Y1- 42+23	LT	215																
-Y1- 43+96	LT	216																
-Y1- 45+23	LT	217																
-Y2- 13+56	RT	201																
-Y2- 14+12	LT	202																
-Y2- 14+91	RT	203																
-Y2- 16+52	RT	204																
-Y2- 16+73	LT	205	OUT		790.00	788.99												
-Y2- 19+20	LT	206	OUT		788.00	786.82							92					
-Y2- 22+56	CL	209			789.67	789.15									92			
-Y2- 28+90	LT	210																
-Y2- 25+32	LT	211																
-Y2- 27+67	LT	212																
-Y2- 29+28	RT	214																
-Y2- 30+82	CL	300			794.80	790.30							104					
SHEET TOTALS								0	60	20	196	504	0	300	0	0	0	0

STATION	BITUMINOUS COATED C.S. PIPE TYPE B (UNLESS NOTED OTHERWISE) SIZE 12"	15"	18"	24"	30"	36"	42"	48"	CLASS III R.C. PIPE OR C.S.PIPE OR TYPE IR ALUMINIZED OR HDPE, TYPE S OR D SIZE 12"	15"	18"	24"	30"	36"	42"	48"
THICKNESS OR GAUGE	.064	.064	.064	.064 UNCOATED	.079 UNCOATED	.079	.109	.109								
-L- 110+60																
									40							
-L- 111+34																
				84												
-L- 124+00																
									568							
-L- 118+30																
									460							
-L- 113+70																
										220						
-L- 111+50																
-DR1- 11+66																
-DR1- 10+94																
-DR1- 13+11																
-DR7- 14+64																
-Y1- 12+00																
-Y1- 17+77																
-Y1- 37+98																
-Y1- 38+56																
		80														
-Y1- 25+32																
		84														
-Y1- 27+00																
		68														
-Y1- 29+54																
-Y1- 30+10																
-Y1- 30+73																
		136														
-Y1- 42+23																
-Y1- 43+96																
-Y1- 45+23																
-Y2- 13+56																
-Y2- 14+12																
-Y2- 14+91																
-Y2- 16+52																
-Y2- 16+73										60						
-Y2- 19+20																
-Y2- 22+56																
-Y2- 28+90																
-Y2- 25+32																
-Y2- 27+67																
-Y2- 29+28																
-Y2- 30+82																
SHEET TOTALS	0	368	0	0	84	0	0	0	0	0	0	0	0	0	0	0

STATION	15" SIDE DRAIN PIPE	18" SIDE DRAIN PIPE	24" SIDE DRAIN PIPE	ENDWALLS STD. 838.01 OR STD. 838.11 (UNLESS NOTED OTHERWISE) STD. 838.80 CU. YARDS R.C.P.	C.S.P.	QUANTITIES FOR DRAINAGE STRUCTURES *TOTAL L.F. FOR PAY QUANTITY SHALL BE COL. "A" + (1.3 X COL."B") PER EACH (0' THRU 5.0')	LIN. FT. A 5.0' THRU 10.0'	LIN. FT. B 10.0' AND ABOVE	C.B. STD. 840.01 OR STD. 840.02	FRAME, GRATES, AND HOOD STANDARD 840.03 TYPE OF GRATE E	F	G	D.I. STD. 840.14 OR STD. 840.15	D.I. FRAME AND GRATE STD. 840.16	G.D.I. TYPE "A" STD. 840.17 OR 840.26	G.D.I. TYPE "B" STD. 840.18 OR 840.27	G.D.I. TYPE "D" STD. 840.19 OR 840.28	G.D.I. FRAME WITH GRATE STD. 840.20	G.D.I. FRAME WITH TWO GRATES STD. 840.22	G.D.I. (N.S.) FRAME WITH GRATE STD. 840.24	G.D.I. (N.S.) FRAME WITH TWO GRATES STD. 840.24	J.B. STD. 840.31 OR 840.32	MANHOLE STD. 840.51	M.H. STD. 840.51 OR 840.53	M.H. FRAME AND COVER STD. 840.54	60"X36" RC TAPERED INLET (DETAIL SHEETS 2-AK)	BERM DRAINAGE OUTLET STD. 850.10	18" CONCRETE PIPE END SECTION STD. 310	24" CONCRETE PIPE END SECTION STD. 310	30" CONCRETE PIPE END SECTION STD. 310.03	C.B. STD. 840.04 OR STD. 840.05	30" SLUICE GATE	36" SLUICE GATE	SLUICE GATE INLET	CORR. STEEL ELBOWS NO. & SIZE	CONC. COLLARS CL. "B" C.Y. STD. 840.72	CONC. & BRICK PIPE PLUG, C.Y. STD. 840.71	PIPE REMOVAL LIN. FT.	REMARKS
-L- 110+60						1										1			1																					
-L- 111+34					1.4	1										1			1													1		1						HAZARDOUS SPILL BASIN
-L- 124+00						1										1			1																					
-L- 118+30						1										1			1																					
-L- 113+70						1										1			1																					
-L- 111+50						1	3.00								1				1																					EXTRA NON-STD. DEPTH
-DR1- 11+66						1							1	1																						0.89				
-DR1- 10+94																																								
-DR1- 13+11			24																																					
-DR7- 14+64			32																																					
-Y1- 12+00																																								
-Y1- 17+77		28																																						
-Y1- 37+98						1							1	1																										
-Y1- 38+56						1							1	1																										
-Y1- 25+32						1										1		1																		1 -15"				
-Y1- 27+00						1										1		1																		1 -15"				
-Y1- 29+54						1																											1							OPEN THROAT CATCH BASIN
-Y1- 30+10						1										1		1																						
-Y1- 30+73						1										1		1																		2 -15"				
-Y1- 42+23			36																																					
-Y1- 43+96			24																																					
-Y1- 45+23			28																																					
-Y2- 13+56			24																																					
-Y2- 14+12			44																																					
-Y2- 14+91			28																																					
-Y2- 16+52			32																																					
-Y2- 16+73																																				1.10				
-Y2- 19+20																																	1							
-Y2- 22+56					5.6																																			RC END WALL BOTH ENDS OF PIPE
-Y2- 28+90			32																																					
-Y2- 25+32		24																																						
-Y2- 27+67			40																																					
-Y2- 29+28			20																																					
-Y2- 30+82																																								
SHEET TOTALS	0	52	364	0	5.6	1.4	14	3	0	0	0	0	0	3	3	1	9	0	4	6	0	0	0	0	0	0	0	0	0	0	1	1	1	0	1				0	0	4	1.99	0	0	

ABBREVIATIONS	
C.B.	CATCH BASIN
N.D.I.	NARROW DROP INLET
D.I.	DROP INLET
G.D.I.	GRATED DROP INLET
G.D.I.(N.S.)	GRATED DROP INLET (NARROW SLOT)
J.B.	JUNCTION BOX
M.H.	MANHOLE
T.B.D.I.	TRAFFIC BEARING DROP INLET
T.B.J.B.	TRAFFIC BEARING JUNCTION BOX

RD212417,7/10/2006,U:\Temp\R2606a_Drainage_summary.xls

RD212417

COMPUTED BY: RR DATE: 6/14/2006

CHECKED BY: KJV DATE: 6/26/2006

PROJECT NO.: R2606A SHEET NO.: 3E

STATE OF NORTH CAROLINA
DIVISION OF HIGHWAYS

LIST OF PIPES, ENDWALLS, ETC. (FOR PIPES 48" & UNDER)

CLASS III R.C. PIPE (UNLESS NOTED OTHERWISE)

STATION	LOCATION (LT, RT, OR CL)	STRUCTURE NO. FROM	STRUCTURE NO. TO	TOP ELEVATION	INVERT ELEVATION	INVERT ELEVATION	SLOPE CRITICAL	12"	15"	18"	24"	30"	36"	36" CLASS IV	42"	42" CLASS IV	48"	48" CLASS IV
-RAMP A- 10+45	RT	129		767.76														
		129	OUT		765.09	750.40												
-RAMPC- 9+67	RT	135		775.19														
		135	OUT		772.52	769.60			32									
-RAMP D- 7+17	LT	140		775.38														
		140	OUT		772.71	768.00			100									
-RAMP D- 10+22	CL	138			767.40	763.00											280	
-RAMP A- 14+02	RT	128		762.59														
		128	125		759.92	759.61			92									
-RAMP D- 14+15	CL	137			768.50	762.30										184		
-LOOP A- 6+26	LT	125		762.69														
		125	126		659.61	757.60			204									
-LOOP A- 4+10	LT	126		765.90														
		126	OUT		757.40	756.60			48									
-LOOP A- 0+05	LT	127		768.79														
		127	OUT		763.21	757.80												
-RAMP C- 10+67	CL	136	OUT		762.40	763.00											180	
-Y- 16+43	CL																	
-SR- 72+50	LT																	
-SR- 73+84	LT																	
-SR- 74+60	RT																	
-SR- 75+48	RT																	
-SR- 76+53	RT																	
-SR- 77+17	RT																	
-SR- 78+67	RT																	
-SR- 78+67	RT																	
-SR- 79+62	RT																	
-SR- 80+21	RT																	
-SR- 80+50	LT																	
-DRIVE 1- 10+52	LT																	
-DRIVE 1- 10+90	LT																	
-DRIVE 1- 12+36	LT																	
-DRIVE 1- 13+10	LT																	
-L- 100+65	LT																	
-L- 101+76	LT																	
-L- 102+00	LT																	
-RAMP C- 6+90	LT																	
-Y1- 11+19	RT																	
-Y1- 42+24	LT																	
-Y1- 44+00	LT																	
-Y1- 45+25	LT																	
-Y2- 13+56	RT																	
-Y2- 14+07	LT																	
-Y2- 14+86	RT																	
-Y2- 16+50	RT																	
-Y2- 23+00	LT																	
-Y2- 25+25	LT																	
SHEET TOTALS								0	476	0	0	0	0	0	0	184	460	0

BITUMINOUS COATED C.S. PIPE TYPE B (UNLESS NOTED OTHERWISE); CLASS III R.C. PIPE OR C.S.PIPE OR TYPE IR ALUMINIZED OR HDPE, TYPE S OR D

STATION	Bit. 12" .064	Bit. 15" .064	Bit. 18" .064	Bit. 24" .064	Bit. 24" UNCOATED	Bit. 30" .079	Bit. 30" UNCOATED	Bit. 36" .079	Bit. 36"	Bit. 42" .109	Bit. 42"	Bit. 48" .109	Bit. 48"	Cl. III/C.S./HDPE 12"	15"	18"	24"	30"	36"	42"	48"	15" SIDE DRAIN PIPE	18" SIDE DRAIN PIPE	24" SIDE DRAIN PIPE
-RAMP A- 10+45																								
129 – OUT		116																						
127 – OUT															56									
SHEET TOTALS	0	116	0	0	0	0	0	0	0	0	0	0	0	0	56	0	0	0	0	0	0	0	0	0

ENDWALLS (STD. 838.01 OR STD. 838.11 (UNLESS NOTED OTHERWISE); STA. 838.80 CU. YARDS); QUANITIES FOR DRAINAGE STRUCTURES; *TOTAL L.F. FOR PAY QUANTITY SHALL BE COL. 'A' + (1.3 X COL.'B'); FRAME, GRATES, AND HOOD STANDARD 840.03

STATION	ENDWALLS R.C.P.	ENDWALLS C.S.P.	PER EACH (0' THRU 5.0')	LIN. FT. A 5.0' THRU 10.0'	LIN. FT. B 10.0' AND ABOVE	C.B. STD. 840.01 OR STD. 840.02	TYPE OF GRATE E	F	G	D.I. STD. 840.14 OR STD. 840.15	D.I. FRAME AND GRATE STD. 840.16	G.D.I. TYPE "A" STD. 840.17 OR 840.26	G.D.I. TYPE "B" STD. 840.18 OR 840.27	G.D.I. TYPE "D" STD. 840.19 OR 840.28	G.D.I. FRAME WITH GRATE STD. 840.20	G.D.I. FRAME WITH TWO GRATES STD. 840.22	G.D.I. (N.S.) FRAME WITH GRATE STD. 840.24	G.D.I. (N.S.) FRAME WITH TWO GRATES STD. 840.24	J.B. STD. 840.31 OR 840.32		MANHOLE STD. 840.51	M.H. STD. 840.51 OR 840.53	M.H. FRAME AND COVER STD. 840.54	60"X36" RC TAPERED INLET (DETAIL SHEETS 2-AK)	BERM DRAINAGE OUTLET STD. 850.10	18" CONCRETE PIPE END SECTION STD. 310	24" CONCRETE PIPE END SECTION STD. 310	30" CONCRETE PIPE END SECTION STD. 310.03	36" CONCRETE PIPE END SECTION SPECIAL	30" SLUCE GATE	36" SLUCE GATE	SLUCE GATE INLET						CORR. STEEL ELBOWS NO. & SIZE	CONC. COLLARS CL. "B" C.Y. STD. 840.72	CONC. & BRICK PIPE PLUG, C.Y. STD. 840.71	PIPE REMOVAL LIN. FT.	REMARKS
-RAMP A- 10+45			1										1			1																						1 -15"				
-RAMPC- 9+67			1										1			1																										
-RAMP D- 7+17			1										1			1																										
-RAMP D- 10+22	7.5																																									2 - 48" RCP
-RAMP A- 14+02			1										1			1																										
-RAMP D- 14+15	3.8																																									
-LOOP A- 6+26			1			1	1																																			
-LOOP A- 4+10			1	3.50		1	1																																			EXTRA NON-STD. DEPTH
-LOOP A- 0+05			1	0.58		1	1																																			NON-STD. DEPTH
-Y- 16+43																																									53	18" RCP
-SR- 72+50																																									17	12" RCP
-SR- 73+84																																									19	12" RCP
-SR- 74+60																																									23	15" RCP
-SR- 75+48																																									34	15" RCP
-SR- 76+53																																									22	15" RCP
-SR- 77+17																																									22	15" RCP
-SR- 78+67																																									24	15" RCP
-SR- 78+67																																									17	15" RCP
-SR- 79+62																																									22	15" RCP
-SR- 80+21																																									20	15" RCP
-SR- 80+50																																									24	15" RCP
-DRIVE 1- 10+52																																									38	15" RCP
-DRIVE 1- 10+90																																									22	15" RCP
-DRIVE 1- 12+36																																									26	12" RCP
-DRIVE 1- 13+10																																									27	15" RCP
-L- 100+65																																									40	15" RCP
-L- 101+76																																									22	12" RCP
-L- 102+00																																									28	8"
-RAMP C- 6+90																																									44	15" RCP
-Y1- 11+19																																									15	12" RCP
-Y1- 42+24																																									29	15" RCP
-Y1- 44+00																																									19	15" PVC
-Y1- 45+25																																									24	15" RCP
-Y2- 13+56																																									30	15" RCP
-Y2- 14+07																																									22	15" RCP
-Y2- 14+86																																									22	15" RCP
-Y2- 16+50																																									83	15" RCP
-Y2- 23+00																																									21	15" RCP
SHEET TOTALS	11.3	0	7	4.08	0	3	3	0	0	0	0	0	4	0	0	4	0	0	0	0	0	0	0	0	0	0	0	0	0	0	0	0				0	0	1	0	0	809	

ABBREVIATIONS

C.B.	CATCH BASIN
N.D.I.	NARROW DROP INLET
D.I.	DROP INLET
G.D.I.	GRATED DROP INLET
G.D.I.(N.S.)	GRATED DROP INLET (NARROW SLOT)
J.B.	JUNCTION BOX
M.H.	MANHOLE
T.B.D.I.	TRAFFIC BEARING DROP INLET
T.B.J.B.	TRAFFIC BEARING JUNCTION BOX

RD212417

COMPUTED BY: RR DATE: 6/14/2006

CHECKED BY: KJV DATE: 6/26/2006

PROJECT NO.	SHEET NO.
R2606A	3F

STATE OF NORTH CAROLINA
DIVISION OF HIGHWAYS

LIST OF PIPES, ENDWALLS, ETC. (FOR PIPES 48" & UNDER)

STATION	LOCATION (LT, RT, OR CL)'	STRUCTURE NO. FROM	STRUCTURE NO. TO	TOP ELEVATION	INVERT ELEVATION	INVERT ELEVATION	SLOPE CRITICAL	CLASS III R.C. PIPE (UNLESS NOTED OTHERWISE) 12"	15"	18"	24"	30"	36"	36"	42"	42"	48"	48"
SIZE								12"	15"	18"	24"	30"	36"	36"	42"	42"	48"	48"
THICKNESS OR GAUGE													CLASS IV			CLASS IV		CLASS IV
-Y2- 27+65	RT																	
-Y2- 23+03	RT																	
-Y2- 33+00	RT																	
SHEET TOTALS								0	0	0	0	0	0	0	0	0	0	0
GRAND TOTALS (ENGLISH)								0	3044	268	516	668	352	680	536	184	720	0
GRAND TOTAL (METRIC)									927.81	81.69	157.28	203.61	107.29	207.26	163.37	56.08	219.46	0.00

STATION	BITUMINOUS COATED C.S. PIPE TYPE B (UNLESS NOTED OTHERWISE) 12"	15"	18"	24"	30"	30"	36"	36"	42"	42"	48"	48"
SIZE	12"	15"	18"	24"	30"	30"	36"	36"	42"	42"	48"	48"
THICKNESS OR GAUGE	.064	.064	.064	.064	UNCOATED	.079	UNCOATED	.079	.109	.109	.109	
-Y2- 27+65												
-Y2- 23+03												
-Y2- 33+00												
SHEET TOTALS	0	0	0	0	0	0	0	0	0	0	0	0
GRAND TOTALS (ENGLISH)	0	508	68	0	168	180	260	132	0	0	0	0
GRAND TOTAL (METRIC)	0.00	154.84	20.73	0.00	51.21	54.86	79.25	40.23	0.00	0.00	0.00	0.00

STATION	CLASS III R.C. PIPE OR C.S.PIPE OR TYPE IR ALUMINIZED OR HDPE, TYPE S OR D 12"	15"	18"	24"	30"	36"	42"	48"	15" SIDE DRAIN PIPE	18" SIDE DRAIN PIPE	24" SIDE DRAIN PIPE	ENDWALLS STD. 838.01 OR STD. 838.11 (UNLESS NOTED OTHERWISE) STD. 838.80 CU. YARDS R.C.P.	C.S.P.
SHEET TOTALS	0	0	0	0	0	0	0	0	0	0	0	0	0
GRAND TOTALS (ENGLISH)	0	1580	2132	1868	1100	0	0	0	444	212	104	32	12.8
GRAND TOTAL (METRIC)	0.00	481.58	649.83	569.37	335.28	0.00	0.00	0.00	135.33	64.62	31.70	24.47	9.79

STATION	QUANTITIES FOR DRAINAGE STRUCTURES PER EACH (0' THRU 5.0')	"TOTAL L.F. FOR PAY QUANTITY SHALL BE COL. 'A' + (1.3 X COL. 'B') LIN. FT. A: 5.0' THRU 10.0'	B: 10.0' AND ABOVE	C.B. STD. 840.01 OR STD. 840.02	FRAME, GRATES, AND HOOD STANDARD 840.03 TYPE OF GRATE E	F	G	D.I. STD. 840.14 OR STD. 840.15	D.I. FRAME AND GRATE STD. 840.16	G.D.I. TYPE "A" STD. 840.17 OR 840.26	G.D.I. TYPE "B" STD. 840.18 OR 840.27	G.D.I. TYPE "D" STD. 840.19 OR 840.28	G.D.I. FRAME WITH GRATE STD. 840.20	G.D.I. FRAME WITH TWO GRATES STD. 840.22	G.D.I. (N.S.) FRAME WITH GRATE STD. 840.24	G.D.I. (N.S.) FRAME WITH TWO GRATES STD. 840.24	J.B. STD. 840.31 OR 840.32	MANHOLE STD. 840.51	M.H. STD. 840.51 OR 840.53	M.H. FRAME AND COVER STD. 840.54	60"X36" RC TAPERED INLET (DETAIL SHEET 2-AK)	BERM DRAINAGE OUTLET STD. 850.10	18" CONCRETE PIPE END SECTION STD. 310	24" CONCRETE PIPE END SECTION STD. 310	30" CONCRETE PIPE END SECTION STD. 310.03	C.B. STD. 840.04 OR STD. 840.05	30" SLUICE GATE	36" SLUICE GATE	SLUICE GATE INLET	CORR. STEEL ELBOWS NO. & SIZE	CONC. COLLARS CL. "B" C.Y. STD. 840.72	CONC. & BRICK PIPE PLUG, C.Y. STD. 840.71	PIPE REMOVAL LIN. FT.	REMARKS
-Y2- 27+65																																22	15"RCP
-Y2- 23+03																																18	15" RCP
-Y2- 33+00																																24	15" RCP
SHEET TOTALS	0	0	0	0	0	0	0	0	0	0	0	0	0	0	0	0	0	0	0	0	0	0	0	0	0	0	0	0	0	0	0	64	
GRAND TOTALS (ENGLISH)	83	38.15	6.02	3	3	0	0	3	3	15	55	6	9	67	0	0	0	0	0	0	2	1	1	0	1	1	2	5	7	9	2	0	873
GRAND TOTAL (METRIC)				3	3	0	0	3	3	15	55	6	9	67	0	0	0	0	0	0	2	1	1	0	1	1	2	5.00	7.00	9.00	1.53 M3	0.00	266.09 M

EXTRA DEPTH =
A+(1.3XCOL B) =

45.976 ft
14.02 m

5 - 15"
1- 18"
1 -30"
2 -36"

ABBREVIATIONS	
C.B.	CATCH BASIN
N.D.I.	NARROW DROP INLET
D.I.	DROP INLET
G.D.I.	GRATED DROP INLET
G.D.I.(N.S.)	GRATED DROP INLET (NARROW SLOT)
J.B.	JUNCTION BOX
M.H.	MANHOLE
T.B.D.I.	TRAFFIC BEARING DROP INLET
T.B.J.B.	TRAFFIC BEARING JUNCTION BOX

RD212417,7/25/2006,U:\Temp\R2606a_Drainage_summary2.xls

HY221524

COMPUTED BY: RR DATE: 6/16/2006

CHECKED BY: KJV DATE: 6/26/2006

PROJECT NO. R2606A

SHEET NO. 3G

STATE OF NORTH CAROLINA
DIVISION OF HIGHWAYS

LIST OF PIPES, ENDWALLS, ETC. (FOR PIPES 54" & OVER)

STATION / SIZE / THICKNESS OR GAUGE	LOCATION (LT, RT, OR CL)'	STRUCTURE NO. FROM	STRUCTURE NO. TO	TOP ELEVATION	INVERT ELEVATION	INVERT ELEVATION	SLOPE CRITICAL	CLASS III R.C. PIPE (UNLESS NOTED OTHERWISE) 54"	54" CLASS IV	60"	66"	72"	78"	84"		BITUMINOUS COATED C.S. PIPE TYPE B (UNLESS NOTED OTHERWISE) 54" .109	54" .138	54" .168	54" SHOP ELONGATED .138	54" SHOP ELONGATED .168	60" .138	60" .168	66" .138	66" .168	72" .139	72" .168		STRUCTURAL PLATE PIPE 60" 12	60" 10		66" 12	66" 10		72" 12	72" 10					REINFORCED ENDWALLS WITH R.C. - C.Y.	REINFORCED ENDWALLS WITH C.S. - C.Y.	MASONRY DRAINAGE STRUCTURES CUBIC YARDS	OPEN THROAT C.B. (SEE SHEET 2-AN)	FRAMES, GRATES & HOOD STANDARD 840.03 TYPE OF GRATE E	F	G					JUNCTION BOX STD. 840.31														REINF. CONC. FLARED END SECTIONS NO. & SIZE	CORR. STEEL FLARED END SECTIONS NO. & Size	CORR. STEEL ELBOWS NO. & SIZE	CONC. COLLARS CL. "B" C.Y. STD. 840.72		PIPE REMOVAL LIN. FT.	REMARKS
-L- 106+84	RT	111	109		756.70						284																													6.3																															
-L- 109+29	RT	109		757.4																																						4.56									1																				JB w/ SLAB LID
		109	OUT		750.13	748.30					180																																																												
-L- 113+46	CL	116	OUT		761.10	754.80				248																														5.6																															
-L- 118+60	CL	119	130		754.10				384																															5.2																															
-RAMP A- 14+40	LT	124B	OUT		746.50	743.70				192																														5.6																															
-RAMP A- 15+12	LT	124A	OUT		746.50	743.70				200																														5.6																															
-RAMP C- 10+67	CL	136	OUT		764.10	762.90		180																																6.9																															
-RAMP A- 10+08	RT	130																																								4.43	1																														OPEN THROAT CATCH BASIN (SEE SHEET 2-AN)
		130	OUT		745.10	743.60			200																																																														
SHEET TOTALS								180	584	640	464	0	0	0	0	0	0	0	0	0	0	0	0	0	0	0	0	0	0	0	0	0	0	0	0	0	0	0	0	35.2	0	8.99	1	0	0	0	0	0	0	0	1	0	0	0	0	0	0	0	0	0	0	0	0	0	0	0	0	0	0	0	
GRAND TOTAL (ENGLISH)								180	584	640	464	0	0	0	0	0	0	0	0	0	0	0	0	0	0	0	0	0	0	0	0	0	0	0	0	0	0	0	0	36	0	8.99	1	0	0	0	0	0	0	0	1	0	0	0	0	0	0	0	0	0	0	0	0	0	0	0	0	0	0	0	
GRAND TOTAL (METRIC)								54.86	178.00	195.07	141.43																													27.53	0.00	6.87	1								1																				

ABBREVIATIONS

C.B. CATCH BASIN
N.D.I. NARROW DROP INLET
D.I. DROP INLET
G.D.I. GRATED DROP INLET
G.D.I.(N.S.) GRATED DROP INLET (NARROW SLOT)
J.B. JUNCTION BOX
M.H. MANHOLE
T.B.D.I. TRAFFIC BEARING DROP INLET
T.B.J.B. TRAFFIC BEARING JUNCTION BOX

COMPUTED BY: HLR DATE:

CHECKED BY: KJV DATE:

PROJECT NO.	SHEET NO.
R-2606A	3-H

STATE OF NORTH CAROLINA
DIVISION OF HIGHWAYS

SUMMARY OF EARTHWORK

LINE	STATION to STATION	UNCLASSIFIED EXCAVATION	UNDERCUT	EMBANKMENT +%	BORROW	WASTE
	SUMMARY NO. 1					
-L-	10+00.00 to 21+85.73 (BRIDGE)	263,800		3,003	0	260,797
	TOTAL SUMMARY NO. 1	**263,800**	**0**	**3,003**	**0**	**260,797**
	SUMMARY NO. 2					
-L-	23+44.27 (BRIDGE) to 46+00.00	279,966		59,251	0	220,715
Y	12+00.00 to 14+09.97 (BRIDGE)	324		298	0	26
Y	16+34.39 (BRIDGE) to 18+00.00	164		550	386	0
SR	10+00.00 to 13+67.04	1,449		5,149	3,700	0
	TOTAL SUMMARY NO. 2	**281,903**	**0**	**65,248**	**4,086**	**220,741**
	SUMMARY NO. 3					
-L-	46+00.00 to 63+00.00	31,910		183,331	151,421	0
DRIVE 3	10+13.60 to 10+75.00	1		259	258	0
	TOTAL SUMMARY NO. 3	**31,911**	**0**	**183,591**	**151,680**	**0**
	SUMMARY NO. 4					
-L-	63+00.00 to 84+50.00	93,277		128,729	35,452	0
DRIVE 6	10+20.00 to 15+35.00	1,152		677	0	475
DRIVE 4	10+20.00 to 11+50.00	2,000		0	0	2,000
DRIVE 5	10+20.00 to 15+45.00	12,841		134	0	12,707
	TOTAL SUMMARY NO. 4	**109,270**	**0**	**129,541**	**35,452**	**15,182**
	SUMMARY NO. 5					
-L-	84+50.00 to 113+50.00	165,403		122,582	0	42,821
SR	69+00.00 to 81+96.59	1,581		7,235	5,654	0
DRIVE 1	10+20.00 to 13+10.00	172		2,864	2,692	0
Y1	29+69.41 to 46+00.00	1,744		134,594	132,850	0
RAMP C	4+72.78 to 10+14.12	30,185		1,787	0	28,398
RAMP A	14+50.00 to 17+83.01	0		21,553	21,553	0
	TOTAL SUMMARY NO. 5	**199,085**	**0**	**290,616**	**162,750**	**71,219**
	SUMMARY NO. 6					
-L-	113+50.00 to 132+00.00	17,500		93,067	75,567	0
Y1	11+00.00 to 27+37.91	13,774		87,079	73,305	0
RAMP A	0+00.00 to 14+50.00	759		59,806	59,047	0
LOOP A	0+00.00 to 7+60.00	883		13,498	12,615	0
RAMP D	4+88.57 to 16+50.00	0		61,618	61,618	0
RAMP C	10+14.12 to 15+00.00	25		20,572	20,547	0
Y2	12+00.00 to 29+00.00	4,771		790	0	3,981
DRIVE 7	11+00.00 to 14+69.67	972		0	0	972
	TOTAL SUMMARY NO. 6	**38,684**	**0**	**336,428**	**302,698**	**4,953**
SUBTOTALS		**924,653**	**0**	**1,008,426**	**656,665**	**572,892**
LOSS DUE TO CLEARING & GRUBBING		-20,700			20,700	
ROCK WASTE TO REPLACE BORROW					-35,603	-35,603
ADJUSTMENT FOR ROCK WASTE				-7,121	-7,121	
WASTE TO BE USED IN LIEU OF BORROW					-537,289	-537,289
SHOULDER MATERIAL				38,760	38,760	
ADDITIONAL UNDERCUT			6,600	7,920	7,920	6,600
PROJECT TOTAL		**903,953**	**6,600**	**1,047,985**	**144,032**	**6,600**
EST. 5% TO REPLACE TOPSOIL ON BORROW PIT					7,202	
GRAND TOTAL		**903,953**			**151,234**	**6,600**
SAY		**910,000**			**154,000**	**6,600**
		695,750.57	**CUBIC METERS**		**117,742.40**	**CUBIC METERS**

ESTIMATED PAVEMENT STRUCTURE VOLUME = 62,000 Cubic Yards

ESTIMATED PAVEMENT STRUCTURE VOLUME = 47,402.79 Cubic Meters

ESTIMATED UNDERCUT = 5038.17 Cubic Meters

EARTHWORK FOR ALTERNATE PAVEMENT DESIGN

LINE	STATION to STATION	UNCLASSIFIED EXCAVATION	UNDERCUT	EMBANKMENT +%	BORROW	WASTE
SUBTOTALS		**924,653**	**0**	**1,008,426**	**656,665**	**572,892**
ADJUSTMENT FOR ALTERNATE PAVEMENT DESIGN		-15,135		15,018	15,018	-15,135
LOSS DUE TO CLEARING & GRUBBING		-20,700			20,700	
ROCK WASTE TO REPLACE BORROW					-35,603	-35,603
ADJUSTMENT FOR ROCK WASTE				-7,121	-7,121	
WASTE TO BE USED IN LIEU OF BORROW					-522,154	-522,154
SHOULDER MATERIAL				38,760	38,760	
ADDITIONAL UNDERCUT			6,600	7,920	7,920	6,600
PROJECT TOTAL		**888,818**	**6,600**	**1,063,003**	**174,185**	**6,600**
EST. 5% TO REPLACE TOPSOIL ON BORROW PIT					8,709	
GRAND TOTAL		**888,818**			**182,895**	**6,600**
SAY		**895,000**			**185,000**	**6,600**
		684,282.15	**CUBIC METERS**		**141,443.80**	**CUBIC METERS**

ESTIMATED PAVEMENT STRUCTURE VOLUME = 58,700 Cubic Yards

ESTIMATED PAVEMENT STRUCTURE VOLUME = 44,879.73 Cubic Meters

ESTIMATED UNDERCUT = 5038.17 Cubic Meters

COMPUTED BY: DEL DATE: 11/03/04
CHECKED BY: KJV, RR DATE: 2/17/05, 2/14/06

DIVISION OF HIGHWAYS
STATE OF NORTH CAROLINA

PROJECT REFERENCE NO.	SHEET NO.
R-2606A	3-I

"N" = DISTANCE FROM EDGE OF LANE TO FACE OF GUARDRAIL
TOTAL SHOULDER WIDTH = DISTANCE FROM EDGE OF TRAVEL LANE TO SHOULDER BREAK POINT.
FLARE LENGTH = DISTANCE FROM LAST SECTION OF PARALLEL GUARDRAIL TO END OF GUARDRAIL
W = TOTAL WIDTH OF FLARE FROM BEGIN

C00026266

GUARDRAIL SUMMARY

G = GATING IMPACT ATTENUATOR TYPE 350
NG = NON-GATING IMPACT ATTENUATOR TYPE 350

SURVEY LINE	BEG. STA.	END STA.	LOCATION	LENGTH			WARRANT POINT		"N" DIST. FROM E.O.L.	TOTAL SHOUL WIDTH	FLARE LENGTH		W		ANCHORS									IMPACT ATTENUATOR TYPE 350		SINGLE FACED CONCRETE BARRIER	REMOVE EXISTING GUARDRAIL	REMOVE & STOCKPILE EXISTING GUARDRAIL	REMARKS
				STRAIGHT	SHOP CURVED	DOUBLE FACED	APPROACH END	TRAILING END			APPROACH END	TRAILING END	APPROACH END	TRAILING END	III	XI MOD	XI	GRAU 350	M-350	TES	CAT-1	VI MOD	AT-1	B-77	NG				
-L-	10+00.00	10+87.50.	LT.	87.50			*	*	11.81	14.81								1											
	18+74.59	21+74.59	RT.	300.00			BRIDGE	BRIDGE	10.00	13.00	181.25		4.375		1			1											
	19+62.09	21+74.59	MED/RT	212.50			BRIDGE	BRIDGE	6.00	12.00					1				1										
	19+83.86	21+71.36	LT.	187.50			BRIDGE	BRIDGE	10.00	13.00					1						1								
	23+58.63	26+58.63	LT.	300.00			BRIDGE	BRIDGE	10.00	13.00					1			1											
	23+58.63	25+71.13	MED/LT	212.50			BRIDGE	BRIDGE	6.00	12.00	168.75		4.125		1				1										
	23+66.41	25+66.41	RT.	200.00			BRIDGE	BRIDGE	10.00	13.00					1						1								
	42+47.36	52+09.86	RT.	962.50			44+00	51+00	12.00	15.00								1			1								
	43+91.85	51+04.35	LT.	712.50			44+00	51+00	12.00	15.00								1			1								
	57+47.37	68+59.87	RT.	1112.50			59+00	66+50	12.00	15.00								1			1								
-SR-	10+91.75	17+19.95	LT	625.00			11+72.06	16+48.02	4.00	7.00								2											
	23+53.15	30+65.65	LT	712.50	50.00		23+31.42	30+64.40	4.00	7.00								1					1						
	45+07.14	56+44.64	LT	1137.50			46+22.52	55+07.61	4.00	7.00								2											
	63+26.75	69+14.25	RT	587.50			61+57.61	69+09.80	4.00	7.00								2											
-Y-	12+36.87	13+99.37	RT.	162.50			BRIDGE	BRIDGE	4.00	7.00	93.75		2.875		1			1											
	13+11.74	13+99.37	LT	87.50			BRIDGE	BRIDGE	3.00	6.00		18.75		1.375	1			1											
	16+59.62	18+09.62	LT	162.50			BRIDGE	BRIDGE	3.00	6.00	81.25		2.625		1			1											
	16+59.62	17+34.62	RT.	87.50			BRIDGE	BRIDGE	4.00	7.00		18.75		1.375	1			1											
-Y1-	24+98.03	27+23.03	RT	225.00			BRIDGE	BRIDGE	6.00	9.00	156.25		4.125		1			1											
	26+35.53	27+23.03	LT	87.50			BRIDGE	BRIDGE	6.00	9.00		31.25		1.625	1			1											
	29+88.35	30+75.85	RT	87.50			BRIDGE	BRIDGE	6.00	9.00		31.25		1.625	1			1											
	29+88.35	36+00.85	LT	612.50			BRIDGE	BRIDGE	6.00	9.00	100.00		2.000		1			1											
-Y2-	20+46.44	25+58.94	RT	512.50			22+50	23+00	5.00	8.00								2											
-RPA-	4+72.23	16+59.73	RT	1187.50			5+76.20	16+50	12.00	15.00								1			1								
-RPC-	9+56.64	15+74.30	RT	587.50	50.00		10+65.13	15+00.00	12.00	15.00								1			1								
-RPD-	1+88.11	16+50.61	LT	1462.50			1+88.11	16+50.00	12.00	15.00								1			1								
-LPA-	7+22.5	9+22.5	LT	200.00			8+50	7+22	12.00	15.00								1			1								
SUB TOTAL-				12812.50	100.00										14.00	0.00	0.00	27.00	2.00	0.00	9.00	0.00	1.00						
TOTAL				12812.50	100.00								TOTAL (ENGLISH)		14.00	0.00	0.00	27.00	2.00	0.00	9.00	0.00	1.00						
DEDUCTIONS		QTY											TOTAL (METRIC)		14.00	0.00	0.00	27.00	2.00	0.00	9.00	0.00	1.00						
	GRAU 350	50.00	27.00	-1350.00																									
	M-350	37.50	2.00	-75.00																									
	CAT-1	6.25	8.00	-50.00																									
	AT-1	6.25	2.00	-12.50																									
	TYPE III	18.75	14.00	-262.50																									
				* STATION WARRANT POINT CAN BE FOUND ON ADJACENT PROJECT R-0609IB																									
		ADDITIONAL GUARDRAIL POSTS = 10 EA																											
GRAND TOTAL (ENGLISH)				11062.50	100.00																								
GRAND TOTAL (METRIC)				3371.850	30.480																								

COMPUTED BY: VARIOUS	DATE:
CHECKED BY: KJV	DATE:

PROJECT NO.	SHEET NO.
R-2606A	3-J

STATE OF NORTH CAROLINA
DIVISION OF HIGHWAYS

SUMMARY OF EXISTING ASPHALT PAVEMENT REMOVAL

LINE	STATION	STATION	LOCATION	SQ. YDS.
-DR1-	10+61.00	13+73.00	CL	718.11
-L-	44+84.00	50+79.00	CL	1335.81
-L-	97+57.00	104+56.00	CL	2178.82
-SR-	10+00.00	11+50.00	CL	336.13
-SR-	72+78.00	77+50.00	CL	1487.91
-Y-	14+00.00	16+46.00	CL	554.58
-Y1-	35+88.00	38+07.00	CL	385.99
-Y1-	40+20.00	41+09.00	CL	216.52
-Y1-	42+00.00	46+00.00	CL	1060.38
			TOTAL:	8274.25
			SAY:	8300
			SQ. METERS	6939.63

WOVEN WIRE FENCE

$$E = \frac{[A-(8B+16C+16D)]}{14} - \frac{(B+C+D)}{2}$$

$$F = (2B+3C+3D)$$

STATION	TO	STATION	LT. OR RT.	A	B	C	D	E	F
				FABRIC L.F.	END BRACE	CORNER BRACE	LINE BRACE	4" POST	5" POST
-L- STA. 10+00	TO	-L- STA. 21+84.26	LT	1386	2	4	2	87	22
-L- STA. 10+00	TO	-L- STA. 21+90	RT	1295	2	1	5	81	22
-L- STA. 23+50	TO	-L- STA. 35+53	LT	1230	2	2	3	78	19
-L- STA. 23+50	TO	-L- STA. 35+40	RT	1454	2	7	3	86	34
-L- STA. 35+69	TO	-L- STA. 46+08	RT	1092	2	3	2	68	19
-L- STA. 35+82	TO	-SR- STA. 79+27.38	LT	7763	2	7	20	494	85
-L- STA. 46+38	TO	-L- STA. 64+57	RT	1951	2	4	5	123	31
-SR- STA. 23+35	TO	-SR- STA. 26+75	LT	667	2	4	0	39	16
-SR- STA. 79+27.38	TO	-DR1- STA. 11+55	LT	280	2	1	0	16	7
-L- STA. 64+90	TO	-L- STA. 101+78	RT	3800	2	5	9	247	46
-SR- STA. 45+40	TO	-SR- STA. 47+95	LT	544	2	3	0	34	10
-L- STA. 121+31	TO	-L- STA. 131+56	RT	1026	2	0	3	69	13
RPC STA.10+34	TO	-Y1- STA. 19+50	LT	778	2	2	1	49	13
-Y1- STA. 19+50	TO	-RPD- STA. 3+20	RT	1711	2	5	2	83	25
-RPA- STA. 13+71	TO	-L- STA. 134+92	LT	2087	2	1	7	134	28
-Y1- STA. 38+00	TO	-Y1- STA. 40+65	LT	271	2	1	1	14	10
-Y1- STA. 40+65	TO	-RPA- STA. 14+30	RT	511	2	2	0	31	10
			TOTAL	30,456			TOTAL	1,733	410
			SAY	30,500			SAY	1,743	420
			METERS	9296.40					

SUMMARY OF BREAKING EXISTING ASPHALT PAVEMENT

LINE	STATION	STATION	LOCATION	SQ. YDS.
-SR-	11+50.00	14+96.00	CL	672.27
-SR-	77+50.00	80+31.00	CL	667.37
-Y1-	41+09.00	42+00.00	CL	264.75
			TOTAL:	1604.39
			SAY:	1620
			SQ. METERS	1354.48

SUMMARY OF CABLE GUIDERAIL

LINE	STATION	STATION	LF	ANCHORS	EA
-L-	10+00.00 LT	21+38.75 LT	1138.75	END	1
-L-	23+89.00 RT	33+17.00 RT	928.00	END	2
-L-	38+04.50 RT	105+54.50 RT	6750.00	INTERMEDIATE	6
				END	2
-L-	110+88.50 RT	131+38.50 RT	2050.00	END	2
		SUBTOTAL	10866.75		
		Deduction For Anchors 13@25 =	-325		
		TOTAL	10541.75		13
		SAY	10550		
		METERS	3215.64		13

COMPUTED BY: DAP DATE: 6/21/02
CHECKED BY: MDP DATE: 11/22/02

PROJECT REFERENCE NO.	SHEET NO.
R-2606A	3-K

STATE OF NORTH CAROLINA
DIVISION OF HIGHWAYS

RIGHT OF WAY AREA DATA SHEET

PARCEL NO.	PROPERTY OWNERS NAME	TOTAL ACREAGE	AREA TAKEN	AREA REMAINING RIGHT	AREA REMAINING LEFT	CONSTR. EASEMENT	PERMANENT DRAINAGE EASEMENT	TEMPORARY DRAINAGE EASEMENT		PARCEL NO.	PROPERTY OWNERS NAME	TOTAL ACREAGE	AREA TAKEN	AREA REMAINING RIGHT	AREA REMAINING LEFT	CONSTR. EASEMENT	PERMANENT DRAINAGE EASEMENT	TEMPORARY DRAINAGE EASEMENT	
1	KEPLEY-FRANK HARDWOOD CO.	RIGHT OF WAY TO BE ACQUIRED UNDER ADJACENT PROJECT R-609 IB								31	JOHN S. ALLRED	5.04 Ac.	4.50 Ac.		0.54 Ac.				
2	MAGGIE N. POOLE	RIGHT OF WAY TO BE ACQUIRED UNDER ADJACENT PROJECT R-609 IB								32	JESSE M. SEAWELL	6.03 Ac.	4.10 Ac.		1.93 Ac.	467 sf			
3	REBECCA SOUTHERN	2.00 Ac.	NO CLAIM		2.00 Ac.					33	CLYDE and RANDALL SPENCER	34.51 Ac.	17.09 Ac.	13.14 Ac.	1.90 Ac.			2.38 Ac.	
4	RAY POOLE	4.82 Ac.	0.94 Ac.	0.48 Ac.	3.40 Ac.		1474 sf	1908 sf		33A	CLYDE R. SPENCER	51.14 Ac.	15.28 Ac.	19.52 Ac.	16.17 Ac.	0.73 Ac.			
5	JAMES H. TROTTER	22.16 Ac.	7.35 Ac.	14.24 Ac.	0.57 Ac.			1974 sf		34	THOMAS S. EDMONDS		0.80 Ac.						
6	HOWARD R. TROTTER	6.48 Ac.	1218 sf	6.45 Ac.						35	L.G. BOWMAN JR.	8.73 Ac.	0.83 Ac.		7.90 Ac.				
7	TIMOTHY LARUE TROTTER	59.85 Ac.	0.52 Ac.		59.33 Ac.	2677 sf		875 sf		36	EARLY W. BOWMAN	7.01 Ac.	5.59 Ac.	1.42 Ac.					
8	ZOLA ROSENBURG	0.84 Ac.	0.59 Ac.		0.25 Ac.			875 sf		37	THOMAS S. EDMONDS	37.64 Ac.	0.91 Ac.		36.73 Ac.				
8A	BRIAN PETERSON	0.92 Ac.	0.46 Ac.		0.46 Ac.	1231 sf				38	VIRGINIA MARSH ESTATE	0.324 Ac	0.148 Ac	2800 sf	0.112 Ac				
8B	TIMOTHY GREER	3.37 Ac.	0.85 Ac.		2.52 Ac.					38A	MARTIN RESOR, SR.	1.098 Ac	0.152 Ac.	0.946 Ac.					
8C	CHARLES PENDLETON	2.46 Ac.	0.83 Ac.		1.63 Ac.					39	LORRAINE HUNT		0.43 Ac.						
9	JOHN FRANCIS REDDING	13.45 Ac.	4.39 Ac.	0.48 Ac.	8.58 Ac.	755 sf.				40	JESSE R. EDMONDS	13.38 Ac.	2.35 Ac.		11.03 Ac.				
9A	GARY REDDING	1.17 Ac.	2614 sf.	1.11 Ac.						41	KERMIT R. HAYES	1.25 Ac.	0.62 Ac.		0.63 Ac.				
10	FAYE T. COLLINS	25.07 Ac.	0.43 Ac.	24.64 Ac.						42	ROGER D. PARRISH, SR.	1.94 Ac.	0.14 Ac.		1.80 Ac.				
11	BETTY NICHOLSON	14.77 Ac.	6.26 Ac.	3.63 Ac.	4.88 Ac.	0.82 Ac.	4114 sf	860 sf		43	LEONARD HARRISON, SR.	0.67 Ac.	3,104 sf.		0.60 Ac.				
12	ARCHIE S. HILL		0.80 Ac.							44	FRANK S. RICH	0.70 Ac.	0.17 Ac.		0.53 Ac.				
13	DON W. ELDRIDGE		5.83 Ac.			1463 sf				45	MRS. O.B. HORNER	0.68 Ac.	3328 sf		0.60 Ac.				
14	JADINE F. HILL	22.99 Ac.	3.18 Ac.	19.77 Ac.	1804 sf			2274 sf		46	ELBERT V. OWENS		0.74 Ac.						
15	DANIEL A. HILL		5.03 Ac.			0.55 Ac.				47	ANGELA H. TACKETT	0.45 Ac.							
16	BOBBY RALPH HILL	15.32 Ac.	3.86 Ac.	5.57 Ac.	5.89 Ac.	1735 sf				48	TERRY A. DAY	0.55 Ac.	1,010 sf.	0.53 Ac.		529 sf.	324 sf.		
17	JERRY G. MCDOWELL	6.98 Ac.	2.34 Ac.		4.64 Ac.					49	DONALD L. LINGERFELT	1.43 Ac.	3,870 sf.	1.34 Ac.					
18	MICAH L. MCDOWELL	6.89 Ac.	4.12 Ac.	0.55 Ac.	2.22 Ac.					50	ARNOLD R. MOSELY	2.48 Ac.	1,175 sf.	2.45 Ac.					
19	DONALD R. SPELL	13.61 Ac.	1.08 Ac.	12.53 Ac.						51	BARRY BAXTER		0.17 Ac.						
20	PAUL G. SEWARD		0.16 Ac.							52	ERIC MICHAEL DAVIS		0.13 Ac.						
21	GRAND FURNITURE, INC.		0.43 Ac.							53	JERIL MILES	0.41 Ac.	0.06 Ac.		0.35 Ac.				
22	ANN H. POOLE	3.11 Ac.	1.83 Ac.		1.29 Ac.					54	NINA KENNEDY		0.20 Ac.				393.67 sf		
23	JAMES E. HARRELSON	1.00 Ac.	1.00 Ac.							55	GLENOLA BAPTIST CHURCH		0.38 Ac.						
24	JAMES MCCRACKEN	1.06 Ac.	0.91 Ac.	0.15 Ac.						14Z	JADINE F. HILL	19.81 Ac						2274 sf	
25	ROGER K. AIKENS		0.50 Ac.																
26	CLARK O. POOLE	0.90 Ac.	0.90 Ac.																
27	ELIZABETH FOLWELL	2.00 Ac.	0.32 Ac.	1.68 Ac.															
28	LARRY WELCH	20.00 Ac.	0.75 Ac.	19.25 Ac.															
29	DONALD W. BOWMAN	7.04 Ac.	6.60 Ac.	0.44 Ac.															
30	ALDENE BOWMAN	7.03 Ac.	5.08 Ac.	1.36 Ac.	0.59 Ac.														

REVISIONS

12/26/98

USER: rataylor
DGN: R2606A_rowsum.dgn
DATE: 6/26/2006

PROJ. REFERENCE NO.	SHEET NO.
R-2606A	3-L

STATE OF NORTH CAROLINA
DIVISION OF HIGHWAYS

PARCEL INDEX SHEET

PARCEL No.	SHEET No.	PROPERTY OWNER NAME
1	4,5,6	KEPLEY-FRANK HARDWOOD CO., INC
2	5,6	MAGGIE N. POOLE
3	6	REBECCA SOUTHERN
4	6,7	RAY POOLE
5	6,7	JAMES H. TROTTER
6	6	HOWARD R. TROTTER
7	7	TIMOTHY LARUE TROTTER
8	7	ZOLA ROSENBURG
8A	7	BRIAN PETTERSON
8B	7	TIMOTHY GREER
8C	7	CHARLES PENDLETON
9	7,8	JOHN FRANCIS REDDING
9A	7	GARY REDDING
10	7	FAYE T. COLLINS
11	8	BETTY NICHOLSON
12	8	ARCHIE S. HILL
13	8,9	DON W. ELDRIDGE
14	8,9	JADINE F. HILL
15	9	DANIEL A. HILL
16	9,10	BOBBY RALPH HILL
17	9,10	JERRY G. MCDOWELL
18	10	MICAH L. MCDOWELL
19	10	DONALD R. SPELL
20	10	PAUL G. SEWARD
21	10	GRAND FURNITURE, INC.
22	10,11	ANN H. POOLE
23	10	JAMES E. HARRELSON
24	10	JAMES MCCRACKEN
25	10	ROGER K. AIKENS
26	10,11	CLARK O. POOLE
27	11	ELIZABETH FOLWELL
28	11,15	R.J. BROWN EST.
29	11,14	DONALD W. BOWMAN
30	11,14	ALDENE BOWMAN
31	11	JOHN S. ALLRED
32	11	JESSE M. SEAWELL
33	11	CLYDE R. SPENCER
33A	11, 12, 12A	CLYDE R. SPENCER
34	11,14	THOMAS S. EDMONDS
35	10,11	L. G. BOWMAN, JR.
36	11,14	EARLY W. BOWMAN
37	11,15	THOMAS S. EDMONDS
38	13	VIRGINIA MARSH ESTATE
38A	13	MARTIN RESOR, SR.
39	13	LORRAINE HUNT
40	13,14	JESSE R. EDMONDS
41	13,14	KERMIT R. HAYES
42	14	ROGER D. PARRISH, SR.
43	14	LEONARD HARRISON, SR.
44	14	FRANK S. RICH
45	14	MRS. O. B. HORNER
46	14	ELBERT V. OWENS
47	15	ANGELA H. TACKETT
48	15	TERRY A. DAY
49	15	DONALD L. LINGERFELT
50	15	ARNOLD R. MOSLEY
51	15	BARRY BAXTER
52	15	ERIC MICHAEL DAVIS
53	14A	JERIL MILES
54	14A	NINA KENNEDY
55	14A	GLENOLA BAPTIST CHURCH

PARCEL No.	SHEET No.	PROPERTY OWNER NAME

PROJECT REFERENCE NO.	SHEET NO.
R-2606A	4
R/W SHEET NO.	

ROADWAY DESIGN ENGINEER — NORTH CAROLINA PROFESSIONAL SEAL 5965 ENGINEER GEORGE T. SHEARIN — 6/26/06

HYDRAULICS ENGINEER — NORTH CAROLINA PROFESSIONAL SEAL 025498 ENGINEER JOHN DAVID REHDER NICHOLS — 6/26/2006

Prepared in the Office of: EarthTech
A Tyco International Ltd. Company
701 Corporate Center Drive, Suite 475
Raleigh, NC 27607
(919) 854-6200 - (919) 854-6259(FAX)

GRAPHIC SCALE
50 25 0 50 100
PLANS

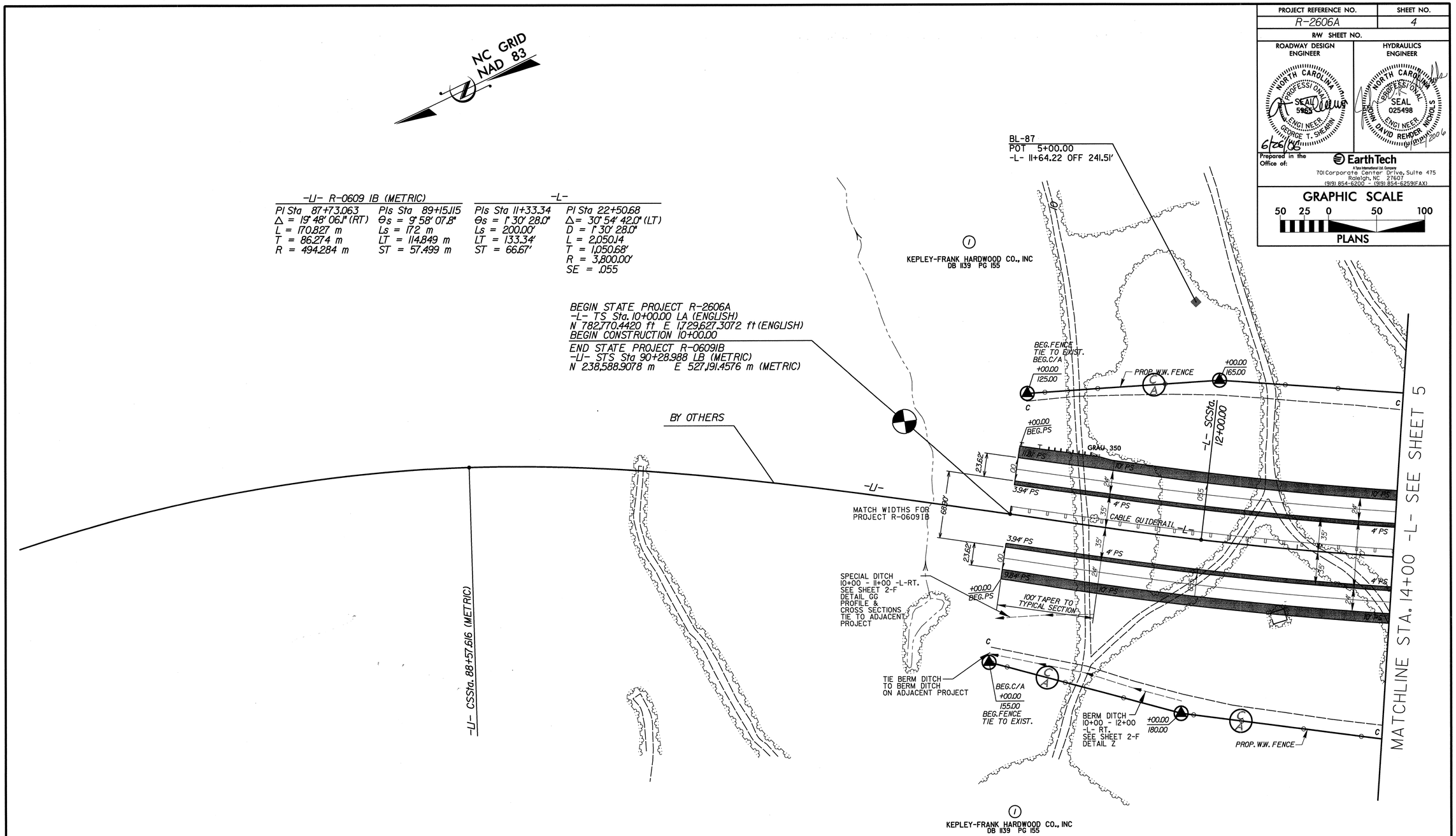

RIGHT OF WAY ON PARCELS 1 & 2 TO BE ACQUIRED UNDER ADJACENT PROJECT R-609 IB

PARCEL 1 ACCESS PROVIDED UNDER R-6091B

FOR -L- PROFILE SEE SHEET 16

◁▷ DENOTES FALSE SUMP SEE DETAIL SHEET 2-F

USER: kevinsanstra
DGN: k:\4158\r2606a\Roadway\Proj\r2606a_rdy_psh_04.dgn
DATE: 6/26/2006

PROJECT REFERENCE NO.	SHEET NO.
R-2606A	5
R/W SHEET NO.	

ROADWAY DESIGN ENGINEER: NORTH CAROLINA PROFESSIONAL SEAL 8965 ENGINEER GEORGE T. SHEARIN — 6/26/08

HYDRAULICS ENGINEER: NORTH CAROLINA PROFESSIONAL SEAL 6982 ENGINEER RICHARD N. SCARCE — 6/27/08

Prepared in the Office of: EarthTech, A Tyco International Ltd. Company, 701 Corporate Center Drive, Suite 475, Raleigh, NC 27607, (919) 854-6200 - (919) 854-6259(FAX)

GRAPHIC SCALE: 50 25 0 50 100

PLANS

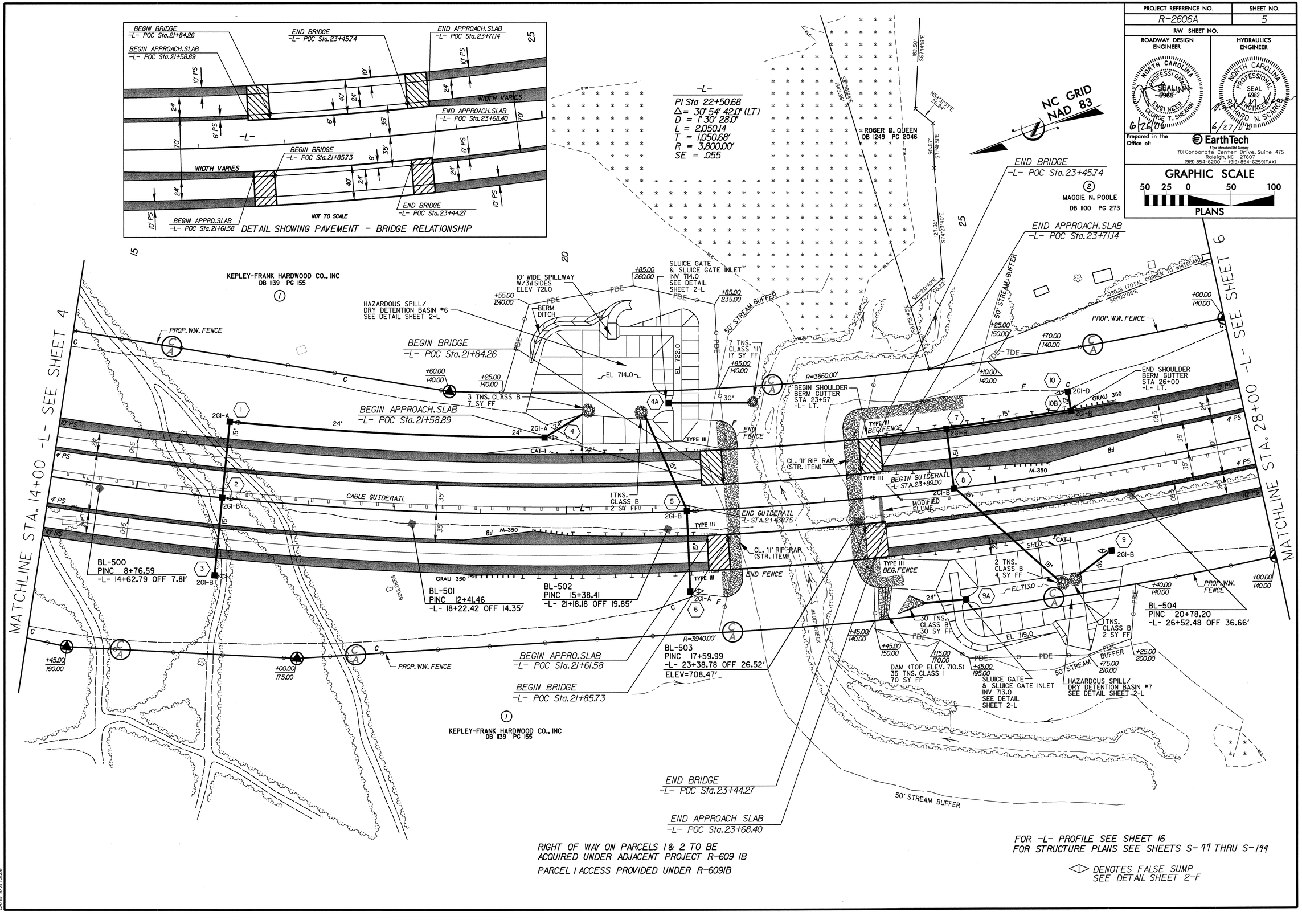

RIGHT OF WAY ON PARCELS 1 & 2 TO BE ACQUIRED UNDER ADJACENT PROJECT R-609 1B

PARCEL 1 ACCESS PROVIDED UNDER R-6091B

FOR -L- PROFILE SEE SHEET 16
FOR STRUCTURE PLANS SEE SHEETS S-11 THRU S-199

◇ DENOTES FALSE SUMP SEE DETAIL SHEET 2-F

USER: rsing.sing
DGN: R:\R2606A\Roadway\Proj\r2606a_rdy_psh_05.dgn
DATE: 6/27/2008

COMPUTED BY: DAP	DATE: 6/21/02
CHECKED BY: MDP	DATE: 11/22/02

REVISIONS

PROJECT REFERENCE NO.	SHEET NO.
R-2606A	6

R/W SHEET NO.

ROADWAY DESIGN ENGINEER — NORTH CAROLINA PROFESSIONAL SEAL 025498 ENGINEER GEORGE T. SHEARIN — 6/26/06

HYDRAULICS ENGINEER — NORTH CAROLINA PROFESSIONAL SEAL 025498 ENGINEER DAVID REHDER NICHOLS — 6/26/06

Prepared in the Office of: EarthTech, A Tyco International Ltd. Company, 701 Corporate Center Drive, Suite 475, Raleigh, NC 27607, (919) 854-6200 - (919) 854-6259 (FAX)

GRAPHIC SCALE: 50 25 0 50 100

PLANS

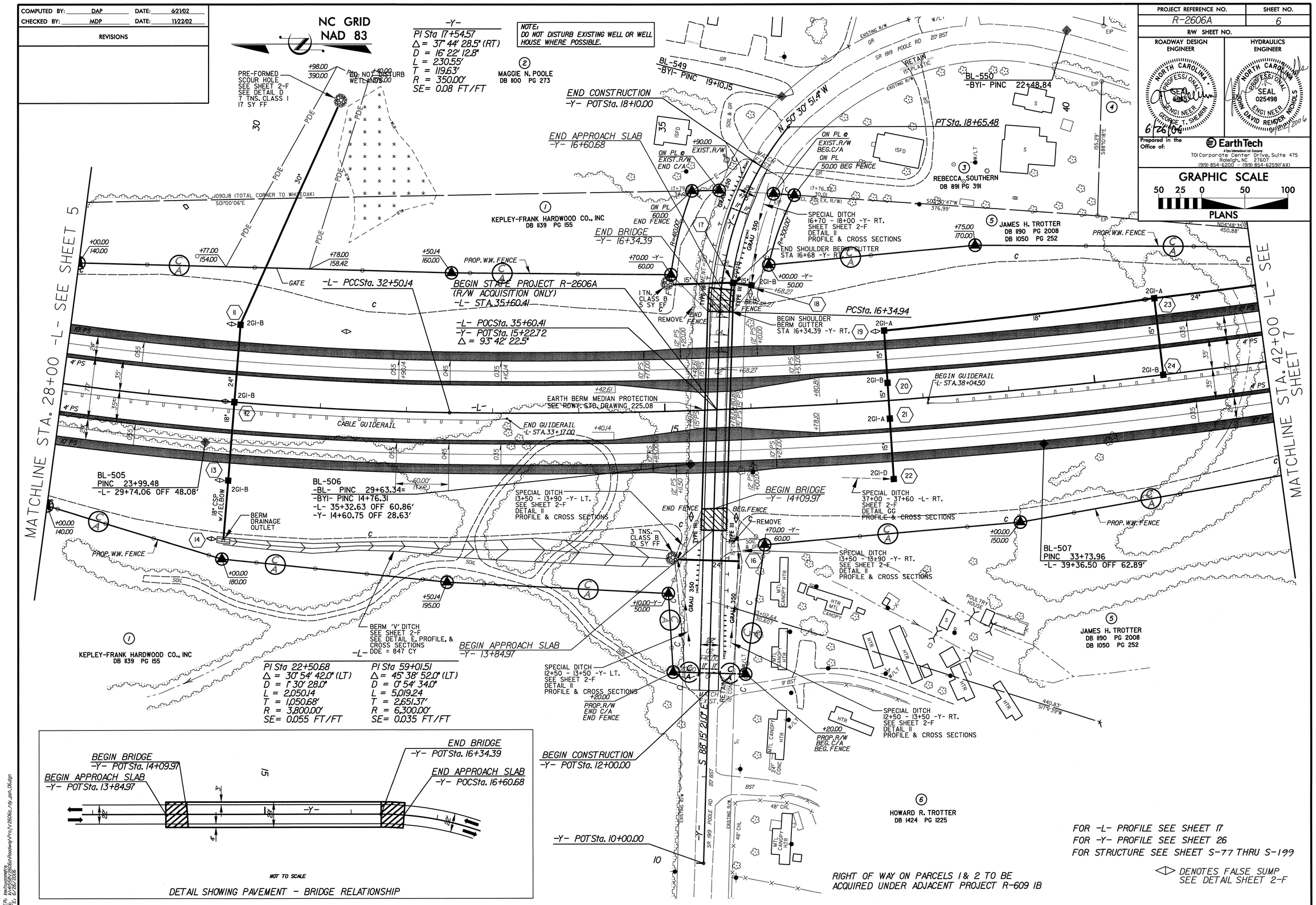

USER: tewhungmatra
DGN: R-2606Sy-2606sr\Roadway\Proj\r2606s_rdy_psh_06.dgn
DATE: 6/26/2006

REVISIONS

PROJECT REFERENCE NO.	SHEET NO.
R-2606A	7
R/W SHEET NO.	

ROADWAY DESIGN ENGINEER: NORTH CAROLINA PROFESSIONAL SEAL 5965 ENGINEER GEORGE T. SHERIN — 6/28/06

HYDRAULICS ENGINEER: NORTH CAROLINA PROFESSIONAL SEAL 025498 ENGINEER JOHN DAVID REMDER NICHOLS — 6/28/2006

Prepared in the Office of: EarthTech, A Tyco International Ltd. Company, 701 Corporate Center Drive, Suite 475, Raleigh, NC 27607, (919) 854-6200 - (919) 854-6259(FAX)

GRAPHIC SCALE: 50 25 0 50 100

PLANS

-L-
PI Sta 59+01.51
Δ = 45° 38' 52.0" (LT)
D = 0° 54' 34.0"
L = 5,019.24
T = 2,651.37'
R = 6,300.00'
SE= 0.035 FT/FT

-SR-
PI Sta 15+42.99
Δ = 38° 18' 02.7" (LT)
D = 9° 32' 57.5"
L = 401.08'
T = 208.36'
R = 600.00'
SE = .08 FT/FT

PI Sta 38+46.89
Δ = 25° 15' 58.2" (LT)
D = 0° 56' 02.1"
L = 2,705.40'
T = 1,375.06'
R = 6,135.00'
SE = NC

-DRIVE3-
PI Sta 10+60.77
Δ = 12° 42' 57.0" (RT)
D = 11° 45' 29.6"
L = 11.10'
T = 5.57'
R = 50.00'

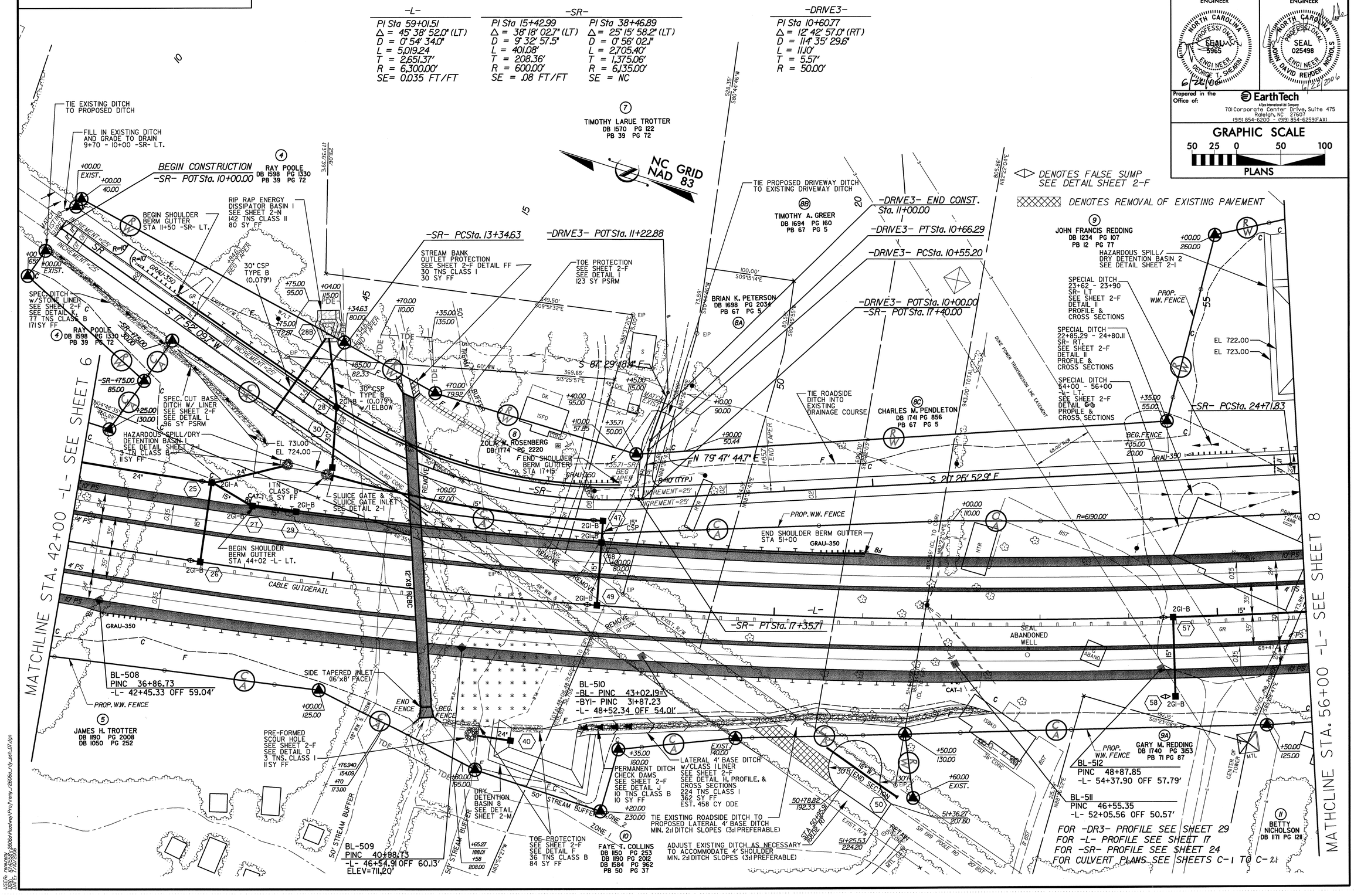

USER: swilson
DGN: R2606A_2606Sch2RoadwayPro1v1.dgn
DATE: 7/07/2006

REVISIONS

PROJECT REFERENCE NO.	SHEET NO.
R-2606A	8
R/W SHEET NO.	
ROADWAY DESIGN ENGINEER	HYDRAULICS ENGINEER

NORTH CAROLINA PROFESSIONAL SEAL 5965 ENGINEER GEORGE T. SHEARIN 6/28/06

NORTH CAROLINA PROFESSIONAL SEAL 025498 ENGINEER DAVID RENDER NICHOLS 6/28/2006

Prepared in the Office of: EarthTech, A Kiewit-Parsons-Ski Company, 701 Corporate Center Drive, Suite 475, Raleigh, NC 27607, (919) 854-6200 - (919) 854-6259(FAX)

GRAPHIC SCALE
50 25 0 50 100
PLANS

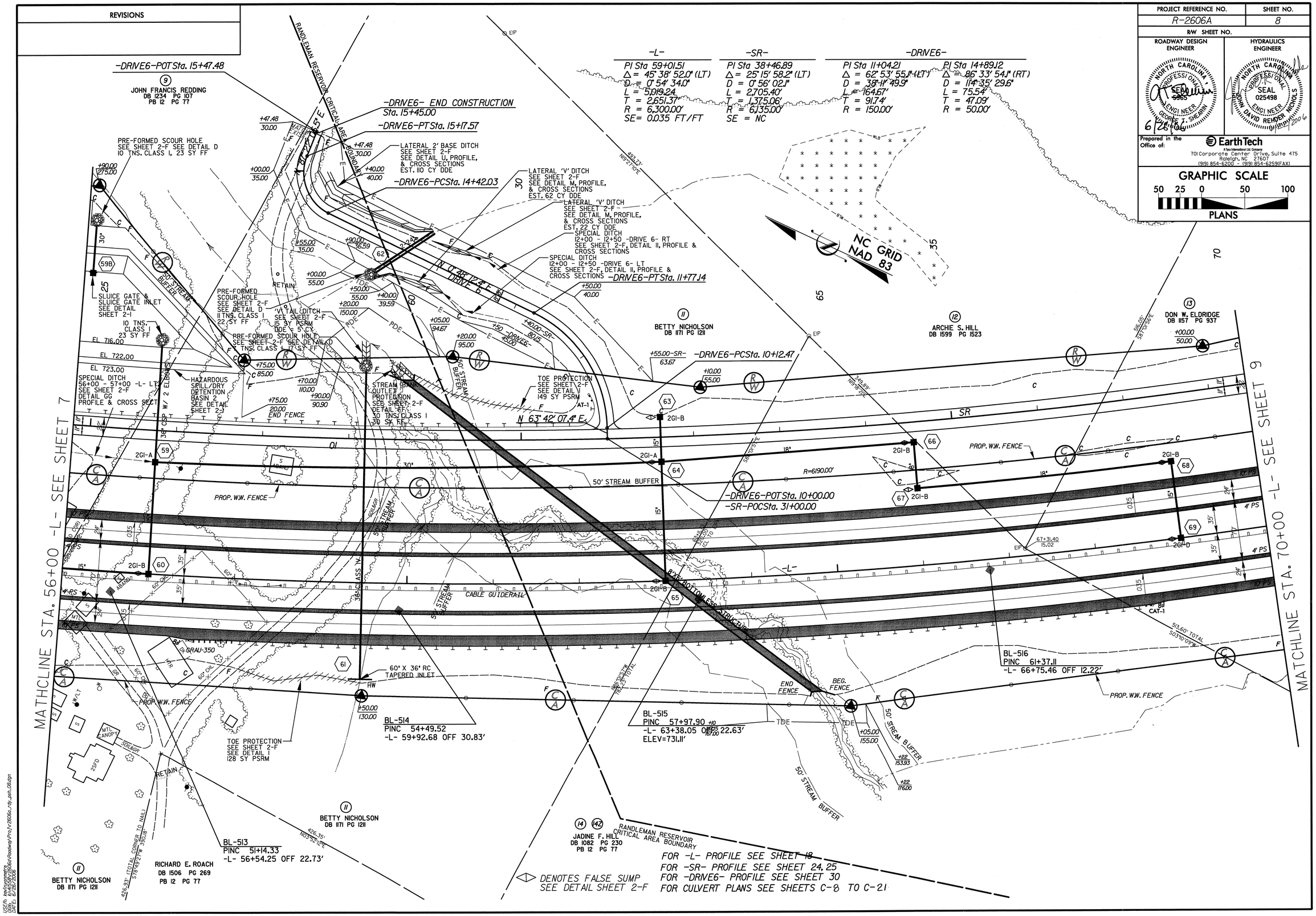

USER: tedhuguenette
DGN: R-2606A_Sheets\Roadway\Proj\r-2606a_rdy_psh_09.dgn
DATE: 6/28/2006

COMPUTED BY: WCB	DATE: 3/10/04
CHECKED BY: GTS	DATE: 3/10/04

REVISIONS

PROJECT REFERENCE NO.	SHEET NO.
R-2606A	9
R/W SHEET NO.	

ROADWAY DESIGN ENGINEER — NORTH CAROLINA PROFESSIONAL SEAL 25361 ENGINEER GEORGE T. SHEARIN 6/28/06

HYDRAULICS ENGINEER — NORTH CAROLINA PROFESSIONAL SEAL 025498 ENGINEER DAVID RENDER NICHOLS 6/28/2006

Prepared in the Office of: EarthTech, A Tyco International Ltd. Company, 701 Corporate Center Drive, Suite 475, Raleigh, NC 27607, (919) 854-6200 - (919) 854-6259(FAX)

GRAPHIC SCALE 50 25 0 50 100

PLANS

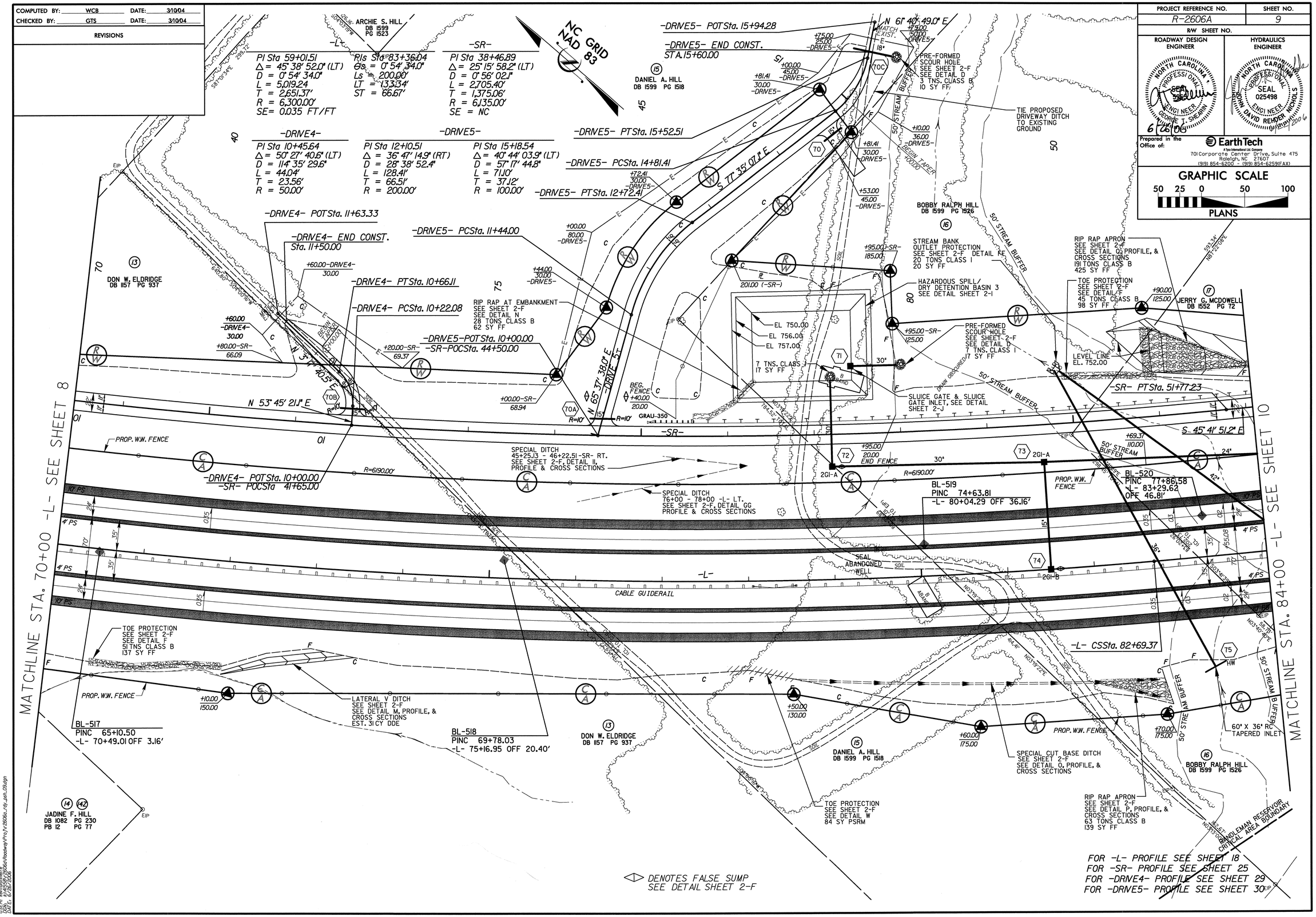

USER: tnelmonmartin
DGN: 6x4150-25-Sol-Roadway-Proj-r2606a_rdy_jph.dgn
DATE: 6/28/2006

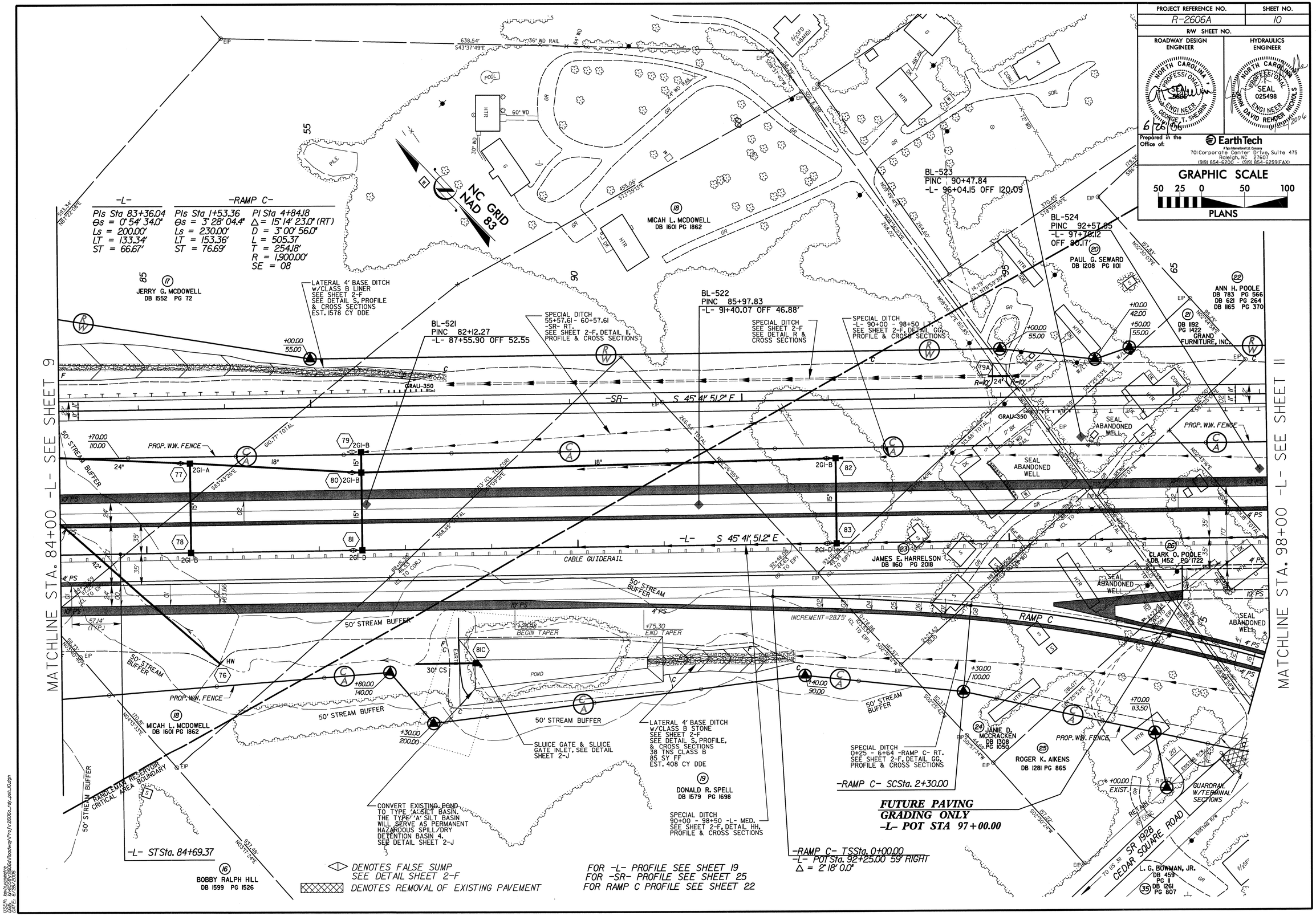
PROJECT REFERENCE NO.
R-2606A
SHEET NO.
10
R/W SHEET NO.
ROADWAY DESIGN ENGINEER
HYDRAULICS ENGINEER
NORTH CAROLINA PROFESSIONAL ENGINEER GEORGE T. SHEARIN
NORTH CAROLINA PROFESSIONAL SEAL 025498 ENGINEER JOHN DAVID REIDER NICHOLS
6/26/06
Prepared in the Office of:
EarthTech
A Tyco International Ltd. Company
701 Corporate Center Drive, Suite 475
Raleigh, NC 27607
(919) 854-6200 - (919) 854-6259(FAX)
GRAPHIC SCALE
50 25 0 50 100
PLANS
NC GRID NAD 83
-L-
PIs Sta 83+36.04
Θs = 0° 54' 34.0"
Ls = 200.00'
LT = 133.34'
ST = 66.67'
-RAMP C-
PIs Sta 1+53.36
Θs = 3° 28' 04.4"
Ls = 230.00'
LT = 153.36'
ST = 76.69'
PI Sta 4+84.18
Δ = 15° 14' 23.0" (RT)
D = 3° 00' 56.0"
L = 505.37
T = 254.18'
R = 1,900.00'
SE = 08
MATCHLINE STA. 84+00 -L- SEE SHEET 9
MATCHLINE STA. 98+00 -L- SEE SHEET 11
JERRY G. MCDOWELL DB 1552 PG 72
MICAH L. MCDOWELL DB 1601 PG 1862
BL-521 PINC 82+12.27 -L- 87+55.90 OFF 52.55
BL-522 PINC 85+97.83 -L- 91+40.07 OFF 46.88'
BL-523 PINC 90+47.84 -L- 96+04.15 OFF 120.09
BL-524 PINC 92+57.95 -L- 97+76.12 OFF 80.17'
PAUL G. SEWARD DB 1208 PG 1101
ANN H. POOLE DB 783 PG 566 DB 621 PG 264 DB 1165 PG 370
DB 1192 PG 1422 GRAND FURNITURE, INC.
LATERAL 4' BASE DITCH w/CLASS B LINER SEE SHEET 2-F SEE DETAIL S, PROFILE & CROSS SECTIONS EST. 1578 CY DDE
SPECIAL DITCH 55+57.61 - 60+57.61 -SR- RT. SEE SHEET 2-F, DETAIL II, PROFILE & CROSS SECTIONS
SPECIAL DITCH SEE SHEET 2-F SEE DETAIL R & CROSS SECTIONS
SPECIAL DITCH -L- 90+00 - 98+50 LT. SEE SHEET 2-F, DETAIL GG, PROFILE & CROSS SECTIONS
-SR- S 45° 41' 51.2" E
-L- S 45° 41' 51.2" E
CABLE GUIDERAIL
PROP. W.W. FENCE
SEAL ABANDONED WELL
JAMES E. HARRELSON DB 1160 PG 2018
CLARK O. POOLE DB 1452 PG 1722
RAMP C
50' STREAM BUFFER
BEGIN TAPER
END TAPER
INCREMENT = 28.75'
POND
SLUICE GATE & SLUICE GATE INLET, SEE DETAIL SHEET 2-J
LATERAL 4' BASE DITCH w/CLASS B STONE SEE SHEET 2-F SEE DETAIL S, PROFILE, & CROSS SECTIONS 38 TNS CLASS B 85 SY FF EST. 408 CY DDE
DONALD R. SPELL DB 1579 PG 1698
SPECIAL DITCH 90+00 - 98+50 -L- MED. SEE SHEET 2-F, DETAIL HH, PROFILE & CROSS SECTIONS
SPECIAL DITCH 0+25 - 6+64 -RAMP C- RT. SEE SHEET 2-F, DETAIL GG, PROFILE & CROSS SECTIONS
JANIE D. MCCRACKEN DB 1308 PG 1050
ROGER K. AIKENS DB 1281 PG 865
-RAMP C- SCSta. 2+30.00
FUTURE PAVING GRADING ONLY -L- POT STA 97+00.00
CONVERT EXISTING POND TO TYPE 'A' SILT BASIN. THE TYPE 'A' SILT BASIN WILL SERVE AS PERMANENT HAZARDOUS SPILL/DRY DETENTION BASIN 4. SEE DETAIL SHEET 2-J
-L- STSta. 84+69.37
BOBBY RALPH HILL DB 1599 PG 1526
-RAMP C- TSSta. 0+00.00
-L- POT Sta. 92+25.00 59' RIGHT
Δ = 2° 18' 0.0"
SR 1928 CEDAR SQUARE ROAD
GUARDRAIL W/TERMINAL SECTIONS
L. G. BOWMAN, JR. DB 459 PG 11 DB 1261 PG 807
DENOTES FALSE SUMP SEE DETAIL SHEET 2-F
DENOTES REMOVAL OF EXISTING PAVEMENT
FOR -L- PROFILE SEE SHEET 19
FOR -SR- PROFILE SEE SHEET 25
FOR RAMP C PROFILE SEE SHEET 22

REVISIONS

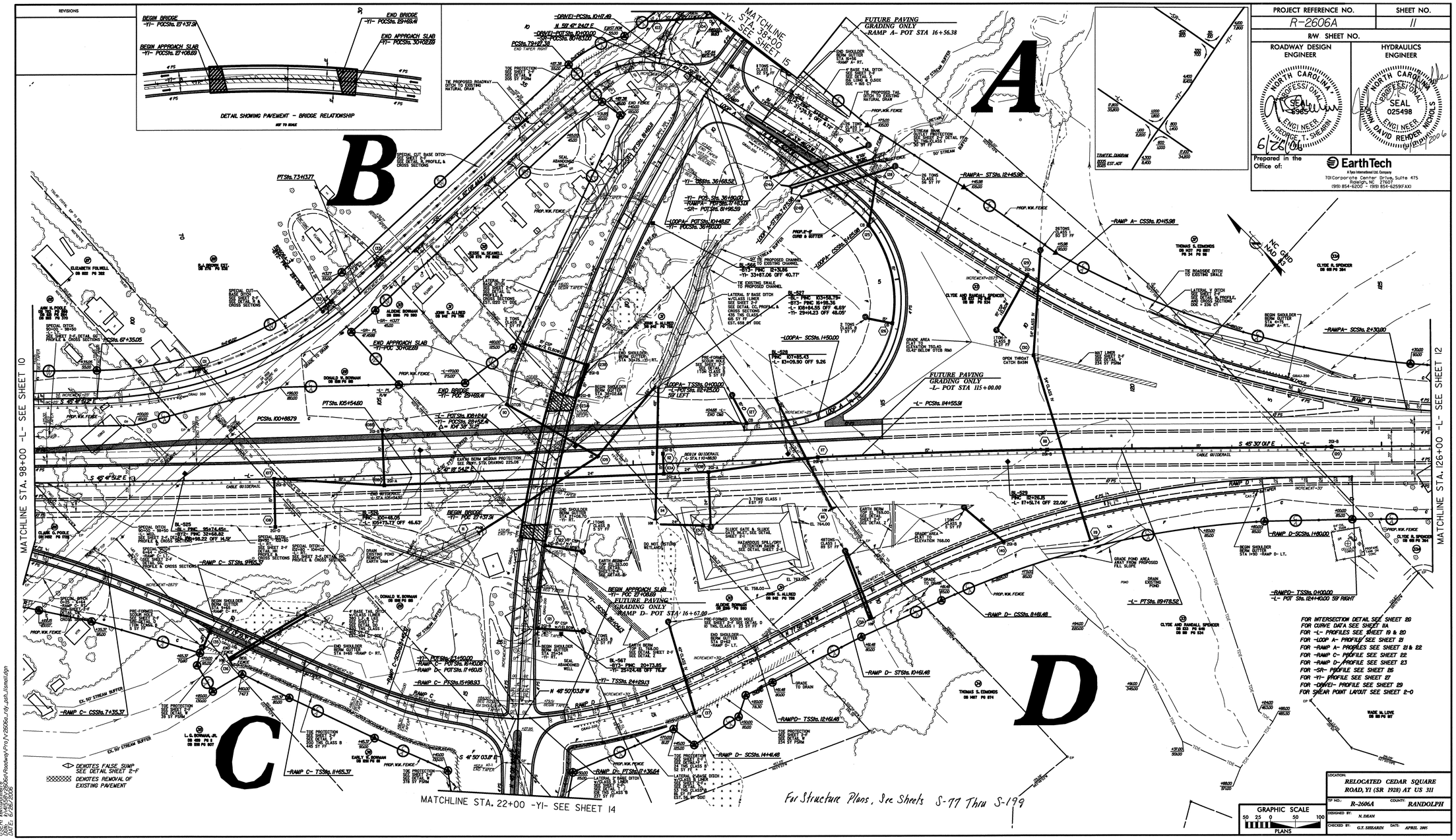

PROJECT REFERENCE NO.	SHEET NO.
R-2606A	11
R/W SHEET NO.	

ROADWAY DESIGN ENGINEER

NORTH CAROLINA PROFESSIONAL SEAL 5985 ENGINEER GEORGE T. SHEARIN 6/22/06

HYDRAULICS ENGINEER

NORTH CAROLINA PROFESSIONAL SEAL 025498 ENGINEER JOHN DAVID REHDER, NICHOLS 11/29/2006

Prepared in the Office of:

EarthTech
A Tyco International Ltd. Company
701 Corporate Center Drive, Suite 475
Raleigh, NC 27607
(919) 854-6200 - (919) 854-6259(FAX)

LOCATION: RELOCATED CEDAR SQUARE ROAD, Y1 (SR 1928) AT US 311

TIP NO.: R-2606A COUNTY: RANDOLPH

DESIGNED BY: N. DEAN

CHECKED BY: G.T. SHEARIN DATE: APRIL 2005

USER: kwilliamsmills
DGN: ...\Roadway\Proj\R2606a_rdy_sph_11rev11.dgn
DATE: 6/28/2006

PROJECT REFERENCE NO.	SHEET NO.
R-2606A	11-A
R/W SHEET NO.	
ROADWAY DESIGN ENGINEER	HYDRAULICS ENGINEER

NORTH CAROLINA PROFESSIONAL SEAL 5663 ENGINEER GEORGE T. SHEARIN 6/28/06

NORTH CAROLINA PROFESSIONAL SEAL 025498 ENGINEER JOHN DAVID REHDER NICHOLS 6/28/2006

Prepared in the Office of:
EarthTech
A Tyco International Ltd. Company
701 Corporate Center Drive, Suite 475
Raleigh, NC 27607
(919) 854-6200 - (919) 854-6259(FAX)

-L-

PI Sta 103+21.71	PI Sta 117+17.24
Δ = 1° 37′ 03.0″ (LT)	Δ = 1° 48′ 53.1″ (RT)
D = 0° 20′ 50.1″	D = 0° 20′ 50.1″
L = 465.81′	L = 522.61′
T = 232.92′	T = 261.33′
R = 16,500.00′	R = 16,500.00′
SE = NC	SE = NC

-SR-

PI Sta 70+37.72	PI Sta 80+64.59
Δ = 41° 26′ 52.8″ (LT)	Δ = 76° 11′ 55.8″ (RT)
D = 7° 09′ 43.1″	D = 32° 44′ 25.6″
L = 578.72′	L = 232.74′
T = 302.68′	T = 137.21′
R = 800.00′	R = 175.00′
SE = 07	SE = 05

-Y1-

PIs Sta 25+45.81	PI Sta 31+48.02	PIs Sta 37+26.86
Θs = 2° 23′ 14.4″	Δ = 29° 02′ 25.5″ (RT)	Θs = 2° 23′ 14.4″
Ls = 175.00′	D = 2° 43′ 42.1″	Ls = 175.00′
LT = 116.68′	L = 1,064.39	LT = 116.68′
ST = 58.34′	T = 543.89′	ST = 58.34′
	R = 2,100.00′	
	SE = 05	

-LOOP A-

PIs Sta 1+00.48	PI Sta 5+01.04	PIs Sta 6+76.41
Θs = 17° 11′ 19.4″	Δ = 109° 05′ 09.5″ (LT)	Θs = 17° 11′ 19.4″
Ls = 150.00′	D = 22° 55′ 05.9″	Ls = 150.00′
LT = 100.48′	L = 475.98	LT = 100.48′
ST = 50.43′	T = 351.04′	ST = 50.43′
	R = 250.00′	
	SE = 08	

-DRIVE1-

PI Sta 10+86.71
Δ = 38° 10′ 40.0″ (RT)
D = 28° 38′ 52.4″
L = 133.27′
T = 69.21′
R = 200.00′

-RAMP A-

PIs Sta 10+92.67	PI Sta 6+28.69	PIs Sta 1+53.36
Θs = 3° 28′ 04.4″	Δ = 23° 42′ 06.2″ (RT)	Θs = 3° 28′ 04.4″
Ls = 230.00′	D = 3° 00′ 56.0″	Ls = 230.00′
LT = 153.36′	L = 785.98	LT = 153.36′
ST = 76.69′	T = 398.69′	ST = 76.69′
	R = 1,900.00′	
	SE = 08	

-RAMP C-

PI Sta 4+84.18	PIs Sta 8+12.06	PIs Sta 12+85.42	PI Sta 14+72.90
Δ = 15° 14′ 23.0″ (RT)	Θs = 3° 28′ 04.4″	Θs = 5° 23′ 58.6″	Δ = 15° 12′ 45.9″ (LT)
D = 3° 00′ 56.0″	Ls = 230.00′	Ls = 180.00′	D = 5° 59′ 58.4″
L = 505.37	LT = 153.36′	LT = 120.06′	L = 253.56
T = 254.18′	ST = 76.69′	ST = 60.05′	T = 127.53′
R = 1,900.00′			R = 955.00′
SE = 08			SE = 06

-RAMP D-

PI Sta 15+90.25	PIs Sta 13+81.53	PIs Sta 9+41.49	PI Sta 5+34.74	PIs Sta 1+20.01
Δ = 17° 42′ 31.3″ (RT)	Θs = 5° 23′ 58.6″	Θs = 2° 41′ 59.3″	Δ = 21° 02′ 34.0″ (LT)	Θs = 2° 41′ 59.3″
D = 5° 59′ 58.4″	Ls = 180.00′	Ls = 180.00′	D = 2° 59′ 59.2″	Ls = 180.00′
L = 295.17	LT = 120.06′	LT = 120.01′	L = 701.48	LT = 120.01′
T = 148.77′	ST = 60.05′	ST = 60.01′	T = 354.74′	ST = 60.01′
R = 955.00′			R = 1,910.00′	
SE = 08			SE = 06	

USER: kevhuyamate DATE: 6/26/2006
DGN: K:\41556\2606a\Roadway\Proj\r2606a_rdy_psh_11.dgn 10:47:51 AM
PRF: $$PRF$$

REVISIONS

PROJECT REFERENCE NO.	SHEET NO.
R-2606A	12
R/W SHEET NO.	

ROADWAY DESIGN ENGINEER — NORTH CAROLINA PROFESSIONAL SEAL 036 ENGINEER GEORGE T. SHEARIN — 6/26/06

HYDRAULICS ENGINEER — NORTH CAROLINA PROFESSIONAL SEAL 025498 ENGINEER JOHN DAVID REHDER NICHOLS — 6/26/2006

Prepared in the Office of: EarthTech, A Tyco International Ltd. Company, 701 Corporate Center Drive, Suite 475, Raleigh, NC 27607, (919) 854-6200 - (919) 854-6259(FAX)

GRAPHIC SCALE 50 25 0 50 100

PLANS

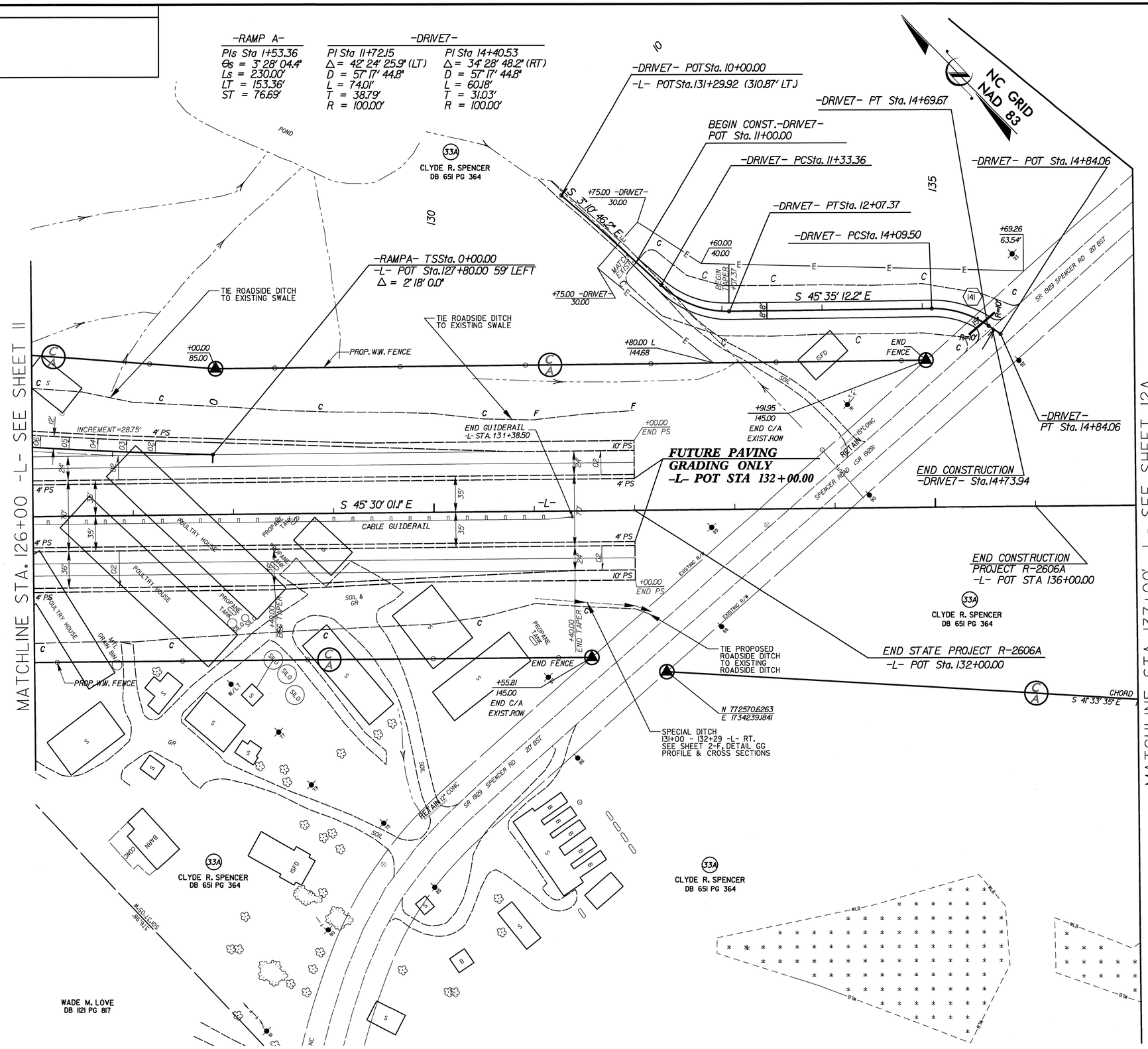

FOR RAMP A PROFILE SEE SHEET 21
FOR DRIVE 7 PROFILE SEE SHEET 30

USER: rhilliamsmitha
DGN: R-2606A-Sheets\Roadway\Proj\2606a_rdy_pshi12.dgn
DATE: 6/26/2006

PROJECT REFERENCE NO.	SHEET NO.
R-2606A	12A
R/W SHEET NO.	

ROADWAY DESIGN ENGINEER

NORTH CAROLINA PROFESSIONAL SEAL 5869 ENGINEER GEORGE T. SHEARIN

6/26/06

HYDRAULICS ENGINEER

NORTH CAROLINA PROFESSIONAL SEAL 025498 ENGINEER JOHN DAVID REHDER NICHOLS

6/26/2006

Prepared in the Office of:

EarthTech
A Tyco International Ltd. Company
701 Corporate Center Drive, Suite 475
Raleigh, NC 27607
(919) 854-6200 - (919) 854-6259(FAX)

GRAPHIC SCALE

50 25 0 50 100

PLANS

REVISIONS

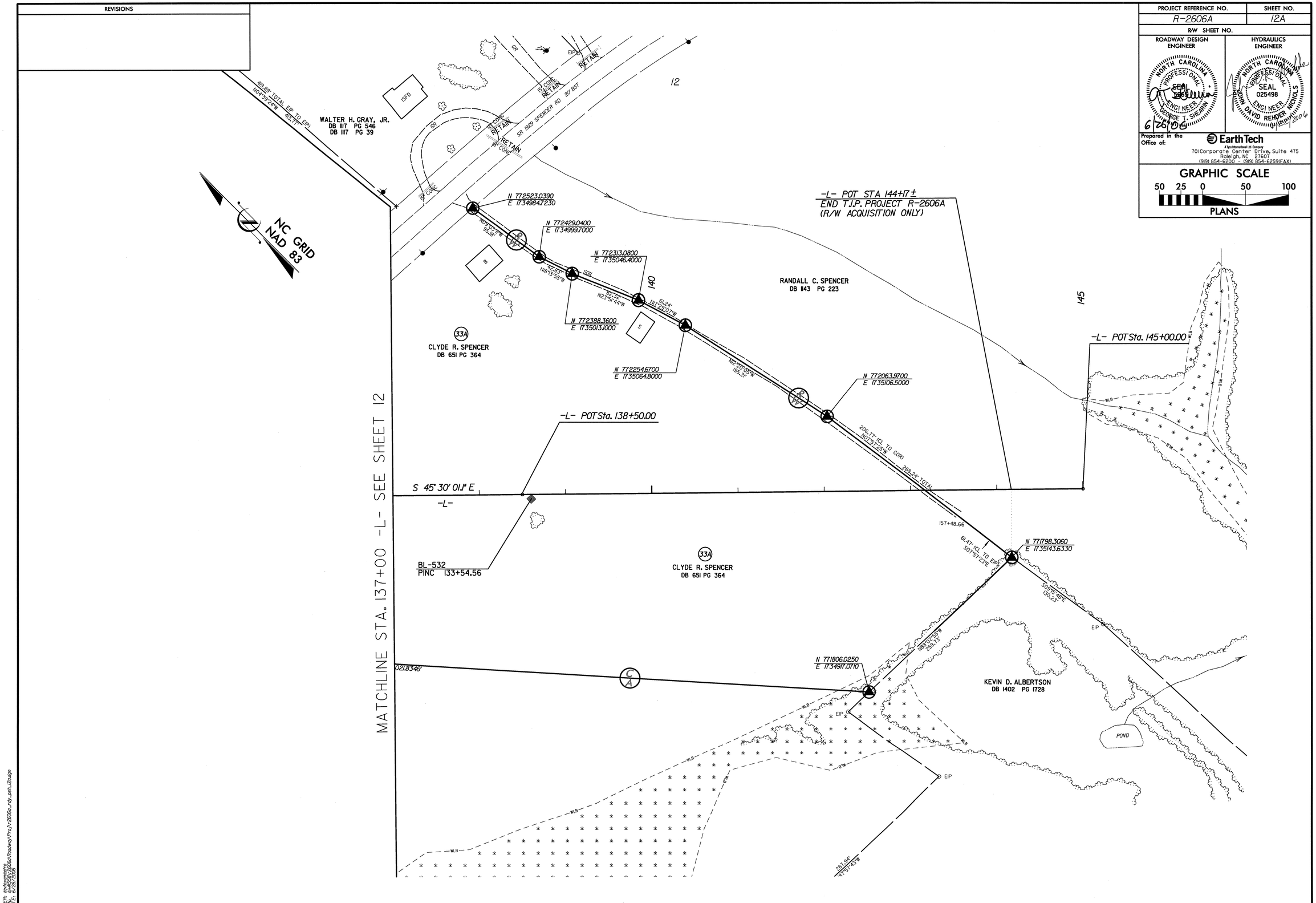

USER: kevinsmetre
DGN: k:\4155\r2606a\Roadway\Proj\r2606a_rdy_psh_12a.dgn
DATE: 6/26/2006

REVISIONS

PROJECT REFERENCE NO.	SHEET NO.
R-2606A	13
R/W SHEET NO.	

ROADWAY DESIGN ENGINEER	HYDRAULICS ENGINEER
NORTH CAROLINA PROFESSIONAL SEAL 5968 ENGINEER GEORGE T. SHEARIN 6/26/06	NORTH CAROLINA PROFESSIONAL SEAL 025498 ENGINEER JOHN DAVID REHDER NICHOLS 6/26/2006

Prepared in the Office of: EarthTech
A Tyco International Ltd. Company
701 Corporate Center Drive, Suite 475
Raleigh, NC 27607
(919) 854-6200 - (919) 854-6259(FAX)

GRAPHIC SCALE
50 25 0 50 100
PLANS

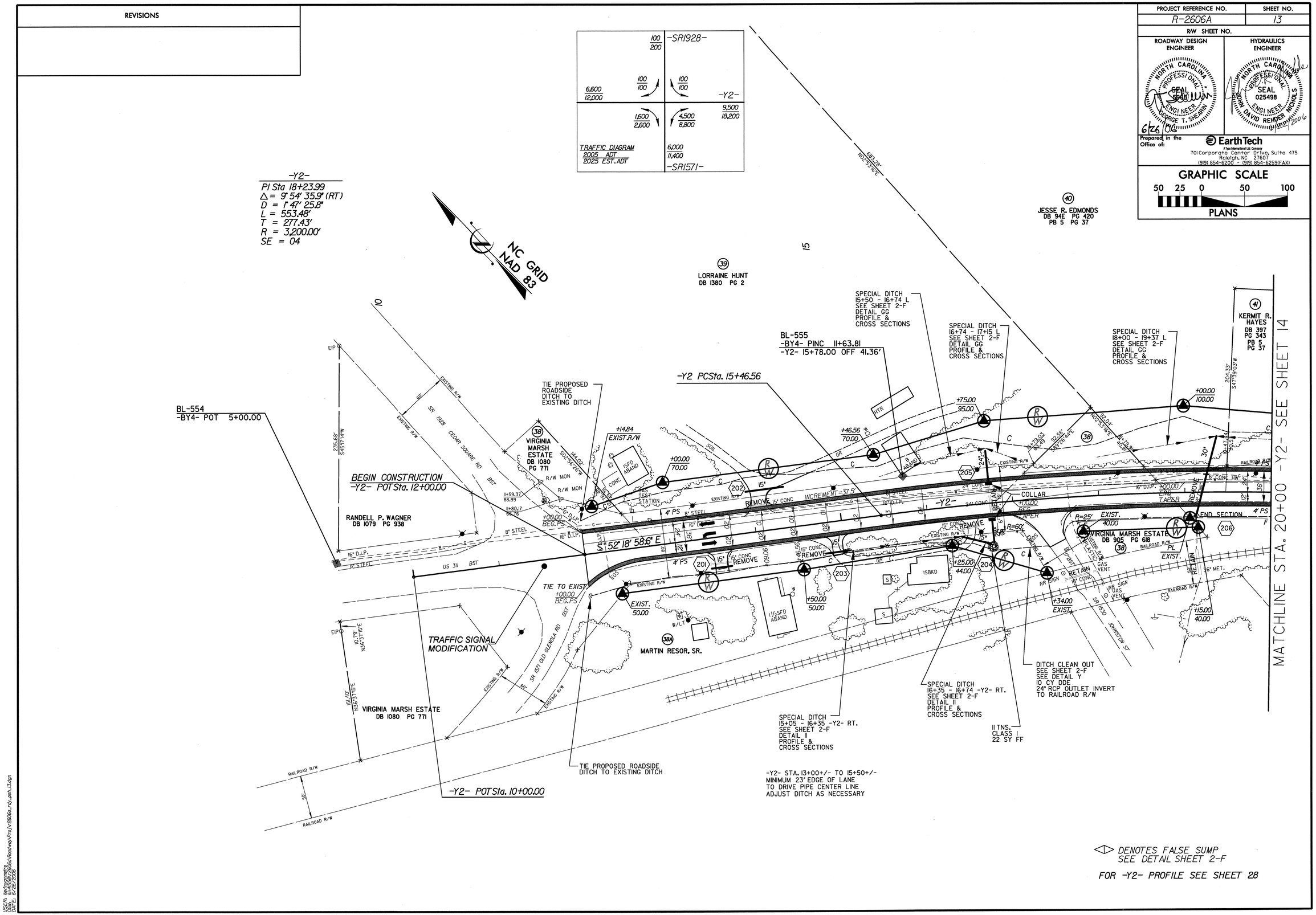

DENOTES FALSE SUMP
SEE DETAIL SHEET 2-F

FOR -Y2- PROFILE SEE SHEET 28

USER: kevhuyanmetre
DGN: R:\4155\R2606a\Roadway\Proj\r2606a_rdy_psh_13.dgn
DATE: 6/26/2006

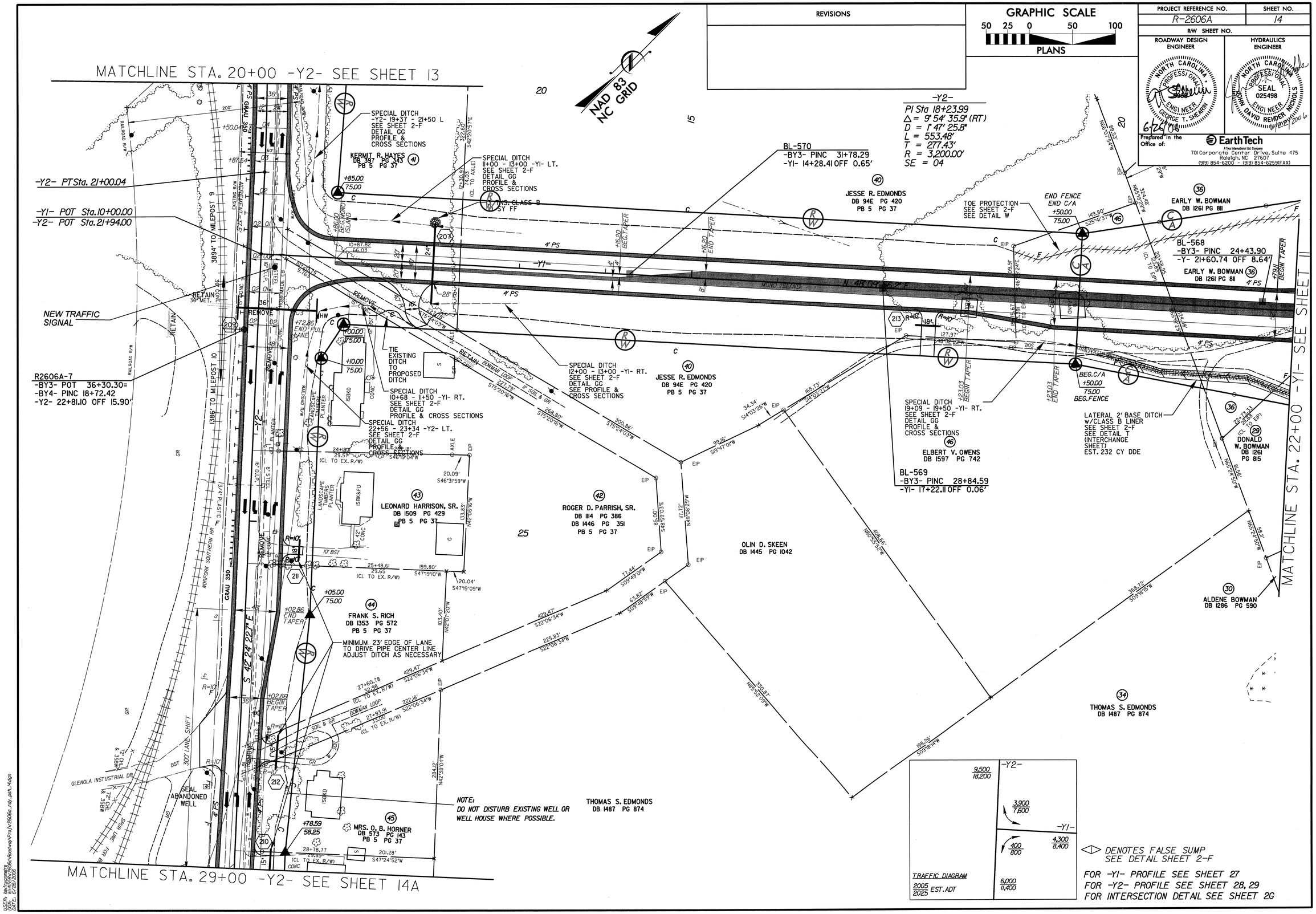

REVISIONS
GRAPHIC SCALE
50 25 0 50 100
PLANS
PROJECT REFERENCE NO.
R-2606A
SHEET NO.
14
R/W SHEET NO.
ROADWAY DESIGN ENGINEER
HYDRAULICS ENGINEER
NORTH CAROLINA PROFESSIONAL ENGINEER GEORGE T. SHEARIN
NORTH CAROLINA PROFESSIONAL SEAL 025498 ENGINEER JOHN DAVID REHDER NICHOLS
6/26/06
6/26/2006
Prepared in the Office of:
EarthTech
A Tyco International Ltd. Company
701 Corporate Center Drive, Suite 475
Raleigh, NC 27607
(919) 854-6200 - (919) 854-6259(FAX)
NAD 83 NC GRID
MATCHLINE STA. 20+00 -Y2- SEE SHEET 13
MATCHLINE STA. 29+00 -Y2- SEE SHEET 14A
MATCHLINE STA. 22+00 -Y1- SEE SHEET 11
-Y2- PT Sta. 21+00.04
-Y1- POT Sta. 10+00.00
-Y2- POT Sta. 21+94.00
NEW TRAFFIC SIGNAL
R2606A-7
-BY3- POT 36+30.30=
-BY4- PINC 18+72.42
-Y2- 22+81.10 OFF 15.90'
SPECIAL DITCH -Y2- 19+37 - 21+50 L SEE SHEET 2-F DETAIL GG PROFILE & CROSS SECTIONS
KERMIT R. HAYES DB 397 PG 343 PB 5 PG 37
SPECIAL DITCH 11+00 - 13+00 -Y1- LT. SEE SHEET 2-F DETAIL GG PROFILE & CROSS SECTIONS
TNS. CLASS B
BL-570
-BY3- PINC 31+78.29
-Y1- 14+28.41 OFF 0.65'
-Y2-
PI Sta 18+23.99
Δ = 9° 54' 35.9" (RT)
D = 1° 47' 25.8"
L = 553.48'
T = 277.43'
R = 3,200.00'
SE = 04
JESSE R. EDMONDS DB 94E PG 420 PB 5 PG 37
TOE PROTECTION SEE SHEET 2-F SEE DETAIL W
END FENCE END C/A
EARLY W. BOWMAN DB 1261 PG 811
BL-568
-BY3- PINC 24+43.90
-Y- 21+60.74 OFF 8.64'
EARLY W. BOWMAN DB 1261 PG 811
TIE EXISTING DITCH TO PROPOSED DITCH
SPECIAL DITCH 10+68 - 11+50 -Y1- RT. SEE SHEET 2-F DETAIL GG PROFILE & CROSS SECTIONS
SPECIAL DITCH 22+56 - 23+34 -Y2- LT. SEE SHEET 2-F DETAIL GG PROFILE & CROSS SECTIONS
SPECIAL DITCH 12+00 - 13+00 -Y1- RT. SEE SHEET 2-F DETAIL GG SEE PROFILE & CROSS SECTIONS
JESSE R. EDMONDS DB 94E PG 420 PB 5 PG 37
SPECIAL DITCH 19+09 - 19+50 -Y1- RT. SEE SHEET 2-F DETAIL GG PROFILE & CROSS SECTIONS
ELBERT V. OWENS DB 1597 PG 742
BL-569
-BY3- PINC 28+84.59
-Y1- 17+22.11 OFF 0.06'
LATERAL 2' BASE DITCH w/CLASS B LINER SEE SHEET 2-F SEE DETAIL T (INTERCHANGE SHEET) EST. 232 CY DDE
DONALD W. BOWMAN DB 1261 PG 815
LEONARD HARRISON, SR. DB 1509 PG 429 PB 5 PG 37
ROGER D. PARRISH, SR. DB 1114 PG 386 DB 1446 PG 351 PB 5 PG 37
OLIN D. SKEEN DB 1445 PG 1042
ALDENE BOWMAN DB 1286 PG 590
FRANK S. RICH DB 1353 PG 572 PB 5 PG 37
MINIMUM 23' EDGE OF LANE TO DRIVE PIPE CENTER LINE ADJUST DITCH AS NECESSARY
THOMAS S. EDMONDS DB 1487 PG 874
MRS. O. B. HORNER DB 573 PG 143 PB 5 PG 37
SEAL ABANDONED WELL
NOTE: DO NOT DISTURB EXISTING WELL OR WELL HOUSE WHERE POSSIBLE.
GLENOLA INSTUSTRIAL DR.
NORFORK SOUTHERN RR
GRAU 350
3894' TO MILEPOST 9
1386' TO MILEPOST 10
300' LANE SHIFT
S 42° 24' 22.7" E
TRAFFIC DIAGRAM
2005 2025 EST. ADT
9,500 18,200
3,900 7,600
4,300 8,400
400 800
6,000 11,400
DENOTES FALSE SUMP SEE DETAIL SHEET 2-F
FOR -Y1- PROFILE SEE SHEET 27
FOR -Y2- PROFILE SEE SHEET 28, 29
FOR INTERSECTION DETAIL SEE SHEET 2G

REVISIONS	PROJECT REFERENCE NO.	SHEET NO.
	R-2606A	14A
	R/W SHEET NO.	
	ROADWAY DESIGN ENGINEER	HYDRAULICS ENGINEER
	NORTH CAROLINA PROFESSIONAL SEAL 3965 ENGINEER GEORGE T. SHEARIN 6/26/06	NORTH CAROLINA PROFESSIONAL SEAL 025498 ENGINEER JOHN DAVID REHDER NICHOLS 6/26/2006

Prepared in the Office of: EarthTech
A Tyco International Ltd. Company
701 Corporate Center Drive, Suite 475
Raleigh, NC 27607
(919) 854-6200 - (919) 854-6259(FAX)

GRAPHIC SCALE
50 25 0 50 100
PLANS

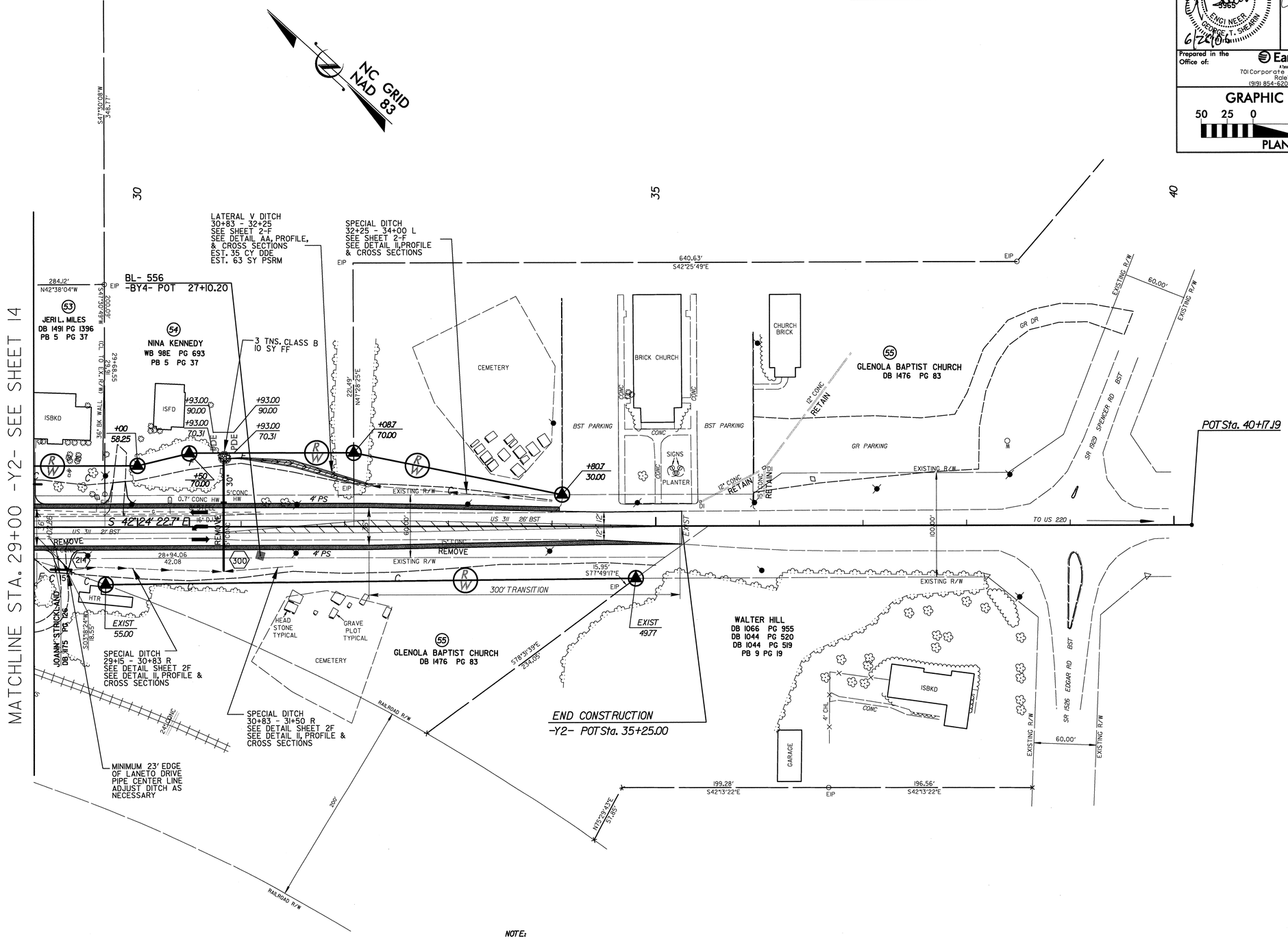

NOTE:
DO NOT DISTURB EXISTING WELL OR WELL HOUSE WHERE POSSIBLE.

FOR -Y2- PROFILE SEE SHEET 29

USER: kwilhoumette
DGN: k:\4556\2606a\Roadway\Proj\r2606a_rdy_psh_14a.dgn
DATE: 6/26/2006

REVISIONS	PROJECT REFERENCE NO.	SHEET NO.
	R-2606A	15
	R/W SHEET NO.	

ROADWAY DESIGN ENGINEER: NORTH CAROLINA PROFESSIONAL SEAL 5666 ENGINEER GEORGE T. SHEARIN 6/26/06

HYDRAULICS ENGINEER: NORTH CAROLINA PROFESSIONAL SEAL 025498 ENGINEER DAVID RENDER NICHOLS 6/26/2006

Prepared in the Office of: EarthTech, A Tyco International Ltd. Company, 701 Corporate Center Drive, Suite 475, Raleigh, NC 27607, (919) 854-6200 - (919) 854-6259(FAX)

GRAPHIC SCALE 50 25 0 50 100

PLANS

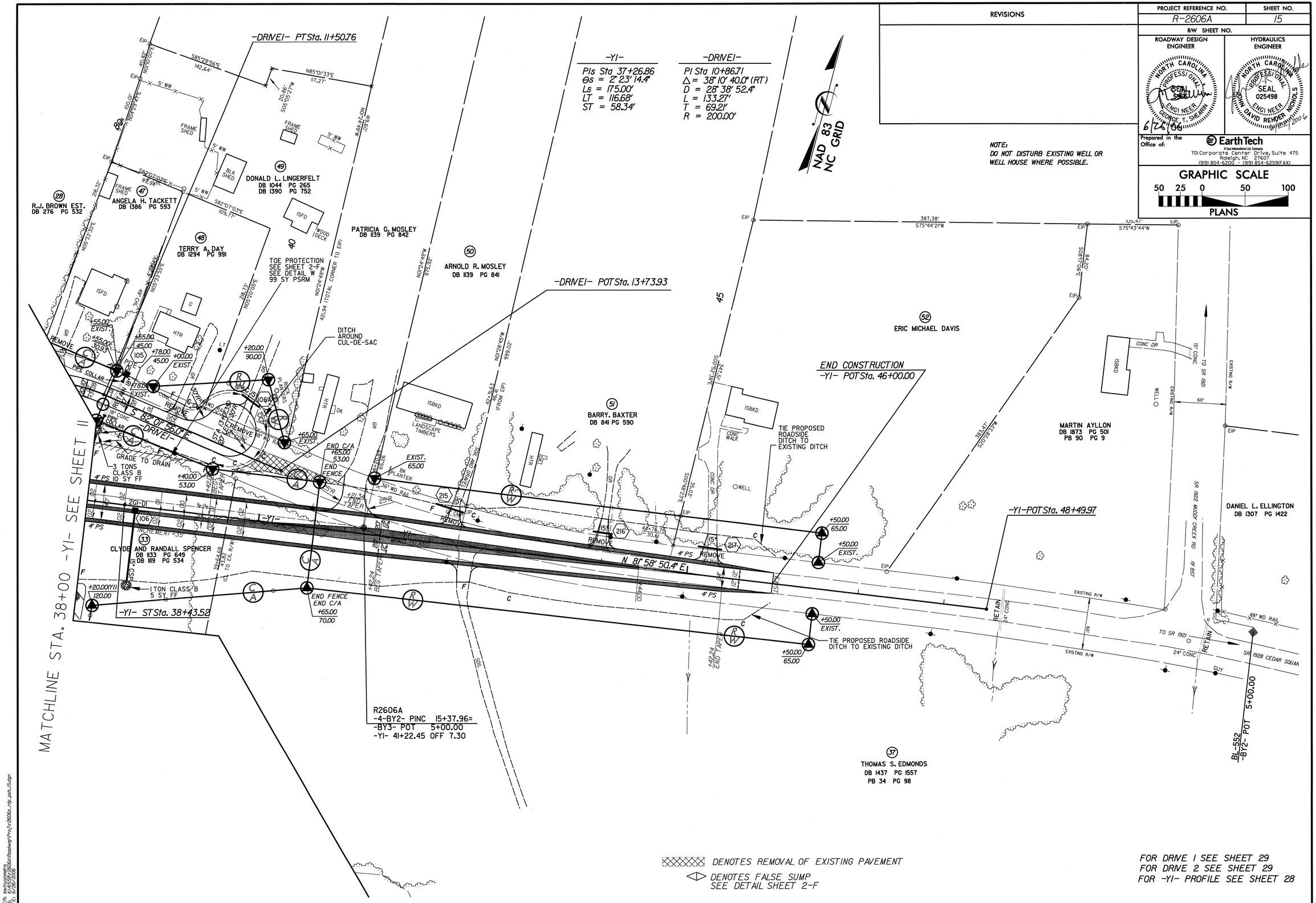

FOR DRIVE 1 SEE SHEET 29
FOR DRIVE 2 SEE SHEET 29
FOR -Y1- PROFILE SEE SHEET 28

USER: tmillsmith
DGN: 6:\R2606\Design\Roadway\Proj\r2606u_rdy_psh_15.dgn
DATE: 6/26/2006

PROJECT REFERENCE NO.	SHEET NO.
R-2606A	16

ROADWAY DESIGN ENGINEER
NORTH CAROLINA PROFESSIONAL SEAL 5365 ENGINEER J. GEORGE T. SHEARIN
6/26/06

HYDRAULICS ENGINEER
NORTH CAROLINA PROFESSIONAL SEAL 025498 ENGINEER JOHN DAVID REHDER NICHOLS
6/26/06

Prepared in the Office of:
EarthTech
A Tyco International Ltd. Company
701 Corporate Center Drive, Suite 475
Raleigh, NC 27607
(919) 854-6200 - (919) 854-6259(FAX)

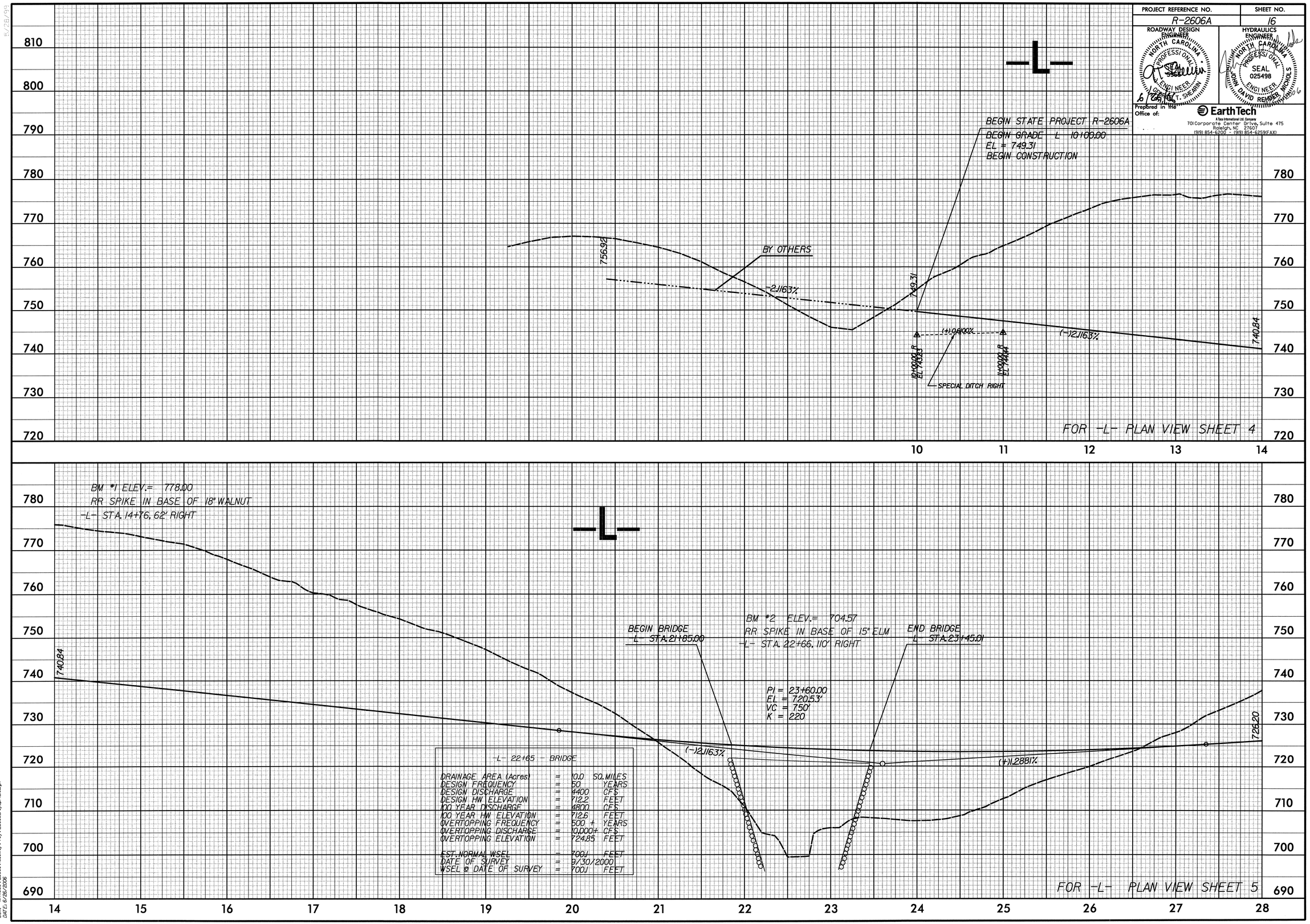

USER: kevinhunnette
DGN: k:\4558\2606a\Roadway\Proj\r2606a_rdy_pf1_l6.dgn
DATE: 6/26/2006

PROJECT REFERENCE NO.	SHEET NO.
R-2606A	17

ROADWAY DESIGN ENGINEER
NORTH CAROLINA PROFESSIONAL SEAL 5865 ENGINEER GEORGE T. SHEARIN
6/26/06

HYDRAULICS ENGINEER
NORTH CAROLINA PROFESSIONAL SEAL 025498 ENGINEER JOHN DAVID REIDER NICHOLS
6/26/06

Prepared in the Office of:
EarthTech
A Tyco International Ltd. Company
701 Corporate Center Drive, Suite 475
Raleigh, NC 27607
(919) 854-6200 - (919) 854-6259(FAX)

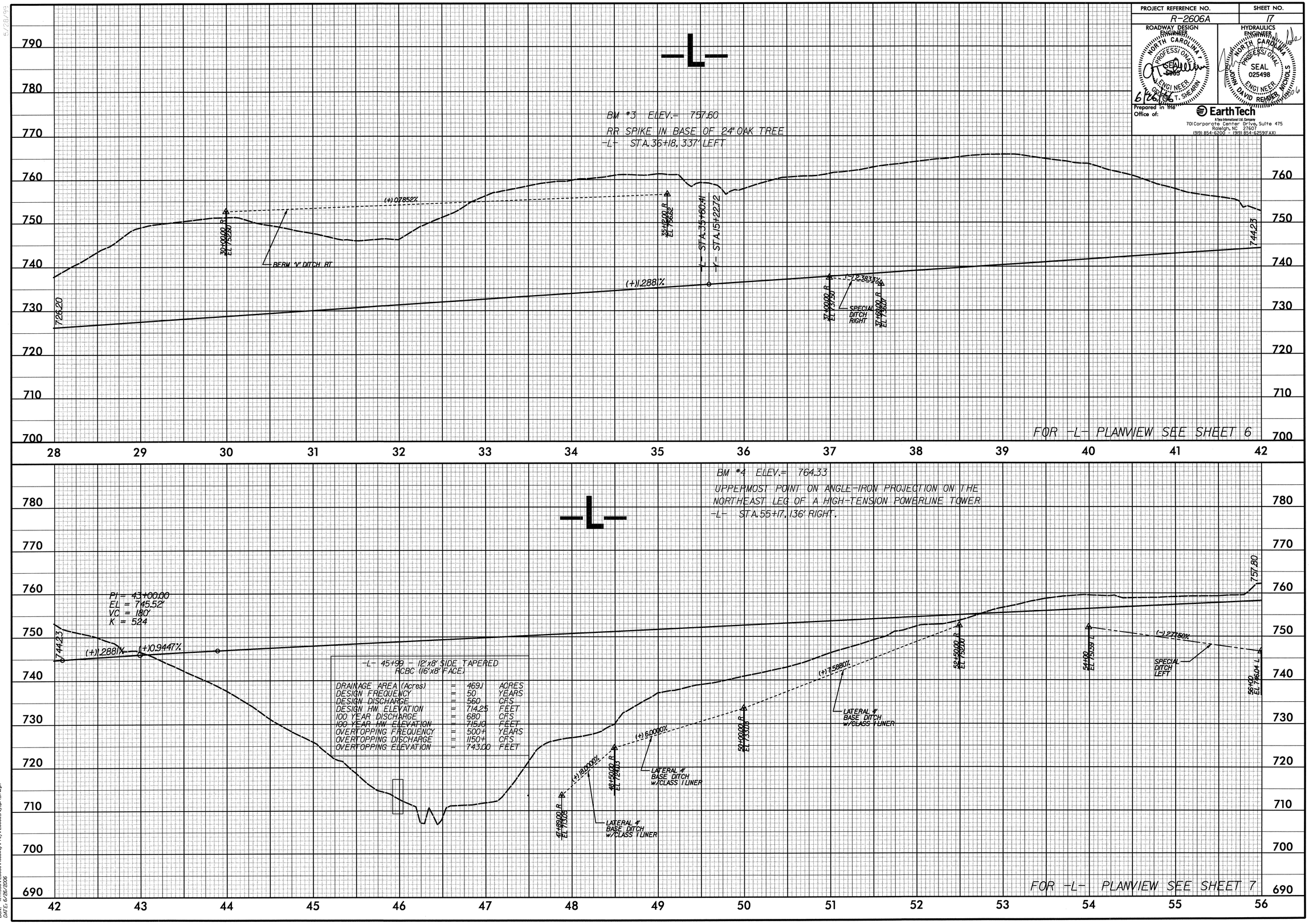

USER: kevinvannette
DGN: k:\41558\2606a\Roadway\Proj\2606a_rdy_pf1_17.dgn
DATE: 6/26/2006

PROJECT REFERENCE NO.	SHEET NO.
R-2606A	18

ROADWAY DESIGN ENGINEER
NORTH CAROLINA PROFESSIONAL SEAL 5966 ENGINEER
6/26/06
JAMES T. SHEARIN

HYDRAULICS ENGINEER
NORTH CAROLINA PROFESSIONAL SEAL 025498 ENGINEER
JOHN DAVID REHDER NICHOLS
6/26/06

Prepared in the Office of:
EarthTech
A Tyco International Ltd. Company
701 Corporate Center Drive, Suite 475
Raleigh, NC 27607
(919) 854-6200 - (919) 854-6259(FAX)

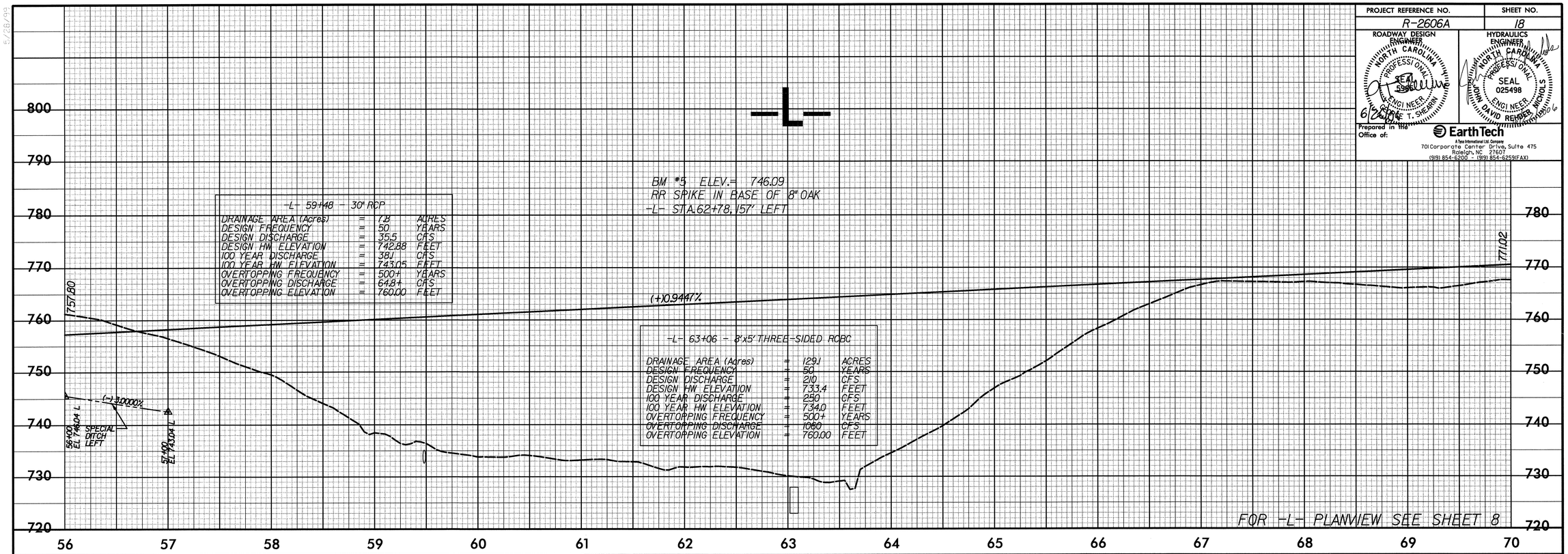

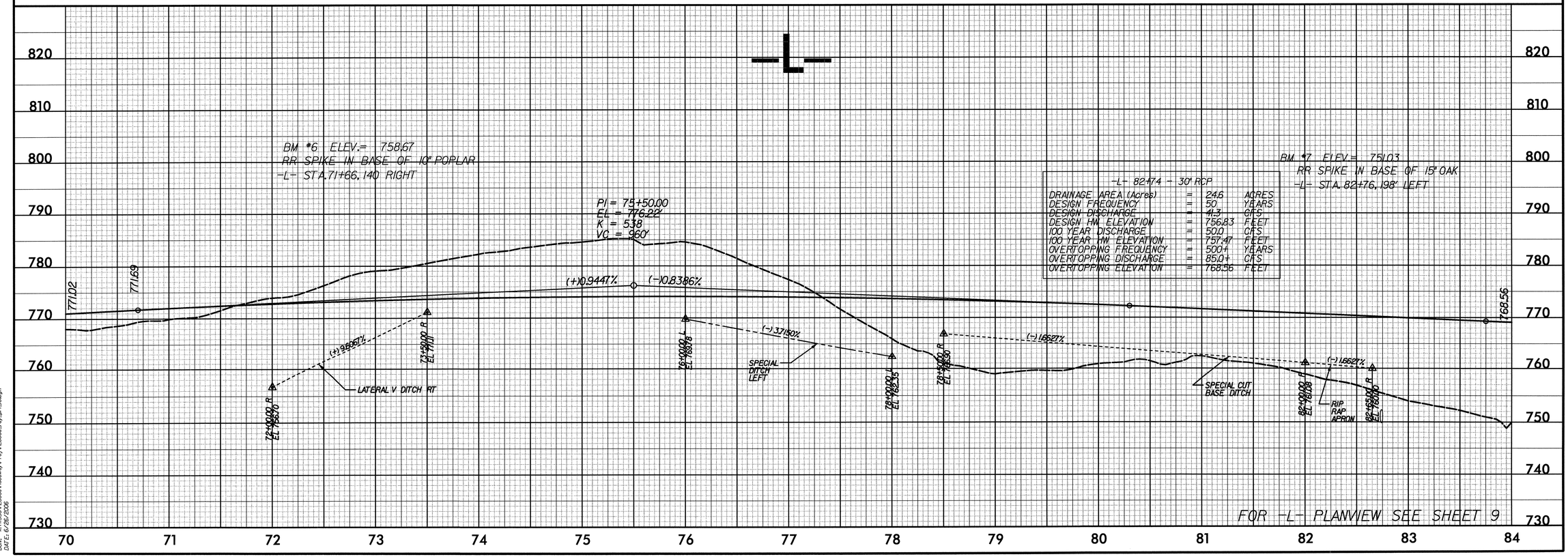

USER: trafcomputa
DGN: k:\4155\r\2606a\roadway\proj\r2606a_rdy_pf1_18.dgn
DATE: 6/26/2006

PROJECT REFERENCE NO.	SHEET NO.
R-2606A	19

ROADWAY DESIGN ENGINEER
NORTH CAROLINA PROFESSIONAL SEAL 025185 ENGINEER
JOHN GRADY G. SHEARIN
6/26/06

HYDRAULICS ENGINEER
NORTH CAROLINA PROFESSIONAL SEAL 025498 ENGINEER
JOHN DAVID RENNER NICHOLS
6/26/06

Prepared in the Office of:
EarthTech
A Tyco International Ltd. Company
701 Corporate Center Drive, Suite 475
Raleigh, NC 27607
(919) 854-6200 - (919) 854-6259(FAX)

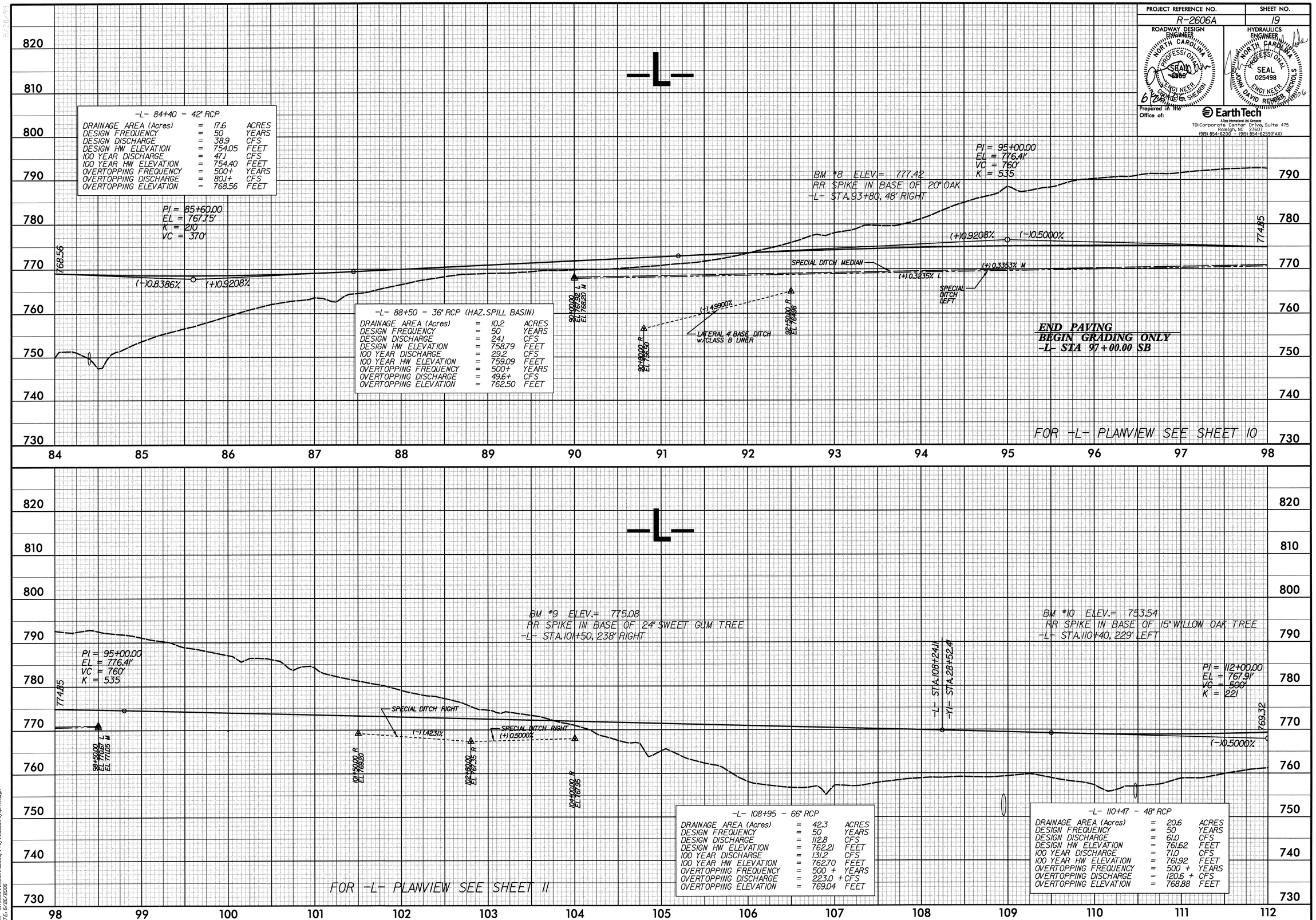

USER: trainmanetrx
DGN: R:\R555\R\2606a\Roadway\Pro\r2606a_rdy_pf1_19.dgn
DATE: 6/26/2006

PROJECT REFERENCE NO.	SHEET NO.
R-2606A	20

ROADWAY DESIGN ENGINEER
NORTH CAROLINA PROFESSIONAL SEAL 9365 ENGINEER G. SHEARIN
6/26/06

HYDRAULICS ENGINEER
NORTH CAROLINA PROFESSIONAL SEAL 025498 ENGINEER DAVID RENDER NICHOLS
6/26/06

Prepared in the Office of:
EarthTech
A Tyco International Ltd. Company
701 Corporate Center Drive, Suite 475
Raleigh, NC 27607
(919) 854-6200 (919) 854-6259(FAX)

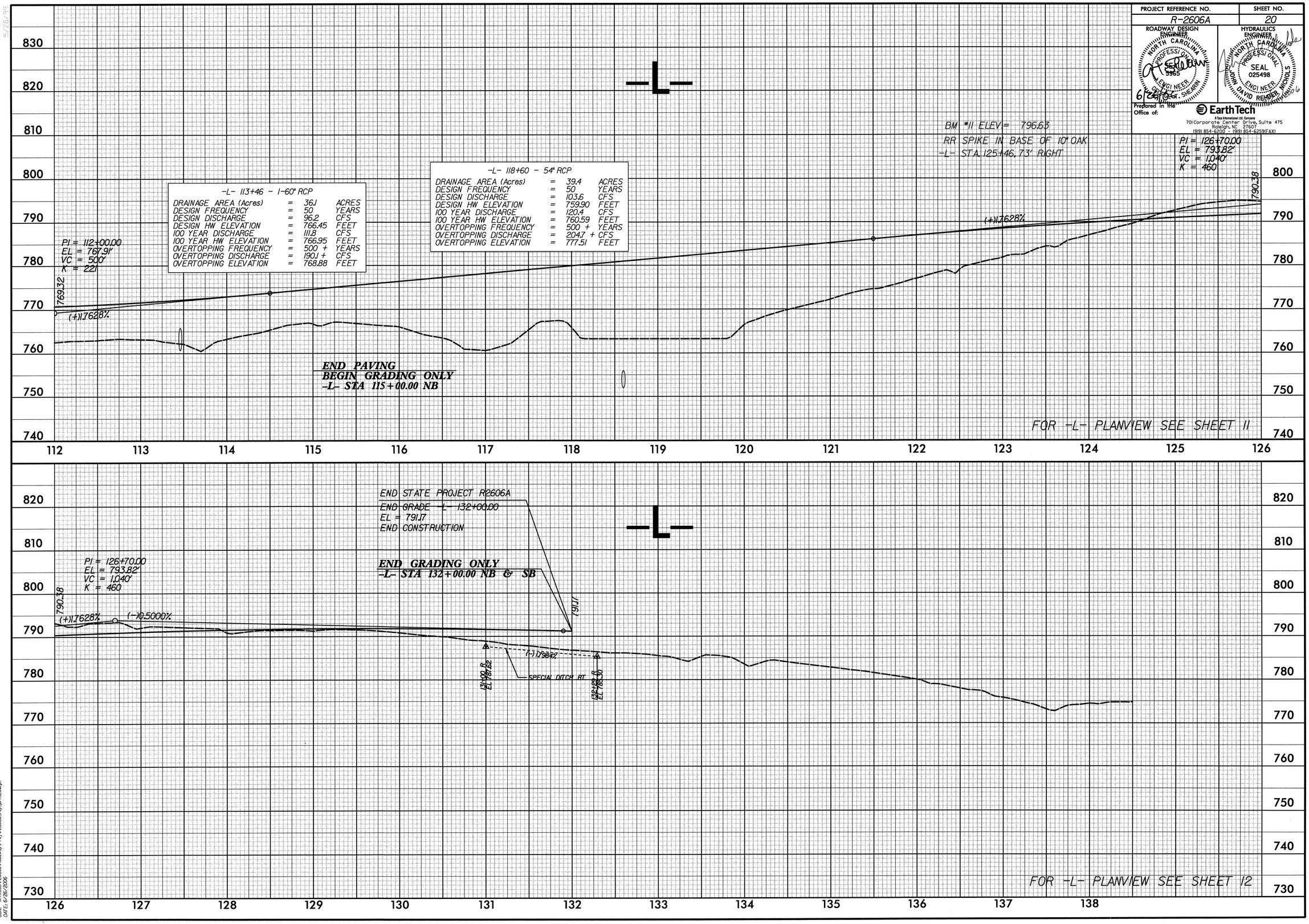

USER: kwilson
DGN: h:\4159\r2606a\roadway\Pro\r2606a_rdy_pf1_20.dgn
DATE: 6/26/2006

PROJECT REFERENCE NO.	SHEET NO.
R-2606A	21

ROADWAY DESIGN ENGINEER — NORTH CAROLINA PROFESSIONAL SEAL 5995 ENGINEER GEORGE T. SHEARIN — 6/28/06

HYDRAULICS ENGINEER — NORTH CAROLINA PROFESSIONAL SEAL 025498 ENGINEER JOHN DAVID REIDER NICHOLS — 6/28/06

Prepared in the Office of: EarthTech
A Tyco International Ltd. Company
701 Corporate Center Drive, Suite 475
Raleigh, NC 27607
(919) 854-6200 - (919) 854-6259(FAX)

-LOOPA-

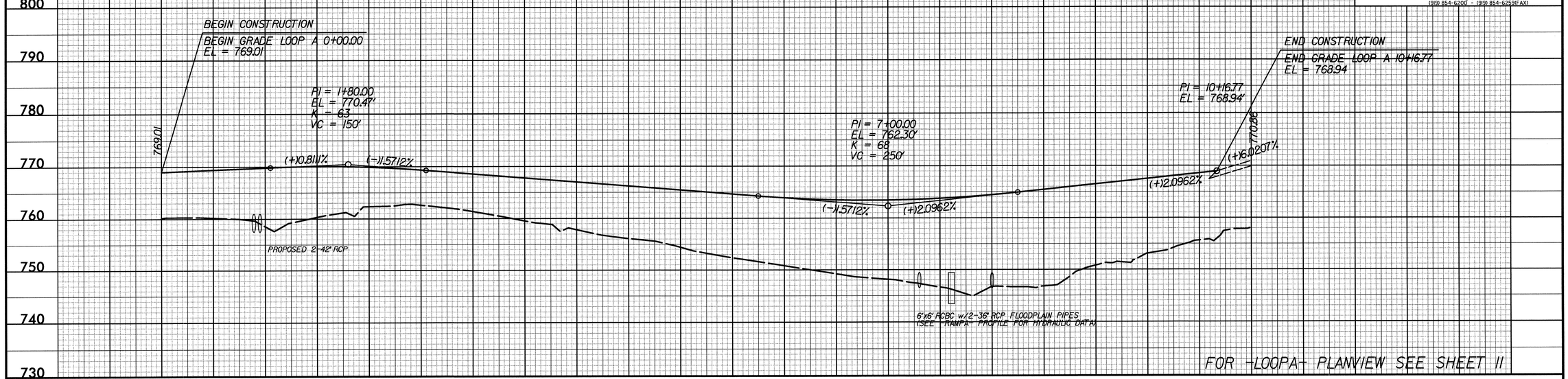

-RAMPA-

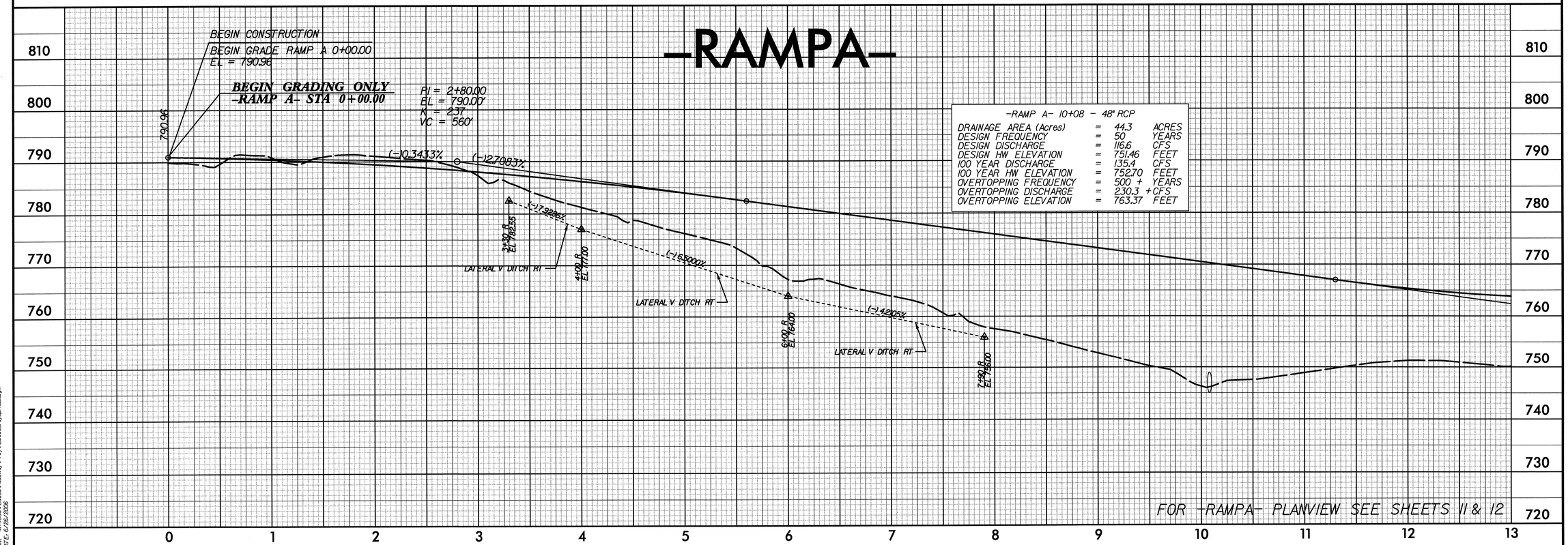

-RAMP A- 10+08 - 48" RCP

DRAINAGE AREA (Acres)	=	44.3	ACRES
DESIGN FREQUENCY	=	50	YEARS
DESIGN DISCHARGE	=	116.6	CFS
DESIGN HW ELEVATION	=	751.46	FEET
100 YEAR DISCHARGE	=	135.4	CFS
100 YEAR HW ELEVATION	=	752.70	FEET
OVERTOPPING FREQUENCY	=	500 +	YEARS
OVERTOPPING DISCHARGE	=	230.3 +	CFS
OVERTOPPING ELEVATION	=	763.37	FEET

USER: kevinhunnette
DGN: k:\4558\2606a\Roadway\Proj\r2606a_rdy_pl1_21.dgn
DATE: 6/26/2006

PROJECT REFERENCE NO.	SHEET NO.
R-2606A	22

ROADWAY DESIGN ENGINEER
NORTH CAROLINA PROFESSIONAL SEAL 9965 ENGINEER
6/26/06
T. SHEARIN

HYDRAULICS ENGINEER
NORTH CAROLINA PROFESSIONAL SEAL 025498 ENGINEER
JOHN DAVID RENNER NICHOLS
6/26/06

Prepared in the Office of: EarthTech
A Tyco International Ltd. Company
701 Corporate Center Drive, Suite 475
Raleigh, NC 27607
(919) 854-6200 - (919) 854-6259(FAX)

-RAMPA-

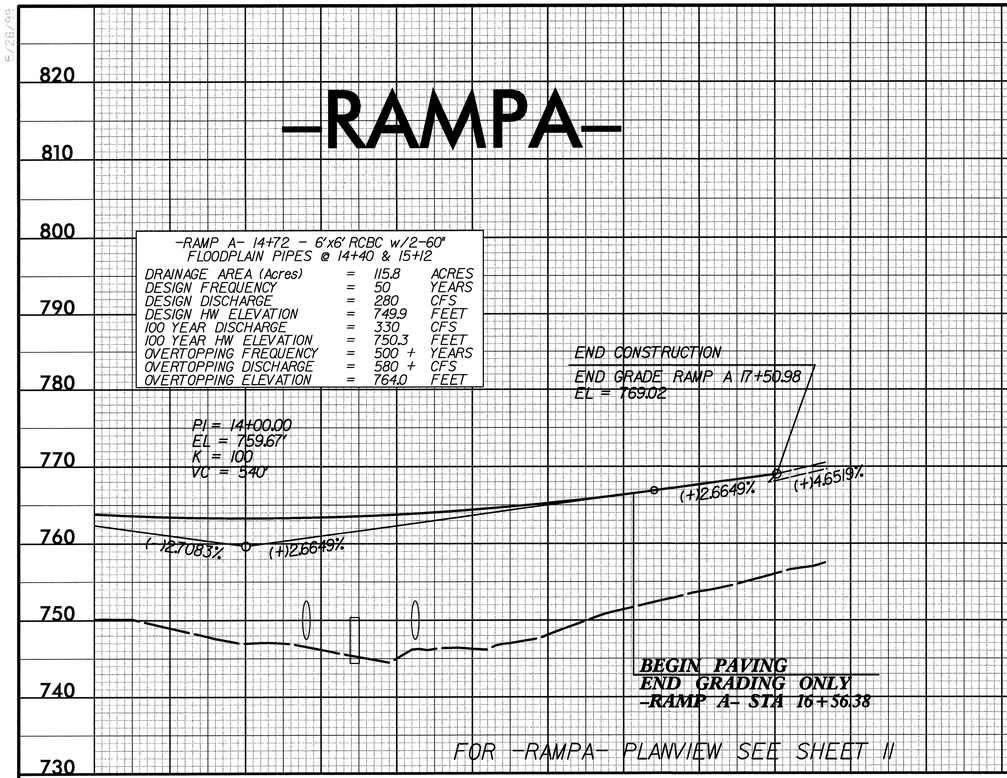

-RAMPC-

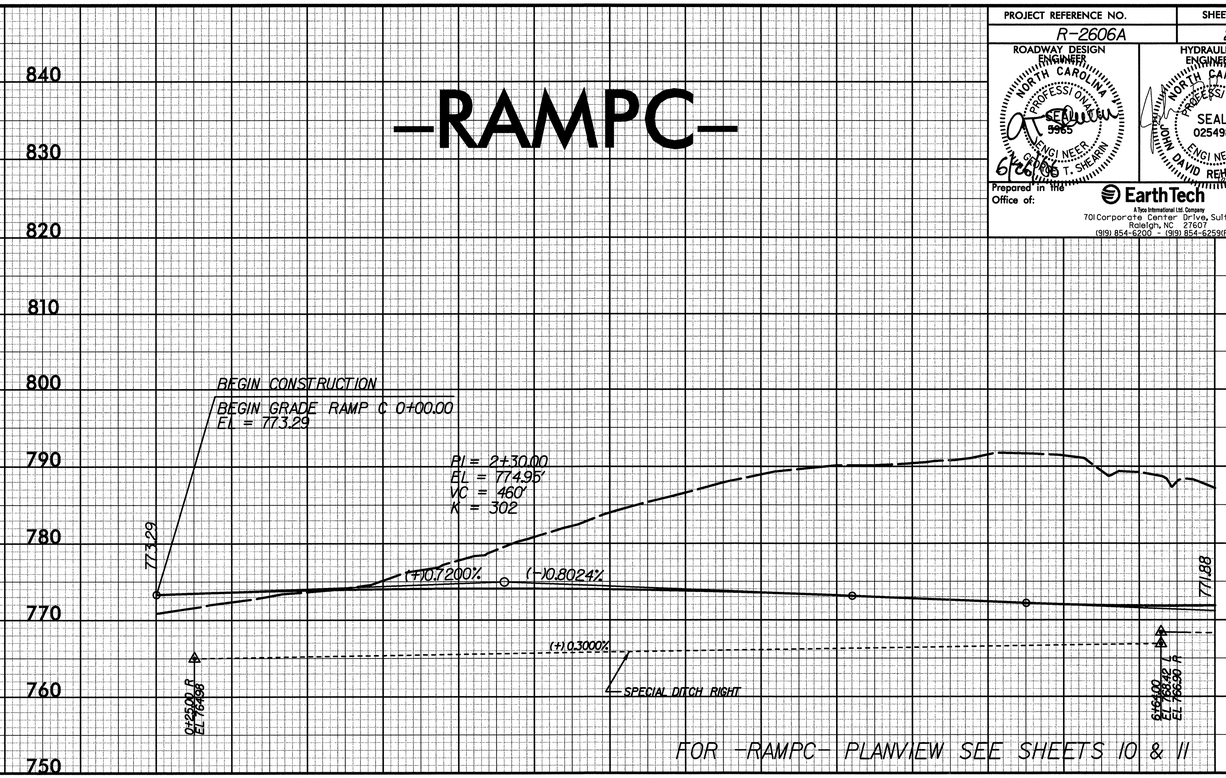

-RAMPC-

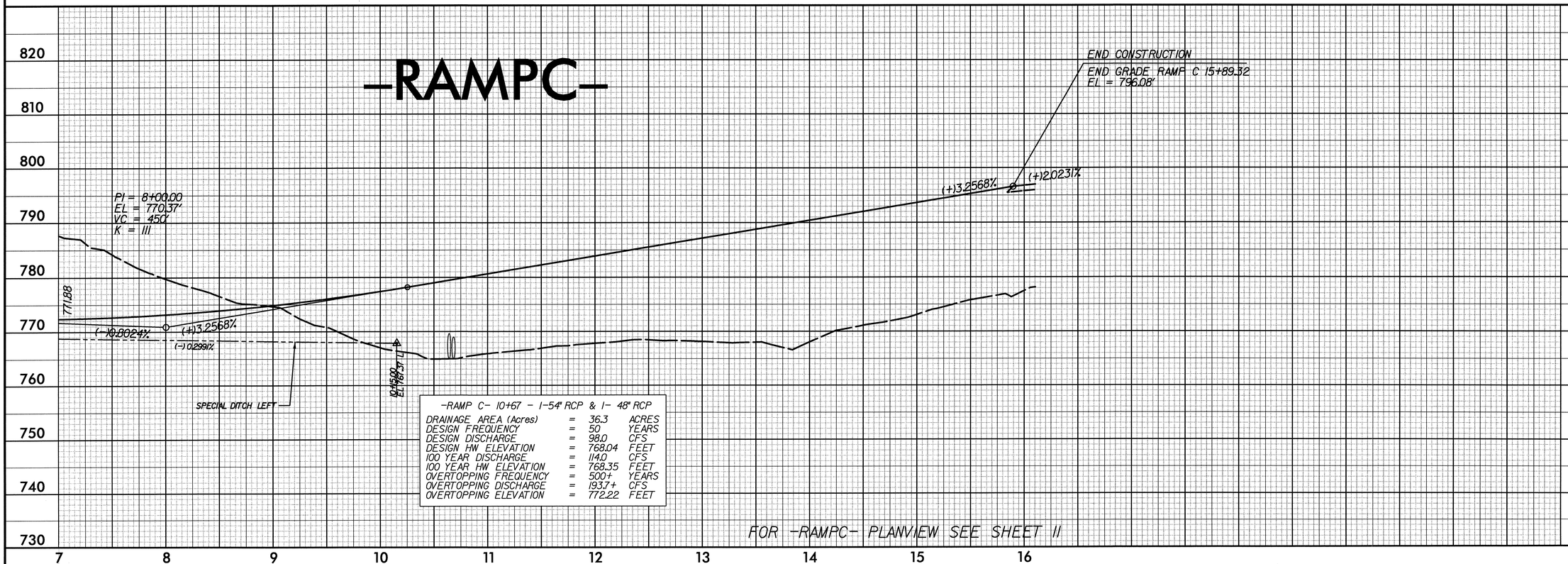

USER: trainingnorth
DGN: k:\4153\r2606a\roadway\pro\r2606a_rdy_pf1_22.dgn
DATE: 6/26/2006

PROJECT REFERENCE NO.	SHEET NO.
R-2606A	23

ROADWAY DESIGN ENGINEER
NORTH CAROLINA PROFESSIONAL SEAL 8960 ENGINEER GEORGE T. SHEARIN
6/26/06

HYDRAULICS ENGINEER
NORTH CAROLINA PROFESSIONAL SEAL 025498 ENGINEER JOHN DAVID REMSER NICHOLS
6/26/06

Prepared in the Office of:
EarthTech
A Tyco International Ltd. Company
701 Corporate Center Drive, Suite 475
Raleigh, NC 27607
(919) 854-6200 - (919) 854-6259(FAX)

-RAMPD-

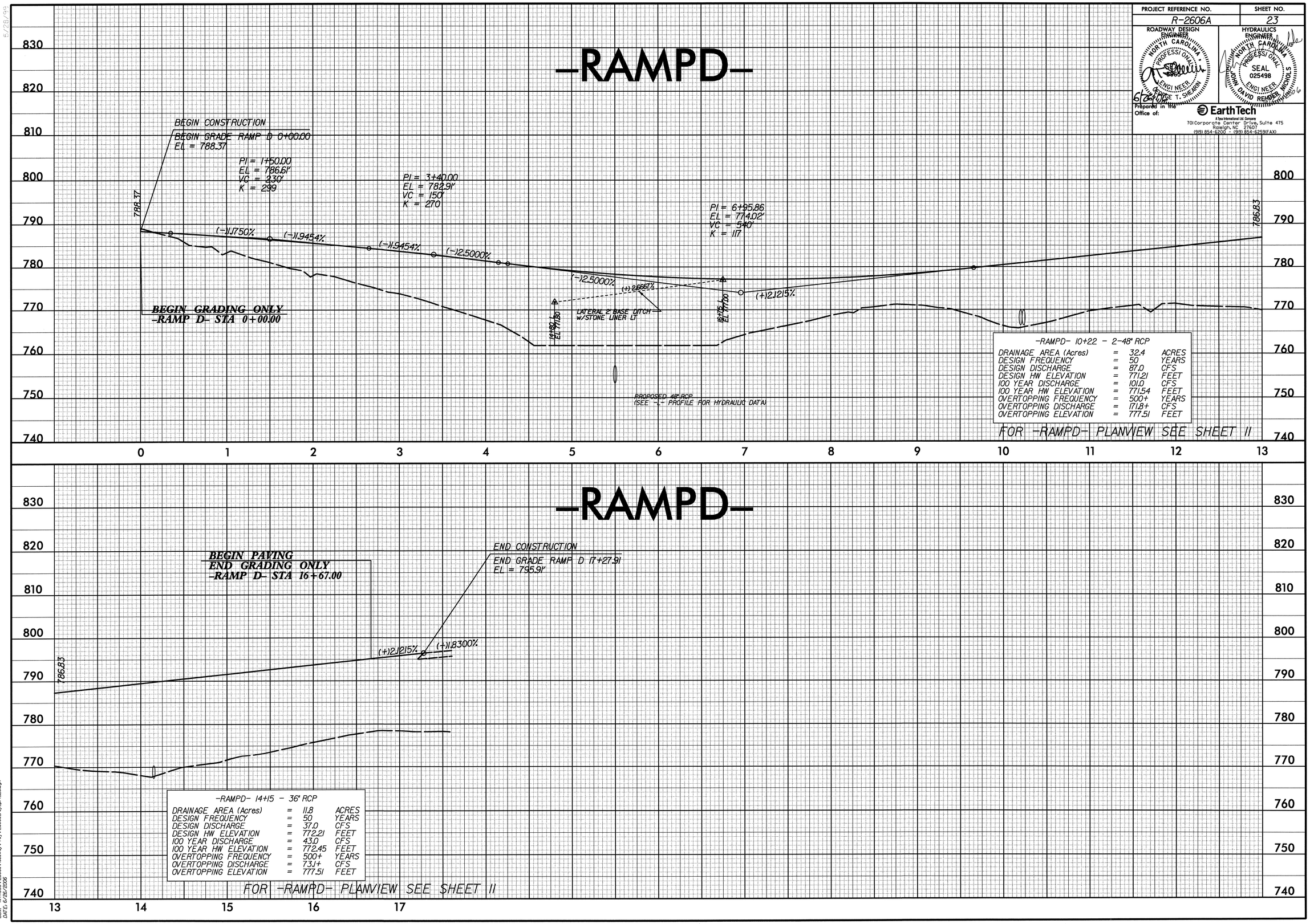

USER: trelnunstrefa
DGN: k:\4155R\2606a\Roadway\Pro1\2606a_rdy_pf1_23.dgn
DATE: 6/26/2006

PROJECT REFERENCE NO.	SHEET NO.
R-2606A	24

ROADWAY DESIGN ENGINEER
NORTH CAROLINA PROFESSIONAL SEAL 5365 ENGINEER GARY T. SHEARIN
6/26/06

HYDRAULICS ENGINEER
NORTH CAROLINA PROFESSIONAL SEAL 025498 ENGINEER JOHN DAVID REHDER NICHOLS
(919)856-6200

Prepared in the Office of:
EarthTech
A Tyco International Ltd. Company
701 Corporate Center Drive, Suite 475
Raleigh, NC 27607
(919) 854-6200 - (919) 854-6259(FAX)

-SR-

-SR- 13+15 - 30" CSP (RELIEF PIPE)

DRAINAGE AREA (Acres)	=	11.6	ACRES
DESIGN FREQUENCY	=	25	YEARS
DESIGN DISCHARGE	=	41.9	CFS
DESIGN HW ELEVATION	=	736.11	FEET
100 YEAR DISCHARGE	=	48.8	CFS
100 YEAR HW ELEVATION	=	737.55	FEET
OVERTOPPING FREQUENCY	=	10	YEARS
OVERTOPPING DISCHARGE	=	39.1	CFS
OVERTOPPING ELEVATION	=	735.63	FEET

-SR- 13+78 - 30" CSP/RCP

DRAINAGE AREA (Acres)	=	11.6	ACRES
DESIGN FREQUENCY	=	25	YEARS
DESIGN DISCHARGE	=	41.9	CFS
DESIGN HW ELEVATION	=	727.94	FEET
100 YEAR DISCHARGE	=	48.8	CFS
100 YEAR HW ELEVATION	=	728.70	FEET
OVERTOPPING FREQUENCY	=	500	YEARS
OVERTOPPING DISCHARGE	=	83	CFS
OVERTOPPING ELEVATION	=	735.63	FEET

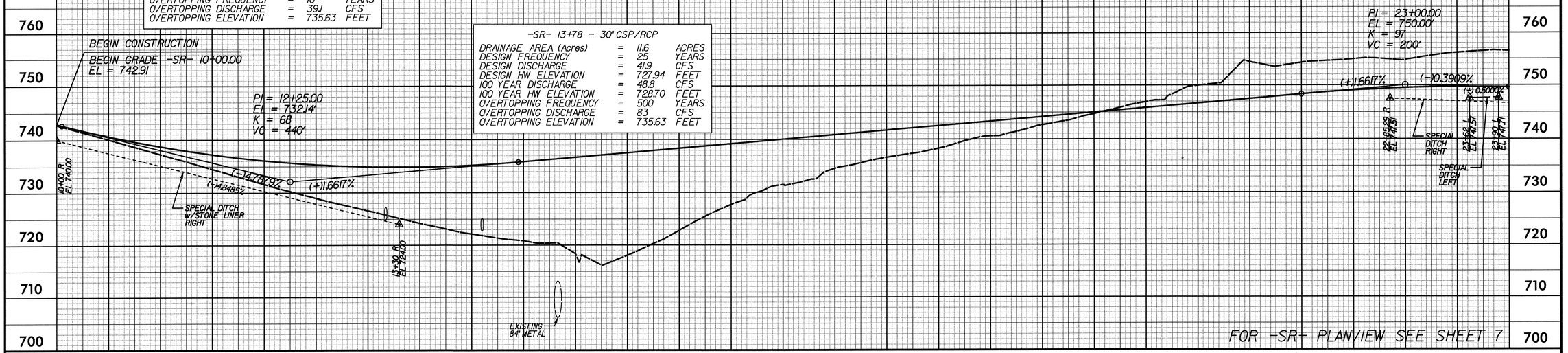

-SR-

-SR- 24+90 - 36" RCP (HAZ.SPILL BASIN)

DRAINAGE AREA (Acres)	=	13.2	ACRES
DESIGN FREQUENCY	=	50	YEARS
DESIGN DISCHARGE	=	45.5	CFS
DESIGN HW ELEVATION	=	719.38	FEET
100 YEAR DISCHARGE	=	49.0	CFS
100 YEAR HW ELEVATION	=	719.57	FEET
OVERTOPPING FREQUENCY	=	200	YEARS
OVERTOPPING DISCHARGE	=	69.6	CFS
OVERTOPPING ELEVATION	=	721.00	FEET

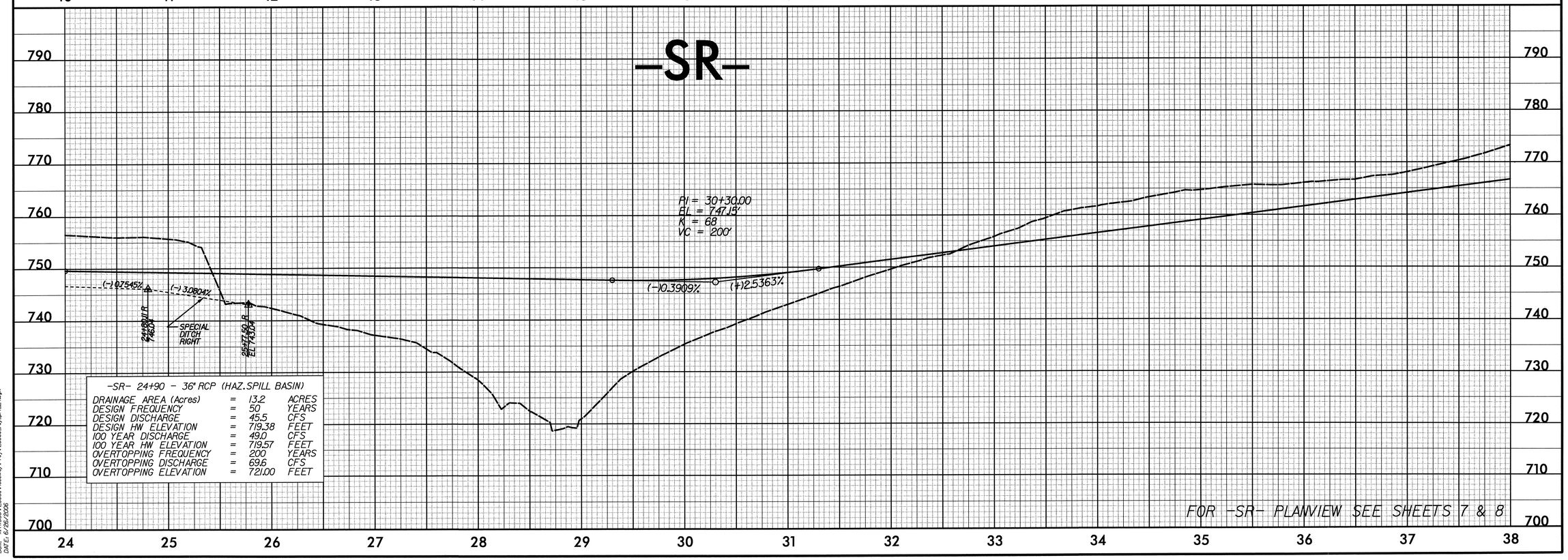

USER: hwilliams
DGN: R:\R2606A\R2606a\Roadway\Proj\R2606a_rdy_pfl_24.dgn
DATE: 6/26/2006

PROJECT REFERENCE NO.	SHEET NO.
R-2606A	25

ROADWAY DESIGN ENGINEER
NORTH CAROLINA PROFESSIONAL SEAL 030351 ENGINEER GARY GRAHAM SHEARIN
6/26/06

HYDRAULICS ENGINEER
NORTH CAROLINA PROFESSIONAL SEAL 025498 ENGINEER JOHN DAVID RENDER NICHOLS
6/26/06

Prebared in the Office of:
EarthTech
A Tyco International Ltd. Company
701 Corporate Center Drive, Suite 475
Raleigh, NC 27607
(919) 854-6200 - (919) 854-6259(FAX)

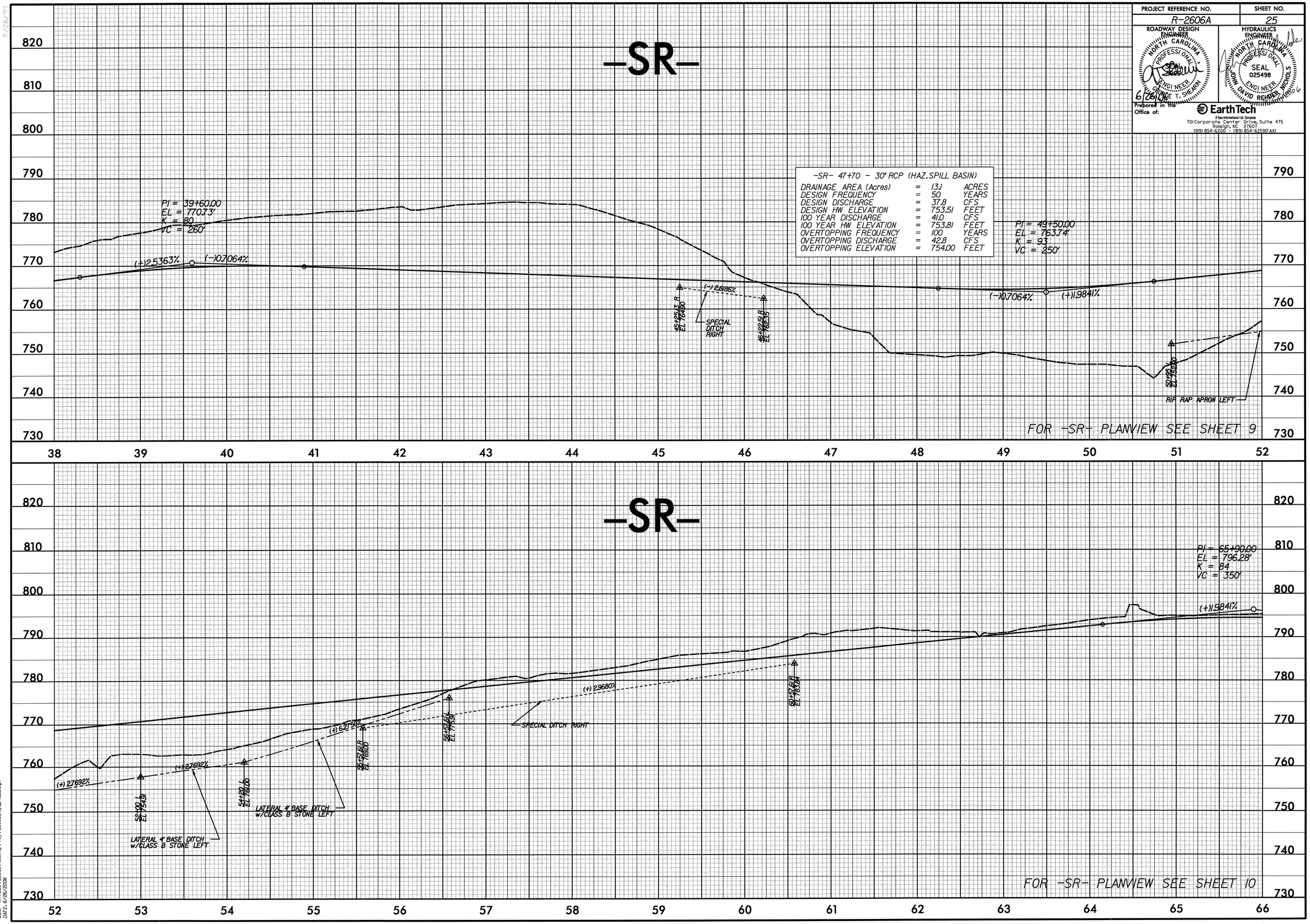

USER: keshumpert
DGN: k:\4155R\2606a\Roadway\Proj\r2606a_rdy_pf1_25.dgn
DATE: 6/26/2006

PROJECT REFERENCE NO.	SHEET NO.
R-2606A	26

ROADWAY DESIGN ENGINEER
NORTH CAROLINA PROFESSIONAL SEAL 036889 ENGINEER GEORGE T. SHEARIN
6/28/06

HYDRAULICS ENGINEER
NORTH CAROLINA PROFESSIONAL SEAL 025498 ENGINEER JOHN DAVID REMDER, NICHOLS
6/28/06

Prepared in the Office of:
EarthTech
A Tyco International Ltd. Company
701 Corporate Center Drive, Suite 475
Raleigh, NC 27607
(919) 854-6200 (919) 854-6259(FAX)

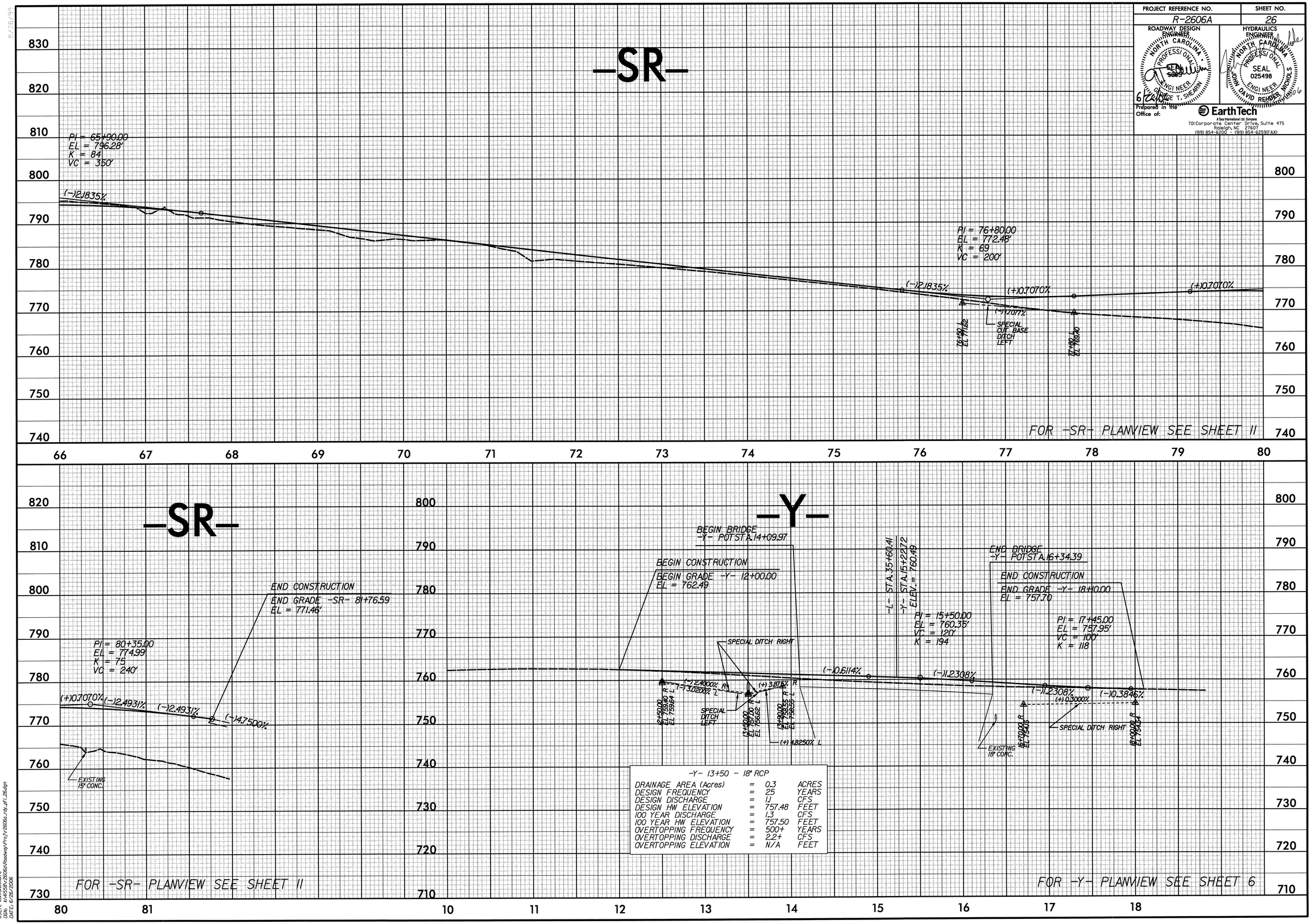

USER: keithcrumpler
DGN: R2606a_rdy_pfl_26.dgn
DATE: 6/26/2006

PROJECT REFERENCE NO.	SHEET NO.
R-2606A	27

ROADWAY DESIGN ENGINEER
NORTH CAROLINA PROFESSIONAL SEAL 5003 ENGINEER
6/26/06
T. SHERRIN

HYDRAULICS ENGINEER
NORTH CAROLINA PROFESSIONAL SEAL 025498 ENGINEER
JOHN DAVID REDDER NICHOLS
6/26/06

Prepared in the Office of: EarthTech
A Tyco International Ltd. Company
701 Corporate Center Drive, Suite 475
Raleigh, NC 27607
(919) 854-6200 - (919) 854-6259(FAX)

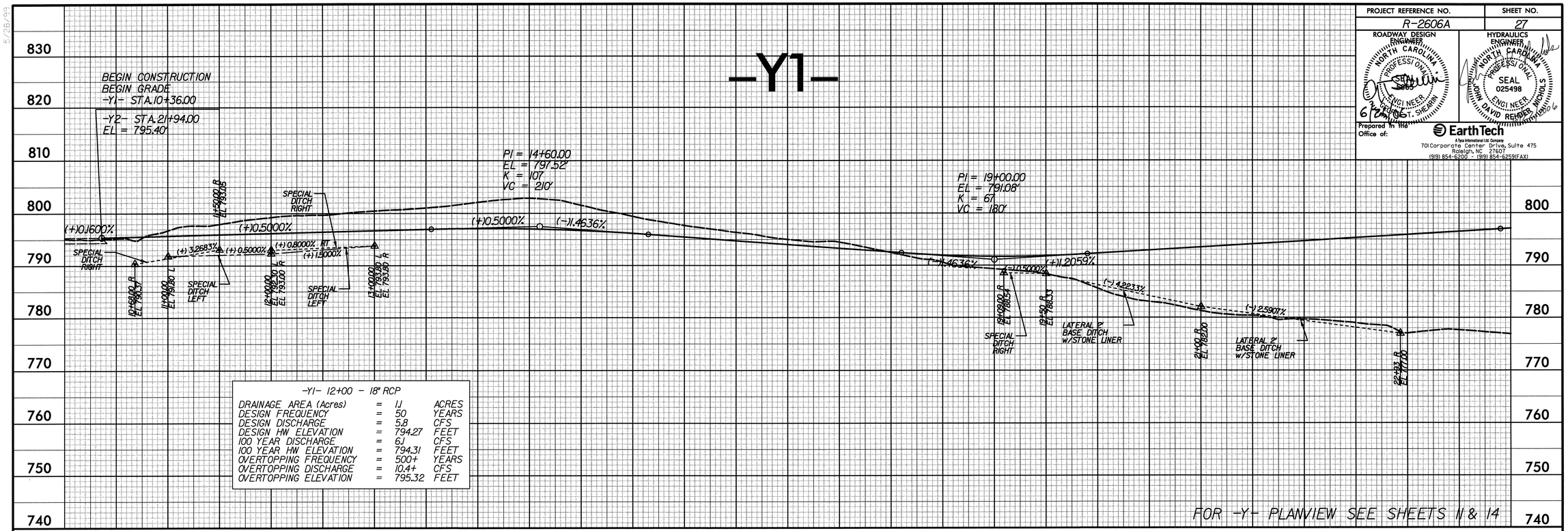

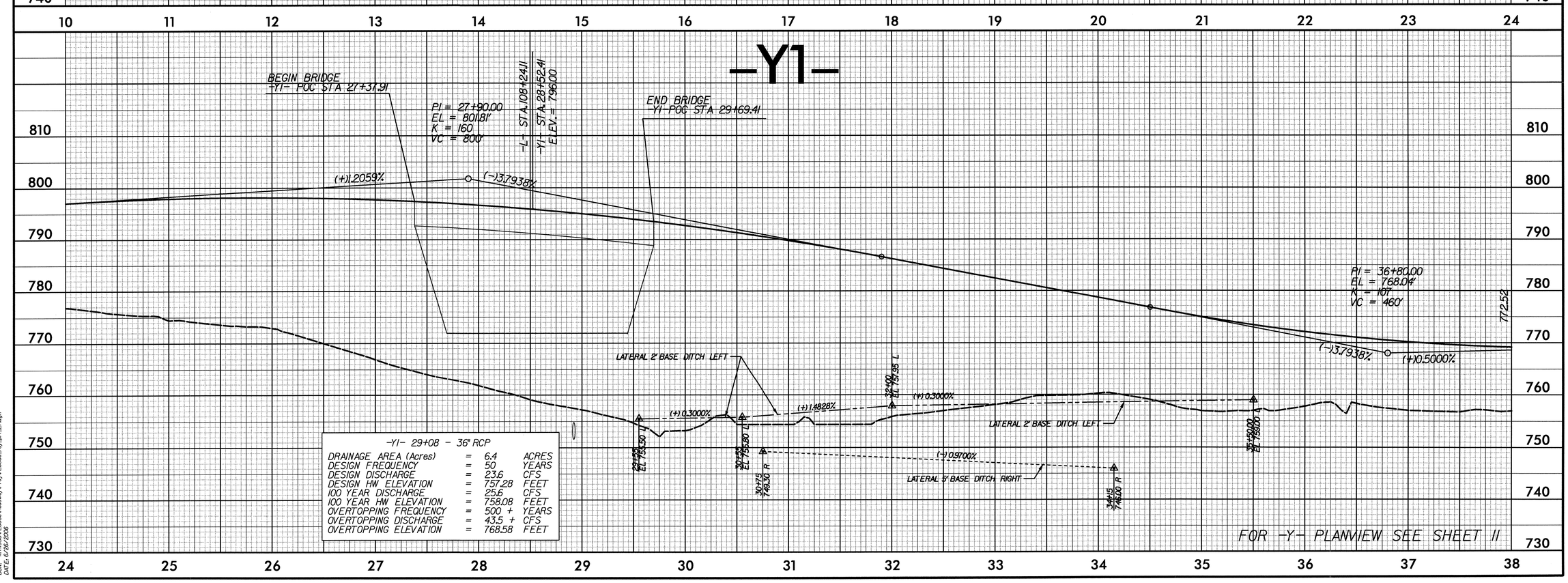

USER: trashnoometra
DGN: k:\45559\r2606a\Roadway\Pro\y2606a_rdy_pf1_27.dgn
DATE: 6/26/2006

REVISIONS	PROJECT REFERENCE NO.	SHEET NO.
	R-2606A	28

ROADWAY DESIGN ENGINEER — NORTH CAROLINA PROFESSIONAL SEAL 5986 — ENGINEER — GEORGE T. SHEARIN — 6/26/06

HYDRAULICS ENGINEER — NORTH CAROLINA PROFESSIONAL SEAL 025498 — ENGINEER — JOHN DAVID REMBERT NICHOLS — 6/26/06

Prepared in the Office of: EarthTech — A Tyco International Ltd. Company — 701 Corporate Center Drive, Suite 475, Raleigh, NC 27607 — (919) 854-6200 - (919) 854-6259(FAX)

-Y1-

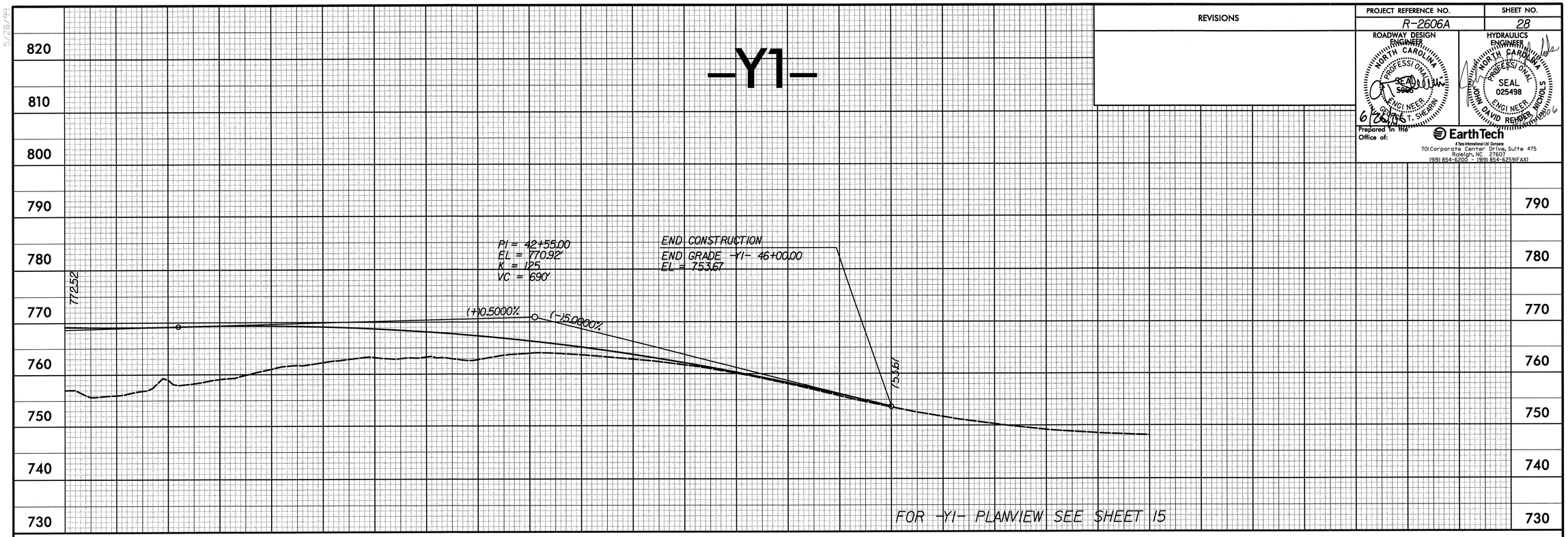

-Y2-

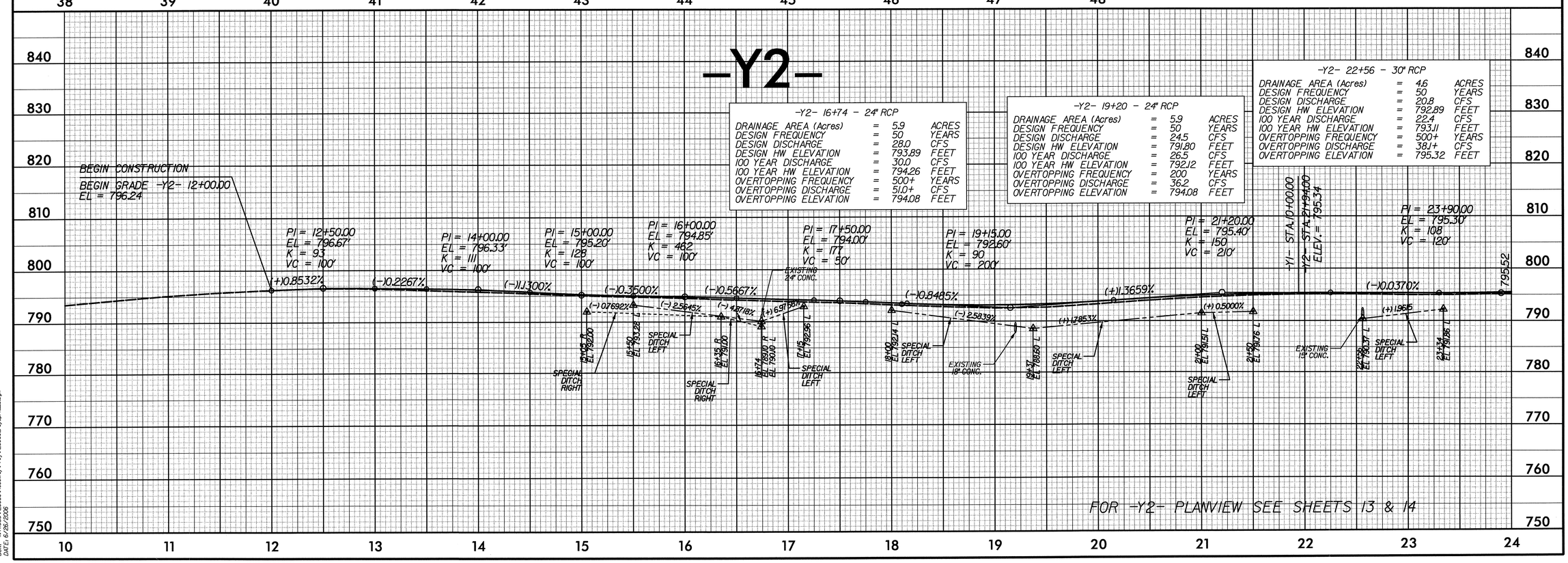

-Y2- 16+74 - 24" RCP

DRAINAGE AREA (Acres)	=	5.9	ACRES
DESIGN FREQUENCY	=	50	YEARS
DESIGN DISCHARGE	=	28.0	CFS
DESIGN HW ELEVATION	=	793.89	FEET
100 YEAR DISCHARGE	=	30.0	CFS
100 YEAR HW ELEVATION	=	794.26	FEET
OVERTOPPING FREQUENCY	=	500+	YEARS
OVERTOPPING DISCHARGE	=	51.0+	CFS
OVERTOPPING ELEVATION	=	794.08	FEET

-Y2- 19+20 - 24" RCP

DRAINAGE AREA (Acres)	=	5.9	ACRES
DESIGN FREQUENCY	=	50	YEARS
DESIGN DISCHARGE	=	24.5	CFS
DESIGN HW ELEVATION	=	791.80	FEET
100 YEAR DISCHARGE	=	26.5	CFS
100 YEAR HW ELEVATION	=	792.12	FEET
OVERTOPPING FREQUENCY	=	200	YEARS
OVERTOPPING DISCHARGE	=	36.2	CFS
OVERTOPPING ELEVATION	=	794.08	FEET

-Y2- 22+56 - 30" RCP

DRAINAGE AREA (Acres)	=	4.6	ACRES
DESIGN FREQUENCY	=	50	YEARS
DESIGN DISCHARGE	=	20.8	CFS
DESIGN HW ELEVATION	=	792.89	FEET
100 YEAR DISCHARGE	=	22.4	CFS
100 YEAR HW ELEVATION	=	793.11	FEET
OVERTOPPING FREQUENCY	=	500+	YEARS
OVERTOPPING DISCHARGE	=	38.1+	CFS
OVERTOPPING ELEVATION	=	795.32	FEET

USER: hwilcoxson
GEN: R:\R1535\R2606\Roadway\Proj\r2606a_rdy_pfl_28.dgn
DATE: 6/26/2006

5/26/99

REVISIONS	PROJECT REFERENCE NO.	SHEET NO.
	R-2606A	29

ROADWAY DESIGN ENGINEER
NORTH CAROLINA PROFESSIONAL SEAL 025498 ENGINEER GEORGE T. SHEARIN
6/26/06

HYDRAULICS ENGINEER
NORTH CAROLINA PROFESSIONAL SEAL 025498 ENGINEER JOHN DAVID RENDER NICHOLS
6/26/06

Prepared in the Office of:
EarthTech
A Tyco International Ltd. Company
701 Corporate Center Drive, Suite 475
Raleigh, NC 27607
(919) 854-6200 - (919) 854-6259(FAX)

-DRIVE1-

BEGIN CONSTRUCTION
BEGIN GRADE
-DRIVE1- STA.10+11.00
EL = 773.63'

PI = 10+50.00
EL = 774.00'
K = 10
VC = 70'

PI = 12+30.00
EL = 763.12'
K = 22
VC = 140

END CONSTRUCTION
END GRADE
-DRIVE1- STA.13+01.00
EL = 768.32'

(+)1.6364% (+)0.9487% (-)6.0444% (+)0.2817%

30" EXISTING 18" CONC.

-DRIVE 1- 10+94 - 30" RCP			
DRAINAGE AREA (Acres)	=	7.7	ACRES
DESIGN FREQUENCY	=	50	YEARS
DESIGN DISCHARGE	=	28.0	CFS
DESIGN HW ELEVATION	=	764.77	FEET
100 YEAR DISCHARGE	=	30.4	CFS
100 YEAR HW ELEVATION	=	764.96	FEET
OVERTOPPING FREQUENCY	=	500	YEARS
OVERTOPPING DISCHARGE	=	51.7+	CFS
OVERTOPPING ELEVATION	=	N/A	FEET

FOR -DRIVE1- PLANVIEW SEE SHEET 11 & 15

-Y2-

PI = 31+50.00
EL = 802.10'
VC = 100'
K = 50'

END CONSTRUCTION
END GRADE -Y2- 35+25.00
EL = 803.76

(+)0.6400% (+)0.4427%
EXISTING 15" CONC.
(+)1.0769% (+)1.733% (+)0.6400% (-)0.5000% (+)2.418% (+)7.4400% (+)2.257% (+)2.5513%

PI = 26+50.00
EL = 798.10'
K = 1057
VC = 100'

PI = 28+00.00
EL = 799.86'
VC = 90'
K = 169

23+45 R EL 796.34
SPECIAL DITCH RIGHT
29+83 R EL 795.50
29+83 L EL 798.10
SPECIAL DITCH RIGHT
31+50 EL 799.70 L
31+50 R EL 799.02
LATERAL V DITCH LEFT
32+25 EL 798.28 L
SPECIAL DITCH LEFT
34+00.00 EL 803.23 L

FOR -Y2- PLANVIEW SEE SHEETS 13,14 & 14A

-DRIVE3-

BEGIN CONSTRUCTION
BEGIN GRADE
-DRIVE3- STA.10+13.60
EL = 739.96'

PI = 10+30.00
EL = 739.06'
K = 2
VC = 30'

PI = 10+75.00
EL = 731.08'
K = 3
VC = 50'

END CONSTRUCTION
END GRADE
-DRIVE3- STA.11+00.00
EL = 730.99'

740.69
(-)5.3676% (-)5.5000% (-)17.7379% (-)0.3500%

FOR -DRIVE3- PLANVIEW SEE SHEET 7

-DRIVE4-

END CONSTRUCTION
END GRADE
-DRIVE4- STA.11+50.00
EL = 780.91'

PI = 10+11.00
EL = 769.07'

PI = 10+35.00
EL = 768.59'
K = 2
VC = 40'

PI = 11+00.00
EL = 781.76'
K = 4
VC = 90'

769.29
(-)1.6916% (+)20.2571% (-)12% (-)12.0000%

BEGIN CONSTRUCTION
BEGIN GRADE
-DRIVE4- STA.10+11.00
EL = 769.07'

FOR -DRIVE4- PLANVIEW SEE SHEET 9

USER: tesfuyonatra
DGN: k:\4153\v2606\roadway\pro\r2606u_rdy_pf1_29.dgn
DATE: 6/26/2006

5/26/99

PROJECT REFERENCE NO.	SHEET NO.
R-2606A	30

ROADWAY DESIGN ENGINEER
NORTH CAROLINA PROFESSIONAL SEAL 5963 ENGINEER
6/26/06 CONRAD T. SHEARIN

HYDRAULICS ENGINEER
NORTH CAROLINA PROFESSIONAL SEAL 025498 ENGINEER
JOHN DAVID REMDER MICHOLS
6/26/06

Prepared in the Office of:
EarthTech
A Tyco International Ltd. Company
701 Corporate Center Drive, Suite 475
Raleigh, NC 27607
(919) 854-6200 - (919) 854-6259(FAX)

-DRIVE5-

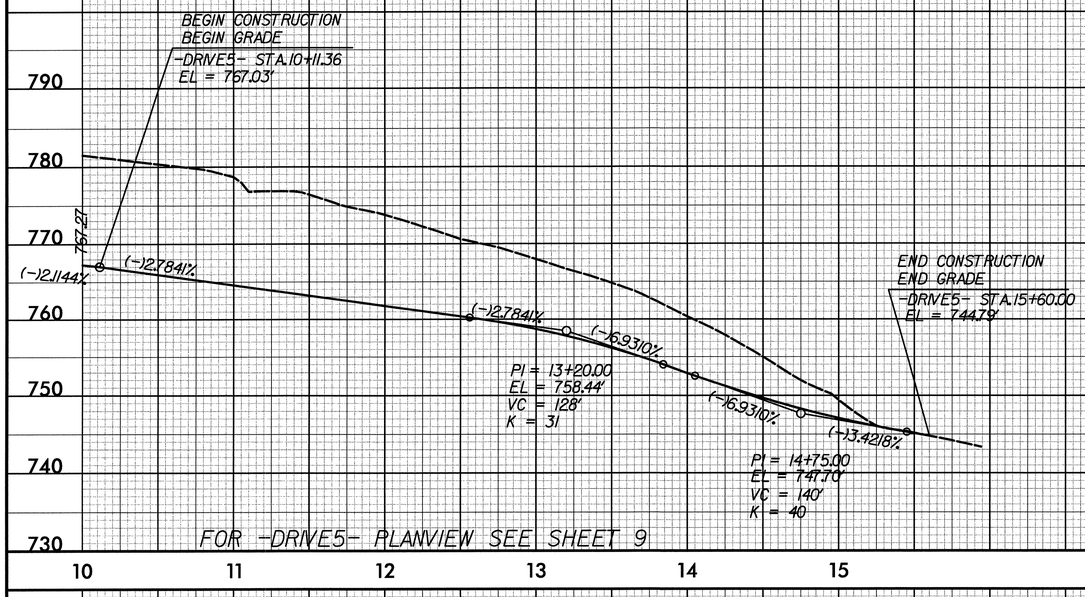

FOR -DRIVE5- PLANVIEW SEE SHEET 9

-DRIVE6-

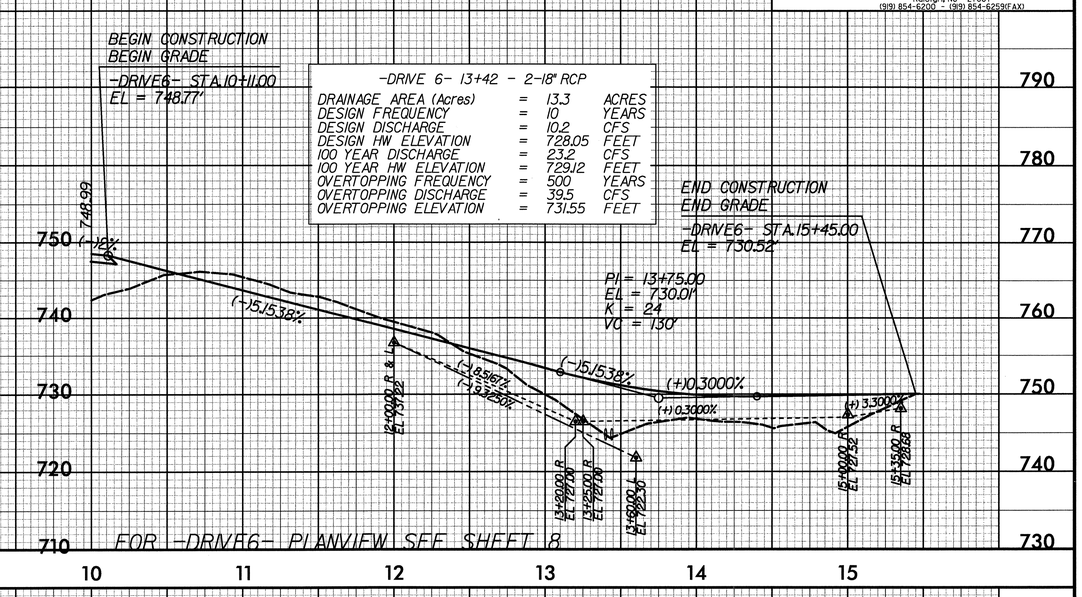

FOR -DRIVE7- PLANVIEW SEE SHEET 8

-DRIVE7-

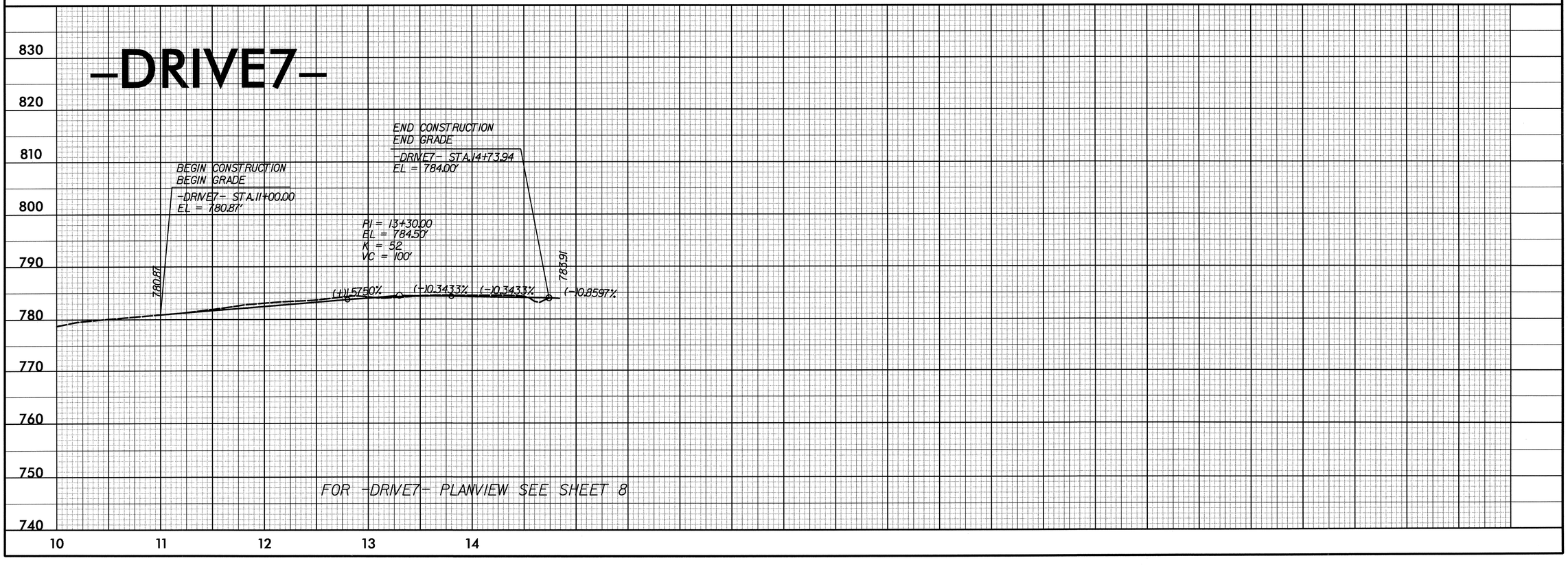

FOR -DRIVE7- PLANVIEW SEE SHEET 8

USER: tea/mcpeterte
DGN: k:\4159\r2606a\Roadway\Pro\r2606a_rdy_pf1_30.dgn
DATE: 6/26/2006

5/26/99